STATE OF CALIFORNIA—BUSINESS, TRANSPORTATION AND HOUSING AGENCY

DEPARTMENT OF TRANSPORTATION
ENGINEERING SERVICE CENTER
Transportation Laboratory
5900 Folsom Blvd.
Sacramento, California 95819-4612

METHOD FOR DETERMINING THE RESISTANCE "R" VALUE OF TREATED AND UNTREATED BASES, SUBBASES, AND BASEMENT SOILS BY THE STABILOMETER

CAUTION: Prior to handling test materials, performing equipment setups, and/or conducting this method, testers are required to read **"SAFETY AND HEALTH"** on Page 3, Section D of this method. It is the responsibility of the user of this method to consult and use appropriate safety and health practices and determine the applicability of regulatory limitations before any testing is performed.

A. OVERVIEW

This method covers the procedure for determining the Resistance (R-value) of both treated and untreated soils or aggregates.

This test method is divided into the following parts:

1. Preparation of Materials for Testing.
2. Compaction, Exudation Pressure Determination, and Measurements of R-Value Test Specimens.
3. Determining the Expansion Pressure of R-Value Test Specimens.
4. Measuring the Horizontal Pressure and Displacement By Means of the Stabilometer.
5. Calculating the Moisture Content and Density of R-Value Test Specimens.
6. Determining the R-Value of a Material.
7. Reporting Results.

B. APPARATUS

1. Riffle splitters, as prescribed in California Test 201.
2. Scales, 5000 g capacity, accurate to 1 g.
3. Scales, 500 g capacity, accurate to 0.1 g.
4. Turntable capable of holding mixing pan.
5. Water spray metering device (calibrated to the nearest milliliter.)
6. Mixing pan approximately 300 mm diameter and approximately 100 mm deep with sides curving in at the bottom. The radius of side curvature should be approximately equal to the pan depth.
7. Large mixing spoon approximately 60 mm wide or triangular hand trowel about 125 mm in length.
8. Expansion pressure devices (Figures 1 and 2) for each specimen and one for measuring compacted specimen height.
9. A deflection gage (expansion pressure dial) having graduations or increments to 0.002 mm and a range of 5 mm (Figure 2).

10. A 4-mm Allen wrench (Figure 2).

11. Height calibration gage. A metal cylinder or block between 50 and 75 mm in height, measured to a tolerance of 0.1 mm with sufficient top and bottom surface to support a perforated disc and stem without tipping.

12. Mold, 101.6 ± 0.13 mm inside diameter by 127 ± 0.2 mm high fabricated to an inside surface roughness of 250 microfinish, General Electric roughness scale. (See note, Figure 3.) Discard any used mold that becomes elliptical in excess of 101.6 ± 0.25 mm or loses the surface texture to the extent that it has an almost "mirror like" finish.

13. Mold Holder (Figure 4) designed to firmly restrain a mold on the compactor turntable during compaction. The base of the mold holder shall have a metal plate 100.8 ± 0.5 mm in diameter and 13 ± 0.5 mm high. The plate shall be an integral part of the base of the mold holder. A rubber disc (Apparatus #16) shall be cemented to the plate.

14. Funnel which fits over the mold to prevent spillage during feeding and compaction (Figure 5).

15. A compactor, conforming to the requirements of California Test 101 or California Test 104, capable of applying an average contact pressure of 2410 ± 110 kPa to the tamper foot with provisions for maintaining this pressure during changes in sample height. The load-time trace shall be free of "chatter" or evidence of impact-associated changes in slope. The rise time for application of foot pressure, in the range from 240 to 2070 kPa, shall not be less than 0.07 nor more than 0.20 s.

    The dwell time, measured at 2070 kPa foot pressure, shall not be less than 0.15 nor more than 0.45 s. The pressure release or removal time shall not be greater than 0.60 s.

    The compactor shall apply the load at the rate of 30 tamps per min at 2410 kPa. The compactor shall include a counter for measuring the number of tamps applied to a specimen and a trough (Figure 5) for mechanically or manually feeding the sample into the mold in 20 increments. The tamper foot shall have a surface area of $2.6 \times 10^{-3}\ m^2$ and conform to the dimensions shown in California Test 101.

16. Rubber discs 100 ± 1 mm in diameter by 3 ± 0.5 mm thick and having a durometer hardness of 80 ± 5, Garlock 22 or equivalent.

17. Metal rod, 40 to 50 mm in diameter, flat ended.

18. Moisture exudation indicating device consisting of a detection plate and display panel (Figure 6) and conforming to the dimensions and tolerances on Transportation Laboratory Plan D-534. The detection plate is wired to the display panel where lights are activated as moisture contacts the respective contact points. Some plates include a contact ring that detects free water being squeezed from under the edge of the mold. Some units have the contacts wired directly to the testing machine to automatically record the applied pressure when exudation occurs. Battery powered units are independent of the testing machine and serve only to provide a visual reference to enable the operator to read and record the exudation pressure manually. This unit does not include a contact ring so the operator must keep a constant watch for free water at the edge of the mold.

19. Disc, 0.4 mm thick, phosphor bronze, with perforations, 100.8 ± 0.5 mm diameter (Figure 7). Several are needed. At least one is needed for exudating

cohesive materials and one for each basket used for Class 2 aggregate base or other cohesionless materials.

20. Specimen follower, solid wall, 100.33 ± 0.13 mm outside diameter by 130 ± 6 mm long, 4 kg maximum (Figure 6).

21. A 45 kN minimum capacity compression testing machine (CTM) with a spherically seated and free acting upper head conforming to the requirements of California Test 108. The machine must accommodate shims to lock the head in a horizontal plane or an additional 45 kN capacity CTM having the upper head firmly fixed in horizontal plane will be required.

22. Basket making device consisting of a 98 ± 2 mm diameter cylindrical form and a 12.7-mm masking tape dispenser (Figure 9-A).

23. Metal basket loading sleeve constructed of #304 stainless steel, 0.6 mm thick (Figure 4-A).

24. Drip pans approximately 150 mm diameter and 50 mm deep for use under expansion pressure devices.

25. Stabilometer and accessories (Figure 10).

26. Standard metal specimen, 101.6 ± 0.13 mm outside diameter by 165 mm long.

C. MATERIALS

1. Cardboard discs, 100 mm outside diameter cut from approximately 70 kg manila stock (Office of Purchasing and Warehousing (OPW) No. 6640-0130-8).

2. Filter paper, 100 mm diameter and 0.15 mm thick, smooth surface, medium filtering speed, medium retention. VWR grade 413 and Ahlstrom grade 613 filters meet this criterion.

3. Strips of slotted paper, for making baskets, composed of 27 kg brown Kraft paper, 64 mm wide by 339 mm long with slots (Figure 8) (OPW No. 6640-0250-2).

4. Masking tape 12.7 mm wide.

5. Filter paper, 110 mm diameter by 0.15 mm thick, creped surface, medium-fast filtering speed, medium retention. S&S Sharkskin general purpose filter paper meets this criteria (OPW No. 6640-0160-1).

D. SAFETY AND HEALTH

Soils and aggregates may contain bacterial, organic and/or chemical contaminants that can be harmful to one's health. The wearing of MSHA/NIOSH approved dust masks and protective gloves when handling material is advised.

Observe good hygiene practices. Wash hands after handling samples and before eating, drinking or smoking.

Dust, noise, lifting and operation of equipment are encountered in the procedures in this test method. It is not possible to completely eliminate these risks, but steps should be taken to minimize them as much as possible.

The use of dust palliatives on workroom floors and dust collection units are very effective methods of reducing dust conditions.

Enclosures built around noisy equipment can eliminate much of the noise. The use of sound deadening material should be utilized when appropriate. The use of ear plugs or ear muffs is recommended when other noise suppression measures are inappropriate.

Guards or shields must be provided around exposed moving parts of machinery. Personnel should be instructed in the proper operation of each machine and in proper

lifting methods. The use of table-high carts to move heavy items can minimize the lifting.

Caution must be exercised in the operation of the compactor so as not to allow any object other than the sample itself to intercede between the compactor foot and the mold at any time while the ram is in motion. The clearance between the inside edge of the mold and the compactor foot is approximately 1.5 mm. The applied shearing force of 4900 N could cause severe injury to an operator's hand if caught between the compactor foot and the mold. A clear plastic guard has been designed for the California compactor to be used as an aid in safeguarding against this hazard.

When picking up both the stabilometer and stage base together, make sure that the lock shoe on the bottom of the stabilometer shell is in position to prevent the base from slipping out. The stage weighs about 9 kg and could cause serious injury if it fell on the operator's foot. It is good practice when carrying the entire assembly to grip it by the bronze adjusting nut on the stage base.

Prior to handling materials, testing, or disposing of any waste materials, testers are required to read Caltrans Laboratory Safety Manual: Part A, Section 5.0, Hazards and Employee Exposure; Part B, Sections: 5.0, Safe Laboratory Practices; 6.0, Chemical Procurement Distribution and Storage; and 10.0, Personal Protective Apparel and Equipment; and Part C, Section 1.0, Safe Laboratory Practices.

PART 1. PREPARATION OF MATERIALS FOR TESTING

A. Sample Preparation

1. Untreated Soils and Aggregates

   a. Process samples as prescribed in California Test 201.

      The preparation of R-value test samples must include removal of coatings from coarse aggregates, and clay lumps must be broken down to pass the 4.75-mm sieve. This is important because relatively small test specimens are used. Therefore, it is necessary that the test specimen be prepared very accurately. (Note: Moisture reduction may be necessary for proper sample preparation. Do not completely dry the sample. Moisture reduction shall be limited to the amount necessary to permit a complete separation on the 4.75-mm sieve and to develop a free-flowing condition in the portion passing the 4.75-mm sieve. Moisture reduction may be performed by any means that does not heat the sample in excess of 60°C).

   b. Miscellaneous lumps of bituminous mix or other friable particles need to be crumbled or pulverized to their minimum durable size on all sieves through the 4.75-mm sieve.

   c. Vegetation and other deleterious substances are a part of the sample and should not be removed.

   d. Note the presence of bituminous lumps or deleterious substances in the sample on the test report and whether any of these materials compromise a portion of the R-value test specimens.

   e. Follow the sieving instructions in California Test 202 to separate the coarse portions into individual coarse size fractions. Keep the size fractions separated for batching.

2. Reclaimed Asphalt Concrete and Portland Cement Concrete, Previously Treated Materials, and Glass.

   a. Samples of these materials generally contain large chunks or particles that normally require further processing for use in roadbed construction.

b. Reduce these materials to a size applicable to construction processes. This reduction is usually best accomplished by crushing.

c. Process the reduced material in the same manner as untreated soils and aggregates.

3. Field Samples Containing Recycled Materials

a. Process the samples in the same manner as untreated soil and aggregates in Section A-1.

b. The presence of recycled material compromising a portion of any oversize material should be noted in the test report.

B. Calculation of Batch Mass

1. Untreated Soils, Aggregates, Recycled Materials, and Samples Containing Recycled Materials.

a. Determine the "as received" grading of the sample as prescribed in California Test 202. The "as received" grading is the grading as measured on a sample prior to any adjustment such as scalping, wasting or crushing of oversize material. Recycled material, which has been reduced in size, is considered an "as received" grading.

b. Establish the "as used" grading as prescribed in California Test 105. In cases where 100 % of the material as received passes the 19.0-mm sieve and no adjustments are necessary, the "as received" and the "as used" gradings will be the same.

Rejection of oversize material (scalping) shall conform to the following criteria:

(1) If 75 % or more of the sample as received passes the 19.0-mm sieve, scalp the sample on the 19-mm sieve

(2) If less than 75 % of the sample as received passes the 19.0-mm sieve, scalp the sample on the 25.0-mm sieve.

c. Calculate batch mass for the desired test specimen, which will be proportional to the sample gradation.

(1) 1200 g samples are normally required; however, a lesser amount may be used for lightweight materials when it is certain that the lesser mass will provide a 63.5 ± 1.3 mm high specimen.

(2) The "cumulative mass" method is the preferable method of combining the various size components of materials for the R-value test.

(3) The following are examples of computations for batching by the "cumulative mass" method:

(a) Single sample with the following grading:

Sieve Passing	As Received Percent Passing	As Used Percent
25.0 mm	100	100
19.0 mm	96	100
12.5 mm	91	95
9.5 mm	85	89
4.75 mm	71	74

Since more than 75 % of the as received sample passes the 19.0-mm sieve, the sample must be scalped on the 19.0-mm sieve and the as used grading determined as prescribed in California Test 105.

Calculate the cumulative mass based on the as received grading for a 1200 g sample as follows:

Size	Cumulative Percent Retained	Cumulative Mass (grams)
19.0 to 12.5 mm	(96-91) = 5	(5/96) x 1200=63
19.0 to 9.5 mm	(96-85) = 11	(11/96) x 1200=138
19.0 to 4.75 mm	(96-71) = 25	(25/96) x 1200=313
Passing 4.75 mm	(96-0) = 96	(96/96) x 1200=1200

(b) Two samples having the gradings and combination as shown:

	Aggregate Gradation, Percent Passing				
	As Received Sample		Proportional		
			80%	20%	
Size, mm	No. 1	No. 2	No. 1	No. 2	Combined
25.0	100		80	20	100
19.0	90		72	20	92
12.5	85	100	68	20	88
9.5	80	95	64	19	83
4.75	70	90	56	18	74

Since more than 75 % of the combined materials pass the 19.0-mm sieve the sample must be scalped on the 19.0-mm sieve and the as used grading determined as prescribed in California Test 105.

	Aggregate Gradation, Percent Passing	
Size	Combined	As Used (Scalp 19 mm)
25.0 mm	100	100
19.0 mm	92	100
12.5 mm	88	96
9.5 mm	83	90
4.75 mm	74	80

Calculate the percent of each size for the proportioned and combined gradings for each size as shown:

	Percent of Each Size Proportioned Grading		
Size	No. 1	No. 2	Combined No. 1 & No. 2
19.0 to 12.5mm	72-68 = 4	20-20 = 0	4+0 = 4
12.5 to 9.5mm	68-64 = 4	20-19 = 1	4+1 = 5
9.5 to 4.75mm	64-56 = 8	19-18 = 1	8+1 = 9
Passing 4.75mm	56	18	56+18 = 74

Calculate the cumulative mass for a 1200 g sample as shown:

	Cumulative, Percent							
Size	Combined No. 1 & 2 (%)		Add Sample No. 1 (%)		Add Sample No. 2 (%)		Combined No. 1 & 2 (%)
19.0 to 12.5 mm	—		4		+ 0		= 4
19.0 to 9.5 mm	4	+	4	= 8	+ 1		= 9
19.0 to 4.75 mm	9	+	8	= 17	+ 1		= 18
Passing 4.75 mm	18	+	56	= 74	+ 18		= 92

	Cumulative, Mass	
Size	Add Sample No. 1 g	Add Sample No. 2 g
19.0 to 12.5 mm	1200/92 x 4 = 52	1200/92 x 4 = 52
19.0 to 9.5 mm	1200/92 x 8 = 104	1200/92 x 9 = 117
19.0 to 4.75 mm	1200/92 x 17 = 222	1200/92 x 18 = 235
Passing 4.75 mm	1200/92 x 74 = 965	1200/92 x 92 = 1200

The percentage of material passing each sieve size, for the calculated combined mass, determined as prescribed in California Test 202, agrees with the as used percent passing previously calculated by California Test 105.

d. The illustrated calculations for batching by the cumulative mass method are intended as a guide in determining the required mass. The cumulative mass method eliminates the need to remove each size fraction from the scale during the weighing process. It also reduces the tendency for mass discrepancies between specimens. Batching by weighing the individual size fractions is permissible. However, when batching by this method the size fractions should be combined and the actual mass for each specimen recorded.

2. Cement Treating of Untreated Materials in the Laboratory:

a. Calculate the batch mass in the same manner as described for untreated soils, aggregates, recycled materials, and samples containing recycled materials (subsection 1 of this section).

b. The addition of cement is explained in Section D, Curing of Specimens.

C. Batching of Specimens

The term "batching" when used in this procedure refers to the act of combining, according to previously calculated

proportions, sufficient material in individual samples to fabricate R-value test specimens.

Prepare sufficient specimens for testing. Normally, five test specimens are required (one for moisture content, one to establish specimen height, and three for R-value determination). Critical materials may require additional R-value tests. The exact number of tests is a matter of judgment dependent on the characteristics of the soil and tester skill.

1. Untreated Soils, Aggregates, Recycled Materials, and Samples Containing Recycled Materials and Cement Treated Materials in the laboratory.

    a. Using a riffle-type splitter separate the passing 4.75 mm portion of the sample into approximate amounts needed for each specimen. By using a proper size splitter (10 to 8 mm openings) and careful procedures, it is possible to obtain amounts that are within 1 % of the desired mass.

    b. Weigh the calculated amounts of the retained 4.75 mm size fractions to the nearest gram.

    c. Weigh (to the nearest gram) the previously split passing 4.75 mm portion. Since the split portions may vary slightly in mass from the amount required, add or remove material to obtain the exact specimen mass.

        (1) If the size fractions were weighed separately, recombine them and record the total mass.

        (2) When batching by the "cumulative mass" method, each specimen will have the same total mass.

    d. As each specimen is proportioned, immediately place it in a moisture proof container with a tight fitting lid.

2. Determination of Initial Moisture Content of R-Value Test Specimens

    a. Utilize one of the prepared specimens for the determination of initial moisture content according to California Test 226. The moisture content shall be calculated to the nearest 0.1 %.

    b. The moisture content of this specimen shall be used as the initial moisture content for the remaining specimens.

D. Curing of Specimens

1. Untreated Soils, Aggregates, Recycled Materials, and Samples Containing Recycled Materials

    a. Transfer a batched specimen from its container to the mixing pan (Apparatus, #6).

    b. Place the pan on the turntable (Apparatus, #4).

    c. Using the water spray device (Apparatus, #5) and trowel or mixing spoon (Apparatus, #7), mix the specimen and water.

    d. Add approximately 1/2 to 2/3 of the moisture necessary to obtain the saturation (Part 2, Section B-4). While mixing continuously rotate the pan horizontally beneath the water spray. Continue mixing for one minute after all the water has been added.

    NOTE: The amount of water to be added to a material is established by experience. With the exception of soils containing a high percentage of clay, generally, sufficient water has been added if the material no longer appears to be free flowing and tends to cling together when tightly squeezed in the hand, leaving only a slight trace or sensation of moisture

on the skin. The presence of clay will often cause a material to cling together before 1/2 the moisture is added.

e. Record the amount of water added. This addition of water is referred to as the "SOAK WATER".

f. Transfer all of the material (including particles adhering to the pan and mixing tools) loosely into its container and replace the lid tightly on the container.

g. Allow the specimens to cure a minimum of 16 h before compacting.

h. The soak water addition and curing is optional for aggregate bases meeting the Standard Specification grading requirements for Class 2 aggregate base.

i. Soak and cure the remaining sample specimens as previously described.

2. Cement Treatment of Materials in the Laboratory.

a. Calculate the amount of cement to be added to each specimen by the following formula:

$$M_C = C \times M_S/(100 + M_1)$$

where:

M_C = mass of cement to the nearest 0.1 g

C = % of cement

M_S = specimen mass to the nearest g

M_1 = initial moisture content as determined in Section C-2.

b. Weigh the amount of cement required for each test specimen.

c. Transfer a batched specimen of the untreated material from its container to the mixing pan (Apparatus, #6).

d. Place the pan on the turntable (Apparatus, #4).

e. Add the previously weighed mass of cement to the specimen and thoroughly mix with the material before adding any soak water.

f. Add soak water as described for untreated soils, aggregates, recycled materials, and samples containing recycled materials in Section D, subsection 1, c through f.

g. Allow the specimens to cure a minimum of 16 h (but not over 24 h) before compacting and exudating.

h. Soak and cure the remaining specimens as described above.

PART 2. COMPACTION, EXUDATION PRESSURE DETERMINATION, AND MEASUREMENTS OF R-VALUE TEST SPECIMENS

The R-value of a material is determined when the material is in a state of saturation such that water will be exuded from the compacted test specimen when a 16.8 kN load (2.07 MPa) is applied. Since it is not always possible to prepare a test specimen that will exude water at the specified load, it is necessary to test a series of specimens prepared at different moisture contents. Four specimens are normally required. The first is used as a pilot to assist in determining the correct amount of material and the proper moisture content. (See Page 10, Section B 3, a, (2) for the formula.) The remainder will be used to establish the exudation pressure curve for the material.

Normally, three specimens are enough to determine the R-value. However, in the case of critical materials, it is sometimes necessary

to make additional tests in order that the true shape of the exudation pressure curve will be known at the "2.07 MPa" exudation point. The exact number of specimens to be fabricated is a matter of judgment but two specimens should exude water at or near 2.07 MPa.

Specimens used in the R-value test should conform to the following criteria when possible.

Height = 63.5 ± 1.3 mm

Exudation pressure: One specimen should be above and two below 2.07 MPa, or two above and one below 2.07 MPa with a minimum spacing of 700 kPa between specimens.

All samples should exude moisture when the pressure is between 700 and 5500 kPa, except when very high expansion pressures are expected. In the latter case, wetter specimens are sometimes necessary to get expansion pressures low enough to determine the R-value by expansion pressure.

Two procedures are provided. The first (Section B) is to be used for soils and fine-grained aggregates which possess sufficient natural cohesiveness to maintain the specimens intact during the various test processes. The second procedure (Section C) is to be used for Class 2 aggregate bases or relatively cohesionless materials such as coarse, granular materials and clean sands that may crumble or lose integrity during the various test processes.

A. Apparatus Preparation

1. Calibration and operation of the compactor shall be in accordance with California Test 101 or California Test 104.

2. Adjustment of Expansion Pressure Device (Apparatus, #8) for use in Specimen Height Measurement.

   a. Clean off all dust and foreign material from the spring steel bar and adjustment plug.

   b. Place the deflection gage (Apparatus, #9) in position on the top bar of the expansion pressure device. The single bearing end must rest on the adjustment plug.

   c. Use an Allen wrench (Apparatus, #10) to raise or lower the adjustment plug until the deflection gage reads zero.

   d. The turntable of the expansion pressure device raises or lowers 2 mm with each revolution. The circumference of the turntable is numbered from 0 to 2.0 in ten equal divisions. The specimen height measuring device is scribed in 2 mm increments to accomodate heights between 48 and 72 mm. An adjusting screw on the measuring device allows for adjusting the device to the nearest 2 mm at the line scribed on the expansion device post.

   e. Place a perforated disc with an adjustable stem on top of the height calibration gage (Apparatus, #11) and center it on the expansion pressure device turntable. Raise the turntable until the disc stem touches the calibrated spring bar. Adjust the measuring device and turntable to read the height of the gage block to the nearest 0.25 mm. Adjust the stem of the perforated disc until the deflection gage reads 0.025 mm. Lock the stem adjustment in place and check to assure that all adjustments duplicate the height of the gage block to the nearest 0.25 mm. The expansion pressure device and perforated stem are now adjusted to measure specimen heights (to nearest 0.25 mm) for specimens between 50.8 and 76.2 mm in height.

3. Maintenance of Moisture Exudation Indicating Device

   a. The batteries in battery powered moisture exudation indicating devices must be replaced every three months to insure efficient operation.

   b. When the exudation contact plate becomes grooved or worn and/or the contact points become raised or depressed, the plate should be resurfaced or replaced.

      These defects can affect the results without it becoming immediately apparent to the operator.

   c. Care must be taken that moisture does not seep around the contact points since this would cause continuity in the wiring and result in erroneous exudation pressures. Detection of this condition may be difficult since the shorting is often not complete until the contact plate is loaded during the test. A check may be made by using a 100 mm diameter by 13 mm thick dry felt pad in the place of the test specimen. If, after loading, any lights go on, the plate should be replaced.

   d. The operator must wipe the contact plate dry between tests since any moisture remaining will prematurely dampen the new filter paper and cause erroneous exudation pressure results.

4. Calibration and operation of the testing machine shall conform to California Test 108.

B. Cohesive Materials

1. Prepare Compacting Mold

   a. Weigh a mold (Apparatus, #12) to the nearest gram and record the mass (Tare).

   b. Place mold in mold holder (Apparatus, #13) and clamp in place with approximately 3 mm clearance between the lower edge of the mold and the base of the mold holder.

   c. Place a cardboard disc (Material, #1) in the mold.

   d. Place the funnel (Apparatus, #14) on the mold.

   e. Position the assembled mold and holder on the compactor turntable (Apparatus, #15) and lock in place.

2. Add Moisture to Specimen

   a. The determination of the proper soil mass-moisture relationships of test specimens, which is needed to meet the requirements of the R-value test, requires judgment and experience on the part of the operator.

   b. After the curing period, add additional moisture (refer to Part 1, D-1, a through c) until the estimated amount needed for exudation is attained. Continue mixing for one minute after all the water has been added.

   c. Record the amount of water (mL) that was added.

3. Compact Specimen

   a. Weigh out enough material to fabricate a compacted specimen 101.6 mm in diameter and 63.5 ± 1.3 mm high.

      (1) The amount of material required to obtain an initial specimen 63.5 mm high can be established with operator experience and judgment. With the exception of lightweight materials, specimen

mass between 1100 and 1200 g will generally produce specimen heights acceptable for R-value testing.

(2) Mass for subsequent specimens are adjusted after exudating and determining the height of a previous specimen. The use of the following formula is a helpful guide in determining subsequent specimen mass to achieve specimen heights of 63.5 ± 1.3 mm.

$$M = \frac{63.5}{H} M_1$$

where:

H = Height of specimen

M_1 = Mass of trial specimen

M = Mass necessary for 63.5 mm specimen

b. Place a well mixed sample in the compactor feeder trough (Apparatus, #15) with the loose material distributed evenly along the full length.

Even distribution of the coarse aggregates throughout the length of the feeder trough is important in order to avoid segregation in the compacted specimen. The material should be evened out and leveled, along the trough, using the fingers or a spatula before starting the feeding operations.

c. Control of the compaction pressure shall be made in accordance with the instructions for operation and calibration of the compactor (California Test 101 or California Test 104).

d. Feed approximately 1/8 of the material from the trough into the mold.

e. Start the compactor and begin compacting with a foot pressure of 1650 ± 170 kPa.

f. Feed the remainder of the material into the mold in 20 approximately equal increments at a rate of one increment with each upstroke of the compactor ram, beginning after the first stroke.

(1) When feeding the material manually, use a spatula shaped to conform to the inside contour of the trough to push the material into the mold.

(2) If the material pushes up around the compactor foot during the loading operation, loss of the material may occur. A long handle brush may be used to sweep the material off the foot as it rises. Otherwise, decrease the pressure slightly.

g. When all of the material is in the mold apply ten additional strokes of the compactor to level and set the material.

h. Stop the compactor with the ram in the raised position and remove any material that may be adhering to the foot and upper portion of the mold and funnel. Remove the funnel.

i. Place a rubber disc (Apparatus, #16) on top of the material in the mold.

j. Loosen the clamp holding the mold in the holder.

k. Start the compactor and apply 100 strokes with a foot pressure of 2410 kPa.

(1) If the compactor foot penetrates more than 6 mm into the surface of the specimen, reduce the pressure as necessary to reduce the penetration to approximately 6 mm. Record the pressure used.

(2) If free water appears around the bottom of the mold during compaction, stop the compactor immediately and note the number of strokes applied.

l. Remove the assembled mold and holder from the compactor.

m. Remove the rubber disc.

n. If the surface of the specimen is left uneven by the action of the compactor, smooth and level the surface by gently tamping with a 40 to 50 mm diameter flat ended rod (Apparatus, #17).

4. Exudation

a. Clean and dry the surface of the detection plate of the moisture exudation-indicating device (Apparatus, #18) with a dry cloth prior to each use.

b. Remove the mold and specimen from the holder.

c. Place a phosphor bronze disc (Apparatus, #19) directly on the tamped surface of the specimen in the mold, and place a single piece of filter paper (Materials, #2) on the disc.

d. Invert the mold with sample so that the filter paper is on the bottom and place the mold on the detection plate of the moisture exudation indicator. Make sure that the filter paper is against the contact points and the mold is centered and contacting both spring posts.

e. Place a cardboard disc (Materials, #1) and then the follower ram (Apparatus, #20) in the mold and force the specimen down to make contact with the plate. This may be done by hand pressure or with the testing machine (Apparatus, #21).

f. If the compression testing machine has a spherically seated type of head, use the appropriate shims to lock it in such a manner that the contact face is fixed firmly in a horizontal plane.

g. Position the assembled detection plate, mold with specimen, and follower ram in the testing machine so that the specimen is centered under the head.

h. Apply an increasing load at the rate of 148 N per second until water is exuded from the specimen. Exudation has occurred when one of the following conditions is met:

(1) Water contacts five of the six contact points in the contact plate. Contact of water with the contact points is indicated by lighting of the bulbs in the indicator device.

(2) Water contacts at least three of the six contact points and free water is squeezed from under the edge of the mold. The presence of free water may be determined visually or by the contact ring which lights another bulb on some indicator devices.

i. Read and remove the load when either of the above conditions occurs. Record the load attained for moisture exudation.

j. Discard the specimen if the exudation pressure is found to be less than 690 or more than 5520 kPa, with the exception that very expansive material may require wetter

specimens to establish cover thicknesses.

k. Occasionally, material from exceptionally heavy clay test specimens will extrude from under the mold and around the follower ram during the loading operation. If this occurs when the 5520 kPa point is reached and less than five lights are lit, this should be noted and the soil should be reported as less than 5 R-value.

5. Specimen Measurements

a. Remove the follower ram and cardboard disc from the surface of the specimen.

b. Remove the filter paper and phosphor bronze disc from the bottom of the specimen.

c. Clean and remove any material adhering to the inner surface of the mold above the specimen surface. Also, remove any material adhering to the outer surfaces of the mold.

d. Measure the specimen height by using the previously calibrated, modified expansion pressure device.

(1) Place the perforated disc and stem (Apparatus, #8) on the specimen inside the mold.

(2) Place the mold with specimen and perforated disc on the device turntable.

(3) Rotate the turntable until the disc stem contacts the spring steel bar of the device and the deflection gage reads 0.025 mm.

(4) Place the specimen height measuring device on the edge of the turntable and record the specimen height to the nearest 0.25 mm as indicated by the measuring device adjusting screw alignment with the number on the turntable.

(5) Lower the turntable and repeat steps (3) and (4) several times to assure proper seating of the disc on the specimen surface and correct height measurement.

e. Record the specimen height. Discard the specimen if the height is less than 58.4 mm or more than 68.6 mm because it cannot be used for R-value determination.

f. Remove the mold and specimen from the modified expansion pressure device, remove the perforated disc and stem from the surface of the specimen, and weigh the mold and specimen to the nearest gram. Record the mass.

g. Determine the specimen mass by subtracting the Tare from the mass of the mold and specimen.

h. Cover the mold and specimen to restrict evaporation (a drip pan, Apparatus, #24 may be used) and allow it to set for at least one half hour before proceeding to Part 3.

i. Use mass ratio calculations (see Page 10, Section B 3, a, (2) for the formula) to determine the specimen mass required to obtain a height of 63.5 ± 1.3 mm. Apply to subsequent specimen.

j. Repeat the procedure, in this section from 1 through 5, on another specimen using a different moisture content until at least three specimens meet the criteria expressed at the beginning of Part 2. The amount of moisture variation necessary to produce the desired results is a

matter of judgment, developed with experience.

C. Class 2 Aggregate Bases as Well as Relatively Cohesionless Materials

1. Preparation of Compaction Mold

a. Construct the baskets in accordance with the following steps:

(1) Take a piece of slotted paper (Materials, #3) and fold it around the cylindrical form (Apparatus, #22). Hook the slotted ends together as shown (Figure 9-B).

(2) Using 4 strips of 12.7-mm wide masking tape, attach a phosphor bronze disc, (Figures 9-C and D), to the paper so that the holes in the disc are not obscured in the process.

(3) The basket remains with the specimen through all phases of the test procedures.

b. Weigh the basket with a mold (Apparatus, #12) to the nearest gram and record the mass (Tare).

c. Place the mold in the mold holder (Apparatus, #13).

d. Place a cardboard disc (Materials, #1) in the mold.

e. Slide a basket into the mold until the top edge of the basket is approximately 12 mm above the top of the mold (Figure 4-B).

f. Insert the metal basket-loading sleeve (Apparatus, #23) into the basket until the bottom edge of the sleeve is approximately 12 mm below the top of the basket (Figure 4-C).

g. Simultaneously press the basket and sleeve into the mold until the phosphor bronze perforated disc attached to the bottom of the basket rests on the cardboard disc and the lip of the sleeve engages the top edge of the mold. Align a sleeve tab with the mold retainer and swing the mold retainer over the sleeve tab.

h. Raise the mold and clamp it in place leaving approximately 3 mm clearance between the lower edge of the mold and base (Figure 4, C and D). Push gently on the Phosphor bronze disc to be certain it is resting on the cardboard disc.

i. Place the funnel (Apparatus, #14) on the mold.

j. Position the assembled mold and holder on the compactor turntable (Apparatus, #15) and lock in place.

2. Add Moisture to Specimen

a. Soak water addition and curing is optional for Class 2 aggregate base.

b. The moisture addition for aggregate base samples tested by the optional method is the same as those requiring soaking and curing.

c. Considering a and b, utilize procedures described in Part 2, Section B-2 (a through c).

3. Compaction

a. Begin fabrication of test specimen (Part 2, Section B-3, a through c).

b. Feed one-half of the material from the trough into the mold.

When feeding the material manually, use a spatula shaped to conform to the inside contour of the trough to push the material into the mold.

c. Start the compactor and apply 10 strokes with a foot pressure of 1100 kPa.

d. Stop the compactor with the ram in the raised position and feed in the remaining material.

e. Start the compactor and apply 10 additional strokes with a foot pressure of 1100 kPa.

f. Stop the compactor with the ram in the raised position and remove any material that may be adhering to the foot and upper portion of the mold and funnel.

g. Remove the funnel and metal loading sleeve.

h. Continue compaction according to the procedures described in Part 2 Section B-3, i through n.

4. Exudation

a. Clean and dry the surface of the detection plate of the moisture exudation-indicating device (Apparatus, #18) with a dry cloth prior to each use.

b. Using caution, remove the mold with specimen from the mold holder. When removing the mold with a basket specimen, place the mold holder on its side and support the basket bottom with a hand before uprighting and handling the mold with specimen.

c. Remove the cardboard disc and place it on the top surface of the specimen.

d. Wipe any dirt or moisture from the phosphor bronze disc (the basket bottom) with a clean, dry cloth and place a single piece of filter paper (Materials, #2) against the disc.

e. Hold the filter paper against the phosphor bronze disc while placing the mold with specimen in an upright position on the detection plate, making sure that the filter paper covers the contact points and the mold is centered against both spring posts.

f. Perform exudation on the specimen according to the procedure in Part 2, Section B-4, e through k.

g. There are many cases where high quality materials of a gravely-sandy nature, such as untreated bases, will have exudation pressures that are extremely sensitive to slight changes in moisture content. Very often these pressures will appear erratic and out of step with the sequence of moistures. However, these materials generally exhibit uniform R-values having relatively small variation throughout the entire range of exudation pressures and moisture contents. The R-value exudation curve is drawn as an average value in these cases.

5. Specimen Measurements

a. Remove the follower ram and cardboard disc from the surface of the specimen.

b. Remove the filter paper from the bottom of the specimen. Do not remove the phosphor bronze disc from the bottom of the specimen basket.

c. Determine the specimen height by following the procedure in Part 2, Section B-5, c through e. Subtract 0.5 mm (the thickness of the phosphor bronze disc) when determining this height.

d. Determine the specimen mass by following the procedure in Part 2, Section B-5, f through i.

PART 3. DETERMINING THE EXPANSION PRESSURE OF R-VALUE TEST SPECIMENS

A. Calibration of Expansion Pressure Devices (Apparatus, #8).

1. The calibration procedure for the expansion pressure device is described in California Test 103.

2. Expansion pressure devices should be recalibrated at least once every two months.

3. Recalibrate any expansion pressure device that has been used with materials that have developed such extreme pressure as to leave a permanent set in the spring steel bar. A deflection gage reading that exceeds 0.25 mm is sufficient to require re-calibration.

   In general, specimens that contain predominant amounts of silt or clay materials will develop the greatest expansion pressures.

4. Keep the gage surfaces on the top bar and contact surfaces on the spring steel bar clean and polished. Since deflection measurements are taken to 0.002 mm, dust and corrosion on any of the gage contact points can result in erroneous measurements.

B. Adjustment of Expansion Pressure Device

1. Clean off all dust and foreign material from the spring steel bar and adjustment plug.

2. Place deflection gage (Apparatus, #9) on the top bar of expansion pressure device with the single bearing end resting on the adjustment plug.

3. Use an Allen wrench (Apparatus, #10) to adjust the plug until the deflection gage reads minus 0.025 mm.

4. Place a filter paper (Materials, #5) on the turntable.

5. Place a pan (Apparatus, #24) under the turntable.

6. Keep the expansion pressure devices free from the influence of any source of vibration during the test. If shelving is used to hold the devices, do not attach or brace it to any of the building walls.

C. Test Procedure

1. Place a perforated disc and stem (Figure 2) on the specimen.

2. Place the mold containing the specimen and perforated disc assembly on the filter paper covered turntable.

3. Seat the perforated disc firmly on specimen with pressure applied from fingers.

4. Turn the turntable up until the dial indicator is on zero.

   Exercise caution when raising the table with the specimen in place and engaging the spring steel bar with the stem of the perforated disc assembly. If too much force is applied to the steel bar, a temporary set will ensue which will slowly relieve itself during the soaking period, and result in erroneous deflection readings.

5. Pour approximately 200 mL of water on the specimen in the mold and allow to stand undisturbed for a normal test period of 16 to 24 h. This period may be extended over weekends or holidays for tests of untreated materials.

a. For Class 2 aggregate bases meeting the following criteria, the expansion period may be reduced to 2 h.

(1) The grading complies with standard specification requirements.

(2) All test specimens show expansion pressure dial readings of 0.005 mm or less at the end of the 2 h period.

(3) At least three specimens show that water has passed or is passing through the specimen at the end of the 2 h period.

b. Materials treated with portland cement must remain in the expansion pressure devices between 16 and 24 h.

6. At the end of the expansion period, place the deflection gage on the top bar of the expansion pressure device. Read and record the dial reading to the nearest 0.002 mm.

7. Record whether water drained freely through the specimen into the pan below.

8. If water has drained through the material so that free water is no longer standing on the surface, pour the water from the pan back into the mold and allow it to stand undisturbed until it begins to drain again.

9. Maintain the contact pressure between the specimen and spring steel bar of the expansion pressure device with a layer of free water on the specimen in the mold until ready to conduct the stabilometer test (Part 4, Section B). Never allow a specimen, with a layer of free water, to set without contact pressure exerted on it. This condition can be particularly serious with expansive clays and silts since it permits the specimen to expand freely, taking up excess water and disrupting the density, which results in an unjustifiable reduction of the stabilometer R-value.

PART 4. MEASURING THE HORIZONTAL PRESSURE AND DISPLACEMENT BY MEANS OF THE STABILOMETER

A. Adjustments of Stabilometer (Apparatus, #25) and Compression Testing Machine (Apparatus, #21).

1. Refer to California Test 102 for details on the mechanics of the stabilometer including its operation, calibration, and the installation of the Neoprene Diaphragm.

   When the stabilometer is not in use, the standard metal specimen must be inserted and a horizontal pressure of approximately 35 kPa applied.

   Use only the fingers and minimal force to close the air adjustment valve of the stabilometer. Excessive tightening will damage the valve seat and cause it to leak air in subsequent operations.

2. The correct volumetric adjustment of the air cell in the hydraulic chamber of the stabilometer is necessary in order to establish standardized horizontal pressure and displacement readings. The following is an outline of this calibration procedure:

   a. Place the stabilometer on the stage base and adjust the base so that the stage is 89 mm below the bottom of the upper tapered ring on the stabilometer.

   b. Put the standard metal specimen (Apparatus, #27) in place in the stabilometer. Seat it firmly on the stage and, by holding it in place with either the hand or a confining load of not more than 440 N in the testing machine, turn the pump to a pressure of exactly 35 kPa on the horizontal

pressure gage. Adjust the turns displacement dial indicator to zero. Turn the pump handle clockwise at a rate of approximately two turns per second until the horizontal pressure gage reads 690 kPa. The turns displacement dial indicator shall read 2.00 ± 0.05 turns. If the reading is not within the specified limits, an air adjustment must be made by using the following procedure.

(1) Without moving the pump handle, reset the dial indicator to 2.00.

(2) Turn the pump handle counter-clockwise until the dial indicator reads zero.

(3) If the horizontal pressure gage reads less than 35 kPa, use a rubber bulb to add air through the air adjustment valve on the stabilometer. Inject air into the stabilometer while using the fingers to open the valve. Close the valve when the gage reads 35 kPa.

(4) If the horizontal pressure gage reads more than 35 kPa release some air by slowly opening and rapidly closing the valve. If too much air is released (indicated by a gage reading of less than 35 kPa), add some air. Close the valve when the gage reads 35 kPa.

(5) Repeat the turns displacement procedure until the specified turns displacement is obtained.

3. Adjust the testing machine to apply a load at the rate of 1.27 ± 0.02 mm/min. On a machine with a moving base, this adjustment must be performed with the stabilometer and stage base on the platen and no load applied. The hydraulic testing machines must be run several minutes so that the oil warms sufficiently to maintain a constant speed.

B. Test Procedure

1. Adhere to the following precautions:

   a. The stabilometer test must be performed within one hour of pouring off the excess water after completion of the expansion pressure test.

   b. Care must be exercised to avoid disrupting the compacted specimen while transferring it from the mold to the stabilometer. This applies particularly to those samples composed of coarse granular materials. A test specimen which has been destructively disrupted due to rough handling, transfer from the mold to stabilometer, or as a result of the test itself, will exhibit excessively high horizontal pressure and turns displacement readings.

   c. Substitution of a cage or vane type follower for the specified solid-wall follower will result in high displacement readings and may rupture the stabilometer diaphragm.

   d. The horizontal pressure gage on the stabilometer can be damaged if the vertical load on soft, fluid materials exceeds 8900 N.

2. After completing the expansion pressure test, remove the mold containing the specimen from the expansion pressure device.

   a. Pour off the water from the top of the specimen.

   b. Keep the mold containing the specimen covered if the stabilometer test is not performed immediately.

3. Remove the standard metal specimen from the stabilometer.

4. Lock the stabilometer to the stage base and place a cardboard disc on the stage.

5. Position the mold and test specimen on top of the stabilometer and place a cardboard disc on top of the specimen.

6. Place the specimen follower (Apparatus, #28) on top of the specimen and push the specimen from the mold directly into the stabilometer.

7. Center the stabilometer under the spherically seated head of the testing machine. If a locking shim was used during exudation, remove it.

8. Bring the head of the testing machine into contact with the follower but do not apply any load.

9. Apply a horizontal pressure of 35 kPa to the test specimen by turning the pump handle.

10. Apply a vertical load to the test specimen at the calibrated rate of 1.3 mm per min.

11. When the vertical load reaches 8900 N, read and record the horizontal pressure.

12. Immediately reduce the vertical load to 4450 N.

13. Reduce the horizontal pressure to 35 kPa by turning the pump handle counter clockwise.

    Reducing the horizontal pressure will result in a further reduction of the vertical load. This is normal and is to be ignored.

14. Set the turns displacement indicator to zero.

15. Turn the pump handle clockwise at a rate of approximately two turns per second until the stabilometer gage reads 690 kPa.

    During this operation, the vertical load will increase and may exceed the initial 4450 N load. This is normal and is to be ignored.

16. Read the turns displacement dial indicator measurement to the nearest 0.01 revolution.

17. Record the turns displacement of the specimen.

18. Release the vertical load on the testing machine.

19. Release the horizontal pressure on the stabilometer by turning the pump handle counter clockwise.

20. Remove the specimen from the stabilometer by lifting the stabilometer from the stage base.

21. The specimen may be discarded.

22. Clean the interior of the stabilometer.

23. Continue testing additional specimens beginning with Step 3 of this procedure.

C. Stabilometer Maintenance

1. Clean interior and exterior of stabilometer with a damp cloth or sponge after testing is completed and wipe dry with a clean cloth.

2. Inspect the stabilometer, including the neoprene diaphragm, for obvious anomalies such as oil leaks and excessive wear as described in California Test 102.

3. Dust the neoprene diaphragm with talcum powder, insert the standard metal specimen, and apply a horizontal pressure of approximately 35 kPa.

PART 5. CALCULATING THE MOISTURE CONTENT AND DENSITY OF R-VALUE TEST SPECIMENS

A. Form TL-0361 Calculations

The calculations in the following sections are the procedures used for completing calculations on Form TL-0361 (Figure 13).

The notations between quotation marks, in these sections, conform to notations on the form.

B. Moisture Calculations

1. The "INITIAL MOISTURE %" is determined on a specimen (Part 1, Section C-3).

2. Determine the "WATER ADDED - ML (TOTAL)" by summing "SOAK WATER - ML" (Part 1, Section D-1, c through f) and the water added for saturation (Part 2, Section B-2) for each specimen.

3. Calculate the "WATER ADDED %" to the nearest 0.1 % for each test specimen by the following formula:

$$M_2 = W\,(100 + M_1)/W_1$$

where:

M_2 = "WATER ADDED %"

W = "WATER ADDED-ML (TOTAL)"

M_1 = "INITIAL MOISTURE %"

W_1 = Original specimen batch mass in grams

4. Calculate the "MOISTURE AT COMPACTION %" for each test specimen by the following formula:

$$M = M_1 + M_2$$

where:

M = "MOISTURE AT COMPACTION %"

M_1 = "INITIAL MOISTURE %"

M_2 = "WATER ADDED %"

C. Density Calculations

1. Calculate the "DRY DENSITY BRIQ. - kg/m^3" for each test specimen by the following formula:

$$D = 1.234 \times 10^4 W_2/(100 + M)H$$

where:

D = "DRY DENSITY BRIQ. -kg/m^3"

W_2 = "WET MASS OF BRIQUETTE - GMs", the mass in grams of the specimen after compaction (Part 2. Section B-5, f and g).

M = MOISTURE AT COMPACTION %"

H = "HEIGHT OF BRIQUETTE - mm", the height of test specimen as determined in Part 2, Section B-5d or Part 2, Section C-5c (for specimens fabricated in a basket).

PART 6. DETERMINING THE R-VALUE OF A MATERIAL

The R-value of a material is determined as described in the following sections. The description follows the steps used in completing Form TL-0361 (Figure 13). The notations within quotation marks in these sections conform to the notations on the form.

A. Determining the R-value of a material by the stabilometer.

1. Calculate the R-value, using the following formula:

$$R = 100 - \left[\frac{100}{\frac{2.5}{d}\left(\frac{P_v}{P_h} - 1\right) + 1} \right]$$

where:

R = "R-VALUE BY STABILOMETER"
P_V = 1.1 MPa vertical pressure
P_h = "STABILOMETER P_h at 8900 N" (the horizontal pressure Part 4, Section B, 1 through 11).
d = "DISPLACEMENT" (Part 4, Section B, 12 through 16).

Correct the R-value for any specimen that does not have a height between 62 and 65 mm by use of the chart (Figure 11).

2. This R-value determination is recorded as the "R-VALUE BY STABILOMETER" for the specimen.

3. Plot the R-value of each specimen against its respective "EXUDATION PRESSURE, MPa" (Part 2, Section B-4 or Part 2, Section C-4 specimens fabricated in baskets).

4. Draw a smooth curve through the plotted points. General curve configurations of R-value versus exudation pressure, for ranges of R-values and various types of materials, are shown (Figure 12) as an aid in interpreting the appropriate curve configuration.

5. Determine the "R-VALUE", "EXUDATION PRESSURE" where the plotted curve crosses 2.07 MPa exudation pressures.

B. Determining the R-value of a material by expansion pressure.

1. To perform this determination, either the gravel equivalent factor or the thicknesses of the various elements (SURFACE, BASE, SUBBASE) of the structural section and the TRAFFIC INDEX for the project must be known.

   a. The structural section thicknesses and traffic index can be obtained from the contract for a project under construction.

   b. For design and planning projects the traffic index will usually be made available by the District Traffic Engineer. The structural section thicknesses can be calculated by the procedure in Chapter 600 (TOPIC 608) of the HIGHWAY DESIGN MANUAL. However, the thickness calculation is not needed if a Gravel Equivalent Factor (G_f) is known as discussed in subsection, 2. g. below.

2. Determine the "GRAVEL EQUIVALENT FACTOR" (G_f) for the structural section layers which cover the material being tested for R-value.

   a. Gravel equivalent factors for various materials within the structural section, listed in Chapter 600 (TOPIC 608) of the HIGHWAY DESIGN MANUAL are as follows:

GRAVEL EQUIVALENT FACTORS FOR COMMON PAVEMENT AND BASE MATERIALS

Type Materials	TI	G_f
Asphalt Concrete with Paving Grades of Asphalt	0 - 5.0	2.54
	5.5 - 6.0	2.32
	6.5 - 7.0	2.14
	7.5 - 8.0	2.01
	8.5 - 9.0	1.89
	9.5 - 10.0	1.79
	10.5 - 11.0	1.71
	11.5 - 12.0	1.64
	12.5 - 13.0	1.57
	13.5 - 14.0	1.52
	14.5 & up	1.46
Asphalt Concrete Base and Lean Concrete Base		1.9
Cement Treated Permeable Base and Class A Cement Treated Base		1.7
Asphalt Treated Permeable Base		1.4
Class B Cement Treated Base		1.2
Aggregate Base		1.1
Aggregate Subbase		1.0

These gravel equivalent factors were derived from cohesiometer values and road test results. For further information, refer to reference No. 10.

b. Calculate the Gravel Equivalent (GE) to the nearest hundredth for each material by the following formula:

$$GE = T \times G_f$$

where:

GE = Gravel Equivalent
T = Thickness of the layer
G_f = Gravel equivalent factor of the layer

c. Determine the total structural section thickness by summing the thickness of each layer.

d. Determine the total Gravel Equivalent for the structural section by summing the Gravel Equivalents for each layer.

e. Calculate the combined "GRAVEL EQUIVALENT FACTOR" (G_f) to the nearest tenth by dividing the total structural section thickness into the total Gravel Equivalent for the structural section.

f. The following example illustrates the calculation of the combined "GRAVEL EQUIVALENT FACTOR" (G_f).

Problem: Determine the combined gravel equivalent factor for the 3-layer combination of asphalt concrete surfacing, Class A cement treated base (CTB) and aggregate subbase (AS) material given below.

First convert the individual thicknesses of asphalt concrete, cement treated base and aggregate subbase to their respective and total gravel equivalents (GE) by multiplying the individual thickness by the G_f for that layer and summing as shown:

Material	Thickness	G_f	GE
AC (For TI = 8.0)	76.2 mm	2.01	153 mm
CTB (Class A)	213.4 mm	1.7	363 mm
AS	152.4 mm	1.0	152 mm
Totals	442 mm		668 mm

Knowing the actual thickness of the cover material and having computed its gravel equivalent (668 mm), determine the combined gravel equivalent factor as shown below using the above example.

$$G_f = \frac{\text{Total Gravel Equivalent of Cover}}{\text{Actual Thickness of Cover}} = \frac{668}{442} = 1.5$$

g. Notes on Gravel Equivalent Factors

When determining G_f for R-value calculations on current contracts, it is necessary to refer to the correct typical section in the contract special provisions. The cover thicknesses used should correspond to the section used for the stationing noted on the sample ticket (Figure 15).

It is often convenient to express the thickness of cover determined from the R-value test in terms of the gravel equivalent as a temporary expedient (when the types of cover materials to be used are either unknown or

uncertain). The gravel equivalent, as the name implies, is the thickness of gravel required to support a given load, and is based upon a gravel equivalent factor of 1.0 for the cover material. One of the principal advantages in using the gravel equivalent is that it indicates to the designer what maximum thicknesses will be required to meet the conditions of the soil and traffic of the proposed project. Since a G_f of 1.0 is the lowest value used for design purposes, use of 1.0 will result in the determination of the highest theoretical thickness requirements for a given R-value and traffic index. Likewise, any subsequent increase in the gravel equivalent factor will always reduce the design thickness requirement.

The design equation is not applicable to the design of portland cement concrete pavements and no gravel equivalent factor is given for concrete. Generally, the untreated materials under portland cement concrete pavement extend under the shoulder area. Therefore, when testing materials which underlie portland cement concrete pavements, the traffic index and gravel equivalent factors of the applicable layers of the shoulder structural section should be used for calculating R-value by expansion pressure.

If the values used for TI and G_f in the calculation of the R-value by expansion pressure are modified later, the R-value must be recalculated.

3. Calculate the "THICK. BY STAB. mm" (thickness of cover material indicated by the stabilometer) for each specimen using the following formula:

$$T = [0.975(TI)(100-R)]/G_f$$

where:

T = "THICK. BY STAB. mm"
TI = Traffic index
R = "R-VALUE BY STABILOMETER" for each specimen calculated in Section B-1.
G_f = "COMBINED GRAVEL EQUIVALENT FACTOR" as calculated above.

4. Calculate the "THICK. BY EXP. PRESS. mm" (thickness of cover required by expansion pressure) for each specimen using the following formula:

$$T = [\text{Dial Reading} \times 100 \times 4] \times 2100/W$$

where:

T = "THICK. BY EXP. PRESS. mm"

Dial Reading = "EXPANSION DIAL READING" (Part 3, Section C, 1 through 6)

W = Unit mass of cover over material being tested.

(Generally, W for structural sections of asphalt concrete, base, and subbase average about 2100 kg/m^3. However, lighter materials could be less and structural sections of asphalt concrete and base or asphalt concrete would probably be higher).

5. Plot the "THICK. BY STAB. mm" (thickness indicated by stabilometer) against the "THICK. BY EXP. PRESS. mm" (thickness indicated by expansion pressure) on a graph with a balance line drawn through the points where both thickness values of the graph are equal.

6. Draw a smooth curve through the plotted points representing each specimen.

7. Determine the thickness where the curve crosses the balance line. At this point both the "THICK. BY STAB. mm" and "THICK. BY EXP. PRESS mm" are equal.

8. Determine the "R-VALUE", "EXPANSION PRESSURE" using the following formula:

$$R = 100 - [G_f(T)]/[.975(TI)]$$

where:

R = "R-VALUE", "EXPANSION PRESSURE"
G_f = "GRAVEL EQUIVALENT FACTOR"
T = Thickness where curve crosses the balance line determined in 7 above.
TI = TRAFFIC INDEX

9. The "R-VALUE", "AT EQUILIBRIUM" which is the lowest of the two R-values determined in Steps 5 (EXUDATION PRESSURE) and 8 (EXPANSION PRESSURE), is the R-value of the sample.

10. If the expansion pressure in pascals is needed, it may be determined by the following formula:

Expansion Pressure =
20.5 x Dial Reading x 4000

PART 7. REPORTING RESULTS

Report all information pertinent to the submitted sample. This includes the following:

1. As received and as used gradations.

2. Data relating to the test specimens.

3. Measured test data.

4. Data obtained for and established by calculations.

5. Test result calculations and determination.

A. Test Report Form TL-0361

1. This is an appropriate form for reporting of test results.

2. The face of the form (Figure 13) contains labeled spaces for entering information.

   a. All applicable information shall be entered on the form.

   b. The form contains graphs for R-value determinations. These graphs are intended as an aid in determining R-values and will normally not appear on a copy of the test report because they are covered by the sample identification card (Form T-101) (Figure 15) which is submitted with the sample.

   c. The graph for cover thickness is not always of sufficient size for plotting the thicknesses used in determining expansion pressure R-values. The scale notations and even the balance line may have to be revised or a larger sheet of graph paper may be used to fit the data.

3. The back of the form (Figure 14) contains spaces for gradation and batching calculations. This side of the form is intended as a worksheet and is normally not reported.

If other forms are used they shall contain all the information that would be reported on Form TL-0361.

REFERENCES

California Tests 201, 202, 226, 101, 102, 103, 104, 105, 108
California DOT Highway Design Manual
"Thickness of Flexible Pavements by the California Formula Compared to AASHTO Road Test Data", F.N. Hveem and G.B. Sherman. Proceedings Highway Research Board, 1963.

End of Text (California Test 301 contains 30 Pages)

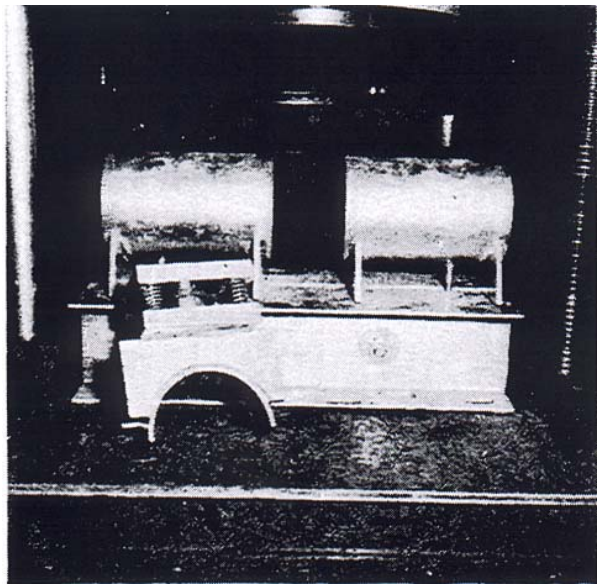

FIGURE 1
Expansion Pressure Device as Used

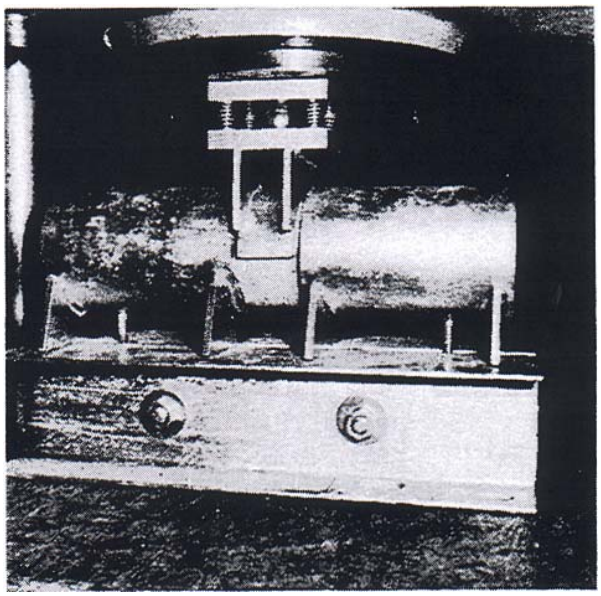

FIGURE 2
Expansion Pressure Device with Accessories

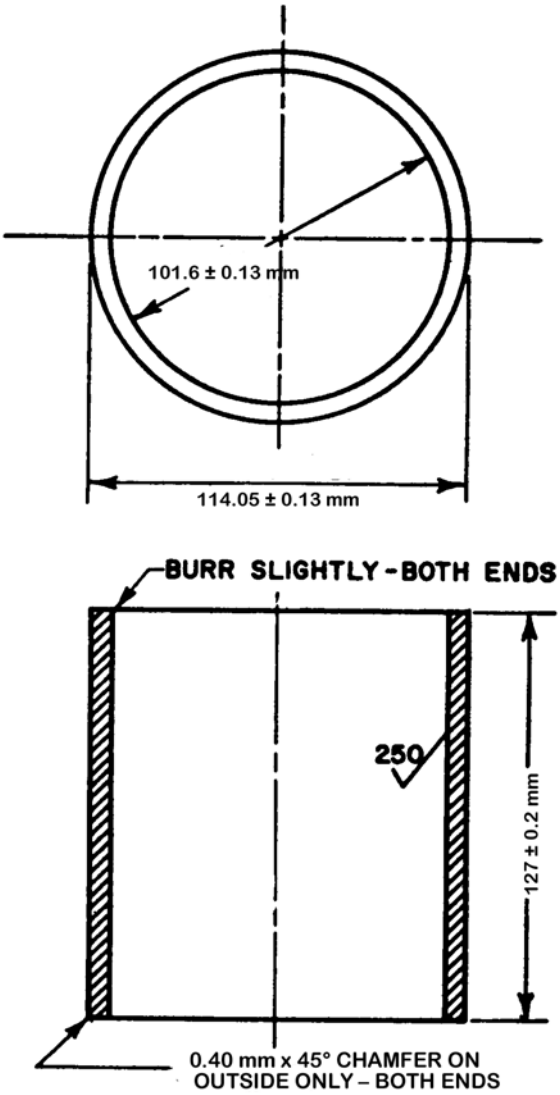

NOTE: Inside roughness is obtained by smooth machining inside to required diamenter of 101.6 ± 0.13 mm followed on final operation with a boring tool bit ground to 90° point with sharp point ground flat measuring 0.025 mm to 0.076 mm across. Depth of cut is 0.051 mm with 0.254 mm feed using sulphur based oil coolant.

FIGURE 3
Mold

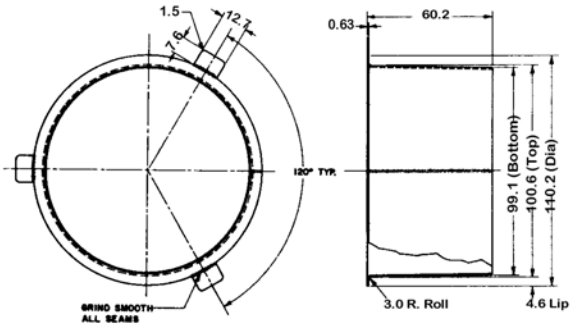

A

B

C

D

FIGURE 4

Mold Holder with Metal Basket Loading Sleeve

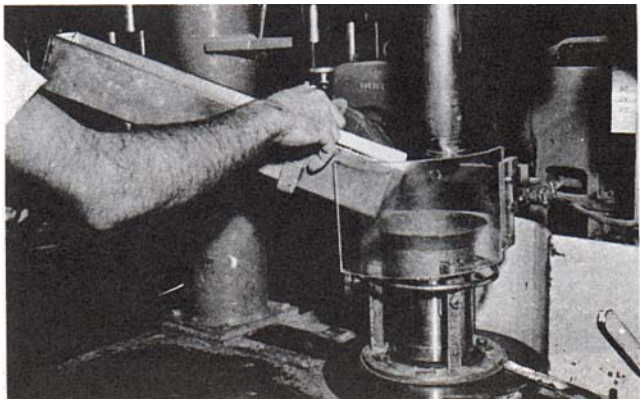

FIGURE 5
Funnel and Trough

Perforated Disc

FIGURE 6
Moisture Exudation Device

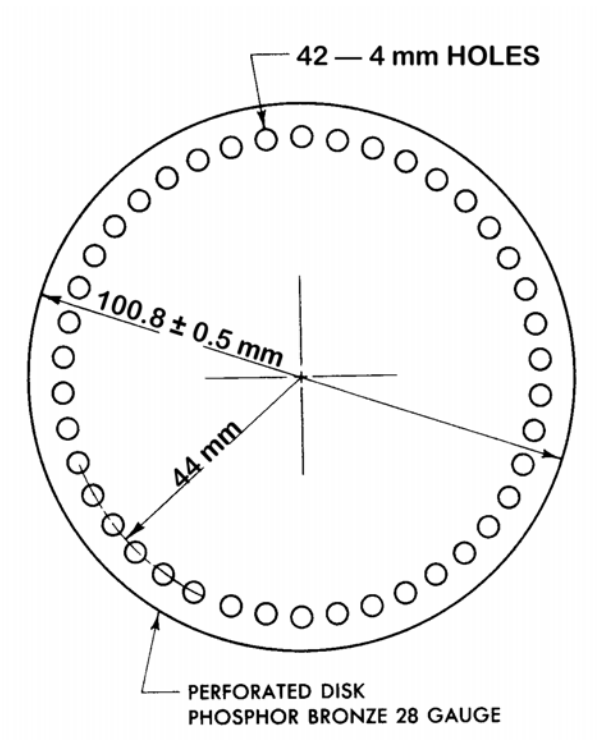

FIGURE 7

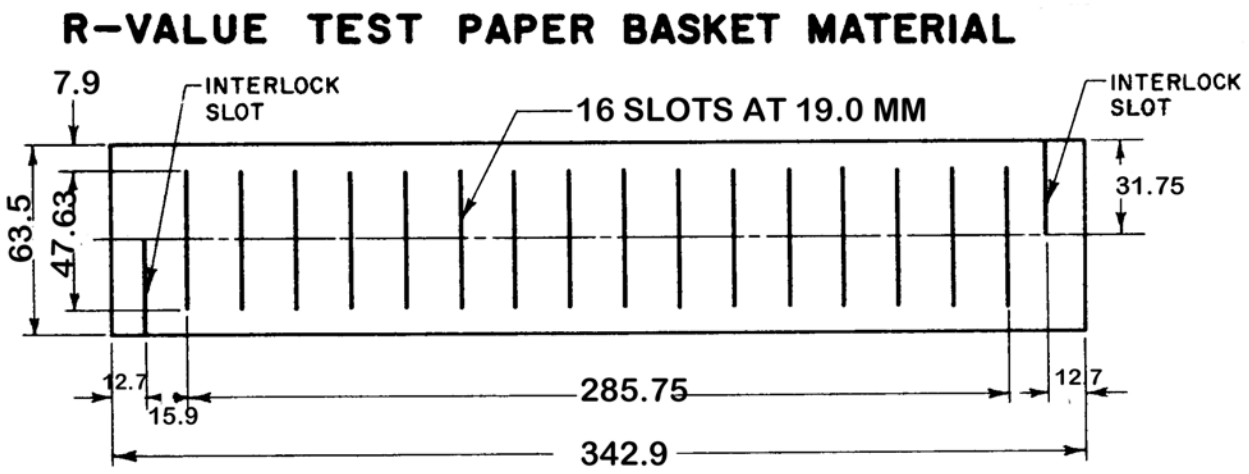

FIGURE 8
R-Value Test Peper Basket Materials

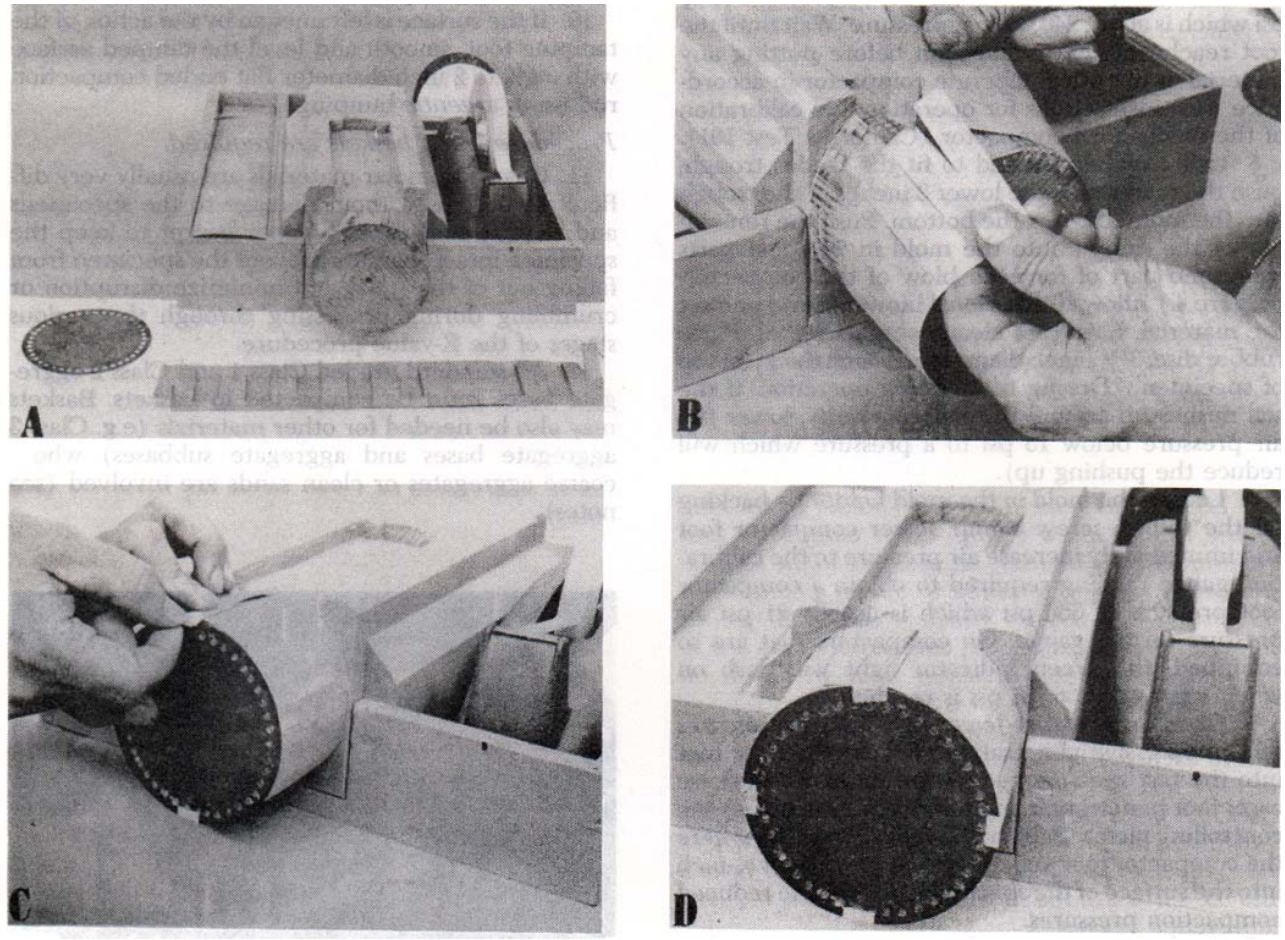

FIGURE 9

Basket Making Device

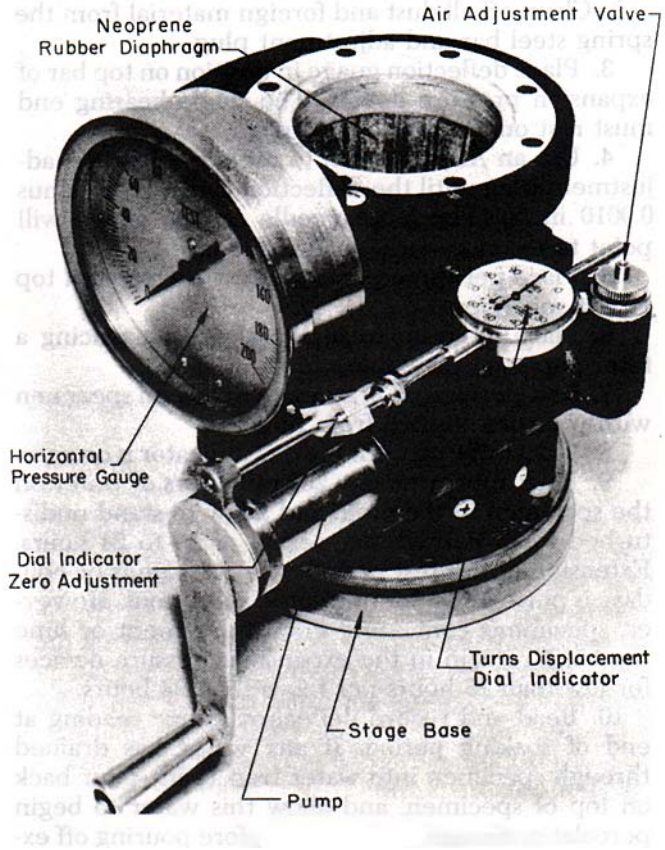

FIGURE 10
Stabilometer

CHART FOR CORRECTING R-VALUES TO SPECIMEN HEIGHT OF 63.5 MM

Height correction should be made using the chart below.

NOTE: No correction for specimen heights between 62.0 mm and 65.0 mm. Interpolate R-value corrections for other heights.

Example: Overall height of 67.3 mm
R-value (uncorrected) = 50
R-value (corrected) = 54

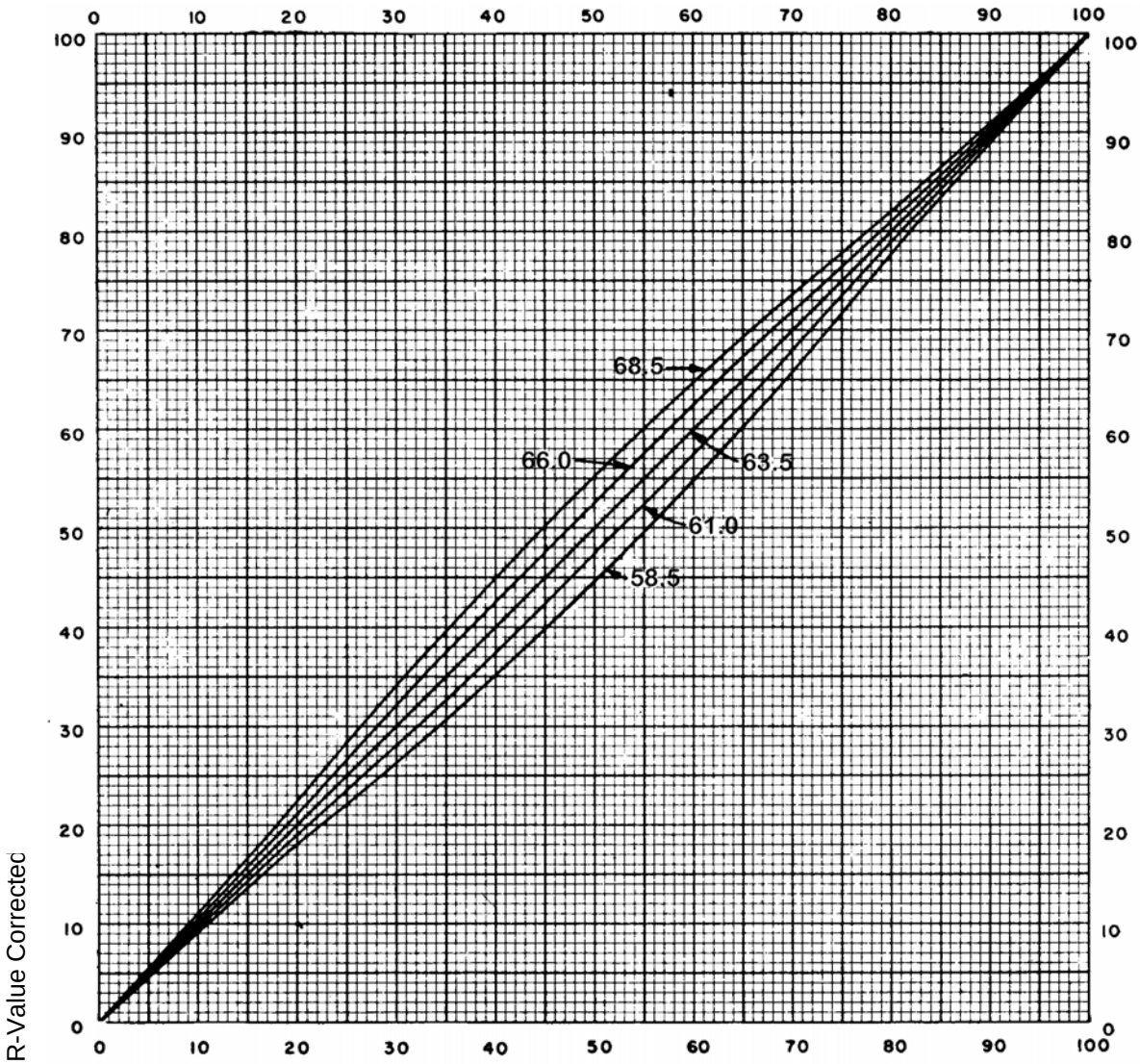

FIGURE 11

R-Value Before Height Correction

CURVE CONFIGURATION CRITERIA FOR APPLICATION IN THE ANALYSIS OF R-VALUE—EXUDATION PRESSURE TEST DATA

GENERAL R-VALUE CLASS	PROBABLE SOIL TYPES	PROBABLE USE IN STRUCTURAL SECTION	EXPECTED ALTERNATIVES IN CURVE SHAPE & SLOPE WHEN TEST DATA IS RELIABLE	
			DESCRIPTION	GRAPHICAL REPRESENTATION
60 or Better	Crushed Rock Gravel Sandy Gravel Silty Gravel Clayey Gravel Sand	Aggregate Base Aggregate Subbase Selected Material	1. Straight line, Horizontal. 2. Straight lines, Gently sloping down to right. 3. Convex Upward, Decreasing R-Values to right.	
30 to 60	Silty Sands Clayey Sands Sandy Silt Silt Clayey Silt	Aggregate Subbase Imported Borrow Selected Material Basement Soil	All curves steeply inclined downward to right. 1. Slightly Convex, Upward. 2. Straight line. 3. Slightly Concave, Upward.	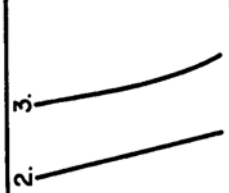
0 to 30	Clayey Sands Clayey Silts Sandy Clay Silty Clay Heavy Clay	Imported Borrow Selected Material Basement Soil	1. Concave Upward, Decreasing R-Values to right. 2. Straight line, Gently sloping downward to right. 3. Straight line, Horizontal.	

R-Value Before Height Correction

FIGURE 12
Chart for correcting R-values to specimen height of 63.5 mm

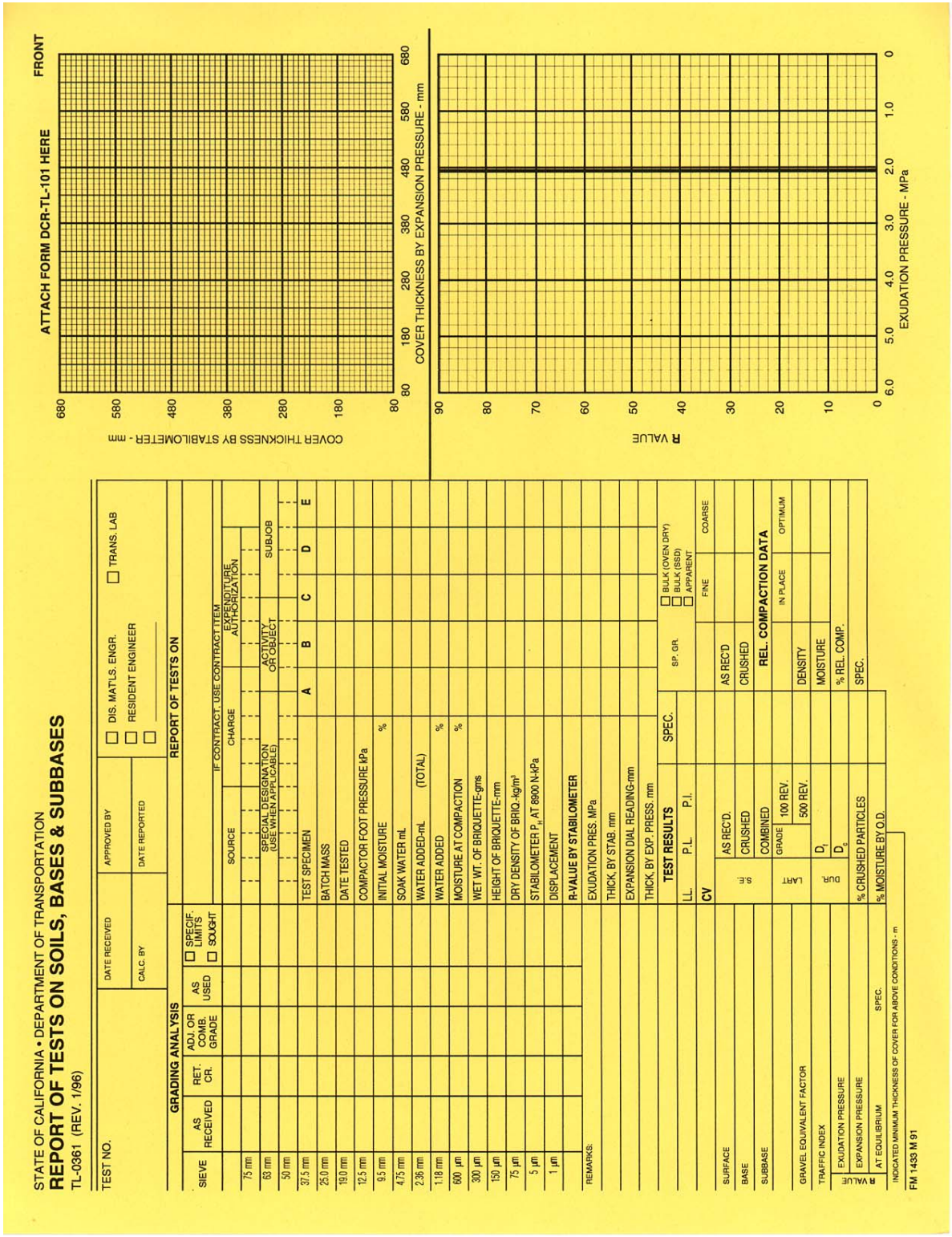

FIGURE 13
(Front TL – 0361)
Report of Test on Soils, Bases & Subbases

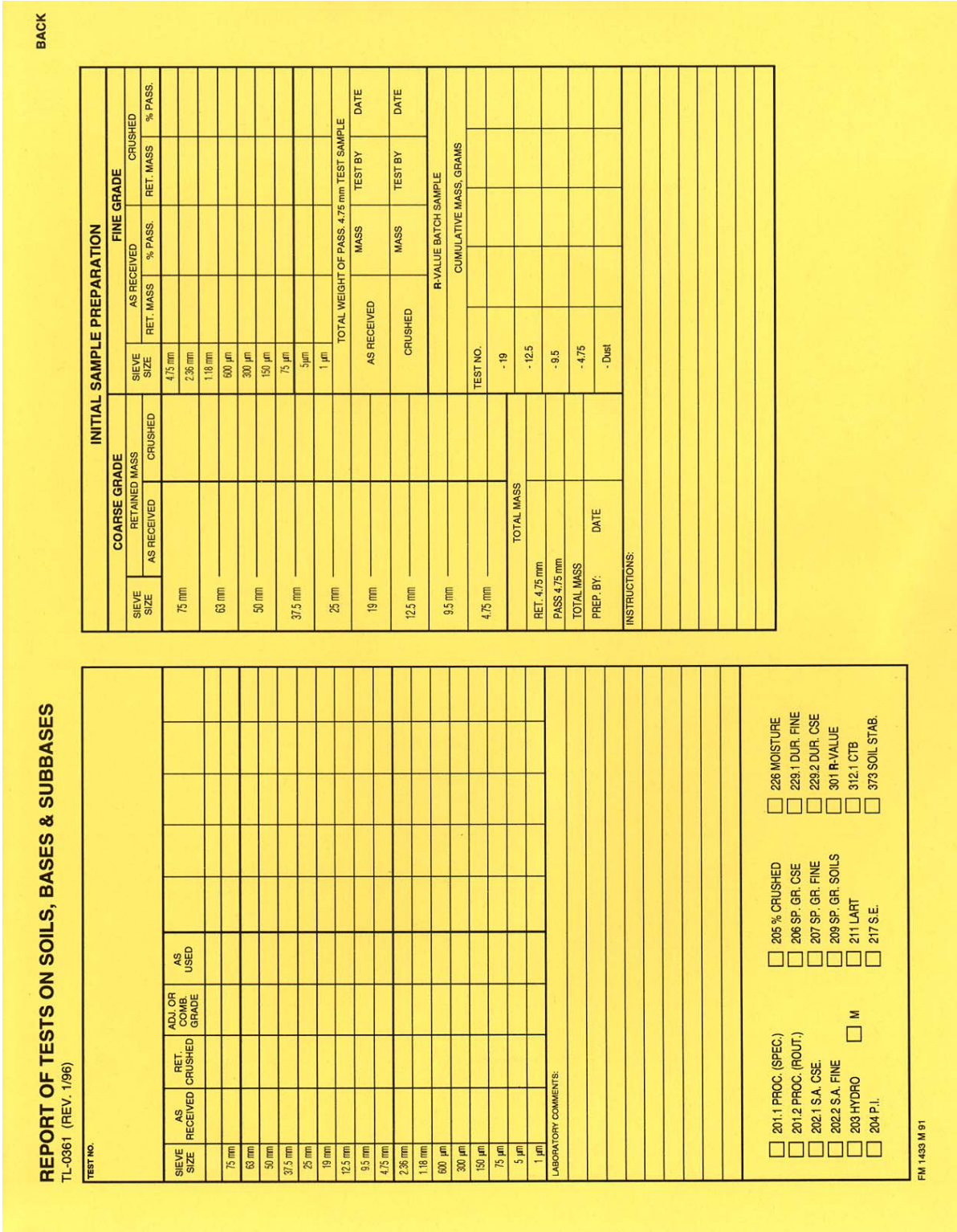

REPORT OF TESTS ON SOILS, BASES & SUBBASES
TL-0361 (REV. 1/96)

TEST NO.

SIEVE SIZE	AS RECEIVED	RET. CRUSHED	ADJ. OR COMB. GRADE	AS USED
75 mm				
63 mm				
50 mm				
37.5 mm				
25 mm				
19 mm				
12.5 mm				
9.5 mm				
4.75 mm				
2.36 mm				
1.18 mm				
600 µm				
300 µm				
150 µm				
75 µm				
5 µm				
1 µm				

LABORATORY COMMENTS:

☐ 201.1 PROC. (SPEC.) ☐ 205 % CRUSHED ☐ 226 MOISTURE
☐ 201.2 PROC. (ROUT.) ☐ 206 SP. GR. CSE ☐ 229.1 DUR. FINE
☐ 202.1 S.A. CSE. ☐ 207 SP. GR. FINE ☐ 229.2 DUR. CSE
☐ 202.2 S.A. FINE ☐ 209 SP. GR. SOILS ☐ 301 R-VALUE
☐ 203 HYDRO ☐ M ☐ 211 LART ☐ 312.1 CTB
☐ 204 P.I. ☐ 217 S.E. ☐ 373 SOIL STAB.

FM 1433 M 91

BACK

INITIAL SAMPLE PREPARATION

COARSE GRADE			FINE GRADE				
SIEVE SIZE	RETAINED MASS		SIEVE SIZE	AS RECEIVED		CRUSHED	
	AS RECEIVED	CRUSHED		RET. MASS	% PASS.	RET. MASS	% PASS.
75 mm			4.75 mm				
			2.36 mm				
63 mm			1.18 mm				
			600 µm				
50 mm			300 µm				
			150 µm				
37.5 mm			75 µm				
			5µm				
25 mm			1 µm				
			TOTAL WEIGHT OF PASS. 4.75 mm TEST SAMPLE				
19 mm			AS RECEIVED	MASS	TEST BY	DATE	
12.5 mm			CRUSHED	MASS	TEST BY	DATE	
9.5 mm			R-VALUE BATCH SAMPLE				
4.75 mm			CUMULATIVE MASS, GRAMS				
			TEST NO.				
TOTAL MASS			- 19				
RET. 4.75 mm			- 12.5				
PASS 4.75 mm			- 9.5				
TOTAL MASS			- 4.75				
PREP. BY:	DATE		- Dust				

INSTRUCTIONS:

FIGURE 14
(Back TL-0361)
Report of Test on Soils, Bases & Subbases

STATE OF CALIFORNIA • DEPARTMENT OF TRANSPORTATION

SAMPLE IDENTIFICATION CARD

TL-0101 (REV. 10/97)

CARD NUMBER C 529050

☐ PRELIMINARY TESTS
☐ PROCESS TESTS
☐ ACCEPTANCE TESTS

INDEPENDENT ASSURANCE TESTS
☐ DIST. LAB
☐ TRANS. LAB

☐ SPECIAL TESTS

SAMPLE SENT TO:
☐ HDQTRS. LAB
☐ BRANCH LAB
☐ DIST. LAB

FIELD NO.
DIST. LAB NO.
LOT NO.
SHIPMENT NO.
P.O. OR REQ. NO.
AUTHORIZATION NO.

SAMPLE OF
FOR USE IN
SAMPLE FROM
DEPTH
LOCATION OF SOURCE

THIS SAMPLE IS SHIPPED IN (NO. CONTAINERS)
AND IS ON E OF A GROUP OF
SAMPLES REPRESENTING (TONS, GALS, BBLS, STA, ETC.)
OWNER OR MANUFACTURER
TOTAL QUANTITY AVAILABLE
TEST RESULTS DESIRED ☐ NORMAL ☐ PRIORITY
DATE NEEDED
REMARKS

COVER ADDITIONAL INFORMATION WITH LETTER
DATE SAMPLEED
BY
TITLE
DIST, CO, RTE, PM
LIMITS
CONT. NO.
FED. NO.
RES. ENGR. OR SUPT.
ADDRESS
CONTRACTOR

MAIL TO SAME DESTINATION AS SAMPLE

OSP 97 91838

FIGURE 15
Form TL-101