Dist	COUNTY	ROUTE	POST MILES TOTAL PROJECT	SHEET No.	TOTAL SHEETS
01	Hum	299	19.3/19.8	1	56

STATE OF CALIFORNIA

ACHSNHP-P299(180)E

DEPARTMENT OF TRANSPORTATION

PROJECT PLANS FOR CONSTRUCTION ON

STATE HIGHWAY

IN HUMBOLDT COUNTY
ABOUT 14 MILES EAST OF BLUE LAKE
FROM 0.3 MILE EAST
TO 0.8 MILE EAST OF BAIR ROAD

TO BE SUPPLEMENTED BY STANDARD PLANS DATED 2010

INDEX OF PLANS

SHEET No.	DESCRIPTION
1	TITLE AND LOCATION MAP
2-3	TYPICAL CROSS SECTIONS
4-5	LAYOUTS
6-8	PROFILES AND SUPERELEVATION DIAGRAMS
9-14	CONSTRUCTION DETAILS
15-21	DRAINAGE PLANS, PROFILES, DETAILS AND QUANTITIES
22	CONSTRUCTION AREA SIGNS
23-25	STAGE CONSTRUCTION AND TRAFFIC HANDLING PLANS
26	STAGE CONSTRUCTION AND TRAFFIC HANDLING QUANTITIES
27-28	PAVEMENT DELINEATION AND SIGN PLANS
29-30	PAVEMENT DELINEATION QUANTITIES
31	SUMMARY OF QUANTITIES
32-35	EROSION CONTROL PLANS
36-56	REVISED STANDARD PLANS

THE STANDARD PLANS LIST APPLICABLE TO THIS CONTRACT IS INCLUDED IN THE NOTICE TO BIDDERS AND SPECIAL PROVISIONS BOOK.

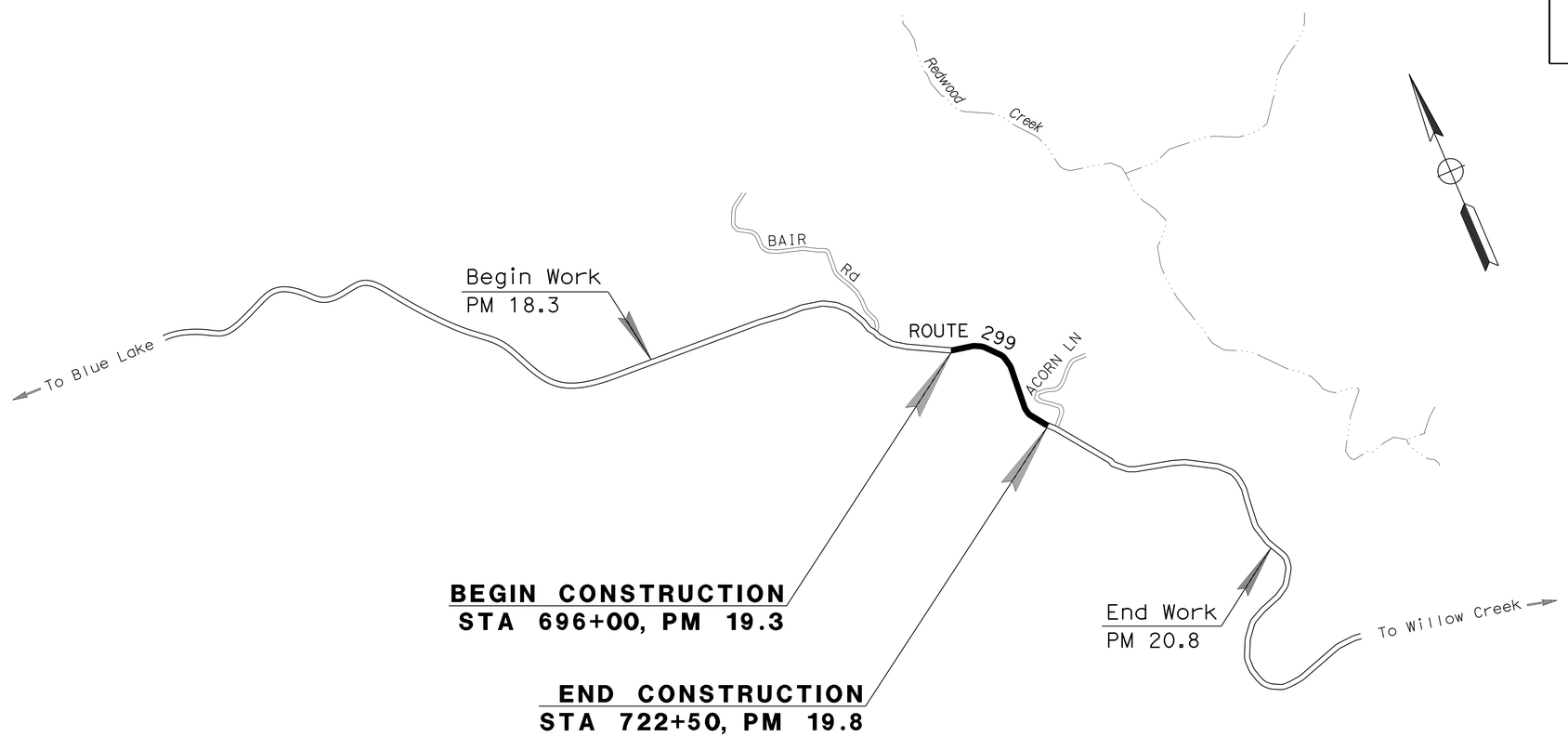

NO SCALE

THE CONTRACTOR SHALL POSSESS THE CLASS (OR CLASSES) OF LICENSE AS SPECIFIED IN THE "NOTICE TO BIDDERS."

William D. Sutherland 02-21-14
PROJECT ENGINEER DATE
REGISTERED CIVIL ENGINEER

February 21, 2014
PLANS APPROVAL DATE

REGISTERED PROFESSIONAL ENGINEER
WILLIAM D. SUTHERLAND
No. C61579
Exp. 06-30-15
CIVIL
STATE OF CALIFORNIA

THE STATE OF CALIFORNIA OR ITS OFFICERS OR AGENTS SHALL NOT BE RESPONSIBLE FOR THE ACCURACY OR COMPLETENESS OF SCANNED COPIES OF THIS PLAN SHEET.

CONTRACT No.	01-0A3604
PROJECT ID	0100020289

PROJECT MANAGER: KIM FLOYD
DESIGN ENGINEER: JOHN L. MARTIN

P:\proj\01\0a360_plans\pse\0100020289ab001.dgn

LAST REVISION 02-21-14
DATE PLOTTED => 12-MAR-2014
TIME PLOTTED => 07:38

Dist	COUNTY	ROUTE	POST MILES TOTAL PROJECT	SHEET No.	TOTAL SHEETS
01	Hum	299	19.3/19.8	2	56

William D. Sutherland 02-21-14
REGISTERED CIVIL ENGINEER DATE

02-21-14
PLANS APPROVAL DATE

REGISTERED PROFESSIONAL ENGINEER W. D. SUTHERLAND No. C61579 Exp. 06-30-15 CIVIL STATE OF CALIFORNIA

THE STATE OF CALIFORNIA OR ITS OFFICERS OR AGENTS SHALL NOT BE RESPONSIBLE FOR THE ACCURACY OR COMPLETENESS OF SCANNED COPIES OF THIS PLAN SHEET.

NOTES:

1. DIMENSIONS OF THE PAVEMENT STRUCTURES (STRUCTURAL SECTIONS) ARE SUBJECT TO TOLERANCES SPECIFIED IN THE STANDARD SPECIFICATIONS.
2. SUPERELEVATIONS AS SHOWN OR AS DETERMINED BY THE ENGINEER.
3. FOR LIMITS OF CPACP, SEE SHEET C-4.
4. SEE REVISED STANDARD PLANS FOR SAFETY EDGE DETAILS.

ABBREVIATIONS:

CPACP	COLD PLANE ASPHALT CONCRETE PAVEMENT
EMB	EMBANKMENT
HMA-O	HOT MIX ASPHALT (TYPE O)
HMA SP-A	HOT MIX ASPHALT, SUPERPAVE (TYPE A)
GRE	GEOSYNTHETIC REINFORCED EMBANKMENT
MGS	MIDWEST GUARDRAIL SYSTEM (8' POST)
SC	SAWCUT

DESIGN DESIGNATION

ADT (2015)	3960	D	60%
ADT (2035)	4700	T	11%
DHV (2015)	560	V	55 mph
DHV (2035)	660	TI_{20}	9.5

PAVEMENT CLIMATE REGION: NORTH COAST

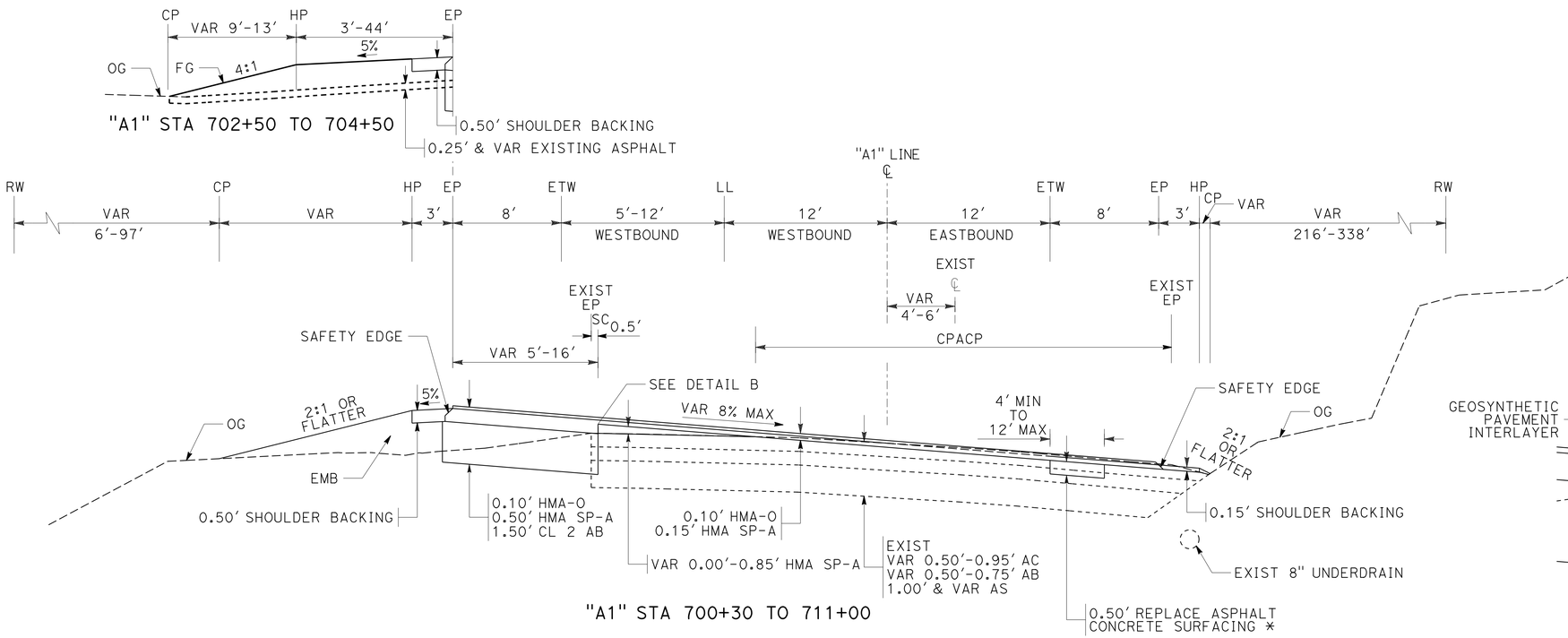

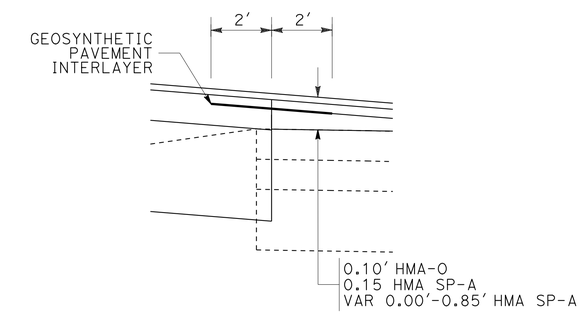

DETAIL B

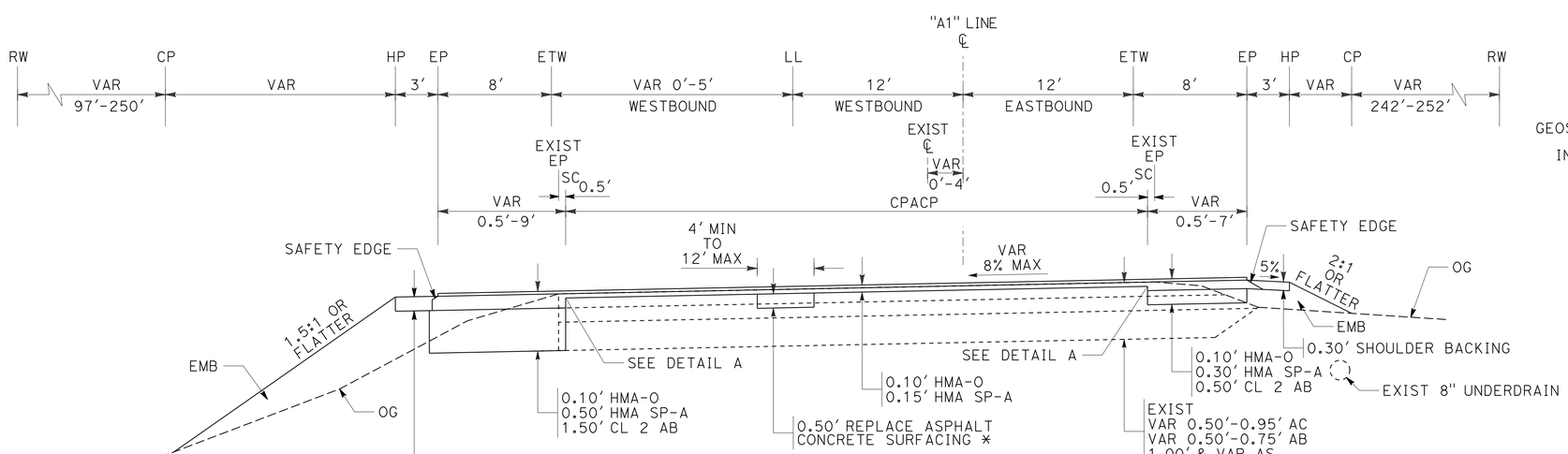

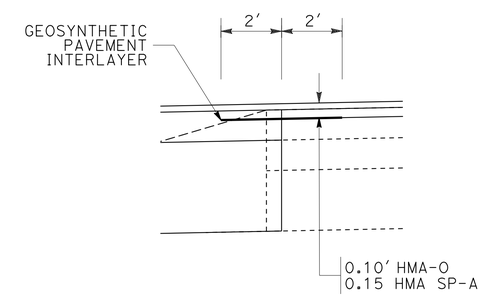

DETAIL A

* LOCATIONS TO BE DETERMINED BY THE ENGINEER

ROUTE 299

TYPICAL CROSS SECTIONS

NO SCALE

X-1

REVISED BY	DATE REVISED
BILL SUTHERLAND	ROBERT NIXON

CALCULATED-DESIGNED BY / CHECKED BY

FUNCTIONAL SUPERVISOR: JOHN L. MARTIN

STATE OF CALIFORNIA - DEPARTMENT OF TRANSPORTATION

DESIGN

Caltrans

P:\proj1\01\0a360_plans\pse\0100020289ca001.dgn

LAST REVISION 11-12-13 | DATE PLOTTED => 12-MAR-2014 | TIME PLOTTED => 07:38

Dist	COUNTY	ROUTE	POST MILES TOTAL PROJECT	SHEET No.	TOTAL SHEETS
01	Hum	299	19.3/19.8	3	56

William D. Sutherland 02-21-14
REGISTERED CIVIL ENGINEER DATE

02-21-14
PLANS APPROVAL DATE

REGISTERED PROFESSIONAL ENGINEER W. D. SUTHERLAND No. C61579 Exp. 06-30-15 CIVIL STATE OF CALIFORNIA

THE STATE OF CALIFORNIA OR ITS OFFICERS OR AGENTS SHALL NOT BE RESPONSIBLE FOR THE ACCURACY OR COMPLETENESS OF SCANNED COPIES OF THIS PLAN SHEET.

NOTE:

1. THE ADDITIONAL HEIGHT OF DIKE SHALL BE EQUIVALENT TO THE DEPTH OF HMA-O. DO NOT EXTEND HMA-O UNDER DIKE.

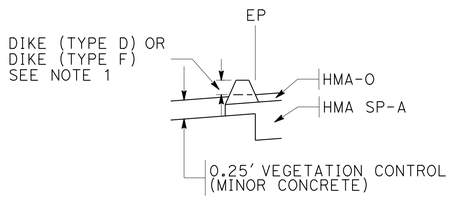

DETAIL C

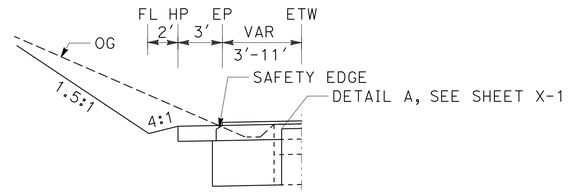

"A1" STA 721+00 TO 722+50

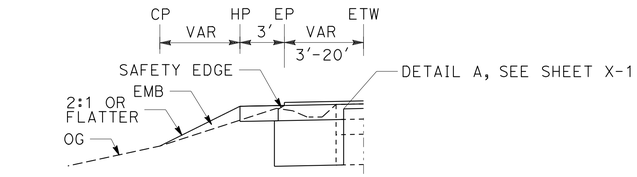

"A1" STA 720+58.4 TO 721+00

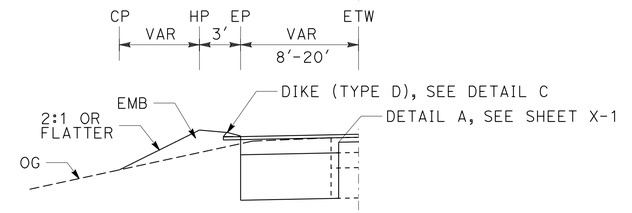

"A1" STA 720+25 TO 720+58.4

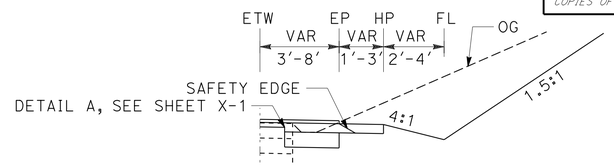

"A1" STA 719+94 TO 722+50

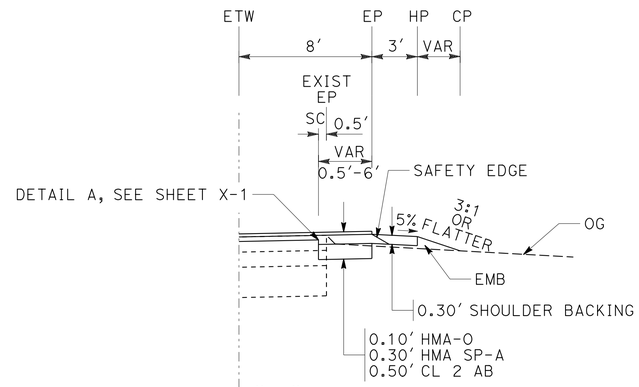

"A1" STA 714+95 TO 719+94

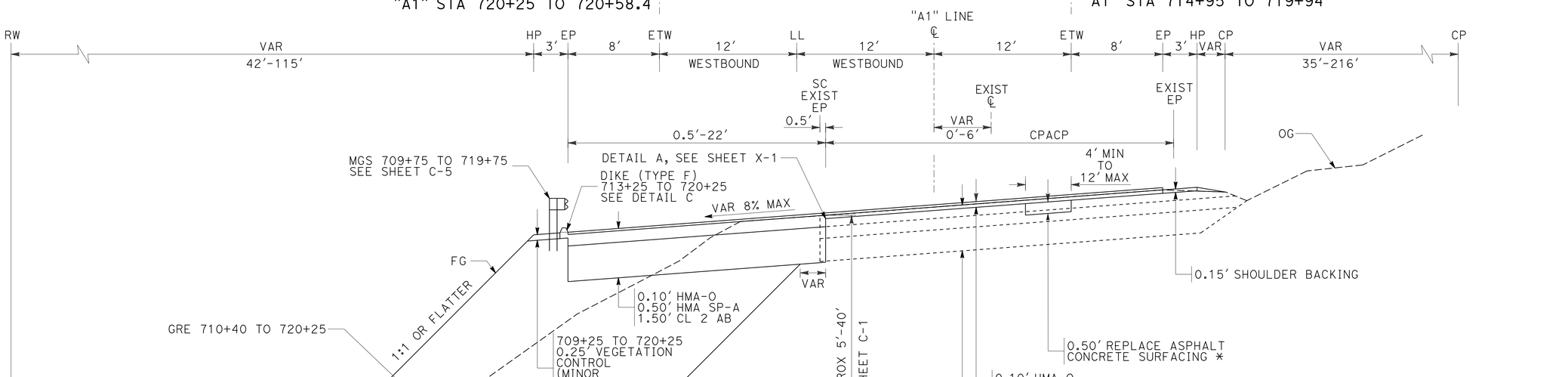

* LOCATIONS TO BE DETERMINED BY THE ENGINEER

"A1" STA 711+00 TO 722+50

ROUTE 299

TYPICAL CROSS SECTIONS

NO SCALE

X-2

REVISED BY	DATE REVISED
BILL SUTHERLAND	ROBERT NIXON
CALCULATED-DESIGNED BY	CHECKED BY
FUNCTIONAL SUPERVISOR	JOHN L. MARTIN

STATE OF CALIFORNIA - DEPARTMENT OF TRANSPORTATION
Caltrans
DESIGN

P:\proj1\01\0a360_plans\pse\0100020289ca002.dgn

LAST REVISION 11-12-13 | DATE PLOTTED => 12-MAR-2014 | TIME PLOTTED => 07:38

Dist	COUNTY	ROUTE	POST MILES TOTAL PROJECT	SHEET No.	TOTAL SHEETS
01	Hum	299	19.3/19.8	4	56

William D. Sutherland 02-21-14
REGISTERED CIVIL ENGINEER DATE

02-21-14
PLANS APPROVAL DATE

REGISTERED PROFESSIONAL ENGINEER W. D. SUTHERLAND No. C61579 Exp. 06-30-15 CIVIL STATE OF CALIFORNIA

THE STATE OF CALIFORNIA OR ITS OFFICERS OR AGENTS SHALL NOT BE RESPONSIBLE FOR THE ACCURACY OR COMPLETENESS OF SCANNED COPIES OF THIS PLAN SHEET.

NOTES:

1. FOR ACCURATE RIGHT OF WAY DATA, CONTACT RIGHT OF WAY ENGINEERING AT THE DISTRICT OFFICE.
2. FOR GRE DETAILS, SEE SHEET C-1.
3. FOR CPACP AND VARIABLE DEPTH HMA DETAILS, SEE SHEET C-4.
4. FOR PAVEMENT CONFORM DETAILS, SEE SHEET C-5.
5. FOR RUMBLE STRIP DETAILS, SEE SHEET C-6.

ABBREVIATIONS:

AI-LTS	ALTERNATIVE IN-LINE TERMINAL SYSTEM (TYPE 11D LAYOUT)
DIKE (D)	PLACE HOT MIX ASPHALT DIKE (TYPE D)
DIKE (F)	PLACE HOT MIX ASPHALT DIKE (TYPE F)
GRE	GEOSYNTHETIC REINFORCED EMBANKMENT
MGS	MIDWEST GUARDRAIL SYSTEM (8' POST)
RS	RUMBLE STRIP (HMA, GROUND-IN INDENTATIONS)
VC	VEGETATION CONTROL (MINOR CONCRETE)

CURVE DATA

No. ⊕	R	Δ	T	L
1	950'	23°01'15"	193.46'	381.70'
2	660'	91°48'24"	681.15'	1057.54'
4	680'	27°27'26"	166.13'	325.87'
5	930'	07°30'29"	61.02'	121.87'

LEGEND

- OVERLAY
- NEW STRUCTURAL SECTION
- —-- tc ——— ——-- tc AT&T UNDERGROUND TELEPHONE
- —-- tc ——— ——-{oh} AT&T OVERHEAD TELEPHONE
- —-- e ——— ——-{oh} PG&E OVERHEAD ELECTRIC

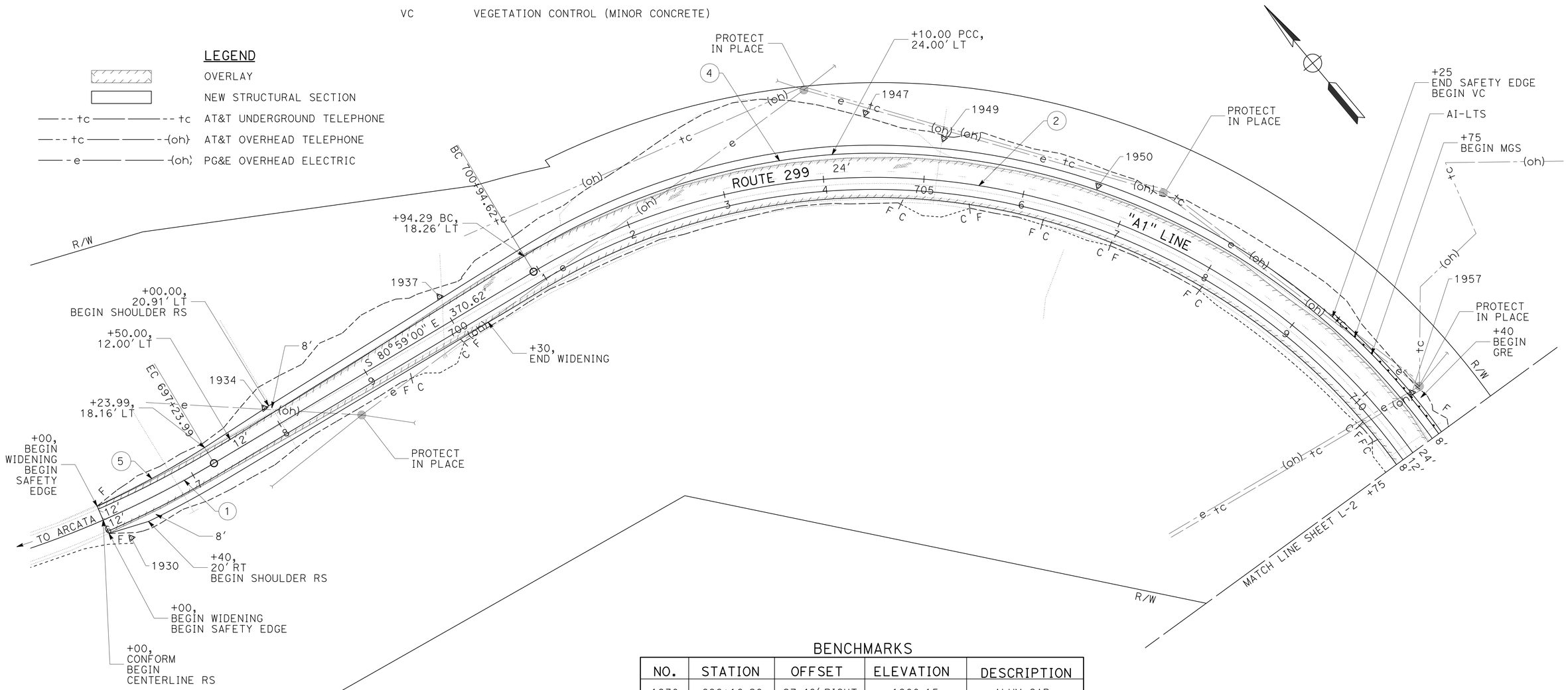

BENCHMARKS

NO.	STATION	OFFSET	ELEVATION	DESCRIPTION
1930	696+18.20	27.48' RIGHT	1900.15	ALUM CAP
1934	697+95.22	21.47' LEFT	1888.40	SPIKE
1937	700+01.48	26.87' LEFT	1877.19	SPIKE
1947	704+42.66	64.27' LEFT	1852.71	ALUM CAP
1949	705+15.76	42.08' LEFT	1847.09	SPIKE
1950	706+68.08	28.49' LEFT	1840.72	SPIKE
1957	710+28.77	35.92' LEFT	1818.77	ALUM CAP

LAYOUT

SCALE: 1" = 50'

L-1

REVISED BY | DATE REVISED
BILL SUTHERLAND | ROBERT NIXON
CALCULATED-DESIGNED BY | CHECKED BY
FUNCTIONAL SUPERVISOR | JOHN L. MARTIN

STATE OF CALIFORNIA - DEPARTMENT OF TRANSPORTATION
Caltrans DESIGN

P:\proj1\01\0a360_plans\pse\0100020289ea001.dgn

LAST REVISION 11-12-13 | DATE PLOTTED => 12-MAR-2014 | TIME PLOTTED => 07:38

Dist	COUNTY	ROUTE	POST MILES TOTAL PROJECT	SHEET No.	TOTAL SHEETS
01	Hum	299	19.3/19.8	5	56

William D. Sutherland 02-21-14
REGISTERED CIVIL ENGINEER DATE

02-21-14
PLANS APPROVAL DATE

REGISTERED PROFESSIONAL ENGINEER W. D. SUTHERLAND No. C61579 Exp. 06-30-15 CIVIL STATE OF CALIFORNIA

THE STATE OF CALIFORNIA OR ITS OFFICERS OR AGENTS SHALL NOT BE RESPONSIBLE FOR THE ACCURACY OR COMPLETENESS OF SCANNED COPIES OF THIS PLAN SHEET.

NOTE:

1. FOR ACCURATE RIGHT OF WAY DATA, CONTACT RIGHT OF WAY ENGINEERING AT THE DISTRICT OFFICE.

CURVE DATA

No. ⊕	R	Δ	T	L
2	660′	91°48′24″	681.15′	1057.54′
3	650′	48°21′55″	291.88′	548.69′

BENCHMARKS

NO.	STATION	OFFSET	ELEVATION	DESCRIPTION
1963	713+56.33	12.21′ LEFT	1799.12	SPIKE
1966	714+95.22	31.21′ RIGHT	1792.78	ALUM CAP
1972	718+71.63	20.24′ LEFT	1768.62	SPIKE
1974	719+70.91	23.82′ RIGHT	1765.44	ALUM CAP
1981	724+08.29	47.918′ LEFT	1740.89	ALUM CAP

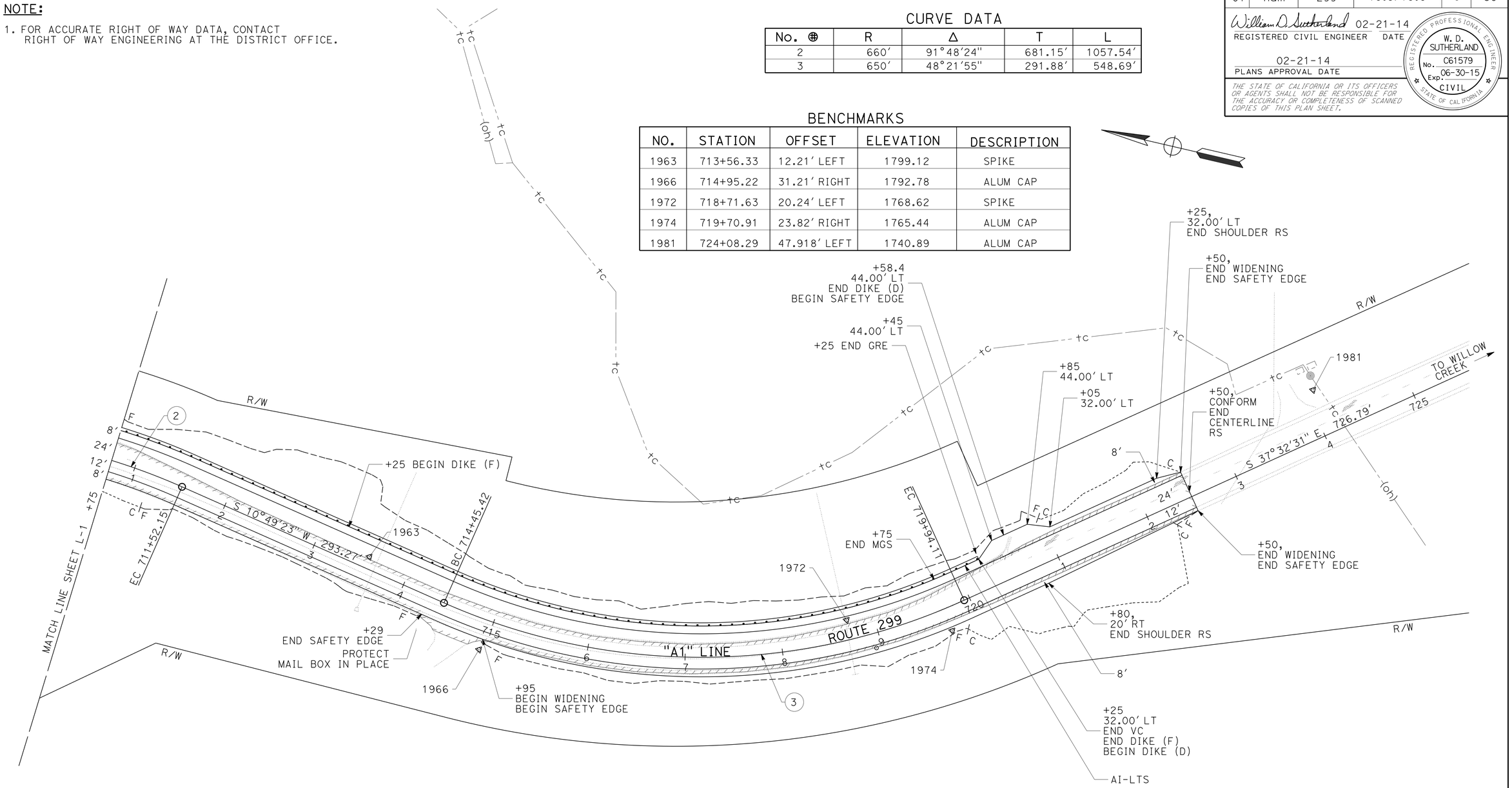

LAYOUT
SCALE: 1″ = 50′

L-2

REVISED BY	DATE REVISED
BILL SUTHERLAND	ROBERT NIXON

CALCULATED-DESIGNED BY / CHECKED BY

FUNCTIONAL SUPERVISOR: JOHN L. MARTIN

STATE OF CALIFORNIA - DEPARTMENT OF TRANSPORTATION
Caltrans
DESIGN

P:\proj1\01\0a360_plans\pse\0100020289ea002.dgn

LAST REVISION 11-12-13 | DATE PLOTTED => 12-MAR-2014 | TIME PLOTTED => 07:38

Dist	COUNTY	ROUTE	POST MILES TOTAL PROJECT	SHEET No.	TOTAL SHEETS
01	Hum	299	19.3/19.8	6	56

William D. Sutherland 02-21-14
REGISTERED CIVIL ENGINEER DATE

02-21-14
PLANS APPROVAL DATE

REGISTERED PROFESSIONAL ENGINEER W. D. SUTHERLAND No. C61579 Exp. 06-30-15 CIVIL STATE OF CALIFORNIA

THE STATE OF CALIFORNIA OR ITS OFFICERS OR AGENTS SHALL NOT BE RESPONSIBLE FOR THE ACCURACY OR COMPLETENESS OF SCANNED COPIES OF THIS PLAN SHEET.

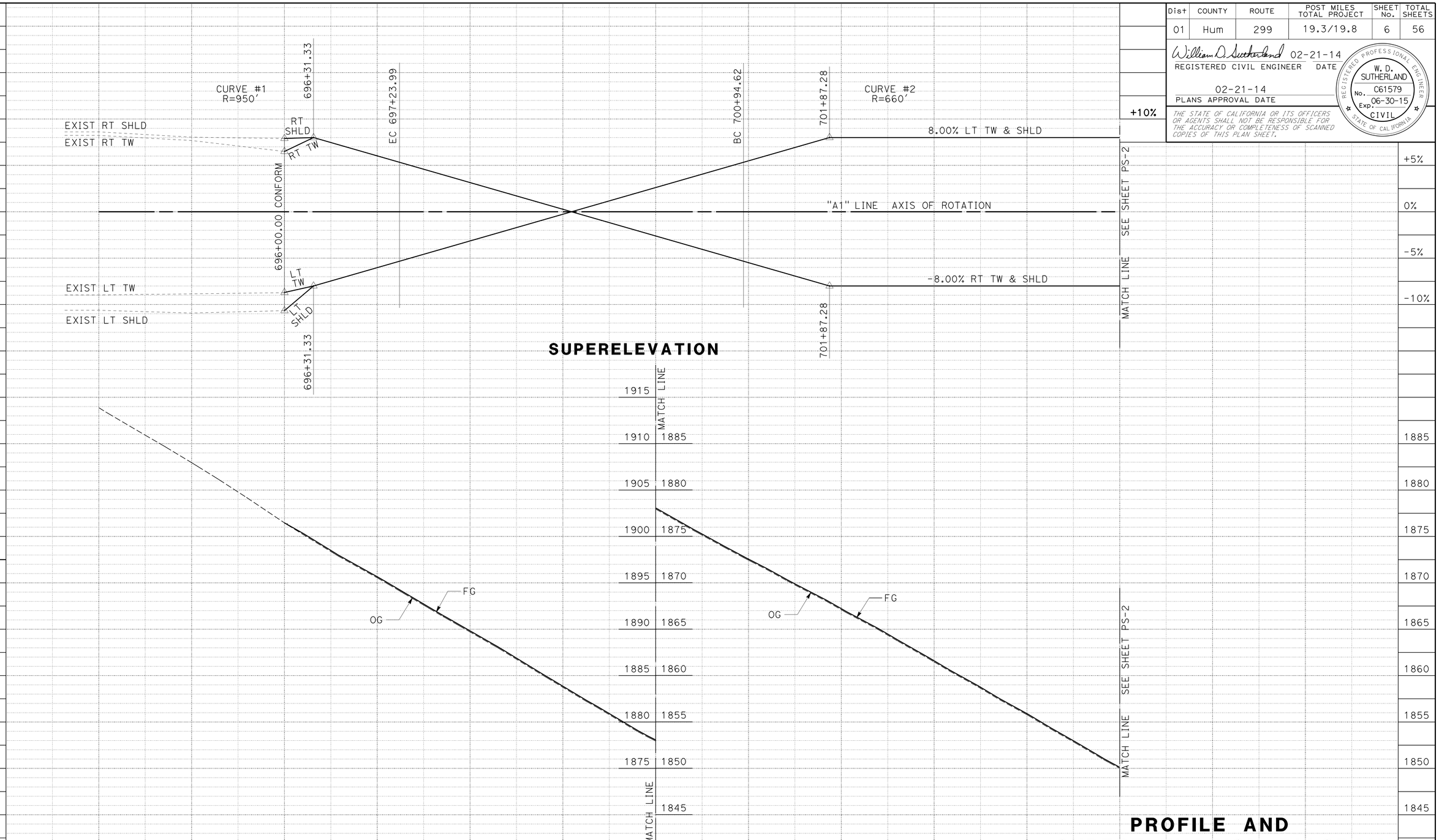

PROFILE AND SUPERELEVATION DIAGRAM

SCALE: 1" = 50' HORIZ
1" = 5' VERT

PS-1

																		SHEET TOTAL
CY	Exc	26	44	41	59	34	30	27	28	24								313
	Emb	11	47	177	168	32	88	240	356	171								1290
	GRE	0	0	0	0	0	0	0	0	0								0

REVISED BY | DATE REVISED
BILL SUTHERLAND | JOHN MARTIN
CALCULATED-DESIGNED BY | CHECKED BY
FUNCTIONAL SUPERVISOR
JOHN L. MARTIN

STATE OF CALIFORNIA - DEPARTMENT OF TRANSPORTATION
Caltrans
DESIGN

P:\proj1\01\0a360_plans\pse\0100020289fb001.dgn

LAST REVISION 10-21-13 | DATE PLOTTED => 12-MAR-2014 | TIME PLOTTED => 07:38

Dist	COUNTY	ROUTE	POST MILES TOTAL PROJECT	SHEET No.	TOTAL SHEETS
01	Hum	299	19.3/19.8	7	56

William D. Sutherland 02-21-14
REGISTERED CIVIL ENGINEER DATE

02-21-14
PLANS APPROVAL DATE

REGISTERED PROFESSIONAL ENGINEER W. D. SUTHERLAND No. C61579 Exp. 06-30-15 CIVIL STATE OF CALIFORNIA

THE STATE OF CALIFORNIA OR ITS OFFICERS OR AGENTS SHALL NOT BE RESPONSIBLE FOR THE ACCURACY OR COMPLETENESS OF SCANNED COPIES OF THIS PLAN SHEET.

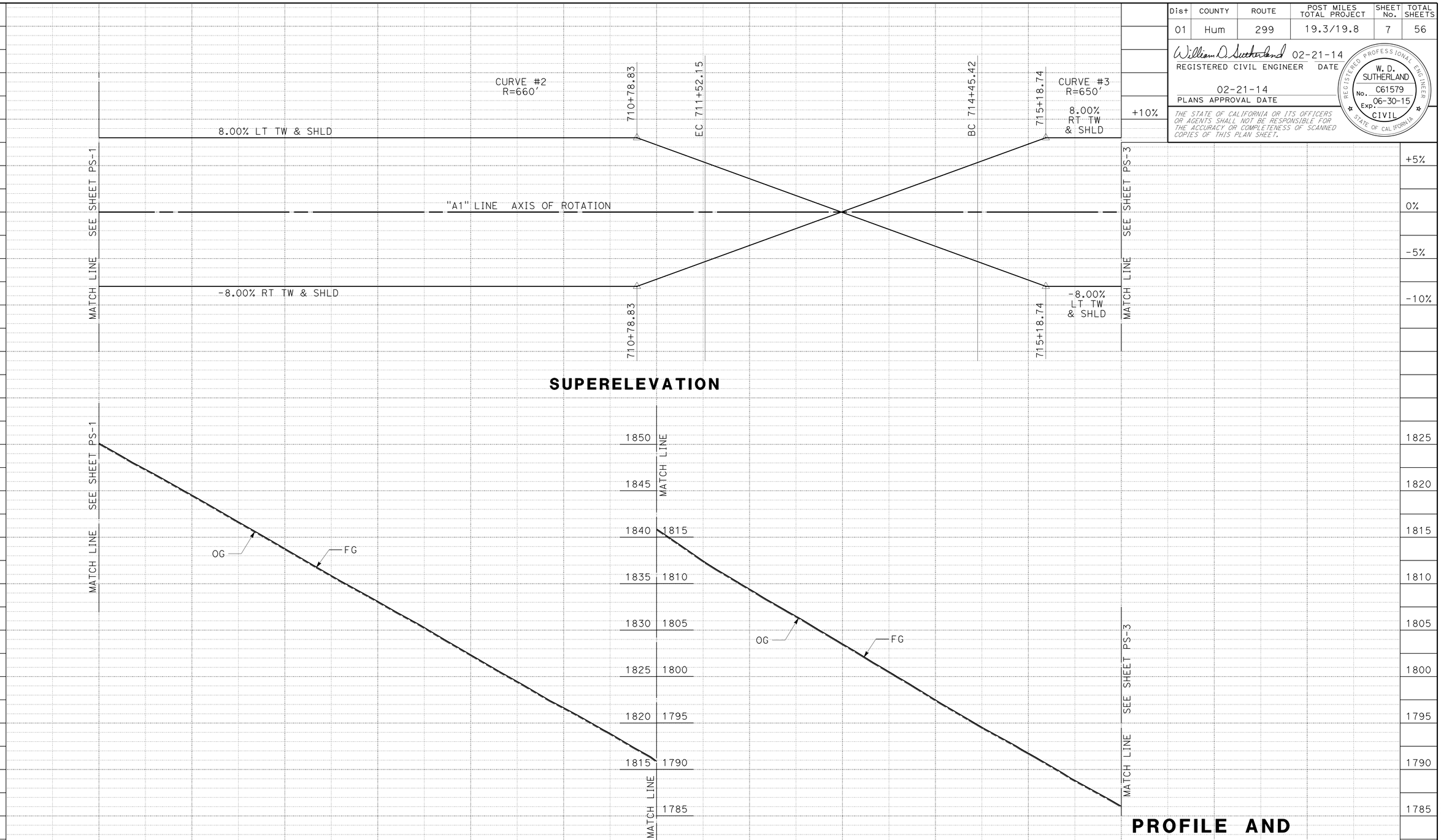

PROFILE AND SUPERELEVATION DIAGRAM

SCALE: 1" = 50' HORIZ
1" = 5' VERT

PS-2

STATION		705	6	7	8	9	710	+40	1	2	3	4	715	6	SHEET TOTAL
CY	Exc	15	18	14	18	14	54	855	2255	2108	755	436			6542
	Emb	126	103	111	131	117	69	14	2	2	1	6			682
	GRE	0	0	0	0	0	0	138	1607	3979	3413	1159	516		10,812

REVISED BY | DATE REVISED
BILL SUTHERLAND | JOHN MARTIN
CALCULATED-DESIGNED BY | CHECKED BY
FUNCTIONAL SUPERVISOR: JOHN L. MARTIN

STATE OF CALIFORNIA - DEPARTMENT OF TRANSPORTATION
Caltrans
DESIGN

P:\proj11\01\0a360_plans\pse\0100020289fb002.dgn

LAST REVISION 11-12-13 | DATE PLOTTED => 12-MAR-2014 | TIME PLOTTED => 07:38

Dist	COUNTY	ROUTE	POST MILES TOTAL PROJECT	SHEET No.	TOTAL SHEETS
01	Hum	299	19.3/19.8	8	56

William D. Sutherland 02-21-14
REGISTERED CIVIL ENGINEER DATE

02-21-14
PLANS APPROVAL DATE

REGISTERED PROFESSIONAL ENGINEER W. D. SUTHERLAND No. C61579 Exp. 06-30-15 CIVIL STATE OF CALIFORNIA

THE STATE OF CALIFORNIA OR ITS OFFICERS OR AGENTS SHALL NOT BE RESPONSIBLE FOR THE ACCURACY OR COMPLETENESS OF SCANNED COPIES OF THIS PLAN SHEET.

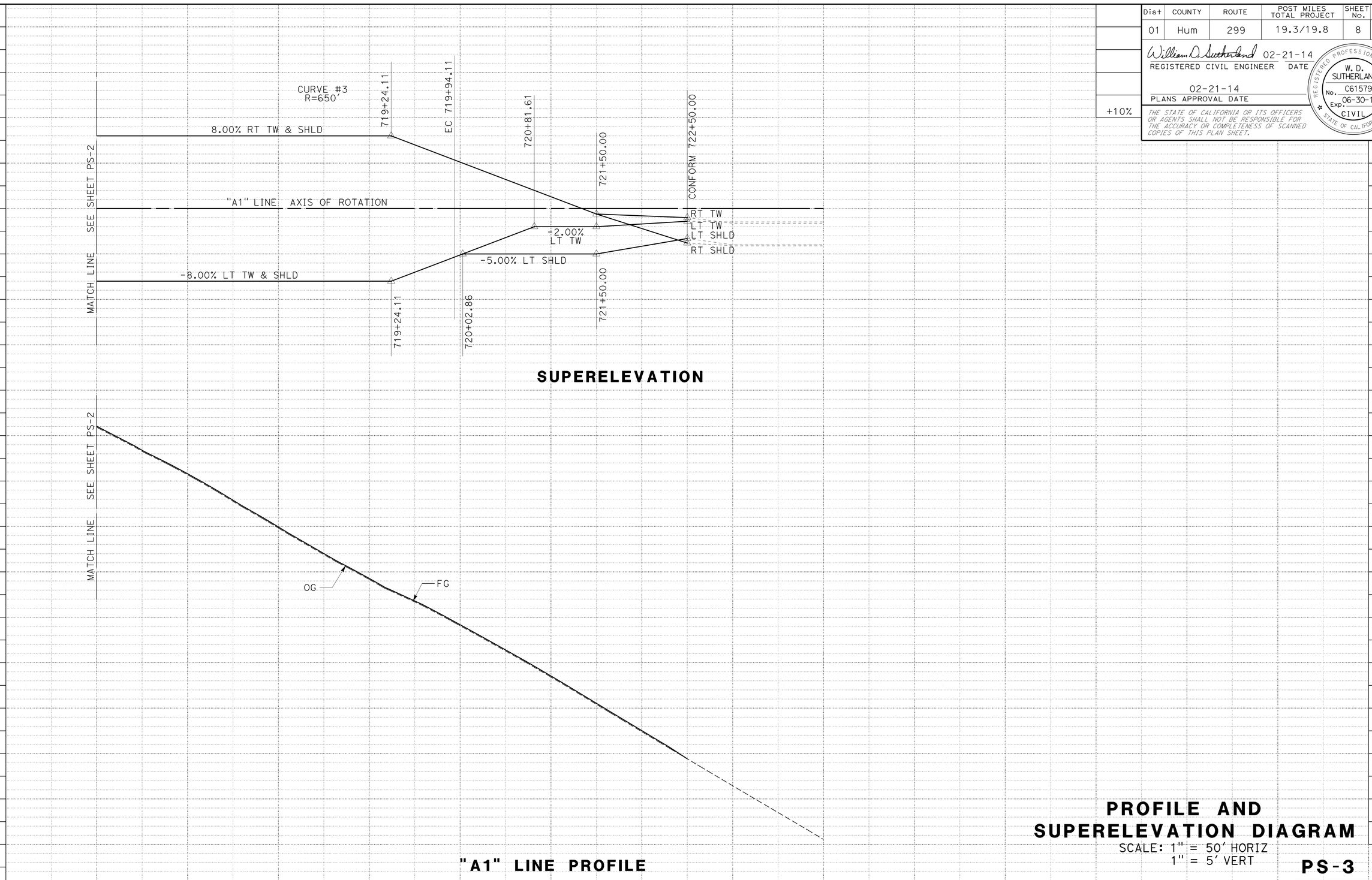

PROFILE AND SUPERELEVATION DIAGRAM

SCALE: 1" = 50' HORIZ
1" = 5' VERT

PS-3

STATION		6	7	8	9	720 +25	1	2	3	4	725	6	7	SHEET TOTAL	TOTAL
CY	Exc	517	875	346	230	541	714	132						3355	10,210
CY	Emb	21	10	37	31	23	2	2						126	2098
	GRE	699	1225	550	313	35								2822	13,634

REVISED BY	DATE REVISED
BILL SUTHERLAND	JOHN MARTIN
CALCULATED-DESIGNED BY	CHECKED BY
FUNCTIONAL SUPERVISOR	JOHN L. MARTIN

STATE OF CALIFORNIA - DEPARTMENT OF TRANSPORTATION
Caltrans
DESIGN

P:\proj1\01\0a360_plans\pse\0100020289fb003.dgn

LAST REVISION DATE PLOTTED => 12-MAR-2014
TIME PLOTTED => 07:38

Dist	COUNTY	ROUTE	POST MILES TOTAL PROJECT	SHEET No.	TOTAL SHEETS
01	Hum	299	19.3/19.8	9	56

REGISTERED CIVIL ENGINEER DATE 02-21-14

PLANS APPROVAL DATE 02-21-14

REGISTERED PROFESSIONAL ENGINEER W. D. SUTHERLAND No. C61579 Exp. 06-30-15 CIVIL STATE OF CALIFORNIA

THE STATE OF CALIFORNIA OR ITS OFFICERS OR AGENTS SHALL NOT BE RESPONSIBLE FOR THE ACCURACY OR COMPLETENESS OF SCANNED COPIES OF THIS PLAN SHEET.

NOTE:

1. END UNIAXIAL OR BIAXIAL GEOGRID WITHIN TOP 2′ OF GRE.

ABBREVIATIONS;

PP	PLASTIC PIPE (SCHEDULE 80)
PPP	PERFORATED PLASTIC PIPE (SCHEDULE 80) UNDERDRAIN
GRE	GEOSYNTHETIC REINFORCED EMBANKMENT

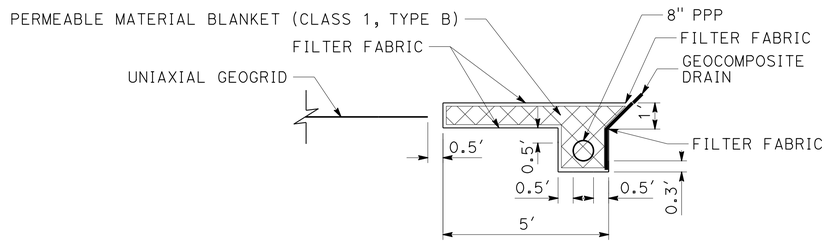

GRE DRAINAGE DETAIL

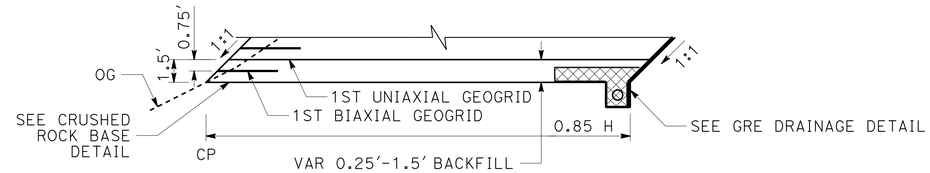

ADDITIONAL BIAXIAL GEOGRID DETAIL

STA 713+94 TO 714+07
STA 716+19 TO 716+30

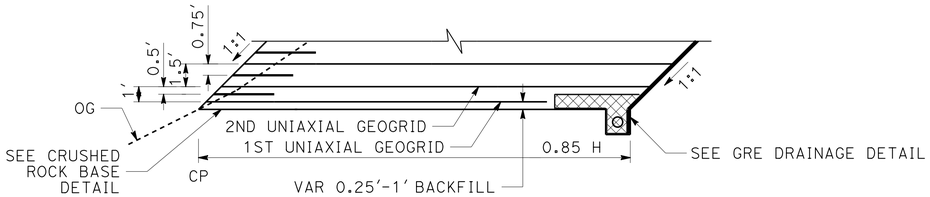

ADDITIONAL UNIAXIAL GEOGRID DETAIL

STA 713+03 TO 713+38

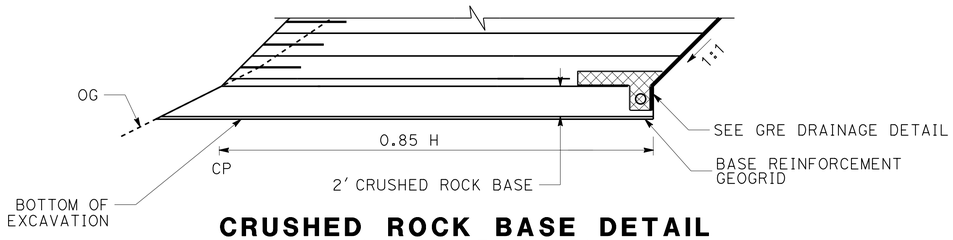

CRUSHED ROCK BASE DETAIL

STA 711+00 TO 718+50

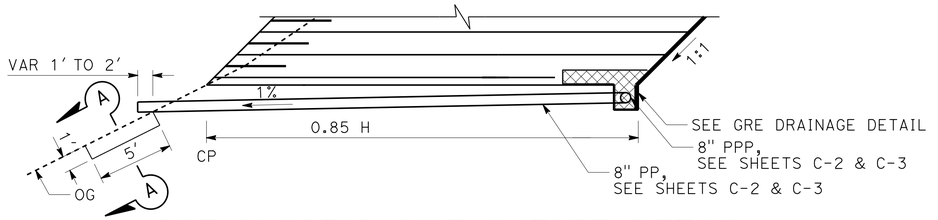

GRE PLASTIC PIPE OUTLET DETAIL

STA 710+65	STA 717+25#
STA 710+70	STA 717+75#
STA 713+25#	STA 718+50#
STA 714+00#	STA 719+00
STA 715+00#	STA 719+75
STA 716+25#	

SEE CRUSHED ROCK BASE DETAIL

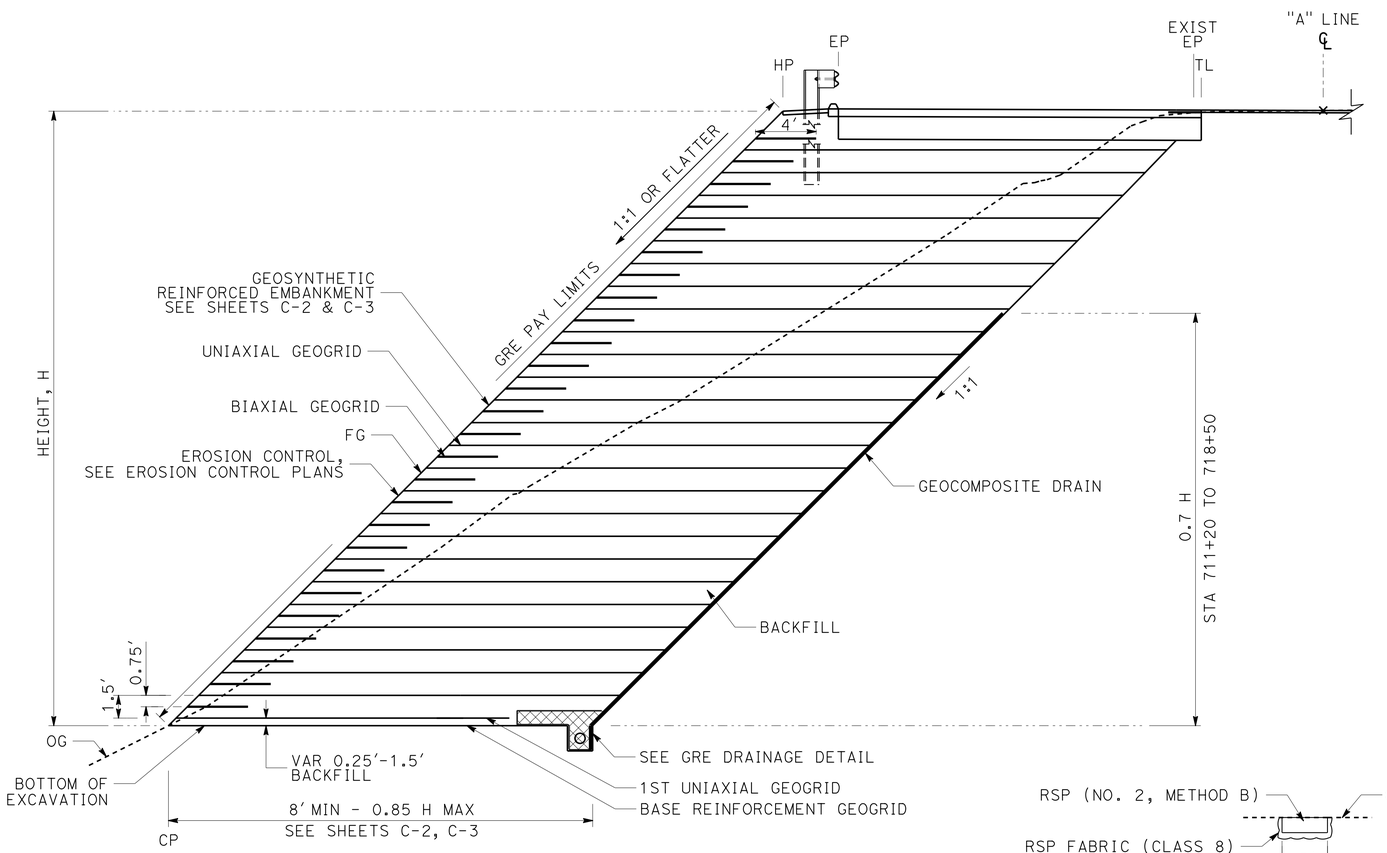

GRE TYPICAL SECTION

STA 710+40 TO 711+00
STA 718+50 TO 720+25

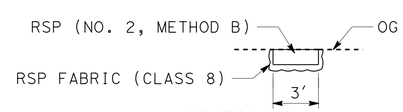

SECTION A-A

GEOSYNTHETIC REINFORCED EMBANKMENT

CONSTRUCTION DETAILS

NO SCALE

C-1

REVISED BY | DATE REVISED
BILL SUTHERLAND | JOHN MARTIN
CALCULATED-DESIGNED BY | CHECKED BY
FUNCTIONAL SUPERVISOR | JOHN L. MARTIN
STATE OF CALIFORNIA - DEPARTMENT OF TRANSPORTATION
Caltrans
DESIGN

P:\proj1\01\0a360_plans\pse\0100020289ga001.dgn

LAST REVISION 11-12-13 | DATE PLOTTED => 12-MAR-2014 | TIME PLOTTED => 07:38

Dist	COUNTY	ROUTE	POST MILES TOTAL PROJECT	SHEET No.	TOTAL SHEETS
01	Hum	299	19.3/19.8	10	56

William D. Sutherland 02-21-14
REGISTERED CIVIL ENGINEER DATE

02-21-14
PLANS APPROVAL DATE

REGISTERED PROFESSIONAL ENGINEER W. D. SUTHERLAND No. C61579 Exp. 06-30-15 CIVIL STATE OF CALIFORNIA

THE STATE OF CALIFORNIA OR ITS OFFICERS OR AGENTS SHALL NOT BE RESPONSIBLE FOR THE ACCURACY OR COMPLETENESS OF SCANNED COPIES OF THIS PLAN SHEET.

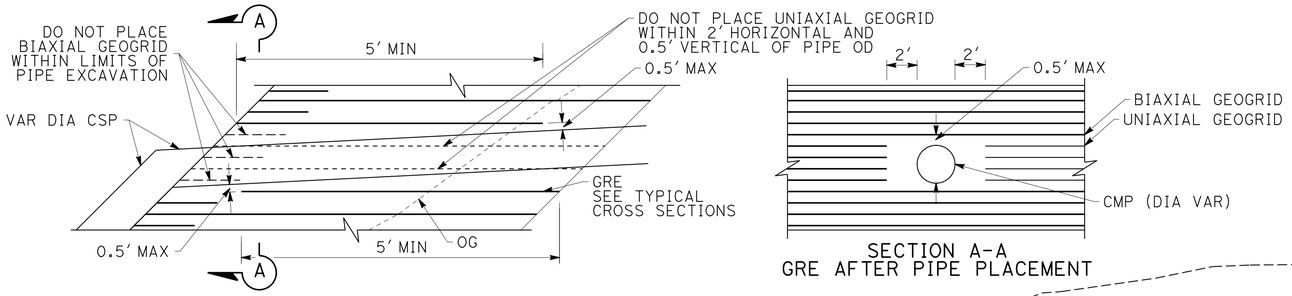

GRE AND DRAINAGE PIPE DETAIL

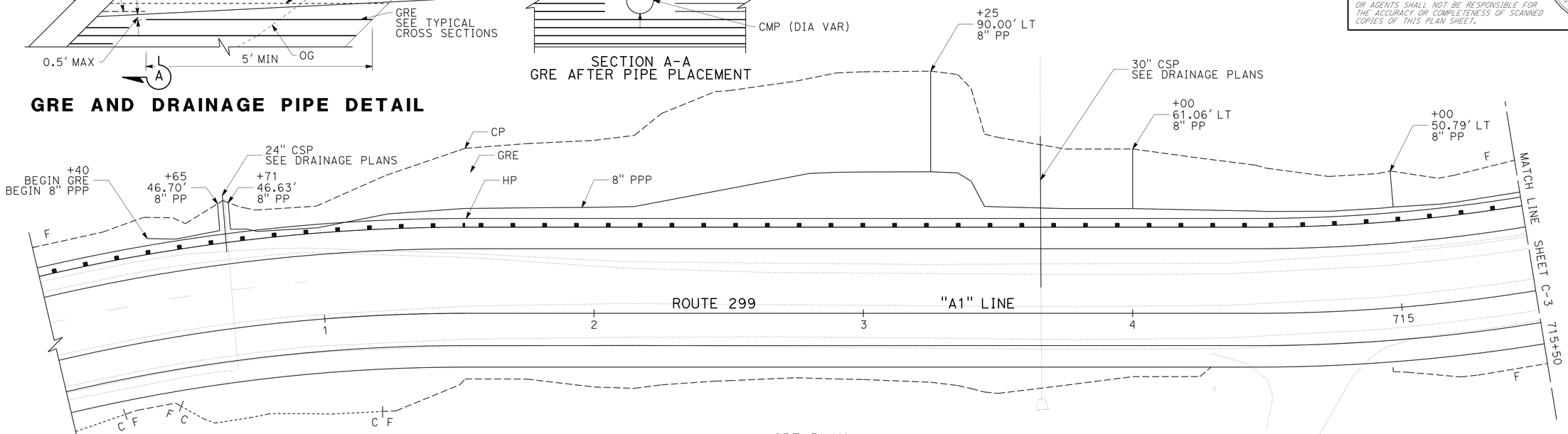

GRE PLAN

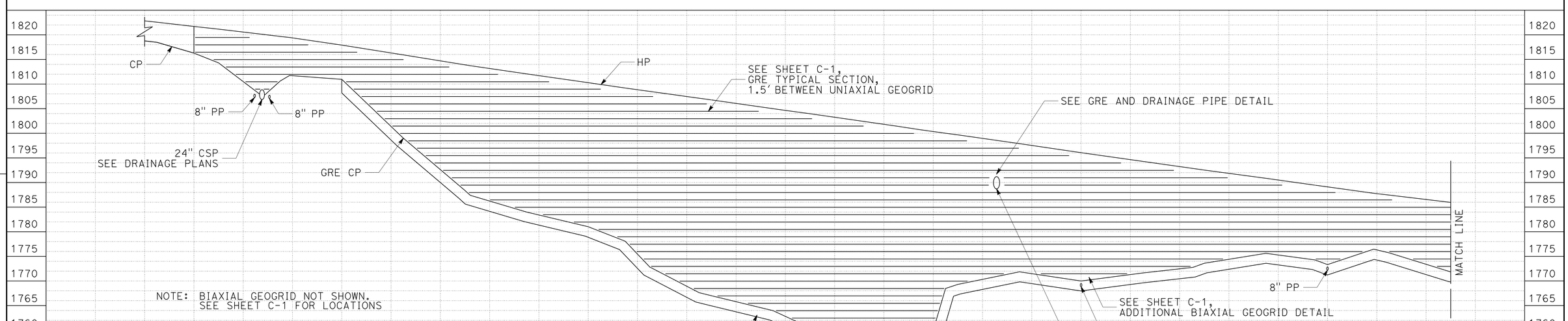

GRE PROFILE

CONSTRUCTION DETAILS

SCALE: 1" = 20' HORIZONTAL
1" = 10' VERTICAL

C-2

REVISED BY	DATE REVISED
BILL SUTHERLAND	JOHN MARTIN
CALCULATED-DESIGNED BY	CHECKED BY
FUNCTIONAL SUPERVISOR	JOHN L. MARTIN

STATE OF CALIFORNIA - DEPARTMENT OF TRANSPORTATION
Caltrans® DESIGN

P:\proj1\01\0a360_plans\pse\0100020289ga002.dgn

LAST REVISION 11-12-13 | DATE PLOTTED => 12-MAR-2014 | TIME PLOTTED => 07:38

Dist	COUNTY	ROUTE	POST MILES TOTAL PROJECT	SHEET No.	TOTAL SHEETS
01	Hum	299	19.3/19.8	11	56

William D. Sutherland 02-21-14
REGISTERED CIVIL ENGINEER DATE

02-21-14
PLANS APPROVAL DATE

REGISTERED PROFESSIONAL ENGINEER
W. D. SUTHERLAND
No. C61579
Exp. 06-30-15
CIVIL
STATE OF CALIFORNIA

THE STATE OF CALIFORNIA OR ITS OFFICERS OR AGENTS SHALL NOT BE RESPONSIBLE FOR THE ACCURACY OR COMPLETENESS OF SCANNED COPIES OF THIS PLAN SHEET.

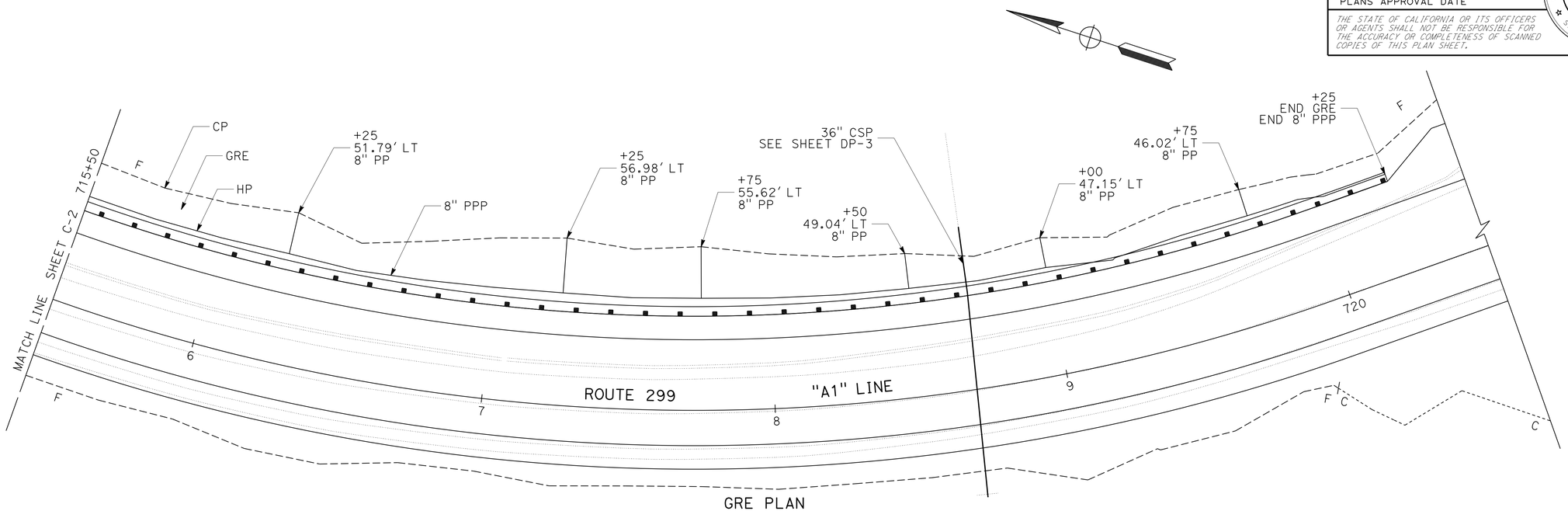

GRE PLAN

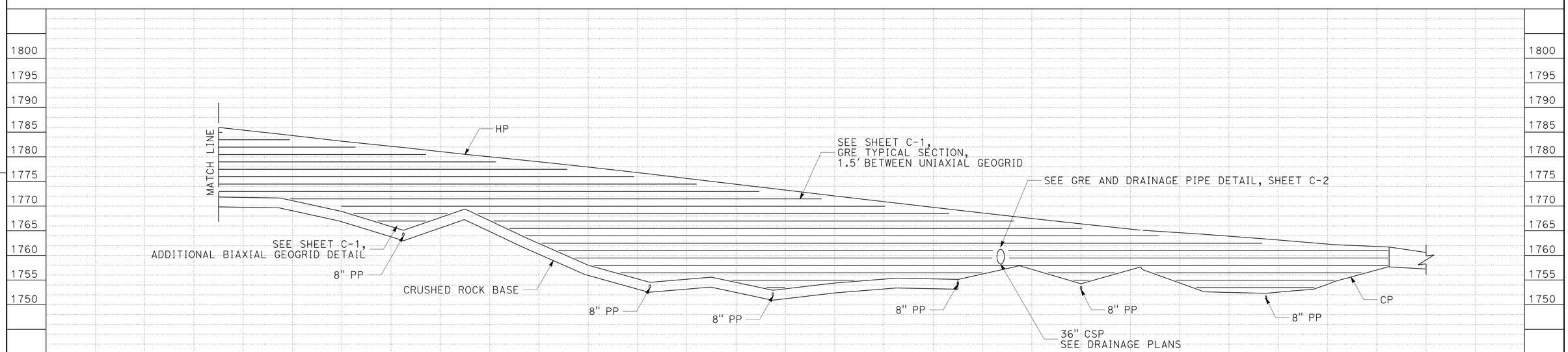

GRE PROFILE

CONSTRUCTION DETAILS

SCALE: 1" = 20' HORIZONTAL
1" = 10' VERTICAL

C-3

REVISED BY | DATE REVISED
BILL SUTHERLAND | JOHN MARTIN
CALCULATED-DESIGNED BY | CHECKED BY
FUNCTIONAL SUPERVISOR: JOHN L. MARTIN

STATE OF CALIFORNIA - DEPARTMENT OF TRANSPORTATION
Caltrans
DESIGN

P:\proj1\01\0a360_plans\pse\0100020289ga003.dgn

LAST REVISION 11-12-13 | DATE PLOTTED => 12-MAR-2014 | TIME PLOTTED => 07:38

Dist	COUNTY	ROUTE	POST MILES TOTAL PROJECT	SHEET No.	TOTAL SHEETS
01	Hum	299	19.3/19.8	12	56

REGISTERED CIVIL ENGINEER 02-21-14 DATE

PLANS APPROVAL DATE 02-21-14

REGISTERED PROFESSIONAL ENGINEER J.L. MARTIN No. C47576 Exp. 12-31-15 CIVIL STATE OF CALIFORNIA

THE STATE OF CALIFORNIA OR ITS OFFICERS OR AGENTS SHALL NOT BE RESPONSIBLE FOR THE ACCURACY OR COMPLETENESS OF SCANNED COPIES OF THIS PLAN SHEET.

NOTE:

1. HMA (TYPE O) LIMITS NOT SHOWN

LEGEND:

- OVERLAY LIMITS
- COLD PLANE LIMITS
- COLD PLANE AND OVERLAY LIMITS

ABBREVIATIONS:

CPACP	COLD PLANE ASPHALT CONCRETE PAVEMENT
HMA-SP-A	HMA, SUPERPAVE (TYPE A)
SUPER	SUPERELEVATION

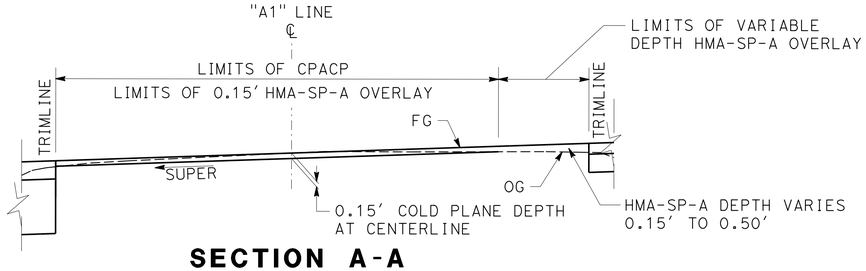

SECTION A-A
NO SCALE

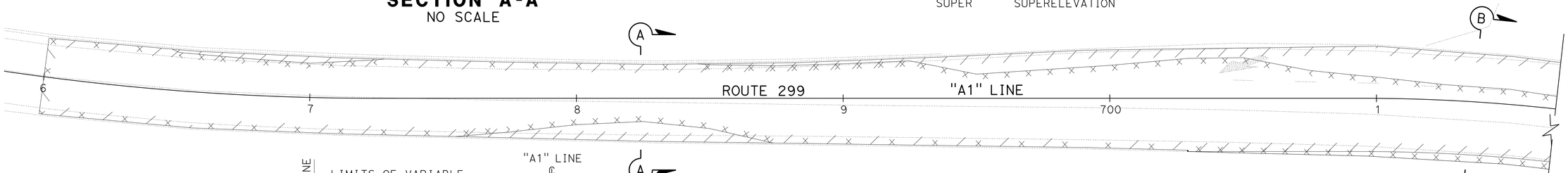

PLAN
SCALE: 1" = 20'

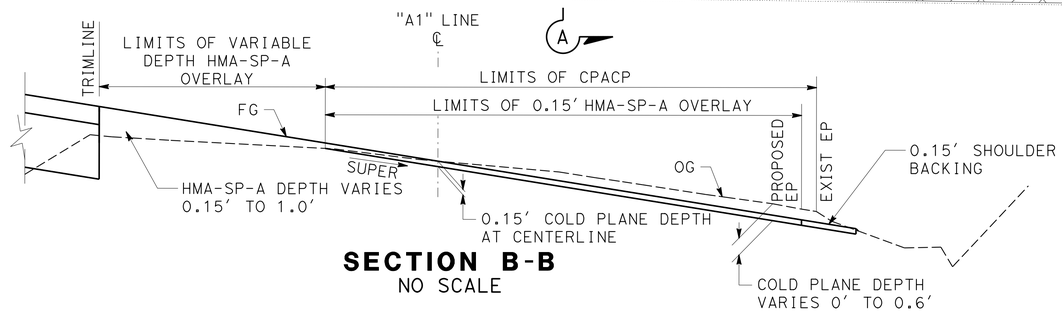

SECTION B-B
NO SCALE

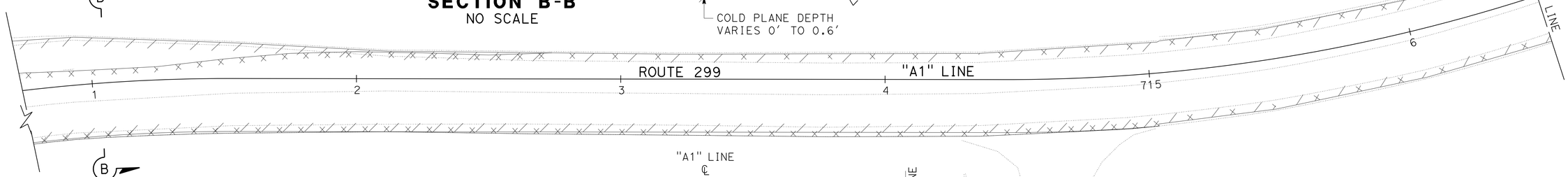

PLAN
SCALE: 1" = 20'

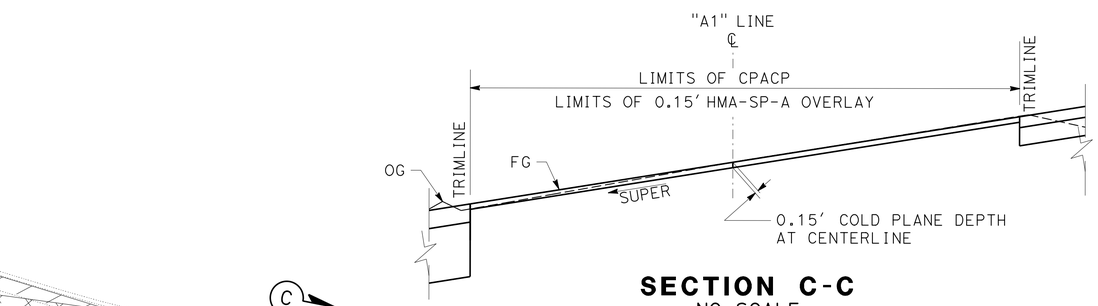

SECTION C-C
NO SCALE

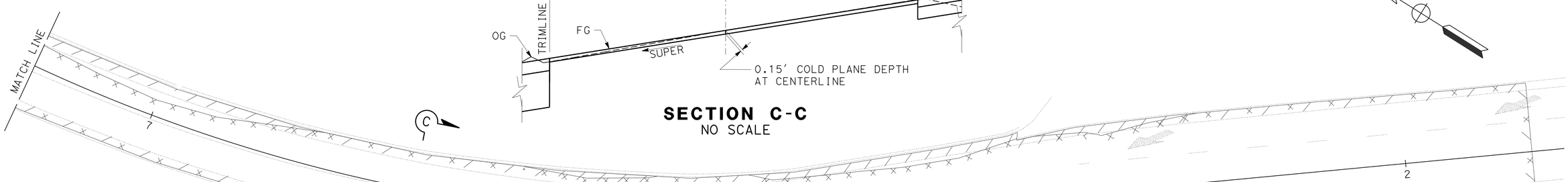

PLAN
SCALE: 1" = 20'

COLD PLANE AND OVERLAY DETAILS

CONSTRUCTION DETAILS

SCALE: AS SHOWN

C-4

REVISED BY | DATE REVISED

BILL SUTHERLAND | JOHN L. MARTIN

CALCULATED-DESIGNED BY | CHECKED BY

FUNCTIONAL SUPERVISOR: JOHN L. MARTIN

STATE OF CALIFORNIA - DEPARTMENT OF TRANSPORTATION

Caltrans

DESIGN

P:\proj1\01\0a360_plans\pse\0100020289ga004.dgn

LAST REVISION | DATE PLOTTED => 12-MAR-2014 | TIME PLOTTED => 07:38

Dist	COUNTY	ROUTE	POST MILES TOTAL PROJECT	SHEET No.	TOTAL SHEETS
01	Hum	299	19.3/19.8	13	56

William D. Sutherland 02-21-14
REGISTERED CIVIL ENGINEER DATE

02-21-14
PLANS APPROVAL DATE

REGISTERED PROFESSIONAL ENGINEER W. D. SUTHERLAND No. C61579 Exp. 06-30-15 CIVIL STATE OF CALIFORNIA

THE STATE OF CALIFORNIA OR ITS OFFICERS OR AGENTS SHALL NOT BE RESPONSIBLE FOR THE ACCURACY OR COMPLETENESS OF SCANNED COPIES OF THIS PLAN SHEET.

LEGEND:

CPACP

ABBREVIATIONS;

MGS MIDWEST GUARDRAIL SYSTEM (8′ POST)

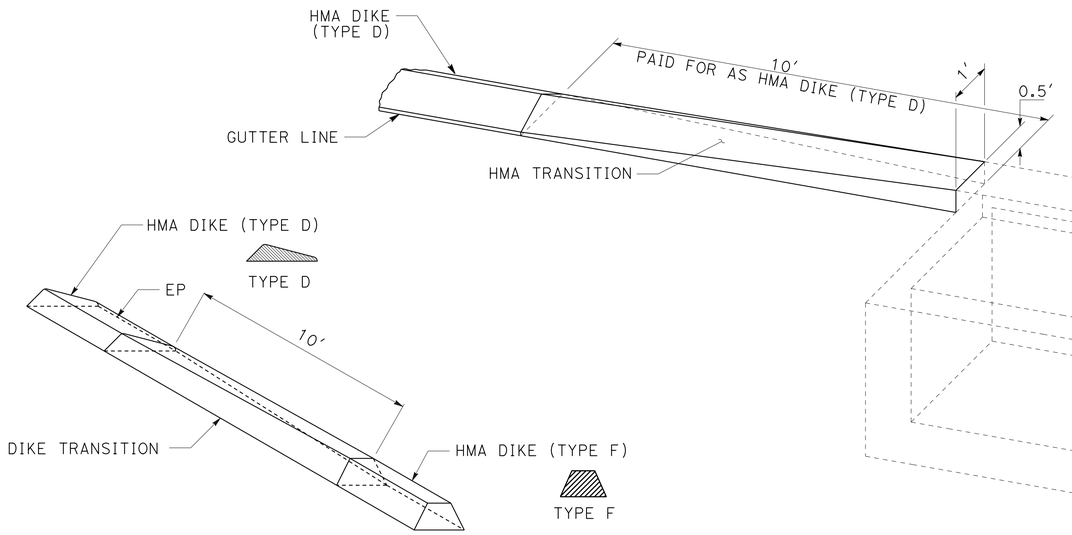

HMA DIKE TRANSITION

HMA DIKE (TYPE F) TO
HMA DIKE (TYPE D)

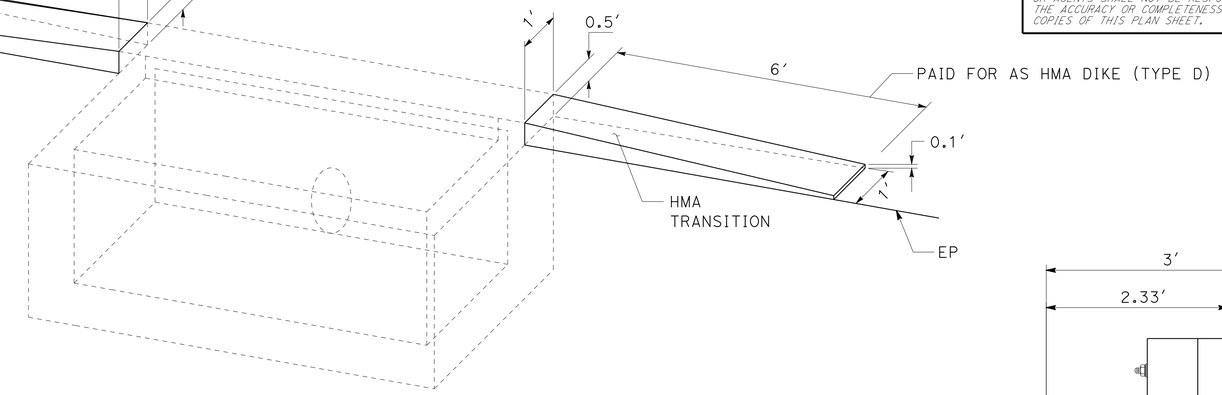

TRANSITION HMA DIKE (TYPE D) TO DI

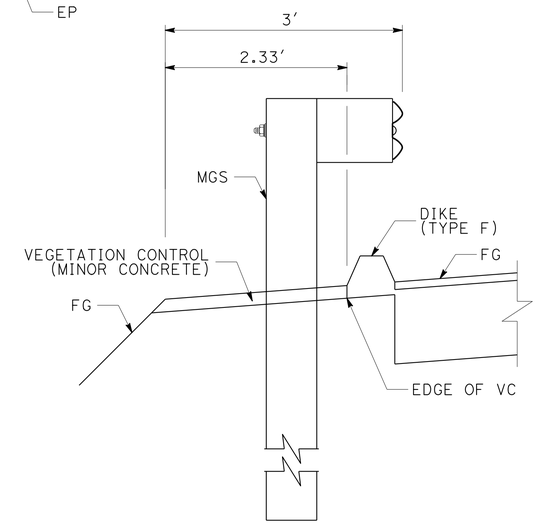

SECTION

VEGETATION CONTROL (MINOR CONCRETE)

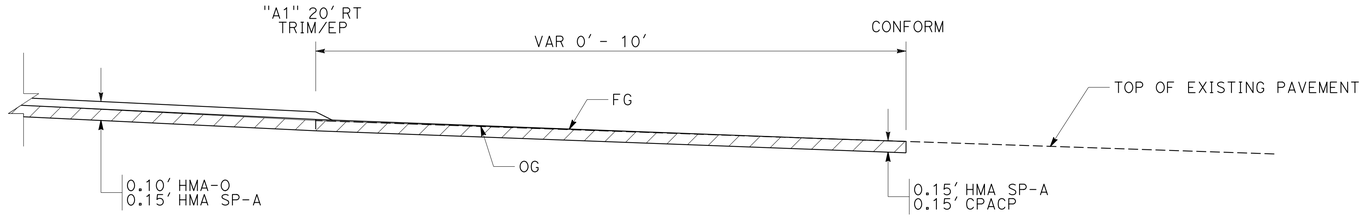

SECTION A-A

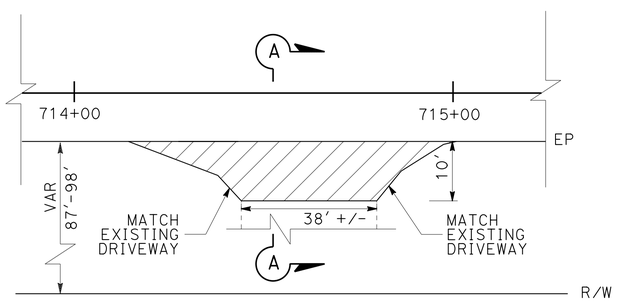

DRIVEWAY PAVING CONFORM

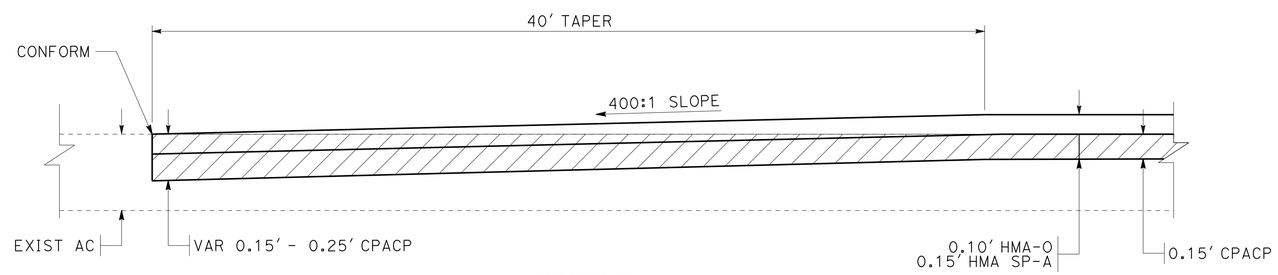

PROFILE

PAVEMENT CONFORM

CONSTRUCTION DETAILS

NO SCALE

C-5

REVISED BY | DATE REVISED
BILL SUTHERLAND | JOHN L. MARTIN
CALCULATED-DESIGNED BY | CHECKED BY
FUNCTIONAL SUPERVISOR: JOHN L. MARTIN
STATE OF CALIFORNIA - DEPARTMENT OF TRANSPORTATION
Caltrans DESIGN
P:\proj1\01\0a360_plans\pse\0100020289ga005.dgn

LAST REVISION | DATE PLOTTED => 12-MAR-2014
11-12-13 | TIME PLOTTED => 07:38

Dist	COUNTY	ROUTE	POST MILES TOTAL PROJECT	SHEET No.	TOTAL SHEETS
01	Hum	299	19.3/19.8	14	56

William D. Sutherland 02-21-14
REGISTERED CIVIL ENGINEER DATE

02-21-14
PLANS APPROVAL DATE

REGISTERED PROFESSIONAL ENGINEER W. D. SUTHERLAND No. C61579 Exp. 06-30-15 CIVIL STATE OF CALIFORNIA

THE STATE OF CALIFORNIA OR ITS OFFICERS OR AGENTS SHALL NOT BE RESPONSIBLE FOR THE ACCURACY OR COMPLETENESS OF SCANNED COPIES OF THIS PLAN SHEET.

NOTES:

1. CENTERLINE RUMBLE STRIP MUST BE CONSTRUCTED PRIOR TO INSTALLING FINAL TRAFFIC STRIPES.

LEGEND:

⇨ DIRECTION OF TRAVEL

RUMBLE STRIP (HMA, GROUND-IN INDENTATIONS)

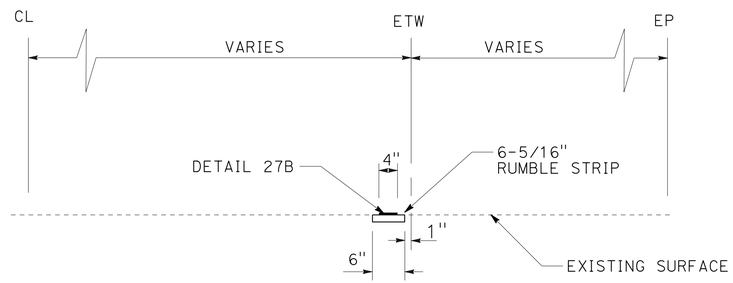

SECTION B-B

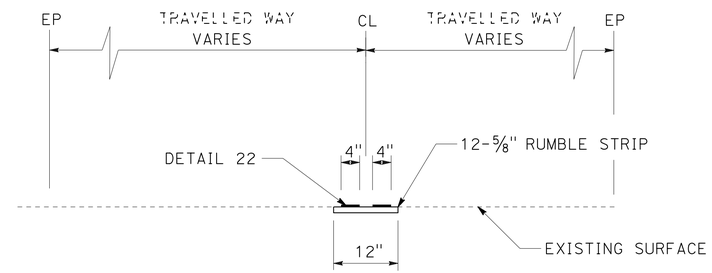

SECTION A-A

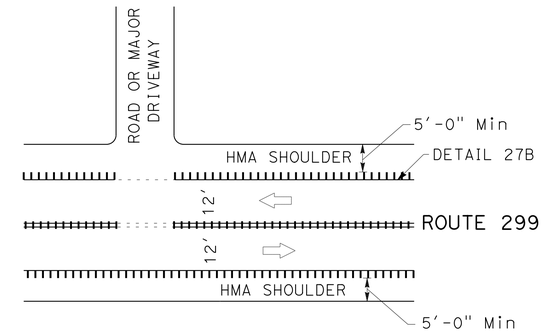

RUMBLE STRIP INTERSECTING ROADS AND MAJOR DRIVEWAYS

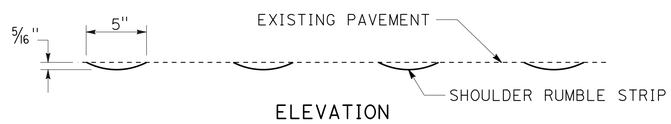

ELEVATION

ELEVATION

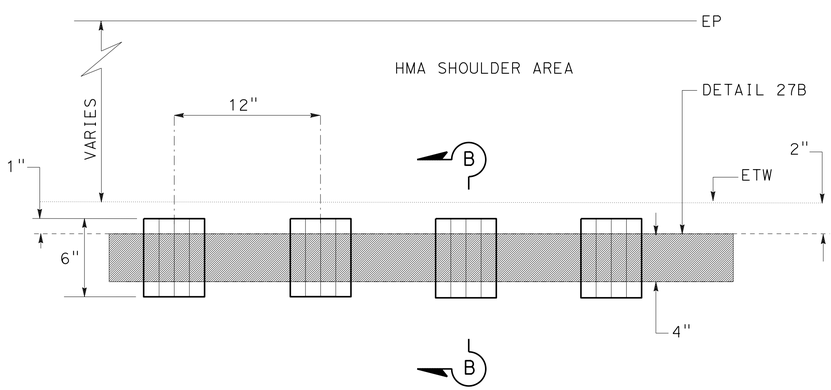

⇦ DIRECTION OF TRAVEL

SHOULDER

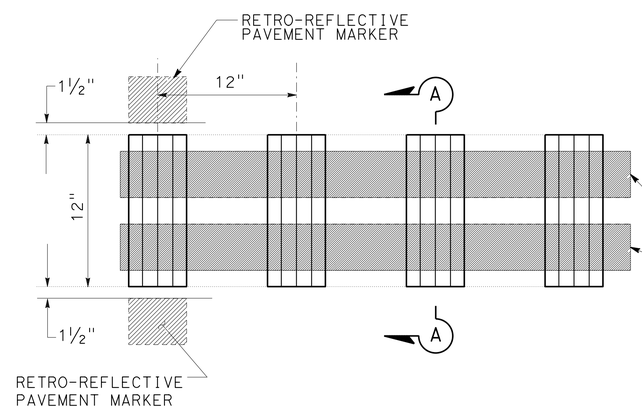

⇦ DIRECTION OF TRAVEL

CENTERLINE

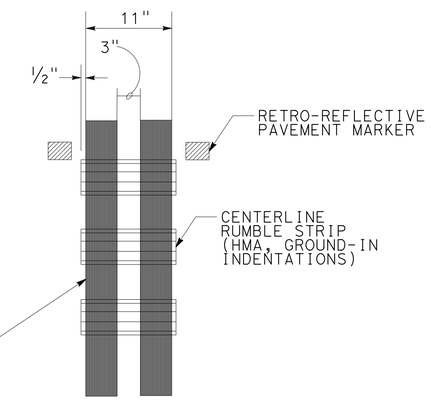

RUMBLE STRIP (HMA, GROUND-IN INDENTATIONS)

CONSTRUCTION DETAILS
NO SCALE

C-6

REVISED BY	DATE REVISED

CALCULATED-DESIGNED BY	CHECKED BY
BILL SUTHERLAND	JOHN MARTIN

FUNCTIONAL SUPERVISOR: JOHN L. MARTIN

STATE OF CALIFORNIA - DEPARTMENT OF TRANSPORTATION
Caltrans
DESIGN

P:\proj1\01\0a360_plans\pse\0100020289ga006.dgn

LAST REVISION 11-12-13 | DATE PLOTTED => 12-MAR-2014 | TIME PLOTTED => 07:38

Dist	COUNTY	ROUTE	POST MILES TOTAL PROJECT	SHEET No.	TOTAL SHEETS
01	Hum	299	19.3/19.8	15	56

REGISTERED CIVIL ENGINEER 02-21-14 DATE

PLANS APPROVAL DATE 02-21-14

REGISTERED PROFESSIONAL ENGINEER ROBERT J. NIXON No. C69123 Exp. 06-30-14 CIVIL STATE OF CALIFORNIA

THE STATE OF CALIFORNIA OR ITS OFFICERS OR AGENTS SHALL NOT BE RESPONSIBLE FOR THE ACCURACY OR COMPLETENESS OF SCANNED COPIES OF THIS PLAN SHEET.

NOTE:

1. FOR ACCURATE RIGHT OF WAY DATA, CONTACT RIGHT OF WAY ENGINEERING AT THE DISTRICT OFFICE.

LEGEND:

- # DRAINAGE SYSTEM NUMBER
- # DRAINAGE UNIT
- C MARKER (CULVERT)

ABBREVIATIONS:

GRE GEOSYNTHETIC REINFORCED EMBANKMENT

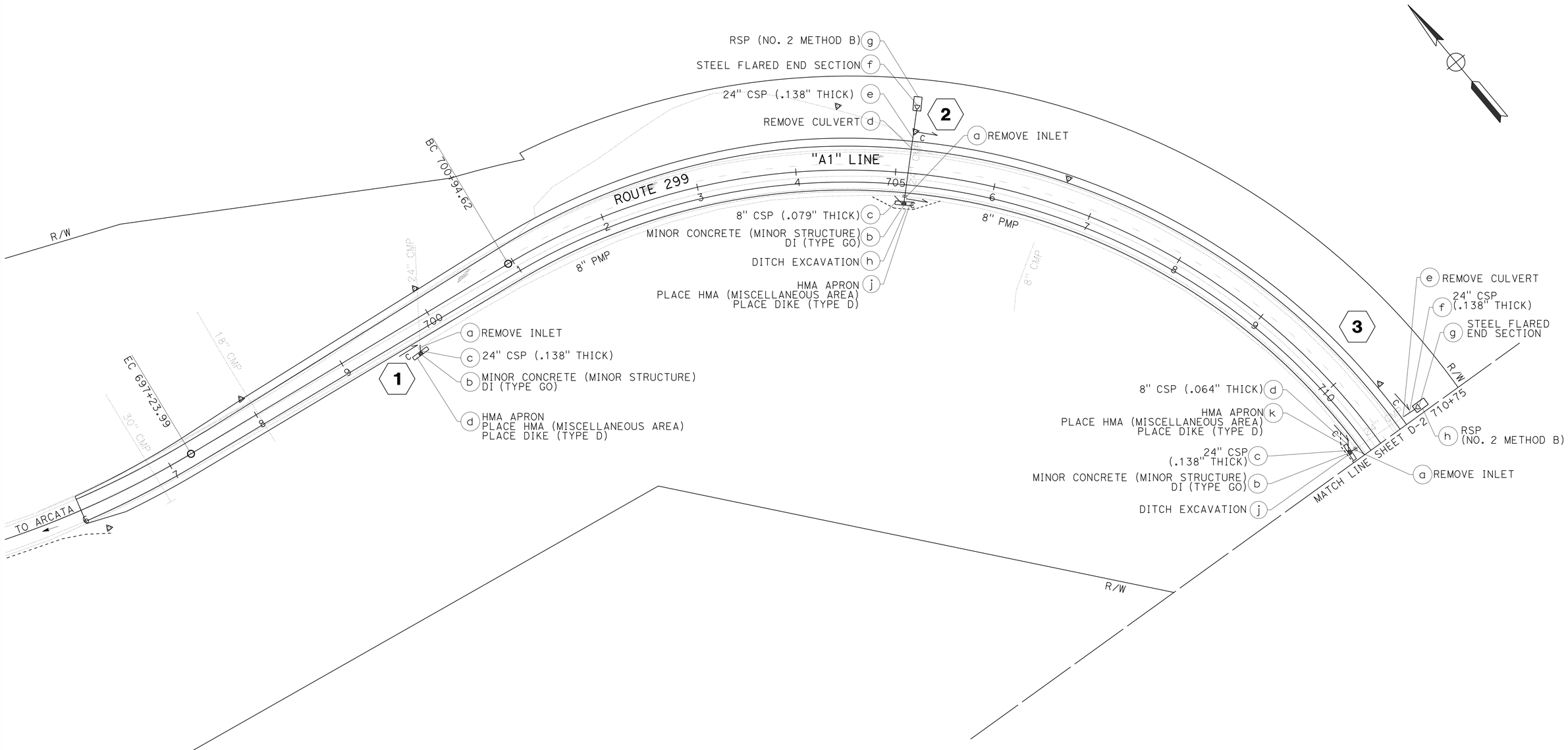

DRAINAGE PLAN

SCALE: 1" = 50'

D-1

APPROVED FOR DRAINAGE WORK ONLY

REVISED BY	DATE REVISED
JOLENA ASTIN	ROBERT NIXON
CALCULATED-DESIGNED BY	CHECKED BY
FUNCTIONAL SUPERVISOR	JOHN L MARTIN

STATE OF CALIFORNIA - DEPARTMENT OF TRANSPORTATION

Caltrans DESIGN

P:\proj1\01\0a360_plans\pse\01000202891a001.dgn

LAST REVISION 10-01-13 | DATE PLOTTED => 12-MAR-2014 | TIME PLOTTED => 07:38

Dist	COUNTY	ROUTE	POST MILES TOTAL PROJECT	SHEET No.	TOTAL SHEETS
01	Hum	299	19.3/19.8	16	56

REGISTERED CIVIL ENGINEER DATE 02-21-14

PLANS APPROVAL DATE 02-21-14

REGISTERED PROFESSIONAL ENGINEER ROBERT J. NIXON No. C69123 Exp. 06-30-14 CIVIL STATE OF CALIFORNIA

THE STATE OF CALIFORNIA OR ITS OFFICERS OR AGENTS SHALL NOT BE RESPONSIBLE FOR THE ACCURACY OR COMPLETENESS OF SCANNED COPIES OF THIS PLAN SHEET.

NOTE:

1. FOR ACCURATE RIGHT OF WAY DATA, CONTACT RIGHT OF WAY ENGINEERING AT THE DISTRICT OFFICE.

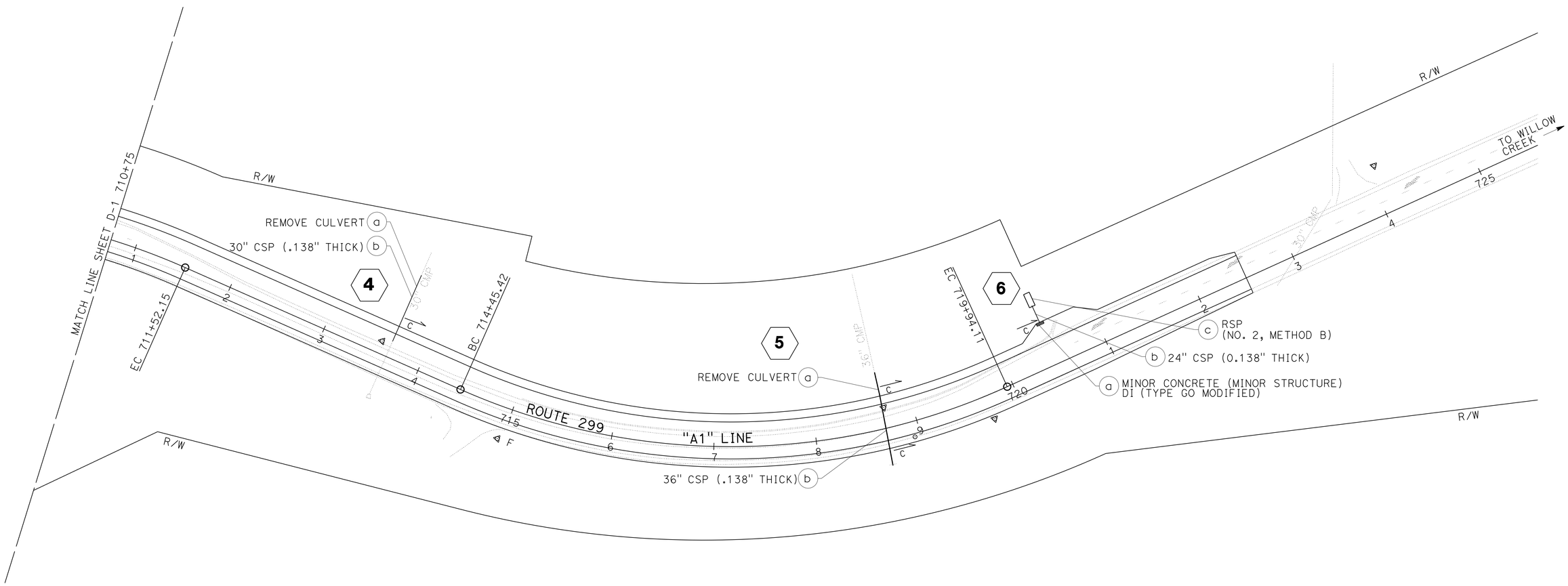

DRAINAGE PLAN

SCALE: 1" = 50'

D-2

APPROVED FOR DRAINAGE WORK ONLY

STATE OF CALIFORNIA - DEPARTMENT OF TRANSPORTATION

Caltrans DESIGN

FUNCTIONAL SUPERVISOR: JOHN L MARTIN

CALCULATED-DESIGNED BY: JOLENA ASTIN

CHECKED BY: ROBERT NIXON

REVISED BY / DATE REVISED

P:\proj1\01\0a360_plans\pse\01000202891a002.dgn

LAST REVISION 10-01-13 | DATE PLOTTED => 12-MAR-2014 | TIME PLOTTED => 07:38

Dist	COUNTY	ROUTE	POST MILES TOTAL PROJECT	SHEET No.	TOTAL SHEETS
01	Hum	299	19.3/19.8	17	56

REGISTERED CIVIL ENGINEER DATE 02-21-14

PLANS APPROVAL DATE 02-21-14

REGISTERED PROFESSIONAL ENGINEER ROBERT J. NIXON No. C69123 Exp. 06-30-14 CIVIL STATE OF CALIFORNIA

THE STATE OF CALIFORNIA OR ITS OFFICERS OR AGENTS SHALL NOT BE RESPONSIBLE FOR THE ACCURACY OR COMPLETENESS OF SCANNED COPIES OF THIS PLAN SHEET.

NOTES:

1. ELEVATION OF UNDERDRAIN TO BE DETERMINED IN THE FIELD BY THE ENGINEER.
2. CONTROL POINT FOR PLACEMENT OF DRAINAGE INLET SHALL BE THE CENTER-CENTER OF DI OR CENTER OF DRAINAGE INLET AT GFL. SEE SPECIFIC PROFILE FOR DETAILS AND DD-1 SHEET.
3. FOR STANDARD CORRUGATED STEEL PIPE COUPLING DETAILS. SEE STANDARD PLANS D97A, D97C, D97D, D97F AND D97G.
4. FOR RSP (NO.2, METHOD B) DETAILS, SEE DD-1 SHEET.
5. ANCHOR ASSEMBLY SHOWN APPROXIMATE, EXACT LOCATION TO BE DETERMINED BY THE ENGINEER.
6. ALL PIPES SHALL HAVE POSITIVE WATER TIGHT JOINTS.
7. PIPE ELBOW ANGLES SHALL BE FIELD VERIFIED PRIOR TO FABRICATION.
8. FOR DIKE DETAILS SEE SHEET C-5, TRANSITION HMA DIKE (TYPE D) TO DI
9. FOR HMA APRON DETAILS, SEE STANDARD PLANS D78C, TYPE GO AND GDO INLET GRADE SAG

ABBREVIATIONS:

GRE GEOSYNTHETIC REINFORCED EMBANKMENT

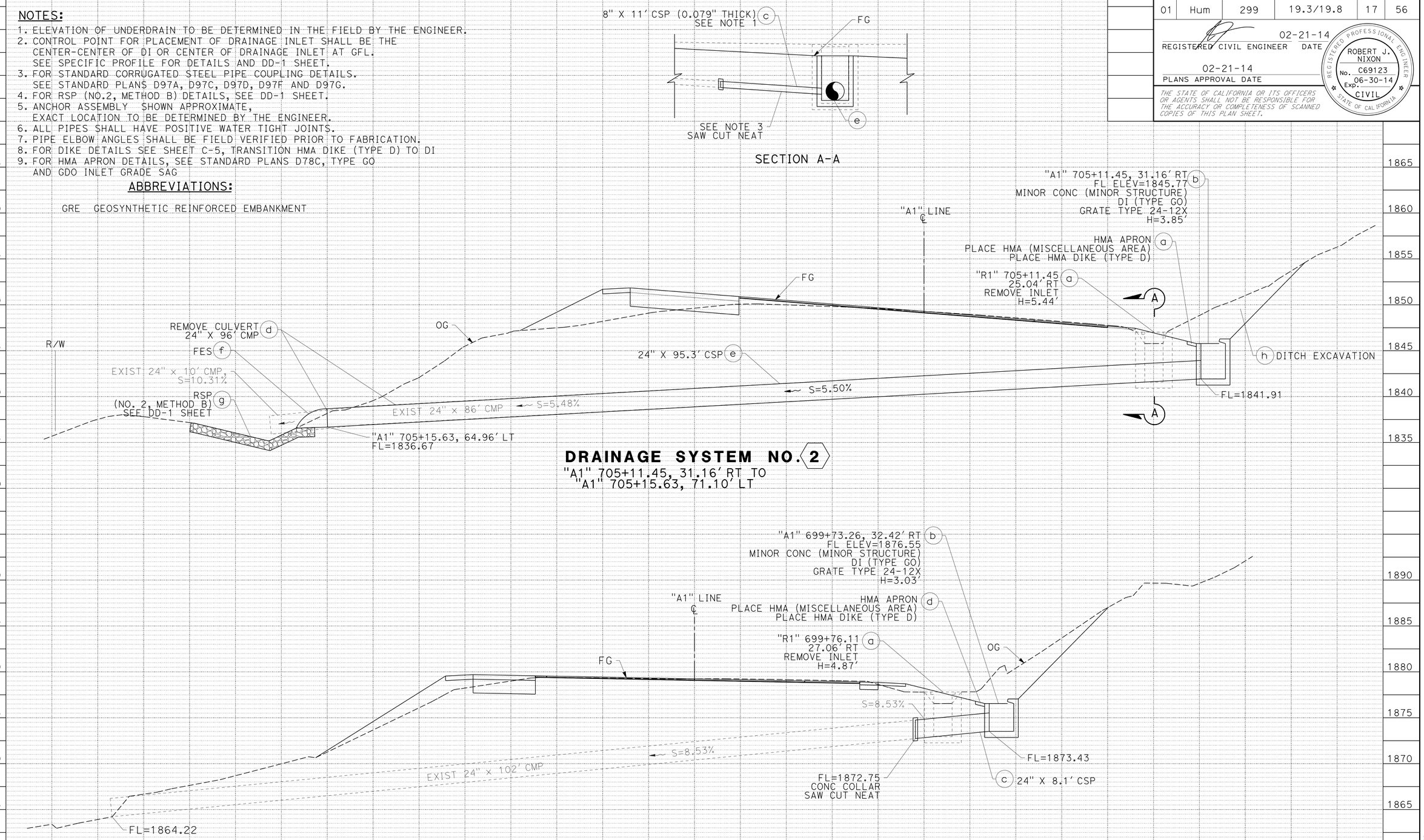

DRAINAGE PROFILES

SCALE: 1" = 5' HORIZ
1" = 5' VERT

DP-1

REVISED BY | DATE REVISED

JOLENA ASTIN | ROBERT NIXON

CALCULATED-DESIGNED BY | CHECKED BY

FUNCTIONAL SUPERVISOR: JOHN L MARTIN

STATE OF CALIFORNIA - DEPARTMENT OF TRANSPORTATION

Caltrans® DESIGN

P:\proj1\01\0a360\plans\pse\0100020289ib001.dgn

LAST REVISION 10-01-13 | DATE PLOTTED => 12-MAR-2014 | TIME PLOTTED => 07:38

Dist	COUNTY	ROUTE	POST MILES TOTAL PROJECT	SHEET No.	TOTAL SHEETS
01	Hum	299	19.3/19.8	18	56

REGISTERED CIVIL ENGINEER 02-21-14 DATE

PLANS APPROVAL DATE 02-21-14

REGISTERED PROFESSIONAL ENGINEER ROBERT J. NIXON No. C69123 Exp. 06-30-14 CIVIL STATE OF CALIFORNIA

THE STATE OF CALIFORNIA OR ITS OFFICERS OR AGENTS SHALL NOT BE RESPONSIBLE FOR THE ACCURACY OR COMPLETENESS OF SCANNED COPIES OF THIS PLAN SHEET.

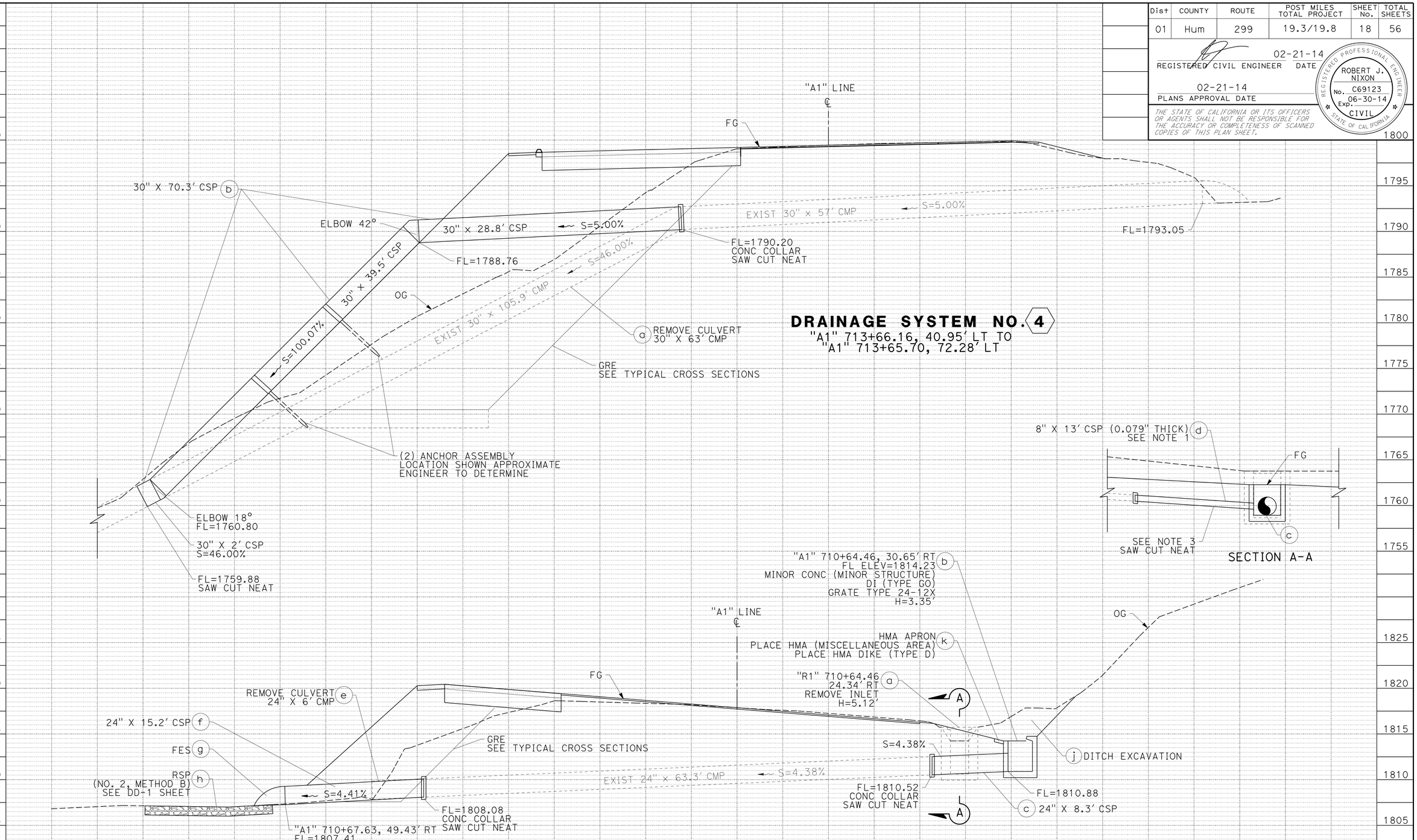

DRAINAGE SYSTEM NO. 4

"A1" 713+66.16, 40.95' LT TO
"A1" 713+65.70, 72.28' LT

DRAINAGE SYSTEM NO. 3

"A1" 710+64.46, 30.65' RT TO
710+67.63, 49.51' LT

DRAINAGE PROFILES

SCALE: 1" = 5' HORIZ
1" = 5' VERT

DP-2

REVISED BY | DATE REVISED
JOLENA ASTIN | ROBERT NIXON
CALCULATED-DESIGNED BY | CHECKED BY
FUNCTIONAL SUPERVISOR: JOHN L MARTIN

STATE OF CALIFORNIA - DEPARTMENT OF TRANSPORTATION
Caltrans
DESIGN

P:\proj\01\0a360_plans\pse\01000202891b002.dgn

LAST REVISION | DATE PLOTTED => 12-MAR-2014 | TIME PLOTTED => 07:38
10-01-13

BORDER LAST REVISED 7/2/2010 | USERNAME => s115152 | DGN FILE => 01000202891b002.dgn | RELATIVE BORDER SCALE IS IN INCHES 0 1 2 3 | UNIT 0315 | PROJECT NUMBER & PHASE 01-0002-0289-1 | EA: 01-0A360

Dist	COUNTY	ROUTE	POST MILES TOTAL PROJECT	SHEET No.	TOTAL SHEETS
01	Hum	299	19.3/19.8	19	56

REGISTERED CIVIL ENGINEER DATE 02-21-14

PLANS APPROVAL DATE 02-21-14

REGISTERED PROFESSIONAL ENGINEER ROBERT J. NIXON No. C69123 Exp. 06-30-14 CIVIL STATE OF CALIFORNIA

THE STATE OF CALIFORNIA OR ITS OFFICERS OR AGENTS SHALL NOT BE RESPONSIBLE FOR THE ACCURACY OR COMPLETENESS OF SCANNED COPIES OF THIS PLAN SHEET.

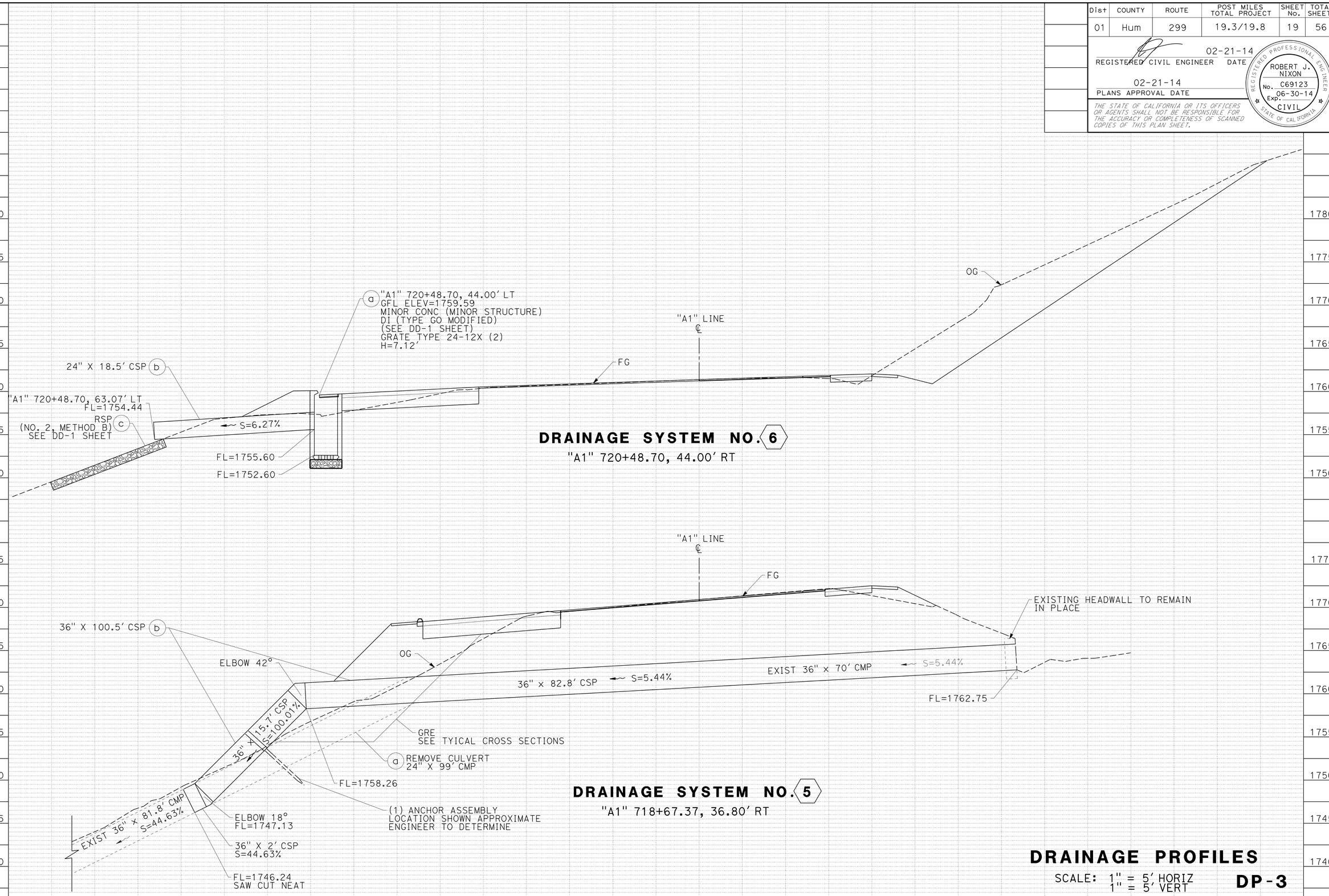

DRAINAGE PROFILES

SCALE: 1" = 5' HORIZ
1" = 5' VERT

DP-3

REVISED BY | DATE REVISED

JOLENA ASTIN | ROBERT NIXON

CALCULATED-DESIGNED BY | CHECKED BY

FUNCTIONAL SUPERVISOR: JOHN L MARTIN

STATE OF CALIFORNIA - DEPARTMENT OF TRANSPORTATION

DESIGN

Caltrans

P:\proj\01\0a360_plans\pse\0100020289ib003.dgn

LAST REVISION 10-09-13 | DATE PLOTTED => 12-MAR-2014 | TIME PLOTTED => 07:38

Dist	COUNTY	ROUTE	POST MILES TOTAL PROJECT	SHEET No.	TOTAL SHEETS
01	Hum	299	19.3/19.8	20	56

REGISTERED CIVIL ENGINEER 02-21-14 DATE

02-21-14
PLANS APPROVAL DATE

REGISTERED PROFESSIONAL ENGINEER ROBERT J. NIXON No. C69123 Exp. 06-30-14 CIVIL STATE OF CALIFORNIA

THE STATE OF CALIFORNIA OR ITS OFFICERS OR AGENTS SHALL NOT BE RESPONSIBLE FOR THE ACCURACY OR COMPLETENESS OF SCANNED COPIES OF THIS PLAN SHEET.

NOTES:

1. FOR DETAILS NOT SHOWN, SEE STANDARD PLAN D74B FOR TYPE GO AND REVISED STANDARD PLAN D73 FOR TYPE G1 DRAINAGE INLETS.
2. FOR FRAME AND GRATE DETAILS, SEE REVISED STANDARD PLANS D77A AND D77B.

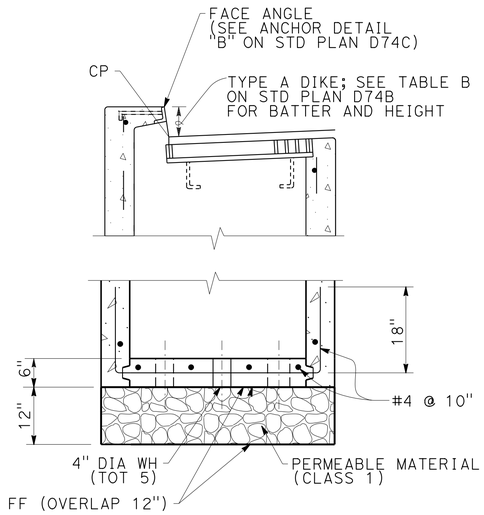

SECTION E-E

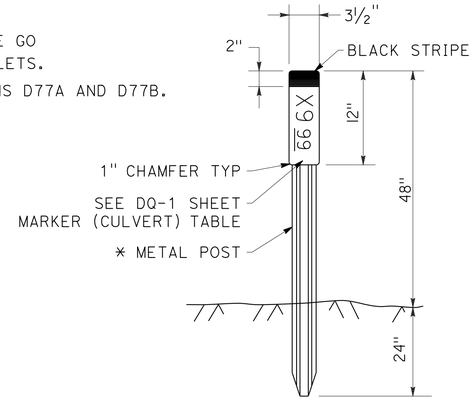

* SEE STANDARD PLAN A73B FOR METAL POST DETAILS

CULVERT MARKER

ROCK SLOPE PROTECTION LOCATION AND VARIABLES

DRAINAGE SYSTEM No.	CP STATION & OFFSET	VARIABLE "A" FT	"B" FT	"C" FT	"Z"	NOTES
2 (g)	"A1" 705+15.21, 69.96' LT	2.0	3.3	8.7	MATCH PIPE SLOPE	FG ELEV TO CONFORM WITH EXIST
3 (h)	"A1" 710+68.06, 54.52' LT	2.0	2.8	9.2	MATCH PIPE SLOPE	FG ELEV TO CONFORM WITH EXIST
6 (c)	"A1" 720+48.70, 68.00' LT	1.0	0	13.0	MATCH EXIST	FG ELEV TO CONFORM WITH EXIST

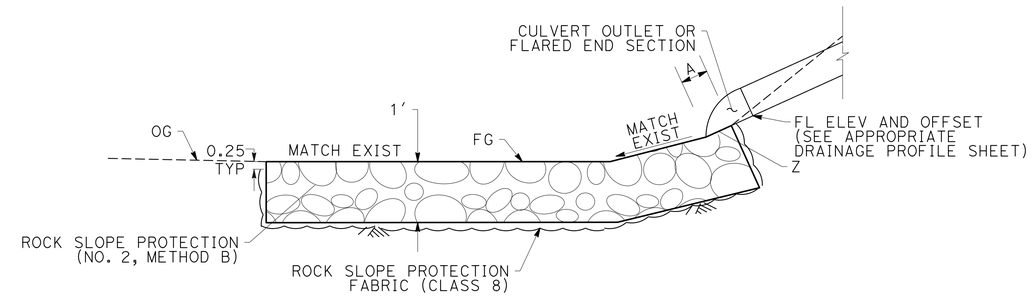

SECTION A-A

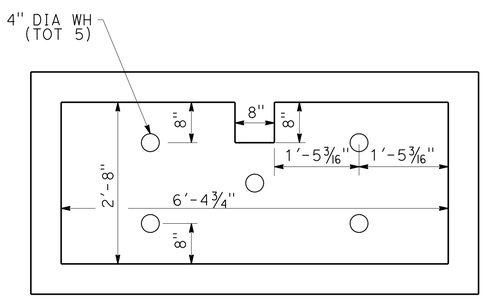

SECTION D-D

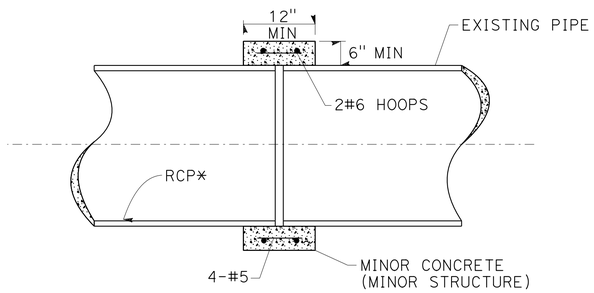

CONCRETE COLLAR DETAIL

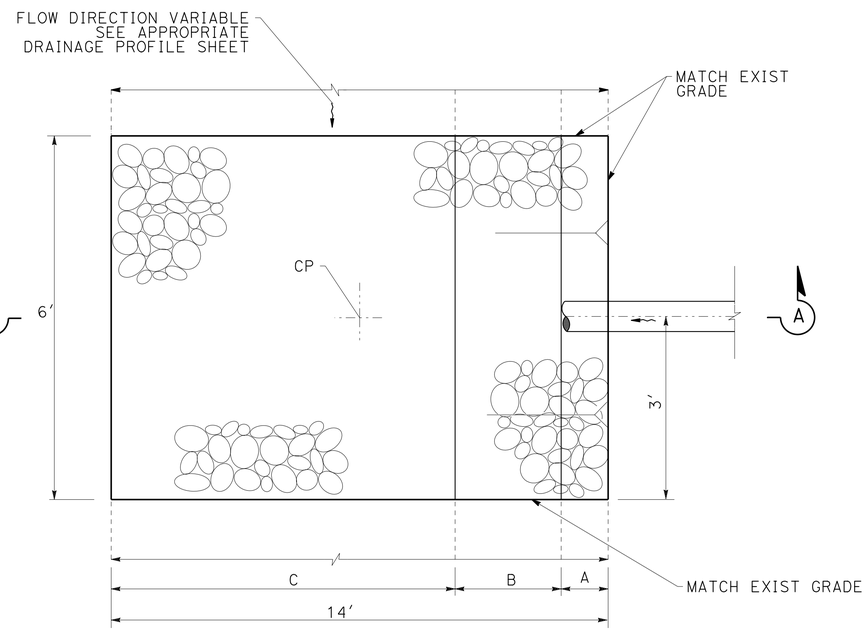

PLAN

ROCK SLOPE PROTECTION

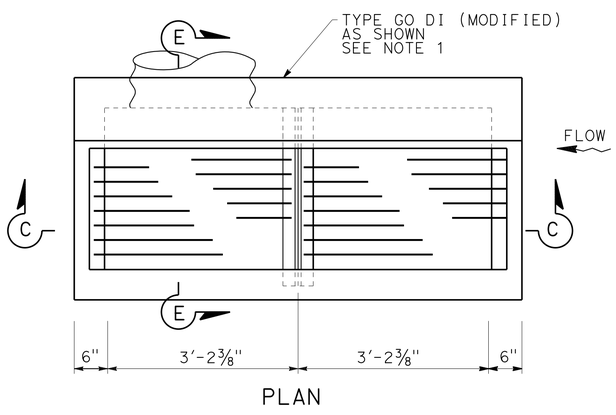

PLAN

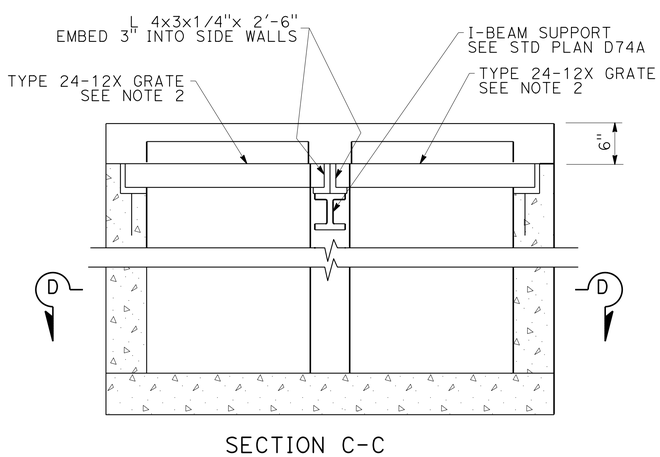

SECTION C-C

TYPE G0 INLET (MODIFIED)

DRAINAGE DETAILS

NO SCALE

DD-1

REVISED BY | DATE REVISED
JOLENA ASTIN | ROBERT NIXON
CALCULATED-DESIGNED BY | CHECKED BY
FUNCTIONAL SUPERVISOR | JOHN L MARTIN

STATE OF CALIFORNIA - DEPARTMENT OF TRANSPORTATION
Caltrans DESIGN

P:\proj1\01\0a360_plans\pse\0100020289ic001.dgn

LAST REVISION 10-01-13 | DATE PLOTTED => 12-MAR-2014 | TIME PLOTTED => 07:38

Dist	COUNTY	ROUTE	POST MILES TOTAL PROJECT	SHEET No.	TOTAL SHEETS
01	Hum	299	19.3/19.8	21	56

REGISTERED CIVIL ENGINEER 02-21-14 DATE

02-21-14
PLANS APPROVAL DATE

REGISTERED PROFESSIONAL ENGINEER ROBERT J. NIXON No. C69123 Exp. 06-30-14 CIVIL STATE OF CALIFORNIA

THE STATE OF CALIFORNIA OR ITS OFFICERS OR AGENTS SHALL NOT BE RESPONSIBLE FOR THE ACCURACY OR COMPLETENESS OF SCANNED COPIES OF THIS PLAN SHEET.

NOTE:
1. (N) NOT A SEPARATE PAY ITEM, FOR INFORMATION ONLY.

MARKER (CULVERT)

DRAINAGE SYSTEM NO. AND UNIT NO.	ALIGNMENT	STATION	POST MILE	LEFT	RIGHT	MARKER (CULVERT) EA
1c	"A1"	699+73.26	19.37		X	1
2e	"A1"	705+11.45	19.48	X	X	2
3c,3f	"A1"	710+64.46	19.57	X	X	2
4b	"A1"	713+66.16	19.63	X		1
5b	"A1"	718+67.37	19.72	X	X	2
6b	"A1"	720+48.70	19.72	X		1
				TOTAL		9

DRAINAGE QUANTITIES

DRAINAGE PROFILE SHEET NO.	# DRAINAGE SYSTEM NO.	# DRAINAGE UNIT NO.	REMOVE CULVERT (LF)	REMOVE INLET	DITCH EXCAVATION	HMA, SUPERPAVE (TYPE A)	PLACE HMA DIKE (TYPE D)	PLACE HMA (MISCELLANEOUS AREA)	MINOR CONCRETE (MINOR STRUCTURE)	8" CORRUGATED STEEL PIPE (0.079" THICK)	24" CORRUGATED STEEL PIPE (.138" THICK)	30" CORRUGATED STEEL PIPE (.138" THICK)	36" CORRUGATED STEEL PIPE (.138" THICK)	ANCHOR ASSEMBLY	24" STEEL FLARED END SECTION	ROCK SLOPE PROTECTION (NO. 2, METHOD B) (CY)	ROCK SLOPE PROTECTION FABRIC (CLASS 8)	MISCELLANEOUS IRON AND STEEL	(N) PERMEABLE MATERIAL CLASS 1 (BLANKET)	(N) FILTER FABRIC	(N) DI HEIGHT	MAX COVER	# DRAINAGE SYSTEM NO.	# DRAINAGE UNIT NO.	ALIGNMENT	STATION	DESCRIPTION
			LF	EA	CY	TON	LF	SQYD	CY	LF	LF	LF	LF	EA	EA	CY	SQYD	LB	CY	SQYD	FT	FT					
DP-1	1	a		1																	4.87		1	a	A1	699+76.11	REMOVE INLET (TYPE DROP INLET, H=4.87′)
DP-1	1	b							1.3									239			3.03		1	b	A1	699+73.26	DI TYPE G1, W/ (1) GRATE TYPE 24-12X (H=3.03′)
DP-1	1	c							0.2		8.1											4.04	1	c	A1	699+73.26	24" X 8.1′ CSP, CONC COLLAR
DP-1	1	d				2	14	8															1	d	A1	699+73.26	HMA APRON, PLACE HMA (MISC AREA), PLACE HMA DIKE
DP-1	2	a		1																	5.44		2	a	A1	705+11.45	REMOVE INLET (TYPE DROP INLET, H=5.44′)
DP-1	2	b							1.4									239			3.85		2	b	A1	705+11.45	DI TYPE G1, W/ (1) GRATE TYPE 24-12X (H=3.85′)
DP-1	2	c								11.0													2	c	A1	705+11.45	8" X 11.0′ CSP
DP-1	2	d	96																			11.30	2	d	A1	705+11.45	REMOVE CULVERT 24" X 96′ CMP
DP-1	2	e									95.3											11.30	2	e	A1	705+11.45	24" X 95.3′ CSP
DP-1	2	f													1								2	f	A1	705+11.45	STEEL FLARED END SECTION
DP-1	2	g														3.1	14.2						2	g	A1	705+11.45	RSP (NO. 2, METHOD B) 6′ X 14′ X 1′, RSP FABRIC
DP-1	2	h			33																		2	h	A1	705+11.45	DITCH EXCAVATION
DP-1	2	j				2	14	8															2	j	A1	705+11.45	HMA APRON, PLACE HMA (MISC AREA), PLACE HMA DIKE
DP-2	3	a		1																	5.12		3	a	A1	710+64.46	REMOVE INLET (TYPE DROP INLET, H=5.12′)
DP-2	3	b							1.3									239			3.35		3	b	A1	710+64.46	DI TYPE G1, W/ (1) GRATE TYPE 24-12X (H=3.35′)
DP-2	3	c							0.2		8.3											3.63	3	c	A1	710+64.46	24" X 8.3′ CSP, CONC COLLAR
DP-2	3	d								13.0													3	d	A1	710+64.46	8" X 13′ CSP
DP-2	3	e	6																			3.93	3	e	A1	710+67.63	REMOVE CULVERT 24" X 6′ CMP
DP-2	3	f							0.2		15.2											10.23	3	f	A1	710+67.63	24" X 15.2′ CSP, CONC COLLAR
DP-2	3	g													1								3	g	A1	710+67.63	STEEL FLARED END SECTION
DP-2	3	h														3.1	14.2						3	h	A1	710+67.63	RSP (NO. 2, METHOD B) 6′ X 14′ X 1′, RSP FABRIC
DP-2	3	J			65																		3	j	A1	710+67.63	DITCH EXCAVATION
DP-2	3	K				2	14	8															3	k	A1	710+67.63	PLACE HMA, PLACE HMA (MISC AREA), PLACE HMA DIKE
DP-2	4	a	63																			3.59	4	a	A1	713+66.16	REMOVE CULVERT 30" X 63′ CMP
DP-2	4	b							0.2			70.3		2								6.76	4	b	A1	713+66.16	30" X 70.3′ CSP, CONC COLLAR, ANCHOR ASSEMBLY
DP-3	5	a	99																			0.46	5	a	A1	718+67.37	REMOVE CULVERT 36" X 99′ CMP
DP-3	5	b							0.2				100.5	1									5	b	A1	718+67.37	36" X 100.5′ CSP, CONC COLLAR, ANCHOR ASSEMBLY
DP-3	6	a							4.6									473	1.0	2.6	7.12		6	a	A1	720+48.70	DI TYPE GO (MODIFIED), W/ (2) GRATE TYPE 24-12X (H=7.12′)
DP-3	6	b									18.5											2.63	6	b	A1	720+48.70	24" X 18.5′ CSP
DP-3	6	c														3.1	14.2						6	c	A1	720+48.70	RSP (NO. 2, METHOD B) 6′ X 14′ X 1′, RSP FABRIC
TOTAL			264	3	98	6*	42*	24*	9.6	24.0	145.4	70.3	100.5	3	2	9.3*	42.6*	1190	1.0	2.6							

*ADDITIONAL QUANTITIES SHOWN ELSEWHERE
SEE SHEET Q-1, SCQ-1

DRAINAGE QUANTITIES

DQ-1

STATE OF CALIFORNIA - DEPARTMENT OF TRANSPORTATION
Caltrans DESIGN

FUNCTIONAL SUPERVISOR: JOHN L MARTIN
CALCULATED-DESIGNED BY: JOLENA ASTIN
CHECKED BY: ROBERT NIXON
REVISED BY / DATE REVISED

P:\proj1\01\0a360_plans\pse\01000202891d001.dgn

LAST REVISION DATE PLOTTED => 12-MAR-2014
TIME PLOTTED => 07:38

Dist	COUNTY	ROUTE	POST MILES TOTAL PROJECT	SHEET No.	TOTAL SHEETS
01	Hum	299	19.3/19.8	22	56

REGISTERED CIVIL ENGINEER 02-21-14 DATE

02-21-14
PLANS APPROVAL DATE

REGISTERED PROFESSIONAL ENGINEER J.L. MARTIN No. C47576 Exp. 12-31-15 CIVIL STATE OF CALIFORNIA

THE STATE OF CALIFORNIA OR ITS OFFICERS OR AGENTS SHALL NOT BE RESPONSIBLE FOR THE ACCURACY OR COMPLETENESS OF SCANNED COPIES OF THIS PLAN SHEET.

NOTES:

1. EXACT LOCATION OF ALL SIGNS TO BE DETERMINED BY THE ENGINEER.
2. CALIFORNIA CODES ARE DESIGNATED BY (CA), OTHERWISE FEDERAL CODES ARE SHOWN.
3. ALL CONSTRUCTION AREA SIGNS EXCEPT C40(CA) SHALL HAVE A BLACK LEGEND WITH AN ORANGE BACKGROUND.
4. FOR ADDITIONAL CONSTRUCTION AREA SIGNS SEE STAGE CONSTRUCTION AND TRAFFIC TRAFFIC HANDLING PLANS.

CONSTRUCTION AREA SIGNS (STATIONARY MOUNTED)

◯	TYPE	PANEL SIZE	SIGN MESSAGE	NUMBER AND SIZE OF POSTS	No. OF SIGNS
A	W20-1 C23B(CA)	36" x 36" 36" x 18"	ROAD WORK AHEAD HIGHWAY WIDENING	1 - 4" x 6"	2
B	C40(CA)	108" x 42"	TRAFFIC FINES DOUBLED IN CONSTRUCTION ZONES	2 - 6" x 6"	2
C	G20-2	36" x 18"	END ROAD WORK	1 - 4" x 4"	2
D	W11-1 W16-1	36" x 36" 24" x 30"	BICYCLE (SYMBOL) SHARE THE ROAD	1 - 4" x 6"	2
E	W20-1	36" x 36"	ROAD WORK AHEAD	1 - 4" x 6"	1

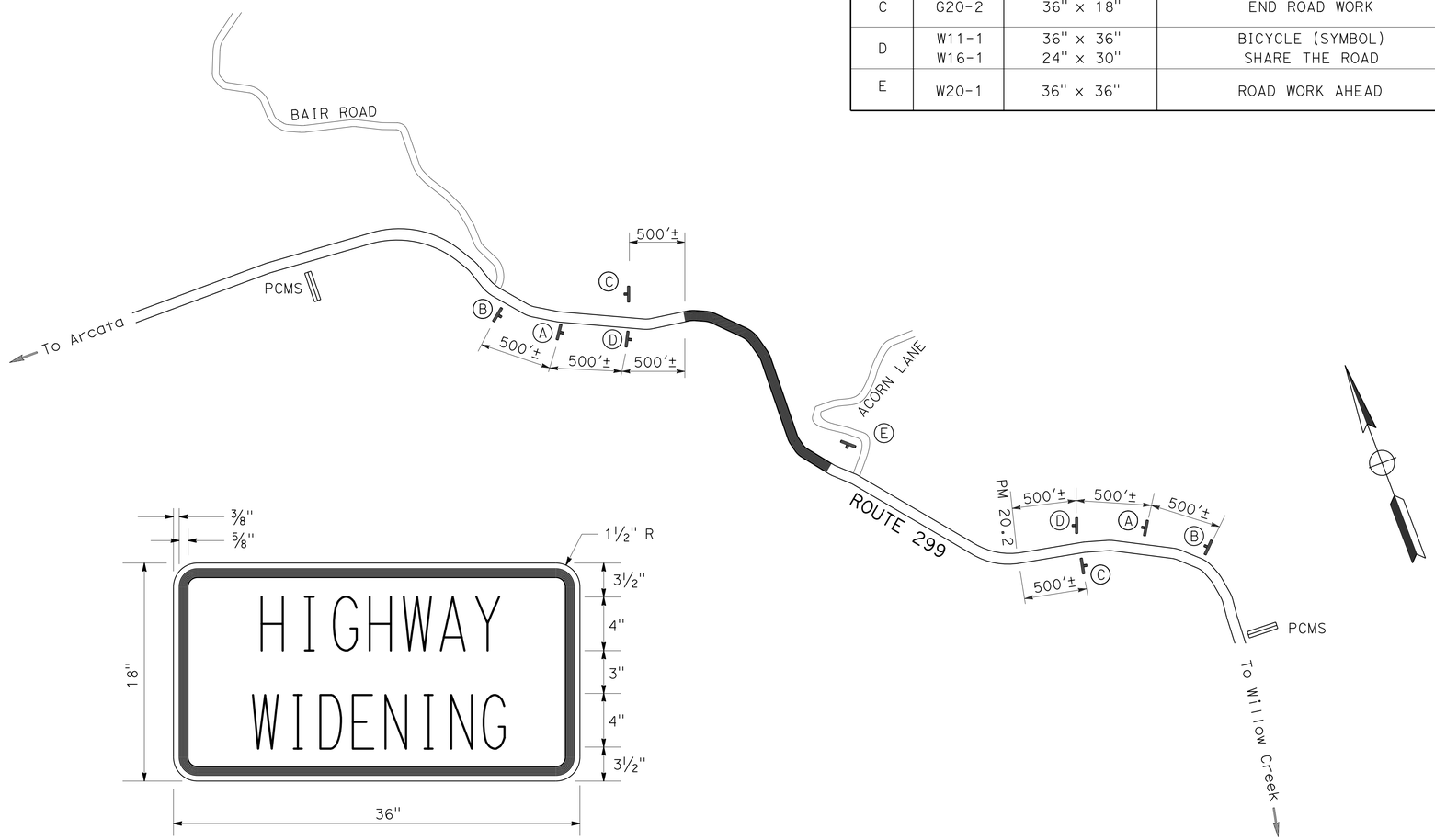

C23B(CA) SIGN PANEL DETAIL
TYPE "C" LETTERING

CONSTRUCTION AREA SIGNS

NO SCALE

CS-1

REVISED BY | DATE REVISED
BILL SUTHERLAND | JOHN MARTIN
CALCULATED-DESIGNED BY | CHECKED BY
FUNCTIONAL SUPERVISOR: JOHN L. MARTIN
STATE OF CALIFORNIA - DEPARTMENT OF TRANSPORTATION
Caltrans DESIGN
P:\proj1\01\0a360_plans\pse\01000202891a001.dgn

LAST REVISION | DATE PLOTTED => 12-MAR-2014 | TIME PLOTTED => 07:38
07-02-13

BORDER LAST REVISED 7/2/2010 | USERNAME => s115152 | DGN FILE => 01000202891a001.dgn | RELATIVE BORDER SCALE IS IN INCHES 0 1 2 3 | UNIT 0315 | PROJECT NUMBER & PHASE 01-0002-0289-1 | EA: 01-0A360

Dist	COUNTY	ROUTE	POST MILES TOTAL PROJECT	SHEET No.	TOTAL SHEETS
01	Hum	299	19.3/19.8	23	56

REGISTERED CIVIL ENGINEER 02-21-14 DATE

02-21-14
PLANS APPROVAL DATE

REGISTERED PROFESSIONAL ENGINEER J.L. MARTIN No. C47576 Exp. 12-31-15 CIVIL STATE OF CALIFORNIA

THE STATE OF CALIFORNIA OR ITS OFFICERS OR AGENTS SHALL NOT BE RESPONSIBLE FOR THE ACCURACY OR COMPLETENESS OF SCANNED COPIES OF THIS PLAN SHEET.

NOTES:

1. FOR ACCURATE RIGHT OF WAY DATA, CONTACT RIGHT OF WAY ENGINEERING AT THE DISTRICT OFFICE.
2. CALIFORNIA SIGN CODES ARE DESIGNATED BY (CA), OTHERWISE, FEDERAL MUTCD SIGN CODES ARE SHOWN.
3. EXACT SIGN LOCATIONS TO BE DETERMINED BY ENGINEER.

LEGEND:

- WORK AREA
- TEMPORARY RAILING (TYPE K)
- TEMPORARY PAVEMENT DELINEATION DETAIL NUMBER
- CHANGE IN TRAFFIC STRIPE
- TEMPORARY CRASH CUSHION
- CHANNELIZER (SURFACE MOUNTED)
- CONSTRUCTION AREA SIGN (PORTABLE)
- DIRECTION OF TRAFFIC

ABBREVIATIONS:

REM STRIPE	REMOVE THERMOPLASTIC TRAFFIC STRIPE
CPACP	COLD PLANE ASPHALT CONCRETE PAVEMENT
HMA-SP-A	HMA, SUPERPAVE (TYPE A)

STAGE 1 TRAFFIC HANDLING AND CONSTRUCTION

PLACE CONSTRUCTION AREA SIGNS

REMOVE CENTERLINE RUMBLE STRIP AND PAVEMENT MARKERS

PLACE TEMPORARY TRAFFIC STRIPE, SHIFT TRAFFIC, CLOSE WB NUMBER 2 LANE STATION 698+28 TO 712+20, AND STATION 719+60 TO 740+52

PLACE CHANNELIZER (SURFACE MOUNTED), TEMPORARY RAILING (TYPE K) AND TEMPORARY CRASH CUSHIONS

CONSTRUCT GEOSYNTHETIC REINFORCED EMBANKMENT

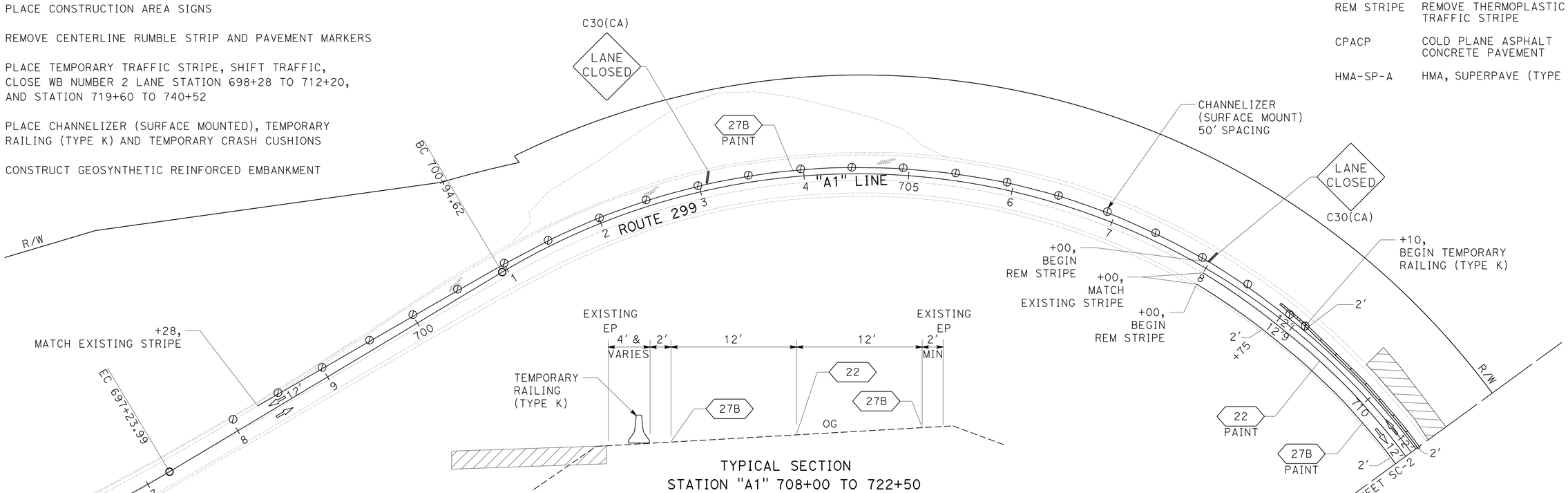

TYPICAL SECTION
STATION "A1" 708+00 TO 722+50

REMOVE CENTERLINE RUMBLE STRIP DETAIL
STATION "A1" 708+00 TO 722+50

TYPICAL SECTION
STATION "A1" 698+00 TO 708+00
STATION "A1" 722+50 TO 740+52

APPROVED FOR STAGE CONSTRUCTION AND TRAFFIC HANDLING WORK ONLY

STAGE 1
STAGE CONSTRUCTION AND TRAFFIC HANDLING PLAN

SCALE: 1" = 50′

SC-1

REVISED BY | DATE REVISED
JOHN MARTIN | ROBERT NIXON
CALCULATED-DESIGNED BY | CHECKED BY
FUNCTIONAL SUPERVISOR: JOHN L. MARTIN
STATE OF CALIFORNIA - DEPARTMENT OF TRANSPORTATION
Caltrans® DESIGN

P:\proj1\01\0a360_plans\pse\0100020289ma001.dgn

LAST REVISION 06-06-12 | DATE PLOTTED => 12-MAR-2014 TIME PLOTTED => 07:38

Dist	COUNTY	ROUTE	POST MILES TOTAL PROJECT	SHEET No.	TOTAL SHEETS
01	Hum	299	19.3/19.8	24	56

REGISTERED CIVIL ENGINEER 02-21-14 DATE

02-21-14
PLANS APPROVAL DATE

REGISTERED PROFESSIONAL ENGINEER J.L. MARTIN No. C47576 Exp. 12-31-15 CIVIL STATE OF CALIFORNIA

THE STATE OF CALIFORNIA OR ITS OFFICERS OR AGENTS SHALL NOT BE RESPONSIBLE FOR THE ACCURACY OR COMPLETENESS OF SCANNED COPIES OF THIS PLAN SHEET.

NOTE:

1. FOR ACCURATE RIGHT OF WAY DATA, CONTACT RIGHT OF WAY ENGINEERING AT THE DISTRICT OFFICE.

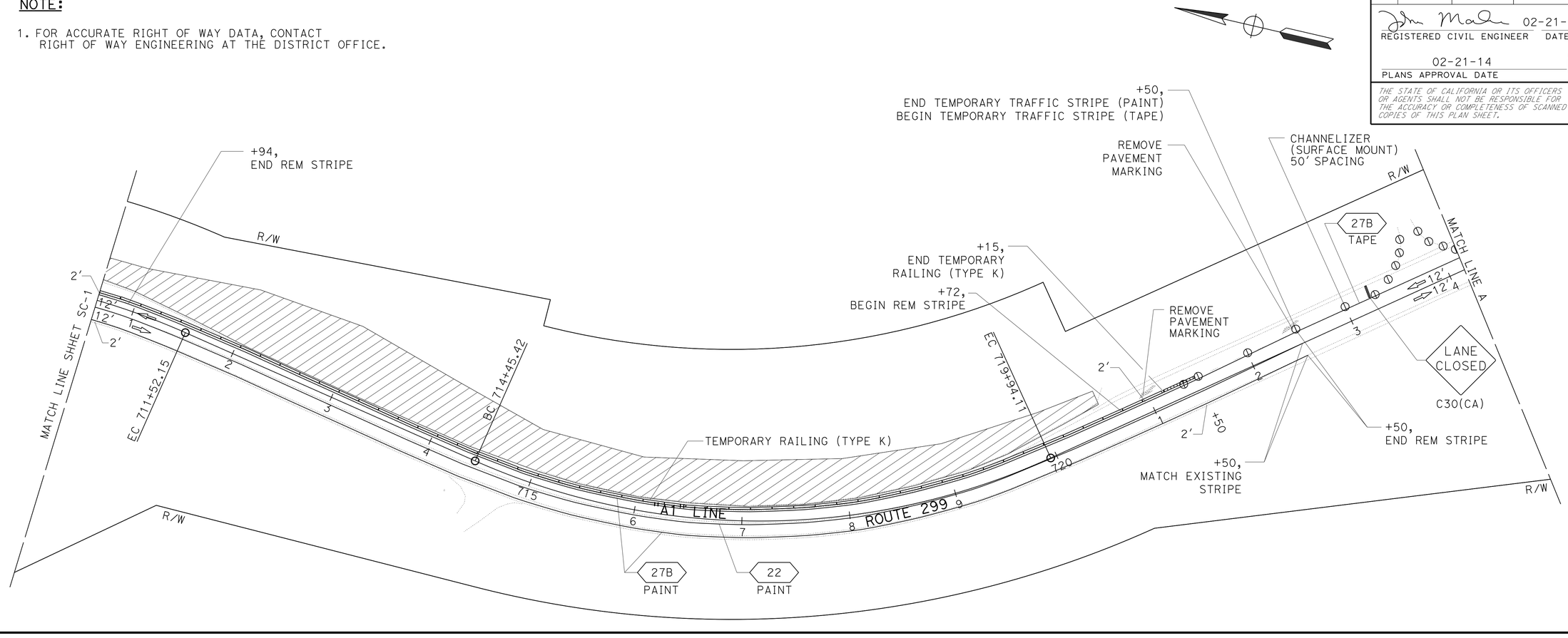

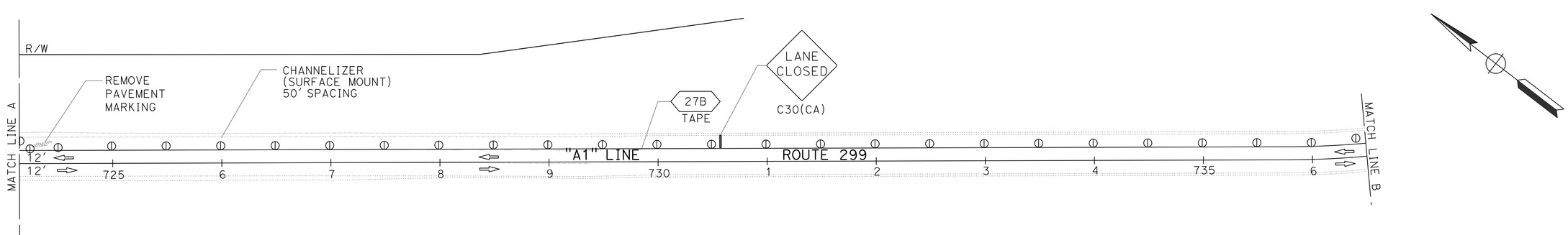

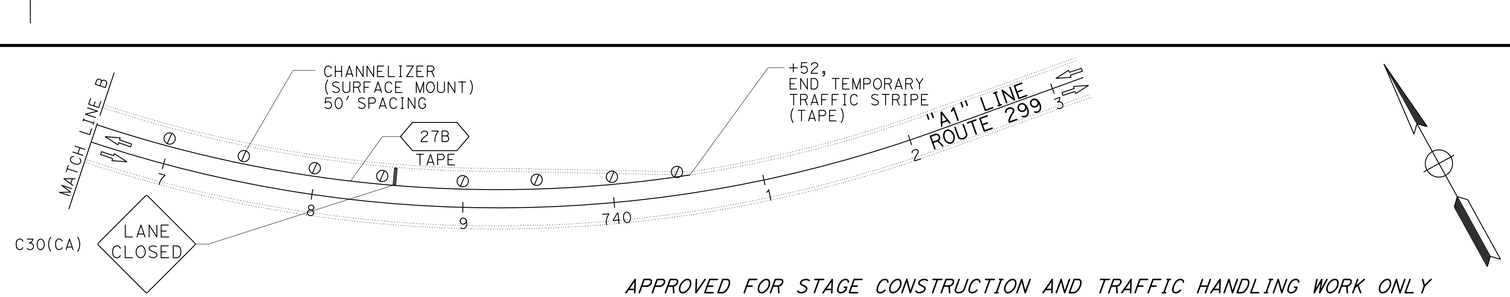

APPROVED FOR STAGE CONSTRUCTION AND TRAFFIC HANDLING WORK ONLY

STAGE 1
STAGE CONSTRUCTION AND TRAFFIC HANDLING PLAN

SCALE: 1" = 50'

SC-2

REVISED BY | DATE REVISED
JOHN MARTIN | ROBERT NIXON
CALCULATED-DESIGNED BY | CHECKED BY
FUNCTIONAL SUPERVISOR: JOHN L. MARTIN

STATE OF CALIFORNIA - DEPARTMENT OF TRANSPORTATION
Caltrans
DESIGN

P:\proj1\01\0a360_plans\pse\0100020289ma002.dgn

LAST REVISION 03-18-12 | DATE PLOTTED => 12-MAR-2014 | TIME PLOTTED => 07:38

Dist	COUNTY	ROUTE	POST MILES TOTAL PROJECT	SHEET No.	TOTAL SHEETS
01	Hum	299	19.3/19.8	25	56

REGISTERED CIVIL ENGINEER 02-21-14 DATE

02-21-14
PLANS APPROVAL DATE

REGISTERED PROFESSIONAL ENGINEER J.L. MARTIN No. C47576 Exp. 12-31-15 CIVIL STATE OF CALIFORNIA

THE STATE OF CALIFORNIA OR ITS OFFICERS OR AGENTS SHALL NOT BE RESPONSIBLE FOR THE ACCURACY OR COMPLETENESS OF SCANNED COPIES OF THIS PLAN SHEET.

STAGE 2 TRAFFIC HANDLING AND CONSTRUCTION

MAINTAIN TEMPORARY TRAFFIC STRIPES, SIGNS AND CHANNELIZERS PLACED IN STAGE 1

REMOVE TEMPORARY RAILING (TYPE K)

COLD PLANE ASPHALT PAVEMENT

PLACE TEMPORARY TRAFFIC STRIPES AND CHANNELIZERS

PLACE VARIABLE DEPTH HMA (TYPE A)

WIDEN PAVEMENT ON LEFT AND RIGHT

PLACE UPPER LAYER OF HMA (TYPE A) AND HMA-O

PLACE PAVEMENT DELINEATION AND SIGNS

NOTE:

1. FOR ACCURATE RIGHT OF WAY DATA, CONTACT RIGHT OF WAY ENGINEERING AT THE DISTRICT OFFICE.

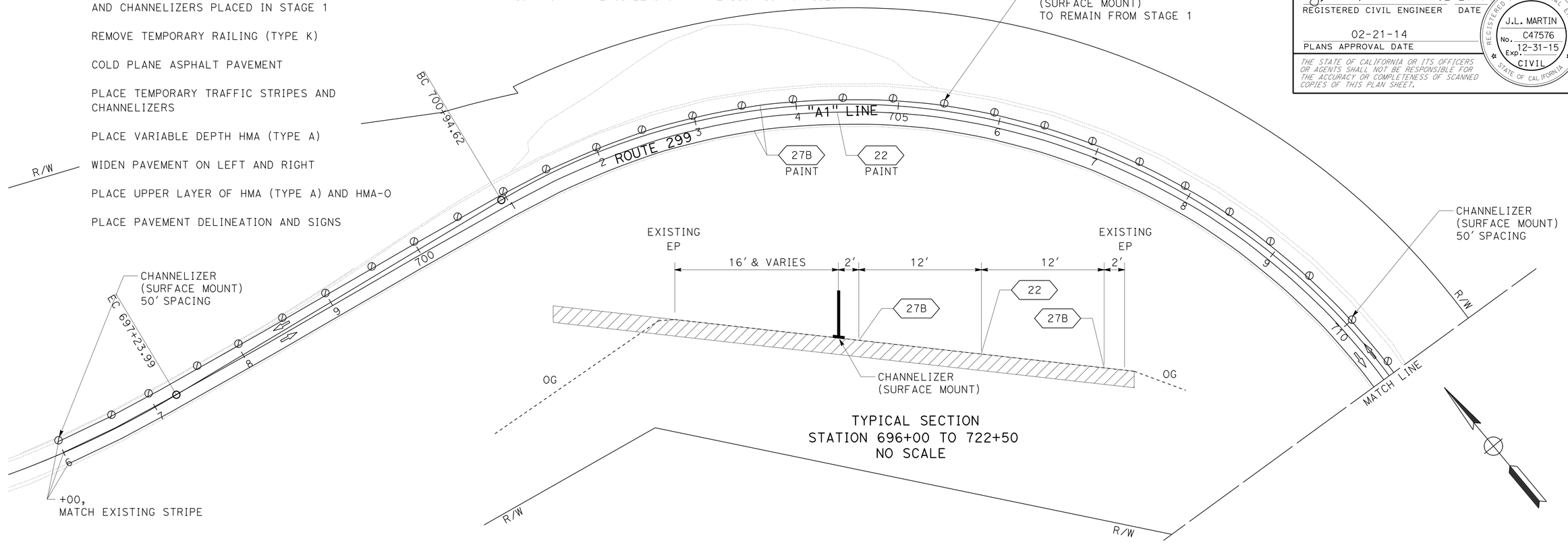

TYPICAL SECTION
STATION 696+00 TO 722+50
NO SCALE

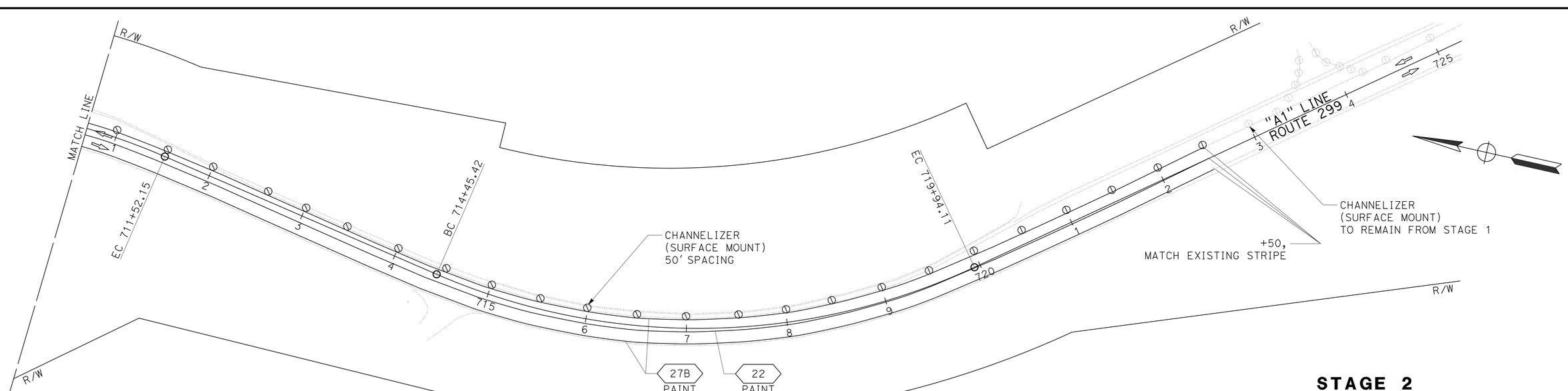

APPROVED FOR STAGE CONSTRUCTION AND TRAFFIC HANDLING WORK ONLY

STAGE 2
STAGE CONSTRUCTION AND TRAFFIC HANDLING PLAN

SCALE: 1" = 50'

SC-3

REVISED BY | DATE REVISED
JOHN MARTIN | ROBERT NIXON
CALCULATED-DESIGNED BY | CHECKED BY
FUNCTIONAL SUPERVISOR: JOHN L. MARTIN

STATE OF CALIFORNIA - DEPARTMENT OF TRANSPORTATION
Caltrans
DESIGN

P:\proj\01\0a360_plans\pse\0100020289ma003.dgn

LAST REVISION 06-06-12 | DATE PLOTTED => 12-MAR-2014 | TIME PLOTTED => 07:38

BORDER LAST REVISED 7/2/2010 | USERNAME => s115152 | DGN FILE => 0100020289ma003.dgn | RELATIVE BORDER SCALE IS IN INCHES 0 1 2 3 | UNIT 0315 | PROJECT NUMBER & PHASE 01-0002-0289-1 | EA: 01-0A360

Dist	COUNTY	ROUTE	POST MILES TOTAL PROJECT	SHEET No.	TOTAL SHEETS
01	Hum	299	19.3/19.8	26	56

REGISTERED CIVIL ENGINEER 02-21-14 DATE

02-21-14
PLANS APPROVAL DATE

REGISTERED PROFESSIONAL ENGINEER J.L. MARTIN No. C47576 Exp. 12-31-15 CIVIL STATE OF CALIFORNIA

THE STATE OF CALIFORNIA OR ITS OFFICERS OR AGENTS SHALL NOT BE RESPONSIBLE FOR THE ACCURACY OR COMPLETENESS OF SCANNED COPIES OF THIS PLAN SHEET.

NOTES:

1. (N) - NOT A SEPARATE PAY ITEM, FOR INFORMATION ONLY
2. FOR ADDITIONAL CONSTRUCTION AREA SIGNS, SEE SHEET CS-1

CONSTRUCTION AREA SIGNS (PORTABLE)

CODE	PANEL SIZE	SIGN MESSAGE	(N) EA
C30 (CA)	30" x 30"	LANE CLOSED	5
		TOTAL	5

TRAFFIC HANDLING QUANTITIES

LOCATION	TEMPORARY TRAFFIC STRIPE (TAPE)	TEMPORARY TRAFFIC STRIPE (PAINT)		CHANNELIZER (SURFACE MOUNTED)	TEMPORARY PAVEMENT MARKER (TYPE D)	TEMPORARY RAILING (TYPE K)	TEMPORARY CRASH CUSHION	REMOVE THERMOPLASTIC TRAFFIC STRIPE		REMOVE THERMOPLASTIC PAVEMENT MARKING	COLD PLANE ASPHALT CONCRETE PAVEMENT	HMA, SUPERPAVE (TYPE A)	PLACE HMA (MISCELLANEOUS AREA)	(N) REMOVE PAVEMENT MARKER
	DETAIL 27B	DETAIL 22	DETAIL 27B		DETAIL 22			DETAIL 12	DETAIL 27B					
	LF	LF	LF	EA	EA	LF	EA	LF	LF	SQFT	SQYD	TON	SQYD	EA
STAGE 1	1796	1450	3877	72	122	1200	2	120	1453	126	484	49	484	122
STAGE 2		2642	5283	54	222									102
FROM DQ-1													24	
SUBTOTAL		4092	9160										508	
TOTAL	1796	13,252		126	344	1200	2	1573		126	484*	49*	508	224

* ADDITIONAL QUANTITIES SHOWN ELSEWHERE, SEE SHEET Q-1

STAGE CONSTRUCTION AND TRAFFIC HANDLING QUANTITIES

SCQ-1

REVISED BY | DATE REVISED
BILL SUTHERLAND | JOHN MARTIN
CALCULATED-DESIGNED BY | CHECKED BY
FUNCTIONAL SUPERVISOR
JOHN L. MARTIN

STATE OF CALIFORNIA - DEPARTMENT OF TRANSPORTATION
Caltrans
DESIGN

P:\proj1\01\0a360_plans\pse\0100020289mc001.dgn

LAST REVISION 12-09-11 | DATE PLOTTED => 12-MAR-2014 TIME PLOTTED => 07:38

Dist	COUNTY	ROUTE	POST MILES TOTAL PROJECT	SHEET No.	TOTAL SHEETS
01	Hum	299	19.3/19.8	27	56

REGISTERED CIVIL ENGINEER 02-21-14 DATE

02-21-14
PLANS APPROVAL DATE

REGISTERED PROFESSIONAL ENGINEER J.L. MARTIN No. C47576 Exp. 12-31-15 CIVIL STATE OF CALIFORNIA

THE STATE OF CALIFORNIA OR ITS OFFICERS OR AGENTS SHALL NOT BE RESPONSIBLE FOR THE ACCURACY OR COMPLETENESS OF SCANNED COPIES OF THIS PLAN SHEET.

NOTE:

1. FOR ACCURATE RIGHT OF WAY DATA, CONTACT RIGHT OF WAY ENGINEERING AT THE DISTRICT OFFICE.
2. CALIFORNIA SIGN CODES ARE DESIGNATED BY (CA), OTHERWISE, FEDERAL MUTCD SIGN CODES ARE SHOWN.
3. EXACT SIGN LOCATIONS TO BE DETERMINED BY ENGINEER.
4. SEE DRAINAGE PLANS FOR MARKER (CULVERT) LOCATIONS

LEGEND:

- STRIPING CHANGE
- DELINEATOR (TYPE E)
- MILEPOST MARKER
- EXISTING SIGN TO REMAIN
- REMOVE ROADSIDE SIGN
- TYPE V ARROW
- EXIST ROADSIDE SIGN
- ROADSIDE SIGN (1-POST)
- #-# ROADSIDE SIGN
- ## PAVEMENT DELINEATION STRIPE DETAIL NUMBER
- S=XX′ DELINEATOR SPACING

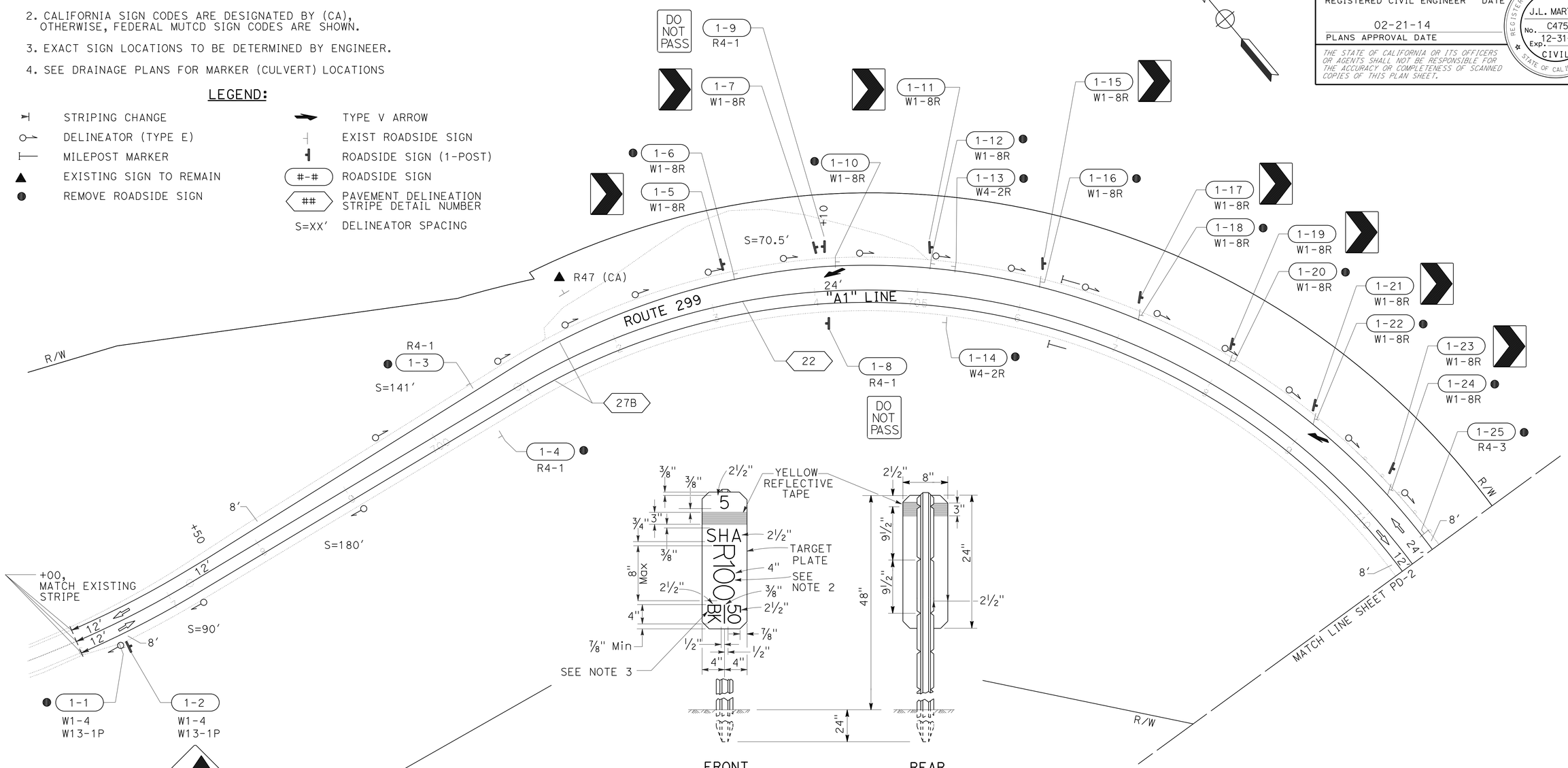

NOTES:

1. THE MARKER SHALL BE WHITE (NON-REFLECTIVE) TARGET PLATE WITH BLACK SERIES D NUMERALS AND LETTERS.
2. A POST MILE PREFIX, SUCH AS "R", SHALL APPLY ONLY WHEN DIRECTED BY THE ENGINEER.
3. "BK" (BACK), "AH" (AHEAD), OR A BLANK SPACE SHALL APPLY AS DIRECTED BY THE ENGINEER.
4. ALL INFORMATION SHALL BE IN ENGLISH UNITS (MILES).

POST MILE MARKER DETAIL

PAVEMENT DELINEATION AND SIGN PLAN

SCALE: 1" = 50′

PD-1

APPROVED FOR PAVEMENT DELINEATION AND SIGN WORK ONLY

REVISED BY | DATE REVISED
JOHN MARTIN | BILL SUTHERLAND
CALCULATED-DESIGNED BY | CHECKED BY
FUNCTIONAL SUPERVISOR | JOHN L. MARTIN

STATE OF CALIFORNIA - DEPARTMENT OF TRANSPORTATION
Caltrans
DESIGN

P:\proj1\01\0a360_plans\pse\0100020289na001.dgn

LAST REVISION 06-06-12 | DATE PLOTTED => 12-MAR-2014 TIME PLOTTED => 07:38

Dist	COUNTY	ROUTE	POST MILES TOTAL PROJECT	SHEET No.	TOTAL SHEETS
01	Hum	299	19.3/19.8	28	56

REGISTERED CIVIL ENGINEER 02-21-14 DATE

02-21-14
PLANS APPROVAL DATE

REGISTERED PROFESSIONAL ENGINEER J.L. MARTIN No. C47576 Exp. 12-31-15 CIVIL STATE OF CALIFORNIA

THE STATE OF CALIFORNIA OR ITS OFFICERS OR AGENTS SHALL NOT BE RESPONSIBLE FOR THE ACCURACY OR COMPLETENESS OF SCANNED COPIES OF THIS PLAN SHEET.

NOTE:

1. FOR ACCURATE RIGHT OF WAY DATA, CONTACT RIGHT OF WAY ENGINEERING AT THE DISTRICT OFFICE.

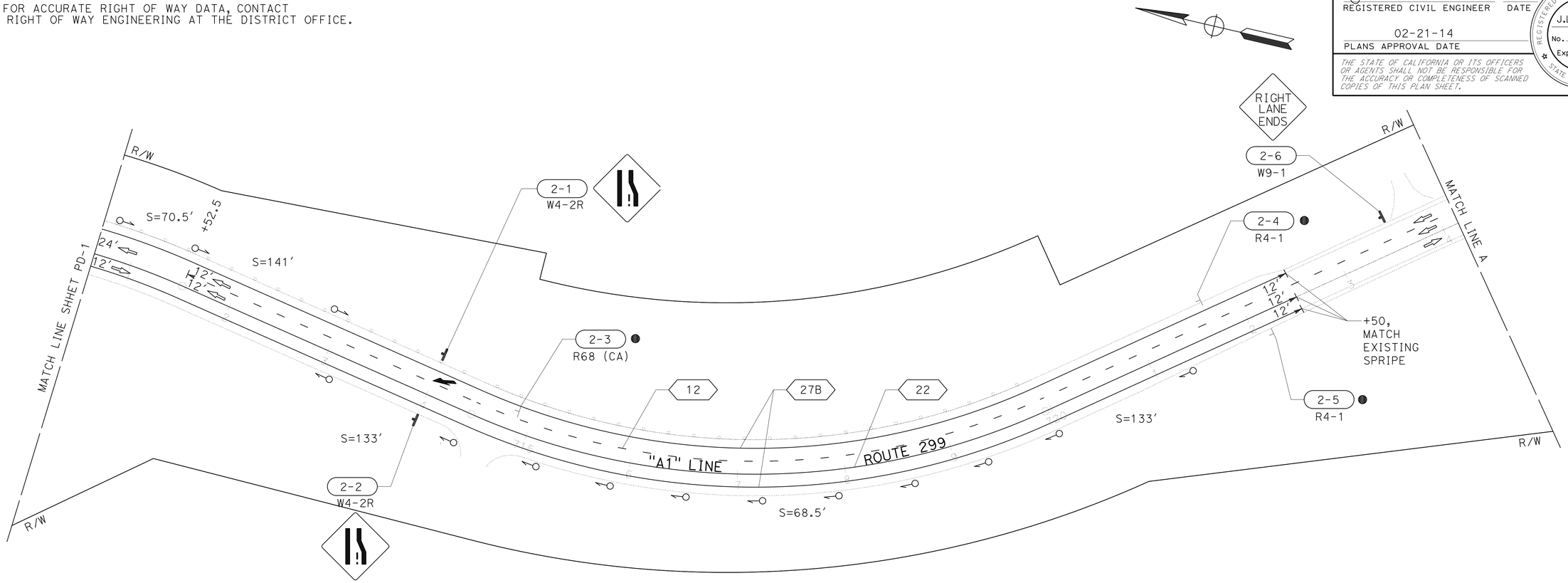

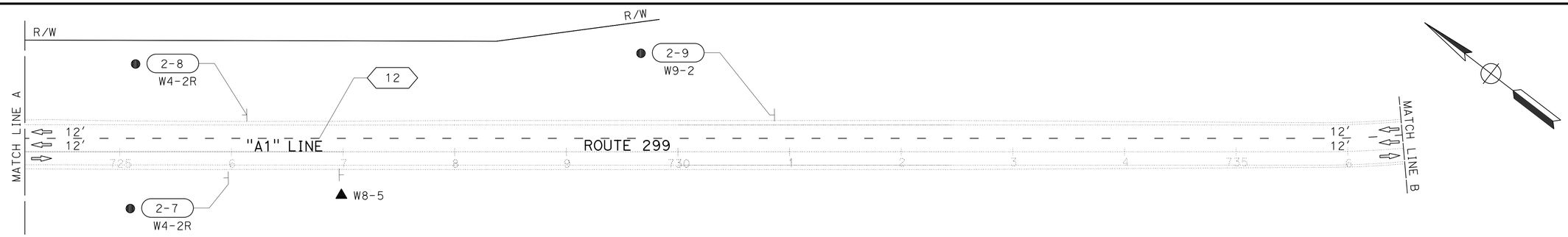

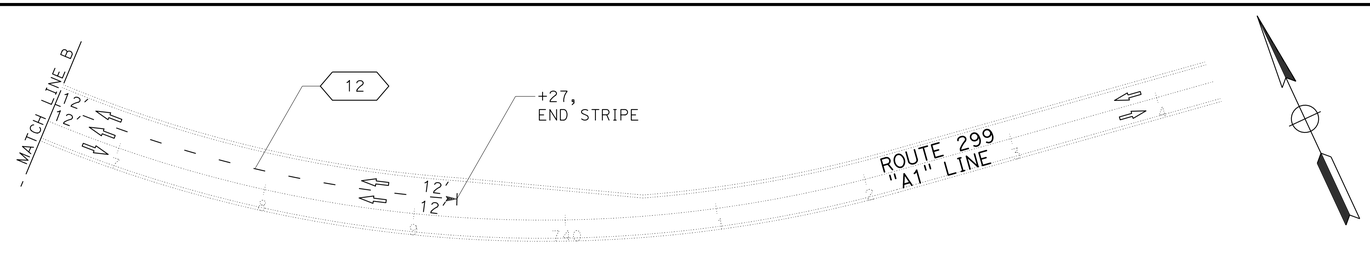

PAVEMENT DELINEATION AND SIGN PLAN

SCALE: 1" = 50′

PD-2

APPROVED FOR PAVEMENT DELINEATION AND SIGN WORK ONLY

REVISED BY	DATE REVISED
JOHN MARTIN	BILL SUTHERLAND
CALCULATED-DESIGNED BY	CHECKED BY
FUNCTIONAL SUPERVISOR	JOHN L. MARTIN

STATE OF CALIFORNIA - DEPARTMENT OF TRANSPORTATION **DESIGN**

P:\proj1\01\0a360_plans\pse\0100020289na002.dgn

LAST REVISION 03-18-12 | DATE PLOTTED => 12-MAR-2014 TIME PLOTTED => 07:38

Dist	COUNTY	ROUTE	POST MILES TOTAL PROJECT	SHEET No.	TOTAL SHEETS
01	Hum	299	19.3/19.8	29	56

REGISTERED CIVIL ENGINEER 02-21-14 DATE

02-21-14
PLANS APPROVAL DATE

REGISTERED PROFESSIONAL ENGINEER J.L. MARTIN No. C47576 Exp. 12-31-15 CIVIL STATE OF CALIFORNIA

THE STATE OF CALIFORNIA OR ITS OFFICERS OR AGENTS SHALL NOT BE RESPONSIBLE FOR THE ACCURACY OR COMPLETENESS OF SCANNED COPIES OF THIS PLAN SHEET.

ROADSIDE SIGNS

SHEET No.	SIGN No.	SIGN CODE	PANEL SIZE	(N) POST SIZE & LENGTH WOOD POST 4" x 6"	(N) POST SIZE & LENGTH WOOD POST 6" x 6"	ROADSIDE SIGN (ONE POST)	REMOVE ROADSIDE SIGN	TREATED WOOD WASTE	SIGN PANEL DESCRIPTION
				LF	LF	EA	EA	LB	
PD-1	1-1	W1-4 W13-1P	48" x 48" 30" x 30"				1	100	REVERSE CURVE (SYMBOL) ADVISORY SPEED (45 MPH)
	1-2	W1-4 W13-1P	48" x 48" 30" x 30"		16	1			REVERSE CURVE (SYMBOL) ADVISORY SPEED (45 MPH)
	1-3	R4-1	24" x 30"				1	30	DO NOT PASS
	1-4	R4-1	24" x 30"				1	30	DO NOT PASS
	1-5	W1-8R	36" x 48"	14		1			CHEVRON ALIGNMENT (SYMBOL)
	1-6	W1-8R	36" x 48"				1	50	CHEVRON ALIGNMENT (SYMBOL)
	1-7	W1-8R	36" x 48"	14		1			CHEVRON ALIGNMENT (SYMBOL)
	1-8	R4-1	36" x 48"	12		1			DO NOT PASS
	1-9	R4-1	36" x 48"	14		1			DO NOT PASS
	1-10	W1-8R	36" x 48"				1	50	CHEVRON ALIGNMENT (SYMBOL)
	1-11	W1-8R	36" x 48"	14		1			CHEVRON ALIGNMENT (SYMBOL)
	1-12	W1-8R	36" x 48"				1	50	CHEVRON ALIGNMENT (SYMBOL)
	1-13	W4-2R	36" x 36"				1	50	LANE ENDS (SYMBOL)
	1-14	W4-2R	36" x 36"				1	50	LANE ENDS (SYMBOL)
	1-15	W1-8R	36" x 48"	14		1			CHEVRON ALIGNMENT (SYMBOL)
	1-16	W1-8R	36" x 48"				1	50	CHEVRON ALIGNMENT (SYMBOL)
	1-17	W1-8R	36" x 48"	14		1			CHEVRON ALIGNMENT (SYMBOL)
	1-18	W1-8R	36" x 48"				1	50	CHEVRON ALIGNMENT (SYMBOL)
	1-19	W1-8R	36" x 48"	14		1			CHEVRON ALIGNMENT (SYMBOL)
	1-20	W1-8R	36" x 48"				1	50	CHEVRON ALIGNMENT (SYMBOL)
	1-21	W1-8R	36" x 48"	14		1			CHEVRON ALIGNMENT (SYMBOL)
	1-22	W1-8R	36" x 48"				1	50	CHEVRON ALIGNMENT (SYMBOL)
	1-23	W1-8R	36" x 48"	14		1			CHEVRON ALIGNMENT (SYMBOL)
	1-24	W1-8R	36" x 48"				1	50	CHEVRON ALIGNMENT (SYMBOL)
	1-25	R4-3	48" x 60"				1	50	SLOWER TRAFFIC KEEP RIGHT
PD-2	2-1	W4-2R	48" x 48"		16	1			LANE ENDS (SYMBOL)
	2-2	W4-2R	48" x 48"		14	1			LANE ENDS (SYMBOL)
	2-3	G68 (CA)	42" x 52"				1	50	PASSING LANE AHEAD
	2-4	R4-1	36" x 48"				1	50	DO NOT PASS
	2-5	R4-1	36" x 48"				1	50	DO NOT PASS
	2-6	W9-1	48" x 48"		16	1			RIGHT LANE ENDS
	2-7	W4-2R	48" x 48"				1	50	LANE ENDS (SYMBOL)
	2-8	W4-2R	48" x 48"				1	50	LANE ENDS (SYMBOL)
	2-9	W9-2	48" x 48"				1	50	LANE ENDS MERGE LEFT
TOTAL						14	20	1010	

NOTE:

1. (N) - NOT A SEPARATE PAY ITEM, FOR INFORMATION ONLY

DELINEATORS AND MARKERS

SHEET NO.	DELINEATOR (CLASS 2) TYPE E	MILEPOST MARKER
	EA	EA
PD-1	18	2
PD-2	14	
TOTAL	32	2

TRAFFIC STRIPE, AND PAVEMENT MARKINGS AND MARKERS

SHEET NO.	LOCATION	THERMOPLASTIC PAVEMENT MARKING	THERMOPLASTIC TRAFFIC STRIPE (SPRAYABLE) YELLOW 4" DETAIL 22	WHITE 4" DETAIL 12	WHITE 4" DETAIL 27B	PAVEMENT MARKER (RETRO-REFLECTIVE-RECESSED) TYPE D	TYPE G
		SQFT	LF	LF	LF	EA	EA
PD-1	"A1" 696+00 TO 710+65, LT/RT	84	1465		2921	124	
PD-2	"A1" 710+65 TO 724+15, LT/RT	42	1185	1253	2362	100	28
	"A1" 724+15 TO 736+50, LT/RT			1234			26
	"A1" 736+50 TO 739+27, LT/RT			274			6
	SUBTOTAL	126	2650	2761	5283	224	60
	TOTAL	126	10,694			284	

PAVEMENT DELINEATION QUANTITIES

PDQ-1

REVISED BY | DATE REVISED
BILL SUTHERLAND | JOHN MARTIN
CALCULATED-DESIGNED BY | CHECKED BY
FUNCTIONAL SUPERVISOR
JOHN L. MARTIN

STATE OF CALIFORNIA - DEPARTMENT OF TRANSPORTATION
Caltrans
DESIGN

P:\proj1\01\0a360_plans\pse\0100020289nc001.dgn

LAST REVISION 12-14-11 | DATE PLOTTED => 12-MAR-2014 | TIME PLOTTED => 07:38

Dist	COUNTY	ROUTE	POST MILES TOTAL PROJECT	SHEET No.	TOTAL SHEETS
01	Hum	299	19.3/19.8	30	56

REGISTERED CIVIL ENGINEER DATE 02-21-14

PLANS APPROVAL DATE 02-21-14

REGISTERED PROFESSIONAL ENGINEER J.L. MARTIN No. C47576 Exp. 12-31-15 CIVIL STATE OF CALIFORNIA

THE STATE OF CALIFORNIA OR ITS OFFICERS OR AGENTS SHALL NOT BE RESPONSIBLE FOR THE ACCURACY OR COMPLETENESS OF SCANNED COPIES OF THIS PLAN SHEET.

MATERIAL SUMMARY CONTRACTOR FURNISHED SIGNS

SIGN No.	SIGN CODE	SIGN SIZE (L x D)	SINGLE FACED	DOUBLE FACED	BACKGROUND SHEETING COLOR	BACKGROUND RETROREFLECTIVE ASTM TYPE	LEGEND SHEETING COLOR	LEGEND RETROREFLECTIVE ASTM TYPE	FURNISH SINGLE SHEET ALUMINUM SIGN (0.063"-UNFRAMED) SQFT	FURNISH SINGLE SHEET ALUMINUM SIGN (0.080"-UNFRAMED) SQFT	DESCRIPTION (REMARKS)
1-2	W1-4R	48" X 48"	X		YELLOW	III	BLACK	III		16	REVERSE CURVE (SYMBOL)
	W13-1P	30" X 30"	X		YELLOW	III	BLACK	III	6.25		45 MPH
1-5	W1-8R	36" X 48"	X		YELLOW	III	BLACK	III	12		CHEVRON ALIGNMENT (SYMBOL)
1-7	W1-8R	36" X 48"	X		YELLOW	III	BLACK	III	12		CHEVRON ALIGNMENT (SYMBOL)
1-8	R4-1	36" X 48"	X		WHITE	III	BLACK	III	12		DO NOT PASS
1-9	R4-1	36" X 48"	X		WHITE	III	BLACK	III	12		DO NOT PASS
1-11	W1-8R	36" X 48"	X		YELLOW	III	BLACK	III	12		CHEVRON ALIGNMENT (SYMBOL)
1-15	W1-8R	36" X 48"	X		YELLOW	III	BLACK	III	12		CHEVRON ALIGNMENT (SYMBOL)
1-17	W1-8R	36" X 48"	X		YELLOW	III	BLACK	III	12		CHEVRON ALIGNMENT (SYMBOL)
1-19	W1-8R	36" X 48"	X		YELLOW	III	BLACK	III	12		CHEVRON ALIGNMENT (SYMBOL)
1-21	W1-8R	36" X 48"	X		YELLOW	III	BLACK	III	12		CHEVRON ALIGNMENT (SYMBOL)
1-23	W1-8R	36" X 48"	X		YELLOW	III	BLACK	III	12		CHEVRON ALIGNMENT (SYMBOL)
2-1	W4-2R	48" X 48"	X		YELLOW	III	BLACK	III		16	LANE ENDS (SYMBOL)
2-2	W4-2R	48" X 48"	X		YELLOW	III	BLACK	III		16	LANE ENDS (SYMBOL)
2-6	W9-1	48" X 48"	X		YELLOW	III	BLACK	III		16	RIGHT LANE ENDS
								TOTAL	126.25	64	

PAVEMENT DELINEATION QUANTITIES

PDQ-2

REVISED BY | DATE REVISED

BILL SUTHERLAND | JOHN MARTIN

CALCULATED-DESIGNED BY | CHECKED BY

FUNCTIONAL SUPERVISOR

JOHN L. MARTIN

STATE OF CALIFORNIA - DEPARTMENT OF TRANSPORTATION

Caltrans® DESIGN

P:\proj1\01\0a360_plans\pse\0100020289nc002.dgn

LAST REVISION 12-14-11 | DATE PLOTTED => 12-MAR-2014 | TIME PLOTTED => 07:38

Dist	COUNTY	ROUTE	POST MILES TOTAL PROJECT	SHEET No.	TOTAL SHEETS
01	Hum	299	19.3/19.8	31	56

William D. Sutherland 02-21-14
REGISTERED CIVIL ENGINEER DATE

02-21-14
PLANS APPROVAL DATE

REGISTERED PROFESSIONAL ENGINEER W. D. SUTHERLAND No. C61579 Exp. 06-30-15 CIVIL STATE OF CALIFORNIA

THE STATE OF CALIFORNIA OR ITS OFFICERS OR AGENTS SHALL NOT BE RESPONSIBLE FOR THE ACCURACY OR COMPLETENESS OF SCANNED COPIES OF THIS PLAN SHEET.

NOTE:

1. (N) - NOT A SEPARATE PAY ITEM, FOR INFORMATION ONLY

RSP

STATION	RSP (NO. 2, METHOD B) (CY)	RSP FABRIC (CLASS 8)
	CY	SQYD
"A1" 710+65 TO 719+75	6.1	30.6
FROM DQ-1	9.3	42.6
TOTAL	15.4	73.2

RUMBLE STRIP

STATION	SHOULDER RUMBLE STRIP (HMA, GROUND-IN INDENTATIONS)	CENTERLINE RUMBLE STRIP (HMA, GROUND-IN INDENTATIONS)
	STA	STA
"A1" 696+00 TO 722+50, CENTERLINE		26.5
"A1" 698+00 TO 722+25, LEFT	24.3	
"A1" 696+40 TO 720+80, RIGHT	24.4	
TOTAL	48.7	26.5

SAFETY EDGE

STATION	(N) SAFETY EDGE, HMA SUPERPAVE (TYPE A)	
	LF	TON
"A1" 696+00 TO 709+25, LEFT	1362	22
"A1" 720+55 TO 722+50, LEFT	201	3
"A1" 696+00 TO 700+30, RIGHT	433	3
"A1" 700+30 TO 714+25, RIGHT	1363	2
"A1" 714+95 TO 722+50, RIGHT	770	5
TOTAL	4129	35

GUARDRAIL SYSTEM

MIDWEST GUARDRAIL SYSTEM (8' POST)	VEGETATION CONTROL (MINOR CONCRETE)	ALTERNATIVE IN-LINE TERMINAL SYSTEM
LF	SQYD	EA
975	389	2

STORM WATER POLLUTION PREVENTION

ITEM	UNIT	QUANTITY
MOVE-IN/MOVE-OUT (TEMPORARY EROSION CONTROL)	EA	4
TEMPORARY HYDRAULIC MULCH	SQYD	7000
TEMPORARY COVER	SQYD	7000
TEMPORARY CHECK DAM	LF	1000
TEMPORARY DRAINAGE INLET PROTECTION	EA	7
TEMPORARY FIBER ROLL	LF	1650
TEMPORARY GRAVEL BAG BERM	LF	500
TEMPORARY REINFORCED SILT FENCE	LF	500
TEMPORARY SILT FENCE	LF	730
TEMPORARY CONSTRUCTION ENTRANCE	EA	2

GEOSYNTHETIC REINFORCED EMBANKMENT

STATION	GEOSYNTHETIC REINFORCED EMBANKMENT	(N) SELECT BACKFILL	(N) GEOGRID		(N) BASE REINFORCEMENT GEOGRID	(N) CRUSHED ROCK BASE (2' THICK)	(N) 8" PERFORATED PLASTIC PIPE (SCHEDULE 80) UNDERDRAIN	(N) 8" PLASTIC PIPE (SCHEDULE 80)	(N) PERMEABLE MATERIAL BLANKET (CLASS 1, TYPE B)	(N) GEOCOMPOSITE DRAIN	(N) FILTER FABRIC
			BIAXIAL	UNIAXIAL							
	SQFT	CY	SQYD	SQYD	SQYD	CY	LF	LF	CY	SQFT	SQYD
"A1" 710+40 TO 720+25	28,205	13,634	5366	29,110	1806	1165	1001	202	292	17,722	1866

ROADWAY QUANTITIES

STATION	COLD PLANE ASPHALT CONCRETE PAVEMENT	ROADWAY EXCAVATION	(N) * EMBANKMENT	SHOULDER BACKING	CLASS 2 AGGREGATE BASE (CY)	REPLACE ASPHALT CONCRETE SURFACING	HMA (OPEN GRADED)	HMA, SUPERPAVE (TYPE A)	(N) VARIABLE DEPTH HMA, SUPERPAVE (TYPE A)	PAVING ASPHALT (BINDER, GEOSYNTHETIC PAVEMENT INTERLAYER)	GEOSYNTHETIC PAVEMENT INTERLAYER (PAVING FABRIC)	PLACE HMA DIKE		TACK COAT
												(TYPE D)	(TYPE F)	
	SQYD	CY	CY	TON	CY	CY	TON	TON	TON	TON	SQYD	LF	LF	TON
"A1" 690+00 TO 722+50	10,529	10,210	2098	368	2104	118	1089	2994	324	2	1604			5
"A1" 712+90 TO 720+55								5				37	700	
FROM DQ-1								6				42		
FROM SCQ-1	484							49						
STOCKPILED SELECTED MATERIAL **		200												
TOTAL	11,013	10,410	2098	368	2104	118	1089	3054	324	2	1604	79	700	5

* NO SHRINK/SWELL FACTOR APPLIED
** FROM SHEET ECQ-1

SUMMARY OF QUANTITIES

Q-1

REVISED BY | DATE REVISED
BILL SUTHERLAND | JOHN MARTIN
CALCULATED-DESIGNED BY | CHECKED BY
FUNCTIONAL SUPERVISOR: JOHN L. MARTIN

STATE OF CALIFORNIA - DEPARTMENT OF TRANSPORTATION
Caltrans DESIGN

P:\proj1\01\0a360_plans\pse\0100020289pa001.dgn

LAST REVISION 11-12-13 | DATE PLOTTED => 12-MAR-2014 | TIME PLOTTED => 07:38

Dist	COUNTY	ROUTE	POST MILES TOTAL PROJECT	SHEET No.	TOTAL SHEETS
01	Hum	299	19.3/19.8	32	56

Laura Lazzarotto
LICENSED LANDSCAPE ARCHITECT

02-21-14
PLANS APPROVAL DATE

LICENSED LANDSCAPE ARCHITECT
Laura Lazzarotto LA 4908
Signature Date
8-31-15
Renewal Date
02-21-14
Date
STATE OF CALIFORNIA

THE STATE OF CALIFORNIA OR ITS OFFICERS OR AGENTS SHALL NOT BE RESPONSIBLE FOR THE ACCURACY OR COMPLETENESS OF SCANNED COPIES OF THIS PLAN SHEET.

EROSION CONTROL TYPE 1

SEQUENCE	ITEM	MATERIAL		APPLICATION RATE
		DESCRIPTION	TYPE	
STEP 1	HYDROSEED	SEED	MIX 1	174 LB/ACRE
		FIBER	WOOD	1100 LB/ACRE
		COMPOST	MEDIUM	270 CY/ACRE
STEP 2	STRAW	STRAW	WHEAT &/OR BARLEY	3 TON/ACRE
STEP 3	HYDROMULCH	FIBER	WOOD	1100 LB/ACRE
		TACKIFIER	PSYLLIUM	140 LB/ACRE
		COMPOST	MEDIUM	270 CY/ACRE

EROSION CONTROL TYPE 2

SEQUENCE	ITEM	MATERIAL		APPLICATION RATE
		DESCRIPTION	TYPE	
STEP 1	RECP (NETTING)	RECP (NETTING)	TYPE B	SEE DETAIL ON PLANS
STEP 2	SELECTED MATERIAL			270 CY/ACRE
STEP 3	HYDROSEED	SEED	MIX 1	174 LB/ACRE
		FIBER	WOOD	1100 LB/ACRE
		COMPOST	MEDIUM	270 CY/ACRE
STEP 4	HYDROMULCH	FIBER	WOOD	1100 LB/ACRE
		TACKIFIER	PSYLLIUM	140 LB/ACRE
		COMPOST	MEDIUM	270 CY/ACRE

FIBER ROLLS

SEQUENCE	ITEM	MATERIAL		REMARKS
		DESCRIPTION	TYPE	
FIBER ROLLS MUST BE INSTALLED BEFORE EROSION CONTROL	FIBER ROLLS	FIBER ROLL	TYPE B 8" TO 10" Dia	TYPE 1 FIBER ROLL INSTALLATION

SEED MIX 1

SEED	BOTANICAL NAME (COMMON NAME)	PERCENT GERMINATION (MINIMUM)	POUNDS PURE LIVE SEED PER ACRE (SLOPE MEASUREMENT)
MIX 1	ACHILLEA MILLEFOLIUM [1] (WHITE YARROW)	45	2
	ELYMUS ELYMOIDES [1] (BOTTLEBRUSH SQUIRRELTAIL)	45	20
	ELYMUS GLAUCUS 'SHASTA TRINITY' [1] (WILD RYE, SHASTA TRINITY)	55	40
	FESTUCA 'MOLATE BLUE' [1] (MOLATE BLUE FESCUE)	65	12
	HORDEUM VULGARE (COMMON BARLEY)	75	90
	LOTUS PURSHIANUS (PURSHING'S LOTUS)	45	10

[1] SEED PRODUCED IN CALIFORNIA ONLY.

EROSION CONTROL LEGEND
ECL-1

REVISED BY | DATE REVISED
LAURA LAZZAROTA | BILL SUTHERLAND
CALCULATED-DESIGNED BY | CHECKED BY
SENIOR LANDSCAPE ARCHITECT | RON FLORY
STATE OF CALIFORNIA - DEPARTMENT OF TRANSPORTATION
Caltrans
03 - DESIGN
P:\proj\01\0a360\ plans\pse\0100020289tc001.dgn

LAST REVISION 02-21-14
DATE PLOTTED => 12-MAR-2014
TIME PLOTTED => 07:38

Dist	COUNTY	ROUTE	POST MILES TOTAL PROJECT	SHEET No.	TOTAL SHEETS
01	Hum	299	19.3/19.8	33	56

Laura Lazzarotto
LICENSED LANDSCAPE ARCHITECT

02-21-14
PLANS APPROVAL DATE

LICENSED LANDSCAPE ARCHITECT
Laura Lazzarotto LA 4905
Signature Date 8-31-15
Renewal Date 02-21-14
Date
STATE OF CALIFORNIA

THE STATE OF CALIFORNIA OR ITS OFFICERS OR AGENTS SHALL NOT BE RESPONSIBLE FOR THE ACCURACY OR COMPLETENESS OF SCANNED COPIES OF THIS PLAN SHEET.

NOTE:

1. FOR ACCURATE RIGHT OF WAY DATA, CONTACT RIGHT OF WAY ENGINEERING AT THE DISTRICT OFFICE.
2. EXISTING UTILITY FACILITIES HAVE NOT BEEN PLOTTED ON THESE PLANS.

LEGEND:

EC TYPE 1

EC TYPE 2

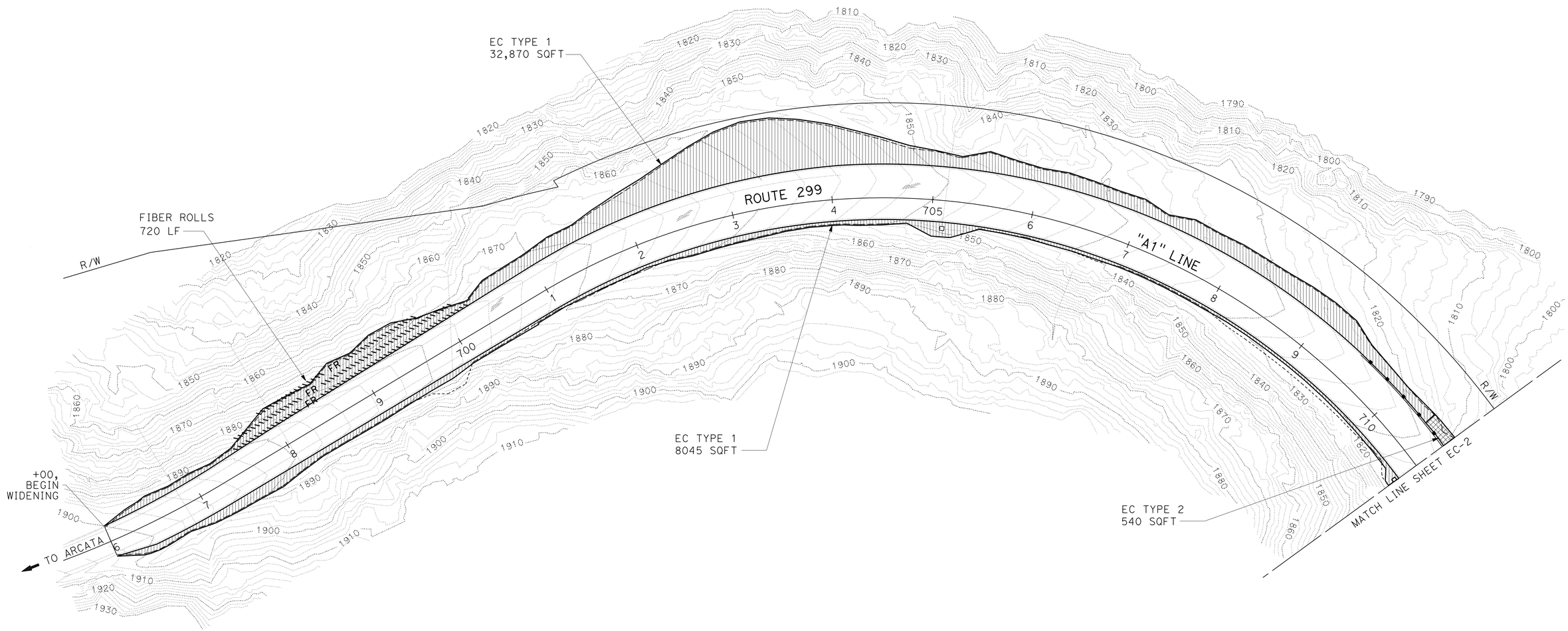

EROSION CONTROL PLAN

SCALE: 1" = 50'

EC-1

APPROVED FOR EROSION CONTROL WORK ONLY

REVISED BY | DATE REVISED

LAURA LAZZAROTA | BILL SUTHERLAND

CALCULATED-DESIGNED BY | CHECKED BY

SENIOR LANDSCAPE ARCHITECT

RON FLORY

STATE OF CALIFORNIA - DEPARTMENT OF TRANSPORTATION

Caltrans

03 - DESIGN

P:\proj1\01\0a360\plans\pse\0100020289te001.dgn

LAST REVISION 02-21-14 | DATE PLOTTED => 12-MAR-2014 TIME PLOTTED => 07:38

BORDER LAST REVISED 7/2/2010 | USERNAME => s115152 DGN FILE => 0100020289te001.dgn | RELATIVE BORDER SCALE IS IN INCHES 0 1 2 3 | UNIT 0314 | PROJECT NUMBER & PHASE 01-0002-0289-1 EA 01-0A360

Dist	COUNTY	ROUTE	POST MILES TOTAL PROJECT	SHEET No.	TOTAL SHEETS
01	Hum	299	19.3/19.8	34	56

Laura Lazzarotto
LICENSED LANDSCAPE ARCHITECT

02-21-14
PLANS APPROVAL DATE

LICENSED LANDSCAPE ARCHITECT
Laura Lazzarotto
Signature
8-31-15
Renewal Date
02-21-14
Date
STATE OF CALIFORNIA

THE STATE OF CALIFORNIA OR ITS OFFICERS OR AGENTS SHALL NOT BE RESPONSIBLE FOR THE ACCURACY OR COMPLETENESS OF SCANNED COPIES OF THIS PLAN SHEET.

NOTE:

1. FOR ACCURATE RIGHT OF WAY DATA, CONTACT RIGHT OF WAY ENGINEERING AT THE DISTRICT OFFICE.
2. EXISTING UTILITY FACILITIES HAVE NOT BEEN PLOTTED ON THESE PLANS.

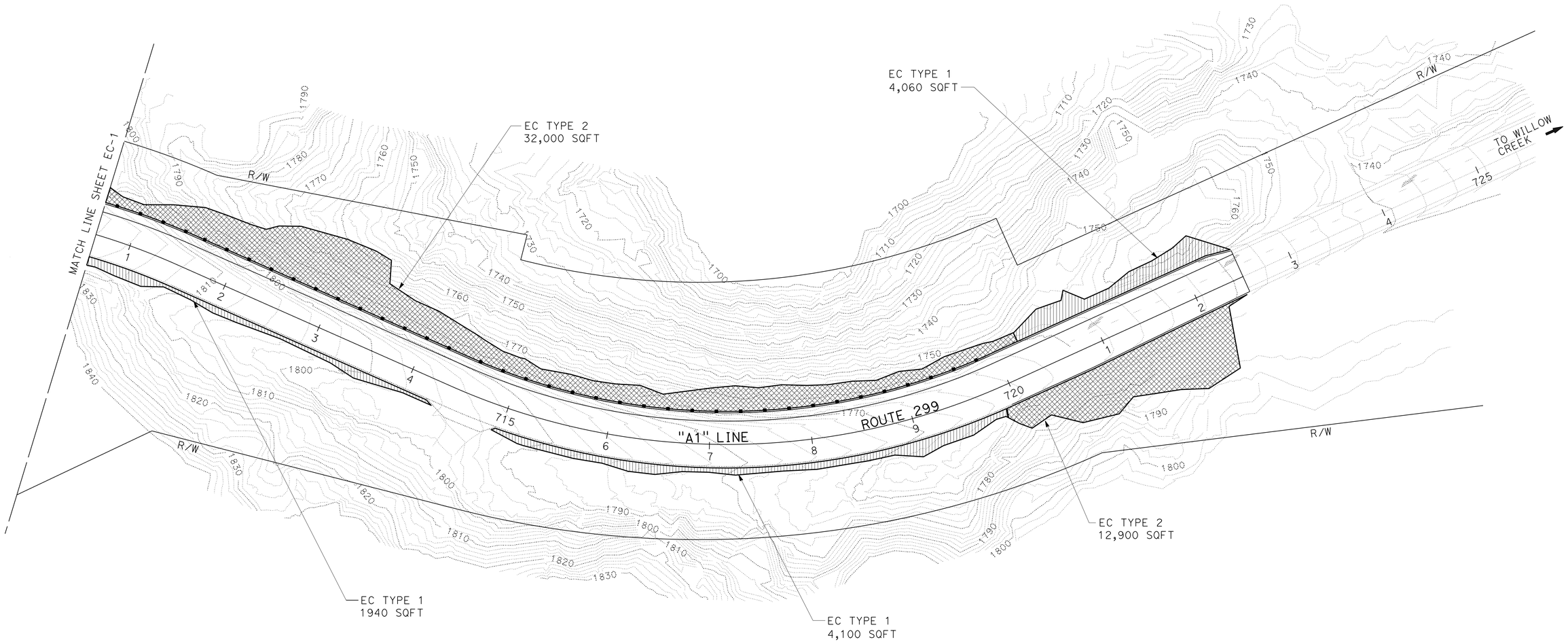

EROSION CONTROL PLAN

SCALE: 1" = 50'

EC-2

APPROVED FOR EROSION CONTROL WORK ONLY

REVISED BY	DATE REVISED

CALCULATED-DESIGNED BY: LAURA LAZZAROTTA
CHECKED BY: BILL SUTHERLAND
SENIOR LANDSCAPE ARCHITECT: RON FLORY

STATE OF CALIFORNIA - DEPARTMENT OF TRANSPORTATION
Caltrans
03 - DESIGN

P:\proj1\01\0a360\ plans\pse\0100020289te002.dgn

LAST REVISION 02-21-14
DATE PLOTTED => 12-MAR-2014
TIME PLOTTED => 07:38

Dist	COUNTY	ROUTE	POST MILES TOTAL PROJECT	SHEET No.	TOTAL SHEETS
01	Hum	299	19.3/19.8	35	56

Laura Lazzarotto
LICENSED LANDSCAPE ARCHITECT

02-21-14
PLANS APPROVAL DATE

LICENSED LANDSCAPE ARCHITECT
Laura Lazzarotto
Signature Date
8-31-15
Renewal Date
02-21-14
Date
STATE OF CALIFORNIA

THE STATE OF CALIFORNIA OR ITS OFFICERS OR AGENTS SHALL NOT BE RESPONSIBLE FOR THE ACCURACY OR COMPLETENESS OF SCANNED COPIES OF THIS PLAN SHEET.

EROSION CONTROL QUANTITIES

SHEET NUMBER	STATION	DESCRIPTION	HYDROSEED (SQFT)	STRAW (SQFT)	HYDROMULCH (SQFT)	FIBER ROLLS	PURE LIVE SEED (N)
						LF	LBS
SHEET EC-1	660+00 TO 710+40 L+	EC TYPE 1	32,870	32,870	32,870	720	131.3
SHEET EC-1	660+00 TO 710+65 R+	EC TYPE 1	8,045	8,045	8,045	-	32.2
SHEET EC-1	710+40 TO 710+65 L+	EC TYPE 2	540	-	540	-	2.2
SHEET EC-2	710+65 TO 720+25 L+	EC TYPE 2	32,000	-	32,000	-	50.7
SHEET EC-2	720+25 TO 722+50 L+	EC TYPE 1	4,060	4,060	4,060	-	6.4
SHEET EC-2	710+65 TO 719+90 R+	EC TYPE 1	6,040	6,040	6,040	-	24.2
SHEET EC-2	719+90 TO 722+50 R+	EC TYPE 2	12,900	-	12,900	-	51.6
		TOTAL	96,455	51,015	96,455	720	298.6

NOTE: (N) NOT A SEPARATE PAY ITEM, FOR INFORMATION ONLY

RECP (NETTING) QUANTITIES

SHEET NUMBER	STATION	ITEM	RECP (NETTING) (INCLUDES EMBEDMENT)	RECP (NETTING) (FACE OF SLOPE) (N)
			SQFT	SQFT
SHEETS EC-1 & EC-2	710+40 TO 720+25 L+	RECP (NETTING)	57,866	32,540
		TOTAL	57,866	32,540

NOTE: (N) NOT A SEPARATE PAY ITEM, FOR INFORMATION ONLY

SELECTED MATERIAL

SHEET NUMBER	STATION	SELECTED MATERIAL (N)	NOTES
		CY	
SHEETS EC-1 & EC-2	710+40 TO 720+25 LT	200	2" DEPTH
	TOTAL	200	

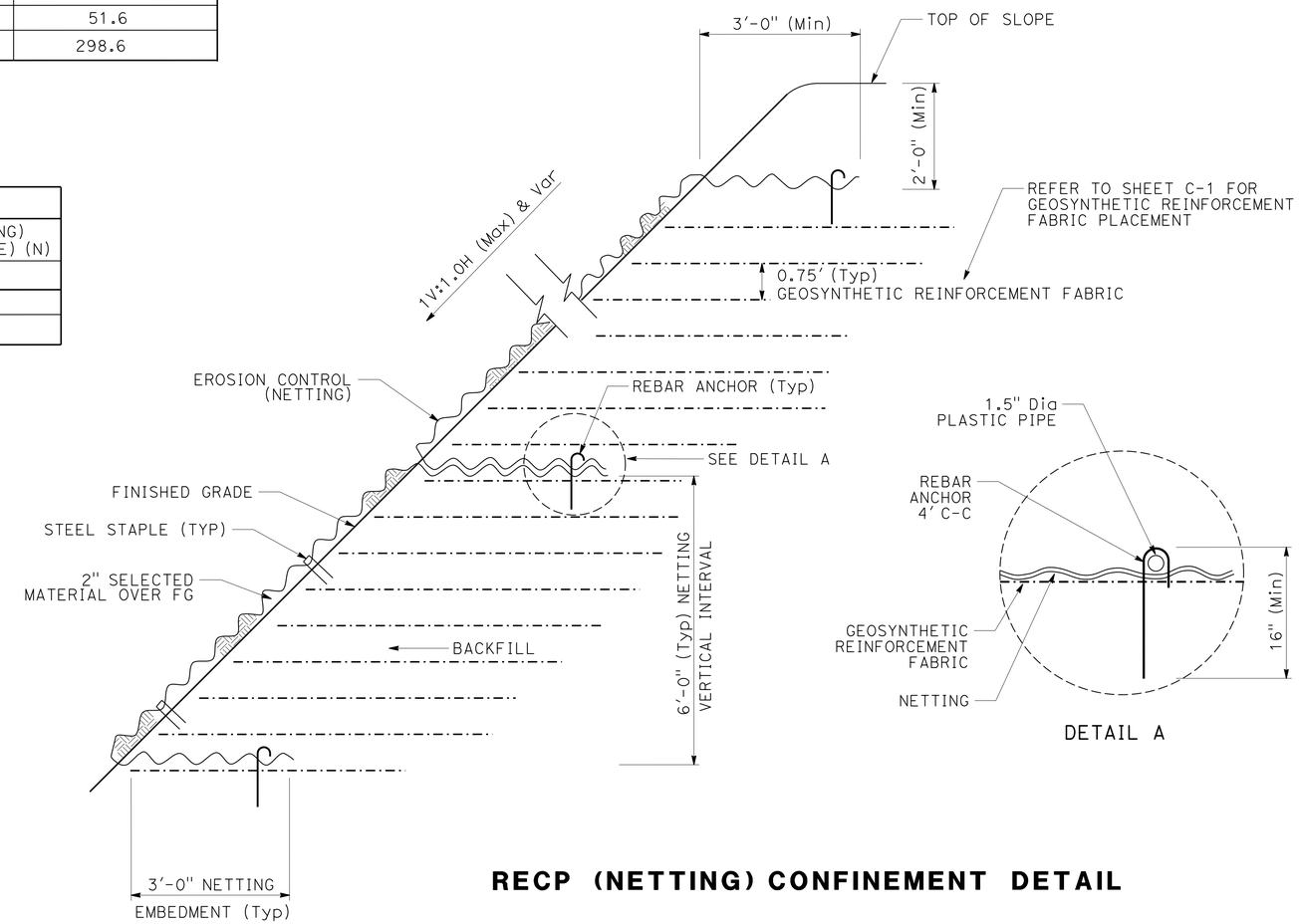

RECP (NETTING) CONFINEMENT DETAIL

EROSION CONTROL DETAILS AND QUANTITIES

NO SCALE

ECQ-1

REVISED BY | DATE REVISED
LAURA LAZZAROTA | BILL SUTHERLAND
CALCULATED-DESIGNED BY | CHECKED BY
SENIOR LANDSCAPE ARCHITECT | RON FLORY

STATE OF CALIFORNIA - DEPARTMENT OF TRANSPORTATION
Caltrans®
03 - DESIGN

P:\proj\01\0a360\ plans\pse\0100020289tg001.dgn

LAST REVISION 02-21-14 | DATE PLOTTED => 12-MAR-2014 | TIME PLOTTED => 07:39

M

Maint	MAINTENANCE
Max	MAXIMUM
MB	METAL BEAM
MBB	METAL BEAM BARRIER
MBGR	METAL BEAM GUARD RAILING
Med	MEDIAN
MGS	MIDWEST GUARDRAIL SYSTEM
MH	MANHOLE
Min	MINIMUM
Misc	MISCELLANEOUS
Misc I & S	MISCELLANEOUS IRON AND STEEL
Mkr	MARKER
Mod	MODIFIED,
	MODIFY
Mon	MONUMENT
MP	METAL PLATE
MPGR	METAL PLATE GUARD RAILING
MR	MOVEMENT RATING
MSE	MECHANICALLY STABILIZED EMBANKMENT
Mt	MOUNTAIN, MOUNT
Mtl	MATERIAL
MVP	MAINTENANCE VEHICLE PULLOUT

N

N	NORTH
NB	NORTHBOUND
No.	NUMBER (MUST HAVE PERIOD)
Nos.	NUMBERS (MUST HAVE PERIOD)
NPS	NOMINAL PIPE SIZE
NS	NEAR SIDE
NSP	NEW STANDARD PLAN
NTS	NOT TO SCALE

O

Oblr	OBLITERATE
OC	OVERCROSSING
OD	OUTSIDE DIAMETER
OF	OUTSIDE FACE
OG	ORIGINAL GROUND
OGAC	OPEN GRADED ASPHALT CONCRETE
OGFC	OPEN GRADED FRICTION COURSE
OH	OVERHEAD
OHWM	ORDINARY HIGH WATER MARK
O-O	OUT TO OUT
Opp	OPPOSITE
OSD	OVERSIDE DRAIN

P

P	PAGE
PAP	PERFORATED ALUMINUM PIPE
PB	PULL BOX
PC	POINT OF CURVATURE,
	PRECAST
PCC	POINT OF COMPOUND CURVE,
	PORTLAND CEMENT CONCRETE
PCMS	PORTABLE CHANGEABLE MESSAGE SIGN
PCP	PERFORATED CONCRETE PIPE,
	PRESTRESSED CONCRETE PIPE
PCVC	POINT OF COMPOUND VERTICAL CURVE
PEC	PERMIT TO ENTER AND CONSTRUCT
Ped	PEDESTRIAN
Ped OC	PEDESTRIAN OVERCROSSING
Ped UC	PEDESTRIAN UNDERCROSSING
Perm Mtl	PERMEABLE MATERIAL

P continued

PG	PROFILE GRADE
PI	POINT OF INTERSECTION
PJP	PARTIAL JOINT PENETRATION
Pkwy	PARKWAY
ℙ,PL	PLATE
P/L	PROPERTY LINE
PM	POST MILE,
	TIME FROM NOON TO MIDNIGHT
PN	PAVING NOTCH
POC	POINT OF HORIZONTAL CURVE
POT	POINT OF TANGENT
POVC	POINT OF VERTICAL CURVE
PP	PIPE PILE,
	PLASTIC PIPE,
	POWER POLE
PPL	PREFORMED PERMEABLE LINER
PPP	PERFORATED PLASTIC PIPE
PRC	POINT OF REVERSE CURVE
PRF	PAVEMENT REINFORCING FABRIC
PRVC	POINT OF REVERSE VERTICAL CURVE
PS&E	PLANS, SPECIFICATIONS AND ESTIMATES
PS, P/S	PRESTRESSED
PSP	PERFORATED STEEL PIPE
PT	POINT OF TANGENCY
PVC	POLYVINYL CHLORIDE
Pvmt	PAVEMENT

Q

Qty	QUANTITY

R

R	RADIUS
R & D	REMOVE AND DISPOSE
R & S	REMOVE AND SALVAGE
R/C	RATE OF CHANGE
RCA	REINFORCED CONCRETE ARCH
RCB	REINFORCED CONCRETE BOX
RCP	REINFORCED CONCRETE PIPE
RCPA	REINFORCED CONCRETE PIPE ARCH
Rd	ROAD
Reinf	REINFORCED,
	REINFORCEMENT,
	REINFORCING
Rel	RELOCATE
Repl	REPLACEMENT
Ret	RETAINING
Rev	REVISED, REVISION
Rdwy	ROADWAY
RHMA	RUBBERIZED HOT MIX ASPHALT
Riv	RIVER
RM	ROAD-MIXED
RP	RADIUS POINT,
	REFERENCE POINT
RR	RAILROAD
RSP	ROCK SLOPE PROTECTION,
	REVISED STANDARD PLAN
Rt	RIGHT
Rte	ROUTE
RW	REDWOOD,
	RETAINING WALL
R/W	RIGHT OF WAY
Rwy	RAILWAY

S

S	SOUTH,
	SUPPLEMENT
SAE	STRUCTURE APPROACH EMBANKMENT
Salv	SALVAGE
SAPP	STRUCTURAL ALUMINUM PLATE PIPE
SB	SOUTHBOUND
SC	SAND CUSHION
SCSP	SLOTTED CORRUGATED STEEL PIPE
SD	STORM DRAIN
Sec	SECOND,
	SECTION
Sep	SEPARATION
SG	SUBGRADE
Shld	SHOULDER
Sht	SHEET
Sim	SIMILAR
℄	STATION LINE
SM	SELECTED MATERIAL
Spec	SPECIAL,
	SPECIFICATIONS
SPP	SLOTTED PLASTIC PIPE
SS	SLOPE STAKE
SSBM	STRAP AND SADDLE BRACKET METHOD
SSD	STRUCTURAL SECTION DRAIN
SSPA	STRUCTURAL STEEL PLATE ARCH
SSPP	STRUCTURAL STEEL PLATE PIPE
SSPPA	STRUCTURAL STEEL PLATE PIPE ARCH
SSRP	STEEL SPIRAL RIB PIPE
St	STREET
Sta	STATION
STBB	SINGLE THRIE BEAM BARRIER
Std	STANDARD
Str	STRUCTURE
Surf	SURFACING
SW	SIDEWALK,
	SOUND WALL
Swr	SEWER
Sym	SYMMETRICAL
S4S	SURFACE 4 SIDES

T

T	SEMI-TANGENT
Tan	TANGENT
TBB	THRIE BEAM BARRIER
Tbr	TIMBER
TC	TOP OF CURB
TCB	TRAFFIC CONTROL BOX
TCE	TEMPORARY CONSTRUCTION EASEMENT
Tel	TELEPHONE
Temp	TEMPORARY
TG	TOP OF GRADE
Tot	TOTAL
TP	TELEPHONE POLE
TPB	TREATED PERMEABLE BASE
TPM	TREATED PERMEABLE MATERIAL
Trans	TRANSITION

T continued

TS	TRANSVERSE,
	TRAFFIC SIGNAL,
	TUBULAR STEEL
Typ	TYPICAL

U

UC	UNDERCROSSING
UD	UNDERDRAIN
UG	UNDERGROUND
UON	UNLESS OTHERWISE NOTED
UP	UNDERPASS

V

V	VALVE,
	DESIGN SPEED
Var	VARIABLE,
	VARIES
VC	VERTICAL CURVE
VCP	VITRIFIED CLAY PIPE
Vert	VERTICAL
Via	VIADUCT
Vol	VOLUME

W

W	WEST,
	WIDTH
WB	WESTBOUND
WH	WEEP HOLE
WM	WIRE MESH
WS	WATER SURFACE
WSP	WELDED STEEL PIPE
Wt	WEIGHT
WV	WATER VALVE
WW	WINGWALL
WWLOL	WINGWALL LAYOUT LINE

X

X Sec	CROSS SECTION
Xing	CROSSING

Y

Yr	YEAR
Yrs	YEARS

Dist	COUNTY	ROUTE	POST MILES TOTAL PROJECT	SHEET No.	TOTAL SHEETS
02	Hum	299	19.3/19.8	36	56

Grace M. Tsushima
REGISTERED CIVIL ENGINEER

July 19, 2013
PLANS APPROVAL DATE

REGISTERED PROFESSIONAL ENGINEER Grace M. Tsushima No. C49814 Exp. 9-30-14 CIVIL STATE OF CALIFORNIA

THE STATE OF CALIFORNIA OR ITS OFFICERS OR AGENTS SHALL NOT BE RESPONSIBLE FOR THE ACCURACY OR COMPLETENESS OF SCANNED COPIES OF THIS PLAN SHEET.

TO ACCOMPANY PLANS DATED 02-21-14

UNIT OF MEASUREMENT SYMBOLS:

Some of the symbols used in the project plan quantity tables and in the Bid Item List are:

TABLE A

SYMBOL USED	DEFINITIONS
ACRE	ACRE
CF	CUBIC FOOT
CY	CUBIC YARD
EA	EACH
GAL	GALLON
LB	POUND
LF	LINEAR FOOT
SQFT	SQUARE FOOT
SQYD	SQUARE YARD
STA	100 FEET
TAB	TABLET
TON	2,000 POUNDS

Some of the symbols used in the plans other than in the project plan quantity tables are:

TABLE B

SYMBOL USED	DEFINITIONS
ksi	KIPS PER SQUARE INCH
ksf	KIPS PER SQUARE FOOT
psi	POUNDS PER SQUARE INCH
psf	POUNDS PER SQUARE FOOT
lb/ft^3, pcf	POUNDS PER CUBIC FOOT
tsf	TONS PER SQUARE FOOT
mph, MPH *	MILES PER HOUR
ø	NOMINAL DIAMETER
oz	OUNCE
lb	POUND
kip	1,000 POUNDS
cal	CALORIE
ft	FOOT OR FEET
gal	GALLON

* For use on a sign panel only

STATE OF CALIFORNIA
DEPARTMENT OF TRANSPORTATION

ABBREVIATIONS (SHEET 2 OF 2)

NO SCALE

RSP A10B DATED JULY 19, 2013 SUPERSEDES STANDARD PLAN A10B DATED MAY 20, 2011 - PAGE 2 OF THE STANDARD PLANS BOOK DATED 2010.

REVISED STANDARD PLAN RSP A10B

2010 REVISED STANDARD PLAN RSP A10B

DATE PLOTTED => 12-MAR-2014
TIME PLOTTED => 07:39

Dist	COUNTY	ROUTE	POST MILES TOTAL PROJECT	SHEET No.	TOTAL SHEETS
02	Hum	299	19.3/19.8	37	56

REGISTERED CIVIL ENGINEER

April 20, 2012
PLANS APPROVAL DATE

REGISTERED PROFESSIONAL ENGINEER
Roberta L. McLaughlin
No. C40375
Exp. 3-31-13
CIVIL
STATE OF CALIFORNIA

THE STATE OF CALIFORNIA OR ITS OFFICERS OR AGENTS SHALL NOT BE RESPONSIBLE FOR THE ACCURACY OR COMPLETENESS OF SCANNED COPIES OF THIS PLAN SHEET.

TO ACCOMPANY PLANS DATED 02-21-14

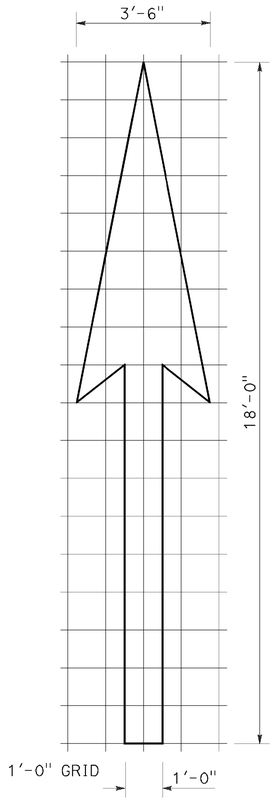

A=25 ft²

TYPE I 18'-0" ARROW

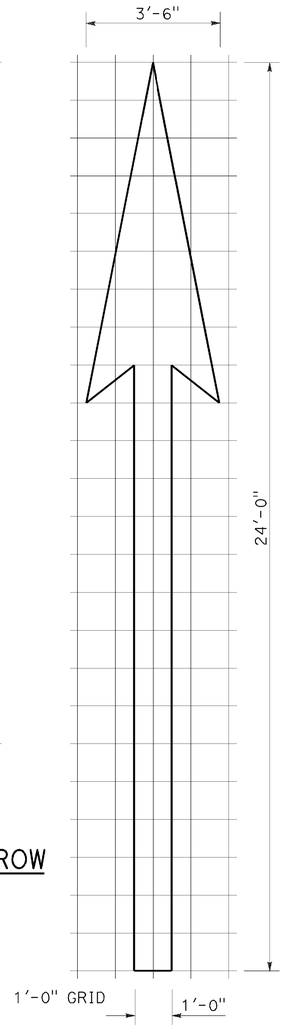

A=31 ft²

TYPE I 24'-0" ARROW

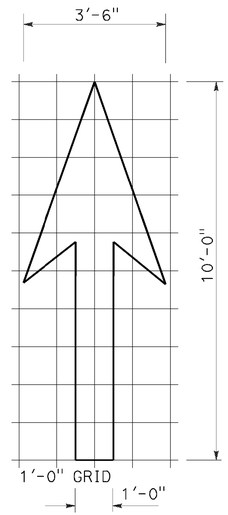

A=14 ft²

TYPE I 10'-0" ARROW

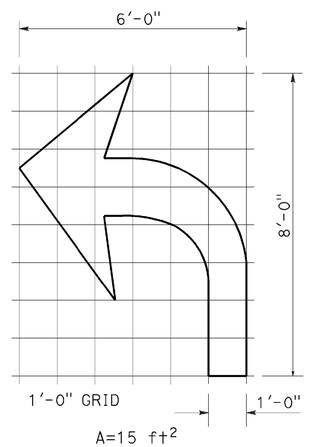

A=15 ft²

TYPE IV (L) ARROW

(For Type IV (R) arrow, use mirror image)

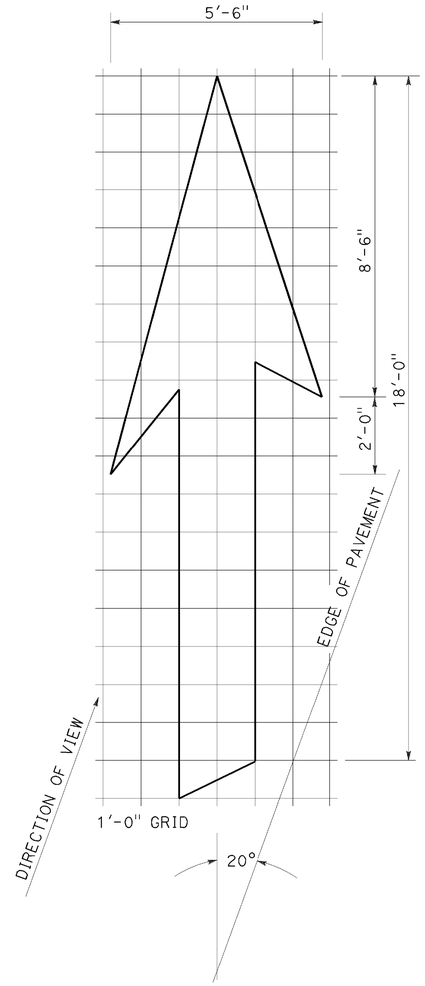

A=42 ft²

TYPE VI ARROW

Right lane drop arrow
(For left lane, use mirror image)

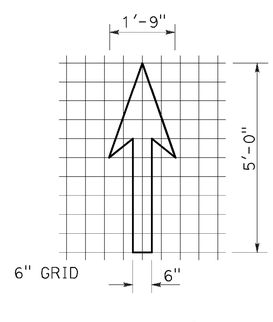

A=3.5 ft²

BIKE LANE ARROW

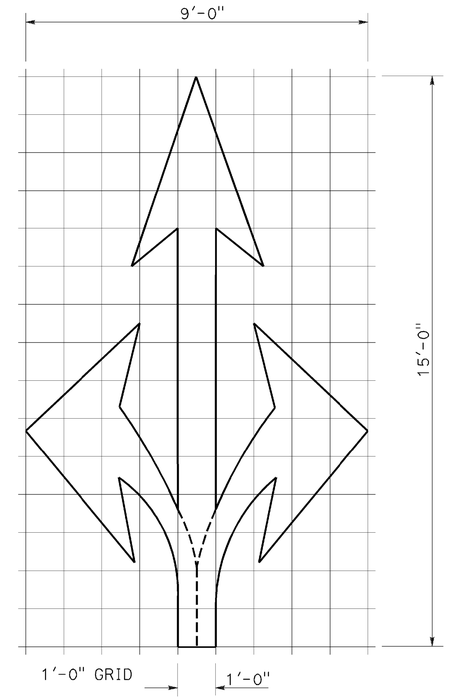

A=36 ft²

TYPE VIII ARROW

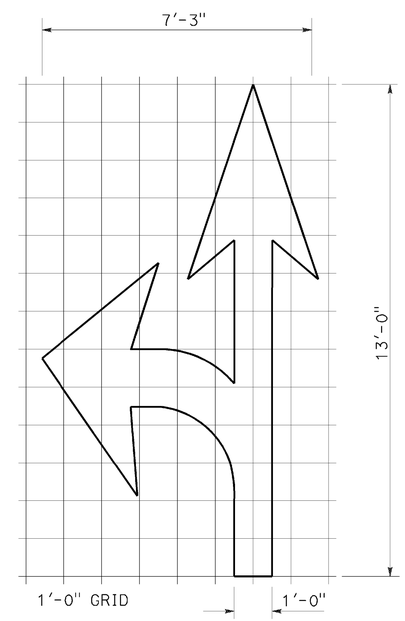

A=27 ft²

TYPE VII (L) ARROW

(For Type VII (R) arrow, use mirror image)

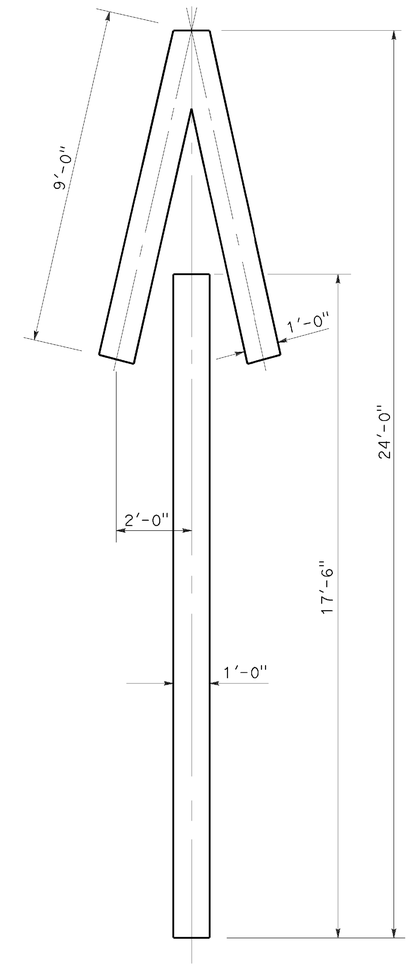

A=33 ft²

TYPE V ARROW

NOTE:
Minor variations in dimensions may be accepted by the Engineer.

STATE OF CALIFORNIA
DEPARTMENT OF TRANSPORTATION

PAVEMENT MARKINGS ARROWS

NO SCALE

RSP A24A DATED APRIL 20, 2012 SUPERSEDES STANDARD PLAN A24A DATED MAY 20, 2011 - PAGE 13 OF THE STANDARD PLANS BOOK DATED 2010.

REVISED STANDARD PLAN RSP A24A

2010 REVISED STANDARD PLAN RSP A24A

DATE PLOTTED => 12-MAR-2014
TIME PLOTTED => 07:39

Dist	COUNTY	ROUTE	POST MILES TOTAL PROJECT	SHEET No.	TOTAL SHEETS
02	Hum	299	19.3/19.8	38	56

Randell D. Hiatt
REGISTERED CIVIL ENGINEER

July 19, 2013
PLANS APPROVAL DATE

REGISTERED PROFESSIONAL ENGINEER
Randell D. Hiatt
No. C50200
Exp. 6-30-15
CIVIL
STATE OF CALIFORNIA

THE STATE OF CALIFORNIA OR ITS OFFICERS OR AGENTS SHALL NOT BE RESPONSIBLE FOR THE ACCURACY OR COMPLETENESS OF SCANNED COPIES OF THIS PLAN SHEET.

TO ACCOMPANY PLANS DATED 02-21-14

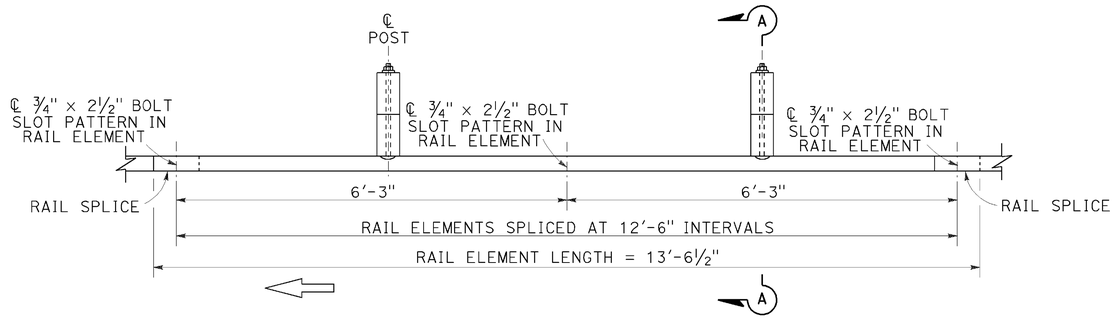

PLAN

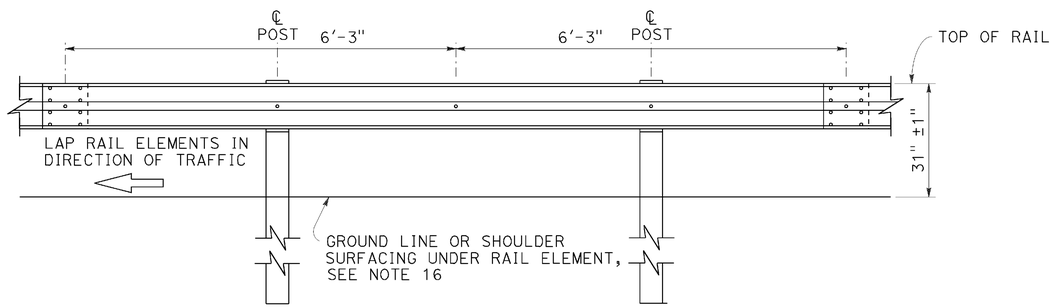

ELEVATION

MIDWEST GUARDRAIL SYSTEM WITH WOOD POST AND BLOCKS

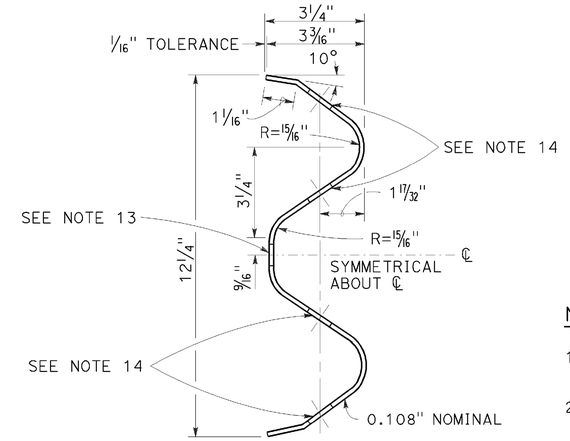

SECTION THRU RAIL ELEMENT

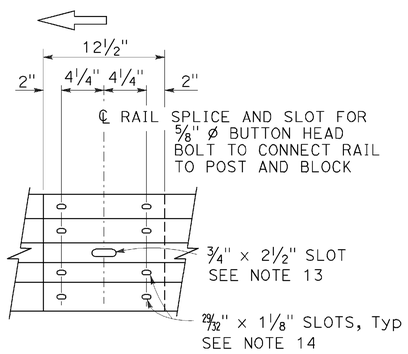

ELEVATION

RAIL ELEMENT SPLICE DETAIL

a) Connect the over lapped end of the rail elements with ⅝" ø × 1⅜" button head oval shoulder splice bolts inserted into the 29⁄32" × 1⅛" slots and bolted together with ⅝" ø recessed hex nuts. Recess of hex nut points toward rail element. A total of 8 bolts and nuts are to be used at each rail splice connection.

b) The ends of the rail elements are to be overlapped in the direction of traffic (see details).

c) Where end cap is to be attached to the end of a rail element, a total of 4 of the above described splice bolts and nuts are to be used.

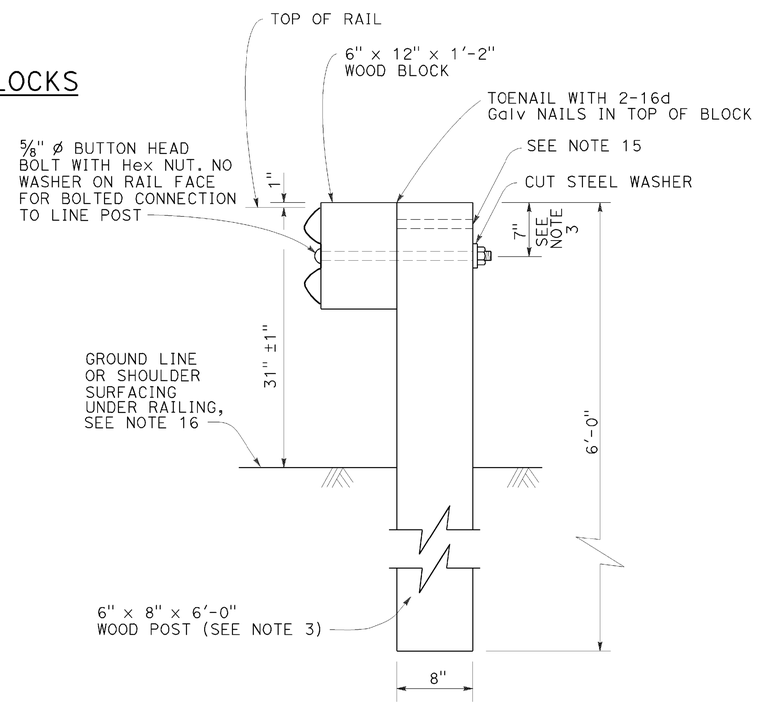

SECTION A-A

TYPICAL WOOD LINE POST INSTALLATION

See Note 4

NOTES:

1. For details of steel post installations, see Revised Standard Plan RSP A77L2.
2. For details of standard hardware used to construct MGS, see Revised Standard Plan RSP A77M1.
3. For details of wood posts and wood blocks used to construct MGS, see Revised Standard Plan RSP A77N1.
4. For additional installation details, see Revised Standard Plan RSP A77N3.
5. MGS post spacing to be 6'-3" center to center, except as otherwise noted.
6. For MGS typical layouts, see the A77P, A77Q and A77R Series of Standard Plans.
7. If railing is connected to terminal system end treatment, use 31" height terminal system end treatment.
8. For MGS end anchor details, see Revised Standard Plans RSP A77S1 and RSP A77T2.
9. For details of MGS transition to bridge railing, see Revised Standard Plan RSP A77U4.
10. For additional details of MSG connection to bridge railing, see Revised Standard Plans RSP A77U1, RSP A77U2 and RSP A77V1.
11. For MGS connection details to abutments and walls, see Revised Standard Plan RSP A77U3.
12. For typical MGS delineation and dike positioning details, see Revised Standard Plan RSP A77N4.
13. Slotted hole for bolted connection of rail element to block and post. See "Section Thru Rail Element".
14. Slotted holes for splice bolts to overlap ends of rail element. See "Section Thru Rail Element".
15. Additional hole in uppermost portion of line post is for potential future adjustments of railing height. See Revised Standard Plan RSP A77N1.
16. Install posts in soil.

STATE OF CALIFORNIA
DEPARTMENT OF TRANSPORTATION

MIDWEST GUARDRAIL SYSTEM STANDARD RAILING SECTION (WOOD POST WITH WOOD BLOCK)

NO SCALE

RSP A77L1 DATED JULY 19, 2013 SUPPLEMENTS STANDARD PLANS BOOK DATED 2010.

REVISED STANDARD PLAN RSP A77L1

2010 REVISED STANDARD PLAN RSP A77L1

DATE PLOTTED => 12-MAR-2014
TIME PLOTTED => 01:39

Dist	COUNTY	ROUTE	POST MILES TOTAL PROJECT	SHEET No.	TOTAL SHEETS
02	Hum	299	19.3/19.8	39	56

Randell D. Hiatt
REGISTERED CIVIL ENGINEER

July 19, 2013
PLANS APPROVAL DATE

REGISTERED PROFESSIONAL ENGINEER
Randell D. Hiatt
No. C50200
Exp. 6-30-15
CIVIL
STATE OF CALIFORNIA

THE STATE OF CALIFORNIA OR ITS OFFICERS OR AGENTS SHALL NOT BE RESPONSIBLE FOR THE ACCURACY OR COMPLETENESS OF SCANNED COPIES OF THIS PLAN SHEET.

TO ACCOMPANY PLANS DATED 02-21-14

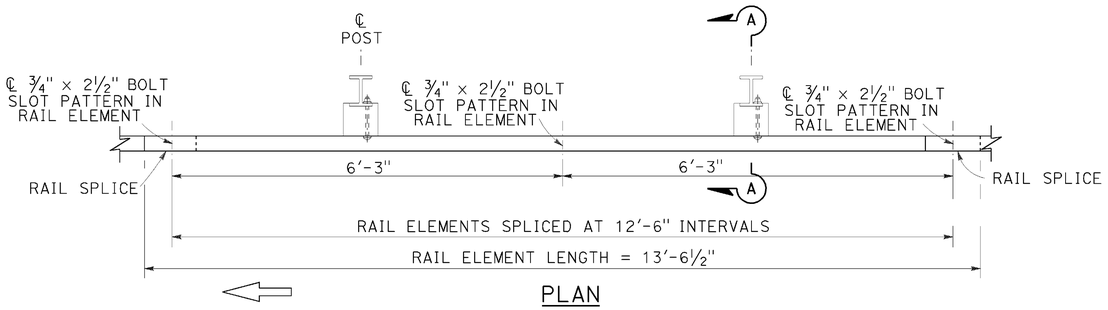

PLAN

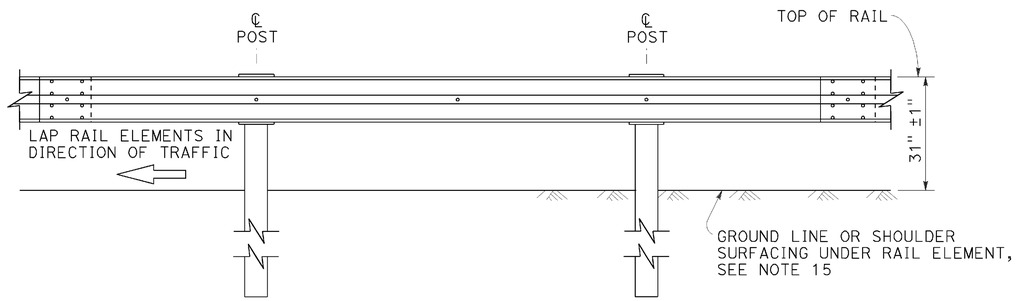

ELEVATION

MIDWEST GUARDRAIL SYSTEM WITH STEEL POSTS AND NOTCHED WOOD OR NOTCHED RECYCLED PLASTIC BLOCKS

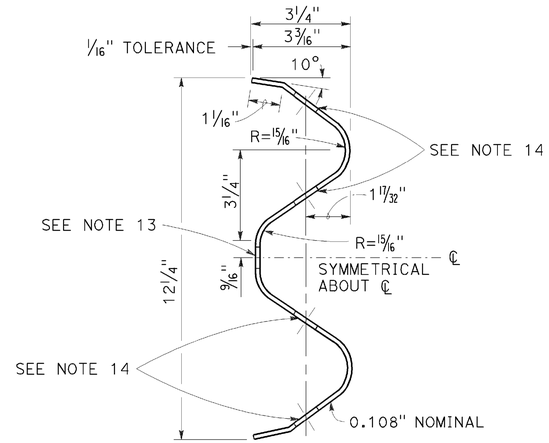

SECTION THRU RAIL ELEMENT

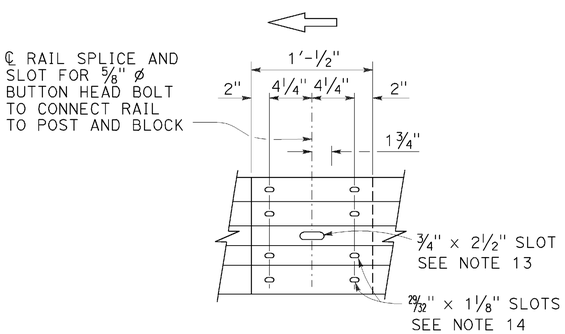

ELEVATION

RAIL ELEMENT SPLICE DETAIL

a) Connect the over lapped end of the rail elements with ⅝" ø × 1⅜" button head oval shoulder splice bolts inserted into the 29⁄32" × 1⅛" slots and bolted together with ⅝" ø recessed hex nuts. Recess of hex nut points toward rail element. A total of 8 bolts and nuts are to be used at each rail splice connection.

b) The ends of the rail elements are to be overlapped in the direction of traffic (see details).

c) Where end cap is to be attached to the end of a rail element, a total of 4 of the above described splice bolts and nuts are to be used.

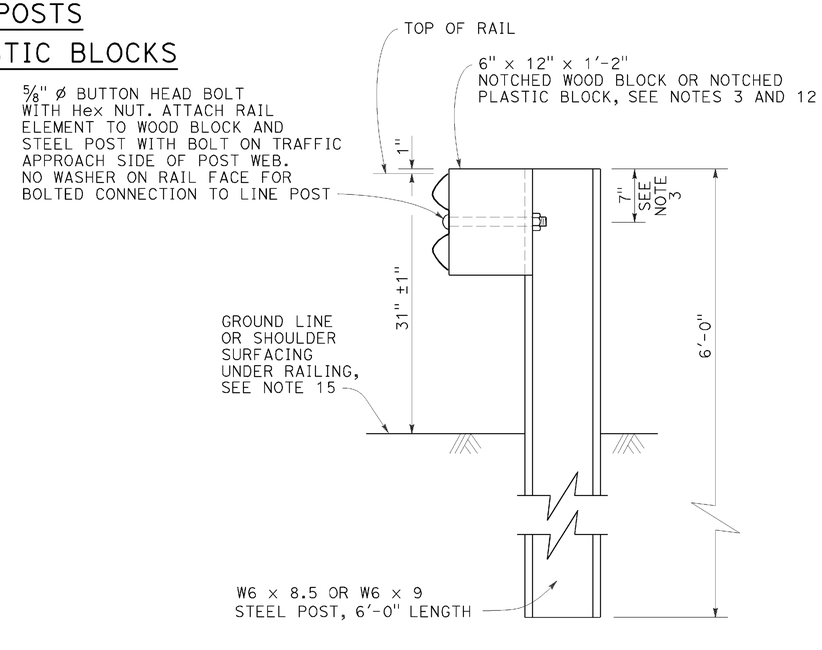

SECTION A-A

TYPICAL STEEL LINE POST INSTALLATION

See Note 4

NOTES:

1. For details of wood post installations, see Revised Standard Plan RSP A77L1.
2. For details of standard hardware used to construct MGS, see Revised Standard Plan RSP A77M1.
3. For details of steel posts and notched wood blocks used to construct MGS, see Revised Standard Plan RSP A77N2.
4. For additional installation details, see Revised Standard Plan RSP A77N3.
5. MGS post spacing to be 6'-3" center to center, except as otherwise noted.
6. For MGS typical layouts, see the A77P, A77Q and A77R Series of Standard Plans.
7. If railing is connected to terminal system end treatment, use 31" height terminal system end treatment.
8. For MGS end anchor details, see Revised Standard Plans RSP A77S1 and RSP A77T2.
9. For details of MGS transition to bridge railing, see Revised Standard Plan RSP A77U4.
10. For additional details of MGS connection to bridge railings, see Revised Standard Plans RSP A77U1, RSP A77U2 and RSP A77V1.
11. For dike positioning and MGS delineation details, see Revised Standard Plan RSP A77N4.
12. Notched face of block faces steel post.
13. Slotted hole for bolted connection of rail element to block and post. See "Section Thru Rail Element".
14. Slotted holes for splice bolts to overlap ends of rail element. See "Section Thru Rail Element".
15. Install posts in soil.

STATE OF CALIFORNIA
DEPARTMENT OF TRANSPORTATION

MIDWEST GUARDRAIL SYSTEM STANDARD RAILING SECTION (STEEL POST WITH NOTCHED WOOD OR NOTCHED RECYCLED PLASTIC BLOCK)

NO SCALE

RSP A77L2 DATED JULY 19, 2013 SUPPLEMENTS THE STANDARD PLANS BOOK DATED 2010.

REVISED STANDARD PLAN RSP A77L2

2010 REVISED STANDARD PLAN RSP A77L2

DATE PLOTTED => 12-MAR-2014
TIME PLOTTED => 07:39

Dist	COUNTY	ROUTE	POST MILES TOTAL PROJECT	SHEET No.	TOTAL SHEETS
02	Hum	299	19.3/19.8	40	56

Randell D. Hiatt
REGISTERED CIVIL ENGINEER

July 19, 2013
PLANS APPROVAL DATE

REGISTERED PROFESSIONAL ENGINEER
Randell D. Hiatt
No. C50200
Exp. 6-30-15
CIVIL
STATE OF CALIFORNIA

THE STATE OF CALIFORNIA OR ITS OFFICERS OR AGENTS SHALL NOT BE RESPONSIBLE FOR THE ACCURACY OR COMPLETENESS OF SCANNED COPIES OF THIS PLAN SHEET.

TO ACCOMPANY PLANS DATED 02-21-14

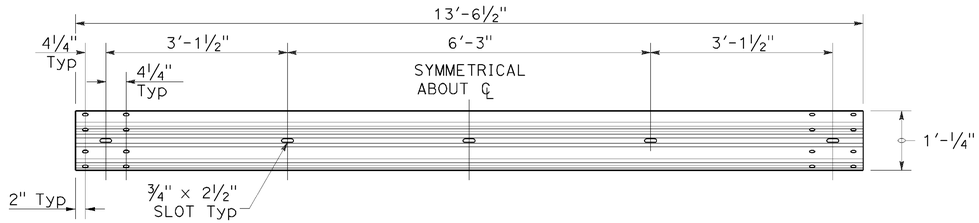

TYPICAL RAIL ELEMENT

NOTE:

1. Slotted holes for splice bolts to overlap ends of rail element.

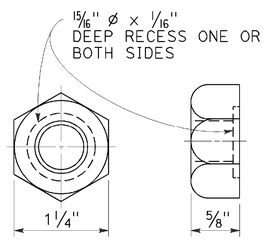

⅝" ø RECESS NUT

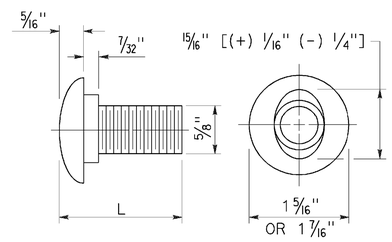

⅝" ø BUTTON HEAD BOLT

BUTTON HEAD BOLT

L	THREAD LENGTH
1⅜"	FULL THREAD LENGTH
2"	FULL THREAD LENGTH
10"	4" Min THREAD LENGTH
18"	4" Min THREAD LENGTH
20"	4" Min THREAD LENGTH
22"	4" Min THREAD LENGTH
26"	4" Min THREAD LENGTH
36"	4" Min THREAD LENGTH
** 2¾"	2" Min THREAD LENGTH
** 19"	4" Min THREAD LENGTH

** For nested rail applications.

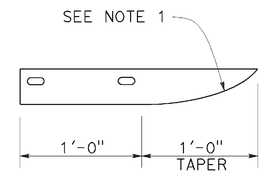

PLAN

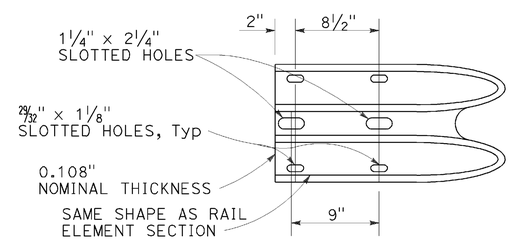

ELEVATION

END CAP
(TYPE A)

STATE OF CALIFORNIA
DEPARTMENT OF TRANSPORTATION

MIDWEST GUARDRAIL SYSTEM STANDARD HARDWARE

NO SCALE

RSP A77M1 DATED JULY 19, 2013 SUPPLEMENTS THE STANDARD PLANS BOOK DATED 2010.

REVISED STANDARD PLAN RSP A77M1

2010 REVISED STANDARD PLAN RSP A77M1

DATE PLOTTED => 12-MAR-2014
TIME PLOTTED => 07:39

Dist	COUNTY	ROUTE	POST MILES TOTAL PROJECT	SHEET No.	TOTAL SHEETS
02	Hum	299	19.3/19.8	41	56

Randell D. Hiatt
REGISTERED CIVIL ENGINEER

July 19, 2013
PLANS APPROVAL DATE

REGISTERED PROFESSIONAL ENGINEER
Randell D. Hiatt
No. C50200
Exp. 6-30-15
CIVIL
STATE OF CALIFORNIA

THE STATE OF CALIFORNIA OR ITS OFFICERS OR AGENTS SHALL NOT BE RESPONSIBLE FOR THE ACCURACY OR COMPLETENESS OF SCANNED COPIES OF THIS PLAN SHEET.

TO ACCOMPANY PLANS DATED 02-21-14

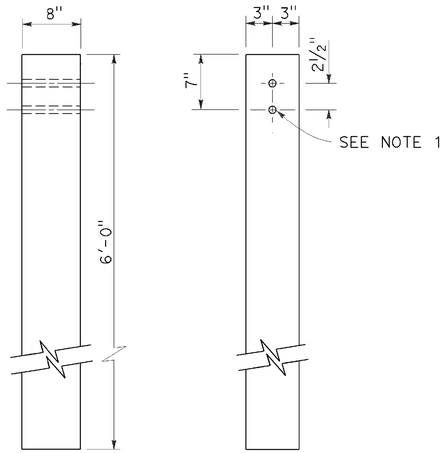

SIDE FRONT

6" x 8" WOOD POST
See Note 3

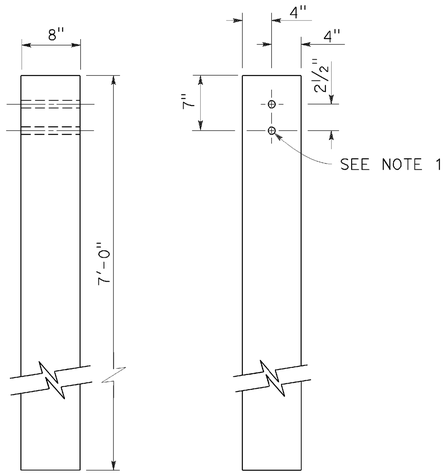

SIDE FRONT

8" x 8" WOOD POST
See Note 4

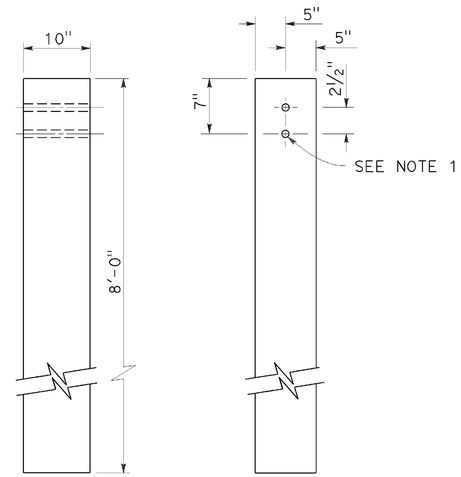

SIDE FRONT

10" x 10" WOOD POST
See Note 5

NOTES:

1. All holes in wood posts and blocks shall be 3/4" Dia ± 1/16".
2. Dimensions shown for wood post are nominal.
3. This post and block combination used for standard line post sections of MGS.
4. This post and 8" x 12" block combination used for line post sections of MGS on narrow roadways.
5. This post and 8" x 12" block combination is typically used where strengthened line post sections of MGS are warranted to shield fixed objects.
6. See Revised Standard Plan RSP A77L3 for use of 6" x 8" and 8" x 8" wood blocks.

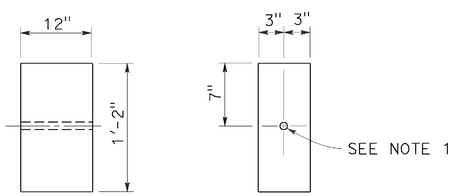

SIDE FRONT

6" x 12" WOOD BLOCK
See Note 3

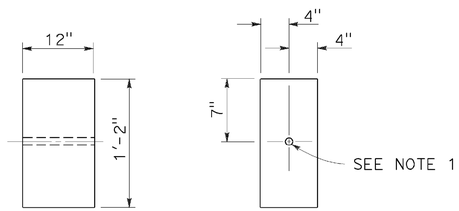

SIDE FRONT

8" x 12" WOOD BLOCK

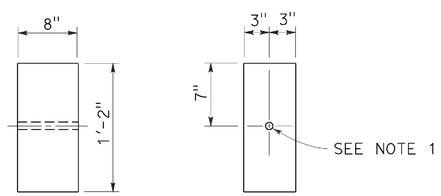

SIDE FRONT

6" x 8" WOOD BLOCK
Only for use with metal beam guard rail see Note 6

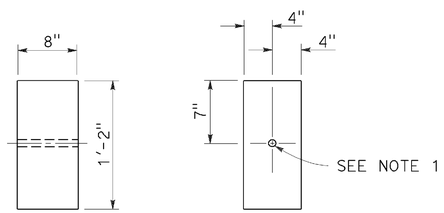

SIDE FRONT

8" x 8" WOOD BLOCK
Only for use with metal beam guard rail see Note 6

STATE OF CALIFORNIA
DEPARTMENT OF TRANSPORTATION

MIDWEST GUARDRAIL SYSTEM WOOD POST AND WOOD BLOCK DETAILS

NO SCALE

RSP A77N1 DATED JULY 19, 2013 SUPPLEMENTS THE STANDARD PLANS BOOK DATED 2010.

REVISED STANDARD PLAN RSP A77N1

2010 REVISED STANDARD PLAN RSP A77N1

DATE PLOTTED => 12-MAR-2014
TIME PLOTTED => 07:39

Dist	COUNTY	ROUTE	POST MILES TOTAL PROJECT	SHEET No.	TOTAL SHEETS
02	Hum	299	19.3/19.8	42	56

Randell D. Hiatt
REGISTERED CIVIL ENGINEER

November 15, 2013
PLANS APPROVAL DATE

REGISTERED PROFESSIONAL ENGINEER
Randell D. Hiatt
No. C50200
Exp. 6-30-15
CIVIL
STATE OF CALIFORNIA

THE STATE OF CALIFORNIA OR ITS OFFICERS OR AGENTS SHALL NOT BE RESPONSIBLE FOR THE ACCURACY OR COMPLETENESS OF SCANNED COPIES OF THIS PLAN SHEET.

TO ACCOMPANY PLANS DATED 02-21-14

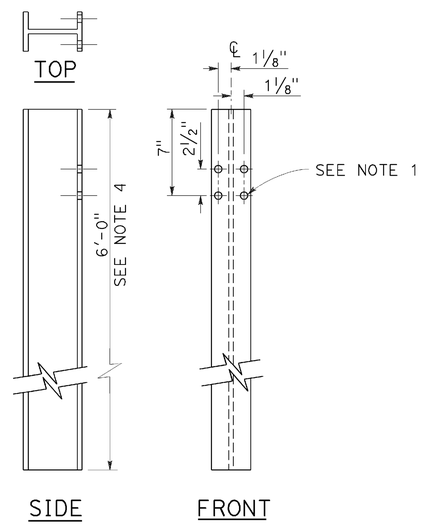

W6 x 9 OR W6 x 8.5
STEEL POST
See Note 4

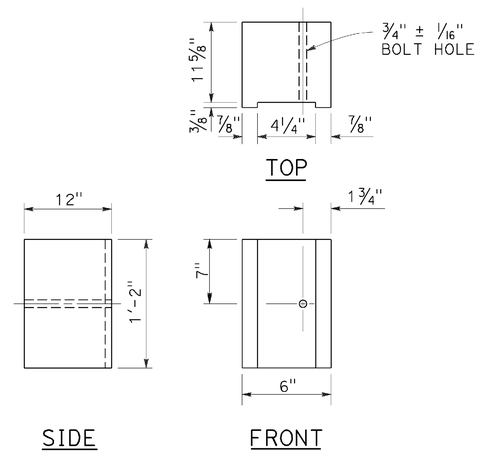

6" x 12"
NOTCHED WOOD BLOCK
See Notes 2 and 3

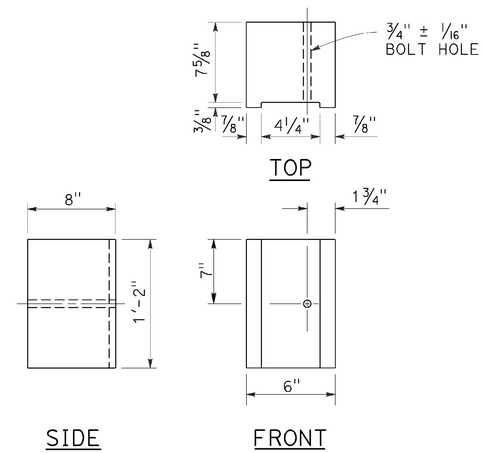

6" x 8"
NOTCHED WOOD BLOCK
Only for use with metal beam guard railing. See Note 5

NOTES:

1. All holes in steel post shall be 13/16" Dia maximum.
2. Dimensions shown for wood block are nominal.
3. Notched face of block faces steel post.
4. 6'-0" length posts to be used for typical roadway installation. See Revised Standard Plan RSP A77N3.
5. See Revised Standard Plan RSP A77L3 for use of 6" x 8" and 8" x 8" notched wood blocks.
6. This post and 8" x 12" block combination to be used for line post sections of MGS on narrow roadways and where strengthened line post sections of MGS are warranted to shield fixed objects.

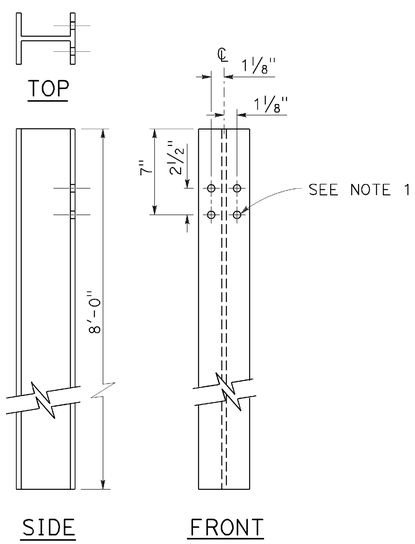

W6 x 15
STEEL POST
See Note 6

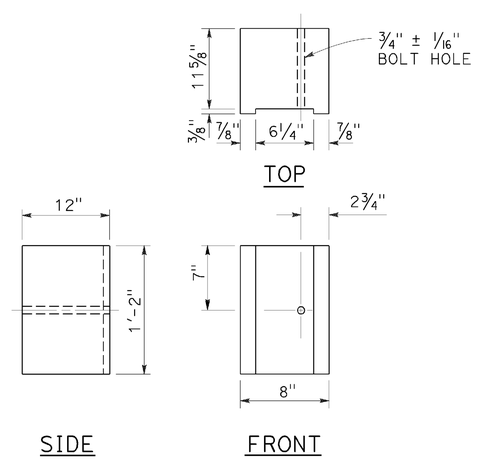

8" x 12"
NOTCHED WOOD BLOCK
See Notes 2 and 3

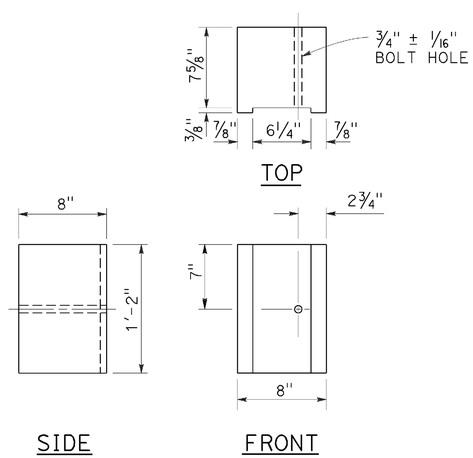

8" x 8"
NOTCHED WOOD BLOCK
Only for use with metal beam guard railing. See Note 5

STATE OF CALIFORNIA
DEPARTMENT OF TRANSPORTATION

MIDWEST GUARDRAIL SYSTEM STEEL POST AND NOTCHED WOOD BLOCK DETAILS

NO SCALE

RSP A77N2 DATED NOVEMBER 15, 2013 SUPERSEDES RSP A77N2
DATED JULY 19, 2013 THAT SUPPLEMENTS THE STANDARD PLANS BOOK DATED 2010.

REVISED STANDARD PLAN RSP A77N2

2010 REVISED STANDARD PLAN RSP A77N2

DATE PLOTTED => 12-MAR-2014
TIME PLOTTED => 07:39

Dist	COUNTY	ROUTE	POST MILES TOTAL PROJECT	SHEET No.	TOTAL SHEETS
02	Hum	299	19.3/19.8	43	56

Randell D. Hiatt
REGISTERED CIVIL ENGINEER

November 15, 2013
PLANS APPROVAL DATE

REGISTERED PROFESSIONAL ENGINEER
Randell D. Hiatt
No. C50200
Exp. 6-30-15
CIVIL
STATE OF CALIFORNIA

THE STATE OF CALIFORNIA OR ITS OFFICERS OR AGENTS SHALL NOT BE RESPONSIBLE FOR THE ACCURACY OR COMPLETENESS OF SCANNED COPIES OF THIS PLAN SHEET.

TO ACCOMPANY PLANS DATED 02-21-14

2010 REVISED STANDARD PLAN RSP A77N3

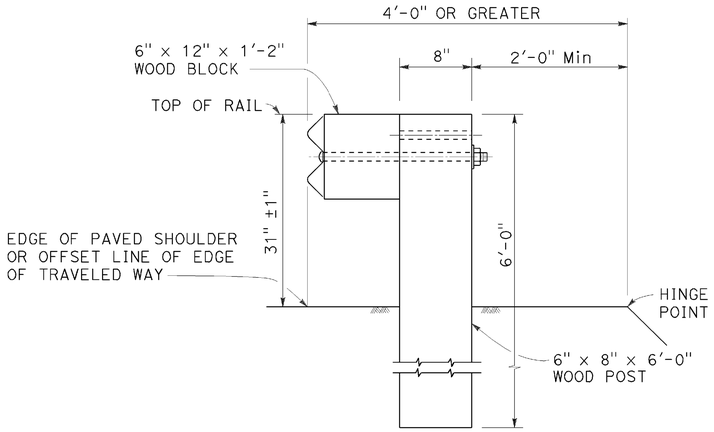

DETAIL A

TYPICAL ROADWAY INSTALLATION

See Note 1

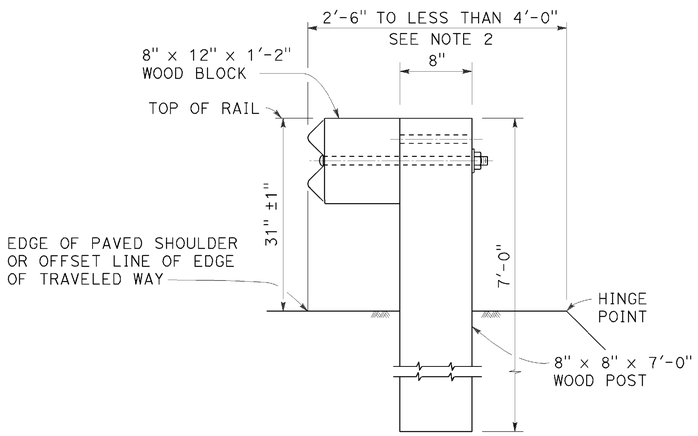

DETAIL B

NARROW ROADWAY INSTALLATION

See Note 1

POST EMBEDMENT

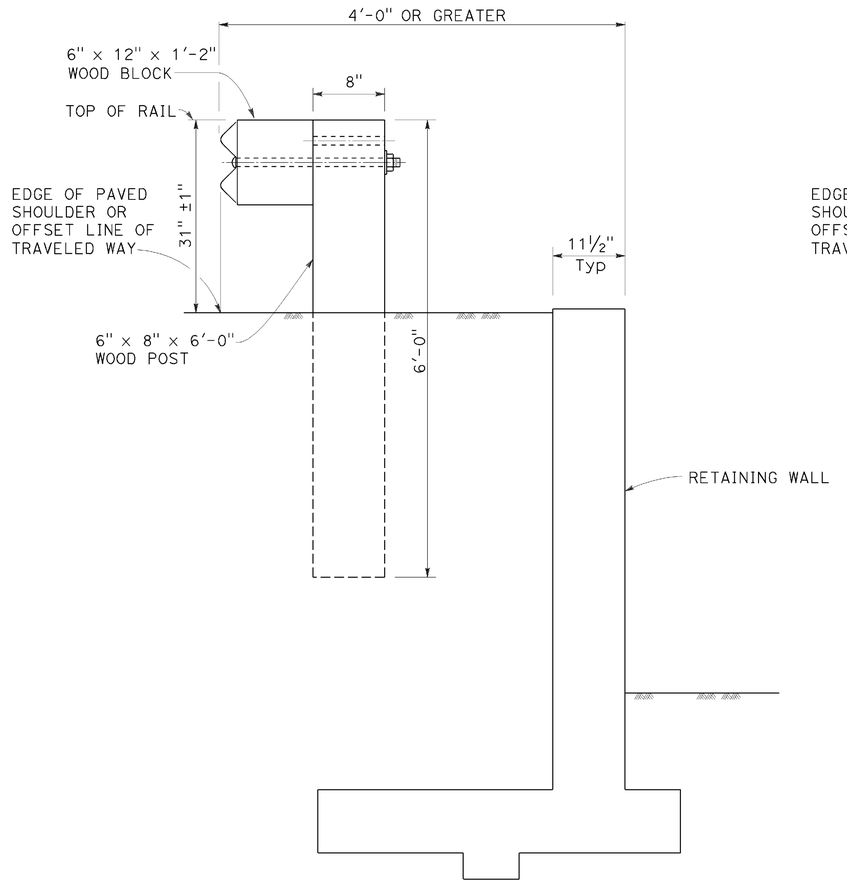

DETAIL C

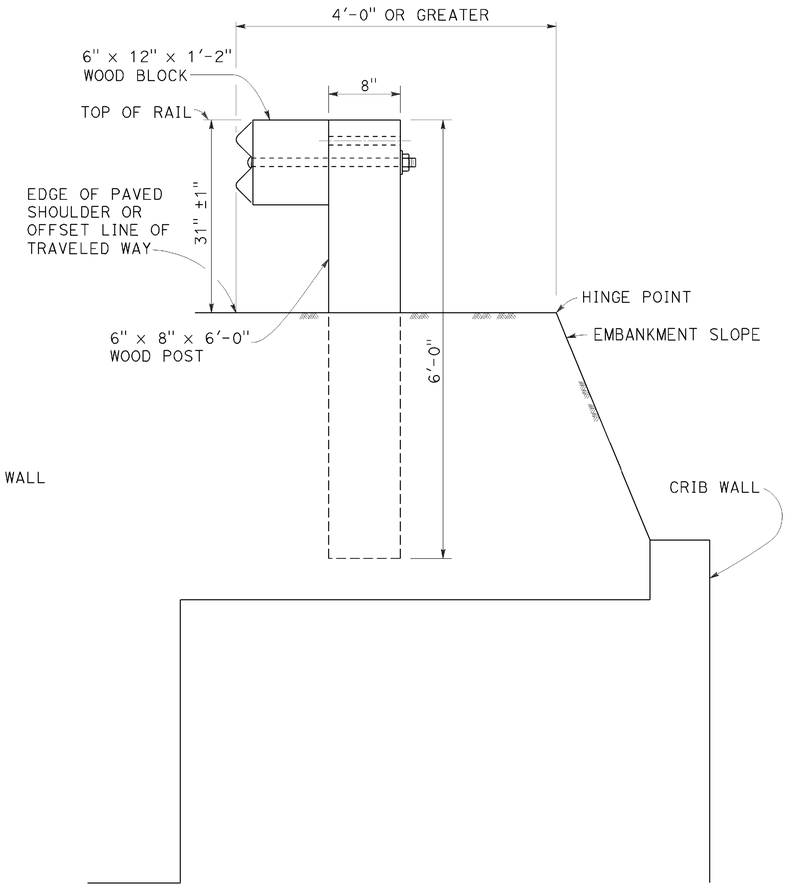

DETAIL D

INSTALLATION AT EARTH RETAINING WALLS

NOTES:

1. These installation details also applicable to steel line post installations. For Detail A, C, and D, where steel line post installations are constructed, W6 x 8.5 or W6 x 9 steel post, 6'-0" in length, with 6" x 12" x 1'-2" notched wood blocks or notched recycled plastic blocks are to be used in place of the size of wood post and wood block shown. For Detail B, where steel line post installations are constructed, W6 x 15 steel post, 8'-0" in length, with 8" x 12" x 1'-2" notched wood blocks or notched recycled plastic blocks are to be used in place of the size of wood post and wood block shown. For additional installation details, see Revised Standard Plan RSP A77L1 and RSP A77L2.
2. Where the distance between the face of the rail and the hinge point is less than 2'-6", see the Project Plans for special details.
3. For dike positioning with MGS installations, see Revised Standard Plan RSP A77N4.

STATE OF CALIFORNIA
DEPARTMENT OF TRANSPORTATION

MIDWEST GUARDRAIL SYSTEM TYPICAL LINE POST EMBEDMENT AND HINGE POINT OFFSET DETAILS

NO SCALE

RSP A77N3 DATED NOVEMBER 15, 2013 SUPERSEDES RSP A77N3
DATED JULY 19, 2013 THAT SUPPLEMENTS THE STANDARD PLANS BOOK DATED 2010.

REVISED STANDARD PLAN RSP A77N3

DATE PLOTTED => 12-MAR-2014
TIME PLOTTED => 07:39

Dist	COUNTY	ROUTE	POST MILES TOTAL PROJECT	SHEET No.	TOTAL SHEETS
02	Hum	299	19.3/19.8	44	56

Randell D. Hiatt
REGISTERED CIVIL ENGINEER

July 19, 2013
PLANS APPROVAL DATE

REGISTERED PROFESSIONAL ENGINEER
Randell D. Hiatt
No. C50200
Exp. 6-30-15
CIVIL
STATE OF CALIFORNIA

THE STATE OF CALIFORNIA OR ITS OFFICERS OR AGENTS SHALL NOT BE RESPONSIBLE FOR THE ACCURACY OR COMPLETENESS OF SCANNED COPIES OF THIS PLAN SHEET.

TO ACCOMPANY PLANS DATED 02-21-14

NOTES:

1. When necessary to place dike more than 7" in front of face of MGS, only Type C dike may be used. For dike details, see Revised Standard Plan RSP A87B.
2. For standard railing post embedment, see Revised Standard Plan RSP A77N3.
3. MGS delineation to be used where shown on the Project Plans.
4. When dike or curb is placed under MGS, the maximum height of the dike or curb shall be 6". Mountable dike should not be used. For dike and curb details, see Revised Standard Plans RSP A87A and RSP A87B.
5. For details of typical distance between the face of rail and hinge point, see Revised Standard Plan RSP A77N3.
6. For steel line posts, use 1/4 - 20 self-tapping screws in 0.22" diameter holes or 1/4" bolts in 9/32" diameter holes.

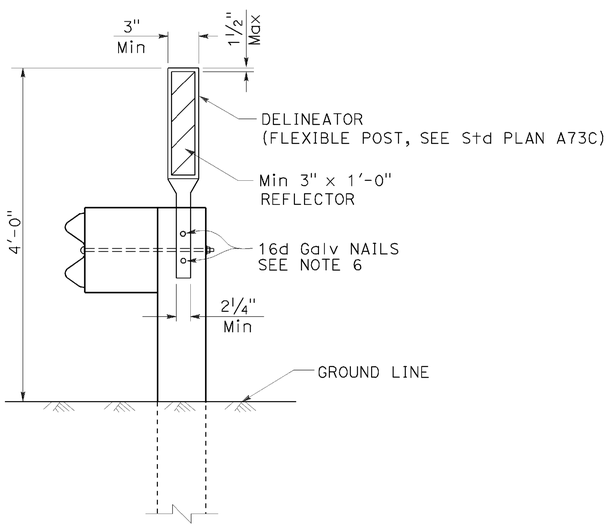

MGS DELINEATION
See Note 3

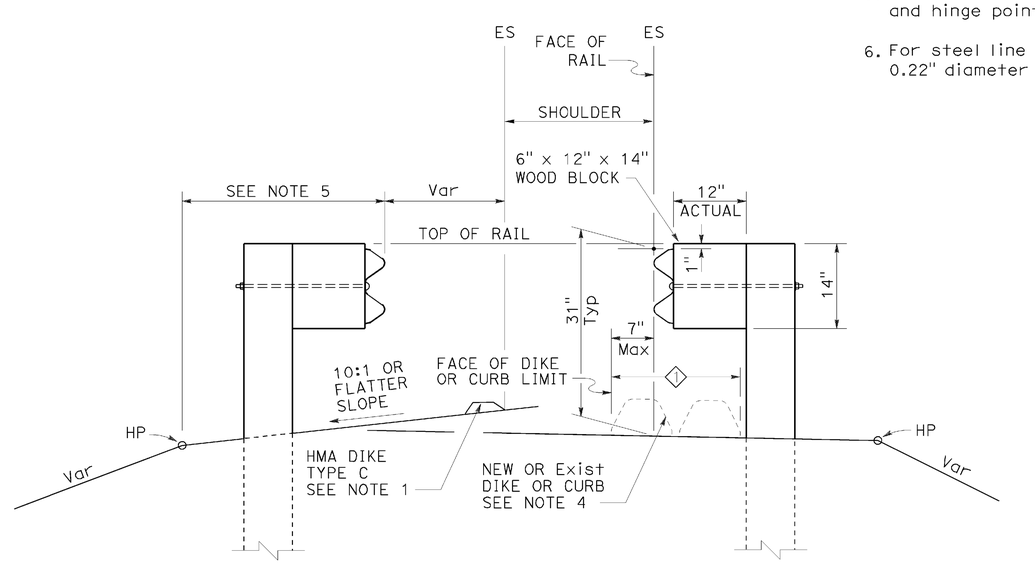

DIKE POSITIONING
See Note 1

1 PERMISSIBLE DIKE OR CURB PLACEMENT AREA

STATE OF CALIFORNIA
DEPARTMENT OF TRANSPORTATION

MIDWEST GUARDRAIL SYSTEM TYPICAL RAILING DELINEATION AND DIKE POSITIONING DETAILS

NO SCALE

RSP A77N4 DATED JULY 19, 2013 SUPPLEMENTS THE STANDARD PLANS BOOK DATED 2010.

REVISED STANDARD PLAN RSP A77N4

2010 REVISED STANDARD PLAN RSP A77N4

DATE PLOTTED => 12-MAR-2014
TIME PLOTTED => 07:40

Dist	COUNTY	ROUTE	POST MILES TOTAL PROJECT	SHEET No.	TOTAL SHEETS
02	Hum	299	19.3/19.8	45	56

Randell D. Hiatt
REGISTERED CIVIL ENGINEER

July 19, 2013
PLANS APPROVAL DATE

REGISTERED PROFESSIONAL ENGINEER
Randell D. Hiatt
No. C50200
Exp. 6-30-15
CIVIL
STATE OF CALIFORNIA

THE STATE OF CALIFORNIA OR ITS OFFICERS OR AGENTS SHALL NOT BE RESPONSIBLE FOR THE ACCURACY OR COMPLETENESS OF SCANNED COPIES OF THIS PLAN SHEET.

TO ACCOMPANY PLANS DATED 02-21-14

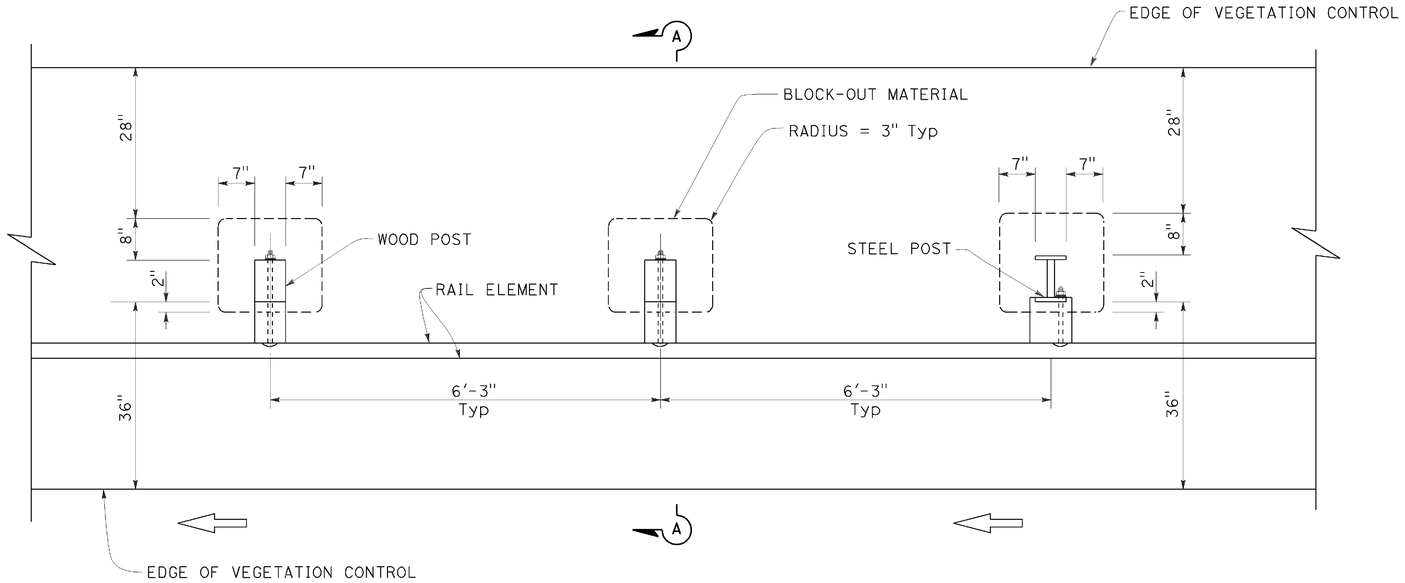

PLAN

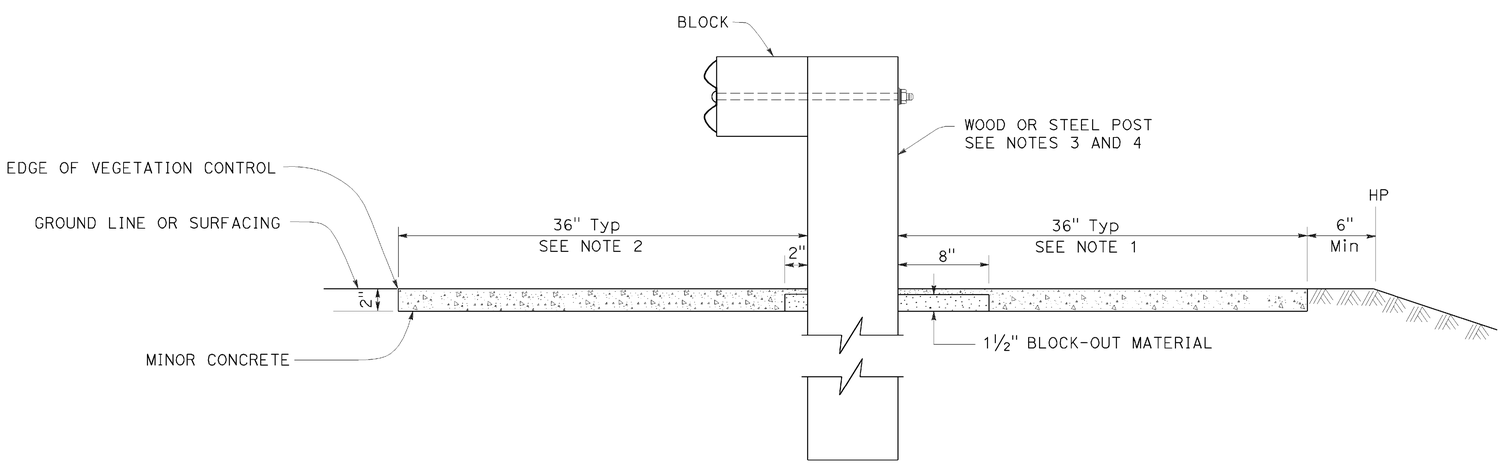

SECTION A-A

NOTES:

1. Where the distance between back of post and hinge point is less than 42", construct vegetation control to 6" from hinge point while maintaining the 8" block-out at back of post. If the 8" block-out at back of post can not be maintained, construct vegetation control flush with the back edge of post.
2. Where dike is constructed under railing, construct vegetation control to back edge of dike. Where paved shoulder is constructed within 36" in front of the post, construct vegetation control to the edge of paved shoulder.
3. For wood post sizes, see Revised Standard Plan RSP A77N1.
4. For steel post sizes, see Revised Standard Plan RSP A77N2.
5. For details not shown, see Revised Standard Plans RSP A77L1 and RSP A77L2.

STATE OF CALIFORNIA
DEPARTMENT OF TRANSPORTATION

MIDWEST GUARDRAIL SYSTEM TYPICAL VEGETATION CONTROL STANDARD RAILING SECTION

NO SCALE

RSP A77N5 DATED JULY 19, 2013 SUPPLEMENTS THE STANDARD PLANS BOOK DATED 2010.

REVISED STANDARD PLAN RSP A77N5

2010 REVISED STANDARD PLAN RSP A77N5

DATE PLOTTED => 12-MAR-2014
TIME PLOTTED => 07:40

Dist	COUNTY	ROUTE	POST MILES TOTAL PROJECT	SHEET No.	TOTAL SHEETS
02	Hum	299	19.3/19.8	46	56

Randell D. Hiatt
REGISTERED CIVIL ENGINEER

July 19, 2013
PLANS APPROVAL DATE

REGISTERED PROFESSIONAL ENGINEER
Randell D. Hiatt
No. C50200
Exp. 6-30-15
CIVIL
STATE OF CALIFORNIA

THE STATE OF CALIFORNIA OR ITS OFFICERS OR AGENTS SHALL NOT BE RESPONSIBLE FOR THE ACCURACY OR COMPLETENESS OF SCANNED COPIES OF THIS PLAN SHEET.

TO ACCOMPANY PLANS DATED 02-21-14

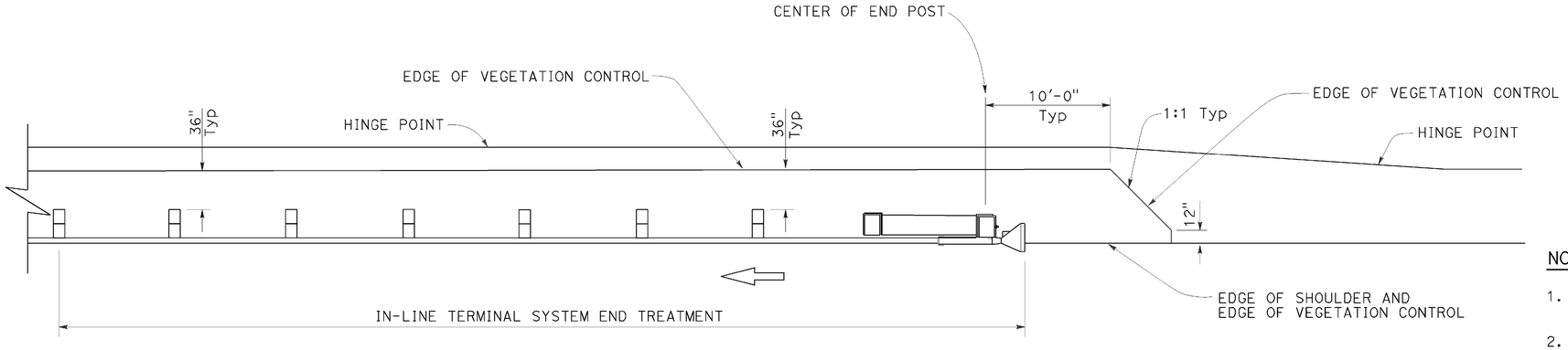

PLAN

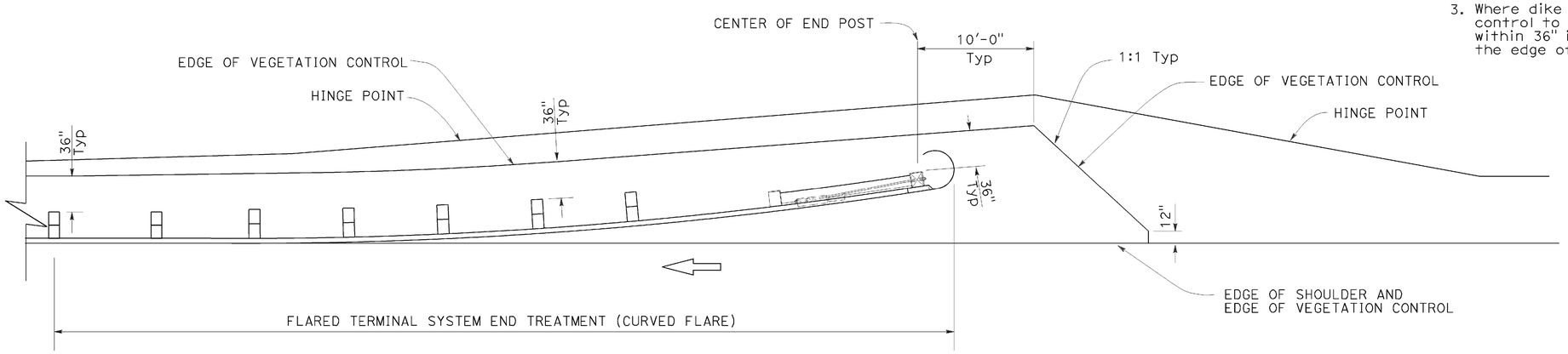

PLAN

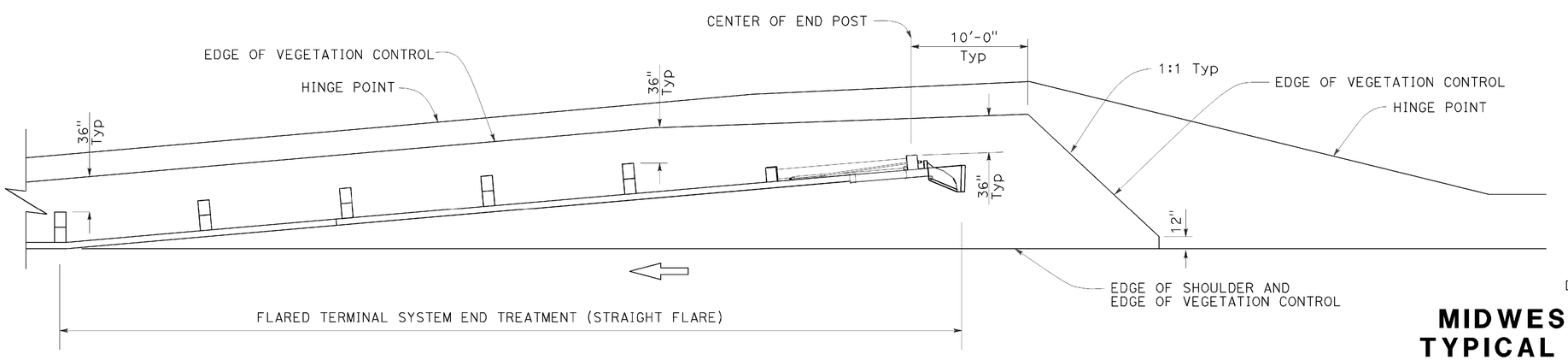

PLAN

NOTES:

1. See Revised Standard Plan RSP A77N5 for additional vegetation control details.
2. Where the distance between back of post and hinge point is less than 42", construct vegetation control to 6" from hinge point while maintaining the 8" block-out at back of post. If the 8" block-out at back of post can not be maintained, construct vegetation control flush with the back edge of post.
3. Where dike is constructed under railing, construct vegetation control to back edge of dike. Where paved shoulder is constructed within 36" in front of the post, construct vegetation control to the edge of paved shoulder.

STATE OF CALIFORNIA
DEPARTMENT OF TRANSPORTATION

MIDWEST GUARDRAIL SYSTEM TYPICAL VEGETATION CONTROL FOR TERMINAL SYSTEM END TREATMENTS

NO SCALE

RSP A77N6 DATED JULY 19, 2013 SUPPLEMENTS THE STANDARD PLANS BOOK DATED 2010.

REVISED STANDARD PLAN RSP A77N6

2010 REVISED STANDARD PLAN RSP A77N6

DATE PLOTTED => 12-MAR-2014
TIME PLOTTED => 07:40

Dist	COUNTY	ROUTE	POST MILES TOTAL PROJECT	SHEET No.	TOTAL SHEETS
02	Hum	299	19.3/19.8	47	56

Randell D. Hiatt
REGISTERED CIVIL ENGINEER

July 19, 2013
PLANS APPROVAL DATE

REGISTERED PROFESSIONAL ENGINEER
Randell D. Hiatt
No. C50200
Exp. 6-30-15
CIVIL
STATE OF CALIFORNIA

THE STATE OF CALIFORNIA OR ITS OFFICERS OR AGENTS SHALL NOT BE RESPONSIBLE FOR THE ACCURACY OR COMPLETENESS OF SCANNED COPIES OF THIS PLAN SHEET.

TO ACCOMPANY PLANS DATED 02-21-14

2010 REVISED STANDARD PLAN RSP A77P2

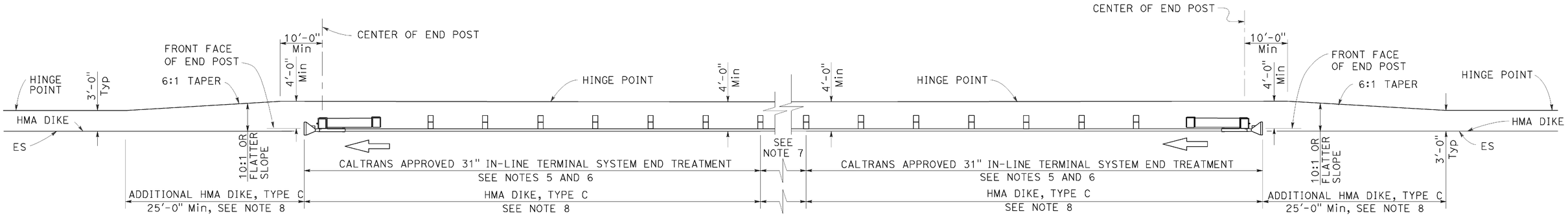

TYPE 11D LAYOUT

(Embankment MGS installation with
31" in-line end treatment at each end of railing)
See Note 4

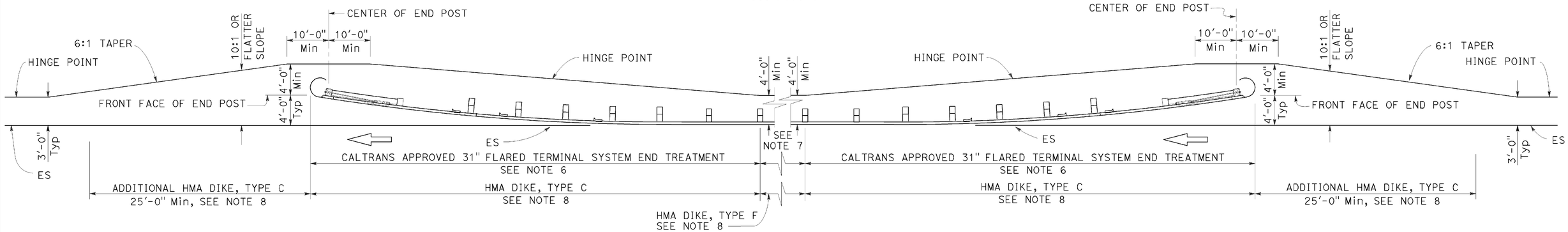

TYPE 11E LAYOUT

(Embankment MGS installation with
31" flared end treatment at each end of railing)
See Note 4

NOTES:

1. Line post, blocks and hardware to be used are shown on Revised Standard Plans RSP A77L1, RSP A77L2, RSP A77M1, RSP A77N1 and RSP A77N2.
2. MGS post spacing to be 6'-3" center to center, except as otherwise noted.
3. Except as noted, line posts are 6" x 8" x 6'-0" wood with 6" x 12" x 1'-2" wood blocks. W6 x 8.5 or W6 x 9 steel posts, 6'-0" in length, with 6" x 12" x 1'-2" notched wood blocks or plastic blocks may be used for 6" x 8" x 6'-0" wood post with 6" x 12" x 1'-2" wood blocks where applicable and when specified.
4. Layout Types 11D through 11L, shown on the A77P Series of Standard Plans, are typically used where MGS is recommended to shield embankment slopes and a crashworthy 31" end treatment is required for both directions of traffic.
5. 31" in-line terminal system end treatments are used where site conditions will not accommodate a flared end treatment.
6. The type of 31" terminal system end treatment to be used will be shown on the Project Plans.
7. Dependent on site conditions (embankment height and side slope), construction of additional MGS (length equal to multiples of 12'-6" with 6'-3" post spacing) may be advisable.
8. Where placement of dike is required with MGS installations, see Revised Standard Plan RSP A77N4 for dike positioning details.

STATE OF CALIFORNIA
DEPARTMENT OF TRANSPORTATION

MIDWEST GUARDRAIL SYSTEM TYPICAL LAYOUTS FOR EMBANKMENTS

NO SCALE

RSP A77P2 DATED JULY 19, 2013 SUPPLEMENTS THE STANDARD PLANS BOOK DATED 2010.

REVISED STANDARD PLAN RSP A77P2

DATE PLOTTED => 12-MAR-2014
TIME PLOTTED => 07:40

Dist	COUNTY	ROUTE	POST MILES TOTAL PROJECT	SHEET No.	TOTAL SHEETS
02	Hum	299	19.3/19.8	48	56

REGISTERED CIVIL ENGINEER

July 19, 2013
PLANS APPROVAL DATE

REGISTERED PROFESSIONAL ENGINEER
Michael Janzen
No. 44788
Exp. 03-31-14
CIVIL
STATE OF CALIFORNIA

THE STATE OF CALIFORNIA OR ITS OFFICERS OR AGENTS SHALL NOT BE RESPONSIBLE FOR THE ACCURACY OR COMPLETENESS OF SCANNED COPIES OF THIS PLAN SHEET.

TO ACCOMPANY PLANS DATED 02-21-14

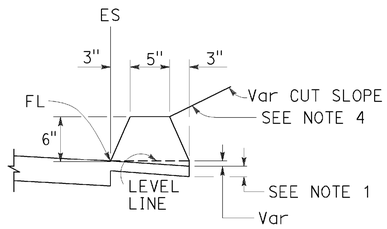

TYPE A
See Note 3

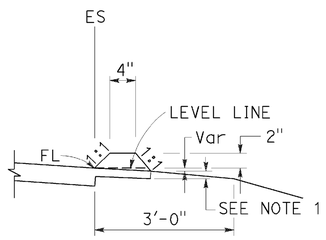

TYPE C

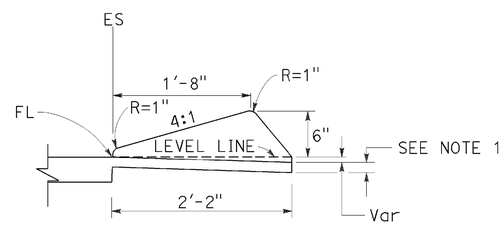

TYPE D

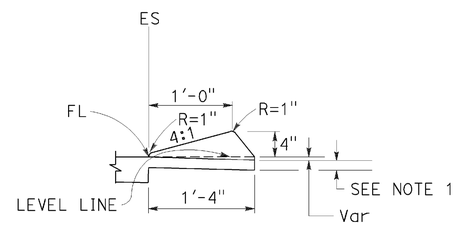

TYPE E

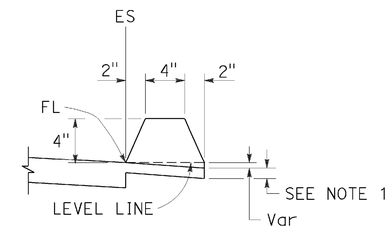

TYPE F
See Note 5

DIKES

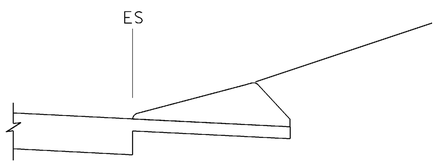

CASE C-1
Cut Slope

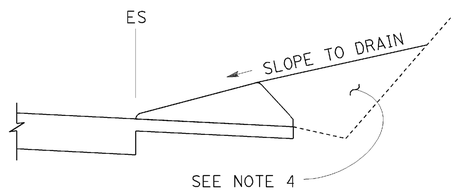

CASE C-2
Cut Slope

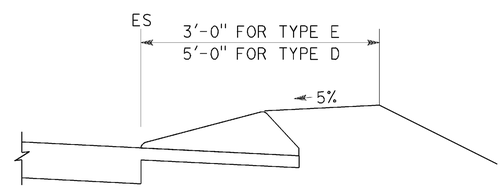

CASE F

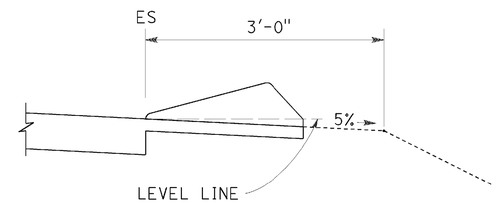

CASE R
See Note 2

TYPE D AND E BACKFILL DETAILS

NOTES:

1. For HMA shoulders only, extend top layer of HMA placed on the shoulder under dike with no joint at the ES. For projects with OGFC shoulders, do not extend OGFC under dike. See project plans for modified dike detail.
2. Case R applies to retrofit only projects where restrictive conditions do not provide enough width for Case F backfill.
3. Type A dike only to be used where restrictive slope conditions do not provide enough width to use Type D or Type E dike.
4. Fill and compact with excavated material to top of dike.
5. Use Type F dike, where dike is required with guard railing installations. See Revised Standard Plan RSP A77N4 for dike positioning details.

DIKE QUANTITIES

TYPE	CUBIC YARDS PER LINEAR FOOT
A	0.0135
C	0.0038
D	0.0293
E	0.0130
F	0.0066

Quantities based on 5% cross slope.

STATE OF CALIFORNIA
DEPARTMENT OF TRANSPORTATION

HOT MIX ASPHALT DIKES

NO SCALE

RSP A87B DATED JULY 19, 2013 SUPERSEDES STANDARD PLAN A87B DATED MAY 20, 2011 - PAGE 120 OF THE STANDARD PLANS BOOK DATED 2010.

REVISED STANDARD PLAN RSP A87B

2010 REVISED STANDARD PLAN RSP A87B

DATE PLOTTED => 12-MAR-2014
TIME PLOTTED => 07:40

DIST	COUNTY	ROUTE	POST MILES TOTAL PROJECT	SHEET No.	TOTAL SHEETS
02	Hum	299	19.3/19.8	49	56

REGISTERED CIVIL ENGINEER

November 15, 2013
PLANS APPROVAL DATE

REGISTERED PROFESSIONAL ENGINEER
Cornelis M. Hokim
No. C55610
Exp. 12-31-14
CIVIL
STATE OF CALIFORNIA

THE STATE OF CALIFORNIA OR ITS OFFICERS OR AGENTS SHALL NOT BE RESPONSIBLE FOR THE ACCURACY OR COMPLETENESS OF SCANNED COPIES OF THIS PLAN SHEET.

TO ACCOMPANY PLANS DATED 02-21-14

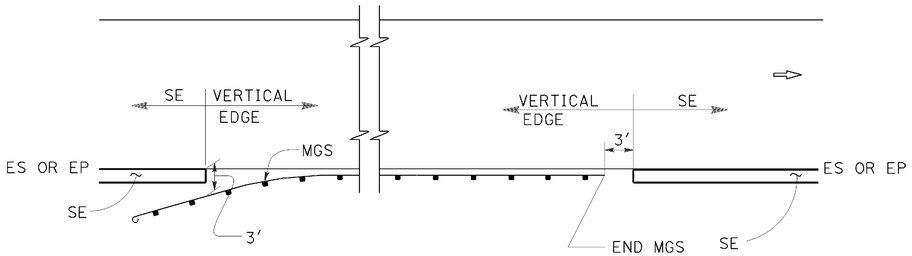

MGS

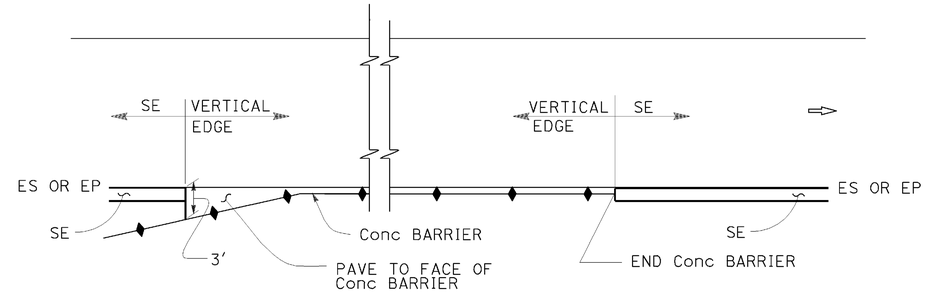

CONCRETE BARRIER

ABBREVIATIONS:

SE SAFETY EDGE

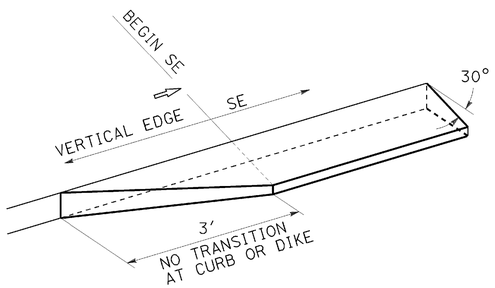

TRANSITION DETAIL
FOR CONCRETE ONLY

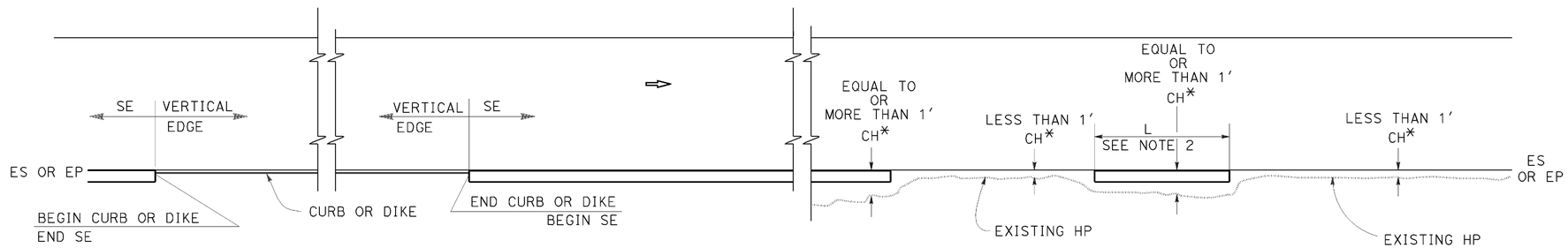

CURB OR DIKE

NARROW SIDE SLOPE

* CH = Distance from ES or EP to existing HP.

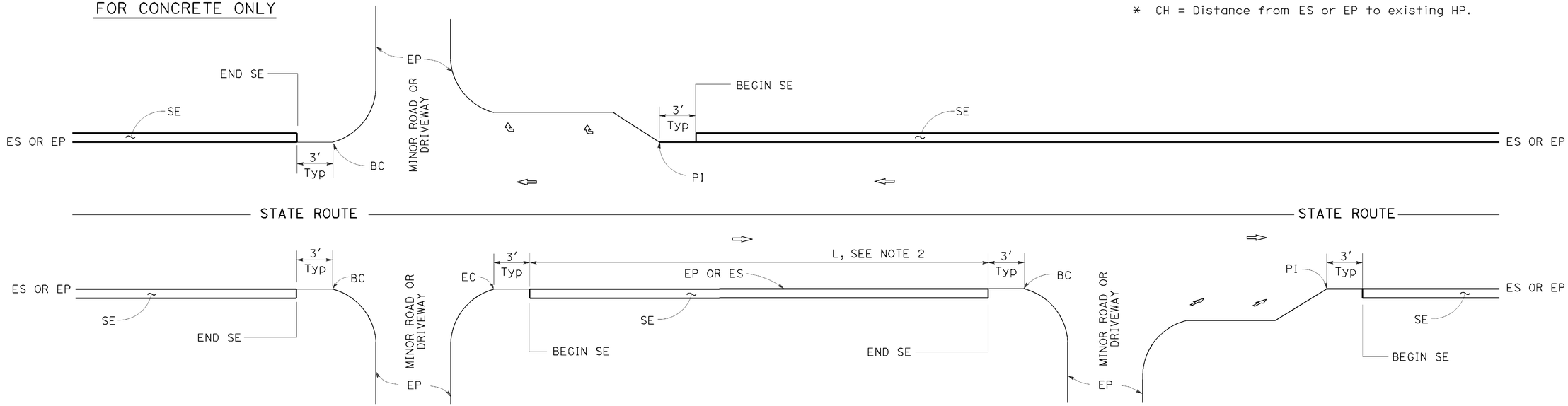

INTERSECTION

DRIVEWAY AND INTERSECTION

MINOR ROADWAY OR DRIVEWAY

NOTES:

1. For details not shown, see Revised Standard Plans RSP P75 and RSP P76.
2. Safety edge is optional when L is less than 30′.

STATE OF CALIFORNIA
DEPARTMENT OF TRANSPORTATION

PAVEMENT EDGE TREATMENTS

NO SCALE

RSP P74 DATED NOVEMBER 15, 2013 SUPERSEDES RSP P74 DATED JANUARY 20, 2012 THAT SUPPLEMENTS THE STANDARD PLANS BOOK DATED 2010.

REVISED STANDARD PLAN RSP P74

2010 REVISED STANDARD PLAN RSP P74

DATE PLOTTED => 12-MAR-2014
TIME PLOTTED => 07:40

DIST	COUNTY	ROUTE	POST MILES TOTAL PROJECT	SHEET No.	TOTAL SHEETS
02	Hum	299	19.3/19.8	50	56

REGISTERED CIVIL ENGINEER

November 15, 2013
PLANS APPROVAL DATE

REGISTERED PROFESSIONAL ENGINEER Cornelis M. Hokim No. C55610 Exp. 12-31-14 CIVIL STATE OF CALIFORNIA

THE STATE OF CALIFORNIA OR ITS OFFICERS OR AGENTS SHALL NOT BE RESPONSIBLE FOR THE ACCURACY OR COMPLETENESS OF SCANNED COPIES OF THIS PLAN SHEET.

TO ACCOMPANY PLANS DATED 02-21-14

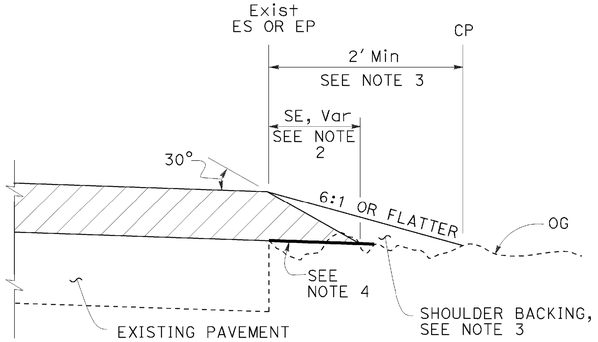

CASE A
Safety Edge

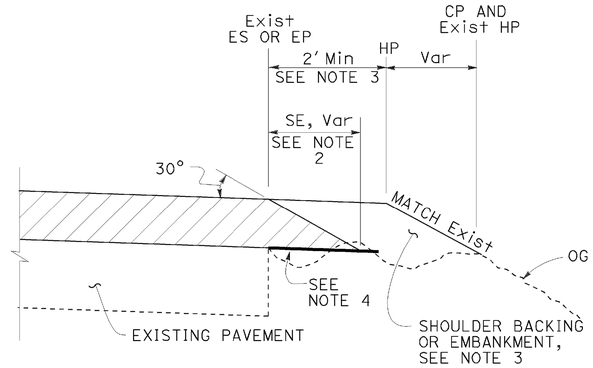

CASE B
Safety Edge

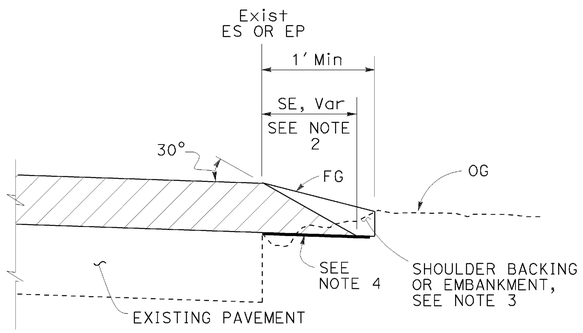

CASE C
Safety Edge

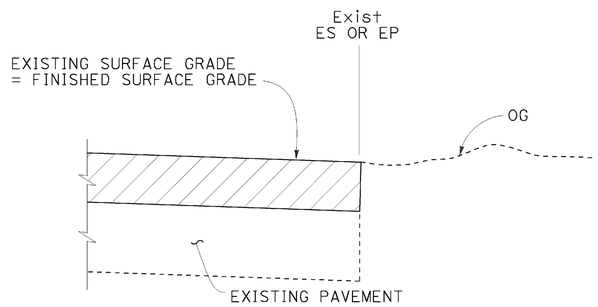

CASE D
Vertical Edge

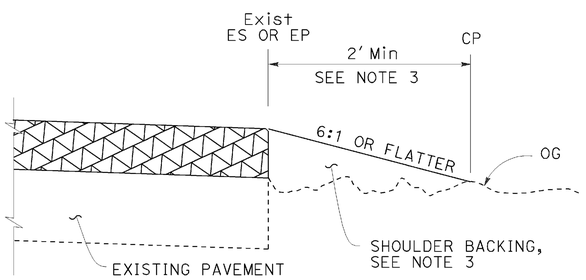

CASE E
Vertical Edge

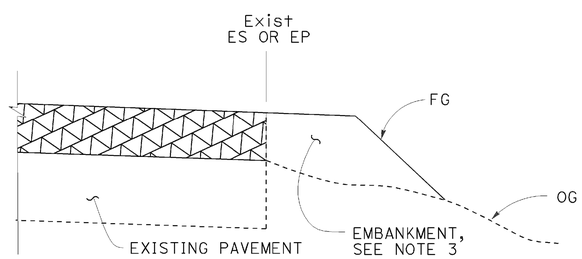

CASE F
Vertical Edge
* See Table A and Revised Std Plan RSP P74

LEGEND:

- HMA OVERLAY
- HMA OR CONCRETE OVERLAY
- CONCRETE OVERLAY

ABBREVIATIONS:

SE SAFETY EDGE
TT TOTAL THICKNESS OF SE

TABLE A
EDGE TREATMENT FOR VARIOUS OVERLAY THICKNESS AND CONDITIONS

	OVERLAY THICKNESS	
FIELD CONDITION	LESS THAN 0.15'	0.15' OR MORE
Exist SLOPE 6:1 OR FLATTER	CASE E	CASE A
Exist SLOPE 3:1 TO 6:1	CASE E	CASE B
Exist SLOPE STEEPER THAN 3:1	CASE F	CASE F
CUT SECTION (REPLACE, COLD PLANE, MILL PAVEMENT)	CASE D	CASE C

ADDITIONAL HMA OR CONCRETE QUANTITIES FOR SE/SIDE/MILE

TYPICAL CROSS SECTION	TT	TOTAL ADDITIONAL MATERIAL FOR SE/SIDE/MILE		
		HMA (TON)	CONCRETE (CY)*	CONCRETE (CY)**
TT	0.15'	NA	NA	NA
	0.20'	13.7	NA	NA
	0.30'	30.9	NA	NA
	0.40'	54.9	NA	NA
	0.45'	69.4	NA	NA
TT 0.43'	0.50'	84.2	NA	NA
	0.60'	113.9	NA	NA
	0.70'	143.6	70.9	94.2
	0.80'	173.3	85.6	112.2
	0.90'	203.0	100.3	130.2
	1.00'	232.7	114.9	148.2
	1.10'	262.4	129.6	166.2
	1.20'	292.1	144.3	184.2

* For Detail "A"
** For Optional Detail "A"

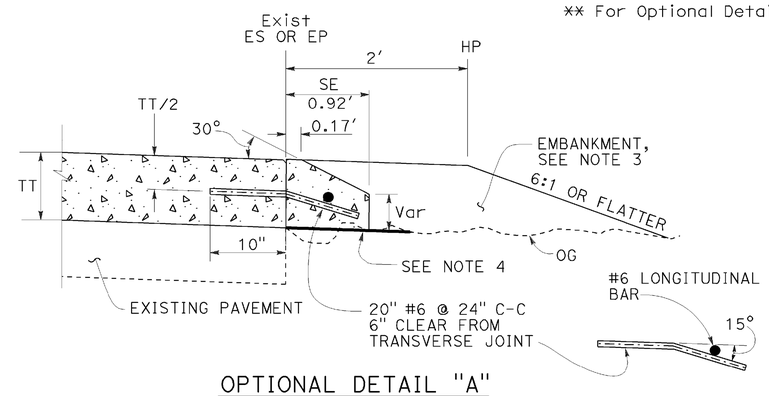

OPTIONAL DETAIL "A"
For concrete overlay
See Note 5

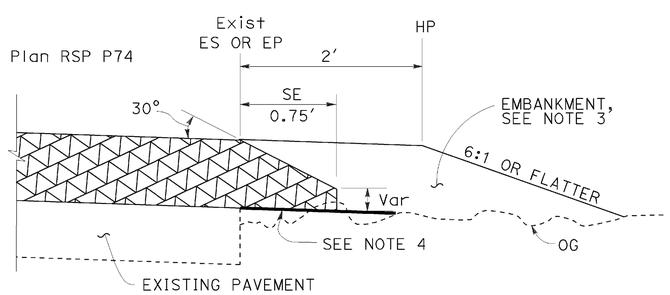

DETAIL "A"
For HMA overlay thickness more than 0.43' or concrete overlay

NOTES:

1. For limits of safety edge and vertical edge treatments, see Revised Standard Plan RSP P74.
2. Details shown for HMA overlay thickness less than 0.43'. See Detail "A" for HMA overlay thickness more than 0.43' or concrete overlay.
3. For locations and limits of shoulder backing or embankment see project plans.
4. Grade existing ground to place safety edge. 1' minimum width
5. Safety edge transverse joint must match overlay transverse joint. End of #6 longitudinal bar must be 2" ±½" clear from transverse joint.
6. Safety edge is not needed in the area of MGS, barrier, right turn lane and acceleration lane. See Revised Standard Plan RSP P74.

STATE OF CALIFORNIA
DEPARTMENT OF TRANSPORTATION

PAVEMENT EDGE TREATMENTS-OVERLAYS

NO SCALE

RSP P75 DATED NOVEMBER 15, 2013 SUPERSEDES RSP P75 DATED JANUARY 20, 2012 THAT SUPPLEMENTS THE STANDARD PLANS BOOK DATED 2010.

REVISED STANDARD PLAN RSP P75

2010 REVISED STANDARD PLAN RSP P75

DATE PLOTTED => 12-MAR-2014
TIME PLOTTED => 07:40

DIST	COUNTY	ROUTE	POST MILES TOTAL PROJECT	SHEET No.	TOTAL SHEETS
02	Hum	299	19.3/19.8	51	56

REGISTERED CIVIL ENGINEER

November 15, 2013
PLANS APPROVAL DATE

REGISTERED PROFESSIONAL ENGINEER
Cornelis M. Hokim
No. C55610
Exp. 12-31-14
CIVIL
STATE OF CALIFORNIA

THE STATE OF CALIFORNIA OR ITS OFFICERS OR AGENTS SHALL NOT BE RESPONSIBLE FOR THE ACCURACY OR COMPLETENESS OF SCANNED COPIES OF THIS PLAN SHEET.

TO ACCOMPANY PLANS DATED 02-21-14

LEGEND:

- HMA PAVEMENT
- HMA OR CONCRETE PAVEMENT
- CONCRETE PAVEMENT

ABBREVIATIONS:

SE SAFETY EDGE
TT TOTAL THICKNESS OF SE
HW HINGE WIDTH, DISTANCE FROM ES OR EP TO HP

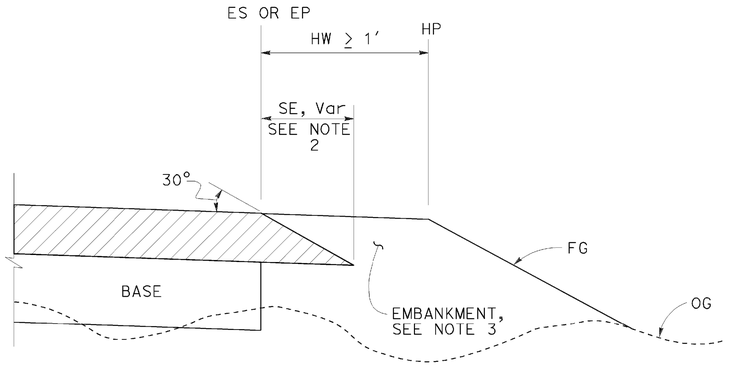

CASE K
Safety Edge - Fill Section, HW ≥ 1′

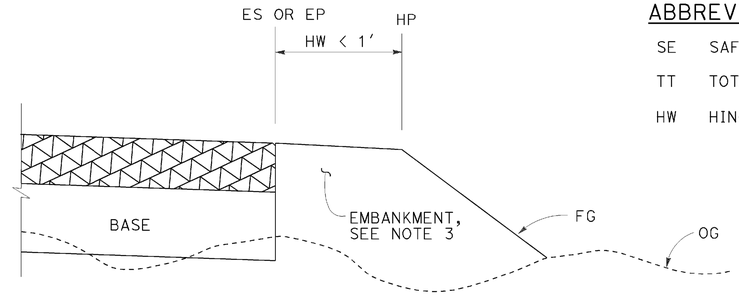

CASE L
Vertical Edge - Fill Section, HW < 1′

FILL SECTION

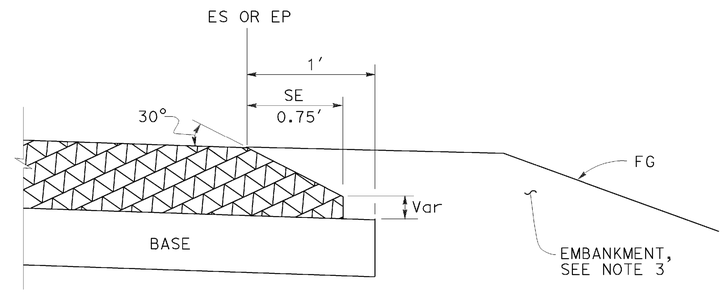

DETAIL "B"
For HMA pavement thickness more than 0.43′ or concrete pavement

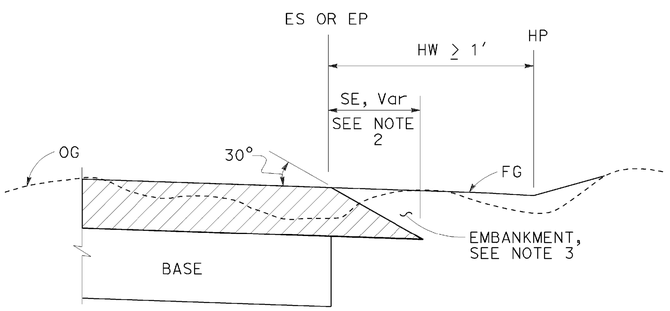

CASE M
Safety Edge - Cut Section, HW ≥ 1′

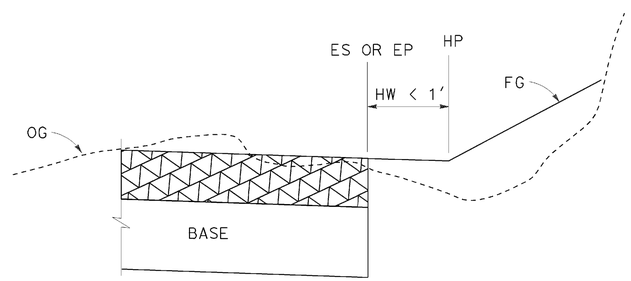

CASE N
Vertical Edge - Cut Section, HW < 1′

CUT SECTION

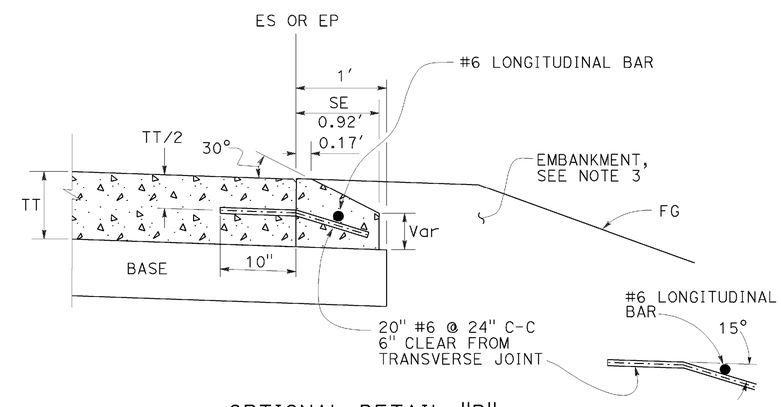

OPTIONAL DETAIL "B"
For concrete pavement
See Note 4

NOTES:

1. For limits of safety edge and vertical edge treatments, see Revised Standard Plan RSP P74
2. Details shown for HMA pavement thickness less than 0.43′. See Detail "B" for HMA pavement thickness more than 0.43′ or concrete pavement.
3. For locations and limits of embankment see project plans.
4. Safety edge transverse joint must match pavement transverse joint. End of #6 longitudinal bar must be 2" ±½" clear from transverse joint.
5. Safety edge is not needed in the area of MGS, barrier, right turn lane and acceleration lane. See Revised Standard Plan RSP P74.

STATE OF CALIFORNIA
DEPARTMENT OF TRANSPORTATION

PAVEMENT EDGE TREATMENTS-NEW CONSTRUCTION

NO SCALE

RSP P76 DATED NOVEMBER 15, 2013 SUPERSEDES RSP P76 DATED JANUARY 20, 2012 THAT SUPPLEMENTS THE STANDARD PLANS BOOK DATED 2010.

REVISED STANDARD PLAN RSP P76

2010 REVISED STANDARD PLAN RSP P76

DATE PLOTTED => 12-MAR-2014
TIME PLOTTED => 07:41

TO ACCOMPANY PLANS DATED 02-21-14

Dist	COUNTY	ROUTE	POST MILES TOTAL PROJECT	SHEET No.	TOTAL SHEETS
02	Hum	299	19.3/19.8	52	56

REGISTERED CIVIL ENGINEER

October 19, 2012
PLANS APPROVAL DATE

REGISTERED PROFESSIONAL ENGINEER Glenn DeCou No. C34547 Exp. 9-30-13 CIVIL STATE OF CALIFORNIA

THE STATE OF CALIFORNIA OR ITS OFFICERS OR AGENTS SHALL NOT BE RESPONSIBLE FOR THE ACCURACY OR COMPLETENESS OF SCANNED COPIES OF THIS PLAN SHEET.

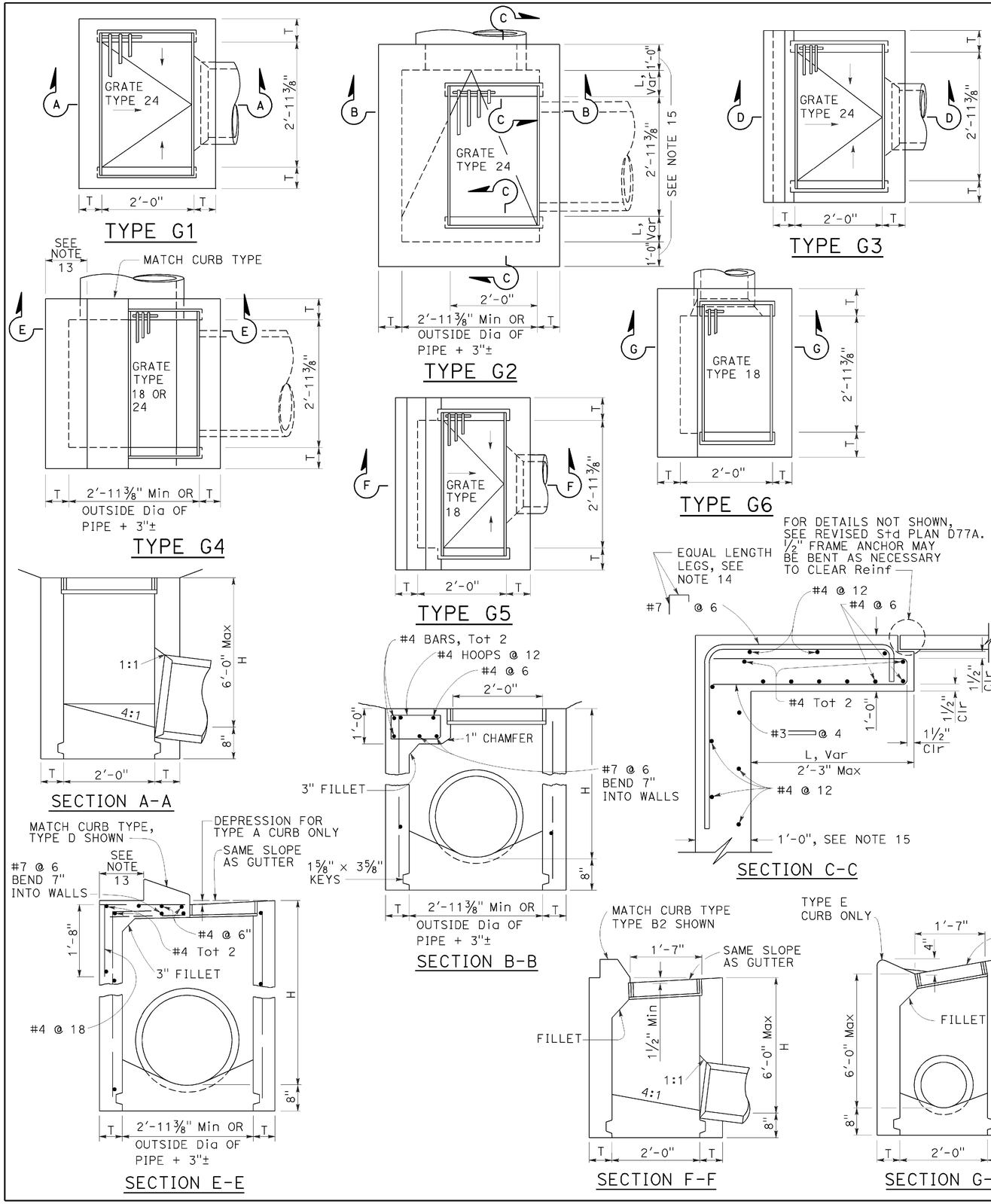

NOTES:

1. "H" is the difference in elevation between the outlet pipe flow line and the normal gutter grade line undepressed.
2. For "T" wall thickness, see Table A below.
3. Wall reinforcing not required when "H" is 8'-0" or less and the unsupported width or length is 7'-0" or less. Walls exceeding these limits shall be reinforced with #4 bars @ 1'-6" ± centers placed 1½" clear to inside of box unless otherwise shown.
4. Inlet bottom reinforcing not required. See Standard Plan D74C for alternative reinforced bottom and alternative half round bottom.
5. Steps-None required where "H" is less than 2'-6". Where "H" is 2'-6" or more, install steps with lowest rung 1'-0" above the floor and highest rung not more than 6" below top of inlet. The distance between steps shall not exceed 1'-0" and shall be uniform throughout the length of the wall. Place steps in the wall without an opening. Steps inserts may be substituted for the bar steps. Step inserts shall comply with State Industrial Safety requirements. See Standard Plan D74C for step details.
6. Details shown apply to both metal and concrete pipe.
7. Pipe(s) can be placed in any wall.
8. Curb section shall match adjacent curb.
9. Basin floors shall have wood trowel finish and a minimum slope of 12:3 from all directions toward outlet pipe.
10. Set inlet so that grate bars are parallel to direction of principal surface flow.
11. See Revised Standard Plans D77A and D77B for grate and frame details and weights of miscellaneous iron and steel.
12. See Standard Plan D78A for gutter depression details.
13. This dimenison will vary with different grates, curbs types, box width and wall thickness.
14. Bar may be rotated as necessary to clear opening. Where "L" is 6" or less, bar may be omitted.
15. Where "L" is 6" or less, wall thickness shall be as shown in Table A.
16. Cast-in-place inlets to be formed around all pipes/stubs intersecting the inlet, and concrete poured in one continuous operation. Precast inlets shall have mortared connections conforming to details for Type GCP Inlet shown on Standard Plan D75B. See Standard Specifications for mortar composition.

TABLE A

CONCRETE QUANTITIES				
TYPE	H=3'-0" TO 8'-0" (T=6")		H=8'-1" TO 20'-0" (T=8")	
	H=3'-0" (CY)	ADDITIONAL PCC PER FOOT (CY)	H=8'-1" (CY)	ADDITIONAL PCC PER FOOT (CY)
G-1	0.95	0.220	See Note A	SEE NOTE A
G-2*	1.31	0.255	3.50	0.357
G-3	1.03	0.220	See Note A	SEE NOTE A
G-4* (TYPE 24)	1.27	0.255	3.48	0.357
G-4* (TYPE 18)	1.30	0.255	3.50	0.357
G-5	1.02	0.220	SEE NOTE A	SEE NOTE A
G-6	1.04	0.220	SEE NOTE A	SEE NOTE A

TABLE BASED ON 8" FLOOR SLAB. NO DEDUCTIONS ARE TO BE MADE TO THESE QUANTITIES BECAUSE OF PIPE OPENINGS, DIFFERENT FLOOR ALTERNATIVES OR DIFFERENT CURB TYPES. * QUANTITIES FOR TYPE G-2 AND G-4 INLETS BASED ON THE MINIMUM INTERIOR DIMENSIONS.

NOTE A:

Maximum allowable height 6'-0".

STATE OF CALIFORNIA
DEPARTMENT OF TRANSPORTATION

DRAINAGE INLETS

NO SCALE

RSP D73 DATED OCTOBER 19, 2012 SUPERSEDES STANDARD PLAN D73 DATED MAY 20, 2011 - PAGE 156 OF THE STANDARD PLANS BOOK DATED 2010.

REVISED STANDARD PLAN RSP D73

2010 REVISED STANDARD PLAN RSP D73

DATE PLOTTED => 12-MAR-2014
TIME PLOTTED => 07:41

Dist	COUNTY	ROUTE	POST MILES TOTAL PROJECT	SHEET No.	TOTAL SHEETS
02	Hum	299	19.3/19.8	53	56

Raymond Don Tsztoo
REGISTERED CIVIL ENGINEER

April 19, 2013
PLANS APPROVAL DATE

REGISTERED PROFESSIONAL ENGINEER Raymond Don Tsztoo No. C37332 Exp. 6-30-14 CIVIL STATE OF CALIFORNIA

THE STATE OF CALIFORNIA OR ITS OFFICERS OR AGENTS SHALL NOT BE RESPONSIBLE FOR THE ACCURACY OR COMPLETENESS OF SCANNED COPIES OF THIS PLAN SHEET.

TO ACCOMPANY PLANS DATED 02-21-14

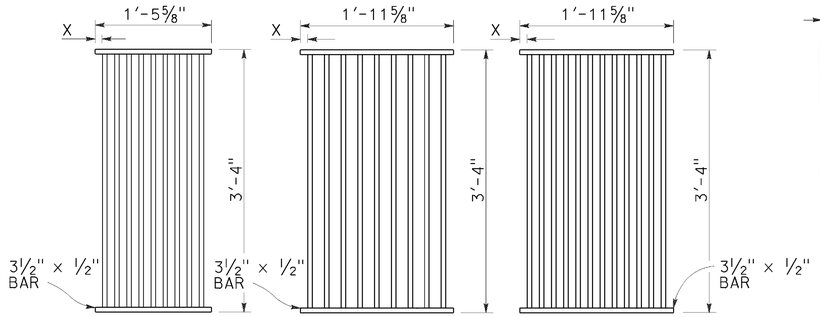

TYPE 18-9

1⅜" Clear spacing. Use within the roadbed on highways where bicycles and pedestrians are excluded.

TYPE 24-9

2" Clear spacing. Use in locations off the roadbed on all types of highways.

TYPE 24-12

1⅜" Clear spacing. Use within the roadbed on highways where bicycles and pedestrians are excluded.

RECTANGULAR GRATE DETAILS

(See table below)

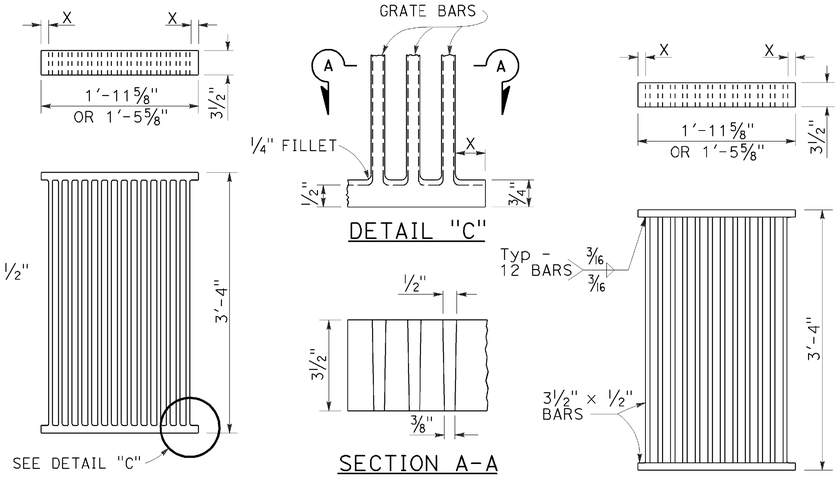

ALTERNATIVE CAST DUCTILE IRON GRATE OR CAST CARBON STEEL GRATE

ALTERNATIVE WELDED GRATE

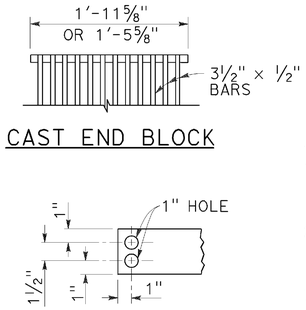

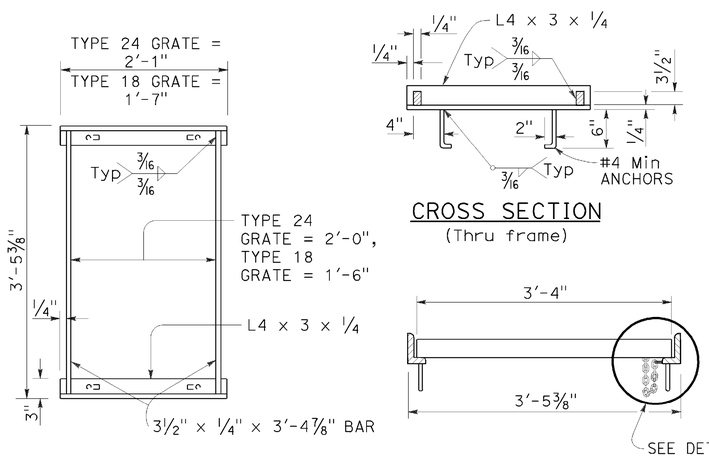

RECTANGULAR FRAME DETAILS

(For all rectangular grates)

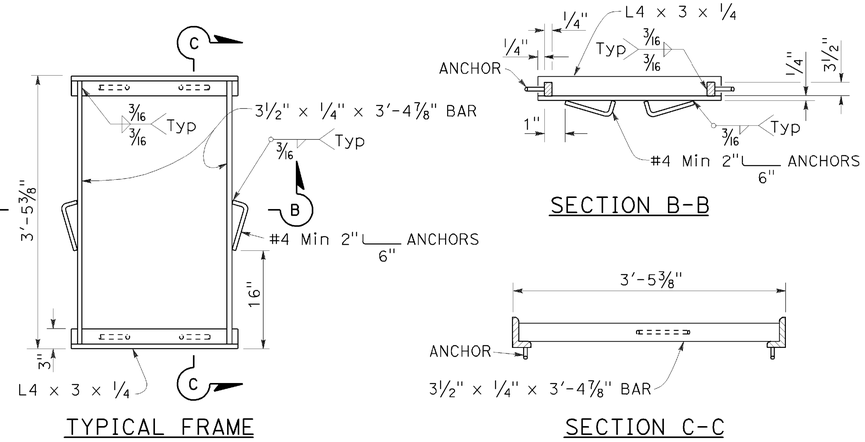

ALTERNATIVE ANCHOR FOR RECTANGULAR FRAME

(For details not shown, See Rectangular Frame Details)

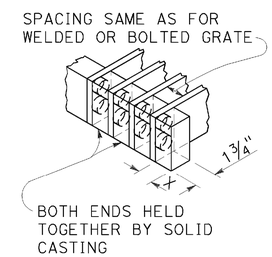

ALTERNATIVE CAST DUCTILE IRON OR CAST CARBON STEEL END BLOCK GRATE

NOTES:

1. Grate type numbers refer to approximate width of grate in inches and number of bars, respectively.
2. Contractor has the option of using cast ductile iron, cast carbon steel, welded, bolted, or cast end block grate.
3. Rounded top of bars optional on all grates.
4. Pipe inlets with a grate shall be placed so that bars parallel direction of principle surface flow.
5. Complete joint penetration butt welds may be substituted for the fillet welds on all anchors.
6. Standard square, hexagon, round or equivalent headed anchors may be substituted for the right angle hooks on the anchors shown on this plan.
7. Grate and frame weights are based on welded grates (weights of face angles, steps, protection bars, etc. are not included).
8. Connect chain to grate and frame only at locations shown on the plans. When chain is required, do not use cast ductile iron grates.

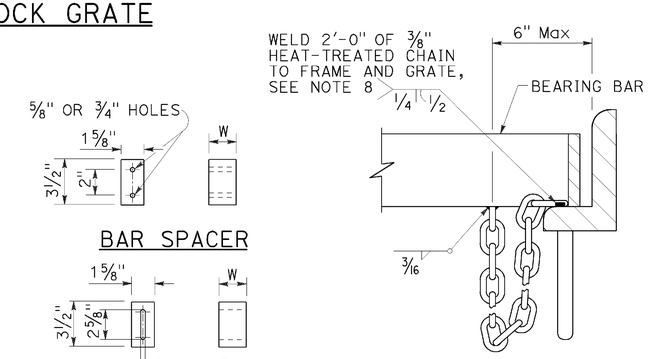

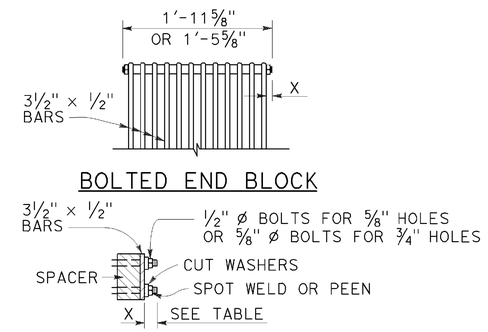

ALTERNATIVE BOLTED GRATE

GRATE BAR SPACING TABLE

TYPE	No. OF BARS	CLEAR BAR SPACING	X
18-9	9	1⅜"	1 1/16"
24-9	9	2"	1 9/16"
24-12	12	1⅜"	1¼"

INLET TYPE	COVER TYPE	WEIGHT LB
OS	PLATE	174
OL-7	PLATE	170
OL-10	PLATE	170
OL-14	PLATE	170
OL-21	PLATE	170
OCP	PLATE	112
OCPI	PLATE	112
OCPI	REDWOOD	42
OMP	PLATE	177
OMPI	PLATE	177

INLET TYPE	GRATE TYPE	No. OF GRATES	WEIGHT LB
GDO	24-12	2	634
GOL-7	24-12	1	326
GOL-10	24-12	1	326
GO,G1,G2,G3,G4 (TYPE 24)	24-9	1	263
	24-12	1	326
G4 (TYPE 18),G5,G6	18-9	1	249
GT1	18-9	2	498
GT2	18-9	2	498
GT3	24-12	2	652
GT4	24-12	2	652
TRASH RACK			22
GRATE CHAIN			3

BASIS FOR Misc IRON & STEEL FINAL PAY WEIGHTS FOR DRAINAGE INLETS

(See Note 7)

STATE OF CALIFORNIA
DEPARTMENT OF TRANSPORTATION

GRATE DETAILS No. 1

NO SCALE

RSP D77A DATED APRIL 19, 2013 SUPERSEDES RSP D77A DATED JULY 20, 2012 AND STANDARD PLAN D77A DATED MAY 20, 2011 - PAGE 164 OF THE STANDARD PLANS BOOK DATED 2010.

REVISED STANDARD PLAN RSP D77A

2010 REVISED STANDARD PLAN RSP D77A

DATE PLOTTED => 12-MAR-2014
TIME PLOTTED => 07:41

Dist	COUNTY	ROUTE	POST MILES TOTAL PROJECT	SHEET No.	TOTAL SHEETS
02	Hum	299	19.3/19.8	54	56

Raymond Don Tsztoo
REGISTERED CIVIL ENGINEER

April 19, 2013
PLANS APPROVAL DATE

REGISTERED PROFESSIONAL ENGINEER Raymond Don Tsztoo No. C37332 Exp. 6-30-14 CIVIL STATE OF CALIFORNIA

THE STATE OF CALIFORNIA OR ITS OFFICERS OR AGENTS SHALL NOT BE RESPONSIBLE FOR THE ACCURACY OR COMPLETENESS OF SCANNED COPIES OF THIS PLAN SHEET.

TO ACCOMPANY PLANS DATED 02-21-14

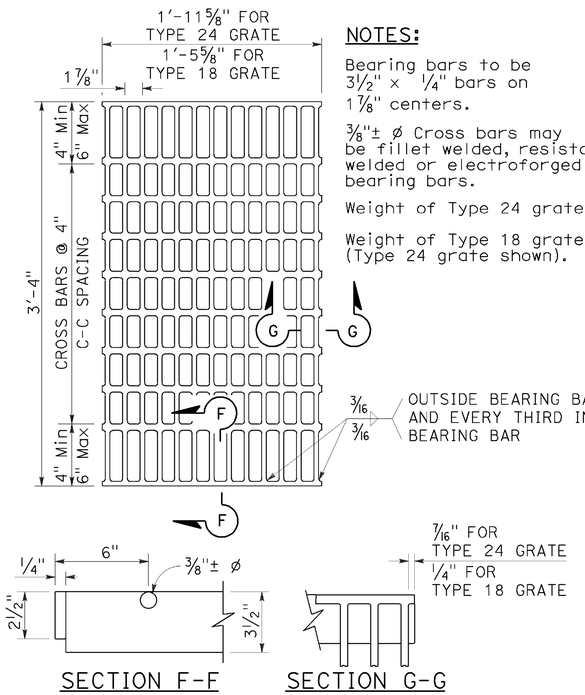

SECTION F-F SECTION G-G

TYPE 18-10 AND 24-13 GRATE

(Welded Steel)

NOTES:

Bearing bars to be 3½" × ¼" bars on 1⅞" centers.

⅜"± ø Cross bars may be fillet welded, resistance welded or electroforged to bearing bars.

Weight of Type 24 grate = 141 LBS.

Weight of Type 18 grate = 107 LBS. (Type 24 grate shown).

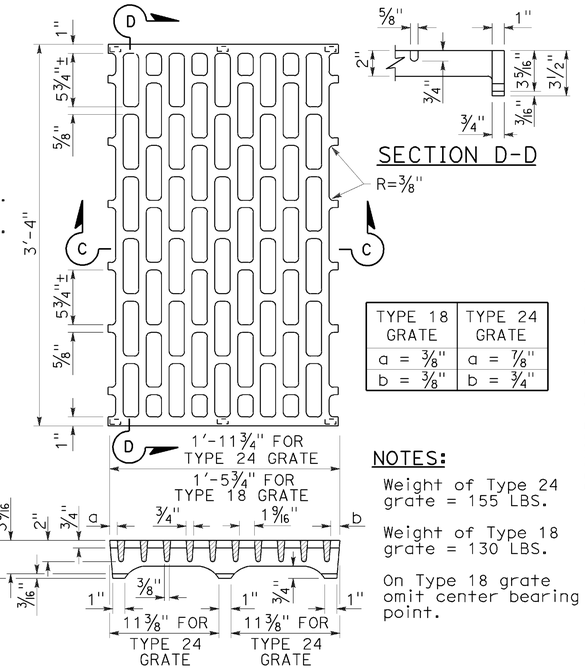

SECTION D-D

TYPE 18 GRATE	TYPE 24 GRATE
a = ⅜"	a = ⅞"
b = ⅜"	b = ¾"

NOTES:

Weight of Type 24 grate = 155 LBS.

Weight of Type 18 grate = 130 LBS.

On Type 18 grate omit center bearing point.

SECTION C-C

TYPE 18-8C AND 24-10C GRATE

(Cast ductile iron)

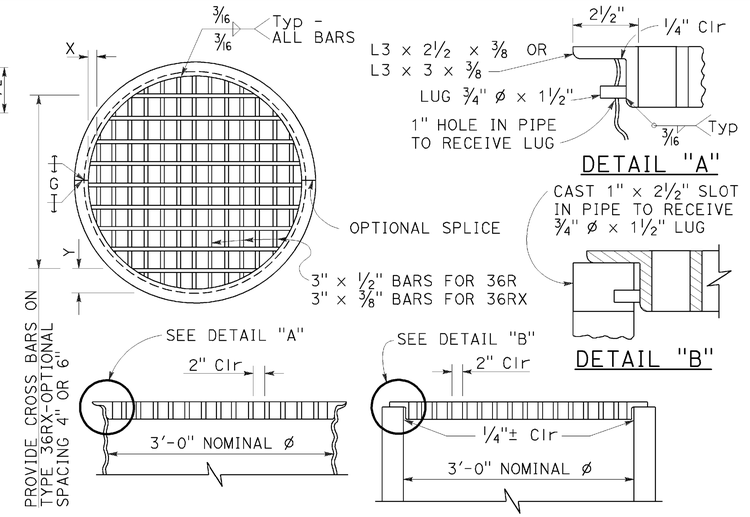

DETAIL "A"

DETAIL "B"

TYPE 36R AND 36RX GRATE DETAILS

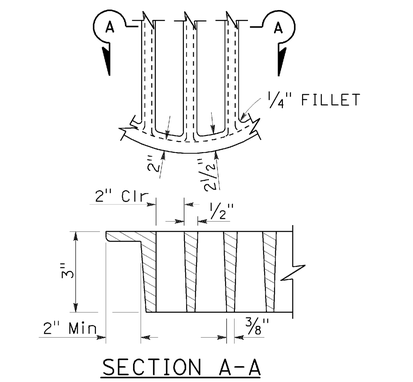

SECTION A-A

ALTERNATIVE CAST DUCTILE IRON GRATE OR CAST CARBON STEEL GRATE TYPE 36R AND 36RX

BASIS FOR Misc IRON AND STEEL FINAL PAY WEIGHTS FOR DRAINAGE INLETS

INLET TYPE	GRATE TYPE	No. OF GRATES	WEIGHT LB
GDO (SEE NOTE 4)	24-10C	2	391
	24-10S	2	456
	24-12X	2	473
	24-13	2	374
GO,GOL,G1,G2, G3,G4 (TYPE 24)	24-10C	1	202
	24-10S	1	229
	24-12X	1	239
	24-13	1	188
G4 (TYPE 18) G5,G6	18-8S	1	187
	18-9X	1	187
	18-10	1	149
GT1,GT2	18-8S	2	374
	18-9X	2	374
	18-10	2	298
GT3,GT4	24-10C	2	404
	24-10S	2	458
	24-12X	2	478
	24-13	2	376
ODI	36RX (Mod)	1	196
GMP,GCP,GCPI	36RX	1	215
ODI	36R (Mod)	1	220
GMP,GCP,GCPI	36R	1	236
TRASH RACK			22
GRATE CHAIN			3

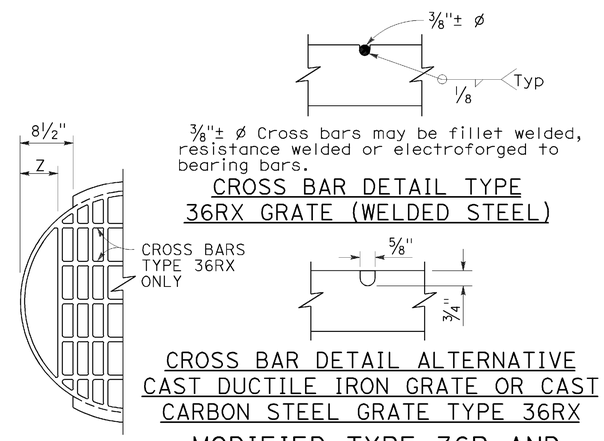

CROSS BAR DETAIL TYPE 36RX GRATE (WELDED STEEL)

CROSS BAR DETAIL ALTERNATIVE CAST DUCTILE IRON GRATE OR CAST CARBON STEEL GRATE TYPE 36RX

MODIFIED TYPE 36R AND 36RX GRATE FOR ODI INLET

NOTES:

1. When alternative grates are allowed - Final pay based on alternative with the lesser weight.
2. Use frame shown on Standard Plan D74A, D74B or RSP D77A as appropriate.
3. When Type 24-10S, 24-12X or 24-13 grates are used with GDO Inlets, a ¼" × 3½" × 3'-4⅞" steel bar shall be welded across the center of inlet frame to separate the individual grates.
4. See Revised Standard Plan RSP D77A for connecting chain to welded grate and frame. When chain is required, do not use cast ductile iron grate.

GRATE BAR SPACING TABLE

TYPE	No. OF BARS	CLEAR BAR SPACING	X	Y 4" SPACING	Y 6" SPACING	Z
36R	13	2"	2⅛"	-	-	-
36RX (STEEL)	15	2"	9/16"	3¾"	5¾"	-
36RX (CAST)	13	2"	2⅛"	3¾"	5¾"	-
36R Mod	12	2"	2⅛"	-	-	5"
36RX Mod (STEEL)	13	2"	9/16"	3¾"	5¾"	5 11/16"
36RX Mod (CAST)	12	2"	2⅛"	3¾"	5¾"	5"

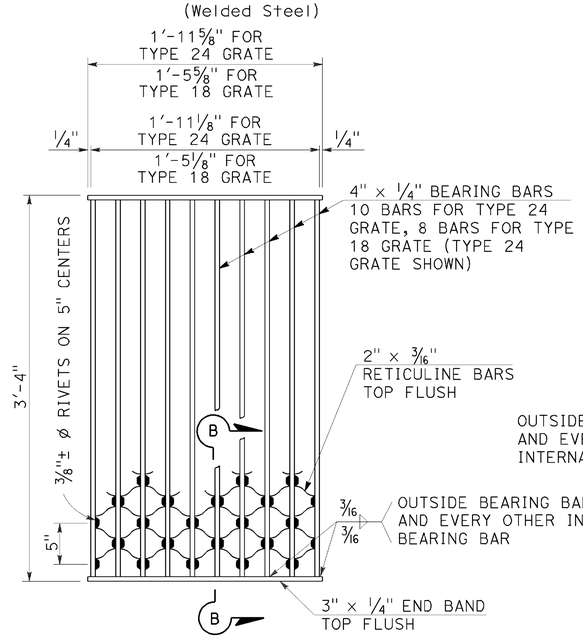

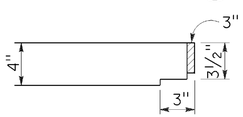

NOTES:

Weight of Type 24 grate = 182 LBS.
Weight of Type 18 grate = 145 LBS.

SECTION B-B

TYPE 18-8S AND 24-10S GRATE

(Welded Steel) Reticuline type

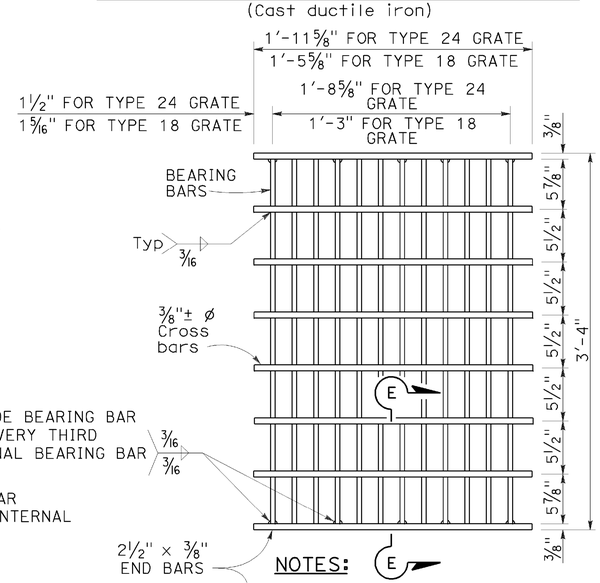

SECTION E-E

NOTES:

Bearing bars to be 3½" × ⅜" bars on 1⅞" centers.

12 Bars for Type 24 grate - 9 bars for Type 18 grates. (Type 24 grate shown).

Weight of Type 24 grate = 192 LBS.

Weight of Type 18 grate = 145 LBS.

⅜"± ø Cross bars may be fillet welded, resistance welded or electroforged to bearing bars.

TYPE 18-9X AND 24-12X GRATE

(Welded Steel)

STATE OF CALIFORNIA
DEPARTMENT OF TRANSPORTATION

GRATE DETAILS No. 2

NO SCALE

RSP D77B DATED APRIL 19, 2013 SUPERSEDES RSP D77B DATED JULY 20, 2012 AND STANDARD PLAN D77B DATED MAY 20, 2011 - PAGE 165 OF THE STANDARD PLANS BOOK DATED 2010.

REVISED STANDARD PLAN RSP D77B

2010 REVISED STANDARD PLAN RSP D77B

DATE PLOTTED => 12-MAR-2014
TIME PLOTTED => 07:41

Dist	COUNTY	ROUTE	POST MILES TOTAL PROJECT	SHEET No.	TOTAL SHEETS
02	Hum	299	19.3/19.8	55	56

REGISTERED CIVIL ENGINEER

July 19, 2013
PLANS APPROVAL DATE

REGISTERED PROFESSIONAL ENGINEER Gurinderpal Bhullar No. C48815 Exp. 9-30-14 CIVIL STATE OF CALIFORNIA

THE STATE OF CALIFORNIA OR ITS OFFICERS OR AGENTS SHALL NOT BE RESPONSIBLE FOR THE ACCURACY OR COMPLETENESS OF SCANNED COPIES OF THIS PLAN SHEET.

TO ACCOMPANY PLANS DATED 02-21-14

TABLE 1

TAPER LENGTH CRITERIA AND CHANNELIZING DEVICE SPACING

SPEED (S)	MINIMUM TAPER LENGTH * FOR WIDTH OF OFFSET 12 FEET (W)				MAXIMUM CHANNELIZING DEVICE SPACING		
					X	Y	Z **
	TANGENT 2L	MERGING L	SHIFTING L/2	SHOULDER L/3	TAPER	TANGENT	CONFLICT
mph	ft	ft	ft	ft	ft	ft	ft
20	160	80	40	27	20	40	10
25	250	125	63	42	25	50	12
30	360	180	90	60	30	60	15
35	490	245	123	82	35	70	17
40	640	320	160	107	40	80	20
45	1080	540	270	180	45	90	22
50	1200	600	300	200	50	100	25
55	1320	660	330	220	55	110	27
60	1440	720	360	240	60	120	30
65	1560	780	390	260	65	130	32
70	1680	840	420	280	70	140	35

* - For other offsets, use the following merging taper length formula for L:
For speed of 40 mph or less, $L = WS^2/60$
For speed of 45 mph or more, $L = WS$

Where: L = Taper length in feet
W = Width of offset in feet
S = Posted speed limit, off-peak 85th-percentile speed prior to work starting, or the anticipated operating speed in mph

** - Use for taper and tangent sections where there are no pavement markings or where there is a conflict between existing pavement markings and channelizers (CA).

TABLE 2

LONGITUDINAL BUFFER SPACE AND FLAGGER STATION SPACING

SPEED *	Min D **	DOWNGRADE Min D ***		
		-3%	-6%	-9%
mph	ft	ft	ft	ft
20	115	116	120	126
25	155	158	165	173
30	200	205	215	227
35	250	257	271	287
40	305	315	333	354
45	360	378	400	427
50	425	446	474	507
55	495	520	553	593
60	570	598	638	686
65	645	682	728	785
70	730	771	825	891

* - Speed is posted speed limit, off-peak 85th-percentile speed prior to work starting, or the anticipated operating speed in mph

** - Longitudinal buffer space or flagger station spacing

*** - Use on sustained downgrade steeper than -3 percent and longer than 1 mile.

TABLE 3

ADVANCE WARNING SIGN SPACING

ROAD TYPE	DISTANCE BETWEEN SIGNS *		
	A	B	C
	ft	ft	ft
URBAN - 25 mph OR LESS	100	100	100
URBAN - MORE THAN 25 mph TO 40 mph	250	250	250
URBAN - MORE THAN 40 mph	350	350	350
RURAL	500	500	500
EXPRESSWAY / FREEWAY	1000	1500	2640

* - The distances are approximate, are intended for guidance purposes only, and should be applied with engineering judgment. These distances should be adjusted by the Engineer for field conditions, if necessary, by increasing or decreasing the recommmended distances.

STATE OF CALIFORNIA
DEPARTMENT OF TRANSPORTATION

TRAFFIC CONTROL SYSTEM TABLES FOR LANE AND RAMP CLOSURES

NO SCALE

RSP T9 DATED JULY 19, 2013 SUPERSEDES RSP T9 DATED APRIL 19, 2013 THAT SUPPLEMENTS THE STANDARD PLANS BOOK DATED 2010.

REVISED STANDARD PLAN RSP T9

2010 REVISED STANDARD PLAN RSP T9

DATE PLOTTED => 12-MAR-2014
TIME PLOTTED => 07:41

Dist	COUNTY	ROUTE	POST MILES TOTAL PROJECT	SHEET No.	TOTAL SHEETS
02	Hum	299	19.3/19.8	56	56

REGISTERED CIVIL ENGINEER

April 19, 2013
PLANS APPROVAL DATE

REGISTERED PROFESSIONAL ENGINEER Gurinderpal Bhullar No. C48815 Exp. 9-30-14 CIVIL STATE OF CALIFORNIA

THE STATE OF CALIFORNIA OR ITS OFFICERS OR AGENTS SHALL NOT BE RESPONSIBLE FOR THE ACCURACY OR COMPLETENESS OF SCANNED COPIES OF THIS PLAN SHEET.

TO ACCOMPANY PLANS DATED 02-21-14

NOTES:

See Revised Standard Plan RSP T9 for tables.

Use cone spacing X for taper segment, Y for tangent segment or Z for conflict situations, as approriate, per Table 1, unless X, Y, or Z cone spacing is shown on this sheet.

Unless otherwise specified in the special provisions, all temporary warning signs shall have black legend on fluorescent orange background.

California codes are designated by (CA). Otherwise, Federal (MUTCD) codes are shown.

TYPICAL LANE CLOSURE WITH REVERSIBLE CONTROL

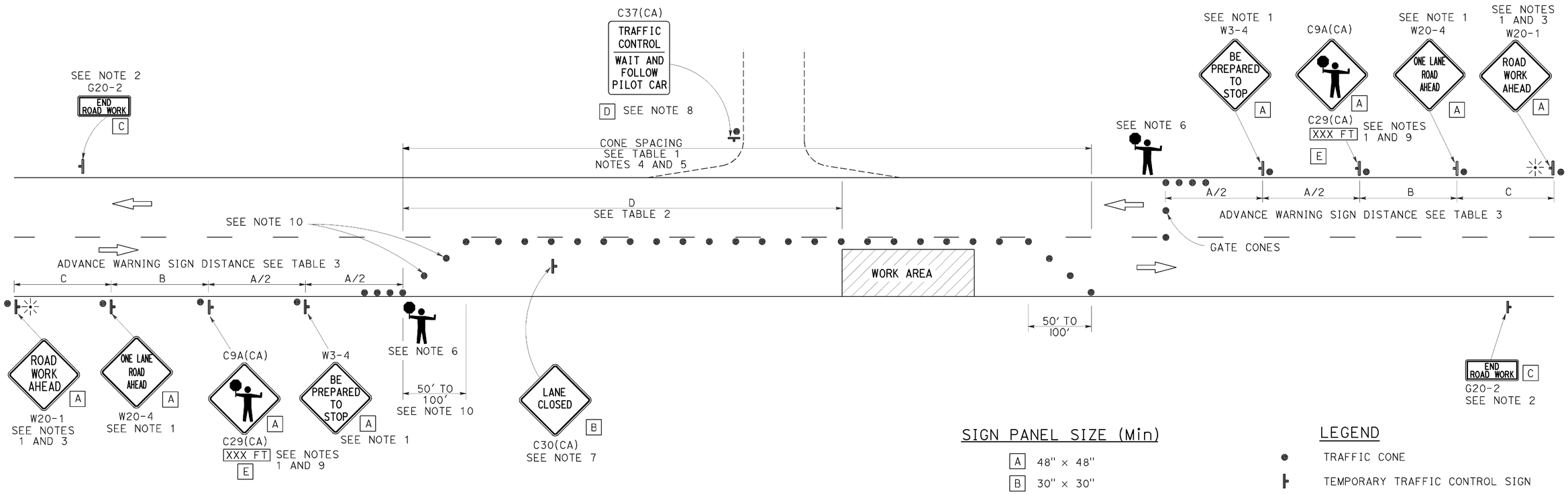

SIGN PANEL SIZE (Min)

A	48" × 48"
B	30" × 30"
C	36" × 18"
D	36" × 42"
E	20" × 7"

LEGEND

- TRAFFIC CONE
- TEMPORARY TRAFFIC CONTROL SIGN
- PORTABLE FLASHING BEACON
- FLAGGER

NOTES:

1. Each advance warning sign in each direction of travel shall be equipped with at least two flags for daytime closure. Each flag shall be at least 16" x 16" in size and shall be orange or fluorescent red-orange in color. Flashing beacons shall be placed at the locations indicated for lane closure during hours of darkness.
2. A G20-2 "END ROAD WORK" sign, as appropriate, shall be placed at the end of the lane control unless the end of work area is obvious, or ends within a larger project's limits.
3. If the W20-1 sign would follow within 2000' of a stationary W20-1 or G20-1 "ROAD WORK NEXT _____ MILES", use a W20-4 sign for the first advance warning sign.
4. All cones used for lane closures during the hours of darkness shall be fitted with retroreflective bands (or sleeves) as specified in the specifications.
5. Portable delineators, placed at one-half the spacing indicated for traffic cones, may be used instead of cones for daytime closures only.
6. Additional advance flaggers may be required. Flagger should stand in a conspicuous place, be visible to approaching traffic as well as approaching vehicles after the first vehicle has stopped. During the hours of darkness, the flagging-station and flagger shall be illuminated and clearly visible to approaching traffic. The illumination footprint of the lighting on the ground shall be at least 20' in diameter. Place a minimum of four cones at 50' intervals in advance of flagger station as shown.
7. Place C30(CA) "LANE CLOSED" sign at 500' to 1000' intervals throughout extended work areas. They are optional if the work area is visible from the flagger station.
8. When a pilot car is used, place a C37(CA) "TRAFFIC CONTROL-WAIT AND FOLLOW PILOT CAR" sign with black legend on white background at all intersections, driveways and alleys without a flagger within traffic control area. Signs shall be clean and visible at all times. Where traffic can not be effectively self-regulated, at least one flagger shall be used at each intersection within traffic control area.
9. An optional C29(CA) sign may be placed below the C9A(CA) sign.
10. Either traffic cones or barricades shall be placed on the taper. Barricades shall be Type I, II, or III.

STATE OF CALIFORNIA
DEPARTMENT OF TRANSPORTATION

TRAFFIC CONTROL SYSTEM FOR LANE CLOSURE ON TWO LANE CONVENTIONAL HIGHWAYS

NO SCALE

RSP T13 DATED APRIL 19, 2013 SUPERSEDES STANDARD PLAN T13
DATED MAY 20, 2011 - PAGE 241 OF THE STANDARD PLANS BOOK DATED 2010.

REVISED STANDARD PLAN RSP T13

2010 REVISED STANDARD PLAN RSP T13

DATE PLOTTED => 12-MAR-2014
TIME PLOTTED => 07:41