Dist	COUNTY	ROUTE	POST MILES TOTAL PROJECT	SHEET No.	TOTAL SHEETS
01	Hum	299	R23.0/R24.0	1	61

ACHSSTP-P299(197)E

STATE OF CALIFORNIA
DEPARTMENT OF TRANSPORTATION

PROJECT PLANS FOR CONSTRUCTION ON
STATE HIGHWAY

IN HUMBOLDT COUNTY ABOUT 15 MILES WEST OF WILLOW CREEK FROM 0.6 MILE EAST TO 1.6 MILES EAST OF REDWOOD CREEK BRIDGE

TO BE SUPPLEMENTED BY STANDARD PLANS DATED 2010

INDEX OF PLANS

SHEET No.	DESCRIPTION
1	TITLE AND LOCATION MAP
2-3	TYPICAL CROSS SECTIONS
4	PROJECT CONTROL
5-6	LAYOUTS
7-8	PROFILES AND SUPERELEVATION DIAGRAMS
9-15	CONSTRUCTION DETAILS
16-20	DRAINAGE PLANS, PROFILES, DETAILS AND QUANTITIES
21	CONSTRUCTION AREA SIGNS
22-25	STAGE CONSTRUCTION AND TRAFFIC HANDLING PLANS, AND QUANTITIES
26	TRAFFIC HANDLING PLANS
27-29	PAVEMENT DELINEATION AND SIGN PLANS, DETAILS AND QUANTITIES
30	SIGN QUANTITIES
31	SUMMARY OF QUANTITIES
32-36	EROSION CONTROL PLANS, DETAILS, AND QUANTITIES
37-61	REVISED STANDARD PLANS

THE STANDARD PLANS LIST APPLICABLE TO THIS CONTRACT IS INCLUDED IN THE NOTICE TO BIDDERS AND SPECIAL PROVISIONS BOOK.

LOCATION MAP

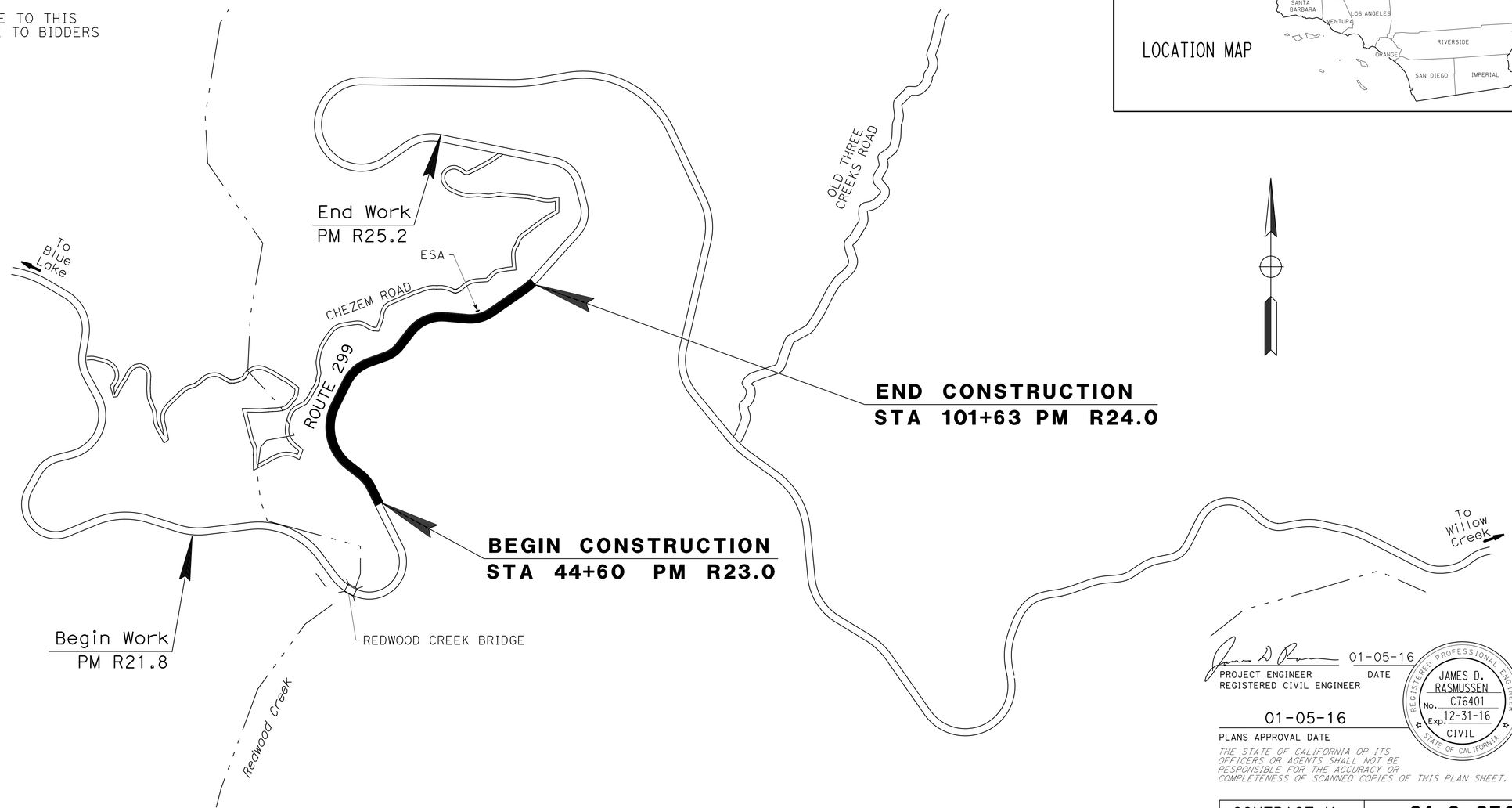

PROJECT ENGINEER
REGISTERED CIVIL ENGINEER
01-05-16
DATE

REGISTERED PROFESSIONAL ENGINEER
JAMES D. RASMUSSEN
No. C76401
Exp. 12-31-16
CIVIL
STATE OF CALIFORNIA

01-05-16
PLANS APPROVAL DATE

THE STATE OF CALIFORNIA OR ITS OFFICERS OR AGENTS SHALL NOT BE RESPONSIBLE FOR THE ACCURACY OR COMPLETENESS OF SCANNED COPIES OF THIS PLAN SHEET.

PROJECT MANAGER: KIMBERLY R. FLOYD
DESIGN MANAGER: JOHN L. MARTIN

THE CONTRACTOR SHALL POSSESS THE CLASS (OR CLASSES) OF LICENSE AS SPECIFIED IN THE "NOTICE TO BIDDERS."

CONTRACT No.	01-0a3704
PROJECT ID	0100020290

LAST REVISION 09-03-15
DATE PLOTTED => 01-FEB-2016
TIME PLOTTED => 09:52

Dist	COUNTY	ROUTE	POST MILES TOTAL PROJECT	SHEET No.	TOTAL SHEETS
01	HUM	299	R23.0/R24.0	2	61

REGISTERED CIVIL ENGINEER 01-05-16 DATE

01-05-16
PLANS APPROVAL DATE

REGISTERED PROFESSIONAL ENGINEER JAMES D. RASMUSSEN No. C76401 Exp. 12-31-16 CIVIL STATE OF CALIFORNIA

THE STATE OF CALIFORNIA OR ITS OFFICERS OR AGENTS SHALL NOT BE RESPONSIBLE FOR THE ACCURACY OR COMPLETENESS OF SCANNED COPIES OF THIS PLAN SHEET.

NOTES:

1. DIMENSIONS OF THE PAVEMENT STRUCTURES (STRUCTURAL SECTIONS) ARE SUBJECT TO TOLERANCES SPECIFIED IN THE STANDARD SPECIFICATIONS.
2. SUPERELEVATIONS ARE SHOWN ON THE SUPERELEVATION DIAGRAMS.
3. THE ADDITIONAL HEIGHT OF DIKE MUST BE EQUIVALENT TO THE DEPTH OF RHMA-O. DO NOT EXTEND RHMA-O UNDER DIKE.

ABBREVIATION:

RHMA-O	RUBBERIZED HOT MIX ASPHALT-OPEN GRADED (OPEN GRADED FRICTION COURSE)
RHMA-G	RUBBERIZED HOT MIX ASPHALT (GAP GRADED)
HMA-A	HOT MIX ASPHALT (TYPE A)
AB (CL2)	CLASS 2 AGGREGATE BASE (CY)
WC	WEED CONTROL MAT (FIBER)
SB	SHOULDER BACKING
SEG	SUBGRADE ENHANCEMENT GEOTEXTILE, CLASS B2
MGS	MIDWEST GUARDRAIL SYSTEM (STEEL POST)
CRS	CENTERLINE RUMBLE STRIP (HMA, GROUND-IN INDENTATIONS)
SRS	SHOULDER RUMBLE STRIP (HMA, GROUND-IN INDENTATIONS)
SUPER	SUPERELEVATION
(E)	EXISTING

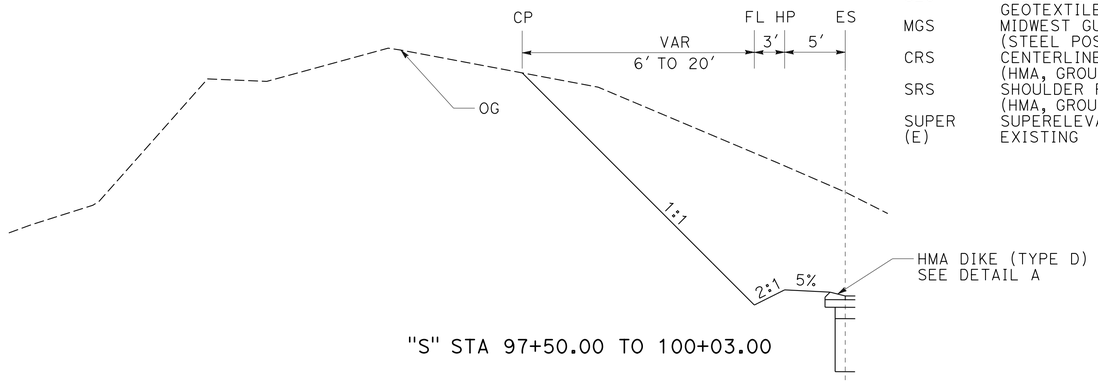

"S" STA 97+50.00 TO 100+03.00

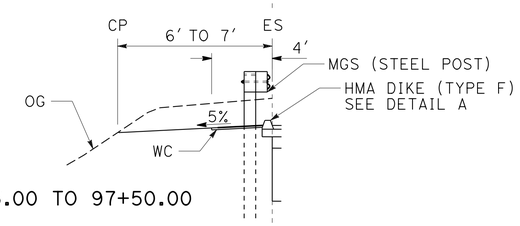

"S" STA 93+75.00 TO 97+50.00

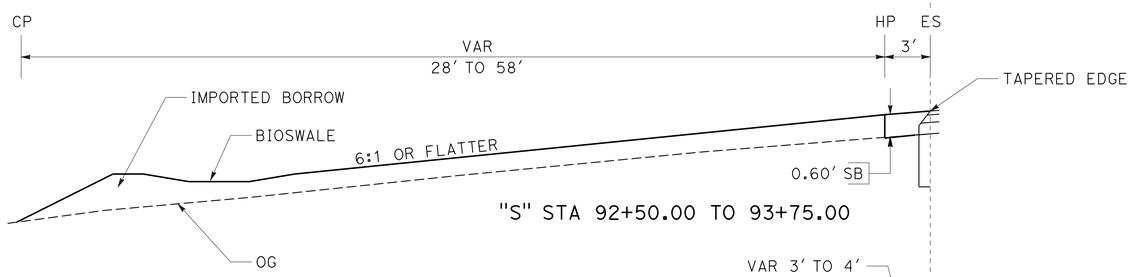

"S" STA 92+50.00 TO 93+75.00

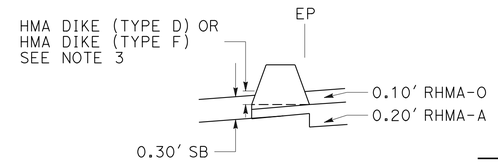

DETAIL A

DESIGN DESIGNATION

ADT (2014)	3,210	D	60%
ADT (2036)	3,430	T	11%
DHV	470	V	55 mph
ESAL	1,575,150	TI_{20}	9.5

PAVEMENT CLIMATE REGION: LOW MOUNTAIN

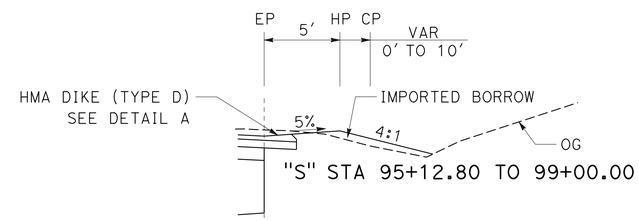

"S" STA 95+12.80 TO 99+00.00

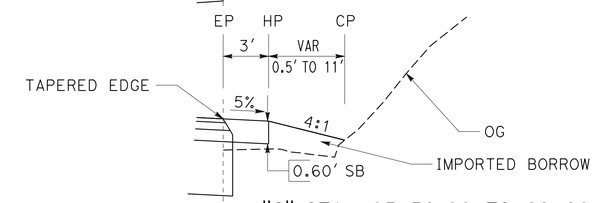

"S" STA 85+50.00 TO 89+00.00
"S" STA 92+50.00 TO 95+12.80
"S" STA 99+00.00 TO 100+63.53

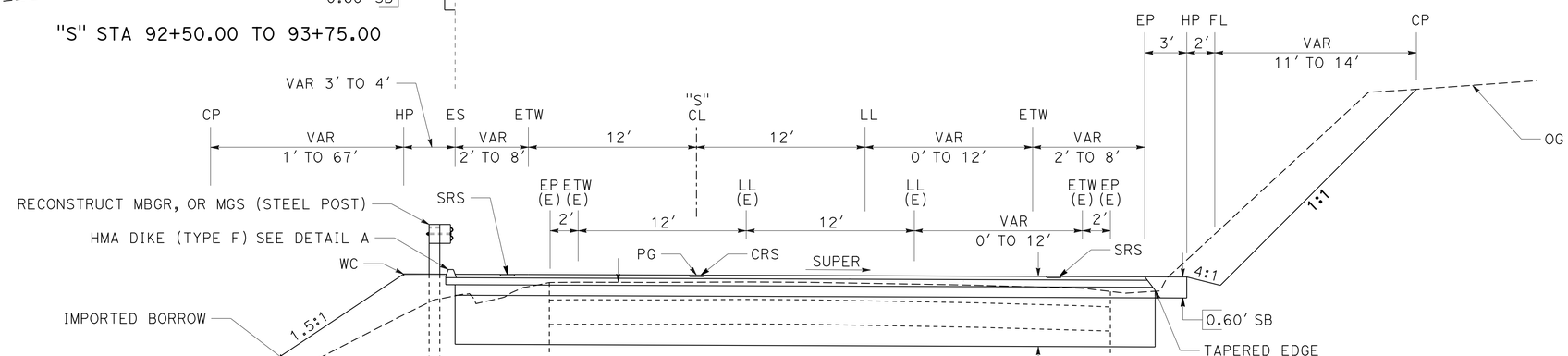

"S" STA 85+00.00 TO 89+00.00
"S" STA 92+50.00 TO 100+63.63

ROUTE 299

TYPICAL CROSS SECTIONS

NO SCALE

X-1

STATE OF CALIFORNIA - DEPARTMENT OF TRANSPORTATION
Caltrans® **DESIGN**

FUNCTIONAL SUPERVISOR: JOHN MARTIN
CALCULATED-DESIGNED BY: BETH A. ELMORE
CHECKED BY: JAMES D RASMUSSEN
REVISED BY / DATE REVISED

P:\proj1\01\0a370_plans\pse\010a370ca001.dgn

LAST REVISION 09-02-15 | DATE PLOTTED => 11-JAN-2016 | TIME PLOTTED => 08:42

Dist	COUNTY	ROUTE	POST MILES TOTAL PROJECT	SHEET No.	TOTAL SHEETS
01	HUM	299	R23.0/R24.0	3	61

REGISTERED CIVIL ENGINEER 01-05-16 DATE

01-05-16
PLANS APPROVAL DATE

REGISTERED PROFESSIONAL ENGINEER JAMES D. RASMUSSEN No. C76401 Exp. 12-31-16 CIVIL STATE OF CALIFORNIA

THE STATE OF CALIFORNIA OR ITS OFFICERS OR AGENTS SHALL NOT BE RESPONSIBLE FOR THE ACCURACY OR COMPLETENESS OF SCANNED COPIES OF THIS PLAN SHEET.

NOTES:

1. DIMENSIONS OF THE PAVEMENT STRUCTURES (STRUCTURAL SECTIONS) ARE SUBJECT TO TOLERANCES SPECIFIED IN THE STANDARD SPECIFICATIONS.
2. SUPERELEVATIONS AS SHOWN OR AS DETERMINED BY THE ENGINEER.

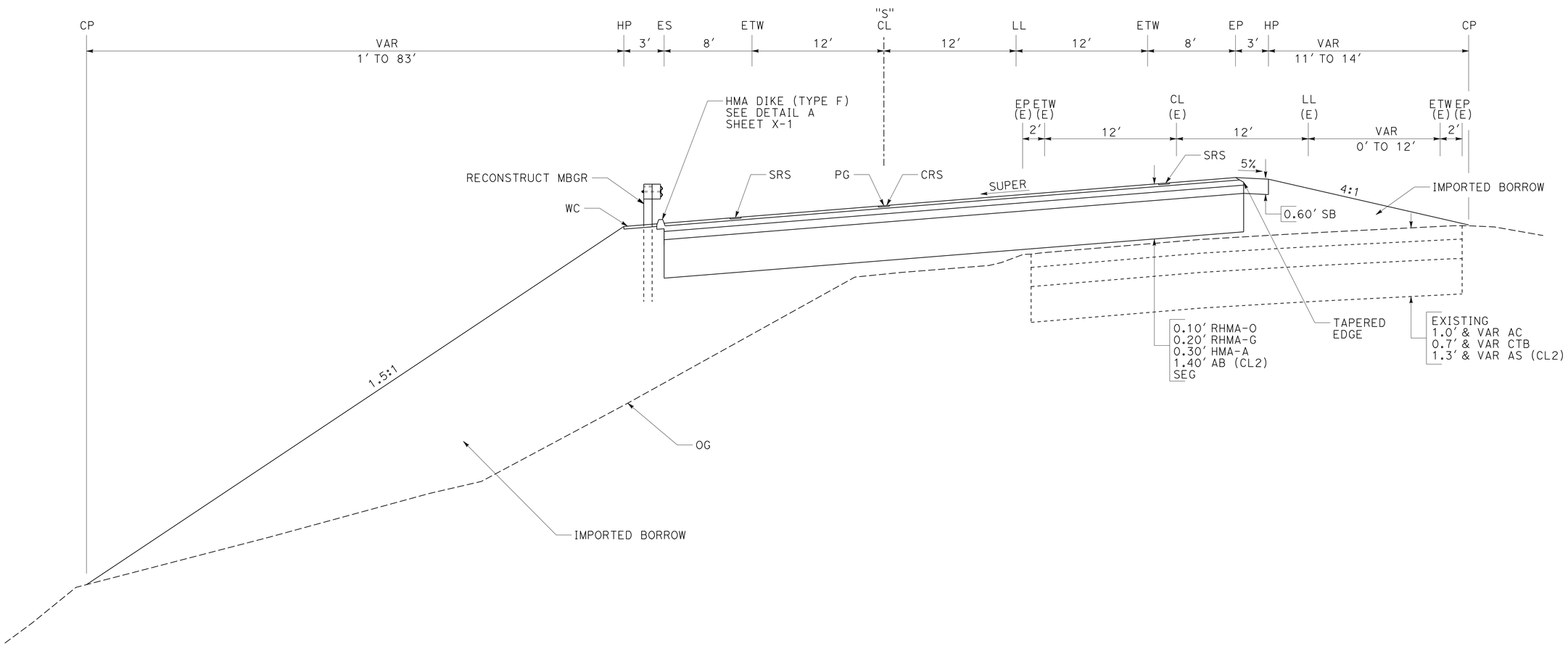

"S" STA 89+00.00 TO 92+50.00

ROUTE 299

TYPICAL CROSS SECTIONS

NO SCALE

X-2

REVISED BY | DATE REVISED

BETH A. ELMORE | JAMES D RASMUSSEN

CALCULATED-DESIGNED BY | CHECKED BY

FUNCTIONAL SUPERVISOR | JOHN MARTIN

STATE OF CALIFORNIA - DEPARTMENT OF TRANSPORTATION

Caltrans® **DESIGN**

P:\proj1\01\0a370_plans\pse\010a370ca002.dgn

LAST REVISION 09-03-15 | DATE PLOTTED => 11-JAN-2016 | TIME PLOTTED => 08:42

Dist	COUNTY	ROUTE	POST MILES TOTAL PROJECT	SHEET No.	TOTAL SHEETS
01	HUM	299	R23.0/R24.0	4	61

REGISTERED CIVIL ENGINEER 01-05-16 DATE

01-05-16
PLANS APPROVAL DATE

REGISTERED PROFESSIONAL ENGINEER JAMES D. RASMUSSEN No. C76401 Exp. 12-31-16 CIVIL STATE OF CALIFORNIA

THE STATE OF CALIFORNIA OR ITS OFFICERS OR AGENTS SHALL NOT BE RESPONSIBLE FOR THE ACCURACY OR COMPLETENESS OF SCANNED COPIES OF THIS PLAN SHEET.

NOTE:

1. ELEVATIONS SHOWN ARE REFERENCED TO THE NORTH AMERICAN VERTICAL DATUM 1988

CONTROL FOR DESIGN AND CONSTRUCTION

NAME	STATION	OFFSET	ELEVATION	DESCRIPTION
2368	"S" 82+16.72	17.59' LT	1412.92	ALCAR
2370	"S" 83+37.98	19.29' LT	1419.44	SPIKE
2373	"S" 85+85.67	130.58' RT	1468.92	SPIKE
2372	"S" 86+38.33	14.93' LT	1436.40	SPIKE
2377	"S" 88+93.76	4.52' LT	1451.07	MAN MADE HUB
2381	"S" 90+67.28	61.56' RT	1462.96	SPIKE
2384	"S" 91+84.55	0.97' RT	1466.23	¾" REBAR
2400	"S" 98+58.47	49.52' RT	1513.79	ALCAR
2402	"S" 99+26.79	39.42' RT	1524.47	BM N1403

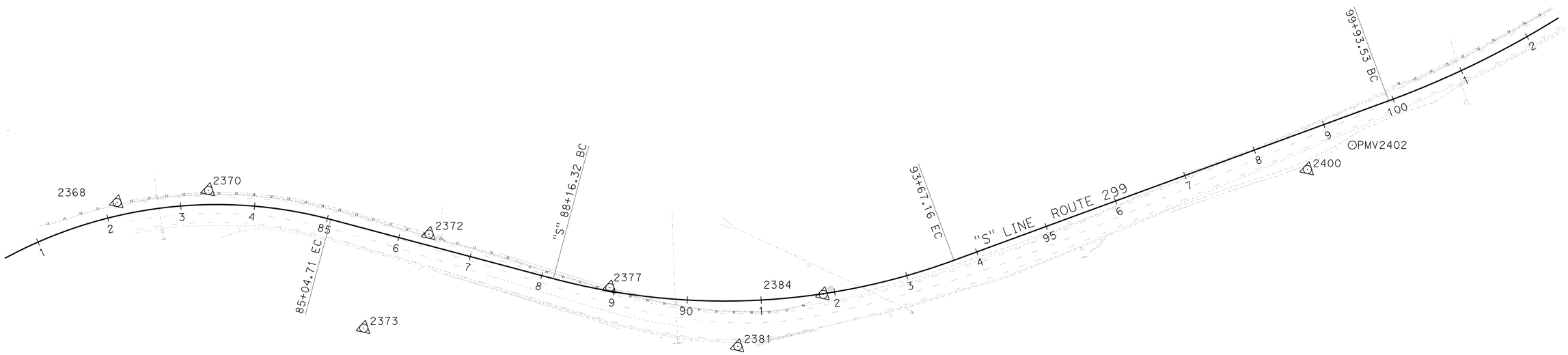

PROJECT CONTROL

NO SCALE

PC-1

REVISED BY	DATE REVISED
BETH A. ELMORE	JAMES D RASMUSSEN

CALCULATED-DESIGNED BY	CHECKED BY

FUNCTIONAL SUPERVISOR: JOHN MARTIN

STATE OF CALIFORNIA - DEPARTMENT OF TRANSPORTATION

Caltrans

DESIGN

P:\proj1\01\0a370_plans\pse\010a370dc001.dgn

LAST REVISION 11-07-15 | DATE PLOTTED => 11-JAN-2016 | TIME PLOTTED => 08:42

Dist	COUNTY	ROUTE	POST MILES TOTAL PROJECT	SHEET No.	TOTAL SHEETS
01	HUM	299	R23.0/R24.0	5	61

REGISTERED CIVIL ENGINEER 01-05-16 DATE

01-05-16
PLANS APPROVAL DATE

REGISTERED PROFESSIONAL ENGINEER JAMES D. RASMUSSEN No. C76401 Exp. 12-31-16 CIVIL STATE OF CALIFORNIA

THE STATE OF CALIFORNIA OR ITS OFFICERS OR AGENTS SHALL NOT BE RESPONSIBLE FOR THE ACCURACY OR COMPLETENESS OF SCANNED COPIES OF THIS PLAN SHEET.

NOTES:

1. FOR ACCURATE RIGHT OF WAY DATA, CONTACT RIGHT OF WAY ENGINEERING AT THE DISTRICT OFFICE.
2. FOR RUMBLE STRIP SEE SHEET C-2
3. FOR REMOVE GUARDRAIL (RAIL ELEMENT WALL) DETAIL SEE SHEET C-1

LEGEND:

- (#) CURVE NUMBER
- (#) DRAINAGE SYSTEM NUMBER
- WELL
- CPACP

ABBREVIATIONS:

BPEA	BURIED POST END ANCHOR
CRS	CENTERLINE RUMBLE STRIP (HMA, GROUND-IN INDENTATIONS)
TE	TAPERED EDGE
SFT	END ANCHOR ASSEMBLY (TYPE SFT).
SRS	SHOULDER RUMBLE STRIP (HMA, GROUND-IN INDENTATIONS)
WC	WEED CONTROL MAT (FIBER)
CPACP	COLD PLANE ASPHALT CONCRETE PAVEMENT
MGS	MIDWEST GUARDRAIL SYSTEM (STEEL POST)

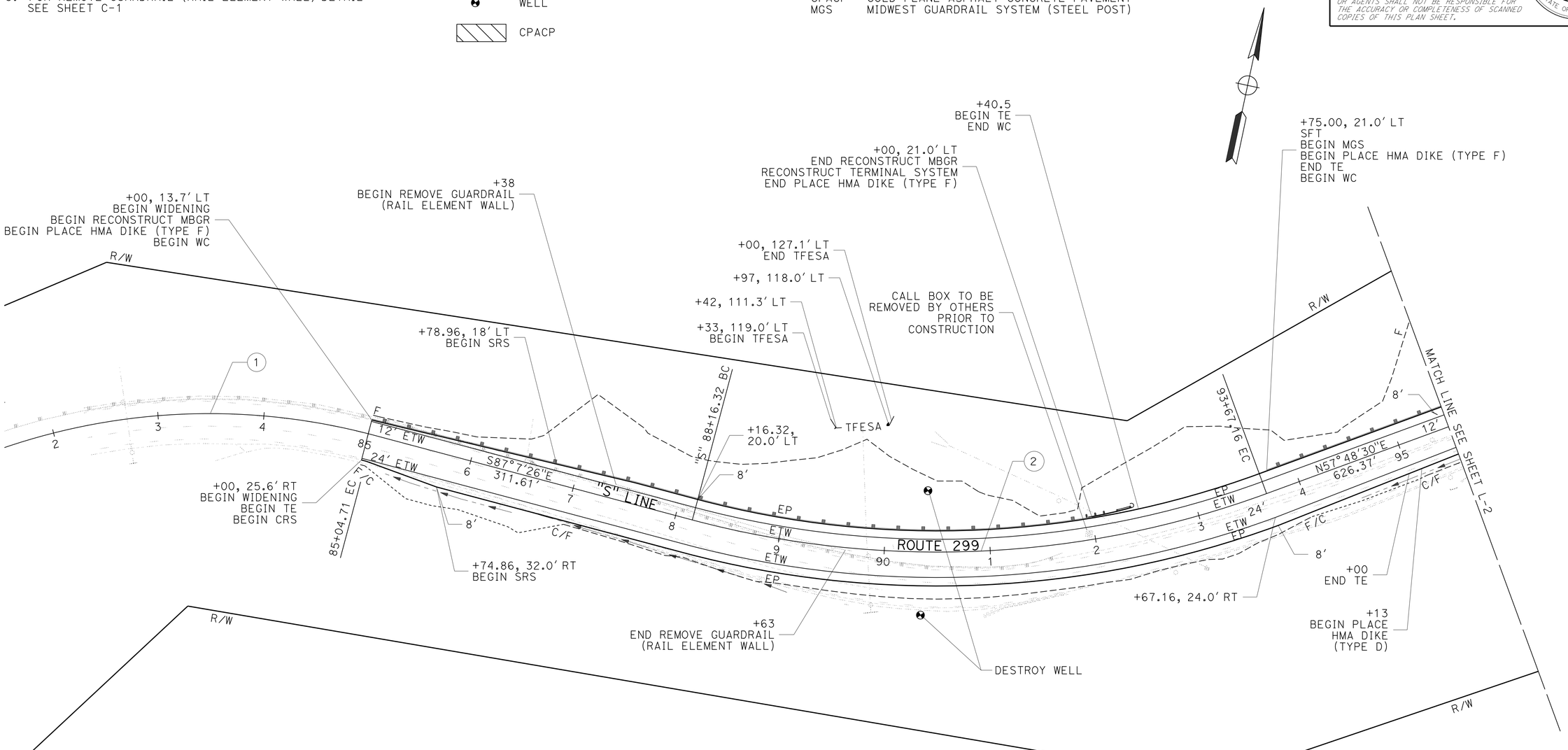

CURVE DATA

No. (#)	R	Δ	T	L
1	600'	53°33'40"	302.83'	560.89'
2	900'	35°04'04"	284.35'	550.84'

LAYOUT

SCALE: 1" = 50'

L-1

REVISED BY | DATE REVISED
BETH A. ELMORE | JAMES D RASMUSSEN
CALCULATED-DESIGNED BY | CHECKED BY
FUNCTIONAL SUPERVISOR: JOHN MARTIN

STATE OF CALIFORNIA - DEPARTMENT OF TRANSPORTATION
Caltrans
DESIGN

P:\proj1\01\0a370_plans\pse\010a370ea001.dgn

LAST REVISION 06-16-15 | DATE PLOTTED => 11-JAN-2016 | TIME PLOTTED => 08:42

Dist	COUNTY	ROUTE	POST MILES TOTAL PROJECT	SHEET No.	TOTAL SHEETS
01	HUM	299	R23.0/R24.0	6	61

REGISTERED CIVIL ENGINEER 01-05-16 DATE

01-05-16
PLANS APPROVAL DATE

REGISTERED PROFESSIONAL ENGINEER JAMES D. RASMUSSEN No. C76401 Exp. 12-31-16 CIVIL STATE OF CALIFORNIA

THE STATE OF CALIFORNIA OR ITS OFFICERS OR AGENTS SHALL NOT BE RESPONSIBLE FOR THE ACCURACY OR COMPLETENESS OF SCANNED COPIES OF THIS PLAN SHEET.

NOTE:

1. FOR ACCURATE RIGHT OF WAY DATA, CONTACT RIGHT OF WAY ENGINEERING AT THE DISTRICT OFFICE.

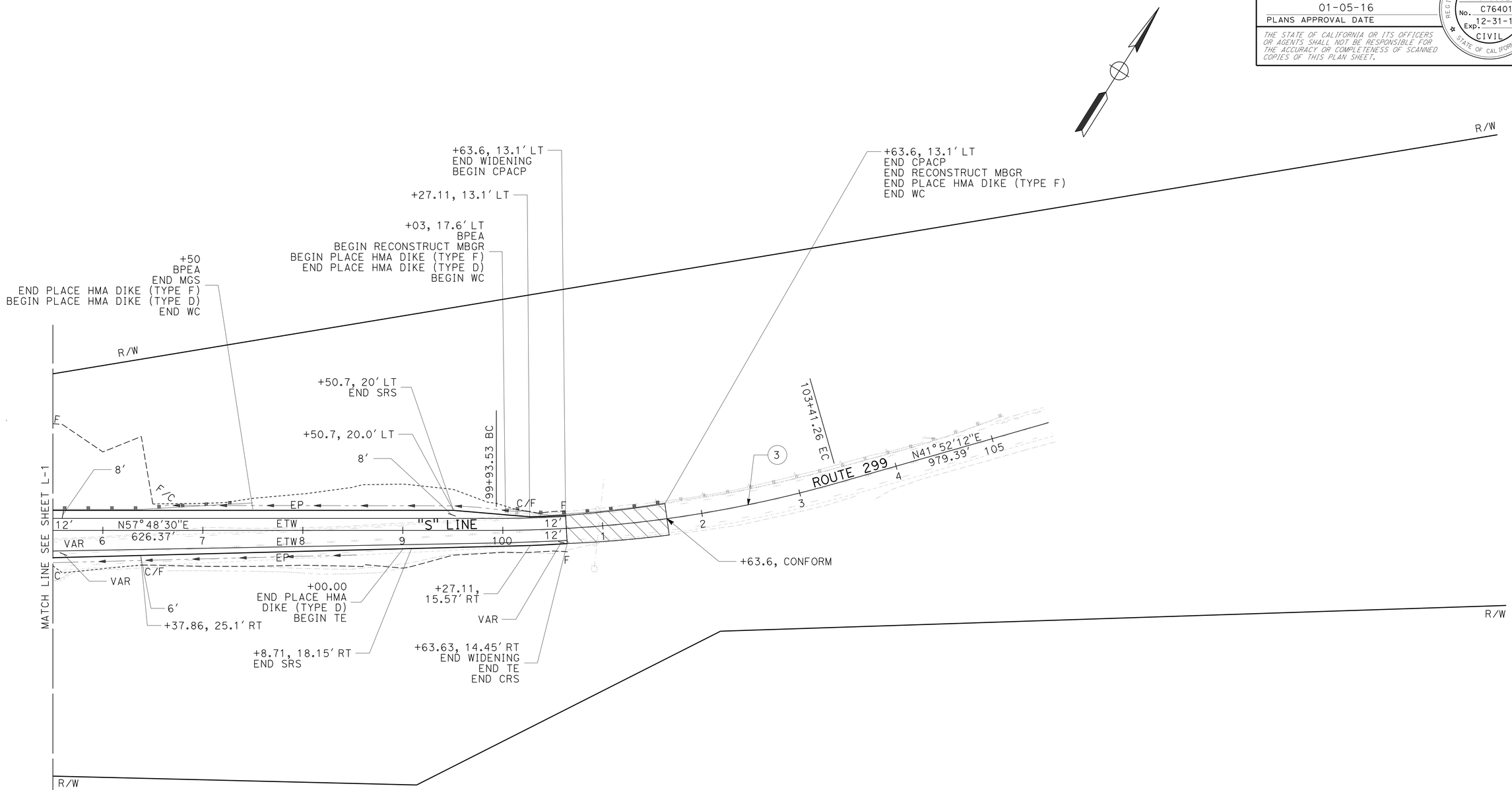

CURVE DATA

No. ⊕	R	Δ	T	L
3	1250′	15°56′19″	174.99′	347.72′

LAYOUT

SCALE: 1" = 50′

L-2

REVISED BY | DATE REVISED
BETH A. ELMORE | JAMES D RASMUSSEN
CALCULATED-DESIGNED BY | CHECKED BY
FUNCTIONAL SUPERVISOR
JOHN MARTIN

STATE OF CALIFORNIA - DEPARTMENT OF TRANSPORTATION
Caltrans
DESIGN

P:\proj1\01\0a370_plans\pse\010a370ea002.dgn

LAST REVISION | DATE PLOTTED => 11-JAN-2016 | TIME PLOTTED => 08:42

Dist	COUNTY	ROUTE	POST MILES TOTAL PROJECT	SHEET No.	TOTAL SHEETS
01	HUM	299	R23.0/R24.0	7	61

REGISTERED CIVIL ENGINEER 01-05-16 DATE

01-05-16
PLANS APPROVAL DATE

REGISTERED PROFESSIONAL ENGINEER JAMES D. RASMUSSEN No. C76401 Exp. 12-31-16 CIVIL STATE OF CALIFORNIA

THE STATE OF CALIFORNIA OR ITS OFFICERS OR AGENTS SHALL NOT BE RESPONSIBLE FOR THE ACCURACY OR COMPLETENESS OF SCANNED COPIES OF THIS PLAN SHEET.

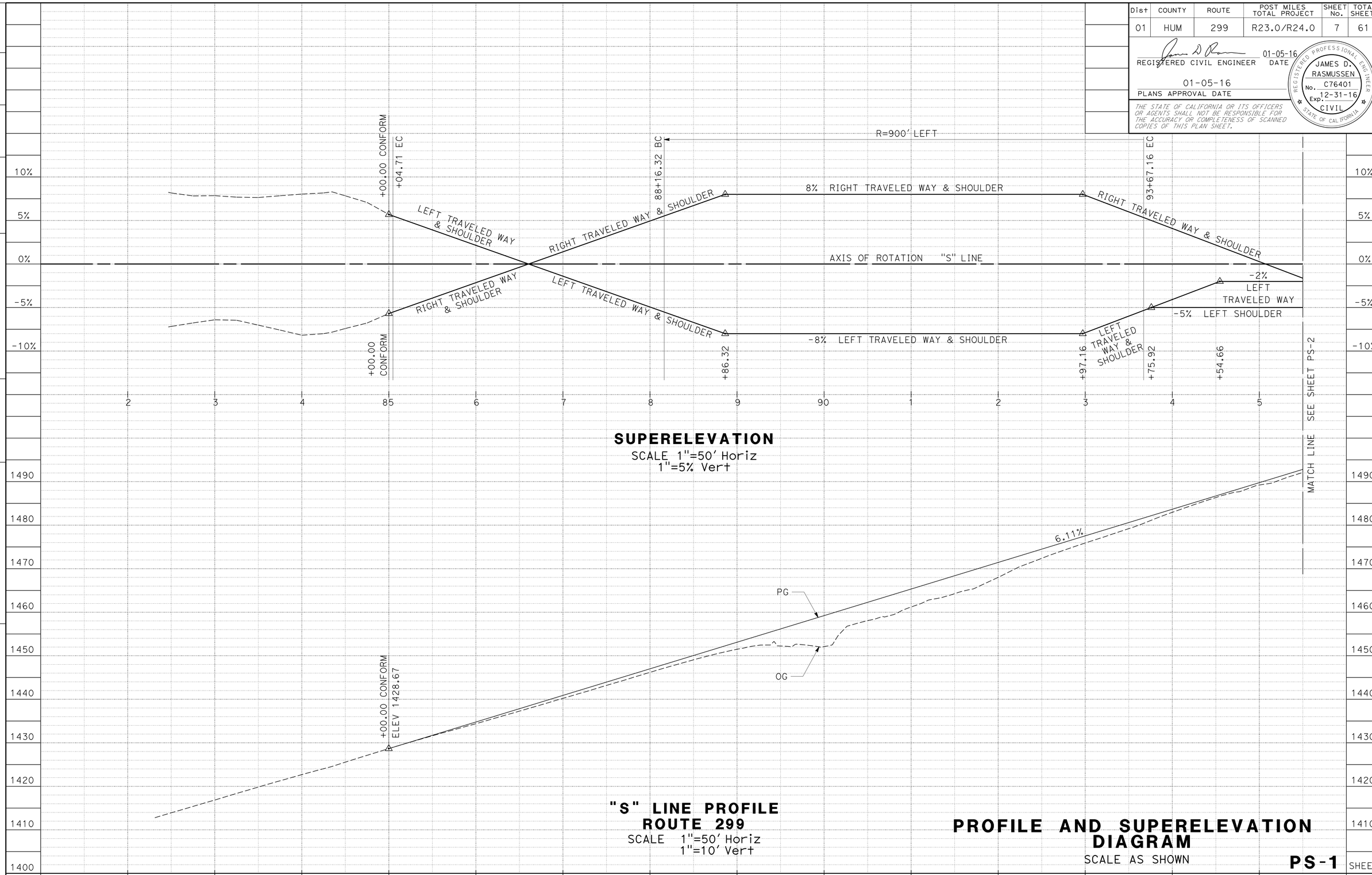

STATION		2	3	4	85	6	7	8	9	90	1	2	3	4	5	TOTAL
CY	Exc	480	368	202	131	16	0	1	36	162	300	143				1839
	Emb	13	455	1142	1280	3068	2342	621	255	163	123	895				10357

REVISED BY | DATE REVISED
BETH A. ELMORE | JAMES D RASMUSSEN
CALCULATED-DESIGNED BY | CHECKED BY
FUNCTIONAL SUPERVISOR: JOHN MARTIN
STATE OF CALIFORNIA - DEPARTMENT OF TRANSPORTATION
Caltrans DESIGN
P:\proj1\01\0a370_plans\pse\010a370fb001.dgn

LAST REVISION 12-08-15 | DATE PLOTTED => 11-JAN-2016 | TIME PLOTTED => 08:42

Dist	COUNTY	ROUTE	POST MILES TOTAL PROJECT	SHEET No.	TOTAL SHEETS
01	HUM	299	R23.0/R24.0	8	61

REGISTERED CIVIL ENGINEER 01-05-16 DATE

01-05-16
PLANS APPROVAL DATE

REGISTERED PROFESSIONAL ENGINEER JAMES D. RASMUSSEN No. C76401 Exp. 12-31-16 CIVIL STATE OF CALIFORNIA

THE STATE OF CALIFORNIA OR ITS OFFICERS OR AGENTS SHALL NOT BE RESPONSIBLE FOR THE ACCURACY OR COMPLETENESS OF SCANNED COPIES OF THIS PLAN SHEET.

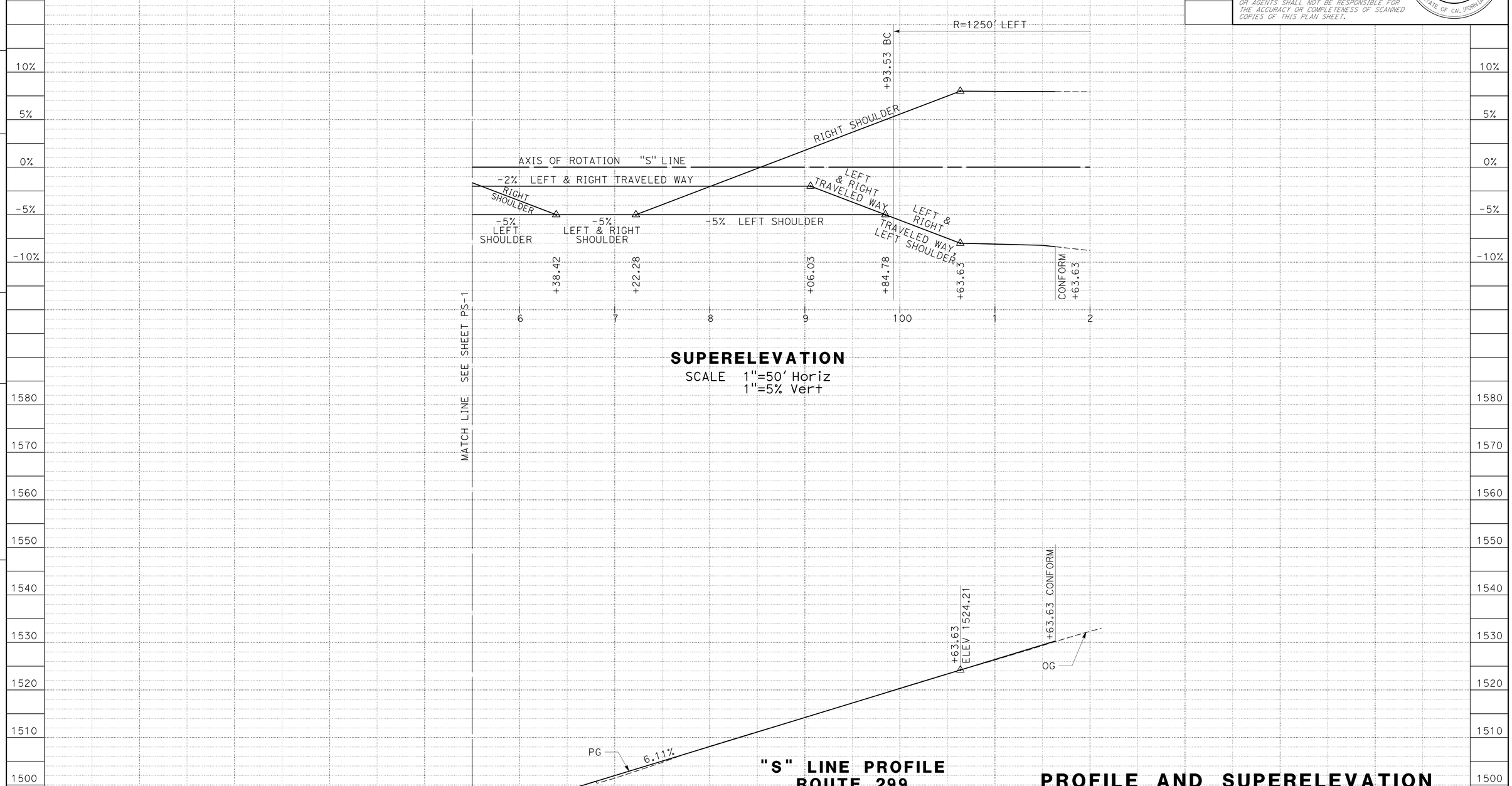

SUPERELEVATION
SCALE 1"=50' Horiz
1"=5% Vert

"S" LINE PROFILE
ROUTE 299
SCALE 1"=50' Horiz
1"=10' Vert

PROFILE AND SUPERELEVATION DIAGRAM
SCALE AS SHOWN

PS-2

STATION		6	7	8	9	100	1	2	SHEET TOTAL	TOTAL
CY	Exc	146	366	764	1327	831	197		3631	5470
	Emb	1374	392	10	18	13	8		1815	12172

REVISED BY | DATE REVISED
BETH A. ELMORE | JAMES D RASMUSSEN
CALCULATED-DESIGNED BY | CHECKED BY
FUNCTIONAL SUPERVISOR: JOHN MARTIN

STATE OF CALIFORNIA - DEPARTMENT OF TRANSPORTATION
Caltrans DESIGN

P:\proj1\01\0a370_plans\pse\010a370fb002.dgn

LAST REVISION 12-08-15 | DATE PLOTTED => 11-JAN-2016 | TIME PLOTTED => 08:42

Dist	COUNTY	ROUTE	POST MILES TOTAL PROJECT	SHEET No.	TOTAL SHEETS
01	HUM	299	R23.0/R24.0	9	61

REGISTERED CIVIL ENGINEER 01-05-16 DATE

01-05-16
PLANS APPROVAL DATE

REGISTERED PROFESSIONAL ENGINEER JAMES D. RASMUSSEN No. C76401 Exp. 12-31-16 CIVIL STATE OF CALIFORNIA

THE STATE OF CALIFORNIA OR ITS OFFICERS OR AGENTS SHALL NOT BE RESPONSIBLE FOR THE ACCURACY OR COMPLETENESS OF SCANNED COPIES OF THIS PLAN SHEET.

NOTES:

1. FOR TEMPORARY CONSTRUCTION TAPERS, GRIND EXISTING SURFACES TO ACCOMMODATE A MINIMUM TAPER THICKNESS OF 0.10′ WHEN EITHER:
   A. HMA MATERIAL SUCH AS RUBBERIZED, POLYMER MODIFIED OR OPEN GRADED IS UNSUITABLE FOR RAKING TO A MAXIMUM 0.02′ THICKNESS AT THE CONFORM.
   B. TEMPORARY TAPER WILL BE IN PLACE FOR MORE THAN 14 DAYS.
2. PERMANENT SURFACE MAY BE EXISTING OR NEW PAVEMENT.
3. ROADWAY SURFACE IS THE TOP OF EXISTING SURFACE OR THE TOP OF THE PLANED SURFACE.

LEGEND:

- HMA MATERIAL (TEMPORARY TAPER)
- IF NECESSARY, COLD PLANE ASPHALT CONCRETE PAVEMENT AND PLACE HMA MATERIAL (SEE NOTE 1)
- COLD PLANE AC PAVEMENT

ABBREVIATION:

RHMA-O RUBBARIZED HOT MIX ASPHALT-OPEN GRADED (OPEN GRADED FRICTION COURSE)

RHMA-G RUBBARIZED HOT MIX ASPHALT (GAP GRADED)

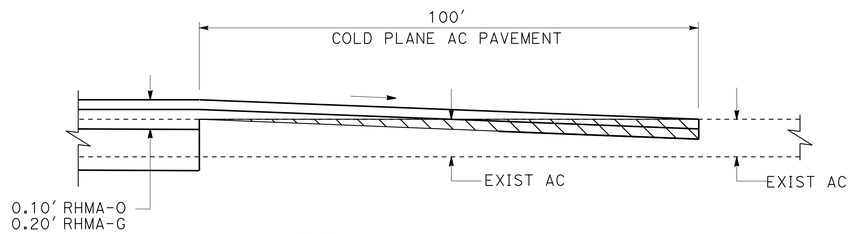

"S" 100+63.6 TO 101+63.6

MAINLINE PAVEMENT CONFORM

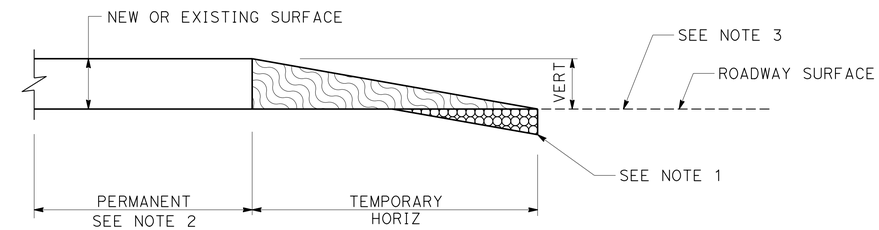

VERT	SLOPE RATIO HORIZ/VERT
0-0.10′	70:1
GREATER THAN 0.10′	160:1

TYPICAL PAVING CONFORM FOR TEMPORARY CONSTRUCTION TAPERS

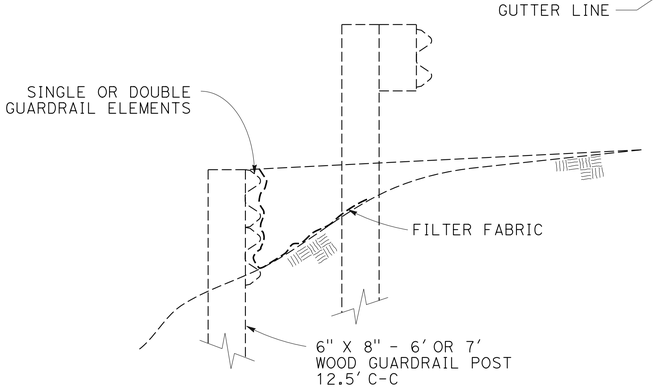

REMOVE GUARDRAIL (RAIL ELEMENT WALL) DETAIL

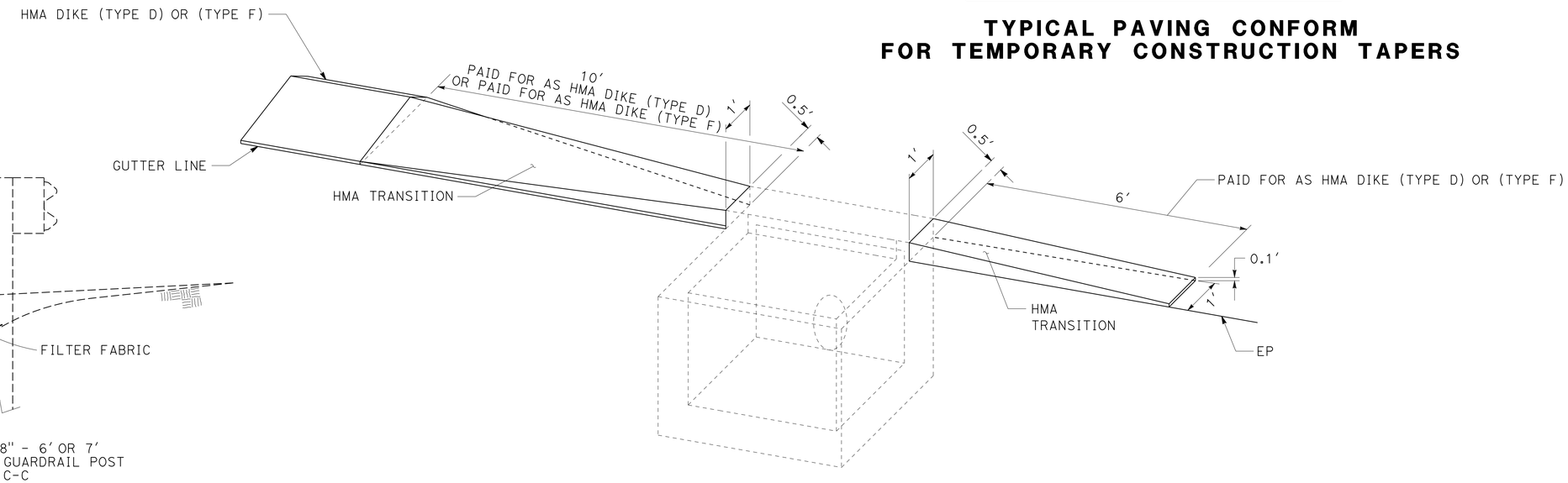

TRANSITION HMA DIKE (TYPE D) OR (TYPE F) TO DI

CONSTRUCTION DETAILS
NO SCALE

C-1

REVISED BY | DATE REVISED
BETH A. ELMORE | JAMES D RASMUSSEN
CALCULATED-DESIGNED BY | CHECKED BY
FUNCTIONAL SUPERVISOR
JOHN MARTIN

STATE OF CALIFORNIA - DEPARTMENT OF TRANSPORTATION
Caltrans® DESIGN

P:\proj1\01\0a370_plans\pse\010a370ga001.dgn

LAST REVISION 10-13-15 | DATE PLOTTED => 11-JAN-2016 | TIME PLOTTED => 08:42

Dist	COUNTY	ROUTE	POST MILES TOTAL PROJECT	SHEET No.	TOTAL SHEETS
01	HUM	299	R23.0/R24.0	10	61

REGISTERED CIVIL ENGINEER 01-05-16 DATE

01-05-16
PLANS APPROVAL DATE

REGISTERED PROFESSIONAL ENGINEER JAMES D. RASMUSSEN No. C76401 Exp. 12-31-16 CIVIL STATE OF CALIFORNIA

THE STATE OF CALIFORNIA OR ITS OFFICERS OR AGENTS SHALL NOT BE RESPONSIBLE FOR THE ACCURACY OR COMPLETENESS OF SCANNED COPIES OF THIS PLAN SHEET.

NOTE:

1. RUMBLE STRIPS MUST BE CONSTRUCTED PRIOR TO INSTALLING FINAL TRAFFIC STRIPES.

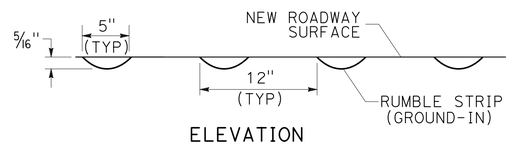

ELEVATION
SECTION A-A
SECTION B-B

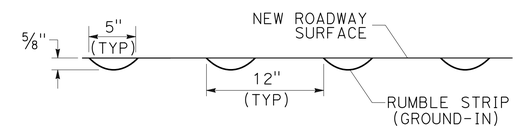

ELEVATION
SECTION C-C

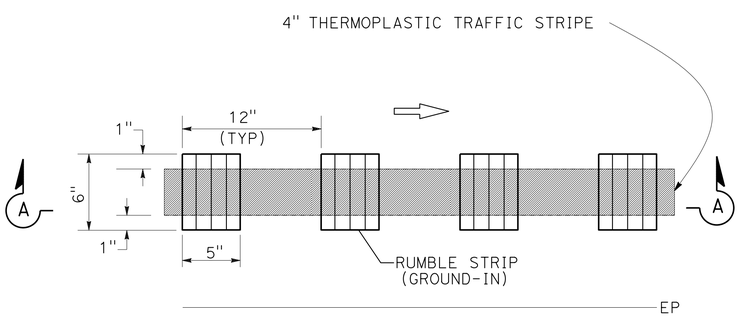

PLAN

SHOULDER RUMBLE STRIP
(HMA, GROUND-IN INDENTATIONS)

STA "S" 86+78.96 TO 88+16.32 LT
STA "S" 96+37.86 TO 99+08.71 RT

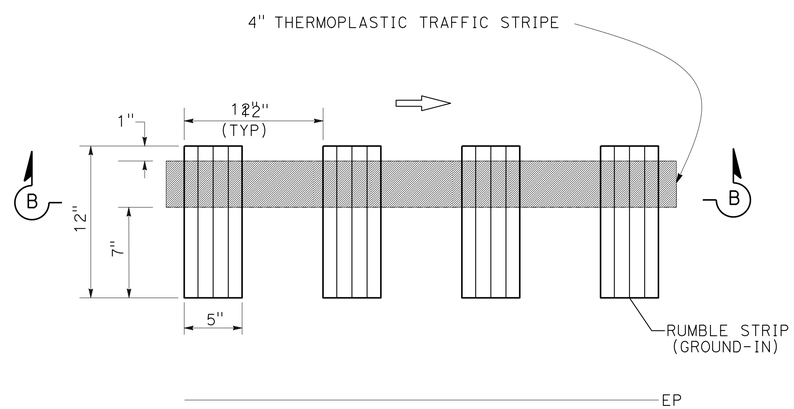

PLAN

SHOULDER RUMBLE STRIP
(HMA, GROUND-IN INDENTATIONS)

STA "S" 88+16.32 TO 99+50.70 LT
STA "S" 85+74.86 TO 96+37.86 RT

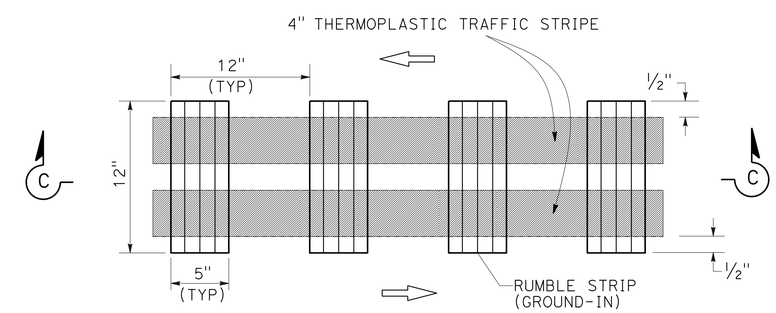

PLAN

CENTERLINE RUMBLE STRIP
(HMA, GROUND-IN INDENTATIONS)

CONSTRUCTION DETAILS
NO SCALE

C-2

GROUND-IN RUMBLE STRIP

REVISED BY	DATE REVISED
BETH A. ELMORE	JAMES D RASMUSSEN
CALCULATED-DESIGNED BY	CHECKED BY
FUNCTIONAL SUPERVISOR	JOHN MARTIN

STATE OF CALIFORNIA - DEPARTMENT OF TRANSPORTATION
Caltrans® DESIGN

P:\proj1\01\0a370_plans\pse\010a370ga002.dgn

LAST REVISION 11-15-15 | DATE PLOTTED => 11-JAN-2016 | TIME PLOTTED => 08:42

Dist	COUNTY	ROUTE	POST MILES TOTAL PROJECT	SHEET No.	TOTAL SHEETS
01	HUM	299	R23.0/R24.0	11	61

REGISTERED CIVIL ENGINEER 01-05-16 DATE

01-05-16
PLANS APPROVAL DATE

REGISTERED PROFESSIONAL ENGINEER JAMES D. RASMUSSEN No. C76401 Exp. 12-31-16 CIVIL STATE OF CALIFORNIA

THE STATE OF CALIFORNIA OR ITS OFFICERS OR AGENTS SHALL NOT BE RESPONSIBLE FOR THE ACCURACY OR COMPLETENESS OF SCANNED COPIES OF THIS PLAN SHEET.

NOTE:

1. WHERE DIKE IS CONSTRUCTED UNDER GUARDRAIL, PLACE WEED CONTROL MAT (FIBER) TO BACK EDGE OF DIKE. WHERE PAVED SHOULDER IS CONSTRUCTED WITHIN 36" IN FRONT OF THE POST, PLACE WEED CONTROL MAT (FIBER) TO THE EDGE OF PAVED SHOULDER.

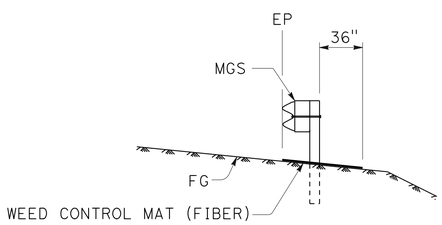

SECTION

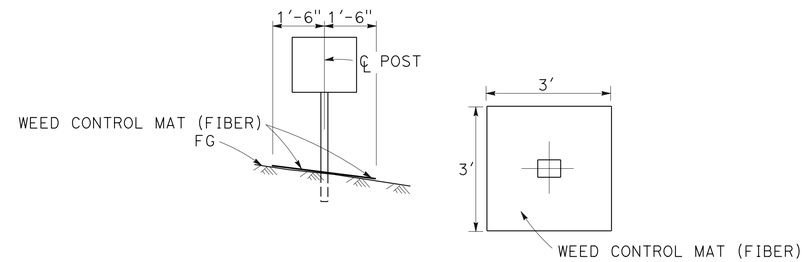

PLACEMENT UNDER ROADSIDE SIGN (ONE POST)

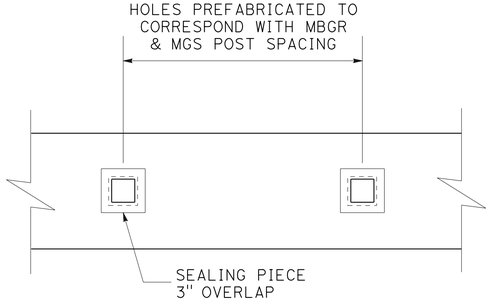

PLAN

DETAILS AT GUARDRAIL POSTS

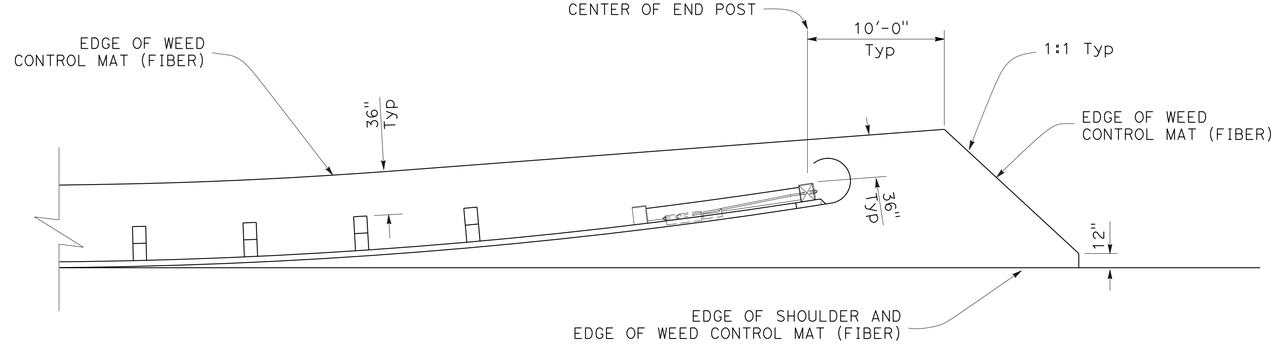

DETAIL AT TERMINAL SECTION

WEED CONTROL MAT (FIBER) DETAILS

CONSTRUCTION DETAILS
NO SCALE

C-3

REVISED BY | DATE REVISED
BETH A. ELMORE | JAMES D RASMUSSEN
CALCULATED-DESIGNED BY | CHECKED BY
FUNCTIONAL SUPERVISOR: JOHN MARTIN

STATE OF CALIFORNIA - DEPARTMENT OF TRANSPORTATION
Caltrans
DESIGN

P:\proj1\01\0a370_plans\pse\010a370ga003.dgn

LAST REVISION 10-12-15 | DATE PLOTTED => 11-JAN-2016 | TIME PLOTTED => 08:42

BORDER LAST REVISED 7/2/2010 | USERNAME => s116738 | DGN FILE => 010a370ga003.dgn | RELATIVE BORDER SCALE IS IN INCHES 0 1 2 3 | UNIT 0315 | PROJECT NUMBER & PHASE 01000202901

Dist	COUNTY	ROUTE	POST MILES TOTAL PROJECT	SHEET No.	TOTAL SHEETS
01	Hum	299	R23.0/R24.0	12	61

Dwight D Winterlin 01-05-16
REGISTERED CIVIL ENGINEER DATE

01-05-16
PLANS APPROVAL DATE

REGISTERED PROFESSIONAL ENGINEER DWIGHT WINTERLIN No. C68438 Exp. 06/30/17 CIVIL STATE OF CALIFORNIA

THE STATE OF CALIFORNIA OR ITS OFFICERS OR AGENTS SHALL NOT BE RESPONSIBLE FOR THE ACCURACY OR COMPLETENESS OF SCANNED COPIES OF THIS PLAN SHEET.

NOTES:

1. A SINGLE LINE POST MAY BE OFFSET UP TO 12" ALONG THE GUARDRAIL. DO NOT CUT OR DRILL HOLE IN ELEMENT TO ATTACH ELEMENT TO POST AND BLOCK IF THERE IS NO HOLE. BOLT BLOCK TO POST ONLY.
2. FOR POST AND BLOCK DETAILS SEE RSP A77N2. FOR RAIL ELEMENT AND HARDWARE DETAILS, USE MGS DETAILS SHOWN ON RSP A77L2 AND RSP A77M1.
3. BOLT THE BLOCK TO THE POST ON THE APPROACH SIDE OF THE STEEL POST FLANGE.
4. WHEN THERE IS A BREAK POINT IN FRONT OF GUARDRAIL BETWEEN 4'-8' THE HEIGHT WILL BE DETERMINED BY THE ENGINEER.
5. PLACE RUB RAIL (GUARDRAIL ELEMENT) AND ATTACH TO POST WITH NO BLOCK WHEN HEIGHT OF GUARDRAIL IS MORE THAN 2" ABOVE STANDARD HEIGHT.
6. BLOCKS MUST HAVE MEANS TO RESIST ROTATION OTHER THAN THROUGH BOLT.
7. FOR PARABOLIC FLARE OFFSETS, SEE RSP A77P1. DO NOT FLARE GUARDRAIL AT MORE THAN 15:1 AWAY FROM THE ETW UNLESS SHOWN.
8. FOR DIKE DETAILS, SEE REVISED STANDARD PLAN RSP A87B.
9. ONLY TYPE C DIKE MAY BE USED UNDER OR IN FRONT OF TERMINAL SYSTEMS, OR WHEN DIKE IS PLACED MORE THAN 2" IN FRONT OF FACE OF MBGR.
10. THE MAXIMUM HEIGHT OF THE DIKE OR CURB SHALL BE 4" FOR MBGR.
11. IF THE WIDTH OF THE PAVED SHOULDER IS REDUCED APPROACHING A FIXED OBJECT, PLACE A "P" MARKER INSTEAD OF THE L-1 MARKER.

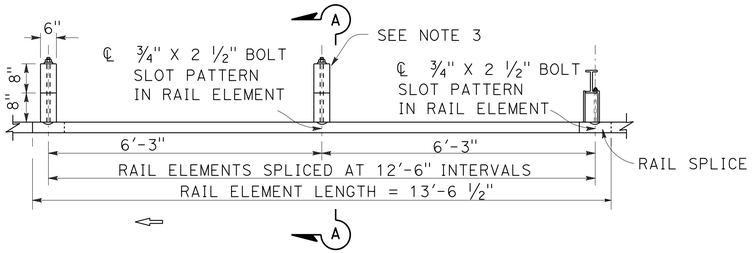

PLAN

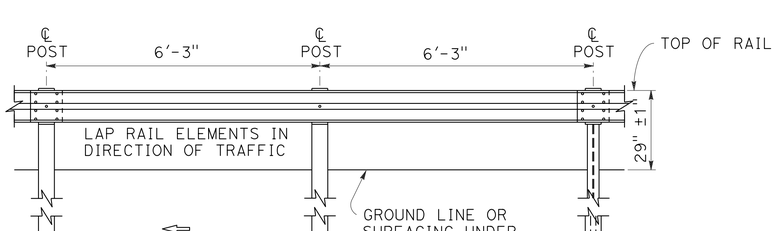

ELEVATION

METAL BEAM GUARD RAILING

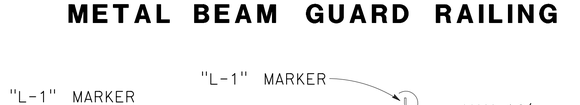

GUARDRAIL DELINEATION

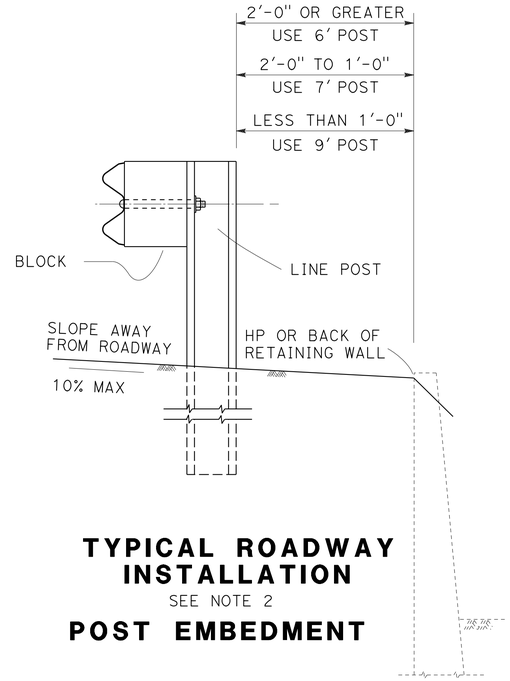

TYPICAL ROADWAY INSTALLATION

SEE NOTE 2

POST EMBEDMENT

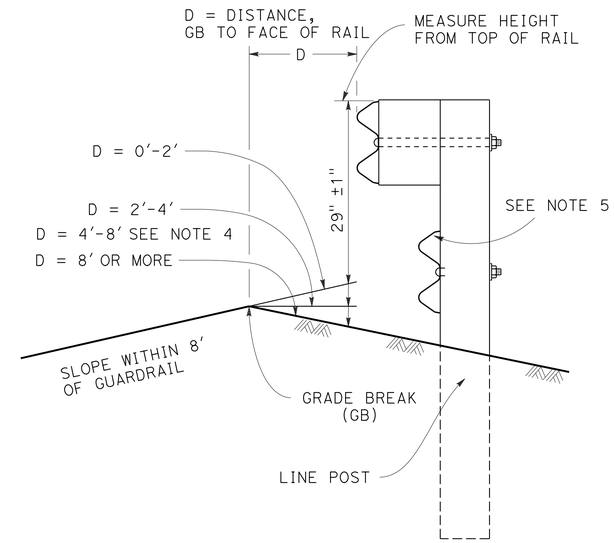

MEASURE HEIGHT DETAIL AT GRADE BREAK (GB)

WHEN THERE IS A GRADE BREAK IN FRONT OF GUARDRAIL MEASURE HEIGHT OF GUARDRAIL BASED ON DISTANCE FROM GRADE BREAK TO ADJUST FOR TRAJECTORY.

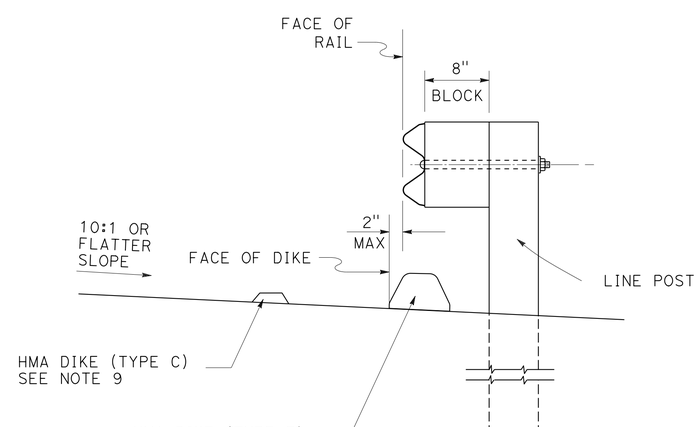

MBGR DIKE POSITIONING

SEE NOTE 8

RECONSTRUCT METAL BEAM GUARD RAILING

STA "S" 85+00 TO 92+00

CONSTRUCTION DETAILS

NO SCALE

C-4

REVISED BY | DATE REVISED
DWIGHT WINTERLIN | JOHN HART
CALCULATED-DESIGNED BY | CHECKED BY
FUNCTIONAL SUPERVISOR | JOHN MARTIN
STATE OF CALIFORNIA - DEPARTMENT OF TRANSPORTATION
Caltrans DESIGN

LAST REVISION 10-13-15 | DATE PLOTTED => 11-JAN-2016 | TIME PLOTTED => 08:42

Dist	COUNTY	ROUTE	POST MILES TOTAL PROJECT	SHEET No.	TOTAL SHEETS
01	Hum	299	R23.0/R24.0	13	61

Dwight D Winterlin 01-05-16
REGISTERED CIVIL ENGINEER DATE

01-05-16
PLANS APPROVAL DATE

REGISTERED PROFESSIONAL ENGINEER DWIGHT WINTERLIN No. C68438 Exp. 06/30/17 CIVIL STATE OF CALIFORNIA

THE STATE OF CALIFORNIA OR ITS OFFICERS OR AGENTS SHALL NOT BE RESPONSIBLE FOR THE ACCURACY OR COMPLETENESS OF SCANNED COPIES OF THIS PLAN SHEET.

NOTES:

1. NEST ALL RAILS AT EXISTING RAIL LAPS
2. WHEN A POST IS REMOVED AND THE RAIL ELEMENTS ARE NESTED, THE NESTED ELEMENTS MUST BE SUPPORTED BY A MIN OF 2 POST EACH SIDE OF THE MISSING POST OR ADD ADDITIONAL LENGTH OF NESTED ELEMENTS.
3. USING CASE 3, A SECOND ADJACENT POST CAN BE REMOVED IF THE NESTED RAIL ELEMENTS ARE SUPPORTED BY A MIN OF 2 POSTS EACH SIDE OF THE MISSING POSTS.
   THE 2-POST OPTION USES CASE 3 BUT NOT SHOWN.
4. FOR STEEL LINE POSTS, USE 1/4 - 20 SELF-TAPPING SCREWS IN 0.22" DIAMETER HOLES OR 1/4" BOLTS IN 9/32" DIAMETER HOLES.

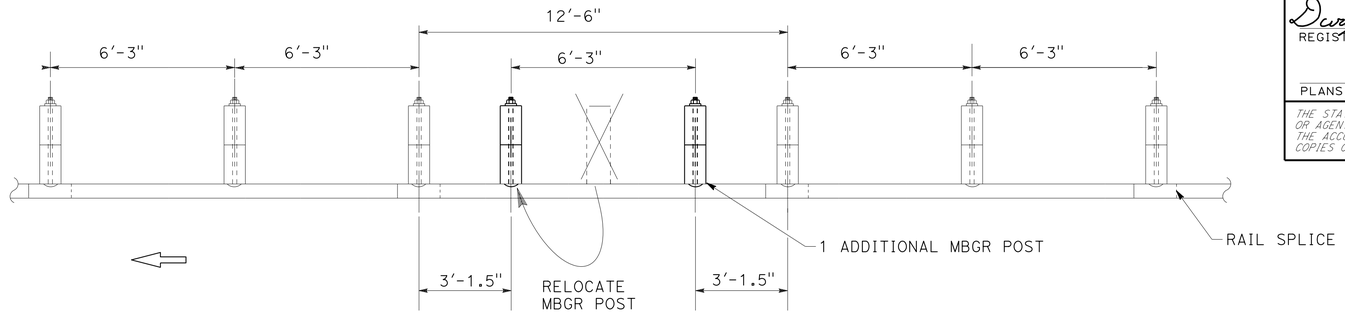

CASE 1

(ONE POST CONFLICT, MOVE THE POST AND ADD ONE POST)
(NO NESTED RAIL REQUIRED)

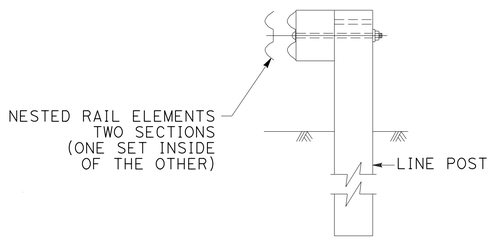

SECTION A-A

TYPICAL RAILING OVERLAP INSTALLATION AT POST

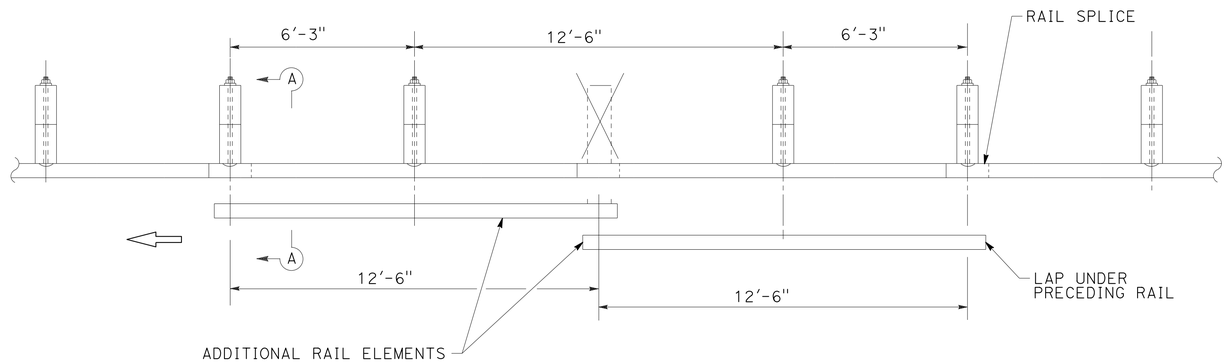

CASE 2

(ONE POST OMITTED AT JUNCTION OF TWO ELEMENTS)
(NEST TWO LENGTHS OF RAIL REQUIRED)

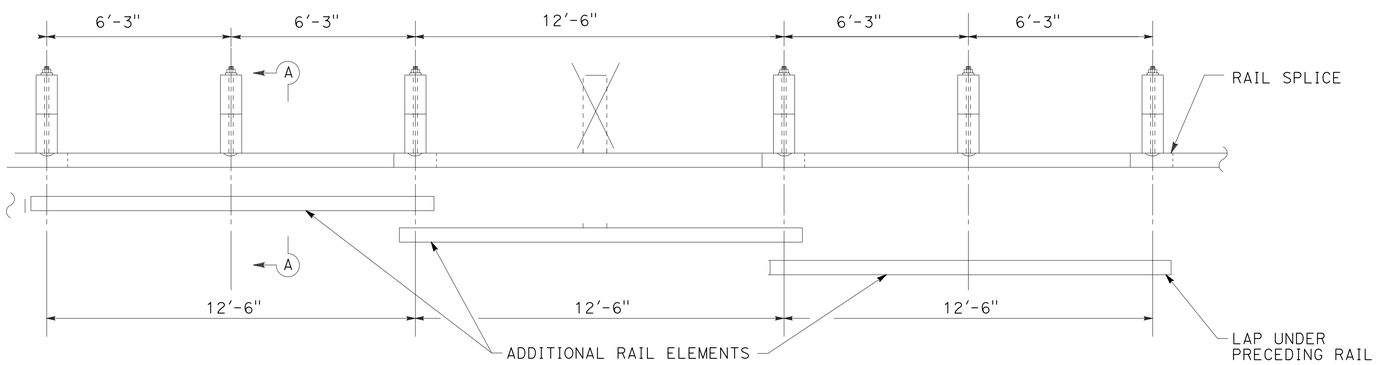

CASE 3

(ONE POST OMITTED AT CENTER OF OF ELEMENT)
(NEST THREE LENGTHS OF RAIL REQUIRED)
(ONE ADDITIONAL POST MAY BE OMITTED SEE NOTE 3)

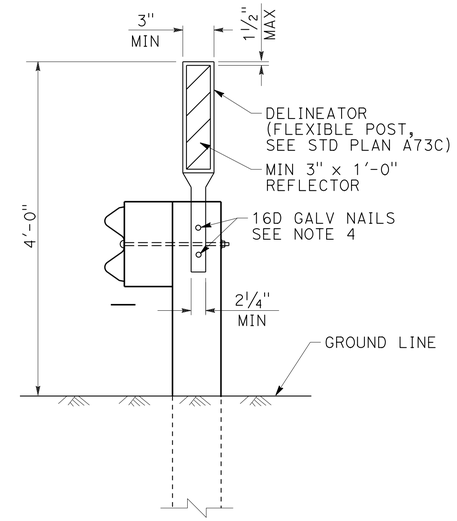

GUARDRAIL DELINEATION

LONG SPAN NESTED GUARD RAILING
RECONSTRUCT METAL BEAM GUARD RAILING

STA "S" 85+00 TO 92+00

CONSTRUCTION DETAILS

NO SCALE

C-5

REVISED BY	DATE REVISED

CALCULATED-DESIGNED BY	CHECKED BY
DWIGHT WINTERLIN	JOHN HART

FUNCTIONAL SUPERVISOR: JOHN MARTIN

STATE OF CALIFORNIA - DEPARTMENT OF TRANSPORTATION
Caltrans
DESIGN

\\S102cadd02\cadd\proj1\01\0a370_plans\pse\010a370ga005.dgn

LAST REVISION 10-13-15 | DATE PLOTTED => 11-JAN-2016 | TIME PLOTTED => 08:42

Dist	COUNTY	ROUTE	POST MILES TOTAL PROJECT	SHEET No.	TOTAL SHEETS
01	Hum	299	R23.0/R24.0	14	61

Dwight D Winterlin 01-05-16
REGISTERED CIVIL ENGINEER DATE

01-05-16
PLANS APPROVAL DATE

REGISTERED PROFESSIONAL ENGINEER DWIGHT WINTERLIN No. C68438 Exp. 06/30/17 CIVIL STATE OF CALIFORNIA

THE STATE OF CALIFORNIA OR ITS OFFICERS OR AGENTS SHALL NOT BE RESPONSIBLE FOR THE ACCURACY OR COMPLETENESS OF SCANNED COPIES OF THIS PLAN SHEET.

NOTES:

1. STANDARD 6′ POST CAN BE WOOD OR STEEL, SEE RSP A77L1 AND A77L2 FOR ADDITIONAL DETAILS NOT SHOWN ON THIS PLAN
2. CRT POST SHALL BE WOOD.
3. SPLICE LOCATION OF MGS WILL NOT EFFECT SPAN.
4. GUARDRAIL ELEMENTS TO BE STANDARD 12′-6″ LENGTH BETWEEN SPLICES.
5. ON ONEWAY ROADS THE NEAR SIDE POSTS DO NOT NEED TO BE CRT POSTS.
6. IF MORE THAN ONE POST IS SKIPPED, THE USE OF THIS DETAIL REQURIES A MIN LENGTH OF 50′ OF STANDARD GUARDRAIL BEFORE ANOTHER POST CAN BE SKIPPED, A TERMINAL CAN BE PLACED, OR ANY SPECIAL GUARDRAIL FEATURE IS USED.

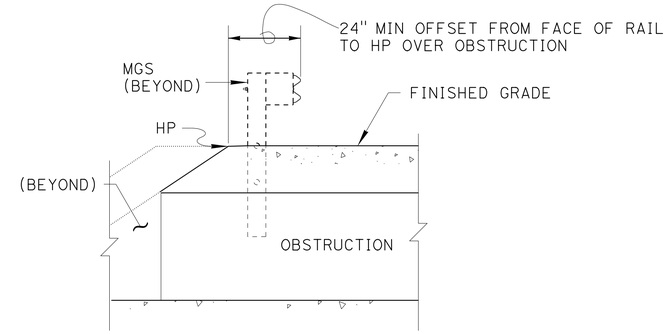

SECTION A-A

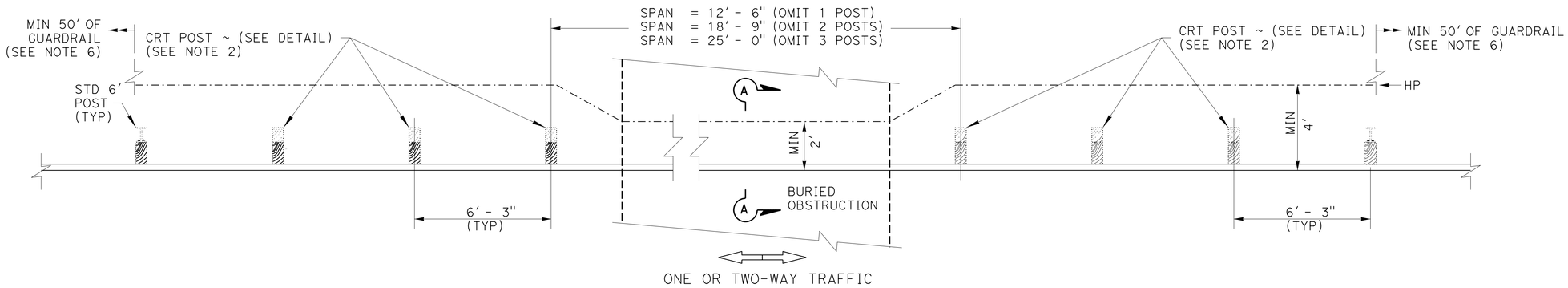

PLAN VIEW

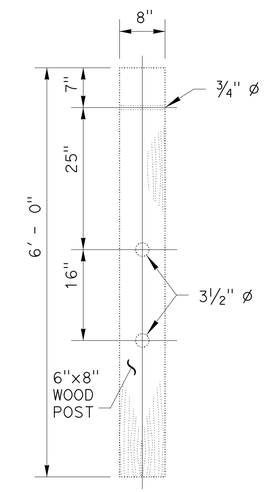

CONTROLLED RELEASING TERMINAL (CRT) POST DETAIL

SEE NOTE 2

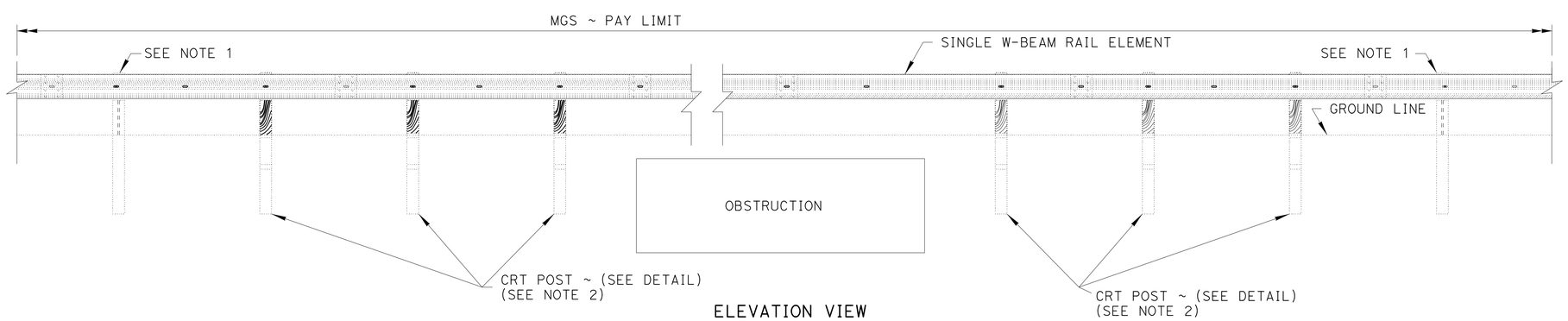

ELEVATION VIEW

SEE NOTE 6

MIDWEST GUARDRAIL SYSTEM OMIT 1 TO 3 POSTS

CONSTRUCTION DETAILS

NO SCALE

C-6

REVISED BY | DATE REVISED
DWIGHT WINTERLIN | JOHN HART
CALCULATED-DESIGNED BY | CHECKED BY
FUNCTIONAL SUPERVISOR: JOHN MARTIN

STATE OF CALIFORNIA - DEPARTMENT OF TRANSPORTATION
Caltrans® DESIGN

\\S402cadam02\cadd\proj1\01\0a370_plans\pse\010a370ga006.dgn

LAST REVISION | DATE PLOTTED => 11-JAN-2016 | TIME PLOTTED => 08:42

Dist	COUNTY	ROUTE	POST MILES TOTAL PROJECT	SHEET No.	TOTAL SHEETS
01	Hum	299	R23.0/R24.0	15	61

Dwight D Winterlin 01-05-16
REGISTERED CIVIL ENGINEER DATE

01-05-16
PLANS APPROVAL DATE

REGISTERED PROFESSIONAL ENGINEER
DWIGHT WINTERLIN
No. C68438
Exp. 06/30/17
CIVIL
STATE OF CALIFORNIA

THE STATE OF CALIFORNIA OR ITS OFFICERS OR AGENTS SHALL NOT BE RESPONSIBLE FOR THE ACCURACY OR COMPLETENESS OF SCANNED COPIES OF THIS PLAN SHEET.

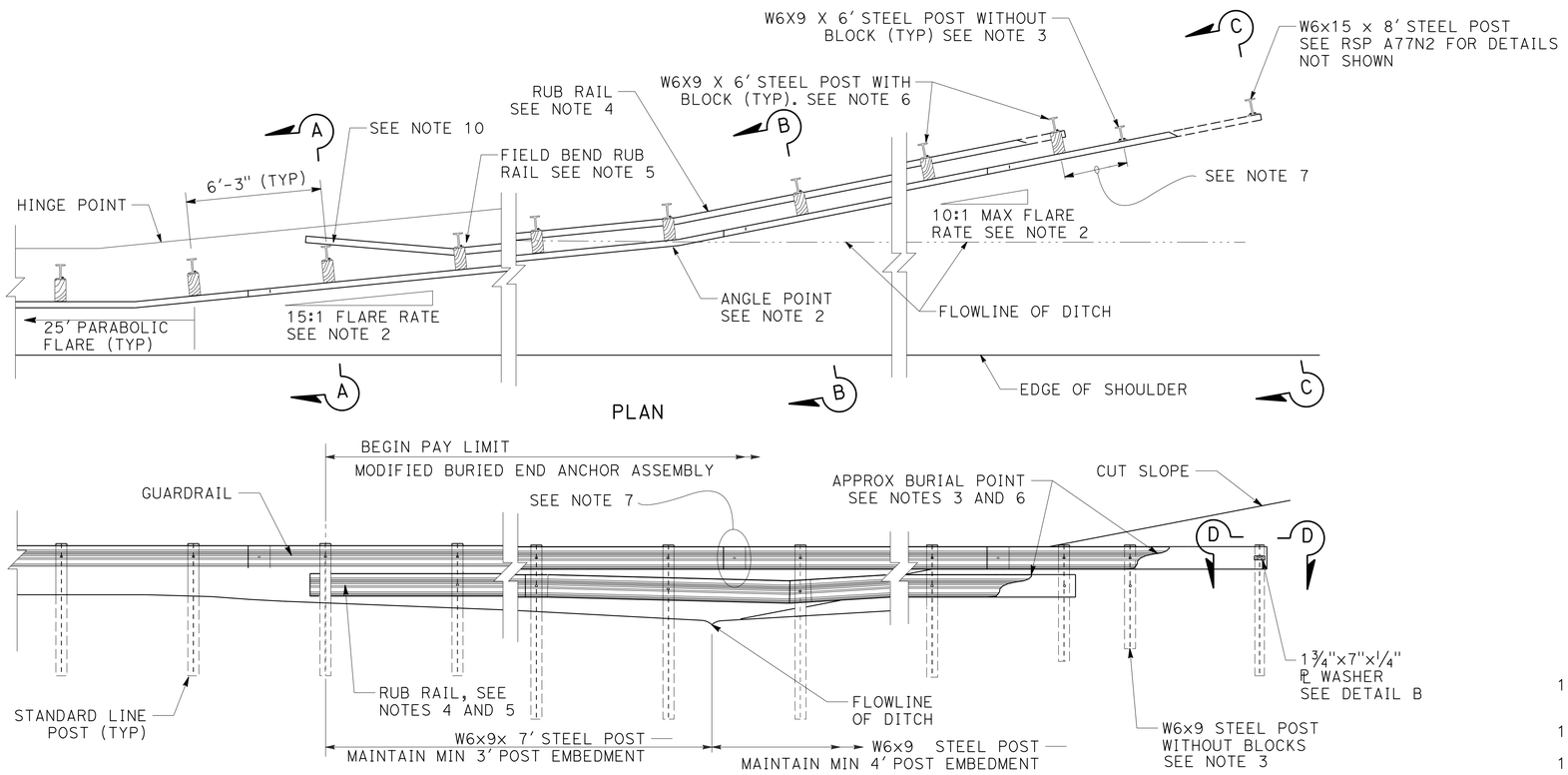

NOTES:

1. ELEVATION OF THE GUARDRAIL SHOULD FOLLOW THE PROFILE GRADE OF THE SHOULDER AND BE NO LOWER THAN 10% OF THE OFFSET FROM THE SHOULDER TO THE RAIL. SEE SECTION B-B AND SECTION C-C.
2. MAXIMUM FLARE RATE OF GUARDRAIL FROM THE SHOULDER TO THE FLOWLINE IS 15:1. FLARE RATE CAN BE INCREASED UP TO 10:1 AFTER CROSSING THE DITCH FLOWLINE.
3. NO BLOCKS ON POSTS WHERE BLOCKS ARE IN CONTACT WITH SOIL.
4. USE STANDARD GUARDRAIL ELEMENTS WITH NO BLOCKS FOR RUB RAIL.
5. BEGIN RUB RAIL WHEN THE HEIGHT OF THE GUARDRAIL IS MORE THAN 32" ABOVE THE GROUND DIRECTLY BELOW THE RAIL. HOLES CUT THOUGH FLANGE OF STEEL POST SHALL BE 3/4"Ø AND ON THE TRAILING SIDE OF POST.
6. CONTINUE RUB RAIL UNTIL TOP OF RUB RAIL BURIED IN THE BACKSLOPE.
7. POST SPACING AND ELEMENT SPLICES SHOWN FOR MGS. MAINTAIN 6'-3" SPACING AND SPLICE ELEMENTS AT POSTS FOR MBGR.
8. THE BURIED POST END ANCHOR SHOULD BE INSTALLED IN A NON-TRAVERSABLE SLOPE.
9. ANCHOR POST MAY BE MOVED 1 POST FROM END IF AUTHORIZED.
10. ONE WAY ROADWAYS AT TRAILING END, RUB RAIL MAY REMAIN ON TRAFFIC SIDE OF POST.
11. 6" MIN AT FLOW LINE
12. ROCK ANCHOR OPTION MAY BE AVAILABLE IF AUTHORIZED.
13. EXISTING UTILITY FACILITIES ARE NOT SHOWN ON THESE PLANS.

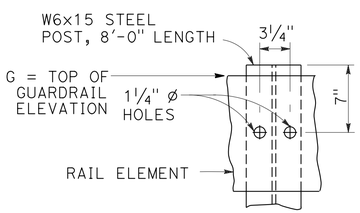

DETAIL A

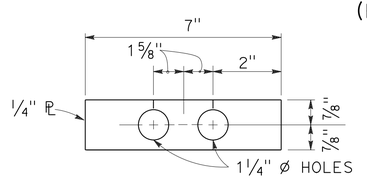

DETAIL B

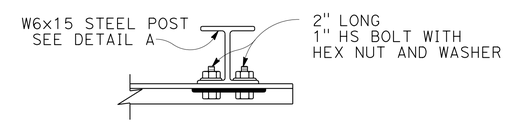

ANCHOR POST DETAIL
SECTION D-D

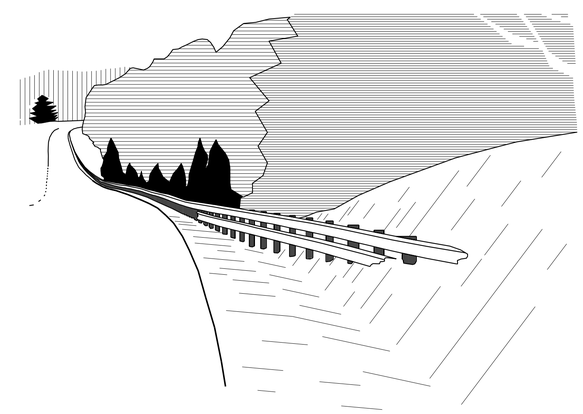

PERSPECTIVE

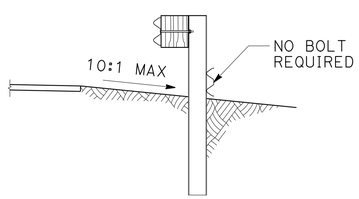

SECTION A-A

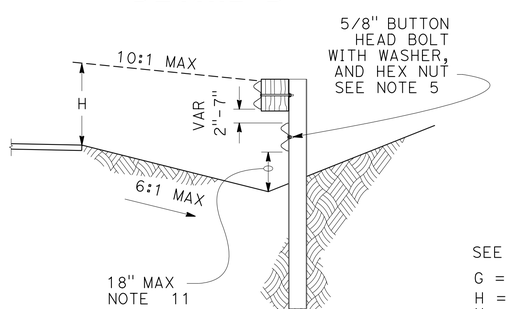

SECTION B-B

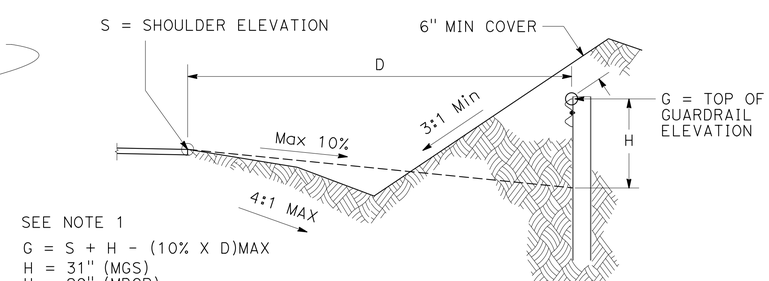

SECTION C-C

GUARDRAIL MODIFIED BURIED END ANCHOR ASSEMBLY

CONSTRUCTION DETAILS
NO SCALE

C-7

STATE OF CALIFORNIA - DEPARTMENT OF TRANSPORTATION
DESIGN
FUNCTIONAL SUPERVISOR: JOHN MARTIN
CALCULATED-DESIGNED BY: DWIGHT WINTERLIN
CHECKED BY: JOHN HART
REVISED BY
DATE REVISED
LAST REVISION
DATE PLOTTED => 11-JAN-2016
TIME PLOTTED => 08:42

Dist	COUNTY	ROUTE	POST MILES TOTAL PROJECT	SHEET No.	TOTAL SHEETS
01	HUM	299	R23.0/R24.0	16	61

REGISTERED CIVIL ENGINEER 01-05-16 DATE

01-05-16
PLANS APPROVAL DATE

REGISTERED PROFESSIONAL ENGINEER
JAMES D. RASMUSSEN
No. C76401
Exp. 12-31-16
CIVIL
STATE OF CALIFORNIA

THE STATE OF CALIFORNIA OR ITS OFFICERS OR AGENTS SHALL NOT BE RESPONSIBLE FOR THE ACCURACY OR COMPLETENESS OF SCANNED COPIES OF THIS PLAN SHEET.

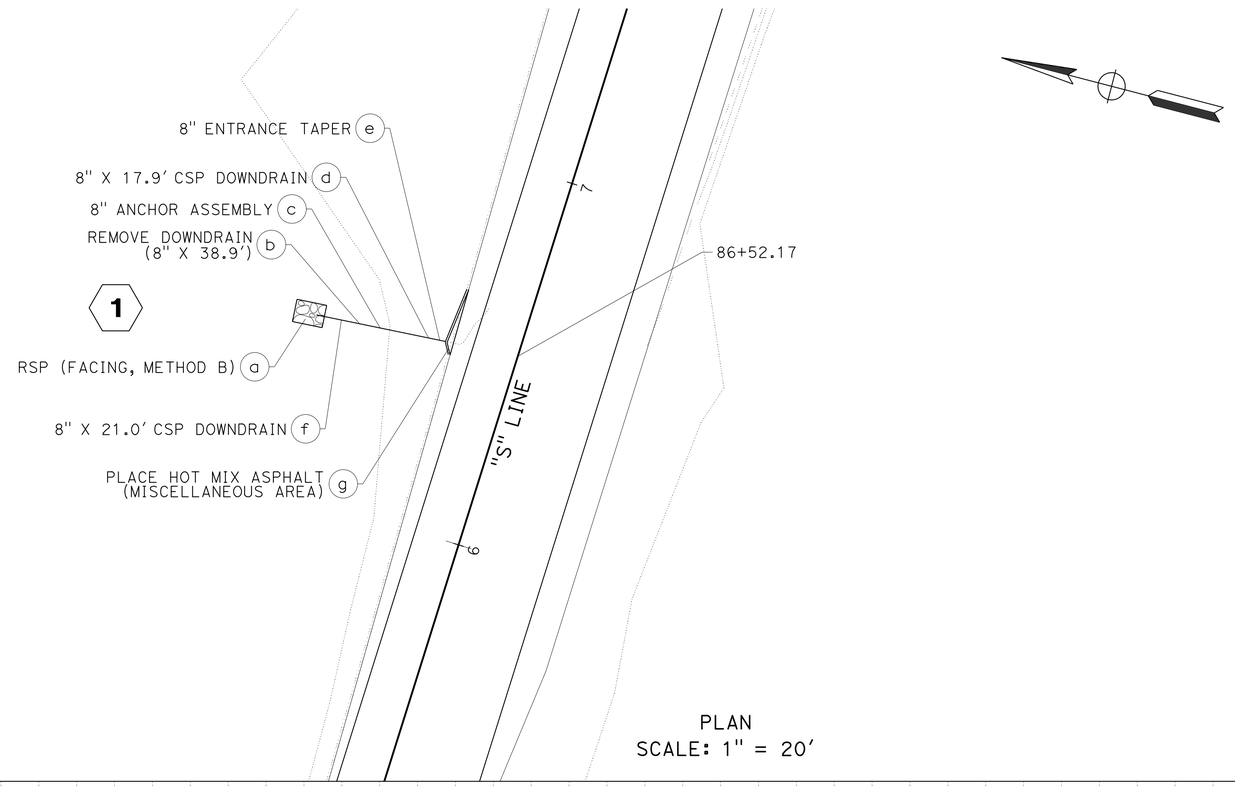

PLAN
SCALE: 1" = 20'

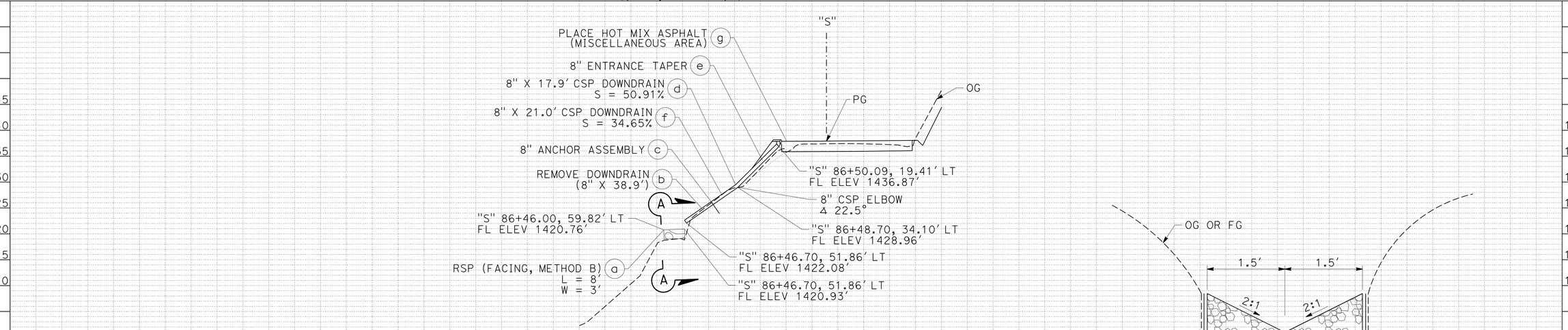

DRAINAGE SYSTEM NO. 1
"S" STA 86+46.00, 59.82' LT TO
STA 86+50.09, 19.41' LT

SCALE: 1" = 20' HORIZ
1" = 10' VERT
PM 23.72

APPROVED FOR DRAINAGE WORK ONLY

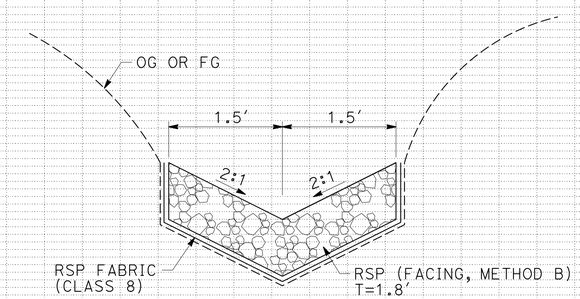

SECTION A-A

DRAINAGE PLAN
SCALE: AS SHOWN **D-1**

REVISED BY	DATE REVISED

CALCULATED-DESIGNED BY: BETH A. ELMORE
CHECKED BY: JAMES D RASMUSSEN
FUNCTIONAL SUPERVISOR: JOHN MARTIN

STATE OF CALIFORNIA - DEPARTMENT OF TRANSPORTATION
Caltrans
DESIGN

P:\proj1\01\0a370_plans\pse\010a370ia001.dgn

LAST REVISION | DATE PLOTTED => 11-JAN-2016
08-25-15 | TIME PLOTTED => 08:42

Dist	COUNTY	ROUTE	POST MILES TOTAL PROJECT	SHEET No.	TOTAL SHEETS
01	HUM	299	R23.0/R24.0	17	61

REGISTERED CIVIL ENGINEER 01-05-16 DATE

01-05-16
PLANS APPROVAL DATE

REGISTERED PROFESSIONAL ENGINEER JAMES D. RASMUSSEN No. C76401 Exp. 12-31-16 CIVIL STATE OF CALIFORNIA

THE STATE OF CALIFORNIA OR ITS OFFICERS OR AGENTS SHALL NOT BE RESPONSIBLE FOR THE ACCURACY OR COMPLETENESS OF SCANNED COPIES OF THIS PLAN SHEET.

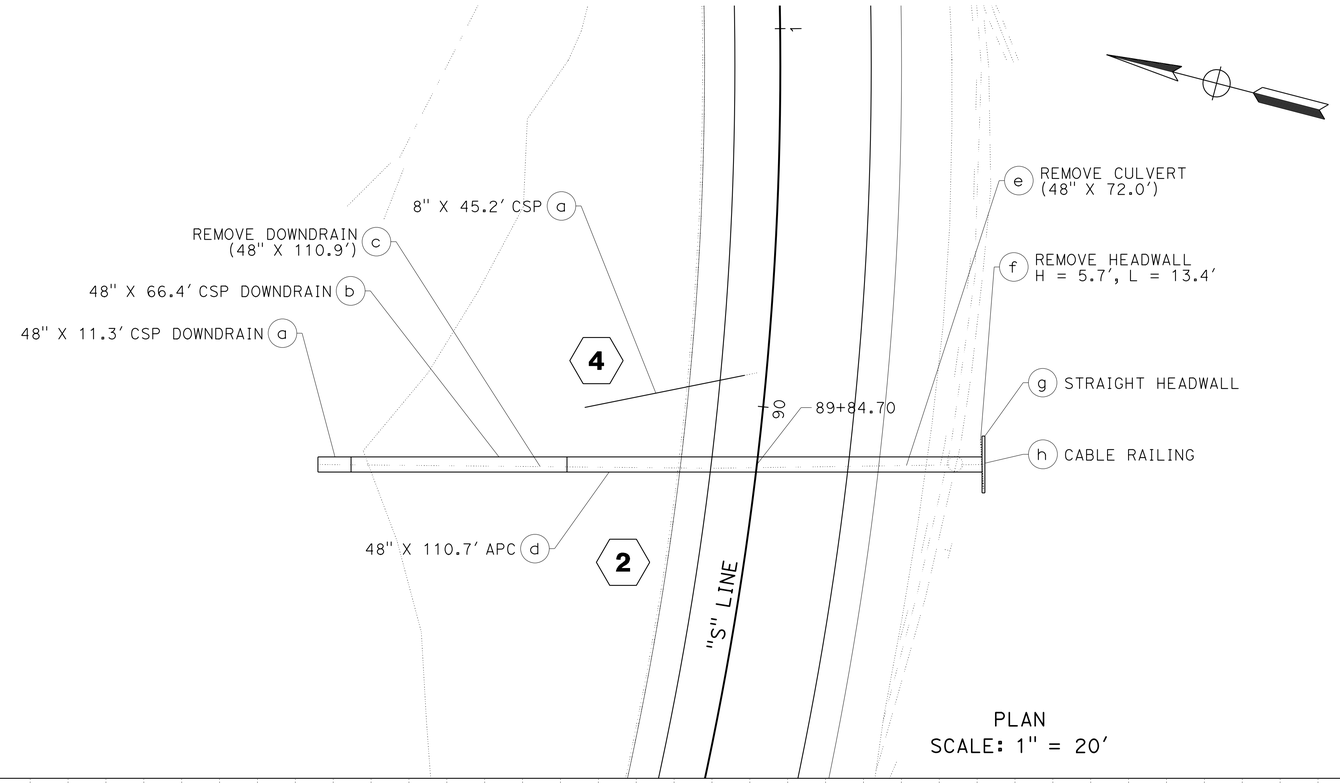

PLAN
SCALE: 1" = 20'

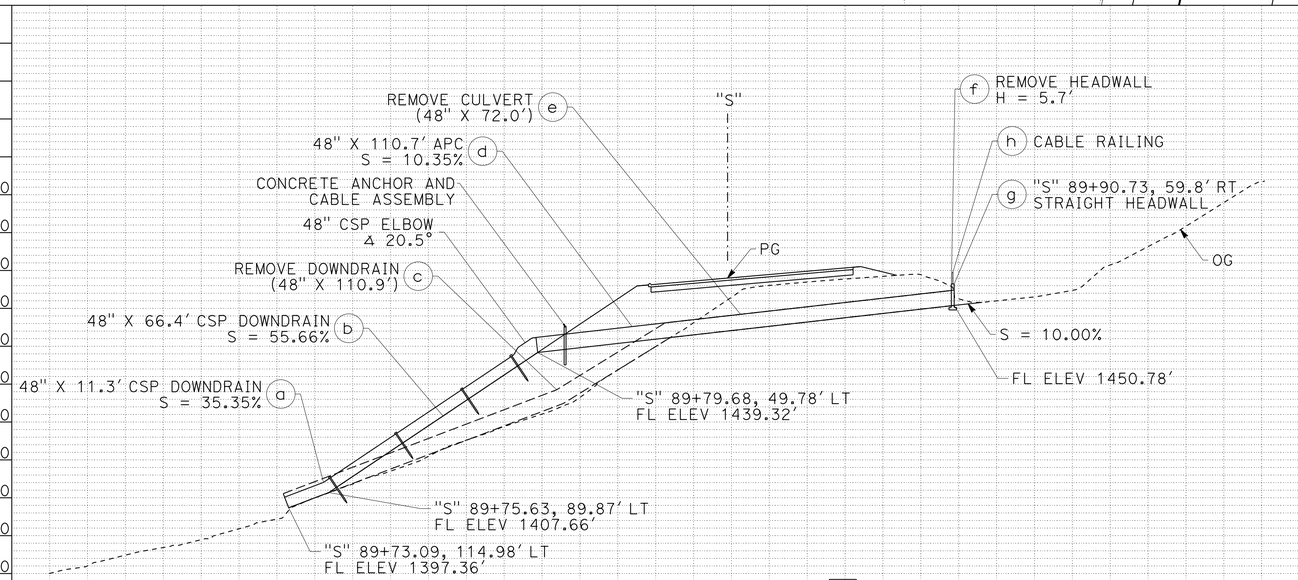

DRAINAGE SYSTEM NO. 2
"S" STA 89+73.09, 114.98' LT TO
STA 89+70.73, 59.80' RT
PM 23.78

SCALE: 1" = 20' HORIZ
1" = 10' VERT

APPROVED FOR DRAINAGE WORK ONLY

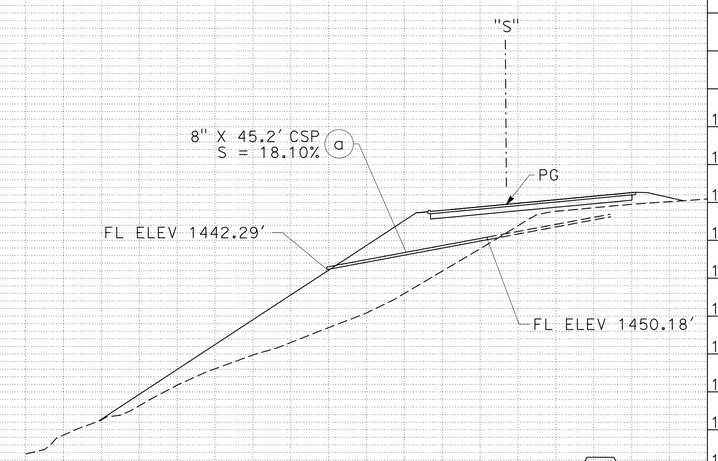

DRAINAGE SYSTEM NO. 4
"S" STA 89+94.86, 46.85' LT TO
STA 90+07.85, 5.65' LT
PM 23.80

DRAINAGE PLAN

SCALE: AS SHOWN

D-2

REVISED BY	DATE REVISED
BETH A. ELMORE	JAMES D RASMUSSEN
CALCULATED-DESIGNED BY	CHECKED BY

FUNCTIONAL SUPERVISOR: JOHN MARTIN

STATE OF CALIFORNIA - DEPARTMENT OF TRANSPORTATION
Caltrans
DESIGN

P:\proj1\01\0a370_plans\pse\010a370ia002.dgn

LAST REVISION 08-3-15
DATE PLOTTED => 11-JAN-2016
TIME PLOTTED => 08:42

Dist	COUNTY	ROUTE	POST MILES TOTAL PROJECT	SHEET No.	TOTAL SHEETS
01	HUM	299	R23.0/R24.0	18	61

REGISTERED CIVIL ENGINEER 01-05-16 DATE

01-05-16
PLANS APPROVAL DATE

REGISTERED PROFESSIONAL ENGINEER JAMES D. RASMUSSEN No. C76401 Exp. 12-31-16 CIVIL STATE OF CALIFORNIA

THE STATE OF CALIFORNIA OR ITS OFFICERS OR AGENTS SHALL NOT BE RESPONSIBLE FOR THE ACCURACY OR COMPLETENESS OF SCANNED COPIES OF THIS PLAN SHEET.

CURVE DATA

No. ⊕	R	Δ	T	L
1	10′	19°20′18"	1.07′	3.38′
2	10′	8°29′57"	0.74′	1.48′
3	10′	10°44′48"	1.21′	2.42′

LINE DATA

Ⓧ	BEARING	L
A	N50°27′23"E	98.97′
B	N50°51′52"E	38.20′
C	N70°12′10"E	31.49′
D	N78°42′07"E	45.18′
E	N89°26′55"E	187.31′

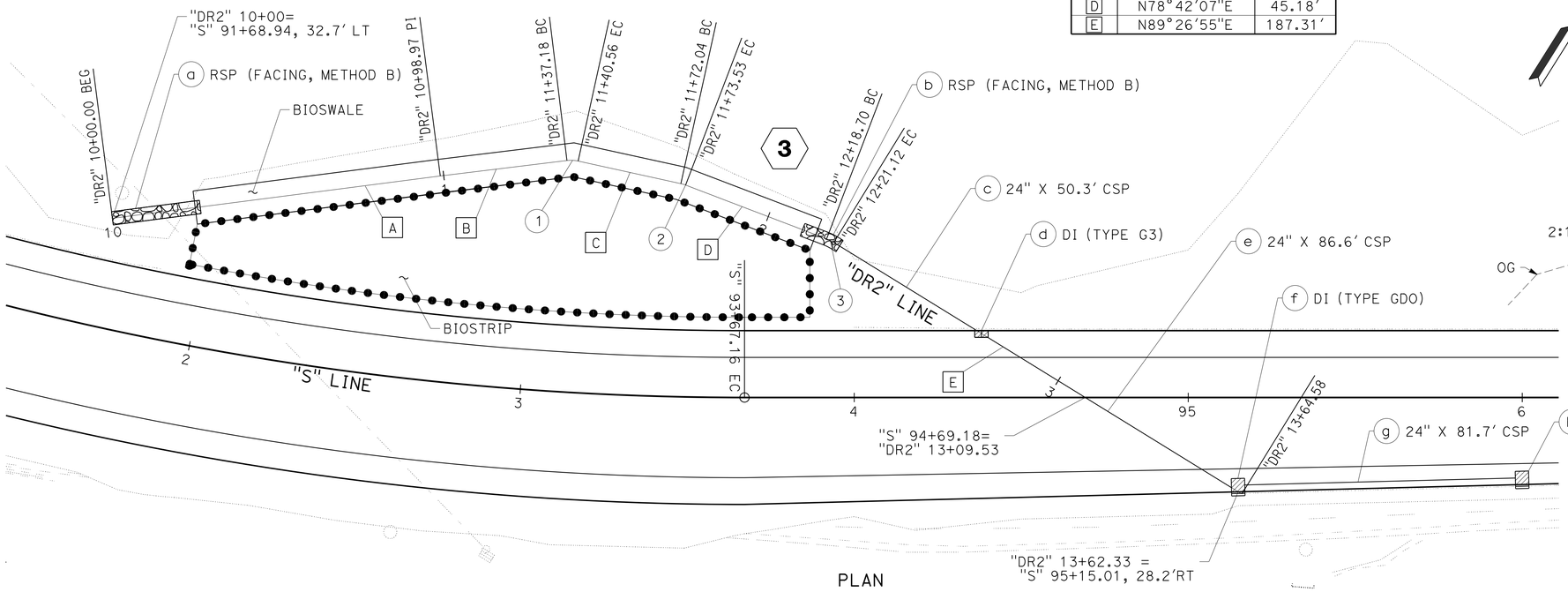

PLAN
SCALE: 1" = 20′

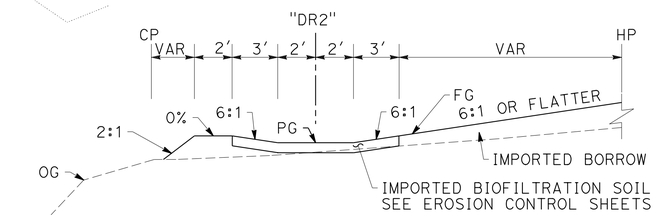

BIOSWALE
TYPICAL SECTION
"DR2" 10+26.51 TO 12+15.23
NO SCALE

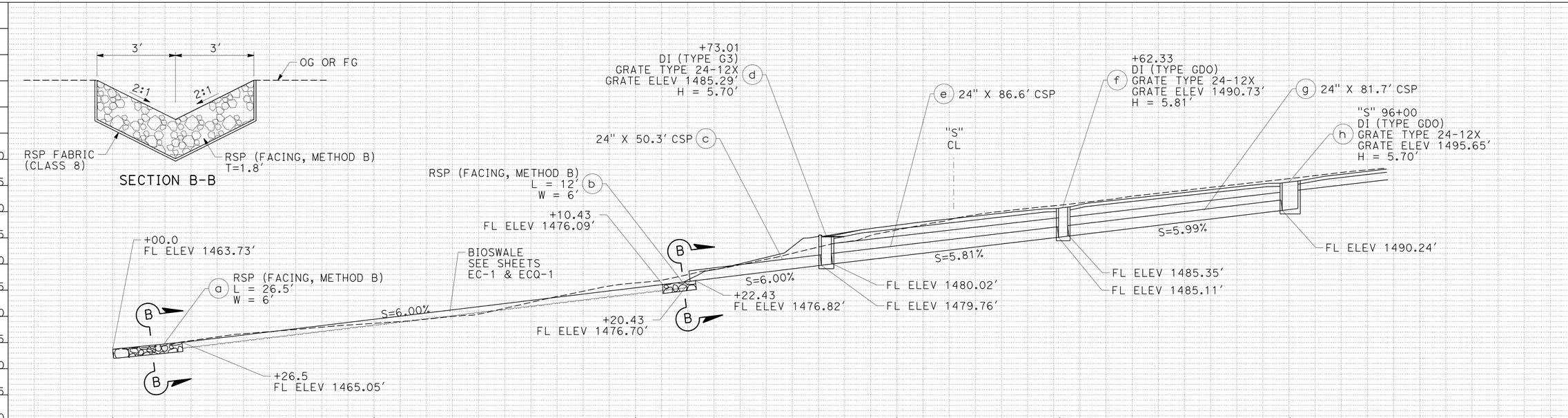

DRAINAGE SYSTEM NO. 3
"S" STA 91+68.94 TO 95+20.40
"DR2" STA 10+00.00 TO 13+69.71
SCALE: 1" = 20′ HORIZ
1" = 10′ VERT
PM 23.87

APPROVED FOR DRAINAGE WORK ONLY

DRAINAGE PLAN
SCALE: AS SHOWN
D-3

REVISED BY | DATE REVISED
BETH A. ELMORE | JAMES D RASMUSSEN
CALCULATED-DESIGNED BY | CHECKED BY
FUNCTIONAL SUPERVISOR: JOHN MARTIN

STATE OF CALIFORNIA - DEPARTMENT OF TRANSPORTATION
Caltrans
DESIGN

P:\proj1\01\0a370_plans\pse\010a370ia003.dgn

LAST REVISION | DATE PLOTTED => 11-JAN-2016 | TIME PLOTTED => 08:42
07-27-15

Dist	COUNTY	ROUTE	POST MILES TOTAL PROJECT	SHEET No.	TOTAL SHEETS
01	HUM	299	R23.0/R24.0	19	61

REGISTERED CIVIL ENGINEER 01-05-16 DATE

01-05-16
PLANS APPROVAL DATE

REGISTERED PROFESSIONAL ENGINEER JAMES D. RASMUSSEN No. C76401 Exp. 12-31-16 CIVIL STATE OF CALIFORNIA

THE STATE OF CALIFORNIA OR ITS OFFICERS OR AGENTS SHALL NOT BE RESPONSIBLE FOR THE ACCURACY OR COMPLETENESS OF SCANNED COPIES OF THIS PLAN SHEET.

ABBREVIATIONS:

IWRC = INDEPENDENT WIRE ROPE CORE
SWL = SAFE WORKING LOAD

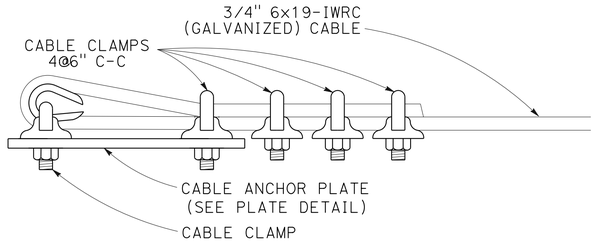

CABLE ANCHOR TERMINAL DETAIL

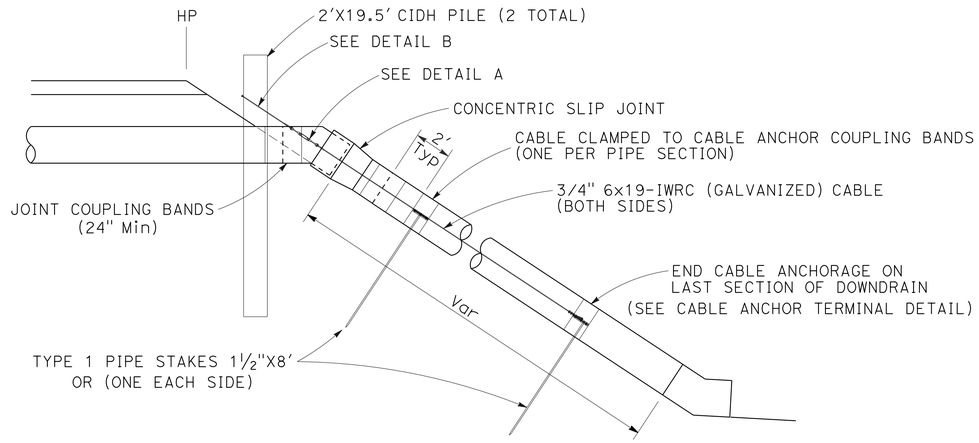

*USED ONLY TO GUIDE THE DOWNDRAIN.
DO NOT INCORPORATE INTO ANCHORAGE.

CABLE ANCHORAGE ASSEMBLY w/ CIDH CONCRETE PILES

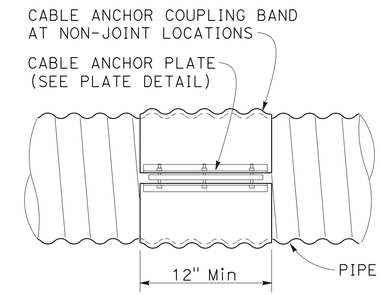

CABLE ANCHOR COUPLING BAND

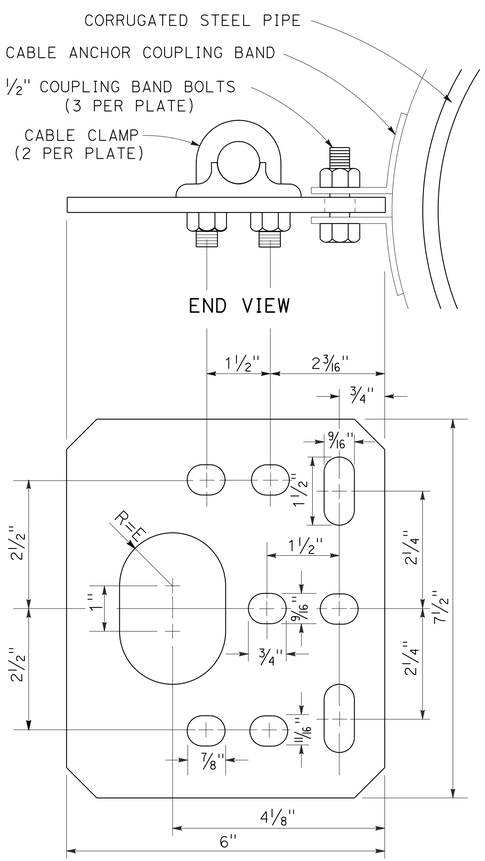

PLATE DETAIL

MATERIAL TO BE 1/4" STEEL PLATE,
GALVANIZED AFTER FABRICATION

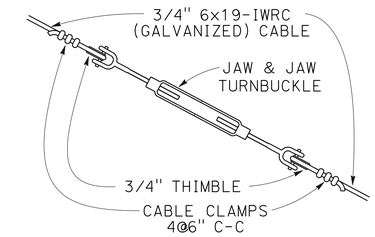

DETAIL A

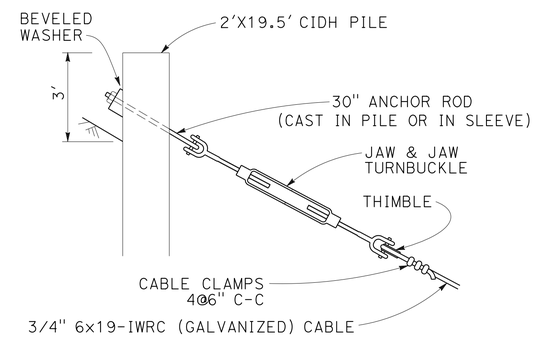

DETAIL B

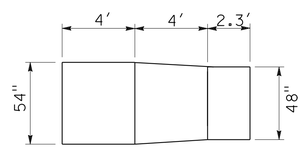

48" CONCENTRIC SLIP JOINT

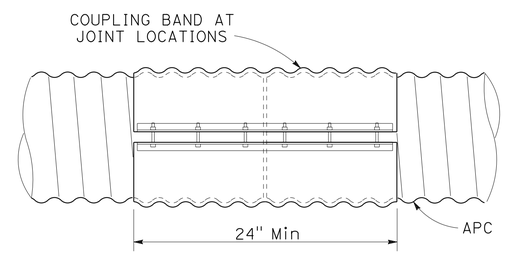

JOINT COUPLING BAND

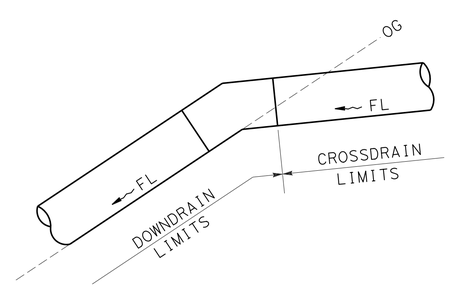

LIMITS OF MEASUREMENT FOR PAYMENT

SWL (1000 LBS)	15K	23K	30K	38K
CABLE CLAMP SPACING	4"	4 1/2"	5 1/4"	6"
CABLE CLAMPS	3	4	4	5
TURNBUCKLES	7/8"x18"	1"x18"	1 1/4"x18"	1 1/4"x18"
CABLE SIZE (THIMBLE)	5/8"	3/4"	7/8"	1"

DRAINAGE DETAILS (2)

DRAINAGE DETAILS

NO SCALE

DD-1

REVISED BY	DATE REVISED
BETH A. ELMORE	JAMES D RASMUSSEN
CALCULATED-DESIGNED BY	CHECKED BY
FUNCTIONAL SUPERVISOR	JOHN MARTIN

STATE OF CALIFORNIA - DEPARTMENT OF TRANSPORTATION
Caltrans® DESIGN

P:\proj1\01\0a370_plans\pse\010a370ic001.dgn

LAST REVISION 10-13-15 | DATE PLOTTED => 11-JAN-2016 TIME PLOTTED => 08:42

Dist	COUNTY	ROUTE	POST MILES TOTAL PROJECT	SHEET No.	TOTAL SHEETS
01	HUM	299	R23.0/R24.0	20	61

REGISTERED CIVIL ENGINEER 01-05-16 DATE

01-05-16
PLANS APPROVAL DATE

REGISTERED PROFESSIONAL ENGINEER JAMES D. RASMUSSEN No. C76401 Exp. 12-31-16 CIVIL STATE OF CALIFORNIA

THE STATE OF CALIFORNIA OR ITS OFFICERS OR AGENTS SHALL NOT BE RESPONSIBLE FOR THE ACCURACY OR COMPLETENESS OF SCANNED COPIES OF THIS PLAN SHEET.

NOTES:

1. ALL CULVERT JOINTS MUST BE POSITIVE.
2. THE JOINT CLASSIFICATION FOR DOWNDRAINS MUST BE DOWNDRAIN.
3. LENGTHS OF PIPES AND ANGLES OF ELBOWS MUST BE VERIFIED IN THE FIELD BY THE CONTRACTOR.

LEGEND:

1. "T" = WALL THICKNESS (INCHES) REQUIRED BEFORE APPLICATION OF COATING/LINING REQUIREMENT
2. APPLY COATING/LINING TREATMENT TO BOTH INTERIOR AND EXTERIOR OF CULVERT PIPE IN ACCORDANCE WITH SPECIFICATIONS

ABBREVIATIONS:

PC POLYMERIC COATING

ALTERNATIVE PIPE CULVERT ALLOWABLE PIPE MATERIAL AND PROTECTION

DESIGNATION	CSP (TYPE 1)		CSP (TYPE 2)		ALUMINUM	HDPE
	T[1] (IN)	COATING LINING[2]	T[1] (IN)	COATING LINING[2]	T[1] (IN)	
48" APC	0.138	GALV	0.079	PC	0.105	TYPE S

DRAINAGE QUANTITIES

DRAINAGE SHEET NO.	DRAINAGE SYSTEM (#)	DRAINAGE UNIT (#)	REMOVE CULVERT (LF)	REMOVE DOWNDRAIN (EA)	REMOVE HEADWALL	MINOR CONCRETE (MINOR STRUCTURE)	8" CORRUGATED STEEL PIPE (.064" THICK)	8" CORRUGATED STEEL PIPE DOWNDRAIN (.064" THICK)	48" ALTERNATIVE PIPE CULVERT	24" CORRUGATED STEEL PIPE (.109" THICK)	48" CORRUGATED STEEL PIPE DOWNDRAIN (.138" THICK)	CONCRETE ANCHOR AND CABLE ASSEMBLY	24" CAST-IN-DRILLED-HOLE CONCRETE PILING	BAR REINFORCING STEEL	8" ENTRANCE TAPER	8" ANCHOR ASSEMBLY	PLACE HOT MIX ASPHALT (MISCELLANEOUS AREA)	HOT MIX ASPHALT (TYPE A)	ROCK SLOPE PROTECTION (FACING, METHOD B) (CY)	ROCK SLOPE PROTECTION FABRIC (CLASS 8)	MISCELLANEOUS IRON AND STEEL	CABLE RAILING	DRAINAGE SYSTEM (#)	DRAINAGE UNIT (#)	ALIGNMENT	STATION	DESCRIPTION
			LF	EA	EA	CY	LF	LF	LF	LF	LF	EA	LF	LB	EA	EA	SQYD	TON	CY	SQYD	LB	LF					
D-1	1	a																	1.6	8.5			1	a	"S"	86+52.17	FACING, METHOD B
D-1	1	b		1																			1	b	"S"	86+52.17	8" X 38.9′
D-1	1	c														1							1	c	"S"	86+52.17	8" ANCHOR ASSEMBLY
D-1	1	d						17.9															1	d	"S"	86+52.17	8" X 33.1′ CSP
D-1	1	e													1								1	e	"S"	86+52.17	8" ENTRANCE TAPER
D-1	1	f						21.0															1	f	"S"	86+52.17	8" x 21.0′ DOWNDRAIN
D-1	1	g															3	1.7					1	g	"S"	86+52.17	PLACE MISCELLANEOUS HMA
D-2	2	a									11.3												2	a	"S"	89+84.70	48" X 11.3′ CSP DOWNDRAIN
D-2	2	b									66.4												2	b	"S"	89+84.70	48" X 66.4′ CSP DOWNDRAIN
D-2	2	c		1																			2	c	"S"	89+84.70	48" X 110.9′ CSP
D-2	2	d							110.7			1	39	869									2	d	"S"	89+84.70	48" X 110.7′ APC
D-2	2	e	72																				2	e	"S"	89+84.70	48" X 72.0′ CSP
D-2	2	f			1																		2	f	"S"	89+84.70	PCC 13′ X 5′
D-2	2	g				2.75																	2	g	"S"	89+84.70	STRAIGHT HEADWALL
D-2	2	h																				15.0	2	h	"S"	89+84.70	CABLE RAILING
D-3	3	a																	10.6	32.1			3	a	"DR2"	10+03.84	FACING, METHOD B
D-3	3	b																	4.8	12.4			3	b	"DR2"	12+14.43	FACING, METHOD B
D-3	3	c								50.3													3	c	"DR2"	12+21.11	24" X 50.3′ CSP
D-3	3	d				1.62															239		3	d	"DR2"	12+73.01	TYPE G3 DI, GRATE TYPE 24-12X
D-3	3	e								86.6													3	e	"DR2"	13+00.00	24" X 86.6′ CSP
D-3	3	f				2.52															473		3	f	"DR2"	13+62.33	TYPE GDO DI, GRATE TYPE 24-12X (2)
D-3	3	g								81.7													3	g	"DR2"	13+62.33	24" X 81.7′ CSP
D-3	3	h				2.49															473		3	h	"DR2"	13+62.33	TYPE GDO DI, GRATE TYPE 24-12X (2)
D-2	4	a					45.2																4	a	"S"	89+95.09	8" X 45.2′ CSP
TOTAL			72	2	1	9.39	45.2	38.9	110.7	218.6	77.7	1	39	869	1	1	3	1.7 *	17.0	44.5	1185	15.0					

* ADDITIONAL QUANTITY SHOWN ELSEWHERE, SEE SHEET Q-1

DRAINAGE QUANTITIES

DQ-1

REVISED BY | DATE REVISED

BETH A. ELMORE | JAMES D RASMUSSEN

CALCULATED-DESIGNED BY | CHECKED BY

FUNCTIONAL SUPERVISOR: JOHN MARTIN

STATE OF CALIFORNIA - DEPARTMENT OF TRANSPORTATION

Caltrans® DESIGN

P:\proj1\01\0a370_plans\pse\010a370id001.dgn

LAST REVISION 11-15-15 | DATE PLOTTED => 17-MAR-2016 | TIME PLOTTED => 09:58

Dist	COUNTY	ROUTE	POST MILES TOTAL PROJECT	SHEET No.	TOTAL SHEETS
01	HUM	299	R23.0/R24.0	21	61

REGISTERED CIVIL ENGINEER 01-05-16 DATE

01-05-16
PLANS APPROVAL DATE

REGISTERED PROFESSIONAL ENGINEER JAMES D. RASMUSSEN No. C76401 Exp. 12-31-16 CIVIL STATE OF CALIFORNIA

THE STATE OF CALIFORNIA OR ITS OFFICERS OR AGENTS SHALL NOT BE RESPONSIBLE FOR THE ACCURACY OR COMPLETENESS OF SCANNED COPIES OF THIS PLAN SHEET.

NOTES:

1. EXACT LOCATION OF ALL SIGNS TO BE DETERMINED BY THE ENGINEER.
2. CALIFORNIA CODES ARE DESIGNATED BY (CA), OTHERWISE FEDERAL CODES ARE SHOWN.
3. ALL CONSTRUCTION AREA SIGNS SHALL BE BLACK ON ORANGE.

CONSTRUCTION AREA SIGNS (STATIONARY MOUNTED)

◯	TYPE	PANEL SIZE	SIGN MESSAGE	NUMBER AND SIZE OF POSTS	No. OF SIGNS
A	W20-1 C23B(CA)	36" x 36" 36" x 18"	ROAD WORK AHEAD HIGHWAY WIDENING	1 - 4" x 6"	2
B	C40(CA)	108" x 42"	TRAFFIC FINES DOUBLED IN CONSTRUCTION ZONES	2 - 6" x 6"	2
C	G20-2	36" x 18"	END ROAD WORK	1 - 4" x 4"	2
D	W11-1 W16-1P	36" x 36" 24" x 30"	BICYCLE (SYMBOL) SHARE THE ROAD	1 - 4" x 6"	2

ADDITIONAL CONSTRUCTION AREA SIGNS SHOWN ELSEWHERE. SEE SHEET SCQ-1

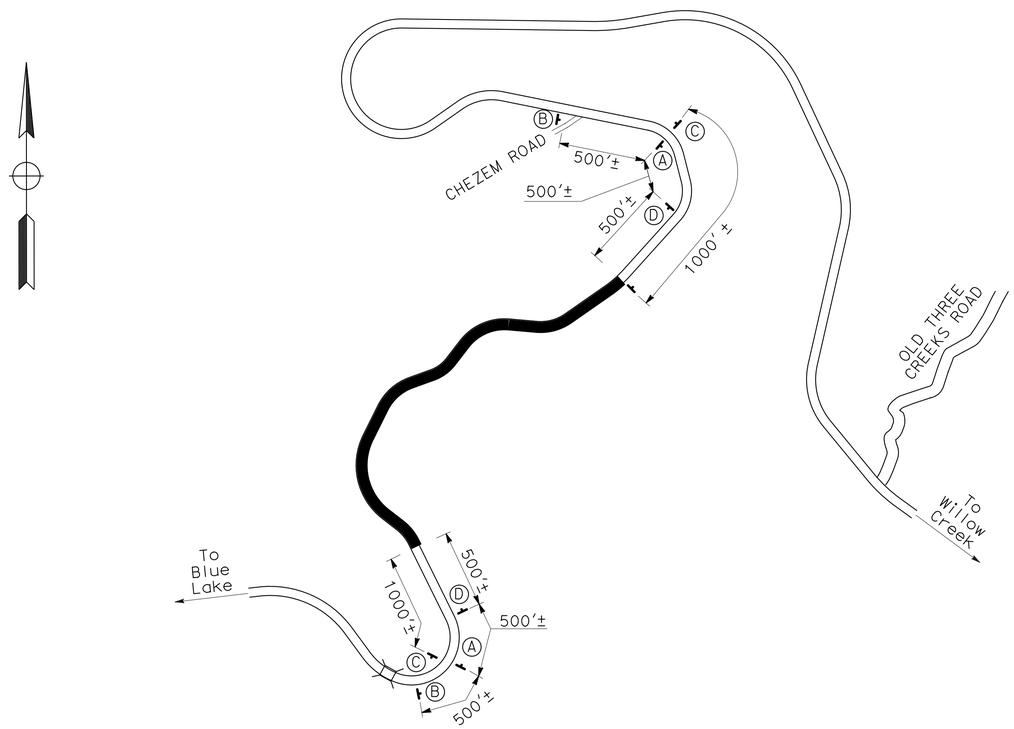

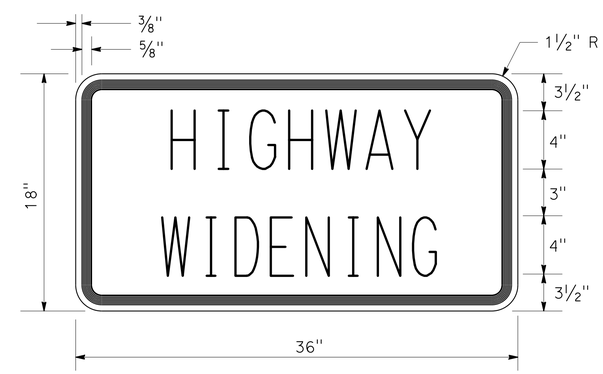

C23B(CA) SIGN PANEL DETAIL
TYPE "C" LETTERING

APPROVED FOR CONSTRUCTION AREA SIGN WORK ONLY

CONSTRUCTION AREA SIGNS
NO SCALE

CS-1

REVISED BY | DATE REVISED
BETH A. ELMORE | JAMES D RASMUSSEN
CALCULATED-DESIGNED BY | CHECKED BY
FUNCTIONAL SUPERVISOR: JOHN MARTIN
STATE OF CALIFORNIA - DEPARTMENT OF TRANSPORTATION
Caltrans® **DESIGN**
P:\proj1\01\0a370_plans\pse\010a3701a001.dgn

LAST REVISION 10-12-15 | DATE PLOTTED => 11-JAN-2016 | TIME PLOTTED => 08:43

Dist	COUNTY	ROUTE	POST MILES TOTAL PROJECT	SHEET No.	TOTAL SHEETS
01	HUM	299	R23.0/R24.0	22	61

REGISTERED CIVIL ENGINEER 01-05-16 DATE

01-05-16
PLANS APPROVAL DATE

REGISTERED PROFESSIONAL ENGINEER JAMES D. RASMUSSEN No. C76401 Exp. 12-31-16 CIVIL STATE OF CALIFORNIA

THE STATE OF CALIFORNIA OR ITS OFFICERS OR AGENTS SHALL NOT BE RESPONSIBLE FOR THE ACCURACY OR COMPLETENESS OF SCANNED COPIES OF THIS PLAN SHEET.

NOTES:

1. EXACT LOCATION OF ALL SIGNS TO BE DETERMINED BY THE ENGINEER.
2. CALIFORNIA SIGN CODES ARE DESIGNATED BY (CA), OTHERWISE FEDERAL SIGN CODES ARE SHOWN.

LEGEND

- WORK AREA
- TEMPORARY PAVEMENT DELINEATION DETAIL NUMBER
- SINGLE STRIPE MARKER
- CHANGE IN TRAFFIC STRIPE
- CHANNELIZER (SURFACE MOUNTED)
- DIRECTION OF TRAFFIC
- CONSTRUCTION AREA SIGN
- TEMPORARY CRASH CUSHION SYSTEM
- TEMPORARY RAILING (TYPE K)

ABBREVIATIONS

REMOVE STRIPE	REMOVE THERMOPLASTIC TRAFFIC STRIPE

STAGE 1A CONSTRUCTION AND TRAFFIC HANDLING

PLACE TEMPORARY TRAFFIC STRIPES, TEMPORARY RAILING (TYPE K) AND CHANNELIZERS TO CLOSE EXISTING EB NUMBER 2 LANE AND SHIFT TRAFFIC TO EXISTING EB LANES

PERFORM GRADING ON LEFT SIDE

PLACE STRUCTURAL SECTION ON LEFT SIDE FROM 87+00 TO 98+00

STAGE 1B CONSTRUCTION AND TRAFFIC HANDLING

REMOVE TEMPORARY RAILING (TYPE K)

ESTABLISH 24-HR REVERSING TRAFFIC CONTROL

PLACE STRUCTURAL SECTION FROM STA "S" 85+00 TO 87+00 AND STA "S" 98+00 TO 100+63.63,

RECONSTRUCT MBGR AND PLACE MGS

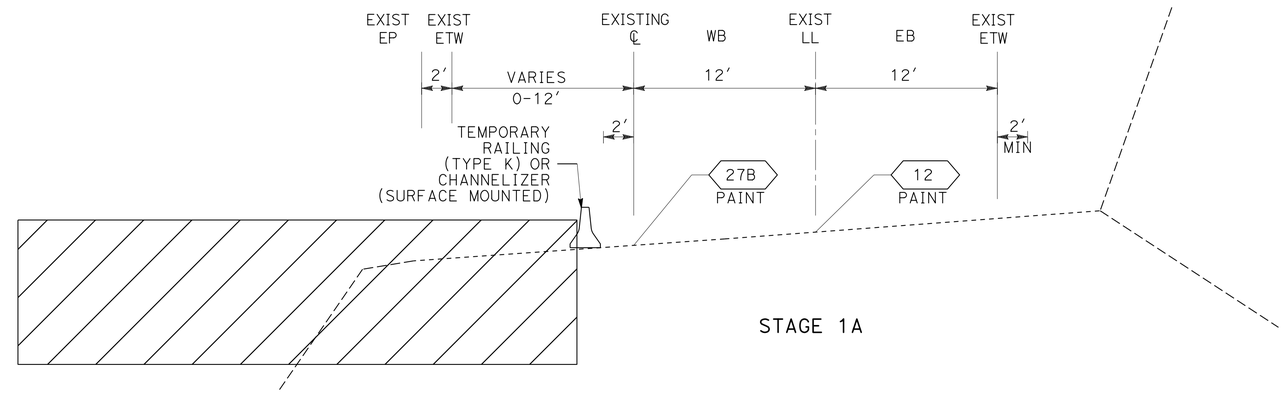

STAGE 1A

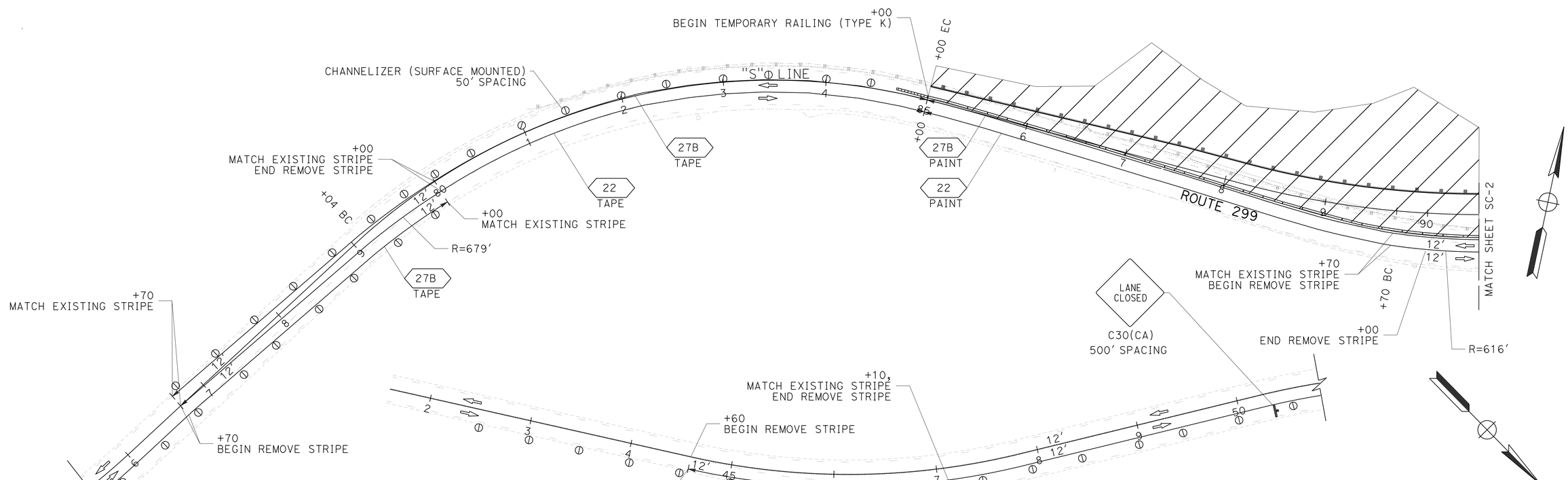

APPROVED FOR STAGE CONSTRUCTION AND TRAFFIC HANDLING WORK ONLY

STAGE 1
STAGE CONSTRUCTION AND TRAFFIC HANDLING PLAN

SCALE: 1" = 50′ **SC-1**

REVISED BY | DATE REVISED
BETH A. ELMORE | JAMES D RASMUSSEN
CALCULATED-DESIGNED BY | CHECKED BY
FUNCTIONAL SUPERVISOR: JOHN MARTIN

STATE OF CALIFORNIA - DEPARTMENT OF TRANSPORTATION
Caltrans
DESIGN

P:\proj1\01\0a370_plans\pse\010a370ma001.dgn

LAST REVISION 10-21-15 | DATE PLOTTED => 11-JAN-2016 | TIME PLOTTED => 08:43

Dist	COUNTY	ROUTE	POST MILES TOTAL PROJECT	SHEET No.	TOTAL SHEETS
01	HUM	299	R23.0/R24.0	23	61

REGISTERED CIVIL ENGINEER 01-05-16 DATE

01-05-16
PLANS APPROVAL DATE

REGISTERED PROFESSIONAL ENGINEER
JAMES D. RASMUSSEN
No. C76401
Exp. 12-31-16
CIVIL
STATE OF CALIFORNIA

THE STATE OF CALIFORNIA OR ITS OFFICERS OR AGENTS SHALL NOT BE RESPONSIBLE FOR THE ACCURACY OR COMPLETENESS OF SCANNED COPIES OF THIS PLAN SHEET.

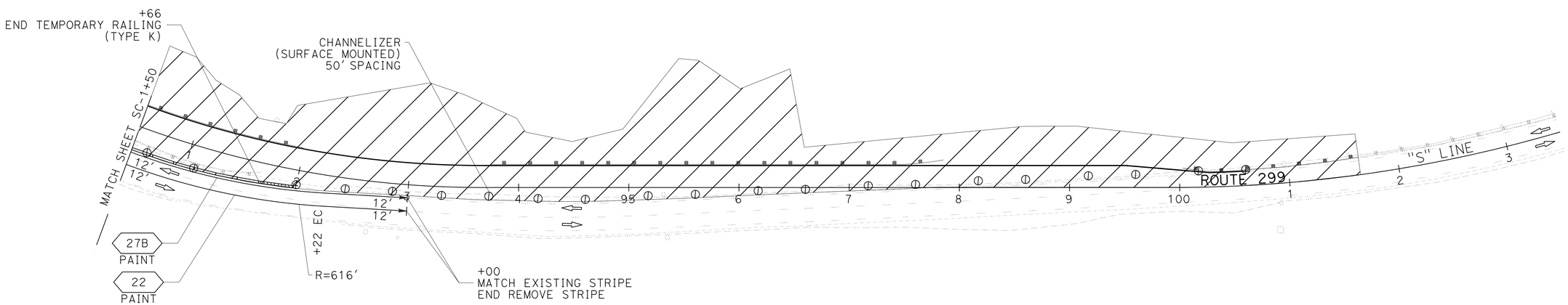

APPROVED FOR STAGE CONSTRUCTION AND TRAFFIC HANDLING WORK ONLY

STAGE 1
STAGE CONSTRUCTION AND TRAFFIC HANDLING PLAN

SCALE: 1" = 50'

SC-2

CALCULATED-DESIGNED BY	BETH A. ELMORE
CHECKED BY	JAMES D RASMUSSEN
FUNCTIONAL SUPERVISOR	JOHN MARTIN
REVISED BY	
DATE REVISED	

STATE OF CALIFORNIA - DEPARTMENT OF TRANSPORTATION
Caltrans®
DESIGN

P:\proj1\01\0a370_plans\pse\010a370ma002.dgn

LAST REVISION 10-21-15
DATE PLOTTED => 11-JAN-2016
TIME PLOTTED => 08:43

Dist	COUNTY	ROUTE	POST MILES TOTAL PROJECT	SHEET No.	TOTAL SHEETS
01	HUM	299	R23.0/R24.0	24	61

REGISTERED CIVIL ENGINEER 01-05-16 DATE

01-05-16
PLANS APPROVAL DATE

REGISTERED PROFESSIONAL ENGINEER JAMES D. RASMUSSEN No. C76401 Exp. 12-31-16 CIVIL STATE OF CALIFORNIA

THE STATE OF CALIFORNIA OR ITS OFFICERS OR AGENTS SHALL NOT BE RESPONSIBLE FOR THE ACCURACY OR COMPLETENESS OF SCANNED COPIES OF THIS PLAN SHEET.

STAGE 2 CONSTRUCTION AND TRAFFIC HANDLING

RECONSTRUCT ROADWAY UNDER 24-HR REVERSING TRAFFIC CONTROL
STA "S" 85+00 TO 100+63.63, RT OF CENTERLINE

PLACE PAVEMENT DELINEATION, RUMBLE STRIPS AND SIGNS

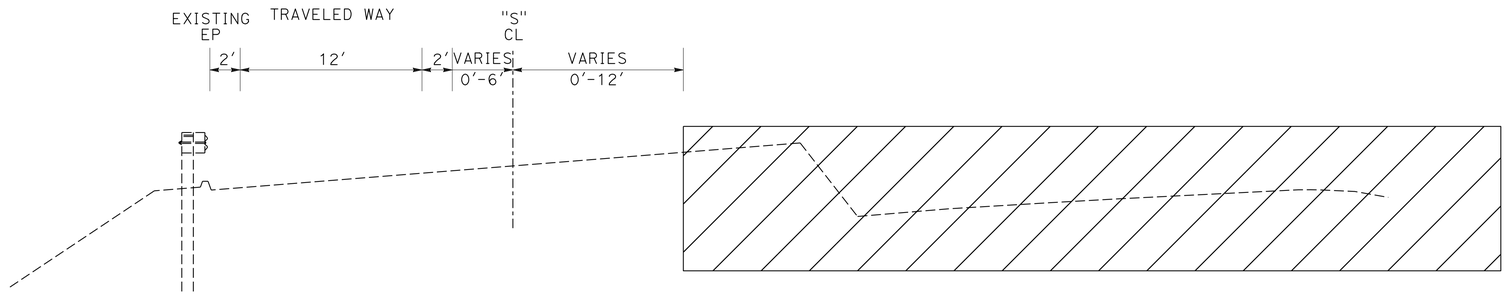

STAGE 2

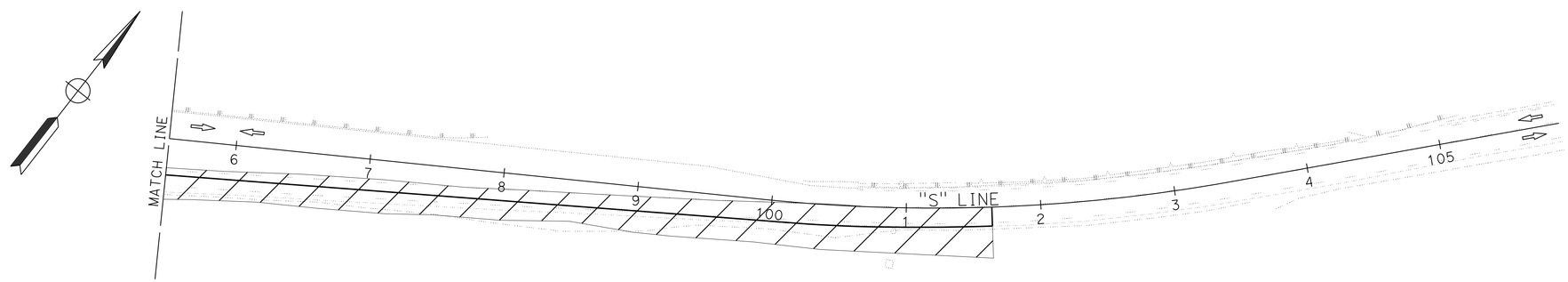

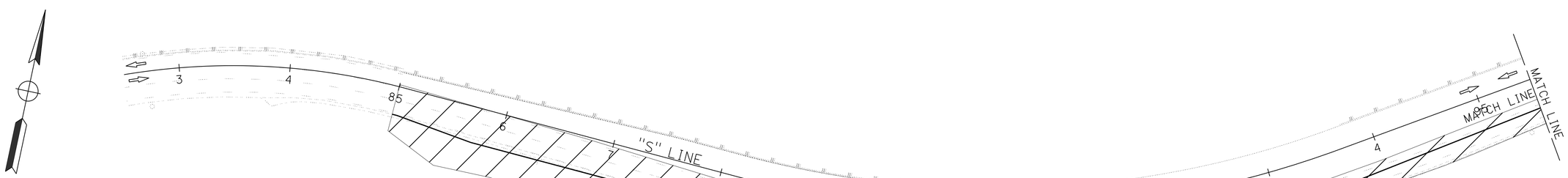

APPROVED FOR TRAFFIC HANDLING AND STAGE CONSTRUCTION WORK ONLY

STAGE 2
STAGE CONSTRUCTION AND TRAFFIC HANDLING PLAN
SCALE: 1" = 50'
SC-3

STATE OF CALIFORNIA - DEPARTMENT OF TRANSPORTATION
Caltrans
DESIGN

FUNCTIONAL SUPERVISOR: JOHN MARTIN
CALCULATED-DESIGNED BY: BETH A. ELMORE
CHECKED BY: JAMES D RASMUSSEN
REVISED BY
DATE REVISED

P:\proj1\01\0a370_plans\pse\010a370ma003.dgn

LAST REVISION 10-23-15
DATE PLOTTED => 11-JAN-2016
TIME PLOTTED => 08:43

Dist	COUNTY	ROUTE	POST MILES TOTAL PROJECT	SHEET No.	TOTAL SHEETS
01	HUM	299	R23.0/R24.0	25	61

REGISTERED CIVIL ENGINEER 01-05-16 DATE

01-05-16
PLANS APPROVAL DATE

REGISTERED PROFESSIONAL ENGINEER JAMES D. RASMUSSEN No. C76401 Exp. 12-31-16 CIVIL STATE OF CALIFORNIA

THE STATE OF CALIFORNIA OR ITS OFFICERS OR AGENTS SHALL NOT BE RESPONSIBLE FOR THE ACCURACY OR COMPLETENESS OF SCANNED COPIES OF THIS PLAN SHEET.

CONSTRUCTION AREA SIGNS (PORTABLE)

CODE	PANEL SIZE	SIGN MESSAGE	(N) EA
C30 (CA)	30" x 30"	LANE CLOSED	4
		TOTAL	4*

* ADDITIONAL QUANTITIES SHOWN ELSEWHERE, SEE SHEET CS-1

TRAFFIC HANDLING QUANTITIES

	TEMPORARY TRAFFIC STRIPE (TAPE)		TEMPORARY TRAFFIC STRIPE (PAINT)		CHANNELIZER (SURFACE MOUNTED)	REMOVE THERMOPLASTIC TRAFFIC STRIPE			REMOVE PAVEMENT MARKER	TEMPORARY CRASH CUSHION SYSTEM	TEMPORARY RAILING (TYPE K)
	DETAIL 22	DETAIL 27B	DETAIL 22	DETAIL 27B		DETAIL 12	DETAIL 5	DETAIL 22			
	LF	LF	LF	LF	EA	LF	LF	LF	EA	EA	LF
STAGE 1	830	4700	800	800	128	90	50	1320	60	2	660
TOTAL	5530		1600		128	1460			60	2	660

STAGE CONSTRUCTION AND TRAFFIC HANDLING QUANTITIES

SCQ-1

BETH A. ELMORE — REVISED BY
JAMES D RASMUSSEN — DATE REVISED
CALCULATED-DESIGNED BY
CHECKED BY
JOHN MARTIN — FUNCTIONAL SUPERVISOR

STATE OF CALIFORNIA - DEPARTMENT OF TRANSPORTATION
Caltrans® DESIGN

P:\proj1\01\0a370_plans\pse\010a370mc001.dgn

LAST REVISION 10-26-15 | DATE PLOTTED => 11-JAN-2016 | TIME PLOTTED => 08:43

Dist	COUNTY	ROUTE	POST MILES TOTAL PROJECT	SHEET No.	TOTAL SHEETS
01	HUM	299	R23.0/R24.0	26	61

REGISTERED CIVIL ENGINEER — DATE 1-5-16

JANUARY 5, 2016
PLANS APPROVAL DATE

REGISTERED PROFESSIONAL ENGINEER — SHERI M. RODRIGUEZ — No. C66861 — Exp. 9-30-16 — CIVIL — STATE OF CALIFORNIA

THE STATE OF CALIFORNIA OR ITS OFFICERS OR AGENTS SHALL NOT BE RESPONSIBLE FOR THE ACCURACY OR COMPLETENESS OF SCANNED COPIES OF THIS PLAN SHEET.

NOTES:

1. CALIFORNIA CODES ARE DESIGNATED BY (CA). OTHERWISE, FEDERAL (MUTCD) CODES ARE SHOWN.
2. ALL SIGNS SHALL HAVE A BLACK LEGEND ON FLUORESCENT ORANGE BACKGROUND AND SHALL BE EQUIPPED WITH AT LEAST TWO 16" x 16" ORANGE FLAGS FOR DAYTIME CLOSURE OR FLASHING BEACONS FOR LANE CLOSURE DURING HOURS OF DARKNESS.
3. ALL CONES USED FOR LANE CLOSURES DURING THE HOURS OF DARKNESS SHALL BE FITTED WITH RETROREFLECTIVE BANDS OR SLEEVES.
4. WHEN A PILOT CAR IS USED, PLACE A C37 (CA) SIGN AT ALL INTERSECTIONS WITHIN TRAFFIC CONTROL AREA. WHERE VEHICULAR TRAFFIC CAN NOT EFFECTIVELY SELF-REGULATE, AT LEAST ONE FLAGGER SHALL BE USED AT EACH INTERSECTION WITHIN THE TRAFFIC CONTROL AREA.
5. FLAGGER SHOULD STAND IN A CONSPICUOUS PLACE, FACING TRAFFIC AT ALL TIMES, BE VISIBLE TO APPROACHING TRAFFIC AS WELL AS APPROACHING VEHICLES AFTER THE FIRST VEHICLE HAS STOPPED.
6. ADDITIONAL ADVANCE FLAGGERS ARE REQUIRED.
7. WHEN FLAGGER IS NOT VISIBLE FROM THIS LOCATION PLACE A C29 (CA) SIGN BELOW THE C9A (CA) SIGN.

LEGEND

- TRAFFIC CONE
- TEMPORARY SIGN
- DIRECTION OF TRAVEL
- PORTABLE FLASHING BEACON
- FLAGGER

SIGN PANEL SIZE (MINIMUM)

A	48" x 48" - SPEED OF 45 mph OR MORE 36" x 36" - SPEED LESS THAN 45 mph
B	30" x 30"
C	UNUSED
D	UNUSED
E	20" x 7"

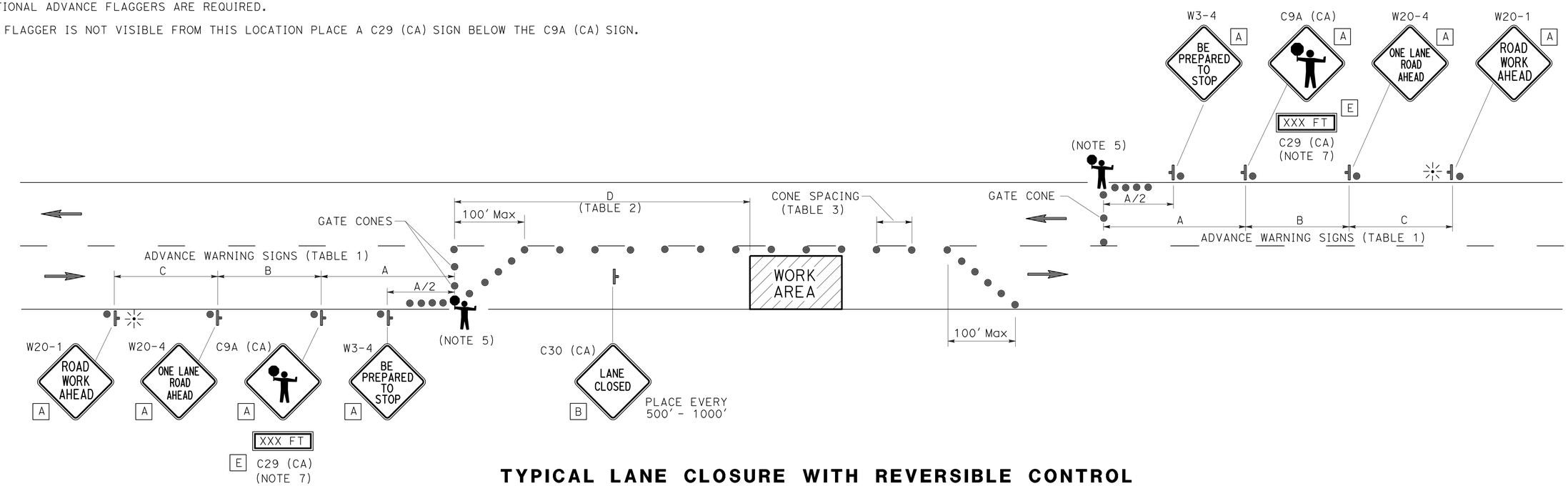

TYPICAL LANE CLOSURE WITH REVERSIBLE CONTROL

TABLE 1
ADVANCE WARNING SIGN SPACING

ROAD TYPE	MIN A	MIN B	MIN C
	FT		
URBAN (25 MPH OR LESS)	100	100	100
URBAN (30 MPH TO 40 MPH)	250	250	250
URBAN (MORE THAN 40 MPH)	350	350	350
RURAL	500	500	500
EXPRESSWAY / FREEWAY	1000	1500	2640

TABLE 2
BUFFER SPACE

APPROACH SPEED	MIN D	DOWNGRADE MIN D		
		-3%*	-6%*	-9%*
MPH	FT			
25 & BELOW	155	158	165	173
30	200	205	215	227
35	250	257	271	287
40	305	315	333	354
45	360	378	400	427
50	425	446	474	507
55	495	520	553	593
60	570	598	638	686
65	645	682	728	785

* USE ON SUSTAINED DOWNGRADE STEEPER THAN -3 PERCENT AND LONGER THAN 1 MILE.

TABLE 3
MAX CONE SPACING

POSTED SPEED	TAPER	TANGENT	CONFLICT*
MPH	FT		
20	20	40	10
25	25	50	12
30	30	60	15
35	35	70	17
40	40	80	20
45	45	90	22
50	50	100	25
55	55	110	27
60	60	120	30
65	65	130	32

* USE WHERE THERE IS A CONFLICT BETWEEN EXISTING PAVEMENT MARKINGS AND CHANNELIZERS.

TRAFFIC HANDLING PLAN

NO SCALE

TH-1

APPROVED FOR TRAFFIC HANDLING WORK ONLY

REVISED BY | DATE REVISED
SHERI M. RODRIGUEZ | TROY A. ARSENEAU
CALCULATED-DESIGNED BY | CHECKED BY
FUNCTIONAL SUPERVISOR: RICHARD MULLEN

STATE OF CALIFORNIA - DEPARTMENT OF TRANSPORTATION
Caltrans® TRAFFIC OPERATIONS

P:\proj11\01\0a370_plans\pse\010a370md001.dgn

LAST REVISION 10-12-15 | DATE PLOTTED => 11-JAN-2016 | TIME PLOTTED => 08:43

Dist	COUNTY	ROUTE	POST MILES TOTAL PROJECT	SHEET No.	TOTAL SHEETS
01	HUM	299	R23.0/R24.0	27	61

REGISTERED CIVIL ENGINEER 01-05-16 DATE

01-05-16
PLANS APPROVAL DATE

REGISTERED PROFESSIONAL ENGINEER JAMES D. RASMUSSEN No. C76401 Exp. 12-31-16 CIVIL STATE OF CALIFORNIA

THE STATE OF CALIFORNIA OR ITS OFFICERS OR AGENTS SHALL NOT BE RESPONSIBLE FOR THE ACCURACY OR COMPLETENESS OF SCANNED COPIES OF THIS PLAN SHEET.

NOTES:

1. FOR ACCURATE RIGHT OF WAY DATA, CONTACT RIGHT OF WAY ENGINEERING AT THE DISTRICT OFFICE.
2. EXACT SIGN LOCATIONS TO BE DETERMINED BY ENGINEER.
3. CALIFORNIA SIGN CODES ARE DESIGNATED GY (CA), OTHERWISE, FEDERAL MUTCD SIGN CODES ARE SHOWN.

LEGEND

- RM X-X — REMOVE ROADSIDE SIGN
- X-X — ROADSIDE SIGN NUMBER
- C — CULVERT MARKER
- 1-1 — PAVEMENT DELINEATION STRIPE DETAIL NUMBER
- TYPE VI ARROW, THERMOPLASTIC PAVEMENT MARKING (ENHANCED WET NIGHT VISIBILITY)
- DELINEATOR (CLASS 2) (TYPE E)
- MILEPOST MARKER
- SINGLE STRIPE MARKER
- STRIPE CHANGE LOCATION
- GUARD RAILING DELINEATOR

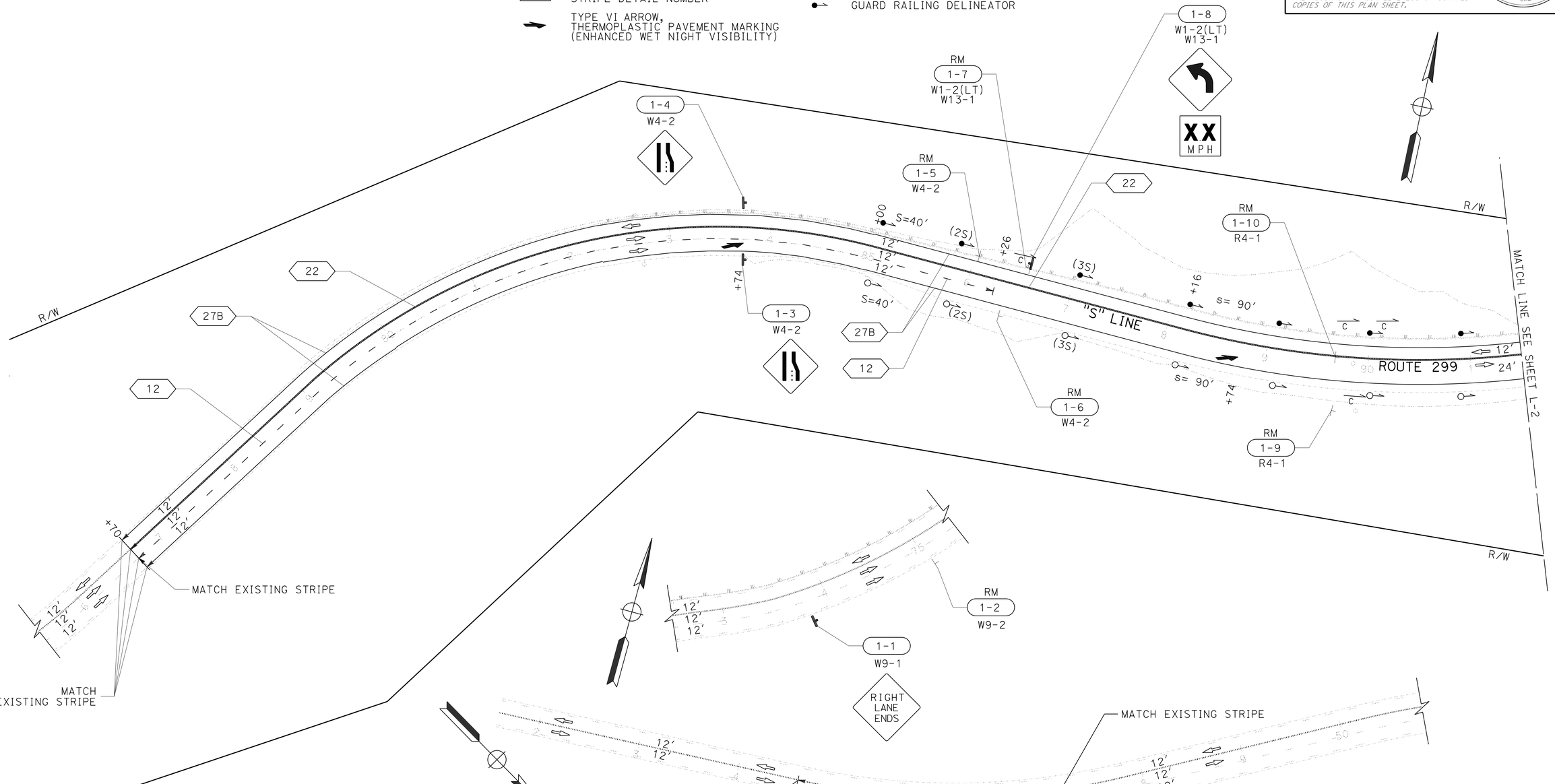

APPROVED FOR PAVEMENT DELINEATION AND SIGN WORK ONLY

PAVEMENT DELINEATION AND SIGN PLAN

SCALE: 1" = 50'

PD-1

REVISED BY	DATE REVISED
BETH A. ELMORE	JAMES D RASMUSSEN
CALCULATED-DESIGNED BY	CHECKED BY
FUNCTIONAL SUPERVISOR	JOHN MARTIN

STATE OF CALIFORNIA - DEPARTMENT OF TRANSPORTATION
Caltrans DESIGN

P:\proj1\01\0a370_plans\pse\010a370na001.dgn

LAST REVISION 10-28-15 | DATE PLOTTED => 29-JAN-2016 | TIME PLOTTED => 13:08

Dist	COUNTY	ROUTE	POST MILES TOTAL PROJECT	SHEET No.	TOTAL SHEETS
01	HUM	299	R23.0/R24.0	28	61

REGISTERED CIVIL ENGINEER 01-05-16 DATE

01-05-16
PLANS APPROVAL DATE

REGISTERED PROFESSIONAL ENGINEER JAMES D. RASMUSSEN No. C76401 Exp. 12-31-16 CIVIL STATE OF CALIFORNIA

THE STATE OF CALIFORNIA OR ITS OFFICERS OR AGENTS SHALL NOT BE RESPONSIBLE FOR THE ACCURACY OR COMPLETENESS OF SCANNED COPIES OF THIS PLAN SHEET.

NOTE:

1. FOR ACCURATE RIGHT OF WAY DATA, CONTACT RIGHT OF WAY ENGINEERING AT THE DISTRICT OFFICE.

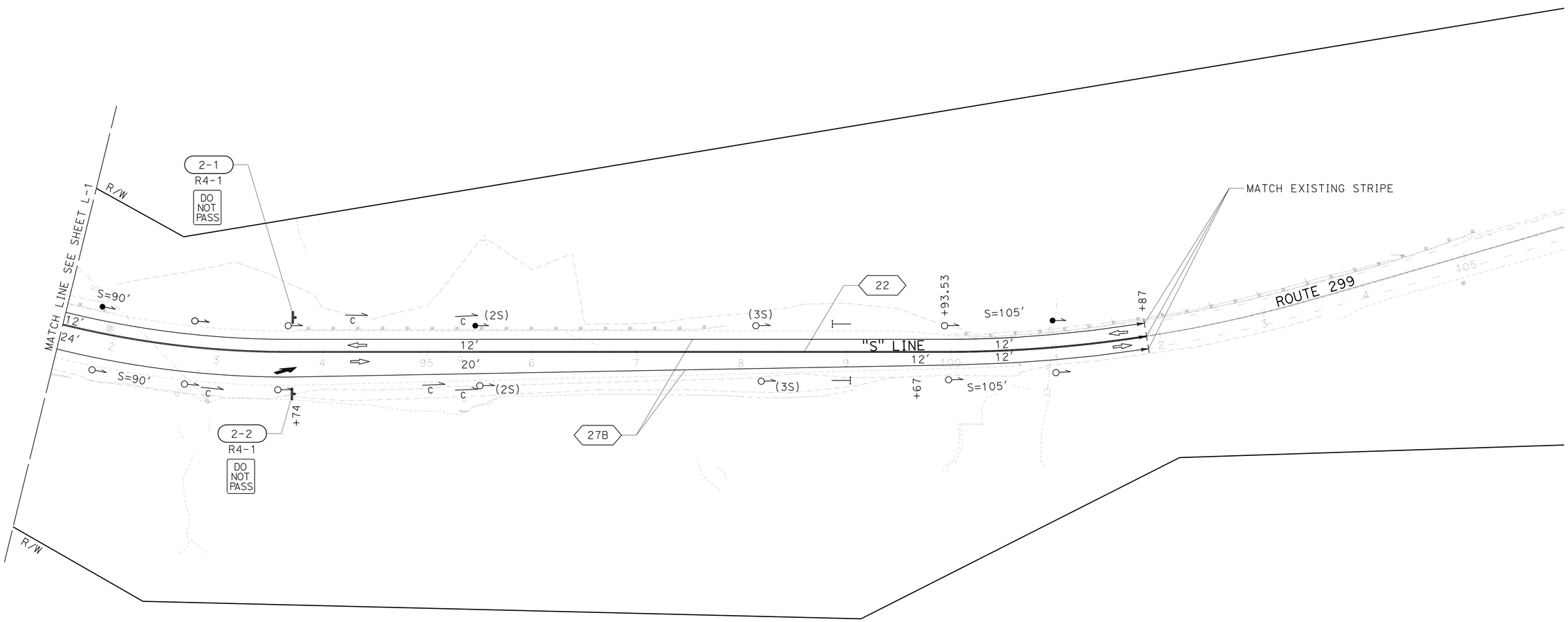

PAVEMENT DELINEATION AND SIGN PLAN

SCALE: 1" = 50′

PD-2

APPROVED FOR PAVEMENT DELINEATION AND SIGN WORK ONLY

STATE OF CALIFORNIA - DEPARTMENT OF TRANSPORTATION

DESIGN

FUNCTIONAL SUPERVISOR: JOHN MARTIN

CALCULATED-DESIGNED BY: BETH A. ELMORE

CHECKED BY: JAMES D RASMUSSEN

REVISED BY / DATE REVISED

P:\proj1\01\0a370_plans\pse\010a370na002.dgn

LAST REVISION 10-28-15 | DATE PLOTTED => 11-JAN-2016 | TIME PLOTTED => 08:43

BORDER LAST REVISED 7/2/2010 | USERNAME => s116738 | DGN FILE => 010a370na002.dgn | RELATIVE BORDER SCALE IS IN INCHES 0 1 2 3 | UNIT 0315 | PROJECT NUMBER & PHASE 01000202901

Dist	COUNTY	ROUTE	POST MILES TOTAL PROJECT	SHEET No.	TOTAL SHEETS
01	HUM	299	R23.0/R24.0	29	61

REGISTERED CIVIL ENGINEER 01-05-16 DATE

01-05-16
PLANS APPROVAL DATE

REGISTERED PROFESSIONAL ENGINEER JAMES D. RASMUSSEN No. C76401 Exp. 12-31-16 CIVIL STATE OF CALIFORNIA

THE STATE OF CALIFORNIA OR ITS OFFICERS OR AGENTS SHALL NOT BE RESPONSIBLE FOR THE ACCURACY OR COMPLETENESS OF SCANNED COPIES OF THIS PLAN SHEET.

NOTES:

1. CALIFORNIA SIGN CODES ARE DESIGNATED BY (CA), OTHERWISE, FEDERAL MUTCD SIGN CODES ARE SHOWN.
2. (N) - NOT A SEPARATE PAY ITEM, FOR INFORMATION ONLY

TRAFFIC STRIPE, AND PAVEMENT MARKINGS AND MARKERS

SHEET NO.	LOCATION			LT/RT	THERMOPLASTIC TRAFFIC STRIPE (ENHANCED WET NIGHT VISIBILITY)				PAVEMENT MARKER (RETROREFLECTIVE-RECESSED)		THERMOPLASTIC PAVEMENT MARKING (ENHANCED WET NIGHT VISIBILITY)	
					WHITE	YELLOW	WHITE	YELLOW				
					4"	4"	4" (BROKEN 18-12)	4" (BROKEN 36-12)				
					DETAIL	DETAIL	DETAIL	DETAIL				
					27B	22	12	5	TYPE D	TYPE G		
					LF	LF	LF	LF	EA	EA	SQFT	NOTES
PD-1	"S"	44+60	91+50	LT/RT	2960	2960	956	250	126	21	84	2-TYPE VI ARROW (LEFT)
PD-2	"S"	91+50	101+87	LT/RT	2027	2027			87		42	1-TYPE VI ARROW (LEFT)
SUBTOTAL					4987	4987	956	250	213	21	126	
TOTAL					9974		956	250	234		126	

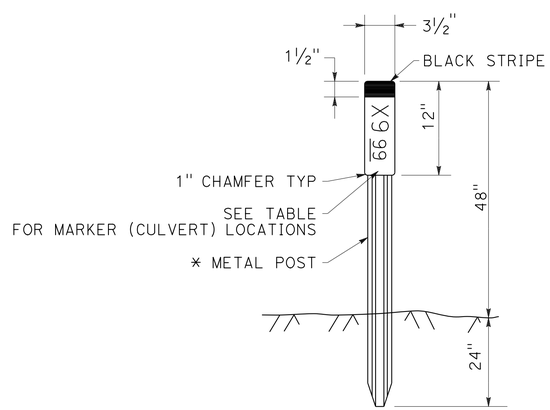

* SEE STANDARD PLAN A73B FOR METAL POST DETAILS

MARKER (CULVERT)

DELINEATORS AND MARKERS

SHEET No.	GUARD RAILING DELINEATOR	DELINEATOR (CLASS 2)	MILEPOST MARKER	(N) POST MILE
		TYPE E		
	EA	EA	EA	
PD-1	7	7		
PD-2	3	11	2	R24.00
TOTAL	10	18	2	

MARKER (CULVERT)

DRAINAGE SYSTEM NO.	ALIGNMENT	STATION	POST MILE	LEFT	RIGHT	MARKER (CULVERT)
						EA
1	"S"	86+52.17	R23.72	X		1
2	"S"	89+84.70	R23.78	X	X	2
4	"S"	90+09.53	R23.80	X		1
	"S"	92+35.93	R23.84	X	X	2
3	"S"	94+69.18	R23.87	X	X	2
	"S"	92+35.93	R23.88	X	X	2
					TOTAL	10

PAVEMENT DELINEATION DETAILS AND QUANTITIES
PDQ-1

BETH A. ELMORE — REVISED BY
JAMES D RASMUSSEN — DATE REVISED
CALCULATED-DESIGNED BY
CHECKED BY
FUNCTIONAL SUPERVISOR
JOHN MARTIN

STATE OF CALIFORNIA - DEPARTMENT OF TRANSPORTATION
Caltrans®
DESIGN

P:\proj1\01\0a370_plans\pse\010a370nc001.dgn

LAST REVISION 11-13-15
DATE PLOTTED => 11-JAN-2016
TIME PLOTTED => 08:43

Dist	COUNTY	ROUTE	POST MILES TOTAL PROJECT	SHEET No.	TOTAL SHEETS
01	HUM	299	R23.0/R24.0	30	61

REGISTERED CIVIL ENGINEER 01-05-16 DATE

01-05-16
PLANS APPROVAL DATE

REGISTERED PROFESSIONAL ENGINEER JAMES D. RASMUSSEN No. C76401 Exp. 12-31-16 CIVIL STATE OF CALIFORNIA

THE STATE OF CALIFORNIA OR ITS OFFICERS OR AGENTS SHALL NOT BE RESPONSIBLE FOR THE ACCURACY OR COMPLETENESS OF SCANNED COPIES OF THIS PLAN SHEET.

NOTES:

1. CALIFORNIA SIGN CODES ARE DESIGNATED BY (CA), OTHERWISE, FEDERAL MUTCD SIGN CODES ARE SHOWN.
2. (N) - NOT A SEPARATE PAY ITEM, FOR INFORMATION ONLY.
3. ADVISORY SPEED FOR W4-14(CA) SIGN TO BE DETERMINED BY THE ENGINEER.

ABBREVIATIONS:

FL. YELLOW FLUORESCENT YELLOW

ROADSIDE SIGNS

SHEET No.	SIGN No.	SIGN CODE	PANEL SIZE	(N) POST SIZE & LENGTH WOOD POST 4" x 6"	(N) POST SIZE & LENGTH WOOD POST 6" x 6"	ROADSIDE SIGN - ONE POST	REMOVE ROADSIDE SIGN	TREATED WOOD WASTE	WEED CONTROL MAT (FIBER)	SIGN PANEL DESCRIPTION
				LF	LF	EA	EA	LB	SQYD	
PD-1	1-1	W9-1	48" X 48"		16	1			1	RIGHT LANE ENDS
	1-2	W9-2	60" X 60"				1	233		LANE ENDS MERGE LEFT
	1-3	W4-2	36" X 36"	14		1			1	LANE ENDS
	1-4	W4-2	36" X 36"	14		1			1	LANE ENDS
	1-5	W4-2	36" X 36"				1	63		DO NOT PASS
	1-6	W4-2	36" X 36"				1	63		DO NOT PASS
	1-7	W1-2 W13-1	36" X 36" 30" X 30"				1	68		CURVE ADVISORY SPEED (PLAQUE) (45)
	1-8	W1-2 (LT) W13-1P	36" X 36" 30" X 30"		15	1			1	CURVE ADVISORY SPEED (PLAQUE) (XX)
	1-9	R4-1	24" X 30"				1	178		DO NOT PASS
	1-10	R4-1	24" X 30"				1	178		DO NOT PASS
PD-2	2-1	R4-1	24" X 30"	13		1			1	DO NOT PASS
	2-2	R4-1	24" X 30"	13		1			1	DO NOT PASS
					TOTAL	6	6	783*	6*	

* ADDITIONAL QUANTITIES SHOWN ELSEWHERE, SEE SHEET Q-1.

MATERIAL SUMMARY CONTRACTOR FURNISHED SIGNS

SIGN No.	SIGN CODE	SIGN SIZE (L x D)	SINGLE FACED	BACKGROUND SHEETING COLOR	BACKGROUND RETROREFLECTIVE ASTM TYPE	LEGEND SHEETING COLOR	FURNISH SINGLE SHEET ALUMINUM SIGN (0.063" UNFRAMED)	FURNISH SINGLE SHEET ALUMINUM SIGN (0.063" UNFRAMED) FOR RETROREFLECTIVE SHEETING (TYPE XI)	FURNISH SINGLE SHEET ALUMINUM SIGN (0.080" UNFRAMED) FOR RETROREFLECTIVE SHEETING (TYPE XI)	RETROREFLECTIVE SHEETING (TYPE XI)	DESCRIPTION (REMARKS)
							SQFT	SQFT	SQFT	SQFT	
1-1	W9-1	48" X 48"	X	FL. YELLOW	XI	BLACK			16	16	RIGHT LANE ENDS
1-3	W4-2	36" X 36"	X	FL. YELLOW	XI	BLACK		9		9	LANE ENDS
1-4	W4-2	36" X 36"	X	FL. YELLOW	XI	BLACK		9		9	LANE ENDS
1-8	W1-2 (LT) W13-1P	36" X 36" 30" X 30"	X X	FL. YELLOW FL. YELLOW	XI XI	BLACK BLACK		9 6		9 6	CURVE ADVISORY SPEED (PLAQUE) (XX)
2-1	R4-1	24" X 30"	X	WHITE	IX	BLACK	5				DO NOT PASS
2-2	R4-1	24" X 30"	X	WHITE	IX	BLACK	5				DO NOT PASS
						TOTAL	10	33	16	49	

SIGN QUANTITIES

SQ-1

REVISED BY	DATE REVISED
BETH A. ELMORE	JAMES D RASMUSSEN
CALCULATED-DESIGNED BY	CHECKED BY
FUNCTIONAL SUPERVISOR	JOHN MARTIN

STATE OF CALIFORNIA - DEPARTMENT OF TRANSPORTATION
Caltrans DESIGN

P:\proj\01\0a370_plans\pse\010a370od001.dgn

LAST REVISION 11-13-15 | DATE PLOTTED => 25-JAN-2016 | TIME PLOTTED => 12:52

Dist	COUNTY	ROUTE	POST MILES TOTAL PROJECT	SHEET No.	TOTAL SHEETS
01	HUM	299	R23.0/R24.0	31	61

REGISTERED CIVIL ENGINEER 01-05-16 DATE

01-05-16
PLANS APPROVAL DATE

REGISTERED PROFESSIONAL ENGINEER JAMES D. RASMUSSEN No. C76401 Exp. 12-31-16 CIVIL STATE OF CALIFORNIA

THE STATE OF CALIFORNIA OR ITS OFFICERS OR AGENTS SHALL NOT BE RESPONSIBLE FOR THE ACCURACY OR COMPLETENESS OF SCANNED COPIES OF THIS PLAN SHEET.

NOTE:

1. (N) - NOT A SEPARATE PAY ITEM, FOR INFORMATION ONLY

ROADWAY ITEMS

STATION	DESTROY WELL	COLD PLANE ASPHALT CONCRETE PAVEMENT	ROADWAY EXCAVATION *	ROADWAY EMBANKMENT (N)	IMPORTED BORROW (CY)	SHOULDER BACKING	SUBGRADE ENHANCEMENT GEOTEXTILE, CLASS B2	CLASS 2 AGGREGATE BASE (CY)	HOT MIX ASPHALT (TYPE A)	RUBBERIZED HOT MIX ASPHALT (GAP GRADED)	RUBBERIZED HOT MIX ASPHALT-OPEN GRADED (OPEN GRADED FRICTION COURSE)	PLACE HOT MIX ASPHALT DIKE (TYPE D)	PLACE HOT MIX ASPHALT DIKE (TYPE F)	CENTERLINE RUMBLE STRIP (HMA, GROUND-IN INDENTATIONS)	SHOULDER RUMBLE STRIP (HMA, GROUND-IN INDENTATIONS)	TACK COAT
	EA	SQYD	CY	CY	CY	TON	SQYD	CY	TON	TON	TON	LF	LF	STA	STA	TON
"S" 85+00.00 TO 101+63.63	2	336	5470	12172	12172	168	8339	4198	2073	1167	583	400	1236	16.7	26.2	1.4
FROM SHEET DQ-1									1.7							
TOTAL	2	336	5470	12172	12172	168	8339	4198	2074.7	1167	583	400	1236	16.7	26.2	1.4

* ROADWAY EXCAVATION MATERIAL UNSUITABLE FOR EMBANKMENT

TAPERED EDGE

STATION	(N) TAPERED EDGE
	LF
"S" 92+40.50 TO "S" 93+75.00, LT	135
"S" 85+00.00 TO "S" 95+00.00, RT	1000
"S" 99+00.00 TO "S" 101+63.63.00, LT	264
TOTAL	1399

STORM WATER POLLUTION PREVENTION

ITEM	UNIT	QUANTITY
RAIN EVENT ACTION PLAN	EA	10
STORM WATER ANNUAL REPORT	EA	2
TEMPORARY CONSTRUCTION ENTRANCE	EA	1
TEMPORARY FIBER ROLL	LF	3600
TEMPORARY LARGE SEDIMENT BARRIER	LF	1850
TEMPORARY SILT FENCE	LF	1600
TEMPORARY CHECK DAM	LF	459
TEMPORARY GRAVEL BAG BERM	LF	1450
TEMPORARY DRAINAGE INLET PROTECTION	LF	5
MOVE-IN/MOVE-OUT (TEMPORARY EROSION CONTROL)	EA	3
TEMPORARY HYDRAULIC MULCH (BONDED FIBER MATRIX)	SQYD	4421
TEMPORARY EROSION CONTROL BLANKET	SQYD	2045
STORMWATER SAMPLING AND ANALYSIS DAY	EA	4

TEMPORARY FENCE (TYPE ESA)

STATION	TEMPORARY FENCE (TYPE ESA)
	LF
"S" 89+33 TO 90+00, LT	70
TOTAL	70

GUARDRAIL SYSTEM

STATION	RECONSTRUCT GUARDRAIL	RECONSTRUCT TERMINAL SYSTEM	REMOVE GUARDRAIL (RAIL ELEMENT WALL)	WEED CONTROL MAT (FIBER)	MIDWEST GUARDRAIL SYSTEM (STEEL POST)	END ANCHOR ASSEMBLY (TYPE SFT)	ALTERNATIVE FLARED TERMINAL SYSTEM	TREATED WOOD WASTE	(N) BURIED POST END ANCHOR
	LF	EA	LF	SQYD	LF	EA	EA	LB	EA
"S" 85+00 to "S" 92+00	700	1		285			1	11109	
"S" 87+38 to "S" 89+63			225						
"S" 93+75 to "S" 95+50				81	175	1			
"S" 95+50 to "S" 97+50				90	200				1
"S" 100+03 to "S" 101+63.63	161			75					1
FROM SHEET PDQ-1				6				783	
TOTAL	861	1	225	537	375	1	1	11892	2

SUMMARY OF QUANTITIES

Q-1

BETH A. ELMORE — REVISED BY
JAMES D RASMUSSEN — DATE REVISED
CALCULATED-DESIGNED BY
CHECKED BY
FUNCTIONAL SUPERVISOR
JOHN MARTIN

STATE OF CALIFORNIA - DEPARTMENT OF TRANSPORTATION
Caltrans DESIGN

P:\proj1\01\0a370_plans\pse\010a370pa001.dgn

LAST REVISION 12-08-15 | DATE PLOTTED => 25-JAN-2016 | TIME PLOTTED => 12:52

Dist	COUNTY	ROUTE	POST MILES TOTAL PROJECT	SHEET No.	TOTAL SHEETS
01	HUM	299	R23.0/R24.0	32	61

LICENSED LANDSCAPE ARCHITECT

01-05-16
PLANS APPROVAL DATE

LICENSED LANDSCAPE ARCHITECT — LAURA LAZZAROTTO — CA 4035 — Signature — 8/31/17 Renewal Date — 01-05-16 Date — STATE OF CALIFORNIA

THE STATE OF CALIFORNIA OR ITS OFFICERS OR AGENTS SHALL NOT BE RESPONSIBLE FOR THE ACCURACY OR COMPLETENESS OF SCANNED COPIES OF THIS PLAN SHEET.

NOTE:

FOR ACCURATE RIGHT OF WAY DATA, CONTACT RIGHT OF WAY ENGINEERING AT THE DISTRICT OFFICE.

LEGEND:

- EROSION CONTROL TYPE 1
- EROSION CONTROL TYPE 2
- EROSION CONTROL TYPE 3
- EROSION CONTROL TYPE 4

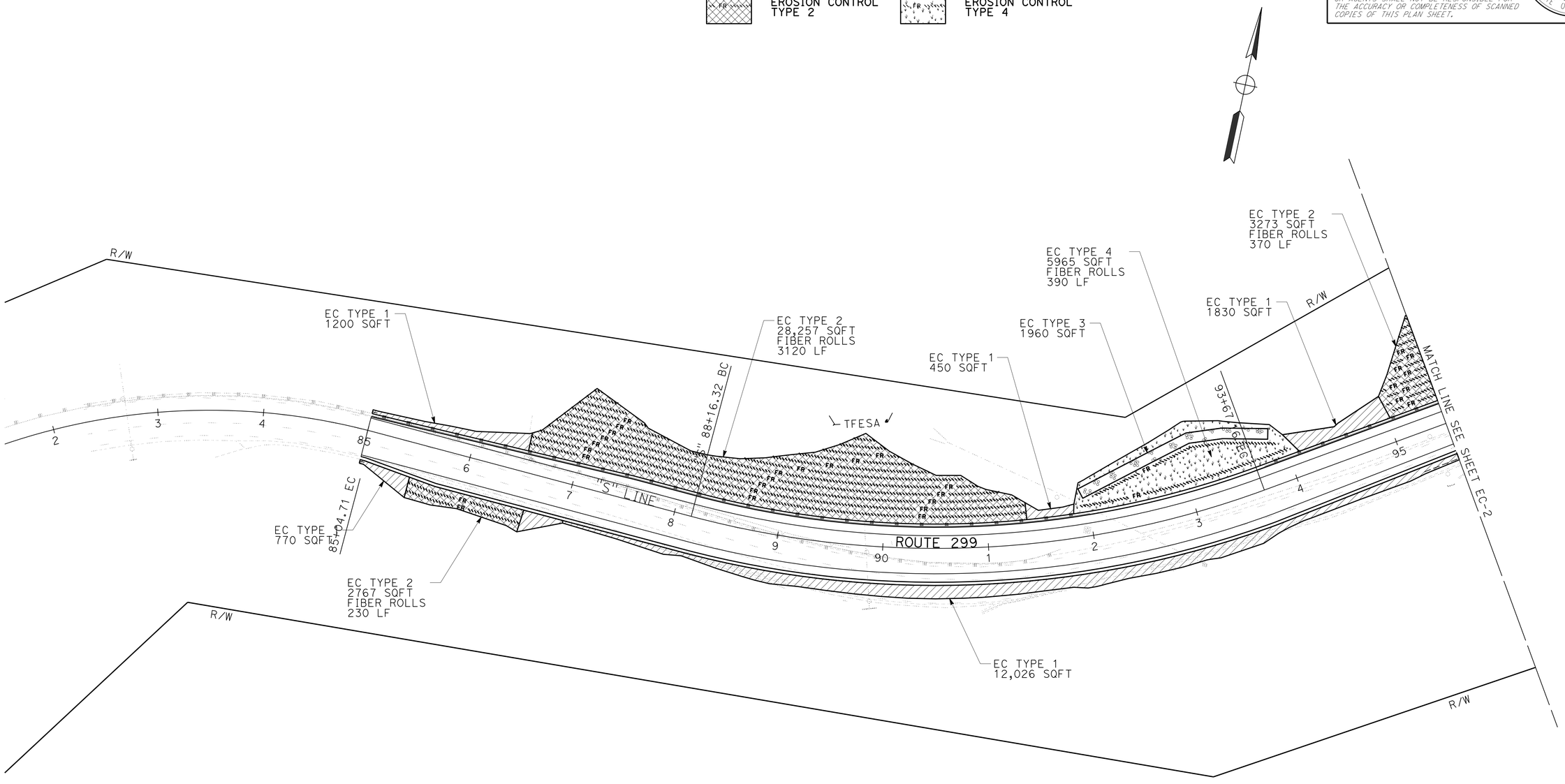

APPROVED FOR EROSION CONTROL WORK ONLY

EROSION CONTROL PLAN

SCALE: 1" = 50'

EC-1

REVISED BY	DATE REVISED
LOGAN MOORE	LAURA LAZZAROTTO

CALCULATED-DESIGNED BY / CHECKED BY

FUNCTIONAL SUPERVISOR: STEVE THORNE

STATE OF CALIFORNIA - DEPARTMENT OF TRANSPORTATION
Caltrans® LANDSCAPE ARCHITECTURE

P:\proj\01\0a370_plans\pse\010a370te001.dgn

LAST REVISION 10-30-15 | DATE PLOTTED => 11-JAN-2016 | TIME PLOTTED => 08:43

Dist	COUNTY	ROUTE	POST MILES TOTAL PROJECT	SHEET No.	TOTAL SHEETS
01	HUM	299	R23.0/R24.0	33	61

LICENSED LANDSCAPE ARCHITECT

01-05-16
PLANS APPROVAL DATE

LICENSED LANDSCAPE ARCHITECT
LAURA LAZZAROTTO
CA 4025
Signature
8/31/17
Renewal date
01-05-16
Date
STATE OF CALIFORNIA

THE STATE OF CALIFORNIA OR ITS OFFICERS OR AGENTS SHALL NOT BE RESPONSIBLE FOR THE ACCURACY OR COMPLETENESS OF SCANNED COPIES OF THIS PLAN SHEET.

NOTE:

FOR ACCURATE RIGHT OF WAY DATA, CONTACT
RIGHT OF WAY ENGINEERING AT THE DISTRICT OFFICE.

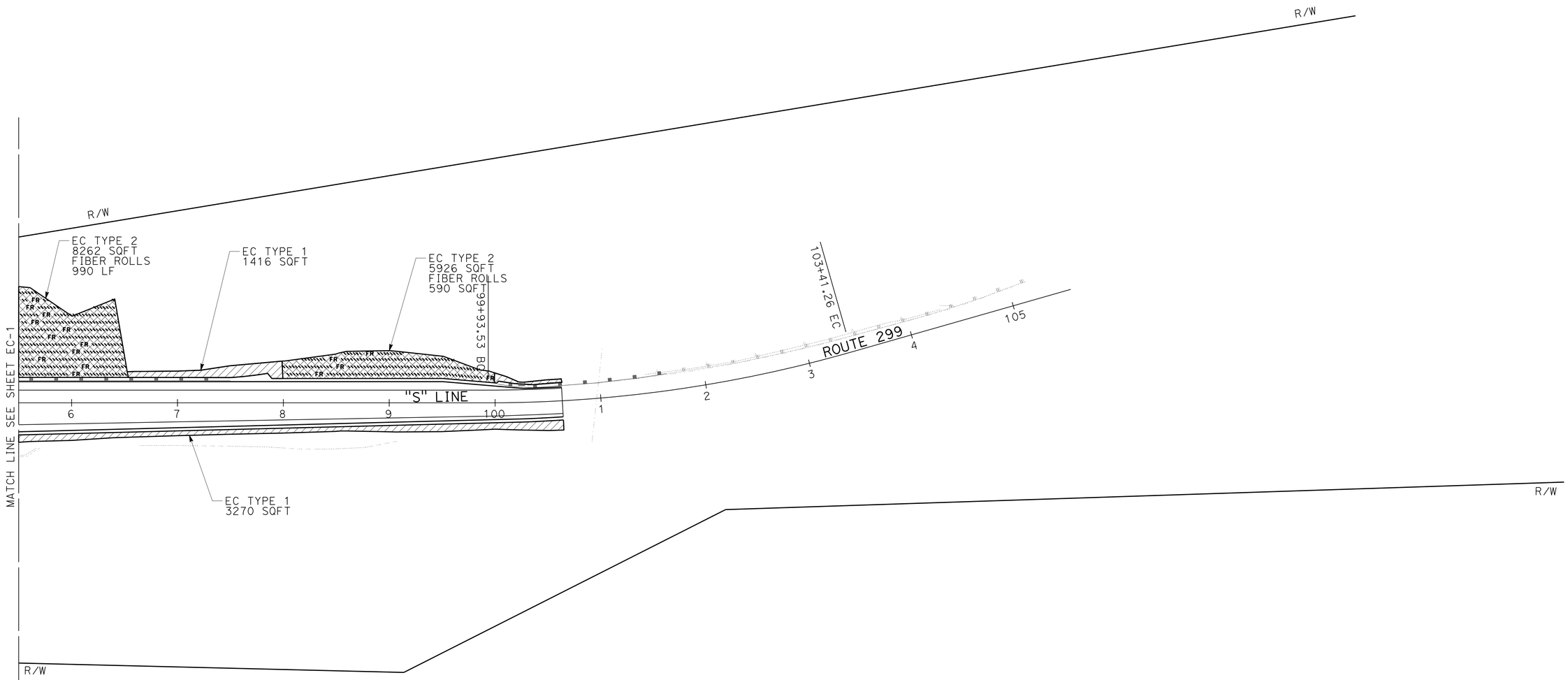

APPROVED FOR EROSION CONTROL WORK ONLY

EROSION CONTROL PLAN

SCALE: 1" = 50'

EC-2

REVISED BY | DATE REVISED
LOGAN MOORE | LAURA LAZZAROTTO
CALCULATED-DESIGNED BY | CHECKED BY
FUNCTIONAL SUPERVISOR
STEVE THORNE

STATE OF CALIFORNIA - DEPARTMENT OF TRANSPORTATION
Caltrans® LANDSCAPE ARCHITECTURE

P:\proj1\01\0a370_plans\pse\010a370te002.dgn

LAST REVISION 10-30-15 | DATE PLOTTED => 11-JAN-2016 | TIME PLOTTED => 08:54

Dist	COUNTY	ROUTE	POST MILES TOTAL PROJECT	SHEET No.	TOTAL SHEETS
01	HUM	299	R23.0/R24.0	34	61

Laura Lazzarotto
LICENSED LANDSCAPE ARCHITECT

01-05-16
PLANS APPROVAL DATE

LICENSED LANDSCAPE ARCHITECT
LAURA LAZZAROTTO
CA 4825
Laura Lazzarotto
Signature
8/31/17
Renewal date
01-05-16
Date
STATE OF CALIFORNIA

THE STATE OF CALIFORNIA OR ITS OFFICERS OR AGENTS SHALL NOT BE RESPONSIBLE FOR THE ACCURACY OR COMPLETENESS OF SCANNED COPIES OF THIS PLAN SHEET.

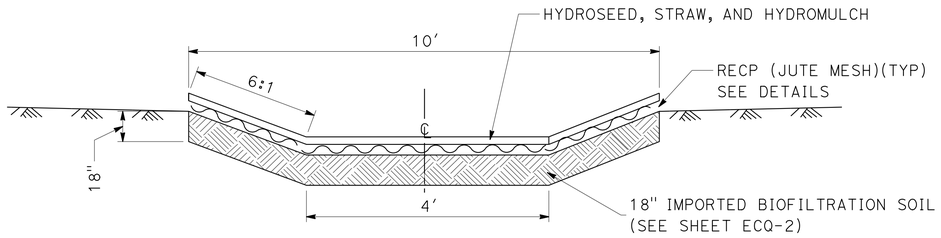

SECTION

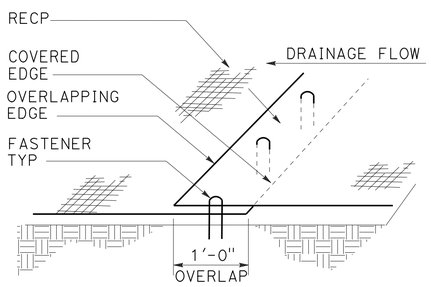

PERSPECTIVE

DETAIL A
LAP JOINT

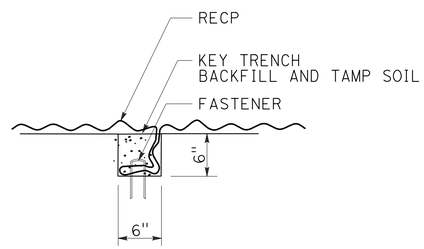

SECTION

DETAIL B
CHECK SLOT

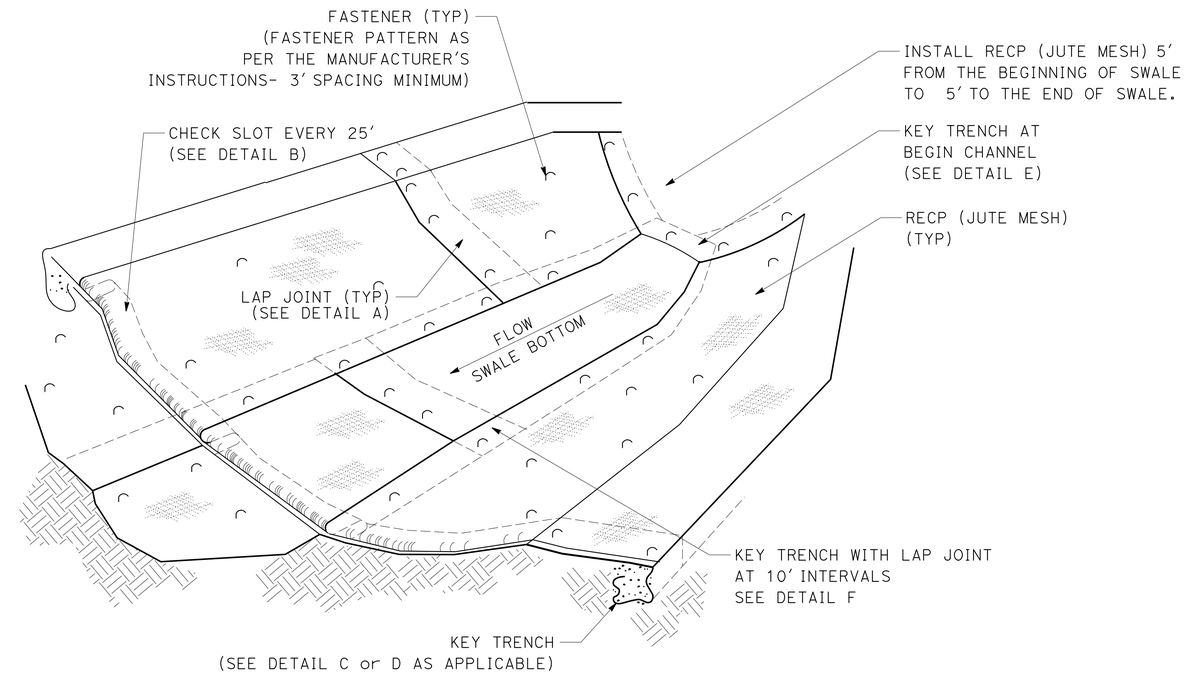

ISOMETRIC

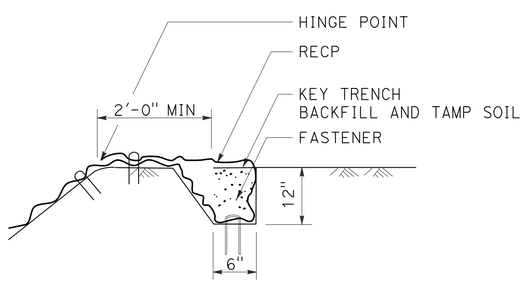

SECTION

DETAIL C
KEY TRENCH AT TOP OF SLOPE

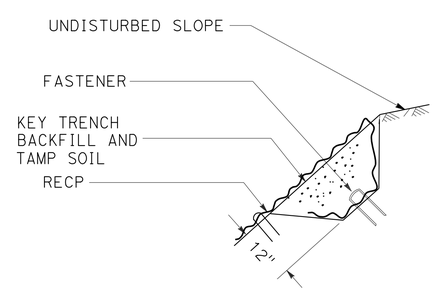

SECTION

DETAIL D
KEY TRENCH AT UPPER CONFORM

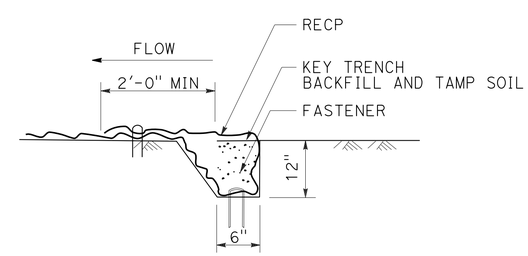

SECTION

DETAIL E
KEY TRENCH AT BEGIN/END SWALE

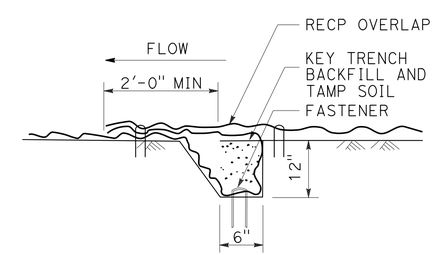

SECTION

DETAIL F
KEY TRENCH WITH LAP JOINT

BIOFILTRATION SWALE DETAILS

EROSION CONTROL DETAILS

NO SCALE

ECD-1

REVISED BY	DATE REVISED

CALCULATED-DESIGNED BY	CHECKED BY
LOGAN MOORE	LAURA LAZZAROTTO

FUNCTIONAL SUPERVISOR: STEVE THORNE

STATE OF CALIFORNIA - DEPARTMENT OF TRANSPORTATION
Caltrans® LANDSCAPE ARCHITECTURE

P:\proj\01\0a370_plans\pse\010a370tf002.dgn

LAST REVISION 10-30-15 | DATE PLOTTED => 11-JAN-2016 | TIME PLOTTED => 08:43

Dist	COUNTY	ROUTE	POST MILES TOTAL PROJECT	SHEET No.	TOTAL SHEETS
01	HUM	299	R23.0/R24.0	35	61

Laura Lazzarotto
LICENSED LANDSCAPE ARCHITECT

01-05-16
PLANS APPROVAL DATE

LICENSED LANDSCAPE ARCHITECT
LAURA LAZZAROTTO
CA 4925
Laura Lazzarotto
Signature
8/31/17
Renewal Date
01-05-16
Date
STATE OF CALIFORNIA

THE STATE OF CALIFORNIA OR ITS OFFICERS OR AGENTS SHALL NOT BE RESPONSIBLE FOR THE ACCURACY OR COMPLETENESS OF SCANNED COPIES OF THIS PLAN SHEET.

EROSION CONTROL TYPE 1

SEQUENCE	ITEM	MATERIAL		APPLICATION RATE
		DESCRIPTION	TYPE	
STEP 1	HYDROSEED	SEED	MIX 1	189 LB/ACRE
		FIBER	WOOD	1100 LB/ACRE
		COMPOST	MEDIUM	270 CY/ACRE
STEP 2	STRAW	STRAW	WHEAT & OR BARLEY	3 TON/ACRE
STEP 3	HYDROMULCH	FIBER	WOOD	1100 LB/ACRE
		TACKIFIER	PSYLLIUM	140 LB/ACRE
		COMPOST	MEDIUM	270 CY/ACRE

EROSION CONTROL TYPE 2

SEQUENCE	ITEM	MATERIAL		APPLICATION RATE	REMARKS
		DESCRIPTION	TYPE		
STEP 1	FIBER ROLLS	FIBER ROLL	TYPE B 8" TO 10" Dia		TYPE 2 FIBER ROLL INSTALLATION
STEP 2	BONDED FIBER MATRIX	SEED	MIX 1	189 LB/ACRE	
		FIBER		1000 LB/ACRE	APPLICATION RATE IS FOR FIBER & TACKIFIER COMBINED
		TACKIFIER			
STEP 3	BONDED FIBER MATRIX	FIBER		3500 LB/ACRE	
		TACKIFIER			

EROSION CONTROL TYPE 3

SEQUENCE	ITEM	MATERIAL		APPLICATION RATE	REMARKS
		DESCRIPTION	TYPE		
STEP 1	IMPORTED BIOFILTRATION SOIL	COMPOST	MEDIUM	691 CY/ACRE	SEE SHEET ECD-1
		SAND	--	1383 CY/ACRE	
		LOCAL TOPSOIL	--	346 CY/ACRE	
STEP 2	ROLLED EROSION CONTROL PRODUCT	JUTE MESH	--	43,560 SQFT/ACRE	
STEP 3	HYDROSEED	SEED	MIX 2	163 LB/ACRE	
		FIBER	WOOD	1100 LB/ACRE	
		COMPOST	MEDIUM	270 CY/ACRE	
STEP 4	STRAW	STRAW	WHEAT &/OR BARLEY	3 TON/ACRE	
STEP 5	HYDROMULCH	FIBER	WOOD	1100 LB/ACRE	
		TACKIFIER	PSYLLIUM	140 LB/ACRE	
		COMPOST	MEDIUM	270 CY/ACRE	

EROSION CONTROL TYPE 4

SEQUENCE	ITEM	MATERIAL		APPLICATION RATE	REMARKS
		DESCRIPTION	TYPE		
STEP 1	INCORPORATE MATERIALS	COMPOST	MEDIUM	540 CY/ACRE	INCORPORATE TO 12 INCHES
STEP 2	FIBER ROLLS	FIBER ROLL	TYPE B 8" TO 10" Dia		TYPE 1 FIBER ROLL INSTALLATION
STEP 3	HYDROSEED	SEED	MIX 2	163 LB/ACRE	
		FIBER	WOOD	1100 LB/ACRE	
		COMPOST	MEDIUM	270 CY/ACRE	
STEP 4	STRAW	STRAW	WHEAT & OR BARLEY	3 TON/ACRE	
STEP 5	HYDROMULCH	FIBER	WOOD	1100 LB/ACRE	
		TACKIFIER	PSYLLIUM	140 LB/ACRE	
		COMPOST	MEDIUM	270 CY/ACRE	

EROSION CONTROL QUANTITIES
ECQ-1

REVISED BY | DATE REVISED
LOGAN MOORE | LAURA LAZZAROTTO
CALCULATED-DESIGNED BY | CHECKED BY
FUNCTIONAL SUPERVISOR: STEVE THORNE

STATE OF CALIFORNIA - DEPARTMENT OF TRANSPORTATION
Caltrans® LANDSCAPE ARCHITECTURE

P:\proj1\01\0a370_plans\pse\010a370tg001.dgn

LAST REVISION 10-30-15 | DATE PLOTTED => 11-JAN-2016 | TIME PLOTTED => 08:43

Dist	COUNTY	ROUTE	POST MILES TOTAL PROJECT	SHEET No.	TOTAL SHEETS
01	HUM	299	R23.0/R24.0	36	61

LICENSED LANDSCAPE ARCHITECT

01-05-16
PLANS APPROVAL DATE

LICENSED LANDSCAPE ARCHITECT — LAURA LAZZAROTTO — LA 4035 — Signature — Renewal date 8/31/17 — 01-05-16 Date — STATE OF CALIFORNIA

THE STATE OF CALIFORNIA OR ITS OFFICERS OR AGENTS SHALL NOT BE RESPONSIBLE FOR THE ACCURACY OR COMPLETENESS OF SCANNED COPIES OF THIS PLAN SHEET.

BIOSWALE QUANTITIES

SHEET	STATION "R1" LINE	L†	R†	LENGTH (LF) (N)	AREA (SQFT) (N)	DESCRIPTION	IMPORTED BIOFILTRATION SOIL	COMPOST (N)	SAND (N)	LOCAL TOPSOIL (N)
							CY	CY	CY	CY
EC-1	91+92 TO 93+90	X		190	1960	BIOFILTRATION SOIL	107	31	61	15
						TOTAL	107	31	61	15

(N) NOT A SEPARATE PAY ITEM, FOR INFORMATION ONLY

EROSION CONTROL QUANTITIES

SHEET	STATION "S LINE"	L†	R†	DESCRIPTION	HYDROSEED	STRAW	HYDROMULCH	EROSION CONTROL (BONDED FIBER MATRIX) (SQFT)	FIBER ROLLS	INCORPORATE MATERIALS	COMPOST	ROLLED EROSION CONTROL PRODUCT (JUTE MESH)	PURE LIVE SEED (N)
					SQFT	SQFT	SQFT	SQFT	LF	SQFT	SQFT	SQFT	LBS
EC-1	85+00 TO 95+50	X	X	EC TYPE 1	16,276	16,276	16,276						69.93
EC-1	85+50 TO 95+50	X	X	EC TYPE 2				34,297	3720				149.31
EC-1	91+92 TO 93+90	X		EC TYPE 3	1960	1960	1960					1960	6.52
EC-1	91+84 TO 94+10	X		EC TYPE 4	5965	5965	5965		390	5965	5965		22.82
EC-2	95+50 TO 100+64	X	X	EC TYPE 1	4686	4686	4686						20.79
EC-2	95+50 TO 100+00	X		EC TYPE 2				14,188	1580				62.37
				TOTAL	28,887	28,887	28,887	48,485	5690	5965	5965	1960	331.74

(N) NOT A SEPARATE PAY ITEM, FOR INFORMATION ONLY

SEED MIX 1

SEED	BOTANICAL NAME (COMMON NAME)	PERCENT GERMINATION (MINIMUM)	POUNDS PURE LIVE SEED PER ACRE (SLOPE MEASUREMENT)
MIX 1	ACHILLEA MILLEFOLIUM [1] (WHITE YARROW)	45	2
	BROMUS CARINATUS [1] (CALIFORNIA BROME)	85	20
	ELYMUS ELYMOIDES [1] (BOTTLE BRUSH SQUIRRELTAIL)	55	10
	ELYMUS GLAUCUS 'ANDERSON' [1] (BLUE WILDRYE, ANDERSON)	65	25
	FESTUCA CALIFORNICA [1] (CALIFORNIA FESCUE)	75	20
	FESTUCA IDAHOENSIS [1] (IDAHO FESCUE)	80	12
	HORDEUM VULGARE (COMMON BARLEY)	75	90
	ACMISPON AMERICANUS (LOTUS PURSHIANUS) (PURSHING'S LOTUS)	45	10

[1] SEED PRODUCED IN CALIFORNIA ONLY

SEED MIX 2

SEED	BOTANICAL NAME (COMMON NAME)	PERCENT GERMINATION (MINIMUM)	POUNDS PURE LIVE SEED PER ACRE (SLOPE MEASUREMENT)
MIX 2	ACHILLEA MILLEFOLIUM [1] (WHITE YARROW)	45	2
	FESTUCA RUBRA [1] (RED FESCUE)	70	9
	HORDEUM BRACHYANTHERUM [1] (MEADOW BARLEY)	80	15
	HORDEUM CALIFORNICUM (CALIFORNIA BARLEY)	80	40
	HORDEUM VULGARE (COMMON BARLEY)	75	90
	NASSELLA PULCHRA [1] (PURPLE NEEDLEGRASS)	70	7

[1] SEED PRODUCED IN CALIFORNIA ONLY

EROSION CONTROL QUANTITIES
ECQ-2

REVISED BY | DATE REVISED
LOGAN MOORE | LAURA LAZZAROTTO
CALCULATED-DESIGNED BY | CHECKED BY
FUNCTIONAL SUPERVISOR: STEVE THORNE

STATE OF CALIFORNIA - DEPARTMENT OF TRANSPORTATION
Caltrans® LANDSCAPE ARCHITECTURE

P:\proj1\01\0a370_plans\pse\010a370tg002.dgn

LAST REVISION 10-30-15 | DATE PLOTTED => 11-JAN-2016 | TIME PLOTTED => 08:43

M

Maint	MAINTENANCE
Max	MAXIMUM
MB	METAL BEAM
MBB	METAL BEAM BARRIER
MBGR	METAL BEAM GUARD RAILING
Med	MEDIAN
MGS	MIDWEST GUARDRAIL SYSTEM
MH	MANHOLE
Min	MINIMUM
Misc	MISCELLANEOUS
Misc I & S	MISCELLANEOUS IRON AND STEEL
Mkr	MARKER
Mod	MODIFIED,
	MODIFY
Mon	MONUMENT
MP	METAL PLATE
MPGR	METAL PLATE GUARD RAILING
MR	MOVEMENT RATING
MSE	MECHANICALLY STABILIZED EMBANKMENT
Mt	MOUNTAIN, MOUNT
Mtl	MATERIAL
MVP	MAINTENANCE VEHICLE PULLOUT

N

N	NORTH
NB	NORTHBOUND
No.	NUMBER (MUST HAVE PERIOD)
Nos.	NUMBERS (MUST HAVE PERIOD)
NPS	NOMINAL PIPE SIZE
NS	NEAR SIDE
NSP	NEW STANDARD PLAN
NTS	NOT TO SCALE

O

Oblr	OBLITERATE
OC	OVERCROSSING
OD	OUTSIDE DIAMETER
OF	OUTSIDE FACE
OG	ORIGINAL GROUND
OGAC	OPEN GRADED ASPHALT CONCRETE
OGFC	OPEN GRADED FRICTION COURSE
OH	OVERHEAD
OHWM	ORDINARY HIGH WATER MARK
O-O	OUT TO OUT
Opp	OPPOSITE
OSD	OVERSIDE DRAIN

P

P	PAGE
PAP	PERFORATED ALUMINUM PIPE
PB	PULL BOX
PC	POINT OF CURVATURE,
	PRECAST
PCC	POINT OF COMPOUND CURVE,
	PORTLAND CEMENT CONCRETE
PCMS	PORTABLE CHANGEABLE MESSAGE SIGN
PCP	PERFORATED CONCRETE PIPE,
	PRESTRESSED CONCRETE PIPE
PCVC	POINT OF COMPOUND VERTICAL CURVE
PEC	PERMIT TO ENTER AND CONSTRUCT
Ped	PEDESTRIAN
Ped OC	PEDESTRIAN OVERCROSSING
Ped UC	PEDESTRIAN UNDERCROSSING
Perm Mtl	PERMEABLE MATERIAL

P continued

PG	PROFILE GRADE
PI	POINT OF INTERSECTION
PJP	PARTIAL JOINT PENETRATION
Pkwy	PARKWAY
ℙ,PL	PLATE
P/L	PROPERTY LINE
PM	POST MILE,
	TIME FROM NOON TO MIDNIGHT
PN	PAVING NOTCH
POC	POINT OF HORIZONTAL CURVE
POT	POINT OF TANGENT
POVC	POINT OF VERTICAL CURVE
PP	PIPE PILE,
	PLASTIC PIPE,
	POWER POLE
PPL	PREFORMED PERMEABLE LINER
PPP	PERFORATED PLASTIC PIPE
PRC	POINT OF REVERSE CURVE
PRF	PAVEMENT REINFORCING FABRIC
PRVC	POINT OF REVERSE VERTICAL CURVE
PS&E	PLANS, SPECIFICATIONS AND ESTIMATES
PS, P/S	PRESTRESSED
PSP	PERFORATED STEEL PIPE
PT	POINT OF TANGENCY
PVC	POLYVINYL CHLORIDE
Pvmt	PAVEMENT

Q

Qty	QUANTITY

R

R	RADIUS
R & D	REMOVE AND DISPOSE
R & S	REMOVE AND SALVAGE
R/C	RATE OF CHANGE
RCA	REINFORCED CONCRETE ARCH
RCB	REINFORCED CONCRETE BOX
RCP	REINFORCED CONCRETE PIPE
RCPA	REINFORCED CONCRETE PIPE ARCH
Rd	ROAD
Reinf	REINFORCED,
	REINFORCEMENT,
	REINFORCING
Rel	RELOCATE
Repl	REPLACEMENT
Ret	RETAINING
Rev	REVISED, REVISION
Rdwy	ROADWAY
RHMA	RUBBERIZED HOT MIX ASPHALT
Riv	RIVER
RM	ROAD-MIXED
RP	RADIUS POINT,
	REFERENCE POINT
RR	RAILROAD
RSP	ROCK SLOPE PROTECTION,
	REVISED STANDARD PLAN
Rt	RIGHT
Rte	ROUTE
RW	REDWOOD,
	RETAINING WALL
R/W	RIGHT OF WAY
Rwy	RAILWAY

S

S	SOUTH,
	SUPPLEMENT
SAE	STRUCTURE APPROACH EMBANKMENT
Salv	SALVAGE
SAPP	STRUCTURAL ALUMINUM PLATE PIPE
SB	SOUTHBOUND
SC	SAND CUSHION
SCSP	SLOTTED CORRUGATED STEEL PIPE
SD	STORM DRAIN
Sec	SECOND,
	SECTION
Sep	SEPARATION
SG	SUBGRADE
Shld	SHOULDER
Sht	SHEET
Sim	SIMILAR
℄	STATION LINE
SM	SELECTED MATERIAL
Spec	SPECIAL,
	SPECIFICATIONS
SPP	SLOTTED PLASTIC PIPE
SS	SLOPE STAKE
SSBM	STRAP AND SADDLE BRACKET METHOD
SSD	STRUCTURAL SECTION DRAIN
SSPA	STRUCTURAL STEEL PLATE ARCH
SSPP	STRUCTURAL STEEL PLATE PIPE
SSPPA	STRUCTURAL STEEL PLATE PIPE ARCH
SSRP	STEEL SPIRAL RIB PIPE
St	STREET
Sta	STATION
STBB	SINGLE THRIE BEAM BARRIER
Std	STANDARD
Str	STRUCTURE
Surf	SURFACING
SW	SIDEWALK,
	SOUND WALL
Swr	SEWER
Sym	SYMMETRICAL
S4S	SURFACE 4 SIDES

T

T	SEMI-TANGENT
Tan	TANGENT
TBB	THRIE BEAM BARRIER
Tbr	TIMBER
TC	TOP OF CURB
TCB	TRAFFIC CONTROL BOX
TCE	TEMPORARY CONSTRUCTION EASEMENT
Tel	TELEPHONE
Temp	TEMPORARY
TG	TOP OF GRADE
Tot	TOTAL
TP	TELEPHONE POLE
TPB	TREATED PERMEABLE BASE
TPM	TREATED PERMEABLE MATERIAL
Trans	TRANSITION

T continued

TS	TRANSVERSE,
	TRAFFIC SIGNAL,
	TUBULAR STEEL
Typ	TYPICAL

U

UC	UNDERCROSSING
UD	UNDERDRAIN
UG	UNDERGROUND
UON	UNLESS OTHERWISE NOTED
UP	UNDERPASS

V

V	VALVE,
	DESIGN SPEED
Var	VARIABLE,
	VARIES
VC	VERTICAL CURVE
VCP	VITRIFIED CLAY PIPE
Vert	VERTICAL
Via	VIADUCT
Vol	VOLUME

W

W	WEST,
	WIDTH
WB	WESTBOUND
WH	WEEP HOLE
WM	WIRE MESH
WS	WATER SURFACE
WSP	WELDED STEEL PIPE
Wt	WEIGHT
WV	WATER VALVE
WW	WINGWALL
WWLOL	WINGWALL LAYOUT LINE

X

X Sec	CROSS SECTION
Xing	CROSSING

Y

Yr	YEAR
Yrs	YEARS

Dist	COUNTY	ROUTE	POST MILES TOTAL PROJECT	SHEET No.	TOTAL SHEETS
01	HUM	299	R23.0/R24.0	37	61

Grace M. Tsushima
REGISTERED CIVIL ENGINEER

July 19, 2013
PLANS APPROVAL DATE

REGISTERED PROFESSIONAL ENGINEER Grace M. Tsushima No. C49814 Exp. 9-30-14 CIVIL STATE OF CALIFORNIA

THE STATE OF CALIFORNIA OR ITS OFFICERS OR AGENTS SHALL NOT BE RESPONSIBLE FOR THE ACCURACY OR COMPLETENESS OF SCANNED COPIES OF THIS PLAN SHEET.

TO ACCOMPANY PLANS DATED 01-05-16

UNIT OF MEASUREMENT SYMBOLS:

Some of the symbols used in the project plan quantity tables and in the Bid Item List are:

TABLE A

SYMBOL USED	DEFINITIONS
ACRE	ACRE
CF	CUBIC FOOT
CY	CUBIC YARD
EA	EACH
GAL	GALLON
LB	POUND
LF	LINEAR FOOT
SQFT	SQUARE FOOT
SQYD	SQUARE YARD
STA	100 FEET
TAB	TABLET
TON	2,000 POUNDS

Some of the symbols used in the plans other than in the project plan quantity tables are:

TABLE B

SYMBOL USED	DEFINITIONS
ksi	KIPS PER SQUARE INCH
ksf	KIPS PER SQUARE FOOT
psi	POUNDS PER SQUARE INCH
psf	POUNDS PER SQUARE FOOT
lb/ft^3, pcf	POUNDS PER CUBIC FOOT
tsf	TONS PER SQUARE FOOT
mph, MPH *	MILES PER HOUR
ø	NOMINAL DIAMETER
oz	OUNCE
lb	POUND
kip	1,000 POUNDS
cal	CALORIE
ft	FOOT OR FEET
gal	GALLON

* For use on a sign panel only

STATE OF CALIFORNIA
DEPARTMENT OF TRANSPORTATION

ABBREVIATIONS (SHEET 2 OF 2)

NO SCALE

RSP A10B DATED JULY 19, 2013 SUPERSEDES STANDARD PLAN A10B DATED MAY 20, 2011 - PAGE 2 OF THE STANDARD PLANS BOOK DATED 2010.

REVISED STANDARD PLAN RSP A10B

2010 REVISED STANDARD PLAN RSP A10B

DATE PLOTTED => 11-JAN-2016
TIME PLOTTED => 08:43

Dist	COUNTY	ROUTE	POST MILES TOTAL PROJECT	SHEET No.	TOTAL SHEETS
01	HUM	299	R23.0/R24.0	38	61

REGISTERED CIVIL ENGINEER

April 20, 2012
PLANS APPROVAL DATE

REGISTERED PROFESSIONAL ENGINEER
Roberta L. McLaughlin
No. C40375
Exp. 3-31-13
CIVIL
STATE OF CALIFORNIA

THE STATE OF CALIFORNIA OR ITS OFFICERS OR AGENTS SHALL NOT BE RESPONSIBLE FOR THE ACCURACY OR COMPLETENESS OF SCANNED COPIES OF THIS PLAN SHEET.

TO ACCOMPANY PLANS DATED 01-05-16

2010 REVISED STANDARD PLAN RSP A24A

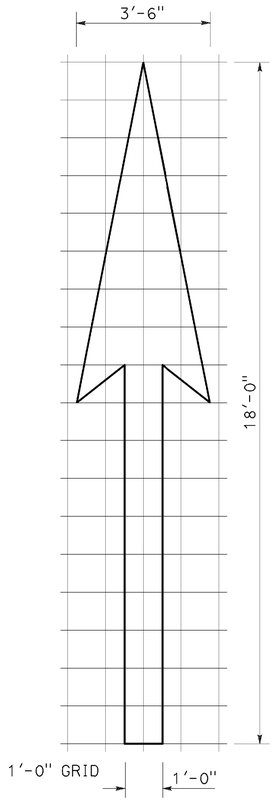

A=25 ft^2

TYPE I 18'-0" ARROW

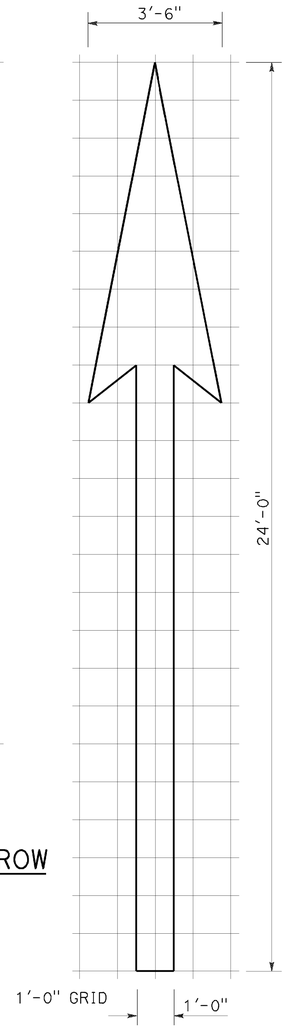

A=31 ft^2

TYPE I 24'-0" ARROW

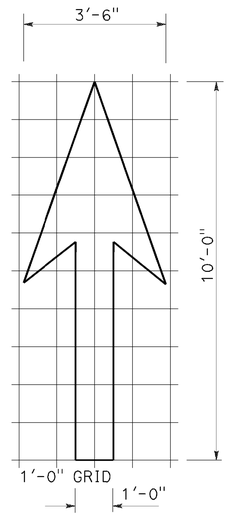

A=14 ft^2

TYPE I 10'-0" ARROW

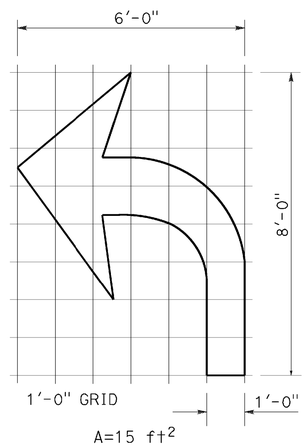

A=15 ft^2

TYPE IV (L) ARROW

(For Type IV (R) arrow, use mirror image)

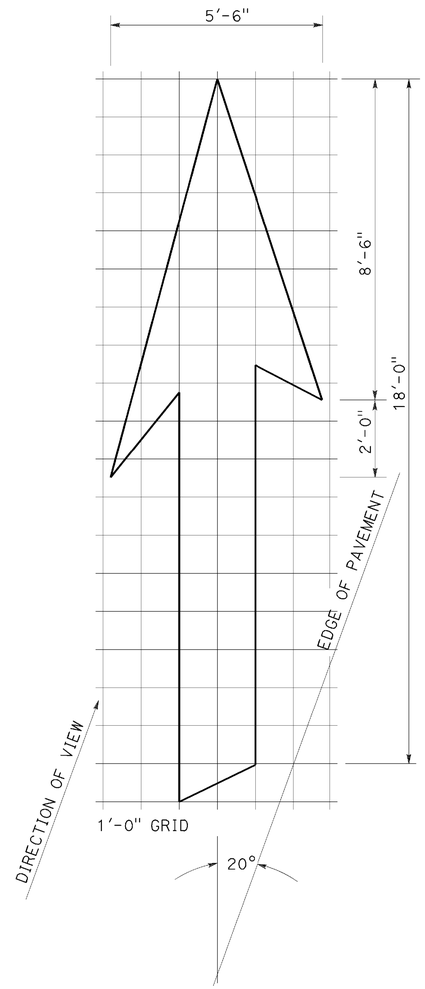

A=42 ft^2

TYPE VI ARROW

Right lane drop arrow
(For left lane, use mirror image)

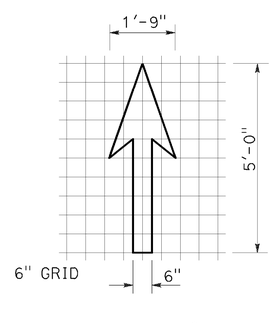

A=3.5 ft^2

BIKE LANE ARROW

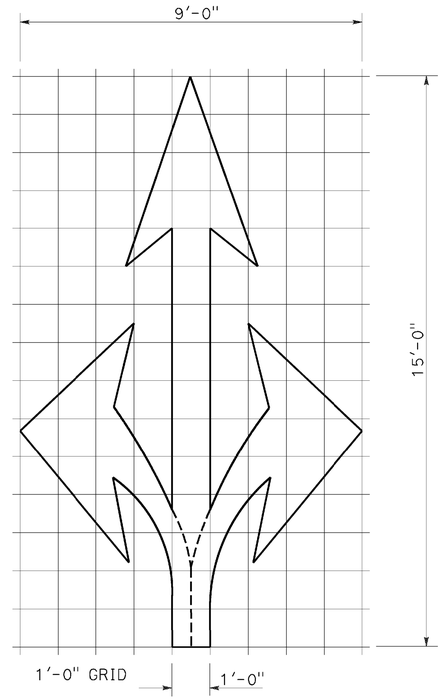

A=36 ft^2

TYPE VIII ARROW

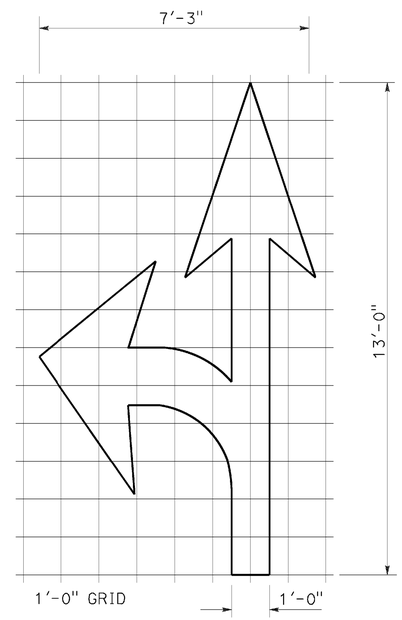

A=27 ft^2

TYPE VII (L) ARROW

(For Type VII (R) arrow, use mirror image)

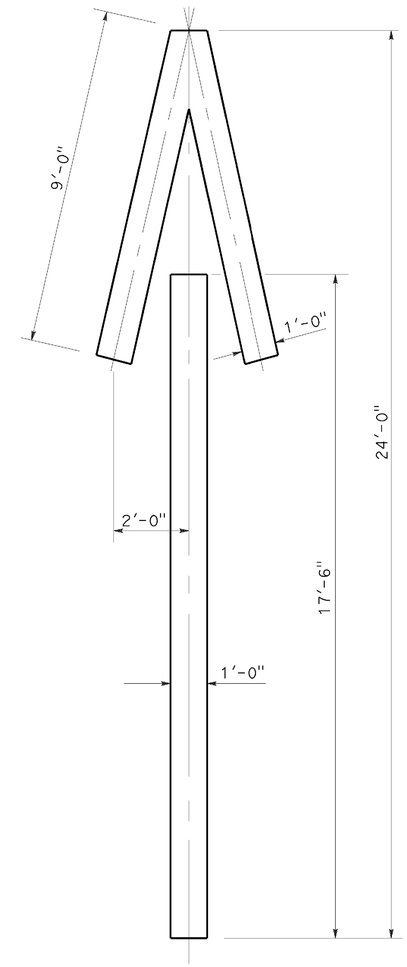

A=33 ft^2

TYPE V ARROW

NOTE:
Minor variations in dimensions may be accepted by the Engineer.

STATE OF CALIFORNIA
DEPARTMENT OF TRANSPORTATION

PAVEMENT MARKINGS ARROWS

NO SCALE

RSP A24A DATED APRIL 20, 2012 SUPERSEDES STANDARD PLAN A24A DATED MAY 20, 2011 - PAGE 13 OF THE STANDARD PLANS BOOK DATED 2010.

REVISED STANDARD PLAN RSP A24A

DATE PLOTTED => 11-JAN-2016
TIME PLOTTED => 08:43

Dist	COUNTY	ROUTE	POST MILES TOTAL PROJECT	SHEET No.	TOTAL SHEETS
01	HUM	299	R23.0/R24.0	39	61

REGISTERED CIVIL ENGINEER

October 30, 2015
PLANS APPROVAL DATE

REGISTERED PROFESSIONAL ENGINEER
Carl M. Duan
No. C59976
Exp. 6-30-16
CIVIL
STATE OF CALIFORNIA

THE STATE OF CALIFORNIA OR ITS OFFICERS OR AGENTS SHALL NOT BE RESPONSIBLE FOR THE ACCURACY OR COMPLETENESS OF SCANNED COPIES OF THIS PLAN SHEET.

TO ACCOMPANY PLANS DATED 01-05-16

2010 REVISED STANDARD PLAN RSP A62F

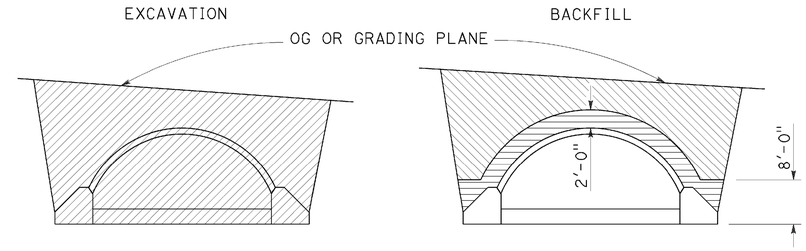

IN TRENCH

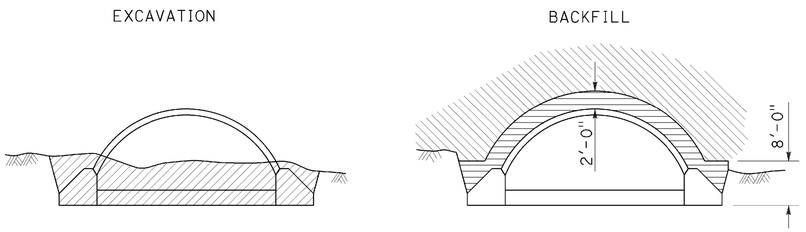

IN EMBANKMENT

STRUCTURAL STEEL PLATE ARCHES

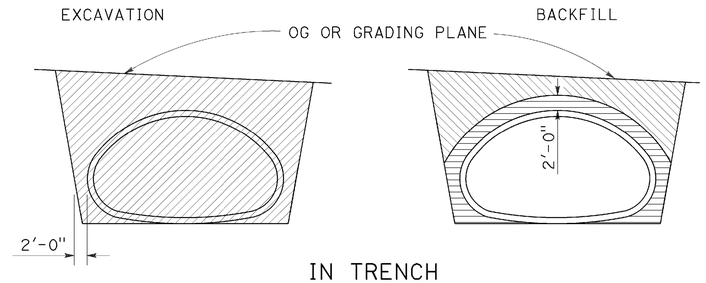

IN TRENCH

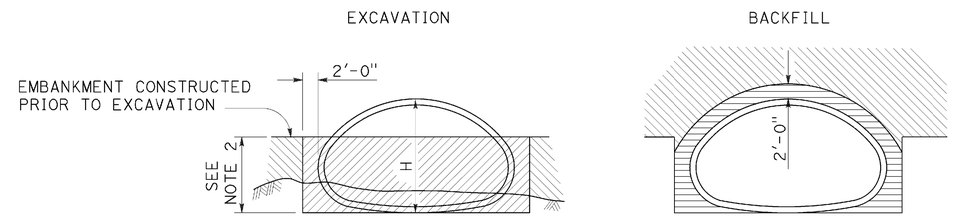

IN EMBANKMENT

STRUCTURAL STEEL PLATE PIPE ARCHES AND VEHICULAR UNDERCROSSING

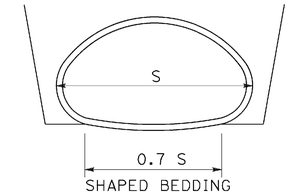

SHAPED BEDDING
S = Larger than 84"

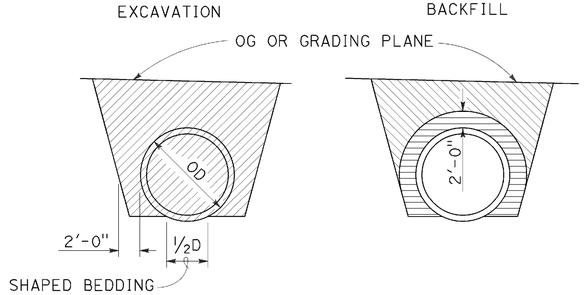

IN TRENCH

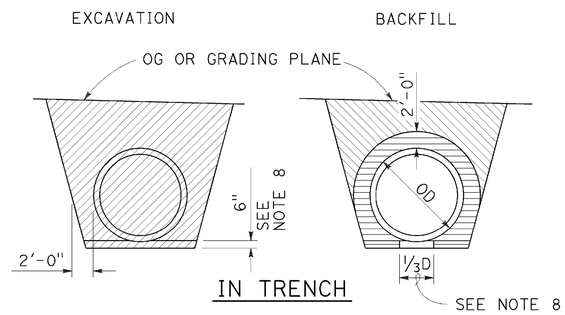

IN TRENCH

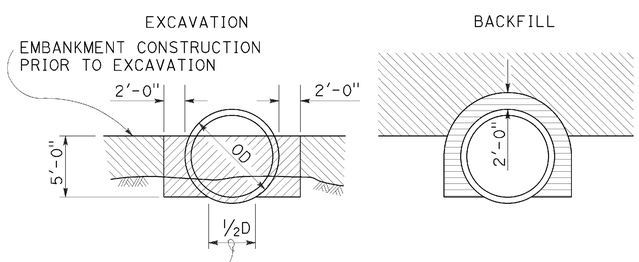

IN EMBANKMENT

PIPES

Larger than 84"

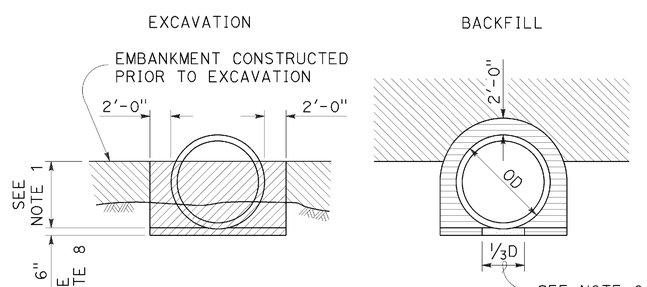

IN EMBANKMENT

METAL AND PLASTIC PIPES AND CORRUGATED METAL PIPE ARCHES

84" or Smaller

NOTES:

1. PIPES: 30" minimum for diameters up to and including 42" then ⅔ diameter but no more than 60" required. CORRUGATED METAL PIPE ARCHES: 30" maximum.
2. ⅔ H up to 60" maximum.
3. Slope or shore excavation sides as necessary.
4. Backfill shall be placed full width of excavation except as noted.
5. Diagrams do not apply to overside drains.
6. Dimensions shown are minimum.
7. Construction strutting of structural steel plate pipe, arches and vehicular undercrossing to be used when shown on the project plans. When shown, see Standard Plan D88A for strutting requirements.
8. Excavation below pipe and 80% relative compaction requirements for plastic pipes only.
9. D is the inside diameter (ID) of the pipe.

LEGEND

- STRUCTURE EXCAVATION (CULVERT)
- ROADWAY EMBANKMENT
- STRUCTURE BACKFILL (CULVERT) 95% RELATIVE COMPACTION
- STRUCTURE BACKFILL (CULVERT) 80% RELATIVE COMPACTION

STATE OF CALIFORNIA
DEPARTMENT OF TRANSPORTATION

EXCAVATION AND BACKFILL METAL AND PLASTIC CULVERTS

NO SCALE

RSP A62F DATED OCTOBER 30, 2015 SUPERSEDES STANDARD PLAN A62F DATED MAY 20, 2011 - PAGE 26 OF THE STANDARD PLANS BOOK DATED 2010.

REVISED STANDARD PLAN RSP A62F

DATE PLOTTED => 11-JAN-2016
TIME PLOTTED => 08:43

Dist	COUNTY	ROUTE	POST MILES TOTAL PROJECT	SHEET No.	TOTAL SHEETS
01	HUM	299	R23.0/R24.0	40	61

Randell D. Hiatt
REGISTERED CIVIL ENGINEER

July 19, 2013
PLANS APPROVAL DATE

REGISTERED PROFESSIONAL ENGINEER
Randell D. Hiatt
No. C50200
Exp. 6-30-15
CIVIL
STATE OF CALIFORNIA

THE STATE OF CALIFORNIA OR ITS OFFICERS OR AGENTS SHALL NOT BE RESPONSIBLE FOR THE ACCURACY OR COMPLETENESS OF SCANNED COPIES OF THIS PLAN SHEET.

TO ACCOMPANY PLANS DATED 01-05-16

2010 REVISED STANDARD PLAN RSP A77L1

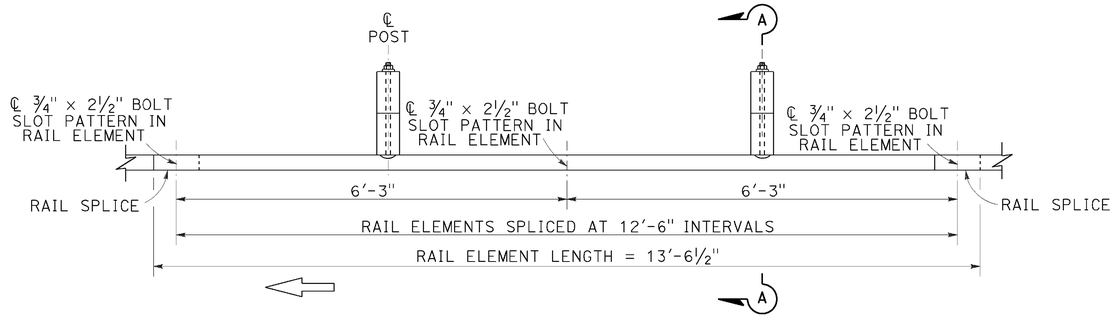

PLAN

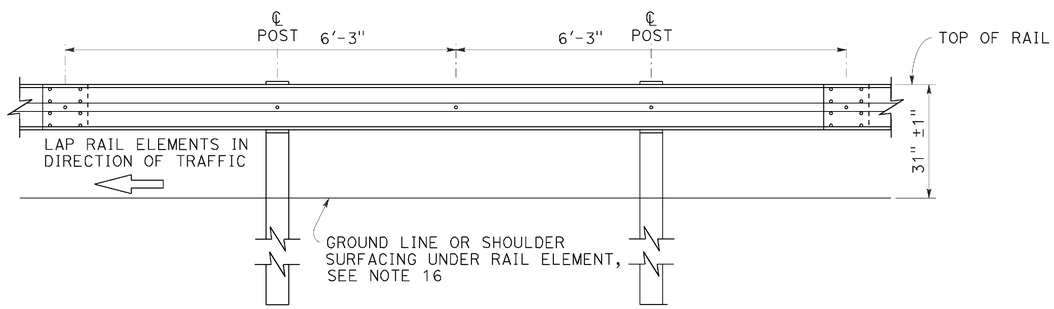

ELEVATION

MIDWEST GUARDRAIL SYSTEM WITH WOOD POST AND BLOCKS

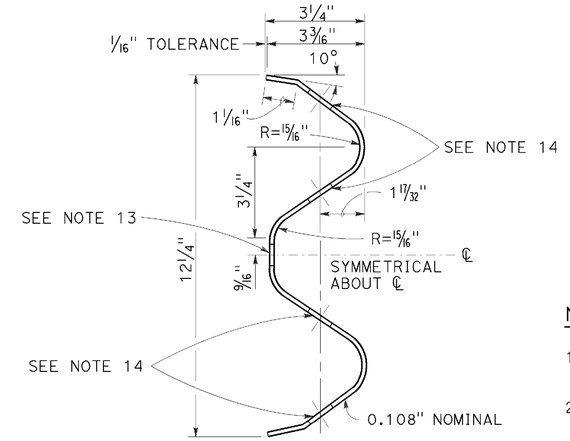

SECTION THRU RAIL ELEMENT

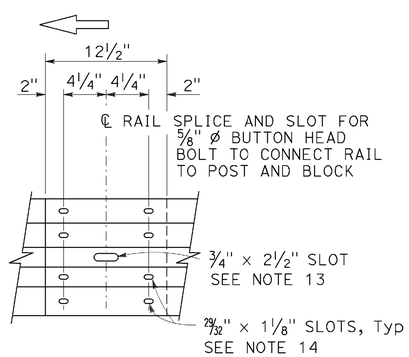

ELEVATION

RAIL ELEMENT SPLICE DETAIL

a) Connect the over lapped end of the rail elements with 5/8" ø × 1 3/8" button head oval shoulder splice bolts inserted into the 29/32" × 1 1/8" slots and bolted together with 5/8" ø recessed hex nuts. Recess of hex nut points toward rail element. A total of 8 bolts and nuts are to be used at each rail splice connection.

b) The ends of the rail elements are to be overlapped in the direction of traffic (see details).

c) Where end cap is to be attached to the end of a rail element, a total of 4 of the above described splice bolts and nuts are to be used.

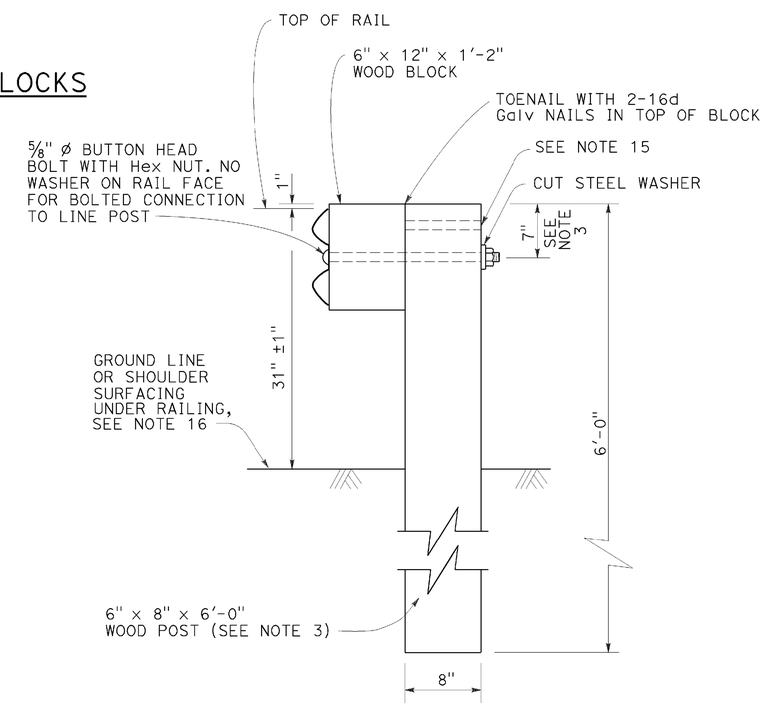

SECTION A-A

TYPICAL WOOD LINE POST INSTALLATION

See Note 4

NOTES:

1. For details of steel post installations, see Revised Standard Plan RSP A77L2.
2. For details of standard hardware used to construct MGS, see Revised Standard Plan RSP A77M1.
3. For details of wood posts and wood blocks used to construct MGS, see Revised Standard Plan RSP A77N1.
4. For additional installation details, see Revised Standard Plan RSP A77N3.
5. MGS post spacing to be 6'-3" center to center, except as otherwise noted.
6. For MGS typical layouts, see the A77P, A77Q and A77R Series of Standard Plans.
7. If railing is connected to terminal system end treatment, use 31" height terminal system end treatment.
8. For MGS end anchor details, see Revised Standard Plans RSP A77S1 and RSP A77T2.
9. For details of MGS transition to bridge railing, see Revised Standard Plan RSP A77U4.
10. For additional details of MSG connection to bridge railing, see Revised Standard Plans RSP A77U1, RSP A77U2 and RSP A77V1.
11. For MGS connection details to abutments and walls, see Revised Standard Plan RSP A77U3.
12. For typical MGS delineation and dike positioning details, see Revised Standard Plan RSP A77N4.
13. Slotted hole for bolted connection of rail element to block and post. See "Section Thru Rail Element".
14. Slotted holes for splice bolts to overlap ends of rail element. See "Section Thru Rail Element".
15. Additional hole in uppermost portion of line post is for potential future adjustments of railing height. See Revised Standard Plan RSP A77N1.
16. Install posts in soil.

STATE OF CALIFORNIA
DEPARTMENT OF TRANSPORTATION

MIDWEST GUARDRAIL SYSTEM STANDARD RAILING SECTION (WOOD POST WITH WOOD BLOCK)

NO SCALE

RSP A77L1 DATED JULY 19, 2013 SUPPLEMENTS STANDARD PLANS BOOK DATED 2010.

REVISED STANDARD PLAN RSP A77L1

DATE PLOTTED => 11-JAN-2016
TIME PLOTTED => 08:43

Dist	COUNTY	ROUTE	POST MILES TOTAL PROJECT	SHEET No.	TOTAL SHEETS
01	HUM	299	R23.0/R24.0	41	61

Randell D. Hiatt
REGISTERED CIVIL ENGINEER

July 19, 2013
PLANS APPROVAL DATE

REGISTERED PROFESSIONAL ENGINEER Randell D. Hiatt No. C50200 Exp. 6-30-15 CIVIL STATE OF CALIFORNIA

THE STATE OF CALIFORNIA OR ITS OFFICERS OR AGENTS SHALL NOT BE RESPONSIBLE FOR THE ACCURACY OR COMPLETENESS OF SCANNED COPIES OF THIS PLAN SHEET.

TO ACCOMPANY PLANS DATED 01-05-16

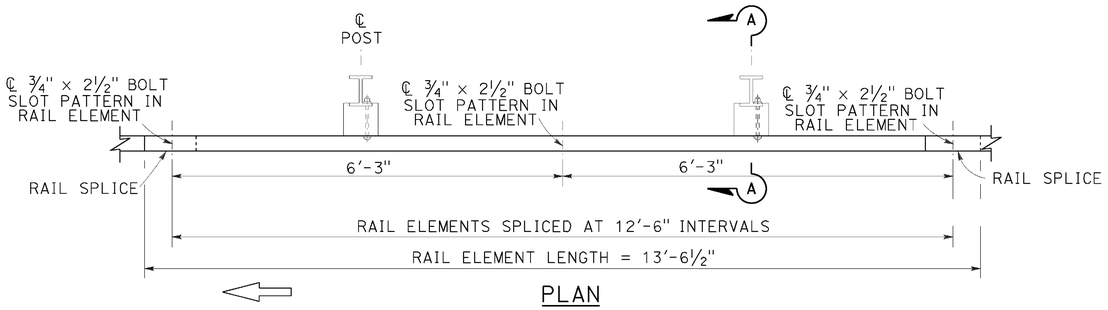

PLAN

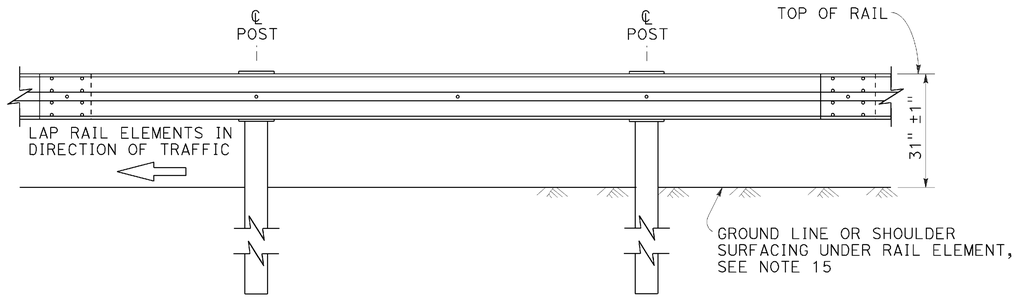

ELEVATION

MIDWEST GUARDRAIL SYSTEM WITH STEEL POSTS AND NOTCHED WOOD OR NOTCHED RECYCLED PLASTIC BLOCKS

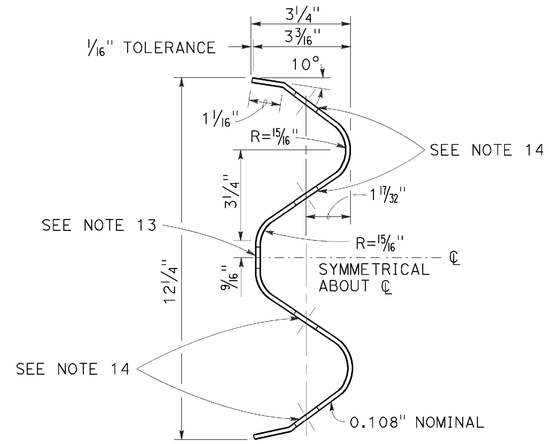

SECTION THRU RAIL ELEMENT

NOTES:

1. For details of wood post installations, see Revised Standard Plan RSP A77L1.
2. For details of standard hardware used to construct MGS, see Revised Standard Plan RSP A77M1.
3. For details of steel posts and notched wood blocks used to construct MGS, see Revised Standard Plan RSP A77N2.
4. For additional installation details, see Revised Standard Plan RSP A77N3.
5. MGS post spacing to be 6'-3" center to center, except as otherwise noted.
6. For MGS typical layouts, see the A77P, A77Q and A77R Series of Standard Plans.
7. If railing is connected to terminal system end treatment, use 31" height terminal system end treatment.
8. For MGS end anchor details, see Revised Standard Plans RSP A77S1 and RSP A77T2.
9. For details of MGS transition to bridge railing, see Revised Standard Plan RSP A77U4.
10. For additional details of MGS connection to bridge railings, see Revised Standard Plans RSP A77U1, RSP A77U2 and RSP A77V1.
11. For dike positioning and MGS delineation details, see Revised Standard Plan RSP A77N4.
12. Notched face of block faces steel post.
13. Slotted hole for bolted connection of rail element to block and post. See "Section Thru Rail Element".
14. Slotted holes for splice bolts to overlap ends of rail element. See "Section Thru Rail Element".
15. Install posts in soil.

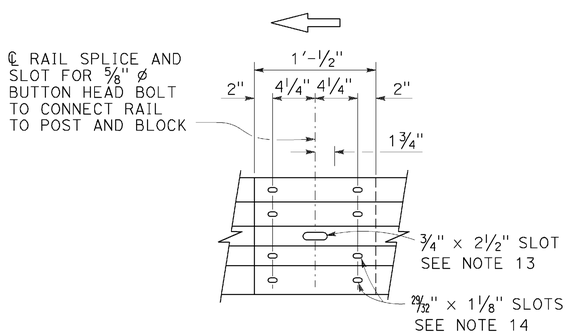

ELEVATION

RAIL ELEMENT SPLICE DETAIL

a) Connect the over lapped end of the rail elements with ⅝" ø × 1⅜" button head oval shoulder splice bolts inserted into the 29⁄32" × 1⅛" slots and bolted together with ⅝" ø recessed hex nuts. Recess of hex nut points toward rail element. A total of 8 bolts and nuts are to be used at each rail splice connection.

b) The ends of the rail elements are to be overlapped in the direction of traffic (see details).

c) Where end cap is to be attached to the end of a rail element, a total of 4 of the above described splice bolts and nuts are to be used.

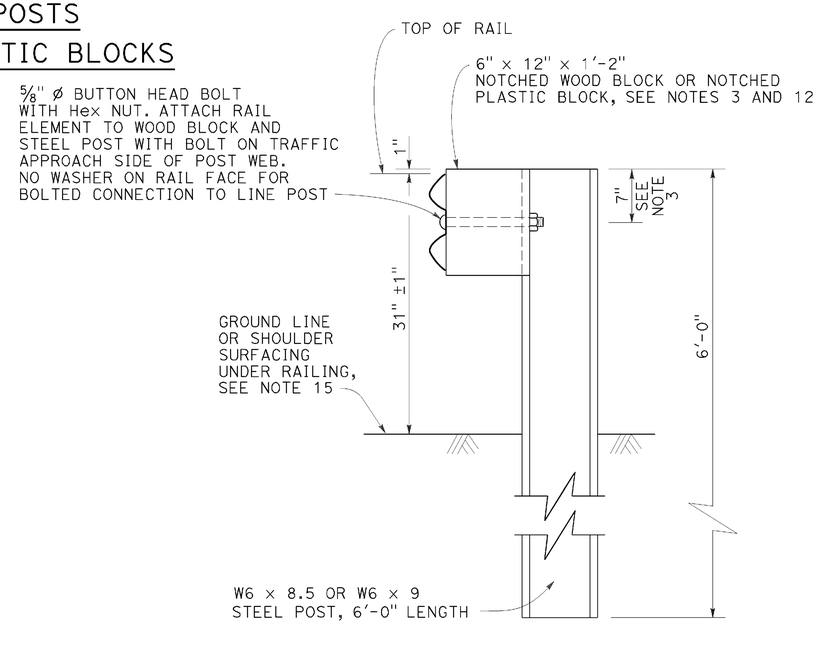

SECTION A-A

TYPICAL STEEL LINE POST INSTALLATION

See Note 4

STATE OF CALIFORNIA
DEPARTMENT OF TRANSPORTATION

MIDWEST GUARDRAIL SYSTEM STANDARD RAILING SECTION (STEEL POST WITH NOTCHED WOOD OR NOTCHED RECYCLED PLASTIC BLOCK)

NO SCALE

RSP A77L2 DATED JULY 19, 2013 SUPPLEMENTS THE STANDARD PLANS BOOK DATED 2010.

REVISED STANDARD PLAN RSP A77L2

2010 REVISED STANDARD PLAN RSP A77L2

DATE PLOTTED => 11-JAN-2016
TIME PLOTTED => 08:44

Dist	COUNTY	ROUTE	POST MILES TOTAL PROJECT	SHEET No.	TOTAL SHEETS
01	HUM	299	R23.0/R24.0	42	61

Randell D. Hiatt
REGISTERED CIVIL ENGINEER

July 19, 2013
PLANS APPROVAL DATE

REGISTERED PROFESSIONAL ENGINEER
Randell D. Hiatt
No. C50200
Exp. 6-30-15
CIVIL
STATE OF CALIFORNIA

THE STATE OF CALIFORNIA OR ITS OFFICERS OR AGENTS SHALL NOT BE RESPONSIBLE FOR THE ACCURACY OR COMPLETENESS OF SCANNED COPIES OF THIS PLAN SHEET.

TO ACCOMPANY PLANS DATED 01-05-16

2010 REVISED STANDARD PLAN RSP A77L3

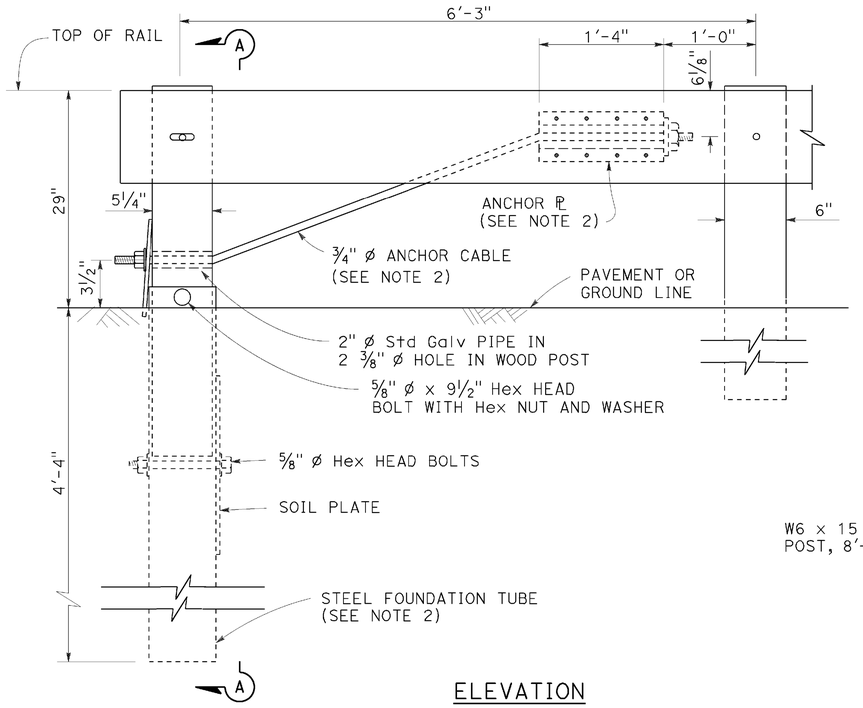

ELEVATION
END ANCHOR
ASSEMBLY (TYPE SFT)

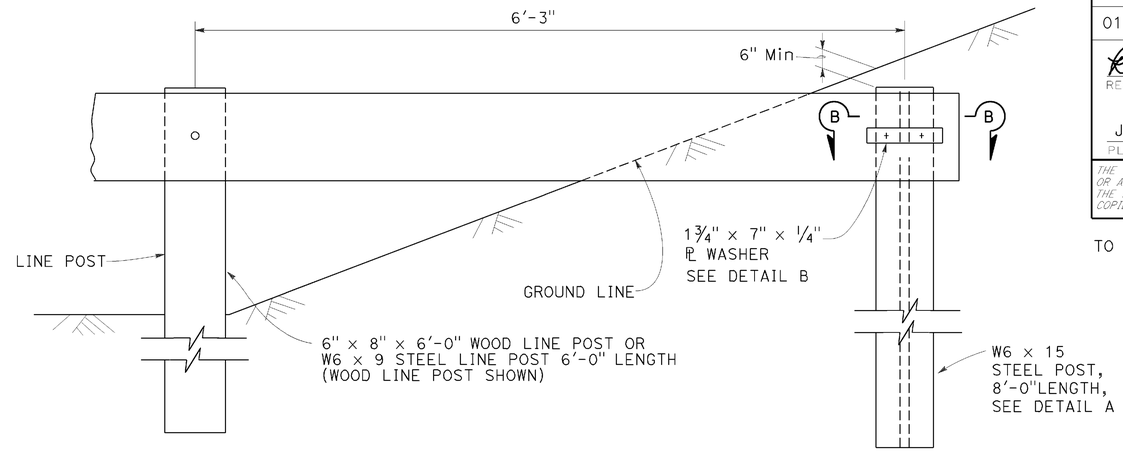

BURIED POST END ANCHOR

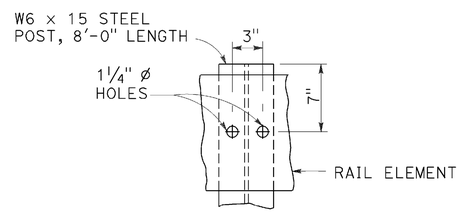

DETAIL A

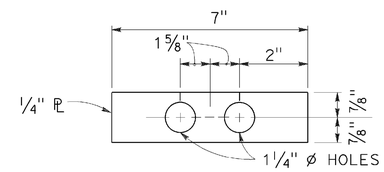

DETAIL B

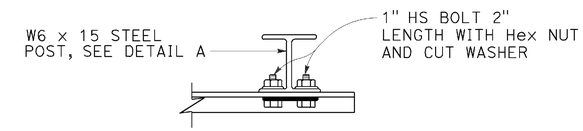

SECTION B-B

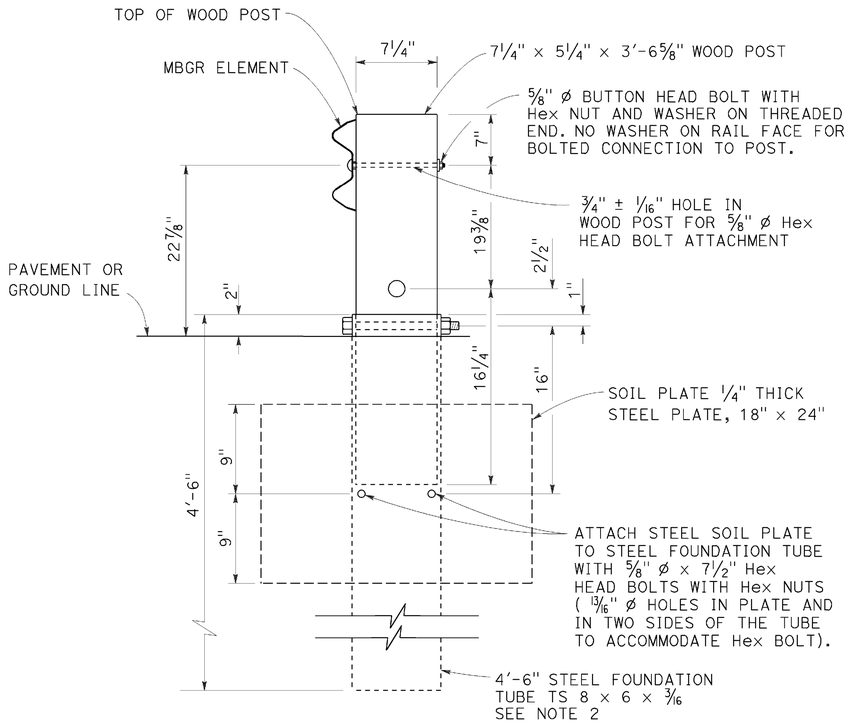

SECTION A-A

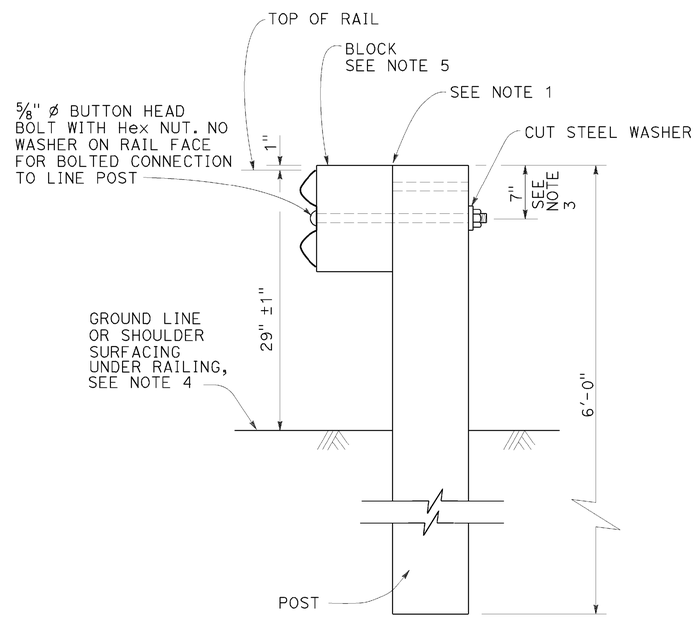

TYPICAL LINE
POST INSTALLATION

NOTES:

1. For wood post and wood block, toenail with 2-16d Galv nails in top of block. For steel post and notched wood or plastic block, notched face of block faces steel post.
2. A 6'-0" Length steel foundation tube, TS 8 x 6 x 3/16, without a soil plate, may be furnished and installed in place of the 4'-6" length steel foundation tube and soil plate shown, Minimum embadment of the 6'-0" length tube shall be 5'-9". A 5/8" ø Hex head bolt and nut shall be installed in the hole in the 6'-0" length tube to keep the wood post from dropping into the tube.
3. To connect railing to 27" terminal system end treatment, transition the top of railing height at a ratio of 120:1 to terminal system end treatment height plus one 12'-6" standard railing section at the transitioned height for a horizontal connection to the end treatment.
4. Install posts in soil.
5. See Revised Standard Plans RSP A77N1 and RSP A77N2 for details.
6. Holes excavation in the slope to construct the buried post end anchor shall be backfilled with selected earth, placed in layers approximately 1'-0" thick. Each layer shall be moistened and thoroughly compacted.

STATE OF CALIFORNIA
DEPARTMENT OF TRANSPORTATION

METAL BEAM GUARD RAILING RECONSTRUCT INSTALLATION

NO SCALE

RSP A77L3 DATED JULY 19, 2013 SUPPLEMENTS THE STANDARD PLANS BOOK DATED 2010.

REVISED STANDARD PLAN RSP A77L3

DATE PLOTTED => 11-JAN-2016
TIME PLOTTED => 08:44

Dist	COUNTY	ROUTE	POST MILES TOTAL PROJECT	SHEET No.	TOTAL SHEETS
01	HUM	299	R23.0/R24.0	43	61

Randell D. Hiatt
REGISTERED CIVIL ENGINEER

July 19, 2013
PLANS APPROVAL DATE

REGISTERED PROFESSIONAL ENGINEER
Randell D. Hiatt
No. C50200
Exp. 6-30-15
CIVIL
STATE OF CALIFORNIA

THE STATE OF CALIFORNIA OR ITS OFFICERS OR AGENTS SHALL NOT BE RESPONSIBLE FOR THE ACCURACY OR COMPLETENESS OF SCANNED COPIES OF THIS PLAN SHEET.

TO ACCOMPANY PLANS DATED 01-05-16

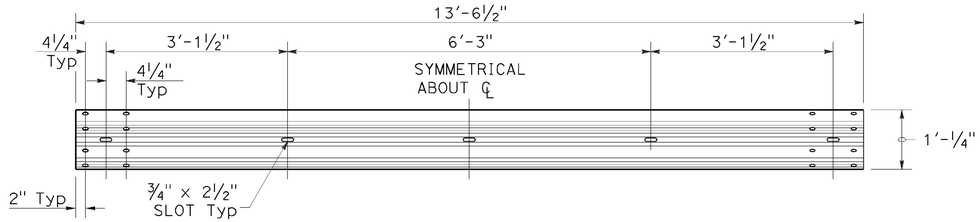

TYPICAL RAIL ELEMENT

NOTE:

1. Slotted holes for splice bolts to overlap ends of rail element.

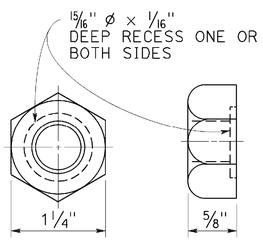

⅝" Ø RECESS NUT

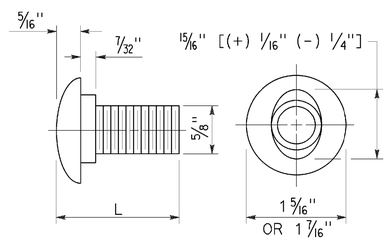

⅝" Ø BUTTON HEAD BOLT

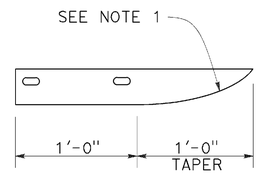

PLAN

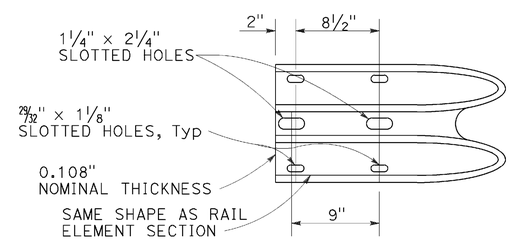

ELEVATION

END CAP
(TYPE A)

BUTTON HEAD BOLT

L	THREAD LENGTH
1⅜"	FULL THREAD LENGTH
2"	FULL THREAD LENGTH
10"	4" Min THREAD LENGTH
18"	4" Min THREAD LENGTH
20"	4" Min THREAD LENGTH
22"	4" Min THREAD LENGTH
26"	4" Min THREAD LENGTH
36"	4" Min THREAD LENGTH
** 2¾"	2" Min THREAD LENGTH
** 19"	4" Min THREAD LENGTH

** For nested rail applications.

STATE OF CALIFORNIA
DEPARTMENT OF TRANSPORTATION

MIDWEST GUARDRAIL SYSTEM STANDARD HARDWARE

NO SCALE

RSP A77M1 DATED JULY 19, 2013 SUPPLEMENTS THE STANDARD PLANS BOOK DATED 2010.

REVISED STANDARD PLAN RSP A77M1

2010 REVISED STANDARD PLAN RSP A77M1

DATE PLOTTED => 11-JAN-2016
TIME PLOTTED => 08:44

Dist	COUNTY	ROUTE	POST MILES TOTAL PROJECT	SHEET No.	TOTAL SHEETS
01	HUM	299	R23.0/R24.0	44	61

Randell D. Hiatt
REGISTERED CIVIL ENGINEER

November 15, 2013
PLANS APPROVAL DATE

REGISTERED PROFESSIONAL ENGINEER
Randell D. Hiatt
No. C50200
Exp. 6-30-15
CIVIL
STATE OF CALIFORNIA

THE STATE OF CALIFORNIA OR ITS OFFICERS OR AGENTS SHALL NOT BE RESPONSIBLE FOR THE ACCURACY OR COMPLETENESS OF SCANNED COPIES OF THIS PLAN SHEET.

TO ACCOMPANY PLANS DATED 01-05-16

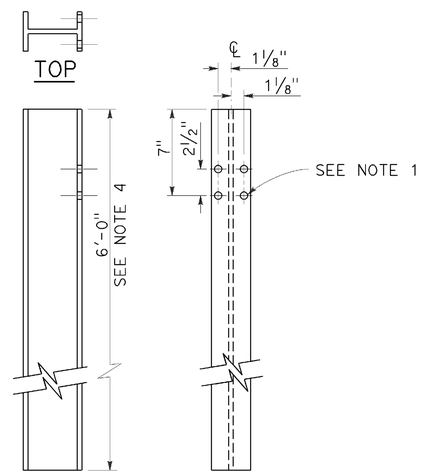

SIDE FRONT

W6 x 9 OR W6 x 8.5 STEEL POST

See Note 4

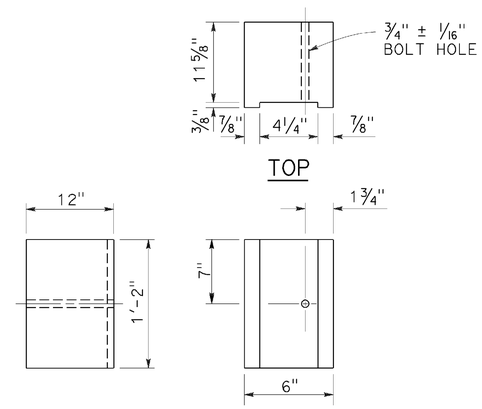

SIDE FRONT

6" x 12" NOTCHED WOOD BLOCK

See Notes 2 and 3

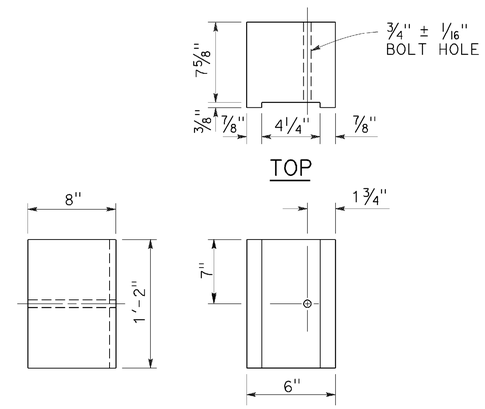

SIDE FRONT

6" x 8" NOTCHED WOOD BLOCK

Only for use with metal beam guard railing. See Note 5

NOTES:

1. All holes in steel post shall be 13/16" Dia maximum.
2. Dimensions shown for wood block are nominal.
3. Notched face of block faces steel post.
4. 6'-0" length posts to be used for typical roadway installation. See Revised Standard Plan RSP A77N3.
5. See Revised Standard Plan RSP A77L3 for use of 6" x 8" and 8" x 8" notched wood blocks.
6. This post and 8" x 12" block combination to be used for line post sections of MGS on narrow roadways and where strengthened line post sections of MGS are warranted to shield fixed objects.

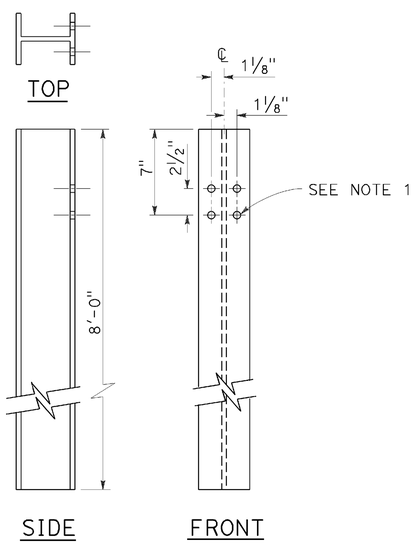

SIDE FRONT

W6 x 15 STEEL POST

See Note 6

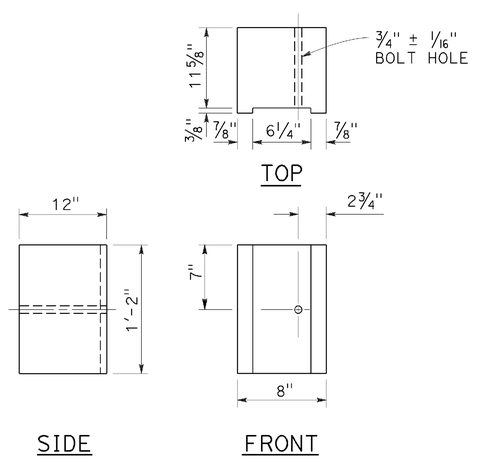

SIDE FRONT

8" x 12" NOTCHED WOOD BLOCK

See Notes 2 and 3

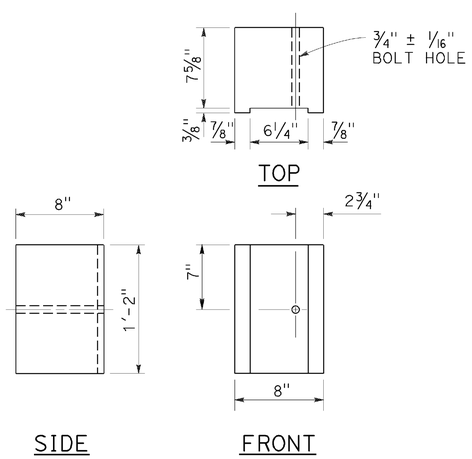

SIDE FRONT

8" x 8" NOTCHED WOOD BLOCK

Only for use with metal beam guard railing. See Note 5

STATE OF CALIFORNIA
DEPARTMENT OF TRANSPORTATION

MIDWEST GUARDRAIL SYSTEM STEEL POST AND NOTCHED WOOD BLOCK DETAILS

NO SCALE

RSP A77N2 DATED NOVEMBER 15, 2013 SUPERSEDES RSP A77N2
DATED JULY 19, 2013 THAT SUPPLEMENTS THE STANDARD PLANS BOOK DATED 2010.

REVISED STANDARD PLAN RSP A77N2

2010 REVISED STANDARD PLAN RSP A77N2

DATE PLOTTED => 11-JAN-2016
TIME PLOTTED => 08:44

Dist	COUNTY	ROUTE	POST MILES TOTAL PROJECT	SHEET No.	TOTAL SHEETS
01	HUM	299	R23.0/R24.0	45	61

Randell D. Hiatt
REGISTERED CIVIL ENGINEER

November 15, 2013
PLANS APPROVAL DATE

REGISTERED PROFESSIONAL ENGINEER
Randell D. Hiatt
No. C50200
Exp. 6-30-15
CIVIL
STATE OF CALIFORNIA

THE STATE OF CALIFORNIA OR ITS OFFICERS OR AGENTS SHALL NOT BE RESPONSIBLE FOR THE ACCURACY OR COMPLETENESS OF SCANNED COPIES OF THIS PLAN SHEET.

TO ACCOMPANY PLANS DATED 01-05-16

2010 REVISED STANDARD PLAN RSP A77N3

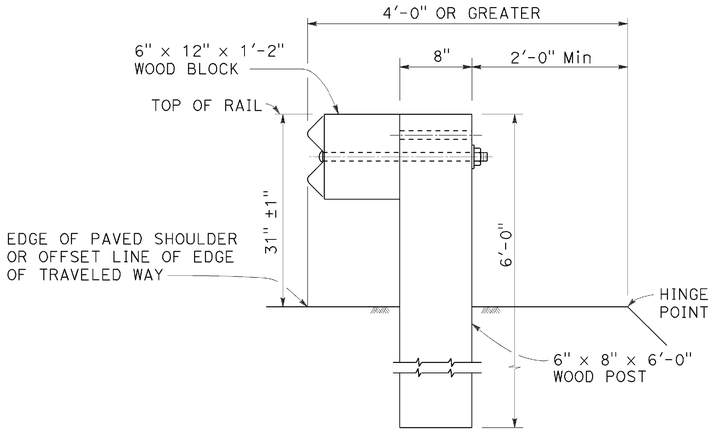

DETAIL A
TYPICAL ROADWAY INSTALLATION
See Note 1

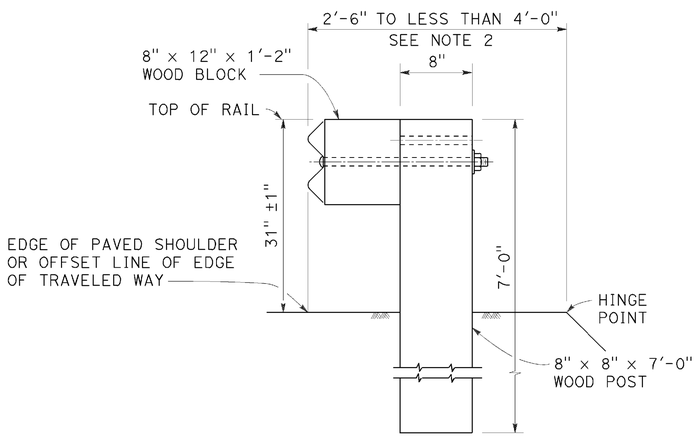

DETAIL B
NARROW ROADWAY INSTALLATION
See Note 1

POST EMBEDMENT

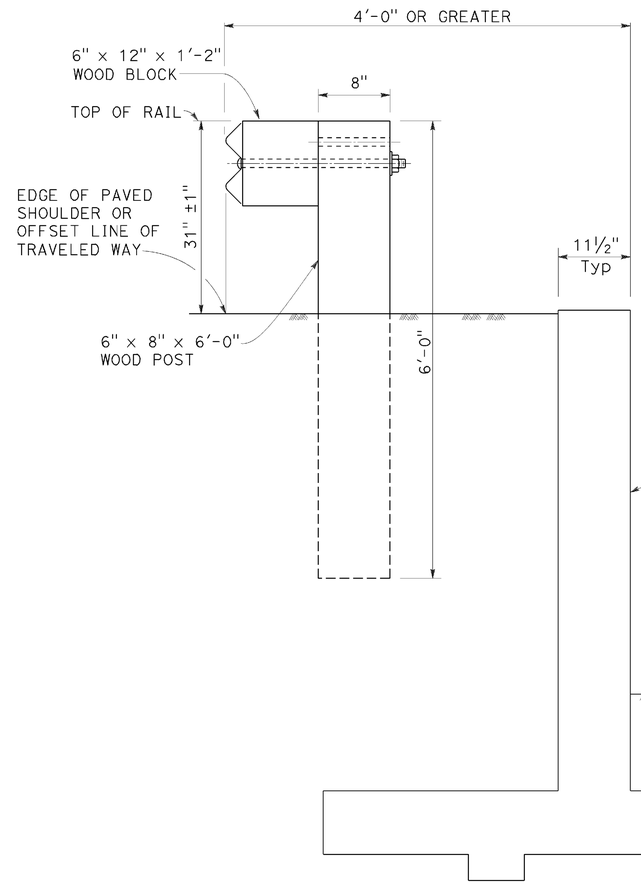

DETAIL C

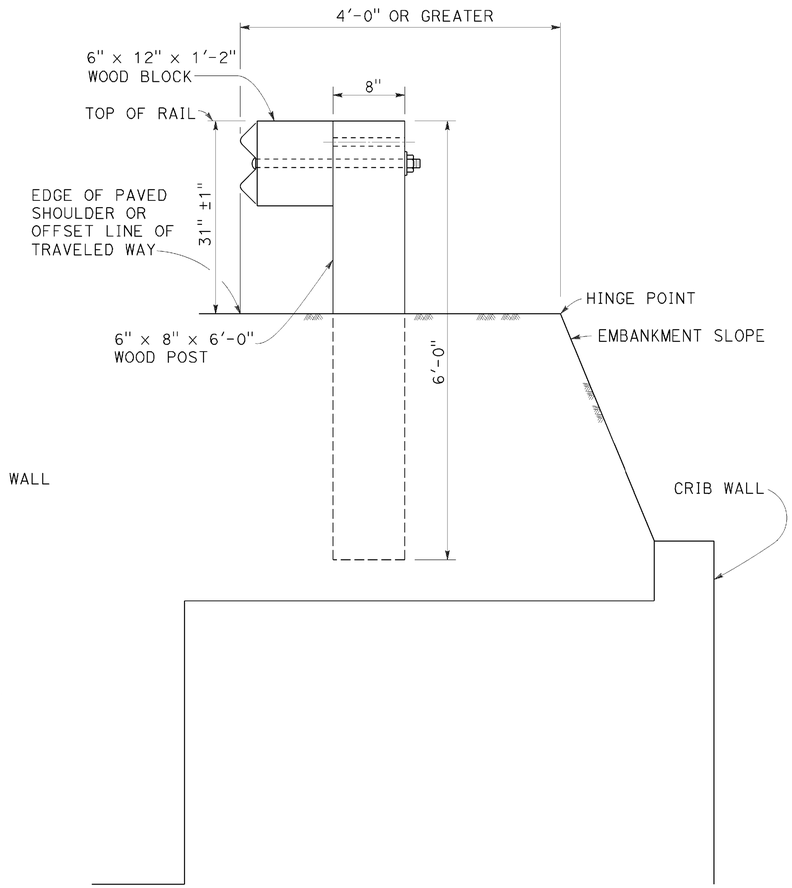

DETAIL D

INSTALLATION AT EARTH RETAINING WALLS

NOTES:

1. These installation details also applicable to steel line post installations. For Detail A, C, and D, where steel line post installations are constructed, W6 x 8.5 or W6 x 9 steel post, 6'-0" in length, with 6" x 12" x 1'-2" notched wood blocks or notched recycled plastic blocks are to be used in place of the size of wood post and wood block shown. For Detail B, where steel line post installations are constructed, W6 x 15 steel post, 8'-0" in length, with 8" x 12" x 1'-2" notched wood blocks or notched recycled plastic blocks are to be used in place of the size of wood post and wood block shown. For additional installation details, see Revised Standard Plan RSP A77L1 and RSP A77L2.
2. Where the distance between the face of the rail and the hinge point is less than 2'-6", see the Project Plans for special details.
3. For dike positioning with MGS installations, see Revised Standard Plan RSP A77N4.

STATE OF CALIFORNIA
DEPARTMENT OF TRANSPORTATION

MIDWEST GUARDRAIL SYSTEM TYPICAL LINE POST EMBEDMENT AND HINGE POINT OFFSET DETAILS

NO SCALE

RSP A77N3 DATED NOVEMBER 15, 2013 SUPERSEDES RSP A77N3 DATED JULY 19, 2013 THAT SUPPLEMENTS THE STANDARD PLANS BOOK DATED 2010.

REVISED STANDARD PLAN RSP A77N3

DATE PLOTTED => 11-JAN-2016
TIME PLOTTED => 08:44

Dist	COUNTY	ROUTE	POST MILES TOTAL PROJECT	SHEET No.	TOTAL SHEETS
01	HUM	299	R23.0/R24.0	46	61

Randell D. Hiatt
REGISTERED CIVIL ENGINEER

July 19, 2013
PLANS APPROVAL DATE

REGISTERED PROFESSIONAL ENGINEER
Randell D. Hiatt
No. C50200
Exp. 6-30-15
CIVIL
STATE OF CALIFORNIA

THE STATE OF CALIFORNIA OR ITS OFFICERS OR AGENTS SHALL NOT BE RESPONSIBLE FOR THE ACCURACY OR COMPLETENESS OF SCANNED COPIES OF THIS PLAN SHEET.

TO ACCOMPANY PLANS DATED 01-05-16

NOTES:

1. When necessary to place dike more than 7" in front of face of MGS, only Type C dike may be used. For dike details, see Revised Standard Plan RSP A87B.
2. For standard railing post embedment, see Revised Standard Plan RSP A77N3.
3. MGS delineation to be used where shown on the Project Plans.
4. When dike or curb is placed under MGS, the maximum height of the dike or curb shall be 6". Mountable dike should not be used. For dike and curb details, see Revised Standard Plans RSP A87A and RSP A87B.
5. For details of typical distance between the face of rail and hinge point, see Revised Standard Plan RSP A77N3.
6. For steel line posts, use 1/4 - 20 self-tapping screws in 0.22" diameter holes or 1/4" bolts in 9/32" diameter holes.

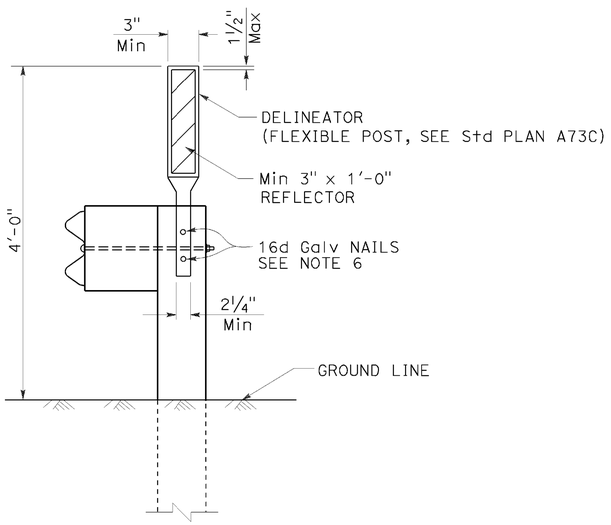

MGS DELINEATION
See Note 3

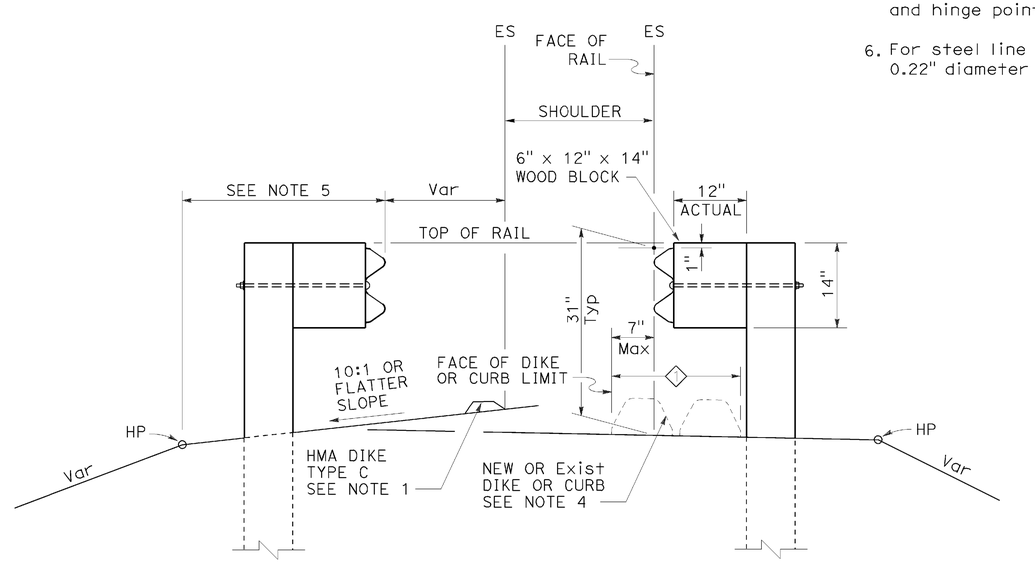

DIKE POSITIONING
See Note 1

1 PERMISSIBLE DIKE OR CURB PLACEMENT AREA

STATE OF CALIFORNIA
DEPARTMENT OF TRANSPORTATION

MIDWEST GUARDRAIL SYSTEM TYPICAL RAILING DELINEATION AND DIKE POSITIONING DETAILS

NO SCALE

RSP A77N4 DATED JULY 19, 2013 SUPPLEMENTS THE STANDARD PLANS BOOK DATED 2010.

REVISED STANDARD PLAN RSP A77N4

2010 REVISED STANDARD PLAN RSP A77N4

DATE PLOTTED => 11-JAN-2016
TIME PLOTTED => 08:45

Dist	COUNTY	ROUTE	POST MILES TOTAL PROJECT	SHEET No.	TOTAL SHEETS
01	HUM	299	R23.0/R24.0	47	61

Randell D. Hiatt
REGISTERED CIVIL ENGINEER

November 15, 2013
PLANS APPROVAL DATE

REGISTERED PROFESSIONAL ENGINEER
Randell D. Hiatt
No. C50200
Exp. 6-30-15
CIVIL
STATE OF CALIFORNIA

THE STATE OF CALIFORNIA OR ITS OFFICERS OR AGENTS SHALL NOT BE RESPONSIBLE FOR THE ACCURACY OR COMPLETENESS OF SCANNED COPIES OF THIS PLAN SHEET.

TO ACCOMPANY PLANS DATED 01-05-16

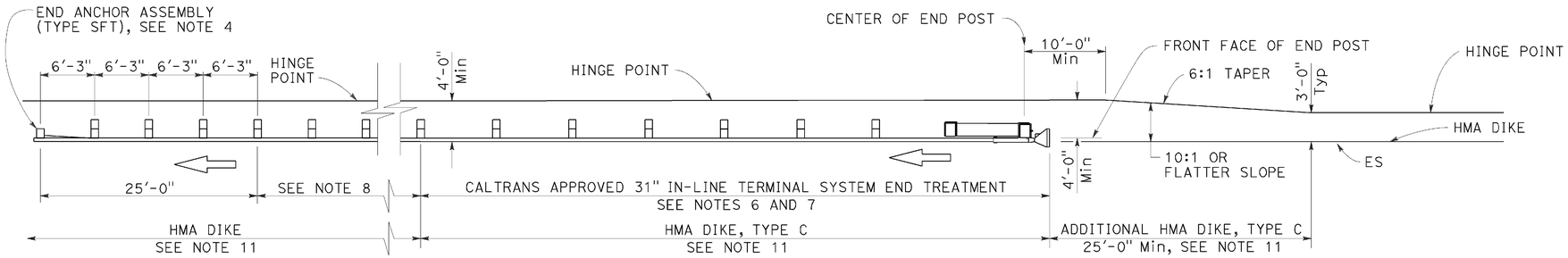

TYPE 11A LAYOUT

(Embankment MGS installation with 31" in-line end treatment at traffic approach end of railing) see Note 5

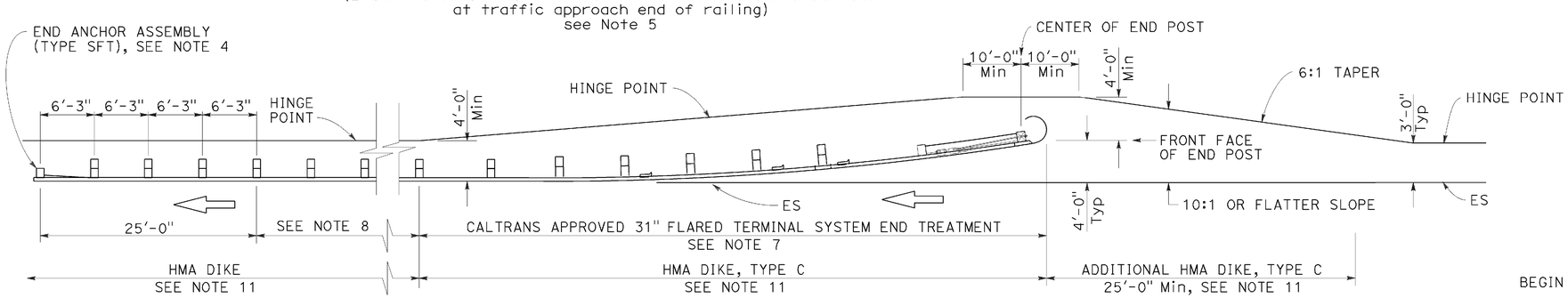

TYPE 11B LAYOUT

(Embankment MGS installation with 31" flared end treatment at traffic approach end of railing) see Note 5

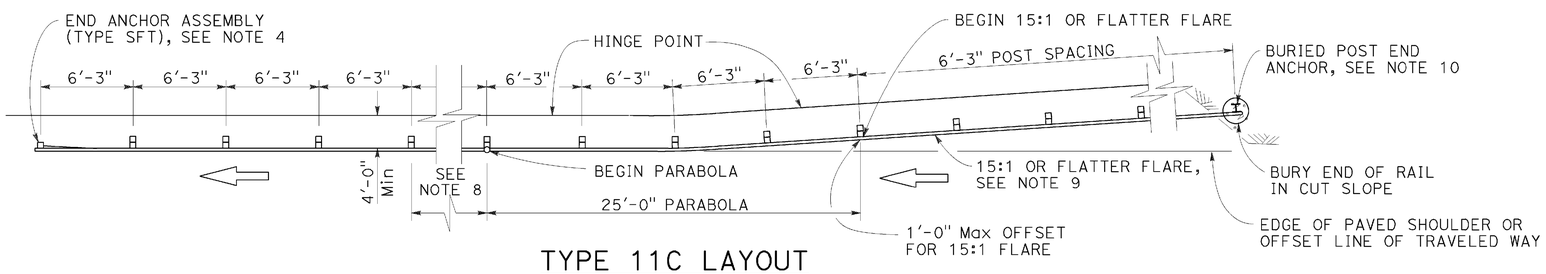

TYPE 11C LAYOUT

(Embankment MGS installation with buried end anchor treatment at traffic approach end of railing) see Notes 5 and 11

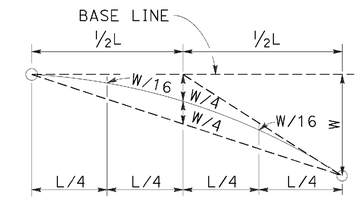

TYPICAL PARABOLIC LAYOUT

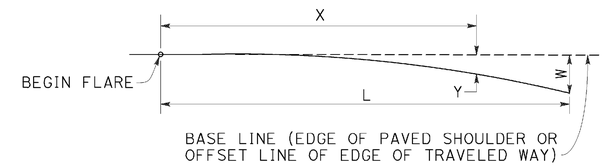

$$Y = \frac{WX^2}{L^2}$$

Y = OFFSET FROM BASE LINE
W = MAXIMUM OFFSET
X = DISTANCE ALONG BASE LINE
L = LENGTH OF FLARE

PARABOLIC FLARE OFFSETS

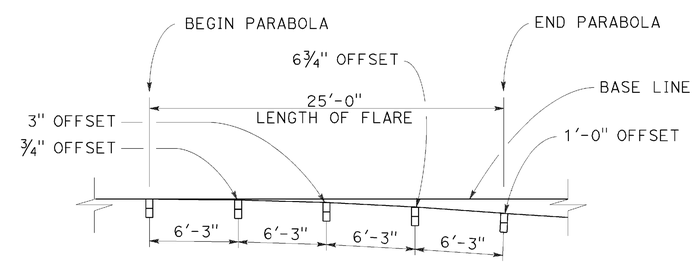

TYPICAL FLARE OFFSETS FOR 1 FOOT Max END OFFSET

NOTES:

1. Line post, blocks and hardware to be used are shown on Revised Standard Plans RSP A77L1, RSP A77L2, RSP A77M1, RSP A77N1 and RSP A77N2.
2. MGS post spacing to be 6'-3" center to center, except as otherwise noted.
3. Except as noted, line posts are 6" x 8" x 6'-0" wood with 6" x 12" x 1'-2" wood blocks. W6 x 8.5 or W6 x 9 steel posts, 6'-0" in length, with 6" x 12" x 1'-2" notched wood blocks or recycled plastic blocks may be used for 6" x 8" x 6'-0" wood post with 6" x 12" x 1'-2" wood blocks where applicable and when specified.
4. For End Anchor Assembly (Type SFT) details, see Revised Standard Plan RSP A77S1.
5. Layout Types 11A, 11B or 11C are typically used where MGS is recommended to shield embankment slopes and a crashworthy end treatment is required for only one direction of traffic.
6. 31" in-line terminal system end treatments are used where site conditions will not accommodate a flared end treatment.
7. The type of 31" terminal system end treatment to be used will be shown on the Project Plans.
8. Dependent on site conditions (embankment height and side slope), construction of additional MGS (length equal to multiples of 12'-6" with 6'-3" post spacing) may be advisable.
9. The 15:1 or flatter flare used with buried end anchors is based on the edge of the paved shoulder or offset line of edge of the traveled way. The length of MGS within the 15:1 or flatter flare is based on site conditions and should be a length equal to multiples of 12'-6".
10. For details of the buried post end anchor used with Type 11C Layout, see Revised Standard Plan RSP A77T2.
11. Where placement of dike is required with MGS installations, see Revised Standard Plan RSP A77N4 for dike positioning details.

STATE OF CALIFORNIA
DEPARTMENT OF TRANSPORTATION

MIDWEST GUARDRAIL SYSTEM TYPICAL LAYOUTS FOR EMBANKMENTS

NO SCALE

RSP A77P1 DATED NOVEMBER 15, 2013 SUPERSEDES RSP A77P1 DATED JULY 19, 2013 THAT SUPPLEMENTS THE STANDARD PLANS BOOK DATED 2010.

REVISED STANDARD PLAN RSP A77P1

2010 REVISED STANDARD PLAN RSP A77P1

DATE PLOTTED => 11-JAN-2016
TIME PLOTTED => 08:45

Dist	COUNTY	ROUTE	POST MILES TOTAL PROJECT	SHEET No.	TOTAL SHEETS
01	HUM	299	R23.0/R24.0	48	61

Randell D. Hiatt
REGISTERED CIVIL ENGINEER

July 19, 2013
PLANS APPROVAL DATE

REGISTERED PROFESSIONAL ENGINEER
Randell D. Hiatt
No. C50200
Exp. 6-30-15
CIVIL
STATE OF CALIFORNIA

THE STATE OF CALIFORNIA OR ITS OFFICERS OR AGENTS SHALL NOT BE RESPONSIBLE FOR THE ACCURACY OR COMPLETENESS OF SCANNED COPIES OF THIS PLAN SHEET.

TO ACCOMPANY PLANS DATED 01-05-16

2010 REVISED STANDARD PLAN RSP A77P3

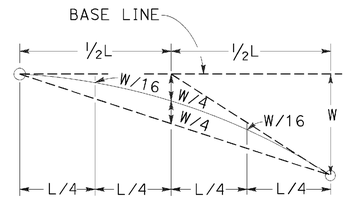

TYPICAL PARABOLIC LAYOUT

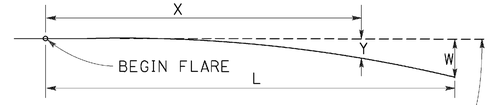

BASE LINE (EDGE OF PAVED SHOULDER OR OFFSET LINE OF EDGE OF TRAVELED WAY)

$$Y = \frac{WX^2}{L^2}$$

Y = OFFSET FROM BASE LINE
W = MAXIMUM OFFSET
X = DISTANCE ALONG BASE LINE
L = LENGTH OF FLARE

PARABOLIC FLARE OFFSETS

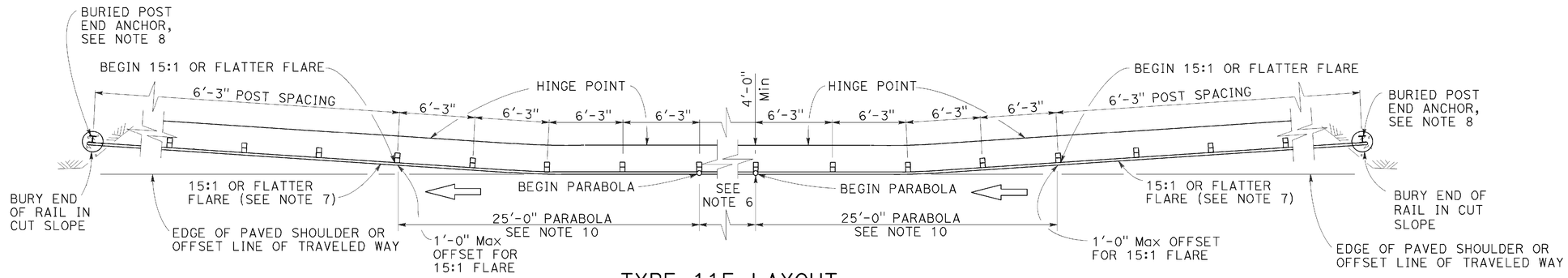

TYPE 11F LAYOUT

(Embankment MGS installation with a buried end anchor treatment at each end of railing)
See Notes 4 and 9

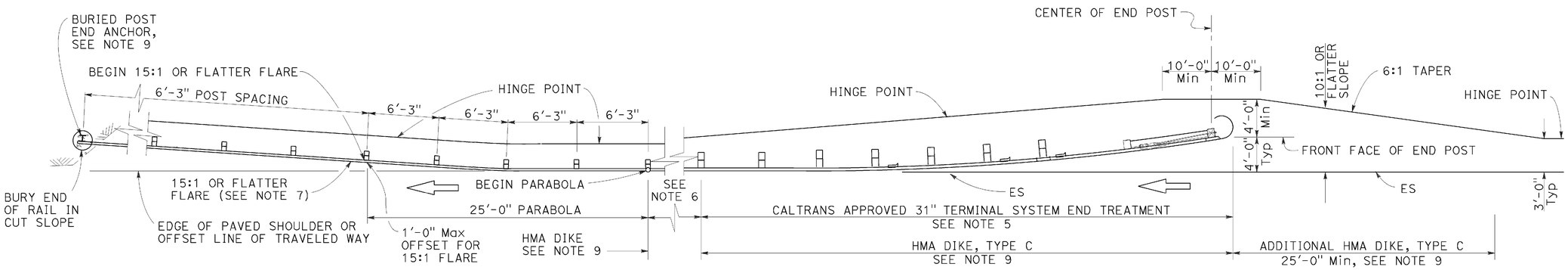

TYPE 11G LAYOUT

(Embankment MGS installation with 31" flared end treatment and a buried end anchor treatment at the ends of railing)
See Notes 4 and 9

NOTES:

1. Line post, blocks and hardware to be used are shown on Revised Standard Plans RSP A77L1, RSP A77L2, RSP A77M1, RSP A77N1 and RSP A77N2.
2. MGS post spacing to be 6'-3" center to center, except as otherwise noted.
3. Except as noted, line posts are 6" x 8" x 6'-0" wood with 6" x 12" x 1'-2" wood blocks. W6 x 8.5 or W6 x 9 steel posts, 6'-0" in length, with 6" x 12" x 1'-2" notched wood blocks or plastic blocks may be used for 6" x 8" x 6'-0" wood post with 6" x 12" x 1'-2" wood blocks where applicable and when specified.
4. Layout Types 11D through 11L, shown on the A77P Series of Standard Plans, are typically used where MGS is recommended to shield embankment slopes and a crashworthy 31" end treatment is required for both directions of traffic.
5. The type of 31" terminal system end treatment to be used will be shown on the Project Plans.
6. Dependent on site conditions (embankment height and side slope), construction of additional MGS (length equal to multiples of 12'-6" with 6'-3" post spacing) may be advisable.
7. The 15:1 or flatter flare used with buried end anchors is based on the edge of the paved shoulder or offset line of edge of the traveled way. The length of MGS within the 15:1 or flatter flare is based on site conditions and should be a length equal to multiples of 12'-6".
8. For details of the buried post end anchor used with Type 11F and 11G Layouts, see Revised Standard Plan RSP A77T2.
9. Where placement of dike is required with MGS installations, see Revised Standard Plan RSP A77N4 for dike positioning details.
10. For typical flare offsets for 25'-0" length parabola with maximum offset of 1'-0", see Revised Standard Plan RSP A77P1.

STATE OF CALIFORNIA
DEPARTMENT OF TRANSPORTATION

MIDWEST GUARDRAIL SYSTEM TYPICAL LAYOUTS FOR EMBANKMENTS

NO SCALE

RSP A77P3 DATED JULY 19, 2013 SUPPLEMENTS THE STANDARD PLANS BOOK DATED 2010.

REVISED STANDARD PLAN RSP A77P3

DATE PLOTTED => 11-JAN-2016
TIME PLOTTED => 08:45

Dist	COUNTY	ROUTE	POST MILES TOTAL PROJECT	SHEET No.	TOTAL SHEETS
01	HUM	299	R23.0/R24.0	49	61

Randell D. Hiatt
REGISTERED CIVIL ENGINEER

November 15, 2013
PLANS APPROVAL DATE

REGISTERED PROFESSIONAL ENGINEER
Randell D. Hiatt
No. C50200
Exp. 6-30-15
CIVIL
STATE OF CALIFORNIA

THE STATE OF CALIFORNIA OR ITS OFFICERS OR AGENTS SHALL NOT BE RESPONSIBLE FOR THE ACCURACY OR COMPLETENESS OF SCANNED COPIES OF THIS PLAN SHEET.

TO ACCOMPANY PLANS DATED 01-05-16

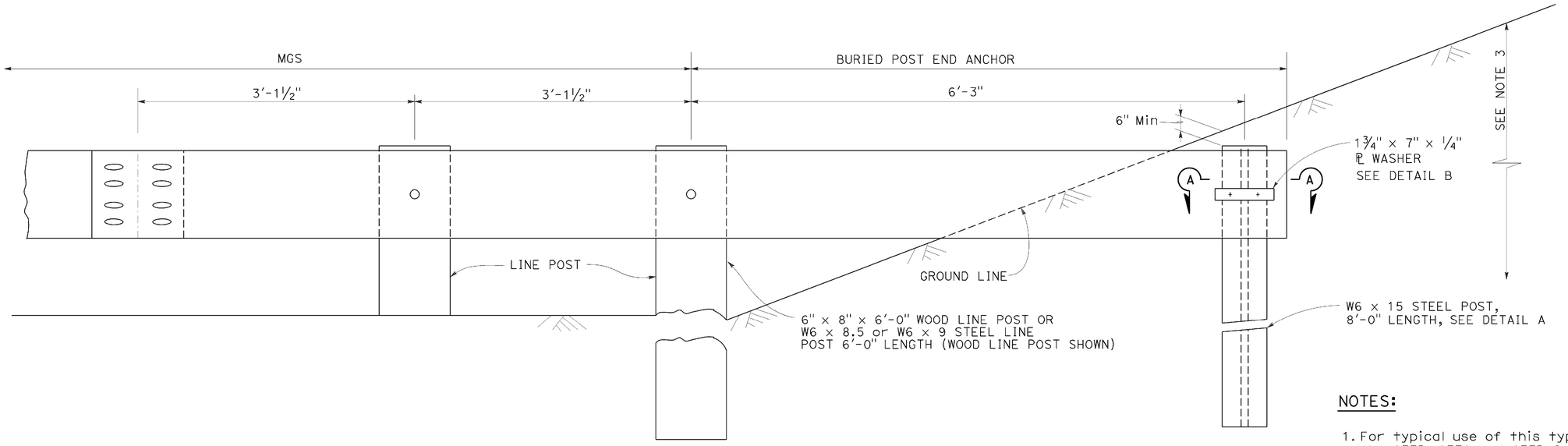

BURIED POST END ANCHOR

See Note 3

NOTES:

1. For typical use of this type of end anchor with MGS see the A77P, A77Q and A77R Series of the Standard Plans.
2. Holes excavation in the slope to construct the buried post end anchor shall be backfilled with selected earth, placed in layers approximately 1'-0" thick. Each layer shall be moistened and thoroughly compacted.
3. The buried post end anchor shall only be constructed at those locations where the slope perpendicular to the roadway is non-traversable.

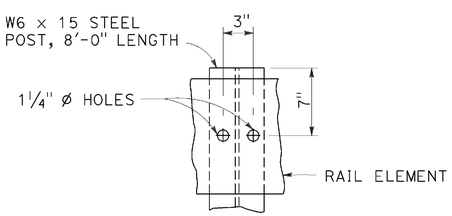

DETAIL A

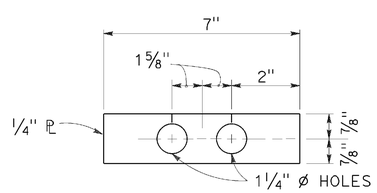

DETAIL B

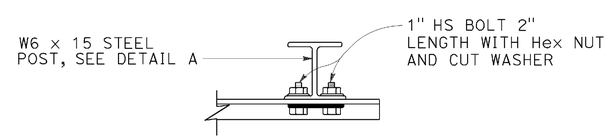

SECTION A-A

STATE OF CALIFORNIA
DEPARTMENT OF TRANSPORTATION

MIDWEST GUARDRAIL SYSTEM BURIED POST END ANCHOR

NO SCALE

RSP A77T2 DATED NOVEMBER 15, 2013 SUPERSEDES RSP A77T2
DATED JULY 19, 2013 THAT SUPPLEMENTS THE STANDARD PLANS BOOK DATED 2010.

REVISED STANDARD PLAN RSP A77T2

2010 REVISED STANDARD PLAN RSP A77T2

DATE PLOTTED => 11-JAN-2016
TIME PLOTTED => 08:45

Dist	COUNTY	ROUTE	POST MILES TOTAL PROJECT	SHEET No.	TOTAL SHEETS
01	HUM	299	R23.0/R24.0	50	61

REGISTERED CIVIL ENGINEER

January 15, 2016
PLANS APPROVAL DATE

REGISTERED PROFESSIONAL ENGINEER
Michael Janzen
No. 44788
Exp. 3-31-16
CIVIL
STATE OF CALIFORNIA

THE STATE OF CALIFORNIA OR ITS OFFICERS OR AGENTS SHALL NOT BE RESPONSIBLE FOR THE ACCURACY OR COMPLETENESS OF SCANNED COPIES OF THIS PLAN SHEET.

TO ACCOMPANY PLANS DATED 01-05-16

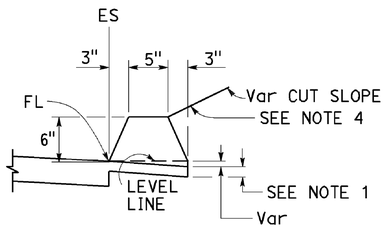

TYPE A
See Notes 3 and 5

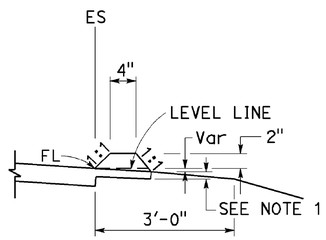

TYPE C

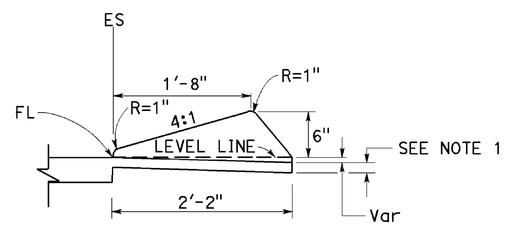

TYPE D

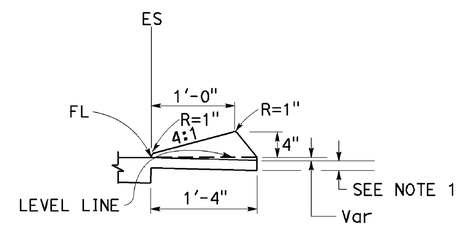

TYPE E

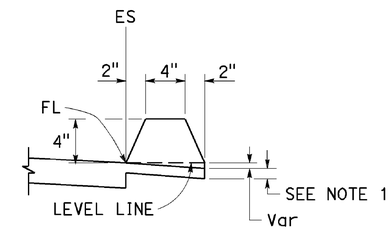

TYPE F
See Note 5

DIKES

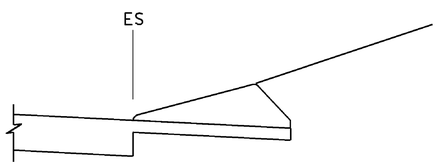

CASE C-1
Cut Slope

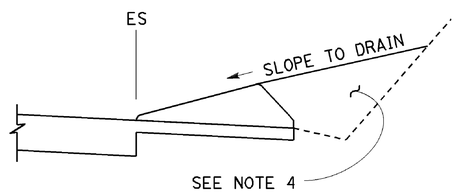

CASE C-2
Cut Slope

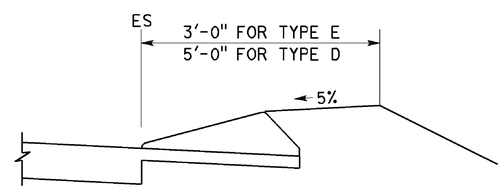

CASE F

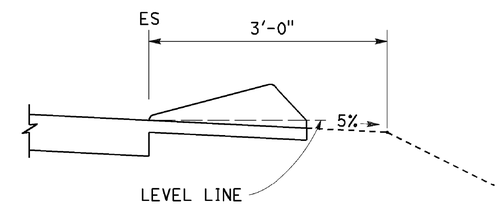

CASE R
See Note 2

TYPE D AND E BACKFILL DETAILS

NOTES:

1. For HMA shoulders only, extend top layer of HMA placed on the shoulder under dike with no joint at the ES. For projects with OGFC shoulders, do not extend OGFC under dike. See project plans for modified dike detail.
2. Case R applies to retrofit only projects where restrictive conditions do not provide enough width for Case F backfill.
3. Type A dike only to be used where restrictive slope conditions do not provide enough width to use Type D or Type E dike.
4. Fill and compact with excavated material to top of dike.
5. Use Type A or F dike, where dike is required with guardrail installations. See Revised Standard Plan RSP A77N4 for dike positioning details. See Revised Standard Plan RSP A77N3 for hinge point offsets with guardrail.

DIKE QUANTITIES

TYPE	CUBIC YARDS PER LINEAR FOOT
A	0.0135
C	0.0038
D	0.0293
E	0.0130
F	0.0066

Quantities based on 5% cross slope.

STATE OF CALIFORNIA
DEPARTMENT OF TRANSPORTATION

HOT MIX ASPHALT DIKES

NO SCALE

RSP A87B DATED JANUARY 15, 2016 SUPERSEDES RSP A87B DATED JULY 19, 2013 AND STANDARD PLAN A87B DATED MAY 20, 2011 - PAGE 120 OF THE STANDARD PLANS BOOK DATED 2010.

REVISED STANDARD PLAN RSP A87B

2010 REVISED STANDARD PLAN RSP A87B

DATE PLOTTED => 20-JAN-2016
TIME PLOTTED => 10:35

Dist	COUNTY	ROUTE	POST MILES TOTAL PROJECT	SHEET No.	TOTAL SHEETS
01	HUM	299	R23.0/R24.0	51	61

REGISTERED CIVIL ENGINEER

October 30, 2015
PLANS APPROVAL DATE

Srikanth N. Balasubramanian
No. C56426
Exp. 6-30-17
CIVIL
STATE OF CALIFORNIA
REGISTERED PROFESSIONAL ENGINEER

THE STATE OF CALIFORNIA OR ITS OFFICERS OR AGENTS SHALL NOT BE RESPONSIBLE FOR THE ACCURACY OR COMPLETENESS OF SCANNED COPIES OF THIS PLAN SHEET.

TO ACCOMPANY PLANS DATED 01-05-16

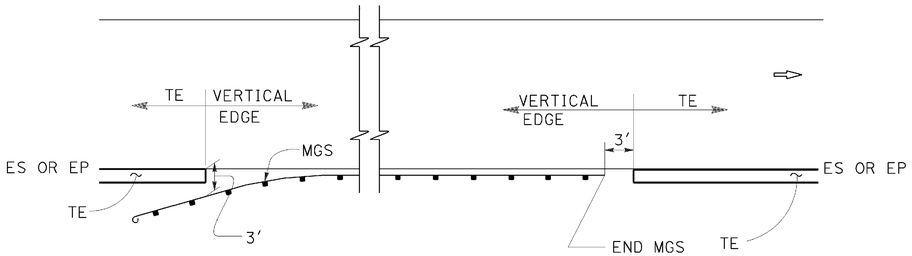

MGS

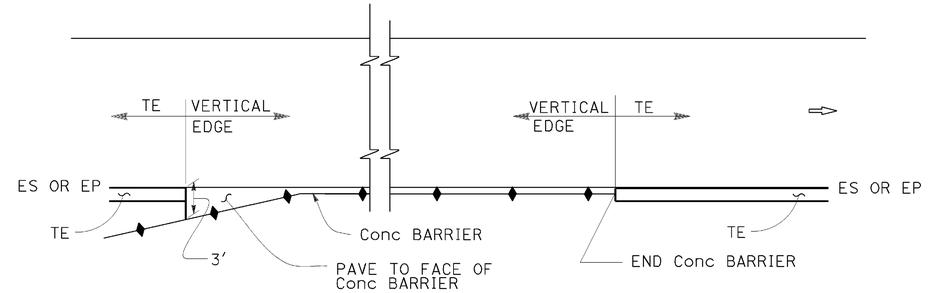

CONCRETE BARRIER

ABBREVIATIONS:

TE TAPERED EDGE

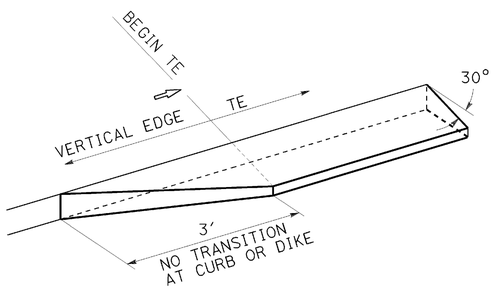

TRANSITION DETAIL
FOR CONCRETE ONLY

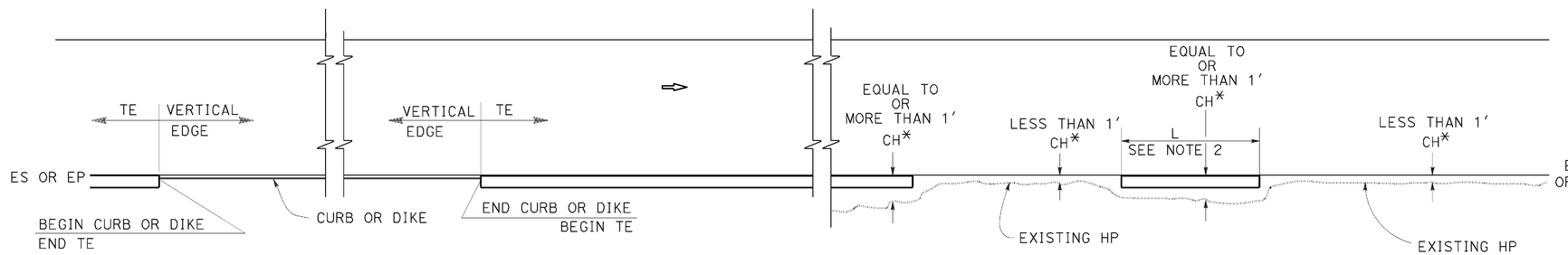

CURB OR DIKE

NARROW SIDE SLOPE

* CH = Distance from ES or EP to existing HP.

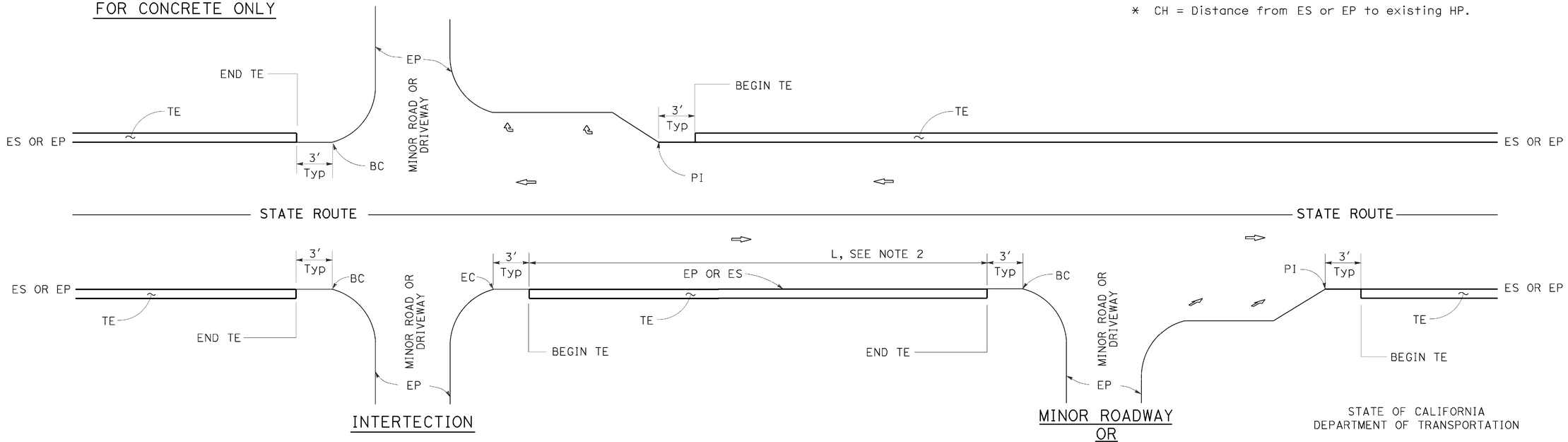

INTERTECTION

MINOR ROADWAY OR DRIVEWAY

DRIVEWAY AND INTERSECTION

STATE OF CALIFORNIA
DEPARTMENT OF TRANSPORTATION

PAVEMENT EDGE TREATMENTS

NO SCALE

NOTES:

1. For details not shown, see Revised Standard Plans RSP P75 and RSP P76.
2. Tapered edge is optional when L is less than 30′.

RSP P74 DATED OCTOBER 30, 2015 SUPERSEDES RSP P74 DATED NOVEMBER 15, 2013 AND RSP P74 DATED JANUARY 20, 2012 THAT SUPPLEMENTS THE STANDARD PLANS BOOK DATED 2010.

REVISED STANDARD PLAN RSP P74

2010 REVISED STANDARD PLAN RSP P74

DATE PLOTTED => 11-JAN-2016
TIME PLOTTED => 08:46

Dist	COUNTY	ROUTE	POST MILES TOTAL PROJECT	SHEET No.	TOTAL SHEETS
01	HUM	299	R23.0/R24.0	52	61

REGISTERED CIVIL ENGINEER

October 30, 2015
PLANS APPROVAL DATE

REGISTERED PROFESSIONAL ENGINEER Srikanth N. Balasubramanian No. C56426 Exp. 6-30-17 CIVIL STATE OF CALIFORNIA

THE STATE OF CALIFORNIA OR ITS OFFICERS OR AGENTS SHALL NOT BE RESPONSIBLE FOR THE ACCURACY OR COMPLETENESS OF SCANNED COPIES OF THIS PLAN SHEET.

TO ACCOMPANY PLANS DATED 01-05-16

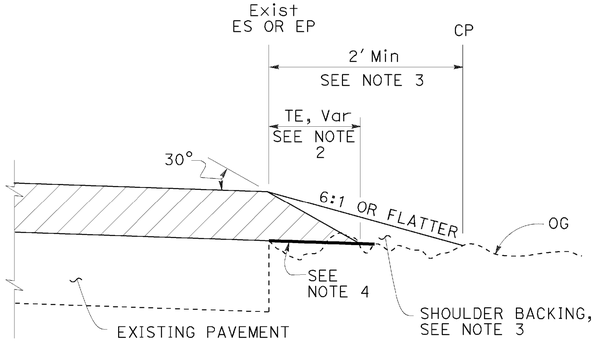

CASE A
Tapered Edge

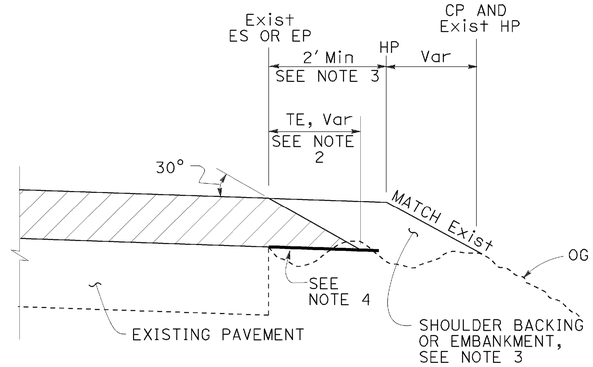

CASE B
Tapered Edge

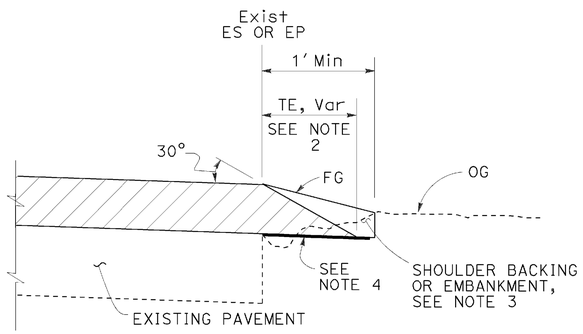

CASE C
Tapered Edge

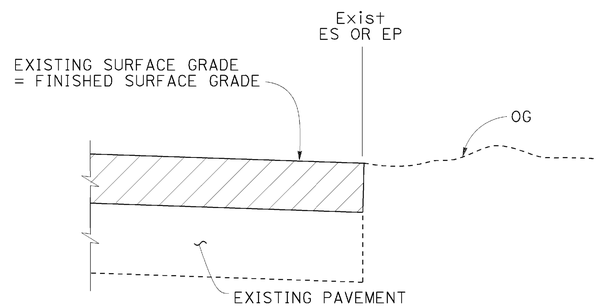

CASE D
Vertical Edge

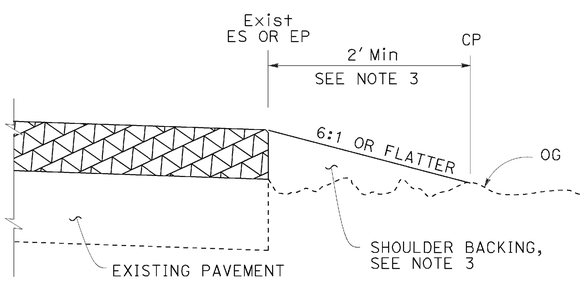

CASE E
Vertical Edge

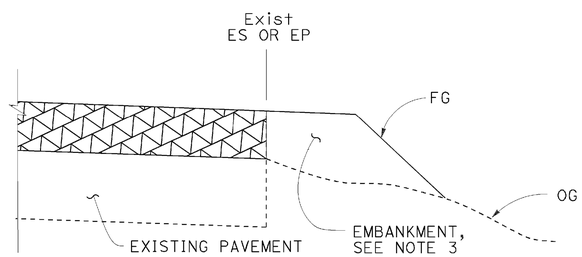

CASE F
Vertical Edge
* See Table A and Revised Std Plan RSP P74

LEGEND:

- HMA OVERLAY
- HMA OR CONCRETE OVERLAY
- CONCRETE OVERLAY

ABBREVIATIONS:

TE TAPERED EDGE
TT TOTAL THICKNESS OF TE

TABLE A
EDGE TREATMENT FOR VARIOUS OVERLAY THICKNESS AND CONDITIONS

	OVERLAY THICKNESS	
FIELD CONDITION	LESS THAN 0.15'	0.15' OR MORE
Exist SLOPE 6:1 OR FLATTER	CASE E	CASE A
Exist SLOPE 3:1 TO 6:1	CASE E	CASE B
Exist SLOPE STEEPER THAN 3:1	CASE F	CASE F
CUT SECTION (REPLACE, COLD PLANE, MILL PAVEMENT)	CASE D	CASE C

ADDITIONAL HMA OR CONCRETE QUANTITIES FOR TE/SIDE/MILE

TYPICAL CROSS SECTION	TT	TOTAL ADDITIONAL MATERIAL FOR TE/SIDE/MILE		
		HMA (TON)	CONCRETE (CY)*	CONCRETE (CY)**
TT	0.15'	7.7	NA	NA
	0.20'	13.7	NA	NA
	0.30'	30.9	NA	NA
	0.40'	54.9	NA	NA
	0.45'	69.4	NA	NA
TT 0.43'	0.50'	84.2	NA	NA
	0.60'	113.9	NA	NA
	0.70'	143.6	70.9	94.2
	0.80'	173.3	85.6	112.2
	0.90'	203.0	100.3	130.2
	1.00'	232.7	114.9	148.2
	1.10'	262.4	129.6	166.2
	1.20'	292.1	144.3	184.2

* For Detail "A"
** For Optional Detail "A"

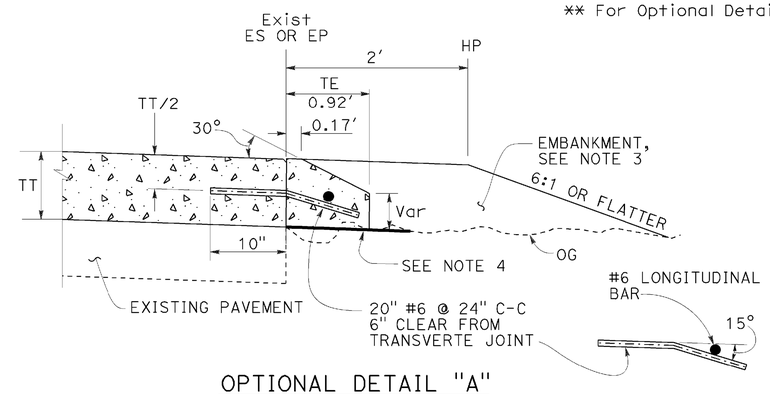

OPTIONAL DETAIL "A"
For concrete overlay
See Note 5

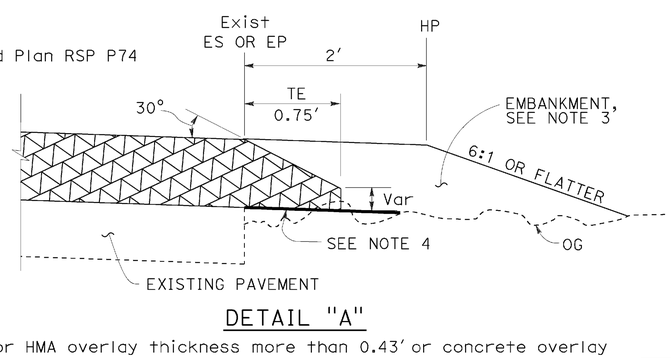

DETAIL "A"
For HMA overlay thickness more than 0.43' or concrete overlay

NOTES:

1. For limits of tapered edge and vertical edge treatments, see Revised Standard Plan RSP P74.
2. Details shown for HMA overlay thickness less than 0.43'. See Detail "A" for HMA overlay thickness more than 0.43' or concrete overlay.
3. For locations and limits of shoulder backing or embankment see project plans.
4. Grade existing ground to place tapered edge. 1' minimum width
5. Tapered edge transverse joint must match overlay transverse joint. End of #6 longitudinal bar must be 2" ±½" clear from transverse joint.
6. Tapered edge is not needed in the area of MGS, barrier, right turn lane and acceleration lane. See Revised Standard Plan RSP P74.

STATE OF CALIFORNIA
DEPARTMENT OF TRANSPORTATION

PAVEMENT EDGE TREATMENTS-OVERLAYS

NO SCALE

RSP P75 DATED OCTOBER 30, 2015 SUPERSEDES RSP P75 DATED NOVEMBER 15, 2013 AND RSP P75 DATED JANUARY 20, 2012 THAT SUPPLEMENTS THE STANDARD PLANS BOOK DATED 2010.

REVISED STANDARD PLAN RSP P75

2010 REVISED STANDARD PLAN RSP P75

DATE PLOTTED => 11-JAN-2016
TIME PLOTTED => 08:46

Dist	COUNTY	ROUTE	POST MILES TOTAL PROJECT	SHEET No.	TOTAL SHEETS
01	HUM	299	R23.0/R24.0	53	61

REGISTERED CIVIL ENGINEER

October 30, 2015
PLANS APPROVAL DATE

REGISTERED PROFESSIONAL ENGINEER Srikanth N. Balasubramanian No. C56426 Exp. 6-30-17 CIVIL STATE OF CALIFORNIA

THE STATE OF CALIFORNIA OR ITS OFFICERS OR AGENTS SHALL NOT BE RESPONSIBLE FOR THE ACCURACY OR COMPLETENESS OF SCANNED COPIES OF THIS PLAN SHEET.

TO ACCOMPANY PLANS DATED 01-05-16

LEGEND:

- HMA PAVEMENT
- HMA OR CONCRETE PAVEMENT
- CONCRETE PAVEMENT

ABBREVIATIONS:

TE TAPERED EDGE

TT TOTAL THICKNESS OF TE

HW HINGE WIDTH, DISTANCE FROM ES OR EP TO HP

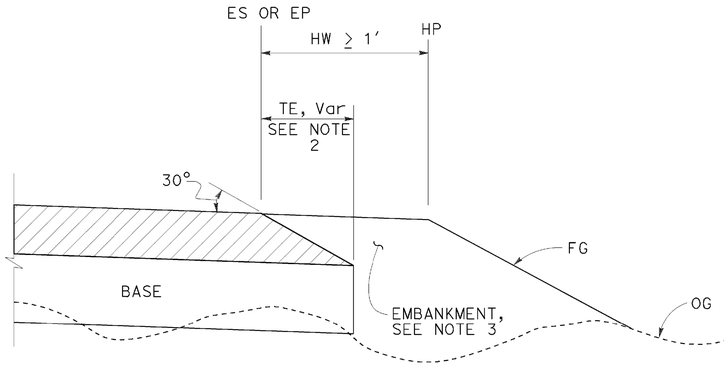

CASE K
Tapered Edge - Fill Section, HW ≥ 1′

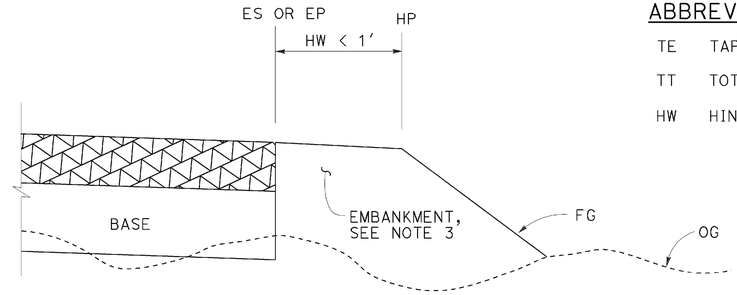

CASE L
Vertical Edge - Fill Section, HW < 1′

FILL SECTION

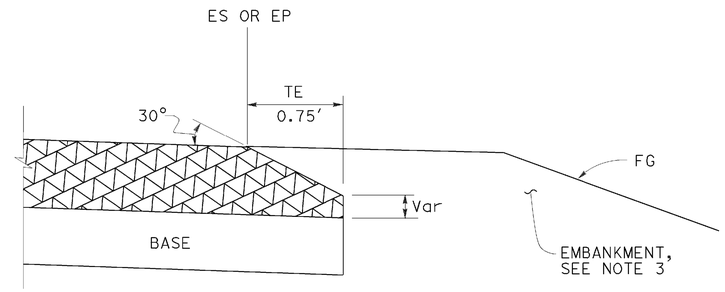

DETAIL "B"
For HMA pavement thickness more than 0.43′ or concrete pavement

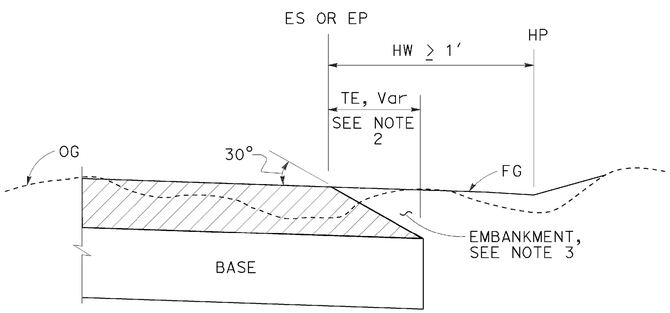

CASE M
Tapered Edge - Cut Section, HW ≥ 1′

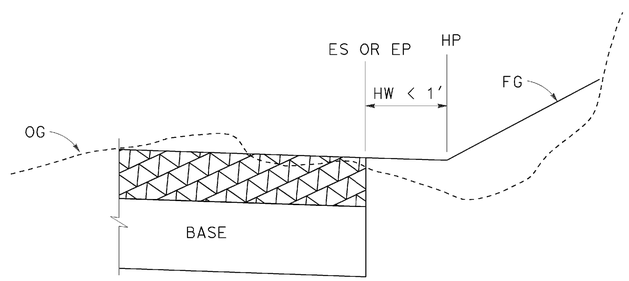

CASE N
Vertical Edge - Cut Section, HW < 1′

CUT SECTION

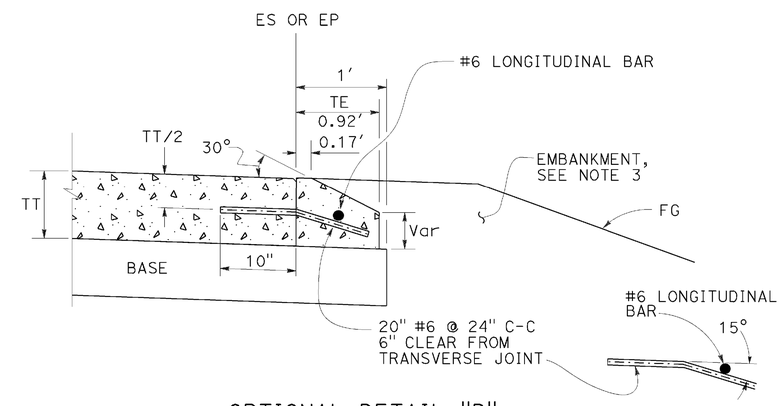

OPTIONAL DETAIL "B"
For concrete pavement
See Note 4

NOTES:

1. For limits of tapered edge and vertical edge treatments, see Revised Standard Plan RSP P74
2. Details shown for HMA pavement thickness less than 0.43′. See Detail "B" for HMA pavement thickness more than 0.43′ or concrete pavement.
3. For locations and limits of embankment see project plans.
4. Tapered edge transverse joint must match pavement transverse joint. End of #6 longitudinal bar must be 2" ±½" clear from transverse joint.
5. Tapered edge is not needed in the area of MGS, barrier, right turn lane and acceleration lane. See Revised Standard Plan RSP P74.

STATE OF CALIFORNIA
DEPARTMENT OF TRANSPORTATION

PAVEMENT EDGE TREATMENTS-NEW CONSTRUCTION

NO SCALE

RSP P76 DATED OCTOBER 30, 2015 SUPERSEDES RSP P76 DATED NOVEMBER 15, 2013 AND RSP P76 DATED JANUARY 20, 2012 THAT SUPPLEMENTS THE STANDARD PLANS BOOK DATED 2010.

REVISED STANDARD PLAN RSP P76

2010 REVISED STANDARD PLAN RSP P76

DATE PLOTTED => 11-JAN-2016
TIME PLOTTED => 08:46

TO ACCOMPANY PLANS DATED 01-05-16

Dist	COUNTY	ROUTE	POST MILES TOTAL PROJECT	SHEET No.	TOTAL SHEETS
01	HUM	299	R23.0/R24.0	54	61

REGISTERED CIVIL ENGINEER

October 19, 2012
PLANS APPROVAL DATE

REGISTERED PROFESSIONAL ENGINEER Glenn DeCou No. C34547 Exp. 9-30-13 CIVIL STATE OF CALIFORNIA

THE STATE OF CALIFORNIA OR ITS OFFICERS OR AGENTS SHALL NOT BE RESPONSIBLE FOR THE ACCURACY OR COMPLETENESS OF SCANNED COPIES OF THIS PLAN SHEET.

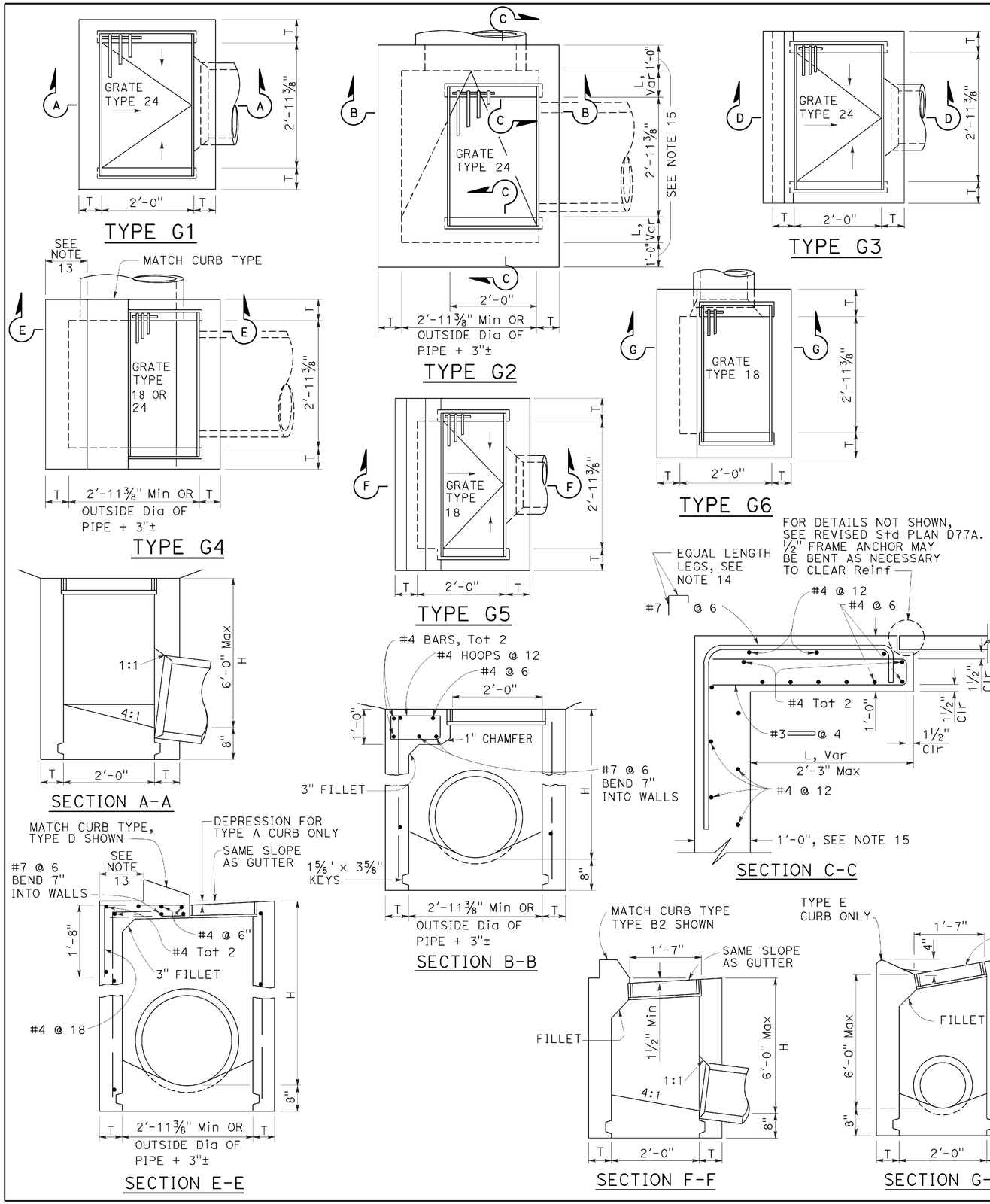

NOTES:

1. "H" is the difference in elevation between the outlet pipe flow line and the normal gutter grade line undepressed.
2. For "T" wall thickness, see Table A below.
3. Wall reinforcing not required when "H" is 8'-0" or less and the unsupported width or length is 7'-0" or less. Walls exceeding these limits shall be reinforced with #4 bars @ 1'-6" ± centers placed 1½" clear to inside of box unless otherwise shown.
4. Inlet bottom reinforcing not required. See Standard Plan D74C for alternative reinforced bottom and alternative half round bottom.
5. Steps-None required where "H" is less than 2'-6". Where "H" is 2'-6" or more, install steps with lowest rung 1'-0" above the floor and highest rung not more than 6" below top of inlet. The distance between steps shall not exceed 1'-0" and shall be uniform throughout the length of the wall. Place steps in the wall without an opening. Steps inserts may be substituted for the bar steps. Step inserts shall comply with State Industrial Safety requirements. See Standard Plan D74C for step details.
6. Details shown apply to both metal and concrete pipe.
7. Pipe(s) can be placed in any wall.
8. Curb section shall match adjacent curb.
9. Basin floors shall have wood trowel finish and a minimum slope of 12:3 from all directions toward outlet pipe.
10. Set inlet so that grate bars are parallel to direction of principal surface flow.
11. See Revised Standard Plans D77A and D77B for grate and frame details and weights of miscellaneous iron and steel.
12. See Standard Plan D78A for gutter depression details.
13. This dimenison will vary with different grates, curbs types, box width and wall thickness.
14. Bar may be rotated as necessary to clear opening. Where "L" is 6" or less, bar may be omitted.
15. Where "L" is 6" or less, wall thickness shall be as shown in Table A.
16. Cast-in-place inlets to be formed around all pipes/stubs intersecting the inlet, and concrete poured in one continuous operation. Precast inlets shall have mortared connections conforming to details for Type GCP Inlet shown on Standard Plan D75B. See Standard Specifications for mortar composition.

TABLE A

CONCRETE QUANTITIES				
TYPE	H=3'-0" TO 8'-0" (T=6")		H=8'-1" TO 20'-0" (T=8")	
	H=3'-0" (CY)	ADDITIONAL PCC PER FOOT (CY)	H=8'-1" (CY)	ADDITIONAL PCC PER FOOT (CY)
G-1	0.95	0.220	See Note A	SEE NOTE A
G-2*	1.31	0.255	3.50	0.357
G-3	1.03	0.220	See Note A	SEE NOTE A
G-4* (TYPE 24)	1.27	0.255	3.48	0.357
G-4* (TYPE 18)	1.30	0.255	3.50	0.357
G-5	1.02	0.220	SEE NOTE A	SEE NOTE A
G-6	1.04	0.220	SEE NOTE A	SEE NOTE A

TABLE BASED ON 8" FLOOR SLAB. NO DEDUCTIONS ARE TO BE MADE TO THESE QUANTITIES BECAUSE OF PIPE OPENINGS, DIFFERENT FLOOR ALTERNATIVES OR DIFFERENT CURB TYPES. * QUANTITIES FOR TYPE G-2 AND G-4 INLETS BASED ON THE MINIMUM INTERIOR DIMENSIONS.

NOTE A:

Maximum allowable height 6'-0".

STATE OF CALIFORNIA
DEPARTMENT OF TRANSPORTATION

DRAINAGE INLETS

NO SCALE

RSP D73 DATED OCTOBER 19, 2012 SUPERSEDES STANDARD PLAN D73 DATED MAY 20, 2011 - PAGE 156 OF THE STANDARD PLANS BOOK DATED 2010.

REVISED STANDARD PLAN RSP D73

2010 REVISED STANDARD PLAN RSP D73

DATE PLOTTED => 11-JAN-2016
TIME PLOTTED => 08:46

Dist	COUNTY	ROUTE	POST MILES TOTAL PROJECT	SHEET No.	TOTAL SHEETS
01	HUM	299	R23.0/R24.0	55	61

REGISTERED CIVIL ENGINEER

October 30, 2015
PLANS APPROVAL DATE

REGISTERED PROFESSIONAL ENGINEER Carl M. Duan No. C59976 Exp. 6-30-16 CIVIL STATE OF CALIFORNIA

THE STATE OF CALIFORNIA OR ITS OFFICERS OR AGENTS SHALL NOT BE RESPONSIBLE FOR THE ACCURACY OR COMPLETENESS OF SCANNED COPIES OF THIS PLAN SHEET.

TO ACCOMPANY PLANS DATED 01-05-16

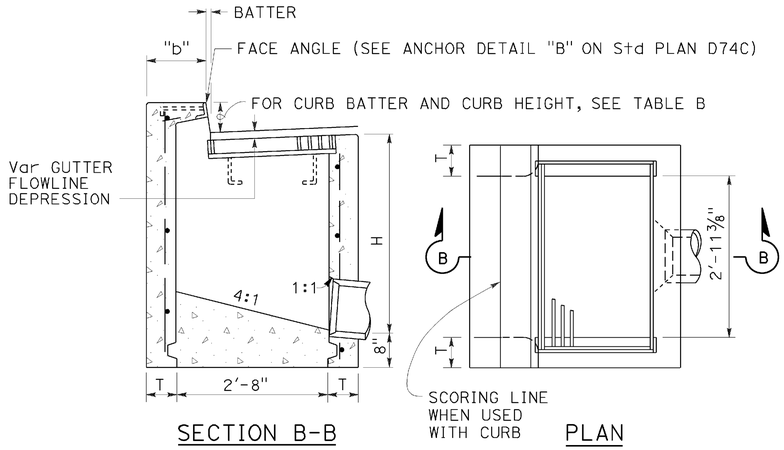

SECTION B-B

PLAN

TYPE GO

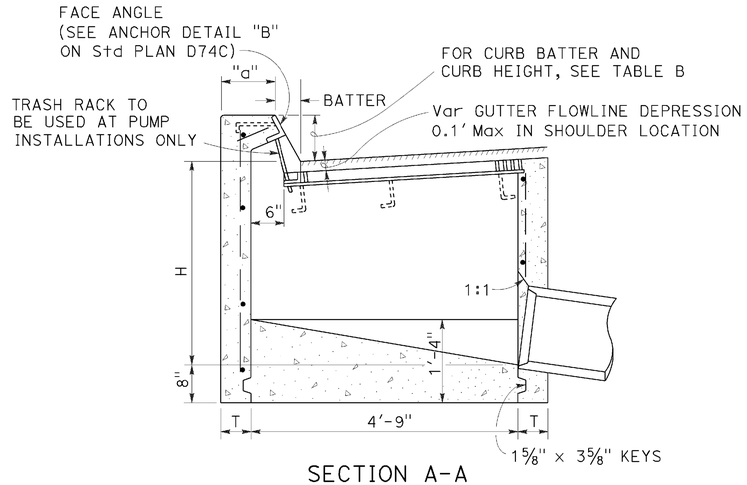

SECTION A-A

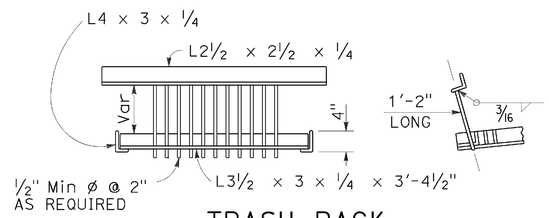

TRASH RACK

(For use with pump installation)

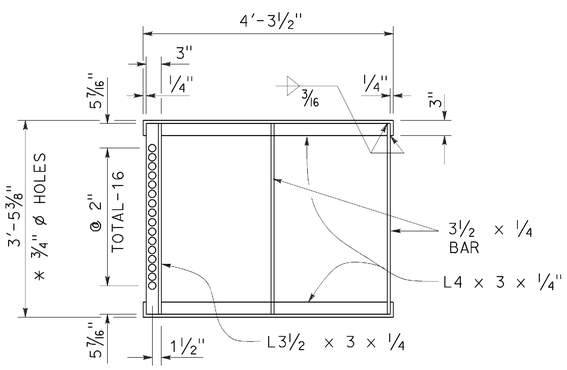

* 3/4" ø Holes required only with trash rack

GRATE FRAME FOR TYPE GDO INLET

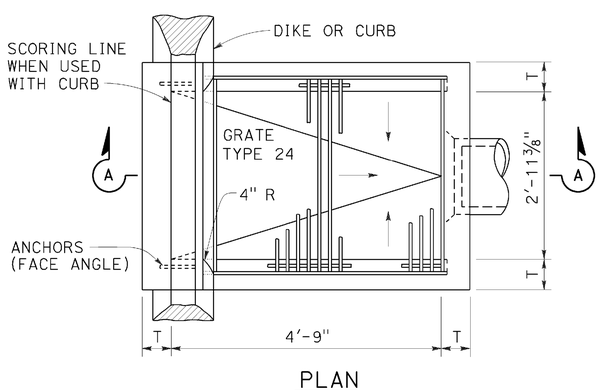

PLAN

TYPE GDO

TABLE A

CONCRETE QUANTITIES				
TYPE	H=3'-0" TO 8'-0" (T=6")		H=8'-1" TO 20'-0" (T=8")	
	H=3'-0" (CY)	ADDITIONAL PCC PER FOOT (CY)	H=8'-1" (CY)	ADDITIONAL PCC PER FOOT (CY)
GO	1.24	0.245	3.39	0.346
GDO	1.62	0.322	4.36	0.446

Table based on 8" floor slab, and curb type giving highest quantity of concrete. no deductions or adjustments are to be made to these quantities because of pipe openings, different floor alternatives or different curb type.

TABLE B

CURB TYPE	NORMAL CURB HEIGHT	CURB BATTER	"a" DIMENSION	"b" DIMENSION
A1-6	6"	1 1/2"	T+7 1/2"	T+6 1/2"
A1-8	8"	2"	T+7"	T+6"
B1-6	6"	4"	T+5"	T+4"
TYPE A DIKE	6"	3"	T+6"	T+5"

NOTES:

1. "H" is the difference in elevation between the outlet pipe flow line and the normal gutter grade line undepressed.
2. For "T" wall thickness, see Table A below.
3. Wall reinforcing not required when "H" is 8'-0" or less and the unsupported width or length is 7'-0" or less. Walls exceeding these limits shall be reinforced with #4 @ 18"± centers placed 1 1/2" clear to inside of box unless otherwise shown.
4. Inlet bottom reinforcing not required. See Standard Plan D74C for alternative reinforced bottom.
5. Steps - None required where "H" is less than 2'-6" Where "H" is 2'-6" or more, install steps with lowest rung 1'-0" above the floor and highest rung not more than 6" below top of inlet. The distance between steps shall not exceed 1'-0" and shall be uniform throughout the length of the wall. Place steps in the wall without an opening. Step inserts may be substituted for the bar steps. Step Inserts shall comply with State Industrial Safety requirements. See Standard Plan D74C for step details.
6. When shown on the project plans, place a 3/4" plain round protection bar horizontally across the length of the opening and bend back 4" into the inlet wall on each side.
7. Pipe(s) can be placed in any wall.
8. Curb section shall match adjacent curb.
9. Basin floors shall have wood trowel finish and shall slope toward the outlet pipe as shown.
10. See Revised Standard Plans RSP D77A and RSP D77B for grate and frame details and weights of miscellaneous iron and Steel.
11. See Standard Plan D78A for gutter depression details.
12. Complete joint penetration butt welds may be substituted for the fillet welds on all anchors.
13. Standard square, hexagon, round or equivalent headed anchors may be substituted for the right angle hooks on the anchors shown on this plan.
14. Cast-in-place inlets to be formed around all pipes/stubs intersecting the inlet and concrete poured in one continuous operation. Precast inlets shall have mortared pipe connections conforming to details for Type GCP inlets on Revised Standard Plan RSP D75B. See Standard Specifications for mortar composition.

STATE OF CALIFORNIA
DEPARTMENT OF TRANSPORTATION

DRAINAGE INLETS

NO SCALE

RSP D74B DATED OCTOBER 30, 2015 SUPERSEDES STANDARD PLAN D74B DATED MAY 20, 2011 - PAGE 159 OF THE STANDARD PLANS BOOK DATED 2010.

REVISED STANDARD PLAN RSP D74B

2010 REVISED STANDARD PLAN RSP D74B

DATE PLOTTED => 11-JAN-2016
TIME PLOTTED => 08:47

Dist	COUNTY	ROUTE	POST MILES TOTAL PROJECT	SHEET No.	TOTAL SHEETS
01	HUM	299	R23.0/R24.0	56	61

Raymond Don Tsztoo
REGISTERED CIVIL ENGINEER

April 19, 2013
PLANS APPROVAL DATE

REGISTERED PROFESSIONAL ENGINEER Raymond Don Tsztoo No. C37332 Exp. 6-30-14 CIVIL STATE OF CALIFORNIA

THE STATE OF CALIFORNIA OR ITS OFFICERS OR AGENTS SHALL NOT BE RESPONSIBLE FOR THE ACCURACY OR COMPLETENESS OF SCANNED COPIES OF THIS PLAN SHEET.

TO ACCOMPANY PLANS DATED 01-05-16

2010 REVISED STANDARD PLAN RSP D77B

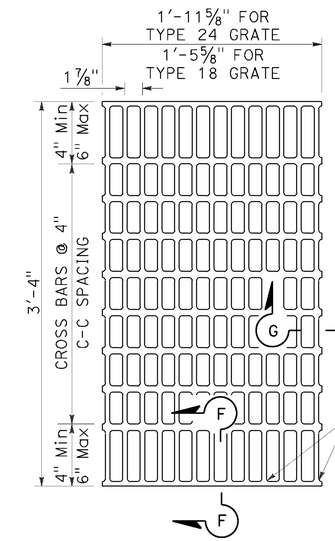

NOTES:

Bearing bars to be 3½" × ¼" bars on 1⅞" centers.

⅜"± ø Cross bars may be fillet welded, resistance welded or electroforged to bearing bars.

Weight of Type 24 grate = 141 LBS.

Weight of Type 18 grate = 107 LBS. (Type 24 grate shown).

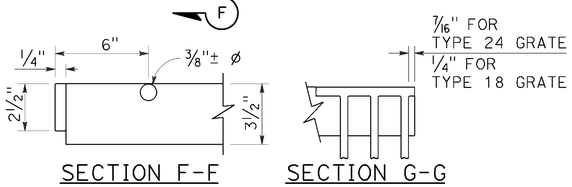

SECTION F-F SECTION G-G

TYPE 18-10 AND 24-13 GRATE

(Welded Steel)

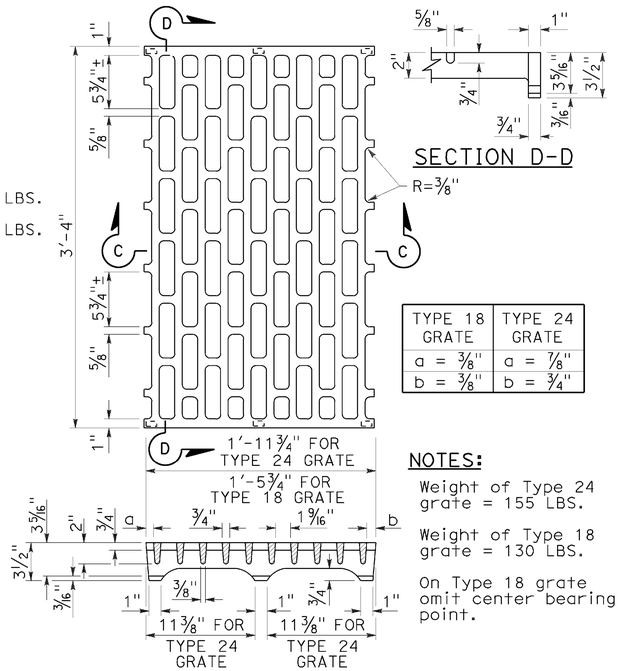

SECTION D-D

NOTES:

Weight of Type 24 grate = 155 LBS.

Weight of Type 18 grate = 130 LBS.

On Type 18 grate omit center bearing point.

TYPE 18 GRATE	TYPE 24 GRATE
a = ⅜"	a = ⅞"
b = ⅜"	b = ¾"

SECTION C-C

TYPE 18-8C AND 24-10C GRATE

(Cast ductile iron)

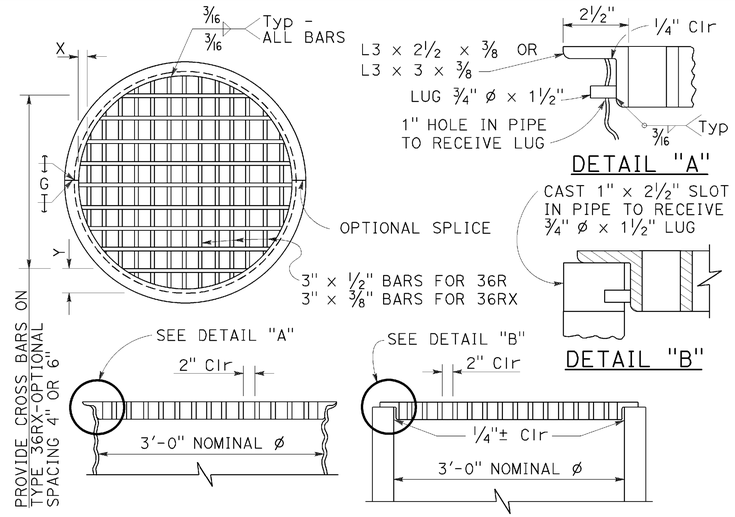

DETAIL "A"

DETAIL "B"

TYPE 36R AND 36RX GRATE DETAILS

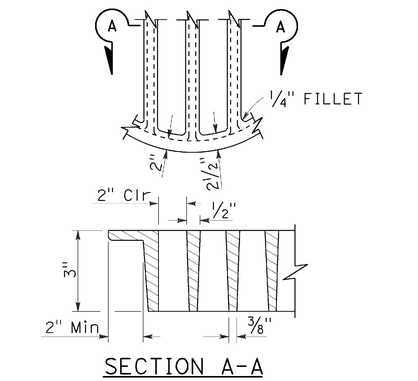

SECTION A-A

ALTERNATIVE CAST DUCTILE IRON GRATE OR CAST CARBON STEEL GRATE TYPE 36R AND 36RX

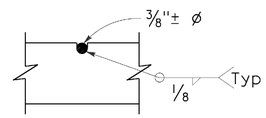

⅜"± ø Cross bars may be fillet welded, resistance welded or electroforged to bearing bars.

CROSS BAR DETAIL TYPE 36RX GRATE (WELDED STEEL)

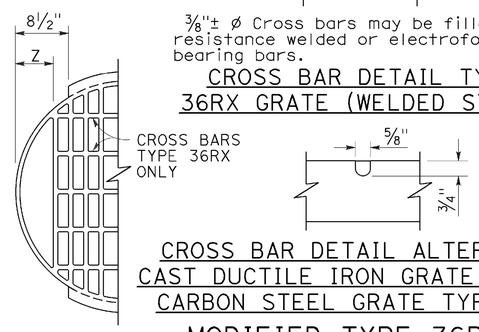

CROSS BAR DETAIL ALTERNATIVE CAST DUCTILE IRON GRATE OR CAST CARBON STEEL GRATE TYPE 36RX

MODIFIED TYPE 36R AND 36RX GRATE FOR ODI INLET

BASIS FOR Misc IRON AND STEEL FINAL PAY WEIGHTS FOR DRAINAGE INLETS

INLET TYPE	GRATE TYPE	No. OF GRATES	WEIGHT LB
GDO (SEE NOTE 4)	24-10C	2	391
	24-10S	2	456
	24-12X	2	473
	24-13	2	374
GO,GOL,G1,G2, G3,G4 (TYPE 24)	24-10C	1	202
	24-10S	1	229
	24-12X	1	239
	24-13	1	188
G4 (TYPE 18) G5,G6	18-8S	1	187
	18-9X	1	187
	18-10	1	149
GT1,GT2	18-8S	2	374
	18-9X	2	374
	18-10	2	298
GT3,GT4	24-10C	2	404
	24-10S	2	458
	24-12X	2	478
	24-13	2	376
ODI	36RX (Mod)	1	196
GMP,GCP,GCPI	36RX	1	215
ODI	36R (Mod)	1	220
GMP,GCP,GCPI	36R	1	236
TRASH RACK			22
GRATE CHAIN			3

NOTES:

1. When alternative grates are allowed - Final pay based on alternative with the lesser weight.
2. Use frame shown on Standard Plan D74A, D74B or RSP D77A as appropriate.
3. When Type 24-10S, 24-12X or 24-13 grates are used with GDO Inlets, a ¼" × 3½" × 3'-4⅞" steel bar shall be welded across the center of inlet frame to separate the individual grates.
4. See Revised Standard Plan RSP D77A for connecting chain to welded grate and frame. When chain is required, do not use cast ductile iron grate.

GRATE BAR SPACING TABLE

TYPE	No. OF BARS	CLEAR BAR SPACING	X	Y 4" SPACING	Y 6" SPACING	Z
36R	13	2"	2⅛"	-	-	-
36RX (STEEL)	15	2"	9/16"	3¾"	5¾"	-
36RX (CAST)	13	2"	2⅛"	3¾"	5¾"	-
36R Mod	12	2"	2⅛"	-	-	5"
36RX Mod (STEEL)	13	2"	9/16"	3¾"	5¾"	5 11/16"
36RX Mod (CAST)	12	2"	2⅛"	3¾"	5¾"	5"

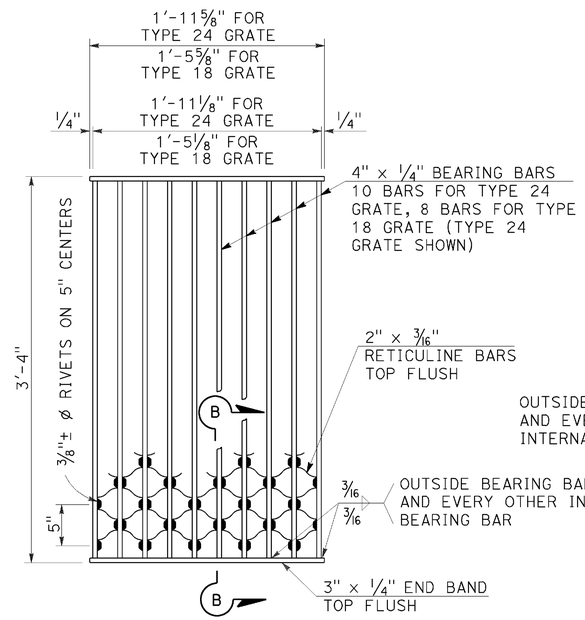

NOTES:

Weight of Type 24 grate = 182 LBS.
Weight of Type 18 grate = 145 LBS.

SECTION B-B

TYPE 18-8S AND 24-10S GRATE

(Welded Steel) Reticuline type

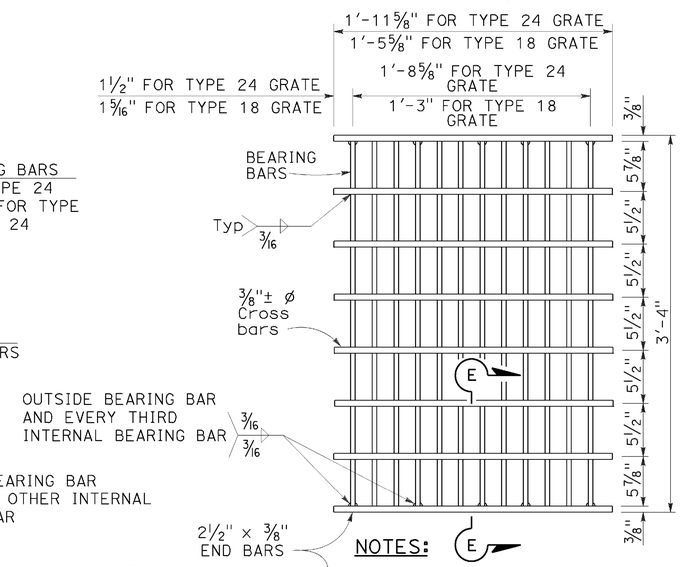

NOTES:

Bearing bars to be 3½" × ⅜" bars on 1⅞" centers.

12 Bars for Type 24 grate - 9 bars for Type 18 grates. (Type 24 grate shown).

Weight of Type 24 grate = 192 LBS.

Weight of Type 18 grate = 145 LBS.

⅜"± ø Cross bars may be fillet welded, resistance welded or electroforged to bearing bars.

SECTION E-E

TYPE 18-9X AND 24-12X GRATE

(Welded Steel)

STATE OF CALIFORNIA
DEPARTMENT OF TRANSPORTATION

GRATE DETAILS No. 2

NO SCALE

RSP D77B DATED APRIL 19, 2013 SUPERSEDES RSP D77B DATED JULY 20, 2012 AND STANDARD PLAN D77B DATED MAY 20, 2011 - PAGE 165 OF THE STANDARD PLANS BOOK DATED 2010.

REVISED STANDARD PLAN RSP D77B

DATE PLOTTED => 11-JAN-2016
TIME PLOTTED => 08:47

Dist	COUNTY	ROUTE	POST MILES TOTAL PROJECT	SHEET No.	TOTAL SHEETS
01	HUM	299	R23.0/R24.0	57	61

Raymond Don Tsztoo
REGISTERED CIVIL ENGINEER

October 30, 2015
PLANS APPROVAL DATE

REGISTERED PROFESSIONAL ENGINEER
Raymond Don Tsztoo
No. C37332
Exp. 6-30-16
CIVIL
STATE OF CALIFORNIA

THE STATE OF CALIFORNIA OR ITS OFFICERS OR AGENTS SHALL NOT BE RESPONSIBLE FOR THE ACCURACY OR COMPLETENESS OF SCANNED COPIES OF THIS PLAN SHEET.

TO ACCOMPANY PLANS DATED 01-05-16

ANNULAR AND HELICAL PROFILE

COUPLING TYPE	PIPE CORRUGATION	PIPE SIZE	W OR A	PIPE WALL THICKNESS		BAND THICKNESS		BAR AND STRAP (CSP ONLY)				ANGLE						
												DIMENSIONS		BOLTS (No.- Dia)		RIVETS ANGLE TO BAND		SPOT WELDS ANGLE TO BAND
				CSP	CAP	CSP	CAP	STRAP THICKNESS	BOLTS Dia	BAR Dia	BAR YIELD STRENGTH	CSP	CAP	CSP	CAP	CSP	CAP	CSP
TWO PIECE INTEGRAL FLANGE	1½′ × ¼"	6"	7"	0.064"-0.168"		0.052"								3-⅜"				
	1½′ × ¼"	8"-10"	7"	0.064"-0.168"	0.060"-0.164"	0.064"	0.060"							3-⅜"	3-⅜"			
ANNULAR	2⅔" × ½"	THROUGH 24"	12"	0.064"-0.168"	0.060"-0.164"	0.064"	0.060"					2" × 2" × 3/16"	2" × 2" × 3/16"	3-½"	3-½"	3-⅜"	3-⅜"	3-½"
HUGGER	2⅔" × ½" REROLLED END	THROUGH 24"	10½"	0.064"-0.168"		0.064"		0.079"	½"	⅞"	32 ksi							

SPIRAL RIB PROFILE

COUPLING TYPE	PIPE CORRUGATION	PIPE SIZE	W	PIPE WALL THICKNESS		BAND THICKNESS		BAR AND STRAP (SSRP ONLY)				ANGLE						
												DIMENSIONS		BOLTS (No.- Dia)		RIVETS ANGLE TO BAND		SPOT WELDS ANGLE TO BAND
				SSRP	ASRP	SSRP	ASRP	STRAP THICKNESS	BOLTS Dia	BAR Dia	BAR YIELD STRENGTH	SSRP	ASRP	SSRP	ASRP	SSRP	ASRP	SSRP
ANNULAR	2⅔" × ½" * REROLLED END	24"	12"	0.064"-0.168"	0.060"-0.164"	0.064"	0.060"					2" × 2" × 3/16"	2" × 2" × 3/16"	3-½"	3-½"	3-⅜"	3-⅜"	3-½"
HUGGER	2⅔" × ½" * REROLLED END	24"	10½"	0.064"-0.168"		0.064"		0.079"	½"	⅞"	32 ksi							

* See Note 11.

NOTES:

1. For helically corrugated coupling bands, the connection angles may be oriented parallel to the pipe axis, provided connecting holes are slotted lengthwise sufficiently to allow adjustment for the helix angle.
2. Tension strap may be connected to band with either spot welds or fillet welds that develop minimum required strength of strap.
3. Use 1¼" gage line dimension on attached angle leg for rivets and spot welds.
4. Band thickness shall not be less than:
   a. 3 standard thicknesses lighter than the thickness of the pipe for Corrugated Steel Pipe.
   b. 2 standard thicknesses lighter than the thickness of the pipe and in no case lighter than 0.060" for Corrugated Aluminum Pipe.
5. Dimensions, thicknesses and strengths shown are minimum.
6. For pipe arches use same width band as for round pipe of equal periphery.
7. Fillet welds of equivalent strength may be substituted for spot welds or rivets.
8. Spot welds shall develop minimum required strength of strap.
9. Pipe with rerolled ends having at least two 2⅔" × ½" annular corrugations at each end with or without an upturned flange may be connected with any of the annular coupling bands shown for pipe of the same diameter and wall thickness and having 2⅔" × ½" corrugations.
10. For downdrain applications, two piece integral flange couplers shall have factory applied sleeve type rubber gaskets with a minimum length of 7" measured along the length of the pipe.
11. All profiles of Spiral Rib Pipe (¾" × ¾" ribs at 7½" pitch and ¾" × 1" ribs at 11½" pitch in both steel and aluminum and ¾" × 1" ribs at 8½" pitch in steel only) shall be manufactured with rerolled ends. Corrugation profile of the rerolled ends shall be 2⅔" × ½" annual corrugations with a minimum of two full corrugations at each end.

STATE OF CALIFORNIA
DEPARTMENT OF TRANSPORTATION

CORRUGATED METAL PIPE COUPLING DETAILS No. 7 DOWNDRAIN

NO SCALE

RSP D97G DATED OCTOBER 30, 2015 SUPERSEDES STANDARD PLAN D97G DATED MAY 20, 2011 - PAGE 202 OF THE STANDARD PLANS BOOK DATED 2010.

REVISED STANDARD PLAN RSP D97G

2010 REVISED STANDARD PLAN RSP D97G

DATE PLOTTED => 11-JAN-2016
TIME PLOTTED => 08:47

Dist	COUNTY	ROUTE	POST MILES TOTAL PROJECT	SHEET No.	TOTAL SHEETS
01	HUM	299	R23.0/R24.0	58	61

REGISTERED CIVIL ENGINEER

July 19, 2013
PLANS APPROVAL DATE

REGISTERED PROFESSIONAL ENGINEER
Gurinderpal Bhullar
No. C48815
Exp. 9-30-14
CIVIL
STATE OF CALIFORNIA

THE STATE OF CALIFORNIA OR ITS OFFICERS OR AGENTS SHALL NOT BE RESPONSIBLE FOR THE ACCURACY OR COMPLETENESS OF SCANNED COPIES OF THIS PLAN SHEET.

TO ACCOMPANY PLANS DATED 01-05-16

2010 REVISED STANDARD PLAN RSP T9

TABLE 1

TAPER LENGTH CRITERIA AND CHANNELIZING DEVICE SPACING

SPEED (S)	MINIMUM TAPER LENGTH * FOR WIDTH OF OFFSET 12 FEET (W)				MAXIMUM CHANNELIZING DEVICE SPACING		
					X	Y	Z **
	TANGENT 2L	MERGING L	SHIFTING L/2	SHOULDER L/3	TAPER	TANGENT	CONFLICT
mph	ft	ft	ft	ft	ft	ft	ft
20	160	80	40	27	20	40	10
25	250	125	63	42	25	50	12
30	360	180	90	60	30	60	15
35	490	245	123	82	35	70	17
40	640	320	160	107	40	80	20
45	1080	540	270	180	45	90	22
50	1200	600	300	200	50	100	25
55	1320	660	330	220	55	110	27
60	1440	720	360	240	60	120	30
65	1560	780	390	260	65	130	32
70	1680	840	420	280	70	140	35

* - For other offsets, use the following merging taper length formula for L:
For speed of 40 mph or less, $L = WS^2/60$
For speed of 45 mph or more, $L = WS$

Where: L = Taper length in feet
W = Width of offset in feet
S = Posted speed limit, off-peak 85th-percentile speed prior to work starting, or the anticipated operating speed in mph

** - Use for taper and tangent sections where there are no pavement markings or where there is a conflict between existing pavement markings and channelizers (CA).

TABLE 2

LONGITUDINAL BUFFER SPACE AND FLAGGER STATION SPACING

SPEED *	Min D **	DOWNGRADE Min D ***		
		-3%	-6%	-9%
mph	ft	ft	ft	ft
20	115	116	120	126
25	155	158	165	173
30	200	205	215	227
35	250	257	271	287
40	305	315	333	354
45	360	378	400	427
50	425	446	474	507
55	495	520	553	593
60	570	598	638	686
65	645	682	728	785
70	730	771	825	891

* - Speed is posted speed limit, off-peak 85th-percentile speed prior to work starting, or the anticipated operating speed in mph

** - Longitudinal buffer space or flagger station spacing

*** - Use on sustained downgrade steeper than -3 percent and longer than 1 mile.

TABLE 3

ADVANCE WARNING SIGN SPACING

ROAD TYPE	DISTANCE BETWEEN SIGNS *		
	A	B	C
	ft	ft	ft
URBAN - 25 mph OR LESS	100	100	100
URBAN - MORE THAN 25 mph TO 40 mph	250	250	250
URBAN - MORE THAN 40 mph	350	350	350
RURAL	500	500	500
EXPRESSWAY / FREEWAY	1000	1500	2640

* - The distances are approximate, are intended for guidance purposes only, and should be applied with engineering judgment. These distances should be adjusted by the Engineer for field conditions, if necessary, by increasing or decreasing the recommmended distances.

STATE OF CALIFORNIA
DEPARTMENT OF TRANSPORTATION

TRAFFIC CONTROL SYSTEM TABLES FOR LANE AND RAMP CLOSURES

NO SCALE

RSP T9 DATED JULY 19, 2013 SUPERSEDES RSP T9 DATED APRIL 19, 2013 THAT SUPPLEMENTS THE STANDARD PLANS BOOK DATED 2010.

REVISED STANDARD PLAN RSP T9

DATE PLOTTED => 11-JAN-2016
TIME PLOTTED => 08:47

Dist	COUNTY	ROUTE	POST MILES TOTAL PROJECT	SHEET No.	TOTAL SHEETS
01	HUM	299	R23.0/R24.0	59	61

REGISTERED CIVIL ENGINEER

April 19, 2013
PLANS APPROVAL DATE

REGISTERED PROFESSIONAL ENGINEER Gurinderpal Bhullar No. C48815 Exp. 9-30-14 CIVIL STATE OF CALIFORNIA

THE STATE OF CALIFORNIA OR ITS OFFICERS OR AGENTS SHALL NOT BE RESPONSIBLE FOR THE ACCURACY OR COMPLETENESS OF SCANNED COPIES OF THIS PLAN SHEET.

TO ACCOMPANY PLANS DATED 01-05-16

NOTES:

See Revised Standard Plan RSP T9 for tables.

Use cone spacing X for taper segment, Y for tangent segment or Z for conflict situations, as approriate, per Table 1, unless X, Y, or Z cone spacing is shown on this sheet.

Unless otherwise specified in the special provisions, all temporary warning signs shall have black legend on fluorescent orange background.

California codes are designated by (CA). Otherwise, Federal (MUTCD) codes are shown.

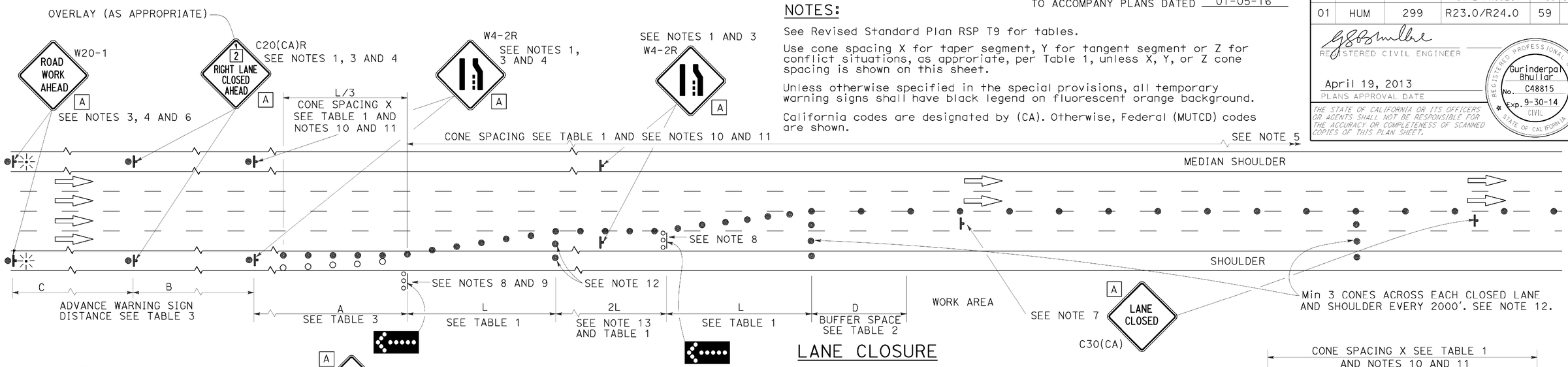

LANE CLOSURE

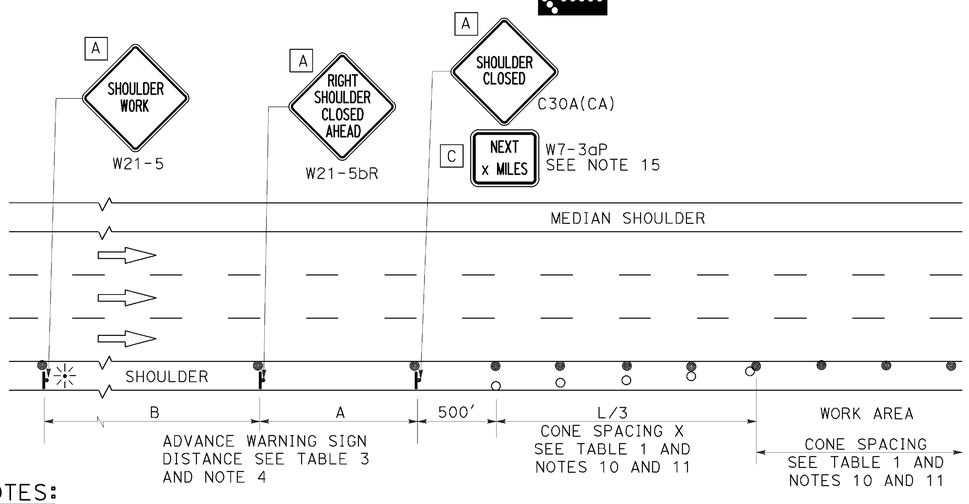

SHOULDER CLOSURE

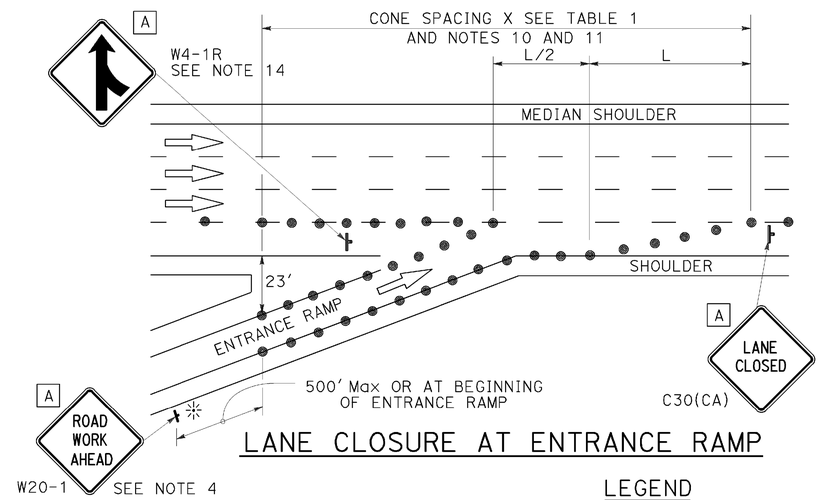

LANE CLOSURE AT ENTRANCE RAMP

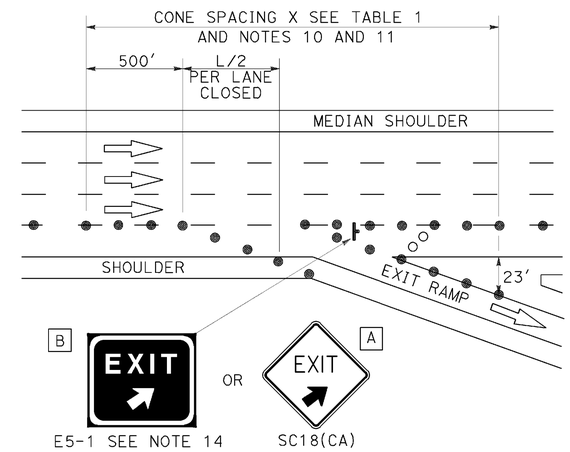

LANE CLOSURE AT EXIT RAMP

NOTES:

1. Median lane closures shall conform to the details as shown except that C20(CA)L and W4-2L signs shall be used.
2. At least one person shall be assigned to provide full time maintenance of traffic control devices for lane closures.
3. Duplicate sign installations are not required:
   a) On opposite shoulder if at least one-half of the available lanes remain open to traffic.
   b) In the median if the width of the median shoulder is less than 8' and the outside lanes are to be closed.
4. Each advance warning sign on each side of the roadway shall be equipped with at least two flags for daytime closure. Each flag shall be at least 16" x 16" in size and shall be orange or fluorescent red-orange in color. Flashing beacons shall be placed at the locations indicated for lane closure during hours of darkness.
5. A G20-2 "END ROAD WORK" sign, with minimum size of 48" x 24" as appropriate, shall be placed at the end of the lane closure unless the end of work area is obvious or ends within a larger project's limits.
6. If the W20-1 sign would follow within 2000' of a stationary W20-1 or G20-1 "ROAD WORK NEXT _____ MILES", use a C20(CA) sign for the first advance warning sign.
7. Place a C30(CA) sign every 2000' throughout length of lane closure.
8. One flashing arrow sign for each lane closed. The flashing arrow signs shall be Type I.
9. A minimum 1500' of sight distance shall be provided where possible for vehicles approaching the first flashing arrow sign. Lane closures shall not begin at top of crest vertical curve or on a horizontal curve.
10. All cones used for lane closures during the hours of darkness shall be fitted with retroreflective bands (or sleeves) as specified in the specifications.
11. Portable delineators, placed at one-half the spacing indicated for traffic cones may be used instead of cones for daytime closures only.
12. Unless otherwise specified in the special provisions, a minimum of 3 cones shall be placed transversely across each closed lane and shoulder at each location where a taper across a traffic lane ends and every 2000' as shown on the "Lane Closure" detail. Two Type II barricades may be used instead of the 3 cones. The transverse alignment of the cones or barricades on the closed shoulder may be shifted from the transverse alignment to provide access to the work.
13. Unless otherwise specified in the special provisions, the 2L tangent shown along lane lines shall be used between the L tapers required for each closed traffic lane.
14. Unless otherwise specified in the special provisions, the E5-1 or SC18(CA) and W4-1 signs shall be used as shown.
15. A W7-3aP "NEXT____ MILES" plaque must be used if theshoulder closure extends beyond the distance that can be perceived by road users.

LEGEND

- TRAFFIC CONE
- TRAFFIC CONE (OPTIONAL TAPER)
- TEMPORARY TRAFFIC CONTROL SIGN
- FLASHING ARROW SIGN (FAS)
- FAS SUPPORT OR TRAILER
- PORTABLE FLASHING BEACON

SIGN PANEL SIZE (Min)

A	48" x 48"
B	72" x 60"
C	36" x 30"

STATE OF CALIFORNIA
DEPARTMENT OF TRANSPORTATION

TRAFFIC CONTROL SYSTEM FOR LANE CLOSURE ON FREEWAYS AND EXPRESSWAYS

NO SCALE

RSP T10 DATED APRIL 19, 2013 SUPERSEDES STANDARD PLAN T10 DATED MAY 20, 2011 - PAGE 237 OF THE STANDARD PLANS BOOK DATED 2010.

REVISED STANDARD PLAN RSP T10

2010 REVISED STANDARD PLAN RSP T10

DATE PLOTTED => 11-JAN-2016
TIME PLOTTED => 08:47

Dist	COUNTY	ROUTE	POST MILES TOTAL PROJECT	SHEET No.	TOTAL SHEETS
01	HUM	299	R23.0/R24.0	60	61

REGISTERED CIVIL ENGINEER

April 19, 2013
PLANS APPROVAL DATE

REGISTERED PROFESSIONAL ENGINEER Gurinderpal Bhullar No. C48815 Exp. 9-30-14 CIVIL STATE OF CALIFORNIA

THE STATE OF CALIFORNIA OR ITS OFFICERS OR AGENTS SHALL NOT BE RESPONSIBLE FOR THE ACCURACY OR COMPLETENESS OF SCANNED COPIES OF THIS PLAN SHEET.

TO ACCOMPANY PLANS DATED 01-05-16

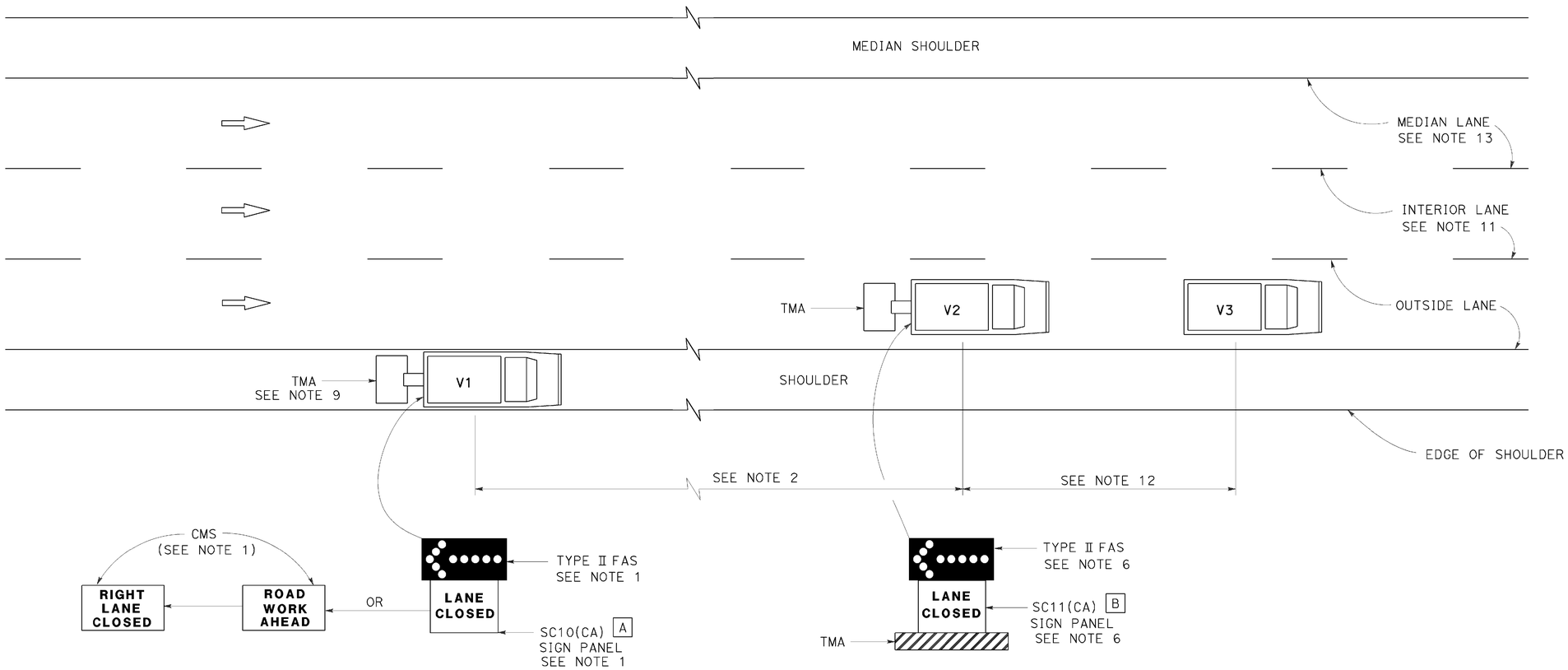

MOVING LANE CLOSURE ON MEDIAN LANE OR OUTSIDE LANE OF MULTILANE HIGHWAYS

SIGN PANEL SIZE (Min)

A 66" x 36"

B 54" x 42"

LEGEND

V1	SIGN VEHICLE
V2	SHADOW VEHICLE
V3	WORK/APPLICATION VEHICLE
	FLASHING ARROW SIGN (FAS)
CMS	CHANGEABLE MESSAGE SIGN
TMA	TRUCK-MOUNTED ATTENUATOR

NOTES:

1. Either a changeable message sign or a SC10(CA) sign panel and a Type II flashing arrow sign shall be mounted on the rear of sign vehicle V1. The changeable message sign shall be sequenced to show the "ROAD WORK AHEAD" message first, followed by the "RIGHT LANE CLOSED" message. For median lane closure, the flashing arrow symbol shall be reversed with the arrowhead on the right and the changeable message sign shall show "LEFT LANE CLOSED".
2. If traffic queues develop, sign vehicle V1 should be positioned upstream from the end of queue. Sign vehicle V1 shall be positioned where highly visible when shoulders are not available.
3. A minimum sight distance of 1500′ should be provided in advance of sign vehicle V1.
4. Sign vehicle V1 should remain at the beginning of horizontal or vertical curves until the other vehicles (V2 and V3) are far enough beyond the curve to resume the minimum sight distance of 1500′.
5. Vehicle-mounted sign panels shall have Type III or above retroreflective sheeting, black on white, or black on fluorescent orange, with 6" minimum series D letters per Caltrans sign specifications.
6. Shadow vehicle V2 shall be equipped with a truck-mounted attenuator. The sign panel shown and a Type II flashing arrow sign shall be mounted on the rear of shadow vehicle V2. For median lane closure the flashing arrow sign symbol shall be displayed with the arrowhead on the right.
7. All vehicles used for lane closures shall be equipped with two-way radios, and the vehicle operators shall maintain communication during the work or application operation.
8. All vehicles shall be equipped with flashing or rotating amber lights.
9. If sign vehicle V1 encroaches into the traffic lane due to insufficient shoulder width, sign vehicle V1 shall be equipped with a truck-mounted attenuator. Sign vehicle V1 shall stay as close to the edge of shoulder as practicable.
10. Where workers would be on foot in the work area, a stationary type lane closure (Revised Standard Plan T10, T11, etc., as applicable) shall be used instead of this plan.
11. For moving lane closure on interior lane of multilane highways, use Revised Standard Plan T16.
12. The spacing between work vehicle(s) and the shadow vehicles, and between each shadow vehicle should be minimized to deter road users from driving in between.
13. When the work/application vehicle V3 occupies the median lane, sign vehicle V1 should drive in the median shoulder and indicate left lane closed ahead.

STATE OF CALIFORNIA
DEPARTMENT OF TRANSPORTATION

TRAFFIC CONTROL SYSTEM FOR MOVING LANE CLOSURE ON MULTILANE HIGHWAYS

NO SCALE

RSP T15 DATED APRIL 19, 2013 SUPERSEDES STANDARD PLAN T15
DATED MAY 20, 2011 - PAGE 243 OF THE STANDARD PLANS BOOK DATED 2010.

REVISED STANDARD PLAN RSP T15

2010 REVISED STANDARD PLAN RSP T15

DATE PLOTTED => 11-JAN-2016
TIME PLOTTED => 08:48

Dist	COUNTY	ROUTE	POST MILES TOTAL PROJECT	SHEET No.	TOTAL SHEETS
01	HUM	299	R23.0/R24.0	61	61

REGISTERED CIVIL ENGINEER

April 19, 2013
PLANS APPROVAL DATE

REGISTERED PROFESSIONAL ENGINEER
Gurinderpal Bhullar
No. C48815
Exp. 9-30-14
CIVIL
STATE OF CALIFORNIA

THE STATE OF CALIFORNIA OR ITS OFFICERS OR AGENTS SHALL NOT BE RESPONSIBLE FOR THE ACCURACY OR COMPLETENESS OF SCANNED COPIES OF THIS PLAN SHEET.

TO ACCOMPANY PLANS DATED 01-05-16

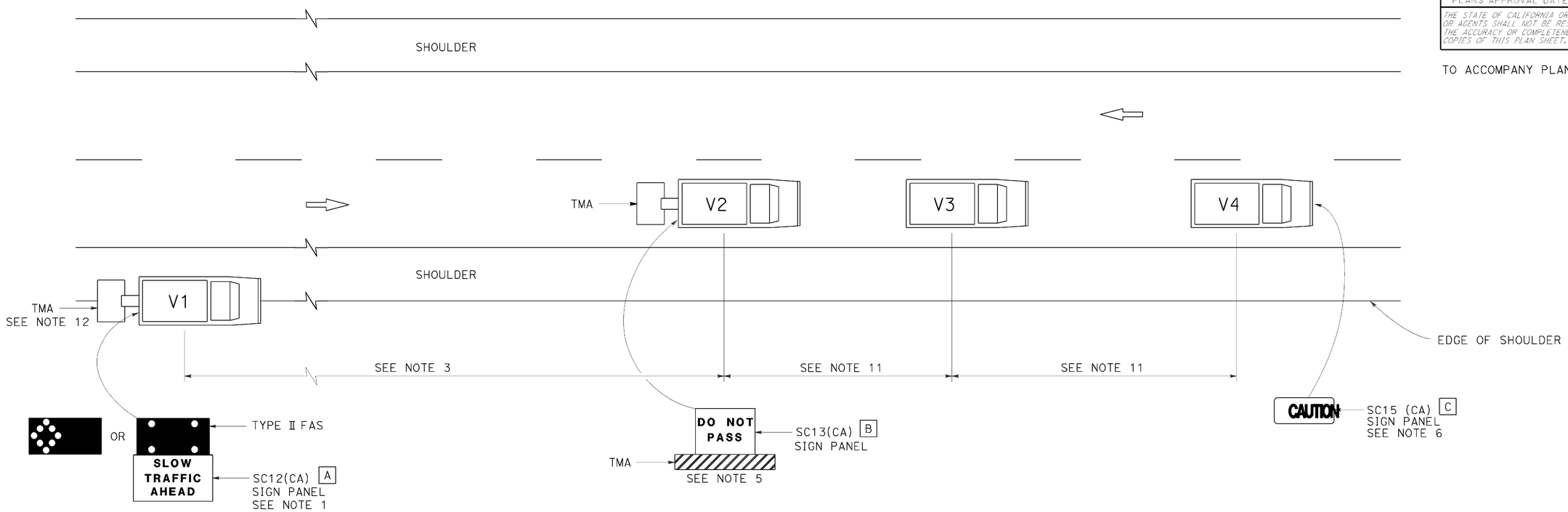

LEGEND

V1	SIGN VEHICLE
V2	SHADOW VEHICLE
V3	WORK/APPLICATION VEHICLE
V4	SIGN VEHICLE
TMA	TRUCK-MOUNTED ATTENUATOR
	FLASHING ARROW SIGN (FAS) IN FLASHING CAUTION MODE
	FLASHING ARROW SIGN (FAS) IN ALTERNATING DIAMOND CAUTION

SIGN PANEL SIZE (Min)

A	72" x 42"
B	54" x 42"
C	54" x 24"

NOTES:

1. Either a changeable message sign or a SC12(CA) "SLOW TRAFFIC AHEAD" sign shall be mounted on the rear of sign vehicle V1. The changeable message sign shall be sequenced to show the "CAUTION" message first, follow by the "SLOW TRAFFIC AHEAD" message. A Type II flashing arrow sign may be used with the SC12(CA) sign panel.
2. Sign vehicle V1 should be positioned where highly visible when shoulders are not available.
3. If traffic queues develop, sign vehicle V1 should be positioned upstream from the end of queue.
4. Vehicle-mounted sign panels shall have Type III or above retroreflective sheeting, black on white, or black on fluorescent orange, with 6" minimum series D letters per Caltrans sign specifications.
5. Shadow vehicle shall be equipped with a truck-mounted attenuator. The sign panel shown shall be mounted on the rear of shadow vehicle V2. The message "LANE CLOSED" may be used in place of the "DO NOT PASS" message.
6. The sign panel shown shall be mounted on the front of sign vehicle V4, facing opposing traffic.
7. All vehicles shall be equipped with flashing or rotating amber lights.
8. Sign vehicle V4 will not be required when the work and vehicles V2 and V3 are 2' or more from the centerline of the highway during the work or application operations.
9. All vehicles used for lane closures shall be equipped with two-way radios and the vehicle operators shall maintain communication during the work or application operation.
10. This plan shall not be used where workers would be on foot in the work area. Use a stationary type lane closure (Revised Standard Plan T13) for this condition.
11. Minimize spacing between vehicles V2 and V3 and vehicles V3 and V4 to deter road users from driving in between them.
12. If sign vehicle V1 encroaches into the traffic lane due to insufficient shoulder width, sign vehicle V1 shall be equipped with a truck-mounted attenuator. Sign vehicle V1 shall stay as close to the edge of shoulder as practicable.

STATE OF CALIFORNIA
DEPARTMENT OF TRANSPORTATION

TRAFFIC CONTROL SYSTEM FOR MOVING LANE CLOSURE ON TWO LANE HIGHWAYS

NO SCALE

RSP T17 DATED APRIL 19, 2013 SUPERSEDES STANDARD PLAN T17
DATED MAY 20, 2011 - PAGE 245 OF THE STANDARD PLANS BOOK DATED 2010.

REVISED STANDARD PLAN RSP T17

2010 REVISED STANDARD PLAN RSP T17

DATE PLOTTED => 11-JAN-2016
TIME PLOTTED => 08:48