Dist	COUNTY	ROUTE	POST MILES TOTAL PROJECT	SHEET No.	TOTAL SHEETS
01	Hum	96	8.3/8.9	2	99

REGISTERED CIVIL ENGINEER 03-30-15 DATE

PLANS APPROVAL DATE 03-30-15

REGISTERED PROFESSIONAL ENGINEER SOCORRO V. URENA No. 79633 Exp. 9-30-16 CIVIL STATE OF CALIFORNIA

THE STATE OF CALIFORNIA OR ITS OFFICERS OR AGENTS SHALL NOT BE RESPONSIBLE FOR THE ACCURACY OR COMPLETENESS OF SCANNED COPIES OF THIS PLAN SHEET.

NOTES:

1. DIMENSIONS OF THE PAVEMENT STRUCTURES (STRUCTURAL SECTIONS) ARE SUBJECT TO TOLERANCES SPECIFIED IN THE STANDARD SPECIFICATIONS.
2. SUPERELEVATIONS ARE SHOWN ON THE SUPERELEVATION DIAGRAM.
3. FOR DETAILS NOT SHOWN, SEE CONSTRUCTION DETAILS.
4. FOR HMA DIKE, MGS AND VCMC LIMITS SEE LAYOUT SHEETS.
5. FOR CLASS 2 AB LIMITS SEE SUMMARY OF QUANTITIES SHEETS.

ABBREVIATIONS:

RHMA-OG	RUBBERIZED HOT MIX ASPHALT-OPEN GRADED (OPEN GRADED FRICTION COURSE)
RHMA-G	RUBBERIZED HOT MIX ASPHALT-GAP GRADED
VCMC	VEGETATION CONTROL MINOR CONCRETE
SEG	SUBGRADE ENHANCEMENT GEOGRID
TWF	TOP OF WALL FACE

DESIGN DESIGNATION:

2011 ADT = 2650 D = 50%

2023 ADT = 3100 T = 8%

2023 DHV = 400 V = 55 mph

CLIMATE REGION:

LOW MOUNTAIN

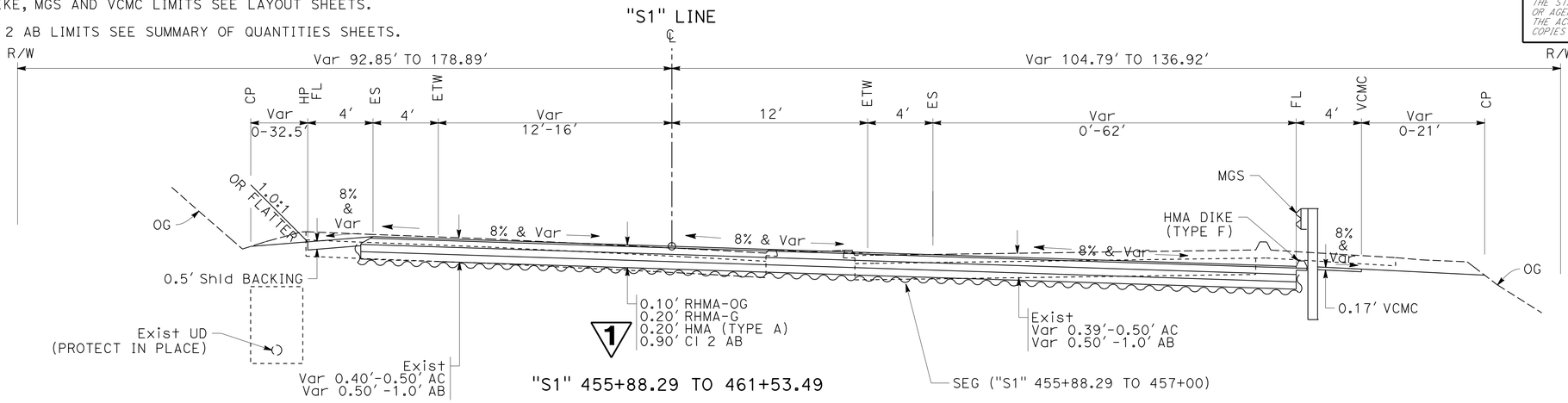

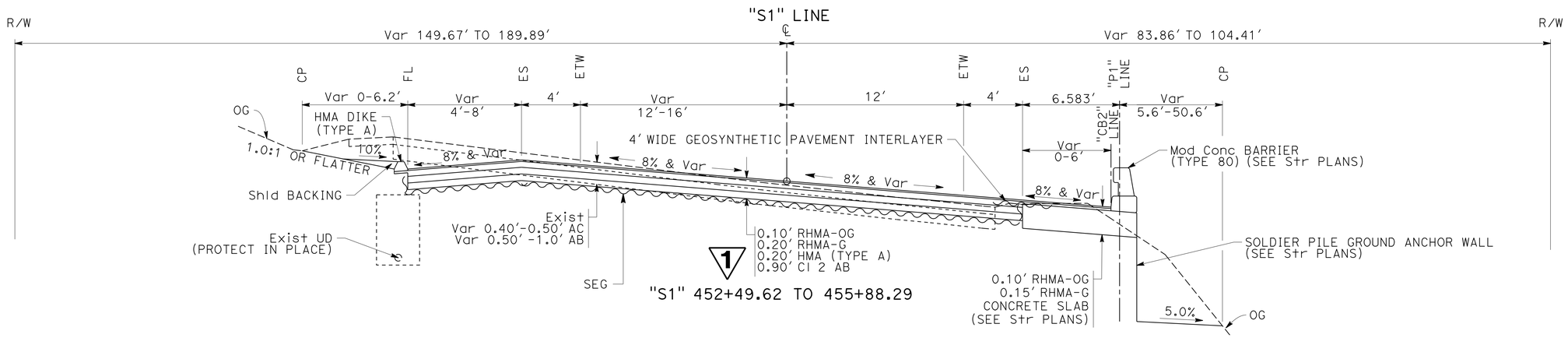

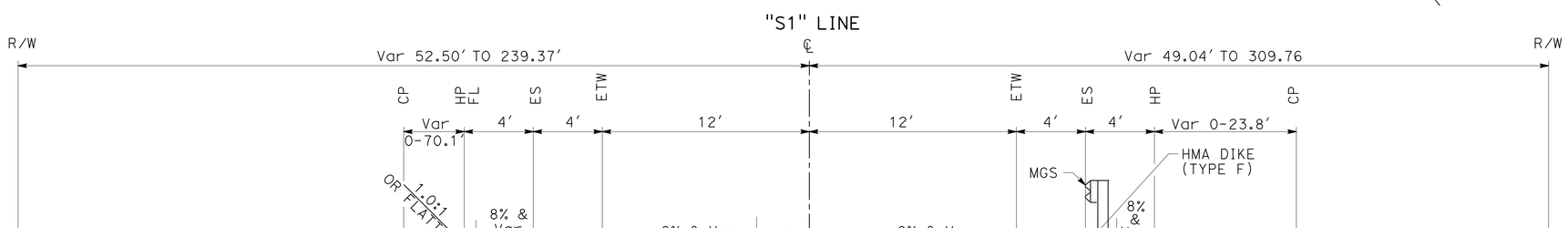

ROUTE 96

TYPICAL CROSS SECTIONS

NO SCALE

X-1

1 REPLACED PER ADDENDUM No. 1 DATED JULY 31, 2015

STATE OF CALIFORNIA - DEPARTMENT OF TRANSPORTATION

Caltrans® DESIGN

FUNCTIONAL SUPERVISOR: ERIC ORR

CALCULATED-DESIGNED BY: KEN HALLIS

CHECKED BY

REVISED BY

DATE REVISED

SOCORRO URENA

P:\proj1\01\0b030_plans\pse\Addenda-1_07-23-15\10b030ca001.dgn

LAST REVISION 03-04-15 | DATE PLOTTED => 30-JUL-2015 | TIME PLOTTED => 10:21

Dist	COUNTY	ROUTE	POST MILES TOTAL PROJECT	SHEET No.	TOTAL SHEETS
01	Hum	96	8.3/8.9	3	99

REGISTERED CIVIL ENGINEER 03-30-15 DATE

PLANS APPROVAL DATE 03-30-15

REGISTERED PROFESSIONAL ENGINEER SOCORRO V. URENA No. 79633 Exp. 9-30-16 CIVIL STATE OF CALIFORNIA

THE STATE OF CALIFORNIA OR ITS OFFICERS OR AGENTS SHALL NOT BE RESPONSIBLE FOR THE ACCURACY OR COMPLETENESS OF SCANNED COPIES OF THIS PLAN SHEET.

"D2" LINE

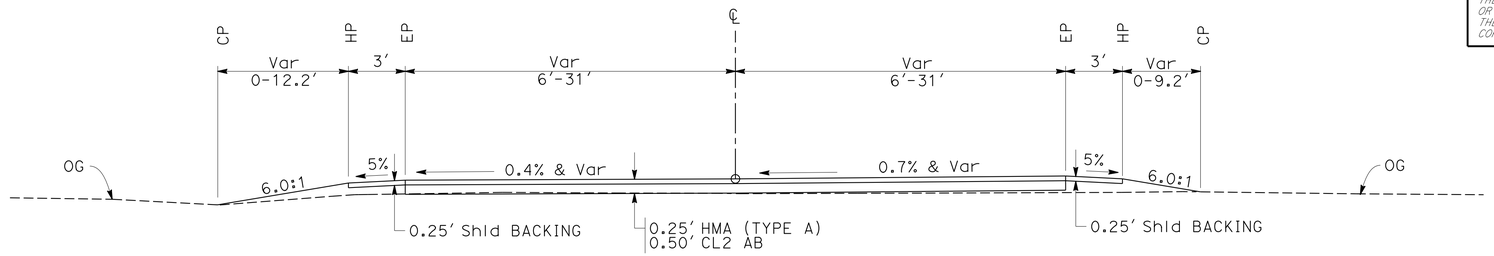

"D2" 0+16.00 TO 0+41.00

"D1" LINE

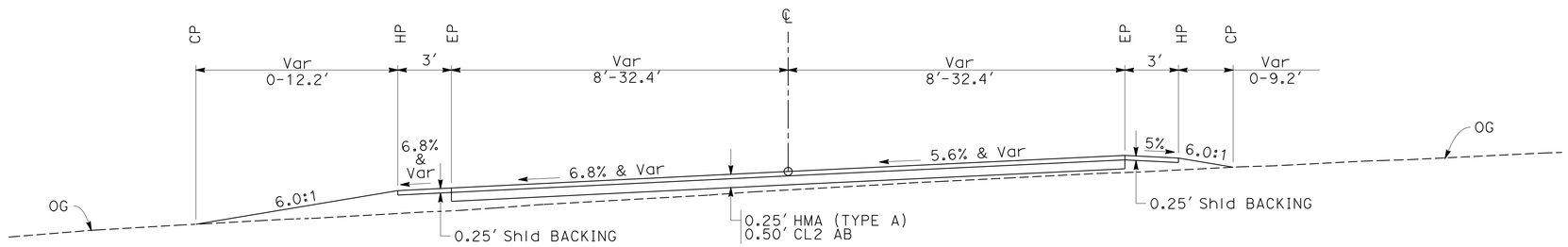

"D1" 0+16.00 TO 0+40.61

"S1" LINE

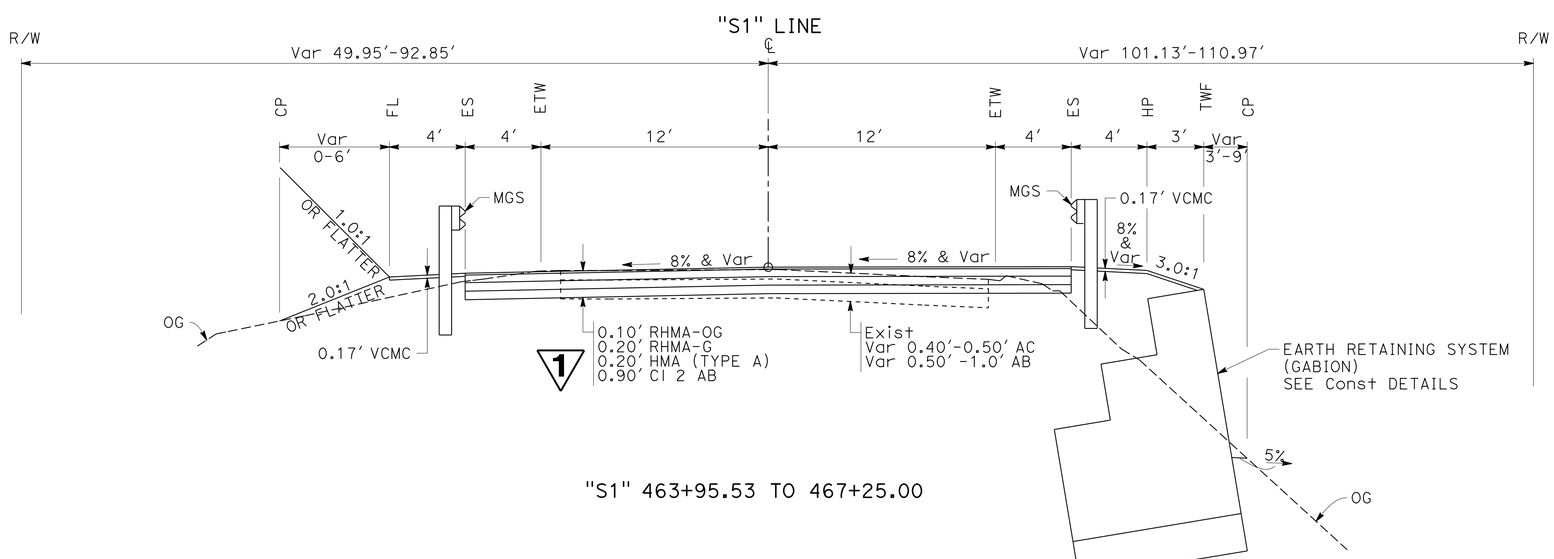

"S1" 463+95.53 TO 467+25.00

TYPICAL CROSS SECTIONS

NO SCALE

X-2

1 REPLACED PER ADDENDUM No. 1 DATED JULY 31, 2015

REVISED BY | DATE REVISED

SOCORRO URENA | KEN HALLIS

CALCULATED-DESIGNED BY | CHECKED BY

FUNCTIONAL SUPERVISOR: ERIC ORR

STATE OF CALIFORNIA - DEPARTMENT OF TRANSPORTATION

Caltrans® **DESIGN**

P:\proj\01\0b030_plans\pse\Addenda-1_07-23-15\10b030ca002.dgn

LAST REVISION 03-04-15 | DATE PLOTTED => 30-JUL-2015 | TIME PLOTTED => 10:21

Dist	COUNTY	ROUTE	POST MILES TOTAL PROJECT	SHEET No.	TOTAL SHEETS
01	Hum	96	8.3/8.9	4	99

REGISTERED CIVIL ENGINEER 03-30-15 DATE

PLANS APPROVAL DATE 03-30-15

REGISTERED PROFESSIONAL ENGINEER SOCORRO V. URENA No. 79633 Exp. 9-30-16 CIVIL STATE OF CALIFORNIA

THE STATE OF CALIFORNIA OR ITS OFFICERS OR AGENTS SHALL NOT BE RESPONSIBLE FOR THE ACCURACY OR COMPLETENESS OF SCANNED COPIES OF THIS PLAN SHEET.

NOTE:

1. FOR ACCURATE RIGHT OF WAY DATA, CONTACT RIGHT OF WAY ENGINEERING AT THE DISTRICT OFFICE.

LEGEND

- COLD PLANE ASPHALT CONCRETE PAVEMENT
- Exist METAL BEAM GUARDRAILING
- ××——××——TSF— MODIFIED TEMPORARY REINFORCED SILT FENCE
- UTILITY POLE LOCATION AT TIME OF CONSTRUCTION (1)

ABBREVIATIONS

AFTS	ALTERNATIVE FLARED TERMINAL SYSTEM
AILTS	ALTERNATIVE IN-LINE TERMINAL SYSTEM
CPACP	COLD PLANE ASPHALT CONCRETE PAVEMENT
EAA	END ANCHOR ASSEMBLY
TFESA	TEMPORARY FENCE (TYPE ESA)
VCMC	VEGETATION CONTROL (MINOR CONCRETE)
MGS (SP)	MIDWEST GUARDRAIL SYSTEM (STEEL POST)
REW	RAIL ELEMENT WALL

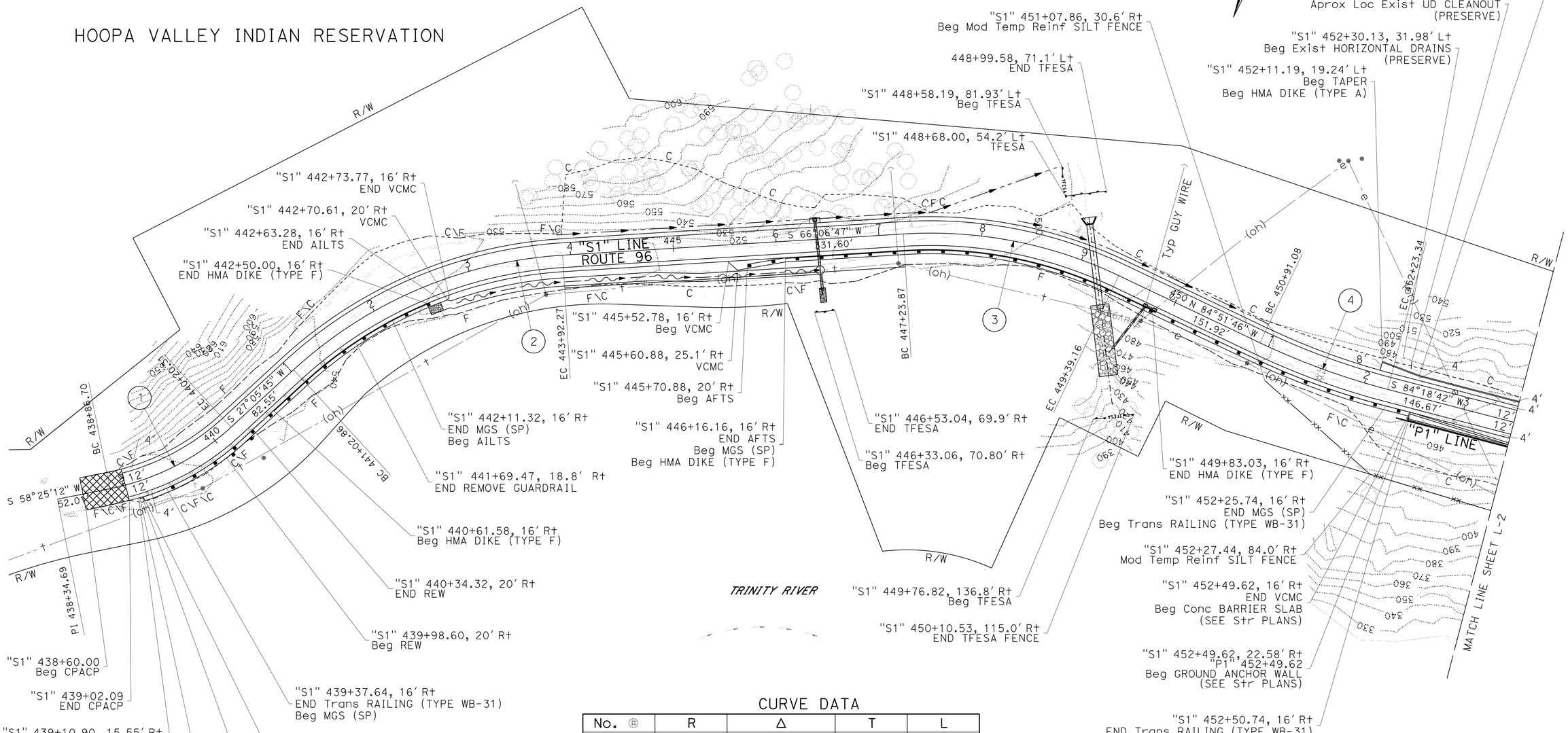

CURVE DATA

No. ⊕	R	Δ	T	L
1	244'	31°19'27"	68.52'	133.60'
2	425'	39°01'02"	150.57'	289.42'
3	425'	29°01'27"	110.01'	215.29'
4	700'	10°49'32"	66.33'	132.26'

(1) **REPLACED PER ADDENDUM No. 1 DATED JULY 31, 2015**

LAYOUT

SCALE: 1" = 50'

L-1

STATE OF CALIFORNIA - DEPARTMENT OF TRANSPORTATION

Caltrans **DESIGN**

FUNCTIONAL SUPERVISOR: ERIC ORR

CALCULATED-DESIGNED BY: SOCORRO URENA

CHECKED BY: KEN HALLIS

REVISED BY / DATE REVISED

P:\proj\01\0b030_plans\pse\Addenda-1_07-23-15\10b030ea001.dgn

LAST REVISION 03-04-15

DATE PLOTTED => 30-JUL-2015

TIME PLOTTED => 10:22

Dist	COUNTY	ROUTE	POST MILES TOTAL PROJECT	SHEET No.	TOTAL SHEETS
01	Hum	96	8.3/8.9	5	99

REGISTERED CIVIL ENGINEER 03-30-15 DATE

PLANS APPROVAL DATE 03-30-15

REGISTERED PROFESSIONAL ENGINEER SOCORRO V. URENA No. 79633 Exp. 9-30-16 CIVIL STATE OF CALIFORNIA

THE STATE OF CALIFORNIA OR ITS OFFICERS OR AGENTS SHALL NOT BE RESPONSIBLE FOR THE ACCURACY OR COMPLETENESS OF SCANNED COPIES OF THIS PLAN SHEET.

NOTES:

1. FOR ACCURATE RIGHT OF WAY DATA, CONTACT RIGHT OF WAY ENGINEERING AT THE DISTRICT OFFICE.

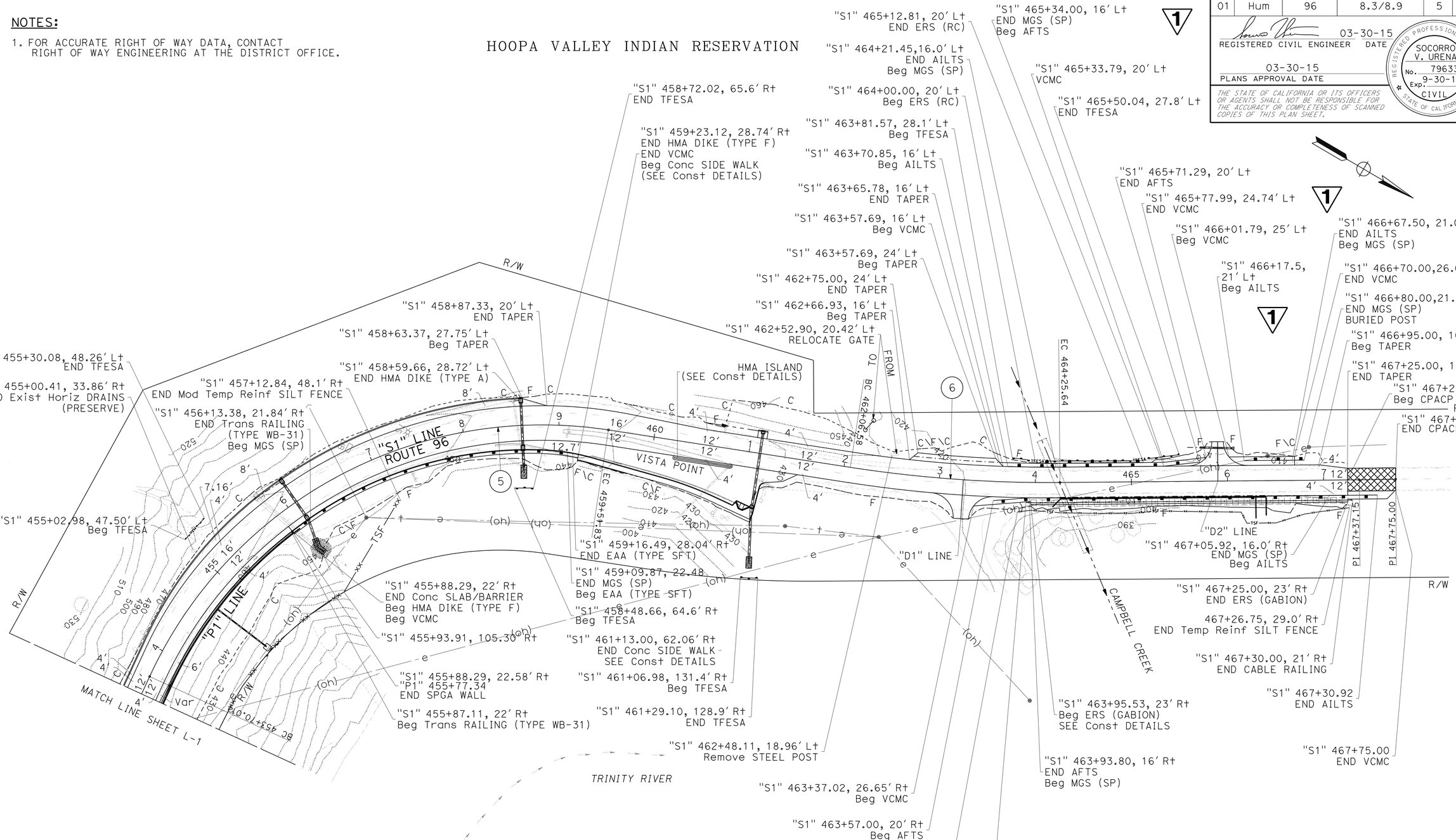

CURVE DATA

No. ⊕	R	Δ	T	L
5	450'	74°04'48"	339.59'	581.82'
6	1350'	08°47'02"	103.68'	206.96'

1 REPLACED PER ADDENDUM No. 1 DATED JULY 31, 2015

LAYOUT

SCALE: 1" = 50'

L-2

STATE OF CALIFORNIA - DEPARTMENT OF TRANSPORTATION

Caltrans DESIGN

FUNCTIONAL SUPERVISOR: ERIC ORR

CALCULATED-DESIGNED BY: KEN HALLIS

CHECKED BY

REVISED BY

DATE REVISED

P:\proj1\01\0b030_plans\pse\Addenda-1_07-23-15\10b030ea002.dgn

LAST REVISION: DATE PLOTTED => 30-JUL-2015 TIME PLOTTED => 10:22 03-04-15

BORDER LAST REVISED 7/2/2010 | USERNAME => s115152 DGN FILE => 10b030ea002.dgn | RELATIVE BORDER SCALE IS IN INCHES 0 1 2 3 | UNIT 0316 | PROJECT NUMBER & PHASE 0115000059-1 | EA 01-0B03U1

Dist	COUNTY	ROUTE	POST MILES TOTAL PROJECT	SHEET No.	TOTAL SHEETS
01	Hum	96	8.3/8.9	8	99

REGISTERED CIVIL ENGINEER 03-30-15 DATE

PLANS APPROVAL DATE 03-30-15

REGISTERED PROFESSIONAL ENGINEER SOCORRO V. URENA No. 79633 Exp. 9-30-16 CIVIL STATE OF CALIFORNIA

THE STATE OF CALIFORNIA OR ITS OFFICERS OR AGENTS SHALL NOT BE RESPONSIBLE FOR THE ACCURACY OR COMPLETENESS OF SCANNED COPIES OF THIS PLAN SHEET.

NOTE:

1. SEE Std PLANS RSP A77L2 AND A77N4 FOR DETAILS NOT SHOWN.

ABBREVIATIONS

RHMA-G	RUBBERIZED HOT MIX ASPHALT-GAP GRADED
CPACP	COLD PLANE ASPHALT CONCRETE PAVEMENT
RHMA-OG	RUBBERIZED HOT MIX ASPHALT OPEN GRADED
REW	RAIL ELEMENT WALL
SEG	SUBGRADE ENHANCEMENT GEOGRID
MGS	MIDWEST GUARDRAIL SYSTEM
TWF	TOP OF WALL FACE
BWF	BOTTOM OF WALL FACE
BS	BIOFILTRATION SWALE

LEGEND

CPACP

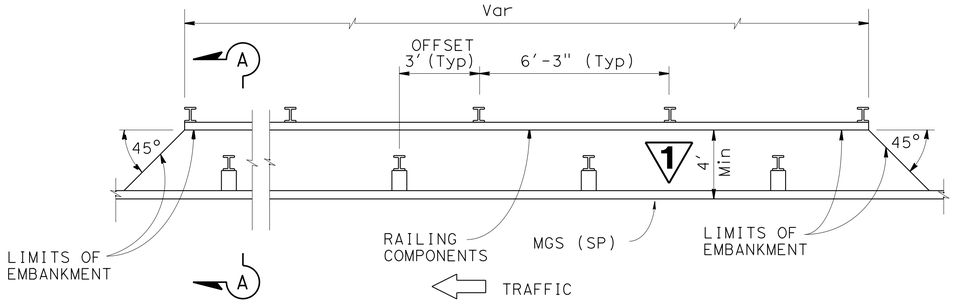

PLAN

RAIL ELEMENT WALL

"S1" 439+98.60 TO 440+34.32 Rt
"S1" 464+00.00 TO 465+12.81 Lt

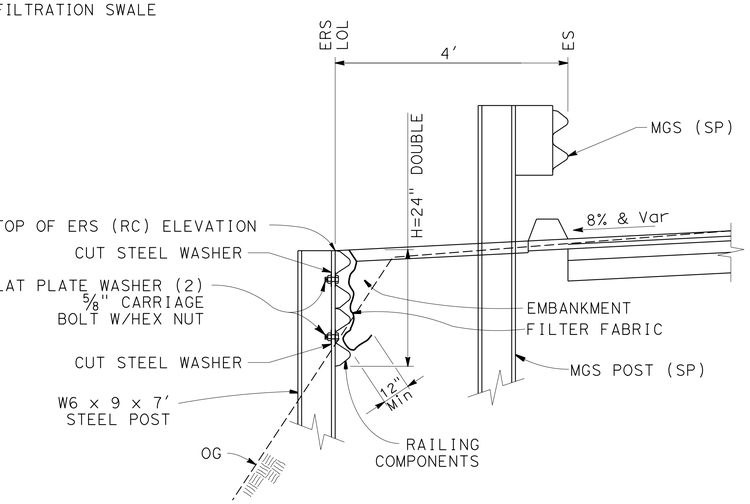

SECTION A-A

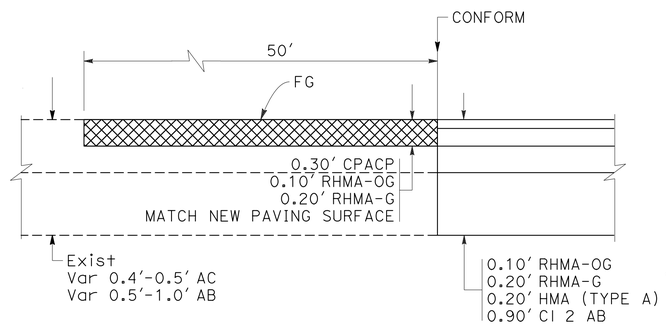

ROUTE 96
HMA PAVING CONFORM

"S1" 467+25.00 TO 467+75.00

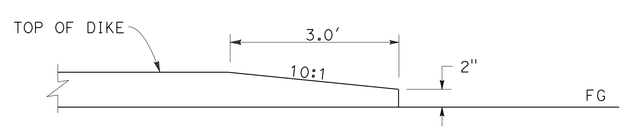

DIKE END TRANSITION

TYPICAL ALL DIKES

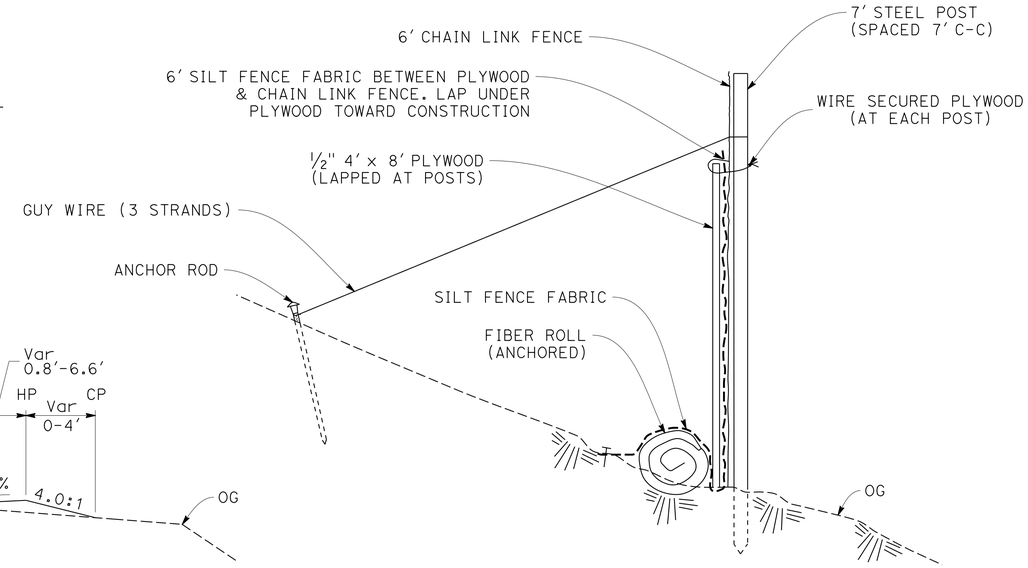

Mod TEMPORARY REINFORCED SILT FENCE

"S1" 451+07.86 TO 457+12.84

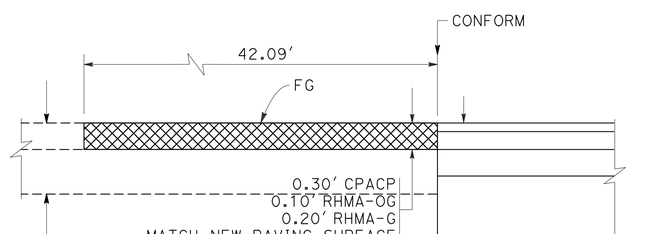

ROUTE 96
HMA PAVING CONFORM

"S1" 438+60.00 TO 439+02.09

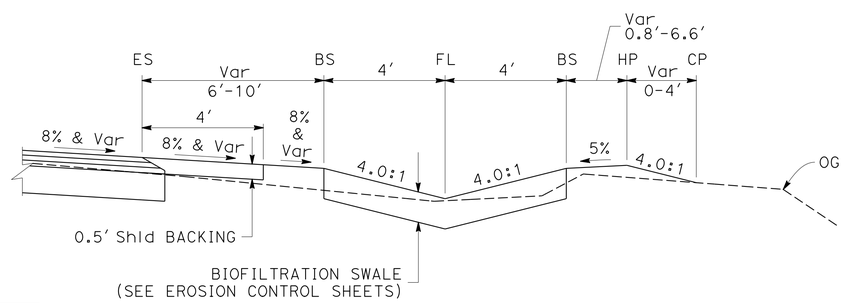

BIOFILTRATION SWALE DETAIL

"S1" 442+73.76 TO 446+39.27

1 REPLACED PER ADDENDUM No. 1 DATED JULY 31, 2015

CONSTRUCTION DETAILS

NO SCALE

C-1

REVISED BY | DATE REVISED
SOCORRO URENA | KEN HALLIS
CALCULATED-DESIGNED BY | CHECKED BY
FUNCTIONAL SUPERVISOR | ERIC ORR
STATE OF CALIFORNIA - DEPARTMENT OF TRANSPORTATION | DESIGN
Caltrans

P:\proj1\01\0b030_plans\pse\Addenda-1_07-23-15\10b030ga001.dgn

LAST REVISION 02-26-15 | DATE PLOTTED => 30-JUL-2015 | TIME PLOTTED => 10:22

NOTE:

1. (N) - NOT A SEPARATE PAY ITEM, FOR INFORMATION ONLY

Dist	COUNTY	ROUTE	POST MILES TOTAL PROJECT	SHEET No.	TOTAL SHEETS
01	Hum	96	8.3/8.9	27	99

REGISTERED CIVIL ENGINEER 03-30-15 DATE

PLANS APPROVAL DATE 03-30-15

REGISTERED PROFESSIONAL ENGINEER SOCORRO V. URENA No. 79633 Exp. 9-30-16 CIVIL STATE OF CALIFORNIA

THE STATE OF CALIFORNIA OR ITS OFFICERS OR AGENTS SHALL NOT BE RESPONSIBLE FOR THE ACCURACY OR COMPLETENESS OF SCANNED COPIES OF THIS PLAN SHEET.

DRAINAGE QUANTITIES

SHEET No.	DRAINAGE SYSTEM No.	DRAINAGE UNIT No.	REMOVE INLET	REMOVE CULVERT	REMOVE OVERSIDE DRAIN	8" PP (N)	8" PPP (N)	8" PPP UD	10" PPP UD	10" PP (N)	GEOCOMPOSITE DRAIN	18" CSP DOWNDRAIN	18" CORRUGATED STEEL PIPE (0.109" THICK)	24" CORRUGATED STEEL PIPE (0.109" THICK)	36" CORRUGATED STEEL PIPE INLET (0.109" THICK)	72" WELDED STEEL PIPE (0.25" THICK)	18' STEEL FLARED END SECTION	MINOR CONCRETE (MINOR STRUCTURE)	HEIGHT (N)	Misc IRON AND STEEL	RSP (LIGHT, METHOD B)	RSP (1/4 TON, METHOD B)	RSP FABRIC (CLASS 10)	CABLE RAILING	PLACE HMA (Misc AREA)	HOT MIX ASPHALT (TYPE A)	SX (N)	SL (N)	STATION	DESCRIPTION	SHEET No.	DRAINAGE SYSTEM No.	DRAINAGE UNIT No.
			EA	LF	EA	LF	LF	LF	LF	LF	SQFT	LF	LF	LF	LF	LF	EA	CY	FT	LB	CY	CY	SQYD	LF	SQYD	TON							
D-1	8.50	a	1																										"S1" 446+39.27		D-1	8.50	a
		b		51																										18" CMP			b
		c																1.66	4.7	239							+0.167	-0.054		INLET (TYPE GO) GRATE 24-12X			c
		d																							4	2.45				HMA APRON			d
		e												46.5																			e
		f													4.7			0.55	4.2	177										INLET (TYPE OMP)1/4" CHECKERED COVER			f
		g												17																			g
		h												2.5																			h
		i																			9	1											i
D-1	8.55	a		150																									"S1" 449+13.82	60"CMP	D-1	8.55	a
		b																16.77	11.0											END WALL AND WING WALL (TYPE A)			b
		c																						20									c
		d														84																	d
		e																				190	230										e
D-1	8.56	a																1.49	4.0	239							-0.105	+0.060	"S1" 449+75.00	INLET (TYPE GO) GRATE 24-12X	D-1	8.56	a
		b											7																				b
		c																1.78	5.2	239							-0.165	+0.060		INLET (TYPE GO) GRATE 24-12X			c
		d											30.5																				d
		e										25																					e
D-1	8.66	a								9																			"S1" 454+69.50		D-1	8.66	a
D-1		b							231																						D-1		b
D-2		c							130												4	1									D-2		c
D-2		d								5																					D-2		d
D-2		e								64																					D-2		e
D-2	8.67	a	1																										"S1" 455+87.59		D-2	8.67	a
		b		77																										24" CMP			b
D-2	8.68	a																2.12	4.5	473							0.080	-0.044	"S1" 456+10.08	INLET (TYPE GDO) (2) GRATE 24-12X	D-2	8.68	a
		b												42																			b
		c																2.42	5.5	473							-0.080	+0.044		INLET (TYPE GDO) (2) GRATE 24-12X			c
		d												24.5																			d
		e																			14	1											e
		f						40																									f
D-2	8.72	a			1																1								"S1" 458+29.07		D-2	8.72	a
SUBTOTAL			2	278	1	0	0	40	361	78	0	25	37.5	132.5	4.7	84	0	26.79	39.1	1840	27	190	230	20	4	2.45							

1 REPLACED PER ADDENDUM No. 1 DATED JULY 31, 2015

DRAINAGE QUANTITIES DQ-1

STATE OF CALIFORNIA - DEPARTMENT OF TRANSPORTATION

DESIGN

Caltrans

SOCORRO URENA | KEN HALLIS | ERIC ORR

REVISED BY | DATE REVISED | CALCULATED-DESIGNED BY | CHECKED BY | FUNCTIONAL SUPERVISOR

P:\proj1\01\0b030_plans\pse\Addenda-1_07-23-15\10b030id001.dgn

DATE PLOTTED => 30-JUL-2015
TIME PLOTTED => 10:22

LAST REVISION 02-27-15

BORDER LAST REVISED 7/2/2010 | USERNAME => s115152 | DGN FILE => 10b030id001.dgn | RELATIVE BORDER SCALE IS IN INCHES 0 1 2 3 | UNIT 0316 | PROJECT NUMBER & PHASE 0115000059-1 | EA 01-0B03U1

Dist	COUNTY	ROUTE	POST MILES TOTAL PROJECT	SHEET No.	TOTAL SHEETS
01	Hum	96	8.3/8.9	28	99

REGISTERED CIVIL ENGINEER 03-30-15 DATE

PLANS APPROVAL DATE 03-30-15

REGISTERED PROFESSIONAL ENGINEER SOCORRO V. URENA No. 79633 Exp. 9-30-16 CIVIL STATE OF CALIFORNIA

THE STATE OF CALIFORNIA OR ITS OFFICERS OR AGENTS SHALL NOT BE RESPONSIBLE FOR THE ACCURACY OR COMPLETENESS OF SCANNED COPIES OF THIS PLAN SHEET.

NOTE:

1. (N) - NOT A SEPARATE PAY ITEM, FOR INFORMATION ONLY

DRAINAGE QUANTITIES

SHEET No.	DRAINAGE SYSTEM No.	DRAINAGE UNIT No.	REMOVE INLET	REMOVE CULVERT	REMOVE OVERSIDE DRAIN	8" PP (N)	8" PPP (N)	8" PPP UD	10" PPP UD	10" PP (N)	GEOCOMPOSITE DRAIN	18" CSP DOWNDRAIN	18" CORRUGATED STEEL PIPE (0.109" THICK)	24" CORRUGATED STEEL PIPE (0.109" THICK)	36" CORRUGATED STEEL PIPE INLET (0.109" THICK)	72" WELDED STEEL PIPE (0.25" THICK)	18' STEEL FLARED END SECTION	MINOR CONCRETE (MINOR STRUCTURE)	HEIGHT (N)	Misc IRON AND STEEL	RSP (LIGHT, METHOD B)	RSP (1/4 TON, METHOD B)	RSP FABRIC (CLASS 10)	CABLE RAILING	PLACE HMA (Misc AREA)	HOT MIX ASPHALT (TYPE A)	SX (N)	SL (N)	STATION	DESCRIPTION	SHEET No.	DRAINAGE SYSTEM No.	DRAINAGE UNIT No.
			EA	LF	EA	LF	LF	LF	LF	LF	SQFT	LF	LF	LF	LF	LF	EA	CY	FT	LB	CY	CY	SQYD	LF	SQYD	TON							
D-2	8.73	a	1																										"S1" 458+56.83	18" CMP 36'	D-2	8.73	a
		b		80																										18" CMP 36'			b
		c																2.10	4.50	473							+0.080	-0.055		INLET (TYPE GDO) (2) GRATE 24-12X			c
		d												45																			d
		e																2.42	5.50	473							-0.080	+0.055		INLET (TYPE GDO) (2) GRATE 24-12X			e
		f												19																			f
		g																			9	1											g
		h						15																									h
D-2	8.77	a	1																										"S1" 460+81.19		D-2	8.77	a
		b		75																										18"CMP			b
D-2	8.78	a																1.65	4.70	473							+0.070	-0.055	"S1" 461+11.45	INLET (TYPE GDO) (2) GRATE 24-12X	D-2	8.78	a
		b																							7	2.5				HMA APRON			b
		c												74																			c
		d																2.00	6.10	239							-0.010	+0.055		INLET (TYPE GO) GRATE 24-12X			d
		e												51																			e
		f																			9	1											f
D-2	8.87	a															1														D-2		a
		b											33																				b
D-2	8.88	a				15																									D-2	8.88	a
		b					204																										b
		c				22																											c
		d					10																										d
		e				19																											e
		f									1283																						f
SUBTOTAL			2	155	0	56	214	15	0	0	1283	0	33	189	0	0	1	8.17	21	1658	18	0	0	0	7	2.5							
TOTAL			4	433	1	56	214	55	361	78	1283	25	71.5	321.5	4.7	84	1	34.96*	60	3498	45*	190	230	20	11	5.0							

* SEE SHEET Q-3 FOR TOTAL QUANTITY
** SEE SHEET Q-2 FOR TOTAL QUANTITY

1 1

1 REPLACED PER ADDENDUM No. 1 DATED JULY 31, 2015

DRAINAGE QUANTITIES
DQ-2

STATE OF CALIFORNIA - DEPARTMENT OF TRANSPORTATION
DESIGN

SOCORRO URENA — REVISED BY
KEN HALLIS — DATE REVISED
CALCULATED-DESIGNED BY
CHECKED BY
FUNCTIONAL SUPERVISOR
ERIC ORR

P:\proj1\01\0b030_plans\pse\Addenda-1_07-23-15\10b030id002.dgn

LAST REVISION 02-27-15 | DATE PLOTTED => 30-JUL-2015 | TIME PLOTTED => 10:22

Dist	COUNTY	ROUTE	POST MILES TOTAL PROJECT	SHEET No.	TOTAL SHEETS
01	Hum	96	8.3/8.9	45	99

REGISTERED CIVIL ENGINEER 03-30-15 DATE

PLANS APPROVAL DATE 03-30-15

REGISTERED PROFESSIONAL ENGINEER SOCORRO V. URENA No. 79633 Exp. 9-30-16 CIVIL STATE OF CALIFORNIA

THE STATE OF CALIFORNIA OR ITS OFFICERS OR AGENTS SHALL NOT BE RESPONSIBLE FOR THE ACCURACY OR COMPLETENESS OF SCANNED COPIES OF THIS PLAN SHEET.

ABBREVIATIONS:

ERS EARTH RETAINING SYSTEM

ROADWAY QUANTITIES

STATION	RELOCATE STEEL POST	REMOVE STEEL POST	RELOCATE GATE	ROADWAY EXCAVATION	EMBANKMENT (N)	COLD PLANE ASPHALT CONCRETE PAVEMENT	HOT MIX ASPHALT (TYPE A)	RUBBERIZED HOT MIX ASPHALT-OPEN GRADED (OPEN GRADED FRICTION COURSE)	RUBBERIZED HOT MIX ASPHALT GAP GRADED	PLACE HOT MIX ASPHALT (Misc AREA)	CLASS 2 AGGREGATE BASE	SHOULDER BACKING	TACK COAT	MINOR Conc (SIDEWALK)	MINOR Conc (CURB)	MINOR Conc (MINOR Str)	VEGETATION CONTROL (MINOR Conc)	CABLE RAILING	RSP FABRIC (CLASS 10)	GABION	SUBGRADE ENHANCEMENT GEOGRID	GEOSYNTHETIC PAVEMENT INTERLAYER (PAVING FABRIC)	PARKING BUMPER (PRECAST CONCRETE)	COMMENTS
	EA	EA	EA	CY	CY	SQYD	TON	TON	TON	SQYD	CY	TON	TON	CY	CY	CY	SQYD	LF	SQYD	CY	SQYD	SQYD	EA	
"S1" 438+60.00 TO 439+02.09						148		12	24				0.04											CONFORM
"S1" 439+02.09 TO 463+61.77 Lt												225.00												
"S1" 439+02.09 TO 467+25.00				8337	685		1758	898	1805		3559		2.92											
"S1" 439+11.96 TO 439+18.13																1								ANCHOR BLOCK
"S1" 439+15.24 TO 442+73.77																	149.0							
"S1" 442+47.27 TO 445+52.78 Rt												40.63												
"S1" 439+02.09 TO 463+95.53																					5191			
"S1" 445+60.88 TO 452+49.62																	294.4							
"S1" 440+61.58 TO 459+23.12							12																	HMA DIKE (TYPE F)
"S1" 446+21.00 TO 467+25.00 Lt												14.93												
"S1" 451+95.70 TO 456+18.10																								
"S1" 452+11.19 TO 458+.59.66							19																	HMA DIKE (TYPE A)
"S1" 452+49.62 TO 455+88.29																						151		
"S1" 455+88.29 TO 459+23.12																	116.9							
"S1" 459+22.35 TO 459+75.0															1.11									B1-4 CURB
"S1" 459+23.12 TO 461+11.32														14.2										SIDEWALK
"S1" 459+23.12 TO 461+13.48															4.67									A1-6 CURB
"S1" 459+25.00 TO 462+92.95 Rt												31.11												
"S1" 460+22.47 TO 460+84.89							3																	HMA DIKE (TYPE E)
"S1" 460+22.47 TO 460+84.89							6			13														HMA ISLAND
"S1" 461+11.32 TO 461+20.44															1.08									A1-6 CURB
"S1" 461+13.65	1																							
"S1" 461+13.90 TO 461+11.38 Rt																							1	
"S1" 462+48.11		1																						
"S1" 462+52.90 TO 462+24.59			1																					
"S1"463+57.69 TO 465+77.99 Rt																	100.8							
"S1"463+37.02 TO 467+75.00 Lt																	337.6							
"S1" 463+90.55 TO 467+30.00																		340						
"S1" 463+95.53 TO 467+25.0											239								1977	803	434			ERS (GABION)
"S1" 466+01.00 TO 466+80.00																	63.3							
"S1" 467+25.00 TO 467+75.00						132		11	18				0.04											CONFORM
SUBTOTAL (THIS SHEET)	1	1	1	8337	685	280	1798	921	1847	13	3798	311.67	3.00	14.2	6.86	1	1062.0	340	1977	803	5625	151	1	
							1	1	1				1				1							

1 REPLACED PER ADDENDUM No. 1 DATED JULY 31, 2015

SUMMARY OF QUANTITIES

Q-1

SOCORRO URENA — KEN HALLIS — ERIC ORR

REVISED BY — DATE REVISED — CALCULATED-DESIGNED BY — CHECKED BY — FUNCTIONAL SUPERVISOR

STATE OF CALIFORNIA - DEPARTMENT OF TRANSPORTATION — DESIGN — Caltrans

P:\proj1\01\0b030_plans\pse\Addenda-1_07-23-15\10b030pa001.dgn

LAST REVISION — DATE PLOTTED => 30-JUL-2015 — TIME PLOTTED => 10:22 — 07-23-15

Dist	COUNTY	ROUTE	POST MILES TOTAL PROJECT	SHEET No.	TOTAL SHEETS
01	Hum	96	8.3/8.9	46	99

REGISTERED CIVIL ENGINEER 03-30-15 DATE

PLANS APPROVAL DATE 03-30-15

REGISTERED PROFESSIONAL ENGINEER SOCORRO V. URENA No. 79633 Exp. 9-30-16 CIVIL STATE OF CALIFORNIA

THE STATE OF CALIFORNIA OR ITS OFFICERS OR AGENTS SHALL NOT BE RESPONSIBLE FOR THE ACCURACY OR COMPLETENESS OF SCANNED COPIES OF THIS PLAN SHEET.

ROADWAY QUANTITIES

STATION	RELOCATE STEEL POST	REMOVE STEEL POST	RELOCATE GATE	ROADWAY EXCAVATION	EMBANKMENT (N)	COLD PLANE ASPHALT CONCRETE PAVEMENT	HOT MIX ASPHALT (TYPE A)	RUBBERIZED HOT MIX ASPHALT-OPEN GRADED (OPEN GRADED FRICTION COURSE)	RUBBERIZED HOT MIX ASPHALT GAP GRADED	PLACE HOT MIX ASPHALT (Misc AREA)	CLASS 2 AGGREGATE BASE	SHOULDER BACKING	TACK COAT	MINOR Conc (SIDEWALK)	MINOR Conc (CURB)	MINOR Conc(MINOR Str)	VEGETATION CONTROL (MINOR Conc)	CABLE RAILING	RSP FABRIC (CLASS 10)	GABION	SUBGRADE ENHANCEMENT GEOGRID	GEOSYNTHETIC PAVEMENT INTERLAYER (PAVING FABRIC)	PARKING BUMPER (PRECAST CONCRETE)	COMMENTS
	EA	EA	EA	CY	CY	SQYD	TON	TON	TON	SQYD	CY	TON	TON	CY	CY	CY	SQYD	LF	SQYD	CY	SQYD	SQYD	EA	
"D1" 0+16.00 TO 0+40.60 R+				4	2		12				12	6												DRIVEWAY 1
"D2" 0+16.00 TO 0+41.00 R+				2	1		11				11	6												DRIVEWAY 2
"D2" 0+24.74 TO 0+41.00 L+												2.66												DRIVEWAY 2
"T1" 451+50.00 TO 456+88.00				8819	3528																			GROUND ANCHOR WALL
"T2" 449+50.00 TO 458+75.00 L+				174	85		257				127	31.93												STAGE 1 CONSTRUCTION
FROM DRAINAGE QUANTITIES							5			11						35		20	230					
SUBTOTAL (THIS SHEET)				8999	3616		285			11	150	46.59				35		20	230					
SUBTOTAL (FROM Q-1)	1	1	1	8337	685	280	1798	921	1844	13	3798	311.67	3.0	14.2	6.86	1	1062.0	340	1977					
TOTAL	1	1	1	17336	4301	280	2083	921	1844	24	3948	358.26	3.0	14.2	6.86	36	1062.0	360	2207	803	5625	151	1	
							1	1	1				1				1							

1 REPLACED PER ADDENDUM No. 1 DATED JULY 31, 2015

SUMMARY OF QUANTITIES
Q-2

FUNCTIONAL SUPERVISOR: ERIC ORR
CALCULATED-DESIGNED BY: SOCORRO URENA
CHECKED BY: KEN HALLIS
REVISED BY
DATE REVISED

STATE OF CALIFORNIA - DEPARTMENT OF TRANSPORTATION
Caltrans® DESIGN

P:\proj1\01\0b030_plans\pse\Addenda-1_07-23-15\10b030pa002.dgn

LAST REVISION 07-23-15 | DATE PLOTTED => 30-JUL-2015 | TIME PLOTTED => 10:22

Dist	COUNTY	ROUTE	POST MILES TOTAL PROJECT	SHEET No.	TOTAL SHEETS
01	Hum	96	8.3/8.9	47	99

REGISTERED CIVIL ENGINEER 03-30-15 DATE

03-30-15
PLANS APPROVAL DATE

REGISTERED PROFESSIONAL ENGINEER SOCORRO V. URENA No. 79633 Exp. 9-30-16 CIVIL STATE OF CALIFORNIA

THE STATE OF CALIFORNIA OR ITS OFFICERS OR AGENTS SHALL NOT BE RESPONSIBLE FOR THE ACCURACY OR COMPLETENESS OF SCANNED COPIES OF THIS PLAN SHEET.

NOTE:

1. (N) - NOT A SEPARATE PAY ITEM, FOR INFORMATION ONLY

1 WATER POLLUTION CONTROL QUANTITIES

STATION	L+/R+	TEMPORARY COVER	TEMPORARY CHECK DAM	TEMPORARY DRAINAGE INLET PROTECTION	TEMPORARY FIBER ROLL	TEMPORARY CONSTRUCTION ENTRANCE
		SQYD	LF	EA	LF	EA
"S1" 439+02.09 TO 467+75.00	LT/RT	10000	200	6	1400	1
TOTAL		10000	200	6	1400	1

ROCK SLOPE PROTECTION

STATION	L+/R+	RSP (LIGHT, METHOD B)	RSP (1/4 TON, METHOD B)
		CY	CY
"S1" 442+50.00 TO 442+73.76	RT	11	
FROM DRAINAGE QUANTITIES		45	190
TOTAL		56	190

1

HMA DIKE

STATION	L+/R+	TYPE A	TYPE E	TYPE F
		LF	LF	LF
"S1" 440+61.58 TO 442+50.00	RT			183
"S1" 446+08.16 TO 449+83.03	RT			366
"S1" 452+11.19 TO 458+59.66	LT	674		
"S1" 455+88.29 TO 459+23.13	RT			318
"S1" 460+22.47 TO 460+84.89	RT		125	
TOTAL		674	125	867

GUARDRAIL

STATION	L+/R+	TREATED WOOD WASTE	REMOVE GUARDRAIL	MIDWEST GUARDRAIL SYSTEM (STEEL POSTS)	TRANSITION RAILING (TYPE WB-31)	END ANCHOR ASSEMBLY (TYPE SFT)	A1+ IN-LINE TERMINAL SYSTEM	A1+ FLARED TERMINAL SYSTEM	ERS (RAILING COMPONENTS)	1 BURIED POST (N)
		LB	LF	LF	EA	EA	EA	EA	SQFT	EA
"S1" 439+10.90 TO 441+69.47	RT	1600	267							
"S1" 439+14.19 TO 439+37.64	RT				1					
"S1" 439+37.64 TO 442+11.32	RT			275						
"S1" 439+98.60 TO 440+34.32	RT								75	
"S1" 442+11.32 TO 442+63.28	RT						1			
"S1" 445+70.88 TO 446+16.16	RT							1		
"S1" 446+16.16 TO 452+25.74	RT			612.5						
"S1" 452+25.74 TO 452+50.74	RT				1					
"S1" 455+87.11 TO 456+13.38	RT				1					
"S1" 456+13.38 TO 459+09.87	RT			287.5						
"S1" 459+09.87 TO 459+16.49	RT					1				
"S1" 463+57.00 TO 463+93.80	RT							1		
"S1" 463+70.85 TO 464+21.45	LT						1			
"S1" 464+00.00 TO 465+12.81	LT								225	
"S1" 464+21.45 TO 465+34.00	LT			112.5						
"S1" 463+93.80 TO 467+05.92	RT			312.5						
"S1" 465+34.00 TO 465+71.29	LT							1		
"S1" 466+17.50 TO 466+67.50	LT			1 12.5			1			1
"S1" 467+05.92 TO 467+30.92	RT						1			
TOTAL		1600	267	1612.5	3	1	4	3	300	1

TEMPORARY FENCE

STATION	L+/R+	TEMP FENCE (TYPE ESA)	TEMP REINFORCED SILT FENCE	Mod TEMP REINFORCED SILT FENCE
		LF	LF	LF
"S1" 446+33.06 TO 446+53.04	RT	20		
"S1" 448+58.19 TO 448+99.58	LT	70		
"S1" 449+76.82 TO 450+10.53	RT	40		
"S1" 451+07.86 TO 457+12.84	RT			572
"S1" 455+02.98 TO 455+30.08	LT	30		
"S1" 458+48.66 TO 458+72.02	RT	20		
"S1" 461+06.98 TO 461+29.10	RT	22		
"S1" 463+81.57 TO 465+50.04	LT	175		
"S1" 463+81.57 TO 467+30.75	RT		355	
TOTAL		375	355	572

1 REPLACED PER ADDENDUM No. 1 DATED JULY 31, 2015

SUMMARY OF QUANTITIES

Q-3

STATE OF CALIFORNIA - DEPARTMENT OF TRANSPORTATION
Caltrans DESIGN

FUNCTIONAL SUPERVISOR: ERIC ORR
CALCULATED-DESIGNED BY: SOCORRO URENA
CHECKED BY: KEN HALLIS
REVISED BY / DATE REVISED

P:\proj\01\0b030_plans\pse\Addenda-1_07-23-15\10b030pa003.dgn

LAST REVISION 03-04-15
DATE PLOTTED => 30-JUL-2015
TIME PLOTTED => 10:22

Dist	COUNTY	ROUTE	POST MILES TOTAL PROJECT	SHEET No.	TOTAL SHEETS
01	Hum	96	8.3/8.9	53	99

LICENSED LANDSCAPE ARCHITECT

03-30-15
PLANS APPROVAL DATE

LICENSED LANDSCAPE ARCHITECT J. PATRICK SULLIVAN #3125 Signature 07/31/16 Renewal Date 03/30/15 Date STATE OF CALIFORNIA

THE STATE OF CALIFORNIA OR ITS OFFICERS OR AGENTS SHALL NOT BE RESPONSIBLE FOR THE ACCURACY OR COMPLETENESS OF SCANNED COPIES OF THIS PLAN SHEET.

NOTE:

1. FOR ACCURATE RIGHT OF WAY DATA, CONTACT RIGHT OF WAY ENGINEERING AT THE DISTRICT OFFICE.

LEGEND

EROSION CONTROL BONDED FIBER MATRIX (EC TYPE 1)

EROSION CONTROL (DRY SEED) (EC TYPE 2)

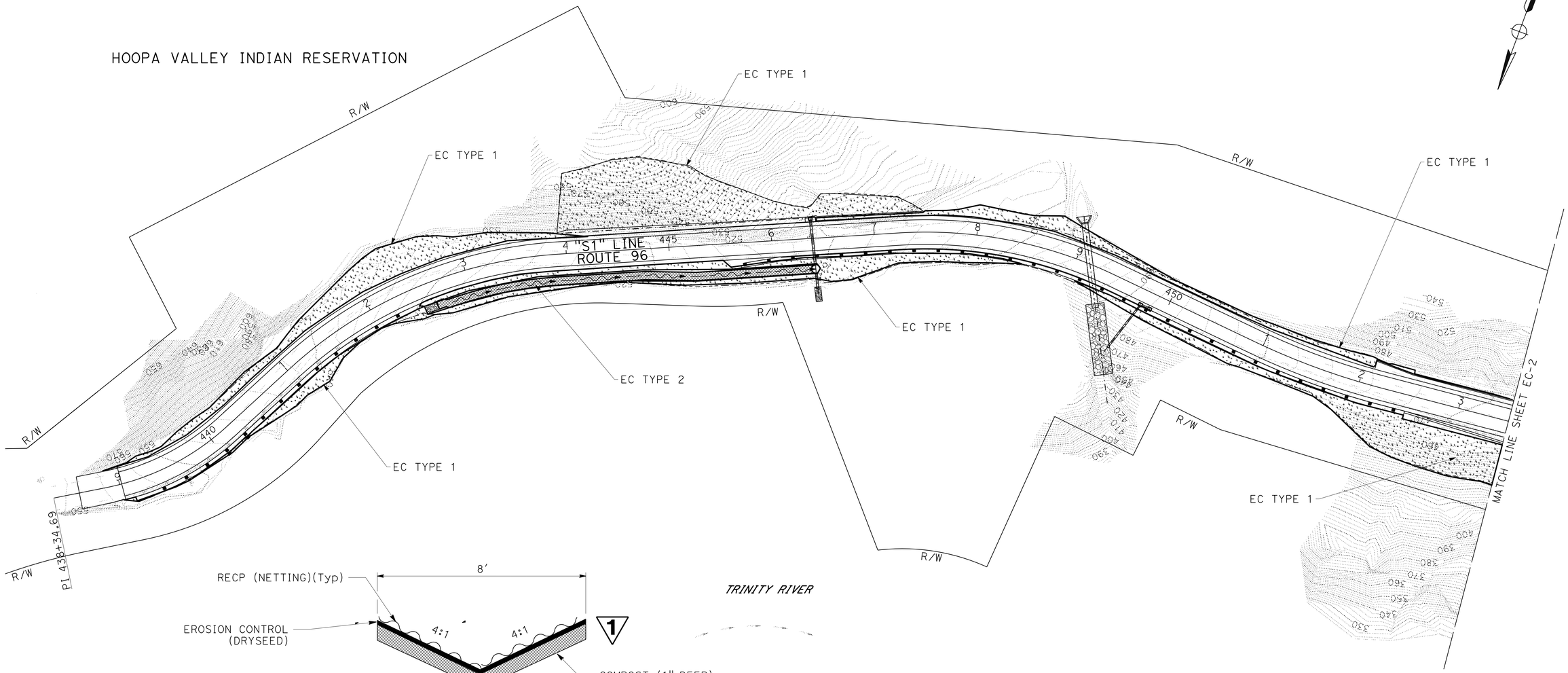

BIOFILTRATION SWALE

"S1" 442+73.76 TO 446+39.27

1 REPLACED PER ADDENDUM No. 1 DATED JULY 31, 2015

APPROVED FOR LANDSCAPE WORK ONLY

EROSION CONTROL PLAN EC-1

SCALE: 1" = 50'

STATE OF CALIFORNIA - DEPARTMENT OF TRANSPORTATION
Caltrans® LANDSCAPE ARCHITECTURE

SENIOR LANDSCAPE ARCHITECT: RON FLORY
CALCULATED-DESIGNED BY: J. PATRICK SULLIVAN
CHECKED BY: RON FLORY
REVISED BY
DATE REVISED

P:\proj1\01\0b030_plans\pse\Addenda-1_07-23-15\10b030te001.dgn

LAST REVISION: DATE PLOTTED => 30-JUL-2015 TIME PLOTTED => 10:22
03-09-15

BORDER LAST REVISED 7/2/2010 | USERNAME => s115152 | DGN FILE => 10b030te001.dgn | RELATIVE BORDER SCALE IS IN INCHES 0 1 2 3 | UNIT 0382 | PROJECT NUMBER & PHASE 0115000059-1 | EA 01-0B03U1