Dist	COUNTY	ROUTE	POST MILES TOTAL PROJECT	SHEET No.	TOTAL SHEETS
01	Hum	169	26.4/29.8	1	41

ACST-ER-19D1(004)E

STATE OF CALIFORNIA
DEPARTMENT OF TRANSPORTATION

PROJECT PLANS FOR CONSTRUCTION ON
STATE HIGHWAY

IN HUMBOLDT COUNTY NEAR WEITCHPEC
FROM 0.6 MILE WEST OF MINERS CREEK BRIDGE
TO ROCK CHUTE CREEK BRIDGE

INDEX OF PLANS

SHEET No.	DESCRIPTION
1	TITLE AND LOCATION MAP
2	TYPICAL CROSS SECTIONS
3-5	LAYOUTS
6	CONSTRUCTION DETAILS
7-14	DRAINAGE PLANS, PROFILES, DETAILS AND QUANTITIES
15	CONSTRUCTION AREA SIGNS
16	MOTORIST INFORMATION PLAN
17-20	TRAFFIC HANDLING PLANS AND QUANTITIES
21	PAVEMENT DELINEATION AND SIGN DETAILS AND QUANTITIES
22	SUMMARY OF QUANTITIES
23-28	EROSION CONTROL PLANS, DETAILS, AND QUANTITIES
29-31	ELECTRICAL PLANS
32-35	REVISED STANDARD PLANS

THE STANDARD PLANS LIST APPLICABLE TO THIS CONTRACT IS INCLUDED IN THE NOTICE TO BIDDERS AND SPECIAL PROVISIONS BOOK.

TO BE SUPPLEMENTED BY STANDARD PLANS DATED 2015

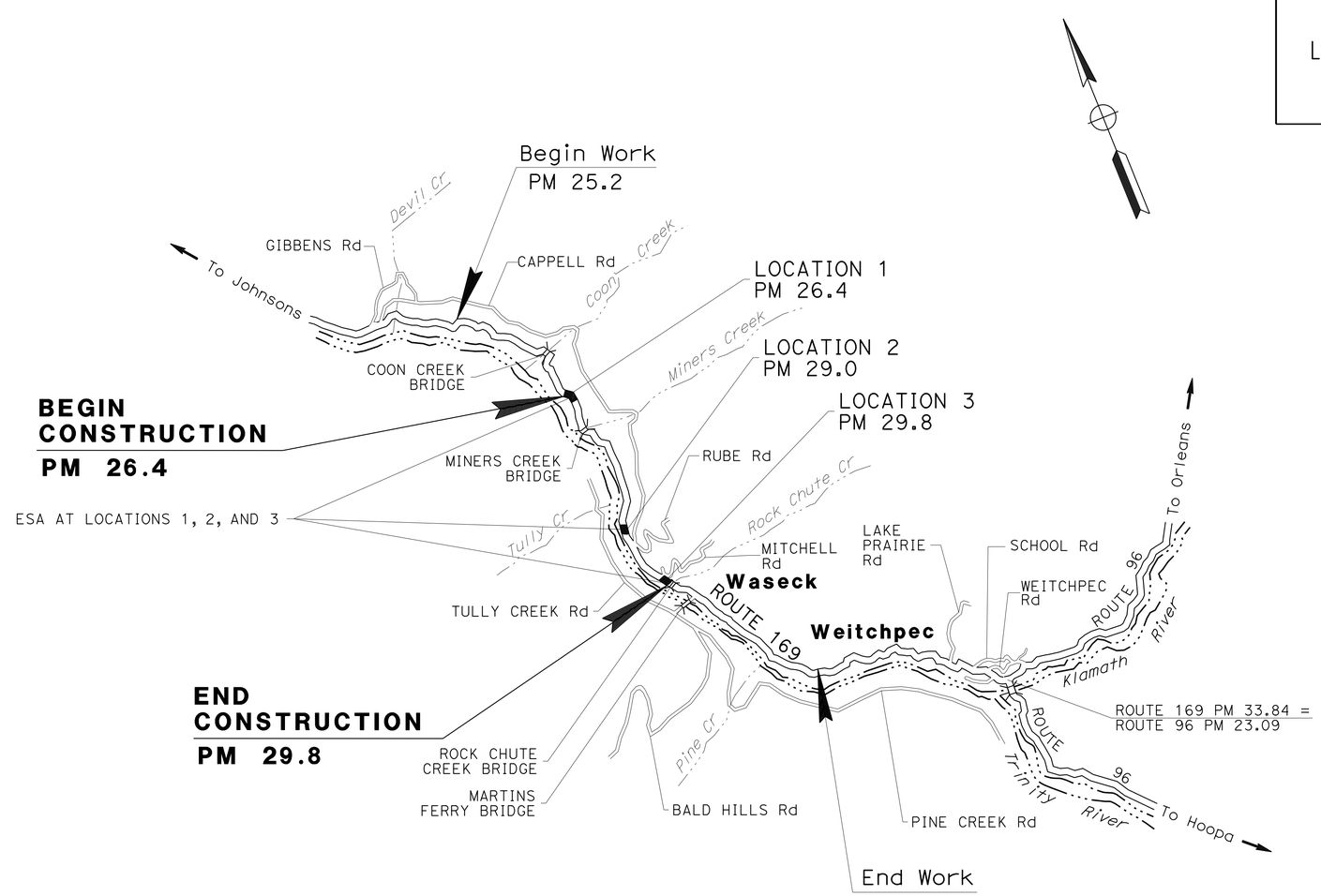

NO SCALE

THE CONTRACTOR SHALL POSSESS THE CLASS (OR CLASSES) OF LICENSE AS SPECIFIED IN THE "NOTICE TO BIDDERS."

PROJECT MANAGER: FRANK C. DEMLING
DESIGN MANAGER: JOHN L. MARTIN

06-15-16
PROJECT ENGINEER REGISTERED CIVIL ENGINEER — DATE

June 15, 2016
PLANS APPROVAL DATE

REGISTERED PROFESSIONAL ENGINEER — JAMES D. RASMUSSEN — No. C76401 — Exp. 12-31-16 — CIVIL — STATE OF CALIFORNIA

THE STATE OF CALIFORNIA OR ITS OFFICERS OR AGENTS SHALL NOT BE RESPONSIBLE FOR THE ACCURACY OR COMPLETENESS OF SCANNED COPIES OF THIS PLAN SHEET.

CONTRACT No.	01-0B4404
PROJECT ID	0112000128

LAST REVISION 12-02-15
DATE PLOTTED => 22-JUL-2016
TIME PLOTTED => 11:14

Dist	COUNTY	ROUTE	POST MILES TOTAL PROJECT	SHEET No.	TOTAL SHEETS
01	Hum	169	26.4/29.8	2	41

REGISTERED CIVIL ENGINEER 6-15-16 DATE

6-15-16
PLANS APPROVAL DATE

REGISTERED PROFESSIONAL ENGINEER JAMES D. RASMUSSEN No. C76401 Exp. 12-31-16 CIVIL STATE OF CALIFORNIA

THE STATE OF CALIFORNIA OR ITS OFFICERS OR AGENTS SHALL NOT BE RESPONSIBLE FOR THE ACCURACY OR COMPLETENESS OF SCANNED COPIES OF THIS PLAN SHEET.

NOTES:

1. DIMENSIONS OF THE PAVEMENT STRUCTURES (STRUCTURAL SECTIONS) ARE SUBJECT TO TOLERANCES SPECIFIED IN THE STANDARD SPECIFICATIONS.
2. DIMENSIONS OF EXISTING RSP UNKNOWN. MAXIMUM ROCK SIZE, WIDTH, AND DEPTH OF RSP IS UNKNOWN.
3. SEE SHEET EC-1 & EC-2 FOR SELECTED MATERIAL LOCATIONS
4. SEE SHEET PP-1 FOR PLANT (GROUP H)

ABBREVIATIONS;

(E)	EXISTING
S/C	SAWCUT
HMA	HOT MIX ASPHALT (TYPE A)
MISC HMA	PLACE HMA (MISCELLANEOUS AREA)

DESIGN DESIGNATION

ADT (2014)	320	D	60%
ADT (2037)	360	T	5%
DHV	70	V	40 mph
ESAL	64,925	TI_{20}	6.5

PAVEMENT CLIMATE REGION: LOW MOUNTAIN

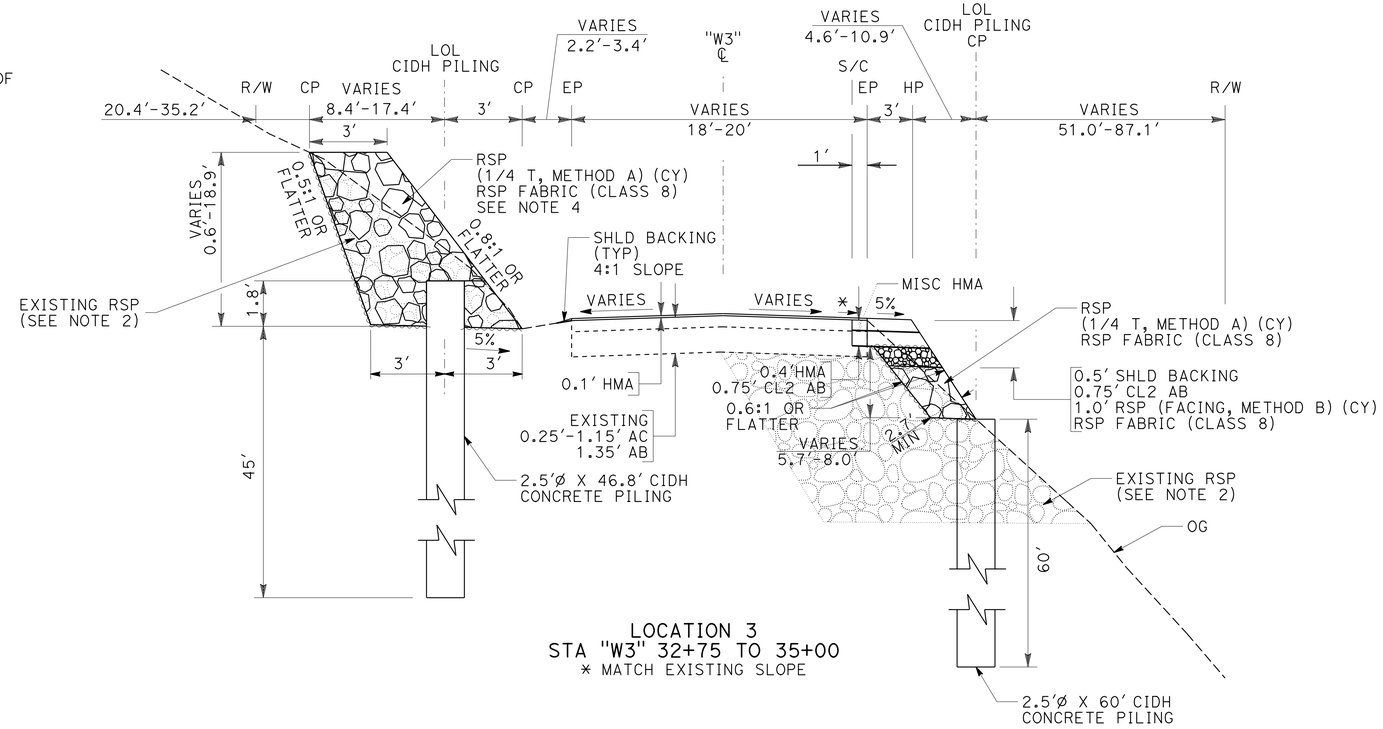

LOCATION 3
STA "W3" 32+75 TO 35+00
* MATCH EXISTING SLOPE

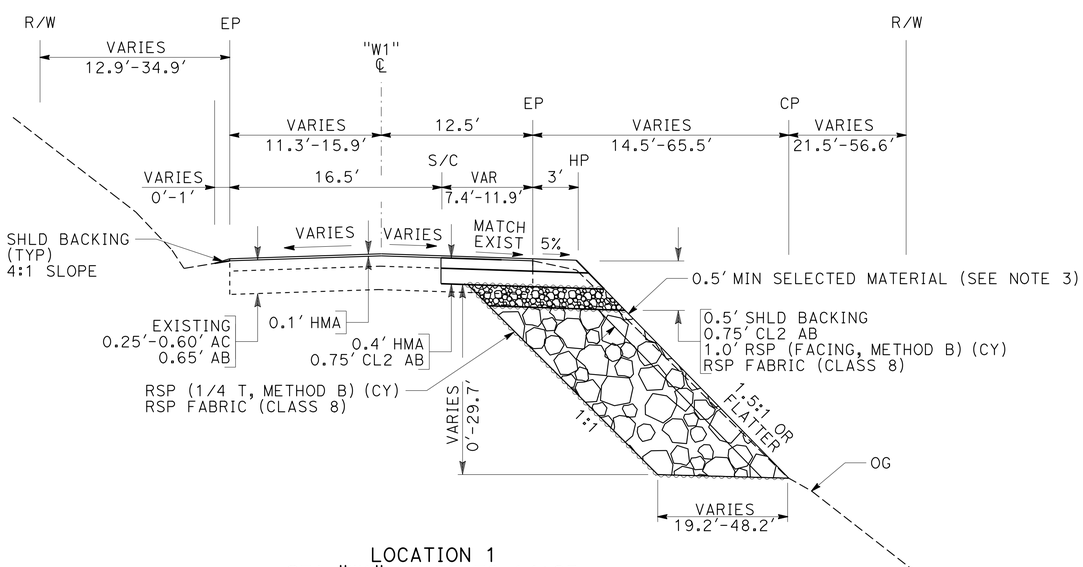

LOCATION 1
STA "W1" 11+75 TO 14+65

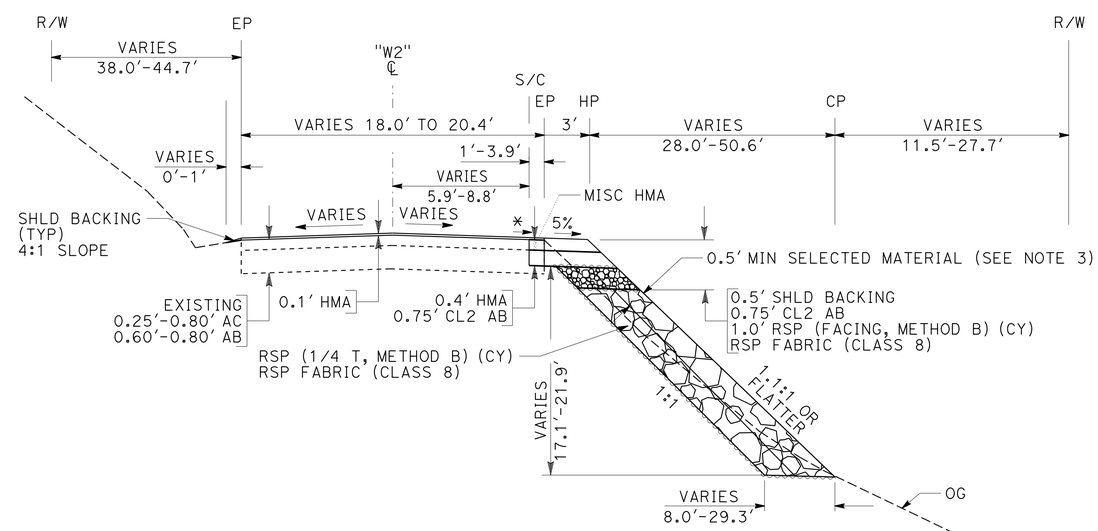

LOCATION 2
STA "W2" 21+80 TO 23+10
* MATCH EXISTING SLOPE

TYPICAL CROSS SECTION

NO SCALE

X-1

ROUTE 169

STATE OF CALIFORNIA - DEPARTMENT OF TRANSPORTATION
Caltrans® **DESIGN**

FUNCTIONAL SUPERVISOR: JOHN L. MARTIN
CALCULATED-DESIGNED BY: BETH A. ELMORE
CHECKED BY: JIM RASMUSSEN
REVISED BY / DATE REVISED

P:\proj1\01\0b440_plans\pse\010b440ca001.dgn

LAST REVISION 02-15-16 | DATE PLOTTED => 22-JUL-2016 | TIME PLOTTED => 11:14

Dist	COUNTY	ROUTE	POST MILES TOTAL PROJECT	SHEET No.	TOTAL SHEETS
01	Hum	169	26.4/29.8	3	41

REGISTERED CIVIL ENGINEER 6-15-16 DATE

6-15-16
PLANS APPROVAL DATE

REGISTERED PROFESSIONAL ENGINEER JAMES D. RASMUSSEN No. C76401 Exp. 12-31-16 CIVIL STATE OF CALIFORNIA

THE STATE OF CALIFORNIA OR ITS OFFICERS OR AGENTS SHALL NOT BE RESPONSIBLE FOR THE ACCURACY OR COMPLETENESS OF SCANNED COPIES OF THIS PLAN SHEET.

NOTES:

1. FOR ACCURATE RIGHT OF WAY DATA, CONTACT RIGHT OF WAY ENGINEERING AT THE DISTRICT OFFICE.
2. EXACT SIGN LOCATIONS TO BE DETERMINED BY ENGINEER.
3. SEE DRAINAGE QUANTITIES FOR MARKER (CULVERT) LOCATIONS.
4. CALIFORNIA SIGN CODES ARE DESIGNATED BY (CA), OTHERWISE, FEDERAL MUTCD SIGN CODES ARE SHOWN.

ABBREVIATIONS:

MISC HMA	PLACE HMA (MISCELLANEOUS AREA)
PR/W	PRESCRIPTIVE RIGHT OF WAY
TFESA	TEMPORARY FENCE (TYPE ESA)

LEGEND:

- (#) CURVE NUMBER
- MILEPOST MARKER
- EXISTING MILEPOST MARKER
- EXISTING ROADSIDE SIGN-ONE POST
- RELOCATE ROADSIDE SIGN-ONE POST
- WELL
- RSP

CURVE DATA

No. (#)	R	Δ	T	L
1	725′	13°22′19"	84.99′	169.20′
2	276′	09°36′33"	23.21′	46.31′
3	215′	27°02′13"	51.69′	101.45′
4	175′	18°33′56"	28.60′	56.71′
5	910′	05°42′26"	45.36′	90.65′
6	100′	23°27′38"	20.76′	40.95′
7	145′	46°05′51"	61.69′	116.66′
8	540′	07°58′26"	37.64′	75.15′

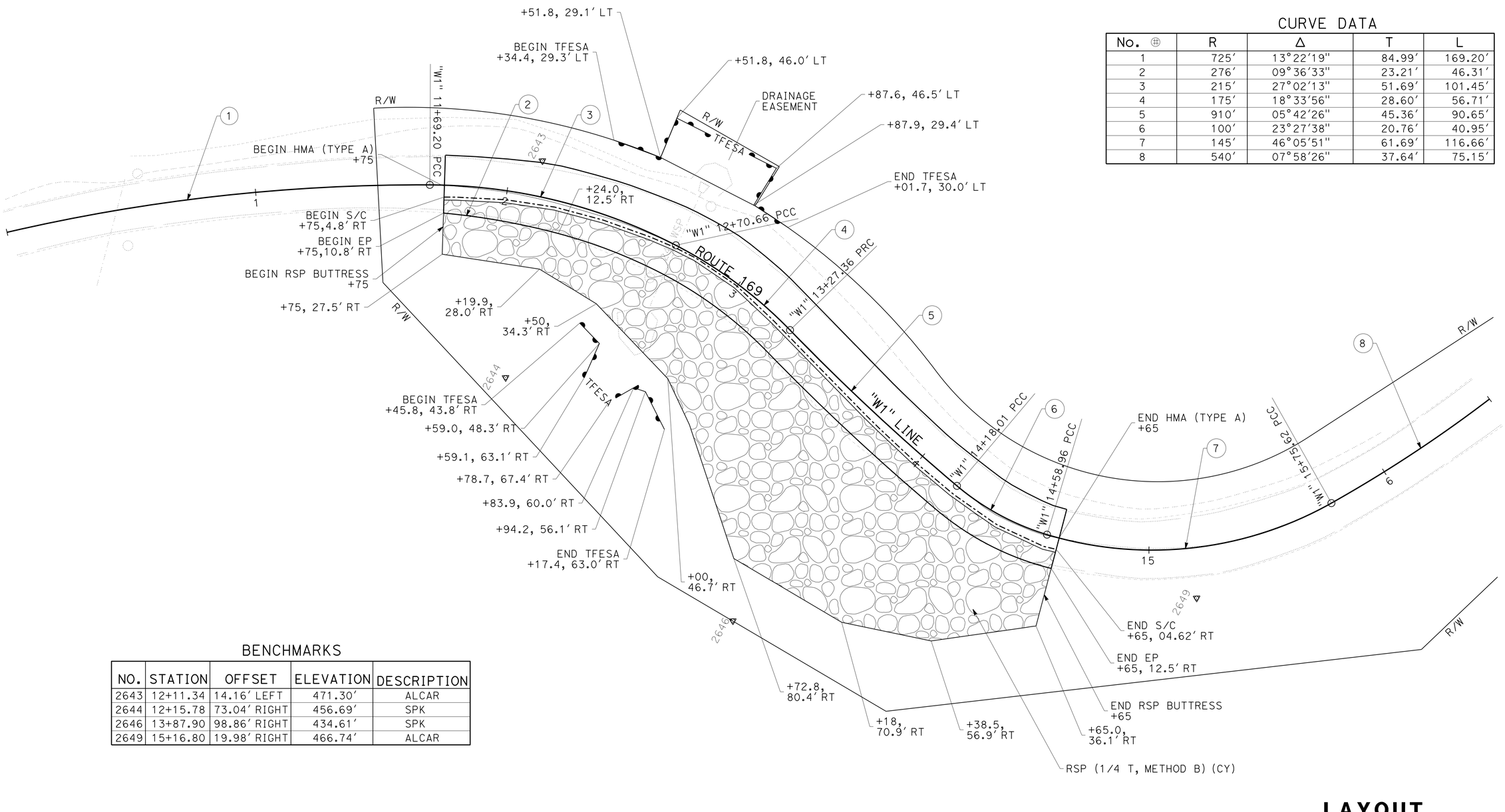

BENCHMARKS

NO.	STATION	OFFSET	ELEVATION	DESCRIPTION
2643	12+11.34	14.16′ LEFT	471.30′	ALCAR
2644	12+15.78	73.04′ RIGHT	456.69′	SPK
2646	13+87.90	98.86′ RIGHT	434.61′	SPK
2649	15+16.80	19.98′ RIGHT	466.74′	ALCAR

LOCATION 1
PM 26.45

LAYOUT
SCALE: 1" = 20′

L-1

REVISED BY | DATE REVISED
BETH A. ELMORE | JAMES D. RASMUSSEN
CALCULATED-DESIGNED BY | CHECKED BY
FUNCTIONAL SUPERVISOR: JOHN L. MARTIN

STATE OF CALIFORNIA - DEPARTMENT OF TRANSPORTATION
Caltrans® DESIGN

P:\proj1\01\0b440_plans\pse\010b440ea001.dgn

LAST REVISION 02-15-16 | DATE PLOTTED => 22-JUL-2016 | TIME PLOTTED => 11:14

Dist	COUNTY	ROUTE	POST MILES TOTAL PROJECT	SHEET No.	TOTAL SHEETS
01	Hum	169	26.4/29.8	4	41

REGISTERED CIVIL ENGINEER 6-15-16 DATE

6-15-16
PLANS APPROVAL DATE

REGISTERED PROFESSIONAL ENGINEER JAMES D. RASMUSSEN No. C76401 Exp. 12-31-16 CIVIL STATE OF CALIFORNIA

THE STATE OF CALIFORNIA OR ITS OFFICERS OR AGENTS SHALL NOT BE RESPONSIBLE FOR THE ACCURACY OR COMPLETENESS OF SCANNED COPIES OF THIS PLAN SHEET.

NOTE:

1. FOR ACCURATE RIGHT OF WAY DATA, CONTACT RIGHT OF WAY ENGINEERING AT THE DISTRICT OFFICE.

CURVE DATA

No. ⊕	R	Δ	T	L
9	7000′	01°44′32"	106.43′	212.85′
10	2450′	01°55′46"	41.25′	82.50′
11	3495′	02°07′34"	64.85′	129.69′
12	2300′	03°33′29"	71.44′	142.83′
13	500′	02°54′46"	12.71′	25.42′
14	1304′	05°59′53"	68.33′	136.54′

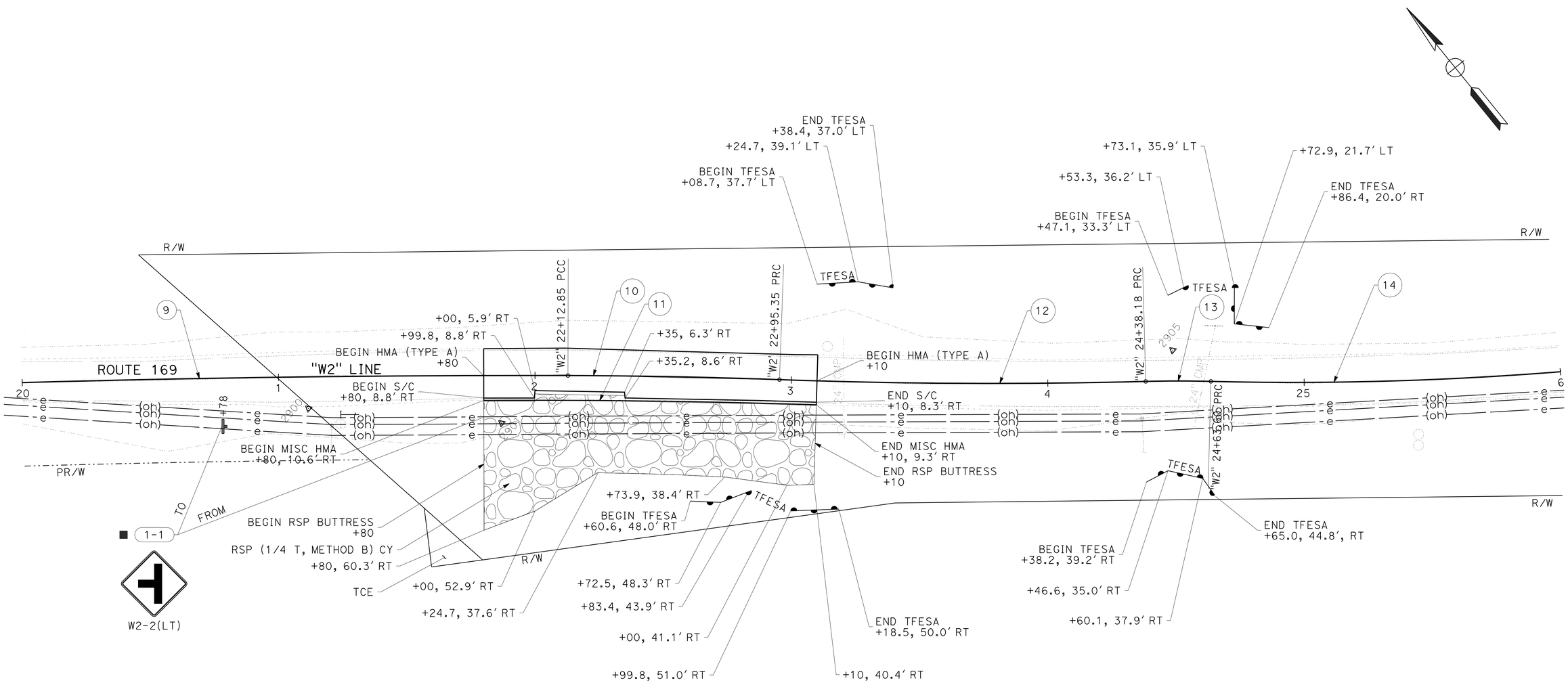

BENCHMARKS

NO.	STATION	OFFSET	ELEVATION	DESCRIPTION
2900	21+11.55	12.30′ RIGHT	313.83′	ALCAR
2901	21+86.96	18.54′ RIGHT	312.39′	SPIKE
2905	24+48.77	12.03′ LEFT	306.01′	ALCAR

LOCATION 2
PM 29.04

LAYOUT
SCALE: 1" = 50′

L-2

REVISED BY | DATE REVISED
BETH A. ELMORE | JAMES D. RASMUSSEN
CALCULATED-DESIGNED BY | CHECKED BY
FUNCTIONAL SUPERVISOR: JOHN L. MARTIN
STATE OF CALIFORNIA - DEPARTMENT OF TRANSPORTATION
Caltrans
DESIGN

P:\proj1\01\0b440_plans\pse\010b440ea002.dgn

LAST REVISION 02-15-16 | DATE PLOTTED => 22-JUL-2016 | TIME PLOTTED => 11:14

BORDER LAST REVISED 7/2/2010 | USERNAME => s116738 | DGN FILE => 010b440ea002.dgn | RELATIVE BORDER SCALE IS IN INCHES 0 1 2 3 | UNIT 0315 | PROJECT NUMBER & PHASE 01120001281

Dist	COUNTY	ROUTE	POST MILES TOTAL PROJECT	SHEET No.	TOTAL SHEETS
01	Hum	169	26.4/29.8	5	41

REGISTERED CIVIL ENGINEER 6-15-16 DATE

6-15-16
PLANS APPROVAL DATE

REGISTERED PROFESSIONAL ENGINEER JAMES D. RASMUSSEN No. C76401 Exp. 12-31-16 CIVIL STATE OF CALIFORNIA

THE STATE OF CALIFORNIA OR ITS OFFICERS OR AGENTS SHALL NOT BE RESPONSIBLE FOR THE ACCURACY OR COMPLETENESS OF SCANNED COPIES OF THIS PLAN SHEET.

NOTE:

1. FOR ACCURATE RIGHT OF WAY DATA, CONTACT RIGHT OF WAY ENGINEERING AT THE DISTRICT OFFICE.

CURVE DATA

No. ⊕	R	Δ	T	L
15	234′	15°37′05"	32.10′	63.80′
16	306′	16°23′42"	44.14′	87.67′

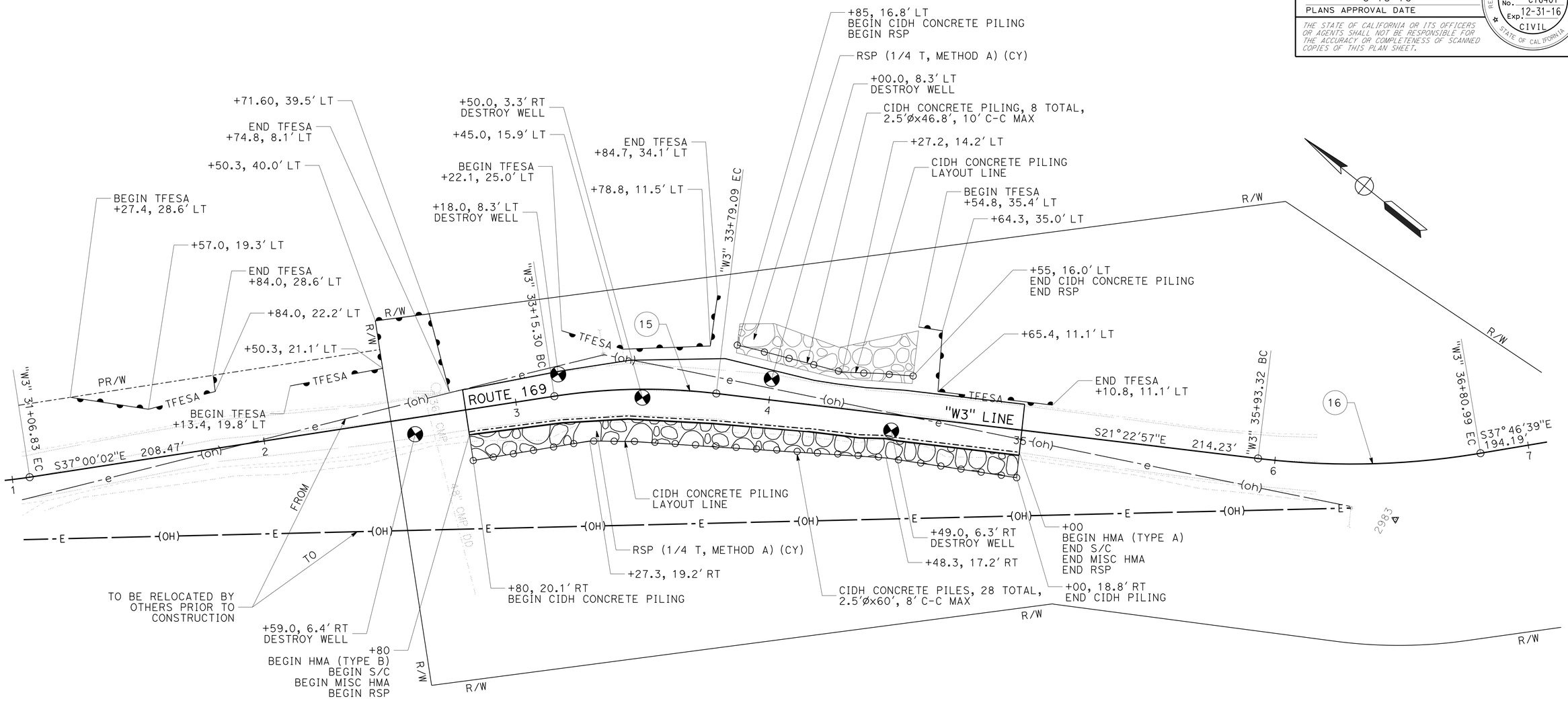

BENCHMARK

NO.	STATION	OFFSET	ELEVATION	DESCRIPTION
2983	36+46.14	22.18′ RIGHT	300.04′	ALCAR

LOCATION 3
PM 29.8

LAYOUT
SCALE: 1" = 20′

L-3

REVISED BY | DATE REVISED
BETH A. ELMORE | JAMES D. RASMUSSEN
CALCULATED-DESIGNED BY | CHECKED BY
FUNCTIONAL SUPERVISOR
JOHN L. MARTIN

STATE OF CALIFORNIA - DEPARTMENT OF TRANSPORTATION
Caltrans
DESIGN

P:\proj1\01\0b440_plans\pse\010b440ea003.dgn

LAST REVISION 02-15-16 | DATE PLOTTED => 22-JUL-2016 | TIME PLOTTED => 11:14

Dist	COUNTY	ROUTE	POST MILES TOTAL PROJECT	SHEET No.	TOTAL SHEETS
01	Hum	169	26.4/29.8	6	41

REGISTERED CIVIL ENGINEER 6-15-16 DATE

6-15-16
PLANS APPROVAL DATE

REGISTERED PROFESSIONAL ENGINEER JAMES D. RASMUSSEN No. C76401 Exp. 12-31-16 CIVIL STATE OF CALIFORNIA

THE STATE OF CALIFORNIA OR ITS OFFICERS OR AGENTS SHALL NOT BE RESPONSIBLE FOR THE ACCURACY OR COMPLETENESS OF SCANNED COPIES OF THIS PLAN SHEET.

LEGEND:

ROADWAY EXCAVATION

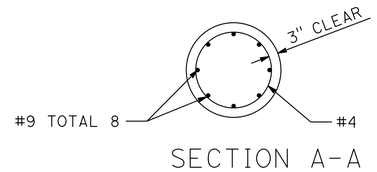

SECTION A-A

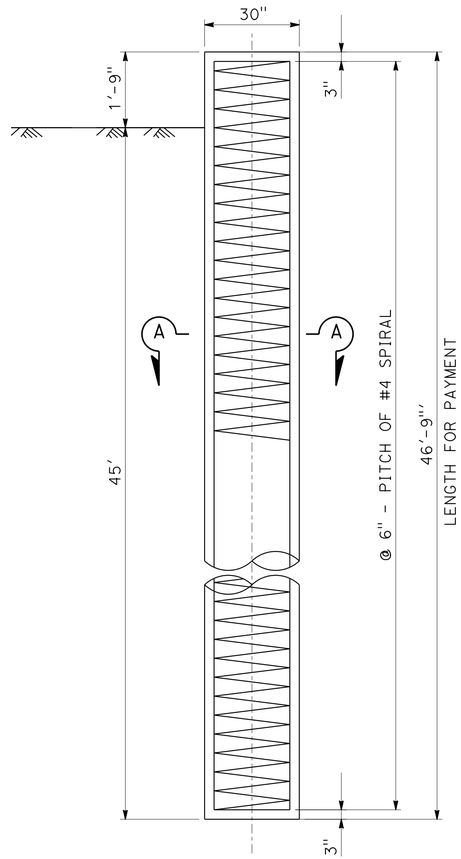

ELEVATION

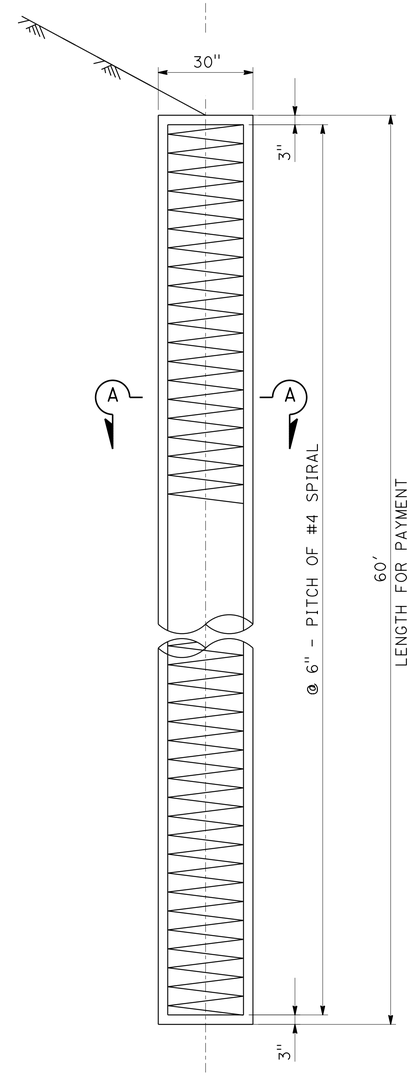

ELEVATION

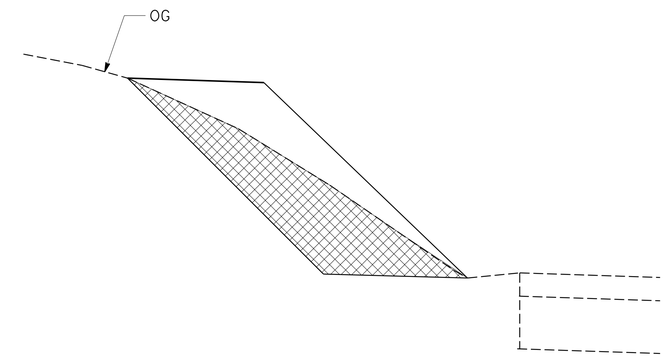

ROADWAY EXCAVATION DETAIL
LOCATION 3 LT

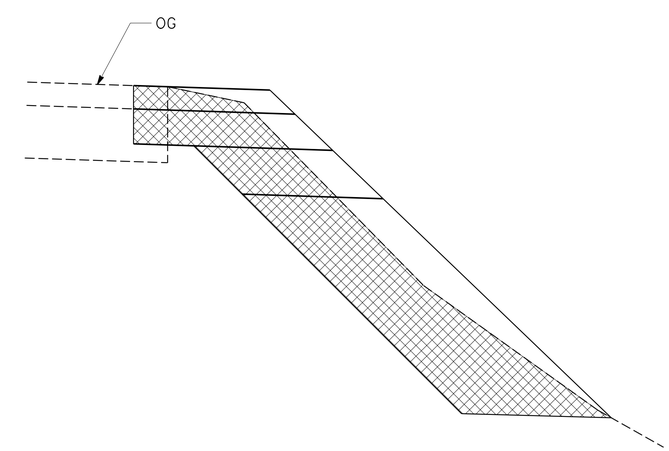

ROADWAY EXCAVATION DETAIL
LOCATIONS 1, 2, & 3 RT

30" CIDH CONCRETE PILING
LOCATION 3
STA "W3" 33+86 TO 34+55 LT

30" CIDH CONCRETE PILING
LOCATION 3
STA "W3" 32+80 TO 35+00 RT

CONSTRUCTION DETAILS

NO SCALE

C-1

REVISED BY	DATE REVISED

CALCULATED-DESIGNED BY	JOLENA ASTIN
CHECKED BY	JAMES D. RASMUSSEN
FUNCTIONAL SUPERVISOR	JOHN L. MARTIN

STATE OF CALIFORNIA - DEPARTMENT OF TRANSPORTATION
Caltrans
DESIGN

P:\proj\01\0b440_plans\pse\010b440ga001.dgn

LAST REVISION 02-17-16 | DATE PLOTTED => 22-JUL-2016 | TIME PLOTTED => 11:14

Dist	COUNTY	ROUTE	POST MILES TOTAL PROJECT	SHEET No.	TOTAL SHEETS
01	Hum	169	26.4/29.8	7	41

REGISTERED CIVIL ENGINEER 6-15-16 DATE

6-15-16
PLANS APPROVAL DATE

REGISTERED PROFESSIONAL ENGINEER JAMES D. RASMUSSEN No. C76401 Exp. 12-31-16 CIVIL STATE OF CALIFORNIA

THE STATE OF CALIFORNIA OR ITS OFFICERS OR AGENTS SHALL NOT BE RESPONSIBLE FOR THE ACCURACY OR COMPLETENESS OF SCANNED COPIES OF THIS PLAN SHEET.

NOTE:

FOR ACCURATE RIGHT OF WAY DATA, CONTACT RIGHT OF WAY ENGINEERING AT THE DISTRICT OFFICE.

LEGEND:

- RSP
- DITCH FLOW LINE
- MARKER (CULVERT)
- RSP BUTTRESS

ABBREVIATION

PR/W PRESCRIPTIVE R/W

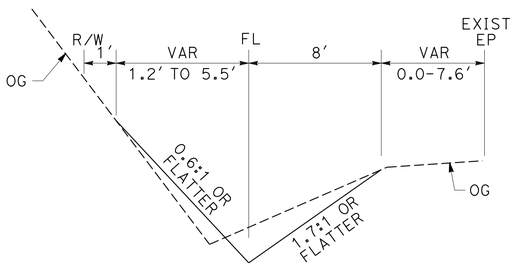

SECTION A-A

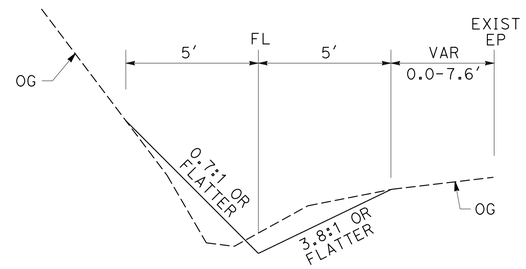

SECTION B-B

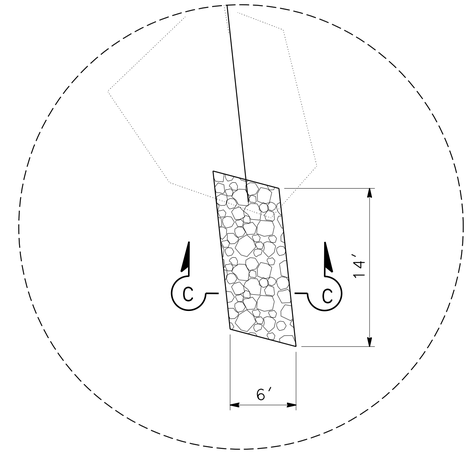

DETAIL A

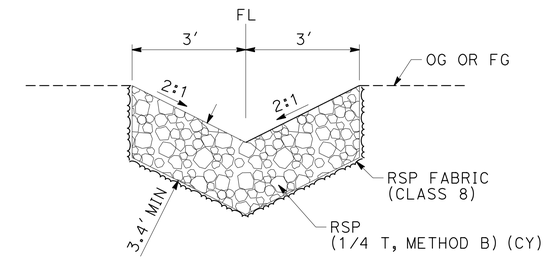

SECTION C-C

1 d

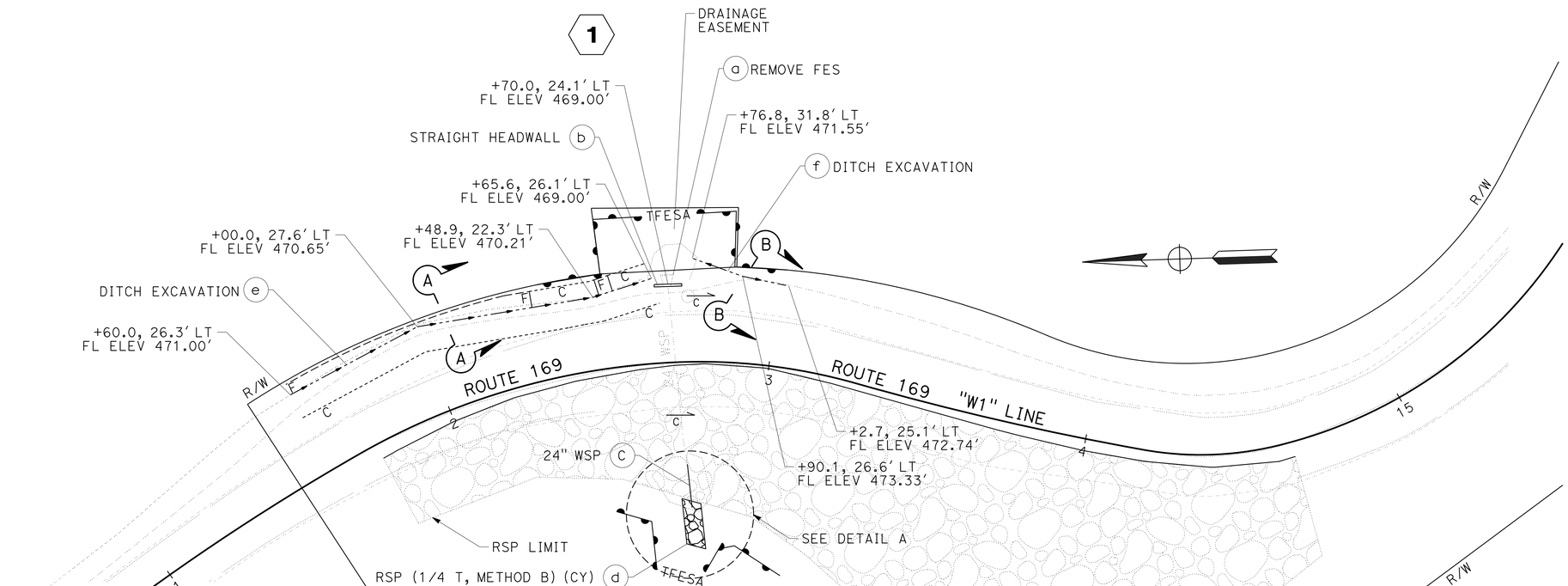

LOCATION 1, PM 26.45

APPROVED FOR DRAINAGE WORK ONLY

DRAINAGE PLANS

SCALE: 1"=20'

D-1

REVISED BY | DATE REVISED

JOLENA ASTIN | JAMES D. RASMUSSEN

CALCULATED-DESIGNED BY | CHECKED BY

FUNCTIONAL SUPERVISOR: JOHN L. MARTIN

STATE OF CALIFORNIA - DEPARTMENT OF TRANSPORTATION

Caltrans **DESIGN**

P:\proj1\01\0b440_plans\pse\010b440ia001.dgn

LAST REVISION 07-22-15 | DATE PLOTTED => 22-JUL-2016 | TIME PLOTTED => 11:14

Dist	COUNTY	ROUTE	POST MILES TOTAL PROJECT	SHEET No.	TOTAL SHEETS
01	Hum	169	26.4/29.8	8	41

REGISTERED CIVIL ENGINEER 6-15-16 DATE

6-15-16
PLANS APPROVAL DATE

REGISTERED PROFESSIONAL ENGINEER JAMES D. RASMUSSEN No. C76401 Exp. 12-31-16 CIVIL STATE OF CALIFORNIA

THE STATE OF CALIFORNIA OR ITS OFFICERS OR AGENTS SHALL NOT BE RESPONSIBLE FOR THE ACCURACY OR COMPLETENESS OF SCANNED COPIES OF THIS PLAN SHEET.

NOTE:

FOR ACCURATE RIGHT OF WAY DATA, CONTACT RIGHT OF WAY ENGINEERING AT THE DISTRICT OFFICE.

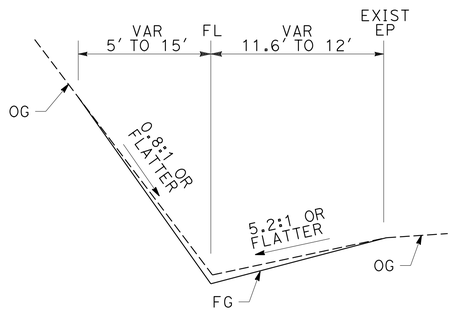

SECTION A-A

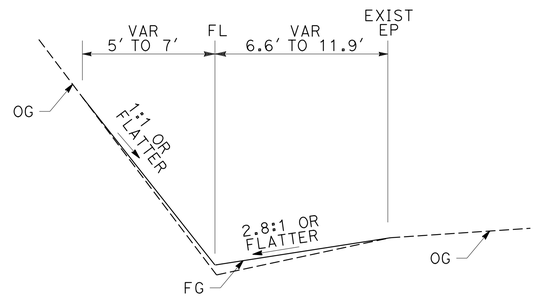

SECTION B-B

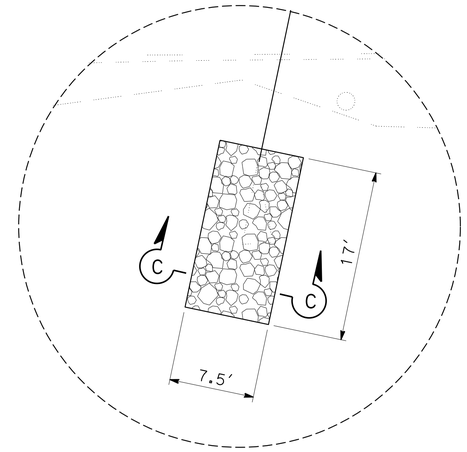

DETAIL A

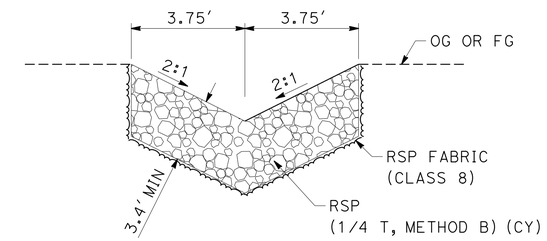

SECTION C-C

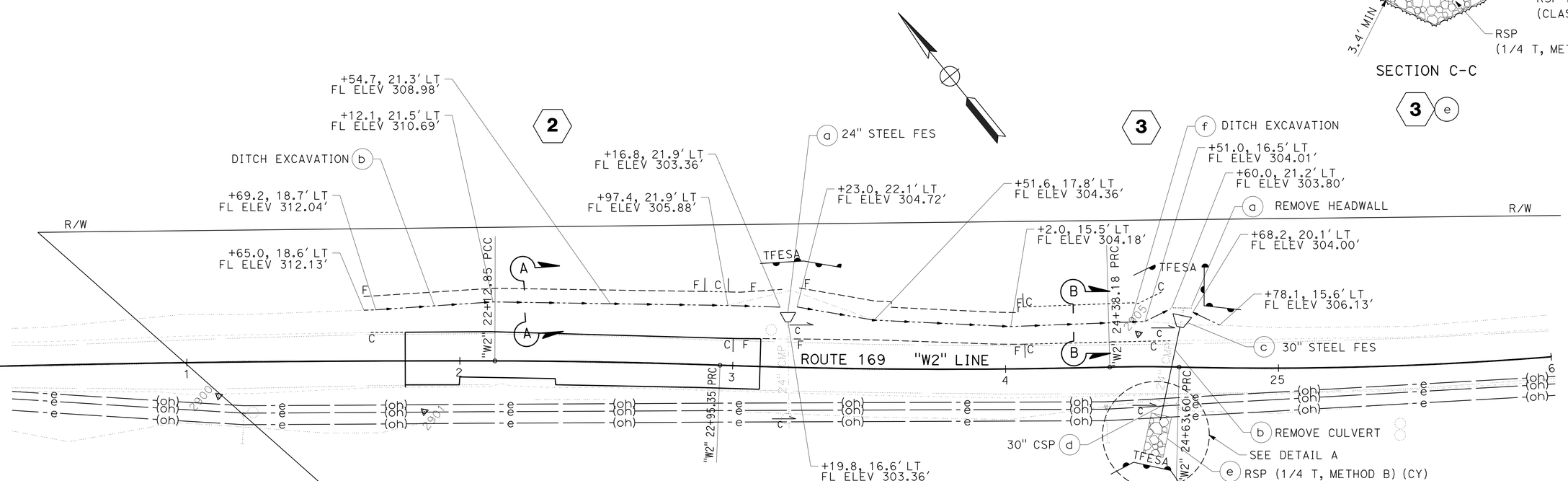

LOCATION 2, PM 29.04

APPROVED FOR DRAINAGE WORK ONLY

DRAINAGE PLAN

SCALE: 1"=20'

D-2

REVISED BY	DATE REVISED
JOLENA ASTIN	JAMES D. RASMUSSEN

CALCULATED-DESIGNED BY / CHECKED BY

FUNCTIONAL SUPERVISOR: JOHN L. MARTIN

STATE OF CALIFORNIA - DEPARTMENT OF TRANSPORTATION

DESIGN

Caltrans

P:\proj1\01\0b440_plans\pse\010b440ia002.dgn

LAST REVISION 02-03-16 | DATE PLOTTED => 22-JUL-2016 | TIME PLOTTED => 11:14

BORDER LAST REVISED 7/2/2010 | USERNAME => s116738 | DGN FILE => 010b440ia002.dgn | RELATIVE BORDER SCALE IS IN INCHES 0 1 2 3 | UNIT 0315 | PROJECT NUMBER & PHASE 01120001281

Dist	COUNTY	ROUTE	POST MILES TOTAL PROJECT	SHEET No.	TOTAL SHEETS
01	Hum	169	26.4/29.8	9	41

REGISTERED CIVIL ENGINEER 6-15-16 DATE

6-15-16
PLANS APPROVAL DATE

REGISTERED PROFESSIONAL ENGINEER JAMES D. RASMUSSEN No. C76401 Exp. 12-31-16 CIVIL STATE OF CALIFORNIA

THE STATE OF CALIFORNIA OR ITS OFFICERS OR AGENTS SHALL NOT BE RESPONSIBLE FOR THE ACCURACY OR COMPLETENESS OF SCANNED COPIES OF THIS PLAN SHEET.

NOTE:

FOR ACCURATE RIGHT OF WAY DATA, CONTACT RIGHT OF WAY ENGINEERING AT THE DISTRICT OFFICE.

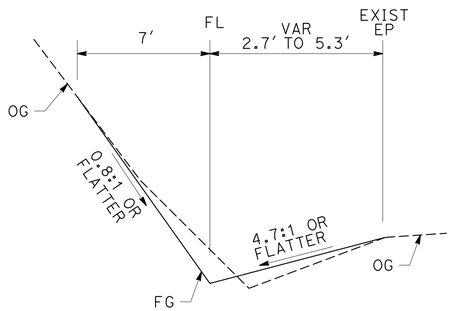

SECTION A-A

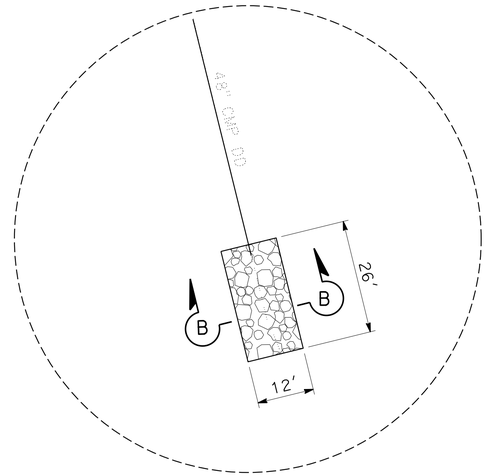

DETAIL A

4 i

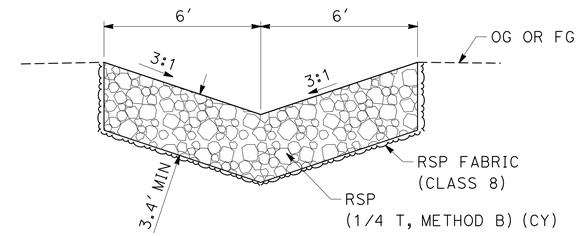

SECTION B-B

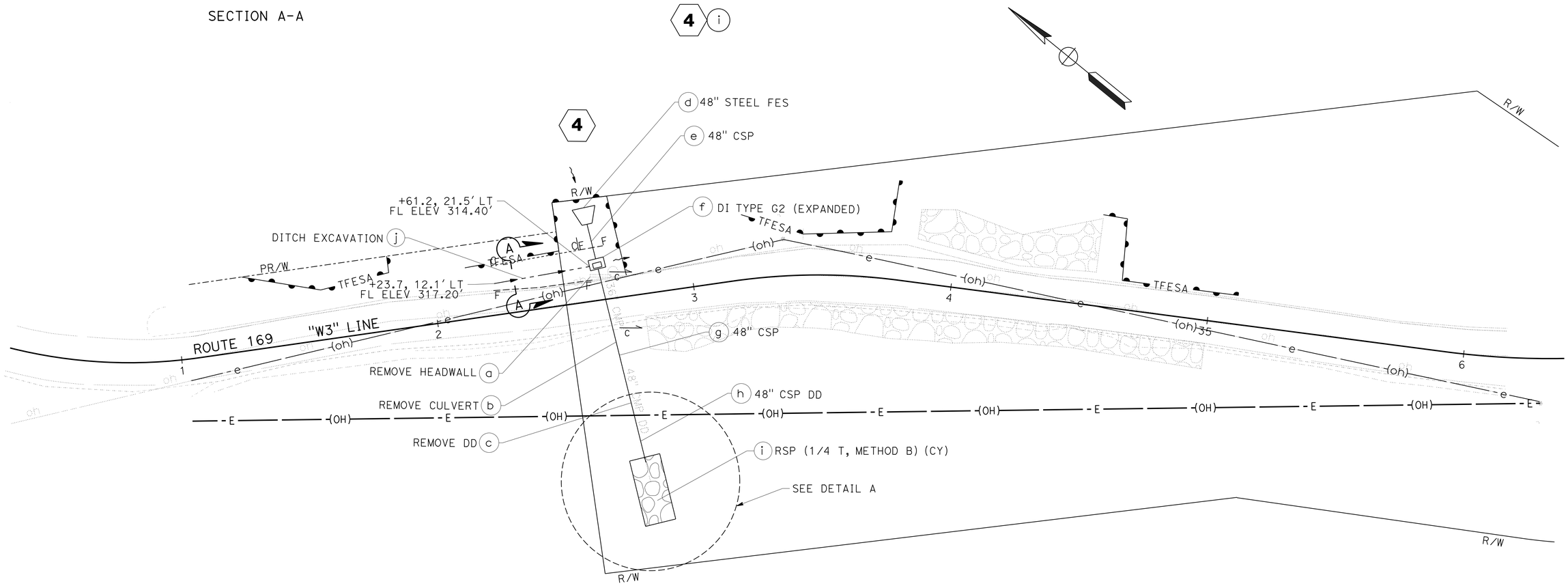

LOCATION 3, PM 29.8

APPROVED FOR DRAINAGE WORK ONLY

DRAINAGE PLAN

SCALE: 1" = 20′

D-3

REVISED BY | DATE REVISED

JOLENA ASTIN | JAMES D. RASMUSSEN

CALCULATED-DESIGNED BY | CHECKED BY

FUNCTIONAL SUPERVISOR: JOHN L. MARTIN

STATE OF CALIFORNIA - DEPARTMENT OF TRANSPORTATION

DESIGN

Caltrans

P:\proj1\01\0b440_plans\pse\010b440ia003.dgn

LAST REVISION 02-03-16 | DATE PLOTTED => 22-JUL-2016 | TIME PLOTTED => 11:14

Dist	COUNTY	ROUTE	POST MILES TOTAL PROJECT	SHEET No.	TOTAL SHEETS
01	Hum	169	26.4/29.8	10	41

REGISTERED CIVIL ENGINEER 6-15-16 DATE

6-15-16
PLANS APPROVAL DATE

REGISTERED PROFESSIONAL ENGINEER JAMES D. RASMUSSEN No. C76401 Exp. 12-31-16 CIVIL STATE OF CALIFORNIA

THE STATE OF CALIFORNIA OR ITS OFFICERS OR AGENTS SHALL NOT BE RESPONSIBLE FOR THE ACCURACY OR COMPLETENESS OF SCANNED COPIES OF THIS PLAN SHEET.

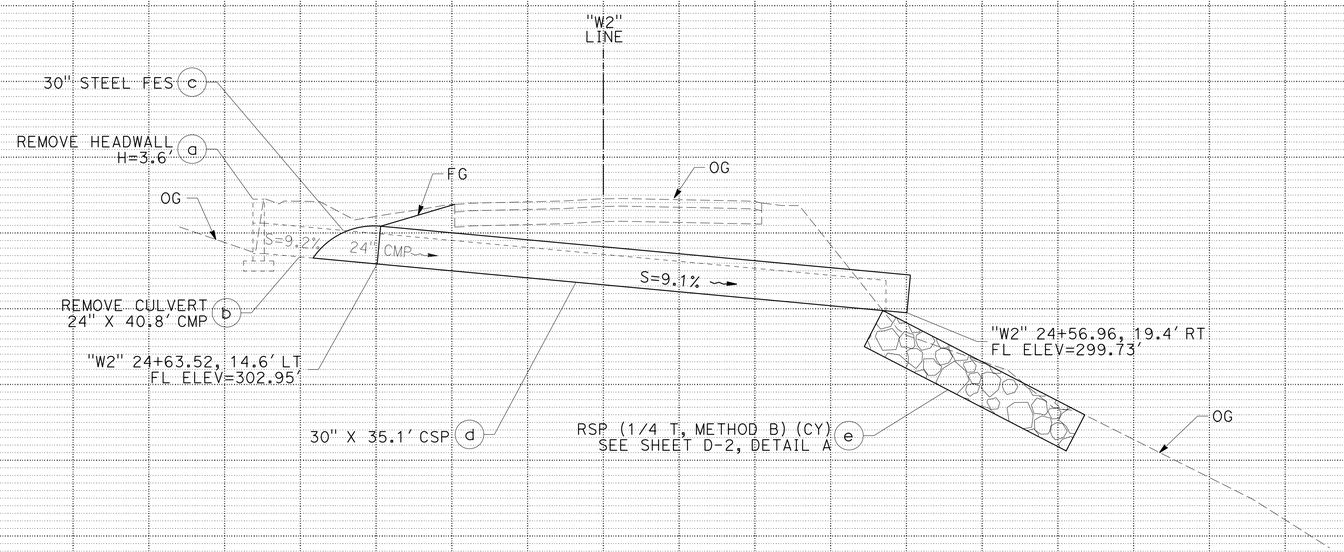

DRAINAGE SYSTEM NO. 3

LOCATION 2, PM 29.06

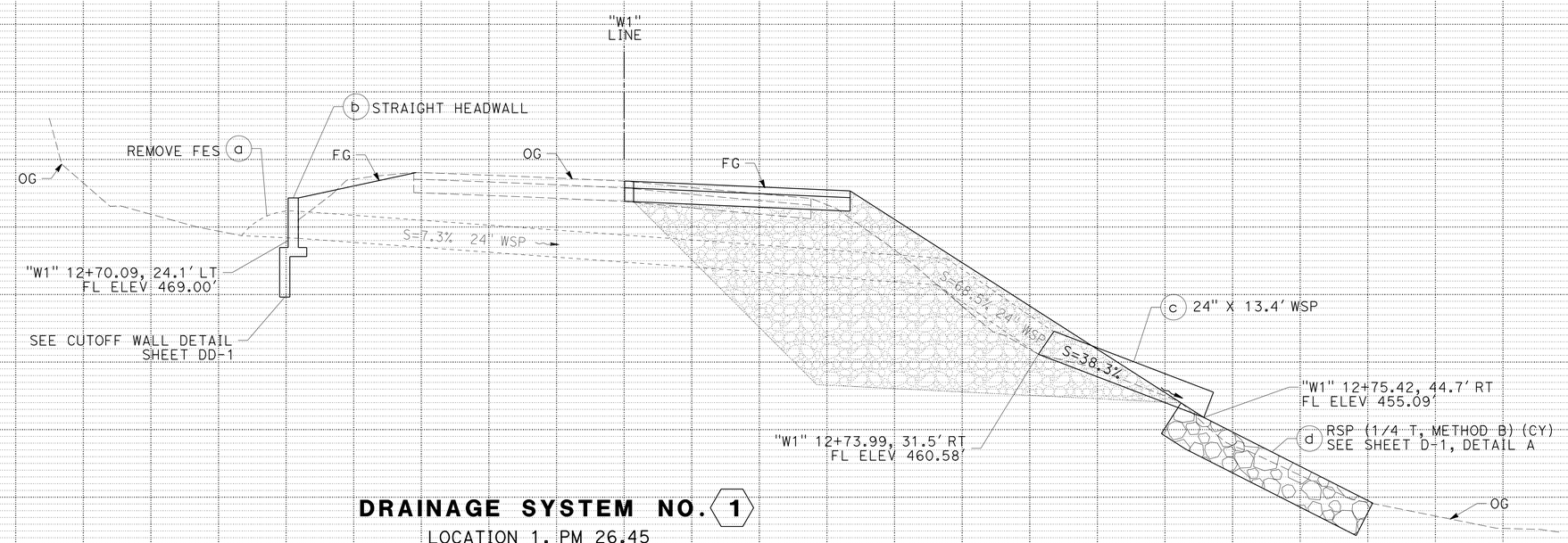

DRAINAGE SYSTEM NO. 1

LOCATION 1, PM 26.45

DRAINAGE PROFILES

SCALE: 1" = 5' Horiz
1" = 5' Vert

DP-1

REVISED BY | DATE REVISED

JOLENA ASTIN | JAMES D. RASMUSSEN

CALCULATED-DESIGNED BY | CHECKED BY

FUNCTIONAL SUPERVISOR: JOHN L. MARTIN

STATE OF CALIFORNIA - DEPARTMENT OF TRANSPORTATION

Caltrans

DESIGN

P:\proj1\01\0b440_plans\pse\010b440ib001.dgn

LAST REVISION | DATE PLOTTED => 22-JUL-2016 | TIME PLOTTED => 11:14 | 07-29-15

Dist	COUNTY	ROUTE	POST MILES TOTAL PROJECT	SHEET No.	TOTAL SHEETS
01	Hum	169	26.4/29.8	11	41

REGISTERED CIVIL ENGINEER 6-15-16 DATE

6-15-16
PLANS APPROVAL DATE

REGISTERED PROFESSIONAL ENGINEER JAMES D. RASMUSSEN No. C76401 Exp. 12-31-16 CIVIL STATE OF CALIFORNIA

THE STATE OF CALIFORNIA OR ITS OFFICERS OR AGENTS SHALL NOT BE RESPONSIBLE FOR THE ACCURACY OR COMPLETENESS OF SCANNED COPIES OF THIS PLAN SHEET.

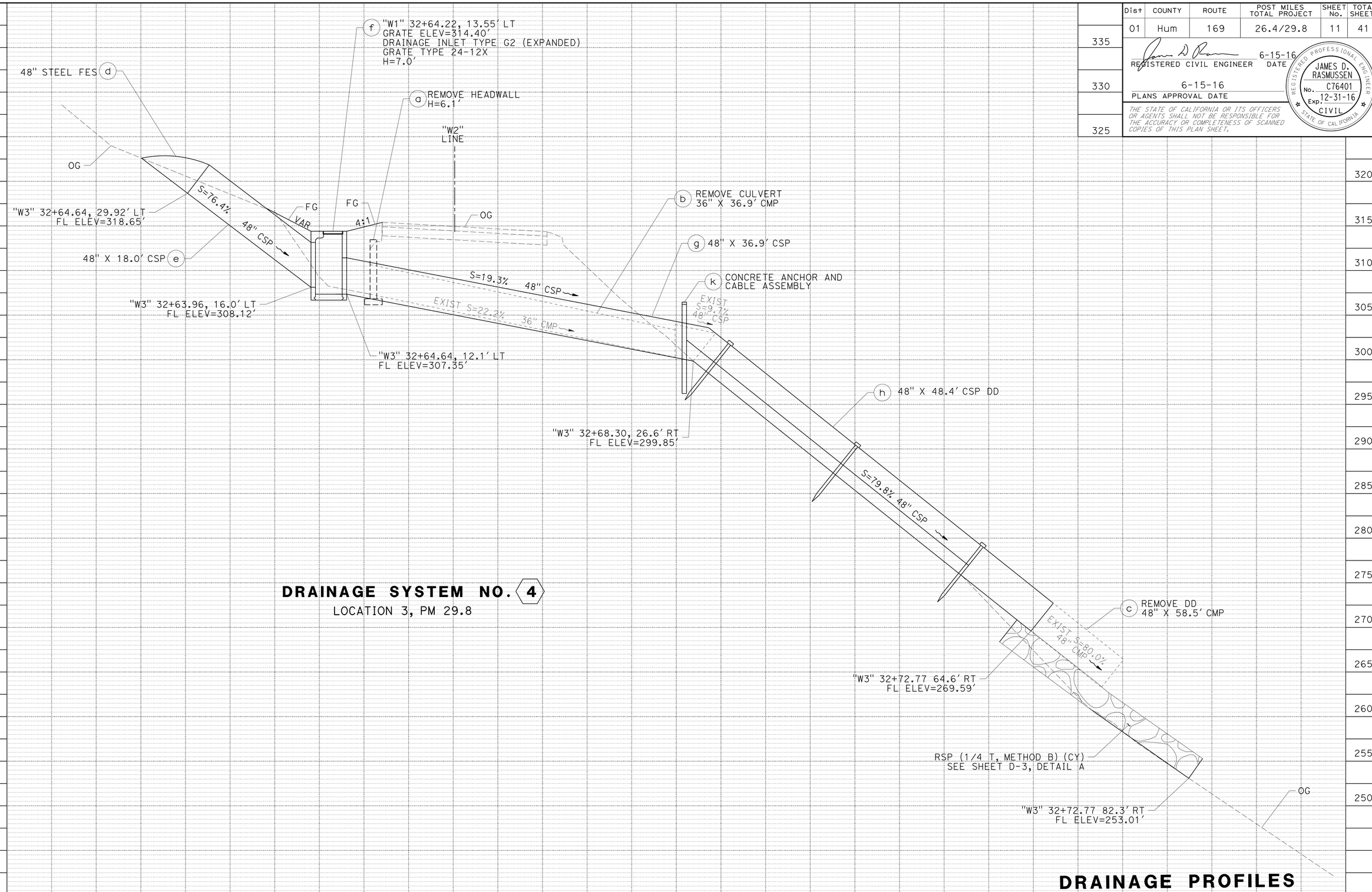

DRAINAGE SYSTEM NO. 4

LOCATION 3, PM 29.8

DRAINAGE PROFILES

SCALE: 1" = 5' Horiz
1" = 5' Vert

DP-2

REVISED BY | DATE REVISED

JOLENA ASTIN | JAMES D. RASMUSSEN

CALCULATED-DESIGNED BY | CHECKED BY

FUNCTIONAL SUPERVISOR: JOHN L. MARTIN

STATE OF CALIFORNIA - DEPARTMENT OF TRANSPORTATION

Caltrans **DESIGN**

P:\proj1\01\0b440_plans\pse\010b440ib002.dgn

LAST REVISION | DATE PLOTTED => 22-JUL-2016 | TIME PLOTTED => 11:14
07-29-15

Dist	COUNTY	ROUTE	POST MILES TOTAL PROJECT	SHEET No.	TOTAL SHEETS
01	Hum	169	26.4/29.8	12	41

REGISTERED CIVIL ENGINEER 6-15-16 DATE

6-15-16
PLANS APPROVAL DATE

REGISTERED PROFESSIONAL ENGINEER JAMES D. RASMUSSEN No. C76401 Exp. 12-31-16 CIVIL STATE OF CALIFORNIA

THE STATE OF CALIFORNIA OR ITS OFFICERS OR AGENTS SHALL NOT BE RESPONSIBLE FOR THE ACCURACY OR COMPLETENESS OF SCANNED COPIES OF THIS PLAN SHEET.

NOTE:

1. FOR HEADWALL DETAILS NOT SHOWN SEE REVISED STANDARD PLAN D89.

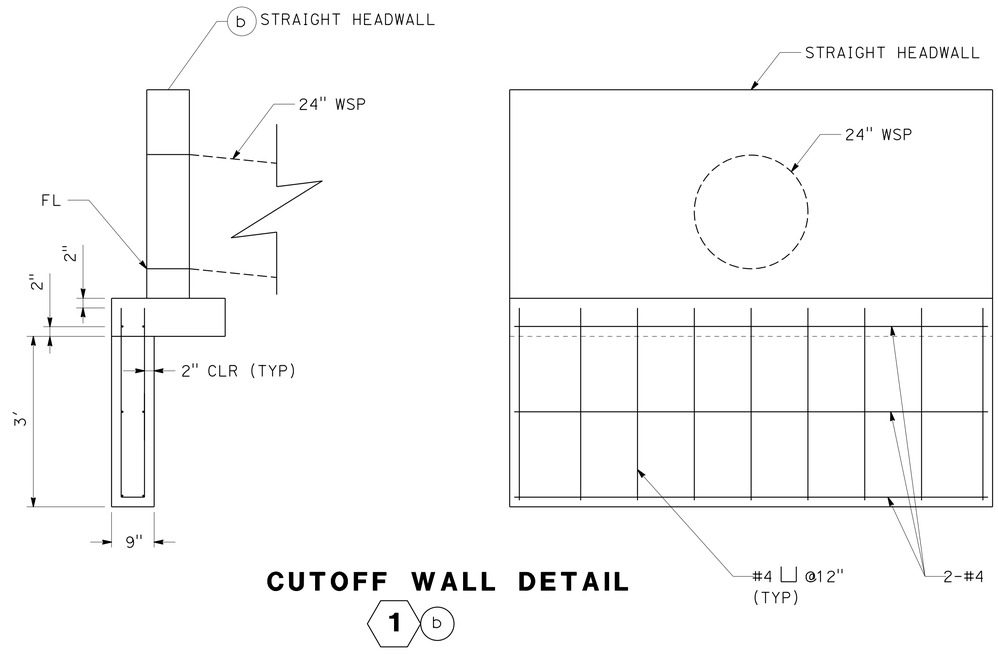

CUTOFF WALL DETAIL

1 b

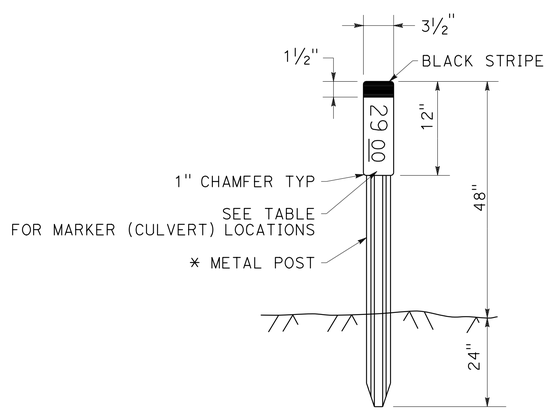

* SEE STANDARD PLAN A73B FOR METAL POST DETAILS

MARKER (CULVERT)

MARKER (CULVERT)

DRAINAGE SYSTEM NO.	STATION	PM	LEFT	RIGHT
1	"W1" 12+71.3	26.45	X	X
2	"W2" 23+20.4	29.04	X	X
3	"W2" 24+60.8	29.06	X	X
4	"W3" 32+65.6	29.80	X	X

DRAINAGE DETAILS

NO SCALE

DD-1

REVISED BY	DATE REVISED
JOLENA ASTIN	JAMES D. RASMUSSEN
CALCULATED-DESIGNED BY	CHECKED BY
FUNCTIONAL SUPERVISOR	JOHN L. MARTIN

STATE OF CALIFORNIA - DEPARTMENT OF TRANSPORTATION

Caltrans® DESIGN

P:\proj1\01\0b440_plans\pse\010b440ic001.dgn

LAST REVISION 02-03-16 | DATE PLOTTED => 22-JUL-2016 | TIME PLOTTED => 11:14

Dist	COUNTY	ROUTE	POST MILES TOTAL PROJECT	SHEET No.	TOTAL SHEETS
01	Hum	169	26.4/29.8	13	41

REGISTERED CIVIL ENGINEER 6-15-16 DATE

6-15-16
PLANS APPROVAL DATE

REGISTERED PROFESSIONAL ENGINEER JAMES D. RASMUSSEN No. C76401 Exp. 12-31-16 CIVIL STATE OF CALIFORNIA

THE STATE OF CALIFORNIA OR ITS OFFICERS OR AGENTS SHALL NOT BE RESPONSIBLE FOR THE ACCURACY OR COMPLETENESS OF SCANNED COPIES OF THIS PLAN SHEET.

ABBREVIATIONS:

IWRC = INDEPENDENT WIRE ROPE CORE
SWL = SAFE WORKING LOAD

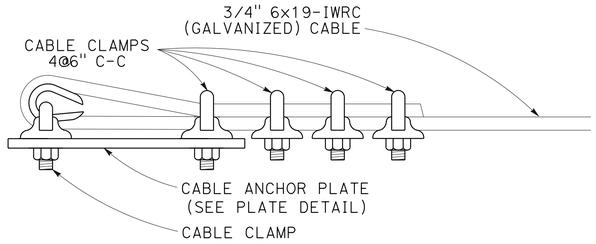

CABLE ANCHOR TERMINAL DETAIL

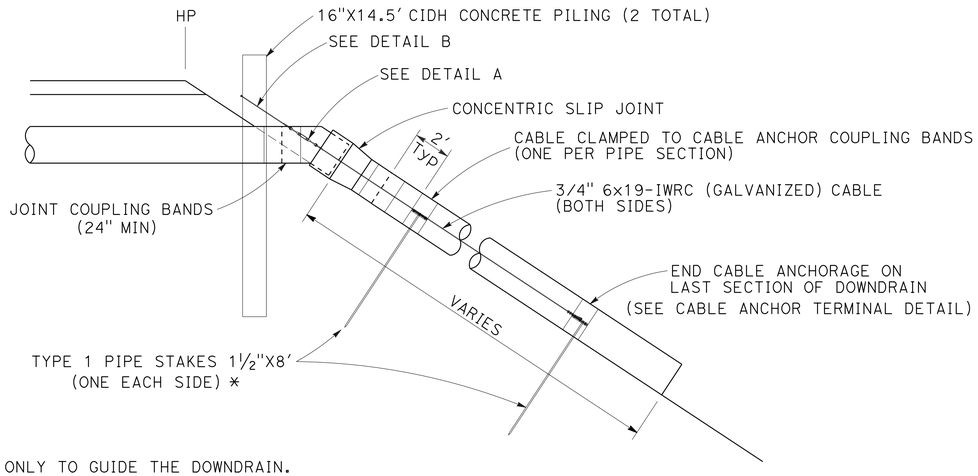

*USED ONLY TO GUIDE THE DOWNDRAIN. DO NOT INCORPORATE INTO ANCHORAGE.

CABLE ANCHORAGE ASSEMBLY w/ CIDH CONCRETE PILES

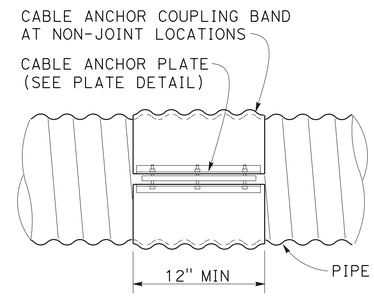

CABLE ANCHOR COUPLING BAND

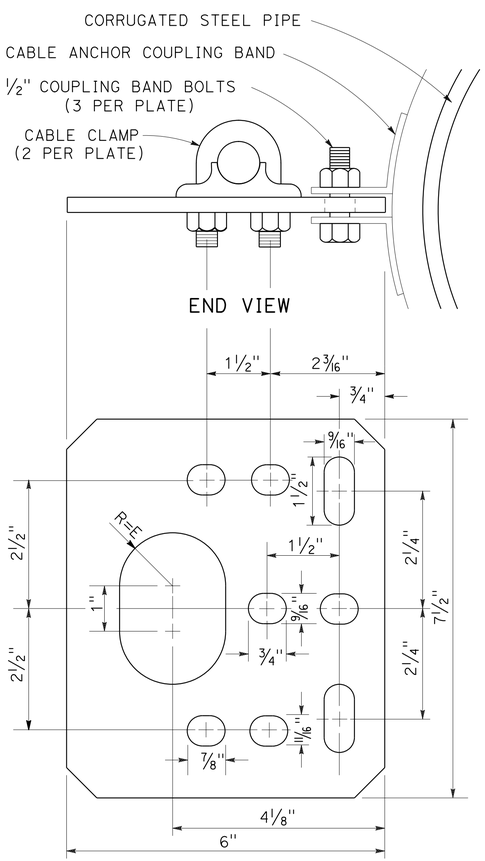

PLATE DETAIL

MATERIAL TO BE ¼" STEEL PLATE, GALVANIZED AFTER FABRICATION

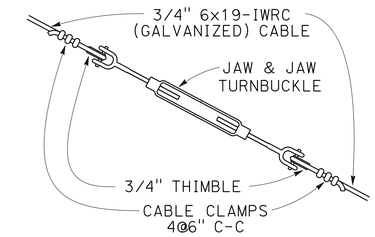

DETAIL A

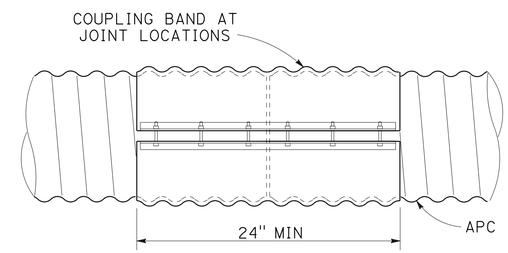

JOINT COUPLING BAND

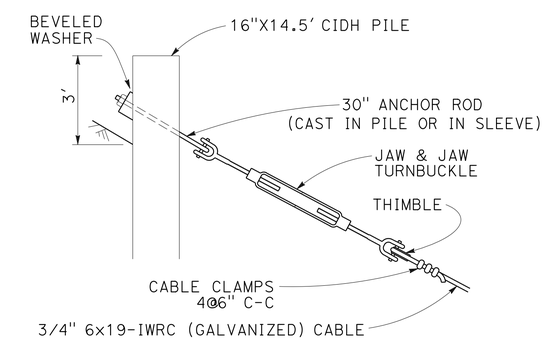

DETAIL B

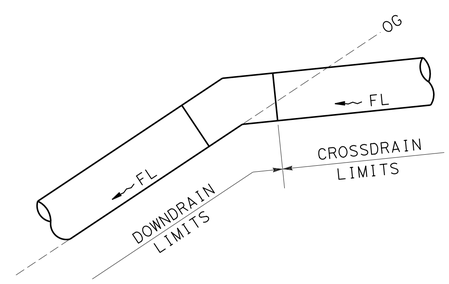

LIMITS OF MEASUREMENT FOR PAYMENT

SWL (1000 LBS)	15K	23K	30K	38K
CABLE CLAMP SPACING	4"	4½"	5¼"	6"
CABLE CLAMPS	3	4	4	5
TURNBUCKLES	⅞"x18"	1"x18"	1¼"x18"	1¼"x18"
CABLE SIZE (THIMBLE)	⅝"	¾"	⅞"	1"

DRAINAGE DETAILS 4

DRAINAGE DETAILS

NO SCALE

DD-2

REVISED BY	DATE REVISED
JOLENA ASTIN	JAMES D. RASMUSSEN
CALCULATED-DESIGNED BY	CHECKED BY
FUNCTIONAL SUPERVISOR	JOHN L. MARTIN

STATE OF CALIFORNIA - DEPARTMENT OF TRANSPORTATION
Caltrans® DESIGN

P:\proj1\01\0b440_plans\pse\010b440ic002.dgn

LAST REVISION 02-03-16 | DATE PLOTTED => 22-JUL-2016 TIME PLOTTED => 11:14

Dist	COUNTY	ROUTE	POST MILES TOTAL PROJECT	SHEET No.	TOTAL SHEETS
01	Hum	169	26.4/29.8	14	41

REGISTERED CIVIL ENGINEER 6-15-16 DATE

6-15-16
PLANS APPROVAL DATE

REGISTERED PROFESSIONAL ENGINEER JAMES D. RASMUSSEN No. C76401 Exp. 12-31-16 CIVIL STATE OF CALIFORNIA

THE STATE OF CALIFORNIA OR ITS OFFICERS OR AGENTS SHALL NOT BE RESPONSIBLE FOR THE ACCURACY OR COMPLETENESS OF SCANNED COPIES OF THIS PLAN SHEET.

NOTE:

1. (N) - NOT A SEPARATE PAY ITEM, FOR INFORMATION ONLY
2. ALL CULVERT JOINTS MUST BE POSITIVE.
3. THE JOINT CLASSIFICATION FOR DOWNDRAINS MUST BE DOWNDRAIN.
4. LENGTHS OF PIPES AND ANGLES OF ELBOWS MUST BE VERIFIED IN THE FIELD BY THE CONTRACTOR.

DRAINAGE QUANTITIES

DRAINAGE SHEET NO.	DRAINAGE SYSTEM NO.	DRAINAGE UNIT	REMOVE FLARED END SECTION	REMOVE CULVERT (LF)	REMOVE DOWNDRAIN (EA)	REMOVE HEADWALL	DITCH EXCAVATION	EMBANKMENT (N)	MINOR CONCRETE (MINOR STRUCTURE)	30" CORRUGATED STEEL PIPE (.138" THICK)	48" CORRUGATED STEEL PIPE (.168" THICK)	24" WELDED STEEL PIPE (.375" THICK)	48" CORRUGATED STEEL PIPE DOWNDRAIN (.138" THICK)	CONCRETE ANCHOR AND CABLE ASSEMBLY	24" STEEL FLARED END SECTION	16" CAST-IN-DRILLED-HOLE CONCRETE PILING	30" STEEL FLARED END SECTION	48" STEEL FLARED END SECTION	ROCK SLOPE PROTECTION (1/4 T, METHOD B) (CY)	ROCK SLOPE PROTECTION FABRIC (CLASS 8)	MISCELLANEOUS IRON AND STEEL	MARKER (CULVERT)	MAX. COVER	DRAINAGE SYSTEM NO.	DRAINAGE UNIT	PM	DESCRIPTION
			EA	LF	EA	EA	CY	CY	CY	LF	LF	LF	LF	EA	EA	LF	EA	EA	CY	SQYD	LB	EA	FT				
DP-1	1	a	1																					1	a	26.45	REMOVE FES
DP-1	1	b							1.9												138			1	b	26.45	STRAIGHT HEADWALL
DP-1	1	c										13.4											1.22	1	c	26.45	24" X 13.4′ WSP DD
D-1	1	d																	10.6	24		2		1	d	26.45	RSP
D-1	1	e					22.7	3.7																1	e	26.45	DITCH EXCAVATION
D-1	1	f					1.6	1.6																1	f	26.45	DITCH EXCAVATION
D-2	2	a													1							2		2	a	29.04	FES
D-2	2	b					10.9	4.8																2	b	29.04	DITCH EXCAVATION
DP-1	3	a				1																		3	a	29.06	REMOVE HEADWALL, H=3.6′
DP-1	3	b		40.8																			3.83	3	b	29.06	REMOVE CULVERT
DP-1	3	c															1							3	c	29.06	30" STEEL FES
DP-1	3	d								35.1												2	4.00	3	d	29.06	30" X 35.1′ CSP
D-2	3	e																	16.1	33				3	e	29.06	RSP
D-2	3	f					20.5	15.2																3	f	29.06	DITCH EXCAVATION
DP-2	4	a				1																		4	a	29.80	REMOVE HEADWALL, H=6.1′
DP-2	4	b		36.9																			7.93	4	b	29.80	REMOVE CULVERT
DP-2	4	c			1																			4	c	29.80	REMOVE DOWNDRAIN, 48" X 58.5′ CMP
DP-2	4	d																1						4	d	29.80	48" STEEL FES
DP-2	4	e									18.0													4	e	29.80	48" X 18.0′ CSP
DP-2	4	f							3.1												326			4	f	29.80	DI TYPE G2 (EXPANDED), H=7.0′, GRATE TYPE 24-12X
DP-2	4	g									36.9											2	7.20	4	g	29.80	48" X 36.9′ CSP
DP-2	4	h											48.4											4	h	29.80	36" X 48.4′ CSP DOWNDRAIN
D-3	4	i																	39.3	63				4	i	29.80	RSP
D-3	4	j					3.3	9.3																4	j	29.80	DITCH EXCAVATION
D-3	4	k												1		29								4	k	29.80	ANCHOR ASSEMBLY
TOTAL			1	77.7	1	2	59.0	34.6	5.0	35.1	54.9	13.4	48.4	1	1	29	1	1	66.0*	120*	464	8					

* ADDITION QUANTITIES SHOWN ELSEWHERE, SEE SHEET Q-1.

DRAINAGE QUANTITIES
DQ-1

STATE OF CALIFORNIA - DEPARTMENT OF TRANSPORTATION
DESIGN

FUNCTIONAL SUPERVISOR: JOHN L. MARTIN
CALCULATED-DESIGNED BY: JOLENA ASTIN
CHECKED BY: JAMES D. RASMUSSEN
REVISED BY
DATE REVISED

P:\proj1\01\0b440_plans\pse\010b440id001.dgn

LAST REVISION 07-22-15 | DATE PLOTTED => 22-JUL-2016 | TIME PLOTTED => 11:14

Dist	COUNTY	ROUTE	POST MILES TOTAL PROJECT	SHEET No.	TOTAL SHEETS
01	Hum	169	26.4/29.8	15	41

REGISTERED CIVIL ENGINEER 6-15-16 DATE

6-15-16
PLANS APPROVAL DATE

REGISTERED PROFESSIONAL ENGINEER JAMES D. RASMUSSEN No. C76401 Exp. 12-31-16 CIVIL STATE OF CALIFORNIA

THE STATE OF CALIFORNIA OR ITS OFFICERS OR AGENTS SHALL NOT BE RESPONSIBLE FOR THE ACCURACY OR COMPLETENESS OF SCANNED COPIES OF THIS PLAN SHEET.

NOTES:

1. EXACT LOCATION OF ALL SIGNS TO BE DETERMINED BY THE ENGINEER.
2. CALIFORNIA CODES ARE DESIGNATED BY (CA), OTHERWISE FEDERAL CODES ARE SHOWN.
3. C40(CA) SIGN MUST BE BLACK ON WHITE, ALL OTHER CONSTRUCTION AREA SIGNS MUST BE BLACK ON ORANGE.
4. ALL DIMENSIONS ARE IN INCHES UNLESS OTHERWISE NOTED.
5. ADDITIONAL CONSTRUCTION AREA SIGNS ON SHEETS MI-1 AND TH-1.

CONSTRUCTION AREA SIGNS (STATIONARY MOUNTED)

◯	TYPE	PANEL SIZE	SIGN MESSAGE	NUMBER AND SIZE OF POSTS	No. OF SIGNS
A	C40(CA)	108" x 42"	TRAFFIC FINES DOUBLED IN CONSTRUCTION ZONES	2 - 6" x 6"	2
B	G20-1 C23B(CA)	60" x 36" 36" x 18"	ROAD WORK NEXT 4 MILES SLIDE REPAIR	2 - 4" x 6"	2
C	G20-2	36" x 18"	END ROAD WORK	1 - 4" x 4"	2
D	W11-1 W16-1P	36" x 36" 24" x 30"	BICYCLE (SYMBOL) SHARE THE ROAD	1 - 4" x 6"	2

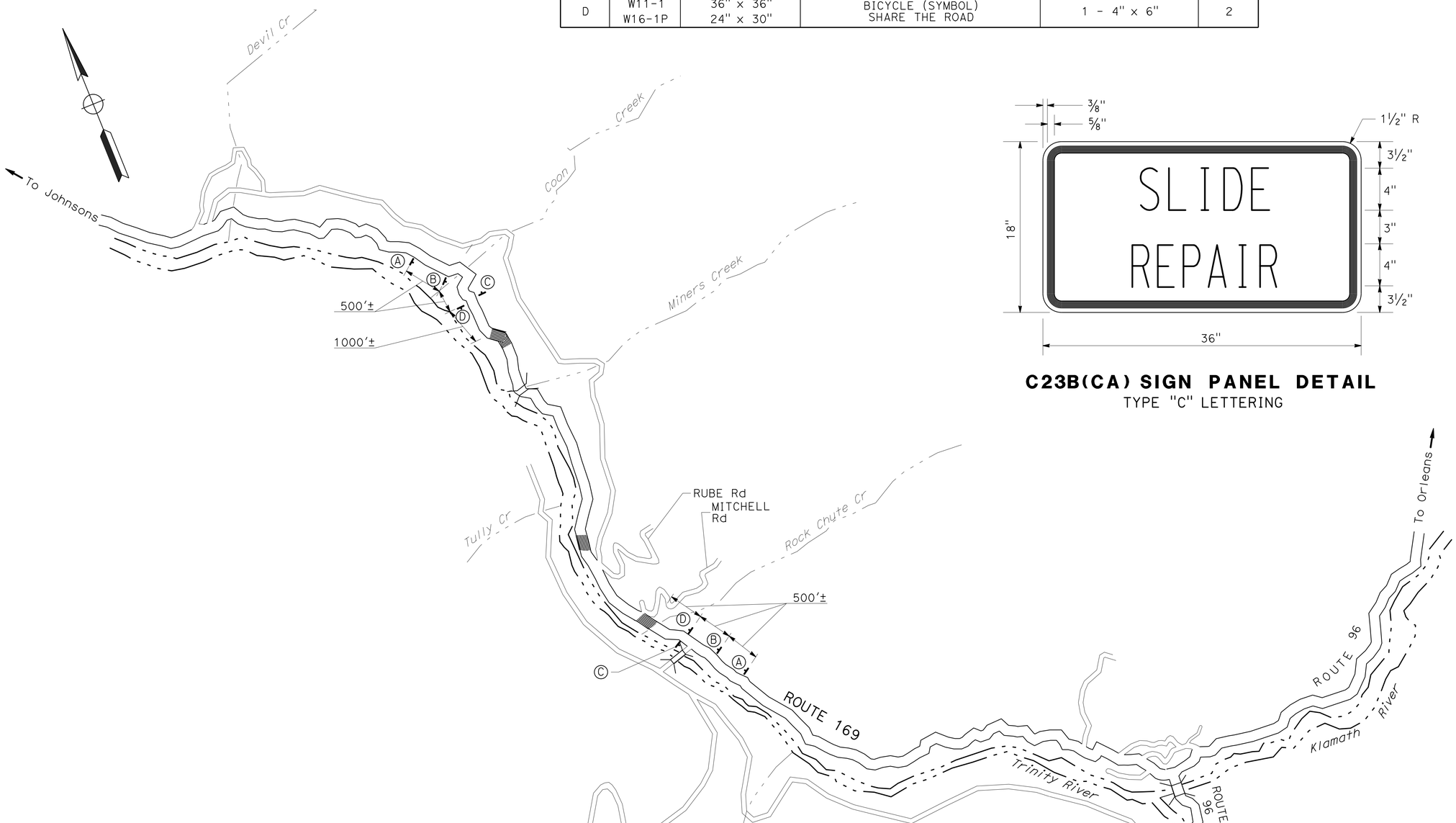

C23B(CA) SIGN PANEL DETAIL

TYPE "C" LETTERING

CONSTRUCTION AREA SIGNS

NO SCALE

CS-1

STATE OF CALIFORNIA - DEPARTMENT OF TRANSPORTATION
DESIGN

FUNCTIONAL SUPERVISOR: JOHN L. MARTIN
CALCULATED-DESIGNED BY: BETH A. ELMORE
CHECKED BY: JAMES D. RASMUSSEN
REVISED BY
DATE REVISED

P:\proj1\01\0b440_plans\pse\010b4401a001.dgn

LAST REVISION 12-10-15 | DATE PLOTTED => 22-JUL-2016 | TIME PLOTTED => 11:14

BORDER LAST REVISED 7/2/2010 | USERNAME => s116738 | DGN FILE => 010b4401a001.dgn | RELATIVE BORDER SCALE IS IN INCHES 0 1 2 3 | UNIT 0315 | PROJECT NUMBER & PHASE 01120001281

Dist	COUNTY	ROUTE	POST MILES TOTAL PROJECT	SHEET No.	TOTAL SHEETS
01	Hum	169	26.4/29.8	16	41

REGISTERED CIVIL ENGINEER 6-15-16 DATE

6-15-16
PLANS APPROVAL DATE

REGISTERED PROFESSIONAL ENGINEER JAMES D. RASMUSSEN No. C76401 Exp. 12-31-16 CIVIL STATE OF CALIFORNIA

THE STATE OF CALIFORNIA OR ITS OFFICERS OR AGENTS SHALL NOT BE RESPONSIBLE FOR THE ACCURACY OR COMPLETENESS OF SCANNED COPIES OF THIS PLAN SHEET.

CONSTRUCTION AREA SIGNS (STATIONARY MOUNTED)

○	TYPE	PANEL SIZE	SIGN MESSAGE	NUMBER AND SIZE OF POSTS	No. OF SIGNS
E	SPECIAL	84" X 60"	ROAD CLOSURES SCHEDULED	2 - 6" x 6"	1

LEGEND:

PCMS

(1) WESTBOUND, PLACE 15 DAYS PRIOR TO CLOSURE, MESSAGE SHALL READ

FRAME 1	ROUTE 169 WEST CLOSED	10 PM-7 AM XX/XX TO XX/XX	FRAME 2

(2) EASTBOUND, PLACE 15 DAYS PRIOR TO CLOSURE, MESSAGE SHALL READ

FRAME 1	ROUTE 169 EAST CLOSED	10 PM-7 AM XX/XX TO XX/XX	FRAME 2

(3) WESTBOUND, PRE-NOTIFICATION PCMS: PLACE AND ACTIVATE APPROXIMATELY 12 HOURS BEFORE ROAD CLOSURE

FRAME 1	ROUTE 169 WEST	CLOSED TONIGHT 10 PM-7 AM	FRAME 2

(4) EASTBOUND, PRE-NOTIFICATION PCMS: PLACE AND ACTIVATE APPROXIMATELY 12 HOURS BEFORE ROAD CLOSURE

FRAME 1	ROUTE 169 EAST	CLOSED TONIGHT 10 PM -7 AM	FRAME 2

(5) ACTIVATE DURING ROAD CLOSURE.

FRAME 1	ROUTE 169 WEST	CLOSED AT MARTINS FERRY BRIDGE	FRAME 2

(6) ACTIVATE DURING ROAD CLOSURE.

FRAME 1	ROUTE 169 EAST	CLOSED AT COON CREEK BRIDGE	FRAME 2

(7) ACTIVATE DURING ROAD CLOSURE.

FRAME 1	ROUTE 169 WEST	CLOSED	FRAME 2

NOTES:

1. EXACT LOCATION OF ALL SIGNS TO BE DETERMINED BY THE ENGINEER.
2. ADDITIONAL CONSTRUCTION AREA SIGNS SHOWN ON SHEET CS-1

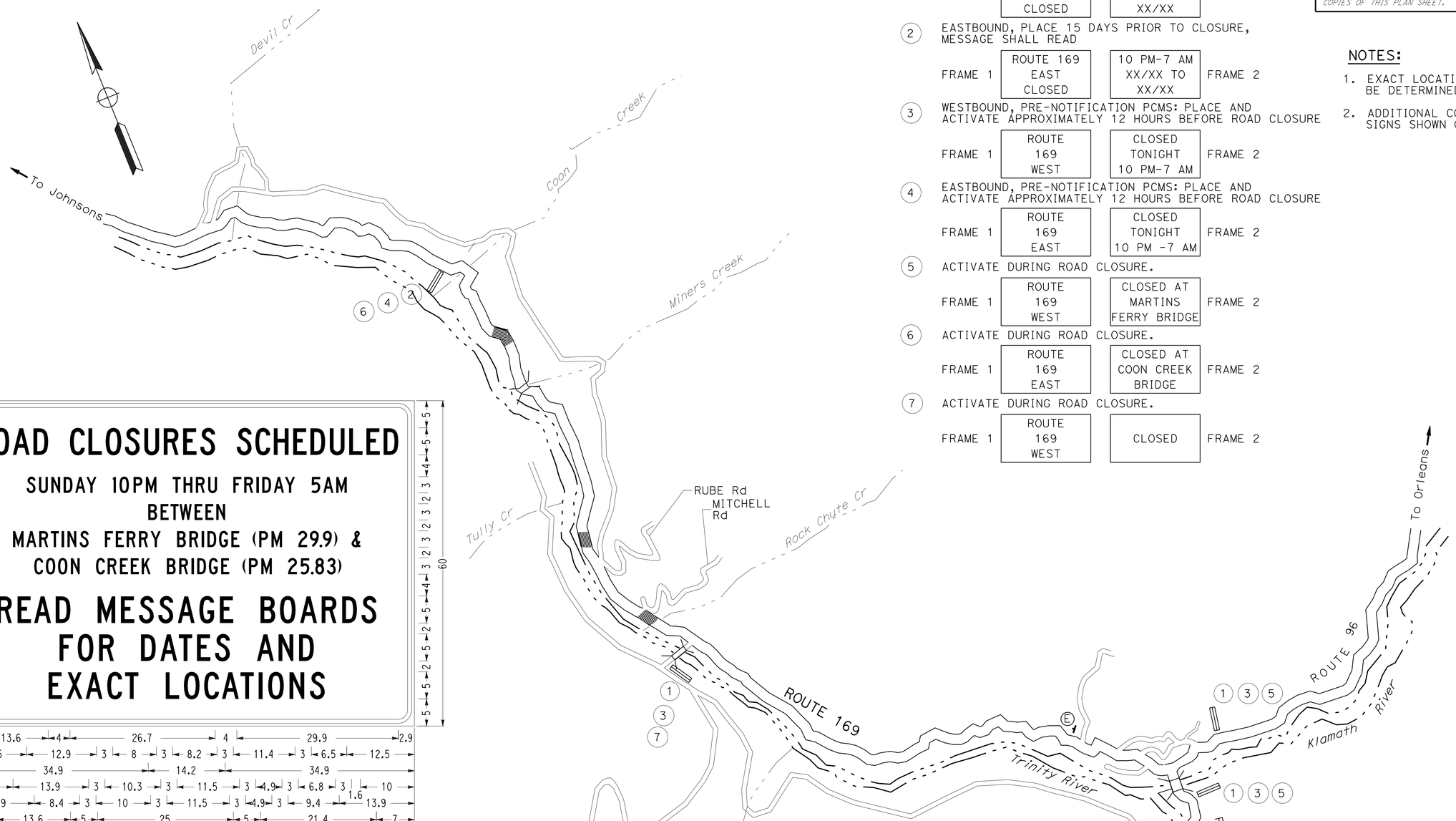

ROAD CLOSURES SCHEDULED

SUNDAY 10PM THRU FRIDAY 5AM
BETWEEN
MARTINS FERRY BRIDGE (PM 29.9) &
COON CREEK BRIDGE (PM 25.83)

READ MESSAGE BOARDS FOR DATES AND EXACT LOCATIONS

60

2.9 13.6 4 26.7 4 29.9 2.9
12.5 12.9 3 8 3 8.2 3 11.4 3 6.5 12.5
34.9 14.2 34.9
10 13.9 3 10.3 3 11.5 3 4.9 3 6.8 3 1.6 10
13.9 8.4 3 10 3 11.5 3 4.9 3 9.4 13.9
7 13.6 5 25 5 21.4 7
18.5 10.1 5 16.4 5 10.5 18.5
16.5 16.6 5 29.4 16.5
84*

3.0" Radius, 0.8" Border, 0.5" Indent, Black on Orange;
[ROAD CLOSURES SCHEDULED] C 80} spacing; [SUNDAY 10PM THRU FRIDAY 5AM] C;
[BETWEEN] C; [MARTINS FERRY BRIDGE (PM 29.9) &] C; [COON CREEK BRIDGE (PM 25.83)] C;
[READ MESSAGE BOARDS] C; [FOR DATES AND] C; [EXACT LOCATIONS] C;
* ALL DIMENSIONS IN INCHES.

SPECIAL SIGN DETAIL

MOTORIST INFORMATION PLAN
NO SCALE

MI-1

REVISED BY | DATE REVISED
BETH A. ELMORE | JAMES D. RASMUSSEN
CALCULATED-DESIGNED BY | CHECKED BY
FUNCTIONAL SUPERVISOR
JOHN L. MARTIN

STATE OF CALIFORNIA - DEPARTMENT OF TRANSPORTATION
Caltrans® DESIGN

P:\proj1\01\0b440_plans\pse\010b4401b001.dgn

LAST REVISION 03-10-16 | DATE PLOTTED => 22-JUL-2016 | TIME PLOTTED => 11:14

Dist	COUNTY	ROUTE	POST MILES TOTAL PROJECT	SHEET No.	TOTAL SHEETS
01	Hum	169	26.4/29.8	17	41

REGISTERED CIVIL ENGINEER 6-15-16 DATE

6-15-16
PLANS APPROVAL DATE

REGISTERED PROFESSIONAL ENGINEER
JAMES D. RASMUSSEN
No. C76401
Exp. 12-31-16
CIVIL
STATE OF CALIFORNIA

THE STATE OF CALIFORNIA OR ITS OFFICERS OR AGENTS SHALL NOT BE RESPONSIBLE FOR THE ACCURACY OR COMPLETENESS OF SCANNED COPIES OF THIS PLAN SHEET.

NOTE:

1. EXACT LOCATION OF ALL SIGNS TO BE DETERMINED BY THE ENGINEER.
2. CALIFORNIA SIGN CODES ARE DESIGNATED BY (CA), OTHERWISE FEDERAL SIGN CODES ARE SHOWN.
3. 24 HOUR FAGGING REQUIRED AT LOCATION 1 LANE CLOSURE.

LEGEND

- WORK AREA
- CONSTRUCTION AREA SIGN
- TEMPORARY CRASH CUSHION SYSTEM
- TEMPORARY FLASHING BEACON
- PORTABLE LIGHT TOWER
- CHANNELZER (SURFACE MOUNTED) (25' C-C)
- CONSTRUCTION AREA SIGNS MOUNTED BACK TO BACK ON ONE POST
- CONSTRUCTION AREA SIGN MOUNTED ON TYPE III BARRICADE
- PORTABLE CHANGEABLE MESSAGE SIGN
- TYPE III BARRICADE

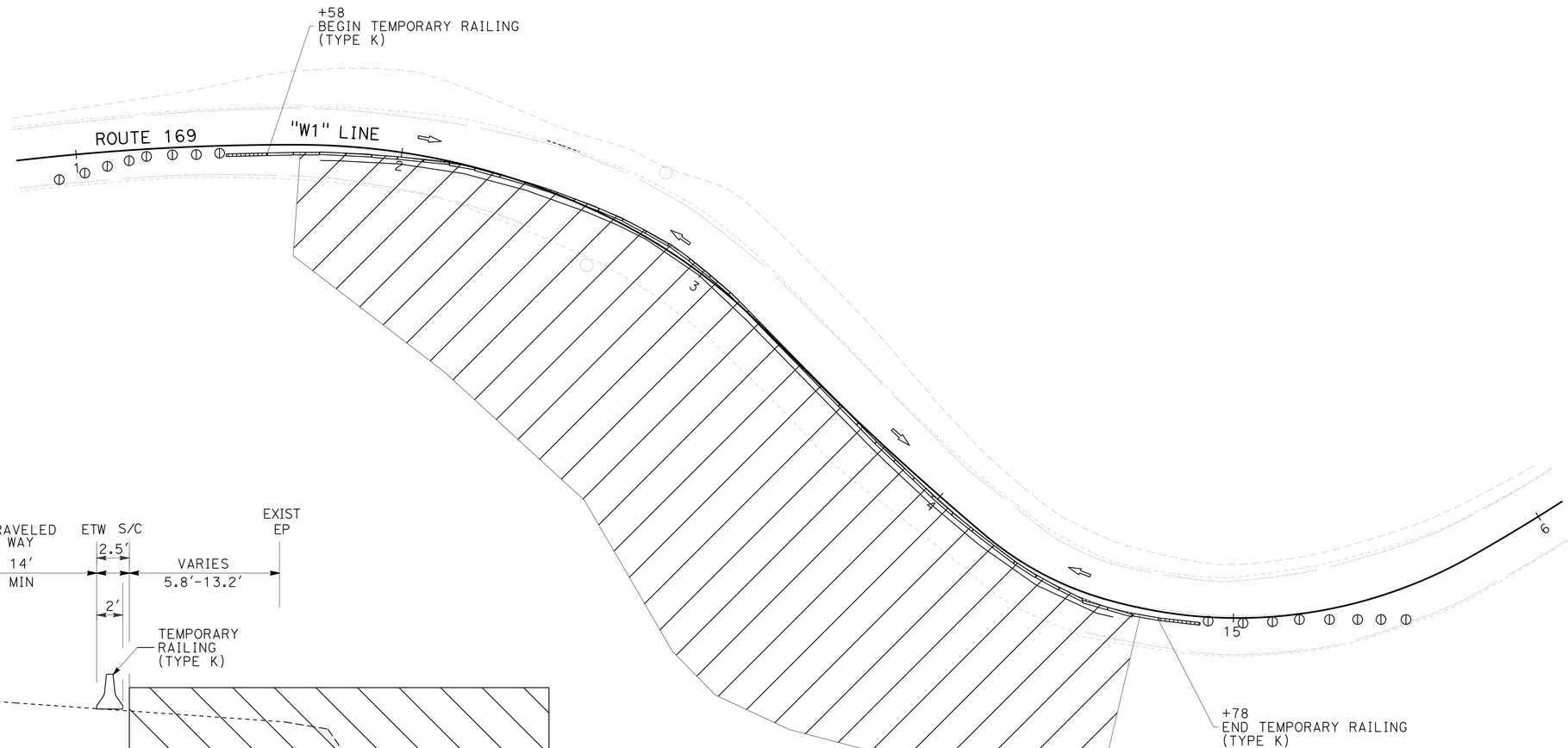

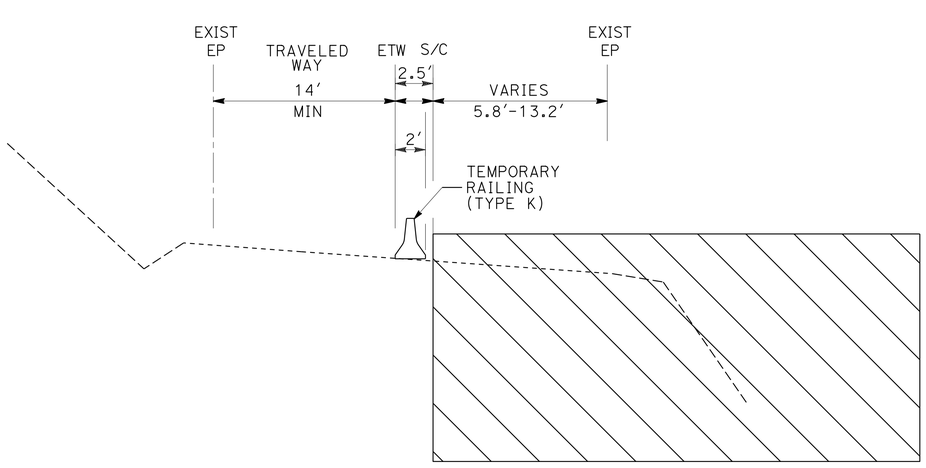

TYPICAL SECTION

LOCATION 1, PM 26.45

APPROVED FOR TRAFFIC HANDLING WORK ONLY

TRAFFIC HANDLING PLAN

SCALE: 1" = 20'

TH-1

REVISED BY	DATE REVISED

CALCULATED-DESIGNED BY	CHECKED BY
JOLENA ASTIN	JAMES D. RASMUSSEN

FUNCTIONAL SUPERVISOR: JOHN L. MARTIN

STATE OF CALIFORNIA - DEPARTMENT OF TRANSPORTATION

Caltrans

DESIGN

P:\proj1\01\0b440_plans\pse\010b440md001.dgn

LAST REVISION 01-20-16 | DATE PLOTTED => 22-JUL-2016 | TIME PLOTTED => 11:14

Dist	COUNTY	ROUTE	POST MILES TOTAL PROJECT	SHEET No.	TOTAL SHEETS
01	Hum	169	26.4/29.8	18	41

REGISTERED CIVIL ENGINEER 6-15-16 DATE

6-15-16
PLANS APPROVAL DATE

REGISTERED PROFESSIONAL ENGINEER JAMES D. RASMUSSEN No. C76401 Exp. 12-31-16 CIVIL STATE OF CALIFORNIA

THE STATE OF CALIFORNIA OR ITS OFFICERS OR AGENTS SHALL NOT BE RESPONSIBLE FOR THE ACCURACY OR COMPLETENESS OF SCANNED COPIES OF THIS PLAN SHEET.

NOTE:

1. EXACT LOCATION OF BARRICADES TO BE DETERMINED BY ENGINEER
2. SIGHT LINES BETWEEN LIMIT LINES TO REMAIN UNOBSTRUCTED AT ALL TIMES

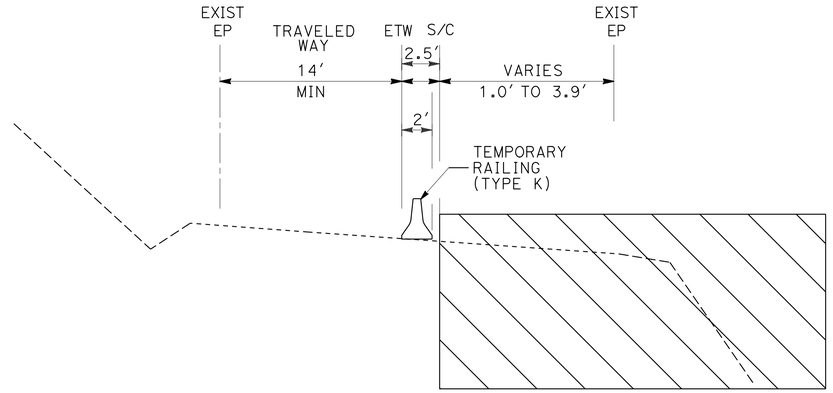

TYPICAL SECTION

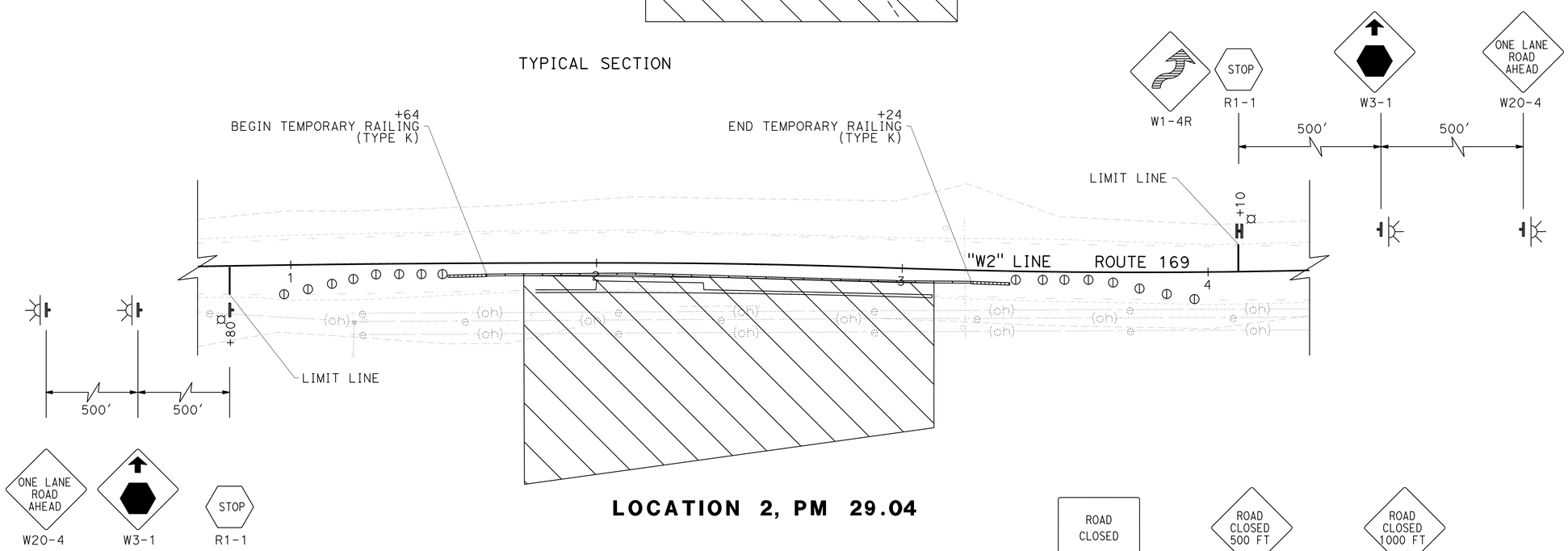

LOCATION 2, PM 29.04

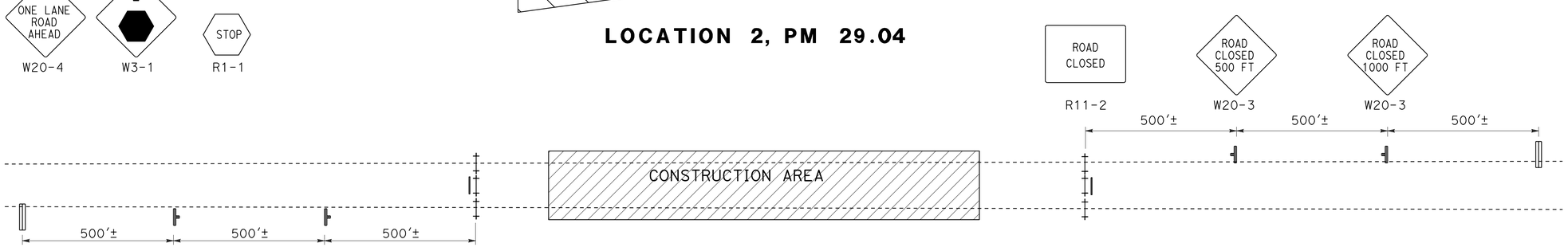

ROAD CLOSURE
LOCATION 3, PM 29.8

APPROVED FOR TRAFFIC HANDLING WORK ONLY

TRAFFIC HANDLING PLAN

SCALE: 1" = 20′

TH-2

REVISED BY	DATE REVISED
JOLENA ASTIN	JAMES D. RASMUSSEN

CALCULATED-DESIGNED BY / CHECKED BY

FUNCTIONAL SUPERVISOR: JOHN L. MARTIN

STATE OF CALIFORNIA - DEPARTMENT OF TRANSPORTATION
Caltrans
DESIGN

P:\proj1\01\0b440_plans\pse\010b440md002.dgn

LAST REVISION 01-22-16 | DATE PLOTTED => 22-JUL-2016 | TIME PLOTTED => 11:14

Dist	COUNTY	ROUTE	POST MILES TOTAL PROJECT	SHEET No.	TOTAL SHEETS
01	Hum	169	26.4/29.8	19	35

REGISTERED CIVIL ENGINEER — DATE 5-18-16

June 15, 2016
PLANS APPROVAL DATE

REGISTERED PROFESSIONAL ENGINEER — SCOTT LEZCHUK — No. C79030 — Exp. 3-31-18 — CIVIL — STATE OF CALIFORNIA

THE STATE OF CALIFORNIA OR ITS OFFICERS OR AGENTS SHALL NOT BE RESPONSIBLE FOR THE ACCURACY OR COMPLETENESS OF SCANNED COPIES OF THIS PLAN SHEET.

NOTES:

This sheet replaces 2015 Standard Plan T13 for District 1 Projects.

See Standard Plan T9 for tables.

Use cone spacing X for taper segment, Y for tangent segment or Z for conflict situations, as appropriate, per Table 1, unless X, Y, or Z cone spacing is shown on this sheet.

All temporary warning signs shall have black legend on fluorescent orange background.

California codes are designated by (CA). Otherwise, Federal (MUTCD) codes are shown.

TYPICAL LANE CLOSURE WITH REVERSIBLE CONTROL

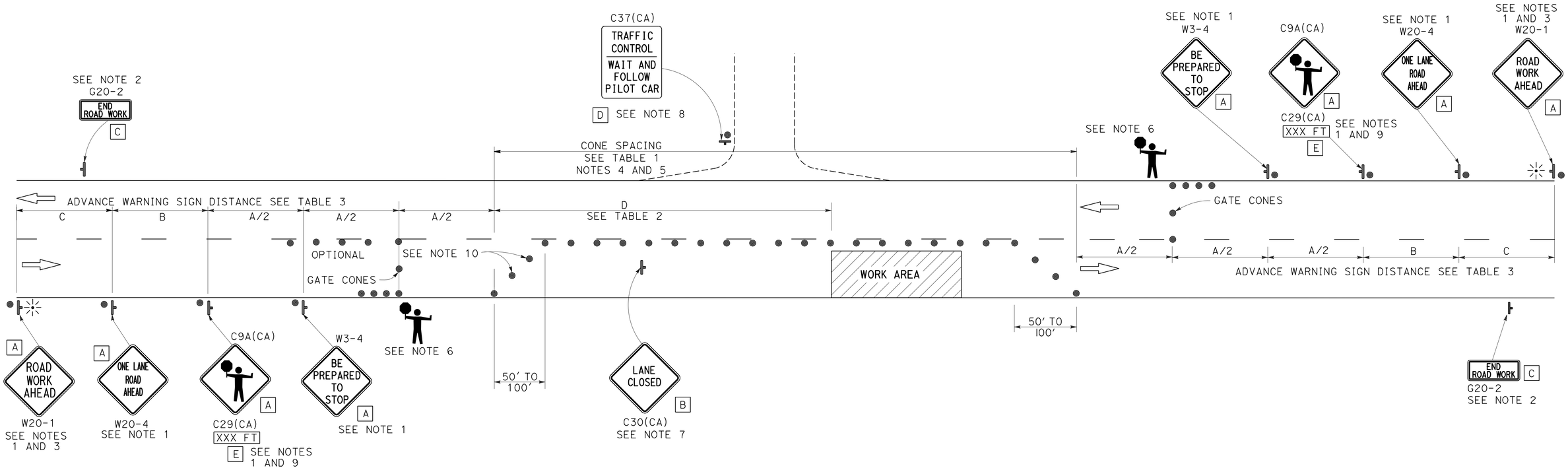

NOTES:

1. Each advance warning sign in each direction of travel shall be equipped with at least two flags for daytime closure. Each flag shall be at least 16" x 16" in size and shall be orange or fluorescent red-orange in color. Flashing beacons shall be placed at the locations indicated for lane closure during hours of darkness.
2. A G20-2 "END ROAD WORK" sign, as appropriate, shall be placed at the end of the lane control unless the end of work area is obvious, or ends within a larger project's limits.
3. If the W20-1 sign would follow within 2000' of a stationary W20-1 or G20-1 "ROAD WORK NEXT _____ MILES", use a W20-4 sign for the first advance warning sign.
4. All cones used for lane closures during the hours of darkness shall be fitted with retroreflective bands (or sleeves).
5. Portable delineators, placed at one-half the spacing indicated for traffic cones, may be used instead of cones for daytime closures only.
6. Additional advance flaggers may be required. Flagger should stand in a conspicuous place, be visible to approaching traffic as well as approaching vehicles after the first vehicle has stopped. During the hours of darkness, the flagging-station and flagger shall be illuminated and clearly visible to approaching traffic. The illumination footprint of the lighting on the ground shall be at least 20' in diameter. Place a minimum of four cones at 50' intervals in advance of flagger station as shown.
7. Place C30(CA) "LANE CLOSED" sign at 500' to 1000' intervals throughout extended work areas. They are optional if the work area is visible from the flagger station.
8. When a pilot car is used, place a C37(CA) "TRAFFIC CONTROL-WAIT AND FOLLOW PILOT CAR" sign with black legend on white background at all intersections, driveways and alleys without a flagger within traffic control area. Signs shall be clean and visible at all times. Where traffic can not be effectively self-regulated, at least one flagger shall be used at each intersection within traffic control area.
9. An optional C29(CA) sign may be placed below the C9A(CA) sign.
10. Either traffic cones or barricades shall be placed on the taper. Barricades shall be Type I, II, or III.

SIGN PANEL SIZE (Min)

A	48" x 48"
B	30" x 30"
C	36" x 18"
D	36" x 42"
E	20" x 7"

LEGEND

- TRAFFIC CONE
- TEMPORARY TRAFFIC CONTROL SIGN
- PORTABLE FLASHING BEACON
- FLAGGER

APPROVED FOR TRAFFIC HANDLING WORK ONLY

STATE OF CALIFORNIA
DEPARTMENT OF TRANSPORTATION

TRAFFIC CONTROL SYSTEM FOR LANE CLOSURE ON TWO LANE CONVENTIONAL HIGHWAYS

NO SCALE

TH-3

REVISED BY | DATE REVISED
SCOTT LEZCHUK | PAUL HAILEY
CALCULATED-DESIGNED BY | CHECKED BY
FUNCTIONAL SUPERVISOR: KEVIN CHURCH

STATE OF CALIFORNIA - DEPARTMENT OF TRANSPORTATION
Caltrans® TRAFFIC OPERATIONS

P:\proj\01\0b440_plans\pse\010b440md003.dgn

LAST REVISION 5-18-16 | DATE PLOTTED => 22-JUL-2016 | TIME PLOTTED => 11:14

Dist	COUNTY	ROUTE	POST MILES TOTAL PROJECT	SHEET No.	TOTAL SHEETS
01	Hum	169	26.4/29.8	20	41

REGISTERED CIVIL ENGINEER 6-15-16 DATE

6-15-16
PLANS APPROVAL DATE

REGISTERED PROFESSIONAL ENGINEER JAMES D. RASMUSSEN No. C76401 Exp. 12-31-16 CIVIL STATE OF CALIFORNIA

THE STATE OF CALIFORNIA OR ITS OFFICERS OR AGENTS SHALL NOT BE RESPONSIBLE FOR THE ACCURACY OR COMPLETENESS OF SCANNED COPIES OF THIS PLAN SHEET.

NOTE:

1. (N) NOT A SEPARATE PAY ITEM, FOR INFORMATION ONLY.

CONSTRUCTION AREA SIGNS (PORTABLE)

TYPE	PANEL SIZE	SIGN MESSAGE	(N) EA	COMMENT
R11-2	48" x 48"	ROAD CLOSED	2	BARRICADE MOUNTED
W20-3	48" x 48"	ROAD CLOSED XX FT	4	

CONSTRUCTION AREA SIGNS (STATIONARY)

CODE	PANEL SIZE	SIGN MESSAGE	NUMBER AND SIZE OF POSTS	(N) EA
R1-1 W1-4R	24" x 36" 36" x 36"	STOP REVERSING CURVE RIGHT	1 - 4" X 6"	1
R1-1	36" x 36"	STOP	1 - 4" X 6"	1
W3-1	36" x 36"	STOP AHEAD	1 - 4" X 6"	2
W20-4	36" x 36"	ONE LANE ROAD AHEAD	1 - 4" X 6"	2

ADDITIONAL QUANTITIES SHOWN ELSEWHERE, SEE SHEET CS-1 & MI-1

TRAFFIC HANDLING QUANTITIES

LOCATION	TEMPORARY PAVEMENT MARKING (TAPE)	TEMPORARY CRASH CUSHION SYSTEM	TEMPORARY RAILING (TYPE K)	CHANNELIZER (SURFACE MOUNTED)	DESCRIPTION
	SQFT	EA	LF	EA	
1		2	320	16	
2	20	2	160	16	LIMIT LINE
TOTAL	20	4	480	32	

TRAFFIC HANDLING QUANTITIES

THQ-1

REVISED BY | DATE REVISED
BETH A. ELMORE | JIM RASMUSSEN
CALCULATED-DESIGNED BY | CHECKED BY
FUNCTIONAL SUPERVISOR
JOHN L. MARTIN

STATE OF CALIFORNIA - DEPARTMENT OF TRANSPORTATION
Caltrans DESIGN

P:\proj1\01\0b440_plans\pse\010b440mf001.dgn

LAST REVISION 02-04-16 | DATE PLOTTED => 22-JUL-2016 | TIME PLOTTED => 11:14

Dist	COUNTY	ROUTE	POST MILES TOTAL PROJECT	SHEET No.	TOTAL SHEETS
01	Hum	169	26.4/29.8	21	41

REGISTERED CIVIL ENGINEER 6-15-16 DATE

6-15-16
PLANS APPROVAL DATE

REGISTERED PROFESSIONAL ENGINEER JAMES D. RASMUSSEN No. C76401 Exp. 12-31-16 CIVIL STATE OF CALIFORNIA

THE STATE OF CALIFORNIA OR ITS OFFICERS OR AGENTS SHALL NOT BE RESPONSIBLE FOR THE ACCURACY OR COMPLETENESS OF SCANNED COPIES OF THIS PLAN SHEET.

NOTES:

1. (N) - NOT A SEPARATE PAY ITEM, FOR INFORMATION ONLY.

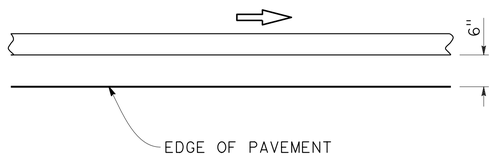

DETAIL 27B (MODIFIED)

MILEPOST MARKER

LOCATION	MILEPOST MARKER	(N) POST MILE
	EA	
2	1	29.00
TOTAL	1	

THERMOPLASTIC TRAFFIC STRIPE (ENHANCED WET NIGHT VISIBILITY)

LOCATION	ALIGNMENT	STATION			RT/LT	WHITE 4" DETAIL 27B (MODIFIED)
						LF
1	"W1"	11+31	TO	15+10	RT/LT	758
2	"W2"	21+40	TO	23+10	RT/LT	340
3	"W3"	32+40	TO	35+40	RT/LT	600
					TOTAL	1698

ROADSIDE SIGNS

SHEET NO.	SIGN NO.	SIGN CODE	PANEL SIZE	TREATED WOOD WASTE	RELOCATE ROADSIDE SIGN-ONE POST	WEED CONTROL MAT (FIBER)	DESCRIPTION
				LB	EA	SQYD	
L-2	1-1	W2-2(LT)	30" X 30"	50	1	1	INTERSECTION WARNING
			TOTAL	50	1	1	

PAVEMENT DELINEATION AND SIGN DETAILS AND QUANTITIES

NO SCALE

PDQ-1

REVISED BY | DATE REVISED
BETH A. ELMORE | JAMES D. RASMUSSEN
CALCULATED-DESIGNED BY | CHECKED BY
FUNCTIONAL SUPERVISOR: JOHN L. MARTIN

STATE OF CALIFORNIA - DEPARTMENT OF TRANSPORTATION
Caltrans
DESIGN

P:\proj1\01\0b440_plans\pse\010b440nc001.dgn

LAST REVISION | DATE PLOTTED => 22-JUL-2016 | TIME PLOTTED => 11:14

Dist	COUNTY	ROUTE	POST MILES TOTAL PROJECT	SHEET No.	TOTAL SHEETS
01	Hum	169	26.4/29.8	22	41

REGISTERED CIVIL ENGINEER 6-15-16 DATE

6-15-16
PLANS APPROVAL DATE

REGISTERED PROFESSIONAL ENGINEER JAMES D. RASMUSSEN No. C76401 Exp. 12-31-16 CIVIL STATE OF CALIFORNIA

THE STATE OF CALIFORNIA OR ITS OFFICERS OR AGENTS SHALL NOT BE RESPONSIBLE FOR THE ACCURACY OR COMPLETENESS OF SCANNED COPIES OF THIS PLAN SHEET.

NOTE:

1. (N) - NOT A SEPARATE PAY ITEM, FOR INFORMATION ONLY

ROADWAY ITEMS

LOCATION	STATION	RT/LT	ROADWAY EXCAVATION	SHOULDER BACKING	CLASS 2 AGGREGATE BASE (CY)	HOT MIX ASPHALT (TYPE A)	PLACE HMA (MISCELLANEOUS AREA)	30" CAST-IN-DRILLED-HOLE CONCRETE PILING	BAR REINFORCING STEEL	ROCK SLOPE PROTECTION (FACING, METHOD B) (CY)	ROCK SLOPE PROTECTION (1/4 T, METHOD A) (CY)	ROCK SLOPE PROTECTION (1/4 T, METHOD B) (CY)	ROCK SLOPE PROTECTION FABRIC (CLASS 8)
			CY	TON	CY	TON	SQYD	LF	LB	CY	CY	CY	SQYD
1	"W1" 11+75 TO 14+80	RT	4170	22	132	155				71		4275	2672
2	"W2" 21+75 TO 23+12	RT	955	10	31	28	25			27		766	842
3	"W3" 32+75 TO 35+00	RT	170	14	41	45	24	1680	13,528	34	130		547
	"W3" 33+85 TO 34+55	LT	113					468	48,677		158		190
SELECTED MATERIAL FROM SHEET ECQ-1			791										
FROM SHEET DQ-1												66	120
TOTAL			6199	46	204	228	49	2148	62,205	132	288	5107	4371

TEMPORARY FENCE (TYPE ESA)

LOCATION	STATION	RT/LT	LF
1	"W1" 12+45.8 TO 13+17.4	RT	75.3
	"W1" 12+34.4 TO 13+01.7	LT	114.2
2	"W2" 22+73.9 TO 23+18.5	RT	60.4
	"W2" 23+08.7 TO 23+38.4	LT	60.4
	"W2" 24+38.2 TO 24+65.0	RT	32.0
	"W2" 24+47.1 TO 24+86.4	LT	54.4
3	"W3" 31+27.4 TO 31+84.0	LT	64.5
	"W3" 32+13.4 TO 32+74.8	LT	108.7
	"W3" 33+22.1 TO 33+84.7	LT	79.5
	"W3" 34+54.8 TO 35+10.8	LT	79.7
		TOTAL	729.1

STORM WATER POLLUTION PREVENTION

ITEM	UNIT	QUANTITY
STORM WATER ANNUAL REPORT	EA	2
TEMPORARY FIBER ROLL	LF	800
TEMPORARY REINFORCED SILT FENCE	LF	650
TEMPORARY CHECK DAM	LF	30
TEMPORARY DRAINAGE INLET PROTECTION	EA	1
MOVE-IN/MOVE-OUT (TEMPORARY EROSION CONTROL)	EA	1
TEMPORARY HYDRAULIC MULCH (BONDED FIBER MATRIX)	SQYD	1,000
STORMWATER SAMPLING AND ANALYSIS DAY	EA	10

DESTROY WELL

LOCATION	STATION	RT/LT	EA	(N) DIAMETER	(N) DEPTH
3	"W3" 32+59	RT	1	6.0"	80'
	"W3" 33+18	LT	1	6.0"	82'
	"W3" 33+45	RT	1	3.4"	140'
	"W3" 34+00	LT	1	3.4"	140'
	"W3" 34+49	RT	1	3.4"	100'
		TOTAL	5		

SUMMARY OF QUANTITIES

Q-1

BETH A. ELMORE — REVISED BY
JAMES D. RASMUSSEN — DATE REVISED
CALCULATED-DESIGNED BY
CHECKED BY
FUNCTIONAL SUPERVISOR
JOHN L. MARTIN

STATE OF CALIFORNIA - DEPARTMENT OF TRANSPORTATION
Caltrans
DESIGN

P:\proj1\01\0b440_plans\pse\010b440pa001.dgn

LAST REVISION 02-25-16 | DATE PLOTTED => 22-JUL-2016 | TIME PLOTTED => 11:14

Dist	COUNTY	ROUTE	POST MILES TOTAL PROJECT	SHEET No.	TOTAL SHEETS
01	HUM	169	26.4/29.8	23	41

Laura Lazzarotto
LICENSED LANDSCAPE ARCHITECT

6-15-16
PLANS APPROVAL DATE

LICENSED LANDSCAPE ARCHITECT LAURA LAZZAROTTO LA 4900 Laura Lazzarotto Expiration Date 8-31-17 Renewal Date 6-15-16 Date STATE OF CALIFORNIA

THE STATE OF CALIFORNIA OR ITS OFFICERS OR AGENTS SHALL NOT BE RESPONSIBLE FOR THE ACCURACY OR COMPLETENESS OF SCANNED COPIES OF THIS PLAN SHEET.

LEGEND:

PLANT (GROUP H)

WILLOW CUTTING QUANTITIES

SHEET	LOCATION STATION "W3" LINE	LT	RT	DESCRIPTION	PACKET FERTILIZER	PLANT (GROUP H)	COMPOST SOCK (TYPE W)
					EA	EA	LF
EC-3	33+85 TO 34+55	X		WILLOW CUTTINGS	61	61	
EC-3	33+85 TO 34+55	X		COMPOST SOCK (TYPE W)			400
				TOTAL	61	61	400

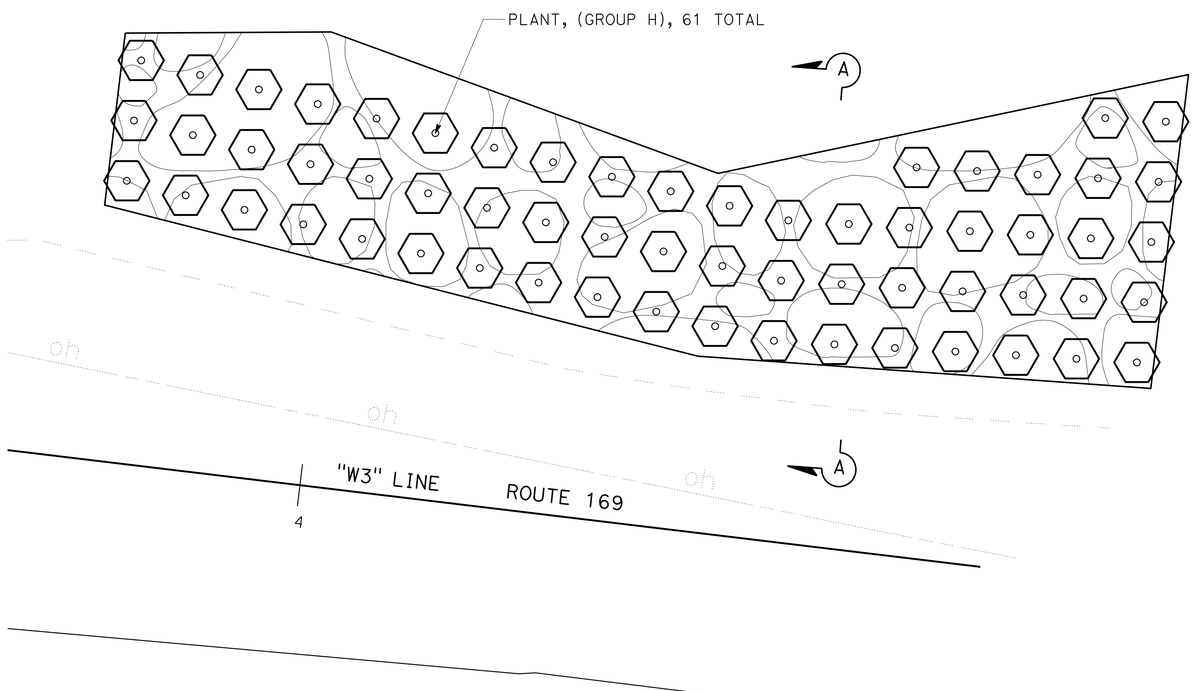

PLAN

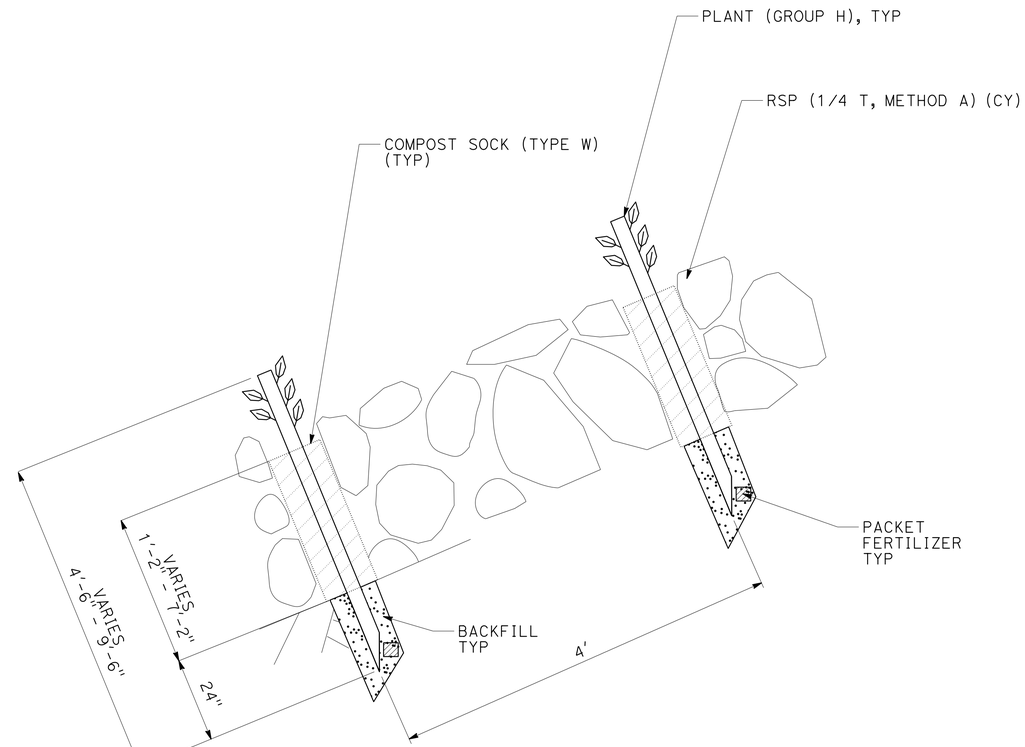

SECTION A-A

LOCATION 3
PM 29.8

APPROVED FOR PLANTING WORK ONLY

ROCK SLOPE PROTECTION
WILLOW CUTTING
PLANTING PLAN AND PLANTING QUANTITIES

NO SCALE

PP-1

STATE OF CALIFORNIA - DEPARTMENT OF TRANSPORTATION
Caltrans® LANDSCAPE ARCHITECTURE

FUNCTIONAL SUPERVISOR: STEVE THORNE
CALCULATED-DESIGNED BY: LOGAN MOORE
CHECKED BY: LAURA LAZZAROTTO
REVISED BY
DATE REVISED

LAST REVISION 03-04-16
DATE PLOTTED => 22-JUL-2016
TIME PLOTTED => 11:14

Dist	COUNTY	ROUTE	POST MILES TOTAL PROJECT	SHEET No.	TOTAL SHEETS
01	HUM	169	26.4/29.8	24	41

Laura Lazzarotto
LICENSED LANDSCAPE ARCHITECT

6-15-16
PLANS APPROVAL DATE

LICENSED LANDSCAPE ARCHITECT
LAURA LAZZAROTTO
LA 4900
Laura Lazzarotto
Signature
8-31-17
Renewal Date
6-15-16
Date
STATE OF CALIFORNIA

THE STATE OF CALIFORNIA OR ITS OFFICERS OR AGENTS SHALL NOT BE RESPONSIBLE FOR THE ACCURACY OR COMPLETENESS OF SCANNED COPIES OF THIS PLAN SHEET.

SEED MIX 1

SEED	BOTANICAL NAME (COMMON NAME)	PERCENT GERMINATION (MINIMUM)	POUNDS PURE LIVE SEED PER ACRE (SLOPE MEASUREMENT)
MIX 1	BROMUS CARINATUS [1] (CALIFORNIA BROME)	85	20
	DESCHAMPSIA ELONGATA [1] (SLENDER HAIRGRASS)	75	10
	FESTUCA IDAHOENSIS [1] (IDAHO FESCUE)	80	12
	HORDEUM VULGARE (COMMON BARLEY)	75	90
	JUNCUS BUFONIUS [1] (TOAD RUSH)	60	5
	MIMULUS GUTTATUS [1] (MONKEY FLOWER)	60	2

[1] SEED PRODUCED IN CALIFORNIA ONLY

COMPOST SOCK

SEQUENCE	ITEM	MATERIAL		REMARKS
		DESCRIPTION	TYPE	
COMPOST SOCK MUST BE INSTALLED BEFORE EROSION CONTROL	COMPOST SOCK	MESH TUBE	8" DIA	TYPE 2 INSTALLATION

SEED MIX 2

SEED	BOTANICAL NAME (COMMON NAME)	PERCENT GERMINATION (MINIMUM)	POUNDS PURE LIVE SEED PER ACRE (SLOPE MEASUREMENT)
MIX 1	ACHILLEA MILLEFOLIUM [1] (WHITE YARROW)	45	2
	BROMUS CARINATUS [1] (CALIFORNIA BROME)	85	20
	DESCHAMPSIA ELONGATA [1] (SLENDER HAIRGRASS)	75	10
	FESTUCA CALIFORNICA [1] (CALIFORNIA FESCUE)	75	10
	FESTUCA IDAHOENSIS [1] (IDAHO FESCUE)	80	12
	HORDEUM VULGARE (COMMON BARLEY)	75	90
	LUPINUS BICOLOR [1] (MINIATURE LUPINE)	80	12

[1] SEED PRODUCED IN CALIFORNIA ONLY

EROSION CONTROL LEGEND

ECL-1

REVISED BY | DATE REVISED
LOGAN MOORE | LAURA LAZZAROTTO
CALCULATED-DESIGNED BY | CHECKED BY
FUNCTIONAL SUPERVISOR: STEVE THORNE
STATE OF CALIFORNIA - DEPARTMENT OF TRANSPORTATION
Caltrans® LANDSCAPE ARCHITECTURE

LAST REVISION 03-04-16
DATE PLOTTED => 22-JUL-2016
TIME PLOTTED => 11:14

Dist	COUNTY	ROUTE	POST MILES TOTAL PROJECT	SHEET No.	TOTAL SHEETS
01	HUM	169	26.4/29.8	25	41

Laura Lazzarotto
LICENSED LANDSCAPE ARCHITECT

6-15-16
PLANS APPROVAL DATE

LICENSED LANDSCAPE ARCHITECT
LAURA LAZZAROTTO
LA 2608
Laura Lazzarotto
Signature
8-31-17
Renewal Date
6-15-16
Date
STATE OF CALIFORNIA

THE STATE OF CALIFORNIA OR ITS OFFICERS OR AGENTS SHALL NOT BE RESPONSIBLE FOR THE ACCURACY OR COMPLETENESS OF SCANNED COPIES OF THIS PLAN SHEET.

NOTE:

1. FOR ACCURATE RIGHT OF WAY DATA, CONTACT RIGHT OF WAY ENGINEERING AT THE DISTRICT OFFICE.

LEGEND:

- EROSION CONTROL TYPE 1
- EROSION CONTROL TYPE 2
- SELECTED MATERIAL
- COMPOST SOCK
- WILLOW CUTTINGS WITHIN RSP

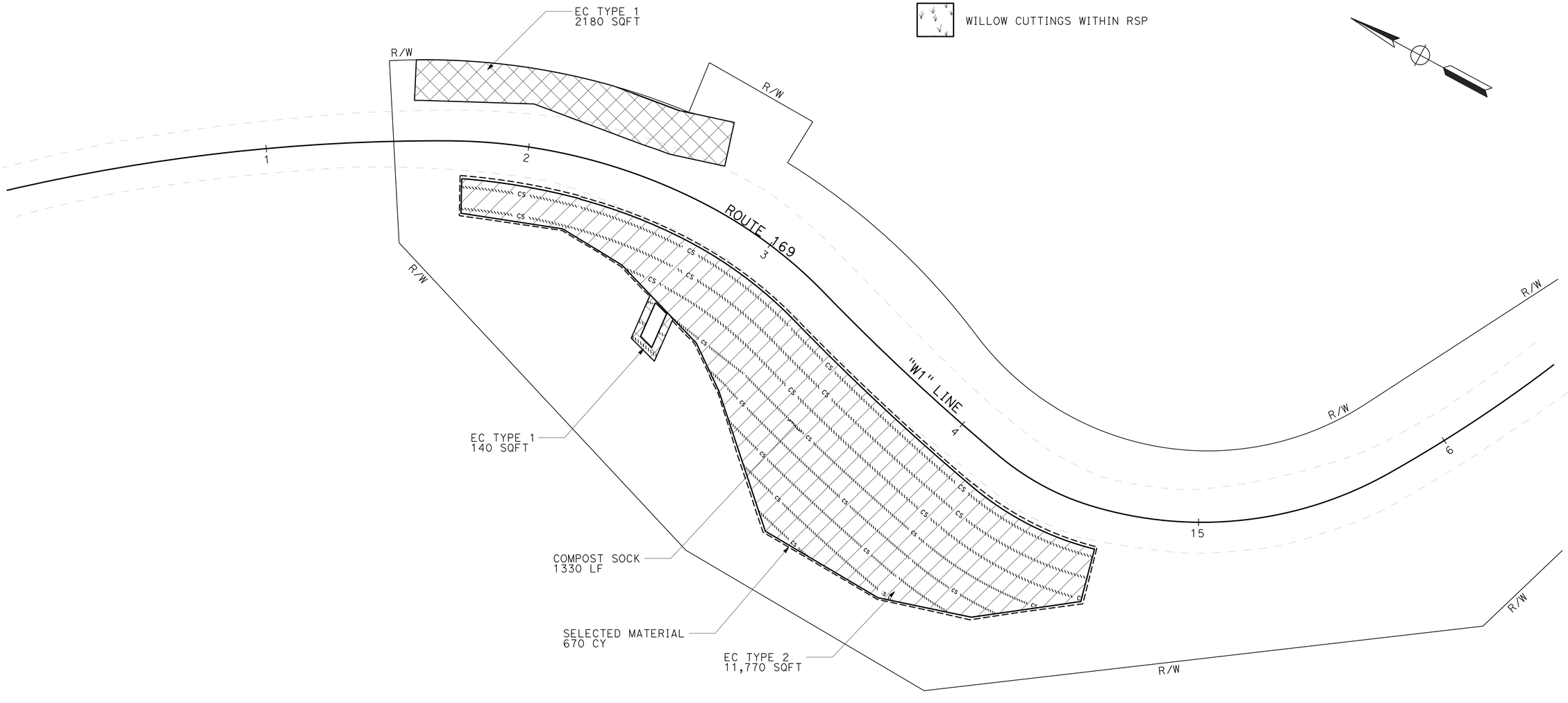

LOCATION 1
PM 26.45

APPROVED FOR EROSION CONTROL WORK ONLY

EROSION CONTROL PLAN

SCALE: 1" = 20'

EC-1

STATE OF CALIFORNIA - DEPARTMENT OF TRANSPORTATION
Caltrans® LANDSCAPE ARCHITECTURE

FUNCTIONAL SUPERVISOR: STEVE THORNE

CALCULATED-DESIGNED BY: LOGAN MOORE
CHECKED BY: LAURA LAZZAROTTO

REVISED BY
DATE REVISED

LAST REVISION 03-04-16
DATE PLOTTED => 22-JUL-2016
TIME PLOTTED => 11:14

Dist	COUNTY	ROUTE	POST MILES TOTAL PROJECT	SHEET No.	TOTAL SHEETS
01	HUM	169	26.4/29.8	26	41

Laura Lazzarotto
LICENSED LANDSCAPE ARCHITECT

6-15-16
PLANS APPROVAL DATE

LICENSED LANDSCAPE ARCHITECT
LAURA LAZZAROTTO
No. 5409
Laura Lazzarotto
Signature
8-31-17
Renewal Date
6-15-16
Date
STATE OF CALIFORNIA

THE STATE OF CALIFORNIA OR ITS OFFICERS OR AGENTS SHALL NOT BE RESPONSIBLE FOR THE ACCURACY OR COMPLETENESS OF SCANNED COPIES OF THIS PLAN SHEET.

NOTE:

1. FOR ACCURATE RIGHT OF WAY DATA, CONTACT RIGHT OF WAY ENGINEERING AT THE DISTRICT OFFICE.

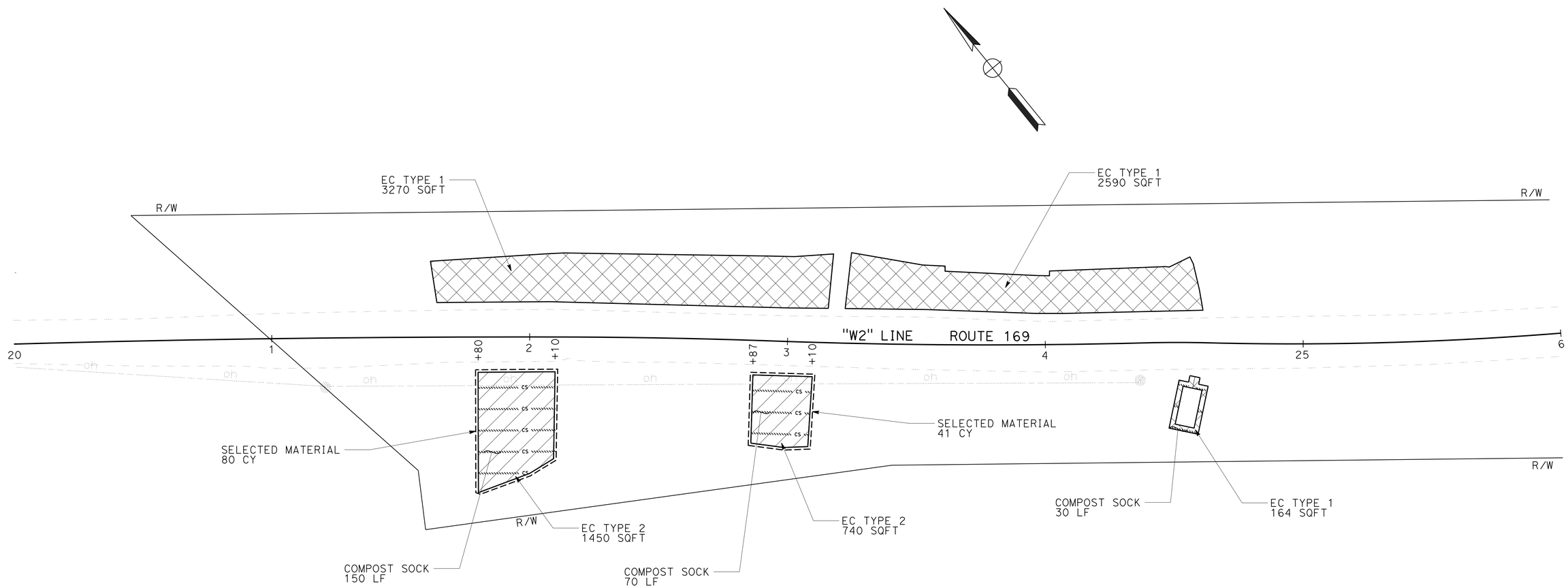

LOCATION 2
PM 29.04

APPROVED FOR EROSION CONTROL WORK ONLY

EROSION CONTROL PLAN

SCALE: 1" = 20'

EC-2

REVISED BY	DATE REVISED

CALCULATED-DESIGNED BY	CHECKED BY
LOGAN MOORE	LAURA LAZZAROTTO

FUNCTIONAL SUPERVISOR: STEVE THORNE

STATE OF CALIFORNIA - DEPARTMENT OF TRANSPORTATION
Caltrans® LANDSCAPE ARCHITECTURE

LAST REVISION 03-04-16
DATE PLOTTED => 22-JUL-2016
TIME PLOTTED => 11:14

Dist	COUNTY	ROUTE	POST MILES TOTAL PROJECT	SHEET No.	TOTAL SHEETS
01	HUM	169	26.4/29.8	27	41

Laura Lazzarotto
LICENSED LANDSCAPE ARCHITECT

6-15-16
PLANS APPROVAL DATE

LICENSED LANDSCAPE ARCHITECT
LAURA LAZZAROTTO
LA 4900
Laura Lazzarotto
Signature
8-31-17
Renewal Date
6-15-16
Date
STATE OF CALIFORNIA

THE STATE OF CALIFORNIA OR ITS OFFICERS OR AGENTS SHALL NOT BE RESPONSIBLE FOR THE ACCURACY OR COMPLETENESS OF SCANNED COPIES OF THIS PLAN SHEET.

NOTE:

1. FOR ACCURATE RIGHT OF WAY DATA, CONTACT RIGHT OF WAY ENGINEERING AT THE DISTRICT OFFICE.

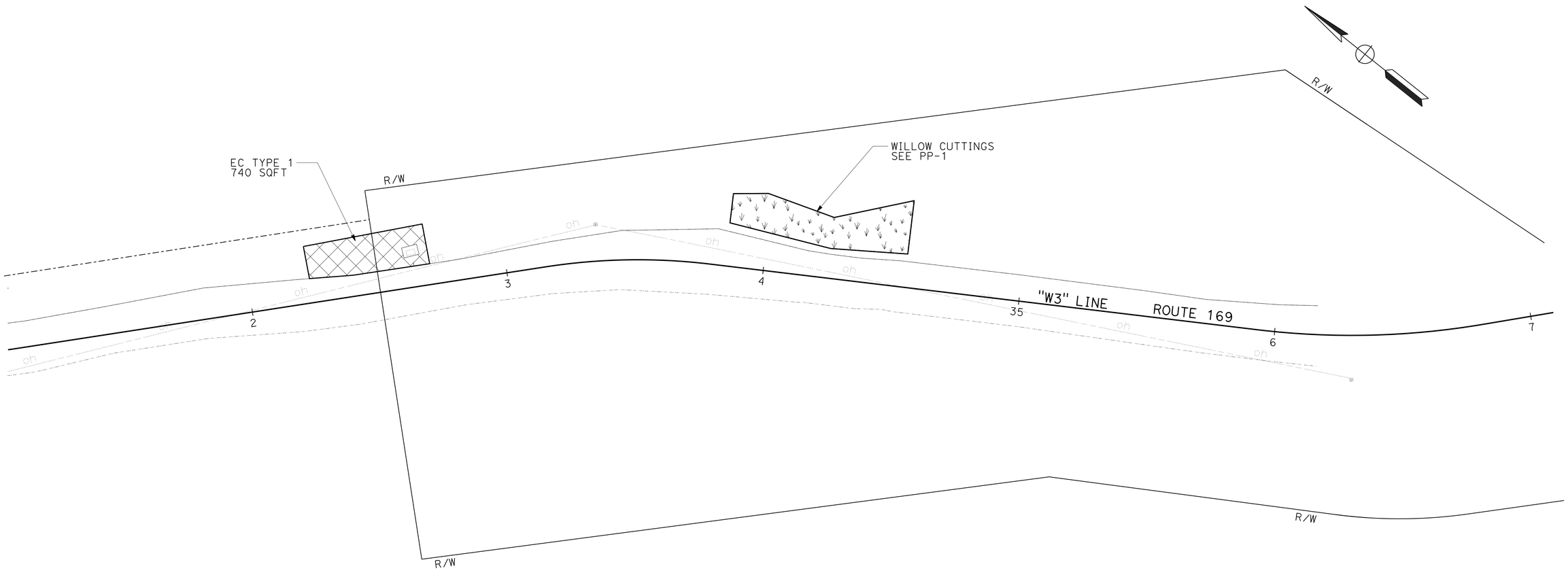

LOCATION 3
PM 29.8

APPROVED FOR EROSION CONTROL WORK ONLY

EROSION CONTROL PLAN

SCALE: 1" = 20'

EC-3

STATE OF CALIFORNIA - DEPARTMENT OF TRANSPORTATION
Caltrans® LANDSCAPE ARCHITECTURE

FUNCTIONAL SUPERVISOR: STEVE THORNE

CALCULATED-DESIGNED BY: LOGAN MOORE
CHECKED BY: LAURA LAZZAROTTO

REVISED BY
DATE REVISED

LAST REVISION 03-04-16
DATE PLOTTED => 22-JUL-2016
TIME PLOTTED => 11:14

Dist	COUNTY	ROUTE	POST MILES TOTAL PROJECT	SHEET No.	TOTAL SHEETS
01	HUM	169	26.4/29.8	28	41

Laura Lazzarotto
LICENSED LANDSCAPE ARCHITECT

6-15-16
PLANS APPROVAL DATE

LICENSED LANDSCAPE ARCHITECT
LAURA LAZZAROTTO
LA 2600
Laura Lazzarotto
Signature
8-31-17
Renewal Date
6-15-16
Date
STATE OF CALIFORNIA

THE STATE OF CALIFORNIA OR ITS OFFICERS OR AGENTS SHALL NOT BE RESPONSIBLE FOR THE ACCURACY OR COMPLETENESS OF SCANNED COPIES OF THIS PLAN SHEET.

EROSION CONTROL QUANTITIES

SHEET	LOCATION	STATION	LT	RT	DESCRIPTION	EROSION CONTROL (BONDED FIBER MATRIX)	ROLLED EROSION CONTROL PRODUCT (NETTING)	COMPOST SOCK	SELECTED MATERIAL	PURE LIVE SEED (N)
						SQFT	SQFT	LF	CY	LBS
EC-1	1	"W1" 10+57 TO 12+71	X	X	EC TYPE 1	2320				6.95
		"W1" 10+75 TO 14+65		X	EC TYPE 2	11,770	11,770			42.12
		"W1" 10+75 TO 14+65		X	COMPOST SOCK			1330		
		"W1" 10+75 TO 14+65		X	SELECTED MATERIAL OVER RSP				670	
EC-2	2	"W2" 21+61 TO 24+61	X	X	EC TYPE 1	6024				19.46
		"W2" 21+80 TO 23+10		X	EC TYPE 2	2190	2190			7.80
		"W2" 21+80 TO 24+64		X	COMPOST SOCK			250		
		"W2" 21+80 TO 23+10		X	SELECTED MATERIAL OVER RSP				121	
EC-3	3	"W3" 32+23 TO 32+83	X		EC TYPE 1	740				2.78
					TOTAL	23044	13960	1580	791*	79.11

(N) NOT A SEPARATE PAY ITEM, FOR INFORMATION ONLY
* PAID AS ROADWAY EXCAVATION, SEE SHEET Q-1

EROSION CONTROL TYPE 1

SEQUENCE	ITEM	MATERIAL		APPLICATION RATE	REMARKS
		DESCRIPTION	TYPE		
STEP 1	BONDED FIBER MATRIX	SEED	SEED MIX 1	139 LB/ACRE	APPLICATION RATE IS FOR FIBER & TACKIFIER COMBINED
		FIBER		1000 LB/ACRE	
		TACKIFIER			
STEP 2	BONDED FIBER MATRIX	FIBER		3500 LB/ACRE	
		TACKIFIER			

EROSION CONTROL TYPE 2

SEQUENCE	ITEM	MATERIAL		APPLICATION RATE	REMARKS
		DESCRIPTION	TYPE		
STEP 1	ROLLED EROSION CONTROL PRODUCT	NETTING	TYPE B		
STEP 2	BONDED FIBER MATRIX	SEED	SEED MIX 2	156 LB/ACRE	APPLICATION RATE IS FOR FIBER & TACKIFIER COMBINED
		FIBER		1000 LB/ACRE	
		TACKIFIER			
STEP 3	BONDED FIBER MATRIX	FIBER		3500 LB/ACRE	
		TACKIFIER			

EROSION CONTROL QUANTITIES
ECQ-1

REVISED BY | DATE REVISED
LOGAN MOORE | LAURA LAZZAROTTO
CALCULATED-DESIGNED BY | CHECKED BY
FUNCTIONAL SUPERVISOR: STEVE THORNE
STATE OF CALIFORNIA - DEPARTMENT OF TRANSPORTATION
Caltrans® LANDSCAPE ARCHITECTURE

LAST REVISION 03-04-16 | DATE PLOTTED => 22-JUL-2016 | TIME PLOTTED => 11:14

Dist	COUNTY	ROUTE	POST MILES TOTAL PROJECT	SHEET No.	TOTAL SHEETS
01	Hum	169	26.4/29.8	29	41

ART 6-15-16
REGISTERED ELECTRICAL ENGINEER DATE

6-15-16
PLANS APPROVAL DATE

REGISTERED PROFESSIONAL ENGINEER A.P. ROBLES No. E15293 Exp. 3-31-17 ELECTRICAL STATE OF CALIFORNIA

THE STATE OF CALIFORNIA OR ITS OFFICERS OR AGENTS SHALL NOT BE RESPONSIBLE FOR THE ACCURACY OR COMPLETENESS OF SCANNED COPIES OF THIS PLAN SHEET.

LEGEND:

- FLASHING BEACON ON WOOD POST
- LED SOLAR MOBILE LIGHT TOWER
- TEMPORARY PHOTOVOLTAIC POWER SOURCE ON WOOD POLE

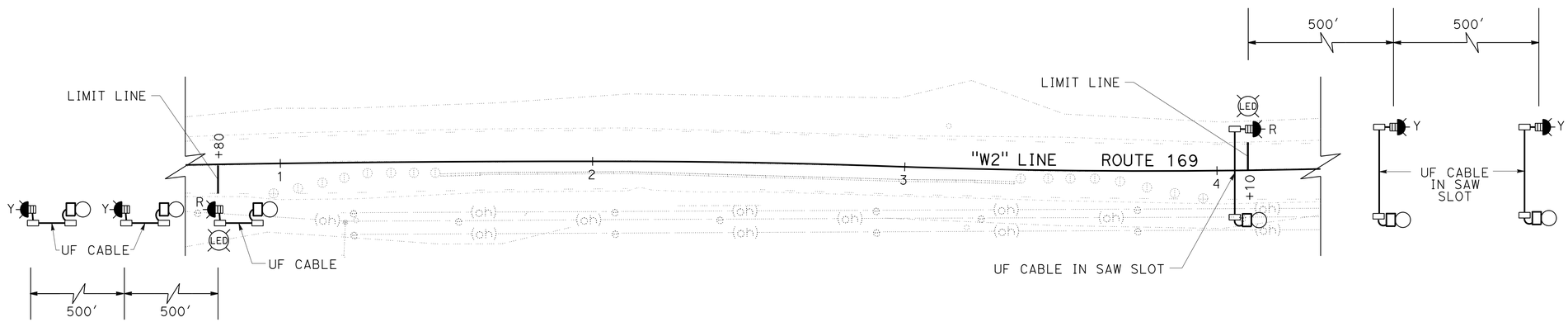

LOCATION 2, PM 29.04

TEMPORARY FLASHING BEACON

SCALE: 1" = 20'

E-1

APPROVED FOR ELECTRICAL WORK ONLY

REVISED BY	DATE REVISED

CALCULATED-DESIGNED BY: ARTURO P. ROBLES
CHECKED BY: JIM HANNIGAN
FUNCTIONAL SUPERVISOR: ROB STINGER

STATE OF CALIFORNIA - DEPARTMENT OF TRANSPORTATION
Caltrans® ELECTRICAL DESIGN

P:\proj1\01\0b440_plans\pse\010b440ua001.dgn

LAST REVISION 12-01-15
DATE PLOTTED => 22-JUL-2016
TIME PLOTTED => 11:14

Dist	COUNTY	ROUTE	POST MILES TOTAL PROJECT	SHEET No.	TOTAL SHEETS
01	Hum	169	26.4/29.8	30	41

REGISTERED ELECTRICAL ENGINEER 6-15-16 DATE

6-15-16
PLANS APPROVAL DATE

REGISTERED PROFESSIONAL ENGINEER A.P. ROBLES No. E15293 Exp. 3-31-17 ELECTRICAL STATE OF CALIFORNIA

THE STATE OF CALIFORNIA OR ITS OFFICERS OR AGENTS SHALL NOT BE RESPONSIBLE FOR THE ACCURACY OR COMPLETENESS OF SCANNED COPIES OF THIS PLAN SHEET.

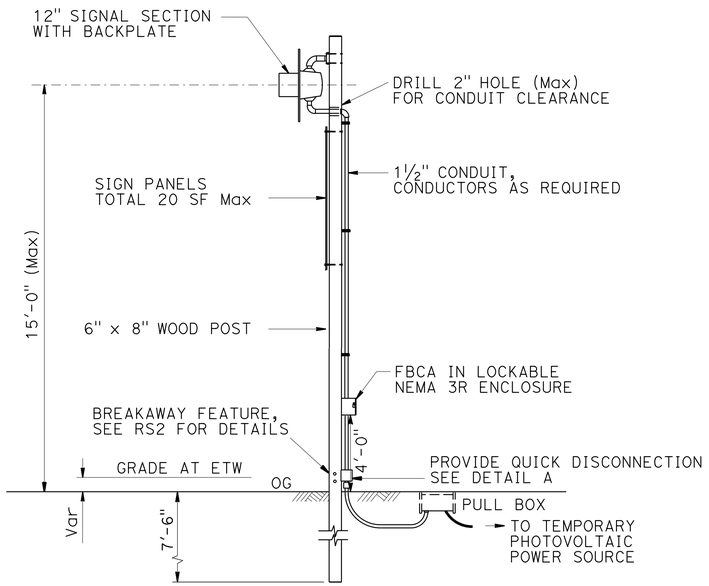

TEMPORARY FLASHING BEACON INSTALLATION

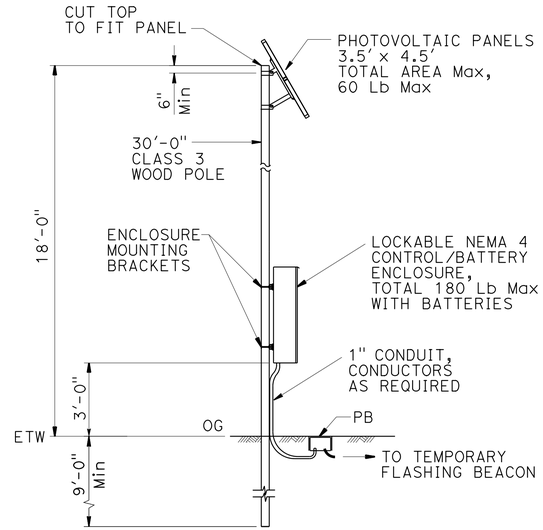

TEMPORARY PHOTOVOLTAIC POWER SOURCE

LOCATE POLE 15' FROM ETW OR SHIELD FROM TRAFFIC

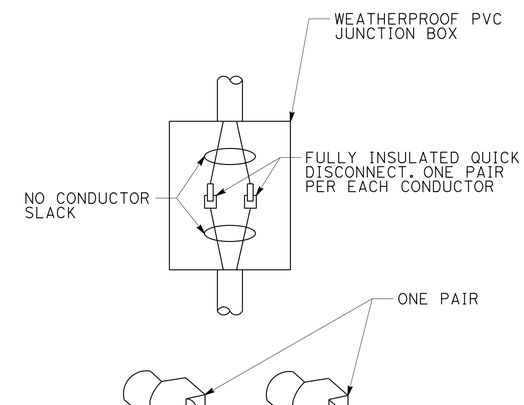

DETAIL B

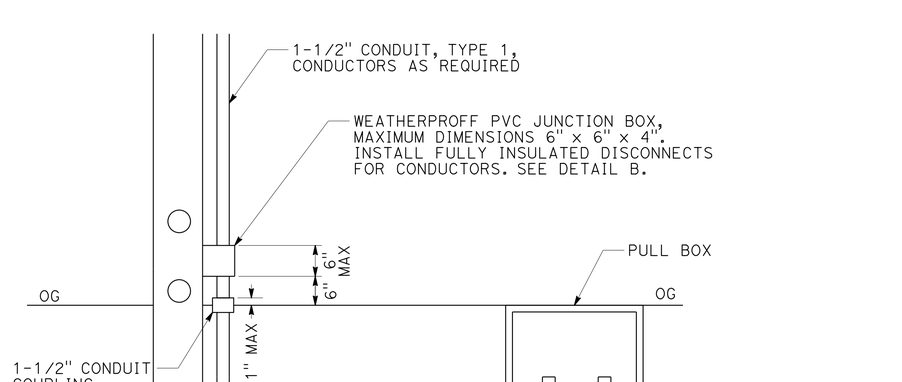

DETAIL A
BREAKAWAY POST
(CONDUIT CONNECTION)

ELECTRICAL DETAILS

NO SCALE

E-2

REVISED BY	DATE REVISED

CALCULATED-DESIGNED BY	ARTURO P. ROBLES
CHECKED BY	JIM HANNIGAN
FUNCTIONAL SUPERVISOR	ROB STINGER

STATE OF CALIFORNIA - DEPARTMENT OF TRANSPORTATION
Caltrans® ELECTRICAL DESIGN

P:\proj1\01\0b440_plans\pse\010b440ua002.dgn

LAST REVISION 12-01-15 | DATE PLOTTED => 22-JUL-2016 | TIME PLOTTED => 11:14

Dist	COUNTY	ROUTE	POST MILES TOTAL PROJECT	SHEET No.	TOTAL SHEETS
01	Hum	169	26.4/29.8	31	41

ART 6-15-16
REGISTERED ELECTRICAL ENGINEER DATE

6-15-16
PLANS APPROVAL DATE

REGISTERED PROFESSIONAL ENGINEER
A.P. ROBLES
No. E15293
Exp. 3-31-17
ELECTRICAL
STATE OF CALIFORNIA

THE STATE OF CALIFORNIA OR ITS OFFICERS OR AGENTS SHALL NOT BE RESPONSIBLE FOR THE ACCURACY OR COMPLETENESS OF SCANNED COPIES OF THIS PLAN SHEET.

NOTE:
(N) - NOT A SEPARATE PAY ITEM. FOR INFORMATION ONLY.

TEMPORARY FLASHING BEACON

SHEET No.	WOOD POLE	WOOD POST	UF CABLE	PULL BOX	RED 12" SIGNAL INDICATION	YELLOW 12" SIGNAL INDICATION	SIGNAL MOUNTING	TEMPORARY PHOTOVOLTAIC POWER SOURCE
	(N)	(N)	(N)	(N)	(N)	(N)	(N)	(N)
	EA	EA	LF	EA	EA	EA	EA	EA
E-1	6	6	300	12	2	4	6	6

ELECTRICAL QUANTITIES

NO SCALE

E-3

REVISED BY	DATE REVISED

CALCULATED-DESIGNED BY	CHECKED BY
ARTURO P. ROBLES	JIM HANNIGAN

FUNCTIONAL SUPERVISOR: ROB STINGER

STATE OF CALIFORNIA - DEPARTMENT OF TRANSPORTATION
Caltrans® ELECTRICAL DESIGN

P:\proj1\01\0b440_plans\pse\010b440ua003.dgn

LAST REVISION 12-01-15 | DATE PLOTTED => 22-JUL-2016 | TIME PLOTTED => 11:14

D'S	COUNTY	ROUTE	POST MILES TOTAL PROJECT	SHEET No.	TOTAL SHEETS
01	Hum	169	26.4/29.8	32	41

REGISTERED CIVIL ENGINEER

July 15, 2016
PLANS APPROVAL DATE

REGISTERED PROFESSIONAL ENGINEER Carl M. Duan No. C59976 Exp. 6-30-18 CIVIL STATE OF CALIFORNIA

THE STATE OF CALIFORNIA OR ITS OFFICERS OR AGENTS SHALL NOT BE RESPONSIBLE FOR THE ACCURACY OR COMPLETENESS OF SCANNED COPIES OF THIS PLAN SHEET.

TC ACCOMPANY PLANS DATED 6-15-16

NOTE:

1. For notes and Table 2, See Revised Standard Plan RSP D73C.

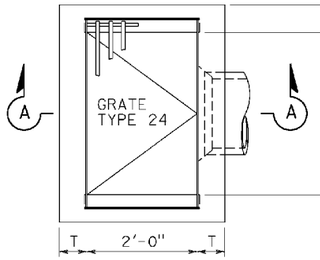

PLAN
TYPE G1

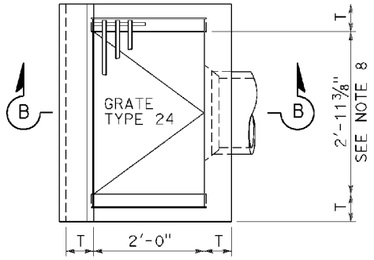

PLAN
TYPE G3

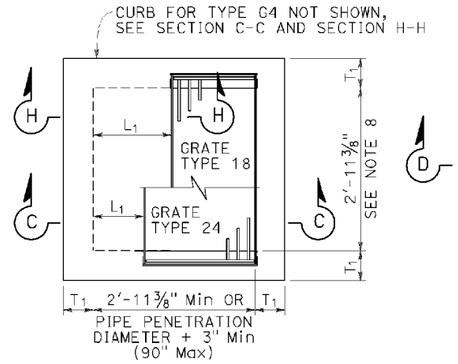

PLAN
STANDARD TYPE G2 OR G4
(INTEGRAL TOP ALTERNATIVE)
FOR "L" AND "T" VALUES, SEE TABLE 1

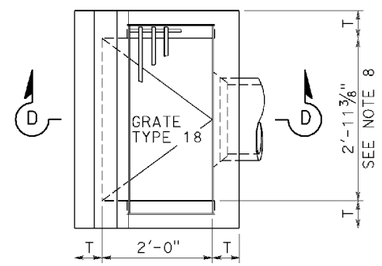

PLAN
TYPE G5

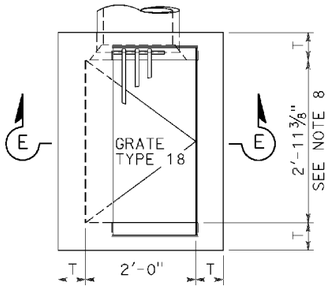

PLAN
TYPE G6

TABLE 1		
	T_1	Vert BARS
L_1 AND L_2 < 2'-10"	8"	#4 @ 12
L_1 OR L_2 > 2'-10"	12"	#5 @ 12

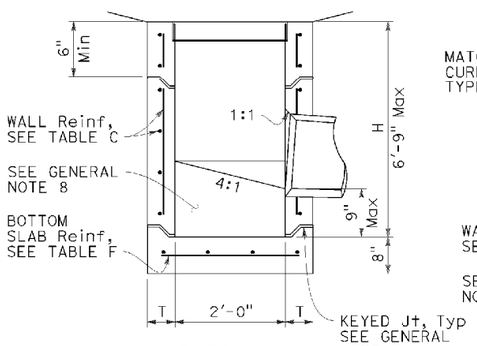

SECTION A-A

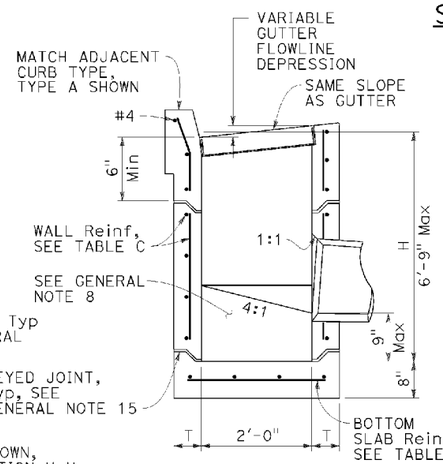

SECTION B-B

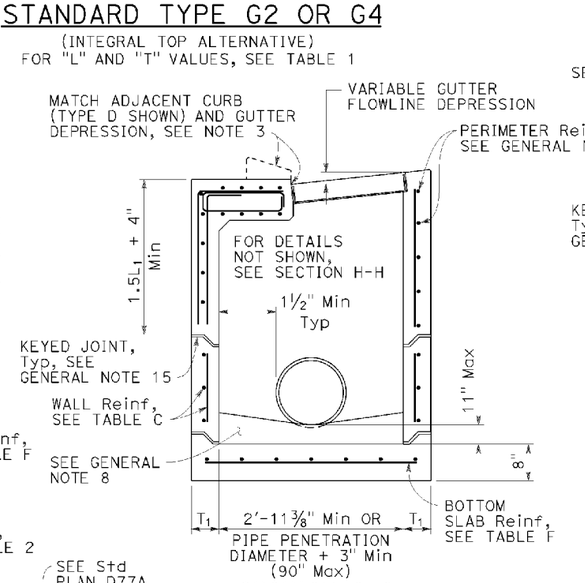

SECTION C-C
FOR "L1", "L2" AND "T1" VALUES, SEE "TABLE 1"

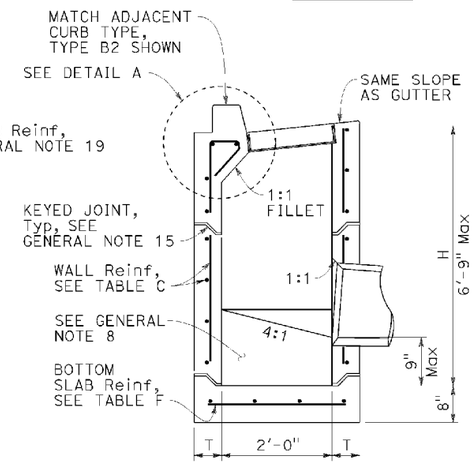

SECTION D-D

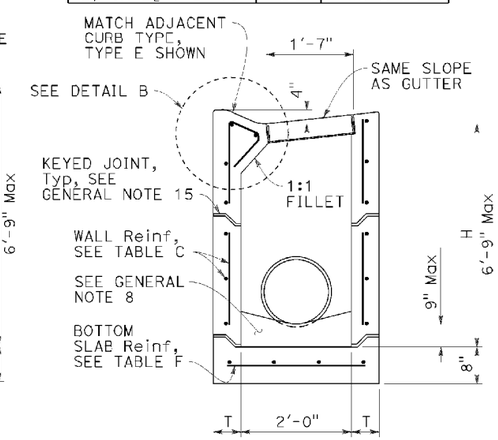

SECTION E-E

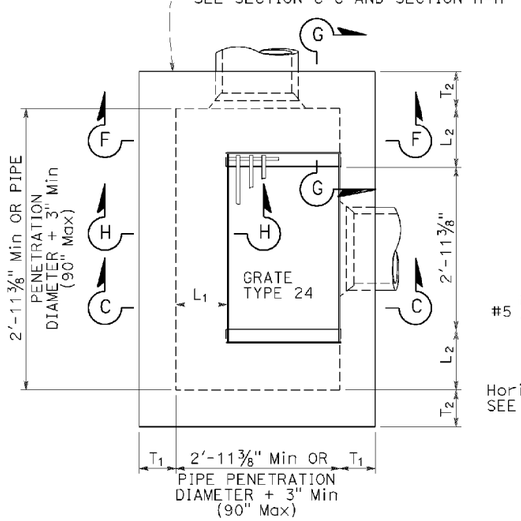

PLAN
EXPANDED
TYPE G2 OR G4
(INTEGRAL TOP ALTERNATIVE)
FOR "L1", "L2" AND "T1" VALUES, SEE "TABLE 1"

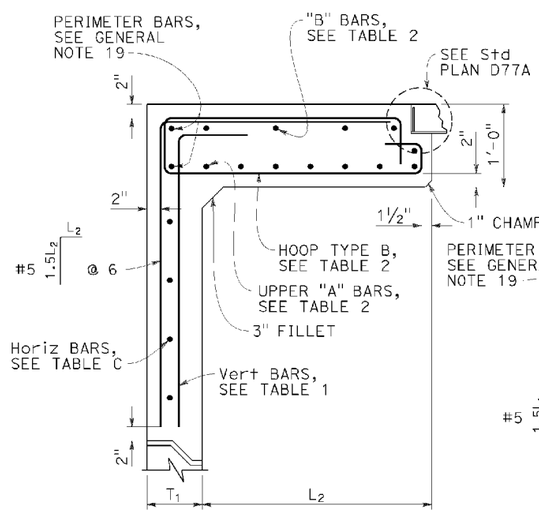

SECTION G-G
FOR "L1", "L2" AND "T1" VALUES, SEE "TABLE 1"

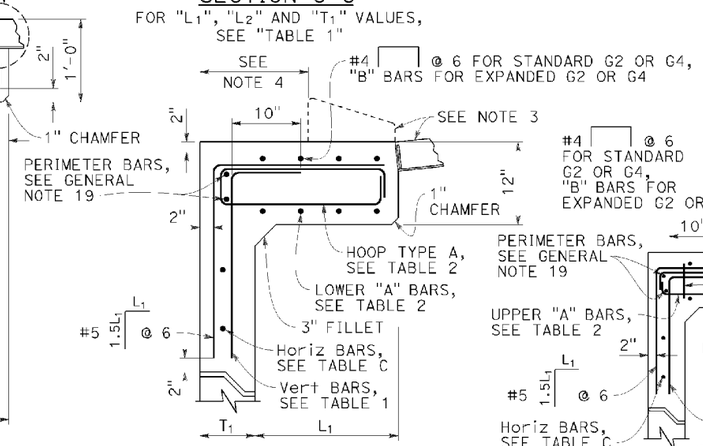

SECTION H-H
FOR "L1", "L2" AND "T1" VALUES, SEE "TABLE 1"

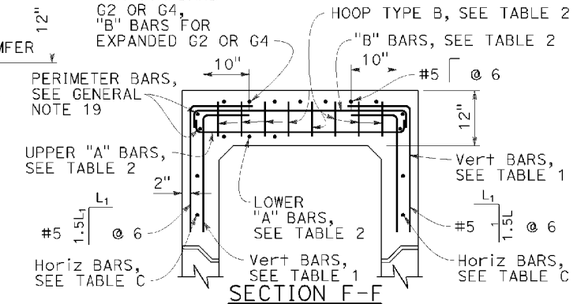

SECTION F-F
FOR "L1", "L2" AND "T1" VALUES, SEE "TABLE 1"

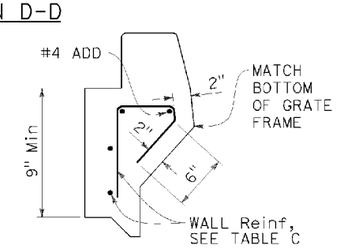

DETAIL A

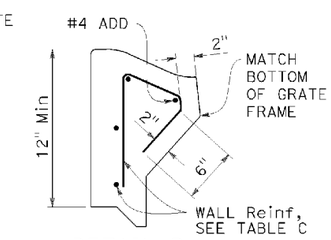

DETAIL B

STATE OF CALIFORNIA
DEPARTMENT OF TRANSPORTATION

PRECAST DRAINAGE INLETS TYPES G1, G2, G3, G4, G5 AND G6

NO SCALE

RSP D73B DATED JULY 15, 2016 SUPPLEMENTS THE STANDARD PLANS BOOK DATED 2015.

REVISED STANDARD PLAN RSP D73B

2015 REVISED STANDARD PLAN RSP D73B

DATE PLOTTED => 22-JUL-2016
TIME PLOTTED => 11:14

D'S	COUNTY	ROUTE	POST MILES TOTAL PROJECT	SHEET No.	TOTAL SHEETS
01	Hum	169	26.4/29.8	33	41

REGISTERED CIVIL ENGINEER

July 15, 2016
PLANS APPROVAL DATE

REGISTERED PROFESSIONAL ENGINEER
Carl M. Duan
No. C59976
Exp. 6-30-18
CIVIL
STATE OF CALIFORNIA

THE STATE OF CALIFORNIA OR ITS OFFICERS OR AGENTS SHALL NOT BE RESPONSIBLE FOR THE ACCURACY OR COMPLETENESS OF SCANNED COPIES OF THIS PLAN SHEET.

TC ACCOMPANY PLANS DATED 6-15-16

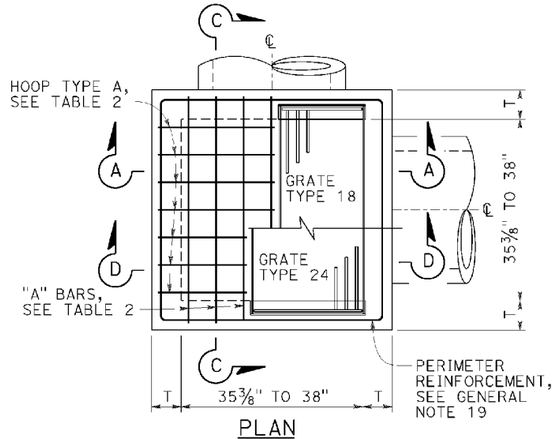

PLAN

STANDARD TYPE G2 OR G4

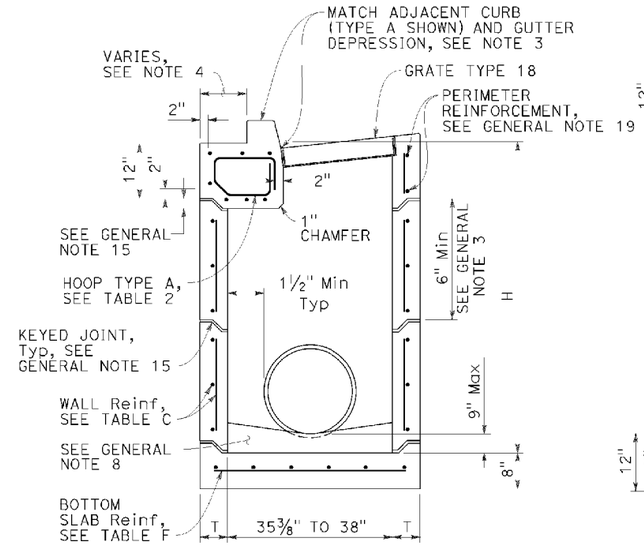

SECTION A-A
(WITH G4 TOP)

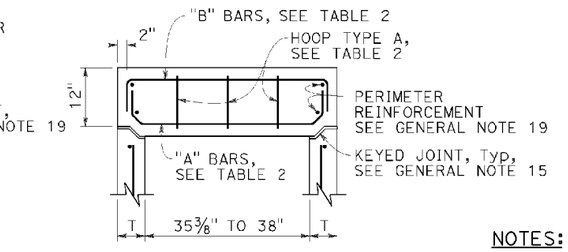

SECTION C-C

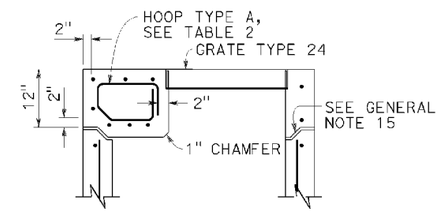

SECTION D-D
(WITH G2 TOP)

NOTES:

1. See Revised Standard Plan RSP D73F for General Notes and additional details. See Revised Standard Plan RSP D73G for additional tables, wall thickness "T" and quantities.
2. Type G4 inlet can use Grate Type 18 or 24. Type G2 inlet uses Grate Type 24.
3. G4 inlet details are the same as the G2 with the addition of a curb and sloped grate that matches the adjacent curb and gutter depression.
4. Dimension will vary with different grates, curb types, box width and wall thickness.
5. 2" unless inlet is expanded in the Span "A" direction, then clearance is 2" plus the diameter of the lower "A" bar.
6. See Revised Standard Plan RSP D73B for integral top slab alternative.
7. Interior dimension of lower sections of inlet may be 3'-0" provided top section conforms to the requirements for frame and grate types on Standard Plan D77A. The wall thickness of top sections may transition from "T" to "T"+⅝" to meet this requirement. Minimum height of thickened wall shall = "T".

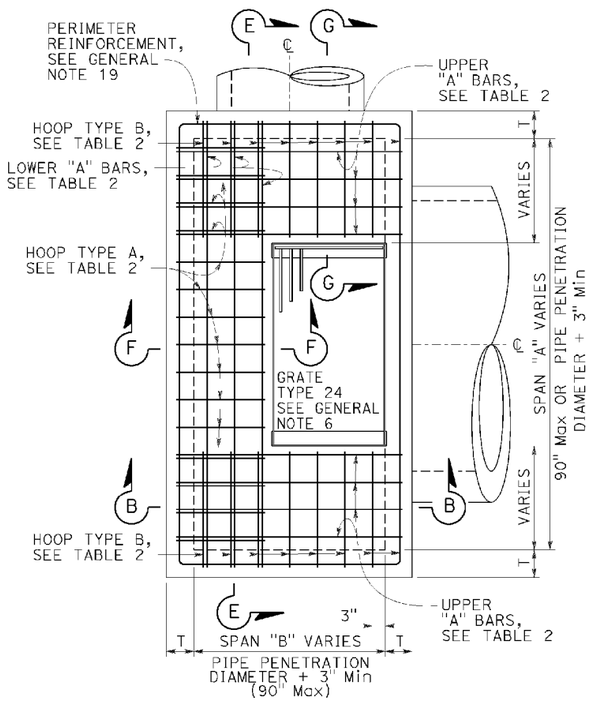

PLAN
EXPANDED
TYPE G2 OR G4
(TOP REBAR NOT SHOWN)

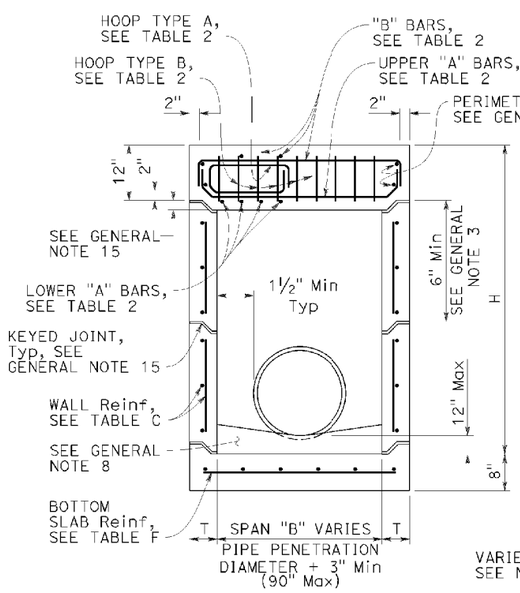

SECTION B-B
(WITH G2 TOP)

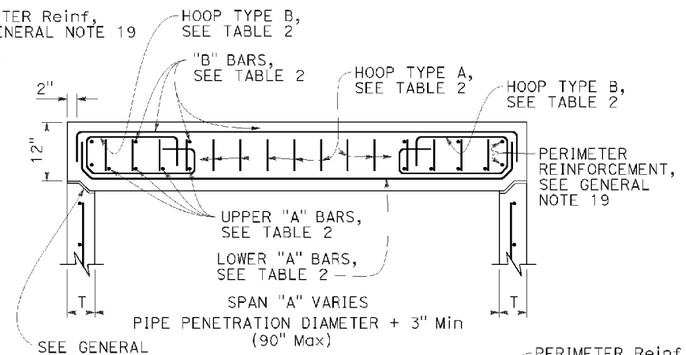

SECTION E-E

TABLE 2 - TOP SLAB REINFORCEMENT		
16 BAR DIAMETERS "A" & "B" BARS VARIES — BEND TO AVOID KEYED JOINT WHERE SHOWN		
	W/ CURB	W/O CURB
"A" BARS	#4 @ 5 (2 BARS Min)	#5 @ 5 (3 BARS Min)
"B" BARS	#4 @ 10 (2 BARS Min)	#4 @ 10 (2 BARS Min)
HOOPS ("A" & "B")	#4 @ 5	#5 @ 5

ROTATE "A" AND "B" BARS SO HOOKED ENDS WILL MAINTAIN 2" CLEAR COVERAGE.

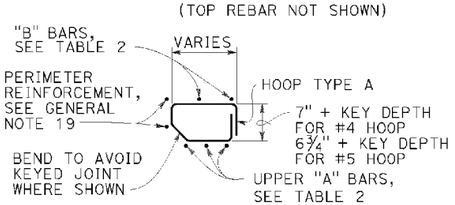

HOOP TYPE A

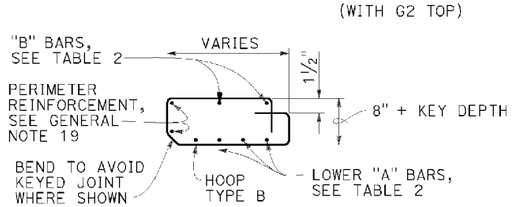

HOOP TYPE B

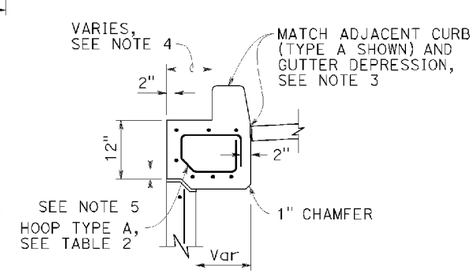

SECTION F-F
(WITH G4 TOP)

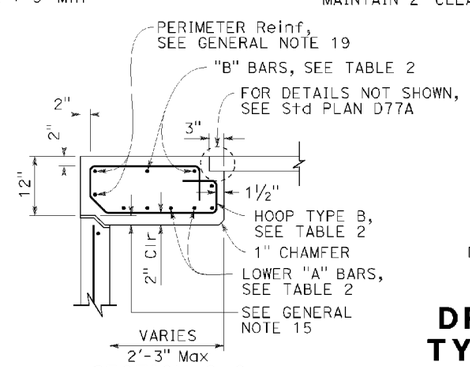

SECTION G-G

STATE OF CALIFORNIA
DEPARTMENT OF TRANSPORTATION

PRECAST DRAINAGE INLETS TYPES G2 AND G4

NO SCALE

RSP D73C DATED JULY 15, 2016 SUPPLEMENTS THE STANDARD PLANS BOOK DATED 2015.

REVISED STANDARD PLAN RSP D73C

2015 REVISED STANDARD PLAN RSP D73C

DATE PLOTTED => 22-JUL-2016
TIME PLOTTED => 11:15

USERNAME => s116738
DGN FILE => 0112000128va002.dgn

P:\proj1\01\0b440_plans\pse\0112000128va002.dgn

D'S	COUNTY	ROUTE	POST MILES TOTAL PROJECT	SHEET No.	TOTAL SHEETS
01	Hum	169	26.4/29.8	34	41

REGISTERED CIVIL ENGINEER

July 15, 2016
PLANS APPROVAL DATE

REGISTERED PROFESSIONAL ENGINEER
Carl M. Duan
No. C59976
Exp. 6-30-18
CIVIL
STATE OF CALIFORNIA

THE STATE OF CALIFORNIA OR ITS OFFICERS OR AGENTS SHALL NOT BE RESPONSIBLE FOR THE ACCURACY OR COMPLETENESS OF SCANNED COPIES OF THIS PLAN SHEET.

TC ACCOMPANY PLANS DATED 6-15-16

GENERAL NOTES:

1. "H" is measured from top of bottom slab to the normal gutter grade line undepressed at the curb face.
2. For "T" wall thickness and reinforcement, see Table C on Revised Standard Plan RSP D73G.
3. Wall reinforcement must be placed at the center of wall thickness with horizontal bars placed on the exterior face. Bottom slab concrete cover must be 3" clear on the interior side face unless otherwise noted. Top slab concrete cover must be 2" clear on the exterior face unless otherwise noted. Short independent wall sections or height adjustment rings 6" to 24" high must have a minimum of two #4 horizontal bars. Reinforcement spacing is in inches unless otherwise noted.
4. Steps - None required where "H" is less than 2'-6". Where "H" is 2'-6" or more, install steps with lowest rung 1'-0" above the floor and highest rung not more than 6" below bottom of lid. The distance between steps must not exceed 1'-0" and be uniform throughout the length of the wall. Place steps in the wall without an opening. Steps inserts may be substituted for the bar steps. Step inserts must comply with State Industrial Safety Requirements. See Revised Standard Plan RSP D74 for step details.
5. Pipe(s) can be placed in any wall. Adjacent to each side of the opening, place additional reinforcement equivalent to half the interupted main reinforcement. For larger pipes greater than or equal to 42" diameter, also add 4 diagonal bars, 1 bar each side. Bars must be the same size as the larger of the main vertical or horizontal bars. Extend bars one development length past the intersection with the adjacent diagonal bar, or where bars intersect mid thickness of adjacent wall bottom or top of non-continuous wall, bend ends as required into same plane.
6. Set inlet so that grate bars are parallel to direction of principal surface flow.
7. Curb section must match adjacent curb.
8. Except for inlets used as junction boxes, basin floors must have wood trowel finish and a minimum slope of 4:1, unless otherwise noted, from all directions toward outlet pipe by casting grout on top of the bottom slab. Grout must be placed prior to backfill.
9. See Standard Plans D77A and D77B for grate and frame details and weights of miscellaneous iron and steel.
10. See Standard Plans D78A and D78B for gutter depression details.
11. See Standard Plan A87A and Revised Standard Plan RSP A87B for curb and dike details.
12. Details shown apply to metal, concrete and plastic pipe(s).
13. The Contractor may use WWR instead of bar reinforcement. The ratio of bar reinforcement to WWR shall be based on the yield strength ratio.
14. Seal precast inlets connection openings between wall and pipe with non-shrink grout or resilient connectors as specified in the Special Provisions. Precast inlets shall have mortared connections conforming to details for Type GCP Inlet shown on Standard Plan D75B. See Standard Specifications for mortar composition.
15. Where shown, provide precast inlets with separate top sections for final grade adjustment. Provide keyed joints with butyl rubber sealant between the top section and wall, multiple wall sections, and wall and bottom slab. Joint design may vary but must be 1" to 3" in depth. For tongue type joints, tongue down orientation is not allowed. For keyed joints, keyway up, keyway down or tongue up configurations are allowed. Only one key type is allowed for each drainage inlet.
16. Non-shrink grout can be used for upper most joint to facilitate final top grade adjustment.
17. Provide a level and firm sand bedding on which to place precast inlets. Extend sand bedding under all structure backfill.
18. For Integral Base, see Detail "A".
19. Perimeter reinforcement must not be smaller than main bars and #4 and serves as a rigid frame to position and attach the required structural reinforcement and may be tack welded at outer corners when using ASTM A706 weldable bars.
20. Inlet extensions may be cast in place after placement of main box and placement and compaction of backfill. Concrete strength must be 3.6 ksi minimum. All slab and wall thicknesses must be per Revised Standard Plan RSP D72A. All reinforcement shall extend a minimum of 24" from precast main inlet box.

DESIGN NOTES:

1. Design Specifications: AASHTO LRFD Bridge Design Specifications, 6th edition with 2012 Interims and Errata and CA Amendments.
2. Live Load (AASHTO LRFD 3.6.1.2):
   HL-93, consists of design truck or tandem, and design lane load.
   Dynamic Load Allowance, IM = 33%
   Multiple Presence Factor, m = 1.0
   Design lane load was excluded in Top Slab design.
   A wheel load of 8 kips without impact factor was used for top slabs that are above a curb.
3. Earth Load:
   Vertical pressure = 140 pcf
   Lateral pressure:
   = 100 pcf for walls with flat embankment
   = 140 pcf For walls with slope embankment, 1.5:1 Max
4. Downdrag: ϕ = 34° and γ_E = 120 pcf.
5. Buoyancy: γ_W = 62.4 pcf to finished grade.
6. Reinforced Concrete: f'c = 5.0 ksi, fy = 60.0 ksi.
7. Tables are based on the worst case from the level ground and sloped ground.
8. Soil pressures shown are factored per AASHTO LRFD and include self-weight, live load and downdrag.

SPAN "A" OR "B" (IN)	L (IN)
<38	34
38 TO 50	40
51 TO 64	47
65 TO 76	53
77 TO 90	60

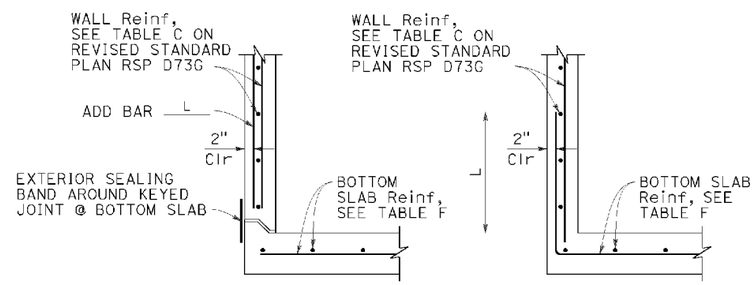

BASE WITH KEYED JOINT INTEGRAL BASE

DETAIL "A"

FOR INTEGRAL BASE, CLEARANCE BETWEEN PIPE PENETRATION AND BASE SLAB MAY BE AS SHOWN IN CIP ALTERNATIVE STANDARD PLAN SHEET.

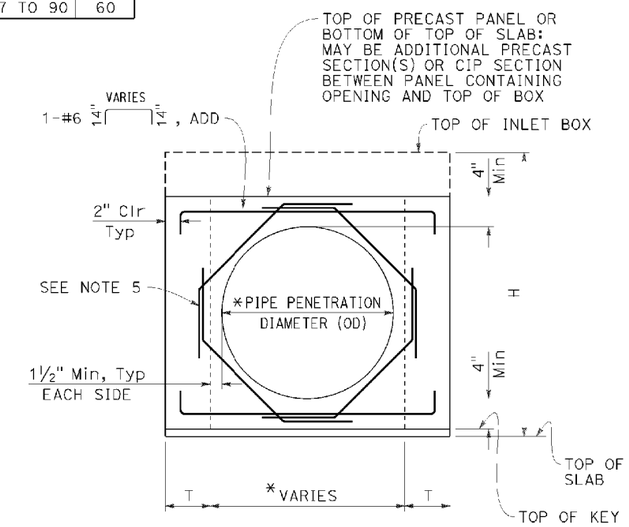

BASE WITH KEYED JOINT

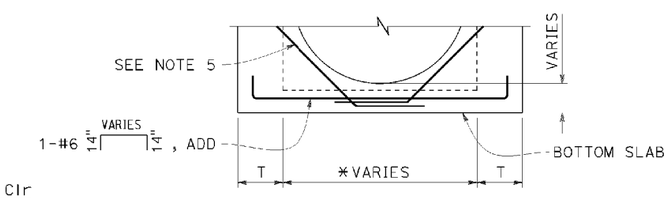

INTEGRAL BASE

FOR DETAILS NOT SHOWN, SEE "BASE WITH KEYED JOINT"

TYPICAL WALL W/ PIPE OPENING

* SEE "SKEWED PIPE PLAN"

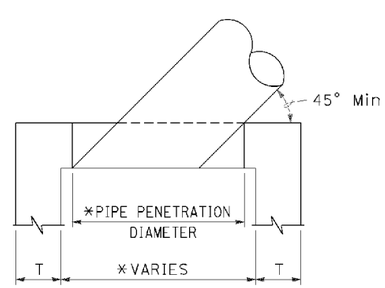

SKEWED PIPE PLAN

* ADJUST PIPE PENETRATION AND BOX WIDTH FOR SKEWED PIPES.

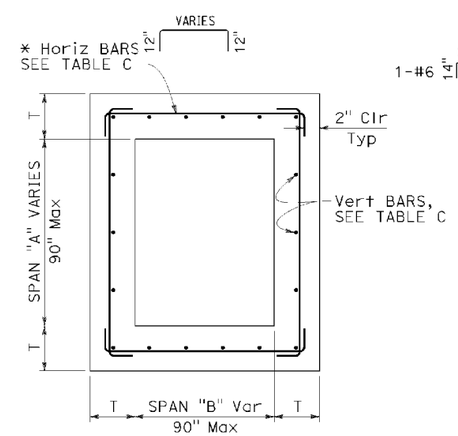

TYPICAL INLET PLAN

* ALTERNATIVE HORIZONTAL BARS

STATE OF CALIFORNIA
DEPARTMENT OF TRANSPORTATION

PRECAST DRAINAGE INLET NOTES

NO SCALE

RSP D73F DATED JULY 15, 2016 SUPPLEMENTS THE STANDARD PLANS BOOK DATED 2015.

REVISED STANDARD PLAN RSP D73F

2015 REVISED STANDARD PLAN RSP D73F

DATE PLOTTED => 22-JUL-2016
TIME PLOTTED => 11:15

D'S	COUNTY	ROUTE	POST MILES TOTAL PROJECT	SHEET No.	TOTAL SHEETS
01	Hum	169	26.4/29.8	35	41

REGISTERED CIVIL ENGINEER

July 15, 2016
PLANS APPROVAL DATE

REGISTERED PROFESSIONAL ENGINEER
Carl M. Duan
No. C59976
Exp. 6-30-18
CIVIL
STATE OF CALIFORNIA

THE STATE OF CALIFORNIA OR ITS OFFICERS OR AGENTS SHALL NOT BE RESPONSIBLE FOR THE ACCURACY OR COMPLETENESS OF SCANNED COPIES OF THIS PLAN SHEET.

TC ACCOMPANY PLANS DATED 6-15-16

2015 REVISED STANDARD PLAN RSP D73G

TABLE A - CONCRETE QUANTITIES

TYPE	H=3'-0" TO 8'-0"		H=8'-1" TO 20'-0"	
	H=3'-0" (CY)	ADDITIONAL CONCRETE PER FOOT (CY)	H=8'-1" (CY)	ADDITIONAL CONCRETE PER FOOT (CY)
G1	0.95	0.220	SEE NOTE 2	SEE NOTE 2
G2*	1.25	0.255	2.55	0.255
G3	1.06	0.220	SEE NOTE 2	SEE NOTE 2
G4 (TYPE 18)*	1.41	0.255	2.71	0.255
G4 (TYPE 24)*	1.36	0.255	2.65	0.255
G5	1.09	0.220	SEE NOTE 2	SEE NOTE 2
G6	1.14	0.220	SEE NOTE 2	SEE NOTE 2
OS	1.28	0.278	2.69	0.278
OL7	1.92	0.278	3.33	0.278
OL10	2.43	0.278	3.84	0.278
OL14	3.16	0.278	4.57	0.278
OL21	4.58	0.278	5.99	0.278
GOL7	2.36	0.313	4.04	0.434
GOL10	2.84	0.313	4.53	0.434
GT1	2.30	0.480	SEE NOTE 2	SEE NOTE 2
GT2	2.71	0.530	5.40	0.530
GT3	2.29	0.480	SEE NOTE 2	SEE NOTE 2
GT4	2.69	0.530	5.39	0.530
GO	1.25	0.245	2.37	0.245
GDO	1.64	0.322	3.37	0.446

* Quantities are based on the minimum interior dimensions.

TABLE B - REINFORCEMENT QUANTITIES

TYPE	H=3'-0" TO 8'-0"		H=8'-1" TO 20'-0"	
	H=3'-0" (LB)	ADDITIONAL REINFORCEMENT PER FOOT (LB)	H=8'-1" (LB)	ADDITIONAL REINFORCEMENT PER FOOT (LB)
G1	88.5	21.90	SEE NOTE 2	SEE NOTE 2
G2*	151.5	24.54	277.4	38.64
G3	92.9	21.90	SEE NOTE 2	SEE NOTE 2
G4 (TYPE 18)*	134.4	24.54	260.3	38.64
G4 (TYPE 24)*	125.1	24.54	251.0	38.64
G5	92.5	21.90	SEE NOTE 2	SEE NOTE 2
G6	92.5	21.90	SEE NOTE 2	SEE NOTE 2
OS	145.8	35.57	327.8	49.60
OL7	328.0	35.57	510.0	49.60
OL10	467.5	35.57	649.5	49.60
OL14	667.5	35.57	849.5	49.60
OL21	1056.1	35.57	1238.1	49.60
GOL7	474.7	45.17	706.8	74.02
GOL10	604.9	45.17	836.9	74.02
GT1	349.0	80.48	SEE NOTE 2	SEE NOTE 2
GT2	403.7	86.82	849.1	135.15
GT3	347.0	80.48	SEE NOTE 2	SEE NOTE 2
GT4	403.7	86.82	849.1	135.15
GO	99.8	23.75	221.7	37.46
GDO	208.8	46.22	446.2	75.61

* Quantities are based on the minimum interior dimensions.

TABLE D

INLET	CURB USED IN QUANTITIES
G1	-
G2	-
G3	A1-6
G4 (Type 18)	A1-6
G4 (Type 24)	A1-6
G5	B1-4
G6	½E
OS	-
OL7	-
OL10	-
OL14	-
OL21	-
GOL7	-
GOL10	-
GT1	D-6
GT2	E
GT3	A2-8
GT4	A2-8
GO	-
GDO	-

TABLE C - WALL REINFORCEMENT

TYPE	H ≤8'-0" (T=6", UON)			8'-0"< H ≤20'-0" (T=8", UON)		
	HORIZONTAL	VERTICAL	*ADD	HORIZONTAL	VERTICAL	*ADD
OS	#4@6	#3@8	#3@8	#4@4 (T=6")	#3@8	#3@8
OL	#4@6	#3@8	#3@8	#4@4 (T=6")	#3@8	#3@8
GOL	#4@5	#3@8	#3@8	#5@5	#3@6	#3@6
G1 (H ≤6'-9")	#4@9	#3@8	#3@8	-	-	-
G2 & G4 (a** ≤38")	#4@9	#3@8	#3@8	#4@5 (T=6")	#3@8	#3@8
G2 & G4 (38" < a** ≤50")	#4@6	#3@8	#3@8	#4@4 (T=6")	#3@8	#3@8
G2 & G4 (50" < a** ≤64")	#4@5	#3@8	#3@8	#5@5	#3@6	#3@6
G2 & G4 (64"< a** ≤76")	#5@7 (T=8")	#3@6	#3@6	#5@4	#3@6	#5@6
G2 & G4 (76" < a** ≤90")	#5@5 (T=8")	#3@6	#3@6	#5@3	#3@6	#5@6
G3 (H ≤6'-9")	#4@9	#3@8	#3@8	-	-	-
G5 (H ≤6'-9")	#4@9	#3@8	#3@8	-	-	-
G6 (H ≤6'-9")	#4@9	#3@8	#3@8	-	-	-
GT1 (H ≤6'-9")	#5@5 (T=8")	#3@6	#3@6	-	-	-
GT2	#5@5 (T=8")	#3@6	#3@6	#5@3	#3@6	#5@6
GT3 (H ≤6'-9")	#5@5 (T=8")	#3@6	#3@6	-	-	-
GT4	#5@5 (T=8")	#3@6	#3@6	#5@3	#3@6	#5@6
GO	#4@9	#3@8	#3@8	#4@5 (T=6")	#3@8	#3@8
GDO	#4@5	#3@8	#3@8	#5@5	#3@6	#3@6

* See Detail A on Revised Standard Plan RSP D73F for additional vertical bars at the base.
** a = Larger interior span

TABLE E

SOIL PRESSURE BELOW BASE SLAB (ksf)		
TYPE	H ≤8'-0"	8'-0"< H ≤20'-0"
OS	2.89	5.68
OL*	2.89	5.68
GOL*	2.36	4.93
G1 (H ≤6'-9")	3.51	-
G2 & G4 (a** ≤38")	2.96	5.79
G2 & G4 (38" < a** ≤50")	2.21	4.51
G2 & G4 (50" < a** ≤64")	3.19	4.89
G2 & G4 (64"< a** ≤76")	2.50	4.23
G2 & G4 (76" < a** ≤90")	2.04	3.56
G3 (H ≤6'-9")	3.51	-
G5 (H ≤6'-9")	3.51	-
G6 (H ≤6'-9")	3.51	-
GT1 (H ≤6'-9")	3.41	-
GT2	3.60	6.42
GT3 (H ≤6'-9")	3.41	-
GT4	3.60	6.42
GO	3.37	6.46
GDO	2.48	7.30

* Main Box
** a = Larger interior span

TABLE F

BASE SLAB REINFORCEMENT (T=8", UON)		
TYPE	H ≤8'-0"	8'-0"< H ≤20'-0"
OS	#4@8 (EW)	#4@5 (EW)
OL*	#4@8 (EW)	#4@5 (EW)
GOL*	#4@6 (EW)	#4@4 (EW)
G1 (H ≤6'-9")	#4@10 (EW)	-
G2 & G4 (a** ≤38")	#4@10 (EW)	#4@6 (EW)
G2 & G4 (38" < a** ≤50")	#4@8 (EW)	#4@5 (EW)
G2 & G4 (50" < a** ≤64")	#4@6 (EW)	#4@4 (EW)
G2 & G4 (64"< a** ≤76")	#4@5 (EW)	#4@3 (EW)
G2 & G4 (76" < a** ≤90")	#4@4 (EW)	#5@3 (EW)
G3 (H ≤6'-9")	#4@10 (EW)	-
G5 (H ≤6'-9")	#4@10 (EW)	-
G6 (H ≤6'-9")	#4@10 (EW)	-
GT1 (H ≤6'-9")	#4@4 (EW)	-
GT2	#4@4 (EW)	#5@3 (EW)
GT3 (H ≤6'-9")	#4@4 (EW)	-
GT4	#4@4 (EW)	#5@3 (EW)
GO	#4@10 (EW)	#4@6 (EW)
GDO	#4@6 (EW)	#4@4 (EW)

(EW) Each Way
* Main Box
** a = Larger interior span

NOTES:

1. No deduction or adjustment was made to the quantities of concrete and reinforcement for pipe openings, floor alternatives or curb type.
2. Maximum allowable height is 6'-9".
3. Quantities are approximate and for design purposes only.
4. Design is based on envelope of level and sloped ground.

STATE OF CALIFORNIA
DEPARTMENT OF TRANSPORTATION

PRECAST DRAINAGE INLET TABLES

NO SCALE

RSP D73G DATED JULY 15, 2016 SUPPLEMENTS THE STANDARD PLANS BOOK DATED 2015.

REVISED STANDARD PLAN RSP D73G

DATE PLOTTED => 22-JUL-2016
TIME PLOTTED => 11:15

D'S	COUNTY	ROUTE	POST MILES TOTAL PROJECT	SHEET No.	TOTAL SHEETS
01	Hum	169	26.4/29.8	36	41

REGISTERED CIVIL ENGINEER

July 15, 2016
PLANS APPROVAL DATE

REGISTERED PROFESSIONAL ENGINEER
Carl M. Duan
No. C59976
Exp. 6-30-18
CIVIL
STATE OF CALIFORNIA

THE STATE OF CALIFORNIA OR ITS OFFICERS OR AGENTS SHALL NOT BE RESPONSIBLE FOR THE ACCURACY OR COMPLETENESS OF SCANNED COPIES OF THIS PLAN SHEET.

TC ACCOMPANY PLANS DATED 6-15-16

FACE ANGLE DETAIL "A"	
LENGTH OF CURB OPENING	No. OF ANCHORS
3'-6" OR LESS	2
7'-0"	3
10'-0"	4
14'-0"	5
21'-0"	7

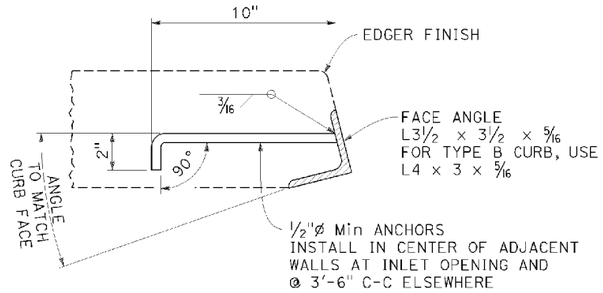

DETAIL "A"

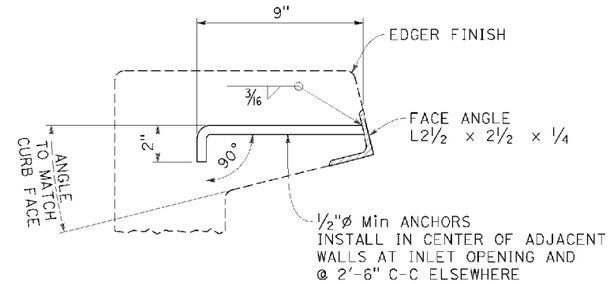

DETAIL "B"

FACE ANGLE AND ANCHOR

NOTE:

1. When shown on the project plans, place a ¾"Ø plain round protection bar horizontally across the length of the opening and bend back 4" into the inlet wall on each side.

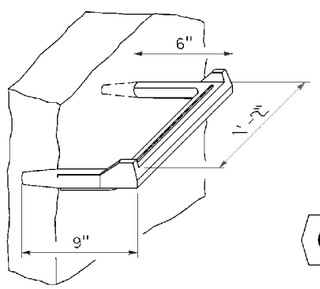

STEP INSERT

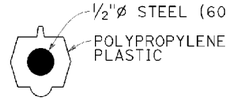

TYPICAL SECTION
(STEP INSERT)

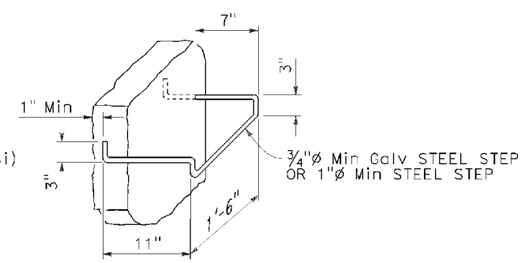

BAR STEP

STEP DETAILS

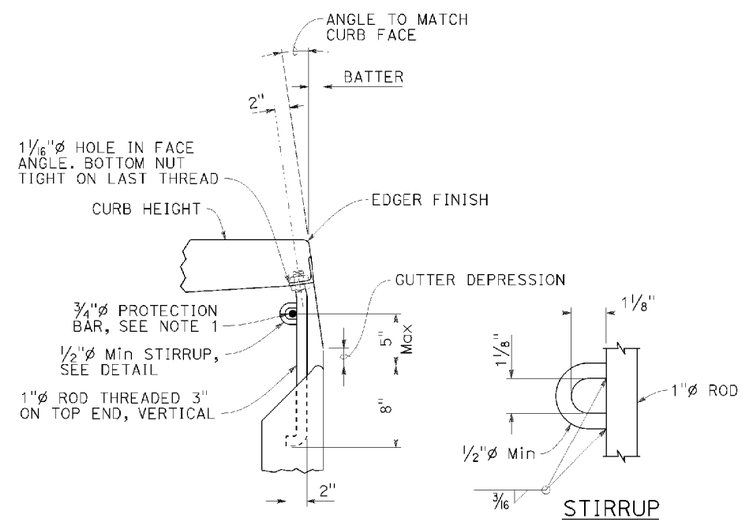

DETAIL "C"

CURB SUPPORT

CURB SUPPORTS SHALL BE EVENLY SPACED AND MINIMAL IN NUMBER SUCH THAT MAXIMUM SPAN OF UNSUPPORTED CURB IS 7'-0".

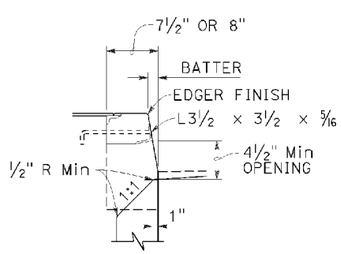

TYPE A CURBS

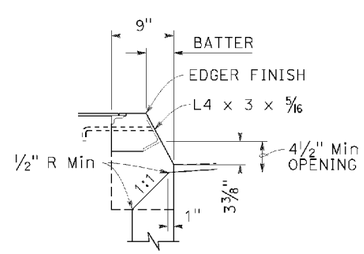

TYPE B CURBS

CURB OPENING DETAILS

STATE OF CALIFORNIA
DEPARTMENT OF TRANSPORTATION

DRAINAGE INLET DETAILS

NO SCALE

RSP D74 DATED JULY 15, 2016 SUPPLEMENTS THE STANDARD PLANS BOOK DATED 2015.

REVISED STANDARD PLAN RSP D74

2015 REVISED STANDARD PLAN RSP D74

DATE PLOTTED => 22-JUL-2016
TIME PLOTTED => 11:15

D's	COUNTY	ROUTE	POST MILES TOTAL PROJEC	SHEET No.	TOTAL SHEETS
01	Hum	169	26.4/29.8	37	41

REGISTERED CIVIL ENGINEER

July 15, 2016
PLANS APPROVAL DATE

REGISTERED PROFESSIONAL ENGINEER
Carl M. Duan
No. C59976
Exp. 6-30-18
CIVIL
STATE OF CALIFORNIA

THE STATE OF CALIFORNIA OR ITS OFFICERS OR AGENTS SHALL NOT BE RESPONSIBLE FOR THE ACCURACY OR COMPLETENESS OF SCANNED COPIES OF THIS PLAN SHEET.

TC ACCOMPANY PLANS DATED 6-15-16

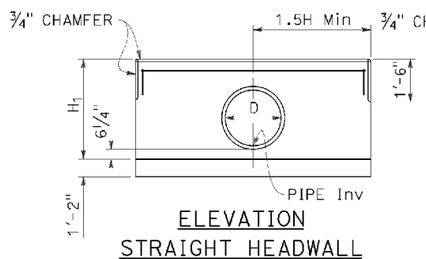

ELEVATION
STRAIGHT HEADWALL
SINGLE CIRCULAR PIPE

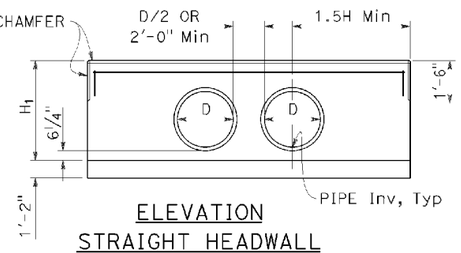

ELEVATION
STRAIGHT HEADWALL
DOUBLE CIRCULAR PIPE

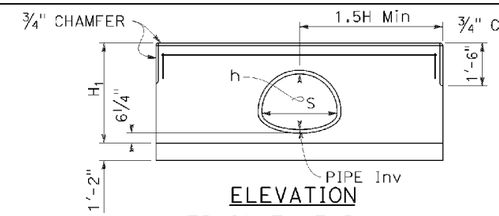

ELEVATION
STRAIGHT HEADWALL
SINGLE CMP

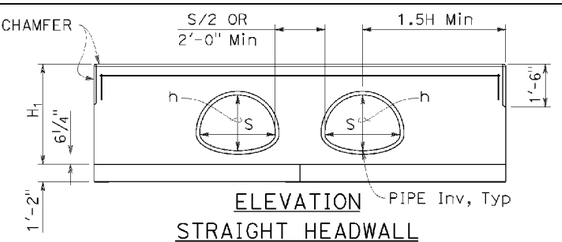

ELEVATION
STRAIGHT HEADWALL
DOUBLE CMP

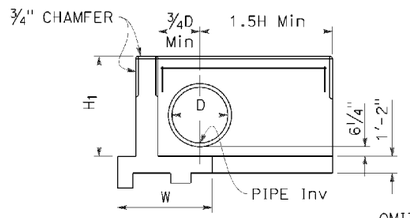

ELEVATION
"L" HEADWALL

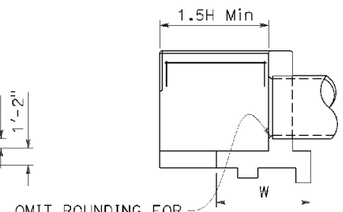

SECTION
"L" HEADWALL

CIRCULAR PIPE CULVERT HEADWALLS

See Note 2

H	CIRCULAR PIPE SIZE D	CMP ARCH SIZE S x h
2'-8"	12"	-
2'-11"	15"	21" x 15"
3'-2"	18"	24" x 18"
3'-5"	21"	28" x 20"
3'-8"	24"	35" x 24"
3'-11"	27"	-
4'-2"	30"	42" x 29"
4'-5"	33"	49" x 33"
4'-8"	36"	-
4'-11"	39"	57" x 38"
5'-2"	42"	64" x 43"
5'-5"	45"	-
5'-8"	48"	71" x 47"
5'-11"	51"	-
6'-2"	54"	-

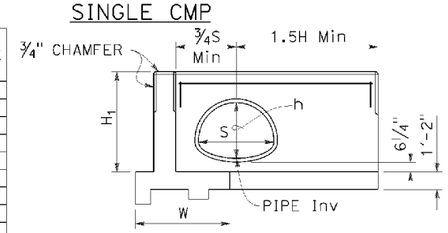

ELEVATION
"L" HEADWALL

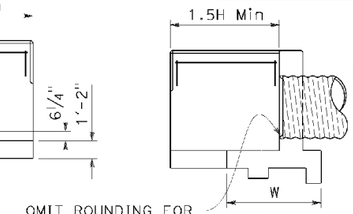

SECTION
"L" HEADWALL

CMP ARCH CULVERT HEADWALLS

See Note 2

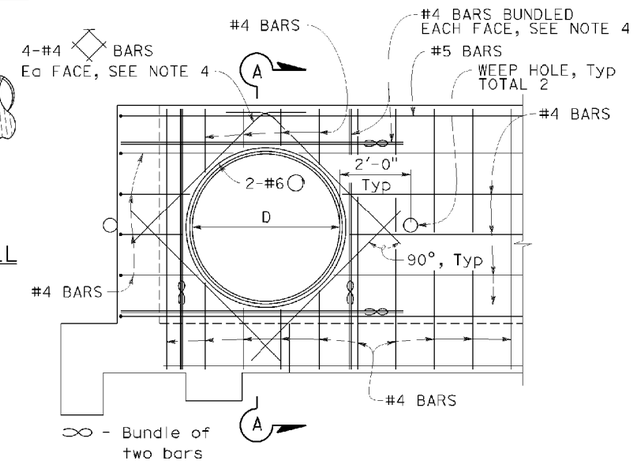

REINFORCEMENT MODIFICATION

"L" headwall shown. Straight headwall similar.
Circular pipe shown. CMP arch similar.

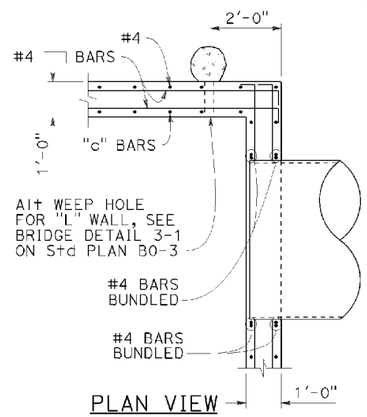

PLAN VIEW
STEM WALL

"L" headwall shown.
Straight headwall similar.

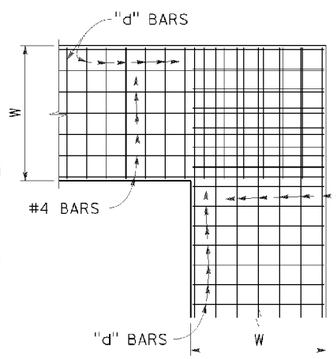

PLAN VIEW
FOOTING

"L" headwall shown.
Straight headwall similar.

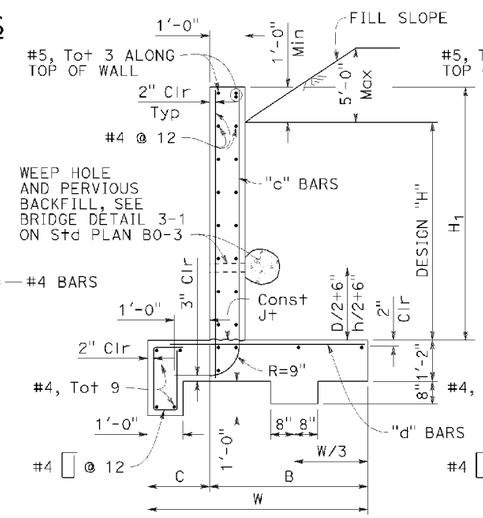

TYPICAL SECTION

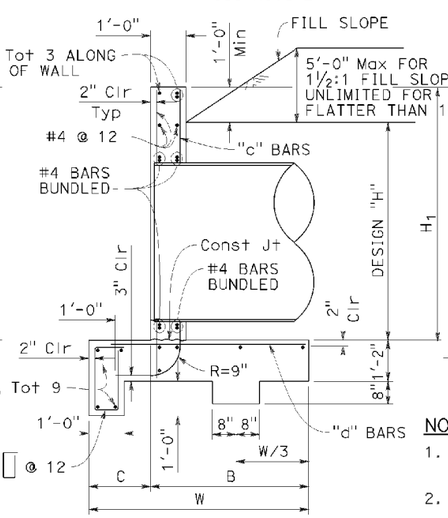

SECTION A-A

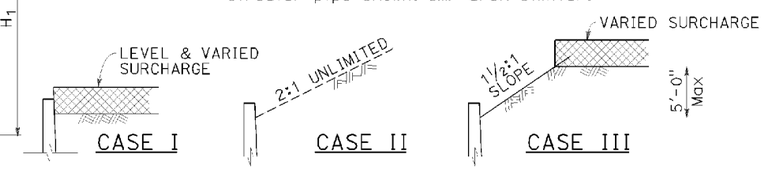

DETAIL OF DESIGN LOADING CASES

	H	2'-8"	2'-11"	3'-2"	3'-5"	3'-8"	3'-11"	4'-2"	4'-5"	4'-8"	4'-11"	5'-2"	5'-5"	5'-8"	5'-11"	6'-2"
	W	4'-7"	4'-9"	4'-10"	5'-0"	5'-1"	5'-2"	5'-3"	5'-5"	5'-6"	5'-7"	5'-8"	5'-9"	5'-11"	6'-0"	6'-3"
	C	1'-2"	1'-2"	1'-2"	1'-3"	1'-3"	1'-3"	1'-3"	1'-4"	1'-4"	1'-4"	1'-5"	1'-5"	1'-6"	1'-6"	1'-9"
	B	3'-5"	3'-7"	3'-8"	3'-9"	3'-10"	3'-11"	4'-0"	4'-1"	4'-2"	4'-3"	4'-3"	4'-4"	4'-5"	4'-6"	4'-6"
	"c" BARS	#4 @ 12	#4 @ 12	#4 @ 12	#4 @ 12	#4 @ 12	#4 @ 12	#4 @ 12	#4 @ 12	#4 @ 12	#4 @ 12	#4 @ 12	#4 @ 12	#4 @ 12	#4 @ 12	#5 @ 12
	"d" BARS	#4 @ 12	#4 @ 8	#4 @ 8	#4 @ 8	#4 @ 8	#5 @ 12	#5 @ 12	#5 @ 12	#5 @ 12	#5 @ 8	#5 @ 8	#5 @ 8	#5 @ 8	#6 @ 8	#6 @ 8
	* Conc CY/LF	0.404	0.412	0.415	0.423	0.426	0.430	0.433	0.440	0.444	0.448	0.451	0.455	0.462	0.466	0.477
	* Reinf LB/LF	23	24	24	25	25	26	27	27	28	28	29	29	30	31	32
**CASE I	Ser (q'o, B')	0.79, 4.66	0.83, 4.57	0.88, 4.58	0.89, 4.73	0.93, 4.74	0.93, 4.75	1.02, 4.75	1.02, 4.92	1.07, 4.93	1.11, 4.94	1.12, 4.98	1.16, 4.99	1.17, 5.16	1.21, 5.18	1.15, 5.53
	Str (q'o, B')	1.48, 1.75	1.53, 1.80	1.65, 1.76	1.64, 1.88	1.76, 1.85	1.89, 1.83	2.02, 1.80	1.97, 1.95	2.08, 1.94	2.20, 1.93	2.28, 1.92	2.39, 1.92	2.31, 2.08	2.41, 2.09	2.17, 2.41
	Extr (q'o, B')	0.65, 4.16	0.68, 4.27	0.72, 4.29	0.74, 4.44	0.78, 4.46	0.82, 4.47	0.86, 4.47	0.87, 4.63	0.92, 4.63	0.96, 4.64	0.98, 4.69	1.03, 4.69	1.04, 4.84	1.09, 4.84	1.05, 5.18
**CASE II	Ser (q'o, B')	0.41, 4.52	0.44, 4.67	0.48, 4.73	0.51, 4.90	0.55, 4.95	0.59, 5.00	0.63, 5.04	0.65, 5.21	0.70, 5.26	0.74, 5.30	0.77, 5.37	0.81, 5.40	0.83, 5.58	0.88, 5.61	0.86, 5.96
	Str (q'o, B')	1.05, 4.49	1.10, 4.64	1.15, 4.69	1.19, 4.86	1.24, 4.90	1.30, 4.94	1.36, 4.98	1.39, 5.15	1.46, 5.18	1.52, 5.22	1.56, 5.28	1.62, 5.31	1.62, 5.48	1.72, 5.51	1.69, 5.85
	Extr (q'o, B')	0.98, 3.90	1.03, 4.00	1.10, 4.01	1.13, 4.15	1.19, 4.15	1.26, 4.15	1.33, 4.14	1.37, 4.28	1.44, 4.27	1.52, 4.26	1.57, 4.29	1.65, 4.28	1.68, 4.41	1.77, 4.40	1.72, 4.71
**CASE III	Ser (q'o, B')	0.61, 4.53	0.64, 4.73	0.68, 4.76	0.70, 4.91	0.74, 4.91	0.79, 4.94	0.83, 4.93	0.85, 5.08	1.17, 4.03	1.23, 4.03	1.27, 4.06	1.34, 4.02	1.36, 4.15	1.43, 4.11	1.36, 4.45
	Str (q'o, B')	0.99, 4.28	1.04, 4.67	1.10, 4.69	1.13, 4.83	1.19, 4.82	1.25, 4.83	1.32, 4.82	1.35, 4.95	2.02, 2.66	2.16, 2.62	2.25, 2.59	2.44, 2.48	2.49, 2.54	2.70, 2.44	2.50, 2.72
	Extr (q'o, B')	0.90, 3.88	0.95, 3.93	1.01, 3.91	1.04, 4.02	1.11, 3.97	1.18, 3.92	1.25, 3.90	1.28, 4.00	1.35, 3.94	1.43, 3.92	1.11, 5.14	1.55, 3.87	1.58, 3.97	1.67, 3.91	1.60, 4.22

* Quantities include 1'-0" extension above the design "H" limit.
** q'o = net bearing stress (ksf), B' = effective footing width (ft)
Ser - service limit
Str - strength limit
Extr - extreme event

REINFORCED CONCRETE HEADWALL

Quantities do not include added diagonals and do not consider pipe occupancy.

NOTE: Reinforced Concrete: fy = 60,000 psi
f'c = 3,600 psi

Earth Density: 120 pcf
Equivalent Fluid Pressure: 36 pcf

NOTES:

1. Length of wall from ℄ pipe to end of wall is 1.5H Min, unless a greater length is shown on project plans.
2. Single circular pipe or single CMP shown for "L" headwall. For double pipe in "L" headwall, see "ELEVATION STRAIGHT HEADWALL DOUBLE CIRCULAR PIPE" or "ELEVATION STRAIGHT HEADWALL DOUBLE CMP" detail for additional information.
3. Cable railing to be installed on top of headwall when shown on Project Plans. See Revised Standard Plan RSP B11-47 for cable railing details.
4. Adjacent to each side of the opening, place additional reinforcement equivalent to half the interrupted main reinforcement. For pipes 42" diameter and greater, add 4 diagonals, 1 bar each side. Extend bars one development length past the intersection with the adjacent diagonal bar, or where bars intersect mid thickness of adjacent wall, bottom slab or at top of wall, bend ends as required into same plane.
5. Quantities are approximate and for design purposes only. No deduction is made for pipe or arch occupancy.

STATE OF CALIFORNIA
DEPARTMENT OF TRANSPORTATION

PIPE CULVERT HEADWALLS STRAIGHT AND "L"

NO SCALE

RSP D89 DATED JULY 15, 2016 SUPERSEDES STANDARD PLAN D89
DATED OCTOBER 30, 2015 - PAGE 205 OF THE STANDARD PLANS BOOK DATED 2015.

REVISED STANDARD PLAN RSP D89

2015 REVISED STANDARD PLAN RSP D89

DATE PLOTTED => 22-JUL-2016
TIME PLOTTED => 11:15

Dist	COUNTY	ROUTE	POST MILES TOTAL PROJECT	SHEET No.	TOTAL SHEETS
01	Hum	169	26.4/29.8	38	41

Theresa Gabriel
REGISTERED ELECTRICAL ENGINEER

April 15, 2016
PLANS APPROVAL DATE

REGISTERED PROFESSIONAL ENGINEER Theresa Aziz Gabriel No. E15129 Exp. 6-30-16 ELECTRICAL STATE OF CALIFORNIA

THE STATE OF CALIFORNIA OR ITS OFFICERS OR AGENTS SHALL NOT BE RESPONSIBLE FOR THE ACCURACY OR COMPLETENESS OF SCANNED COPIES OF THIS PLAN SHEET.

TC ACCOMPANY PLANS DATED 6-15-16

EQUIPMENT IDENTIFICATION

ILLUMINATED SIGN IDENTIFICATION:

SIGN No. 12345 — SIGN EQUIPMENT IDENTIFICATION CHARACTERS - PLACE ON POST OR STRUCTURE

10 ISL SCI 1.0

- 10 — TRANSFORMER RATING (kVA)
- ISL — LIGHTING CONTROL TYPE
- SCI — NUMBER AND TYPE OF FIXTURES

DO NOT PLACE ON STANDARD OR STRUCTURE

ELECTROLIER OR EQUIPMENT IDENTIFICATION:

L2745 - 15'-0"

- 15'-0" — MAST ARM LENGTH, IF SHOWN. DO NOT PLACE ON STANDARD OR STRUCTURE
- L2745 — EQUIPMENT IDENTIFICATION CHARACTERS - PLACE ON STANDARD OR STRUCTURE. EXISTING EQUIPMENT IDENTIFICATION CHARACTERS ARE SHOWN IN PARENTHESIS

CONDUIT AND CONDUCTOR IDENTIFICATION:

1½"C, 2#10, 15#14, 2 DLC, 12P#18

- 2#10, 15#14, 2 DLC, 12P#18 — NUMBER AND SIZE OF CONDUCTORS AND CABLES
- 1½"C — SIZE OF CONDUIT IN INCHES
- P — PAIR
- ø1, ø2, ø2P, etc. — TRAFFIC PHASE IDENTIFICATION FOR SIGNALS, DETECTORS AND PHASE DIAGRAMS
- 1 2 3 — LEGEND NUMBERS
- A B C — EQUIPMENT, SIGNAL POLES, INSTALLATION OR ITEMS
- 1 2 3 — CONDUIT RUN NUMBERS

SIGNAL AND LIGHTING STANDARD (TYPICAL DESIGNATION):

19A - 3 - 100

- 100 — WIND VELOCITY = 100 mph
- 3 — CASE 3 ARM LOADING
- 19A — STANDARD TYPE
- STANDARD PLAN SHEET NUMBER
- DETAIL, NUMBER, SECTION, TYPE OR ELEVATION

MISCELLANEOUS EQUIPMENT

NEW	EXISTING	
CMS	cms	CHANGEABLE MESSAGE SIGN
		CLOSED CIRCUIT TELEVISION CAMERA
		HIGHWAY ADVISORY RADIO POLE AND ANTENNA
EMS	ems	LED EXTINGUISHABLE MESSAGE SIGN
M V	m v	DETECTION DEVICE M = MICROWAVE SENSOR V = VIDEO IMAGE SENSOR

WIRING DIAGRAM LEGEND

- EXTERNAL CONDUCTOR
- CONDUCTOR OR BUS
- TIE POINT
- CONTACTOR COIL
- CONTACTOR, NO CONTACT
- TERMINAL BLOCKS
- CONTACTOR, NC CONTACT
- ENCLOSURE BOND
- GROUNDING ELECTRODE
- CIRCUIT BREAKER
- RECEPTACLE

PULL BOXES

NEW	EXISTING	
		PULL BOX, No. 5 UNLESS OTHERWISE INDICATED OR NOTED
3	9A(21)	PULL BOX, ADDITIONAL DESIGNATIONS OR DESCRIPTIONS

3 No. 3½ PULL BOX
5 No. 5 PULL BOX
6 No. 6 PULL BOX
7 No. 7 PULL BOX (CEILING)
8 No. 8 PULL BOX
9 No. 9 PULL BOX (STRUCTURE)
9A No. 9A PULL BOX (STRUCTURE)

(C) COMMUNICATIONS PULL BOX
(E) PULL BOX WITH EXTENSION
(S) SPRINKLER CONTROL PULL BOX
(21) ANCHOR BOLTS AND CONDUIT FOR FUTURE INSTALLATION OF TYPE 21 STANDARD
(T) TRAFFIC PULL BOX

VEHICLE DETECTORS

5 J 9 U

- 5 — VEHICLE DETECTOR DESIGNATION
- U — U = UPPER, L = LOWER
- 9 — SLOT NUMBER IN INPUT FILE
- J — INPUT FILE (I OR J)
- 5 — PHASE

NEW	EXISTING	
		TYPE A LOOP DETECTOR. OUTLINE OF SAW CUT SHOWN
		TYPE B LOOP DETECTOR. OUTLINE OF SAW CUT SHOWN
		TYPE C LOOP DETECTOR. OUTLINE OF SAW CUT SHOWN
		TYPE D LOOP DETECTOR. OUTLINE OF SAW CUT SHOWN
		TYPE E LOOP DETECTOR. OUTLINE OF SAW CUT SHOWN
		TYPE Q LOOP DETECTOR. OUTLINE OF SAW CUT SHOWN
DH	dh	DETECTOR HANDHOLE
		MICROWAVE OR VIDEO DETECTION ZONE

STATE OF CALIFORNIA
DEPARTMENT OF TRANSPORTATION

ELECTRICAL SYSTEMS (LEGEND AND ABBREVIATIONS)

NO SCALE

RSP ES-1C DATED APRIL 15, 2016 SUPERSEDES STANDARD PLAN ES-1C DATED OCTOBER 30, 2015 - PAGE 420 OF THE STANDARD PLANS BOOK DATED 2015.

REVISED STANDARD PLAN RSP ES-1C

2015 REVISED STANDARD PLAN RSP ES-1C

DATE PLOTTED => 22-JUL-2016
TIME PLOTTED => 11:15

Dist	COUNTY	ROUTE	POST MILES TOTAL PROJECT	SHEET No.	TOTAL SHEETS
01	Hum	169	26.4/29.8	39	41

Theresa Gabriel
REGISTERED ELECTRICAL ENGINEER

April 15, 2016
PLANS APPROVAL DATE

REGISTERED PROFESSIONAL ENGINEER Theresa Aziz Gabriel No. E15129 Exp. 6-30-16 ELECTRICAL STATE OF CALIFORNIA

THE STATE OF CALIFORNIA OR ITS OFFICERS OR AGENTS SHALL NOT BE RESPONSIBLE FOR THE ACCURACY OR COMPLENESS OF SCANNED COPIES OF THIS PLAN SHEET.

TC ACCOMPANY PLANS DATED 6-15-16

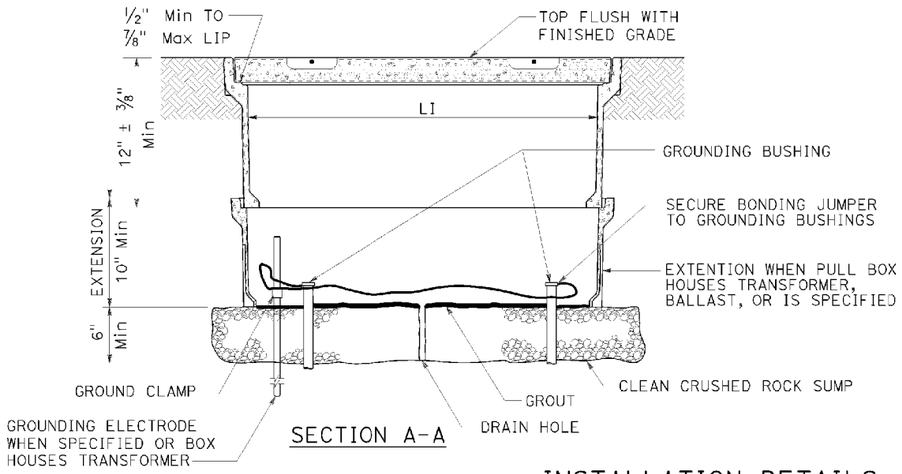

SECTION A-A

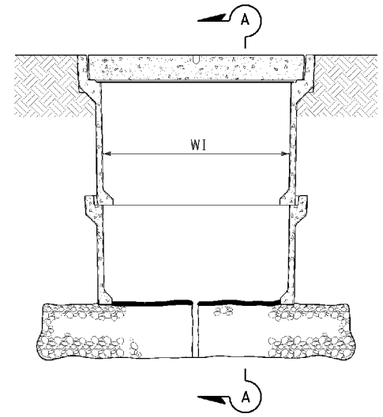

SIDE VIEW

INSTALLATION DETAILS

DETAIL A

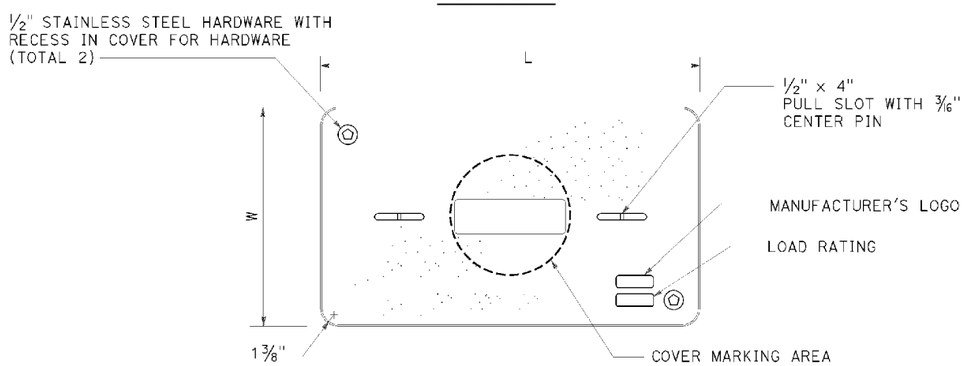

COVER TOP VIEW

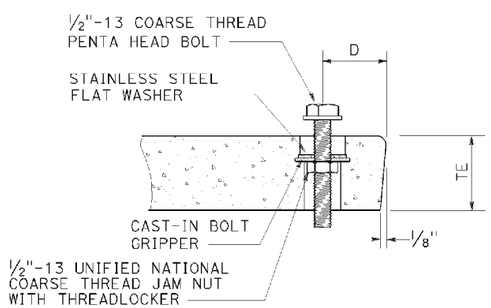

TYPICAL COVER CAPTIVE BOLT

OR SIMILAR

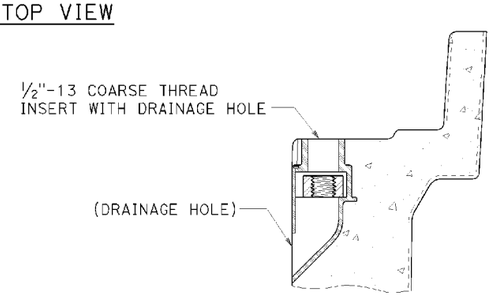

TYPICAL THREADED INSERT

OR SIMILAR

NOTES:

1. The nominal dimensions of the opening in which the cover sets shall be the same as the cover dimensions except the length and width dimensions shall be 1/8" greater.
2. Covers and boxes shall be interchangeable with California standard male and female gages. When interchanged with a standard male or female gage, the top surfaces shall be flush within 1/8". Top outside radius of covers and pull boxes shall have a 1/8" radius.
3. Dimensions for the cover for non-traffic pull box are nominal values.

DIMENSION TABLE

PULL BOX	PULL BOX					COVER				
	MINIMUM DEPTH BOX	MINIMUM DEPTH EXTENSION	MINIMUM WEIGHT	LI Min	WI Min	TE	D	L	W	MINIMUM WEIGHT
No. 3 1/2	12"	N/A	40 lb	1' - 3"	9"	1 3/4"	1 3/4"	1'-3 1/4" - 1'-3 3/8"	10" - 10 1/8"	30 lb
No. 5	12"	10"	55 lb	1' - 8"	11"	2"	1 3/4"	1'-11 1/4"	1'-1 3/4"	60 lb
No. 6	12"	10"	70 lb	2' - 4 1/4"	1' - 3 1/4"	2"	2"	2'-6 1/2"	1'-5 1/2"	85 lb

STATE OF CALIFORNIA
DEPARTMENT OF TRANSPORTATION

ELECTRICAL SYSTEMS (NON-TRAFFIC PULL BOX)

NO SCALE

RSP ES-8A DATED APRIL 15, 2016 SUPERSEDES STANDARD PLAN ES-8A
DATED OCTOBER 30, 2015 - PAGE 473 OF THE STANDARD PLANS BOOK DATED 2015.

REVISED STANDARD PLAN RSP ES-8A

2015 REVISED STANDARD PLAN RSP ES-8A

DATE PLOTTED => 22-JUL-2016
TIME PLOTTED => 11:15

Dist	COUNTY	ROUTE	POST MILES TOTAL PROJECT	SHEET No.	TOTAL SHEETS
01	Hum	169	26.4/29.8	40	41

Theresa Gabriel
REGISTERED ELECTRICAL ENGINEER

April 15, 2016
PLANS APPROVAL DATE

REGISTERED PROFESSIONAL ENGINEER Theresa Aziz Gabriel No. E15129 Exp. 6-30-16 ELECTRICAL STATE OF CALIFORNIA

THE STATE OF CALIFORNIA OR ITS OFFICERS OR AGENTS SHALL NOT BE RESPONSIBLE FOR THE ACCURACY OR COMPLETENESS OF SCANNED COPIES OF THIS PLAN SHEET.

TC ACCOMPANY PLANS DATED 6-15-16

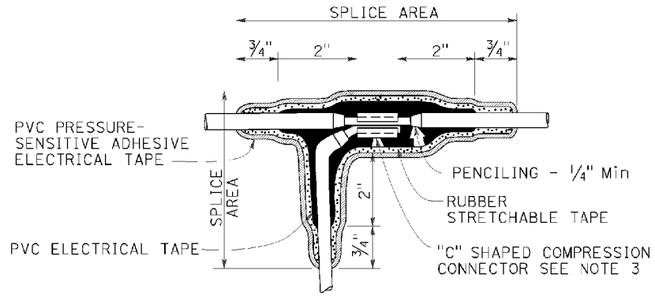

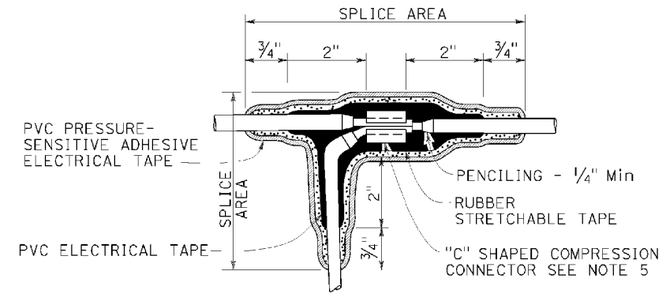

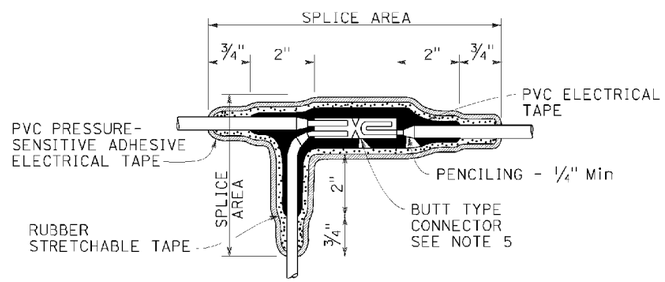

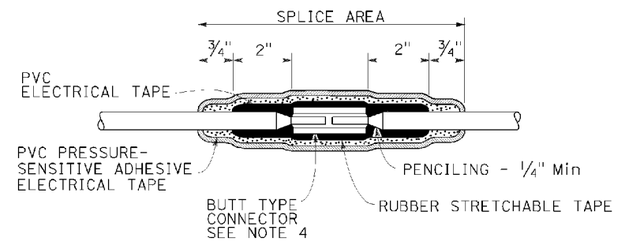

TYPICAL SPLICE INSULATION METHOD B

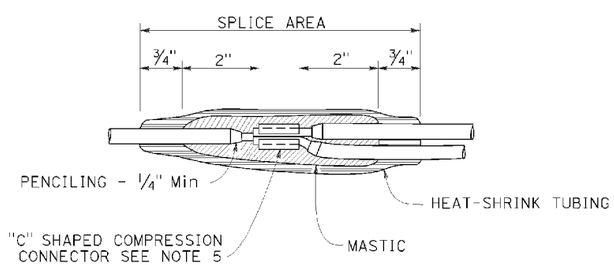

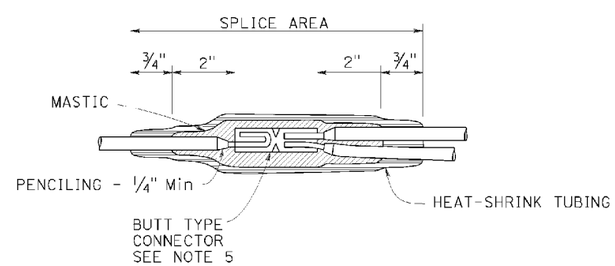

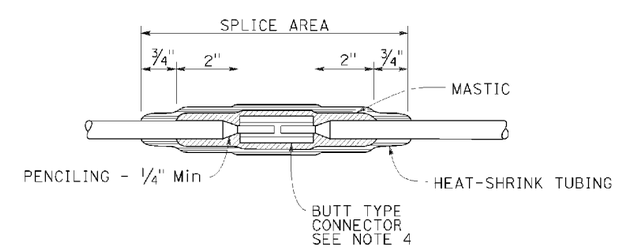

TYPICAL SPLICE INSULATION HEAT-SHRINK TUBING

NOTES:

1. Dimensions are minimum.
2. Rubber tapes shall be rolled after application.
3. Between 1 free-end and 1 through conductor.
4. Between 2 free-end conductors.
5. Between 3 free-end conductors.

STATE OF CALIFORNIA
DEPARTMENT OF TRANSPORTATION

ELECTRICAL SYSTEMS (SPLICE INSULATION METHODS DETAILS)

NO SCALE

RSP ES-13A DATED APRIL 15, 2016 SUPERSEDES STANDARD PLAN ES-13A DATED OCTOBER 30, 2015 - PAGE 484 OF THE STANDARD PLANS BOOK DATED 2015.

REVISED STANDARD PLAN RSP ES-13A

2015 REVISED STANDARD PLAN RSP ES-13A

DATE PLOTTED => 22-JUL-2016
TIME PLOTTED => 11:15

Dist	COUNTY	ROUTE	POST MILES TOTAL PROJECT	SHEET No.	TOTAL SHEETS
01	Hum	169	26.4/29.8	41	41

Theresa Gabriel
REGISTERED ELECTRICAL ENGINEER

April 15, 2016
PLANS APPROVAL DATE

REGISTERED PROFESSIONAL ENGINEER
Theresa Aziz Gabriel
No. E15129
Exp. 6-30-16
ELECTRICAL
STATE OF CALIFORNIA

THE STATE OF CALIFORNIA OR ITS OFFICERS OR AGENTS SHALL NOT BE RESPONSIBLE FOR THE ACCURACY OR COMPLETENESS OF SCANNED COPIES OF THIS PLAN SHEET.

TC ACCOMPANY PLANS DATED 6-15-16

THE FLASHER SHALL MATE WITH A CINCH-JONES SOCKET S-406-SB OR EQUAL AND CONNECTED AS FOLLOWS:

PIN	CIRCUIT	PIN	CIRCUIT
7	LOAD	10	NEUTRAL
8	LOAD	11	LINE
9	CHASSIS GROUND	12	NOT USED

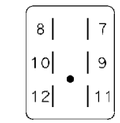

CONNECTOR SOCKET
SOLID STATE FLASHER UNIT

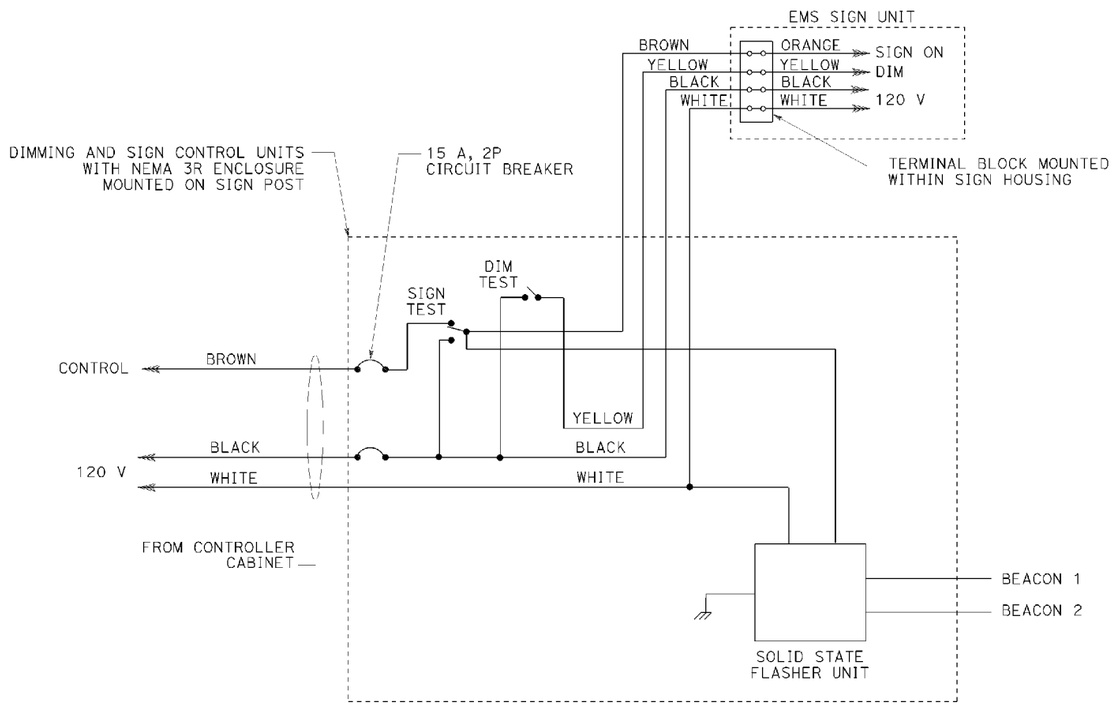

WIRING DIAGRAM
LED EXTINGUISHABLE MESSAGE SIGN
DETAIL A

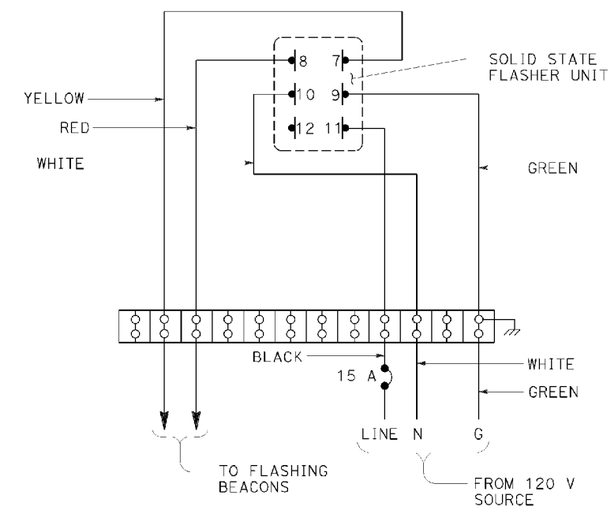

WIRING DIAGRAM
FLASHING BEACON CONTROL ASSEMBLY
DETAIL B

STATE OF CALIFORNIA
DEPARTMENT OF TRANSPORTATION

ELECTRICAL SYSTEMS (CONTROL ASSEMBLY WIRING DIAGRAMS)

NO SCALE

RSP ES-14B DATED APRIL 15, 2016 SUPERSEDES STANDARD PLAN ES-14B DATED OCTOBER 30, 2015 - PAGE 487 OF THE STANDARD PLANS BOOK DATED 2015.

REVISED STANDARD PLAN RSP ES-14B

2015 REVISED STANDARD PLAN RSP ES-14B

DATE PLOTTED => 22-JUL-2016
TIME PLOTTED => 11:15