DIST	COUNTY	ROUTE	POST MILES TOTAL PROJECT	SHEET No.	TOTAL SHEETS
02	Tri	299	0.4/0.9	101	136

REGISTERED CIVIL ENGINEER 2-23-13 DATE

2-25-13
PLANS APPROVAL DATE

REGISTERED PROFESSIONAL ENGINEER Kelly Ann Holden No. 42268 Exp. 3/31/14 CIVIL STATE OF CALIFORNIA

The State of California or its officers or agents shall not be responsible for the accuracy or completeness of electronic copies of this plan sheet.

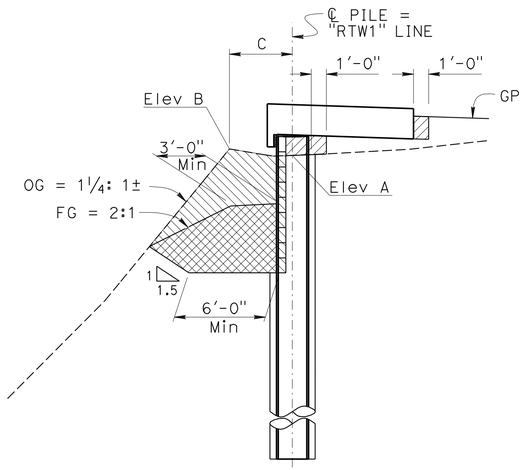

SECTION STATION
10+41.00 TO 10+60.00
(ALONG "RTW1" LINE)

NO SCALE

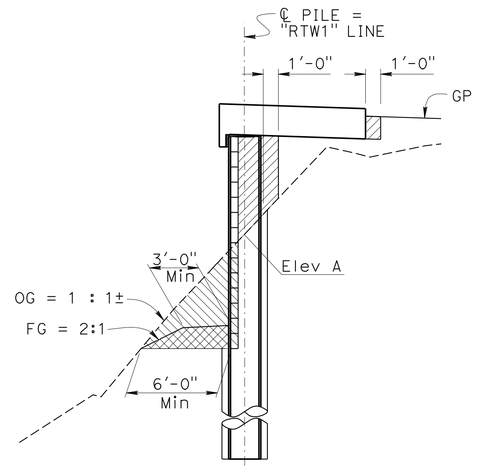

SECTION STATION
10+60.00 TO 11+80.00
(ALONG "RTW1" LINE)

NO SCALE

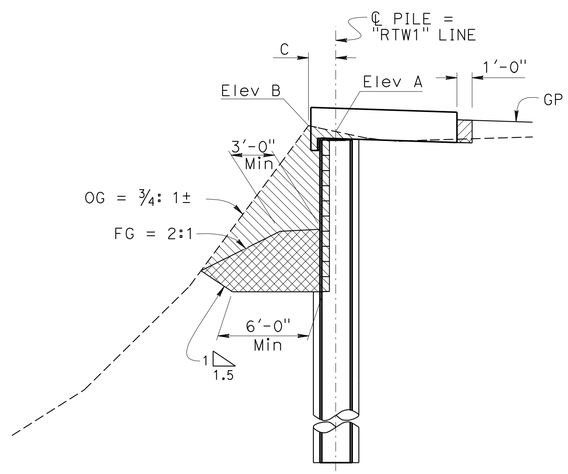

SECTION STATION
11+80.00 TO 12+17.00
(ALONG "RTW1" LINE)

NO SCALE

EXCAVATION AND BACKFILL LIMIT TABLE

"A1" LINE STATION	"RTW1" LINE STATION	Approx Elev (ft)		C (ft)
		Elev A	Elev B	
111+95	10+40	582.17	582.60	13.14
112+00	10+45	582.04	582.43	10.13
112+05	10+50	581.85	582.27	7.11
112+10	10+55	581.67	582.10	4.14
112+15	10+60	581.77	581.93	1.13
112+20	10+65	579.82		
112+25	10+70	578.60		
112+30	10+75	578.15		
112+35	10+80	577.77		
112+40	10+85	577.43		
112+45	10+90	577.09		
112+50	10+95	576.76		
112+55	11+00	576.42		
112+60	11+05	576.08		
112+65	11+10	575.80		
112+70	11+15	576.09		
112+75	11+20	576.40		
112+80	11+25	576.70		
112+85	11+30	577.01		
112+90	11+35	576.98		
112+95	11+40	576.94		
113+00	11+45	577.09		
113+05	11+50	577.46		
113+10	11+55	578.05		
113+15	11+60	579.13		
113+20	11+65	580.21		
113+25	11+70	581.28		
113+30	11+75	582.30		
113+35	11+80	583.05	583.05	1.00
113+40	11+85	583.01	583.23	1.01
113+45	11+90	582.96	583.35	1.80
113+50	11+95	582.90	583.48	2.58
113+55	12+00	582.84	583.60	3.36
113+60	12+05	582.37	583.61	5.25
113+65	12+10	582.27	583.60	7.34
113+70	12+15	582.29	583.58	9.53
113+73	12+18	582.28	583.57	10.90

LEGEND:

Indicates Structure Excavation (Soldier Pile Wall)

Indicates Structure Backfill (Soldier Pile Wall)

DESIGN	BY Wendy Hou	CHECKED K. Stillmunkes / J. Jung	
DETAILS	BY Gerald Dickerson	CHECKED K. Stillmunkes / J. Jung	
QUANTITIES	BY Evan Franciliso	CHECKED Tomoko Kusumi	

STATE OF CALIFORNIA
DEPARTMENT OF TRANSPORTATION

DIVISION OF ENGINEERING SERVICES
STRUCTURE DESIGN
DESIGN BRANCH 7

BRIDGE NO. 05E0009
POST MILE 0.5

ENCHILADA CURVE IMPROVEMENT
RETAINING WALL NO. 1
EXCAVATION AND BACKFILL DETAILS

STRUCTURES DESIGN DETAIL SHEET (ENGLISH) (REV. 09-01-10)

ORIGINAL SCALE IN INCHES FOR REDUCED PLANS 0 1 2 3

UNIT: 3592
PROJECT NO. & PHASE: 0200000211-1
CONTRACT NO.: 02-2E3500

DISREGARD PRINTS BEARING EARLIER REVISION DATES

REVISION DATES: ~~1-19-12~~ 9-10-12 ~~2-09-12~~

SHEET 7 OF 14

FILE => 05-rtw1-m-exbk-det.dgn

USERNAME => s121614 DATE PLOTTED => 01-MAR-2013 TIME PLOTTED => 08:17

DIST	COUNTY	ROUTE	POST MILES TOTAL PROJECT	SHEET No.	TOTAL SHEETS
02	Tri	299	0.4/0.9	102	136

REGISTERED CIVIL ENGINEER 2-23-13 DATE

2-25-13
PLANS APPROVAL DATE

REGISTERED PROFESSIONAL ENGINEER Kelly Ann Holden No. 42268 Exp. 3/31/14 CIVIL STATE OF CALIFORNIA

The State of California or its officers or agents shall not be responsible for the accuracy or completeness of electronic copies of this plan sheet.

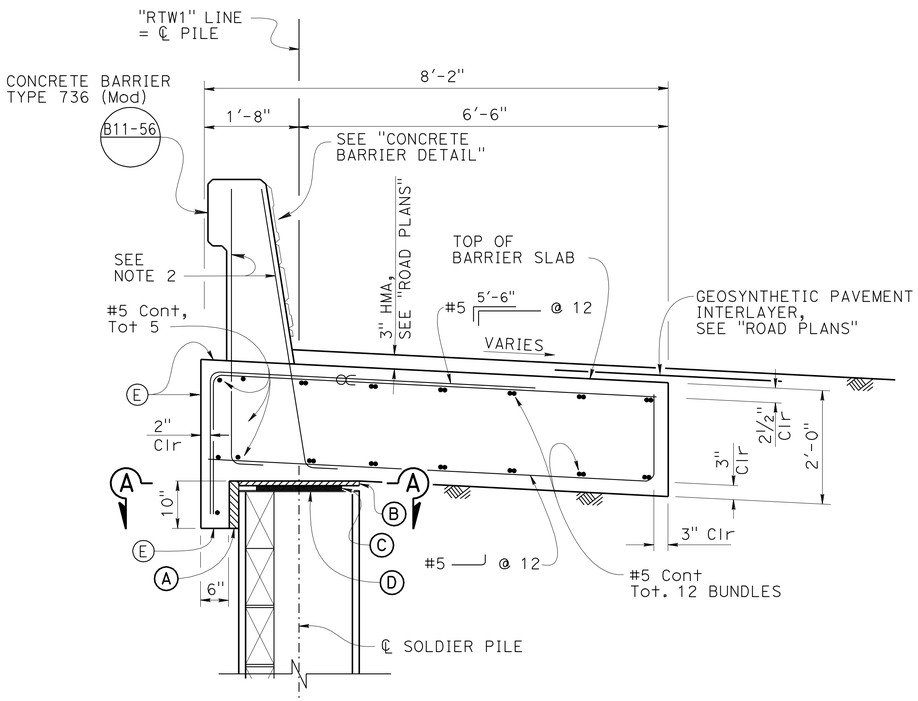

CONCRETE BARRIER SLAB

¾" = 1'-0"

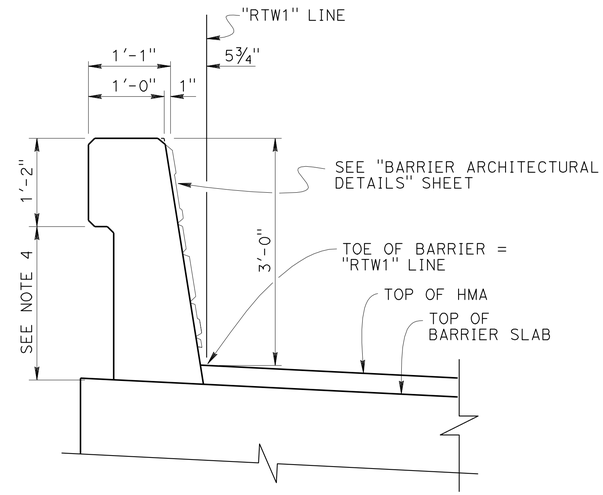

CONCRETE BARRIER DETAIL

1" = 1'-0"

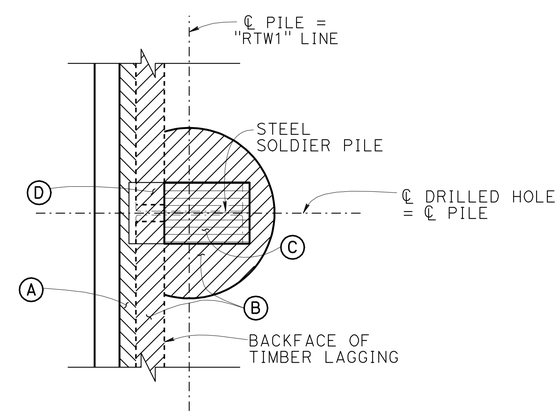

SECTION A-A

¾" = 1'-0"

NOTES:

1. Barrier and Concrete Barrier Slab reinforcement shall be epoxy coated.
2. Not all barrier reinforcement shown.
3. No expansion joints in concrete barrier or barrier slab within wall limits.
4. Dimension may vary with roadway cross slope and with certain thickness of HMA surfacing.

(A) 2" Expanded polystyrene

(B) 1" Expanded polystyrene, see "SECTION A-A"

(C) 1" x 13" x 18" Elastomeric bearing pad bonded to top of each pile

(D) ¼" x 13" x 25½" ℙ welded to the top of pile

(E) Prepare and stain exposed surfaces of barrier slab FSTD 595C #36118

LEGEND:

Indicates 1" Expanded polystyrene

Indicates 2" Min Expanded polystyrene

Indicates Bearing Pad

∝ Indicates bundled bars

ENCHILADA CURVE IMPROVEMENT
RETAINING WALL NO. 1
CONCRETE BARRIER SLAB DETAILS

	BY	CHECKED
DESIGN	Wendy Hou	K. Stillmunkes / J. Jung
DETAILS	G Dickerson / Y. Feng	K. Stillmunkes / J. Jung
QUANTITIES	Evan Franciliso	Tomoko Kusumi

STATE OF CALIFORNIA DEPARTMENT OF TRANSPORTATION

DIVISION OF ENGINEERING SERVICES STRUCTURE DESIGN DESIGN BRANCH 7

BRIDGE NO. 05E0009

POST MILE 0.5

STRUCTURES DESIGN DETAIL SHEET (ENGLISH) (REV. 09-01-10)

ORIGINAL SCALE IN INCHES FOR REDUCED PLANS 0 1 2 3

UNIT: 3592
PROJECT NO. & PHASE: 0200000211-1

CONTRACT NO.: 02-2E3500

DISREGARD PRINTS BEARING EARLIER REVISION DATES

REVISION DATES 1-26-12 2-13-13 2-23-13

SHEET 8 OF 14

FILE => 05-rtw1-n-bs_det.dgn

USERNAME => s121614 DATE PLOTTED => 01-MAR-2013 TIME PLOTTED => 08:17

DIST	COUNTY	ROUTE	POST MILES TOTAL PROJECT	SHEET No.	TOTAL SHEETS
02	Tri	299	0.4/0.9	103	136

REGISTERED CIVIL ENGINEER — DATE 2-23-13
PLANS

2-25-13
PLANS APPROVAL DATE

REGISTERED PROFESSIONAL ENGINEER — Kelly Ann Holden — No. 42268 — Exp. 3/31/14 — CIVIL — STATE OF CALIFORNIA

The State of California or its officers or agents shall not be responsible for the accuracy or completeness of electronic copies of this plan sheet.

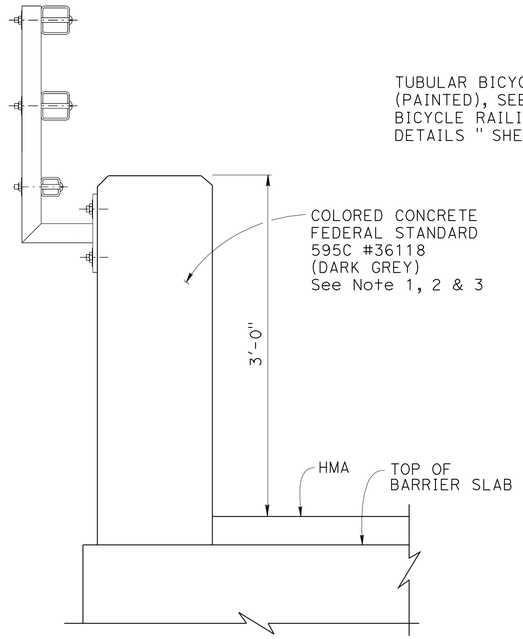

SECTION B-B
1½" = 1'-0"

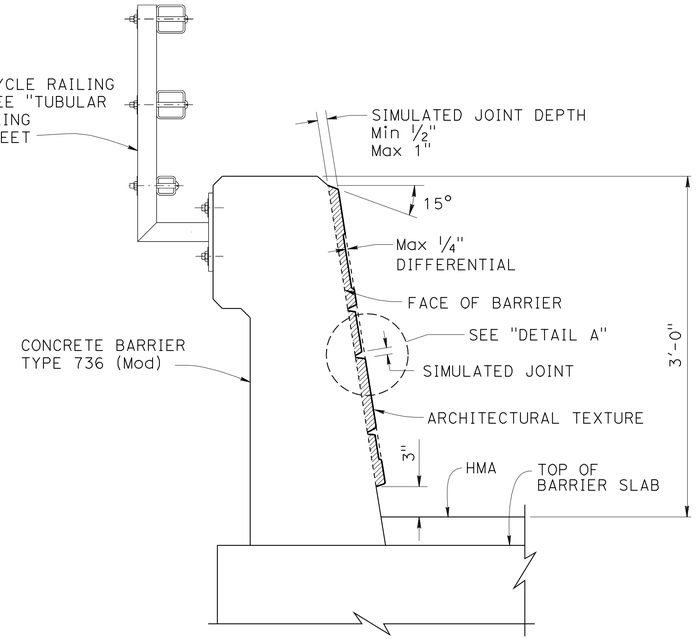

SECTION C-C
1½" = 1'-0"

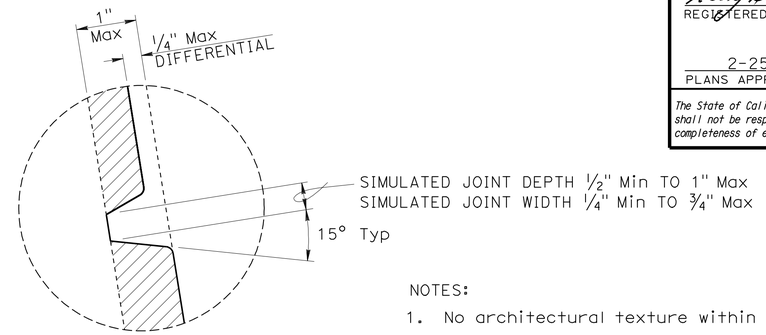

DETAIL A
NO SCALE

NOTES:

1. No architectural texture within 3'-0" of Begin Wall and End Wall
2. For transition front face of barrier, see B11-56
3. For Metal Beam Guard connection details, see RSP A77J2

LEGEND:

- COLORED CONCRETE (ENTIRE BARRIER) FEDERAL STANDARD 595C #36118 (DARK GREY)
- 75% CONCRETE STAIN FEDERAL STANDARD 595C #26008 (VERY DARK GRAY)
- 13% CONCRETE STAIN FEDERAL STANDARD 595C #26231 (MEDIUM GRAY)
- 2% CONCRETE STAIN FEDERAL STANDARD 595C #36650 (OFF WHITE)
- 10% CONCRETE STAIN FEDERAL STANDARD 595C #33717 (TAN)

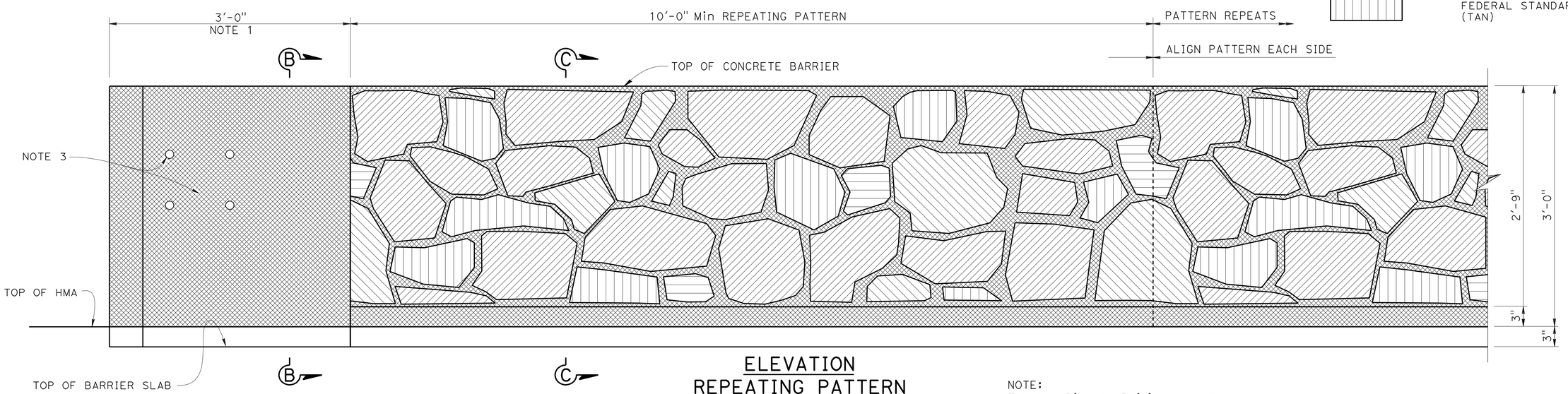

ELEVATION
REPEATING PATTERN
1½" = 1'-0"

NOTE:
Tubular Bicycle Railing not shown

DESIGN	BY Wendy Hou	CHECKED K. Stillmunkes / J. Jung	
DETAILS	BY G. Dickerson / Y. Feng	CHECKED K. Stillmunkes / J. Jung	
QUANTITIES	BY Evan Franciliso	CHECKED Tomoko Kusumi	

STATE OF CALIFORNIA
DEPARTMENT OF TRANSPORTATION

DIVISION OF ENGINEERING SERVICES
STRUCTURE DESIGN
DESIGN BRANCH 7

BRIDGE NO. 05E0009
POST MILE 0.5

ENCHILADA CURVE IMPROVEMENT
RETAINING WALL NO. 1
BARRIER ARCHITECTURAL DETAILS

STRUCTURES DESIGN DETAIL SHEET (ENGLISH) (REV. 09-01-10)

ORIGINAL SCALE IN INCHES FOR REDUCED PLANS 0 1 2 3

UNIT: 3592
PROJECT NO. & PHASE: 0200000211-1
CONTRACT NO.: 02-2E3500

DISREGARD PRINTS BEARING EARLIER REVISION DATES

REVISION DATES: 3-28-12 2-14-13 2-23-13

SHEET 9 OF 14

FILE => 05-rtw1-o-bar_archdet.dgn

USERNAME => s127614 DATE PLOTTED => 01-MAR-2013 TIME PLOTTED => 08:18

DIST	COUNTY	ROUTE	POST MILES TOTAL PROJECT	SHEET No.	TOTAL SHEETS
02	Tri	299	0.4/0.9	104	136

REGISTERED CIVIL ENGINEER — DATE

2-25-13
PLANS APPROVAL DATE

Gregory J. Kaderabek No. C40814 Exp. 3-31-13 CIVIL — REGISTERED PROFESSIONAL ENGINEER — STATE OF CALIFORNIA

The State of California or its officers or agents shall not be responsible for the accuracy or completeness of electronic copies of this plan sheet.

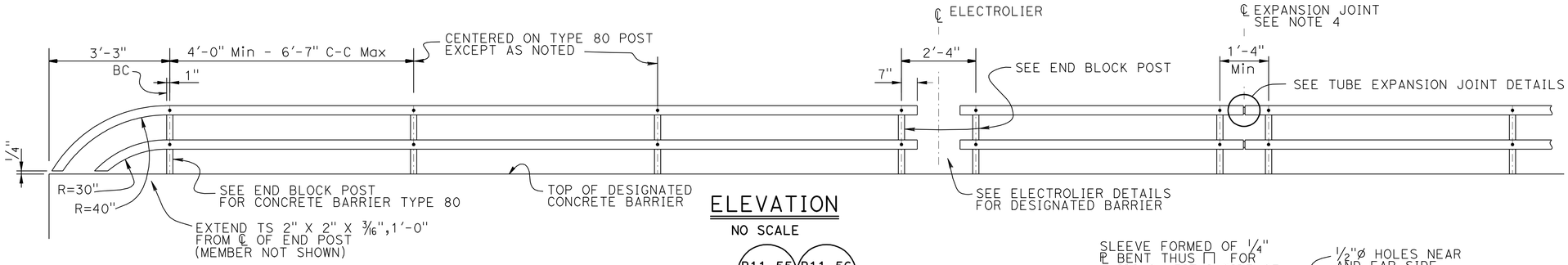

ELEVATION
NO SCALE

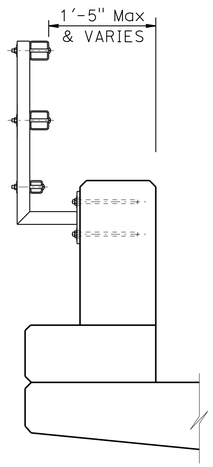

NOTE:
For details not shown, see "TYPE 732 OR 736"

TYPE 80 END BLOCK POST
1" = 1'-0"

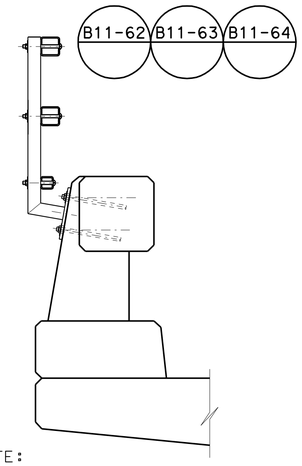

NOTE:
For details not shown, see "TYPE 732 OR 736"

TYPE 80
1" = 1'-0"

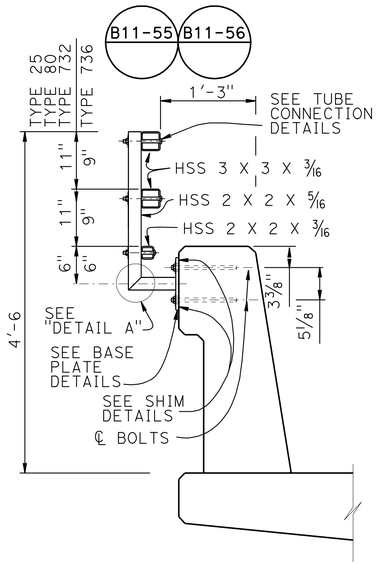

TYPE 732 OR 736
1" = 1'-0"

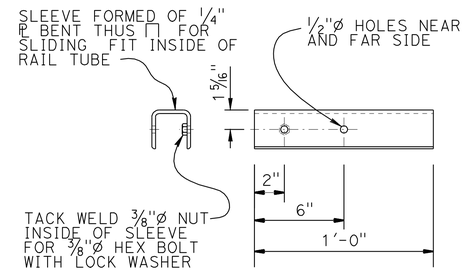

SLEEVE DETAIL
NO SCALE

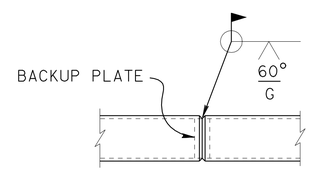

WELDED SPLICE DETAIL
NO SCALE

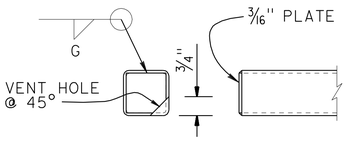

RAIL CAP DETAIL
NO SCALE

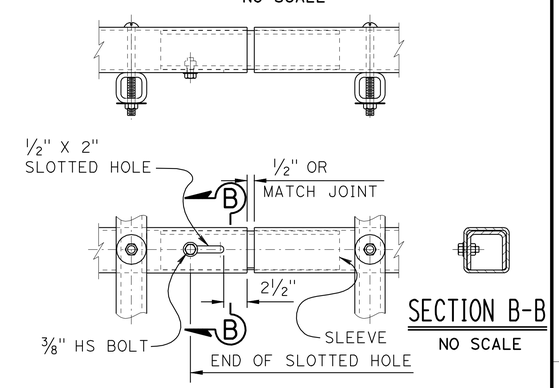

SECTION B-B
NO SCALE

TUBE EXPANSION JOINT DETAILS
NO SCALE

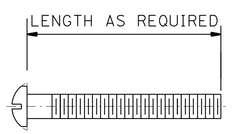

ROUND HEAD SCREW DETAIL
NO SCALE

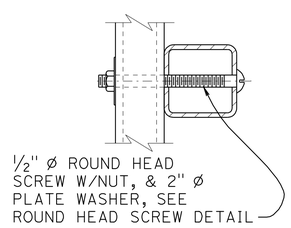

TUBE CONNECTION DETAIL
NO SCALE

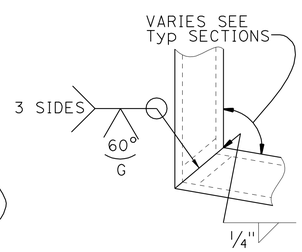

DETAIL A
NO SCALE

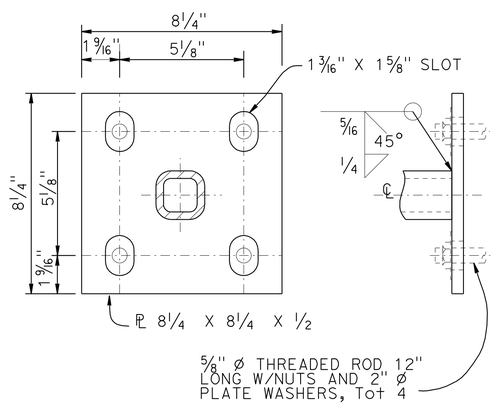

BASE PLATE DETAIL
NO SCALE

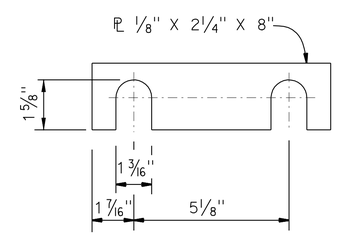

SHIM DETAILS
NO SCALE

NOTES:

1. Post shall be normal to railing.
2. Rail tubes shall be shop bent or fabricated to fit horizontal curve when radius is less than 12".
3. Tube splices shall be located in the tubes spanning deck or wall joints. Increase joint width in tubes to match expansion joint width and increase sleeve length correspondingly.
4. Top rail tube shall be continuous over not less than two posts except a short post spacing is permitted near deck or wall joints, electroliers, or other rail discontinuities as noted.
5. See Project Plans for limits of tubular hand railing.

ENCHILADA CURVE IMPROVEMENT
RETAINING WALL NO. 1
CONCRETE BARRIER TYPE 80, 732 & 736
TUBULAR BICYCLE RAILING DETAILS

STANDARD DRAWING
FILE NO. xs16-035
APPROVAL DATE March 2012

STATE OF CALIFORNIA DEPARTMENT OF TRANSPORTATION
DIVISION OF ENGINEERING SERVICES

BRIDGE NO. 05E0009
POST MILE 0.8

DS OSD 2147A (ENGLISH STANDARD DRAWING "XS" BORDER REV. (02-02-11))

ORIGINAL SCALE IN INCHES FOR REDUCED PLANS 0 1 2 3

UNIT: 3592
PROJECT NUMBER & PHASE: 0200000211-1
CONTRACT NO.: 02-3E3500

DISREGARD PRINTS BEARING EARLIER REVISION DATES

REVISION DATES

SHEET 10 OF 14

FILE => 05-rtw1-u-tbrde01.dgn

USERNAME => s121614 DATE PLOTTED => 01-MAR-2013 TIME PLOTTED => 08:18

DIST	COUNTY	ROUTE	POST MILES TOTAL PROJECT	SHEET No.	TOTAL SHEETS
02	Tri	299	0.4/0.9	105	136

CERTIFIED ENGINEERING GEOLOGIST — DATE 7-13-12

PROFESSIONAL GEOLOGIST — Luis Paredes-Mejia — No. 2329 — Exp. 01-31-14 — CERTIFIED ENGINEERING GEOLOGIST — STATE OF CALIFORNIA

2-25-13
PLANS APPROVAL DATE

The State of California or its officers or agents shall not be responsible for the accuracy or completeness of electronic copies of this plan sheet.

This LOTB sheet was prepared in accordance with the Caltrans Soil & Rock Logging, Classification, & Presentation Manual (2010 Edition).
See 2010 Standard Plans A10F and A10G for Soil Legend, and A10H for Rock Legend.

BENCH MARK

TRI 299 0.57
Fnd 2¼" CADH Brass Disk in Concrete
37.15 Ft Rt "A1" Line Rte 299
Sta 111+07.93
N 673,743.070
E 1,865,923.082
Elev= 590.31
Vertical Datum: NAVD88

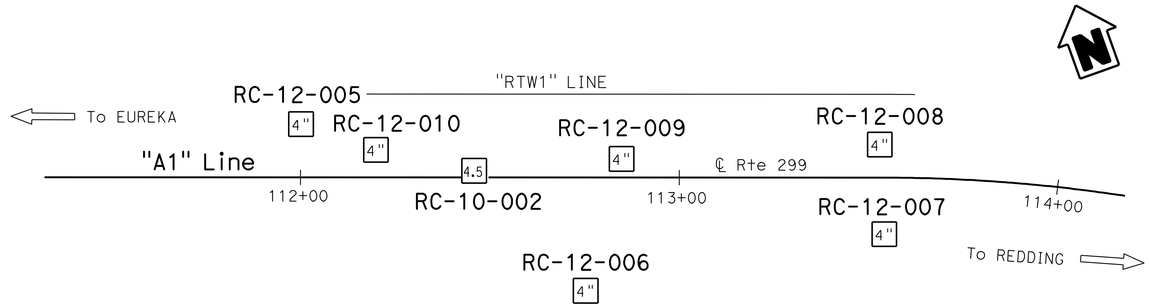

PLAN
1" = 20′

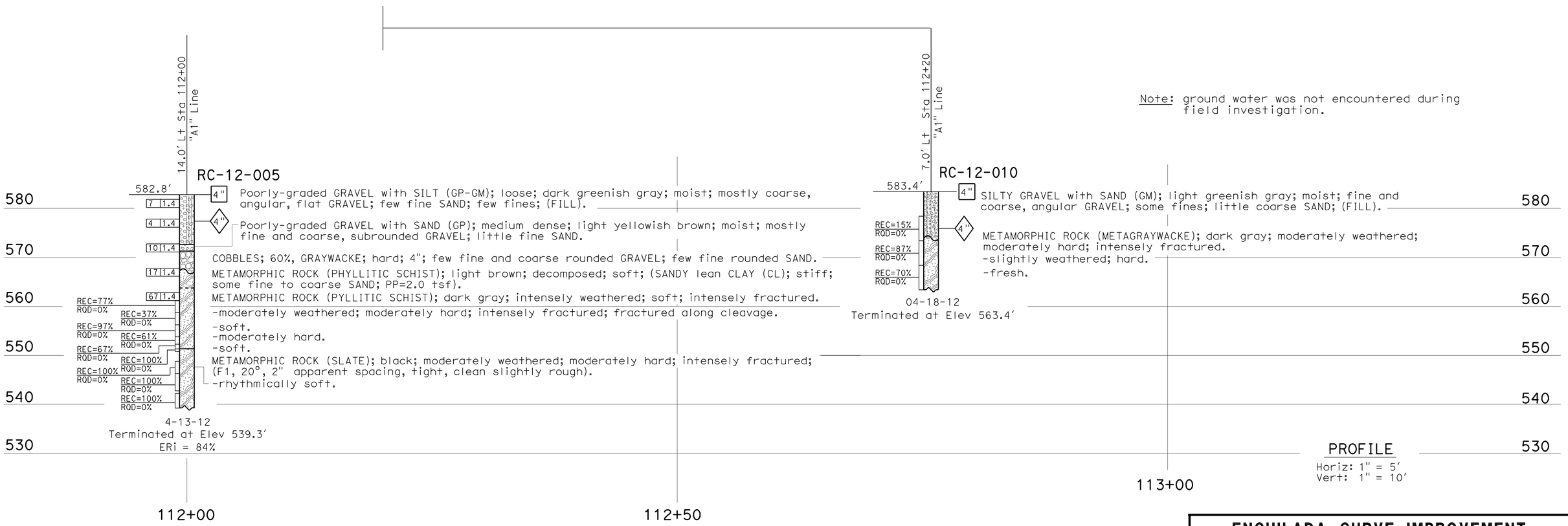

Note: ground water was not encountered during field investigation.

PROFILE
Horiz: 1" = 5′
Vert: 1" = 10′

ENGINEERING SERVICES	MATERIALS AND GEOTECHNICAL SERVICES	STATE OF CALIFORNIA DEPARTMENT OF TRANSPORTATION	DIVISION OF ENGINEERING SERVICES STRUCTURE DESIGN DESIGN BRANCH 7	BRIDGE NO. 05E0009 / POST MILE 0.5	ENCHILADA CURVE IMPROVEMENT RETAINING WALL NO. 1 LOG OF TEST BORINGS 1 OF 4
FUNCTIONAL SUPERVISOR NAME: M. Hagy	DRAWN BY: I. G-Remmen / CHECKED BY: F. DeHaro	FIELD INVESTIGATION BY: L. Paredes-Mejia			

OGS CIVIL LOG OF TEST BORINGS SHEET — ORIGINAL SCALE IN INCHES FOR REDUCED PLANS 0 1 2 3 — UNIT: 3643 — PROJECT NUMBER & PHASE: 02000002111 — CONTRACT NO.: 02-2E3501 — DISREGARD PRINTS BEARING EARLIER REVISION DATES — REVISION DATES ~~07-09-12~~ 07-12-12 — SHEET 11 OF 14

FILE => 05-rtw1-z-lotb01.dgn

USERNAME => s126614 DATE PLOTTED => 01-MAR-2013 TIME PLOTTED => 08:18

DIST	COUNTY	ROUTE	POST MILES TOTAL PROJECT	SHEET No.	TOTAL SHEETS
02	Tri	299	0.4/0.9	106	136

CERTIFIED ENGINEERING GEOLOGIST — DATE 7-13-12

PROFESSIONAL GEOLOGIST — Luis Paredes-Mejia — No. 2329 — Exp. 01-31-12 — CERTIFIED ENGINEERING GEOLOGIST — STATE OF CALIFORNIA

2-25-13
PLANS APPROVAL DATE

The State of California or its officers or agents shall not be responsible for the accuracy or completeness of electronic copies of this plan sheet.

This LOTB sheet was prepared in accordance with the Caltrans Soil & Rock Logging, Classification, & Presentation Manual (2010 Edition).
See 2010 Standard Plans A10F and A10G for Soil Legend, and A10H for Rock Legend.

FOR PLAN VIEW, SEE
"LOG OF TEST BORINGS 1 OF 4"

Note: ground water was not encountered during field investigation.

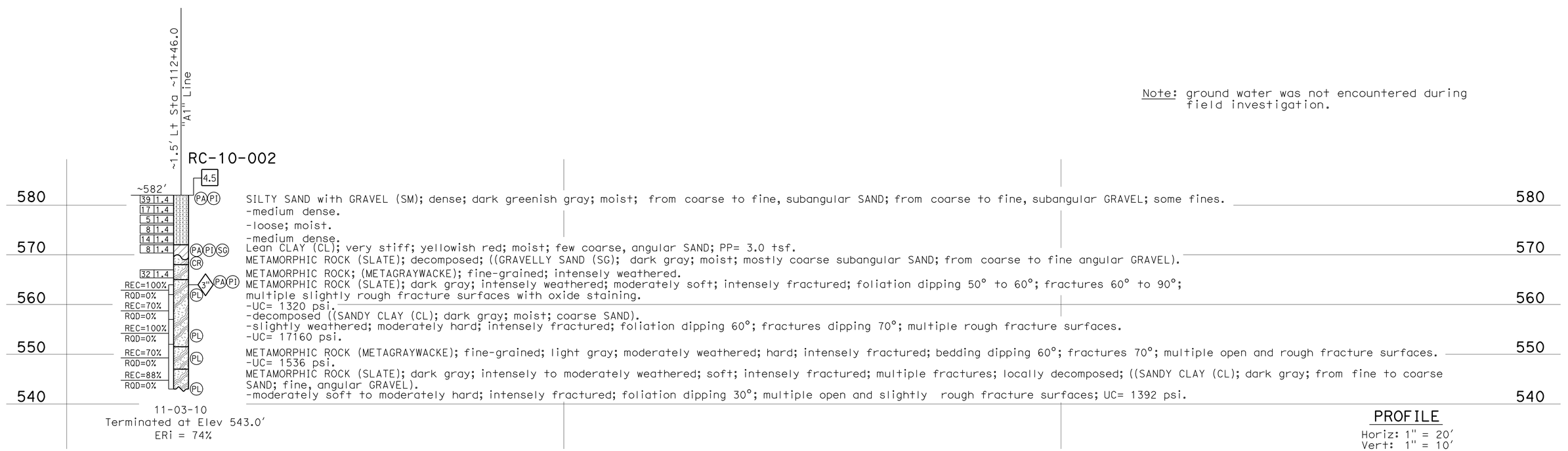

PROFILE
Horiz: 1" = 20'
Vert: 1" = 10'

ENGINEERING SERVICES	MATERIALS AND GEOTECHNICAL SERVICES	STATE OF CALIFORNIA DEPARTMENT OF TRANSPORTATION	DIVISION OF ENGINEERING SERVICES STRUCTURE DESIGN DESIGN BRANCH 7	BRIDGE NO. 05E0009 / POST MILE 0.5	ENCHILADA CURVE IMPROVEMENT
FUNCTIONAL SUPERVISOR	DRAWN BY: F. Nguyen	FIELD INVESTIGATION BY:			RETAINING WALL NO. 1
NAME: M. Hagy	CHECKED BY: A. Barrie	L. Paredes-Mejia			LOG OF TEST BORINGS 2 OF 4

OGS CIVIL LOG OF TEST BORINGS SHEET — ORIGINAL SCALE IN INCHES FOR REDUCED PLANS 0 1 2 3 — UNIT: 3643 — PROJECT NUMBER & PHASE: 02000002111 — CONTRACT NO.: 02-2E3501 — DISREGARD PRINTS BEARING EARLIER REVISION DATES — REVISION DATES 07-12-12 — SHEET 12 OF 14

FILE => 05-rtw1-z-lotb02.dgn

USERNAME => s121614 DATE PLOTTED => 01-MAR-2013 TIME PLOTTED => 08:46

DIST	COUNTY	ROUTE	POST MILES TOTAL PROJECT	SHEET No.	TOTAL SHEETS
02	Tri	299	0.4/0.9	107	136

CERTIFIED ENGINEERING GEOLOGIST — DATE 7-13-12

PROFESSIONAL GEOLOGIST — Luis Paredes-Mejia — No. 2329 — Exp. 01-31-14 — CERTIFIED ENGINEERING GEOLOGIST — STATE OF CALIFORNIA

2-25-13
PLANS APPROVAL DATE

The State of California or its officers or agents shall not be responsible for the accuracy or completeness of electronic copies of this plan sheet.

This LOTB sheet was prepared in accordance with the Caltrans Soil & Rock Logging, Classification, & Presentation Manual (2010 Edition).
See 2010 Standard Plans A10F and A10G for Soil Legend, and A10H for Rock Legend.

FOR PLAN VIEW, SEE
"LOG OF TEST BORINGS 1 OF 4"

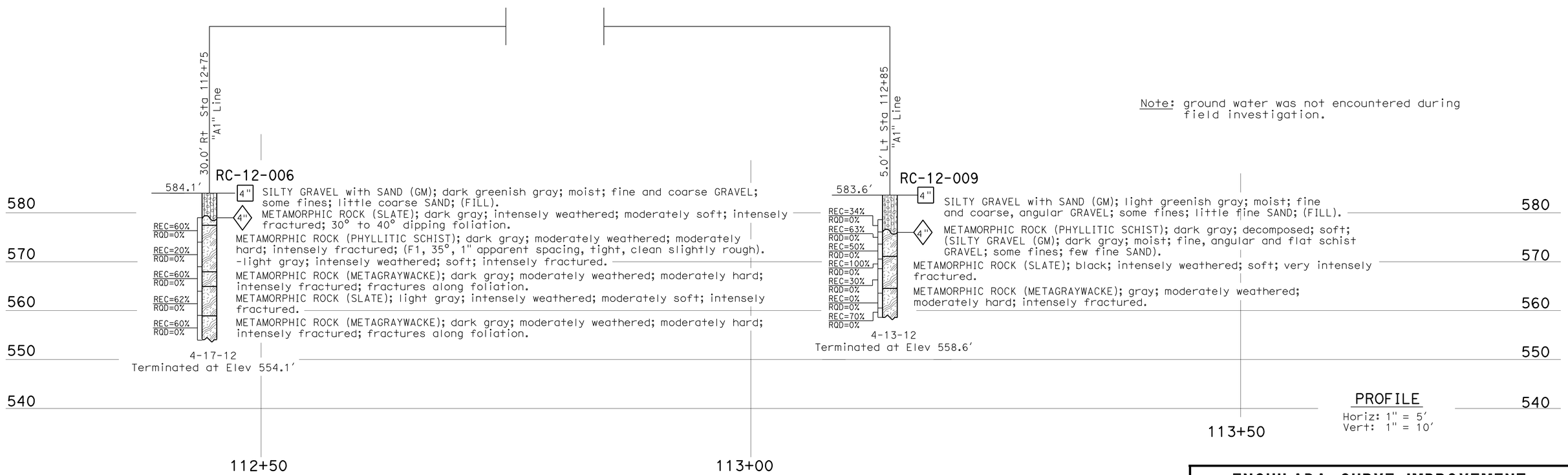

Note: ground water was not encountered during field investigation.

ENGINEERING SERVICES	MATERIALS AND GEOTECHNICAL SERVICES	STATE OF CALIFORNIA DEPARTMENT OF TRANSPORTATION	DIVISION OF ENGINEERING SERVICES STRUCTURE DESIGN DESIGN BRANCH 7	BRIDGE NO. 05E0009 / POST MILE 0.5	ENCHILADA CURVE IMPROVEMENT RETAINING WALL NO. 1 LOG OF TEST BORINGS 3 OF 4
FUNCTIONAL SUPERVISOR NAME: M. Hagy	DRAWN BY: I. G-Remmen CHECKED BY: F. DeHaro	FIELD INVESTIGATION BY: L. Paredes-Mejia			

OGS CIVIL LOG OF TEST BORINGS SHEET — ORIGINAL SCALE IN INCHES FOR REDUCED PLANS 0 1 2 3

UNIT: 3643
PROJECT NUMBER & PHASE: 02000002111 — CONTRACT NO.: 02-2E3501

DISREGARD PRINTS BEARING EARLIER REVISION DATES → REVISION DATES 07-09-12 07-12-12 — SHEET 13 OF 14

FILE => 05-rtw1-z-lotb03.dgn

USERNAME => s121614 DATE PLOTTED => 01-MAR-2013 TIME PLOTTED => 08:46

DIST	COUNTY	ROUTE	POST MILES TOTAL PROJECT	SHEET No.	TOTAL SHEETS
02	Tri	299	0.4/0.9	108	136

CERTIFIED ENGINEERING GEOLOGIST — DATE 7-13-12

PROFESSIONAL GEOLOGIST — Luis Paredes-Mejia — No. 2329 — Exp. 01-31-14 — CERTIFIED ENGINEERING GEOLOGIST — STATE OF CALIFORNIA

2-25-13
PLANS APPROVAL DATE

The State of California or its officers or agents shall not be responsible for the accuracy or completeness of electronic copies of this plan sheet.

This LOTB sheet was prepared in accordance with the Caltrans Soil & Rock Logging, Classification, & Presentation Manual (2010 Edition).
See 2010 Standard Plans A10F and A10G for Soil Legend, and A10H for Rock Legend.

FOR PLAN VIEW, SEE
"LOG OF TEST BORINGS 1 OF 4"

Note: ground water was not encountered during field investigation.

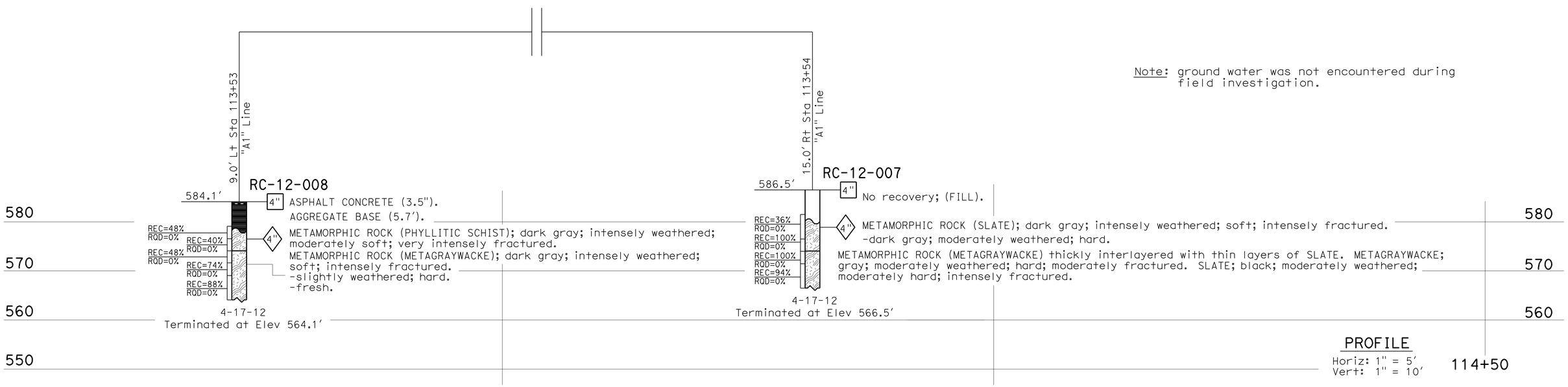

PROFILE
Horiz: 1" = 5'
Vert: 1" = 10'

ENGINEERING SERVICES	MATERIALS AND GEOTECHNICAL SERVICES	STATE OF CALIFORNIA DEPARTMENT OF TRANSPORTATION	DIVISION OF ENGINEERING SERVICES STRUCTURE DESIGN DESIGN BRANCH 7	BRIDGE NO. 05E0009 / POST MILE 0.5	ENCHILADA CURVE IMPROVEMENT RETAINING WALL NO. 1 LOG OF TEST BORINGS 4 OF 4
FUNCTIONAL SUPERVISOR NAME: M. Hagy	DRAWN BY: I. G-Remmen CHECKED BY: F. DeHaro	FIELD INVESTIGATION BY: L. Paredes-Mejia			

OGS CIVIL LOG OF TEST BORINGS SHEET

ORIGINAL SCALE IN INCHES FOR REDUCED PLANS 0 1 2 3

UNIT: 3643
PROJECT NUMBER & PHASE: 02000002111 CONTRACT NO.: 02-2E3501

DISREGARD PRINTS BEARING EARLIER REVISION DATES → REVISION DATES 07-09-12 07-12-12 SHEET 14 OF 14

FILE => 05-rtw1-z-lotb04.dgn

USERNAME => s126614 DATE PLOTTED => 01-MAR-2013 TIME PLOTTED => 08:47

DIST	COUNTY	ROUTE	POST MILES TOTAL PROJECT	SHEET No.	TOTAL SHEETS
02	Tri	299	0.4/0.9	109	136

REGISTERED CIVIL ENGINEER 2-27-13 DATE

2-25-13
PLANS APPROVAL DATE

REGISTERED PROFESSIONAL ENGINEER Kelly Holden No. 42268 Exp. 3/31/14 CIVIL STATE OF CALIFORNIA

The State of California or its officers or agents shall not be responsible for the accuracy or completeness of electronic copies of this plan sheet.

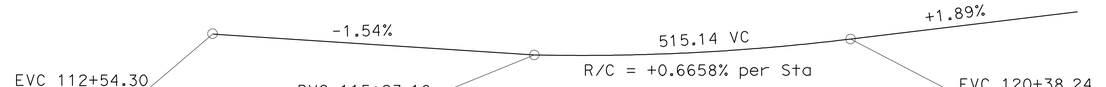

PROFILE GRADE
ALONG "A1" LINE
No scale

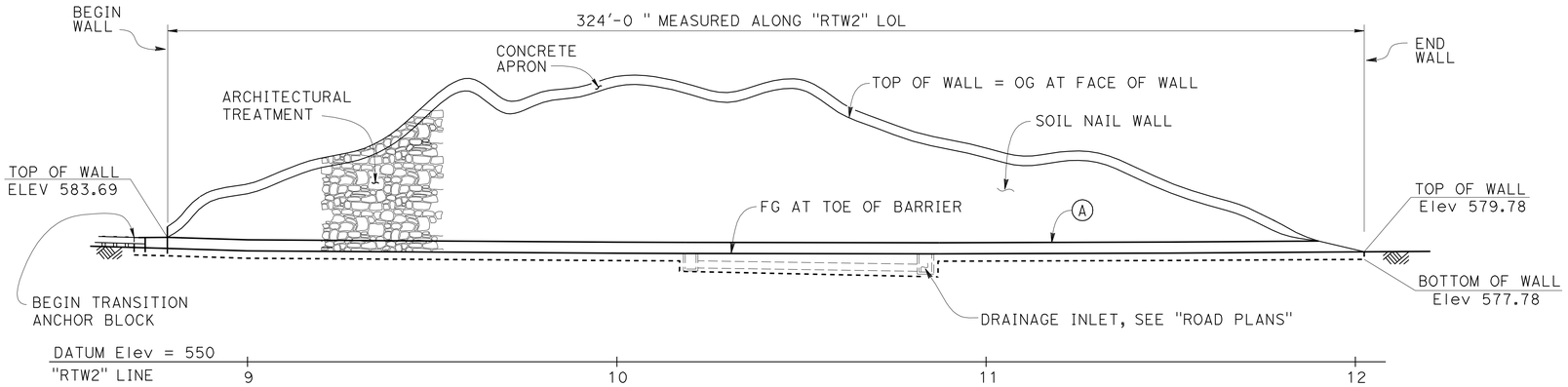

DEVELOPED MIRROR ELEVATION
1" = 20'

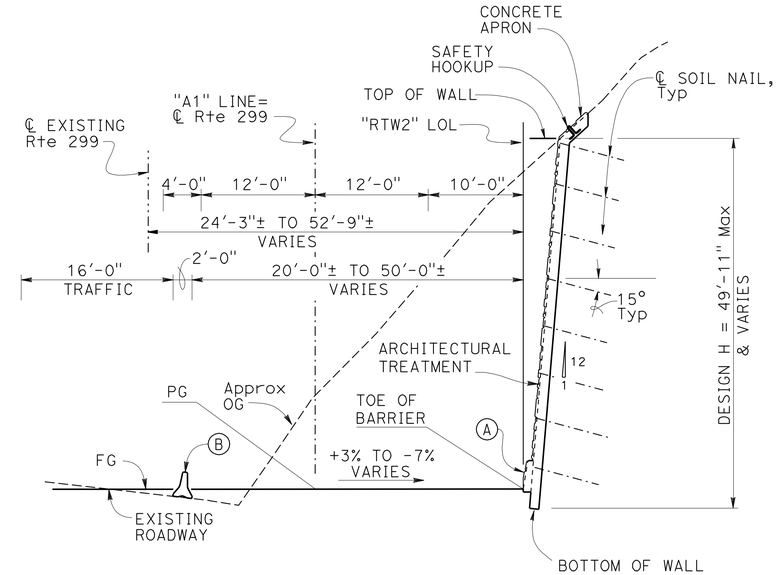

TYPICAL SECTION
1/8" = 1'-0"

CURVE DATA

"A1" Line	"RTW2" LOL
R = 425.00'	R = 403.00'
Δ = 10°29'04"	Δ = 10°29'04"
T = 38.99'	T = 36.98'
L = 77.77'	L = 73.74'

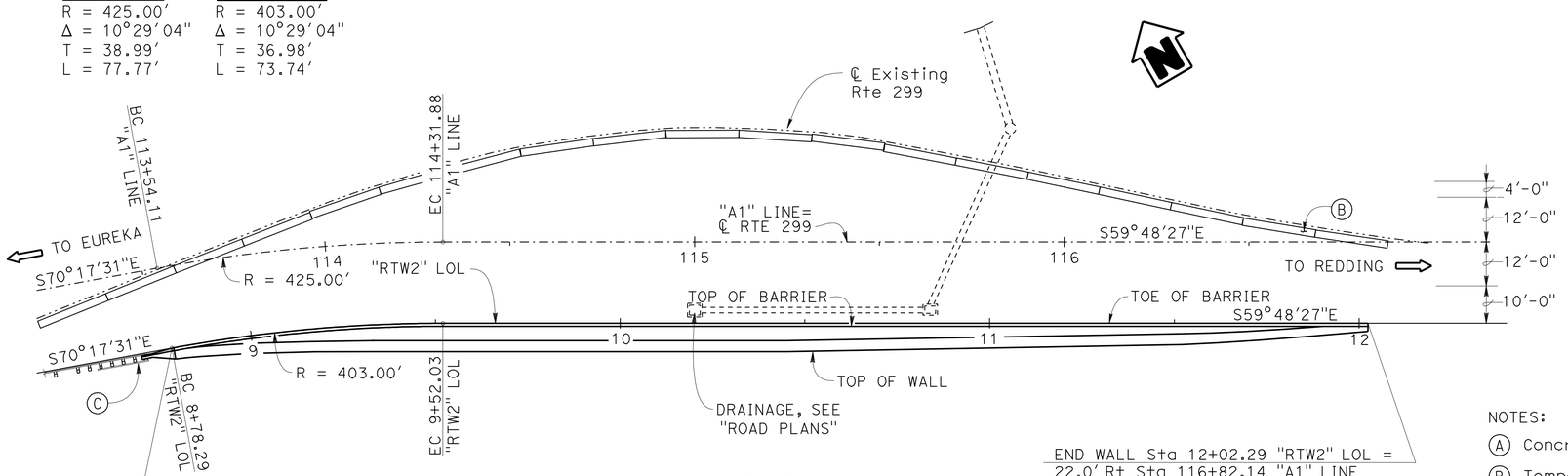

PLAN
1" = 20'

QUANTITIES

STRUCTURE EXCAVATION (SOIL NAIL WALL)	890	CY
STRUCTURE BACKFILL (SOIL NAIL WALL)	37	CY
SOIL NAIL	10,860	LF
STRUCTURAL CONCRETE, RETAINING WALL	302	CY
ARCHITECTURAL TREATMENT	9,209	SQFT
BAR REINFORCING STEEL (RETAINING WALL)	72,240	LB
SHOTCRETE	137	CY
PREPARE AND STAIN CONCRETE	10,208	SQFT
MISCELLANEOUS METAL (SAFETY HOOKUP)	374	LB
CONCRETE BARRIER (TYPE 60D MODIFIED)	324	LF
TRANSITION ANCHOR BLOCK	9	LF

NOTES:

(A) Concrete Barrier, Type 60D (Mod)

(B) Temporary Railing, Type K, see "ROAD PLANS"

(C) MBGR, see "ROAD PLANS"

ENCHILADA CURVE IMPROVEMENT
RETAINING WALL NO. 2
GENERAL PLAN

Kelly Ann Holden
DESIGN ENGINEER

	BY	CHECKED			
DESIGN	Keith Stillmunkes	Mario Guadamuz	SERVICE LOAD DESIGN		
DETAILS	G. Dickerson\ Y. Feng	Mario Guadamuz	LAYOUT	Wendy Hou	Keith Stillmunkes
QUANTITIES	Sameh Hegazi	Tuong Ha	SPECIFICATIONS	Adam Menke	Adam Menke (PLANS AND SPECS COMPARED)

ORIGINAL SCALE IN INCHES FOR REDUCED PLANS 0 1 2 3

STATE OF CALIFORNIA
DEPARTMENT OF TRANSPORTATION

DIVISION OF ENGINEERING SERVICES
STRUCTURE DESIGN
DESIGN BRANCH 7

BRIDGE NO. 05E0010
POST MILE 0.6

UNIT: 3592
PROJECT NO. & PHASE: 0200000211-1
CONTRACT NO.: 02-2E3500

DISREGARD PRINTS BEARING EARLIER REVISION DATES

REVISION DATES: 5-23-11 | 2-27-13 | 2-12-13

SHEET 1 OF 14

FILE => 05-rtw2-a-gp.dgn

STRUCTURES DESIGN GENERAL PLAN SHEET (ENGLISH) (REV.09-01-10)

USERNAME => s126614 DATE PLOTTED => 01-MAR-2013 TIME PLOTTED => 08:18

DIST	COUNTY	ROUTE	POST MILES TOTAL PROJECT	SHEET No.	TOTAL SHEETS
02	Tri	299	0.4/0.9	110	136

REGISTERED CIVIL ENGINEER 2-23-13 DATE

2-25-13
PLANS APPROVAL DATE

REGISTERED PROFESSIONAL ENGINEER
Kelly Holden
No. 42268
Exp. 3/31/14
CIVIL
STATE OF CALIFORNIA

The State of California or its officers or agents shall not be responsible for the accuracy or completeness of electronic copies of this plan sheet.

INDEX TO PLANS

SHEET	TITLE
1.	GENERAL PLAN
2.	INDEX TO PLANS
3.	STRUCTURE PLAN NO. 1
4.	STRUCTURE PLAN NO. 2
5.	FOUNDATION PLAN
6.	TYPICAL SECTION
7.	RETAINING WALL DETAILS NO. 1
8.	RETAINING WALL DETAILS NO. 2
9.	SOIL NAIL DETAILS
10.	DRAINAGE DETAILS
11.	ARCHITECTURAL DETAILS
12.	TRANSITION ANCHOR BLOCK DETAILS
13.	LOG OF TEST BORINGS 1 OF 2
14.	LOG OF TEST BORINGS 2 OF 2

STANDARD PLANS DATED MAY 2006

A10A	ACRONYMS AND ABBREVIATIONS (A-L)
A10B	ACRONYMS AND ABBREVIATIONS (M-Z)
RSP A76A	CONCRETE BARRIER TYPE 60
RSP A77J3	METAL BEAM GUARD RAILING CONNECTIONS TO ABUTMENTS AND WALLS
T3	TEMPORARY RAILING (TYPE K)
NSP T3A	TEMPORARY RAILING (TYPE K)

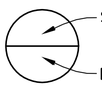

GENERAL NOTES

DESIGN:

Bridge Design Specification, April 2000 (LFD)
(1996 AASHTO with interims and Revisions by Caltrans)

SOIL PARAMETERS:

$\phi = 35°$
$\gamma = 135$ pcf

REINFORCED CONCRETE & SHOTCRETE:

$f'c = 3.6$ ksi
$fy = 60$ ksi
$n = 8$

STRUCTURAL STEEL:

Plates and shapes shall conform to ASTM Designation A709 Grade (36 ksi)

SOIL NAILS:

Soil nails shall conform to ASTM Designation A615, Grade 60, fy = 60 ksi

Design pullout resistance, $Q_d = 3600$ lb/ft

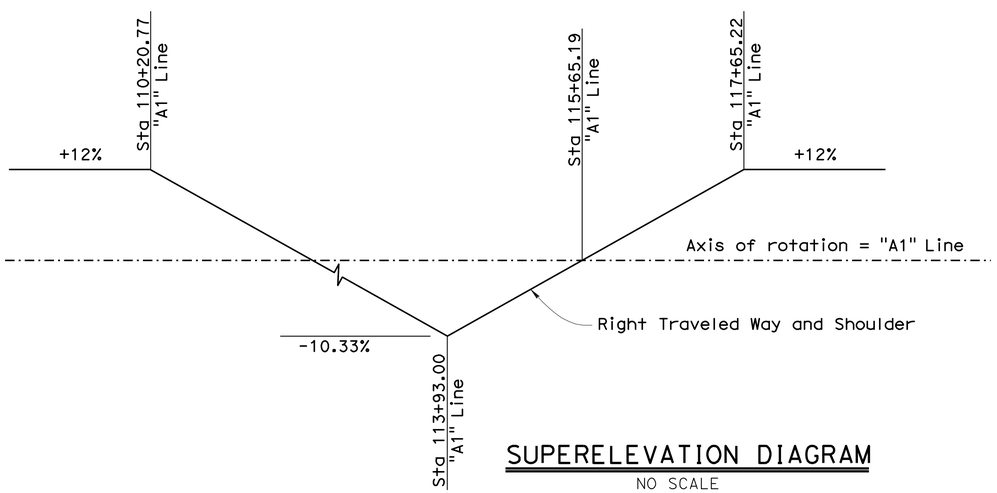

SUPERELEVATION DIAGRAM

NO SCALE

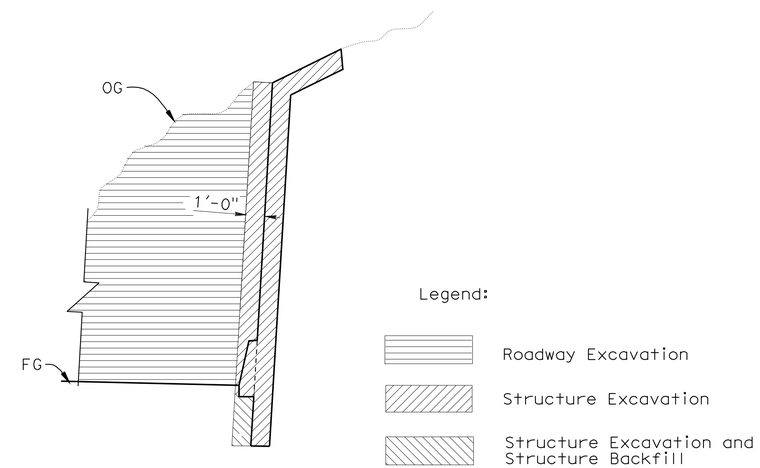

EARTHWORK PAYMENT

NO SCALE

	BY	CHECKED
DESIGN	Keith Stillmunkes	Mario Guadamuz
DETAILS	Bruno Jenko	Mario Guadamuz
QUANTITIES	Sameh Hegazi	Tuong Ha

STATE OF CALIFORNIA
DEPARTMENT OF TRANSPORTATION

DIVISION OF ENGINEERING SERVICES
STRUCTURE DESIGN
DESIGN BRANCH 7

BRIDGE NO. 05E0010
POST MILE 0.6

ENCHILADA CURVE IMPROVEMENT
RETAINING WALL NO. 2
INDEX TO PLANS

STRUCTURES DESIGN DETAIL SHEET (ENGLISH) (REV. 09-01-10)

ORIGINAL SCALE IN INCHES FOR REDUCED PLANS 0 1 2 3

UNIT: 3592
PROJECT NUMBER & PHASE: 0200000211-1
CONTRACT NO.: 02-2E3500

DISREGARD PRINTS BEARING EARLIER REVISION DATES

REVISION DATES: 1-22-12 5-28-12 2-12-13

SHEET 2 OF 14

FILE => 05-rtw2-a-itp.dgn

USERNAME => s121614 DATE PLOTTED => 20-MAR-2013 TIME PLOTTED => 06:00

DIST	COUNTY	ROUTE	POST MILES TOTAL PROJECT	SHEET No.	TOTAL SHEETS
02	Tri	299	0.4/0.9	111	136

REGISTERED CIVIL ENGINEER 2-23-13 DATE

2-25-13
PLANS APPROVAL DATE

REGISTERED PROFESSIONAL ENGINEER Kelly Holden No. 42268 Exp. 3/31/14 CIVIL STATE OF CALIFORNIA

The State of California or its officers or agents shall not be responsible for the accuracy or completeness of electronic copies of this plan sheet.

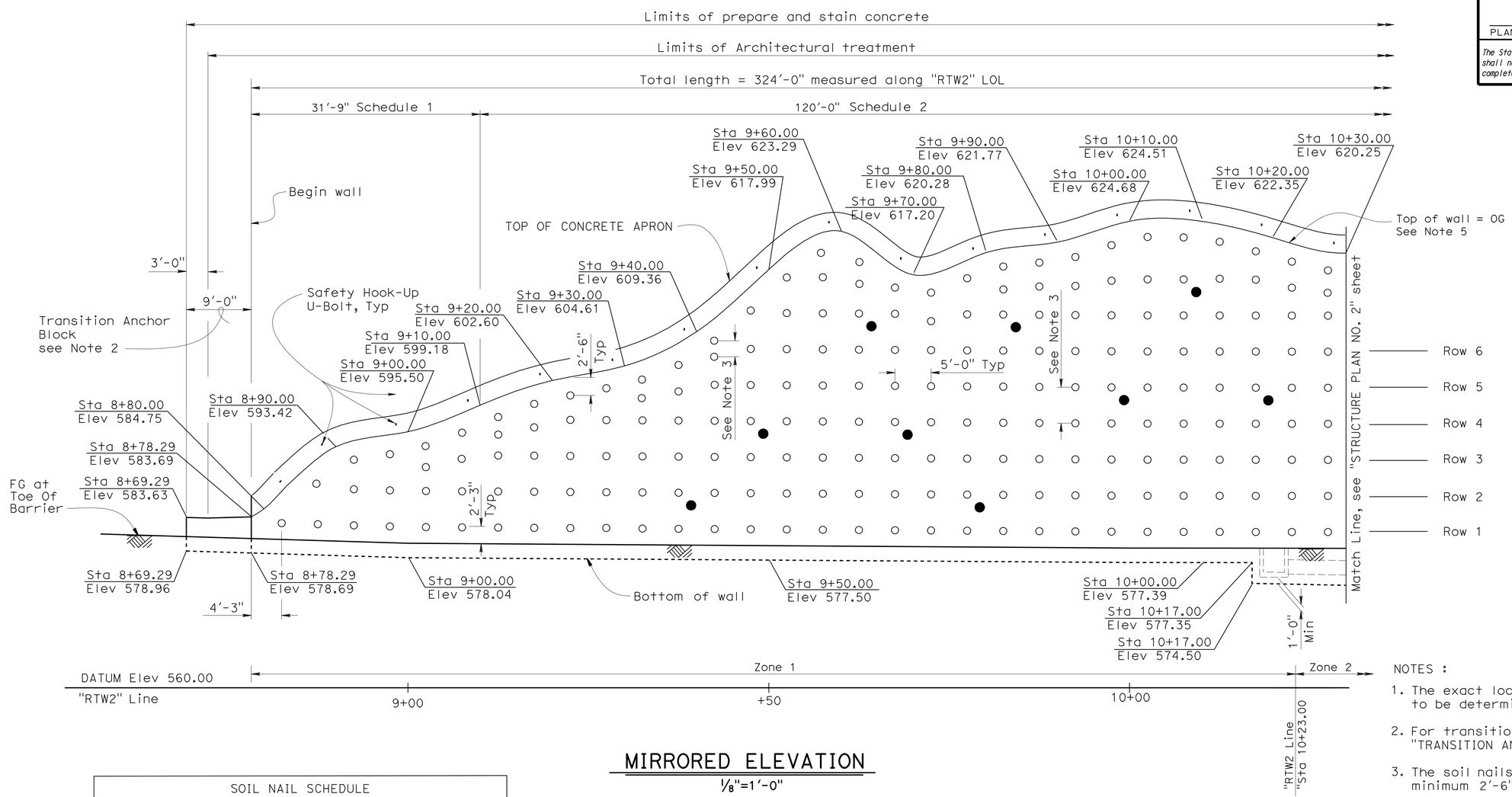

MIRRORED ELEVATION

1/8"=1'-0"

SOIL NAIL SCHEDULE	
Location	Soil Nail Embedment Length, Le
Schedule 1	All rows : L_e = 15.0'
Schedule 2	Rows 1, 2 & 3 : L_e = 20.0' Rows 4, 5 & 6 : L_e = 30.0' All others : L_e = 40.0'
Schedule 3	Rows 1 & 2 : L_e = 15.0' All others : L_e = 20.0'

NOTES :

1. The exact location of Proof Test soil nails to be determined by the Engineer.
2. For transition Anchor Block details, see "TRANSITION ANCHOR BLOCK DETAILS" sheet.
3. The soil nails shall be spaced vertically at minimum 2'-6" to maximum 5'-0".
4. Concrete barrier not shown.
5. Top of wall spot elevations are approximate and shall be verified in the field. Top of wall profile shall be a parabolic curve between given elevations.

LEGEND :

o = Production Nails
● = Proof Test Nails

ENCHILADA CURVE IMPROVEMENT

RETAINING WALL NO. 2

STRUCTURE PLAN NO. 1

	BY	CHECKED
DESIGN	Keith Stillmunkes	Mario Guadamuz
DETAILS	Bruno Jenko	Mario Guadamuz
QUANTITIES	Sameh Hegazi	Tuong Ha

STATE OF CALIFORNIA
DEPARTMENT OF TRANSPORTATION

DIVISION OF ENGINEERING SERVICES
STRUCTURE DESIGN
DESIGN BRANCH 7

BRIDGE NO. 05E0010
POST MILE 0.6

STRUCTURES DESIGN DETAIL SHEET (ENGLISH) (REV. 09-01-10)

ORIGINAL SCALE IN INCHES FOR REDUCED PLANS 0 1 2 3

UNIT: 3592
PROJECT NUMBER & PHASE: 0200000211-1
CONTRACT NO.: 02-2E3500

DISREGARD PRINTS BEARING EARLIER REVISION DATES

REVISION DATES 5-18-12 5-31-12 2-12-13

SHEET 3 OF 14

FILE => 05-rtw2-b-sp01.dgn

USERNAME => s121614 DATE PLOTTED => 01-MAR-2013 TIME PLOTTED => 08:19

DIST	COUNTY	ROUTE	POST MILES TOTAL PROJECT	SHEET No.	TOTAL SHEETS
02	Tri	299	0.4/0.9	112	136

REGISTERED CIVIL ENGINEER 2-23-13 DATE

2-25-13
PLANS APPROVAL DATE

REGISTERED PROFESSIONAL ENGINEER Kelly Holden No. 42268 Exp. 3/31/14 CIVIL STATE OF CALIFORNIA

The State of California or its officers or agents shall not be responsible for the accuracy or completeness of electronic copies of this plan sheet.

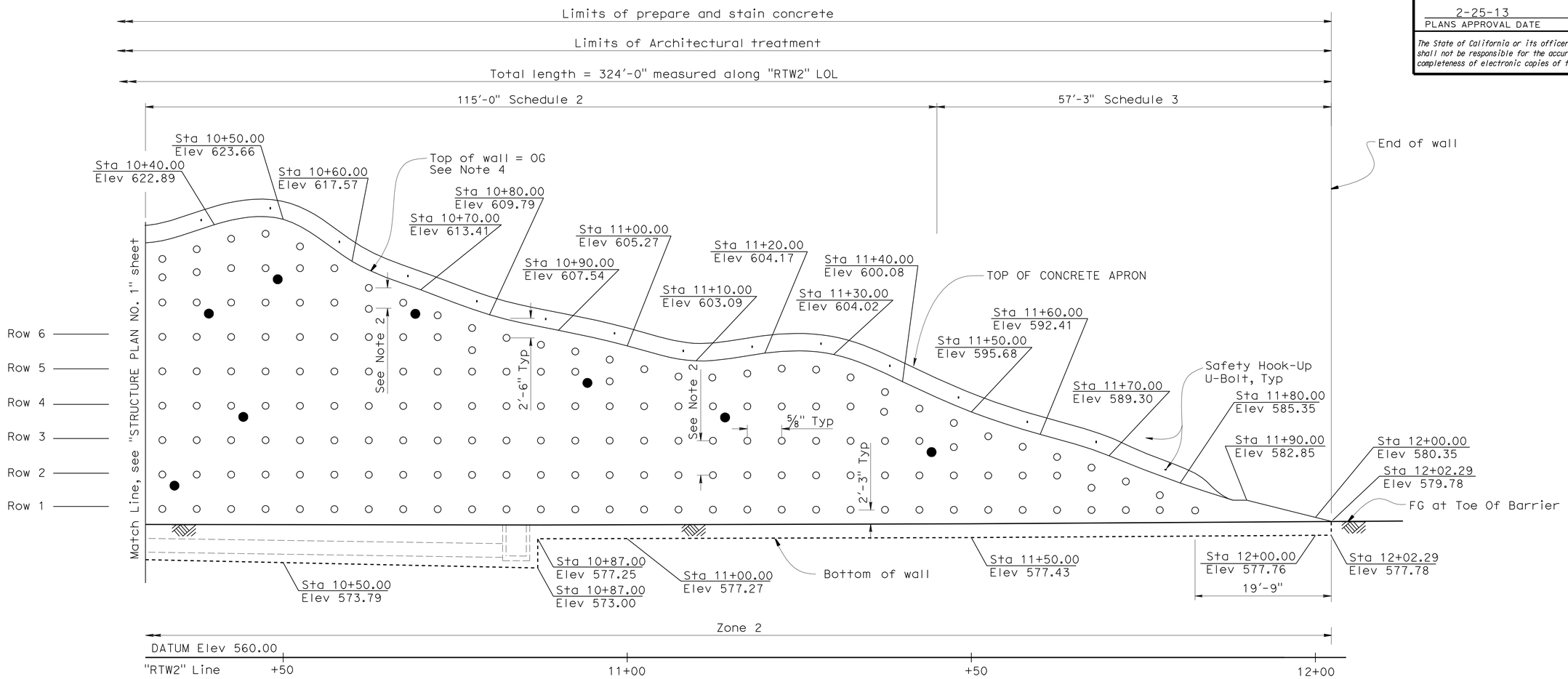

MIRRORED ELEVATION

1/8"=1'-0"

SOIL NAIL SCHEDULE	
Location	Soil Nail Embedment Length, Le
Schedule 1	All rows : L_e = 15.0'
Schedule 2	Rows 1, 2 & 3 : L_e = 20.0' Rows 4, 5 & 6 : L_e = 30.0' All others : L_e = 40.0'
Schedule 3	Rows 1 & 2 : L_e = 15.0' All others : L_e = 20.0'

LEGEND :

○ = Production Nails
● = Proof Test Nails

NOTES :

1. The exact location of Proof Test soil nails to be determined by the Engineer.
2. The soil nails shall be spaced vertically at minimum 2'-6" to maximum 5'-0".
3. Concrete barrier not shown.
4. Top of wall spot elevations are approximate and shall be verified in the field. Top of wall profile shall be a parabolic curve between given elevations.

ENCHILADA CURVE IMPROVEMENT

RETAINING WALL NO. 2

STRUCTURE PLAN NO. 2

	BY	CHECKED
DESIGN	Keith Stillmunkes	Mario Guadamuz
DETAILS	Bruno Jenko	Mario Guadamuz
QUANTITIES	Sameh Hegazi	Tuong Ha

STATE OF CALIFORNIA
DEPARTMENT OF TRANSPORTATION

DIVISION OF ENGINEERING SERVICES
STRUCTURE DESIGN
DESIGN BRANCH 7

BRIDGE NO. 05E0010
POST MILE 0.6

STRUCTURES DESIGN DETAIL SHEET (ENGLISH) (REV. 09-01-10)

ORIGINAL SCALE IN INCHES FOR REDUCED PLANS 0 1 2 3

UNIT: 3592
PROJECT NUMBER & PHASE: 0200000211-1
CONTRACT NO.: 02-2E3500

DISREGARD PRINTS BEARING EARLIER REVISION DATES

REVISION DATES: 5-18-12 | 2-23-13 | 2-12-13

SHEET 4 OF 14

FILE => 05-rtw2-b-sp02.dgn

USERNAME => s127614 DATE PLOTTED => 01-MAR-2013 TIME PLOTTED => 08:19

DIST	COUNTY	ROUTE	POST MILES TOTAL PROJECT	SHEET No.	TOTAL SHEETS
02	Tri	299	0.4/0.9	113	136

REGISTERED CIVIL ENGINEER — DATE 2-23-13

2-25-13
PLANS APPROVAL DATE

REGISTERED PROFESSIONAL ENGINEER — Kelly Holden No. 42268 Exp. 3/31/14 CIVIL — STATE OF CALIFORNIA

The State of California or its officers or agents shall not be responsible for the accuracy or completeness of electronic copies of this plan sheet.

CURVE DATA

No.	R	Δ	T	L
Ⓐ	425.00	10°29′04″	38.99	77.77
Ⓑ	425.00	91°27′46″	435.99	678.44
Ⓒ	403.00	10°29′04″	36.98	73.74
Ⓓ	447.00	0°11′45″	0.76	1.53

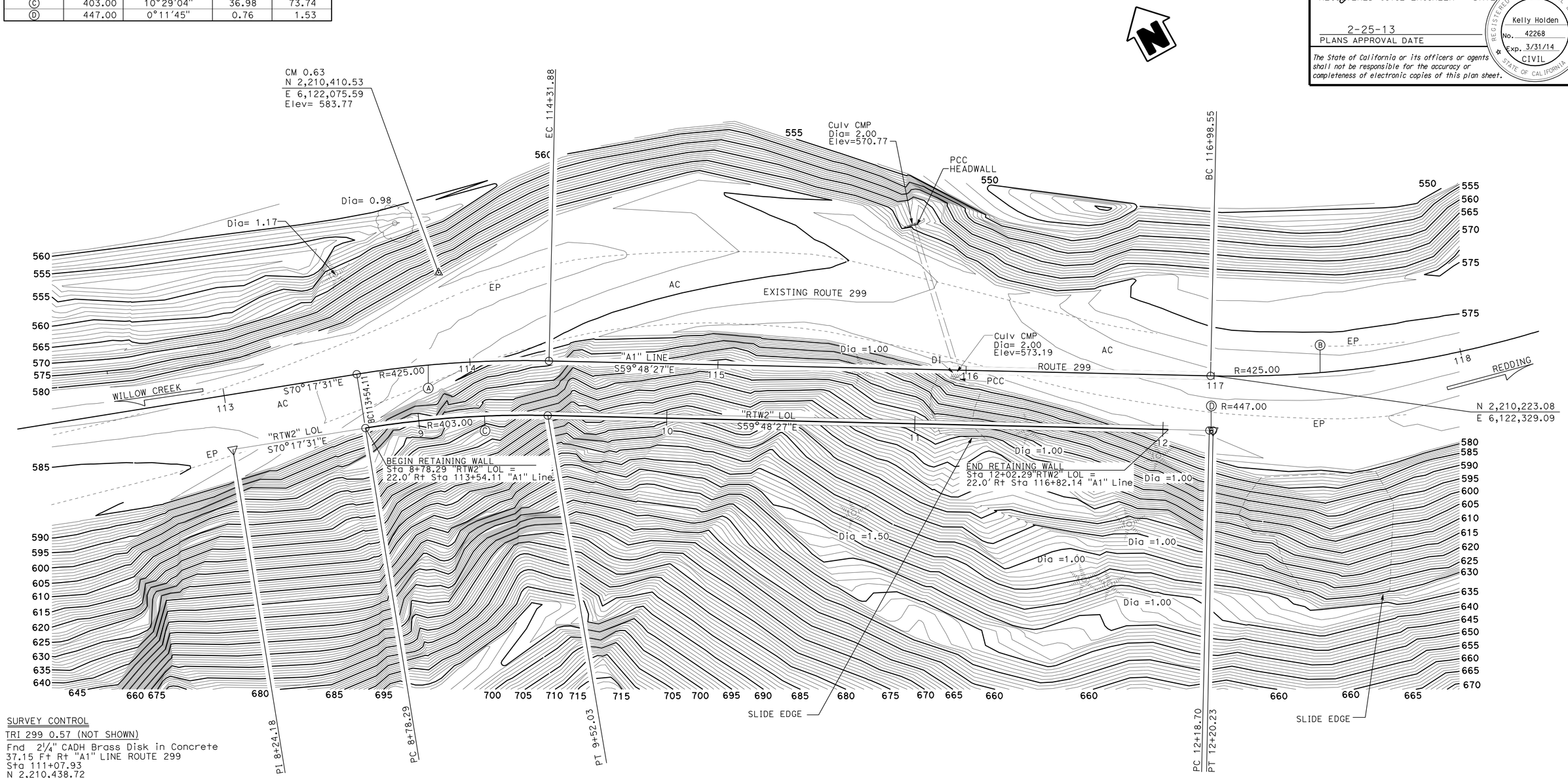

SURVEY CONTROL

TRI 299 0.57 (NOT SHOWN)
Fnd 2¼" CADH Brass Disk in Concrete
37.15 Ft Rt "A1" LINE ROUTE 299
Sta 111+07.93
N 2,210,438.72
E 6,121,782.65
Elev= 590.31

CM 0.63
Fnd CADT Alum Cap on ¾" Rebar
36.75 Ft Lt "A1" LINE ROUTE 299
Sta 113+90.15
N 2,210,410.53
E 6,122,075.59
Elev= 583.77

ENCHILADA CURVE IMPROVEMENT

RETAINING WALL NO. 2
FOUNDATION PLAN

PRELIMINARY INVESTIGATION SECTION

SCALE	VERT.DATUM NAVD 88	PHOTOGRAMMETRY AS OF: X			
1"=20′	HORZ.DATUM NAD83(2004.69)	SURVEYED	BY District	CHECKED	BY J. Pallares 07/2011
ALIGNMENT TIES Dist. Traverse Sheet		DRAFTED	BY Jin Zhou 07/2011	CHECKED	BY L. Lew 07/2011

DESIGN	BY Keith Stillmunkes	CHECKED Mario Guadamuz
DETAILS	BY Bruno Jenko	CHECKED Mario Guadamuz
QUANTITIES	BY Sameh Hegazi	CHECKED Tuong Ha

STATE OF CALIFORNIA
DEPARTMENT OF TRANSPORTATION

DIVISION OF ENGINEERING SERVICES
STRUCTURE DESIGN
DESIGN BRANCH 7

BRIDGE NO. 05E0010
POST MILE 0.6

STRUCTURES FOUNDATION PLAN SHEET (ENGLISH) (REV. 09-01-10)

ORIGINAL SCALE IN INCHES FOR REDUCED PLANS 0 1 2 3

UNIT: 3592
PROJECT NUMBER & PHASE: 0200000211-1
CONTRACT NO.: 02-2E3500

DISREGARD PRINTS BEARING EARLIER REVISION DATES

REVISION DATES 07/13/11 05/24/12 6/5/12

SHEET 5 OF 14

FILE => 05-rtw2-e-fp01.dgn

PROJECT NUMBER & PHASE:

DIST	COUNTY	ROUTE	POST MILES TOTAL PROJECT	SHEET No.	TOTAL SHEETS
02	Tri	299	0.4/0.9	114	136

REGISTERED CIVIL ENGINEER 2-23-13 DATE

2-25-13
PLANS APPROVAL DATE

REGISTERED PROFESSIONAL ENGINEER Kelly Holden No. 42268 Exp. 3/31/14 CIVIL STATE OF CALIFORNIA

The State of California or its officers or agents shall not be responsible for the accuracy or completeness of electronic copies of this plan sheet.

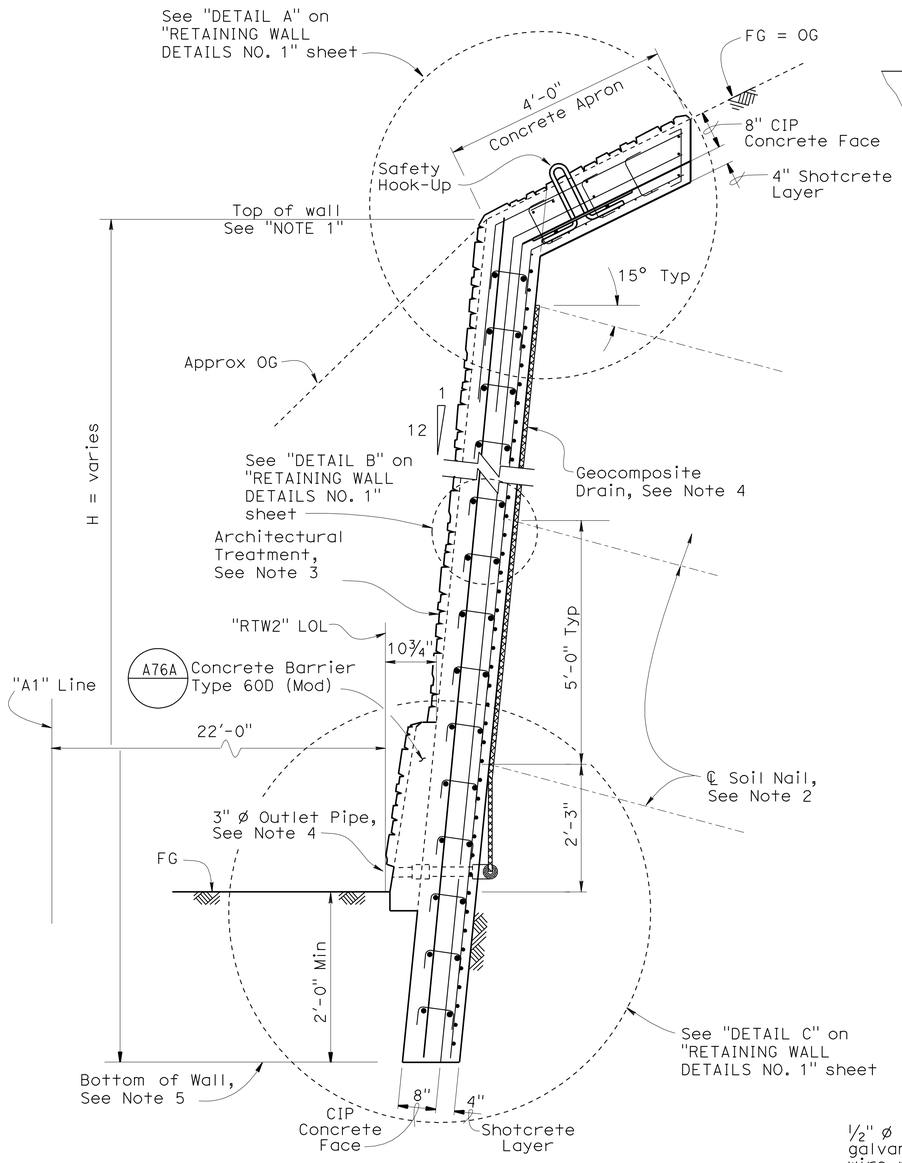

TYPICAL SECTION

¾" = 1'

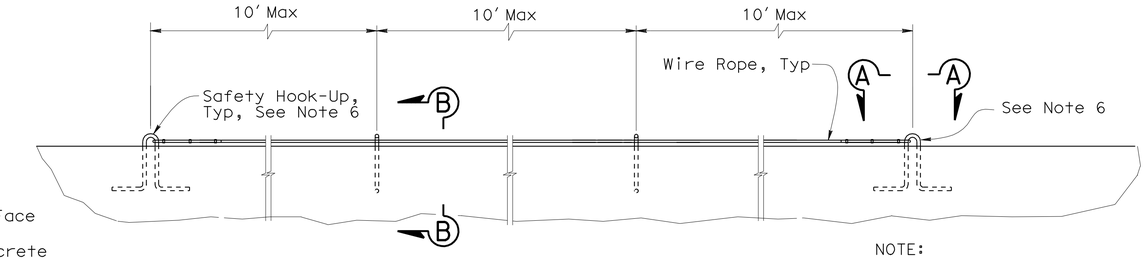

TYPICAL SAFETY HOOKUP ELEVATION

No Scale

NOTE:

Architectural Treatment not shown for clarity.

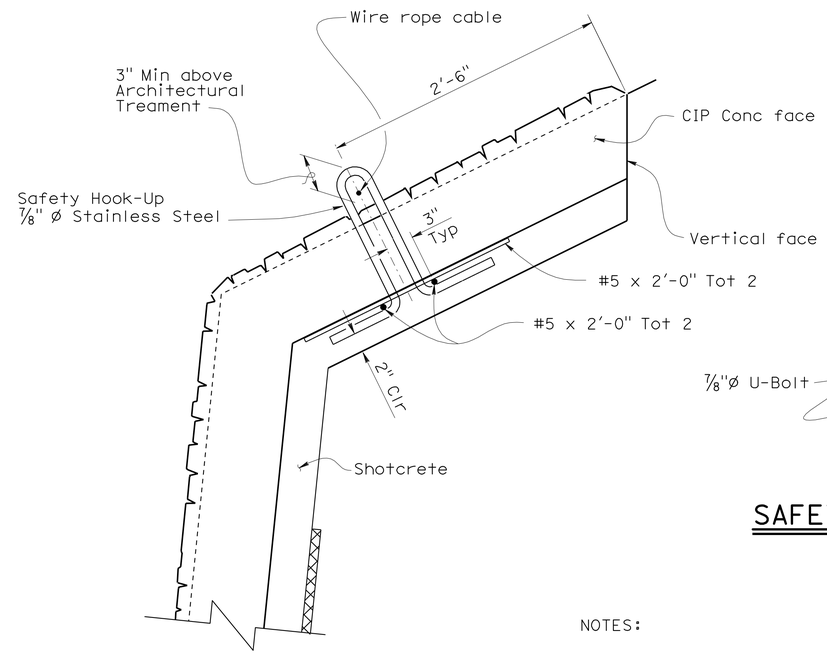

SECTION B-B

1½" = 1'

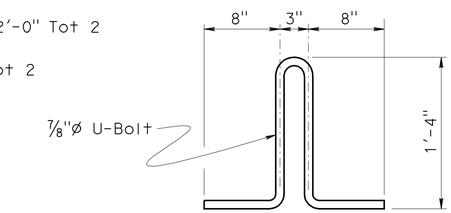

SAFETY HOOK-UP DETAILS

1½" = 1'

NOTES:

1. Top of the wall Elevations shall be verified in field.
2. For Soil Nail Assembly and Test Soil Nail, see "SOIL NAIL DETAILS" sheet.
3. For Architectural Treatment detail, see "ARCHITECTURAL DETAILS" sheets.
4. For Geocomposite Drain and outlet pipe details, see "DRAINAGE DETAILS" sheet
5. Bottom of wall to be placed against undisturbed material.
6. Terminate Safety Hook-Up system when wall height is less than 6'-0" above FG.
7. ½" ø galvanized u-bolt wire rope clips.
   Install and torque to manufacturer's guidelines.

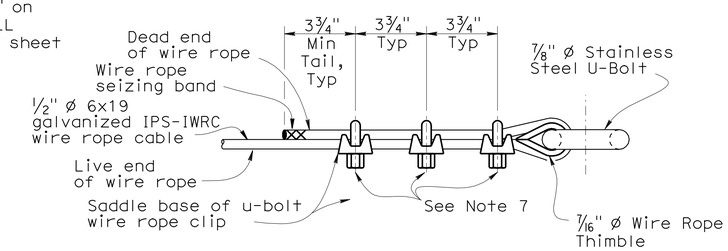

VIEW A-A

No Scale

ENCHILADA CURVE IMPROVEMENT

RETAINING WALL NO. 2

TYPICAL SECTION

DESIGN	BY Keith Stillmunkes	CHECKED Mario Guadamuz	
DETAILS	BY Bruno Jenko	CHECKED Mario Guadamuz	
QUANTITIES	BY Sameh Hegazi	CHECKED Tuong Ha	

STATE OF CALIFORNIA DEPARTMENT OF TRANSPORTATION

DIVISION OF ENGINEERING SERVICES STRUCTURE DESIGN DESIGN BRANCH 7

BRIDGE NO. 05E0010

POST MILE 0.6

STRUCTURES DESIGN DETAIL SHEET (ENGLISH) (REV. 09-01-10)

ORIGINAL SCALE IN INCHES FOR REDUCED PLANS 0 1 2 3

UNIT: 3592
PROJECT NUMBER & PHASE: 0200000211-1
CONTRACT NO.: 02-2E3500

DISREGARD PRINTS BEARING EARLIER REVISION DATES

REVISION DATES 1-26-12 4-11-12 8-08-12 2-14-13

SHEET 6 OF 14

FILE => 05-rtw2-k-ts.dgn

USERNAME => s127614 DATE PLOTTED => 01-MAR-2013 TIME PLOTTED => 08:19

DIST	COUNTY	ROUTE	POST MILES TOTAL PROJECT	SHEET No.	TOTAL SHEETS
02	Tri	299	0.4/0.9	115	136

REGISTERED CIVIL ENGINEER 2-23-13 DATE

2-25-13
PLANS APPROVAL DATE

REGISTERED PROFESSIONAL ENGINEER Kelly Holden No. 42268 Exp. 3/31/14 CIVIL STATE OF CALIFORNIA

The State of California or its officers or agents shall not be responsible for the accuracy or completeness of electronic copies of this plan sheet.

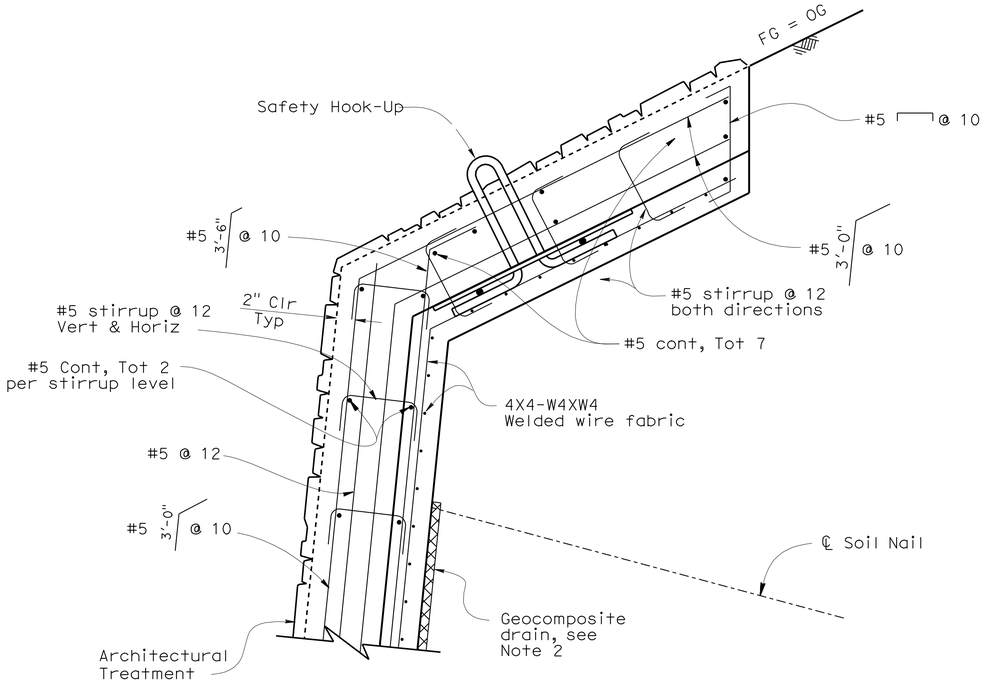

DETAIL A

1½" = 1'

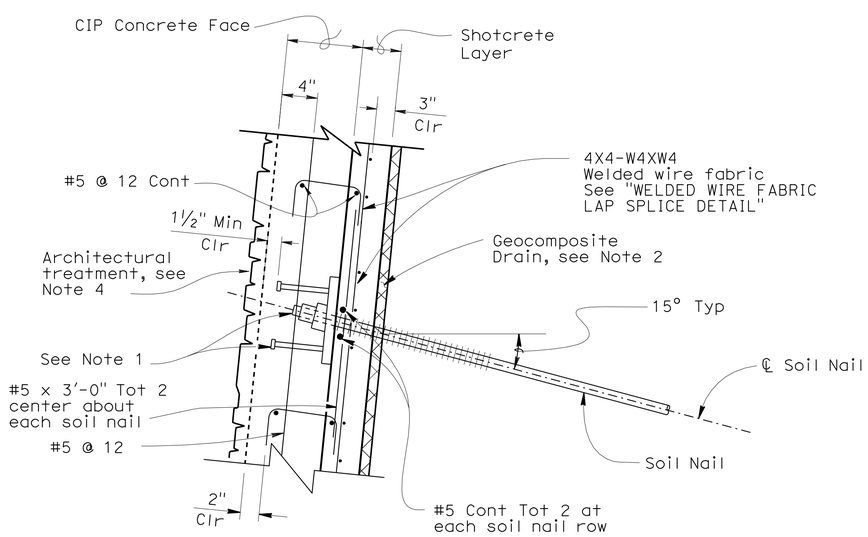

DETAIL B

1½" = 1'

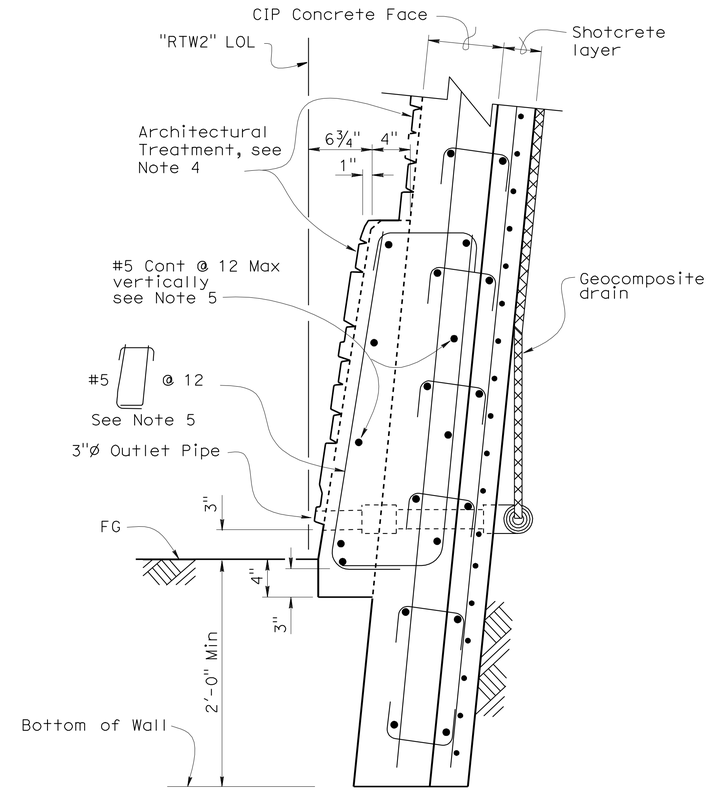

DETAIL C

1½" = 1'

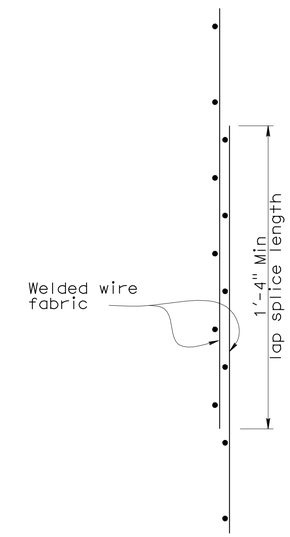

WELDED WIRE FABRIC LAP SPLICE DETAIL

3" = 1'

NOTES :

1. For Bearing Plate and Soil Nail details, not shown see "SOIL NAIL DETAILS" sheet.
2. For Geocomposite Drain details, see "DRAINAGE DETAILS" sheet.
3. For location of "DETAIL A", "DETAIL B" and "DETAIL C", see "TYPICAL SECTION" sheet.
4. For Architectural Treatment details see "ARCHITECTURAL DETAILS" sheets.
5. Reinforcement shall be epoxy coated.

	BY	CHECKED
DESIGN	Keith Stillmunkes	Mario Guadamuz
DETAILS	Bruno Jenko	Mario Guadamuz
QUANTITIES	Sameh Hegazi	Tuong Ha

STATE OF CALIFORNIA
DEPARTMENT OF TRANSPORTATION

DIVISION OF ENGINEERING SERVICES
STRUCTURE DESIGN
DESIGN BRANCH 7

BRIDGE NO. 05E0010
POST MILE 0.6

ENCHILADA CURVE IMPROVEMENT
RETAINING WALL NO. 2
RETAINING WALL DETAILS NO. 1

STRUCTURES DESIGN DETAIL SHEET (ENGLISH) (REV. 09-01-10)

ORIGINAL SCALE IN INCHES FOR REDUCED PLANS 0 1 2 3

UNIT: 3592
PROJECT NUMBER & PHASE: 0200000211-1
CONTRACT NO.: 02-2E3500

DISREGARD PRINTS BEARING EARLIER REVISION DATES

REVISION DATES: 1-27-12 5-24-12 8-08-12 2-23-13

SHEET 7 OF 14

FILE => 05-rtw2-1-dt01.dgn

USERNAME => s12161 4 DATE PLOTTED => 01-MAR-2013 TIME PLOTTED => 08:19

DIST	COUNTY	ROUTE	POST MILES TOTAL PROJECT	SHEET No.	TOTAL SHEETS
02	Tri	299	0.4/0.9	116	136

REGISTERED CIVIL ENGINEER 2-23-13 DATE

2-25-13
PLANS APPROVAL DATE

REGISTERED PROFESSIONAL ENGINEER Kelly Holden No. 42268 Exp. 3/31/14 CIVIL STATE OF CALIFORNIA

The State of California or its officers or agents shall not be responsible for the accuracy or completeness of electronic copies of this plan sheet.

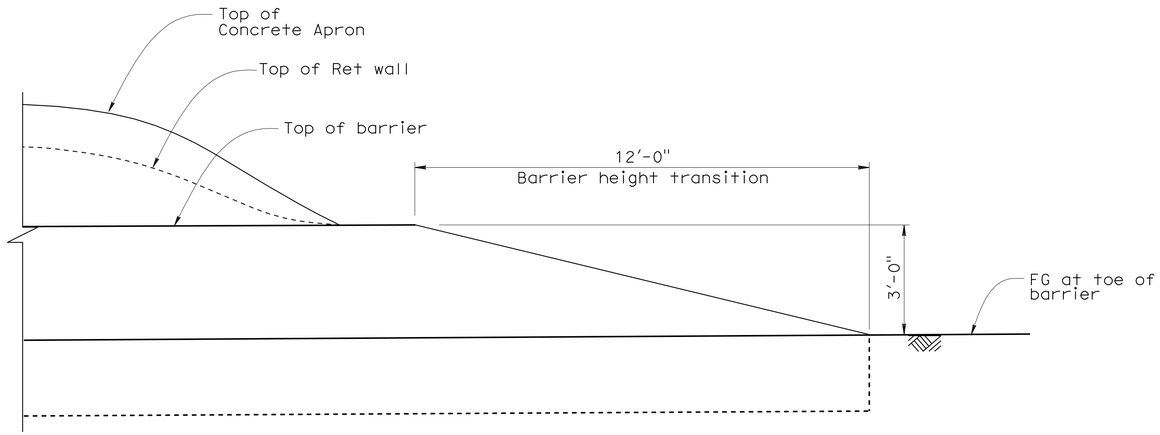

END OF WALL PART MIRROR ELEVATION

½" = 1'-0"

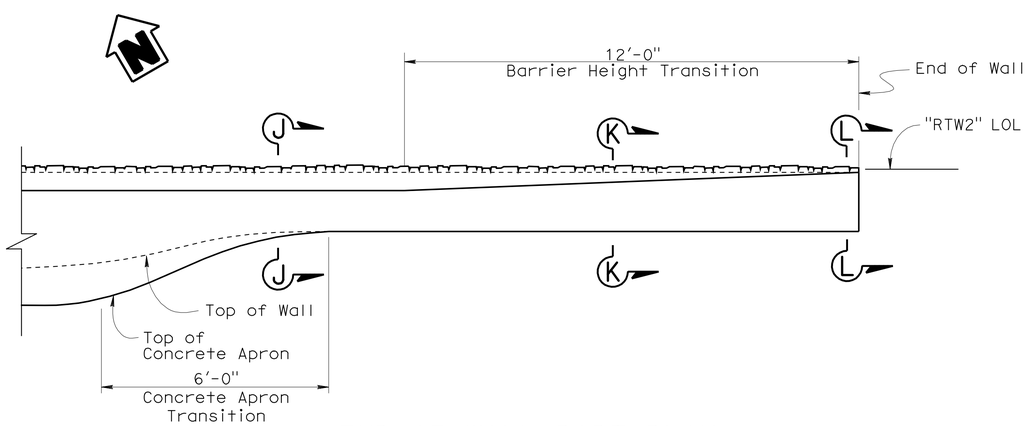

END OF WALL PART PLAN

½" = 1'-0"

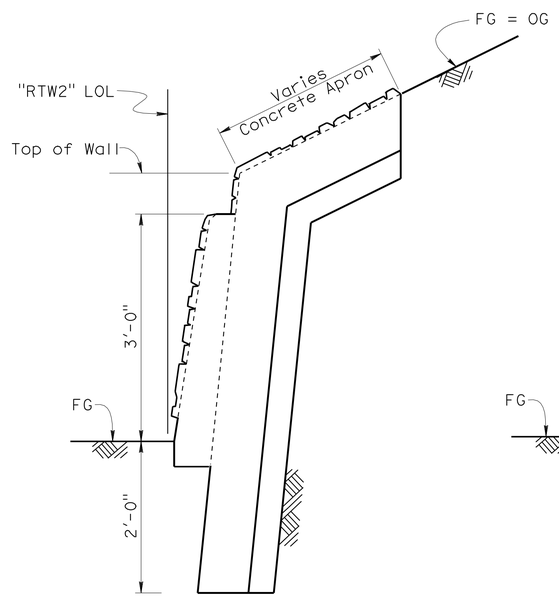

SECTION J-J

1" = 1'-0"

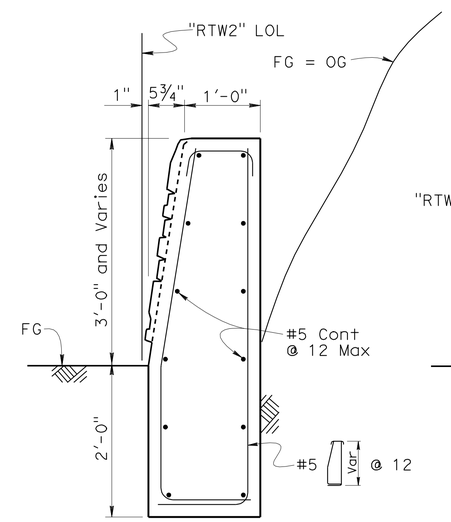

SECTION K-K

1" = 1'-0"

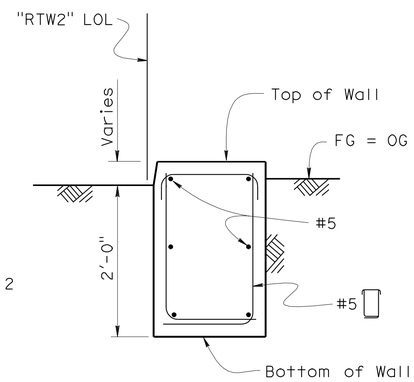

SECTION L-L

1" = 1'-0"

NOTE:
For details not shown, see "DETAIL A" and "DETAIL C" on " RETAINING WALL DETAILS NO. 1" sheet

DESIGN	BY Keith Stillmunkes	CHECKED Mario Guadamuz
DETAILS	BY Gerald Dickerson	CHECKED Mario Guadamuz
QUANTITIES	BY Sameh Hegazi	CHECKED Tuong Ha

STATE OF CALIFORNIA
DEPARTMENT OF TRANSPORTATION

DIVISION OF ENGINEERING SERVICES
STRUCTURE DESIGN
DESIGN BRANCH 7

BRIDGE NO. 05E0010
POST MILE 0.6

ENCHILADA CURVE IMPROVEMENT
RETAINING WALL NO. 2
RETAINING WALL DETAILS NO. 2

STRUCTURES DESIGN DETAIL SHEET (ENGLISH) (REV. 09-01-10)

ORIGINAL SCALE IN INCHES FOR REDUCED PLANS 0 1 2 3

UNIT: 3592
PROJECT NUMBER & PHASE: 0200000211-1
CONTRACT NO.: 02-2E3500

DISREGARD PRINTS BEARING EARLIER REVISION DATES

REVISION DATES: ~~8-08-12~~ 2-13-13 2-23-13

SHEET 8 OF 14

FILE => 05-rtw2-l-dt02.dgn

USERNAME => 6121614 DATE PLOTTED => 01-MAR-2013 TIME PLOTTED => 08:19

DIST	COUNTY	ROUTE	POST MILES TOTAL PROJECT	SHEET No.	TOTAL SHEETS
02	Tri	299	0.4/0.9	117	136

REGISTERED CIVIL ENGINEER 2-23-13 DATE

2-25-13
PLANS APPROVAL DATE

REGISTERED PROFESSIONAL ENGINEER Kelly Holden No. 42268 Exp. 3/31/14 CIVIL STATE OF CALIFORNIA

The State of California or its officers or agents shall not be responsible for the accuracy or completeness of electronic copies of this plan sheet.

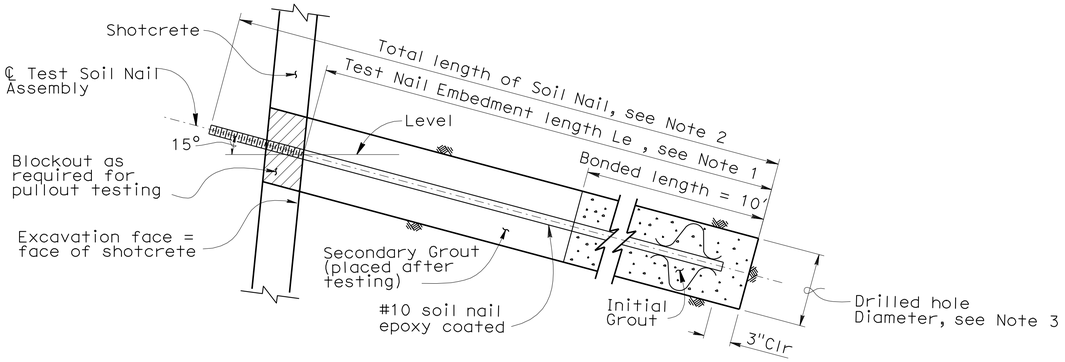

PROOF TEST NAIL DETAIL

No Scale

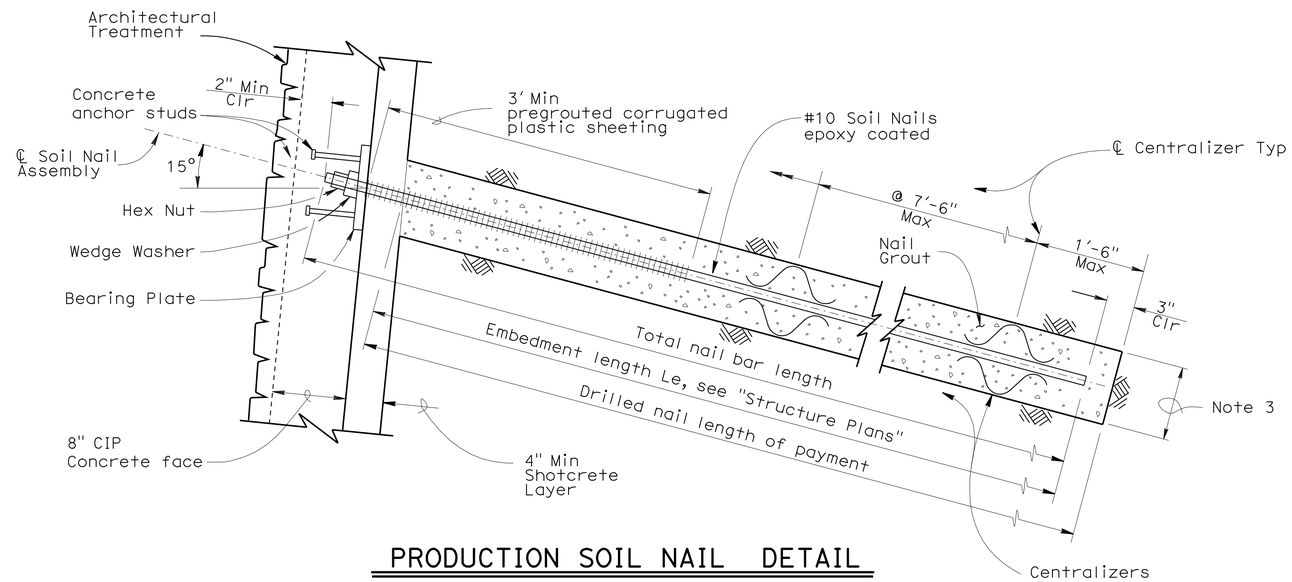

PRODUCTION SOIL NAIL DETAIL

No Scale

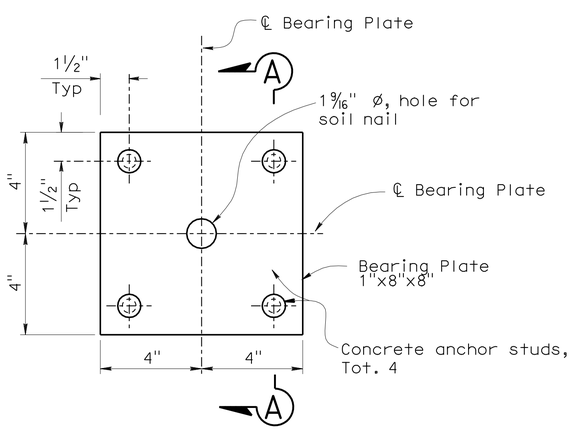

BEARING PLATE DETAIL

3"=1'

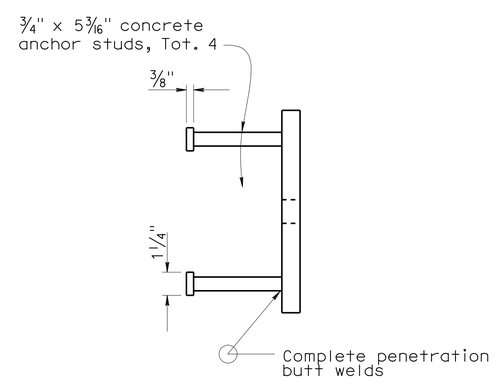

SECTION A-A

3" = 1'

NOTES:

1. Embedment length of Proof Test nails equals 2/3 of embedment length of adjacent production soil nail assemblies, but not less than 12 ft.
2. Total length of Proof Test nail assembly equals embedment length plus length required for jacking equipment.
3. Contractor to determine drilled hole diameter.

	BY	CHECKED
DESIGN	Keith Stillmunkes	Mario Guadamuz
DETAILS	Bruno Jenko	Mario Guadamuz
QUANTITIES	Sameh Hegazi	Tuong Ha

STATE OF CALIFORNIA
DEPARTMENT OF TRANSPORTATION

DIVISION OF ENGINEERING SERVICES
STRUCTURE DESIGN
DESIGN BRANCH 7

BRIDGE NO. 05E0010
POST MILE 0.6

ENCHILADA CURVE IMPROVEMENT
RETAINING WALL NO. 2
SOIL NAIL DETAILS

STRUCTURES DESIGN DETAIL SHEET (ENGLISH) (REV. 09-01-10)

ORIGINAL SCALE IN INCHES FOR REDUCED PLANS 0 1 2 3

UNIT: 3592
PROJECT NUMBER & PHASE: 0200000211-1
CONTRACT NO.: 02-2E3500

DISREGARD PRINTS BEARING EARLIER REVISION DATES

REVISION DATES 1-18-12 8-08-12 2-13-13

SHEET 9 OF 14

FILE => 05-rtw2-m-sndt.dgn

USERNAME => s121614 DATE PLOTTED => 01-MAR-2013 TIME PLOTTED => 08:19

DIST	COUNTY	ROUTE	POST MILES TOTAL PROJECT	SHEET No.	TOTAL SHEETS
02	Tri	299	0.4/0.9	118	136

REGISTERED CIVIL ENGINEER 2-23-13 DATE

2-25-13
PLANS APPROVAL DATE

REGISTERED PROFESSIONAL ENGINEER Kelly Holden No. 42268 Exp. 3/31/14 CIVIL STATE OF CALIFORNIA

The State of California or its officers or agents shall not be responsible for the accuracy or completeness of electronic copies of this plan sheet.

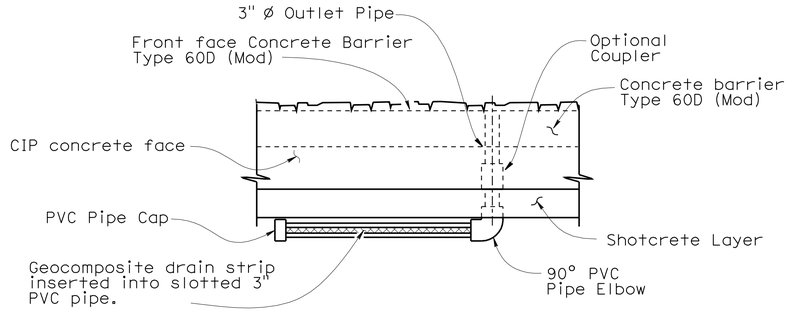

SECTION E-E

No Scale

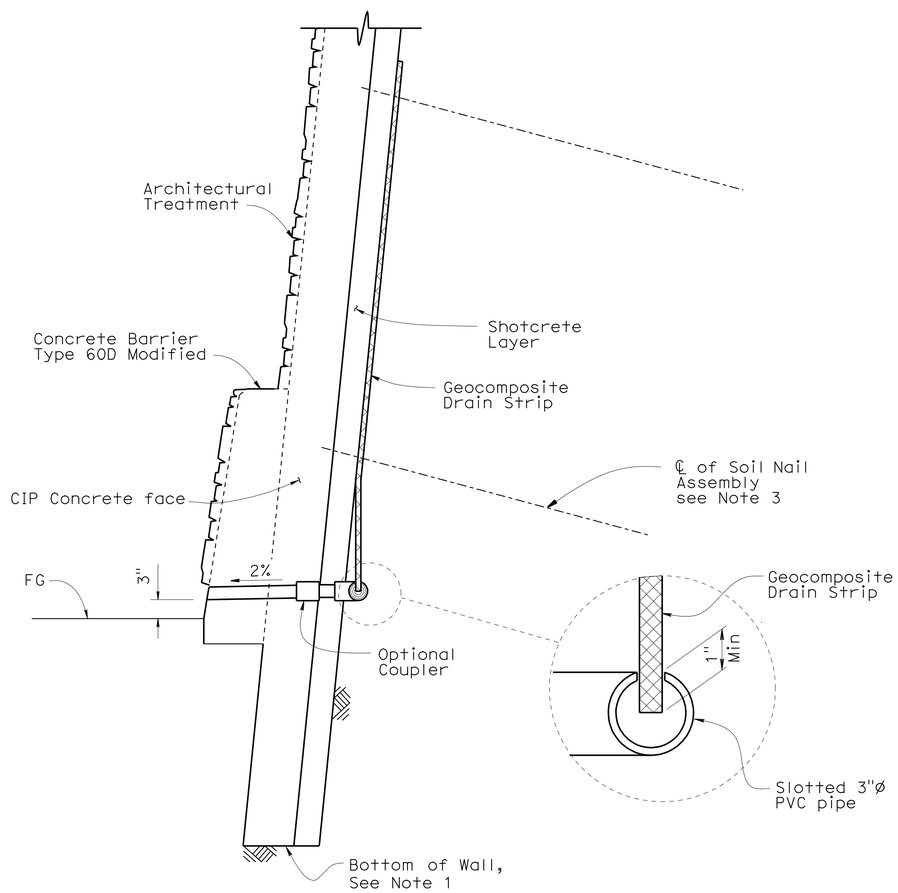

SECTION D-D

No Scale

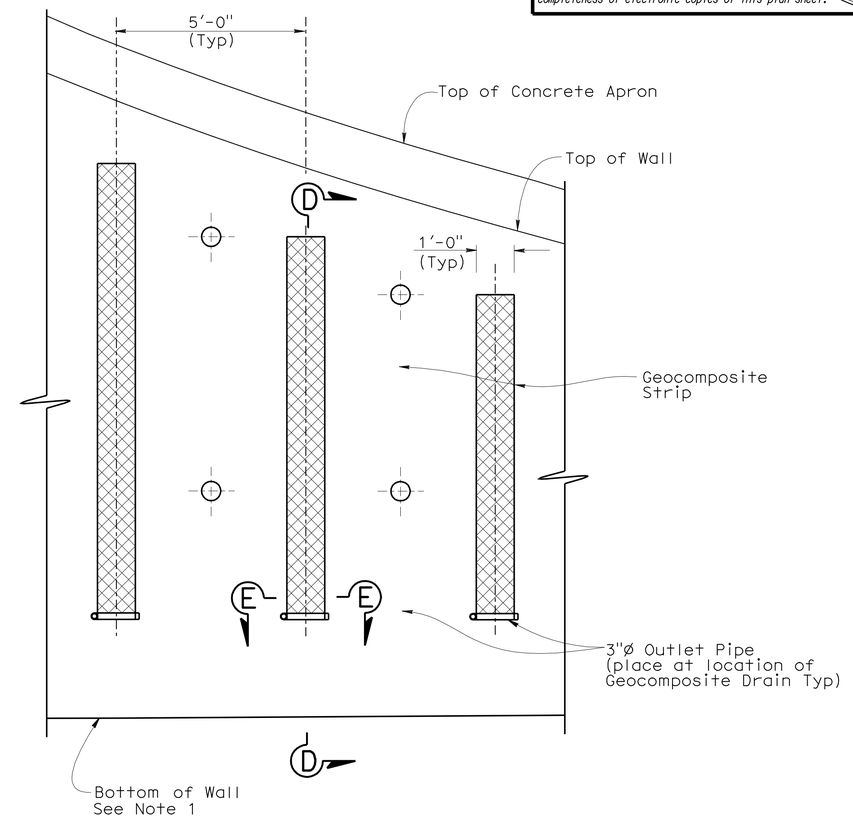

WALL PART ELEVATION

No Scale

NOTES:

1. Bottom of wall to be placed against undisturbed material.
2. Geocomposite Strips shall be centered vertically between Soil Nail Assemblies and extended to height of highest adjacent soil nail.
3. ⊖ Indicates soil nail locations. For Soil Nail Layout see "STRUCTURE PLAN NO. 1" and "STRUCTURE PLAN NO. 2" sheets.

ENCHILADA CURVE IMPROVEMENT

RETAINING WALL NO. 2

DRAINAGE DETAILS

	BY	CHECKED
DESIGN	Keith Stillmunkes	Mario Guadamuz
DETAILS	Bruno Jenko	Mario Guadamuz
QUANTITIES	Sameh Hegazi	Tuong Ha

STATE OF CALIFORNIA
DEPARTMENT OF TRANSPORTATION

DIVISION OF ENGINEERING SERVICES
STRUCTURE DESIGN
DESIGN BRANCH 7

BRIDGE NO. 05E0010
POST MILE 0.6

STRUCTURES DESIGN DETAIL SHEET (ENGLISH) (REV. 09-01-10)

ORIGINAL SCALE IN INCHES FOR REDUCED PLANS 0 1 2 3

UNIT: 3592
PROJECT NUMBER & PHASE: 0200000211-1
CONTRACT NO.: 02-2E3500

DISREGARD PRINTS BEARING EARLIER REVISION DATES

REVISION DATES 1-30-12 8-08-12 2-14-13

SHEET 10 OF 14

FILE => 05-rtw2-r-ddt.dgn

USERNAME => s121614 DATE PLOTTED => 01-MAR-2013 TIME PLOTTED => 08:19

DIST	COUNTY	ROUTE	POST MILES TOTAL PROJECT	SHEET No.	TOTAL SHEETS
02	Tri	299	0.4/0.9	119	136

Kelly Ann Holden 2-23-13
REGISTERED CIVIL ENGINEER DATE

2-25-13
PLANS APPROVAL DATE

REGISTERED PROFESSIONAL ENGINEER
Kelly Ann Holden
No. 42268
Exp. 3/31/14
CIVIL
STATE OF CALIFORNIA

The State of California or its officers or agents shall not be responsible for the accuracy or completeness of electronic copies of this plan sheet.

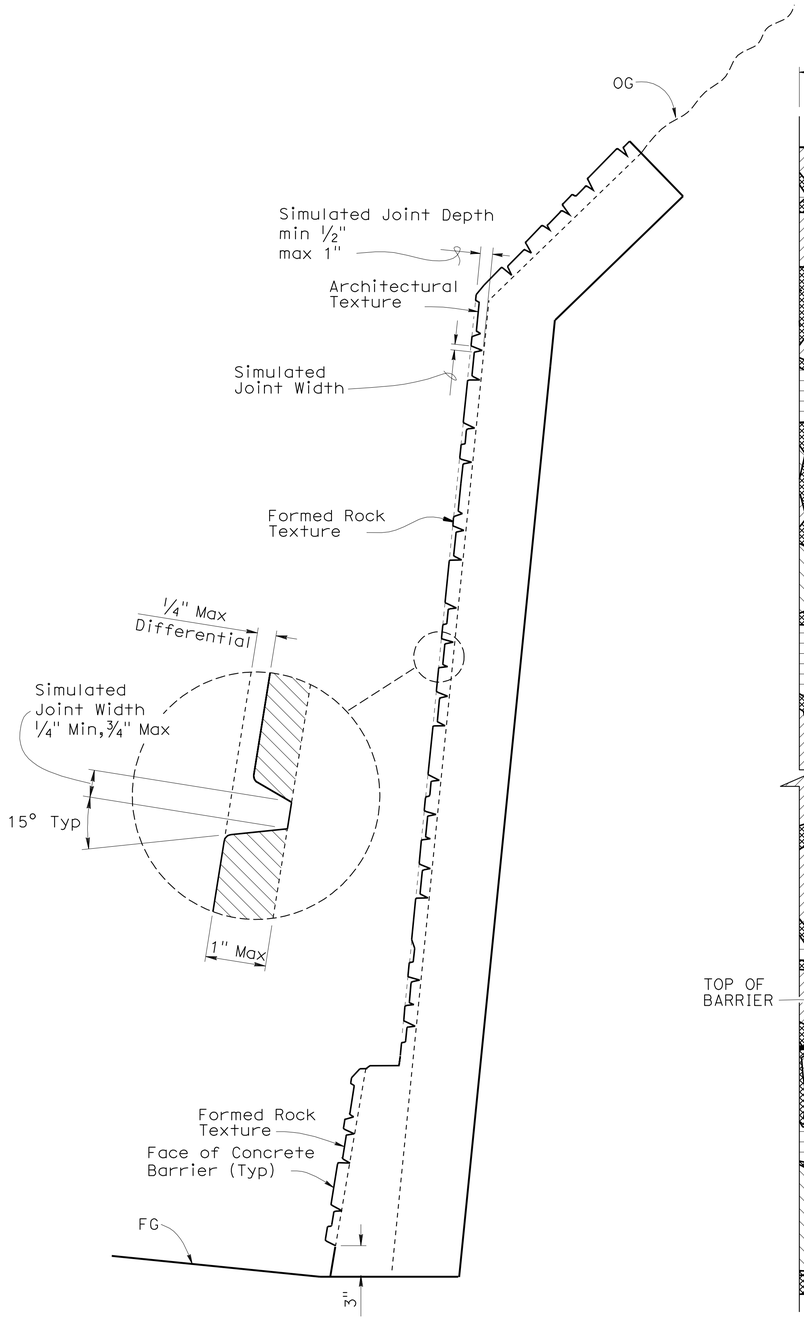

TYPICAL CROSS SECTION

No Scale

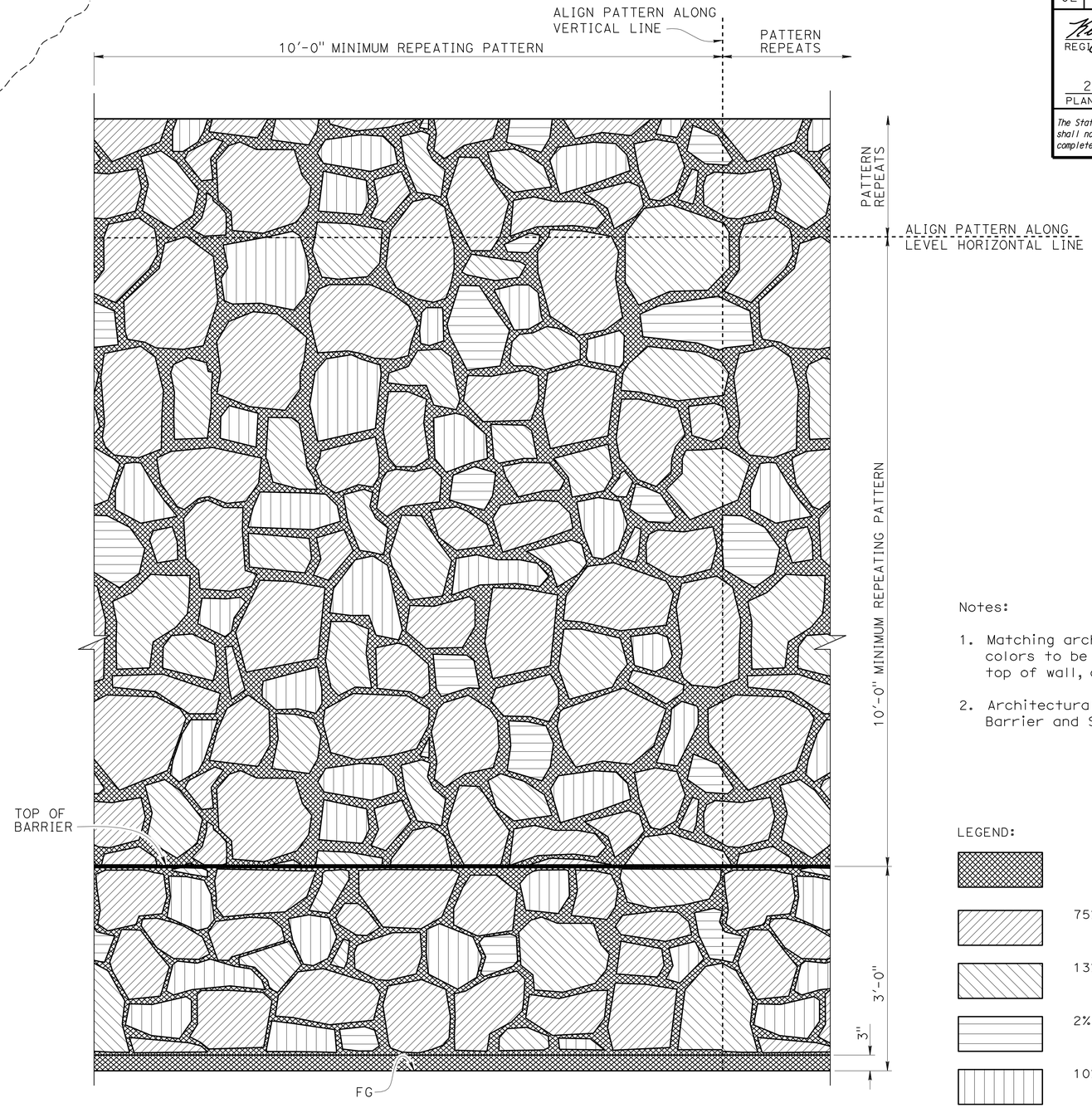

REPEATING PATTERN AND COLOR KEY

1"=1'-0"

Notes:

1. Matching architectural treatment texture and colors to be applied to roadside face of wall, top of wall, and face of barrier.
2. Architectural treatment and colors for Concrete Barrier and Soil Nail Wall to match.

LEGEND:

- COLORED CONCRETE (ENTIRE BARRIER, TRANSITION ANCHOR BLOCK AND WALL) FEDERAL STANDARD 595C #36118 (DARK GREY)
- 75% CONCRETE STAIN FEDERAL STANDARD 595C #26008 (VERY DARK GRAY)
- 13% CONCRETE STAIN FEDERAL STANDARD 595C #26231 (MEDIUM GRAY)
- 2% CONCRETE STAIN FEDERAL STANDARD 595C #36650 (OFF WHITE)
- 10% CONCRETE STAIN FEDERAL STANDARD 595C #33717 (TAN)

ENCHILADA CURVE IMPROVEMENT

RETAINING WALL NO. 2

ARCHITECTURAL DETAILS

	BY	CHECKED
DESIGN	Keith Stillmunkes	Mario Guadamuz
DETAILS	Bruno Jenko	Mario Guadamuz
QUANTITIES	Sameh Hegazi	Tuong Ha

STATE OF CALIFORNIA
DEPARTMENT OF TRANSPORTATION

DIVISION OF ENGINEERING SERVICES
STRUCTURE DESIGN
DESIGN BRANCH 7

BRIDGE NO. 05E0010
POST MILE 0.6

STRUCTURES DESIGN DETAIL SHEET (ENGLISH) (REV. 09-01-10)

ORIGINAL SCALE IN INCHES FOR REDUCED PLANS 0 1 2 3

UNIT: 3592
PROJECT NUMBER & PHASE: 0200000211-1
CONTRACT NO.: 02-2E3500

DISREGARD PRINTS BEARING EARLIER REVISION DATES

REVISION DATES: 1-26-12 2-15-13 2-23-13

SHEET 11 OF 14

FILE => 05-rtw2-u-archdt.dgn

USERNAME => s121614 DATE PLOTTED => 01-MAR-2013 TIME PLOTTED => 08:19

DIST	COUNTY	ROUTE	POST MILES TOTAL PROJECT	SHEET No.	TOTAL SHEETS
02	Tri	299	0.4/0.9	120	136

REGISTERED CIVIL ENGINEER 2-23-13 DATE

2-25-13
PLANS APPROVAL DATE

REGISTERED PROFESSIONAL ENGINEER Kelly Ann Holden No. 42268 Exp. 3/31/14 CIVIL STATE OF CALIFORNIA

The State of California or its officers or agents shall not be responsible for the accuracy or completeness of electronic copies of this plan sheet.

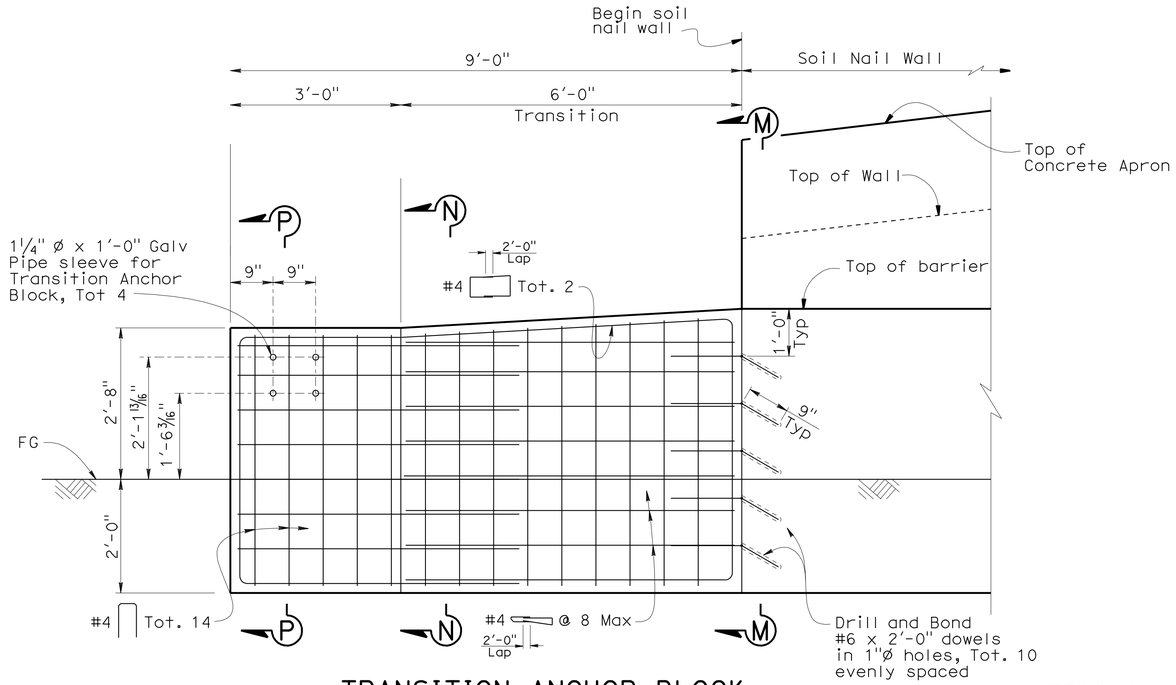

TRANSITION ANCHOR BLOCK PART MIRROR ELEVATION

RSP A77J3

¾" = 1'-0"

NOTES:

1. For Architectural texture, see "ARCHITECTURAL DETAILS" sheet.
2. Colored Concrete Federal Standard 595C #36118 (dark grey)

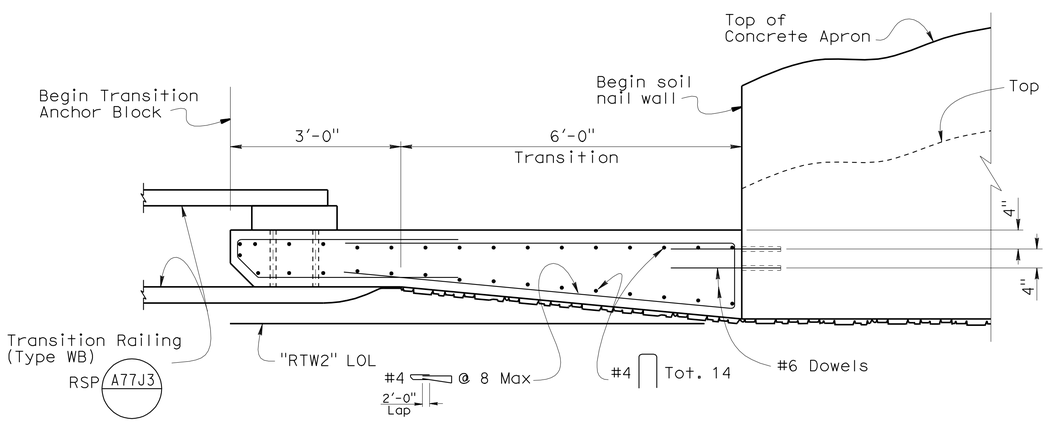

TRANSITION ANCHOR BLOCK PART PLAN

¾" = 1'-0"

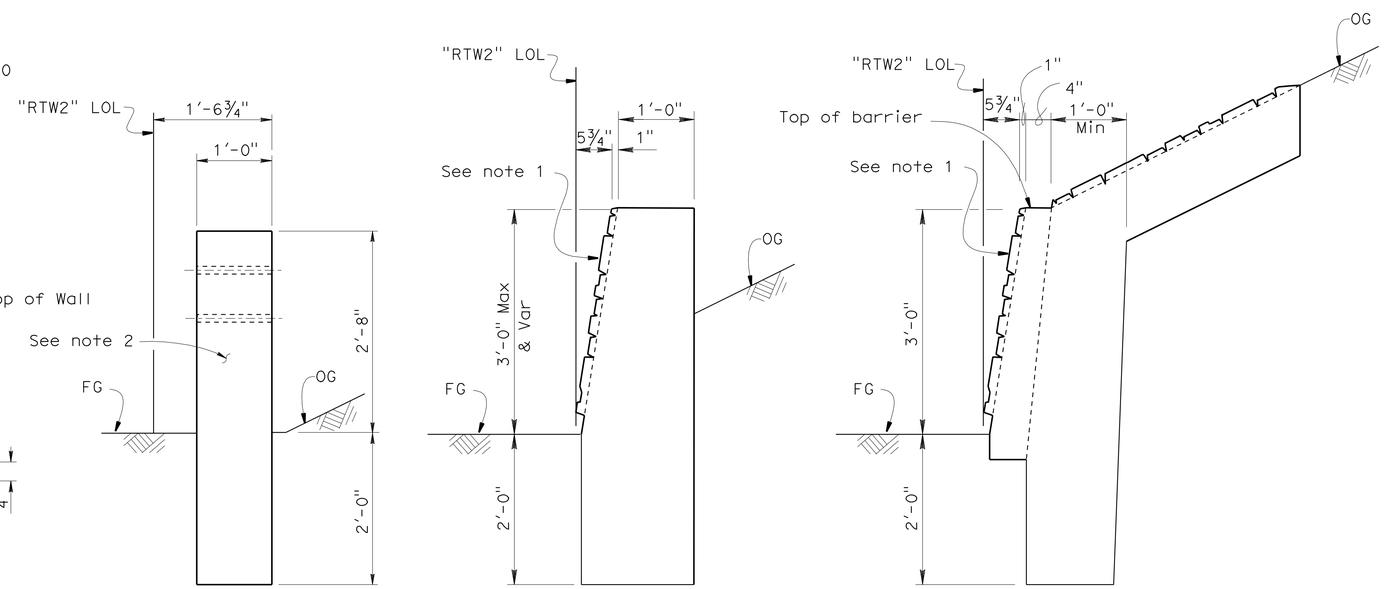

SECTION P-P

SECTION N-N

SECTION M-M

TRANSITION ANCHOR BLOCK TO BARRIER CONNECTION

1" = 1'-0"

DESIGN	BY Keith Stillmunkes	CHECKED Mario Guadamuz	
DETAILS	BY Bruno Jenko	CHECKED Mario Guadamuz	
QUANTITIES	BY Sameh Hegazi	CHECKED Tuong Ha	

STATE OF CALIFORNIA DEPARTMENT OF TRANSPORTATION

DIVISION OF ENGINEERING SERVICES STRUCTURE DESIGN DESIGN BRANCH 7

BRIDGE NO. 05E0010

POST MILE 0.6

ENCHILADA CURVE IMPROVEMENT
RETAINING WALL NO. 2
TRANSITION ANCHOR BLOCK DETAILS

STRUCTURES DESIGN DETAIL SHEET (ENGLISH) (REV. 09-01-10)

ORIGINAL SCALE IN INCHES FOR REDUCED PLANS 0 1 2 3

UNIT: 3592
PROJECT NUMBER & PHASE: 0200000211-1
CONTRACT NO.: 02-2E3500

DISREGARD PRINTS BEARING EARLIER REVISION DATES

REVISION DATES 1-18-12 2-23-13 2-18-13

SHEET 12 OF 14

FILE => 05-rtw2-v-sndt02.dgn

USERNAME => s121614 DATE PLOTTED => 01-MAR-2013 TIME PLOTTED => 08:20

DIST	COUNTY	ROUTE	POST MILES TOTAL PROJECT	SHEET No.	TOTAL SHEETS
02	Tri	299	0.4/0.9	121	136

CERTIFIED ENGINEERING GEOLOGIST 7-13-12 DATE

2-25-13
PLANS APPROVAL DATE

PROFESSIONAL GEOLOGIST Luis Paredes-Mejia No. 2329 Exp. 1-31-14 CERTIFIED ENGINEERING GEOLOGIST STATE OF CALIFORNIA

The State of California or its officers or agents shall not be responsible for the accuracy or completeness of electronic copies of this plan sheet.

This LOTB sheet was prepared in accordance with the Caltrans Soil & Rock Logging, Classification, & Presentation Manual (2010 Edition).
See 2010 Standard Plans A10F and A10G for Soil Legend, and A10H for Rock Legend.

BENCH MARK

TRI 299 0.54
Fdn 2¼" CADH Brass Disk in Concrete,
37.15′ Rt "A1" Line Rte 299, Sta 111+07.93,
N 673,743.070
E 1,865,923.082
Elev 590.31
Vertical Datum: NAVD 88

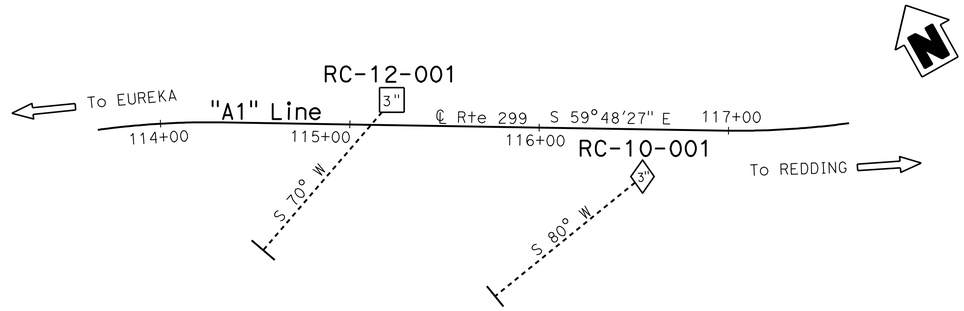

PLAN

1" = 40′

Note: No ground water encountered during field investigation.

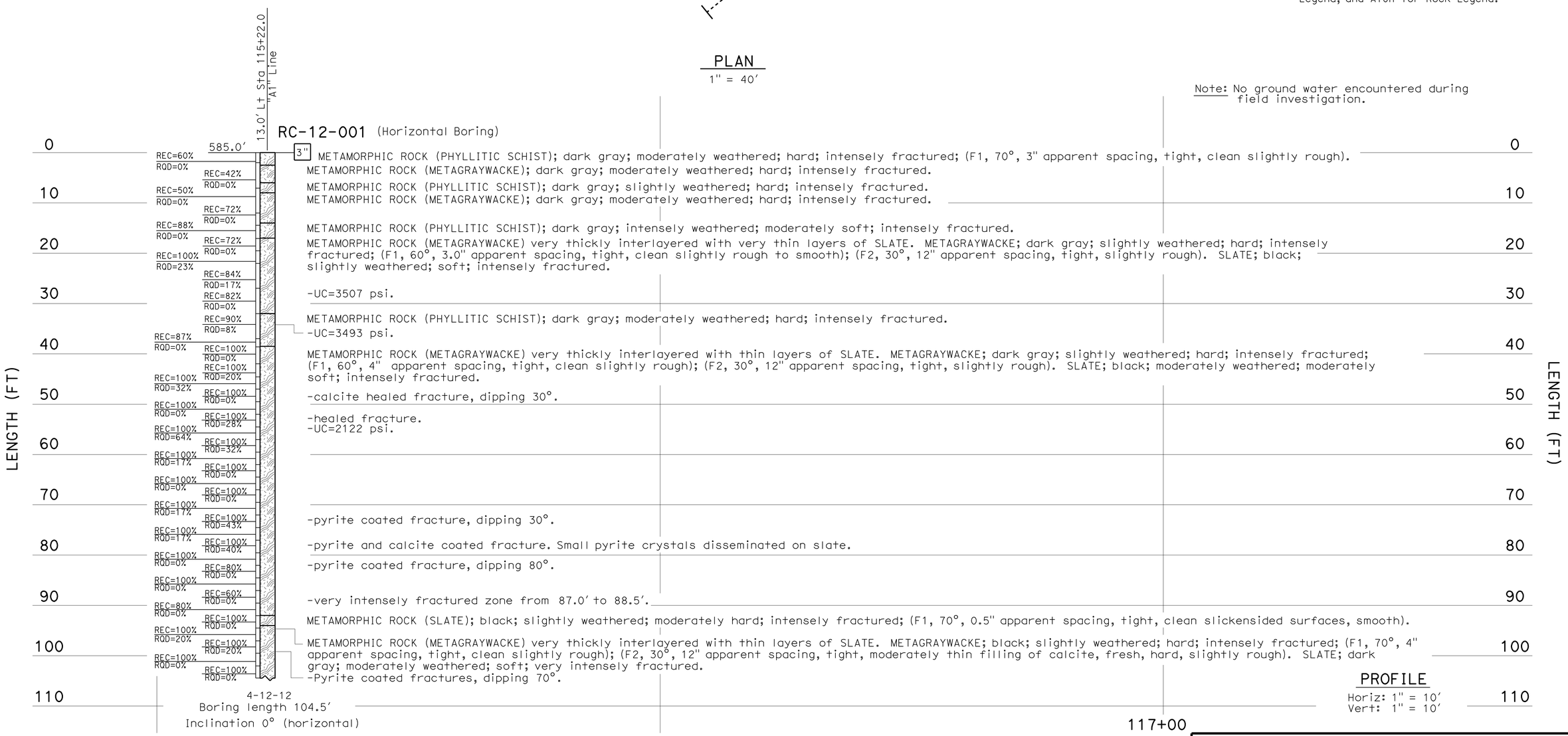

PROFILE

Horiz: 1" = 10′
Vert: 1" = 10′

ENGINEERING SERVICES	MATERIALS AND GEOTECHNICAL SERVICES	STATE OF CALIFORNIA DEPARTMENT OF TRANSPORTATION	DIVISION OF ENGINEERING SERVICES STRUCTURE DESIGN DESIGN BRANCH 7	BRIDGE NO. 05E0010 POST MILE 0.6	ENCHILADA CURVE IMPROVEMENT RETAINING WALL NO. 2 LOG OF TEST BORINGS 1 OF 2
FUNCTIONAL SUPERVISOR NAME: M. Hagy	DRAWN BY: W. Tang, I.G-Remmen CHECKED BY: F. DeHaro	FIELD INVESTIGATION BY: L. Paredes-Mejia			

OGS CIVIL LOG OF TEST BORINGS SHEET

ORIGINAL SCALE IN INCHES FOR REDUCED PLANS 0 1 2 3

UNIT: 3643
PROJECT NUMBER & PHASE: 0200000211 CONTRACT NO.: 02-2E3501

DISREGARD PRINTS BEARING EARLIER REVISION DATES 07-11-12 07-12-12

SHEET 13 OF 14

FILE => 05-rtw2-z-ltb01.dgn

USERNAME => s126614 DATE PLOTTED => 01-MAR-2013 TIME PLOTTED => 08:20

DIST	COUNTY	ROUTE	POST MILES TOTAL PROJECT	SHEET No.	TOTAL SHEETS
02	Tri	299	0.4/0.9	122	136

CERTIFIED ENGINEERING GEOLOGIST — DATE 7-13-12

PROFESSIONAL GEOLOGIST — Luis Paredes-Mejia — No. 2329 — Exp. 01-31-12 — CERTIFIED ENGINEERING GEOLOGIST — STATE OF CALIFORNIA

2-25-13
PLANS APPROVAL DATE

The State of California or its officers or agents shall not be responsible for the accuracy or completeness of electronic copies of this plan sheet.

This LOTB sheet was prepared in accordance with the Caltrans Soil & Rock Logging, Classification, & Presentation Manual (2010 Edition).
See 2010 Standard Plans A10F and A10G for Soil Legend, and A10H for Rock Legend.

FOR PLAN VIEW, SEE
"LOG OF TEST BORINGS 1 OF 2"

Note: Ground water was not encountered during field investigation.

~25.0' Rt Sta ~116+55.0 "A1" Line

RC-10-001 (Horizontal Boring)

~586'

LENGTH (FT): 0, 10, 20, 30, 40, 50, 60, 70, 80, 90, 100

REC=50% RQD=0%
REC=40% RQD=0%
REC=72% RQD=0%
REC=100% RQD=0%
REC=72% RQD=0%
REC=24% RQD=0%
REC=24% RQD=0%
REC=100% RQD=0%
REC=20% RQD=0%
REC=100% RQD=0%
REC=72% RQD=0%
REC=0% RQD=0%
REC=60% RQD=0%
REC=48% RQD=0%
REC=60% RQD=0%
REC=64% RQD=0%
REC=40% RQD=0%
REC=84% RQD=0%
REC=96% RQD=0%
REC=40% RQD=0%
REC=40% RQD=0%
REC=52% RQD=0%
REC=70% RQD=0%
REC=0% RQD=0%
REC=5% RQD=0%
REC=40% RQD=0%
REC=48% RQD=0%
REC=28% RQD=0%
REC=60% RQD=0%
REC=100% RQD=0%
REC=96% RQD=0%
REC=100% RQD=0%
REC=100% RQD=14%
REC=100% RQD=16%
REC=100% RQD=0%

3"

METAMORPHIC ROCK (SLATE); grayish black; intensely to moderately weathered; moderately soft to moderately hard; intensely fractured; multiple closely spaced, smooth fracture surfaces with oxide staining; foliation 30° to 60°.
-foliation 25° to 30°; oxide staining along foliation planes; smooth foliation surfaces.

METAMORPHIC ROCK, (METAGRAYWACKE); fine-grained; thinly bedded; dark gray; moderately weathered; hard; intensely fractured; multiple slickensided; slightly rough, clean fracture surfaces; fractures 25° to 60°.

(PL) METAMORPHIC ROCK (SLATE); dark gray; decomposed; ((SANDY CLAY (CL); dark gray; moist; some SAND); very intensely fractured; foliation 50° to 60°; multiple slightly rough fracture surfaces with oxide staining; UC= 3864 psi.

METAMORPHIC ROCK (METAGRAYWACKE); fine-grained; very thinly to thinly bedded; light gray; moderately weathered; hard; intensely fractured; bedding dipping 60° to core axis; multiple smooth to slightly rough fracture surfaces with oxide staining.

-fractures surfaces slightly weathered; dipping 30° to 60°; smooth to slightly rough.

-laminated to very thinly bedded; decomposed; ((SANDY CLAY (CL); light gray; moist; some medium and fine SAND).
-UC= 13680 psi.

(PL) -thinly to moderately bedded; bedding 30°; bedding slickensided; fracture surfaces moderately rough and coated with SILT.

-Intensely fractured; multiple moderately rough fracture surfaces with oxide staining.

METAMORPHIC ROCK (SLATE); dark gray; intensely weathered; soft; intensely fractured; foliation 25° to 30°; fractures dipping 70°; multiple tight fracture surfaces with oxide staining.
-decomposed; ((SANDY CLAY (CL); light gray; moist; fine SAND).
METAMORPHIC ROCK (METAGRAYWACKE); fine-grained; very thinly to thinly bedded; light gray; moderately weathered; hard; intensely fractured.
-bedding dipping 25° to 30°; fracture surfaces tight; moderately rough with oxide staining.
(PL) -fractures, 70°; oxide staining; tight to slightly open; filled with CLAY; slightly rough to rough; (F1, 70°; oxide staining; slightly rough; slickensiding parallel to core axis; F2, 0°; healed with 1/4" wide QUARTZ vein).
(PL) -UC= 3624 psi.
METAMORPHIC ROCK (SLATE); dark gray; moderately weathered; moderately hard; intensely fractured; foliaation 30°; multiple slickenside foliation surfaces; UC= 6400 psi.
(PL) METAMORPHIC ROCK (METAGRAYWACKE); fine-grained; thinly bedded; light gray; moderately weathered; moderately hard; intensely fractured.
-UC= 7296 psi.
METAMORPHIC ROCK (SLATE);dark gray; moderately weathered; moderately soft; intensely fractured; foliation 30°; smooth foliation surfaces.

(PL) METAMORPHIC ROCK (METAGRAYWACKE); fine-grained; thinly to moderately bedded; light gray; moderately weathered; moderately hard to hard; intensely to moderately fractured; bedding 30° to 40°; bedding surfaces slickensided; stained; clean; tight; smooth. Fractures 30°; multiple tight, clean, moderately rough fracture surfaces with oxide staining.

11-02-10
Boring Length 100.0'
Inclination 0° (horizontal).

PROFILE
Horiz: 1" = 20'
Vert: 1" = 10'

116+00 118+00 120+00

ENGINEERING SERVICES	MATERIALS AND GEOTECHNICAL SERVICES	STATE OF CALIFORNIA DEPARTMENT OF TRANSPORTATION	DIVISION OF ENGINEERING SERVICES STRUCTURE DESIGN DESIGN BRANCH 7	BRIDGE NO. 05E0010 POST MILE 0.6	ENCHILADA CURVE IMPROVEMENT RETAINING WALL NO. 2 LOG OF TEST BORINGS 2 OF 2
FUNCTIONAL SUPERVISOR NAME: M. Hagy	DRAWN BY: F. Nguyen CHECKED BY: A. Barrie	FIELD INVESTIGATION BY: L. Paredes-Mejia			

OGS CIVIL LOG OF TEST BORINGS SHEET — ORIGINAL SCALE IN INCHES FOR REDUCED PLANS 0 1 2 3

UNIT: 3643
PROJECT NUMBER & PHASE: 02000002111 CONTRACT NO.: 02-2E3501

DISREGARD PRINTS BEARING EARLIER REVISION DATES — REVISION DATES 07-12-12 — SHEET 14 OF 14

FILE => 05-rtw2-z-ltb02.dgn

USERNAME => s126614 DATE PLOTTED => 01-MAR-2013 TIME PLOTTED => 08:20

DIST	COUNTY	ROUTE	POST MILES TOTAL PROJECT	SHEET No.	TOTAL SHEETS
02	Tri	299	0.4/0.9	123	136

REGISTERED CIVIL ENGINEER 2-23-13 DATE

2-25-13
PLANS APPROVAL DATE

REGISTERED PROFESSIONAL ENGINEER Kelly Ann Holden No. 42268 Exp. 3/31/14 CIVIL STATE OF CALIFORNIA

The State of California or its officers or agents shall not be responsible for the accuracy or completeness of electronic copies of this plan sheet.

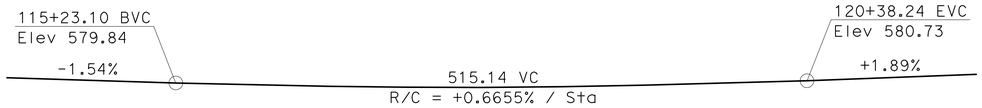

PROFILE GRADE (ALONG "A1" LINE)

NO SCALE

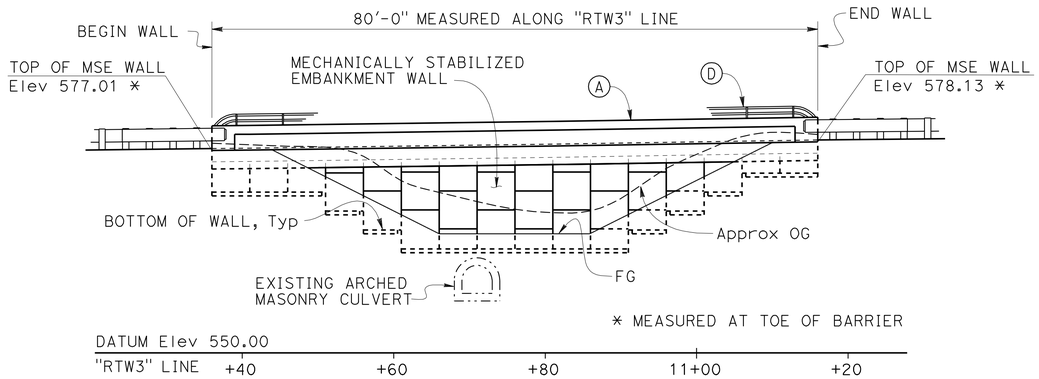

DEVELOPED MIRRORED ELEVATION

1" = 10'

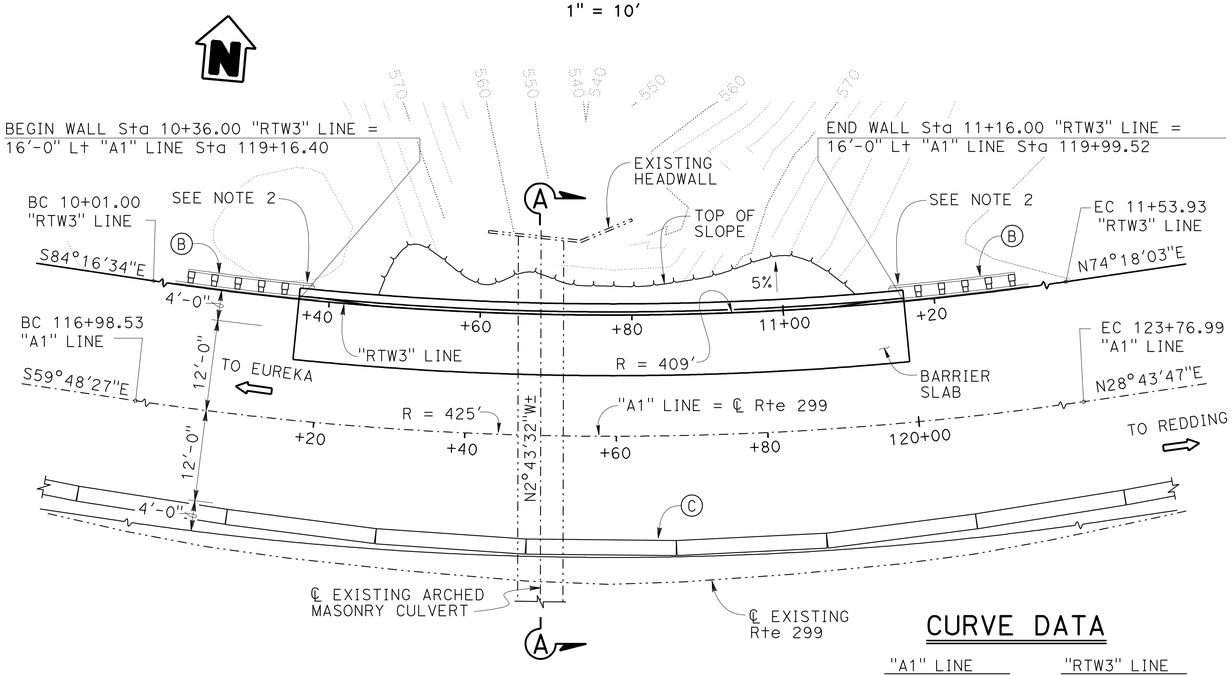

PLAN

1" = 10'

NOTE:
THE CONTRACTOR SHALL VERIFY ALL CONTROLLING FIELD DIMENSIONS BEFORE ORDERING OR FABRICATING ANY MATERIAL.

CURVE DATA

"A1" LINE	"RTW3" LINE
R = 425'	R = 409'
Δ = 91°27'46"	Δ = 21°25'23"
T = 435.99'	T = 77.37'
L = 678.44'	L =152.93'

QUANTITIES

EARTH RETAINING STRUCTURE (MECHANICALLY STABILIZED EARTH WALL)	777	SQFT
STRUCTURAL CONCRETE, BARRIER SLAB	50	CY
PREPARE AND STAIN CONCRETE	440	SQFT
DRAINAGE SYSTEM	LUMP	SUM
GEOMEMBRANE	122	SQYD
TUBULAR BICYCLE RAILING	80	LF
CONCRETE BARRIER (TYPE 736 MODIFIED)	80	LF

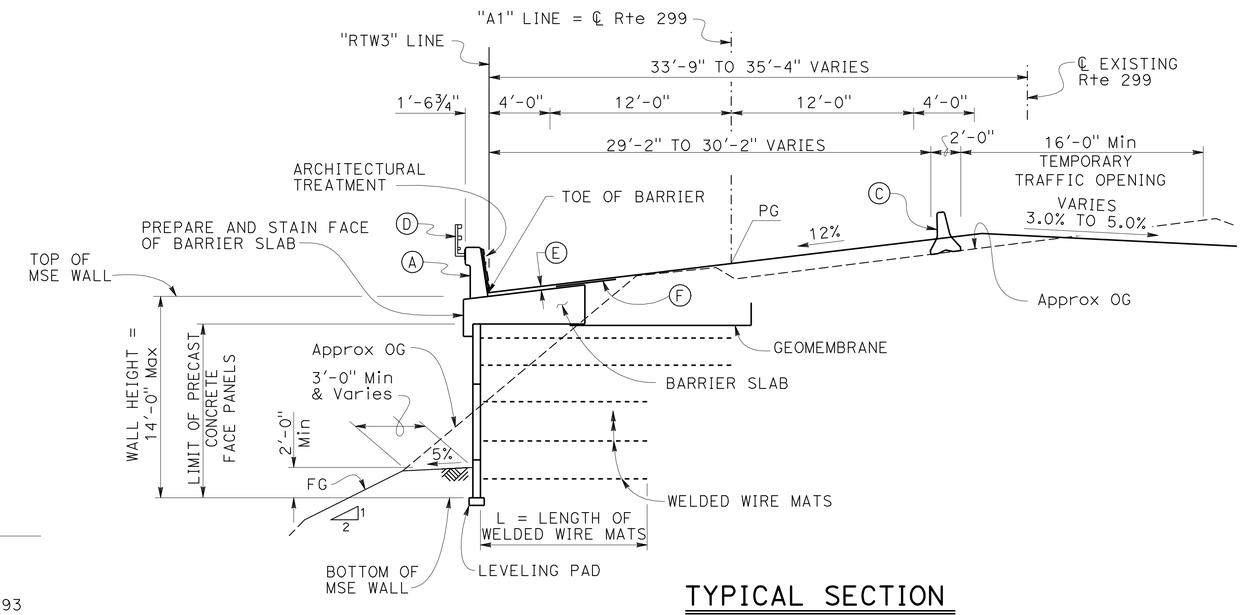

TYPICAL SECTION

1" = 5'

NOTES:

1. For General Notes, Standard Plan List and Index to Plans, see "INDEX TO PLANS" sheet
2. See RSP A77J2

(A) Concrete Barrier, Type 736 (Mod)

(B) MBGR, see "ROAD PLANS"

(C) Temporary Railing, Type K, see "ROAD PLANS"

(D) Tubular Bicycle Railing (Painted)

(E) 3" HMA, see "ROAD PLANS"

(F) Geosynthetic Pavement Interlayer, see "ROAD PLANS"

LEGEND:

—·—·— Indicates existing structure

Kelly Ann Holden
DESIGN ENGINEER

	BY	CHECKED
DESIGN	J. Jung / C. Le	Wendy Hou
DETAILS	G. Dickerson / Y. Feng	Wendy Hou
QUANTITIES	David Alvarez	Seiji Morimoto

SERVICE LOAD DESIGN — LIVE LOADING: 240 PSF SURCHARGE

	BY	CHECKED
LAYOUT	Wendy Hou	Jun Ki Jung
SPECIFICATIONS	Adam Menke	PLANS AND SPECS COMPARED Adam Menke

ORIGINAL SCALE IN INCHES FOR REDUCED PLANS 0 1 2 3

STATE OF CALIFORNIA
DEPARTMENT OF TRANSPORTATION

DIVISION OF ENGINEERING SERVICES
STRUCTURE DESIGN
DESIGN BRANCH 7

BRIDGE NO. 05E0011
POST MILE 0.8

ENCHILADA CURVE IMPROVEMENT
RETAINING WALL NO. 3
GENERAL PLAN

UNIT: 3592
PROJECT NO. & PHASE: 0200000211-1
CONTRACT NO.: 02-2E3500

DISREGARD PRINTS BEARING EARLIER REVISION DATES

REVISION DATES: 3-06-12 2-23-13 2-13-13

SHEET 1 OF 14

USERNAME => s121614 DATE PLOTTED => 01-MAR-2013 TIME PLOTTED => 08:20

STRUCTURES DESIGN GENERAL PLAN SHEET (ENGLISH) (REV.09-01-10)

FILE => 05-rtw3-a-gp.dgn

DIST	COUNTY	ROUTE	POST MILES TOTAL PROJECT	SHEET No.	TOTAL SHEETS
02	Tri	299	0.4/0.9	124	136

Kelly Ann Holden 2-23-13
REGISTERED CIVIL ENGINEER DATE

2-25-13
PLANS APPROVAL DATE

REGISTERED PROFESSIONAL ENGINEER
Kelly Ann Holden
No. 42268
Exp. 3/31/14
CIVIL
STATE OF CALIFORNIA

The State of California or its officers or agents shall not be responsible for the accuracy or completeness of electronic copies of this plan sheet.

INDEX TO PLANS

SHEET NO.	TITLE
1.	GENERAL PLAN
2.	INDEX TO PLANS
3.	FOUNDATION PLAN
4.	WALL LAYOUT
5.	MECHANICALLY STABILIZED EMBANKMENT DETAILS NO. 1
6.	MECHANICALLY STABILIZED EMBANKMENT DETAILS NO. 2
7.	MECHANICALLY STABILIZED EMBANKMENT DETAILS NO. 3
8.	MECHANICALLY STABILIZED EMBANKMENT DETAILS NO. 4
9.	EXCAVATION AND BACKFILL DETAILS
10.	DRAINAGE DETAILS
11.	BARRIER ARCHITECTURAL DETAILS
12.	TUBULAR BICYCLE RAILING DETAILS
13.	LOG OF TEST BORINGS 1 OF 2
14.	LOG OF TEST BORINGS 2 OF 2

STANDARD PLANS DATED MAY 2006

	A10A	ACRONYMS AND ABBREVIATIONS (SHEET 1 OF 2)
	A10B	ACRONYMS AND ABBREVIATIONS (SHEET 2 OF 2)
	A10C	SYMBOLS (SHEET 1 OF 2)
RSP	A77J2	METAL BEAM GUARD RAILING-CONNECTIONS TO BRIDGE RAILINGS WITHOUT SIDEWALKS DETAILS NO.2
	B11-56	CONCRETE BARRIER TYPE 736
	D87B	PLASTIC PIPE DOWNDRAIN DETAILS
	D102	UNDERDRAINS
	T3	TEMPORARY RAILING (TYPE K)
NSP	T3A	TEMPORARY RAILING (TYPE K)

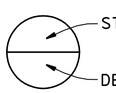

GENERAL NOTES

DESIGN:
Bridge Design Specification, April 2000
(1996 AASHTO with Interims and Revisions by Caltrans)

WORKING STRESS DESIGN

LIVE LOAD:
Surcharge = 240 lb/ft^2

SOIL PARAMETERS:
Internal Design: ϕ = 34° , γ = 120 lb/ft^3
External Design: ϕ (Backfill) = 34° , γ = 120 lb/ft^3
ϕ (Foundation) = 30°

PRECAST CONCRETE PANELS:
See "GENERAL NOTES (MSE) WALLS" on "MECHANICALLY STABILIZED EMBANKMENT DETAILS NO. 2" sheet

SOIL REINFORCEMENT:
See "GENERAL NOTES (MSE) WALLS" on "MECHANICALLY STABILIZED EMBANKMENT DETAILS NO. 2" sheet

LOAD FACTOR DESIGN

LIVE LOAD:
HS20-44 and Alternative and Permit Design Load

REINFORCED CONCRETE:
f'_c = 3.6 ksi, except as noted (Concrete compressive strength at 28 days)
f_y = 60 ksi (Yield strength of reinforcement)

DESIGN	BY Jun Ki Jung	CHECKED Wendy Hou	
DETAILS	BY G. Dickerson / Y. Feng	CHECKED Wendy Hou	
QUANTITIES	BY David Alvarez	CHECKED Seiji Morimoto	

STATE OF CALIFORNIA
DEPARTMENT OF TRANSPORTATION

DIVISION OF ENGINEERING SERVICES
STRUCTURE DESIGN
DESIGN BRANCH 7

BRIDGE NO. 05E0011
POST MILE 0.8

ENCHILADA CURVE IMPROVEMENT
RETAINING WALL NO. 3
INDEX TO PLANS

STRUCTURES DESIGN DETAIL SHEET (ENGLISH) (REV. 09-01-10)

ORIGINAL SCALE IN INCHES FOR REDUCED PLANS 0 1 2 3

UNIT: 3592
PROJECT NO. & PHASE: 0200000211-1
CONTRACT NO.: 02-2E3500

DISREGARD PRINTS BEARING EARLIER REVISION DATES
REVISION DATES 1-10-12 9-7-12 2-13-13
SHEET 2 OF 14

FILE => 05-rtw3-b-itp.dgn

USERNAME => s121614 DATE PLOTTED => 01-MAR-2013 TIME PLOTTED => 08:20

DIST	COUNTY	ROUTE	POST MILES TOTAL PROJECT	SHEET No.	TOTAL SHEETS
02	Tri	299	0.4/0.9	125	136

REGISTERED CIVIL ENGINEER — DATE 2-23-13

2-25-13
PLANS APPROVAL DATE

REGISTERED PROFESSIONAL ENGINEER — Kelly Ann Holden — No. 42268 — Exp. 3/31/14 — CIVIL — STATE OF CALIFORNIA

The State of California or its officers or agents shall not be responsible for the accuracy or completeness of electronic copies of this plan sheet.

CURVE DATA

No.	R	Δ	T	L
Ⓐ	409.00	21°25′23″	77.37	152.93
Ⓑ	425.00	91°27′46″	435.99	678.44

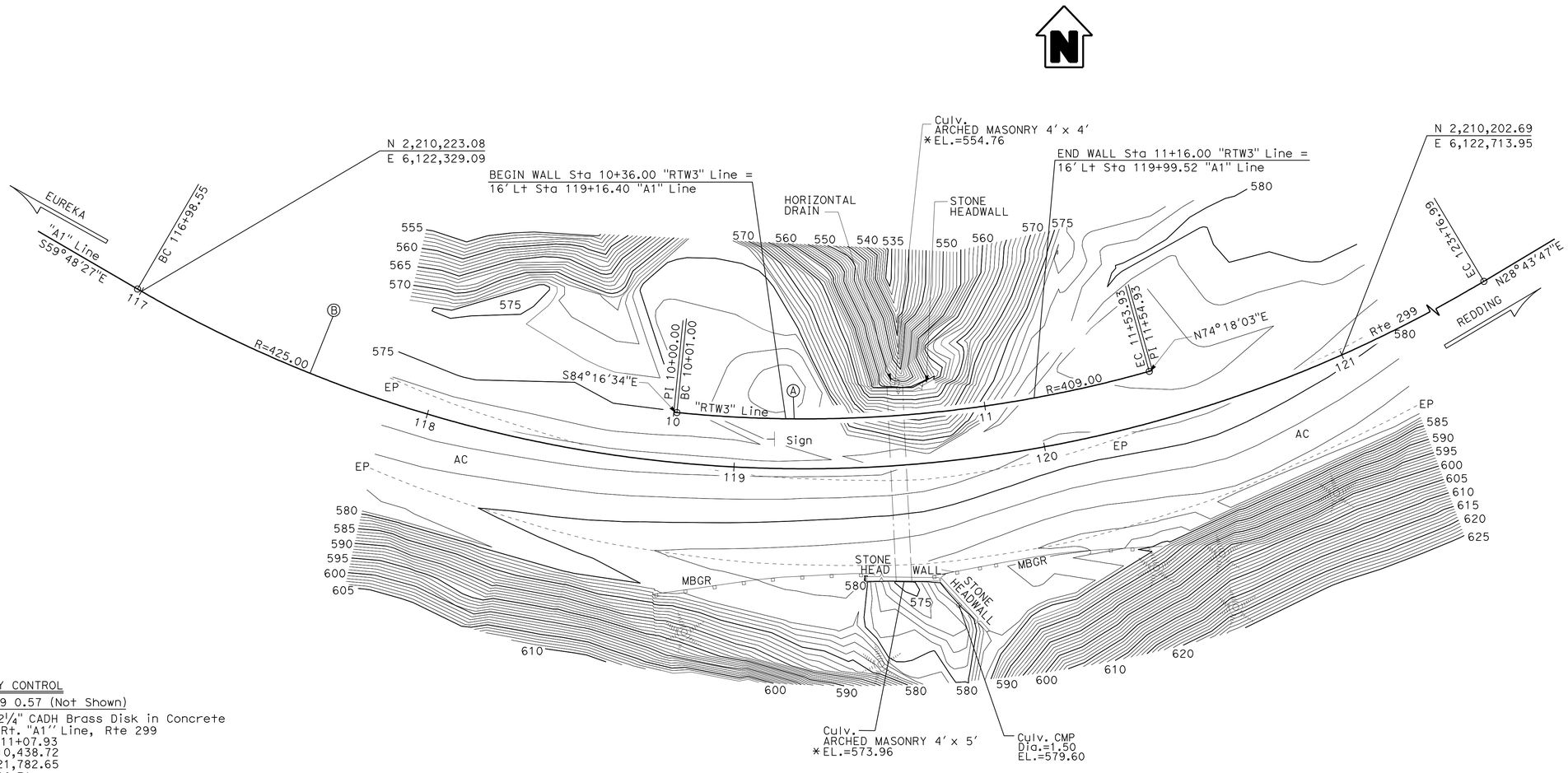

SURVEY CONTROL

TRI 299 0.57 (Not Shown)

Fnd 2¼" CADH Brass Disk in Concrete
37.15 Rt. "A1" Line, Rte 299
Sta. 111+07.93
N 2,210,438.72
E 6,121,782.65
EL.=590.31

CM 0.63 (Not Shown)

Fnd CADT Alum Cap on ¾" Rebar
36.75 Lt. "A1" Line, Rte 299
Sta. 113+90.15
N 2,210,410.53
E 6,122,075.59
EL.=583.77

NOTE:

* - Indicates flow line elevation.

NOTE:
THE CONTRACTOR SHALL VERIFY ALL CONTROLLING FIELD DIMENSIONS BEFORE ORDERING OR FABRICATING ANY MATERIAL.

ENCHILADA CURVE IMPROVEMENT

RETAINING WALL NO. 3

FOUNDATION PLAN

PRELIMINARY INVESTIGATION SECTION

SCALE 1"=20′	VERT.DATUM NAVD88	PHOTOGRAMMETRY AS OF: X			
	HORZ.DATUM NAD83 (2004.69)	SURVEYED	BY District	CHECKED	BY L. Lew 07/2011
	ALIGNMENT TIES Dist. Traverse Sheet	DRAFTED	BY S. Zheng 07/2011	CHECKED	BY Jim Pallares 07/2011

DESIGN	BY Jun Ki Jung	CHECKED Wendy Hou
DETAILS	BY Gerald Dickerson	CHECKED Wendy Hou
QUANTITIES	BY David Alvarez	CHECKED Seiji Morimoto

STATE OF CALIFORNIA
DEPARTMENT OF TRANSPORTATION

DIVISION OF ENGINEERING SERVICES
STRUCTURE DESIGN
DESIGN BRANCH 7

BRIDGE NO. 05E0011
POST MILE 0.8

STRUCTURES FOUNDATION PLAN SHEET (ENGLISH) (REV. 09-01-10)

ORIGINAL SCALE IN INCHES FOR REDUCED PLANS 0 1 2 3

UNIT: 3592
PROJECT NO. & PHASE: 0200000211-1
CONTRACT NO.: 02-2E3500

DISREGARD PRINTS BEARING EARLIER REVISION DATES

REVISION DATES: 7-18-11 6-14-12 8-22-12 2-04-13

SHEET 3 OF 14

FILE => 05-rtw3-e-fpl01.dgn

DIST	COUNTY	ROUTE	POST MILES TOTAL PROJECT	SHEET No.	TOTAL SHEETS
02	Tri	299	0.4/0.9	126	136

REGISTERED CIVIL ENGINEER 2-23-13 DATE

2-25-13
PLANS APPROVAL DATE

REGISTERED PROFESSIONAL ENGINEER Kelly Ann Holden No. 42268 Exp. 3/31/14 CIVIL STATE OF CALIFORNIA

The State of California or its officers or agents shall not be responsible for the accuracy or completeness of electronic copies of this plan sheet.

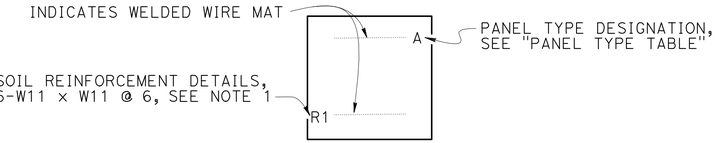

PANEL WIRE LEGEND

NO SCALE

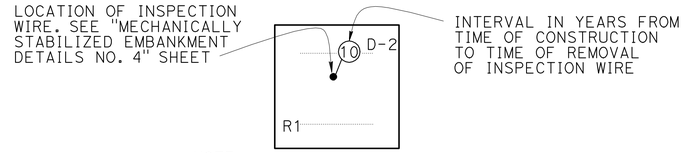

NOTE:
Soil reinforcement not shown

INSPECTION LEGEND

NO SCALE

LEGEND:

- * - Indicates top of leveling pad elevation
- ** - Indicates Toe of Barrier (Top of HMA) spot elevation along "RTW3" Line
- H - Indicates maximum wall height
- L - Indicates Welded Wire Mat length. L=16'-0" for top 2 levels and L=11'-0" for other levels

NOTES:

1. Configuration: R1 = indicates 6 - W11 = 6 longitudinal wires W11 sized
   W11 @ 6 = W11 sized transverse wires at 6-inch spacing
2. Concrete barrier and tubular bicycle railing not shown

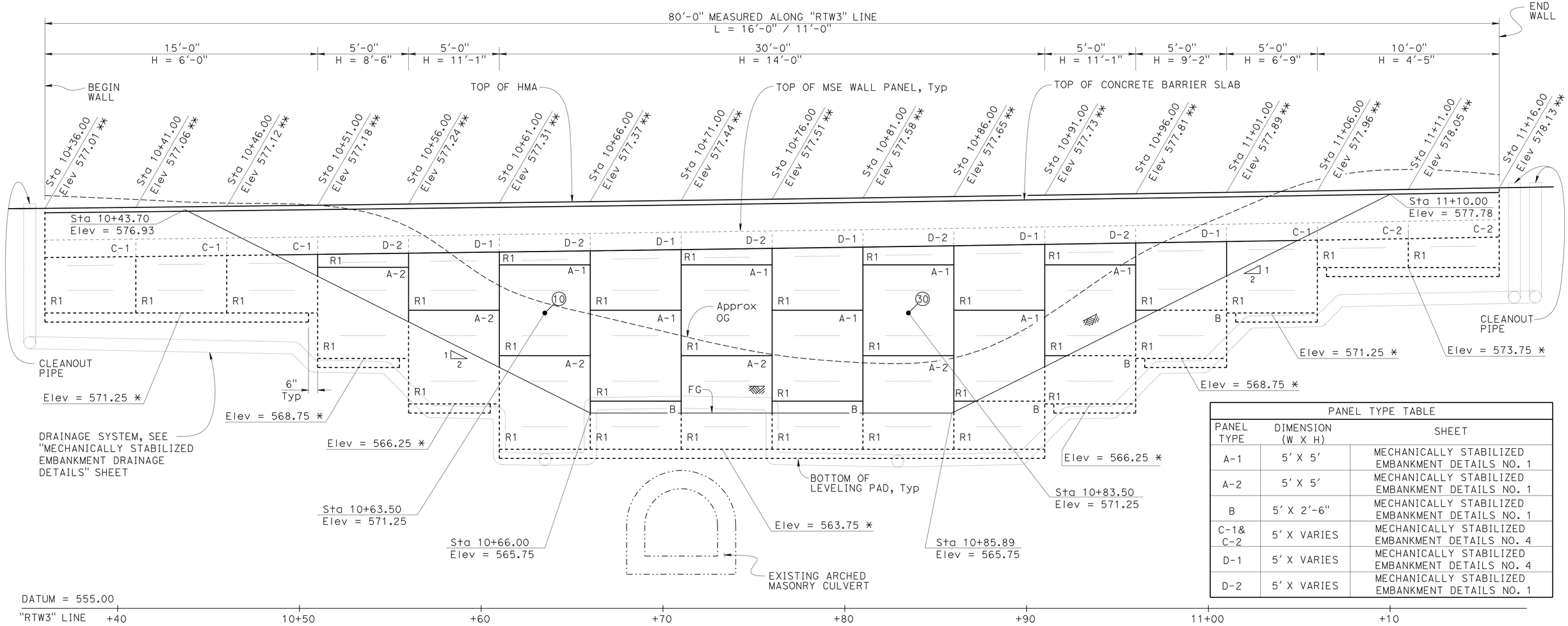

PANEL TYPE TABLE		
PANEL TYPE	DIMENSION (W X H)	SHEET
A-1	5' X 5'	MECHANICALLY STABILIZED EMBANKMENT DETAILS NO. 1
A-2	5' X 5'	MECHANICALLY STABILIZED EMBANKMENT DETAILS NO. 1
B	5' X 2'-6"	MECHANICALLY STABILIZED EMBANKMENT DETAILS NO. 1
C-1& C-2	5' X VARIES	MECHANICALLY STABILIZED EMBANKMENT DETAILS NO. 4
D-1	5' X VARIES	MECHANICALLY STABILIZED EMBANKMENT DETAILS NO. 4
D-2	5' X VARIES	MECHANICALLY STABILIZED EMBANKMENT DETAILS NO. 1

DEVELOPED ELEVATION

3/8" = 1'-0"

NOTE:
THE CONTRACTOR SHALL VERIFY ALL CONTROLLING FIELD DIMENSIONS BEFORE ORDERING OR FABRICATING ANY MATERIAL.

ENCHILADA CURVE IMPROVEMENT

RETAINING WALL NO. 3

WALL LAYOUT

	BY	CHECKED
DESIGN	Jun Jung / David Soon	Wendy Hou
DETAILS	G. Dickerson / Y. Feng	Wendy Hou
QUANTITIES	David Alvarez	Seiji Morimoto

STATE OF CALIFORNIA
DEPARTMENT OF TRANSPORTATION

DIVISION OF ENGINEERING SERVICES
STRUCTURE DESIGN
DESIGN BRANCH 7

BRIDGE NO. 05E0011
POST MILE 0.8

STRUCTURES DESIGN DETAIL SHEET (ENGLISH) (REV. 09-01-10)

ORIGINAL SCALE IN INCHES FOR REDUCED PLANS 0 1 2 3

UNIT: 3592
PROJECT NO. & PHASE: 0200000211-1
CONTRACT NO.: 02-2E3500

DISREGARD PRINTS BEARING EARLIER REVISION DATES

REVISION DATES 12-29-11 2-13-13 9-18-13

SHEET 4 OF 14

FILE => 05-rtw3-f-wlo.dgn

USERNAME => s121614 DATE PLOTTED => 01-MAR-2013 TIME PLOTTED => 08:20

DIST.	COUNTY	ROUTE	POST MILES TOTAL PROJECT	SHEET NO.	TOTAL SHEETS
02	Tri	299	0.4/0.9	127	136

Kelly Ann Holden 2-23-13
REGISTERED ENGINEER - CIVIL

2-25-13
PLANS APPROVAL DATE

REGISTERED PROFESSIONAL ENGINEER Kelly Ann Holden No. 42268 Exp. 3/31/14 CIVIL STATE OF CALIFORNIA

The State of California or its officers or agents shall not be responsible for the accuracy or completeness of electronic copies of this plan sheet.

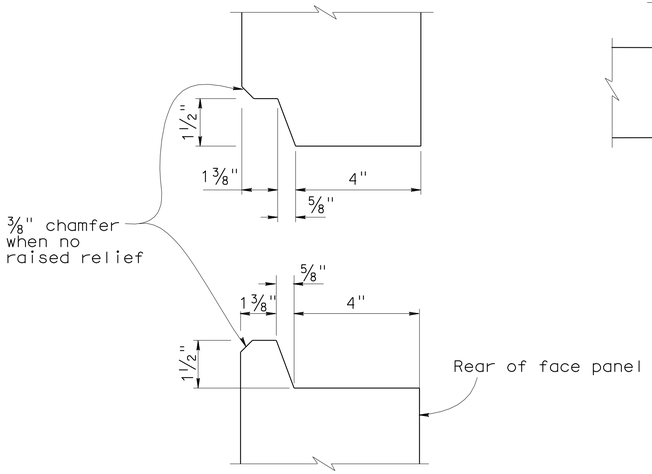

HORIZONTAL JOINT DETAIL
1:2.5

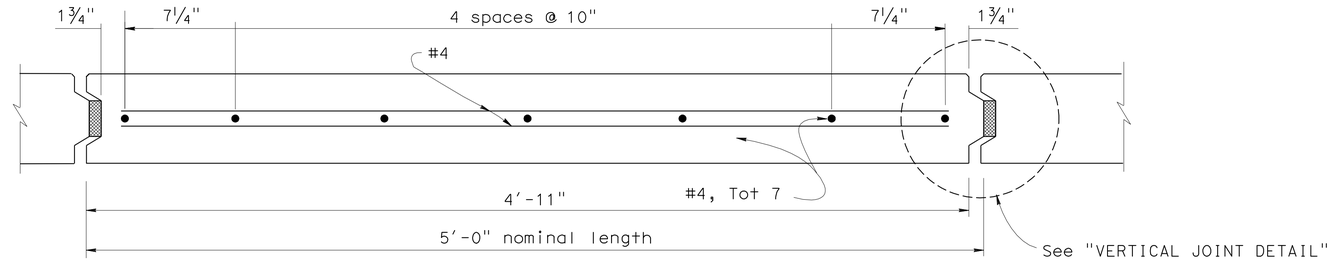

PLAN - FACE PANEL

NOTES:

1. Architectural treatment not shown.
2. Place reinforced elastomeric bearing pads in all of the panel joints between the panels. Place one in each vertical joint where the horizontal joint intersects it. Place two per panel in each horizontal joint.
   3/4" x 2 3/8" x 6" for vertical joints
   3/4" x 4" x 6" for horizontal joints.
3. Bond a strip of filter fabric, 1' - 0" wide, over the full length of all panel joints.

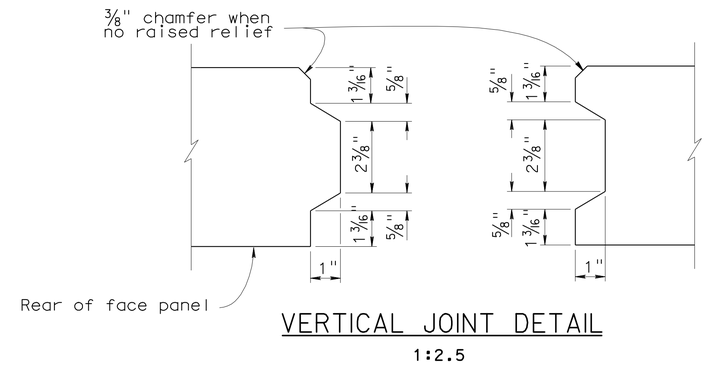

VERTICAL JOINT DETAIL
1:2.5

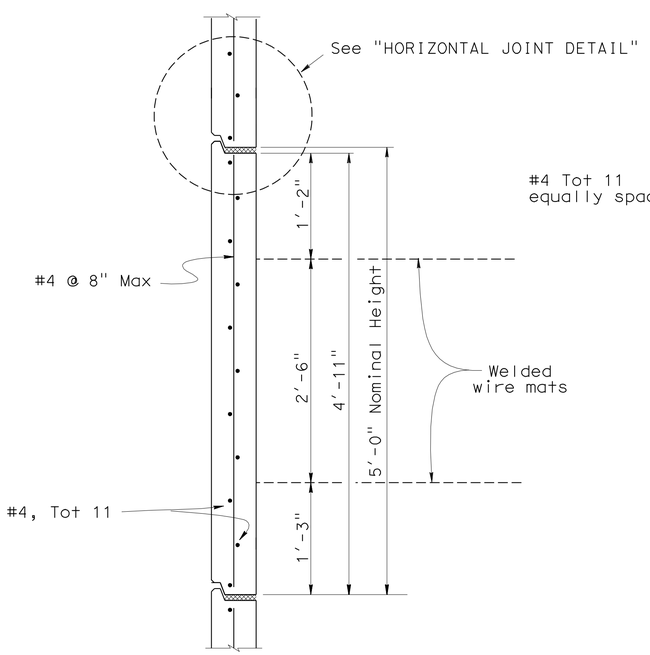

TYPE A-1 PANEL ②
1:10

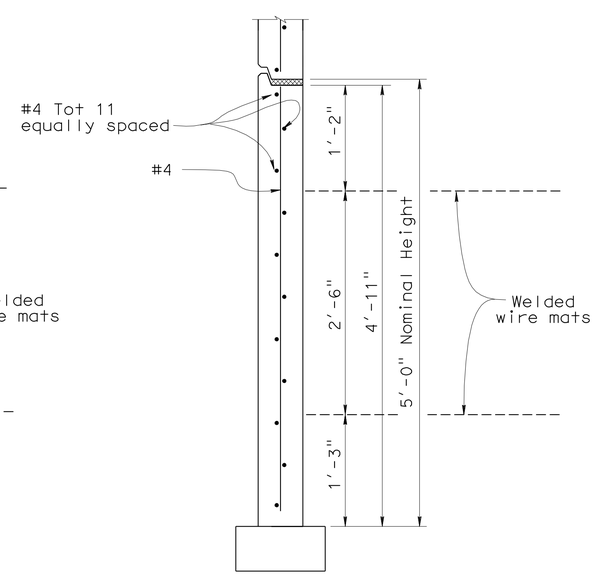

TYPE A-2 PANEL ②
1:10

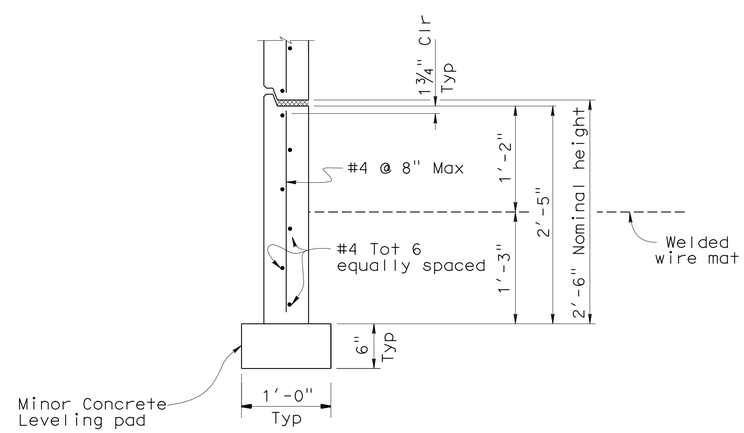

TYPE B PANEL ②
1:10

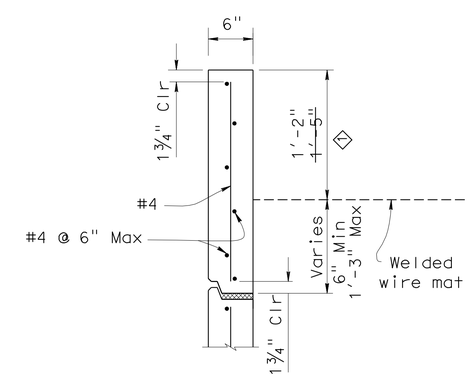

TYPE D-2 PANEL ②
1:10

STANDARD DRAWING

FILE NO. xs13-020-1e

APPROVED BY K. GRISWELL
RESPONSIBLE TECHNICAL SPECIALIST
APPROVAL DATE 5-6-08

RELEASED BY ROBERTO LACALLE
RESPONSIBLE OFFICE CHIEF
RELEASE DATE 5-6-08

① Change dimension
② Change Panel Name

STATE OF CALIFORNIA
DEPARTMENT OF TRANSPORTATION

DIVISION OF ENGINEERING SERVICES

BRIDGE NO. 05E0011
POST MILE 0.8

ENCHILADA CURVE IMPROVEMENT
RETAINING WALL NO. 3
MECHANICALLY STABILIZED EMBANKMENT
DETAILS NO. 1

DS OSD 2147A (ENGLISH STANDARD DRAWING "XS" BORDER REV. 01/11/08)

ORIGINAL SCALE IN INCHES FOR REDUCED PLANS 0 1 2 3

UNIT: 3592
PROJECT NO. & PHASE: 0200000211-1
CONTRACT NO.: 02-2E3500

DISREGARD PRINTS BEARING EARLIER REVISION DATES

REVISION DATES

SHEET 5 OF 14

USERNAME => s121614

05-rtw3-g-msedt01.dgn

DATE PLOTTED => 01-MAR-2013 TIME PLOTTED => 08:21

DIST.	COUNTY	ROUTE	POST MILES TOTAL PROJECT	SHEET NO.	TOTAL SHEETS
02	Tri	299	0.4/0.9	128	136

Kelly Ann Holden 2-23-13
REGISTERED ENGINEER - CIVIL

2-25-13
PLANS APPROVAL DATE

REGISTERED PROFESSIONAL ENGINEER Kelly Ann Holden No. 42268 Exp. 3/31/14 CIVIL STATE OF CALIFORNIA

The State of California or its officers or agents shall not be responsible for the accuracy or completeness of electronic copies of this plan sheet.

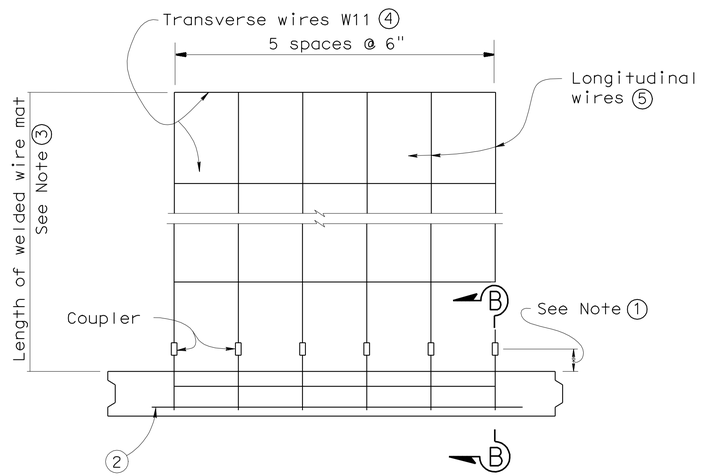

PLAN OF PANEL WITH WELDED WIRE MAT
No scale

GENERAL NOTES (MSE WALLS)

Live loading: Surcharge = 240 lb/ft^2

Soil parameters:

Internal design ϕ = 34°, γ = 120 lb/ft^3
External design ϕ(Backfill) = 34°, γ = 120 lb/ft^3
ϕ(Foundation) = 30°

Precast concrete panels:

f′c = 4,000 psi (Concrete compressive strength at 28 days)
fy = 60,000 psi (Yield strength of reinforcement)

Soil reinforcement:

Welded wire mats: fy = 65,000 psi (Yield strength)
Coupler: fy = 36,000 psi (Yield strength)
Corrosion rate = 1.1 mils/year

Reinforced concrete:

f′c = 3,600 psi, except as noted
(Concrete compressive strength at 28 days)

fy = 60,000 psi (Yield strength of reinforcement)

MSE = Mechanically stabilized embankment

Notes:

① Distance as required to permit coupler to be swaged.

② Place #4 bar, 3′ - 2" long, centered on connector mat, but not welded to it.

③ Length equals "Base width" of wall, except it shall not be less than 16′ for the top 2 levels of mats at the top of the wall.

④ All Transverse Wires size W11 at various spacings as shown elsewhere in plans.

⑤ All Longitudinal Wires at 6" spacing, of various sizes, as shown elsewhere in plans.

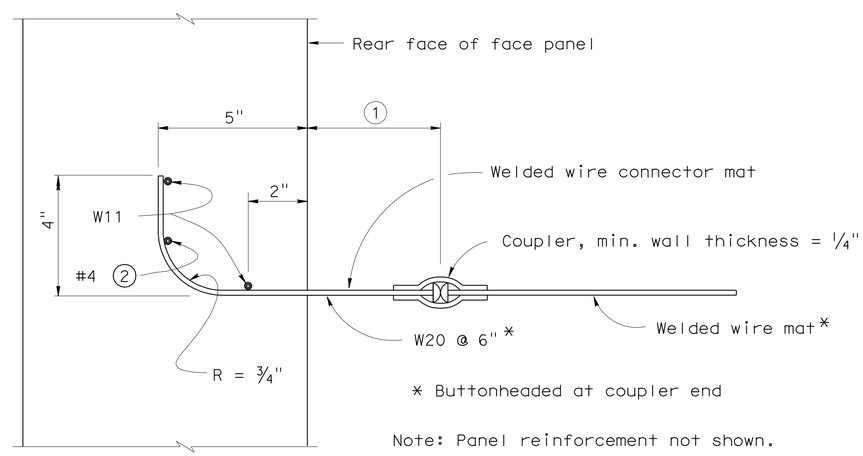

SECTION B-B
No scale

STANDARD DRAWING

FILE NO. xs13-020-2e

APPROVED BY K. GRISWELL
RESPONSIBLE TECHNICAL SPECIALIST
APPROVAL DATE 5-6-08

RELEASED BY ROBERTO LACALLE
RESPONSIBLE OFFICE CHIEF
RELEASE DATE 5-6-08

STATE OF CALIFORNIA
DEPARTMENT OF TRANSPORTATION

DIVISION OF ENGINEERING SERVICES

BRIDGE NO. 05E0011
POST MILE 0.8

ENCHILADA CURVE IMPROVEMENT
RETAINING WALL NO. 3
MECHANICALLY STABILIZED EMBANKMENT
DETAILS NO. 2

DS OSD 2147A (ENGLISH STANDARD DRAWING "XS" BORDER REV. 01/11/08)

ORIGINAL SCALE IN INCHES FOR REDUCED PLANS 0 1 2 3

UNIT: 3592
PROJECT NO. & PHASE: 0200000211-1
CONTRACT NO.: 02-2E3500

DISREGARD PRINTS BEARING EARLIER REVISION DATES

REVISION DATES

SHEET 6 OF 14

DATE PLOTTED => 01-MAR-2013 TIME PLOTTED => 08:21

USERNAME => s121614

05-rtw3-g-msedt02.dgn

DIST.	COUNTY	ROUTE	POST MILES TOTAL PROJECT	SHEET NO.	TOTAL SHEETS
02	Tri	299	0.4/0.9	129	136

Kelly Ann Holden 2-23-13
REGISTERED ENGINEER - CIVIL

2-25-13
PLANS APPROVAL DATE

REGISTERED PROFESSIONAL ENGINEER Kelly Ann Holden No. 42268 Exp. 3/31/14 CIVIL STATE OF CALIFORNIA

The State of California or its officers or agents shall not be responsible for the accuracy or completeness of electronic copies of this plan sheet.

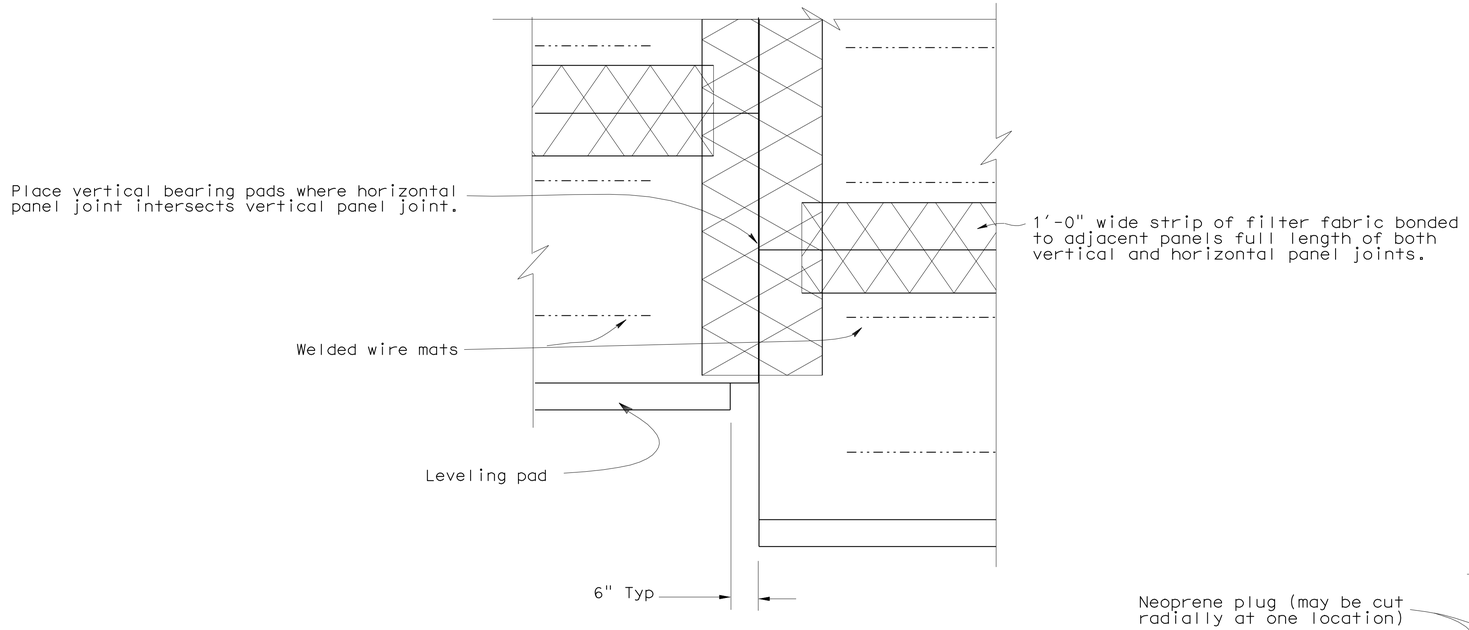

REAR ELEVATION

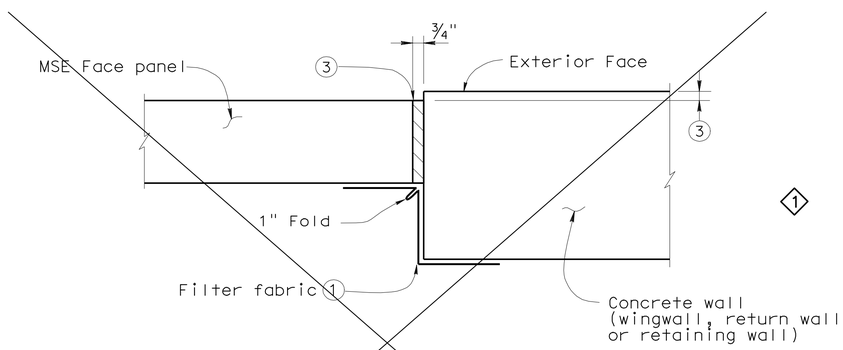

1

MSE FACE PANEL-TO-CONCRETE WALL JOINT DETAIL

LEGEND:

1. Bond a strip of filter fabric, 1'-6" wide, to back of MSE panels and the adjacent concrete wall for entire length of vertical joint.
2. Bond expansion joint material to the concrete wall.
3. Offset between face of MSE face panel and face of the concrete wall as dictated by location of layout lines shown elsewhere in Project Plans.

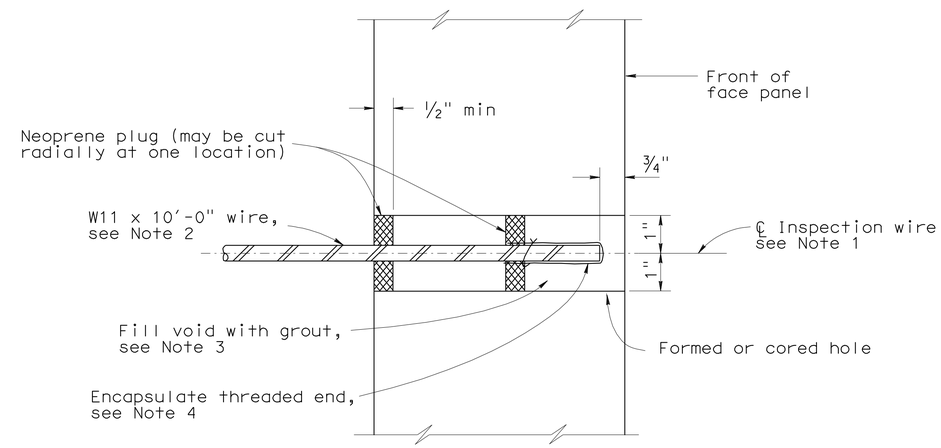

SECTION THRU INSPECTION WIRE

NOTES:

1. Center inspection wire in face panel.
2. Fabricate inspection wires from W11 wire representative of the welded wire mats, with 3/8" dia - 16 UNC threads for at least 1 1/2" of one end.
3. Place inspection wire horizontal and perpendicular to the wall panel prior to backfilling. After backfill placement to a level at least 2'-0" above the inspection wire, dry pack opening with 1000 to 1500 psi mortar. Trowel mortar smooth and flush with face of panel.
4. Encapsulate threaded end with corrosion inhibiting mastic, and secure round vinyl cover with nylon tie.

UNC = Unified coarse threads

STANDARD DRAWING

FILE NO. xs13-020-3e

APPROVED BY K. GRISWELL
RESPONSIBLE TECHNICAL SPECIALIST
APPROVAL DATE 5-6-08

RELEASED BY ROBERTO LACALLE
RESPONSIBLE OFFICE CHIEF
RELEASE DATE 5-6-08

1 Remove Detail

STATE OF CALIFORNIA
DEPARTMENT OF TRANSPORTATION

DIVISION OF ENGINEERING SERVICES

BRIDGE NO. 05E0011
POST MILE 0.8

ENCHILADA CURVE IMPROVEMENT
RETAINING WALL NO. 3
MECHANICALLY STABILIZED EMBANKMENT
DETAILS NO. 3

DS OSD 2147A (ENGLISH STANDARD DRAWING "XS" BORDER REV. 01/11/08)

ORIGINAL SCALE IN INCHES FOR REDUCED PLANS 0 1 2 3

UNIT: 3592
PROJECT NO. & PHASE: 0200000211-1
CONTRACT NO.: 02-2E3500

DISREGARD PRINTS BEARING EARLIER REVISION DATES

REVISION DATES

SHEET 7 OF 14

USERNAME => s121614

05-rtw3-g-msedt03.dgn

DATE PLOTTED => 01-MAR-2013 TIME PLOTTED => 08:21

DIST	COUNTY	ROUTE	POST MILES TOTAL PROJECT	SHEET No.	TOTAL SHEETS
02	Tri	299	0.4/0.9	130	136

REGISTERED CIVIL ENGINEER 2-23-13 DATE

2-25-13
PLANS APPROVAL DATE

REGISTERED PROFESSIONAL ENGINEER Kelly Ann Holden No. 42268 Exp. 3/31/14 CIVIL STATE OF CALIFORNIA

The State of California or its officers or agents shall not be responsible for the accuracy or completeness of electronic copies of this plan sheet.

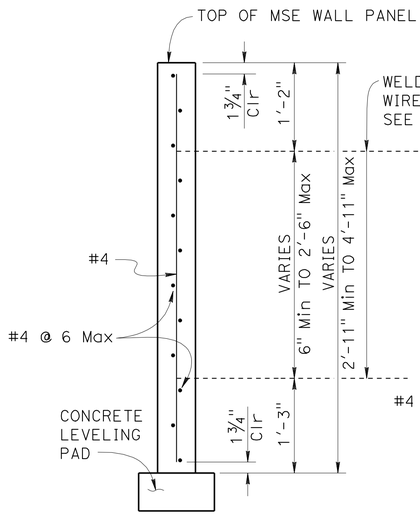

TYPE C-1 PANEL

1" = 1'-0"

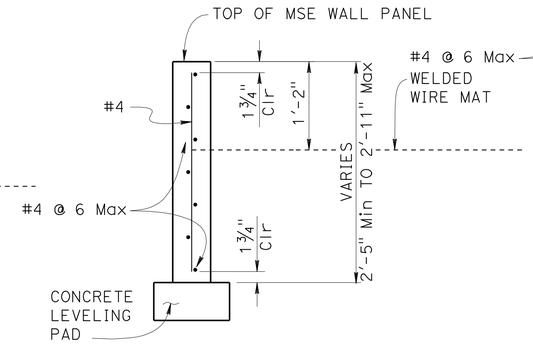

TYPE C-2 PANEL

1" = 1'-0"

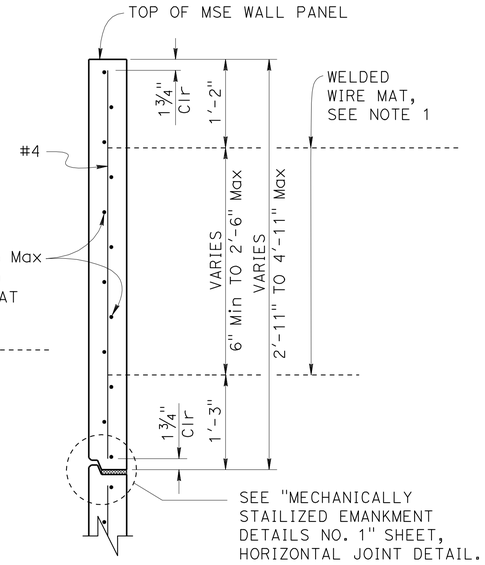

TYPE D-1 PANEL

1" = 1'-0"

TOP PANEL WITH MULTIPLE MATS

1" = 1'-0"

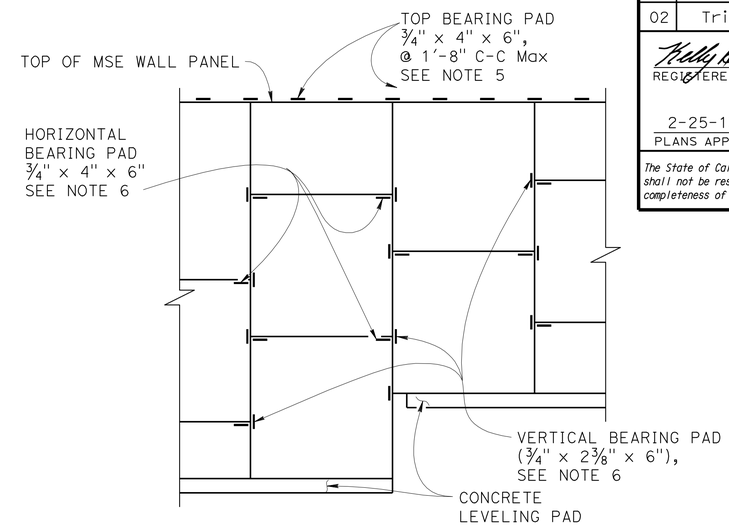

ELASTOMERIC BEARING PAD LOCATION MAP

ELEVATION

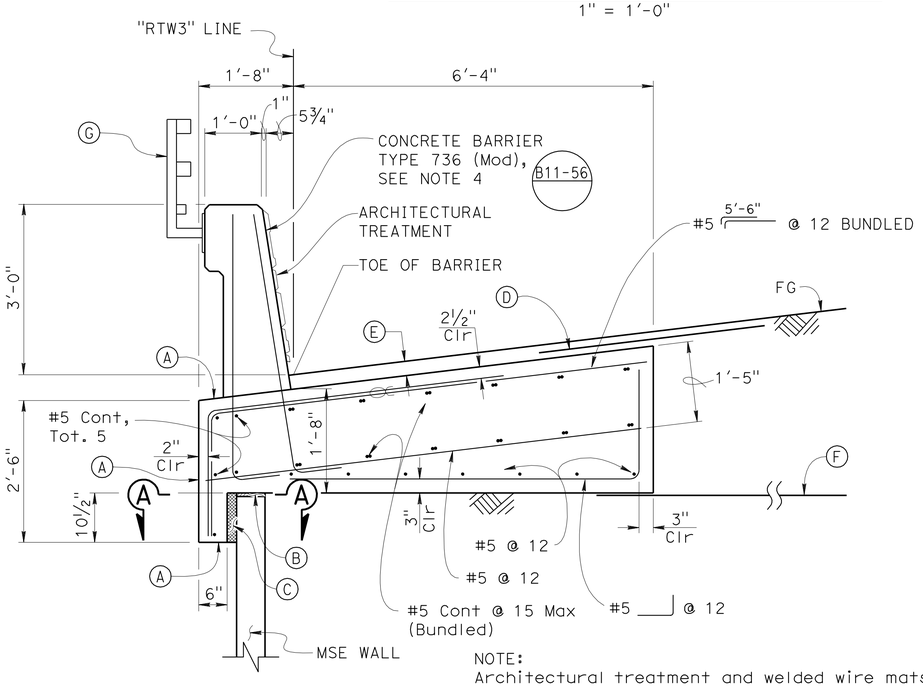

NOTE:
Architectural treatment and welded wire mats not shown

CONCRETE BARRIER SLAB

¾" = 1'-0"

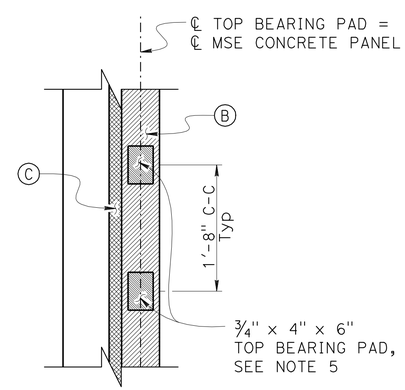

SECTION A-A

1" = 1'-0"

NOTES:

1. Top layer of welded wire mats shall be attached parallel to top of MSE wall.
2. 1'-0" wide filter fabric not shown
3. Reinforcement for welded wire connection mat not shown. See "MECHANICALLY STABILIZED EMBANKMENT DETAILS NO. 2" sheet
4. For reinforcement not shown, see B11-56
5. Place elastomeric top bearing pads (¾" x 4" x 6") bonded on top of MSE wall panel.
6. Place horizontal and vertical elastomeric bearing pads in all of the panel joints between the panels. Place one in each vertical joint where horizontal joints intersect. Place two per panel in each horizontal joint.
7. Epoxy coated reinforcement for Barrier and Concrete Barrier Slab.

(A) Prepare and Stain exposed surfaces of barrier slab FSTD 595C #36118

(B) ¾" Expanded Polystyrene

(C) 2" Expanded Polystyrene

(D) 4'-0" wide Geosynthetic Pavement Interlayer, see "ROAD PLANS". Center over edge of barrier slab.

(E) 3" HMA overlay, see "ROAD PLANS"

(F) Geomembrane placed along entire length of barrier slab.

(G) Tubular Bicycle Railing (Painted), see "TUBULAR BICYCLE RAILING DETAILS" sheet

LEGEND:

Indicates bundled bars horizontally

2" Expanded Polystyrene

¾" Expanded Polystyrene

ENCHILADA CURVE IMPROVEMENT
RETAINING WALL NO. 3
MECHANICALLY STABILIZED EMBANKMENT
DETAILS NO. 4

	BY	CHECKED
DESIGN	Jun Jung / David Soon	Wendy Hou
DETAILS	Yingjue Feng	Wendy Hou
QUANTITIES	David Alvarez	Seiji Morimoto

STATE OF CALIFORNIA DEPARTMENT OF TRANSPORTATION

DIVISION OF ENGINEERING SERVICES STRUCTURE DESIGN DESIGN BRANCH 7

BRIDGE NO. 05E0011
POST MILE 0.8

STRUCTURES DESIGN DETAIL SHEET (ENGLISH) (REV. 09-01-10)

ORIGINAL SCALE IN INCHES FOR REDUCED PLANS 0 1 2 3

UNIT: 3592
PROJECT NO. & PHASE: 0200000211-1
CONTRACT NO.: 02-2E3500

DISREGARD PRINTS BEARING EARLIER REVISION DATES

REVISION DATES 8-20-12 2-14-13 2-23-13

SHEET 8 OF 14

FILE => 05-rtw3-g-msedt04.dgn

USERNAME => s121614 DATE PLOTTED => 01-MAR-2013 TIME PLOTTED => 08:21

DIST	COUNTY	ROUTE	POST MILES TOTAL PROJECT	SHEET No.	TOTAL SHEETS
02	Tri	299	0.4/0.9	131	136

REGISTERED CIVIL ENGINEER 2-23-13 DATE

2-25-13
PLANS APPROVAL DATE

REGISTERED PROFESSIONAL ENGINEER Kelly Ann Holden No. 42268 Exp. 3/31/14 CIVIL STATE OF CALIFORNIA

The State of California or its officers or agents shall not be responsible for the accuracy or completeness of electronic copies of this plan sheet.

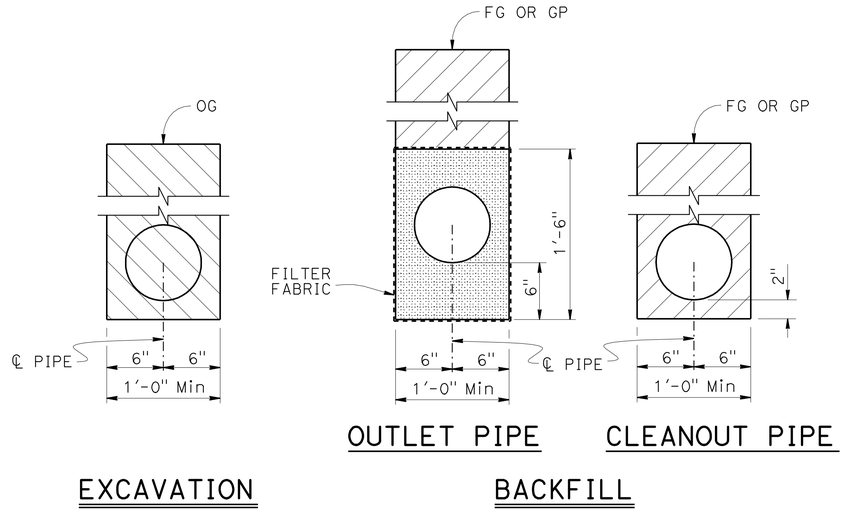

UNPERFORATED OUTLET OR CLEAN OUT PIPE FOR UNDERDRAIN

NO SCALE

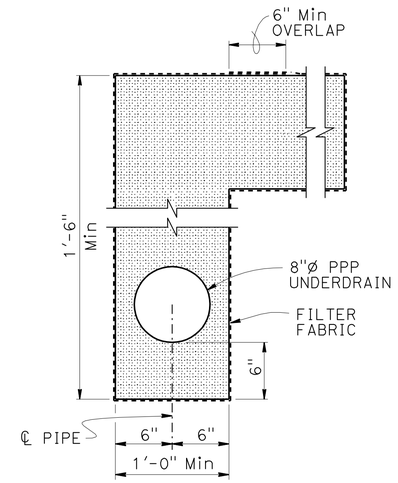

UNDERDRAIN DETAIL

NO SCALE

NOTES:

1. Locate underdrain behind bottom level of welded wire mats wherever possible or at elevation needed to drain as shown on "MECHANICALLY STABILIZED EMBANKMENT DRAINAGE DETAIL" sheet.
2. Hand guided compaction equipment shall be used to compact structural backfill material within 6' from top of culvert.
3. Adjust welded wire mat to avoid conflict with existing culvert as directed by the Engineer
4. 13'-0" wide geomembrane. Extend full length and 2' beyond wall ends.

LEGEND:

- Indicates limits of structure excavation
- Indicates limits of structure backfill
- Indicates limits of roadway excavation
- Indicates limits of permeable material

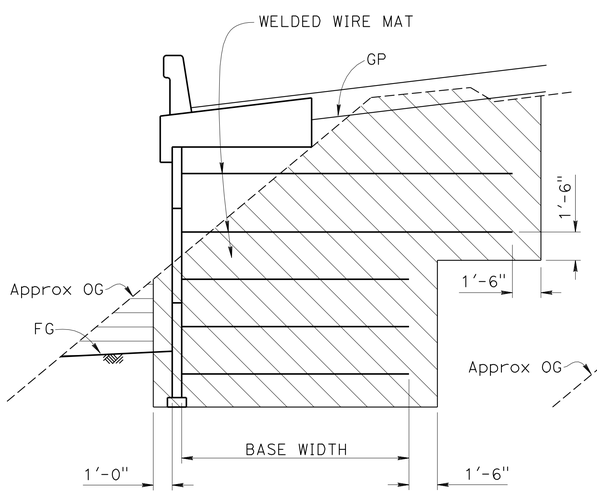

LIMITS OF EXCAVATION

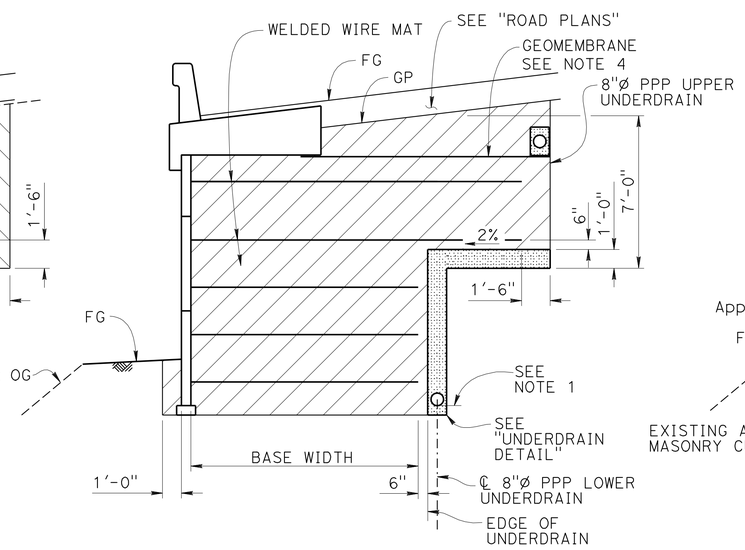

LIMITS OF BACKFILL

TYPICAL SECTION

NO SCALE

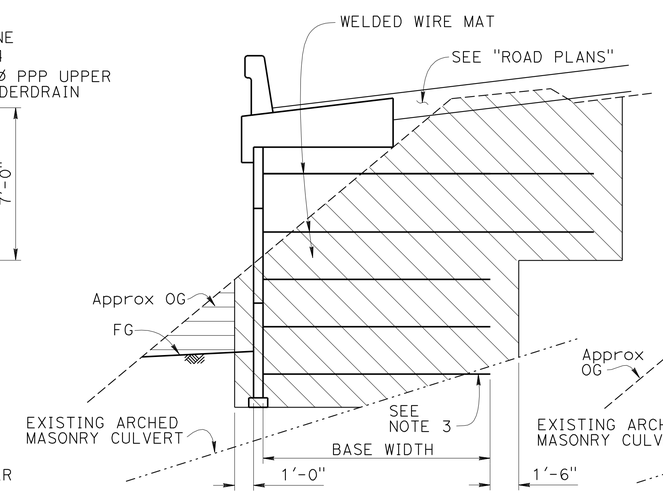

LIMITS OF EXCAVATION

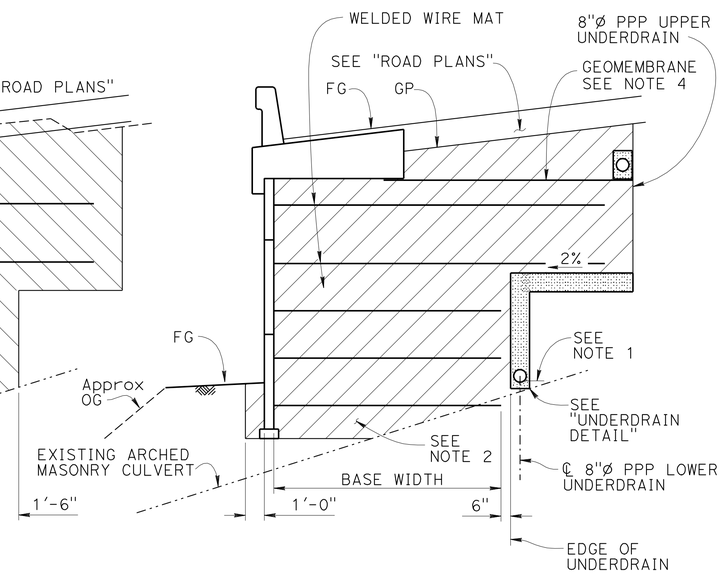

LIMITS OF BACKFILL

SECTION AT EXISTING ARCHED MASONRY CULVERT

NO SCALE

	BY	CHECKED
DESIGN	Jun Jung / David Soon	Wendy Hou
DETAILS	G. Dickerson / Y. Feng	Wendy Hou
QUANTITIES	Gerald Dickerson	Jun Ki Jung

STATE OF CALIFORNIA
DEPARTMENT OF TRANSPORTATION

DIVISION OF ENGINEERING SERVICES
STRUCTURE DESIGN
DESIGN BRANCH 7

BRIDGE NO. 05E0011
POST MILE 0.8

ENCHILADA CURVE IMPROVEMENT
RETAINING WALL NO. 3
EXCAVATION AND BACKFILL DETAILS

STRUCTURES DESIGN DETAIL SHEET (ENGLISH) (REV. 09-01-10)

ORIGINAL SCALE IN INCHES FOR REDUCED PLANS 0 1 2 3

UNIT: 3592
PROJECT NO. & PHASE: 0200000211-1
CONTRACT NO.: 02-2E3500

DISREGARD PRINTS BEARING EARLIER REVISION DATES

REVISION DATES 1-08-12 2-14-13 2-23-13

SHEET 9 OF 14

FILE => 05-rtw3-g-msed+05.dgn

USERNAME => s121614 DATE PLOTTED => 01-MAR-2013 TIME PLOTTED => 08:21

DIST	COUNTY	ROUTE	POST MILES TOTAL PROJECT	SHEET No.	TOTAL SHEETS
02	Tri	299	0.4/0.9	132	136

REGISTERED CIVIL ENGINEER 2-23-13 DATE

2-25-13
PLANS APPROVAL DATE

REGISTERED PROFESSIONAL ENGINEER Kelly Ann Holden No. 42268 Exp. 3/31/14 CIVIL STATE OF CALIFORNIA

The State of California or its officers or agents shall not be responsible for the accuracy or completeness of electronic copies of this plan sheet.

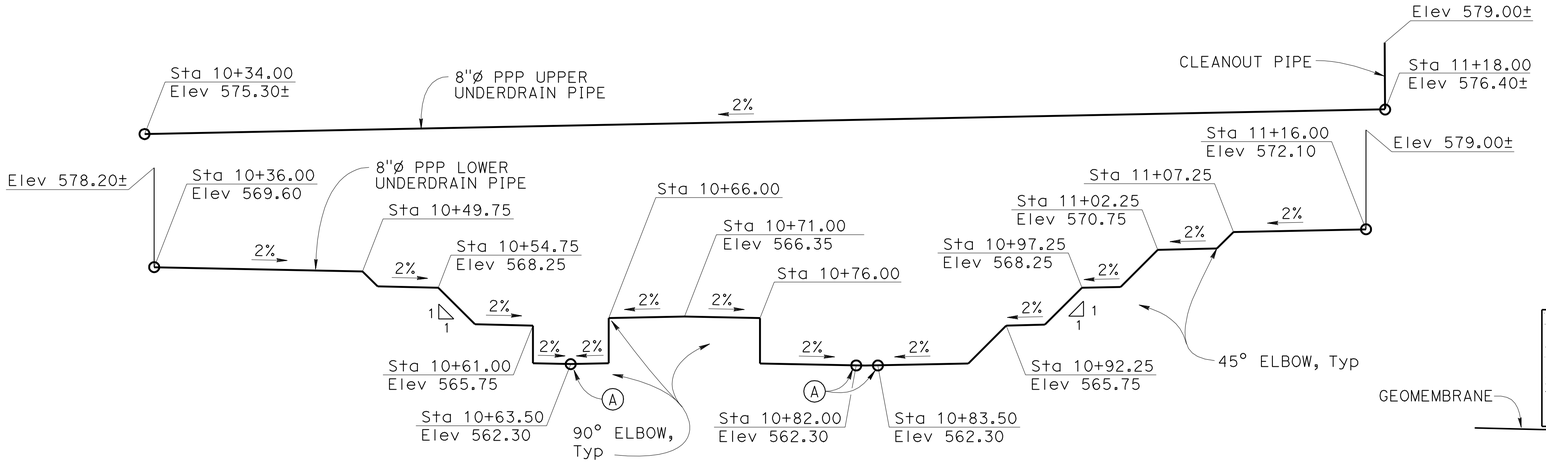

NOTE:
(A) Outlet pipe, see "OUTLET PIPE DETAIL"

UNDERDRAIN PROFILE
NO SCALE

DETAIL X
NO SCALE

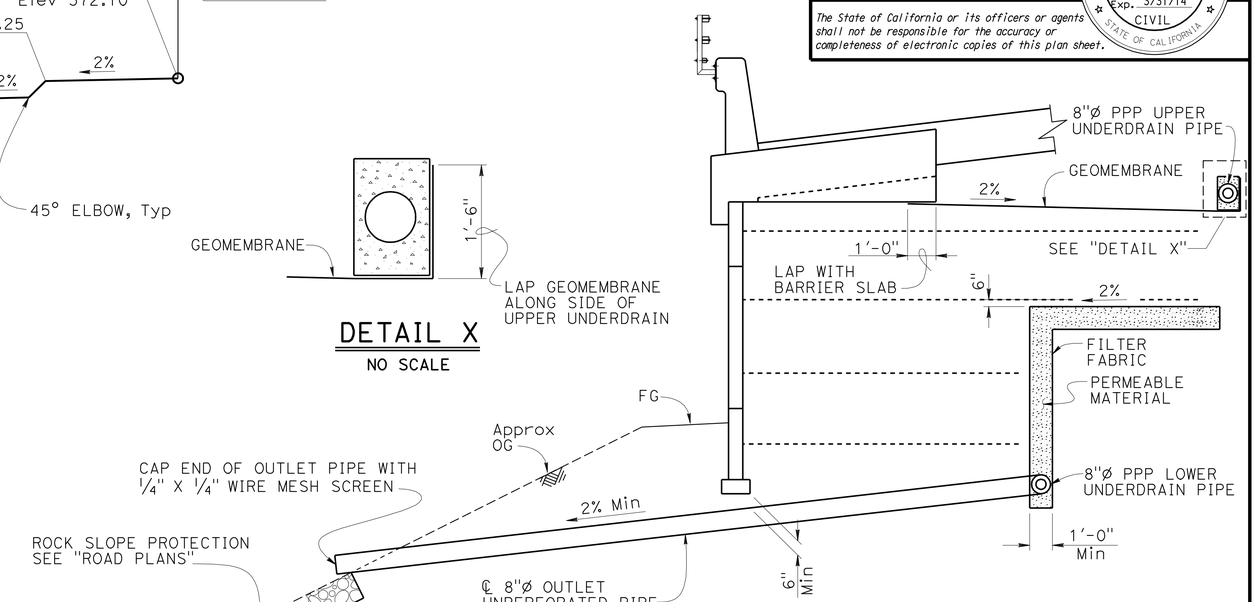

D87B D102 **OUTLET PIPE DETAIL**
NO SCALE

NOTE:
Lower Underdrain Outlet shown, Upper Underdrain Outlet similar

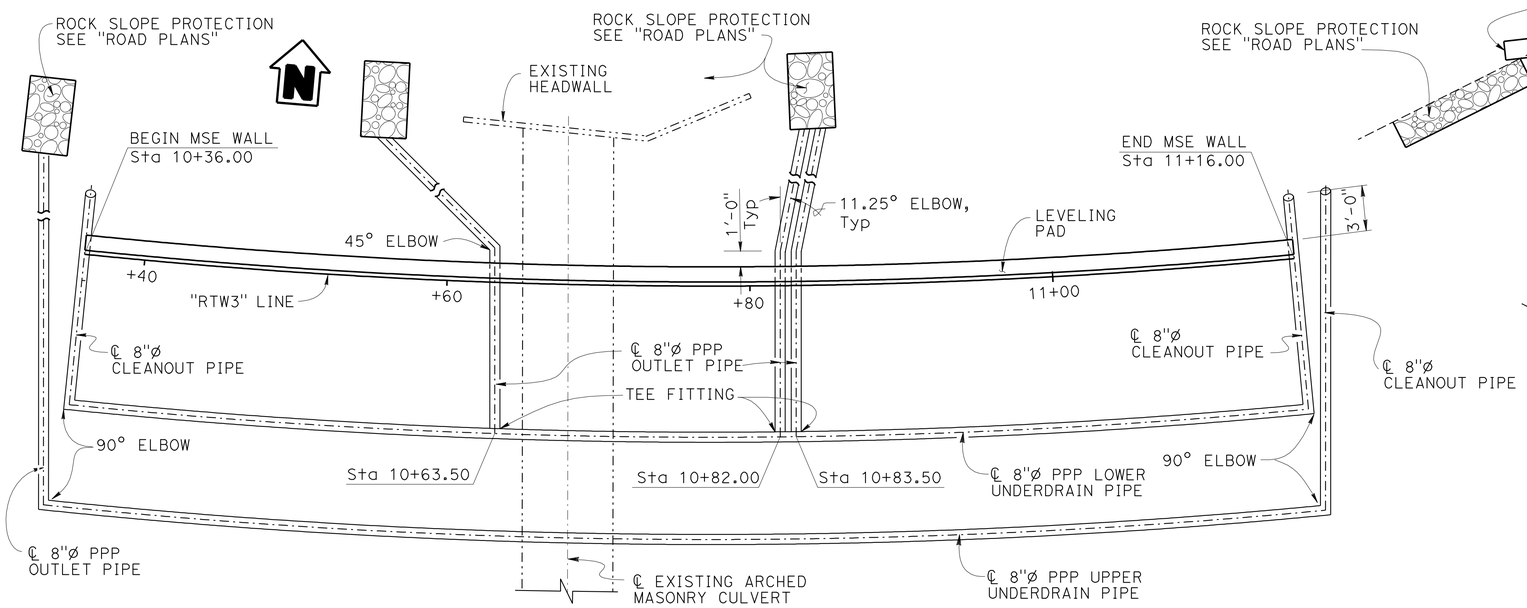

DRAINAGE PLAN
1" = 5'

NOTE:
THE CONTRACTOR SHALL VERIFY ALL CONTROLLING FIELD DIMENSIONS BEFORE ORDERING OR FABRICATING ANY MATERIAL.

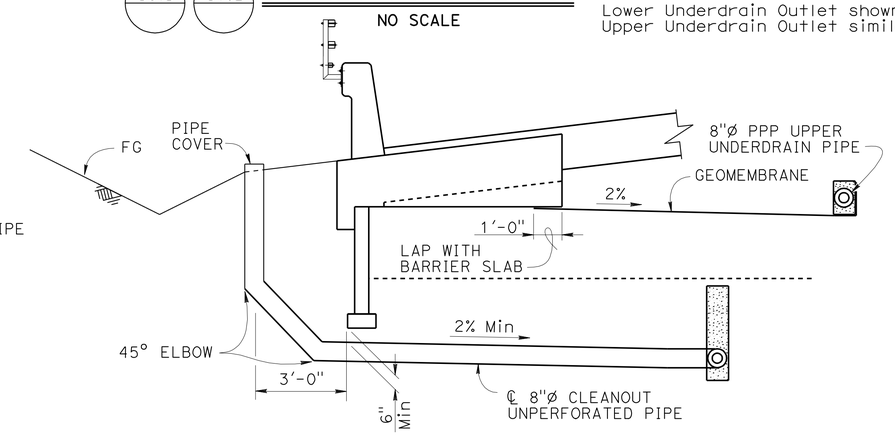

D87B D102 **CLEANOUT PIPE DETAIL**
NO SCALE

NOTE:
For details not shown, see "OUTLET PIPE DETAIL"

DESIGN	BY Jun Jung / David Soon	CHECKED Wendy Hou	
DETAILS	BY G. Dickerson / Y. Feng	CHECKED Wendy Hou	
QUANTITIES	BY David Alvarez	CHECKED Seiji Morimoto	

STATE OF CALIFORNIA
DEPARTMENT OF TRANSPORTATION

DIVISION OF ENGINEERING SERVICES
STRUCTURE DESIGN
DESIGN BRANCH 7

BRIDGE NO. 05E0011
POST MILE 0.8

ENCHILADA CURVE IMPROVEMENT
RETAINING WALL NO. 3
DRAINAGE DETAILS

STRUCTURES DESIGN DETAIL SHEET (ENGLISH) (REV. 09-01-10)

ORIGINAL SCALE IN INCHES FOR REDUCED PLANS 0 1 2 3

UNIT: 3592
PROJECT NO. & PHASE: 0200000211-1
CONTRACT NO.: 02-2E3500

DISREGARD PRINTS BEARING EARLIER REVISION DATES

REVISION DATES 1-28-12 9-26-12 2-14-13

SHEET 10 OF 14

FILE => 05-rtw3-h-msed-det.dgn

USERNAME => s121614 DATE PLOTTED => 01-MAR-2013 TIME PLOTTED => 08:21

DIST	COUNTY	ROUTE	POST MILES TOTAL PROJECT	SHEET No.	TOTAL SHEETS
02	Tri	299	0.4/0.9	133	136

REGISTERED CIVIL ENGINEER — 2-23-13 DATE
PLANS

2-25-13
APPROVAL DATE

REGISTERED PROFESSIONAL ENGINEER — Kelly Ann Holden No. 42268 Exp. 3/31/14 CIVIL — STATE OF CALIFORNIA

The State of California or its officers or agents shall not be responsible for the accuracy or completeness of electronic copies of this plan sheet.

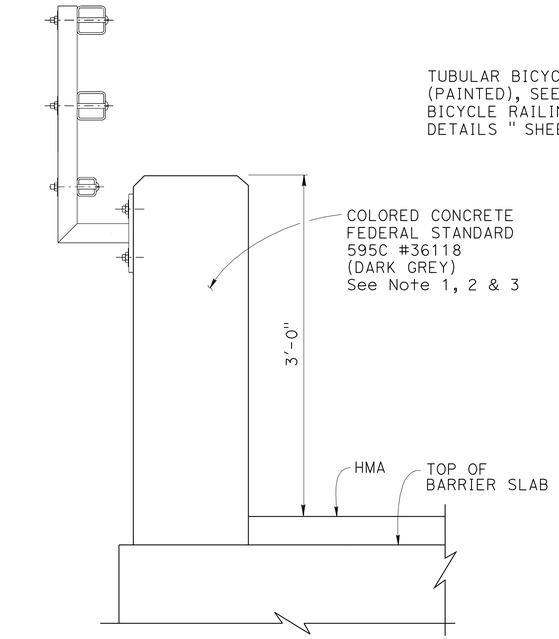

SECTION B-B
1½" = 1'-0"

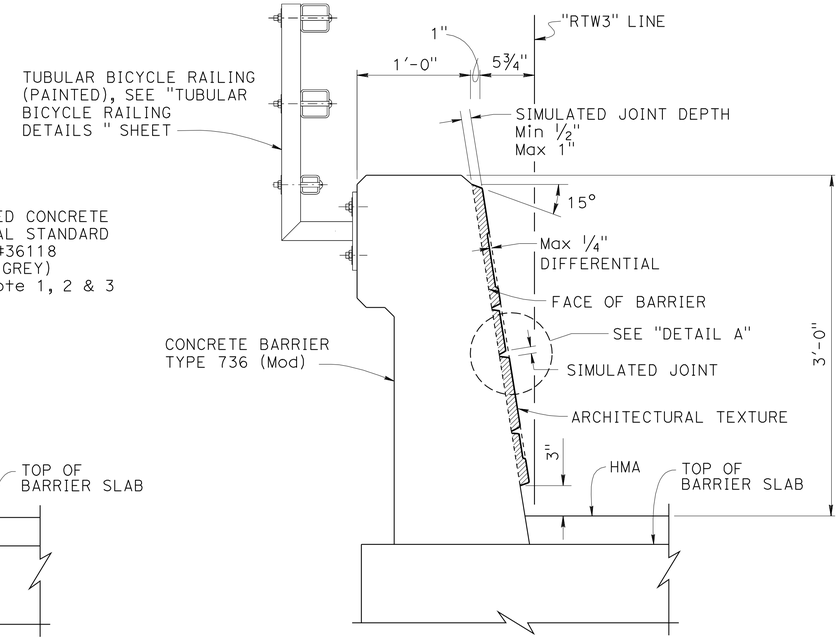

SECTION C-C
1½" = 1'-0"

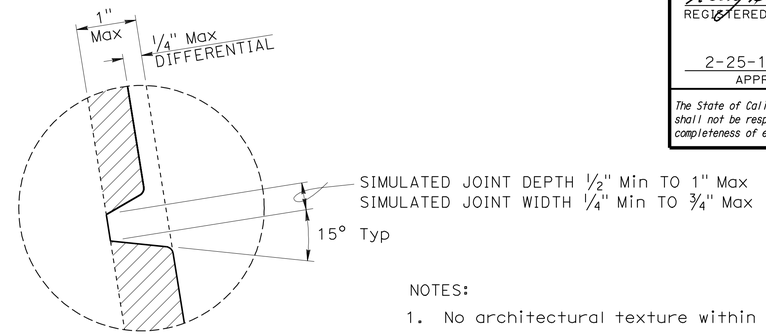

DETAIL A
NO SCALE

NOTES:
1. No architectural texture within 3'-0" of Begin Wall and End Wall
2. For transition front face of barrier, see B11-56
3. For Metal Beam Guard connection details, see RSP A77J2

LEGEND:
- COLORED CONCRETE (ENTIRE BARRIER) FEDERAL STANDARD 595C #36118 (DARK GREY)
- 75% CONCRETE STAIN FEDERAL STANDARD 595C #26008 (VERY DARK GRAY)
- 13% CONCRETE STAIN FEDERAL STANDARD 595C #26231 (MEDIUM GRAY)
- 2% CONCRETE STAIN FEDERAL STANDARD 595C #36650 (OFF WHITE)
- 10% CONCRETE STAIN FEDERAL STANDARD 595C #33717 (TAN)

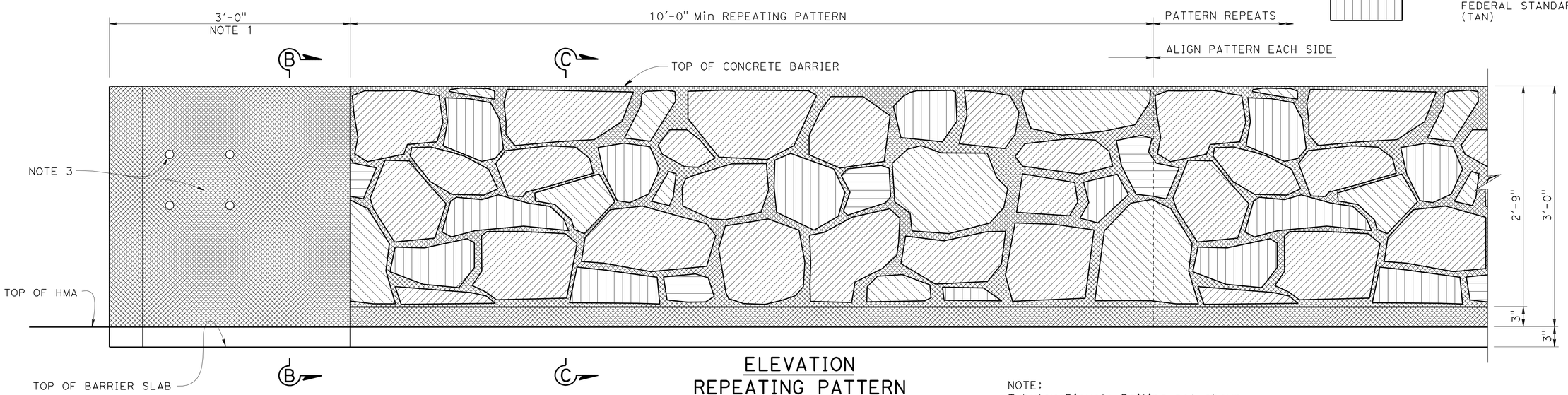

ELEVATION
REPEATING PATTERN
1½" = 1'-0"

NOTE:
Tubular Bicycle Railing not shown

	BY	CHECKED
DESIGN	Jun Ki Jung	Wendy Hou
DETAILS	G. Dickerson \ Y. Feng	Wendy Hou
QUANTITIES	David Alvarez	Seiji Morimoto

STATE OF CALIFORNIA
DEPARTMENT OF TRANSPORTATION

DIVISION OF ENGINEERING SERVICES
STRUCTURE DESIGN
DESIGN BRANCH 7

BRIDGE NO. 05E0011
POST MILE 0.8

ENCHILADA CURVE IMPROVEMENT
RETAINING WALL NO. 3
BARRIER ARCHITECTURAL DETAILS

STRUCTURES DESIGN DETAIL SHEET (ENGLISH) (REV. 09-01-10)

ORIGINAL SCALE IN INCHES FOR REDUCED PLANS 0 1 2 3

UNIT: 3592
PROJECT NO. & PHASE: 0200000211-1
CONTRACT NO.: 02-2E3500

DISREGARD PRINTS BEARING EARLIER REVISION DATES

REVISION DATES: 1-10-12 | 2-14-13 | 2-23-13

SHEET 11 OF 14

FILE => 05-rtw3-1-bar_archdet.dgn

USERNAME => s132614 DATE PLOTTED => 01-MAR-2013 TIME PLOTTED => 08:21

DIST	COUNTY	ROUTE	POST MILES TOTAL PROJECT	SHEET No.	TOTAL SHEETS
02	Tri	299	0.4/0.9	134	136

REGISTERED CIVIL ENGINEER — DATE

2-25-13
PLANS APPROVAL DATE

Gregory J. Kaderabek No. C40814 Exp. 3-31-13 CIVIL — REGISTERED PROFESSIONAL ENGINEER — STATE OF CALIFORNIA

The State of California or its officers or agents shall not be responsible for the accuracy or completeness of electronic copies of this plan sheet.

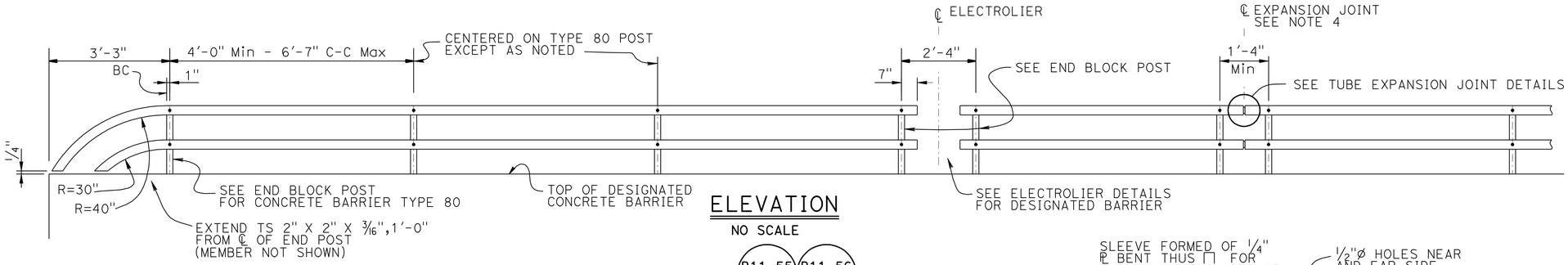

ELEVATION
NO SCALE

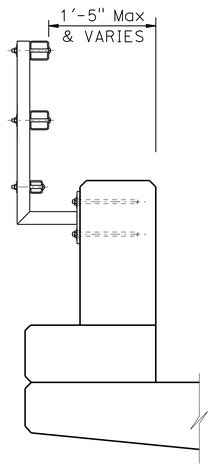

NOTE:
For details not shown, see "TYPE 732 OR 736"

TYPE 80 END BLOCK POST
1" = 1'-0"

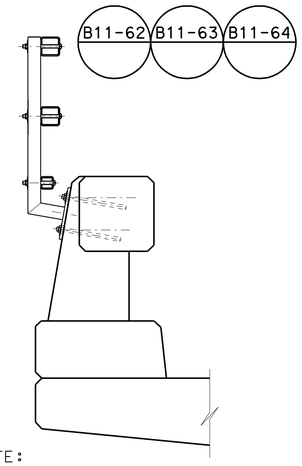

NOTE:
For details not shown, see "TYPE 732 OR 736"

TYPE 80
1" = 1'-0"

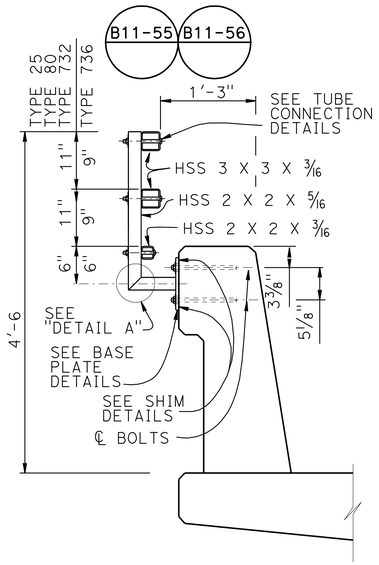

TYPE 732 OR 736
1" = 1'-0"

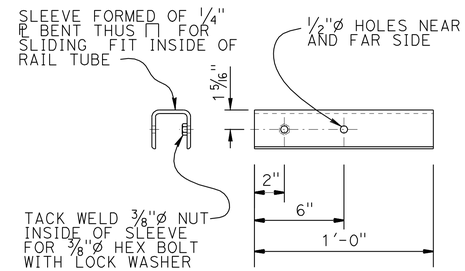

SLEEVE DETAIL
NO SCALE

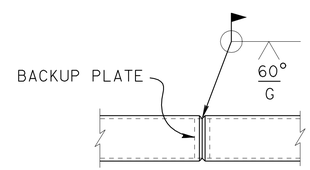

WELDED SPLICE DETAIL
NO SCALE

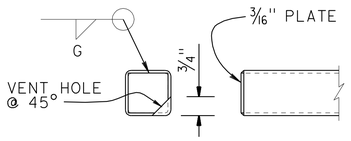

RAIL CAP DETAIL
NO SCALE

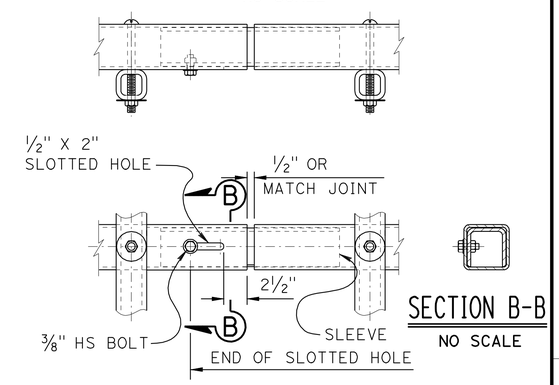

SECTION B-B
NO SCALE

TUBE EXPANSION JOINT DETAILS
NO SCALE

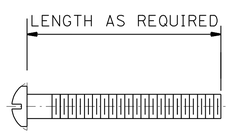

ROUND HEAD SCREW DETAIL
NO SCALE

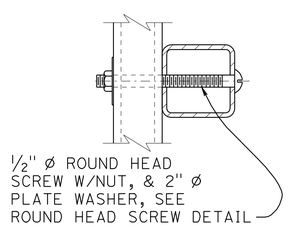

TUBE CONNECTION DETAIL
NO SCALE

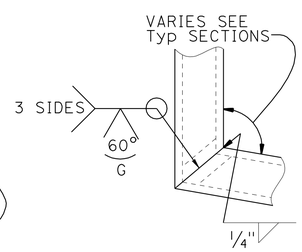

DETAIL A
NO SCALE

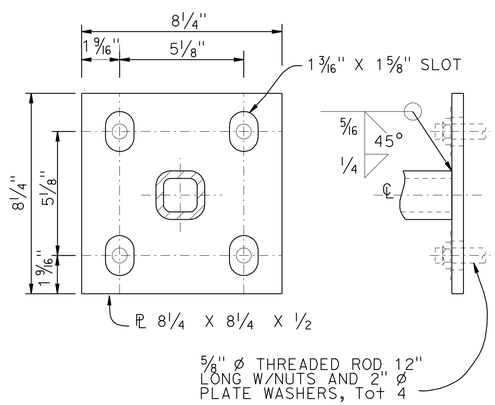

BASE PLATE DETAIL
NO SCALE

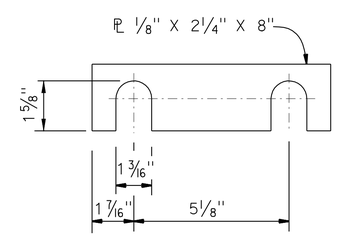

SHIM DETAILS
NO SCALE

NOTES:

1. Post shall be normal to railing.
2. Rail tubes shall be shop bent or fabricated to fit horizontal curve when radius is less than 12".
3. Tube splices shall be located in the tubes spanning deck or wall joints. Increase joint width in tubes to match expansion joint width and increase sleeve length correspondingly.
4. Top rail tube shall be continuous over not less than two posts except a short post spacing is permitted near deck or wall joints, electroliers, or other rail discontinuities as noted.
5. See Project Plans for limits of tubular hand railing.

ENCHILADA CURVE IMPROVEMENT
RETAINING WALL NO. 3
CONCRETE BARRIER TYPE 80, 732 & 736
TUBULAR BICYCLE RAILING DETAILS

STANDARD DRAWING
FILE NO. xs16-035
APPROVAL DATE March 2012

STATE OF CALIFORNIA
DEPARTMENT OF TRANSPORTATION

DIVISION OF ENGINEERING SERVICES

BRIDGE NO. 05E0011
POST MILE 0.8

DS OSD 2147A (ENGLISH STANDARD DRAWING "XS" BORDER REV. (02-02-11))

ORIGINAL SCALE IN INCHES FOR REDUCED PLANS 0 1 2 3

UNIT: 3592
PROJECT NUMBER & PHASE: 0200000211-1
CONTRACT NO.: 02-2E3500

DISREGARD PRINTS BEARING EARLIER REVISION DATES

REVISION DATES

SHEET 12 OF 14

FILE => 05-rtw3-u-tbrdet01.dgn

USERNAME => s121614 DATE PLOTTED => 01-MAR-2013 TIME PLOTTED => 08:21

DIST	COUNTY	ROUTE	POST MILES TOTAL PROJECT	SHEET No.	TOTAL SHEETS
02	Tri	299	0.4/0.9	135	136

CERTIFIED ENGINEERING GEOLOGIST 7-13-12 DATE

2-25-13
PLANS APPROVAL DATE

PROFESSIONAL GEOLOGIST Luis Paredes-Mejia No. 2329 Exp. 01-31-14 CERTIFIED ENGINEERING GEOLOGIST STATE OF CALIFORNIA

The State of California or its officers or agents shall not be responsible for the accuracy or completeness of electronic copies of this plan sheet.

This LOTB sheet was prepared in accordance with the Caltrans Soil & Rock Logging, Classification, & Presentation Manual (2010 Edition).
See 2010 Standard Plans A10F and A10G for Soil Legend, and A10H for Rock Legend.

BENCH MARK

TRI 299 0.54
Fnd 2¼" CADH Brass Disk in Concrete
37.15 Ft Rt "A1" Line Rte 299
Sta 111+07.93
N 673,743.070
E 1,865,923.082
Elev= 590.31
Vertical Datum: NAVD88

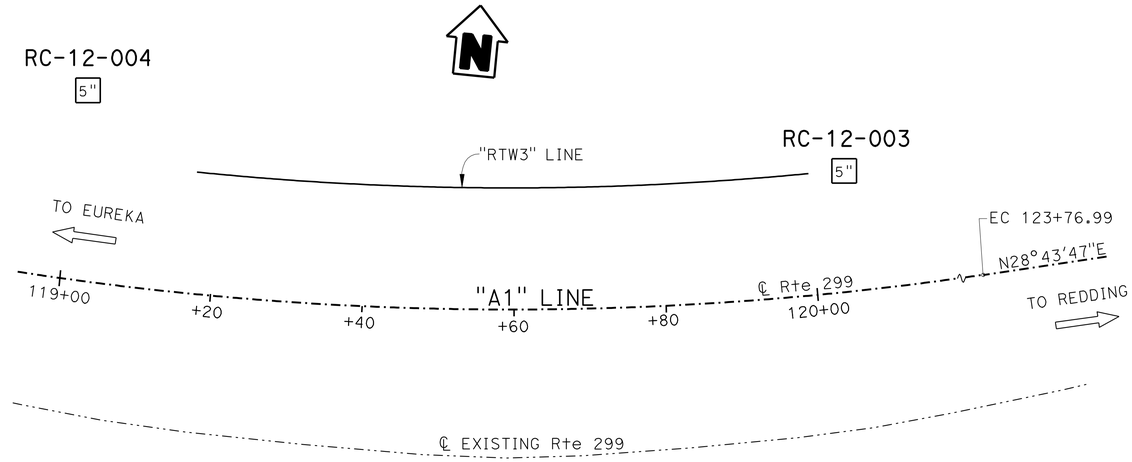

PLAN

1" = 10'

Note: ground water was not encountered during field investigation.

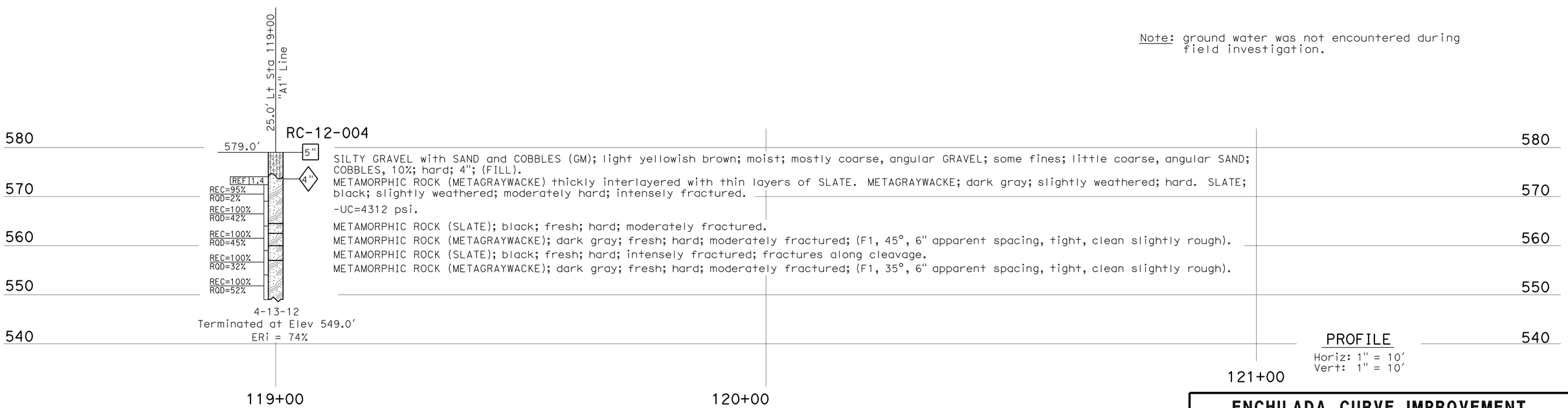

PROFILE

Horiz: 1" = 10'
Vert: 1" = 10'

ENCHILADA CURVE IMPROVEMENT

RETAINING WALL NO. 3

LOG OF TEST BORINGS 1 OF 2

ENGINEERING SERVICES	MATERIALS AND GEOTECHNICAL SERVICES	STATE OF CALIFORNIA DEPARTMENT OF TRANSPORTATION	DIVISION OF ENGINEERING SERVICES STRUCTURE DESIGN DESIGN BRANCH 7	BRIDGE NO. 05E0011 / POST MILE 0.8
FUNCTIONAL SUPERVISOR	DRAWN BY: I. G-Remmen	FIELD INVESTIGATION BY:		
NAME: M. Hagy	CHECKED BY: F. DeHaro	L. Paredes-Mejia		

OGS CIVIL LOG OF TEST BORINGS SHEET

ORIGINAL SCALE IN INCHES FOR REDUCED PLANS 0 1 2 3

UNIT: 3643
PROJECT NUMBER & PHASE: 02000002111 CONTRACT NO.: 02-2E3501

DISREGARD PRINTS BEARING EARLIER REVISION DATES

REVISION DATES 07-12-12 07-12-12

SHEET 13 OF 14

FILE => 05-rtw3-z-lotb01.dgn

USERNAME => s121614 DATE PLOTTED => 01-MAR-2013 TIME PLOTTED => 08:50

DIST	COUNTY	ROUTE	POST MILES TOTAL PROJECT	SHEET No.	TOTAL SHEETS
02	Tri	299	0.4/0.9	136	136

CERTIFIED ENGINEERING GEOLOGIST — DATE 7-13-12

PROFESSIONAL GEOLOGIST Luis M. Paredes-Mejia No. 2329 Exp. 1-31-14 CERTIFIED ENGINEERING GEOLOGIST STATE OF CALIFORNIA

2-25-13
PLANS APPROVAL DATE

The State of California or its officers or agents shall not be responsible for the accuracy or completeness of electronic copies of this plan sheet.

This LOTB sheet was prepared in accordance with the Caltrans Soil & Rock Logging, Classification, & Presentation Manual (2010 Edition).
See 2010 Standard Plans A10F and A10G for Soil Legend, and A10H for Rock Legend.

FOR PLAN VIEW, SEE
"LOG OF TEST BORINGS 1 OF 2"

Note: ground water was not encountered during field investigation.

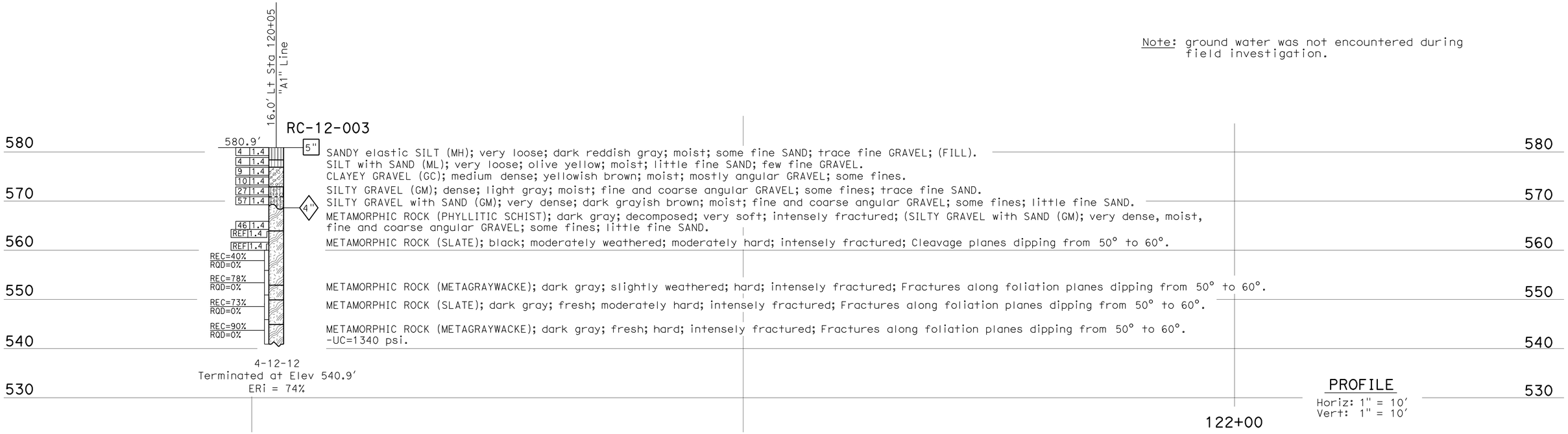

ENGINEERING SERVICES	MATERIALS AND GEOTECHNICAL SERVICES	STATE OF CALIFORNIA DEPARTMENT OF TRANSPORTATION	DIVISION OF ENGINEERING SERVICES STRUCTURE DESIGN DESIGN BRANCH 7	BRIDGE NO. 05E0011 POST MILE 0.8	ENCHILADA CURVE IMPROVEMENT RETAINING WALL NO. 3 LOG OF TEST BORINGS 2 OF 2
FUNCTIONAL SUPERVISOR NAME: M. Hagy	DRAWN BY: I. G-Remmen CHECKED BY: F. DeHaro	FIELD INVESTIGATION BY: L. Paredes-Mejia			

OGS CIVIL LOG OF TEST BORINGS SHEET

ORIGINAL SCALE IN INCHES FOR REDUCED PLANS 0 1 2 3

UNIT: 3643
PROJECT NUMBER & PHASE: 02000002111 CONTRACT NO.: 02-2E3501

DISREGARD PRINTS BEARING EARLIER REVISION DATES → 07-12-12 07-12-12

SHEET 14 OF 14

FILE => 05-rtw3-z-lotb02.dgn

USERNAME => s121614 DATE PLOTTED => 01-MAR-2013 TIME PLOTTED => 08:51