Dist	COUNTY	ROUTE	KILOMETER POST TOTAL PROJECT	SHEET No.	TOTAL SHEETS
04	Son	101	7.3/8.3	1	320

HPLUL-6204(101)
HPLUL-6204(102)

STATE OF CALIFORNIA
DEPARTMENT OF TRANSPORTATION

PROJECT PLANS FOR CONSTRUCTION ON
STATE HIGHWAY
IN SONOMA COUNTY
IN PETALUMA
ON ROUTE 101 FROM 0.4 KM SOUTH TO 0.7 KM NORTH OF EAST WASHINGTON STREET OVERCROSSING

TO BE SUPPLEMENTED BY STANDARD PLANS DATED JULY 2004

INDEX OF SHEETS

SHEET No.	DESCRIPTION
1	TITLE AND LOCATION MAP
2-5	LOCATIONS OF CONSTRUCTION
6	KEY MAP AND LINE INDEX
7-12	LAYOUTS
13-15	PROFILES AND SUPERELEVATION DIAGRAMS
16-34	CONSTRUCTION DETAILS
35-42	TEMPORARY WATER POLLUTION CONTROL PLANS, DETAILS AND QUANTITIES
43-54	EROSION CONTROL PLANS, DETAILS AND QUANTITIES
55-56	CONTOUR GRADING
57-79	DRAINAGE PLANS, PROFILES, DETAILS AND QUANTITIES
80-90	SANITARY SEWER PLANS, PROFILES, DETAILS AND QUANTITIES
91-114	UTILITY PLANS, PROFILES, DETAILS AND QUANTITIES
115	CONSTRUCTION AREA SIGNS
116-142	STAGE CONSTRUCTION PLANS, DETAILS AND QUANTITIES
143-145	DETOUR PLANS
146-153	PAVEMENT DELINEATION PLANS AND QUANTITIES
154-165	SIGN PLANS, DETAILS AND QUANTITIES
166-167	SUMMARY OF QUANTITIES
168-173	TREE REMOVAL
174-215	ELECTRICAL PLANS
216-262	REVISED AND NEW STANDARD PLANS

STRUCTURE PLANS

263-291	WASHINGTON CREEK ON-RAMP Br No. 20-0163S
292-320	RETAINING WALL No. 2 AND Br No. 20E0017 R/L

THE STANDARD PLANS LIST APPLICABLE TO THIS CONTRACT IS INCLUDED IN THE NOTICE TO BIDDERS AND SPECIAL PROVISIONS BOOK.

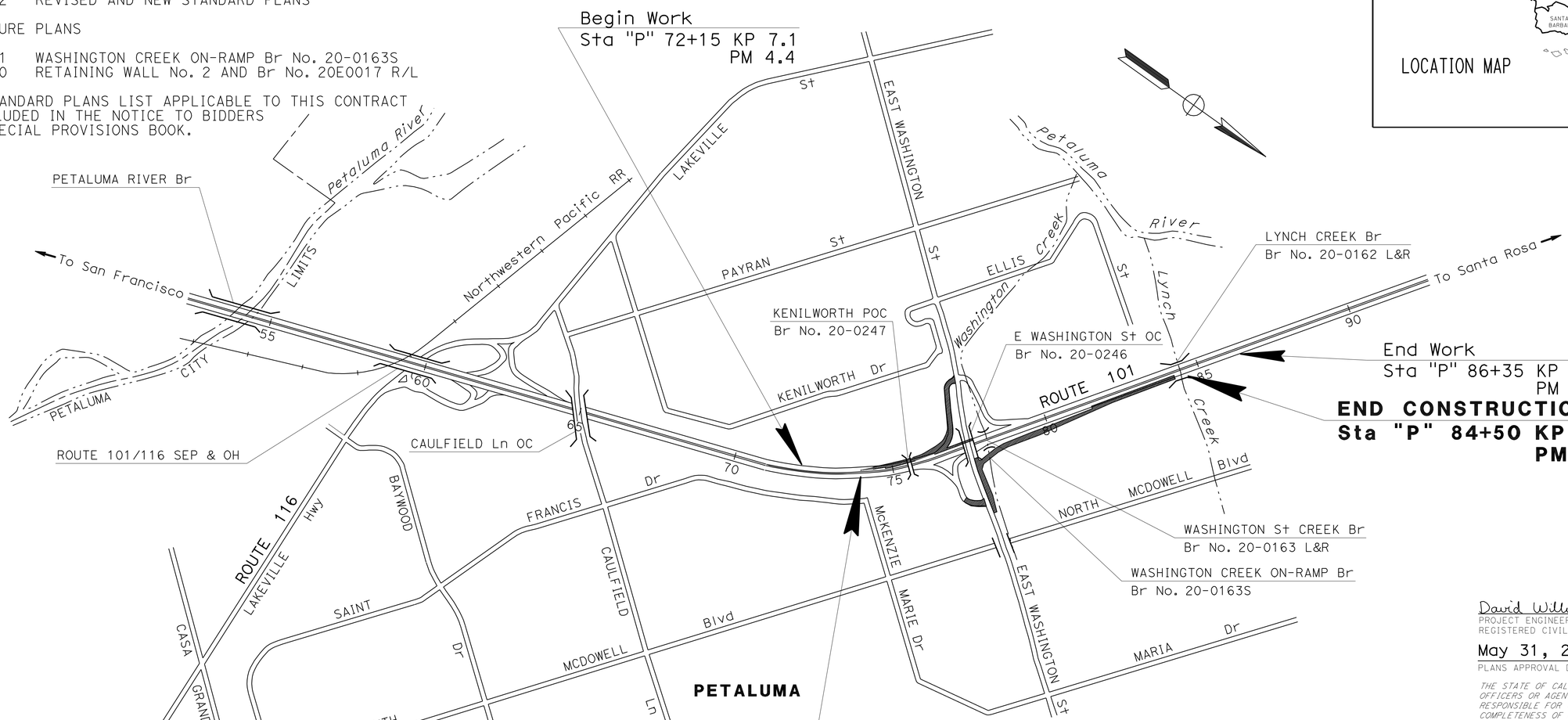

NO SCALE

LOCATION MAP

Caltrans Metric

APPROVED AS TO IMPACT ON STATE FACILITIES AND CONFORMANCE WITH APPLICABLE STATE STANDARDS AND PRACTICES AND THAT TECHNICAL OVERSIGHT WAS PERFORMED.

CONSULTANT DESIGN ENGINEER: DAVID A. WILLIAMS — REGISTRATION No. C49486 — LICENSE Exp DATE 9/3/12

CALTRANS DESIGN OVERSIGHT APPROVAL: HASSAN NIKZAD — DATE SIGNED 9/30/10

David Williams 9/3/10
PROJECT ENGINEER REGISTERED CIVIL ENGINEER — DATE

May 31, 2011
PLANS APPROVAL DATE

REGISTERED PROFESSIONAL ENGINEER — David A. Williams — No. C58697 — Exp. 12/31/12 — CIVIL — STATE OF CALIFORNIA

THE STATE OF CALIFORNIA OR ITS OFFICERS OR AGENTS SHALL NOT BE RESPONSIBLE FOR THE ACCURACY OR COMPLETENESS OF ELECTRONIC COPIES OF THIS PLAN SHEET.

URS CORPORATION
1380 LEAD HILL BLVD, SUITE 100
ROSEVILLE, CA 95661

CITY OF PETALUMA
11 ENGLISH STREET
PETALUMA, CA 94952

CONTRACT No.	04-264044
PROJECT ID	0400020503

LAST REVISION 9-30-10 — DATE PLOTTED => 20-JUL-2011 — TIME PLOTTED => 0559

THE CONTRACTOR SHALL POSSESS THE CLASS (OR CLASSES) OF LICENSE AS SPECIFIED IN THE "NOTICE TO BIDDERS."

Dist	COUNTY	ROUTE	KILOMETER POST TOTAL PROJECT	SHEET No.	TOTAL SHEETS
04	Son	101	7.3/8.3	2	320

David Williams 9/3/10
REGISTERED CIVIL ENGINEER DATE

5-31-11
PLANS APPROVAL DATE

REGISTERED PROFESSIONAL ENGINEER David A. Williams No. C58697 Exp. 12/31/12 CIVIL STATE OF CALIFORNIA

THE STATE OF CALIFORNIA OR ITS OFFICERS OR AGENTS SHALL NOT BE RESPONSIBLE FOR THE ACCURACY OR COMPLETENESS OF ELECTRONIC COPIES OF THIS PLAN SHEET.

URS CORPORATION
1380 LEAD HILL BLVD,
SUITE 100
ROSEVILLE, CA 95661

CITY OF PETALUMA
11 ENGLISH STREET
PETALUMA, CA 94952

NOTES:

1. DIMENSIONS OF THE PAVEMENT STRUCTURES (STRUCTURAL SECTIONS) ARE SUBJECT TO TOLERANCES SPECIFIED IN THE STANDARD SPECIFICATIONS.
2. SUPERELEVATIONS ARE SHOWN ON THE SUPERELEVATION DIAGRAMS.
3. SEE "LAYOUT" AND "CONSTRUCTION DETAILS" SHEETS FOR EXACT LOCATION AND LIMITS OF CURB, HMA DIKE, METAL BEAM GUARD RAILING, AND BARRIER.
4. PLACE 60 mm (Min) HMA (TYPE A) UNDER DIKES.
5. IMPORTED BORROW (LIGHTWEIGHT AGGREGATE) SHALL BE PLACED BELOW STRUCTURAL SECTION AS SHOWN ON CONSTRUCTION DETAIL SHEETS.
6. SEE CONSTRUCTION DETAIL SHEETS FOR DEEP SOIL-CEMENT MIXING LIMITS AND DETAILS.

TYPICAL PAVEMENT STRUCTURE SECTIONS

Caltrans Metric

1	45 mm RHMA-G 165 mm HMA (TYPE A) 210 mm LCB 405 mm CI 4 AS
2	45 mm RHMA-G 135 mm HMA (TYPE A) 225 mm CI 2 AB 375 mm CI 4 AS
3	45 mm RHMA-G 165 mm HMA (TYPE A) 105 mm CI 2 AB
4	345 mm HMA (TYPE A) 150 mm CI 2 AB
5	45 mm RHMA-G 120 mm HMA (TYPE A) 195 mm CI 2 AB 285 mm CI 4 AS
6	COLD PLANE AC (50 mm Max) 45 mm RHMA-G Var HMA (TYPE A) (75 mm Max)

ABBREVIATIONS:

RHMA-G	RUBBERIZED HOT MIX ASPHALT-GAP GRADED
RAC	RUBBERIZED ASPHALT CONCRETE
REC	RECLAIMED
PMS	PLANT-MIXED SURFACING
IBM	IMPORTED BASE MATERIAL
CTB	CEMENT TREATED BASE
CTS	CEMENT TREATED SUBGRADE
WSM	WELDED STEEL MESH
MSN	MARIN-SONOMA NARROWS PROJECT

DESIGN DESIGNATION

ROUTE 101 AUX LANE	TI = 13.5, R-VALUE = 15
SB ON-RAMP, NB OFF-RAMP	TI = 10.0, R-VALUE = 5
NB ON-RAMP	TI = 10.0, R-VALUE = 50
EAST WASHINGTON STREET	TI = 10.0, R-VALUE = 5
EAST WASHINGTON STREET/NB ON-RAMP	TI = 10.0, R-VALUE = 15

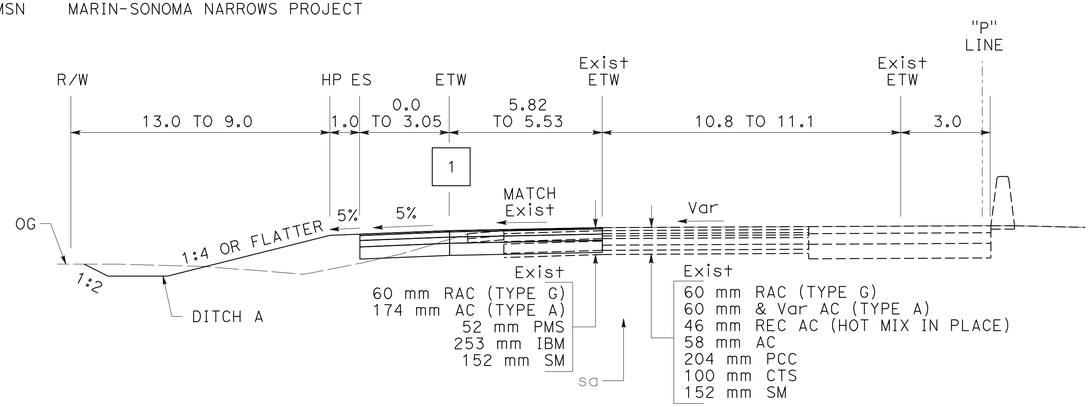

SOUTHBOUND ROUTE 101
"P" 74+28.991 TO 74+77.976

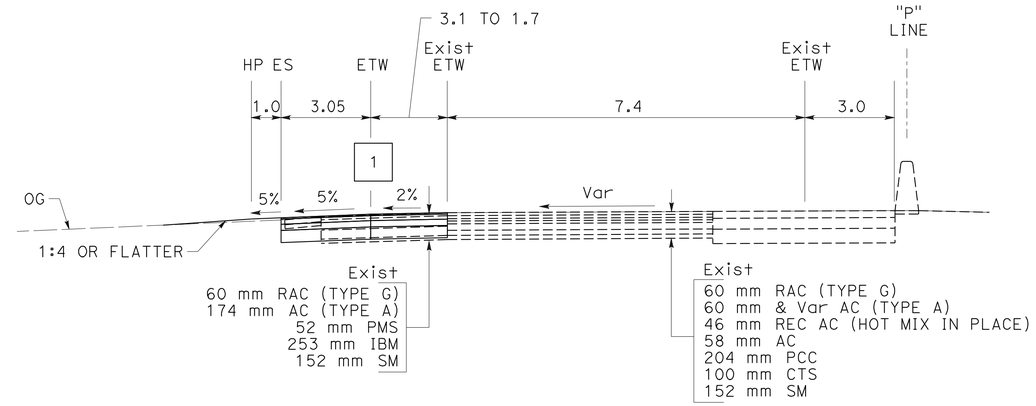

SOUTHBOUND ROUTE 101
"P" 76+39.130 TO 77+63.860

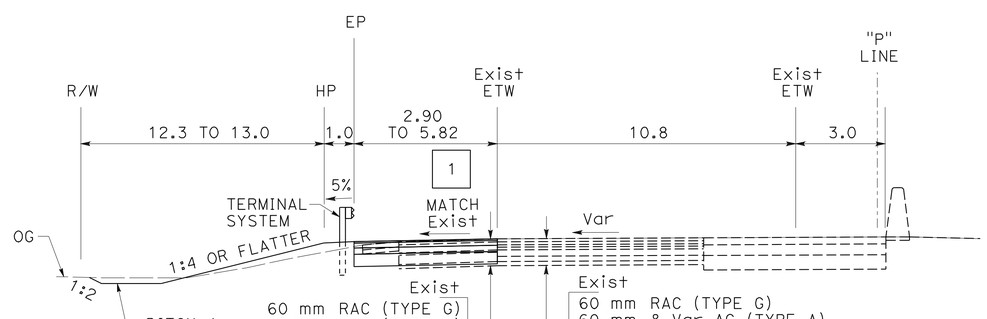

SOUTHBOUND ROUTE 101
"P" 74+00.000 TO 74+28.991

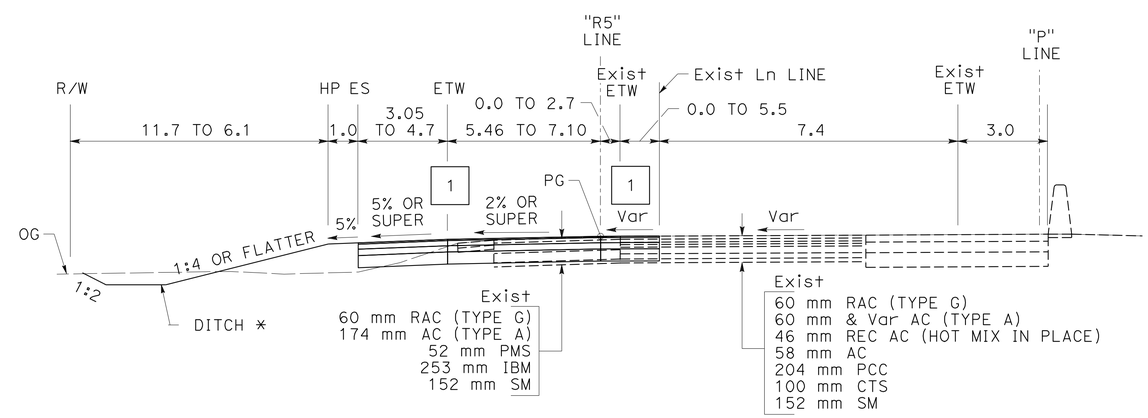

SOUTHBOUND ROUTE 101
"P" 74+77.976 TO 76+39.130

* STA 74+77.976 TO 76+01.553 DITCH A
STA 76+01.553 TO 76+39.130 DITCH B
DIMENSION Lt OF "R5" LINE ARE PERPENDICULAR TO "R5" LINE.

TYPICAL CROSS SECTIONS

NO SCALE

ALL DIMENSIONS ARE IN METERS
UNLESS OTHERWISE SHOWN

X-1

REVISED BY | DATE REVISED

SHERINA LAM | DAVID A. WILLIAMS

CALCULATED-DESIGNED BY | CHECKED BY

CONSULTANT FUNCTIONAL SUPERVISOR | RAMSEY HISSEN

STATE OF CALIFORNIA - DEPARTMENT OF TRANSPORTATION
Caltrans

LAST REVISION 10-01-10 | DATE PLOTTED => 31-MAY-2011 | TIME PLOTTED => 10:31

Dist	COUNTY	ROUTE	KILOMETER POST TOTAL PROJECT	SHEET No.	TOTAL SHEETS
04	Son	101	7.3/8.3	3	320

David Williams 9/3/10
REGISTERED CIVIL ENGINEER DATE

5-31-11
PLANS APPROVAL DATE

REGISTERED PROFESSIONAL ENGINEER David A. Williams No. C58697 Exp. 12/31/12 CIVIL STATE OF CALIFORNIA

THE STATE OF CALIFORNIA OR ITS OFFICERS OR AGENTS SHALL NOT BE RESPONSIBLE FOR THE ACCURACY OR COMPLETENESS OF ELECTRONIC COPIES OF THIS PLAN SHEET.

URS CORPORATION
1380 LEAD HILL BLVD,
SUITE 100
ROSEVILLE, CA 95661

CITY OF PETALUMA
11 ENGLISH STREET
PETALUMA, CA 94952

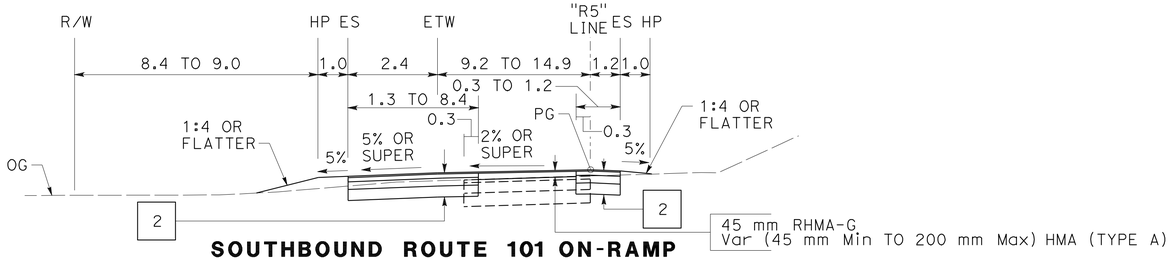

SOUTHBOUND ROUTE 101 ON-RAMP
"R5" 78+40.973 TO 78+71.820

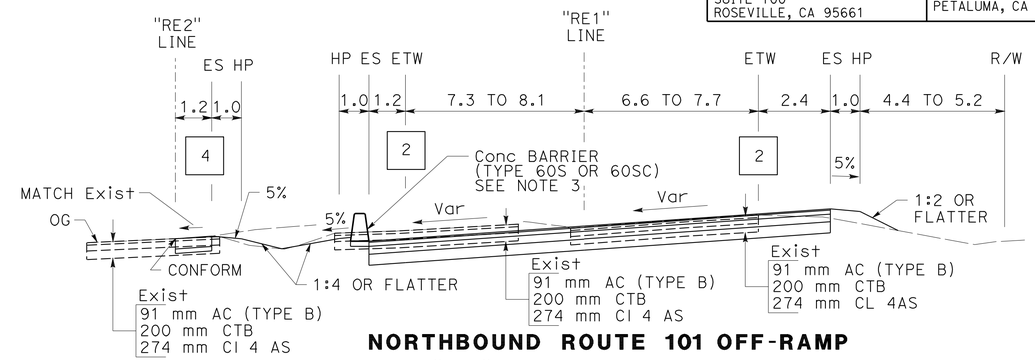

NORTHBOUND ROUTE 101 OFF-RAMP
"RE1" 78+06.011 TO 78+54.721

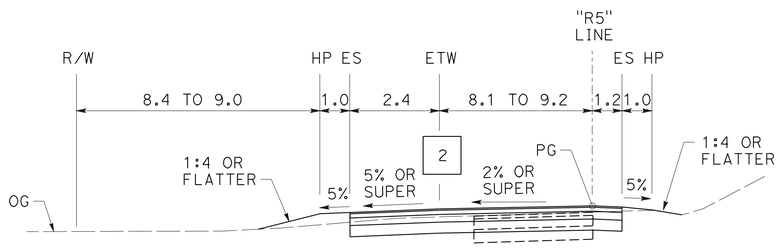

SOUTHBOUND ROUTE 101 ON-RAMP
"R5" 78+02.760 TO 78+40.973

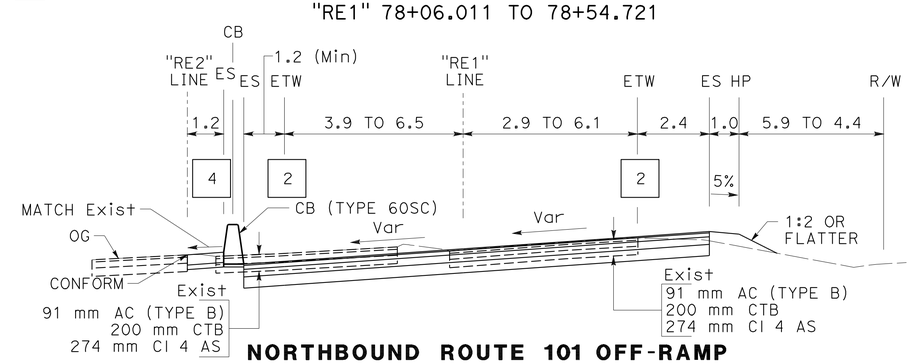

NORTHBOUND ROUTE 101 OFF-RAMP
"RE1" 77+60.596 TO 78+06.011

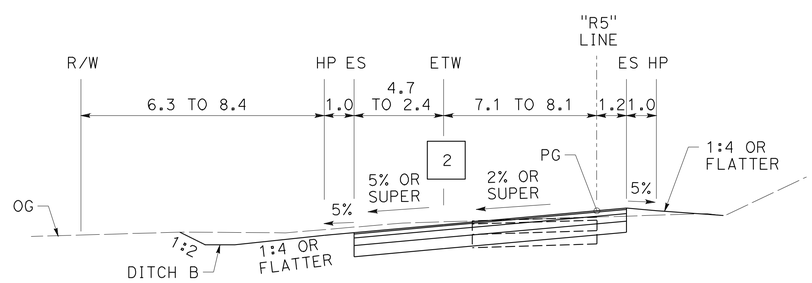

SOUTHBOUND ROUTE 101 ON-RAMP
"R5" 76+37.102 TO 78+02.760

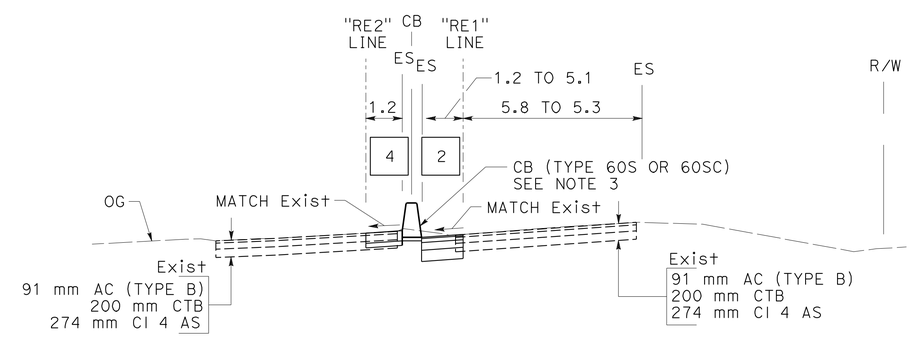

NORTHBOUND ROUTE 101 OFF-RAMP
"RE2" 17+12.769 TO "RE1" 77+60.596

TYPICAL CROSS SECTIONS

NO SCALE

ALL DIMENSIONS ARE IN METERS
UNLESS OTHERWISE SHOWN

X-2

REVISED BY | DATE REVISED
SHERINA LAM | DAVID A. WILLIAMS
CALCULATED-DESIGNED BY | CHECKED BY
CONSULTANT FUNCTIONAL SUPERVISOR
RAMSEY HISSEN

STATE OF CALIFORNIA - DEPARTMENT OF TRANSPORTATION
Caltrans

LAST REVISION 09-03-10 | DATE PLOTTED => 31-MAY-2011 | TIME PLOTTED => 10:31

Dist	COUNTY	ROUTE	KILOMETER POST TOTAL PROJECT	SHEET No.	TOTAL SHEETS
04	Son	101	7.3/8.3	4	320

David Williams 9/3/10
REGISTERED CIVIL ENGINEER DATE

5-31-11
PLANS APPROVAL DATE

REGISTERED PROFESSIONAL ENGINEER David A. Williams No. C58697 Exp. 12/31/12 CIVIL STATE OF CALIFORNIA

THE STATE OF CALIFORNIA OR ITS OFFICERS OR AGENTS SHALL NOT BE RESPONSIBLE FOR THE ACCURACY OR COMPLETENESS OF ELECTRONIC COPIES OF THIS PLAN SHEET.

URS CORPORATION
1380 LEAD HILL BLVD,
SUITE 100
ROSEVILLE, CA 95661

CITY OF PETALUMA
11 ENGLISH STREET
PETALUMA, CA 94952

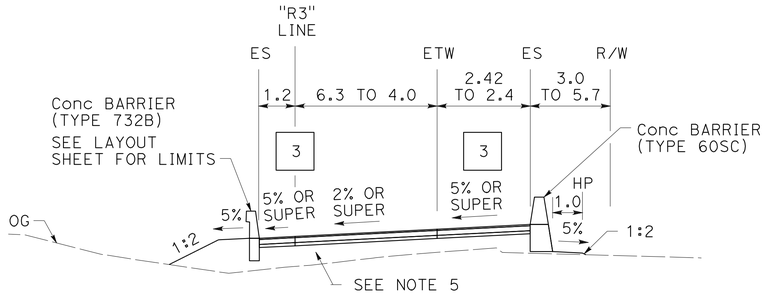

NORTHBOUND ROUTE 101 ON-RAMP
"R3" 80+29.148 TO 80+78.169

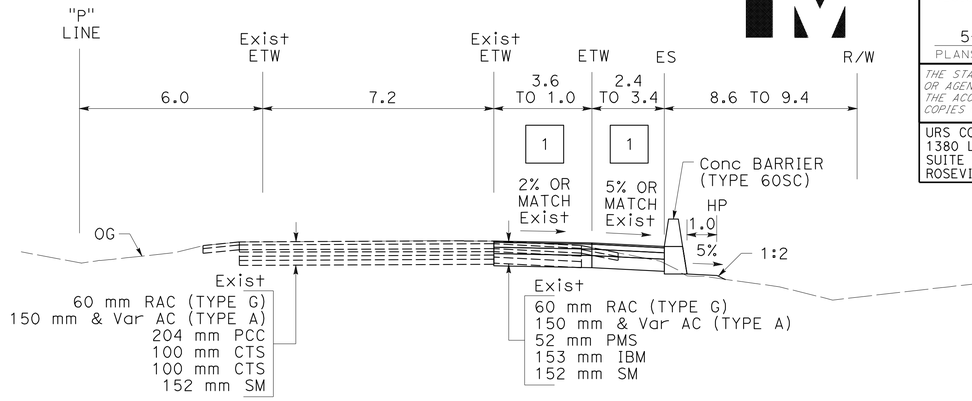

NORTHBOUND ROUTE 101
"P" 82+55.392 TO 83+85.742

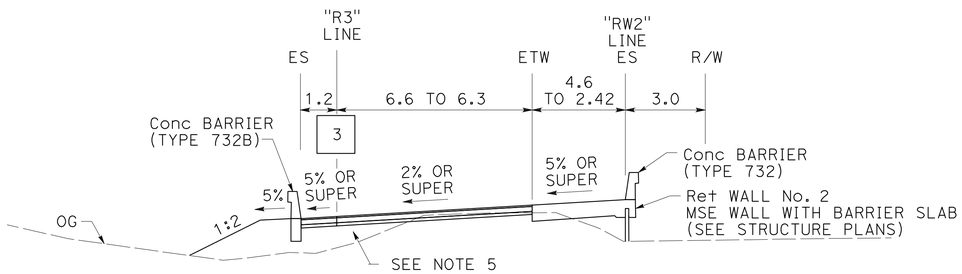

NORTHBOUND ROUTE 101 ON-RAMP
"R3" 79+81.012 TO 80+29.148

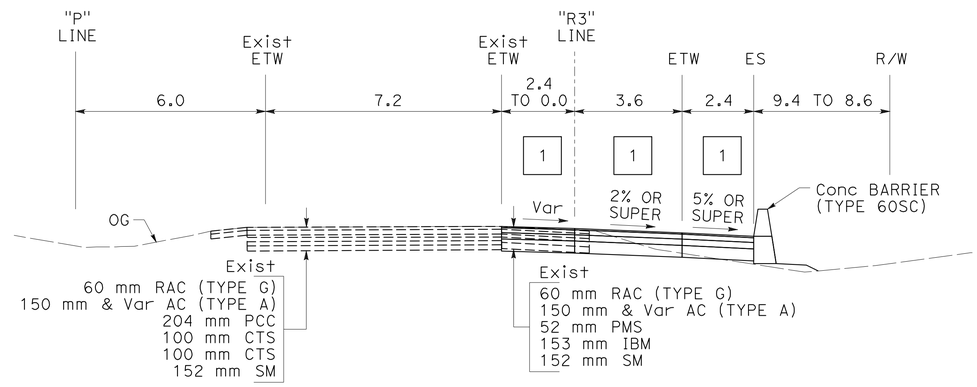

NORTHBOUND ROUTE 101 ON-RAMP
"R3" 81+40.000 TO 82+56.004

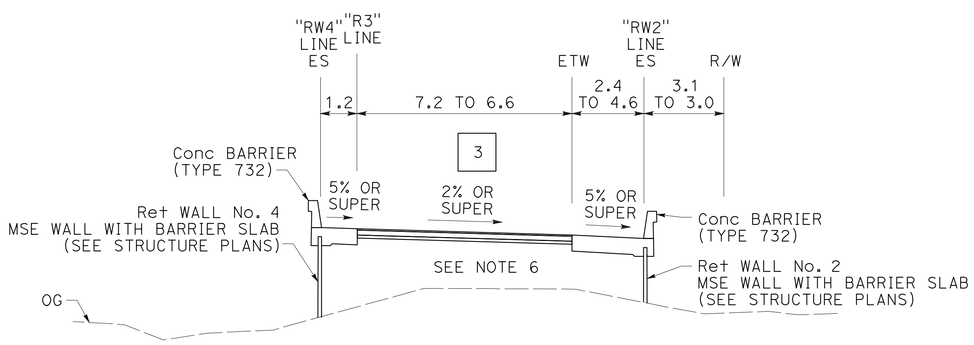

NORTHBOUND ROUTE 101 ON-RAMP
"R3" 78+00.137 EB TO 79+81.012

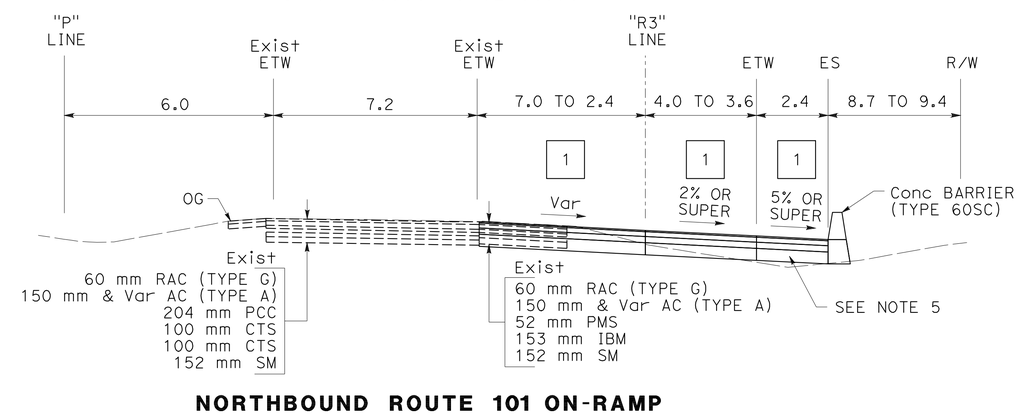

NORTHBOUND ROUTE 101 ON-RAMP
"R3" 80+78.169 TO 81+40.000

TYPICAL CROSS SECTIONS
NO SCALE

ALL DIMENSIONS ARE IN METERS
UNLESS OTHERWISE SHOWN

X-3

STATE OF CALIFORNIA - DEPARTMENT OF TRANSPORTATION
Caltrans

CONSULTANT FUNCTIONAL SUPERVISOR: RAMSEY HISSEN
CALCULATED-DESIGNED BY: SHERINA LAM
CHECKED BY: DAVID A. WILLIAMS
REVISED BY
DATE REVISED

LAST REVISION 09-03-10
DATE PLOTTED => 31-MAY-2011
TIME PLOTTED => 10:32

Dist	COUNTY	ROUTE	KILOMETER POST TOTAL PROJECT	SHEET No.	TOTAL SHEETS
04	Son	101	7.3/8.3	5	320

David Williams 9/3/10
REGISTERED CIVIL ENGINEER DATE

5-31-11
PLANS APPROVAL DATE

REGISTERED PROFESSIONAL ENGINEER David A. Williams No. C58697 Exp. 12/31/12 CIVIL STATE OF CALIFORNIA

THE STATE OF CALIFORNIA OR ITS OFFICERS OR AGENTS SHALL NOT BE RESPONSIBLE FOR THE ACCURACY OR COMPLETENESS OF ELECTRONIC COPIES OF THIS PLAN SHEET.

URS CORPORATION
1380 LEAD HILL BLVD,
SUITE 100
ROSEVILLE, CA 95661

CITY OF PETALUMA
11 ENGLISH STREET
PETALUMA, CA 94952

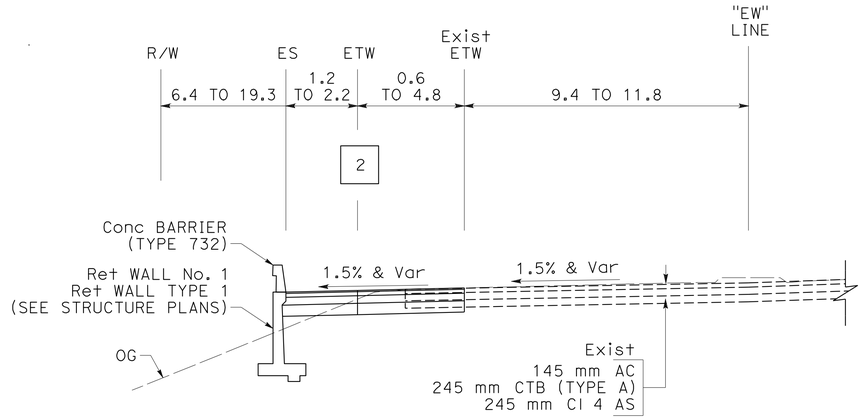

EAST WASHINGTON STREET
"EW" 14+94.674 TO 15+15.000
"EW" 15+90.000 TO 16+33.727

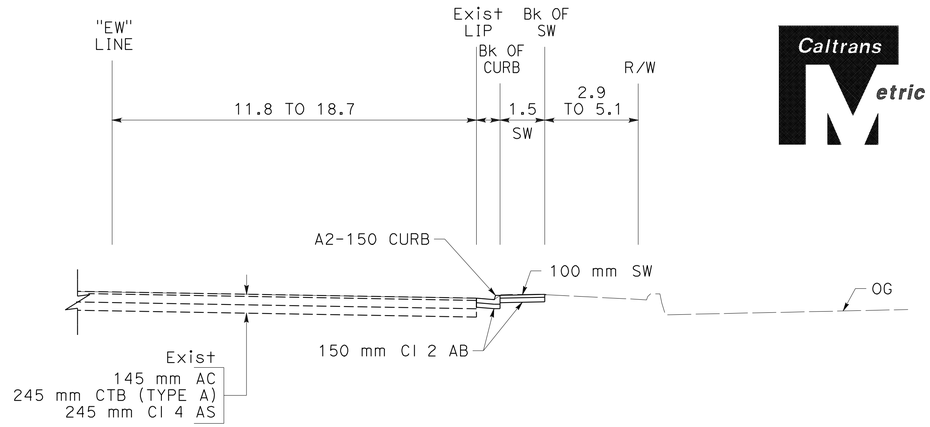

EAST WASHINGTON STREET
"EW" 11+66.078 TO 12+09.958

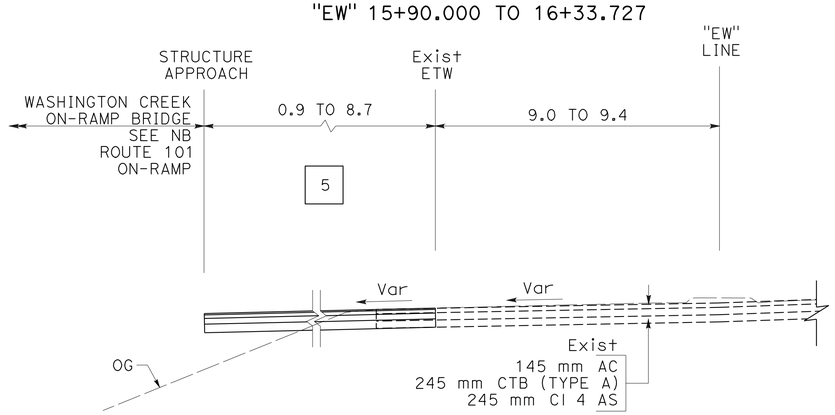

EAST WASHINGTON STREET
"EW" 14+70.917 TO 14+94.674

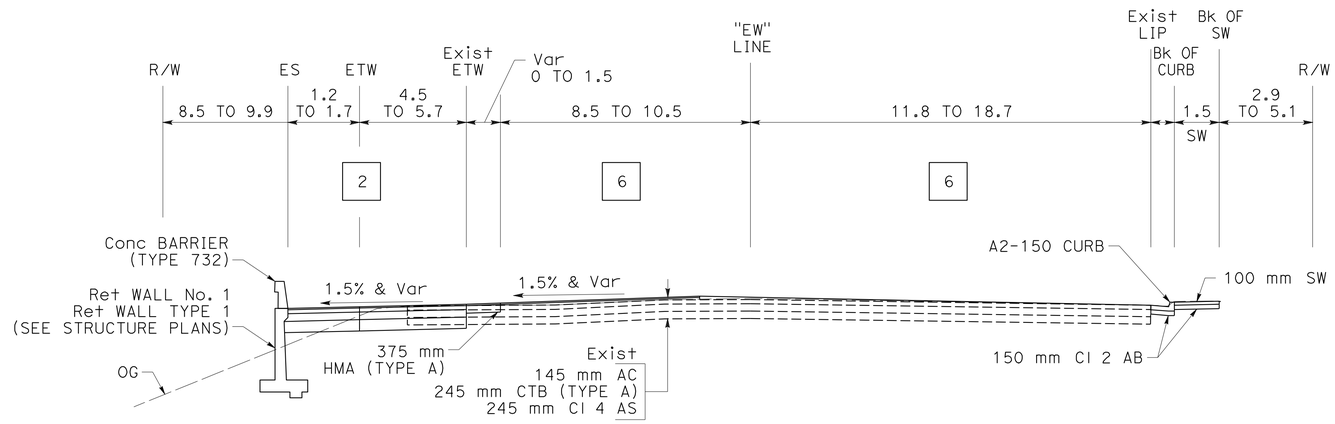

EAST WASHINGTON STREET
"EW" 15+71.748 TO 15+90.000

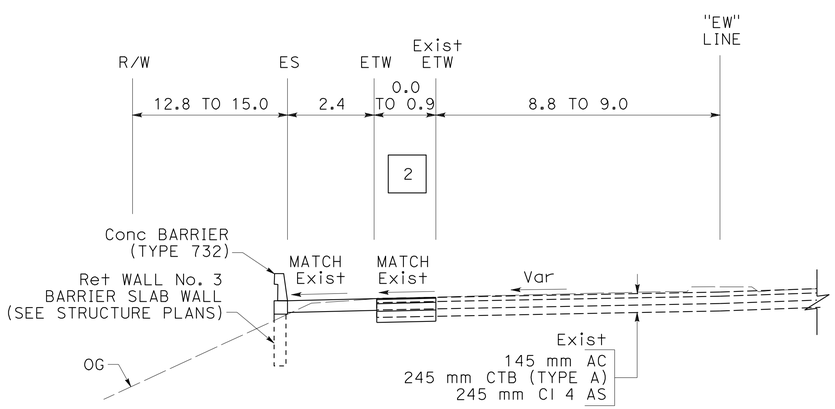

EAST WASHINGTON STREET
"EW" 14+56.091 TO 14+70.917

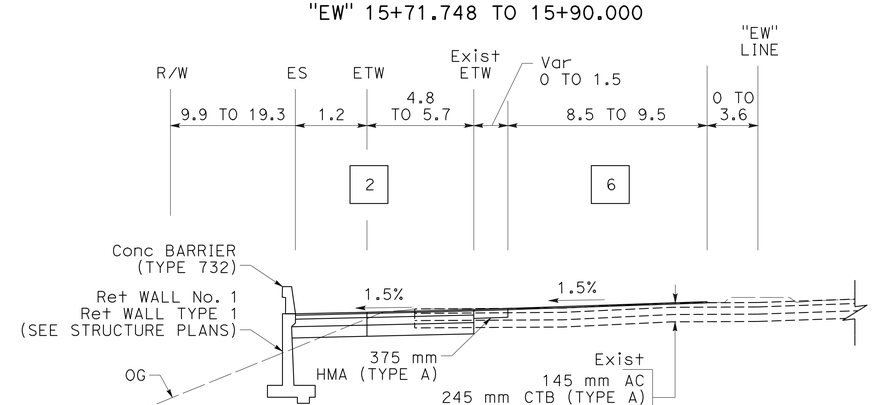

EAST WASHINGTON STREET
"EW" 15+15.000 TO 15+71.748

TYPICAL CROSS SECTIONS
NO SCALE

ALL DIMENSIONS ARE IN METERS
UNLESS OTHERWISE SHOWN

X-4

STATE OF CALIFORNIA - DEPARTMENT OF TRANSPORTATION
Caltrans

CONSULTANT FUNCTIONAL SUPERVISOR: RAMSEY HISSEN
CALCULATED-DESIGNED BY: SHERINA LAM
CHECKED BY: DAVID A. WILLIAMS
REVISED BY / DATE REVISED

LAST REVISION 09-03-10 | DATE PLOTTED => 31-MAY-2011 | TIME PLOTTED => 10:32

Dist	COUNTY	ROUTE	KILOMETER POST TOTAL PROJECT	SHEET No.	TOTAL SHEETS
04	Son	101	7.3/8.3	6	320

David Williams 9/3/10
REGISTERED CIVIL ENGINEER DATE

5-31-11
PLANS APPROVAL DATE

REGISTERED PROFESSIONAL ENGINEER
David A. Williams
No. C58697
Exp. 12/31/12
CIVIL
STATE OF CALIFORNIA

THE STATE OF CALIFORNIA OR ITS OFFICERS OR AGENTS SHALL NOT BE RESPONSIBLE FOR THE ACCURACY OR COMPLETENESS OF ELECTRONIC COPIES OF THIS PLAN SHEET.

URS CORPORATION
1380 LEAD HILL BLVD,
SUITE 100
ROSEVILLE, CA 95661

CITY OF PETALUMA
11 ENGLISH STREET
PETALUMA, CA 94952

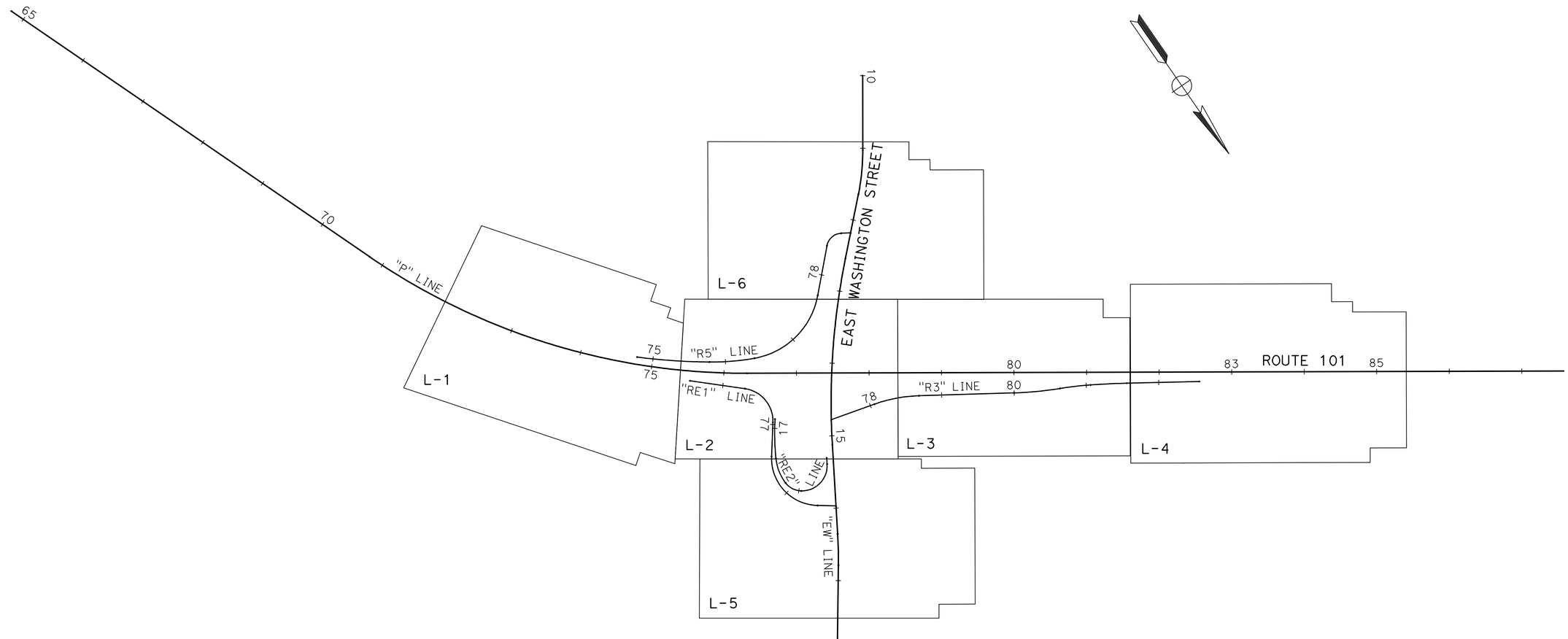

KEYMAP & LINE INDEX

NO SCALE

ALL DIMENSIONS ARE IN METERS
UNLESS OTHERWISE SHOWN

K-1

STATE OF CALIFORNIA - DEPARTMENT OF TRANSPORTATION
Caltrans

CONSULTANT FUNCTIONAL SUPERVISOR: RAMSEY HISSEN
CALCULATED-DESIGNED BY: SHERINA LAM
CHECKED BY: DAVID A. WILLIAMS
REVISED BY
DATE REVISED

LAST REVISION 09-03-10
DATE PLOTTED => 31-MAY-2011
TIME PLOTTED => 10:32

Dist	COUNTY	ROUTE	KILOMETER POST TOTAL PROJECT	SHEET No.	TOTAL SHEETS
04	Son	101	7.3/8.3	7	320

David Williams 9/3/10
REGISTERED CIVIL ENGINEER DATE

5-31-11
PLANS APPROVAL DATE

REGISTERED PROFESSIONAL ENGINEER David A. Williams No. C58697 Exp. 12/31/12 CIVIL STATE OF CALIFORNIA

THE STATE OF CALIFORNIA OR ITS OFFICERS OR AGENTS SHALL NOT BE RESPONSIBLE FOR THE ACCURACY OR COMPLETENESS OF ELECTRONIC COPIES OF THIS PLAN SHEET.

URS CORPORATION
1380 LEAD HILL BLVD,
SUITE 100
ROSEVILLE, CA 95661

CITY OF PETALUMA
11 ENGLISH STREET
PETALUMA, CA 94952

Caltrans Metric

FOR ACCURATE RIGHT OF WAY DATA, CONTACT RIGHT OF WAY ENGINEERING AT THE DISTRICT OFFICE.

NOTES:

1. THE HORIZONTAL DATUM IS NAD 83, COORDINATES ARE BASED ON THE CALIFORNIA COORDINATE SYSTEM ZONE 3, WITH A 1986 ADJUSTMENT TO OBTAIN GROUND DISTANCES, MULTIPLY GRID DISTANCES BY 1.0000639. THE VERTICAL DATUM IS NAVD 1988.
2. BOLLARDS SHALL BE PLACED WITH 0.3 m Clr FROM EASEMENT LINE OR AS DIRECTED BY THE ENGINEER.
3. REMOVE OR ABANDON ALL EXISTING IRRIGATION FACILITIES WITHIN THE ROADWAY CONSTRUCTION. EXISTING IRRIGATION FACILITIES OUTSIDE OF ROADWAY CONSTRUCTION SHALL BE MAINTAINED.
4. REMOVED BOLLARDS SHALL BE STOCKPILED ONSITE AT A LOCATION DESIGNATED BY THE ENGINEER TO BE SALVAGED FOR PROPERTY OWNER.

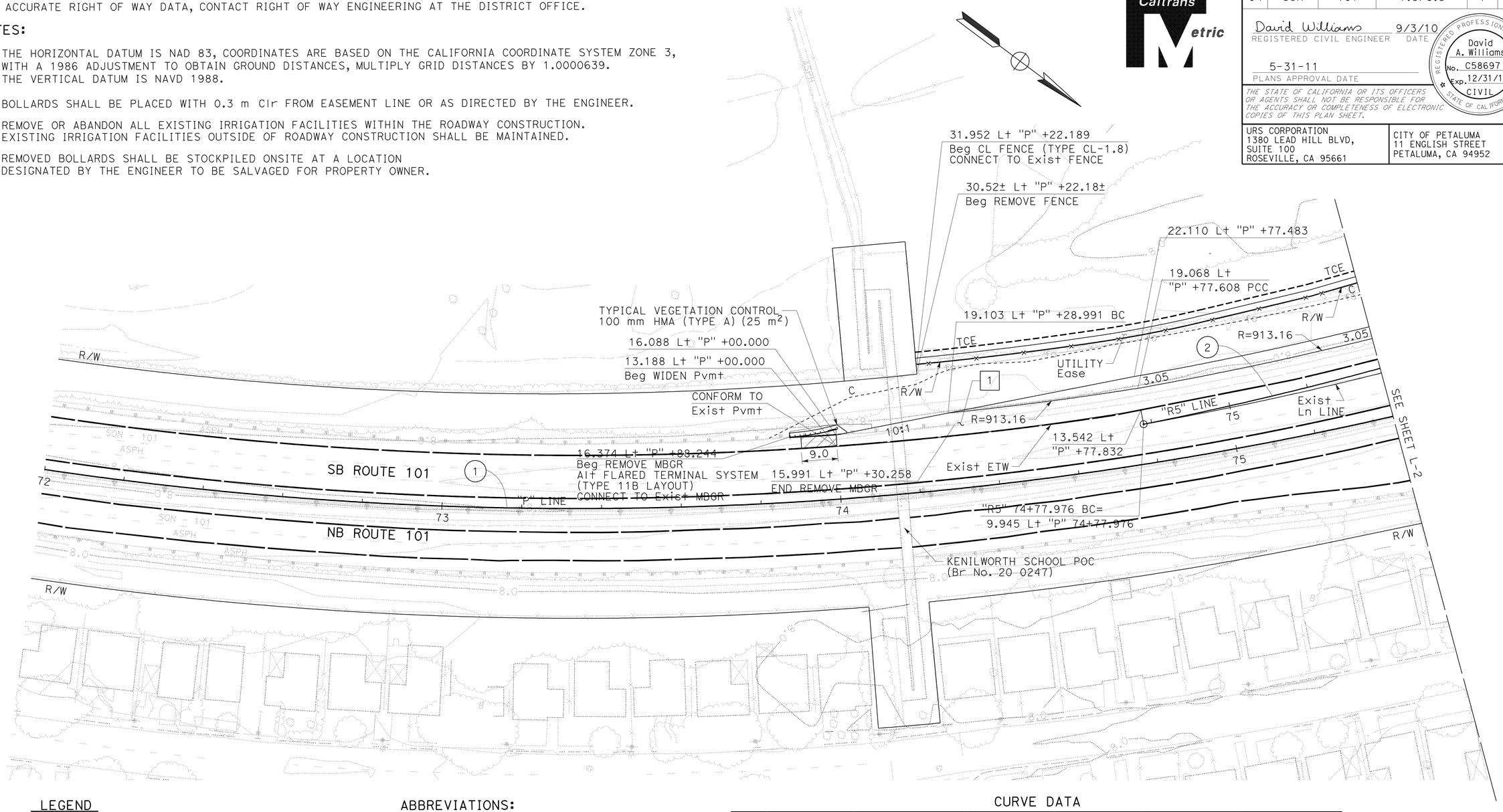

LEGEND

- COLD PLANE AC Pvmt (45 mm Max)
- (No.) CURVE ALIGNMENT DATA NUMBER
- × REMOVE BOLLARD
- MINOR CONCRETE (MEDIUM BROOM FINISH) (SEE SHEET C-7 FOR DETAILS)
- [No.] STRUCTURE SECTION
  STRUCTURE SECTION IS FOR INFORMATION ONLY.
  SEE TYPICAL SECTIONS SHEETS FOR EXACT LIMITS.

ABBREVIATIONS:

MSN	MARIN-SONOMA NARROWS PROJECT
TCE	TEMPORARY CONSTRUCTION EASEMENT
MVP	MAINTENANCE VEHICLE PULLOUT

CURVE DATA

No.	R	Δ	T	L	N	E
1	915.000	34°36′36″	285.078	552.713	695167.7885	1813346.8330
2	864.500	06°38′21″	50.144	100.175	695173.5073	1813400.0677

LAYOUT
SCALE 1:500

ALL DIMENSIONS ARE IN METERS
UNLESS OTHERWISE SHOWN

L-1

STATE OF CALIFORNIA - DEPARTMENT OF TRANSPORTATION
Caltrans

CONSULTANT FUNCTIONAL SUPERVISOR: RAMSEY HISSEN
CALCULATED-DESIGNED BY: SHERINA LAM
CHECKED BY: DAVID A. WILLIAMS
REVISED BY / DATE REVISED

LAST REVISION 09-03-10 | DATE PLOTTED => 31-MAY-2011 | TIME PLOTTED => 10:32

Dist	COUNTY	ROUTE	KILOMETER POST TOTAL PROJECT	SHEET No.	TOTAL SHEETS
04	Son	101	7.3/8.3	8	320

David Williams 9/3/10
REGISTERED CIVIL ENGINEER DATE

5-31-11
PLANS APPROVAL DATE

REGISTERED PROFESSIONAL ENGINEER David A. Williams No. C58697 Exp. 12/31/12 CIVIL STATE OF CALIFORNIA

THE STATE OF CALIFORNIA OR ITS OFFICERS OR AGENTS SHALL NOT BE RESPONSIBLE FOR THE ACCURACY OR COMPLETENESS OF ELECTRONIC COPIES OF THIS PLAN SHEET.

URS CORPORATION
1380 LEAD HILL BLVD,
SUITE 100
ROSEVILLE, CA 95661

CITY OF PETALUMA
11 ENGLISH STREET
PETALUMA, CA 94952

FOR ACCURATE RIGHT OF WAY DATA, CONTACT RIGHT OF WAY ENGINEERING AT THE DISTRICT OFFICE.

CURVE DATA

No.	R	Δ	T	L	N	E
1	915.000	34°36'36"	285.078	552.713	695167.7885	1813346.8330
2	864.500	06°38'21"	50.144	100.175	695173.5073	1813400.0677
3	333.153	10°42'36"	31.229	62.275	695607.0282	1813707.2956
4	108.000	69°22'39"	74.751	130.773	695811.7222	1813801.0739
5	45.000	84°05'46"	40.587	66.049	695969.8050	1813911.4135
6	65.000	90°56'37"	66.079	103.172	696073.7643	1813852.0364
7	350.000	08°53'31"	27.214	54.319	696209.7117	1813594.2688
8	1000.000	14°47'50"	129.852	258.259	696589.5776	1812971.9533
9	200.000	17°59'39"	31.667	62.812	696249.2955	1813798.2168

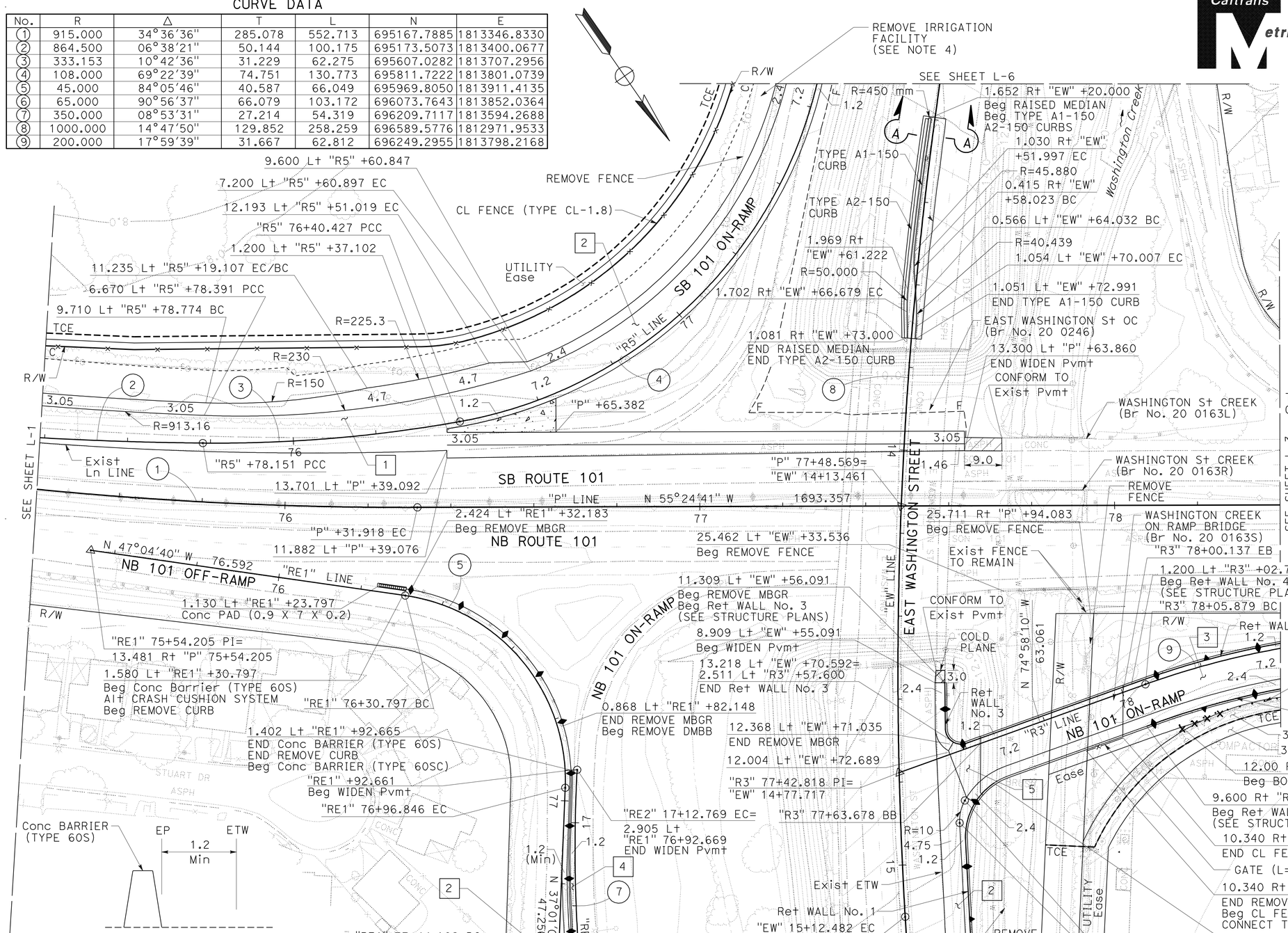

CB PLACEMENT DETAIL

"RE1" 76+30.797 TO "RE1" 76+92.665

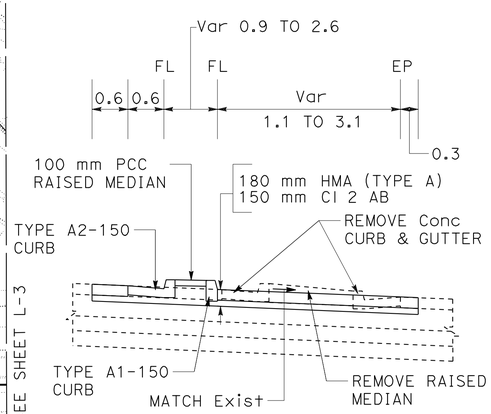

SECTION A-A
NO SCALE

FOR NOTES, ABBREVIATIONS AND LEGEND, SEE SHEET L-1

ALL DIMENSIONS ARE IN METERS UNLESS OTHERWISE SHOWN

LAYOUT

SCALE 1:500

L-2

REVISED BY	DATE REVISED
SHERINA LAM	DAVID A. WILLIAMS

CALCULATED-DESIGNED BY
CHECKED BY

CONSULTANT FUNCTIONAL SUPERVISOR
RAMSEY HISSEN

STATE OF CALIFORNIA - DEPARTMENT OF TRANSPORTATION
Caltrans

LAST REVISION 09-03-10 | DATE PLOTTED => 31-MAY-2011 | TIME PLOTTED => 10:39

FOR ACCURATE RIGHT OF WAY DATA, CONTACT RIGHT OF WAY ENGINEERING AT THE DISTRICT OFFICE.

Dist	COUNTY	ROUTE	KILOMETER POST TOTAL PROJECT	SHEET No.	TOTAL SHEETS
04	Son	101	7.3/8.3	9	320

David Williams 9/3/10
REGISTERED CIVIL ENGINEER DATE

5-31-11
PLANS APPROVAL DATE

REGISTERED PROFESSIONAL ENGINEER David A. Williams No. C58697 Exp. 12/31/12 CIVIL STATE OF CALIFORNIA

THE STATE OF CALIFORNIA OR ITS OFFICERS OR AGENTS SHALL NOT BE RESPONSIBLE FOR THE ACCURACY OR COMPLETENESS OF ELECTRONIC COPIES OF THIS PLAN SHEET.

URS CORPORATION
1380 LEAD HILL BLVD,
SUITE 100
ROSEVILLE, CA 95661

CITY OF PETALUMA
11 ENGLISH STREET
PETALUMA, CA 94952

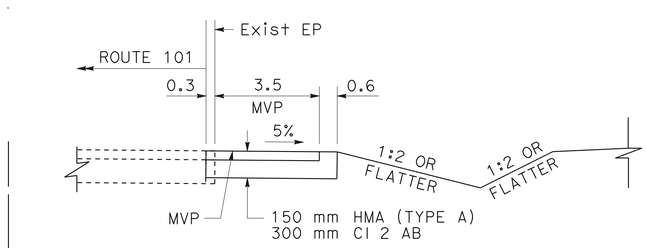

SECTION B-B
NO SCALE

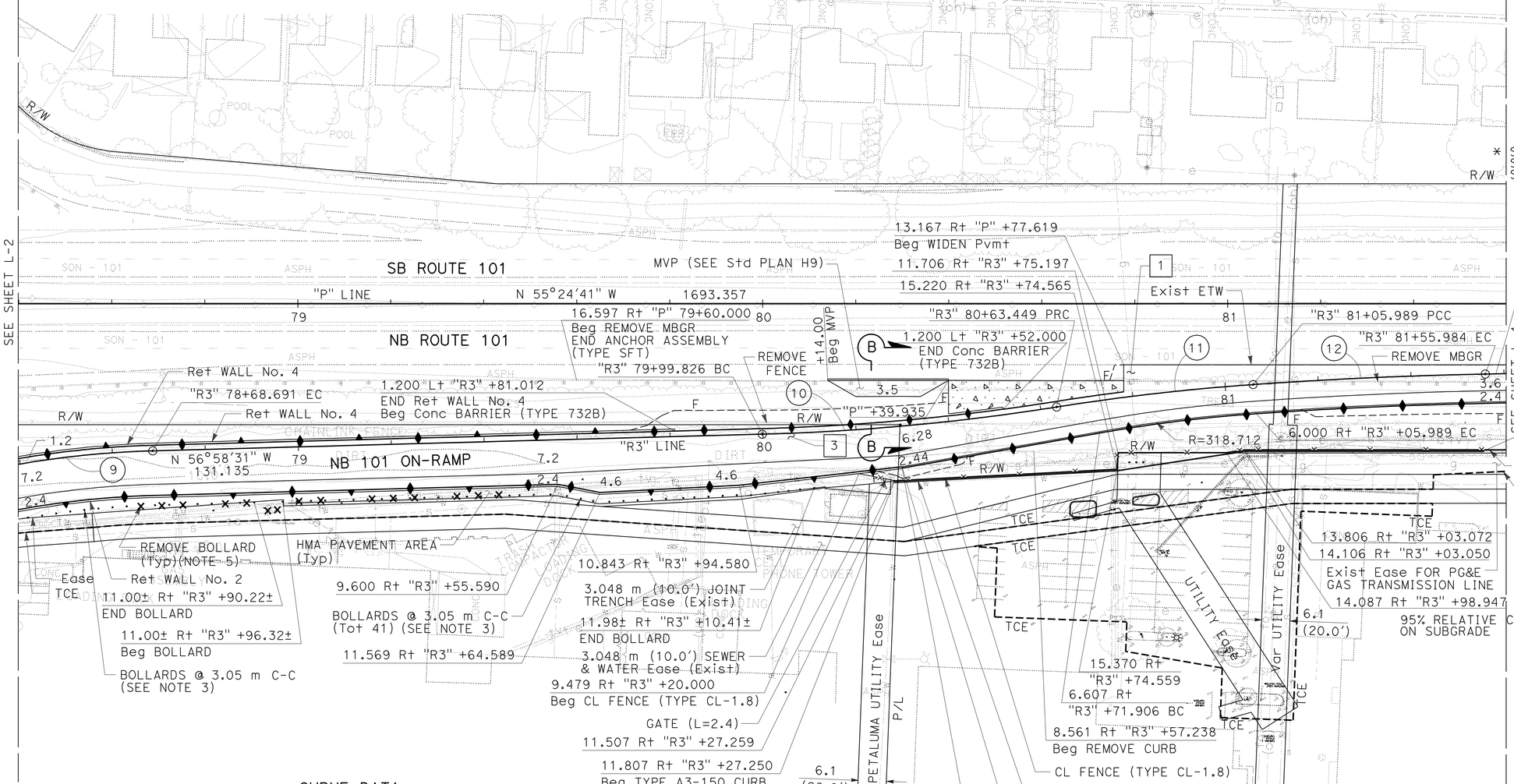

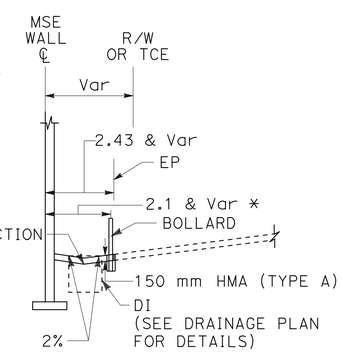

"R3" 77+91.209 TO "R3" 80+27.250

HMA PAVEMENT AREA DETAILS

NO SCALE

CURVE DATA

No.	R	Δ	T	L	N	E
9	200.000	17°59'39"	31.667	62.812	696249.2955	1813798.2168
10	490.000	07°26'22"	31.856	63.623	695742.2436	1813312.2179
11	490.000	04°58'27"	21.283	42.540	696626.1486	1813735.4341
12	1000.000	02°51'52"	25.003	49.995	697065.3108	1813994.7344

FOR NOTES, ABBREVIATIONS AND LEGEND, SEE SHEET L-1

ALL DIMENSIONS ARE IN METERS UNLESS OTHERWISE SHOWN

LAYOUT

SCALE 1:500

L-3

STATE OF CALIFORNIA - DEPARTMENT OF TRANSPORTATION

Caltrans

CONSULTANT FUNCTIONAL SUPERVISOR: RAMSEY HISSEN

CALCULATED-DESIGNED BY: SHERINA LAM

CHECKED BY: DAVID A. WILLIAMS

REVISED BY | DATE REVISED

LAST REVISION 09-03-10

DATE PLOTTED => 31-MAY-2011
TIME PLOTTED => 10:32

Dist	COUNTY	ROUTE	KILOMETER POST TOTAL PROJECT	SHEET No.	TOTAL SHEETS
04	Son	101	7.3/8.3	10	320

David Williams 9/3/10
REGISTERED CIVIL ENGINEER DATE

5-31-11
PLANS APPROVAL DATE

REGISTERED PROFESSIONAL ENGINEER
David A. Williams
No. C58697
Exp. 12/31/12
CIVIL
STATE OF CALIFORNIA

THE STATE OF CALIFORNIA OR ITS OFFICERS OR AGENTS SHALL NOT BE RESPONSIBLE FOR THE ACCURACY OR COMPLETENESS OF ELECTRONIC COPIES OF THIS PLAN SHEET.

URS CORPORATION
1380 LEAD HILL BLVD,
SUITE 100
ROSEVILLE, CA 95661

CITY OF PETALUMA
11 ENGLISH STREET
PETALUMA, CA 94952

Caltrans Metric

FOR ACCURATE RIGHT OF WAY DATA,
CONTACT RIGHT OF WAY ENGINEERING AT THE DISTRICT OFFICE.

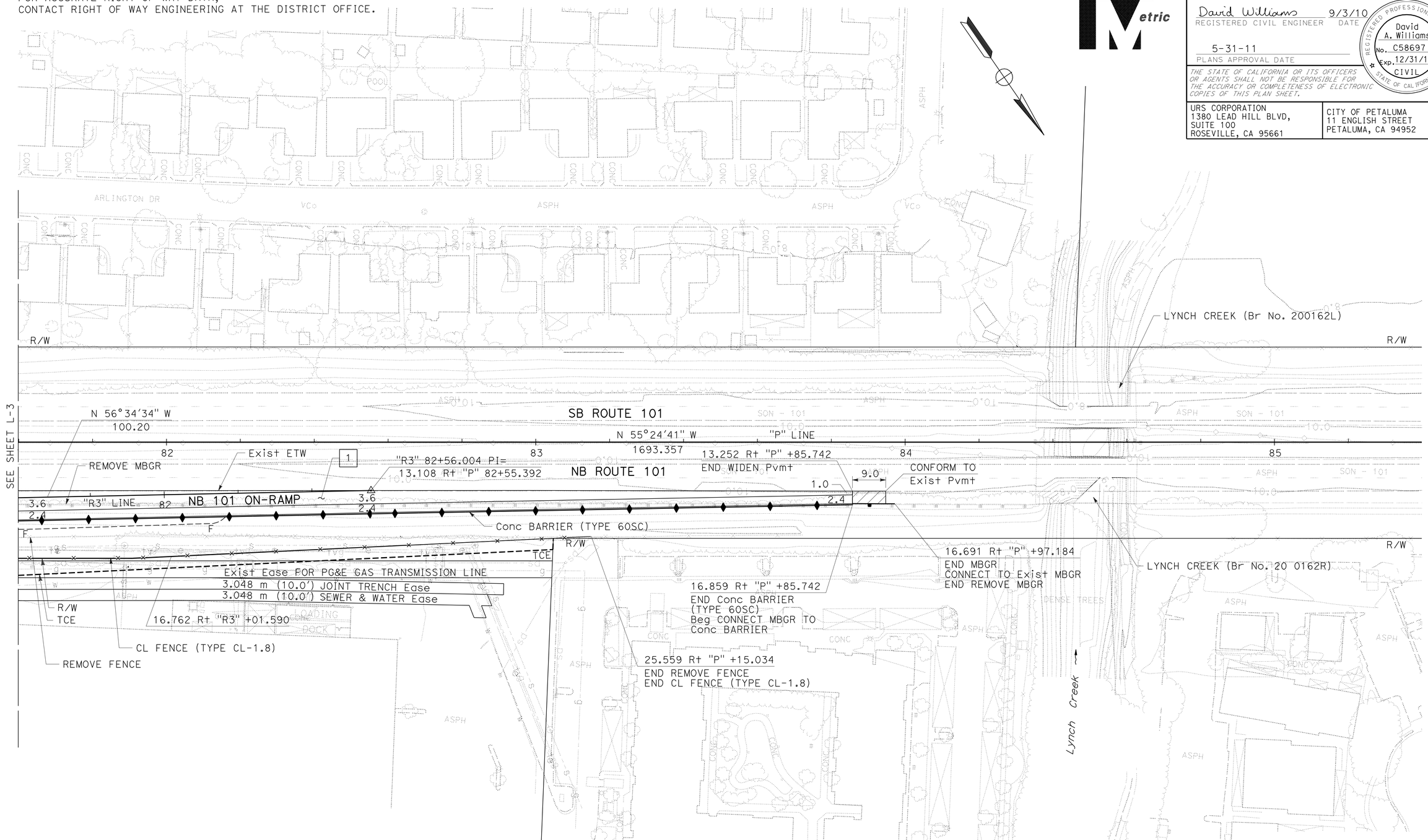

FOR NOTES, ABBREVIATIONS
AND LEGEND, SEE SHEET L-1

ALL DIMENSIONS ARE IN METERS
UNLESS OTHERWISE SHOWN

LAYOUT
SCALE 1:500

L-4

REVISED BY	DATE REVISED
SHERINA LAM	DAVID A. WILLIAMS

CALCULATED-DESIGNED BY
CHECKED BY

CONSULTANT FUNCTIONAL SUPERVISOR
RAMSEY HISSEN

STATE OF CALIFORNIA - DEPARTMENT OF TRANSPORTATION
Caltrans

LAST REVISION 09-03-10
DATE PLOTTED => 31-MAY-2011
TIME PLOTTED => 10:32

Dist	COUNTY	ROUTE	KILOMETER POST TOTAL PROJECT	SHEET No.	TOTAL SHEETS
04	Son	101	7.3/8.3	11	320

David Williams 9/3/10
REGISTERED CIVIL ENGINEER DATE

5-31-11
PLANS APPROVAL DATE

REGISTERED PROFESSIONAL ENGINEER David A. Williams No. C58697 Exp. 12/31/12 CIVIL STATE OF CALIFORNIA

THE STATE OF CALIFORNIA OR ITS OFFICERS OR AGENTS SHALL NOT BE RESPONSIBLE FOR THE ACCURACY OR COMPLETENESS OF ELECTRONIC COPIES OF THIS PLAN SHEET.

URS CORPORATION
1380 LEAD HILL BLVD,
SUITE 100
ROSEVILLE, CA 95661

CITY OF PETALUMA
11 ENGLISH STREET
PETALUMA, CA 94952

FOR ACCURATE RIGHT OF WAY DATA,
CONTACT RIGHT OF WAY ENGINEERING AT THE DISTRICT OFFICE.

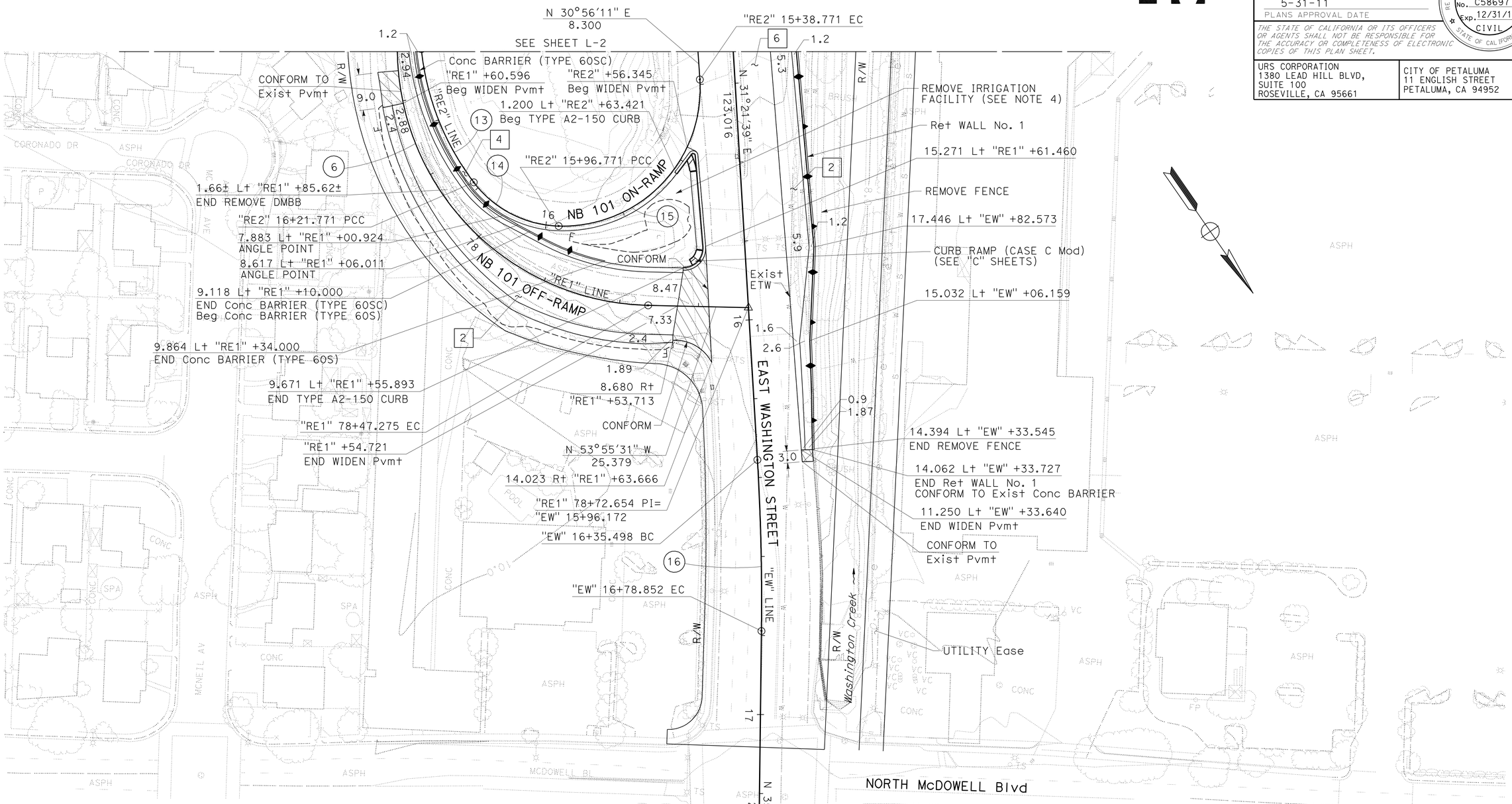

CURVE DATA

No.	R	Δ	T	L	N	E
6	65.000	90°56'37"	66.079	103.172	696073.7643	1813852.0364
13	67.000	31°21'59"	18.812	36.679	696072.7149	1813841.8994
14	28.000	51°09'25"	13.402	25.000	696074.3574	1813880.8648
15	34.800	95°29'35"	38.307	58.000	696068.8862	1813876.8267
16	609.606	04°04'29"	21.686	43.354	695856.9379	1814410.4259

FOR NOTES, ABBREVIATIONS
AND LEGEND, SEE SHEET L-1

ALL DIMENSIONS ARE IN METERS
UNLESS OTHERWISE SHOWN

LAYOUT
SCALE 1:500

L-5

STATE OF CALIFORNIA - DEPARTMENT OF TRANSPORTATION
Caltrans

CONSULTANT FUNCTIONAL SUPERVISOR: RAMSEY HISSEN
CALCULATED-DESIGNED BY: SHERINA LAM
CHECKED BY: DAVID A. WILLIAMS
REVISED BY / DATE REVISED

LAST REVISION 09-03-10 | DATE PLOTTED => 31-MAY-2011 | TIME PLOTTED => 10:33

Dist	COUNTY	ROUTE	KILOMETER POST TOTAL PROJECT	SHEET No.	TOTAL SHEETS
04	Son	101	7.3/8.3	12	320

David Williams 9/3/10
REGISTERED CIVIL ENGINEER DATE

5-31-11
PLANS APPROVAL DATE

REGISTERED PROFESSIONAL ENGINEER David A. Williams No. C58697 Exp. 12/31/12 CIVIL STATE OF CALIFORNIA

THE STATE OF CALIFORNIA OR ITS OFFICERS OR AGENTS SHALL NOT BE RESPONSIBLE FOR THE ACCURACY OR COMPLETENESS OF ELECTRONIC COPIES OF THIS PLAN SHEET.

URS CORPORATION
1380 LEAD HILL BLVD,
SUITE 100
ROSEVILLE, CA 95661

CITY OF PETALUMA
11 ENGLISH STREET
PETALUMA, CA 94952

FOR ACCURATE RIGHT OF WAY DATA,
CONTACT RIGHT OF WAY ENGINEERING AT THE DISTRICT OFFICE.

CURVE DATA

No.	R	Δ	T	L	N	E
4	108.000	69°22'39"	74.751	130.773	695811.7222	1813801.0739
17	21.000	76°56'26"	16.686	28.200	695854.1831	1813660.6949
18	304.998	11°30'05"	30.715	61.224	695585.7296	1813810.6906
8	1000.000	14°47'50"	129.852	258.259	696589.5776	1812971.9533

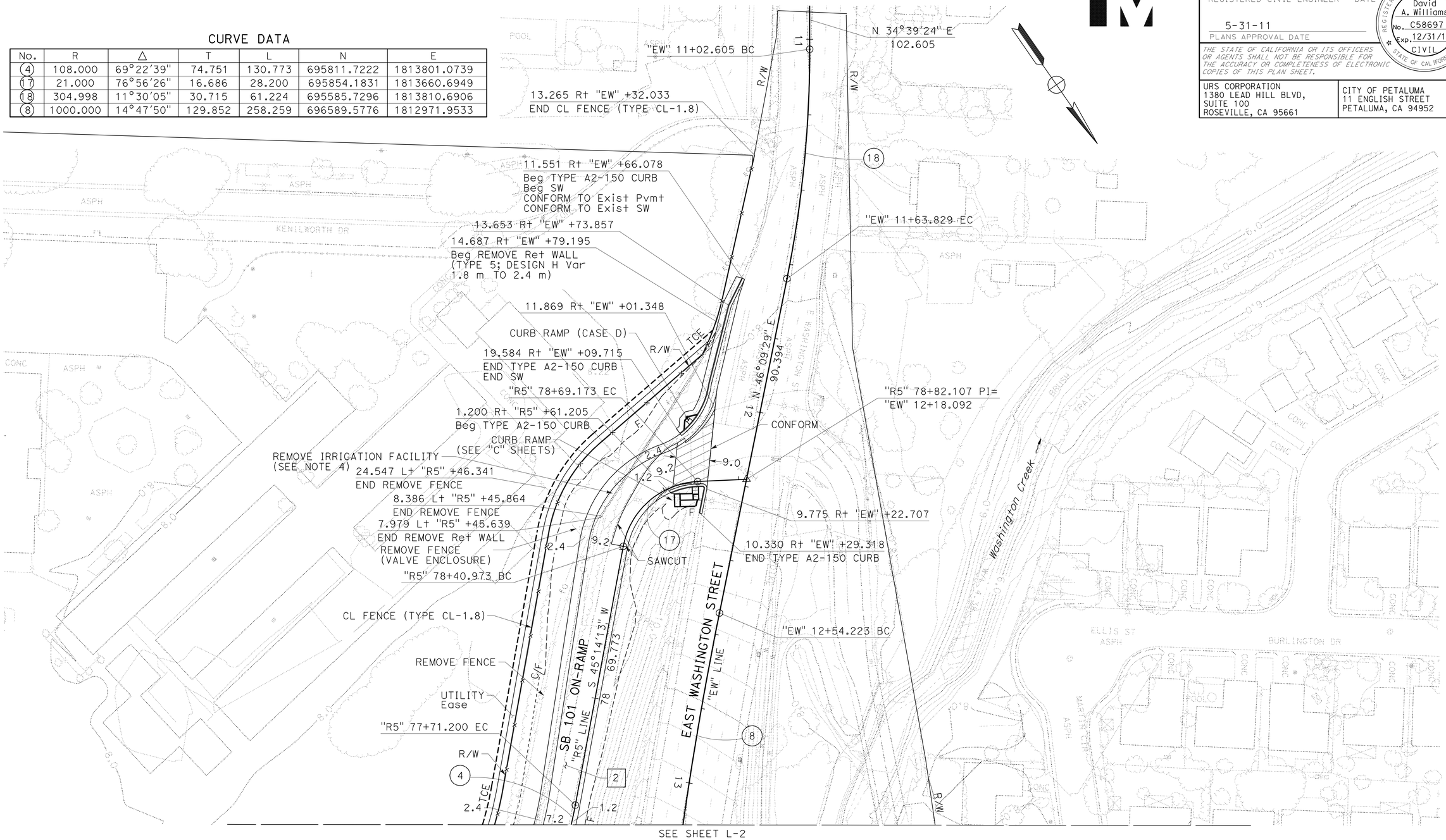

FOR NOTES, ABBREVIATIONS
AND LEGEND, SEE SHEET L-1

LAYOUT
SCALE 1:500

ALL DIMENSIONS ARE IN METERS
UNLESS OTHERWISE SHOWN

L-6

STATE OF CALIFORNIA - DEPARTMENT OF TRANSPORTATION
Caltrans

CONSULTANT FUNCTIONAL SUPERVISOR: RAMSEY HISSEN
CALCULATED-DESIGNED BY: SHERINA LAM
CHECKED BY: DAVID A. WILLIAMS
REVISED BY / DATE REVISED

LAST REVISION 09-03-10
DATE PLOTTED => 31-MAY-2011
TIME PLOTTED => 10:33

Dist	COUNTY	ROUTE	KILOMETER POST TOTAL PROJECT	SHEET No.	TOTAL SHEETS
04	Son	101	7.3/8.3	13	320

David Williams 9/3/10
REGISTERED CIVIL ENGINEER DATE

5-31-11
PLANS APPROVAL DATE

REGISTERED PROFESSIONAL ENGINEER David A. Williams No. C58697 Exp. 12/31/12 CIVIL STATE OF CALIFORNIA

THE STATE OF CALIFORNIA OR ITS OFFICERS OR AGENTS SHALL NOT BE RESPONSIBLE FOR THE ACCURACY OR COMPLETENESS OF ELECTRONIC COPIES OF THIS PLAN SHEET.

URS CORPORATION
1380 Lead Hill Blvd.
Suite 100
Roseville, CA 95661

CITY OF PETALUMA
11 ENGLISH STREET
PETALUMA, CA 94952

NOTES:

1. AXIS OF ROTATION IS ABOUT PG. SEE TYPICAL SECTIONS FOR LOCATION OF PG.
2. ELEVATIONS SHOWN ARE BASED ON NORTH AMERICAN VERTICAL DATUM OF 1988 (NGVD 88).

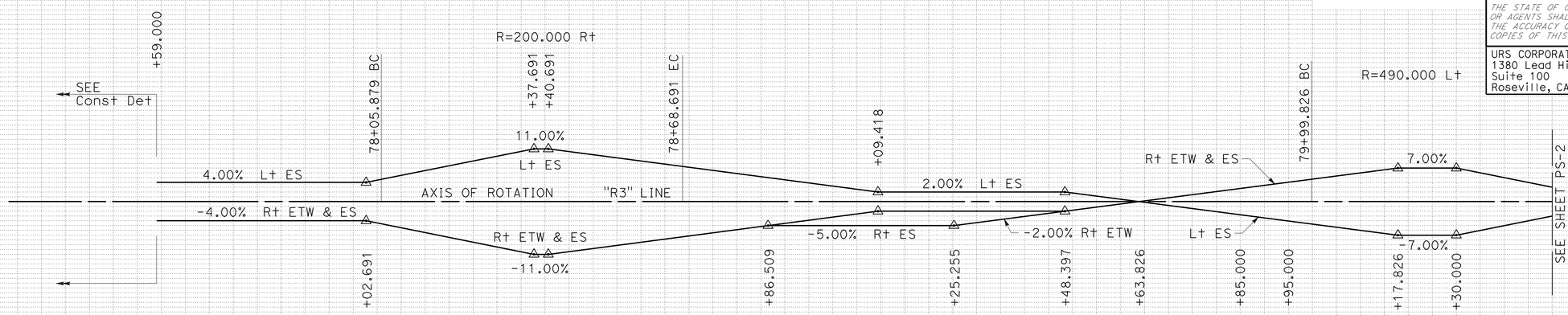

SUPERELEVATION DIAGRAM

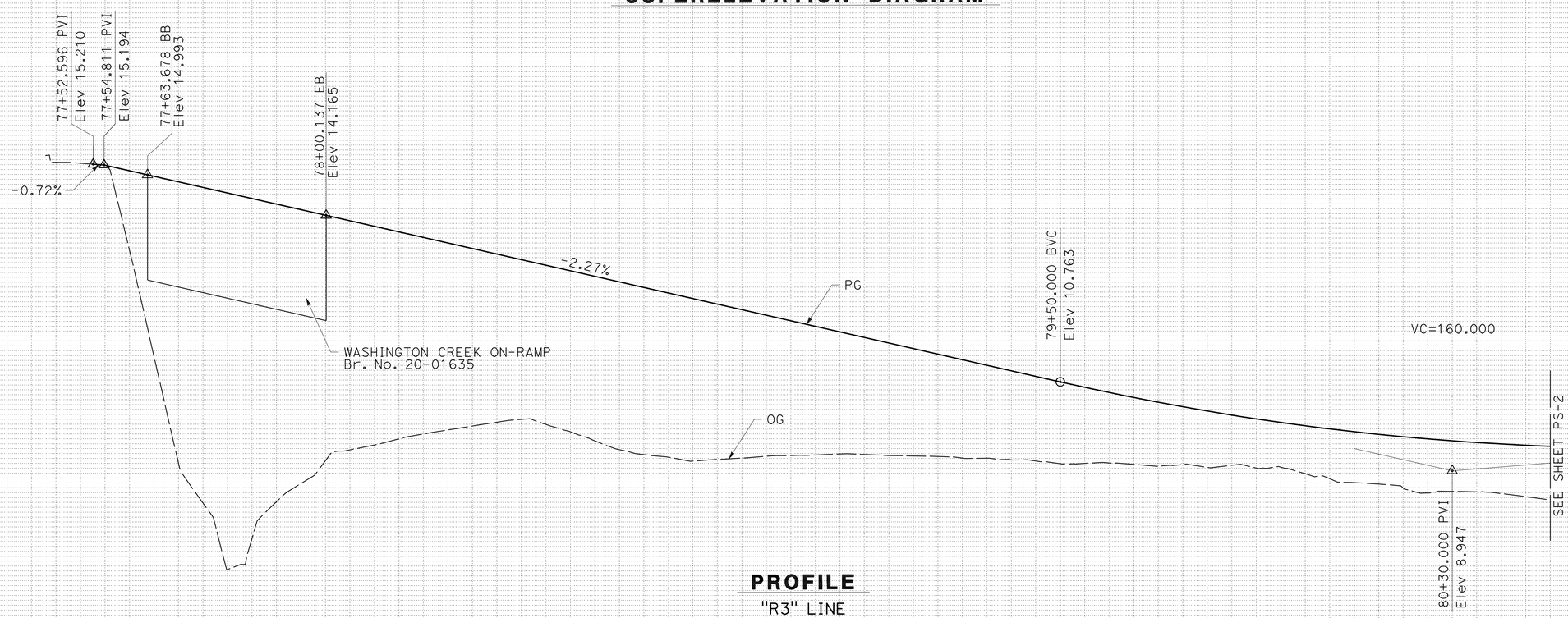

PROFILE

"R3" LINE

NB ON-RAMP AT EAST WASHINGTON STREET

ALL DIMENSIONS ARE IN METERS
UNLESS OTHERWISE SHOWN

PROFILE AND SUPERELEVATION DIAGRAM

SCALE: Horiz 1:500
Vert 1:50

PS-1

Station	40	60	80	78+00	20	40	60	80	79+00	20	40	60	80	80+00	20	40
m^3 Exc				1429												
m^3 Emb				115												

REVISED BY | DATE REVISED
SHERINA LAM | DAVID A. WILLIAMS
CALCULATED-DESIGNED BY | CHECKED BY
CONSULTANT FUNCTIONAL SUPERVISOR
RAMSEY HISSEN

STATE OF CALIFORNIA - DEPARTMENT OF TRANSPORTATION

LAST REVISION 09-03-10 DATE PLOTTED => 31-MAY-2011 TIME PLOTTED => 10:47

Dist	COUNTY	ROUTE	KILOMETER POST TOTAL PROJECT	SHEET No.	TOTAL SHEETS
04	Son	101	7.3/8.3	14	320

David Williams 9/3/10
REGISTERED CIVIL ENGINEER DATE

5-31-11
PLANS APPROVAL DATE

REGISTERED PROFESSIONAL ENGINEER David A. Williams No. C58697 Exp. 12/31/12 CIVIL STATE OF CALIFORNIA

THE STATE OF CALIFORNIA OR ITS OFFICERS OR AGENTS SHALL NOT BE RESPONSIBLE FOR THE ACCURACY OR COMPLETENESS OF ELECTRONIC COPIES OF THIS PLAN SHEET.

URS CORPORATION
1380 Lead Hill Blvd.
Suite 100
Roseville, CA 95661

CITY OF PETALUMA
11 ENGLISH STREET
PETALUMA, CA 94952

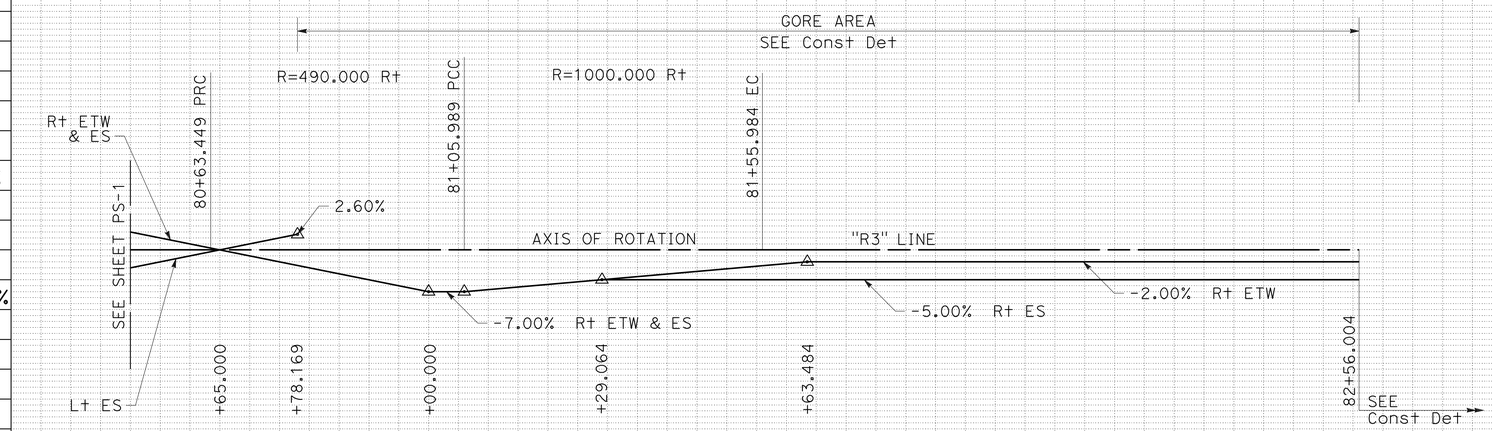

SUPERELEVATION DIAGRAM

PROFILE

"R3" LINE

NB ON-RAMP AT EAST WASHINGTON STREET

ALL DIMENSIONS ARE IN METERS
UNLESS OTHERWISE SHOWN

PROFILE AND SUPERELEVATION DIAGRAM

SCALE: Horiz 1:500
Vert 1:50

PS-2

Station	40	60	80	81+00	20	40	60	80	82+00	20	40	60	80	83+00	20	40
m^3 Exc		1429														
m^3 Emb		115														

STATE OF CALIFORNIA - DEPARTMENT OF TRANSPORTATION
Caltrans

CONSULTANT FUNCTIONAL SUPERVISOR: RAMSEY HISSEN
CALCULATED-DESIGNED BY: SHERINA LAM
CHECKED BY: DAVID A. WILLIAMS
REVISED BY / DATE REVISED

LAST REVISION 09-03-10
DATE PLOTTED => 31-MAY-2011
TIME PLOTTED => 10:33

Dist	COUNTY	ROUTE	KILOMETER POST TOTAL PROJECT	SHEET No.	TOTAL SHEETS
04	Son	101	7.3/8.3	15	320

David Williams 9/3/10
REGISTERED CIVIL ENGINEER DATE

5-31-11
PLANS APPROVAL DATE

REGISTERED PROFESSIONAL ENGINEER David A. Williams No. C58697 Exp. 12/31/12 CIVIL STATE OF CALIFORNIA

THE STATE OF CALIFORNIA OR ITS OFFICERS OR AGENTS SHALL NOT BE RESPONSIBLE FOR THE ACCURACY OR COMPLETENESS OF ELECTRONIC COPIES OF THIS PLAN SHEET.

URS CORPORATION
1380 Lead Hill Blvd.
Suite 100
Roseville, CA 95661

CITY OF PETALUMA
11 ENGLISH STREET
PETALUMA, CA 94952

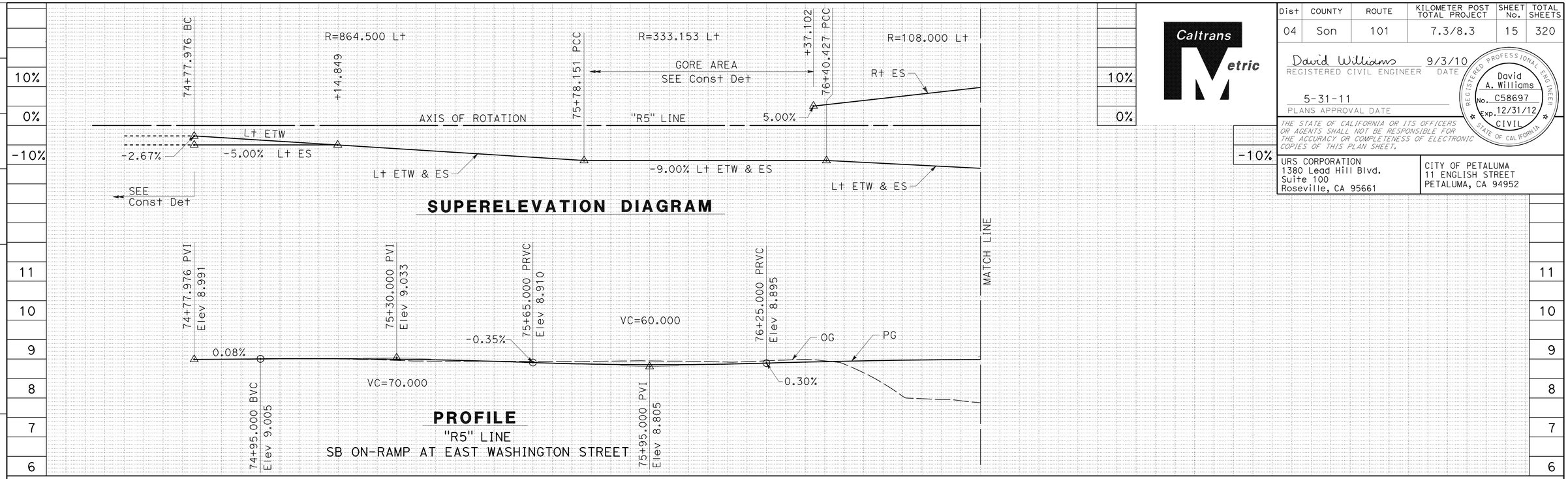

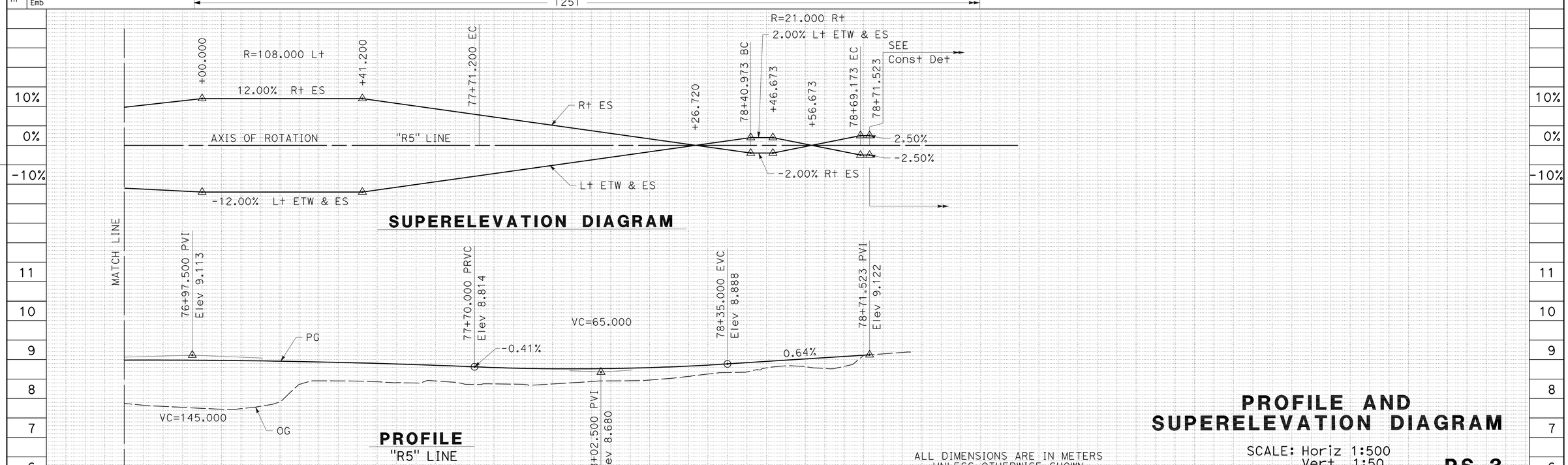

ALL DIMENSIONS ARE IN METERS
UNLESS OTHERWISE SHOWN

PROFILE AND SUPERELEVATION DIAGRAM

SCALE: Horiz 1:500
Vert 1:50

PS-3

REVISED BY | DATE REVISED

SHERINA LAM | DAVID A. WILLIAMS

CALCULATED-DESIGNED BY | CHECKED BY

CONSULTANT FUNCTIONAL SUPERVISOR: RAMSEY HISSEN

STATE OF CALIFORNIA - DEPARTMENT OF TRANSPORTATION

Caltrans

LAST REVISION | DATE PLOTTED => 31-MAY-2011 | TIME PLOTTED => 10:33

09-03-10

Dist	COUNTY	ROUTE	KILOMETER POST TOTAL PROJECT	SHEET No.	TOTAL SHEETS
04	Son	101	7.3/8.3	16	320

David Williams 9/3/10
REGISTERED CIVIL ENGINEER DATE

5-31-11
PLANS APPROVAL DATE

REGISTERED PROFESSIONAL ENGINEER David A. Williams No. C58697 Exp. 12/31/12 CIVIL STATE OF CALIFORNIA

THE STATE OF CALIFORNIA OR ITS OFFICERS OR AGENTS SHALL NOT BE RESPONSIBLE FOR THE ACCURACY OR COMPLETENESS OF ELECTRONIC COPIES OF THIS PLAN SHEET.

URS CORPORATION
1380 LEAD HILL BLVD,
SUITE 100
ROSEVILLE, CA 95661

CITY OF PETALUMA
11 ENGLISH STREET
PETALUMA, CA 94952

FOR ACCURATE RIGHT OF WAY DATA, CONTACT RIGHT OF WAY ENGINEERING AT THE DISTRICT OFFICE.

NOTES:

1. PAVEMENT ELEVATIONS ALONG THE CONTROL LINES ARE AT 20 m INTERVALS, COINCIDING WITH FULL 20 m STATION MARKS, UNLESS OTHERWISE NOTED.
2. ALL OFFSETS REFERRING TO CURB ARE MEASURED TO FLOW LINE OF CURB.

LEGEND

DSCM LIMIT

SOIL-CEMENT COLUMNS

ABBREVIATIONS:

DSCM DEEP SOIL CEMENT MIXING

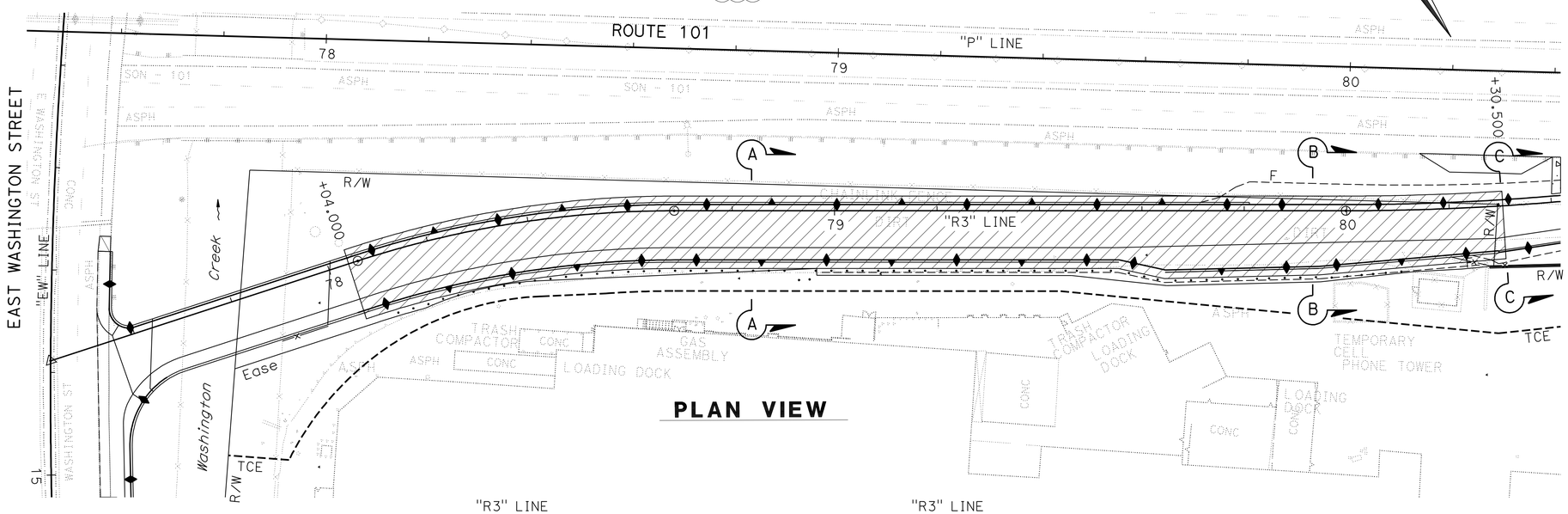

PLAN VIEW

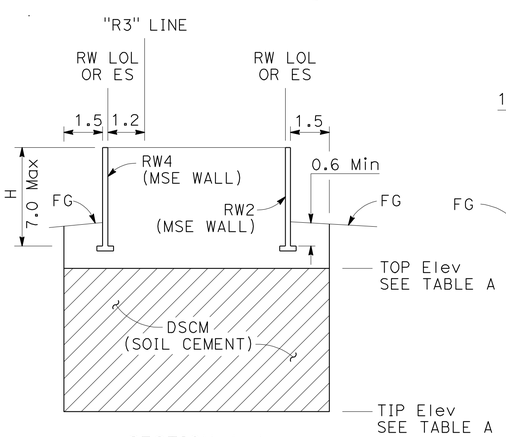

SECTION A-A

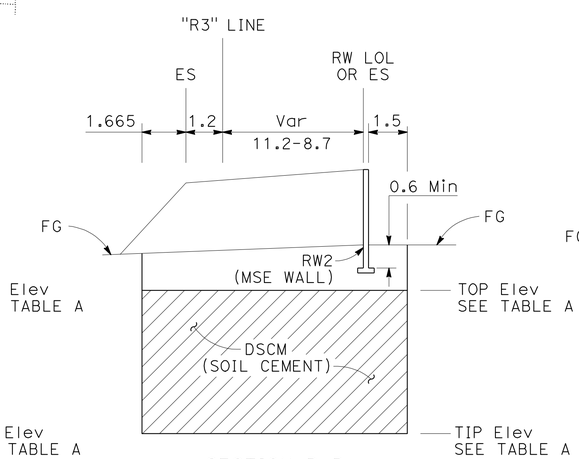

SECTION B-B

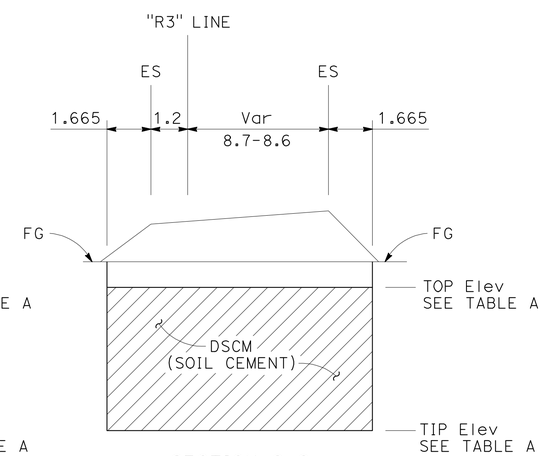

SECTION C-C

TABLE A

STATION LIMITS	DEPTH	TIP ELEVATION	TOP ELEVATION
	m		
"R3" 78+04 * TO 78+85	8.0	0.0	8.0
"R3" 78+85 TO 79+40	6.0	2.0	8.0
"R3" 79+40 TO 79+80	5.5	2.5	8.0
"R3" 79+80 TO 79+90	5.0	3.0	8.0
"R3" 79+90 TO 80+30.5	4.0	4.0	8.0

*SUBJECT TO VERIFICATION. THE SOIL COLUMNS MUST HAVE A MINIMUM CLEARANCE OF 1.5 m FROM ANY DRIVEN PILES.

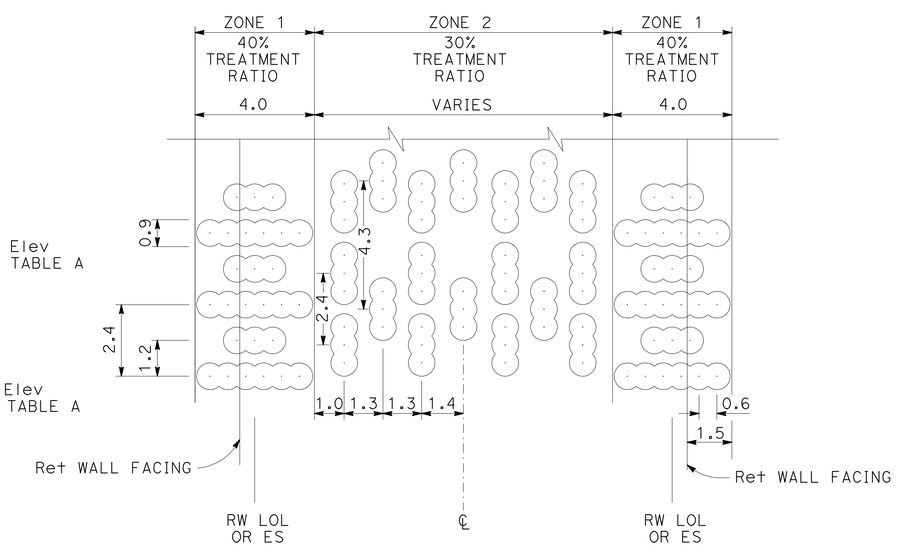

SOIL-CEMENT LAYOUT PATTERN (TYPICAL)

CONSTRUCTION DETAILS

NO SCALE

ALL DIMENSIONS ARE IN METERS UNLESS OTHERWISE SHOWN

C-1

STATE OF CALIFORNIA - DEPARTMENT OF TRANSPORTATION
Caltrans

SCALE 1:250

CONSULTANT FUNCTIONAL SUPERVISOR: RAMSEY HISSEN

CALCULATED-DESIGNED BY: SHERINA LAM

CHECKED BY: DAVID A. WILLIAMS

REVISED BY | DATE REVISED

LAST REVISION 09-03-10 | DATE PLOTTED => 31-MAY-2011 | TIME PLOTTED => 10:33

Dist	COUNTY	ROUTE	KILOMETER POST TOTAL PROJECT	SHEET No.	TOTAL SHEETS
04	Son	101	7.3/8.3	17	320

David Williams 9/3/10
REGISTERED CIVIL ENGINEER DATE

5-31-11
PLANS APPROVAL DATE

REGISTERED PROFESSIONAL ENGINEER
David A. Williams
No. C58697
Exp. 12/31/12
CIVIL
STATE OF CALIFORNIA

THE STATE OF CALIFORNIA OR ITS OFFICERS OR AGENTS SHALL NOT BE RESPONSIBLE FOR THE ACCURACY OR COMPLETENESS OF ELECTRONIC COPIES OF THIS PLAN SHEET.

URS CORPORATION
1380 LEAD HILL BLVD,
SUITE 100
ROSEVILLE, CA 95661

CITY OF PETALUMA
11 ENGLISH STREET
PETALUMA, CA 94952

Caltrans Metric

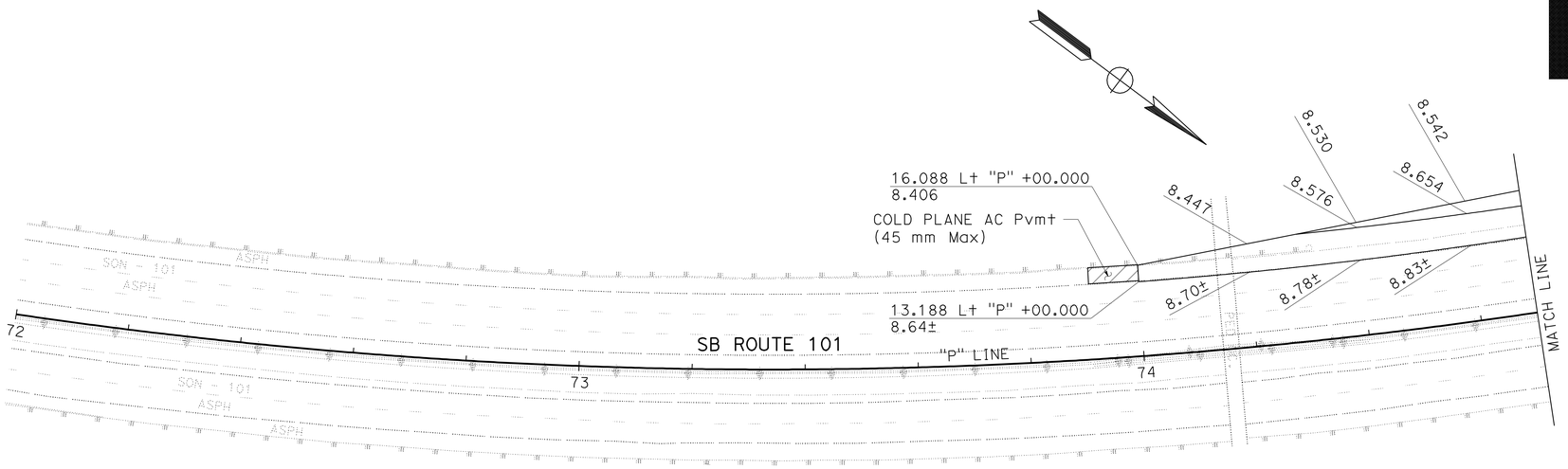

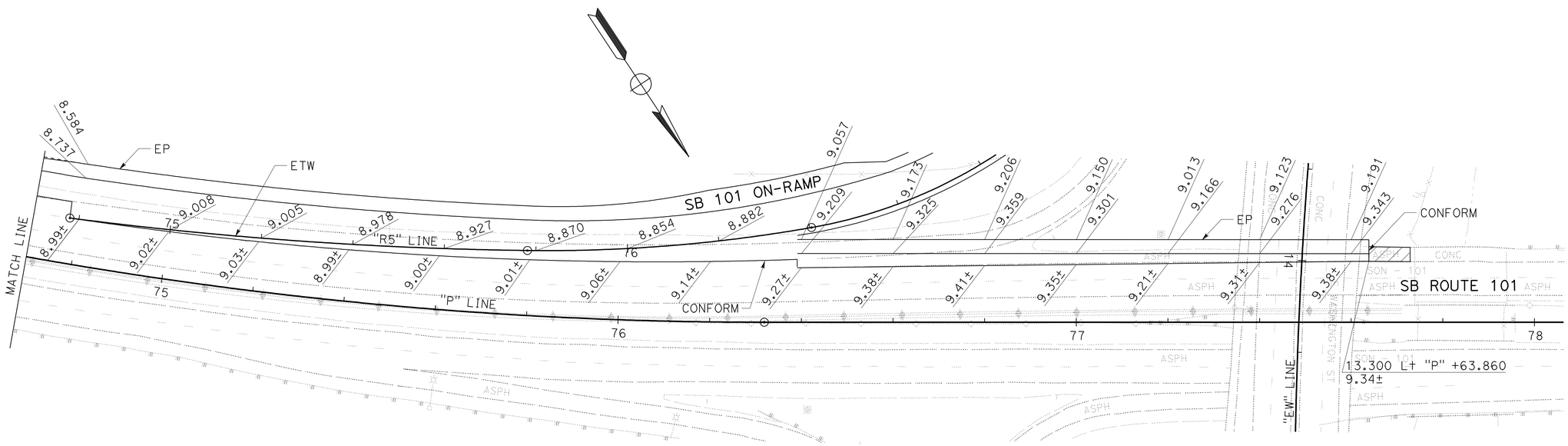

FOR NOTES, ABBREVIATIONS AND LEGEND, SEE SHEET C-1

CONSTRUCTION DETAILS

SCALE 1:500

ALL DIMENSIONS ARE IN METERS
UNLESS OTHERWISE SHOWN

C-2

REVISED BY	DATE REVISED
SHERINA LAM	
DAVID A. WILLIAMS	
CALCULATED-DESIGNED BY	
CHECKED BY	
CONSULTANT FUNCTIONAL SUPERVISOR	
RAMSEY HISSEN	

STATE OF CALIFORNIA - DEPARTMENT OF TRANSPORTATION
Caltrans

LAST REVISION 09-03-10
DATE PLOTTED => 31-MAY-2011
TIME PLOTTED => 10:33

Dist	COUNTY	ROUTE	KILOMETER POST TOTAL PROJECT	SHEET No.	TOTAL SHEETS
04	Son	101	7.3/8.3	18	320

David Williams 9/3/10
REGISTERED CIVIL ENGINEER DATE

5-31-11
PLANS APPROVAL DATE

REGISTERED PROFESSIONAL ENGINEER
David A. Williams
No. C58697
Exp. 12/31/12
CIVIL
STATE OF CALIFORNIA

THE STATE OF CALIFORNIA OR ITS OFFICERS OR AGENTS SHALL NOT BE RESPONSIBLE FOR THE ACCURACY OR COMPLETENESS OF ELECTRONIC COPIES OF THIS PLAN SHEET.

URS CORPORATION
1380 LEAD HILL BLVD,
SUITE 100
ROSEVILLE, CA 95661

CITY OF PETALUMA
11 ENGLISH STREET
PETALUMA, CA 94952

FOR ACCURATE RIGHT OF WAY DATA,
CONTACT RIGHT OF WAY ENGINEERING AT THE DISTRICT OFFICE.

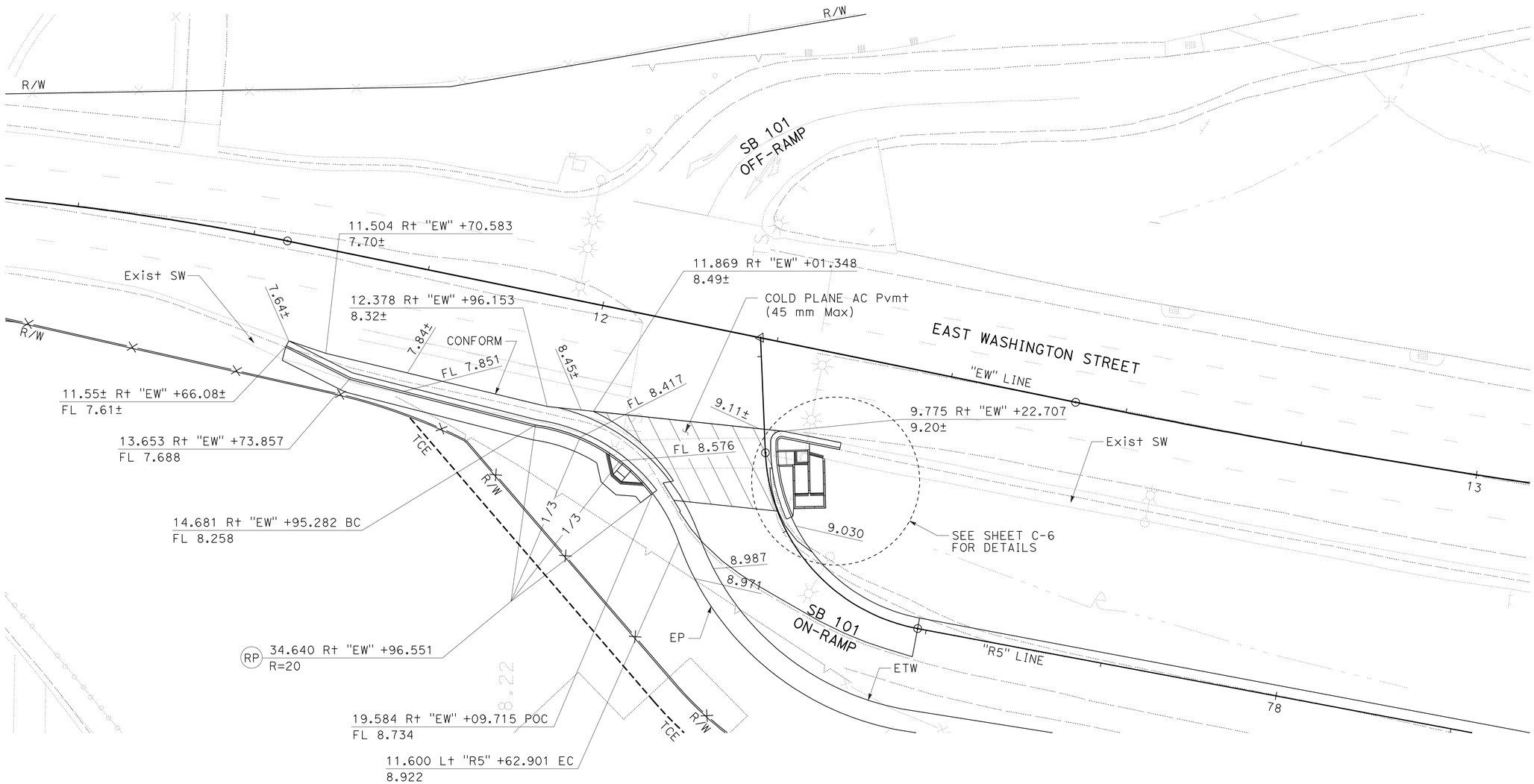

FOR NOTES, ABBREVIATIONS
AND LEGEND, SEE SHEET C-1

ALL DIMENSIONS ARE IN METERS
UNLESS OTHERWISE SHOWN

CONSTRUCTION DETAILS

SCALE 1:250

C-3

REVISED BY	DATE REVISED
SHERINA LAM	DAVID A. WILLIAMS

CALCULATED-DESIGNED BY
CHECKED BY

CONSULTANT FUNCTIONAL SUPERVISOR
RAMSEY HISSEN

STATE OF CALIFORNIA - DEPARTMENT OF TRANSPORTATION
Caltrans

LAST REVISION 09-03-10
DATE PLOTTED => 31-MAY-2011
TIME PLOTTED => 10:34

Dist	COUNTY	ROUTE	KILOMETER POST TOTAL PROJECT	SHEET No.	TOTAL SHEETS
04	Son	101	7.3/8.3	19	320

David Williams 9/3/10
REGISTERED CIVIL ENGINEER DATE

5-31-11
PLANS APPROVAL DATE

REGISTERED PROFESSIONAL ENGINEER David A. Williams No. C58697 Exp. 12/31/12 CIVIL STATE OF CALIFORNIA

THE STATE OF CALIFORNIA OR ITS OFFICERS OR AGENTS SHALL NOT BE RESPONSIBLE FOR THE ACCURACY OR COMPLETENESS OF ELECTRONIC COPIES OF THIS PLAN SHEET.

URS CORPORATION
1380 LEAD HILL BLVD,
SUITE 100
ROSEVILLE, CA 95661

CITY OF PETALUMA
11 ENGLISH STREET
PETALUMA, CA 94952

FOR ACCURATE RIGHT OF WAY DATA,
CONTACT RIGHT OF WAY ENGINEERING AT THE DISTRICT OFFICE.

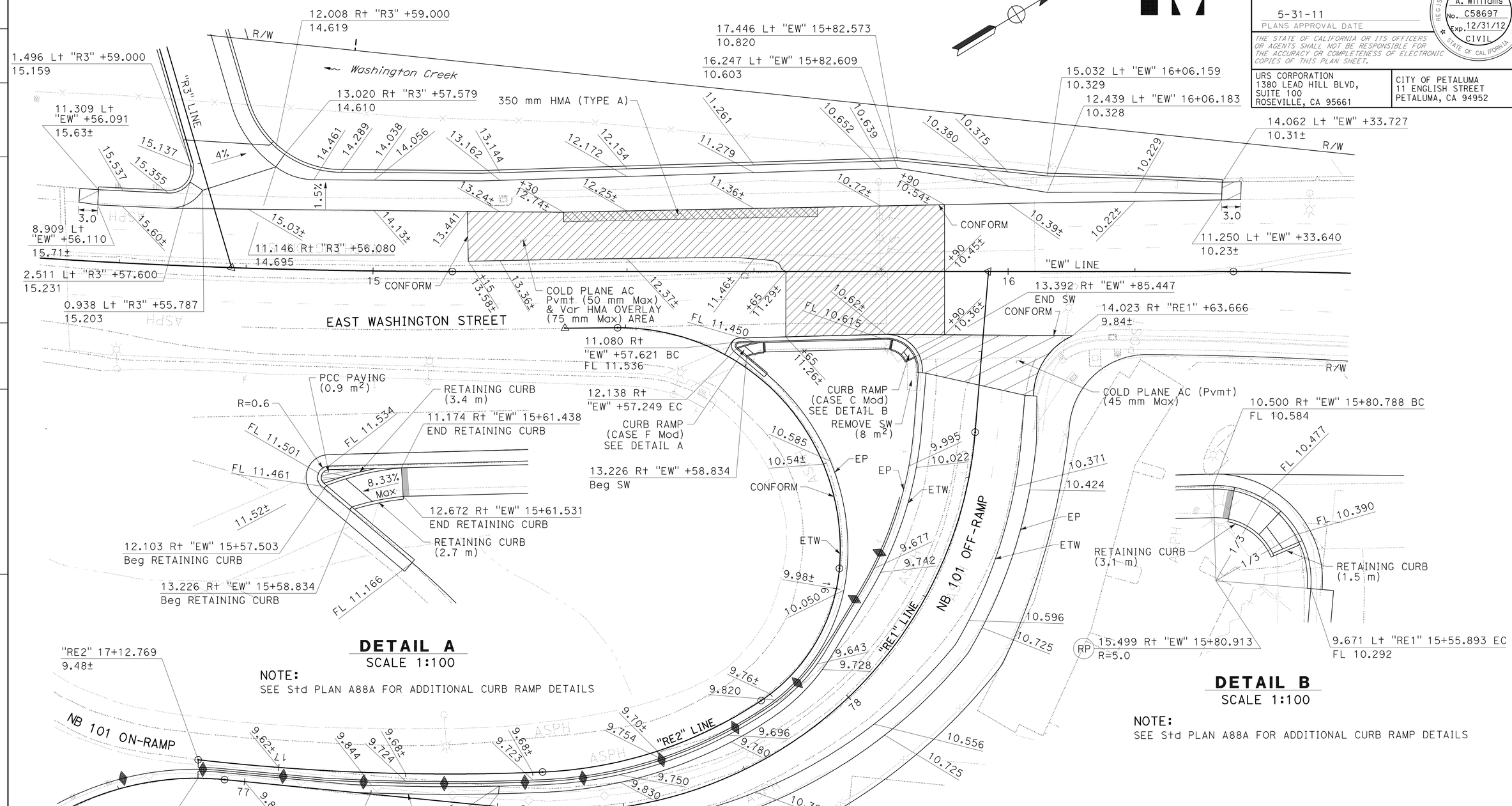

NOTE:
SEE Std PLAN A88A FOR ADDITIONAL CURB RAMP DETAILS

NOTE:
SEE Std PLAN A88A FOR ADDITIONAL CURB RAMP DETAILS

FOR NOTES, ABBREVIATIONS AND LEGEND, SEE SHEET C-1

ALL DIMENSIONS ARE IN METERS
UNLESS OTHERWISE SHOWN

CONSTRUCTION DETAILS

SCALE AS SHOWN

C-4

STATE OF CALIFORNIA - DEPARTMENT OF TRANSPORTATION
Caltrans

CONSULTANT FUNCTIONAL SUPERVISOR: RAMSEY HISSEN
CALCULATED-DESIGNED BY: SHERINA LAM
CHECKED BY: DAVID A. WILLIAMS
REVISED BY / DATE REVISED

LAST REVISION 09-03-10 | DATE PLOTTED => 31-MAY-2011 | TIME PLOTTED => 10:34

Dist	COUNTY	ROUTE	KILOMETER POST TOTAL PROJECT	SHEET No.	TOTAL SHEETS
04	Son	101	7.3/8.3	20	320

David Williams 9/3/10
REGISTERED CIVIL ENGINEER DATE

5-31-11
PLANS APPROVAL DATE

REGISTERED PROFESSIONAL ENGINEER David A. Williams No. C58697 Exp. 12/31/12 CIVIL STATE OF CALIFORNIA

THE STATE OF CALIFORNIA OR ITS OFFICERS OR AGENTS SHALL NOT BE RESPONSIBLE FOR THE ACCURACY OR COMPLETENESS OF ELECTRONIC COPIES OF THIS PLAN SHEET.

URS CORPORATION
1380 LEAD HILL BLVD,
SUITE 100
ROSEVILLE, CA 95661

CITY OF PETALUMA
11 ENGLISH STREET
PETALUMA, CA 94952

Caltrans Metric

FOR ACCURATE RIGHT OF WAY DATA,
CONTACT RIGHT OF WAY ENGINEERING AT THE DISTRICT OFFICE.

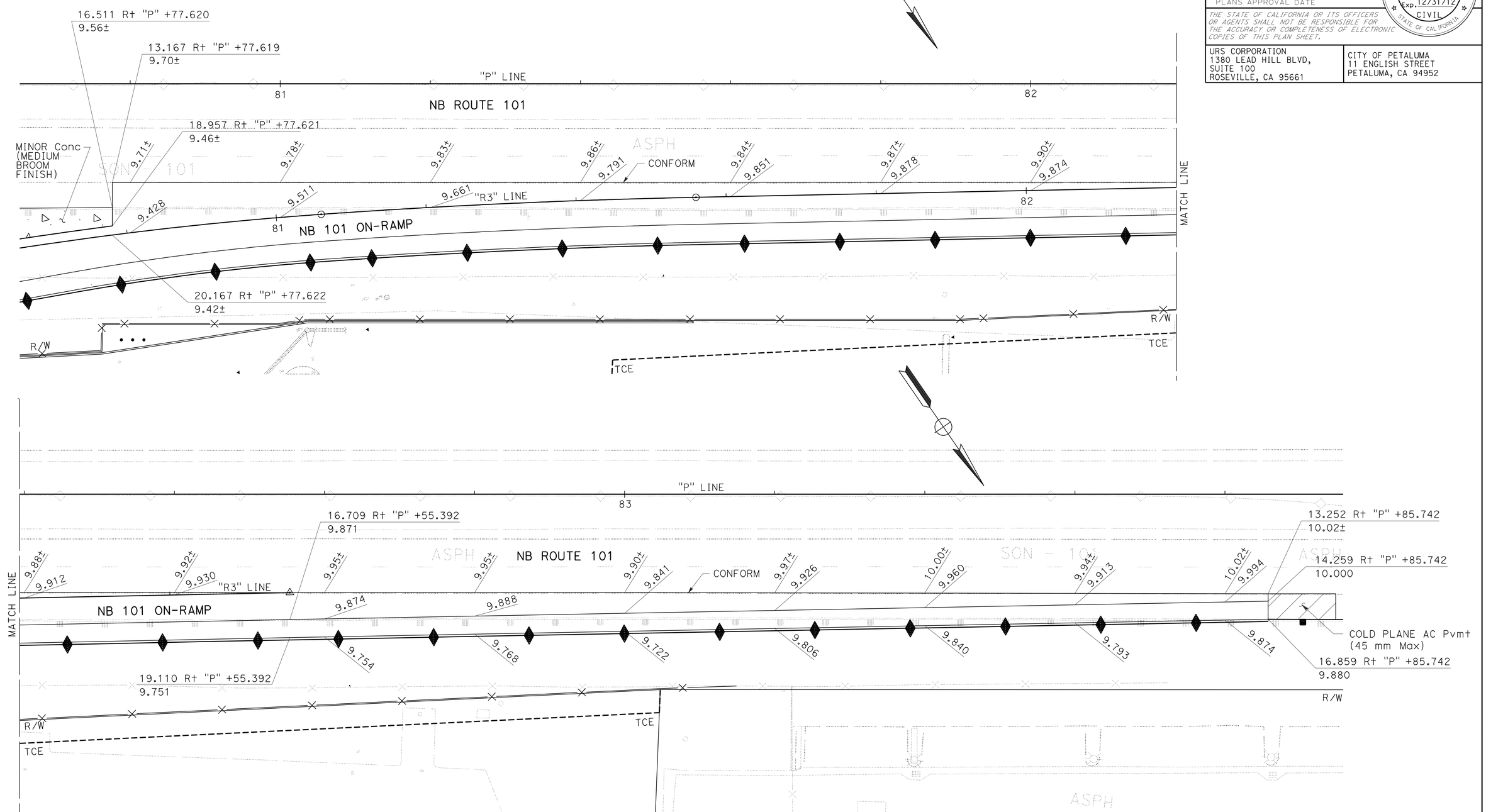

FOR NOTES, ABBREVIATIONS AND LEGEND, SEE SHEET C-1

ALL DIMENSIONS ARE IN METERS
UNLESS OTHERWISE SHOWN

CONSTRUCTION DETAILS

SCALE 1:250

C-5

REVISED BY | DATE REVISED

SHERINA LAM | DAVID A. WILLIAMS

CALCULATED-DESIGNED BY | CHECKED BY

CONSULTANT FUNCTIONAL SUPERVISOR: RAMSEY HISSEN

STATE OF CALIFORNIA - DEPARTMENT OF TRANSPORTATION

Caltrans

LAST REVISION | DATE PLOTTED => 31-MAY-2011 | TIME PLOTTED => 10:34

09-03-10

Dist	COUNTY	ROUTE	KILOMETER POST TOTAL PROJECT	SHEET No.	TOTAL SHEETS
04	Son	101	7.3/8.3	21	320

David Williams 9/3/10
REGISTERED CIVIL ENGINEER DATE

5-31-11
PLANS APPROVAL DATE

REGISTERED PROFESSIONAL ENGINEER David A. Williams No. C58697 Exp. 12/31/12 CIVIL STATE OF CALIFORNIA

THE STATE OF CALIFORNIA OR ITS OFFICERS OR AGENTS SHALL NOT BE RESPONSIBLE FOR THE ACCURACY OR COMPLETENESS OF ELECTRONIC COPIES OF THIS PLAN SHEET.

URS CORPORATION
1380 LEAD HILL BLVD,
SUITE 100
ROSEVILLE, CA 95661

CITY OF PETALUMA
11 ENGLISH STREET
PETALUMA, CA 94952

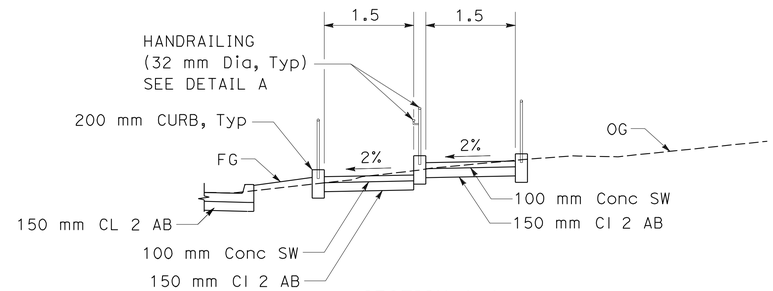

SECTION A-A
TYPICAL

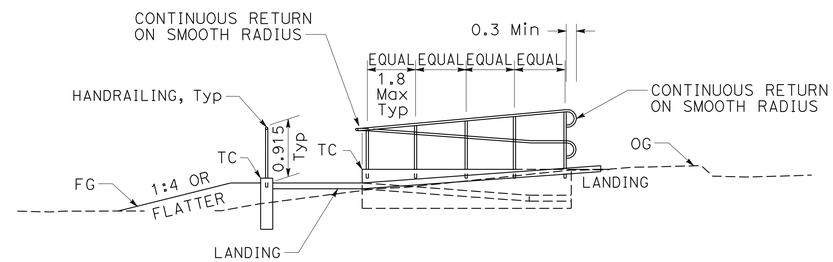

SECTION B-B
TYPICAL

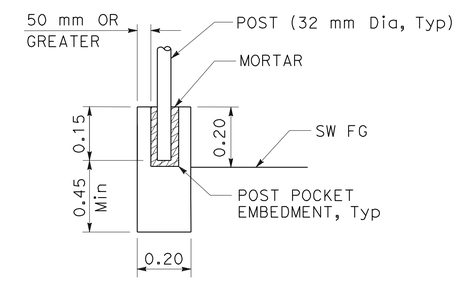

POST POCKET EMBEDMENT
TYPICAL

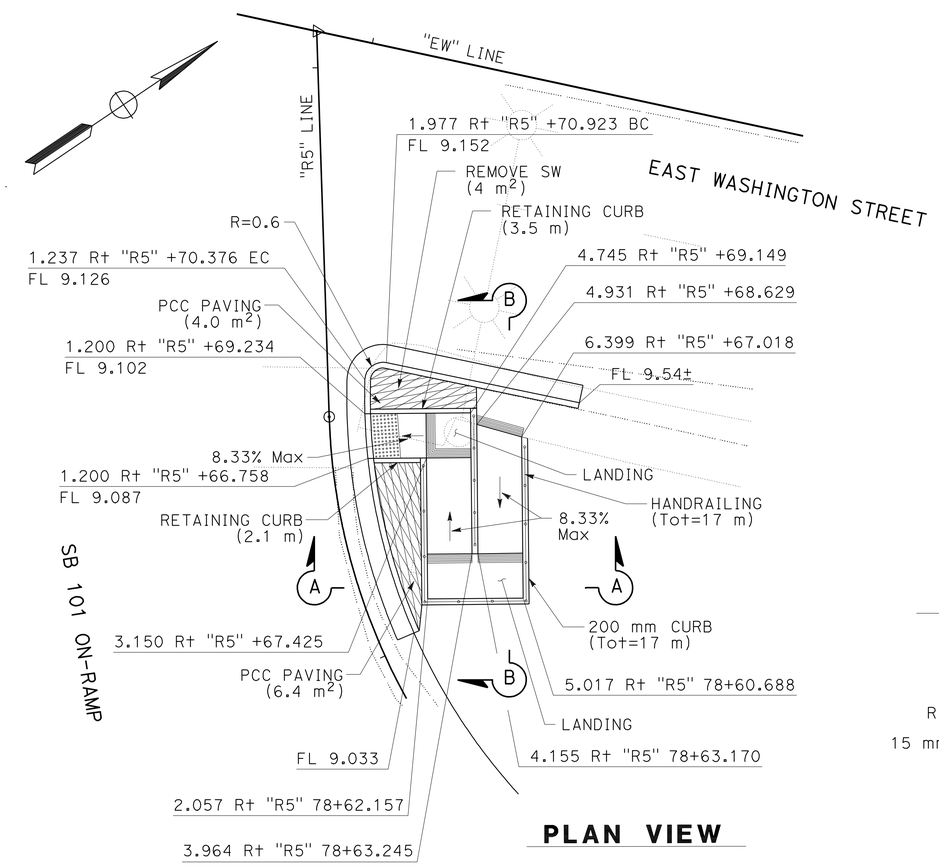

PLAN VIEW

NOTE:
SEE Std PLAN A88A FOR
ADDITIONAL CURB RAMP DETAILS

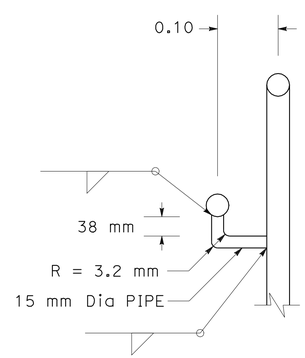

DETAIL A

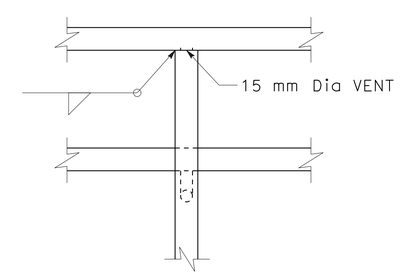

ELEVATION

CONSTRUCTION DETAILS

NO SCALE

ALL DIMENSIONS ARE IN METERS
UNLESS OTHERWISE SHOWN

C-6

REVISED BY	DATE REVISED

SHERINA LAM
DAVID A. WILLIAMS

CALCULATED-DESIGNED BY
CHECKED BY

CONSULTANT FUNCTIONAL SUPERVISOR
RAMSEY HISSEN

STATE OF CALIFORNIA - DEPARTMENT OF TRANSPORTATION
Caltrans

LAST REVISION 09-03-10 | DATE PLOTTED => 31-MAY-2011 | TIME PLOTTED => 10:34

Dist	COUNTY	ROUTE	KILOMETER POST TOTAL PROJECT	SHEET No.	TOTAL SHEETS
04	Son	101	7.3/8.3	22	320

David Williams 9/3/10
REGISTERED CIVIL ENGINEER DATE

5-31-11
PLANS APPROVAL DATE

REGISTERED PROFESSIONAL ENGINEER
David A. Williams
No. C58697
Exp. 12/31/12
CIVIL
STATE OF CALIFORNIA

THE STATE OF CALIFORNIA OR ITS OFFICERS OR AGENTS SHALL NOT BE RESPONSIBLE FOR THE ACCURACY OR COMPLETENESS OF ELECTRONIC COPIES OF THIS PLAN SHEET.

URS CORPORATION
1380 LEAD HILL BLVD,
SUITE 100
ROSEVILLE, CA 95661

CITY OF PETALUMA
11 ENGLISH STREET
PETALUMA, CA 94952

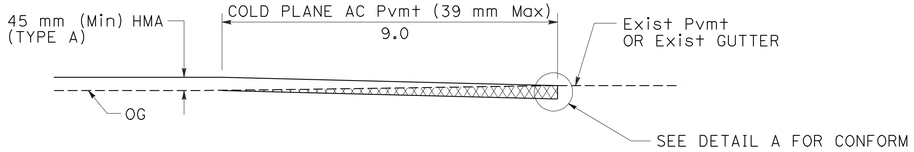

COLD PLANE AC PAVEMENT DETAIL

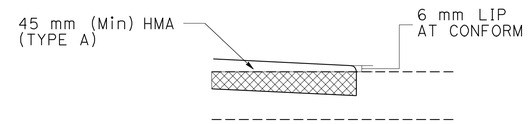

DETAIL A

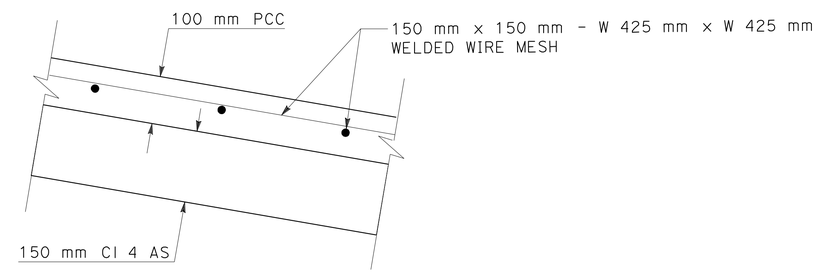

MINOR CONCRETE (MEDIUM BROOM FINISH)

CONSTRUCTION DETAILS

NO SCALE

ALL DIMENSIONS ARE IN METERS
UNLESS OTHERWISE SHOWN

C-7

STATE OF CALIFORNIA - DEPARTMENT OF TRANSPORTATION
Caltrans

CONSULTANT FUNCTIONAL SUPERVISOR: RAMSEY HISSEN
CALCULATED-DESIGNED BY: SHERINA LAM
CHECKED BY: DAVID A. WILLIAMS
REVISED BY
DATE REVISED

LAST REVISION 09-03-10 | DATE PLOTTED => 31-MAY-2011 | TIME PLOTTED => 10:34

Dist	COUNTY	ROUTE	KILOMETER POST TOTAL PROJECT	SHEET No.	TOTAL SHEETS
04	Son	101	7.3/8.3	23	320

David Williams 9/3/12
REGISTERED CIVIL ENGINEER DATE

5-31-11
PLANS APPROVAL DATE

REGISTERED PROFESSIONAL ENGINEER David A. Williams No. C58697 Exp. 12/31/12 CIVIL STATE OF CALIFORNIA

THE STATE OF CALIFORNIA OR ITS OFFICERS OR AGENTS SHALL NOT BE RESPONSIBLE FOR THE ACCURACY OR COMPLETENESS OF ELECTRONIC COPIES OF THIS PLAN SHEET.

URS CORPORATION
1380 LEAD HILL BLVD,
SUITE 100
ROSEVILLE, CA 95661

CITY OF PETALUMA
11 ENGLISH STREET
PETALUMA, CA 94952

Caltrans Metric

FOR ACCURATE RIGHT OF WAY DATA, CONTACT RIGHT OF WAY ENGINEERING AT THE DISTRICT OFFICE.

LEGEND

- ROADWAY EXCAVATION (TYPE Y-1) AERIALLY DEPOSITED LEAD (OG TO 0.3 m DEEP)
- ROADWAY EXCAVATION (TYPE Y-2) AERIALLY DEPOSITED LEAD (OG TO 0.3 m DEEP)
- ROADWAY EXCAVATION (TYPE Y-2) AERIALLY DEPOSITED LEAD (OG TO 0.6 m DEEP)
- ROADWAY EXCAVATION (TYPE Z-2) AERIALLY DEPOSITED LEAD (OG TO 0.6 m DEEP)

ABBREVIATION:

ADL AERIALLY DEPOSITED LEAD

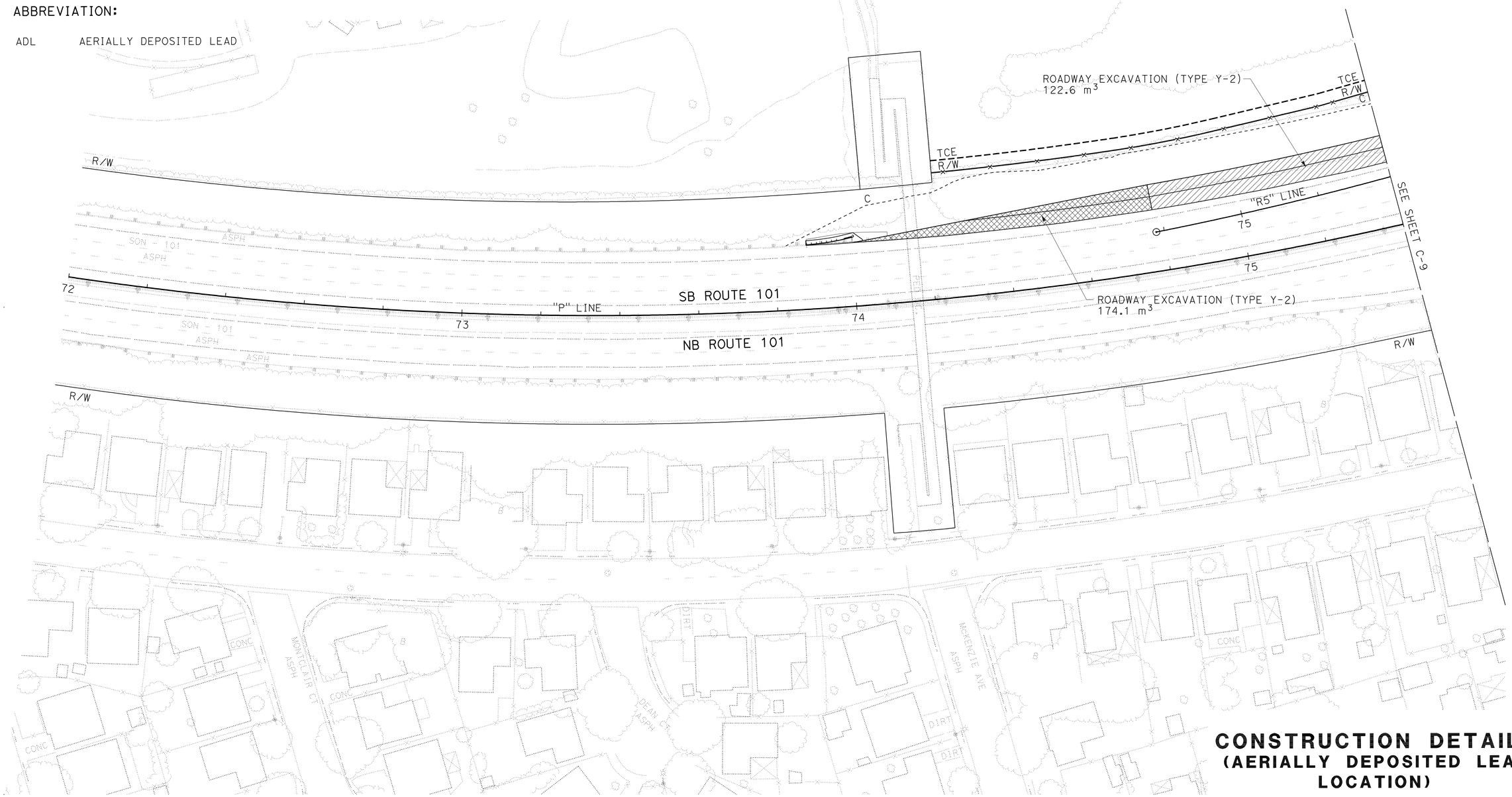

ALL DIMENSIONS ARE IN METERS
UNLESS OTHERWISE SHOWN

CONSTRUCTION DETAILS
(AERIALLY DEPOSITED LEAD LOCATION)

SCALE 1:500

C-8

STATE OF CALIFORNIA - DEPARTMENT OF TRANSPORTATION
Caltrans

CONSULTANT FUNCTIONAL SUPERVISOR: RAMSEY HISSEN
CALCULATED-DESIGNED BY: SHERINA LAM
CHECKED BY: DAVID A. WILLIAMS
REVISED BY / DATE REVISED

LAST REVISION 09-03-10 | DATE PLOTTED => 31-MAY-2011 | TIME PLOTTED => 10:34

Dist	COUNTY	ROUTE	KILOMETER POST TOTAL PROJECT	SHEET No.	TOTAL SHEETS
04	Son	101	7.3/8.3	24	320

David Williams 9/3/10
REGISTERED CIVIL ENGINEER DATE

5-31-11
PLANS APPROVAL DATE

REGISTERED PROFESSIONAL ENGINEER David A. Williams No. C58697 Exp. 12/31/12 CIVIL STATE OF CALIFORNIA

THE STATE OF CALIFORNIA OR ITS OFFICERS OR AGENTS SHALL NOT BE RESPONSIBLE FOR THE ACCURACY OR COMPLETENESS OF ELECTRONIC COPIES OF THIS PLAN SHEET.

URS CORPORATION
1380 LEAD HILL BLVD,
SUITE 100
ROSEVILLE, CA 95661

CITY OF PETALUMA
11 ENGLISH STREET
PETALUMA, CA 94952

FOR ACCURATE RIGHT OF WAY DATA,
CONTACT RIGHT OF WAY ENGINEERING AT THE DISTRICT OFFICE.

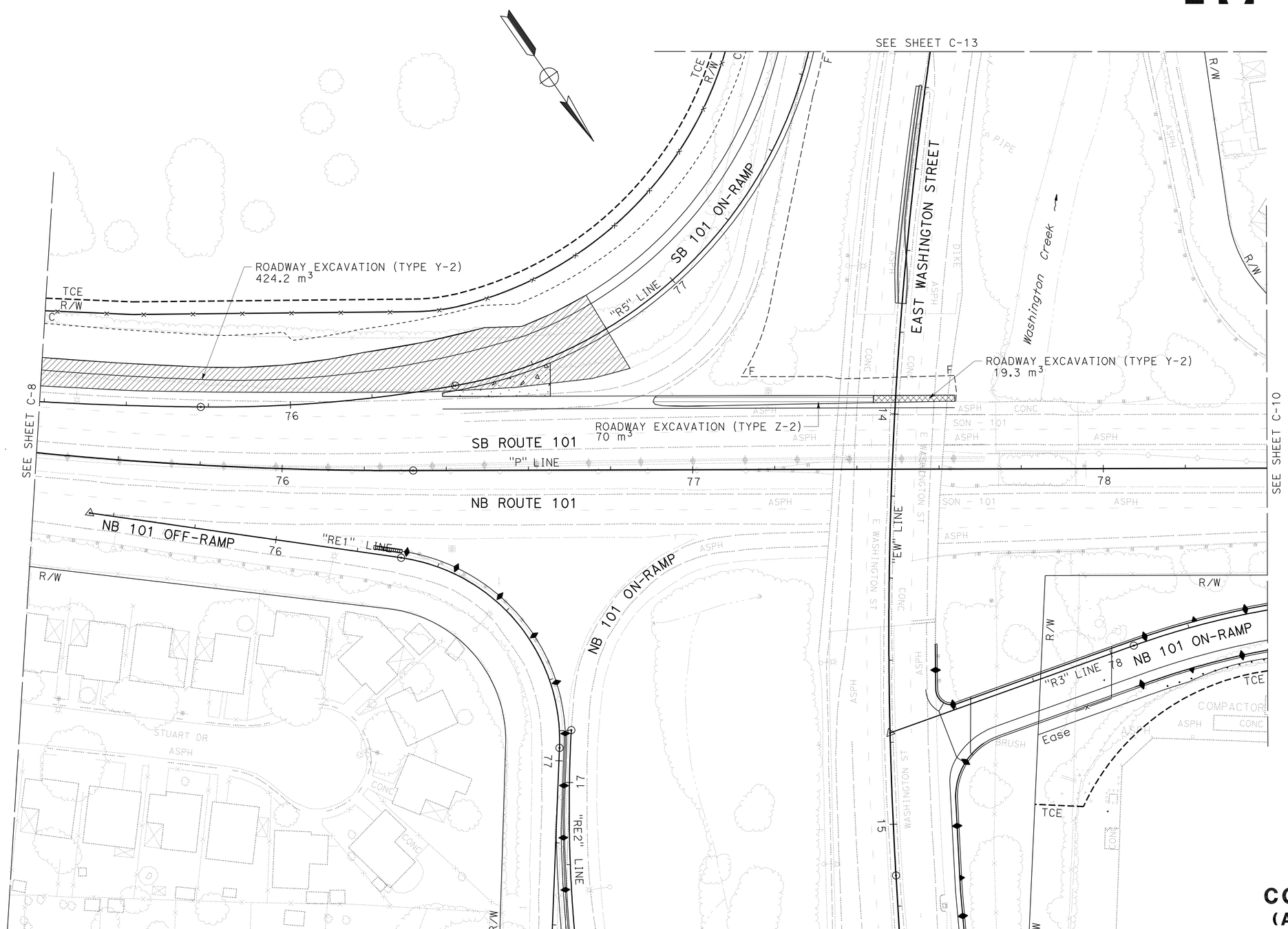

FOR NOTES, ABBREVIATIONS AND LEGEND, SEE SHEET C-8

ALL DIMENSIONS ARE IN METERS UNLESS OTHERWISE SHOWN

CONSTRUCTION DETAILS
(AERIALLY DEPOSITED LEAD LOCATION)
SCALE 1:500

C-9

STATE OF CALIFORNIA - DEPARTMENT OF TRANSPORTATION
Caltrans

CONSULTANT FUNCTIONAL SUPERVISOR: RAMSEY HISSEN
CALCULATED-DESIGNED BY: SHERINA LAM
CHECKED BY: DAVID A. WILLIAMS
REVISED BY / DATE REVISED

LAST REVISION 09-03-10
DATE PLOTTED => 31-MAY-2011
TIME PLOTTED => 10:34

Dist	COUNTY	ROUTE	KILOMETER POST TOTAL PROJECT	SHEET No.	TOTAL SHEETS
04	Son	101	7.3/8.3	25	320

David Williams 9/3/10
REGISTERED CIVIL ENGINEER DATE

5-31-11
PLANS APPROVAL DATE

REGISTERED PROFESSIONAL ENGINEER
David A. Williams
No. C58697
Exp. 12/31/12
CIVIL
STATE OF CALIFORNIA

THE STATE OF CALIFORNIA OR ITS OFFICERS OR AGENTS SHALL NOT BE RESPONSIBLE FOR THE ACCURACY OR COMPLETENESS OF ELECTRONIC COPIES OF THIS PLAN SHEET.

URS CORPORATION
1380 LEAD HILL BLVD,
SUITE 100
ROSEVILLE, CA 95661

CITY OF PETALUMA
11 ENGLISH STREET
PETALUMA, CA 94952

Caltrans Metric

FOR ACCURATE RIGHT OF WAY DATA,
CONTACT RIGHT OF WAY ENGINEERING
AT THE DISTRICT OFFICE.

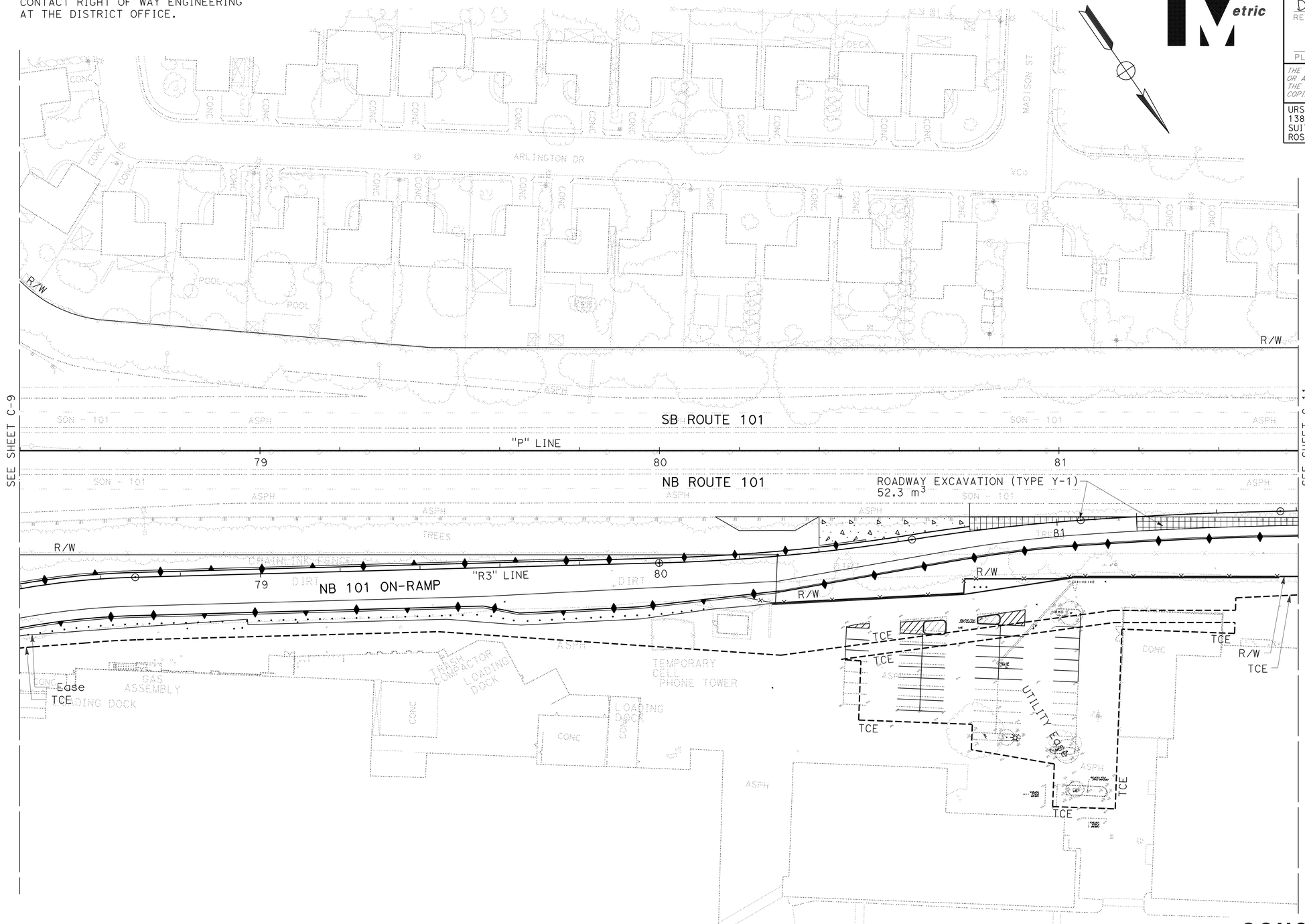

FOR NOTES, ABBREVIATIONS
AND LEGEND, SEE SHEET C-8

ALL DIMENSIONS ARE IN METERS
UNLESS OTHERWISE SHOWN

CONSTRUCTION DETAILS
(AERIALLY DEPOSITED LEAD LOCATION)

SCALE 1:500

C-10

STATE OF CALIFORNIA - DEPARTMENT OF TRANSPORTATION
Caltrans

CONSULTANT FUNCTIONAL SUPERVISOR: RAMSEY HISSEN
CALCULATED-DESIGNED BY: SHERINA LAM
CHECKED BY: DAVID A. WILLIAMS
REVISED BY
DATE REVISED

LAST REVISION 09-03-10
DATE PLOTTED => 31-MAY-2011
TIME PLOTTED => 10:34

Dist	COUNTY	ROUTE	KILOMETER POST TOTAL PROJECT	SHEET No.	TOTAL SHEETS
04	Son	101	7.3/8.3	26	320

David Williams 9/3/10
REGISTERED CIVIL ENGINEER DATE

5-31-11
PLANS APPROVAL DATE

REGISTERED PROFESSIONAL ENGINEER
David A. Williams
No. C58697
Exp. 12/31/12
CIVIL
STATE OF CALIFORNIA

THE STATE OF CALIFORNIA OR ITS OFFICERS OR AGENTS SHALL NOT BE RESPONSIBLE FOR THE ACCURACY OR COMPLETENESS OF ELECTRONIC COPIES OF THIS PLAN SHEET.

URS CORPORATION
1380 LEAD HILL BLVD,
SUITE 100
ROSEVILLE, CA 95661

CITY OF PETALUMA
11 ENGLISH STREET
PETALUMA, CA 94952

FOR ACCURATE RIGHT OF WAY DATA, CONTACT RIGHT OF WAY ENGINEERING AT THE DISTRICT OFFICE.

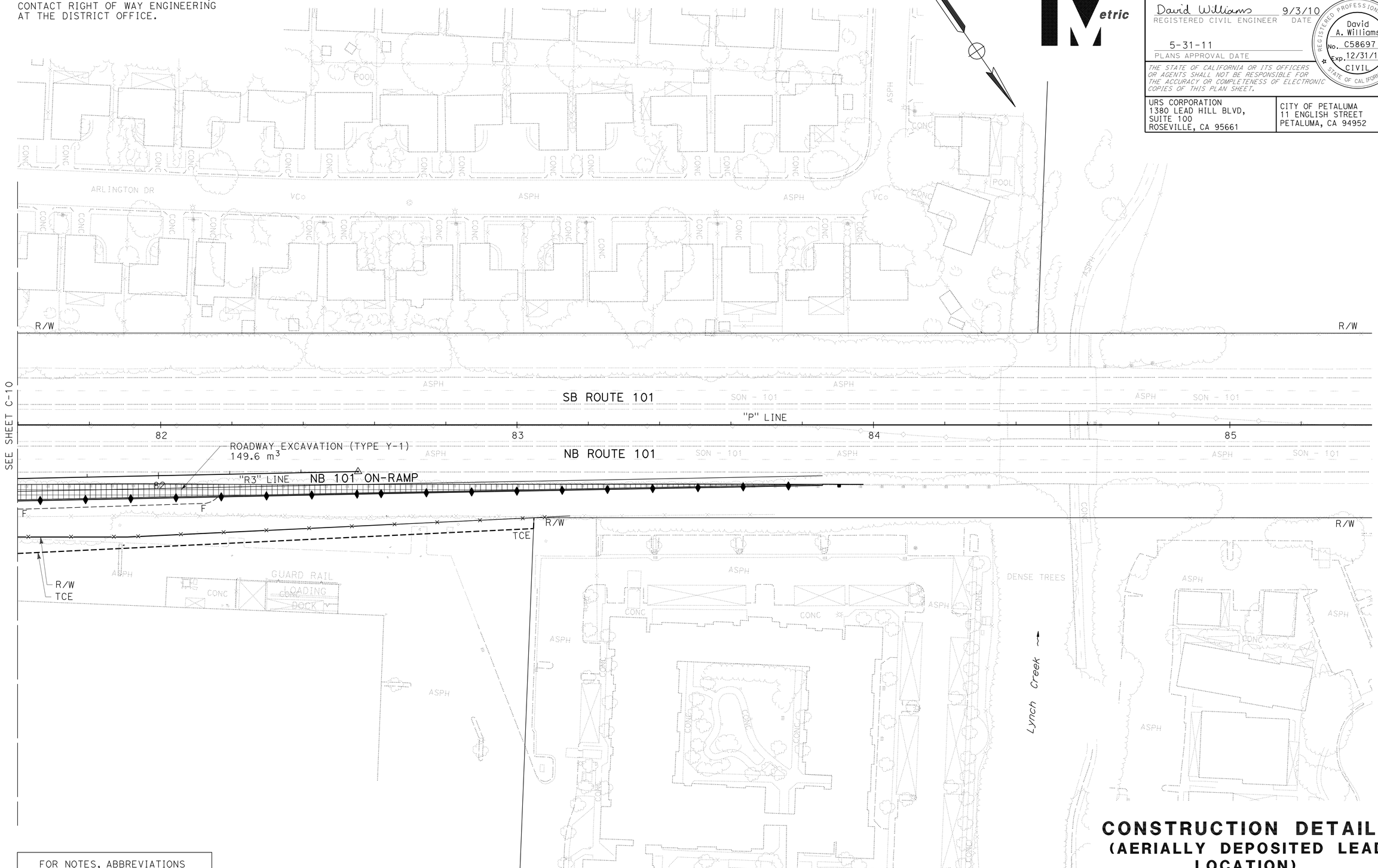

FOR NOTES, ABBREVIATIONS AND LEGEND, SEE SHEET C-8

ALL DIMENSIONS ARE IN METERS UNLESS OTHERWISE SHOWN

CONSTRUCTION DETAILS (AERIALLY DEPOSITED LEAD LOCATION)

SCALE 1:500

C-11

STATE OF CALIFORNIA - DEPARTMENT OF TRANSPORTATION

Caltrans

CONSULTANT FUNCTIONAL SUPERVISOR: RAMSEY HISSEN

CALCULATED-DESIGNED BY: SHERINA LAM

CHECKED BY: DAVID A. WILLIAMS

REVISED BY / DATE REVISED

LAST REVISION 09-03-10

DATE PLOTTED => 31-MAY-2011
TIME PLOTTED => 10:35

Dist	COUNTY	ROUTE	KILOMETER POST TOTAL PROJECT	SHEET No.	TOTAL SHEETS
04	Son	101	7.3/8.3	27	320

David Williams 9/3/10
REGISTERED CIVIL ENGINEER DATE

5-31-11
PLANS APPROVAL DATE

REGISTERED PROFESSIONAL ENGINEER
David A. Williams
No. C58697
Exp. 12/31/12
CIVIL
STATE OF CALIFORNIA

THE STATE OF CALIFORNIA OR ITS OFFICERS OR AGENTS SHALL NOT BE RESPONSIBLE FOR THE ACCURACY OR COMPLETENESS OF ELECTRONIC COPIES OF THIS PLAN SHEET.

URS CORPORATION
1380 LEAD HILL BLVD,
SUITE 100
ROSEVILLE, CA 95661

CITY OF PETALUMA
11 ENGLISH STREET
PETALUMA, CA 94952

FOR ACCURATE RIGHT OF WAY DATA,
CONTACT RIGHT OF WAY ENGINEERING AT THE DISTRICT OFFICE.

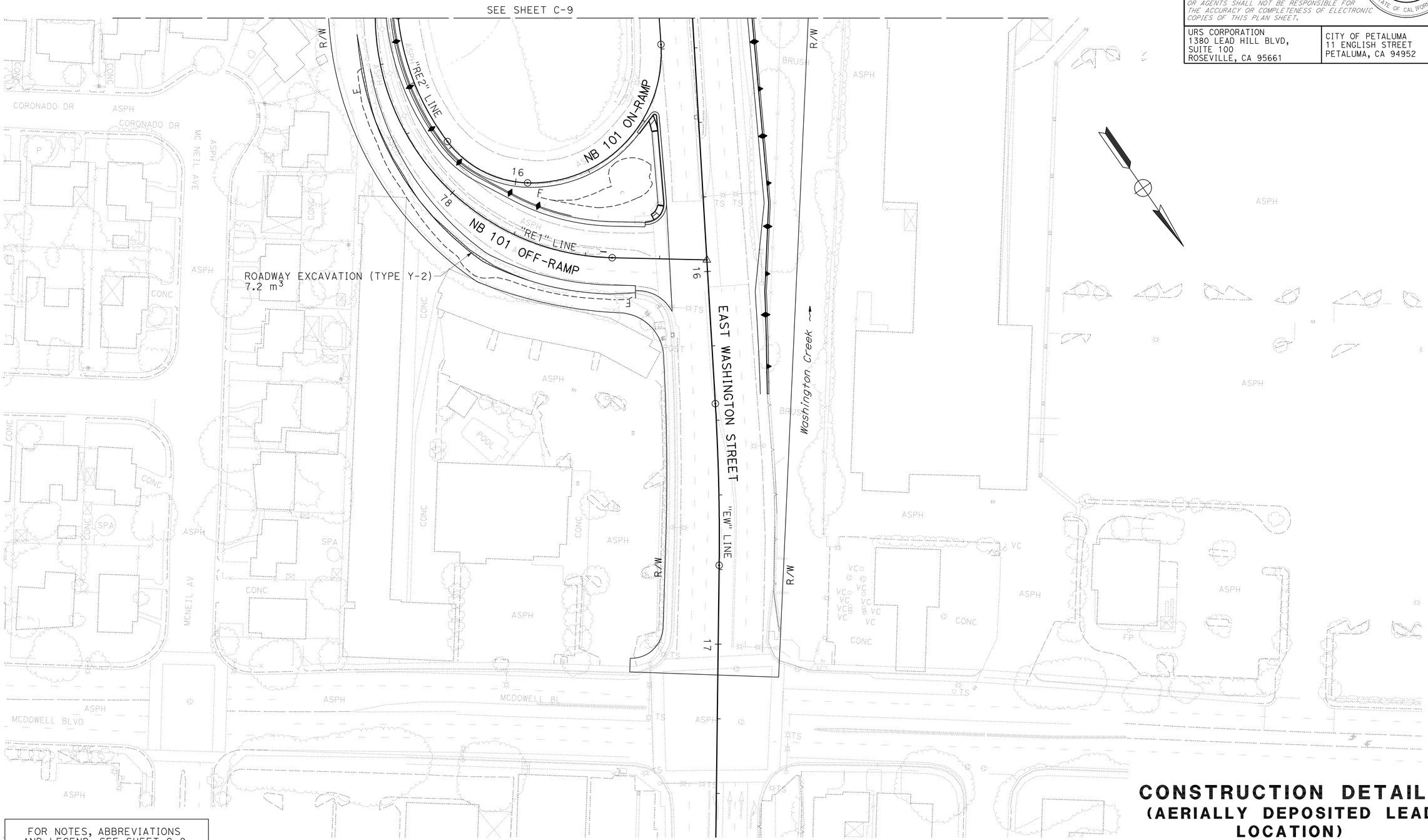

FOR NOTES, ABBREVIATIONS AND LEGEND, SEE SHEET C-8

ALL DIMENSIONS ARE IN METERS UNLESS OTHERWISE SHOWN

CONSTRUCTION DETAILS (AERIALLY DEPOSITED LEAD LOCATION)

SCALE 1:500

C-12

STATE OF CALIFORNIA - DEPARTMENT OF TRANSPORTATION

Caltrans

CONSULTANT FUNCTIONAL SUPERVISOR: RAMSEY HISSEN

CALCULATED-DESIGNED BY: SHERINA LAM

CHECKED BY: DAVID A. WILLIAMS

REVISED BY

DATE REVISED

LAST REVISION 09-03-10

DATE PLOTTED => 31-MAY-2011
TIME PLOTTED => 10:35

Dist	COUNTY	ROUTE	KILOMETER POST TOTAL PROJECT	SHEET No.	TOTAL SHEETS
04	Son	101	7.3/8.3	28	320

David Williams 9/3/10
REGISTERED CIVIL ENGINEER DATE

5-31-11
PLANS APPROVAL DATE

REGISTERED PROFESSIONAL ENGINEER David A. Williams No. C58697 Exp. 12/31/12 CIVIL STATE OF CALIFORNIA

THE STATE OF CALIFORNIA OR ITS OFFICERS OR AGENTS SHALL NOT BE RESPONSIBLE FOR THE ACCURACY OR COMPLETENESS OF ELECTRONIC COPIES OF THIS PLAN SHEET.

URS CORPORATION
1380 LEAD HILL BLVD,
SUITE 100
ROSEVILLE, CA 95661

CITY OF PETALUMA
11 ENGLISH STREET
PETALUMA, CA 94952

FOR ACCURATE RIGHT OF WAY DATA,
CONTACT RIGHT OF WAY ENGINEERING AT THE DISTRICT OFFICE.

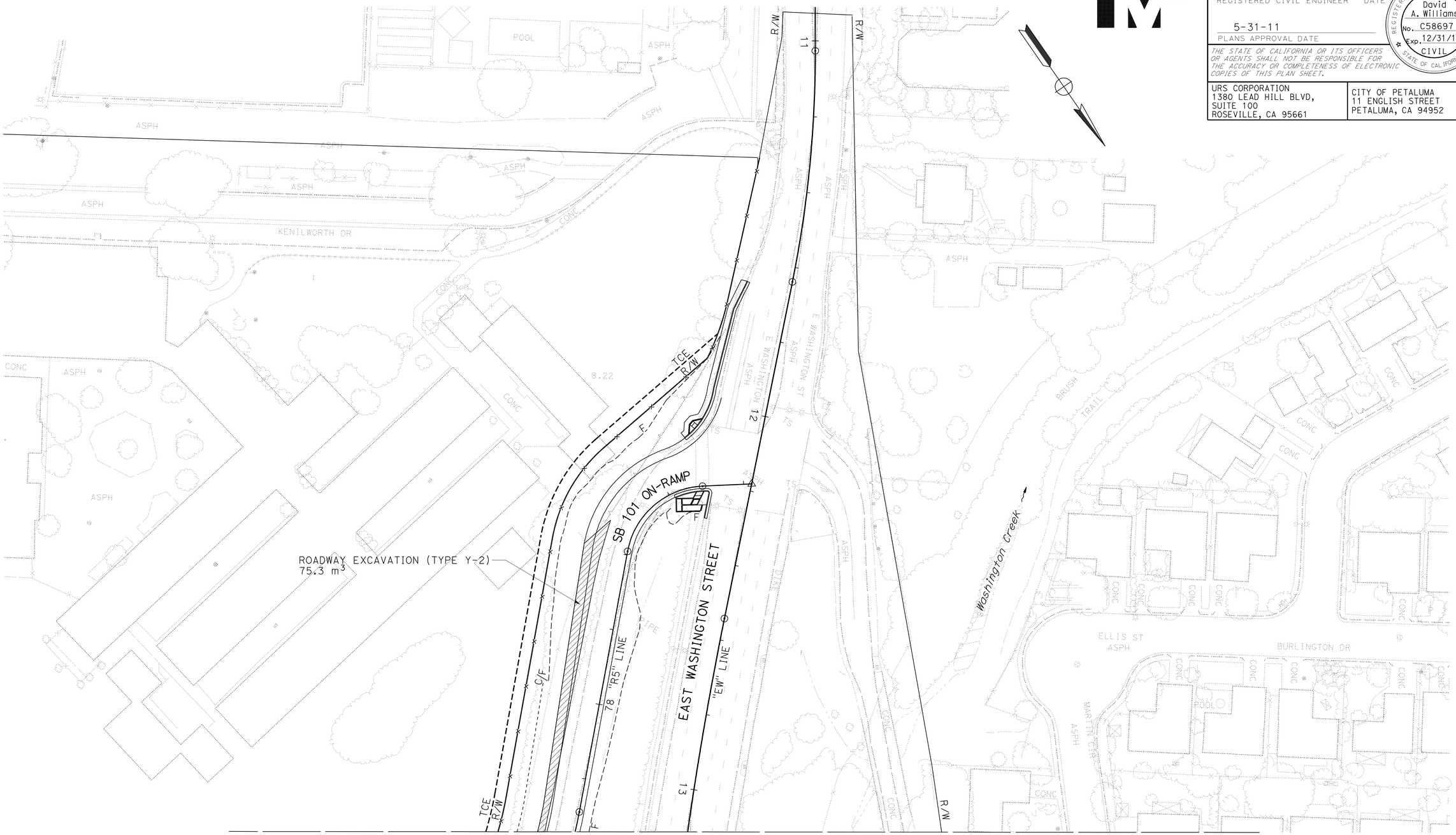

FOR NOTES, ABBREVIATIONS
AND LEGEND, SEE SHEET C-8

ALL DIMENSIONS ARE IN METERS
UNLESS OTHERWISE SHOWN

CONSTRUCTION DETAILS
(AERIALLY DEPOSITED LEAD LOCATION)

SCALE 1:500

C-13

STATE OF CALIFORNIA - DEPARTMENT OF TRANSPORTATION

Caltrans

CONSULTANT FUNCTIONAL SUPERVISOR: RAMSEY HISSEN

CALCULATED-DESIGNED BY: SHERINA LAM

CHECKED BY: DAVID A. WILLIAMS

REVISED BY | DATE REVISED

LAST REVISION DATE PLOTTED => 31-MAY-2011
09-03-10 TIME PLOTTED => 10:35

Dist	COUNTY	ROUTE	KILOMETER POST TOTAL PROJECT	SHEET No.	TOTAL SHEETS
04	Son	101	7.3/8.3	29	320

David Williams 9/3/10
REGISTERED CIVIL ENGINEER DATE

5-31-11
PLANS APPROVAL DATE

REGISTERED PROFESSIONAL ENGINEER David A. Williams No. C58697 Exp. 12/31/12 CIVIL STATE OF CALIFORNIA

THE STATE OF CALIFORNIA OR ITS OFFICERS OR AGENTS SHALL NOT BE RESPONSIBLE FOR THE ACCURACY OR COMPLETENESS OF ELECTRONIC COPIES OF THIS PLAN SHEET.

URS CORPORATION
1380 LEAD HILL BLVD,
SUITE 100
ROSEVILLE, CA 95661

CITY OF PETALUMA
11 ENGLISH STREET
PETALUMA, CA 94952

Caltrans Metric

NOTE:
ADL MATERIALS SHALL BE PLACED AT A MINIMUM ELEVATION OF 9.1 AND HIGHER.

LEGEND

- PLACE TYPE Y-1 ADL MATERIAL ONLY AREA
- PLACE TYPE Y-1 OR TYPE Y-2 ADL MATERIALS AREA
- DEEP-SOIL CEMENT MIXING (DSCM)

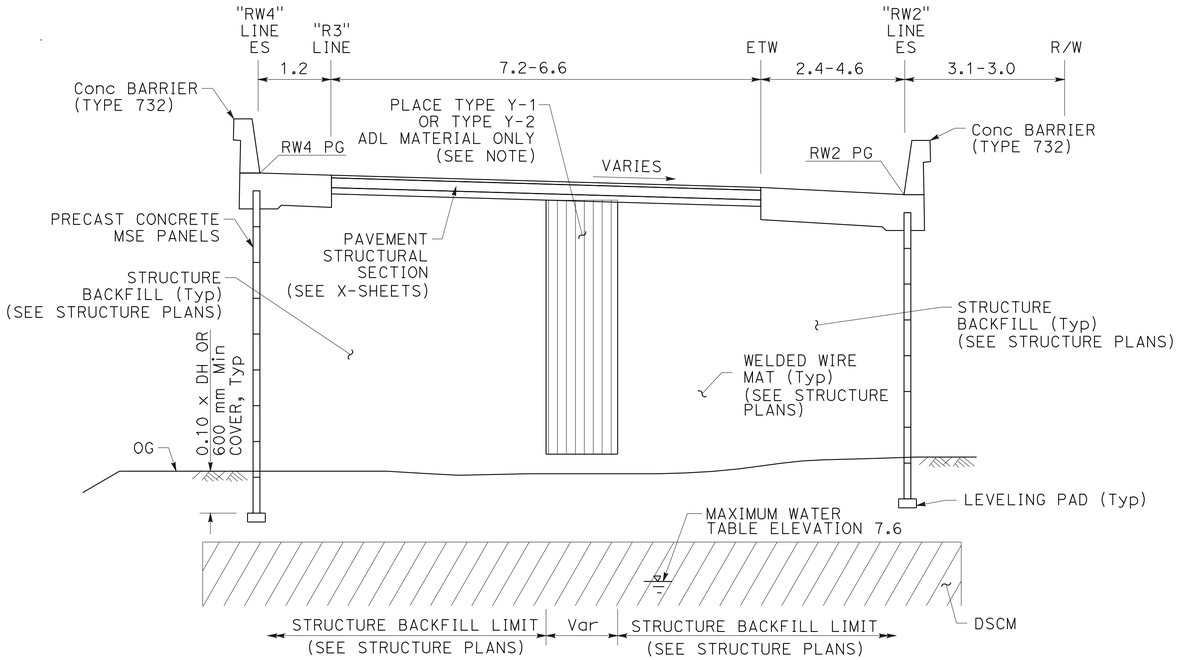

"R3" 78+30.000 EB TO 79+81.012
TYPICAL CROSS SECTIONS
NO SCALE

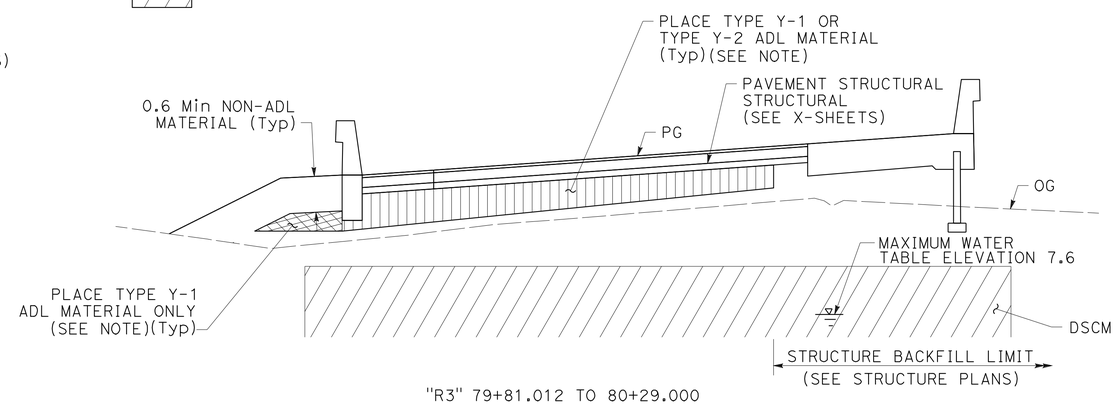

"R3" 79+81.012 TO 80+29.000
TYPICAL CROSS SECTIONS
NO SCALE

FOR ACCURATE RIGHT OF WAY DATA, CONTACT RIGHT OF WAY ENGINEERING AT THE DISTRICT OFFICE.

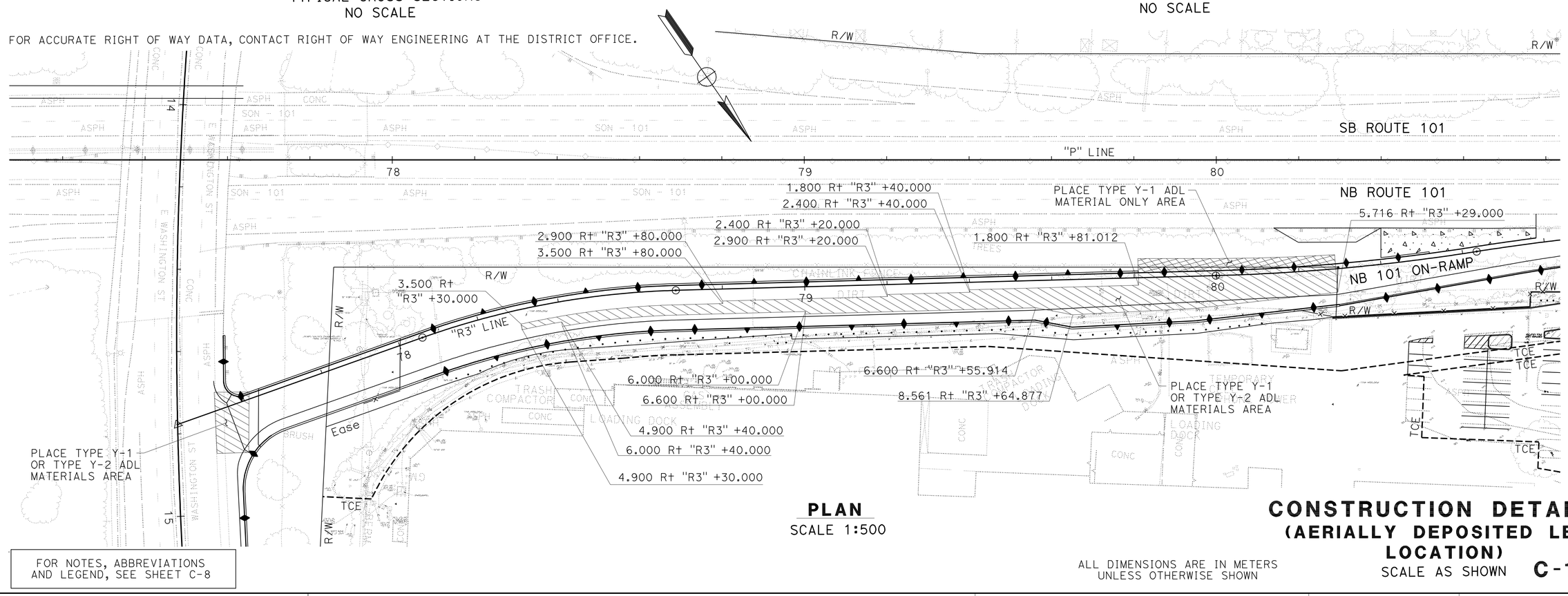

PLAN
SCALE 1:500

FOR NOTES, ABBREVIATIONS AND LEGEND, SEE SHEET C-8

ALL DIMENSIONS ARE IN METERS UNLESS OTHERWISE SHOWN

CONSTRUCTION DETAILS
(AERIALLY DEPOSITED LEAD LOCATION)

SCALE AS SHOWN **C-14**

STATE OF CALIFORNIA - DEPARTMENT OF TRANSPORTATION
Caltrans

CONSULTANT FUNCTIONAL SUPERVISOR: RAMSEY HISSEN
CALCULATED-DESIGNED BY: SHERINA LAM
CHECKED BY: DAVID A. WILLIAMS
REVISED BY / DATE REVISED

LAST REVISION 09-03-10 | DATE PLOTTED => 31-MAY-2011 | TIME PLOTTED => 10:35

Dist	COUNTY	ROUTE	KILOMETER POST TOTAL PROJECT	SHEET No.	TOTAL SHEETS
04	Son	101	7.3/8.3	30	320

David Williams 9/3/10
REGISTERED CIVIL ENGINEER DATE

5-31-11
PLANS APPROVAL DATE

REGISTERED PROFESSIONAL ENGINEER David A. Williams No. C58697 Exp. 12/31/12 CIVIL STATE OF CALIFORNIA

THE STATE OF CALIFORNIA OR ITS OFFICERS OR AGENTS SHALL NOT BE RESPONSIBLE FOR THE ACCURACY OR COMPLETENESS OF ELECTRONIC COPIES OF THIS PLAN SHEET.

URS CORPORATION
1380 LEAD HILL BLVD,
SUITE 100
ROSEVILLE, CA 95661

CITY OF PETALUMA
11 ENGLISH STREET
PETALUMA, CA 94952

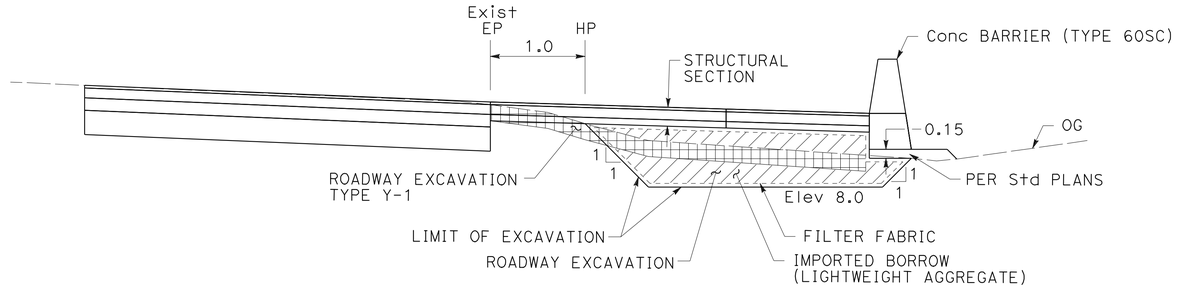

"RW3" 80+70.50 TO 82+50.00
TYPICAL CROSS SECTIONS
NO SCALE

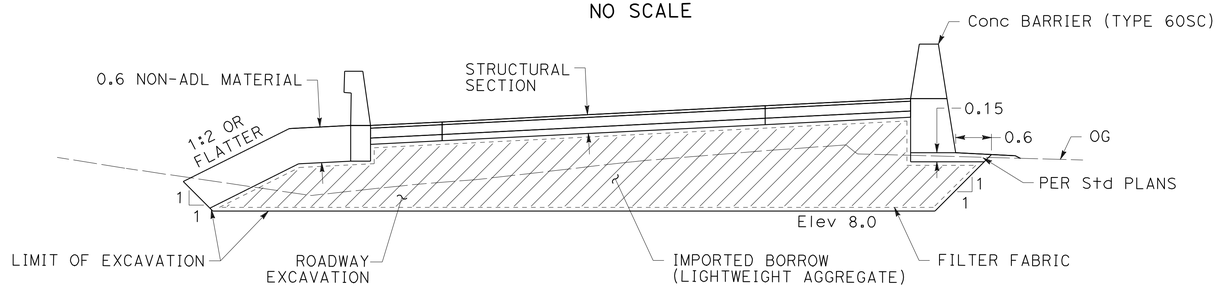

"RW3" 80+29.00* TO 80+70.50
TYPICAL CROSS SECTIONS
NO SCALE
* FROM "RW3" 80+29.00 TO 80+30.50,SEE SHEET C-1
FOR DEEP SOIL CEMENT MIXING DETAIL

LEGEND

ROADWAY EXCAVATION (TYPE Y-1)

IMPORTED BORROW (LIGHTWEIGHT AGGREGATE)

FOR ACCURATE RIGHT OF WAY DATA, CONTACT RIGHT OF WAY ENGINEERING AT THE DISTRICT OFFICE.

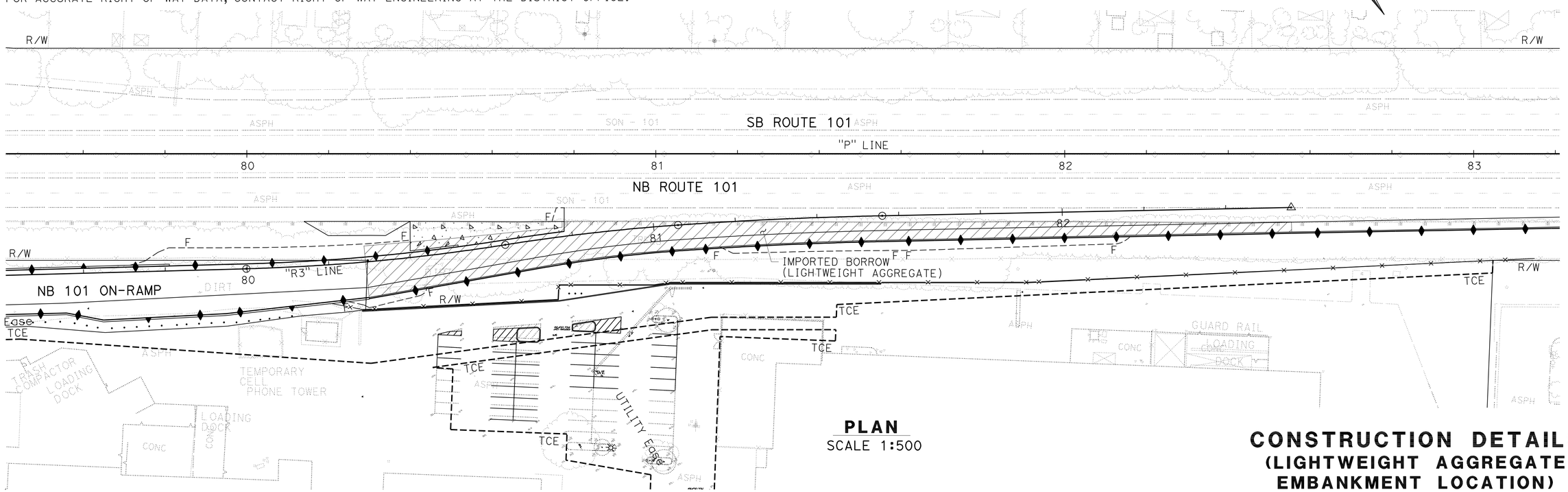

PLAN
SCALE 1:500

ALL DIMENSIONS ARE IN METERS
UNLESS OTHERWISE SHOWN

CONSTRUCTION DETAILS
(LIGHTWEIGHT AGGREGATE EMBANKMENT LOCATION)

SCALE AS SHOWN

C-15

SHERINA LAM
DAVID A. WILLIAMS
RAMSEY HISSEN
REVISED BY
DATE REVISED
CALCULATED-DESIGNED BY
CHECKED BY
CONSULTANT FUNCTIONAL SUPERVISOR

STATE OF CALIFORNIA - DEPARTMENT OF TRANSPORTATION
Caltrans

LAST REVISION 09-03-10
DATE PLOTTED => 31-MAY-2011
TIME PLOTTED => 10:35

FOR ACCURATE RIGHT OF WAY DATA, CONTACT RIGHT OF WAY ENGINEERING AT THE DISTRICT OFFICE.

NOTES:

1. SEE C-1 SHEET FOR GENERAL NOTES.
2. GRADING SHOWN ON THIS PLAN SHEET TO BE COMPLETED PRIOR TO INSTALLATION OF THE SOIL-CEMENT GROUND IMPROVEMENT.
3. FINISHED GRADING SHOWN ON THIS PLAN IS REFERRED TO AS ORIGINAL GROUND (OG) ON ALL OTHER PLANS, INCLUDING STRUCTURE PLANS. SEE CONTOUR GRADING PLANS FOR ADDITIONAL CONTOUR GRADING WORK.

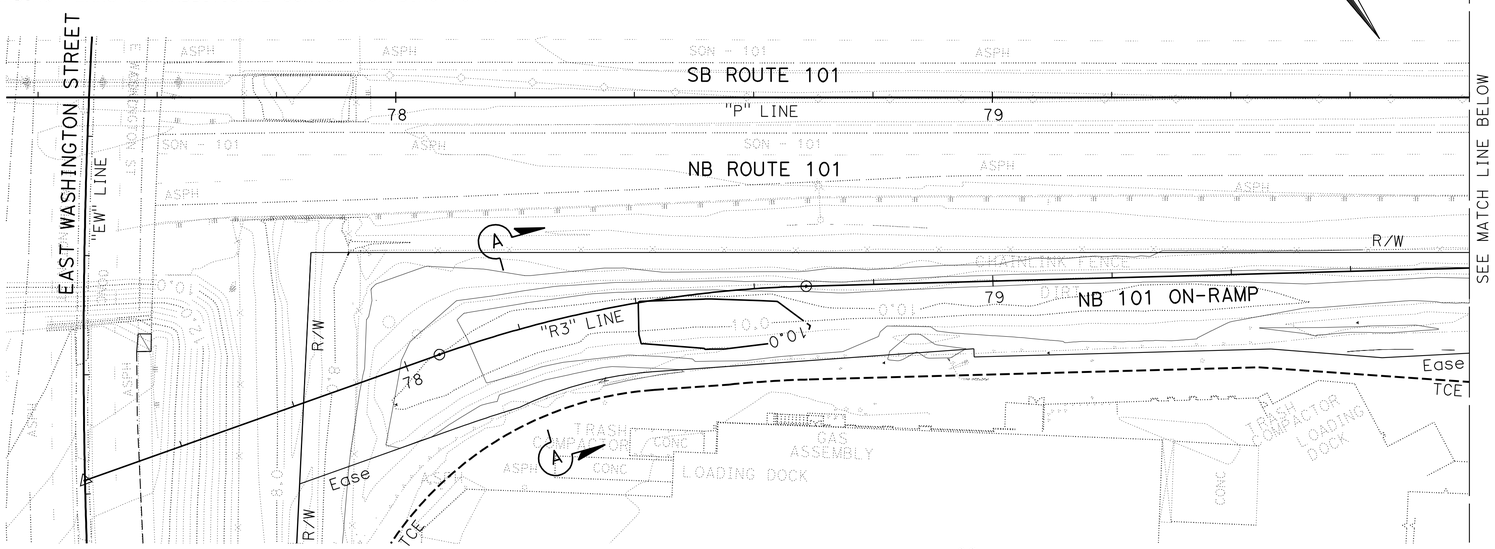

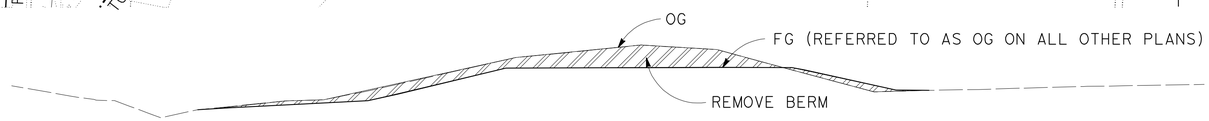

SECTION A-A
NO SCALE

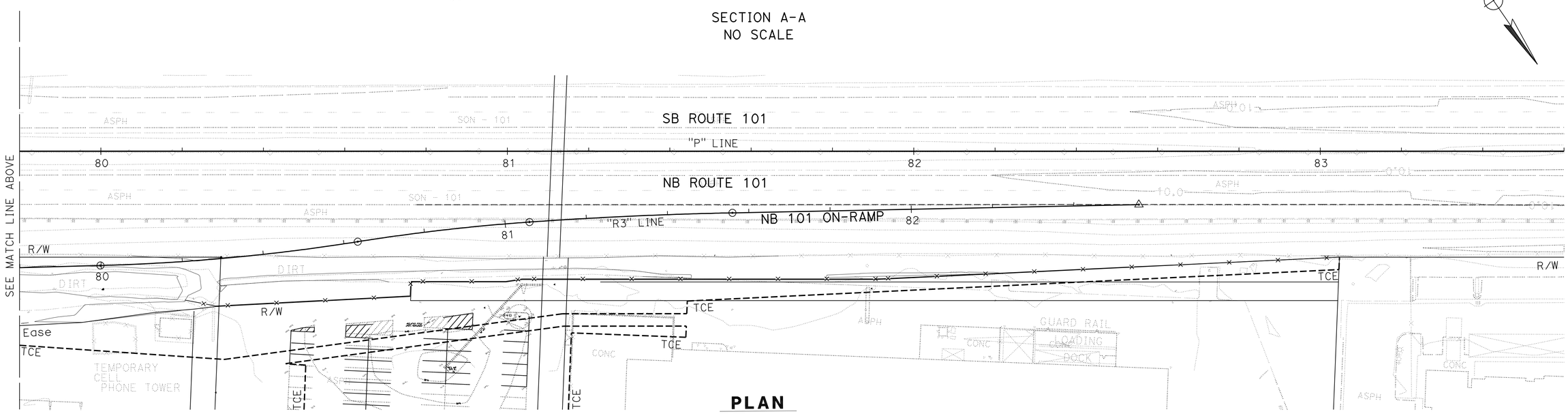

PLAN

SCALE 1:500

Dist	COUNTY	ROUTE	KILOMETER POST TOTAL PROJECT	SHEET No.	TOTAL SHEETS
04	Son	101	7.3/8.3	31	320

David Williams 9/3/10
REGISTERED CIVIL ENGINEER DATE

5-31-11
PLANS APPROVAL DATE

REGISTERED PROFESSIONAL ENGINEER David A. Williams No. C58697 Exp. 12/31/12 CIVIL STATE OF CALIFORNIA

THE STATE OF CALIFORNIA OR ITS OFFICERS OR AGENTS SHALL NOT BE RESPONSIBLE FOR THE ACCURACY OR COMPLETENESS OF ELECTRONIC COPIES OF THIS PLAN SHEET.

URS CORPORATION
1380 LEAD HILL BLVD,
SUITE 100
ROSEVILLE, CA 95661

CITY OF PETALUMA
11 ENGLISH STREET
PETALUMA, CA 94952

BERM REMOVAL *

LOCATION	ROADWAY EXCAVATION
	m^3
"R3" LINE	1189.6

* ROADWAY EXCAVATION FOR BERM REMOVAL IS FOR INFORMATION ONLY. FOR ROADWAY EXCAVATION QUANTITIES SEE QUANTITY SHEETS.

CONSTRUCTION DETAILS

SCALE AS SHOWN

ALL DIMENSIONS ARE IN METERS
UNLESS OTHERWISE SHOWN

C-16

REVISED BY | DATE REVISED
SHERINA LAM | DAVID A. WILLIAMS
CALCULATED-DESIGNED BY | CHECKED BY
CONSULTANT FUNCTIONAL SUPERVISOR
RAMSEY HISSEN
STATE OF CALIFORNIA - DEPARTMENT OF TRANSPORTATION
Caltrans

LAST REVISION 09-03-10 | DATE PLOTTED => 31-MAY-2011 | TIME PLOTTED => 10:35

Dist	COUNTY	ROUTE	KILOMETER POST TOTAL PROJECT	SHEET No.	TOTAL SHEETS
04	Son	101	7.3/8.3	32	320

David Williams 9/3/10
REGISTERED CIVIL ENGINEER DATE

5-31-11
PLANS APPROVAL DATE

REGISTERED PROFESSIONAL ENGINEER David A. Williams No. C58697 Exp. 12/31/12 CIVIL STATE OF CALIFORNIA

THE STATE OF CALIFORNIA OR ITS OFFICERS OR AGENTS SHALL NOT BE RESPONSIBLE FOR THE ACCURACY OR COMPLETENESS OF ELECTRONIC COPIES OF THIS PLAN SHEET.

URS CORPORATION
1380 LEAD HILL BLVD,
SUITE 100
ROSEVILLE, CA 95661

CITY OF PETALUMA
11 ENGLISH STREET
PETALUMA, CA 94952

Caltrans Metric

FOR ACCURATE RIGHT OF WAY DATA, CONTACT RIGHT OF WAY ENGINEERING AT THE DISTRICT OFFICE.

NOTE:

1. SEE SCQ SHEETS FOR QUANTITY SUMMARY OF PARKING LOT PAVEMENT DELINEATION REMOVAL.
2. SEE Std PLAN A87A FOR DETAILS.

LEGEND

REMOVE PAINTED PAVEMENT MARKING

+ CENTER OF CURB RADIUS

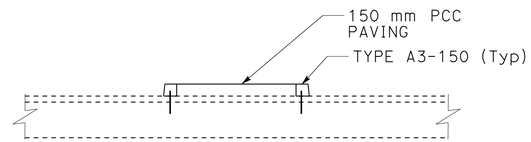

TYPICAL RAISED ISLAND SECTION
NO SCALE

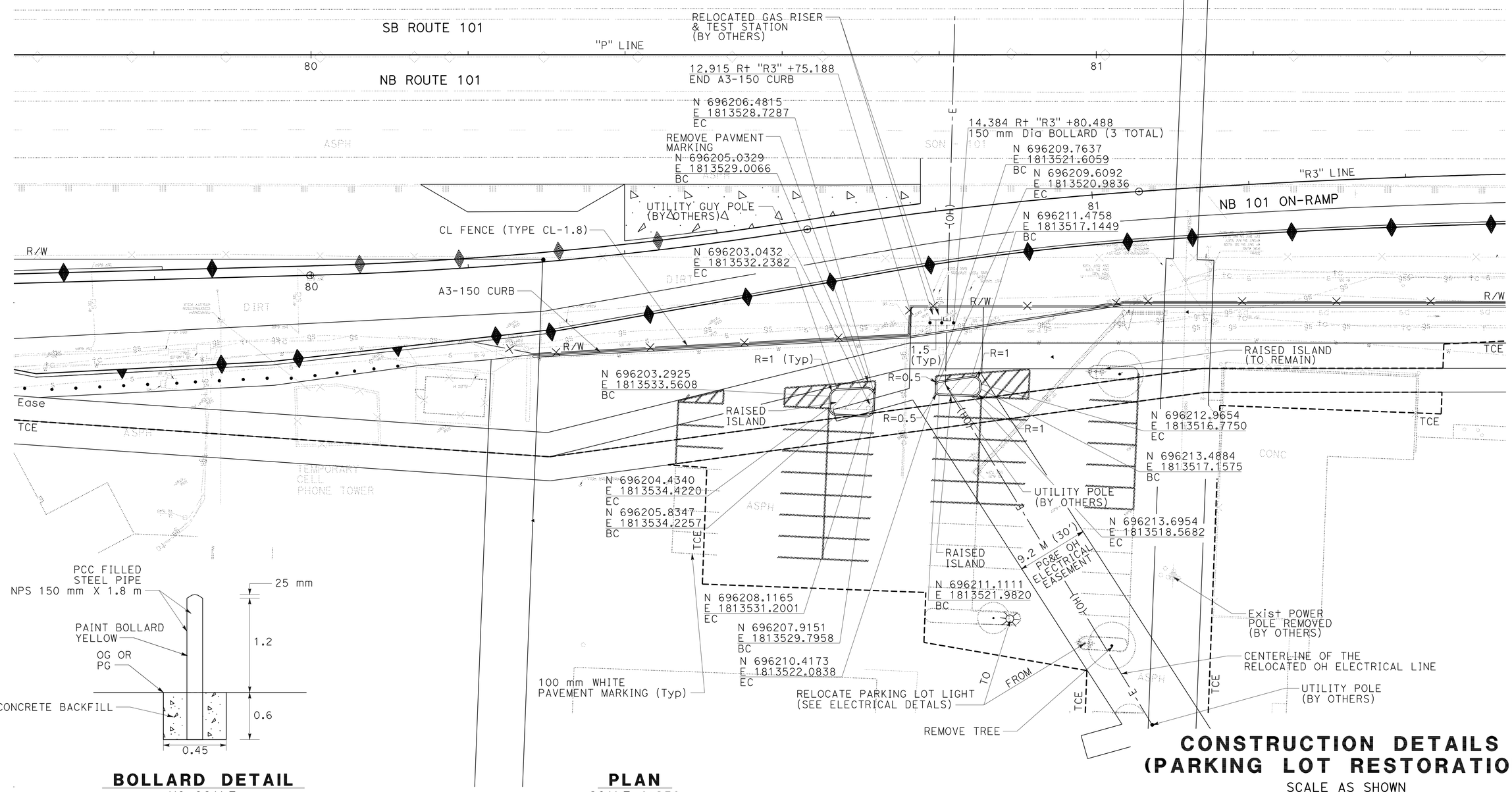

PLAN
SCALE 1:250

BOLLARD DETAIL
NO SCALE

ALL DIMENSIONS ARE IN METERS UNLESS OTHERWISE SHOWN

CONSTRUCTION DETAILS (PARKING LOT RESTORATION)
SCALE AS SHOWN

C-17

REVISED BY | DATE REVISED

SHERINA LAM | DAVID A. WILLIAMS

CALCULATED-DESIGNED BY | CHECKED BY

CONSULTANT FUNCTIONAL SUPERVISOR: RAMSEY HISSEN

STATE OF CALIFORNIA - DEPARTMENT OF TRANSPORTATION

Caltrans

LAST REVISION 09-03-10 | DATE PLOTTED => 31-MAY-2011 | TIME PLOTTED => 10:35

Dist	COUNTY	ROUTE	KILOMETER POST TOTAL PROJECT	SHEET No.	TOTAL SHEETS
04	Son	101	7.3/8.3	33	320

David Williams 9/3/10
REGISTERED CIVIL ENGINEER DATE

5-31-11
PLANS APPROVAL DATE

REGISTERED PROFESSIONAL ENGINEER David A. Williams No. C58697 Exp. 12/31/12 CIVIL STATE OF CALIFORNIA

THE STATE OF CALIFORNIA OR ITS OFFICERS OR AGENTS SHALL NOT BE RESPONSIBLE FOR THE ACCURACY OR COMPLETENESS OF ELECTRONIC COPIES OF THIS PLAN SHEET.

URS CORPORATION
1380 LEAD HILL BLVD,
SUITE 100
ROSEVILLE, CA 95661

CITY OF PETALUMA
11 ENGLISH STREET
PETALUMA, CA 94952

Caltrans Metric

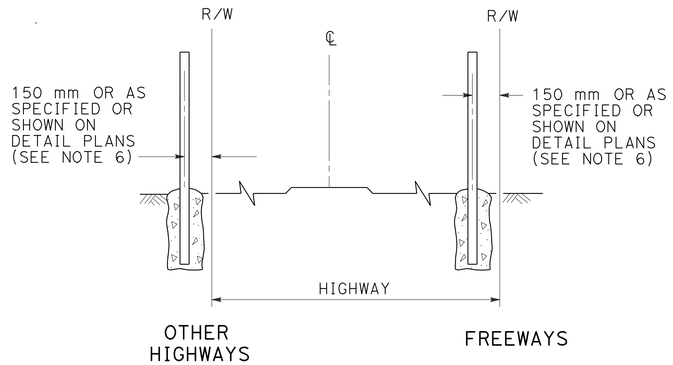

FENCE LOCATION

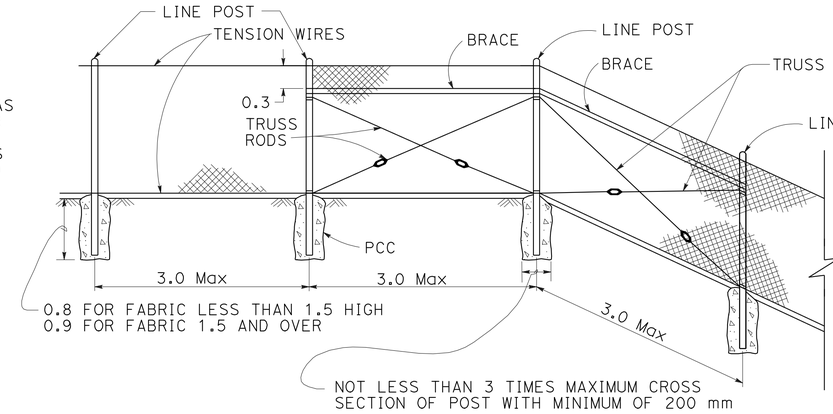

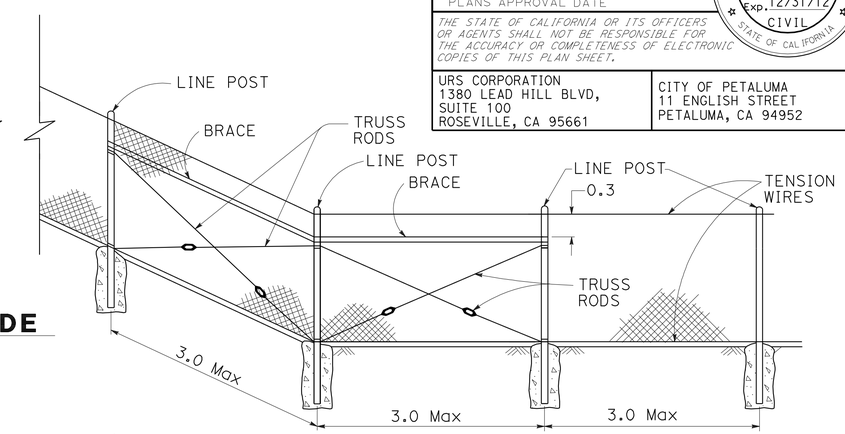

CHAIN LINK FENCE ON SHARP BREAK IN GRADE

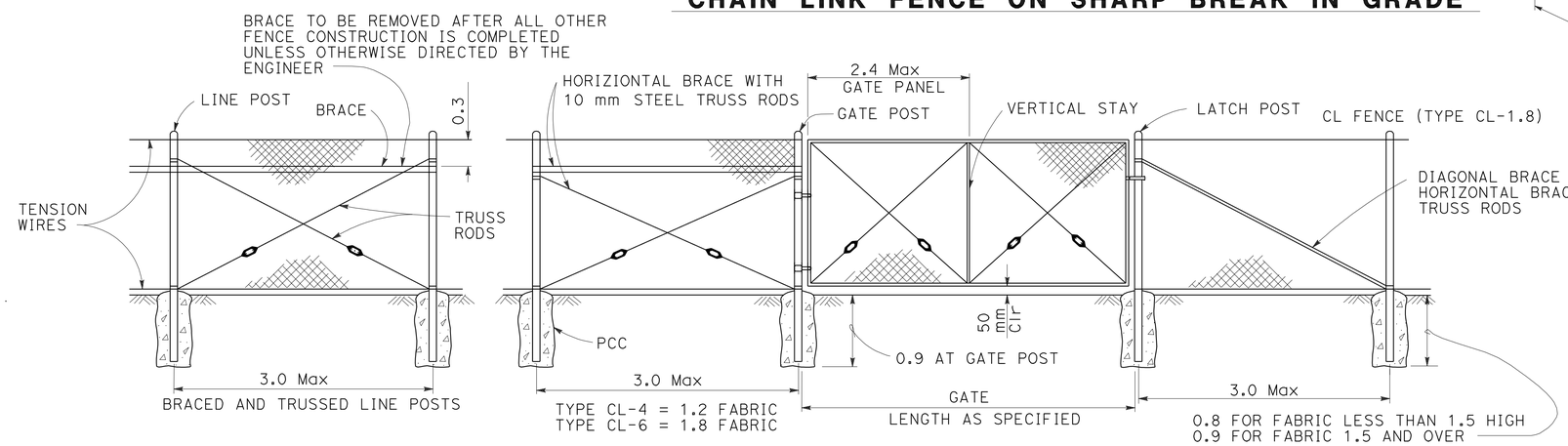

CHAIN LINK GATE INSTALLATION

GATE POST			
FENCE HEIGHT	GATE WIDTHS	NOMINAL ID	WEIGHT PER FOOT
1.8 AND LESS	UP THRU 1.8	64 mm	2.25 kg
	OVER 1.8 THRU 3.6	100 mm	4.89 kg
	OVER 3.6 THRU 5.4	125 mm	6.63 kg
	OVER 5.4 TO 7.2 Max	150 mm	8.60 kg
OVER 1.8	UP THRU 1.8	75 mm	3.44 kg
	OVER 1.8 THRU 3.6	125 mm	6.63 kg
	OVER 3.6 THRU 5.4	150 mm	8.60 kg
	OVER 5.4 TO 7.2 Max	200 mm	12.95 kg

ABOVE POST DIMENSIONS AND WEIGHTS ARE MINIMUMS.
LARGER SIZES MAY BE USED ON APPROVAL OF THE ENGINEER.

NOTES:

1. THE BELOW TABLE SHOWS EXAMPLES OF POST AND BRACE SECTIONS WHICH MAY COMPLY WITH THE SPECIFICATIONS.
2. SECTIONS SHOWN IN THE TABLES MUST ALSO COMPLY WITH THE STRENGTH REQUIREMENTS AND OTHER PROVISIONS OF THE SPECIFICATIONS.
3. OTHER SECTIONS WHICH COMPLY WITH THE STRENGTH REQUIREMENTS AND OTHER PROVISIONS OF THE SPECIFICATIONS MAY BE USED ON APPROVAL OF THE ENGINEER.
4. OPTIONS EXERCISED SHALL BE UNIFORM ON ANY ONE PROJECT.
5. DIMENSIONS SHOWN ARE NOMINAL.
6. OFFSET TO BE 0.6 AT MONUMENT LOCATIONS, MEASURED AT RIGHT ANGLES TO 4/2 LINES. TAPER TO ACHIEVE OFFSET TO BE AT LEAST 6.0 LONG.

TYPICAL MEMBER DIMENSIONS (SEE NOTES)										
FENCE HEIGHT	LINE POSTS			END, LATCH & CORNER POSTS			BRACES			
	ROUND ID	H	ROLL FORMED	ROUND ID	ROLL FORMED		ROUND ID	H	ROLL FORMED	
1.8 & less	40 mm	48 mm x 41 mm	48 mm x 41 mm	50 mm	89 mm x 89 mm	51 mm x 44 mm	32 mm	38 mm x 33 mm	41 mm x 32 mm	44 mm x 32 mm
Over 1.8	50 mm	57 mm x 51 mm	51 mm x 44 mm	63 mm	89 mm x 89 mm	63 mm x 63 mm	32 mm	38 mm x 33 mm	41 mm x 32 mm	44 mm x 32 mm

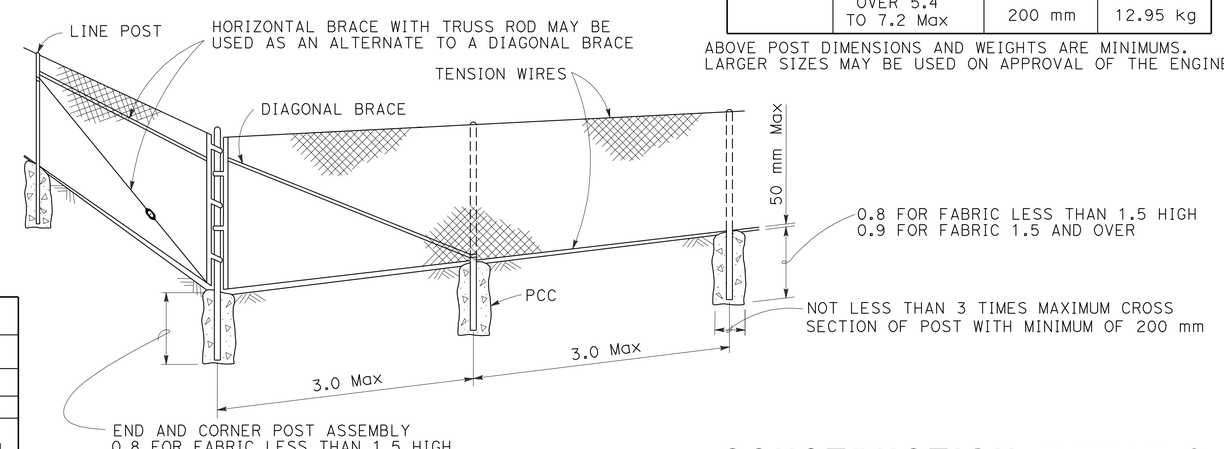

CORNER POST

CONSTRUCTION DETAILS (CHAIN LINK FENCE)

NO SCALE

ALL DIMENSIONS ARE IN METERS UNLESS OTHERWISE SHOWN

C-18

STATE OF CALIFORNIA - DEPARTMENT OF TRANSPORTATION
Caltrans

CONSULTANT FUNCTIONAL SUPERVISOR: RAMSEY HISSEN
CALCULATED-DESIGNED BY: SHERINA LAM
CHECKED BY: DAVID A. WILLIAMS
REVISED BY / DATE REVISED

LAST REVISION 09-03-10
DATE PLOTTED => 31-MAY-2011
TIME PLOTTED => 10:36

Dist	COUNTY	ROUTE	KILOMETER POST TOTAL PROJECT	SHEET No.	TOTAL SHEETS
04	Son	101	7.3/8.3	34	320

David Williams 9/3/10
REGISTERED CIVIL ENGINEER DATE

5-31-11
PLANS APPROVAL DATE

REGISTERED PROFESSIONAL ENGINEER
David A. Williams
No. C58697
Exp. 12/31/12
CIVIL
STATE OF CALIFORNIA

THE STATE OF CALIFORNIA OR ITS OFFICERS OR AGENTS SHALL NOT BE RESPONSIBLE FOR THE ACCURACY OR COMPLETENESS OF ELECTRONIC COPIES OF THIS PLAN SHEET.

URS CORPORATION
1380 LEAD HILL BLVD,
SUITE 100
ROSEVILLE, CA 95661

CITY OF PETALUMA
11 ENGLISH STREET
PETALUMA, CA 94952

NOTES:

1. WHERE THE DISTANCE BETWEEN BACK OF POST AND HINGE POINT IS LESS THAN 0.6, VEGETATION CONTROL TO BE CONSTRUCTED FLUSH WITH THE BACK EDGE OF THE POST.
2. WHERE DIKE IS CONSTRUCTED UNDER RAILING, CONSTRUCT VEGETATION CONTROL TO BACK EDGE OF DIKE. WHERE PAVED SHOULDER IS CONSTRUCTED WITH 0.6 IN FRONT OF THE POST, CONSTRUCT VEGETATION CONTROL TO THE EDGE OF PAVED SHOULDER.
3. DIRECTION OF ADJACENT TRAFFIC INDICATED BY ← .

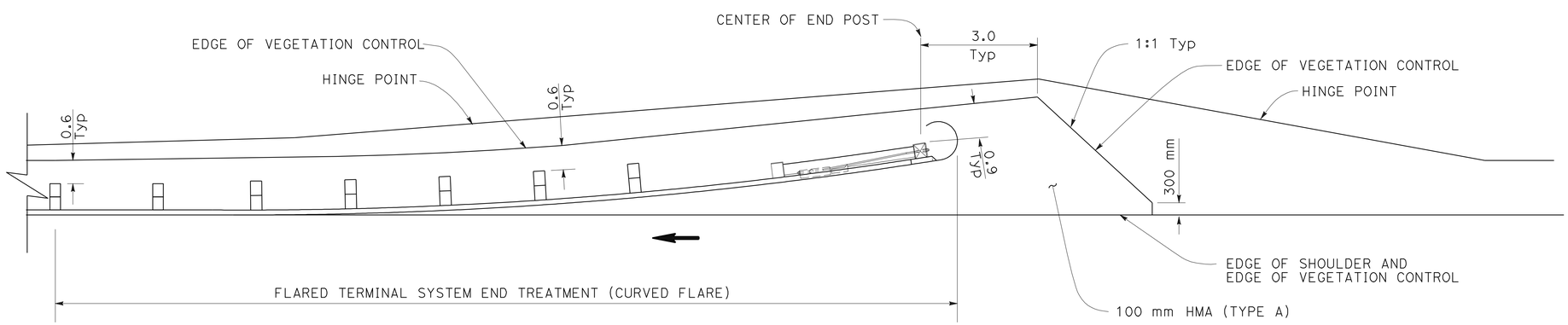

TYPICAL VEGETATION CONTROL FOR TERMINAL SYSTEM END TREATMENT

ALL DIMENSIONS ARE IN METERS
UNLESS OTHERWISE SHOWN

CONSTRUCTION DETAILS

NO SCALE

C-19

STATE OF CALIFORNIA - DEPARTMENT OF TRANSPORTATION
Caltrans

CONSULTANT FUNCTIONAL SUPERVISOR: RAMSEY HISSEN
CALCULATED-DESIGNED BY: SHERINA LAM
CHECKED BY: DAVID A. WILLIAMS
REVISED BY
DATE REVISED

LAST REVISION 09-03-10
DATE PLOTTED => 31-MAY-2011
TIME PLOTTED => 10:36

Dist	COUNTY	ROUTE	KILOMETER POST TOTAL PROJECT	SHEET No.	TOTAL SHEETS
04	Son	101	7.3/8.3	35	320

David Williams 9/3/10
REGISTERED CIVIL ENGINEER DATE

5-31-11
PLANS APPROVAL DATE

REGISTERED PROFESSIONAL ENGINEER David A. Williams No. C58697 Exp. 12/31/12 CIVIL STATE OF CALIFORNIA

THE STATE OF CALIFORNIA OR ITS OFFICERS OR AGENTS SHALL NOT BE RESPONSIBLE FOR THE ACCURACY OR COMPLETENESS OF ELECTRONIC COPIES OF THIS PLAN SHEET.

URS CORPORATION
1380 LEAD HILL BLVD,
SUITE 100
ROSEVILLE, CA 95661

CITY OF PETALUMA
11 ENGLISH STREET
PETALUMA, CA 94952

FOR ACCURATE RIGHT OF WAY DATA, CONTACT RIGHT OF WAY ENGINEERING AT THE DISTRICT OFFICE.

LEGEND:

- TFESA — Temp FENCE (TYPE ESA)
- TFR — Temp FIBER ROLL
- Temp HYDROSEED
- DRAINAGE INLET PROTECTION
- 3A — DRAINAGE INLET PROTECTION (TYPE 3A)
- 3B — DRAINAGE INLET PROTECTION (TYPE 3B)
- TEMPORARY CONSTRUCTION ENTRANCE
- TEMPORARY CONCRETE WASHOUT (BIN)
- DIRECTION OF FLOW IN UNLINED DITCH
- STORM DRAIN INLET AND PIPE SYSTEM
- 1:X — SLOPE RATIO

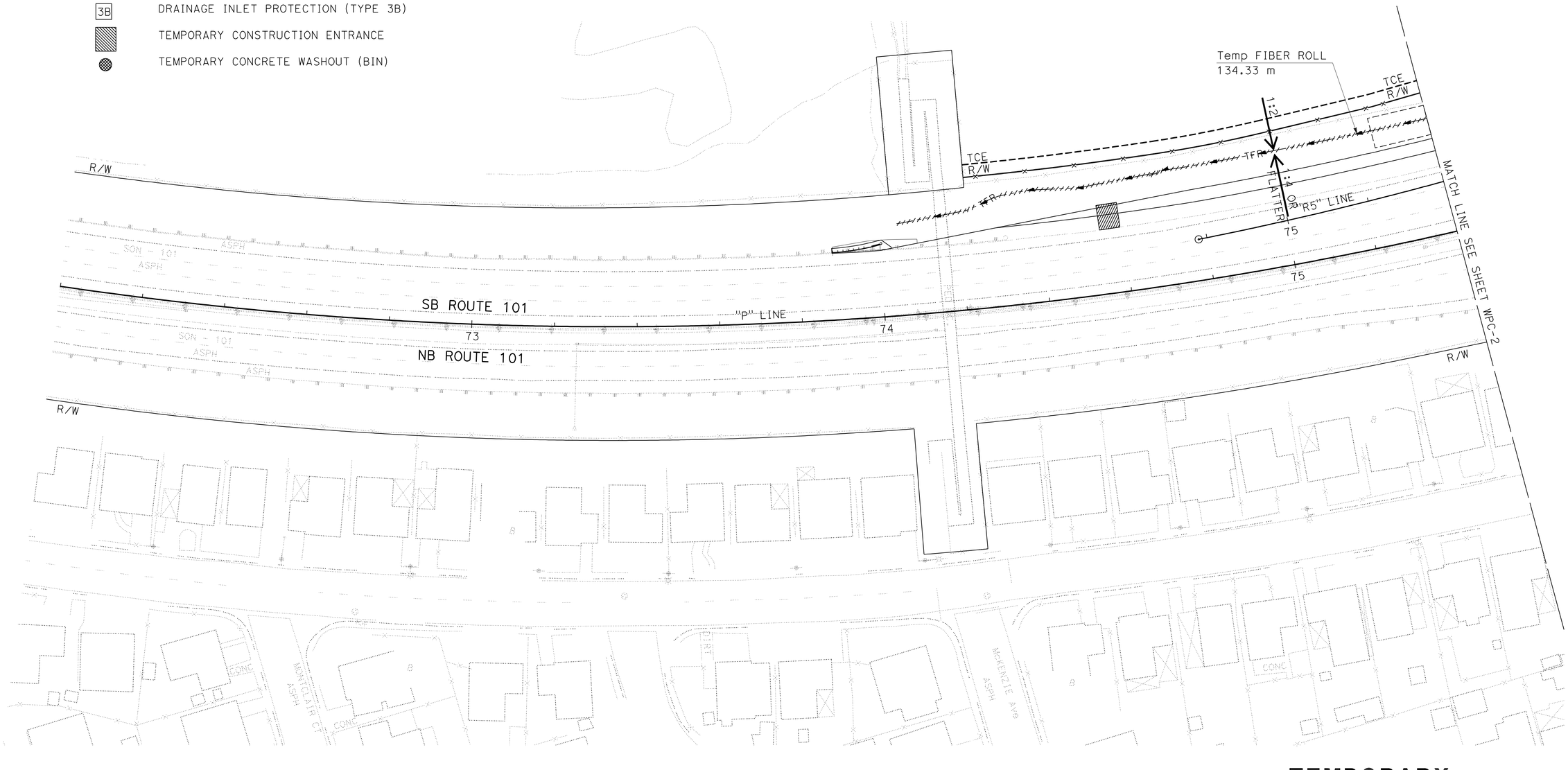

TEMPORARY WATER POLLUTION CONTROL PLAN

SCALE 1:500

WPC-1

THIS PLAN ACCURATE FOR TEMPORARY WATER POLLUTION CONTROL WORK ONLY

ALL DIMENSIONS ARE IN METERS UNLESS OTHERWISE SHOWN

STATE OF CALIFORNIA - DEPARTMENT OF TRANSPORTATION

Caltrans

CONSULTANT FUNCTIONAL SUPERVISOR: RAMSEY HISSEN

CALCULATED-DESIGNED BY: SHERINA LAM

CHECKED BY: DAVID A. WILLIAMS

REVISED BY | DATE REVISED

LAST REVISION 09-03-10 | DATE PLOTTED => 31-MAY-2011 | TIME PLOTTED => 10:41

Dist	COUNTY	ROUTE	KILOMETER POST TOTAL PROJECT	SHEET No.	TOTAL SHEETS
04	Son	101	7.3/8.3	36	320

David Williams 9/3/10
REGISTERED CIVIL ENGINEER DATE

5-31-11
PLANS APPROVAL DATE

REGISTERED PROFESSIONAL ENGINEER David A. Williams No. C58697 Exp. 12/31/12 CIVIL STATE OF CALIFORNIA

THE STATE OF CALIFORNIA OR ITS OFFICERS OR AGENTS SHALL NOT BE RESPONSIBLE FOR THE ACCURACY OR COMPLETENESS OF ELECTRONIC COPIES OF THIS PLAN SHEET.

URS CORPORATION
1380 LEAD HILL BLVD,
SUITE 100
ROSEVILLE, CA 95661

CITY OF PETALUMA
11 ENGLISH STREET
PETALUMA, CA 94952

FOR ACCURATE RIGHT OF WAY DATA,
CONTACT RIGHT OF WAY ENGINEERING AT THE DISTRICT OFFICE.

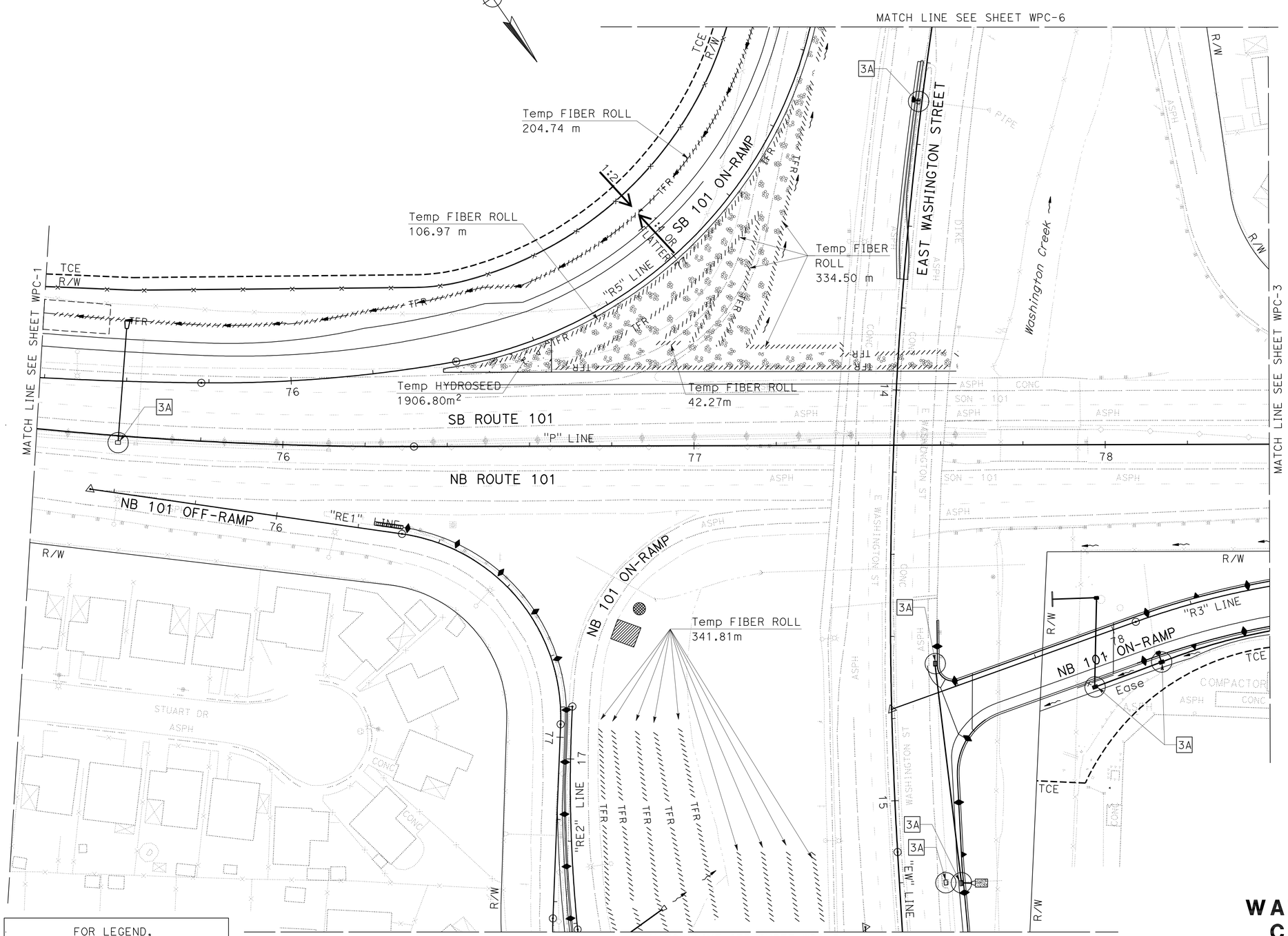

FOR LEGEND,
SEE SHEET WPC-1

THIS PLAN ACCURATE FOR TEMPORARY WATER POLLUTION CONTROL WORK ONLY

ALL DIMENSIONS ARE IN METERS
UNLESS OTHERWISE SHOWN

TEMPORARY WATER POLLUTION CONTROL PLAN

SCALE 1:500

WPC-2

STATE OF CALIFORNIA - DEPARTMENT OF TRANSPORTATION
Caltrans

CONSULTANT FUNCTIONAL SUPERVISOR: RAMSEY HISSEN
CALCULATED-DESIGNED BY: SHERINA LAM
CHECKED BY: DAVID A. WILLIAMS
REVISED BY
DATE REVISED

LAST REVISION 09-03-10
DATE PLOTTED => 31-MAY-2011
TIME PLOTTED => 10:41

Dist	COUNTY	ROUTE	KILOMETER POST TOTAL PROJECT	SHEET No.	TOTAL SHEETS
04	Son	101	7.3/8.3	37	320

David Williams 9/3/10
REGISTERED CIVIL ENGINEER DATE

5-31-11
PLANS APPROVAL DATE

REGISTERED PROFESSIONAL ENGINEER David A. Williams No. C58697 Exp. 12/31/12 CIVIL STATE OF CALIFORNIA

THE STATE OF CALIFORNIA OR ITS OFFICERS OR AGENTS SHALL NOT BE RESPONSIBLE FOR THE ACCURACY OR COMPLETENESS OF ELECTRONIC COPIES OF THIS PLAN SHEET.

URS CORPORATION
1380 LEAD HILL BLVD,
SUITE 100
ROSEVILLE, CA 95661

CITY OF PETALUMA
11 ENGLISH STREET
PETALUMA, CA 94952

FOR ACCURATE RIGHT OF WAY DATA,
CONTACT RIGHT OF WAY ENGINEERING
AT THE DISTRICT OFFICE.

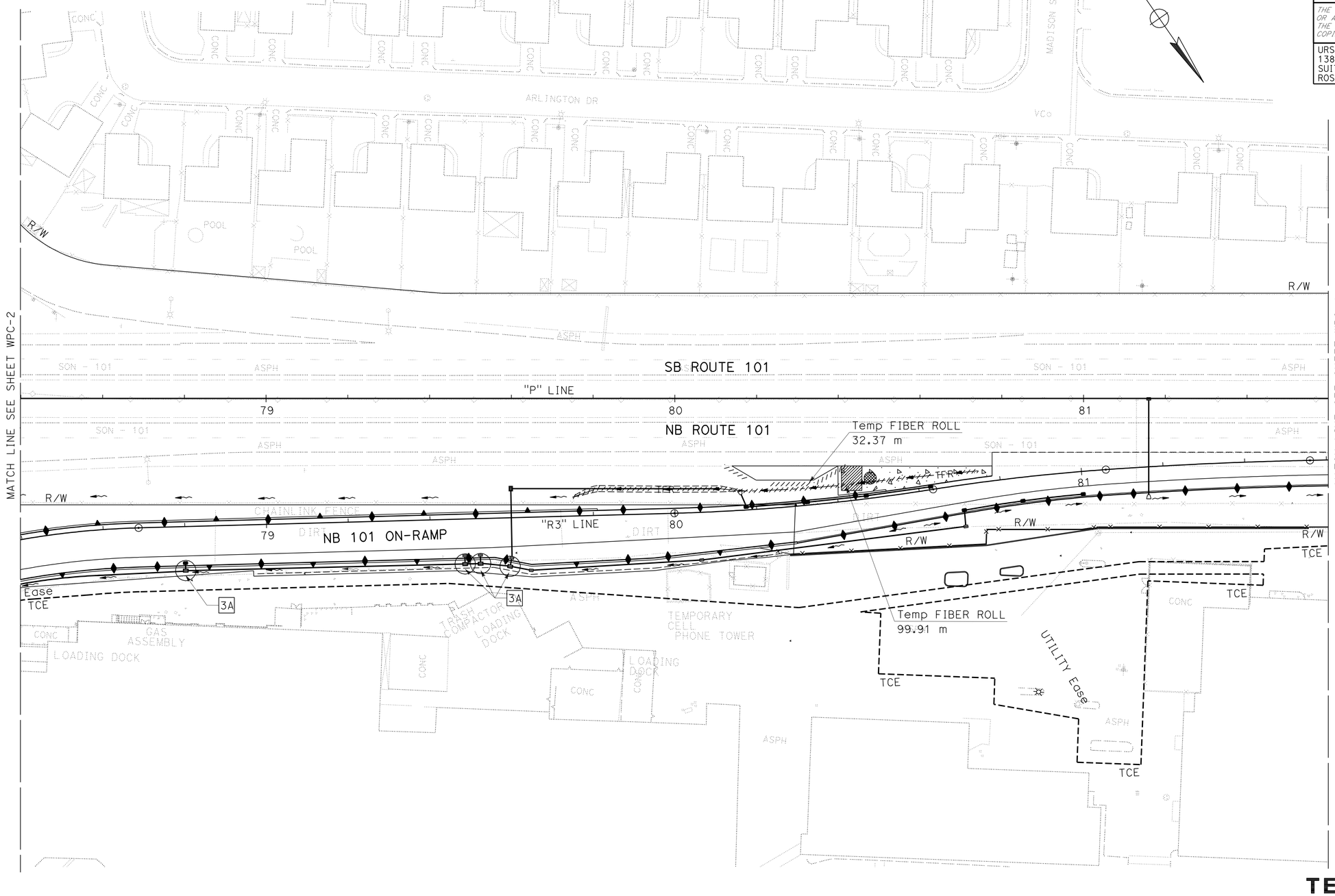

FOR LEGEND,
SEE SHEET WPC-1

THIS PLAN ACCURATE FOR TEMPORARY WATER POLLUTION CONTROL WORK ONLY

ALL DIMENSIONS ARE IN METERS
UNLESS OTHERWISE SHOWN

TEMPORARY WATER POLLUTION CONTROL PLAN

SCALE 1:500

WPC-3

STATE OF CALIFORNIA - DEPARTMENT OF TRANSPORTATION

Caltrans

CONSULTANT FUNCTIONAL SUPERVISOR: RAMSEY HISSEN

CALCULATED-DESIGNED BY: SHERINA LAM

CHECKED BY: DAVID A. WILLIAMS

REVISED BY | DATE REVISED

LAST REVISION 09-03-10 | DATE PLOTTED => 31-MAY-2011 | TIME PLOTTED => 10:41

Dist	COUNTY	ROUTE	KILOMETER POST TOTAL PROJECT	SHEET No.	TOTAL SHEETS
04	Son	101	7.3/8.3	38	320

David Williams 9/3/10
REGISTERED CIVIL ENGINEER DATE

5-31-11
PLANS APPROVAL DATE

REGISTERED PROFESSIONAL ENGINEER
David A. Williams
No. C58697
Exp. 12/31/12
CIVIL
STATE OF CALIFORNIA

THE STATE OF CALIFORNIA OR ITS OFFICERS OR AGENTS SHALL NOT BE RESPONSIBLE FOR THE ACCURACY OR COMPLETENESS OF ELECTRONIC COPIES OF THIS PLAN SHEET.

URS CORPORATION
1380 LEAD HILL BLVD,
SUITE 100
ROSEVILLE, CA 95661

CITY OF PETALUMA
11 ENGLISH STREET
PETALUMA, CA 94952

FOR ACCURATE RIGHT OF WAY DATA,
CONTACT RIGHT OF WAY ENGINEERING
AT THE DISTRICT OFFICE.

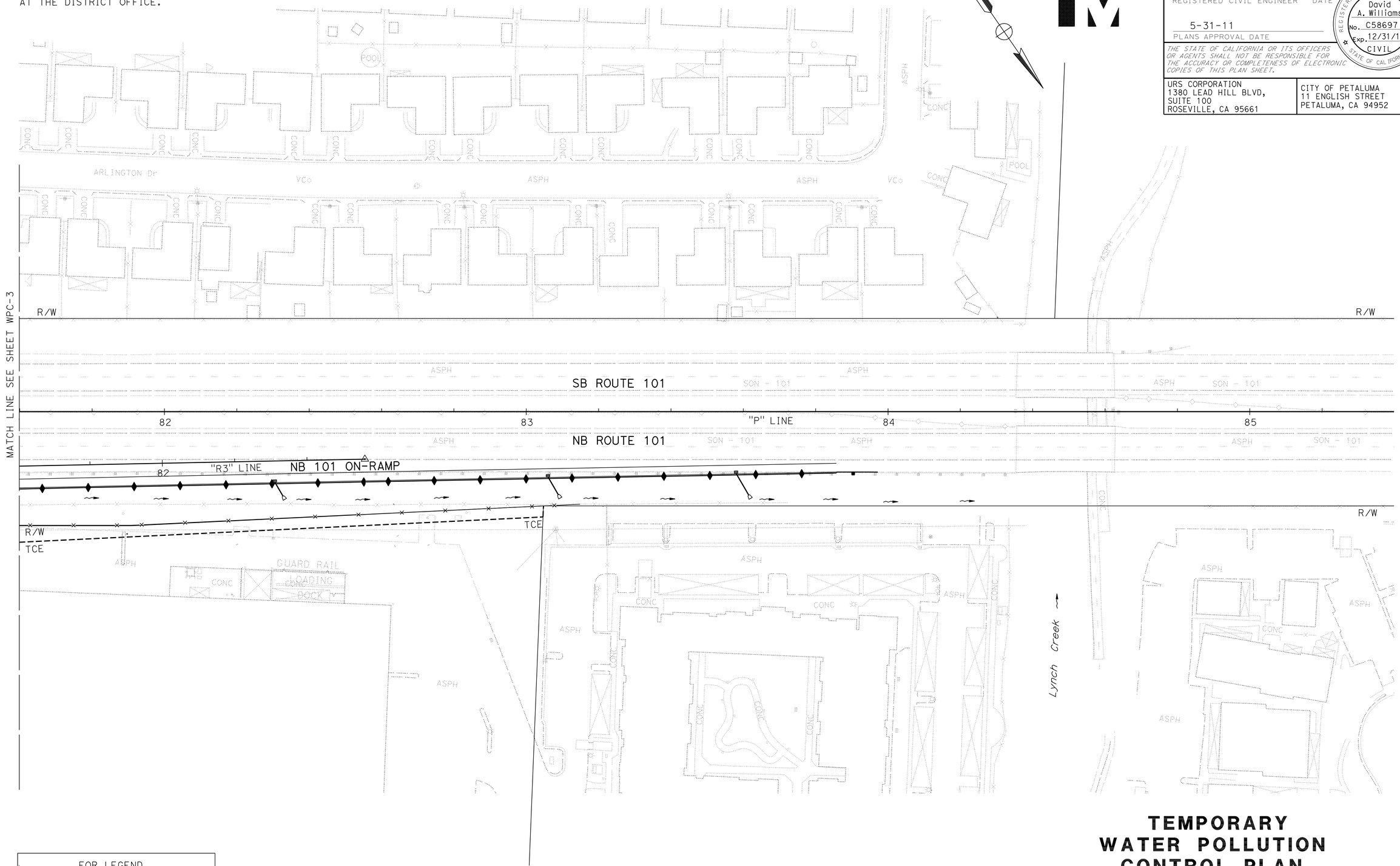

FOR LEGEND,
SEE SHEET WPC-1

THIS PLAN ACCURATE FOR TEMPORARY WATER POLLUTION CONTROL WORK ONLY

ALL DIMENSIONS ARE IN METERS
UNLESS OTHERWISE SHOWN

TEMPORARY WATER POLLUTION CONTROL PLAN

SCALE 1:500

WPC-4

STATE OF CALIFORNIA - DEPARTMENT OF TRANSPORTATION
Caltrans

CONSULTANT FUNCTIONAL SUPERVISOR: RAMSEY HISSEN
CALCULATED-DESIGNED BY: SHERINA LAM
CHECKED BY: DAVID A. WILLIAMS
REVISED BY
DATE REVISED

LAST REVISION 09-03-10
DATE PLOTTED => 31-MAY-2011
TIME PLOTTED => 10:41

Dist	COUNTY	ROUTE	KILOMETER POST TOTAL PROJECT	SHEET No.	TOTAL SHEETS
04	Son	101	7.3/8.3	39	320

David Williams 9/3/10
REGISTERED CIVIL ENGINEER DATE

5-31-11
PLANS APPROVAL DATE

REGISTERED PROFESSIONAL ENGINEER David A. Williams No. C58697 Exp. 12/31/12 CIVIL STATE OF CALIFORNIA

THE STATE OF CALIFORNIA OR ITS OFFICERS OR AGENTS SHALL NOT BE RESPONSIBLE FOR THE ACCURACY OR COMPLETENESS OF ELECTRONIC COPIES OF THIS PLAN SHEET.

URS CORPORATION
1380 LEAD HILL BLVD,
SUITE 100
ROSEVILLE, CA 95661

CITY OF PETALUMA
11 ENGLISH STREET
PETALUMA, CA 94952

FOR ACCURATE RIGHT OF WAY DATA,
CONTACT RIGHT OF WAY ENGINEERING AT THE DISTRICT OFFICE.

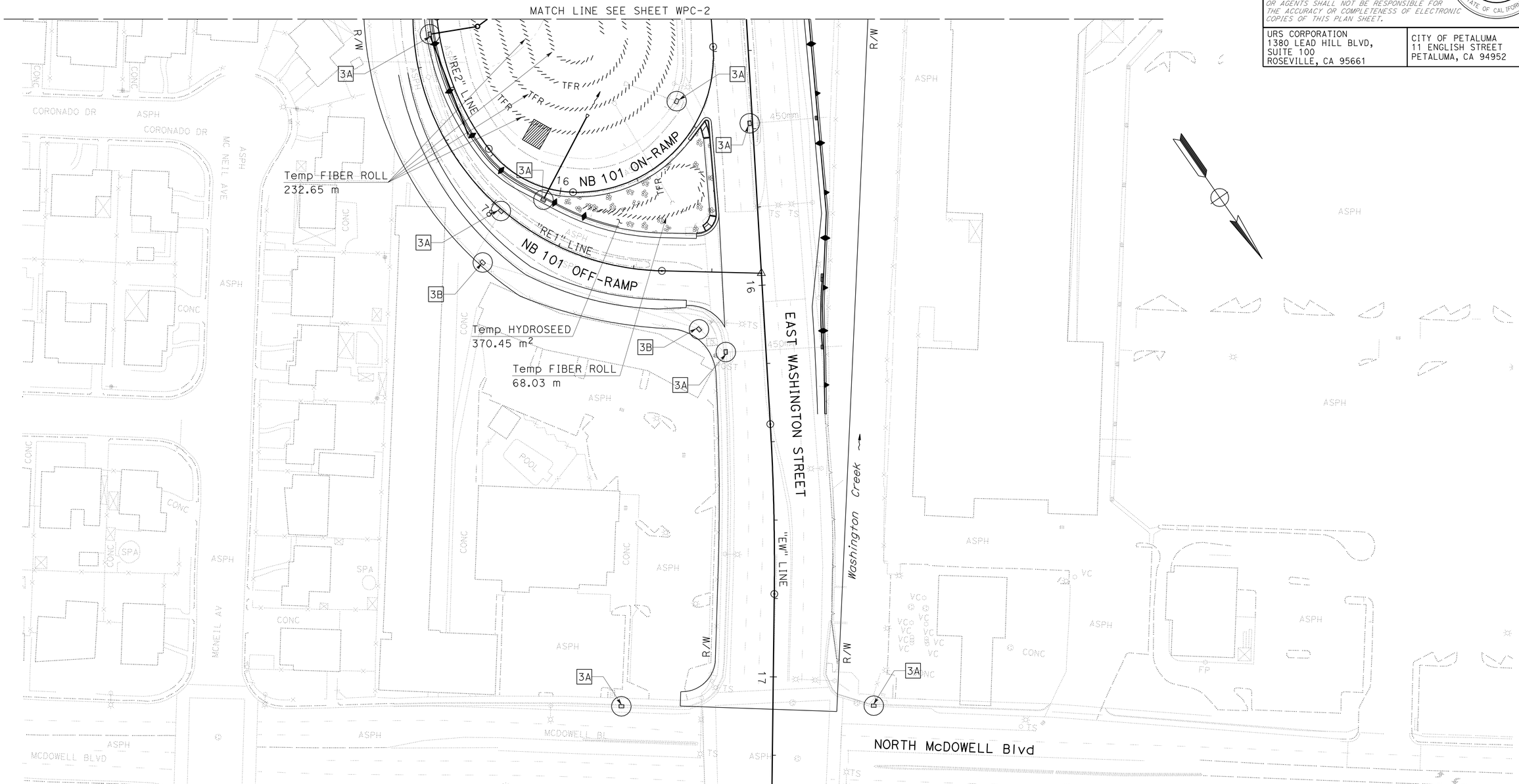

FOR LEGEND,
SEE SHEET WPC-1

THIS PLAN ACCURATE FOR TEMPORARY WATER POLLUTION CONTROL WORK ONLY

ALL DIMENSIONS ARE IN METERS
UNLESS OTHERWISE SHOWN

TEMPORARY WATER POLLUTION CONTROL PLAN

SCALE 1:500

WPC-5

STATE OF CALIFORNIA - DEPARTMENT OF TRANSPORTATION

Caltrans

CONSULTANT FUNCTIONAL SUPERVISOR: RAMSEY HISSEN

CALCULATED-DESIGNED BY: SHERINA LAM

CHECKED BY: DAVID A. WILLIAMS

REVISED BY / DATE REVISED

LAST REVISION 09-03-10 | DATE PLOTTED => 31-MAY-2011 | TIME PLOTTED => 10:41

Dist	COUNTY	ROUTE	KILOMETER POST TOTAL PROJECT	SHEET No.	TOTAL SHEETS
04	Son	101	7.3/8.3	40	320

David Williams 9/3/10
REGISTERED CIVIL ENGINEER DATE

5-31-11
PLANS APPROVAL DATE

REGISTERED PROFESSIONAL ENGINEER David A. Williams No. C58697 Exp. 12/31/12 CIVIL STATE OF CALIFORNIA

THE STATE OF CALIFORNIA OR ITS OFFICERS OR AGENTS SHALL NOT BE RESPONSIBLE FOR THE ACCURACY OR COMPLETENESS OF ELECTRONIC COPIES OF THIS PLAN SHEET.

URS CORPORATION
1380 LEAD HILL BLVD,
SUITE 100
ROSEVILLE, CA 95661

CITY OF PETALUMA
11 ENGLISH STREET
PETALUMA, CA 94952

FOR ACCURATE RIGHT OF WAY DATA,
CONTACT RIGHT OF WAY ENGINEERING
AT THE DISTRICT OFFICE.

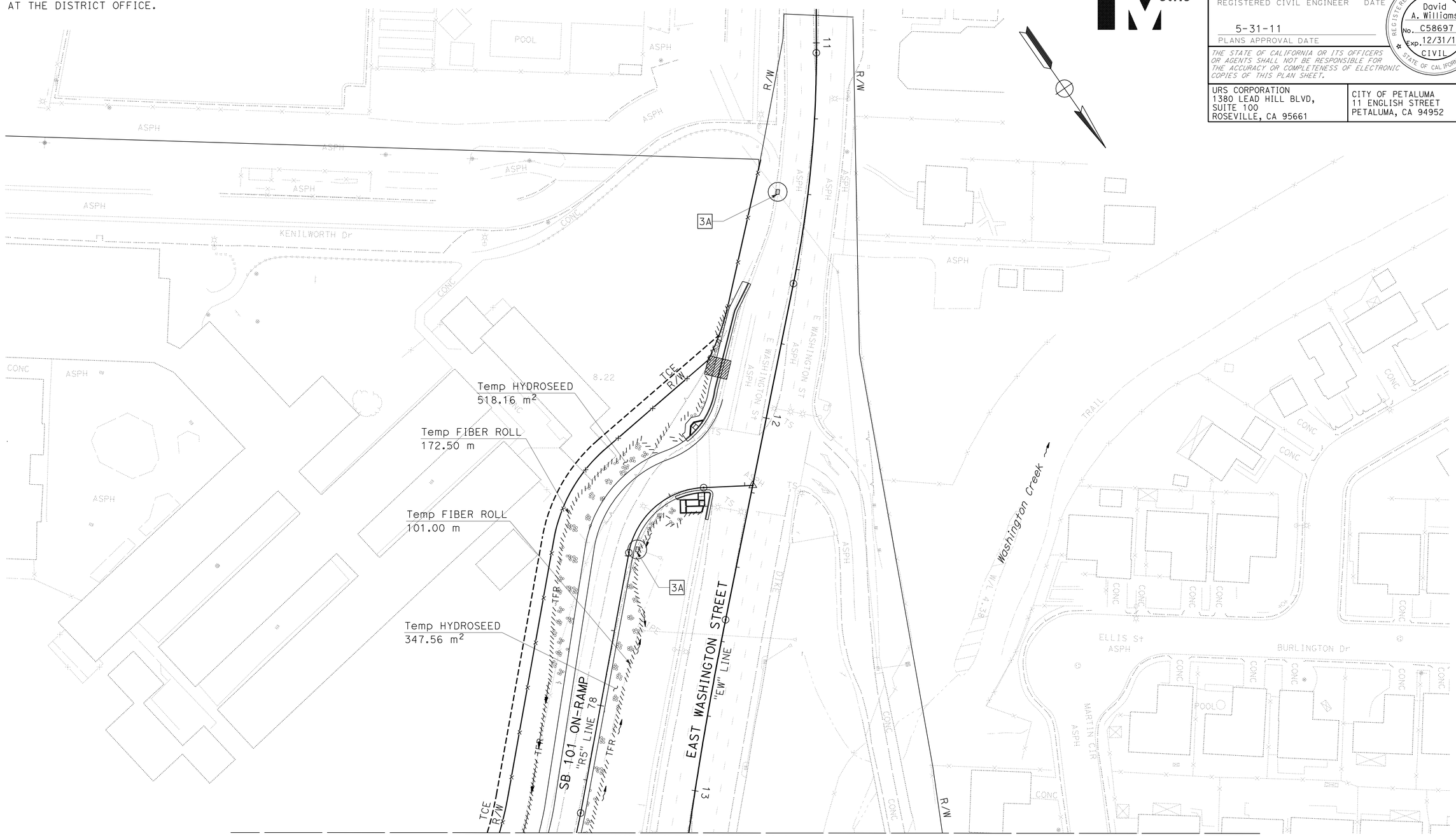

MATCH LINE SEE SHEET WPC-2

FOR LEGEND,
SEE SHEET WPC-1

THIS PLAN ACCURATE FOR TEMPORARY WATER POLLUTION CONTROL WORK ONLY

ALL DIMENSIONS ARE IN METERS
UNLESS OTHERWISE SHOWN

TEMPORARY WATER POLLUTION CONTROL PLAN

SCALE 1:500

WPC-6

STATE OF CALIFORNIA - DEPARTMENT OF TRANSPORTATION
Caltrans

CONSULTANT FUNCTIONAL SUPERVISOR: RAMSEY HISSEN
CALCULATED-DESIGNED BY: SHERINA LAM
CHECKED BY: DAVID A. WILLIAMS
REVISED BY
DATE REVISED

LAST REVISION 09-03-10
DATE PLOTTED => 31-MAY-2011
TIME PLOTTED => 10:41

Dist	COUNTY	ROUTE	KILOMETER POST TOTAL PROJECT	SHEET No.	TOTAL SHEETS
04	Son	101	7.3/8.3	41	320

David Williams 9/3/10
REGISTERED CIVIL ENGINEER DATE

5-31-11
PLANS APPROVAL DATE

REGISTERED PROFESSIONAL ENGINEER David A. Williams No. C58697 Exp. 12/31/12 CIVIL STATE OF CALIFORNIA

THE STATE OF CALIFORNIA OR ITS OFFICERS OR AGENTS SHALL NOT BE RESPONSIBLE FOR THE ACCURACY OR COMPLETENESS OF ELECTRONIC COPIES OF THIS PLAN SHEET.

URS CORPORATION
1380 LEAD HILL BLVD,
SUITE 100
ROSEVILLE, CA 95661

CITY OF PETALUMA
11 ENGLISH STREET
PETALUMA, CA 94952

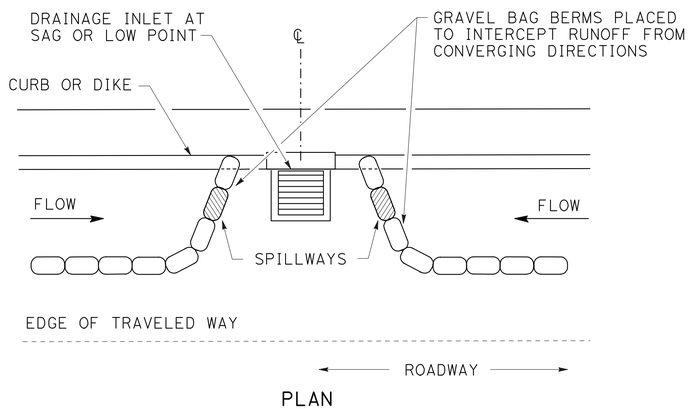

PLAN

CONFIGURATION FOR SAG POINT INLET (GRAVEL BAG BERM)

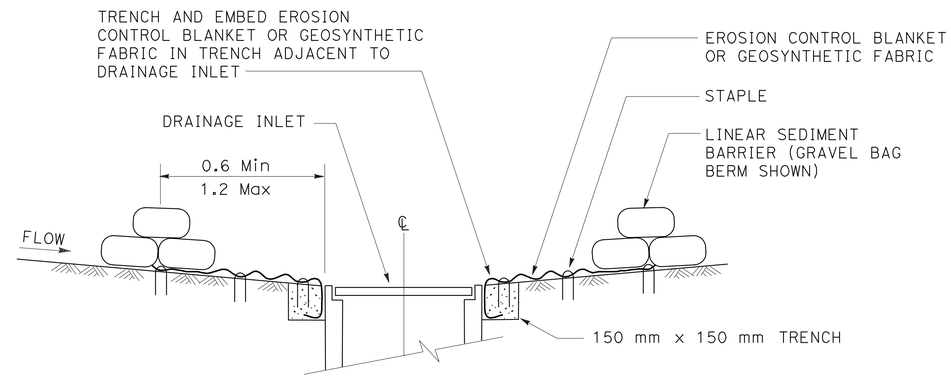

SECTION A-A

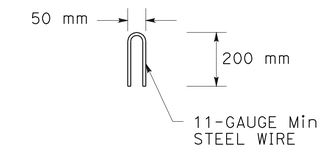

STAPLE DETAIL

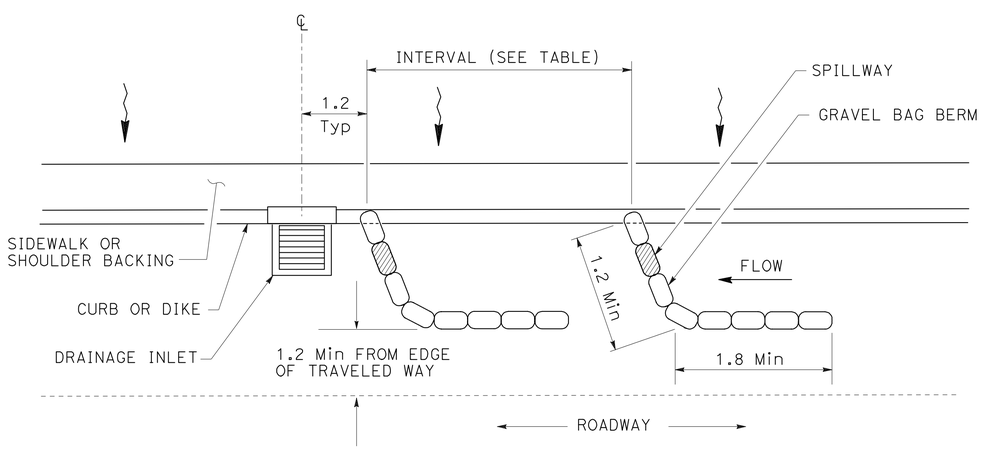

PLAN

TEMPORARY DRAINAGE INLET PROTECTION (TYPE 3A) (GRAVEL BAG BERM)

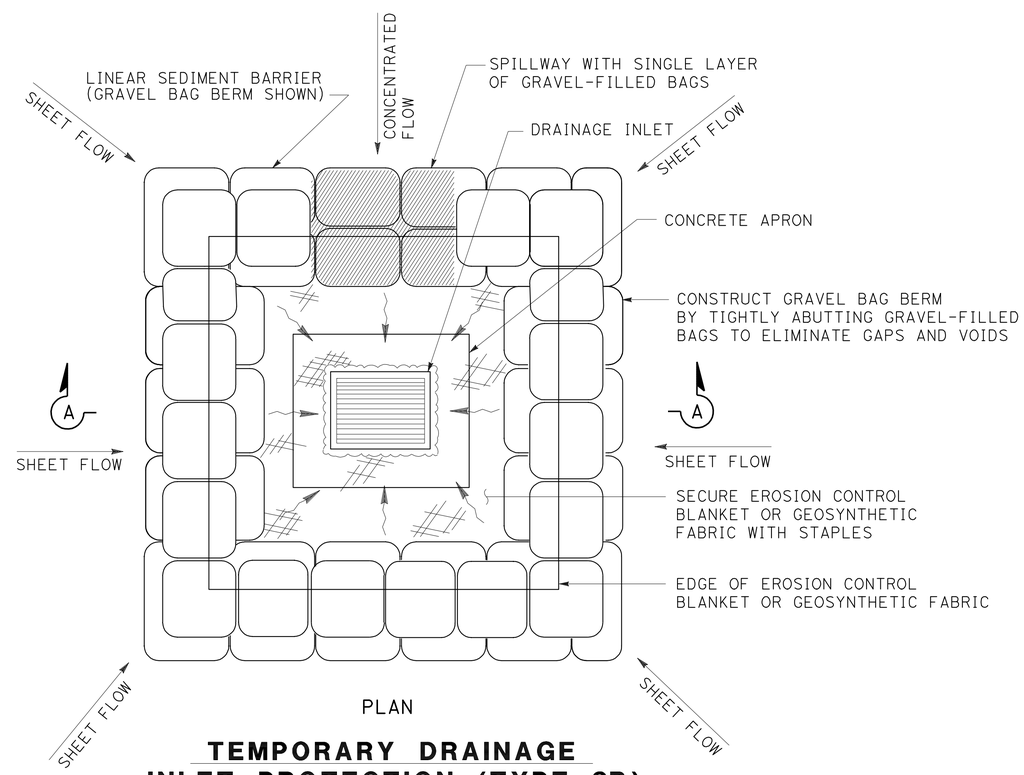

PLAN

TEMPORARY DRAINAGE INLET PROTECTION (TYPE 3B)

ALL DIMENSIONS ARE IN METERS UNLESS OTHERWISE SHOWN

TEMPORARY WATER POLLUTION CONTROL DETAILS

NO SCALE

WPCD-1

STATE OF CALIFORNIA - DEPARTMENT OF TRANSPORTATION
Caltrans

CONSULTANT FUNCTIONAL SUPERVISOR: RAMSEY HISSEN
CALCULATED-DESIGNED BY: SHERINA LAM
CHECKED BY: DAVID A. WILLIAMS
REVISED BY
DATE REVISED

LAST REVISION 09-03-10
DATE PLOTTED => 31-MAY-2011
TIME PLOTTED => 10:41

Dist	COUNTY	ROUTE	KILOMETER POST TOTAL PROJECT	SHEET No.	TOTAL SHEETS
04	Son	101	7.3/8.3	42	320

David Williams 9/3/10
REGISTERED CIVIL ENGINEER DATE

5-31-11
PLANS APPROVAL DATE

REGISTERED PROFESSIONAL ENGINEER David A. Williams No. C58697 Exp. 12/31/12 CIVIL STATE OF CALIFORNIA

THE STATE OF CALIFORNIA OR ITS OFFICERS OR AGENTS SHALL NOT BE RESPONSIBLE FOR THE ACCURACY OR COMPLETENESS OF ELECTRONIC COPIES OF THIS PLAN SHEET.

URS CORPORATION
1380 LEAD HILL BLVD,
SUITE 100
ROSEVILLE, CA 95661

CITY OF PETALUMA
11 ENGLISH STREET
PETALUMA, CA 94952

TEMPORARY WATER POLLUTION CONTROL QUANTITIES

LOCATION	TEMPORARY FIBER ROLL	TEMPORARY HYDROSEED	REMARK
	m	m²	
SB EAST WASHINGTON STREET ON-RAMP	1097	2773	"R5" LINE
NB EAST WASHINGTON STREET OFF-RAMP	0	0	"RE1" LINE
NB EAST WASHINGTON STREET ON-RAMP	643	371	"RE2" LINE
NB EAST WASHINGTON STREET ON-RAMP	133	0	"R3" LINE
EAST WASHINGTON STREET	0	0	"EW" LINE
TOTAL	1873	3144	

DRAINAGE INLET PROTECTION

LOCATION	TYPE 3A	TYPE 3B	REMARK
	EA	EA	
SB ROUTE 101	1	0	"P" LINE
SB EAST WASHINGTON STREET ON-RAMP	1	0	"R5" LINE
NB EAST WASHINGTON STREET OFF-RAMP	2	2	"RE1" LINE
NB EAST WASHINGTON STREET ON-RAMP	2	0	"RE2" LINE
NB EAST WASHINGTON STREET ON-RAMP	6	0	"R3" LINE
EAST WASHINGTON STREET	11	0	"EW" LINE
SUB-TOTAL	23	2	
TOTAL	25		

TEMPORARY WATER POLLUTION CONTROL QUANTITIES

WPCQ-1

STATE OF CALIFORNIA - DEPARTMENT OF TRANSPORTATION
Caltrans

CONSULTANT FUNCTIONAL SUPERVISOR: RAMSEY HISSEN
CALCULATED-DESIGNED BY: SHERINA LAM
CHECKED BY: DAVID A. WILLIAMS
REVISED BY
DATE REVISED

LAST REVISION 09-03-10 | DATE PLOTTED => 31-MAY-2011 | TIME PLOTTED => 10:41

Dist	COUNTY	ROUTE	KILOMETER POST TOTAL PROJECT	SHEET No.	TOTAL SHEETS
04	Son	101	7.3/8.3	43	320

David Williams 9/3/10
REGISTERED CIVIL ENGINEER DATE

5-31-11
PLANS APPROVAL DATE

REGISTERED PROFESSIONAL ENGINEER David A. Williams No. C58697 Exp. 12/31/12 CIVIL STATE OF CALIFORNIA

THE STATE OF CALIFORNIA OR ITS OFFICERS OR AGENTS SHALL NOT BE RESPONSIBLE FOR THE ACCURACY OR COMPLETENESS OF ELECTRONIC COPIES OF THIS PLAN SHEET.

URS CORPORATION
1380 LEAD HILL BLVD,
SUITE 100
ROSEVILLE, CA 95661

CITY OF PETALUMA
11 ENGLISH STREET
PETALUMA, CA 94952

FOR ACCURATE RIGHT OF WAY DATA, CONTACT RIGHT OF WAY ENGINEERING AT THE DISTRICT OFFICE.

LEGEND:

- TFESA — Temp FENCE (TYPE ESA)
- FIBER ROLL
- EROSION CONTROL (TYPE 3) ROLLED EROSION CONTROL PRODUCT (NETTING) and EROSION CONTROL (HYDROSEED)
- EROSION CONTROL (TYPE 4) EROSION CONTROL (HYDROSEED)
- EROSION CONTROL (TYPE 1) (BIOFILTRATION STRIP)
- EROSION CONTROL (TYPE 2) (BIOFILTRATION SWALE)
- DIRECTION OF FLOW IN UNLINED DITCH
- STORM DRAIN INLET AND PIPE SYSTEM
- 1:X SLOPE RATIO

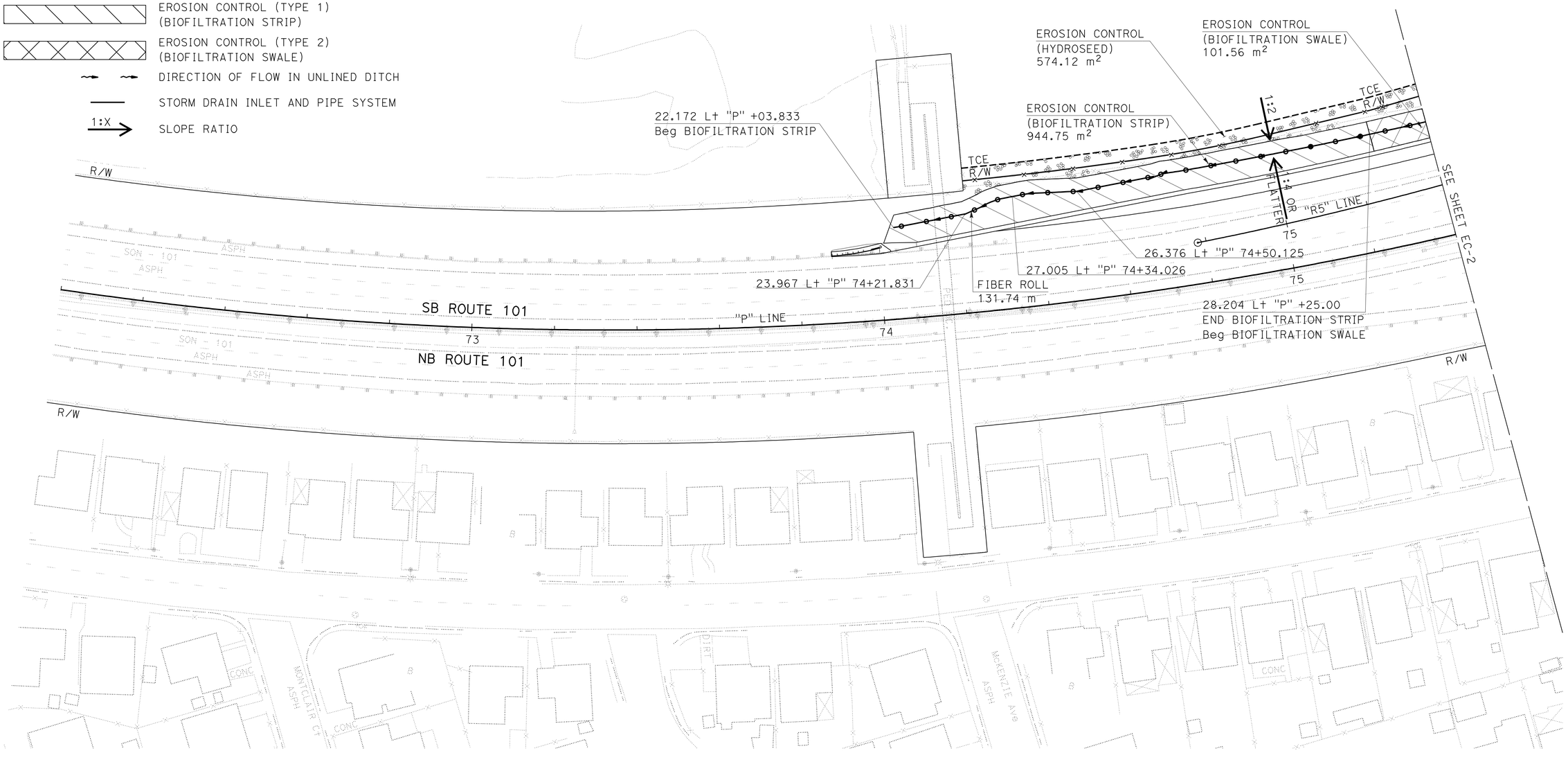

THIS PLAN ACCURATE FOR EROSION CONTROL WORK ONLY

ALL DIMENSIONS ARE IN METERS
UNLESS OTHERWISE SHOWN

EROSION CONTROL PLAN

SCALE 1:500

EC-1

STATE OF CALIFORNIA - DEPARTMENT OF TRANSPORTATION
Caltrans

CONSULTANT FUNCTIONAL SUPERVISOR: RAMSEY HISSEN
CALCULATED-DESIGNED BY: DAVID A. WILLIAMS
CHECKED BY: SHERINA LAM
REVISED BY / DATE REVISED

LAST REVISION 09-03-10 | DATE PLOTTED => 31-MAY-2011 | TIME PLOTTED => 10:41

Dist	COUNTY	ROUTE	KILOMETER POST TOTAL PROJECT	SHEET No.	TOTAL SHEETS
04	Son	101	7.3/8.3	44	320

David Williams 9/3/10
REGISTERED CIVIL ENGINEER DATE

5-31-11
PLANS APPROVAL DATE

REGISTERED PROFESSIONAL ENGINEER David A. Williams No. C58697 Exp. 12/31/12 CIVIL STATE OF CALIFORNIA

THE STATE OF CALIFORNIA OR ITS OFFICERS OR AGENTS SHALL NOT BE RESPONSIBLE FOR THE ACCURACY OR COMPLETENESS OF ELECTRONIC COPIES OF THIS PLAN SHEET.

URS CORPORATION
1380 LEAD HILL BLVD,
SUITE 100
ROSEVILLE, CA 95661

CITY OF PETALUMA
11 ENGLISH STREET
PETALUMA, CA 94952

FOR ACCURATE RIGHT OF WAY DATA,
CONTACT RIGHT OF WAY ENGINEERING
AT THE DISTRICT OFFICE.

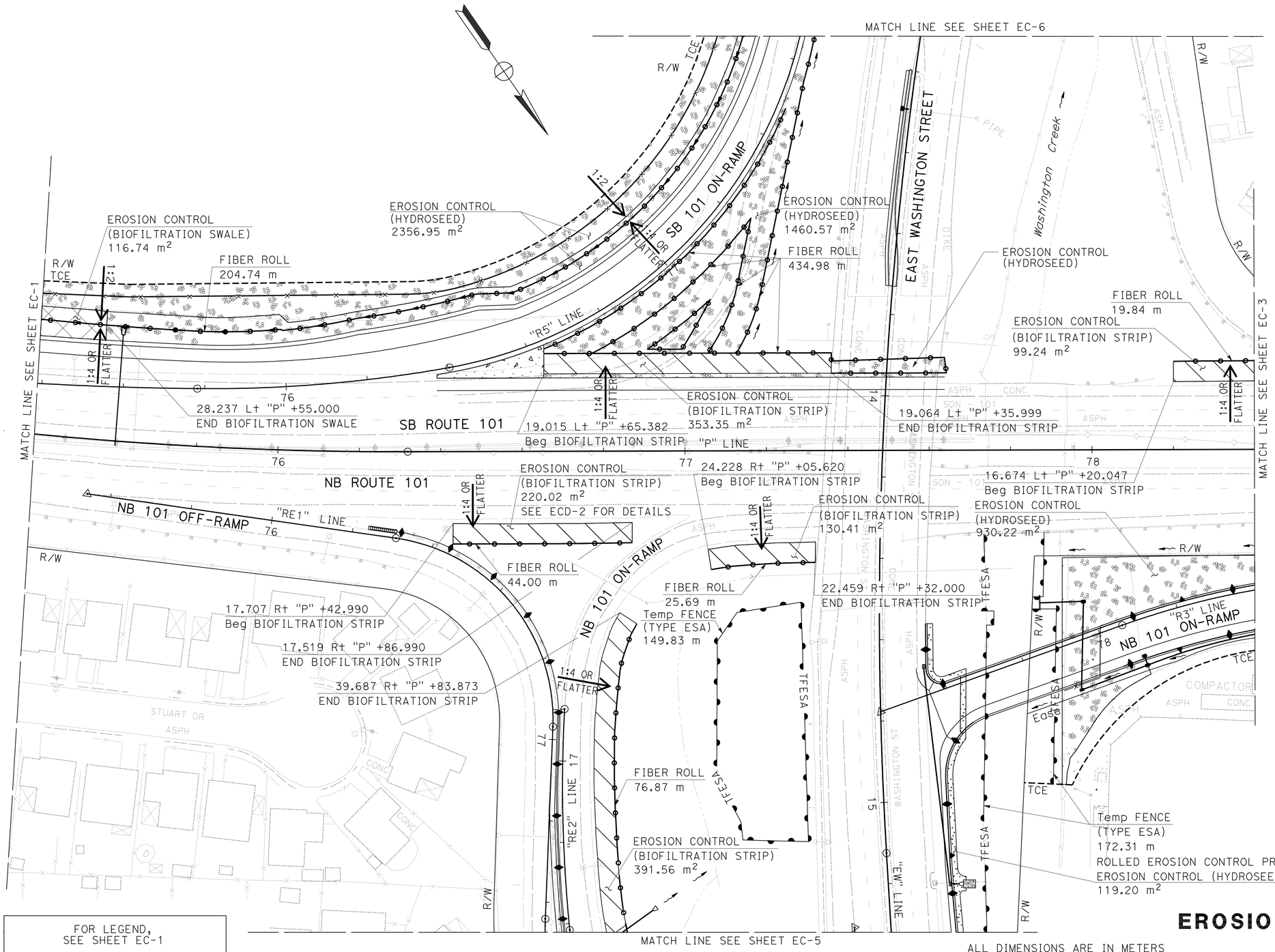

FOR LEGEND,
SEE SHEET EC-1

MATCH LINE SEE SHEET EC-5

THIS PLAN ACCURATE FOR EROSION CONTROL WORK ONLY

ALL DIMENSIONS ARE IN METERS
UNLESS OTHERWISE SHOWN

EROSION CONTROL PLAN

SCALE 1:500

EC-2

STATE OF CALIFORNIA - DEPARTMENT OF TRANSPORTATION

Caltrans

CONSULTANT FUNCTIONAL SUPERVISOR: RAMSEY HISSEN

CALCULATED-DESIGNED BY: SHERINA LAM

CHECKED BY: DAVID A. WILLIAMS

REVISED BY / DATE REVISED

LAST REVISION DATE PLOTTED => 31-MAY-2011
TIME PLOTTED => 10:42
09-03-10

Dist	COUNTY	ROUTE	KILOMETER POST TOTAL PROJECT	SHEET No.	TOTAL SHEETS
04	Son	101	7.3/8.3	45	320

David Williams 9/3/10
REGISTERED CIVIL ENGINEER DATE

5-31-11
PLANS APPROVAL DATE

REGISTERED PROFESSIONAL ENGINEER David A. Williams No. C58697 Exp. 12/31/12 CIVIL STATE OF CALIFORNIA

THE STATE OF CALIFORNIA OR ITS OFFICERS OR AGENTS SHALL NOT BE RESPONSIBLE FOR THE ACCURACY OR COMPLETENESS OF ELECTRONIC COPIES OF THIS PLAN SHEET.

URS CORPORATION
1380 LEAD HILL BLVD,
SUITE 100
ROSEVILLE, CA 95661

CITY OF PETALUMA
11 ENGLISH STREET
PETALUMA, CA 94952

Caltrans Metric

FOR ACCURATE RIGHT OF WAY DATA,
CONTACT RIGHT OF WAY ENGINEERING
AT THE DISTRICT OFFICE.

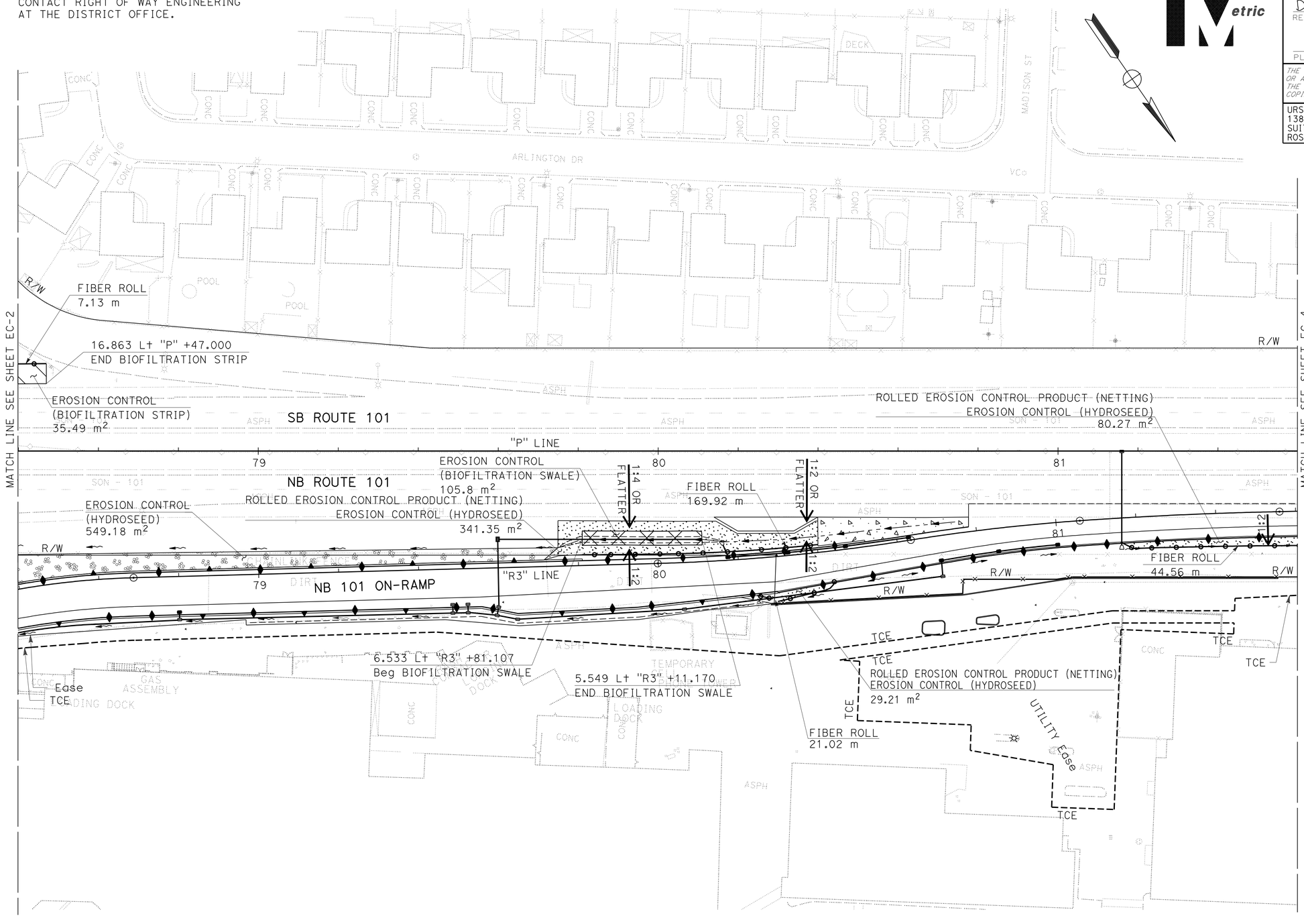

FOR LEGEND,
SEE SHEET EC-1

THIS PLAN ACCURATE FOR EROSION CONTROL WORK ONLY

ALL DIMENSIONS ARE IN METERS
UNLESS OTHERWISE SHOWN

EROSION CONTROL PLAN

SCALE 1:500

EC-3

STATE OF CALIFORNIA - DEPARTMENT OF TRANSPORTATION

Caltrans

CONSULTANT FUNCTIONAL SUPERVISOR: RAMSEY HISSEN

CALCULATED-DESIGNED BY: SHERINA LAM

CHECKED BY: DAVID A. WILLIAMS

REVISED BY / DATE REVISED

LAST REVISION 09-03-10 | DATE PLOTTED => 31-MAY-2011 | TIME PLOTTED => 10:42

Dist	COUNTY	ROUTE	KILOMETER POST TOTAL PROJECT	SHEET No.	TOTAL SHEETS
04	Son	101	7.3/8.3	46	320

David Williams 9/3/10
REGISTERED CIVIL ENGINEER DATE

5-31-11
PLANS APPROVAL DATE

REGISTERED PROFESSIONAL ENGINEER David A. Williams No. C58697 Exp. 12/31/12 CIVIL STATE OF CALIFORNIA

THE STATE OF CALIFORNIA OR ITS OFFICERS OR AGENTS SHALL NOT BE RESPONSIBLE FOR THE ACCURACY OR COMPLETENESS OF ELECTRONIC COPIES OF THIS PLAN SHEET.

URS CORPORATION
1380 LEAD HILL BLVD,
SUITE 100
ROSEVILLE, CA 95661

CITY OF PETALUMA
11 ENGLISH STREET
PETALUMA, CA 94952

Caltrans Metric

FOR ACCURATE RIGHT OF WAY DATA,
CONTACT RIGHT OF WAY ENGINEERING
AT THE DISTRICT OFFICE.

FOR LEGEND,
SEE SHEET EC-1

THIS PLAN ACCURATE FOR EROSION CONTROL WORK ONLY

ALL DIMENSIONS ARE IN METERS
UNLESS OTHERWISE SHOWN

EROSION CONTROL PLAN

SCALE 1:500

EC-4

STATE OF CALIFORNIA - DEPARTMENT OF TRANSPORTATION

Caltrans

CONSULTANT FUNCTIONAL SUPERVISOR: RAMSEY HISSEN

CALCULATED-DESIGNED BY: SHERINA LAM

CHECKED BY: DAVID A. WILLIAMS

REVISED BY | DATE REVISED

LAST REVISION 09-03-10 | DATE PLOTTED => 31-MAY-2011 | TIME PLOTTED => 10:42

Dist	COUNTY	ROUTE	KILOMETER POST TOTAL PROJECT	SHEET No.	TOTAL SHEETS
04	Son	101	7.3/8.3	47	320

David Williams 9/3/10
REGISTERED CIVIL ENGINEER DATE

5-31-11
PLANS APPROVAL DATE

REGISTERED PROFESSIONAL ENGINEER David A. Williams No. C58697 Exp. 12/31/12 CIVIL STATE OF CALIFORNIA

THE STATE OF CALIFORNIA OR ITS OFFICERS OR AGENTS SHALL NOT BE RESPONSIBLE FOR THE ACCURACY OR COMPLETENESS OF ELECTRONIC COPIES OF THIS PLAN SHEET.

URS CORPORATION
1380 LEAD HILL BLVD,
SUITE 100
ROSEVILLE, CA 95661

CITY OF PETALUMA
11 ENGLISH STREET
PETALUMA, CA 94952

FOR ACCURATE RIGHT OF WAY DATA,
CONTACT RIGHT OF WAY ENGINEERING
AT THE DISTRICT OFFICE.

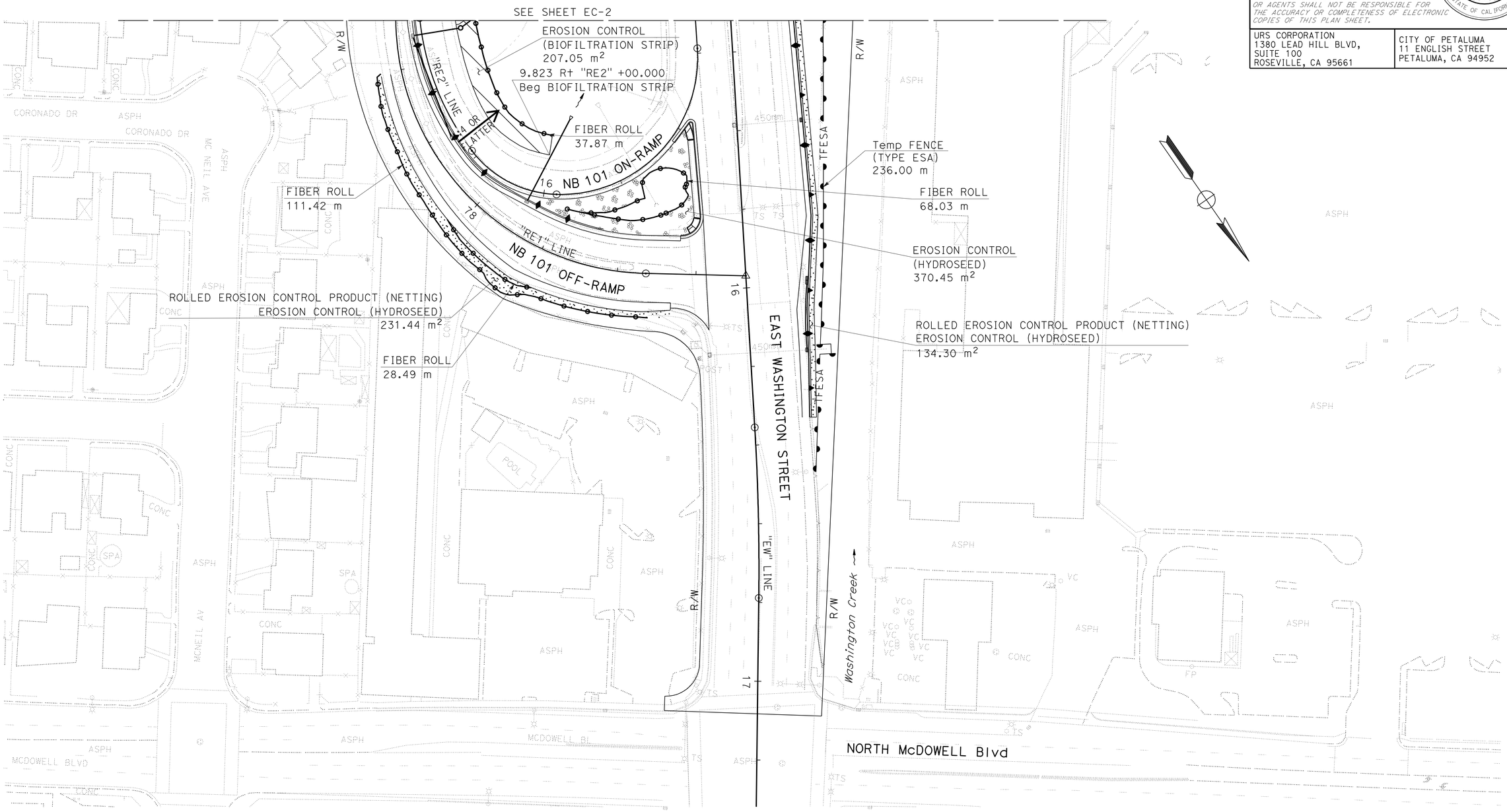

FOR LEGEND,
SEE SHEET EC-1

THIS PLAN ACCURATE FOR EROSION CONTROL WORK ONLY

ALL DIMENSIONS ARE IN METERS
UNLESS OTHERWISE SHOWN

EROSION CONTROL PLAN

SCALE 1:500

EC-5

STATE OF CALIFORNIA - DEPARTMENT OF TRANSPORTATION
Caltrans

CONSULTANT FUNCTIONAL SUPERVISOR: RAMSEY HISSEN

CALCULATED-DESIGNED BY: SHERINA LAM
CHECKED BY: DAVID A. WILLIAMS

REVISED BY | DATE REVISED

LAST REVISION 09-03-10 | DATE PLOTTED => 31-MAY-2011 | TIME PLOTTED => 10:42

Dist	COUNTY	ROUTE	KILOMETER POST TOTAL PROJECT	SHEET No.	TOTAL SHEETS
04	Son	101	7.3/8.3	48	320

David Williams 9/3/10
REGISTERED CIVIL ENGINEER DATE

5-31-11
PLANS APPROVAL DATE

REGISTERED PROFESSIONAL ENGINEER
David A. Williams
No. C58697
Exp. 12/31/12
CIVIL
STATE OF CALIFORNIA

THE STATE OF CALIFORNIA OR ITS OFFICERS OR AGENTS SHALL NOT BE RESPONSIBLE FOR THE ACCURACY OR COMPLETENESS OF ELECTRONIC COPIES OF THIS PLAN SHEET.

URS CORPORATION
1380 LEAD HILL BLVD,
SUITE 100
ROSEVILLE, CA 95661

CITY OF PETALUMA
11 ENGLISH STREET
PETALUMA, CA 94952

FOR ACCURATE RIGHT OF WAY DATA,
CONTACT RIGHT OF WAY ENGINEERING AT THE DISTRICT OFFICE.

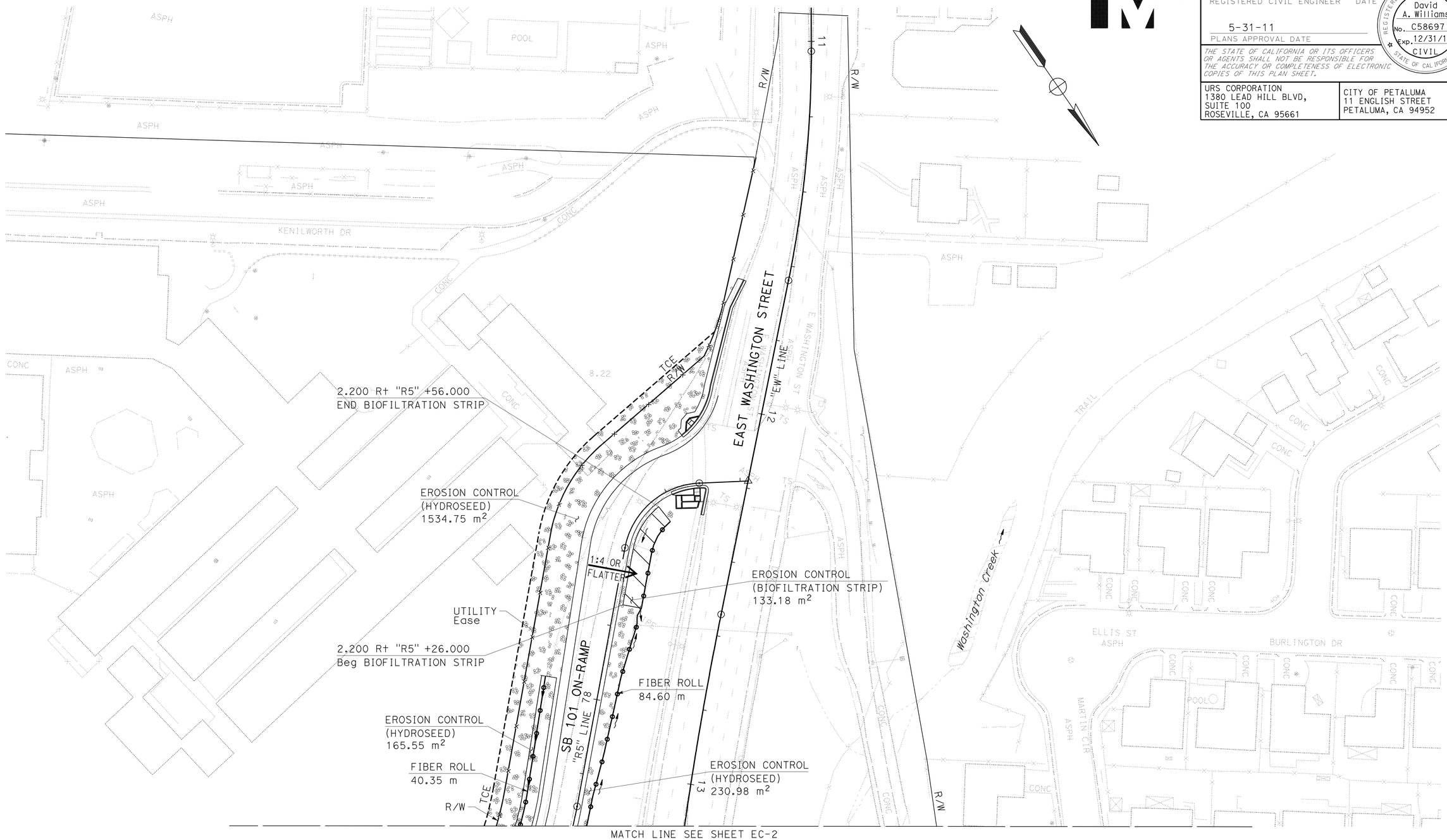

FOR LEGEND,
SEE SHEET EC-1

THIS PLAN ACCURATE FOR EROSION CONTROL WORK ONLY

ALL DIMENSIONS ARE IN METERS
UNLESS OTHERWISE SHOWN

EROSION CONTROL PLAN

SCALE 1:500

EC-6

STATE OF CALIFORNIA - DEPARTMENT OF TRANSPORTATION
Caltrans

CONSULTANT FUNCTIONAL SUPERVISOR: RAMSEY HISSEN
CALCULATED-DESIGNED BY: SHERINA LAM
CHECKED BY: DAVID A. WILLIAMS
REVISED BY
DATE REVISED

LAST REVISION 09-03-10
DATE PLOTTED => 31-MAY-2011
TIME PLOTTED => 10:42

Dist	COUNTY	ROUTE	KILOMETER POST TOTAL PROJECT	SHEET No.	TOTAL SHEETS
04	Son	101	7.3/8.3	49	320

David Williams 9/3/10
REGISTERED CIVIL ENGINEER DATE

5-31-11
PLANS APPROVAL DATE

REGISTERED PROFESSIONAL ENGINEER David A. Williams No. C58697 Exp. 12/31/12 CIVIL STATE OF CALIFORNIA

THE STATE OF CALIFORNIA OR ITS OFFICERS OR AGENTS SHALL NOT BE RESPONSIBLE FOR THE ACCURACY OR COMPLETENESS OF ELECTRONIC COPIES OF THIS PLAN SHEET.

URS CORPORATION
1380 LEAD HILL BLVD,
SUITE 100
ROSEVILLE, CA 95661

CITY OF PETALUMA
11 ENGLISH STREET
PETALUMA, CA 94952

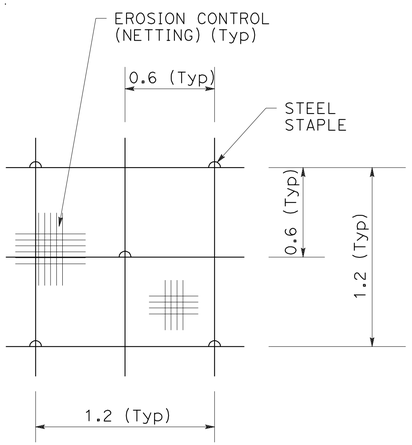

DETAIL A
STAPLE PATTERN

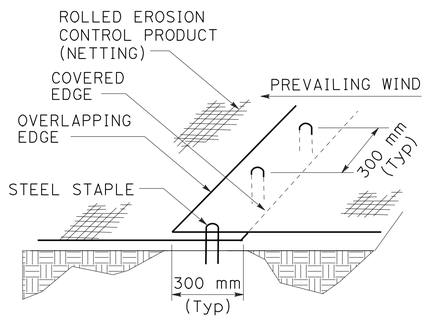

DETAIL B
LONGITUDINAL (NETTING) JOINT

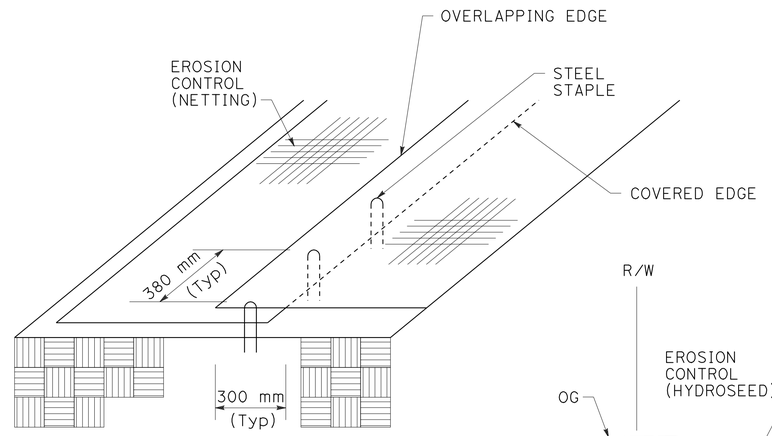

NETTING OVERLAP AND
STAPLE PATTERN

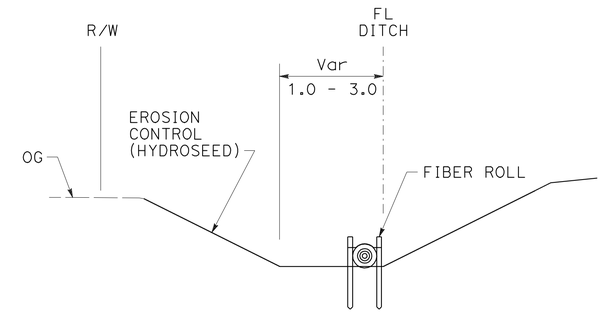

DITCH A EROSION CONTROL*
"P" 75+65.439 TO "R5" 76+00.000

* SEE SHEET ECD-2 & ECD-3 FOR BIOFILTRATION STRIP & BIOFILTRATION SWALE PORTION FOR DETAILS

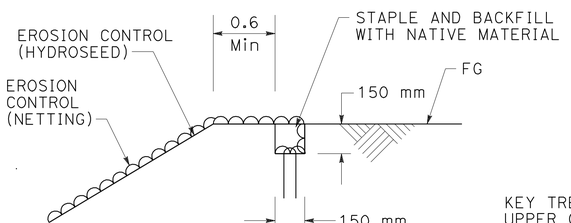

SECTION
KEY TRENCH AT
SLOPE HINGE POINT

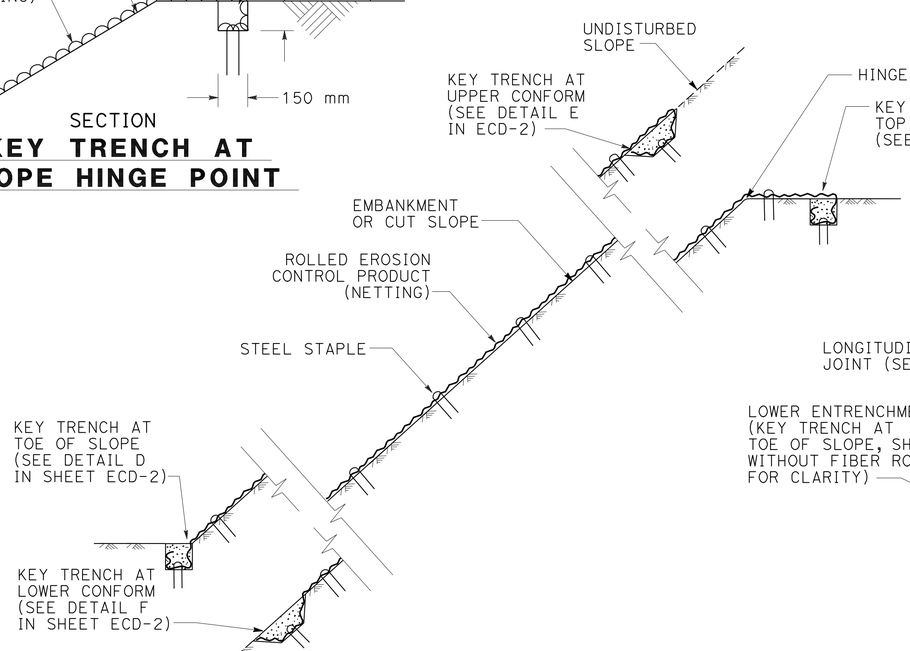

SECTION
ROLLED EROSION CONTROL PRODUCT (NETTING)
ON SLOPE WITH VARIOUS KEY ENTRENCHMENTS

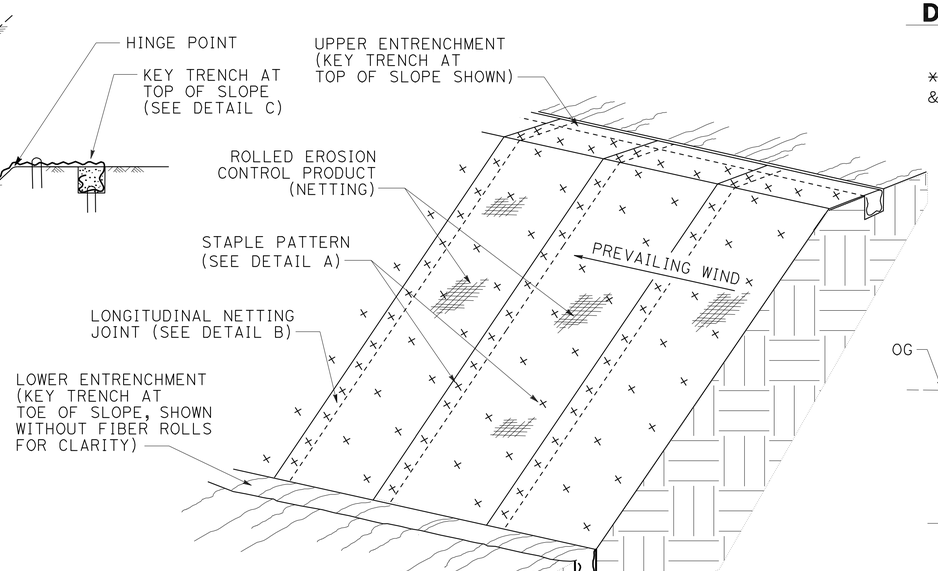

ISOMETRIC
ROLLED EROSION CONTROL
PRODUCT (NETTING)
ON SLOPE

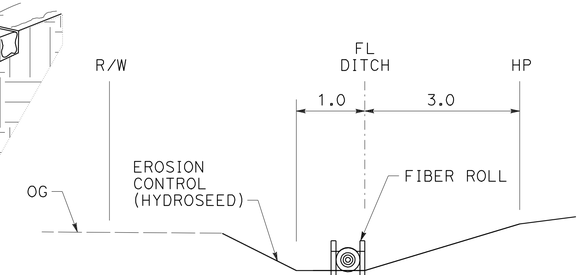

DITCH B EROSION CONTROL
"R5" 76+00.000 TO "R5" 78+03.652

EROSION CONTROL DETAILS
NO SCALE

ALL DIMENSIONS ARE IN METERS
UNLESS OTHERWISE SHOWN

ECD-1

REVISED BY	DATE REVISED
SHERINA LAM	DAVID A. WILLIAMS

CALCULATED-DESIGNED BY
CHECKED BY

CONSULTANT FUNCTIONAL SUPERVISOR
RAMSEY HISSEN

STATE OF CALIFORNIA - DEPARTMENT OF TRANSPORTATION
Caltrans

LAST REVISION 09-03-10
DATE PLOTTED => 31-MAY-2011
TIME PLOTTED => 10:42

Dist	COUNTY	ROUTE	KILOMETER POST TOTAL PROJECT	SHEET No.	TOTAL SHEETS
04	Son	101	7.3/8.3	50	320

David Williams 9/3/10
REGISTERED CIVIL ENGINEER DATE

5-31-11
PLANS APPROVAL DATE

REGISTERED PROFESSIONAL ENGINEER David A. Williams No. C58697 Exp. 12/31/12 CIVIL STATE OF CALIFORNIA

THE STATE OF CALIFORNIA OR ITS OFFICERS OR AGENTS SHALL NOT BE RESPONSIBLE FOR THE ACCURACY OR COMPLETENESS OF ELECTRONIC COPIES OF THIS PLAN SHEET.

URS CORPORATION
1380 LEAD HILL BLVD,
SUITE 100
ROSEVILLE, CA 95661

CITY OF PETALUMA
11 ENGLISH STREET
PETALUMA, CA 94952

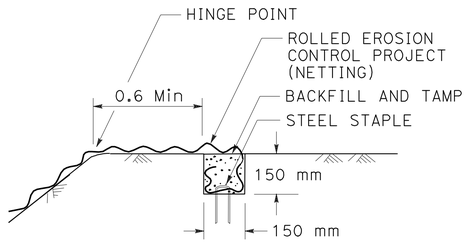

SECTION

DETAIL C
KEY TRENCH AT TOP OF SLOPE

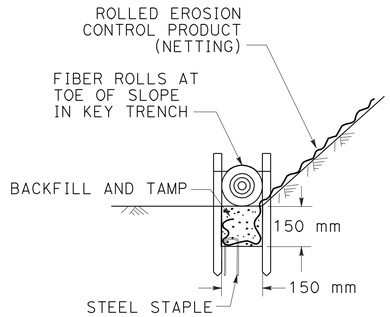

SECTION

DETAIL D
KEY TRENCH AT TOE OF SLOPE

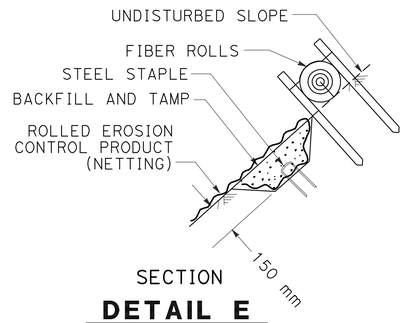

SECTION

DETAIL E
KEY TRENCH AT UPPER CONFORM

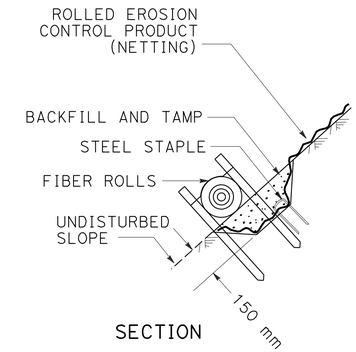

SECTION

DETAIL F
KEY TRENCH AT LOWER CONFORM

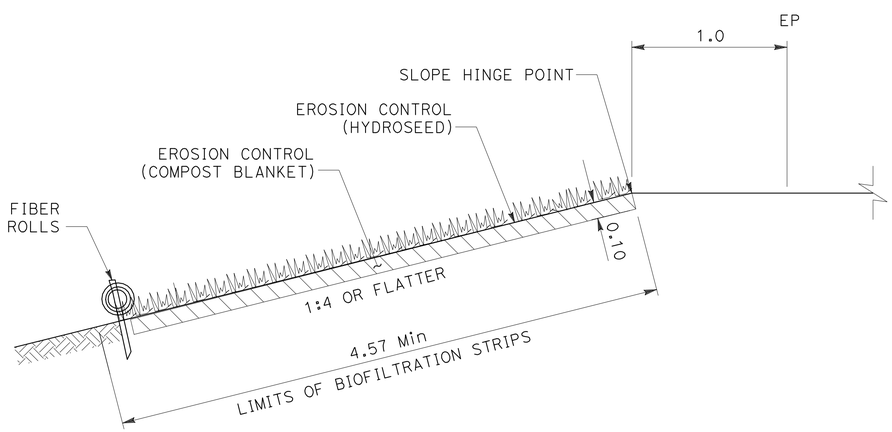

SECTION

BIOFILTRATION STRIPS DETAIL

"P" 76+42.990 TO 76+86.990
"P" 76+61.222 TO 77+35.999
"P" 77+05.620 TO 77+32.000
"P" 78+20.047 TO 78+47.000
"RE2" 16+00.000 TO 17+83.873

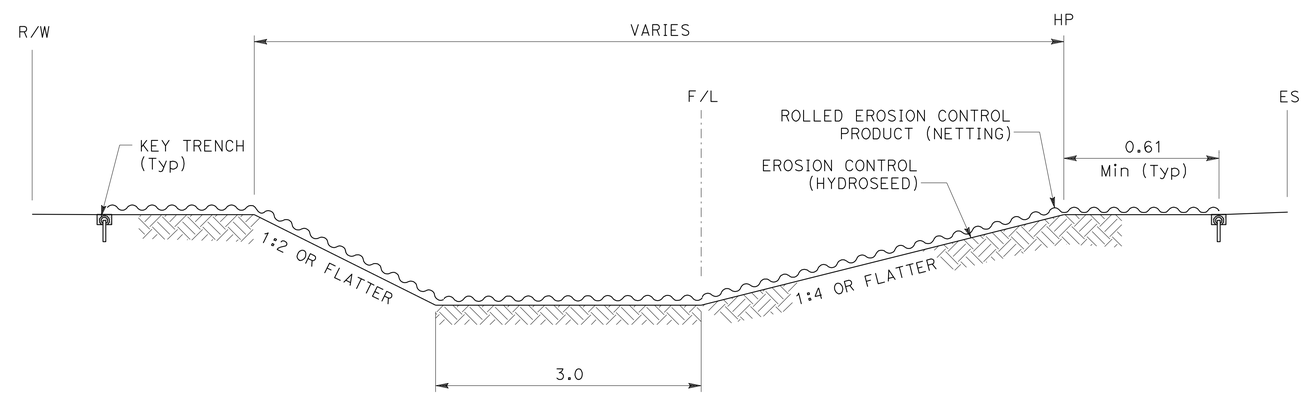

SECTION

DITCH A - BIOFILTRATION STRIPS DETAIL

"P" 74+03.833 TO 75+35.612

EROSION CONTROL DETAILS

NO SCALE

ALL DIMENSIONS ARE IN METERS
UNLESS OTHERWISE SHOWN

ECD-2

STATE OF CALIFORNIA - DEPARTMENT OF TRANSPORTATION
Caltrans

CONSULTANT FUNCTIONAL SUPERVISOR: RAMSEY HISSEN
CALCULATED-DESIGNED BY: SHERINA LAM
CHECKED BY: DAVID A. WILLIAMS
REVISED BY
DATE REVISED

LAST REVISION 09-03-10
DATE PLOTTED => 31-MAY-2011
TIME PLOTTED => 10:42

NOTE:
SEE DRAINAGE PLANS, DETAILS, AND QUANTITIES SHEETS FOR MORE INFORMATION.

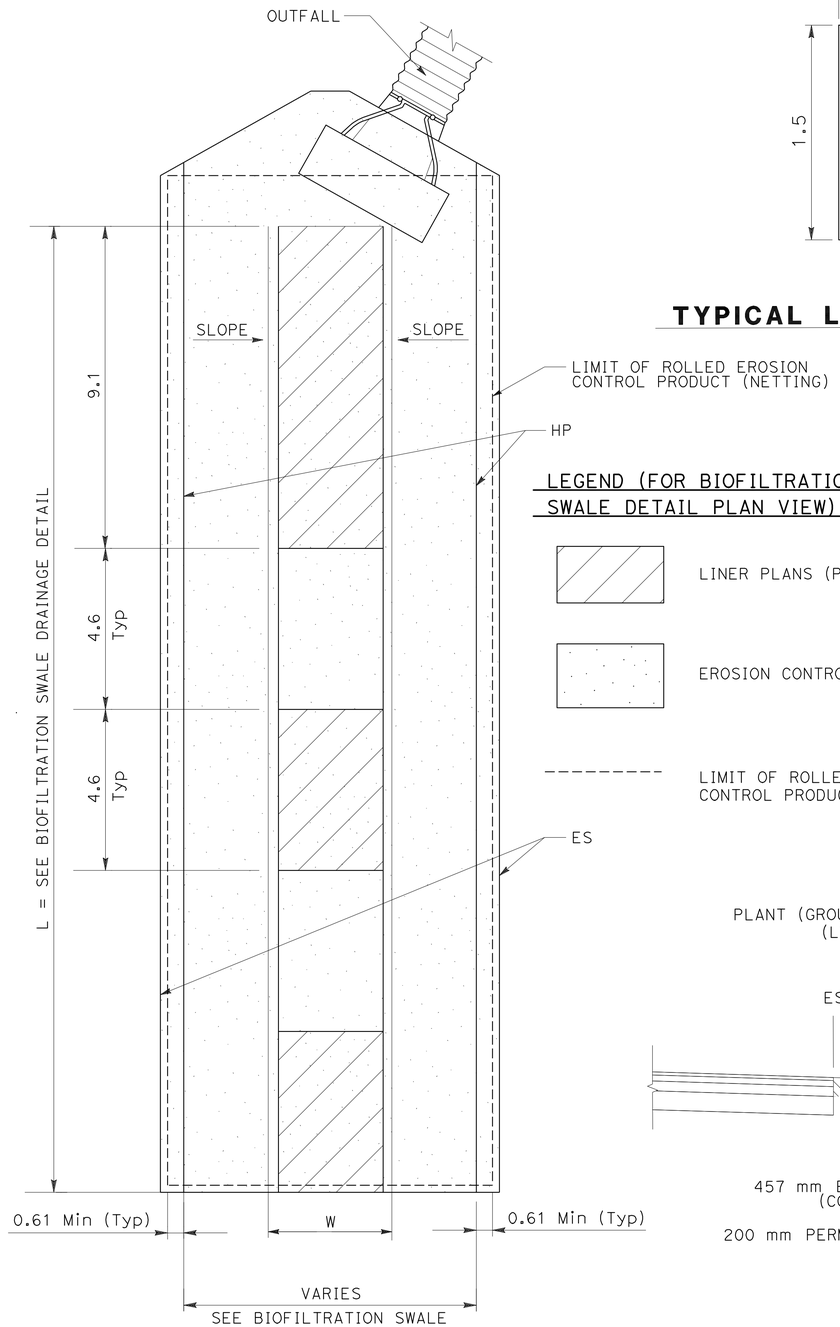

PLAN

BIOFILTRATION SWALE DETAIL

LEGEND (FOR BIOFILTRATION SWALE DETAIL PLAN VIEW)

- LINER PLANS (PLANT GROUP M)
- EROSION CONTROL (HYDROSEED)
- LIMIT OF ROLLED EROSION CONTROL PRODUCT (NETTING)

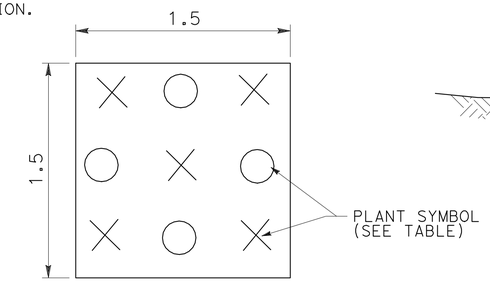

PLAN

TYPICAL LINER PLANTS SPACING

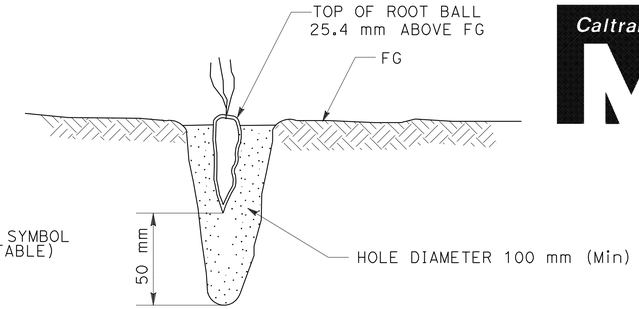

SECTION

PLANT BASIN (LINER)

PLANT LIST AND PLANTING SPECIFICATIONS

PLANT GROUP	PLANT No.	SYMBOL	BOTANICAL MAME	COMMON NAME	SIZE	QUANTITY (EA)	HOLE SIZE (mm)	
							Dia	DEPTH
M	1	X	HORDEUM BRACHYANTHERUM	MEADOW BARLEY	LINER	240	100	100
	2	O	FESTUCA RUBRA 'MOLATE'	MOLATE FESCUE	LINER	192	100	100

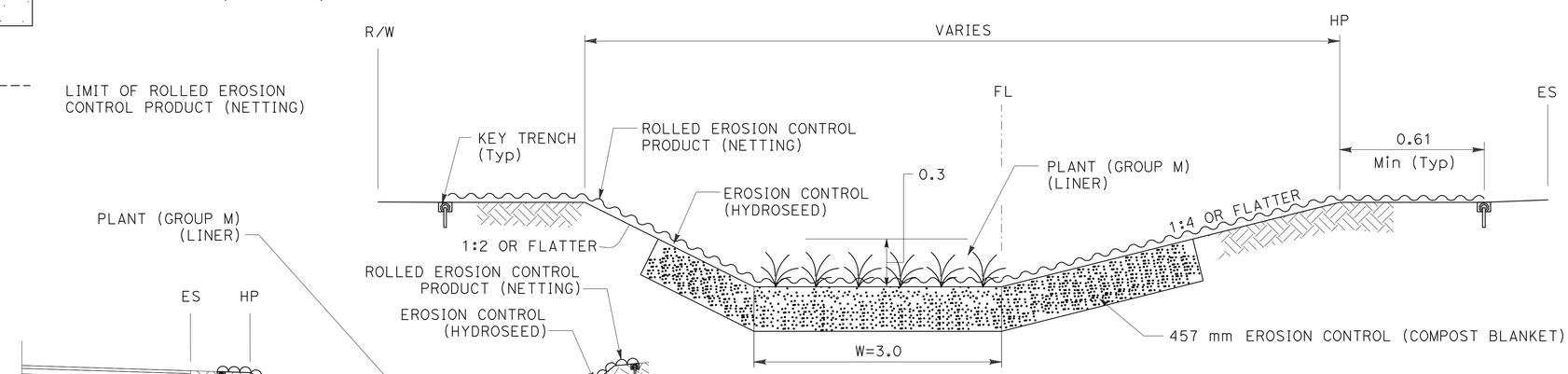

SECTION

DITCH A - BIOFILTRATION SWALE DETAIL

"P" 75+25.000 TO 75+55.000

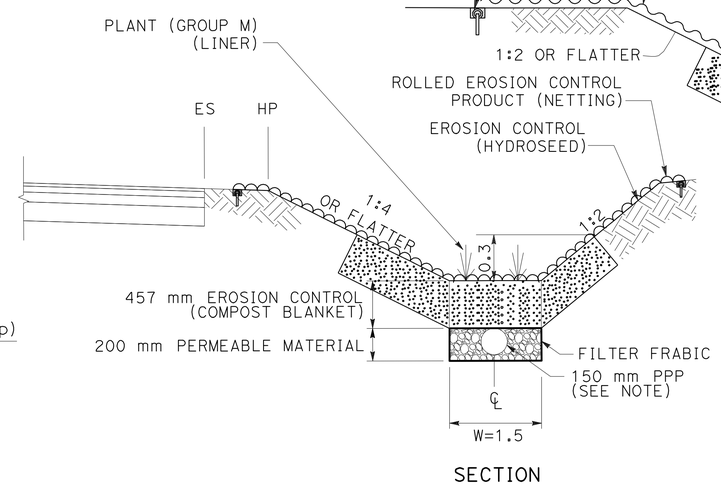

SECTION

DITCH D - BIOFILTRATION SWALE DETAIL

"R3" 79+81.107 TO 80+11.170

ALL DIMENSIONS ARE IN METERS UNLESS OTHERWISE SHOWN

EROSION CONTROL DETAILS

NO SCALE

ECD-3

Dist	COUNTY	ROUTE	KILOMETER POST TOTAL PROJECT	SHEET No.	TOTAL SHEETS
04	Son	101	7.3/8.3	51	320

David Williams 9/3/10
REGISTERED CIVIL ENGINEER DATE

5-31-11
PLANS APPROVAL DATE

REGISTERED PROFESSIONAL ENGINEER David A. Williams No. C58697 Exp. 12/31/12 CIVIL STATE OF CALIFORNIA

THE STATE OF CALIFORNIA OR ITS OFFICERS OR AGENTS SHALL NOT BE RESPONSIBLE FOR THE ACCURACY OR COMPLETENESS OF ELECTRONIC COPIES OF THIS PLAN SHEET.

URS CORPORATION
1380 LEAD HILL BLVD,
SUITE 100
ROSEVILLE, CA 95661

CITY OF PETALUMA
11 ENGLISH STREET
PETALUMA, CA 94952

STATE OF CALIFORNIA - DEPARTMENT OF TRANSPORTATION
Caltrans

CONSULTANT FUNCTIONAL SUPERVISOR: RAMSEY HISSEN
CALCULATED-DESIGNED BY: SHERINA LAM
CHECKED BY: DAVID A. WILLIAMS
REVISED BY
DATE REVISED

LAST REVISION 09-03-10
DATE PLOTTED => 31-MAY-2011
TIME PLOTTED => 10:43

Dist	COUNTY	ROUTE	KILOMETER POST TOTAL PROJECT	SHEET No.	TOTAL SHEETS
04	Son	101	7.3/8.3	52	320

David Williams 9/3/10
REGISTERED CIVIL ENGINEER DATE

5-31-11
PLANS APPROVAL DATE

REGISTERED PROFESSIONAL ENGINEER David A. Williams No. C58697 Exp. 12/31/12 CIVIL STATE OF CALIFORNIA

THE STATE OF CALIFORNIA OR ITS OFFICERS OR AGENTS SHALL NOT BE RESPONSIBLE FOR THE ACCURACY OR COMPLETENESS OF ELECTRONIC COPIES OF THIS PLAN SHEET.

URS CORPORATION
1380 LEAD HILL BLVD,
SUITE 100
ROSEVILLE, CA 95661

CITY OF PETALUMA
11 ENGLISH STREET
PETALUMA, CA 94952

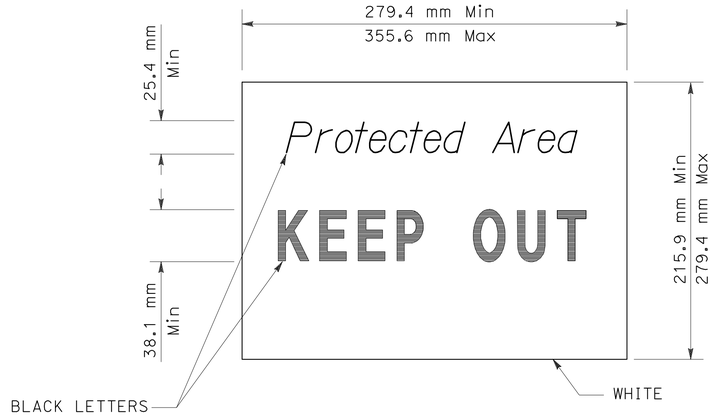

SIGN DETAIL

NOTE:

1. TEMPORARY SILT FENCE AND TEMPORARY STRAW BALE BARRIER SHOWN FOR REFERENCE PURPOSES ONLY.

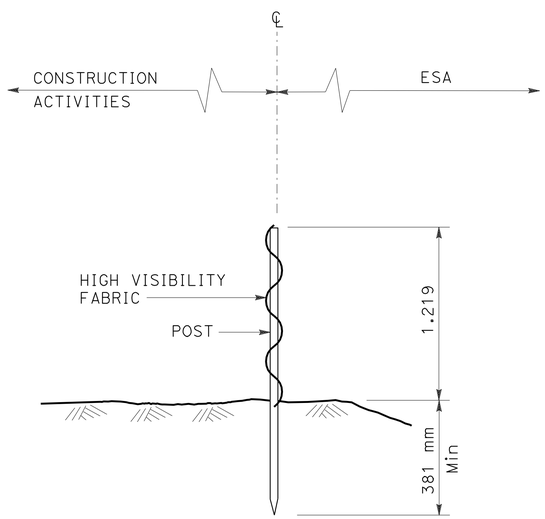

SECTION

TEMPORARY FENCE (TYPE ESA)

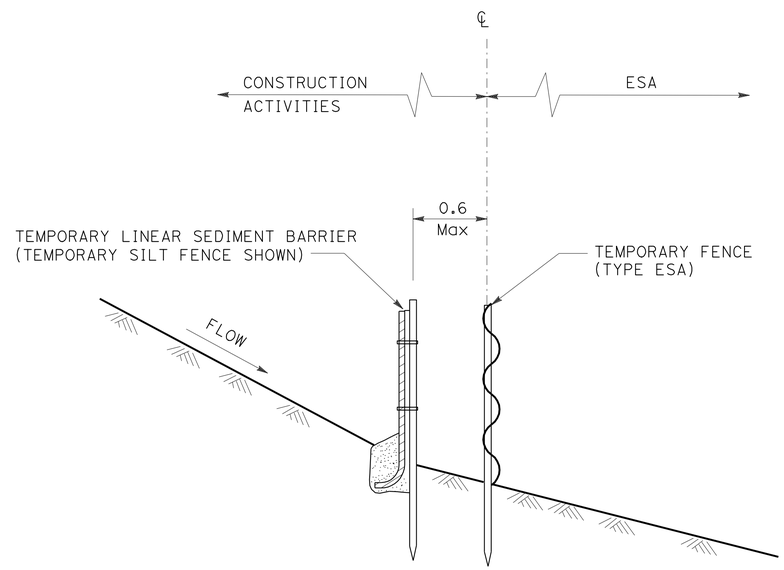

SECTION

PLACEMENT DETAIL FOR TEMPORARY LINEAR SEDIMENT BARRIER USED WITH TEMPORARY FENCE (TYPE ESA)

(SEE NOTE 1)

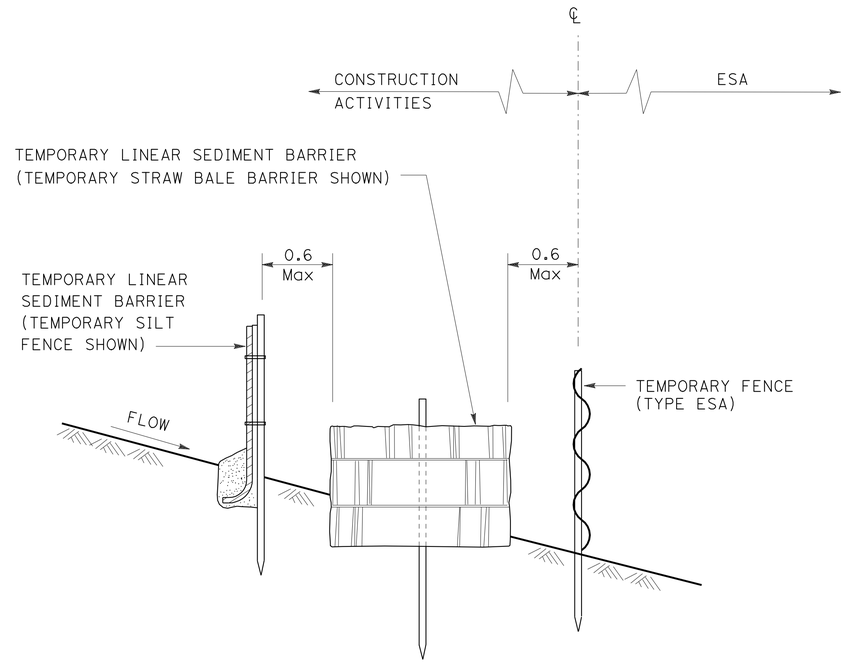

SECTION

PLACEMENT DETAIL FOR TEMPORARY SILT FENCE AND TEMPORARY STRAW BALE BARRIER USED WITH TEMPORARY FENCE (TYPE ESA)

(SEE NOTE 1)

ALL DIMENSIONS ARE IN METERS UNLESS OTHERWISE SHOWN

EROSION CONTROL DETAILS

NO SCALE

ECD-4

STATE OF CALIFORNIA - DEPARTMENT OF TRANSPORTATION
Caltrans

CONSULTANT FUNCTIONAL SUPERVISOR: RAMSEY HISSEN
CALCULATED-DESIGNED BY: SHERINA LAM
CHECKED BY: DAVID A. WILLIAMS
REVISED BY
DATE REVISED

LAST REVISION 09-03-10
DATE PLOTTED => 31-MAY-2011
TIME PLOTTED => 10:43

Dist	COUNTY	ROUTE	KILOMETER POST TOTAL PROJECT	SHEET No.	TOTAL SHEETS
04	Son	101	7.3/8.3	53	320

David Williams 9/3/10
REGISTERED CIVIL ENGINEER DATE

5-31-11
PLANS APPROVAL DATE

REGISTERED PROFESSIONAL ENGINEER David A. Williams No. C58697 Exp. 12/31/12 CIVIL STATE OF CALIFORNIA

THE STATE OF CALIFORNIA OR ITS OFFICERS OR AGENTS SHALL NOT BE RESPONSIBLE FOR THE ACCURACY OR COMPLETENESS OF ELECTRONIC COPIES OF THIS PLAN SHEET.

URS CORPORATION
1380 LEAD HILL BLVD,
SUITE 100
ROSEVILLE, CA 95661

CITY OF PETALUMA
11 ENGLISH STREET
PETALUMA, CA 94952

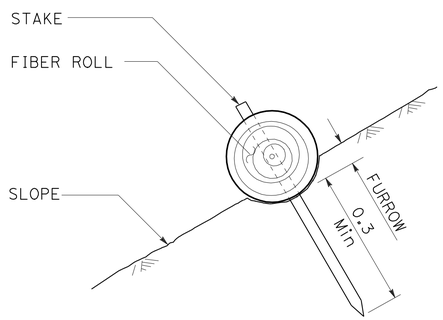

SECTION

FIBER ROLL (TYPE 1)

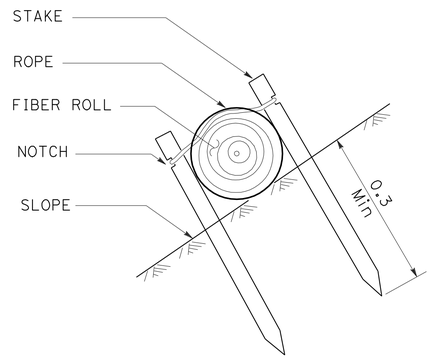

SECTION

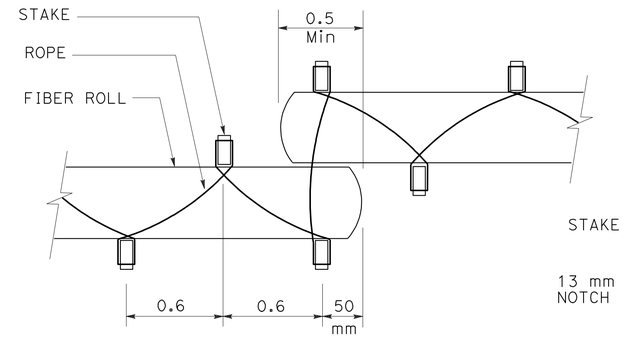

PLAN

FIBER ROLL (TYPE 2)

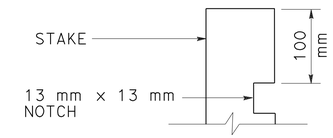

ELEVATION

STAKE NOTCH DETAIL

NOTES:

1. FIBER ROLL SPACING VARIES DEPENDING UPON SLOPE INCLINATION.
2. INSTALLATIONS SHOWN IN THE PERSPECTIVES ARE FOR SLOPE INCLINATION OF 10:1 AND STEEPER.

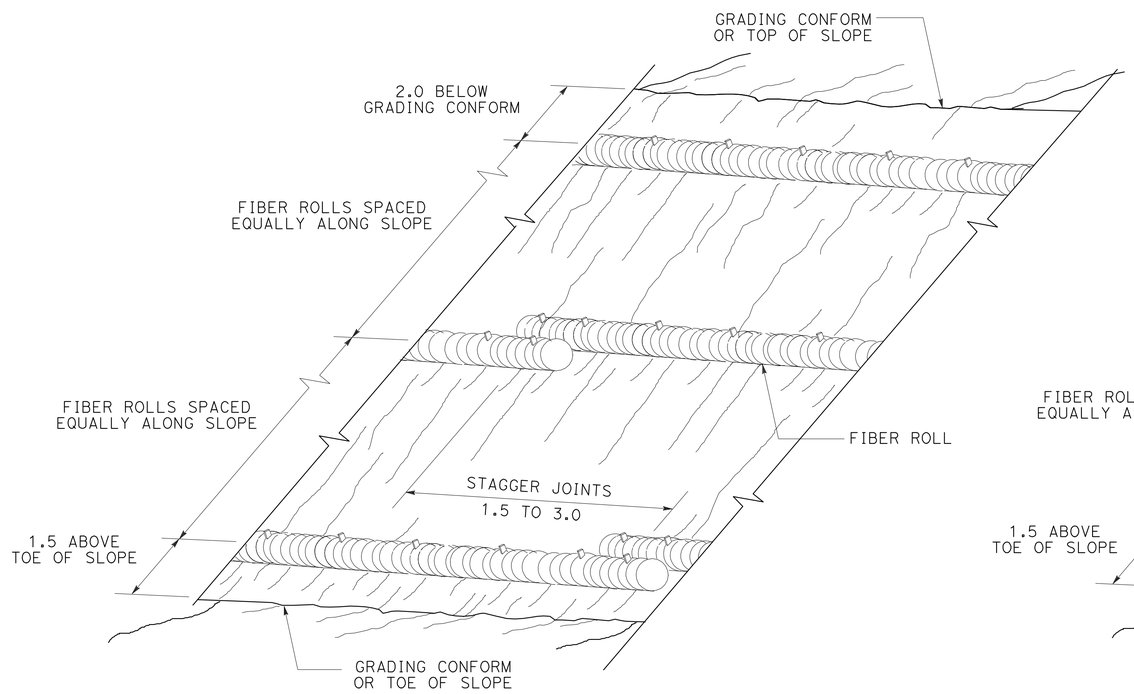

PERSPECTIVE

FIBER ROLL (TYPE 1)

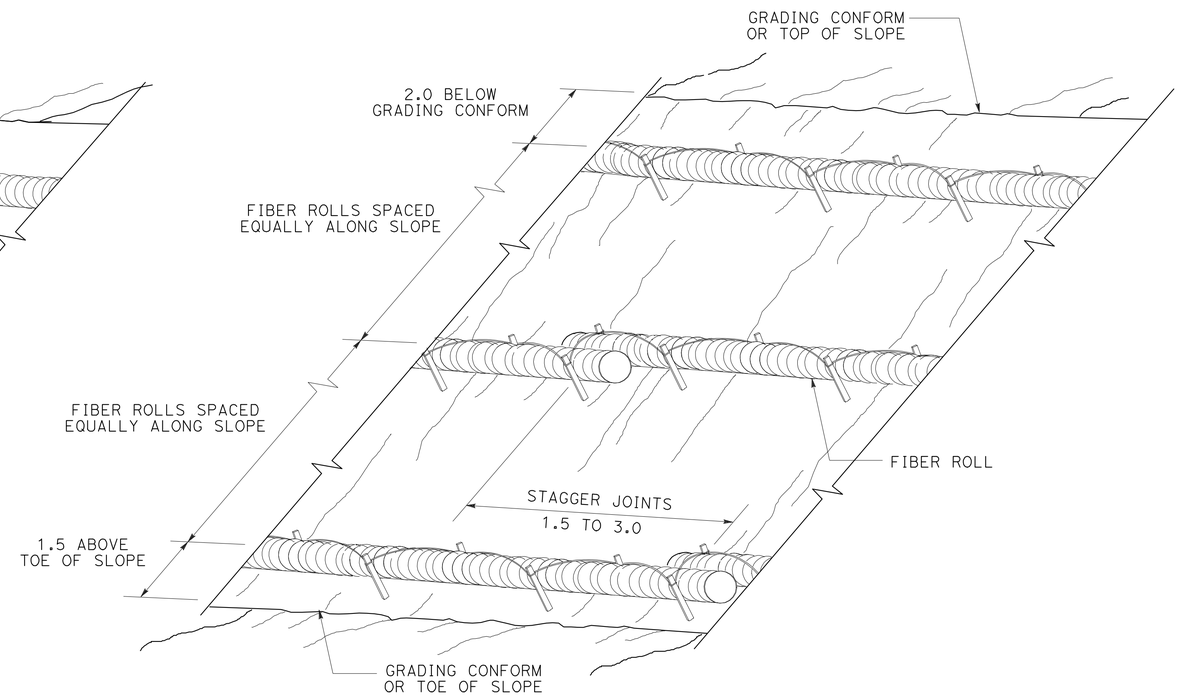

PERSPECTIVE

FIBER ROLL (TYPE 2)

ALL DIMENSIONS ARE IN METERS
UNLESS OTHERWISE SHOWN

EROSION CONTROL DETAILS

NO SCALE

ECD-5

STATE OF CALIFORNIA - DEPARTMENT OF TRANSPORTATION
Caltrans

CONSULTANT FUNCTIONAL SUPERVISOR: RAMSEY HISSEN
CALCULATED-DESIGNED BY: SHERINA LAM
CHECKED BY: DAVID A. WILLIAMS
REVISED BY / DATE REVISED

LAST REVISION 09-03-10
DATE PLOTTED => 31-MAY-2011
TIME PLOTTED => 10:43

Dist	COUNTY	ROUTE	KILOMETER POST TOTAL PROJECT	SHEET No.	TOTAL SHEETS
04	Son	101	7.3/8.3	54	320

David Williams 9/3/10
REGISTERED CIVIL ENGINEER DATE

5-31-11
PLANS APPROVAL DATE

REGISTERED PROFESSIONAL ENGINEER David A. Williams No. C58697 Exp. 12/31/12 CIVIL STATE OF CALIFORNIA

THE STATE OF CALIFORNIA OR ITS OFFICERS OR AGENTS SHALL NOT BE RESPONSIBLE FOR THE ACCURACY OR COMPLETENESS OF ELECTRONIC COPIES OF THIS PLAN SHEET.

URS CORPORATION
1380 LEAD HILL BLVD,
SUITE 100
ROSEVILLE, CA 95661

CITY OF PETALUMA
11 ENGLISH STREET
PETALUMA, CA 94952

EROSION CONTROL QUANTITIES

LOCATION	EROSION CONTROL (COMPOST BLANKET)	ROLLED EROSION CONTROL PRODUCT (NETTING)	FIBER ROLLS	EROSION CONTROL (HYDROSEED)	PLANT (GROUP M) (LINER)	TEMPORARY FENCE (TYPE ESA)	REMARK
	m^3	m^2	m	m^2	EA	m	
SB EAST WASHINGTON STREET ON-RAMP, EC-1, 2, & 6	174	0	1035	7620	324	0	"R5" LINE
NB EAST WASHINGTON STREET OFF-RAMP; EC-2 & 5	23	232	252	221	0	0	"RE1" LINE
NB EAST WASHINGTON STREET ON-RAMP; EC-2 & 5	73	0	141	1331	0	0	"RE2" LINE
NB EAST WASHINGTON STREET ON-RAMP; EC-2, 3, & 4	45	686	331	2042	108	0	"R3" LINE
EAST WASHINGTON STREET; EC-2, 5, & 6	0	254	0	254	0	586	"EW" LINE
SB 101; EC-1, 2, & 3	49	0	27	489	0	0	"P" LINE
TOTAL	364	1048	1786	11957	432	586	

REVISED BY | DATE REVISED

SHERINA LAM
DAVID A. WILLIAMS

CALCULATED-DESIGNED BY
CHECKED BY

CONSULTANT FUNCTIONAL SUPERVISOR
RAMSEY HISSEN

STATE OF CALIFORNIA - DEPARTMENT OF TRANSPORTATION
Caltrans

EROSION CONTROL QUANTITIES
ECQ-1

LAST REVISION 09-03-10 | DATE PLOTTED => 31-MAY-2011 | TIME PLOTTED => 10:43

Dist	COUNTY	ROUTE	KILOMETER POST TOTAL PROJECT	SHEET No.	TOTAL SHEETS
04	Son	101	7.3/8.3	55	320

David Williams 9/3/10
REGISTERED CIVIL ENGINEER DATE

5-31-11
PLANS APPROVAL DATE

REGISTERED PROFESSIONAL ENGINEER David A. Williams No. C58697 Exp. 12/31/12 CIVIL STATE OF CALIFORNIA

THE STATE OF CALIFORNIA OR ITS OFFICERS OR AGENTS SHALL NOT BE RESPONSIBLE FOR THE ACCURACY OR COMPLETENESS OF ELECTRONIC COPIES OF THIS PLAN SHEET.

URS CORPORATION
1380 LEAD HILL BLVD,
SUITE 100
ROSEVILLE, CA 95661

CITY OF PETALUMA
11 ENGLISH STREET
PETALUMA, CA 94952

Caltrans Metric

FOR ACCURATE RIGHT OF WAY DATA,
CONTACT RIGHT OF WAY ENGINEERING
AT THE DISTRICT OFFICE.

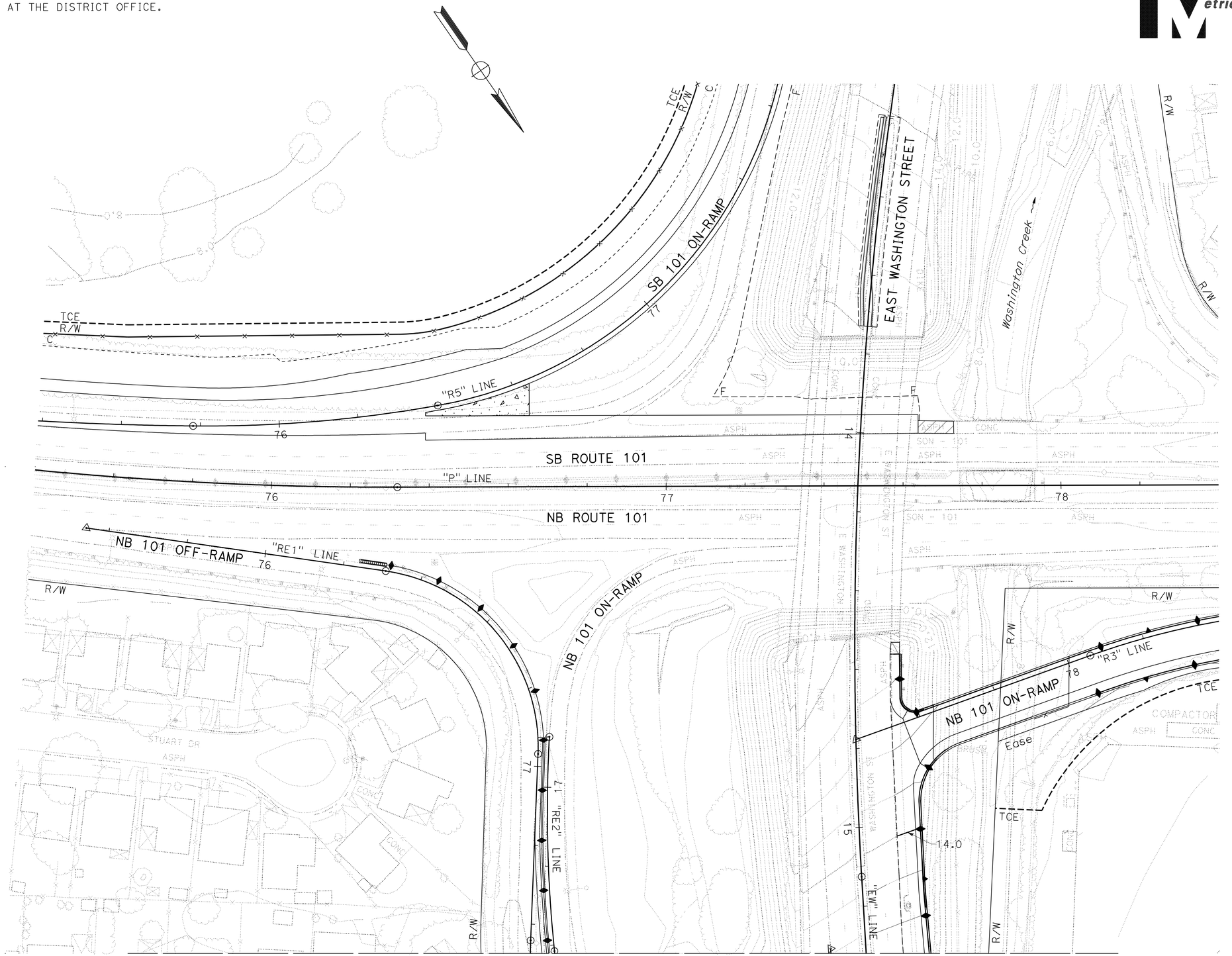

SEE SHEET G-2

THIS PLAN ACCURATE FOR CONTOUR GRADING WORK ONLY

ALL DIMENSIONS ARE IN METERS
UNLESS OTHERWISE SHOWN

CONTOUR GRADING

SCALE 1:500

G-1

STATE OF CALIFORNIA - DEPARTMENT OF TRANSPORTATION
Caltrans

CONSULTANT FUNCTIONAL SUPERVISOR: RAMSEY HISSEN

CALCULATED-DESIGNED BY: SHERINA LAM
CHECKED BY: DAVID A. WILLIAMS

REVISED BY | DATE REVISED

LAST REVISION 09-03-10
DATE PLOTTED => 31-MAY-2011
TIME PLOTTED => 09:35

Dist	COUNTY	ROUTE	KILOMETER POST TOTAL PROJECT	SHEET No.	TOTAL SHEETS
04	Son	101	7.3/8.3	56	320

David Williams 9/3/10
REGISTERED CIVIL ENGINEER DATE

5-31-11
PLANS APPROVAL DATE

REGISTERED PROFESSIONAL ENGINEER
David A. Williams
No. C58697
Exp. 12/31/12
CIVIL
STATE OF CALIFORNIA

THE STATE OF CALIFORNIA OR ITS OFFICERS OR AGENTS SHALL NOT BE RESPONSIBLE FOR THE ACCURACY OR COMPLETENESS OF ELECTRONIC COPIES OF THIS PLAN SHEET.

URS CORPORATION
1380 LEAD HILL BLVD,
SUITE 100
ROSEVILLE, CA 95661

CITY OF PETALUMA
11 ENGLISH STREET
PETALUMA, CA 94952

FOR ACCURATE RIGHT OF WAY DATA,
CONTACT RIGHT OF WAY ENGINEERING AT THE DISTRICT OFFICE.

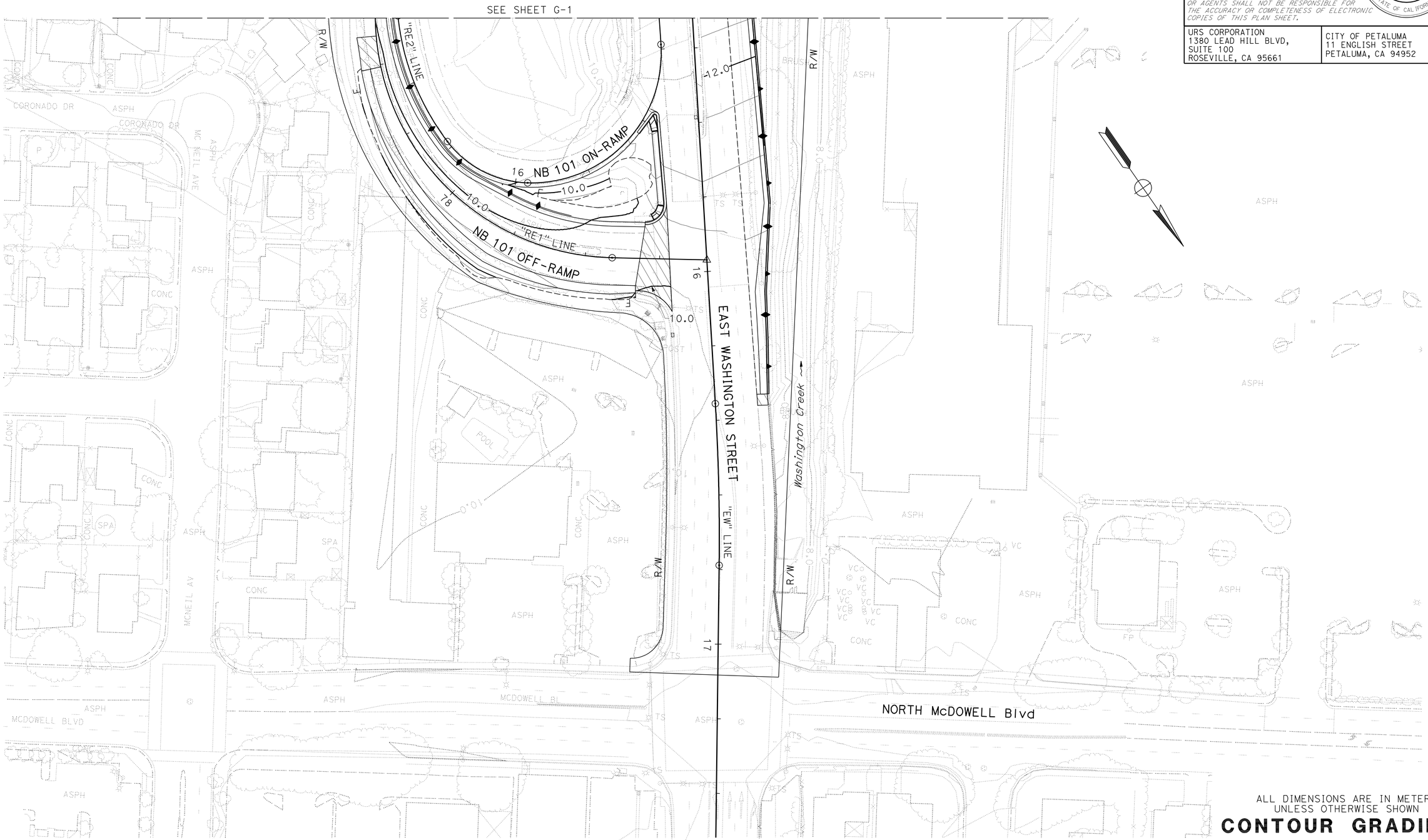

ALL DIMENSIONS ARE IN METERS
UNLESS OTHERWISE SHOWN

CONTOUR GRADING

SCALE 1:500

G-2

THIS PLAN ACCURATE FOR CONTOUR GRADING WORK ONLY

STATE OF CALIFORNIA - DEPARTMENT OF TRANSPORTATION

Caltrans

CONSULTANT FUNCTIONAL SUPERVISOR: RAMSEY HISSEN

CALCULATED-DESIGNED BY: SHERINA LAM

CHECKED BY: DAVID A. WILLIAMS

REVISED BY / DATE REVISED

LAST REVISION 09-03-10

DATE PLOTTED => 31-MAY-2011
TIME PLOTTED => 09:36

Dist	COUNTY	ROUTE	KILOMETER POST TOTAL PROJECT	SHEET No.	TOTAL SHEETS
04	Son	101	7.3/8.3	57	320

David Williams 9/3/10
REGISTERED CIVIL ENGINEER DATE

5-31-11
PLANS APPROVAL DATE

REGISTERED PROFESSIONAL ENGINEER David A. Williams No. C58697 Exp. 12/31/12 CIVIL STATE OF CALIFORNIA

THE STATE OF CALIFORNIA OR ITS OFFICERS OR AGENTS SHALL NOT BE RESPONSIBLE FOR THE ACCURACY OR COMPLETENESS OF ELECTRONIC COPIES OF THIS PLAN SHEET.

URS CORPORATION
1380 LEAD HILL BLVD,
SUITE 100
ROSEVILLE, CA 95661

CITY OF PETALUMA
11 ENGLISH STREET
PETALUMA, CA 94952

FOR ACCURATE RIGHT OF WAY DATA, CONTACT RIGHT OF WAY ENGINEERING AT THE DISTRICT OFFICE.

NOTE:

1. SEE EC SHEETS FOR VEGETATION TREATMENT OF DITCHES.

LEGEND:

- (X) DRAINAGE SYSTEM NUMBER
- (X) DRAINAGE UNIT
- DIRECTION OF FLOW/GRADE TO DRAIN
- EXISTING PIPE

ABBREVIATIONS:

MSE	MECHANICALLY STABILIZED EMBANKMENT
BSD	BARRIER SLAB DRAIN (PER STRUCTURAL PLANS)
MSED	MECHANICALLY STABILIZED EMBANKMENT DRAIN (PER STRUCTURAL PLANS)

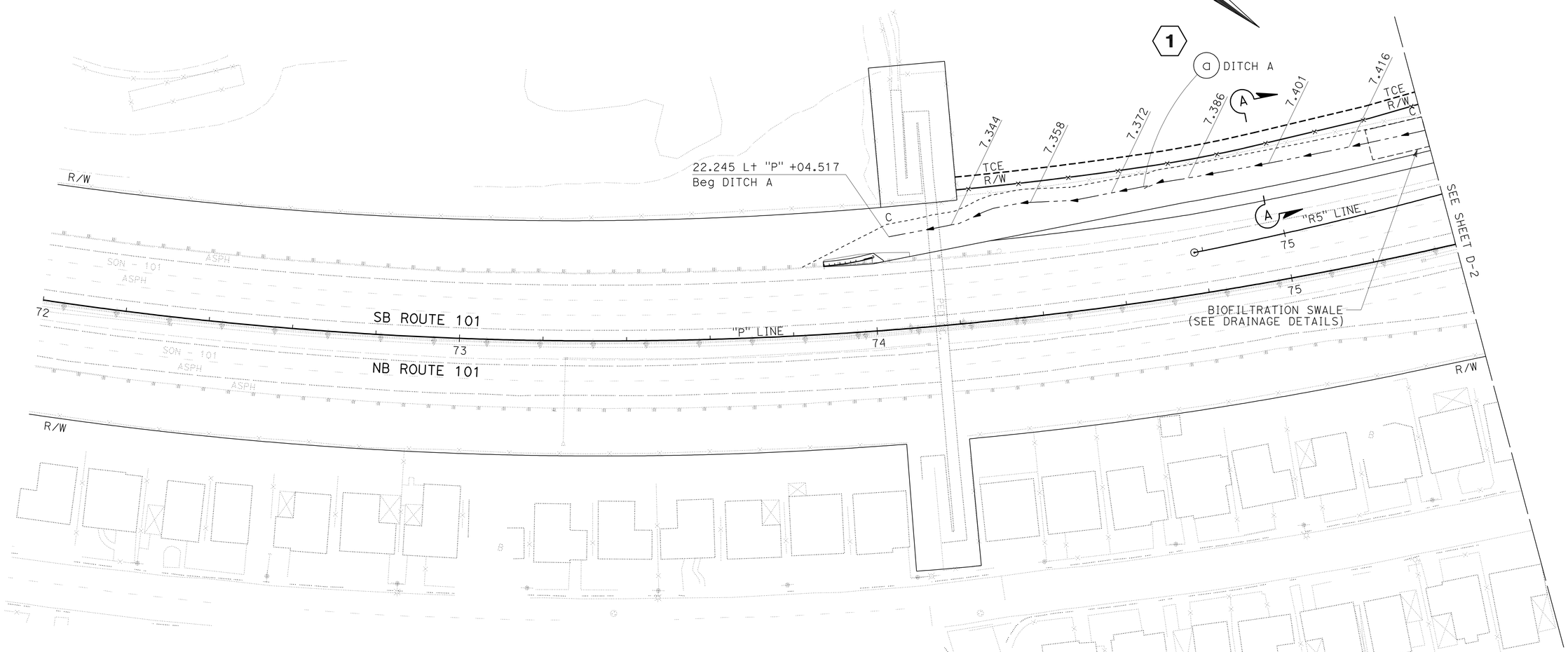

PLAN
SCALE 1:500

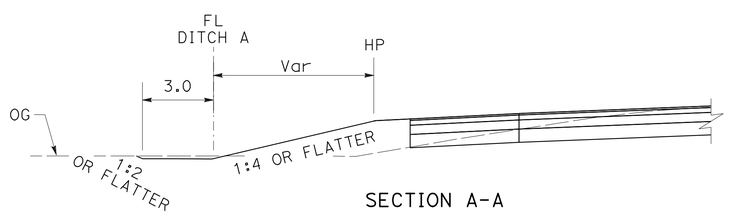

SECTION A-A
NO SCALE

THIS PLAN ACCURATE FOR DRAINAGE WORK ONLY

ALL DIMENSIONS ARE IN METERS UNLESS OTHERWISE SHOWN

DRAINAGE PLAN

SCALE AS SHOWN **D-1**

STATE OF CALIFORNIA - DEPARTMENT OF TRANSPORTATION
Caltrans

CONSULTANT FUNCTIONAL SUPERVISOR: RAMSEY HISSEN
CALCULATED-DESIGNED BY: SHERINA LAM
CHECKED BY: DAVID A. WILLIAMS
REVISED BY
DATE REVISED

LAST REVISION 09-03-10
DATE PLOTTED => 31-MAY-2011
TIME PLOTTED => 09:36

Dist	COUNTY	ROUTE	KILOMETER POST TOTAL PROJECT	SHEET No.	TOTAL SHEETS
04	Son	101	7.3/8.3	58	320

David Williams 9/3/10
REGISTERED CIVIL ENGINEER DATE

5-31-11
PLANS APPROVAL DATE

REGISTERED PROFESSIONAL ENGINEER David A. Williams No. C58697 Exp. 12/31/12 CIVIL STATE OF CALIFORNIA

THE STATE OF CALIFORNIA OR ITS OFFICERS OR AGENTS SHALL NOT BE RESPONSIBLE FOR THE ACCURACY OR COMPLETENESS OF ELECTRONIC COPIES OF THIS PLAN SHEET.

URS CORPORATION
1380 LEAD HILL BLVD,
SUITE 100
ROSEVILLE, CA 95661

CITY OF PETALUMA
11 ENGLISH STREET
PETALUMA, CA 94952

Caltrans Metric

FOR ACCURATE RIGHT OF WAY DATA,
CONTACT RIGHT OF WAY ENGINEERING AT THE DISTRICT OFFICE.

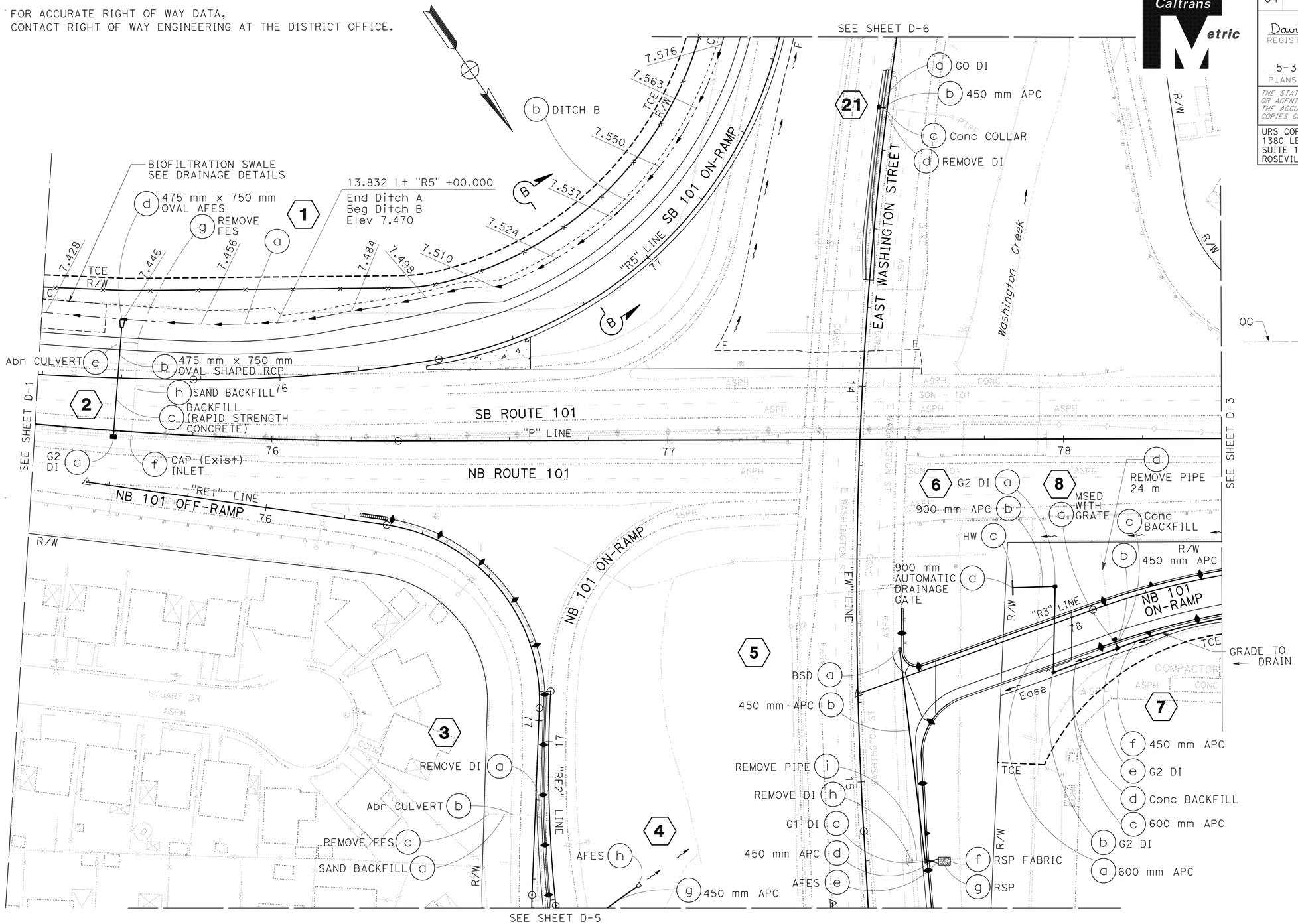

PLAN
SCALE 1:500

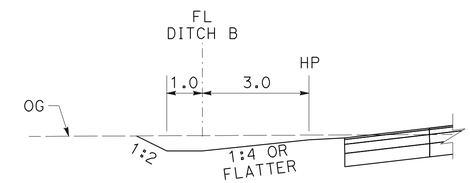

SECTION B-B
NO SCALE

FOR NOTES, ABBREVIATIONS AND LEGEND, SEE SHEET D-1

THIS PLAN ACCURATE FOR DRAINAGE WORK ONLY

ALL DIMENSIONS ARE IN METERS UNLESS OTHERWISE SHOWN

DRAINAGE PLAN

SCALE AS SHOWN **D-2**

REVISED BY	DATE REVISED
SHERINA LAM	DAVID A. WILLIAMS

CALCULATED-DESIGNED BY
CHECKED BY
CONSULTANT FUNCTIONAL SUPERVISOR
RAMSEY HISSEN

STATE OF CALIFORNIA - DEPARTMENT OF TRANSPORTATION
Caltrans

LAST REVISION 09-03-10 | DATE PLOTTED => 31-MAY-2011 | TIME PLOTTED => 09:36

Dist	COUNTY	ROUTE	KILOMETER POST TOTAL PROJECT	SHEET No.	TOTAL SHEETS
04	Son	101	7.3/8.3	59	320

David Williams 9/3/10
REGISTERED CIVIL ENGINEER DATE

5-31-11
PLANS APPROVAL DATE

REGISTERED PROFESSIONAL ENGINEER David A. Williams No. C58697 Exp. 12/31/12 CIVIL STATE OF CALIFORNIA

THE STATE OF CALIFORNIA OR ITS OFFICERS OR AGENTS SHALL NOT BE RESPONSIBLE FOR THE ACCURACY OR COMPLETENESS OF ELECTRONIC COPIES OF THIS PLAN SHEET.

URS CORPORATION
1380 LEAD HILL BLVD,
SUITE 100
ROSEVILLE, CA 95661

CITY OF PETALUMA
11 ENGLISH STREET
PETALUMA, CA 94952

Caltrans Metric

FOR ACCURATE RIGHT OF WAY DATA,
CONTACT RIGHT OF WAY ENGINEERING AT THE DISTRICT OFFICE.

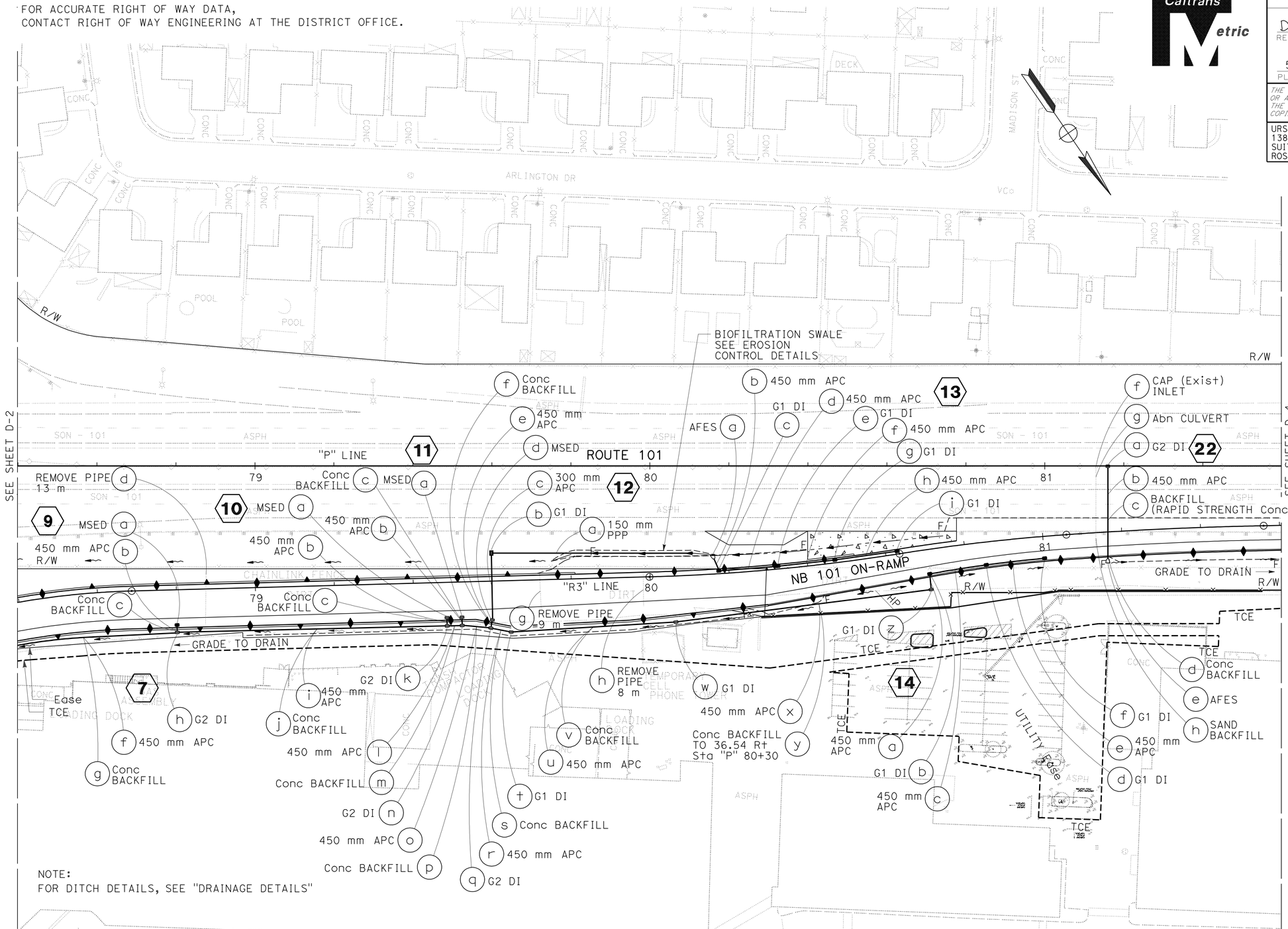

NOTE:
FOR DITCH DETAILS, SEE "DRAINAGE DETAILS"

FOR NOTES, ABBREVIATIONS AND LEGEND, SEE SHEET D-1

THIS PLAN ACCURATE FOR DRAINAGE WORK ONLY

ALL DIMENSIONS ARE IN METERS UNLESS OTHERWISE SHOWN

DRAINAGE PLAN

SCALE 1:500

D-3

STATE OF CALIFORNIA - DEPARTMENT OF TRANSPORTATION
Caltrans

CONSULTANT FUNCTIONAL SUPERVISOR: RAMSEY HISSEN
CALCULATED-DESIGNED BY: SHERINA LAM
CHECKED BY: DAVID A. WILLIAMS
REVISED BY
DATE REVISED

LAST REVISION 09-03-10
DATE PLOTTED => 31-MAY-2011
TIME PLOTTED => 09:36

Dist	COUNTY	ROUTE	KILOMETER POST TOTAL PROJECT	SHEET No.	TOTAL SHEETS
04	Son	101	7.3/8.3	60	320

David Williams 9/3/10
REGISTERED CIVIL ENGINEER DATE

5-31-11
PLANS APPROVAL DATE

REGISTERED PROFESSIONAL ENGINEER
David A. Williams
No. C58697
Exp. 12/31/12
CIVIL
STATE OF CALIFORNIA

THE STATE OF CALIFORNIA OR ITS OFFICERS OR AGENTS SHALL NOT BE RESPONSIBLE FOR THE ACCURACY OR COMPLETENESS OF ELECTRONIC COPIES OF THIS PLAN SHEET.

URS CORPORATION
1380 LEAD HILL BLVD,
SUITE 100
ROSEVILLE, CA 95661

CITY OF PETALUMA
11 ENGLISH STREET
PETALUMA, CA 94952

FOR ACCURATE RIGHT OF WAY DATA,
CONTACT RIGHT OF WAY ENGINEERING AT THE DISTRICT OFFICE.

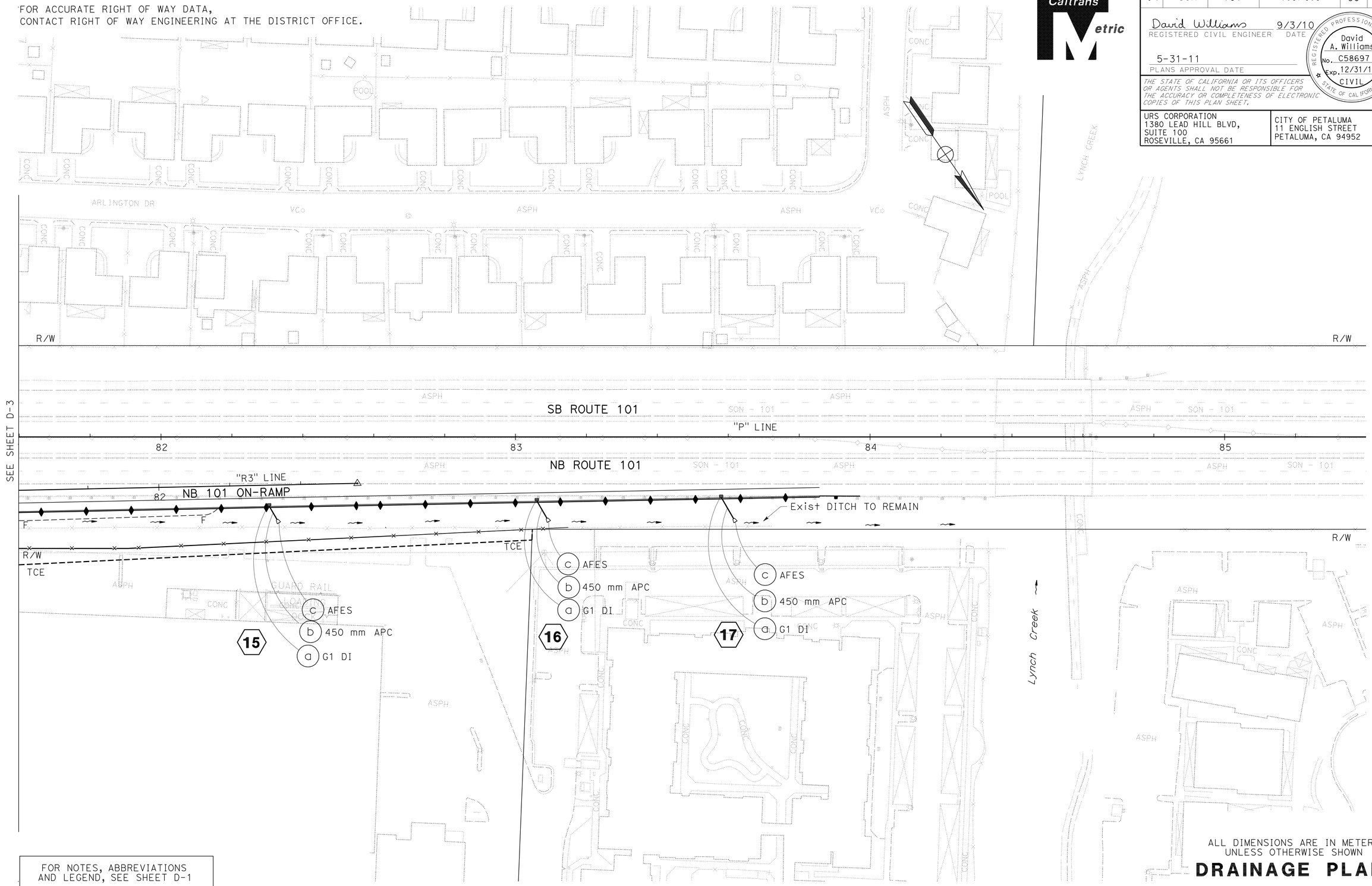

FOR NOTES, ABBREVIATIONS AND LEGEND, SEE SHEET D-1

THIS PLAN ACCURATE FOR DRAINAGE WORK ONLY

ALL DIMENSIONS ARE IN METERS UNLESS OTHERWISE SHOWN

DRAINAGE PLAN

SCALE 1:500 **D-4**

STATE OF CALIFORNIA - DEPARTMENT OF TRANSPORTATION
Caltrans

CONSULTANT FUNCTIONAL SUPERVISOR: RAMSEY HISSEN
CALCULATED-DESIGNED BY: SHERINA LAM
CHECKED BY: DAVID A. WILLIAMS
REVISED BY
DATE REVISED

LAST REVISION 09-03-10
DATE PLOTTED => 31-MAY-2011
TIME PLOTTED => 09:36

Dist	COUNTY	ROUTE	KILOMETER POST TOTAL PROJECT	SHEET No.	TOTAL SHEETS
04	Son	101	7.3/8.3	61	320

David Williams 9/3/10
REGISTERED CIVIL ENGINEER DATE

5-31-11
PLANS APPROVAL DATE

REGISTERED PROFESSIONAL ENGINEER David A. Williams No. C58697 Exp. 12/31/12 CIVIL STATE OF CALIFORNIA

THE STATE OF CALIFORNIA OR ITS OFFICERS OR AGENTS SHALL NOT BE RESPONSIBLE FOR THE ACCURACY OR COMPLETENESS OF ELECTRONIC COPIES OF THIS PLAN SHEET.

URS CORPORATION
1380 LEAD HILL BLVD,
SUITE 100
ROSEVILLE, CA 95661

CITY OF PETALUMA
11 ENGLISH STREET
PETALUMA, CA 94952

FOR ACCURATE RIGHT OF WAY DATA,
CONTACT RIGHT OF WAY ENGINEERING AT THE DISTRICT OFFICE.

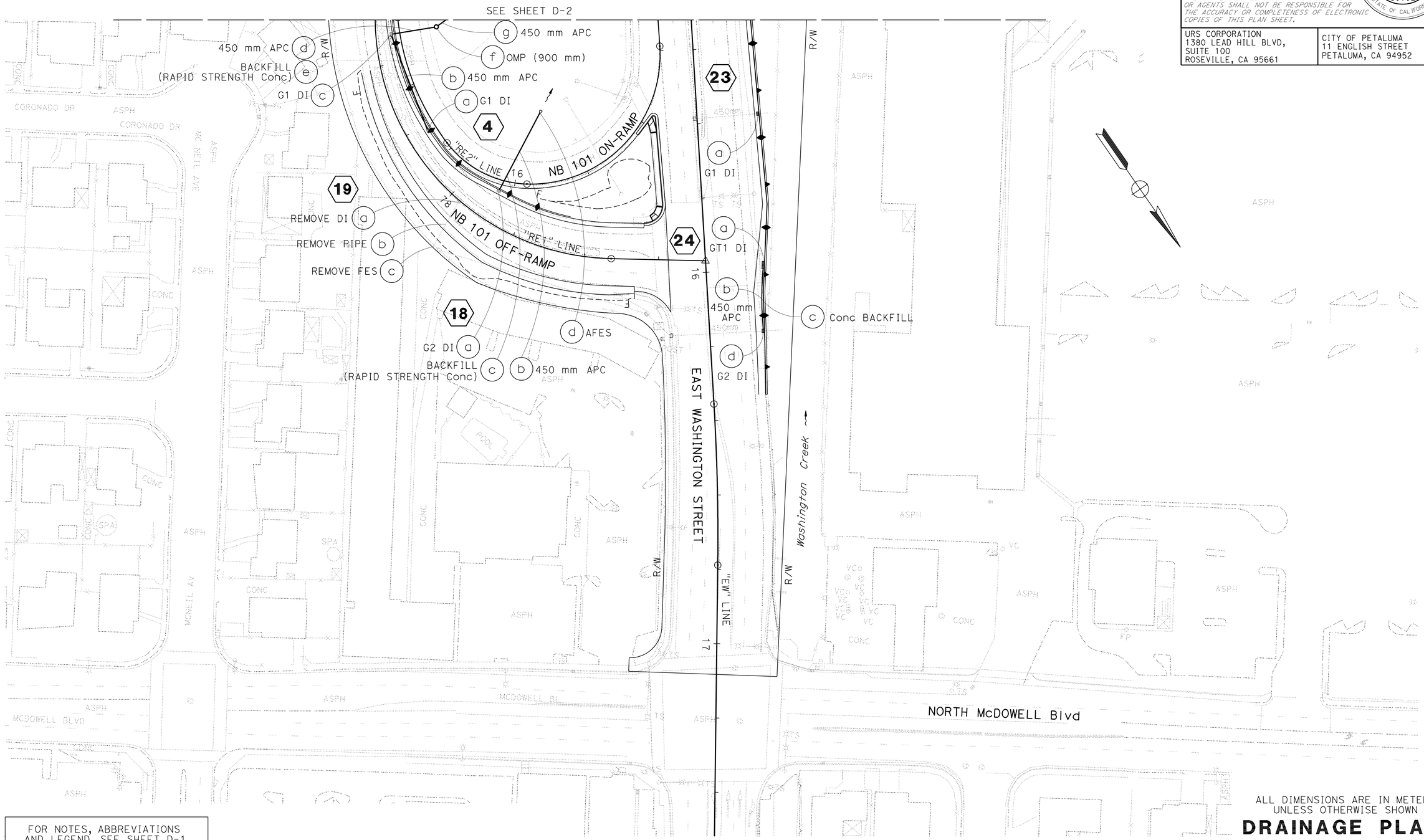

FOR NOTES, ABBREVIATIONS AND LEGEND, SEE SHEET D-1

THIS PLAN ACCURATE FOR DRAINAGE WORK ONLY

ALL DIMENSIONS ARE IN METERS UNLESS OTHERWISE SHOWN

DRAINAGE PLAN

SCALE 1:500 **D-5**

STATE OF CALIFORNIA - DEPARTMENT OF TRANSPORTATION
Caltrans

CONSULTANT FUNCTIONAL SUPERVISOR: RAMSEY HISSEN
CALCULATED-DESIGNED BY: SHERINA LAM
CHECKED BY: DAVID A. WILLIAMS
REVISED BY
DATE REVISED

LAST REVISION 09-03-10
DATE PLOTTED => 31-MAY-2011
TIME PLOTTED => 09:36

Dist	COUNTY	ROUTE	KILOMETER POST TOTAL PROJECT	SHEET No.	TOTAL SHEETS
04	Son	101	7.3/8.3	62	320

David Williams 9/3/10
REGISTERED CIVIL ENGINEER DATE

5-31-11
PLANS APPROVAL DATE

REGISTERED PROFESSIONAL ENGINEER David A. Williams No. C58697 Exp. 12/31/12 CIVIL STATE OF CALIFORNIA

THE STATE OF CALIFORNIA OR ITS OFFICERS OR AGENTS SHALL NOT BE RESPONSIBLE FOR THE ACCURACY OR COMPLETENESS OF ELECTRONIC COPIES OF THIS PLAN SHEET.

URS CORPORATION
1380 LEAD HILL BLVD,
SUITE 100
ROSEVILLE, CA 95661

CITY OF PETALUMA
11 ENGLISH STREET
PETALUMA, CA 94952

Caltrans Metric

FOR ACCURATE RIGHT OF WAY DATA,
CONTACT RIGHT OF WAY ENGINEERING AT THE DISTRICT OFFICE.

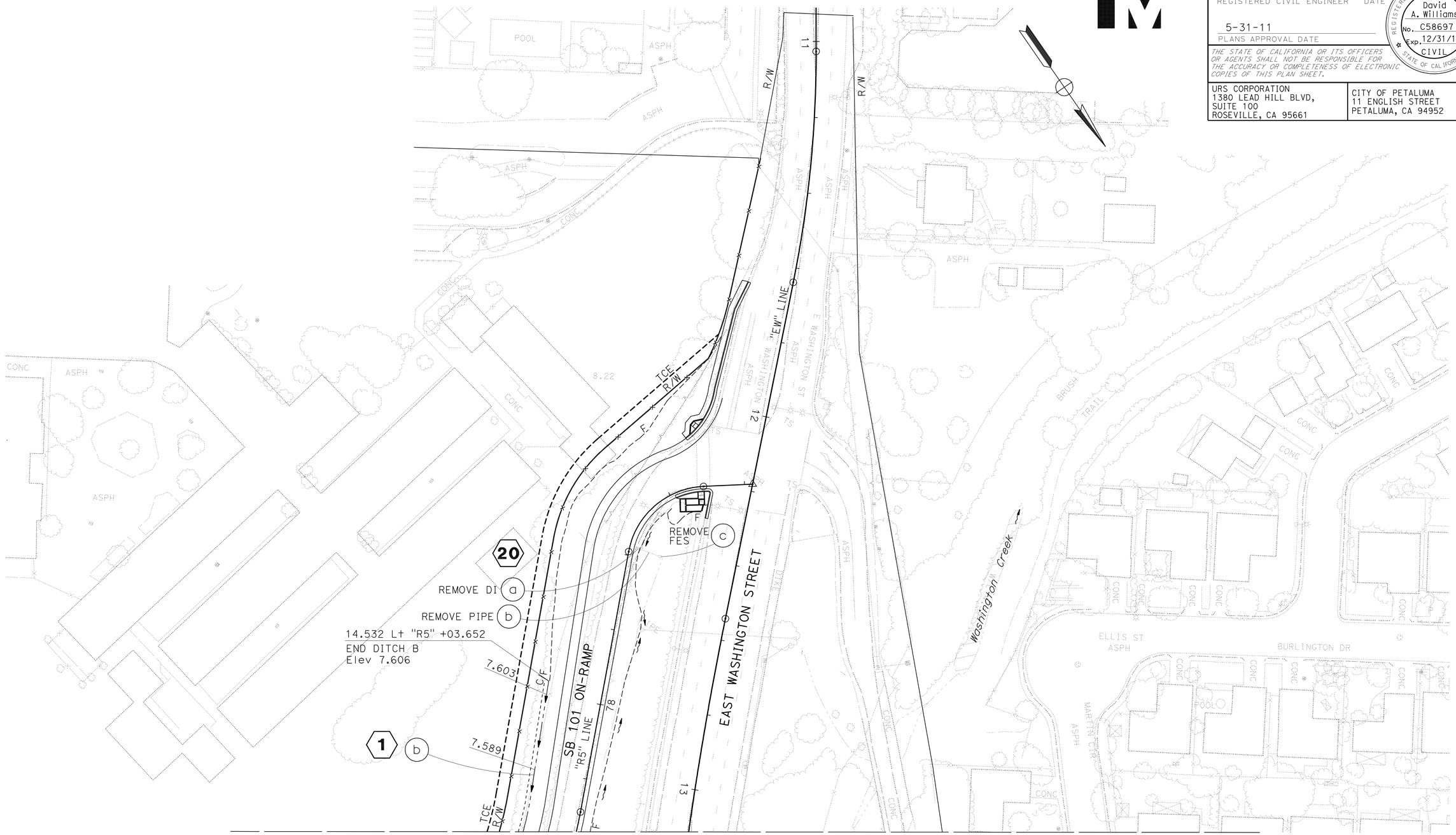

FOR NOTES, ABBREVIATIONS AND LEGEND, SEE SHEET D-1

THIS PLAN ACCURATE FOR DRAINAGE WORK ONLY

ALL DIMENSIONS ARE IN METERS
UNLESS OTHERWISE SHOWN

DRAINAGE PLAN

SCALE 1:500 **D-6**

STATE OF CALIFORNIA - DEPARTMENT OF TRANSPORTATION
Caltrans

CONSULTANT FUNCTIONAL SUPERVISOR: RAMSEY HISSEN
CALCULATED-DESIGNED BY: SHERINA LAM
CHECKED BY: DAVID A. WILLIAMS
REVISED BY
DATE REVISED

LAST REVISION 09-03-10 | DATE PLOTTED => 31-MAY-2011 | TIME PLOTTED => 09:36

Dist	COUNTY	ROUTE	KILOMETER POST TOTAL PROJECT	SHEET No.	TOTAL SHEETS
04	Son	101	7.3/8.3	63	320

David Williams 9/3/10
REGISTERED CIVIL ENGINEER DATE

5-31-11
PLANS APPROVAL DATE

REGISTERED PROFESSIONAL ENGINEER David A. Williams No. C58697 Exp. 12/31/12 CIVIL STATE OF CALIFORNIA

THE STATE OF CALIFORNIA OR ITS OFFICERS OR AGENTS SHALL NOT BE RESPONSIBLE FOR THE ACCURACY OR COMPLETENESS OF ELECTRONIC COPIES OF THIS PLAN SHEET.

URS CORPORATION
1380 Lead Hill Blvd.
Suite 100
Roseville, CA 95661

CITY OF PETALUMA
11 ENGLISH STREET
PETALUMA, CA 94952

NOTE:
1. PAYMENT FOR GRADING IS INCLUDED IN ROADWAY EXCAVATION.

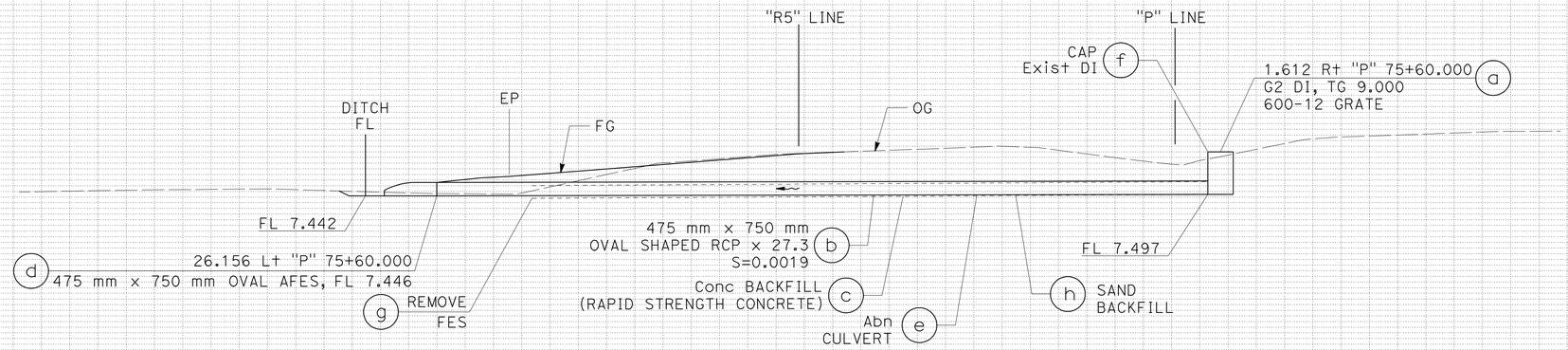

DRAINAGE SYSTEM No. 2

"P" 75+60.00

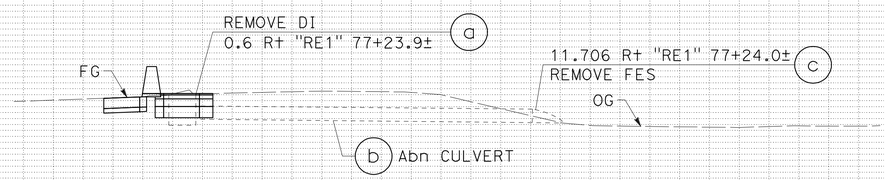

DRAINAGE SYSTEM No. 3

"RE1" 77+23.9± TO "RE1" 77+24.0±

ALL DIMENSIONS ARE IN
METERS UNLESS OTHERWISE SHOWN

DRAINAGE PROFILES

SCALE Horiz 1:100
Vert 1:100

DP-1

STATE OF CALIFORNIA - DEPARTMENT OF TRANSPORTATION
Caltrans

CONSULTANT FUNCTIONAL SUPERVISOR: RAMSEY HISSEN
CALCULATED-DESIGNED BY: SHERINA LAM
CHECKED BY: DAVID A. WILLIAMS
REVISED BY / DATE REVISED

Station	
m^3	Exc
	Emb

LAST REVISION 09-03-10
DATE PLOTTED => 31-MAY-2011
TIME PLOTTED => 09:36

Dist	COUNTY	ROUTE	KILOMETER POST TOTAL PROJECT	SHEET No.	TOTAL SHEETS
04	Son	101	7.3/8.3	64	320

David Williams 9/3/10
REGISTERED CIVIL ENGINEER DATE

5-31-11
PLANS APPROVAL DATE

REGISTERED PROFESSIONAL ENGINEER David A. Williams No. C58697 Exp. 12/31/12 CIVIL STATE OF CALIFORNIA

THE STATE OF CALIFORNIA OR ITS OFFICERS OR AGENTS SHALL NOT BE RESPONSIBLE FOR THE ACCURACY OR COMPLETENESS OF ELECTRONIC COPIES OF THIS PLAN SHEET.

URS CORPORATION
1380 Lead Hill Blvd.
Suite 100
Roseville, CA 95661

CITY OF PETALUMA
11 ENGLISH STREET
PETALUMA, CA 94952

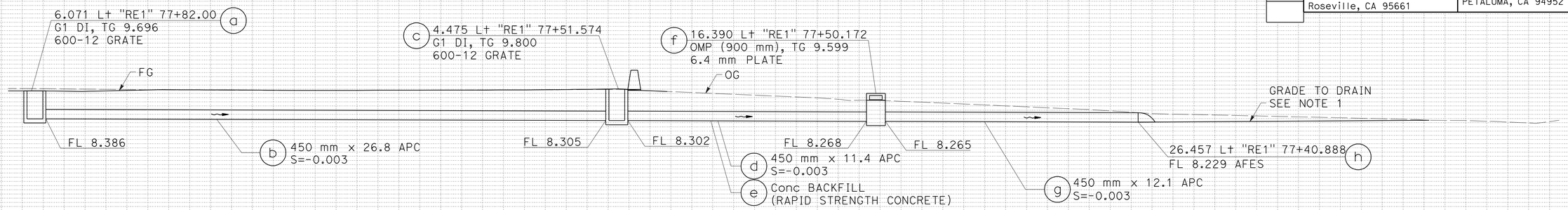

DRAINAGE SYSTEM No. 4

"RE1" 77+82.00 TO "RE1" 77+40.888

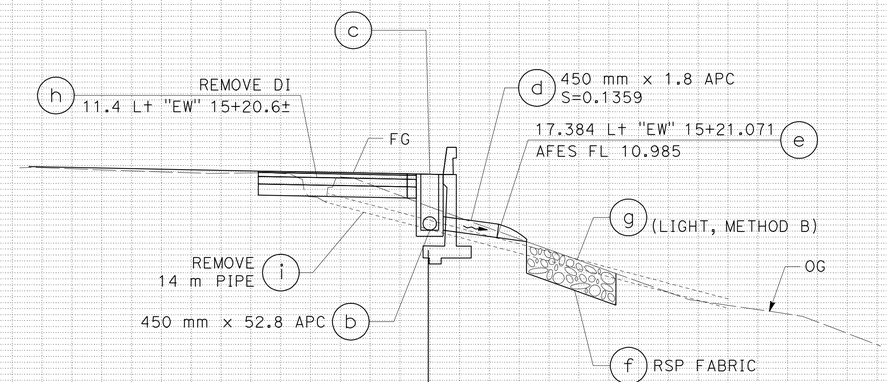

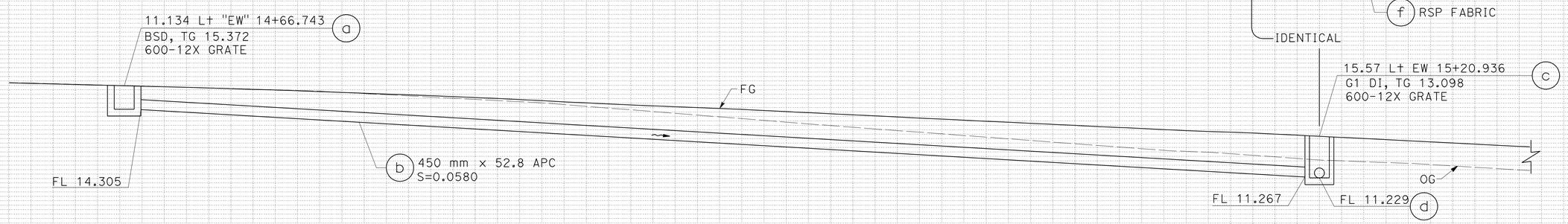

DRAINAGE SYSTEM No. 5

"EW" 14+66.743 TO "EW" 15+21.071

ALL DIMENSIONS ARE IN
METERS UNLESS OTHERWISE SHOWN

DRAINAGE PROFILES

SCALE Horiz 1:100
Vert 1:100

DP-2

Station	
m^3	Exc
	Emb

STATE OF CALIFORNIA - DEPARTMENT OF TRANSPORTATION
Caltrans

CONSULTANT FUNCTIONAL SUPERVISOR: RAMSEY HISSEN
CALCULATED-DESIGNED BY: SHERINA LAM
CHECKED BY: DAVID A. WILLIAMS
REVISED BY / DATE REVISED

LAST REVISION 09-03-10
DATE PLOTTED => 31-MAY-2011
TIME PLOTTED => 09:36

Dist	COUNTY	ROUTE	KILOMETER POST TOTAL PROJECT	SHEET No.	TOTAL SHEETS
04	Son	101	7.3/8.3	65	320

David Williams 9/3/10
REGISTERED CIVIL ENGINEER DATE

5-31-11
PLANS APPROVAL DATE

REGISTERED PROFESSIONAL ENGINEER David A. Williams No. C58697 Exp. 12/31/12 CIVIL STATE OF CALIFORNIA

THE STATE OF CALIFORNIA OR ITS OFFICERS OR AGENTS SHALL NOT BE RESPONSIBLE FOR THE ACCURACY OR COMPLETENESS OF ELECTRONIC COPIES OF THIS PLAN SHEET.

URS CORPORATION
1380 Lead Hill Blvd.
Suite 100
Roseville, CA 95661

CITY OF PETALUMA
11 ENGLISH STREET
PETALUMA, CA 94952

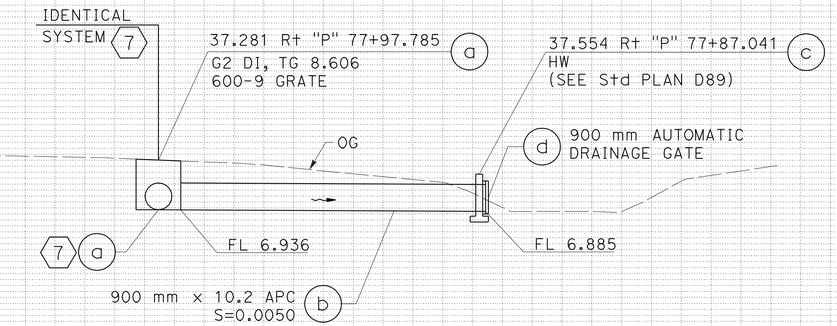

DRAINAGE SYSTEM No. 6

"P" 77+97.785 TO "P" 77+87.041

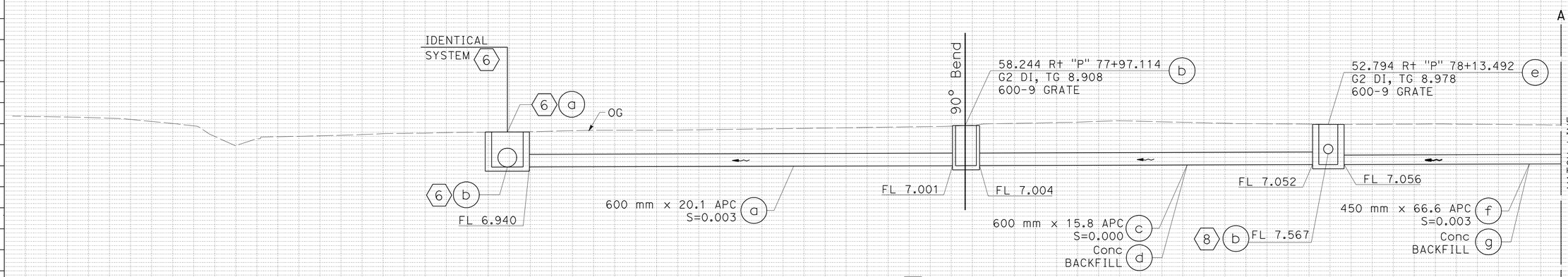

DRAINAGE SYSTEM No. 7

"P" 77+97.785 TO "P" 80+71.227

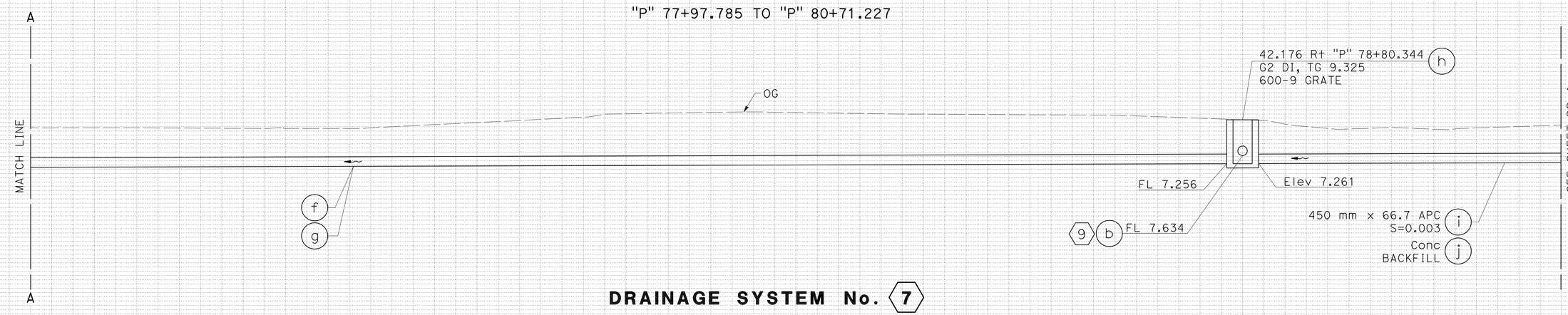

DRAINAGE SYSTEM No. 7

"P" 77+97.785 TO "P" 80+71.227

ALL DIMENSIONS ARE IN
METERS UNLESS OTHERWISE SHOWN

DRAINAGE PROFILES

SCALE Horiz 1:100
Vert 1:100

DP-3

REVISED BY	DATE REVISED
SHERINA LAM	DAVID A. WILLIAMS

CALCULATED-DESIGNED BY
CHECKED BY

CONSULTANT FUNCTIONAL SUPERVISOR
RAMSEY HISSEN

STATE OF CALIFORNIA - DEPARTMENT OF TRANSPORTATION
Caltrans

Station	
m^3	Exc
	Emb

LAST REVISION 09-03-10
DATE PLOTTED => 31-MAY-2011
TIME PLOTTED => 09:37

Dist	COUNTY	ROUTE	KILOMETER POST TOTAL PROJECT	SHEET No.	TOTAL SHEETS
04	Son	101	7.3/8.3	66	320

Caltrans Metric

David Williams 9/3/10
REGISTERED CIVIL ENGINEER DATE

5-31-11
PLANS APPROVAL DATE

REGISTERED PROFESSIONAL ENGINEER David A. Williams No. C58697 Exp. 12/31/12 CIVIL STATE OF CALIFORNIA

THE STATE OF CALIFORNIA OR ITS OFFICERS OR AGENTS SHALL NOT BE RESPONSIBLE FOR THE ACCURACY OR COMPLETENESS OF ELECTRONIC COPIES OF THIS PLAN SHEET.

URS CORPORATION
1380 Lead Hill Blvd.
Suite 100
Roseville, CA 95661

CITY OF PETALUMA
11 ENGLISH STREET
PETALUMA, CA 94952

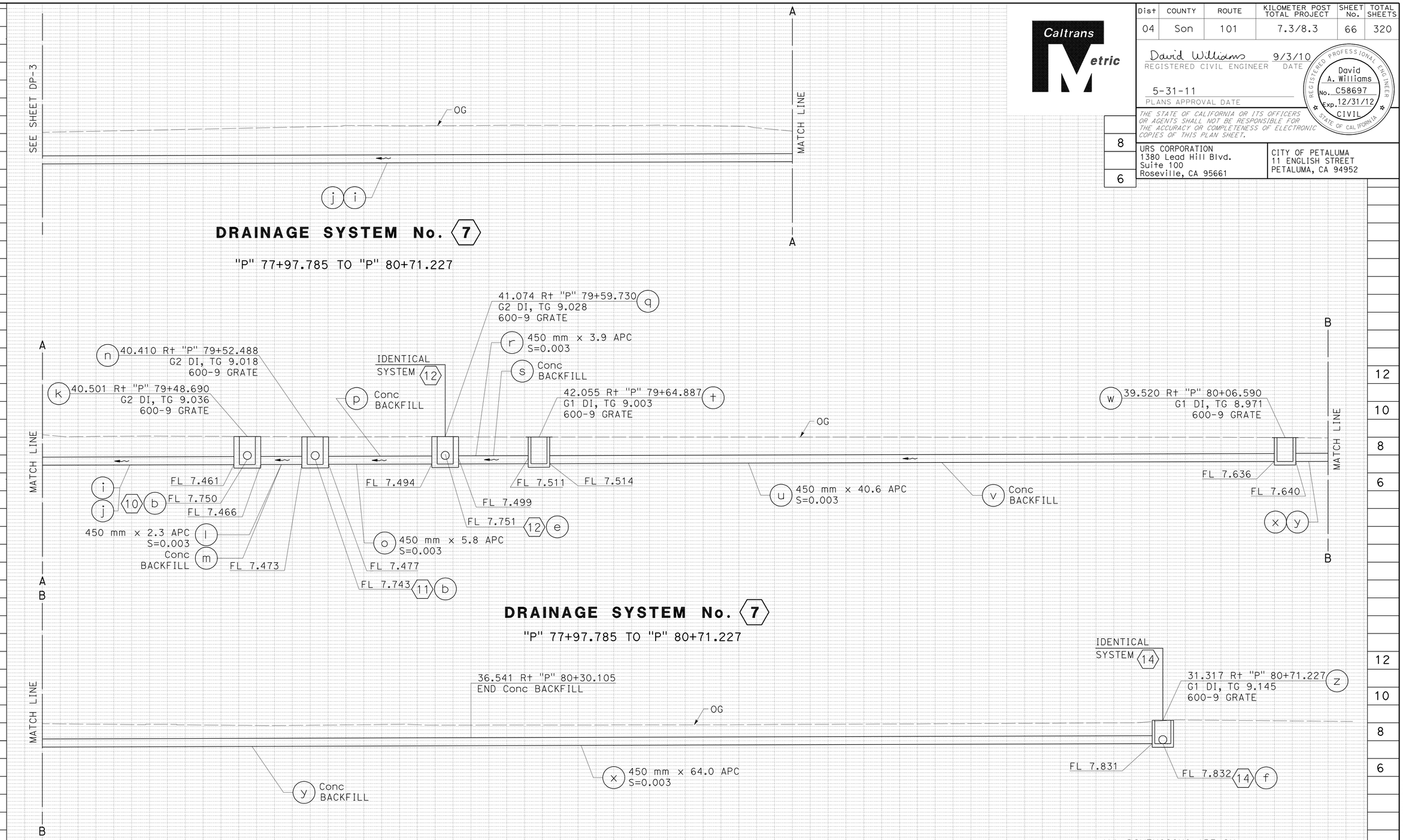

ALL DIMENSIONS ARE IN METERS UNLESS OTHERWISE SHOWN

DRAINAGE PROFILES

SCALE Horiz 1:100
Vert 1:100

DP-4

REVISED BY	DATE REVISED
SHERINA LAM	DAVID A. WILLIAMS

CALCULATED-DESIGNED BY
CHECKED BY

CONSULTANT FUNCTIONAL SUPERVISOR
RAMSEY HISSEN

STATE OF CALIFORNIA - DEPARTMENT OF TRANSPORTATION
Caltrans

Station	
m^3	Exc
	Emb

LAST REVISION 09-03-10
DATE PLOTTED => 31-MAR-2011
TIME PLOTTED => 09:37

Dist	COUNTY	ROUTE	KILOMETER POST TOTAL PROJECT	SHEET No.	TOTAL SHEETS
04	Son	101	7.3/8.3	67	320

David Williams 9/3/10
REGISTERED CIVIL ENGINEER DATE

5-31-11
PLANS APPROVAL DATE

REGISTERED PROFESSIONAL ENGINEER
David A. Williams
No. C58697
Exp. 12/31/12
CIVIL
STATE OF CALIFORNIA

THE STATE OF CALIFORNIA OR ITS OFFICERS OR AGENTS SHALL NOT BE RESPONSIBLE FOR THE ACCURACY OR COMPLETENESS OF ELECTRONIC COPIES OF THIS PLAN SHEET.

URS CORPORATION
1380 Lead Hill Blvd.
Suite 100
Roseville, CA 95661

CITY OF PETALUMA
11 ENGLISH STREET
PETALUMA, CA 94952

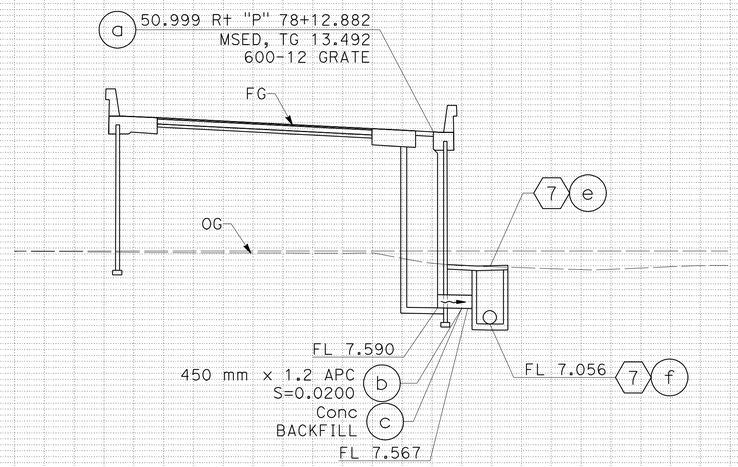

DRAINAGE SYSTEM No. 8

"P" 78+12.882 TO "P" 78+13.492

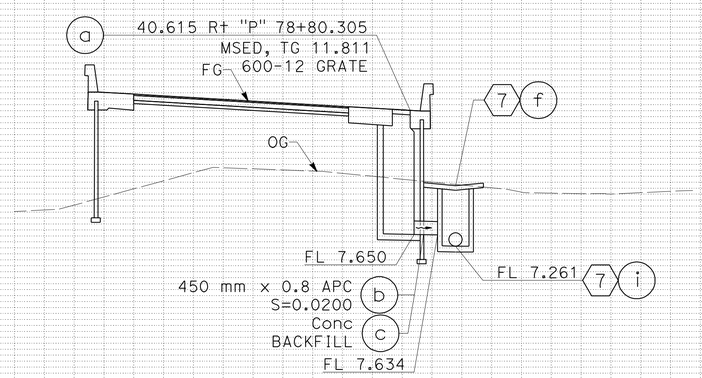

DRAINAGE SYSTEM No. 9

"P" 78+80.305 TO "P" 78+80.344

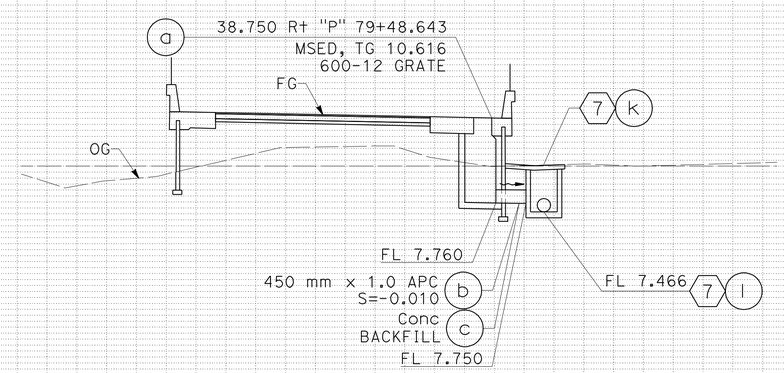

DRAINAGE SYSTEM No. 10

"P" 79+48.643 TO "P" 79+48.690

ALL DIMENSIONS ARE IN
METERS UNLESS OTHERWISE SHOWN

DRAINAGE PROFILES

SCALE Horiz 1:100
Vert 1:100

DP-5

Station	
m^3 Exc	
m^3 Emb	

STATE OF CALIFORNIA - DEPARTMENT OF TRANSPORTATION
Caltrans

CONSULTANT FUNCTIONAL SUPERVISOR: RAMSEY HISSEN
CALCULATED-DESIGNED BY: SHERINA LAM
CHECKED BY: DAVID A. WILLIAMS
REVISED BY / DATE REVISED

LAST REVISION 09-03-10
DATE PLOTTED => 31-MAY-2011
TIME PLOTTED => 09:37

Dist	COUNTY	ROUTE	KILOMETER POST TOTAL PROJECT	SHEET No.	TOTAL SHEETS
04	Son	101	7.3/8.3	68	320

David Williams 9/3/10
REGISTERED CIVIL ENGINEER DATE

5-31-11
PLANS APPROVAL DATE

REGISTERED PROFESSIONAL ENGINEER David A. Williams No. C58697 Exp. 12/31/12 CIVIL STATE OF CALIFORNIA

THE STATE OF CALIFORNIA OR ITS OFFICERS OR AGENTS SHALL NOT BE RESPONSIBLE FOR THE ACCURACY OR COMPLETENESS OF ELECTRONIC COPIES OF THIS PLAN SHEET.

URS CORPORATION
1380 Lead Hill Blvd.
Suite 100
Roseville, CA 95661

CITY OF PETALUMA
11 ENGLISH STREET
PETALUMA, CA 94952

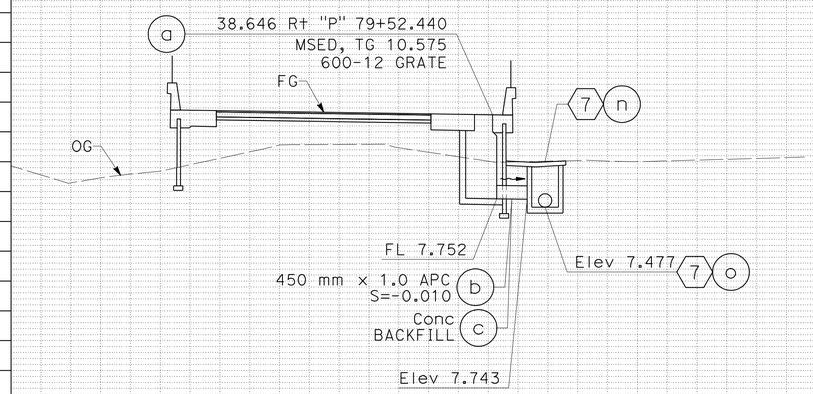

DRAINAGE SYSTEM No. 11

"P" 79+52.440 TO "P" 79+52.488

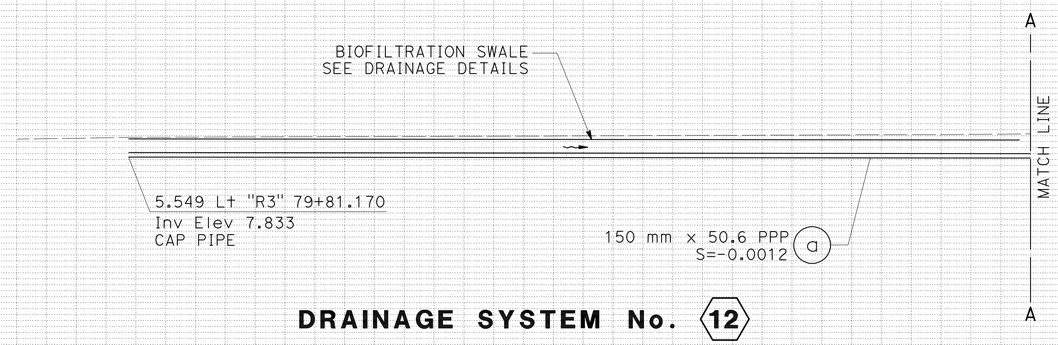

DRAINAGE SYSTEM No. 12

"R3" 79+81.170 TO "P" 79+59.730

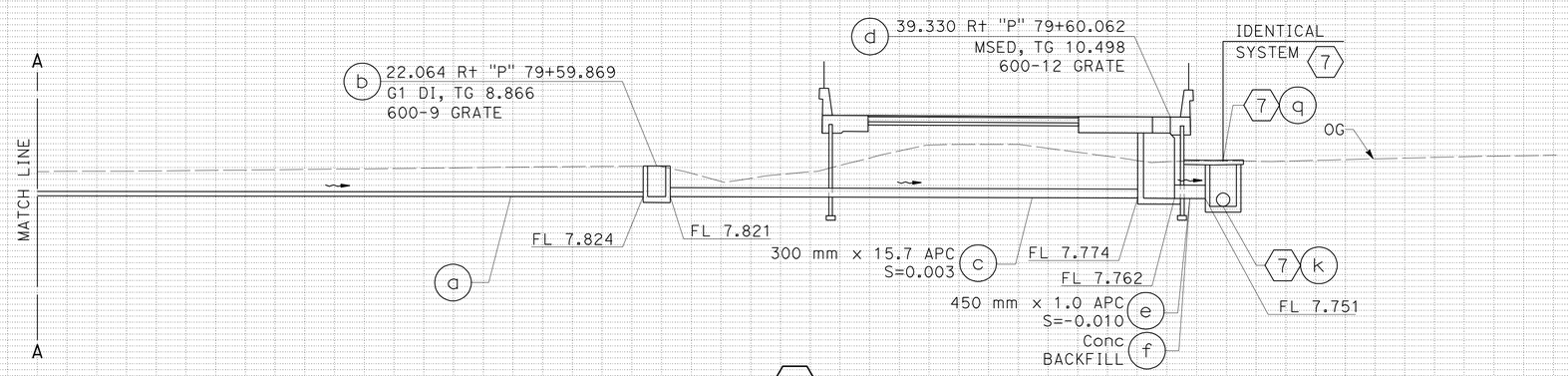

DRAINAGE SYSTEM No. 12

"R3" 79+81.170 TO "P" 79+59.730

ALL DIMENSIONS ARE IN
METERS UNLESS OTHERWISE SHOWN

DRAINAGE PROFILES

SCALE Horiz 1:100
Vert 1:100

DP-6

STATE OF CALIFORNIA - DEPARTMENT OF TRANSPORTATION
Caltrans

CONSULTANT FUNCTIONAL SUPERVISOR: RAMSEY HISSEN
CALCULATED-DESIGNED BY: DAVID A. WILLIAMS
CHECKED BY: SHERINA LAM
REVISED BY / DATE REVISED

Station	Exc	Emb
m^3		

LAST REVISION 09-03-10
DATE PLOTTED => 31-MAY-2011
TIME PLOTTED => 09:37

Dist	COUNTY	ROUTE	KILOMETER POST TOTAL PROJECT	SHEET No.	TOTAL SHEETS
04	Son	101	7.3/8.3	69	320

David Williams 9/3/10
REGISTERED CIVIL ENGINEER DATE

5-31-11
PLANS APPROVAL DATE

REGISTERED PROFESSIONAL ENGINEER David A. Williams No. C58697 Exp. 12/31/12 CIVIL STATE OF CALIFORNIA

THE STATE OF CALIFORNIA OR ITS OFFICERS OR AGENTS SHALL NOT BE RESPONSIBLE FOR THE ACCURACY OR COMPLETENESS OF ELECTRONIC COPIES OF THIS PLAN SHEET.

URS CORPORATION
1380 Lead Hill Blvd.
Suite 100
Roseville, CA 95661

CITY OF PETALUMA
11 ENGLISH STREET
PETALUMA, CA 94952

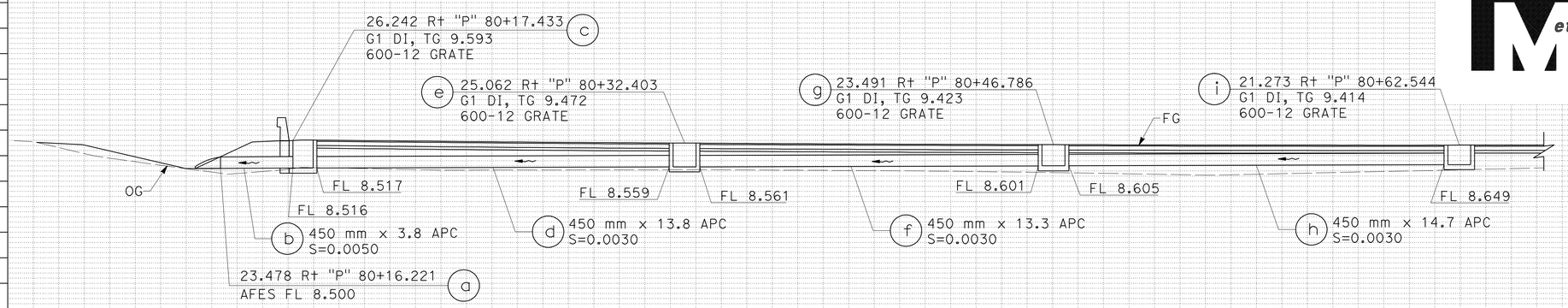

DRAINAGE SYSTEM No. 13

"P" 80+16.221 TO "P" 80+62.544

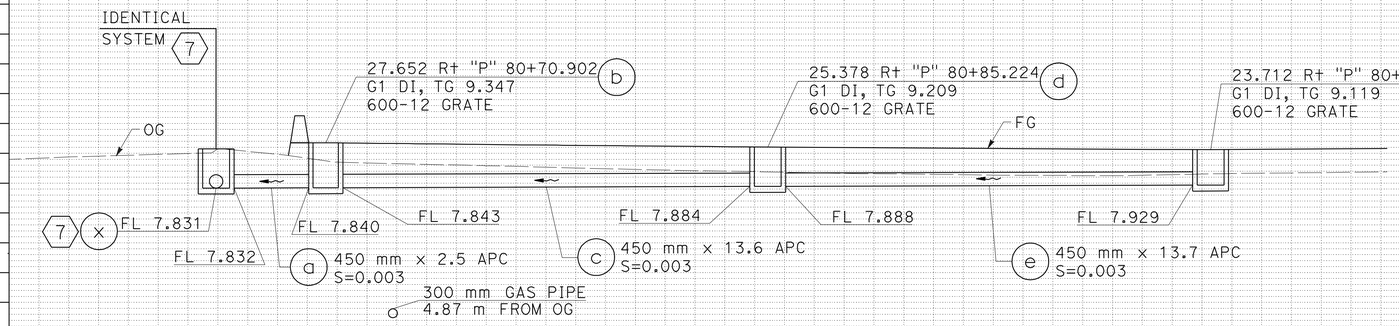

DRAINAGE SYSTEM No. 14

"P" 80+71.227 TO "P" 80+99.965

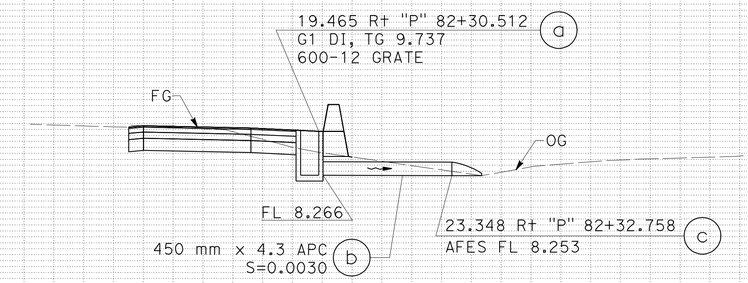

DRAINAGE SYSTEM No. 15

"P" 82+30.512 TO "P" 82+32.758

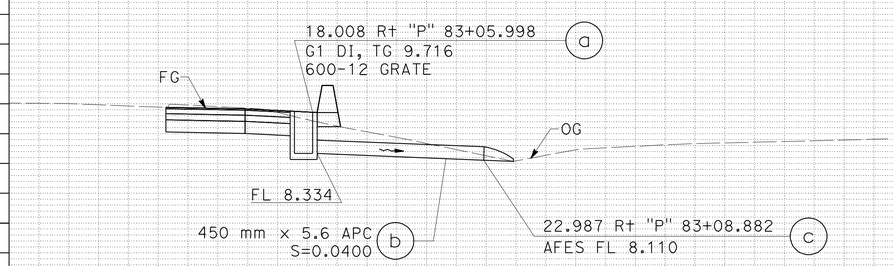

DRAINAGE SYSTEM No. 16

"P" 83+05.998 TO "P" 83+08.882

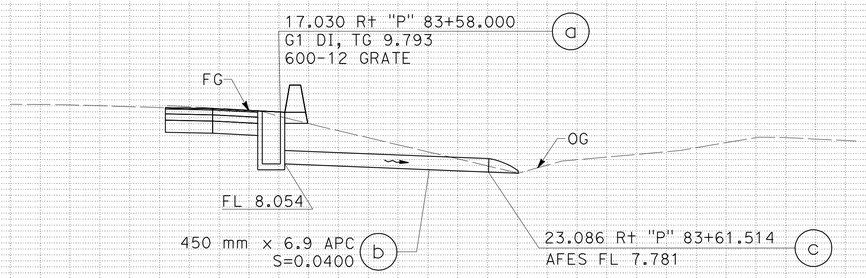

DRAINAGE SYSTEM No. 17

"P" 83+58.000 TO "P" 83+61.514

ALL DIMENSIONS ARE IN METERS UNLESS OTHERWISE SHOWN

DRAINAGE PROFILES

SCALE Horiz 1:100
Vert 1:100

DP-7

REVISED BY	DATE REVISED
SHERINA LAM	DAVID A. WILLIAMS

CALCULATED-DESIGNED BY / CHECKED BY

CONSULTANT FUNCTIONAL SUPERVISOR: RAMSEY HISSEN

STATE OF CALIFORNIA - DEPARTMENT OF TRANSPORTATION

Caltrans

Station		
m^3	Exc	
	Emb	

LAST REVISION 09-03-10 DATE PLOTTED => 31-MAY-2011 TIME PLOTTED => 09:37

Dist	COUNTY	ROUTE	KILOMETER POST TOTAL PROJECT	SHEET No.	TOTAL SHEETS
04	Son	101	7.3/8.3	70	320

David Williams 9/3/10
REGISTERED CIVIL ENGINEER DATE

5-31-11
PLANS APPROVAL DATE

REGISTERED PROFESSIONAL ENGINEER David A. Williams No. C58697 Exp. 12/31/12 CIVIL STATE OF CALIFORNIA

THE STATE OF CALIFORNIA OR ITS OFFICERS OR AGENTS SHALL NOT BE RESPONSIBLE FOR THE ACCURACY OR COMPLETENESS OF ELECTRONIC COPIES OF THIS PLAN SHEET.

URS CORPORATION
1380 Lead Hill Blvd.
Suite 100
Roseville, CA 95661

CITY OF PETALUMA
11 ENGLISH STREET
PETALUMA, CA 94952

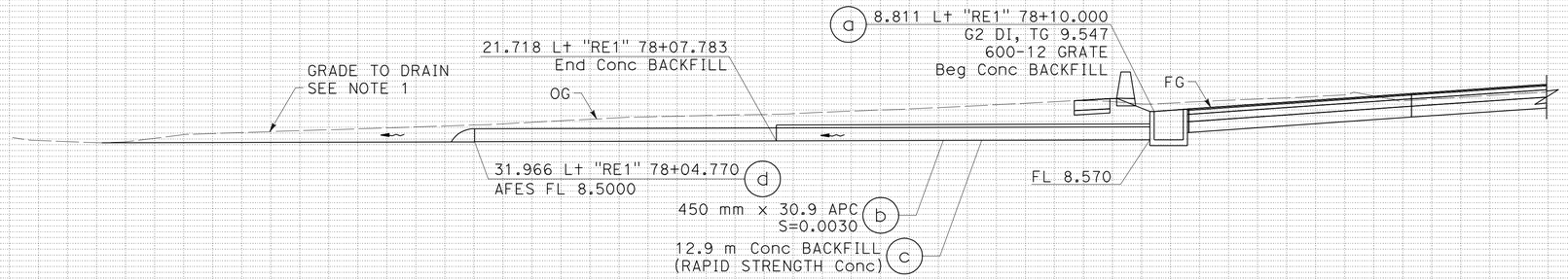

DRAINAGE SYSTEM No. 18

"RE1" 78+04.770 TO "RE1" 78+10.000

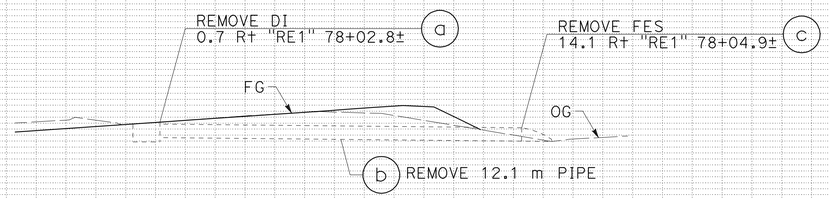

DRAINAGE SYSTEM No. 19

"RE1" 78+02.8± TO "RE1" 78+04.9±

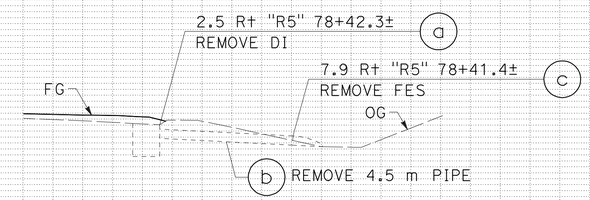

DRAINAGE SYSTEM No. 20

"R5" 78+41.4± TO "R5" 78+42.3±

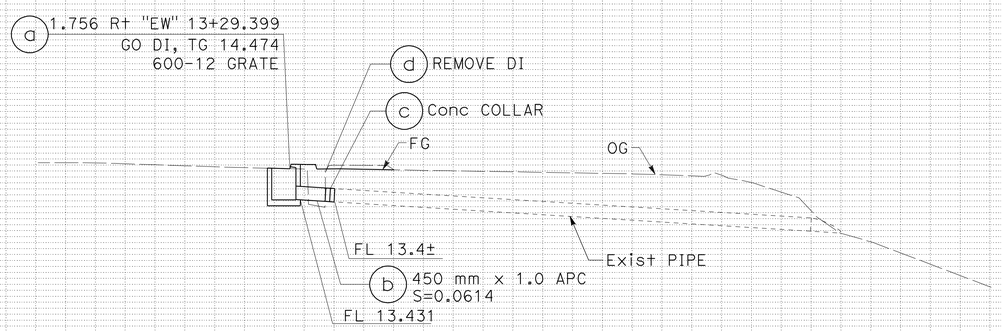

DRAINAGE SYSTEM No. 21

"EW" 13+29.407 TO "EW" 13+29.6±

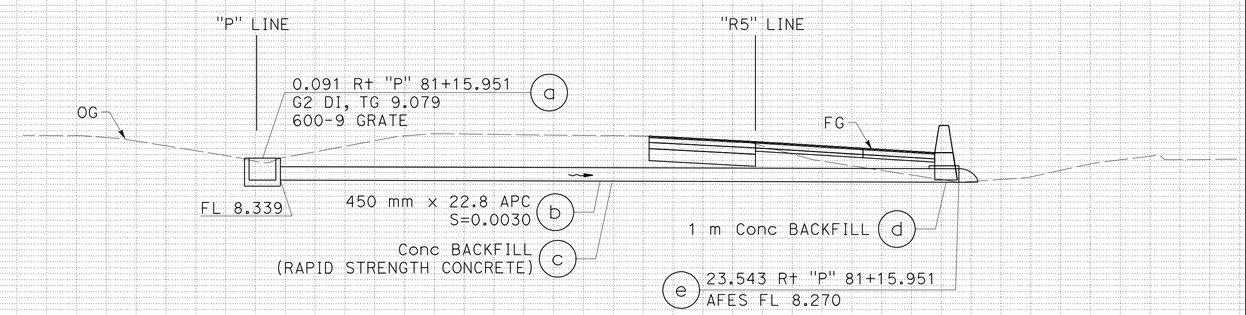

DRAINAGE SYSTEM No. 22

"P" 81+15.951

ALL DIMENSIONS ARE IN METERS UNLESS OTHERWISE SHOWN

DRAINAGE PROFILES

SCALE Horiz 1:100
Vert 1:100

DP-8

Station	
m^3	Exc
	Emb

STATE OF CALIFORNIA - DEPARTMENT OF TRANSPORTATION
Caltrans

CONSULTANT FUNCTIONAL SUPERVISOR: RAMSEY HISSEN
CALCULATED-DESIGNED BY: SHERINA LAM
CHECKED BY: DAVID A. WILLIAMS
REVISED BY / DATE REVISED

LAST REVISION 09-03-10
DATE PLOTTED => 31-MAY-2011
TIME PLOTTED => 09:37

Dist	COUNTY	ROUTE	KILOMETER POST TOTAL PROJECT	SHEET No.	TOTAL SHEETS
04	Son	101	7.3/8.3	71	320

David Williams 9/3/10
REGISTERED CIVIL ENGINEER DATE

5-31-11
PLANS APPROVAL DATE

REGISTERED PROFESSIONAL ENGINEER David A. Williams No. C58697 Exp. 12/31/12 CIVIL STATE OF CALIFORNIA

THE STATE OF CALIFORNIA OR ITS OFFICERS OR AGENTS SHALL NOT BE RESPONSIBLE FOR THE ACCURACY OR COMPLETENESS OF ELECTRONIC COPIES OF THIS PLAN SHEET.

URS CORPORATION
1380 Lead Hill Blvd.
Suite 100
Roseville, CA 95661

CITY OF PETALUMA
11 ENGLISH STREET
PETALUMA, CA 94952

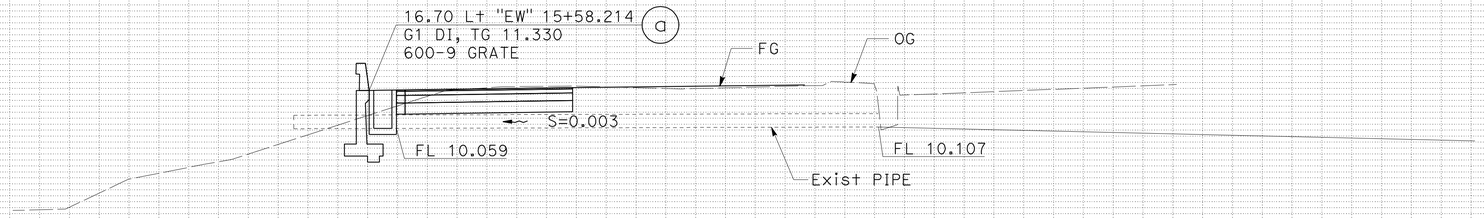

DRAINAGE SYSTEM No. 23

"EW" 15+58.214

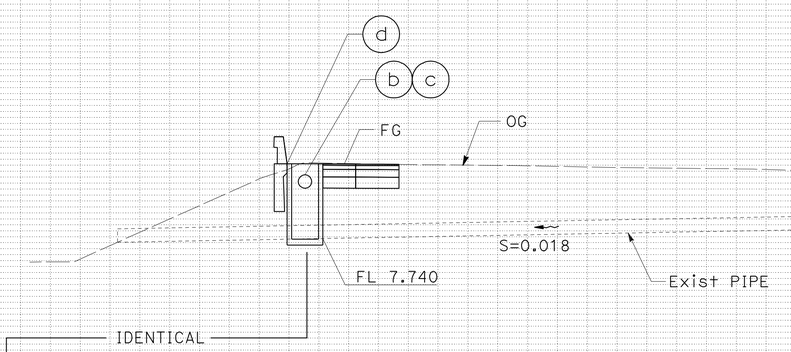

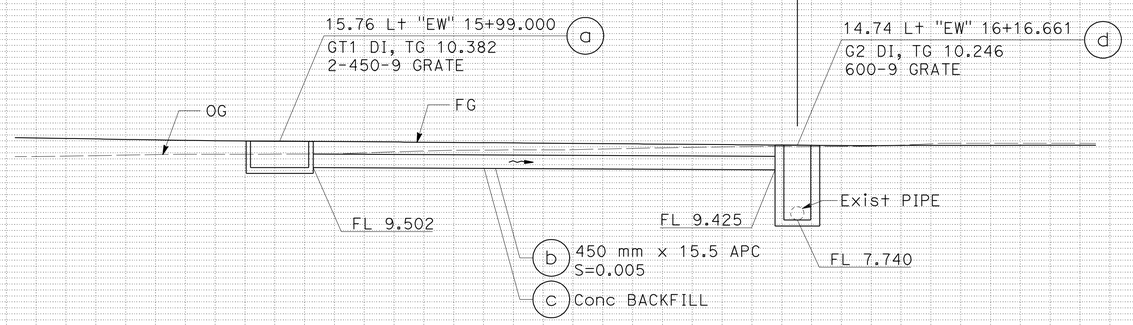

DRAINAGE SYSTEM No. 24

"EW" 15+99.000 TO "EW" 16+16.661

ALL DIMENSIONS ARE IN
METERS UNLESS OTHERWISE SHOWN

DRAINAGE PROFILES

SCALE Horiz 1:100
Vert 1:100

DP-9

REVISED BY | DATE REVISED
SHERINA LAM | DAVID A. WILLIAMS
CALCULATED-DESIGNED BY | CHECKED BY
CONSULTANT FUNCTIONAL SUPERVISOR
RAMSEY HISSEN

STATE OF CALIFORNIA - DEPARTMENT OF TRANSPORTATION
Caltrans

Station	
m^3	Exc
	Emb

LAST REVISION 09-03-10
DATE PLOTTED => 31-MAY-2011
TIME PLOTTED => 09:37

Dist	COUNTY	ROUTE	KILOMETER POST TOTAL PROJECT	SHEET No.	TOTAL SHEETS
04	Son	101	7.3/8.3	72	320

David Williams 9/3/10
REGISTERED CIVIL ENGINEER DATE

5-31-11
PLANS APPROVAL DATE

REGISTERED PROFESSIONAL ENGINEER David A. Williams No. C58697 Exp. 12/31/12 CIVIL STATE OF CALIFORNIA

THE STATE OF CALIFORNIA OR ITS OFFICERS OR AGENTS SHALL NOT BE RESPONSIBLE FOR THE ACCURACY OR COMPLETENESS OF ELECTRONIC COPIES OF THIS PLAN SHEET.

URS CORPORATION
1380 LEAD HILL BLVD,
SUITE 100
ROSEVILLE, CA 95661

CITY OF PETALUMA
11 ENGLISH STREET
PETALUMA, CA 94952

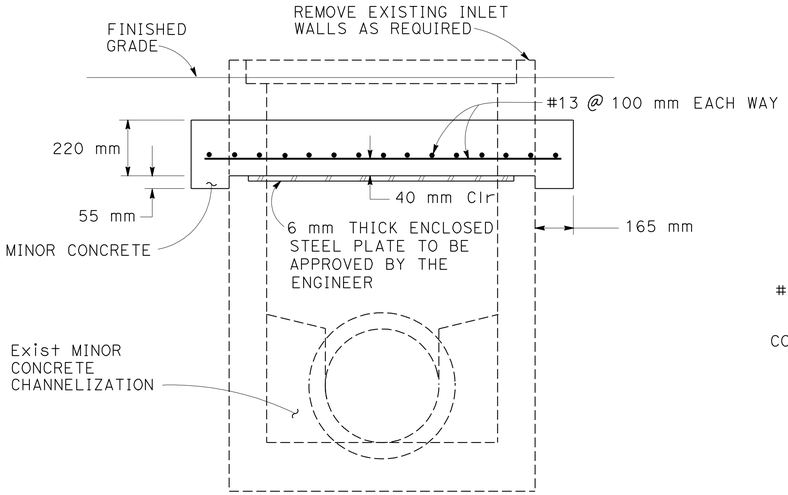

CAP INLET DETAIL

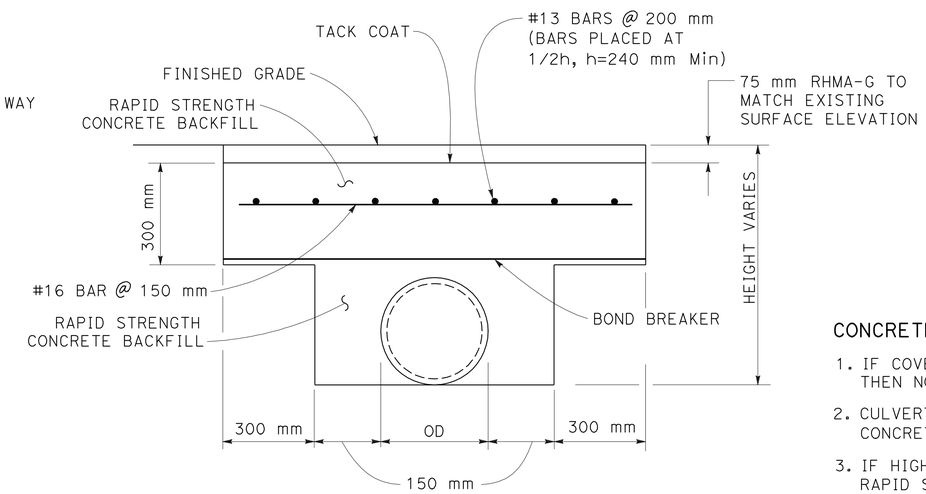

CONCRETE BACKFILL (RAPID STRENGTH CONCRETE)

CONCRETE BACKFILL NOTES:

1. IF COVER OVER CULVERT PIPE IS GREATER THAN 0.31 m THEN NO STEEL REINFORCEMENT IS NEEDED.
2. CULVERT PIPE SHOULD BE SECURED SO IT DOES NOT FLOAT DURING CONCRETE POUR.
3. IF HIGH CHLORIDES OR OTHER ACCELERATORS TO BE USED WITH THE RAPID STRENGTH CONCRETE WOULD BE CONSIDERED DETRIMENTAL TO STEEL REINFORCEMENT (IF USED ON THIS PROJECT) THEN THE STEEL WILL NEED TO BE PROTECTED WITH AN APPROVED EPOXY COATING OR EQUIVALENT.

2 c 4 e 18 c 22 c

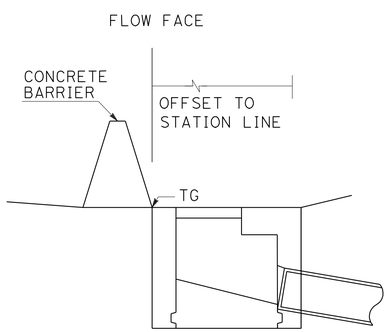

ELEVATION

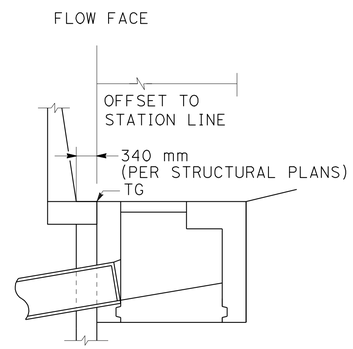

ELEVATION

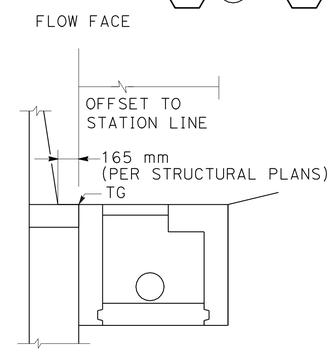

ELEVATION

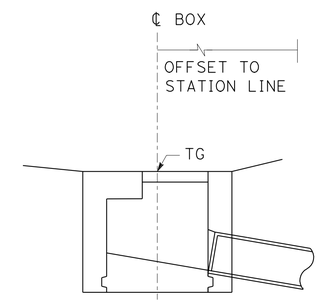

ELEVATION

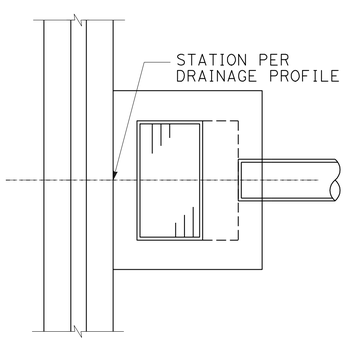

PLAN

INLET ADJACENT TO CONCRETE BARRIER

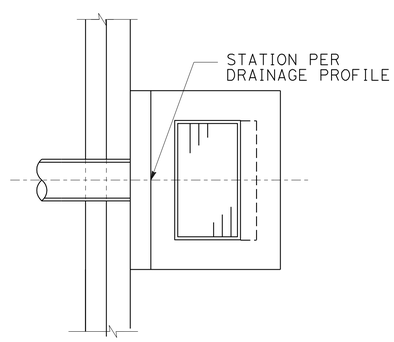

PLAN

INLET ADJACENT TO MSE WALL

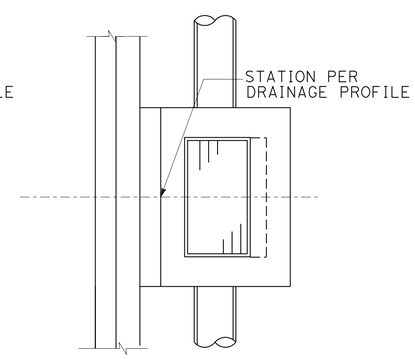

PLAN

INLET ADJACENT TO BARRIER SLAB

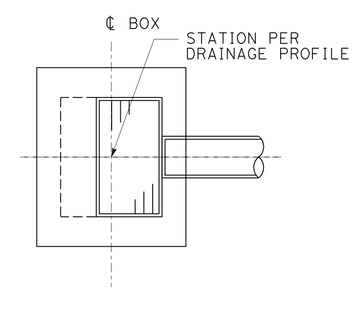

PLAN

FIELD INLET

ALL DIMENSIONS ARE IN METERS UNLESS OTHERWISE SHOWN

DRAINAGE DETAILS

NO SCALE

DD-1

STATE OF CALIFORNIA - DEPARTMENT OF TRANSPORTATION
Caltrans

CONSULTANT FUNCTIONAL SUPERVISOR: RAMSEY HISSEN
CALCULATED-DESIGNED BY: SHERINA LAM
CHECKED BY: DAVID A. WILLIAMS
REVISED BY | DATE REVISED

LAST REVISION 09-03-10 | DATE PLOTTED => 31-MAY-2011 | TIME PLOTTED => 09:27

Dist	COUNTY	ROUTE	KILOMETER POST TOTAL PROJECT	SHEET No.	TOTAL SHEETS
04	Son	101	7.3/8.3	73	320

David Williams 9/3/10
REGISTERED CIVIL ENGINEER DATE

5-31-11
PLANS APPROVAL DATE

REGISTERED PROFESSIONAL ENGINEER David A. Williams No. C58697 Exp. 12/31/12 CIVIL STATE OF CALIFORNIA

THE STATE OF CALIFORNIA OR ITS OFFICERS OR AGENTS SHALL NOT BE RESPONSIBLE FOR THE ACCURACY OR COMPLETENESS OF ELECTRONIC COPIES OF THIS PLAN SHEET.

URS CORPORATION
1380 LEAD HILL BLVD,
SUITE 100
ROSEVILLE, CA 95661

CITY OF PETALUMA
11 ENGLISH STREET
PETALUMA, CA 94952

TABLE D

D (mm)	L (Min)	T (Min)
300	300	150
450	300	150
600	300	150
900	450	200

NOTES:

1. WHERE PIPES OF DIFFERENT DIAMETERS ARE JOINED WITH A CONCRETE COLLAR, L & T SHALL CORRESPOND WITH THE LARGER OF THE TWO PIPE DIAMETERS.
2. JOIN PIPES AT INVERTS.

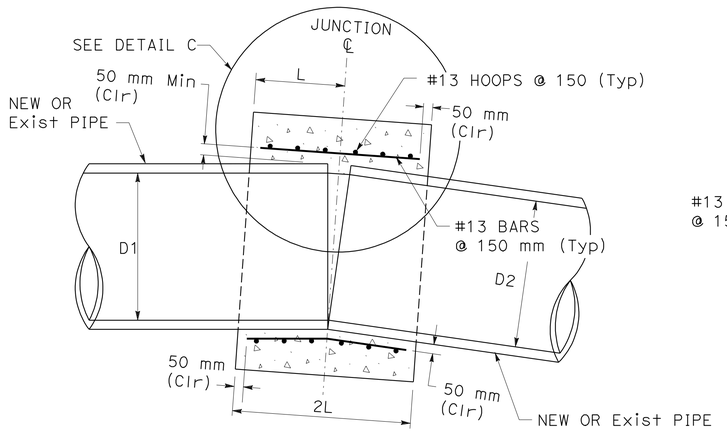

NOTE:
BEND BOTTOM BARS AS NECESSARY TO MAINTAIN 50 mm CLEARANCE

SECTION C-C

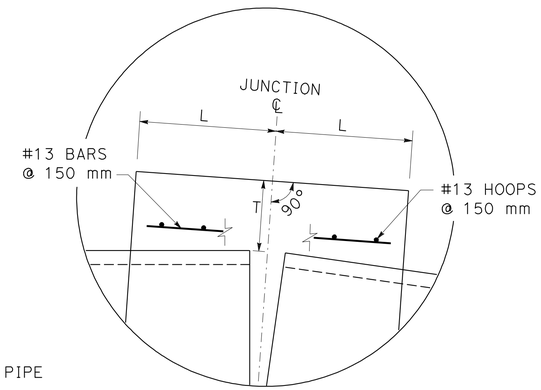

NOTE:
T IS MEASURED ALONG JUNCTION ℄

DETAIL C

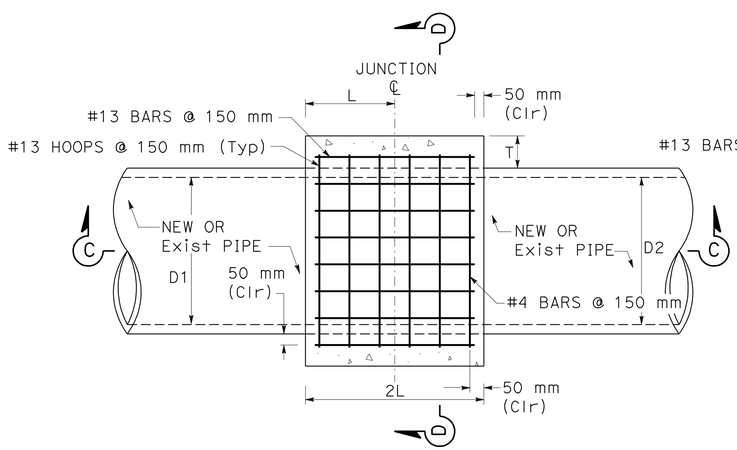

PLAN

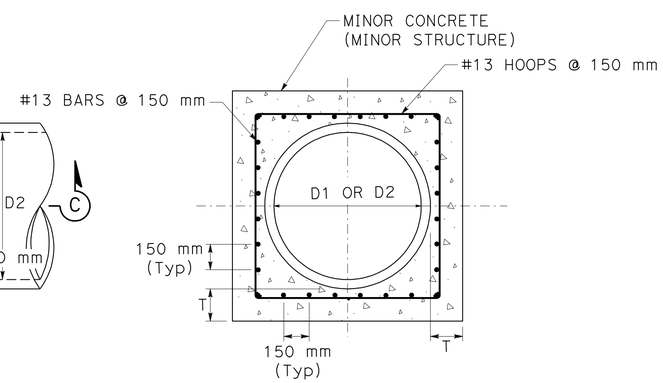

SECTION D-D

CONCRETE COLLAR

21 c

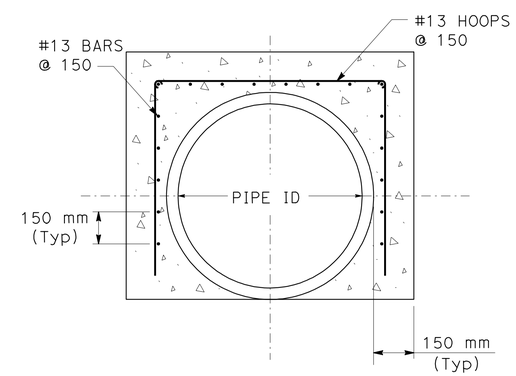

CONCRETE BACKFILL DETAIL

7 d g j m p s v y 8 c

9 c 10 c 11 c 12 f 22 d

DRAINAGE DETAILS

NO SCALE

ALL DIMENSIONS ARE IN METERS UNLESS OTHERWISE SHOWN

DD-2

STATE OF CALIFORNIA - DEPARTMENT OF TRANSPORTATION
Caltrans

CONSULTANT FUNCTIONAL SUPERVISOR: RAMSEY HISSEN
CALCULATED-DESIGNED BY: SHERINA LAM
CHECKED BY: DAVID A. WILLIAMS
REVISED BY
DATE REVISED

LAST REVISION 09-03-10
DATE PLOTTED => 31-MAY-2011
TIME PLOTTED => 09:27

Dist	COUNTY	ROUTE	KILOMETER POST TOTAL PROJECT	SHEET No.	TOTAL SHEETS
04	Son	101	7.3/8.3	74	320

David Williams 9/3/10
REGISTERED CIVIL ENGINEER DATE

5-31-11
PLANS APPROVAL DATE

REGISTERED PROFESSIONAL ENGINEER David A. Williams No. C58697 Exp. 12/31/12 CIVIL STATE OF CALIFORNIA

THE STATE OF CALIFORNIA OR ITS OFFICERS OR AGENTS SHALL NOT BE RESPONSIBLE FOR THE ACCURACY OR COMPLETENESS OF ELECTRONIC COPIES OF THIS PLAN SHEET.

URS CORPORATION
1380 LEAD HILL BLVD,
SUITE 100
ROSEVILLE, CA 95661

CITY OF PETALUMA
11 ENGLISH STREET
PETALUMA, CA 94952

NOTE:

1. SEE EC SHEETS FOR VEGETATION TREATMENT OF PROPOSED DITCHES.

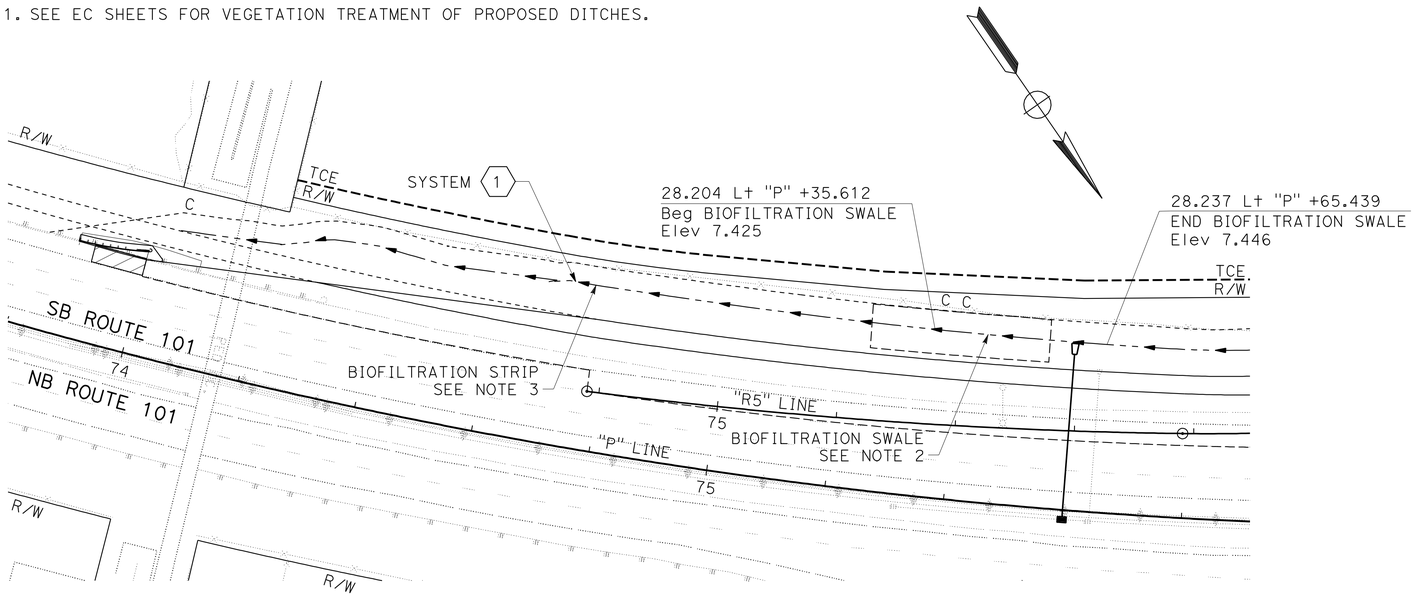

DITCH DETAILS

"P" 75+35.162 TO 75+65.439
SCALE 1:500

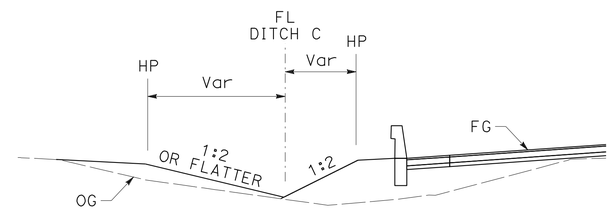

SECTION C-C
NO SCALE

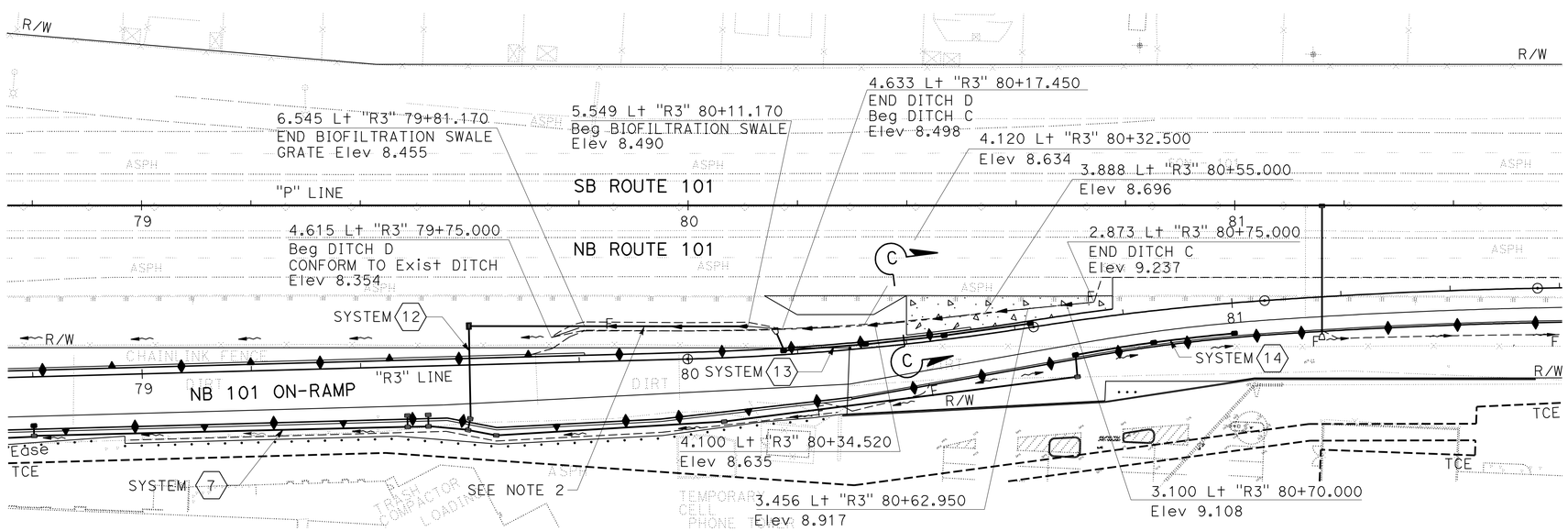

DITCH DETAILS

"R3" 79+81.170 TO 80+11.170
SCALE 1:500

ALL DIMENSIONS ARE IN METERS
UNLESS OTHERWISE SHOWN

DRAINAGE DETAILS

SCALE AS SHOWN

DD-3

STATE OF CALIFORNIA - DEPARTMENT OF TRANSPORTATION
Caltrans

CONSULTANT FUNCTIONAL SUPERVISOR: RAMSEY HISSEN
CALCULATED-DESIGNED BY: SHERINA LAM
CHECKED BY: DAVID A. WILLIAMS
REVISED BY / DATE REVISED

LAST REVISION 09-03-10 | DATE PLOTTED => 31-MAY-2011 | TIME PLOTTED => 09:27

Dist	COUNTY	ROUTE	KILOMETER POST TOTAL PROJECT	SHEET No.	TOTAL SHEETS
04	Son	101	7.3/8.3	75	320

David Williams 9/3/10
REGISTERED CIVIL ENGINEER DATE

5-31-11
PLANS APPROVAL DATE

REGISTERED PROFESSIONAL ENGINEER David A. Williams No. C58697 Exp. 12/31/12 CIVIL STATE OF CALIFORNIA

THE STATE OF CALIFORNIA OR ITS OFFICERS OR AGENTS SHALL NOT BE RESPONSIBLE FOR THE ACCURACY OR COMPLETENESS OF ELECTRONIC COPIES OF THIS PLAN SHEET.

URS CORPORATION
1380 LEAD HILL BLVD,
SUITE 100
ROSEVILLE, CA 95661

CITY OF PETALUMA
11 ENGLISH STREET
PETALUMA, CA 94952

PLAN
DRAINAGE INLET MARKER
(PREFABRICATED THERMOPLASTIC)

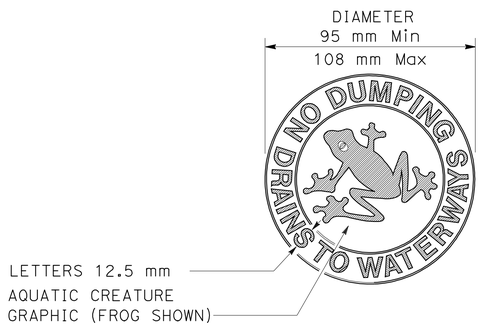

PLAN
DRAINAGE INLET MARKER
(PLASTIC)

NOTES:

1. THE DIMENSIONS OF THE DRAINAGE INLET MARKER (PREFABRICATED THERMOPLASTIC) SHALL VARY NO MORE THAN 25 mm WIDTH AND LENGTH.
2. THE DRAINAGE INLET MARKER SHALL BE CENTERED OPPOSITE THE DRAINAGE FACILITY.
3. THE TEXT, GRAPHIC AND BACKGROUND SHALL BE OF CONTRASTING COLORS FOR THE PREFABRICATED THERMOPLASTIC AND PLASTIC DRAINAGE INLET MARKERS. COLORS FOR TEXT AND GRAPHIC SHALL BE BLUE OR GREEN.

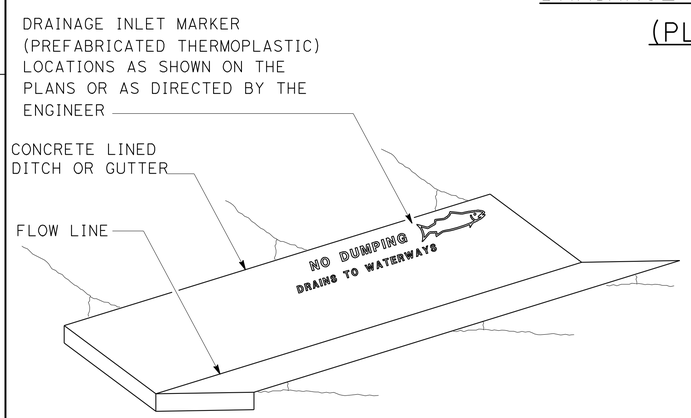

PERSPECTIVE
DRAINAGE INLET MARKER ON
CONCRETE LINED DITCH

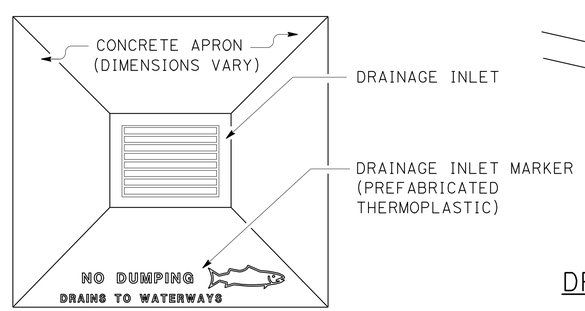

PLAN
DRAINAGE INLET MARKER ON
DRAINAGE INLET APRON

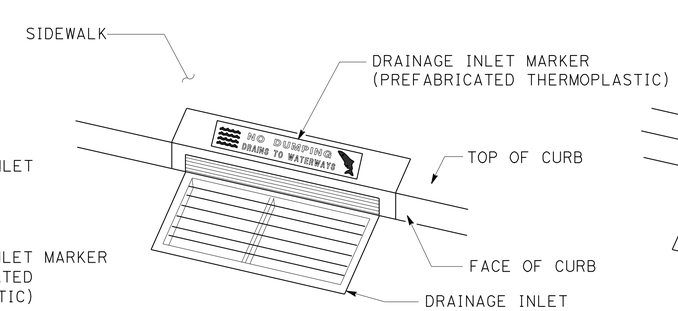

PERSPECTIVE
DRAINAGE INLET MARKER ON
DRAINAGE INLET

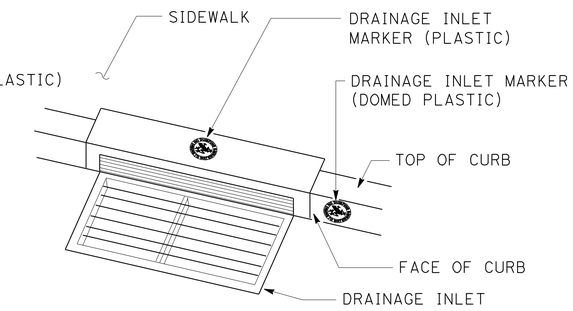

PERSPECTIVE
DRAINAGE INLET MARKER (PLASTIC)
ON DRAINAGE INLET

DRAINAGE INLET MARKERS
NO SCALE

ALL DIMENSIONS ARE IN MILLIMETERS
UNLESS OTHERWISE SHOWN

DD-4

STATE OF CALIFORNIA - DEPARTMENT OF TRANSPORTATION
Caltrans

CONSULTANT FUNCTIONAL SUPERVISOR: RAMSEY HISSEN
CALCULATED-DESIGNED BY: SHERINA LAM
CHECKED BY: DAVID A. WILLIAMS
REVISED BY
DATE REVISED

LAST REVISION 09-03-10
DATE PLOTTED => 31-MAY-2011
TIME PLOTTED => 09:28

Dist	COUNTY	ROUTE	KILOMETER POST TOTAL PROJECT	SHEET No.	TOTAL SHEETS
04	Son	101	7.3/8.3	76	320

David Williams 9/3/10
REGISTERED CIVIL ENGINEER DATE

5-31-11
PLANS APPROVAL DATE

REGISTERED PROFESSIONAL ENGINEER David A. Williams No. C58697 Exp. 12/31/12 CIVIL STATE OF CALIFORNIA

THE STATE OF CALIFORNIA OR ITS OFFICERS OR AGENTS SHALL NOT BE RESPONSIBLE FOR THE ACCURACY OR COMPLETENESS OF ELECTRONIC COPIES OF THIS PLAN SHEET.

URS CORPORATION
1380 LEAD HILL BLVD,
SUITE 100
ROSEVILLE, CA 95661

CITY OF PETALUMA
11 ENGLISH STREET
PETALUMA, CA 94952

APC ALLOWABLE PIPE MATERIAL

DESIGNATION	RCP TYPE II MODIFIED CEMENT	PLASTIC PIPE	
	SIZE	SIZE	TYPE
450 mm APC	450 mm	450 mm	SMOOTH INTERIOR
600 mm APC	600 mm	600 mm	SMOOTH INTERIOR
900 mm APC	900 mm	900 mm	SMOOTH INTERIOR

NOTE:

1. PAYMENT FOR DITCHES ARE INCLUDED IN ROADWAY EXCAVATION.
2. ALL JOINTS ARE STANDARD JOINT TYPE.

Caltrans Metric

DRAINAGE QUANTITIES

DRAINAGE PLAN SHEET No.	DRAINAGE SYSTEM No. ⬡	DRAINAGE UNIT ◯	ABANDON CULVERT (m)	REMOVE FES (EA)	REMOVE PIPE (m)	REMOVE INLET (EA)	CAP INLET (EA)	SAND BACKFILL (m^3)	Conc BACKFILL (RAPID STRENGTH Conc) (m^3)	MINOR CONCRETE (MINOR STRUCTURE) (m^3)	475 mm X 750 mm OVAL SHAPED RCP (m)	150 mm PPP (m)	300 mm APC (m)	450 mm APC (m)	600 mm APC (m)	900 mm APC (m)	450 mm AFES (EA)	475 mm X 750 mm OVAL AFES (EA)	DRAINAGE INLET MARKER (EA)	900 mm AUTOMATIC DRAINAGE GATE (EA)	900 mm CORRUGATED STEEL PIPE INLET(2.77 mm Thick) (m)	ROCK SLOPE PROTECTION (LIGHT, METHOD B) (m^3)	ROCK SLOPE PROTECTION FABRIC (m^2)	DRAINAGE DITCH (N) (SEE NOTE 1) (m)	Misc IRON AND STEEL (Kg)	GRATE TYPE (N) (EA)	CONCRETE BACKFILL (m^3)	BAR REINFORCING STEEL (Kg)	DRAINAGE INLET HEIGHT (N) (m)	DESCRIPTION	LOCATION	DRAINAGE SYSTEM No. ⬡
D-1,2,6	1	a																					1.0	193.9						DITCH A	"P" 74+04.517 TO "R5" 76+00.000	1
		b																						185.6						DITCH B	"R5" 76+00.00 TO "R5" 78+03.652	
D-2	2	a								1.4															119	600-9			1.5	G2 DI W/ GRATE	1.612 R+ "P" 75+60.000	2
		b									27.3																			OVAL SHAPED RCP		
		c							30.0																					Conc BACKFILL		
		d																1												FES		
		e	25.0																											Abn CULVERT		
		f					1																							CAP INLET		
		g		1																										REMOVE FES	0.967 R+ "P" 76+78.999	
		h						3.9																						SAND BACKFILL		
D-2	3	a				1																								REMOVE DI	0.6 R+ "RE1" 77+23.9	3
		b	11.3																											Abn PIPE		
		c		1																										REMOVE FES		
		d						2.0																						SAND BACKFILL		
D-2,5	4	a								0.9															148	600-12			1.3	G1 DI W/ GRATE	6.071 L+ "RE1" 77+82.00	4
		b												26.8																450 mm APC		
		c								1.0															148	600-12			1.5	G1 DI W/ GRATE	4.475 L+ "RE1" 77+51.574	
		d												11.4																450 mm APC		
		e							10.6																					Conc BACKFILL		
		f																			1.5				80	6.4mm PL			1.3	OMP PIPE INLET	16.390 L+ "RE1" 77+50.172	
		g												12.1																450 mm APC		
		h															1													450 mm AFES	40.614 L+ "RE1" 77+29.758	
D-2	5	a								*									1						108	600-12X			1.1	BARRIER SLAB DRAIN	11.134 L+ "EW" 14+66.743	5
		b												52.8																450 mm APC		
		c								1.3									1						108	600-12X			2.0	G1 DI W/ GRATE	15.370 L+ "EW" 15+20.921	
		d												1.8																450 mm APC		
		e															1													450 mm AFES	17.384 L+ "EW" 15+21.071	
		f																					16.0							RSP FABRIC		
		g																				6.0								RSP LIGHT, METHOD B		
		h				1																								REMOVE DI	11.4 L+ "EW" 15+20.6±	
		i			14.0																									REMOVE PIPE		
D-2	6	a								1.5															119	600-9			1.7	G2 DI W/ GRATE	32.241 R+ "P" 77+97.882	6
		b														10.0														900 mm APC		
		c								1.5																				HW	32.558 R+ "P" 77+87.134	
		d																		1										DRAINAGE GATE	32.558 R+ "P" 77+87.134	
SHEET TOTAL			36.3	2.0	14.0	2	1	5.9	40.6	7.6	27.3	0.0	0.0	104.9	0.0	10.0	2	1	2	1	1.5	6.0	17.0	379.5	830.0	N/A	0.0	0.0	N/A			
SUBTOTAL			36.3	2.0	14.0	2	1	5.9	40.6	7.6	27.3	0.0	0.0	104.9	0.0	10.0	2	1	2	1	1.5	6.0	17.0	379.5	830.0	N/A	0.0	0.0	N/A			

(N) NOT A SEPARATE PAY ITEM, FOR INFORMATION ONLY

* SEE STRUCTURE PLANS

DRAINAGE QUANTITIES

DQ-1

SHERINA LAM — REVISED BY
DAVID A. WILLIAMS — DATE REVISED
CALCULATED-DESIGNED BY
CHECKED BY
CONSULTANT FUNCTIONAL SUPERVISOR
RAMSEY HISSEN

STATE OF CALIFORNIA - DEPARTMENT OF TRANSPORTATION
Caltrans

LAST REVISION 09-03-10
DATE PLOTTED => 31-MAY-2011
TIME PLOTTED => 09:28

Dist	COUNTY	ROUTE	KILOMETER POST TOTAL PROJECT	SHEET No.	TOTAL SHEETS
04	Son	101	7.3/8.3	77	320

David Williams 9/3/10
REGISTERED CIVIL ENGINEER DATE

5-31-11
PLANS APPROVAL DATE

REGISTERED PROFESSIONAL ENGINEER David A. Williams No. C58697 Exp. 12/31/12 CIVIL STATE OF CALIFORNIA

THE STATE OF CALIFORNIA OR ITS OFFICERS OR AGENTS SHALL NOT BE RESPONSIBLE FOR THE ACCURACY OR COMPLETENESS OF ELECTRONIC COPIES OF THIS PLAN SHEET.

URS CORPORATION
1380 LEAD HILL BLVD,
SUITE 100
ROSEVILLE, CA 95661

CITY OF PETALUMA
11 ENGLISH STREET
PETALUMA, CA 94952

DRAINAGE QUANTITIES

DRAINAGE PLAN SHEET No.	DRAINAGE SYSTEM No. ⬡	DRAINAGE UNIT ◯	ABANDON CULVERT	REMOVE FES	REMOVE PIPE	REMOVE INLET	CAP INLET	SAND BACKFILL	Conc BACKFILL (RAPID STRENGTH Conc)	MINOR CONCRETE (MINOR STRUCTURE)	475 mm X 750 mm OVAL SHAPED RCP	150 mm PPP	300 mm APC	450 mm APC	600 mm APC	900 mm APC	450 mm AFES	475 mm X 750 mm OVAL AFES	DRAINAGE INLET MARKER	900 mm AUTOMATIC DRAINAGE GATE	900 mm CORRUGATED STEEL PIPE INLET(2.77 mm Thick)	ROCK SLOPE PROTECTION (LIGHT, METHOD B)	ROCK SLOPE PROTECTION FABRIC	DRAINAGE DITCH (N) (SEE NOTE 1)	Misc IRON AND STEEL	GRATE TYPE (N)	CONCRETE BACKFILL	BAR REINFORCING STEEL	DRAINAGE INLET HEIGHT (N)	DESCRIPTION	LOCATION	DRAINAGE SYSTEM No. ⬡
			m	EA	m	EA	EA	m³	m³	m³	m	m	m	m	m	m	EA	EA	EA	EA	m	m³	m²	m	Kg	EA	m³	Kg	m			
D-2,3	7	a													20.1															600 mm APC		7
		b								1.6															119	600-9			1.9	G2 DI W/ GRATE	58.244 R+ "P" 77+97.114	
		c													15.8															600 mm APC		
		d																									10.8	623		Conc BACKFILL		
		e								1.7															119	600-9			1.9	G2 DI W/ GRATE	52.794 R+ "P" 78+13.492	
		f												66.6																450 mm APC		
		g																									32.2	2187		Conc BACKFILL		
		h								1.8															119	600-9			2.1	G2 DI W/ GRATE	42.176 R+ "P" 78+80.344	
		i												66.7																450 mm APC		
		j																									32.2	2190		Conc BACKFILL		
		k								1.4															119	600-9			1.6	G2 DI W/ GRATE	40.501 R+ "P" 79+48.690	
		l												2.3																450 mm APC		
		m																									1.1	78		Conc BACKFILL		
		n								1.4															119	600-9			1.5	G2 DI W/ GRATE	40.410 R+ "P" 79+52.488	
		o												5.8																450 mm APC		
		p																									2.8	192		Conc BACKFILL		
		q								1.4															119	600-9			1.5	G2 DI W/ GRATE	41.074 R+ "P" 79+59.730	
		r												3.9																450 mm APC		
		s																									1.9	130		Conc BACKFILL		
		t								1.0															119	600-9			1.5	G1 DI W/ GRATE	42.055 R+ "P" 79+64.887	
		u												40.6																450 mm APC		
		v																									19.6	1334		Conc BACKFILL		
		w								0.9															119	600-9			1.3	G1 DI W/ GRATE	39.520 R+ "P" 80+06.590	
		x												64.0																450 mm APC		
		y																									12.5	2101		Conc BACKFILL		
		z								0.9															119	600-9			1.3	G1 DI W/ GRATE	31.317 R+ "P" 80+71.227	
D-2	8	a								*															148	600-12			5.9	MSE DRAIN W/ GRATE	50.999 R+ "P" 78+12.882	8
		b												1.2																450 mm APC		
		c																							22		0.6	41		Conc BACKFILL		
		d			24.0																									REMOVE PIPE		
SHEET TOTAL			0.0	0	24.0	0	0	0.0	0.0	12.2	0.0	0.0	0.0	251.1	35.9	0.0	0	0	0	0	0.0	0.0	0.0	0.0	1241.3	N/A	113.6	8876	N/A			
SUBTOTAL			36.3	2	38.0	2	1	5.9	40.6	19.8	27.3	0.0	0.0	356.0	35.9	10.0	2	1	2	1	1.5	6.0	17.0	379.5	2071.3	N/A	113.6	8876	N/A			

(N) NOT A SEPARATE PAY ITEM, FOR INFORMATION ONLY

* SEE STRUCTURE PLANS

DRAINAGE QUANTITIES

DQ-2

STATE OF CALIFORNIA - DEPARTMENT OF TRANSPORTATION
Caltrans

CONSULTANT FUNCTIONAL SUPERVISOR: RAMSEY HISSEN
CALCULATED-DESIGNED BY: SHERINA LAM
CHECKED BY: DAVID A. WILLIAMS
REVISED BY
DATE REVISED

LAST REVISION 09-03-10 DATE PLOTTED => 31-MAY-2011 TIME PLOTTED => 09:28

Dist	COUNTY	ROUTE	KILOMETER POST TOTAL PROJECT	SHEET No.	TOTAL SHEETS
04	Son	101	7.3/8.3	78	320

David Williams 9/3/10
REGISTERED CIVIL ENGINEER DATE

5-31-11
PLANS APPROVAL DATE

REGISTERED PROFESSIONAL ENGINEER David A. Williams No. C58697 Exp. 12/31/12 CIVIL STATE OF CALIFORNIA

THE STATE OF CALIFORNIA OR ITS OFFICERS OR AGENTS SHALL NOT BE RESPONSIBLE FOR THE ACCURACY OR COMPLETENESS OF ELECTRONIC COPIES OF THIS PLAN SHEET.

URS CORPORATION
1380 LEAD HILL BLVD,
SUITE 100
ROSEVILLE, CA 95661

CITY OF PETALUMA
11 ENGLISH STREET
PETALUMA, CA 94952

DRAINAGE QUANTITIES

DRAINAGE PLAN SHEET No.	DRAINAGE SYSTEM No. ⬡	DRAINAGE UNIT ◯	ABANDON CULVERT (m)	REMOVE FES (EA)	REMOVE PIPE (m)	REMOVE INLET (EA)	CAP INLET (EA)	SAND BACKFILL (m^3)	Conc BACKFILL (RAPID STRENGTH Conc) (m^3)	MINOR CONCRETE (MINOR STRUCTURE) (m^3)	475 mm X 750 mm OVAL SHAPED RCP (m)	150 mm PPP (m)	300 mm APC (m)	450 mm APC (m)	600 mm APC (m)	900 mm APC (m)	450 mm AFES (EA)	475 mm X 750 mm OVAL AFES (EA)	DRAINAGE INLET MARKER (EA)	900 mm AUTOMATIC DRAINAGE GATE (EA)	900 mm CORRUGATED STEEL PIPE INLET(2.77 mm Thick) (m)	ROCK SLOPE PROTECTION (LIGHT, METHOD B) (m^3)	ROCK SLOPE PROTECTION FABRIC (m^2)	DRAINAGE DITCH (N) (SEE NOTE 1) (m)	Misc IRON AND STEEL (Kg)	GRATE TYPE (N) (EA)	CONCRETE BACKFILL (m^3)	BAR REINFORCING STEEL (Kg)	DRAINAGE INLET HEIGHT (N) (m)	DESCRIPTION	LOCATION	DRAINAGE SYSTEM No. ⬡
D-3	9	a								*															148	600-12				MSE DRAIN W/ GRATE	40.615 R+ "P" 78+80.305	9
		b												0.8																450 mm APC		
		c																									0.4	28		Conc BACKFILL		
		d			13																									REMOVE PIPE		
	10	a								*															148	600-12				MSE DRAIN W/ GRATE	38.750 R+ "P" 79+48.643	10
		b												1.0																450 mm APC		
		c																									0.5	35		Conc BACKFILL		
	11	a								*															148	600-12				MSE DRAIN W/ GRATE	38.646 R+ "P" 79+52.440	11
		b												1.0																450 mm APC		
		c																									0.5	35		Conc BACKFILL		
	12	a										50.6																		150 mm PPP	39.330 R+ "P" 79+60.062	12
		b								0.8															119	600-9				G1 DI W/ GRATE	22.064 R+ "P" 79+59.869	
		c											15.7																	300 mm APC		
		d								*															148	600-12				MSE DRAIN W/ GRATE	39.330 R+ "P" 79+60.062	
		e												1.0																450 mm APC		
		f																									0.5	35		Conc BACKFILL		
	13	a															1													450 mm AFES		13
		b												3.8																450 mm APC		
		c								0.8															148	600-12				G1 DI W/ GRATE	26.242 R+ "P" 80+17.433	
		d												13.8																450 mm APC		
		e								0.7															148	600-12				G1 DI W/ GRATE	25.062 R+ "P" 80+32.403	
		f												13.3																450 mm APC		
		g								0.7															148	600-12				G1 DI W/ GRATE	23.491 R+ "P" 80+46.786	
		h												14.7																450 mm APC		
		i								0.7															148	600-12				G1 DI W/ GRATE	21.273 R+ "P" 80+62.544	
	14	a												2.5																450 mm APC		14
		b								1.0															148	600-12				G1 DI W/ GRATE	27.652 R+ "P" 80+70.902	
		c												13.6																450 mm APC		
		d								0.9															148	600-12				G1 DI W/ GRATE	25.378 R+ "P" 80+85.224	
		e												13.7																450 mm APC		
		f								0.9															148	600-12				G1 DI W/ GRATE	23.712 R+ "P" 80+99.965	
SHEET TOTAL			0.0	0	13.0	0	0	0.0	0.0	6.4	0.0	50.6	15.7	79.2	0	0.0	1	0	0	0	0.0	0.0	0.0	0.0	1747.0	N/A	1.8	133	N/A			
SUBTOTAL			36.3	2	51.0	2	1	5.9	40.6	26.2	27.3	50.6	15.7	435.2	35.9	10.0	3	1	2	1	1.5	6.0	17.0	379.5	3818.3	N/A	115.4	9009	N/A			

(N) NOT A SEPARATE PAY ITEM, FOR INFORMATION ONLY

* SEE STRUCTURE PLANS

DRAINAGE QUANTITIES
DQ-3

STATE OF CALIFORNIA - DEPARTMENT OF TRANSPORTATION
Caltrans

CONSULTANT FUNCTIONAL SUPERVISOR: RAMSEY HISSEN
CALCULATED-DESIGNED BY: SHERINA LAM
CHECKED BY: DAVID A. WILLIAMS
REVISED BY
DATE REVISED

LAST REVISION 09-03-10 DATE PLOTTED => 31-MAY-2011 TIME PLOTTED => 09:28

Dist	COUNTY	ROUTE	KILOMETER POST TOTAL PROJECT	SHEET No.	TOTAL SHEETS
04	Son	101	7.3/8.3	79	320

David Williams 9/3/10
REGISTERED CIVIL ENGINEER DATE

5-31-11
PLANS APPROVAL DATE

REGISTERED PROFESSIONAL ENGINEER David A. Williams No. C58697 Exp. 12/31/12 CIVIL STATE OF CALIFORNIA

THE STATE OF CALIFORNIA OR ITS OFFICERS OR AGENTS SHALL NOT BE RESPONSIBLE FOR THE ACCURACY OR COMPLETENESS OF ELECTRONIC COPIES OF THIS PLAN SHEET.

URS CORPORATION
1380 LEAD HILL BLVD,
SUITE 100
ROSEVILLE, CA 95661

CITY OF PETALUMA
11 ENGLISH STREET
PETALUMA, CA 94952

DRAINAGE QUANTITIES

DRAINAGE PLAN SHEET No.	DRAINAGE SYSTEM No. ⬡	DRAINAGE UNIT ◯	ABANDON CULVERT (m)	REMOVE FES (EA)	REMOVE PIPE (m)	REMOVE INLET (EA)	CAP INLET (EA)	SAND BACKFILL (m^3)	Conc BACKFILL (RAPID STRENGTH Conc) (m^3)	MINOR CONCRETE (MINOR STRUCTURE) (m^3)	475 mm X 750 mm OVAL SHAPED RCP (m)	150 mm PPP (m)	300 mm APC (m)	450 mm APC (m)	600 mm APC (m)	900 mm APC (m)	450 mm AFES (EA)	475 mm X 750 mm OVAL AFES (EA)	DRAINAGE INLET MARKER (EA)	900 mm AUTOMATIC DRAINAGE GATE (EA)	900 mm CORRUGATED STEEL PIPE INLET(2.77 mm Thick) (m)	ROCK SLOPE PROTECTION (LIGHT, METHOD B) (m^3)	ROCK SLOPE PROTECTION FABRIC (m^2)	DRAINAGE DITCH (N) (SEE NOTE 1) (m)	Misc IRON AND STEEL (Kg)	GRATE TYPE (N) (EA)	CONCRETE BACKFILL (m^3)	BAR REINFORCING STEEL (Kg)	DRAINAGE INLET HEIGHT (N) (m)	DESCRIPTION	LOCATION	DRAINAGE SYSTEM No. ⬡
D-4	15	a								1.0															148	600-12			1.5	G1 DI W/ GRATE	19.465 R+ "P" 82+30.512	15
		b												4.3																450 mm APC		
		c															1													450 mm AFES	23.348 R+ "P" 82+32.758	
	16	a								1.0															148	600-12			1.4	G1 DI W/ GRATE	18.008 R+ "P" 83+05.998	16
		b												5.6																450 mm APC		
		c															1													450 mm AFES	22.987 R+ "P" 83+08.882	
	17	a								1.2															148	600-12			1.7	G1 DI W/ GRATE	17.030 R+ "P" 82+58.000	17
		b												6.9																450 mm APC		
		c															1													450 mm AFES	23.086 R+ "P" 83+61.514	
D-5	18	a								1.1															148	600-12			1.0	G2 DI W/ GRATE	8.811 L+ "RE1" 78+10.000	18
		b												30.9																450 mm APC		
		c							10.1																					Conc BACKFILL		
		d															1													450 mm AFES	31.966 L+ "RE1" 78+04.770	
	19	a				1																								REMOVE DI	0.7 R+ "RE1" 78+02.8±	19
		b			12.1																									REMOVE PIPE		
		c		1																										REMOVE FES	14.1 R+ "RE1" 78+04.9±	
D-6	20	a				1																								REMOVE DI	2.5 R+ "R5" 78+42.3±	20
		b			4.5																									REMOVE PIPE		
		c		1																										REMOVE FES	7.9 R+ "R5" 78+41.4±	
D-2	21	a								1.0									1						148	600-12			1.0	GO DI W/ GRATE	1.756 R+ "EW" 13+29.399	21
		b												1.0																450 mm APC		
		c								0.2																				Conc COLLAR		
		d																												REMOVE DI	0.698 R+ "EW" 13+29.642	
D-3	22	a								1.0															119	600-9			0.7	G2 DI W/ GRATE	0.091 R+ "P" 81+15.951	22
		b												22.8																450 mm APC		
		c							11.4																					Conc BACKFILL		
		d																									0.3	35		Conc BACKFILL		
		e															1													450 mm AFES	23.543 R+ "P" 81+15.951	
		f					1																							CAP INLET		
		g	20.3																											Abn CULVERT		
		h						3.3																						SAND BACKFILL		
D-5	23	a								1.2															119	600-12			1.3	G1 DI W/ GRATE	16.70 L+ "EW" 15+58.214	23
D-5	24	a								1.3															226	2-450-12			0.9	GT1 DI W/ GRATE	15.76 L+ "EW" 15+99.00	24
		b												15.5																450 mm APC		
		c																									7.5			Conc BACKFILL		
		d								2.0															119	600-12			2.5	G2 DI W/ GRATE	14.74 L+ "EW" 16+16.661	
SHEET TOTAL			20.3	2.0	16.6	2	1.0	3.3	21.5	11.0	0.0	0.0	0.0	87.0	0.0	0.0	5.0	0.0	1.0	0.0	0.0	0.0	0.0	0.0	1323.0	N/A	7.8	35	N/A			
GRAND TOTAL			56.6	4	67.6	4	2	9.2	62.0	37.2	27.3	50.6	15.7	522.2	35.9	10.0	8	1	3	1	1.5	6.0	17.0	379.5	5141.3	N/A	123.2	9044	N/A			

(N) NOT A SEPARATE PAY ITEM, FOR INFORMATION ONLY

DRAINAGE QUANTITIES

DQ-4

STATE OF CALIFORNIA - DEPARTMENT OF TRANSPORTATION
Caltrans

CONSULTANT FUNCTIONAL SUPERVISOR: RAMSEY HISSEN
CALCULATED-DESIGNED BY: SHERINA LAM
CHECKED BY: DAVID A. WILLIAMS
REVISED BY
DATE REVISED

LAST REVISION DATE PLOTTED => 31-MAY-2011
09-03-10 TIME PLOTTED => 09:28

Dist	COUNTY	ROUTE	KILOMETER POST TOTAL PROJECT	SHEET No.	TOTAL SHEETS
04	Son	101	7.3/8.3	80	320

REGISTERED CIVIL ENGINEER 9/3/10 DATE

5-31-11
PLANS APPROVAL DATE

REGISTERED PROFESSIONAL ENGINEER YEV PHILIPOVITCH No. C-25392 Exp. 12/31/11 CIVIL STATE OF CALIFORNIA

THE STATE OF CALIFORNIA OR ITS OFFICERS OR AGENTS SHALL NOT BE RESPONSIBLE FOR THE ACCURACY OR COMPLETENESS OF ELECTRONIC COPIES OF THIS PLAN SHEET.

URS CORPORATION
100 W. SAN FERNANDO St
SUITE 200
SAN JOSE, CA 95113

CITY OF PETALUMA
11 ENGLISH STREET
PETALUMA, CA 94952

LEGEND & ABBREVIATIONS

NEW	EXISTING	
----------	----------	SANITARY SEWER LATERAL
⊙	⊙	SANITARY SEWER MANHOLE
	-s-	SEWER TO BE ABANDONED
	-s-	SANITARY SEWER TO BE REMOVED
1	1	SANITARY SEWER SYSTEM No.
A	a	SANITARY SEWER ITEM No.
●		SLURRY CEMENT BACKFILL PLUG
	SSMH	SANITARY SEWER MANHOLE
	SS	SANITARY SEWER
	CP	CITY OF PETALUMA
	SDR	STANDARD DIMENSION RATIO
	PVC	SDR35 PVC SEWER PIPE

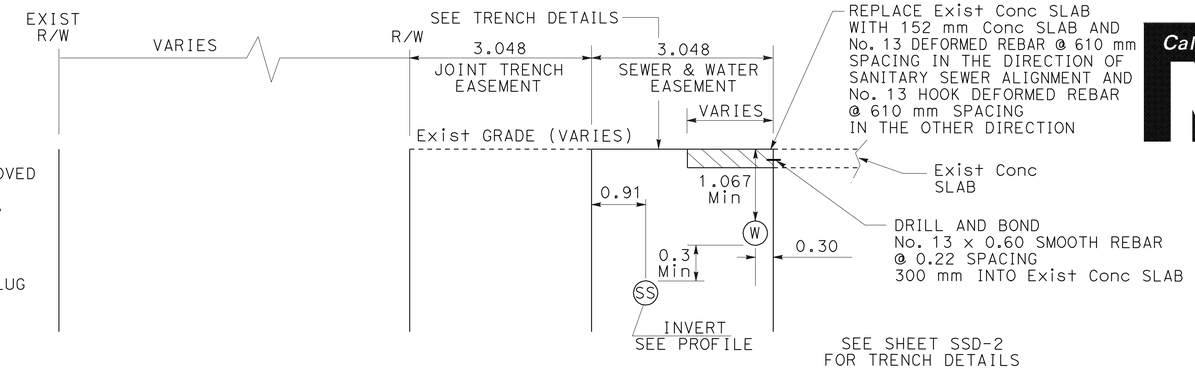

SECTION A-A
SCALE 1:50

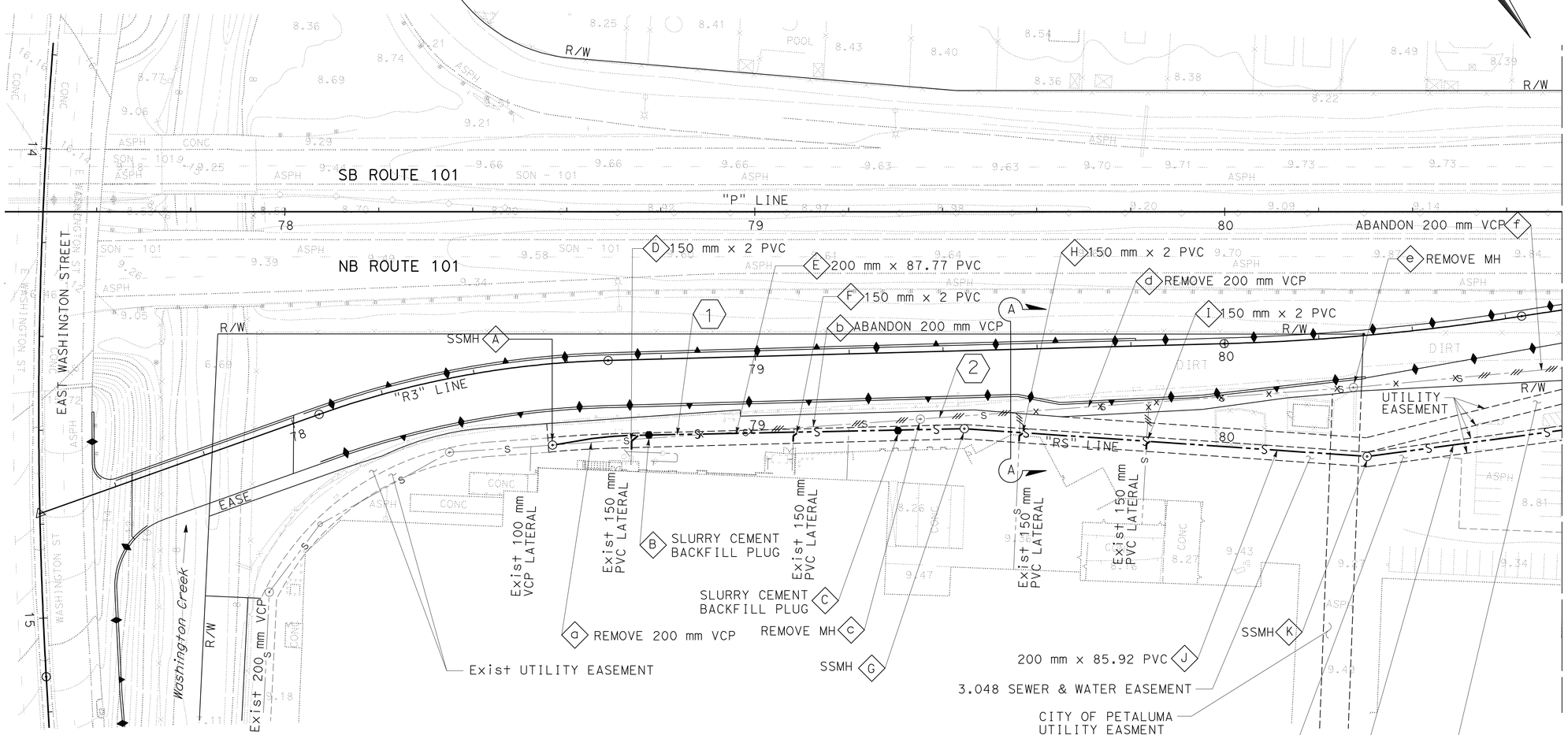

NOTES:
1. FOR EXISTING UTILITIES, SEE UTILITY PLANS.
2. VERIFY LOCATION, SIZE AND DEPTH OF EXISTING UTILITIES PRIOR TO START OF CONSTRUCTION.
3. SANITARY SEWER ALIGNMENT "RS" LINE LAYOUT INFORMATION IS SHOWN ON SHEET SS-3.

THIS PLAN ACCURATE FOR SANITARY SEWER WORK ONLY

ALL DIMENSIONS ARE IN METERS UNLESS OTHERWISE SHOWN

SANITARY SEWER PLAN
SCALE 1:500

SS-1

STATE OF CALIFORNIA - DEPARTMENT OF TRANSPORTATION
Caltrans

CONSULTANT FUNCTIONAL SUPERVISOR: RAMSEY HISSEN
CALCULATED-DESIGNED BY: VAN QUIAMBAO
CHECKED BY: YEV PHILIPOVITCH
REVISED BY / DATE REVISED

LAST REVISION 09-03-10 DATE PLOTTED => 31-MAY-2011 TIME PLOTTED => 09:28

BORDER LAST REVISED 3/1/2007 | RELATIVE BORDER SCALE IS IN MILLIMETERS 0 20 40 60 80 | USERNAME => trcarol DGN FILE => 426404ja001.dgn | CU 04276 | EA 264041

Dist	COUNTY	ROUTE	KILOMETER POST TOTAL PROJECT	SHEET No.	TOTAL SHEETS
04	Son	101	7.3/8.3	81	320

Caltrans Metric

REGISTERED CIVIL ENGINEER 9/3/10 DATE

5-31-11
PLANS APPROVAL DATE

REGISTERED PROFESSIONAL ENGINEER YEV PHILIPOVITCH No. C-25392 Exp. 12/31/11 CIVIL STATE OF CALIFORNIA

THE STATE OF CALIFORNIA OR ITS OFFICERS OR AGENTS SHALL NOT BE RESPONSIBLE FOR THE ACCURACY OR COMPLETENESS OF ELECTRONIC COPIES OF THIS PLAN SHEET.

URS CORPORATION
100 W. SAN FERNANDO St
SUITE 200
SAN JOSE, CA 95113

CITY OF PETALUMA
11 ENGLISH STREET
PETALUMA, CA 94952

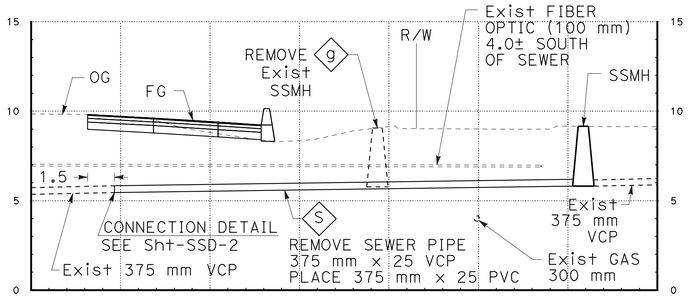

SECTION B-B

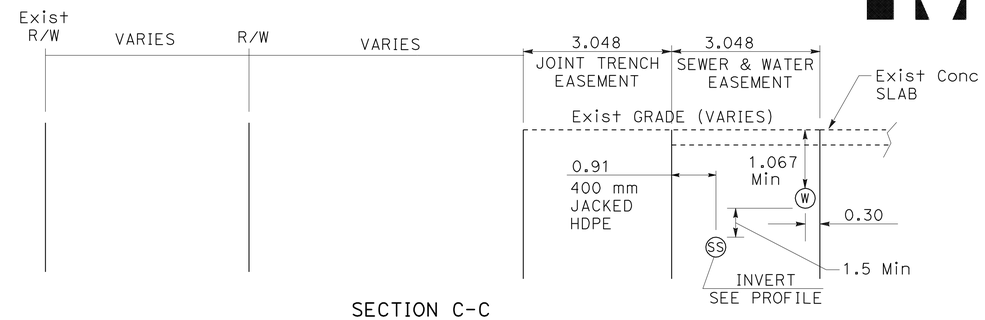

SECTION C-C
SCALE 1:40

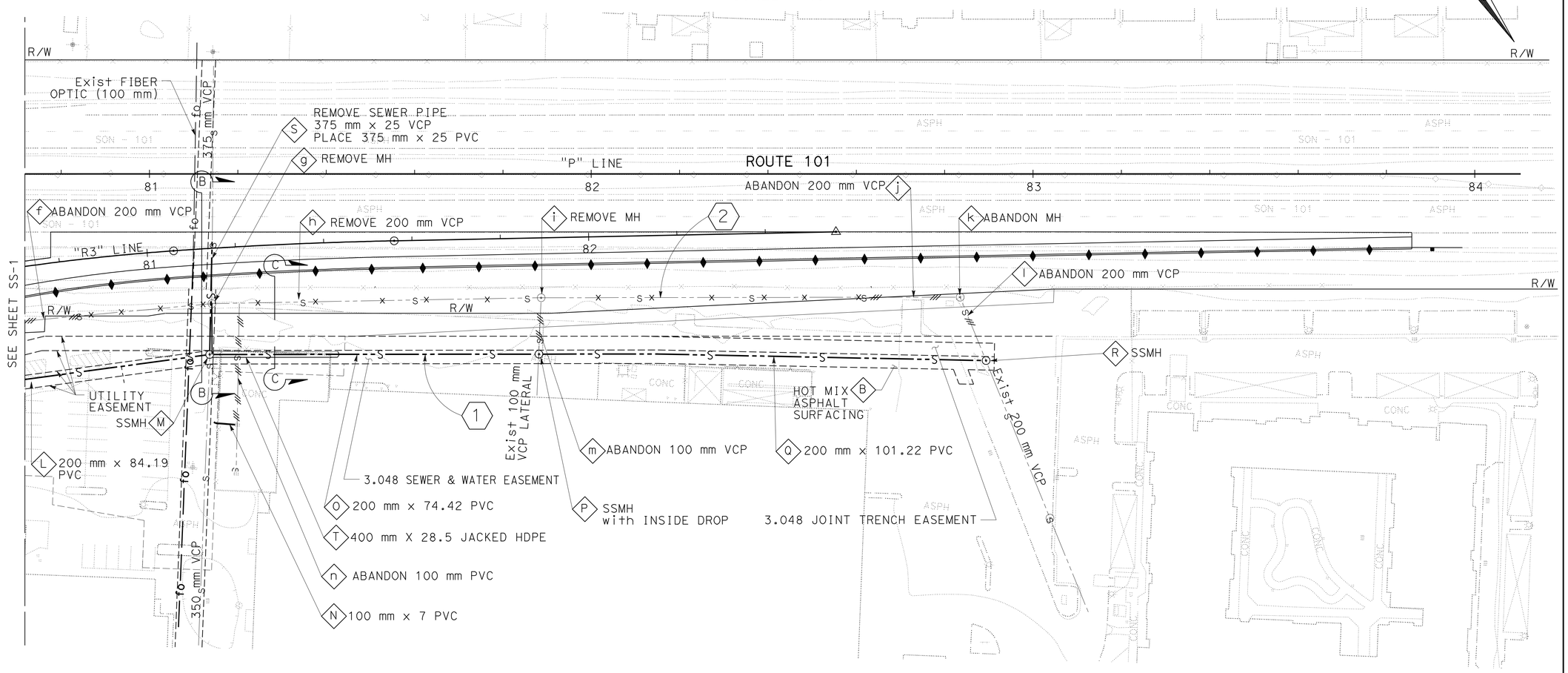

FOR NOTES, ABBREVIATIONS AND LEGEND, SEE SHEET SS-1

THIS PLAN ACCURATE FOR SANITARY SEWER WORK ONLY

ALL DIMENSIONS ARE IN METERS UNLESS OTHERWISE SHOWN

SANITARY SEWER PLAN

SCALE 1:500

SS-2

STATE OF CALIFORNIA - DEPARTMENT OF TRANSPORTATION

Caltrans

CONSULTANT FUNCTIONAL SUPERVISOR: RAMSEY HISSEN

CALCULATED-DESIGNED BY: VAN QUIAMBAO

CHECKED BY: YEV PHILIPOVITCH

REVISED BY | DATE REVISED

LAST REVISION 09-03-10

DATE PLOTTED => 31-MAY-2011
TIME PLOTTED => 09:28

Dist	COUNTY	ROUTE	KILOMETER POST TOTAL PROJECT	SHEET No.	TOTAL SHEETS
04	Son	101	7.3/8.3	82	320

REGISTERED CIVIL ENGINEER 9/3/10 DATE

5-31-11
PLANS APPROVAL DATE

REGISTERED PROFESSIONAL ENGINEER YEV PHILIPOVITCH No. C-25392 Exp. 12/31/11 CIVIL STATE OF CALIFORNIA

THE STATE OF CALIFORNIA OR ITS OFFICERS OR AGENTS SHALL NOT BE RESPONSIBLE FOR THE ACCURACY OR COMPLETENESS OF ELECTRONIC COPIES OF THIS PLAN SHEET.

URS CORPORATION
100 W. SAN FERNANDO St
SUITE 200
SAN JOSE, CA 95113

CITY OF PETALUMA
11 ENGLISH STREET
PETALUMA, CA 94952

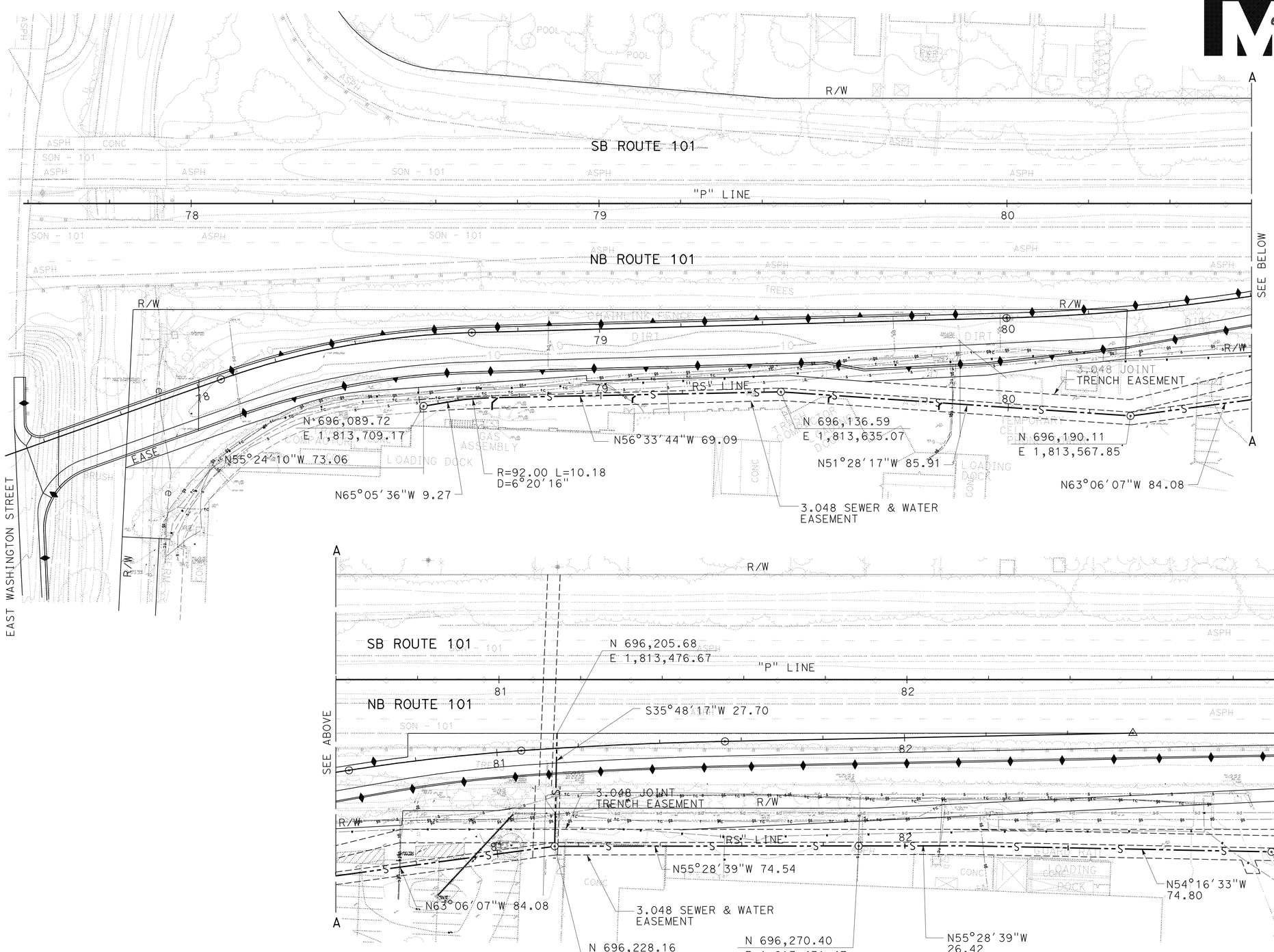

FOR NOTES, ABBREVIATIONS AND LEGEND, SEE SHEET SS-1

THIS PLAN ACCURATE FOR SANITARY SEWER WORK ONLY

ALL DIMENSIONS ARE IN METERS UNLESS OTHERWISE SHOWN

SANITARY SEWER PLAN

SCALE 1:500

SS-3

REVISED BY	DATE REVISED

CALCULATED-DESIGNED BY: VAN QUIAMBAO
CHECKED BY: YEV PHILIPOVITCH

CONSULTANT FUNCTIONAL SUPERVISOR: RAMSEY HISSEN

STATE OF CALIFORNIA - DEPARTMENT OF TRANSPORTATION

LAST REVISION DATE PLOTTED => 31-MAY-2011
TIME PLOTTED => 10:55

Dist	COUNTY	ROUTE	KILOMETER POST TOTAL PROJECT	SHEET No.	TOTAL SHEETS
04	Son	101	7.3/8.3	83	320

Caltrans Metric

REGISTERED CIVIL ENGINEER 9/3/10 DATE

5-31-11
PLANS APPROVAL DATE

REGISTERED PROFESSIONAL ENGINEER YEV PHILIPOVITCH No. C-25392 Exp. 12/31/11 CIVIL STATE OF CALIFORNIA

THE STATE OF CALIFORNIA OR ITS OFFICERS OR AGENTS SHALL NOT BE RESPONSIBLE FOR THE ACCURACY OR COMPLETENESS OF ELECTRONIC COPIES OF THIS PLAN SHEET.

URS CORPORATION
100 W. SAN FERNANDO St
SUITE 200
SAN JOSE, CA 95113

CITY OF PETALUMA
11 English Street
Petaluma, CA 94952

SANITARY SEWER SYSTEM No. 1

"RS" LINE

ALL DIMENSIONS ARE IN METERS UNLESS OTHERWISE SHOWN

SANITARY SEWER PROFILES

SCALE: HORIZONTAL 1:100
VERTICAL 1:50

SSP-1

Station	
m^3 Exc	
m^3 Emb	

STATE OF CALIFORNIA - DEPARTMENT OF TRANSPORTATION

Caltrans

CONSULTANT FUNCTIONAL SUPERVISOR: RAMSEY HISSEN

CALCULATED-DESIGNED BY: YEV PHILIPOVITCH

CHECKED BY: VAN QUIAMBAO

REVISED BY / DATE REVISED

LAST REVISION 09-03-10 DATE PLOTTED => 31-MAY-2011 TIME PLOTTED => 10:55

Dist	COUNTY	ROUTE	KILOMETER POST TOTAL PROJECT	SHEET No.	TOTAL SHEETS
04	Son	101	7.3/8.3	84	320

Caltrans Metric

REGISTERED CIVIL ENGINEER 9/3/10 DATE

5-31-11
PLANS APPROVAL DATE

REGISTERED PROFESSIONAL ENGINEER YEV PHILIPOVITCH No. C-25392 Exp. 12/31/11 CIVIL STATE OF CALIFORNIA

THE STATE OF CALIFORNIA OR ITS OFFICERS OR AGENTS SHALL NOT BE RESPONSIBLE FOR THE ACCURACY OR COMPLETENESS OF ELECTRONIC COPIES OF THIS PLAN SHEET.

URS CORPORATION
100 W. SAN FERNANDO St
SUITE 200
SAN JOSE, CA 95113

CITY OF PETALUMA
11 English Street
Petaluma, CA 94952

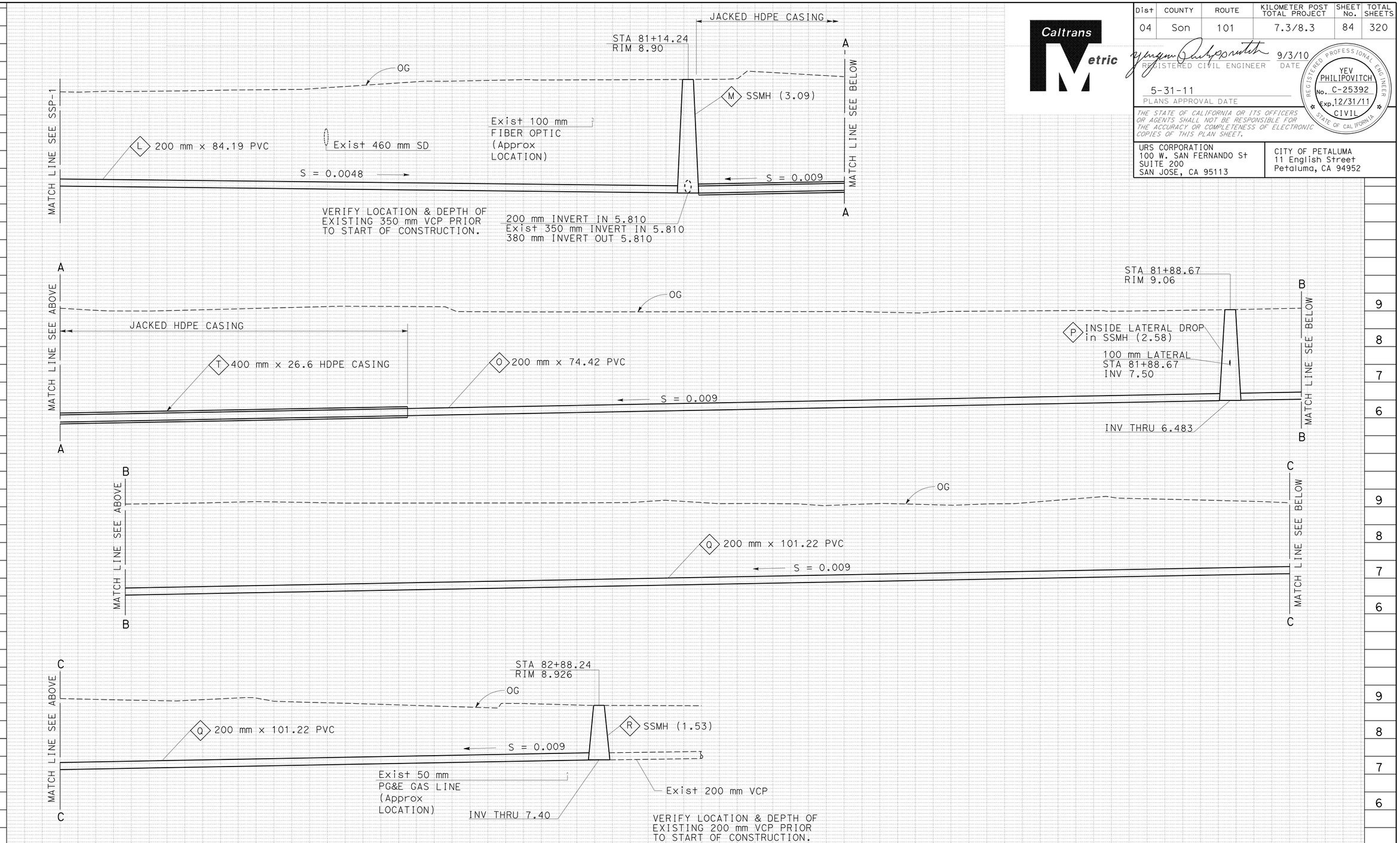

SANITARY SEWER SYSTEM No. 2
"RS" LINE

ALL DIMENSIONS ARE IN METERS UNLESS OTHERWISE SHOWN

SANITARY SEWER PROFILES
SCALE: HORIZONTAL 1:100
VERTICAL 1:50

SSP-2

Station	
m^3	Exc
	Emb

REVISED BY | DATE REVISED

VAN QUIAMBAO | YEV PHILIPOVITCH

CALCULATED-DESIGNED BY | CHECKED BY

CONSULTANT FUNCTIONAL SUPERVISOR: RAMSEY HISSEN

STATE OF CALIFORNIA - DEPARTMENT OF TRANSPORTATION

Caltrans

LAST REVISION 09-03-10 | DATE PLOTTED => 31-MAY-2011 | TIME PLOTTED => 10:55

Dist	COUNTY	ROUTE	KILOMETER POST TOTAL PROJECT	SHEET No.	TOTAL SHEETS
04	Son	101	7.3/8.3	85	320

Caltrans Metric

REGISTERED CIVIL ENGINEER 9/3/10 DATE

5-31-11
PLANS APPROVAL DATE

REGISTERED PROFESSIONAL ENGINEER YEV PHILIPOVITCH No. C-25392 Exp. 12/31/11 CIVIL STATE OF CALIFORNIA

THE STATE OF CALIFORNIA OR ITS OFFICERS OR AGENTS SHALL NOT BE RESPONSIBLE FOR THE ACCURACY OR COMPLETENESS OF ELECTRONIC COPIES OF THIS PLAN SHEET.

URS CORPORATION
100 W. SAN FERNANDO St
SUITE 200
SAN JOSE, CA 95113

CITY OF PETALUMA
11 ENGLISH STREET
PETALUMA, CA 94952

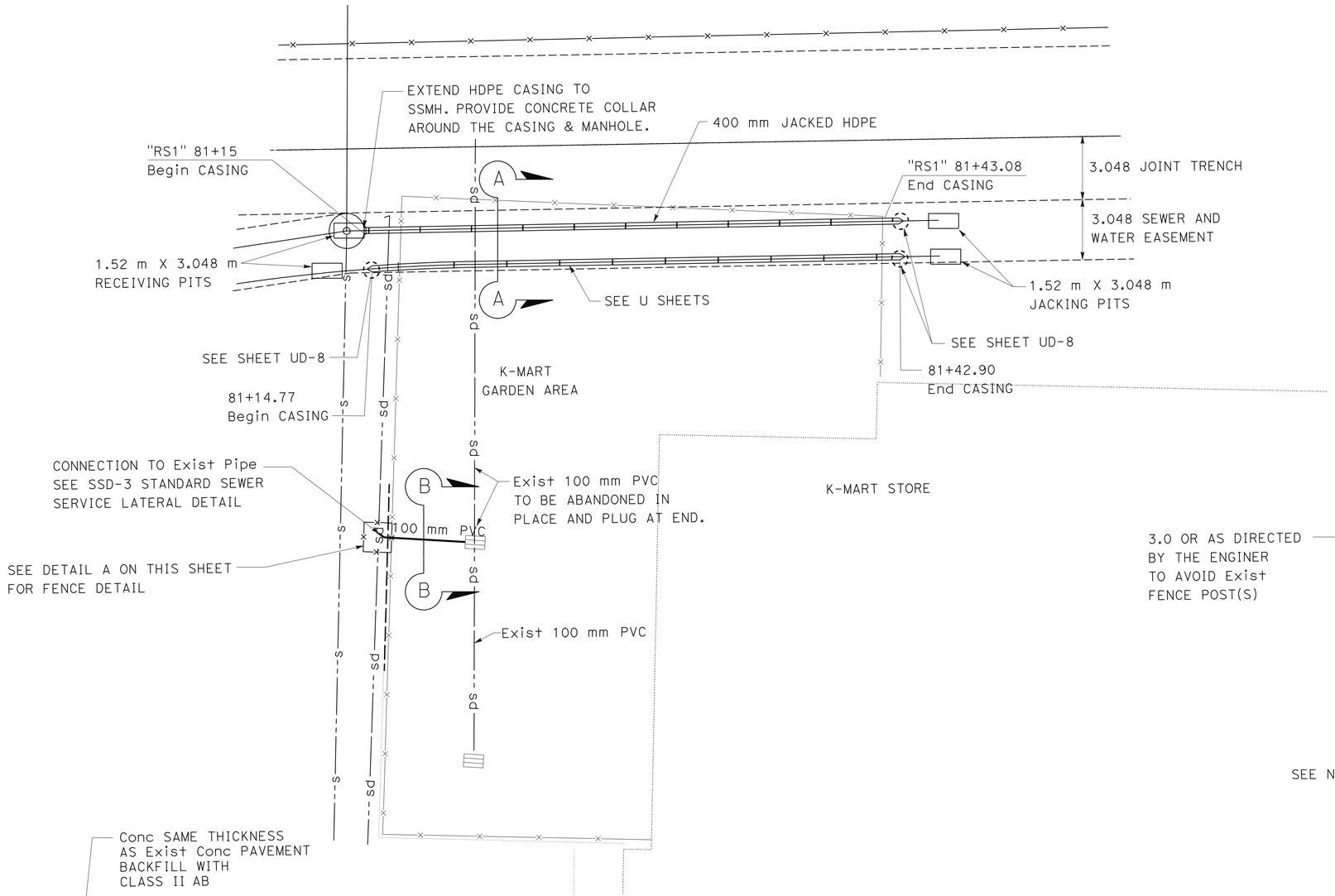

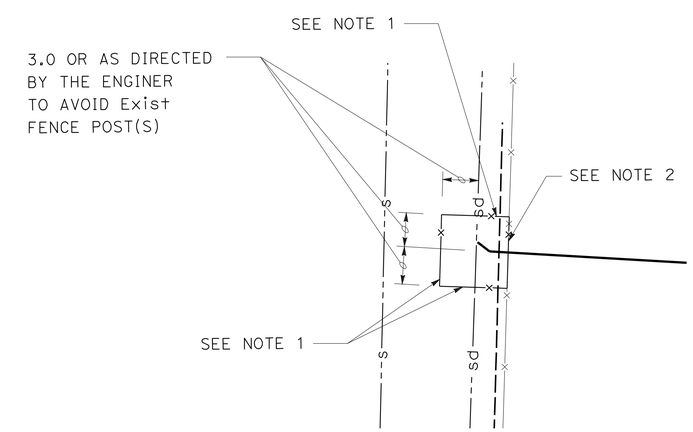

DETAIL A

NOTES:

1. CONSTRUCT Temp CL FENCE (TYPE CL-3.0) WITH GATE ON ONE SIDE FOR CONSTRUCITON ACCESS ONLY. CONNECT TO Exist K-MART FENCE. POSTS SHALL BE METAL AND EMBEDDED IN Pvmt.
2. RECONSTRUCT Exist K-MART FENCE PRIOR TO REMOVING Temp CL FENCE.

ABBREVIATIONS:

SDR	STANDARD DIMENSION RATIO
O.C.	ON CENTER

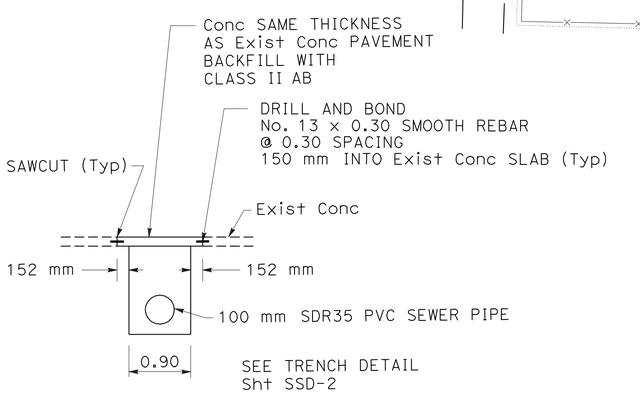

SECTION B-B

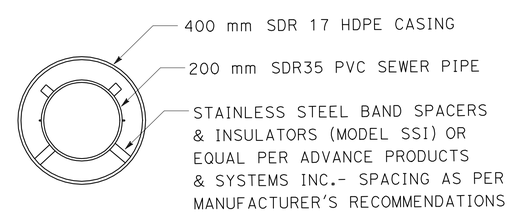

SECTION A-A

NOTE: SECTION FOR SANITARY SEWER ONLY.

SANITARY SEWER DETAILS

NO SCALE

ALL DIMENSIONS ARE IN METERS
UNLESS OTHERWISE SHOWN

SSD-1

STATE OF CALIFORNIA - DEPARTMENT OF TRANSPORTATION
Caltrans

CONSULTANT FUNCTIONAL SUPERVISOR: RAMSEY HISSEN
CALCULATED-DESIGNED BY: VAN QUIAMBAO
CHECKED BY: YEV PHILIPOVITCH
REVISED BY
DATE REVISED

LAST REVISION 09-03-10 | DATE PLOTTED => 31-MAY-2011 | TIME PLOTTED => 10:55

Dist	COUNTY	ROUTE	KILOMETER POST TOTAL PROJECT	SHEET No.	TOTAL SHEETS
04	Son	101	7.3/8.3	86	320

REGISTERED CIVIL ENGINEER 9/3/10 DATE

5-31-11
PLANS APPROVAL DATE

REGISTERED PROFESSIONAL ENGINEER YEV PHILIPOVITCH No. C-25392 Exp. 12/31/11 CIVIL STATE OF CALIFORNIA

THE STATE OF CALIFORNIA OR ITS OFFICERS OR AGENTS SHALL NOT BE RESPONSIBLE FOR THE ACCURACY OR COMPLETENESS OF ELECTRONIC COPIES OF THIS PLAN SHEET.

URS CORPORATION
100 W. SAN FERNANDO St
SUITE 200
SAN JOSE, CA 95113

CITY OF PETALUMA
11 ENGLISH STREET
PETALUMA, CA 94952

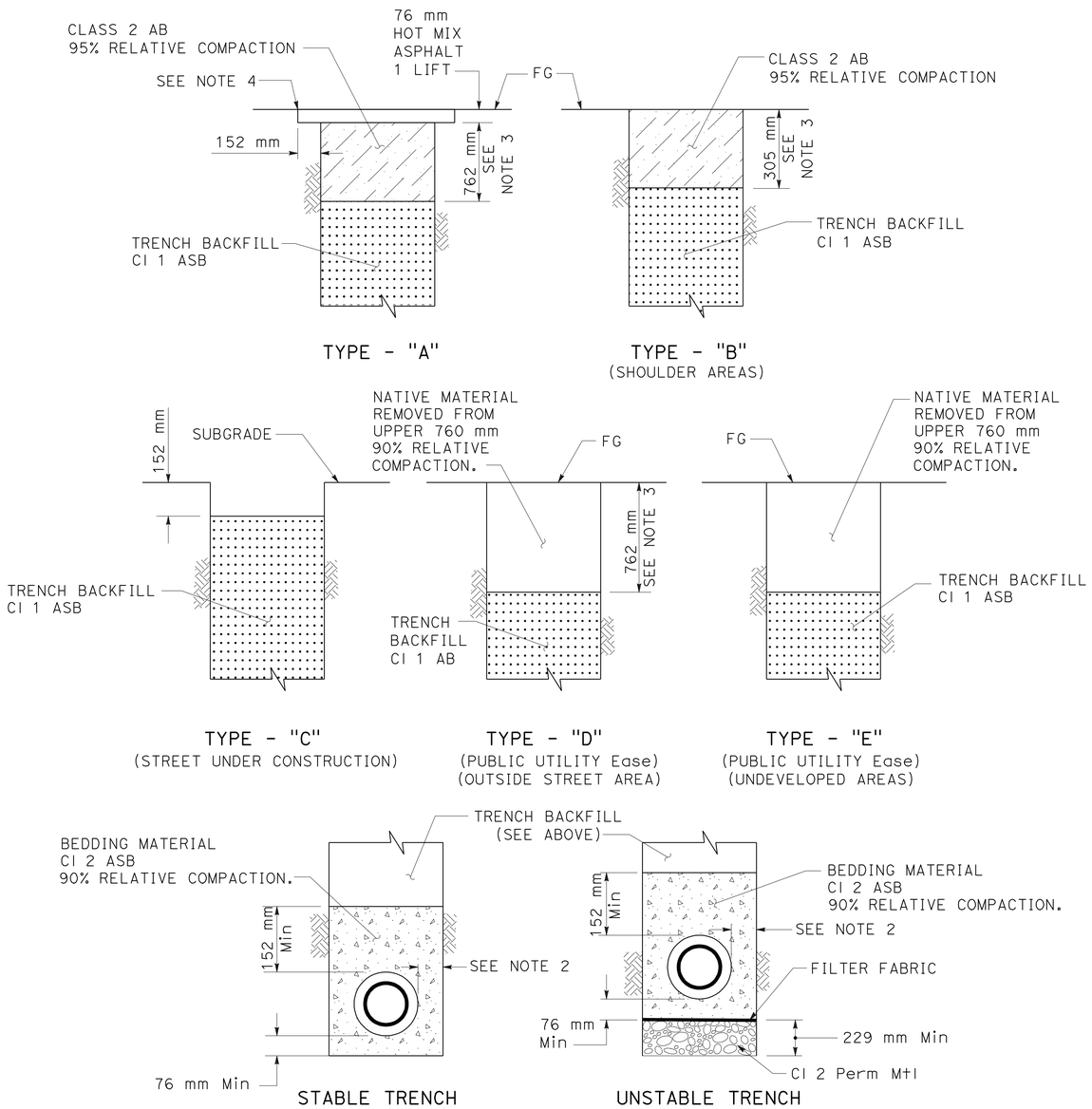

PIPE BEDDING

NOTES:

1. DIFFERENT TRENCH SECTION MAY BE REQUIRED BY THE ENGINEER.
2. PIPE DIAMETER 457 mm OR LESS: 152 mm MINIMUM, 229 mm MAXIMUM. PIPE Dia GREATER THAN 457 mm : 152 mm MINIMUM, 305 mm MAXIMUM.
3. THE MINIMUM STREET STRUCTURAL SECTION SHALL BE 76 mm HMA ON 762 mm CLASS 2 AB OR AS SHOWN ON PLANS, WHICHEVER IS HIGHER.
4. NEATLY CUT PAVEMENT 152 mm FROM EDGE OF TRENCH.

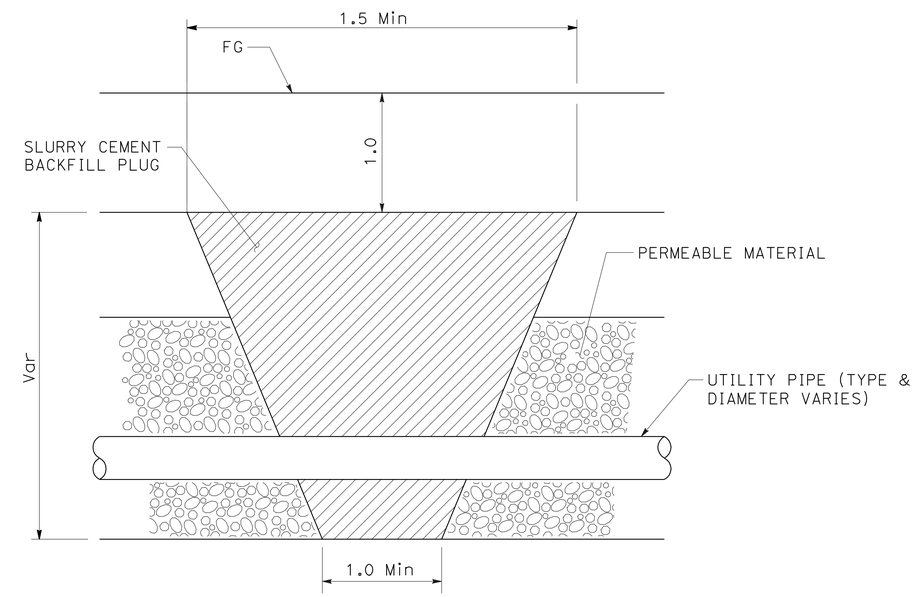

CUT-OFF BARRIER IN UTILITY TRENCH

STANDARD TRENCH DETAILS
SANITARY SEWER AND WATER PIPELINE

ALL DIMENSIONS ARE IN METERS
UNLESS OTHERWISE SHOWN

SANITARY SEWER DETAILS
NO SCALE

SSD-2

STATE OF CALIFORNIA - DEPARTMENT OF TRANSPORTATION
Caltrans

CONSULTANT FUNCTIONAL SUPERVISOR: RAMSEY HISSEN
CALCULATED-DESIGNED BY: VAN QUIAMBAO
CHECKED BY: YEV PHILIPOVITCH
REVISED BY
DATE REVISED

LAST REVISION 09-03-10 | DATE PLOTTED => 31-MAY-2011 | TIME PLOTTED => 10:55

Dist	COUNTY	ROUTE	KILOMETER POST TOTAL PROJECT	SHEET No.	TOTAL SHEETS
04	Son	101	7.3/8.3	87	320

Caltrans Metric

REGISTERED CIVIL ENGINEER 9/3/10 DATE

5-31-11
PLANS APPROVAL DATE

REGISTERED PROFESSIONAL ENGINEER YEV PHILIPOVITCH No. C-25392 Exp. 12/31/11 CIVIL STATE OF CALIFORNIA

THE STATE OF CALIFORNIA OR ITS OFFICERS OR AGENTS SHALL NOT BE RESPONSIBLE FOR THE ACCURACY OR COMPLETENESS OF ELECTRONIC COPIES OF THIS PLAN SHEET.

URS CORPORATION
100 W. SAN FERNANDO St
SUITE 200
SAN JOSE, CA 95113

CITY OF PETALUMA
11 ENGLISH STREET
PETALUMA, CA 94952

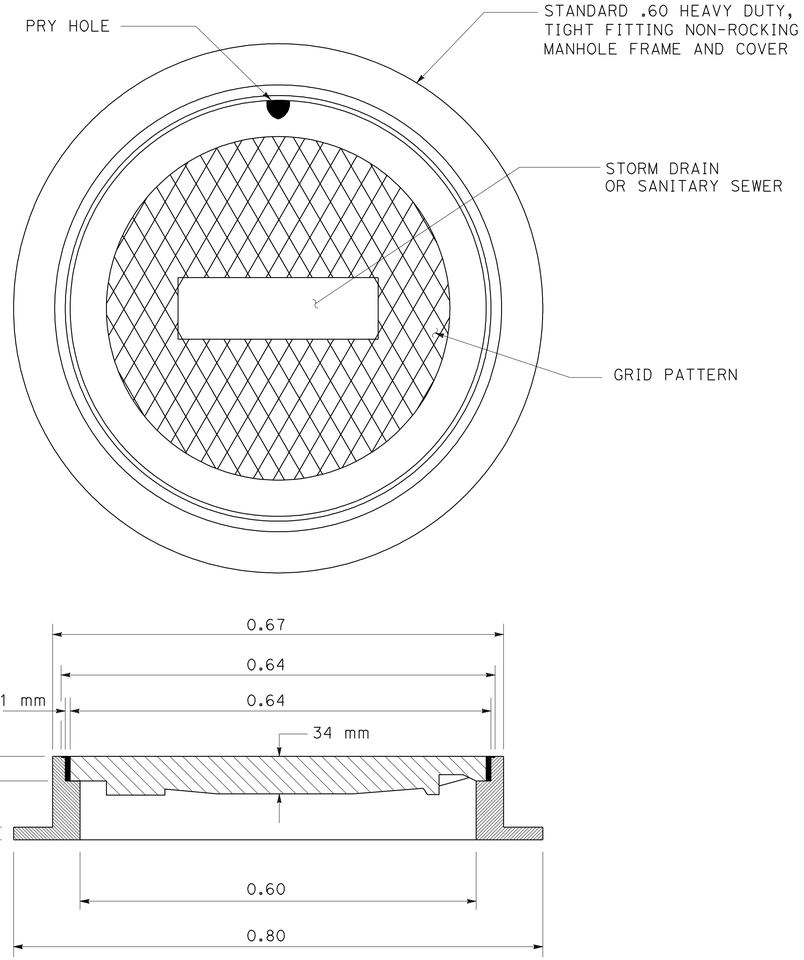

NOTES:

1. SPECIFY SANITARY SEWER OR STORM DRAIN, WHEN ORDERING. ALL CASTING SHALL BE DIPPED IN APPROVED ASPHALT PAINT.
2. ALL MATERIAL USED IN MANUFACTURING SHALL CONFORM TO A.S.T.M. DESIGNATION A-159-G3000, OR OF UNITED STATES GOVERNMENT SPECIFICATIONS QQ-652b.
3. MINIMUM WEIGHT COMPNENTS: COVER - 59 Kg
   FRAME - 61 Kg

APPROVED MANHOLE FRAME & COVER WITHOUT PICK HOLE

PHOENIX IRON WORKS CAT. No. P-1090CPH
SOUTH BAY FOUNDRY CAT. No. SBF-1900CPH
D & L SUPPLY CAT. No. A-1024CPH
PINKERTON FOUNDRY CAT. No. A-640

STANDARD MANHOLE FRAME AND COVER DETAIL

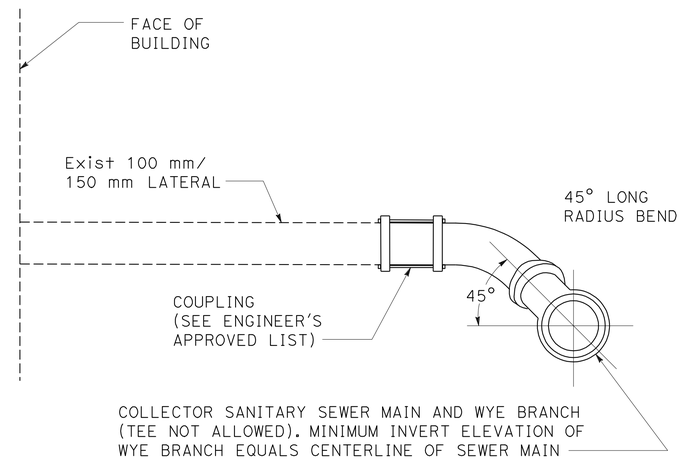

LATERAL PIPE MATERIAL TO BE 100 mm Min AND ONE OF THE FOLLOWING:

DUCTILE IRON PIPE (DIP)
VITRIFIED CLAY PIPE, EXTRA STRENGHT
POLYVINLY CHLORIDE (PVC PIPE, SDR-35 WHEN USED WITH A MANUFACTURED "Y" SHALL BE OF THE SAME MATERIAL AS THE SEWER MAIN.

NOTES:

1. THE SEWER SERVICE LATERAL SHALL BE OF SUFFICIENT DEPTH TO ADEQUATELY SERVE THE BUILDING SITE, AND IN NO CASE SHALL BE LESS THAN 1 METER DEEP AT THE BACK OF THE PUBLIC UTILITY EASEMENT (P.U.E.) UNLESS OTHERWISE AUTHORIZED BY THE ENGINEER.
2. WHERE PROBLEMS ARE ANTICIPATED IN PROVIDING SEWER SERVICE TO A GIVEN BUILDING SITE, THE LATERAL INVERT AT THE P.U.E. SHALL BE STAKED BY THE CONTRACTOR.
3. MINIMUM 2% SLOPE EXCEPT WHERE A VARIATION IS SPECIFICALLY APPROVED BY THE ENGINEER.

LATERAL CONNECTIONS TO EXISTING MAINS:

PVC, (SDR-35)
102 mm - 104 CUT IN WYE
254 mm AND LARGER: GLUE ON SADDLE WITH STRAP TIES.

STANDARD SEWER SERVICE LATERAL DETAIL

ALL DIMENSIONS ARE IN METERS
UNLESS OTHERWISE SHOWN

SANITARY SEWER DETAILS

NO SCALE

SSD-3

REVISED BY	DATE REVISED

VAN QUIAMBAO
YEV PHILIPOVITCH
CALCULATED-DESIGNED BY
CHECKED BY
CONSULTANT FUNCTIONAL SUPERVISOR
RAMSEY HISSEN

STATE OF CALIFORNIA - DEPARTMENT OF TRANSPORTATION
Caltrans

LAST REVISION 09-03-10
DATE PLOTTED => 31-MAY-2011
TIME PLOTTED => 10:55

Dist	COUNTY	ROUTE	KILOMETER POST TOTAL PROJECT	SHEET No.	TOTAL SHEETS
04	Son	101	7.3/8.3	88	320

Caltrans Metric

REGISTERED CIVIL ENGINEER 9/3/10 DATE

5-31-11
PLANS APPROVAL DATE

REGISTERED PROFESSIONAL ENGINEER YEV PHILIPOVITCH No. C-25392 Exp. 12/31/11 CIVIL STATE OF CALIFORNIA

THE STATE OF CALIFORNIA OR ITS OFFICERS OR AGENTS SHALL NOT BE RESPONSIBLE FOR THE ACCURACY OR COMPLETENESS OF ELECTRONIC COPIES OF THIS PLAN SHEET.

URS CORPORATION
100 W. SAN FERNANDO St
SUITE 200
SAN JOSE, CA 95113

CITY OF PETALUMA
11 ENGLISH STREET
PETALUMA, CA 94952

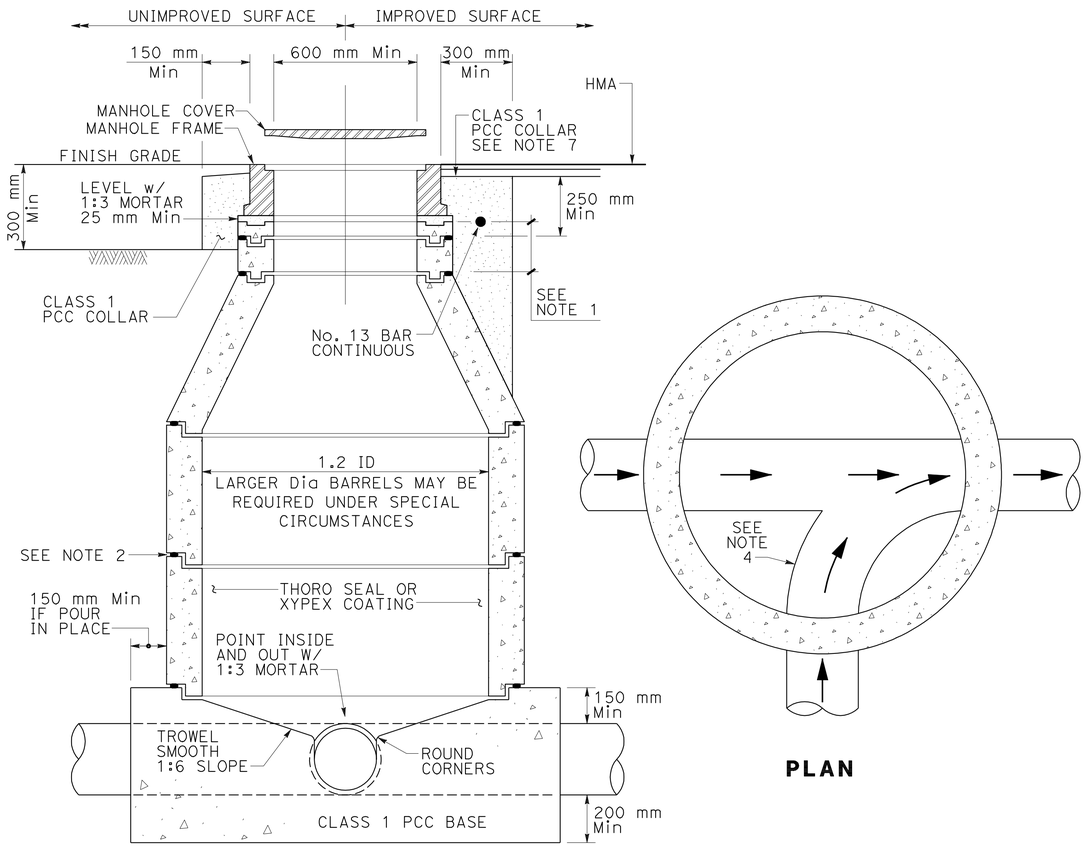

PLAN

SANITARY SEWER MANHOLE

NOTES:

1. MINIMUM OF ONE 75 mm AND ONE 150 mm GRADE ADJUSTMENT RINGS. MAXIMUM HEIGHT OF GRADE ADJUSTMENT RINGS = 500 mm. ALTERNATELY, CONTRACTOR MAY CAST GRADE RINGS IN PLACE.
2. SET ALL BARREL SECTIONS AND TAPER SECTIONS IN APPROVED GASKET/SEALER. "RAM-NEK" OR APPROVED EQUAL. TYPICAL JOINT USES ONE 19 mm × 63 mm "RAM-NEK" SEAL OR TWO SEALS IN HIGH WATER TABLE AREAS.
3. CONE SECTION (TAPER) MUST BE CONCENTRIC FOR 1.2 MANHOLE UNLESS OTHERWISE SPECIFIED AND APPROVED BY THE ENGINEER.
4. CONSTRUCT ALL FLOW CHANNELS OF PIPE WHERE POSSIBLE AFTER LOW RING SECTION IS SET, BREAK OUT TOP HALF OF PIPE FLUSH WITH INSIDE FACE OF MANHOLE WALL AND CONSTRUCT SHELF AND U-SHAPED CHANNEL. MAKE ELEVATION CHANGES GRADUALLY AND DIRECTIONAL CHANGES WITH SMOOTH CURVES.
5. POURED-IN-PLACE BASE SHALL BE POURED FULL THICKNESS TO UNDISTURBED SIDES OF EXCAVATION OR SHALL BE FORMED. PRECAST BASES MAY BE USED ONLY WITH DIRECT APPROVAL OF THE ENGINEER, AND SHALL BE PLACED ON 300 mm THICK 19 mm Cl 2 PERMEABLE MATERIAL SUB-BASE INSTALLED AGAINST UNDISTURBED EARTH.
6. JOINT BETWEEN BASE AND BARREL TO BE SEALED WITH APPROVED GASKET/SEALER.
7. CLASS 1 PCC COLLAR SHALL BE 38 mm BELOW FINISHED GRADE.
8. 1.2 m ID MANHOLE TO BE USED FOR SEWER MAINS LESS THAN 457 mm ON CENTER AND LESS THAN 2.4 m DEEP FROM FINISHED GRADE.
9. MANHOLE REDUCER SLAB MAY BE USED WHERE PIPE IS TOO SHALLOW FOR TAPER SECTION.
10. WHEN DIMENSION FROM FINISHED GRADE TO THE SEWER FLOW LINE IS GREATER THAN 2.4 m, THE BASE SHALL HAVE No. 13 REINFORCING STEEL BARS AT 300 mm ON CENTER BOTH WAYS.

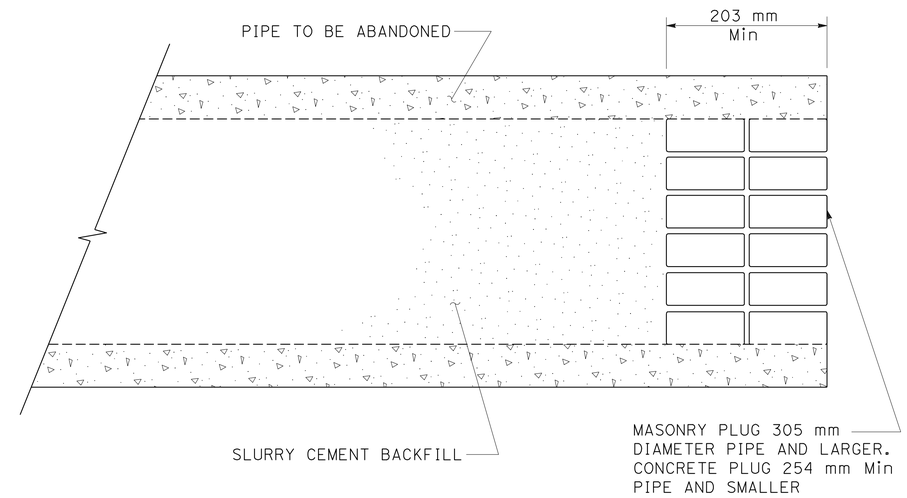

STANDARD ABANDONED PIPE PLUG DETAIL

NOTES:

1. PIPE PLUGS SHALL BE INSTALLED AS DIRECTED BY THE ENGINEER.
2. ALL ABANDONED PIPES, SHALL BE BROKEN INTO EVERY 15.24 AND SHALL BE FILLED COMPLETELY WITH SLURRY CEMENT BACKFILL.

SANITARY SEWER DETAILS

NO SCALE

ALL DIMENSIONS ARE IN METERS UNLESS OTHERWISE SHOWN

SSD-4

STATE OF CALIFORNIA - DEPARTMENT OF TRANSPORTATION
Caltrans

CONSULTANT FUNCTIONAL SUPERVISOR: RAMSEY HISSEN
CALCULATED-DESIGNED BY: VAN QUIAMBAO
CHECKED BY: YEV PHILIPOVITCH
REVISED BY
DATE REVISED

LAST REVISION 09-03-10
DATE PLOTTED => 31-MAY-2011
TIME PLOTTED => 10:55

Dist	COUNTY	ROUTE	KILOMETER POST TOTAL PROJECT	SHEET No.	TOTAL SHEETS
04	Son	101	7.3/8.3	89	320

Caltrans Metric

REGISTERED CIVIL ENGINEER 9/3/10 DATE

5-31-11
PLANS APPROVAL DATE

REGISTERED PROFESSIONAL ENGINEER YEV PHILIPOVITCH No. C-25392 Exp. 12/31/11 CIVIL STATE OF CALIFORNIA

THE STATE OF CALIFORNIA OR ITS OFFICERS OR AGENTS SHALL NOT BE RESPONSIBLE FOR THE ACCURACY OR COMPLETENESS OF ELECTRONIC COPIES OF THIS PLAN SHEET.

URS CORPORATION
100 W. SAN FERNANDO St
SUITE 200
SAN JOSE, CA 95113

CITY OF PETALUMA
11 ENGLISH STREET
PETALUMA, CA 94952

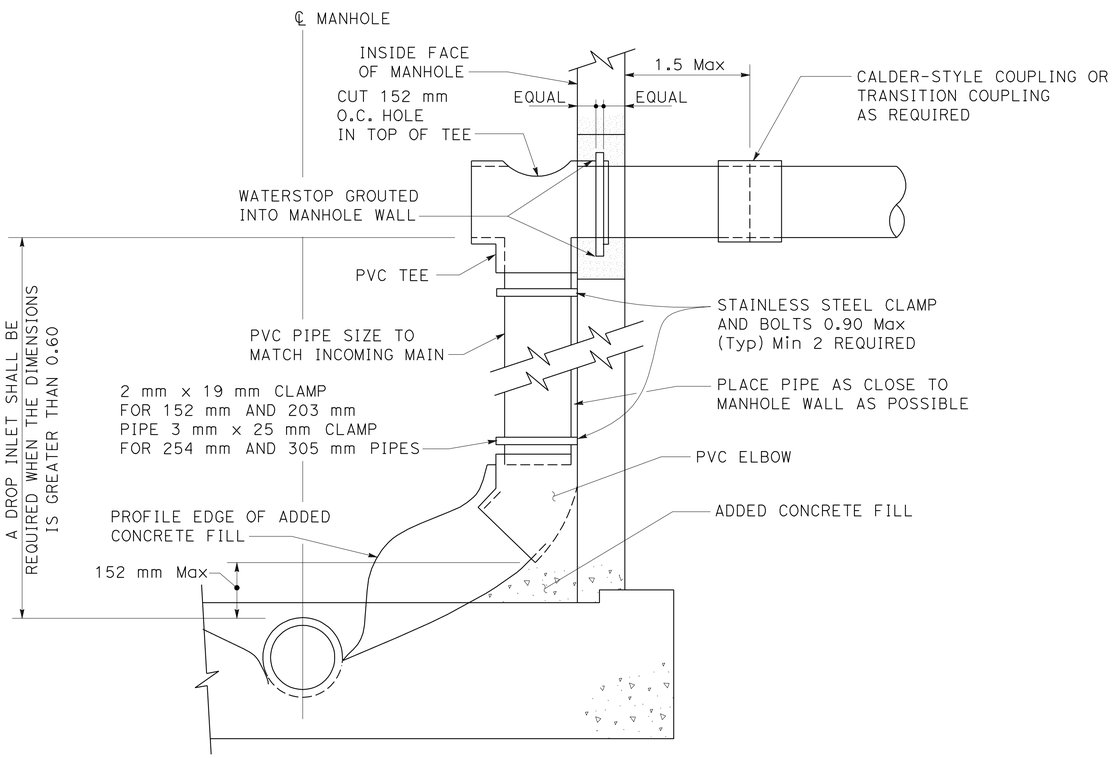

NOTES:

1. INSTALL WATERSTOP IN ACCORDANCE WITH MANUFACTURER'S INSTRUCTION AS SHOWN.
2. NEW MANHOLES CONSTRUCTED USING THIS STANDARD SHALL BE 1500 mm IN DIAMETER, AND INSTALLED IN CONFORMANCE WITH CONCRETE MANHOLE ON SSD-4.
3. ENCLOSE ELBOW IN CONCRETE. FORM SMOOTH CHANNEL TO MANHOLE FLOWLINE.
4. PVC PIPE AND FITTINGS TO BE SDR 35 PVC SCHEDULE 40.

INSIDE DROP IN SANITARY SEWER MANHOLE

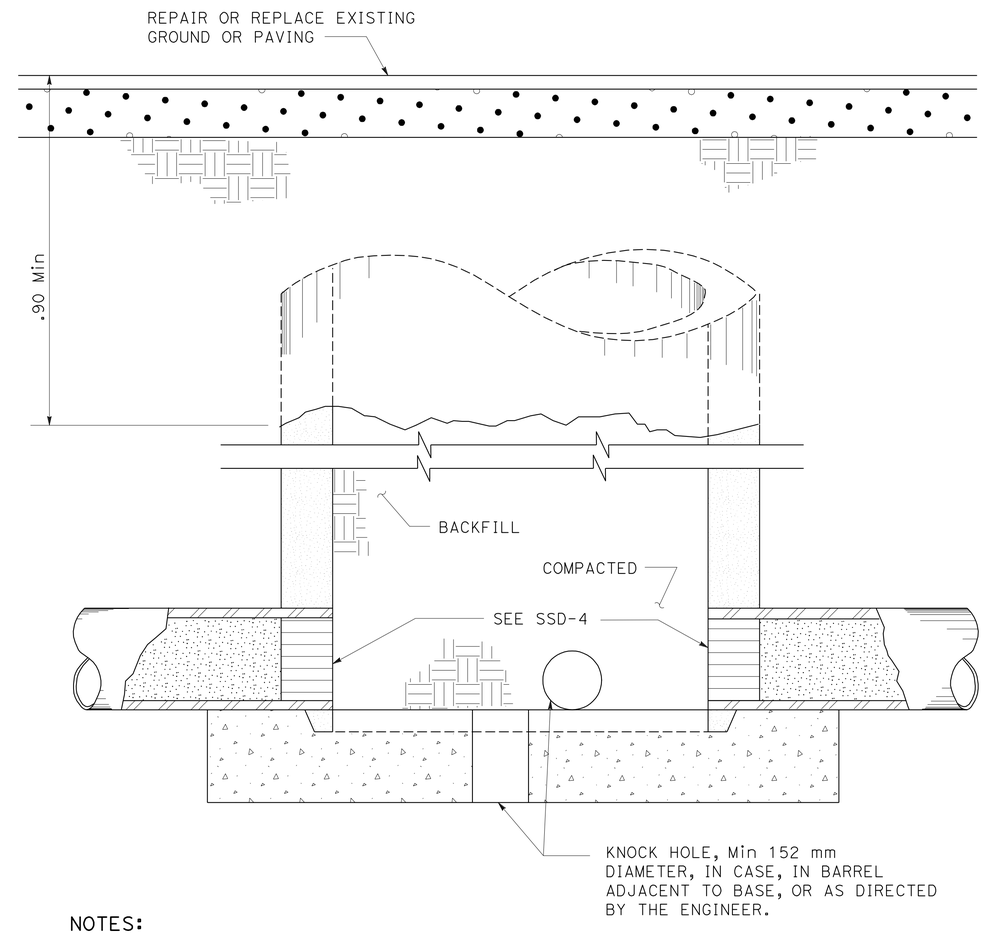

NOTES:

1. REMOVE FRAME, COVER, TAPER AND BARREL SECTIONS.
2. AFTER PLUGGING ALL PIPES IN MANHOLE, SHALL BE BACKFILLED AND COMPACTED TO 90% RELATIVE DENSITY. USE TRENCH BACKFILL OR PIPE BEDDING MATERIAL.

STANDARD ABANDONED MANHOLE DETAIL

SANITARY SEWER DETAILS

NO SCALE

ALL DIMENSIONS ARE IN METERS UNLESS OTHERWISE SHOWN

SSD-5

REVISED BY | DATE REVISED

VAN QUIAMBAO | YEV PHILIPOVITCH

CALCULATED-DESIGNED BY | CHECKED BY

CONSULTANT FUNCTIONAL SUPERVISOR: RAMSEY HISSEN

STATE OF CALIFORNIA - DEPARTMENT OF TRANSPORTATION

Caltrans

LAST REVISION 09-03-10 | DATE PLOTTED => 31-MAY-2011 | TIME PLOTTED => 10:55

Dist	COUNTY	ROUTE	KILOMETER POST TOTAL PROJECT	SHEET No.	TOTAL SHEETS
04	Son	101	7.3/8.3	90	320

REGISTERED CIVIL ENGINEER 9/3/10 DATE

5-31-11
PLANS APPROVAL DATE

REGISTERED PROFESSIONAL ENGINEER YEV PHILIPOVITCH No. C-25392 Exp. 12/31/11 CIVIL STATE OF CALIFORNIA

THE STATE OF CALIFORNIA OR ITS OFFICERS OR AGENTS SHALL NOT BE RESPONSIBLE FOR THE ACCURACY OR COMPLETENESS OF ELECTRONIC COPIES OF THIS PLAN SHEET.

URS CORPORATION
100 W. SAN FERNANDO St
SUITE 200
SAN JOSE, CA 95113

CITY OF PETALUMA
11 ENGLISH STREET
PETALUMA, CA 94952

NOTES:

1. (N) THE QUANTITY SHOWN IN THESE COLUMNS ARE FOR INFORMATION ONLY AND NOT A SEPARATE ITEM.

2. ALL OFFSETS ARE TO THE CENTER OF THE STRUCTURE.

SANITARY SEWER QUANTITIES

⬡ SANITARY SEWER SYSTEM No.	◇ SANITARY SEWER ITEM No.	SANITARY SEWER MANHOLE	HEIGHT OF MANHOLE (N)	100 mm SDR35 PVC SEWER PIPE	150 mm SDR35 PVC SEWER PIPE	200 mm SDR35 PVC SEWER PIPE	375 mm SDR35 PVC SEWER PIPE	400 mm JACKED HDPE	REMOVE SEWER PIPE	ABANDON SEWER PIPE	ABANDON MANHOLE	REMOVE SEWER MANHOLE	(N) LATERAL CONNECTION	(N) SLURRY CEMENT BACKFILL PLUG	DESCRIPTION	STATION / OFFSET	⬡ SANITARY SEWER SYSTEM No.	◇ SANITARY SEWER ITEM No.	PLAN SHEET No.
		EA		m	m	m	m	m	m	m	EA	EA	EA	EA					
1	A	1	2.11												INSTALL SS MANHOLE OVER Exist SS PIPE	"RS" 78+56.41 , 0 Rt	1	A	SS-1
	B													1	PLACE SLURRY CEMENT BACKFILL PLUG	"RS" 78+77.00 , 0 Rt	1	B	SS-1
	C													1	PLACE SLURRY CEMENT BACKFILL PLUG	"RS" 79+30.00 , 0 Rt	1	C	SS-1
	D				2								1		CUT AND PLUG SEWER MAIN, EXTEND & CONNECT Exist LATERAL	"RS" 78+72.64 , 0 Rt	1	D	SS-1
	E					87.77									INSTALL 200 mm SDR35 PVC PIPE		1	E	SS-1
	F				2								1		CUT AND PLUG SEWER MAIN, EXTEND & CONNECT Exist LATERAL	"RS" 79+07.35 , 0 Rt	1	F	SS-1
	G	1	2.60												INSTALL SS MANHOLE	"RS" 79+44.14 , 0 Rt	1	G	SS-1
	H				2								1		CUT AND PLUG SEWER MAIN, CUT & CONNECT Exist LATERAL	"RS" 79+55.92 , 0 Rt	1	H	SS-1
	I				2								1		CUT AND PLUG SEWER MAIN, CUT & CONNECT Exist LATERAL	"RS" 79+83.04 , 0 Rt	1	I	SS-1
	J					85.92									INSTALL 200 mm SDR35 PVC PIPE		1	J	SS-1
	K	1	2.88												INSTALL SS MANHOLE	"RS" 80+30.06 , 0 Rt	1	K	SS-1
	L					84.19									INSTALL 200 mm SDR35 PVC PIPE		1	L	
	M	1	3.09												INSTALL SS MANHOLE	"RS" 81+14.24 , 0 Rt	1	M	SS-2
	N			7											INSTALL 100 mm PVC, CONSTRUCT Temp FENCE AND RECONSTRUCT FENCE	"RS" 81+21.62 , 0 Rt	1	N	SS-2
	O					74.42									INSTALL 200 mm SDR35 PVC PIPE		1	O	SS-2
	P	1	2.58										1		INSTALL SS MANHOLE	"RS" 81+88.67 , 0 Rt	1	P	SS-2
	Q					101.22									INSTALL 200 mm SDR35 PVC PIPE		1	Q	SS-2
1	R	1	1.53												INSTALL SS MANHOLE OVER Exist SS PIPE	"RS" 82+89.88 , 0 Rt	1	R	SS-2
	S						25		25						REMOVE 375 mm VCP PIPE, PLACE 375 mm SDR35 PVC PIPE	"RS" 81+14.24 , 0 Rt	1	S	SS-2
	T							28.5							INSTALL 400 mm HDPE CASING UNDER GARDEN AREA BY JACKING	"RS" 81+14.24 TO 81+42.50	1	T	SS-2
2	a								47						REMOVE 200 mm VCP	"RS" 78+56.41 TO 79+04.00	2	a	SS-1
	b									50					ABANDON 200 mm VCP	"RS" 79+04.00 TO 79+53.00	2	b	SS-1
	c											1			REMOVE SANITARY SEWER MANHOLE	"RS" 79+34.86 , 2.3 Lt	2	c	SS-1
	d								100						REMOVE 200 mm VCP	"RS" 79+53.00 TO 80+56.00	2	d	SS-1
	e											1			REMOVE SANITARY SEWER MANHOLE	"RS" 80+26.14 , 14.4 Lt	2	e	SS-1
	f									32					ABANDON 200 mm VCP	"RS" 80+56.00 TO 80+85.00	2	f	SS-1/SS-2
	g											1			REMOVE SANITARY SEWER MANHOLE	"RS" 81+14.65 , 11.5 Lt	2	g	SS-2
	h								180						REMOVE 200 mm VCP	"RS" 80+85.00 TO 82+66.00	2	h	SS-2
	i											1			REMOVE SANITARY SEWER MANHOLE	"RS" 82+83.72 , 12.75 Lt	2	i	SS-2
	j									20					ABANDON 200 mm VCP	"RS" 82+66.00 TO 82+83.74	2	j	SS-2
	k										1				ABANDON SANITARY SEWER MANHOLE	"RS" 82+83.74 , 14.22 Lt	2	k	SS-2
	l									15					ABANDON 200 mm VCP	"RS" 82+83.74 TO 82+89.88	2	l	SS-2
	m									12					ABANDON 100 mm VCP	"RS" 81+89.05 , 9.70 Lt	2	m	SS-2
2	n									31					ABANDON 100 mm VCP	"RS" 81+21.40 , 9.52 Lt	2	n	SS-2
TOTAL		6		7	8	433.52	25	28.5	352	160	1	4	5	2					

ALL DIMENSIONS ARE IN METERS
UNLESS OTHERWISE SHOWN

SANITARY SEWER QUANTITIES
SSQ-1

VAN QUIAMBAO — REVISED BY
YEV PHILIPOVITCH — DATE REVISED
CALCULATED-DESIGNED BY
CHECKED BY
CONSULTANT FUNCTIONAL SUPERVISOR
RAMSEY HISSEN
STATE OF CALIFORNIA - DEPARTMENT OF TRANSPORTATION
Caltrans

LAST REVISION 09-03-10 | DATE PLOTTED => 31-MAY-2011 | TIME PLOTTED => 10:56

Dist	COUNTY	ROUTE	KILOMETER POST TOTAL PROJECT	SHEET No.	TOTAL SHEETS
04	Son	101	7.3/8.3	91	320

David Williams 9/3/10
REGISTERED CIVIL ENGINEER DATE

5-31-11
PLANS APPROVAL DATE

REGISTERED PROFESSIONAL ENGINEER David A. Williams No. C58697 Exp. 12/31/12 CIVIL STATE OF CALIFORNIA

THE STATE OF CALIFORNIA OR ITS OFFICERS OR AGENTS SHALL NOT BE RESPONSIBLE FOR THE ACCURACY OR COMPLETENESS OF ELECTRONIC COPIES OF THIS PLAN SHEET.

URS CORPORATION
1380 LEAD HILL BLVD,
SUITE 100
ROSEVILLE, CA 95661

CITY OF PETALUMA
11 ENGLISH STREET
PETALUMA, CA 94952

FOR ACCURATE RIGHT OF WAY DATA,
CONTACT RIGHT OF WAY ENGINEERING AT THE DISTRICT OFFICE.

LEGEND

- ABANDONED/RELOCATED UTILITIES
- fo — fo — Exist FIBER OPTIC
- POTHOLE LOCATION
- (No.) POTHOLE NUMBER

ABBREVIATION:

kV	KILOVOLTS
SS	SANITARY SEWER

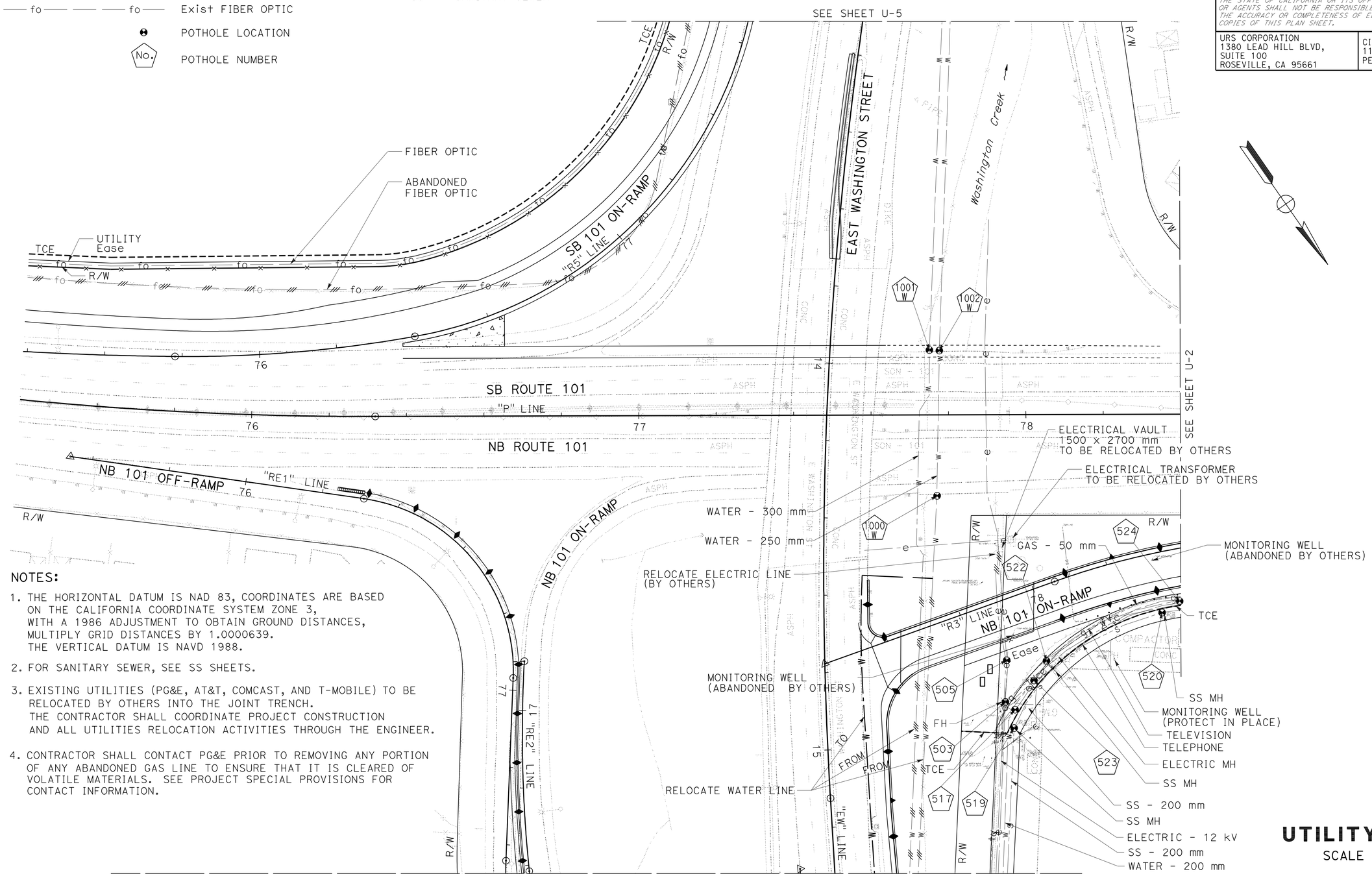

NOTES:

1. THE HORIZONTAL DATUM IS NAD 83, COORDINATES ARE BASED ON THE CALIFORNIA COORDINATE SYSTEM ZONE 3, WITH A 1986 ADJUSTMENT TO OBTAIN GROUND DISTANCES, MULTIPLY GRID DISTANCES BY 1.0000639. THE VERTICAL DATUM IS NAVD 1988.
2. FOR SANITARY SEWER, SEE SS SHEETS.
3. EXISTING UTILITIES (PG&E, AT&T, COMCAST, AND T-MOBILE) TO BE RELOCATED BY OTHERS INTO THE JOINT TRENCH. THE CONTRACTOR SHALL COORDINATE PROJECT CONSTRUCTION AND ALL UTILITIES RELOCATION ACTIVITIES THROUGH THE ENGINEER.
4. CONTRACTOR SHALL CONTACT PG&E PRIOR TO REMOVING ANY PORTION OF ANY ABANDONED GAS LINE TO ENSURE THAT IT IS CLEARED OF VOLATILE MATERIALS. SEE PROJECT SPECIAL PROVISIONS FOR CONTACT INFORMATION.

THIS PLAN ACCURATE FOR UTILITY WORK ONLY

ALL DIMENSIONS ARE IN METERS UNLESS OTHERWISE SHOWN

UTILITY PLAN

SCALE 1:500

U-1

REVISED BY | DATE REVISED
SHERINA LAM | DAVID A. WILLIAMS
CALCULATED-DESIGNED BY | CHECKED BY
CONSULTANT FUNCTIONAL SUPERVISOR
RAMSEY HISSEN
STATE OF CALIFORNIA - DEPARTMENT OF TRANSPORTATION
Caltrans

LAST REVISION 09-03-10 | DATE PLOTTED => 01-JUN-2011 | TIME PLOTTED => 07:46

Dist	COUNTY	ROUTE	KILOMETER POST TOTAL PROJECT	SHEET No.	TOTAL SHEETS
04	Son	101	7.3/8.3	92	320

David Williams 9/3/10
REGISTERED CIVIL ENGINEER DATE

5-31-11
PLANS APPROVAL DATE

REGISTERED PROFESSIONAL ENGINEER David A. Williams No. C58697 Exp. 12/31/12 CIVIL STATE OF CALIFORNIA

THE STATE OF CALIFORNIA OR ITS OFFICERS OR AGENTS SHALL NOT BE RESPONSIBLE FOR THE ACCURACY OR COMPLETENESS OF ELECTRONIC COPIES OF THIS PLAN SHEET.

URS CORPORATION
1380 LEAD HILL BLVD,
SUITE 100
ROSEVILLE, CA 95661

CITY OF PETALUMA
11 ENGLISH STREET
PETALUMA, CA 94952

Caltrans Metric

FOR ACCURATE RIGHT OF WAY DATA,
CONTACT RIGHT OF WAY ENGINEERING AT THE DISTRICT OFFICE.

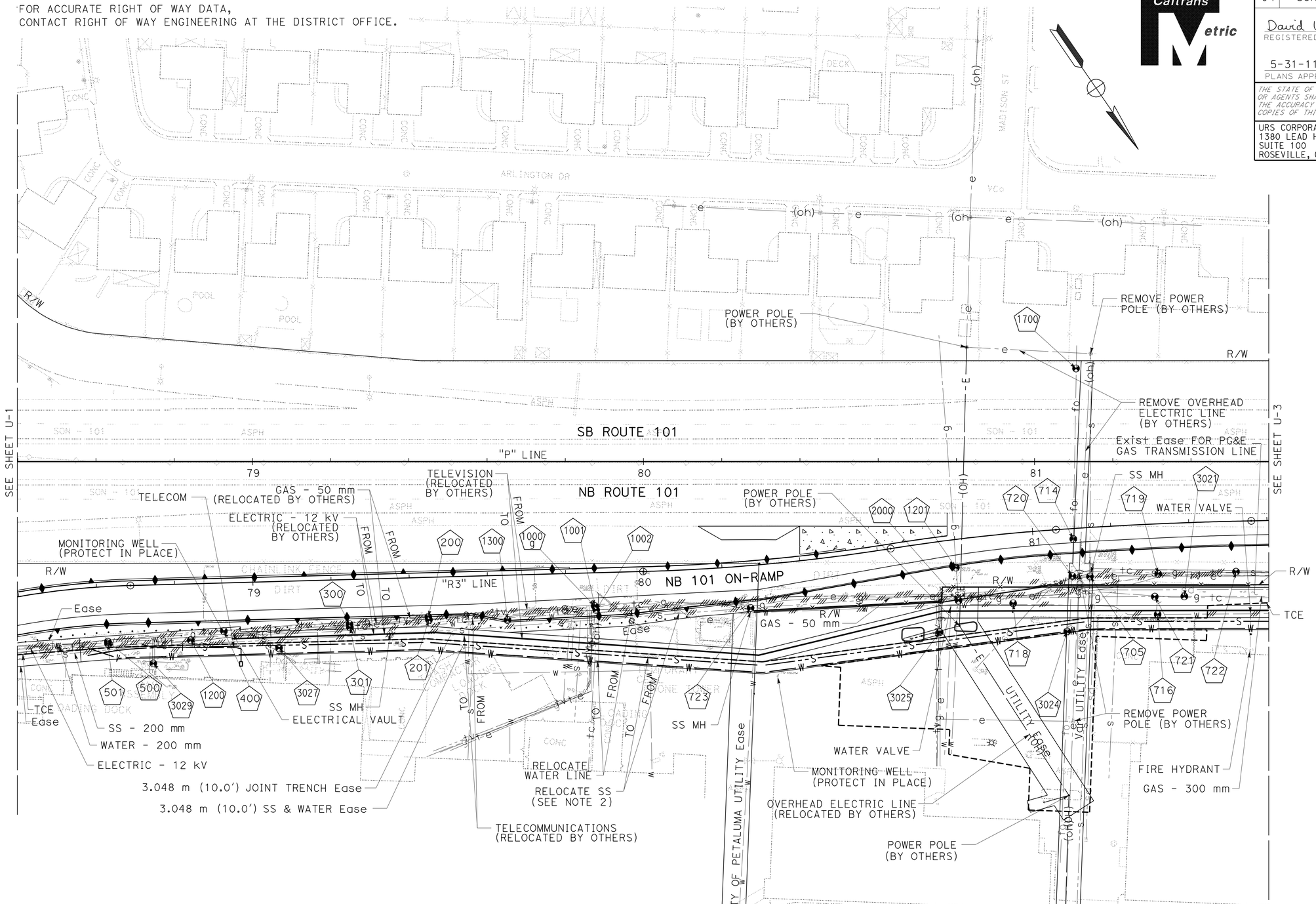

FOR NOTES, ABBREVIATIONS AND LEGEND, SEE SHEET U-1

THIS PLAN ACCURATE FOR UTILITY WORK ONLY

ALL DIMENSIONS ARE IN METERS UNLESS OTHERWISE SHOWN

UTILITY PLAN

SCALE 1:500

U-2

REVISED BY	DATE REVISED

SHERINA LAM
DAVID A. WILLIAMS
CALCULATED-DESIGNED BY
CHECKED BY
CONSULTANT FUNCTIONAL SUPERVISOR
RAMSEY HISSEN

STATE OF CALIFORNIA - DEPARTMENT OF TRANSPORTATION
Caltrans

LAST REVISION 09-03-10
DATE PLOTTED => 31-MAY-2011
TIME PLOTTED => 10:26

Dist	COUNTY	ROUTE	KILOMETER POST TOTAL PROJECT	SHEET No.	TOTAL SHEETS
04	Son	101	7.3/8.3	93	320

David Williams 9/3/10
REGISTERED CIVIL ENGINEER DATE

5-31-11
PLANS APPROVAL DATE

REGISTERED PROFESSIONAL ENGINEER
David A. Williams
No. C58697
Exp. 12/31/12
CIVIL
STATE OF CALIFORNIA

THE STATE OF CALIFORNIA OR ITS OFFICERS OR AGENTS SHALL NOT BE RESPONSIBLE FOR THE ACCURACY OR COMPLETENESS OF ELECTRONIC COPIES OF THIS PLAN SHEET.

URS CORPORATION
1380 LEAD HILL BLVD,
SUITE 100
ROSEVILLE, CA 95661

CITY OF PETALUMA
11 ENGLISH STREET
PETALUMA, CA 94952

Caltrans Metric

FOR ACCURATE RIGHT OF WAY DATA,
CONTACT RIGHT OF WAY ENGINEERING AT THE DISTRICT OFFICE.

FOR NOTES, ABBREVIATIONS AND LEGEND, SEE SHEET U-1

THIS PLAN ACCURATE FOR UTILITY WORK ONLY

ALL DIMENSIONS ARE IN METERS UNLESS OTHERWISE SHOWN

UTILITY PLAN

SCALE 1:500

U-3

REVISED BY	DATE REVISED

SHERINA LAM
DAVID A. WILLIAMS

CALCULATED-DESIGNED BY
CHECKED BY

CONSULTANT FUNCTIONAL SUPERVISOR
RAMSEY HISSEN

STATE OF CALIFORNIA - DEPARTMENT OF TRANSPORTATION
Caltrans

LAST REVISION 09-03-10 | DATE PLOTTED => 31-MAY-2011 | TIME PLOTTED => 10:26

Dist	COUNTY	ROUTE	KILOMETER POST TOTAL PROJECT	SHEET No.	TOTAL SHEETS
04	Son	101	7.3/8.3	94	320

David Williams 9/3/10
REGISTERED CIVIL ENGINEER DATE

5-31-11
PLANS APPROVAL DATE

REGISTERED PROFESSIONAL ENGINEER David A. Williams No. C58697 Exp. 12/31/12 CIVIL STATE OF CALIFORNIA

THE STATE OF CALIFORNIA OR ITS OFFICERS OR AGENTS SHALL NOT BE RESPONSIBLE FOR THE ACCURACY OR COMPLETENESS OF ELECTRONIC COPIES OF THIS PLAN SHEET.

URS CORPORATION
1380 LEAD HILL BLVD,
SUITE 100
ROSEVILLE, CA 95661

CITY OF PETALUMA
11 ENGLISH STREET
PETALUMA, CA 94952

FOR ACCURATE RIGHT OF WAY DATA,
CONTACT RIGHT OF WAY ENGINEERING AT THE DISTRICT OFFICE.

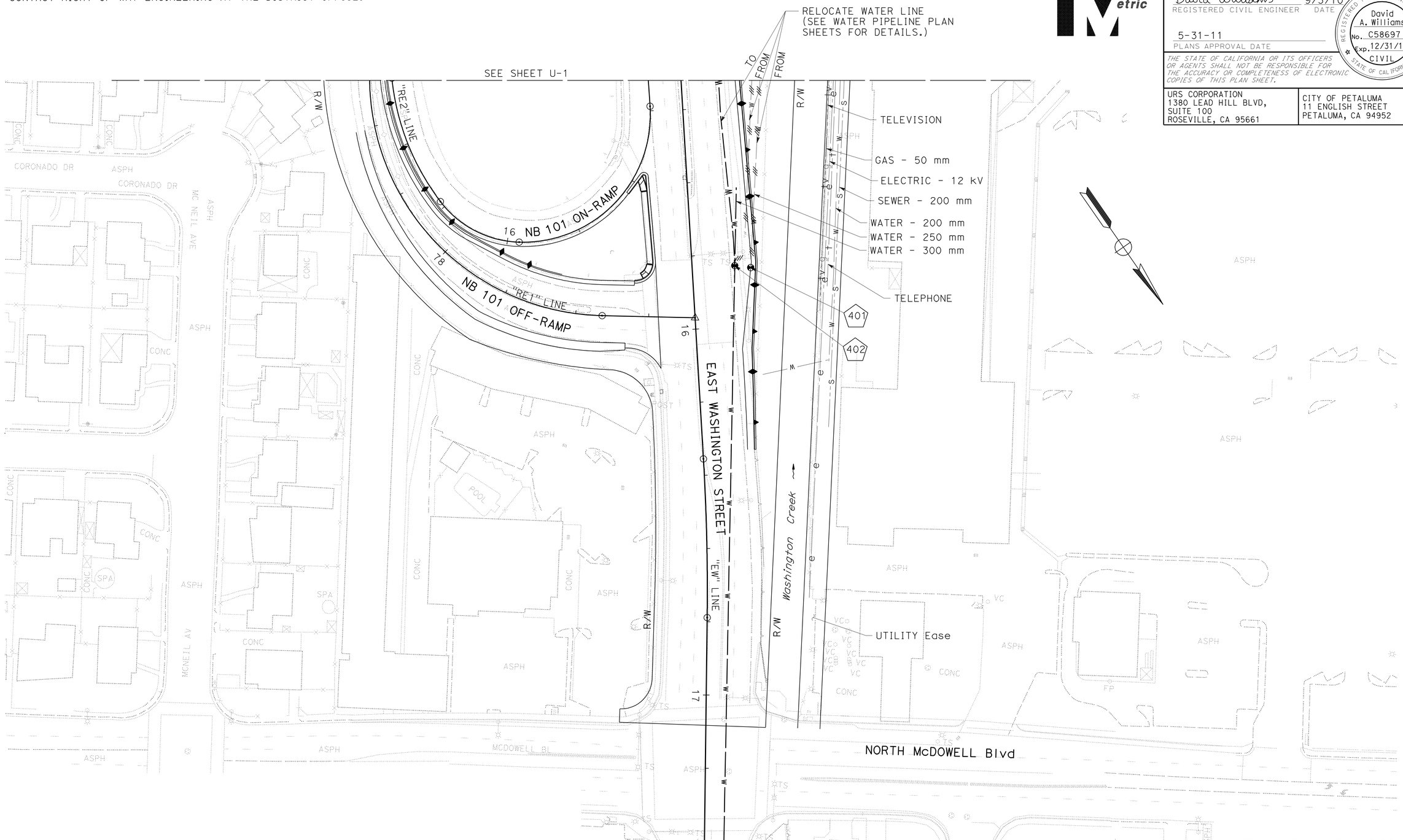

FOR NOTES, ABBREVIATIONS
AND LEGEND, SEE SHEET U-1

THIS PLAN ACCURATE FOR UTILITY WORK ONLY

ALL DIMENSIONS ARE IN METERS
UNLESS OTHERWISE SHOWN

UTILITY PLAN

SCALE 1:500

U-4

STATE OF CALIFORNIA - DEPARTMENT OF TRANSPORTATION

Caltrans

CONSULTANT FUNCTIONAL SUPERVISOR: RAMSEY HISSEN

CALCULATED-DESIGNED BY: SHERINA LAM

CHECKED BY: DAVID A. WILLIAMS

REVISED BY / DATE REVISED

LAST REVISION 09-03-10 | DATE PLOTTED => 31-MAY-2011 | TIME PLOTTED => 10:26

Dist	COUNTY	ROUTE	KILOMETER POST TOTAL PROJECT	SHEET No.	TOTAL SHEETS
04	Son	101	7.3/8.3	95	320

David Williams 9/3/10
REGISTERED CIVIL ENGINEER DATE

5-31-11
PLANS APPROVAL DATE

REGISTERED PROFESSIONAL ENGINEER David A. Williams No. C58697 Exp. 12/31/12 CIVIL STATE OF CALIFORNIA

THE STATE OF CALIFORNIA OR ITS OFFICERS OR AGENTS SHALL NOT BE RESPONSIBLE FOR THE ACCURACY OR COMPLETENESS OF ELECTRONIC COPIES OF THIS PLAN SHEET.

URS CORPORATION
1380 LEAD HILL BLVD,
SUITE 100
ROSEVILLE, CA 95661

CITY OF PETALUMA
11 ENGLISH STREET
PETALUMA, CA 94952

FOR ACCURATE RIGHT OF WAY DATA,
CONTACT RIGHT OF WAY ENGINEERING AT THE DISTRICT OFFICE.

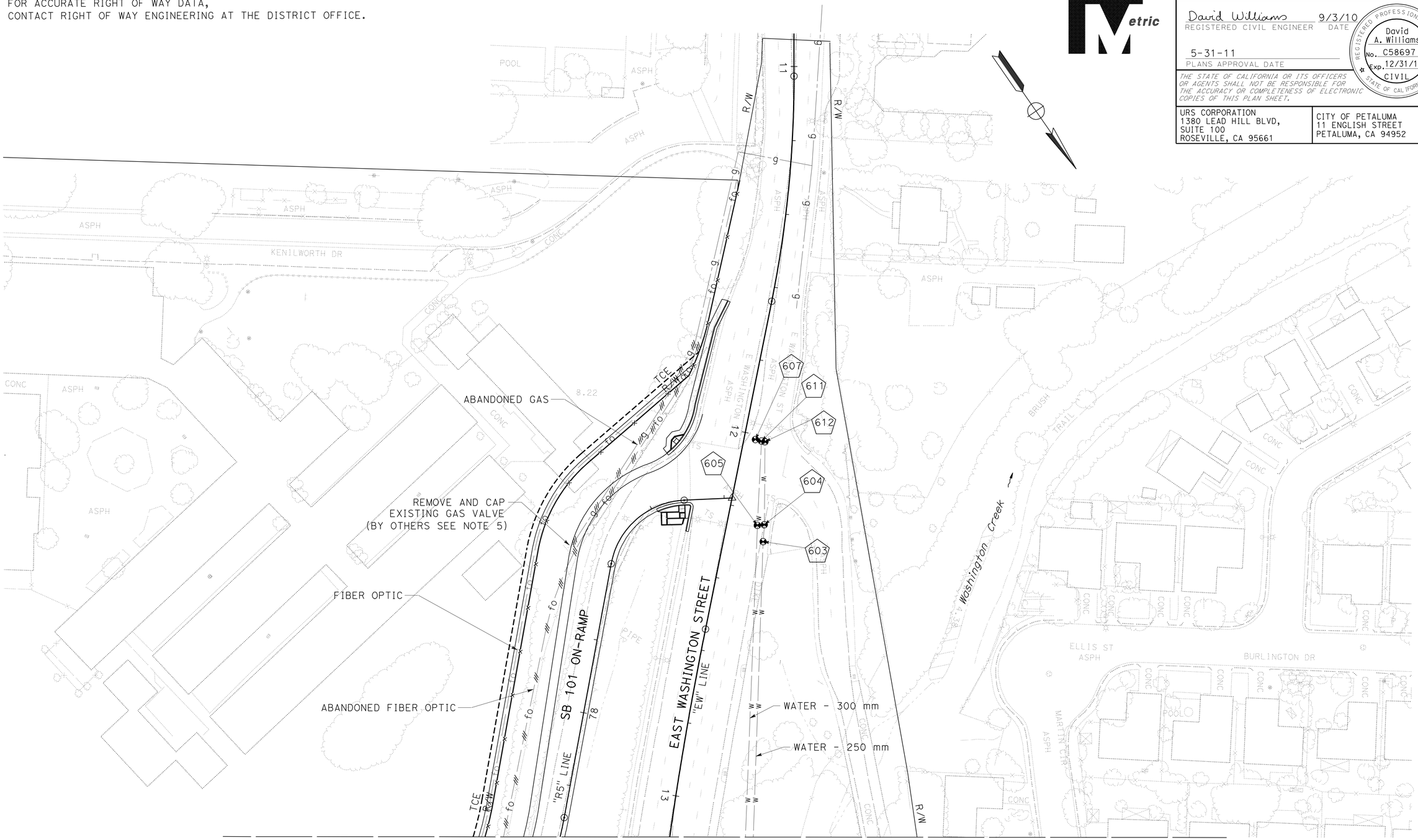

FOR NOTES, ABBREVIATIONS
AND LEGEND, SEE SHEET U-1

THIS PLAN ACCURATE FOR UTILITY WORK ONLY

ALL DIMENSIONS ARE IN METERS
UNLESS OTHERWISE SHOWN

UTILITY PLAN

SCALE 1:500

U-5

STATE OF CALIFORNIA - DEPARTMENT OF TRANSPORTATION
Caltrans

CONSULTANT FUNCTIONAL SUPERVISOR: RAMSEY HISSEN
CALCULATED-DESIGNED BY: SHERINA LAM
CHECKED BY: DAVID A. WILLIAMS
REVISED BY
DATE REVISED

LAST REVISION 09-03-10
DATE PLOTTED => 31-MAY-2011
TIME PLOTTED => 10:26

Dist	COUNTY	ROUTE	KILOMETER POST TOTAL PROJECT	SHEET No.	TOTAL SHEETS
04	Son	101	7.3/8.3	96	320

David Williams 9/3/10
REGISTERED CIVIL ENGINEER DATE

5-31-11
PLANS APPROVAL DATE

REGISTERED PROFESSIONAL ENGINEER David A. Williams No. C58697 Exp. 12/31/12 CIVIL STATE OF CALIFORNIA

THE STATE OF CALIFORNIA OR ITS OFFICERS OR AGENTS SHALL NOT BE RESPONSIBLE FOR THE ACCURACY OR COMPLETENESS OF ELECTRONIC COPIES OF THIS PLAN SHEET.

URS CORPORATION
1380 LEAD HILL BLVD,
SUITE 100
ROSEVILLE, CA 95661

CITY OF PETALUMA
11 ENGLISH STREET
PETALUMA, CA 94952

POTHOLE LOCATION

No.		UTILITY	N-COORDINATE	E-COORDINATE	DEPTH	SHEET No.
503	A	GAS - 50 mm	696074.459	1813774.541	1.20	U-1
	B	ELECTRIC - 100 mm			1.40	
	C	TV - 50 mm			1.40	
	D	TELEPHONE - 100 mm			1.50	
505	A	TELEPHONE - 100 mm	696065.811	1813788.128	1.70	U-1
	B	ELECTRIC - 100 mm (12 kV)			1.70	
517		WATER - 200 mm	696077.527	1813773.633	1.40	U-1
519		SEWER - 200 mm	696081.303	1813776.530	1.20	U-1
520		SEWER - 200 mm	696078.566	1813728.115	1.60	U-1
522		GAS - 50 mm	696071.778	1813759.786	0.80	U-1
523	A	TELEPHONE - 100 mm	696074.114	1813765.310	0.90	U-1
	B	TV - 50 mm			0.80	
	C	ELECTRIC - 100 mm (12 kV)			1.00	
	D	WATER - 200 mm			0.90	
524	A	TELEPHONE - 100 mm	696078.734	1813722.718	1.00	U-1
	B	ELECTRIC - 100 mm (12 kV)			0.90	
1000W		WATER - 250 mm	696020.642	1813758.692	1.30	U-1
1001W		WATER - 300 mm	695988.560	1813738.853	0.30	U-1
1002W		WATER - 250 mm	695990.133	1813736.822	1.30	U-1
200		GAS - 50 mm	696131.470	1813631.080	0.86	U-2
201		FIBER OPTIC - 100 mm	696132.160	1813631.357	0.76	U-2
300		GAS - 50 mm	696121.537	1813648.701	1.24	U-2
301	A	ELECTRIC - 100 mm	696122.263	1813649.078	0.89	U-2
	B	TELEPHONE - 100 mm			0.86	
	C	TV - 50 mm			0.89	
400	A	GAS - 50 mm	696104.765	1813676.147	0.94	U-2
	B	ELECTRIC - 100 mm			0.94	
	C	TELEPHONE - 100 mm			0.94	
	D	TV - 50 mm			0.94	
500	A	GAS - 50 mm	696090.175	1813702.136	0.99	U-2
	B	ELECTRIC - 100 mm			0.89	
501	A	TELEPHONE - 100 mm	696090.589	1813702.381	1.75	U-2
	B	FIBER OPTIC - 100 mm			1.75	
	C	TV - 50 mm			1.57	
705		SEWER - 200 mm	696218.984	1813485.933	3.18	U-2
714		FIBER OPTIC - 100 mm	696208.685	1813484.002	1.75	U-2
716		WATER - 200 mm	696236.783	1813477.180	1.20	U-2
718		WATER - 200 mm	696213.493	1813505.999	1.50	U-2
719	A	GAS - 50 mm	696228.332	1813471.181	1.00	U-2
	B	TELEPHONE - 100 mm			1.20	
720		ELECTRIC - 12 kV	696216.339	1813489.574	0.40	U-2
721		GAS - 300 mm	696232.647	1813475.205	1.20	U-2
722	A	GAS - 50 mm	696239.170	1813454.486	1.00	U-2
	B	TV - 100 mm			1.20	
723		SEWER - 200 mm	696176.357	1813561.923	2.60	U-2

No.		UTILITY	N-COORDINATE	E-COORDINATE	DEPTH	SHEET No.
1000g		GAS - 50 mm	696153.294	1813594.462	0.91	U-2
1001		FIBER OPTIC - 100 mm	696153.294	1813594.462	0.91	U-2
1002		ELECTRIC - 100 mm	696154.308	1813594.733	1.40	U-2
1200		WATER - 200 mm	696101.855	1813684.447	2.06	U-2
1300		WATER - 200 mm	696143.586	1813614.897	1.73	U-2
1201		GAS - 300 mm	696197.682	1813512.841	4.52	U-2
1700		FIBER OPTIC - 100 mm	696173.201	1813458.679	2.08	U-2
2000		GAS - 300 mm	696204.992	1813517.059	2.87	U-2
3021		GAS - 300 mm	696236.766	1813468.845	1.09	U-2
3024		FIBER OPTIC - 100 mm	696227.318	1813498.664	1.12	U-2
3025		TELEPHONE (LATERAL)	696208.894	1813525.596	1.42	U-2
		ELECTRIC (LATERAL)			1.12	
		GAS - 50 mm (LATERAL)			0.89	
		TV (LATERAL)			0.94	
3027		TELEPHONE (LATERAL)	696116.307	1813666.949	0.86	U-2
		ELECTRIC (LATERAL)			0.86	
3029		TELEPHONE (LATERAL)	696101.311	1813695.702	1.12	U-2
801		SEWER - 200 mm	696313.933	1813345.740	1.50	U-3
802	A	GAS - 300 mm	696318.790	1813350.521	1.90	U-3
3001		GAS - 300 mm	696336.063	1813325.810	1.52	U-3
3003		GAS - 300 mm	696361.064	1813343.388	1.57	U-3
3005		TV - 50 mm	696354.867	1813357.066	1.17	U-3
		ELECTRIC - 100 mm			1.57	
		GAS - 50 mm			1.19	
3009		WATER - 225 mm	696326.710	1813353.485	1.27	U-3
3010		WATER - 200 mm	696316.806	1813358.867	1.24	U-3
3013		TV - 50 mm	696306.510	1813659.710	1.17	U-3
		ELECTRIC - 100 mm			1.57	
		GAS - 50 mm			1.19	
3015		GAS - 300 mm	696295.266	1813384.618	1.98	U-3
3017		GAS - 300 mm	696271.822	1813417.954	1.93	U-3
3019		TELEPHONE - 100 mm	696259.704	1813426.174	1.02	U-3
		ELECTRIC - 100 mm (12 kV)			1.35	
		GAS - 50 mm			0.81	
401		WATER - 250 mm	696138.621	1813849.509	1.50	U-4
402		WATER - 300 mm	696135.704	1813852.787	2.00	U-4
603		WATER - 250 mm	695857.772	1813638.368	1.80	U-5
604		WATER - 250 mm	695854.183	1813635.493	1.60	U-5
605		WATER - 300 mm	695853.251	1813637.133	1.70	U-5
607		WATER - 300 mm	695833.906	1813624.360	0.60	U-5
611		WATER - 250 mm	695835.195	1813623.227	0.70	U-5
612		WATER - 250 mm	695835.854	1813622.579	1.00	U-5

UTILITY PLAN
U-6

STATE OF CALIFORNIA - DEPARTMENT OF TRANSPORTATION
Caltrans

CONSULTANT FUNCTIONAL SUPERVISOR: RAMSEY HISSEN
CALCULATED-DESIGNED BY: SHERINA LAM
CHECKED BY: DAVID A. WILLIAMS
REVISED BY / DATE REVISED

LAST REVISION 09-03-10 | DATE PLOTTED => 31-MAY-2011 | TIME PLOTTED => 10:26

Dist	COUNTY	ROUTE	KILOMETER POST TOTAL PROJECT	SHEET No.	TOTAL SHEETS
04	Son	101	7.3/8.3	97	320

REGISTERED CIVIL ENGINEER 9/3/10 DATE

5-31-11
PLANS APPROVAL DATE

REGISTERED PROFESSIONAL ENGINEER YEV PHILIPOVITCH No. C-25392 Exp. 12/31/11 CIVIL STATE OF CALIFORNIA

THE STATE OF CALIFORNIA OR ITS OFFICERS OR AGENTS SHALL NOT BE RESPONSIBLE FOR THE ACCURACY OR COMPLETENESS OF ELECTRONIC COPIES OF THIS PLAN SHEET.

URS CORPORATION
100 W. SAN FERNANDO St
SUITE 200
SAN JOSE, CA 95113

CITY OF PETALUMA
11 ENGLISH STREET
PETALUMA, CA 94952

Caltrans Metric

ABBREVIATIONS:

AC	ASBESTOS CEMENT
BE	BEVELED END
BFP	BACKFLOW PREVENTER
CDF	CONTROLLED DENSITY FILL
CI	CAST IRON
CP	CITY OF PETALUMA
DI	DUCTILE IRON
FE	FLANGE END
FLG	FLANGE
MJ	MECHANICAL JOINT
STL	STEEL
WM	WATER METER
TB	THRUST BLOCK
SS	SANITARY SEWER
B&S	BELL AND SPIGOT

LEGEND

EXISTING	PROPOSED	
		WATER LATERAL
—w—	—W—	WATER MAIN
—///—w—///—		ABANDONED WATER MAIN
—X—w—X—		REMOVE WATER MAIN
		FIRE HYDRANT
		WATER VALVE
		CAP
	1	WATER SYSTEM NUMBER
	a	WATER ITEM NUMBER
	A	WATER DETAIL NUMBER
	UD-1	SHEET LOCATION

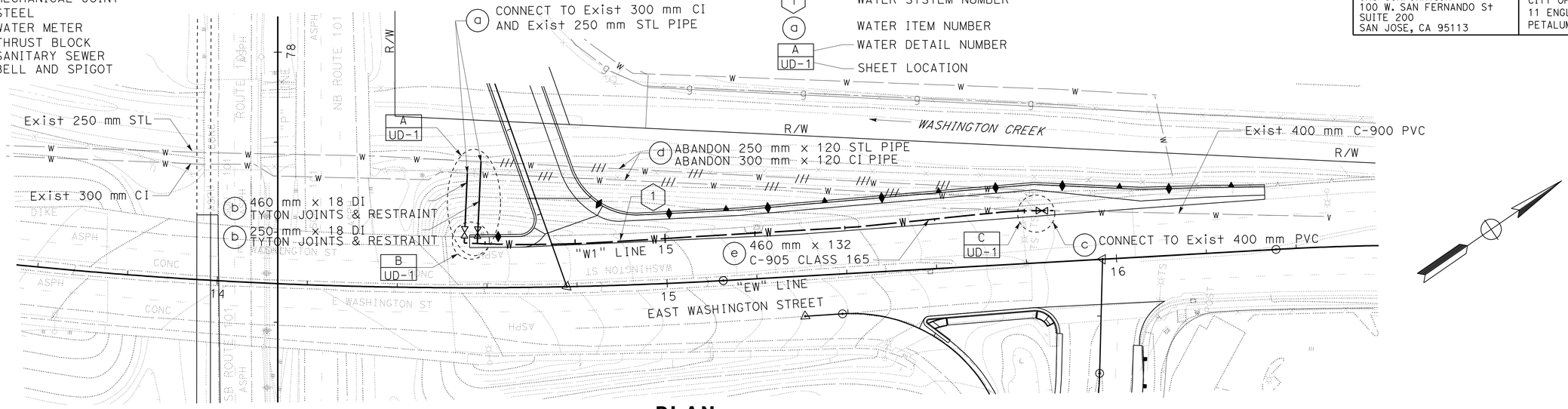

PLAN
SCALE 1:500

NOTES:

1. FIELD VERIFY LOCATION, SIZE AND DEPTH OF Exist WATER SERVICES.
2. FOR WATER PIPELINE LAYOUT, SEE Sht U-10.
3. FOR VERTICAL BENDS AND CONCRETE ANCHOR BLOCKS SEE Sht UD-3.
4. FOR CONCRETE THRUST BLOCK DETAILS, SEE Sht UD-4.
5. FOR PIPE CROSSING DETAIL AND 38 mm & 51 mm WATER SERVICE LATERAL INSTALLATION, SEE Sht UD-5.
6. FOR GATE VALVE, SEE Sht UD-7.
7. FOR CASING INSTALLATION, SEE Sht UD-8.
8. EXISTING MONITORING WELLS SHOWN ON Sht U-8 TO BE PROTECTED DURING CONSTRUCTION.
9. SEE SHEET SDD-2 FOR TRENCH DETAIL.

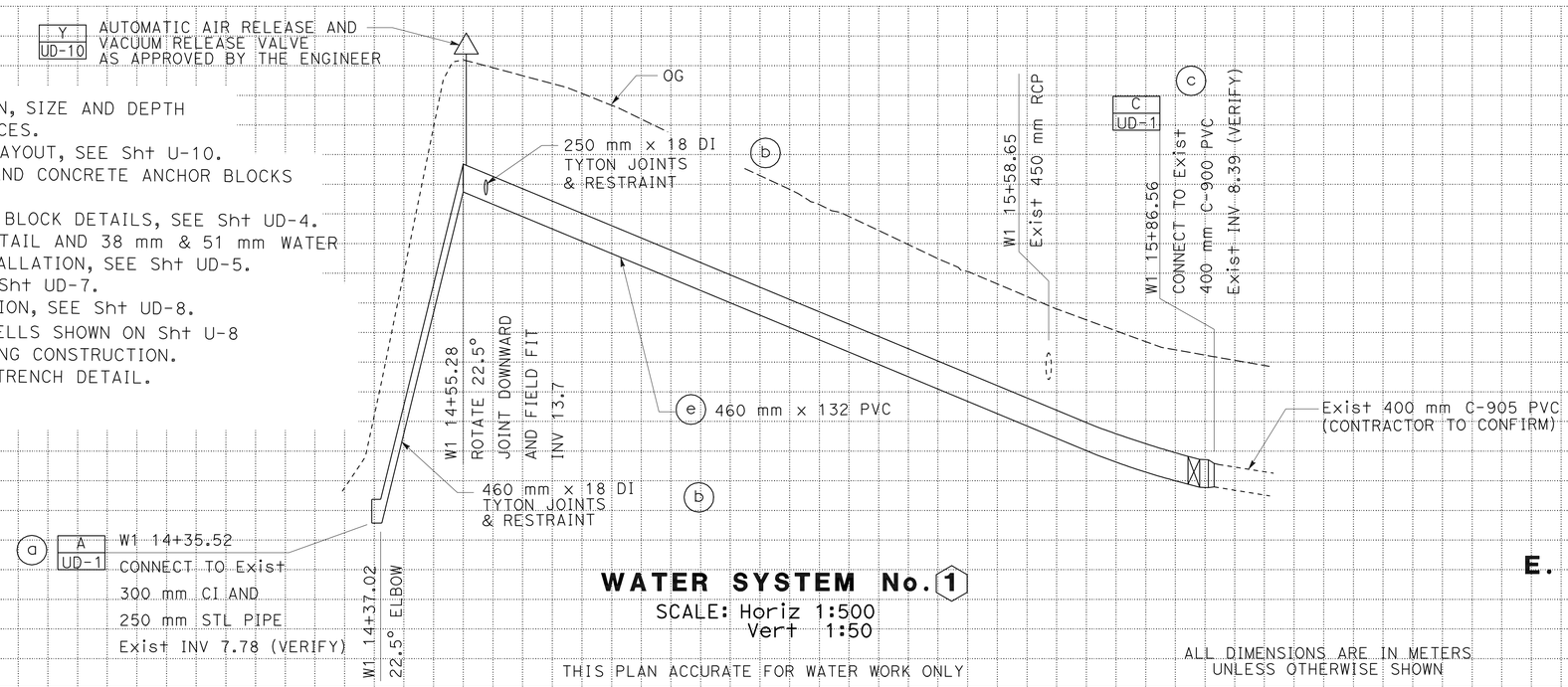

WATER SYSTEM No. 1
SCALE: Horiz 1:500
Vert 1:50

THIS PLAN ACCURATE FOR WATER WORK ONLY

ALL DIMENSIONS ARE IN METERS UNLESS OTHERWISE SHOWN

UTILITY PLAN
E. WASHINGTON STREET WATER PIPELINE
SCALE AS SHOWN

U-7

Station	14	15	16
m^3 Exc			
m^3 Emb			

CONSULTANT FUNCTIONAL SUPERVISOR: RAMSEY HISSEN
CALCULATED-DESIGNED BY: VAN QUIAMBAO
CHECKED BY: YEV PHILIPOVITCH
REVISED BY / DATE REVISED

STATE OF CALIFORNIA - DEPARTMENT OF TRANSPORTATION
Caltrans

LAST REVISION 09-03-10 DATE PLOTTED => 31-MAY-2011 TIME PLOTTED => 10:26

Dist	COUNTY	ROUTE	KILOMETER POST TOTAL PROJECT	SHEET No.	TOTAL SHEETS
04	Son	101	7.3/8.3	98	320

REGISTERED CIVIL ENGINEER DATE

5-31-11
PLANS APPROVAL DATE

REGISTERED PROFESSIONAL ENGINEER YEV PHILIPOVITCH No. C-25392 Exp. 12/31/11 CIVIL STATE OF CALIFORNIA

THE STATE OF CALIFORNIA OR ITS OFFICERS OR AGENTS SHALL NOT BE RESPONSIBLE FOR THE ACCURACY OR COMPLETENESS OF ELECTRONIC COPIES OF THIS PLAN SHEET.

URS CORPORATION
100 W. SAN FERNANDO St
SUITE 200
SAN JOSE, CA 95113

CITY OF PETALUMA
11 ENGLISH STREET
PETALUMA, CA 94952

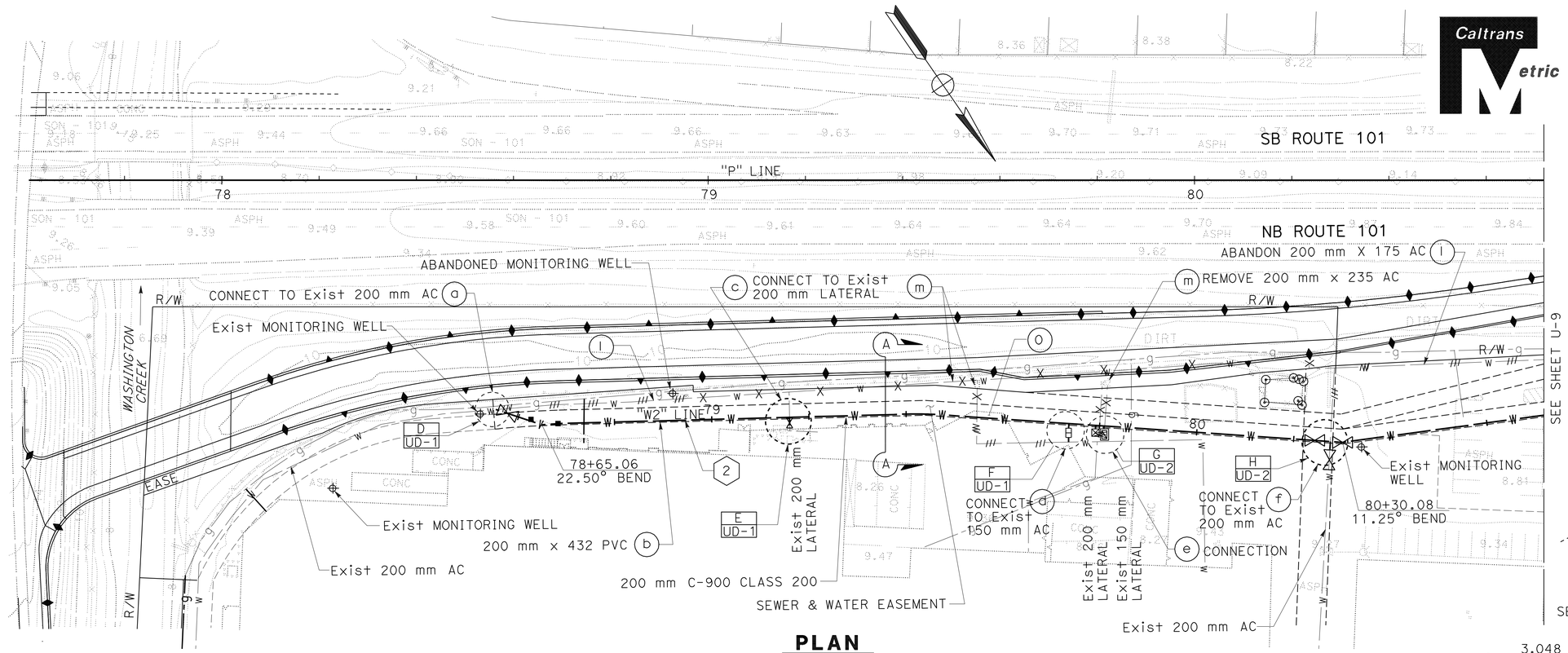

PLAN
SCALE 1:500

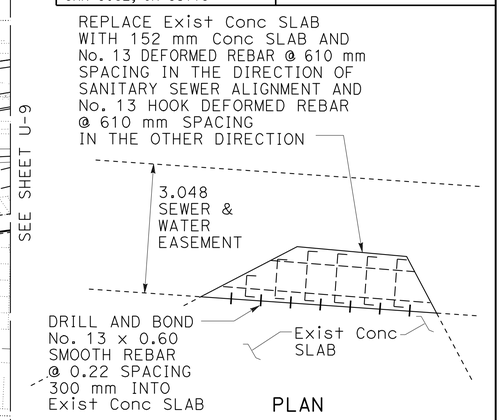

PLAN
SLAB REPLACEMENT

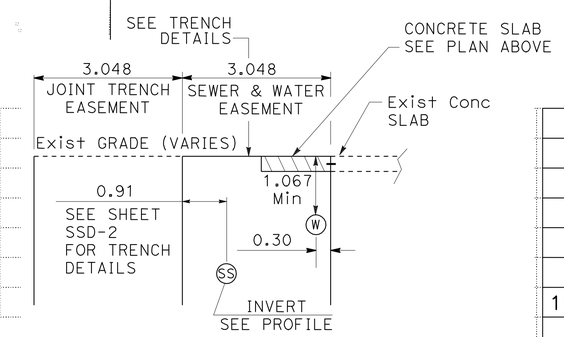

TYPICAL TRENCH SECTION

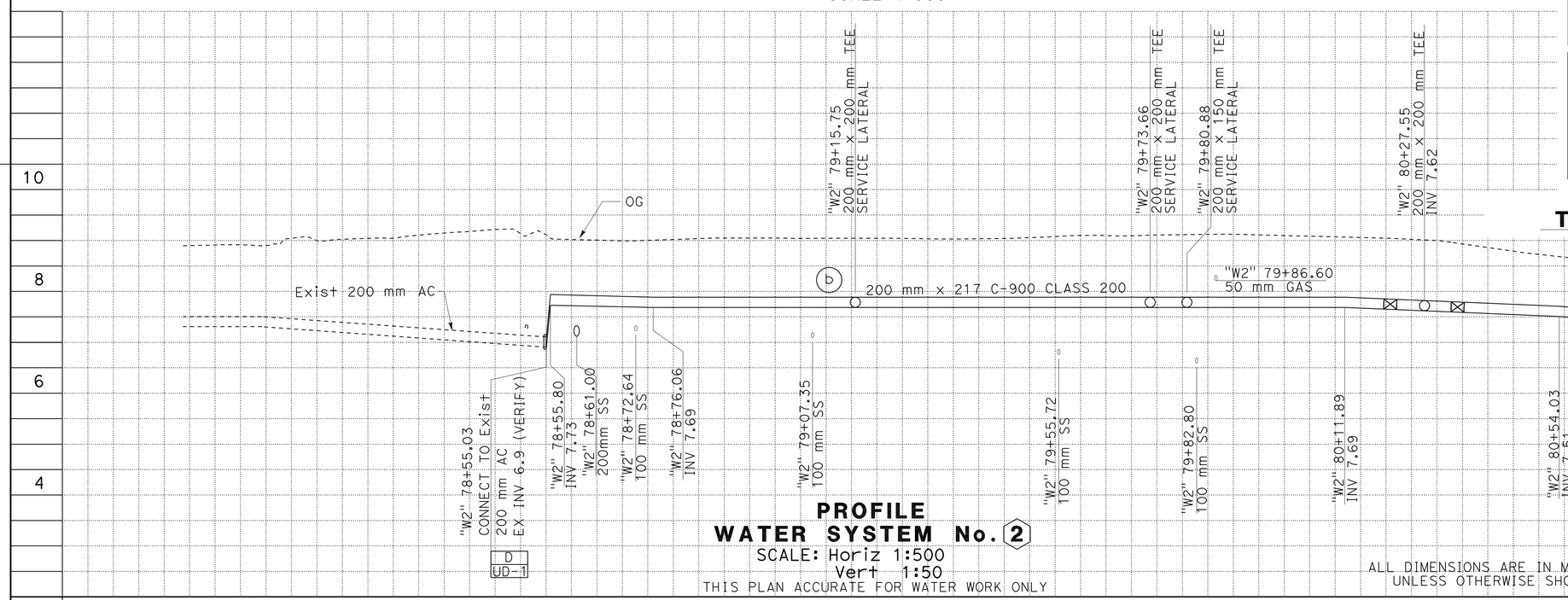

PROFILE
WATER SYSTEM No. 2
SCALE: Horiz 1:500
Vert 1:50
THIS PLAN ACCURATE FOR WATER WORK ONLY

ALL DIMENSIONS ARE IN METERS UNLESS OTHERWISE SHOWN

UTILITY PLAN
WATER PIPELINE
SCALE AS SHOWN

U-8

REVISED BY | DATE REVISED
VAN QUIAMBAO | YEV PHILIPOVITCH
CALCULATED-DESIGNED BY | CHECKED BY
CONSULTANT FUNCTIONAL SUPERVISOR
RAMSEY HISSEN

STATE OF CALIFORNIA - DEPARTMENT OF TRANSPORTATION
Caltrans

LAST REVISION 09-03-10 | DATE PLOTTED => 31-MAY-2011 | TIME PLOTTED => 10:26

Dist	COUNTY	ROUTE	KILOMETER POST TOTAL PROJECT	SHEET No.	TOTAL SHEETS
04	Son	101	7.3/8.3	99	320

REGISTERED CIVIL ENGINEER 9/3/10 DATE

5-31-11
PLANS APPROVAL DATE

REGISTERED PROFESSIONAL ENGINEER YEV PHILIPOVITCH No. C-25392 Exp. 12/31/11 CIVIL STATE OF CALIFORNIA

THE STATE OF CALIFORNIA OR ITS OFFICERS OR AGENTS SHALL NOT BE RESPONSIBLE FOR THE ACCURACY OR COMPLETENESS OF ELECTRONIC COPIES OF THIS PLAN SHEET.

URS CORPORATION
100 W. SAN FERNANDO St
SUITE 200
SAN JOSE, CA 95113

CITY OF PETALUMA
11 ENGLISH STREET
PETALUMA, CA 94952

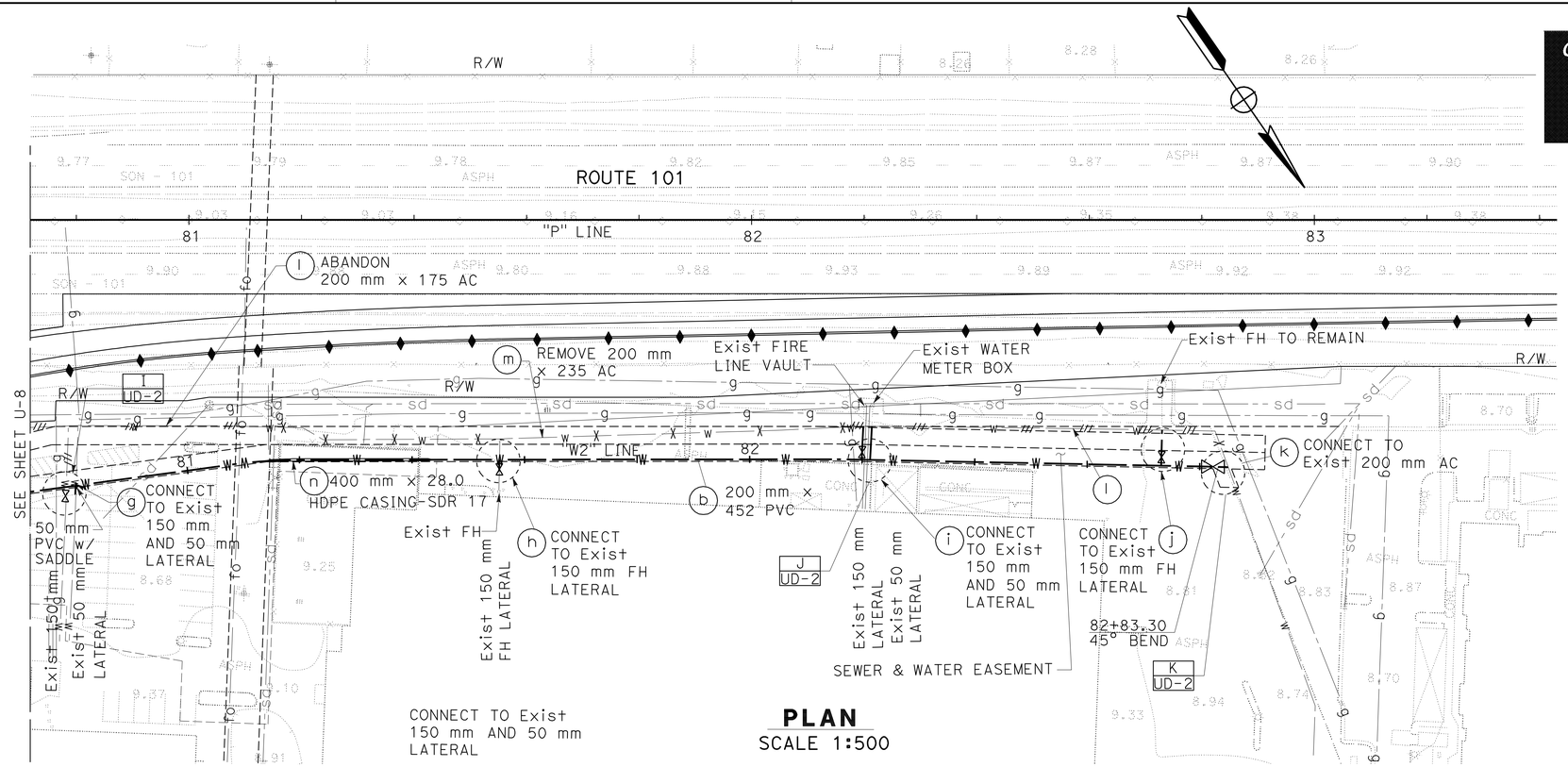

PLAN
SCALE 1:500

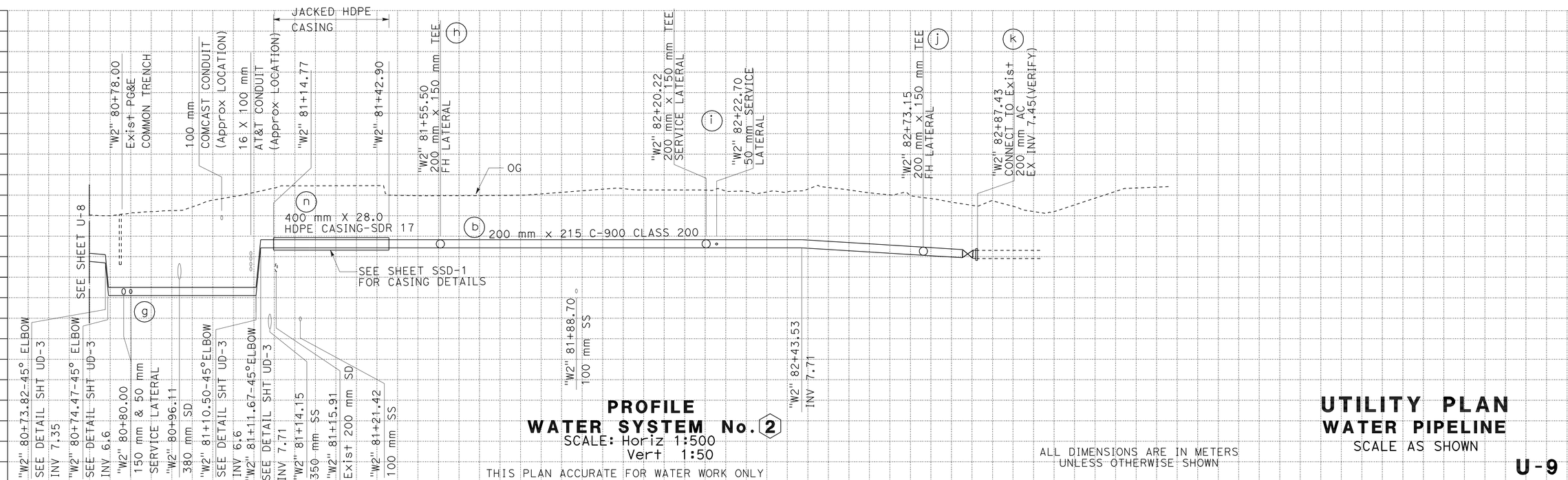

PROFILE
WATER SYSTEM No. 2
SCALE: Horiz 1:500
Vert 1:50
THIS PLAN ACCURATE FOR WATER WORK ONLY

ALL DIMENSIONS ARE IN METERS UNLESS OTHERWISE SHOWN

UTILITY PLAN
WATER PIPELINE
SCALE AS SHOWN

U-9

STATE OF CALIFORNIA - DEPARTMENT OF TRANSPORTATION
Caltrans

CONSULTANT FUNCTIONAL SUPERVISOR: RAMSEY HISSEN
CALCULATED-DESIGNED BY: VAN QUIAMBAO
CHECKED BY: YEV PHILIPOVITCH
REVISED BY / DATE REVISED

LAST REVISION 09-03-10 DATE PLOTTED => 31-MAY-2011 TIME PLOTTED => 10:26

Dist	COUNTY	ROUTE	KILOMETER POST TOTAL PROJECT	SHEET No.	TOTAL SHEETS
04	Son	101	7.3/8.3	100	320

Caltrans Metric

REGISTERED CIVIL ENGINEER — DATE 9/3/10

5-31-11
PLANS APPROVAL DATE

REGISTERED PROFESSIONAL ENGINEER — YEV PHILIPOVITCH — No. C-25392 — Exp. 12/31/11 — CIVIL — STATE OF CALIFORNIA

THE STATE OF CALIFORNIA OR ITS OFFICERS OR AGENTS SHALL NOT BE RESPONSIBLE FOR THE ACCURACY OR COMPLETENESS OF ELECTRONIC COPIES OF THIS PLAN SHEET.

URS CORPORATION
100 W. SAN FERNANDO St
SUITE 200
SAN JOSE, CA 95113

CITY OF PETALUMA
11 ENGLISH STREET
PETALUMA, CA 94952

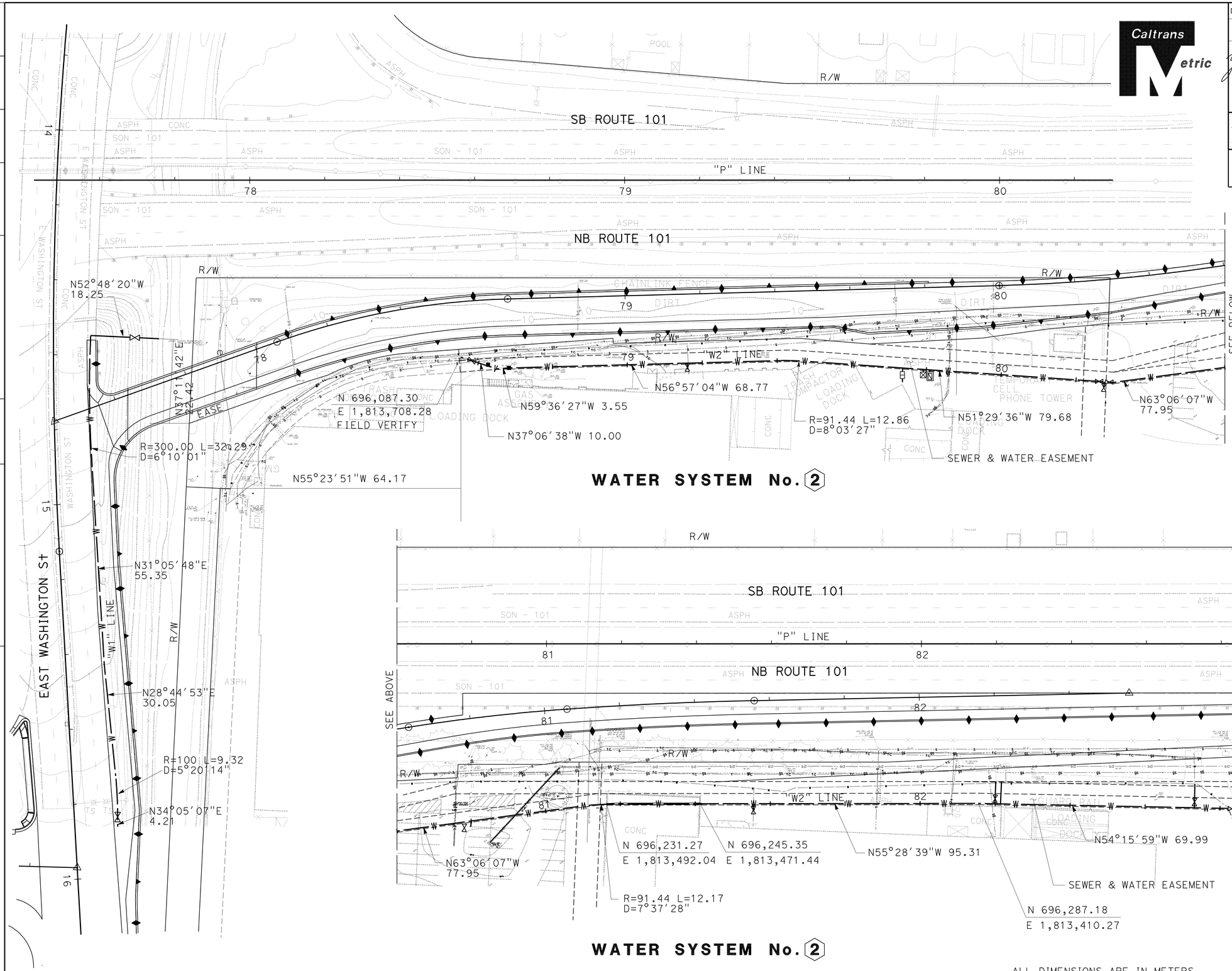

THIS PLAN ACCURATE FOR WATER WORK ONLY

ALL DIMENSIONS ARE IN METERS UNLESS OTHERWISE SHOWN

UTILITY PLAN
WATER PIPELINE LAYOUT
SCALE 1:500

U-10

STATE OF CALIFORNIA - DEPARTMENT OF TRANSPORTATION
Caltrans

CONSULTANT FUNCTIONAL SUPERVISOR: RAMSEY HISSEN
CALCULATED-DESIGNED BY: VAN QUIAMBAO
CHECKED BY: YEV PHILIPOVITCH
REVISED BY / DATE REVISED

LAST REVISION 09-03-10 | DATE PLOTTED => 31-MAY-2011 | TIME PLOTTED => 10:26