Dist	COUNTY	ROUTE	POST MILES TOTAL PROJECT	SHEET No.	TOTAL SHEETS
05	Mon	68	R17.4/R18.0	34	149

REGISTERED CIVIL ENGINEER 06-01-15 DATE

6-22-15
PLANS APPROVAL DATE

REGISTERED PROFESSIONAL ENGINEER FAWZI YAGHMOUR No. C-54750 Exp. 12/31/15 CIVIL STATE OF CALIFORNIA

THE STATE OF CALIFORNIA OR ITS OFFICERS OR AGENTS SHALL NOT BE RESPONSIBLE FOR THE ACCURACY OR COMPLETENESS OF SCANNED COPIES OF THIS PLAN SHEET.

4

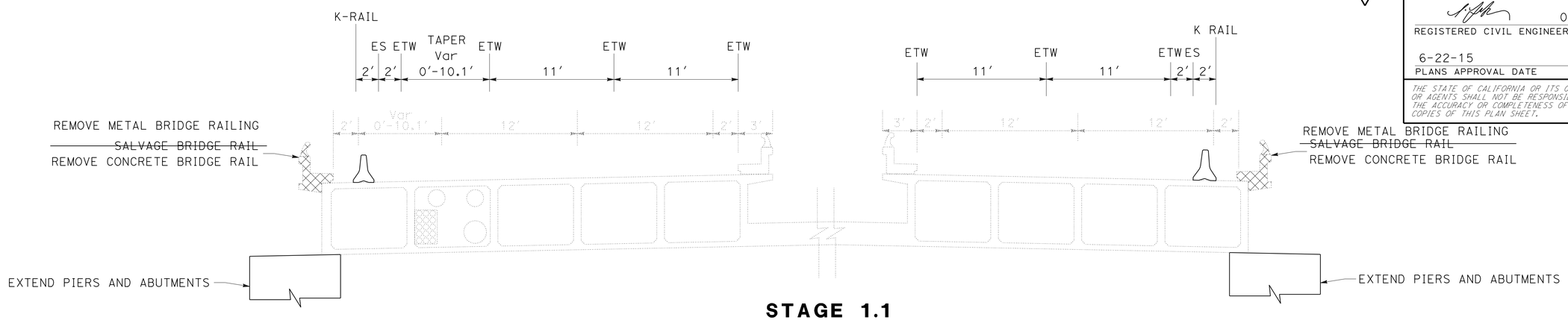

STAGE 1.1
EXTEND PIERS
SEISMIC RETROFIT

Sta 759+29.00-771+00.00

SECTION A-A

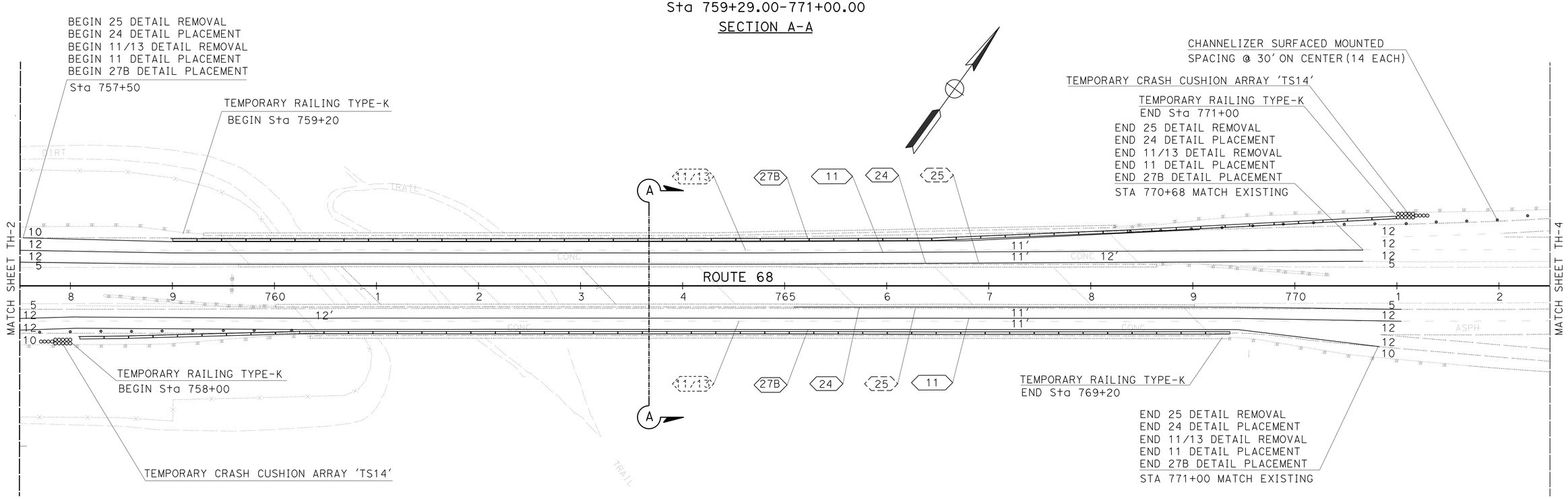

TRAFFIC HANDLING PLAN
(OUTSIDE SHOULDER WIDEN BRIDGE)
(STAGE 1.1)

SCALE:1"=50'

TH-3

4 **REPLACED PER ADDENDUM No. 4 DATED DECEMBER 3, 2015**

APPROVED FOR TRAFFIC HANDLING WORK ONLY

STATE OF CALIFORNIA - DEPARTMENT OF TRANSPORTATION
Caltrans®
TRAFFIC DESIGN

FUNCTIONAL SUPERVISOR: MOHAMMED QATAMI
CALCULATED-DESIGNED BY: DAVID BLACK
CHECKED BY: FAWZI YAGHMOUR
REVISED BY
DATE REVISED

LAST REVISION 06-19-15
DATE PLOTTED => 02-DEC-2015
TIME PLOTTED => 16:53

Dist	COUNTY	ROUTE	POST MILES TOTAL PROJECT	SHEET No.	TOTAL SHEETS
05	Mon	68	R17.4/R18.0	36	149

REGISTERED CIVIL ENGINEER 06-01-15 DATE

6-22-15
~~6-19-15~~
PLANS APPROVAL DATE

REGISTERED PROFESSIONAL ENGINEER
FAWZI YAGHMOUR
No. C-54750
Exp. 12/31/15
CIVIL
STATE OF CALIFORNIA

THE STATE OF CALIFORNIA OR ITS OFFICERS OR AGENTS SHALL NOT BE RESPONSIBLE FOR THE ACCURACY OR COMPLETENESS OF SCANNED COPIES OF THIS PLAN SHEET.

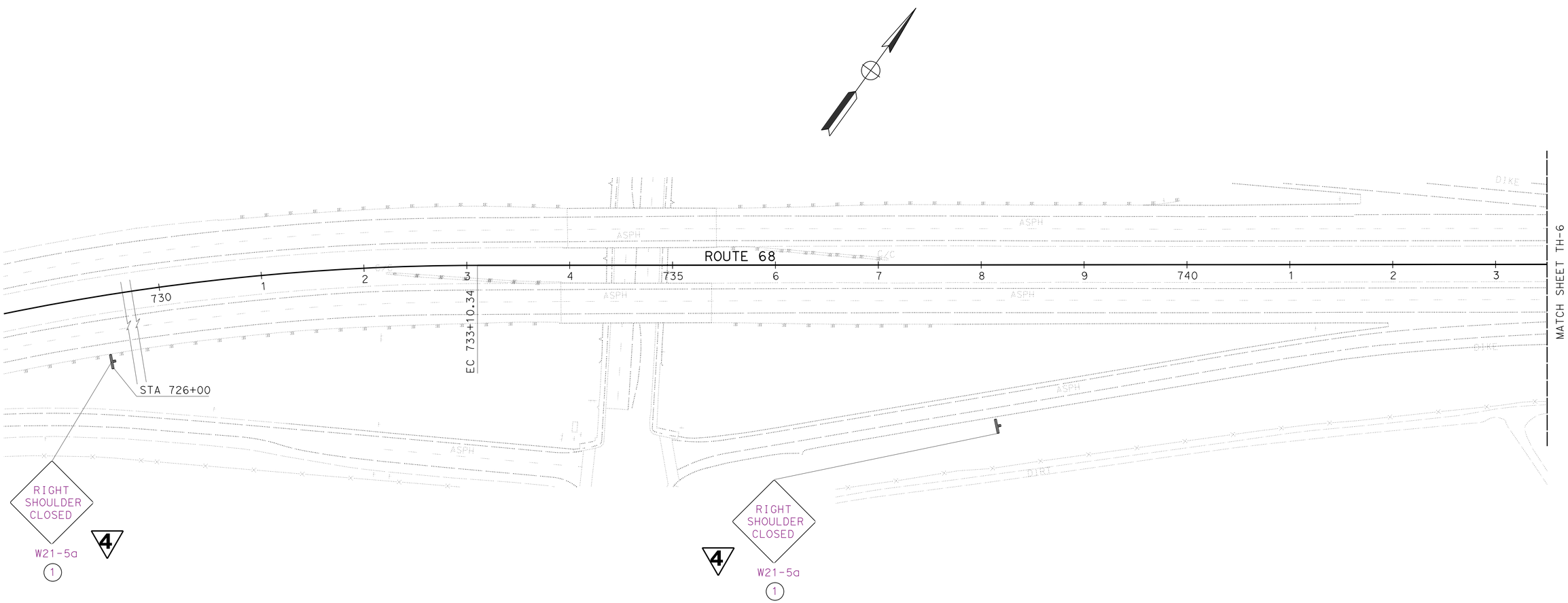

4 **REPLACED PER ADDENDUM No. 4 DATED DECEMBER 3, 2015**

APPROVED FOR TRAFFIC HANDLING WORK ONLY

TRAFFIC HANDLING PLAN

(OUTSIDE SHOULDER WIDEN BRIDGE)

(STAGE 1.2)

SCALE: 1" = 50'

TH-5

STATE OF CALIFORNIA - DEPARTMENT OF TRANSPORTATION
Caltrans
TRAFFIC DESIGN

FUNCTIONAL SUPERVISOR: MOHAMMED QATAMI
CALCULATED-DESIGNED BY: DAVID BLACK
CHECKED BY: FAWZI YAGHMOUR
REVISED BY
DATE REVISED

LAST REVISION 06-19-15
DATE PLOTTED => 02-DEC-2015
TIME PLOTTED => 16:53

Dist	COUNTY	ROUTE	POST MILES TOTAL PROJECT	SHEET No.	TOTAL SHEETS
05	Mon	68	R17.4/R18.0	37	149

REGISTERED CIVIL ENGINEER DATE 06-01-15

PLANS APPROVAL DATE 6-22-15

REGISTERED PROFESSIONAL ENGINEER FAWZI YAGHMOUR No. C-54750 Exp. 12/31/15 CIVIL STATE OF CALIFORNIA

THE STATE OF CALIFORNIA OR ITS OFFICERS OR AGENTS SHALL NOT BE RESPONSIBLE FOR THE ACCURACY OR COMPLETENESS OF SCANNED COPIES OF THIS PLAN SHEET.

4

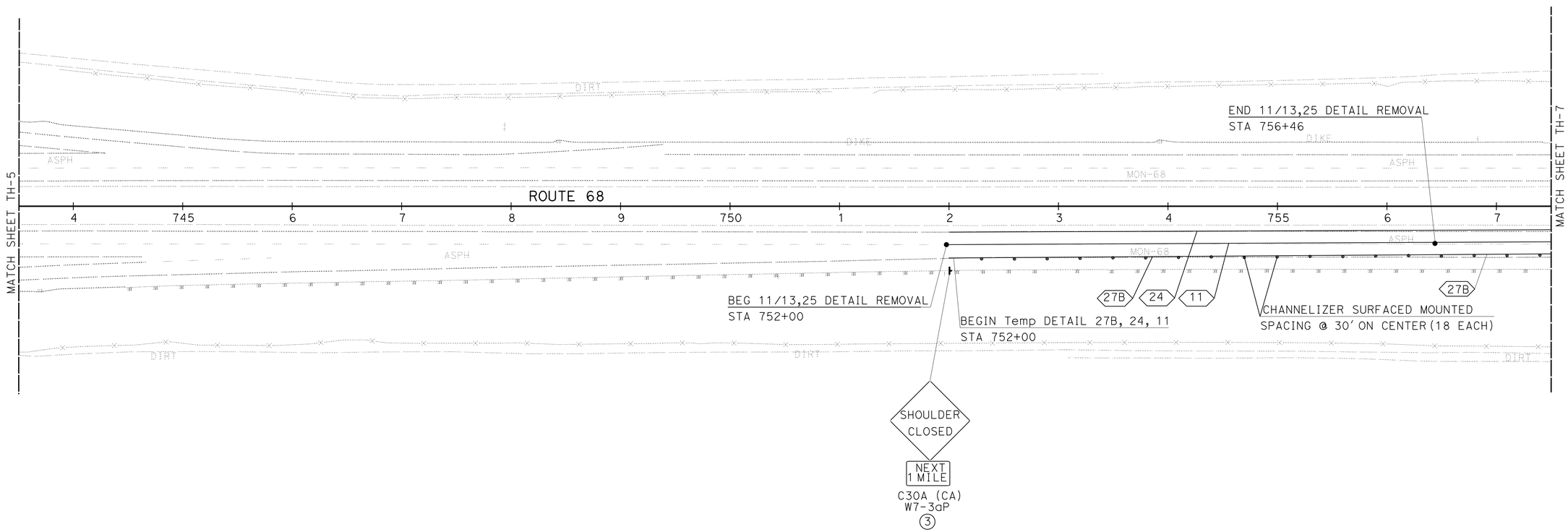

4 **REPLACED PER ADDENDUM No. 4 DATED DECEMBER 3, 2015**

APPROVED FOR TRAFFIC HANDLING WORK ONLY

TRAFFIC HANDLING PLAN

(OUTSIDE SHOULDER WIDEN BRIDGE)

(STAGE 1.2)

SCALE:1"=50'

TH-6

STATE OF CALIFORNIA - DEPARTMENT OF TRANSPORTATION

Caltrans

TRAFFIC DESIGN

FUNCTIONAL SUPERVISOR: MOHAMMED QATAMI

CALCULATED-DESIGNED BY: DAVID BLACK

CHECKED BY: FAWZI YAGHMOUR

REVISED BY

DATE REVISED

LAST REVISION 06-19-15

DATE PLOTTED => 02-DEC-2015

TIME PLOTTED => 16:53

Dist	COUNTY	ROUTE	POST MILES TOTAL PROJECT	SHEET No.	TOTAL SHEETS
05	Mon	68	R17.4/R18.0	38	149

REGISTERED CIVIL ENGINEER 06-01-15 DATE

6-22-15
PLANS APPROVAL DATE

REGISTERED PROFESSIONAL ENGINEER FAWZI YAGHMOUR No. C-54750 Exp. 12/31/15 CIVIL STATE OF CALIFORNIA

THE STATE OF CALIFORNIA OR ITS OFFICERS OR AGENTS SHALL NOT BE RESPONSIBLE FOR THE ACCURACY OR COMPLETENESS OF SCANNED COPIES OF THIS PLAN SHEET.

4

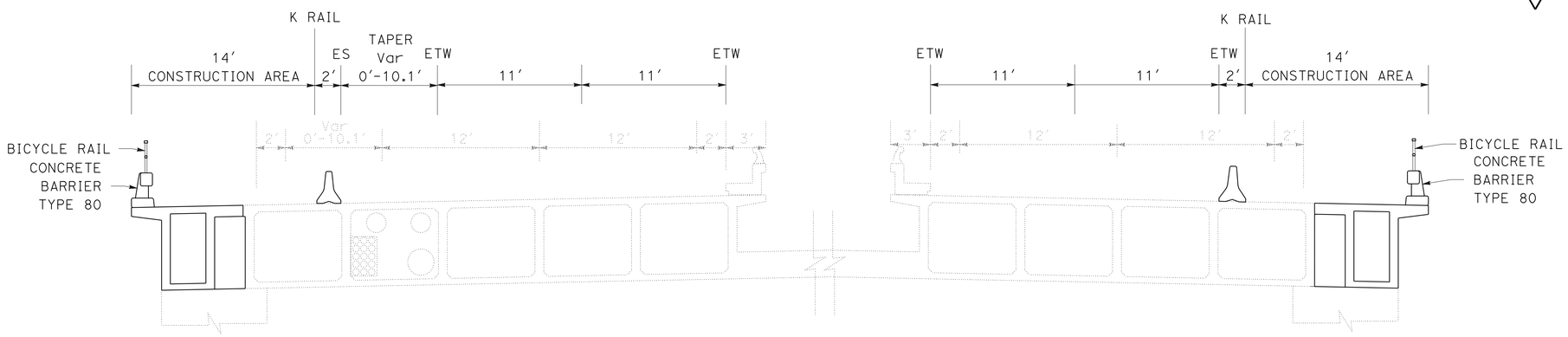

STAGE 1.2
SHOULDER WIDENING

Sta 759+29.00-771+00.00

SECTION B-B

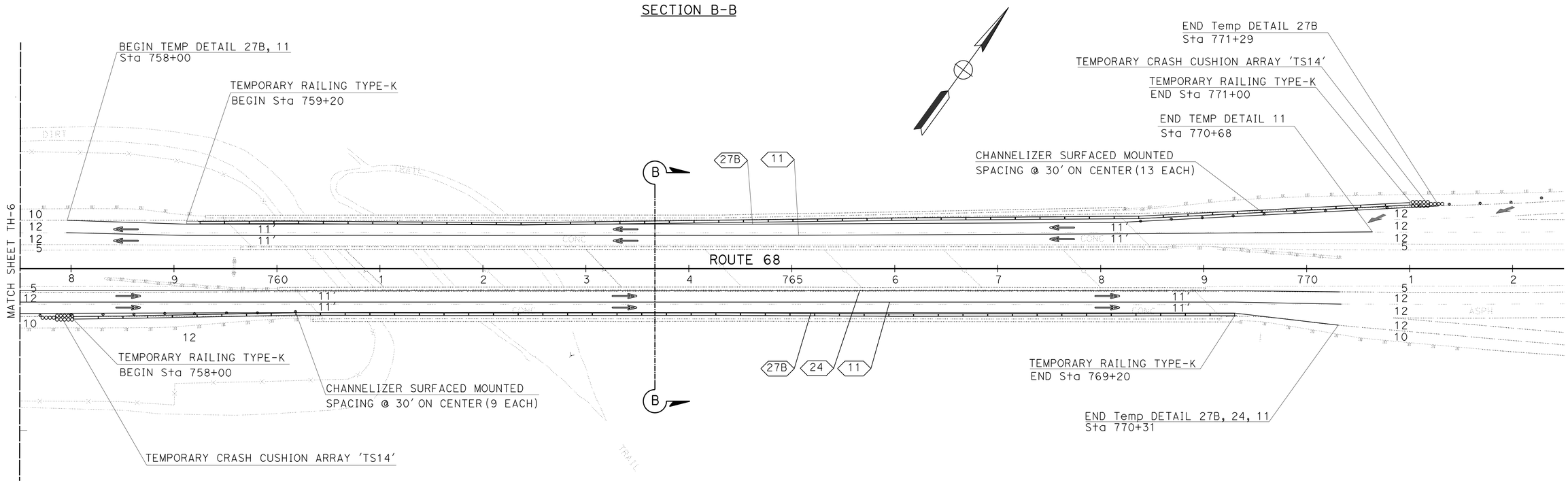

4 **REPLACED PER ADDENDUM No. 4 DATED DECEMBER 3, 2015**

APPROVED FOR TRAFFIC HANDLING WORK ONLY

TRAFFIC HANDLING PLAN
(OUTSIDE SHOULDER WIDEN BRIDGE)
(STAGE 1.2)

SCALE:1"=50′

TH-7

STATE OF CALIFORNIA - DEPARTMENT OF TRANSPORTATION
Caltrans
TRAFFIC DESIGN

FUNCTIONAL SUPERVISOR: MOHAMMED QATAMI
CALCULATED-DESIGNED BY: DAVID BLACK
CHECKED BY: FAWZI YAGHMOUR
REVISED BY
DATE REVISED

LAST REVISION 06-19-15
DATE PLOTTED => 02-DEC-2015
TIME PLOTTED => 16:53

Dist	COUNTY	ROUTE	POST MILES TOTAL PROJECT	SHEET No.	TOTAL SHEETS
05	Mon	68	R17.4/R18.0	39	149

REGISTERED CIVIL ENGINEER 06-01-15 DATE

6-22-15
PLANS APPROVAL DATE

REGISTERED PROFESSIONAL ENGINEER
FAWZI YAGHMOUR
No. C-54750
Exp. 12/31/15
CIVIL
STATE OF CALIFORNIA

THE STATE OF CALIFORNIA OR ITS OFFICERS OR AGENTS SHALL NOT BE RESPONSIBLE FOR THE ACCURACY OR COMPLETENESS OF SCANNED COPIES OF THIS PLAN SHEET.

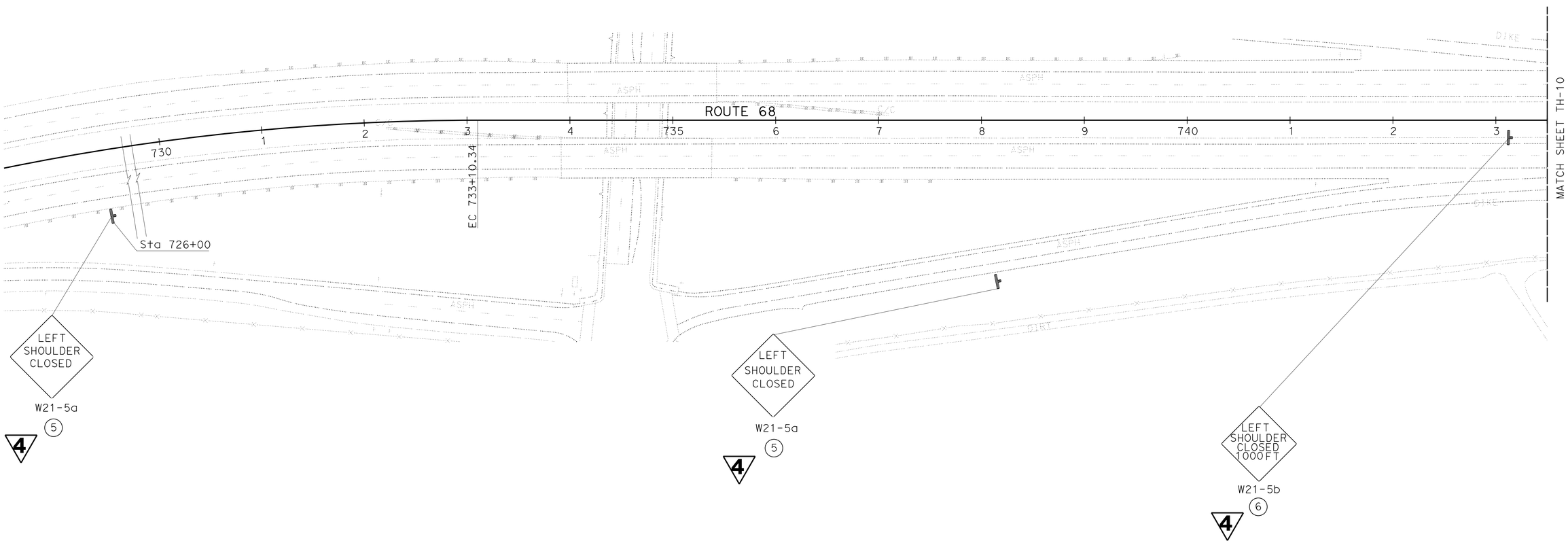

4 **REPLACED PER ADDENDUM No. 4 DATED DECEMBER 3, 2015**

APPROVED FOR TRAFFIC HANDLING WORK ONLY

TRAFFIC HANDLING PLAN

(INSIDE SHOULDER WIDEN BRIDGE)

(STAGE 2)

SCALE:1"=50'

TH-8

STATE OF CALIFORNIA - DEPARTMENT OF TRANSPORTATION
Caltrans
TRAFFIC DESIGN

FUNCTIONAL SUPERVISOR: MOHAMMED QATAMI
CALCULATED-DESIGNED BY: DAVID BLACK
CHECKED BY: FAWZI YAGHMOUR
REVISED BY
DATE REVISED

LAST REVISION 06-19-15
DATE PLOTTED => 02-DEC-2015
TIME PLOTTED => 16:53

Dist	COUNTY	ROUTE	POST MILES TOTAL PROJECT	SHEET No.	TOTAL SHEETS
05	Mon	68	R17.4/R18.0	42	149

REGISTERED CIVIL ENGINEER DATE 06-01-15

6-22-15
PLANS APPROVAL DATE

REGISTERED PROFESSIONAL ENGINEER
FAWZI YAGHMOUR
No. C-54750
Exp. 12/31/15
CIVIL
STATE OF CALIFORNIA

THE STATE OF CALIFORNIA OR ITS OFFICERS OR AGENTS SHALL NOT BE RESPONSIBLE FOR THE ACCURACY OR COMPLETENESS OF SCANNED COPIES OF THIS PLAN SHEET.

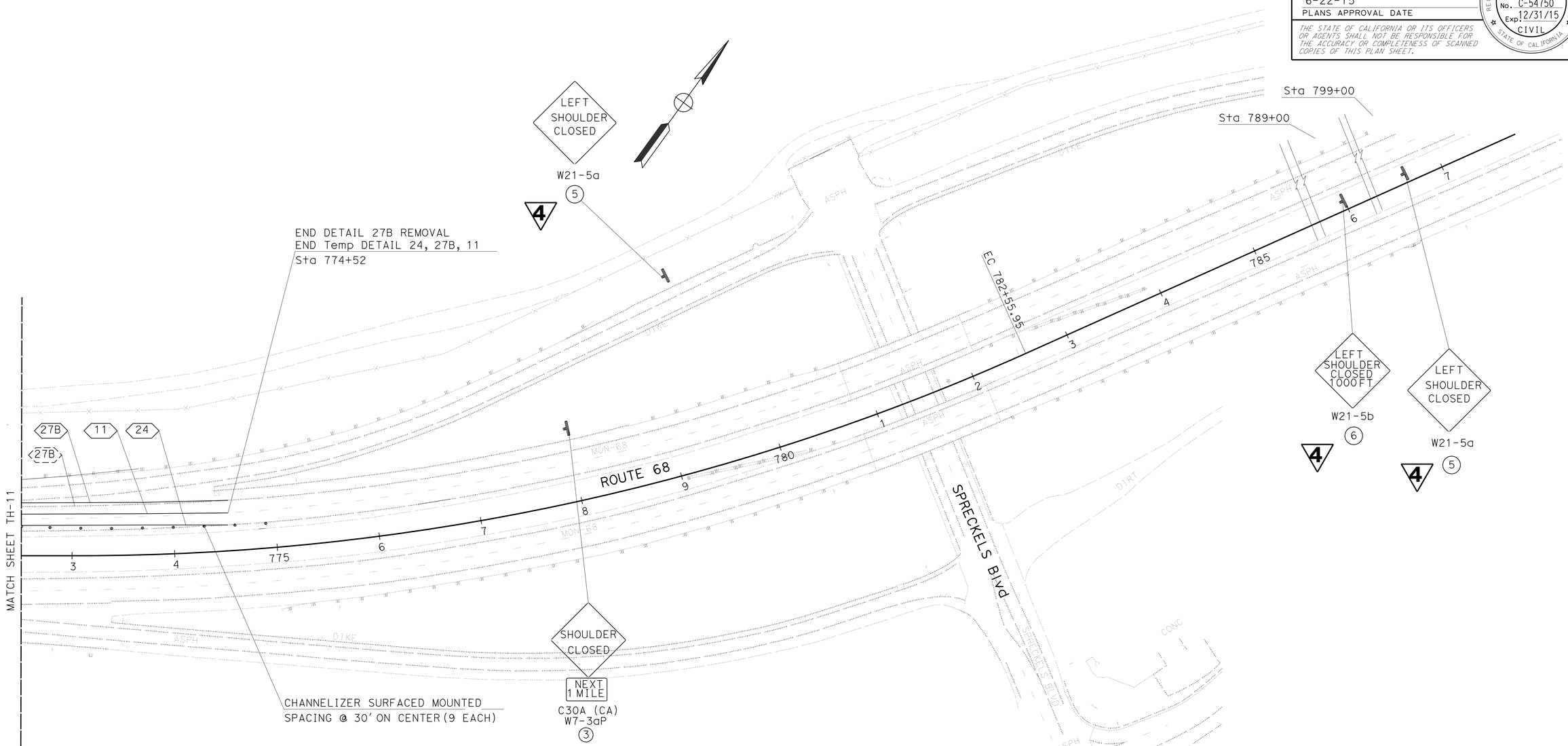

4 **REPLACED PER ADDENDUM No. 4 DATED DECEMBER 3, 2015**

APPROVED FOR TRAFFIC HANDLING WORK ONLY

TRAFFIC HANDLING PLAN

(INSIDE SHOULDER WIDEN BRIDGE)

(STAGE 2)

SCALE:1"=50'

TH-11

STATE OF CALIFORNIA - DEPARTMENT OF TRANSPORTATION
Caltrans
TRAFFIC DESIGN

FUNCTIONAL SUPERVISOR: MOHAMMED QATAMI

CALCULATED-DESIGNED BY: DAVID BLACK
CHECKED BY: FAWZI YAGHMOUR

REVISED BY
DATE REVISED

LAST REVISION 06-19-15
DATE PLOTTED => 02-DEC-2015
TIME PLOTTED => 16:58

Dist	COUNTY	ROUTE	POST MILES TOTAL PROJECT	SHEET No.	TOTAL SHEETS
05	Mon	68	R17.4/R18.0	43	149

REGISTERED CIVIL ENGINEER DATE 06-01-15

PLANS APPROVAL DATE 6-22-15

REGISTERED PROFESSIONAL ENGINEER FAWZI YAGHMOUR No. C-54750 Exp. 12/31/15 CIVIL STATE OF CALIFORNIA

THE STATE OF CALIFORNIA OR ITS OFFICERS OR AGENTS SHALL NOT BE RESPONSIBLE FOR THE ACCURACY OR COMPLETENESS OF SCANNED COPIES OF THIS PLAN SHEET.

4

TEMPORARY PAVEMENT DELINEATION

STAGE	SHEET	ROUTE	DIRECTION	DETAIL	TEMPORARY TRAFFIC STRIPE (TAPE) 4" WHITE	TEMPORARY TRAFFIC STRIPE (TAPE) 4" YELLOW	REMOVE THERMOPLASTIC TRAFFIC STRIPE	REMOVE PAVEMENT MARKERS	CHANNELIZER (SURFACE MOUNTED)	TEMPORARY CRASH CUSHION MODULE TYPE 'TS14'
					LF		LF	EA	EA	EA
1.1	TH-2	68	EB	25			105	3	5	
		68	EB	11/13			26	11		
		68	EB	27B	105					
		68	EB	24		105				
		68	EB	11	105					
	TH-3	68	EB	25			1354	30	8	14
		68	EB	11/13			339	150		
		68	EB	27B	1354					
		68	EB	24		1354				
		68	EB	11	1354					
		68	WB	25			1316	29	14	14
		68	WB	11/13			329	116		
		68	WB	27B	1316					
		68	WB	24		1316				
		68	WB	11		1316				
1.2	TH-6	68	EB	27B	546				18	
		68	EB	11/13			223	90		
		68	WB	11/13			112	50		
		68	EB	11	1831					
		68	WB	11	1268					
		68	WB	27B	546					
		68	EB	24		550				
		68	WB	25			550	13		
	TH-7	68	EB	27B	1020				9	14
		68	WB	27B	1329				13	14
		68	WB	11		1281				
		68	EB	24		1281				
		68	WB	25			1281	28		
2	TH-9	68	EB	27B	450				15	
		68	EB	24		450				
		68	EB	11	450					
	TH-10	68	EB	27B	1334				9	14
		68	EB	24		1356				
		68	EB	11	450					
		68	WB	27B	1060		40		13	14
		68	WB	24		1500				
		68	WB	11		1500				
	TH-11	68	WB	27B	202		202		9	
		68	WB	24		202				
		68	WB	11		202				
				TOTAL	27133		5877	520	113	84

TEMPORARY RAILING (TYPE K)

LOCATION	SHEET	ROUTE	DIRECTION	STAGE	TEMPORARY RAILING (TYPE K)
					LF
STA 758+00 TO 769+20	TH-3	68	EB	1.1	1120
STA 759+20 TO 771+00	TH-3	68	WB	1.1	1180
STA 758+00 TO 769+20	TH-7	68	EB	1.2	1120
STA 759+20 TO 771+00	TH-7	68	WB	1.2	1180
STA 758+00 TO 769+20	TH-10	68	EB	2	1120
STA 759+40 TO 770+80	TH-10	68	WB	2	1140
TOTAL					6860

EXACT LOCATION OF TEMPORARY RAILING (TYPE K) TO BE DETERMINED BY THE ENGINEER

4 **REPLACED PER ADDENDUM No. 4 DATED DECEMBER 3, 2015**

STATIONARY MOUNTED CONSTRUCTION AREA SIGNS

SIGN No. ⊗	SIGN CODE FEDERAL	SIGN CODE CALIFORNIA	PANEL SIZE	SIGN MESSAGE	NUMBER OF POSTS AND SIZE	No. OF SIGNS
1	W21-5a		48"x48"	RIGHT SHOULDER CLOSED	1-4"x6"	3
2	W21-5b		48"x48"	RIGHT SHOULDER CLOSED 1000FT	1-4"x6"	2
3		C30A (CA)	48"x48"	SHOULDER CLOSED	1-6"x6"	5
	W7-3aP		32"x18"	NEXT 1 MILE		
4	W13-1P		24"x18"	45 MPH SPEED LIMIT	1-4"x4"	5
5	W21-5a		48"x48"	LEFT SHOULDER CLOSED	1-4"x6"	4
6	W21-5b		48"x48"	LEFT SHOULDER CLOSED 1000FT	1-4"x6"	2

TRAFFIC HANDLING QUANTITIES
THQ-1

STATE OF CALIFORNIA - DEPARTMENT OF TRANSPORTATION
Caltrans® TRAFFIC DESIGN

FUNCTIONAL SUPERVISOR: MOHAMMED QATAMI
CALCULATED-DESIGNED BY: DAVID BLACK
CHECKED BY: FAWZI YAGHMOUR
REVISED BY / DATE REVISED

LAST REVISION 06-19-15 | DATE PLOTTED => 03-DEC-2015 | TIME PLOTTED => 10:00