Dist	COUNTY	ROUTE	POST MILES TOTAL PROJECT	SHEET No.	TOTAL SHEETS
05	Mon	68	R17.4/R18.0	1	149

STATE OF CALIFORNIA

DEPARTMENT OF TRANSPORTATION

ACNHP-P068(024)E

PROJECT PLANS FOR CONSTRUCTION ON

STATE HIGHWAY

IN MONTEREY COUNTY NEAR SALINAS FROM 0.2 MILE EAST OF RESERVATION ROAD UNDERCROSSING TO SPRECKELS BOULEVARD UNDERCROSSING

TO BE SUPPLEMENTED BY STANDARD PLANS DATED 2010

INDEX OF PLANS

SHEET No.	DESCRIPTION
1	TITLE AND LOCATION MAP
2-5	TYPICAL CROSS SECTIONS
6-10	LAYOUTS
11-12	PROFILES AND SUPERELEVATION DIAGRAMS
13-16	CONSTRUCTION DETAILS
17-18	CONTOUR GRADING PLANS
19-25	DRAINAGE PLANS, PROFILES, DETAILS AND QUANTITIES
26-28	UTILITY PLANS
29	CONSTRUCTION AREA SIGNS
30-31	MOTORIST INFORMATION PLAN AND QUANTITIES
32-43	TRAFFIC HANDLING PLANS AND QUANTITIES
44-47	PAVEMENT DELINEATION AND SIGN PLANS, DETAILS AND QUANTITIES
48-50	SUMMARY OF QUANTITIES
51-54	LANDSCAPE PLANS
55-58	EROSION CONTROL PLANS
59-60	ELECTRICAL PLANS
61-105	REVISED STANDARD PLANS

STRUCTURE PLANS

106-149	SALINAS RIVER BRIDGE Br No. 44-0040 L/R

THE STANDARD PLANS LIST APPLICABLE TO THIS CONTRACT IS INCLUDED IN THE NOTICE TO BIDDERS AND SPECIAL PROVISIONS BOOK.

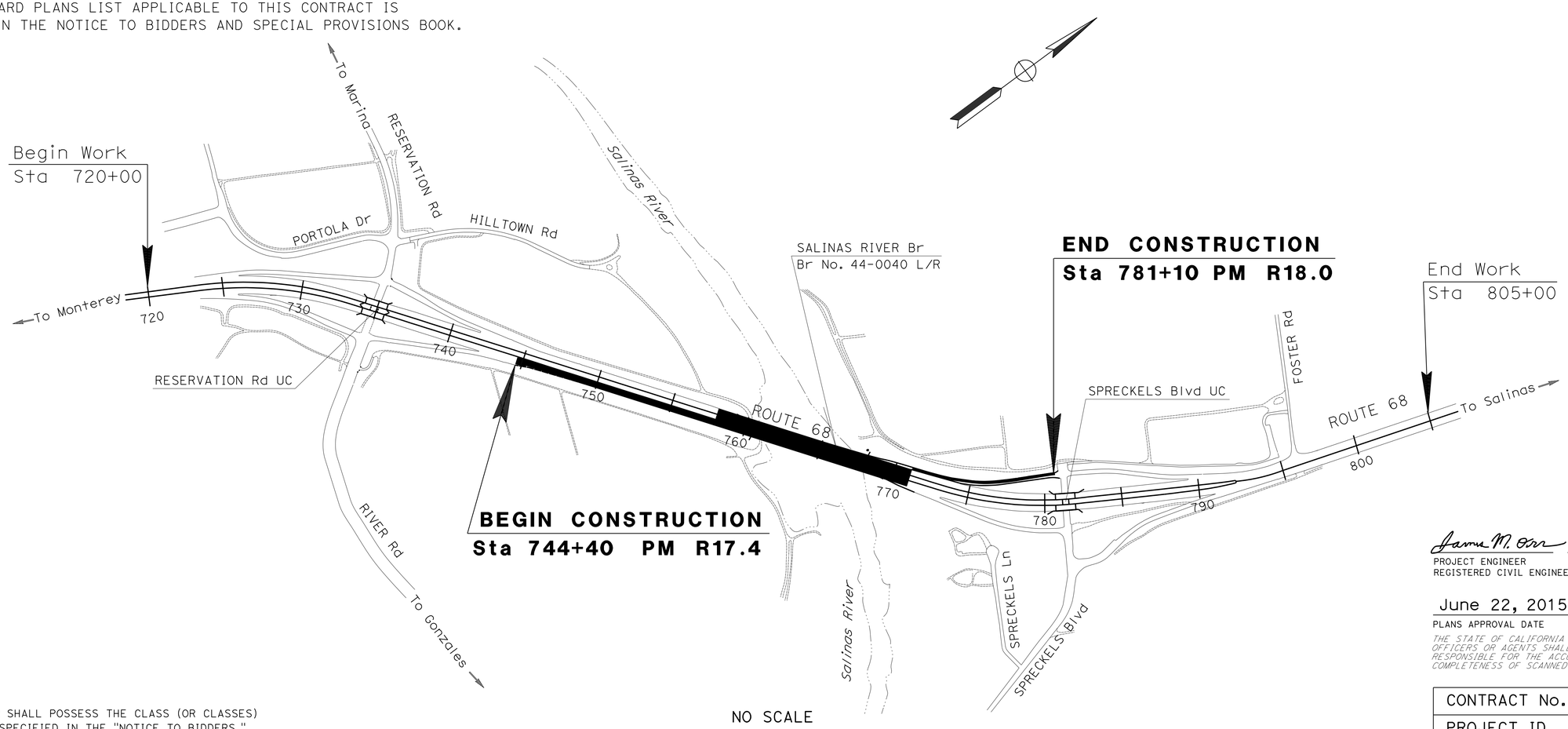

NO SCALE

LOCATION MAP

James M. Orr 6-22-15
PROJECT ENGINEER DATE
REGISTERED CIVIL ENGINEER

June 22, 2015
PLANS APPROVAL DATE

REGISTERED PROFESSIONAL ENGINEER JAMES M. ORR No. C67928 Exp. 6/30/17 CIVIL STATE OF CALIFORNIA

THE STATE OF CALIFORNIA OR ITS OFFICERS OR AGENTS SHALL NOT BE RESPONSIBLE FOR THE ACCURACY OR COMPLETENESS OF SCANNED COPIES OF THIS PLAN SHEET.

PROJECT MANAGER DAVID RASMUSSEN

DESIGN MANAGER SCOTT SHAVER

THE CONTRACTOR SHALL POSSESS THE CLASS (OR CLASSES) OF LICENSE AS SPECIFIED IN THE "NOTICE TO BIDDERS."

CONTRACT No.	05-0F7004
PROJECT ID	0500000049

LAST REVISION 06-18-15 DATE PLOTTED => 10-SEP-2015 TIME PLOTTED => 13:30

Dist	COUNTY	ROUTE	POST MILES TOTAL PROJECT	SHEET No.	TOTAL SHEETS
05	Mon	68	R17.4/R18.0	2	149

James M. Orr 6-22-15
REGISTERED CIVIL ENGINEER DATE

6-22-15
PLANS APPROVAL DATE

REGISTERED PROFESSIONAL ENGINEER JAMES M. ORR No. C67928 Exp. 06/30/17 CIVIL STATE OF CALIFORNIA

THE STATE OF CALIFORNIA OR ITS OFFICERS OR AGENTS SHALL NOT BE RESPONSIBLE FOR THE ACCURACY OR COMPLETENESS OF SCANNED COPIES OF THIS PLAN SHEET.

PAVEMENT CLIMATE REGION

CENTRAL COAST

NOTES:

1. FOR ACCURATE RIGHT OF WAY DATA CONTACT RIGHT OF WAY ENGINEERING AT THE DISTRICT OFFICE.
2. DIMENSIONS OF THE PAVEMENT STRUCTURES (STRUCTURAL SECTIONS) ARE SUBJECT TO TOLERANCES SPECIFIED IN THE STANDARD SPECIFICATIONS.
3. SUPER ELEVATIONS AS SHOWN OR AS DIRECTED BY THE ENGINEER.
4. SURVEY DATUM: NAD 1983, NAVD 1988, CCS83, ZONE 4
5. SEE STRUCTURE PLANS FOR BRIDGE DETAILS.
6. EXACT LOCATIONS AND TYPE OF HMA DIKE ARE SHOWN ON THE SUMMARY OF QUANTITIES SHEETS.
7. EXACT LOCATIONS OF COLD PLANE AND HMA ARE SHOWN ON THE LAYOUT AND SUMMARY OF QUANTITIES SHEETS.
8. SHOULDER AND LANE CROSS SLOPES ON ROUTE 68 "CL1" MATCH EXISTING SLOPES.

DESIGN DESIGNATION (ROUTE 68)

YEAR	2013	2017	2027	2037
DHV	2,825	2,886	3,116	3,380
AADT	29,000	29,442	31,331	33,556
DIRECTIONAL SPLIT	TRUCKS IN PEAK HOUR	TRUCKS IN ADT	DESIGN HOURLY GROWTH (VEHICLES/Yr)	AADT GROWTH (VEHICLES/Yr)
50.2%	4.6%	4.6%	17	169

DURATION	SHOULDER TI	LANE TI
10-Yr	6	9
20-Yr	6	10
40-Yr	7	11

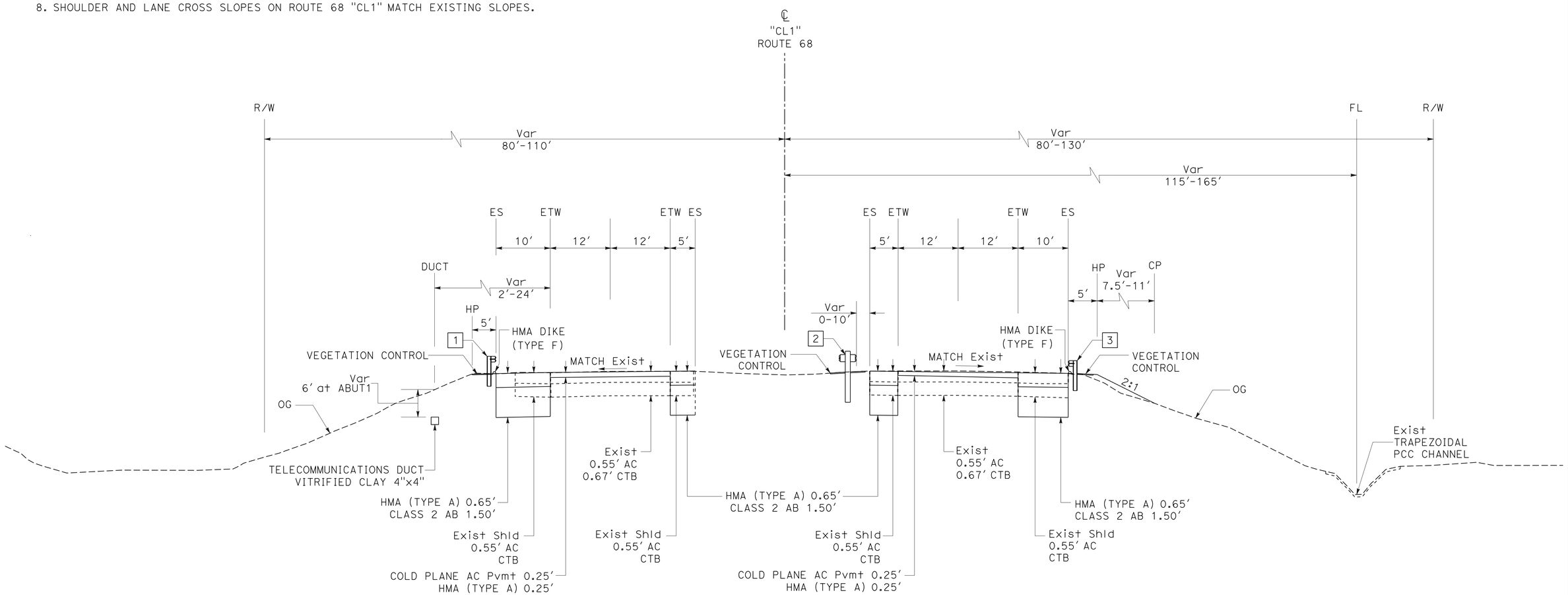

GUARD RAIL

ACTION	ITEM 1	ITEM 2	ITEM 3
SALVAGE GUARDRAIL	757+43.48-759+30.74	758+32.62-760+02.30	744+47.35-760+37.37
TERMINAL SYSTEM	END ANCHOR (TYPE SFT)	Alt CRASH CUSHION	Alt IN-LINE
LAYOUT TYPE	TYPE 12DD	TYPE 12E	NONE
DOUBLE MGS (WOOD POST)	NONE	758+22.11-759+09.44	NONE
MGS (STEEL POST)	757+47.17-758+97.17	759+09.44-759+71.86	744+47.35-760+14.56
TRANSITION RAILING	758+97.17-759+22.17	759+71.86-759+96.86	760+14.56-760+39.37

Sta 744+47.35-760+39.37
ROUTE 68

TYPICAL CROSS SECTIONS

NO SCALE

X-1

STATE OF CALIFORNIA-DEPARTMENT OF TRANSPORTATION
Caltrans
06-DESIGN
FUNCTIONAL SUPERVISOR: SCOTT SHAVER
CALCULATED-DESIGNED BY: JAMES M. ORR
CHECKED BY: M. FAZLE RABBI
REVISED BY
DATE REVISED

LAST REVISION 06-19-15
DATE PLOTTED => 08-SEP-2015
TIME PLOTTED => 16:44

Dist	COUNTY	ROUTE	POST MILES TOTAL PROJECT	SHEET No.	TOTAL SHEETS
05	Mon	68	R17.4/R18.0	3	149

REGISTERED CIVIL ENGINEER DATE 6-22-15

6-22-15
PLANS APPROVAL DATE

REGISTERED PROFESSIONAL ENGINEER JAMES M. ORR No. C67928 Exp. 06/30/17 CIVIL STATE OF CALIFORNIA

THE STATE OF CALIFORNIA OR ITS OFFICERS OR AGENTS SHALL NOT BE RESPONSIBLE FOR THE ACCURACY OR COMPLETENESS OF SCANNED COPIES OF THIS PLAN SHEET.

NOTE:

FOR ACCURATE RIGHT OF WAY DATA CONTACT
RIGHT OF WAY ENGINEERING AT THE DISTRICT OFFICE.

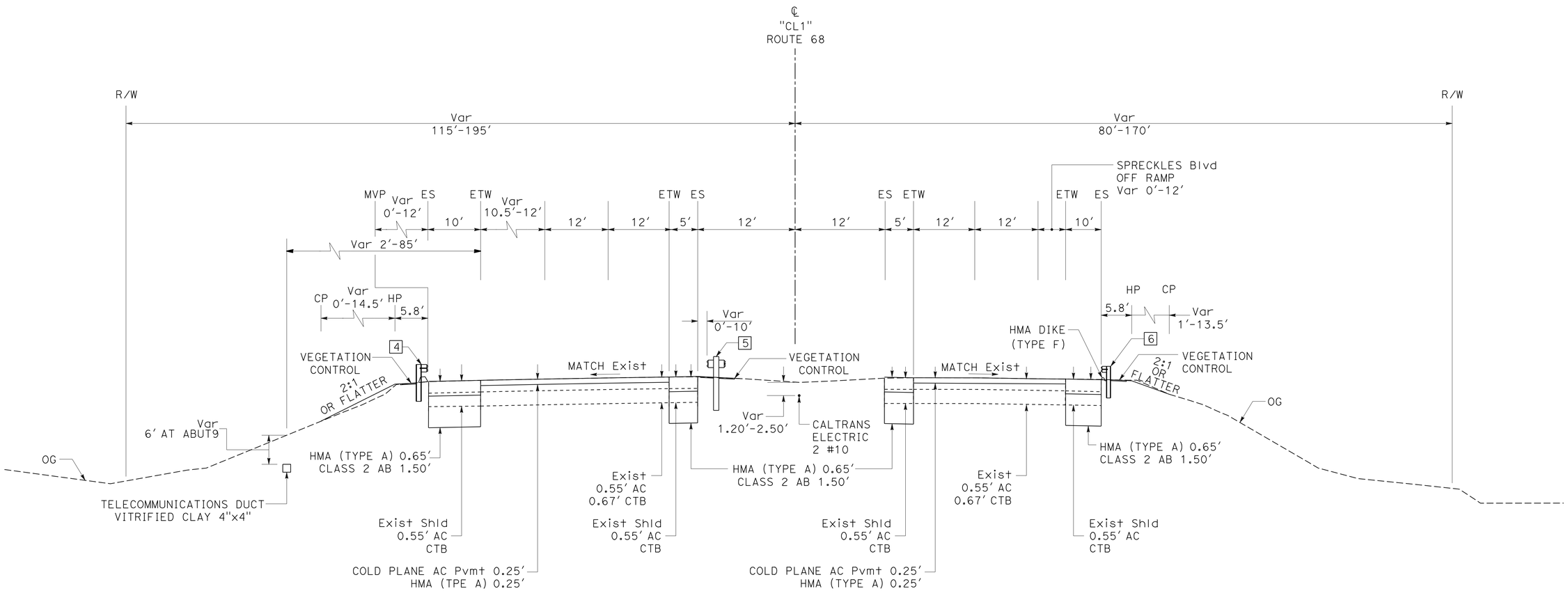

Sta 768+20.95-778+52.85
ROUTE 68

GUARD RAIL

ACTION	ITEM 4	ITEM 5	ITEM 6
SALVAGE GUARDRAIL	768+20.95-778+52.85	768+64.20-770+33.70	769+35.21-771+79.11
TERMINAL SYSTEM	Alt IN-LINE	Alt CRASH CUSHION	END ANCHOR (TYPE SFT)
LAYOUT TYPE	NONE	TYPE 12E	TYPE 12DD
DOUBLE MGS (WOOD POST)	NONE	769+44.14-770+43.88	NONE
MGS (STEEL POST)	768+40.46-778+52.85	768+94.20-769+44.14	769+68.09-771+79.11
TRANSITION RAILING	768+15.46-768+40.46	768+69.20-768+94.20	769+43.09-769+68.09

TYPICAL CROSS SECTIONS

NO SCALE

X-2

STATE OF CALIFORNIA-DEPARTMENT OF TRANSPORTATION
Caltrans
06-DESIGN
FUNCTIONAL SUPERVISOR: SCOTT SHAVER
CALCULATED-DESIGNED BY: JAMES M. ORR
CHECKED BY: M. FAZLE RABBI
REVISED BY
DATE REVISED

LAST REVISION 06-19-15
DATE PLOTTED => 08-SEP-2015
TIME PLOTTED => 16:44

Dist	COUNTY	ROUTE	POST MILES TOTAL PROJECT	SHEET No.	TOTAL SHEETS
05	Mon	68	R17.4/R18.0	4	149

REGISTERED CIVIL ENGINEER 6-22-15 DATE

6-22-15
PLANS APPROVAL DATE

REGISTERED PROFESSIONAL ENGINEER JAMES M. ORR No. C67928 Exp. 06/30/17 CIVIL STATE OF CALIFORNIA

THE STATE OF CALIFORNIA OR ITS OFFICERS OR AGENTS SHALL NOT BE RESPONSIBLE FOR THE ACCURACY OR COMPLETENESS OF SCANNED COPIES OF THIS PLAN SHEET.

NOTE:

FOR ACCURATE RIGHT OF WAY DATA, CONTACT RIGHT OF WAY ENGINEERING AT THE DISTRICT OFFICE.

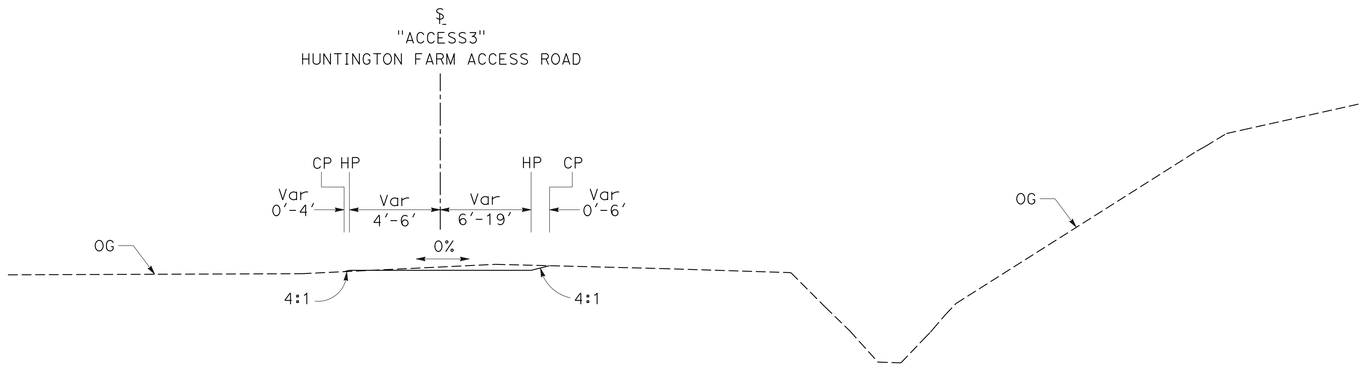

LINE "ACCESS3" 125+50.00-128+00.00

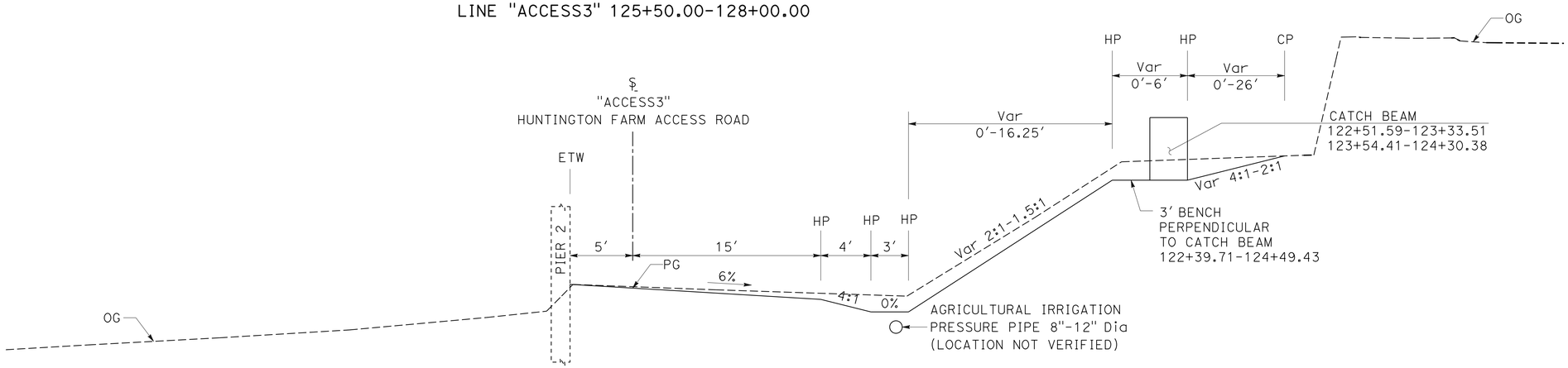

LINE "ACCESS3" 123+10.00-124+75.43

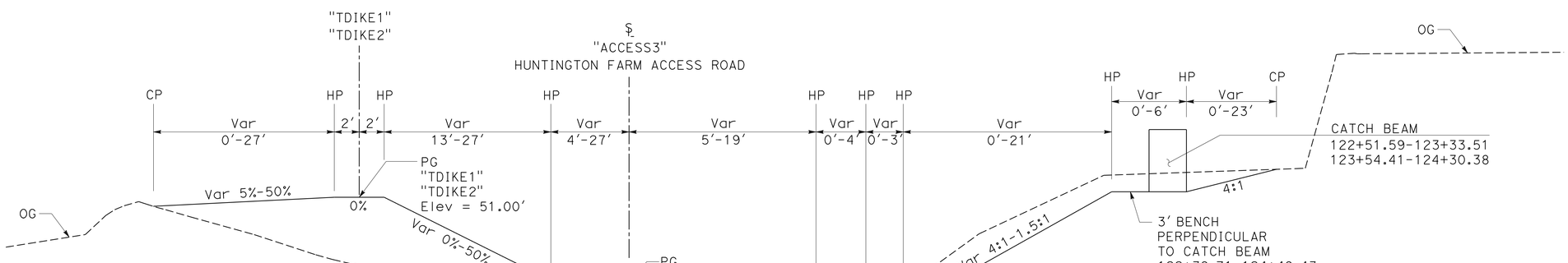

LINE "ACCESS3" 121+00.00-123+10.00
LINE "ACCESS3" 124+75.43-125+50.00

HUNTINGTON FARM ACCESS ROAD

TYPICAL CROSS SECTIONS

NO SCALE

X-3

REVISED BY	DATE REVISED

CALCULATED-DESIGNED BY	CHECKED BY
JAMES M. ORR	M. FAZLE RABBI

FUNCTIONAL SUPERVISOR: SCOTT SHAVER

STATE OF CALIFORNIA-DEPARTMENT OF TRANSPORTATION

Caltrans

06-DESIGN

LAST REVISION 06-19-15 | DATE PLOTTED => 08-SEP-2015 | TIME PLOTTED => 16:44

Dist	COUNTY	ROUTE	POST MILES TOTAL PROJECT	SHEET No.	TOTAL SHEETS
05	Mon	68	R17.4/R18.0	5	149

James M. Orr 6-22-15
REGISTERED CIVIL ENGINEER DATE

6-22-15
PLANS APPROVAL DATE

REGISTERED PROFESSIONAL ENGINEER JAMES M. ORR No. C67928 Exp. 06/30/17 CIVIL STATE OF CALIFORNIA

THE STATE OF CALIFORNIA OR ITS OFFICERS OR AGENTS SHALL NOT BE RESPONSIBLE FOR THE ACCURACY OR COMPLETENESS OF SCANNED COPIES OF THIS PLAN SHEET.

NOTE:

FOR ACCURATE RIGHT OF WAY DATA CONTACT
RIGHT OF WAY ENGINEERING AT THE DISTRICT OFFICE.

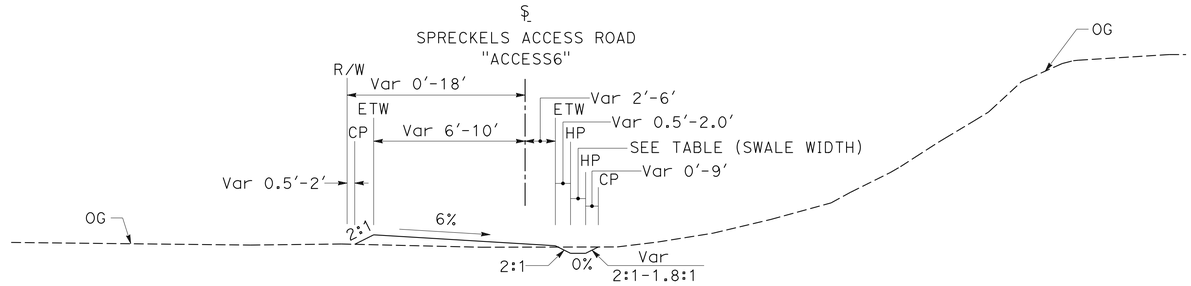

LINE "ACCESS6" 135+00.00-144+62.00

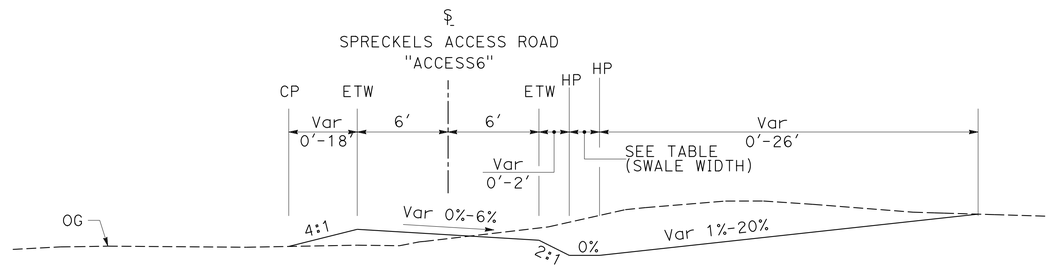

LINE "ACCESS6" 130+26.72-135+00.00

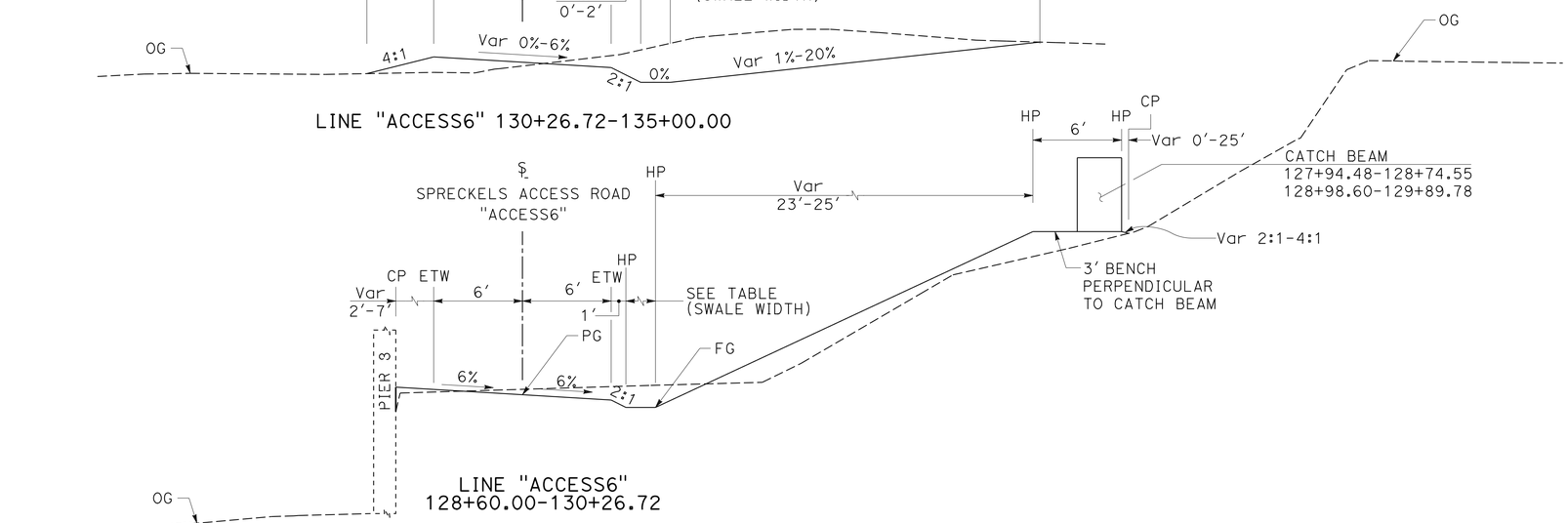

LINE "ACCESS6"
128+60.00-130+26.72

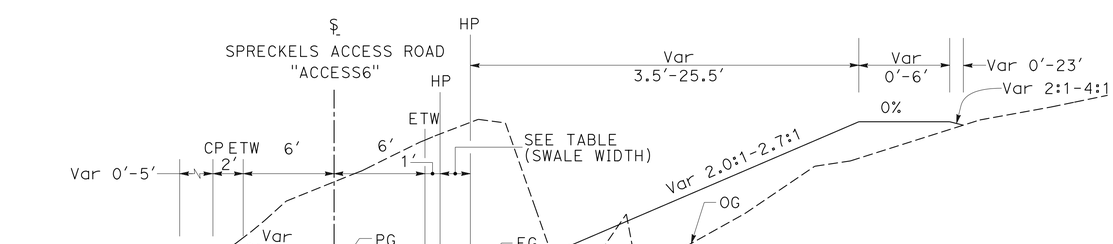

LINE "ACCESS6" 127+70 - 128+60.00

SWALE WIDTH

STARTING STATION	WIDTH
127+70.00	0.00'
127+80.00	2.00'
129+22.00	5.00'
130+60.00	2.00'
132+20.00	0.00'
135+00.00	1.00'
142+60.00	0.00'

SPRECKELS ACCESS ROAD

TYPICAL CROSS SECTIONS

NO SCALE

X-4

REVISED BY | DATE REVISED
JAMES M. ORR | M. FAZLE RABBI
CALCULATED-DESIGNED BY | CHECKED BY
FUNCTIONAL SUPERVISOR | SCOTT SHAVER
STATE OF CALIFORNIA-DEPARTMENT OF TRANSPORTATION
Caltrans
06-DESIGN

LAST REVISION 06-18-15 | DATE PLOTTED => 08-SEP-2015 | TIME PLOTTED => 16:44

Dist	COUNTY	ROUTE	POST MILES TOTAL PROJECT	SHEET No.	TOTAL SHEETS
05	Mon	68	R17.4/R18.0	6	149

James M. Orr 6-22-15
REGISTERED CIVIL ENGINEER DATE

6-22-15
PLANS APPROVAL DATE

REGISTERED PROFESSIONAL ENGINEER JAMES M. ORR No. C67928 Exp. 6/30/17 CIVIL STATE OF CALIFORNIA

THE STATE OF CALIFORNIA OR ITS OFFICERS OR AGENTS SHALL NOT BE RESPONSIBLE FOR THE ACCURACY OR COMPLETENESS OF SCANNED COPIES OF THIS PLAN SHEET.

NOTES:

1. FOR ACCURATE RIGHT OF WAY DATA, CONTACT RIGHT OF WAY ENGINEERING AT THE DISTRICT OFFICE.
2. STATIONS AND OFFSETS MEASURED FROM LINE "CL1" UNLESS OTHERWISE STATED.
3. SEE SHEETS X-2 AND Q-2 FOR GUARD RAIL ITEMS AND LIMITS NOT SHOWN.

LEGEND:

COLD PLANE ASPHALT CONCRETE PAVEMENT

WIDEN SHOULDER

DOWNDRAIN LOCATION

1 DRAINAGE SYSTEM

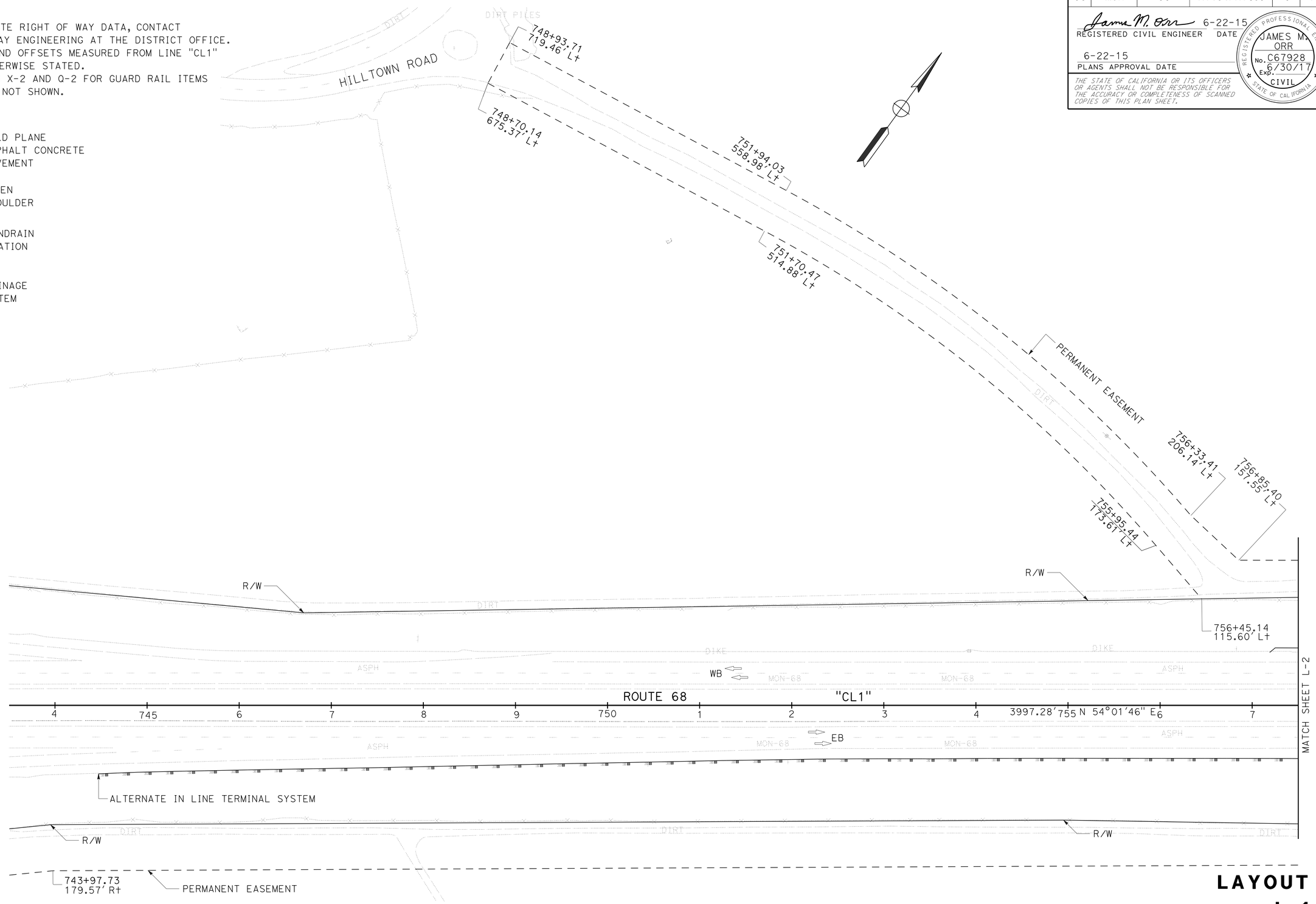

LAYOUT

SCALE: 1" = 50'

L-1

STATE OF CALIFORNIA - DEPARTMENT OF TRANSPORTATION
Caltrans
06-DESIGN

FUNCTIONAL SUPERVISOR: SCOTT SHAVER
CALCULATED-DESIGNED BY: JAMES ORR
CHECKED BY: M. FAZLE RABBI
REVISED BY
DATE REVISED

LAST REVISION 06-18-15
DATE PLOTTED => 08-SEP-2015
TIME PLOTTED => 16:45

Dist	COUNTY	ROUTE	POST MILES TOTAL PROJECT	SHEET No.	TOTAL SHEETS
05	Mon	68	R17.4/R18.0	7	149

James M. Orr 6-22-15
REGISTERED CIVIL ENGINEER DATE

6-22-15
PLANS APPROVAL DATE

REGISTERED PROFESSIONAL ENGINEER JAMES M. ORR No. C67928 Exp. 6/30/17 CIVIL STATE OF CALIFORNIA

THE STATE OF CALIFORNIA OR ITS OFFICERS OR AGENTS SHALL NOT BE RESPONSIBLE FOR THE ACCURACY OR COMPLETENESS OF SCANNED COPIES OF THIS PLAN SHEET.

NOTES:

1. FOR ACCURATE RIGHT OF WAY DATA, CONTACT RIGHT OF WAY ENGINEERING AT THE DISTRICT OFFICE.
2. SEE STRUCTURE DESIGN PLANS FOR BRIDGE DETAILS.
3. SEE SHEETS C-2 AND C-3 FOR ROADWAY DETAILS AT ABUTMENTS.
4. SEE SHEETS L-4 AND L-5 FOR "ACCESS3" AND "ACCESS6" ALIGNMENT DETAILS.

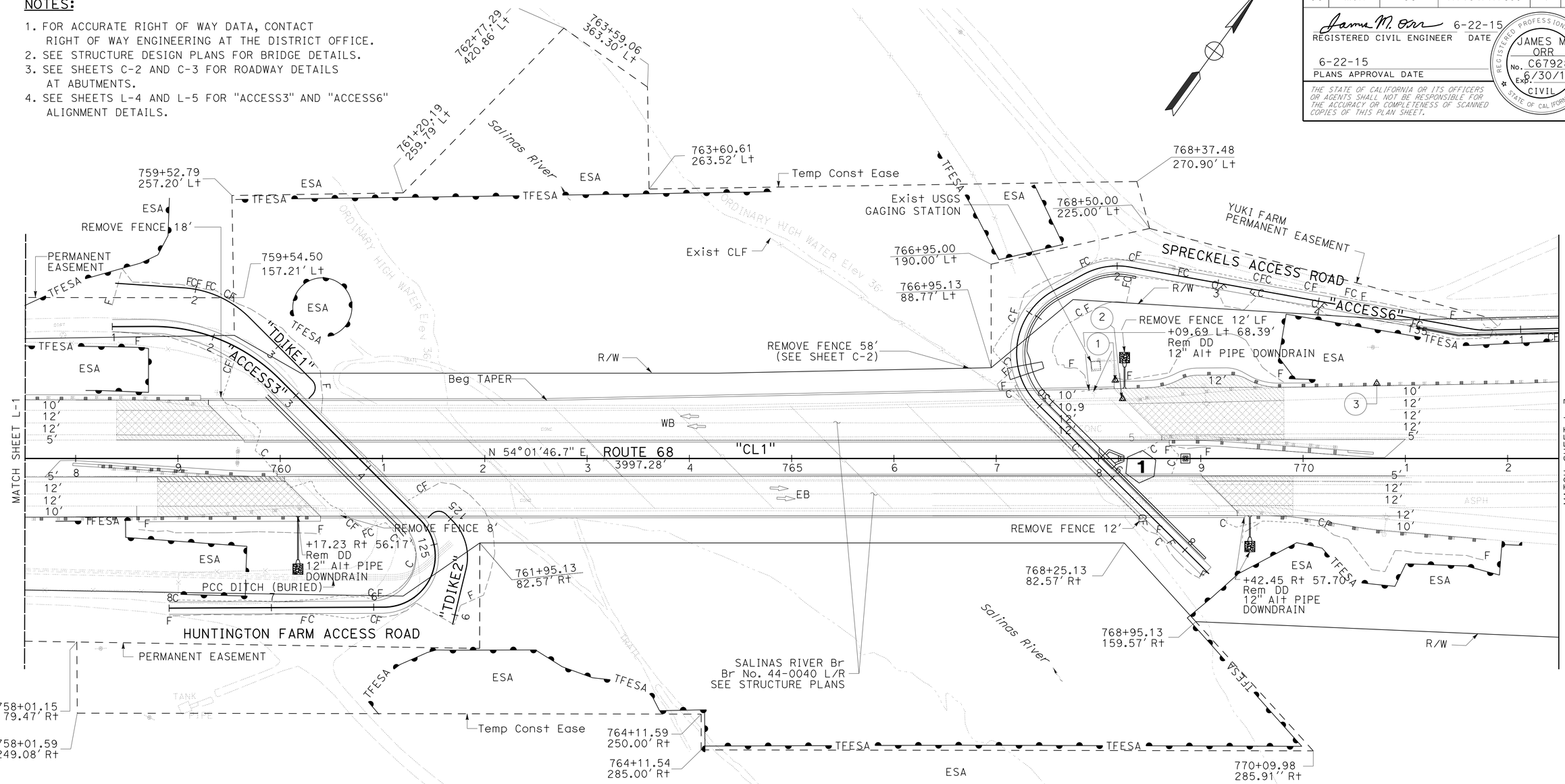

SURVEY MONUMENTS

MONUMENT ID	NORTHING	EASTING	OWNER	WORK DESCRIPTION
1	2123587.499	5777486.466	USGS	RESET BY CALTRANS
2	2123577.004	5777502.889	USGS	RESET BY CALTRANS
3	2123735.120	5777695.181	CALTRANS	PROTECT IN PLACE

LAYOUT

SCALE: 1" = 50'

L-2

STATE OF CALIFORNIA - DEPARTMENT OF TRANSPORTATION
Caltrans
06-DESIGN
FUNCTIONAL SUPERVISOR: SCOTT SHAVER
CALCULATED-DESIGNED BY: JAMES ORR
CHECKED BY: M. FAZLE RABBI
REVISED BY
DATE REVISED

LAST REVISION 06-18-15
DATE PLOTTED => 08-SEP-2015
TIME PLOTTED => 16:45

Dist	COUNTY	ROUTE	POST MILES TOTAL PROJECT	SHEET No.	TOTAL SHEETS
05	Mon	68	R17.4/R18.0	8	149

James M. Orr 6-22-15
REGISTERED CIVIL ENGINEER DATE

6-22-15
PLANS APPROVAL DATE

REGISTERED PROFESSIONAL ENGINEER JAMES M. ORR No. C67928 Exp. 6/30/17 CIVIL STATE OF CALIFORNIA

THE STATE OF CALIFORNIA OR ITS OFFICERS OR AGENTS SHALL NOT BE RESPONSIBLE FOR THE ACCURACY OR COMPLETENESS OF SCANNED COPIES OF THIS PLAN SHEET.

NOTES:

1. FOR ACCURATE RIGHT OF WAY DATA, CONTACT RIGHT OF WAY ENGINEERING AT THE DISTRICT OFFICE.
2. STATIONS AND OFFSETS MEASURED FROM ("CL1" LINE) OTHERWISE STATED.
3. SEE SHEET L-5 FOR "ACCESS6" DETAILS.

CURVE DATA

No. ⊕	R	Δ	T	L
1	2252′	24°07′39″	481.30′	948.33′

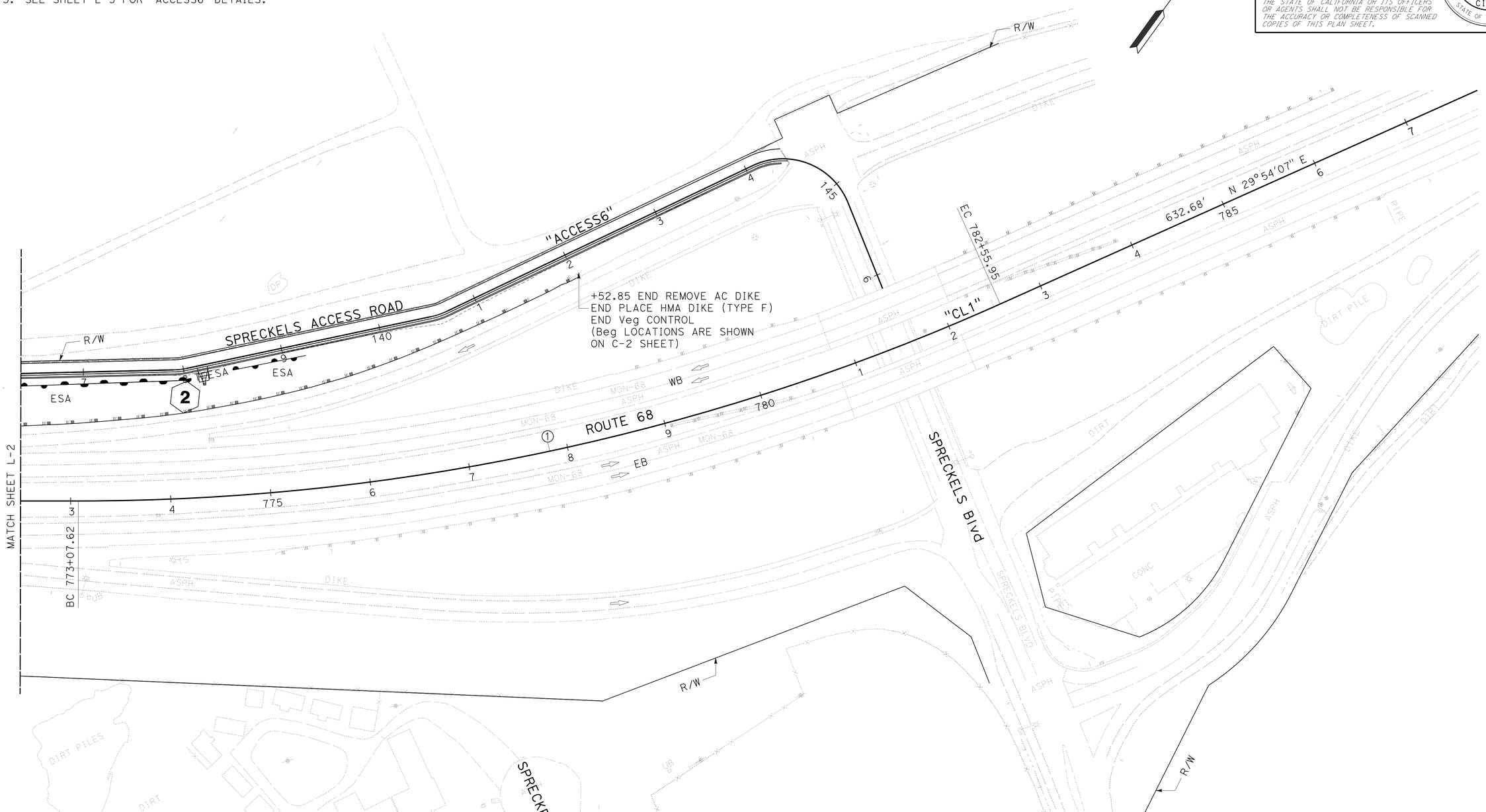

LAYOUT

SCALE: 1" = 50′ **L-3**

STATE OF CALIFORNIA - DEPARTMENT OF TRANSPORTATION
Caltrans
06-DESIGN

FUNCTIONAL SUPERVISOR: SCOTT SHAVER
CALCULATED-DESIGNED BY: M. FAZLE RABBI
CHECKED BY: JAMES ORR
REVISED BY
DATE REVISED

LAST REVISION 06-18-15
DATE PLOTTED => 08-SEP-2015
TIME PLOTTED => 16:45

Dist	COUNTY	ROUTE	POST MILES TOTAL PROJECT	SHEET No.	TOTAL SHEETS
05	Mon	68	R17.4/R18.0	9	149

James M. Orr 6-22-15
REGISTERED CIVIL ENGINEER DATE

6-22-15
PLANS APPROVAL DATE

REGISTERED PROFESSIONAL ENGINEER JAMES M. ORR No. C67928 Exp. 6/30/17 CIVIL STATE OF CALIFORNIA

THE STATE OF CALIFORNIA OR ITS OFFICERS OR AGENTS SHALL NOT BE RESPONSIBLE FOR THE ACCURACY OR COMPLETENESS OF SCANNED COPIES OF THIS PLAN SHEET.

NOTES:

1. FOR ACCURATE RIGHT OF WAY DATA, CONTACT RIGHT OF WAY ENGINEERING AT THE DISTRICT OFFICE.
2. STATIONS AND OFFSETS MEASURED FROM "ACCESS6" LINE UNLESS OTHERWISE STATED.

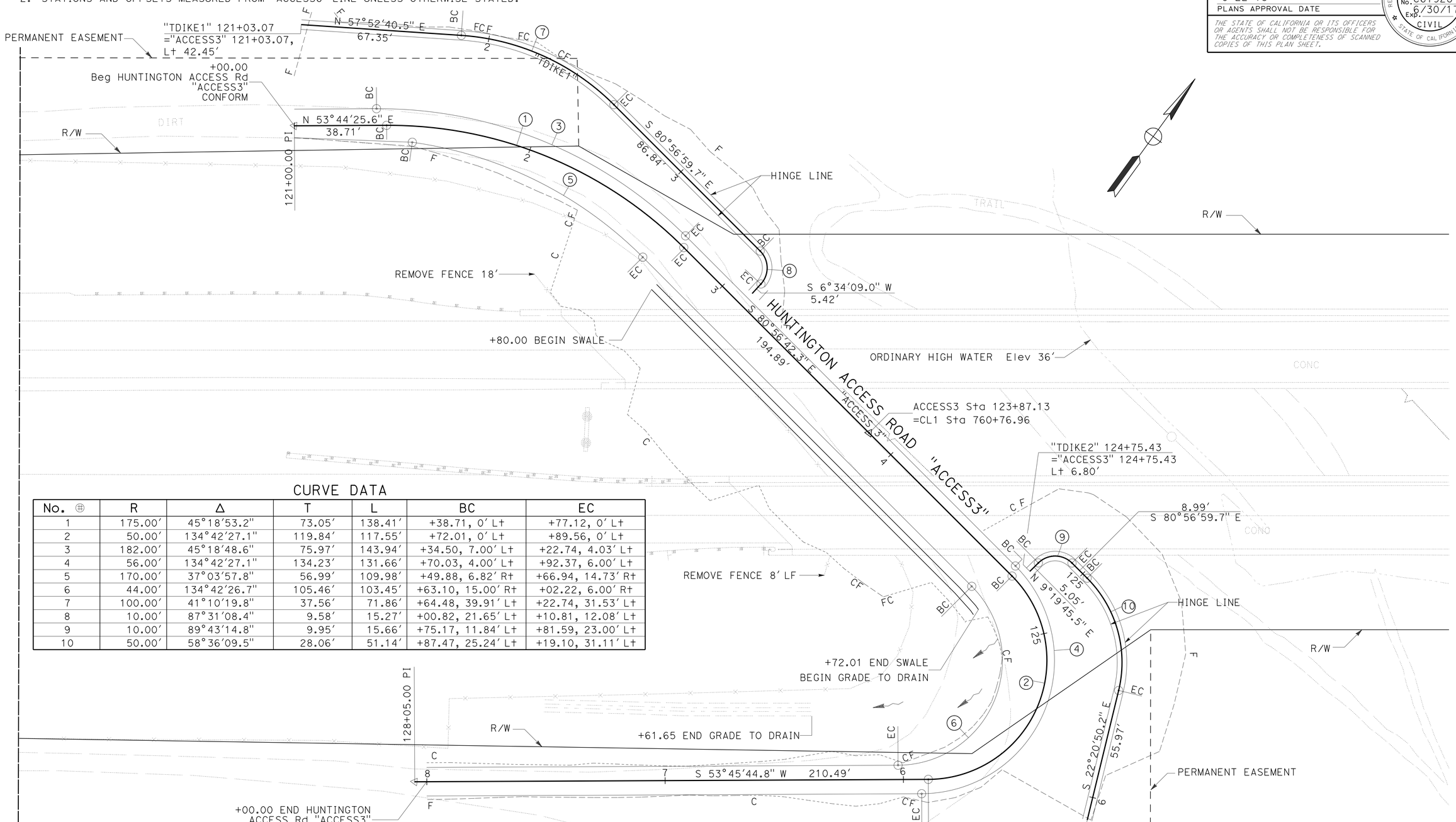

CURVE DATA

No. ⊕	R	Δ	T	L	BC	EC
1	175.00'	45°18'53.2"	73.05'	138.41'	+38.71, 0' Lt	+77.12, 0' Lt
2	50.00'	134°42'27.1"	119.84'	117.55'	+72.01, 0' Lt	+89.56, 0' Lt
3	182.00'	45°18'48.6"	75.97'	143.94'	+34.50, 7.00' Lt	+22.74, 4.03' Lt
4	56.00'	134°42'27.1"	134.23'	131.66'	+70.03, 4.00' Lt	+92.37, 6.00' Lt
5	170.00'	37°03'57.8"	56.99'	109.98'	+49.88, 6.82' Rt	+66.94, 14.73' Rt
6	44.00'	134°42'26.7"	105.46'	103.45'	+63.10, 15.00' Rt	+02.22, 6.00' Rt
7	100.00'	41°10'19.8"	37.56'	71.86'	+64.48, 39.91' Lt	+22.74, 31.53' Lt
8	10.00'	87°31'08.4"	9.58'	15.27'	+00.82, 21.65' Lt	+10.81, 12.08' Lt
9	10.00'	89°43'14.8"	9.95'	15.66'	+75.17, 11.84' Lt	+81.59, 23.00' Lt
10	50.00'	58°36'09.5"	28.06'	51.14'	+87.47, 25.24' Lt	+19.10, 31.11' Lt

LAYOUT

SCALE: 1" = 20'

L-4

STATE OF CALIFORNIA - DEPARTMENT OF TRANSPORTATION
Caltrans
06-DESIGN

FUNCTIONAL SUPERVISOR: SCOTT SHAVER
CALCULATED-DESIGNED BY: JAMES ORR
CHECKED BY: M. FAZLE RABBI
REVISED BY
DATE REVISED

LAST REVISION 06-18-15
DATE PLOTTED => 08-SEP-2015
TIME PLOTTED => 16:45

Dist	COUNTY	ROUTE	POST MILES TOTAL PROJECT	SHEET No.	TOTAL SHEETS
05	Mon	68	R17.4/R18.0	10	149

James M. Orr 6-22-15
REGISTERED CIVIL ENGINEER DATE

6-22-15
PLANS APPROVAL DATE

REGISTERED PROFESSIONAL ENGINEER JAMES M. ORR No. C67928 Exp. 6/30/17 CIVIL STATE OF CALIFORNIA

THE STATE OF CALIFORNIA OR ITS OFFICERS OR AGENTS SHALL NOT BE RESPONSIBLE FOR THE ACCURACY OR COMPLETENESS OF SCANNED COPIES OF THIS PLAN SHEET.

NOTES:

1. FOR ACCURATE RIGHT OF WAY DATA, CONTACT RIGHT OF WAY ENGINEERING AT THE DISTRICT OFFICE.
2. STATIONS AND OFFSETS MEASURED FROM LINE "ACCESS6" UNLESS OTHERWISE STATED.

CURVE DATA

No. ⊕	R	Δ	T	L
1	70.00′	106°43′25.37"	94.12′	130.39′
2	70.00′	38°45′50.51"	24.63′	47.36′
3	70.00′	11°38′19.10"	7.13′	14.22′
4	70.00′	10°34′51.59"	6.48′	12.93′
5	70.00′	13°30′51.69"	8.29′	16.51′
6	70.00′	93°31′54.60"	74.45′	114.27′

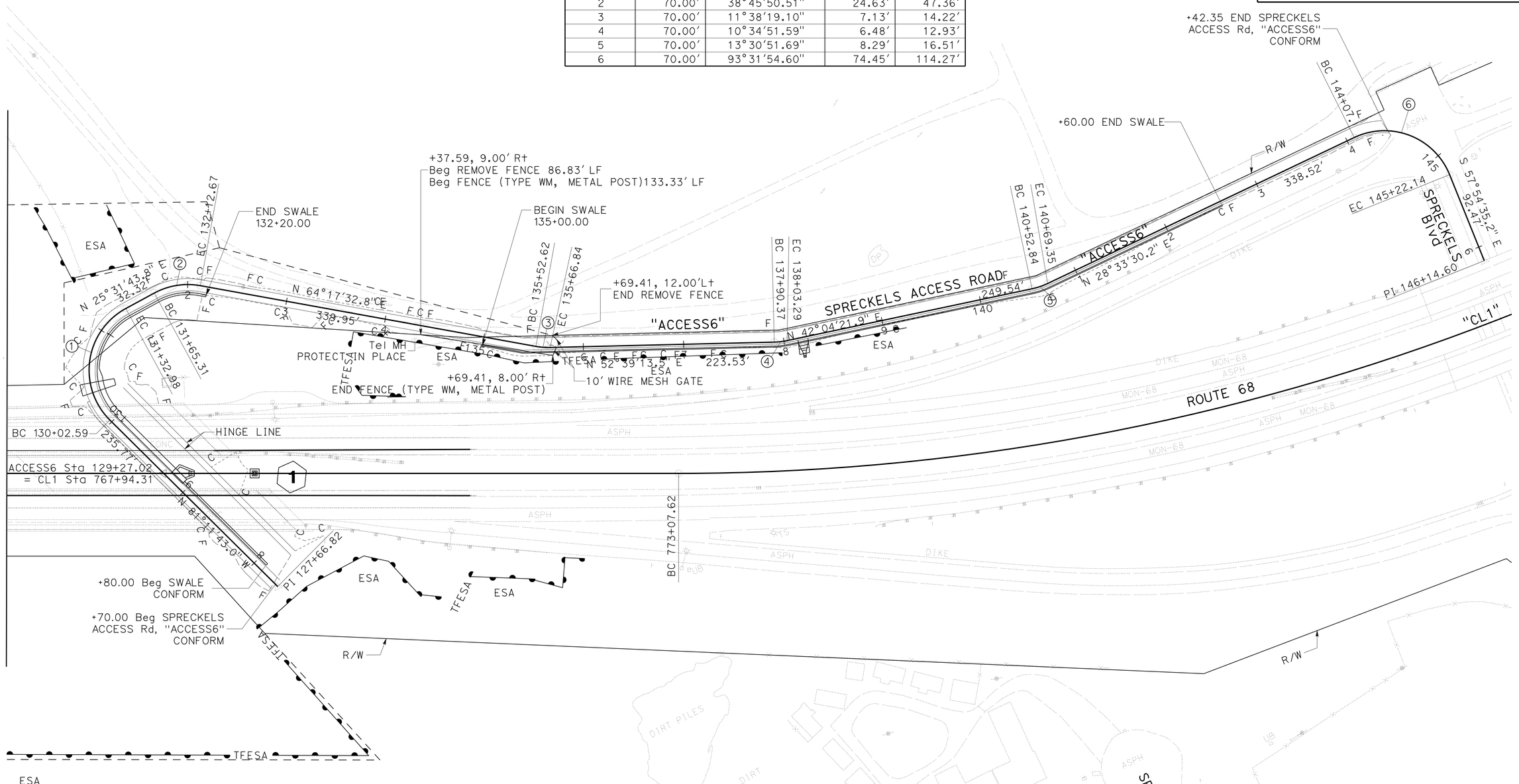

LAYOUT

SCALE: 1" = 50′ L-5

STATE OF CALIFORNIA - DEPARTMENT OF TRANSPORTATION
Caltrans
06-DESIGN

FUNCTIONAL SUPERVISOR: SCOTT SHAVER
CALCULATED-DESIGNED BY: JAMES ORR
CHECKED BY: M. FAZLE RABBI
REVISED BY
DATE REVISED

LAST REVISION 06-18-15
DATE PLOTTED => 08-SEP-2015
TIME PLOTTED => 16:45

Dist	COUNTY	ROUTE	POST MILES TOTAL PROJECT	SHEET No.	TOTAL SHEETS
05	Mon	68	R17.4/R18.0	11	149

James M. Orr 6-22-15
REGISTERED CIVIL ENGINEER DATE

6-22-15
PLANS APPROVAL DATE

REGISTERED PROFESSIONAL ENGINEER
JAMES M. ORR
No. C67928
Exp. 06/30/17
CIVIL
STATE OF CALIFORNIA

THE STATE OF CALIFORNIA OR ITS OFFICERS OR AGENTS SHALL NOT BE RESPONSIBLE FOR THE ACCURACY OR COMPLETENESS OF SCANNED COPIES OF THIS PLAN SHEET.

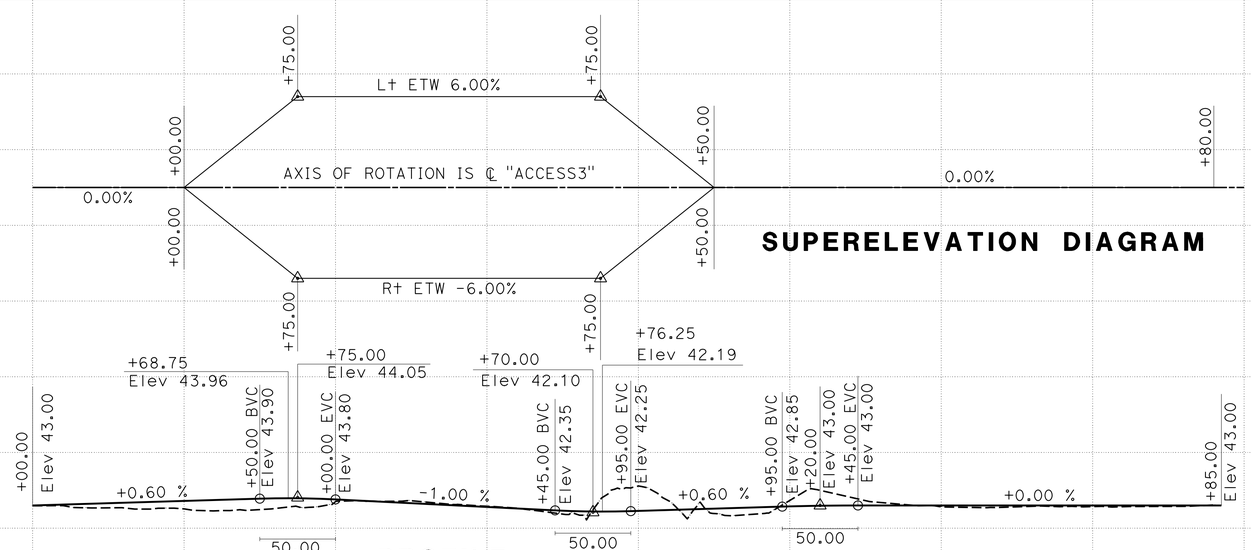

SUPERELEVATION DIAGRAM

PROFILE
HUNTINGTON ACCESS ROAD
"ACCESS3"

PROFILE AND SUPERELEVATION DIAGRAM
PS-1

SCALE: Horiz 1"=50'
Vert 1"=10'

STATION		120	1	2	3	4	125	6	7	8	9	TOTAL
CY	Exc	0	32	89	297	91	83	47	1	0		640
	Emb	0	95	446	60	407	211	1	8	0		1228

STATE OF CALIFORNIA - DEPARTMENT OF TRANSPORTATION
Caltrans
06-DESIGN

FUNCTIONAL SUPERVISOR: SCOTT SHAVER

CALCULATED-DESIGNED BY: JAMES M. ORR
CHECKED BY: M. FAZLE RABBI

REVISED BY
DATE REVISED

LAST REVISION 06-18-15
DATE PLOTTED => 08-SEP-2015
TIME PLOTTED => 16:45

Dist	COUNTY	ROUTE	POST MILES TOTAL PROJECT	SHEET No.	TOTAL SHEETS
05	Mon	68	R17.4/R18.0	12	149

REGISTERED CIVIL ENGINEER 6-22-15 DATE

6-22-15
PLANS APPROVAL DATE

REGISTERED PROFESSIONAL ENGINEER JAMES M. ORR No. C67928 Exp. 06/30/17 CIVIL STATE OF CALIFORNIA

THE STATE OF CALIFORNIA OR ITS OFFICERS OR AGENTS SHALL NOT BE RESPONSIBLE FOR THE ACCURACY OR COMPLETENESS OF SCANNED COPIES OF THIS PLAN SHEET.

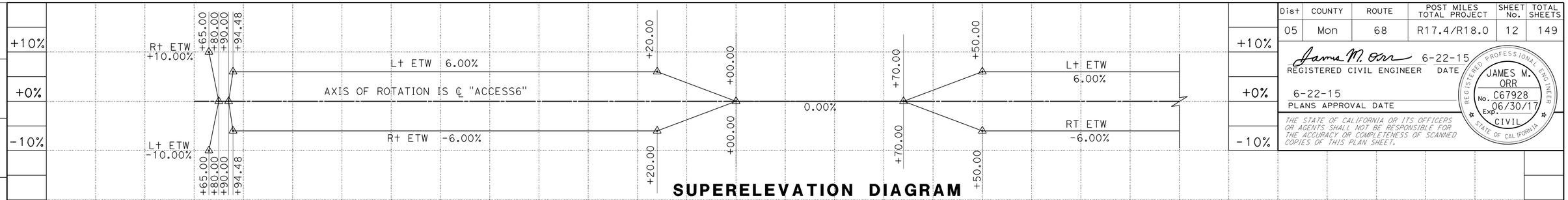

SUPERELEVATION DIAGRAM

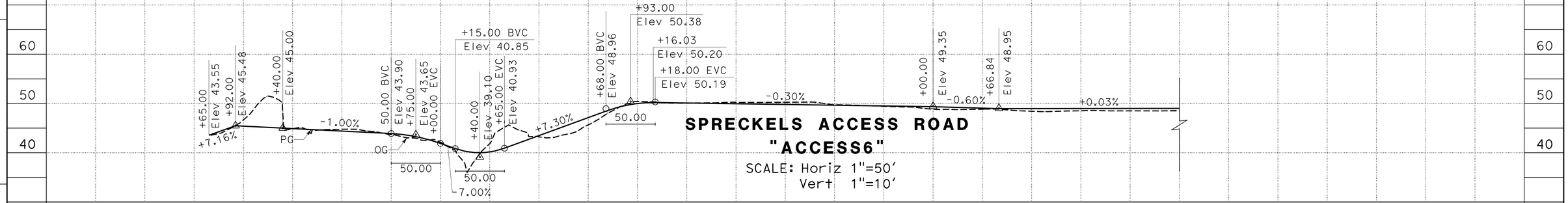

SPRECKELS ACCESS ROAD "ACCESS6"

SCALE: Horiz 1"=50'
Vert 1"=10'

STATION		7	8	9	130	1	2	3	4	135	6	7	TOTAL
CY	Exc	0	187	256	84	247	63	10	15	1	16	0	0
	Emb	0	14	139	220	117	53	2	1	10	18	27	12

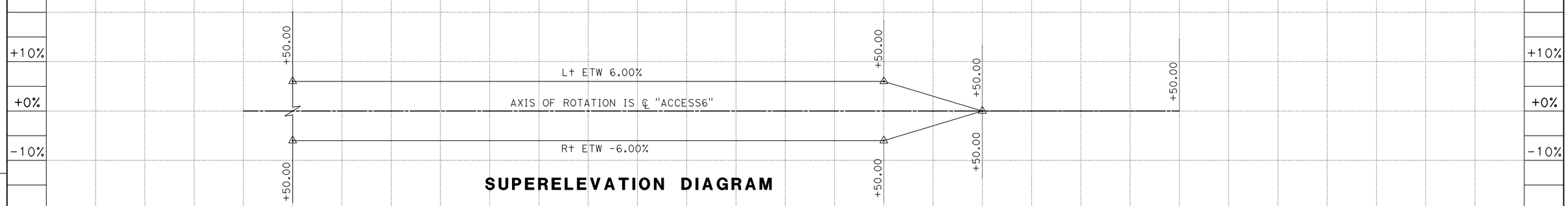

SUPERELEVATION DIAGRAM

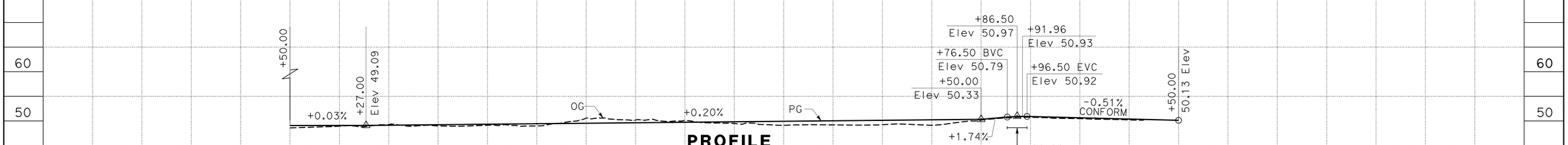

PROFILE
SPRECKELS ACCESS ROAD "ACCESS6"

SCALE: Horiz 1"=50'
Vert 1"=10'

STATION		7	8	9	140	1	2	3	4	145	6	7	TOTAL
CY	Exc	3	8	3	43	19	1	0	0	0			956
	Emb	11	13	22	8	22	43	53	9	0			794

PROFILE AND SUPERELEVATION DIAGRAM
PS-2

REVISED BY | DATE REVISED
JAMES M. ORR | M. FAZLE RABBI
CALCULATED-DESIGNED BY | CHECKED BY
FUNCTIONAL SUPERVISOR: SCOTT SHAVER

STATE OF CALIFORNIA - DEPARTMENT OF TRANSPORTATION
Caltrans
06-DESIGN

LAST REVISION 06-18-15 | DATE PLOTTED => 08-SEP-2015 | TIME PLOTTED => 16:45

Dist	COUNTY	ROUTE	POST MILES TOTAL PROJECT	SHEET No.	TOTAL SHEETS
05	Mon	68	R17.4/R18.0	13	149

James M. Orr 6-22-15
REGISTERED CIVIL ENGINEER DATE

6-22-15
PLANS APPROVAL DATE

REGISTERED PROFESSIONAL ENGINEER JAMES M. ORR No. C67928 Exp. 6/30/17 CIVIL STATE OF CALIFORNIA

THE STATE OF CALIFORNIA OR ITS OFFICERS OR AGENTS SHALL NOT BE RESPONSIBLE FOR THE ACCURACY OR COMPLETENESS OF SCANNED COPIES OF THIS PLAN SHEET.

NOTES:

1. FOR ACCURATE RIGHT OF WAY DATA, CONTACT RIGHT OF WAY ENGINEERING AT THE DISTRICT OFFICE.
2. SEE STRUCTURE PLANS FOR BRIDGE DETAILS.
3. ALL STATIONS AND OFFSETS MEASURED FROM "CL1" UNLESS OTHERWISE STATED.
4. SEE SHEET L-4 FOR DETAILS OF "ACCESS3", "TDIKE1", AND "TDIKE2".
5. SEE SHEETS X-1 AND Q-2 FOR GUARD RAIL ITEMS AND LIMITS NOT SHOWN.

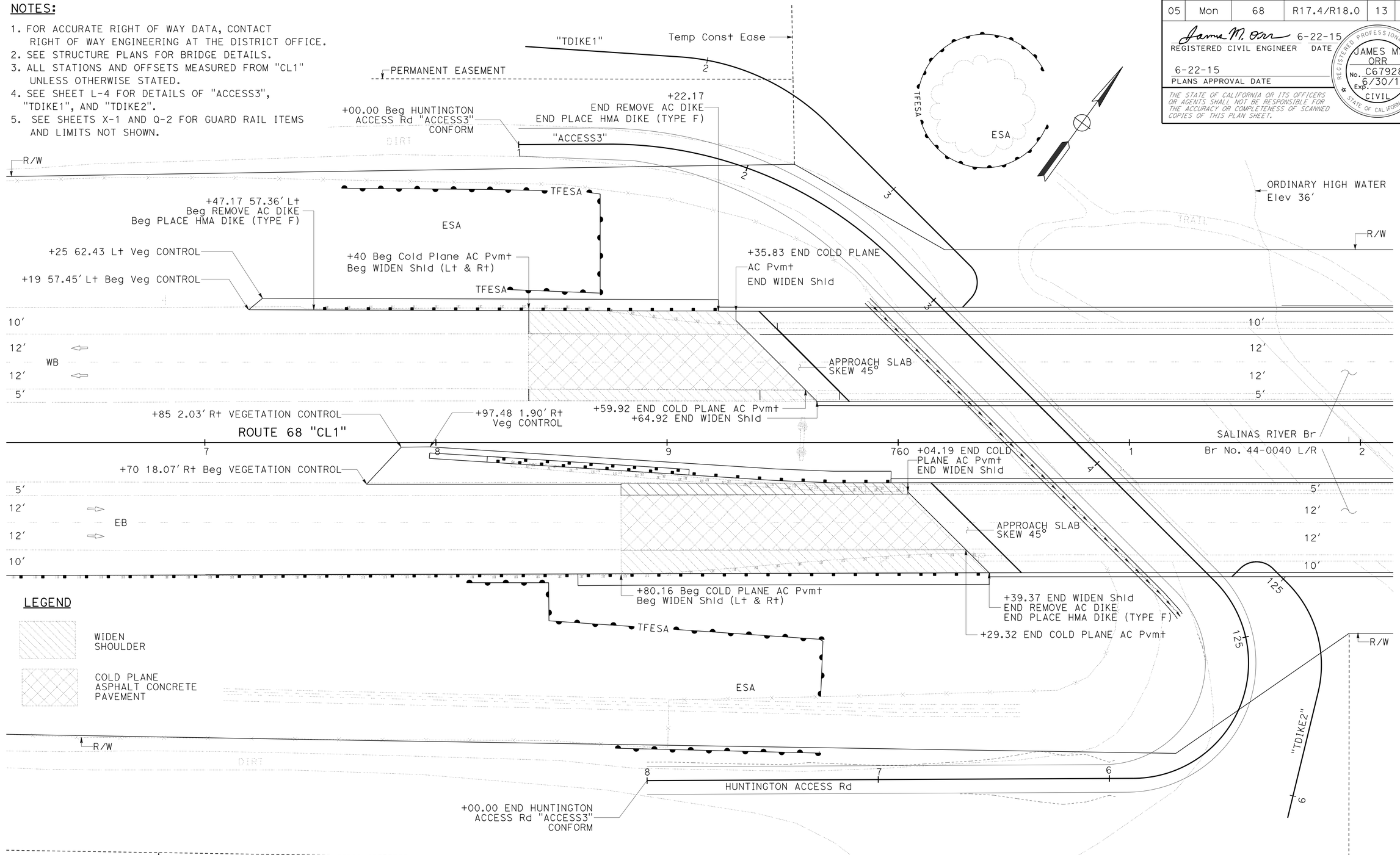

CONSTRUCTION DETAILS

NO SCALE

C-1

STATE OF CALIFORNIA - DEPARTMENT OF TRANSPORTATION
Caltrans
06-DESIGN

FUNCTIONAL SUPERVISOR: SCOTT SHAVER
CALCULATED-DESIGNED BY: JAMES ORR
CHECKED BY: M. FAZLE RABBI
REVISED BY
DATE REVISED

LAST REVISION 06-18-15
DATE PLOTTED => 08-SEP-2015
TIME PLOTTED => 16:45

Dist	COUNTY	ROUTE	POST MILES TOTAL PROJECT	SHEET No.	TOTAL SHEETS
05	Mon	68	R17.4/R18.0	14	149

James M. Orr 6-22-15
REGISTERED CIVIL ENGINEER DATE

6-22-15
PLANS APPROVAL DATE

REGISTERED PROFESSIONAL ENGINEER JAMES M. ORR No. C67928 Exp. 6/30/17 CIVIL STATE OF CALIFORNIA

THE STATE OF CALIFORNIA OR ITS OFFICERS OR AGENTS SHALL NOT BE RESPONSIBLE FOR THE ACCURACY OR COMPLETENESS OF SCANNED COPIES OF THIS PLAN SHEET.

NOTES:

1. FOR ACCURATE RIGHT OF WAY DATA, CONTACT RIGHT OF WAY ENGINEERING AT THE DISTRICT OFFICE.
2. SEE STRUCTURE DESIGN PLANS FOR BRIDGE DETAILS.
3. ALL STATIONS AND OFFSETS MEASURED FROM "CL1" UNLESS OTHERWISE STATED.
4. SEE SHEET L-5 FOR DETAILS OF "ACCESS6"

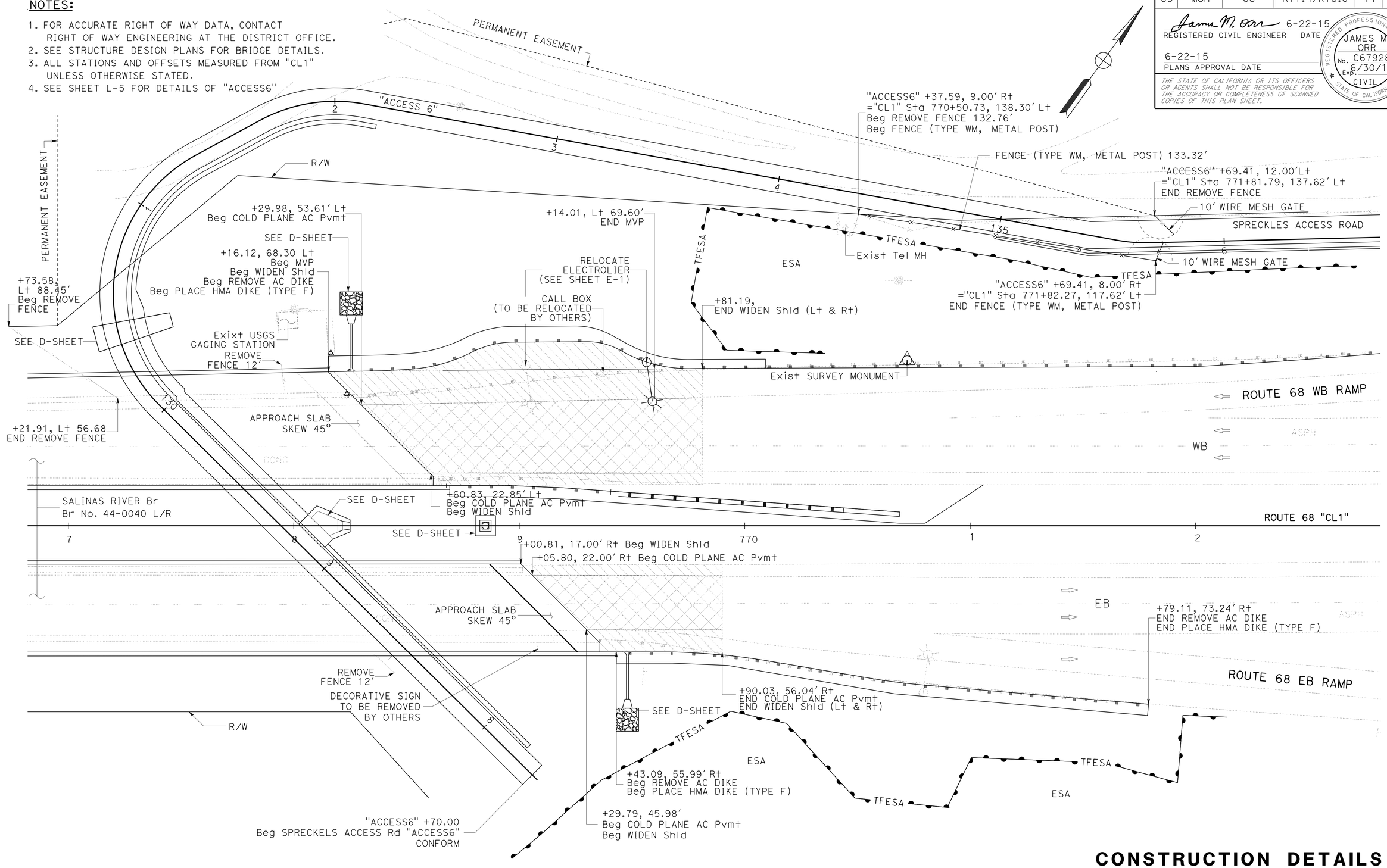

CONSTRUCTION DETAILS

NO SCALE

C-2

STATE OF CALIFORNIA - DEPARTMENT OF TRANSPORTATION
Caltrans
06-DESIGN

FUNCTIONAL SUPERVISOR: SCOTT SHAVER
CALCULATED-DESIGNED BY: M. FAZLE RABBI
CHECKED BY: JAMES ORR
REVISED BY
DATE REVISED

LAST REVISION 05-06-15
DATE PLOTTED => 08-SEP-2015
TIME PLOTTED => 16:45

Dist	COUNTY	ROUTE	POST MILES TOTAL PROJECT	SHEET No.	TOTAL SHEETS
05	Mon	68	R17.4/R18.0	15	149

James M. Orr 6-22-15
REGISTERED CIVIL ENGINEER DATE

6-22-15
PLANS APPROVAL DATE

REGISTERED PROFESSIONAL ENGINEER
JAMES M. ORR
No. C67928
Exp. 06/30/17
CIVIL
STATE OF CALIFORNIA

THE STATE OF CALIFORNIA OR ITS OFFICERS OR AGENTS SHALL NOT BE RESPONSIBLE FOR THE ACCURACY OR COMPLETENESS OF SCANNED COPIES OF THIS PLAN SHEET.

NOTES:

1. FOR ADDITIONAL DETAILS NOT SHOWN ON THIS PLAN, REFER TO RSP A77L1 AND RSP A77L2.
2. CRT POST TO BE WOOD ONLY.

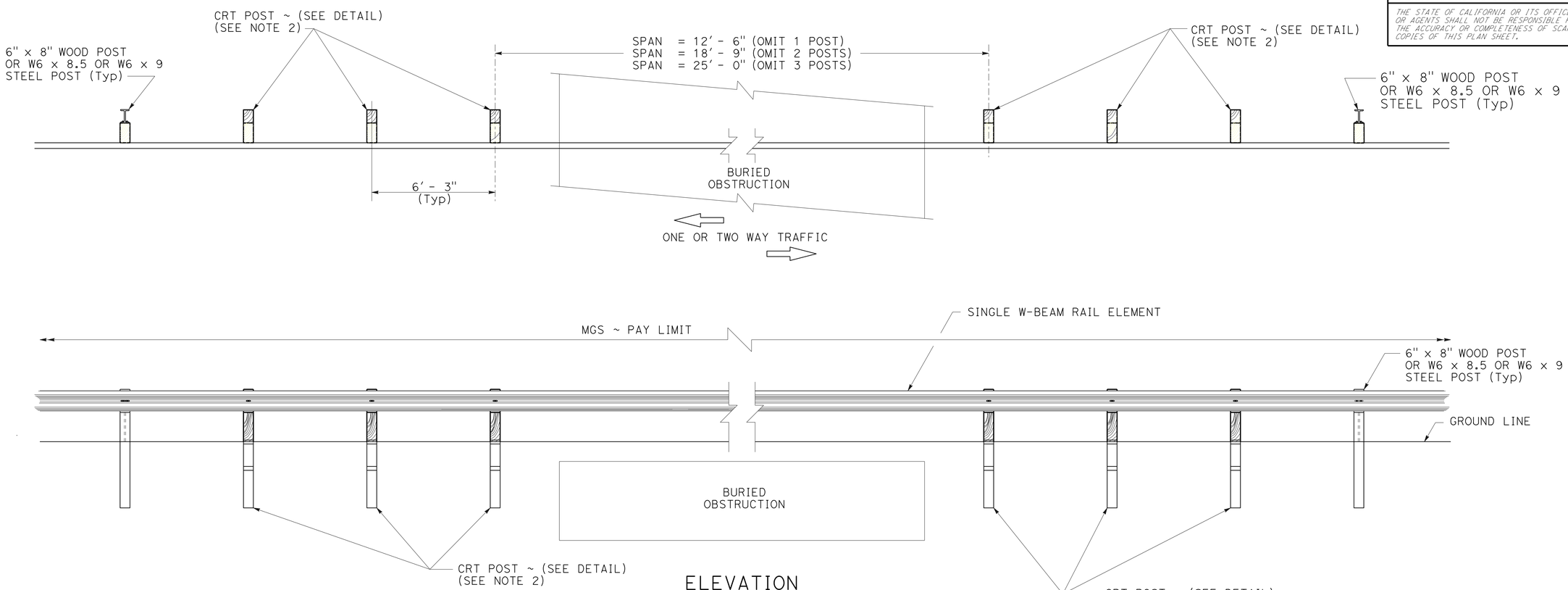

ELEVATION

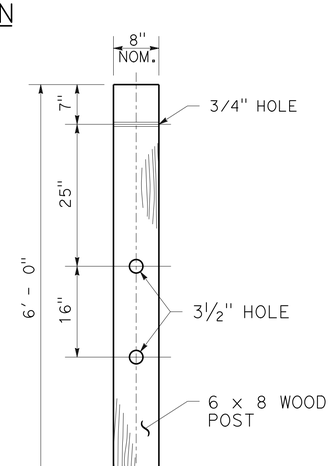

CONTROLLED RELEASING
TERMINAL (CRT) POST DETAIL

MIDWEST GUARDRAIL SYSTEM DETAILS
CONSTRUCTION DETAILS

NO SCALE

C-3

REVISED BY	DATE REVISED

CALCULATED-DESIGNED BY	CHECKED BY
JAMES M. ORR	M. FAZLE RABBI

FUNCTIONAL SUPERVISOR: SCOTT SHAVER

STATE OF CALIFORNIA - DEPARTMENT OF TRANSPORTATION
Caltrans
06-DESIGN

LAST REVISION 06-19-15
DATE PLOTTED => 08-SEP-2015
TIME PLOTTED => 16:45

Dist	COUNTY	ROUTE	POST MILES TOTAL PROJECT	SHEET No.	TOTAL SHEETS
05	Mon	68	R17.4/R18.0	16	149

James M. Orr 6-22-15
REGISTERED CIVIL ENGINEER DATE

6-22-15
PLANS APPROVAL DATE

REGISTERED PROFESSIONAL ENGINEER JAMES M. ORR No. C67928 Exp. 06/30/17 CIVIL STATE OF CALIFORNIA

THE STATE OF CALIFORNIA OR ITS OFFICERS OR AGENTS SHALL NOT BE RESPONSIBLE FOR THE ACCURACY OR COMPLETENESS OF SCANNED COPIES OF THIS PLAN SHEET.

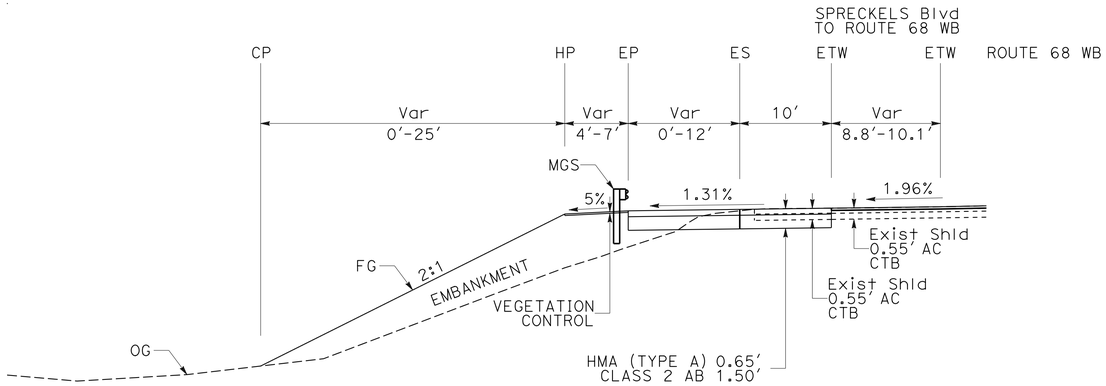

SECTION A-A

CURVE DATA

No. ⊕	R	Δ	T	L
1	350.00'	22°56'58.68"	71.05'	140.19'
2	200.00'	25°58'56.85"	46.14'	90.70'
3	150.00'	29°24'33.76"	39.36'	76.99'
4	300.00'	29°35'48.10"	79.25'	154.97'

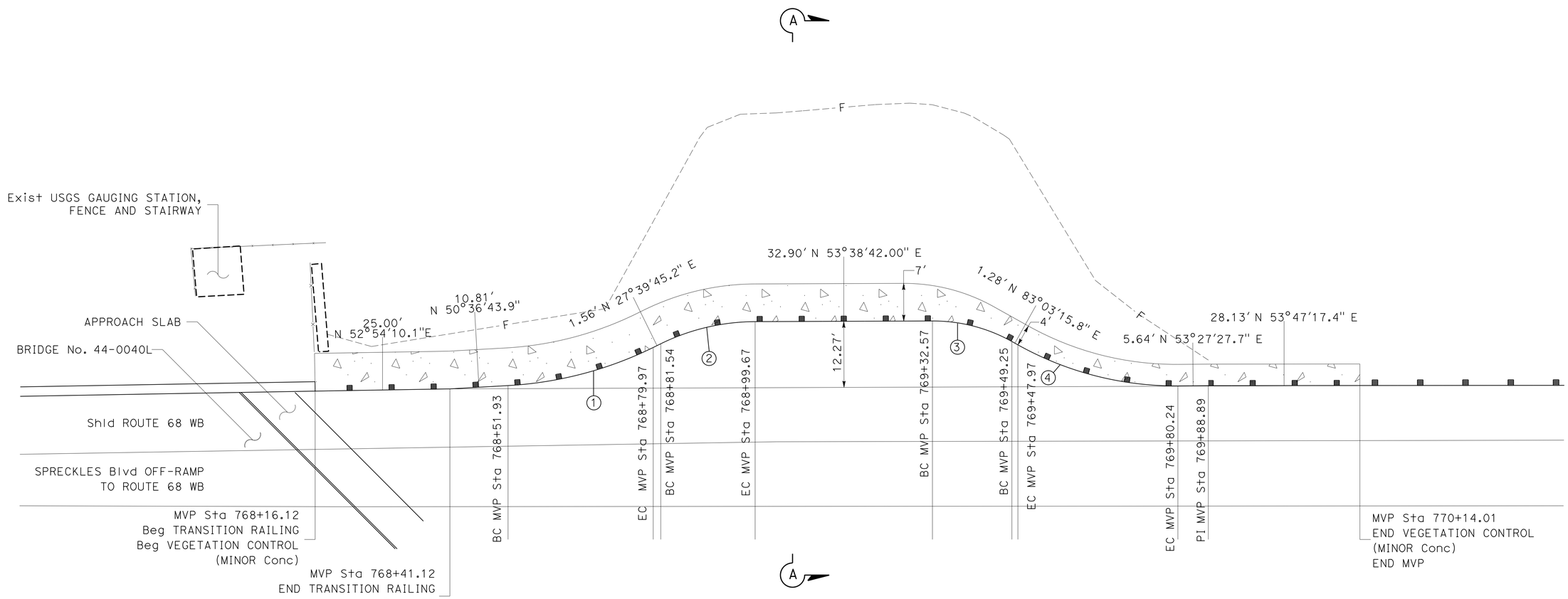

MAINTENANCE VEHICLE PULLOUT
MIDWEST GUARD RAIL SYSTEM LAYOUT

CONSTRUCTION DETAILS

NO SCALE

C-4

STATE OF CALIFORNIA - DEPARTMENT OF TRANSPORTATION
Caltrans®
06-DESIGN

FUNCTIONAL SUPERVISOR: SCOTT SHAVER
CALCULATED-DESIGNED BY: JAMES M. ORR
CHECKED BY: M. FAZLE RABBI
REVISED BY
DATE REVISED

LAST REVISION 06-19-15
DATE PLOTTED => 08-SEP-2015
TIME PLOTTED => 16:45

Dist	COUNTY	ROUTE	POST MILES TOTAL PROJECT	SHEET No.	TOTAL SHEETS
05	Mon	68	R17.4/R18.0	17	149

James M. Orr 6-22-15
REGISTERED CIVIL ENGINEER DATE

6-22-15
PLANS APPROVAL DATE

REGISTERED PROFESSIONAL ENGINEER
JAMES M. ORR
No. C67928
Exp. 06/30/17
CIVIL
STATE OF CALIFORNIA

THE STATE OF CALIFORNIA OR ITS OFFICERS OR AGENTS SHALL NOT BE RESPONSIBLE FOR THE ACCURACY OR COMPLETENESS OF SCANNED COPIES OF THIS PLAN SHEET.

NOTE:

FOR ACCURATE RIGHT OF WAY DATA, CONTACT RIGHT OF WAY ENGINEERING AT THE DISTRICT OFFICE.

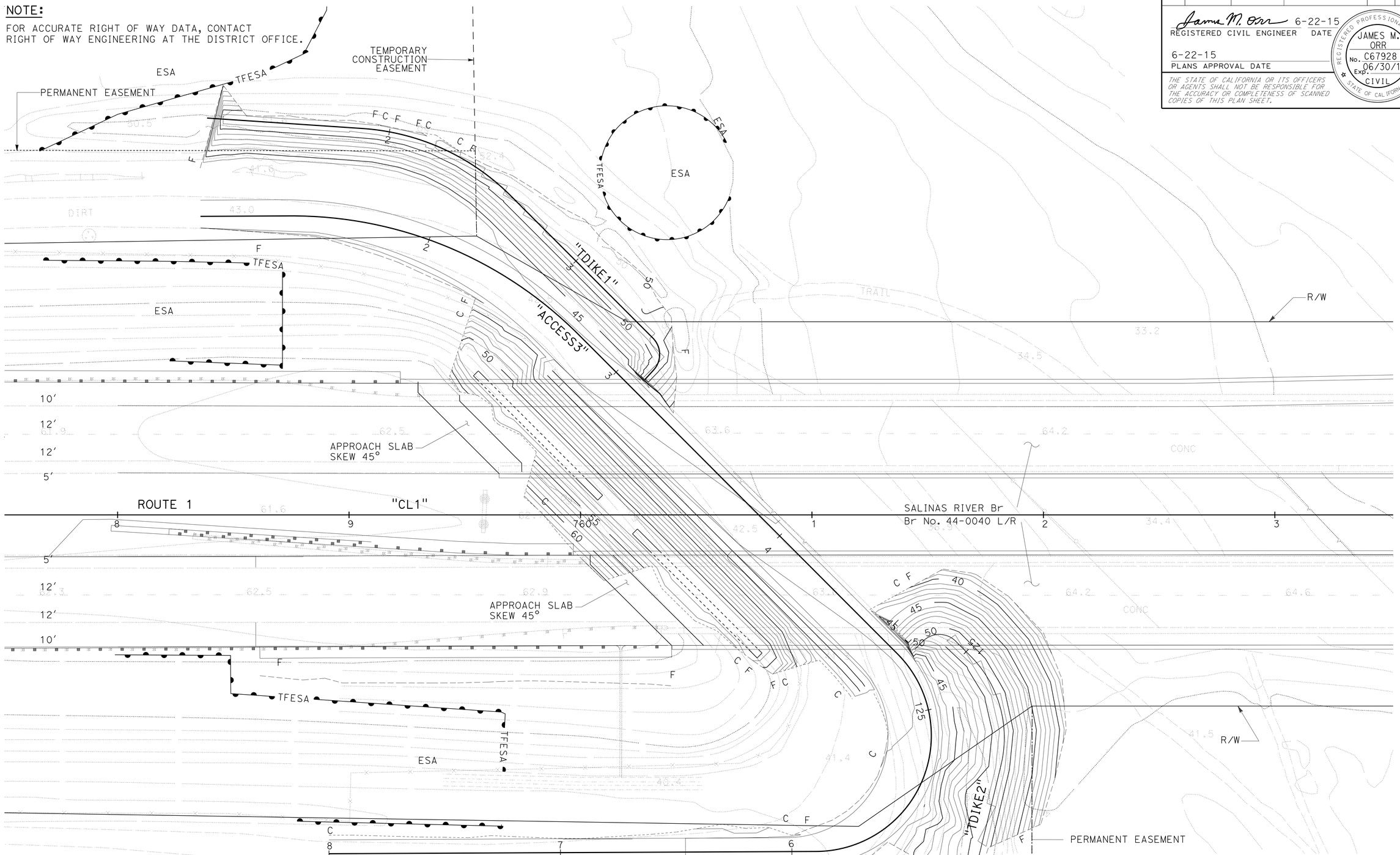

CONTOUR GRADING

SCALE: 1"=20'

G-1

APPROVED FOR CONTOUR GRADING WORK ONLY

STATE OF CALIFORNIA - DEPARTMENT OF TRANSPORTATION
Caltrans
06-DESIGN

FUNCTIONAL SUPERVISOR: SCOTT SHAVER
CALCULATED-DESIGNED BY: JAMES M. ORR
CHECKED BY: M. FAZLE RABBI
REVISED BY
DATE REVISED

LAST REVISION 06-19-15
DATE PLOTTED => 08-SEP-2015
TIME PLOTTED => 16:45

BORDER LAST REVISED 7/2/2010
USERNAME => s115755
DGN FILE => 0500000049ha001.dgn
RELATIVE BORDER SCALE IS IN INCHES 0 1 2 3
UNIT 1464
PROJECT NUMBER & PHASE 05000000491

Dist	COUNTY	ROUTE	POST MILES TOTAL PROJECT	SHEET No.	TOTAL SHEETS
05	Mon	68	R17.4/R18.0	18	149

James M. Orr 6-22-15
REGISTERED CIVIL ENGINEER DATE

6-22-15
PLANS APPROVAL DATE

REGISTERED PROFESSIONAL ENGINEER
JAMES M. ORR
No. C67928
Exp. 06/30/17
CIVIL
STATE OF CALIFORNIA

THE STATE OF CALIFORNIA OR ITS OFFICERS OR AGENTS SHALL NOT BE RESPONSIBLE FOR THE ACCURACY OR COMPLETENESS OF SCANNED COPIES OF THIS PLAN SHEET.

NOTE:

FOR ACCURATE RIGHT OF WAY DATA, CONTACT RIGHT OF WAY ENGINEERING AT THE DISTRICT OFFICE.

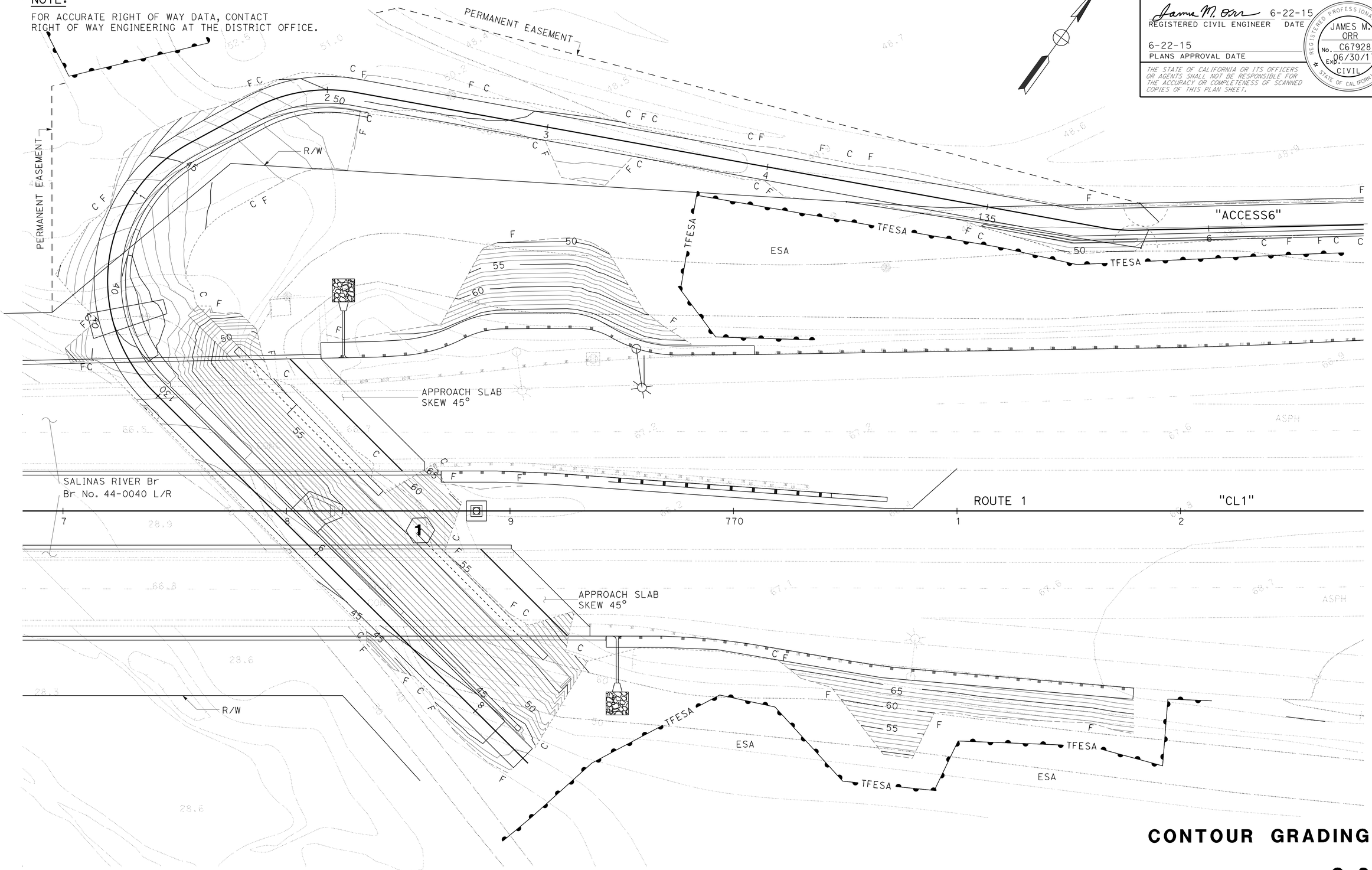

CONTOUR GRADING

SCALE: 1"=20'

G-2

APPROVED FOR CONTOUR GRADING WORK ONLY

REVISED BY | DATE REVISED

JAMES M. ORR | M. FAZLE RABBI

CALCULATED-DESIGNED BY | CHECKED BY

FUNCTIONAL SUPERVISOR: SCOTT SHAVER

STATE OF CALIFORNIA - DEPARTMENT OF TRANSPORTATION

Caltrans

06-DESIGN

LAST REVISION 06-19-15 | DATE PLOTTED => 08-SEP-2015 | TIME PLOTTED => 16:45

Dist	COUNTY	ROUTE	POST MILES TOTAL PROJECT	SHEET No.	TOTAL SHEETS
05	Mon	68	R17.4/R18.0	19	149

James M. Orr 6-22-15
REGISTERED CIVIL ENGINEER DATE

6-22-15
PLANS APPROVAL DATE

REGISTERED PROFESSIONAL ENGINEER JAMES M. ORR No. C67928 Exp. 6/30/17 CIVIL STATE OF CALIFORNIA

THE STATE OF CALIFORNIA OR ITS OFFICERS OR AGENTS SHALL NOT BE RESPONSIBLE FOR THE ACCURACY OR COMPLETENESS OF SCANNED COPIES OF THIS PLAN SHEET.

NOTES:

1. FOR ACCURATE RIGHT OF WAY DATA, CONTACT RIGHT OF WAY ENGINEERING AT THE DISTRICT OFFICE.
2. STATIONS AND OFFSETS MEASURED FROM ("CL1" LINE) OTHERWISE STATED.

LEGEND:

DOWNDRAIN LOCATION

DRAINAGE SYSTEM

DRAINAGE UNIT

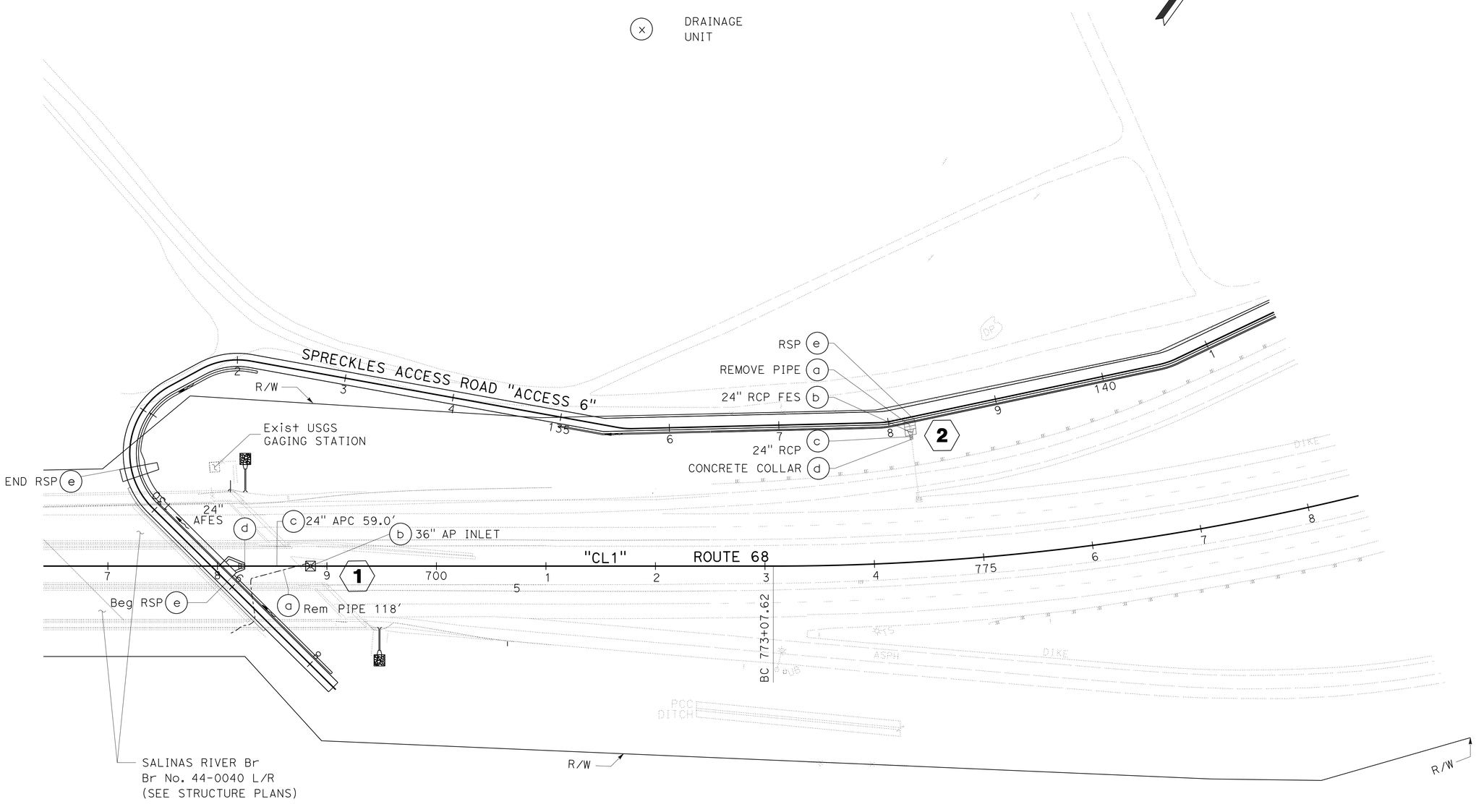

DRAINAGE PLAN

SCALE: 1" = 50'

D-1

APPROVED FOR DRAINAGE WORK ONLY

STATE OF CALIFORNIA - DEPARTMENT OF TRANSPORTATION
Caltrans
06-DESIGN

FUNCTIONAL SUPERVISOR: SCOTT SHAVER

CALCULATED-DESIGNED BY: JAMES M. ORR
CHECKED BY: M. FAZLE RABBI

REVISED BY
DATE REVISED

LAST REVISION 06-18-15
DATE PLOTTED => 08-SEP-2015
TIME PLOTTED => 16:45

Dist	COUNTY	ROUTE	POST MILES TOTAL PROJECT	SHEET No.	TOTAL SHEETS
05	Mon	68	R17.4/R18.0	20	149

James M. Orr 6-22-15
REGISTERED CIVIL ENGINEER DATE

6-22-15
PLANS APPROVAL DATE

REGISTERED PROFESSIONAL ENGINEER JAMES M. ORR No. C67928 Exp. 6/30/17 CIVIL STATE OF CALIFORNIA

THE STATE OF CALIFORNIA OR ITS OFFICERS OR AGENTS SHALL NOT BE RESPONSIBLE FOR THE ACCURACY OR COMPLETENESS OF SCANNED COPIES OF THIS PLAN SHEET.

NOTES:

1. FOR 36" AP INLET DETAILS, SEE DRAINAGE DETAILS SHEET DD-1
2. FOR RSP DETAILS, SEE DRAINAGE DETAILS DD-2, DD-3
3. SEE TABLE "REMOVE PIPE" FOR REMOVE PIPE STATIONS AND OFFSETS

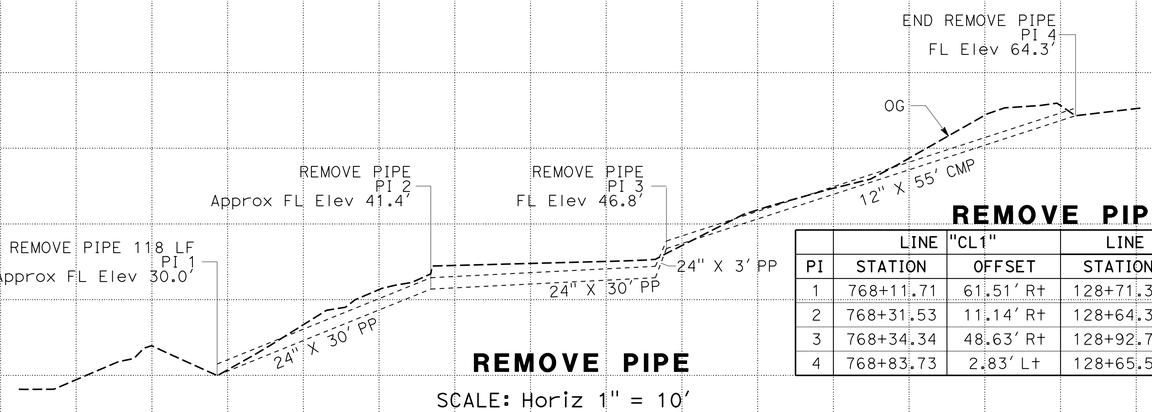

REMOVE PIPE

	LINE "CL1"		LINE "ACCESS6"	
PI	STATION	OFFSET	STATION	OFFSET
1	768+11.71	61.51' Rt	128+71.35	31.42' Lt
2	768+31.53	11.14' Rt	128+64.35	6.33' Lt
3	768+34.34	48.63' Rt	128+92.75	18.31' Rt
4	768+83.73	2.83' Lt	128+65.54	64.98' Rt

REMOVE PIPE

SCALE: Horiz 1" = 10'
Vert 1" = 10'

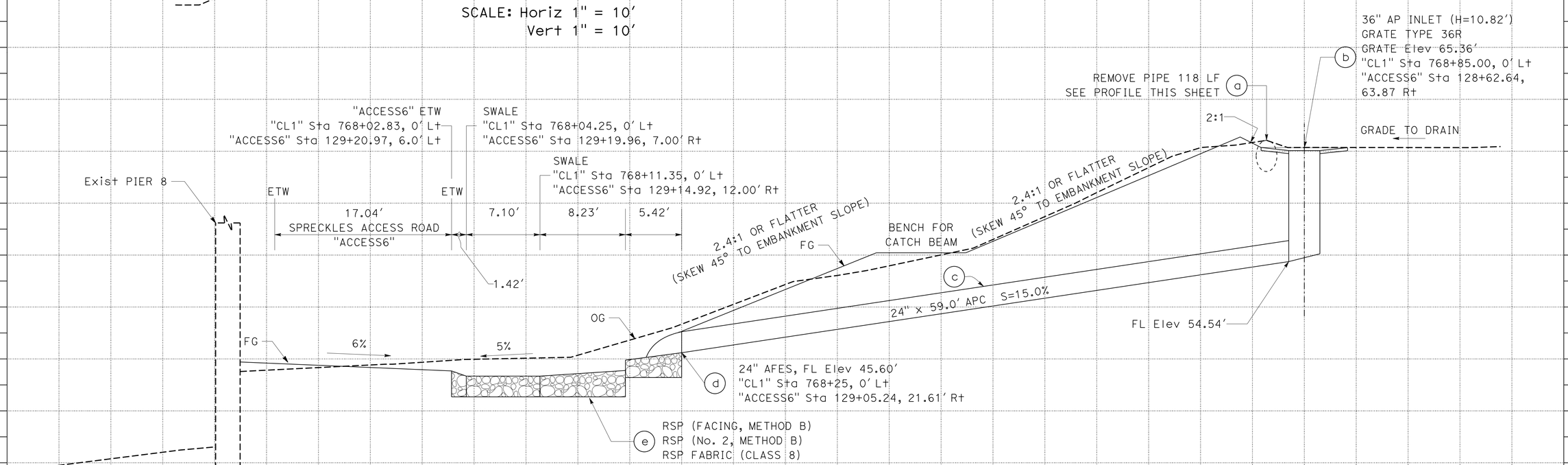

DRAINAGE SYSTEM No. 1

SCALE: Horiz 1" = 5'
Vert 1" = 5'

DRAINAGE PROFILE

SCALE AS SHOWN

DP-1

REVISED BY | DATE REVISED
JAMES ORR | M. FAZLE RABBI
CALCULATED-DESIGNED BY | CHECKED BY
FUNCTIONAL SUPERVISOR | SCOTT SHAVER

STATE OF CALIFORNIA - DEPARTMENT OF TRANSPORTATION
Caltrans
06-DESIGN

LAST REVISION 06-19-15 | DATE PLOTTED => 08-SEP-2015 | TIME PLOTTED => 16:45

Dist	COUNTY	ROUTE	POST MILES TOTAL PROJECT	SHEET No.	TOTAL SHEETS
05	Mon	68	R17.4/R18.0	21	149

James M. Orr 6-22-15
REGISTERED CIVIL ENGINEER DATE

6-22-15
PLANS APPROVAL DATE

REGISTERED PROFESSIONAL ENGINEER JAMES M. ORR No. C67928 Exp. 6/30/17 CIVIL STATE OF CALIFORNIA

THE STATE OF CALIFORNIA OR ITS OFFICERS OR AGENTS SHALL NOT BE RESPONSIBLE FOR THE ACCURACY OR COMPLETENESS OF SCANNED COPIES OF THIS PLAN SHEET.

NOTE:

FOR RSP LAYOUT, SEE DRAINAGE DETAILS SHEET DD-2.

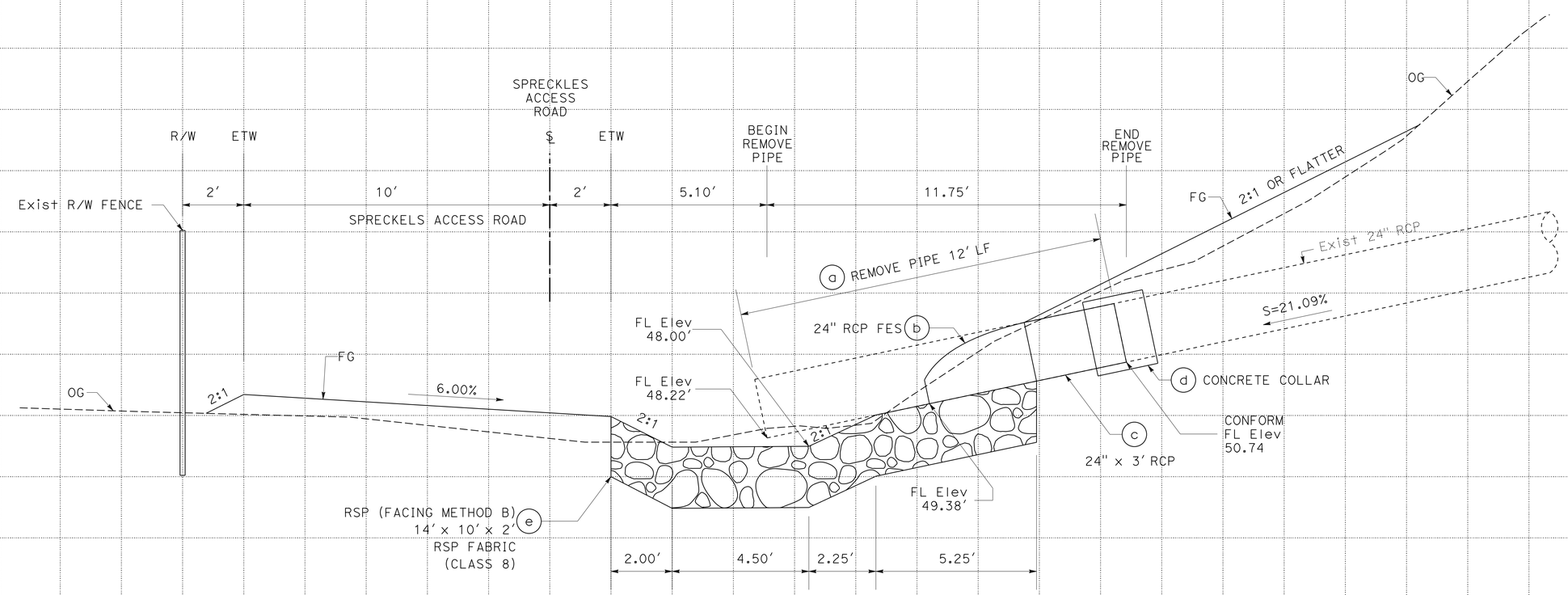

DRAINAGE SYSTEM No. 2

"ACCESS 6" Sta 138+27.00

DRAINAGE PROFILE

SCALE: Horiz 1" = 2′
Vert 1" = 2′

DP-2

REVISED BY | DATE REVISED
JAMES ORR | M. FAZLE RABBI
CALCULATED-DESIGNED BY | CHECKED BY
FUNCTIONAL SUPERVISOR: SCOTT SHAVER

STATE OF CALIFORNIA - DEPARTMENT OF TRANSPORTATION
06-DESIGN
Caltrans

LAST REVISION 06-19-15 | DATE PLOTTED => 08-SEP-2015 | TIME PLOTTED => 16:45

Dist	COUNTY	ROUTE	POST MILES TOTAL PROJECT	SHEET No.	TOTAL SHEETS
05	Mon	68	R17.4/R18.0	22	149

James M. Orr 6-22-15
REGISTERED CIVIL ENGINEER DATE

6-22-15
PLANS APPROVAL DATE

REGISTERED PROFESSIONAL ENGINEER JAMES M. ORR No. C67928 Exp. 6/30/17 CIVIL STATE OF CALIFORNIA

THE STATE OF CALIFORNIA OR ITS OFFICERS OR AGENTS SHALL NOT BE RESPONSIBLE FOR THE ACCURACY OR COMPLETENESS OF SCANNED COPIES OF THIS PLAN SHEET.

NOTES:

1. ALL DD JOINTS WATERTIGHT.
2. ALL OTHER JOINTS STANDARD.
3. JOIN PIPES AT INVERTS.

ABBREVIATIONS:

COAT	ALLOWABLE COATING
AL2	ALUMINIZED STEEL PIPE
PA	POLYMERIZED ASPHALT INVERT
PS	POLYMERIC SHEET COATED

LEGEND:

ROCK SLOPE PROTECTION (FACING, METHOD B)

ROCK SLOPE PROTECTION (No. 2, METHOD B)

ALLOWABLE ALTERNATIVE PIPES AND FLARED END SECTIONS

PIPE DIAMETER		12"	24"	36"
PIPE TYPE	COAT	MINIMUM THICKNESS (INCHES)		
CORRUGATED STEEL PIPE HELICAL CORRUGATIONS 2 2/3"x1/2" CORRUGATIONS				
	AL2	0.052	0.052	0.138
	PA	0.052	0.052	0.052
	PS	0.052	0.052	0.052
CORRUGATED STEEL PIPE ANNULAR CORRUGATIONS 2 2/3"x1/2" CORRUGATIONS				
	AL2	0.064	0.064	-
	PA	0.064	0.064	0.064
	PS	0.064	0.064	0.064
CORRUGATED ALUMINUM PIPE ANNULAR CORRUGATIONS 2 2/3"x1/2" CORRUGATIONS		0.060	-	-
CORRUGATED ALUMINUM PIPE HELICAL CORRUGATIONS 2 2/3"x1/2" CORRUGATIONS		0.060	-	-
PVC CORRUGATED		ALLOW	ALLOW	-
HDPE CORRUGATED - TYPE C		ALLOW	-	-
REINFORCED CONCRETE PIPE		-	-	ALLOW

PLAN

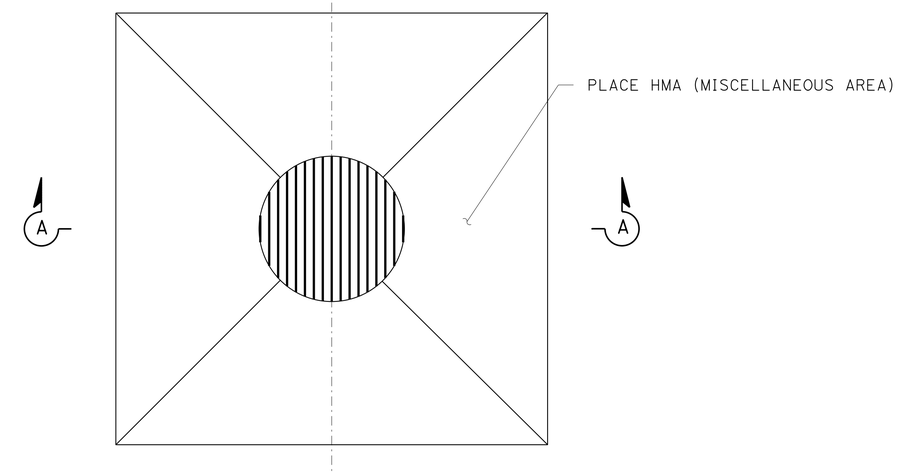

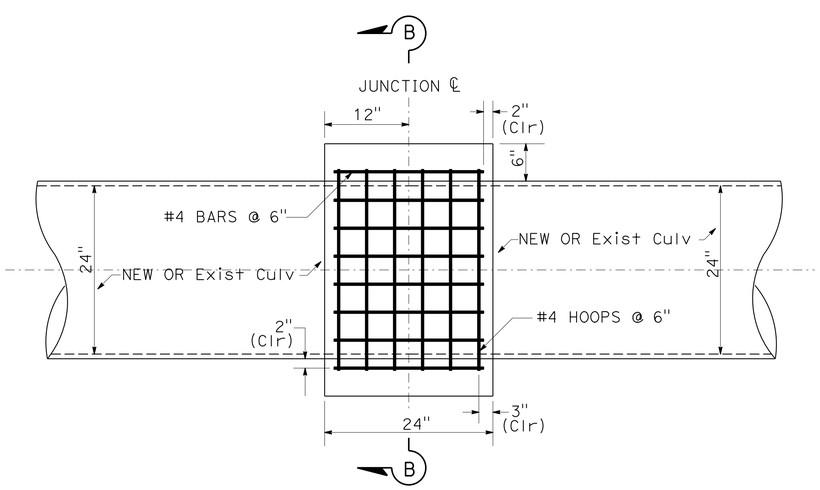

CONCRETE COLLAR PLAN

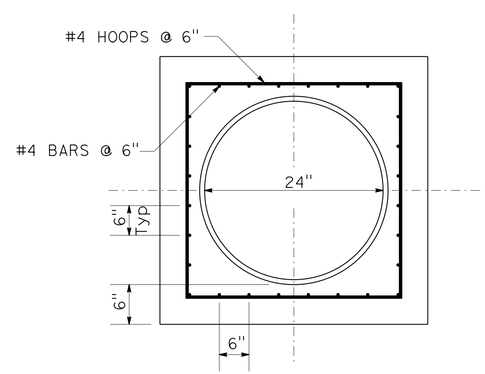

SECTION B-B

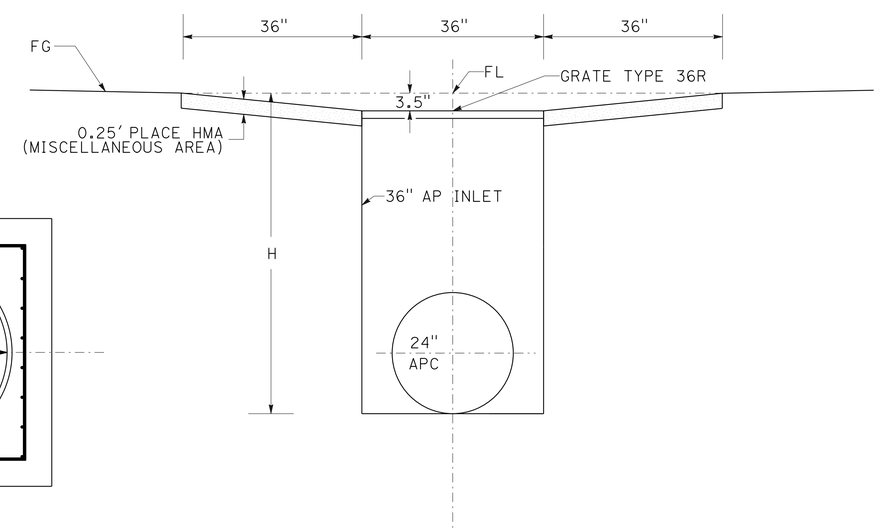

SECTION A-A
36" AP INLET

DRAINAGE DETAILS

NO SCALE

DD-1

STATE OF CALIFORNIA - DEPARTMENT OF TRANSPORTATION
Caltrans
06-DESIGN

FUNCTIONAL SUPERVISOR: SCOTT SHAVER
CALCULATED-DESIGNED BY: JAMES ORR
CHECKED BY: M. FAZLE RABBI
REVISED BY
DATE REVISED

LAST REVISION 06-19-15
DATE PLOTTED => 08-SEP-2015
TIME PLOTTED => 16:45

Dist	COUNTY	ROUTE	POST MILES TOTAL PROJECT	SHEET No.	TOTAL SHEETS
05	Mon	68	R17.4/R18.0	23	149

James M. Orr 6-22-15
REGISTERED CIVIL ENGINEER DATE

6-22-15
PLANS APPROVAL DATE

REGISTERED PROFESSIONAL ENGINEER JAMES M. ORR No. C67928 Exp. 6/30/17 CIVIL STATE OF CALIFORNIA

THE STATE OF CALIFORNIA OR ITS OFFICERS OR AGENTS SHALL NOT BE RESPONSIBLE FOR THE ACCURACY OR COMPLETENESS OF SCANNED COPIES OF THIS PLAN SHEET.

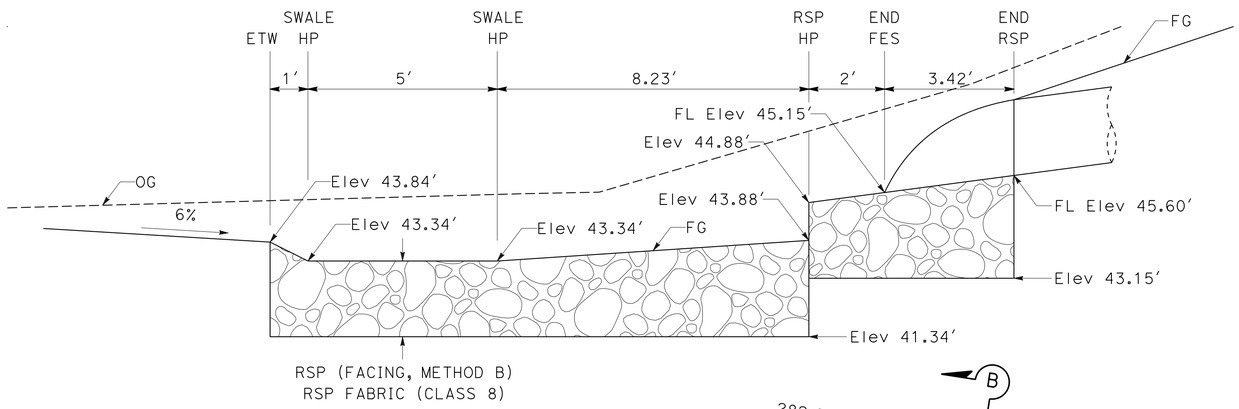

SECTION A-A
ENERGY DISSIPATOR

SWALE VARIABLE WIDTHS

ACCESS6 STATION	WIDTH ETW TO SWALE HP	WIDTH SWALE HP TO CP
129+22.00	1'	1.0'
130+10.00	1'	1.5'
130+20.00	2'	1.5'
130+35.00	2'	4.0'

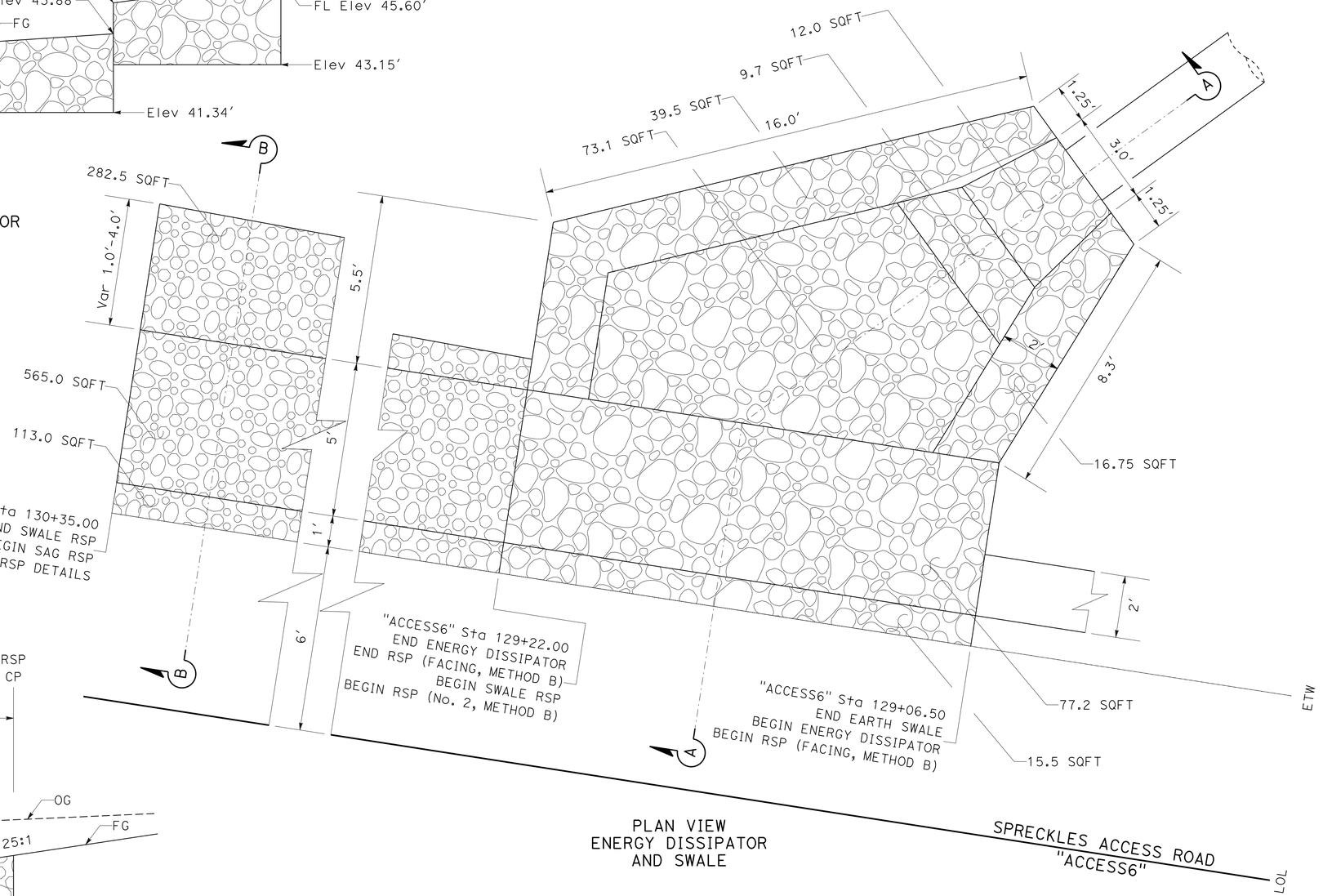

PLAN VIEW
ENERGY DISSIPATOR
AND SWALE

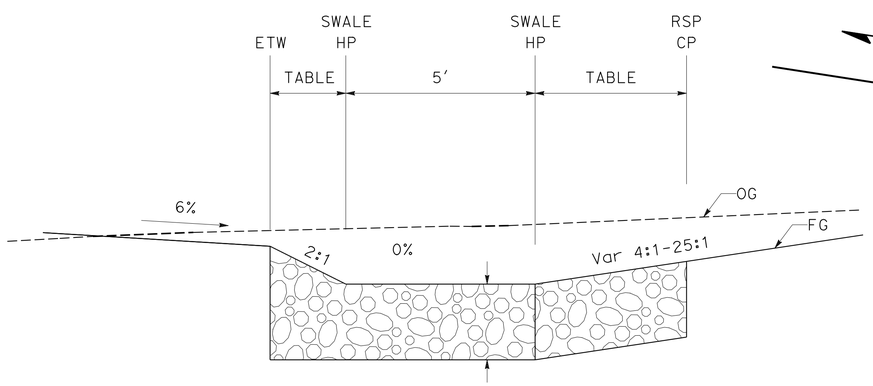

SECTION B-B
RSP SWALE

ROCK SLOPE PROTECTION
DRAINAGE SYSTEM 1

DRAINAGE DETAILS

NO SCALE **DD-2**

STATE OF CALIFORNIA - DEPARTMENT OF TRANSPORTATION
Caltrans
06-DESIGN

FUNCTIONAL SUPERVISOR: SCOTT SHAVER
CALCULATED-DESIGNED BY: JAMES ORR
CHECKED BY: M. FAZLE RABBI
REVISED BY
DATE REVISED

LAST REVISION 06-19-15
DATE PLOTTED => 08-SEP-2015
TIME PLOTTED => 16:45

Dist	COUNTY	ROUTE	POST MILES TOTAL PROJECT	SHEET No.	TOTAL SHEETS
05	Mon	68	R17.4/R18.0	24	149

James M. Orr 6-22-15
REGISTERED CIVIL ENGINEER DATE

6-22-15
PLANS APPROVAL DATE

REGISTERED PROFESSIONAL ENGINEER JAMES M. ORR No. C67928 Exp. 6/30/17 CIVIL STATE OF CALIFORNIA

THE STATE OF CALIFORNIA OR ITS OFFICERS OR AGENTS SHALL NOT BE RESPONSIBLE FOR THE ACCURACY OR COMPLETENESS OF SCANNED COPIES OF THIS PLAN SHEET.

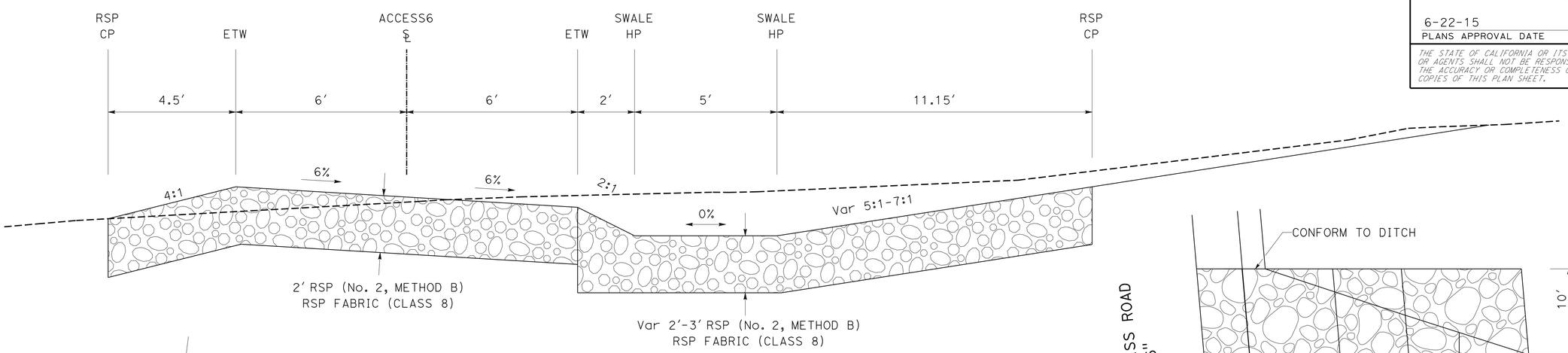

SECTION A-A

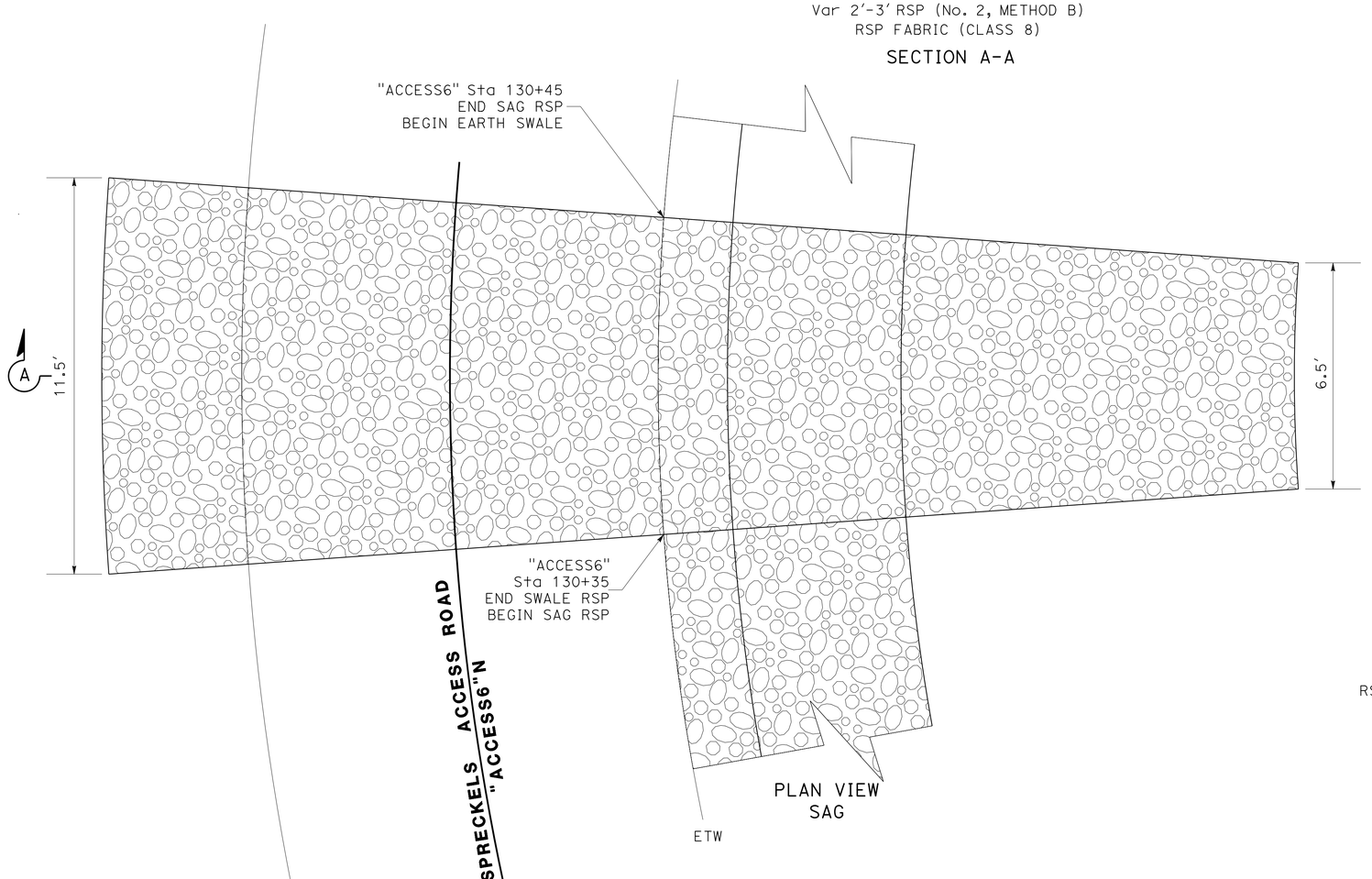

ROCK SLOPE PROTECTION DRAINAGE SYSTEM 1

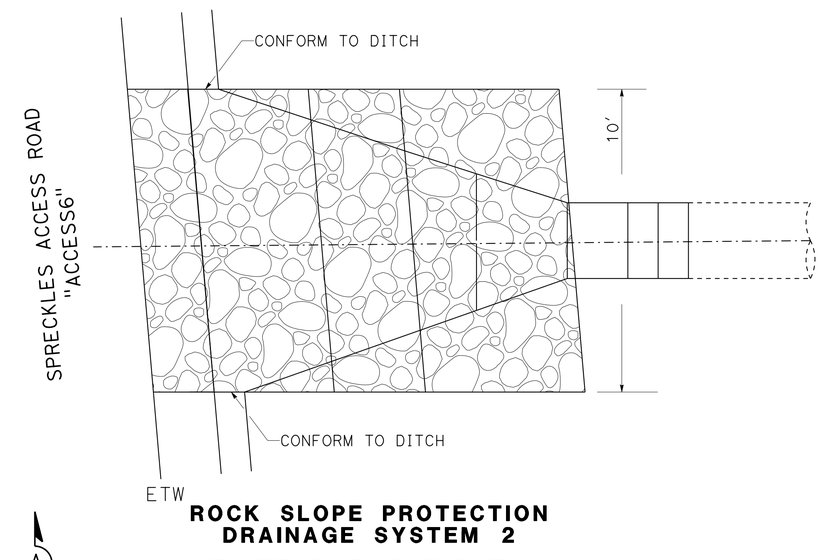

ROCK SLOPE PROTECTION DRAINAGE SYSTEM 2

SEE SHEET DP-2 FOR PROFILE DETAILS

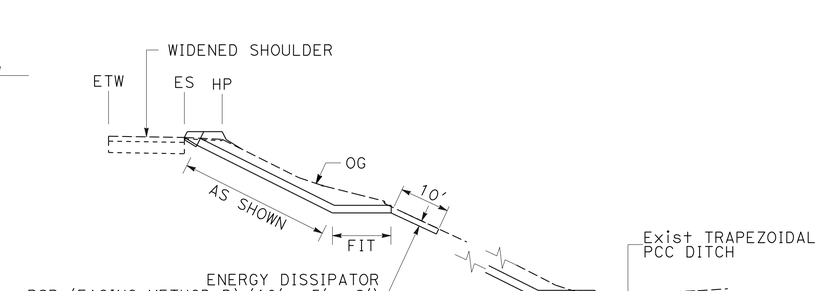

ALTERNATIVE PIPE OVERSIDE DRAIN

DRAINAGE DETAILS

NO SCALE

DD-3

STATE OF CALIFORNIA - DEPARTMENT OF TRANSPORTATION
Caltrans
06-DESIGN
FUNCTIONAL SUPERVISOR: SCOTT SHAVER
CALCULATED-DESIGNED BY: JAMES ORR
CHECKED BY: M. FAZLE RABBI
REVISED BY
DATE REVISED

LAST REVISION 06-19-15
DATE PLOTTED => 08-SEP-2015
TIME PLOTTED => 16:45

Dist	COUNTY	ROUTE	POST MILES TOTAL PROJECT	SHEET No.	TOTAL SHEETS
05	Mon	68	R17.4/R18.0	25	149

James M. Orr 6-22-15
REGISTERED CIVIL ENGINEER DATE

6-22-15
PLANS APPROVAL DATE

REGISTERED PROFESSIONAL ENGINEER JAMES M. ORR No. C67928 Exp. 6/30/17 CIVIL STATE OF CALIFORNIA

THE STATE OF CALIFORNIA OR ITS OFFICERS OR AGENTS SHALL NOT BE RESPONSIBLE FOR THE ACCURACY OR COMPLETENESS OF SCANNED COPIES OF THIS PLAN SHEET.

NOTES:

1. FOR ALLOWABLE ALTERNATIVES FOR AP, APC AND AFES, SEE DRAINAGE DETAILS SHEET DD-1
2. ALL JOINTS ARE STANDARD JOINTS EXCEPT FOR PIPE DOWN DRAINS WHICH MUST BE WATERTIGHT.

DRAINAGE QUANTITIES

DRAINAGE PLAN SHEET No.	DRAINAGE SYSTEM No.	DRAINAGE UNIT	REMOVE PIPE (LF)	PLACE HOT MIX ASPHALT (MISCELLANEOUS AREA)	HOT MIX ASPHALT (TYPE A) *	MINOR CONCRETE (MINOR STRUCTURE)	24" ALTERNATIVE PIPE CULVERT	36" ALTERNATIVE PIPE INLET	24" REINFORCED CONCRETE PIPE	24" CONCRETE FLARED END SECTION	24" ALTERNATIVE FLARED END SECTION	ROCK SLOPE PROTECTION (FACING, METHOD B) (CY)	ROCK SLOPE PROTECTION (NUMBER 2, METHOD B) (CY)	ROCK SLOPE PROTECTION FABRIC (CLASS 8)	MISCELLANEOUS IRON AND STEEL	(N) GRATE TYPE 36R	DESCRIPTION	LINE	STATION	DRAINAGE PLAN SHEET No.	DRAINAGE SYSTEM No.	DRAINAGE UNIT
			LF	SQYD	TON	CY	LF	LF	LF	EA	EA	CY	CY	SQYD	LB	EA						
D-1	1	a	118														REMOVE PIPE	"CL1"	768+85.00	D-1	1	a
		b		8.2	0.7			10.8							236	1	36" AP INLET	"CL1"	768+85.00			b
		c					59.0										24" APC	"CL1"	768+85.00			c
		d									1						24" AFES	"CL1"	768+24.50			d
		e										19		43			ENERGY DISSIPATOR	"CL1"	768+04.50			e
		e											66	190			SWALE	"ACCESS6"	129+22.00			e
		e											24	64			SAG	"ACCESS6"	130+40.00			e
D-2	2	a	12														REMOVE PIPE	"ACCESS6"	138+27.00	D-2	2	a
		b								1							24" RCP FES	"ACCESS6"	138+27.00			b
		c							3								24" RCP	"ACCESS6"	138+27.00			c
		d				1.14											CONCRETE COLLAR	"ACCESS6"	138+27.00			d
		e										10		27			RSP	"ACCESS6"	138+27.00			e
TOTAL			130	8.2	0.7	1.14	59.0	10.8	3	1	1	29	90	324	236	1						

(N) NOT A SEPARATE PAY ITEM, FOR INFORMATION ONLY.
* QUANTITY IS ADDED TO PAVEMENT STRUCTURE QUANTITIES TABLE IN Q-3 SHEET

DOWNDRAINS (TRENCH INSTALLATION)

STATION	OFFSET	REMOVE DOWNDRAIN	12" ENTRANCE TAPER	12" ALTERNATIVE PIPE DOWNDRAIN	DOWNDRAIN ENERGY DISSIPATOR
		EA	EA	LF	EA
760+17.23	56.17' R†	1	1	62.0	
768+09.69	68.39' L†	1	1	28.0	1
769+42.45	57.70' R†	1	1	25.0	1
TOTAL		3	3	115.0	2

DRAINAGE QUANTITIES
DQ-1

REVISED BY	DATE REVISED

CALCULATED-DESIGNED BY: JAMES ORR
CHECKED BY: M. FAZLE RABBI
FUNCTIONAL SUPERVISOR: SCOTT SHAVER

STATE OF CALIFORNIA - DEPARTMENT OF TRANSPORTATION
Caltrans
06-DESIGN

LAST REVISION 06-19-15 | DATE PLOTTED => 08-SEP-2015 | TIME PLOTTED => 16:45

Dist	COUNTY	ROUTE	POST MILES TOTAL PROJECT	SHEET No.	TOTAL SHEETS
05	Mon	68	R17.4/R18.0	26	149

James M. Orr 6-22-15
REGISTERED CIVIL ENGINEER DATE

6-22-15
PLANS APPROVAL DATE

REGISTERED PROFESSIONAL ENGINEER JAMES M. ORR No. C67928 Exp. 6/30/17 CIVIL STATE OF CALIFORNIA

THE STATE OF CALIFORNIA OR ITS OFFICERS OR AGENTS SHALL NOT BE RESPONSIBLE FOR THE ACCURACY OR COMPLETENESS OF SCANNED COPIES OF THIS PLAN SHEET.

NOTE:

FOR ACCURATE RIGHT OF WAY DATA, CONTACT RIGHT OF WAY ENGINEERING AT THE DISTRICT OFFICE.

UTILITY OWNERSHIP ON THIS PROJECT

--e—	ELECTRICITY	PACIFIC GAS & ELECTRIC (PG&E)
-g—	GAS	PG&E
-tc-	TELEPHONE	AT&T
-tc-	TELECOMMUNICATIONS	AT&T

LEGEND:

◎ POTHOLE LOCATION

△ SURFACE MARKING (ELECTRONIC DETECTION)

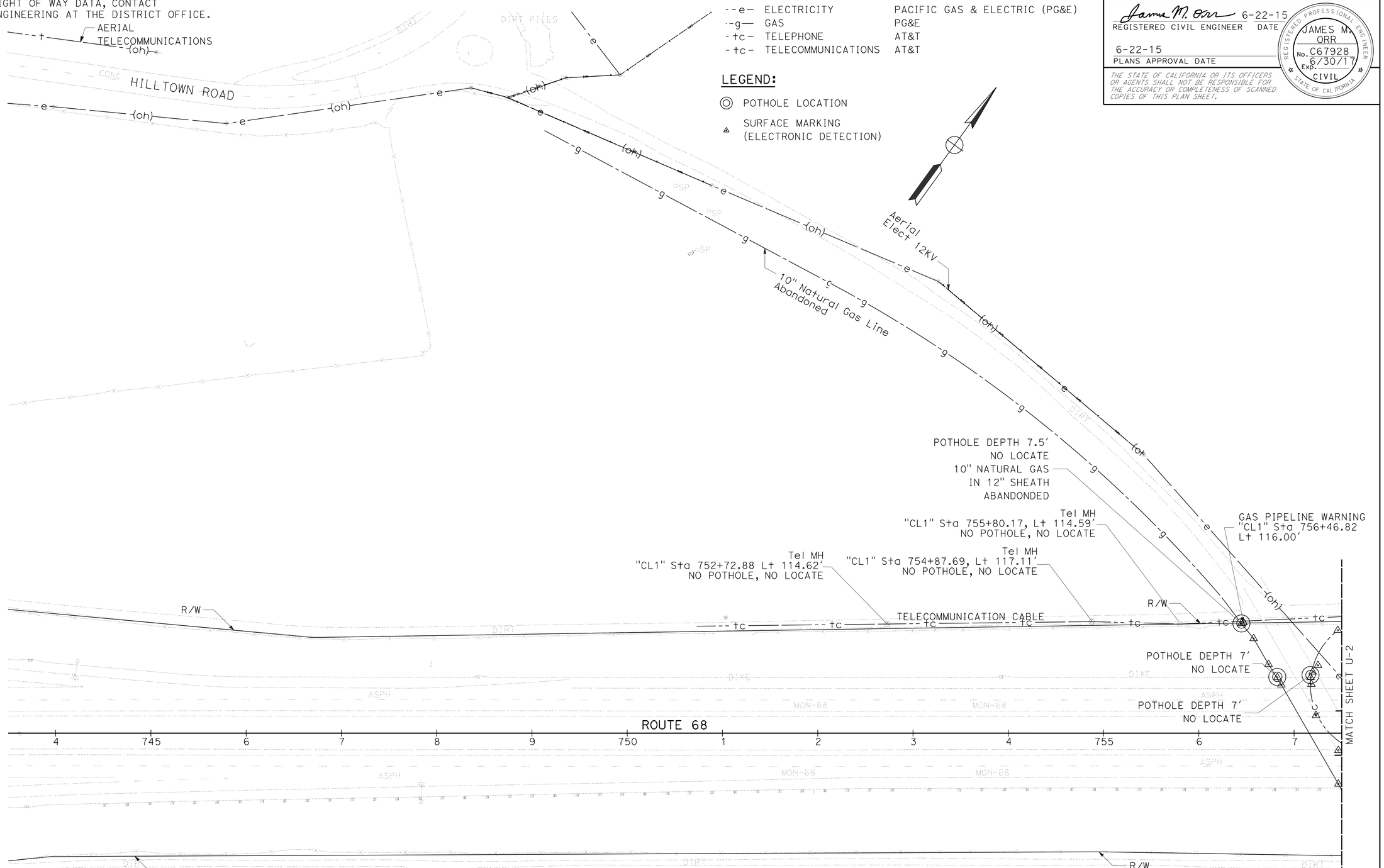

UTILITY PLAN

SCALE: 1" = 50′ **U-1**

APPROVED FOR UTILITY INFORMATION ONLY

STATE OF CALIFORNIA - DEPARTMENT OF TRANSPORTATION
Caltrans
06-DESIGN

FUNCTIONAL SUPERVISOR: SCOTT SHAVER
CALCULATED-DESIGNED BY: JAMES ORR
CHECKED BY: M. FAZLE RABBI
REVISED BY
DATE REVISED

LAST REVISION 06-19-15
DATE PLOTTED => 08-SEP-2015
TIME PLOTTED => 16:45

Dist	COUNTY	ROUTE	POST MILES TOTAL PROJECT	SHEET No.	TOTAL SHEETS
05	Mon	68	R17.4/R18.0	27	149

James M. Orr 6-22-15
REGISTERED CIVIL ENGINEER DATE

6-22-15
PLANS APPROVAL DATE

REGISTERED PROFESSIONAL ENGINEER JAMES M. ORR No. C67928 Exp. 6/30/17 CIVIL STATE OF CALIFORNIA

THE STATE OF CALIFORNIA OR ITS OFFICERS OR AGENTS SHALL NOT BE RESPONSIBLE FOR THE ACCURACY OR COMPLETENESS OF SCANNED COPIES OF THIS PLAN SHEET.

NOTE:

FOR ACCURATE RIGHT OF WAY DATA, CONTACT RIGHT OF WAY ENGINEERING AT THE DISTRICT OFFICE.

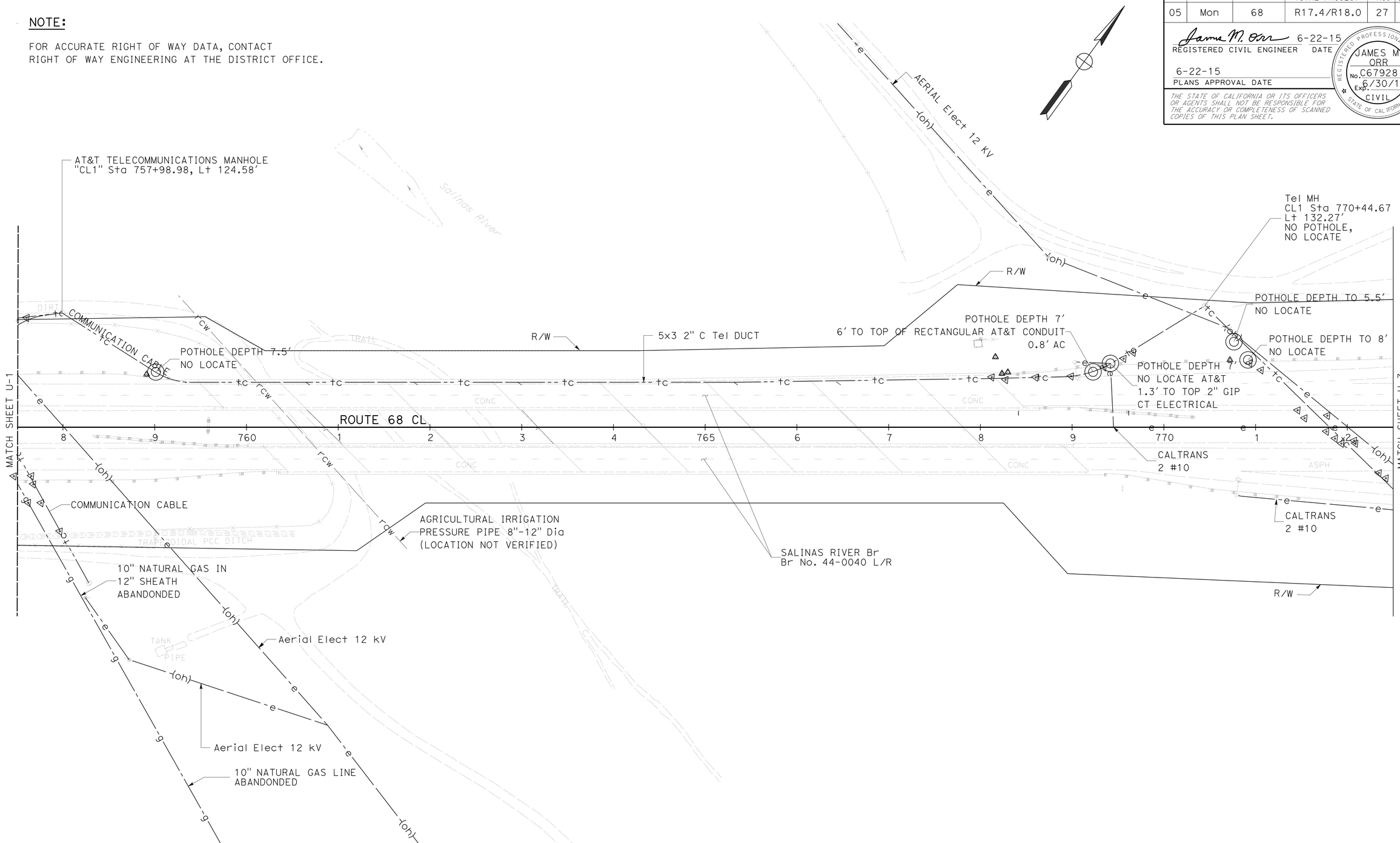

APPROVED FOR UTILITY INFORMATION ONLY

UTILITY PLAN

SCALE: 1" = 50'

U-2

REVISED BY	DATE REVISED

CALCULATED-DESIGNED BY	CHECKED BY
JAMES ORR	M. FAZLE RABBI

FUNCTIONAL SUPERVISOR: SCOTT SHAVER

STATE OF CALIFORNIA - DEPARTMENT OF TRANSPORTATION

Caltrans

06-DESIGN

LAST REVISION 06-19-15 | DATE PLOTTED => 08-SEP-2015 | TIME PLOTTED => 16:45

Dist	COUNTY	ROUTE	POST MILES TOTAL PROJECT	SHEET No.	TOTAL SHEETS
05	Mon	68	R17.4/R18.0	28	149

James M. Orr 6-22-15
REGISTERED CIVIL ENGINEER DATE

6-22-15
PLANS APPROVAL DATE

REGISTERED PROFESSIONAL ENGINEER JAMES M. ORR No. C67928 Exp. 6/30/17 CIVIL STATE OF CALIFORNIA

THE STATE OF CALIFORNIA OR ITS OFFICERS OR AGENTS SHALL NOT BE RESPONSIBLE FOR THE ACCURACY OR COMPLETENESS OF SCANNED COPIES OF THIS PLAN SHEET.

NOTE:

FOR ACCURATE RIGHT OF WAY DATA, CONTACT RIGHT OF WAY ENGINEERING AT THE DISTRICT OFFICE.

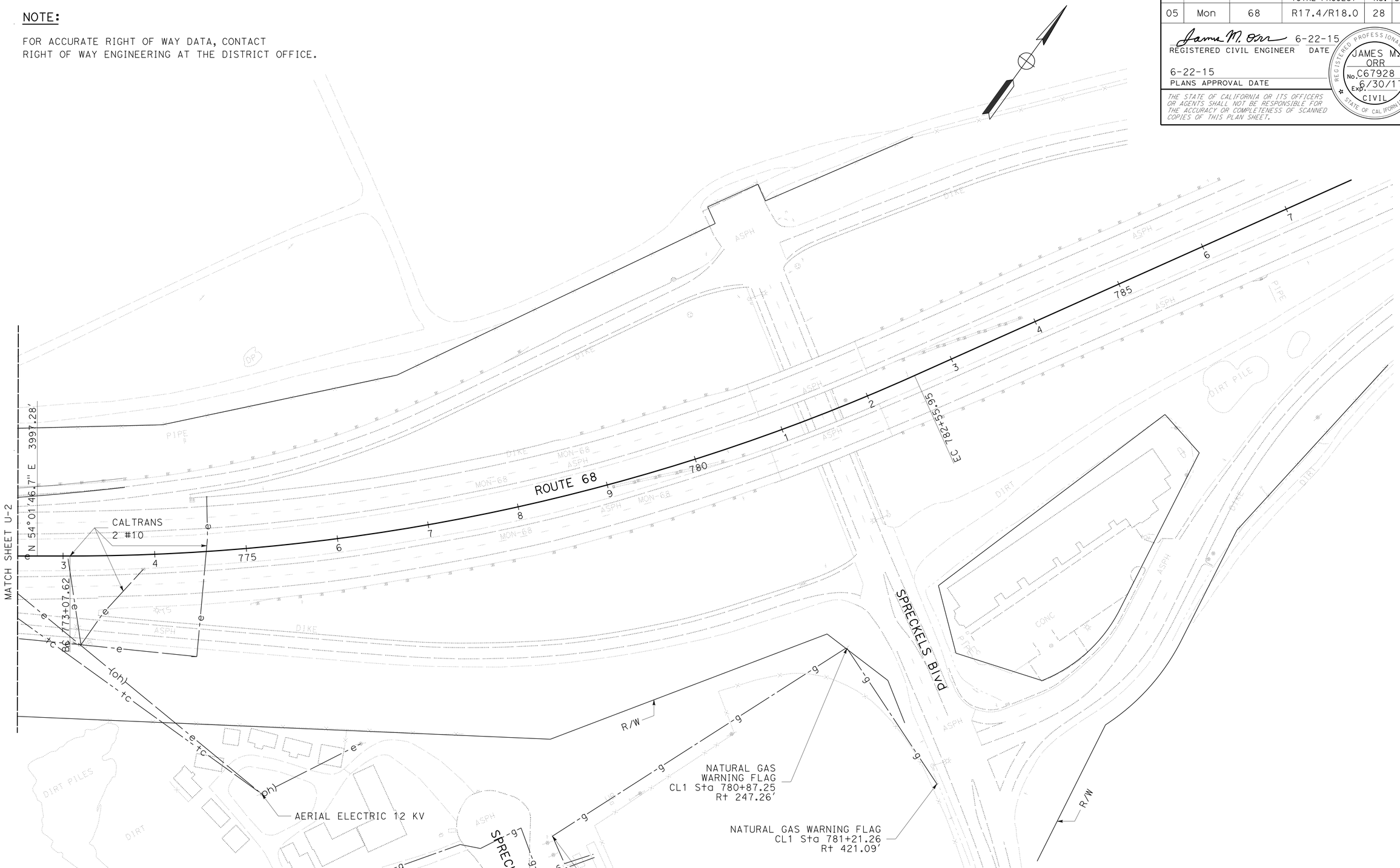

APPROVED FOR UTILITY INFORMATION ONLY

UTILITY PLAN

SCALE: 1" = 50'

U-3

STATE OF CALIFORNIA - DEPARTMENT OF TRANSPORTATION
Caltrans
06-DESIGN

FUNCTIONAL SUPERVISOR: SCOTT SHAVER
CALCULATED-DESIGNED BY: JAMES ORR
CHECKED BY: M. FAZLE RABBI
REVISED BY
DATE REVISED

LAST REVISION 06-19-15
DATE PLOTTED => 08-SEP-2015
TIME PLOTTED => 16:45

Dist	COUNTY	ROUTE	POST MILES TOTAL PROJECT	SHEET No.	TOTAL SHEETS
05	Mon	68	R17.4/R18.0	29	149

REGISTERED CIVIL ENGINEER 06-01-15 DATE

6-22-15
PLANS APPROVAL DATE

REGISTERED PROFESSIONAL ENGINEER FAWZI YAGHMOUR No. C-54750 Exp. 12/31/15 CIVIL STATE OF CALIFORNIA

THE STATE OF CALIFORNIA OR ITS OFFICERS OR AGENTS SHALL NOT BE RESPONSIBLE FOR THE ACCURACY OR COMPLETENESS OF SCANNED COPIES OF THIS PLAN SHEET.

NOTES:

1. EXACT LOCATION OF SIGNS TO BE DETERMINED BY THE ENGINEER.
2. FOR SIGN "C40" (TRAFFIC FINES DOUBLED IN CONSTRUCTION ZONES), ALL LETTERS MUST BE BLACK ON WHITE BACKGROUND.
3. FOR ADDITIONAL CONSTRUCTION AREA SIGNS, REFER TO THQ.

STATIONARY MOUNTED CONSTRUCTION AREA SIGNS

SIGN No. (X)	SIGN CODE		PANEL SIZE	SIGN MESSAGE	NUMBER OF POSTS AND SIZE	NUMBER OF SIGNS
	FEDERAL	CALIFORNIA				
A	W20-1		60" x 60"	ROAD WORK AHEAD	2 - 6" x 6"	2
B	G20-2		36" x 18"	END ROAD WORK	1 - 4" x 4"	7
C	W20-1		48" x 48"	ROAD WORK AHEAD	1 - 4" x 4"	4
D		C40(CA)	108" x 42"	TRAFFIC FINES DOUBLED IN CONSTRUCTION ZONES	2 - 6" x 6"	2
E	W16-1P		18" x 24"	SHARE THE ROAD	1 - 4" x 4"	2

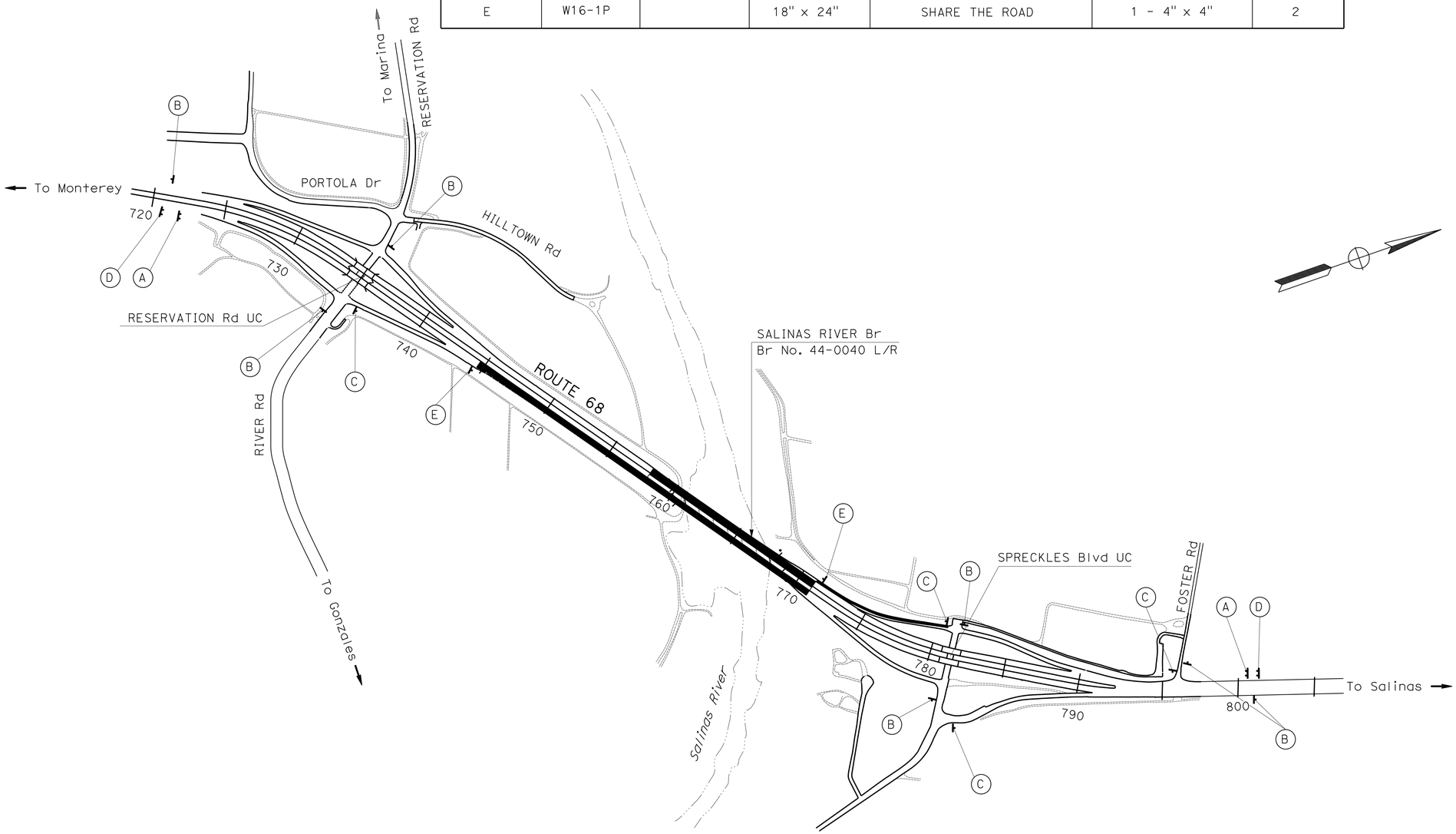

CONSTRUCTION AREA SIGN

NO SCALE

CS-1

APPROVED FOR CONSTRUCTION AREA SIGN WORK ONLY

STATE OF CALIFORNIA - DEPARTMENT OF TRANSPORTATION
Caltrans
TRAFFIC DESIGN

FUNCTIONAL SUPERVISOR: MOHAMMED QATAMI
DAVID BLACK | FAWZI YAGHMOUR
CALCULATED-DESIGNED BY | CHECKED BY
REVISED BY | DATE REVISED

LAST REVISION 06-19-15 | DATE PLOTTED => 08-SEP-2015 | TIME PLOTTED => 16:45

Dist	COUNTY	ROUTE	POST MILES TOTAL PROJECT	SHEET No.	TOTAL SHEETS
05	Mon	68	R17.4/R18.0	30	149

REGISTERED CIVIL ENGINEER DATE 06-01-15

6-22-15
PLANS APPROVAL DATE

REGISTERED PROFESSIONAL ENGINEER FAWZI YAGHMOUR No. C-54750 Exp. 12/31/15 CIVIL STATE OF CALIFORNIA

THE STATE OF CALIFORNIA OR ITS OFFICERS OR AGENTS SHALL NOT BE RESPONSIBLE FOR THE ACCURACY OR COMPLETENESS OF SCANNED COPIES OF THIS PLAN SHEET.

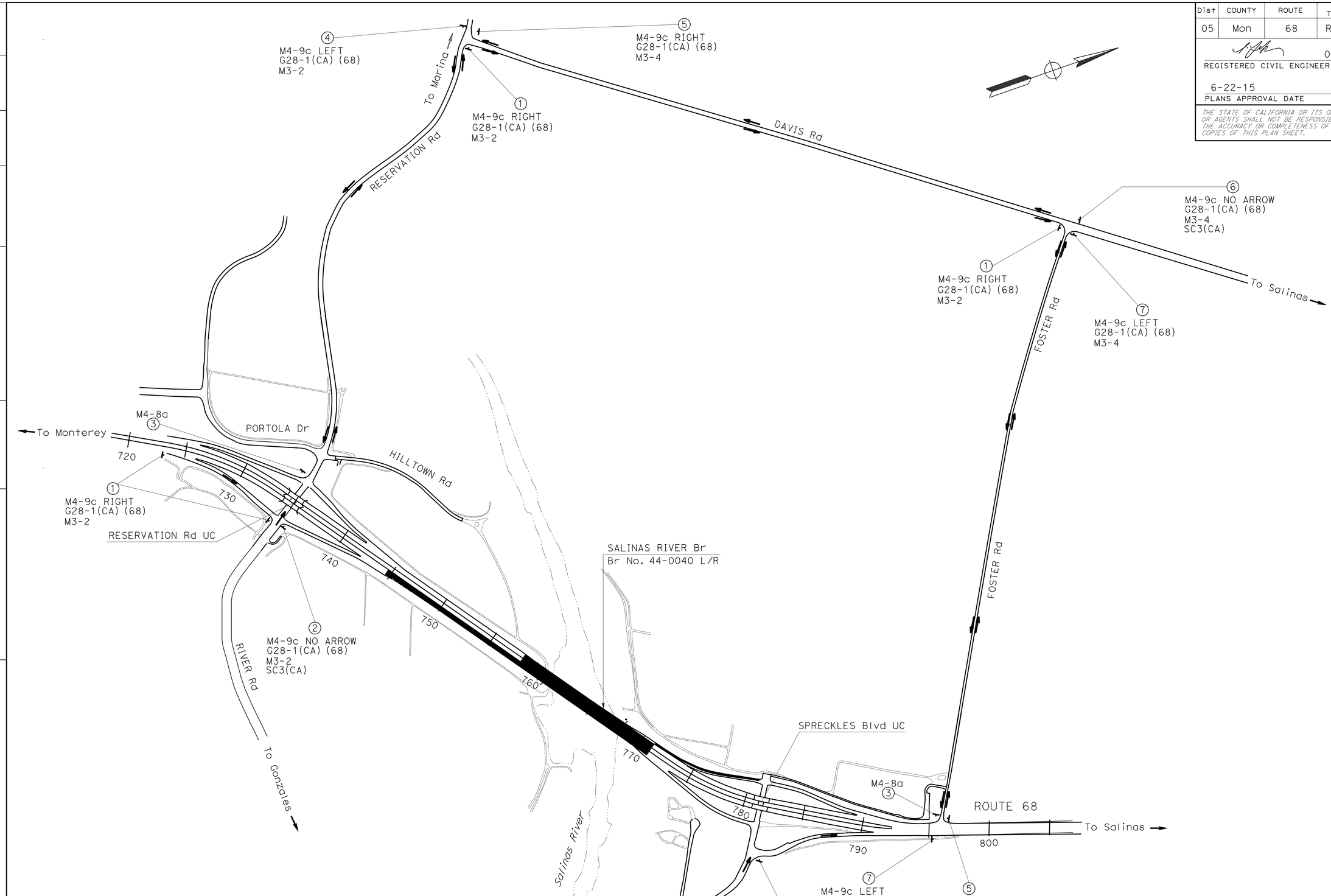

APPROVED FOR CONSTRUCTION AREA SIGN WORK ONLY

MOTORIST INFORMATION PLAN

NO SCALE

MI-1

REVISED BY	DATE REVISED

CALCULATED-DESIGNED BY	CHECKED BY
DAVID BLACK	FAWZI YAGHMOUR

FUNCTIONAL SUPERVISOR: MOHAMMED QATAMI

STATE OF CALIFORNIA - DEPARTMENT OF TRANSPORTATION

Caltrans® **TRAFFIC DESIGN**

LAST REVISION 06-22-15 | DATE PLOTTED => 08-SEP-2015 | TIME PLOTTED => 16:45

Dist	COUNTY	ROUTE	POST MILES TOTAL PROJECT	SHEET No.	TOTAL SHEETS
05	Mon	68	R17.4/R18.0	31	149

REGISTERED CIVIL ENGINEER DATE 06-01-15

06-22-15
PLANS APPROVAL DATE

REGISTERED PROFESSIONAL ENGINEER FAWZI YAGHMOUR No. C-54750 Exp. 12/31/15 CIVIL STATE OF CALIFORNIA

THE STATE OF CALIFORNIA OR ITS OFFICERS OR AGENTS SHALL NOT BE RESPONSIBLE FOR THE ACCURACY OR COMPLETENESS OF SCANNED COPIES OF THIS PLAN SHEET.

STATIONARY MOUNTED CONSTRUCTION AREA SIGNS

SIGN No. (X)	SIGN CODE FEDERAL	SIGN CODE CALIFORNIA	PANEL SIZE	SIGN MESSAGE	NUMBER OF POSTS AND SIZE	NUMBER OF SIGNS
1	M4-9c		30" x 24"	BIKE DETOUR R ARROW	1 - 4" x 6"	4
		G28-1(CA)	18" x 21"	ROUTE 68		
	M3-2		24" x 12"	EAST		
2	M4-9c		30" x 24"	BIKE DETOUR NO ARROW	1 - 4" x 6"	1
		G28-1(CA)	18" x 21"	ROUTE 68		
	M3-2		24" x 12"	EAST		
		SC3(CA)	36" x 12"	DETOUR W STRAIGHT ARROW		
3	M4-8a		24" x 12"	END DETOUR	1 - 4" x 4"	2
4	M4-9c		30" x 24"	BIKE DETOUR L ARROW	1 - 4" x 6"	1
		G28-1(CA)	18" x 21"	ROUTE 68		
	M3-2		24" x 12"	EAST		
5	M4-9c		30" x 24"	BIKE DETOUR R ARROW	1 - 4" x 6"	3
		G28-1(CA)	18" x 21"	ROUTE 68		
	M3-4		24" x 12"	WEST		
6	M4-9c		30" x 24"	BIKE DETOUR NO ARROW	1 - 4" x 6"	1
		G28-1(CA)	18" x 21"	ROUTE 68		
	M3-4		24" x 12"	WEST		
		SC3(CA)	36" x 12"	DETOUR W STRAIGHT ARROW		
7	M4-9c		30" x 24"	BIKE DETOUR L ARROW	1 - 4" x 6"	1
		G28-1(CA)	18" x 21"	ROUTE 68		
	M3-4		24" x 12"	WEST		

MOTORIST INFORMATION QUANTITIES

NO SCALE

MIQ-1

STATE OF CALIFORNIA - DEPARTMENT OF TRANSPORTATION
Caltrans
TRAFFIC DESIGN

FUNCTIONAL SUPERVISOR: MOHAMMED QATAMI
CALCULATED-DESIGNED BY: DAVID BLACK
CHECKED BY: FAWZI YAGHMOUR
REVISED BY
DATE REVISED

LAST REVISION 06-19-15
DATE PLOTTED => 08-SEP-2015
TIME PLOTTED => 16:45

Dist	COUNTY	ROUTE	POST MILES TOTAL PROJECT	SHEET No.	TOTAL SHEETS
05	Mon	68	R17.4/R18.0	32	149

REGISTERED CIVIL ENGINEER DATE 06-01-15

6-22-15
PLANS APPROVAL DATE

REGISTERED PROFESSIONAL ENGINEER FAWZI YAGHMOUR No. C-54750 Exp. 12/31/15 CIVIL STATE OF CALIFORNIA

THE STATE OF CALIFORNIA OR ITS OFFICERS OR AGENTS SHALL NOT BE RESPONSIBLE FOR THE ACCURACY OR COMPLETENESS OF SCANNED COPIES OF THIS PLAN SHEET.

NOTE: ALL Temp RAILING (Type K) TO BE PINNED IN ACCORDANCE WITH STANDARD PLAN T3A, T3B

LEGEND

- TEMPORARY RAILING (Type K)
- NEW OR RELOCATED CAS THIS STAGE
- TYPE VI PAINT TRAFFIC ARROW
- OC ON CENTER
- REMOVE THERMOPLASTIC TRAFFIC STRIPE
- PLACE TEMPORARY TRAFFIC STRIPE (TAPE)
- TEMPORARY CRASH CUSHION ARRAY TS'14'
- CHANNELIZER (SURFACE MOUNTED)
- TEMPORARY RAILING (TYPE K)
- CAS REMOVE THIS STAGE
- REMOVE TEMPORARY TRAFFIC STRIPE (TAPE)(N) INFORMATION ONLY

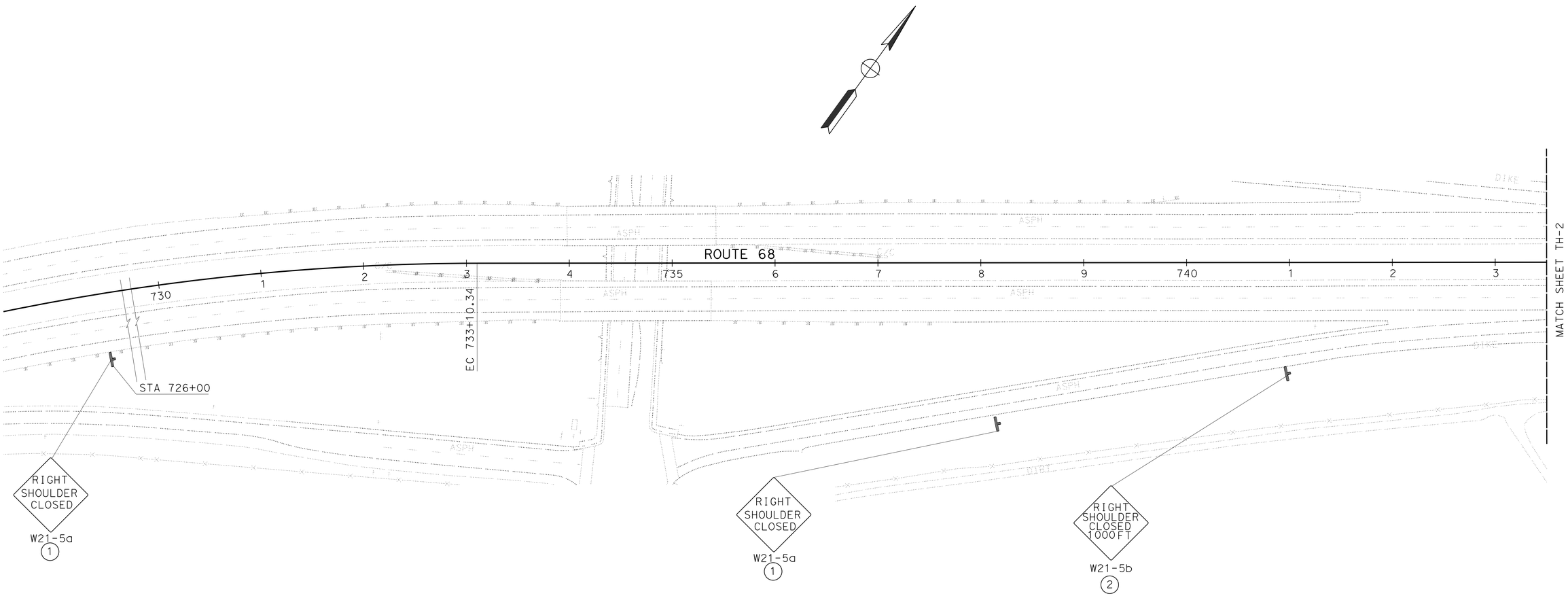

TRAFFIC HANDLING PLAN

(OUTSIDE SHOULDER WIDEN BRIDGE)

(STAGE 1.1)

SCALE: 1" = 50'

TH-1

APPROVED FOR TRAFFIC HANDLING WORK ONLY

STATE OF CALIFORNIA - DEPARTMENT OF TRANSPORTATION

Caltrans

TRAFFIC DESIGN

FUNCTIONAL SUPERVISOR: MOHAMMED QATAMI

CALCULATED-DESIGNED BY: DAVID BLACK

CHECKED BY: FAWZI YAGHMOUR

REVISED BY | DATE REVISED

LAST REVISION 06-19-15 | DATE PLOTTED => 08-SEP-2015 | TIME PLOTTED => 16:45

Dist	COUNTY	ROUTE	POST MILES TOTAL PROJECT	SHEET No.	TOTAL SHEETS
05	Mon	68	R17.4/R18.0	33	149

REGISTERED CIVIL ENGINEER DATE 6-01-15

6-22-15
PLANS APPROVAL DATE

REGISTERED PROFESSIONAL ENGINEER
FAWZI YAGHMOUR
No. C-54750
Exp. 12/31/15
CIVIL
STATE OF CALIFORNIA

THE STATE OF CALIFORNIA OR ITS OFFICERS OR AGENTS SHALL NOT BE RESPONSIBLE FOR THE ACCURACY OR COMPLETENESS OF SCANNED COPIES OF THIS PLAN SHEET.

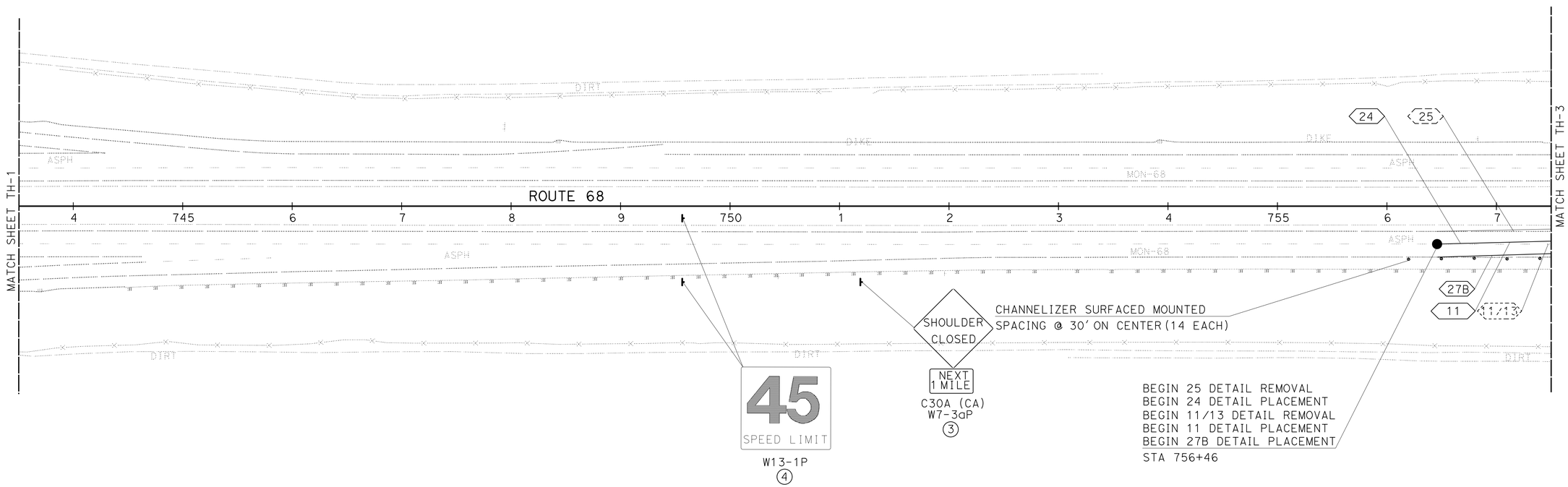

TRAFFIC HANDLING PLAN

(OUTSIDE SHOULDER WIDEN BRIDGE)

(STAGE 1.1)

SCALE:1"=50'

TH-2

APPROVED FOR TRAFFIC HANDLING WORK ONLY

STATE OF CALIFORNIA - DEPARTMENT OF TRANSPORTATION
Caltrans®
TRAFFIC DESIGN

FUNCTIONAL SUPERVISOR: MOHAMMED QATAMI
CALCULATED-DESIGNED BY: DAVID BLACK
CHECKED BY: FAWZI YAGHMOUR
REVISED BY
DATE REVISED

LAST REVISION 06-19-15
DATE PLOTTED => 09-SEP-2015
TIME PLOTTED => 13:46

Dist	COUNTY	ROUTE	POST MILES TOTAL PROJECT	SHEET No.	TOTAL SHEETS
05	Mon	68	R17.4/R18.0	34	149

REGISTERED CIVIL ENGINEER 06-01-15 DATE

6-22-15
PLANS APPROVAL DATE

REGISTERED PROFESSIONAL ENGINEER FAWZI YAGHMOUR No. C-54750 Exp. 12/31/15 CIVIL STATE OF CALIFORNIA

THE STATE OF CALIFORNIA OR ITS OFFICERS OR AGENTS SHALL NOT BE RESPONSIBLE FOR THE ACCURACY OR COMPLETENESS OF SCANNED COPIES OF THIS PLAN SHEET.

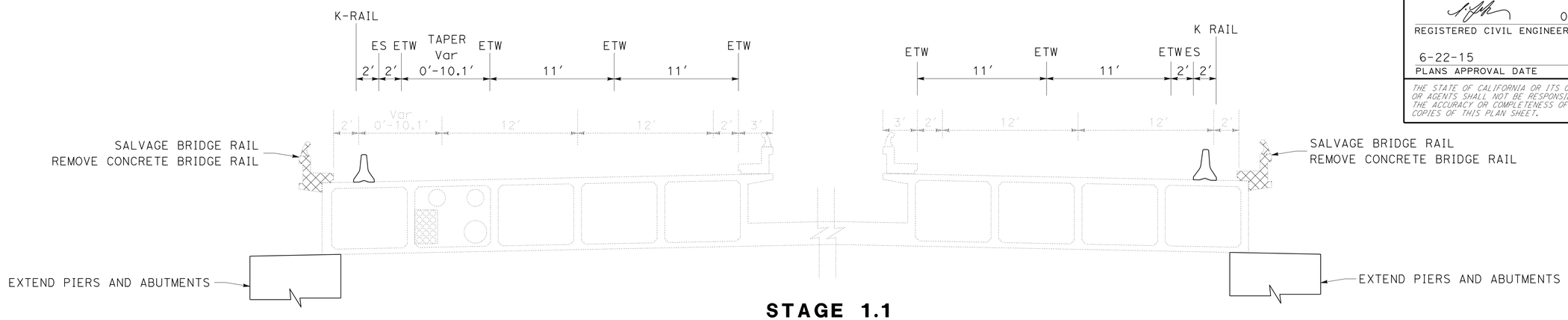

STAGE 1.1
EXTEND PIERS
SEISMIC RETROFIT

Sta 759+29.00-771+00.00

SECTION A-A

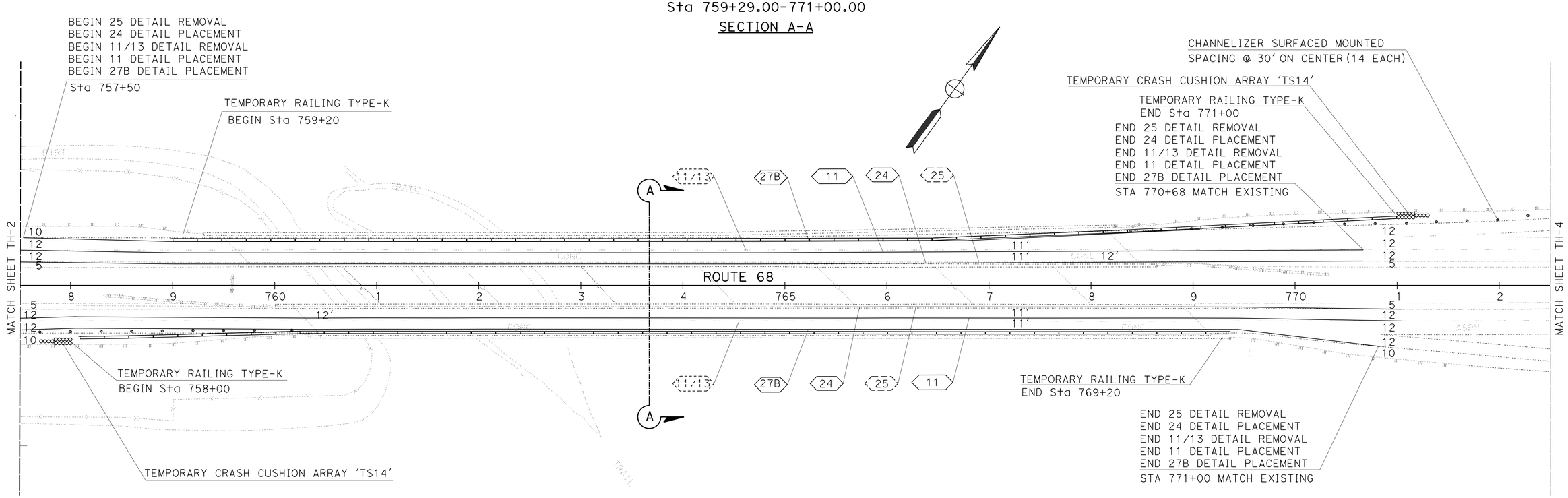

TRAFFIC HANDLING PLAN

(OUTSIDE SHOULDER WIDEN BRIDGE)

(STAGE 1.1)

SCALE:1"=50'

TH-3

APPROVED FOR TRAFFIC HANDLING WORK ONLY

STATE OF CALIFORNIA - DEPARTMENT OF TRANSPORTATION
Caltrans
TRAFFIC DESIGN

FUNCTIONAL SUPERVISOR: MOHAMMED QATAMI

CALCULATED-DESIGNED BY: DAVID BLACK
CHECKED BY: FAWZI YAGHMOUR

REVISED BY | DATE REVISED

LAST REVISION 06-19-15
DATE PLOTTED => 08-SEP-2015
TIME PLOTTED => 16:46

Dist	COUNTY	ROUTE	POST MILES TOTAL PROJECT	SHEET No.	TOTAL SHEETS
05	Mon	68	R17.4/R18.0	35	149

REGISTERED CIVIL ENGINEER DATE 06-01-15

6-22-15
PLANS APPROVAL DATE

REGISTERED PROFESSIONAL ENGINEER FAWZI YAGHMOUR No. C-54750 Exp. 12/31/15 CIVIL STATE OF CALIFORNIA

THE STATE OF CALIFORNIA OR ITS OFFICERS OR AGENTS SHALL NOT BE RESPONSIBLE FOR THE ACCURACY OR COMPLETENESS OF SCANNED COPIES OF THIS PLAN SHEET.

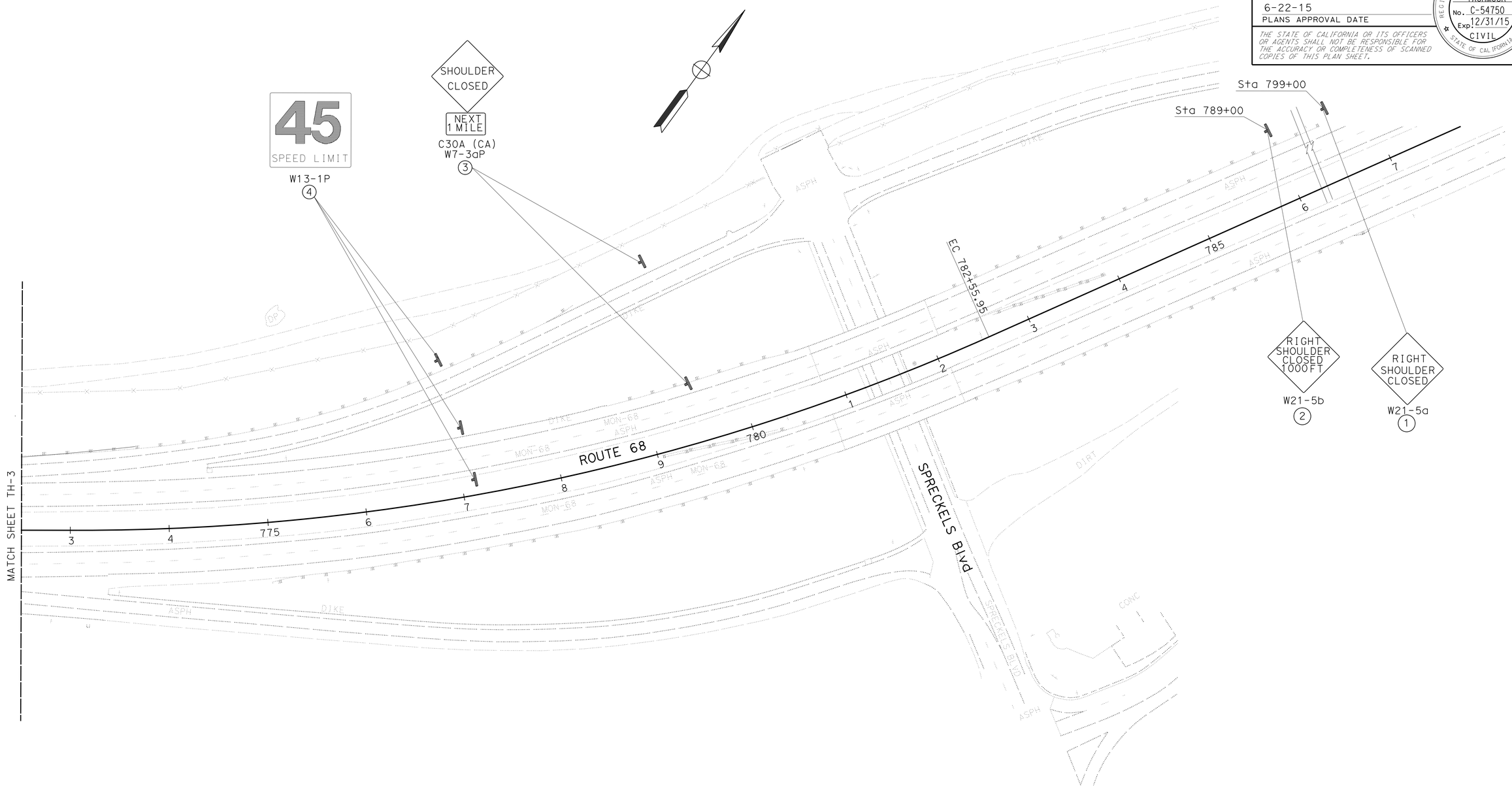

TRAFFIC HANDLING PLAN

(OUTSIDE SHOULDER WIDEN BRIDGE)

(STAGE 1.1)

SCALE:1"=50'

TH-4

APPROVED FOR TRAFFIC HANDLING WORK ONLY

STATE OF CALIFORNIA - DEPARTMENT OF TRANSPORTATION
Caltrans
TRAFFIC DESIGN

FUNCTIONAL SUPERVISOR: MOHAMMED QATAMI
CALCULATED-DESIGNED BY: DAVID BLACK
CHECKED BY: FAWZI YAGHMOUR
REVISED BY
DATE REVISED

LAST REVISION 06-19-15
DATE PLOTTED => 08-SEP-2015
TIME PLOTTED => 16:46

Dist	COUNTY	ROUTE	POST MILES TOTAL PROJECT	SHEET No.	TOTAL SHEETS
05	Mon	68	R17.4/R18.0	36	149

REGISTERED CIVIL ENGINEER 06-01-15 DATE

6-19-15
PLANS APPROVAL DATE

REGISTERED PROFESSIONAL ENGINEER
FAWZI YAGHMOUR
No. C-54750
Exp. 12/31/15
CIVIL
STATE OF CALIFORNIA

THE STATE OF CALIFORNIA OR ITS OFFICERS OR AGENTS SHALL NOT BE RESPONSIBLE FOR THE ACCURACY OR COMPLETENESS OF SCANNED COPIES OF THIS PLAN SHEET.

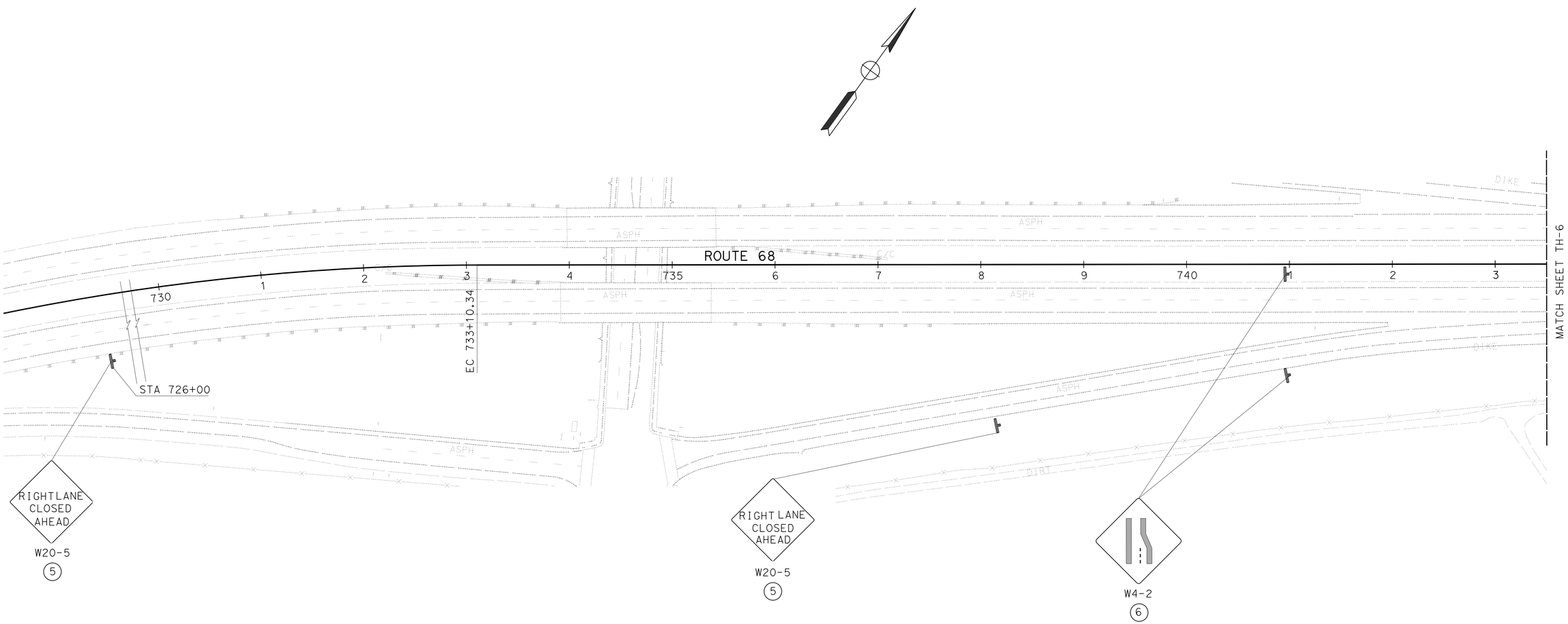

TRAFFIC HANDLING PLAN

(OUTSIDE SHOULDER WIDEN BRIDGE)

(STAGE 1.2)

SCALE: 1" = 50'

TH-5

APPROVED FOR TRAFFIC HANDLING WORK ONLY

STATE OF CALIFORNIA - DEPARTMENT OF TRANSPORTATION
Caltrans
TRAFFIC DESIGN

FUNCTIONAL SUPERVISOR: MOHAMMED QATAMI
CALCULATED-DESIGNED BY: DAVID BLACK
CHECKED BY: FAWZI YAGHMOUR
REVISED BY
DATE REVISED

LAST REVISION 06-19-15
DATE PLOTTED => 08-SEP-2015
TIME PLOTTED => 16:46

Dist	COUNTY	ROUTE	POST MILES TOTAL PROJECT	SHEET No.	TOTAL SHEETS
05	Mon	68	R17.4/R18.0	37	149

REGISTERED CIVIL ENGINEER DATE 06-01-15

6-22-15
PLANS APPROVAL DATE

REGISTERED PROFESSIONAL ENGINEER FAWZI YAGHMOUR No. C-54750 Exp. 12/31/15 CIVIL STATE OF CALIFORNIA

THE STATE OF CALIFORNIA OR ITS OFFICERS OR AGENTS SHALL NOT BE RESPONSIBLE FOR THE ACCURACY OR COMPLETENESS OF SCANNED COPIES OF THIS PLAN SHEET.

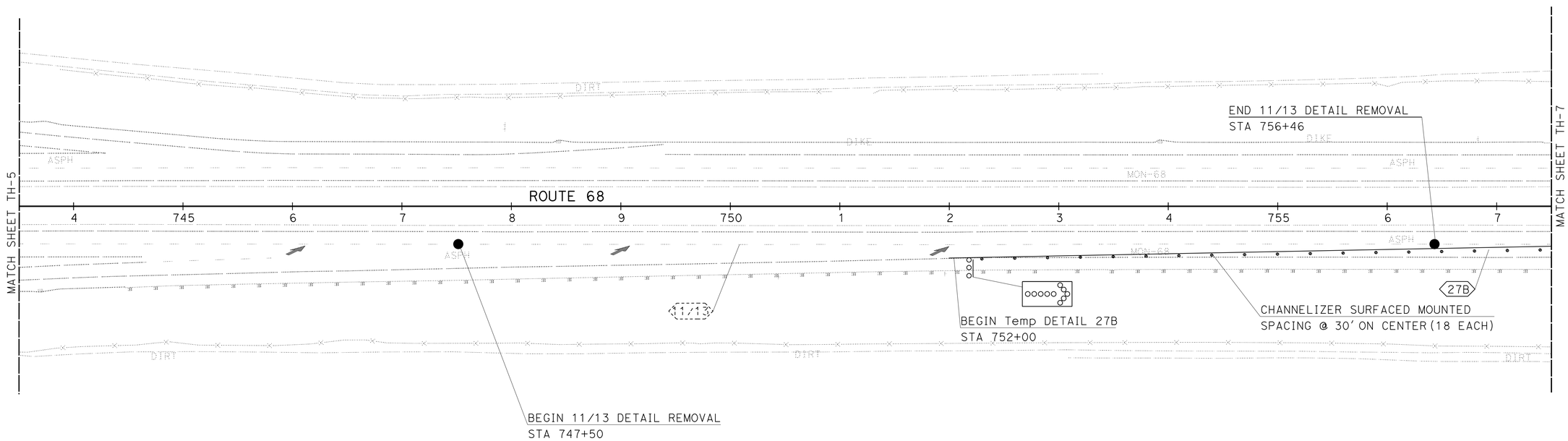

TRAFFIC HANDLING PLAN

(OUTSIDE SHOULDER WIDEN BRIDGE)

(STAGE 1.2)

SCALE:1"=50'

TH-6

APPROVED FOR TRAFFIC HANDLING WORK ONLY

STATE OF CALIFORNIA - DEPARTMENT OF TRANSPORTATION

Caltrans

TRAFFIC DESIGN

FUNCTIONAL SUPERVISOR: MOHAMMED QATAMI

CALCULATED-DESIGNED BY: DAVID BLACK

CHECKED BY: FAWZI YAGHMOUR

REVISED BY

DATE REVISED

LAST REVISION 06-19-15

DATE PLOTTED => 08-SEP-2015

TIME PLOTTED => 16:46

Dist	COUNTY	ROUTE	POST MILES TOTAL PROJECT	SHEET No.	TOTAL SHEETS
05	Mon	68	R17.4/R18.0	38	149

REGISTERED CIVIL ENGINEER 06-01-15 DATE

6-22-15
PLANS APPROVAL DATE

REGISTERED PROFESSIONAL ENGINEER FAWZI YAGHMOUR No. C-54750 Exp. 12/31/15 CIVIL STATE OF CALIFORNIA

THE STATE OF CALIFORNIA OR ITS OFFICERS OR AGENTS SHALL NOT BE RESPONSIBLE FOR THE ACCURACY OR COMPLETENESS OF SCANNED COPIES OF THIS PLAN SHEET.

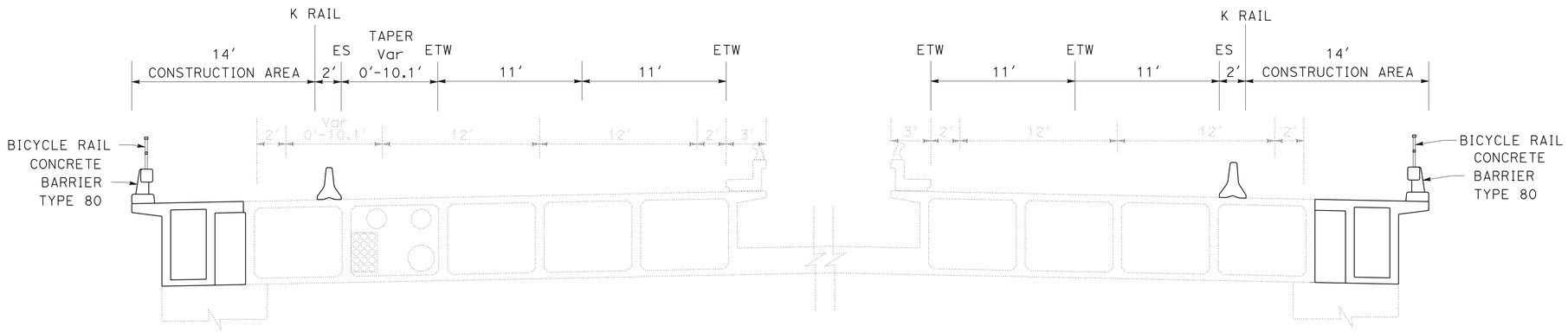

STAGE 1.2
SHOULDER WIDENING

Sta 759+29.00-771+00.00

SECTION B-B

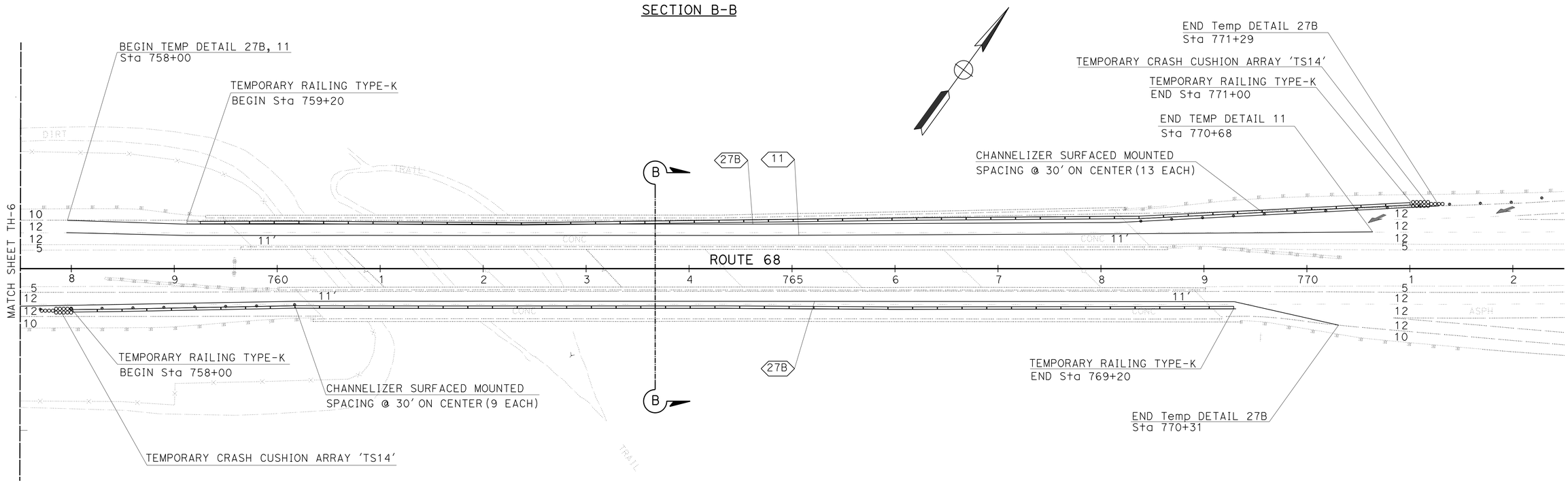

TRAFFIC HANDLING PLAN
(OUTSIDE SHOULDER WIDEN BRIDGE)
(STAGE 1.2)

SCALE:1"=50′

TH-7

APPROVED FOR TRAFFIC HANDLING WORK ONLY

STATE OF CALIFORNIA - DEPARTMENT OF TRANSPORTATION
Caltrans
TRAFFIC DESIGN

FUNCTIONAL SUPERVISOR: MOHAMMED QATAMI
CALCULATED-DESIGNED BY: DAVID BLACK
CHECKED BY: FAWZI YAGHMOUR
REVISED BY
DATE REVISED

LAST REVISION 06-19-15
DATE PLOTTED => 08-SEP-2015
TIME PLOTTED => 16:46

Dist	COUNTY	ROUTE	POST MILES TOTAL PROJECT	SHEET No.	TOTAL SHEETS
05	Mon	68	R17.4/R18.0	39	149

REGISTERED CIVIL ENGINEER 06-01-15 DATE

6-22-15
PLANS APPROVAL DATE

REGISTERED PROFESSIONAL ENGINEER
FAWZI YAGHMOUR
No. C-54750
Exp. 12/31/15
CIVIL
STATE OF CALIFORNIA

THE STATE OF CALIFORNIA OR ITS OFFICERS OR AGENTS SHALL NOT BE RESPONSIBLE FOR THE ACCURACY OR COMPLETENESS OF SCANNED COPIES OF THIS PLAN SHEET.

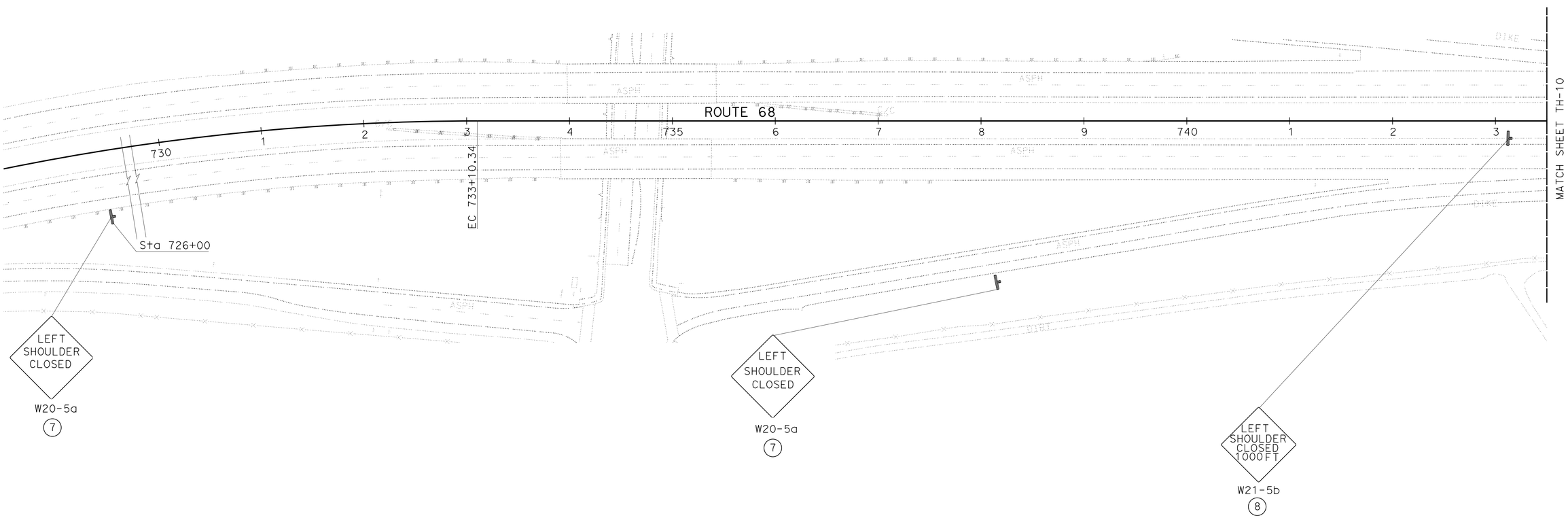

TRAFFIC HANDLING PLAN

(INSIDE SHOULDER WIDEN BRIDGE)

(STAGE 2)

SCALE:1"=50'

TH-8

APPROVED FOR TRAFFIC HANDLING WORK ONLY

STATE OF CALIFORNIA - DEPARTMENT OF TRANSPORTATION
Caltrans
TRAFFIC DESIGN

FUNCTIONAL SUPERVISOR: MOHAMMED QATAMI

CALCULATED-DESIGNED BY: DAVID BLACK
CHECKED BY: FAWZI YAGHMOUR

REVISED BY
DATE REVISED

LAST REVISION 06-19-15
DATE PLOTTED => 08-SEP-2015
TIME PLOTTED => 16:46

Dist	COUNTY	ROUTE	POST MILES TOTAL PROJECT	SHEET No.	TOTAL SHEETS
05	Mon	68	R17.4/R18.0	40	149

REGISTERED CIVIL ENGINEER DATE 06-01-15

PLANS APPROVAL DATE 6-22-15

REGISTERED PROFESSIONAL ENGINEER FAWZI YAGHMOUR No. C-54750 Exp. 12/31/15 CIVIL STATE OF CALIFORNIA

THE STATE OF CALIFORNIA OR ITS OFFICERS OR AGENTS SHALL NOT BE RESPONSIBLE FOR THE ACCURACY OR COMPLETENESS OF SCANNED COPIES OF THIS PLAN SHEET.

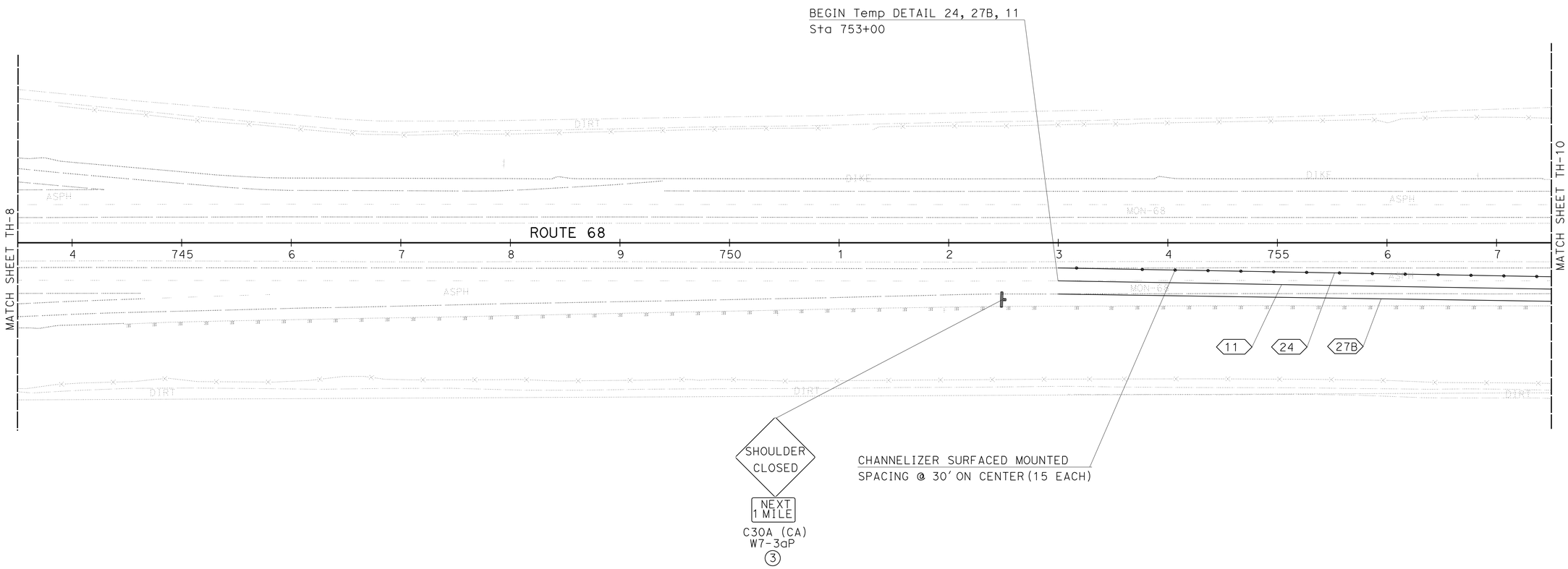

TRAFFIC HANDLING PLAN

(INSIDE SHOULDER WIDEN BRIDGE)

(STAGE 2)

APPROVED FOR TRAFFIC HANDLING WORK ONLY

SCALE:1"=50'

TH-9

STATE OF CALIFORNIA - DEPARTMENT OF TRANSPORTATION

Caltrans® **TRAFFIC DESIGN**

FUNCTIONAL SUPERVISOR: MOHAMMED QATAMI

CALCULATED-DESIGNED BY: DAVID BLACK

CHECKED BY: FAWZI YAGHMOUR

REVISED BY

DATE REVISED

LAST REVISION 06-19-15 DATE PLOTTED => 08-SEP-2015 TIME PLOTTED => 16:46

Dist	COUNTY	ROUTE	POST MILES TOTAL PROJECT	SHEET No.	TOTAL SHEETS
05	Mon	68	R17.4/R18.0	41	149

REGISTERED CIVIL ENGINEER DATE 06-01-15

06-22-15
PLANS APPROVAL DATE

REGISTERED PROFESSIONAL ENGINEER FAWZI YAGHMOUR No. C-54750 Exp. 12/31/15 CIVIL STATE OF CALIFORNIA

THE STATE OF CALIFORNIA OR ITS OFFICERS OR AGENTS SHALL NOT BE RESPONSIBLE FOR THE ACCURACY OR COMPLETENESS OF SCANNED COPIES OF THIS PLAN SHEET.

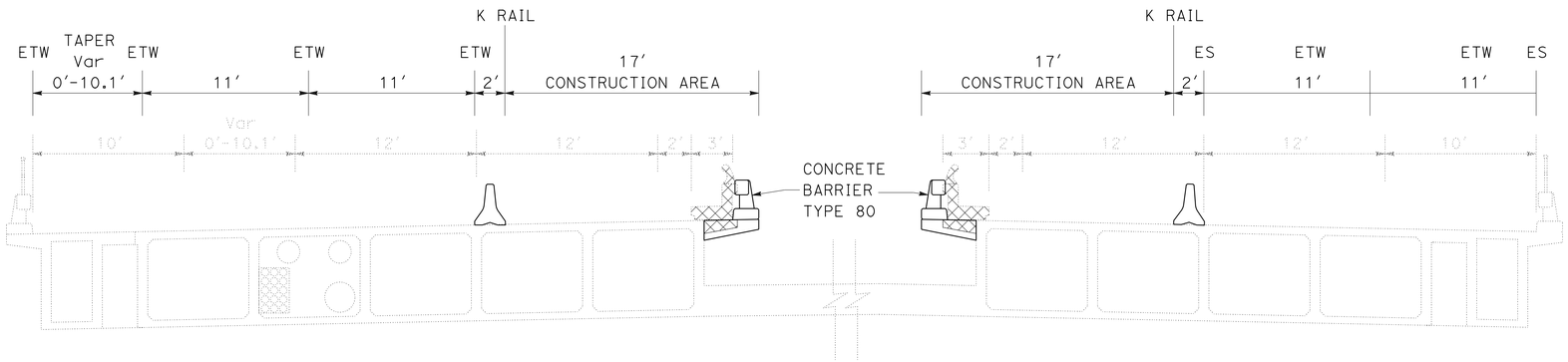

STAGE 2 - INSIDE SHOULDER BRIDGE WIDENING ACTIVITIES

Sta 759+29.00-771+00.00

SECTION C-C

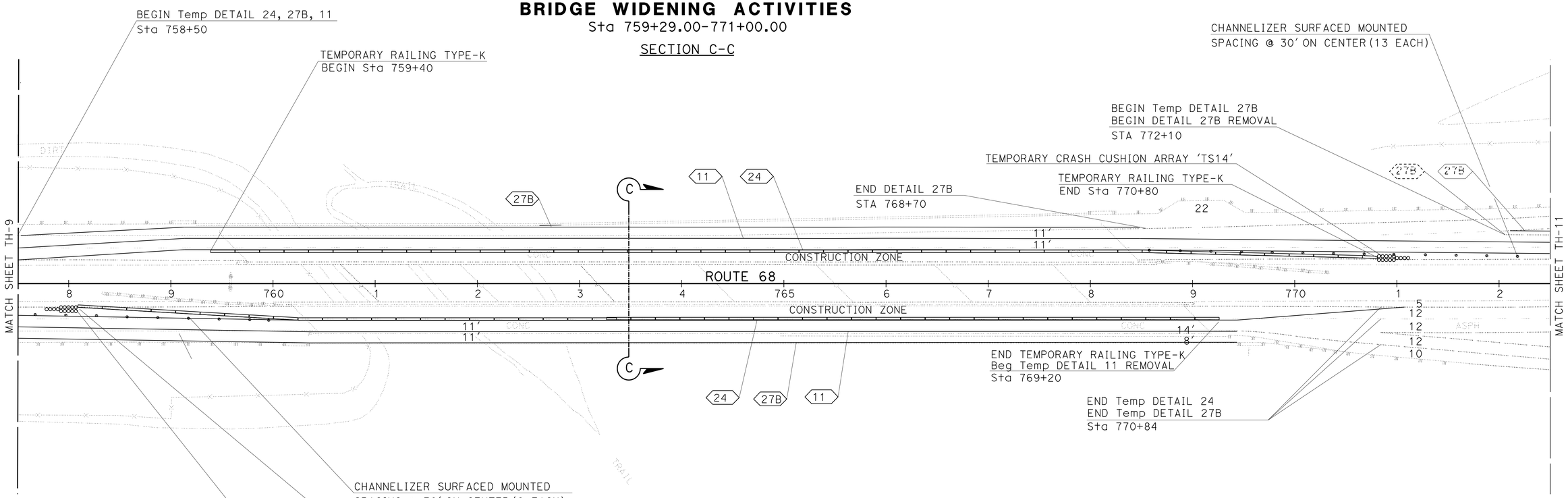

TRAFFIC HANDLING PLAN

(INSIDE SHOULDER WIDEN BRIDGE)

(STAGE 2)

SCALE:1"=50'

TH-10

APPROVED FOR TRAFFIC HANDLING WORK ONLY

STATE OF CALIFORNIA - DEPARTMENT OF TRANSPORTATION

TRAFFIC DESIGN

FUNCTIONAL SUPERVISOR: MOHAMMED QATAMI

CALCULATED-DESIGNED BY: DAVID BLACK

CHECKED BY: FAWZI YAGHMOUR

REVISED BY | DATE REVISED

LAST REVISION 06-19-15 | DATE PLOTTED => 08-SEP-2015 | TIME PLOTTED => 16:46

Dist	COUNTY	ROUTE	POST MILES TOTAL PROJECT	SHEET No.	TOTAL SHEETS
05	Mon	68	R17.4/R18.0	42	149

REGISTERED CIVIL ENGINEER DATE 06-01-15

6-22-15
PLANS APPROVAL DATE

REGISTERED PROFESSIONAL ENGINEER FAWZI YAGHMOUR No. C-54750 Exp. 12/31/15 CIVIL STATE OF CALIFORNIA

THE STATE OF CALIFORNIA OR ITS OFFICERS OR AGENTS SHALL NOT BE RESPONSIBLE FOR THE ACCURACY OR COMPLETENESS OF SCANNED COPIES OF THIS PLAN SHEET.

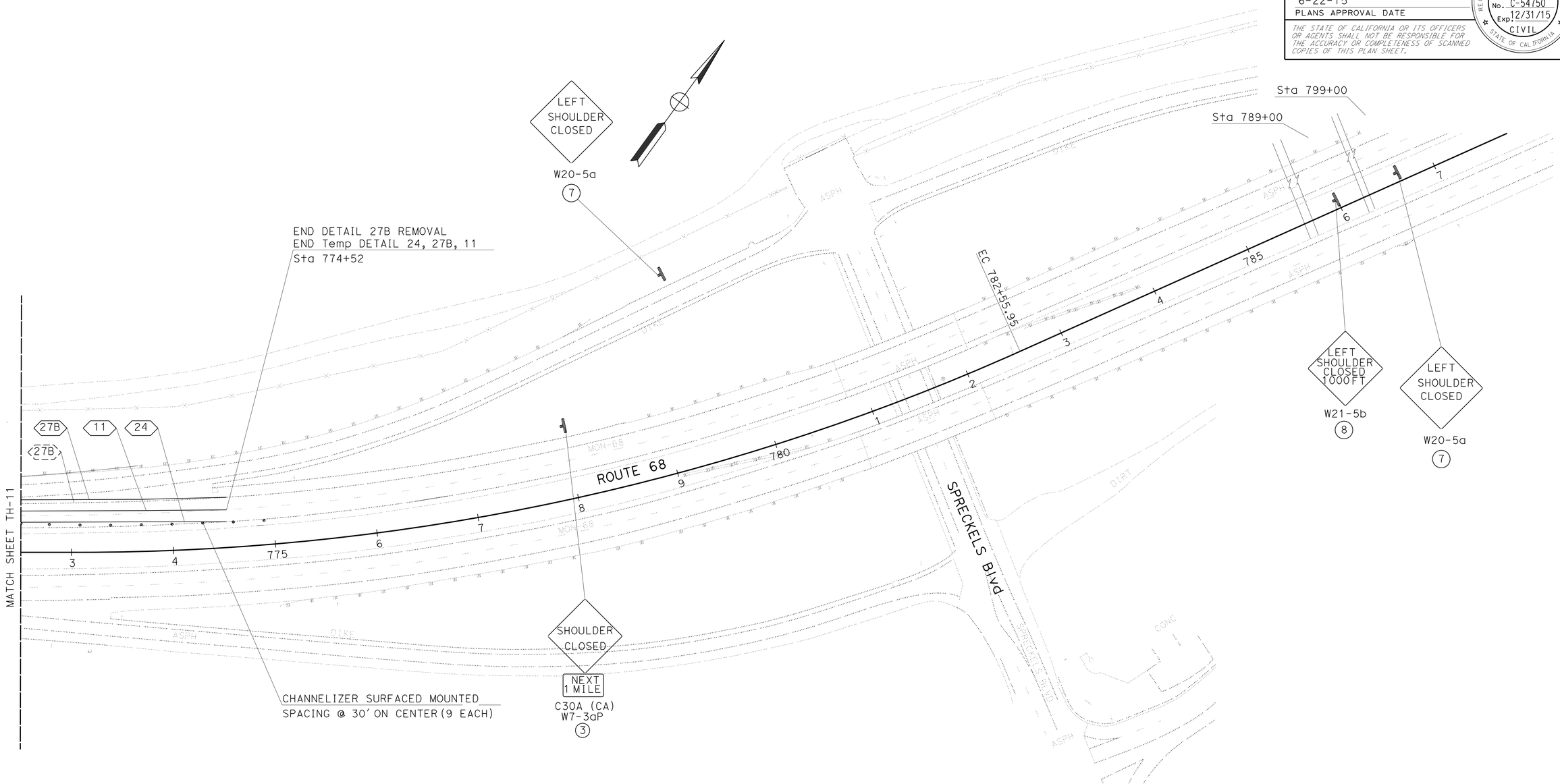

TRAFFIC HANDLING PLAN

(INSIDE SHOULDER WIDEN BRIDGE)

(STAGE 2)

SCALE:1"=50'

TH-11

APPROVED FOR TRAFFIC HANDLING WORK ONLY

STATE OF CALIFORNIA - DEPARTMENT OF TRANSPORTATION

Caltrans

TRAFFIC DESIGN

FUNCTIONAL SUPERVISOR: MOHAMMED QATAMI

CALCULATED-DESIGNED BY: DAVID BLACK

CHECKED BY: FAWZI YAGHMOUR

REVISED BY

DATE REVISED

LAST REVISION 06-19-15

DATE PLOTTED => 08-SEP-2015
TIME PLOTTED => 16:46

Dist	COUNTY	ROUTE	POST MILES TOTAL PROJECT	SHEET No.	TOTAL SHEETS
05	Mon	68	R17.4/R18.0	43	149

REGISTERED CIVIL ENGINEER 06-01-15 DATE

6-22-15
PLANS APPROVAL DATE

REGISTERED PROFESSIONAL ENGINEER FAWZI YAGHMOUR No. C-54750 Exp. 12/31/15 CIVIL STATE OF CALIFORNIA

THE STATE OF CALIFORNIA OR ITS OFFICERS OR AGENTS SHALL NOT BE RESPONSIBLE FOR THE ACCURACY OR COMPLETENESS OF SCANNED COPIES OF THIS PLAN SHEET.

TEMPORARY PAVEMENT DELINEATION

STAGE	SHEET	ROUTE	DIRECTION	DETAIL	TEMPORARY TRAFFIC STRIPE (TAPE) 4" WHITE	TEMPORARY TRAFFIC STRIPE (TAPE) 4" YELLOW	REMOVE THERMOPLASTIC TRAFFIC STRIPE	REMOVE PAVEMENT MARKER	CHANNELIZER (SURFACE MOUNTED)	TEMPORARY CRASH CUSHION MODULE TYPE 'TS14'	TEMPORARY PAVMENT MARKING (PAINT) TYPE VI ARROW PLACE	FLASHING ARROW SIGN
					LF		LF	EA	EA	EA	SQFT	EA
1.1	TH-2	68	EB	25			105	3	5			
		68	EB	11/13			26	11				
		68	EB	27B	105							
		68	EB	24		105						
		68	EB	11	105							
	TH-3	68	EB	25			1354	30	8	14		
		68	EB	11/13			339	150				
		68	EB	27B	1354							
		68	EB	24		1354						
		68	EB	11	1354							
		68	WB	25			1316	29	14	14		
		68	WB	11/13			329	116				
		68	WB	27B	1316							
		68	WB	24		1316						
		68	WB	11		1316						
1.2	TH-6	68	EB	27B	546				18		126	1
		68	EB	11/13			223	90				
	TH-7	68	EB	27B	1020				9	14		
		68	WB	27B	1329				13	14	84	
		68	WB	11		1268						
2	TH-9	68	EB	27B	450				15			
		68	EB	24		450						
		68	EB	11	450							
	TH-10	68	EB	27B	1334				9	14		
		68	EB	24		1356						
		68	EB	11	450							
		68	WB	27B	1060		40		13	14		
		68	WB	24		1500						
		68	WB	11		1500						
	TH-11	68	WB	27B	202		202		9			
		68	WB	24		202						
		68	WB	11		202						
	TOTAL				21644		3934	429	113	84	210	1

TEMPORARY RAILING (TYPE K)

LOCATION	SHEET	ROUTE	DIRECTION	STAGE	TEMPORARY RAILING (TYPE K)
					LF
STA 758+00 TO 769+20	TH-3	68	EB	1.1	1120
STA 759+20 TO 771+00	TH-3	68	WB	1.1	1180
STA 758+00 TO 769+20	TH-7	68	EB	1.2	1120
STA 759+20 TO 771+00	TH-7	68	WB	1.2	1180
STA 758+00 TO 769+20	TH-10	68	EB	2	1120
STA 759+40 TO 770+80	TH-10	68	WB	2	1140
TOTAL					6860

EXACT LOCATION OF TEMPORARY RAILING (TYPE K) TO BE DETERMINED BY THE ENGINEER

STATIONARY MOUNTED CONSTRUCTION AREA SIGNS

SIGN No. ⊗	SIGN CODE FEDERAL	SIGN CODE CALIFORNIA	PANEL SIZE	SIGN MESSAGE	NUMBER OF POSTS AND SIZE	No. OF SIGNS
1	W21-5a		48"x48"	RIGHT SHOULDER CLOSED	1-4"x6"	3
2	W21-5b		48"x48"	RIGHT SHOULDER CLOSED 1000FT	1-4"x6"	2
3		C30A (CA)	48"x48"	SHOULDER CLOSED	1-6"x6"	5
	W7-3aP		32"x18"	NEXT 1 MILE		
4	W13-1P		24"x18"	45 MPH SPEED LIMIT	1-4"x4"	5
5	W20-5		48"x48"	RIGHT LANE CLOSED AHEAD	1-4"x6"	2
6	W4-2		48"x48"	RIGHT LANE DROP FIGURE	1-4"x6"	2
7	W21-5a		48"x48"	LEFT SHOULDER CLOSED	1-4"x6"	4
8	W21-5b		48"x48"	LEFT SHOULDER CLOSED 1000FT	1-4"x6"	2

TRAFFIC HANDLING QUANTITIES
THQ-1

STATE OF CALIFORNIA - DEPARTMENT OF TRANSPORTATION
Caltrans
TRAFFIC DESIGN

FUNCTIONAL SUPERVISOR: MOHAMMED QATAMI
CALCULATED-DESIGNED BY: DAVID BLACK
CHECKED BY: FAWZI YAGHMOUR
REVISED BY
DATE REVISED

LAST REVISION 06-19-15
DATE PLOTTED => 08-SEP-2015
TIME PLOTTED => 16:46

Dist	COUNTY	ROUTE	POST MILES TOTAL PROJECT	SHEET No.	TOTAL SHEETS
05	Mon	68	R17.4/R18.0	44	149

REGISTERED CIVIL ENGINEER DATE 06-01-15

6-22-15
PLANS APPROVAL DATE

REGISTERED PROFESSIONAL ENGINEER FAWZI YAGHMOUR No. C-54750 Exp. 12/31/15 CIVIL STATE OF CALIFORNIA

THE STATE OF CALIFORNIA OR ITS OFFICERS OR AGENTS SHALL NOT BE RESPONSIBLE FOR THE ACCURACY OR COMPLETENESS OF SCANNED COPIES OF THIS PLAN SHEET.

LEGEND

XX TRAFFIC STRIPE DETAIL No.

LIMITS OF DESIGNATED TRAFFIC STRIPING DETAIL

XX ROADSIDE SIGN No.

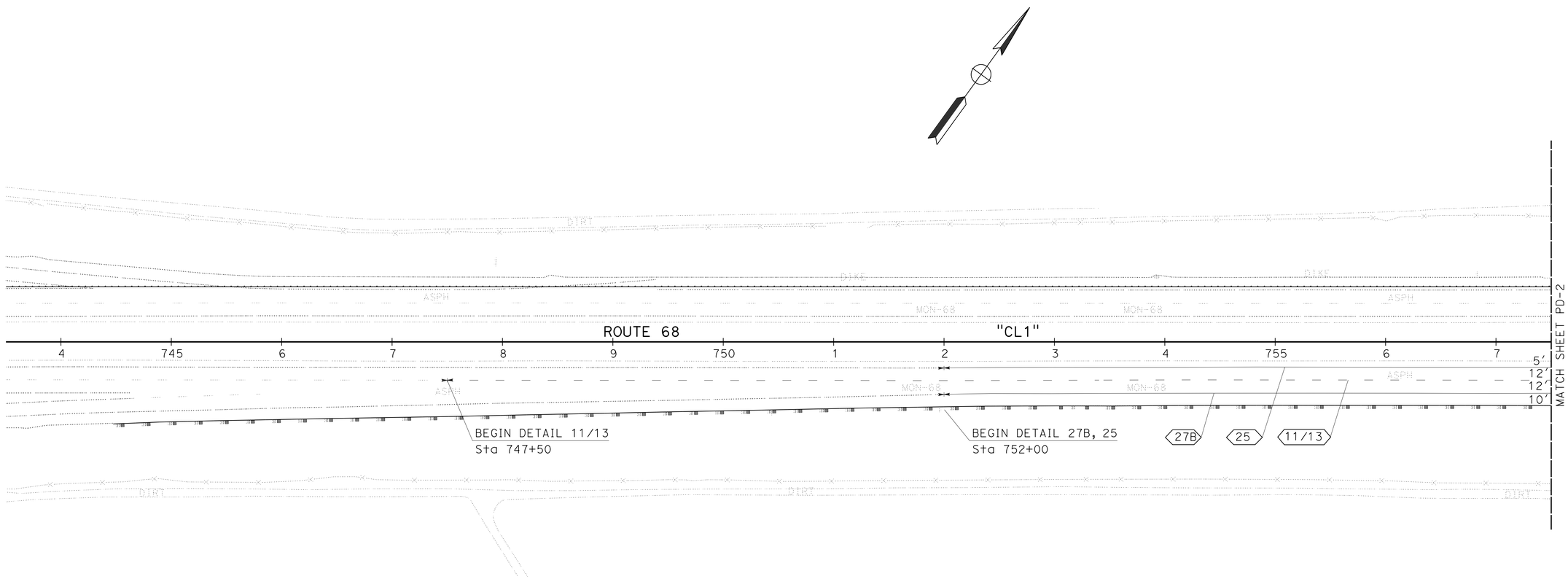

PAVEMENT DELINEATION AND SIGN PLAN

SCALE: 1" = 50'

PD-1

APPROVED FOR PAVEMENT DELINEATION AND SIGN WORK ONLY

STATE OF CALIFORNIA - DEPARTMENT OF TRANSPORTATION

Caltrans®

TRAFFIC DESIGN

FUNCTIONAL SUPERVISOR: MOHAMMED QATAMI

CALCULATED-DESIGNED BY: DAVID BLACK

CHECKED BY: FAWZI YAGHMOUR

REVISED BY | DATE REVISED

LAST REVISION 06-19-15 | DATE PLOTTED => 08-SEP-2015 | TIME PLOTTED => 16:46

Dist	COUNTY	ROUTE	POST MILES TOTAL PROJECT	SHEET No.	TOTAL SHEETS
05	Mon	68	R17.4/R18.0	45	149

REGISTERED CIVIL ENGINEER 06-01-15 DATE

6-22-15
PLANS APPROVAL DATE

REGISTERED PROFESSIONAL ENGINEER
FAWZI YAGHMOUR
No. C-54750
Exp. 12/31/15
CIVIL
STATE OF CALIFORNIA

THE STATE OF CALIFORNIA OR ITS OFFICERS OR AGENTS SHALL NOT BE RESPONSIBLE FOR THE ACCURACY OR COMPLETENESS OF SCANNED COPIES OF THIS PLAN SHEET.

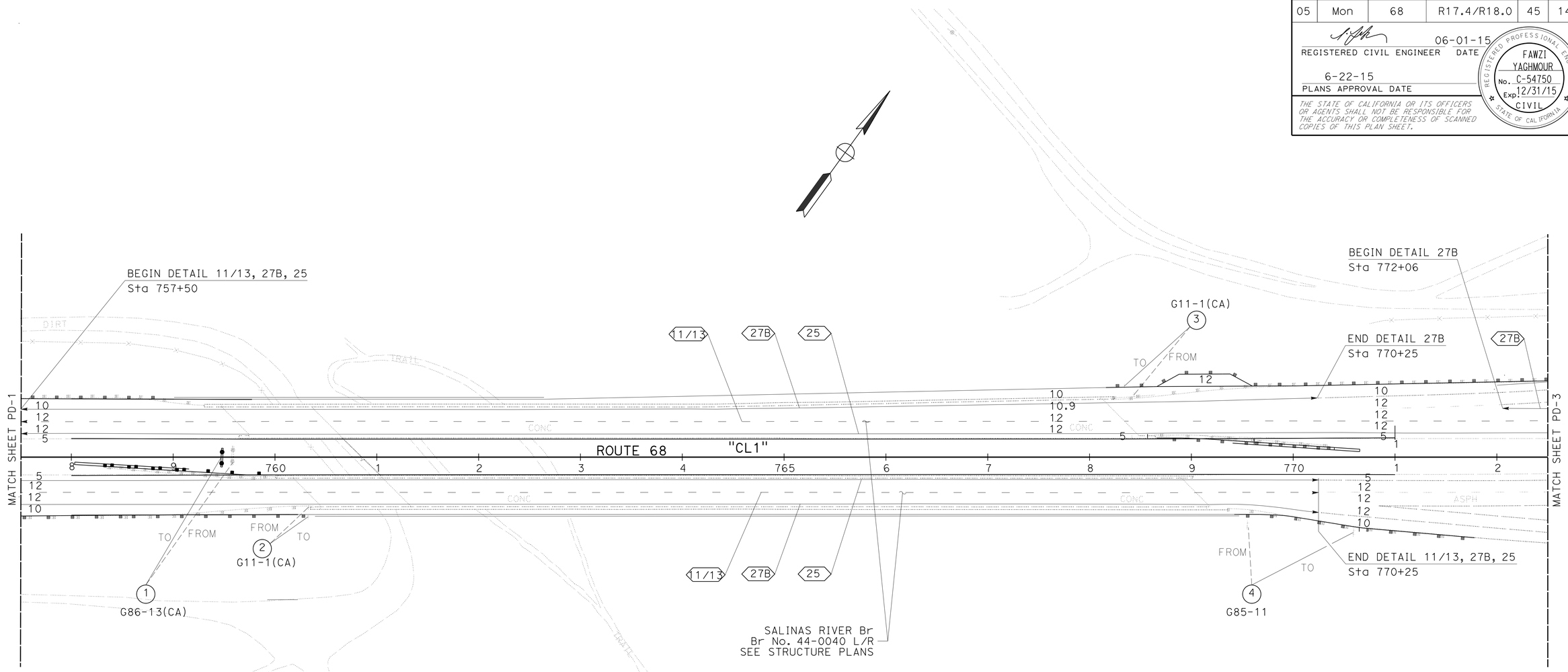

APPROVED FOR PAVEMENT DELINEATION AND SIGN WORK ONLY

PAVEMENT DELINEATION AND SIGN PLAN

SCALE: 1" = 50'

PD-2

STATE OF CALIFORNIA - DEPARTMENT OF TRANSPORTATION
Caltrans
TRAFFIC DESIGN

FUNCTIONAL SUPERVISOR: MOHAMMED QATAMI
CALCULATED-DESIGNED BY: DAVID BLACK
CHECKED BY: FAWZI YAGHMOUR
REVISED BY
DATE REVISED

LAST REVISION 06-22-15
DATE PLOTTED => 08-SEP-2015
TIME PLOTTED => 16:46

Dist	COUNTY	ROUTE	POST MILES TOTAL PROJECT	SHEET No.	TOTAL SHEETS
05	Mon	68	R17.4/R18.0	46	149

REGISTERED CIVIL ENGINEER DATE 06-01-15

6-22-15
PLANS APPROVAL DATE

REGISTERED PROFESSIONAL ENGINEER FAWZI YAGHMOUR No. C-54750 Exp. 12/31/15 CIVIL STATE OF CALIFORNIA

THE STATE OF CALIFORNIA OR ITS OFFICERS OR AGENTS SHALL NOT BE RESPONSIBLE FOR THE ACCURACY OR COMPLETENESS OF SCANNED COPIES OF THIS PLAN SHEET.

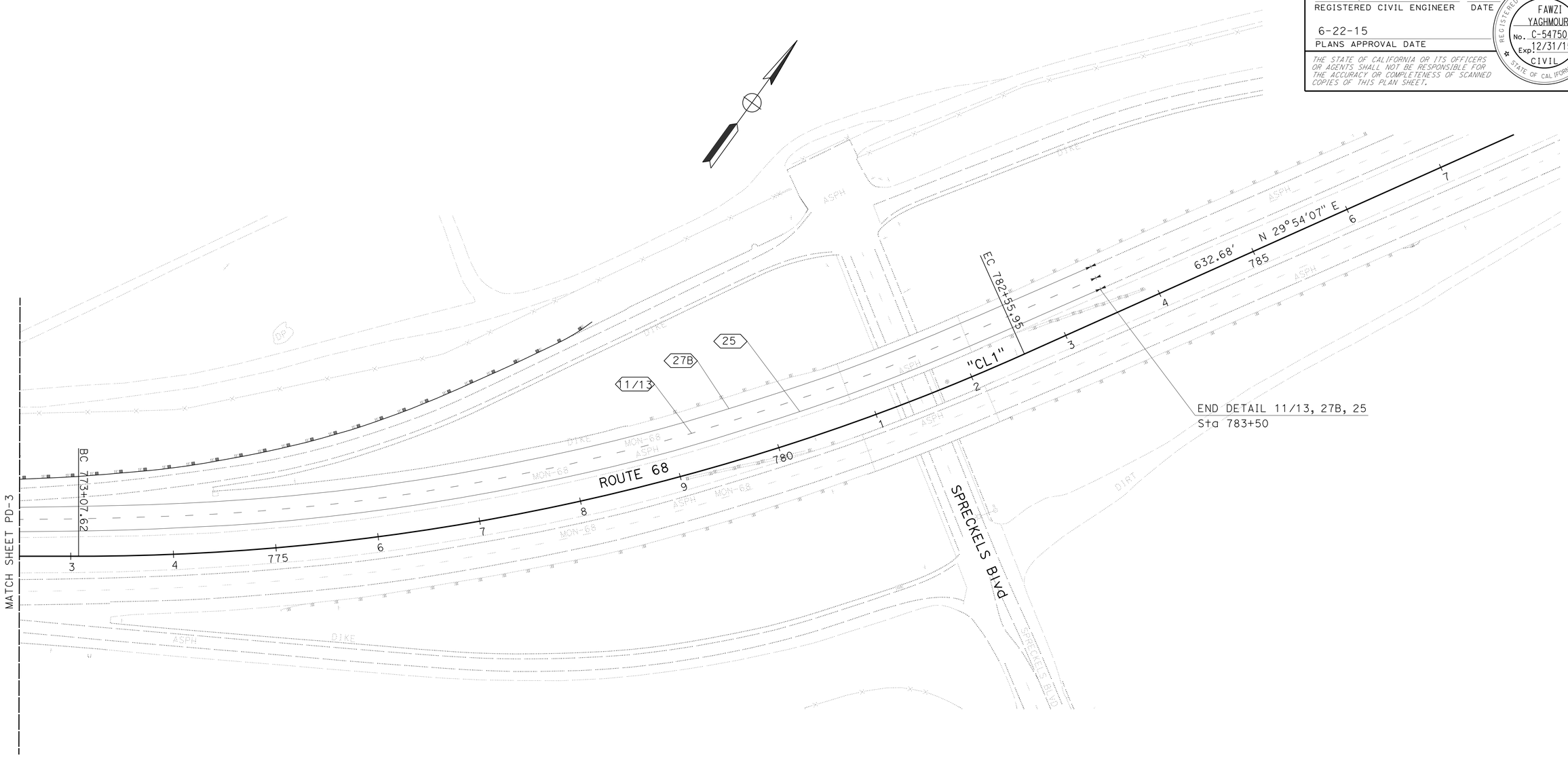

APPROVED FOR PAVEMENT DELINEATION AND SIGN WORK ONLY

PAVEMENT DELINEATION AND SIGN PLAN

SCALE: 1"=50"

PD-3

STATE OF CALIFORNIA - DEPARTMENT OF TRANSPORTATION
Caltrans
TRAFFIC DESIGN

FUNCTIONAL SUPERVISOR: MOHAMMED QATAMI

CALCULATED-DESIGNED BY: DAVID BLACK
CHECKED BY: FAWZI YAGHMOUR

REVISED BY
DATE REVISED

LAST REVISION 06-19-15
DATE PLOTTED => 08-SEP-2015
TIME PLOTTED => 16:46

Dist	COUNTY	ROUTE	POST MILES TOTAL PROJECT	SHEET No.	TOTAL SHEETS
05	Mon	68	R17.4/R18.0	47	149

REGISTERED CIVIL ENGINEER DATE 06-01-15

6-22-15
PLANS APPROVAL DATE

REGISTERED PROFESSIONAL ENGINEER FAWZI YAGHMOUR No. C-54750 Exp. 12/31/15 CIVIL STATE OF CALIFORNIA

THE STATE OF CALIFORNIA OR ITS OFFICERS OR AGENTS SHALL NOT BE RESPONSIBLE FOR THE ACCURACY OR COMPLETENESS OF SCANNED COPIES OF THIS PLAN SHEET.

PAVEMENT DELINEATION QUANTITIES

SHEET No.	LOCATION/STATION	DIRECTION	DETAIL No.	THERMOPLASTIC TRAFFIC STRIPE (ENHANCED WET NIGHT VISABILITY) 4" STRIPE			PAVEMENT MARKERS (RETROREFLECTIVE)			PAVEMENT MARKERS (NON-REFLECTIVE)	DESCRIPTION/ COMMENTS
				SOLID WHITE	BROKEN WHITE	SOLID YELLOW	TYPE G	TYPE H	TYPE *C	TYPE A	
				LF			EA				
PD1-PD3	MAINLINE STA 752+00 TO 770+25	EB	27B	1825							
PD1-PD3	MAINLINE STA 747+50 TO 770+25	EB	11/13		2275		49		3	196	
PD1-PD3	MAINLINE STA 752+00 TO 770+25	EB	25			1825		40			
PD1-PD3	MAINLINE STA 757+50 TO 783+50	WB	27B	2600							
PD1-PD3	MAINLINE STA 757+50 TO 783+50	WB	11/13		2600		54		2	220	
PD1-PD3	MAINLINE STA 757+50 TO 783+50	WB	25			2600		56			
SUBTOTAL				4425	4875	4425	103	96	5	416	
TOTAL					13725			204		416	

*SEE STANDARD PLAN A20A FOR TYPE "C" MARKER PLACMENT ON MAINLINE 11/13 - 11/14 ALTERNATION DETAILS

SIGN QUANTITIES

SHEET No.	SIGN No.	SIGN CODE	RESET ROADSIDE SIGN (ONE POST) EA	RESET ROADSIDE SIGN (TWO POST) EA
PD-2	1	G86-13(CA)		1
PD-2	2	G11-1(CA)	1	
PD-2	3	G11-1(CA)	1	
PD-2	4	G85-11(CA)		1
TOTAL			2	2

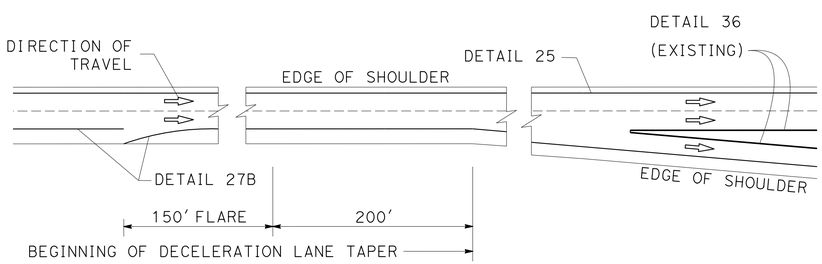

RIGHT EDGELINE FLARE DETAIL

NO SCALE

PAVEMENT DELINEATION QUANTITIES

PDQ-1

STATE OF CALIFORNIA - DEPARTMENT OF TRANSPORTATION
Caltrans® TRAFFIC DESIGN

FUNCTIONAL SUPERVISOR: MOHAMMED QATAMI
CALCULATED-DESIGNED BY: DAVID BLACK
CHECKED BY: FAWZI YAGHMOUR
REVISED BY / DATE REVISED

LAST REVISION 06-19-15 | DATE PLOTTED => 08-SEP-2015 | TIME PLOTTED => 16:46

Dist	COUNTY	ROUTE	POST MILES TOTAL PROJECT	SHEET No.	TOTAL SHEETS
05	Mon	68	R17.4/R18.0	48	149

James M. Orr 6-22-15
REGISTERED CIVIL ENGINEER DATE

6-22-15
PLANS APPROVAL DATE

REGISTERED PROFESSIONAL ENGINEER JAMES M. ORR No. C67928 Exp. 6/30/17 CIVIL STATE OF CALIFORNIA

THE STATE OF CALIFORNIA OR ITS OFFICERS OR AGENTS SHALL NOT BE RESPONSIBLE FOR THE ACCURACY OR COMPLETENESS OF SCANNED COPIES OF THIS PLAN SHEET.

FENCING

SHEET No.	DESCRIPTION	ALIGNMENT	BEGIN STATION	OFFSET	END STATION	OFFSET	REMOVE FENCE	REMOVE FENCE (TYPE WM)	FENCE (TYPE WM, METAL POST)	10' WIRE MESH GATE
							LF	LF	LF	EA
L-3	CHAIN LINK FENCE-6' HIGH	"CL1"	759+36.60	66.68' L+	759+47.54	52.16' L+	18			
L-3	CHAIN LINK FENCE-6' HIGH	"CL1"	760+58.17	59.72' R+	760+60.40	52.00' R+	8			
L-3	CHAIN LINK FENCE-7' HIGH	"CL1"	766+73.56	88.34' L+	767+21.90	56..68' L+	58			
C-2	CHAIN LINK FENCE-3' HIGH	"CL1"	768+35.55	56.93' R+	768+44.54	65.14' R+	12			
C-2	CHAIN LINK FENCE-6' HIGH	"CL1"	767+94.46	71.60' L+	767+95.98	59.92' L+	12			
C-2	WIRE MESH FENCE-5' HIGH	"ACCESS6"	134+37.59	9.00' R+	135+69.41	12.00' L+		132.76		
C-2	WIRE MESH FENCE-5' HIGH	"ACCESS6"	134+37.59	9.00' R+	135+69.41	8.00' R+			133.32	
C-2	10' WIRE MESH GATE	"ACCESS6"	135+69.41	8.00' R+	135+69.41	2.00' L+				1
C-2	10' WIRE MESH GATE	"ACCESS6"	135+69.41	2.00' L+	135+69.41	12.00' L+				1
TOTAL							108	132.76	133.32	2

EARTHWORK

SHEET No.	DESCRIPTION	BEGIN STATION	END STATION	ROADWAY EXCAVATION	(N) EMBANKMENT
				CY	CY
PS-1	LINE "ACCESS3"	121+00.00	128+00.00	640	1228
PS-2	LINE "ACCESS6"	127+50.00	145+00.00	956	794
C-1	VEGETATION CONTROL LINE "CL1"	757+19.00	760+53.51	337 (N)	68
C-2	VEGETATION CONTROL MAINTENANCE VEHICLE PULLOUT LINE "CL1"	768+01.37	771+70.00	328 (N)	406
			SUBTOTAL	1596	
	FROM SHEET Q-3 PAVEMENT STRUCTURE QUANTITIES			714	
			TOTAL	2310	

(N) NOT A SEPARATE PAY ITEM. FOR INFORMATION ONLY.

TEMPORARY WATER POLLUTION CONTROL

SHEET No.	LOCATION	ALIGNMENT	BEGIN STATION	OFFSET	END STATION	OFFSET	TEMPORARY HYDRAULIC MULCH (BONDED FIBER MATRIX)	TEMPORARY CHECK DAM	TEMPORARY DRAINAGE INLET PROTECTION	TEMPORARY FIBER ROLL	TEMPORARY LARGE SEDIMENT BARRIER	TEMPORARY CONSTRUCTION ENTRANCE
							SQYD	LF	EA	LF	LF	EA
L-1	BEGIN Const ACCESS Rd	"CL1"	734+90	400' R+								1
L-2	BEGIN Const ACCESS Rd	"CL1"	749+25	675' L+								1
L-4	BEGIN Const ACCESS Rd	"CL1"	780+70	220' L+								1
L-3	MEDIAN	"CL1"	768+85						1			
L-3	ABOVE ORDINARY HIGH WATER ELEVATION	"CL1"	758+70	260' L+	766+95	275' R+	16,500	100		200	200	
L-3	ABOVE ORDINARY HIGH WATER ELEVATION	"CL1"	767+50	155' L+	771+50	115' R+	2,000	150		300	300	
L-6	EMBANKMENT	"ACCESS6"	133+00	21' R+	144+00	6.00' R+	5,750	450		1,500		
TOTAL							24,250	700	1	2,000	500	3

TEMPORARY FENCE (TYPE ESA)

LOCATION				LENGTH
BEGIN STATION	BEGIN OFFSET	END STATION	END OFFSET	(LF)
757+50.00	150' L+	758+92.00	255' L+	200
757+50.00	110' L+	758+10.00	66' L+	225
758+00.00	60' R+	759+66.00	111' R+	210
758+60.00	132' R+	759+66.00	119' R+	120
759+56.00	253' L+	764+80.00	261' L+	525
760+97.00	250' R+	772+14.00	85' R+	1585
766+43.00	300' L+	767+37.00	268' L+	250
770+36.00	76' L+	774+24.00	117' L+	550
774+44.00	122' L+	775+50.00	133' L+	100
TOTAL				3765

SUMMARY OF QUANTITIES

Q-1

STATE OF CALIFORNIA - DEPARTMENT OF TRANSPORTATION
Caltrans® 06-DESIGN
FUNCTIONAL SUPERVISOR: SCOTT SHAVER
CALCULATED-DESIGNED BY: JAMES ORR
CHECKED BY: M. FAZLE RABBI
REVISED BY
DATE REVISED

LAST REVISION 06-19-15
DATE PLOTTED => 08-SEP-2015
TIME PLOTTED => 16:46

Dist	COUNTY	ROUTE	POST MILES TOTAL PROJECT	SHEET No.	TOTAL SHEETS
05	Mon	68	R17.4/R18.0	49	149

James M. Orr 6-22-15
REGISTERED CIVIL ENGINEER DATE

6-22-15
PLANS APPROVAL DATE

REGISTERED PROFESSIONAL ENGINEER JAMES M. ORR No. C67928 Exp. 6/30/17 CIVIL STATE OF CALIFORNIA

THE STATE OF CALIFORNIA OR ITS OFFICERS OR AGENTS SHALL NOT BE RESPONSIBLE FOR THE ACCURACY OR COMPLETENESS OF SCANNED COPIES OF THIS PLAN SHEET.

GUARDRAIL QUANTITIES

SHEET No.	DESCRIPTION	BEGIN STATION "CL1"	END STATION "CL1"	OFFSET	SALVAGE GUARDRAIL	MIDWEST GUARDRAIL SYSTEM (STEEL POST)	VEGETATION CONTROL (MINOR CONCRETE)	DOUBLE MIDWEST GUARDRAIL SYSTEM (WOOD POST)	TRANSITION RAILING (TYPE WB-31)	END ANCHOR ASSEMBLY (TYPE SFT)	ALTERNATIVE IN-LINE TERMINAL SYSTEM	ALTERNATIVE CRASH CUSHION SYSTEM	TREATED WOOD WASTE	(N) TREATED WOOD WASTE POSTS	(N) TREATED WOOD WASTE BLOCKS
					LF	LF	SQYD	LF	EA	EA	EA	EA	LB	EA	EA
C-1	SALVAGE GUARDRAIL	757+43.48	759+30.74	WB L+	187.5										
C-1	SALVAGE GUARDRAIL	758+32.62	760+02.30	EB L+	162.5								3,914	29	52
C-1,L-2	SALVAGE GUARDRAIL	744+47.35	760+37.37	EB R+	1600.0								1,673	14	14
C-2,L-4	SALVAGE GUARDRAIL	768+20.95	778+52.85	WB L+	1012.5								717	6	6
C-2	SALVAGE GUARDRAIL	768+64.20	770+33.70	WB R+	175.0								3,914	29	52
C-2	SALVAGE GUARDRAIL	769+35.21	771+79.11	EB R+	237.5										
C-1	MIDWEST GUARDRAIL SYSTEM	757+47.17	758+97.17	WB L+		150.0				1					
C-1	TRANSITION RAILING (TYPE WB-31)	758+97.17	759+22.17	WB L+					1						
C-1	ALTERNATIVE CRASH CUSHION		758+22.11	EB L+								1			
C-1	DOUBLE MGS (WOOD POST)	758+22.11	759+09.44	EB L+				87.5							
C-1	MIDWEST GUARDRAIL SYSTEM	759+09.44	759+71.86	EB L+		62.5									
C-1	TRANSITION RAILING (TYPE WB-31)	759+71.86	759+96.86	EB L+					1						
L-2	ALT IN-LINE TERMINAL SYSTEM		744+47.35	EB R+							1				
C-1,L-2	MIDWEST GUARDRAIL SYSTEM	744+47.35	760+14.56	EB R+		1550.0									
C-1	TRANSITION RAILING (TYPE WB-31)	760+14.56	760+39.37	EB R+					1						
C-2	TRANSITION RAILING (TYPE WB-31)	768+15.46	768+40.46	WB L+					1						
C-2,L-4	MIDWEST GUARDRAIL SYSTEM	768+40.46	778+52.85	WB L+		1037.5									
C-2	ALT IN-LINE TERMINAL SYSTEM	778+52.85		WB L+							1				
C-2	TRANSITION RAILING (TYPE WB-31)	768+69.20	768+94.20	WB R+					1						
C-2	MIDWEST GUARDRAIL SYSTEM	768+94.20	769+44.14	WB R+		50.0									
C-2	DOUBLE MGS (WOOD POST)	769+44.14	770+43.88	WB R+				100.0							
C-2	ALTERNATIVE CRASH CUSHION	770+43.88		WB R+								1			
C-2	TRANSITION RAILING (TYPE WB-31)	769+43.09	769+68.09	EB R+					1						
C-2	MIDWEST GUARDRAIL SYSTEM	769+68.09	771+79.11	EB R+		212.5				1					
C-1	VEGETATION CONTROL	757+19.00	759+22.17	WB L+			111.2								
C-1	VEGETATION CONTROL	757+70.00	759+96.86	EB L+			257.6								
C-1,L-2	VEGETATION CONTROL	744+47.35	760+39.37	EB R+			569.2								
C-2,L-4	VEGETATION CONTROL	768+15.46	778+52.85	WB L+			402.8								
C-2	VEGETATION CONTROL	768+69.20	771+05.92	WB R+			270.3								
C-2	VEGETATION CONTROL	769+43.09	771+79.11	EB R+			131.2								
TOTAL					3375.0	3062.5	1742.3	187.5	6	2	2	2	10,218		

(N) NOT A SEPARATE PAY ITEM. FOR INFORMATION ONLY.

SUMMARY OF QUANTITIES

Q-2

STATE OF CALIFORNIA - DEPARTMENT OF TRANSPORTATION
Caltrans
06-DESIGN

FUNCTIONAL SUPERVISOR: SCOTT SHAVER
CALCULATED-DESIGNED BY: JAMES ORR
CHECKED BY: M. FAZLE RABBI
REVISED BY
DATE REVISED

LAST REVISION 06-22-15
DATE PLOTTED => 08-SEP-2015
TIME PLOTTED => 16:46

Dist	COUNTY	ROUTE	POST MILES TOTAL PROJECT	SHEET No.	TOTAL SHEETS
05	Mon	68	R17.4/R18.0	50	149

REGISTERED CIVIL ENGINEER 6-22-15 DATE

6-22-15
PLANS APPROVAL DATE

REGISTERED PROFESSIONAL ENGINEER JAMES M. ORR No. C67928 Exp. 6/30/17 CIVIL STATE OF CALIFORNIA

THE STATE OF CALIFORNIA OR ITS OFFICERS OR AGENTS SHALL NOT BE RESPONSIBLE FOR THE ACCURACY OR COMPLETENESS OF SCANNED COPIES OF THIS PLAN SHEET.

PAVEMENT STRUCTURE QUANTITIES

SHEET No.	DESCRIPTION	BEGIN STATION "CL1"	END STATION "CL1"	OFFSET	REMOVE AC DIKE	COLD PLANE ASPHALT CONCRETE PAVEMENT	ROADWAY EXCAVATION *	CLASS 2 AGGREGATE BASE (CY)	HOT MIX ASPHALT (TYPE A)	PLACE HMA DIKE (TYPE F)	TACK COAT
					LF	SQYD	CY	CY	TON	LF	TON
L-2, C-1	HMA DIKE AT GUARDRAIL	744+47.35	760+39.37	EB R+	1592.0				20.6	1592.0	
C-1	HMA DIKE AT GUARDRAIL	757+47.17	759+22.17	WB L+	175.0				2.3	175.0	
C-1	WIDEN SHOULDER	758+40.00	759+35.83	WB L+			83.7	50.9	44.6		
C-1	COLD PLANE AC Pvm+, HMA	758+40.00	759+59.92	WB LANES		287.6			48.5		0.1
C-1	WIDEN SHOULDER	758+40.00	759+64.92	WB R+			47.3	34.0	29.8		
C-1	WIDEN SHOULDER	758+80.16	760+04.19	EB L+			51.3	34.5	30.2		
C-1	COLD PLANE AC Pvm+, HMA	758+80.16	760+29.32	EB LANES		366.4			61.8		0.2
C-1	WIDEN SHOULDER	758+80.16	760+39.37	EB R+			129.2	85.9	75.4		
C-2	MAINTENANCE VEHICLE PULLOUT	768+56.09	769+59.98	WB L+			70.3	37.2	46.7		
C-2	WIDEN SHOULDER	768+15.46	769+81.19	WB L+			164.6	86.2	108.3		
L-4, C-2	HMA DIKE AT GUARDRAIL	768+15.46	778+52.85	WB R+	1021.2				13.2	1021.2	
C-2	COLD PLANE AC Pvm+	768+29.98	769+81.19	WB LANES		486.9			82.2		0.2
C-2	WIDEN SHOULDER	768+60.83	769+81.19	WB R+			36.2	33.3	29.3		
C-2	WIDEN SHOULDER	769+00.81	770+90.03	EB L+			50.8	24.1	21.1		
C-2	COLD PLANE AC Pvm+, HMA	769+05.80	769+90.03	EB LANES		192.5			32.5		0.1
C-2	WIDEN SHOULDER	769+29.79	769+90.03	EB R+			80.4	31.14	27.3		
C-2	HMA DIKE AT GUARDRAIL	769+43.09	771+79.11	EB R+	237.5				3.1	237.5	
	SUB TOTAL				3025.7	1333.4	713.8	417.3	676.9	3025.7	0.6
	FROM DRAINAGE QUANTITIES TABLE SHEET DQ-1								0.7		
	TOTAL				3025.7	1333.4	713.8	417.3	677.6	3025.7	0.6

* QUANTITY INCLUDED IN EARTHWORK TABLE SHEET Q-1

SUMMARY OF QUANTITIES

Q-3

STATE OF CALIFORNIA - DEPARTMENT OF TRANSPORTATION
Caltrans
06-DESIGN

FUNCTIONAL SUPERVISOR: SCOTT SHAVER
CALCULATED-DESIGNED BY: JAMES ORR
CHECKED BY: M. FAZLE RABBI
REVISED BY
DATE REVISED

LAST REVISION 06-22-15
DATE PLOTTED => 08-SEP-2015
TIME PLOTTED => 16:46

Dist	COUNTY	ROUTE	POST MILES TOTAL PROJECT	SHEET No.	TOTAL SHEETS
05	Mon	68	R17.4/R18.0	51	149

LICENSED LANDSCAPE ARCHITECT

6-22-15
PLANS APPROVAL DATE

LICENSED LANDSCAPE ARCHITECT SCOTT P. DOWLAN No. 4410 STATE OF CALIFORNIA Expiration Date 09/30/16 Renewal Date 04/20/15 Date

THE STATE OF CALIFORNIA OR ITS OFFICERS OR AGENTS SHALL NOT BE RESPONSIBLE FOR THE ACCURACY OR COMPLETENESS OF SCANNED COPIES OF THIS PLAN SHEET.

NOTE:
FOR ACCURATE RIGHT OF WAY DATA, CONTACT RIGHT OF WAY ENGINEERING AT THE DISTRICT OFFICE.

ABBREVIATION:
WF - WYE FILTER

LEGEND:

-·-·-·-·- ¾" DRIP IRRIGATION TUBING

⊟ WYE FILTER (WF)

2"-CCA-1-13-380
- CCA SIZE
- CAM COUPLER ASSEMBLY
- CCA NUMBER
- GPM
- QUANTITY OF SPRINKLERS

SPRINKLER SCHEDULE

SYMBOL	ITEM DESCRIPTION	SPRINKLER TYPE	SPRAY PATTERN	OPERATING PRESSURE (psi)	PRESSURE COMPENSATING	PLUS/MINUS 5% DISCHARGE GALLONS PER MINUTE (GPM)	PLUS/MINUS 5% DISCHARGE GALLONS PER HOUR (GPH)	RADIUS (Ft)	WIDTH x LENGTH (Ft)	MATERIAL	REMARKS
-·-·-	DRIP IRRIGATION TUBING	EMITTER	-	30	X	-	2.0	-	-	PL	1

APPLICABLE WHEN CIRCLED BELOW:

1 - TWO EMITTERS PER PLANT. EMITTERS TO BE EVENLY SPACED AT EDGE OF ROOTBALL.

X IN BOX DENOTES REQUIREMENT

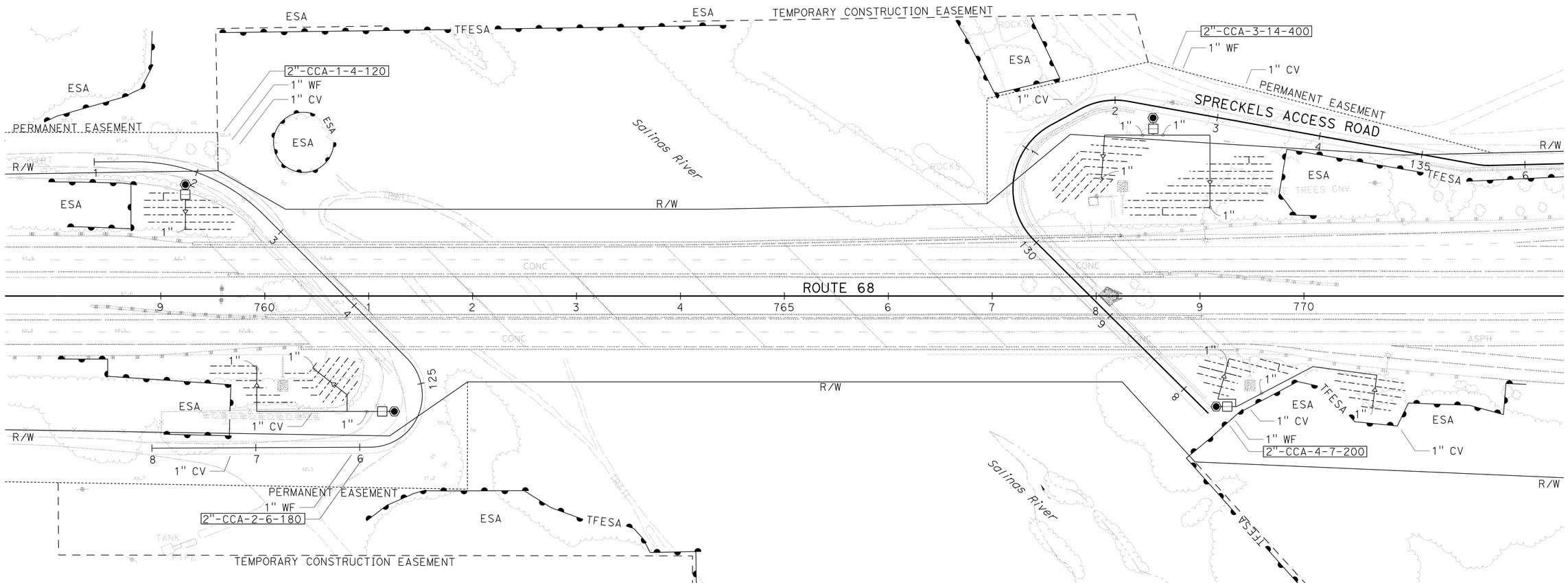

IRRIGATION PLAN
IP-1

SCALE: 1"=50'

APPROVED FOR IRRIGATION WORK ONLY

STATE OF CALIFORNIA - DEPARTMENT OF TRANSPORTATION
Caltrans® LANDSCAPE ARCHITECTURE

SENIOR LANDSCAPE ARCHITECT: DENNIS REEVES
CALCULATED-DESIGNED BY: SCOTT DOWLAN
CHECKED BY: LINDA BAKER
REVISED BY / DATE REVISED

LAST REVISION 06-19-15
DATE PLOTTED => 08-SEP-2015
TIME PLOTTED => 16:46

Dist	COUNTY	ROUTE	POST MILES TOTAL PROJECT	SHEET No.	TOTAL SHEETS
05	Mon	68	R17.4/R18.0	52	149

LICENSED LANDSCAPE ARCHITECT

6-22-15
PLANS APPROVAL DATE

LICENSED LANDSCAPE ARCHITECT SCOTT P. DOWLAN No. 4410 STATE OF CALIFORNIA
Expiration Date 09/30/16
Renewal Date 04/20/15
Date

THE STATE OF CALIFORNIA OR ITS OFFICERS OR AGENTS SHALL NOT BE RESPONSIBLE FOR THE ACCURACY OR COMPLETENESS OF SCANNED COPIES OF THIS PLAN SHEET.

NOTE:

UNDERLINED PORTIONS OF BOTANICAL NAME INDICATE ABBREVIATIONS USED ON PLANTING PLANS.

LEGEND:

ROADSIDE CLEARING LIMITS

EXISTING VEGETATION

PLANT LEGEND AND PLANTING SPECIFICATIONS

PLANT GROUP	PLANT No.	SYMBOL	BOTANICAL NAME	COMMON NAME	SIZE	QUANTITY EACH	HOLE SIZE (INCH)	BASIN TYPE	IRON SULFATE	SOIL AMEND (CY) (1) (8)	ORGANIC FERTILIZER (1) PLANTING	ORGANIC FERTILIZER (1) PLT ESTB	BASIN MULCH (CY) (1) (10)	STAKING	PLANTING LIMITS MINIMUM DISTANCE (Ft) FROM TRVD WAY	Pvmt	FENCE	WALL	PAVED DITCH	EARTH DITCH	ON CENTER (Ft)	REMARKS
A	1		ARTEMISIA CALIFORNICA	CALIFORNIA SAGE BRUSH	No. 1	90	(2)	II	-	.04	3 Oz	3 Oz	.10	-	-	10	5	10	5	5	7	SHRUB (4) (7)
	2		DIPLACUS AURANTIACUS	ORANGE BUSH MONKEY FLOWER	No. 1	90	(2)	II	-	.04	3 Oz	3 Oz	.10	-	-	10	5	10	5	5	7	SHRUB (4) (7)
	3		HETEROMELES ARBUTIFOLIA	TOYON	No. 1	45	(2)	II	-	.04	3 Oz	3 Oz	.10	-	-	10	5	10	5	5	7	SHRUB (4) (7)
	4		QUERCUS AGRIFOLIA	COAST LIVE OAK	No. 1	90	(2)	II	-	.04	3 Oz	3 Oz	.10	-	40	10	5	10	5	5	7	TREE (4) (7)
	5		SALVIA MELLIFERA	BLACK SAGE	NO. 1	90	(2)	II	-	.04	3 Oz	3 Oz	.10	-	-	10	5	10	5	5	7	SHRUB (4) (7)
	6		SAMBUCUS MEXICANA	ELDERBERRY	NO. 1	45	(2)	II	-	.04	3 Oz	3 Oz	.10	-	-	10	5	10	5	5	7	SHRUB (4) (7)
	7		POPULUS FREMONTII	FREMONT COTTONWOOD	NO. 1	60	(2)	II	-	.04	3 Oz	3 Oz	.10	-	-	10	5	10	5	5	(6)	TREE
	8		AGROSTIS EXARATA	SPIKE BENTGRASS	NO. 1	30	(2)	-	-	-	-	-	-	-	-	-	-	-	-	-	2	REED (7)
	9		TYPHA ANGUSTIFOLIA	NARROW-LEAF CATTAIL	NO. 1	50	(2)	-	-	-	-	-	-	-	-	-	-	-	-	-	2	REED (7)
H	10		SALIX EXIGUA	SANDBAR WILLOW	CUTTING	335	(9)	-	-	-	-	-	-	-	-	-	-	-	-	-	15	TREE (7)
	11		SALIX LASIOLEPIS	ARROYO WILLOW	CUTTING	225	(9)	-	-	-	-	-	-	-	-	-	-	-	-	-	15	TREE (7)
O	12		QUERCUS AGRIFOLIA	COAST LIVE OAK	ACORN	76	(2)	II	-	-	-	-	.10	-	40	10	5	10	5	5	(6)	ACORN (3) (4) (5)

APPLICABLE WHEN CIRCLED:

(1)- QUANTITIES SHOWN ARE "PER PLANT".
(2)- HOLE SIZE MUST BE 20" DIAMETER X 14" DEPTH.
(3)- ROOT PROTECTORS MUST BE 18 INCH DIAMETER X 16 INCHES HIGH.
(4)- ROOT PROTECTOR REQUIRED.
(5)- PLACE THREE ACORNS PER PLANT BASIN. SEE ACORN PLANTING DETAIL.
(6)- AS SHOWN ON PLANS.
(7)-RANDOMLY MIX PLANT SPECIES IN A TRIANGULAR SPACING PATTERN IN AREAS SHOWN.
(8)-SOIL AMENDMENT MUST BE FINE COMPOST.
(9)-SEE SPECIAL PROVISIONS AND LANDSCAPE DETAILS.
(10)-MULCH MUST BE WOOD MULCH.

PLANT LIST
PL-1

REVISED BY | DATE REVISED
SCOTT DOWLAN | LINDA BAKER
CALCULATED-DESIGNED BY | CHECKED BY
SENIOR LANDSCAPE ARCHITECT | DENNIS REEVES
STATE OF CALIFORNIA - DEPARTMENT OF TRANSPORTATION
Caltrans® LANDSCAPE ARCHITECTURE

LAST REVISION 06-19-15
DATE PLOTTED => 08-SEP-2015
TIME PLOTTED => 16:46

Dist	COUNTY	ROUTE	POST MILES TOTAL PROJECT	SHEET No.	TOTAL SHEETS
05	Mon	68	R17.4/R18.0	53	149

LICENSED LANDSCAPE ARCHITECT

6-22-15
PLANS APPROVAL DATE

LICENSED LANDSCAPE ARCHITECT SCOTT P. DOWLAN No. 4410 STATE OF CALIFORNIA
Expiration Date 09/30/16
Renewal Date 04/20/15
Date

THE STATE OF CALIFORNIA OR ITS OFFICERS OR AGENTS SHALL NOT BE RESPONSIBLE FOR THE ACCURACY OR COMPLETENESS OF SCANNED COPIES OF THIS PLAN SHEET.

NOTE:

FOR ACCURATE RIGHT OF WAY DATA, CONTACT RIGHT OF WAY ENGINEERING AT THE DISTRICT OFFICE.

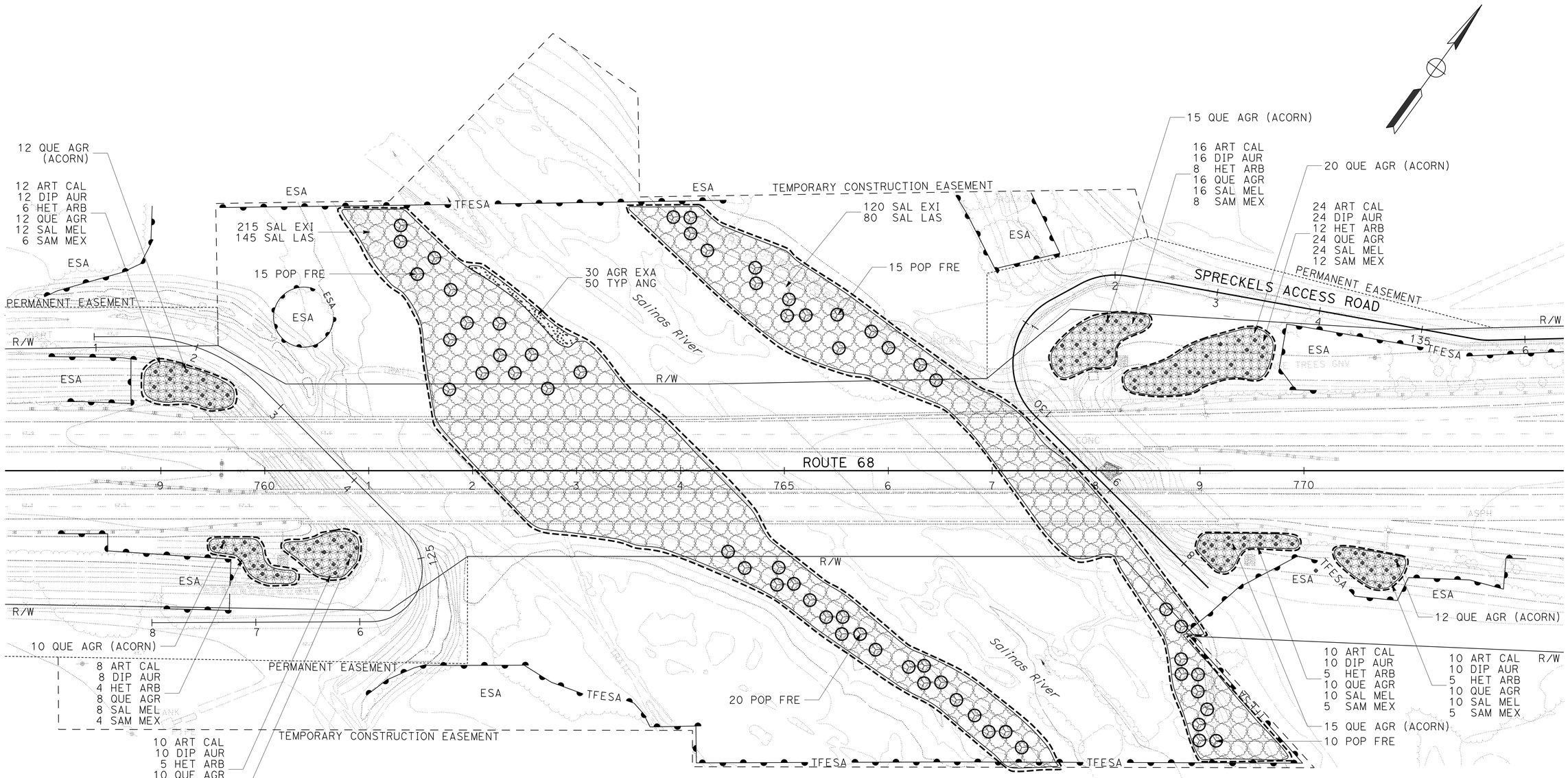

APPROVED FOR PLANTING WORK ONLY

PLANTING PLAN PP-1

SCALE: 1"=50'

STATE OF CALIFORNIA - DEPARTMENT OF TRANSPORTATION
Caltrans® LANDSCAPE ARCHITECTURE

SENIOR LANDSCAPE ARCHITECT: DENNIS REEVES
CALCULATED-DESIGNED BY: SCOTT DOWLAN
CHECKED BY: LINDA BAKER
REVISED BY
DATE REVISED

LAST REVISION 06-19-15
DATE PLOTTED => 08-SEP-2015
TIME PLOTTED => 16:47

Dist	COUNTY	ROUTE	POST MILES TOTAL PROJECT	SHEET No.	TOTAL SHEETS
05	Mon	68	R17.4/R18.0	54	149

LICENSED LANDSCAPE ARCHITECT

6-22-15
PLANS APPROVAL DATE

LICENSED LANDSCAPE ARCHITECT SCOTT P. DOWLAN No. 4410 STATE OF CALIFORNIA Expiration Date 09/30/16 Renewal Date 04/20/15 Date

THE STATE OF CALIFORNIA OR ITS OFFICERS OR AGENTS SHALL NOT BE RESPONSIBLE FOR THE ACCURACY OR COMPLETENESS OF SCANNED COPIES OF THIS PLAN SHEET.

IRRIGATION QUANTITIES

VALVE NUMBER	VALVES AND ASSEMBLIES			DRIP IRRIGATION TUBING		PLASTIC PIPE (SCHEDULE 40) (SUPPLY LINE)
	CCA	WF	CV			
	2 INCH	1 INCH	1 INCH	¾ INCH	EMITTERS (N)	1 INCH
	EA	EA	EA	LF	EA	LF
CCA-1	1	1	1	430	120	40
CCA-2	1	1	2	530	180	235
CCA-3	1	1	2	1,400	400	215
CCA-4	1	1	2	600	200	260
TOTAL	4	4	7	2,960	900	750

(N) - NOT A SEPARATE PAY ITEM, FOR INFORMATION ONLY.

HIGHWAY PLANTING QUANTITIES

SHEET	PLANT (GROUP A)	PLANT (GROUP H)	PLANT (GROUP O)	SOIL AMENDMENT	ORGANIC FERTILIZER	WOOD MULCH BASIN	ROOT PROTECTORS
	EA	EA	EA	CY	LB	CY	EA
PL-1	590	560	76	20.4	95.6	58.6	526

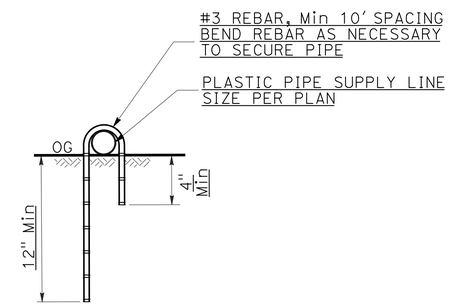

SECTION

PIPE ANCHOR

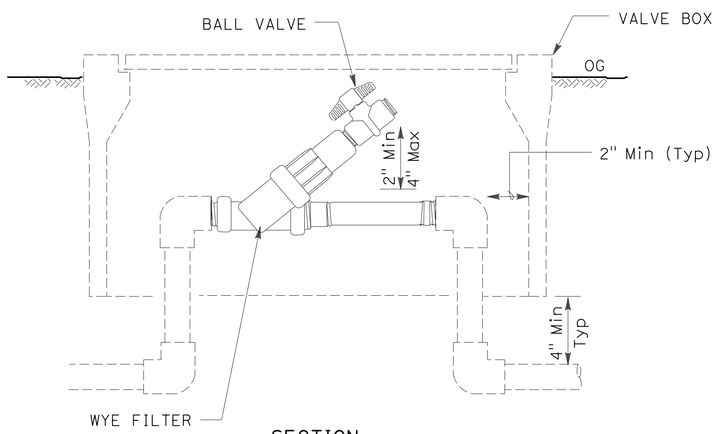

SECTION

WYE FILTER

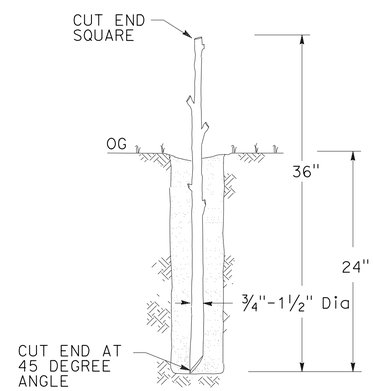

SECTION

WILLOW CUTTING

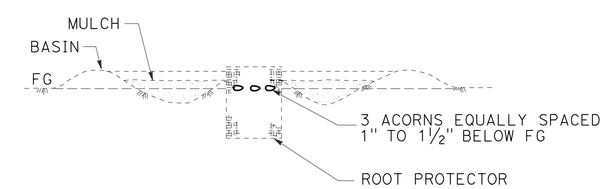

SECTION

ACORN PLANTING

LANDSCAPE QUANTITIES AND DETAILS

LQ-1

STATE OF CALIFORNIA - DEPARTMENT OF TRANSPORTATION
Caltrans® LANDSCAPE ARCHITECTURE

SENIOR LANDSCAPE ARCHITECT: DENNIS REEVES
CALCULATED-DESIGNED BY: SCOTT DOWLAN
CHECKED BY: LINDA BAKER
REVISED BY / DATE REVISED

LAST REVISION 06-19-15 | DATE PLOTTED => 08-SEP-2015 | TIME PLOTTED => 16:47

Dist	COUNTY	ROUTE	POST MILES TOTAL PROJECT	SHEET No.	TOTAL SHEETS
05	Mon	68	R17.4/R18.0	55	149

LICENSED LANDSCAPE ARCHITECT

6-22-15
PLANS APPROVAL DATE

LICENSED LANDSCAPE ARCHITECT SCOTT P. DOWLAN No. 4410 STATE OF CALIFORNIA
Expiration Date 09/30/16
Renewal Date 04/20/15
Date

THE STATE OF CALIFORNIA OR ITS OFFICERS OR AGENTS SHALL NOT BE RESPONSIBLE FOR THE ACCURACY OR COMPLETENESS OF SCANNED COPIES OF THIS PLAN SHEET.

SEED MIX

SEED	BOTANICAL NAME (COMMON NAME)	PERCENT GERMINATION (MINIMUM)	POUNDS PURE LIVE SEED PER ACRE (SLOPE MEASUREMENT)
MIX 1	ACHILLEA MILLEFOLIUM (WHITE YARROW)	80	0.5
	ARTEMISIA CALIFORNICA (CALIFORNIA SAGE BRUSH)	85	0.5
	BROMUS CARINATUS (CALIFORNIA BROME)	75	12.0
	ERIOGONUM FASICULATUM (CALIFORNIA BUCKWHEAT)	85	2.0
	ESCHSCHOLZIA CALIFORNICA (CALIFORNIA POPPY)	75	4.0
	LEYMUS CONDENSATUS (GIANT WILD RYE)	75	6.0
	SALVIA MELIFERA (BLACK SAGE)	85	4.0
	VULPIA MICROSTACHYS (SMALL FESCUE)	80	8.0
		TOTAL	37.0
MIX 2	AGROSITIS PALLENS (THIN GRASS)	70	8.0
	ARTEMISIA DOUGLASIANA (MUGWORT)	70	3.0
	DESCHAMPSIA CESPITOSA (TUFTED HAIRGRASS)	80	3.0
	HORDEUM DEPRESSUM (LOW BARLEY)	70	4.0
	LEYMUS TRITICOIDES "RIO" (CREEPING WILD RYE)	80	6.0
	TRIFOLIUM OBTUSIFLORUM (CLAMMY CLOVER)	80	3.0
	VULPIA MICROSTACHYS (SMALL FESCUE)	80	8.0
		TOTAL	35.0
MIX 3	ACHILLEA MILLEFOLIUM (WHITE YARROW)	80	0.5
	BROMUS CARINATUS (CALIFORNIA BROME)	75	12.0
	ESCHSCHOLZIA CALIFORNICA (CALIFORNIA POPPY)	75	4.0
	LAYIA PLATYGLOSSA (TIDY TIPS)	85	2.0
	LUPINUS BICOLOR (PIGMY-LEAF LUPINE)	65	3.0
	NASSELLA PULCHRA (PURPLE NEEDLE GRASS)	80	8.0
	VULPIA MICROSTACHYS (SMALL FESCUE)	80	8.0
		TOTAL	37.5

EROSION CONTROL TYPE 1

SEQUENCE	ITEM	MATERIAL		APPLICATION RATE	DEPTH
		DESCRIPTION	TYPE		
STEP 1	DUFF	DUFF		270 CY/ACRE	2"
STEP 2	COMPOST	COMPOST	MEDIUM	270 CY/ACRE	2"
STEP 3	HYDROSEED	SEED	MIX 1	37 LB/ACRE	
		FIBER	WOOD	1500 LB/ACRE	
		TACKIFIER	PSYLLIUM	125 LB/ACRE	
STEP 4	ROLLED EROSION CONTROL PRODUCT (NETTING)	NETTING	TYPE A		

EROSION CONTROL TYPE 2

SEQUENCE	ITEM	MATERIAL		APPLICATION RATE
		DESCRIPTION	TYPE	
STEP 1	HYDROSEED	SEED	MIX 2	35 LB/ACRE
		FIBER	WOOD	1500 LB/ACRE
		TACKIFIER	PSYLLIUM	125 LB/ACRE

EROSION CONTROL TYPE 3

SEQUENCE	ITEM	MATERIAL		APPLICATION RATE	DEPTH
		DESCRIPTION	TYPE		
STEP 1	COMPOST	COMPOST	MEDIUM	135 CY/ACRE	1"
STEP 2	HYDROSEED	SEED	MIX 3	37.5 LB/ACRE	
		FIBER	WOOD	1500 LB/ACRE	
		TACKIFIER	PSYLLIUM	125 LB/ACRE	

EROSION CONTROL TYPE 4

SEQUENCE	ITEM	MATERIAL		APPLICATION RATE	DEPTH
		DESCRIPTION	TYPE		
STEP 1	COMPOST	COMPOST	MEDIUM	135 CY/ACRE	1"
STEP 2	HYDROSEED	SEED	MIX 3	37.5 LB/ACRE	
		FIBER	WOOD	1500 LB/ACRE	
		TACKIFIER	PSYLLIUM	125 LB/ACRE	
STEP 3	ROLLED EROSION CONTROL PRODUCT (NETTING)	NETTING	TYPE B		

COMPOST SOCKS

SEQUENCE	ITEM	MATERIAL		REMARKS
		DESCRIPTION	TYPE	
INSTALL COMPOST SOCKS AFTER RECP (NETTING)	COMPOST SOCK	MEDIUM COMPOST	MESH TUBE 8" Dia BURLAP	INSTALL PER PLAN

EROSION CONTROL LEGEND
ECL-1

STATE OF CALIFORNIA - DEPARTMENT OF TRANSPORTATION
Caltrans® LANDSCAPE ARCHITECTURE

SENIOR LANDSCAPE ARCHITECT: DENNIS REEVES
CALCULATED-DESIGNED BY: SCOTT DOWLAN
CHECKED BY: LINDA BAKER
REVISED BY
DATE REVISED

LAST REVISION 06-19-15
DATE PLOTTED => 24-SEP-2015
TIME PLOTTED => 13:16

Dist	COUNTY	ROUTE	POST MILES TOTAL PROJECT	SHEET No.	TOTAL SHEETS
05	Mon	68	R17.4/R18.0	56	149

LICENSED LANDSCAPE ARCHITECT

6-22-15
PLANS APPROVAL DATE

LICENSED LANDSCAPE ARCHITECT SCOTT P. DOWLAN No. 4410 STATE OF CALIFORNIA
Expiration Date 09/30/16
Renewal Date 04/20/15
Date

THE STATE OF CALIFORNIA OR ITS OFFICERS OR AGENTS SHALL NOT BE RESPONSIBLE FOR THE ACCURACY OR COMPLETENESS OF SCANNED COPIES OF THIS PLAN SHEET.

NOTE:
FOR ACCURATE RIGHT OF WAY DATA, CONTACT RIGHT OF WAY ENGINEERING AT THE DISTRICT OFFICE.

LEGEND

- EROSION CONTROL TYPE 1
- EROSION CONTROL TYPE 2
- EROSION CONTROL TYPE 3
- EROSION CONTROL TYPE 4
- DUFF (COLLECT) 3" DEPTH

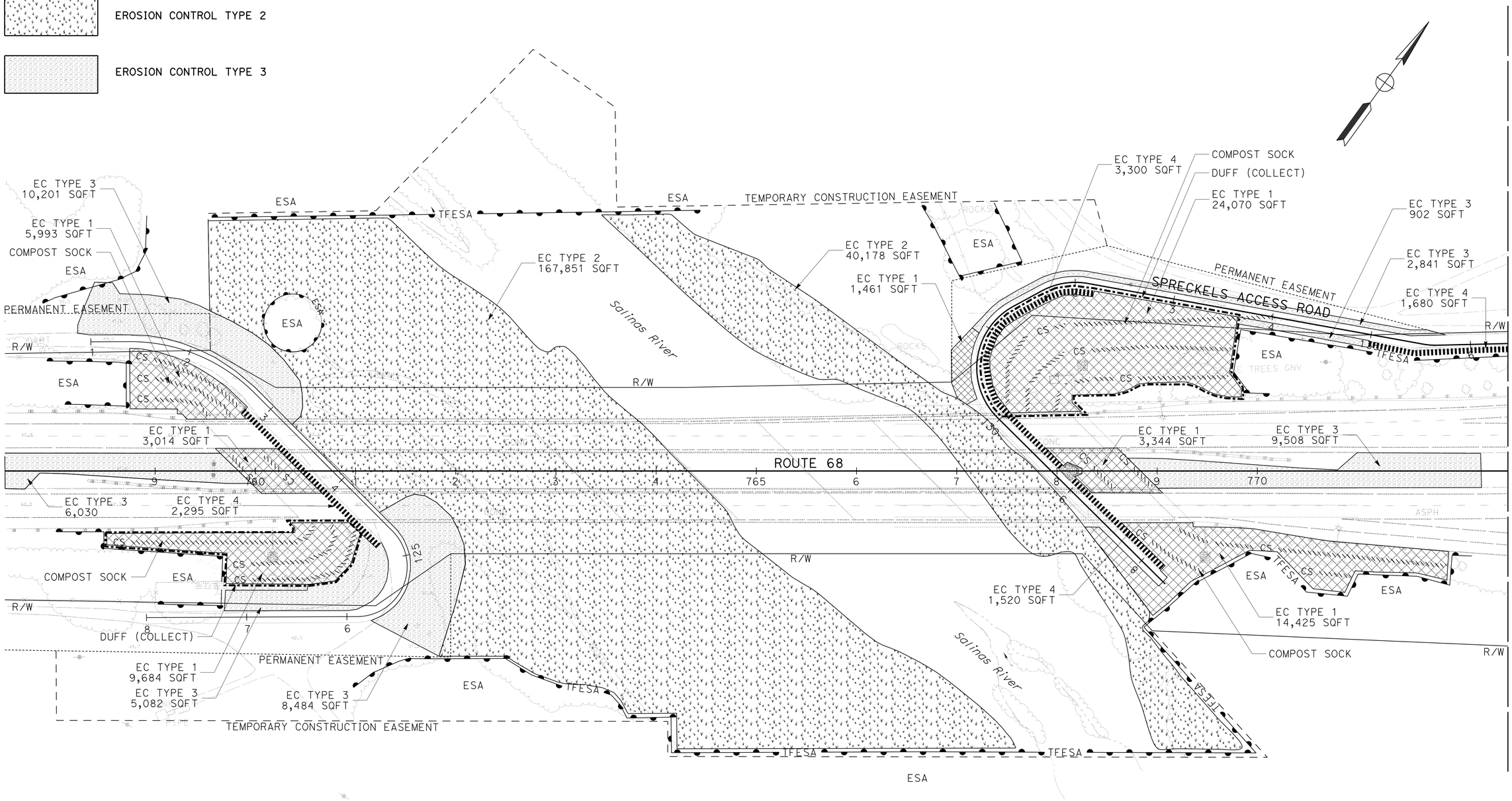

EROSION CONTROL PLAN EC-1

SCALE: 1"=50'

APPROVED FOR EROSION CONTROL WORK ONLY

STATE OF CALIFORNIA - DEPARTMENT OF TRANSPORTATION
Caltrans® LANDSCAPE ARCHITECTURE

SENIOR LANDSCAPE ARCHITECT: DENNIS REEVES
CALCULATED-DESIGNED BY: SCOTT DOWLAN
CHECKED BY: LINDA BAKER
REVISED BY / DATE REVISED

LAST REVISION 06-19-15
DATE PLOTTED => 08-SEP-2015
TIME PLOTTED => 16:47

Dist	COUNTY	ROUTE	POST MILES TOTAL PROJECT	SHEET No.	TOTAL SHEETS
05	Mon	68	R17.4/R18.0	57	149

LICENSED LANDSCAPE ARCHITECT

6-22-15
PLANS APPROVAL DATE

LICENSED LANDSCAPE ARCHITECT
SCOTT P. DOWLAN No. 4410
Expiration Date 09/30/16
Renewal Date 04/20/15
Date
STATE OF CALIFORNIA

THE STATE OF CALIFORNIA OR ITS OFFICERS OR AGENTS SHALL NOT BE RESPONSIBLE FOR THE ACCURACY OR COMPLETENESS OF SCANNED COPIES OF THIS PLAN SHEET.

NOTE:
FOR ACCURATE RIGHT OF WAY DATA, CONTACT RIGHT OF WAY ENGINEERING AT THE DISTRICT OFFICE.

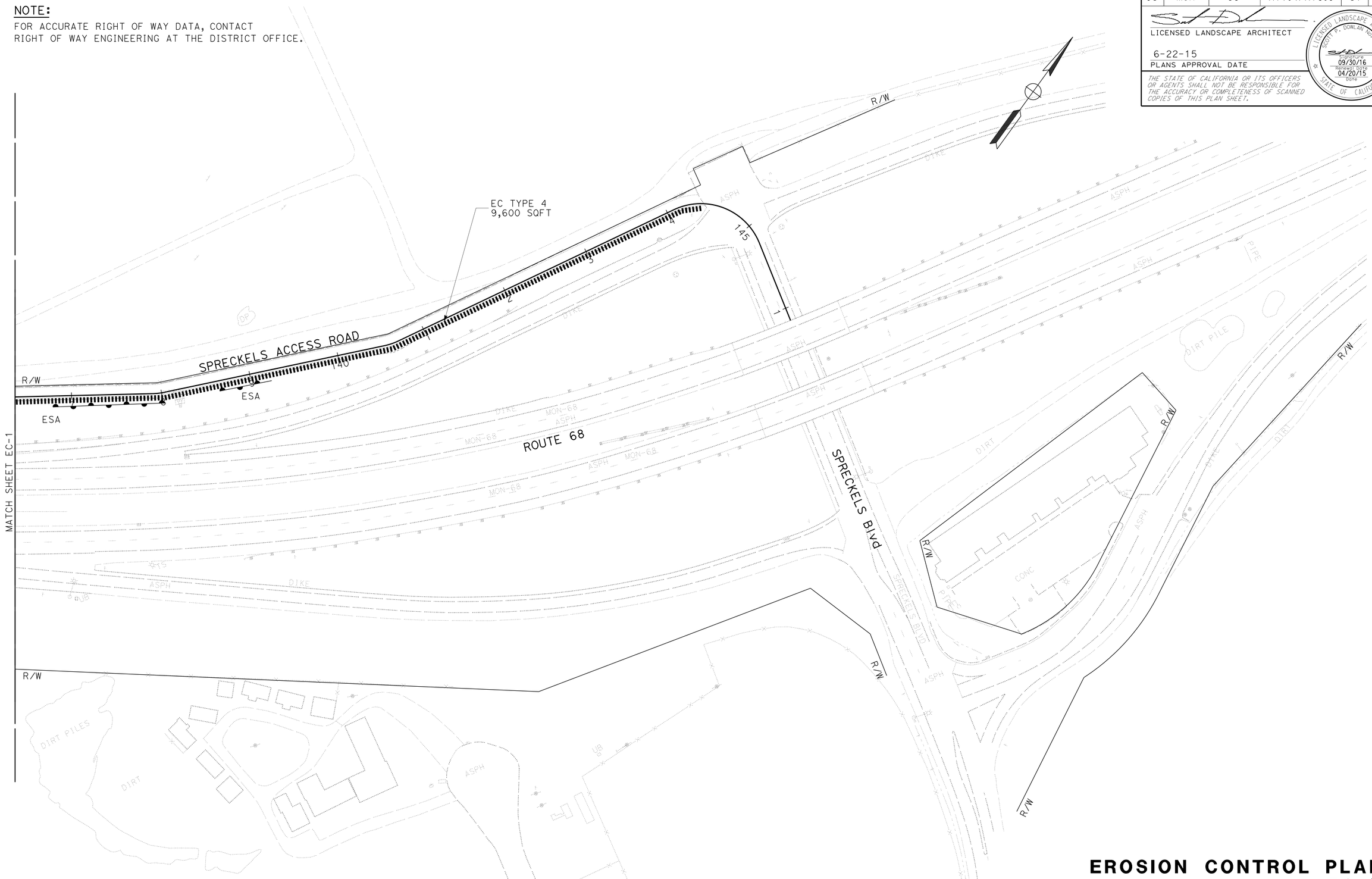

APPROVED FOR EROSION CONTROL WORK ONLY

EROSION CONTROL PLAN EC-2

SCALE: 1"=50'

STATE OF CALIFORNIA - DEPARTMENT OF TRANSPORTATION
Caltrans® LANDSCAPE ARCHITECTURE

SENIOR LANDSCAPE ARCHITECT: DENNIS REEVES
CALCULATED-DESIGNED BY: SCOTT DOWLAN
CHECKED BY: LINDA BAKER
REVISED BY
DATE REVISED

LAST REVISION 06-19-15
DATE PLOTTED => 08-SEP-2015
TIME PLOTTED => 16:47

Dist	COUNTY	ROUTE	POST MILES TOTAL PROJECT	SHEET No.	TOTAL SHEETS
05	Mon	68	R17.4/R18.0	58	149

LICENSED LANDSCAPE ARCHITECT

6-22-15
PLANS APPROVAL DATE

LICENSED LANDSCAPE ARCHITECT SCOTT P. DOWLAN No. 4410 Signature 09/30/16 Renewal Date 06/19/15 Date STATE OF CALIFORNIA

THE STATE OF CALIFORNIA OR ITS OFFICERS OR AGENTS SHALL NOT BE RESPONSIBLE FOR THE ACCURACY OR COMPLETENESS OF SCANNED COPIES OF THIS PLAN SHEET.

EROSION CONTROL

SHEET	DESCRIPTION	COMPOST	ROLLED EROSION CONTROL PRODUCT (NETTING)	HYDROSEED	DUFF	COMPOST SOCK
		CY	SQFT	SQFT	ACRE	LF
EC SHEETS	EROSION CONTROL TYPE 1	378	62,026	62,026	1.4	
	EROSION CONTROL TYPE 2			208,454		
	EROSION CONTROL TYPE 3	134		43,070		
	EROSION CONTROL TYPE 4	57	18,395	18,395		
	COMPOST SOCK					2,175
	TOTAL	569	80,421	331,945	1.4	2,175

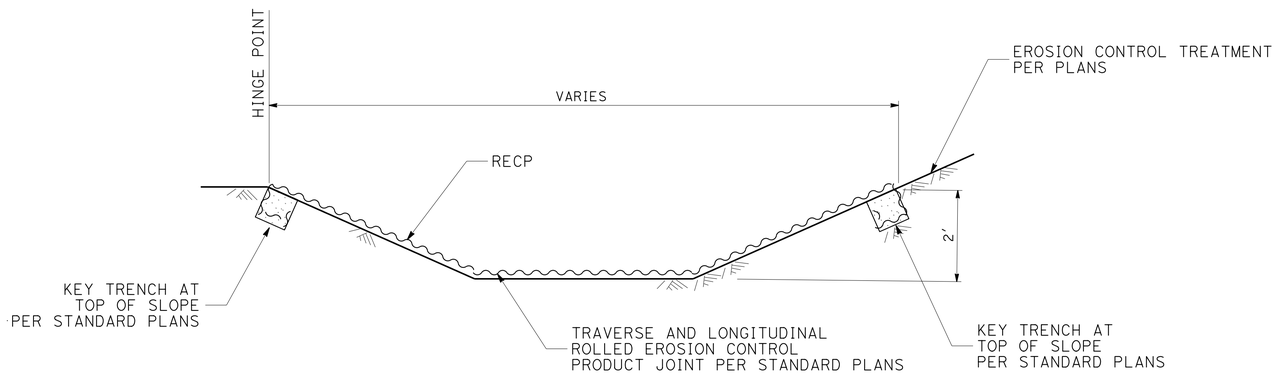

ROLLED EROSION CONTROL PRODUCT AT DRAINAGE SWALE

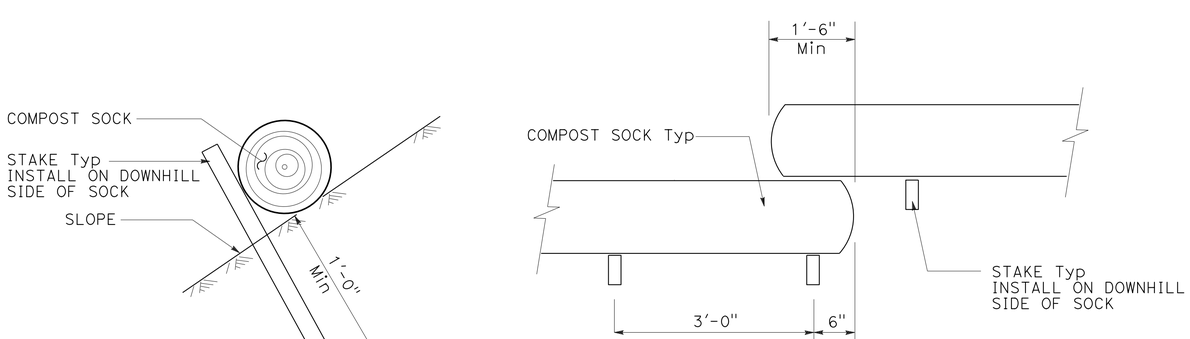

COMPOST SOCK

EROSION CONTROL QUANTITIES AND DETAILS

ECQ-1

STATE OF CALIFORNIA - DEPARTMENT OF TRANSPORTATION
Caltrans® LANDSCAPE ARCHITECTURE

SENIOR LANDSCAPE ARCHITECT: DENNIS REEVES
CALCULATED-DESIGNED BY: SCOTT DOWLAN
CHECKED BY: LINDA BAKER
REVISED BY
DATE REVISED

LAST REVISION 06-19-15
DATE PLOTTED => 08-SEP-2015
TIME PLOTTED => 16:47

Dist	COUNTY	ROUTE	POST MILES TOTAL PROJECT	SHEET No.	TOTAL SHEETS
05	Mon	68	R17.4/R18.0	59	149

Xavier Alfaro 02-26-15
REGISTERED ELECTRICAL ENGINEER DATE

6-22-15
PLANS APPROVAL DATE

REGISTERED PROFESSIONAL ENGINEER XAVIER I. ALFARO No. E17488 Exp. 6-30-17 ELECTRICAL STATE OF CALIFORNIA

THE STATE OF CALIFORNIA OR ITS OFFICERS OR AGENTS SHALL NOT BE RESPONSIBLE FOR THE ACCURACY OR COMPLETENESS OF SCANNED COPIES OF THIS PLAN SHEET.

NOTE:

FOR ACCURATE RIGHT OF WAY DATA, CONTACT RIGHT OF WAY ENGINEERING AT THE DISTRICT OFFICE.

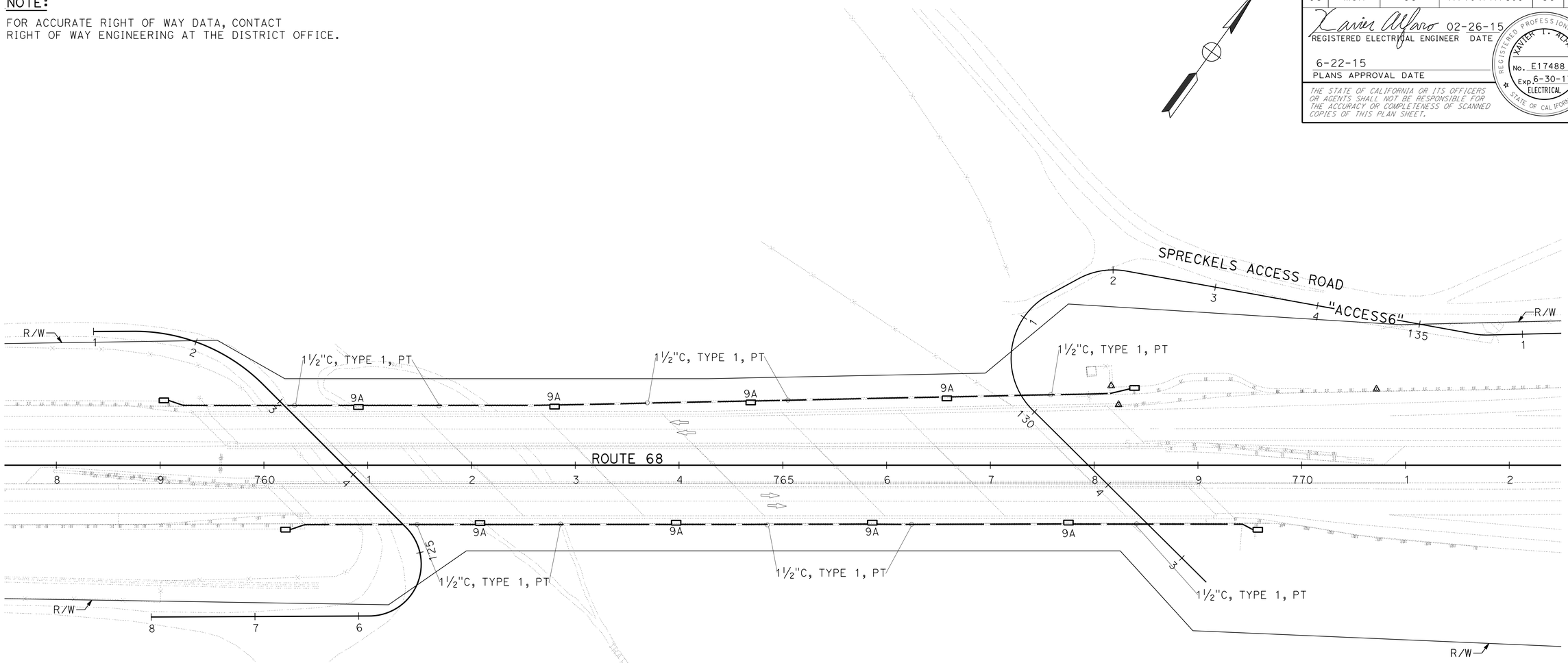

COMMUNICATION CONDUIT (BRIDGE)

SHEET No.	1-1/2"EXPANSION DEFLECTION FITTING	NO. 5 PB	NO. 9A PB	1-1/2" CONDUIT (TYPE 1)
	EA			FT
E-1	4	4	8	1800

THE QUANTITIES ON THIS TABLE ARE NOT A SEPARATE PAY ITEM, FOR INFORMATION ONLY. FOR COMPLETE ELECTRICAL WORK, SEE ELECTRICAL SHEETS.

APPROVED FOR ELECTRICAL WORK ONLY

COMMUNICATION CONDUIT (BRIDGE)

SCALE: 1" = 50'

E-1

STATE OF CALIFORNIA - DEPARTMENT OF TRANSPORTATION
Caltrans® ELECTRICAL DESIGN

FUNCTIONAL SUPERVISOR: ALI BAKHDOUD
CALCULATED-DESIGNED BY: PAUL MATOS
CHECKED BY
REVISED BY
DATE REVISED

LAST REVISION 06-19-15
DATE PLOTTED => 08-SEP-2015
TIME PLOTTED => 16:47

Dist	COUNTY	ROUTE	POST MILES TOTAL PROJECT	SHEET No.	TOTAL SHEETS
05	Mon	68	R17.4/R18.0	60	149

Xavier Alfaro 02-26-15
REGISTERED ELECTRICAL ENGINEER

6-22-15
PLANS APPROVAL DATE

REGISTERED PROFESSIONAL ENGINEER XAVIER I. ALFARO No. E17488 Exp. 6/30/17 ELECTRICAL STATE OF CALIFORNIA

THE STATE OF CALIFORNIA OR ITS OFFICERS OR AGENTS SHALL NOT BE RESPONSIBLE FOR THE ACCURACY OR COMPLETENESS OF SCANNED COPIES OF THIS PLAN SHEET.

NOTE:

FOR ACCURATE RIGHT OF WAY DATA, CONTACT RIGHT OF WAY ENGINEERING AT THE DISTRICT OFFICE.

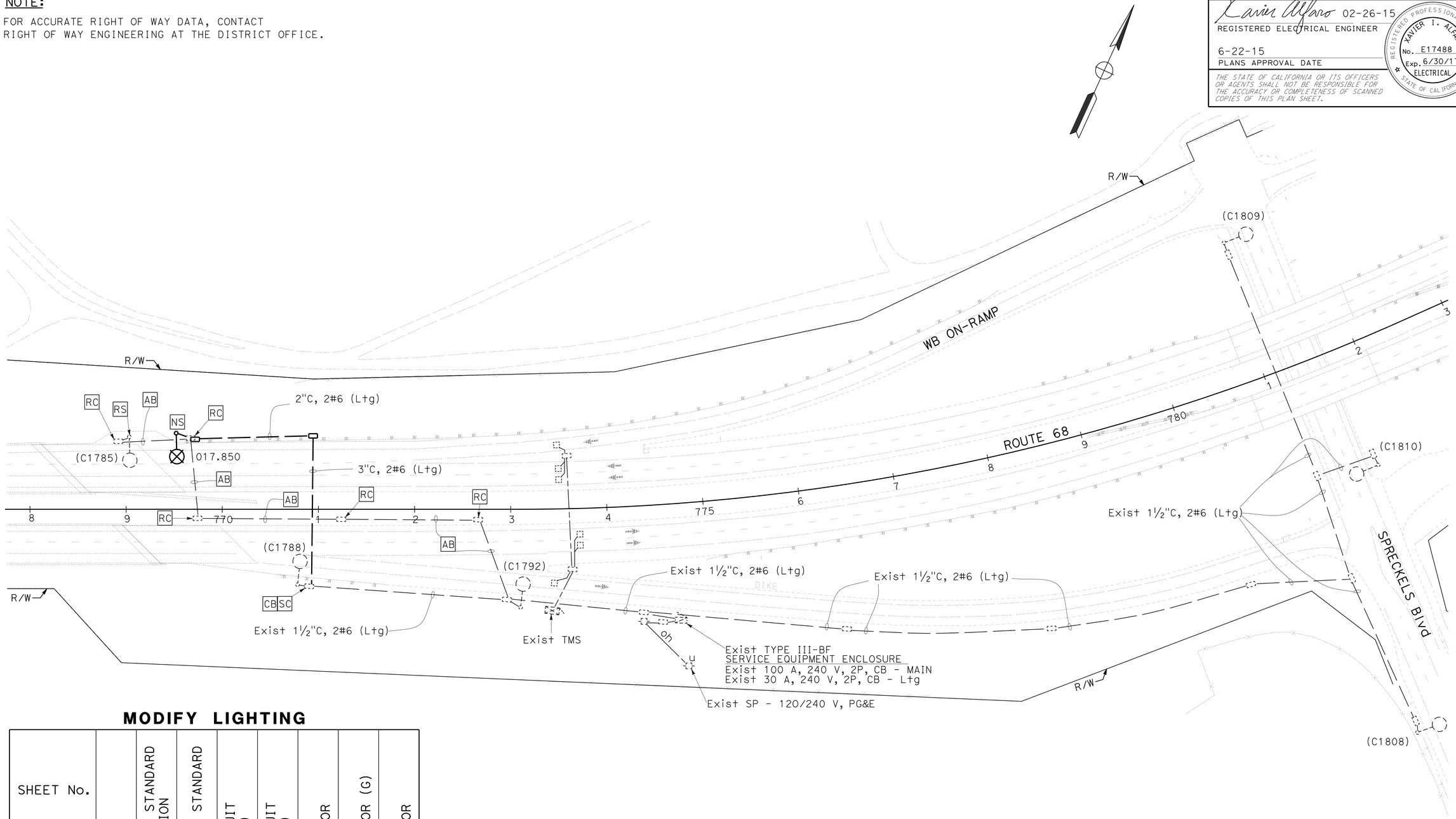

MODIFY LIGHTING

SHEET No.	NO. 5 PB	TYPE 30 STANDARD FOUNDATION	TYPE 30 STANDARD	2" CONDUIT (TYPE 3)	3" CONDUIT (TYPE 3)	NO. 14 CONDUCTOR	NO. 8 CONDUCTOR (G)	NO. 6 CONDUCTOR
	EA			FT				
E-2	2	1	1	130	170	100	350	700

THE QUANTITIES ON THIS TABLE ARE NOT A SEPARATE PAY ITEM, FOR INFORMATION ONLY. FOR COMPLETE ELECTRICAL WORK, SEE ELECTRICAL SHEETS.

APPROVED FOR ELECTRICAL WORK ONLY

SCALE: 1"=50'

MODIFY LIGHTING
E-2

STATE OF CALIFORNIA - DEPARTMENT OF TRANSPORTATION
Caltrans® ELECTRICAL DESIGN

FUNCTIONAL SUPERVISOR: ALI BAKHDOUD
CALCULATED-DESIGNED BY: XAVIER ALFARO
CHECKED BY: PAUL MATOS
REVISED BY: XIA
DATE REVISED: 02-26-15

LAST REVISION: 06-19-15
DATE PLOTTED => 08-SEP-2015
TIME PLOTTED => 16:47

M

Maint	MAINTENANCE
Max	MAXIMUM
MB	METAL BEAM
MBB	METAL BEAM BARRIER
MBGR	METAL BEAM GUARD RAILING
Med	MEDIAN
MGS	MIDWEST GUARDRAIL SYSTEM
MH	MANHOLE
Min	MINIMUM
Misc	MISCELLANEOUS
Misc I & S	MISCELLANEOUS IRON AND STEEL
Mkr	MARKER
Mod	MODIFIED, MODIFY
Mon	MONUMENT
MP	METAL PLATE
MPGR	METAL PLATE GUARD RAILING
MR	MOVEMENT RATING
MSE	MECHANICALLY STABILIZED EMBANKMENT
Mt	MOUNTAIN, MOUNT
Mtl	MATERIAL
MVP	MAINTENANCE VEHICLE PULLOUT

N

N	NORTH
NB	NORTHBOUND
No.	NUMBER (MUST HAVE PERIOD)
Nos.	NUMBERS (MUST HAVE PERIOD)
NPS	NOMINAL PIPE SIZE
NS	NEAR SIDE
NSP	NEW STANDARD PLAN
NTS	NOT TO SCALE

O

Oblr	OBLITERATE
OC	OVERCROSSING
OD	OUTSIDE DIAMETER
OF	OUTSIDE FACE
OG	ORIGINAL GROUND
OGAC	OPEN GRADED ASPHALT CONCRETE
OGFC	OPEN GRADED FRICTION COURSE
OH	OVERHEAD
OHWM	ORDINARY HIGH WATER MARK
O-O	OUT TO OUT
Opp	OPPOSITE
OSD	OVERSIDE DRAIN

P

P	PAGE
PAP	PERFORATED ALUMINUM PIPE
PB	PULL BOX
PC	POINT OF CURVATURE, PRECAST
PCC	POINT OF COMPOUND CURVE, PORTLAND CEMENT CONCRETE
PCMS	PORTABLE CHANGEABLE MESSAGE SIGN
PCP	PERFORATED CONCRETE PIPE, PRESTRESSED CONCRETE PIPE
PCVC	POINT OF COMPOUND VERTICAL CURVE
PEC	PERMIT TO ENTER AND CONSTRUCT
Ped	PEDESTRIAN
Ped OC	PEDESTRIAN OVERCROSSING
Ped UC	PEDESTRIAN UNDERCROSSING
Perm Mtl	PERMEABLE MATERIAL

P continued

PG	PROFILE GRADE
PI	POINT OF INTERSECTION
PJP	PARTIAL JOINT PENETRATION
Pkwy	PARKWAY
ℙL,PL	PLATE
P/L	PROPERTY LINE
PM	POST MILE, TIME FROM NOON TO MIDNIGHT
PN	PAVING NOTCH
POC	POINT OF HORIZONTAL CURVE
POT	POINT OF TANGENT
POVC	POINT OF VERTICAL CURVE
PP	PIPE PILE, PLASTIC PIPE, POWER POLE
PPL	PREFORMED PERMEABLE LINER
PPP	PERFORATED PLASTIC PIPE
PRC	POINT OF REVERSE CURVE
PRF	PAVEMENT REINFORCING FABRIC
PRVC	POINT OF REVERSE VERTICAL CURVE
PS&E	PLANS, SPECIFICATIONS AND ESTIMATES
PS, P/S	PRESTRESSED
PSP	PERFORATED STEEL PIPE
PT	POINT OF TANGENCY
PVC	POLYVINYL CHLORIDE
Pvmt	PAVEMENT

Q

Qty	QUANTITY

R

R	RADIUS
R & D	REMOVE AND DISPOSE
R & S	REMOVE AND SALVAGE
R/C	RATE OF CHANGE
RCA	REINFORCED CONCRETE ARCH
RCB	REINFORCED CONCRETE BOX
RCP	REINFORCED CONCRETE PIPE
RCPA	REINFORCED CONCRETE PIPE ARCH
Rd	ROAD
Reinf	REINFORCED, REINFORCEMENT, REINFORCING
Rel	RELOCATE
Repl	REPLACEMENT
Ret	RETAINING
Rev	REVISED, REVISION
Rdwy	ROADWAY
RHMA	RUBBERIZED HOT MIX ASPHALT
Riv	RIVER
RM	ROAD-MIXED
RP	RADIUS POINT, REFERENCE POINT
RR	RAILROAD
RSP	ROCK SLOPE PROTECTION, REVISED STANDARD PLAN
Rt	RIGHT
Rte	ROUTE
RW	REDWOOD, RETAINING WALL
R/W	RIGHT OF WAY
Rwy	RAILWAY

S

S	SOUTH, SUPPLEMENT
SAE	STRUCTURE APPROACH EMBANKMENT
Salv	SALVAGE
SAPP	STRUCTURAL ALUMINUM PLATE PIPE
SB	SOUTHBOUND
SC	SAND CUSHION
SCSP	SLOTTED CORRUGATED STEEL PIPE
SD	STORM DRAIN
Sec	SECOND, SECTION
Sep	SEPARATION
SG	SUBGRADE
Shld	SHOULDER
Sht	SHEET
Sim	SIMILAR
℄	STATION LINE
SM	SELECTED MATERIAL
Spec	SPECIAL, SPECIFICATIONS
SPP	SLOTTED PLASTIC PIPE
SS	SLOPE STAKE
SSBM	STRAP AND SADDLE BRACKET METHOD
SSD	STRUCTURAL SECTION DRAIN
SSPA	STRUCTURAL STEEL PLATE ARCH
SSPP	STRUCTURAL STEEL PLATE PIPE
SSPPA	STRUCTURAL STEEL PLATE PIPE ARCH
SSRP	STEEL SPIRAL RIB PIPE
St	STREET
Sta	STATION
STBB	SINGLE THRIE BEAM BARRIER
Std	STANDARD
Str	STRUCTURE
Surf	SURFACING
SW	SIDEWALK, SOUND WALL
Swr	SEWER
Sym	SYMMETRICAL
S4S	SURFACE 4 SIDES

T

T	SEMI-TANGENT
Tan	TANGENT
TBB	THRIE BEAM BARRIER
Tbr	TIMBER
TC	TOP OF CURB
TCB	TRAFFIC CONTROL BOX
TCE	TEMPORARY CONSTRUCTION EASEMENT
Tel	TELEPHONE
Temp	TEMPORARY
TG	TOP OF GRADE
Tot	TOTAL
TP	TELEPHONE POLE
TPB	TREATED PERMEABLE BASE
TPM	TREATED PERMEABLE MATERIAL
Trans	TRANSITION

T continued

TS	TRANSVERSE, TRAFFIC SIGNAL, TUBULAR STEEL
Typ	TYPICAL

U

UC	UNDERCROSSING
UD	UNDERDRAIN
UG	UNDERGROUND
UON	UNLESS OTHERWISE NOTED
UP	UNDERPASS

V

V	VALVE, DESIGN SPEED
Var	VARIABLE, VARIES
VC	VERTICAL CURVE
VCP	VITRIFIED CLAY PIPE
Vert	VERTICAL
Via	VIADUCT
Vol	VOLUME

W

W	WEST, WIDTH
WB	WESTBOUND
WH	WEEP HOLE
WM	WIRE MESH
WS	WATER SURFACE
WSP	WELDED STEEL PIPE
Wt	WEIGHT
WV	WATER VALVE
WW	WINGWALL
WWLOL	WINGWALL LAYOUT LINE

X

X Sec	CROSS SECTION
Xing	CROSSING

Y

Yr	YEAR
Yrs	YEARS

Dist	COUNTY	ROUTE	POST MILES TOTAL PROJECT	SHEET No.	TOTAL SHEETS
05	Mon	68	R17.4/R18.0	61	149

Grace M. Tsushima
REGISTERED CIVIL ENGINEER

July 19, 2013
PLANS APPROVAL DATE

REGISTERED PROFESSIONAL ENGINEER Grace M. Tsushima No. C49814 Exp. 9-30-14 CIVIL STATE OF CALIFORNIA

THE STATE OF CALIFORNIA OR ITS OFFICERS OR AGENTS SHALL NOT BE RESPONSIBLE FOR THE ACCURACY OR COMPLETENESS OF SCANNED COPIES OF THIS PLAN SHEET.

TO ACCOMPANY PLANS DATED 6-22-15

UNIT OF MEASUREMENT SYMBOLS:

Some of the symbols used in the project plan quantity tables and in the Bid Item List are:

TABLE A

SYMBOL USED	DEFINITIONS
ACRE	ACRE
CF	CUBIC FOOT
CY	CUBIC YARD
EA	EACH
GAL	GALLON
LB	POUND
LF	LINEAR FOOT
SQFT	SQUARE FOOT
SQYD	SQUARE YARD
STA	100 FEET
TAB	TABLET
TON	2,000 POUNDS

Some of the symbols used in the plans other than in the project plan quantity tables are:

TABLE B

SYMBOL USED	DEFINITIONS
ksi	KIPS PER SQUARE INCH
ksf	KIPS PER SQUARE FOOT
psi	POUNDS PER SQUARE INCH
psf	POUNDS PER SQUARE FOOT
lb/ft^3, pcf	POUNDS PER CUBIC FOOT
tsf	TONS PER SQUARE FOOT
mph, MPH *	MILES PER HOUR
ø	NOMINAL DIAMETER
oz	OUNCE
lb	POUND
kip	1,000 POUNDS
cal	CALORIE
ft	FOOT OR FEET
gal	GALLON

* For use on a sign panel only

STATE OF CALIFORNIA
DEPARTMENT OF TRANSPORTATION

ABBREVIATIONS (SHEET 2 OF 2)

NO SCALE

RSP A10B DATED JULY 19, 2013 SUPERSEDES STANDARD PLAN A10B DATED MAY 20, 2011 - PAGE 2 OF THE STANDARD PLANS BOOK DATED 2010.

REVISED STANDARD PLAN RSP A10B

2010 REVISED STANDARD PLAN RSP A10B

6-7-13

Dist	COUNTY	ROUTE	POST MILES TOTAL PROJECT	SHEET No.	TOTAL SHEETS
05	Mon	68	R17.4/R18.0	62	149

REGISTERED CIVIL ENGINEER

April 20, 2012
PLANS APPROVAL DATE

REGISTERED PROFESSIONAL ENGINEER
Roberta L. McLaughlin
No. C40375
Exp. 3-31-13
CIVIL
STATE OF CALIFORNIA

THE STATE OF CALIFORNIA OR ITS OFFICERS OR AGENTS SHALL NOT BE RESPONSIBLE FOR THE ACCURACY OR COMPLETENESS OF SCANNED COPIES OF THIS PLAN SHEET.

TO ACCOMPANY PLANS DATED 6-22-15

2010 REVISED STANDARD PLAN RSP A24A

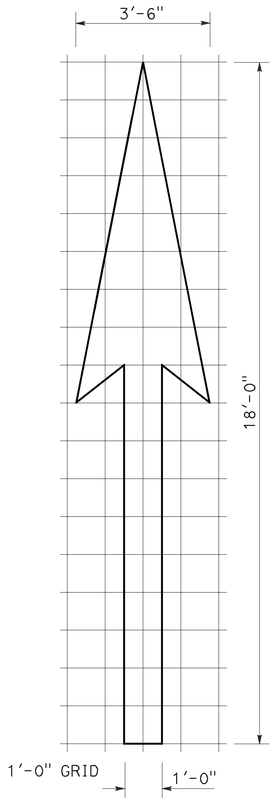

A=25 ft^2

TYPE I 18'-0" ARROW

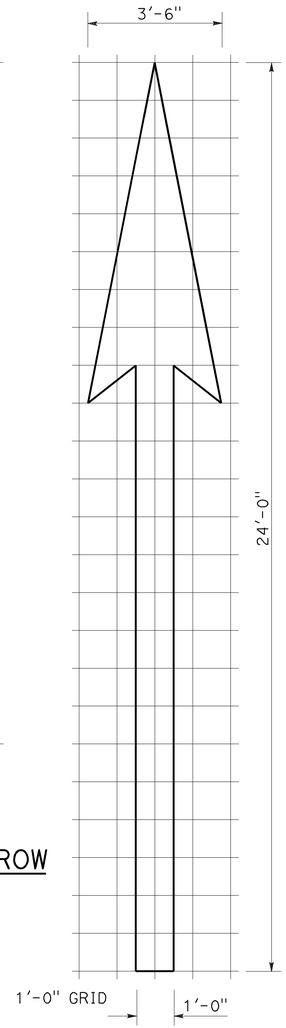

A=31 ft^2

TYPE I 24'-0" ARROW

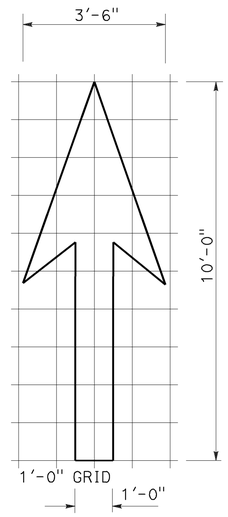

A=14 ft^2

TYPE I 10'-0" ARROW

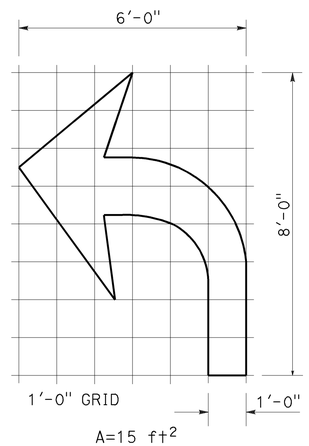

A=15 ft^2

TYPE IV (L) ARROW

(For Type IV (R) arrow, use mirror image)

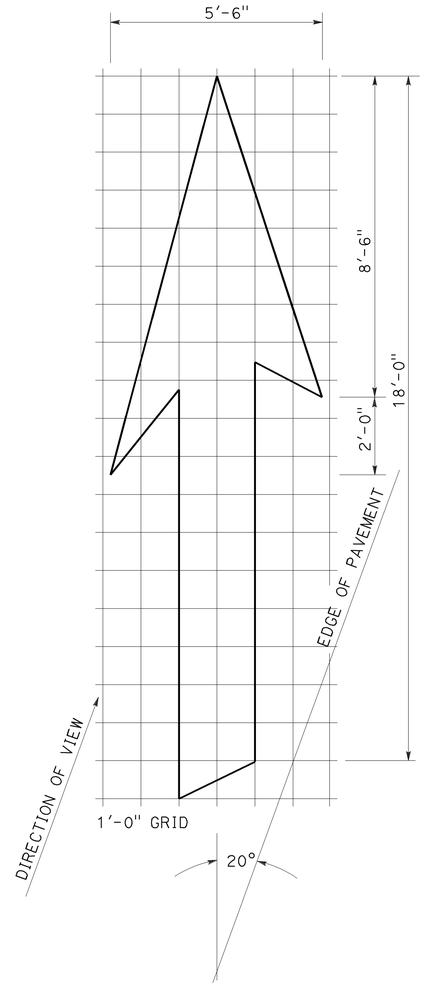

A=42 ft^2

TYPE VI ARROW

Right lane drop arrow
(For left lane, use mirror image)

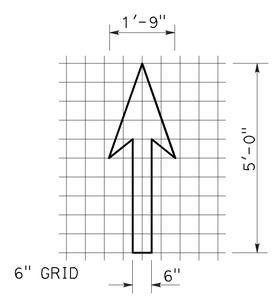

A=3.5 ft^2

BIKE LANE ARROW

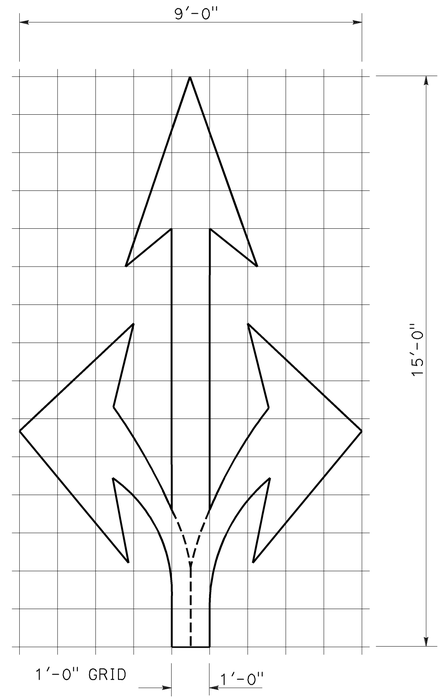

A=36 ft^2

TYPE VIII ARROW

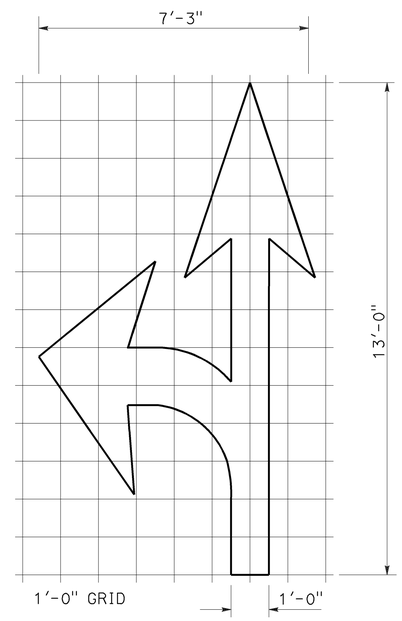

A=27 ft^2

TYPE VII (L) ARROW

(For Type VII (R) arrow, use mirror image)

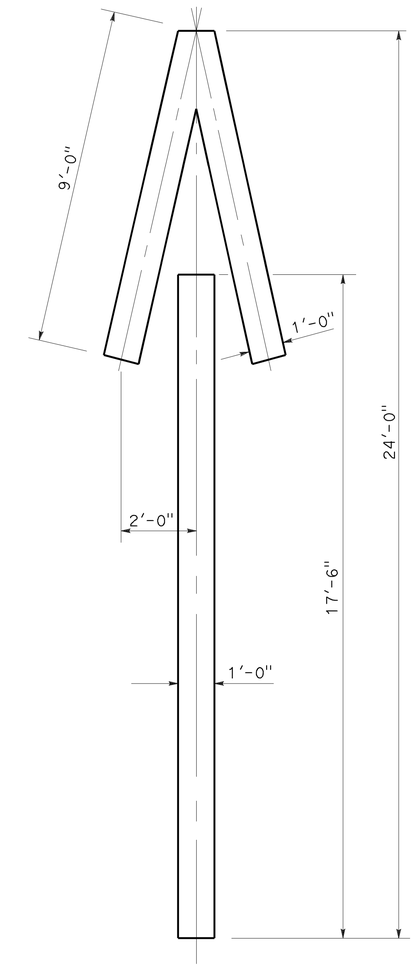

A=33 ft^2

TYPE V ARROW

NOTE:
Minor variations in dimensions may be accepted by the Engineer.

STATE OF CALIFORNIA
DEPARTMENT OF TRANSPORTATION

PAVEMENT MARKINGS ARROWS

NO SCALE

RSP A24A DATED APRIL 20, 2012 SUPERSEDES STANDARD PLAN A24A DATED MAY 20, 2011 - PAGE 13 OF THE STANDARD PLANS BOOK DATED 2010.

REVISED STANDARD PLAN RSP A24A

3-14-12

Dist	COUNTY	ROUTE	POST MILES TOTAL PROJECT	SHEET No.	TOTAL SHEETS
05	Mon	68	R17.4/R18.0	63	149

REGISTERED CIVIL ENGINEER

July 18, 2014
PLANS APPROVAL DATE

REGISTERED PROFESSIONAL ENGINEER Carl M. Duan No. C59976 Exp. 6-30-16 CIVIL STATE OF CALIFORNIA

THE STATE OF CALIFORNIA OR ITS OFFICERS OR AGENTS SHALL NOT BE RESPONSIBLE FOR THE ACCURACY OR COMPLETENESS OF SCANNED COPIES OF THIS PLAN SHEET.

TO ACCOMPANY PLANS DATED 6-22-15

DESIGN NOTES:

Design: AASHTO LRFD Bridge Design Specifications, 4th edition with California Amendments. ACPA DESIGN DATA 1, October 2007. INDIRECT DESIGN METHOD

Soil: w Fe = 162 pcf Installation Type 1
w Fe = 168 pcf Installation Types 2 & 3
w = Unit weight of soil (pcf)
Fe = Soil-structure interaction factor

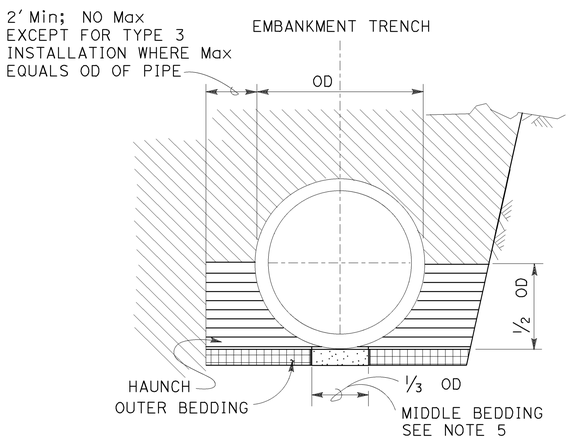

BACKFILL

LEGEND:

- ROADWAY EMBANKMENT
- STRUCTURE BACKFILL (CULVERT) FOR HAUNCH SEE NOTE 6
- STRUCTURE BACKFILL (CULVERT) FOR OUTER BEDDING SEE NOTE 6
- LOOSE BACKFILL
- STRUCTURE EXCAVATION (CULVERT)

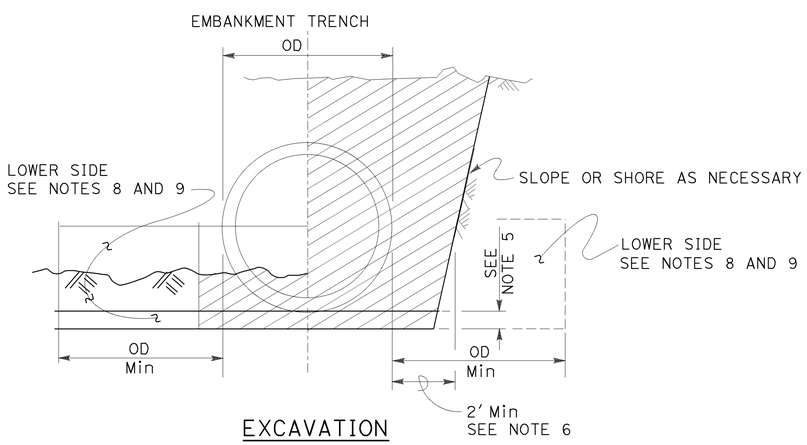

EXCAVATION

INSTALLATION TYPE 1:

The haunch and outer bedding shall be compacted to a minimum 90 percent relative compaction. In addition, the minimum sand equivalent in these areas shall be 30 and the maximum percentage passing the No. 200 sieve size shall be 12.

INSTALLATION TYPE 2:

The haunch and outer bedding shall be compacted to a minimum 90 percent relative compaction. In addition, the minimum sand equivalent in these areas shall be 25.

INSTALLATION TYPE 3:

The haunch and outer bedding shall be compacted to a minimum 85 percent relative compaction. 90 percent relative compaction will be required where the fill over the pipe is less than 4′-0″ or 1/2 OD. In addition, the minimum sand equivalent in these areas shall be 25 and the material shall not contain rocks, broken concrete, or other solid material exceeding 3″ in greatest dimension.

INSTALLATION TYPE 1

MINIMUM CLASS AND D-LOAD	COVER	
	60″ Dia AND SMALLER	OVER 60″ Dia TO 120″ Dia Max
CLASS II 1000D	14.9′	12.9′
CLASS III 1350D	15.0′ - 21.9′	13.0′ - 18.9′
CLASS III SPECIAL 1700D	22.0′ - 27.9′	19.0′ - 24.9′
CLASS IV 2000D	28.0′ - 32.9′	25.0′ - 29.9′
CLASS IV SPECIAL 2500D	33.0′ - 41.9′	30.0′ - 38.9′
CLASS V 3000D	42.0′ - 49.9′	39.0′ - 46.9′
CLASS V SPECIAL 3600D	50.0′ - 60.0′	47.0′ - 58.0′

INSTALLATION TYPE 2

MINIMUM CLASS AND D-LOAD	COVER	
	60″ Dia AND SMALLER	OVER 60″ Dia TO 120″ Dia Max
CLASS II 1000D	11.9′	9.9′
CLASS III 1350D	12.0′ - 15.9′	10.0′ - 14.9′
CLASS III SPECIAL 1700D	16.0′ - 20.9′	15.0′ - 19.9′
CLASS IV 2000D	21.0′ - 24.9′	20.0′ - 23.9′
CLASS IV SPECIAL 2500D	25.0′ - 31.9′	24.0′ - 30.9′
CLASS V 3000D	32.0′ - 37.9′	31.0′ - 37.9′
CLASS V SPECIAL 3600D	38.0′ - 46.0′	38.0′ - 46.0′

INSTALLATION TYPE 3

MINIMUM CLASS AND D-LOAD	COVER	
	60″ Dia AND SMALLER	OVER 60″ Dia TO 120″ Dia Max
CLASS II 1000D	8.9′	5.9′
CLASS III 1350D	9.0′ - 11.9′	6.0′ - 10.9′
CLASS III SPECIAL 1700D	12.0′ - 15.9′	11.0′ - 13.9′
CLASS IV 2000D	16.0′ - 18.9′	14.0′ - 17.9′
CLASS IV SPECIAL 2500D	19.0′ - 24.9′	18.0′ - 22.9′
CLASS V 3000D	25.0′ - 29.9′	23.0′ - 28.9′
CLASS V SPECIAL 3600D	30.0′ - 36.0′	29.0′ - 35.0′

NOTES:

1. Unless otherwise shown on the plans or specified in the special provision, the Contractor shall have the option of selecting the class of RCP and the type of installation to be used, provided the height of cover does not exceed the value shown for the RCP selected.
   Example: 24″ RCP culvert with maximum cover of 24′-0″ the options are:
   a) Class III Special or stronger with Installation Type 1.
   b) Class IV or stronger with Installation Type 2.
   c) Class IV Special or stronger with Installation Type 3.
   Cover is defined as the maximum vertical distance from top of the pipe to finished grade within the length of any given culvert.
2. The class of RCP and Installation Type selected shall be the same throughout the length of any given culvert.
3. The "length of any culvert" is defined as the culvert between:
   a) Successive drainage structure (inlets, junction boxes, headwalls, etc.).
   b) A drainage structure and the inlet or outlet end of the culvert.
   c) The inlet and outlet end of the culvert when there are no intervening drainage structures.
4. Oval and arch shaped RCP shall not be used.
5. Bedding depth: 1/25 OD Min, not less than 3″.
6. Slurry cement backfill may be substituted for backfill in the outer bedding and haunch areas. If slurry is used, the outer and middle beddings shall be omitted. Prior to installation, the soil under the middle 1/3 of the outside diameter of the pipe shall be softened by scarifying or other means to a minimum depth of 1/25 OD, but not less than 3″. Where slurry cement backfill is used, clear distance to trench wall may be reduced as set forth in the Standard Specifications.
7. Backfill shall be placed full width of excavation except where dimensions are shown for backfill width or thickness. Dimensions shown are minimum.
8. Lower side shall be suitable material as determined by the Engineer. Otherwise it shall be considered unsuitable as set forth in of the Standard Specifications. See Note 9.
9. Where the pipe is placed in a trench, if the trench walls are sloped at 5 vertical to 1 horizontal or steeper for at least 90 percent of the trench height or up to not less than 12″ from the grading plane, the firmness of the soil in the lower side need not be considered.
10. Non-reinforced precast concrete pipe sizes 3′-0″ or smaller may be placed under installation Types 1, 2 or 3.

STATE OF CALIFORNIA
DEPARTMENT OF TRANSPORTATION

EXCAVATION AND BACKFILL CONCRETE PIPE CULVERTS INDIRECT DESIGN METHOD

NO SCALE

RSP A62DA DATED JULY 18, 2014 SUPERSEDES STANDARD PLAN A62DA DATED MAY 20, 2011 - PAGE 24 OF THE STANDARD PLANS BOOK DATED 2010.

REVISED STANDARD PLAN RSP A62DA

2010 REVISED STANDARD PLAN RSP A62DA

5-13-14

Dist	COUNTY	ROUTE	POST MILES TOTAL PROJECT	SHEET No.	TOTAL SHEETS
05	Mon	68	R17.4/R18.0	64	149

Randell D. Hiatt
REGISTERED CIVIL ENGINEER

July 19, 2013
PLANS APPROVAL DATE

REGISTERED PROFESSIONAL ENGINEER
Randell D. Hiatt
No. C50200
Exp. 6-30-15
CIVIL
STATE OF CALIFORNIA

THE STATE OF CALIFORNIA OR ITS OFFICERS OR AGENTS SHALL NOT BE RESPONSIBLE FOR THE ACCURACY OR COMPLETENESS OF SCANNED COPIES OF THIS PLAN SHEET.

TO ACCOMPANY PLANS DATED 6-22-15

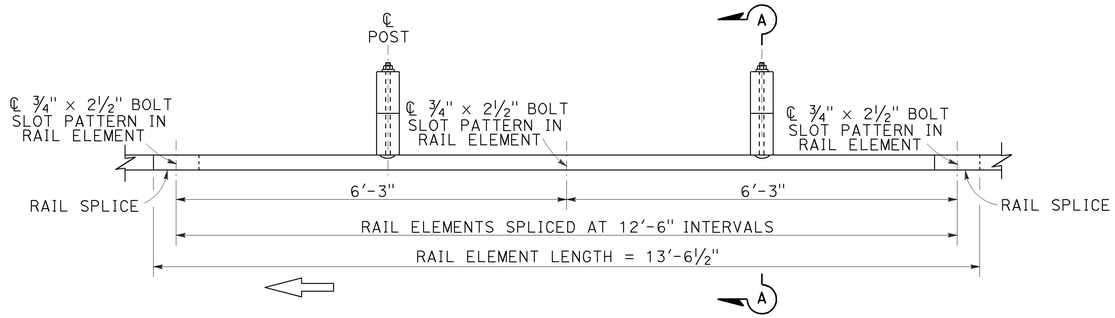

PLAN

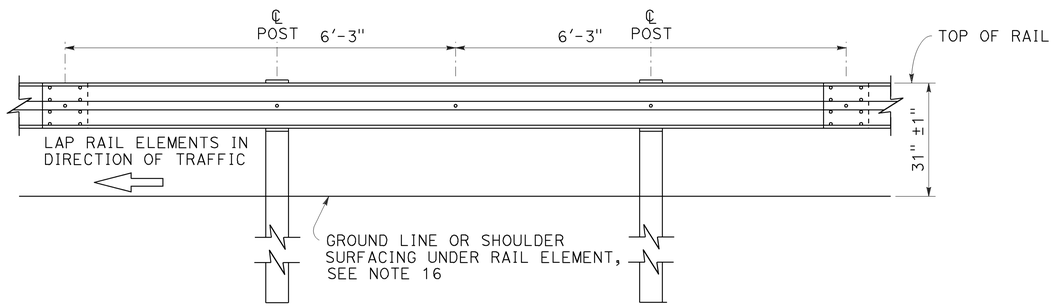

ELEVATION

MIDWEST GUARDRAIL SYSTEM WITH WOOD POST AND BLOCKS

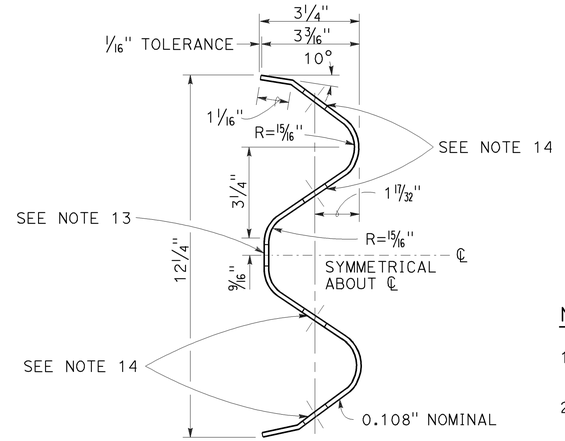

SECTION THRU RAIL ELEMENT

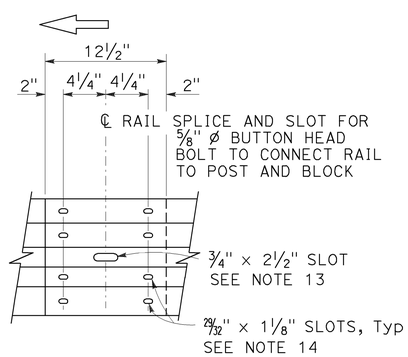

ELEVATION

RAIL ELEMENT SPLICE DETAIL

a) Connect the over lapped end of the rail elements with 5/8" ø × 1 3/8" button head oval shoulder splice bolts inserted into the 29/32" × 1 1/8" slots and bolted together with 5/8" ø recessed hex nuts. Recess of hex nut points toward rail element. A total of 8 bolts and nuts are to be used at each rail splice connection.

b) The ends of the rail elements are to be overlapped in the direction of traffic (see details).

c) Where end cap is to be attached to the end of a rail element, a total of 4 of the above described splice bolts and nuts are to be used.

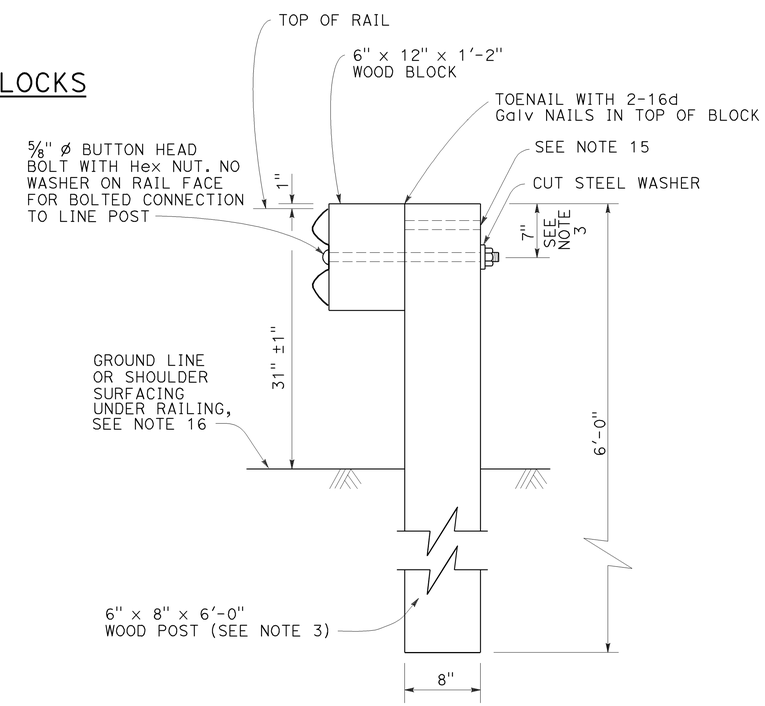

SECTION A-A

TYPICAL WOOD LINE POST INSTALLATION

See Note 4

NOTES:

1. For details of steel post installations, see Revised Standard Plan RSP A77L2.
2. For details of standard hardware used to construct MGS, see Revised Standard Plan RSP A77M1.
3. For details of wood posts and wood blocks used to construct MGS, see Revised Standard Plan RSP A77N1.
4. For additional installation details, see Revised Standard Plan RSP A77N3.
5. MGS post spacing to be 6'-3" center to center, except as otherwise noted.
6. For MGS typical layouts, see the A77P, A77Q and A77R Series of Standard Plans.
7. If railing is connected to terminal system end treatment, use 31" height terminal system end treatment.
8. For MGS end anchor details, see Revised Standard Plans RSP A77S1 and RSP A77T2.
9. For details of MGS transition to bridge railing, see Revised Standard Plan RSP A77U4.
10. For additional details of MSG connection to bridge railing, see Revised Standard Plans RSP A77U1, RSP A77U2 and RSP A77V1.
11. For MGS connection details to abutments and walls, see Revised Standard Plan RSP A77U3.
12. For typical MGS delineation and dike positioning details, see Revised Standard Plan RSP A77N4.
13. Slotted hole for bolted connection of rail element to block and post. See "Section Thru Rail Element".
14. Slotted holes for splice bolts to overlap ends of rail element. See "Section Thru Rail Element".
15. Additional hole in uppermost portion of line post is for potential future adjustments of railing height. See Revised Standard Plan RSP A77N1.
16. Install posts in soil.

STATE OF CALIFORNIA
DEPARTMENT OF TRANSPORTATION

MIDWEST GUARDRAIL SYSTEM STANDARD RAILING SECTION (WOOD POST WITH WOOD BLOCK)

NO SCALE

RSP A77L1 DATED JULY 19, 2013 SUPPLEMENTS STANDARD PLANS BOOK DATED 2010.

REVISED STANDARD PLAN RSP A77L1

2010 REVISED STANDARD PLAN RSP A77L1

Dist	COUNTY	ROUTE	POST MILES TOTAL PROJECT	SHEET No.	TOTAL SHEETS
05	Mon	68	R17.4/R18.0	65	149

Randell D. Hiatt
REGISTERED CIVIL ENGINEER

July 19, 2013
PLANS APPROVAL DATE

REGISTERED PROFESSIONAL ENGINEER
Randell D. Hiatt
No. C50200
Exp. 6-30-15
CIVIL
STATE OF CALIFORNIA

THE STATE OF CALIFORNIA OR ITS OFFICERS OR AGENTS SHALL NOT BE RESPONSIBLE FOR THE ACCURACY OR COMPLETENESS OF SCANNED COPIES OF THIS PLAN SHEET.

TO ACCOMPANY PLANS DATED 6-22-15

2010 REVISED STANDARD PLAN RSP A77L2

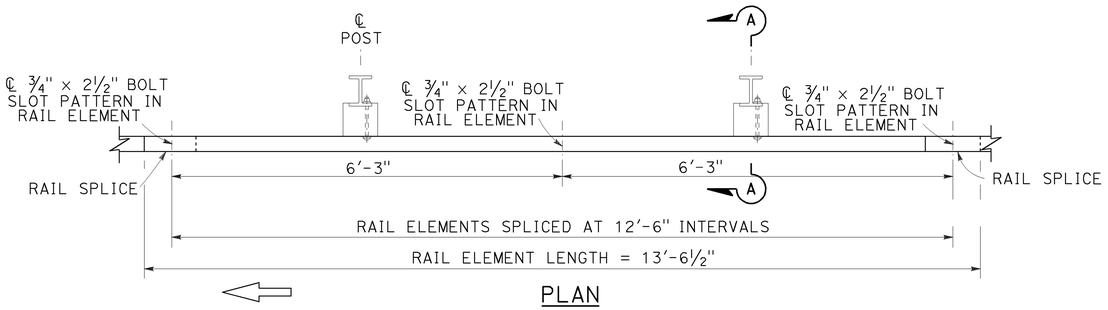

PLAN

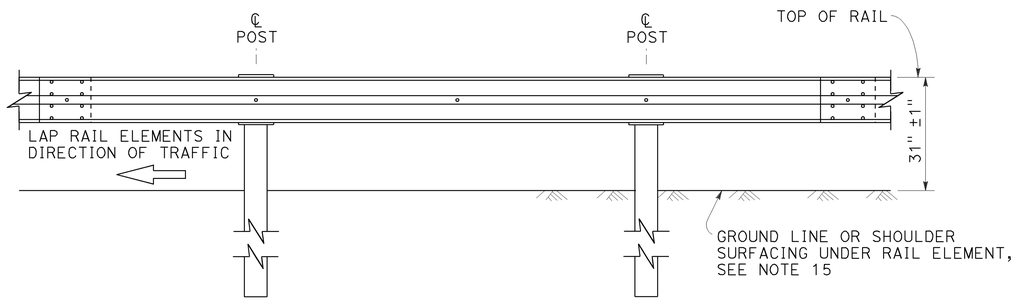

ELEVATION

MIDWEST GUARDRAIL SYSTEM WITH STEEL POSTS AND NOTCHED WOOD OR NOTCHED RECYCLED PLASTIC BLOCKS

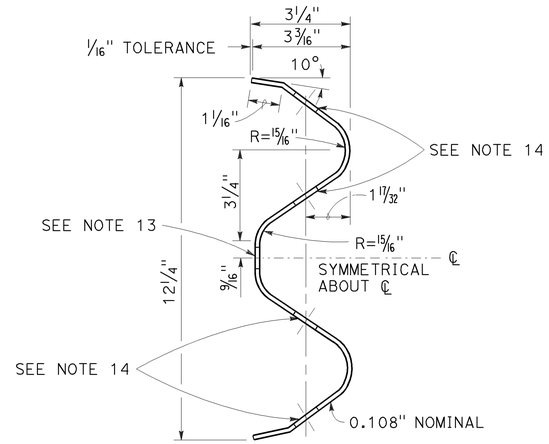

SECTION THRU RAIL ELEMENT

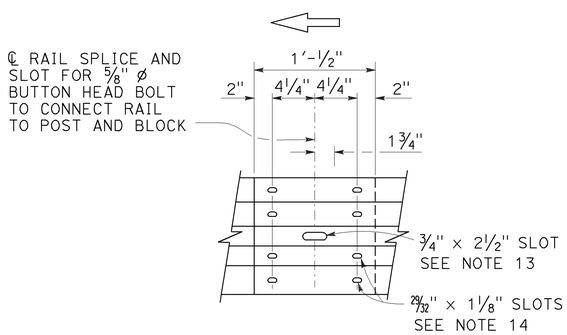

ELEVATION

RAIL ELEMENT SPLICE DETAIL

a) Connect the over lapped end of the rail elements with ⅝" ø × 1⅜" button head oval shoulder splice bolts inserted into the 29⁄₃₂" × 1⅛" slots and bolted together with ⅝" ø recessed hex nuts. Recess of hex nut points toward rail element. A total of 8 bolts and nuts are to be used at each rail splice connection.

b) The ends of the rail elements are to be overlapped in the direction of traffic (see details).

c) Where end cap is to be attached to the end of a rail element, a total of 4 of the above described splice bolts and nuts are to be used.

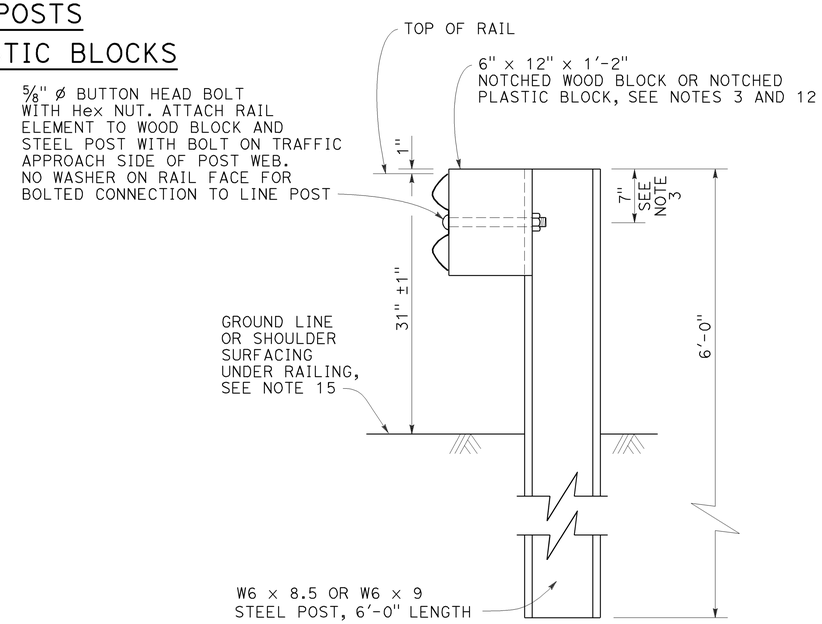

SECTION A-A

TYPICAL STEEL LINE POST INSTALLATION

See Note 4

NOTES:

1. For details of wood post installations, see Revised Standard Plan RSP A77L1.
2. For details of standard hardware used to construct MGS, see Revised Standard Plan RSP A77M1.
3. For details of steel posts and notched wood blocks used to construct MGS, see Revised Standard Plan RSP A77N2.
4. For additional installation details, see Revised Standard Plan RSP A77N3.
5. MGS post spacing to be 6'-3" center to center, except as otherwise noted.
6. For MGS typical layouts, see the A77P, A77Q and A77R Series of Standard Plans.
7. If railing is connected to terminal system end treatment, use 31" height terminal system end treatment.
8. For MGS end anchor details, see Revised Standard Plans RSP A77S1 and RSP A77T2.
9. For details of MGS transition to bridge railing, see Revised Standard Plan RSP A77U4.
10. For additional details of MGS connection to bridge railings, see Revised Standard Plans RSP A77U1, RSP A77U2 and RSP A77V1.
11. For dike positioning and MGS delineation details, see Revised Standard Plan RSP A77N4.
12. Notched face of block faces steel post.
13. Slotted hole for bolted connection of rail element to block and post. See "Section Thru Rail Element".
14. Slotted holes for splice bolts to overlap ends of rail element. See "Section Thru Rail Element".
15. Install posts in soil.

STATE OF CALIFORNIA
DEPARTMENT OF TRANSPORTATION

MIDWEST GUARDRAIL SYSTEM STANDARD RAILING SECTION (STEEL POST WITH NOTCHED WOOD OR NOTCHED RECYCLED PLASTIC BLOCK)

NO SCALE

RSP A77L2 DATED JULY 19, 2013 SUPPLEMENTS THE STANDARD PLANS BOOK DATED 2010.

REVISED STANDARD PLAN RSP A77L2

Dist	COUNTY	ROUTE	POST MILES TOTAL PROJECT	SHEET No.	TOTAL SHEETS
05	Mon	68	R17.4/R18.0	66	149

Randell D. Hiatt
REGISTERED CIVIL ENGINEER

July 19, 2013
PLANS APPROVAL DATE

REGISTERED PROFESSIONAL ENGINEER
Randell D. Hiatt
No. C50200
Exp. 6-30-15
CIVIL
STATE OF CALIFORNIA

THE STATE OF CALIFORNIA OR ITS OFFICERS OR AGENTS SHALL NOT BE RESPONSIBLE FOR THE ACCURACY OR COMPLETENESS OF SCANNED COPIES OF THIS PLAN SHEET.

TO ACCOMPANY PLANS DATED 6-22-15

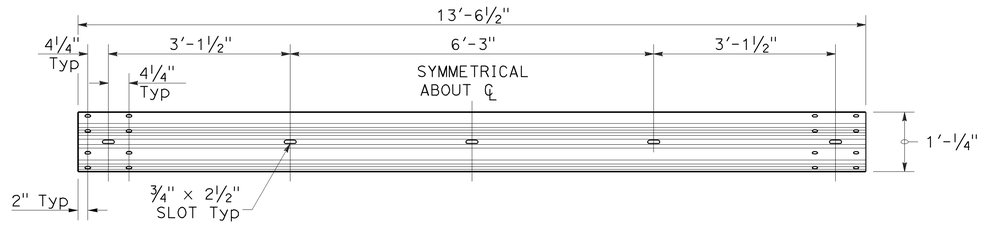

TYPICAL RAIL ELEMENT

NOTE:

1. Slotted holes for splice bolts to overlap ends of rail element.

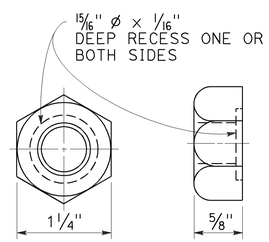

⅝" ø RECESS NUT

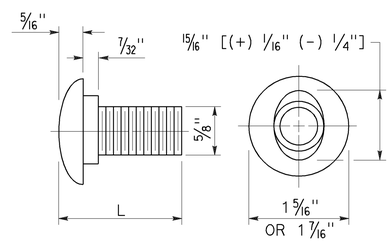

⅝" ø BUTTON HEAD BOLT

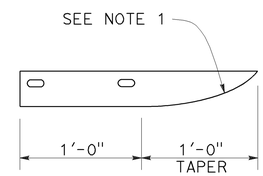

PLAN

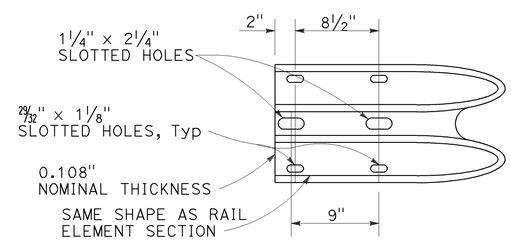

ELEVATION

END CAP
(TYPE A)

BUTTON HEAD BOLT

L	THREAD LENGTH
1⅜"	FULL THREAD LENGTH
2"	FULL THREAD LENGTH
10"	4" Min THREAD LENGTH
18"	4" Min THREAD LENGTH
20"	4" Min THREAD LENGTH
22"	4" Min THREAD LENGTH
26"	4" Min THREAD LENGTH
36"	4" Min THREAD LENGTH
** 2¾"	2" Min THREAD LENGTH
** 19"	4" Min THREAD LENGTH

** For nested rail applications.

STATE OF CALIFORNIA
DEPARTMENT OF TRANSPORTATION

MIDWEST GUARDRAIL SYSTEM STANDARD HARDWARE

NO SCALE

RSP A77M1 DATED JULY 19, 2013 SUPPLEMENTS THE STANDARD PLANS BOOK DATED 2010.

REVISED STANDARD PLAN RSP A77M1

2010 REVISED STANDARD PLAN RSP A77M1

Dist	COUNTY	ROUTE	POST MILES TOTAL PROJECT	SHEET No.	TOTAL SHEETS
05	Mon	68	R17.4/R18.0	67	149

Randell D. Hiatt
REGISTERED CIVIL ENGINEER

July 19, 2013
PLANS APPROVAL DATE

REGISTERED PROFESSIONAL ENGINEER
Randell D. Hiatt
No. C50200
Exp. 6-30-15
CIVIL
STATE OF CALIFORNIA

THE STATE OF CALIFORNIA OR ITS OFFICERS OR AGENTS SHALL NOT BE RESPONSIBLE FOR THE ACCURACY OR COMPLETENESS OF SCANNED COPIES OF THIS PLAN SHEET.

TO ACCOMPANY PLANS DATED 6-22-15

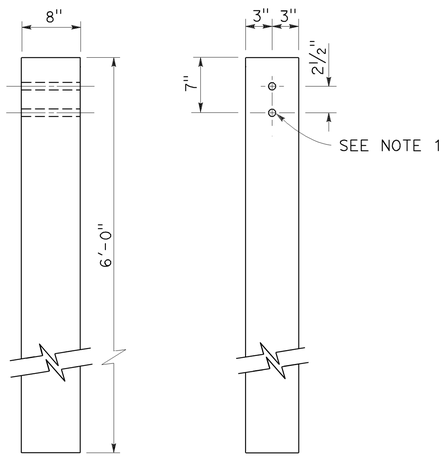

SIDE FRONT

6" x 8" WOOD POST
See Note 3

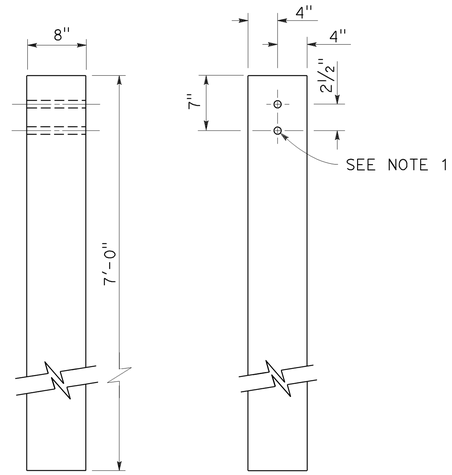

SIDE FRONT

8" x 8" WOOD POST
See Note 4

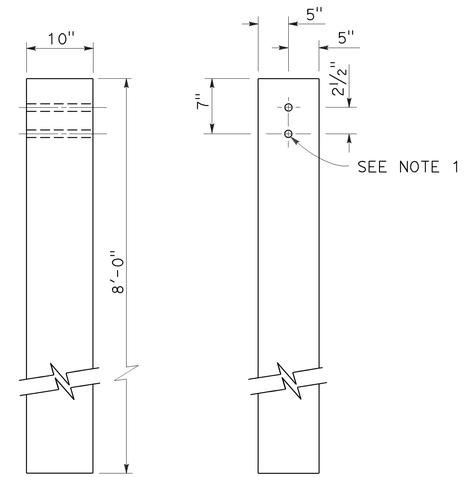

SIDE FRONT

10" x 10" WOOD POST
See Note 5

NOTES:

1. All holes in wood posts and blocks shall be ¾" Dia ± 1/16".
2. Dimensions shown for wood post are nominal.
3. This post and block combination used for standard line post sections of MGS.
4. This post and 8" x 12" block combination used for line post sections of MGS on narrow roadways.
5. This post and 8" x 12" block combination is typically used where strengthened line post sections of MGS are warranted to shield fixed objects.
6. See Revised Standard Plan RSP A77L3 for use of 6" x 8" and 8" x 8" wood blocks.

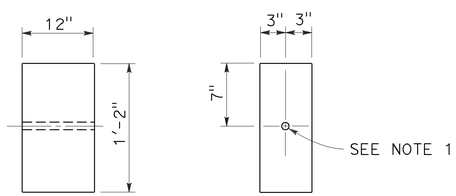

SIDE FRONT

6" x 12" WOOD BLOCK
See Note 3

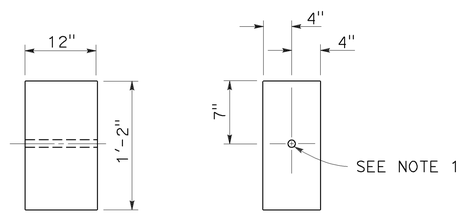

SIDE FRONT

8" x 12" WOOD BLOCK

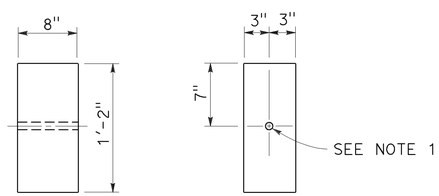

SIDE FRONT

6" x 8" WOOD BLOCK
Only for use with metal beam guard rail see Note 6

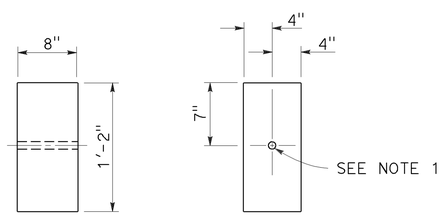

SIDE FRONT

8" x 8" WOOD BLOCK
Only for use with metal beam guard rail see Note 6

STATE OF CALIFORNIA
DEPARTMENT OF TRANSPORTATION

MIDWEST GUARDRAIL SYSTEM WOOD POST AND WOOD BLOCK DETAILS

NO SCALE

RSP A77N1 DATED JULY 19, 2013 SUPPLEMENTS THE STANDARD PLANS BOOK DATED 2010.

REVISED STANDARD PLAN RSP A77N1

2010 REVISED STANDARD PLAN RSP A77N1

7-3-13

Dist	COUNTY	ROUTE	POST MILES TOTAL PROJECT	SHEET No.	TOTAL SHEETS
05	Mon	68	R17.4/R18.0	68	149

Randell D. Hiatt
REGISTERED CIVIL ENGINEER

November 15, 2013
PLANS APPROVAL DATE

REGISTERED PROFESSIONAL ENGINEER
Randell D. Hiatt
No. C50200
Exp. 6-30-15
CIVIL
STATE OF CALIFORNIA

THE STATE OF CALIFORNIA OR ITS OFFICERS OR AGENTS SHALL NOT BE RESPONSIBLE FOR THE ACCURACY OR COMPLETENESS OF SCANNED COPIES OF THIS PLAN SHEET.

TO ACCOMPANY PLANS DATED 6-22-15

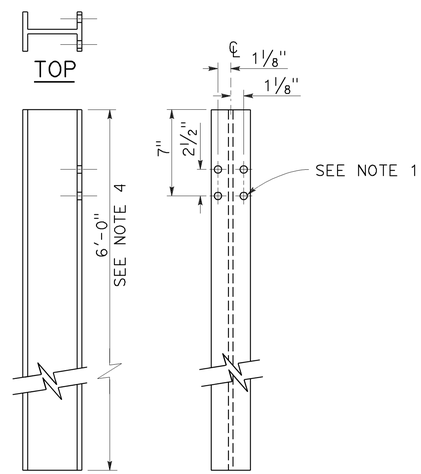

W6 x 9 OR W6 x 8.5
STEEL POST
See Note 4

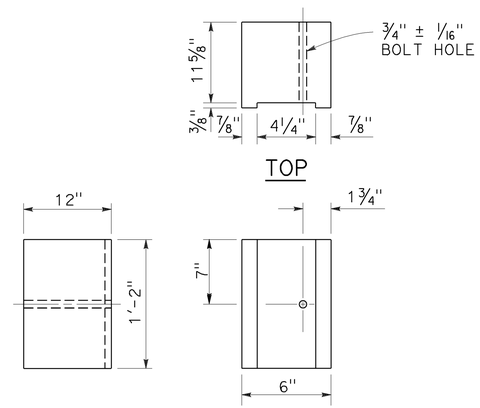

6" x 12"
NOTCHED WOOD BLOCK
See Notes 2 and 3

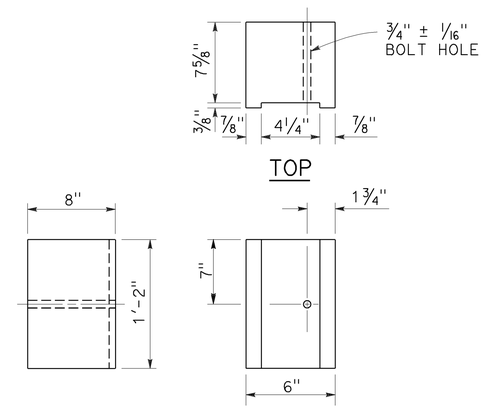

6" x 8"
NOTCHED WOOD BLOCK
Only for use with metal beam guard railing. See Note 5

NOTES:

1. All holes in steel post shall be 13/16" Dia maximum.
2. Dimensions shown for wood block are nominal.
3. Notched face of block faces steel post.
4. 6'-0" length posts to be used for typical roadway installation. See Revised Standard Plan RSP A77N3.
5. See Revised Standard Plan RSP A77L3 for use of 6" x 8" and 8" x 8" notched wood blocks.
6. This post and 8" x 12" block combination to be used for line post sections of MGS on narrow roadways and where strengthened line post sections of MGS are warranted to shield fixed objects.

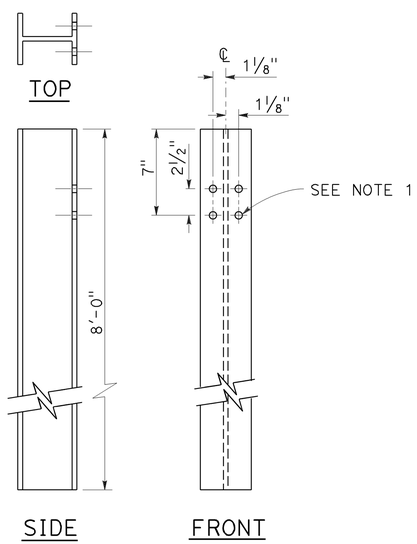

W6 x 15
STEEL POST
See Note 6

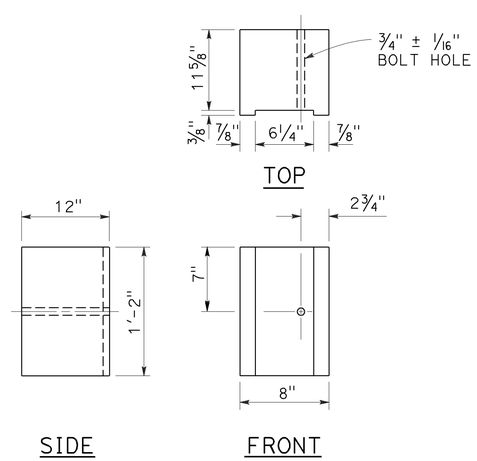

8" x 12"
NOTCHED WOOD BLOCK
See Notes 2 and 3

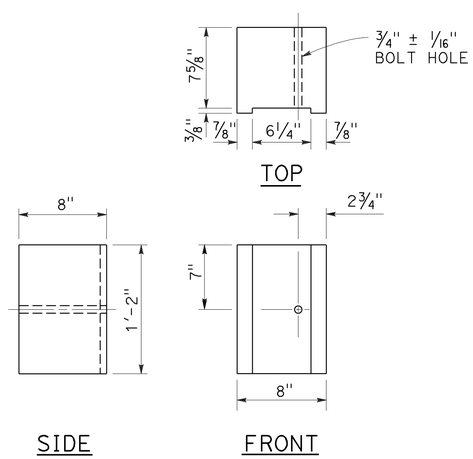

8" x 8"
NOTCHED WOOD BLOCK
Only for use with metal beam guard railing. See Note 5

STATE OF CALIFORNIA
DEPARTMENT OF TRANSPORTATION

MIDWEST GUARDRAIL SYSTEM STEEL POST AND NOTCHED WOOD BLOCK DETAILS

NO SCALE

RSP A77N2 DATED NOVEMBER 15, 2013 SUPERSEDES RSP A77N2
DATED JULY 19, 2013 THAT SUPPLEMENTS THE STANDARD PLANS BOOK DATED 2010.

REVISED STANDARD PLAN RSP A77N2

2010 REVISED STANDARD PLAN RSP A77N2

10-29-13

Dist	COUNTY	ROUTE	POST MILES TOTAL PROJECT	SHEET No.	TOTAL SHEETS
05	Mon	68	R17.4/R18.0	69	149

Randell D. Hiatt
REGISTERED CIVIL ENGINEER

November 15, 2013
PLANS APPROVAL DATE

REGISTERED PROFESSIONAL ENGINEER
Randell D. Hiatt
No. C50200
Exp. 6-30-15
CIVIL
STATE OF CALIFORNIA

THE STATE OF CALIFORNIA OR ITS OFFICERS OR AGENTS SHALL NOT BE RESPONSIBLE FOR THE ACCURACY OR COMPLETENESS OF SCANNED COPIES OF THIS PLAN SHEET.

TO ACCOMPANY PLANS DATED 6-22-15

2010 REVISED STANDARD PLAN RSP A77N3

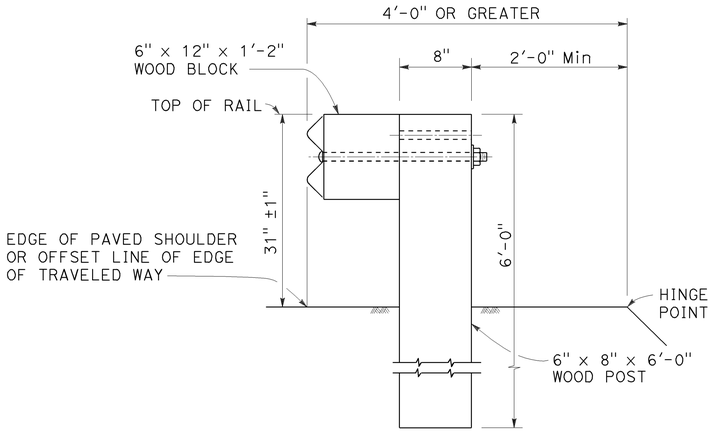

DETAIL A

TYPICAL ROADWAY INSTALLATION

See Note 1

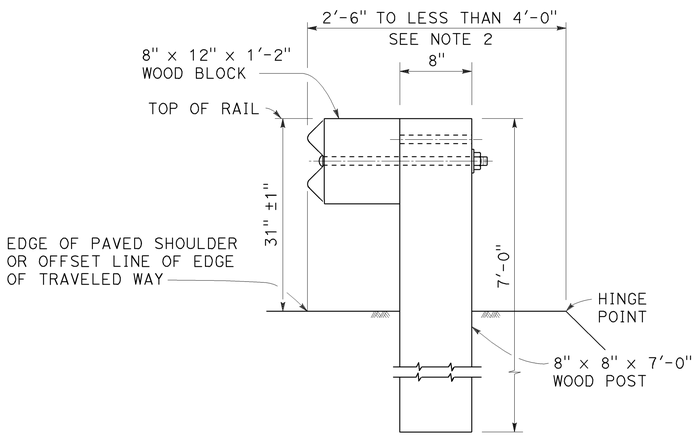

DETAIL B

NARROW ROADWAY INSTALLATION

See Note 1

POST EMBEDMENT

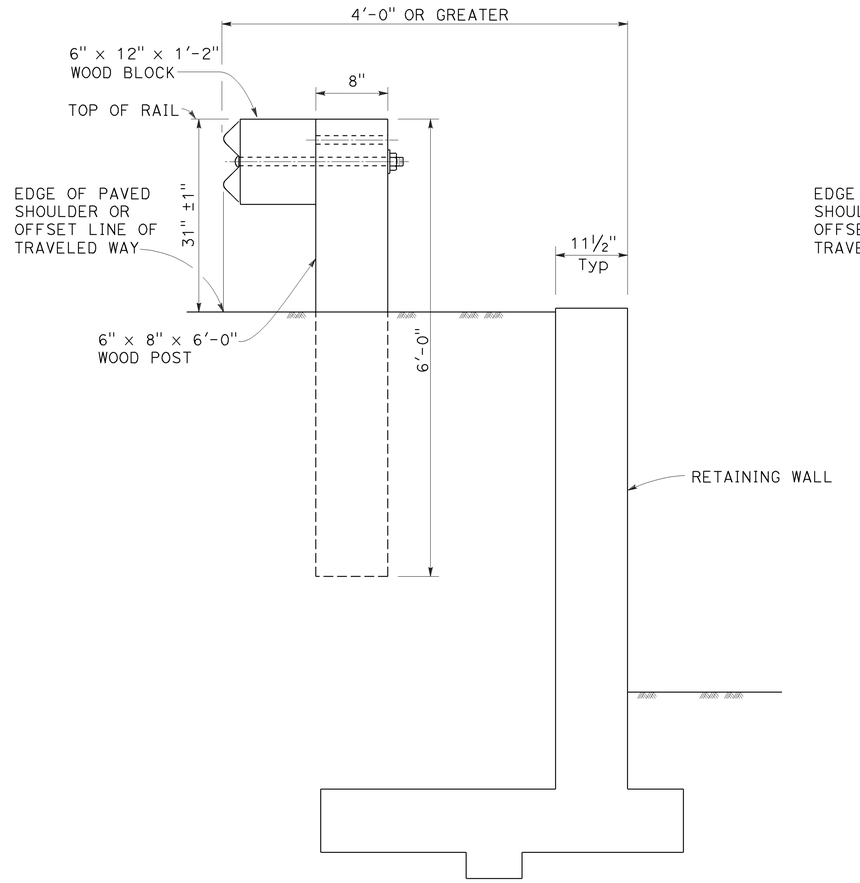

DETAIL C

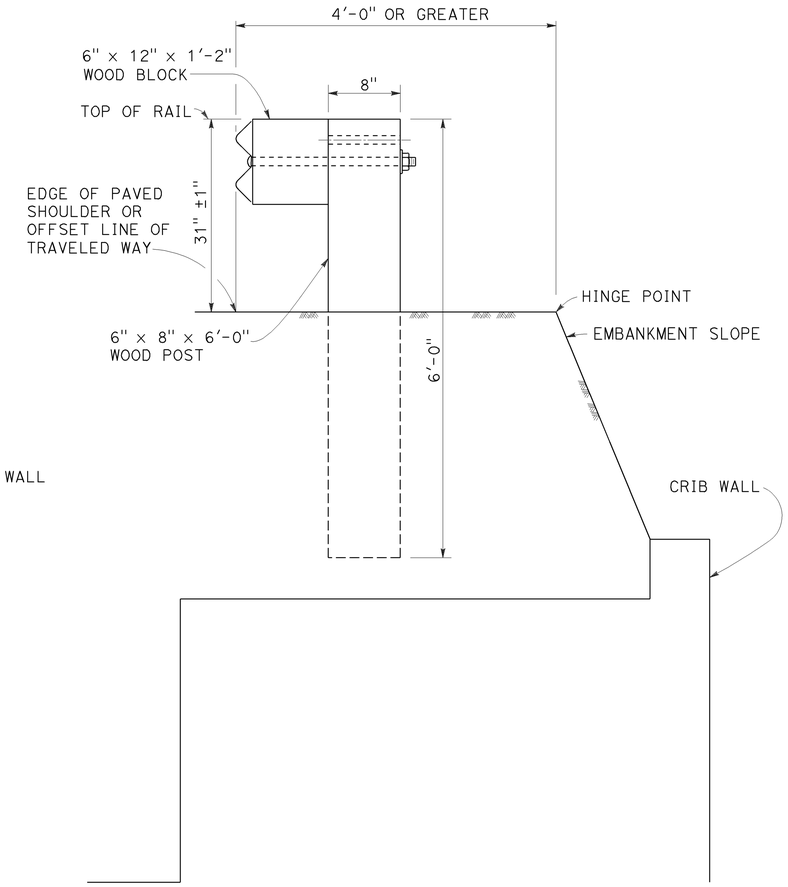

DETAIL D

INSTALLATION AT EARTH RETAINING WALLS

NOTES:

1. These installation details also applicable to steel line post installations. For Detail A, C, and D, where steel line post installations are constructed, W6 x 8.5 or W6 x 9 steel post, 6'-0" in length, with 6" x 12" x 1'-2" notched wood blocks or notched recycled plastic blocks are to be used in place of the size of wood post and wood block shown. For Detail B, where steel line post installations are constructed, W6 x 15 steel post, 8'-0" in length, with 8" x 12" x 1'-2" notched wood blocks or notched recycled plastic blocks are to be used in place of the size of wood post and wood block shown. For additional installation details, see Revised Standard Plan RSP A77L1 and RSP A77L2.
2. Where the distance between the face of the rail and the hinge point is less than 2'-6", see the Project Plans for special details.
3. For dike positioning with MGS installations, see Revised Standard Plan RSP A77N4.

STATE OF CALIFORNIA
DEPARTMENT OF TRANSPORTATION

MIDWEST GUARDRAIL SYSTEM TYPICAL LINE POST EMBEDMENT AND HINGE POINT OFFSET DETAILS

NO SCALE

RSP A77N3 DATED NOVEMBER 15, 2013 SUPERSEDES RSP A77N3 DATED JULY 19, 2013 THAT SUPPLEMENTS THE STANDARD PLANS BOOK DATED 2010.

REVISED STANDARD PLAN RSP A77N3

10-29-13

Dist	COUNTY	ROUTE	POST MILES TOTAL PROJECT	SHEET No.	TOTAL SHEETS
05	Mon	68	R17.4/R18.0	70	149

Randell D. Hiatt
REGISTERED CIVIL ENGINEER

July 19, 2013
PLANS APPROVAL DATE

REGISTERED PROFESSIONAL ENGINEER
Randell D. Hiatt
No. C50200
Exp. 6-30-15
CIVIL
STATE OF CALIFORNIA

THE STATE OF CALIFORNIA OR ITS OFFICERS OR AGENTS SHALL NOT BE RESPONSIBLE FOR THE ACCURACY OR COMPLETENESS OF SCANNED COPIES OF THIS PLAN SHEET.

TO ACCOMPANY PLANS DATED 6-22-15

NOTES:

1. When necessary to place dike more than 7" in front of face of MGS, only Type C dike may be used. For dike details, see Revised Standard Plan RSP A87B.
2. For standard railing post embedment, see Revised Standard Plan RSP A77N3.
3. MGS delineation to be used where shown on the Project Plans.
4. When dike or curb is placed under MGS, the maximum height of the dike or curb shall be 6". Mountable dike should not be used. For dike and curb details, see Revised Standard Plans RSP A87A and RSP A87B.
5. For details of typical distance between the face of rail and hinge point, see Revised Standard Plan RSP A77N3.
6. For steel line posts, use 1/4 - 20 self-tapping screws in 0.22" diameter holes or 1/4" bolts in 9/32" diameter holes.

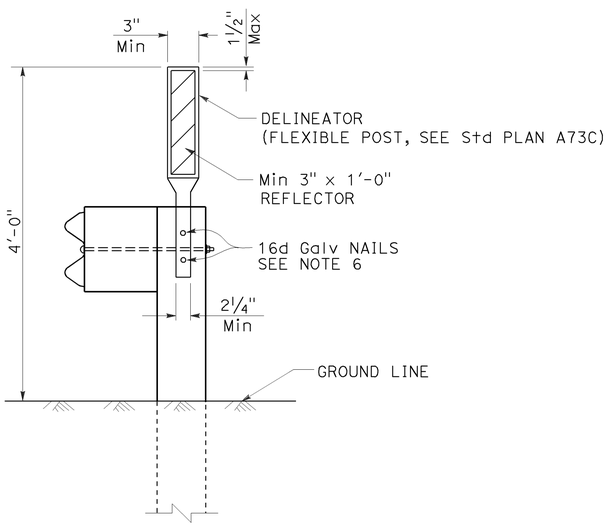

MGS DELINEATION

See Note 3

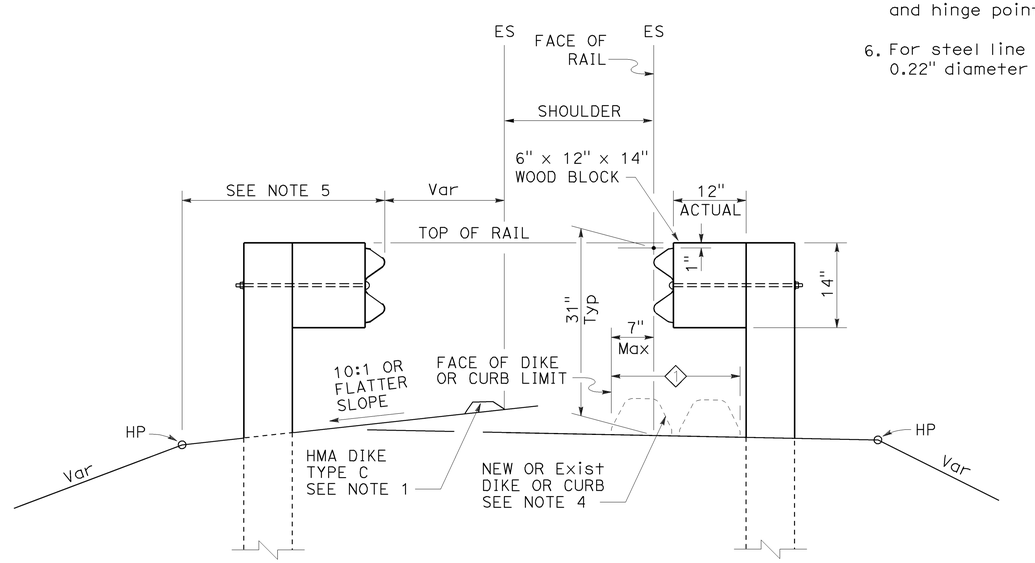

DIKE POSITIONING

See Note 1

1 PERMISSIBLE DIKE OR CURB PLACEMENT AREA

STATE OF CALIFORNIA
DEPARTMENT OF TRANSPORTATION

MIDWEST GUARDRAIL SYSTEM TYPICAL RAILING DELINEATION AND DIKE POSITIONING DETAILS

NO SCALE

RSP A77N4 DATED JULY 19, 2013 SUPPLEMENTS THE STANDARD PLANS BOOK DATED 2010.

REVISED STANDARD PLAN RSP A77N4

2010 REVISED STANDARD PLAN RSP A77N4

7-10-13

Dist	COUNTY	ROUTE	POST MILES TOTAL PROJECT	SHEET No.	TOTAL SHEETS
05	Mon	68	R17.4/R18.0	71	149

Randell D. Hiatt
REGISTERED CIVIL ENGINEER

July 19, 2013
PLANS APPROVAL DATE

REGISTERED PROFESSIONAL ENGINEER
Randell D. Hiatt
No. C50200
Exp. 6-30-15
CIVIL
STATE OF CALIFORNIA

THE STATE OF CALIFORNIA OR ITS OFFICERS OR AGENTS SHALL NOT BE RESPONSIBLE FOR THE ACCURACY OR COMPLETENESS OF SCANNED COPIES OF THIS PLAN SHEET.

TO ACCOMPANY PLANS DATED 6-22-15

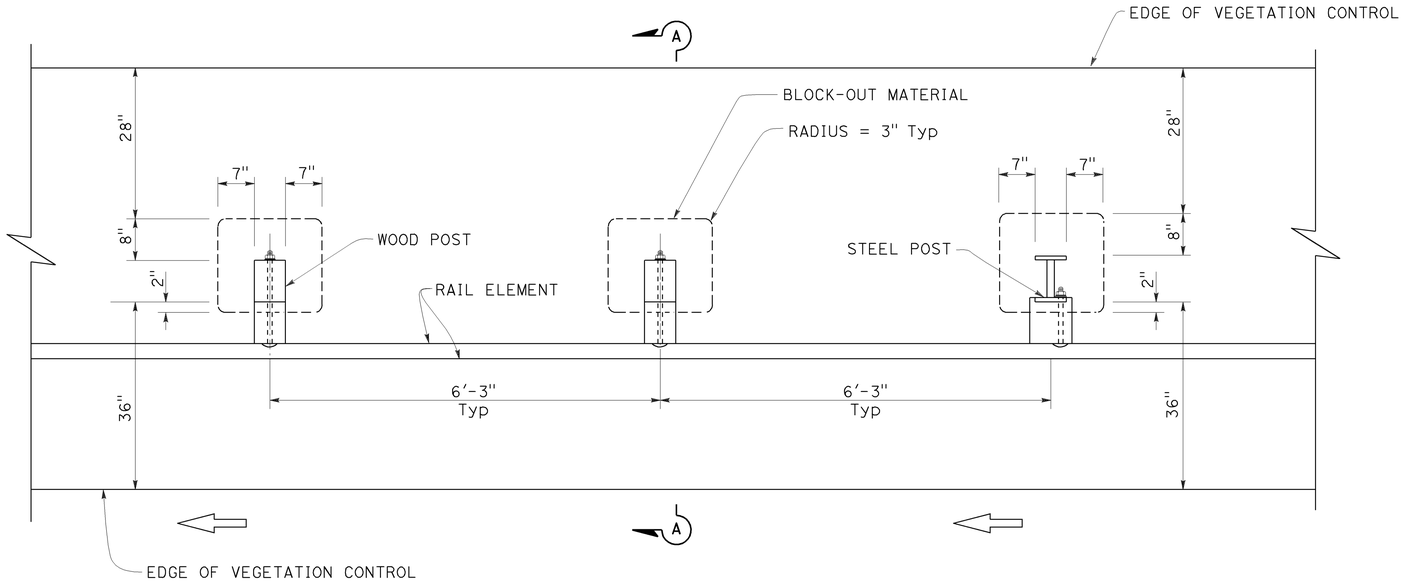

PLAN

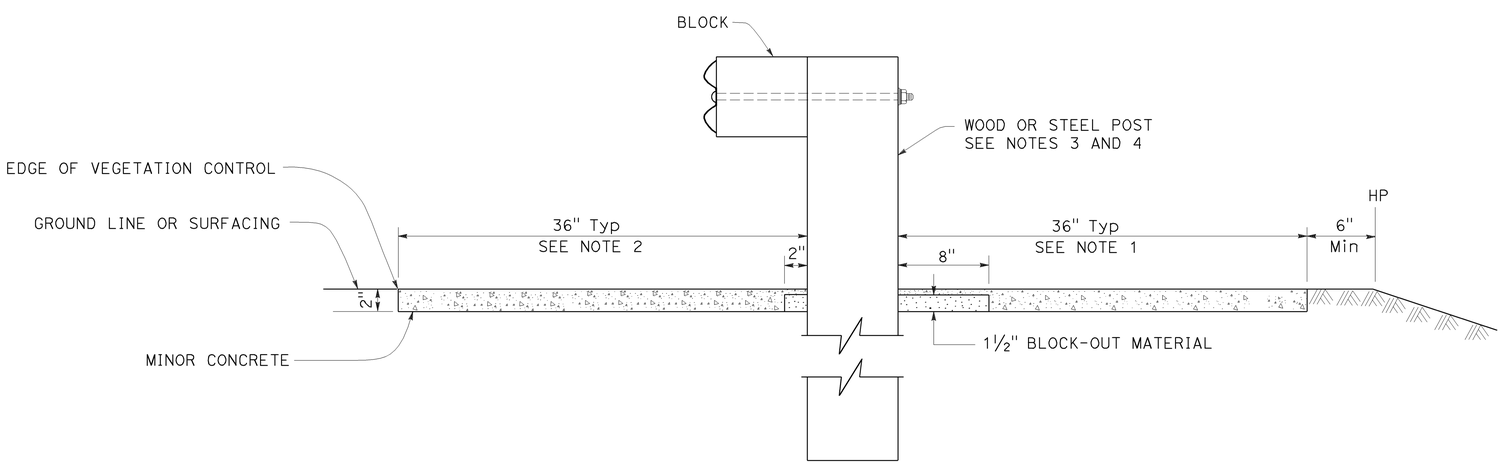

SECTION A-A

NOTES:

1. Where the distance between back of post and hinge point is less than 42", construct vegetation control to 6" from hinge point while maintaining the 8" block-out at back of post. If the 8" block-out at back of post can not be maintained, construct vegetation control flush with the back edge of post.
2. Where dike is constructed under railing, construct vegetation control to back edge of dike. Where paved shoulder is constructed within 36" in front of the post, construct vegetation control to the edge of paved shoulder.
3. For wood post sizes, see Revised Standard Plan RSP A77N1.
4. For steel post sizes, see Revised Standard Plan RSP A77N2.
5. For details not shown, see Revised Standard Plans RSP A77L1 and RSP A77L2.

STATE OF CALIFORNIA
DEPARTMENT OF TRANSPORTATION

MIDWEST GUARDRAIL SYSTEM TYPICAL VEGETATION CONTROL STANDARD RAILING SECTION

NO SCALE

RSP A77N5 DATED JULY 19, 2013 SUPPLEMENTS THE STANDARD PLANS BOOK DATED 2010.

REVISED STANDARD PLAN RSP A77N5

2010 REVISED STANDARD PLAN RSP A77N5

7-3-13

Dist	COUNTY	ROUTE	POST MILES TOTAL PROJECT	SHEET No.	TOTAL SHEETS
05	Mon	68	R17.4/R18.0	72	149

Randell D. Hiatt
REGISTERED CIVIL ENGINEER

July 19, 2013
PLANS APPROVAL DATE

REGISTERED PROFESSIONAL ENGINEER
Randell D. Hiatt
No. C50200
Exp. 6-30-15
CIVIL
STATE OF CALIFORNIA

THE STATE OF CALIFORNIA OR ITS OFFICERS OR AGENTS SHALL NOT BE RESPONSIBLE FOR THE ACCURACY OR COMPLETENESS OF SCANNED COPIES OF THIS PLAN SHEET.

TO ACCOMPANY PLANS DATED 6-22-15

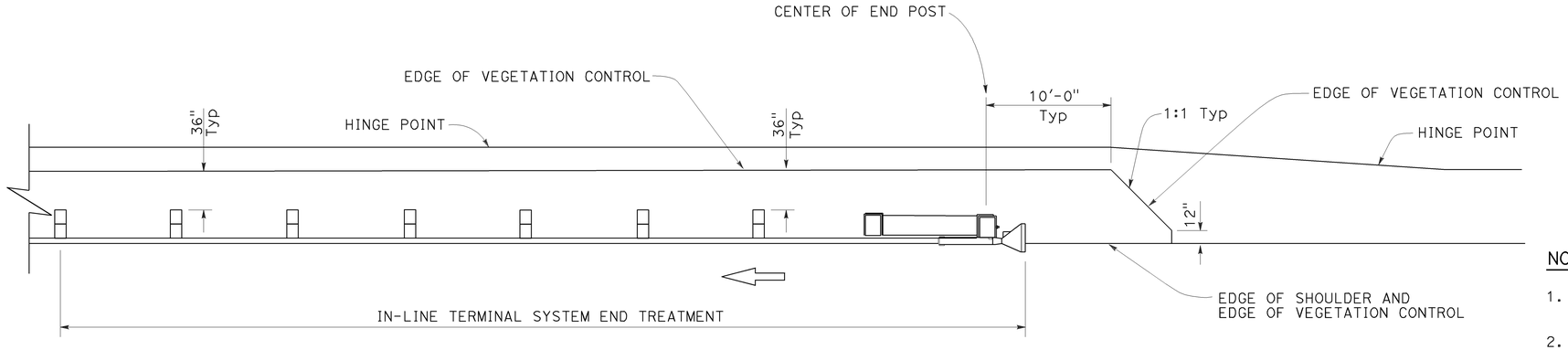

PLAN

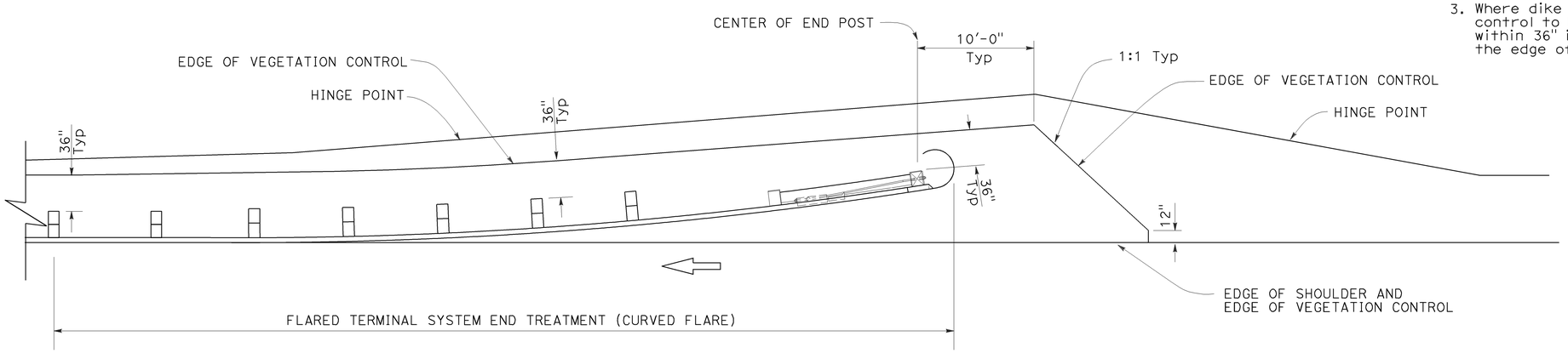

PLAN

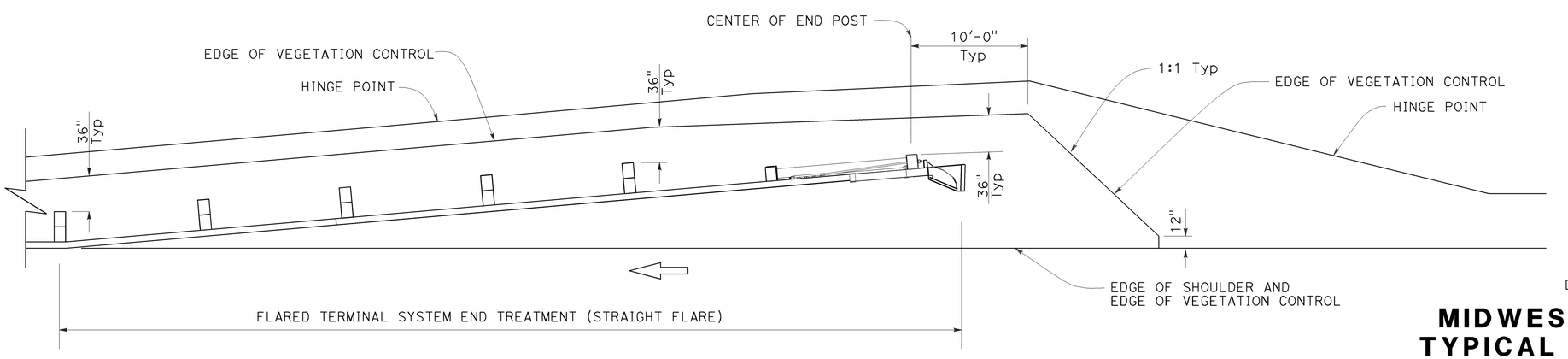

PLAN

NOTES:

1. See Revised Standard Plan RSP A77N5 for additional vegetation control details.
2. Where the distance between back of post and hinge point is less than 42", construct vegetation control to 6" from hinge point while maintaining the 8" block-out at back of post. If the 8" block-out at back of post can not be maintained, construct vegetation control flush with the back edge of post.
3. Where dike is constructed under railing, construct vegetation control to back edge of dike. Where paved shoulder is constructed within 36" in front of the post, construct vegetation control to the edge of paved shoulder.

STATE OF CALIFORNIA
DEPARTMENT OF TRANSPORTATION

MIDWEST GUARDRAIL SYSTEM TYPICAL VEGETATION CONTROL FOR TERMINAL SYSTEM END TREATMENTS

NO SCALE

RSP A77N6 DATED JULY 19, 2013 SUPPLEMENTS THE STANDARD PLANS BOOK DATED 2010.

REVISED STANDARD PLAN RSP A77N6

2010 REVISED STANDARD PLAN RSP A77N6

6-12-13

Dist	COUNTY	ROUTE	POST MILES TOTAL PROJECT	SHEET No.	TOTAL SHEETS
05	Mon	68	R17.4/R18.0	73	149

Randell D. Hiatt
REGISTERED CIVIL ENGINEER

July 19, 2013
PLANS APPROVAL DATE

REGISTERED PROFESSIONAL ENGINEER
Randell D. Hiatt
No. C50200
Exp. 6-30-15
CIVIL
STATE OF CALIFORNIA

THE STATE OF CALIFORNIA OR ITS OFFICERS OR AGENTS SHALL NOT BE RESPONSIBLE FOR THE ACCURACY OR COMPLETENESS OF SCANNED COPIES OF THIS PLAN SHEET.

TO ACCOMPANY PLANS DATED 6-22-15

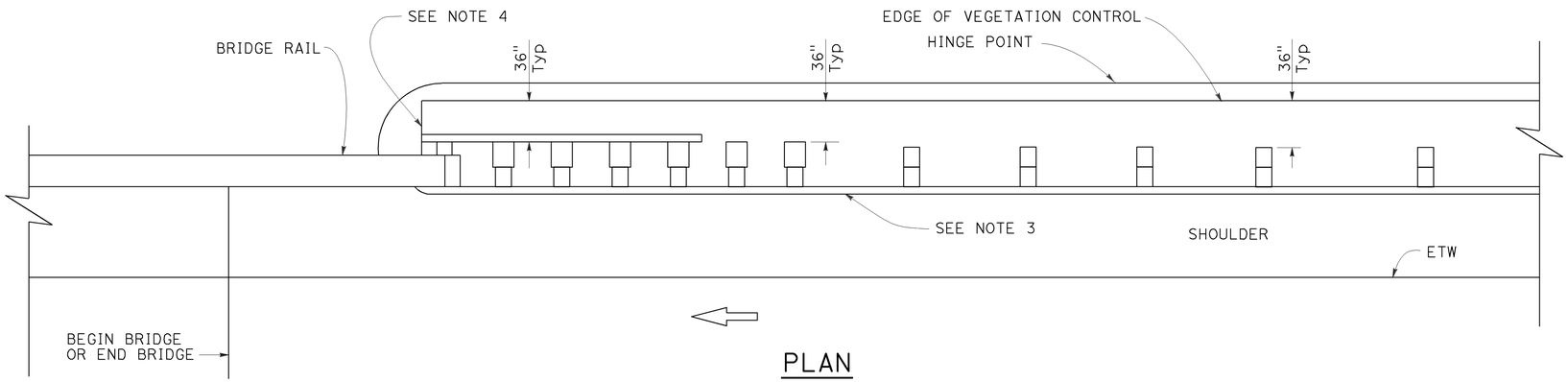

PLAN

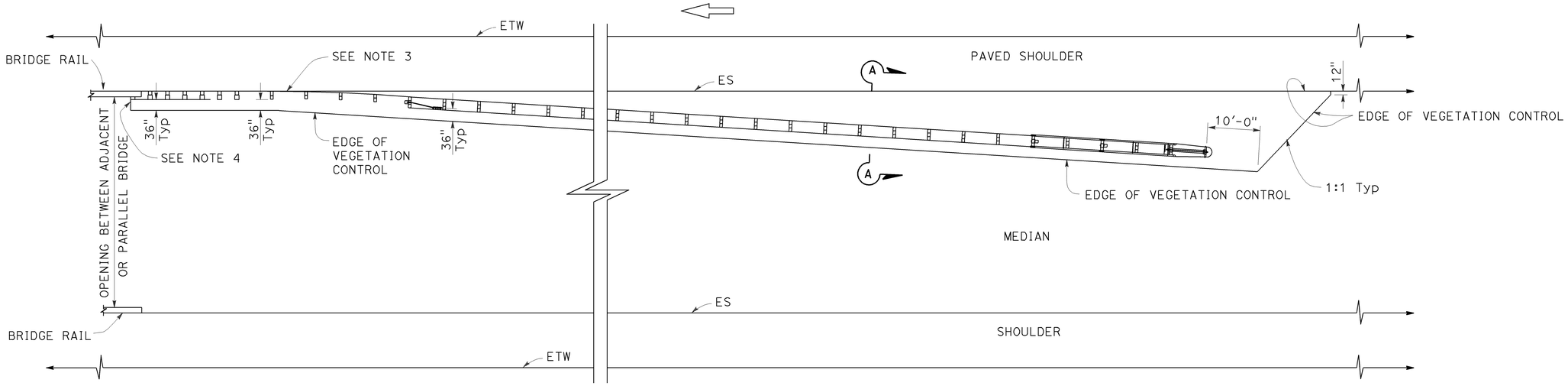

PLAN

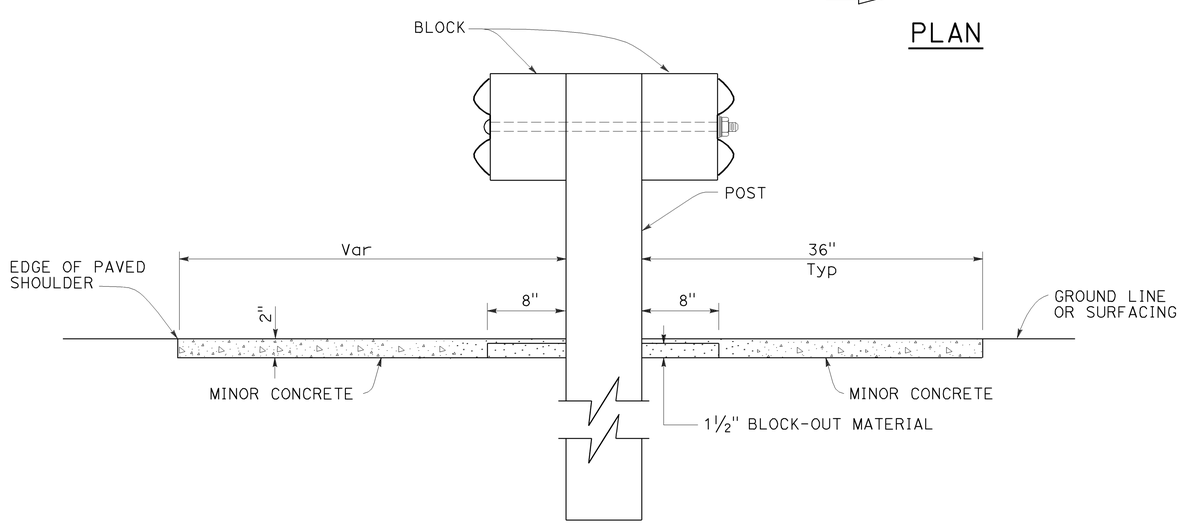

SECTION A-A

NOTES:

1. See Revised Standard Plan RSP A77N5 for additional vegetation control details.
2. Where the distance between back of post and hinge point is less than 42", construct vegetation control to 6" from hinge point while maintaining the 8" block-out at back of post. If the 8" block-out at back of post can not be maintained, construct vegetation control flush with the back edge of post.
3. Where dike is constructed under railing, construct vegetation control to back edge of dike. Where paved shoulder is constructed within 36" in front of the post, construct vegetation control to the edge of paved shoulder.
4. End vegetation control at end of backside rail element.

STATE OF CALIFORNIA
DEPARTMENT OF TRANSPORTATION

MIDWEST GUARDRAIL SYSTEM TYPICAL VEGETATION CONTROL AT STRUCTURE APPROACH

NO SCALE

RSP A77N7 DATED JULY 19, 2013 SUPPLEMENTS THE STANDARD PLANS BOOK DATED 2010.

REVISED STANDARD PLAN RSP A77N7

2010 REVISED STANDARD PLAN RSP A77N7

6-12-13

Dist	COUNTY	ROUTE	POST MILES TOTAL PROJECT	SHEET No.	TOTAL SHEETS
05	Mon	68	R17.4/R18.0	74	149

Randell D. Hiatt
REGISTERED CIVIL ENGINEER

July 19, 2013
PLANS APPROVAL DATE

REGISTERED PROFESSIONAL ENGINEER
Randell D. Hiatt
No. C50200
Exp. 6-30-15
CIVIL
STATE OF CALIFORNIA

THE STATE OF CALIFORNIA OR ITS OFFICERS OR AGENTS SHALL NOT BE RESPONSIBLE FOR THE ACCURACY OR COMPLETENESS OF SCANNED COPIES OF THIS PLAN SHEET.

TO ACCOMPANY PLANS DATED 6-22-15

2010 REVISED STANDARD PLAN RSP A77Q1

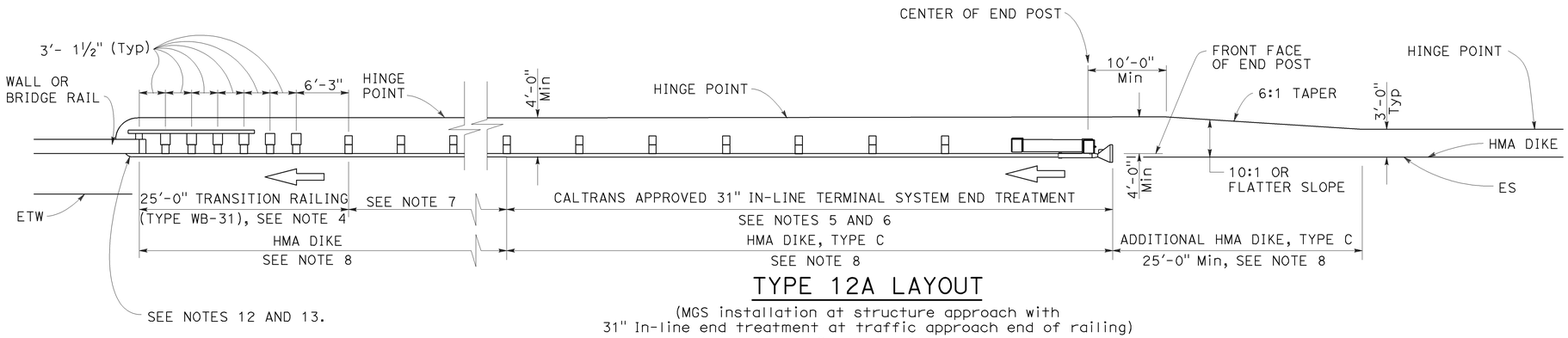

TYPE 12A LAYOUT

(MGS installation at structure approach with
31" In-line end treatment at traffic approach end of railing)
See Notes 9

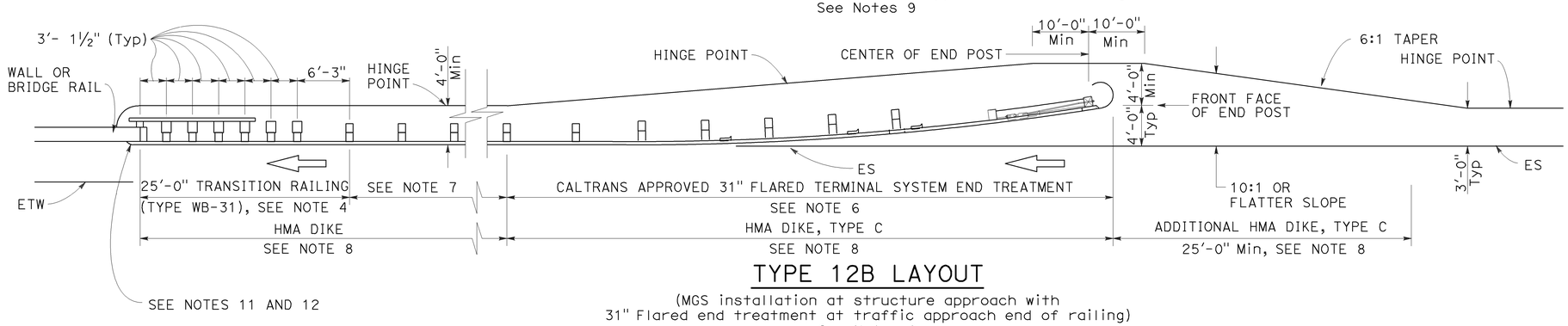

TYPE 12B LAYOUT

(MGS installation at structure approach with
31" Flared end treatment at traffic approach end of railing)
See Notes 9

NOTES:

1. Line post, blocks and hardware to be used are shown on Revised Standard Plans RSP A77L1, RSP A77L2, RSP A77M1, RSP A77N1 and RSP A77N2.
2. MGS post spacing to be 6'-3" center to center, except as otherwise noted.
3. Except as noted, line posts are 6" x 8" x 6'-0" wood with 6" x 12" x 1'-2" wood blocks. W6 x 8.5 or W6 x 9 steel posts, 6'-0" in length, with 6" x 12" x 1'-2" notched wood blocks or plastic blocks may be used for 6" x 8" x 6'-0" wood posts with 6" x 12" x 1'-2" wood blocks where applicable and when specified.
4. For Transition Railing (Type WB-31) details for Types 12A and 12B Layouts, see Revised Standard Plan RSP A77U4.
5. 31" in-line terminal system end treatments are used where site conditions will not accommodate a 31" flared end treatment.
6. The type 31" of terminal system end treatment to be used will be shown on the Project Plans.
7. Dependent on site conditions (embankment height, side slopes, or other fixed objects), it may be advisable to construct additional guard railing (a length equal to multiples of 12'-6" with 6'-3" post spacing) between the transition railing and end treatment. A 12.5 degree angle of departure can be drawn on the Project Plans from the edge of traveled way through the outer most point of the fixed object to determine the additional length of railing needed.
8. Where placement of dike is required with guard railing installations, see Revised Standard Plan RSP A77N4 for dike positioning details.
9. Type 12A or Type 12B Layouts are typically used:
   a. To the right of approaching traffic, at the end of a structure, on two-lane conventional highway where the roadbed width across the structure is less than 40 feet.
   b. To the left of approaching traffic, at the end of a structure, on two-lane conventional highway where the roadbed width across the structure is less than 40 feet.
   c. To the right of approaching traffic at the end of each structure on multilane freeways or expressways with separate adjacent or parallel bridges.
   d. To the right of approaching traffic at the end of the structure on multilane freeways or expressways with decked median on the bridge.
10. See Revised Standard Plan RSP A77Q3 for typical layout used left of approaching traffic at the ends of each structure on multilane freeways or expressways with separate adjacent or parallel bridges.
11. For additional details of typical connections to bridge rail, see Connection Detail AA on Revised Standard Plans RSP A77U1 and RSP A77U2 and Connection Detail FF on Revised Standard Plans RSP A77V1 and RSP A77V2.
12. For additional details of a typical connection to walls or abutments, see Revised Standard Plan RSP A77U3.

STATE OF CALIFORNIA
DEPARTMENT OF TRANSPORTATION

MIDWEST GUARDRAIL SYSTEM TYPICAL LAYOUTS FOR STRUCTURE APPROACH

NO SCALE

RSP A77Q1 DATED JULY 19, 2013 SUPPLEMENTS THE STANDARD PLANS BOOK DATED 2010.

REVISED STANDARD PLAN RSP A77Q1

Dist	COUNTY	ROUTE	POST MILES TOTAL PROJECT	SHEET No.	TOTAL SHEETS
05	Mon	68	R17.4/R18.0	75	149

Randell D. Hiatt
REGISTERED CIVIL ENGINEER

July 19, 2013
PLANS APPROVAL DATE

REGISTERED PROFESSIONAL ENGINEER
Randell D. Hiatt
No. C50200
Exp. 6-30-15
CIVIL
STATE OF CALIFORNIA

THE STATE OF CALIFORNIA OR ITS OFFICERS OR AGENTS SHALL NOT BE RESPONSIBLE FOR THE ACCURACY OR COMPLETENESS OF SCANNED COPIES OF THIS PLAN SHEET.

TO ACCOMPANY PLANS DATED 6-22-15

2010 REVISED STANDARD PLAN RSP A77Q3

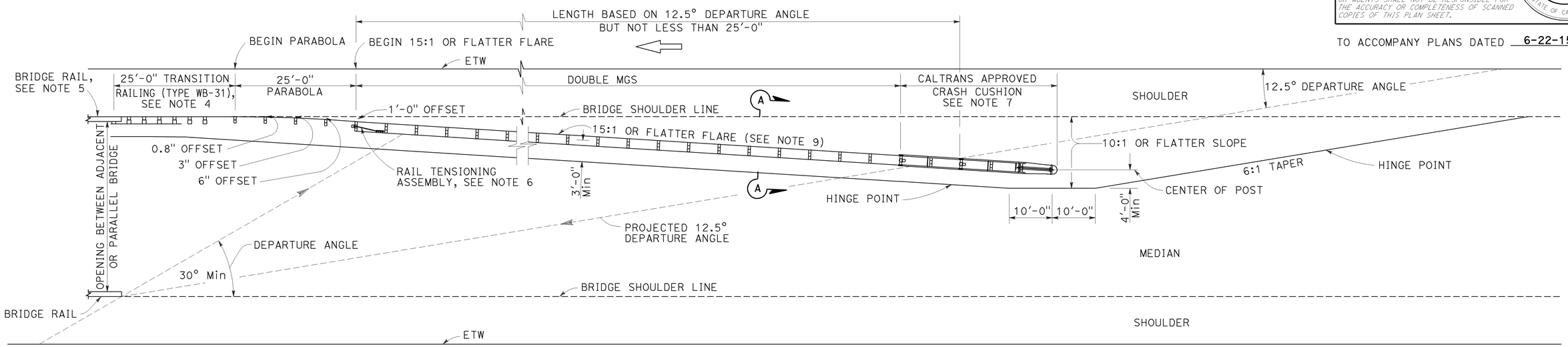

TYPE 12E LAYOUT

See Note 9

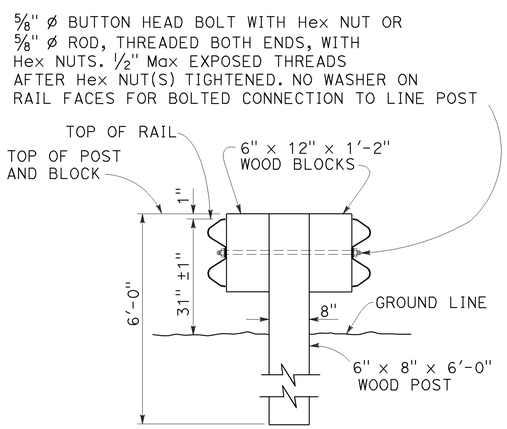

SECTION A-A
TYPICAL DOUBLE MIDWEST GUARDRAIL SYSTEM

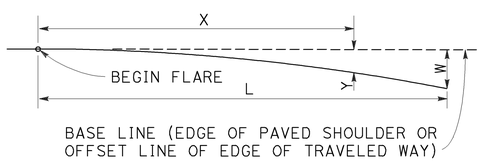

$$Y = \frac{WX^2}{L^2}$$

Y = OFFSET FROM BASE LINE
W = MAXIMUM OFFSET
X = DISTANCE ALONG BASE LINE
L = LENGTH OF FLARE

PARABOLIC FLARE OFFSETS

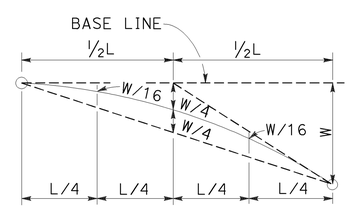

TYPICAL PARABOLIC LAYOUT

NOTES:

1. Line post, blocks and hardware to be used are shown on Revised Standard Plans RSP A77L1, RSP A77L2, RSP A77M1, RSP A77N1 and RSP A77N2.
2. MGS post spacing to be 6'-3" center to center, except as otherwise noted.
3. Except as noted, line posts are 6" x 8" x 6'-0" wood with 6" x 12" x 1'-2" wood blocks. W6 x 8.5 or W6 x 9 steel posts, 6'-0" in length, with 6" x 12" x 1'-2" notched wood blocks or notched recycled plastic blocks may be used for 6" x 8" x 6'-0" wood line posts with 6" x 12" x 1'-2" wood blocks where applicable and when specified.
4. For Transition Railing (Type WB-31) details, see Revised Standard Plan RSP A77U4.
5. For additional details of a typical connection to bridge rail, see Connection Detail AA on Revised Standard Plan RSP A77U1.
6. For Rail Tensioning Assembly details, see Revised Standard Plan RSP A77S2.
7. The type of Crash Cushion to be used will be shown on the Project Plans.
8. Type 12E Layout is typically used left of approaching traffic at the end of each structure on multilane freeways or expressways where a median type barrier is not constructed between separated roadbeds.
9. The 15:1 or flatter flare is measured off of the edge of traveled way.

STATE OF CALIFORNIA
DEPARTMENT OF TRANSPORTATION

MIDWEST GUARDRAIL SYSTEM TYPICAL LAYOUTS FOR STRUCTURE APPROACH

NO SCALE

RSP A77Q3 DATED JULY 19, 2013 SUPPLEMENTS THE STANDARD PLANS BOOK DATED 2010.

REVISED STANDARD PLAN RSP A77Q3

Dist	COUNTY	ROUTE	POST MILES TOTAL PROJECT	SHEET No.	TOTAL SHEETS
05	Mon	68	R17.4/R18.0	76	149

Randell D. Hiatt
REGISTERED CIVIL ENGINEER

July 19, 2013
PLANS APPROVAL DATE

REGISTERED PROFESSIONAL ENGINEER
Randell D. Hiatt
No. C50200
Exp. 6-30-15
CIVIL
STATE OF CALIFORNIA

THE STATE OF CALIFORNIA OR ITS OFFICERS OR AGENTS SHALL NOT BE RESPONSIBLE FOR THE ACCURACY OR COMPLETENESS OF SCANNED COPIES OF THIS PLAN SHEET.

TO ACCOMPANY PLANS DATED 6-22-15

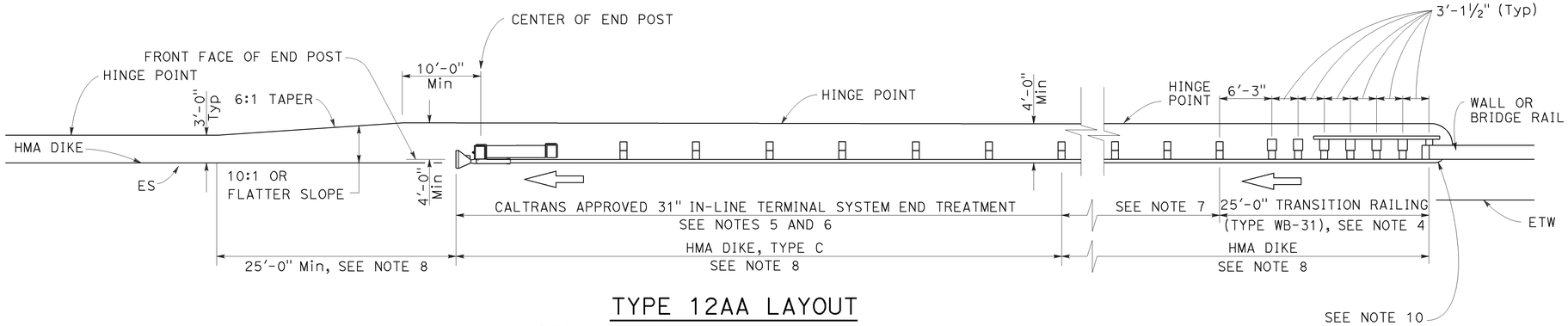

TYPE 12AA LAYOUT

(MGS installation at structure departure with
31" in-line end treatment at trailing end of railing)
See Notes 8 and 9

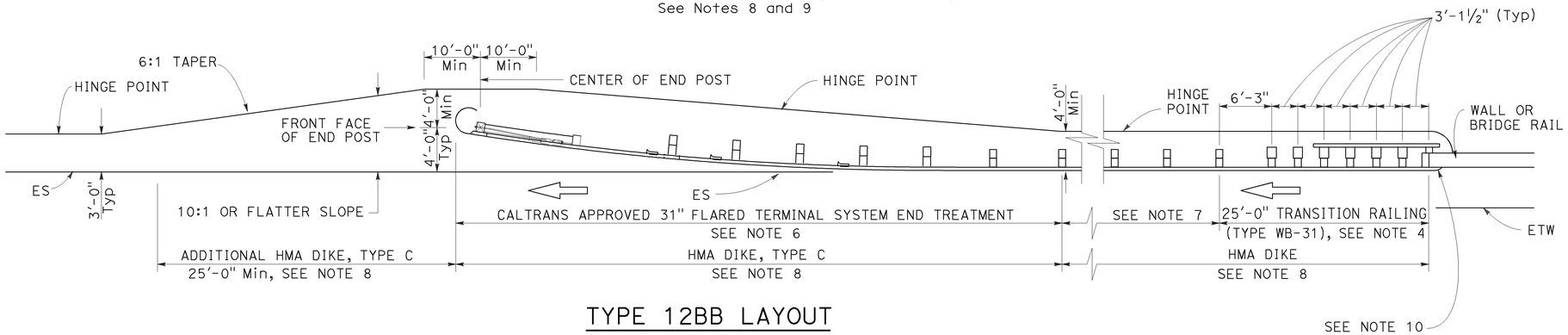

TYPE 12BB LAYOUT

(MGS installation at structure departure with
31" flared end treatment at trailing end of railing)
See Notes 8 and 9

NOTES:

1. Line post, blocks and hardware to be used are shown on Revised Standard Plans RSP A77L1, RSP A77L2, RSP A77M1, RSP A77N1 and RSP A77N2.
2. MGS post spacing to be 6'-3" center to center, except as otherwise noted.
3. Except as noted, line posts are 6" x 8" x 6'-0" wood with 6" x 12" x 1'-2" wood blocks. W6 x 8.5 or W6 x 9 steel posts, 6'-0" in length, with 6" x 12" x 1-2" notched wood blocks or notched recycled plastic blocks may be used for 6" x 8" x 6'-0" wood posts with 6" x 12" x 1'-2" wood blocks where applicable and when specified.
4. For Transition Railing (Type WB-31) details for Types 12AA and 12BB Layouts, see Revised Standard Plan RSP A77U4.
5. 31" in-line terminal system treatments are used where site conditions will not accommodate a 31" flared end treatment.
6. The type of 31" terminal system to be used will be shown on the Project Plans.
7. Dependent on site conditions (embankment height, side slopes, other fixed objects), it may be advisable to construct additional MGS (a length equal to multiples of 12'-6" with 6'-3" post spacing) between the transition railing and 31" end treatments.
8. Where placement of dike is required with MGS installations, see Revised Standard Plan RSP A77N4 for dike positioning details.
9. Type 12AA or Type 12BB Layouts are typically used to the right of traffic departing a structure on two-way conventional highways where the roadbed width across the structure is less than 40 feet.
10. For additional details of typical connections to bridge rail, see Connection Detail CC on Revised Standard Plan RSP A77U2 and Connection Detail HH on Revised Standard Plan RSP A77V2.

STATE OF CALIFORNIA
DEPARTMENT OF TRANSPORTATION

MIDWEST GUARDRAIL SYSTEM TYPICAL LAYOUTS FOR STRUCTURE DEPARTURE

NO SCALE

RSP A77Q4 DATED JULY 19, 2013 SUPPLEMENTS THE STANDARD PLANS BOOK DATED 2010.

REVISED STANDARD PLAN RSP A77Q4

2010 REVISED STANDARD PLAN RSP A77Q4

6-19-13

Dist	COUNTY	ROUTE	POST MILES TOTAL PROJECT	SHEET No.	TOTAL SHEETS
05	Mon	68	R17.4/R18.0	77	149

Randell D. Hiatt
REGISTERED CIVIL ENGINEER

July 19, 2013
PLANS APPROVAL DATE

REGISTERED PROFESSIONAL ENGINEER
Randell D. Hiatt
No. C50200
Exp. 6-30-15
CIVIL
STATE OF CALIFORNIA

THE STATE OF CALIFORNIA OR ITS OFFICERS OR AGENTS SHALL NOT BE RESPONSIBLE FOR THE ACCURACY OR COMPLETENESS OF SCANNED COPIES OF THIS PLAN SHEET.

TO ACCOMPANY PLANS DATED 6-22-15

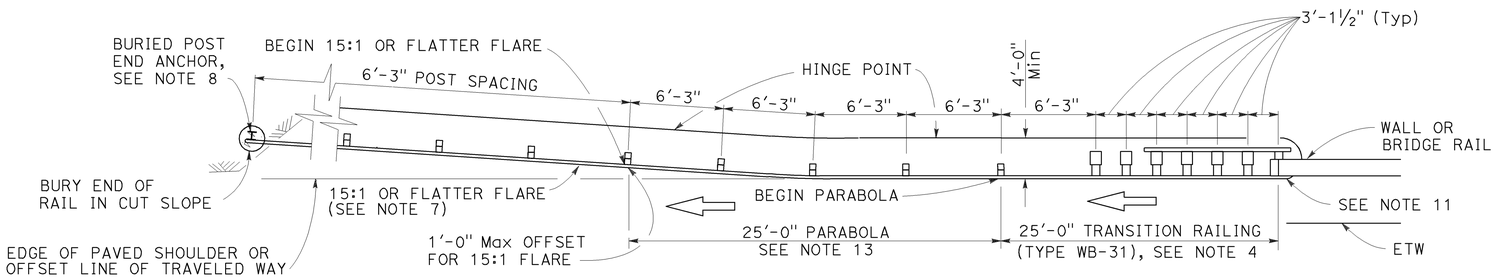

TYPE 12CC LAYOUT

(MGS installation at structure departure with a Buried end anchor treatment at trailing end of railing)
See Notes 9 and 10

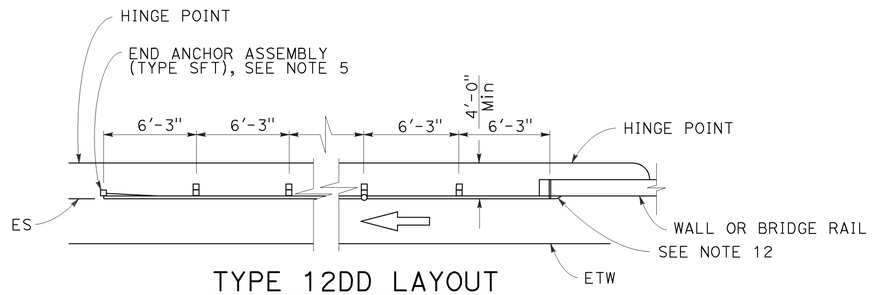

TYPE 12DD LAYOUT

(MGS installation at structure departure With end anchor assembly at trailing end of railing)
See Notes 6 and 9

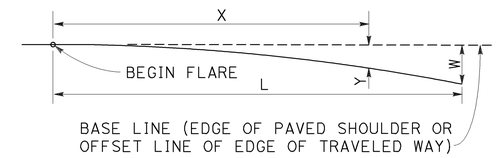

$$Y = \frac{WX^2}{L^2}$$

Y = OFFSET FROM BASE LINE
W = MAXIMUM OFFSET
X = DISTANCE ALONG BASE LINE
L = LENGTH OF FLARE

PARABOLIC FLARE OFFSETS

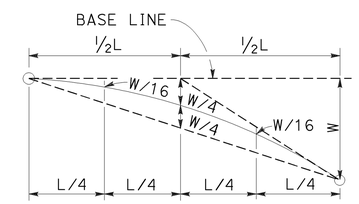

TYPICAL PARABOLIC LAYOUT

NOTES:

1. Line post, blocks and hardware to be used are shown on Revised Standard Plans RSP A77L1, RSP A77L2, RSP A77M1, RSP A77N1 and RSP A77N2.
2. MSG post spacing to be 6'-3" center to center, except as otherwise noted.
3. Except as noted, line posts are 6" x 8" x 6'-0" wood with 6" x 12" x 1'-2" wood blocks. W6 x 8.5 or W6 x 9 steel posts, 6'-0" in length, with 6" x 12" x 1'-2" notched wood blocks or notched recycled plastic blocks may be used for 6" x 8" x 6'-0" wood line posts with 6" x 12" x 1'-2" wood blocks where applicable and when specified.
4. For Transition Railing (Type WB-31) details for Type 12CC Layout, see Revised Standard Plan RSP A77U4.
5. For details of End Anchor Assembly (Type SFT) used with Type 12DD Layout, see Revised Standard Plan RSP A77S1.
6. Type 12DD layout is typically used to the right of traffic departing a structure on two-way conventional highways where the roadbed width across the structure is equal to or greater than 40 feet and MGS is recommended (embankment height, side slopes, other fixed objects). Length of railing to be equal to multiples of 12'-6". For MGS connection details to bridge rail, see Revised Standard Plans RSP A77U1 and RSP A77V1. For MGS connection details to wall, see Revised Standard Plan RSP A77U3.
7. The 15:1 or flatter flare for Type 12CC Layout is based on the edge of the paved shoulder or offset line of edge of the traveled way. The length of MGS within the 15:1 or flatter flare is based on site conditions and should be a length equal to multiples of 12'-6".
8. For details of the buried post end anchor used with Type 12CC Layout, see Revised Standard Plan RSP A77T2.
9. Where placement of dike is required with MGS installations, see Revised Standard Plan RSP A77N4 for dike positioning details.
10. Type 12CC Layout is typically used to the right of traffic departing a structure on two-way conventional highways where the roadbed width across the structure is less than 40 feet.
11. For additional details of a typical connection to bridge rail for Layout Type 12CC, see Connection Detail CC on Revised Standard Plan RSP A77U2 and Connection Detail HH on Revised Standard Plan RSP A77V2.
12. For additional details of a typical connection to bridge rail for Layout Type 12DD, see Connection Detail BB on Revised Standard Plan RSP A77U1 and Connection Detail GG on Revised Standard Plan RSP A77V1.
13. For typical flare offsets for 25'-0" length parabola with maximum offset of 1'-0", see Revised Standard Plan RSP A77P1.

STATE OF CALIFORNIA
DEPARTMENT OF TRANSPORTATION

MIDWEST GUARDRAIL SYSTEM TYPICAL LAYOUTS FOR STRUCTURE DEPARTURE

NO SCALE

RSP A77Q5 DATED JULY 19, 2013 SUPPLEMENTS THE STANDARD PLANS BOOK DATED 2010.

REVISED STANDARD PLAN RSP A77Q5

2010 REVISED STANDARD PLAN RSP A77Q5

6-20-13

Dist	COUNTY	ROUTE	POST MILES TOTAL PROJECT	SHEET No.	TOTAL SHEETS
05	Mon	68	R17.4/R18.0	78	149

Randell D. Hiatt
REGISTERED CIVIL ENGINEER

November 15, 2013
PLANS APPROVAL DATE

REGISTERED PROFESSIONAL ENGINEER
Randell D. Hiatt
No. C50200
Exp. 6-30-15
CIVIL
STATE OF CALIFORNIA

THE STATE OF CALIFORNIA OR ITS OFFICERS OR AGENTS SHALL NOT BE RESPONSIBLE FOR THE ACCURACY OR COMPLETENESS OF SCANNED COPIES OF THIS PLAN SHEET.

TO ACCOMPANY PLANS DATED 6-22-15

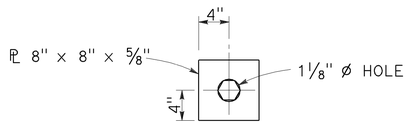

DETAIL "A"
CABLE CONNECTION
END PLATE

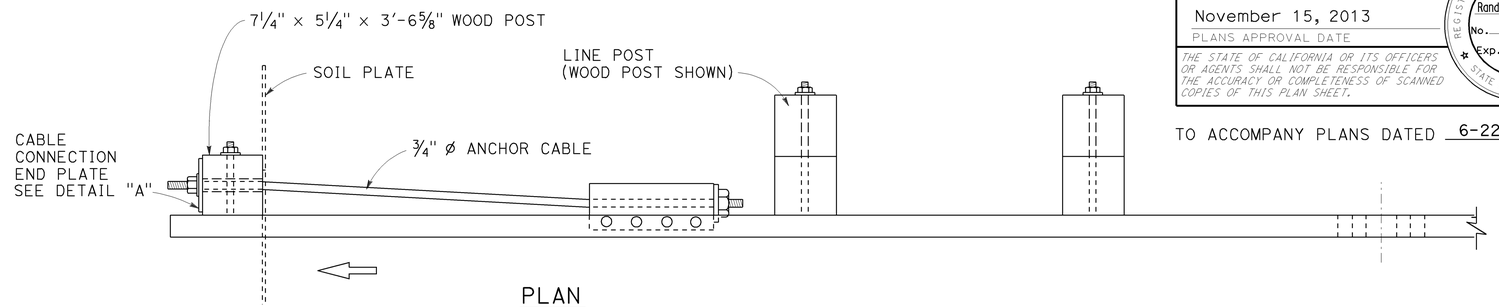

PLAN

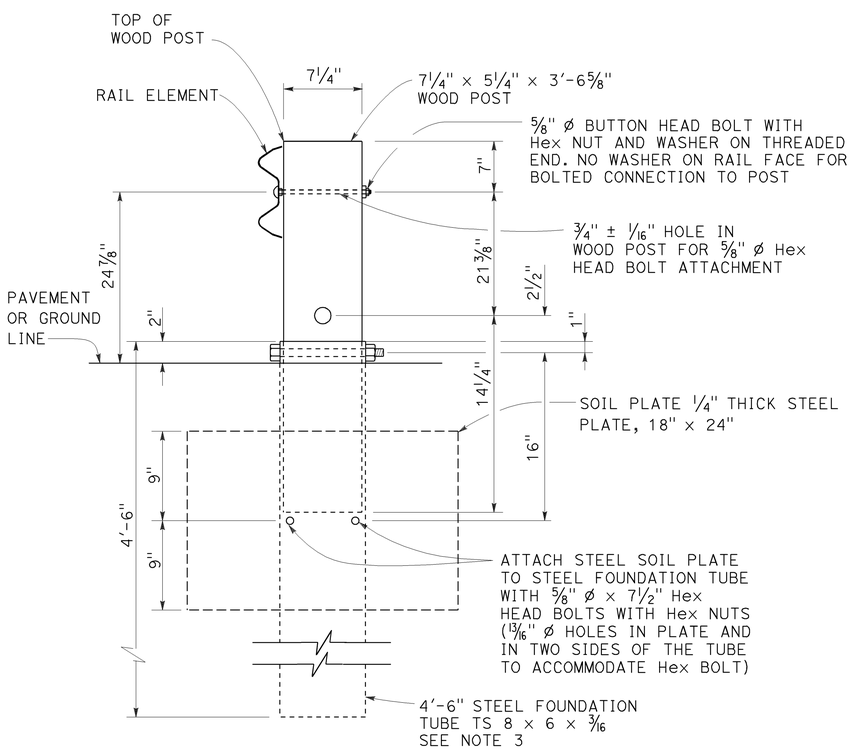

SECTION A-A

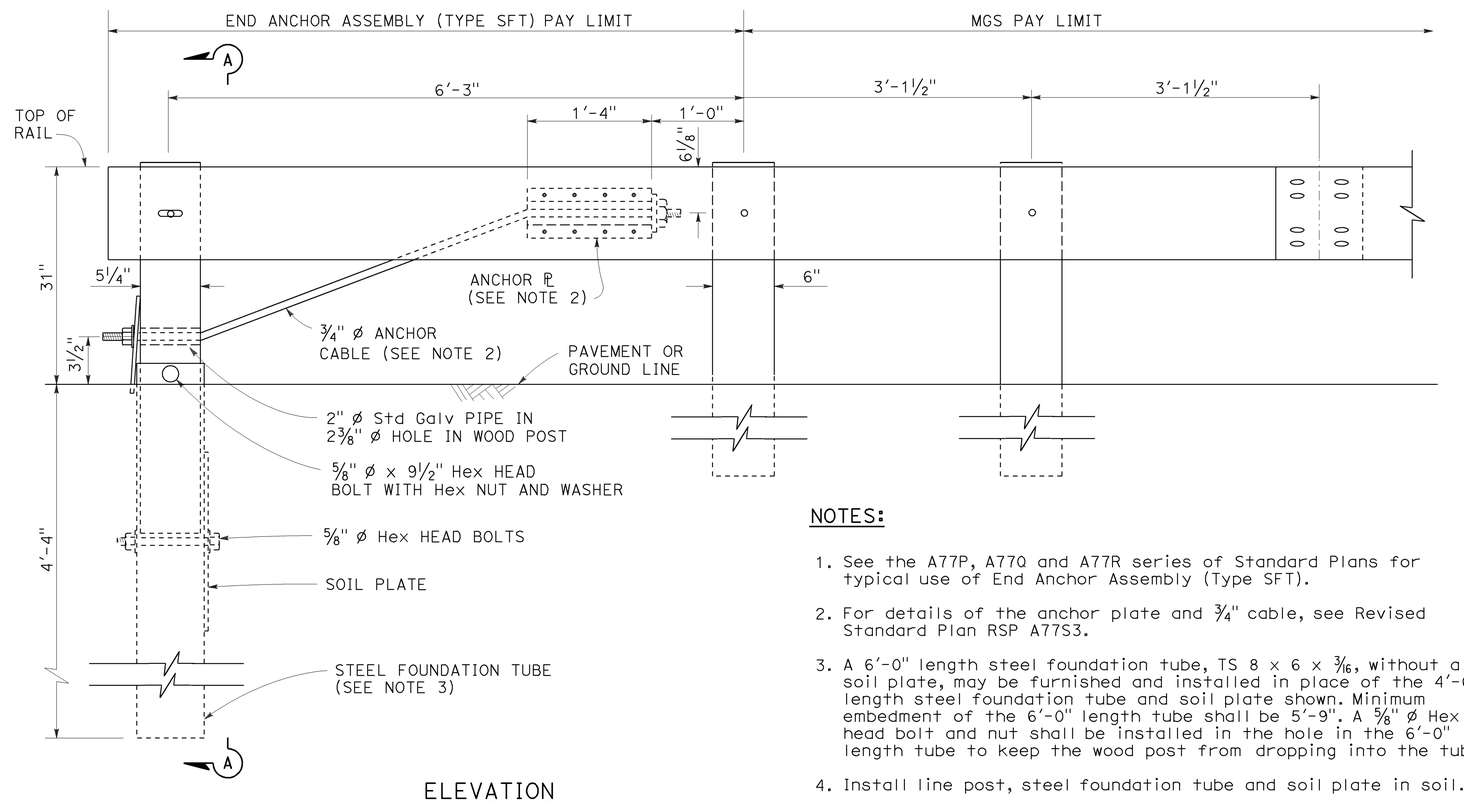

ELEVATION

END ANCHOR
ASSEMBLY (TYPE SFT)
See Note 1

NOTES:

1. See the A77P, A77Q and A77R series of Standard Plans for typical use of End Anchor Assembly (Type SFT).
2. For details of the anchor plate and 3/4" cable, see Revised Standard Plan RSP A77S3.
3. A 6'-0" length steel foundation tube, TS 8 × 6 × 3/16, without a soil plate, may be furnished and installed in place of the 4'-6" length steel foundation tube and soil plate shown. Minimum embedment of the 6'-0" length tube shall be 5'-9". A 5/8" ø Hex head bolt and nut shall be installed in the hole in the 6'-0" length tube to keep the wood post from dropping into the tube.
4. Install line post, steel foundation tube and soil plate in soil.

STATE OF CALIFORNIA
DEPARTMENT OF TRANSPORTATION

MIDWEST GUARDRAIL SYSTEM END ANCHOR ASSEMBLY (TYPE SFT)

NO SCALE

RSP A77S1 DATED NOVEMBER 15, 2013 SUPERSEDES RSP A77S1
DATED JULY 19, 2013 THAT SUPPLEMENTS THE STANDARD PLANS BOOK DATED 2010.

REVISED STANDARD PLAN RSP A77S1

2010 REVISED STANDARD PLAN RSP A77S1

10-4-13

Dist	COUNTY	ROUTE	POST MILES TOTAL PROJECT	SHEET No.	TOTAL SHEETS
05	Mon	68	R17.4/R18.0	79	149

Randell D. Hiatt
REGISTERED CIVIL ENGINEER

July 19, 2013
PLANS APPROVAL DATE

REGISTERED PROFESSIONAL ENGINEER
Randell D. Hiatt
No. C50200
Exp. 6-30-15
CIVIL
STATE OF CALIFORNIA

THE STATE OF CALIFORNIA OR ITS OFFICERS OR AGENTS SHALL NOT BE RESPONSIBLE FOR THE ACCURACY OR COMPLETENESS OF SCANNED COPIES OF THIS PLAN SHEET.

TO ACCOMPANY PLANS DATED 6-22-15

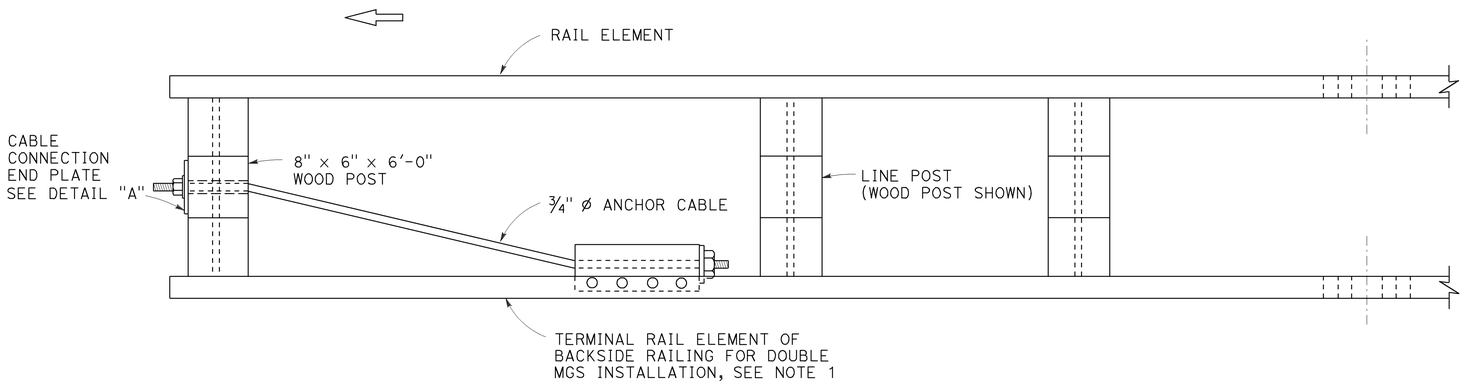

PLAN

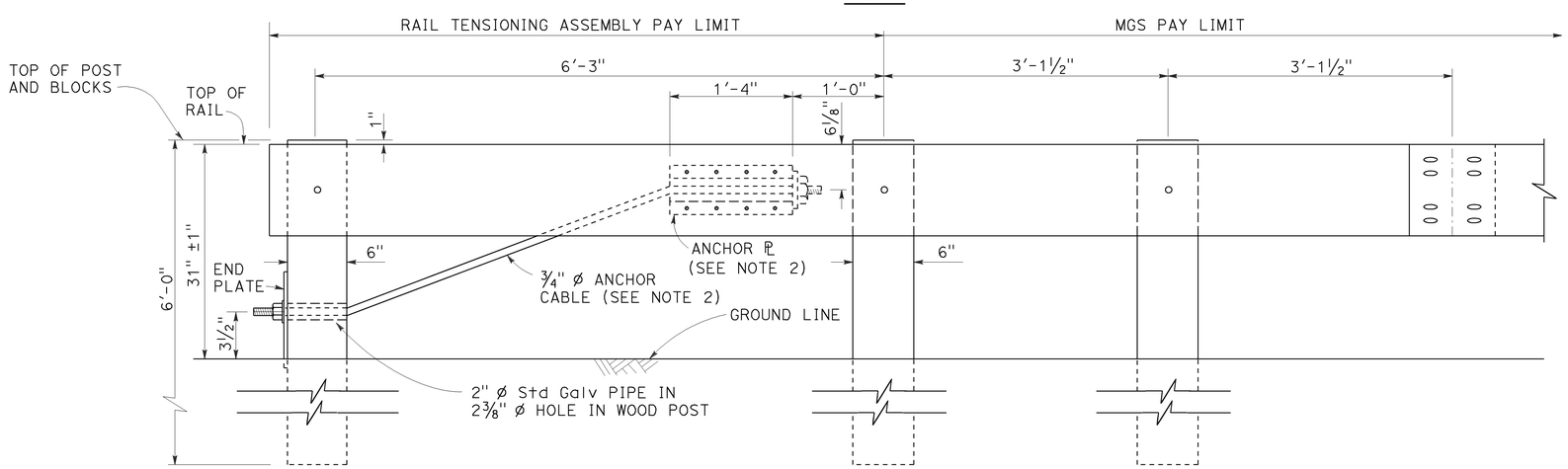

ELEVATION
RAIL TENSIONING ASSEMBLY
See Note 1

NOTES:

1. See Revised Standard Plans RSP A77Q3 and RSP A77R1 for typical use of rail tensioning assembly.
2. For details of the anchor plate and ¾" cable, see Revised Standard Plan RSP A77S3.

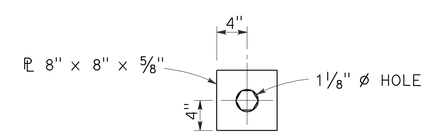

DETAIL "A"
CABLE CONNECTION END PLATE

STATE OF CALIFORNIA
DEPARTMENT OF TRANSPORTATION

MIDWEST GUARDRAIL SYSTEM
RAIL TENSIONING ASSEMBLY

NO SCALE

RSP A77S2 DATED JULY 19, 2013 SUPPLEMENTS THE STANDARD PLANS BOOK DATED 2010.

REVISED STANDARD PLAN RSP A77S2

2010 REVISED STANDARD PLAN RSP A77S2

7-3-13

Dist	COUNTY	ROUTE	POST MILES TOTAL PROJECT	SHEET No.	TOTAL SHEETS
05	Mon	68	R17.4/R18.0	80	149

Randell D. Hiatt
REGISTERED CIVIL ENGINEER

November 15, 2013
PLANS APPROVAL DATE

REGISTERED PROFESSIONAL ENGINEER
Randell D. Hiatt
No. C50200
Exp. 6-30-15
CIVIL
STATE OF CALIFORNIA

THE STATE OF CALIFORNIA OR ITS OFFICERS OR AGENTS SHALL NOT BE RESPONSIBLE FOR THE ACCURACY OR COMPLETENESS OF SCANNED COPIES OF THIS PLAN SHEET.

TO ACCOMPANY PLANS DATED 6-22-15

2010 REVISED STANDARD PLAN RSP A77S3

NOTE:

See Revised Standard Plans RSP A77S1, RSP A77S2 and RSP A77T1 for typical use of anchor cable and anchor plate.

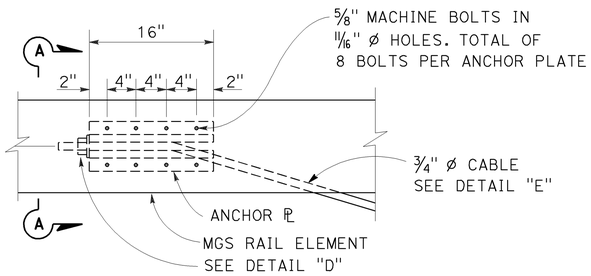

ANCHOR PLATE DETAIL
(MGS shown, TBB similar)

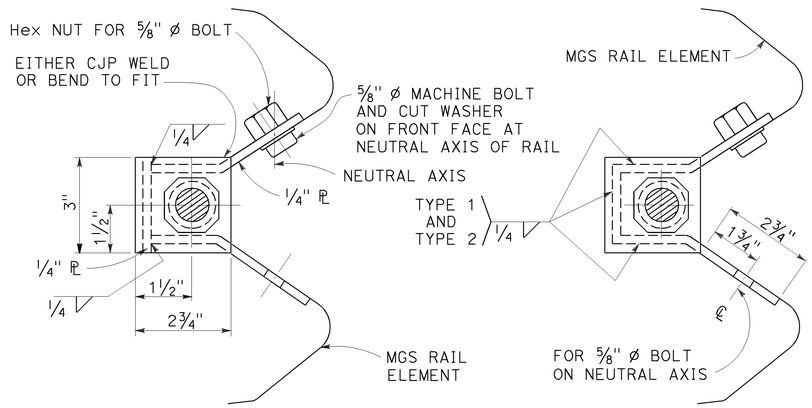

NOTE:
Dimensioning applies to both types.

SECTION A-A
(ALTERNATIVE TYPE 1)

SECTION A-A
(ALTERNATIVE TYPE 2)

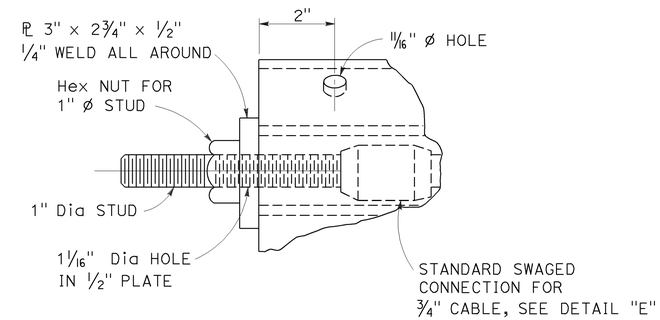

DETAIL "D"

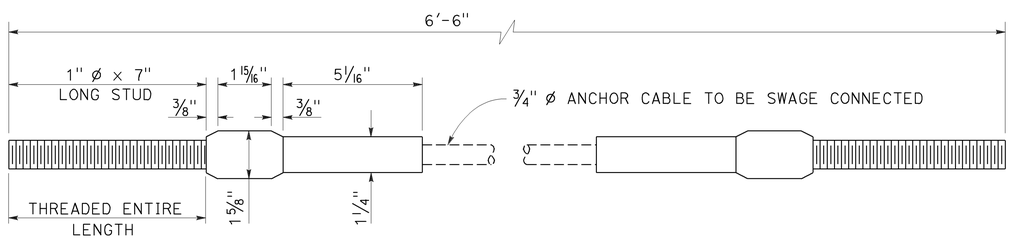

ANCHOR CABLE WITH
SWAGED FITTING AND STUD
DETAIL "E"

STATE OF CALIFORNIA
DEPARTMENT OF TRANSPORTATION

METAL RAILING ANCHOR CABLE AND ANCHOR PLATE DETAILS

NO SCALE

RSP A77S3 DATED NOVEMBER 15, 2013 SUPERSEDES RSP A77S3
DATED JULY 19, 2013 THAT SUPPLEMENTS THE STANDARD PLANS BOOK DATED 2010.

REVISED STANDARD PLAN RSP A77S3

10-4-13

Dist	COUNTY	ROUTE	POST MILES TOTAL PROJECT	SHEET No.	TOTAL SHEETS
05	Mon	68	R17.4/R18.0	81	149

Randell D. Hiatt
REGISTERED CIVIL ENGINEER

July 19, 2013
PLANS APPROVAL DATE

REGISTERED PROFESSIONAL ENGINEER
Randell D. Hiatt
No. C50200
Exp. 6-30-15
CIVIL
STATE OF CALIFORNIA

THE STATE OF CALIFORNIA OR ITS OFFICERS OR AGENTS SHALL NOT BE RESPONSIBLE FOR THE ACCURACY OR COMPLETENESS OF SCANNED COPIES OF THIS PLAN SHEET.

TO ACCOMPANY PLANS DATED 6-22-15

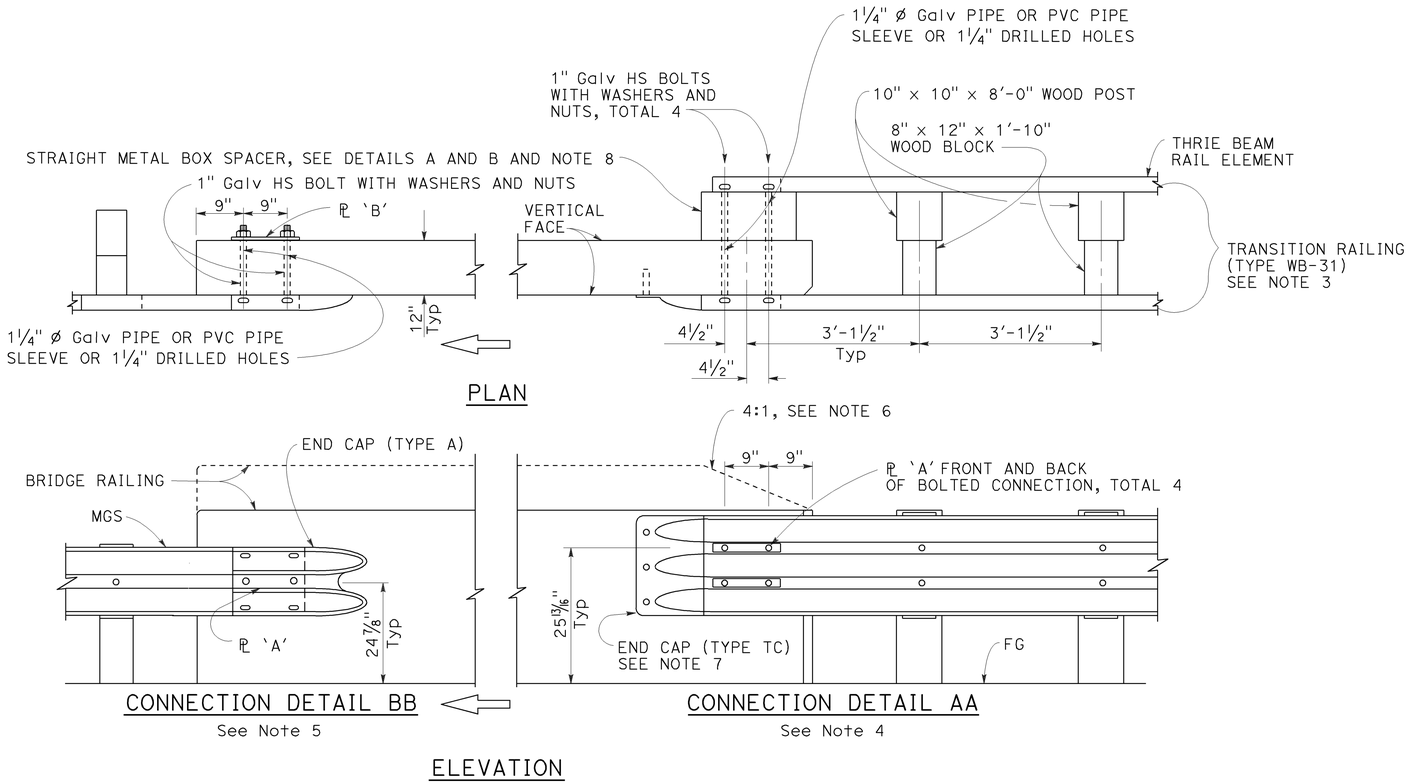

MIDWEST GUARDRAIL SYSTEM CONNECTION TO BRIDGE RAILING WITHOUT SIDEWALK

NOTES:

1. See Revised Standard Plan RSP A77U2 for additional connection details to bridges without sidewalks.
2. Additional details of posts, blocks and hardware are shown on Revised Standard Plans RSP A77M1, RSP A77N1 and RSP A77N2.
3. For additional details of Transition Railing (Type WB-31), see Revised Standard Plan RSP A77U4. Transition Railing (Type WB-31) transitions the 12 gauge MGS railing section to a heavier gage nested thrie beam railing section which is connected to the concrete bridge railing.
4. For typical use of Connection Detail AA, see Layout Types 12A and 12B on Revised Standard Plan RSP A77Q1, Layout Types 12C and 12D on Revised Standard Plan RSP A77Q2, and Layout Type 12E on Revised Standard Plan RSP A77Q3.
5. For typical use of Connection Detail BB, see Layout Type 12D (structure departure railing connection) on Revised Standard Plan RSP A77Q2 and Layout Type 12DD on Revised Standard Plan RSP A77Q5.
6. Where the height of the bridge railing exceeds the height of the thrie beam railing by more than 1" at Connection Detail AA, taper the top of the end of the bridge railing at 4:1 to match the top elevation of the thrie beam rail.
7. For details of End Cap (Type TC), see Revised Standard Plan RSP A77U4.
8. See Revised Standard Plan RSP A77U4 for additional details regarding depth dimension for straight metal box spacer.

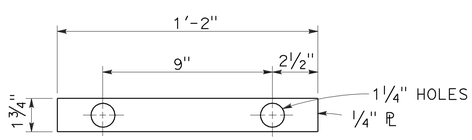

PLATE 'A'

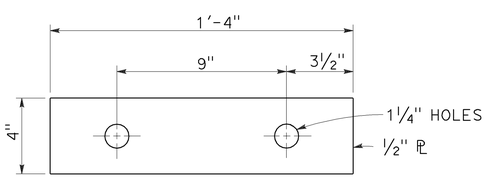

PLATE 'B'
(For backside of connection BB)

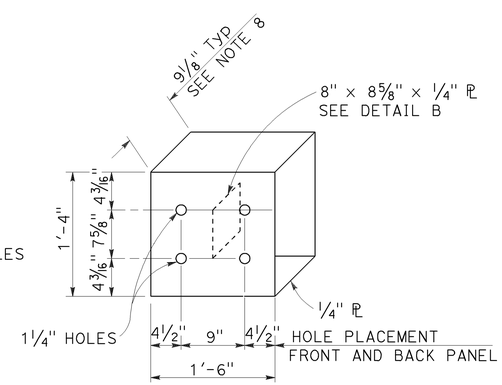

DETAIL A

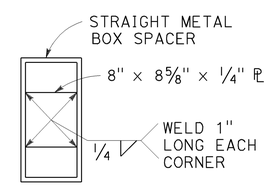

DETAIL B

STRAIGHT METAL BOX SPACER

STATE OF CALIFORNIA
DEPARTMENT OF TRANSPORTATION

MIDWEST GUARDRAIL SYSTEM CONNECTIONS TO BRIDGE RAILINGS WITHOUT SIDEWALKS DETAILS No. 1

NO SCALE

RSP A77U1 DATED JULY 19, 2013 SUPPLEMENTS THE STANDARD PLANS BOOK DATED 2010.

REVISED STANDARD PLAN RSP A77U1

2010 REVISED STANDARD PLAN RSP A77U1

7-8-13

Dist	COUNTY	ROUTE	POST MILES TOTAL PROJECT	SHEET No.	TOTAL SHEETS
05	Mon	68	R17.4/R18.0	82	149

Randell D. Hiatt
REGISTERED CIVIL ENGINEER

January 23, 2015
PLANS APPROVAL DATE

REGISTERED PROFESSIONAL ENGINEER
Randell D. Hiatt
No. C50200
Exp. 6-30-15
CIVIL
STATE OF CALIFORNIA

THE STATE OF CALIFORNIA OR ITS OFFICERS OR AGENTS SHALL NOT BE RESPONSIBLE FOR THE ACCURACY OR COMPLETENESS OF SCANNED COPIES OF THIS PLAN SHEET.

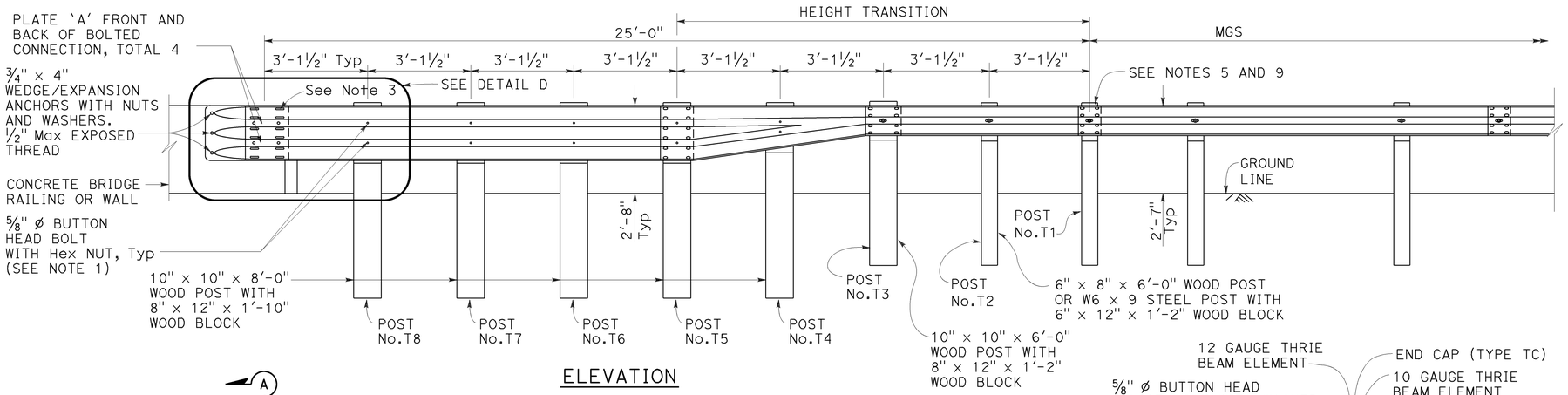

ELEVATION

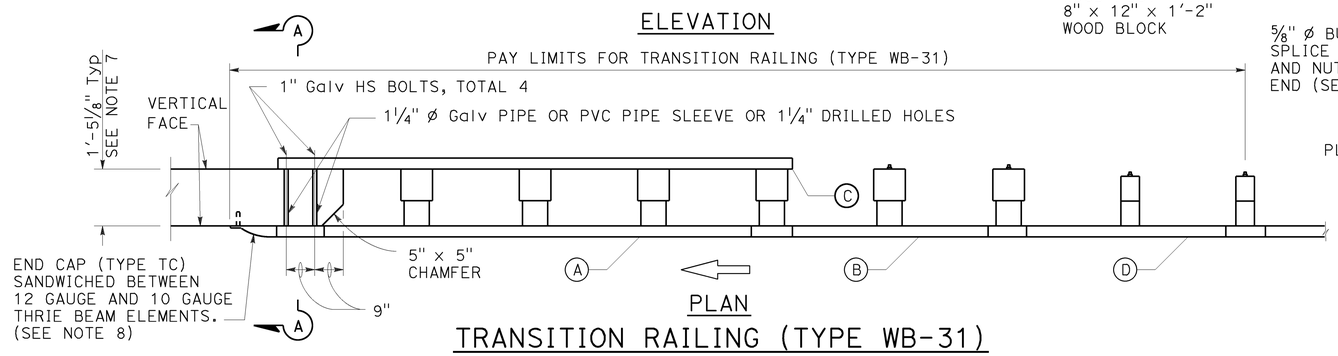

PLAN

TRANSITION RAILING (TYPE WB-31)

(No Blockout Attachment)

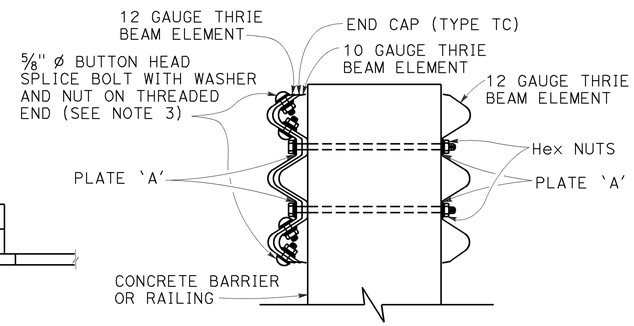

SECTION A-A

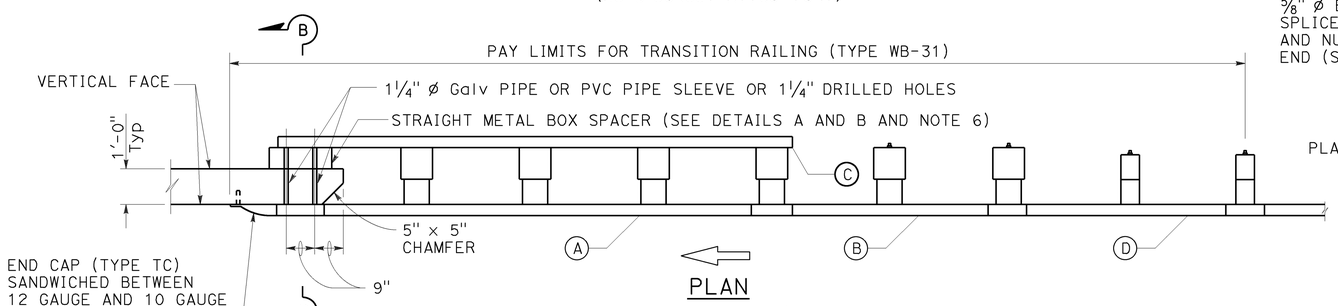

PLAN

TRANSITION RAILING (TYPE WB-31)

(Blockout Attachment)

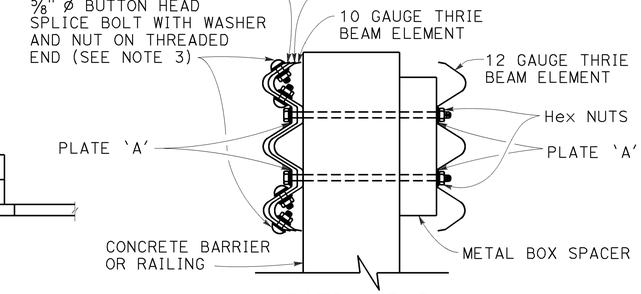

SECTION B-B

LEGEND:

(A) NESTED THRIE BEAM ELEMENTS (ONE 12 GAUGE ELEMENT NESTED OVER ONE 10 GAUGE ELEMENT).

(B) ONE ASYMMETRICAL 10 GAUGE "W" BEAM TO THRIE BEAM ELEMENT.

(C) ONE 12 GAUGE THRIE BEAM ELEMENT.

(D) ONE 10 GAUGE "W" BEAM RAIL ELEMENT (7'-3 1/2"LENGTH)

10 GAUGE = 0.138" THICK
12 GAUGE = 0.108" THICK

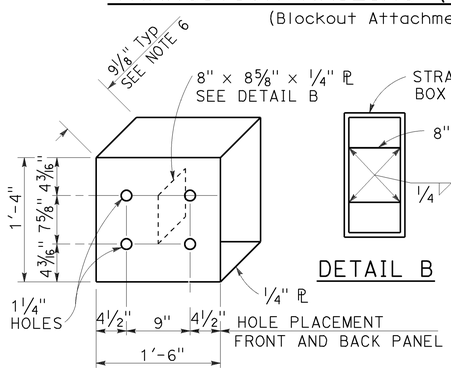

DETAIL A

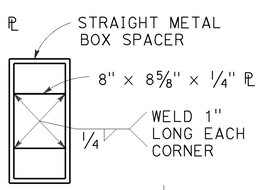

DETAIL B

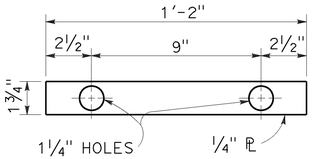

DETAIL C

STRAIGHT METAL BOX SPACER

PLATE 'A'

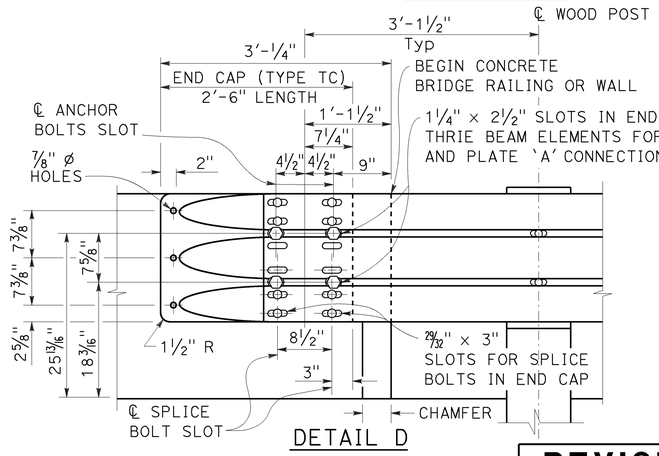

DETAIL D

NOTES:

TO ACCOMPANY PLANS DATED 6-22-15

1. Use 5/8" ø Button head bolts and hex nuts for connections to posts. No washer on rail face for bolted connections to post.

2. The nested rail elements, end cap, and 'W' beam to thrie beam element may be spliced together prior to bolting the elements to the wood post and concrete barrier or railing.

3. Exterior splice bolt holes for rail element splices at Post No. T5 and the connection to the concrete barrier or railing shall be the standard 29/32" x 1 1/8" slot size. Interior splice bolt holes at these locations may be increased up to 1 1/4" ø. Only the top 4 and the bottom 4 splice bolts with washers and nuts are required for rail splices at Post No. T5 and the connection to the concrete barrier or railing.

4. The top elevation of Posts No. T2 through No. T7 shall not project more than 1" above the top elevation of the rail element.

5. Typically, the railing connected to Transition Railing (Type WB-31) will be either standard railing section of MGS with height transition ratio of 150:1 or a Caltrans approved 31" end treatment attached to Post No. T1.

6. The depth of the metal box spacer varies from the 9 1/8" to 1 1/2" and is dependent on the width of the concrete railing or wall. The combined dimension for the depth of the metal box spacer plus the width of railing or wall is typically 21 1/8". Where the space between the backside of the concrete railing or wall and the rear thrie beam element is less than 1 1/2", metal plates similar to Plate 'A' are to be used as spacers.

7. Where the width of the concrete railing or wall is greater than 17 1/8", wood blocks are to be used to fill the space created between the backside of Posts No. T5 through No. T8 and the rear thrie beam element. These wood blocks shall be 8" in width and 1'-2" in length. The dimension between the front thrie beam element and the rear thrie beam element is to match the width of the concrete railing or wall.

8. End cap may be installed over 12 gauge and 10 gauge thrie beam elements where transition railing is installed on the departure end of bridge railing.

9. Conform standard railing section height to 31" at Post No. T1 using height transition ratio of 150:1.

STATE OF CALIFORNIA
DEPARTMENT OF TRANSPORTATION

MIDWEST GUARDRAIL SYSTEM TRANSITION RAILING (TYPE WB-31)

NO SCALE

RSP A77U4 DATED JANUARY 23, 2015 SUPERSEDES RSP A77U4 DATED NOVEMBER 15, 2013 AND RSP A77U4 DATED JULY 19, 2013 THAT SUPPLEMENTS THE STANDARD PLANS BOOK DATED 2010.

REVISED STANDARD PLAN RSP A77U4

2010 REVISED STANDARD PLAN RSP A77U4

1-8-15

Dist	COUNTY	ROUTE	POST MILES TOTAL PROJECT	SHEET No.	TOTAL SHEETS
05	Mon	68	R17.4/R18.0	83	149

Randell D. Hiatt
REGISTERED CIVIL ENGINEER

July 19, 2013
PLANS APPROVAL DATE

REGISTERED PROFESSIONAL ENGINEER
Randell D. Hiatt
No. C50200
Exp. 6-30-15
CIVIL
STATE OF CALIFORNIA

THE STATE OF CALIFORNIA OR ITS OFFICERS OR AGENTS SHALL NOT BE RESPONSIBLE FOR THE ACCURACY OR COMPLETENESS OF SCANNED COPIES OF THIS PLAN SHEET.

TO ACCOMPANY PLANS DATED 6-22-15

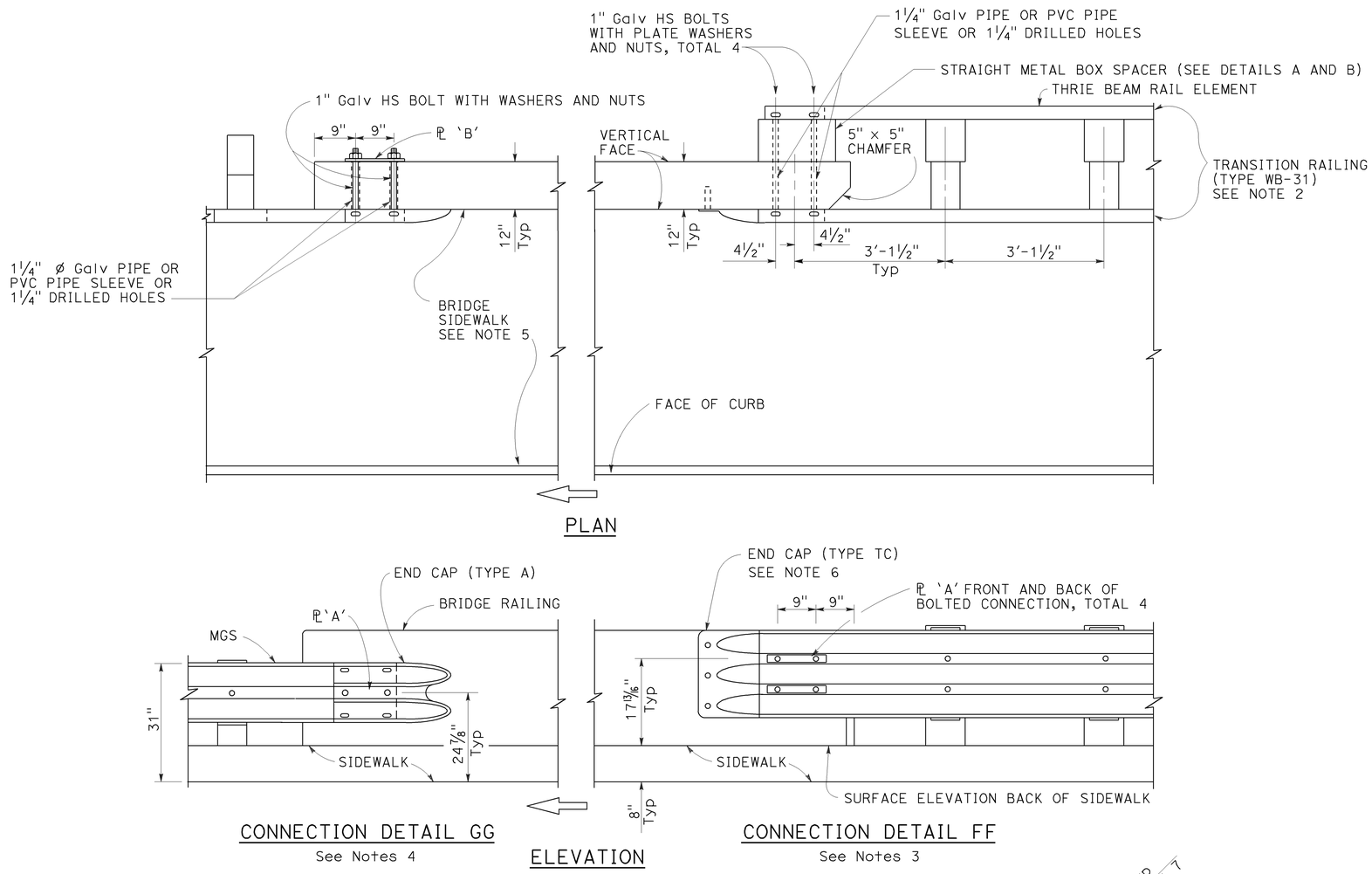

MIDWEST GUARDRAIL SYSTEM CONNECTION TO BRIDGE RAILING WITH SIDEWALKS

NOTES:

1. See Revised Standard Plan RSP A77V2 for additional connection details to bridges with sidewalks.
2. For additional details of Transition Railing (Type WB-31), see Revised Standard Plan RSP A77U4. Transition Railing (Type WB-31) transitions the 12 gauge MGS railing section to a heavier gage nested thrie beam railing section which is connected to the concrete bridge railing.
3. For typical use of Connection Detail FF, see Layout Types 12A and 12B on Revised Standard Plan RSP A77Q1.
4. For typical use of Connection Detail GG, see Layout Type 12D on Revised Standard Plan RSP A77Q2 and Layout Type 12DD on Revised Standard Plan RSP A77Q5.
5. Where the bridge sidewalk is not continued beyond the end of the bridge railing, the portion of the sidewalk beyond each end of the bridge railing shall be transitioned down from the top elevation of the sidewalk, for its entire width, to the finished grade of the adjacent roadbed. The longitudinal slope of each sidewalk elevation transition shall not exceed 8.33 percent.
6. For details of End Cap (Type TC), see Revised Standard Plan RSP A77U4.
7. See Revised Standard Plan RSP A77U4 for additional details regarding depth dimension for straight metal box spacer.

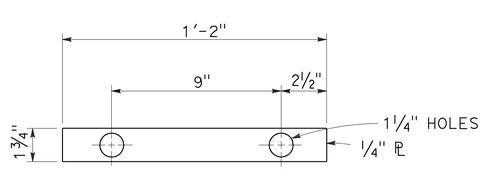

PLATE 'A'

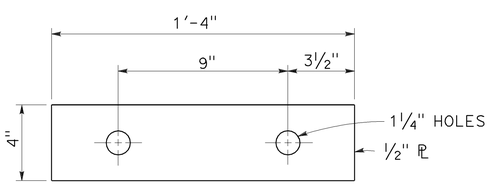

PLATE 'B'
(For backside of connection SB)

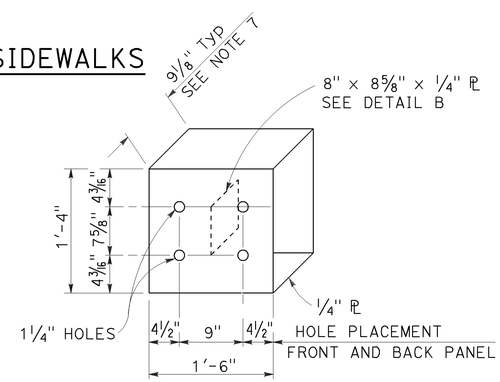

DETAIL A

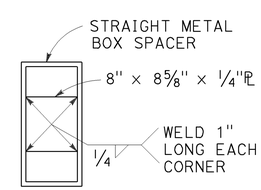

DETAIL B

STRAIGHT METAL BOX SPACER

STATE OF CALIFORNIA
DEPARTMENT OF TRANSPORTATION

MIDWEST GUARDRAIL SYSTEM CONNECTIONS TO BRIDGE RAILINGS WITH SIDEWALKS DETAILS No. 1

NO SCALE

RSP A77V1 DATED JULY 19, 2013 SUPPLEMENTS THE STANDARD PLANS BOOK DATED 2010.

REVISED STANDARD PLAN RSP A77V1

2010 REVISED STANDARD PLAN RSP A77V1

7-8-13

Dist	COUNTY	ROUTE	POST MILES TOTAL PROJECT	SHEET No.	TOTAL SHEETS
05	Mon	68	R17.4/R18.0	84	149

Randell D. Hiatt
REGISTERED CIVIL ENGINEER

July 19, 2013
PLANS APPROVAL DATE

REGISTERED PROFESSIONAL ENGINEER
Randell D. Hiatt
No. C50200
Exp. 6-30-15
CIVIL
STATE OF CALIFORNIA

THE STATE OF CALIFORNIA OR ITS OFFICERS OR AGENTS SHALL NOT BE RESPONSIBLE FOR THE ACCURACY OR COMPLETENESS OF SCANNED COPIES OF THIS PLAN SHEET.

TO ACCOMPANY PLANS DATED 6-22-15

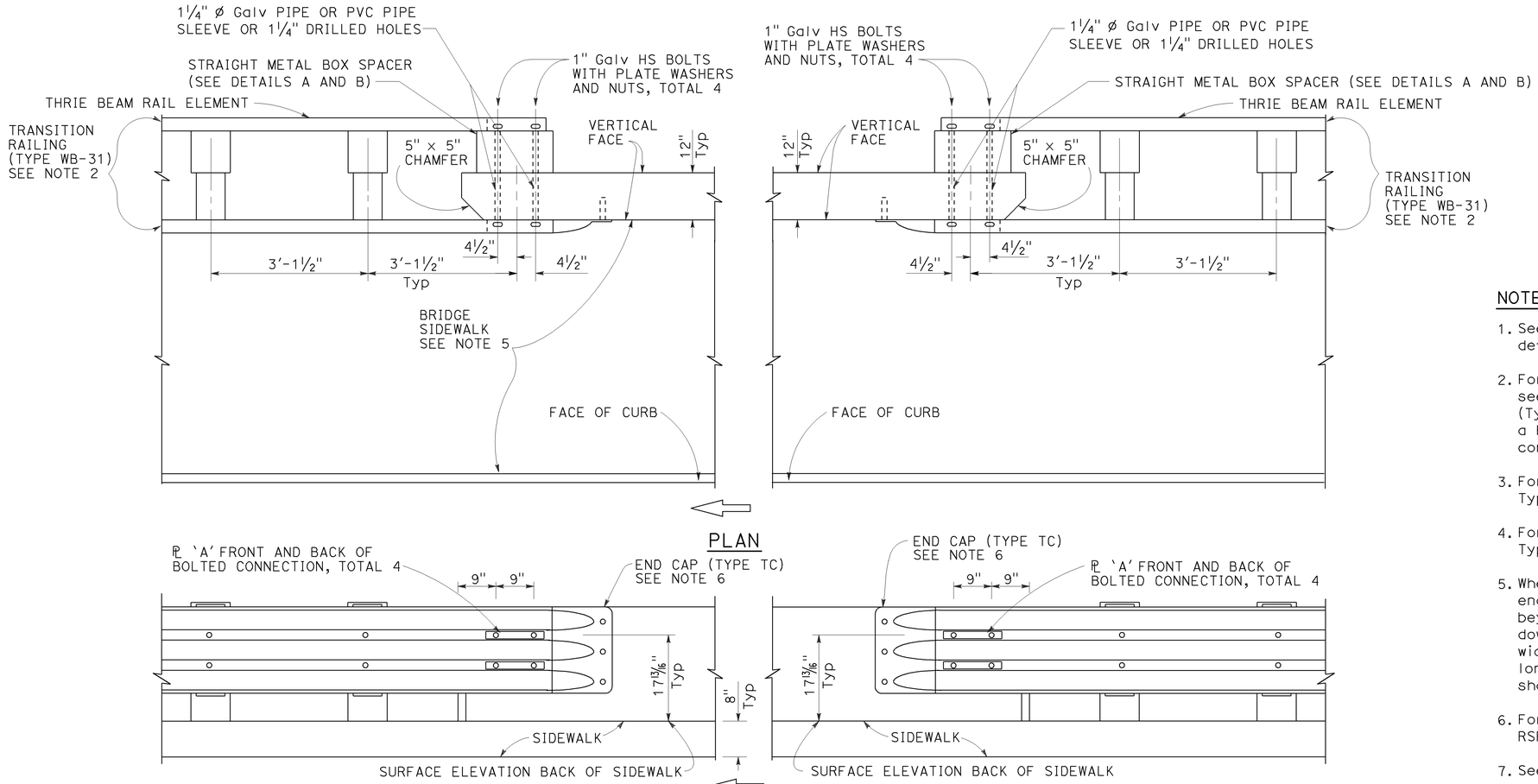

MIDWEST GUARDRAIL SYSTEM CONNECTION TO BRIDGE RAILING WITH SIDEWALKS

NOTES:

1. See Revised Standard Plan RSP A77V1 for additional connection details to bridges with sidewalks.
2. For additional details of Transition Railing (Type WB-31), see Revised Standard Plan RSP A77U4. Transition Railing (Type WB-31) transitions the 12 gauge MGS railing section to a heavier gage nested thrie beam railing section which is connected to the concrete bridge railing.
3. For typical use of Connection Detail FF, see Layout Types 12A and 12B on Revised Standard Plan RSP A77Q1.
4. For typical use of Connection Detail HH, see Layout Types 12AA and 12BB on Revised Standard Plan RSP A77Q4.
5. Where the bridge sidewalk is not continued beyond the end of the bridge railing, the portion of the sidewalk beyond each end of the bridge railing shall be transitioned down from the top elevation of the sidewalk, for its entire width, to the finished grade of the adjacent roadbed. The longitudinal slope of each sidewalk elevation transition shall not exceed 8.33 percent.
6. For details of End Cap (Type TC), see Revised Standard Plan RSP A77U4.
7. See Revised Standard Plan RSP A77U4 for additional details regarding depth dimension for straight metal box spacer.

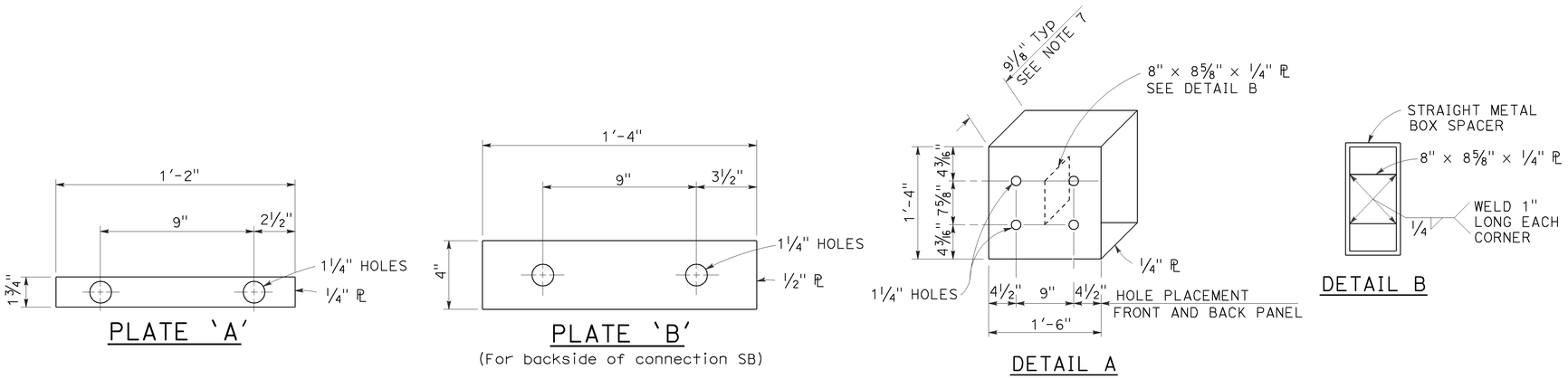

STRAIGHT METAL BOX SPACER

STATE OF CALIFORNIA
DEPARTMENT OF TRANSPORTATION

MIDWEST GUARDRAIL SYSTEM CONNECTIONS TO BRIDGE RAILINGS WITH SIDEWALKS DETAILS No. 2

NO SCALE

RSP A77V2 DATED JULY 19, 2013 SUPPLEMENTS THE STANDARD PLANS BOOK DATED 2010.

REVISED STANDARD PLAN RSP A77V2

2010 REVISED STANDARD PLAN RSP A77V2

6-20-13

Dist	COUNTY	ROUTE	POST MILES TOTAL PROJECT	SHEET No.	TOTAL SHEETS
05	Mon	68	R17.4/R18.0	85	149

Raymond Don Tsztoo
REGISTERED CIVIL ENGINEER

October 19, 2012
PLANS APPROVAL DATE

REGISTERED PROFESSIONAL ENGINEER
Raymond Don Tsztoo
No. C37332
Exp. 6-30-14
CIVIL
STATE OF CALIFORNIA

THE STATE OF CALIFORNIA OR ITS OFFICERS OR AGENTS SHALL NOT BE RESPONSIBLE FOR THE ACCURACY OR COMPLETENESS OF SCANNED COPIES OF THIS PLAN SHEET.

TO ACCOMPANY PLANS DATED 6-22-15

2010 REVISED STANDARD PLAN RSP A86D

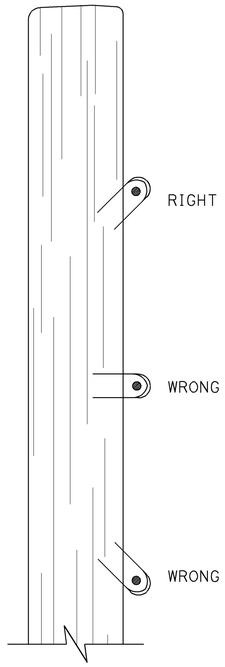

DRIVE STAPLES AT ANGLE

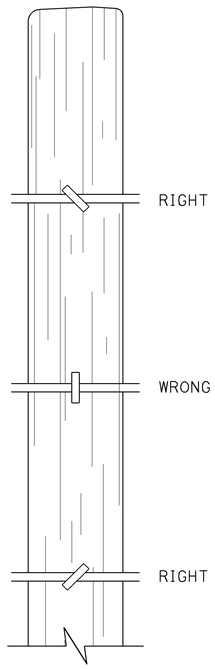

DO NOT DRIVE STAPLES PARALLEL TO SIDE OF POST

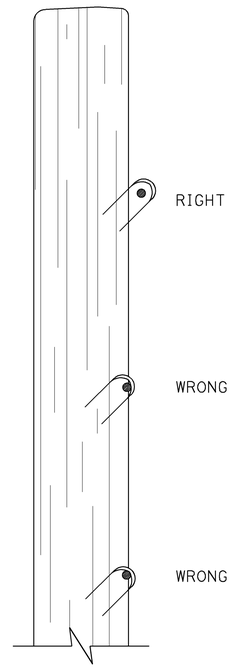

LEAVE WIRE LOOSE IN STAPLE

LINE POST STAPLING DETAILS

(Apply to rectangular/square and round posts)
Do not staple vertical wire in wire mesh.

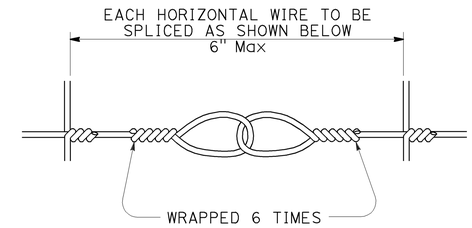

SPLICE DETAIL FOR BARBED WIRE/WIRE MESH FENCE

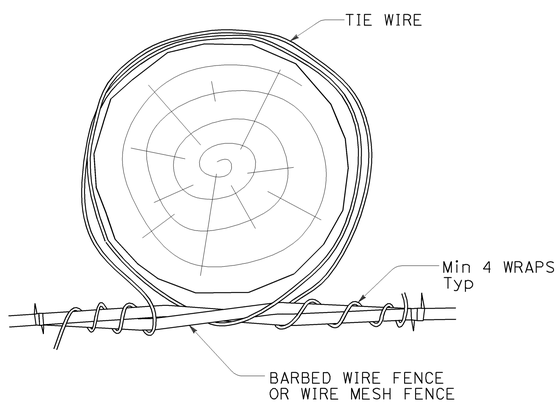

OPTION A

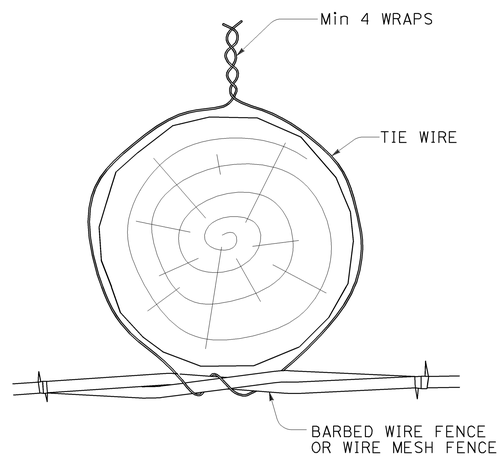

OPTION B

LINE POST WIRE TIE OPTION DETAILS

(Option details also apply to rectangular/square posts)

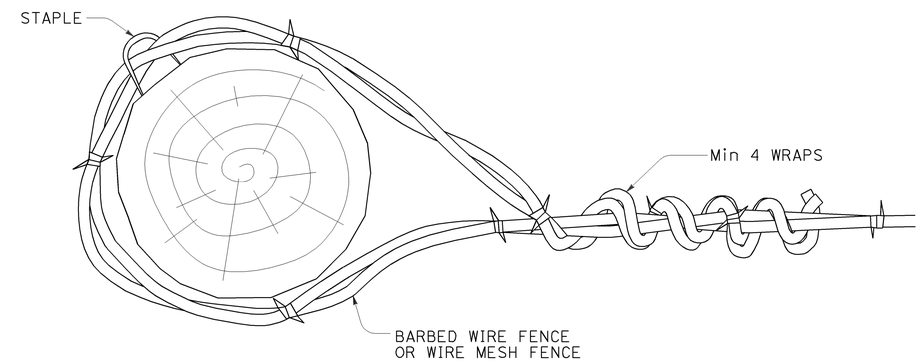

END, LATCH, PULL, AND CORNER POST DETAIL

(Also applies to rectangular/square posts)

STATE OF CALIFORNIA
DEPARTMENT OF TRANSPORTATION

BARBED WIRE AND WIRE MESH FENCE - MISCELLANEOUS DETAILS

NO SCALE

RSP A86D DATED OCTOBER 19, 2012 SUPPLEMENTS THE STANDARD PLANS BOOK DATED 2010.

REVISED STANDARD PLAN RSP A86D

10-9-12

Dist	COUNTY	ROUTE	POST MILES TOTAL PROJECT	SHEET No.	TOTAL SHEETS
05	Mon	68	R17.4/R18.0	86	149

REGISTERED CIVIL ENGINEER

July 19, 2013
PLANS APPROVAL DATE

REGISTERED PROFESSIONAL ENGINEER
Michael Janzen
No. 44788
Exp. 03-31-14
CIVIL
STATE OF CALIFORNIA

THE STATE OF CALIFORNIA OR ITS OFFICERS OR AGENTS SHALL NOT BE RESPONSIBLE FOR THE ACCURACY OR COMPLETENESS OF SCANNED COPIES OF THIS PLAN SHEET.

TO ACCOMPANY PLANS DATED 6-22-15

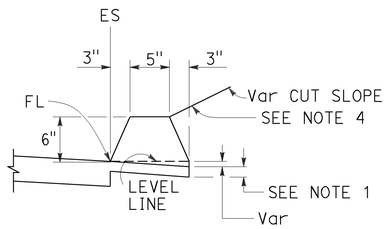

TYPE A
See Note 3

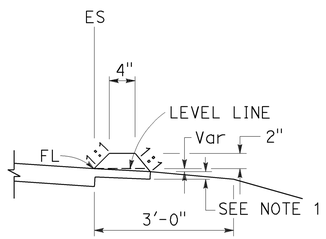

TYPE C

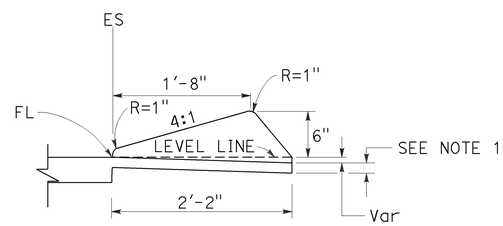

TYPE D

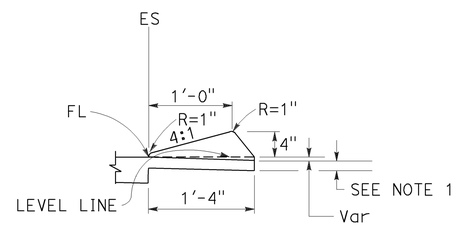

TYPE E

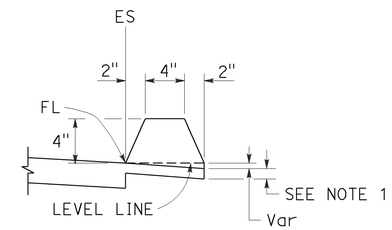

TYPE F
See Note 5

DIKES

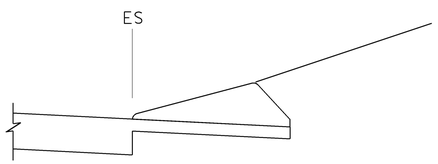

CASE C-1
Cut Slope

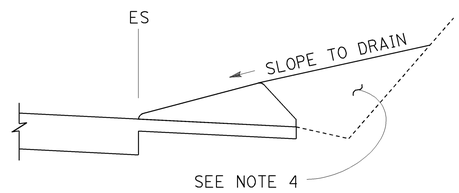

CASE C-2
Cut Slope

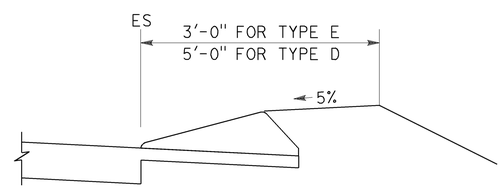

CASE F

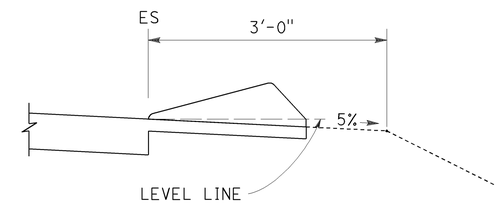

CASE R
See Note 2

TYPE D AND E BACKFILL DETAILS

NOTES:

1. For HMA shoulders only, extend top layer of HMA placed on the shoulder under dike with no joint at the ES. For projects with OGFC shoulders, do not extend OGFC under dike. See project plans for modified dike detail.
2. Case R applies to retrofit only projects where restrictive conditions do not provide enough width for Case F backfill.
3. Type A dike only to be used where restrictive slope conditions do not provide enough width to use Type D or Type E dike.
4. Fill and compact with excavated material to top of dike.
5. Use Type F dike, where dike is required with guard railing installations. See Revised Standard Plan RSP A77N4 for dike positioning details.

DIKE QUANTITIES

TYPE	CUBIC YARDS PER LINEAR FOOT
A	0.0135
C	0.0038
D	0.0293
E	0.0130
F	0.0066

Quantities based on 5% cross slope.

STATE OF CALIFORNIA
DEPARTMENT OF TRANSPORTATION

HOT MIX ASPHALT DIKES

NO SCALE

RSP A87B DATED JULY 19, 2013 SUPERSEDES STANDARD PLAN A87B DATED MAY 20, 2011 - PAGE 120 OF THE STANDARD PLANS BOOK DATED 2010.

REVISED STANDARD PLAN RSP A87B

2010 REVISED STANDARD PLAN RSP A87B

6-27-13

Dist	COUNTY	ROUTE	POST MILES TOTAL PROJECT	SHEET No.	TOTAL SHEETS
05	Mon	68	R17.4/R18.0	87	149

Raymond Don Tsztoo
REGISTERED CIVIL ENGINEER

April 19, 2013
PLANS APPROVAL DATE

REGISTERED PROFESSIONAL ENGINEER Raymond Don Tsztoo No. C37332 Exp. 6-30-14 CIVIL STATE OF CALIFORNIA

THE STATE OF CALIFORNIA OR ITS OFFICERS OR AGENTS SHALL NOT BE RESPONSIBLE FOR THE ACCURACY OR COMPLETENESS OF SCANNED COPIES OF THIS PLAN SHEET.

TO ACCOMPANY PLANS DATED 6-22-15

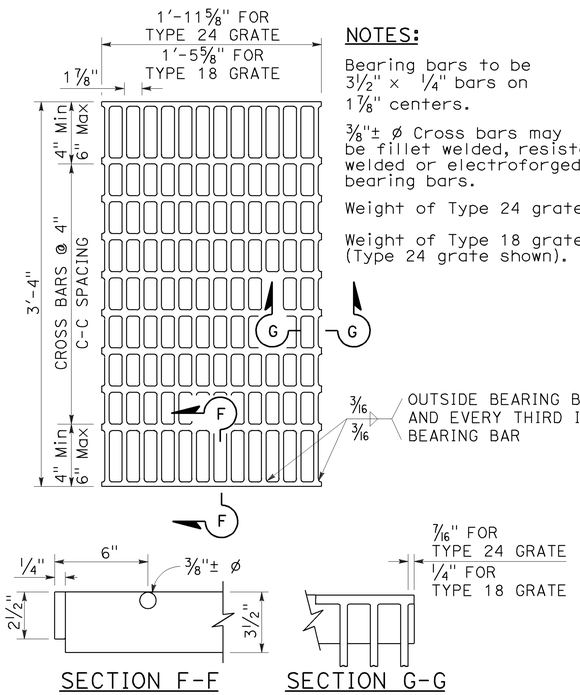

SECTION F-F SECTION G-G

TYPE 18-10 AND 24-13 GRATE

(Welded Steel)

NOTES:

Bearing bars to be 3½" × ¼" bars on 1⅞" centers.

⅜"± ø Cross bars may be fillet welded, resistance welded or electroforged to bearing bars.

Weight of Type 24 grate = 141 LBS.

Weight of Type 18 grate = 107 LBS. (Type 24 grate shown).

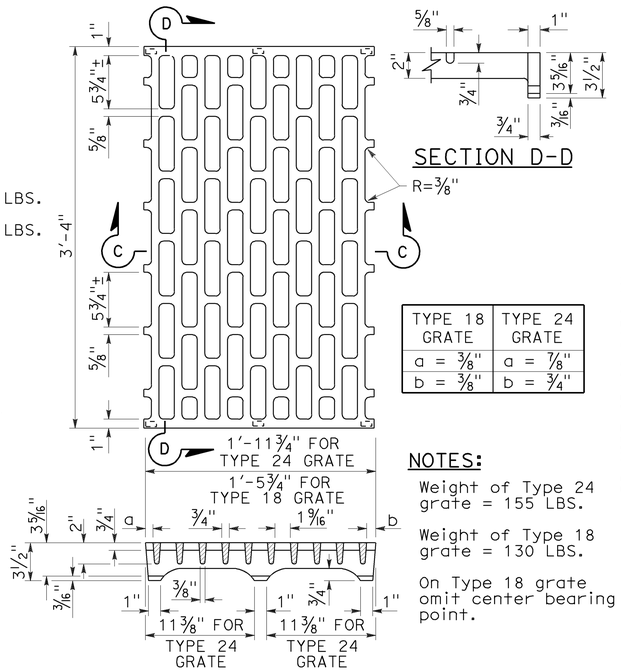

SECTION D-D

TYPE 18 GRATE	TYPE 24 GRATE
a = ⅜"	a = ⅞"
b = ⅜"	b = ¾"

NOTES:

Weight of Type 24 grate = 155 LBS.

Weight of Type 18 grate = 130 LBS.

On Type 18 grate omit center bearing point.

SECTION C-C

TYPE 18-8C AND 24-10C GRATE

(Cast ductile iron)

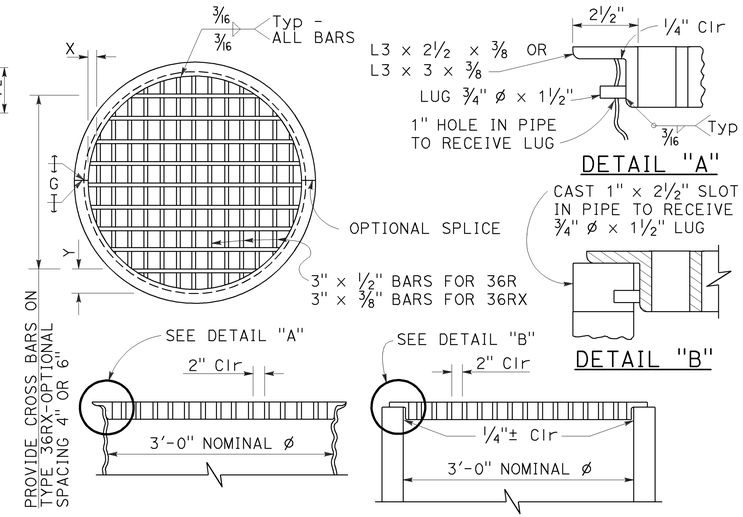

TYPE 36R AND 36RX GRATE DETAILS

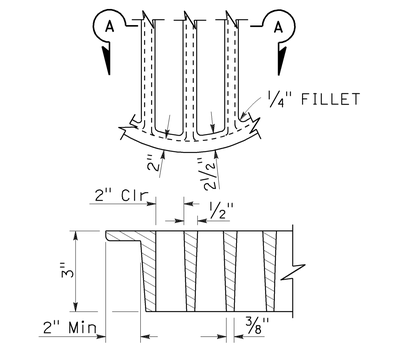

SECTION A-A

ALTERNATIVE CAST DUCTILE IRON GRATE OR CAST CARBON STEEL GRATE TYPE 36R AND 36RX

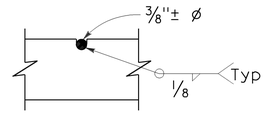

⅜"± ø Cross bars may be fillet welded, resistance welded or electroforged to bearing bars.

CROSS BAR DETAIL TYPE 36RX GRATE (WELDED STEEL)

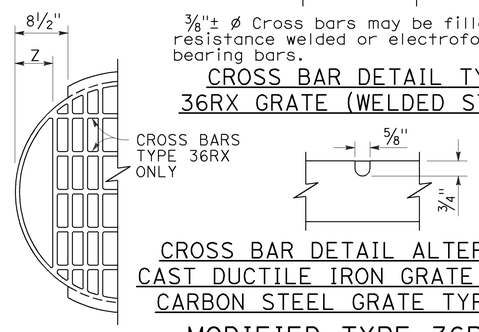

CROSS BAR DETAIL ALTERNATIVE CAST DUCTILE IRON GRATE OR CAST CARBON STEEL GRATE TYPE 36RX

MODIFIED TYPE 36R AND 36RX GRATE FOR ODI INLET

BASIS FOR Misc IRON AND STEEL FINAL PAY WEIGHTS FOR DRAINAGE INLETS

INLET TYPE	GRATE TYPE	No. OF GRATES	WEIGHT LB
GDO (SEE NOTE 4)	24-10C	2	391
	24-10S	2	456
	24-12X	2	473
	24-13	2	374
GO,GOL,G1,G2, G3,G4 (TYPE 24)	24-10C	1	202
	24-10S	1	229
	24-12X	1	239
	24-13	1	188
G4 (TYPE 18) G5,G6	18-8S	1	187
	18-9X	1	187
	18-10	1	149
GT1,GT2	18-8S	2	374
	18-9X	2	374
	18-10	2	298
GT3,GT4	24-10C	2	404
	24-10S	2	458
	24-12X	2	478
	24-13	2	376
ODI	36RX (Mod)	1	196
GMP,GCP,GCPI	36RX	1	215
ODI	36R (Mod)	1	220
GMP,GCP,GCPI	36R	1	236
TRASH RACK			22
GRATE CHAIN			3

NOTES:

1. When alternative grates are allowed - Final pay based on alternative with the lesser weight.
2. Use frame shown on Standard Plan D74A, D74B or RSP D77A as appropriate.
3. When Type 24-10S, 24-12X or 24-13 grates are used with GDO Inlets, a ¼" × 3½" × 3'-4⅞" steel bar shall be welded across the center of inlet frame to separate the individual grates.
4. See Revised Standard Plan RSP D77A for connecting chain to welded grate and frame. When chain is required, do not use cast ductile iron grate.

GRATE BAR SPACING TABLE

TYPE	No. OF BARS	CLEAR BAR SPACING	X	Y 4" SPACING	Y 6" SPACING	Z
36R	13	2"	2⅛"	-	-	-
36RX (STEEL)	15	2"	9/16"	3¾"	5¾"	-
36RX (CAST)	13	2"	2⅛"	3¾"	5¾"	-
36R Mod	12	2"	2⅛"	-	-	5"
36RX Mod (STEEL)	13	2"	9/16"	3¾"	5¾"	5 11/16"
36RX Mod (CAST)	12	2"	2⅛"	3¾"	5¾"	5"

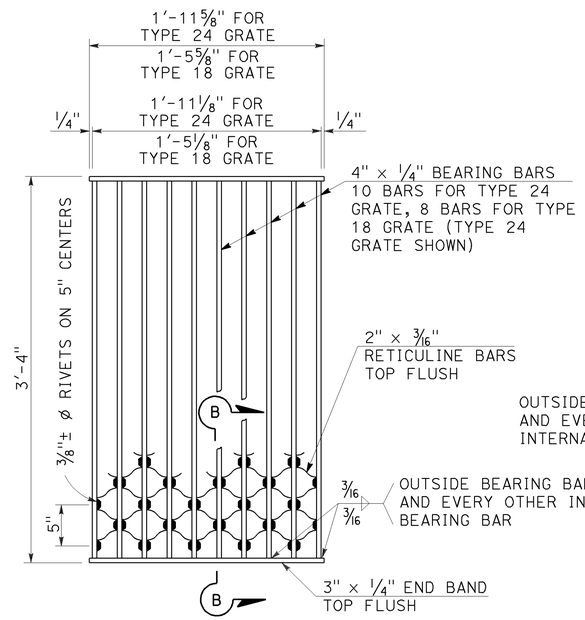

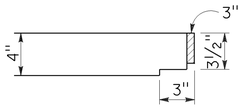

SECTION B-B

NOTES:

Weight of Type 24 grate = 182 LBS.
Weight of Type 18 grate = 145 LBS.

TYPE 18-8S AND 24-10S GRATE

(Welded Steel) Reticuline type

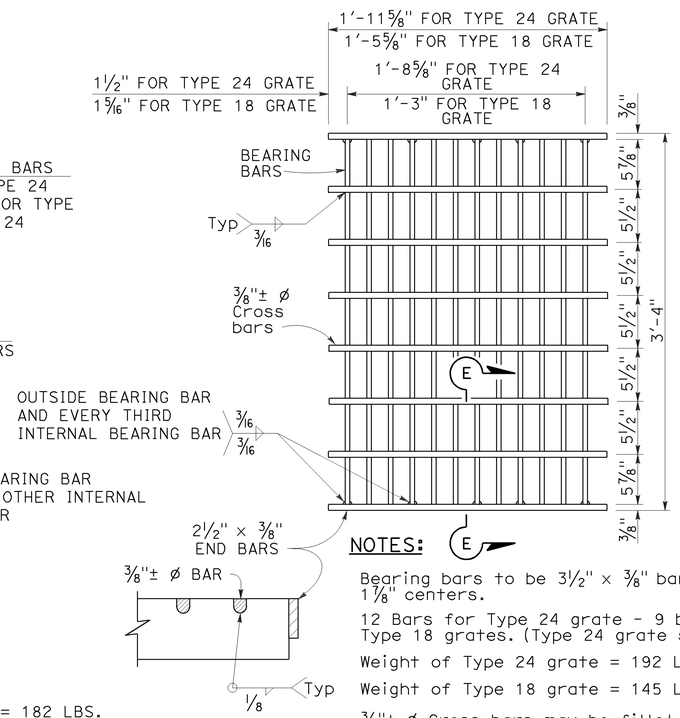

SECTION E-E

NOTES:

Bearing bars to be 3½" × ⅜" bars on 1⅞" centers.

12 Bars for Type 24 grate - 9 bars for Type 18 grates. (Type 24 grate shown).

Weight of Type 24 grate = 192 LBS.

Weight of Type 18 grate = 145 LBS.

⅜"± ø Cross bars may be fillet welded, resistance welded or electroforged to bearing bars.

TYPE 18-9X AND 24-12X GRATE

(Welded Steel)

STATE OF CALIFORNIA
DEPARTMENT OF TRANSPORTATION

GRATE DETAILS No. 2

NO SCALE

RSP D77B DATED APRIL 19, 2013 SUPERSEDES RSP D77B DATED JULY 20, 2012 AND STANDARD PLAN D77B DATED MAY 20, 2011 - PAGE 165 OF THE STANDARD PLANS BOOK DATED 2010.

REVISED STANDARD PLAN RSP D77B

2010 REVISED STANDARD PLAN RSP D77B

4-4-13

Dist	COUNTY	ROUTE	POST MILES TOTAL PROJECT	SHEET No.	TOTAL SHEETS
05	Mon	68	R17.4/R18.0	88	149

Gregory A. Balzer
LICENSED LANDSCAPE ARCHITECT

July 19, 2013
PLANS APPROVAL DATE

LICENSED LANDSCAPE ARCHITECT Gregory A. Balzer 2516 STATE OF CALIFORNIA
Gregory A. Balzer
10-Year Renewal Date 2-28-15
Renewal Date 7-19-13
Date

THE STATE OF CALIFORNIA OR ITS OFFICERS OR AGENTS SHALL NOT BE RESPONSIBLE FOR THE ACCURACY OR COMPLETENESS OF SCANNED COPIES OF THIS PLAN SHEET.

TO ACCOMPANY PLANS DATED 6-22-15

2010 REVISED STANDARD PLAN RSP H1

A

AB	AGGREGATE BASE
ABS	ACRYLONITRILE-BUTADIENE-STYRENE
AC	ASPHALT CONCRETE
ACC	ARMOR-CLAD CONDUCTORS
Adj	ADJACENT/ADJUSTABLE
AIC	AUXILIARY IRRIGATION CONTROLLER
Alt	ALTERNATIVE
AMEND	AMENDMENT
ARV	AIR RELEASE VALVE
AUTO	AUTOMATIC
AUX	AUXILIARY
AVB	ATMOSPHERIC VACUUM BREAKER

B

B&B	BALLED AND BURLAPPED
B/B	BRASS/BRONZE
B/B/PL	BRASS/BRONZE/PLASTIC
B/PL	BRASS/PLASTIC
BFM	BONDED FIBER MATRIX
Bit Ctd	BITUMINOUS COATED
BP	BOOSTER PUMP
BPA	BACKFLOW PREVENTER ASSEMBLY
BPE	BACKFLOW PREVENTER ENCLOSURE
BV	BALL VALVE

C

C	CONDUIT
CAP	CORRUGATED ALUMINUM PIPE
CARV	COMBINATION AIR RELEASE VALVE
CB	COUPLING BAND
CCA	CAM COUPLER ASSEMBLY
CEC	CONTROLLER ENCLOSURE CABINET
CHDPE	CORRUGATED HIGH DENSITY POLYETHYLENE
CL	CHAIN LINK
CNC	CONTROL AND NEUTRAL CONDUCTORS
Conc	CONCRETE
CP	COPPER PIPE
CS	COMPOST SOCK
CSP	CORRUGATED STEEL PIPE
CST	CENTER STRIP
CV	CHECK VALVE

D

Dia	DIAMETER
DIP	DUCTILE IRON PIPE
DIT	DRIP IRRIGATION TUBING
DG	DECOMPOSED GRANITE
DN	DIAMETER NOMINAL
DVA	DRIP VALVE ASSEMBLY

E

EC	EROSION CONTROL
ECTC	EROSION CONTROL TECHNOLOGY COUNCIL
Elect	ELECTRIC/ELECTRICAL
Elev	ELEVATION
ELL	ELBOW
ENCL	ENCLOSURE
EP	EDGE OF PAVEMENT
ES	EDGE OF SHOULDER
EST	END STRIP
ESTB	ESTABLISHMENT
ETW	EDGE OF TRAVELED WAY

F

F	FULL CIRCLE
F/P	FULL/PART CIRCLE
FCV	FLOW CONTROL VALVE
FERT	FERTILIZER
FG	FINISHED GRADE
FH	FLEXIBLE HOSE
FIPT	FEMALE IRON PIPE THREAD
FIS	FERTILIZER INJECTOR SYSTEM
FL	FLOW LINE
FR	FIBER ROLL
FS	FLOW SENSOR
FSC	FLOW SENSOR CABLE
FV	FLUSH VALVE

G

Galv	GALVANIZED
GARV	GARDEN VALVE
GARVA	GARDEN VALVE ASSEMBLY
GM	GRAVEL MULCH
GPH	GALLONS PER HOUR
GPM	GALLONS PER MINUTE
GSP	GALVANIZED STEEL PIPE
GV	GATE VALVE

H

H	HALF CIRCLE
HDPE	HIGH DENSITY POLYETHYLENE
HP	HORSEPOWER/HINGE POINT
HPL	HIGH PRESSURE LINE
Hwy	HIGHWAY

I

IC	IRRIGATION CONTROLLER
ICC	IRRIGATION CONTROLLER(S) IN CONTROLLER ENCLOSURE CABINET
ID	INSIDE DIAMETER
IFS	IRRIGATION FILTRATION SYSTEM
IPS	IRON PIPE SIZE
IPT	IRON PIPE THREAD
Irr	IRRIGATION

L

L	LENGTH

M

Max	MAXIMUM
MBGR	METAL BEAM GUARD RAILING
MCV	MANUAL CONTROL VALVE
MIC	MASTER IRRIGATION CONTROLLER
Min	MINIMUM
MIPT	MALE IRON PIPE THREAD
Misc	MISCELLANEOUS
Mtl	MATERIAL
MVP	MAINTENANCE VEHICLE PULLOUT

N

NCN	NO COMMON NAME
NL	NOZZLE LINE
No.	NUMBER
NPT	NATIONAL PIPE THREAD

O

O/C	ON CENTER
OD	OUTSIDE DIAMETER
OL	OVERLAP

P

P	PART CIRCLE
PB	PULL BOX
PCC	PORTLAND CEMENT CONCRETE
PE	POLYETHYLENE
Pkt	PACKET
PL	PLASTIC
PLS	PURE LIVE SEED
PLT	PLANT/PLANTING
PLT ESTB	PLANT ESTABLISHMENT
PM	POST MILE
PR	PRESSURE RATED
PRLV	PRESSURE RELIEF VALVE
PRV	PRESSURE REGULATING VALVE
PVC	POLYVINYL CHLORIDE
Pvmt	PAVEMENT

Q

Q	QUARTER CIRCLE
QCV	QUICK COUPLING VALVE

R

R	RADIUS
RCP	REINFORCED CONCRETE PIPE
RCV	REMOTE CONTROL VALVE
RCVM	REMOTE CONTROL VALVE (MASTER)
RCVMF	REMOTE CONTROL VALVE (MASTER) W/FLOW SENSOR
RCVP	REMOTE CONTROL VALVE W/PRESSURE REGULATOR
RCW	RECYCLED WATER
RECP	ROLLED EROSION CONTROL PRODUCT
REQ	REQUIRED
RICS	REMOTE IRRIGATION CONTROL SYSTEM
R/W	RIGHT OF WAY

S

S	SLIP
SCH	SCHEDULE
SF	STATE-FURNISHED
Shld	SHOULDER
Sq	SQUARE
SST	SIDE STRIP
Sta	STATION
Std	STANDARD
SW	SIDEWALK/SOUND WALL

T

T	THIRD CIRCLE/THREAD
TLS	TRUCK LOADING STANDPIPE
TQ	THREE QUARTER CIRCLE
TRM	TURF REINFORCEMENT MAT
TT	TWO-THIRDS CIRCLE
TWSA	TREE WELL SPRINKLER ASSEMBLY
Typ	TYPICAL

U

UG	UNDERGROUND

W

W	WIDTH
W/	WITH
WM	WATER METER
WS	WYE STRAINER
WSA	WYE STRAINER ASSEMBLY
WSP	WELDED STEEL PIPE
WWM	WELDED WIRE MESH

NOTE:

For additional abbreviations, see Standard Plans A10A and A10B.

STATE OF CALIFORNIA
DEPARTMENT OF TRANSPORTATION

LANDSCAPE AND EROSION CONTROL ABBREVIATIONS

NO SCALE

RSP H1 DATED JULY 19, 2013 SUPERSEDES STANDARD PLAN H1 DATED MAY 20, 2011 - PAGE 218 OF THE STANDARD PLANS BOOK DATED 2010.

REVISED STANDARD PLAN RSP H1

Dist	COUNTY	ROUTE	POST MILES TOTAL PROJECT	SHEET No.	TOTAL SHEETS
05	Mon	68	R17.4/R18.0	89	149

LICENSED LANDSCAPE ARCHITECT

November 15, 2013
PLANS APPROVAL DATE

Gregory A. Balzer 2516
LICENSED LANDSCAPE ARCHITECT
Expiration Date 2-28-15
Renewal Date 11-15-13
Date
STATE OF CALIFORNIA

THE STATE OF CALIFORNIA OR ITS OFFICERS OR AGENTS SHALL NOT BE RESPONSIBLE FOR THE ACCURACY OR COMPLETENESS OF SCANNED COPIES OF THIS PLAN SHEET.

TO ACCOMPANY PLANS DATED 6-22-15

2010 REVISED STANDARD PLAN RSP H2

EXISTING	NEW	ITEM DESCRIPTION
		WATER METER (WM)
		BACKFLOW PREVENTER ASSEMBLY (BPA)
		BACKFLOW PREVENTER ENCLOSURE (BPE)
		BOOSTER PUMP (BP)
		TRUCK LOADING STANDPIPE (TLS)
	FS	FLOW SENSOR (FS)
		MASTER IRRIGATION CONTROLLER (MIC)
		AUXILIARY IRRIGATION CONTROLLER (AIC)
		IRRIGATION CONTROLLER (IC) IRRIGATION CONTROLLER (IC) (BATTERY) IRRIGATION CONTROLLER (IC) (SOLAR) IRRIGATION CONTROLLER (IC) (TWO WIRE) IRRIGATION CONTROLLER(S) IN CONTROLLER ENCLOSURE CABINET (ICC)
acc	ACC	ARMOR-CLAD CONDUCTORS (ACC)
cnc	CNC	CONTROL AND NEUTRAL CONDUCTORS (CNC)
		IRRIGATION CONDUIT
		EXTEND IRRIGATION CONDUIT
dip	DIP	DUCTILE IRON PIPE (SUPPLY LINE) (MAIN) (DIP)
		GALVANIZED STEEL PIPE (SUPPLY LINE) (MAIN) (GSP)
		GALVANIZED STEEL PIPE (SUPPLY LINE) (LATERAL) (GSP)
		PLASTIC PIPE (SUPPLY LINE) (MAIN)
		PLASTIC PIPE (SUPPLY LINE) (LATERAL)
cp	CP	COPPER PIPE (SUPPLY LINE)
dit	DIT	DRIP IRRIGATION TUBING
		REMOTE CONTROL VALVE (RCV) REMOTE CONTROL VALVE (MASTER) (RCVM) REMOTE CONTROL VALVE (MASTER) W/FLOW METER (RCVMF)
P	P	REMOTE CONTROL VALVE W/PRESSURE REGULATOR (RCVP)
		EXISTING MANUAL CONTROL VALVE (MCV)
	V	DRIP VALVE ASSEMBLY (DVA)
	Y	WYE STRAINER ASSEMBLY (WSA)

EXISTING	NEW	ITEM DESCRIPTION
		GATE VALVE (GV)
		BALL VALVE (BV)
		QUICK COUPLING VALVE (QCV)
		CAM COUPLER ASSEMBLY (CCA)
		GARDEN VALVE ASSEMBLY (GARVA)
		PRESSURE REGULATING VALVE (PRV)
		PRESSURE RELIEF VALVE (PRLV)
		FLOW CONTROL VALVE (FCV)
		COMBINATION AIR RELEASE VALVE (CARV)
		CHECK VALVE (CV)
		FLUSH VALVE (FV)
		EXISTING NOZZLE LINE W/TURNING UNION
		EXISTING IRRIGATION SYSTEM
		EXISTING IRRIGATION SYSTEM TO BE REMOVED
		CHAIN LINK GATE
		QUICK COUPLING VALVE W/SPRINKLER PROTECTOR
3	3	SPRINKLER W/SPRINKLER PROTECTOR
	C	CONNECT TO EXISTING SYSTEM
		CAP
		CAP EXISTING
	FR	FIBER ROLL
	CS	COMPOST SOCK

- RCV SIZE
- IRRIGATION CONTROLLER
- CONTROLLER STATION
- VALVE IN PARALLEL (IF APPLICABLE)
- GPM
- QUANTITY OF SPRINKLERS (WHEN SHOWN)

* 2½"-A-2b-40-60

VALVE CODE

* VALVE CODES FOR EXISTING VALVES ARE SHOWN IN A DASHED ENCLOSURE.

STATE OF CALIFORNIA
DEPARTMENT OF TRANSPORTATION

LANDSCAPE AND EROSION CONTROL SYMBOLS

NO SCALE

RSP H2 DATED NOVEMBER 15, 2013 SUPERSEDES RSP H2 DATED JULY 19, 2013 AND STANDARD PLAN H2 DATED MAY 20, 2011 - PAGE 219 OF THE STANDARD PLANS BOOK DATED 2010.

REVISED STANDARD PLAN RSP H2

10-9-13

Dist	COUNTY	ROUTE	POST MILES TOTAL PROJECT	SHEET No.	TOTAL SHEETS
05	Mon	68	R17.4/R18.0	90	149

Gregory A. Balzer
LICENSED LANDSCAPE ARCHITECT

July 19, 2013
PLANS APPROVAL DATE

LICENSED LANDSCAPE ARCHITECT
Gregory A. Balzer 2516
Gregory A. Balzer
09 Expiration Date
2-28-15
Renewal Date
7-19-13
Date
STATE OF CALIFORNIA

THE STATE OF CALIFORNIA OR ITS OFFICERS OR AGENTS SHALL NOT BE RESPONSIBLE FOR THE ACCURACY OR COMPLETENESS OF SCANNED COPIES OF THIS PLAN SHEET.

TO ACCOMPANY PLANS DATED 6-22-15

2010 REVISED STANDARD PLAN RSP H4

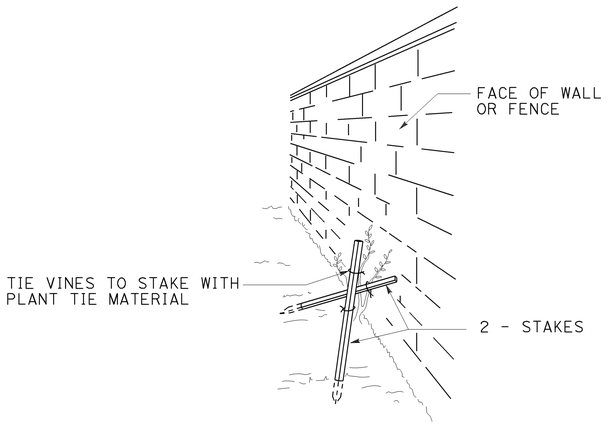

PERSPECTIVE
VINE STAKING

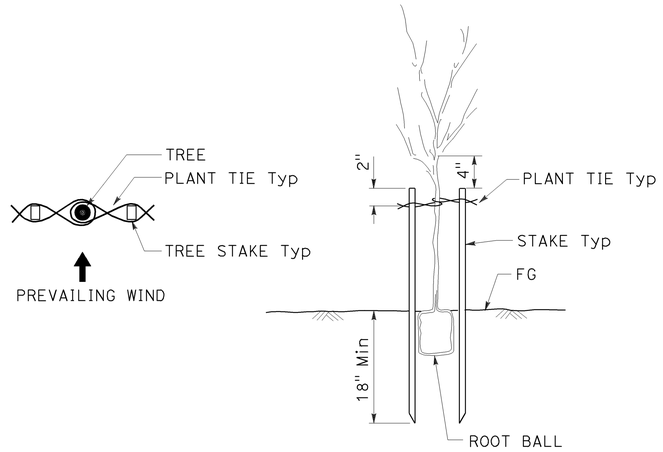

TREE STAKING

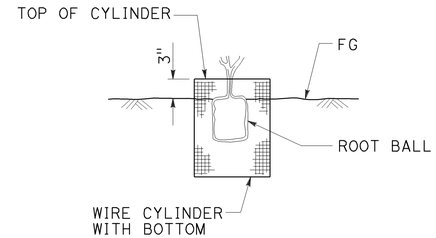

SECTION
ROOT PROTECTOR

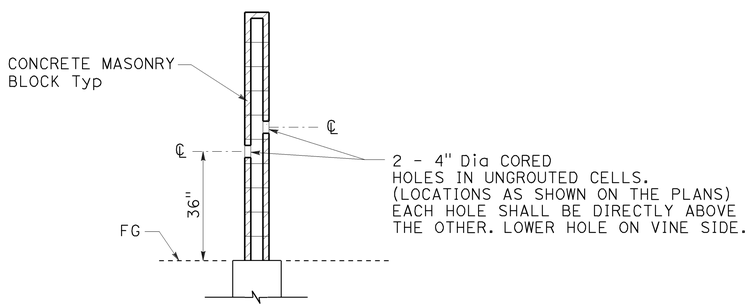

SECTION
CORE HOLE (VINE)

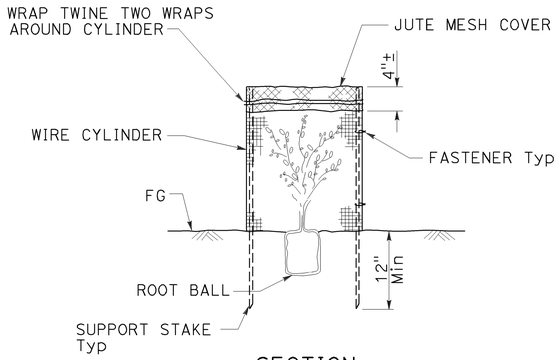

SECTION
FOLIAGE PROTECTOR

STATE OF CALIFORNIA
DEPARTMENT OF TRANSPORTATION

LANDSCAPE DETAILS

NO SCALE

RSP H4 DATED JULY 19, 2013 SUPERSEDES STANDARD PLAN H4
DATED MAY 20, 2011 - PAGE 221 OF THE STANDARD PLANS BOOK DATED 2010.

REVISED STANDARD PLAN RSP H4

6-28-13

Dist	COUNTY	ROUTE	POST MILES TOTAL PROJECT	SHEET No.	TOTAL SHEETS
05	Mon	68	R17.4/R18.0	91	149

LICENSED LANDSCAPE ARCHITECT

July 19, 2013
PLANS APPROVAL DATE

THE STATE OF CALIFORNIA OR ITS OFFICERS OR AGENTS SHALL NOT BE RESPONSIBLE FOR THE ACCURACY OR COMPLETENESS OF SCANNED COPIES OF THIS PLAN SHEET.

LICENSED LANDSCAPE ARCHITECT — Gregory A. Balzer 2516 — 09-30-14 Expiration Date — 2-28-15 Renewal Date — 7-19-13 Date — STATE OF CALIFORNIA

TO ACCOMPANY PLANS DATED 6-22-15

2010 REVISED STANDARD PLAN RSP H7

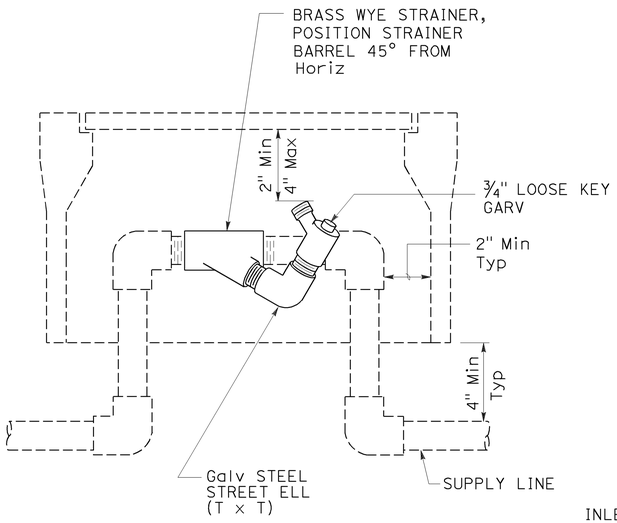

ELEVATION
WYE STRAINER ASSEMBLY

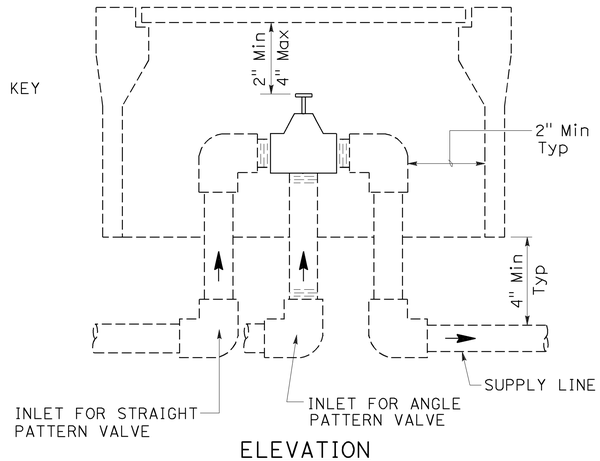

ELEVATION
VALVE

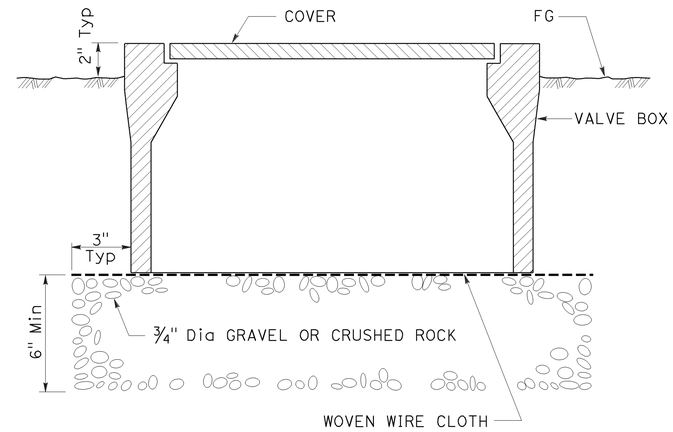

SECTION
VALVE BOX

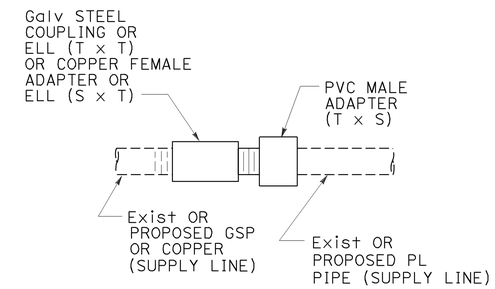

GALVANIZED OR COPPER PIPE CONNECTION TO PLASTIC PIPE

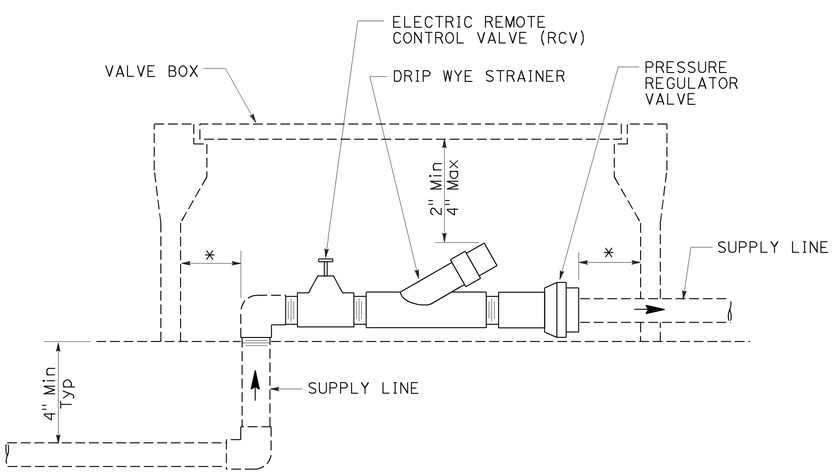

* 2" CLEARANCE ON ALL SIDES

ELEVATION
DRIP VALVE ASSEMBLY

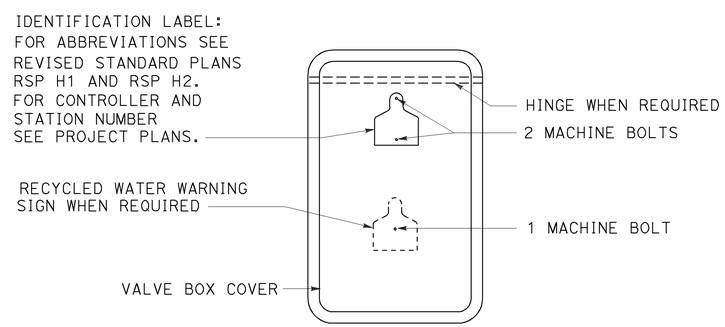

PLAN

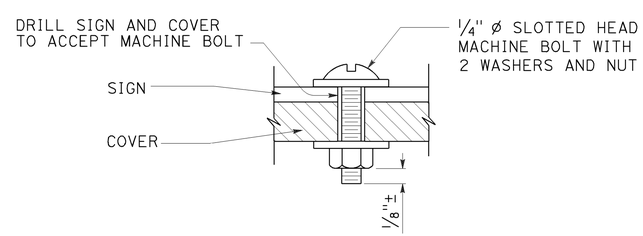

SECTION
VALVE BOX IDENTIFICATION

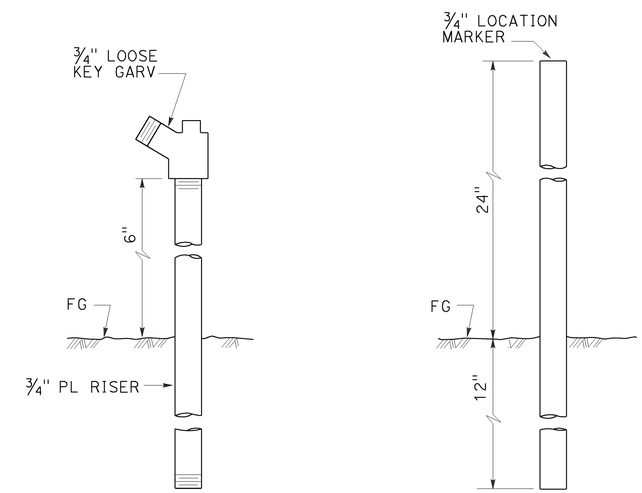

ELEVATION
GARDEN VALVE ASSEMBLY

ELEVATION
LOCATION MARKER

GARDEN VALVE ASSEMBLY

STATE OF CALIFORNIA
DEPARTMENT OF TRANSPORTATION

LANDSCAPE DETAILS

NO SCALE

RSP H7 DATED JULY 19, 2013 SUPERSEDES STANDARD PLAN H7 DATED MAY 20, 2011 - PAGE 224 OF THE STANDARD PLANS BOOK DATED 2010.

REVISED STANDARD PLAN RSP H7

6-20-13

Dist	COUNTY	ROUTE	POST MILES TOTAL PROJECT	SHEET No.	TOTAL SHEETS
05	Mon	68	R17.4/R18.0	92	149

LICENSED LANDSCAPE ARCHITECT

July 19, 2013
PLANS APPROVAL DATE

LICENSED LANDSCAPE ARCHITECT
Gregory A. Balzer 2576
Expiration Date
2-28-15
Renewal Date
7-19-13
Date
STATE OF CALIFORNIA

THE STATE OF CALIFORNIA OR ITS OFFICERS OR AGENTS SHALL NOT BE RESPONSIBLE FOR THE ACCURACY OR COMPLETENESS OF SCANNED COPIES OF THIS PLAN SHEET.

TO ACCOMPANY PLANS DATED 6-22-15

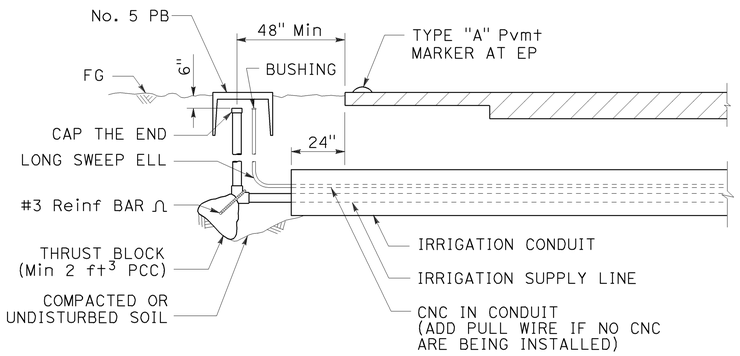

SECTION

IRRIGATION CONDUIT

UNDER TRAVELED WAY

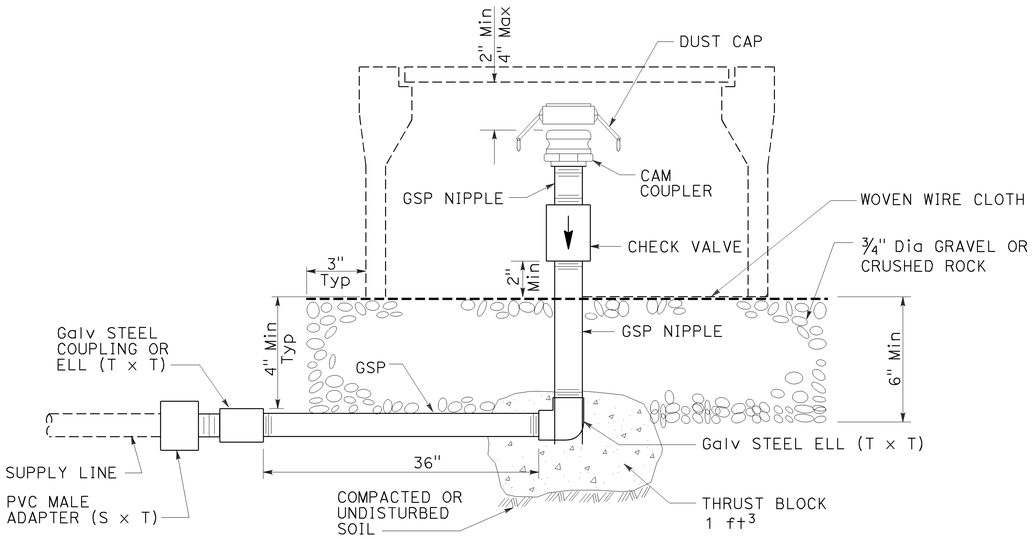

ELEVATION

CAM COUPLER ASSEMBLY

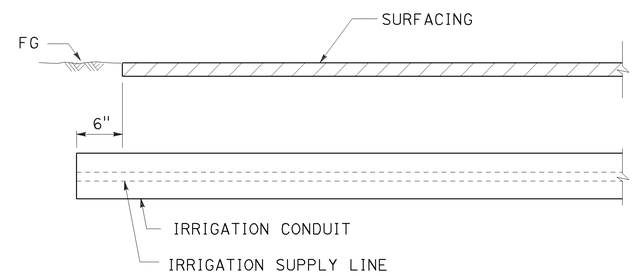

SECTION

IRRIGATION CONDUIT

UNDER SIDEWALKS, DRIVEWAYS AND PATHS

STATE OF CALIFORNIA
DEPARTMENT OF TRANSPORTATION

LANDSCAPE DETAILS

NO SCALE

RSP H9 DATED JULY 19, 2013 SUPERSEDES STANDARD PLAN H9
DATED MAY 20, 2011 - PAGE 226 OF THE STANDARD PLANS BOOK DATED 2010.

REVISED STANDARD PLAN RSP H9

2010 REVISED STANDARD PLAN RSP H9

6-28-13

Dist	COUNTY	ROUTE	POST MILES TOTAL PROJECT	SHEET No.	TOTAL SHEETS
05	Mon	68	R17.4/R18.0	93	149

LICENSED LANDSCAPE ARCHITECT

July 19, 2013
PLANS APPROVAL DATE

THE STATE OF CALIFORNIA OR ITS OFFICERS OR AGENTS SHALL NOT BE RESPONSIBLE FOR THE ACCURACY OR COMPLETENESS OF SCANNED COPIES OF THIS PLAN SHEET.

LICENSED LANDSCAPE ARCHITECT — Gregory A. Balzer — 2516 — Expires 2-28-15 — Renewal Date 7-19-13 — Date — STATE OF CALIFORNIA

TO ACCOMPANY PLANS DATED 6-22-15

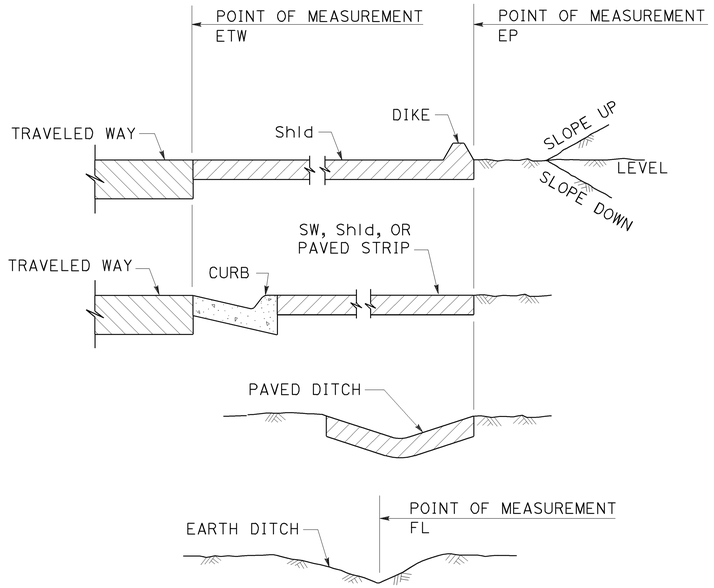

SECTION
POINTS OF MEASUREMENT

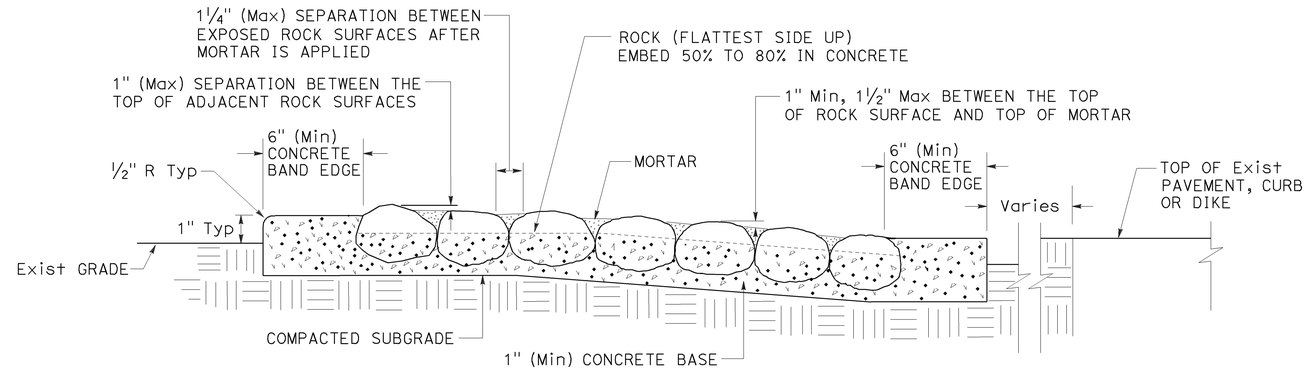

SECTION
ROCK BLANKET

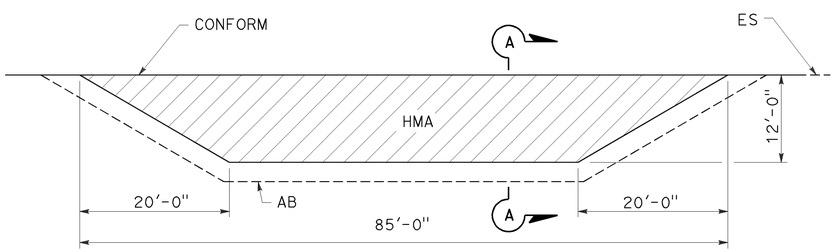

PLAN

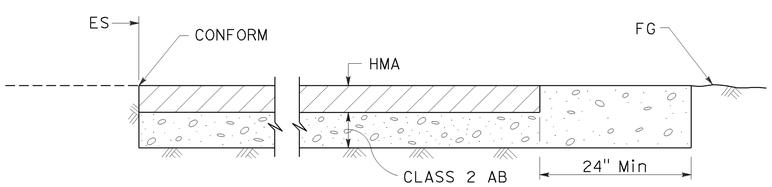

SECTION A-A
MAINTENANCE VEHICLE PULLOUT

STATE OF CALIFORNIA
DEPARTMENT OF TRANSPORTATION

LANDSCAPE DETAILS

NO SCALE

RSP H9A DATED JULY 19, 2013 SUPPLEMENTS THE STANDARD PLANS BOOK DATED 2010.

REVISED STANDARD PLAN RSP H9A

2010 REVISED STANDARD PLAN RSP H9A

6-21-13

Dist	COUNTY	ROUTE	POST MILES TOTAL PROJECT	SHEET No.	TOTAL SHEETS
05	Mon	68	R17.4/R18.0	94	149

REGISTERED CIVIL ENGINEER

July 19, 2013
PLANS APPROVAL DATE

REGISTERED PROFESSIONAL ENGINEER
Gurinderpal Bhullar
No. C48815
Exp. 9-30-14
CIVIL
STATE OF CALIFORNIA

THE STATE OF CALIFORNIA OR ITS OFFICERS OR AGENTS SHALL NOT BE RESPONSIBLE FOR THE ACCURACY OR COMPLETENESS OF SCANNED COPIES OF THIS PLAN SHEET.

TO ACCOMPANY PLANS DATED 6-22-15

TABLE 1

TAPER LENGTH CRITERIA AND CHANNELIZING DEVICE SPACING

SPEED (S)	MINIMUM TAPER LENGTH * FOR WIDTH OF OFFSET 12 FEET (W)				MAXIMUM CHANNELIZING DEVICE SPACING		
					X	Y	Z **
	TANGENT 2L	MERGING L	SHIFTING L/2	SHOULDER L/3	TAPER	TANGENT	CONFLICT
mph	ft	ft	ft	ft	ft	ft	ft
20	160	80	40	27	20	40	10
25	250	125	63	42	25	50	12
30	360	180	90	60	30	60	15
35	490	245	123	82	35	70	17
40	640	320	160	107	40	80	20
45	1080	540	270	180	45	90	22
50	1200	600	300	200	50	100	25
55	1320	660	330	220	55	110	27
60	1440	720	360	240	60	120	30
65	1560	780	390	260	65	130	32
70	1680	840	420	280	70	140	35

* - For other offsets, use the following merging taper length formula for L:
For speed of 40 mph or less, $L = WS^2/60$
For speed of 45 mph or more, $L = WS$

Where: L = Taper length in feet
W = Width of offset in feet
S = Posted speed limit, off-peak 85th-percentile speed prior to work starting, or the anticipated operating speed in mph

** - Use for taper and tangent sections where there are no pavement markings or where there is a conflict between existing pavement markings and channelizers (CA).

TABLE 2

LONGITUDINAL BUFFER SPACE AND FLAGGER STATION SPACING

SPEED *	Min D **	DOWNGRADE Min D ***		
		-3%	-6%	-9%
mph	ft	ft	ft	ft
20	115	116	120	126
25	155	158	165	173
30	200	205	215	227
35	250	257	271	287
40	305	315	333	354
45	360	378	400	427
50	425	446	474	507
55	495	520	553	593
60	570	598	638	686
65	645	682	728	785
70	730	771	825	891

* - Speed is posted speed limit, off-peak 85th-percentile speed prior to work starting, or the anticipated operating speed in mph

** - Longitudinal buffer space or flagger station spacing

*** - Use on sustained downgrade steeper than -3 percent and longer than 1 mile.

TABLE 3

ADVANCE WARNING SIGN SPACING

ROAD TYPE	DISTANCE BETWEEN SIGNS *		
	A	B	C
	ft	ft	ft
URBAN - 25 mph OR LESS	100	100	100
URBAN - MORE THAN 25 mph TO 40 mph	250	250	250
URBAN - MORE THAN 40 mph	350	350	350
RURAL	500	500	500
EXPRESSWAY / FREEWAY	1000	1500	2640

* - The distances are approximate, are intended for guidance purposes only, and should be applied with engineering judgment. These distances should be adjusted by the Engineer for field conditions, if necessary, by increasing or decreasing the recommmended distances.

STATE OF CALIFORNIA
DEPARTMENT OF TRANSPORTATION

TRAFFIC CONTROL SYSTEM TABLES FOR LANE AND RAMP CLOSURES

NO SCALE

RSP T9 DATED JULY 19, 2013 SUPERSEDES RSP T9 DATED APRIL 19, 2013 THAT SUPPLEMENTS THE STANDARD PLANS BOOK DATED 2010.

REVISED STANDARD PLAN RSP T9

2010 REVISED STANDARD PLAN RSP T9

4-30-13

Dist	COUNTY	ROUTE	POST MILES TOTAL PROJECT	SHEET No.	TOTAL SHEETS
05	Mon	68	R17.4/R18.0	95	149

REGISTERED CIVIL ENGINEER

April 19, 2013
PLANS APPROVAL DATE

REGISTERED PROFESSIONAL ENGINEER Gurinderpal Bhullar No. C48815 Exp. 9-30-14 CIVIL STATE OF CALIFORNIA

THE STATE OF CALIFORNIA OR ITS OFFICERS OR AGENTS SHALL NOT BE RESPONSIBLE FOR THE ACCURACY OR COMPLETENESS OF SCANNED COPIES OF THIS PLAN SHEET.

TO ACCOMPANY PLANS DATED 6-22-15

NOTES:

See Revised Standard Plan RSP T9 for tables.

Use cone spacing X for taper segment, Y for tangent segment or Z for conflict situations, as approriate, per Table 1, unless X, Y, or Z cone spacing is shown on this sheet.

Unless otherwise specified in the special provisions, all temporary warning signs shall have black legend on fluorescent orange background.

California codes are designated by (CA). Otherwise, Federal (MUTCD) codes are shown.

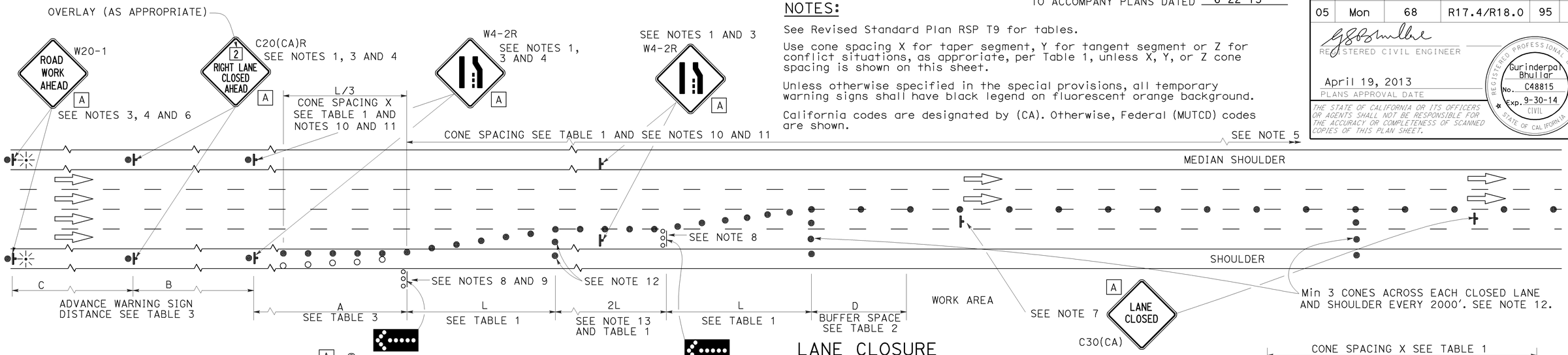

LANE CLOSURE

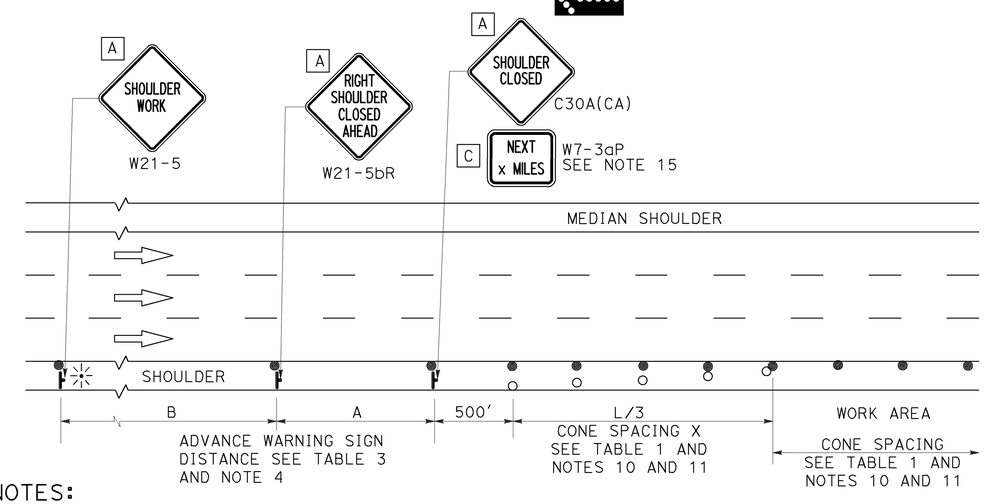

SHOULDER CLOSURE

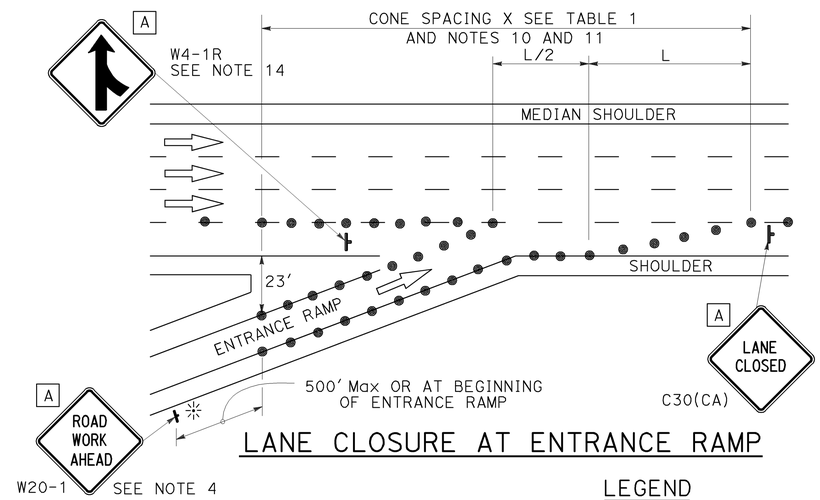

LANE CLOSURE AT ENTRANCE RAMP

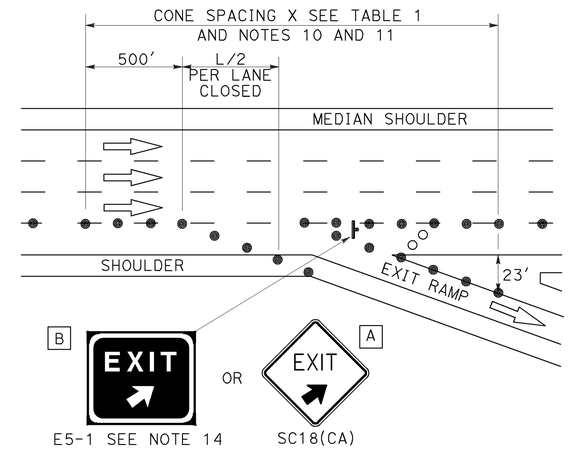

LANE CLOSURE AT EXIT RAMP

NOTES:

1. Median lane closures shall conform to the details as shown except that C20(CA)L and W4-2L signs shall be used.
2. At least one person shall be assigned to provide full time maintenance of traffic control devices for lane closures.
3. Duplicate sign installations are not required:
   a) On opposite shoulder if at least one-half of the available lanes remain open to traffic.
   b) In the median if the width of the median shoulder is less than 8' and the outside lanes are to be closed.
4. Each advance warning sign on each side of the roadway shall be equipped with at least two flags for daytime closure. Each flag shall be at least 16" x 16" in size and shall be orange or fluorescent red-orange in color. Flashing beacons shall be placed at the locations indicated for lane closure during hours of darkness.
5. A G20-2 "END ROAD WORK" sign, with minimum size of 48" x 24" as appropriate, shall be placed at the end of the lane closure unless the end of work area is obvious or ends within a larger project's limits.
6. If the W20-1 sign would follow within 2000' of a stationary W20-1 or G20-1 "ROAD WORK NEXT _____ MILES", use a C20(CA) sign for the first advance warning sign.
7. Place a C30(CA) sign every 2000' throughout length of lane closure.
8. One flashing arrow sign for each lane closed. The flashing arrow signs shall be Type I.
9. A minimum 1500' of sight distance shall be provided where possible for vehicles approaching the first flashing arrow sign. Lane closures shall not begin at top of crest vertical curve or on a horizontal curve.
10. All cones used for lane closures during the hours of darkness shall be fitted with retroreflective bands (or sleeves) as specified in the specifications.
11. Portable delineators, placed at one-half the spacing indicated for traffic cones may be used instead of cones for daytime closures only.
12. Unless otherwise specified in the special provisions, a minimum of 3 cones shall be placed transversely across each closed lane and shoulder at each location where a taper across a traffic lane ends and every 2000' as shown on the "Lane Closure" detail. Two Type II barricades may be used instead of the 3 cones. The transverse alignment of the cones or barricades on the closed shoulder may be shifted from the transverse alignment to provide access to the work.
13. Unless otherwise specified in the special provisions, the 2L tangent shown along lane lines shall be used between the L tapers required for each closed traffic lane.
14. Unless otherwise specified in the special provisions, the E5-1 or SC18(CA) and W4-1 signs shall be used as shown.
15. A W7-3aP "NEXT____ MILES" plaque must be used if theshoulder closure extends beyond the distance that can be perceived by road users.

LEGEND

- TRAFFIC CONE
- TRAFFIC CONE (OPTIONAL TAPER)
- TEMPORARY TRAFFIC CONTROL SIGN
- FLASHING ARROW SIGN (FAS)
- FAS SUPPORT OR TRAILER
- PORTABLE FLASHING BEACON

SIGN PANEL SIZE (Min)

A	48" x 48"
B	72" x 60"
C	36" x 30"

STATE OF CALIFORNIA
DEPARTMENT OF TRANSPORTATION

TRAFFIC CONTROL SYSTEM FOR LANE CLOSURE ON FREEWAYS AND EXPRESSWAYS

NO SCALE

RSP T10 DATED APRIL 19, 2013 SUPERSEDES STANDARD PLAN T10 DATED MAY 20, 2011 - PAGE 237 OF THE STANDARD PLANS BOOK DATED 2010.

REVISED STANDARD PLAN RSP T10

2010 REVISED STANDARD PLAN RSP T10

12-18-12

Dist	COUNTY	ROUTE	POST MILES TOTAL PROJECT	SHEET No.	TOTAL SHEETS
05	Mon	68	R17.4/R18.0	96	149

REGISTERED CIVIL ENGINEER

April 19, 2013
PLANS APPROVAL DATE

REGISTERED PROFESSIONAL ENGINEER Gurinderpal Bhullar No. C48815 Exp. 9-30-14 CIVIL STATE OF CALIFORNIA

THE STATE OF CALIFORNIA OR ITS OFFICERS OR AGENTS SHALL NOT BE RESPONSIBLE FOR THE ACCURACY OR COMPLETENESS OF SCANNED COPIES OF THIS PLAN SHEET.

TO ACCOMPANY PLANS DATED 6-22-15

TYPICAL RAMP CLOSURES

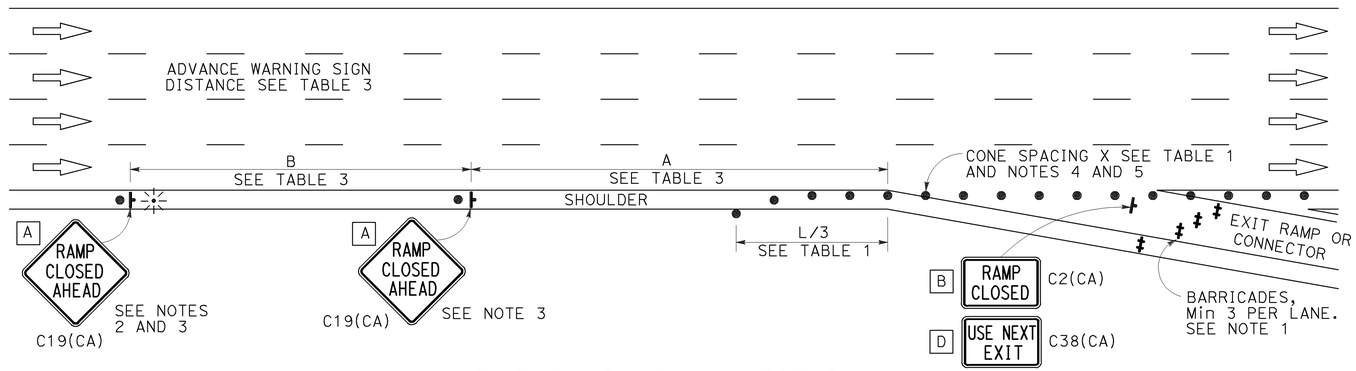

EXIT RAMP OR CONNECTOR

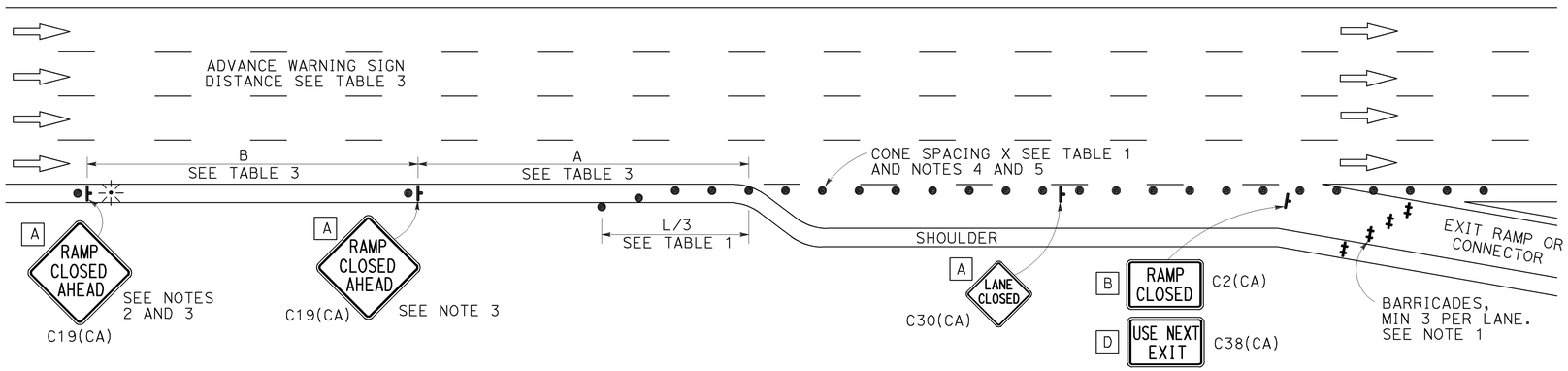

EXIT RAMP OR CONNECTOR WITH ADDITIONAL LANE

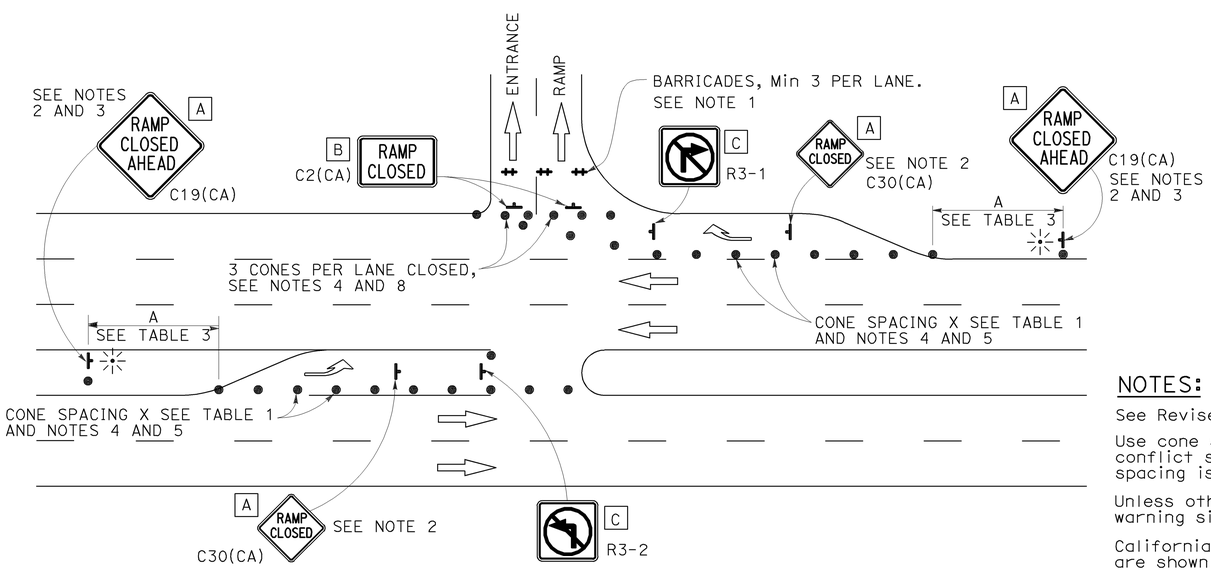

ENTRANCE RAMP WITH TURNING POCKETS

SIGN PANEL SIZE (Min)

- A 48" × 48"
- B 48" × 30"
- C 36" × 36"
- D 48" × 36"

LEGEND

- TRAFFIC CONE
- TEMPORARY TRAFFIC CONTROL SIGN
- BARRICADES
- PORTABLE FLASHING BEACON

NOTES:

1. Barricades shall be Type I, II, or III for closures lasting one week or less and Type III for closures lasting longer than one week.
2. In addition to placing the C19(CA) "RAMP CLOSED AHEAD" and C30(CA) "RAMP CLOSED" signs, black on orange overlay plates with the word "CLOSED" may be mounted, as directed by the Engineer, on all guide signs that refer to the closed ramp. The letter size on the overlay shall be the same as the guide sign.
3. Each advance C19(CA) "RAMP CLOSED AHEAD" sign shall be equipped with at least two flags for daytime closure. Each flag shall be at least 16" x 16" in size and shall be orange or fluorescent red-orange in color. A flashing beacon shall be placed on top of the first C19(CA) sign during hours of darkness.
4. All cones used for ramp closures during the hours of darkness shall be fitted with retroreflective bands (or sleeves) as specified in the specifications.
5. Portable delineators, placed at one-half the spacing indicated for traffic cones, may be used instead of cones for daytime ramp closures only.
6. At least one person shall be assigned to provide full time maintenance of traffic control devices, unless otherwise directed by the Engineer.
7. The existing "EXIT" signs shall be covered during ramp closures.
8. A minimum of 3 cones shall be placed transversely across each closed lane and shoulder.

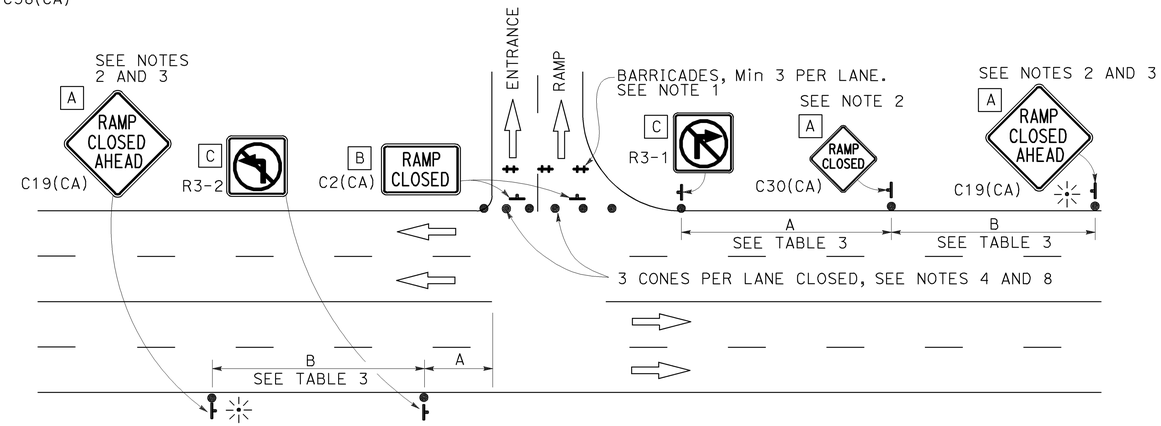

ENTRANCE RAMP WITHOUT TURNING POCKETS

NOTES:

See Revised Standard Plan RSP T9 for tables.

Use cone spacing X for taper segment, Y for tangent segment or Z for conflict situations, as approriate, per Table 1, unless X, Y, or Z cone spacing is shown on this sheet.

Unless otherwise specified in the special provisions, all temporary warning signs shall have black legend on fluorescent orange background.

California codes are designated by (CA). Otherwise, Federal (MUTCD) codes are shown.

STATE OF CALIFORNIA
DEPARTMENT OF TRANSPORTATION

TRAFFIC CONTROL SYSTEM FOR RAMP CLOSURE

NO SCALE

RSP T14 DATED APRIL 19, 2013 SUPERSEDES STANDARD PLAN T14
DATED MAY 20, 2011 - PAGE 242 OF THE STANDARD PLANS BOOK DATED 2010.

REVISED STANDARD PLAN RSP T14

2010 REVISED STANDARD PLAN RSP T14

12-18-12

Dist	COUNTY	ROUTE	POST MILES TOTAL PROJECT	SHEET No.	TOTAL SHEETS
05	Mon	68	R17.4/R18.0	97	149

REGISTERED CIVIL ENGINEER

April 19, 2013
PLANS APPROVAL DATE

REGISTERED PROFESSIONAL ENGINEER Gurinderpal Bhullar No. C48815 Exp. 9-30-14 CIVIL STATE OF CALIFORNIA

THE STATE OF CALIFORNIA OR ITS OFFICERS OR AGENTS SHALL NOT BE RESPONSIBLE FOR THE ACCURACY OR COMPLETENESS OF SCANNED COPIES OF THIS PLAN SHEET.

TO ACCOMPANY PLANS DATED 6-22-15

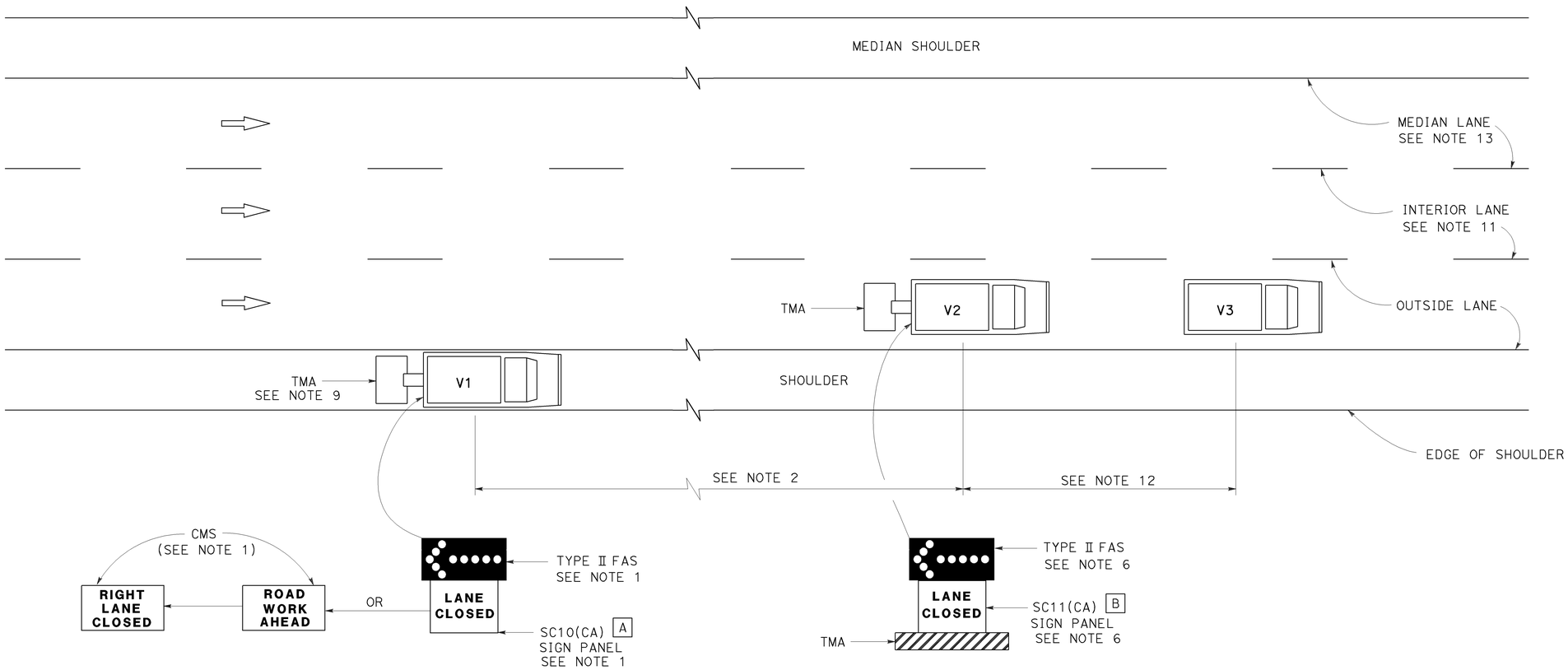

MOVING LANE CLOSURE ON MEDIAN LANE OR OUTSIDE LANE OF MULTILANE HIGHWAYS

SIGN PANEL SIZE (Min)

A 66" x 36"

B 54" x 42"

LEGEND

V1	SIGN VEHICLE
V2	SHADOW VEHICLE
V3	WORK/APPLICATION VEHICLE
	FLASHING ARROW SIGN (FAS)
CMS	CHANGEABLE MESSAGE SIGN
TMA	TRUCK-MOUNTED ATTENUATOR

NOTES:

1. Either a changeable message sign or a SC10(CA) sign panel and a Type II flashing arrow sign shall be mounted on the rear of sign vehicle V1. The changeable message sign shall be sequenced to show the "ROAD WORK AHEAD" message first, followed by the "RIGHT LANE CLOSED" message. For median lane closure, the flashing arrow symbol shall be reversed with the arrowhead on the right and the changeable message sign shall show "LEFT LANE CLOSED".
2. If traffic queues develop, sign vehicle V1 should be positioned upstream from the end of queue. Sign vehicle V1 shall be positioned where highly visible when shoulders are not available.
3. A minimum sight distance of 1500′ should be provided in advance of sign vehicle V1.
4. Sign vehicle V1 should remain at the beginning of horizontal or vertical curves until the other vehicles (V2 and V3) are far enough beyond the curve to resume the minimum sight distance of 1500′.
5. Vehicle-mounted sign panels shall have Type III or above retroreflective sheeting, black on white, or black on fluorescent orange, with 6" minimum series D letters per Caltrans sign specifications.
6. Shadow vehicle V2 shall be equipped with a truck-mounted attenuator. The sign panel shown and a Type II flashing arrow sign shall be mounted on the rear of shadow vehicle V2. For median lane closure the flashing arrow sign symbol shall be displayed with the arrowhead on the right.
7. All vehicles used for lane closures shall be equipped with two-way radios, and the vehicle operators shall maintain communication during the work or application operation.
8. All vehicles shall be equipped with flashing or rotating amber lights.
9. If sign vehicle V1 encroaches into the traffic lane due to insufficient shoulder width, sign vehicle V1 shall be equipped with a truck-mounted attenuator. Sign vehicle V1 shall stay as close to the edge of shoulder as practicable.
10. Where workers would be on foot in the work area, a stationary type lane closure (Revised Standard Plan T10, T11, etc., as applicable) shall be used instead of this plan.
11. For moving lane closure on interior lane of multilane highways, use Revised Standard Plan T16.
12. The spacing between work vehicle(s) and the shadow vehicles, and between each shadow vehicle should be minimized to deter road users from driving in between.
13. When the work/application vehicle V3 occupies the median lane, sign vehicle V1 should drive in the median shoulder and indicate left lane closed ahead.

STATE OF CALIFORNIA
DEPARTMENT OF TRANSPORTATION

TRAFFIC CONTROL SYSTEM FOR MOVING LANE CLOSURE ON MULTILANE HIGHWAYS

NO SCALE

RSP T15 DATED APRIL 19, 2013 SUPERSEDES STANDARD PLAN T15
DATED MAY 20, 2011 - PAGE 243 OF THE STANDARD PLANS BOOK DATED 2010.

REVISED STANDARD PLAN RSP T15

2010 REVISED STANDARD PLAN RSP T15

12-18-12

Dist	COUNTY	ROUTE	POST MILES TOTAL PROJECT	SHEET No.	TOTAL SHEETS
05	Mon	68	R17.4/R18.0	98	149

REGISTERED CIVIL ENGINEER

July 19, 2013
PLANS APPROVAL DATE

REGISTERED PROFESSIONAL ENGINEER Marc Friedheim No. C57968 Exp. 6-30-14 CIVIL STATE OF CALIFORNIA

THE STATE OF CALIFORNIA OR ITS OFFICERS OR AGENTS SHALL NOT BE RESPONSIBLE FOR THE ACCURACY OR COMPLETENESS OF SCANNED COPIES OF THIS PLAN SHEET.

TO ACCOMPANY PLANS DATED 6-22-15

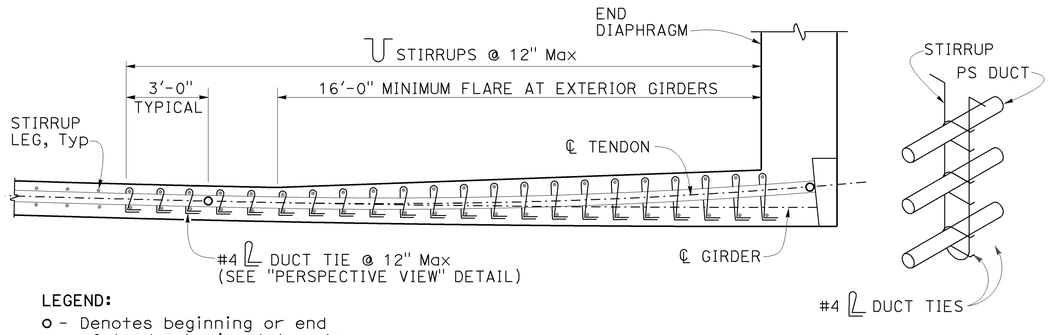

LEGEND:

o - Denotes beginning or end of tendon horizontal angle change (BC, EC or PCC)

PLAN

PERSPECTIVE VIEW

DUCT TIES AT TENDON HORIZONTAL ANGLE CHANGES
DETAIL 5-1

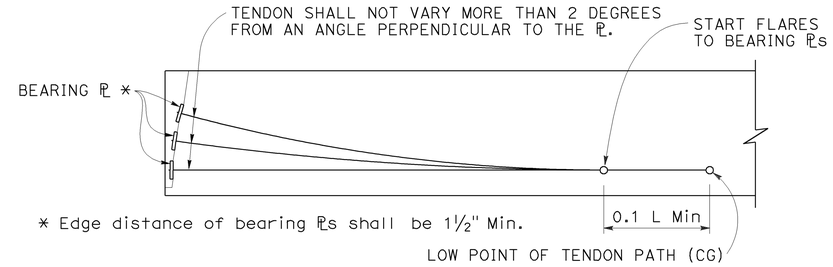

ELEVATION - BEARING PLATE AND PRESTRESSING PATH
DETAIL 5-2

NOTES FOR DETAIL 5-1

1. Tendon horizontal angle change at end diaphragm shown. Duct tie placement similar for other locations where tendon horizontal angle changes occur. For curved girders place duct ties at tendon angle changes where ℄ tendon radius is smaller than ℄ girder radius.
2. Adjacent duct ties may be staggered to facilitate placement if stirrup spacing is less than 12 inches.
3. Place closed end of duct ties toward inside of tendon curve.
4. Wrap duct ties around both stirrup legs.
5. Individual duct ties may only be used to anchor one duct.

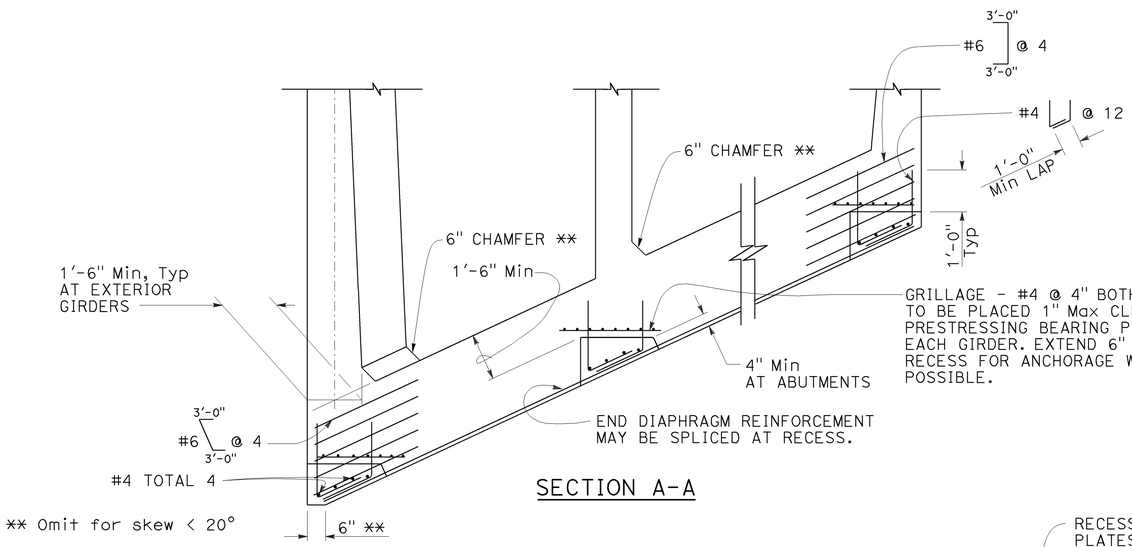

SECTION A-A

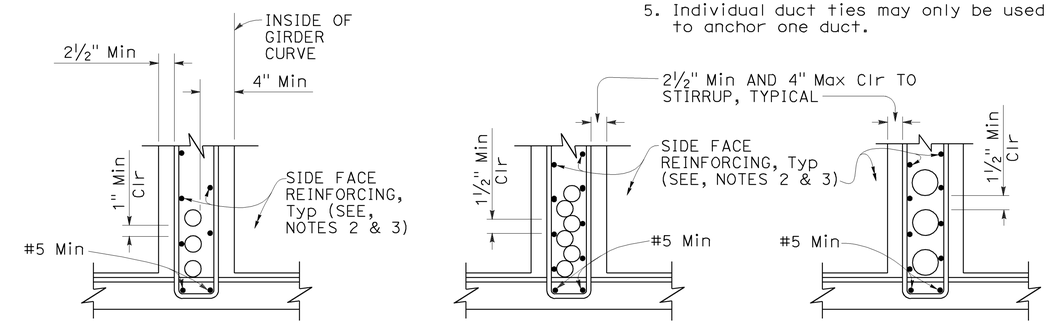

DUCTS 4½" OD AND LESS FOR HORIZONTAL CURVE RADIUS ≤ 2000'

DUCTS 4½" OD AND LESS

DUCTS OVER 4½" OD

CLEARANCE REQUIREMENTS FOR DUCTS
DETAIL 5-4

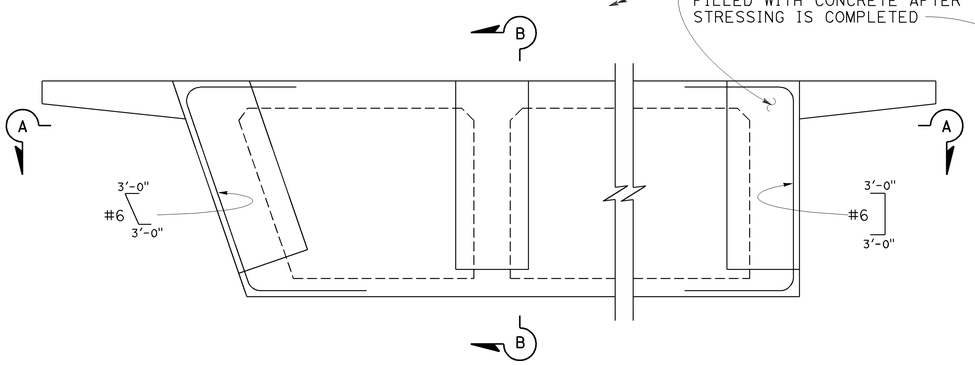

PRESTRESS ANCHORAGE DETAILS AT END DIAPHRAGMS
DETAIL 5-3

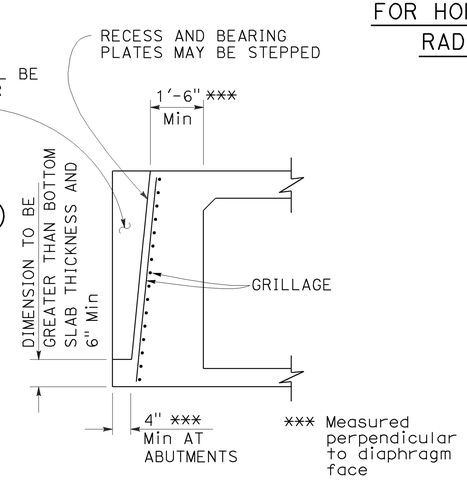

SECTION B-B

NOTES FOR DETAIL 5-4:

1. ⊔ Stirrups may also be used.
2. For additional details, see Standard Plan B7-1, and Project Plans.
3. Bar reinforcing which interferes with prestressing ducts may be adjusted as approved by the Engineer.

STATE OF CALIFORNIA
DEPARTMENT OF TRANSPORTATION

CAST-IN-PLACE POST-TENSIONED GIRDER DETAILS

NO SCALE

RSP B8-5 DATED JULY 19, 2013 SUPERSEDES STANDARD PLAN B8-5 DATED MAY 20, 2011 - PAGE 291 OF THE STANDARD PLANS BOOK DATED 2010.

REVISED STANDARD PLAN RSP B8-5

2010 REVISED STANDARD PLAN RSP B8-5

4-17-13

Dist	COUNTY	ROUTE	POST MILES TOTAL PROJECT	SHEET No.	TOTAL SHEETS
05	Mon	68	R17.4/R18.0	99	149

REGISTERED CIVIL ENGINEER

July 19, 2013
PLANS APPROVAL DATE

REGISTERED PROFESSIONAL ENGINEER
Tillat Satter
No. C42892
Exp. 3-31-14
CIVIL
STATE OF CALIFORNIA

THE STATE OF CALIFORNIA OR ITS OFFICERS OR AGENTS SHALL NOT BE RESPONSIBLE FOR THE ACCURACY OR COMPLETENESS OF SCANNED COPIES OF THIS PLAN SHEET.

TO ACCOMPANY PLANS DATED 6-22-15

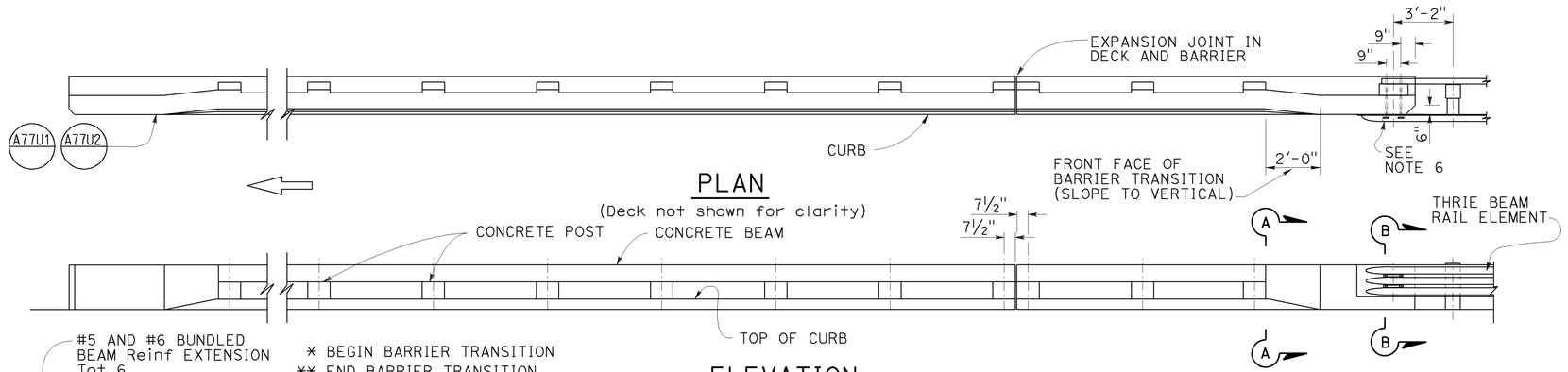

PLAN

(Deck not shown for clarity)

ELEVATION

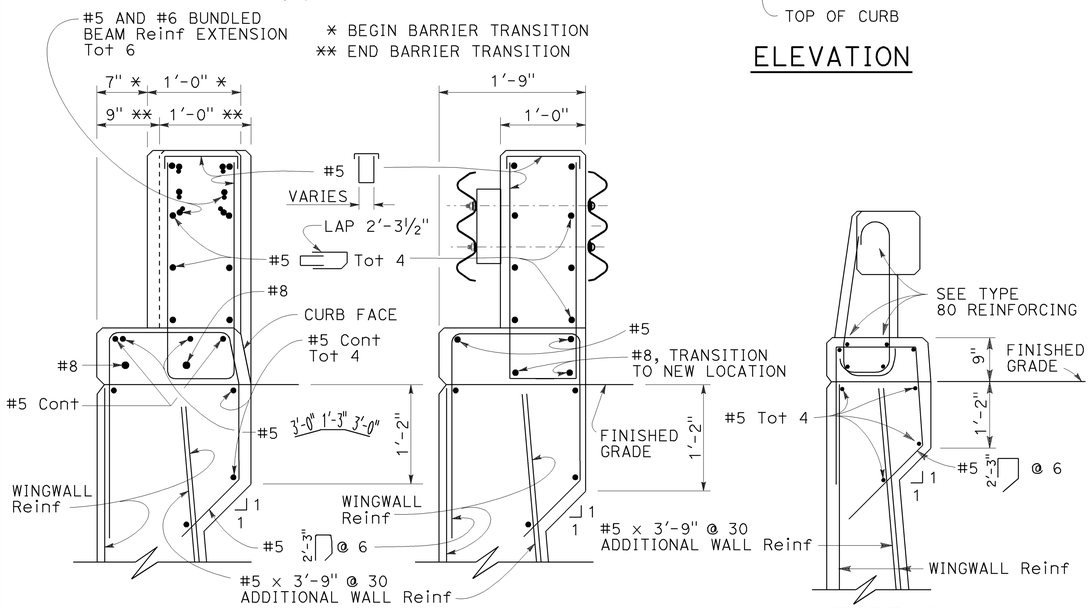

SECTION A-A

SECTION B-B

TYPE 80A

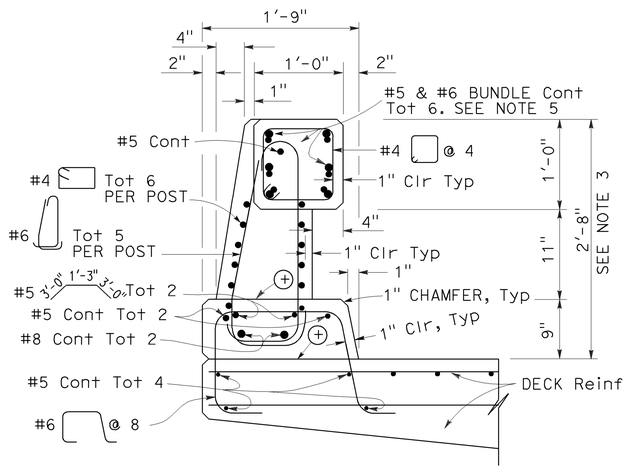

TYPE 80

⊕ Construction joint

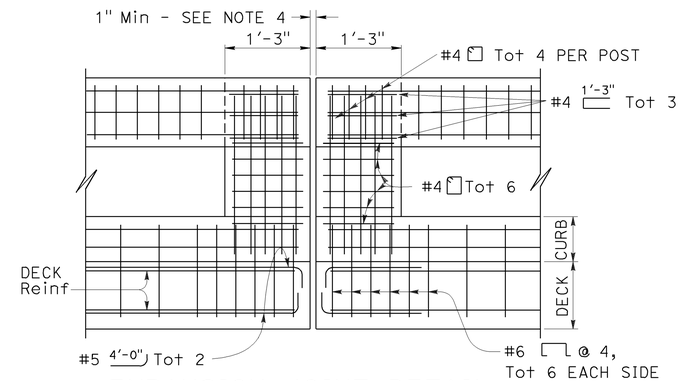

EXPANSION JOINT DETAIL

NOTES:

1. Walls are to be backfilled before the barrier is placed.
2. Longitudinal reinforcing steel to stop at all expansion joints.
3. The front face dimensions are to be constant above the finish roadway profile, but the overall height will vary with certain thicknesses of surfacing and roadway slopes.
4. Expansion joint to match deck joint.
5. No lap splicing allowed on the longitudinal rail reinforcing. Splicing shall be staggered.
6. For typical metal railing connection details not shown, see Revised Standard Plans RSP A77U1 and RSP A77U2.
7. Chain link railing is not allowed on Type 80 Barriers.
8. Post to be spaced equally, typically 6'-6" spacing. Post spacing may be reduced where location of hinges or expansion joints or the length of wingwalls will not accommodate the 6'-6" spacing. Maximum see-through availability is to be strived for, where 6'-6" post spacing can not be achieved.

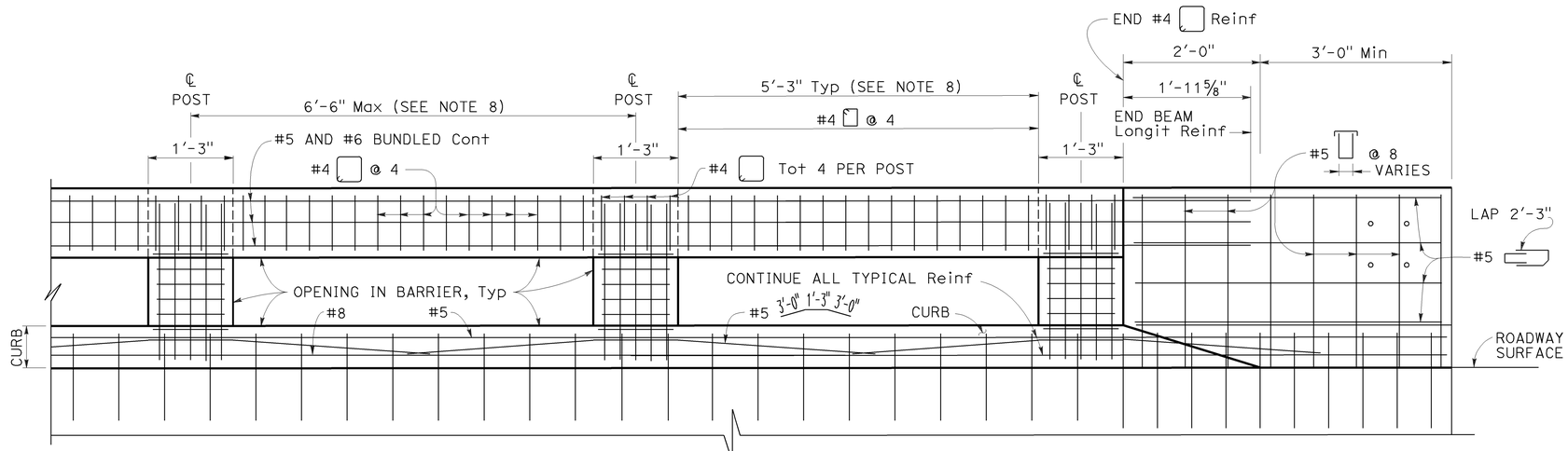

LONGITUDINAL SECTION

(Deck or wingwall reinforcing not shown)

STATE OF CALIFORNIA
DEPARTMENT OF TRANSPORTATION

CONCRETE BARRIER TYPE 80 (SHEET 1 OF 2)

NO SCALE

RSP B11-60 DATED JULY 19, 2013 SUPERSEDES RSP B11-60 DATED APRIL 20, 2012 AND STANDARD PLAN B11-60 DATED MAY 20, 2011 - PAGE 300 OF THE STANDARD PLANS BOOK DATED 2010.

REVISED STANDARD PLAN RSP B11-60

2010 REVISED STANDARD PLAN RSP B11-60

6-27-13

Dist	COUNTY	ROUTE	POST MILES TOTAL PROJECT	SHEET No.	TOTAL SHEETS
05	Mon	68	R17.4/R18.0	100	149

Theresa Gabriel
REGISTERED ELECTRICAL ENGINEER

July 19, 2013
PLANS APPROVAL DATE

REGISTERED PROFESSIONAL ENGINEER
Theresa Aziz Gabriel
No. E15129
Exp. 6-30-14
ELECTRICAL
STATE OF CALIFORNIA

THE STATE OF CALIFORNIA OR ITS OFFICERS OR AGENTS SHALL NOT BE RESPONSIBLE FOR THE ACCURACY OR COMPLETENESS OF SCANNED COPIES OF THIS PLAN SHEET.

TO ACCOMPANY PLANS DATED 6-22-15

LEGEND:

AB	ABANDON. IF APPLIED TO CONDUIT, REMOVE CONDUCTORS
BC	INSTALL PULL BOX IN EXISTING CONDUIT RUN
BP	PEDESTRIAN BARRICADE, TYPE AS INDICATED ON PLAN
CB	INSTALL CONDUIT INTO EXISTING PULL BOX
CC	CONNECT NEW AND EXISTING CONDUIT. REMOVE EXISTING CONDUCTORS AND INSTALL CONDUCTORS AS INDICATED
CF	CONDUIT TO REMAIN FOR FUTURE USE. REMOVE CONDUCTORS. INSTALL PULL TAPE
DH	DETECTOR HANDHOLE
FA	FOUNDATION TO BE ABANDONED
IS	INSTALL SIGN ON SIGNAL MAST ARM
NS	NO SLIP BASE ON STANDARD
PEC	PHOTOELECTRIC CONTROL
PEU	PHOTOELECTRIC UNIT
RC	EQUIPMENT OR MATERIAL TO BE REMOVED AND BECOME THE PROPERTY OF THE CONTRACTOR
RE	REMOVE ELECTROLIER, FUSES AND BALLAST. TAPE ENDS OF CONDUCTORS
RL	RELOCATE EQUIPMENT
RR	REMOVE AND REUSE EQUIPMENT
RS	REMOVE AND SALVAGE EQUIPMENT
SC	SPLICE NEW TO EXISTING CONDUCTORS
SD	SERVICE DISCONNECT
TSP	TELEPHONE SERVICE POINT

ABBREVIATIONS

APS	ACCESSIBLE PEDESTRIAN SIGNAL
BBS	BATTERY BACKUP SYSTEM
BC	BOLT CIRCLE
BPB	BICYCLE PUSH BUTTON
C	CONDUIT
CB	CIRCUIT BREAKER
CCTV	CLOSED CIRCUIT TELEVISION
Ckt	CIRCUIT
CMS	CHANGEABLE MESSAGE SIGN
Ctid	CALTRANS IDENTIFICATION
Comm	COMMUNICATION
DLC	LOOP DETECTOR LEAD-IN CABLE
EMS	EXTINGUISHABLE MESSAGE SIGN
EVUC	EMERGENCY VEHICLE UNIT CABLE
EVUD	EMERGENCY VEHICLE UNIT DETECTOR
FB	FLASHING BEACON
FBCA	FLASHING BEACON CONTROL ASSEMBLY
FBS	FLASHING BEACON WITH SLIP BASE
FO	FIBER OPTIC
G	EQUIPMENT GROUNDING CONDUCTOR
GB	GROUND BUS
GFCI	GROUND FAULT CIRCUIT INTERRUPTER
HAR	HIGHWAY ADVISORY RADIO
Hex	HEXAGONAL
HPS	HIGH PRESSURE SODIUM
IISNS	INTERNALLY ILLUMINATED STREET NAME SIGN
ISL	INDUCTION SIGN LIGHTING
LED	LIGHT EMITTING DIODE
LMA	LUMINAIRE MAST ARM
LPS	LOW PRESSURE SODIUM
Ltg	LIGHTING
Lum	LUMINAIRE
M	METERED
MAT	MAST ARM MOUNTING TOP ATTACHMENT
MAS	MAST ARM MOUNTING SIDE ATTACHMENT
M/M	MULTIPLE TO MULTIPLE TRANSFORMER
Mtg	MOUNTING
MV	MERCURY VAPOR LIGHTING FIXTURE
MVDS	MICROWAVE VEHICLE DETECTION SYSTEM
N	NEUTRAL (GROUNDED CONDUCTOR)
NB	NEUTRAL BUS
NC	NORMALLY CLOSE
NO	NORMALLY OPEN
P	CIRCUIT BREAKER'S POLE
PB	PULL BOX
PBA	PUSH BUTTON ASSEMBLY
PEC	PHOTOELECTRIC CONTROL
Ped	PEDESTRIAN
PEU	PHOTOELECTRIC UNIT
PT	CONDUIT WITH PULL TAPE
RE	RELOCATED EQUIPMENT
RM	RAMP METERING
RWIS	ROADSIDE WEATHER INFORMATION SYSTEM
SB	SLIP BASE
SIC	SIGNAL INTERCONNECT CABLE
Sig	SIGNAL
SMA	SIGNAL MAST ARM
SNS	STREET NAME SIGN
SP	SERVICE POINT
TDC	TELEPHONE DEMARCATION CABINET
TMS	TRAFFIC MONITORING STATION
TOS	TRAFFIC OPERATIONS SYSTEM
Veh	VEHICLE
VIVDS	VIDEO IMAGE VEHICLE DETECTION SYSTEM
WIM	WEIGH-IN-MOTION
Xfmr	TRANSFORMER

SOFFIT AND WALL MOUNTED LUMINAIRES

PENDANT, 70 W HPS UNLESS OTHERWISE SPECIFIED

FLUSH, 70 W HPS UNLESS OTHERWISE SPECIFIED

WALL SURFACE, 70 W HPS UNLESS OTHERWISE SPECIFIED

EXISTING SOFFIT OR WALL LUMINAIRE TO REMAIN UNMODIFIED

EXISTING SOFFIT OR WALL LUMINAIRE TO BE MODIFIED AS SPECIFIED

NOTE:

Arrow indicates "street side" of luminaire.

COMMONLY USED SYMBOLS FOR UNITED STATES CUSTOMARY UNITS OF MEASUREMENT:

SYMBOL USED	DEFINITIONS
Ω	OHMS
min	MINUTE
s	SECOND
bps	BITS PER SECOND
Bps	BYTES PER SECOND
A	AMPERE
V	VOLT
V(dc)	VOLT (DIRECT CURRENT)
V(ac)	VOLT (ALTERNATING CURRENT)
FC	FOOT - CANDLE
W	WATTS
VA	VOLT-AMPERE
M	MEGA
k	KILO
m	MILLI
μ	MICRO
P	PICO
Hz	HERTZ

MISCELLANEOUS ELECTROLIERS

NEW	EXISTING	
		LUMINAIRE ON WOOD POLE
		NON-STANDARD ELECTROLIER (SEE PROJECT NOTES OR PROJECT PLANS)
		CITY ELECTROLIER
		ELECTROLIER FOUNDATION (FUTURE INSTALLATION)

NOTES:

1. HPS luminaires shall be 310 W HPS when installed on Type 21, 21D, 30, 31 and 32 Standards, unless otherwise specified. HPS luminaires shall be 200 W when installed on other type standards or poles, unless otherwise specified.
2. LED luminaires shall be 235 W when installed on Type 21, 21D, 30, 31 and 32 Standards, unless otherwise specified. LED luminaires shall be 165 W when installed on other type standards or poles, unless otherwise specified.
3. Luminaires shall be the cutoff type, ANSI Type III medium cutoff lighting distribution, unless otherwise specified.

STANDARD ELECTROLIER

NEW	EXISTING	STANDARD TYPE
		15
		15D
		15 STRUCTURE
		15D STRUCTURE
		21
		21D
		21 STRUCTURE
		21D STRUCTURE
		30
		31
		32

STATE OF CALIFORNIA
DEPARTMENT OF TRANSPORTATION

ELECTRICAL SYSTEMS (LEGEND AND ABBREVIATIONS)

NO SCALE

RSP ES-1A DATED JULY 19, 2013 SUPERSEDES STANDARD PLAN ES-1A DATED MAY 20, 2011 - PAGE 425 OF THE STANDARD PLANS BOOK DATED 2010.

REVISED STANDARD PLAN RSP ES-1A

2010 REVISED STANDARD PLAN RSP ES-1A

Dist	COUNTY	ROUTE	POST MILES TOTAL PROJECT	SHEET No.	TOTAL SHEETS
05	Mon	68	R17.4/R18.0	101	149

Theresa Gabriel
REGISTERED ELECTRICAL ENGINEER

July 19, 2013
PLANS APPROVAL DATE

REGISTERED PROFESSIONAL ENGINEER Theresa Aziz Gabriel No. E15129 Exp. 6-30-14 ELECTRICAL STATE OF CALIFORNIA

THE STATE OF CALIFORNIA OR ITS OFFICERS OR AGENTS SHALL NOT BE RESPONSIBLE FOR THE ACCURACY OR COMPLETENESS OF SCANNED COPIES OF THIS PLAN SHEET.

TO ACCOMPANY PLANS DATED 6-22-15

CONDUIT

NEW	EXISTING	
		LIGHTING CONDUIT, UNLESS OTHERWISE INDICATED OR NOTED
		TRAFFIC SIGNAL CONDUIT
C	c	COMMUNICATION CONDUIT
T	t	TELEPHONE CONDUIT
F	f	FIRE ALARM CONDUIT
FO	fo	FIBER OPTIC CONDUIT
		CONDUIT TERMINATION
R	r	CONDUIT RISER ATTACHED TO THE STRUCTURE OR SERVICE POLE

SERVICE EQUIPMENT

NEW	EXISTING	
OH	oh	OVERHEAD LINES
U	U	WOOD POLE, "U" INDICATES UTILITY OWNED
		POLE GUY WITH ANCHOR
		UTILITY TRANSFORMER - GROUND MOUNTED
III	III	SERVICE EQUIPMENT ENCLOSURE TYPE. DOOR INDICATES FRONT OF ENCLOSURE
T	t	TELEPHONE DEMARCATION CABINET

POLE-MOUNTED SERVICE DESIGNATION

TYPE H SERVICE, 28'-10" — TYPE OF INSTALLATION AND POLE HEIGHT ABOVE GRADE

FLASHING BEACON

NEW	EXISTING	
R	R	FLASHING BEACON (ONE VEHICLE SIGNAL HEAD WITH BACKPLATE AND VISOR) "R" INDICATES RED INDICATION, "Y" INDICATES YELLOW INDICATION
Y Y	Y Y	FLASHING BEACON WITH TYPE 15-FBS STANDARD AND A SIGN.
R R	R R	FLASHING BEACON WITH TYPES 9, 9A OR 9B SIGN UNLESS OTHERWISE SPECIFIED OR INDICATED

SIGNAL EQUIPMENT

NEW	EXISTING	
C	C	PEDESTRIAN SIGNAL HEAD "C" INDICATES COUNTDOWN PEDESTRIAN HEAD
		PUSH BUTTON ASSEMBLY POST
		PEDESTRIAN BARRICADE
		VEHICLE SIGNAL HEAD (WITH BACKPLATE AND 3-SECTIONS: RED, YELLOW AND GREEN)
		VEHICLE SIGNAL HEAD WITH ANGLE VISOR
PV	PV	MODIFICATIONS OF BASIC SYMBOL: "L" INDICATES ALL NON-ARROW SECTIONS LOUVERED "LG" INDICATES LOUVERED GREEN SECTION ONLY "PV" INDICATES ALL 12" SECTIONS PROGRAMMED VISIBILITY "8" INDICATES ALL 8" SECTIONS (ONLY WHEN SPECIFIED)
		VEHICLE SIGNAL HEAD CONSISTING OF RED, YELLOW AND GREEN LEFT ARROW SECTIONS
		VEHICLE SIGNAL HEAD CONSISTING OF RED AND YELLOW SECTIONS WITH AN UP GREEN ARROW SECTION
		VEHICLE SIGNAL HEAD (5 SECTION) CONSISTING OF RED, YELLOW AND GREEN SECTIONS WITH YELLOW AND GREEN RIGHT ARROW SECTIONS
		TYPE 15TS STANDARD WITH VEHICLE SIGNAL HEAD AND LUMINAIRE
		TYPE 21TS STANDARD WITH VEHICLE SIGNAL HEAD AND LUMINAIRE
		STANDARD WITH LUMINAIRE AND SIGNAL MAST ARMS AND ATTACHED VEHICLE SIGNAL HEADS
		TYPE 1 STANDARD WITH ATTACHED VEHICLE SIGNAL HEADS
		STANDARD WITH A SIGNAL MAST ARM, ATTACHED VEHICLE SIGNAL HEADS AND INTERNALLY ILLUMINATED STREET NAME SIGN
		CONTROLLER ASSEMBLY. DOOR INDICATES FRONT OF CABINET

SIGNAL EQUIPMENT Cont

NEW	EXISTING	
		GUARD POST
		TYPE 1 STANDARD WITH RAMP METERING SIGN
		OPTICAL DETECTOR FOR THE EMERGENCY VEHICLE DETECTION SYSTEM

NOTES:

1. All signal sections shall be 12" unless shown otherwise.
2. Signal heads shall be provided with backplates unless shown otherwise.

ILLUMINATED OVERHEAD SIGN

NEW	EXISTING	
		SINGLE POST, SINGLE ILLUMINATED SIGN, BALANCED BUTTERFLY
		SINGLE POST, DOUBLE ILLUMINATED SIGN, BALANCED BUTTERFLY
		SINGLE POST, SINGLE ILLUMINATED SIGN, FULL CANTILEVER
		DOUBLE POST, SINGLE ILLUMINATED SIGN
		SINGLE ILLUMINATED SIGN MOUNTED ON STRUCTURE
		DOUBLE POST, SINGLE ILLUMINATED SIGN WITH ELECTROLIER

STATE OF CALIFORNIA
DEPARTMENT OF TRANSPORTATION

ELECTRICAL SYSTEMS (LEGEND AND ABBREVIATIONS)

NO SCALE

RSP ES-1B DATED JULY 19, 2013 SUPERSEDES STANDARD PLAN ES-1B DATED MAY 20, 2011 - PAGE 426 OF THE STANDARD PLANS BOOK DATED 2010.

REVISED STANDARD PLAN RSP ES-1B

2010 REVISED STANDARD PLAN RSP ES-1B

7-15-13

Dist	COUNTY	ROUTE	POST MILES TOTAL PROJECT	SHEET No.	TOTAL SHEETS
05	Mon	68	R17.4/R18.0	102	149

Theresa Gabriel
REGISTERED ELECTRICAL ENGINEER

July 19, 2013
PLANS APPROVAL DATE

REGISTERED PROFESSIONAL ENGINEER
Theresa Aziz Gabriel
No. E15129
Exp. 6-30-14
ELECTRICAL
STATE OF CALIFORNIA

THE STATE OF CALIFORNIA OR ITS OFFICERS OR AGENTS SHALL NOT BE RESPONSIBLE FOR THE ACCURACY OR COMPLETENESS OF SCANNED COPIES OF THIS PLAN SHEET.

TO ACCOMPANY PLANS DATED 6-22-15

EQUIPMENT IDENTIFICATION

ILLUMINATED SIGN IDENTIFICATION NUMBER:

SIGN No. 12345
10 ISL SCI 1.0

- SIGN NUMBER - PLACE ON POST OR STRUCTURE
- TRANSFORMER RATING (kVA)
- LIGHTING CONTROL TYPE
- NUMBER AND TYPE OF FIXTURES

DO NOT PLACE ON STANDARD OR STRUCTURE

ELECTROLIER OR EQUIPMENT IDENTIFICATION NUMBER:

12345 - 15'-0"

- MAST ARM LENGTH, IF SHOWN. DO NOT PLACE ON STANDARD OR STRUCTURE
- EQUIPMENT NUMBER - PLACE ON STANDARD OR STRUCTURE. EXISTING EQUIPMENT NUMBERS ARE SHOWN IN PARENTHESIS

CONDUIT AND CONDUCTOR IDENTIFICATION:

1½"C, 2#10, 15#14, 2 DLC, 12P#18

- PAIR
- NUMBER AND SIZE OF CONDUCTORS AND CABLES
- SIZE OF CONDUIT IN INCHES

ø1, ø2, ø2P, etc.	TRAFFIC PHASE IDENTIFICATION FOR SIGNAL FACES, DETECTORS AND PHASE DIAGRAMS
1 2 3	LEGEND NUMBERS
A B C	EQUIPMENT, SIGNAL POLES, INSTALLATION OR ITEMS
1 2 3	CONDUIT RUN NUMBERS

SIGNAL AND LIGHTING STANDARD (TYPICAL DESIGNATION):

19A - 3 - 100

- WIND VELOCITY = 100 mph
- CASE 3 ARM LOADING
- STANDARD TYPE
- STANDARD PLAN SHEET NUMBER
- DETAIL, NUMBER, SECTION, TYPE OR ELEVATION

MISCELLANEOUS EQUIPMENT

NEW	EXISTING	
CMS	cms	CHANGEABLE MESSAGE SIGN
		CLOSED CIRCUIT TELEVISION CAMERA
		HIGHWAY ADVISORY RADIO POLE AND ANTENNA
EMS	ems	EXTINGUISHABLE MESSAGE SIGN
M V	m v	DETECTION DEVICE M = MICROWAVE SENSOR V = VIDEO IMAGE SENSOR

WIRING DIAGRAM LEGEND

- EXTERNAL CONDUCTOR
- CONDUCTOR OR BUS
- TIE POINT
- CONTACTOR COIL
- CONTACTOR, NO CONTACT
- TERMINAL BLOCKS
- CONTACTOR, NC CONTACT
- ENCLOSURE BOND
- GROUNDING ELECTRODE
- CIRCUIT BREAKER
- RECEPTACLE

PULL BOXES

NEW	EXISTING	
		PULL BOX, No. 5 UNLESS OTHERWISE INDICATED OR NOTED
3	9A(21)	PULL BOX, ADDITIONAL DESIGNATIONS OR DESCRIPTIONS

3 No. 3½ PULL BOX
5 No. 5 PULL BOX
6 No. 6 PULL BOX
7 No. 7 (CEILING PULL BOX)
8 No. 8 (PENDANT SOFFIT PULL BOX)
9 No. 9 PULL BOX
9A No. 9A PULL BOX

(C) COMMUNICATIONS PULL BOX
(E) PULL BOX WITH EXTENSION
(S) SPRINKLER CONTROL PULL BOX
(21) ANCHOR BOLTS AND CONDUIT FOR FUTURE INSTALLATION OF TYPE 21 STANDARD
(T) TRAFFIC PULL BOX

VEHICLE DETECTORS

5 J 9 U

- VEHICLE DETECTOR DESIGNATION
- U = UPPER
  L = LOWER
- SLOT NUMBER IN INPUT FILE
- INPUT FILE (I OR J)
- PHASE

NEW	EXISTING	
		TYPE A DETECTOR LOOP. OUTLINE OF SAWCUT SHOWN
		TYPE B DETECTOR LOOP. OUTLINE OF SAWCUT SHOWN
		TYPE C DETECTOR LOOP. OUTLINE OF SAWCUT SHOWN
		TYPE D DETECTOR LOOP. OUTLINE OF SAWCUT SHOWN
		TYPE E DETECTOR LOOP. OUTLINE OF SAWCUT SHOWN
		TYPE Q DETECTOR LOOP. OUTLINE OF SAWCUT SHOWN
		MAGNETIC DETECTOR
DH	dh	DETECTOR HANDHOLE
		MICROWAVE OR VIDEO DETECTION ZONE

STATE OF CALIFORNIA
DEPARTMENT OF TRANSPORTATION

ELECTRICAL SYSTEMS (LEGEND AND ABBREVIATIONS)

NO SCALE

RSP ES-1C DATED JULY 19, 2013 SUPERSEDES STANDARD PLAN ES-1C DATED MAY 20, 2011 - PAGE 427 OF THE STANDARD PLANS BOOK DATED 2010.

REVISED STANDARD PLAN RSP ES-1C

2010 REVISED STANDARD PLAN RSP ES-1C

7-11-13

DIST	COUNTY	ROUTE	POST MILES TOTAL PROJECT	SHEET NO.	TOTAL SHEETS
05	Mon	68	R17.4/R18.0	103	149

Theresa Gabriel
REGISTERED ELECTRICAL ENGINEER

July 19, 2013
PLANS APPROVAL DATE

REGISTERED PROFESSIONAL ENGINEER Theresa Aziz Gabriel No. E15129 Exp. 6-30-14 ELECTRICAL STATE OF CALIFORNIA

THE STATE OF CALIFORNIA OR ITS OFFICERS OR AGENTS SHALL NOT BE RESPONSIBLE FOR THE ACCURACY OR COMPLETENESS OF SCANNED COPIES OF THIS PLAN SHEET.

TO ACCOMPANY PLANS DATED 6-22-15

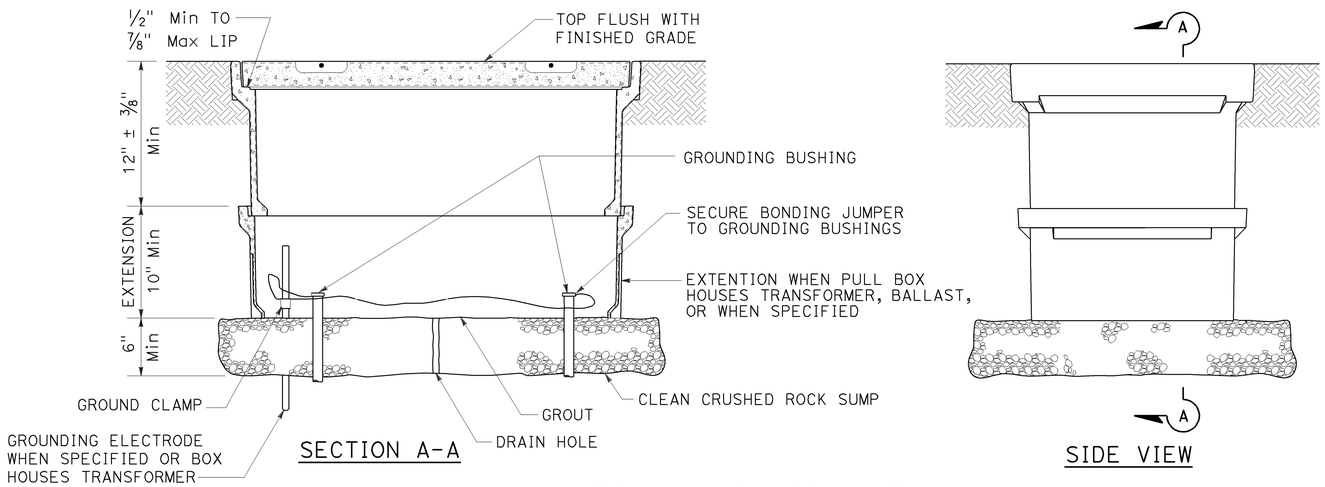

SECTION A-A

SIDE VIEW

INSTALLATION DETAILS

DETAIL A

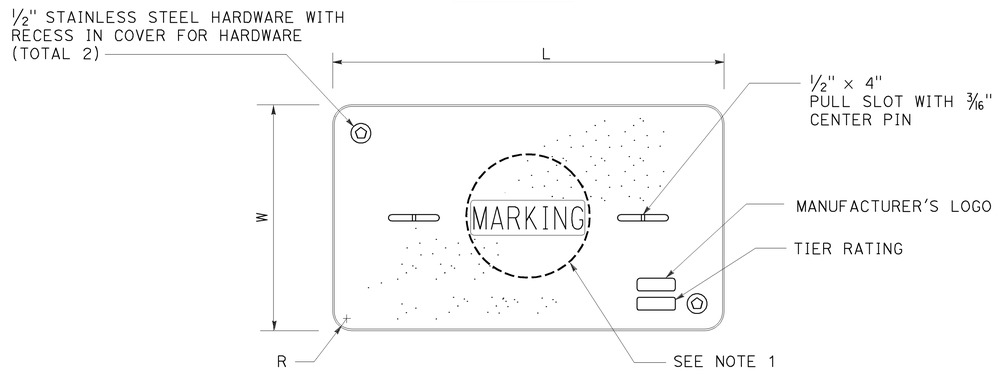

COVER TOP VIEW

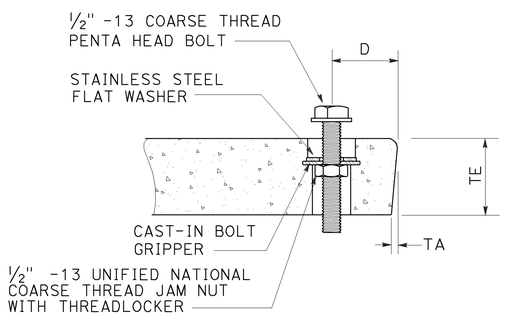

TYPICAL COVER CAPTIVE BOLT

OR SIMILAR

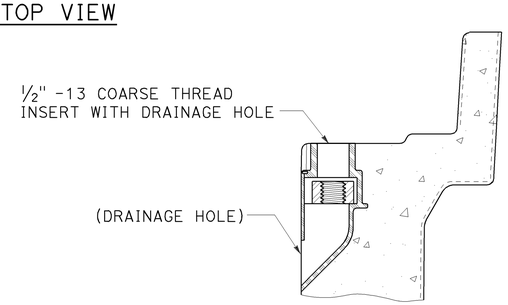

TYPICAL THREADED INSERT

OR SIMILAR

DIMENSION TABLE										
PULL BOX	PULL BOX			COVER						
	MINIMUM DEPTH BOX	MINIMUM DEPTH EXTENSION	MAXIMUM WEIGHT	L	W	R	TE	TA	D	MAXIMUM WEIGHT
No. 3½	12"	N/A	40 lb	1′ - 3⅜"	10⅛"	1⅜"	2"	⅛"	1¾"	30 lb
No. 5	12"	10"	55 lb	1′ - 11¼"	1′ - 1¾"	1⅜"	2"	⅛"	1¾"	60 lb
No. 6	12"	10"	70 lb	2′ - 6½"	1′ - 5½"	1⅜"	2"	⅛"	2"	85 lb

NOTES:

1. Pull box covers shall be marked as follows: "SERVICE" Service circuits between service point and service disconnect; "SPRINKLER-CONTROL" sprinkler control circuits, 50 V or less; "CALTRANS" on all pull boxes, except pull boxes marked "SPRINKLER-CONTROL"; and "TELEPHONE" Telephone service;
   - A) No. 3½ pull box.
     - 1) "SIGNAL" - Traffic signal circuits with or without lighting or sign lighting circuits.
     - 2) "LIGHTING" - Lighting or sign lighting circuits where voltage is under 600 V.
   - B) No. 5, 6, 9 or 9A pull box.
     - 1) "TRAFFIC SIGNAL" - Traffic signal circuits with or without lighting or sign lighting circuits.
     - 2) "LIGHTING" - Lighting or sign lighting circuits where voltage is under 600 V.
     - 3) "LIGHTING-HIGH VOLTAGE" - Lighting or sign lighting circuits where voltage is above 600 V.
     - 4) "IRRIGATION" - Circuits to irrigation controller 120 V or more.
     - 5) "RAMP METER" - Ramp meter circuits.
     - 6) "COUNT STATION" - Count or speed monitor circuits.
     - 7) "COMMUNICATIONS" - Communication circuits.
     - 8) "TOS COMMUNICATIONS" - TOS communication line.
     - 9) "TOS POWER" - TOS power.
     - 10) "TDC POWER" - Telephone demarcation cabinet power.
     - 11) "CCTV" - Closed circuit television circuits.
     - 12) "TMS" - Traffic monitoring station circuits.
     - 13) "CMS" - Changeable message sign circuits.
     - 14) "HAR" - Highway advisory radio circuits.
     - 15) "BOOSTER PUMP" - Booster pump circuit.
2. The nominal dimensions of the opening in which the cover sets shall be the same as the cover dimensions except the length and width dimensions shall be ⅛" greater.
3. Covers and boxes shall be interchangeable with California standard male and female gages. When interchanged with a standard male or female gage, the top surfaces shall be flush within ⅛". Top outside radius of covers and pull boxes shall have a ⅛" radius.
4. Pull box extension may be another pull box as long as the bottom edge of the pull box can fit into the cover opening.
5. All dimensions for the cover for non-traffic pull box are nominal values.

STATE OF CALIFORNIA
DEPARTMENT OF TRANSPORTATION

ELECTRICAL SYSTEMS (NON-TRAFFIC PULL BOX)

NO SCALE

RSP ES-8A DATED JULY 19, 2013 SUPERSEDES RSP ES-8A DATED JANUARY 20, 2012 THAT SUPPLEMENTS THE STANDARD PLANS BOOK DATED 2010.

REVISED STANDARD PLAN RSP ES-8A

2010 REVISED STANDARD PLAN RSP ES-8A

7-15-13

Dist	COUNTY	ROUTE	POST MILES TOTAL PROJECT	SHEET No.	TOTAL SHEETS
05	Mon	68	R17.4/R18.0	104	149

Theresa Gabriel
REGISTERED ELECTRICAL ENGINEER

July 19, 2013
PLANS APPROVAL DATE

REGISTERED PROFESSIONAL ENGINEER
Theresa Aziz Gabriel
No. E15129
Exp. 6-30-14
ELECTRICAL
STATE OF CALIFORNIA

THE STATE OF CALIFORNIA OR ITS OFFICERS OR AGENTS SHALL NOT BE RESPONSIBLE FOR THE ACCURACY OR COMPLETENESS OF SCANNED COPIES OF THIS PLAN SHEET.

TO ACCOMPANY PLANS DATED 6-22-15

ISOFOOTCANDLE CURVE - MINIMUM

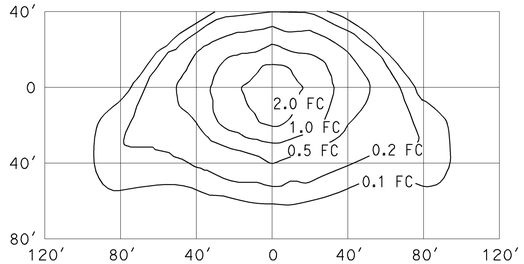

TYPE III MEDIUM CUTOFF

Cutoff Luminaire
34′ Mounting Height
Lamp operated at 22,000 lm
200-W high pressure sodium lamp
ANSI Designation S66

ISOFOOTCANDLE CURVE - MINIMUM

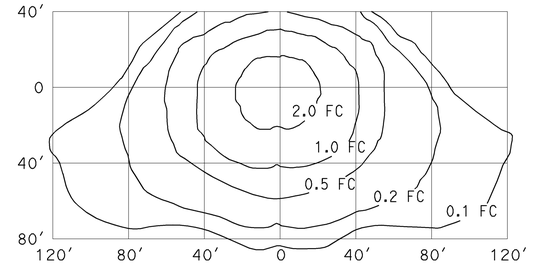

TYPE III MEDIUM CUTOFF

Cutoff Luminaire
40′ Mounting Height
Lamp operated at 37,000 lm
310-W high pressure sodium lamp
ANSI Designation S67

ISOFOOTCANDLE CURVE - MINIMUM

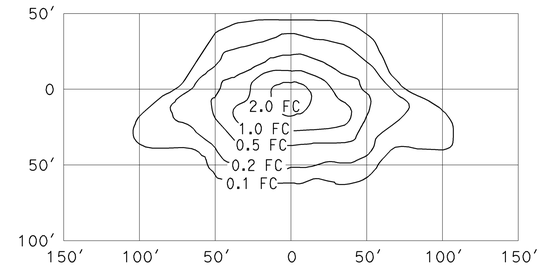

TYPE III MEDIUM CUTOFF

Cutoff Luminaire
30′ Mounting Height
Lamp operated at 16,000 lm
150-W high pressure sodium lamp
ANSI Designation S55

ISOFOOTCANDLE CURVE - MINIMUM

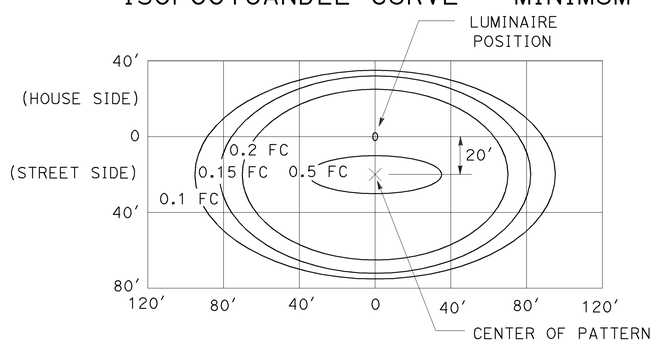

LED LUMINAIRE ROADWAY 1

165-W at 34′ Mounting Height

ISOFOOTCANDLE CURVE - MINIMUM

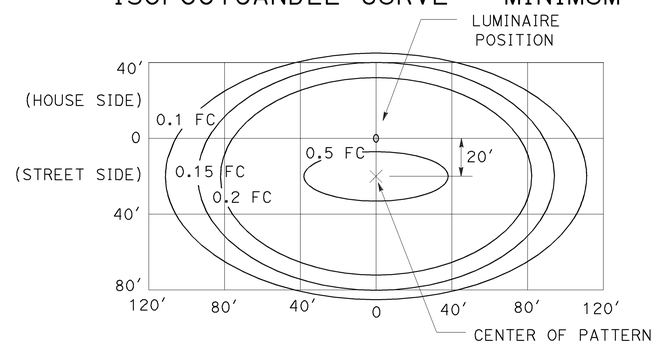

LED LUMINAIRE ROADWAY 2

235-W at 40′ Mounting Height

ISOFOOTCANDLE CURVE - MINIMUM

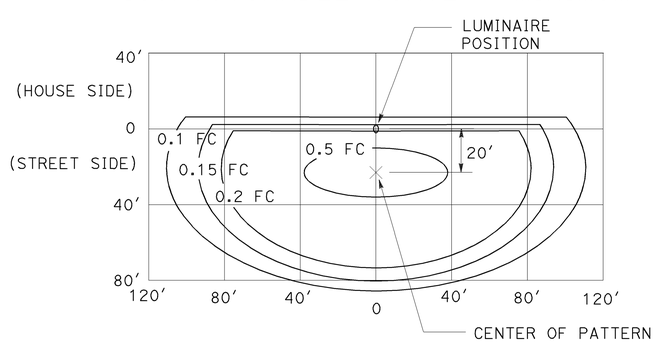

LED LUMINAIRE ROADWAY 3

235-W at 40′ Mounting Height
with back side control

ISOFOOTCANDLE CURVE - MINIMUM

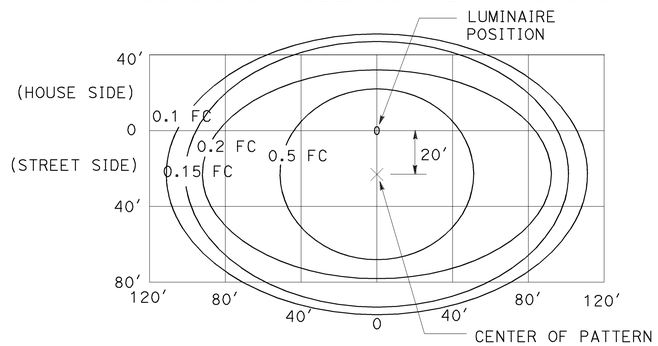

LED LUMINAIRE ROADWAY 4

300-W at 40′ Mounting Height

ISOFOOTCANDLE CURVE - MINIMUM

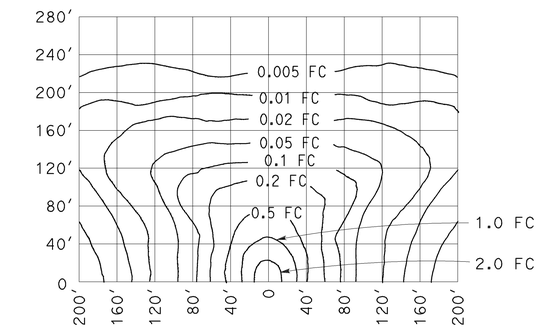

LOW PRESSURE SODIUM LUMINAIRE

40′ Mounting Height
Lamp operated at 33,000 lm
180-W low pressure sodium lamp

STATE OF CALIFORNIA
DEPARTMENT OF TRANSPORTATION

ELECTRICAL SYSTEMS (ISOFOOTCANDLE DIAGRAMS)

NO SCALE

RSP ES-10A DATED JULY 19, 2013 SUPERSEDES RSP ES-10A DATED JULY 20, 2012 THAT SUPPLEMENTS THE STANDARD PLANS BOOK DATED 2010.

REVISED STANDARD PLAN RSP ES-10A

2010 REVISED STANDARD PLAN RSP ES-10A

7-9-13

Dist	COUNTY	ROUTE	POST MILES TOTAL PROJECT	SHEET No.	TOTAL SHEETS
05	Mon	68	R17.4/R18.0	105	149

REGISTERED CIVIL ENGINEER

July 19, 2013
PLANS APPROVAL DATE

REGISTERED PROFESSIONAL ENGINEER
Stanley P. Johnson
No. C57793
Exp. 3-31-14
CIVIL
STATE OF CALIFORNIA

THE STATE OF CALIFORNIA OR ITS OFFICERS OR AGENTS SHALL NOT BE RESPONSIBLE FOR THE ACCURACY OR COMPLETENESS OF SCANNED COPIES OF THIS PLAN SHEET.

TO ACCOMPANY PLANS DATED 6-22-15

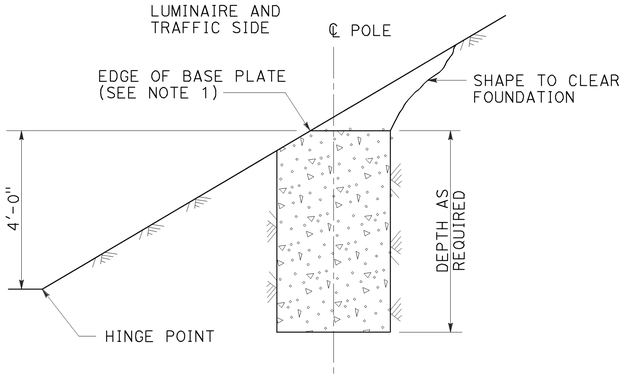

CUT SLOPES
STEEPER THAN 4:1,
LESS THAN 2:1
DETAIL A-1
See Note 2 and 3

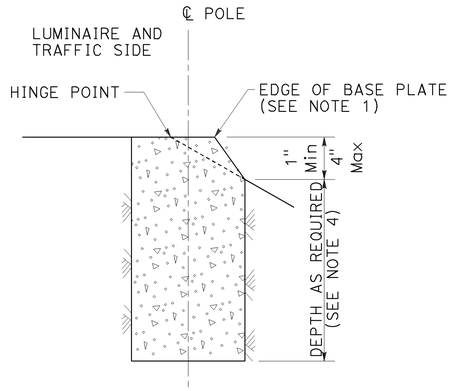

FILL SLOPES
STEEPER THAN 4:1,
LESS THAN 2:1
DETAIL A-2
See Note 2 and 3

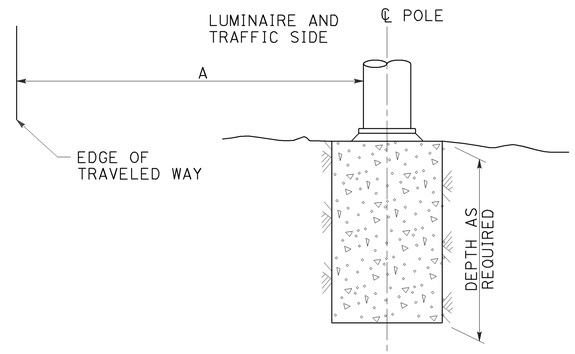

FLAT SECTIONS, CUT OR FILL SLOPES
4:1 OR FLATTER
DETAIL A-3
See Note 2

FOUNDATIONS ADJACENT TO ALL ROADWAYS EXCEPT
IN SIDEWALK, MEDIAN AND ISLAND AREAS
DETAIL A

STANDARD TYPE	SETBACK (DIMENSION A)
32	30'-0" (Min)
31	20'-0" (Min)
15, 15D, 15-SB, 21, 21D, 30	ARM LENGTH (Min)

NOTES:

1. Where a portion of the foundation is above grade, the top edges shall have a 1" chamfer.
2. Slopes shall be horizontal to vertical ratio (Horizontal : Vertical).
3. Horizontal setbacks on cut and fill slopes steeper than 4:1 shall not exceed the distance shown for flat sections.
4. CIDH embedment depth shall be increased beyond standard depths by the diameter of the CIDH.

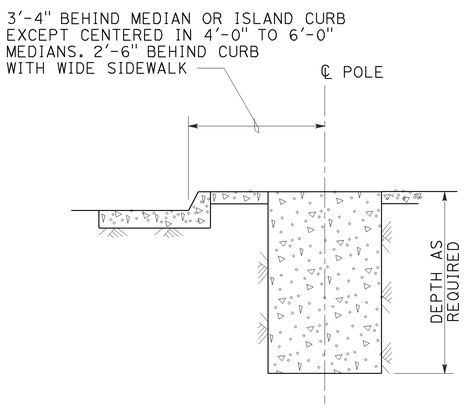

MEDIAN, ISLAND
OR WIDE SIDEWALK
DETAIL B-1
7' Wide and wider

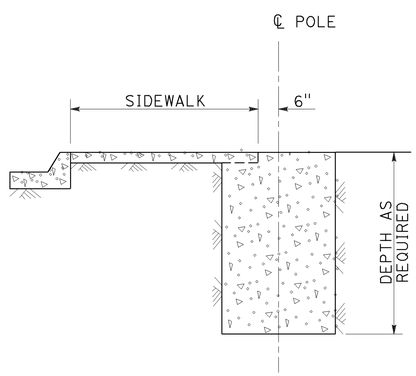

NARROW SIDEWALK
DETAIL B-2
Less than 7' wide

FOUNDATIONS IN SIDEWALK, MEDIAN AND ISLAND AREAS
DETAIL B

STATE OF CALIFORNIA
DEPARTMENT OF TRANSPORTATION

ELECTRICAL SYSTEMS (FOUNDATION INSTALLATIONS)

NO SCALE

RSP ES-11 DATED JULY 19, 2013 SUPERSEDES STANDARD PLAN ES-11
DATED MAY 20, 2011 - PAGE 488 OF THE STANDARD PLANS BOOK DATED 2010.

REVISED STANDARD PLAN RSP ES-11

2010 REVISED STANDARD PLAN RSP ES-11

7-9-13

DIST	COUNTY	ROUTE	POST MILES TOTAL PROJECT	SHEET No.	TOTAL SHEETS
05	Mon	68	R17.4/R18.0	106	149

Seiji Morimoto 4-15-15
REGISTERED CIVIL ENGINEER DATE

6-22-15
PLANS APPROVAL DATE

REGISTERED PROFESSIONAL ENGINEER SEIJI MORIMOTO No. C65997 Exp. 6/30/2016 CIVIL STATE OF CALIFORNIA

The State of California or its officers or agents shall not be responsible for the accuracy or completeness of scanned copies of this plan sheet.

1. Paint "Salinas River Bridge".
2. Paint "Bridge No. 44-0040L".
3. Paint "Bridge No. 44-0040R".
4. Structure Approach Type R(10S).
5. Structure Approach Type EQ (10) MOD.
6. Concrete Barrier (Type 80 MOD) with Tubular Bicycle Railing, stain galvanized surfaces. Prepare and paint concrete.
7. Remove and replace existing joint seals at abutments and hinges with new Joint Seal at abutments and hinges.
8. Pull Box No. 9A on barrier rail, see Roadway Plans.
9. Remove existing Metal Beam Rail, see Roadway Plans.
10. Midwest Guard Rail System, see Roadway Plans.
11. Place scuppers every 50'-0", along the outside barrier, all spans 1-8.
12. Remove Metal Bridge Railing.
13. Concrete Barrier (Type 80 MOD), prepare and paint concrete.
14. Abutment Catcher Beam: see "ABUTMENT DETAILS NO. 2", "ABUTMENT DETAILS NO. 3" and "ABUTMENT DETAILS NO. 4" sheet.
15. Existing sign to be relocated, see Roadway Plans.
16. USGS Monitoring Equipment at Pier 4, Pier 5, Pier 6, and Pier 7, To be constructed by others. see Roadway Plans.

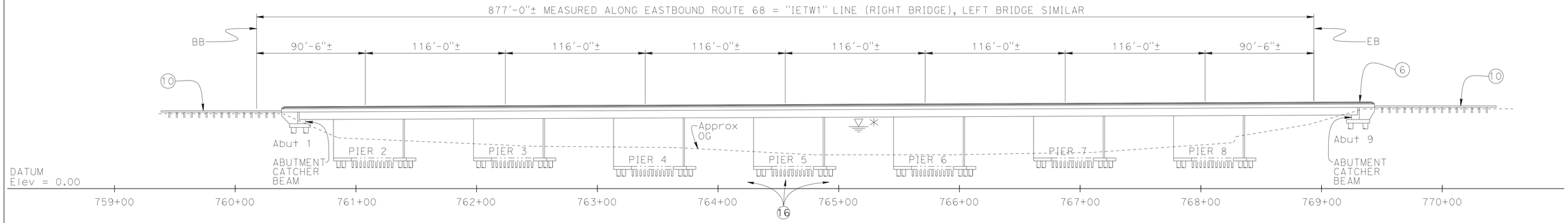

ELEVATION

1" = 40'-0"

NOTE:
✳ - 100 year High Water elevation = 51.27'.
For Hydraulic Summary, see "FOUNDATION PLAN NO.2" sheet.

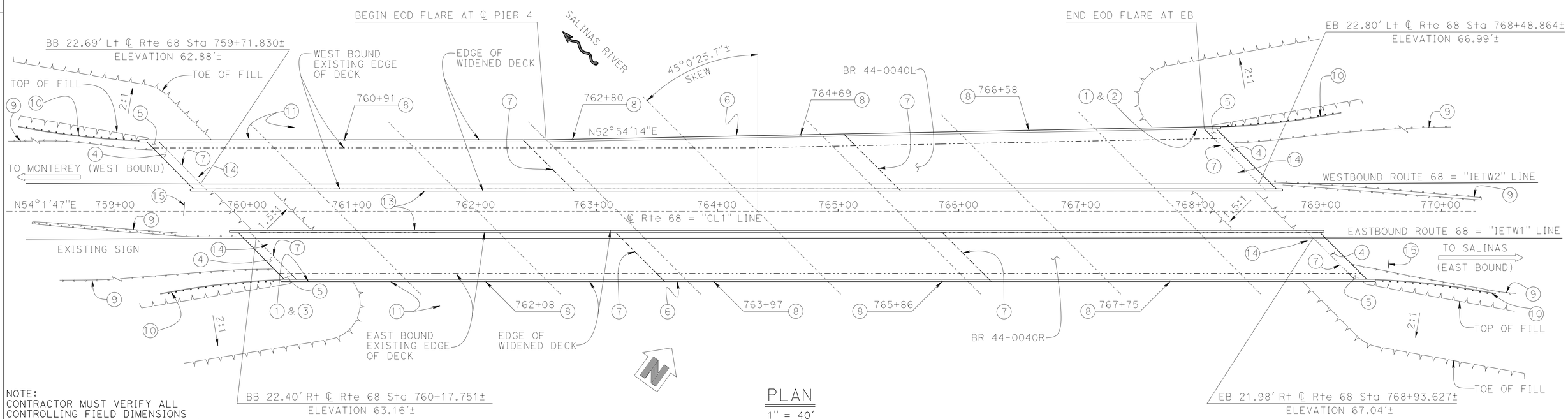

PLAN

1" = 40'

NOTE:
CONTRACTOR MUST VERIFY ALL CONTROLLING FIELD DIMENSIONS BEFORE ORDERING OR FABRICATING ANY MATERIAL.

FOR GENERAL NOTES, SEE "INDEX TO PLANS" SHEET

GARY BLAKESLEY
DESIGN ENGINEER

	BY	CHECKED			
DESIGN	S. MORIMOTO	H. PEREZ	LOAD & RESISTANCE FACTOR DESIGN	LIVE LOADING: HL93 W/"LOW-BOY"; PERMIT DESIGN VEHICLE	
DETAILS	K. CHONKRIA	H. PEREZ	LAYOUT	H. PEREZ	S. MORIMOTO
QUANTITIES	K. CHONKRIA	S. MORIMOTO	SPECIFICATIONS	T. CHEN	T. CHEN

ORIGINAL SCALE IN INCHES FOR REDUCED PLANS 0 1 2 3

STATE OF CALIFORNIA
DEPARTMENT OF TRANSPORTATION

DIVISION OF ENGINEERING SERVICES
STRUCTURE DESIGN
DESIGN BRANCH 6

BRIDGE NO. 44-0040R/L
POST MILE R17.69

SALINAS RIVER BRIDGE (WIDEN)
GENERAL PLAN 1

UNIT: 3591
PROJECT NUMBER & PHASE: 0500000049-1
CONTRACT NO.: 05-0F7004

DISREGARD PRINTS BEARING EARLIER REVISION DATES

REVISION DATES				SHEET	OF
6-13-13		4-23-15	4-15-15	1	44

FILE => 44-0040r1-a-gp01.dgn

USERNAME => s115755 DATE PLOTTED => 10-SEP-2015 TIME PLOTTED => 13:10

STRUCTURES DESIGN GENERAL PLAN SHEET (ENGLISH) (REV.09-01-10)

DIST	COUNTY	ROUTE	POST MILES TOTAL PROJECT	SHEET No.	TOTAL SHEETS
05	Mon	68	R17.4/R18.0	107	149

Seiji Morimoto 4-15-15
REGISTERED CIVIL ENGINEER DATE

6-22-15
PLANS APPROVAL DATE

REGISTERED PROFESSIONAL ENGINEER SEIJI MORIMOTO No. C 65997 Exp. 6/30/16 CIVIL STATE OF CALIFORNIA

The State of California or its officers or agents shall not be responsible for the accuracy or completeness of scanned copies of this plan sheet.

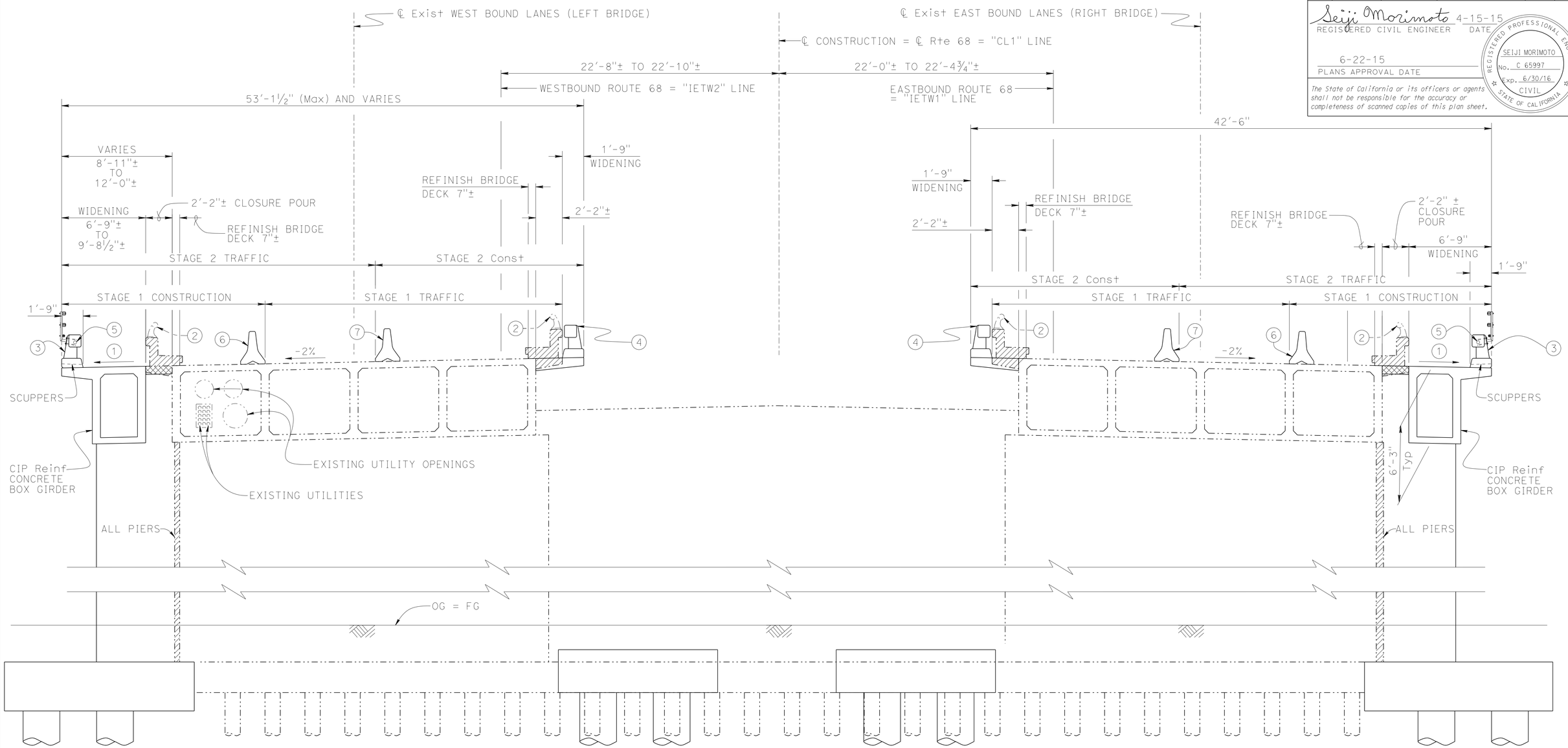

Note:

All piles not shown.

TYPICAL SECTION

¼" = 1'-0"

Notes:

1. Match existing grade and cross slope
2. Remove Metal Bridge Railing
3. Concrete Barrier (Type 80 MOD) with Tubular Bicycle Railing, prepare and paint concrete, stain galvanized surfaces
4. Concrete Barrier (Type 80 MOD), prepare and paint concrete
5. One 1.5" ϕ electrical conduit, See "Roadway Plans"
6. Temporary Railing (Type K) during Stage 1 Const, see "Roadway Plans"
7. Temporary Railing (Type K) during Stage 2 Const, See "Roadway Plans"

NOTE:
CONTRACTOR MUST VERIFY ALL CONTROLLING FIELD DIMENSIONS BEFORE ORDERING OR FABRICATING ANY MATERIAL.

LEGEND:

Denotes Bridge Removal (Portion)

Denotes Closure Pour

GARY BLAKESLEY DESIGN ENGINEER	DESIGN	BY S. MORIMOTO	CHECKED H. PEREZ	LOAD & RESISTANCE FACTOR DESIGN	LIVE LOADING: HL93 W/"LOW-BOY"; PERMIT DESIGN VEHICLE
	DETAILS	BY K. CHONKRIA	CHECKED H. PEREZ	LAYOUT BY H. PEREZ	CHECKED S. MORIMOTO
	QUANTITIES	BY K. CHONKRIA	CHECKED S. MORIMOTO	SPECIFICATIONS BY T. CHEN	PLANS AND SPECS COMPARED T. CHEN

STATE OF CALIFORNIA
DEPARTMENT OF TRANSPORTATION

DIVISION OF ENGINEERING SERVICES
STRUCTURE DESIGN
DESIGN BRANCH 6

BRIDGE NO. 44-0040R/L
POST MILE R17.69

SALINAS RIVER BRIDGE (WIDEN)
GENERAL PLAN 2

STRUCTURES DESIGN DETAIL SHEET (ENGLISH) (REV. 09-01-10)

ORIGINAL SCALE IN INCHES FOR REDUCED PLANS 0 1 2 3

UNIT: 3591
PROJECT NUMBER & PHASE: 0500000049-1 CONTRACT NO.: 05-0F7004

DISREGARD PRINTS BEARING EARLIER REVISION DATES → 6-13-13 4-15-15 4-23-15

SHEET 2 OF 44

STRUCTURES DESIGN GENERAL PLAN SHEET (ENGLISH) (REV.09-01-10)

FILE => 44-0040ri-a-gp02.dgn

USERNAME => s115755 DATE PLOTTED => 10-SEP-2015 TIME PLOTTED =>

DIST	COUNTY	ROUTE	POST MILES TOTAL PROJECT	SHEET No.	TOTAL SHEETS
05	Mon	68	R17.4/R18.0	108	149

Seiji Morimoto 4-15-15
REGISTERED CIVIL ENGINEER DATE

6-22-15
PLANS APPROVAL DATE

REGISTERED PROFESSIONAL ENGINEER S. MORIMOTO No. C65997 Exp. 6/30/16 CIVIL STATE OF CALIFORNIA

The State of California or its officers or agents shall not be responsible for the accuracy or completeness of scanned copies of this plan sheet.

INDEX TO PLANS

SHEET NO.	SHEET TITLE
1	GENERAL PLAN 1
2	GENERAL PLAN 2
3	INDEX TO PLANS
4	PILE DATA
5	FOUNDATION PLAN No. 1
6	FOUNDATION PLAN No. 2
7	FOUNDATION PLAN No. 3
8	ABUTMENT 1 LAYOUT (RIGHT BRIDGE)
9	ABUTMENT 9 LAYOUT (LEFT BRIDGE)
10	ABUTMENT DETAILS No. 1
11	ABUTMENT DETAILS No. 2
12	ABUTMENT DETAILS No. 3
13	ABUTMENT DETAILS No. 4
14	PIERS 2 THRU 4 LAYOUT
15	PIERS 5 THRU 8 LAYOUT
16	PIER DETAILS No. 1
17	PIER DETAILS No. 2
18	PIER DETAILS No. 3
19	TYPICAL SECTION - LEFT BRIDGE
20	TYPICAL SECTION - RIGHT BRIDGE
21	GIRDER LAYOUT No. 1
22	GIRDER LAYOUT No. 2
23	GIRDER LAYOUT No. 3
24	GIRDER REINFORCEMENT No. 1
25	GIRDER REINFORCEMENT No. 2
26	HINGE DETAILS No. 1
27	PIPE SEAT EXTENDER DETAILS (RETROFIT)
28	PIPE SEAT EXTENDER MISCELLANEOUS DETAILS
29	STRUCTURE APPROACH TYPE EQ MOD (10)
30	STRUCTURE APPROACH TYPE R(10S)
31	STRUCTURE APPROACH DRAINAGE DETAILS
32	CONCRETE BARRIER TYPE 80 MOD - TUBULAR BICYCLE RAILING DETAILS
33	LIMITS FOR EXCAVATION AND BACKFILL
34	LOG OF TEST BORINGS 1 OF 11
35	LOG OF TEST BORINGS 2 OF 11
36	LOG OF TEST BORINGS 3 OF 11
37	LOG OF TEST BORINGS 4 OF 11
38	LOG OF TEST BORINGS 5 OF 11
39	LOG OF TEST BORINGS 6 OF 11
40	LOG OF TEST BORINGS 7 OF 11
41	LOG OF TEST BORINGS 8 OF 11
42	LOG OF TEST BORINGS 9 OF 11
43	LOG OF TEST BORINGS 10 OF 11
44	LOG OF TEST BORINGS 11 OF 11

STANDARD PLANS DATED 2010

PLAN NO.	PLAN TITLE
A10A	ABBREVIATIONS (SHEET 1 OF 2)
RSP A10B	ABBREVIATIONS (SHEET 2 OF 2)
A10C	LINE AND SYMBOLS (SHEET 1 OF 3)
A10D	LINE AND SYMBOLS (SHEET 2 OF 3)
A10E	LINE AND SYMBOLS (SHEET 3 OF 3)
A10F	LEGEND - SOIL (SHEET 1 OF 2)
A10G	LEGEND - SOIL (SHEET 2 OF 2)
A10H	LEGEND - ROCK
B0-1	BRIDGE DETAILS
B0-3	BRIDGE DETAILS
B0-5	BRIDGE DETAILS
B0-13	BRIDGE DETAILS
B6-21	JOINT SEALS (MAXIMUM MOVEMENT RATING = 2")
B7-1	BOX GIRDER DETAILS
B7-8	DECK DRAINAGE DETAILS
B8-5	CAST-IN PLACE PRESTRESSED GIRDER DETAILS
RSP B11-60	CONCRETE BARRIER TYPE 80 (SHEET 1 OF 2)
B11-61	CONCRETE BARRIER TYPE 80 (SHEET 2 OF 2)

NOTE:
CONTRACTOR MUST VERIFY ALL CONTROLLING FIELD DIMENSIONS BEFORE ORDERING OR FABRICATING ANY MATERIAL.

STANDARD PLAN NO.

DETAIL NO.

GENERAL NOTES
LOAD AND RESISTANCE FACTOR DESIGN

DESIGN:
AASHTO LRFD Bridge Design Specifications, 4th edition and the California Amendments preface dated January 2014.

SEISMIC DESIGN:
Caltrans Seismic Design Criteria (SDC), Version 1.7 dated April 2013.

DEAD LOAD:
Includes 35 psf for future wearing surface.

LIVE LOADING: (For bridge widening portion only)
HL93 and permit design load.

SEISMIC LOADING:
Soil profile: V_{s30} = 590 ft/sec
Magnitude group (7.0 +/- 0.25)
Peak Ground Acceleration 0.5g
See ARS curve on "PILE DATA" sheet

REINFORCED CONCRETE:
fy = 60 ksi
f'c = 3.6 ksi
n = 8

FALSEWORK RELEASE

Alternative 1:
Falsework shall be released as soon as permitted by the specifications. Closure pour shall not be placed sooner than 60 days after the false-work had been released.

Alternative 2:
Falsework shall not be released less than 28 days after the last concrete has been placed. Closure pour shall not be placed sooner than 14 days after the falsework has been released.

When Falsework Release Alternative 2 is used, camber values are 0.75 times those shown.

QUANTITIES

CORE AND PRESSURE GROUT DOWEL	217	LF
REMOVE METAL BRIDGE RAILING	1,754	LF
REFINISH BRIDGE DECK	3,508	SQFT
CORE CONCRETE (12")	20	LF
ACCESS OPENING, SOFFIT	16	EA
BRIDGE REMOVAL (PORTION)	LUMP	SUM
STRUCTURE EXCAVATION (BRIDGE)	436	CY
STRUCTURE EXCAVATION (TYPE A)	4,830	CY
STRUCTURE BACKFILL (BRIDGE)	262	CY
FURNISH 36" CAST-IN-STEEL SHELL CONCRETE PILING	11,697	LF
DRIVE 36" CAST-IN-STEEL SHELL CONCRETE PILE	112	EA
FURNISH 48" CAST-IN-STEEL SHELL CONCRETE PILING	1,333	LF
DRIVE 48" CAST-IN-STEEL SHELL CONCRETE PILE	12	EA
PRESTRESSING CAST-IN-PLACE CONCRETE	LUMP	SUM
STRUCTURAL CONCRETE, BRIDGE FOOTING	995	CY
STRUCTURAL CONCRETE, BRIDGE	1,876	CY
AGGREGATE BASE (APPROACH SLAB)	5	CY
STRUCTURAL CONCRETE, APPROACH SLAB (TYPE EQ MODIFIED)	14	CY
STRUCTURAL CONCRETE, APPROACH SLAB (TYPE R)	50	CY
DIAPHRAGM BOLSTER	16	EA
DRILL AND BOND DOWEL	6,404	LF
CLEAN EXPANSION JOINT	393	LF
JOINT SEAL (MR 2")	490	LF
BAR REINFORCING STEEL (BRIDGE)	1,735,148	LB
PREPARE AND PAINT CONCRETE	27,000	SQFT
STAIN GALVANIZED SURFACES	1,820	LF
MISCELLANEOUS METAL (PIPE SEAT EXTENDER)	3,911	LB
TUBULAR BICYCLE RAILING	1,820	LF
CONCRETE BARRIER (TYPE 80 MODIFIED)	3,640	LF
PLUG DECK DRAIN	14	EA
SEAL COURSE CONCRETE	622	CY

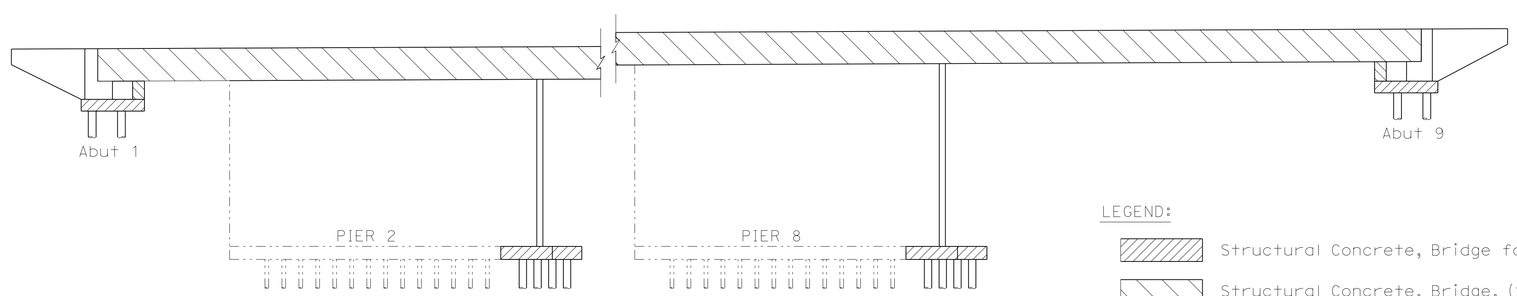

LEGEND:
Structural Concrete, Bridge footing.
Structural Concrete, Bridge. (Superstructure and Abutment Catcher Beam) (5 KSI @ 28 Days).
Structural Concrete, Bridge. (Piles, Pierwalls, Abutment, and Wingwall).

CONCRETE STRENGTH AND TYPE LIMITS

No Scale

	BY	CHECKED
DESIGN	S. MORIMOTO	H. PEREZ
DETAILS	K. CHONKRIA	H. PEREZ
QUANTITIES	K. CHONKRIA	S. MORIMOTO

STATE OF CALIFORNIA
DEPARTMENT OF TRANSPORTATION

DIVISION OF ENGINEERING SERVICES
STRUCTURE DESIGN
DESIGN BRANCH 6

BRIDGE NO. 44-0040R/L
POST MILE R17.69

SALINAS RIVER BRIDGE (WIDEN)
INDEX TO PLANS

STRUCTURES DESIGN DETAIL SHEET (ENGLISH) (REV. 09-01-10)

ORIGINAL SCALE IN INCHES FOR REDUCED PLANS 0 1 2 3

UNIT: 3591
PROJECT NUMBER & PHASE: 0500000049-1
CONTRACT NO.: 05-0F7004

DISREGARD PRINTS BEARING EARLIER REVISION DATES → 09-05-13 4-16-15 4-23-15

SHEET 3 OF 44

FILE => 44-0040rl-a-itp01.dgn

USERNAME => s115755 DATE PLOTTED => 10-SEP-2015 TIME PLOTTED => 13:11

DIST	COUNTY	ROUTE	POST MILES TOTAL PROJECT	SHEET No.	TOTAL SHEETS
05	Mon	68	R17.4/R18.0	109	149

Seiji Morimoto 4-15-15
REGISTERED CIVIL ENGINEER DATE

6-22-15
PLANS APPROVAL DATE

REGISTERED PROFESSIONAL ENGINEER
SEIJI MORIMOTO
No. C65997
Exp. 6/30/16
CIVIL
STATE OF CALIFORNIA

The State of California or its officers or agents shall not be responsible for the accuracy or completeness of scanned copies of this plan sheet.

NOTE:
THE CONTRACTOR MUST VERIFY ALL CONTROLLING FIELD DIMENSIONS BEFORE ORDERING OR FABRICATING ANY MATERIAL.

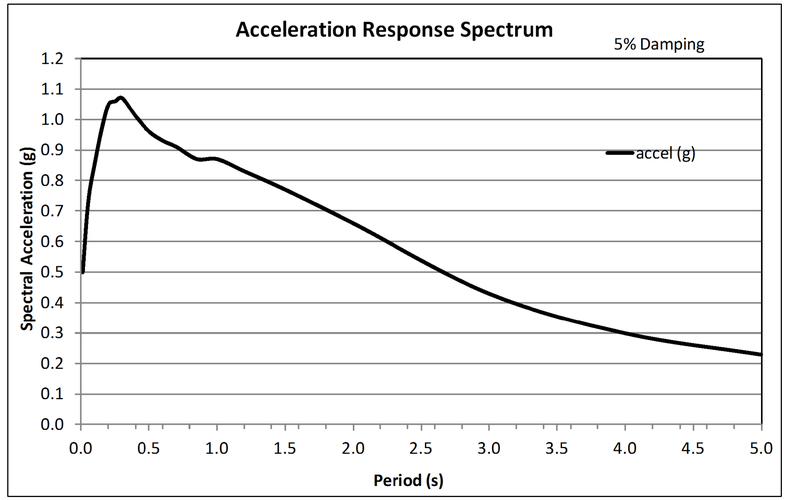

ACCELERATION RESPONSE SPECTRUM

NOTES:

1. Design tip elevation for piers and abutments are controlled by:
   (a) Compression
   (c) Lateral Load
2. The Specified Tip Elevation shall not be raised above the design tip elevations for lateral load.

PILE DATA TABLE - BRIDGE 44-0040L

Location	Pile Type	Cut-Off Elevation		Nominal Resistance		Design Tip Elevation		Specified Tip Elevation		Nominal Driving Resistance (Kips)
		Left Side (Ft)	Right Side (Ft)	Compression (Kips)	Tension (Kips)	Left Side (Ft)	Right Side (Ft)	Left Side (Ft)	Right Side (Ft)	
Abut 1 and Catcher Beam	48" CISS Concrete Pile	50.55	54.71	750	0	-65.0 (a)	-65.0 (a)	-65.0	-65.0	1270
Pier 2	36" CISS Concrete Pile	21.80	23.30	750	0	-83.29 (a) -58.3 (c)	-83.79 (a) -56.8 (c)	-83.29	-83.79	1035
Pier 3	36" CISS Concrete Pile	21.80	23.30	750	0	-83.29 (a) -58.3 (c)	-83.79 (a) -56.8 (c)	-83.29	-83.79	1140
Pier 4	36" CISS Concrete Pile	14.80	16.30	750	0	-86.29 (a) -65.3 (c)	-86.79 (a) -63.8 (c)	-86.29	-86.79	1000
Pier 5	36" CISS Concrete Pile	14.80	16.30	750	0	-86.29 (a) -65.3 (c)	-86.79 (a) -63.8 (c)	-86.29	-86.79	950
Pier 6	36" CISS Concrete Pile	14.80	16.30	750	0	-86.29 (a) -65.3 (c)	-86.79 (a) -63.8 (c)	-86.29	-86.79	950
Pier 7	36" CISS Concrete Pile	21.80	23.30	750	0	-83.29 (a) -58.3 (c)	-83.79 (a) -56.8 (c)	-83.29	-83.79	1120
Pier 8	36" CISS Concrete Pile	21.80	23.30	750	0	-83.29 (a) -58.3 (c)	-83.79 (a) -56.8 (c)	-83.29	-83.79	1240
Abut 9 and Catcher Beam	48" CISS Concrete Pile	54.05	58.43	750	0	-49.0 (a)	-49.0 (a)	-49.0	-49.0	1250

PILE DATA TABLE - BRIDGE 44-0040R

Location	Pile Type	Cut-Off Elevation		Nominal Resistance		Design Tip Elevation		Specified Tip Elevation		Nominal Driving Resistance (Kips)
		Left Side (Ft)	Right Side (Ft)	Compression (Kips)	Tension (Kips)	Left Side (Ft)	Right Side (Ft)	Left Side (Ft)	Right Side (Ft)	
Abut 1 and Catcher Beam	48" CISS Concrete Pile	55.21	51.05	750	0	-65.0 (a)	-65.0 (a)	-65.0	-65.0	1270
Pier 2	36" CISS Concrete Pile	23.30	21.80	750	0	-83.79 (a) -56.8 (c)	-83.29 (a) -58.3 (c)	-83.79	-83.29	1035
Pier 3	36" CISS Concrete Pile	23.30	21.80	750	0	-83.79 (a) -56.8 (c)	-86.79 (a) -65.3 (c)	-83.79	-86.79	1140
Pier 4	36" CISS Concrete Pile	16.30	14.80	750	0	-86.29 (a) -63.8 (c)	-86.79 (a) -65.3 (c)	-86.29	-86.79	1015
Pier 5	36" CISS Concrete Pile	16.30	14.80	750	0	-86.29 (a) -63.8 (c)	-86.79 (a) -65.3 (c)	-86.29	-86.79	980
Pier 6	36" CISS Concrete Pile	16.30	14.80	750	0	-86.29 (a) -63.8 (c)	-83.29 (a) -58.3 (c)	-86.29	-83.29	980
Pier 7	36" CISS Concrete Pile	23.30	21.80	750	0	-83.79 (a) -56.8 (c)	-83.29 (a) -58.3 (c)	-83.79	-83.29	1120L 1200R
Pier 8	36" CISS Concrete Pile	23.30	21.80	750	0	-83.79 (a) -56.8 (c)	-83.29 (a) -56.8 (c)	-83.79	-83.29	1210L 1240R
Abut 9 and Catcher Beam	48" CISS Concrete Pile	58.71	54.55	750	0	-49.0 (a)	-49.0 (a)	-49.0	-49.0	1250

DIST	COUNTY	ROUTE	POST MILES TOTAL PROJECT	SHEET No.	TOTAL SHEETS
05	Mon	68	R17.4/R18.0	110	149

Seiji Morimoto 4-15-15
REGISTERED CIVIL ENGINEER DATE

6-22-15
PLANS APPROVAL DATE

REGISTERED PROFESSIONAL ENGINEER
SEIJI MORIMOTO
No. C65997
Exp. 6/30/16
CIVIL
STATE OF CALIFORNIA

The State of California or its officers or agents shall not be responsible for the accuracy or completeness of electronic copies of this plan sheet.

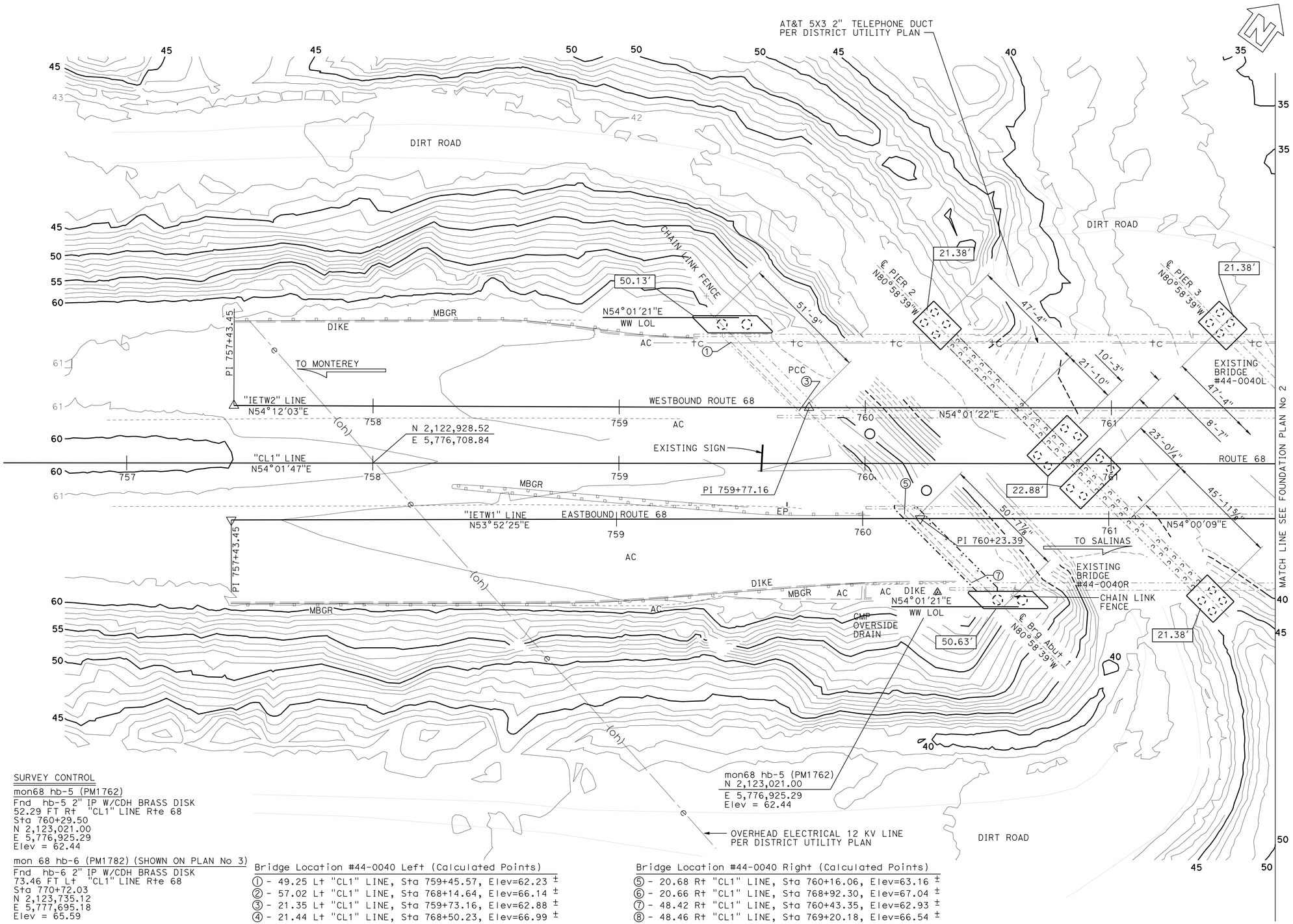

SURVEY CONTROL

mon68 hb-5 (PM1762)
Fnd hb-5 2" IP W/CDH BRASS DISK
52.29 FT Rt "CL1" LINE Rte 68
Sta 760+29.50
N 2,123,021.00
E 5,776,925.29
Elev = 62.44

mon 68 hb-6 (PM1782) (SHOWN ON PLAN No 3)
Fnd hb-6 2" IP W/CDH BRASS DISK
73.46 FT Lt "CL1" LINE Rte 68
Sta 770+72.03
N 2,123,735.12
E 5,777,695.18
Elev = 65.59

Bridge Location #44-0040 Left (Calculated Points)

① - 49.25 Lt "CL1" LINE, Sta 759+45.57, Elev=62.23 ±
② - 57.02 Lt "CL1" LINE, Sta 768+14.64, Elev=66.14 ±
③ - 21.35 Lt "CL1" LINE, Sta 759+73.16, Elev=62.88 ±
④ - 21.44 Lt "CL1" LINE, Sta 768+50.23, Elev=66.99 ±

Bridge Location #44-0040 Right (Calculated Points)

⑤ - 20.68 Rt "CL1" LINE, Sta 760+16.06, Elev=63.16 ±
⑥ - 20.66 Rt "CL1" LINE, Sta 768+92.30, Elev=67.04 ±
⑦ - 48.42 Rt "CL1" LINE, Sta 760+43.35, Elev=62.93 ±
⑧ - 48.46 Rt "CL1" LINE, Sta 769+20.18, Elev=66.54 ±

NOTE:
Indicates Bottom of Footing Elevation

NOTE:
CONTRACTOR MUST VERIFY ALL CONTROLLING FIELD DIMENSIONS BEFORE ORDERING OR FABRICATING ANY MATERIAL.

PRELIMINARY INVESTIGATION SECTION

SCALE	VERT.DATUM NAVD88	PHOTOGRAMMETRY AS OF: X			
1"=20'	HORZ.DATUM NAD83 (1991.35)	SURVEYED	BY DISTRICT	CHECKED	BY D. IVY 01/2013
ALIGNMENT TIES Dist TRAVERSE SHEET		DRAFTED	BY T. ZOLNIKOV 01/2013	CHECKED	BY L. LEW 01/2013

DESIGN	BY S. MORIMOTO	CHECKED H. PEREZ
DETAILS	BY K. CHONKRIA	CHECKED S. MORIMOTO
QUANTITIES	BY K. CHONKRIA	CHECKED S. MORIMOTO

STATE OF CALIFORNIA
DEPARTMENT OF TRANSPORTATION

DIVISION OF ENGINEERING SERVICES
STRUCTURE DESIGN
DESIGN BRANCH 6

BRIDGE NO. 44-0040R/L
POST MILE R17.69

SALINAS RIVER BRIDGE (WIDEN)
FOUNDATION PLAN No. 1

STRUCTURES FOUNDATION PLAN SHEET (ENGLISH) (REV. 09-01-10)

ORIGINAL SCALE IN INCHES FOR REDUCED PLANS 0 1 2 3

UNIT: 3646
PROJECT NUMBER & PHASE: 0500000049-1
CONTRACT NO.: 05-0F7004

DISREGARD PRINTS BEARING EARLIER REVISION DATES

REVISION DATES 07-01-13 4-08-15 4-14-15 4-23-15

SHEET 5 OF 44

FILE => 44-0040rl-e-fdpl01.dgn

USERNAME => s115755 DATE PLOTTED => 10-SEP-2015 TIME PLOTTED => 13:11

DIST	COUNTY	ROUTE	POST MILES TOTAL PROJECT	SHEET No.	TOTAL SHEETS
05	Mon	68	R17.4/R18.0	111	149

Seiji Morimoto 4-15-15
REGISTERED CIVIL ENGINEER DATE

6-22-15
PLANS APPROVAL DATE

REGISTERED PROFESSIONAL ENGINEER
SEIJI MORIMOTO
No. C65997
Exp. 6/30/16
CIVIL
STATE OF CALIFORNIA

The State of California or its officers or agents shall not be responsible for the accuracy or completeness of electronic copies of this plan sheet.

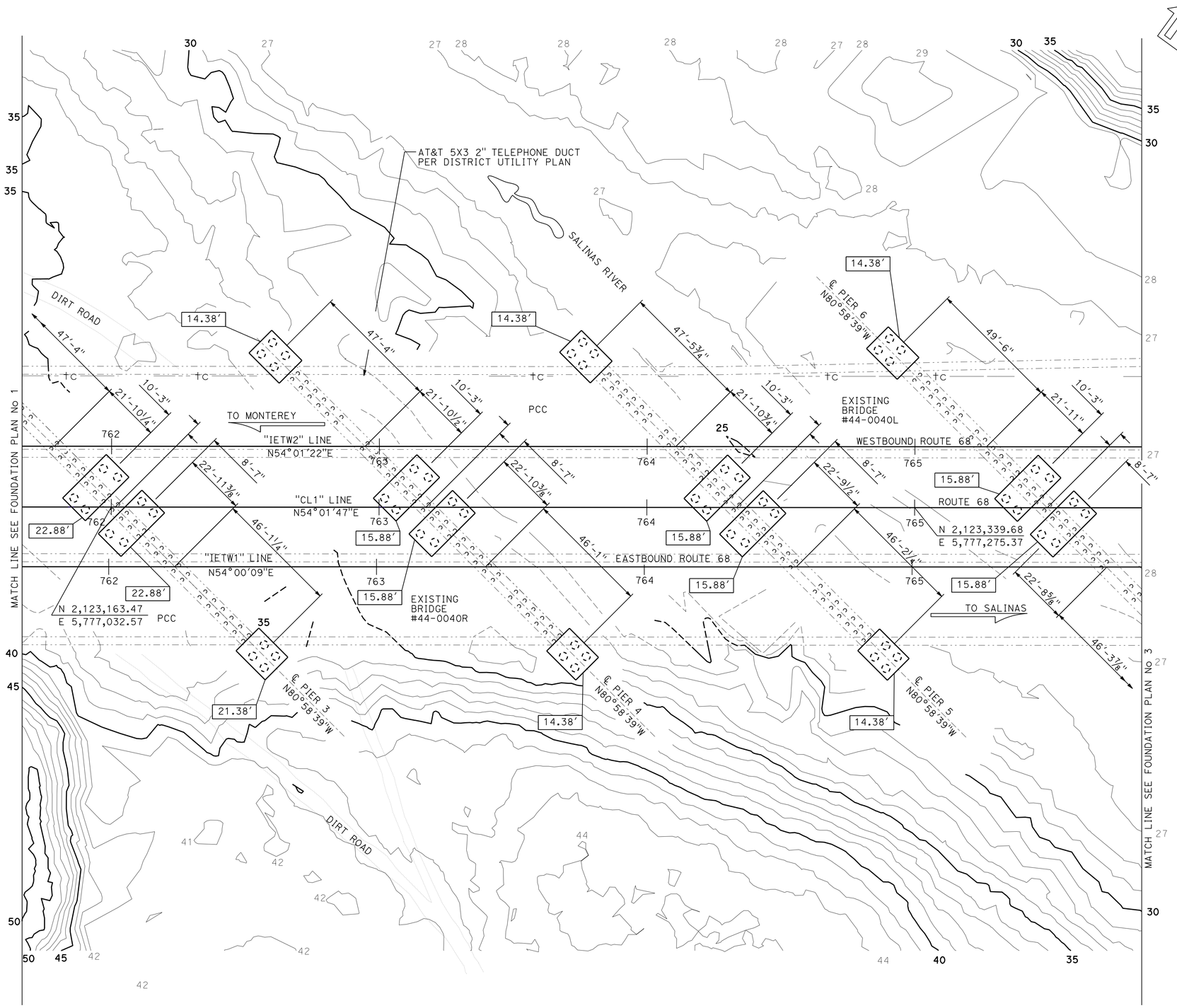

HYDROLOGIC SUMMARY

DRAINAGE AREA: 4,156 SQUARE MILES

	DESIGN FLOOD	BASE FLOOD	OVERTOPPING FLOOD
FREQUENCY (YEARS)	50	100	N/A
DISCHARGE (CUBIC FEET PER SECOND)	64,000	85,000	N/A
WATER SURFACE ELEV AT BRIDGE (FT)	50.50	51.27	

FLOOD PLAIN DATA BASED UPON INFORMATION AVAILABLE WHEN THE PLANS WERE PREPARED AND ARE SHOWN TO MEET FEDERAL REQUIREMENTS. THE ACCURACY OF SAID INFORMATION IS NOT WARRANTED BY THE STATE AND INTERESTED OR AFFECTED PARTIES SHOULD MAKE THEIR OWN INVESTIGATIONS.

NOTE:
Indicates Bottom of Footing Elevation

NOTE:
VERIFY ALL CONTROLLING FIELD DIMENSIONS BEFORE ORDERING OR FABRICATING ANY MATERIAL.

PRELIMINARY INVESTIGATION SECTION

SCALE 1"=20'	VERT.DATUM NAVD88	PHOTOGRAMMETRY AS OF: X			
	HORZ.DATUM NAD83 (1991.35)	SURVEYED	BY DISTRICT	CHECKED	BY D. IVY 01/2013
ALIGNMENT TIES Dist TRAVERSE SHEET		DRAFTED	BY T. ZOLNIKOV 01/2013	CHECKED	BY L. LEW 01/2013

DESIGN	BY S. MORIMOTO	CHECKED H. PEREZ
DETAILS	BY K. CHONKRIA	CHECKED S. MORIMOTO
QUANTITIES	BY K. CHONKRIA	CHECKED S. MORIMOTO

STATE OF CALIFORNIA
DEPARTMENT OF TRANSPORTATION

DIVISION OF ENGINEERING SERVICES
STRUCTURE DESIGN
DESIGN BRANCH 6

BRIDGE NO. 44-0040R/L
POST MILE R17.69

SALINAS RIVER BRIDGE (WIDEN)
FOUNDATION PLAN No. 2

STRUCTURES FOUNDATION PLAN SHEET (ENGLISH) (REV. 09-01-10)

ORIGINAL SCALE IN INCHES FOR REDUCED PLANS 0 1 2 3

UNIT: 3646
PROJECT NUMBER & PHASE: 0500000049-1
CONTRACT NO.: 05-0F7004

DISREGARD PRINTS BEARING EARLIER REVISION DATES

REVISION DATES 02-27-13 4-14-15 4-23-15 4-29-15

SHEET 6 OF 44

FILE => 44-0040rl-e-fdp102.dgn

USERNAME => s115755 DATE PLOTTED => 10-SEP-2015 TIME PLOTTED => 13:11

DIST	COUNTY	ROUTE	POST MILES TOTAL PROJECT	SHEET No.	TOTAL SHEETS
05	Mon	68	R17.4/R18.0	112	149

Seiji Morimoto 4-15-15
REGISTERED CIVIL ENGINEER DATE

6-22-15
PLANS APPROVAL DATE

REGISTERED PROFESSIONAL ENGINEER S. MORIMOTO No. C65997 Exp. 6/30/16 CIVIL STATE OF CALIFORNIA

The State of California or its officers or agents shall not be responsible for the accuracy or completeness of electronic copies of this plan sheet.

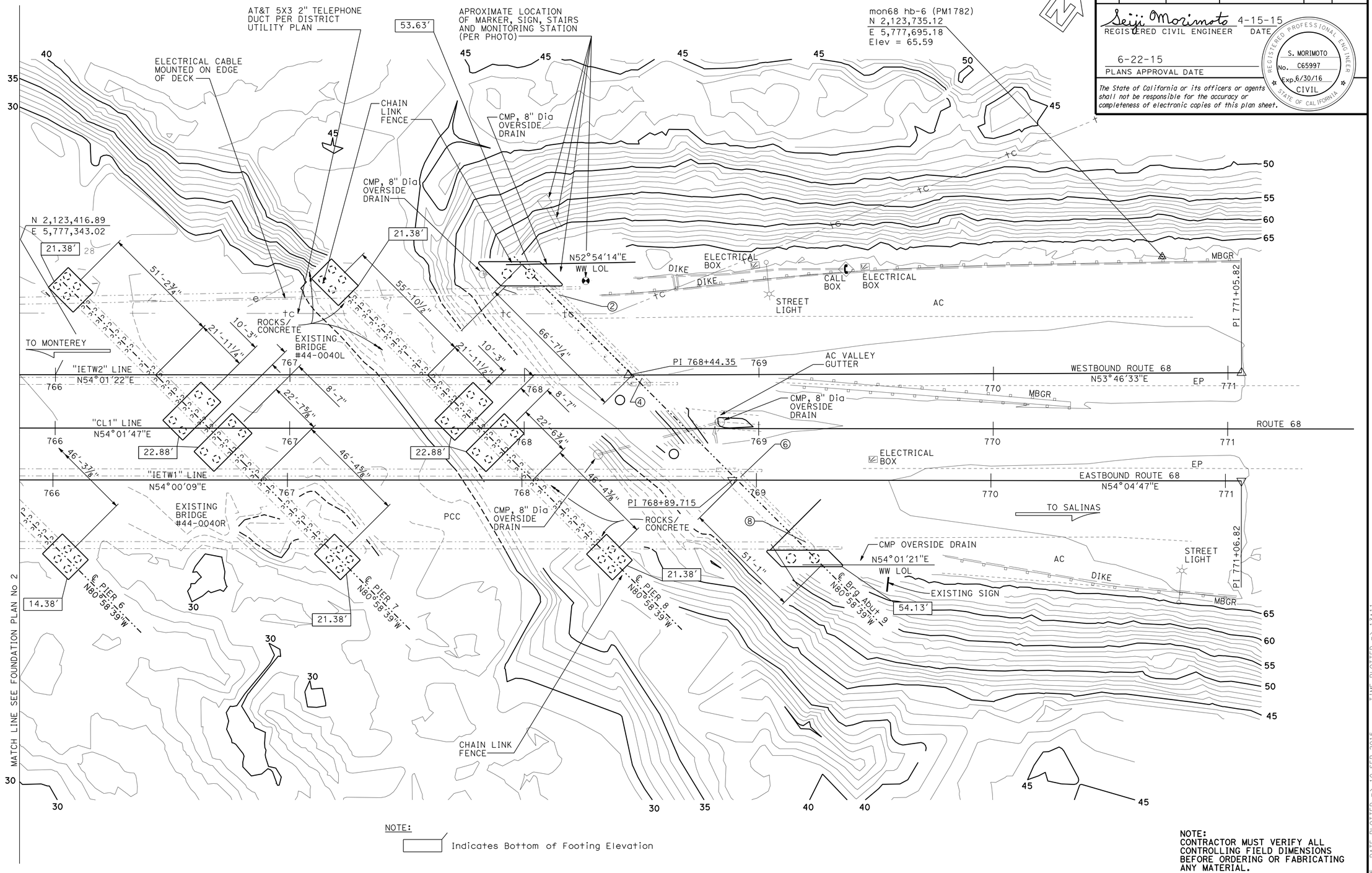

NOTE:
Indicates Bottom of Footing Elevation

NOTE:
CONTRACTOR MUST VERIFY ALL CONTROLLING FIELD DIMENSIONS BEFORE ORDERING OR FABRICATING ANY MATERIAL.

PRELIMINARY INVESTIGATION SECTION

SCALE 1"=20'	VERT.DATUM NAVD88	PHOTOGRAMMETRY AS OF: X			
HORZ.DATUM NAD83 (1991.35)		SURVEYED	BY DISTRICT	CHECKED	BY D. IVY 01/2013
ALIGNMENT TIES Dist TRAVERSE SHEET		DRAFTED	BY T. ZOLNIKOV 01/2013	CHECKED	BY L. LEW 01/2013

DESIGN	BY S. MORIMOTO	CHECKED H. PEREZ
DETAILS	BY K. CHONKRIA	CHECKED S. MORIMOTO
QUANTITIES	BY K. CHONKRIA	CHECKED S. MORIMOTO

STATE OF CALIFORNIA
DEPARTMENT OF TRANSPORTATION

DIVISION OF ENGINEERING SERVICES
STRUCTURE DESIGN
DESIGN BRANCH 6

BRIDGE NO. 44-0040R/L
POST MILE R17.69

SALINAS RIVER BRIDGE (WIDEN)
FOUNDATION PLAN No. 3

STRUCTURES FOUNDATION PLAN SHEET (ENGLISH) (REV. 09-01-10)

ORIGINAL SCALE IN INCHES FOR REDUCED PLANS 0 1 2 3

UNIT: 3646
PROJECT NUMBER & PHASE: 0500000049-1
CONTRACT NO.: 05-0F7004

DISREGARD PRINTS BEARING EARLIER REVISION DATES

REVISION DATES: 02-27-13 4-08-15 4-14-15 4-23-15

SHEET 7 OF 44

FILE => 44-0040rl-e-fdp103.dgn

USERNAME => s115755 DATE PLOTTED => 10-SEP-2015 TIME PLOTTED => 13:11

DIST	COUNTY	ROUTE	POST MILES TOTAL PROJECT	SHEET No.	TOTAL SHEETS
05	Mon	68	R17.4/R18.0	113	149

Seiji Morimoto 4-15-15
REGISTERED CIVIL ENGINEER DATE

6-22-15
PLANS APPROVAL DATE

REGISTERED PROFESSIONAL ENGINEER SEIJI MORIMOTO No. C65997 Exp. 6/30/16 CIVIL STATE OF CALIFORNIA

The State of California or its officers or agents shall not be responsible for the accuracy or completeness of scanned copies of this plan sheet.

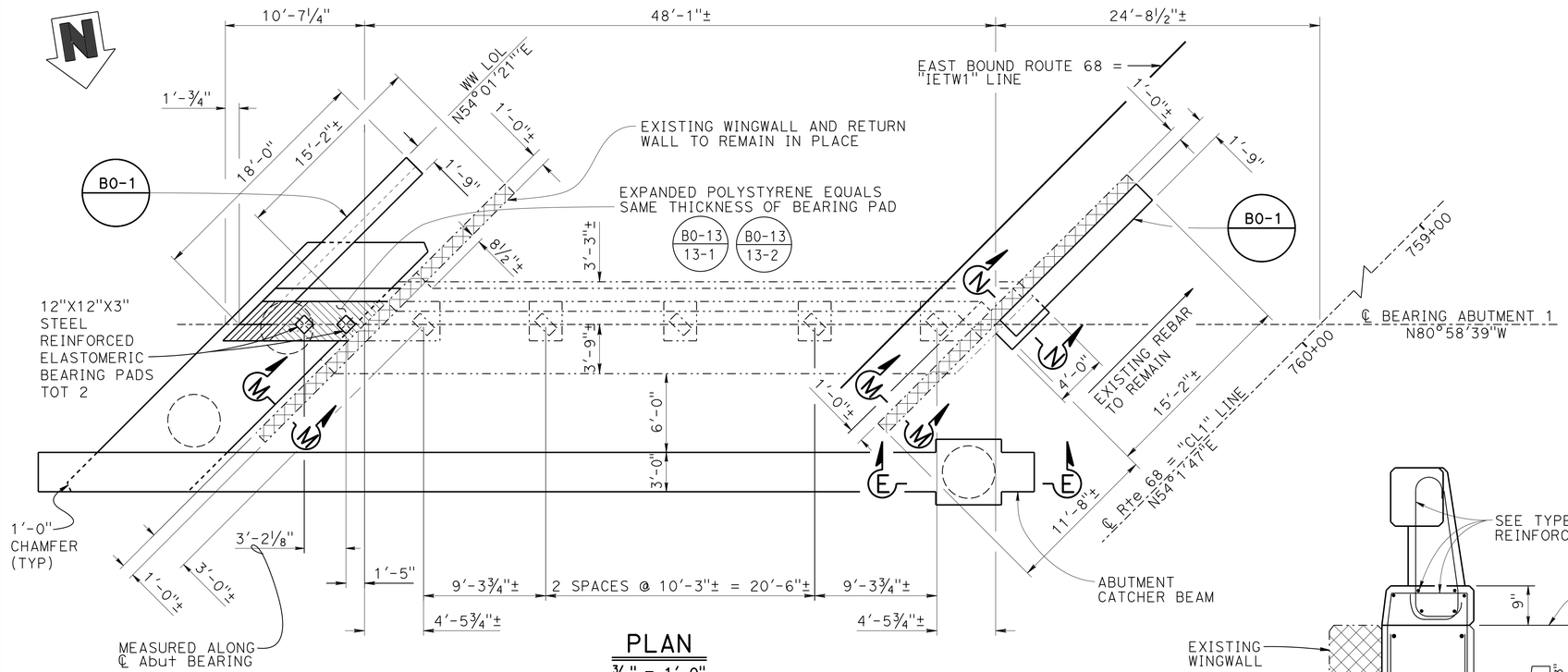

PLAN
3/16" = 1'-0"

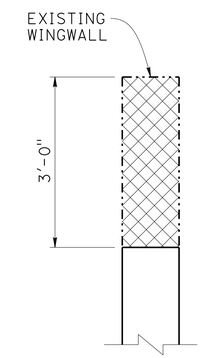

SECTION M-M
¾" = 1'-0"

LEGEND

Bridge removal portion

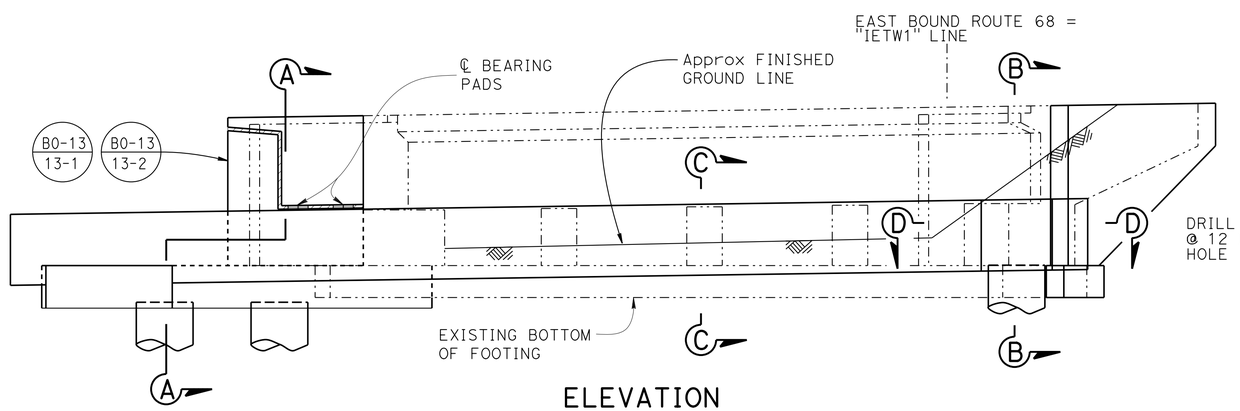

ELEVATION
3/16" = 1'-0"

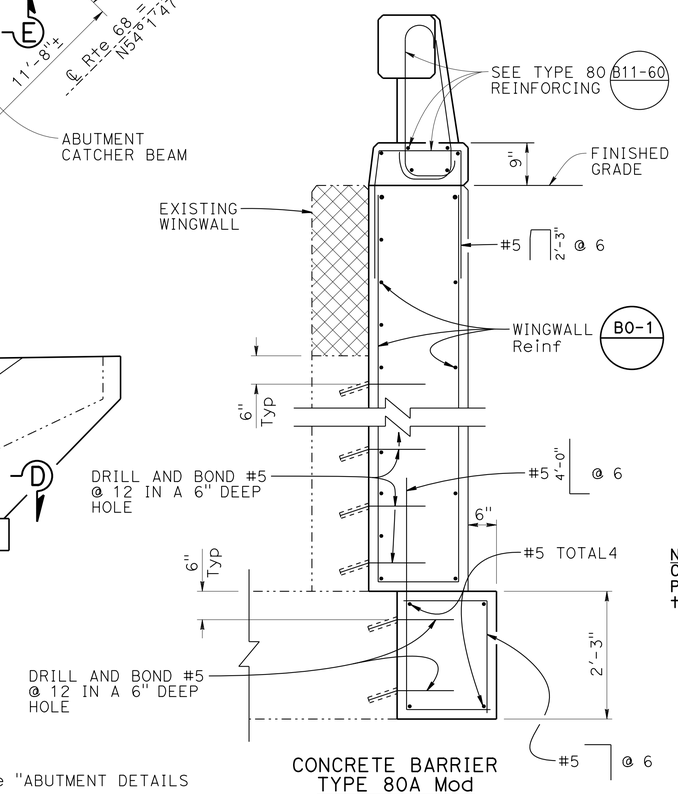

CONCRETE BARRIER TYPE 80A Mod

SECTION N-N
¾" = 1'-0"

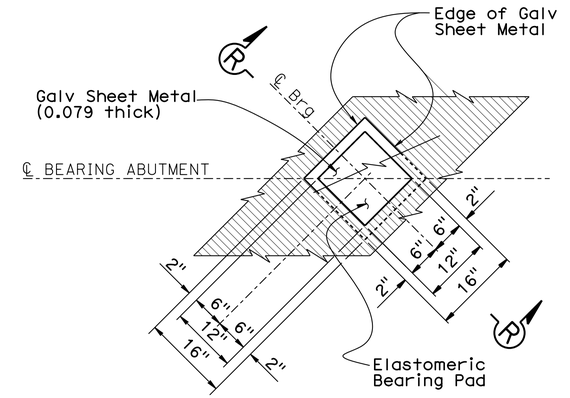

Note:
Coat top of Bearing Pad with grease prior to placing sheet metal.

PLAN

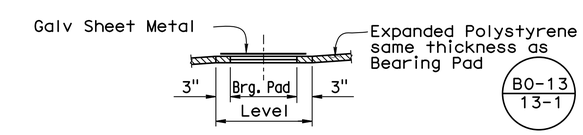

SECTION R-R
BEARING PAD DETAIL
No Scale
Details typical at all bearing pads

NOTES:

1. Abut 1 Right Bridge shown, Abut 1 Left Bridge and Abut 9 Right Bridge similar.
2. For "SECTION A-A", "SECTION B-B", "SECTION C-C" and "SECTION D-D", see "ABUTMENT DETAILS NO. 1" sheet.
3. For "SECTION E-E", see "ABUTMENT DETAILS NO.2" sheet.
4. For PILE LAYOUT, see "ABUTMENT DETAILS NO.3" sheet.

NOTE:
CONTRACTOR MUST VERIFY ALL CONTROLLING FIELD DIMENSIONS BEFORE ORDERING OR FABRICATING ANY MATERIAL.

	BY	CHECKED
DESIGN	S. MORIMOTO	H. PEREZ
DETAILS	K. CHONKRIA	H. PEREZ
QUANTITIES	K. CHONKRIA	S. MORIMOTO

STATE OF CALIFORNIA
DEPARTMENT OF TRANSPORTATION

DIVISION OF ENGINEERING SERVICES
STRUCTURE DESIGN
DESIGN BRANCH 6

BRIDGE NO. 44-0040R/L
POST MILE R17.69

SALINAS RIVER BRIDGE (WIDEN)
ABUTMENT 1 LAYOUT (RIGHT BRIDGE)

STRUCTURES DESIGN DETAIL SHEET (ENGLISH) (REV. 09-01-10)

ORIGINAL SCALE IN INCHES FOR REDUCED PLANS 0 1 2 3

UNIT: 3591
PROJECT NUMBER & PHASE: 0500000049-1
CONTRACT NO.: 05-0F7004

DISREGARD PRINTS BEARING EARLIER REVISION DATES

REVISION DATES 08-14-13 9-18-14 10-15-14 4-24-15

SHEET 8 OF 44

FILE => 44-0040rl-f-a01_la1.dgn

USERNAME => s115755 DATE PLOTTED => 10-SEP-2015 TIME PLOTTED => 13:11

DIST	COUNTY	ROUTE	POST MILES TOTAL PROJECT	SHEET No.	TOTAL SHEETS
05	Mon	68	R17.4/R18.0	114	149

Seiji Morimoto 4-15-15
REGISTERED CIVIL ENGINEER DATE

6-22-15
PLANS APPROVAL DATE

REGISTERED PROFESSIONAL ENGINEER
SEIJI MORIMOTO
No. C65997
Exp. 6/30/16
CIVIL
STATE OF CALIFORNIA

The State of California or its officers or agents shall not be responsible for the accuracy or completeness of scanned copies of this plan sheet.

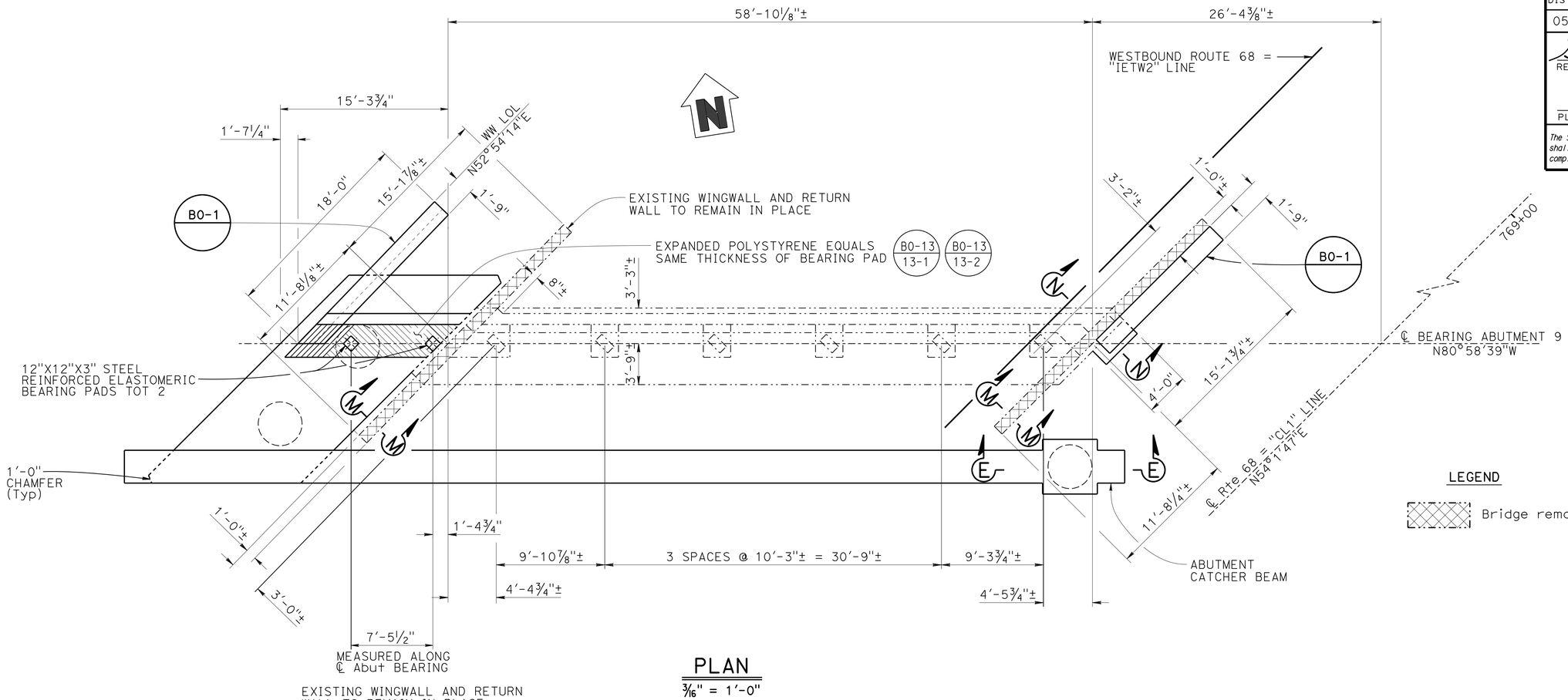

PLAN

3/16" = 1'-0"

LEGEND

Bridge removal portion

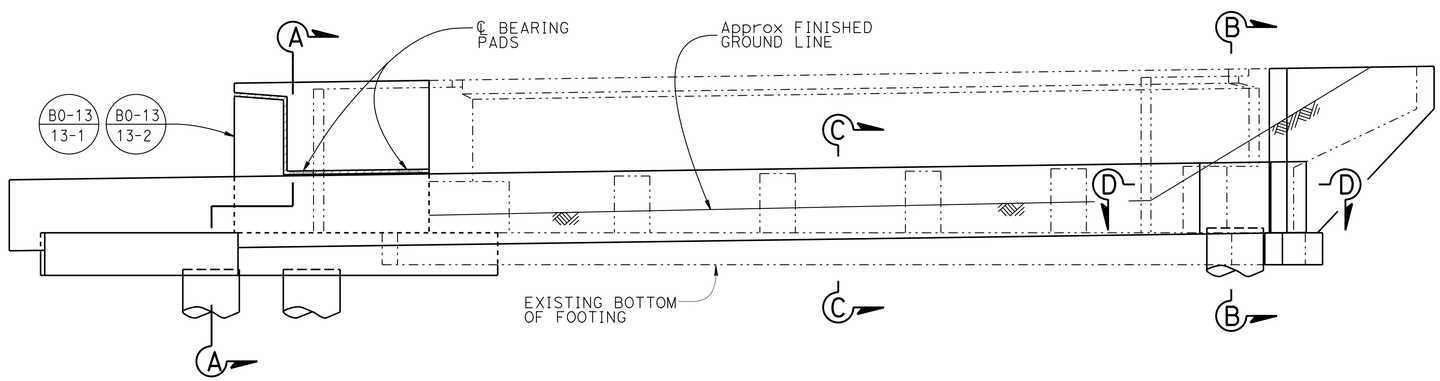

ELEVATION

3/16" = 1'-0"

NOTES:

1. For "SECTION A-A", "SECTION B-B", "SECTION C-C" and "SECTION D-D", see "ABUTMENT DETAILS NO. 1" sheet.
2. For "SECTION E-E", see "ABUTMENT DETAILS NO.2" sheet.
3. For PILE LAYOUT, see "ABUTMENT DETAILS NO.3" sheet.
4. For "SECTION M-M" and "SECTION N-N", see "ABUTMENT 1 LAYOUT (RIGHT BRIDGE)" sheet.

NOTE:
CONTRACTOR MUST VERIFY ALL CONTROLLING FIELD DIMENSIONS BEFORE ORDERING OR FABRICATING ANY MATERIAL.

	BY	CHECKED
DESIGN	S. MORIMOTO	H. PEREZ
DETAILS	K. CHONKRIA	S. MORIMOTO
QUANTITIES	K. CHONKRIA	S. MORIMOTO

STATE OF CALIFORNIA
DEPARTMENT OF TRANSPORTATION

DIVISION OF ENGINEERING SERVICES
STRUCTURE DESIGN
DESIGN BRANCH 6

BRIDGE NO. 44-0040R/L
POST MILE R17.69

SALINAS RIVER BRIDGE (WIDEN)
ABUTMENT 9 LAYOUT (LEFT BRIDGE)

STRUCTURES DESIGN DETAIL SHEET (ENGLISH) (REV. 09-01-10)

ORIGINAL SCALE IN INCHES FOR REDUCED PLANS 0 1 2 3

UNIT: 3591
PROJECT NUMBER & PHASE: 0500000049-1
CONTRACT NO.: 05-0F7004

DISREGARD PRINTS BEARING EARLIER REVISION DATES

REVISION DATES: 09-24-14 4-24-15 8-28-14 10-14-14

SHEET 9 OF 44

FILE => 44-0040r1-f-a01_lo2.dgn

USERNAME => s115755 DATE PLOTTED => 10-SEP-2015 TIME PLOTTED => 13:11

DIST	COUNTY	ROUTE	POST MILES TOTAL PROJECT	SHEET No.	TOTAL SHEETS
05	Mon	68	R17.4/R18.0	115	149

Seiji Morimoto 4-15-15
REGISTERED CIVIL ENGINEER DATE

6-22-15
PLANS APPROVAL DATE

REGISTERED PROFESSIONAL ENGINEER
SEIJI MORIMOTO
No. C65997
Exp. 6/30/16
CIVIL
STATE OF CALIFORNIA

The State of California or its officers or agents shall not be responsible for the accuracy or completeness of scanned copies of this plan sheet.

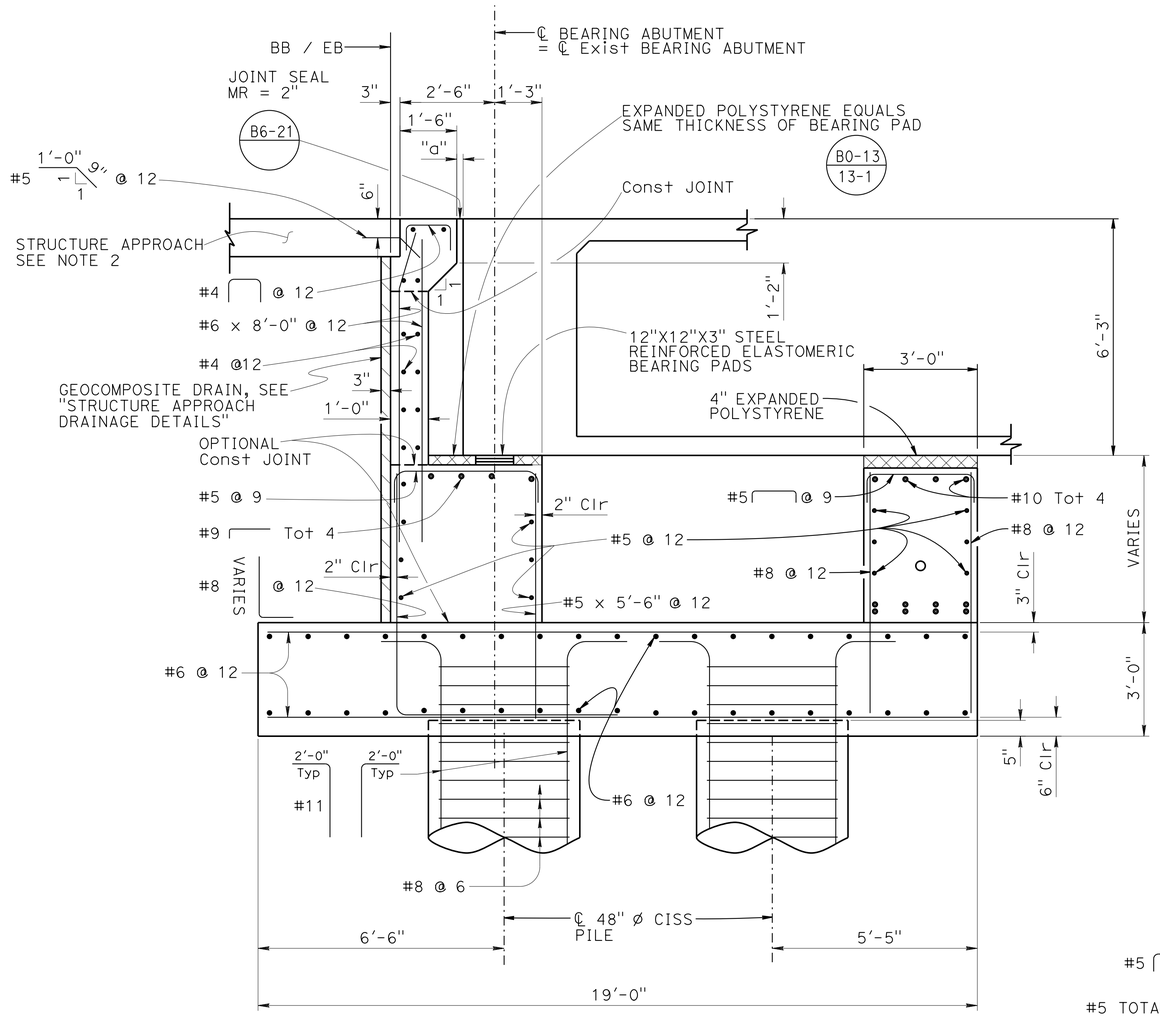

SECTION A-A
½" = 1'-0"

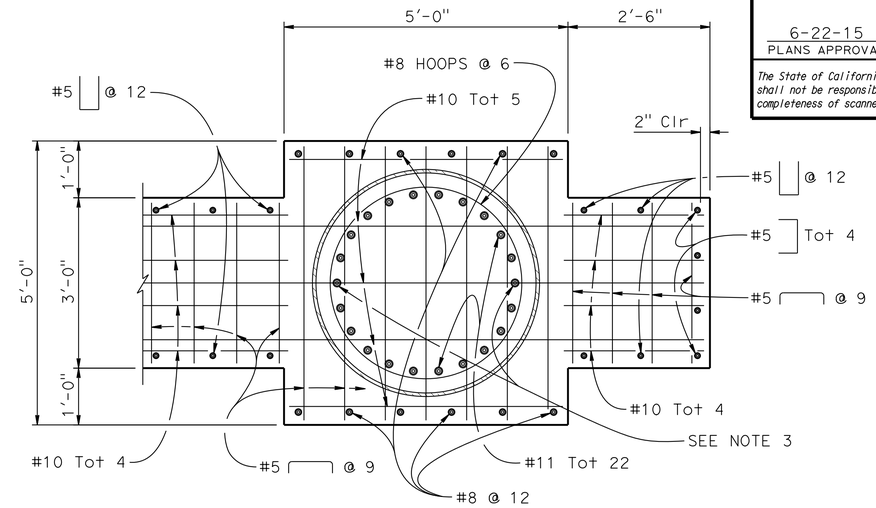

SECTION D-D
¾" = 1'-0"

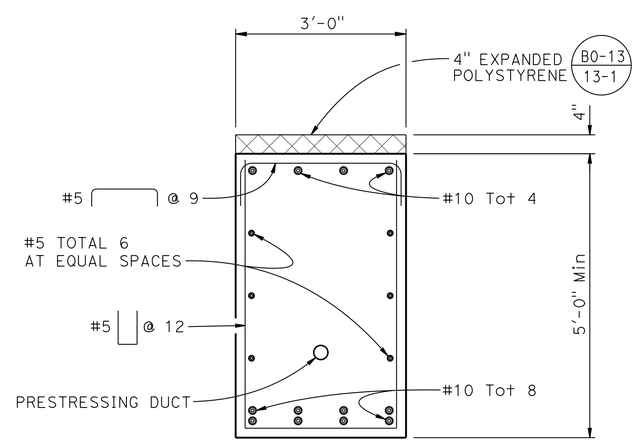

SECTION C-C
¾" = 1'-0"

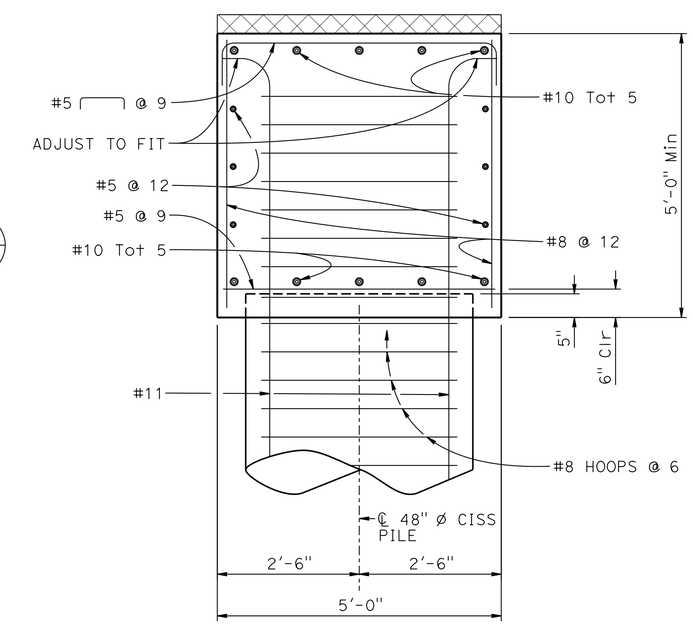

SECTION B-B
¾" = 1'-0"

NOTES:

1. Wingwall not shown for clarity
2. For details see "STRUCTURE APPROACH TYPE EQ MOD (10)" sheet and "STRUCTURE APPROACH TYPE R (10S)" sheet
3. Bars may be cut to make room for P/S duct
4. Construct catcher beams after widening is complete

NOTE:
CONTRACTOR MUST VERIFY ALL CONTROLLING FIELD DIMENSIONS BEFORE ORDERING OR FABRICATING ANY MATERIAL.

	BY	CHECKED
DESIGN	S. MORIMOTO	H. PEREZ
DETAILS	K. CHONKRIA	S. MORIMOTO
QUANTITIES	K. CHONKRIA	S. MORIMOTO

STATE OF CALIFORNIA
DEPARTMENT OF TRANSPORTATION

DIVISION OF ENGINEERING SERVICES
STRUCTURE DESIGN
DESIGN BRANCH 6

BRIDGE NO. 44-0040R/L
POST MILE R17.69

SALINAS RIVER BRIDGE (WIDEN)
ABUTMENT DETAILS NO. 1

STRUCTURES DESIGN DETAIL SHEET (ENGLISH) (REV. 09-01-10)

ORIGINAL SCALE IN INCHES FOR REDUCED PLANS 0 1 2 3

UNIT: 3591
PROJECT NUMBER & PHASE: 0500000049-1
CONTRACT NO.: 05-0F7004

DISREGARD PRINTS BEARING EARLIER REVISION DATES

REVISION DATES 1-6-15 3-2-15 4-24-15

SHEET 10 OF 44

FILE => 44-0040rl-f-abut-dt01.dgn

USERNAME => s113755 DATE PLOTTED => 10-SEP-2015 TIME PLOTTED => 13:11

DIST	COUNTY	ROUTE	POST MILES TOTAL PROJECT	SHEET No.	TOTAL SHEETS
05	Mon	68	R17.4/R18.0	116	149

Seiji Morimoto 4-15-15
REGISTERED CIVIL ENGINEER DATE

6-22-15
PLANS APPROVAL DATE

REGISTERED PROFESSIONAL ENGINEER
SEIJI MORIMOTO
No. C65997
Exp. 6/30/16
CIVIL
STATE OF CALIFORNIA

The State of California or its officers or agents shall not be responsible for the accuracy or completeness of scanned copies of this plan sheet.

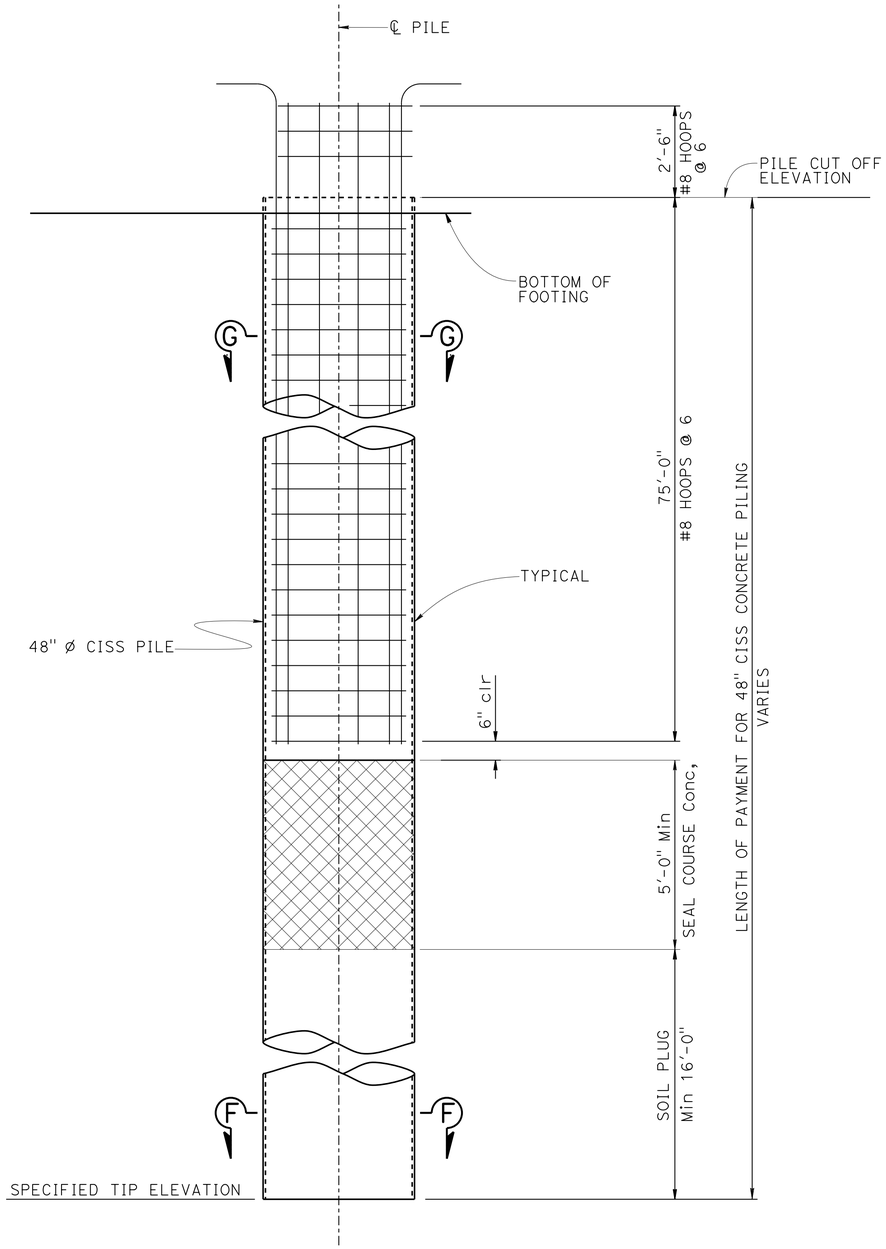

PILE ELEVATION

½" = 1'-0"

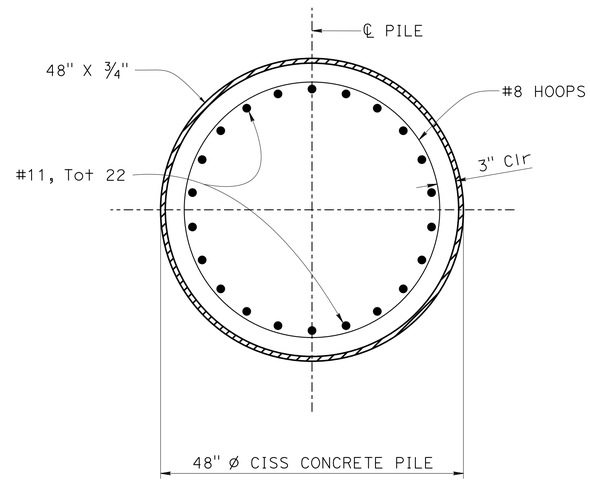

SECTION G-G

1" = 1'-0"

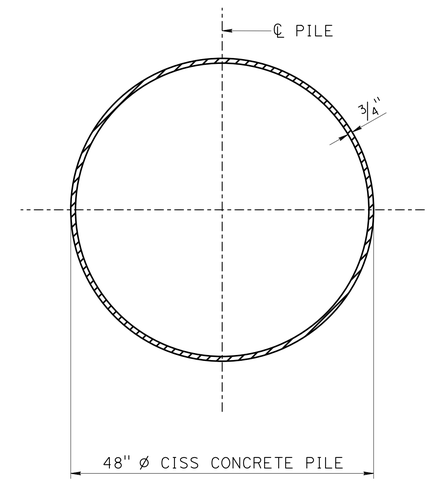

SECTION F-F

1" = 1'-0"

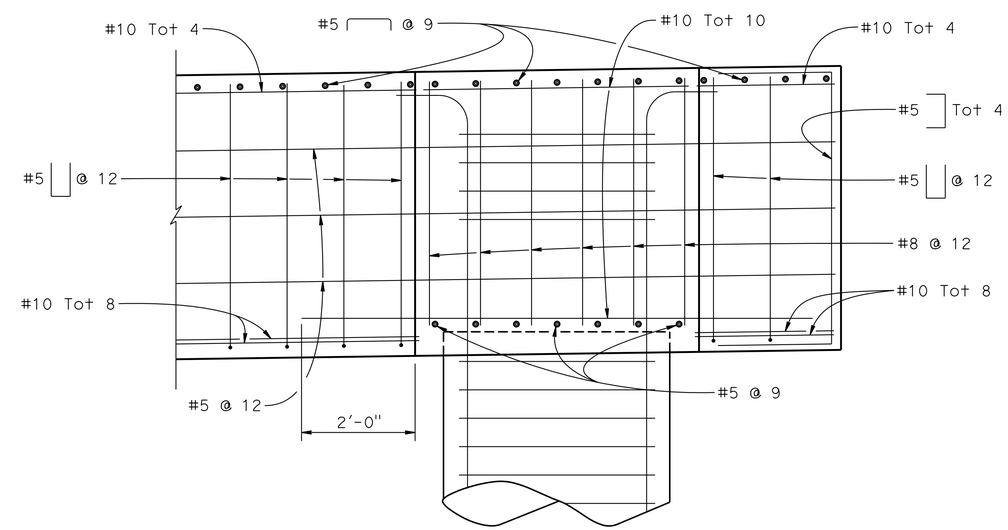

SECTION E-E

¾" = 1'-0"

NOTE:
CONTRACTOR MUST VERIFY ALL CONTROLLING FIELD DIMENSIONS BEFORE ORDERING OR FABRICATING ANY MATERIAL.

NOTES:

1. Ultimate splices are allowed in main pile reinforcement.
2. #8 pile hoops shall have ultimate butt splices.
3. For "Pile Data Table", see "PILE DATA" sheet.

	BY	CHECKED
DESIGN	S. MORIMOTO	H. PEREZ
DETAILS	K. CHONKRIA	S. MORIMOTO
QUANTITIES	K. CHONKRIA	S. MORIMOTO

STATE OF CALIFORNIA
DEPARTMENT OF TRANSPORTATION

DIVISION OF ENGINEERING SERVICES
STRUCTURE DESIGN
DESIGN BRANCH 6

BRIDGE NO. 44-0040R/L
POST MILE R17.69

SALINAS RIVER BRIDGE (WIDEN)
ABUTMENT DETAILS NO. 2

STRUCTURES DESIGN DETAIL SHEET (ENGLISH) (REV. 09-01-10)

ORIGINAL SCALE IN INCHES FOR REDUCED PLANS 0 1 2 3

UNIT: 3591
PROJECT NUMBER & PHASE: 0500000049-1
CONTRACT NO.: 05-0F7004

DISREGARD PRINTS BEARING EARLIER REVISION DATES

REVISION DATES: 02-07-14 4-24-15 9-15-14 10-21-14

SHEET 11 OF 44

FILE => 44-0040r1-f-abut-dt02.dgn

USERNAME => s115755 DATE PLOTTED => 10-SEP-2015 TIME PLOTTED => 13:11

DIST	COUNTY	ROUTE	POST MILES TOTAL PROJECT	SHEET No.	TOTAL SHEETS
05	Mon	68	R17.4/R18.0	117	149

Seiji Morimoto 4-15-15
REGISTERED CIVIL ENGINEER DATE

6-22-15
PLANS APPROVAL DATE

REGISTERED PROFESSIONAL ENGINEER SEIJI MORIMOTO No. C65997 Exp. 6-30-16 CIVIL STATE OF CALIFORNIA

The State of California or its officers or agents shall not be responsible for the accuracy or completeness of scanned copies of this plan sheet.

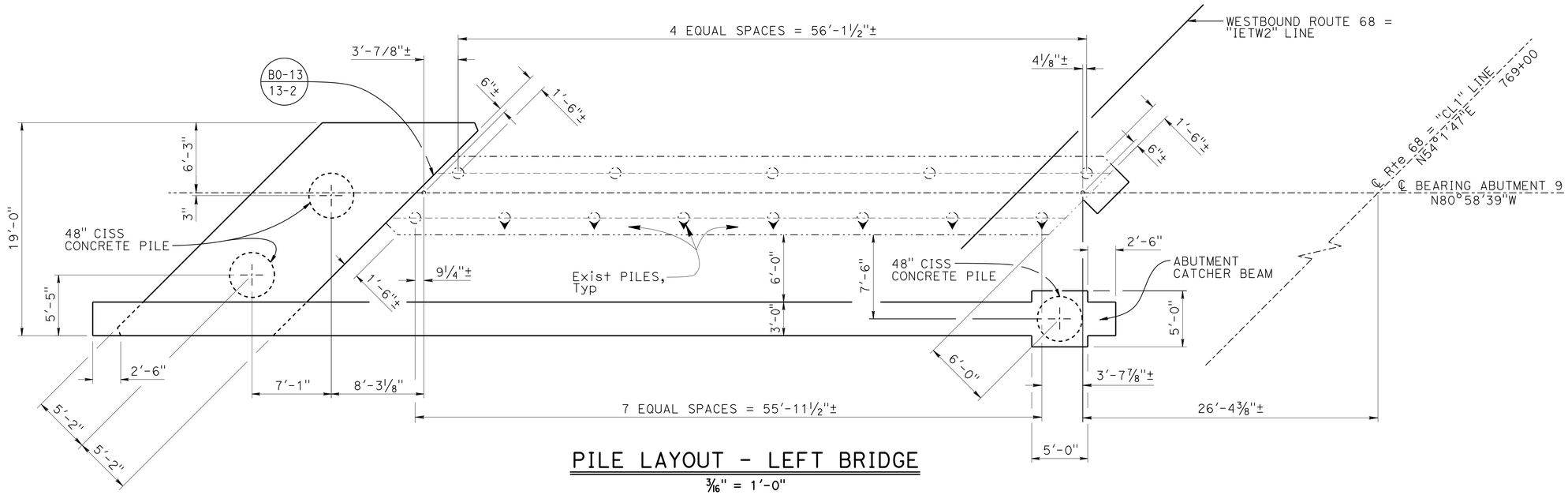

PILE LAYOUT - LEFT BRIDGE

3/16" = 1'-0"

NOTE 1:
Abutment 9 shown.

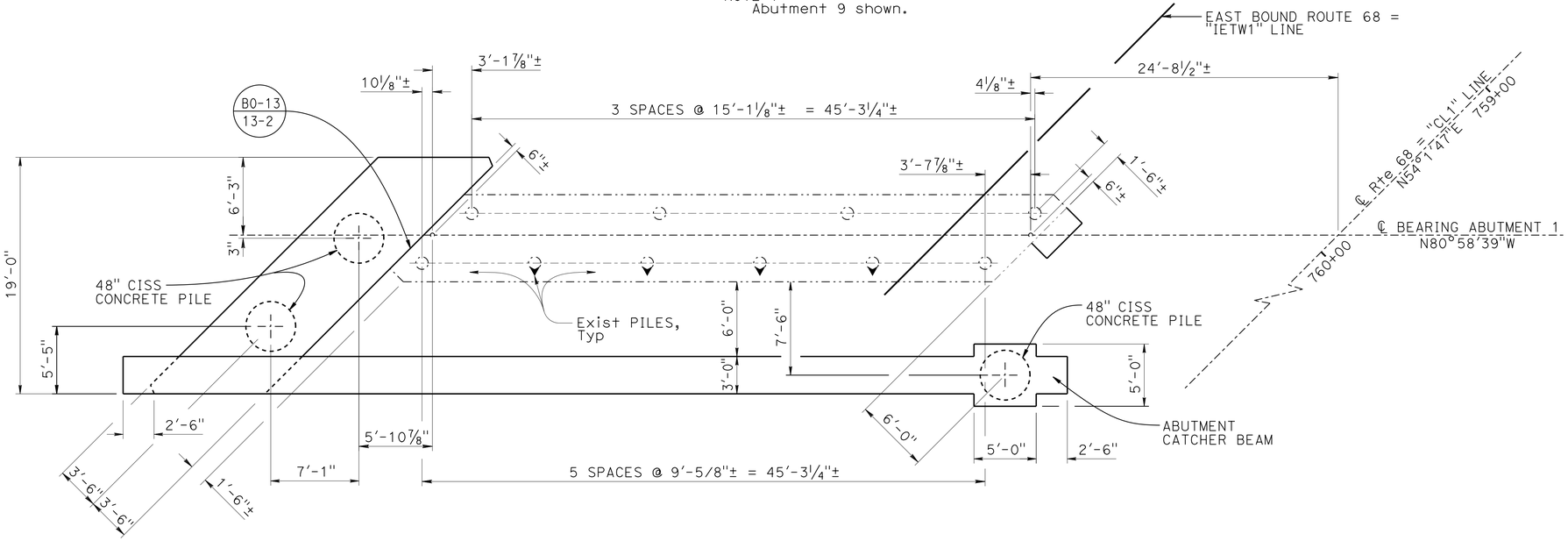

PILE LAYOUT - RIGHT BRIDGE

3/16" = 1'-0"

NOTE 2:
Abutment 1 Right shown, Abutment 9 Right similar and Abutment 1 Left similar.

NOTE:
CONTRACTOR MUST VERIFY ALL CONTROLLING FIELD DIMENSIONS BEFORE ORDERING OR FABRICATING ANY MATERIAL.

	BY	CHECKED
DESIGN	S. MORIMOTO	H. PEREZ
DETAILS	D. PATO	S. MORIMOTO
QUANTITIES	K. CHONKRIA	S. MORIMOTO

STATE OF CALIFORNIA
DEPARTMENT OF TRANSPORTATION

DIVISION OF ENGINEERING SERVICES
STRUCTURE DESIGN
DESIGN BRANCH 6

BRIDGE NO. 44-0040R/L
POST MILE 17.69

SALINAS RIVER BRIDGE (WIDEN)
ABUTMENT DETAILS NO. 3

STRUCTURES DESIGN DETAIL SHEET (ENGLISH) (REV. 09-01-10)

ORIGINAL SCALE IN INCHES FOR REDUCED PLANS 0 1 2 3

UNIT: 3591
PROJECT NUMBER & PHASE: 0500000049-1
CONTRACT NO.: 05-0F7004

DISREGARD PRINTS BEARING EARLIER REVISION DATES

REVISION DATES: 8-15-14 8-18-14 10-23-14 6-24-15

SHEET 12 OF 44

FILE => 44-0040rl-f-abut-dt03.dgn

USERNAME => s115755 DATE PLOTTED => 10-SEP-2015 TIME PLOTTED => 13:11

DIST	COUNTY	ROUTE	POST MILES TOTAL PROJECT	SHEET No.	TOTAL SHEETS
05	Mon	68	R17.4/R18.0	118	149

Seiji Morimoto 4-15-15
REGISTERED CIVIL ENGINEER DATE

6-22-15
PLANS APPROVAL DATE

REGISTERED PROFESSIONAL ENGINEER
SEIJI MORIMOTO
No. C65997
Exp. 6-30-16
CIVIL
STATE OF CALIFORNIA

The State of California or its officers or agents shall not be responsible for the accuracy or completeness of scanned copies of this plan sheet.

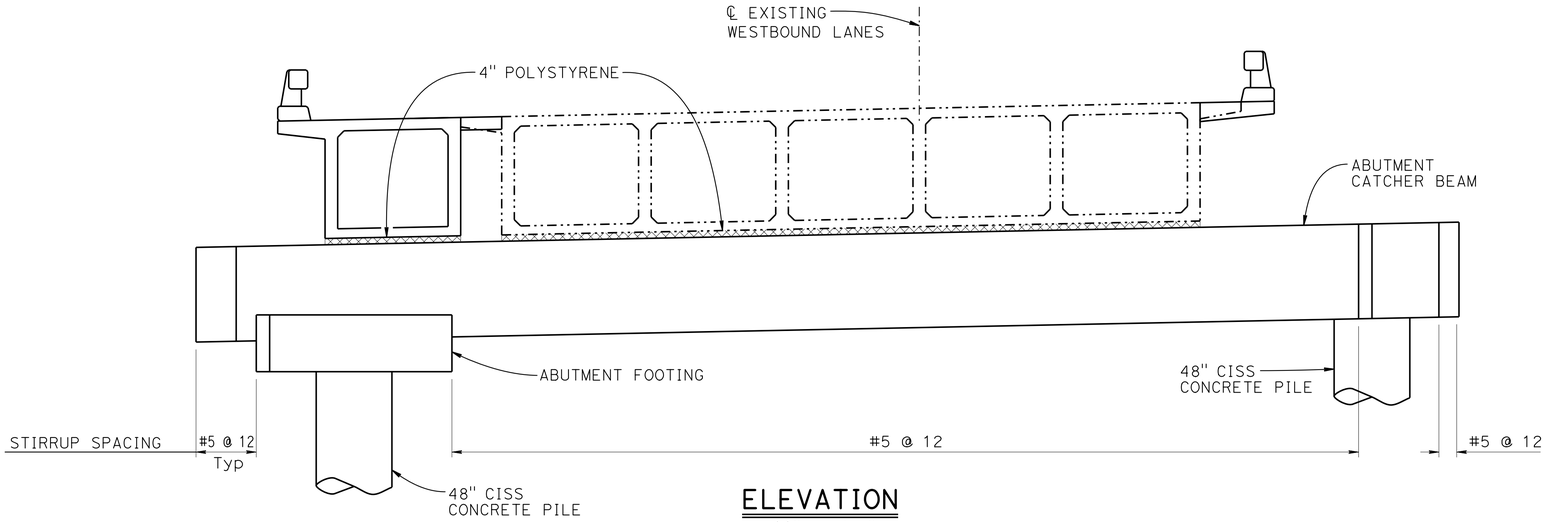

ELEVATION

1/4" = 1'-0"

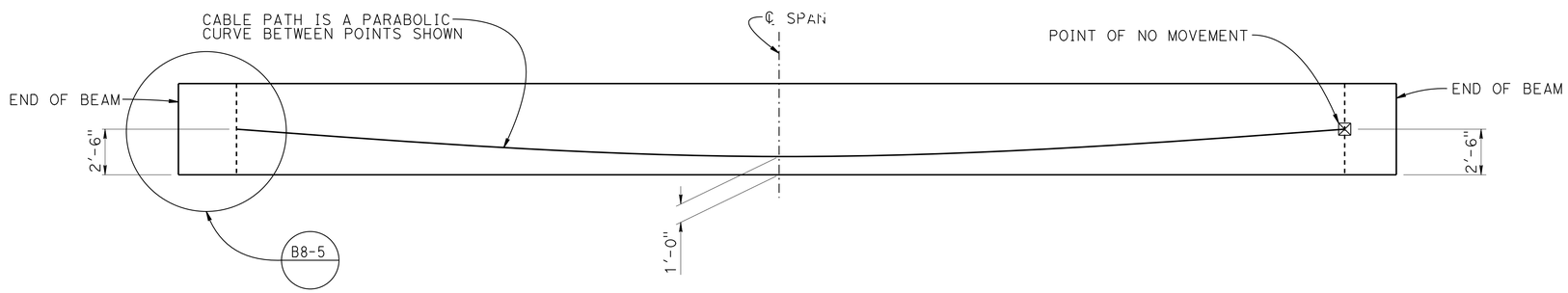

LONGITUDINAL SECTION

NO SCALE

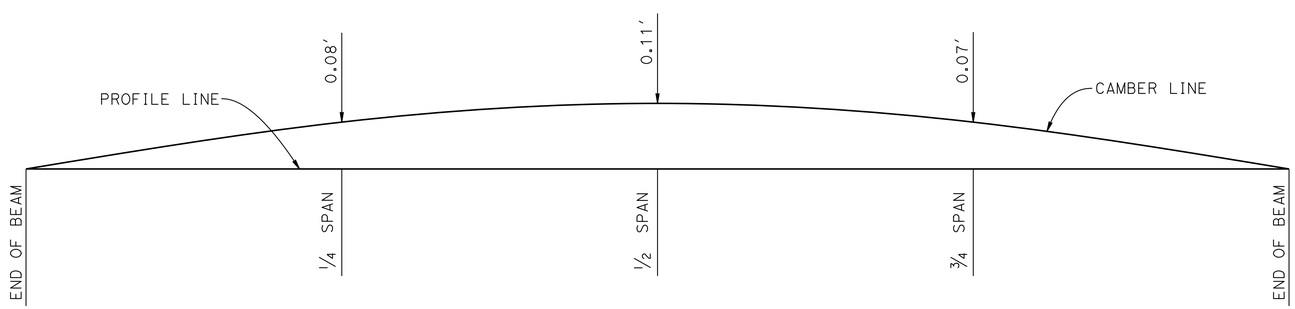

CAMBER DIAGRAM

DOES NOT INCLUDE ALLOWANCE FOR FALSEWORK SETTLEMENT

NOTE:
CONTRACTOR MUST VERIFY ALL CONTROLLING FIELD DIMENSIONS BEFORE ORDERING OR FABRICATING ANY MATERIAL.

PRESTRESSING NOTES

270 KSI Low Relaxation Strand:

P_{jack} = 3500 kips

Anchor Set = 3/8 in

Friction curvature coefficient, μ = 15×10^{-2} (1/rad)

Friction wobble coefficient, K = 0.0002 (1/ft)

Assumed long term losses = 20 (ksi)

Total Number of Girders = 1

The final force ratio (larger divided by smaller) between any two girders shall not exceed exceed the ratio of 10 to 9

Concrete: f'_c = 5,000 psi @ 28 days

f'_{ci} = 4,000 psi @ time of stressing

Contractor shall submit elongation calculations based on initial stress at

⊠ = 0.9345 times jacking stress.

One end stressing must be performed from the outside widening side.

	BY	CHECKED
DESIGN	S. MORIMOTO	H. PEREZ
DETAILS	D. PATO	H. PEREZ
QUANTITIES	K. CHONKRIA	S. MORIMOTO

STATE OF CALIFORNIA
DEPARTMENT OF TRANSPORTATION

DIVISION OF ENGINEERING SERVICES
STRUCTURE DESIGN
DESIGN BRANCH 6

BRIDGE NO. 44-0040R/L
POST MILE 17.69

SALINAS RIVER BRIDGE (WIDEN)
ABUTMENT DETAILS NO. 4

STRUCTURES DESIGN DETAIL SHEET (ENGLISH) (REV. 09-01-10)

ORIGINAL SCALE IN INCHES FOR REDUCED PLANS 0 1 2 3

UNIT: 3591
PROJECT NUMBER & PHASE: 0500000049-1
CONTRACT NO.: 05-0F7004

DISREGARD PRINTS BEARING EARLIER REVISION DATES

REVISION DATES: 8-25-14 10-23-14

SHEET 13 OF 44

FILE => 44-0040r1-f-abut-dt04.dgn

USERNAME => s115755 DATE PLOTTED => 10-SEP-2015 TIME PLOTTED => 13:11

DIST	COUNTY	ROUTE	POST MILES TOTAL PROJECT	SHEET No.	TOTAL SHEETS
05	Mon	68	R17.4/R18.0	119	149

Seiji Morimoto 4-15-15
REGISTERED CIVIL ENGINEER DATE

6-22-15
PLANS APPROVAL DATE

REGISTERED PROFESSIONAL ENGINEER SEIJI MORIMOTO No. C65997 Exp. 6/30/16 CIVIL STATE OF CALIFORNIA

The State of California or its officers or agents shall not be responsible for the accuracy or completeness of scanned copies of this plan sheet.

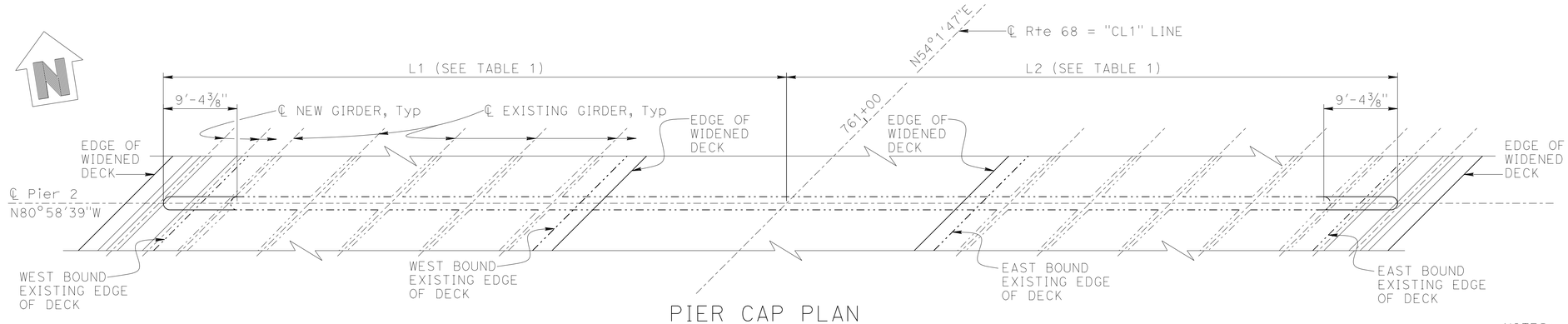

PIER CAP PLAN

1/8" = 1'-0"

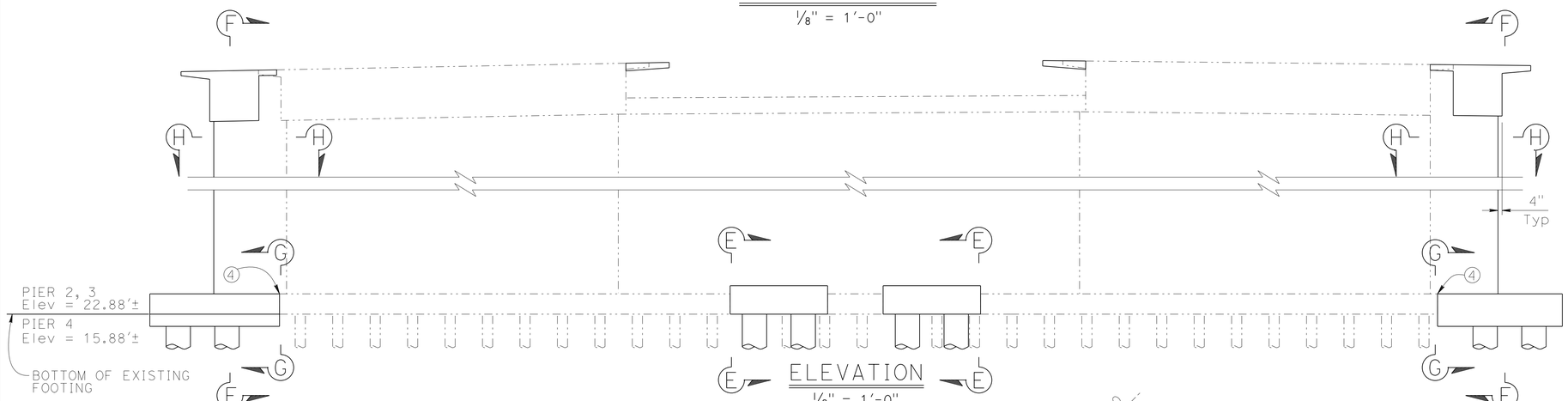

ELEVATION

1/8" = 1'-0"

NOTES:

1. Roughen surface to 1/4" minimum amplitude at all new to existing concrete interfaces.
2. Pier 2 shown. Piers 3 and 4 are similar, except as noted.
3. Match existing Top of footing elevation.
4. For SECTION E-E, F-F, G-G, and H-H, see "PIER DETAILS NO.1" and PIER DETAILS NO. 2" sheets.

TABLE 1		
PIER No.	L1	L2
PIER 2	79'-7/8"±	77'-6 3/8"±
PIER 3	79'-1 1/8"±	77'-6 1/8"±
PIER 4	79'-1 3/8"±	77'-5 7/8"±

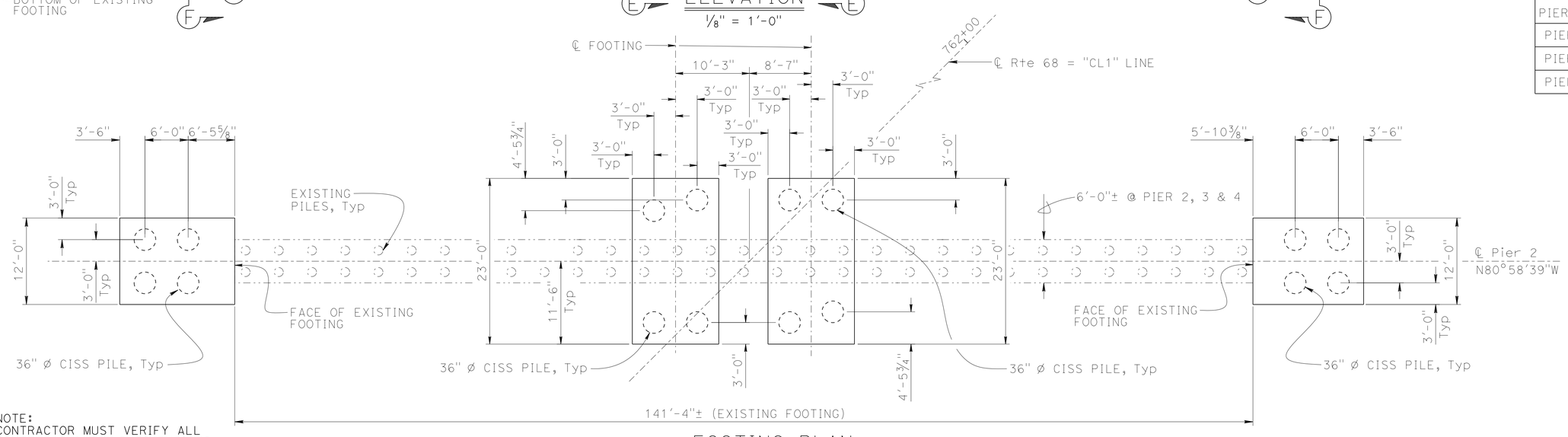

FOOTING PLAN

1/8" = 1'-0"

NOTE:
CONTRACTOR MUST VERIFY ALL CONTROLLING FIELD DIMENSIONS BEFORE ORDERING OR FABRICATING ANY MATERIAL.

	BY	CHECKED
DESIGN	S. MORIMOTO	H. PEREZ
DETAILS	K. CHONKRIA	S. MORIMOTO
QUANTITIES	K. CHONKRIA	S. MORIMOTO

STATE OF CALIFORNIA
DEPARTMENT OF TRANSPORTATION

DIVISION OF ENGINEERING SERVICES
STRUCTURE DESIGN
DESIGN BRANCH 6

BRIDGE NO. 44-0040R/L
POST MILE R17.69

SALINAS RIVER BRIDGE (WIDEN)
PIERS 2 THRU 4 LAYOUT

STRUCTURES DESIGN DETAIL SHEET (ENGLISH) (REV. 09-01-10)

ORIGINAL SCALE IN INCHES FOR REDUCED PLANS 0 1 2 3

UNIT: 3591
PROJECT NUMBER & PHASE: 0500000049-1
CONTRACT NO.: 05-0F7004

DISREGARD PRINTS BEARING EARLIER REVISION DATES

REVISION DATES: 10-02-13 4-24-15 8-01-14 4-14-15

SHEET 14 OF 44

FILE => 44-0040r1-i-p0_11o01.dgn

USERNAME => s115755 DATE PLOTTED => 10-SEP-2015 TIME PLOTTED => 13:11

DIST	COUNTY	ROUTE	POST MILES TOTAL PROJECT	SHEET No.	TOTAL SHEETS
05	Mon	68	R17.4/R18.0	120	149

Seiji Morimoto 4-15-15
REGISTERED CIVIL ENGINEER DATE

6-22-15
PLANS APPROVAL DATE

REGISTERED PROFESSIONAL ENGINEER SEIJI MORIMOTO No. C65997 Exp. 6/30/16 CIVIL STATE OF CALIFORNIA

The State of California or its officers or agents shall not be responsible for the accuracy or completeness of scanned copies of this plan sheet.

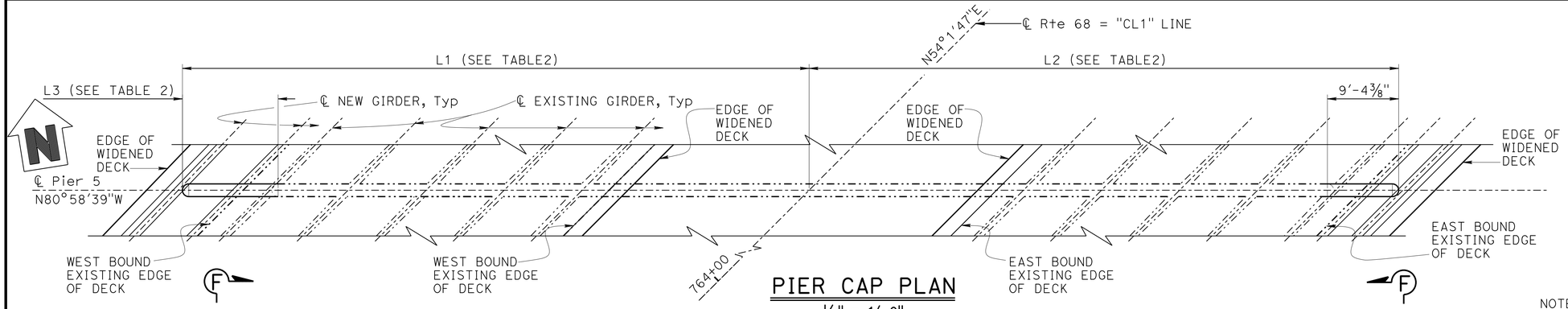

PIER CAP PLAN
⅛" = 1'-0"

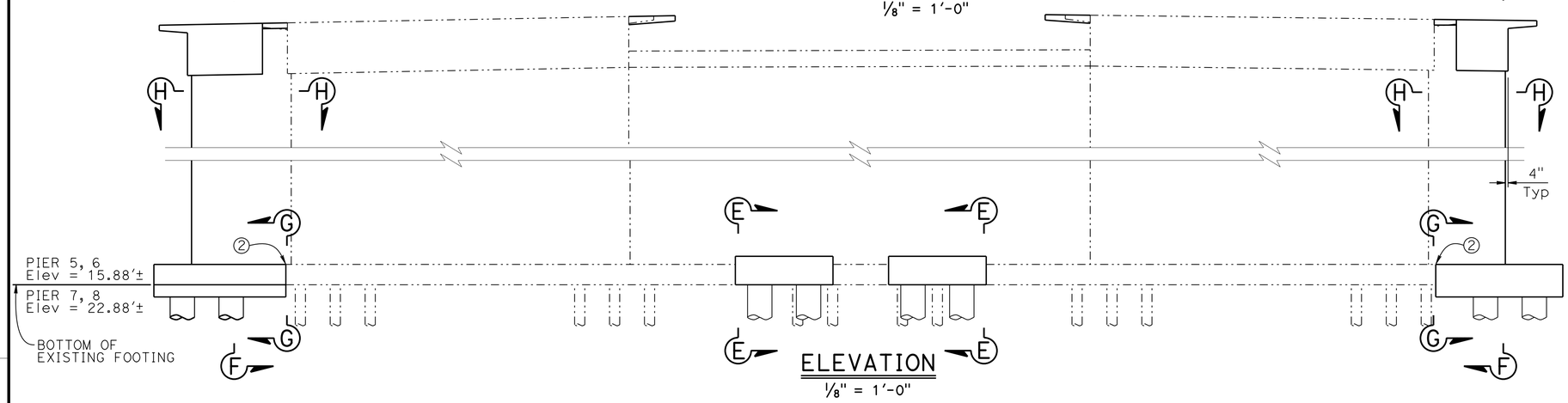

ELEVATION
⅛" = 1'-0"

NOTES:

① Pier 5 shown. Pier 6, 7 and 8 are similar, except as noted.

② Match existing Top of footing elevation.

③ For "SECTION E-E", "SECTION F-F", "SECTION G-G", and "SECTION H-H", see "PIER DETAILS NO.1" and "PIER DETAILS NO.2" sheets.

④ Roughen surface to ¼" minimum amplitude at all new to existing concrete interfaces.

TABLE 2			
PIER No.	L1	L2	L3
PIER 5	82'-4⅛"±	77'-5⅝"±	12'-6⅞"
PIER 6	85'-6"±	77'-5⅜"±	13'-8⅜"
PIER 7	88'-8"±	77'-5⅛"±	14'-6½"
PIER 8	91'-9⅞"±	77'-4⅞"±	13'-6⅝"

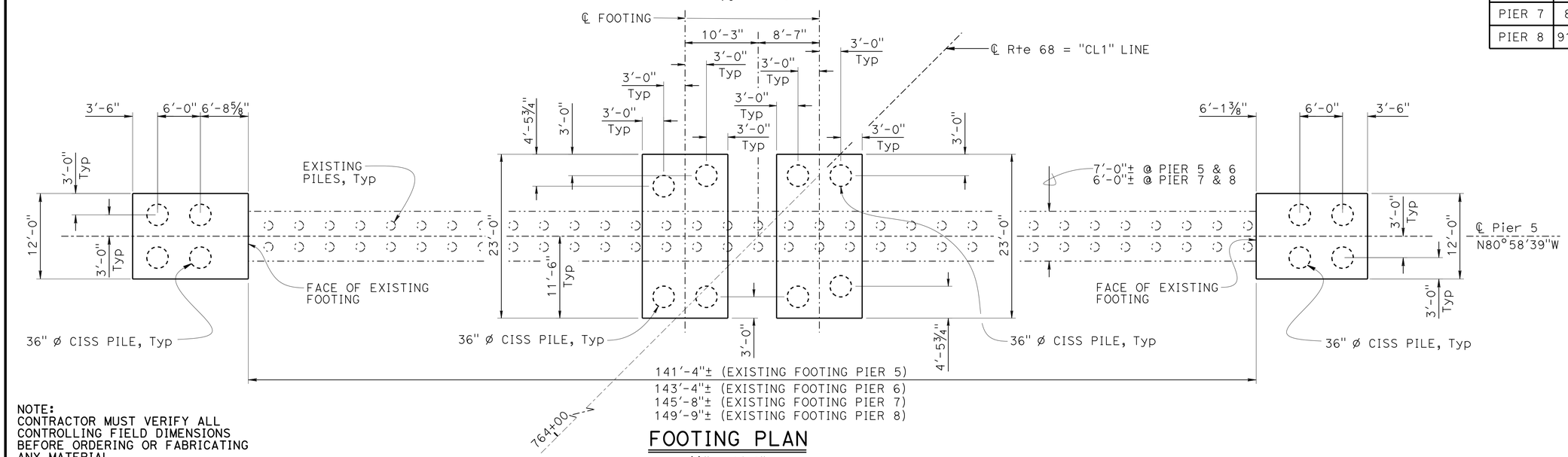

FOOTING PLAN
⅛" = 1'-0"

NOTE:
CONTRACTOR MUST VERIFY ALL CONTROLLING FIELD DIMENSIONS BEFORE ORDERING OR FABRICATING ANY MATERIAL.

	BY	CHECKED
DESIGN	S. MORIMOTO	H. PEREZ
DETAILS	K. CHONKRIA	S. MORIMOTO
QUANTITIES	K. CHONKRIA	S. MORIMOTO

STATE OF CALIFORNIA
DEPARTMENT OF TRANSPORTATION

DIVISION OF ENGINEERING SERVICES
STRUCTURE DESIGN
DESIGN BRANCH 6

BRIDGE NO. 44-0040R/L
POST MILE 17.69

SALINAS RIVER BRIDGE (WIDEN)
PIERS 5 THRU 8 LAYOUT

STRUCTURES DESIGN DETAIL SHEET (ENGLISH) (REV. 09-01-10)

ORIGINAL SCALE IN INCHES FOR REDUCED PLANS 0 1 2 3

UNIT: 3591
PROJECT NUMBER & PHASE: 0500000049-1
CONTRACT NO.: 05-0F7004

DISREGARD PRINTS BEARING EARLIER REVISION DATES

REVISION DATES 10-2-13 4-24-15 9-17-14 4-14-15

SHEET 15 OF 44

FILE => 44-0040rl-i-p0_11o02.dgn

USERNAME => s115755 DATE PLOTTED => 10-SEP-2015 TIME PLOTTED => 13:11

DIST	COUNTY	ROUTE	POST MILES TOTAL PROJECT	SHEET No.	TOTAL SHEETS
05	Mon	68	R17.4/R18.0	121	149

Seiji Morimoto 4-15-15
REGISTERED CIVIL ENGINEER DATE

6-22-15
PLANS APPROVAL DATE

REGISTERED PROFESSIONAL ENGINEER SEIJI MORIMOTO No. C65997 Exp. 6/30/16 CIVIL STATE OF CALIFORNIA

The State of California or its officers or agents shall not be responsible for the accuracy or completeness of scanned copies of this plan sheet.

NOTES:

1. Deck and soffit reinforcement not shown.
2. Existing rebar to remain undamaged.
3. All side face drill and bond dowels to have 3 / 1 slope.

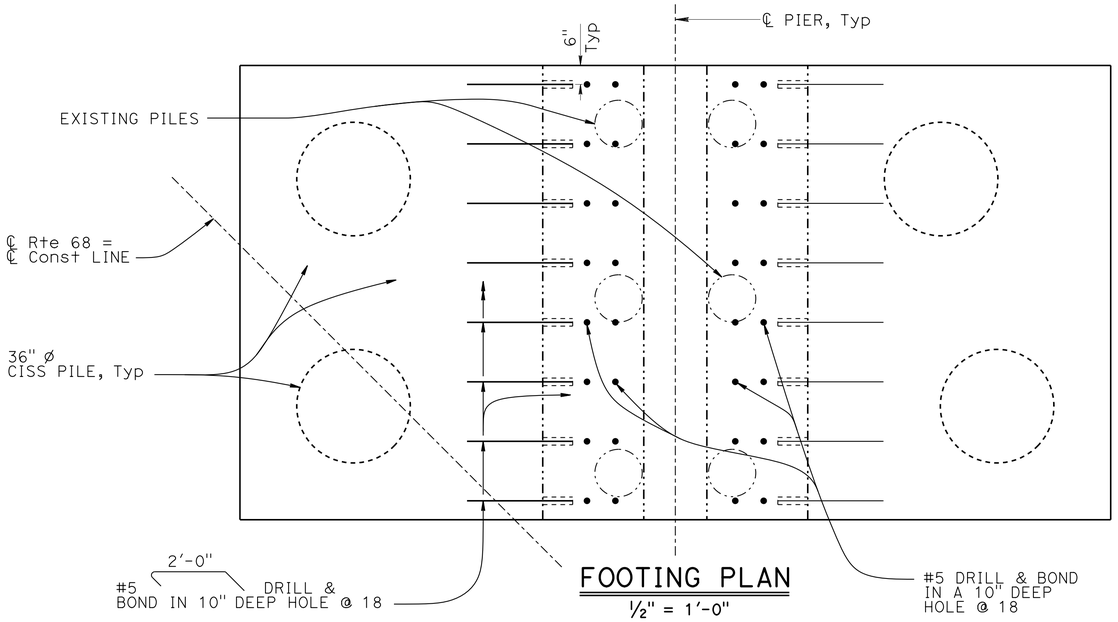

FOOTING PLAN
½" = 1'-0"

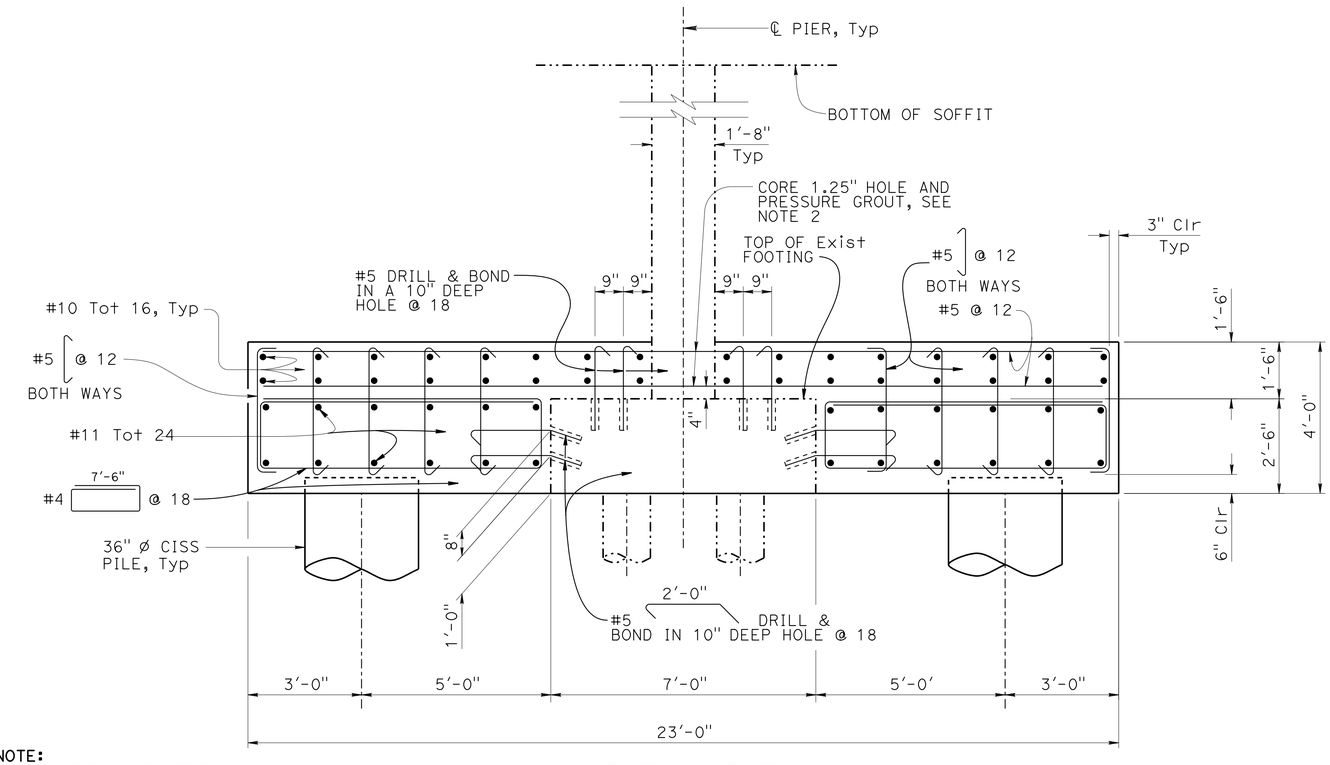

SECTION E-E
½" = 1'-0"

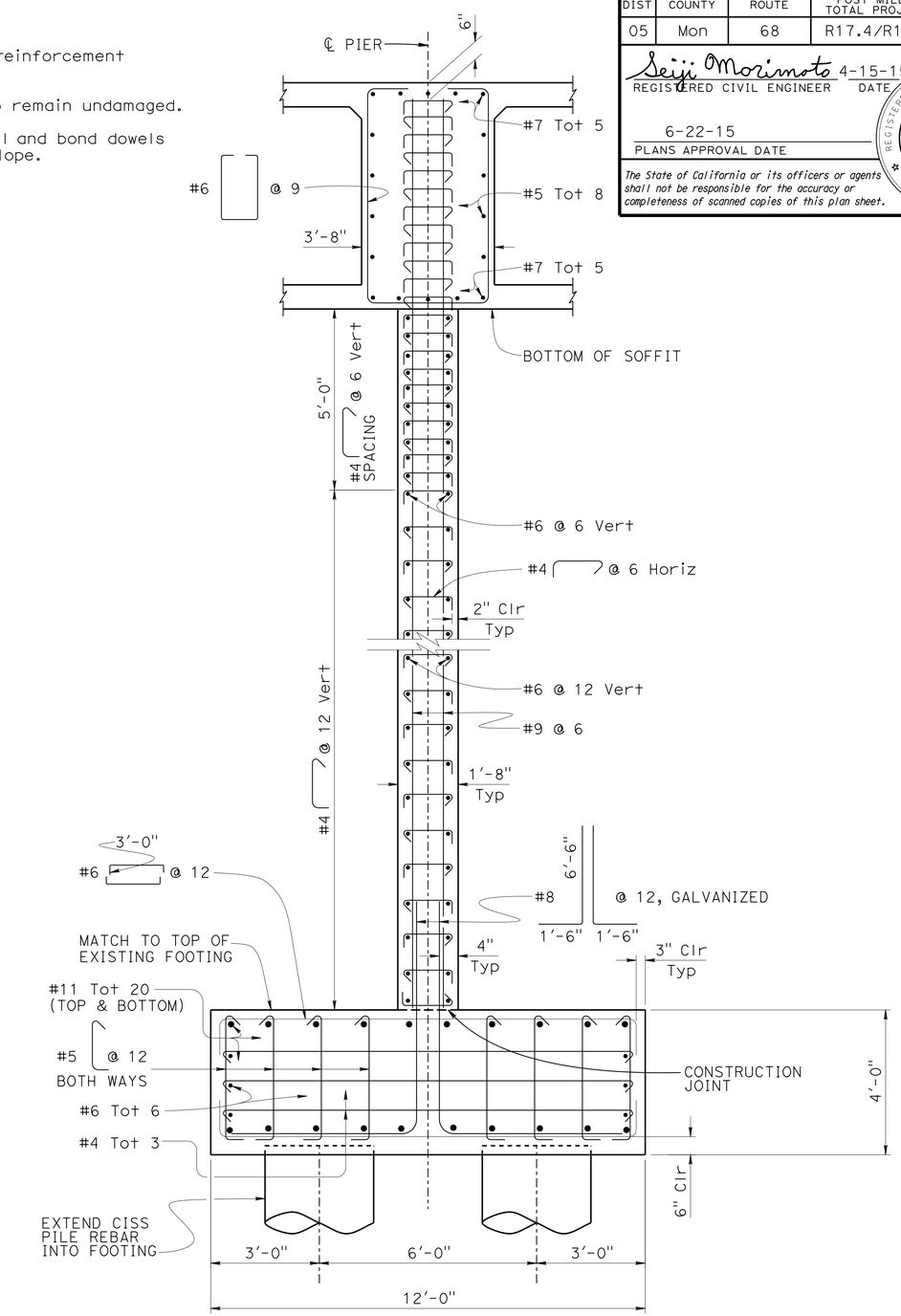

SECTION F-F
½" = 1'-0"

NOTE:
CONTRACTOR MUST VERIFY ALL CONTROLLING FIELD DIMENSIONS BEFORE ORDERING OR FABRICATING ANY MATERIAL.

	BY	CHECKED
DESIGN	S. MORIMOTO	H. PEREZ
DETAILS	K. CHONKRIA	S. MORIMOTO
QUANTITIES	K. CHONKRIA	S. MORIMOTO

STATE OF CALIFORNIA
DEPARTMENT OF TRANSPORTATION

DIVISION OF ENGINEERING SERVICES
STRUCTURE DESIGN
DESIGN BRANCH 6

BRIDGE NO. 44-0040R/L
POST MILE 17.69

SALINAS RIVER BRIDGE (WIDEN)
PIER DETAILS NO.1

STRUCTURES DESIGN DETAIL SHEET (ENGLISH) (REV. 09-01-10)

ORIGINAL SCALE IN INCHES FOR REDUCED PLANS 0 1 2 3

UNIT: 3591
PROJECT NUMBER & PHASE: 0500000049-1
CONTRACT NO.: 05-0F7004

DISREGARD PRINTS BEARING EARLIER REVISION DATES

REVISION DATES 12-14-13 8-22-14 4-14-15 4-24-15

SHEET 16 OF 44

FILE => 44-0040rl-i-pier-det1.dgn

USERNAME => s115755 DATE PLOTTED => 10-SEP-2015 TIME PLOTTED => 13:11

DIST	COUNTY	ROUTE	POST MILES TOTAL PROJECT	SHEET No.	TOTAL SHEETS
05	Mon	68	R17.4/R18.0	122	149

Seiji Morimoto 4-15-15
REGISTERED CIVIL ENGINEER DATE

6-22-15
PLANS APPROVAL DATE

REGISTERED PROFESSIONAL ENGINEER
SEIJI MORIMOTO
No. C65997
Exp. 6/30/16
CIVIL
STATE OF CALIFORNIA

The State of California or its officers or agents shall not be responsible for the accuracy or completeness of scanned copies of this plan sheet.

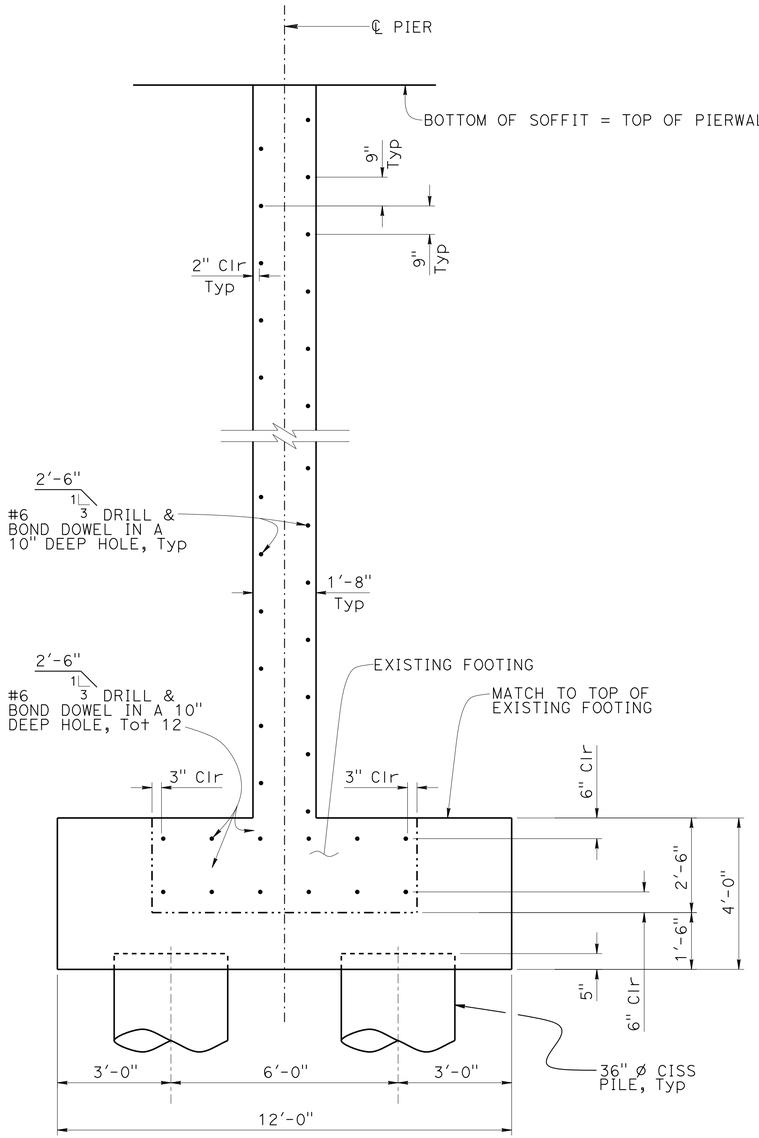

SECTION G-G

½" = 1'-0"

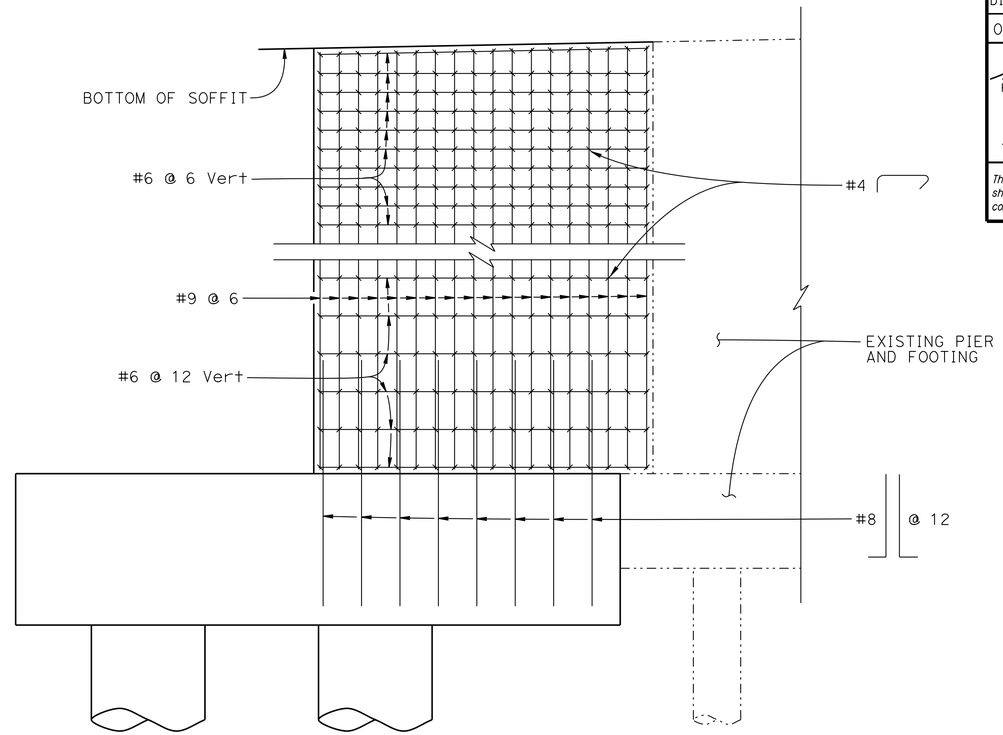

ELEVATION Z-Z

½" = 1'-0"

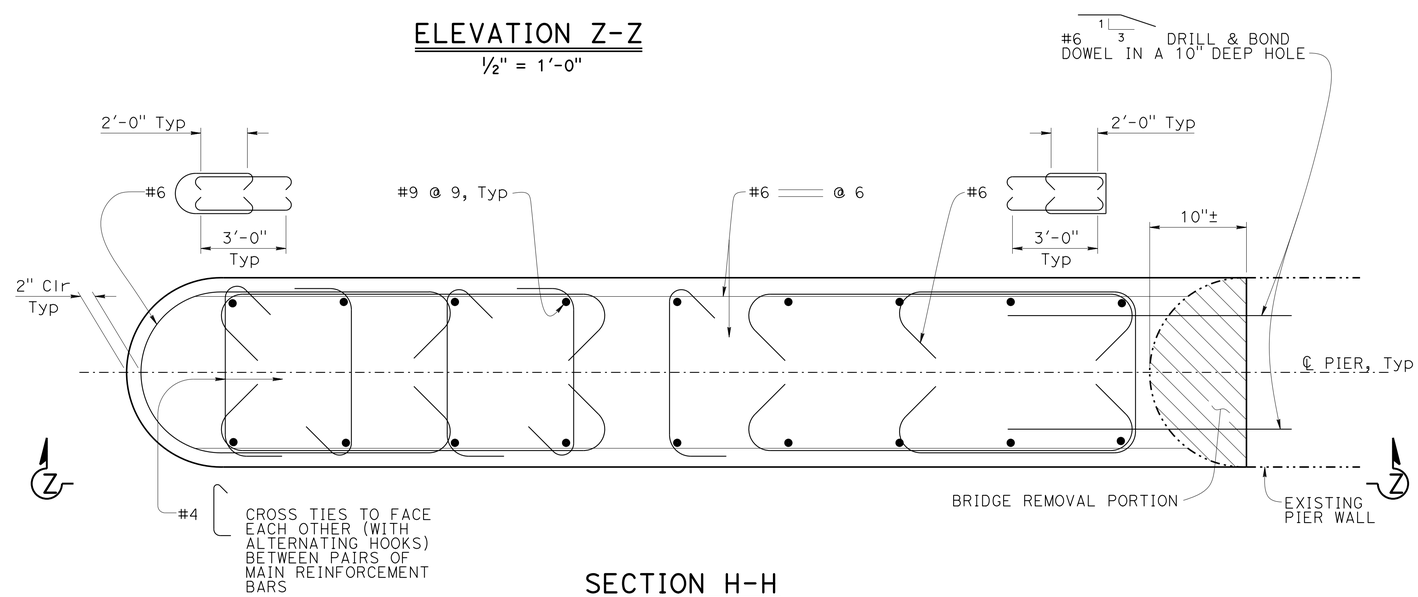

SECTION H-H

1½" = 1'-0"

NOTE:
CONTRACTOR MUST VERIFY ALL CONTROLLING FIELD DIMENSIONS BEFORE ORDERING OR FABRICATING ANY MATERIAL.

NOTE:

1. All Existing Pier Wall Reinforcement to remain.
2. Refer to "SECTION F-F" for spacing.

	BY	CHECKED
DESIGN	S. MORIMOTO	H. PEREZ
DETAILS	K. CHONKRIA	S. MORIMOTO
QUANTITIES	K. CHONKRIA	S. MORIMOTO

STATE OF CALIFORNIA
DEPARTMENT OF TRANSPORTATION

DIVISION OF ENGINEERING SERVICES
STRUCTURE DESIGN
DESIGN BRANCH 6

BRIDGE NO. 44-0040R/L
POST MILE 17.69

SALINAS RIVER BRIDGE (WIDEN)
PIER DETAILS NO. 2

STRUCTURES DESIGN DETAIL SHEET (ENGLISH) (REV. 09-01-10)

ORIGINAL SCALE IN INCHES FOR REDUCED PLANS 0 1 2 3

UNIT: 3591
PROJECT NUMBER & PHASE: 0500000049-1
CONTRACT NO.: 05-0F7004

DISREGARD PRINTS BEARING EARLIER REVISION DATES

REVISION DATES: 12-13-13 | 4-10-15 | 4-14-15

SHEET 17 OF 44

FILE => 44-0040rl-i-pier-det2.dgn

USERNAME => s113755 DATE PLOTTED => 10-SEP-2015 TIME PLOTTED => 13:11

DIST	COUNTY	ROUTE	POST MILES TOTAL PROJECT	SHEET No.	TOTAL SHEETS
05	Mon	68	R17.4/R18.0	123	149

Seiji Morimoto 4-15-15
REGISTERED CIVIL ENGINEER DATE

6-22-15
PLANS APPROVAL DATE

REGISTERED PROFESSIONAL ENGINEER
SEIJI MORIMOTO
No. C65997
Exp. 12/30/16
CIVIL
STATE OF CALIFORNIA

The State of California or its officers or agents shall not be responsible for the accuracy or completeness of scanned copies of this plan sheet.

NOTE:
CONTRACTOR MUST VERIFY ALL CONTROLLING FIELD DIMENSIONS BEFORE ORDERING OR FABRICATING ANY MATERIAL.

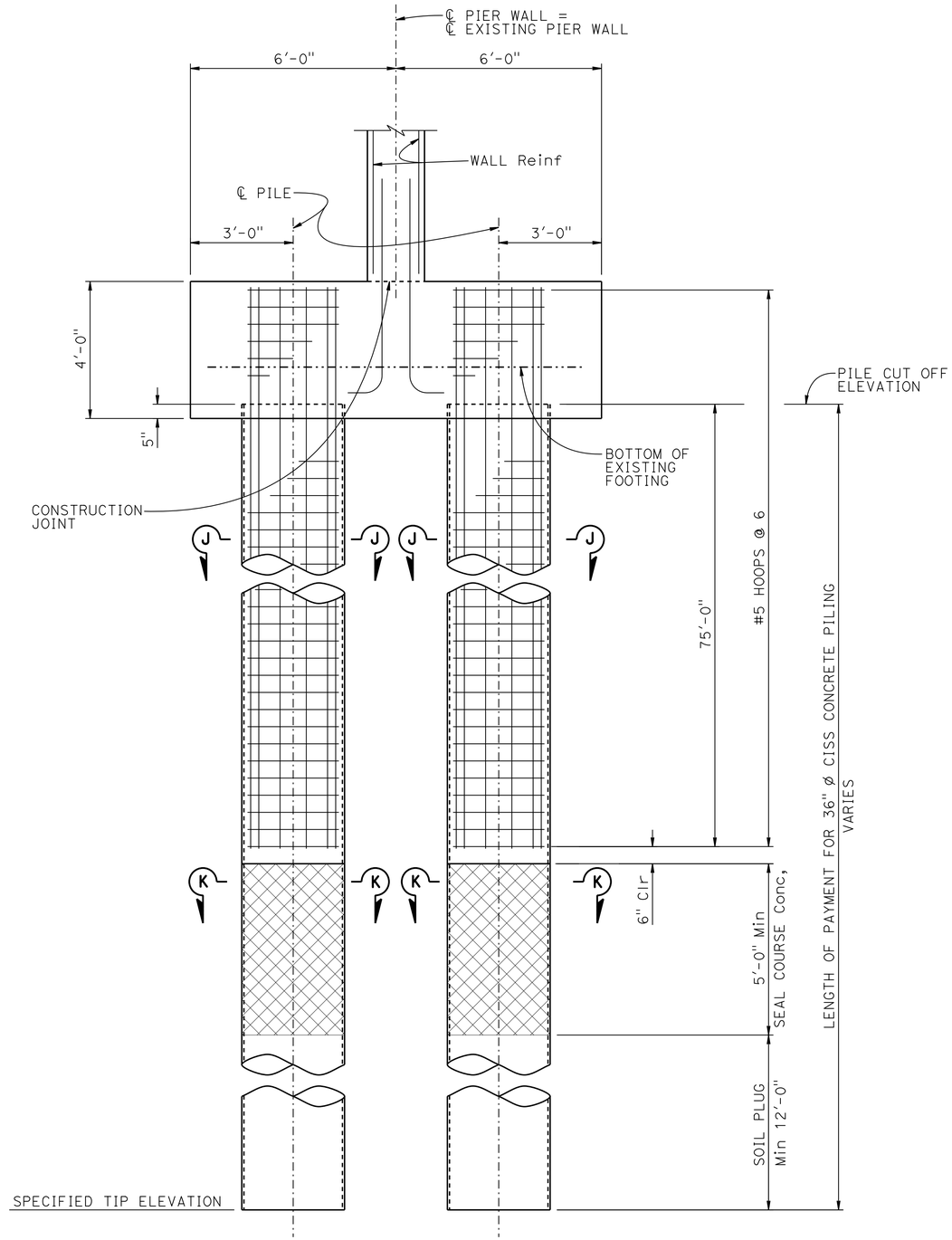

PILE ELEVATION
½" = 1'-0"

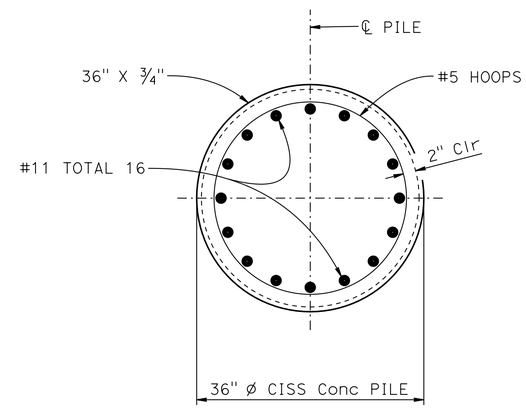

SECTION J-J
1" = 1'-0"

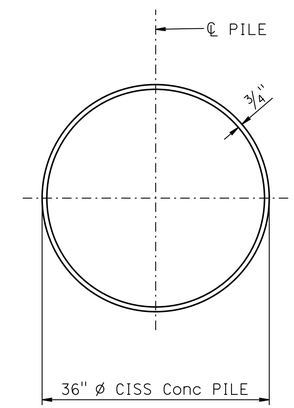

SECTION K-K
1" = 1'-0"

NOTES:
1. Ultimate splices are allowed in main pile reinforcement.
2. #5 Pile hoops shall have ultimate butt splices.
3. For "Pile Data Table", see "PILE DATA" sheet.

DESIGN	BY S. MORIMOTO	CHECKED H. PEREZ	
DETAILS	BY D. PATO	CHECKED S. MORIMOTO	
QUANTITIES	BY K. CHONKRIA	CHECKED S. MORIMOTO	

STATE OF CALIFORNIA
DEPARTMENT OF TRANSPORTATION

DIVISION OF ENGINEERING SERVICES
STRUCTURE DESIGN
DESIGN BRANCH 6

BRIDGE NO. 44-0040R/L
POST MILE 17.69

SALINAS RIVER BRIDGE (WIDEN)
PIER DETAILS No. 3

STRUCTURES DESIGN DETAIL SHEET (ENGLISH) (REV. 09-01-10)

ORIGINAL SCALE IN INCHES FOR REDUCED PLANS 0 1 2 3

UNIT: 3591
PROJECT NUMBER & PHASE: 0500000049-1
CONTRACT NO.: 05-0F7004

DISREGARD PRINTS BEARING EARLIER REVISION DATES

REVISION DATES: 10-25-13 8-01-14 4-27-15

SHEET 18 OF 44

FILE => 44-0040rl-i-pier-det3.dgn

USERNAME => s115755 DATE PLOTTED => 10-SEP-2015 TIME PLOTTED => 13:11

DIST	COUNTY	ROUTE	POST MILES TOTAL PROJECT	SHEET No.	TOTAL SHEETS
05	Mon	68	R17.4/R18.0	124	149

Seiji Morimoto 4-15-15
REGISTERED CIVIL ENGINEER DATE

6-22-15
PLANS APPROVAL DATE

REGISTERED PROFESSIONAL ENGINEER SEIJI MORIMOTO No. C65997 Exp. 6/30/16 CIVIL STATE OF CALIFORNIA

The State of California or its officers or agents shall not be responsible for the accuracy or completeness of scanned copies of this plan sheet.

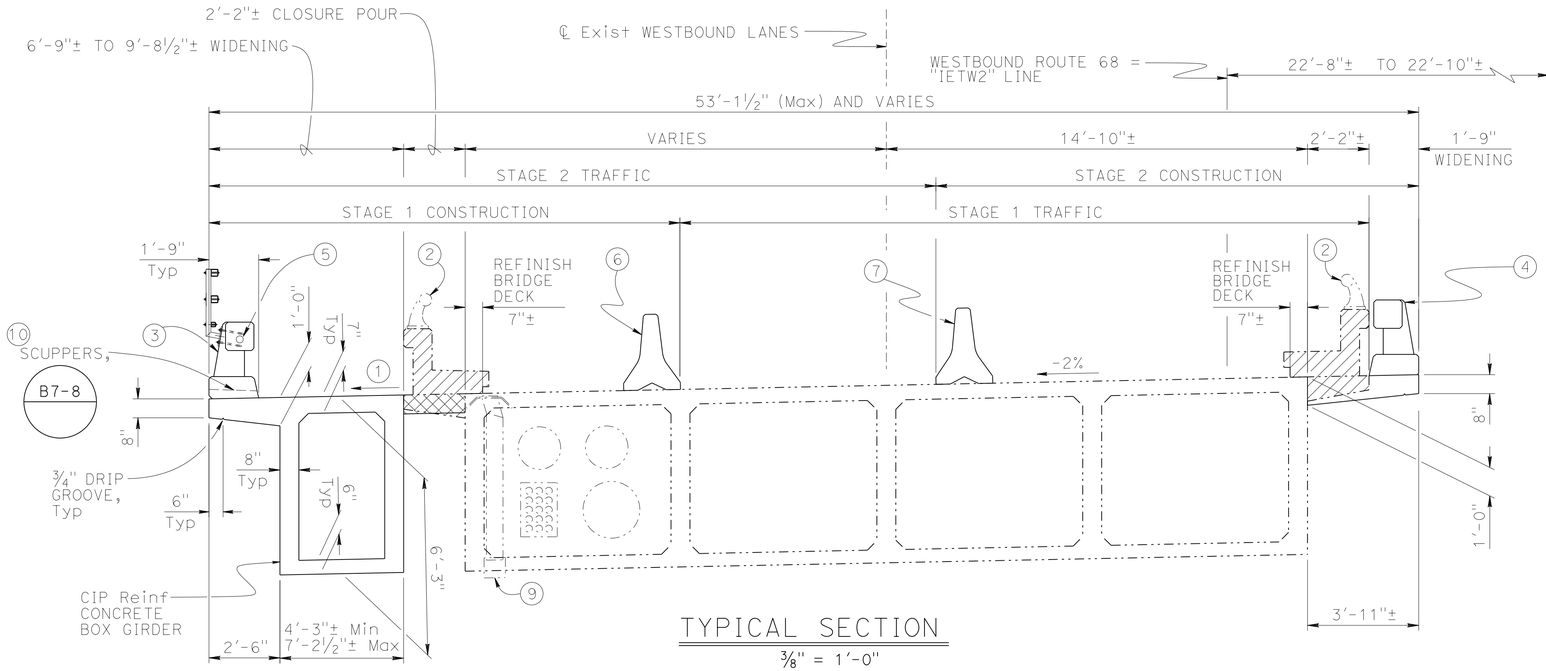

TYPICAL SECTION

⅜" = 1'-0"

LEGEND:

- Denotes Bridge Removal Portion
- Denotes Closure Pour

Notes:

1. Match existing grade and cross slope
2. Remove Metal Bridge Railing
3. Concrete Barrier (Type 80 Mod) with Bicycle Railing
4. Concrete Barrier (Type 80 Mod)
5. One 1.5" ϕ electrical conduit, see "Roadway Plans"
6. Temporary Railing (Type K) during Stage 1 Const, see "Roadway Plans"
7. Temporary Railing (Type K) during Stage 2 Const, See "Roadway Plans"
8. Concrete Removal not shown for clarity
9. Plug Deck Drain, see sheet 28
10. At Scuppers, adjust rebar as needed

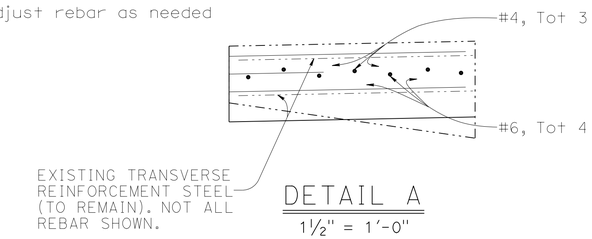

DETAIL A

1½" = 1'-0"

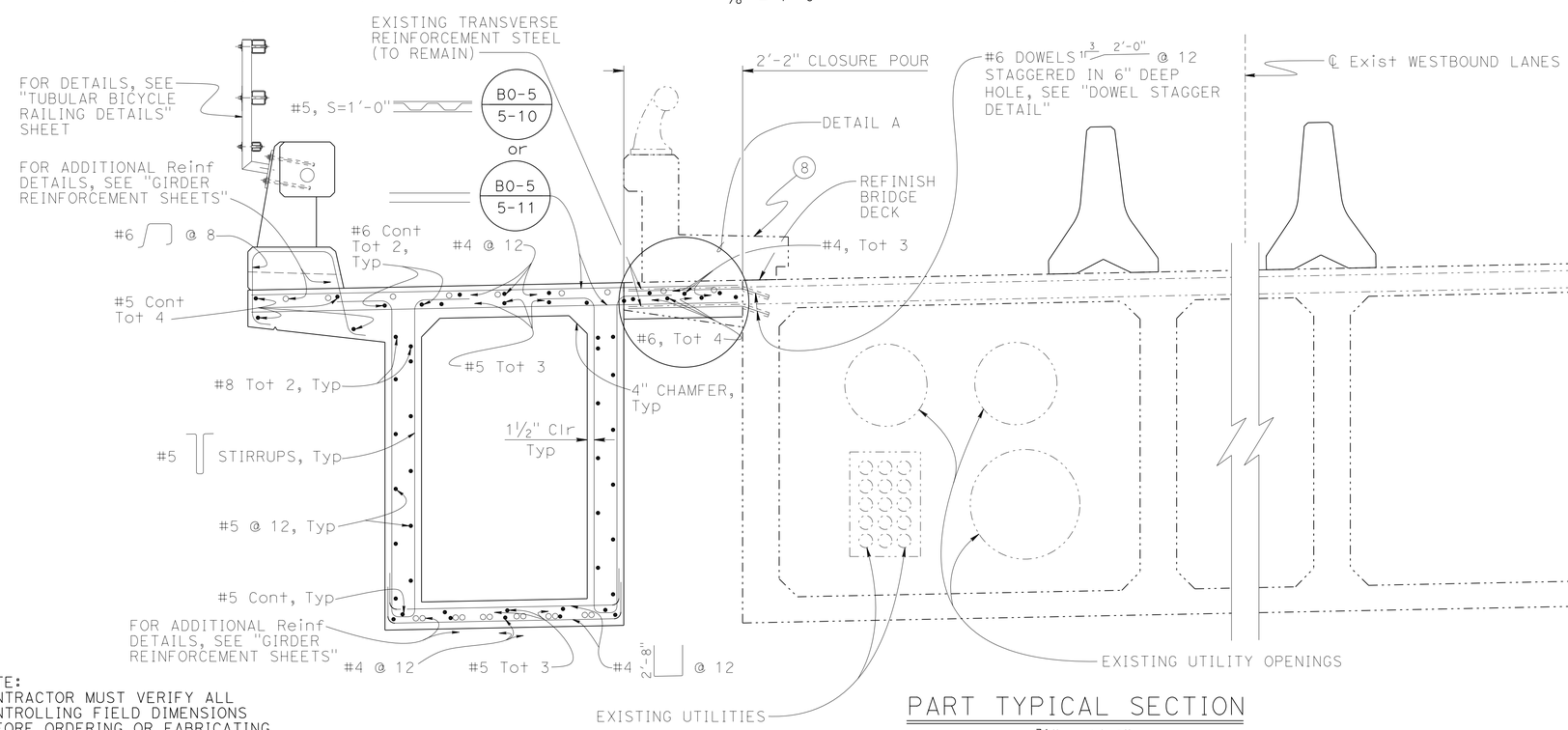

PART TYPICAL SECTION

¾" = 1'-0"

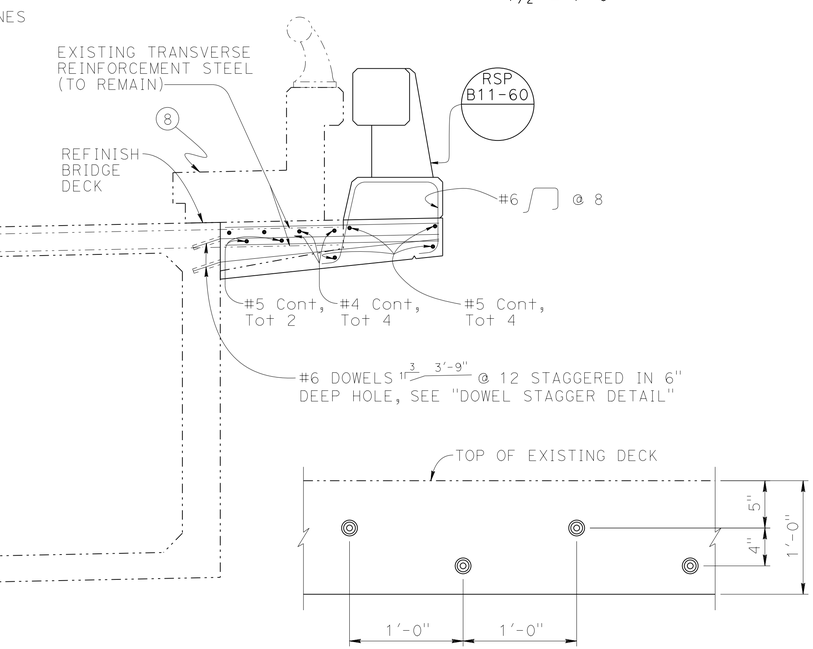

DOWEL STAGGER DETAIL

1½" = 1'-0"

NOTE:
CONTRACTOR MUST VERIFY ALL CONTROLLING FIELD DIMENSIONS BEFORE ORDERING OR FABRICATING ANY MATERIAL.

	BY	CHECKED
DESIGN	S. MORIMOTO	H. PEREZ
DETAILS	K. CHONKRIA	S. MORIMOTO
QUANTITIES	K. CHONKRIA	S. MORIMOTO

STATE OF CALIFORNIA
DEPARTMENT OF TRANSPORTATION

DIVISION OF ENGINEERING SERVICES
STRUCTURE DESIGN
DESIGN BRANCH 6

BRIDGE NO. 44-0040R/L
POST MILE R17.69

SALINAS RIVER BRIDGE (WIDEN)
TYPICAL SECTION - LEFT BRIDGE

STRUCTURES DESIGN DETAIL SHEET (ENGLISH) (REV. 09-01-10)

ORIGINAL SCALE IN INCHES FOR REDUCED PLANS 0 1 2 3

UNIT: 3591
PROJECT NUMBER & PHASE: 0500000049-1
CONTRACT NO.: 05-0F7004

DISREGARD PRINTS BEARING EARLIER REVISION DATES

REVISION DATES				SHEET	OF
12-18-13		4-10-15	4-27-15	19	44

FILE => 44-0040rl-k-ts01.dgn

USERNAME => s115755 DATE PLOTTED => 11-SEP-2015 TIME PLOTTED => 09:08

DIST	COUNTY	ROUTE	POST MILES TOTAL PROJECT	SHEET No.	TOTAL SHEETS
05	Mon	68	R17.4/R18.0	125	149

REGISTERED CIVIL ENGINEER Seiji Morimoto DATE 4-15-15

6-22-15
PLANS APPROVAL DATE

REGISTERED PROFESSIONAL ENGINEER SEIJI MORIMOTO No. C65997 Exp. 6/30/16 CIVIL STATE OF CALIFORNIA

The State of California or its officers or agents shall not be responsible for the accuracy or completeness of scanned copies of this plan sheet.

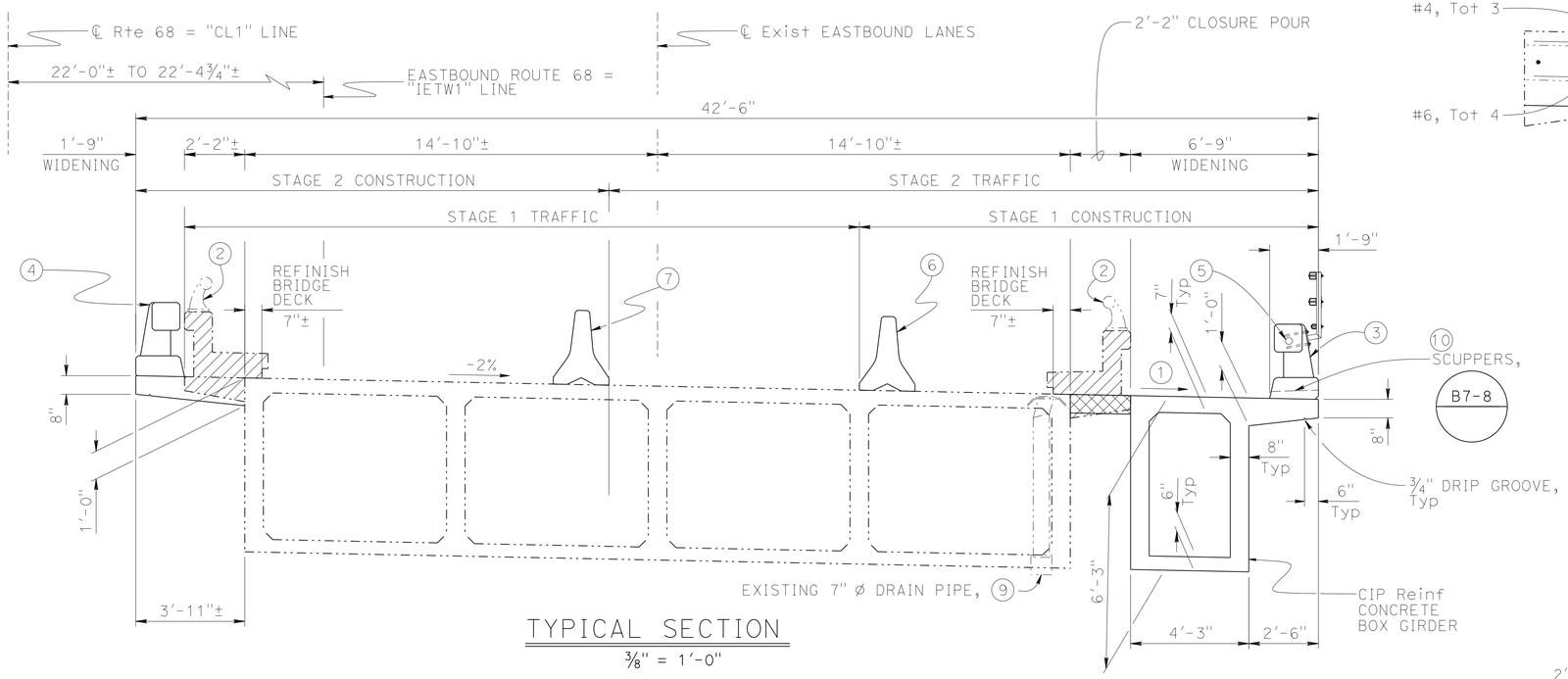

TYPICAL SECTION

⅜" = 1'-0"

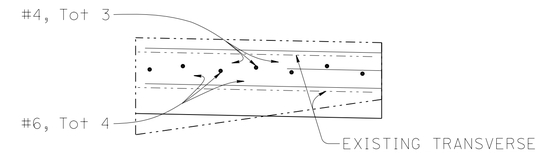

DETAIL B

1½" = 1'-0"

LEGEND:

- Denotes Bridge Removal Portion
- Denotes Closure Pour

Notes:

1. Match existing grade and cross slope
2. Remove Metal Bridge Railing
3. Concrete Barrier (Type 80 Mod) with Bicycle Railing
4. Concrete Barrier (Type 80 Mod)
5. One 1.5" ⌀ electrical conduit, see "Roadway Plans"
6. Temporary Railing (Type K) during Stage 1 Const, see "Roadway Plans"
7. Temporary Railing (Type K) during Stage 2 Const, See "Roadway Plans"
8. Concrete Removal not shown for clarity
9. Plug Deck Drain, see sheet 28
10. At Scuppers adjust rebar as needed

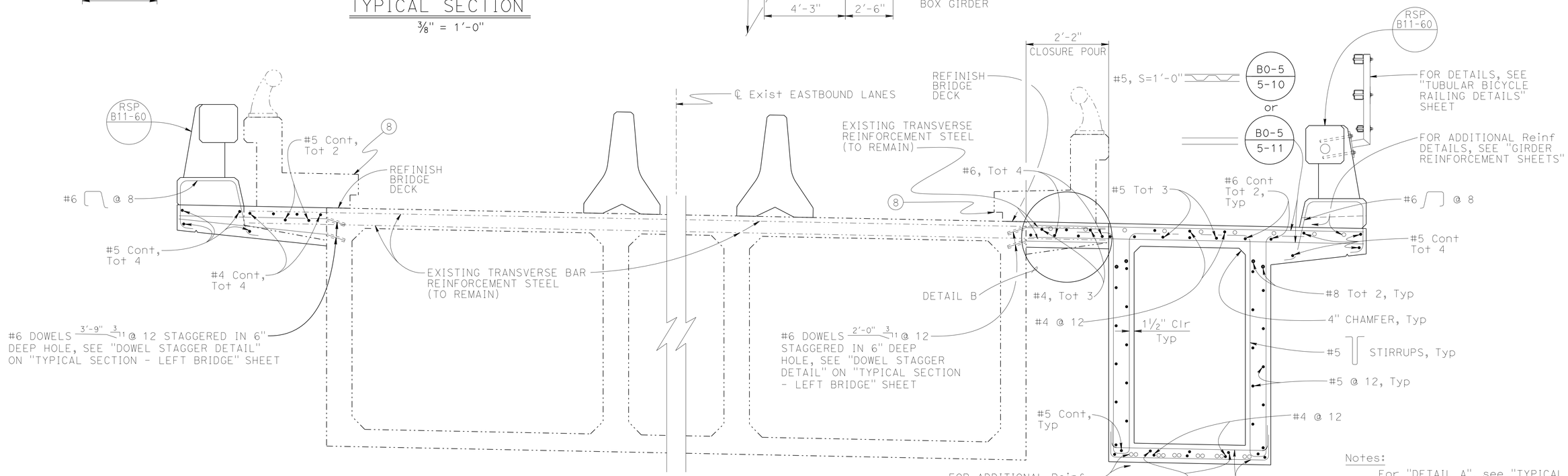

PART TYPICAL SECTION

¾" = 1'-0"

Notes:

For "DETAIL A", see "TYPICAL SECTION - LEFT BRIDGE"

NOTE:
CONTRACTOR MUST VERIFY ALL CONTROLLING FIELD DIMENSIONS BEFORE ORDERING OR FABRICATING ANY MATERIAL.

	BY	CHECKED
DESIGN	S. MORIMOTO	H. PEREZ
DETAILS	K. CHONKRIA	S. MORIMOTO
QUANTITIES	K. CHONKRIA	S. MORIMOTO

STATE OF CALIFORNIA
DEPARTMENT OF TRANSPORTATION

DIVISION OF ENGINEERING SERVICES
STRUCTURE DESIGN
DESIGN BRANCH 6

BRIDGE NO. 44-0040R/L
POST MILE R17.69

SALINAS RIVER BRIDGE (WIDEN)
TYPICAL SECTION - RIGHT BRIDGE

STRUCTURES DESIGN DETAIL SHEET (ENGLISH) (REV. 09-01-10)

ORIGINAL SCALE IN INCHES FOR REDUCED PLANS 0 1 2 3

UNIT: 3591
PROJECT NUMBER & PHASE: 0500000049-1
CONTRACT NO.: 05-0F7004

DISREGARD PRINTS BEARING EARLIER REVISION DATES

REVISION DATES: 10-21-13 | 4-27-15 | 4-30-15 | SHEET 20 OF 44

FILE => 44-0040rl-k-ts02.dgn

USERNAME => s115755 DATE PLOTTED => 11-SEP-2015 TIME PLOTTED => 09:08

DIST	COUNTY	ROUTE	POST MILES TOTAL PROJECT	SHEET No.	TOTAL SHEETS
05	Mon	68	R17.4/R18.0	126	149

Seiji Morimoto 4-15-15
REGISTERED CIVIL ENGINEER DATE

6-22-15
PLANS APPROVAL DATE

REGISTERED PROFESSIONAL ENGINEER SEIJI MORIMOTO No. C65997 Exp. 6/30/16 CIVIL STATE OF CALIFORNIA

The State of California or its officers or agents shall not be responsible for the accuracy or completeness of scanned copies of this plan sheet.

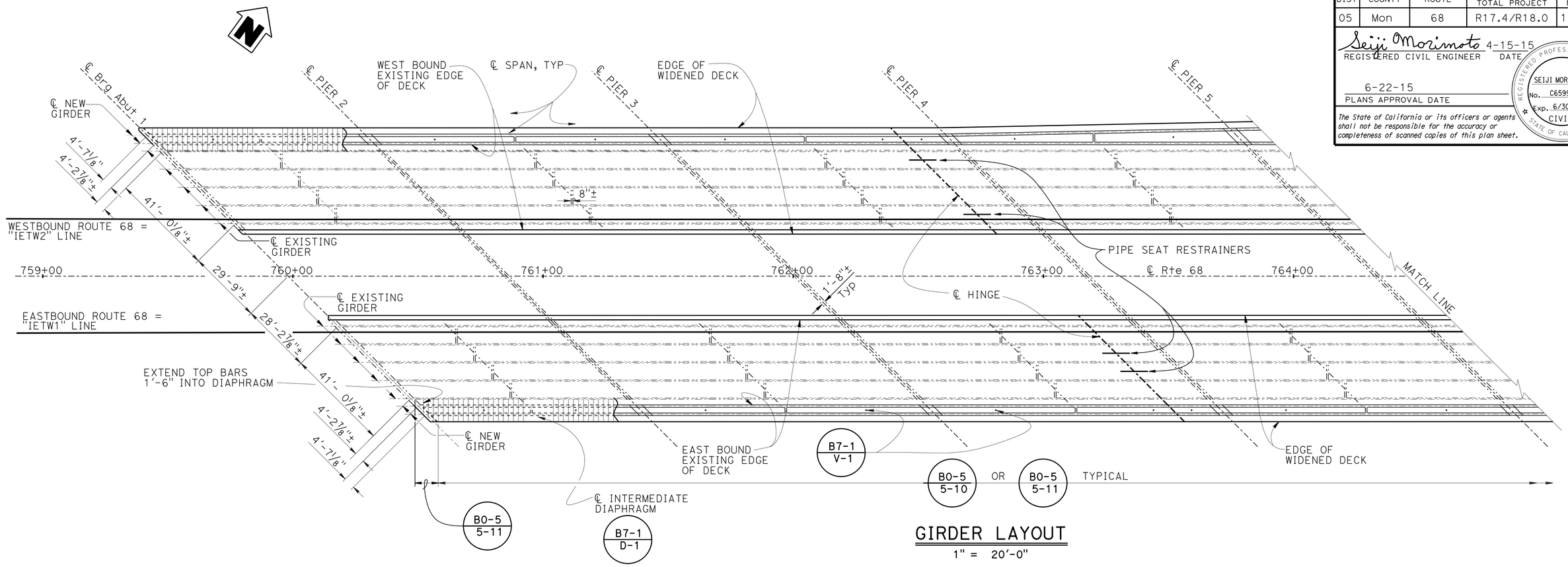

GIRDER LAYOUT

1" = 20'-0"

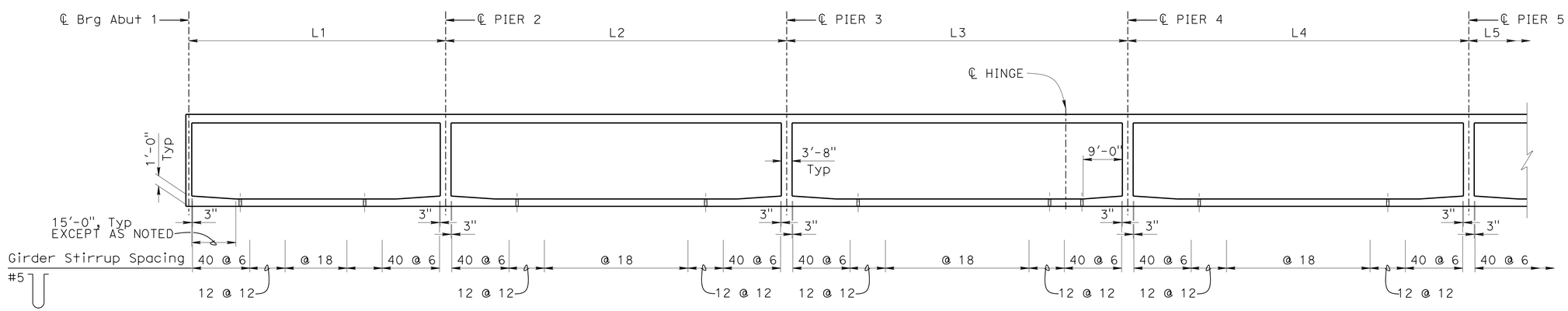

LONGITUDINAL SECTION

NO SCALE

LEGENDS:

Indicates Vent Location, See B7-1 / V-1 for details

NOTE:
CONTRACTOR MUST VERIFY ALL CONTROLLING FIELD DIMENSIONS BEFORE ORDERING OR FABRICATING ANY MATERIAL.

	BY	CHECKED
DESIGN	S. MORIMOTO	H. PEREZ
DETAILS	K. CHONKRIA	S. MORIMOTO
QUANTITIES	K. CHONKRIA	S. MORIMOTO

STATE OF CALIFORNIA
DEPARTMENT OF TRANSPORTATION

DIVISION OF ENGINEERING SERVICES
STRUCTURE DESIGN
DESIGN BRANCH 6

BRIDGE NO. 44-0040R/L
POST MILE R17.69

SALINAS RIVER BRIDGE (WIDEN)
GIRDER LAYOUT No. 1

STRUCTURES DESIGN DETAIL SHEET (ENGLISH) (REV. 09-01-10)

ORIGINAL SCALE IN INCHES FOR REDUCED PLANS 0 1 2 3

UNIT: 3591
PROJECT NUMBER & PHASE: 0500000049-1
CONTRACT NO.: 05-0F7004

DISREGARD PRINTS BEARING EARLIER REVISION DATES

REVISION DATES: 1-16-14 3-6-14

SHEET 21 OF 44

FILE => 44-0040r1-1-g_1o01.dgn

USERNAME => s115755 DATE PLOTTED => 10-SEP-2015 TIME PLOTTED => 13:11

DIST	COUNTY	ROUTE	POST MILES TOTAL PROJECT	SHEET No.	TOTAL SHEETS
05	Mon	68	R17.4/R18.0	127	149

Seiji Morimoto 4-15-15
REGISTERED CIVIL ENGINEER DATE

6-22-15
PLANS APPROVAL DATE

REGISTERED PROFESSIONAL ENGINEER SEIJI MORIMOTO No. C65997 Exp. 6/30/16 CIVIL STATE OF CALIFORNIA

The State of California or its officers or agents shall not be responsible for the accuracy or completeness of scanned copies of this plan sheet.

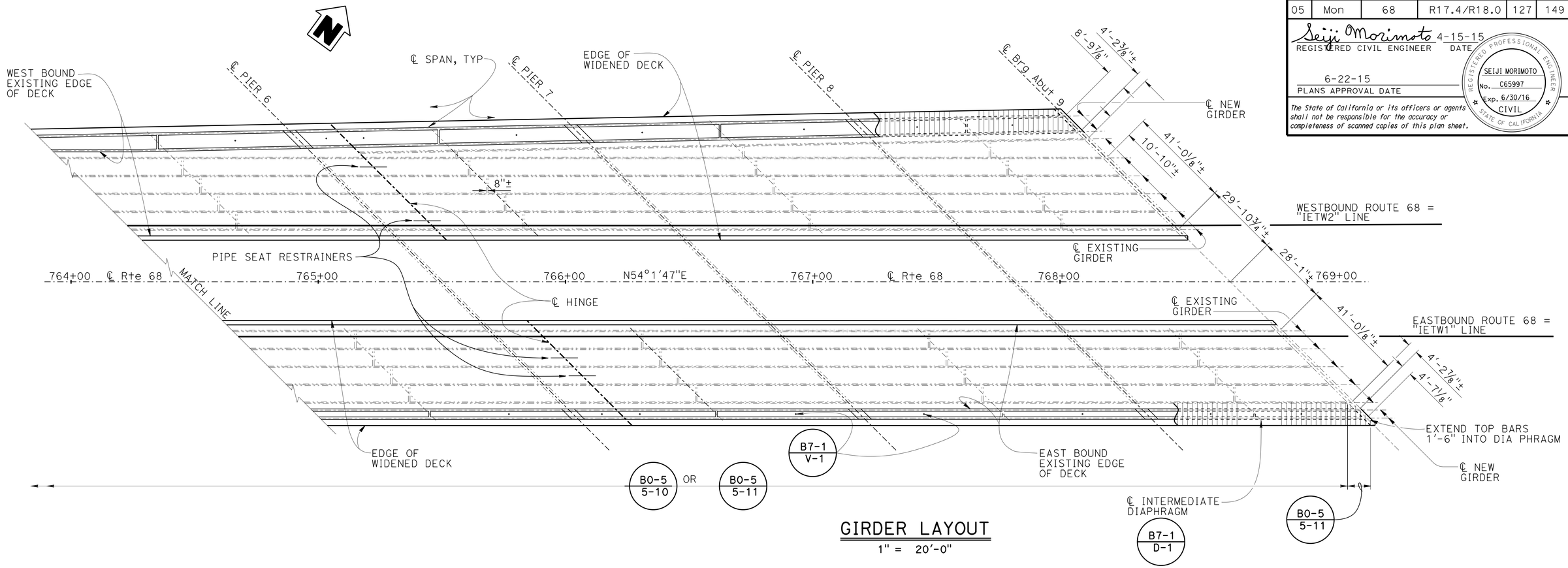

GIRDER LAYOUT

1" = 20'-0"

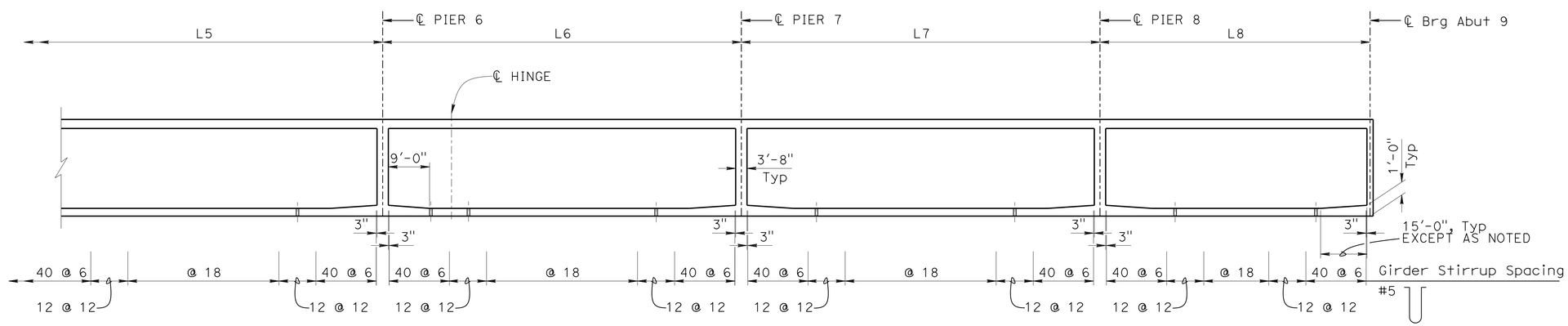

LONGITUDINAL SECTION

NO SCALE

LEGENDS:

Indicates Vent Location, See B7-1 / V-1 for details

NOTE:
CONTRACTOR MUST VERIFY ALL CONTROLLING FIELD DIMENSIONS BEFORE ORDERING OR FABRICATING ANY MATERIAL.

	BY	CHECKED
DESIGN	S. MORIMOTO	H. PEREZ
DETAILS	K. CHONKRIA	S. MORIMOTO
QUANTITIES	K. CHONKRIA	S. MORIMOTO

STATE OF CALIFORNIA
DEPARTMENT OF TRANSPORTATION

DIVISION OF ENGINEERING SERVICES
STRUCTURE DESIGN
DESIGN BRANCH 6

BRIDGE NO. 44-0040R/L
POST MILE R17.69

SALINAS RIVER BRIDGE (WIDEN)
GIRDER LAYOUT No. 2

STRUCTURES DESIGN DETAIL SHEET (ENGLISH) (REV. 09-01-10)

ORIGINAL SCALE IN INCHES FOR REDUCED PLANS 0 1 2 3

UNIT: 3591
PROJECT NUMBER & PHASE: 0500000049-1
CONTRACT NO.: 05-0F7004

DISREGARD PRINTS BEARING EARLIER REVISION DATES

REVISION DATES: 1-16-14 3-5-14 4-27-15

SHEET 22 OF 44

FILE => 44-0040r1-1-g_1o02.dgn

USERNAME => s115755 DATE PLOTTED => 10-SEP-2015 TIME PLOTTED => 13:11

DIST	COUNTY	ROUTE	POST MILES TOTAL PROJECT	SHEET No.	TOTAL SHEETS
05	Mon	68	R17.4/R18.0	128	149

Seiji Morimoto 4-15-15
REGISTERED CIVIL ENGINEER DATE

6-22-15
PLANS APPROVAL DATE

REGISTERED PROFESSIONAL ENGINEER
SEIJI MORIMOTO
No. C65997
Exp. 12-18-16
CIVIL
STATE OF CALIFORNIA

The State of California or its officers or agents shall not be responsible for the accuracy or completeness of scanned copies of this plan sheet.

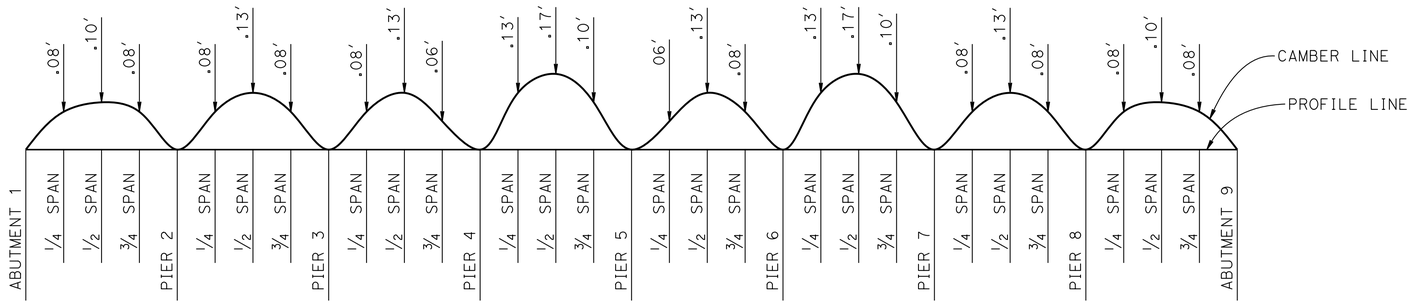

CAMBER DIAGRAM

NO SCALE

DOES NOT INCLUDE ALLOWANCE FOR FALSEWORK SETTLEMENT.

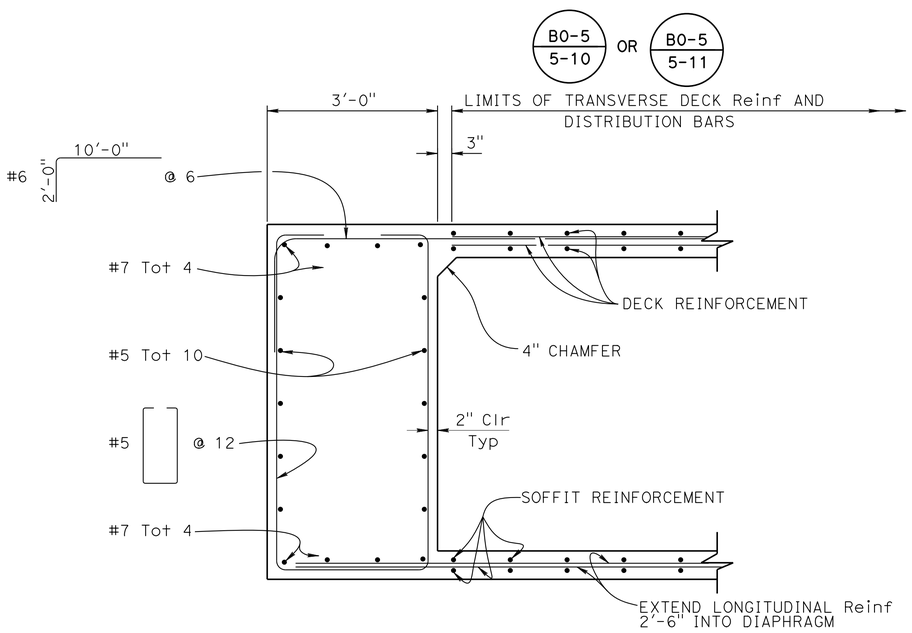

END DIAPHRAGM

3/4″ = 1′-0″

NOTE:
CONTRACTOR MUST VERIFY ALL CONTROLLING FIELD DIMENSIONS BEFORE ORDERING OR FABRICATING ANY MATERIAL.

DESIGN	BY S. MORIMOTO	CHECKED H. PEREZ	
DETAILS	BY D. PATO	CHECKED S. MORIMOTO	
QUANTITIES	BY K. CHONKRIA	CHECKED S. MORIMOTO	

STATE OF CALIFORNIA
DEPARTMENT OF TRANSPORTATION

DIVISION OF ENGINEERING SERVICES
STRUCTURE DESIGN
DESIGN BRANCH 6

BRIDGE NO. 44-0040R/L
POST MILE 17.69

SALINAS RIVER BRIDGE (WIDEN)
GIRDER LAYOUT NO. 3

STRUCTURES DESIGN DETAIL SHEET (ENGLISH) (REV. 09-01-10)

ORIGINAL SCALE IN INCHES FOR REDUCED PLANS 0 1 2 3

UNIT: 3591
PROJECT NUMBER & PHASE: 0500000049-1
CONTRACT NO.: 05-0F7004

DISREGARD PRINTS BEARING EARLIER REVISION DATES

REVISION DATES: 2-2-14 2-19-14 4-2-14

SHEET 23 OF 44

FILE => 44-0040r1-1-g_1o3.dgn

USERNAME => s115755 DATE PLOTTED => 10-SEP-2015 TIME PLOTTED => 13:11

DIST	COUNTY	ROUTE	POST MILES TOTAL PROJECT	SHEET No.	TOTAL SHEETS
05	Mon	68	R17.4/R18.0	129	149

Seiji Morimoto 4-15-15
REGISTERED CIVIL ENGINEER DATE

6-22-15
PLANS APPROVAL DATE

REGISTERED PROFESSIONAL ENGINEER
SEIJI MORIMOTO
No. C65997
Exp. 6-30-16
CIVIL
STATE OF CALIFORNIA

The State of California or its officers or agents shall not be responsible for the accuracy or completeness of scanned copies of this plan sheet.

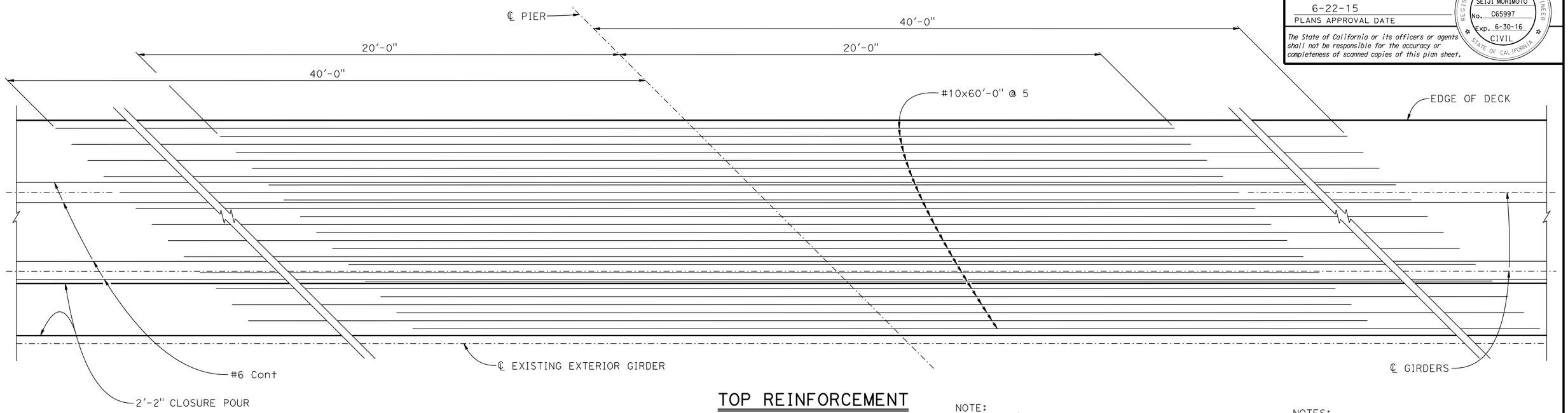

TOP REINFORCEMENT

½"=1'-0"

NOTE:
For Piers 2,3,5,7 & 8.

NOTES:

1. No lap splices allowed.
2. Reinforcement may be moved to avoid continuous reinforcement.

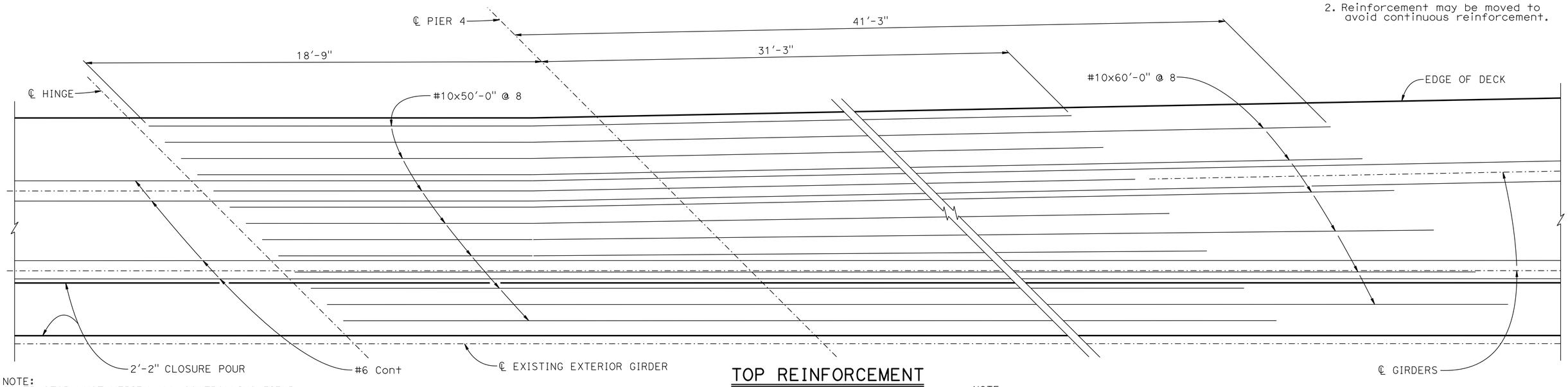

TOP REINFORCEMENT

½"=1'-0"

NOTE:
For Pier 4 only.

NOTE:
CONTRACTOR MUST VERIFY ALL CONTROLLING FIELD DIMENSIONS BEFORE ORDERING OR FABRICATING ANY MATERIAL.

	BY	CHECKED
DESIGN	S. MORIMOTO	H. PEREZ
DETAILS	D. PATO	S. MORIMOTO
QUANTITIES	K. CHONKRIA	S. MORIMOTO

STATE OF CALIFORNIA
DEPARTMENT OF TRANSPORTATION

DIVISION OF ENGINEERING SERVICES
STRUCTURE DESIGN
DESIGN BRANCH 6

BRIDGE NO. 44-0040R/L
POST MILE 17.69

SALINAS RIVER BRIDGE (WIDEN)
GIRDER REINFORCEMENT NO. 1

STRUCTURES DESIGN DETAIL SHEET (ENGLISH) (REV. 09-01-10)

ORIGINAL SCALE IN INCHES FOR REDUCED PLANS 0 1 2 3

UNIT: 3591
PROJECT NUMBER & PHASE: 0500000049-1
CONTRACT NO.: 05-0F7004

DISREGARD PRINTS BEARING EARLIER REVISION DATES

REVISION DATES: 2-5-14 8-04-14

SHEET 24 OF 44

FILE => 44-0040rl-m1-girref1.dgn

USERNAME => s113755 DATE PLOTTED => 10-SEP-2015 TIME PLOTTED => 13:11

DIST	COUNTY	ROUTE	POST MILES TOTAL PROJECT	SHEET No.	TOTAL SHEETS
05	Mon	68	R17.4/R18.0	130	149

Seiji Morimoto 4-15-15
REGISTERED CIVIL ENGINEER DATE

6-22-15
PLANS APPROVAL DATE

REGISTERED PROFESSIONAL ENGINEER
SEIJI MORIMOTO
No. C65997
Exp. 6-30-16
CIVIL
STATE OF CALIFORNIA

The State of California or its officers or agents shall not be responsible for the accuracy or completeness of scanned copies of this plan sheet.

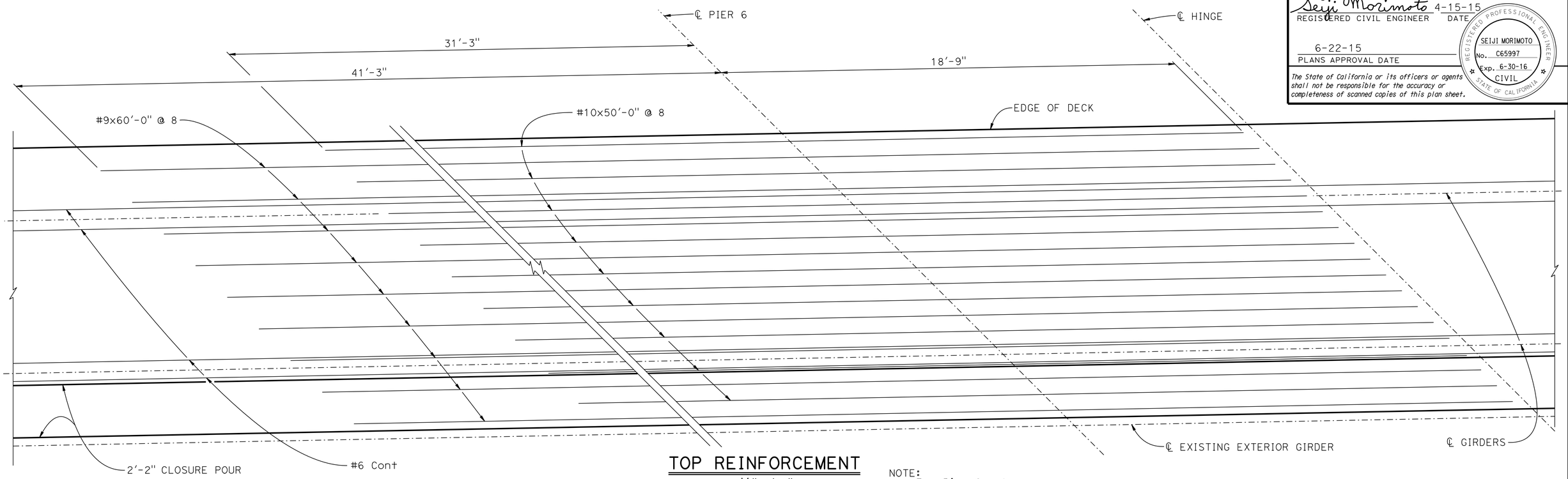

TOP REINFORCEMENT

½"=1'-0"

NOTE:
For Pier 6 only.

NOTES:

1. No lap splices allowed.
2. Reinforcement may be moved to avoid continuous reinforcement.

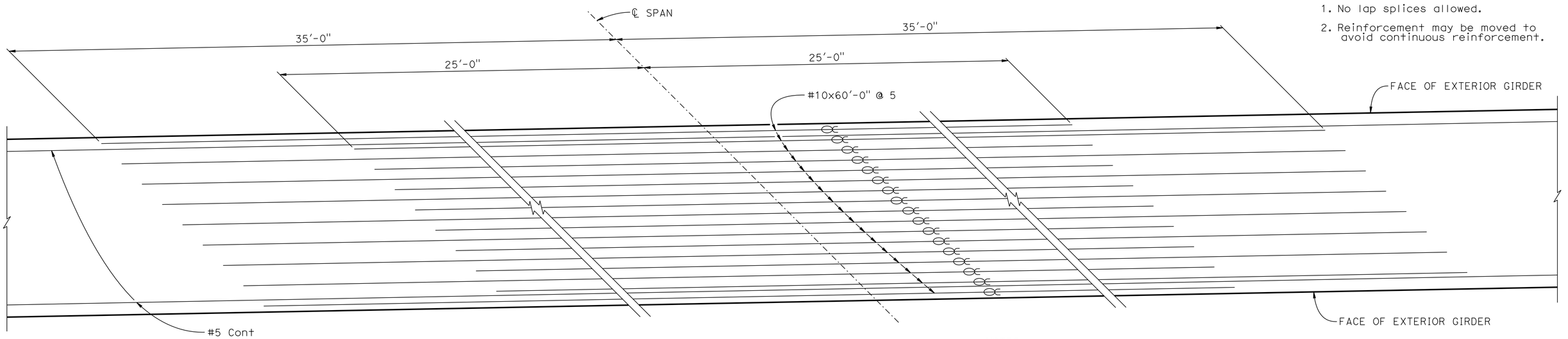

BOTTOM REINFORCEMENT

½"=1'-0"

NOTES:
For Spans 1 thru 8.

⌒ - Indicates vertical bundle bars.

NOTE:
CONTRACTOR MUST VERIFY ALL CONTROLLING FIELD DIMENSIONS BEFORE ORDERING OR FABRICATING ANY MATERIAL.

	BY	CHECKED
DESIGN	S. MORIMOTO	H. PEREZ
DETAILS	D. PATO	S. MORIMOTO
QUANTITIES	K. CHONKRIA	S. MORIMOTO

STATE OF CALIFORNIA
DEPARTMENT OF TRANSPORTATION

DIVISION OF ENGINEERING SERVICES
STRUCTURE DESIGN
DESIGN BRANCH 6

BRIDGE NO. 44-0040R/L
POST MILE 17.69

SALINAS RIVER BRIDGE (WIDEN)
GIRDER REINFORCEMENT NO. 2

STRUCTURES DESIGN DETAIL SHEET (ENGLISH) (REV. 09-01-10)

ORIGINAL SCALE IN INCHES FOR REDUCED PLANS 0 1 2 3

UNIT: 3591
PROJECT NUMBER & PHASE: 0500000049-1
CONTRACT NO.: 05-0F7004

DISREGARD PRINTS BEARING EARLIER REVISION DATES

REVISION DATES: 2-4-14 8-04-14

SHEET 25 OF 44

FILE => 44-0040rl-m2-girref2.dgn

USERNAME => s113755 DATE PLOTTED => 10-SEP-2015 TIME PLOTTED => 13:11

DIST	COUNTY	ROUTE	POST MILES TOTAL PROJECT	SHEET No.	TOTAL SHEETS
05	Mon	68	R17.4/R18.0	131	149

Seiji Morimoto 4-15-15
REGISTERED CIVIL ENGINEER DATE

6-22-15
PLANS APPROVAL DATE

REGISTERED PROFESSIONAL ENGINEER SEIJI MORIMOTO No. C 65997 Exp. 6-30-16 CIVIL STATE OF CALIFORNIA

The State of California or its officers or agents shall not be responsible for the accuracy or completeness of scanned copies of this plan sheet.

NOTE:
THE CONTRACTOR MUST VERIFY ALL CONTROLLING FIELD DIMENSIONS BEFORE ORDERING OR FABRICATING ANY MATERIAL.

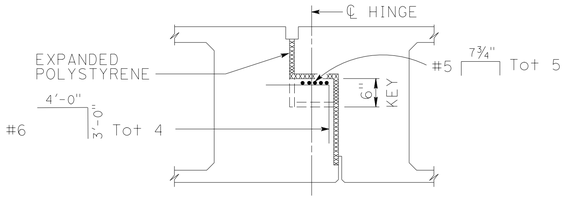

SECTION B-B
NO SCALE

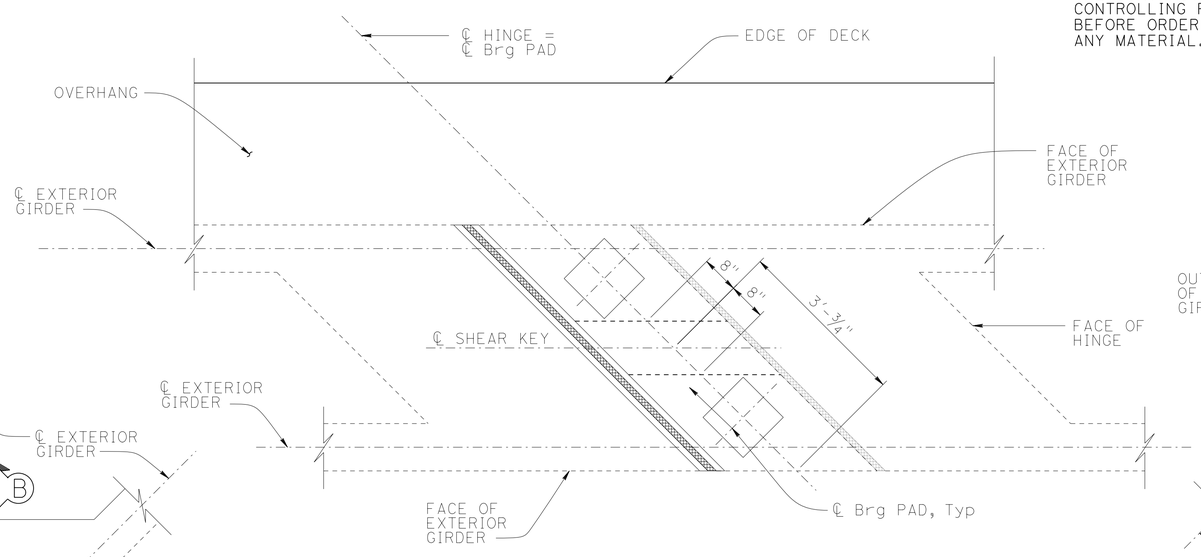

HINGE PLAN
NO SCALE

Note
For additional Bearing Details see, "Typical Bearing Detail"

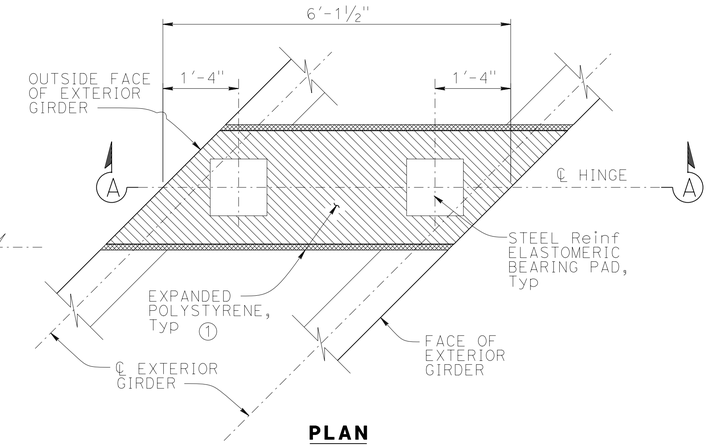

PLAN

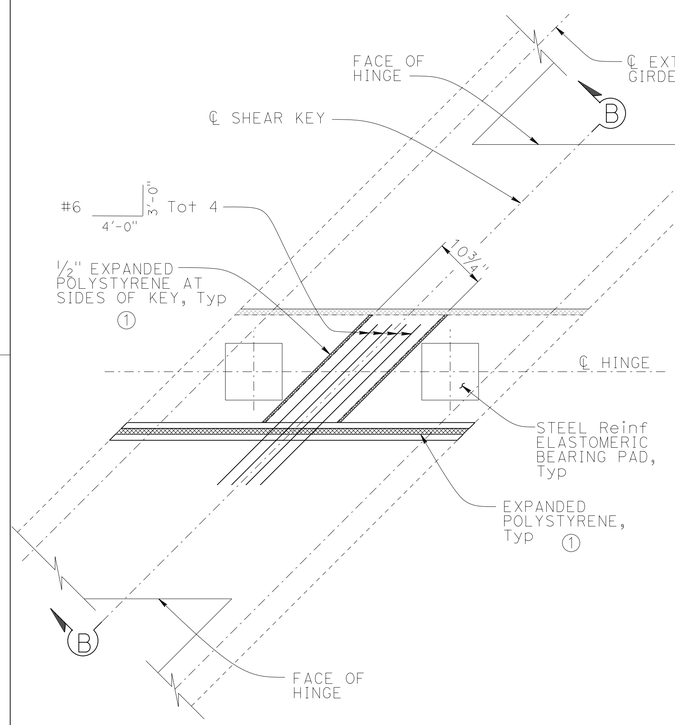

SHEAR KEY DETAIL
¾" = 1'-0"

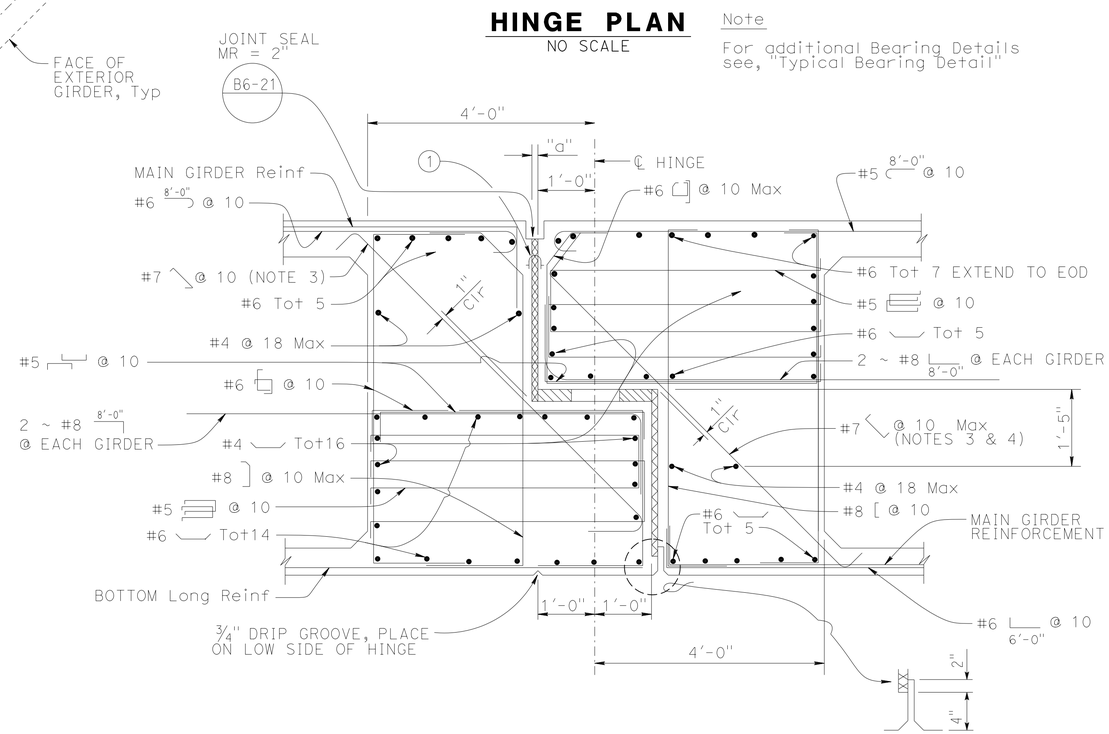

SECTION THRU HINGE
¾" = 1'-0"

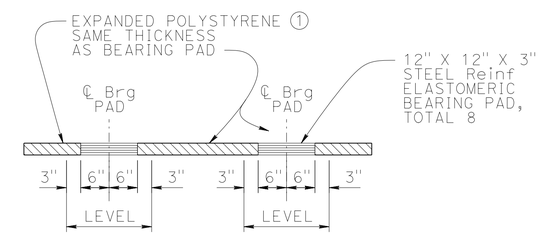

SECTION A-A

TYPICAL BEARING DETAIL
¾" = 1'-0"

NOTES:

1. See Standard Plans B0-13 13-1, B0-13 13-2, B0-3 3-6
2. To provide for free movement of the completed hinge, concrete is to be excluded from the joint by sealing all openings during concrete placement.
3. Bars may be placed with hooks horizontal if required for clearance.
4. Adjust angle of bars at key to clear.
5. Space reinforcement along ℄ of Hinge and placed parallel to ℄ structure.

DESIGN	BY H. PEREZ	CHECKED S. MORIMOTO	
DETAILS	BY S. NG	CHECKED H. PEREZ	
QUANTITIES	BY K. CHONKRIA	CHECKED S. MORIMOTO	

STATE OF CALIFORNIA
DEPARTMENT OF TRANSPORTATION

DIVISION OF ENGINEERING SERVICES
STRUCTURE DESIGN
DESIGN BRANCH 6

BRIDGE NO. 44-0040R/L
POST MILE R17.69

SALINAS RIVER BRIDGE (WIDEN)
HINGE DETAILS NO. 1

STRUCTURES DESIGN DETAIL SHEET (ENGLISH) (REV. 09-01-10)

ORIGINAL SCALE IN INCHES FOR REDUCED PLANS 0 1 2 3

UNIT: 3591
PROJECT NUMBER & PHASE: 0500000049-1
CONTRACT NO.: 05-0F7004

DISREGARD PRINTS BEARING EARLIER REVISION DATES

REVISION DATES				SHEET	OF
02-06-14	02-12-14	3-5-14	8-04-14	26	44

FILE => 44-0040rl-n1-hinge-det1.dgn

USERNAME => s115755 DATE PLOTTED => 10-SEP-2015 TIME PLOTTED => 13:11

DIST	COUNTY	ROUTE	POST MILES TOTAL PROJECT	SHEET No.	TOTAL SHEETS
05	Mon	68	R17.4/R18.0	132	149

Seiji Morimoto 4-15-15
REGISTERED CIVIL ENGINEER DATE

6-22-15
PLANS APPROVAL DATE

REGISTERED PROFESSIONAL ENGINEER
SEIJI MORIMOTO
No. C65997
Exp. 6/30/16
CIVIL
STATE OF CALIFORNIA

The State of California or its officers or agents shall not be responsible for the accuracy or completeness of scanned copies of this plan sheet.

NOTE:
CONTRACTOR MUST VERIFY ALL CONTROLLING FIELD DIMENSIONS BEFORE ORDERING OR FABRICATING ANY MATERIAL.

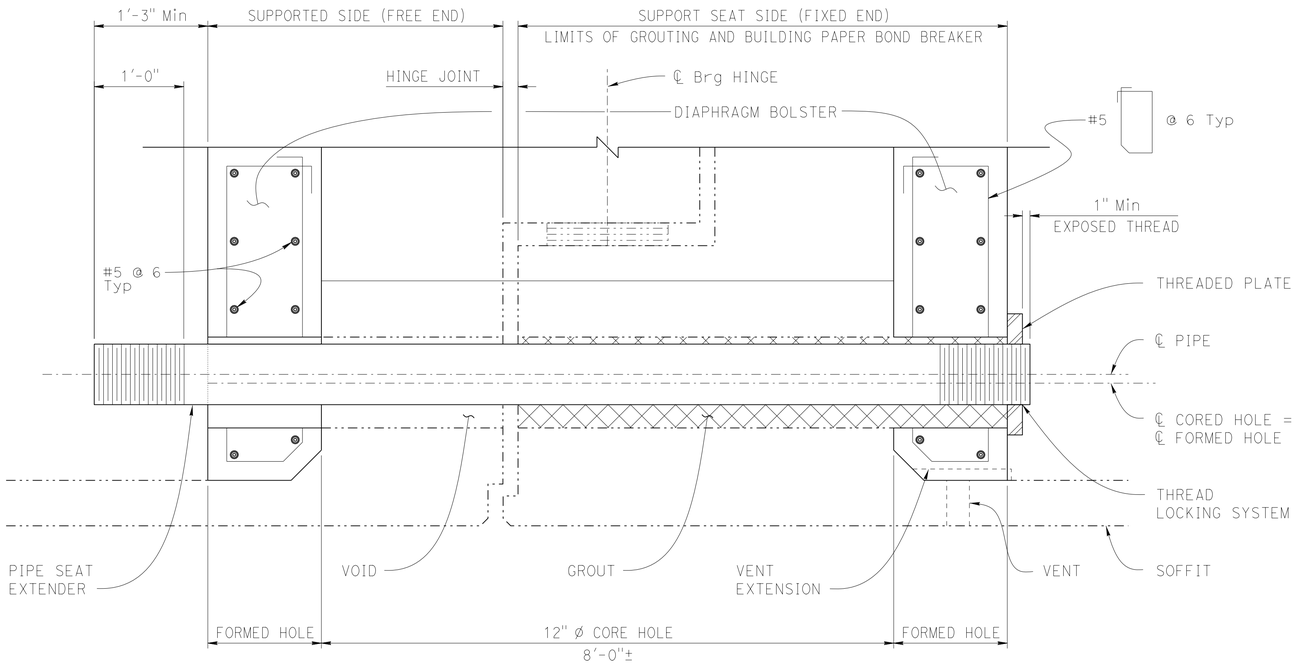

DETAIL A
NO SCALE

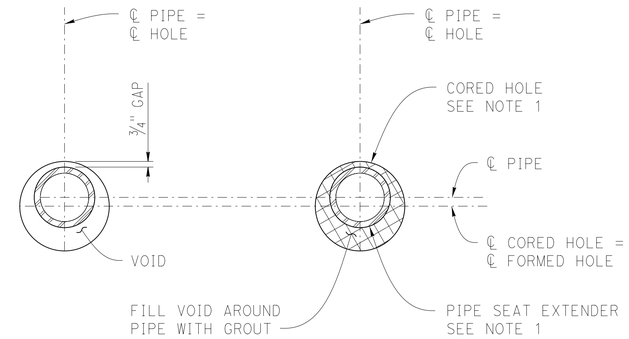

SUPPORTED SIDE
FREE END

SECTION B-B
NO SCALE

SUPPORT SEAT SIDE
FIXED END

SECTION C-C
NO SCALE

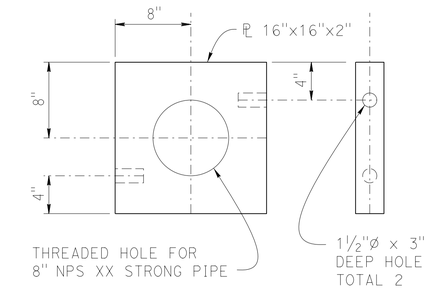

FOR 8"ø PIPE SEAT EXTENDER

THREADED PLATE DETAILS
1½" = 1'-0"

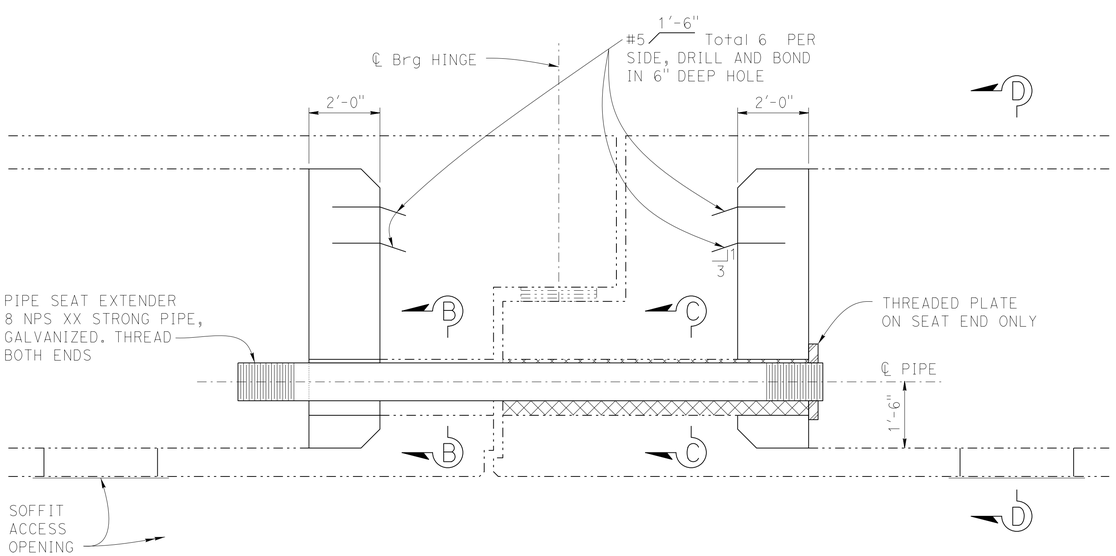

TYPICAL HINGE SECTION
¾" = 1'-0"

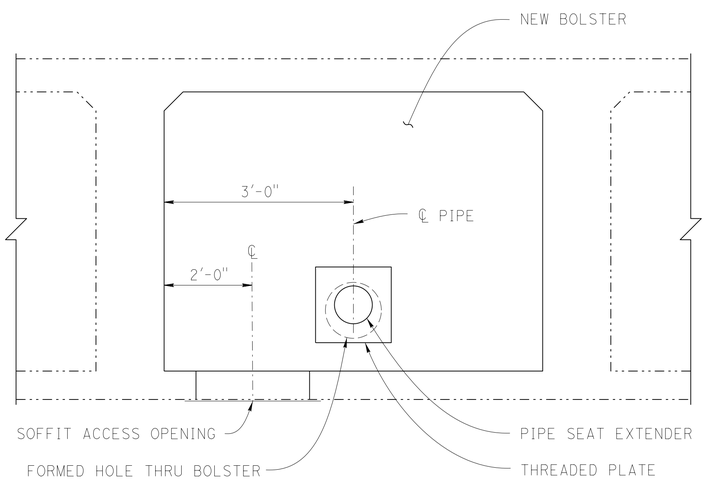

SECTION D-D
¾" = 1'-0"

Notes

1. 8 NPS xx strong pipe and 12" ø Core Hole.
2. Set pipe parallel to top of hole. Maintain a ¾" gap between pipe and top of hole.
3. Tightly wrap fixed side of pipe with 2 layers of 15 lbs building paper. Paper is to remain in place as a bond breaker.
4. Thread Pipe and Plate: 8 threads per inch per ASME B 1.20.1.
5. Apply thread locking system after grouting and place plate snug against bolster.
6. 3" deep holes in plate are to receive a 1" ø rod used in the removal of the plate.

	BY	CHECKED
DESIGN	S. MORIMOTO	H. PEREZ
DETAILS	K. CHONKRIA	S. MORIMOTO
QUANTITIES	K. CHONKRIA	S. MORIMOTO

STATE OF CALIFORNIA
DEPARTMENT OF TRANSPORTATION

DIVISION OF ENGINEERING SERVICES
STRUCTURE DESIGN
DESIGN BRANCH 6

BRIDGE NO. 44-0040R/L
POST MILE 17.69

SALINAS RIVER BRIDGE (WIDEN)
PIPE SEAT EXTENDER DETAILS (RETROFIT)

STRUCTURES DESIGN DETAIL SHEET (ENGLISH) (REV. 09-01-10)

ORIGINAL SCALE IN INCHES FOR REDUCED PLANS 0 1 2 3

UNIT: 3591
PROJECT NUMBER & PHASE: 0500000049-1
CONTRACT NO.: 05-0F7004

DISREGARD PRINTS BEARING EARLIER REVISION DATES

REVISION DATES: 02-04-14 2-12-14 8-06-14 4-28-15

SHEET 27 OF 44

FILE => 44-0040rl-n2-psedt_01.dgn

USERNAME => s115755 DATE PLOTTED => 10-SEP-2015 TIME PLOTTED => 13:11

DIST	COUNTY	ROUTE	POST MILES TOTAL PROJECT	SHEET No.	TOTAL SHEETS
05	Mon	68	R17.4/R18.0	133	149

Seiji Morimoto 4-15-15
REGISTERED CIVIL ENGINEER DATE

6-22-15
PLANS APPROVAL DATE

REGISTERED PROFESSIONAL ENGINEER
SEIJI MORIMOTO
No. C65997
Exp. 6/30/16
CIVIL
STATE OF CALIFORNIA

The State of California or its officers or agents shall not be responsible for the accuracy or completeness of scanned copies of this plan sheet.

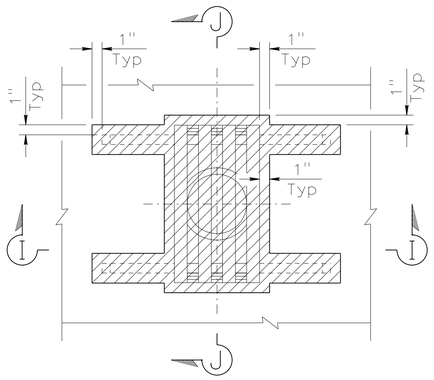

PLAN

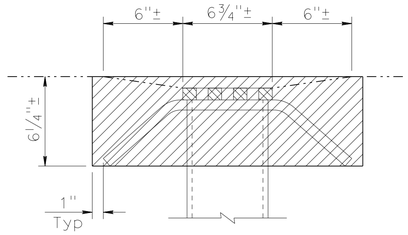

SECTION I-I

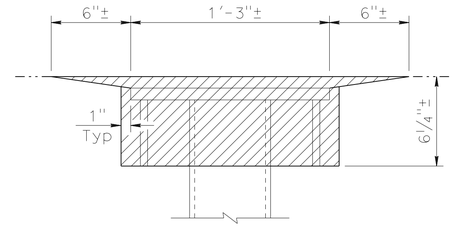

SECTION J-J

LEGEND:

Remove concrete and patch with Rapid Setting Concrete.

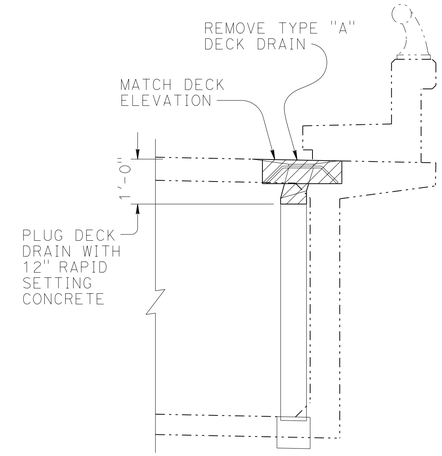

EXISTING DECK DRAIN

MISCELLANOUS: PLUG EXISTING TYPE"A" DECK DRAIN

NO SCALE

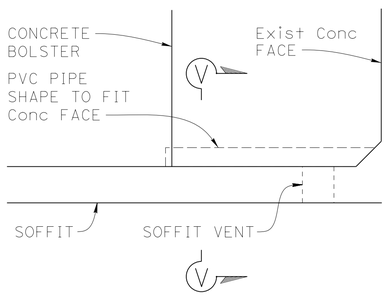

ELEVATION

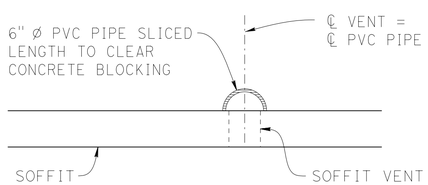

SECTION V-V

Existing soffit vents shall remain open. Where diaphragm bolster interferes, place a PVC pipe extension or similar device.

VENT EXTENSION

1" = 1'-0"

NOTE:

1. Existing Type "A" Deck Drain at each Bent location on low side. Total 7 per bridge.

NOTE:
CONTRACTOR MUST VERIFY ALL CONTROLLING FIELD DIMENSIONS BEFORE ORDERING OR FABRICATING ANY MATERIAL.

	BY	CHECKED
DESIGN	S. MORIMOTO	H. PEREZ
DETAILS	K. CHONKRIA	S. MORIMOTO
QUANTITIES	K. CHONKRIA	S. MORIMOTO

STATE OF CALIFORNIA
DEPARTMENT OF TRANSPORTATION

DIVISION OF ENGINEERING SERVICES
STRUCTURE DESIGN
DESIGN BRANCH 6

BRIDGE NO. 44-0040R/L
POST MILE 17.69

SALINAS RIVER BRIDGE (WIDEN)

PIPE SEAT EXTENDER MISCELLANEOUS DETAILS

STRUCTURES DESIGN DETAIL SHEET (ENGLISH) (REV. 09-01-10)

ORIGINAL SCALE IN INCHES FOR REDUCED PLANS 0 1 2 3

UNIT: 3591
PROJECT NUMBER & PHASE: 0500000049-1
CONTRACT NO.: 05-0F7004

DISREGARD PRINTS BEARING EARLIER REVISION DATES

REVISION DATES: 02-04-14 2-12-14 8-04-14

SHEET 28 OF 44

FILE => 44-0040rl-n3-psedt_02.dgn

USERNAME => s115755 DATE PLOTTED => 10-SEP-2015 TIME PLOTTED => 13:12

DIST	COUNTY	ROUTE	POST MILES TOTAL PROJECT	SHEET No.	TOTAL SHEETS
05	Mon	68	R17.4/R18.0	134	149

Seiji Morimoto 4-15-15
REGISTERED CIVIL ENGINEER DATE

6-22-15
PLANS APPROVAL DATE

REGISTERED PROFESSIONAL ENGINEER SEIJI MORIMOTO No. C65997 Exp. 6/30/16 CIVIL STATE OF CALIFORNIA

The State of California or its officers or agents shall not be responsible for the accuracy or completeness of scanned copies of this plan sheet.

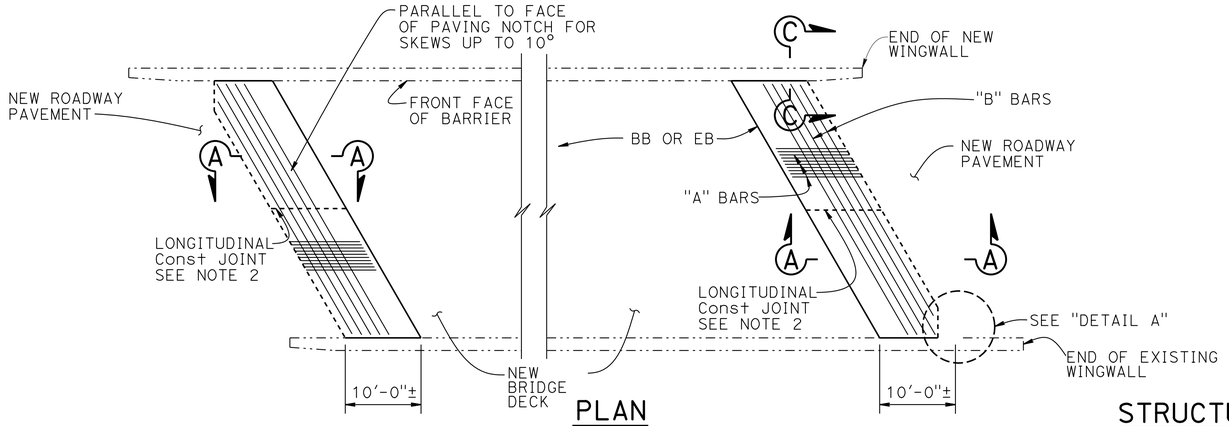

PLAN
1" = 10'

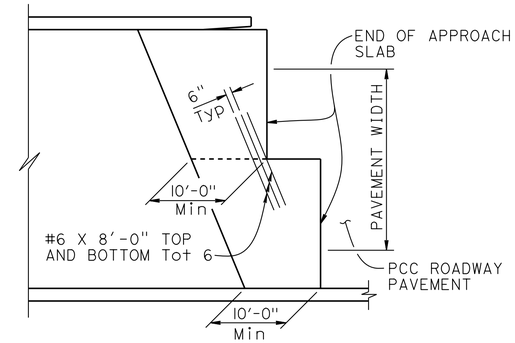

STRUCTURE APPROACH - END STAGGER DETAIL
NO SCALE

APPROACH SLAB TRANSVERSE CONTACT JOINT		
APPROACH SKEW	AC ROADWAY PAVEMENT	WITH PCC ROADWAY PAVEMENT
< 20°	PARALLEL TO FACE OF PN	PARALLEL TO FACE OF PN
20° - 45°	PARALLEL TO FACE OF PN USE "DETAIL A"	STAGGER LINES 24' TO 36' APART
> 45°	PARALLEL TO FACE OF PN USE "DETAIL A"	STAGGER AT EACH LANE LINE

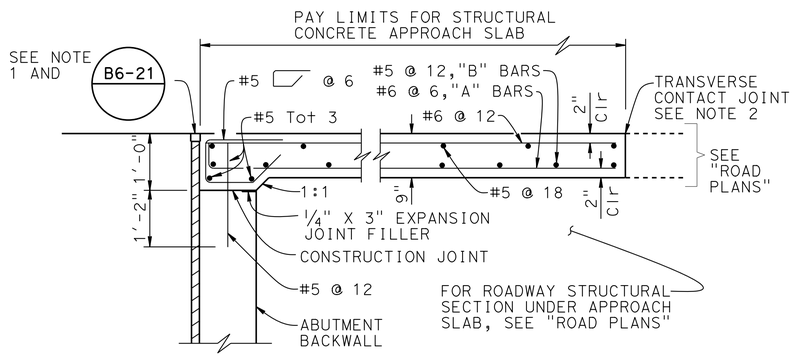

MR ≤ 2"

SECTION A-A
3/4" = 1'-0"

NOTE: Seat type abutment shown, for diaphragm type abutment, see "ABUTMENT TIE DETAILS"

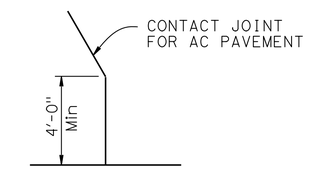

DETAIL A
No Scale

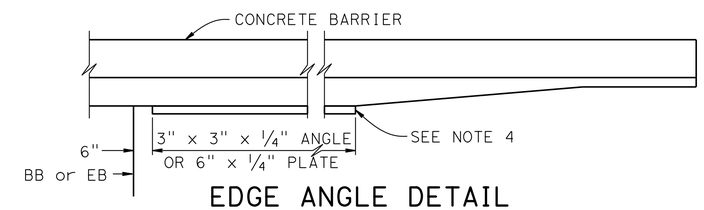

EDGE ANGLE DETAIL
1/2" = 1'-0"

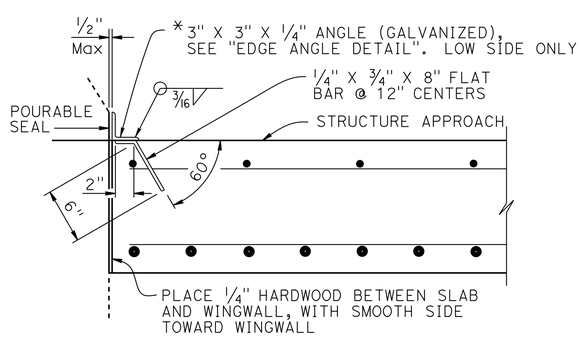

*(TO BE USED WITH CONCRETE BARRIER WITH VERTICAL FACE)

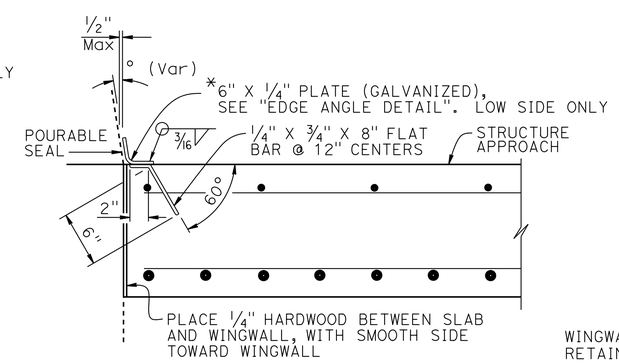

*(TO BE USED WITH CONCRETE BARRIER WITH SLOPING FACE)

DETAIL B
1 1/2" = 1'-0"

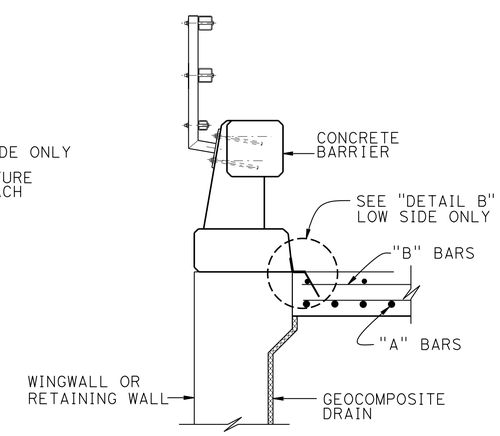

SECTION C-C
3/4" = 1'-0"

NOTES:

1. For details not noted or shown, see Structure Plans. Adjust bar reinforcement to clear a sawcut for sealed joint, when required
2. For transverse contact joint with new PCC paving, refer to Standard Plan P10
3. Longitudinal construction joints, when permitted by the Engineer, shall be located on lane lines
4. End angle or plate at beginning of barrier transition, end of wingwall or end of structure approach as applicable
5. At the Contractor's option, approach slab transverse reinforcement may be placed parallel to paving notch. Spacing of transverse reinforcement is measured along ℄ roadway
6. For drainage details, see Structure Plans.

	BY	CHECKED
DESIGN	S. MORIMOTO	H. PEREZ
DETAILS	K. CHONKRIA	S. MORIMOTO
QUANTITIES	K. CHONKRIA	S. MORIMOTO

STATE OF CALIFORNIA
DEPARTMENT OF TRANSPORTATION

DIVISION OF ENGINEERING SERVICES
STRUCTURE DESIGN
DESIGN BRANCH 6

BRIDGE NO. 44-0040R/L
POST MILE 17.69

SALINAS RIVER BRIDGE (WIDEN)
STRUCTURE APPROACH TYPE EQ Mod (10)

STRUCTURES DESIGN DETAIL SHEET (ENGLISH) (REV. 09-01-10)

ORIGINAL SCALE IN INCHES FOR REDUCED PLANS 0 1 2 3

UNIT: 3591
PROJECT NUMBER & PHASE: 0500000049-1
CONTRACT NO.: 05-0F7004

DISREGARD PRINTS BEARING EARLIER REVISION DATES

REVISION DATES: 02-06-14 4-10-15

SHEET 29 OF 44

FILE => 44-0040rl-s-sa-eq10s.dgn

USERNAME => s115755 DATE PLOTTED => 10-SEP-2015 TIME PLOTTED => 13:12

DIST	COUNTY	ROUTE	POST MILES TOTAL PROJECT	SHEET No.	TOTAL SHEETS
05	Mon	68	R17.4/R18.0	135	149

Seiji Morimoto 4-15-15
REGISTERED CIVIL ENGINEER DATE

6-22-15
PLANS APPROVAL DATE

REGISTERED PROFESSIONAL ENGINEER SEIJI MORIMOTO No. C65997 Exp. 6/30/16 CIVIL STATE OF CALIFORNIA

The State of California or its officers or agents shall not be responsible for the accuracy or completeness of scanned copies of this plan sheet.

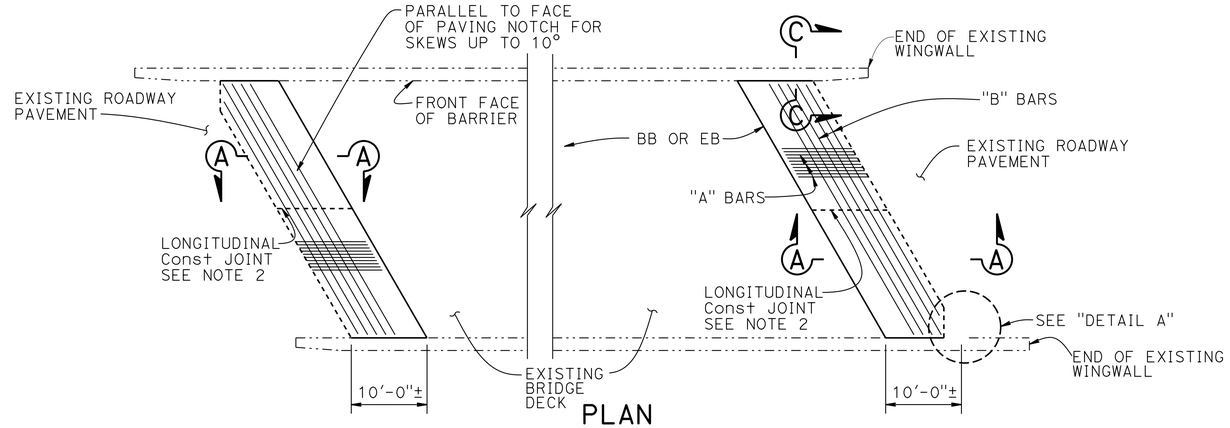

PLAN
1" = 10'

NOTE:
Left Bridge shown, Right Bridge similar.

APPROACH SLAB TRANSVERSE CONTACT JOINT		
APPROACH SKEW	WITH AC ROADWAY PAVEMENT	WITH PCC ROADWAY PAVEMENT
< 10°	PARALLEL TO FACE OF PN	PARALLEL TO FACE OF PN
10° - 45°	PARALLEL TO FACE OF PN USE "DETAIL A"	STAGGER LINES 24' TO 36' APART
> 45°	PARALLEL TO FACE OF PN USE "DETAIL A"	STAGGER AT EACH LANE LINE

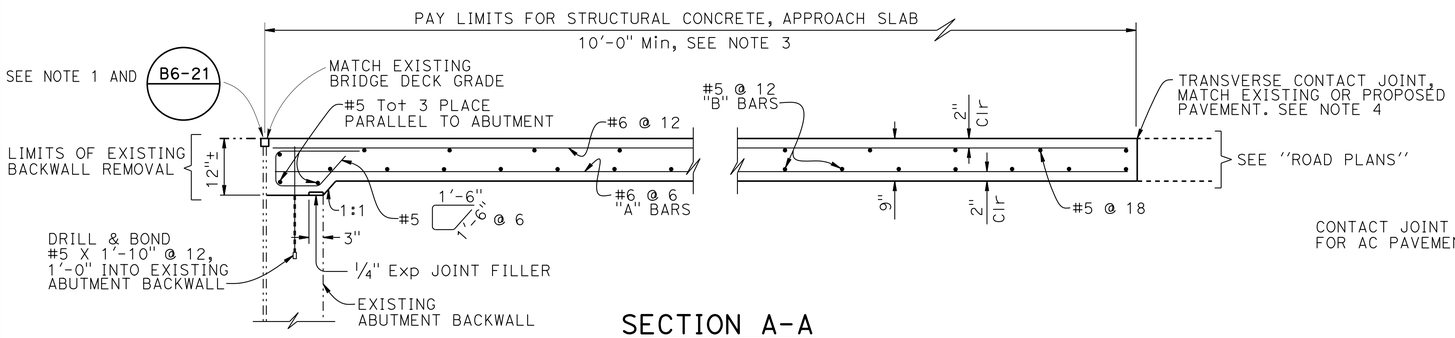

SECTION A-A
3/4" = 1'-0"

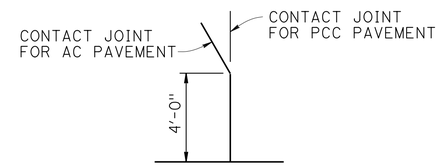

DETAIL A
NO SCALE

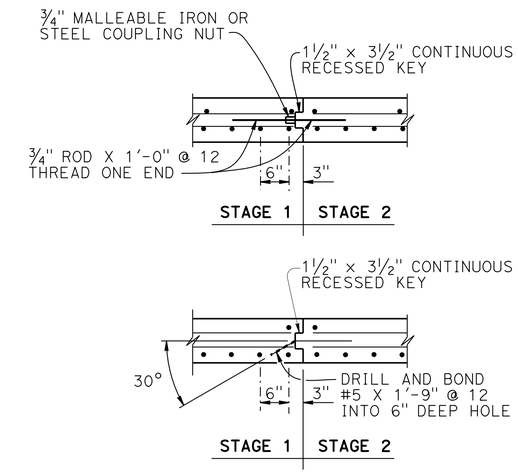

LONGITUDINAL CONSTRUCTION JOINT
3/4" = 1'-0"

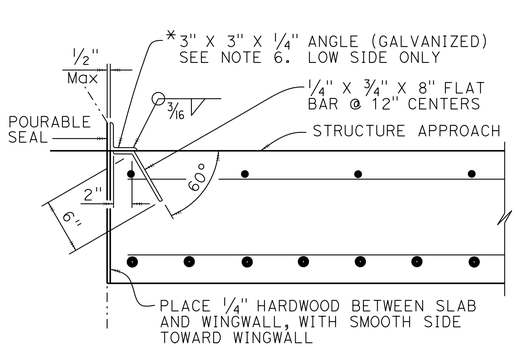

*(TO BE USED WITH CONCRETE BARRIER WITH VERTICAL FACE)

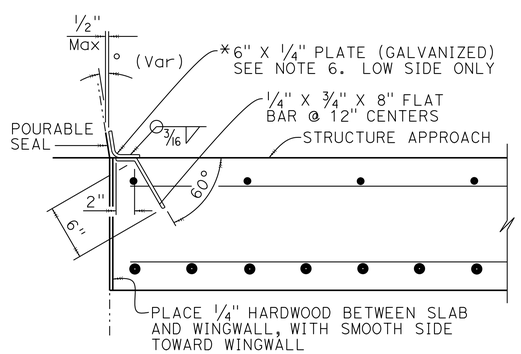

*(TO BE USED WITH CONCRETE BARRIER WITH SLOPING FACE)

DETAIL B
1 1/2" = 1'-0"

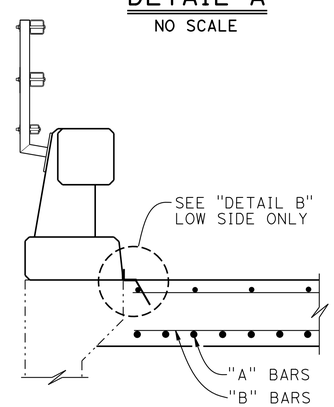

SECTION C-C
3/4" = 1'-0"

NOTES:

1. For details not noted or shown, see Structure Plans. Adjust bar reinforcement to clear a sawcut for sealed joint, when required
2. Longitudinal construction joints, when permitted by the Engineer, shall be located on lane lines
3. Transverse contact joint shall be a minimum of 5' from an existing or constructed weakened plane joint
4. For transverse contact joint with new PCC paving, refer to Standard Plan P10
5. Couplers are required for stage construction
6. End angle or plate at beginning of barrier transition, end of wingwall or end of structure approach as applicable.

NOTE:
CONTRACTOR MUST VERIFY ALL CONTROLLING FIELD DIMENSIONS BEFORE ORDERING OR FABRICATING ANY MATERIAL.

	BY	CHECKED
DESIGN	S. MORIMOTO	H. PEREZ
DETAILS	K. CHONKRIA	S. MORIMOTO
QUANTITIES	K. CHONKRIA	S. MORIMOTO

STATE OF CALIFORNIA
DEPARTMENT OF TRANSPORTATION

DIVISION OF ENGINEERING SERVICES
STRUCTURE DESIGN
DESIGN BRANCH 6

BRIDGE NO. 44-0040R/L
POST MILE 17.69

SALINAS RIVER BRIDGE (WIDEN)
STRUCTURE APPROACH TYPE R(10S)

STRUCTURES DESIGN DETAIL SHEET (ENGLISH) (REV. 09-01-10)

ORIGINAL SCALE IN INCHES FOR REDUCED PLANS 0 1 2 3

UNIT: 3591
PROJECT NUMBER & PHASE: 0500000049-1
CONTRACT NO.: 05-0F7004

DISREGARD PRINTS BEARING EARLIER REVISION DATES

REVISION DATES 02-24-14 2-3-14 4-10-15

SHEET 30 OF 44

FILE => 44-0040rl-s-sa-r10s.dgn

USERNAME => s115755 DATE PLOTTED => 10-SEP-2015 TIME PLOTTED => 13:12

DIST	COUNTY	ROUTE	POST MILES TOTAL PROJECT	SHEET No.	TOTAL SHEETS
05	Mon	68	R17.4/R18.0	136	149

Seiji Morimoto 4-15-15
REGISTERED CIVIL ENGINEER DATE

6-22-15
PLANS APPROVAL DATE

REGISTERED PROFESSIONAL ENGINEER
SEIJI MORIMOTO
No. C65997
Exp. 6/30/16
CIVIL
STATE OF CALIFORNIA

The State of California or its officers or agents shall not be responsible for the accuracy or completeness of scanned copies of this plan sheet.

NOTE:
CONTRACTOR MUST VERIFY ALL CONTROLLING FIELD DIMENSIONS BEFORE ORDERING OR FABRICATING ANY MATERIAL.

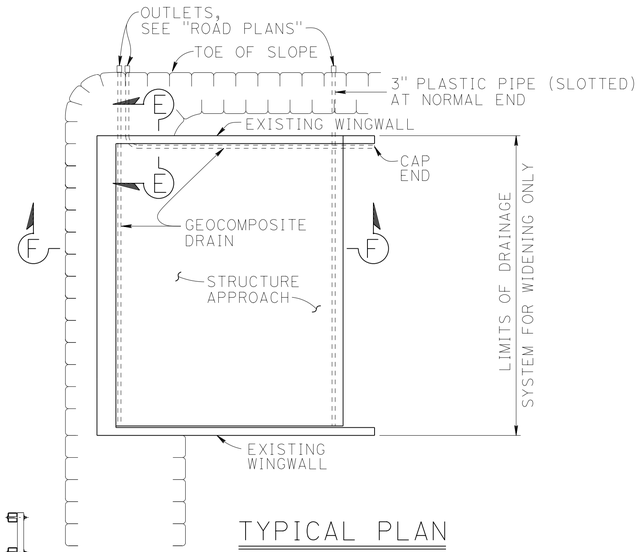

TYPICAL PLAN
1" = 10'

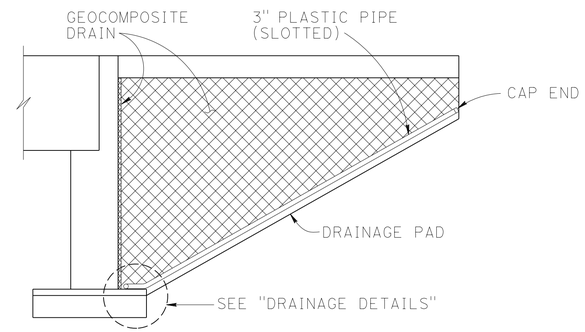

CANTILEVER WINGWALL

SECTION F-F
1/4" = 1'-0"

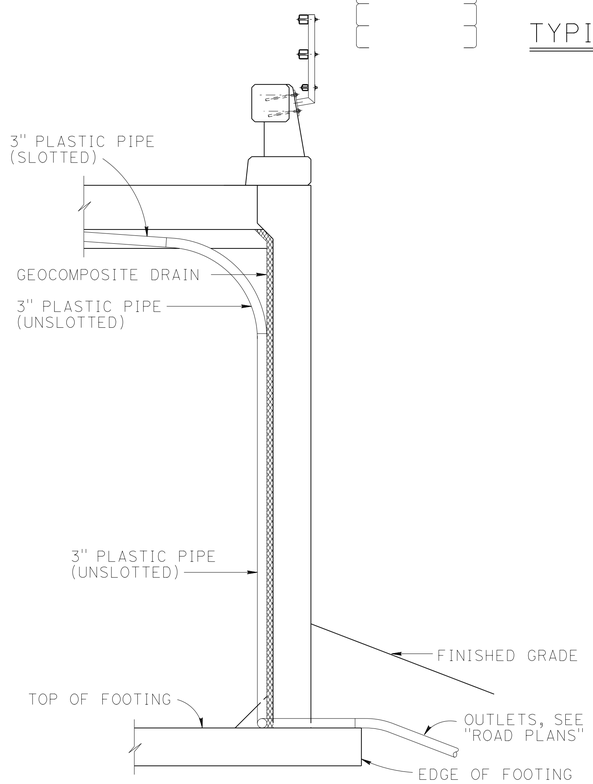

SECTION E-E
1/2" = 1'-0"

NOTE: Bends and junctions in 3" plastic pipe are 30" radius Min

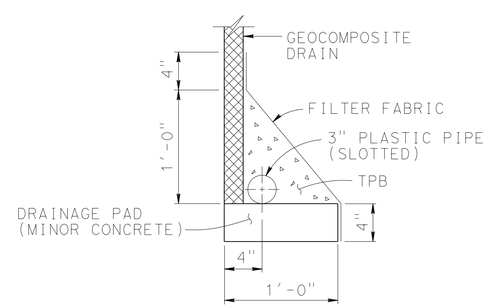

WITHOUT FOOTING

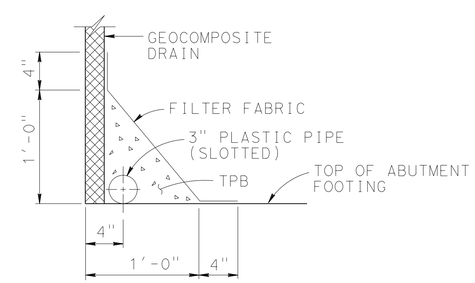

WITH FOOTING

DRAINAGE DETAILS
1 1/2" = 1'-0"

DESIGN	BY S. MORIMOTO	CHECKED H. PEREZ	
DETAILS	BY K. CHONKRIA	CHECKED S. MORIMOTO	
QUANTITIES	BY K. CHONKRIA	CHECKED S. MORIMOTO	

STATE OF CALIFORNIA
DEPARTMENT OF TRANSPORTATION

DIVISION OF ENGINEERING SERVICES
STRUCTURE DESIGN
DESIGN BRANCH 6

BRIDGE NO. 44-0040R/L
POST MILE 17.69

SALINAS RIVER BRIDGE (WIDEN)
STRUCTURE APPROACH DRAINAGE DETAILS

STRUCTURES DESIGN DETAIL SHEET (ENGLISH) (REV. 09-01-10)

ORIGINAL SCALE IN INCHES FOR REDUCED PLANS 0 1 2 3

UNIT: 3591
PROJECT NUMBER & PHASE: 0500000049-1
CONTRACT NO.: 05-0F7004

DISREGARD PRINTS BEARING EARLIER REVISION DATES

REVISION DATES: ~~02-06-14~~ ~~2-6-14~~ 4-10-15

SHEET 31 OF 44

FILE => 44-0040rl-t-sa-dd.dgn

USERNAME => s115755 DATE PLOTTED => 10-SEP-2015 TIME PLOTTED => 13:12

DIST	COUNTY	ROUTE	POST MILES TOTAL PROJECT	SHEET No.	TOTAL SHEETS
05	Mon	68	R17.4/R18.0	137	149

Seiji Morimoto 4-15-15
REGISTERED CIVIL ENGINEER DATE

6-22-15
PLANS APPROVAL DATE

REGISTERED PROFESSIONAL ENGINEER
SEIJI MORIMOTO
No. C65997
Exp. 6/30/16
CIVIL
STATE OF CALIFORNIA

The State of California or its officers or agents shall not be responsible for the accuracy or completeness of scanned copies of this plan sheet.

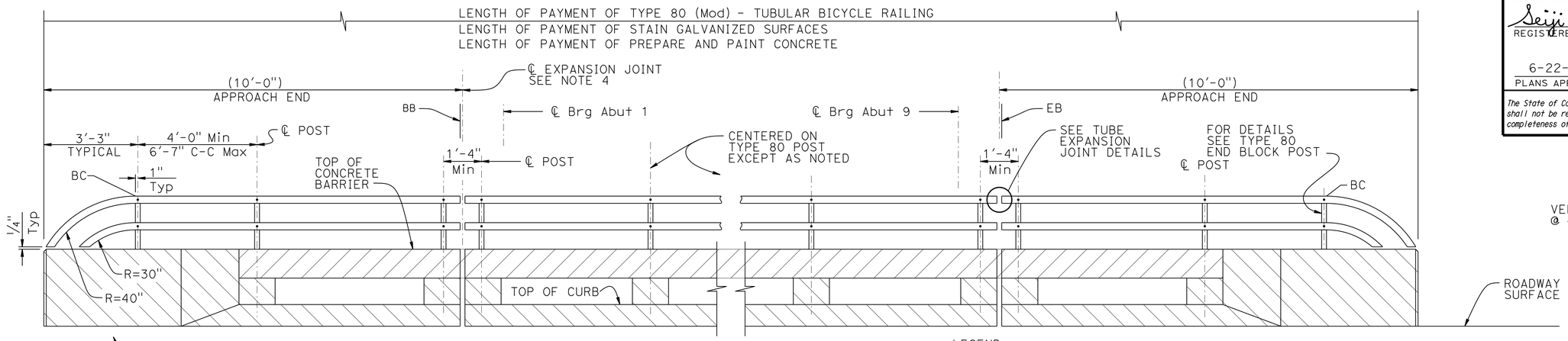

ELEVATION
NO SCALE

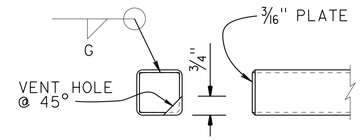

RAIL CAP DETAIL
NO SCALE

LEGEND:

PREPARE AND PAINT CONCRETE (FEDERAL COLOR #30145)

PREPARE AND PAINT CONCRETE (FEDERAL COLOR #33728)

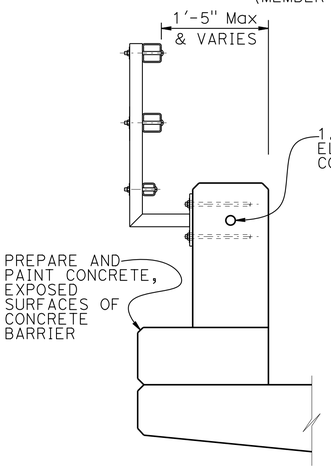

TYPE 80 END BLOCK POST
1" = 1'-0"

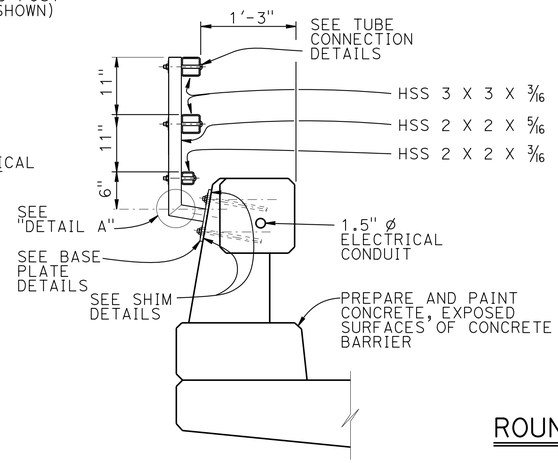

TYPE 80
1" = 1'-0"

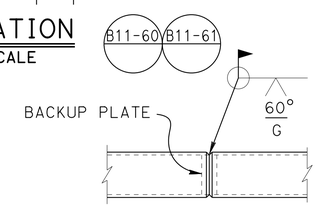

WELDED SPLICE DETAIL
NO SCALE

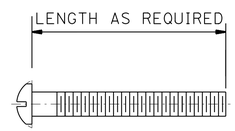

ROUND HEAD SCREW DETAIL
NO SCALE

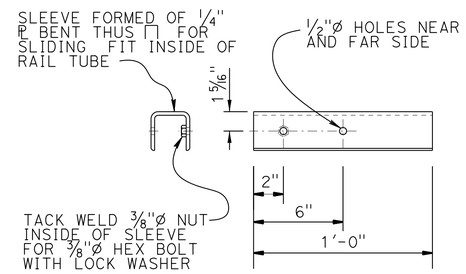

SLEEVE DETAIL
NO SCALE

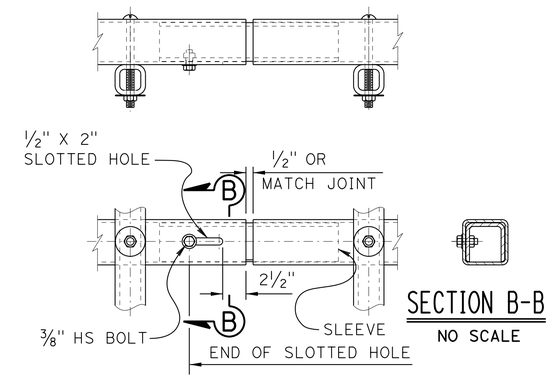

SECTION B-B
NO SCALE

TUBE EXPANSION JOINT DETAILS
NO SCALE

NOTES:

1. Post shall be normal to railing.
2. Rail tubes shall be shop bent or fabricated to fit horizontal curve when radius is less than 12".
3. Tube splices shall be located in the tubes spanning deck or wall joints. Increase joint width in tubes to match expansion joint width and increase sleeve length correspondingly.
4. Top rail tube shall be continuous over not less than two posts except a short post spacing is permitted near deck or other rail discontinuities as noted.

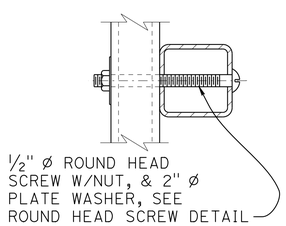

TUBE CONNECTION DETAIL
NO SCALE

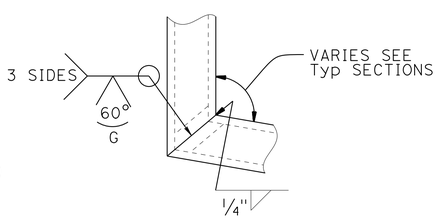

DETAIL A
NO SCALE

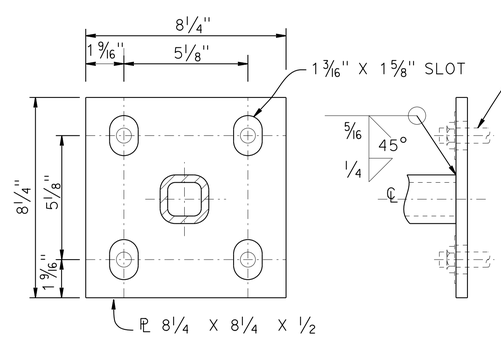

BASE PLATE DETAIL
NO SCALE

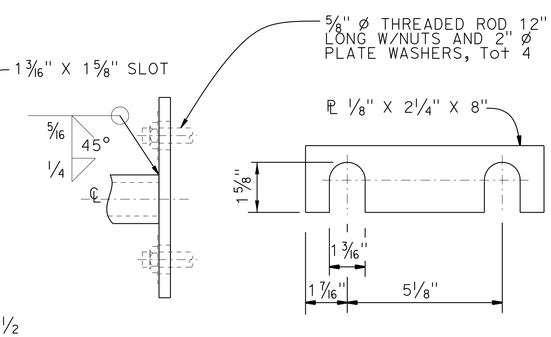

SHIM DETAILS
NO SCALE

NOTE:
CONTRACTOR MUST VERIFY ALL CONTROLLING FIELD DIMENSIONS BEFORE ORDERING OR FABRICATING ANY MATERIAL.

	BY	CHECKED
DESIGN	S. MORIMOTO	H. PEREZ
DETAILS	K. CHONKRIA	S. MORIMOTO
QUANTITIES	K. CHONKRIA	S. MORIMOTO

STATE OF CALIFORNIA
DEPARTMENT OF TRANSPORTATION

DIVISION OF ENGINEERING SERVICES
STRUCTURE DESIGN
DESIGN BRANCH 6

BRIDGE NO. 44-0040R/L
POST MILE 17.69

SALINAS RIVER BRIDGE (WIDEN)
CONCRETE BARRIER TYPE 80 (Mod)
TUBULAR BICYCLE RAILING DETAILS

STRUCTURES DESIGN DETAIL SHEET (ENGLISH) (REV. 09-01-10)

ORIGINAL SCALE IN INCHES FOR REDUCED PLANS 0 1 2 3

UNIT: 3591
PROJECT NUMBER & PHASE: 0500000049-1
CONTRACT NO.: 05-0F7004

DISREGARD PRINTS BEARING EARLIER REVISION DATES

REVISION DATES: 02-06-14 02-07-14 02-10-14 4-10-15

SHEET 32 OF 44

FILE => 44-0040rl-u-tbrd.dgn

USERNAME => s115755 DATE PLOTTED => 10-SEP-2015 TIME PLOTTED => 13:12

DIST	COUNTY	ROUTE	POST MILES TOTAL PROJECT	SHEET No.	TOTAL SHEETS
05	Mon	68	R17.4/R18.0	138	149

Seiji Morimoto 4-15-15
REGISTERED CIVIL ENGINEER DATE

6-22-15
PLANS APPROVAL DATE

REGISTERED PROFESSIONAL ENGINEER
SEIJI MORIMOTO
No. C65997
Exp. 12-18-16
CIVIL
STATE OF CALIFORNIA

The State of California or its officers or agents shall not be responsible for the accuracy or completeness of scanned copies of this plan sheet.

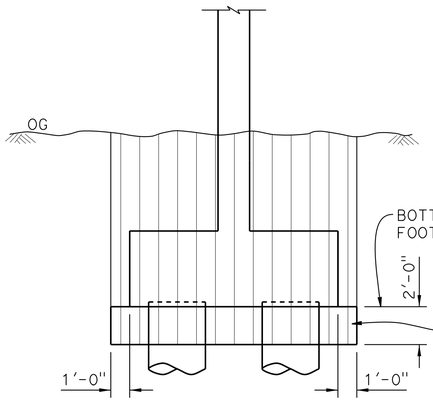

EXCAVATION
NO SCALE

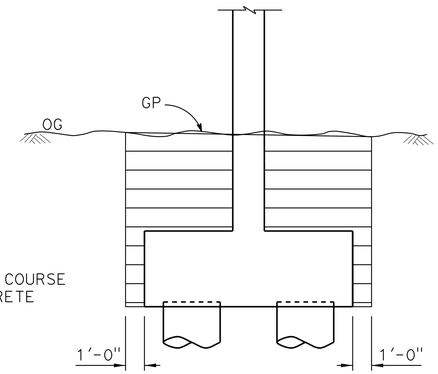

BACKFILL
NO SCALE

PIERS 2-8 (OUTSIDE WIDENING)

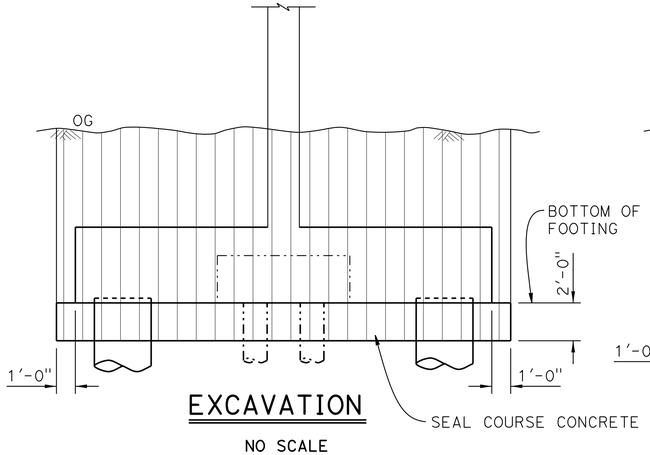

EXCAVATION
NO SCALE

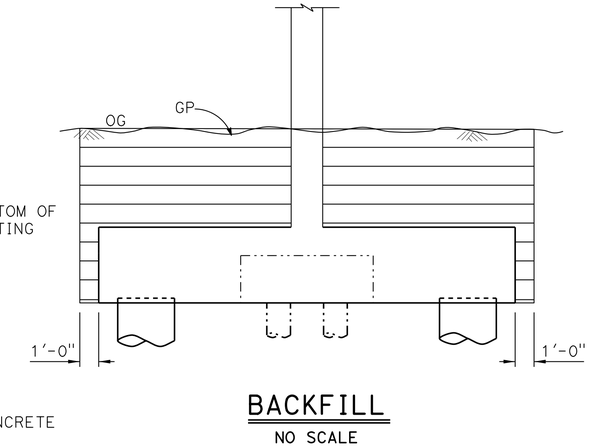

BACKFILL
NO SCALE

PIERS 2-8 (INSIDE WIDENING)

LEGEND:

- Indicates existing structure
- Indicates new construction
- Indicates structure excavation
- Indicates structure excavation, Type A
- Indicates structure backfill

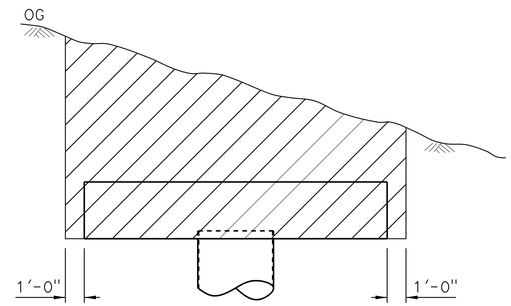

EXCAVATION
NO SCALE

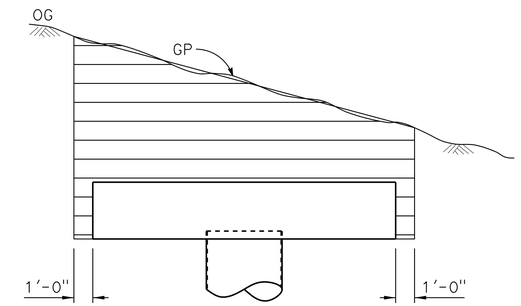

BACKFILL
NO SCALE

ABUTMENTS 1 AND 9 (INSIDE WIDENING)

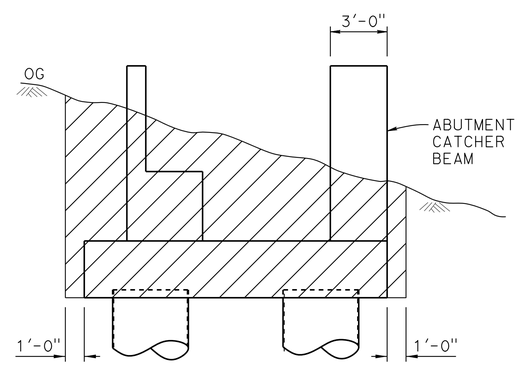

EXCAVATION
NO SCALE

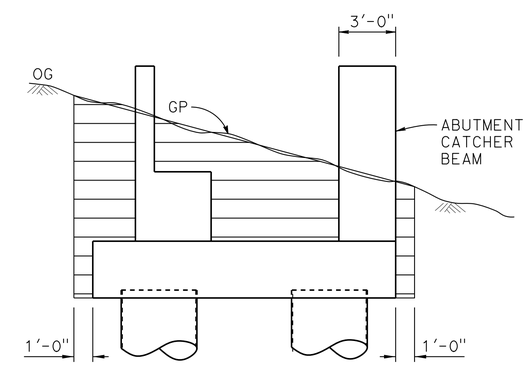

BACKFILL
NO SCALE

ABUTMENTS 1 AND 9 (OUTSIDE WIDENING)

DESIGN	BY S. MORIMOTO	CHECKED H. PEREZ	
DETAILS	BY D. PATO	CHECKED S. MORIMOTO	
QUANTITIES	BY K. CHONKRIA	CHECKED S. MORIMOTO	

STATE OF CALIFORNIA
DEPARTMENT OF TRANSPORTATION

DIVISION OF ENGINEERING SERVICES
STRUCTURE DESIGN
DESIGN BRANCH 6

BRIDGE NO. 44-0040R/L
POST MILE 17.69

SALINAS RIVER BRIDGE (WIDEN)
LIMITS FOR EXCAVATION AND BACKFILL

STRUCTURES DESIGN DETAIL SHEET (ENGLISH) (REV. 09-01-10)

ORIGINAL SCALE IN INCHES FOR REDUCED PLANS 0 1 2 3

UNIT: 3591
PROJECT NUMBER & PHASE: 0500000049-1
CONTRACT NO.: 05-0F7004

DISREGARD PRINTS BEARING EARLIER REVISION DATES

REVISION DATES 2-25-14 3-5-14 8-04-14

SHEET 33 OF 44

FILE => 44-0040ri-w-limits-ex-back.dgn

USERNAME => s113755 DATE PLOTTED => 10-SEP-2015 TIME PLOTTED => 13:12

DIST	COUNTY	ROUTE	POST MILES TOTAL PROJECT	SHEET No	TOTAL SHEETS
05	Mon	68	R17.4/R18.0	139	149

CERTIFIED ENGINEERING GEOLOGIST 5-22-14

PROFESSIONAL GEOLOGIST Xing Zheng No. 2130 Exp. 3-31-15 CERTIFIED ENGINEERING GEOLOGIST STATE OF CALIFORNIA

6-22-15
PLANS APPROVAL DATE

The State of California or its officers or agents shall not be responsible for the accuracy or completeness of electronic copies of this Plan sheet.

This LOTB sheet was prepared in accordance with the Caltrans Soil & Rock Logging, Classification, & Presentation Manual (2010 Edition).

See 2010 Standard Plans A10F and A10G for Soil Legend, and A10H for Rock Legend.

BENCH MARK

Mon 68 hb-6 (PM 17.82)
Fnd hb-9 2" IP W/CDH BRASS DISK
73.46′ Lt ℄ Rte 68
Sta 770+72.03
N 2,123,735.12
E 5,777,695.18
Elev 65.59
VERT DATUM : NAVD88

Notes:

1. In Boring RC-11-003, groundwater was measured in a standpipe piezometer.
2. In borings RC-11-001, RC-11-002, RC-11-006, RC-11-007, and RC-11-008, groundwater level was measured in hand auger borings drilled next to these borings.
3. In borings RC-11-004, RC-11-005, and RC-11-009, groundwater level was estimated from the hand auger borings close to these borings (within approximately 30 feet).
4. No groundwater measurement was taken in the CPT soundings. Refer to the nearby borings for groundwater elevations.

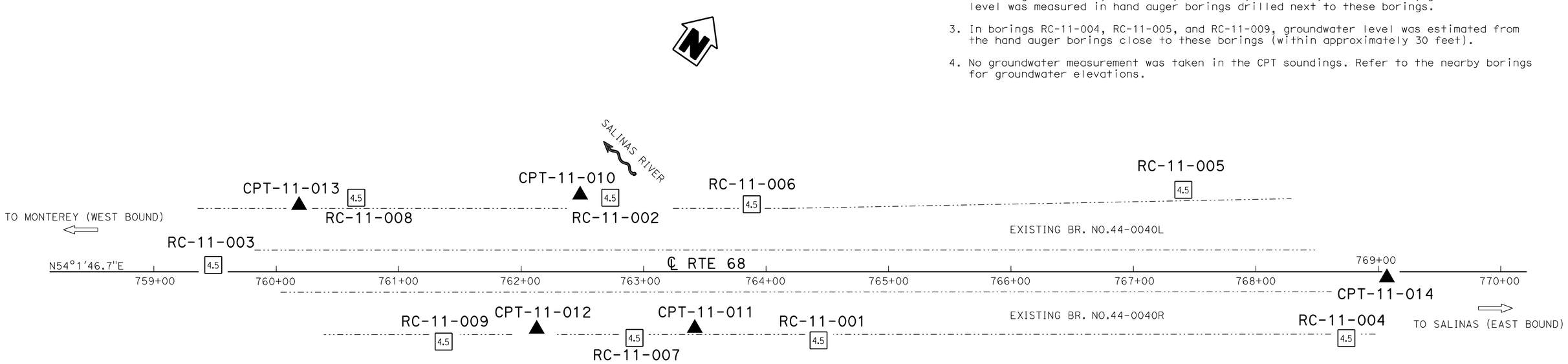

PLAN
1" = 40′

ENGINEERING SERVICES	MATERIALS AND GEOTECHNICAL SERVICES	STATE OF CALIFORNIA DEPARTMENT OF TRANSPORTATION	DIVISION OF ENGINEERING SERVICES STRUCTURE DESIGN DESIGN BRANCH 6	BRIDGE NO. 44-0040R/L POST MILE R17.7	SALINAS RIVER BRIDGE LOG OF TEST BORINGS 1 of 11
FUNCTIONAL SUPERVISOR NAME: R. Buell	DRAWN BY: W. Tang 10/13 CHECKED BY: C. Koepke	FIELD INVESTIGATION BY: X. Zheng / L. Mejia-Paredes			

OGS CIVIL LOG OF TEST BORINGS SHEET

ORIGINAL SCALE IN INCHES FOR REDUCED PLANS 0 1 2 3

UNIT: 3643
PROJECT NUMBER & PHASE: 0500000049-1 CONTRACT NO.: 05-0F7004

DISREGARD PRINTS BEARING EARLIER REVISION DATES

REVISION DATES 03-10-14 03-19-14 04-02-14 05-21-14 SHEET 34 OF 44

FILE => 44-0040r1-z-1tb01.dgn

USERNAME => s115755 DATE PLOTTED => 10-SEP-2015 TIME PLOTTED => 13:12

DIST	COUNTY	ROUTE	POST MILES TOTAL PROJECT	SHEET No	TOTAL SHEETS
05	Mon	68	R17.4/R18.0	140	149

CERTIFIED ENGINEERING GEOLOGIST 5-22-14

6-22-15
PLANS APPROVAL DATE

PROFESSIONAL GEOLOGIST Xing Zheng No. 2130 Exp. 3-31-15 CERTIFIED ENGINEERING GEOLOGIST STATE OF CALIFORNIA

The State of California or its officers or agents shall not be responsible for the accuracy or completeness of electronic copies of this Plan sheet.

This LOTB sheet was prepared in accordance with the Caltrans Soil & Rock Logging, Classification, & Presentation Manual (2010 Edition).

See 2010 Standard Plans A10F and A10G for Soil Legend, and A10H for Rock Legend.

FOR PLAN VIEW, SEE
"LOG OF TEST BORINGS 1 of 11"

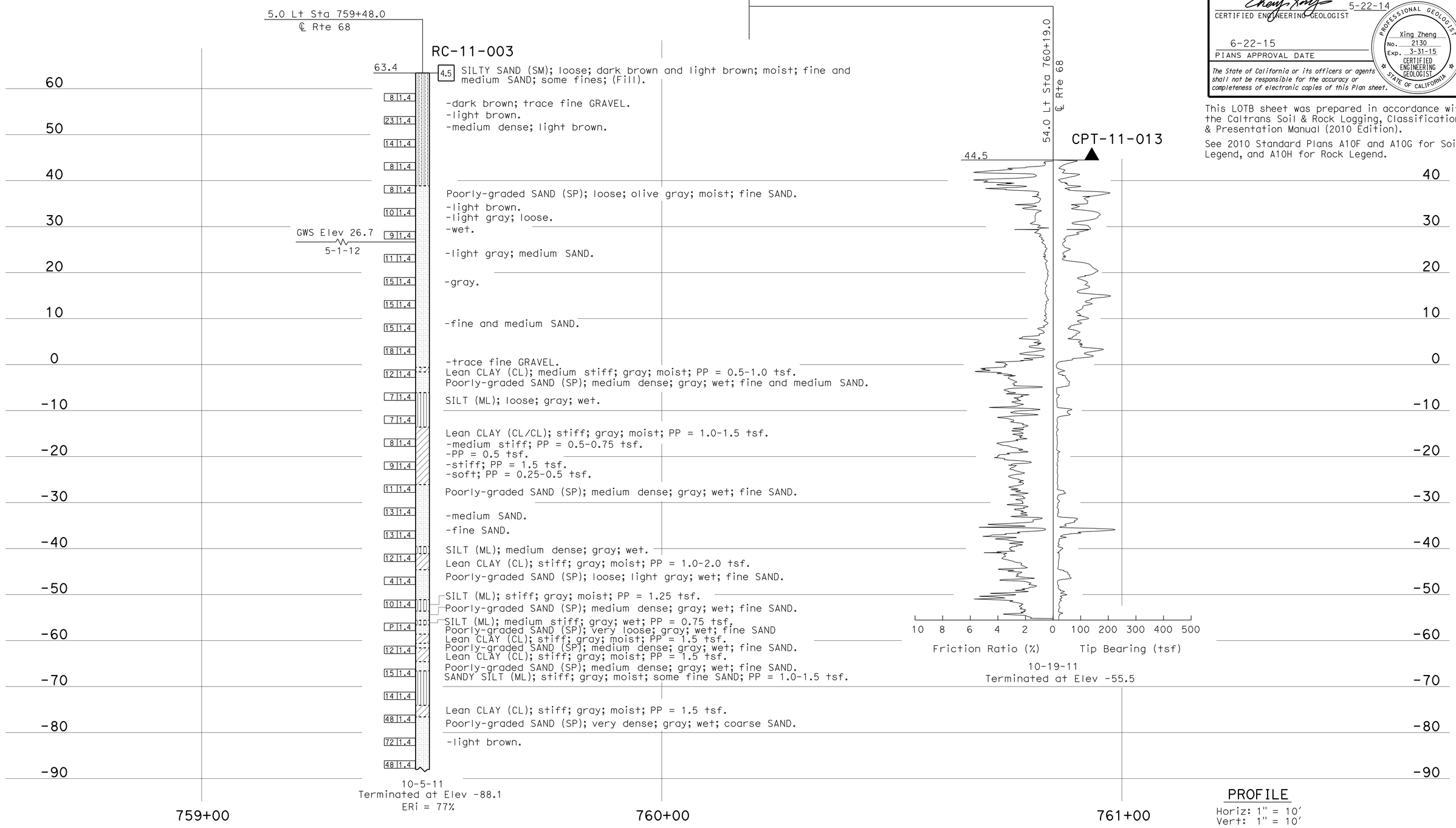

PROFILE
Horiz: 1" = 10'
Vert: 1" = 10'

ENGINEERING SERVICES	MATERIALS AND GEOTECHNICAL SERVICES	STATE OF CALIFORNIA DEPARTMENT OF TRANSPORTATION	DIVISION OF ENGINEERING SERVICES STRUCTURE DESIGN DESIGN BRANCH 6	BRIDGE NO. 44-0040R/L POST MILE R17.7	SALINAS RIVER BRIDGE
FUNCTIONAL SUPERVISOR NAME: R. Buell	DRAWN BY: W. Tang 10/13 CHECKED BY: C. Koepke	FIELD INVESTIGATION BY: V. Khotan			LOG OF TEST BORINGS 2 of 11

OGS CIVIL LOG OF TEST BORINGS SHEET

ORIGINAL SCALE IN INCHES FOR REDUCED PLANS 0 1 2 3

UNIT: 3643
PROJECT NUMBER & PHASE: 0500000049-1 CONTRACT NO.: 05-0F7004

DISREGARD PRINTS BEARING EARLIER REVISION DATES

REVISION DATES 01-10-14 03-06-14 03-26-14 04-07-14

SHEET 35 OF 44

FILE => 44-0040rl-z-ltb02.dgn

USERNAME => s115755 DATE PLOTTED => 10-SEP-2015 TIME PLOTTED => 13:12

FOR PLAN VIEW, SEE
"LOG OF TEST BORINGS 1 of 11"

60.0 Lt Sta 760+69.0
℄ Rte 68

RC-11-008

39.9 | 4.5

Poorly-graded SAND (SP); medium dense; light gray; moist; fine SAND.
-yellowish brown.
-light gray.
-yellowish brown.
-wet.
-light gray; fine and medium SAND;.
Poorly-graded SAND with SILT (SP-SM); medium dense; light gray; wet; fine and medium SAND; few fines; trace fine GRAVEL.
Poorly-graded SAND (SP); loose; dark gray; moist; fine and medium SAND; trace coarse SAND.
-light gray.
-medium dense.
Well-graded SAND (SW); medium dense; light gray; moist; few fine GRAVEL.
SILTY SAND (SM); loose; dark gray; moist; fine SAND; some nonplastic fines.
Well-graded SAND (SW); medium dense; light gray; moist; few fine GRAVEL.
SILTY SAND (SM); loose; dark gray; moist; fine SAND; some nonplastic fines.
SANDY lean CLAY (CL); medium stiff; moist; fine SAND; low plastic fines; dark gray; PP = 0.5-1.0 tsf.
SANDY SILT (ML); loose; dark gray; moist; fine SAND; some low plastic fines.
SANDY lean CLAY (CL); medium stiff; gark gray; moist; fine SAND; PP = 1.0 tsf.
SANDY SILT (ML); loose; gark gray; wet; fine SAND.
Lean CLAY (CL); stiff; gark gray; moist; PP = 1.0-1.75 tsf.
-PP = 1.0 tsf.
-very stiff; PP = 2.5 tsf.
-stiff; PP = 1.0 tsf.
-PP = 1.5 tsf.
SANDY SILT (ML); very loose; dark gray; moist.
Lean CLAY (CL); medium stiff; dark gray; moist; PP = 0.5-1.0 tsf.
-stiff; PP = 1.0 1.5 tsf.
SANDY SILT (ML); loose; dark gray; wet; fine SAND; trace fine GRAVEL.
Lean CLAY (CL); medium stiff; gray; moist; dark; PP = 0.5 tsf.
SILTY SAND (SM); medium dense; light gray; moist; fine SAND; some fines.
Lean CLAY (CL); stiff; dark gray; moist; PP = 1.25 tsf.
SILTY SAND (SM); medium dense; light gray; wet; fine SAND; some fines.
Lean CLAY (CL); stiff; dark gray; moist; PP = 1.0-1.75 tsf.
SILTY SAND (SM); very loose; dark gray; wet; fine SAND; some fines.
-light gray.
Lean CLAY (CL); stiff; dark gray; moist; PP = 1.25-1.5 tsf.
CLAYEY SAND (SC); very loose; dark gray; wet; fine SAND; some low plastic fines.
SANDY lean CLAY (CL); stiff; dark gray; moist; fine SAND; PP = 1.75-2.0 tsf.
SANDY SILT (ML); very loose; dark gray; wet; fine SAND.
Lean CLAY (CL); very stiff; dark gray; moist; trace coarse SAND and fine GRAVEL; PP = 2.0 tsf.
-stiff; PP = 1.0 tsf.
SANDY SILT (ML); medium dense; dark gray; wet; fine SAND.
Lean CLAY with SAND (CL); stiff; dark gray; moist; fine SAND; PP = 1.0 tsf.
Poorly-graded SAND (SP); medium dense; dark gray; wet; fine SAND.
Lean CLAY (CL); stiff; dark gray; moist; PP = 1.5-1.75 tsf.
SANDY SILT (ML); medium dense; dark gray; wet; fine SAND.
Lean CLAY (CL); stiff; dark gray; moist; PP = 1.75 tsf.
SILTY SAND (SM); dense; gray; wet; fine SAND; nonplastic fines.
Poorly-graded SAND with GRAVEL (SP); very dense; light gray; wet; fine and medium SAND; little fine GRAVEL.
Well-graded SAND with GRAVEL (SW); very dense; yellowish brown; wet; little fine GRAVEL.
Poorly-graded SAND (SP); dense; wet; yellowish brown; trace fine GRAVEL.
Well-graded SAND with GRAVEL (SW); very dense; yellowish brown; wet; some fine GRAVEL.
SANDY SILT (ML); hard; light yellowish brown; wet; CLAY laminations; PP > 4.5 tsf.
Well-graded SAND with GRAVEL (SW); very dense; light yellowish brown; wet; some fine GRAVEL; trace fines.
-few COBBLES.

GWS Elev 28.0
5-1-12

Elev	Blows
24	1.4
11	1.4
11	1.4
7	1.4
6	1.4
9	1.4
7	1.4
8	1.4
6	1.4
P	1.4
4	1.4
P	1.4
7	1.4
11	1.4
9	1.4
P	1.4
P	1.4
7	1.4
P	1.4
P	1.4
10	1.4
8	1.4
33	1.4
59	1.4
80	1.4
27	1.4
67	1.4
61	1.4
57	1.4
50/4.5	1.4
46	1.4
50/1	1.4
50/5.5	1.4
50/4	1.4
50/2.5	1.4
50/2	1.4

10-19-11
Terminated at Elev -180.6
ERi = 77%

PROFILE

Horiz: 1" = 10'
Vert: 1" = 10'

760+50 761+50

This LOTB sheet was prepared in accordance with the Caltrans Soil & Rock Logging, Classification, & Presentation Manual (2010 Edition).
See 2010 Standard Plans A10F and A10G for Soil Legend, and A10H for Rock Legend.

CERTIFIED ENGINEERING GEOLOGIST 5-22-14
6-22-15
PLANS APPROVAL DATE

PROFESSIONAL GEOLOGIST
Xing Zheng
No. 2130
Exp. 3-31-15
CERTIFIED ENGINEERING GEOLOGIST
STATE OF CALIFORNIA

The State of California or its officers or agents shall not be responsible for the accuracy or completeness of electronic copies of this plan sheet.

DIST	COUNTY	ROUTE	POST MILES TOTAL PROJECT	SHEET NO	TOTAL SHEETS
05	Mon	68	R17.4/R18.0	141	149

ENGINEERING SERVICES
MATERIALS AND GEOTECHNICAL SERVICES

FUNCTIONAL SUPERVISOR
NAME: R. Buell
DRAWN BY: W. Tang 10/13
CHECKED BY: J. Thorne
FIELD INVESTIGATION BY: X. Zheng / L. Mejia-Paredes

STATE OF CALIFORNIA
DEPARTMENT OF TRANSPORTATION
DIVISION OF ENGINEERING SERVICES
STRUCTURE DESIGN
DESIGN BRANCH 6

BRIDGE NO. 44-0040R/L
POST MILE R17.7

SALINAS RIVER BRIDGE
LOG OF TEST BORINGS 3 OF 11

SHEET 36 OF 44

ORIGINAL SCALE IN INCHES FOR REDUCED PLANS 0 1 2 3

DGS CIVIL LOG OF TEST BORINGS SHEET

UNIT: 3643
PROJECT NUMBER & PHASE: 0500000049-1
CONTRACT NO.: 05-0F7004

DISREGARD PRINTS BEARING EARLIER REVISION DATES

REVISION DATES 07-24-14 07-24-14 01-26-15

FILE => 44-0040R-2-LTB03.dgn

USERNAME => s115755 DATE PLOTTED => 10-SEP-2015 TIME PLOTTED => 13:12

DIST	COUNTY	ROUTE	POST MILES TOTAL PROJECT	SHEET No	TOTAL SHEETS
05	Mon	68	R17.4/R18.0	142	149

Zheng, Xing 5-22-14
CERTIFIED ENGINEERING GEOLOGIST

6-22-15
PLANS APPROVAL DATE

The State of California or its officers or agents shall not be responsible for the accuracy or completeness of electronic copies of this Plan sheet.

PROFESSIONAL GEOLOGIST Xing Zheng No. 2130 Exp. 3-31-15 CERTIFIED ENGINEERING GEOLOGIST STATE OF CALIFORNIA

This LOTB sheet was prepared in accordance with the Caltrans Soil & Rock Logging, Classification, & Presentation Manual (2010 Edition).

See 2010 Standard Plans A10F and A10G for Soil Legend, and A10H for Rock Legend.

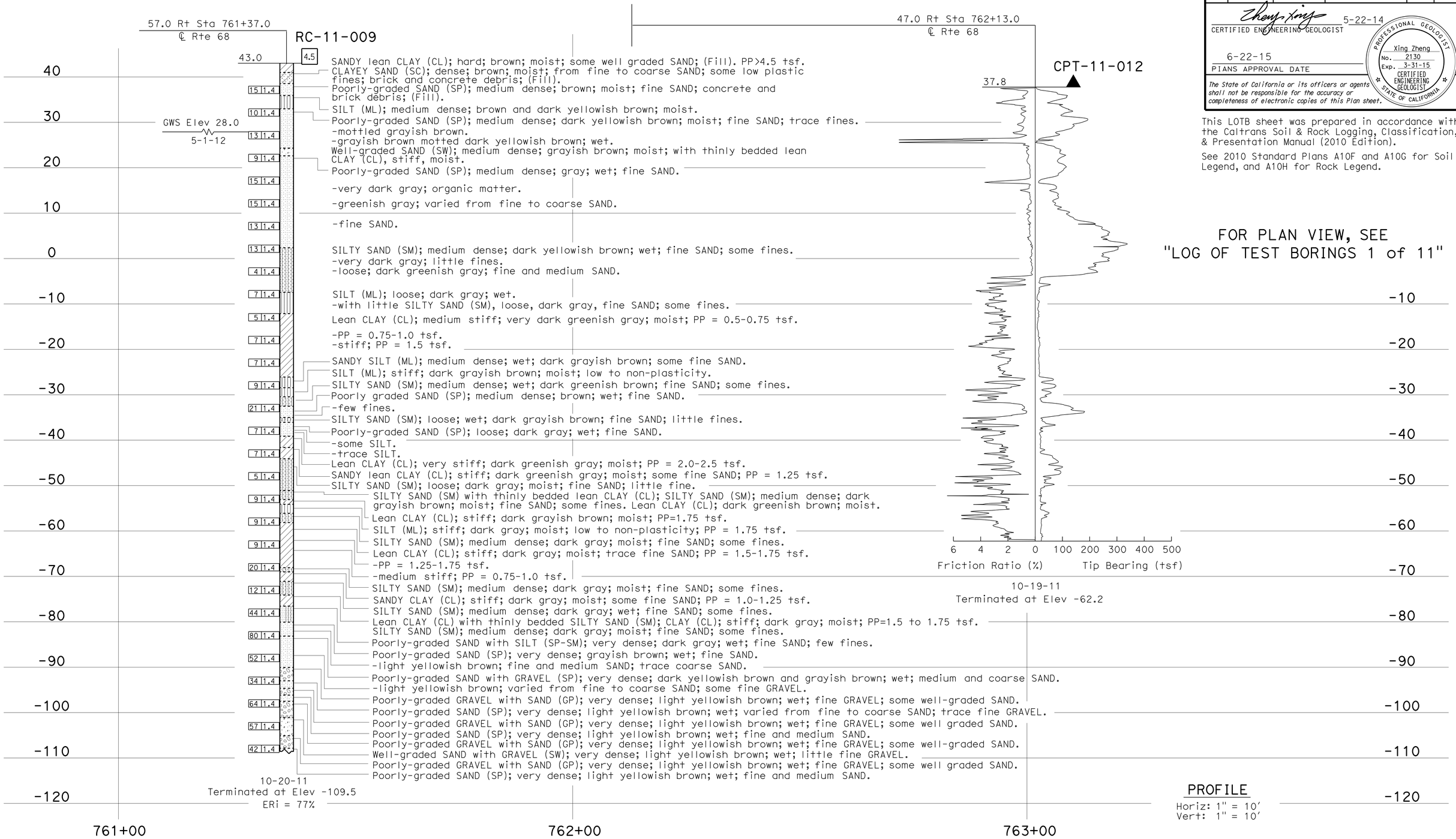

FOR PLAN VIEW, SEE "LOG OF TEST BORINGS 1 of 11"

PROFILE
Horiz: 1" = 10'
Vert: 1" = 10'

ENGINEERING SERVICES	MATERIALS AND GEOTECHNICAL SERVICES	STATE OF CALIFORNIA DEPARTMENT OF TRANSPORTATION	DIVISION OF ENGINEERING SERVICES STRUCTURE DESIGN DESIGN BRANCH 6	BRIDGE NO. 44-0040R/L POST MILE R17.7	SALINAS RIVER BRIDGE LOG OF TEST BORINGS 4 of 11
FUNCTIONAL SUPERVISOR NAME: R. Buell	DRAWN BY: W. Tang 10/13 CHECKED BY: C. Koepke	FIELD INVESTIGATION BY: X. Zheng / L. Mejia-Paredes			

OGS CIVIL LOG OF TEST BORINGS SHEET

ORIGINAL SCALE IN INCHES FOR REDUCED PLANS 0 1 2 3

UNIT: 3643
PROJECT NUMBER & PHASE: 0500000049-1 CONTRACT NO.: 05-0F7004

DISREGARD PRINTS BEARING EARLIER REVISION DATES

REVISION DATES 01-10-14 03-06-14 03-26-14 04-07-14 SHEET 37 OF 44

FILE => 44-0040rl-z-ltb04.dgn

USERNAME => s115755 DATE PLOTTED => 10-SEP-2015 TIME PLOTTED => 13:12

DIST	COUNTY	ROUTE	POST MILES TOTAL PROJECT	SHEET No	TOTAL SHEETS
05	Mon	68	R17.4/R18.0	143	149

Zheng, Xing 5-22-14
CERTIFIED ENGINEERING GEOLOGIST

6-22-15
PLANS APPROVAL DATE

PROFESSIONAL GEOLOGIST Xing Zheng No. 2130 Exp. 3-31-15 CERTIFIED ENGINEERING GEOLOGIST STATE OF CALIFORNIA

The State of California or its officers or agents shall not be responsible for the accuracy or completeness of electronic copies of this Plan sheet.

This LOTB sheet was prepared in accordance with the Caltrans Soil & Rock Logging, Classification, & Presentation Manual (2010 Edition).

See 2010 Standard Plans A10F and A10G for Soil Legend, and A10H for Rock Legend.

FOR PLAN VIEW, SEE "LOG OF TEST BORINGS 1 of 11"

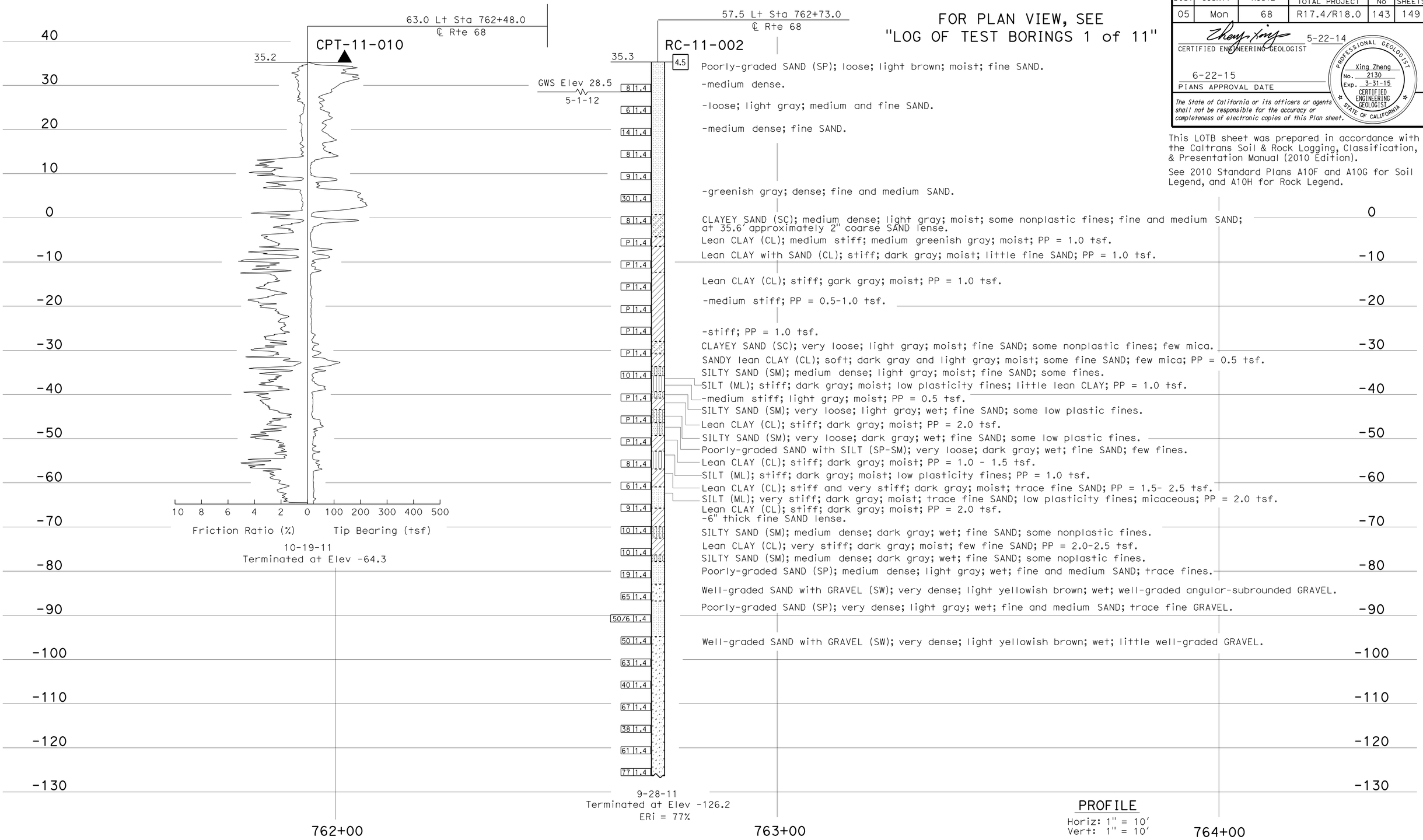

ENGINEERING SERVICES	MATERIALS AND GEOTECHNICAL SERVICES	STATE OF CALIFORNIA DEPARTMENT OF TRANSPORTATION	DIVISION OF ENGINEERING SERVICES STRUCTURE DESIGN DESIGN BRANCH 6	BRIDGE NO. 44-0040R/L POST MILE R17.7	SALINAS RIVER BRIDGE LOG OF TEST BORINGS 5 of 11
FUNCTIONAL SUPERVISOR NAME: R. Buell	DRAWN BY: W. Tang 10/13 CHECKED BY: C. Koepke	FIELD INVESTIGATION BY: X. Zheng / L. Mejia-Paredes			

OGS CIVIL LOG OF TEST BORINGS SHEET

ORIGINAL SCALE IN INCHES FOR REDUCED PLANS 0 1 2 3

UNIT: 3643
PROJECT NUMBER & PHASE: 0500000049-1 CONTRACT NO.: 05-0F7004

DISREGARD PRINTS BEARING EARLIER REVISION DATES → REVISION DATES 01-10-14 03-06-14 03-26-14 04-07-14

SHEET 38 OF 44

FILE => 44-0040rl-z-ltb05.dgn

USERNAME => s115755 DATE PLOTTED => 10-SEP-2015 TIME PLOTTED => 13:12

DIST	COUNTY	ROUTE	POST MILES TOTAL PROJECT	SHEET No	TOTAL SHEETS
05	Mon	68	R17.4/R18.0	144	149

Xing Zheng 5-22-14
CERTIFIED ENGINEERING GEOLOGIST

6-22-15
PLANS APPROVAL DATE

PROFESSIONAL GEOLOGIST Xing Zheng No. 2130 Exp. 3-31-15 CERTIFIED ENGINEERING GEOLOGIST STATE OF CALIFORNIA

The State of California or its officers or agents shall not be responsible for the accuracy or completeness of electronic copies of this Plan sheet.

This LOTB sheet was prepared in accordance with the Caltrans Soil & Rock Logging, Classification, & Presentation Manual (2010 Edition).

See 2010 Standard Plans A10F and A10G for Soil Legend, and A10H for Rock Legend.

FOR PLAN VIEW, SEE
"LOG OF TEST BORINGS 1 of 11"

54.0 Rt Sta 762+93.0
℄ Rte 68

RC-11-007

36.8

GWS Elev 27.9
5-1-12

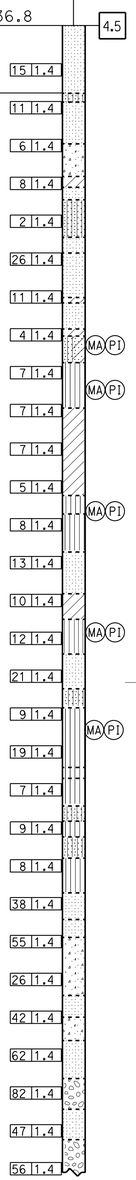

Poorly-graded SAND (SP); loose; yellowish brown; grade from dry to moist from surface to a depth of 2 feet; fine SAND.
-medium dense; moist.
SILTY SAND (SM); medium dense; yellowish brown; moist; fine SAND; some fines; organic matter.
Poorly-graded SAND (SP); medium dense; light yellowish brown; moist; fine SAND.
-fine and medium SAND.
Well-graded SAND (SW); loose; light gray; moist.
-few fine GRAVEL.
Lean CLAY (CL); medium stiff; dark gray; moist; trace fine GRAVEL; PP = 0.75-1.0 tsf.
Poorly-graded SAND (SP); medium dense; gray; wet; fine SAND.
SILTY SAND (SM) with thin bedded lean CLAY (CL). SAND (SM), very loose, gray, wet, fine SAND, some fines. CLAY (CL), medium stiff, gray, moist.
Poorly graded SAND (SP) with thin bedded lean CLAY (CL). SAND (SP), medium dense, light gray, wet, medium SAND. CLAY (CL), medium stiff, gray, moist.
Poorly-graded SAND (SP); dense; light gray; wet; fine and medium SAND.
-predominant fine SAND.
Lean CLAY (CL); medium stiff; dark gray; moist; PP = 0.5-0.75 tsf.
Poorly-graded SAND (SP); medium dense; gray; wet; varied from fine to coarse SAND.
Lean CLAY (CL); medium stiff; dark gray and very dark gray; moist; PP = 0.75-1.0 tsf.
SILTY CLAYEY SAND (SC-SM); loose; gray; wet; fine SAND; some fines (49%).
SILT (ML); medium stiff; gray mottled with light yellowish brown; moist; PP = 0.5-0.75 tsf.
Lean CLAY (CL); medium stiff; dark gray; moist; PP = 0.5-0.75 tsf.
-stiff; PP = 1.0-1.5 tsf.
-medium stiff; PP = 0.5-0.75 tsf.
-stiff; PP = 1.0-1.5 tsf.
-medium stiff; PP = 0.75 tsf.
-PP = 0.6-0.75 tsf.
SILT with SAND (ML); medium stiff; moist; light yellowish brown; little fine SAND (22%); PP=0.5-0.75 tsf.
SANDY SILT (ML); medium dense; light yellowish brown; moist; some fine SAND; low plastic fines.
-with thin bedded SILT (ML); medium stiff; light yellowish brown; moist.
Poorly-graded SAND (SP); medium dense; light gray; wet; fine SAND.
-SILT laminations.
Lean CLAY (CL); very stiff; gray; moist; PP = 2.25 tsf.
SANDY SILT (ML); medium dense; light gray; wet; some fine SAND (50%).
Poorly-graded SAND (SP); medium dense; light gray; wet; fine SAND; trace fines.
SILTY SAND (SM); medium dense; light gray; wet; fine SAND; some fines.
SILT (ML); very stiff; light gray; moist; low plastic fines; PP= 2.25 tsf.
-stiff; light gray; moist; low plastic fines; PP = 1.25-1.75 tsf.
SANDY SILT (ML); stiff; gray; moist; some fine SAND; low plastic fines; PP = 1.5 tsf.
SILT (ML); stiff; dark gray; moist; few fine SAND; low plastic fines; orgnic matter; PP = 1.5 tsf.
SILTY SAND (SM); medium dense; gray; wet; fine SAND; some fines.
SILT (ML); stiff; gray; moist; low plastic fines; PP = 1.25-1.5 tsf.
SILTY SAND (SM); medium dense; light gray; wet; fine SAND; some fines; with CLAY laminations.
SILT (ML); stiff; gray; moist; PP = 1.25-1.5 tsf.
-PP = 1.75-2.0 tsf.
Poorly-graded SAND (SP); dense; light gray; wet; fine SAND.
-very dense; light yellowish brown; fine and medium SAND.
Poorly-graded SAND with GRAVEL (SP); very dense; light yellowish brown; wet; medium and coarse SAND; little fine GRAVEL.
Well-graded SAND (SW); very dense; light yellowish brown; wet; trace fine GRAVEL.
-little fine GRAVEL.
-dense.
Poorly-graded SAND with GRAVEL (SP); very dense; light yellowish brown; wet; fine and medium SAND; little fine GRAVEL.
Well-graded SAND with GRAVEL (SW); very dense; light yellowish brown; wet; little fine GRAVEL.
Poorly-graded SAND with GRAVEL (SP); very dense; light yellowish brown; wet; some fine and coarse GRAVEL.
Poorly-graded GRAVEL with SAND (GP); very dense; light yellowish brown; wet; fine GRAVEL; some well-graded SAND.
Poorly-graded SAND (SP); very dense; light yellowish brown; wet; fine SAND.
Poorly-graded GRAVEL with SAND (GP); very dense; light yellowish brown; wet; fine GRAVEL; some poorly graded SAND.

10-14-11
Terminated at Elev -114.7
ERi = 77%

40 30 20 10 0 -10 -20 -30 -40 -50 -60 -70 -80 -90 -100 -110 -120

762+50 763+50 764+50

PROFILE
Horiz: 1" = 10'
Vert: 1" = 10'

ENGINEERING SERVICES	MATERIALS AND GEOTECHNICAL SERVICES	STATE OF CALIFORNIA DEPARTMENT OF TRANSPORTATION	DIVISION OF ENGINEERING SERVICES STRUCTURE DESIGN DESIGN BRANCH 6	BRIDGE NO. 44-0040R/L POST MILE R17.7	SALINAS RIVER BRIDGE LOG OF TEST BORINGS 6 of 11
FUNCTIONAL SUPERVISOR NAME: R. Buell	DRAWN BY: W. Tang 10/13 CHECKED BY: C. Koepke	FIELD INVESTIGATION BY: X. Zheng / L. Mejia-Paredes			

OGS CIVIL LOG OF TEST BORINGS SHEET

ORIGINAL SCALE IN INCHES FOR REDUCED PLANS 0 1 2 3

UNIT: 3643
PROJECT NUMBER & PHASE: 0500000049-1 CONTRACT NO.: 05-0F7004

DISREGARD PRINTS BEARING EARLIER REVISION DATES → REVISION DATES 01-10-14 03-06-14 03-26-14 04-07-14 SHEET 39 OF 44

FILE => 44-0040rl-z-ltb06.dgn

USERNAME => s115755 DATE PLOTTED => 10-SEP-2015 TIME PLOTTED => 13:12

DIST	COUNTY	ROUTE	POST MILES TOTAL PROJECT	SHEET No	TOTAL SHEETS
05	Mon	68	R17.4/R18.0	145	149

CERTIFIED ENGINEERING GEOLOGIST 5-22-14

6-22-15
PLANS APPROVAL DATE

PROFESSIONAL GEOLOGIST Xing Zheng No. 2130 Exp. 3-31-15 CERTIFIED ENGINEERING GEOLOGIST STATE OF CALIFORNIA

The State of California or its officers or agents shall not be responsible for the accuracy or completeness of electronic copies of this Plan sheet.

FOR PLAN VIEW, SEE
"LOG OF TEST BORINGS 1 of 11"

This LOTB sheet was prepared in accordance with the Caltrans Soil & Rock Logging, Classification, & Presentation Manual (2010 Edition).

See 2010 Standard Plans A10F and A10G for Soil Legend, and A10H for Rock Legend.

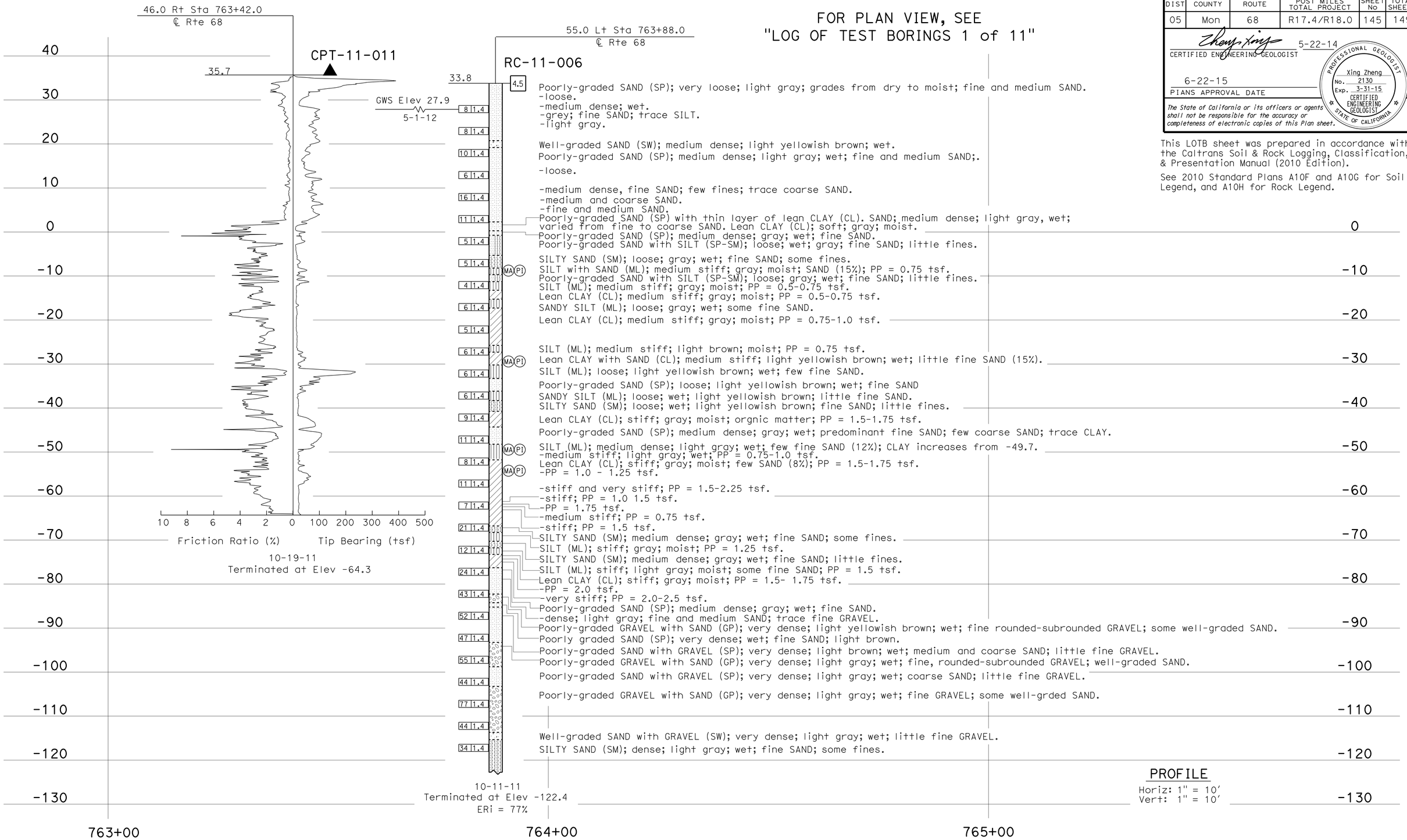

ENGINEERING SERVICES	MATERIALS AND GEOTECHNICAL SERVICES	STATE OF CALIFORNIA DEPARTMENT OF TRANSPORTATION	DIVISION OF ENGINEERING SERVICES STRUCTURE DESIGN DESIGN BRANCH 6	BRIDGE NO. 44-0040R/L POST MILE R17.7	SALINAS RIVER BRIDGE LOG OF TEST BORINGS 7 of 11
FUNCTIONAL SUPERVISOR NAME: R. Buell	DRAWN BY: W. Tang 10/13 CHECKED BY: C. Koepke	FIELD INVESTIGATION BY: X. Zheng / L. Mejia-Paredes			

OGS CIVIL LOG OF TEST BORINGS SHEET

ORIGINAL SCALE IN INCHES FOR REDUCED PLANS 0 1 2 3

UNIT: 3643
PROJECT NUMBER & PHASE: 0500000049-1 CONTRACT NO.: 05-0F7004

DISREGARD PRINTS BEARING EARLIER REVISION DATES → REVISION DATES 01-10-14 03-06-14 03-26-14 SHEET 40 OF 44

FILE => 44-0040rl-z-ltb07.dgn

USERNAME => s115755 DATE PLOTTED => 10-SEP-2015 TIME PLOTTED => 13:12

FOR PLAN VIEW, SEE
"LOG OF TEST BORINGS 1 of 11"

56.0 Rt Sta 764+43.5
℄ Rte 68

RC-11-001

33.0

4.5 Poorly-graded SAND (SP); loose; light gray; dry; fine SAND; few fine GRAVEL;
-medium dense; light brown; grade from moist to wet.

GWS Elev 27.5
5-1-12

8 1.4
7 1.4 Poorly-graded SAND with SILT (SP-SM); loose; light gray; wet; fine SAND; little fines.
10 1.4 Poorly-graded SAND (SP); medium dense; light gray; wet; medium SAND.
12 1.4
5 1.4 MA PI SANDY SILTY CLAY (CL-ML); medium stiff; light gray; wet; some fine SAND (32%); PP = 0.5 tsf.
SANDY lean CLAY (CL); soft; light yellowish brown; wet; some fine SAND; PP = 0.25-0.5 tsf.
5 1.4 MA PI CLAYEY SAND (SC); loose; dark gray; moist; medium and fine SAND; little fines (23%); PP = 0.5-1.5 tsf.
3 1.4 Well-graded SAND (SW); loose; dark gray; wet.
Lean CLAY (CL); stiff; dark gray; moist; PP = 1.0-1.25 tsf.
10 1.4 MA PI SILTY CLAY with SAND (CL-ML); medium stiff; dark gray; wet; little fine SAND (16%).
3 1.4 PI Lean CLAY (CL); soft; medium gray; very moist; PP = 0.5 tsf.
-PP = 0.75 tsf.
9 1.4 -stiff; moist; PP = 1.5 - 1.75 tsf.
3 1.4 -soft; PP = 0.25-0.5 tsf.
-medium stiff; PP = 0.5-0.75 tsf.
6 1.4 MA PI -stiff; little fine SAND (17%); light yellowish brown; PP = 1-1.5 tsf.
15 1.4 Poorly-graded SAND (SP); medium dense; light yellowish brown; wet; fine SAND; little fines.
8 1.4 MA PI Lean CLAY (CL); soft; light gray; wet; PP = 0.5 tsf.
6 1.4 MA PI SANDY lean CLAY (CL); stiff; gray; moist; little fine SAND; PP = 2 tsf.
SILTY SAND (SM); loose; gray; wet; SAND (61%); some fines (39%).
11 1.4 MA PI SANDY SILT (ML); medium dense; light gray; wet; some fine SAND (47%).
7 1.4 SILTY SAND (SM); loose; light gray; wet; fine SAND; some fines.
21 1.4 MA PI Lean CLAY with SAND (CL); medium dense; light gray; wet; little fine SAND (17%).
6 1.4 CLAYEY SAND (SC); loose; gray; very moist; fine SAND; some fines.
SILT (ML); stiff; gray; moist; low plastic fines; PP = 1.25-1.75 tsf.
7 1.4
12 1.4 SILTY SAND (SM); medium dense; gray; wet; fine SAND; some fines.
Lean CLAY (CL); stiff; gray; moist; PP = 1.25 -1.5 tsf.
56 1.4 Poorly-graded SAND (SP); very dense; gray; wet; fine SAND; few fines.
Poorly-graded SAND with GRAVEL (SP); very dense; light gray; wet; coarse SAND; little fines; little rounded GRAVEL.
73 1.4 Poorly-graded SAND (SP); very dense; light gray; wet; medium SAND.
Well-graded GRAVEL with SAND (GW); very dense; light yellowish brown; wet; rounded-subrounded GRAVEL; some well-graded SAND; moderate cementation.
48 1.4 Well-graded SAND with GRAVEL (SW); very dense; light yellowish brown; wet; some fine subrounded GRAVEL.
38 1.4 Well-graded GRAVEL with SAND (GW); dense; light yellowish brown; wet; subrounded GRAVEL; some well-graded SAND.
Poorly-graded SAND with GRAVEL (SP); very dense; light yellowish brown; wet; medium and coarse SAND; some fine GRAVEL.
50 1.4 Poorly graded SAND (SP); very dense; light yellowish brown; wet; fine and medium SAND.
61 1.4 Well-graded SAND with GRAVEL (SW); very dense; light gray; moist; some fine rounded-subrounded GRAVEL; moderate cementation.
Well-graded GRAVEL with SAND (GW); very dense; light gray; moist; some well-graded SAND; moderate cementation.
34 1.4 Poorly-graded SAND with GRAVEL (SP); dense; light gray; wet; some fine rounded GRAVEL.
96 1.4 SILTY SAND (SM); very dense; light yellowish brown; moist; fine SAND; some fines; weak cementation.
53 1.4 Poorly-graded SAND (SP); very dense; light gray; wet; medium SAND, minor fine and coarse SAND.
Poorly-graded SAND with SILT (SP-SM); very dense; light gray; wet; fine SAND; few fines; weak cementation.
65 1.4
86 1.4 Poorly-graded SAND (SP); very dense; light gray; wet; fine SAND; minor coarse SAND; with SANDY SILT (ML) layers (± 6" thick), light gray.
61 1.4 SILTY SAND (SM); very dense;very light reddish brown; moist; fine SAND; some fines; weak cementation.
69 1.4 Poorly-graded SAND (SP); very dense; very light reddish brown; wet; predominately medium and coarse SAND; few fine GRAVEL; weak cementation.
53/5 1.4 -few fine and coarse GRAVEL.
-very yellowish brown; fine and medium SAND.
80 1.4 Poorly-graded SAND with SILT (SP-SM); very dense; light yellowish brown; moist; fine SAND; few fines; weak cementation.
50/4 1.4 Poorly-graded SAND (SP); very dense; light gray; wet; fine SAND.
Poorly-graded SAND with SILT (SP-SM); very dense; light gray; moist; fine SAND; few fines; weak cementation.
54/3 1.4 Poorly-graded SAND with GRAVEL (SP); very dense; light yellowish brown; wet; alternate thin fine SAND layer and coarse SAND layers; little fine GRAVEL .
50/4 1.4
50/3 1.4 Well-graded SAND (SW); very dense; light gray; wet; few fine GRAVEL.

9-29-11
Terminated at Elev -167.5
ERi = 81%

40 30 20 10 0 -10 -20 -30 -40 -50 -60 -70 -80 -90 -100 -110 -120 -130 -140 -150 -160 -170

764+00 764+50 765+00

PROFILE
Horiz: 1" = 10'
Vert: 1" = 10'

This LOTB sheet was prepared in accordance with the Caltrans Soil & Rock Logging, Classification, & Presentation Manual (2010 Edition).
See 2010 Standard Plans A10F and A10G for Soil Legend, and A10H for Rock Legend.

CERTIFIED ENGINEERING GEOLOGIST 5-22-14
PLANS APPROVAL DATE 6-22-15
The State of California or its officers or agents shall not be responsible for the accuracy or completeness of electronic copies of this plan sheet.
PROFESSIONAL GEOLOGIST Xing Zheng No. 2130 Exp. 3-31-15 CERTIFIED ENGINEERING GEOLOGIST STATE OF CALIFORNIA

DIST	COUNTY	ROUTE	POST MILES TOTAL PROJECT	SHEET NO	TOTAL SHEETS
05	Mon	68	R17.4/R18.0	146	149

ENGINEERING SERVICES
MATERIALS AND GEOTECHNICAL SERVICES

FUNCTIONAL SUPERVISOR
NAME: R. Buell
DRAWN BY: W. Tang 10/13
CHECKED BY: J. Thorne
FIELD INVESTIGATION BY: X. Zheng / L. Mejia-Paredes
ORIGINAL SCALE IN INCHES FOR REDUCED PLANS 0 1 2 3

STATE OF CALIFORNIA
DEPARTMENT OF TRANSPORTATION
DIVISION OF ENGINEERING SERVICES
STRUCTURE DESIGN
DESIGN BRANCH 6
BRIDGE NO. 44-0040R/L
POST MILE R17.7

SALINAS RIVER BRIDGE
LOG OF TEST BORINGS 8 OF 11

UNIT: 3643
PROJECT NUMBER & PHASE: 0500000049-1
CONTRACT NO.: 05-0F7004
DISREGARD PRINTS BEARING EARLIER REVISION DATES
REVISION DATES
SHEET 41 OF 44

FILE => 44-0040r1-2-ltb08.dgn
DGS CIVIL LOG OF TEST BORINGS SHEET
USERNAME => s115755 DATE PLOTTED => 10-SEP-2015 TIME PLOTTED => 13:12

FOR PLAN VIEW, SEE
"LOG OF TEST BORINGS 1 of 11"

67.0 Lt Sta 767+41.0
℄ Rte 68

RC-11-005

42.5

GWS Elev 27.5
5-1-12

Elev	N	Description
4.5		Poorly-graded SAND (SP); loose; yellowish brown; dry; predominate fine SAND; (Fill).
40	11 1.4	SILTY SAND (SM); loose; light brown; moist; fine and medium SAND; some fines; (Fill).
40	7 1.4	-fine SAND.
30	10 1.4	-No recovery. Estimate 25% COBBLES from drilling.
30	6 1.4	Poorly-graded SAND with GRAVEL (SP); loose; medium yellowish brown; moist; fine and medium SAND; little fine and coarse GRAVEL; (Fill). -30% COBBLES (estimated).
20	10 1.4	Well-graded SAND (SW); medium dense; light brown; wet.
20	10 1.4	Poorly-graded SAND (SP); medium dense; light brown; wet; fine and medium SAND.
10	10 1.4	Lean CLAY (CL); medium stiff; gray; moist; PP = 1.0 tsf.
10	4 1.4	Poorly-graded SAND (SP); medium dense; light brown; wet; fine and medium SAND.
10	4 1.4	Lean CLAY (CL); medium stiff; gray; moist; PP = 1.0 tsf.
0	3 1.4	Poorly-graded SAND (SP); medium dense; light brown to gray; wet; fine SAND; few fines.
0	P 1.4	SILT (ML); from soft to stiff; gray; wet; PP = 0.5 - 2.0 tsf.
0	P 1.4	Lean CLAY (CL); stiff; gray; moist; PP = 2.0 tsf.
0	P 1.4	SILTY SAND (SM); very loose; gray; wet; fine SAND; some fines.
-10	10 1.4	SANDY SILT (ML); medium dense gray; moist; some fine SAND; low plastic fines.
-10	5 1.4	SILT (ML); medium stiff; gray; moist; low plastic fines; PP = 0.5-1.0 tsf.
-20	5 1.4	Lean CLAY (CL); stiff; dark gray; moist; PP = 1.0 to 2.0 tsf.
-20	7 1.4	
-30	7 1.4	SANDY SILT (ML); loose; gray; wet; some fine SAND.
-30	32 1.4	Poorly-graded SAND (SP); dense; light brown; wet; fine and medium SAND.
-40	45 1.4	Lean CLAY (CL); medium stiff; gray; moist; PP = 1.0 tsf.
-40	45 1.4	Poorly-graded SAND (SP); very dense; light brown; moist; fine and medium SAND.
-50	41 1.4	-grayish green; trace coarse SAND.
-50	38 1.4	
-60	13 1.4	Lean CLAY (CL); very stiff; gray; moist; PP = 2.0 tsf.
-60	9 1.4	SILT (ML); stiff; gray; moist; PP = 1.0-1.5 tsf.
-70	8 1.4	-PP = 2.0 tsf.
-70	8 1.4	Lean CLAY (CL); varied from stiff to very stiff; light gray; moist; PP = 1.0 and 2.5 tsf.
-70	12 1.4	SANDY SILT (ML); dense; light gray; moist; some fine SAND; nonplastic fines.
-70	12 1.4	SILT (ML); stiff; lighy gray; moist; low plastic fines; PP = 1.5 tsf.
-70	12 1.4	Lean CLAY (CL); stiff; light gray; moist; PP = 1.0-1.5 tsf.
-80	14 1.4	SILT (ML); stiff; light gray; moist; PP = 1.5-2.0 tsf.
-80	14 1.4	Lean CLAY (CL); stiff; light gray; moist; PP = 1.0-2.0 tsf.
-90	52 1.4	Well-graded SAND with GRAVEL (SW); very dense; light brown; wet; little fine and coarse GRAVEL.
-90	58 1.4	
-100	34 1.4	
-100	40 1.4	
-110	55 1.4	
-110	52 1.4	
-120	50/5 1.4	
-120	50/6 1.4	Poorly-graded SAND with SILT (SP-SM); very dense; light brown; wet; fine SAND; few coarse SAND; few fines.
-120	50/5 1.4	SILTY SAND with COBBLES (SP); very dense; light yellowish brown; wet; fine SAND; some fines; 10% COBBLES (estimated).
-130	50/3 1.4	SILTY SAND (SM); very dense; light brown; wet; fine SAND; few coarse GRAVEL; some nonplastic fines.
-130	REF 1.4	
-140	50/4 1.4	
-140	50/6 1.4	SILTY SAND with GRAVEL (SM); dense; light yellowish gray; moist; fine SAND; few fine and coarse GRAVEL; some fines.
-150	35 1.4	
-150	50/3.5 1.4	Poorly-graded SAND with GRAVEL (SP); very dense; light yellowish brown; wet; fine and medium SAND; little fine and coarse GRAVEL.
-160	50/6 1.4	SANDY lean CLAY (CL); hard; light gray; moist; some fine SAND; PP>4.5 tsf.

10-6-11
Terminated at Elev -159.0
ERi = 77%

767+00 767+50 768+00

PROFILE
Horiz: 1" = 10'
Vert: 1" = 10'

This LOTB sheet was prepared in accordance with the Caltrans Soil & Rock Logging, Classification, & Presentation Manual (2010 Edition).
See 2010 Standard Plans A10F and A10G for Soil Legend, and A10H for Rock Legend.

CERTIFIED ENGINEERING GEOLOGIST 5-22-14
6-22-15
PLANS APPROVAL DATE
PROFESSIONAL GEOLOGIST Xing Zheng No. 2130 Exp. 3-31-15 CERTIFIED ENGINEERING GEOLOGIST STATE OF CALIFORNIA
The State of California or its officers or agents shall not be responsible for the accuracy or completeness of electronic copies of this plan sheet.

DIST	COUNTY	ROUTE	POST MILES TOTAL PROJECT	SHEET NO	TOTAL SHEETS
05	Mon	68	R17.4/R18.0	147	149

ENGINEERING SERVICES
MATERIALS AND GEOTECHNICAL SERVICES
FUNCTIONAL SUPERVISOR
NAME: R. Buell
DRAWN BY: W. Tang 10/13
CHECKED BY: J. Thorne
FIELD INVESTIGATION BY: X. Zheng / L. Mejia-Paredes
ORIGINAL SCALE IN INCHES FOR REDUCED PLANS 0 1 2 3
STATE OF CALIFORNIA
DEPARTMENT OF TRANSPORTATION
DIVISION OF ENGINEERING SERVICES
STRUCTURE DESIGN
DESIGN BRANCH 6
BRIDGE NO. 44-0040R/L
POST MILE R17.7
UNIT: 3643
PROJECT NUMBER & PHASE: 0500000049-1
CONTRACT NO.: 05-0F7004
DISREGARD PRINTS BEARING EARLIER REVISION DATES
REVISION DATES D-MM-YY D-MM-YY D-MM-YY 00-07-14
SHEET 42 OF 44

SALINAS RIVER BRIDGE
LOG OF TEST BORINGS 9 OF 11

005 CIVIL LOG OF TEST BORINGS SHEET
FILE => 44-0040r1-2-tb09.dgn
USERNAME => s115755 DATE PLOTTED => 10-SEP-2015 TIME PLOTTED => 13:12

DIST	COUNTY	ROUTE	POST MILES TOTAL PROJECT	SHEET No	TOTAL SHEETS
05	Mon	68	R17.4/R18.0	148	149

CERTIFIED ENGINEERING GEOLOGIST 5-22-14

6-22-15
PIANS APPROVAL DATE

PROFESSIONAL GEOLOGIST Xing Zheng No. 2130 Exp. 3-31-15 CERTIFIED ENGINEERING GEOLOGIST STATE OF CALIFORNIA

The State of California or its officers or agents shall not be responsible for the accuracy or completeness of electronic copies of this Plan sheet.

This LOTB sheet was prepared in accordance with the Caltrans Soil & Rock Logging, Classification, & Presentation Manual (2010 Edition).

See 2010 Standard Plans A10F and A10G for Soil Legend, and A10H for Rock Legend.

FOR PLAN VIEW, SEE
"LOG OF TEST BORINGS 1 of 11"

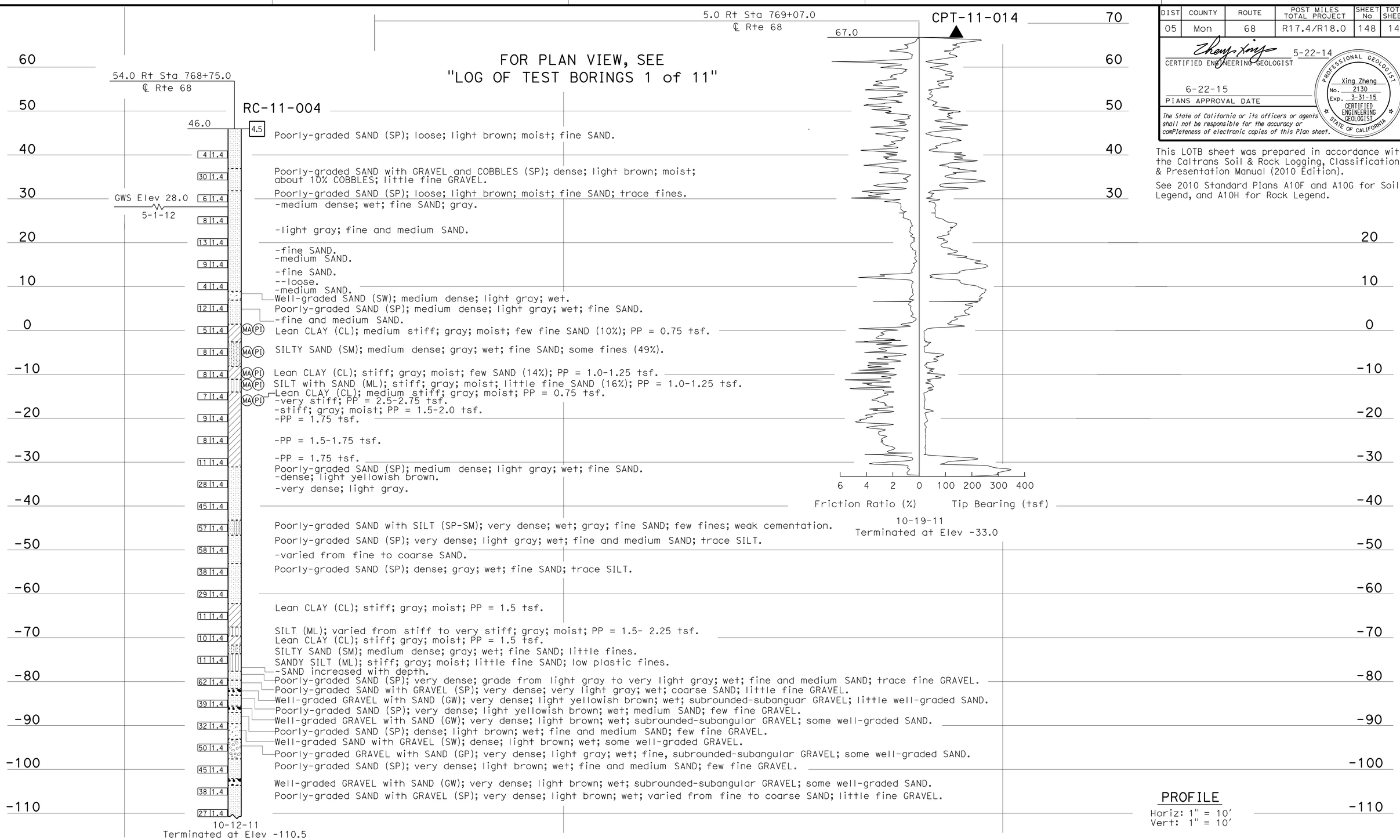

ENGINEERING SERVICES	MATERIALS AND GEOTECHNICAL SERVICES	STATE OF CALIFORNIA DEPARTMENT OF TRANSPORTATION	DIVISION OF ENGINEERING SERVICES STRUCTURE DESIGN DESIGN BRANCH 6	BRIDGE NO. 44-0040R/L POST MILE R17.7	SALINAS RIVER BRIDGE LOG OF TEST BORINGS 10 of 11
FUNCTIONAL SUPERVISOR NAME: R. Buell	DRAWN BY: W. Tang 10/13 CHECKED BY: C. Koepke	FIELD INVESTIGATION BY: X. Zheng / L. Mejia-Paredes			

OGS CIVIL LOG OF TEST BORINGS SHEET

ORIGINAL SCALE IN INCHES FOR REDUCED PLANS 0 1 2 3

UNIT: 3643
PROJECT NUMBER & PHASE: 0500000049-1 CONTRACT NO.: 05-0F7004

DISREGARD PRINTS BEARING EARLIER REVISION DATES

REVISION DATES 01-10-14 03-06-14 03-26-14 SHEET 43 OF 44

FILE => 44-0040rl-z-ltb10.dgn

USERNAME => s115755 DATE PLOTTED => 10-SEP-2015 TIME PLOTTED => 13:12

August 10, 1964

6-22-15
PLANS APPROVAL DATE

BM
T-bar ℄ cap
25'lt "LO" ℄ 765+97±
Elev. 33.737

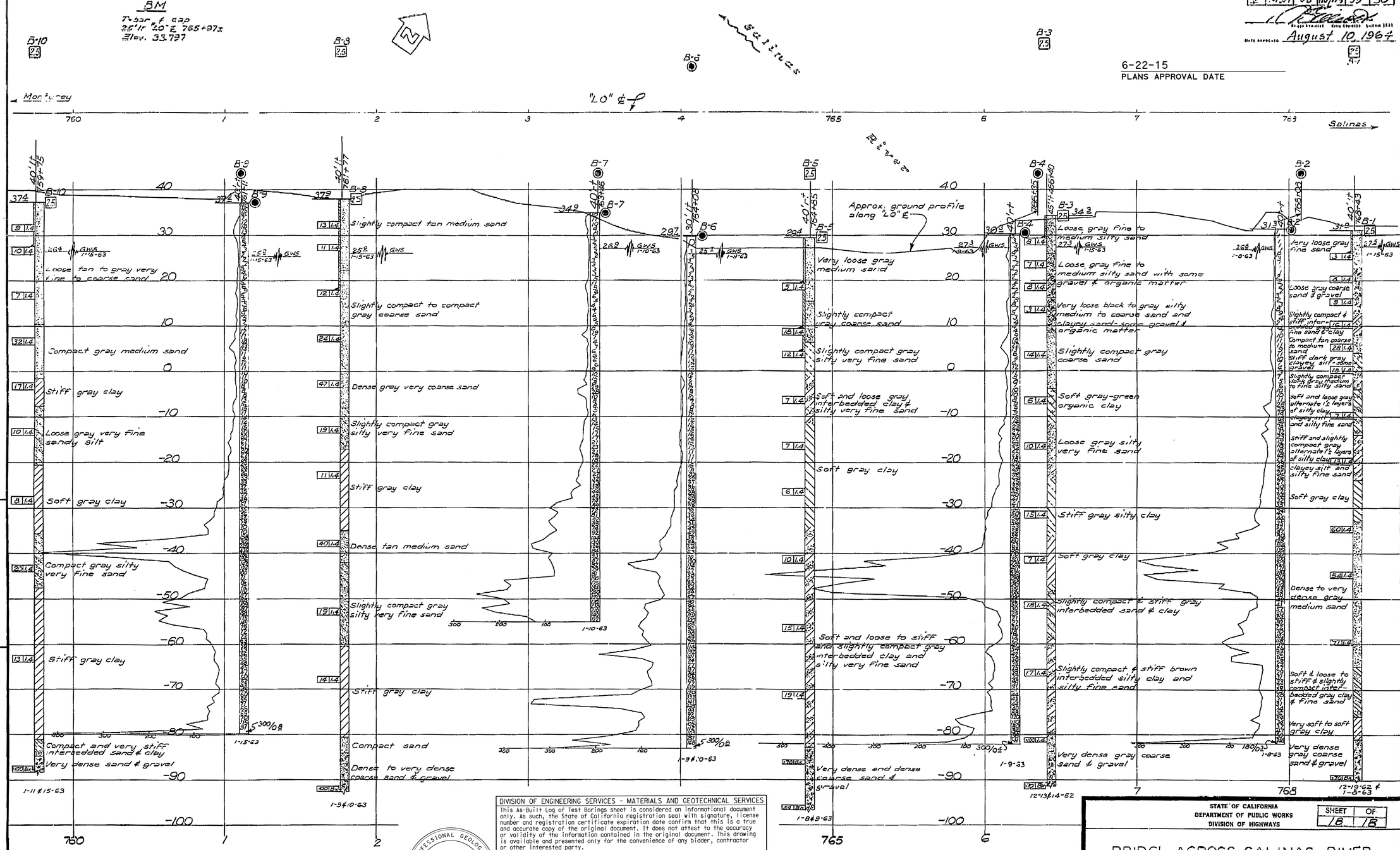

LEGEND OF BORING OPERATIONS

PENETROMETER
2¼" CORE PENETROMETER
SAMPLER BORING (SPV)
ROTARY BORING (RVC)
AUGER BORING (PEN)
JET BORING
CORE BORING
TEST PIT

PENETRATION RESISTANCE
ROTARY BORING
1" SOIL TUBE

LEGEND OF EARTH MATERIALS

GRAVEL
SAND
SILT
CLAY
SILTY CLAY OR CLAYEY SILT
PEAT AND/OR ORGANIC MATTER
FILL MATERIAL
IGNEOUS ROCK
SANDY CLAY OR CLAYEY SAND
SANDY SILT OR SILTY SAND
SEDIMENTARY ROCK
METAMORPHIC ROCK

CLASSIFICATION OF MATERIAL BASED ON STANDARD GRADE SIZE LIMITS

DIAGRAMS SHOWING THE BASIS FOR ESTIMATES OF GRADE SIZE DISTRIBUTION USED IN DETERMINATION OF CLASS NAMES.
IF GRAVEL IS PRESENT IN APPRECIABLE QUANTITIES, THE CLASS NAME OF SAND WILL BE ADDED TO THE CLASS NAME, VIZ. "GRAVELLY SAND". THE TERMS "GRAVEL AND SAND" SHOULD BE USED TO DESCRIBE SAND, SILT AND GRAVEL. REFER TO STANDARD GRADE SIZE LIMITS.

NOTE: Classification of earth material as shown on this sheet is based upon field inspection and is not to be construed to imply mechanical analysis.

FIELD STUDY	By: Shaw, Jr. & Hall	1-63
DRAWN	By: Darr	2-63
CHECKED	By: W. Stoller	2-13-63

Approval Recommended by: R. E. Cobb, Chief Engineer (Geology)

BRIDGE DEPARTMENT
ENGINEERING GEOLOGY SECTION

39

AS BUILT PLANS
Contract No. 14-020814
Date Completed
Document No. 5000107

DIVISION OF ENGINEERING SERVICES - MATERIALS AND GEOTECHNICAL SERVICES

This As-Built Log of Test Borings sheet is considered an informational document only. As such, the State of California registration seal with signature, license number and registration certificate expiration date confirm that this is a true and accurate copy of the original document. It does not attest to the accuracy or validity of the information contained in the original document. This drawing is available and presented only for the convenience of any bidder, contractor or other interested party.

DIST.	COUNTY	ROUTE	POST MILE-TOTAL PROJECT	Sheet No.	Total Sheets
05	Mon	68	R17.7/17.9	44	44

CERTIFIED ENGINEERING GEOLOGIST — DATE 4/8/2014

PROFESSIONAL GEOLOGIST — Xing Zheng — No. 2130 — Exp. 3-31-15 — CERTIFIED ENGINEERING GEOLOGIST — STATE OF CALIFORNIA

SALINAS RIVER BRIDGE
LOG OF TEST BORINGS 11 OF 11

UNIT: 3643	CONTRACT No.	BRIDGE No.
PROJ. No. & PHASE: 05000000491	05-0F7001	44-0040R/L

AS-BUILT VERT DATUM: CONVERSION: Sheet of

NOTE: A COPY OF THIS LOG OF TEST BORINGS IS AVAILABLE AT THE OFFICE OF STRUCTURE MAINTENANCE AND INVESTIGATIONS, SACRAMENTO, CALIFORNIA

THIS SET OF PLANS DOES NOT CORRESPOND TO THE AS-BUILT CONDITION. ENTIRELY TRACING CORRECTED PLANS

STATE OF CALIFORNIA
DEPARTMENT OF PUBLIC WORKS
DIVISION OF HIGHWAYS

SHEET	OF
18	18

BRIDGE ACROSS SALINAS RIVER

LOG OF TEST BORINGS

SCALE Horiz: 1"=30' Vert: 1"=10' | BRIDGE 44-40 R/L | FILE | DRAWING 4440-18

Disregard prints bearing earlier numbers → PREL. DRAWING NO. PR-4440 5 10/1/2

352