INFORMATION HANDOUT

For Contract No. 05-0G0404
At 05-SLO,Mon-101-63.2/R69.3, R0.0/R1.9

Identified by
Project ID 0500020020

PERMITS

1. US Army Corps of Engineers Nationwide Permit 14

AGREEMENTS

2. California Department of Fish and Wildlife Streambed Alteration Agreement No. 1600-2015-0234-R4
3. US Department of the Interior Fish and Wildlife Service Letter of Concurrence
4. US Department of the Commerce Letter of Concurrence

CERTIFICATIONS

5. Central Coast Regional Water Quality Control Board Water Quality Certification No. 34015WQ17

RAILROAD RELATIONS

6. Railroad Relations and Insurance Requirements

MATERIALS INFORMATION

7. Revised Foundation Report North San Miguel UC; dated January 5, 2016.
8. Revised Foundation Report San Marcos Creek Bridge R/L; dated January 5, 2016.
9. Revised Foundation Report South San Miquel UC Left; dated January 5, 2016.
10. Revised Foundation Report South San Miquel UC Right; dated January 5, 2016.
11. Revised Foundation Report Retaining Wall at PM 65.08; dated January 21, 2016.
12. Revised Foundation Report 10th Street UC; dated January 5, 2016
13. Water Source Information
14. Temporary Alternative Crash Cushion System
15. Alternative Flared Terminal System
16. Alternative In-Line Terminal System
17. Alternative Crash Cushion System
18. Geotechnical Design Report
19. Temporary Water Pollution Control Plans

REPLACED PER ADDENDUM NO. 1 DATED SEPTEMBER 2 ,2016

PERMITS

1. US Army Corps of Engineers Nationwide Permit 14

NATIONWIDE PERMIT 14
DEPARTMENT OF THE ARMY
CORPS OF ENGINEERS
FINAL NOTICE OF ISSUANCE AND MODIFICATION OF NATIONWIDE PERMITS
FEDERAL REGISTER
AUTHORIZED MARCH 19, 2012

Linear Transportation Projects. Activities required for the construction, expansion, modification, or improvement of linear transportation projects (e.g., roads, highways, railways, trails, airport runways, and taxiways) in waters of the United States. For linear transportation projects in non-tidal waters, the discharge cannot cause the loss of greater than 1/2-acre of waters of the United States. For linear transportation projects in tidal waters, the discharge cannot cause the loss of greater than 1/3-acre of waters of the United States. Any stream channel modification, including bank stabilization, is limited to the minimum necessary to construct or protect the linear transportation project; such modifications must be in the immediate vicinity of the project.

This NWP also authorizes temporary structures, fills, and work necessary to construct the linear transportation project. Appropriate measures must be taken to maintain normal downstream flows and minimize flooding to the maximum extent practicable, when temporary structures, work, and discharges, including cofferdams, are necessary for construction activities, access fills, or dewatering of construction sites. Temporary fills must consist of materials, and be placed in a manner, that will not be eroded by expected high flows. Temporary fills must be removed in their entirety and the affected areas returned to pre-construction elevations. The areas affected by temporary fills must be revegetated, as appropriate.

This NWP cannot be used to authorize non-linear features commonly associated with transportation projects, such as vehicle maintenance or storage buildings, parking lots, train stations, or aircraft hangars.

Notification: The permittee must submit a pre-construction notification to the district engineer prior to commencing the activity if: (1) the loss of waters of the United States exceeds 1/10-acre; or (2) there is a discharge in a special aquatic site, including wetlands. (See general condition 31.) (Sections 10 and 404)

Note: Some discharges for the construction of farm roads or forest roads, or temporary roads for moving mining equipment, may qualify for an exemption under Section 404(f) of the Clean Water Act (see 33 CFR 323.4).

NATIONWIDE PERMIT CONDITIONS

The following General Conditions must be followed in order for any authorization by a NWP to be valid:

1. Navigation. (a) No activity may cause more than a minimal adverse effect on navigation.

(b) Any safety lights and signals prescribed by the U.S. Coast Guard, through regulations or otherwise, must be installed and maintained at the permittee's expense on authorized facilities in navigable waters of the United States.

(c) The permittee understands and agrees that, if future operations by the United States require the removal, relocation, or other alteration, of the structure or work herein authorized, or if, in the opinion of the Secretary of the Army or his authorized representative, said structure or work shall cause unreasonable obstruction to the free navigation of the navigable waters, the permittee will be required, upon due notice from the Corps of Engineers, to remove, relocate, or alter the structural work or obstructions caused thereby, without expense to the United States. No claim shall be made against the United States on account of any such removal or alteration.

2. Aquatic Life Movements. No activity may substantially disrupt the necessary life cycle movements of those species of aquatic life indigenous to the waterbody, including those species that normally migrate through the area, unless the activity's primary purpose is to impound water. All permanent and temporary crossings of waterbodies shall be suitably culverted, bridged, or otherwise designed and constructed to maintain low flows to sustain the movement of those aquatic species.

3. Spawning Areas. Activities in spawning areas during spawning seasons must be avoided to the maximum extent practicable. Activities that result in the physical destruction (e.g., through excavation, fill, or downstream smothering by substantial turbidity) of an important spawning area are not authorized.

4. Migratory Bird Breeding Areas. Activities in waters of the United States that serve as breeding areas for migratory birds must be avoided to the maximum extent practicable.

5. Shellfish Beds. No activity may occur in areas of concentrated shellfish populations, unless the activity is directly related to a shellfish harvesting activity authorized by NWPs 4 and 48, or is a shellfish seeding or habitat restoration activity authorized by NWP 27.

6. Suitable Material. No activity may use unsuitable material (e.g., trash, debris, car bodies, asphalt, etc.). Material used for construction or discharged must be free from toxic pollutants in toxic amounts (see Section 307 of the Clean Water Act).

7. Water Supply Intakes. No activity may occur in the proximity of a public water supply intake, except where the activity is for the repair or improvement of public water supply intake structures or adjacent bank stabilization.

8. Adverse Effects From Impoundments. If the activity creates an impoundment of water, adverse effects to the aquatic system due to accelerating the passage of water, and/or restricting its flow must be minimized to the maximum extent practicable.

9. Management of Water Flows. To the maximum extent practicable, the pre-construction course, condition, capacity, and location of open waters must be maintained for each activity, including stream channelization and storm water management activities, except as provided below. The activity must be constructed to withstand expected high flows. The activity must not restrict or impede the passage of normal or high flows, unless the primary purpose of the activity is to impound water or manage high flows. The activity may alter the pre-construction course, condition, capacity, and location of open waters if it benefits the aquatic environment (e.g., stream restoration or relocation activities).

10. Fills Within 100-Year Floodplains. The activity must comply with applicable FEMA-approved state or local floodplain management requirements.

11. Equipment. Heavy equipment working in wetlands or mudflats must be placed on mats, or other measures must be taken to minimize soil disturbance.

12. Soil Erosion and Sediment Controls. Appropriate soil erosion and sediment controls must be used and maintained in effective operating condition during construction, and all exposed soil and other fills, as well as any work below the ordinary high water mark or high tide line, must be permanently stabilized at the earliest practicable date. Permittees are encouraged to perform work within waters of the United States during periods of low-flow or no-flow.

13. Removal of Temporary Fills. Temporary fills must be removed in their entirety and the affected areas returned to pre-construction elevations. The affected areas must be revegetated, as appropriate.

14. Proper Maintenance. Any authorized structure or fill shall be properly maintained, including maintenance to ensure public safety and compliance with applicable NWP general conditions, as well as any activity-specific conditions added by the district engineer to an NWP authorization.

15. Single and Complete Project. The activity must be a single and complete project. The same NWP cannot be used more than once for the same single and complete project.

16. Wild and Scenic Rivers. No activity may occur in a component of the National Wild and Scenic River System, or in a river officially designated by Congress as a “study river” for possible inclusion in the system while the river is in an official study status, unless the appropriate Federal agency with direct management responsibility for such river, has determined in writing that the proposed activity will not adversely affect the Wild and Scenic River designation or study status. Information on Wild and Scenic Rivers may be obtained from the appropriate Federal land management agency responsible for the designated Wild and Scenic River or study river (e.g., National Park Service, U.S. Forest Service, Bureau of Land Management, U.S. Fish and Wildlife Service).

17. Tribal Rights. No activity or its operation may impair reserved tribal rights, including, but not limited to, reserved water rights and treaty fishing and hunting rights.

18. Endangered Species. (a) No activity is authorized under any NWP which is likely to directly or indirectly jeopardize the continued existence of a threatened or endangered species or a species proposed for such designation, as identified under the Federal Endangered Species Act (ESA), or which will directly or indirectly destroy or adversely modify the critical habitat of such species. No activity is authorized under any NWP which "may affect" a listed species or critical habitat, unless Section 7 consultation addressing the effects of the proposed activity has been completed.

(b) Federal agencies should follow their own procedures for complying with the requirements of the ESA. Federal permittees must provide the district engineer with the appropriate documentation to demonstrate compliance with those requirements. The district engineer will review the documentation and determine whether it is sufficient to address ESA compliance for the NWP activity, or whether additional ESA consultation is necessary.

(c) Non-federal permittees must submit a pre-construction notification to the district engineer if any listed species or designated critical habitat might be affected or is in the vicinity of the project, or if the project is located in designated critical habitat, and shall not begin work on the activity until notified by the district engineer that the requirements of the ESA have been satisfied and that the activity is authorized. For activities that might affect Federally-listed endangered or threatened species or designated critical habitat, the pre-construction notification must include the name(s) of the endangered or threatened species that might be affected by the proposed work or that utilize the designated critical habitat that might be affected by the proposed work. The district engineer will determine whether the proposed activity "may affect" or will have "no effect" to listed species and designated critical habitat and will notify the non-Federal applicant of the Corps' determination within 45 days of receipt of a complete pre-construction notification. In cases where the non-Federal applicant has identified listed species or critical habitat that might be affected or is in the vicinity of the project, and has so notified the Corps, the applicant shall not begin work until the Corps has provided notification the proposed activities will have "no effect" on listed species or critical habitat, or until Section 7 consultation has been completed. If the non-Federal applicant has not heard back from the Corps within 45 days, the applicant must still wait for notification from the Corps.

(d) As a result of formal or informal consultation with the FWS or NMFS the district engineer may add species-specific regional endangered species conditions to the NWPs.

(e) Authorization of an activity by a NWP does not authorize the "take" of a threatened or endangered species as defined under the ESA. In the absence of separate authorization (e.g., an ESA Section 10 Permit, a Biological Opinion with "incidental take" provisions, etc.) from the U.S. FWS or the NMFS, The Endangered Species Act prohibits any person subject to the jurisdiction of the United States to take a listed species, where "take" means to harass, harm, pursue, hunt, shoot, wound, kill, trap, capture, or collect, or to attempt to engage in any such conduct. The word "harm" in the definition of "take" means an act which actually kills or injures wildlife. Such an act may include significant habitat modification or degradation where it actually kills or injures wildlife by significantly impairing essential behavioral patterns, including breeding, feeding or sheltering.

(f) Information on the location of threatened and endangered species and their critical habitat can be obtained directly from the offices of the U.S. FWS and NMFS or their world wide web pages at http://www.fws.gov/ or http://www.fws.gov/ipac and http://www.noaa.gov/fisheries.html respectively.

19. Migratory Birds and Bald and Golden Eagles. The permittee is responsible for obtaining any "take" permits required under the U.S. Fish and Wildlife Service's regulations governing compliance with the Migratory Bird Treaty Act or the Bald and Golden Eagle Protection Act. The permittee should contact the appropriate local office of the U.S. Fish and Wildlife Service to determine if such "take" permits are required for a particular activity.

20. Historic Properties. (a) In cases where the district engineer determines that the activity may affect properties listed, or eligible for listing, in the National Register of Historic Places, the activity is not authorized, until the requirements of Section 106 of the National Historic Preservation Act (NHPA) have been satisfied.

(b) Federal permittees should follow their own procedures for complying with the requirements of Section 106 of the National Historic Preservation Act. Federal permittees must provide the district engineer with the appropriate documentation to demonstrate compliance with those requirements. The district engineer will review the documentation and determine whether it is sufficient to address section 106 compliance for the NWP activity, or whether additional section 106 consultation is necessary.

(c) Non-federal permittees must submit a pre-construction notification to the district engineer if the authorized activity may have the potential to cause effects to any historic properties listed on, determined to be eligible for listing on, or potentially eligible for listing on the National Register of Historic Places, including previously unidentified properties. For such activities, the pre-construction notification must state which historic properties may be affected by the proposed work or include a vicinity map indicating the location of the historic properties or the potential for the presence of historic properties. Assistance regarding information on the location of or potential for the presence of historic resources can be sought from the State Historic Preservation Officer or Tribal Historic Preservation Officer, as appropriate, and the National Register of Historic Places (see 33 CFR 330.4(g)). When reviewing pre-construction notifications, district engineers will comply with the current procedures for addressing the requirements of Section 106 of the National Historic Preservation Act. The district engineer shall make a reasonable and good faith effort to carry out appropriate identification efforts, which may include background research, consultation, oral history interviews, sample field investigation, and field survey. Based on the information submitted and these efforts, the district engineer shall determine whether the proposed activity has the potential to cause an effect on the historic properties. Where the non-Federal applicant has identified historic properties on which the activity may have the potential to cause effects and so notified the Corps, the non-Federal applicant shall not begin the activity until notified by the district engineer either that the activity has no potential to cause effects or that consultation under Section 106 of the NHPA has been completed.

(d) The district engineer will notify the prospective permittee within 45 days of receipt of a complete pre-construction notification whether NHPA Section 106 consultation is required. Section 106 consultation is not required when the Corps determines that the activity does not have the potential to cause effects on historic properties (see 36 CFR §800.3(a)). If NHPA

section 106 consultation is required and will occur, the district engineer will notify the non-Federal applicant that he or she cannot begin work until Section 106 consultation is completed. If the non-Federal applicant has not heard back from the Corps within 45 days, the applicant must still wait for notification from the Corps.

(e) Prospective permittees should be aware that section 110k of the NHPA (16 U.S.C. 470h-2(k)) prevents the Corps from granting a permit or other assistance to an applicant who, with intent to avoid the requirements of Section 106 of the NHPA, has intentionally significantly adversely affected a historic property to which the permit would relate, or having legal power to prevent it, allowed such significant adverse effect to occur, unless the Corps, after consultation with the Advisory Council on Historic Preservation (ACHP), determines that circumstances justify granting such assistance despite the adverse effect created or permitted by the applicant. If circumstances justify granting the assistance, the Corps is required to notify the ACHP and provide documentation specifying the circumstances, the degree of damage to the integrity of any historic properties affected, and proposed mitigation. This documentation must include any views obtained from the applicant, SHPO/THPO, appropriate Indian tribes if the undertaking occurs on or affects historic properties on tribal lands or affects properties of interest to those tribes, and other parties known to have a legitimate interest in the impacts to the permitted activity on historic properties.

21. Discovery of Previously Unknown Remains and Artifacts. If you discover any previously unknown historic, cultural or archeological remains and artifacts while accomplishing the activity authorized by this permit, you must immediately notify the district engineer of what you have found, and to the maximum extent practicable, avoid construction activities that may affect the remains and artifacts until the required coordination has been completed. The district engineer will initiate the Federal, Tribal and state coordination required to determine if the items or remains warrant a recovery effort or if the site is eligible for listing in the National Register of Historic Places.

22. Designated Critical Resource Waters. Critical resource waters include, NOAA-managed marine sanctuaries and marine monuments, and National Estuarine Research Reserves. The district engineer may designate, after notice and opportunity for public comment, additional waters officially designated by a state as having particular environmental or ecological significance, such as outstanding national resource waters or state natural heritage sites. The district engineer may also designate additional critical resource waters after notice and opportunity for public comment.

(a) Discharges of dredged or fill material into waters of the United States are not authorized by NWPs 7, 12, 14, 16, 17, 21, 29, 31, 35, 39, 40, 42, 43, 44, 49, 50, 51, and 52 for any activity within, or directly affecting, critical resource waters, including wetlands adjacent to such waters.

(b) For NWPs 3, 8, 10, 13, 15, 18, 19, 22, 23, 25, 27, 28, 30, 33, 34, 36, 37, and 38, notification is required in accordance with general condition 31, for any activity proposed in the designated critical resource waters including wetlands adjacent to those waters. The district engineer may authorize activities under these NWPs only after it is determined that the impacts to the critical resource waters will be no more than minimal.

23. Mitigation. The district engineer will consider the following factors when determining appropriate and practicable mitigation necessary to ensure that adverse effects on the aquatic environment are minimal:

(a) The activity must be designed and constructed to avoid and minimize adverse effects, both temporary and permanent, to waters of the United States to the maximum extent practicable at the project site (i.e., on site).

(b) Mitigation in all its forms (avoiding, minimizing, rectifying, reducing, or compensating for resource losses) will be required to the extent necessary to ensure that the adverse effects to the aquatic environment are minimal.

(c) Compensatory mitigation at a minimum one-for-one ratio will be required for all wetland losses that exceed 1/10-acre and require pre-construction notification, unless the district engineer determines in writing that either some other form of mitigation would be more environmentally appropriate or the adverse effects of the proposed activity are minimal, and provides a project-specific waiver of this requirement. For wetland losses of 1/10-acre or less that require pre-construction notification, the district engineer may determine on a case-by-case basis that compensatory mitigation is required to ensure that the activity results in minimal adverse effects on the aquatic environment. Compensatory mitigation projects provided to offset losses of aquatic resources must comply with the applicable provisions of 33 CFR part 332.

(1) The prospective permittee is responsible for proposing an appropriate compensatory mitigation option if compensatory mitigation is necessary to ensure that the activity results in minimal adverse effects on the aquatic environment.

(2) Since the likelihood of success is greater and the impacts to potentially valuable uplands are reduced, wetland restoration should be the first compensatory mitigation option considered.

(3) If permittee-responsible mitigation is the proposed option, the prospective permittee is responsible for submitting a mitigation plan. A conceptual or detailed mitigation plan may be used by the district engineer to make the decision on the NWP verification request, but a final mitigation plan that addresses the applicable requirements of 33 CFR 332.4(c)(2) – (14) must be approved by the district engineer before the permittee begins work in waters of the United States, unless the district engineer determines that prior approval of the final mitigation plan is not practicable or not necessary to ensure timely completion of the required compensatory mitigation (see 33 CFR 332.3(k)(3)).

(4) If mitigation bank or in-lieu fee program credits are the proposed option, the mitigation plan only needs to address the baseline conditions at the impact site and the number of credits to be provided.

(5) Compensatory mitigation requirements (e.g., resource type and amount to be provided as compensatory mitigation, site protection, ecological performance standards, monitoring requirements) may be addressed through conditions added to the NWP authorization, instead of components of a compensatory mitigation plan.

(d) For losses of streams or other open waters that require pre-construction notification, the district engineer may require compensatory mitigation, such as stream rehabilitation, enhancement, or preservation, to ensure that the activity results in minimal adverse effects on the aquatic environment.

(e) Compensatory mitigation will not be used to increase the acreage losses allowed by the acreage limits of the NWPs. For example, if an NWP has an acreage limit of 1/2-acre, it cannot be used to authorize any project resulting in the loss of greater than 1/2-acre of waters of

the United States, even if compensatory mitigation is provided that replaces or restores some of the lost waters. However, compensatory mitigation can and should be used, as necessary, to ensure that a project already meeting the established acreage limits also satisfies the minimal impact requirement associated with the NWPs.

(f) Compensatory mitigation plans for projects in or near streams or other open waters will normally include a requirement for the restoration or establishment, maintenance, and legal protection (e.g., conservation easements) of riparian areas next to open waters. In some cases, riparian areas may be the only compensatory mitigation required. Riparian areas should consist of native species. The width of the required riparian area will address documented water quality or aquatic habitat loss concerns. Normally, the riparian area will be 25 to 50 feet wide on each side of the stream, but the district engineer may require slightly wider riparian areas to address documented water quality or habitat loss concerns. If it is not possible to establish a riparian area on both sides of a stream, or if the waterbody is a lake or coastal waters, then restoring or establishing a riparian area along a single bank or shoreline may be sufficient. Where both wetlands and open waters exist on the project site, the district engineer will determine the appropriate compensatory mitigation (e.g., riparian areas and/or wetlands compensation) based on what is best for the aquatic environment on a watershed basis. In cases where riparian areas are determined to be the most appropriate form of compensatory mitigation, the district engineer may waive or reduce the requirement to provide wetland compensatory mitigation for wetland losses.

(g) Permittees may propose the use of mitigation banks, in-lieu fee programs, or separate permittee-responsible mitigation. For activities resulting in the loss of marine or estuarine resources, permittee-responsible compensatory mitigation may be environmentally preferable if there are no mitigation banks or in-lieu fee programs in the area that have marine or estuarine credits available for sale or transfer to the permittee. For permittee-responsible mitigation, the special conditions of the NWP verification must clearly indicate the party or parties responsible for the implementation and performance of the compensatory mitigation project, and, if required, its long-term management.

(h) Where certain functions and services of waters of the United States are permanently adversely affected, such as the conversion of a forested or scrub-shrub wetland to a herbaceous wetland in a permanently maintained utility line right-of-way, mitigation may be required to reduce the adverse effects of the project to the minimal level.

24. Safety of Impoundment Structures. To ensure that all impoundment structures are safely designed, the district engineer may require non-Federal applicants to demonstrate that the structures comply with established state dam safety criteria or have been designed by qualified persons. The district engineer may also require documentation that the design has been independently reviewed by similarly qualified persons, and appropriate modifications made to ensure safety.

25. Water Quality. Where States and authorized Tribes, or EPA where applicable, have not previously certified compliance of an NWP with CWA Section 401, individual 401 Water Quality Certification must be obtained or waived (see 33 CFR 330.4(c)). The district engineer or State or Tribe may require additional water quality management measures to ensure that the authorized activity does not result in more than minimal degradation of water quality.

26. Coastal Zone Management. In coastal states where an NWP has not previously received a state coastal zone management consistency concurrence, an individual state coastal zone management consistency concurrence must be obtained, or a presumption of concurrence must occur (see 33 CFR 330.4(d)). The district engineer or a State may require additional measures to ensure that the authorized activity is consistent with state coastal zone management requirements.

27. Regional and Case-By-Case Conditions. The activity must comply with any regional conditions that may have been added by the Division Engineer (see 33 CFR 330.4(e)) and with any case specific conditions added by the Corps or by the state, Indian Tribe, or U.S. EPA in its section 401 Water Quality Certification, or by the state in its Coastal Zone Management Act consistency determination.

28. Use of Multiple Nationwide Permits. The use of more than one NWP for a single and complete project is prohibited, except when the acreage loss of waters of the United States authorized by the NWPs does not exceed the acreage limit of the NWP with the highest specified acreage limit. For example, if a road crossing over tidal waters is constructed under NWP 14, with associated bank stabilization authorized by NWP 13, the maximum acreage loss of waters of the United States for the total project cannot exceed 1/3-acre.

29. Transfer of Nationwide Permit Verifications. If the permittee sells the property associated with a nationwide permit verification, the permittee may transfer the nationwide permit verification to the new owner by submitting a letter to the appropriate Corps district office to validate the transfer. A copy of the nationwide permit verification must be attached to the letter, and the letter must contain the following statement and signature:

"When the structures or work authorized by this nationwide permit are still in existence at the time the property is transferred, the terms and conditions of this nationwide permit, including any special conditions, will continue to be binding on the new owner(s) of the property. To validate the transfer of this nationwide permit and the associated liabilities associated with compliance with its terms and conditions, have the transferee sign and date below."

_____
(Transferee)

_____
(Date)

30. Compliance Certification. Each permittee who receives an NWP verification letter from the Corps must provide a signed certification documenting completion of the authorized activity and any required compensatory mitigation. The success of any required permittee-responsible mitigation, including the achievement of ecological performance standards, will be addressed separately by the district engineer. The Corps will provide the permittee the certification document with the NWP verification letter. The certification document will include:

(a) A statement that the authorized work was done in accordance with the NWP authorization, including any general, regional, or activity-specific conditions;

(b) A statement that the implementation of any required compensatory mitigation was completed in accordance with the permit conditions. If credits from a mitigation bank or in-lieu fee program are used to satisfy the compensatory mitigation requirements, the certification must include the documentation required by 33 CFR 332.3(l)(3) to confirm that the permittee secured the appropriate number and resource type of credits; and

(c) The signature of the permittee certifying the completion of the work and mitigation.

31. Pre-Construction Notification. (a) Timing. Where required by the terms of the NWP, the prospective permittee must notify the district engineer by submitting a pre-construction notification (PCN) as early as possible. The district engineer must determine if the PCN is complete within 30 calendar days of the date of receipt and, if the PCN is determined to be incomplete, notify the prospective permittee within that 30 day period to request the additional information necessary to make the PCN complete. The request must specify the information needed to make the PCN complete. As a general rule, district engineers will request additional information necessary to make the PCN complete only once. However, if the prospective permittee does not provide all of the requested information, then the district engineer will notify the prospective permittee that the PCN is still incomplete and the PCN review process will not commence until all of the requested information has been received by the district engineer. The prospective permittee shall not begin the activity until either:

(1) He or she is notified in writing by the district engineer that the activity may proceed under the NWP with any special conditions imposed by the district or division engineer; or

(2) 45 calendar days have passed from the district engineer's receipt of the complete PCN and the prospective permittee has not received written notice from the district or division engineer. However, if the permittee was required to notify the Corps pursuant to general condition 18 that listed species or critical habitat might be affected or in the vicinity of the project, or to notify the Corps pursuant to general condition 20 that the activity may have the potential to cause effects to historic properties, the permittee cannot begin the activity until receiving written notification from the Corps that there is "no effect" on listed species or "no potential to cause effects" on historic properties, or that any consultation required under Section 7 of the Endangered Species Act (see 33 CFR 330.4(f)) and/or Section 106 of the National Historic Preservation (see 33 CFR 330.4(g)) has been completed. Also, work cannot begin under NWPs 21, 49, or 50 until the permittee has received written approval from the Corps. If the proposed activity requires a written waiver to exceed specified limits of an NWP, the permittee may not begin the activity until the district engineer issues the waiver. If the district or division engineer notifies the permittee in writing that an individual permit is required within 45 calendar days of receipt of a complete PCN, the permittee cannot begin the activity until an individual permit has been obtained. Subsequently, the permittee's right to proceed under the NWP may be modified, suspended, or revoked only in accordance with the procedure set forth in 33 CFR 330.5(d)(2).

(b) Contents of Pre-Construction Notification: The PCN must be in writing and include the following information:

(1) Name, address and telephone numbers of the prospective permittee;

(2) Location of the proposed project;

(3) A description of the proposed project; the project's purpose; direct and indirect adverse environmental effects the project would cause, including the anticipated amount of loss of water of the United States expected to result from the NWP activity, in acres, linear feet, or other appropriate unit of measure; any other NWP(s), regional general permit(s), or individual permit(s) used or intended to be used to authorize any part of the proposed project or any related activity. The description should be sufficiently detailed to allow the district engineer to determine that the adverse effects of the project will be minimal and to determine the need for compensatory mitigation. Sketches should be provided when necessary to show that the activity complies with the terms of the NWP. (Sketches usually clarify the project and when provided results in a quicker decision. Sketches should contain sufficient detail to provide an illustrative description of the proposed activity (e.g., a conceptual plan), but do not need to be detailed engineering plans);

(4) The PCN must include a delineation of wetlands, other special aquatic sites, and other waters, such as lakes and ponds, and perennial, intermittent, and ephemeral streams, on the project site. Wetland delineations must be prepared in accordance with the current method required by the Corps. The permittee may ask the Corps to delineate the special aquatic sites and other waters on the project site, but there may be a delay if the Corps does the delineation, especially if the project site is large or contains many waters of the United States. Furthermore, the 45 day period will not start until the delineation has been submitted to or completed by the Corps, as appropriate;

(5) If the proposed activity will result in the loss of greater than 1/10-acre of wetlands and a PCN is required, the prospective permittee must submit a statement describing how the mitigation requirement will be satisfied, or explaining why the adverse effects are minimal and why compensatory mitigation should not be required. As an alternative, the prospective permittee may submit a conceptual or detailed mitigation plan.

(6) If any listed species or designated critical habitat might be affected or is in the vicinity of the project, or if the project is located in designated critical habitat, for non-Federal applicants the PCN must include the name(s) of those endangered or threatened species that might be affected by the proposed work or utilize the designated critical habitat that may be affected by the proposed work. Federal applicants must provide documentation demonstrating compliance with the Endangered Species Act; and

(7) For an activity that may affect a historic property listed on, determined to be eligible for listing on, or potentially eligible for listing on, the National Register of Historic Places, for non-Federal applicants the PCN must state which historic property may be affected by the proposed work or include a vicinity map indicating the location of the historic property. Federal applicants must provide documentation demonstrating compliance with Section 106 of the National Historic Preservation Act.

(c) Form of Pre-Construction Notification: The standard individual permit application form (Form ENG 4345) may be used, but the completed application form must clearly indicate that it is a PCN and must include all of the information required in paragraphs (b)(1) through (7) of this general condition. A letter containing the required information may also be used.

(d) Agency Coordination: (1) The district engineer will consider any comments from Federal and state agencies concerning the proposed activity's compliance with the terms and conditions of the NWPs and the need for mitigation to reduce the project's adverse environmental effects to a minimal level.

(2) For all NWP activities that require pre-construction notification and result in the loss of greater than 1/2-acre of waters of the United States, for NWP 21, 29, 39, 40, 42, 43, 44, 50, 51, and 52 activities that require pre-construction notification and will result in the loss of greater than 300 linear feet of intermittent and ephemeral stream bed, and for all NWP 48 activities that require pre-construction notification, the district engineer will immediately provide (e.g., via e-mail, facsimile transmission, overnight mail, or other expeditious manner) a copy of the complete PCN to the appropriate Federal or state offices (U.S. FWS, state natural resource or water quality agency, EPA, State Historic Preservation Officer (SHPO) or Tribal Historic Preservation Office (THPO), and, if appropriate, the NMFS). With the exception of NWP 37, these agencies will have 10 calendar days from the date the material is transmitted to telephone or fax the district engineer notice that they intend to provide substantive, site-specific comments. The comments must explain why the agency believes the adverse effects will be more than minimal. If so contacted by an agency, the district engineer will wait an additional 15 calendar days before making a decision on the pre-construction notification. The district engineer will fully consider agency comments received within the specified time frame concerning the proposed activity's compliance with the terms and conditions of the NWPs, including the need for mitigation to ensure the net adverse environmental effects to the aquatic environment of the proposed activity are minimal. The district engineer will provide no response to the resource agency, except as provided below. The district engineer will indicate in the administrative record associated with each pre-construction notification that the resource agencies' concerns were considered. For NWP 37, the emergency watershed protection and rehabilitation activity may proceed immediately in cases where there is an unacceptable hazard to life or a significant loss of property or economic hardship will occur. The district engineer will consider any comments received to decide whether the NWP 37 authorization should be modified, suspended, or revoked in accordance with the procedures at 33 CFR 330.5.

(3) In cases of where the prospective permittee is not a Federal agency, the district engineer will provide a response to NMFS within 30 calendar days of receipt of any Essential Fish Habitat conservation recommendations, as required by Section 305(b)(4)(B) of the Magnuson-Stevens Fishery Conservation and Management Act.

(4) Applicants are encouraged to provide the Corps with either electronic files or multiple copies of pre-construction notifications to expedite agency coordination.

D. District Engineer's Decision

1. In reviewing the PCN for the proposed activity, the district engineer will determine whether the activity authorized by the NWP will result in more than minimal individual or cumulative adverse environmental effects or may be contrary to the public interest. For a linear project, this determination will include an evaluation of the individual crossings to determine whether they individually satisfy the terms and conditions of the NWP(s), as well as the cumulative effects caused by all of the crossings authorized by NWP. If an applicant requests a waiver of the 300 linear foot limit on impacts to intermittent or ephemeral streams or of an otherwise applicable limit, as provided for in NWPs 13, 21, 29, 36, 39, 40, 42, 43, 44, 50, 51 or 52, the district engineer will only grant the waiver upon a written determination that the NWP activity will result in minimal adverse effects. When making minimal effects determinations the district engineer will consider the direct and indirect effects caused by the NWP activity. The district engineer will also consider site specific factors, such as the environmental setting in the

vicinity of the NWP activity, the type of resource that will be affected by the NWP activity, the functions provided by the aquatic resources that will be affected by the NWP activity, the degree or magnitude to which the aquatic resources perform those functions, the extent that aquatic resource functions will be lost as a result of the NWP activity (e.g., partial or complete loss), the duration of the adverse effects (temporary or permanent), the importance of the aquatic resource functions to the region (e.g., watershed or ecoregion), and mitigation required by the district engineer. If an appropriate functional assessment method is available and practicable to use, that assessment method may be used by the district engineer to assist in the minimal adverse effects determination. The district engineer may add case-specific special conditions to the NWP authorization to address site-specific environmental concerns.

2. If the proposed activity requires a PCN and will result in a loss of greater than 1/10-acre of wetlands, the prospective permittee should submit a mitigation proposal with the PCN. Applicants may also propose compensatory mitigation for projects with smaller impacts. The district engineer will consider any proposed compensatory mitigation the applicant has included in the proposal in determining whether the net adverse environmental effects to the aquatic environment of the proposed activity are minimal. The compensatory mitigation proposal may be either conceptual or detailed. If the district engineer determines that the activity complies with the terms and conditions of the NWP and that the adverse effects on the aquatic environment are minimal, after considering mitigation, the district engineer will notify the permittee and include any activity-specific conditions in the NWP verification the district engineer deems necessary. Conditions for compensatory mitigation requirements must comply with the appropriate provisions at 33 CFR 332.3(k). The district engineer must approve the final mitigation plan before the permittee commences work in waters of the United States, unless the district engineer determines that prior approval of the final mitigation plan is not practicable or not necessary to ensure timely completion of the required compensatory mitigation. If the prospective permittee elects to submit a compensatory mitigation plan with the PCN, the district engineer will expeditiously review the proposed compensatory mitigation plan. The district engineer must review the proposed compensatory mitigation plan within 45 calendar days of receiving a complete PCN and determine whether the proposed mitigation would ensure no more than minimal adverse effects on the aquatic environment. If the net adverse effects of the project on the aquatic environment (after consideration of the compensatory mitigation proposal) are determined by the district engineer to be minimal, the district engineer will provide a timely written response to the applicant. The response will state that the project can proceed under the terms and conditions of the NWP, including any activity-specific conditions added to the NWP authorization by the district engineer.

3. If the district engineer determines that the adverse effects of the proposed work are more than minimal, then the district engineer will notify the applicant either: (a) That the project does not qualify for authorization under the NWP and instruct the applicant on the procedures to seek authorization under an individual permit; (b) that the project is authorized under the NWP subject to the applicant's submission of a mitigation plan that would reduce the adverse effects on the aquatic environment to the minimal level; or (c) that the project is authorized under the NWP with specific modifications or conditions. Where the district engineer determines that mitigation is required to ensure no more than minimal adverse effects occur to the aquatic environment, the activity will be authorized within the 45-day PCN period, with activity-specific

conditions that state the mitigation requirements. The authorization will include the necessary conceptual or detailed mitigation or a requirement that the applicant submit a mitigation plan that would reduce the adverse effects on the aquatic environment to the minimal level. When mitigation is required, no work in waters of the United States may occur until the district engineer has approved a specific mitigation plan or has determined that prior approval of a final mitigation plan is not practicable or not necessary to ensure timely completion of the required compensatory mitigation.

FURTHER INFORMATION

1. District Engineers have authority to determine if an activity complies with the terms and conditions of an NWP.
2. NWPs do not obviate the need to obtain other federal, state, or local permits, approvals, or authorizations required by law.
3. NWPs do not grant any property rights or exclusive privileges.
4. NWPs do not authorize any injury to the property or rights of others.
5. NWPs do not authorize interference with any existing or proposed Federal project.

DEFINITIONS

Best management practices (BMPs): Policies, practices, procedures, or structures implemented to mitigate the adverse environmental effects on surface water quality resulting from development. BMPs are categorized as structural or non-structural.

Compensatory mitigation: The restoration (re-establishment or rehabilitation), establishment (creation), enhancement, and/or in certain circumstances preservation of aquatic resources for the purposes of offsetting unavoidable adverse impacts which remain after all appropriate and practicable avoidance and minimization has been achieved.

Currently serviceable: Useable as is or with some maintenance, but not so degraded as to essentially require reconstruction.

Direct effects: Effects that are caused by the activity and occur at the same time and place.

Discharge: The term "discharge" means any discharge of dredged or fill material.

Enhancement: The manipulation of the physical, chemical, or biological characteristics of an aquatic resource to heighten, intensify, or improve a specific aquatic resource function(s). Enhancement results in the gain of selected aquatic resource function(s), but may also lead to a decline in other aquatic resource function(s). Enhancement does not result in a gain in aquatic resource area.

Ephemeral stream: An ephemeral stream has flowing water only during, and for a short duration after, precipitation events in a typical year. Ephemeral stream beds are located above the water table year-round. Groundwater is not a source of water for the stream. Runoff from rainfall is the primary source of water for stream flow.

Establishment (creation): The manipulation of the physical, chemical, or biological characteristics present to develop an aquatic resource that did not previously exist at an upland site. Establishment results in a gain in aquatic resource area.

High Tide Line: The line of intersection of the land with the water's surface at the maximum height reached by a rising tide. The high tide line may be determined, in the absence

of actual data, by a line of oil or scum along shore objects, a more or less continuous deposit of fine shell or debris on the foreshore or berm, other physical markings or characteristics, vegetation lines, tidal gages, or other suitable means that delineate the general height reached by a rising tide. The line encompasses spring high tides and other high tides that occur with periodic frequency but does not include storm surges in which there is a departure from the normal or predicted reach of the tide due to the piling up of water against a coast by strong winds such as those accompanying a hurricane or other intense storm.

Historic Property: Any prehistoric or historic district, site (including archaeological site), building, structure, or other object included in, or eligible for inclusion in, the National Register of Historic Places maintained by the Secretary of the Interior. This term includes artifacts, records, and remains that are related to and located within such properties. The term includes properties of traditional religious and cultural importance to an Indian tribe or Native Hawaiian organization and that meet the National Register criteria (36 CFR part 60).

Independent utility: A test to determine what constitutes a single and complete non-linear project in the Corps regulatory program. A project is considered to have independent utility if it would be constructed absent the construction of other projects in the project area. Portions of a multi-phase project that depend upon other phases of the project do not have independent utility. Phases of a project that would be constructed even if the other phases were not built can be considered as separate single and complete projects with independent utility.

Indirect effects: Effects that are caused by the activity and are later in time or farther removed in distance, but are still reasonably foreseeable.

Intermittent stream: An intermittent stream has flowing water during certain times of the year, when groundwater provides water for stream flow. During dry periods, intermittent streams may not have flowing water. Runoff from rainfall is a supplemental source of water for stream flow.

Loss of waters of the United States: Waters of the United States that are permanently adversely affected by filling, flooding, excavation, or drainage because of the regulated activity. Permanent adverse effects include permanent discharges of dredged or fill material that change an aquatic area to dry land, increase the bottom elevation of a waterbody, or change the use of a waterbody. The acreage of loss of waters of the United States is a threshold measurement of the impact to jurisdictional waters for determining whether a project may qualify for an NWP; it is not a net threshold that is calculated after considering compensatory mitigation that may be used to offset losses of aquatic functions and services. The loss of stream bed includes the linear feet of stream bed that is filled or excavated. Waters of the United States temporarily filled, flooded, excavated, or drained, but restored to pre-construction contours and elevations after construction, are not included in the measurement of loss of waters of the United States. Impacts resulting from activities eligible for exemptions under Section 404(f) of the Clean Water Act are not considered when calculating the loss of waters of the United States.

Non-tidal wetland: A non-tidal wetland is a wetland that is not subject to the ebb and flow of tidal waters. The definition of a wetland can be found at 33 CFR 328.3(b). Non-tidal wetlands contiguous to tidal waters are located landward of the high tide line (i.e., spring high tide line).

Open water: For purposes of the NWPs, an open water is any area that in a year with normal patterns of precipitation has water flowing or standing above ground to the extent that an ordinary high water mark can be determined. Aquatic vegetation within the area of standing or

flowing water is either non-emergent, sparse, or absent. Vegetated shallows are considered to be open waters. Examples of "open waters" include rivers, streams, lakes, and ponds.

Ordinary High Water Mark: An ordinary high water mark is a line on the shore established by the fluctuations of water and indicated by physical characteristics, or by other appropriate means that consider the characteristics of the surrounding areas (see 33 CFR 328.3(e)).

Perennial stream: A perennial stream has flowing water year-round during a typical year. The water table is located above the stream bed for most of the year. Groundwater is the primary source of water for stream flow. Runoff from rainfall is a supplemental source of water for stream flow.

Practicable: Available and capable of being done after taking into consideration cost, existing technology, and logistics in light of overall project purposes.

Pre-construction notification: A request submitted by the project proponent to the Corps for confirmation that a particular activity is authorized by nationwide permit. The request may be a permit application, letter, or similar document that includes information about the proposed work and its anticipated environmental effects. Pre-construction notification may be required by the terms and conditions of a nationwide permit, or by regional conditions. A pre-construction notification may be voluntarily submitted in cases where pre-construction notification is not required and the project proponent wants confirmation that the activity is authorized by nationwide permit.

Preservation: The removal of a threat to, or preventing the decline of, aquatic resources by an action in or near those aquatic resources. This term includes activities commonly associated with the protection and maintenance of aquatic resources through the implementation of appropriate legal and physical mechanisms. Preservation does not result in a gain of aquatic resource area or functions.

Re-establishment: The manipulation of the physical, chemical, or biological characteristics of a site with the goal of returning natural/historic functions to a former aquatic resource. Re-establishment results in rebuilding a former aquatic resource and results in a gain in aquatic resource area and functions.

Rehabilitation: The manipulation of the physical, chemical, or biological characteristics of a site with the goal of repairing natural/historic functions to a degraded aquatic resource. Rehabilitation results in a gain in aquatic resource function, but does not result in a gain in aquatic resource area.

Restoration: The manipulation of the physical, chemical, or biological characteristics of a site with the goal of returning natural/historic functions to a former or degraded aquatic resource. For the purpose of tracking net gains in aquatic resource area, restoration is divided into two categories: re-establishment and rehabilitation.

Riffle and pool complex: Riffle and pool complexes are special aquatic sites under the 404(b)(1) Guidelines. Riffle and pool complexes sometimes characterize steep gradient sections of streams. Such stream sections are recognizable by their hydraulic characteristics. The rapid movement of water over a course substrate in riffles results in a rough flow, a turbulent surface, and high dissolved oxygen levels in the water. Pools are deeper areas associated with riffles. A slower stream velocity, a streaming flow, a smooth surface, and a finer substrate characterize pools.

Riparian areas: Riparian areas are lands adjacent to streams, lakes, and estuarine-marine shorelines. Riparian areas are transitional between terrestrial and aquatic ecosystems, through

which surface and subsurface hydrology connects riverine, lacustrine, estuarine, and marine waters with their adjacent wetlands, non-wetland waters, or uplands. Riparian areas provide a variety of ecological functions and services and help improve or maintain local water quality. (See general condition 23.)

Shellfish seeding: The placement of shellfish seed and/or suitable substrate to increase shellfish production. Shellfish seed consists of immature individual shellfish or individual shellfish attached to shells or shell fragments (i.e., spat on shell). Suitable substrate may consist of shellfish shells, shell fragments, or other appropriate materials placed into waters for shellfish habitat.

Single and complete linear project: A linear project is a project constructed for the purpose of getting people, goods, or services from a point of origin to a terminal point, which often involves multiple crossings of one or more waterbodies at separate and distant locations. The term "single and complete project" is defined as that portion of the total linear project proposed or accomplished by one owner/developer or partnership or other association of owners/developers that includes all crossings of a single water of the United States (i.e., a single waterbody) at a specific location. For linear projects crossing a single or multiple waterbodies several times at separate and distant locations, each crossing is considered a single and complete project for purposes of NWP authorization. However, individual channels in a braided stream or river, or individual arms of a large, irregularly shaped wetland or lake, etc., are not separate waterbodies, and crossings of such features cannot be considered separately.

Single and complete non-linear project: For non-linear projects, the term "single and complete project" is defined at 33 CFR 330.2(i) as the total project proposed or accomplished by one owner/developer or partnership or other association of owners/developers. A single and complete non-linear project must have independent utility (see definition of "independent utility"). Single and complete non-linear projects may not be "piecemealed" to avoid the limits in an NWP authorization.

Stormwater management: Stormwater management is the mechanism for controlling stormwater runoff for the purposes of reducing downstream erosion, water quality degradation, and flooding and mitigating the adverse effects of changes in land use on the aquatic environment.

Stormwater management facilities: Stormwater management facilities are those facilities, including but not limited to, stormwater retention and detention ponds and best management practices, which retain water for a period of time to control runoff and/or improve the quality (i.e., by reducing the concentration of nutrients, sediments, hazardous substances and other pollutants) of stormwater runoff.

Stream bed: The substrate of the stream channel between the ordinary high water marks. The substrate may be bedrock or inorganic particles that range in size from clay to boulders. Wetlands contiguous to the stream bed, but outside of the ordinary high water marks, are not considered part of the stream bed.

Stream channelization: The manipulation of a stream's course, condition, capacity, or location that causes more than minimal interruption of normal stream processes. A channelized stream remains a water of the United States.

Structure: An object that is arranged in a definite pattern of organization. Examples of structures include, without limitation, any pier, boat dock, boat ramp, wharf, dolphin, weir, boom, breakwater, bulkhead, revetment, riprap, jetty, artificial island, artificial reef, permanent

mooring structure, power transmission line, permanently moored floating vessel, piling, aid to navigation, or any other manmade obstacle or obstruction.

Tidal wetland: A tidal wetland is a wetland (i.e., water of the United States) that is inundated by tidal waters. The definitions of a wetland and tidal waters can be found at 33 CFR 328.3(b) and 33 CFR 328.3(f), respectively. Tidal waters rise and fall in a predictable and measurable rhythm or cycle due to the gravitational pulls of the moon and sun. Tidal waters end where the rise and fall of the water surface can no longer be practically measured in a predictable rhythm due to masking by other waters, wind, or other effects. Tidal wetlands are located channelward of the high tide line, which is defined at 33 CFR 328.3(d).

Vegetated shallows: Vegetated shallows are special aquatic sites under the 404(b)(1) Guidelines. They are areas that are permanently inundated and under normal circumstances have rooted aquatic vegetation, such as seagrasses in marine and estuarine systems and a variety of vascular rooted plants in freshwater systems.

Waterbody: For purposes of the NWPs, a waterbody is a jurisdictional water of the United States. If a jurisdictional wetland is adjacent – meaning bordering, contiguous, or neighboring – to a waterbody determined to be a water of the United States under 33 CFR 328.3(a)(1)-(6), that waterbody and its adjacent wetlands are considered together as a single aquatic unit (see 33 CFR 328.4(c)(2)). Examples of "waterbodies" include streams, rivers, lakes, ponds, and wetlands.

AGREEMENTS

2. California Department of Fish and Wildlife Streambed Alteration Agreement No. 1600-2015-0234-R4

CALIFORNIA DEPARTMENT OF FISH AND WILDLIFE
REGION 4 - CENTRAL REGION
1234 EAST SHAW AVENUE
FRESNO, CALIFORNIA 93710

STREAMBED ALTERATION AGREEMENT
NOTIFICATION NO. 1600-2015-0234-R4
SAN MARCOS CREEK AND TWO UNNAMED STREAMS
SAN LUIS OBISPO COUNTY

CALIFORNIA DEPARTMENT OF TRANSPORTATION
CALTRANS DISTRICT 5
LARRY BONNER
50 HIGUERA STREET
SAN LUIS OBISPO, CALIFORNIA 93401

SR 101 NORTH PASO ROBLES REHABILITATION (PROJECT)

This Streambed Alteration Agreement (Agreement) is entered into between the California Department of Fish and Wildlife (CDFW) and the California Department of Transportation (referred to as Permittee), represented by Larry Bonner.

RECITALS

WHEREAS, pursuant to Fish and Game Code (FGC) section 1602, Permittee notified CDFW on November 19, 2015, that Permittee intends to complete the Project described herein.

WHEREAS, pursuant to FGC section 1603, CDFW has determined that the Project could substantially adversely affect existing fish or wildlife resources and has included Protective Measures in this Agreement necessary to protect those resources.

WHEREAS, Permittee has reviewed this Agreement and accepts its terms and conditions, including the Protective Measures to protect fish and wildlife resources.

NOW THEREFORE, Permittee agrees to complete the Project in accordance with this Agreement.

PROJECT LOCATION

The Project is generally located along State Route (SR) 101 in the vicinity of the town of San Miguel in San Luis Obispo County, California. Project construction will occur at three locations within Township 25 South, Range 12 East, Sections 8, 20, and 29 United States Geologic Survey (USGS) of the Mount Diablo Base and Meridian (MDB&M). (Figure 1). Specific details for each location follow.

Location 1 – San Marcos Creek at Post Mile (PM) 63.6, Township 25 South, Range 12 East, Section 8, United States Geological Survey (USGS) map Shandon, MDB&M; Latitude 35.7199, Longitude -120.6968.

Location 2 – Unnamed drainage at PM 65.2, Township 25 South, Range 12 East, Section 20, (USGS) map Shandon, MDB&M;
Latitude 35.7423, Longitude -120.6998.

Location 3 – Unnamed drainage at PM 67.2, Township 25 South, Range 12 East, Section 29, USGS map Cholame, MDB&M;
Latitude 35.7707, Longitude -120.7058.

PROJECT DESCRIPTION

The Project includes activities related to rehabilitating the pavement along SR 101 to prevent further deterioration. As part of the rehabilitation Project the northbound and southbound highway bridges at San Marcos Creek will be replaced and two culverts will be modified. Specific Project details follow.

Location 1 – San Marcos Creek Bridge at PM 63.6

Work consists of replacing the existing left southbound (SB) and right northbound (NB) SR 101 bridges over San Marcos Creek. Activities include removing the existing superstructures and bents. The base of the bridge abutments will be left in place for each bridge, but approximately three feet will be removed from the top to tie in with the new bridge decks. The NB bridge is currently 160 feet long by 34 feet wide and has two bents, each with three 3-foot diameter columns. The southbound bridge is currently 130 feet long by 32.5 feet wide and has three bents, each with three 3-foot by 4.5-foot rectangular columns. Temporary impacts will result from the excavation of existing footings to be removed. The footing area for the SB bridge is 966 square feet, and the NB bridge is 384 square feet, for a total of 1,350 square feet at a depth of five feet. All existing columns for the SB bridge will be removed three feet below grade for a total quantity of 22 cubic yards of native soil disturbance (removal). All existing columns for the NB bridge except for one column and footing on Pier 3 will be removed three feet below grade for a total quantity of 18 cubic yards of native soil disturbance (removal). One existing column and footing at the NB bridge on Pier 3 will be completely removed for an excavation volume of 47 cubic yards. Holes created by excavation will be filled with un-compacted native material. No imported borrow will be used. The total native excavation will be 87 cubic yards, and total native un-compacted backfill will be 87 cubic yards. The area where concrete will be removed at San Marcos Creek equals six 3-foot diameter concrete piers (42.5 square feet of area) and nine 3-foot by 4.5-foot rectangular concrete piers (121.5 square feet of area) for a total area of 164 square feet of area.

Both bridge replacements will consist of two span, precast, pre-stressed bulb "T" girder type bridges with one bent each that will consist of two 4.25-foot diameter columns. The new NB bridge will be 220 feet long by 39 feet wide, and the new SB bridge will be 220 feet long by 39 feet wide. The profile of the NB bridge will be elevated by seven feet and the SB will be elevated by three feet. Each of the four columns will be

supported by a Cast-In-Drilled-Hole pile six feet in diameter and approximately 45 feet deep, and will require approximately 47 cubic yards of concrete. The piles will be connected to the columns with a 1-foot diameter spiral column pin of galvanized steel that will extend six feet down into the pile and five feet up into the column. Each cast-in-place column will be 4.25 feet in diameter and will be approximately 30 feet high, and will require approximately 16 cubic yards of concrete. Total concrete poured within the channel will be 252 cubic yards. The area for the new piers will cover 58 square feet. There will be no grade changes or channel modifications, and the existing Rock Slope Protection along the north bank will be left in place to continue to stabilize the northern bridge abutment.

The construction of the new bridges and the demolition of the old bridges will be done in two phases. During the first year, all traffic will be routed over the existing NB bridge while the SB bridge is removed and the new bridge constructed. During the second year, all traffic will be routed over the new SB bridge while the NB bridge is removed and the new bridge constructed. One willow tree and seven mulefat shrubs will need to be removed within the channel to allow equipment access required for bridge construction. Approximately 22,220 square feet (0.51 acres) over 292 linear feet will be temporary impacted.

Location 2 – Culvert at PM 65.2
Currently there is an open Air Blown Mortar (ABM) culvert, which is a concrete lined ditch 95 feet in length between two concrete pipe culverts that run under the NB and SB lanes of SR 101 with headwalls at each end, both 13 feet by 6 feet by 1-foot thick. Removal of the head walls and concrete lining the channel will result in the removal of 16 cubic yards of concrete. This will result in temporary impacts to an area approximately 120 feet long and 4 feet wide (0.011 acre). The open channel will be replaced with a 124-foot long and 42-inch diameter alternative pipe culvert that will be of one of the following types: Reinforced Concrete Pipe (RCP), Corrugated Steel Pipe (CSP) or high density polyethylene (HDPE). The new culvert will be connected to the two existing culverts with concrete junction boxes with a manhole cover at the top. The junction boxes will be prefabricated off site or cast-in-place on site requiring 5 cubic yards of concrete each. Each manhole cover will require 0.93 cubic yards of concrete for the apron encircling the cover and connecting to the junction box. There will be temporary impacts to 480 square feet over 120 linear feet of stream.

Location 3 – Two Culverts at PM 67.2
The existing 66-inch diameter RCP culvert, which runs under Mission Street, is 65 feet long. This culvert that be removed by cutting through the road pavement. Approximately 100 cubic yards of the road bed fill material will be excavated, and the existing pipe will be removed and replaced with a 72-inch diameter RCP that is 67 feet in length. The upstream end will tie into an existing junction box connecting to another existing culvert leading to the upstream inlet and headwall that will not be modified. The excavated material will be backfilled and compacted to cover the culvert leaving the downstream end still exposed.

The downstream end will tie into a junction box connecting to the second culvert to be worked on (described below). The junction box will be 8.5 feet by 9 feet by 9 feet and

will require 13.7 cubic yards of concrete to construct or will be precast off site. Two additional culverts connect to this junction box that collect stormwater runoff and are not in an area of CDFW jurisdiction, but when work is done on them there could impacts to CDFW jurisdictional areas downstream. These culverts will be completely sealed off with visqueen and either plywood or Plexiglas while they are being worked on and will not be reconnected until any wet concrete has cured for 30 days and they are clean of all material that could be carried downstream.

The downstream 66-inch diameter RCP pipe culvert that runs under the northbound SR 101 lanes is 136 feet long and will be abandoned in place. The abandoned culvert will be filled with 120 cubic yards of sand and the ends will each be capped with 1.8 cubic yards of concrete two feet thick. The new 72-inch diameter RCP pipe culvert will be 136 feet long and will be installed under NB-101 adjacent to the abandoned culvert by jack and bore, which will require excavation of a 38-foot by 14-foot by 12-foot bore pit located in the overcrossing median, where the junction box for the two culverts will be installed, and a 24-foot long by 14-foot wide by 7-foot deep receiving pit between the SB lanes and SB onramp. The jack and bore drill bit will be 6.5 feet in diameter. The process will use a contained and recirculating drill fluid with bentonite and/or polymers mixed with water. Approximately 150 cubic yards of material will be removed for the installation of the culvert and will be used elsewhere in the road rehabilitation outside of the Project area or will be removed and disposed of appropriately. The downstream junction box will be 7.5 feet by 11 feet by 6.5 feet and will require 11.6 cubic yards of concrete to construct or will be precast off site. This box connects to another culvert that will not be worked on that leads to the downstream outlet and headwall for this system will not be modified. There will be temporary impacts to 1,260 square feet of ruderal vegetation over 210 linear feet. Approximately 210.9 cubic yards of material will be backfilled over the first junction box and approximately 67.2 cubic yards of material will be backfilled over the second junction box. The remaining 45.4 cubic yards will be used elsewhere in the road rehabilitation outside of the Project area or will be removed and disposed of appropriately.

For all Locations:

- All in-channel drainage work will be limited to the dry season when no surface water is present.

- Equipment required includes trucks, excavators, dump trucks, loaders, backhoes, cranes, drill rig for CIDH piles, concrete truck, concrete pump, man lifts, Hoe rams, generators, jack hammers, torches, welding equipment, power saw, auger boring machine and tunnel boring machine.

- Mitigation planting will be implemented on site at San Marcos Creek according to the requirements of this Agreement.

PROJECT IMPACTS

Structures to be removed at San Marcos Creek cover 164 square feet and will be replaced by new structures covering 64 square feet. This will result in 106 square feet

of area to be restored. There will be a total of 23,960 square feet (0.55 acres), over a total of 622 linear feet temporarily impacted by construction. Of this area, approximately 0.025 acres over 72 linear feet includes one willow tree and seven mulefat shrubs that will be removed for bridge construction. For all locations, a total of approximately 410.5 cubic yards of material will be excavated and a total of approximately 365.1 cubic yards of backfill. For all locations, a total of approximately 284 cubic yards of concrete will be removed and a total of approximately 291 cubic yards of concrete will be installed. Other potential impacts related to disturbance during Project implementation include but are not limited to those resulting from noise, vibration, trampling/crushing, excavation, erosion, and surface water contact with construction-related materials.

This Agreement is intended to avoid, minimize, and mitigate adverse impacts to the fish and wildlife resources that occupy the Project area and the adjacent habitat. Absent implementation of the Protective Measures required by this Agreement the Federal endangered and State threatened San Joaquin kit fox (*Vulpes macrotis mutica*), and the State species of special concern burrowing owl (*Athene cunicularia*), western spadefoot (*Spea hammondii*), western pond turtle (*Actinemys marmorata*), coast horned lizard (*Phrynosoma blainvillii*), Salinas pocket mouse (*Perognathus inornatus psammophilus),* American badger (*Taxidea taxus*), and pallid bat (*Antrozous pallidus*), as well as other birds, mammals (in particular bat species), fish, reptiles, amphibians, invertebrates, and plants that compose the local ecosystem could potentially be impacted.

MEASURES TO PROTECT FISH AND WILDLIFE RESOURCES

1. Administrative Measures

Permittee shall meet each administrative Protective Measure described below.

1.1 Documentation at Project Site. Permittee shall make this Agreement, any extensions and amendments to this Agreement, and all related notification materials and California Environmental Quality Act (CEQA) documents, readily available at the Project site at all times and shall be presented to CDFW personnel or personnel from another State, Federal, or local agency upon request.

1.2 Providing Agreement to Persons at Project Site. Permittee shall provide copies of this Agreement and any extensions and amendments to this Agreement to all persons who will be working on the Project at the Project site on behalf of Permittee, including but not limited to contractors, subcontractors, inspectors, and monitors.

1.3 Notification of Conflicting Provisions. Permittee shall notify CDFW if Permittee determines or learns that a Protective Measure in this Agreement might conflict with a provision imposed on the Project by another local, State, or Federal agency. In that event, CDFW shall contact Permittee to resolve any conflict.

1.4 Project Site Entry. Permittee agrees that CDFW personnel may enter the Project site at any time to verify compliance with this Agreement.

1.5 Legal Obligations. This Agreement does not exempt Permittee from complying with all other applicable local, State, and Federal law, or other legal obligations.

1.6 Unauthorized Take. This Agreement does not authorize the "take" (defined in Fish and Game Code Section 86 as to hunt, pursue, catch, capture, or kill; or attempt to hunt, pursue, catch, capture, or kill) of State- or Federally-listed threatened or endangered species. Any such take shall require separate permitting as may be required.

1.7 Property Not Owned by Permittee. To the extent that the Protective Measures of this Agreement provide for activities that require Permittee to enter on another owner's property, they are agreed to with the understanding that Permittee possesses the legal right to so enter.

1.8 Work Schedule. Permittee shall submit a work schedule to CDFW prior to beginning any activities covered by this Agreement. Permittee shall also notify CDFW upon the completion of the activities covered by this Agreement.

1.9 Training. Prior to starting Project activity, all employees and contractors who will be present during Project activities shall receive training from a qualified individual on the contents of this Agreement, the resources at stake, and the legal consequences of non-compliance. A training sign-in sheet for the employees and contractors, including the date of the training and who gave the training shall be submitted to CDFW within one (1) week of completing training.

2 Avoidance and Minimization Measures

To avoid or minimize adverse impacts to fish and wildlife resources identified above, Permittee shall implement each Protective Measure listed below.

2.1 Construction/Work Hours.

(a) Work activities shall be confined to daylight hours, except for the following activities: bridge foundation installation work initiated during daylight hours, including drilling for the piling, installing the rebar cage, and pouring concrete; installation of junction box structures; traffic movement; and activities on the bridge after the structure is installed (e.g., striping). For purposes of this Agreement, "daylight hours" are defined as that daytime period between sunrise and sunset. Permittee may request approval from CDFW to complete additional activities outside of daylight hours; such requests shall be made in writing at least seven days prior to initiating proposed night work, and no night work requiring approval shall begin until CDFW has provided written authorization. CDFW will approve work that would not increase Project impacts; activities that result in increased impacts would warrant an amendment to this Agreement.

(b) During all night work, Permittee shall not use permanent or temporary, fixed, exterior lighting, including motion-triggered security lighting, that casts light

into CDFW jurisdictional areas beyond the footprint of the Project work areas as demarked according to Avoidance and Minimization Measure 2.2 below. Permittee shall ensure that lighting is operated as low as feasible to complete Project activity, and that lighting is pointed downward. Permittee may use plywood shields or similar barriers to prevent light from shining outside of Project work areas.

2.2 Flagging. Prior to any activity within the CDFW jurisdictional area, Permittee shall identify the limits of the required access routes and encroachment. These "work area" limits shall be identified with brightly-colored flagging. Work completed under this Agreement shall be limited to this defined area only. Flagging/ shall be maintained in good repair for the duration of the Project. All CDFW jurisdictional areas beyond the identified work area limits shall be considered Environmentally Sensitive Areas (ESA) and shall not be disturbed.

2.3 Listed and Other Special Status Species.

(a) This Agreement does not allow for the take of any State- or Federally-listed threatened or endangered species. Liability for any take of such listed species remains the separate responsibility of Permittee for the duration of the Project.

(b) Permittee affirms that no take of listed species shall occur as a result of this Project and shall take prudent measures to ensure that all take is avoided. Permittee acknowledges and fully understands that it does not have State incidental take authority. If any State- or Federally-listed threatened or endangered species occur within the proposed work area or could be impacted by the work proposed, and thus taken as a result of Project activities, Permittee is responsible for obtaining and complying with required State and Federally threatened and endangered species permits or other written authorization before proceeding with this Project.

(c) Permittee shall immediately notify CDFW of the discovery of any such threatened or endangered species prior to and/or during Project implementation.

(d) Pre-activity surveys for potential listed and other special status species shall be conducted by a qualified biologist within 30 days prior to the commencement of Project activities. Surveys shall be conducted within the work area and all access routes to avoid and minimize incidental take, confirm previous observations, identify any areas occupied by listed or sensitive species, and clearly mark all resources to be avoided by Project activities. If any State- or Federally-listed threatened or endangered species are found or could be impacted by the work proposed, Permittee shall notify CDFW of the discovery prior to commencement of Project activity. An amended Agreement and/or State Incidental Take Permit may be necessary and an additional CEQA analysis may need to be conducted, before work can begin.

(e) San Joaquin Kit Fox: Prior to the start of Project activities, a qualified biologist shall perform transect surveys of the Project work area and a 250-foot buffer, to identify potential dens and other kit fox sign. During Project implementation, Permittee shall follow all requirements in the United States Fish and Wildlife Service (USFWS) "USFWS Standardized Recommendations for the Protection of the Endangered San Joaquin Kit Fox Prior to or During Ground Disturbance" (http://www.fws.gov/sacramento/es/Survey-Protocols-Guidelines/Documents/kitfox_standard_rec_2011.pdf). A qualified biologist shall be on-site during all Project-related activities that could impact the species. If kit fox are found on or within 250 feet of the Project site, all Project activity shall cease until a qualified biologist confirms that the individual(s) has left of its own volition.

If San Joaquin kit fox dens are found, they shall be avoided by appropriate distances (potential or atypical den = 50 feet; known den = 100 feet; pupping den = 250 feet minimum). During transect surveys the den shall be treated as a known den unless sign associated with natal/pupping activity is observed. If any occupied San Joaquin kit fox pupping dens are subsequently discovered or suspected, Permittee shall stop work and contact CDFW immediately for further guidance. Absolutely no disturbance to known San Joaquin kit fox dens shall occur and no work shall occur within the above buffers without contacting CDFW and obtaining prior written authorization to do so.

(f) Burrowing Owl: A qualified wildlife biologist shall survey for burrowing owl within a 500-foot radius of the Project site, within 30 days prior to Project commencement. Surveys shall be conducted at appropriate times to maximize detection. If any active burrowing owl burrows are observed, these burrows shall be designated an ESA, protected, and monitored by a qualified biologist during Project-related activities. A minimum 500-foot avoidance buffer shall be established and maintained around each owl burrow during the nesting season (February 1 through August 31). If active burrowing owl burrows are observed outside of the nesting season, a minimum 150-foot no disturbance buffer shall be established around each burrow. If avoidance is not feasible and Permittee proposes to evict burrowing owls from burrows, Permittee shall submit to CDFW for written approval a Burrowing Owl Eviction Plan (Eviction Plan) at least 30 days prior to any activity requiring eviction of owls. The Eviction Plan shall include details regarding the eviction via one-way doors, including but not limited to the materials used and at least twice daily monitoring of subject burrows to ensure that owls are not trapped; timing of eviction only outside the nesting season; and details about any proposed use of artificial burrows, including but not limited to design, installation, and maintenance.

(g) Western Spadefoot and Western Pond Turtle: Any western spadefoot or western pond turtles discovered at the site immediately prior to or during Project activities shall be allowed to move out of the area of their own volition. If this is not feasible, they shall be captured by a qualified biologist and

relocated out of harm's way to the nearest suitable habitat at least 100 feet upstream or downstream from the Project site.

(h) Coast Horned Lizard. The Project work area shall be searched for these lizards by a qualified biologist immediately prior to Project activities. Any loose substrate in which lizards could bury themselves shall be gently raked with a hand tool (e.g., a garden rake) to a depth of 2 inches to locate any lizards that could be under the surface immediately prior to Project activities. Lizards present in the work area shall be allowed to leave the work area on their own volition or shall be moved out of harm's way by a qualified biologist with handling experience.

(i) Salinas Pocket Mouse: In Project areas where rodent burrows are present, ground disturbing activity shall proceed in a manner that allows individuals of these nocturnal species to move out of the area. Any individuals detected exiting burrow systems shall be given adequate space to exit the site. Individuals unable to escape the site or appear to not be acclimated to daylight conditions shall be removed from areas of ground disturbance by a qualified biologist and placed into a burrow as close as possible to the work area and out of the immediate influence of Project activity.

(j) American Badger: Any American badger detected within the Project area during Project-related activities shall be allowed to move out of the work area of its own volition. If American badger is detected denning on or immediately adjacent to the Project site, Permittee shall consult with CDFW to determine whether the animal(s) may be evicted from the den. Eviction of badgers will not be approved by CDFW unless it is confirmed that no dependent young are present.

(k) Bat Species: Bats shall not be disturbed without specific notice to and consultation with CDFW. Pre-construction surveys shall be conducted by a qualified biologist to determine if bat species are roosting on-site or near Project work areas. If surveys confirm that bats are present, Permittee shall submit a Bat Exclusion Plan to CDFW for review and approval prior to its implementation. The Plan shall be submitted for CDFW written approval a minimum of 30 days in advance of its proposed implementation. If initial surveys had a negative result, Permittee shall conduct a follow-up bat preconstruction survey within seven (7) days prior to the construction start date, to determine whether bats have moved into or adjacent to the Project area. If bats are detected, the process defined above shall be followed, to develop a Bat Exclusion Plan.

2.4 Fish and Wildlife.

(a) If any fish or wildlife is encountered during the course of Project activities, said fish or wildlife shall be allowed to leave the Project area unharmed.

(b) Pursuant to FGC Sections 3503 and 3503.5, it is unlawful to take, possess, or destroy the nest or eggs of any bird or bird-of-prey. To protect nesting birds,

no Project activity shall be completed from February 15 through August 31 unless the following Avian Nesting Surveys are completed by a qualified biologist within 30 days prior to commencing Project activities.

Separate avian survey and avoidance requirements are listed above for burrowing owl, due to their special status listings and different nesting ecology (see Avoidance and Minimization Measures 2.3(f).

Raptors: Survey for nesting activity of raptors within a 500-foot radius of the site. Surveys shall be conducted at appropriate nesting times and concentrate on trees with the potential to support raptor nests. If any active nests are observed, these nests and nest trees shall be designated an ESA and protected with a minimum 500-foot buffer until young have fledged and are no longer reliant on the nest site or parental care.

Other Avian Species: Survey for nesting activity within a 250-foot radius of the defined work area. If any nesting activity is found, these nests shall be designated an ESA and protected with a minimum 250-foot buffer until young have fledged and are no longer reliant on the nest site or parental care.

Swallows: If work cannot avoid the avian nesting season described above, Permittee shall develop a Swallow Exclusion Plan for approval by CDFW prior to implementation outside the nesting season of after surveys with a negative finding for swallows. The plan shall include methods to prevent swallows from initiating nesting on the existing bridge prior to starting Project activity, and shall include maintenance of any screen or netting used to prevent swallows from accessing bridge structures suitable for nesting. If swallows are already nesting at the time surveys are done, nest sites shall be protected per Other Avian Species, above.

CDFW may consider variances from these buffers when there is a compelling biological or ecological reason to do so, such as when the Project area would be concealed from a nest site by topography.

2.5 Vegetation.

(a) Removal and trimming of vegetation shall be limited to the minimal amount necessary to complete the Project.

(b) Permittee shall document the number and species of all woody-stemmed plants four inches DBH and greater that are cut, trimmed, or otherwise removed or damaged during Project activities. Trees and shrubs with a DBH of four inches or greater that are damaged or removed shall be replaced by replanting appropriate native species at a 3:1 ratio (replaced to lost), except that heritage trees 24 inches or greater in DBH shall require replanting of like

species at a 10:1 ratio in or immediately adjacent to the Project site, according to Compensatory Measure 3.1(a) Revegetation/Restoration.

(c) Prior to tree removal, Permittee shall clearly mark each tree that will be removed, to prevent unintentional tree removal.

(d) Vegetation or material removed from the Project site shall be disposed of at an appropriate and legal off-site location where the material cannot enter the stream channel. No such material shall be stockpiled in the streambed, banks, or channel, except that native vegetation removed from the channel may be chipped and the chips used as mulch for disturbed soil sites in or near the Project area.

(e) All disturbed invasive, exotic plant species shall be bagged, removed from the site, and appropriately disposed of in a landfill. Invasive species shall not be used in mulching, composting, or otherwise placed in or around the Project site.

(f) Heavy equipment and other machinery shall be inspected for the presence of undesirable species and cleaned prior to on-site use to reduce the risk of introducing exotic plant species into the Project site.

2.6 Vehicles and Equipment.

(a) Vehicles and heavy equipment shall only be operated within naturally dry portions of the stream.

(b) Any equipment or vehicles driven and/or operated in or adjacent to the stream shall be checked and maintained daily to prevent leaks of materials that, if introduced to water, could be deleterious to aquatic and terrestrial life.

(c) Staging and storage areas for equipment, materials, fuels, lubricants, and solvents shall be located outside of the stream channel and banks. Stationary equipment such as motors, pumps, generators, compressors and welders, located within or adjacent to the stream, shall be positioned over drip-pans. Vehicles shall be moved away from the stream prior to refueling and lubrication.

2.7 Fill/Spoil.

(a) Spoil storage sites shall not be located within the stream, or where spoil will be washed into the stream. Rock, gravel, and/or other materials shall not be imported into or moved within the bed or banks of the stream, except as otherwise addressed in this Agreement.

(b) Fill shall be limited to the minimal amount necessary to accomplish the agreed activities. Excess fill material shall be moved off-site at Project completion.

(c) Rip rap and rock slope protection materials shall be composed of clean rock and shall not include asphalt, broken concrete, or any other material that is deleterious to fish or wildlife.

2.8 Erosion.

(a) No work within jurisdictional areas shall occur during or within 24 hours following significant rainfall events, defined as ¼ inch or more of rain in a 24-hour period.

(b) All disturbed soils within the Project site shall be stabilized to reduce erosion potential, both during and following Project implementation. Temporary erosion control devices, such as straw bales, silt fencing, and sand bags, may be used, as appropriate, to prevent siltation of the stream. To minimize the risk of ensnaring and strangling wildlife, coir rolls, erosion control mats or

blankets, straw or fiber wattles, or similar erosion control products shall be composed entirely of natural-fiber, biodegradable materials. Permittee shall not use "photodegradable" or other plastic erosion control materials.

2.9 Pollution.

(a) Permittee and all contractors shall be subject to the water pollution regulations found in Fish and Game Code sections 5650 and 12015.

(b) Permittee shall install the necessary containment structures to control the placement of wet concrete and to prevent it from entering into the channel outside of those structures. No concrete shall be poured below the top of bank if the 5-day weather forecast indicates any chance of rain. At all times when the Permittee is pouring or working with wet concrete there shall be a designated monitor to inspect the containment structures and ensure that no concrete or other debris enters into the channel outside of those structures. Poured concrete shall be isolated from surface waters and allowed to dry/cure for a minimum of 30 days or until the pH as tested with tap water does not exceed 9.5. Any rain water that comes into contact with the concrete structures shall be contained and isolated from stream flows; the water pH shall be tested, and water shall be removed from the site and disposed of lawfully if the pH exceeds 9.5. Permittee shall submit to CDFW the methods and results of all pH testing, including measurements that demonstrate a pH at or below 9.5 as tested prior to removing the containment structures.

(c) Raw cement, concrete or washings thereof, asphalt, drilling fluids or lubricants, paint or other coating material, oil or other petroleum products, or any other substances that could be hazardous to fish or wildlife resulting from or disturbed by Project-related activities, shall be prevented from contaminating the soil and/or entering the "Waters of the State".

(d) An Emergency Response Plan shall be prepared and submitted to CDFW for approval prior to the start of Project activities, and kept on-site during all phases of the Project. The Plan shall identify the actions that shall be taken in the event of a spill of petroleum products, concrete, contaminated soil, or other material harmful to fish, plants, or aquatic life. Emergency response materials shall be kept at the site and readily available to allow rapid containment and cleanup of any spilled material. In the event that a spill occurs, all Project activities shall immediately cease until cleanup of the spilled materials is completed. CDFW shall be notified immediately by Permittee of any spills and shall be consulted regarding cleanup procedures.

(e) All Project-generated debris, building materials, and rubbish shall be removed from the stream and from areas where such materials could be washed into the stream.

2.10 Structures. Permittee shall confirm that all structures and installed features are designed (i.e., size and alignment), constructed, and maintained such that they will not fail, will accommodate high (i.e., 100-year) flows, and will not cause long- term changes in water flows that adversely modify the existing upstream or downstream channel bed/bank contours, increase sediment deposition, or cause significant new erosion.

3 Compensatory Measures

To compensate for adverse impacts to fish and wildlife resources identified above that cannot be avoided or minimized, Permittee shall implement each Protective Measure listed below.

3.1 Revegetation and Restoration.

(a) If any trees or woody shrubs four (4) inches in DBH or greater will be removed during Project implementation, Permittee shall develop a Revegetation Plan for the site and submit it to CDFW for written approval at least 30 days prior to Project commencement. The Revegetation Plan shall specifically address plantings as indicated in Avoidance and Minimization Measure 2.5(b) above, to result in a minimum of 70 percent survival for tree and shrub plantings after five (5) years, including up to three years with supplemental irrigation and at least two (2) years without such assistance. The Plan shall also include final and interim success performance criteria, and define remedial actions to take if those criteria are not met. The Plan shall describe an initial planting date (Year 0) that is within one year of Project completion; describe the location(s) and species of plantings; and include a reporting format to be used for annual reporting to CDFW. CDFW shall review reports and beginning with Year 5 post-planting shall determine whether performance criteria have been met; if performance criteria have been met, CDFW shall provide written documentation.

(b) Any exposed slopes or exposed areas created by Project activities shall be seeded (with weed-free straw or mulch) with a blend of a minimum of three (3) locally native grass species. One (1) or two (2) sterile non-native perennial grass species may be added to the seed mix provided that amount does not exceed 25 percent of the total seed mix by count. Locally native wildflower and/or shrub seeds may also be included in the seed mix. The seeding shall be completed as soon as possible, but no later than November 15 of the year construction ends or as otherwise approved in writing by CDFW. A seed mixture shall be submitted to CDFW for approval prior to application.

(c) Where suitable vegetation cannot be reasonably expected to become established, non-erodible materials shall be used for such stabilization. Any installation of non-erodible materials not described in the original Project description shall be coordinated with CDFW. Coordination may include the negotiation of additional Protective Measures for this activity.

4 Reporting Measures

Permittee shall meet each reporting requirement described below.

4.1 Obligations of Permittee.

(a) Permittee shall have primary responsibility for monitoring compliance with all Protective Measures in this Agreement. Protective Measures shall be implemented within the time periods indicated in this Agreement and the reporting described below.

(b) Permittee (or Permittee's designee) shall ensure the implementation of the Protective Measures of this Agreement, and shall monitor the effectiveness of the Protective Measures.

4.2 Reports. Permittee shall submit the following Reports to CDFW:

- Construction/work schedule, submitted to CDFW prior to Project commencement (Administrative Measure 1.8).
- A Training Sign-in Sheet, submitted to CDFW within one (1) week of completing training (Administrative Measure 1.9).
- Pre-activity survey results, submitted to CDFW at least one (1) week prior to the start of Project activities (Avoidance and Minimization Measure 2.3(d)).
- Kit fox survey results, submitted to CDFW at least one (1) week prior to the start of Project activities (Avoidance and Minimization Measure 2.3(e)).
- Results of burrowing owl surveys, submitted to CDFW at least one (1) week prior to the start of Project activities, and a Burrowing Owl Eviction Plan, if

eviction of owls from burrows is proposed, at least 30 days prior to any proposed eviction activity (Avoidance and Minimization Measure 2.3(f)).

- Results of bat surveys submitted to CDFW at least 30 days prior to commencement of Project activities. If bats are present, a Bat Exclusion Plan submitted to CDFW for review and approval a minimum of 30 days in advance of proposed exclusion activities. If the initial survey results were negative, the follow-up survey report submitted to CDFW within one week of survey completion (Avoidance and Minimization Measure 2.3(k)).

- Results of surveys for nesting birds, if any work is scheduled during the avian nesting season, submitted to CDFW at least one (1) week prior to the start of Project activities (Avoidance and Minimization Measure 2.4(b)).

- Swallow Exclusion Plan, if any work is scheduled during the swallow nesting period, submitted to CDFW at least one (1) week prior to implementation (Avoidance and Minimization Measure 2.4(b)).
- Methods and results of pH testing, if not waiting 30 days for concrete to cure, submitted to CDFW within one (1) week of testing (Avoidance and Minimization Measure 2.9(b)).

- An Emergency Response Plan, submitted to CDFW at least two (2) weeks prior to the start of Project activities (Avoidance and Minimization Measure 2.9(d)).

- A Revegetation Plan submitted to CDFW for approval at least 30 days prior to the start of Project activities (Compensatory Measure 3.1(a)).

- A seed mixture to be used to control erosion, submitted to CDFW for approval prior to application (Compensatory Measure 3.1(b)).

- A Final Project Report to be submitted within 30 days after the Project is completed. The final report shall summarize the Project and address the implementation of each Protective Measure included in this Agreement. Before, during, and after photo documentation of the Project site shall be included in the report.

CONTACT INFORMATION

Any communication that Permittee or CDFW submits to the other shall be in writing and any communication or documentation shall be delivered to the address below by U.S. mail, fax, or email, or to such other address as Permittee or CDFW specifies by written notice to the other. Permittee shall submit all schedules, survey results, reports, and/or plans required by this Agreement in hard copy to the address below; Permittee may also submit those materials electronically by email to the CDFW contact identified below (or subsequent contact) **and** to R4LSA@wildlife.ca.gov.

To Permittee:

California Department of Transportation (Caltrans)
Morgan Robertson
50 Higuera Street
San Luis Obispo, California 93401
Phone: (805) 549-3019
Fax: (805) 542-4684
morgan.robertson@dot.ca.gov

To CDFW:

California Department of Fish and Wildlife
Region 4 - Central Region
1234 East Shaw Avenue
Fresno, California 93710
Attn: Lake and Streambed Alteration Program – Charles Walbridge
Notification No. 1600-2015-0234-R4
Phone: (559) 243-4017 extension 352
Fax: (559) 243-4020
charles.walbridge@wildlife.ca.gov

LIABILITY

Permittee shall be solely liable for any violations of this Agreement, whether committed by Permittee or any person acting on behalf of Permittee, including its officers, employees, representatives, agents or contractors and subcontractors, to complete the Project or any activity related to it that this Agreement authorizes.

This Agreement does not constitute CDFW's endorsement of, or require Permittee to proceed with the Project. The decision to proceed with the Project is Permittee's alone.

SUSPENSION AND REVOCATION

CDFW may suspend or revoke in its entirety this Agreement if it determines that Permittee or any person acting on behalf of Permittee, including its officers, employees, representatives, agents, or contractors and subcontractors, is not in compliance with this Agreement.

Before CDFW suspends or revokes this Agreement, it shall provide Permittee written notice by certified or registered mail that it intends to suspend or revoke. The notice shall state the reason(s) for the proposed suspension or revocation, provide Permittee an opportunity to correct any deficiency before CDFW suspends or revokes this Agreement, and include instructions to Permittee, if necessary, including but not limited to a directive to immediately cease the specific activity or activities that caused CDFW to issue the notice.

ENFORCEMENT

Nothing in this Agreement precludes CDFW from pursuing an enforcement action against Permittee instead of, or in addition to, suspending or revoking this Agreement.

Nothing in this Agreement limits or otherwise affects CDFW's enforcement authority or that of its enforcement personnel.

OTHER LEGAL OBLIGATIONS

This Agreement does not relieve Permittee or any person acting on behalf of Permittee, including its officers, employees, representatives, agents, or contractors and subcontractors, from obtaining any other permits or authorizations that might be required under other Federal, State, or local laws or regulations before beginning the Project or an activity related to it.

This Agreement does not relieve Permittee or any person acting on behalf of Permittee, including its officers, employees, representatives, agents, or contractors and subcontractors, from complying with other applicable statutes in the FGC including, but not limited to, FGC sections 2050 *et seq.* (threatened and endangered species), 3503 (bird nests and eggs), 3503.5 (birds of prey), 5650 (water pollution), 5652 (refuse disposal into water), 5901 (fish passage), 5937 (sufficient water for fish), and 5948 (obstruction of stream).

Nothing in this Agreement authorizes Permittee or any person acting on behalf of Permittee, including its officers, employees, representatives, agents, or contractors and subcontractors, to trespass.

AMENDMENT

CDFW may amend this Agreement at any time during its term if CDFW determines the amendment is necessary to protect an existing fish or wildlife resource.

Permittee may amend this Agreement at any time during its term, provided the amendment is mutually agreed to in writing by CDFW and Permittee. To request an amendment, Permittee shall submit to CDFW a completed CDFW "Request to Amend Lake or Streambed Alteration" form and include with the completed form payment of the corresponding amendment fee identified in CDFW's fee schedule at the time of the request (see Cal. Code Regs., Title 14, § 699.5).

TRANSFER AND ASSIGNMENT

This Agreement may not be transferred or assigned to another entity, and any purported transfer or assignment of this Agreement to another entity shall not be valid or effective, unless the transfer or assignment is requested by Permittee in writing, as specified below, and thereafter CDFW approves the transfer or assignment in writing.

The transfer or assignment of this Agreement to another entity shall constitute a minor amendment, and therefore to request a transfer or assignment, Permittee shall submit to CDFW a completed CDFW "Request to Amend Lake or Streambed Alteration" form and include with the completed form payment of the minor amendment fee identified in CDFW's fee schedule at the time of the request (see Cal. Code Regs., Title 14, § 699.5).

EXTENSIONS

In accordance with FGC section 1605(b), Permittee may request one (1) extension of this Agreement, provided the request is made prior to the expiration of this Agreement's term. To request an extension, Permittee shall submit to CDFW a completed CDFW "Request to Extend Lake or Streambed Alteration" form and include with the completed form payment of the extension fee identified in CDFW's fee schedule at the time of the request (see Cal. Code Regs., Title 14, § 699.5). CDFW shall process the extension request in accordance with FGC 1605(b) through (e).

If Permittee fails to submit a request to extend this Agreement prior to its expiration, Permittee must submit a new notification and notification fee before beginning or continuing the Project this Agreement covers (FGC, § 1605, subd. (f)).

EFFECTIVE DATE

This Agreement becomes effective on the date of CDFW's signature, which shall be: 1) after Permittee's signature; 2) after CDFW complies with all applicable requirements under the California Environmental Quality Act (CEQA); and 3) after payment of the applicable FGC section 711.4 filing fee listed at http://www.wildlife.ca.gov/habcon/ceqa/ceqa_changes.html.

TERM

This Agreement shall remain in effect for three (3) years beginning on the date signed by CDFW, unless it is terminated or extended before then. All provisions in this Agreement shall remain in force throughout its term. Permittee shall remain responsible for implementing any provisions specified herein to protect fish and wildlife resources after this Agreement expires or is terminated, as FGC section 1605(a)(2) requires.

CALIFORNIA ENVIRONMENTAL QUALITY ACT (CEQA) COMPLIANCE

In approving this Agreement, CDFW is independently required to assess the applicability of CEQA. The features of this Agreement shall be considered as part of the overall Project description.

Permittee's concurrence signature on this Agreement serves as confirmation to CDFW that the activities conducted under the terms of this Agreement are consistent with the Project as described in the CEQA Mitigated Negative Declaration prepared by California Department of Transportation as the Lead Agency for the SR 101 North Paso Robles

Rehabilitation Project (State Clearinghouse No. 2013061006), approved on September 9, 2013. A copy of the Mitigated Negative Declaration was provided to CDFW by Permittee.

CDFW, as a CEQA Responsible Agency, shall submit a Notice of Determination to the State Clearinghouse upon signing this Agreement.

EXHIBITS

The document listed below is included as an exhibit to this Agreement and is incorporated herein by reference.

Figure 1. Project Location USGS Quad Map.

AUTHORITY

If the person signing this Agreement (signatory) is doing so as a representative of Permittee, the signatory hereby acknowledges that he or she is doing so on Permittee's behalf and represents and warrants that he or she has the authority to legally bind Permittee to the provisions herein.

AUTHORIZATION

This Agreement authorizes only the Project described herein. If Permittee begins or completes a Project different from the Project this Agreement authorizes, Permittee may be subject to civil or criminal prosecution for failing to notify CDFW in accordance with FGC section 1602.

CONCURRENCE

The undersigned accepts and agrees to comply with all the provisions of this Agreement.

FOR CALIFORNIA DEPARTMENT OF TRANSPORTATION

Paul Andreas — 4/22/16

Acting for Larry Bonner — Date

Senior Environmental Planner - Caltrans District 5

FOR CALIFORNIA DEPARTMENT OF FISH AND WILDLIFE

4/22/16

Julie A. Vance — Date

Regional Manager - Central Region

Figure 1

Exhibit A

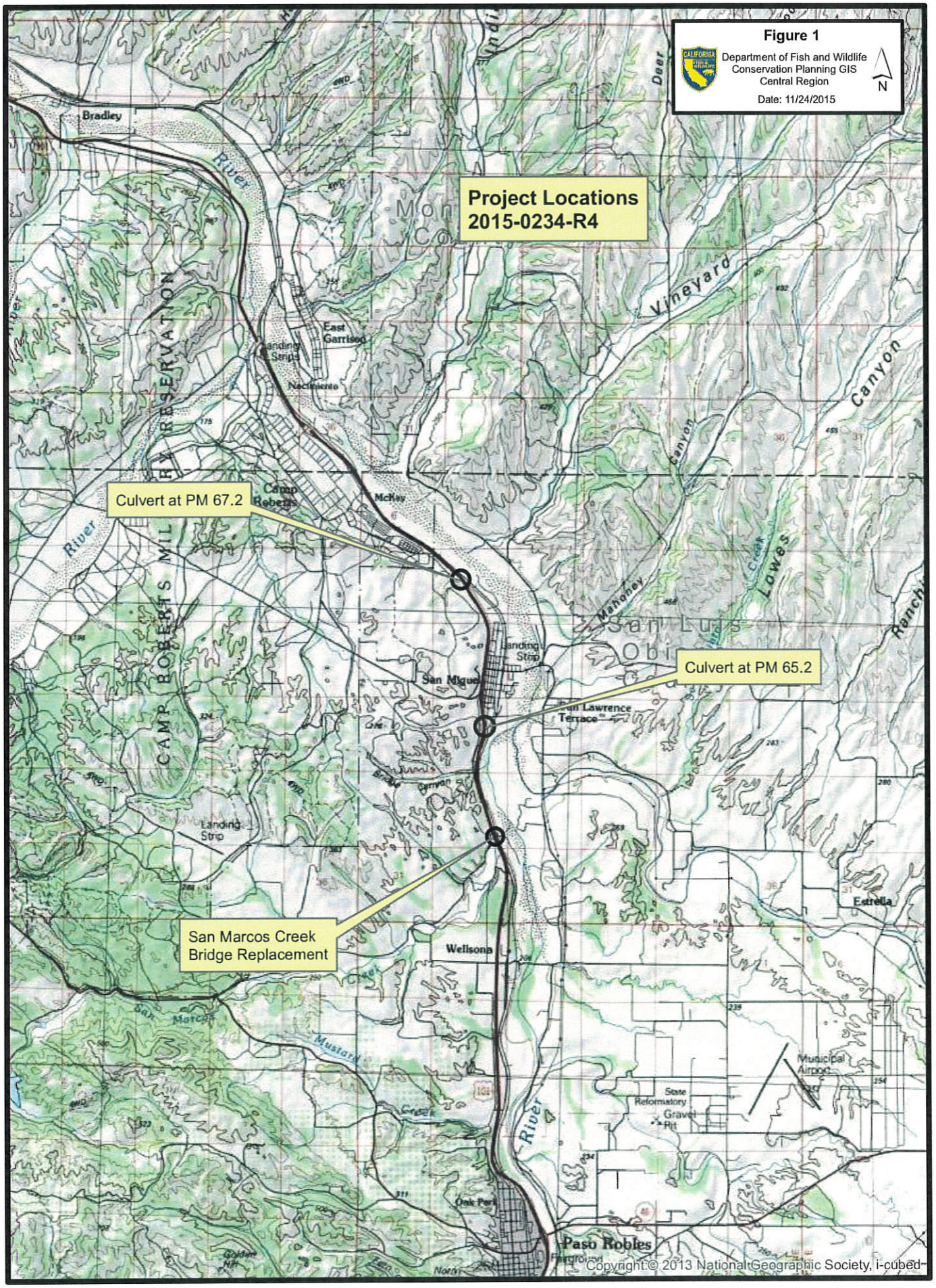
Figure 1
Department of Fish and Wildlife
Conservation Planning GIS
Central Region
Date: 11/24/2015
N
Project Locations
2015-0234-R4
Culvert at PM 67.2
Culvert at PM 65.2
San Marcos Creek
Bridge Replacement
Bradley
River
Camp Roberts
Landing Strip
East Garrison
Nacimiento
McKay
San Miguel
Lawrence Terrace
Wellsona
Estrella
Paso Robles
Municipal Airport
State Reformatory
Gravel Pit
Vineyard
Canyon
Lawes
Mahoney
Deer
Copyright © 2013 National Geographic Society, i-cubed

0 1 2 Miles

AGREEMENTS

3. US Department of the Interior Fish and Wildlife Service Letter of Concurrence

United States Department of the Interior

FISH AND WILDLIFE SERVICE
Ventura Fish and Wildlife Office
2493 Portola Road, Suite B
Ventura, California 93003

IN REPLY REFER TO:
08EVEN00-2012-I-0438

November 5, 2012

Morgan Robertson
Associate Environmental Planner - Biologist
California Department of Transportation
50 Higuera Street
San Luis Obispo, California 93401

Subject: Highway 101 Pavement Rehabilitation Project, San Luis Obispo and Monterey Counties, California

Dear Ms. Robertson:

We have reviewed your request, dated July 12, 2012, and received by our office on July 16, 2012, for our concurrence that the subject project may affect but is not likely to adversely affect the federally endangered San Joaquin kit fox (*Vulpes macrotis mutica*). The California Department of Transportation (Caltrans) is proposing to rehabilitate 8 miles of Highway 101 from San Luis Obispo County post mile 63.2 to Monterey County post mile 1.9, California.

The proposed project would consist of hot-mix asphalt overlay through the project limits. All work would occur within the Highway 101 right-of-way with the exception of a small permanent easement on a Union Pacific Railroad right-of-way. The inside shoulders would be widened from the existing 2 feet to 5 feet and the outside shoulders would be widened from the existing 8 feet to 10 feet. The project would also repair and upgrade drainage systems, improve vertical clearance of some structures within project limits, and construct a new 500-foot retaining wall with guardrail at postmile 69.11. The northbound and southbound bridges over San Marcos Creek would be replaced with new bridge structures.

Several records of San Joaquin kit fox occur within 5 miles of the proposed site (CNDDB 2012). Any previously undisturbed areas of the proposed project site could provide suitable foraging, dispersal, and denning habitat for San Joaquin kit fox. You are proposing the following measures to avoid adverse effects to San Joaquin kit fox:

1. Project employees will be directed to exercise caution when commuting within listed species habitats. A 20 mile-per-hour speed limit will be observed in all project areas, except on county roads and State and Federal highways. Cross-country travel by vehicles will be prohibited outside of the project area unless authorized by the U.S. Fish and Wildlife Service (Service). Project employees will be provided with written guidance governing vehicle use, speed limits on unpaved roads, fire prevention, and other hazards.

2. Prior to any ground disturbance, the contractor, all employees of the contractor, subcontractors, and subcontractors' employees will attend an employee education program conducted by a Caltrans or Service approved biologist. The program will consist of a brief presentation by persons knowledgeable in San Joaquin kit fox biology, and legislative protection, and measures to avoid impacts to the species during project implementation.

3. A litter control program will be initiated at each project site. No pets or firearms (except for law enforcement officers and security personnel) will be allowed on-site.

4. Excavations deeper than 2 feet will be covered with plywood or similar material at the end of each work day, or escape ramps put in place to prevent any entrapment. Each excavation will be inspected thoroughly before being filled.

5. All construction pipes, culverts, or similar structures with a diameter of 4 inches or greater stored on the construction site overnight will be thoroughly inspected for San Joaquin kit foxes prior to being buried, capped, or otherwise used or moved. If a San Joaquin kit fox is discovered inside a pipe, the pipe should not be moved until the Service has been consulted. If the San Joaquin kit fox is in direct harm's way, the pipe may be moved to a safe location one time under the direct supervision of a qualified biologist.

6. The resident engineer or their designee will be responsible for implementing these conservation measures and will represent the point of contact for the project.

7. Restoration and vegetation work will use California endemic plant materials from on-site or local sources. Loss of soil from run-off or erosion will be prevented using fiber rolls or similar material and by implementing the best management practices from the Caltrans National Pollutant Discharge Elimination System statewide storm water permit.

8. Prior to any ground disturbance, a preconstruction survey will be conducted for San Joaquin kit fox. The preconstruction survey will be conducted no less than 14 days and no more than 30 days prior to the beginning of ground disturbance or construction activities. The survey will identify any potential kit fox dens. The status of all potential dens will be determined and mapped. Potential dens will be monitored with tracking medium for 3 days to determine the current use. If no kit fox activity is observed during this period then the den will be excavated by hand or carefully with equipment provided by the contractor, under the direction of the biologist to preclude subsequent use. If kit fox activity is observed at a den, Caltrans will contact the Service for further coordination.

9. Written results of the preconstruction survey will be submitted to the Service within 5 days after survey completion and prior to the start of ground disturbance. If a natal or pupping den is discovered within the project area or within 200 feet of the project boundary, the Service will be notified immediately. If the preconstruction survey reveals an active natal den or new information, Caltrans will notify the Service immediately for further consultation.

We concur with your determination that the proposed action is not likely to adversely affect the San Joaquin kit fox. This concurrence is based on the expected effects of the activities proposed, the distribution of San Joaquin kit fox in the project vicinity, and the proposed avoidance measures. Therefore, further consultation, pursuant to section 7 of the Endangered Species Act of 1973, as amended is not necessary. If the proposed action changes in any manner that may affect a listed species, you must contact us immediately to determine whether additional consultation is required.

Due to the status of the San Joaquin kit fox population in the project area, we request that you immediately report any San Joaquin kit fox sightings or evidence of sign to our office. If you have any questions, please contact Christopher Diel of my staff at (805) 644-1766, extension 305.

Sincerely,

Douglass M. Cooper
Deputy Assistant Field Supervisor

LITERATURE CITED

[CNDDB] California Natural Diversity Data Base. 2012. Rarefind: A database application for the California Department of Fish and Game, Natural Heritage Division, California Natural Diversity Data Base, Sacramento.

AGREEMENTS

4. US Department of the Commerce Letter of Concurrence

UNITED STATES DEPARTMENT OF COMMERCE
National Oceanic and Atmospheric Administration
NATIONAL MARINE FISHERIES SERVICE
Southwest Region
501 West Ocean Boulevard, Suite 4200
Long Beach, California 90802- 4213

August 21, 2012

In response, refer to:
2012/03257

Janet Newland
Office Chief, Central Coast Environmental Office
California Department of Transportation, District 5
50 Higuera Street
San Luis Obispo, California 93401

Dear Ms. Newland:

Thank you for your June 29, 2012, letter requesting initiation of informal consultation with NOAA's National Marine Fisheries Service (NMFS) pursuant to section 7 of the Endangered Species Act (ESA) of 1973, as amended (16 U.S.C. 1531 *et seq.*). The California Department of Transportation (Caltrans) is now acting as the lead agency for this project as per the agreement with the Federal Highway Administration (FHWA) in accordance with Section 6005(a) of the Safe, Accountable, Flexible, Efficient Transportation Equity Act of 1969 (42 U.S.C. 4351 *et seq.*) and all or part of the FHWA Secretary's responsibilities for environmental review, consultation, or other action required under any environmental law with respect to one or more highway projects within the state. Therefore, Caltrans is now considered the federal action agency for ESA consultations with NMFS for federally funded projects. This letter also serves as consultation under the provisions of the Fish and Wildlife Coordination Act (FWCA) of 1934, as amended. The consultation pertains to Caltrans' proposed North Paso Robles Highway 101 Rehabilitation Project in San Luis Obispo and Monterey counties, California. Caltrans has proposed to implement a series of safety and operational improvements along Highway 101 beginning just south of the town of San Miguel and ending at Bradley Road, near the entrance to the Camp Roberts Military Reservation. The purpose of the project is to rehabilitate the pavement along Highway 101 from post mark (PM) 63.2 to PM 69.3 in San Luis Obispo County and from PM 0.0 to PM 1.9 in Monterey County to prevent further deterioration and reduce maintenance costs. In addition to pavement rehabilitation, improvements would include widening the existing road shoulders and replacing the northbound and southbound highway bridges over San Marcos Creek.

Pavement rehabilitation will consist of a hot-mix asphalt-cement overlay. Both the inside and outside shoulders along the ramps and highway mainline will be widened and will include rumble strips in order to meet current design standards for safety. Inside shoulders will be

widened from 2 to 5 feet and outside shoulders will be widened from 8 to 10 feet. The widening is designed to preserve the existing slopes and minimize undisturbed areas. In addition, the project would include the construction of a 500-foot long retaining wall with guardrail at PM 69.11, upgrades to drainage systems, and the replacement of existing metal beam guardrail and concrete barriers.

Both the southbound and northbound bridges over San Marcos Creek, an intermittent tributary to the Salinas River, would be replaced to match both current and future highway dimensions. The northbound bridge will be raised approximately four feet to match the profile grade of the southbound bridge. The new bridge structures would include one set of piers (two piers) in the channel below the ordinary high water mark (OHWM) at approximately the same location as the existing set of piers (three piers). Additional channel supports would be located outside of the channel's OHWM. During site visits in 2010 and 2011, no scour was observed at the bridge piers, therefore fill (*e.g.,* rock slope protection) will not be necessary. The abutment walls on the north end of each bridge would be retained in the channel's current configuration in order to avoid geomorphic or hydraulic disruption of the channel. The existing two bridges and associated wing walls extend for approximately 180 linear feet along the channel, and the new bridge will extend the same distance. No grade changes or channel modifications are proposed. All construction activities below OHWM will occur when the creek channel is dry (typically May 1 – October 31). The project will likely require two seasons to complete.

Approximately 0.22 acres of Waters of the United States (U.S.) will be temporarily affected by the project. These impacts will include the removal of a small amount of riparian vegetation along the banks of the creek channel as well as disturbance of the un-vegetated channel bottom. All temporary impacts to Waters of the U.S. will be graded to reflect their pre-existing state. Vegetation to be removed would include the following: two black cottonwood trees (14 and 10 inch diameter at breast height), one arroyo willow, one blue elderberry, and up to five mulefat shrubs. These trees and shrubs provide little to no shade to the creek channel. The removal of vegetation will be mitigated for by the re-vegetation and restoration of the area with native plants at a 3:1 ratio. All plantings will be monitored for three years to ensure successful re-vegetation. A large black cottonwood tree located west of the highway bridges would not be impacted.

Caltrans will clearly delineate the project area with environmental sensitive area fencing to minimize impacts and protect habitats outside of the project area. Caltrans will implement erosion and sediment best management practices (BMPs) as outlined in its National Pollutant Discharge Elimination System Statewide Stormwater Permit to reduce sedimentation and downstream transport of construction generated materials. Caltrans will conduct pre-construction educational meetings for all construction personnel regarding sensitive species and habitats. Equipment storage will be located in upland areas and fueling of equipment will not occur within 50 feet of riparian or wetland habitats.

Endangered Species Act

In its June 29, 2012 letter, Caltrans asked for concurrence with a finding that the North Paso Robles Highway 101 Rehabilitation Project would not likely adversely affect threatened South-Central California Coast (S-CCC) steelhead (*Oncorhynchus mykiss*). Although the project would

result in temporary impacts to a small geographic area of designated critical habitat in San Marcos Creek, Caltrans has determined these impacts are unlikely to cause destruction or adverse modification that appreciably diminishes the value of critical habitat for S-CCC steelhead.

The life history of steelhead is summarized by Busby *et al.* (1996) and Shapovalov and Taft (1954). Historically, San Marcos Creek supported a run of steelhead (USLTRCD 2002). According to USLTRCD (2002), steelhead were captured in San Marcos Creek in the 1920's, however there have been no sightings of steelhead in San Marcos Creek in recent years. There are perennial springs and seeps in the upper watershed; however a dam located on San Marcos Creek approximately nine miles upstream of the Salinas River confluence restricts access to most, if not all, of this perennial habitat. Stream flow in San Marcos Creek is highly ephemeral and is usually dry in the lower mainstem except for during periods of heavy rainfall. In February 2010 (a wet year), the channel in the lower reaches of the creek (including the project area) was dry (Caltrans 2012). NMFS designated San Marcos Creek as critical habitat for the S-CCC steelhead DPS (70 FR 52488).

NMFS considers the possibility of adverse effects to listed S-CCC steelhead and their designated critical habitat during project implementation to be insignificant because: (1) the proposed project will occur only when the creek is dry (typically May 1 through October 31), and therefore dewatering and fish capture and relocation will not be necessary; (2) BMPs and other measures will be implemented to minimize disturbances and to preclude potential adverse effects to the creek environment; (3) only small geographic areas of critical habitat at the bridge locations will be temporarily impacted; (4) there will be a net decrease in the total number of piers, thereby reducing the total amount of structures in the channel; and (5) although a minimal amount of vegetation will be removed, this vegetation is providing very little or no shade to the creek and will be replaced at a 3:1 ratio.

Based on the best available information, NMFS concurs with Caltrans' determination that threatened S-CCC steelhead are not likely to be adversely affected by the activities proposed for the North Paso Robles Highway 101 Rehabilitation Project. Regarding designated critical habitat, NMFS has determined the proposed the North Paso Robles Highway 101 Rehabilitation Project is not likely to adversely affect designated critical habitat for S-CCC steelhead. This concludes informal consultation in accordance with 50 CFR 402.13(a) for the proposed North Paso Robles Highway 101 Rehabilitation Project in San Luis Obispo and Monterey counties, California. However, further consultation may be required if: (1) new information reveals effects of the project that may affect listed species or critical habitat in a manner or to an extent not previously considered; (2) current project plans change in a manner that causes an effect to listed species or critical habitat not previously considered; or (3) a new species is listed or critical habitat designated that may be affected by the action.

Fish and Wildlife Coordination Act

The purpose of the FWCA is to ensure wildlife conservation receives equal consideration, and is coordinated with other aspects of water resources development [16 U.S.C. 661]. The FWCA establishes a consultation requirement for Federal departments and agencies that undertake any

action that proposes to modify any stream or other body of water for any purpose, including navigation and drainage [16 U.S.C 662]. Consistent with this consultation requirement, NMFS provides recommendations and comments to Federal action agencies for the purpose of conserving fish and wildlife resources. The FWCA allows the opportunity to offer recommendations for the conservation of species and habitats beyond those currently managed under the ESA. Pursuant to FWCA, NMFS has no comments to provide.

Please contact Mr. Joel Casagrande at (707) 575-6016, or via email at joel.casagrande@noaa.gov should you have any questions concerning this consultation.

Sincerely,

for Rodney R. McInnis
Regional Administrator

cc: Steve Kirkland, USFWS, Ventura
Laura Peterson Diaz, CDFG, Fresno
Copy to File: ARN: 151422-SWR-2012-SR00329

Literature Cited

Busby, P.J., T.C. Wainwright, G.J. Bryant, L. Lierheimer, R.S. Waples, F.W. Waknitz, and I.V. Lagomarsino. 1996. Status review of west coast steelhead from Washington, Idaho, Oregon, and California. NOAA Technical Memorandum NMFS-NWFSC-27. United States Department of Commerce, National Oceanic and Atmospheric Administration, National Marine Fisheries Service, Northwest Fisheries Science Center, Seattle, Washington. August, 1996.

Caltrans (California Department of Transportation). 2012. Biological Assessment: North Paso Robles Highway 101 Rehabilitation Project. June 2012.

Shapovalov, L., and A. C. Taft. 1954. The life histories of the steelhead rainbow trout (*Salmo gairdneri gairdneri*) and silver salmon (*Oncorhynchus kisutch*) with special reference to Waddell Creek, California, and recommendations regarding their management. California Department of Fish and Game Fish Bulletin 98: 375 p.

USLTRCD (Upper Salinas-Las Tablas Resource Conservation District). 2002. Watershed Fisheries Report and Early Actions: A Study of the Upper Salinas River and its Tributaries. Prepared for the California Department of Fish and Game. 133 p.

70 FR 52488. September 2, 2005. Final Rule: Endangered and Threatened Species: Designation of Critical Habitat for Seven Evolutionarily Significant Units of Pacific Salmon and Steelhead in California. National Marine Fisheries Service, National Oceanic and Atmospheric Administration, United States Department of Commerce. Federal Register, Volume 70 Pages 52487-52627.

CERTIFICATIONS

5. Central Coast Regional Water Quality Control Board Water Quality Certification No. 34015WQ17

February 12, 2016

Larry Bonner
Caltrans District 5
50 Higuera Street
San Luis Obispo, CA 93401
Email: larry.bonner@dot.ca.gov

VIA ELECTRONIC MAIL

Dear Mr. Bonner:

WATER QUALITY CERTIFICATION NUMBER 34015WQ17 FOR NORTH PASO ROBLES HIGHWAY 101 REHABILITATION PROJECT, SAN LUIS OBISPO COUNTY

Thank you for the opportunity to review your November 19, 2015 application for water quality certification of the North Paso Robles Highway 101 Rehabilitation Project (Project). The application was completed on November 19, 2015. A Notification of Denial Without Prejudice was issued on January 19, 2016. The project, if implemented as described in your application and with the additional mitigation and other conditions required by this Clean Water Action Section 401 Water Quality Certification (Certification), appears to be protective of beneficial uses of State waters. We are issuing the enclosed Certification. Should new information come to our attention that indicates a water quality problem, we may require additional monitoring and reporting, issue Waste Discharge Requirements, or take other action.

Your Certification application and submitted documents indicate that project activities have the potential to affect beneficial uses and water quality. The Central Coast Regional Water Quality Control Board (Central Coast Water Board) issues this Certification to protect water quality and associated beneficial uses from project activities. We need reports to determine compliance with this Certification. All technical and monitoring reports requested in this Certification, or any time after, are required per Section 13267 of the California Water Code.

Failure to submit reports required by this Certification, or failure to submit a report of technical quality acceptable to the Executive Officer, may subject you to enforcement action per Section 13268 of the California Water Code. The Central Coast Water Board will base enforcement actions on the date of certification. Any person affected by this Central Coast Water Board action may petition the State Water Resources Control Board (State Water Board) to review this action in accordance with California Water Code Section 13320; and Title 23, California Code of Regulations, Sections 2050 and 3867-3869. The State Water Board, Office of Chief Counsel, PO Box 100, Sacramento, CA 95812, must receive the petition within 30 days of the date of this Certification. We will provide upon request copies of the law and regulations applicable to filing petitions.

If you have questions please contact **Paula Richter** at (805) 549-3865 or via email at Paula.Richter@waterboards.ca.gov, or Phil Hammer at (805) 549-3882. Please mention the above certification number in all future correspondence pertaining to this project.

Sincerely,

for
Lisa Horowitz McCann
Interim Executive Officer

Enclosure: Action on Request for CWA Section 401 Water Quality Certification

cc: With enclosures

Morgan Robertson
Caltrans District 5
Email: Morgan.Robertson@dot.ca.gov

Katerina Galacatos
U.S. Army Corps of Engineers
Email: Katerina.galacatos@usace.army.mil

Theresa Stevens
U.S Army Corps of Engineers
Caltrans Liaison
Email: Theresa.Stevens@usace.army.mil

Linda Connolly
California Department of Fish and Wildlife
Email: Linda.Connolly@wildlife.ca.gov

Laura Peterson-Diaz
California Department of Fish and Wildlife
Caltrans Liaison
Email: Laura.Peterson-Diaz@wildlife.ca.gov

401 Program Manager
State Water Resources Control Board
Email: Stateboard401@waterboards.ca.gov

Jennifer Siu
U.S. Environmental Protection Agency
Region 9
Email: siu.jennifer@epa.gov

Shea Oades
Central Coast Water Board
Email: Shea.Oades@waterboards.ca.gov

Paula Richter
Central Coast Water Board
Email: Paula.Richter@waterboards.ca.gov

R:\RB3\Shared\401\Certifications\San Luis Obispo\2015\North Paso Robles Highway 101 Rehabilitation\401_Certification_North Paso Robles Highway 101 Rehabilitation_34015WQ17_final

Action on Request for
Clean Water Act Section 401 Water Quality Certification
for Discharge of Dredged and/or Fill Materials

PROJECT: North Paso Robles Highway 101 Rehabilitation

APPLICANT: Larry Bonner
Caltrans District 5
50 Higuera Street
San Luis Obispo, CA 93401

ACTION:
1. ☐ Order for Standard Certification
2. ■ Order for Technically-conditioned Certification
3. ☐ Order for Denial of Certification

STANDARD CONDITIONS:

1. This Certification action is subject to modification or revocation upon administrative or judicial review, including review and amendment per section 13330 of the California Water Code and section 3867 of Title 23 of the California Code of Regulations (23 CCR).

2. This Certification action is not intended to apply to any discharge from any activity involving a hydroelectric facility requiring a Federal Energy Regulatory Commission (FERC) license or an amendment to a FERC license unless the pertinent Certification application was filed per 23 CCR subsection 3855(b) and the application specifically identified that a FERC license or amendment to a FERC license was being sought.

3. The validity of any non-denial Certification action (Actions 1 and 2) is conditioned upon total payment of the fee required under 23 CCR section 3833, unless otherwise stated in writing by the certifying agency.

ADMINISTRATIVE CONDITIONS:

1. This Certification is subject to the acquisition of all local, regional, state, and federal permits and approvals as required by law. Failure to meet any conditions contained herein or any conditions contained in any other permit or approval issued by the State of California or any subdivision thereof may result in the revocation of this Certification and civil or criminal liability.

2. In the event of a violation or threatened violation of this Certification, the violation or threatened violation shall be subject to any remedies, penalties, process or sanctions as provided for under state law. For purposes of Section 401(d) of the Clean Water Act, the applicability of any state law authorizing remedies, penalties, process or sanctions for the violation or threatened violation constitutes a limitation necessary to assure compliance with the water quality standards and other pertinent requirements incorporated into this Certification.

3. In response to a suspected violation of any condition of this Certification, the Central Coast Water Board may require the holder of any permit or license subject to this Certification to furnish, under penalty of perjury, any technical or monitoring reports the Central Coast Water Board deems appropriate, provided that the burden, including costs, of the reports shall have a reasonable relationship to the need for the reports and the benefits obtained from the reports.

4. In response to any violation of the conditions of this Certification, the Central Coast Water Board may add to or modify the conditions of this Certification as appropriate to ensure compliance.

5. The Central Coast Water Board reserves the right to suspend, cancel, or modify and reissue this Certification, after providing notice to the applicant, if the Central Coast Water Board determines that the Project fails to comply with any of the terms or conditions of this Certification.

6. A copy of this Certification, the application, and supporting documentation must be available at the Project site during construction for review by site personnel and agencies. A copy of this Certification must also be provided to the contractor and all subcontractors who will work at the Project site. All personnel performing work on the proposed Project shall be familiar with the content of this Certification and its posted location on the Project site.

7. The Applicant shall grant Central Coast Water Board staff, or an authorized representative, upon presentation of credentials and other documents as may be required by law, permission to enter the Project site at reasonable times, to ensure compliance with the terms and conditions of this Certification and/or to determine the impacts the Project may have on waters of the State.

8. The Applicant must, at all times, fully comply with the application, engineering plans, specifications, and technical reports submitted to support this Certification; all subsequent submittals required as part of this Certification; and the attached Project Information and Conditions. The conditions within this Certification and attachment(s) supersede conflicting provisions within applicant submittals.

9. The Applicant shall notify the Central Coast Water Board within 24 hours of any unauthorized discharge to waters of the U.S. and/or State; measures that were implemented to stop and contain the discharge; measures implemented to clean-up the discharge; the volume and type of materials discharged and recovered; and additional BMPs or other measures that will be implemented to prevent future discharges.

10. This Certification is not transferable to any person except after notice to the Executive Officer of the Central Coast Water Board. The Applicant shall submit this notice in writing at least 30 days in advance of any proposed transfer. The notice must include a written agreement between the existing and new responsible party containing a specific date for the transfer of this Certification's responsibility and coverage between the current responsible party and the new responsible party. This agreement shall include an acknowledgement that the existing responsible party is liable for compliance and violations up to the transfer date and that the new responsible party is liable from the transfer date on.

11. This Certification expires if Project construction does not begin (a) prior to expiration of the associated U.S. Army Corps of Engineers (Corps) authorization or permit for the Project, or

(b) within five years from the date of this Certification. If a Corps authorization or permit was unnecessary for this Project due to coverage under a non-reporting Nationwide Permit (NWP), and Project construction has not begun, this Certification expires when the non-reporting NWP expires. If the Corps issues a one-year grace period for uncompleted projects that began under a NWP that has since expired, this Certification is valid during the grace period for such projects. If this Certification does not expire as described above, it remains in effect until the Applicant complies with all Certification requirements and conditions.

12. The total fee for this project is $6,939. The remaining fee payable to the Central Coast Water Board is $0.

CENTRAL COAST WATER BOARD CONTACT PERSON:

Paula Richter
(805) 549-3865
Paula.Richter@waterboards.ca.gov

Please refer to the above certification number when corresponding with the Central Coast Water Board concerning this project.

WATER QUALITY CERTIFICATION:

I hereby issue an order certifying that as long as all the conditions listed in this Certification are met, any discharge from the North Paso Robles Highway 101 Rehabilitation Project shall comply with the applicable provisions of sections 301 ("Effluent Limitations"), 302 ("Water Quality Related Effluent Limitations"), 303 ("Water Quality Standards and Implementation Plans"), 306 ("National Standards of Performance"), and 307 ("Toxic and Pretreatment Effluent Standards") of the Clean Water Act. This discharge is also regulated pursuant to State Water Board Water Quality Order No. 2003-0017-DWQ, which requires compliance with all conditions of this Certification.

Except insofar as may be modified by any preceding conditions, all Certification actions are contingent on (a) the discharge being limited and all proposed mitigation being completed in strict compliance with the applicant's project description and the attached Project Information and Conditions, and (b) compliance with all applicable requirements of the Central Coast Water Board's policies and Water Quality Control Plan (Basin Plan).

for _____ February 12, 2016
Lisa Horowitz McCann Date
Interim Executive Officer
Central Coast Water Board

PROJECT INFORMATION AND CONDITIONS

Application Date	Received: November 19, 2015 Completed: November 19, 2015
Applicant	Larry Bonner Caltrans District 5 50 Higuera Street San Luis Obispo, CA 93401 Email: larry.bonner@dot.ca.gov (805) 549-3337
Applicant Representatives	Morgan Robertson Caltrans District 5 50 Higuera Street San Luis Obispo, CA 93401 Email: morgan.robertson@dot.ca.gov (805) 542-4684
Project Name	North Paso Robles Highway 101 Rehabilitation
Application Number	34015WQ17
Type of Project	Bridges, Overpasses and Crossings
Project Location	San Miguel Latitude: 35° 43' 8.562"N Longitude: -120° 41' 49.7832" W
County	Monterey and San Luis Obispo
Receiving Water(s)	San Marcos Creek and two unnamed tributaries to the Salinas River
Water Body Type	Streambed and riparian
Designated Beneficial Uses	Municipal and Domestic Supply (MUN) Agricultural Supply (AGR) Ground Water Recharge (GWR) Water Contact Recreation (REC-1) Non-Contact Recreation (REC-2) Wildlife Habitat (WILD) Warm Fresh Water Habitat (WARM) Commercial and Sport Fishing (COMM)
Project Description (purpose/goal)	The purpose of this project is to rehabilitate the pavement along Highway 101 from Post Mile 63.2 to Post Mile 69.3 in San Luis Obispo County and from Post Mile 0.0 to Post Mile 1.9 in Monterey County, including additional improvements to widen existing road shoulders and replace the northbound and southbound highway bridges at San Marcos Creek. Central Coast Regional Water Quality Control Board (Central Coast Water Board) staff understands that the project includes the following activities: 1. <u>San Marcos Creek Bridge at Post Mile 63.6</u>. The existing northbound and southbound Highway 101 bridges will be removed and replaced with span, pre-cast, pre-stressed built “T” girder type bridges. 2. <u>Culvert at Post Mile 65.2</u>. The culvert will be removed and replaced with a 42” enclosed alternative pipe culvert. 3. Culvert at Post Mile 67.2. The pavement under the road crossing

	will be lowered to achieve standard height for trucks. The existing storm drainage system will be modified to accommodate the road lowering. The existing pipe culvert will be removed and replaced within the same footprint. The adjoining 136-foot section of pipe culvert will be abandoned and capped in place. A new 136-foot section of pipe culvert will be jacked under northbound Highway 101 at the same location. Jacking will require a driving/bore pit located in the overcrossing median and a receiving pit between the southbound lands and southbound onramp. The inlet and outlet system will not be modified.
U.S. Army Corps of Engineers Permit No.	Nationwide Permit 14 – Linear Transportation Projects
Federal Public Notice	N/A
Dept. of Fish and Wildlife Streambed Alteration Agreement	Streambed Alteration Agreement is pending. Final, signed copy shall be forwarded immediately upon execution.
Status of CEQA Compliance	Mitigated Negative Declaration dated July 31, 2013 Lead Agency: Caltrans, District 5
Total Certification Fee	$6,939
Area of Disturbance	Approximately 0.288 acre / 514 linear feet total <u>San Marcos Creek</u> Streambed: 0.243 acre / 292 linear feet temporary Riparian: 0.025 acre / 72 linear feet temporary <u>Culvert at Post Mile 65.2</u> Streambed: 0.01 acre / 120 linear feet temporary <u>Culvert at Post Mile 67.2</u> Streambed: 0.01 acre / 102 linear feet temporary
Dredge Volume	N/A
Excavation Volume	N/A
Fill Volume	N/A

Compensatory Mitigation Requirements	1. The project shall include the following compensatory mitigation: a. 0.263 acre / 514 linear feet of temporary streambed impacts shall be mitigated at a 1:1 ratio through the restoration of streambed habitat to pre-project conditions. b. 0.025 acre / 72 linear feet of temporary riparian impacts (seven mulefat shrubs and one willow) shall be mitigated at a 3:1 ratio through in-kind restoration by replacement plantings within 0.075 acre of riparian habitat at San Marcos Creek and the adjacent floodplain of the state right-of-way. 2. The Applicant shall implement compensatory mitigation installation, maintenance, and monitoring as described in the Mitigation and Monitoring Plan dated November 2015, the Application, and supporting documents. 3. Offsite compensatory mitigation shall be installed within 12 months of the commencement of project construction. Onsite compensatory mitigation shall be installed within 12 months of completion of project construction.
Project Requirements	<u>Project practices that are required to comply with 401 Water Quality Certification are as follows:</u> 1. All work performed within waters of the State shall be completed in a manner that minimizes impacts to beneficial uses and habitat. Measures shall be employed to minimize land disturbances that will adversely impact the water quality of waters of the State. Disturbance or removal of vegetation shall not exceed the minimum necessary to complete Project implementation. 2. Prior to any ground disturbance, the contractor, all employees of the contractor, subcontractors, and subcontractors' employees shall attend an employee education program conducted by a Caltrans biologist. The program shall consist of a presentation that includes a thorough review of the 401 Water Quality Certification conditions for this project. 3. No construction activities shall be conducted below top of creek banks or in other waters of the State during the winter period (November 1 – April 30), unless prior written approval has been obtained from Central Coast Water Board staff. Requests to conduct construction activities below top of creek banks or in other waters of the State during the winter period shall be submitted to Central Coast Water Board staff at least 21 days prior to the planned winter period work date. 4. Erosion and sediment control measures shall be on site prior to the start of construction and kept on site at all times so they are immediately available for installation in anticipation of rain events. 5. Caltrans shall implement and maintain an effective combination of erosion and sediment control measures (e.g., revegetation, fiber rolls, erosion control blankets, hydromulching, compost, straw with tackifiers, temporary basins) to prevent erosion and capture sediment. Caltrans shall implement and maintain washout, trackout, dust control, and any other applicable source control BMPs. 6. Erosion and sediment control measures and other construction BMPs shall be implemented and maintained in accordance with all

	specifications governing their proper design, installation, operation, and maintenance. 7. At any time of year, the Applicant shall not conduct construction activities below top of creek banks or in other waters of the State during rain events or on any day for which the National Weather Service has predicted a 25% or more chance of at least 0.1 inch rain in 24 hours (Predicted Rain Event). The Applicant shall install effective erosion control, sediment control, and other protective measures no later than the day prior to the Predicted Rain Event, and prior to the start of any rainfall. Construction activities below top of creek banks or in other waters of the State may resume after the rain has ceased, the National Weather Service predicts clear weather for at least 24 hours, and site conditions are dry enough to continue work without discharge of sediment or other pollutants from the project site. 8. Any material stockpiled that is not actively being used during construction shall be covered and surrounded with a linear sediment barrier. 9. Caltrans shall retain a spill plan and appropriate spill control and clean up materials (e.g., oil absorbent pads) onsite in case spills occur. 10. Caltrans shall confine all trash and debris in appropriate enclosed bins and dispose of the trash and debris at an approved site at least weekly. 11. All construction vehicles and equipment used on site shall be well maintained and checked daily for fuel, oil, and hydraulic fluid leaks or other problems that could result in spills of toxic materials. 12. Caltrans shall designate a staging area for equipment and vehicle fueling and storage at least 100 feet away from waterways, in a location where fluids or accidental discharges cannot flow into waterways. 13. Caltrans may make a request for refueling and lubricating crane(s) within 100 feet of waterways or between the banks of waterways if the request is submitted for Central Coast Water Board staff approval at least 21 days in advance of the start of work. The request shall include (within one stand-alone document): a. Clearly identified designated crane refueling and lubricating area(s) on construction engineering plans; b. A thorough demonstration of why the designated crane refueling and lubricating area(s) are the most feasible locations for refueling and lubricating crane(s) and why the refueling area cannot remain 100 feet from waterways; and c. A textual site specific spill prevention and cleanup plan for each designated refueling and lubricating area that includes measures for preventing and promptly removing and cleaning all spills from the designated area. 14. All vehicle fueling and maintenance activity shall occur at least 100 feet away from waterways and in designated staging areas, unless a requested exception on a case-by case basis granted by prior written approval has been obtained from Central Coast Water Board staff

	15. Dewatering and stream diversion measures are not authorized based on the application. If the project requires dewatering or diversion, Caltrans shall submit detailed dewatering/ diversion plans for Central Coast Water Board staff approval at least 21 days prior to any dewatering or diversion. Dewatering/diversion plans shall include the area to be dewatered, timing of dewatering, and method of dewatering to be implemented. All temporary dewatering/diversion methods shall be designed to have the minimum necessary impacts to waters of the State to isolate the immediate work area. All dewatering/diversion methods shall be installed such that natural flow is maintained upstream and downstream of the project area. Any temporary dams or diversions shall be installed such that the diversion does not cause sedimentation, siltation, or erosion upstream or downstream of the project area. All dewatering/diversion methods shall be removed immediately upon completion of dewatering/diversion activities. Dewatering or diversion shall not commence until Caltrans has obtained Central Coast Water Board staff approval of the dewatering/diversion plans. 16. Caltrans shall implement post-construction stormwater management for the project including, but not limited to, the installation of a LID stormwater infiltration area (the entire median area between the northbound and southbound lanes of Highway 101 within the project boundaries). Pre-project runoff volume for the 85th percentile storm event shall match post-project runoff volume for the 85th percentile storm event. Post-project peak flow rates for the two-year storm even shall not exceed pre-project peak flow rates for the two-year storm event. All post-construction BMPs shall be implemented and functioning prior to completion of the project. 17. All construction-related equipment, materials, and any temporary BMPs no longer needed shall be removed and cleared from the site upon completion of the project. 18. Central Coast Water Board staff shall be notified if mitigations as described in the 401 Water Quality Certification application for this project are altered by the imposition of subsequent permit conditions by any local, state or federal regulatory authority. The Applicant shall inform Central Coast Water Board staff of any modifications that interfere with compliance with this Certification.
Monitoring and Reporting Requirements	The Applicant shall conduct the following monitoring: 1. Visually inspect the project site and areas of waters of the State adjacent to project impact areas following completion of project construction and for two subsequent rainy seasons to ensure that the project is not causing excessive erosion, stream instability, or other water quality problems. If the project does cause water quality problems, contact the Central Coast Water Board staff member overseeing the project. You will be responsible for obtaining any additional permits necessary for implementing plans for restoration to prevent further water quality problems. 2. Monitor the compensatory mitigation site for five years. If success criteria are not achieved within that time, continue annual monitoring

	and maintenance until success criteria are achieved. Compensatory mitigation monitoring shall include assessment of growth, survival, percent cover, general health and stature, signs of reproduction, progress towards achieving success criteria, and any other measures identified in the Mitigation and Monitoring Plan dated November 2015, the Application, and supporting documents. **The Applicant shall provide the following reporting to RB3_401Reporting@waterboards.ca.gov [Note: Annual fees are based on submittal of reporting items 3-4 below]:** 1. Streambed Alteration Agreement - Submit a signed copy of the Department of Fish and Wildlife's streambed alteration agreement to the Central Coast Water Board immediately upon execution and prior to any discharge to waters of the State. 2. Construction Commencement Notification - At least seven days in advance of any ground disturbing or grubbing activities, submit notification to the Central Coast Water Board of the date when project construction will begin. 3. Discharge, Construction, and Mitigation Installation Completion Notification - Within seven days of completing all project discharge, construction, and mitigation installation activities, submit notification to the Central Coast Water Board of project discharge, construction, and mitigation installation completion. 4. Compensatory Mitigation and Monitoring Completion Notification – Within seven days of Applicant verification of achievement of all compensatory mitigation success criteria and completion of all monitoring, submit notification to the Central Coast Water Board of compensatory mitigation success criteria achievement and monitoring completion. Include identification of the date when the final Annual Project Status Report will be submitted. [Note: Submittal of Compensatory Mitigation and Monitoring Completion Notification does not terminate this Certification or its requirements.] 5. Annual Project Status Report – The Applicant shall submit to the Central Coast Water Board an Annual Project Status Report by May 31 of each year following the issuance of this Certification, regardless of whether project construction has started or not. The Applicant shall submit Annual Project Status Reports until the Applicant has conducted all required monitoring and mitigation has achieved all success criteria. The final Annual Project Status Report is due on or before the May 31 following the achievement of all mitigation success criteria. Each Annual Project Status Report shall include at a minimum: a. The status of the project: construction not started, construction started, or construction complete. b. The date of construction initiation, if applicable. c. The date of construction completion, if applicable. d. If project construction is complete: i. A summary of daily activities, monitoring and inspection observations, and problems incurred and actions taken; ii. Status of permanent post-construction stormwater management BMPs, including photo documentation of all

	BMPs; iii. A description of the results of the annual visual inspection of the project site and areas of waters of the State adjacent to project impact areas, including: 1. Erosion conditions; 2. Stream stability conditions; 3. Water quality and beneficial use conditions; 4. Clearly identified photo-documentation of all areas of permanent and temporary impact, prior to and after project construction; and 5. Clearly identified representative photo-documentation of other project areas, prior to and after project construction. 6. If the visual inspection monitoring period is over, but water quality problems persist, the Annual Report shall identify corrective measures to be undertaken, including extension of the monitoring period until the project is no longer causing excessive erosion, stream instability, or other water quality problems. e. Mitigation reporting, if mitigation installation has started, including the following information: i. Date of initiation of mitigation installation and date mitigation installation was completed; ii. If mitigation installation was completed, confirmation mitigation was installed according to the requirements of this Certification and as described in the Mitigation and Monitoring Plan dated November 2015, the Application, and supporting documents; iii. Analysis of monitoring data collected in the field; iv. Quantification of growth, percent cover, survival, general health and stature, signs of reproduction, and documentation of progress toward achieving all mitigation performance criteria; v. Qualitative and quantitative comparisons of current mitigation conditions with preconstruction conditions and previous mitigation monitoring results; vi. Any remedial or maintenance actions taken or needed; vii. Any additional information specified in the Mitigation and Monitoring Plan dated November 2015, the Application, and supporting documents; and viii. Annual photo-documentation representative of all mitigation areas, taken from vantage points from which Central Coast Water Board staff can identify changes in size and cover of plants. Compare photos of installed mitigation with photos of the mitigation areas prior to installation. f. A description of mitigation completion status that identifies the amount of mitigation monitoring and maintenance remaining, or certifies that mitigation is complete and all required mitigation monitoring and maintenance has been conducted and all success criteria achieved. If the monitoring period is over, but all success criteria have not been achieved, the Annual Report

	shall identify corrective measures to be undertaken, including extension of the monitoring period until the criteria are met.

RAILROAD RELATIONS

6. Railroad Relations and Insurance Requirements

State of California

California State Transportation Agency

Memorandum

To: Hal Kenyon
Project Design

Date: April 22, 2016

File: SLO/MON-101-SLO 63.2/MON 1.5
North Paso Robles Rehab.

EA 05-0G0404
Proj ID 05 0002 0020 4

From: Steve W. Beaudoin
District 5 Railroad Coordinator
Office of Right of Way

Subject: Railroad Clearance

I have reviewed the plans for the above-referenced project and determined there is railroad involvement.

Project drainage work and bridge work activities will be in Union Pacific Railroad Company's (UPRR) property. Clearance with the California Public Utilities Commission will not be required since there are no crossings involved.

Railroad requirements, required to protect railroad facilities for UPRR, are attached for insertion to the Information Handout in the document titled "Railroad Relation and Insurance Requirements." There will be railroad work for flagging and inspection under a separate Railroad Right of Way Agreement No. 05R075 between the State and UPRR. This will be a State-furnished service to the Contractor. We anticipate execution of this agreement by the end of April 2016.

The project is now cleared for advertising.

c: Denny Fong, HQ Right of Way
Rochelle Simms, Regional Office Engineer
Danny Milsap, Right of Way

Enclosure

Information Handout Document to Project's Construction Contract Document Package:

"RAILROAD RELATIONS AND INSURANCEREQUIREMENTS"

1.01 GENERAL

The term "Railroad" shall mean Union Pacific Railroad Company.

It is expected that the Railroad will cooperate with the Contractor to the end that the work may be handled in an efficient manner. However, except for the additional compensation provided for hereinafter for delays in completion of specific unit of work to be performed by the Railroad, and except as provided in Public Contracts Code Section 7102, the Contractor shall have no claim for damages, extension of time, or extra compensation in the event his work is held up by railroad train operations or other work performed by the Railroad.

The Contractor must understand the Contractor's right to enter the Railroad's property is subject to the absolute right of the Railroad to cause the Contractor's work on the Railroad's property to cease if, in the opinion of the Railroad, the Contractor's activities create a hazard to the Railroad's property, employees, and operations.

The Contractor acknowledges its receipt from the State of a copy of the Contractor's Right of Entry Agreement that has been executed by the Railroad and the State. The Contractor agrees to execute and deliver to the Railroad the Contractor's Endorsement that is attached hereto as Appendix 1 and to provide to the State and/or the Railroad all insurance policies, binders, certificates or endorsements that are set forth in Exhibits B and C of the Caltrans Right of Entry Agreement.

The Contract's cost for his Contractor's Endorsement application fee and for meeting all necessary requirements required by Railroad such as, but not limited to, safety training, insurance expense, and inspection shall be paid under other items of work of Project.

1.02 RAILROAD REQUIREMENTS

The Contractor shall provide to Mr. Kevin Yoder, Railroads Manager, Industry and Public Projects, 9451 Atkinson Boulevard, Roseville, California 95747, (916) 789-5152, and State's Resident Engineer (Engineer) in writing, the advance notice requirements set forth in Section 1 of Exhibit B of the Caltrans Right of Entry Agreement before performing any work on, or adjacent to the property or tracks of the Railroad.

Contractor shall cooperate with the Railroad where work is over or under the tracks, or within the limits of the Railroad property to expedite the work and avoid interference with the operation of railroad equipment.

Contractor shall comply with the rules and regulations of the Railroad or the instructions of its representatives in relation to protecting the tracks and property of the Railroad and the traffic moving on such tracks, as well as the wires, signals and other property of the Railroad, its tenants or licensees, at and in the vicinity of the work during the period of construction. The responsibility of the Contractor for safe conduct and adequate policing and supervision of its work at the job site shall not be lessened or otherwise affected by the presence at the work site of

the Railroad representatives, or by the Contractor's compliance with any requests or recommendations made by the Railroad representatives.

Contractor shall perform work so as not to endanger or interfere with the safe operation of the tracks and property of the Railroad and traffic moving on such tracks, as well as wires, signals and other property of the Railroad, its tenants or licensees, at or in the vicinity of the work.

Contractor shall take protective measures to keep the Railroad facilities, including track ballast, free of sand or debris resulting from his operations. Damage to the Railroad facilities resulting from the Contractor's operations will be repaired or replaced by the Railroad and the cost of such repairs or replacement shall be deducted from the Contractor's progress and final pay estimates.

Contractor shall contact the Railroad's "Call Before You Dig" at least forty-eight (48) hours prior to commencing work, at 1-800-336-9193 during normal business hours (7:00 a.m. to 9:00 p.m. Central Time, Monday through Friday, except holidays – also a 24-hour, 7-day number for emergency calls) to determine location of fiber optics. If a telecommunications system is buried anywhere on or near the Railroad property, the Contractor will coordinate with the Railroad and the Telecommunication Company (ies) to arrange for relocation or other protection of the system prior to beginning any work on or near Railroad property.

Contractor shall not pile or store any materials nor park any equipment closer than 25' 0" to the centerline of the nearest track, unless directed by the Railroad's representative.

1.03 PROTECTION OF RAILROAD FACILITIES

The cost of flagging and inspection provided by the Railroad during the period of constructing that portion of the project located on or near the Railroad property, as deemed necessary for the protection of the Railroad's facilities and trains, will be borne by the State. The Railroad has indicated that its estimated flagging rate will be around One Thousand Three Hundred Dollars ($1,300.00) per day and that the State has estimated a total of fifty-seven (57) days of flagging. The State shall pay the Railroad for all actual flagging costs incurred by the Railroad under this Project and under separate Railroad Right of Way Agreement No. 05R075 between State and UPRR.

Appendix 1

CONTRACTOR'S ENDORSEMENT

Folder No. 02979-40

A. As a condition to entering upon Licensor's right-of-way to perform work pursuant to this Agreement, Licensee's contractor *(Fill in)*:

_____

_____

_____

(hereinafter "Contractor") agrees to comply with all the terms and provisions of this Agreement relating to the work to be performed and the insurance requirements set forth in Exhibit C.

B. Before the Contractor commences any work, the Contractor will pay the Licensor a nonrefundable payment of $500 upon execution and return of this Contractor's Endorsement, and will provide the Licensor with a certificate issued by its insurance carrier providing the insurance coverage required pursuant to Exhibit C in a policy which contains the following type endorsement:

UNION PACIFIC RAILROAD COMPANY is named as an additional insured with respect to all liabilities arising out of Insured's performance of work on behalf of the Licensee.

All insurance correspondence shall be directed to: Sarah Brower - Folder No. 02979-40, Union Pacific Railroad Company, 1400 Douglas Street STOP 1690, Omaha, Nebraska 68179-1690.

_____

(Please print Contractor's Name above)

X_____

Title:_____

Form Approved, AVP-Law

Folder No. 02979-40

RIGHT OF ENTRY AGREEMENT

THIS AGREEMENT is made and entered into as of March 15, 2016, by and between **UNION PACIFIC RAILROAD COMPANY**, a Delaware corporation (hereinafter the "Railroad"), and **CALTRANS**, to be addressed at 50 Higuera Street, San Luis Obispo, CA 93401 (hereinafter the "Licensee").

IT IS MUTUALLY AGREED BY AND BETWEEN THE PARTIES HERETO AS FOLLOWS:

Article 1. DEFINITION OF LICENSEE.

For purposes of this Agreement, all references in this Agreement to the Licensee shall include the Licensee's contractors, subcontractors, officers, agents and employees, and others acting under its or their authority.

Article 2. RIGHT GRANTED; PURPOSE.

The Railroad hereby grants to the Licensee the right, during the term hereinafter stated and upon and subject to each and all of the terms, provisions and conditions herein contained, to enter upon and have ingress to and egress from the portion of Railroad's property in the vicinity of Mile Post 205.8, Coast Subdivision, at or near Paso Robles, California, for the purpose of performing work relating to placing Rock Slop Protection (RSP) for scour prevention. The right herein granted to Licensee is limited to those portions of the Railroad's property specifically described herein in the location shown on the print marked Exhibit A, attached hereto and hereby made a part hereof, or designated by the Railroad Representative named in Article 4.

For the purposes of Exhibit A, Licensee acknowledges that if it or its contractor provides to Railroad digital imagery, Licensee authorizes Railroad to use the Digital Imagery in preparing the print attached as an exhibit hereto. Licensee represents and warrants that through a license or otherwise, it has the right to use the Digital Imagery and to permit Railroad to use the Digital Imagery in said manner.

Article 3. TERMS AND CONDITIONS CONTAINED IN EXHIBITS B AND C.

The terms and conditions contained in Exhibits B and C, hereto attached, are hereby made a part of this Agreement.

Article 4. ALL EXPENSES TO BE BORNE BY LICENSEE; RAILROAD REPRESENTATIVE.

The Licensee shall bear any and all costs and expenses associated with any work performed by the Licensee, or any costs or expenses incurred by the Railroad relating to this Agreement. All work performed by Licensee on Railroad's property shall be performed in a manner satisfactory to the representative local Manager of Track Maintenance of the Railroad or his authorized representative (hereinafter the Railroad Representative):

Tony Chu
MGR TRACK MNTCE
999 Paso Robles Street
Paso Robles, CA 93446
Work/Cell # 402-677-8259
Email: tchu@up.com

MAIKEL I. YOUNAN
MGR SIGNAL MNTCE
1011 RAILROAD AVE
SAN LUIS OBISPO, CA 93401
Work # 402-216-2342
Cell# 402-216-2342
Email: miyounan@up.com

Article 5. TERM; TERMINATION.

A. The grant of right herein made to Licensee shall commence on the date of this Agreement, and continue until May 9, 2019 unless sooner terminated as herein provided, or at such time as Licensee has completed its work on Railroad's property, whichever is earlier. Licensee agrees to notify the Railroad Representative in writing when it has completed its work on Railroad property.

B. This Agreement may be terminated by either party on ten (10) days written notice to the other party.

Article 6. CERTIFICATE OF INSURANCE.

A. Before commencing any work, the Licensee will provide the Railroad with a Certificate issued by its insurance carrier providing the insurance coverage required pursuant to Exhibit C of this Agreement.

B. Union Pacific should be listed as certificate holder and all insurance correspondence shall be directed to: Union Pacific Railroad Company, Director (Attn.: Sarah Brower - Folder No.02979-40), 1400 Douglas Street STOP 1690, Omaha, Nebraska 68179-1690.

Article 7. PROTECTION OF FIBER OPTIC CABLE SYSTEMS.

Fiber optic cable systems may be buried on Licensor's property. Protection of the fiber optic cable systems is of extreme importance since any break could disrupt service to users resulting in business interruption and loss of revenue and profits. Prior to beginning any work, the Licensee shall telephone the Railroad at **1-800-336-9193** (a 24-hour number) to determine if fiber optic cable is buried anywhere on the property set forth herein. If it is, the Licensee shall also comply with and be subject to the provisions contained in Section 6 of Exhibit B.

Article 8. ENFORCEABILITY; CHOICE OF LAW; CHOICE OF FORUM.

This Agreement shall be governed, construed, and enforced in accordance with the laws of the state of Nebraska. Litigation arising out of or connected with this Agreement may be instituted and maintained in the courts of the state of Nebraska and California only, and the parties consent to

jurisdiction over their person and over the subject matter of any such litigation, in those courts, and consent to service of process issued by such courts.

Article 9. **ADMINISTRATIVE HANDLING CHARGE.**

Upon execution and delivery of this Agreement, the Licensee shall pay to Railroad an additional, one-time administrative handling change of **Five Hundred Forty Five Dollars ($545.00)** for clerical, administrative and handling expense in connection with processing this Agreement.

Article 10. **LICENSE FEE.**

Licensee shall pay, and Railroad shall accept, upon the execution and return of this instrument, the nonrefundable sum of **One Thousand Five Hundred Dollars ($1,500.00)** to cover Railroad's cost to prepare and administer this Agreement.

Flagging charges are not included in the sum recited in the preceding paragraph, and will be billed separately, if incurred.

IN WITNESS WHEREOF, the parties hereto have caused this Agreement to be executed as of the date first herein written.

UNION PACIFIC RAILROAD COMPANY
Federal Taxpayer I.D. #94-6001323

By: _____
Kylan Crawford
Senior Manager

CALTRANS

By: Nancy Johnson
Title: Chief Rail Road Coordinator

(Pursuant to ordinance, resolution, or other evidence of proper authority to execute this instrument, a copy of which shall be attached to the Railroad's original counterpart of this document.)

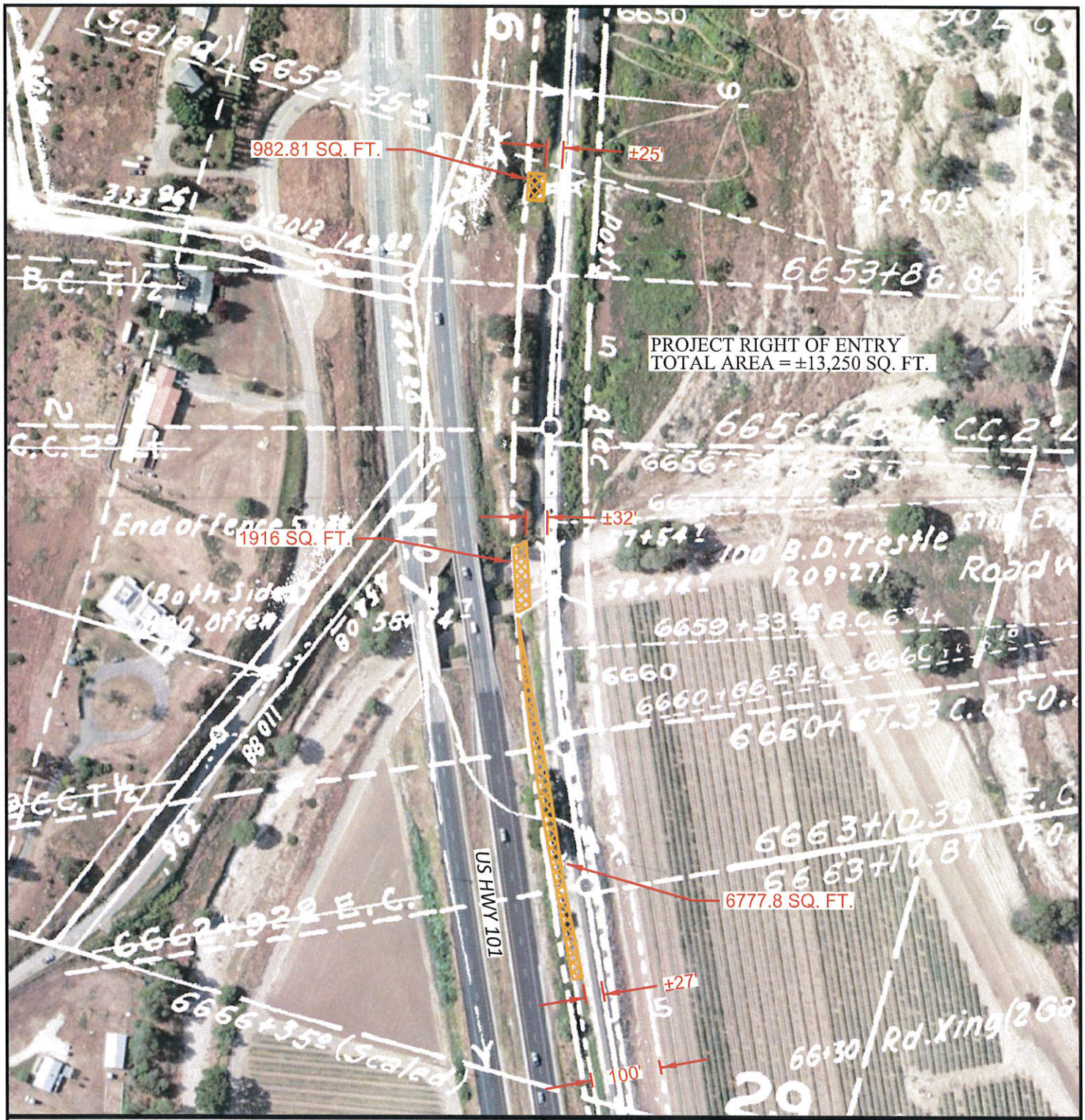

LEGEND:

RIGHT OF ENTRY AREA.....

UPRRCO. R/W OUTLINED.....

CADD FILENAME	0297940.DGN
SCAN FILENAME	0297940-CAV68027.TIF

NOTE: BEFORE YOU BEGIN ANY WORK, SEE AGREEMENT FOR FIBER OPTIC PROVISIONS.

EXHIBIT "A" PAGE 1

UNION PACIFIC RAILROAD COMPANY

SAN MIGUEL, SAN LUIS OBISPO COUNTY, CA

M.P. 205.80 TO 206.02 - COAST SUB.

TO ACCOMPANY AGREEMENT WITH
CALTRANS
SP V-68 / 27
SCALE: 1" = 200'

OFFICE OF REAL ESTATE
OMAHA, NEBRASKA DATE: 03-08-2016

COB FILE: 2979-40

LEGEND:

RIGHT OF ENTRY AREA

UPRRCO. R/W OUTLINED

CADD FILENAME	0297940.DGN
SCAN FILENAME	0297940-CAV68027.TIF

NOTE: BEFORE YOU BEGIN ANY WORK, SEE AGREEMENT FOR FIBER OPTIC PROVISIONS.

EXHIBIT "A" PAGE 2

UNION PACIFIC RAILROAD COMPANY

SAN MIGUEL, SAN LUIS OBISPO COUNTY, CA

M.P. 205.09 TO 205.29 - COAST SUB.

TO ACCOMPANY AGREEMENT WITH CALTRANS

SP V-68 / 27

SCALE: 1" = 200'

OFFICE OF REAL ESTATE

OMAHA, NEBRASKA DATE: 03-08-2016

COB FILE: 2979-40

EXHIBIT B

Section 1 - NOTICE OF COMMENCEMENT OF WORK – FLAGGING.

The Licensee agrees to notify the Railroad Representative at least Ten (10) days in advance of Licensee commencing its work and at least 24 hours in advance of proposed performance of any work by the Licensee in which any person or equipment will be within 25 feet of any track, or will be near enough to any track that any equipment extension (such as, but not limited to, a crane boom) will reach to within 25 feet of any track. Upon receipt of such notice, the Railroad Representative will determine and inform the Licensee whether a flagman need be present and whether the Licensee need implement any special protective or safety measures. If any flagmen or other special protective or safety measures are performed by the Railroad, such services will be provided at Licensee's expense with the understanding that if the Railroad provides any flagging or other services, the Licensee shall not be relieved of any of its responsibilities or liabilities set forth herein.

Section 2 - LIMITATION AND SUBORDINATION OF RIGHTS GRANTED.

a. The foregoing grant of right is subject and subordinate to the prior and continuing right and obligation of the Railroad to use and maintain its entire property including the right and power of the Railroad to construct, maintain, repair, renew, use, operate, change, modify or relocate railroad tracks, roadways, signal, communication, fiber optics, or other wirelines, pipelines and other facilities upon, along or across any or all parts of its property, all or any of which may be freely done at any time or times by the Railroad without liability to the Licensee or to any other party for compensation or damages.

b. The foregoing grant is also subject to all outstanding superior rights (including those in favor of licensees and lessees of the Railroad's property, and others) and the right of the Railroad to renew and extend the same, and is made without covenant of title or for quiet enjoyment.

Section 3 - NO INTERFERENCE WITH RAILROAD'S OPERATION.

No work performed by Licensee shall cause any interference with the constant, continuous and uninterrupted use of the tracks, property and facilities of the Railroad, its lessees, licensees or others, unless specifically permitted under this Agreement, or specifically authorized in advance by the Railroad Representative. Nothing shall be done or suffered to be done by the Licensee at any time that would in any manner impair the safety thereof. When not in use, Licensee's machinery and materials shall be kept at least 50 feet from the centerline of Railroad's nearest track, and there shall be no crossings of Railroad's tracks except at existing open public crossings.

Section 4 - PERMITS.

Prior to beginning any work, the Licensee, at its sole expense, shall obtain all necessary permits to perform any work contemplated by this Agreement.

Section 5 - MECHANIC'S LIENS.

The Licensee shall pay in full all persons who perform labor or provide materials for the work to be performed by Licensee. The Licensee shall not create, permit or suffer any mechanic's or materialmen's liens of any kind or nature to be enforced against any property of the Railroad for any such

work performed. The Licensee shall indemnify and hold harmless the Railroad from and against any and all liens, claims, demands, costs or expenses of whatsoever nature in any way connected with or growing out of such work done, labor performed, or materials furnished.

Section 6 - FIBER OPTIC CABLE SYSTEMS.

In addition to other indemnity provisions in this Agreement, the Licensee shall indemnify and hold the Railroad harmless from and against all costs, liability and expense whatsoever (including, without limitation, attorneys' fees, court costs and expenses) arising out of any act or omission of the Licensee, its contractor, agents and/or employees, that causes or contributes to (1) any damage to or destruction of any telecommunications system on Railroad's property, and (2) any injury to or death of any person employed by or on behalf of any telecommunications company, and/or its contractor, agents and/or employees, on Railroad's property. Licensee shall not have or seek recourse against Railroad for any claim or cause of action for alleged loss of profits or revenue or loss of service or other consequential damage to a telecommunication company using Railroad's property or a customer or user of services of the fiber optic cable on Railroad's property.

Section 7 - COMPLIANCE WITH LAWS.

In the prosecution of the work covered by this Agreement, the Licensee shall comply with all applicable federal, state and local laws, regulations and enactments affecting the work. The Licensee shall use only such methods as are consistent with safety, both as concerns the Licensee, the Licensee's agents and employees, the officers, agents, employees and property of the Railroad and the public in general. The Licensee (without limiting the generality of the foregoing) shall comply with all applicable state and federal occupational safety and health acts and regulations. All Federal Railroad Administration regulations shall be followed when work is performed on the Railroad's property. If any failure by the Licensee to comply with any such laws, regulations, and enactments, shall result in any fine, penalty, cost or charge being assessed, imposed or charged against the Railroad, the Licensee shall reimburse and indemnify the Railroad for any such fine, penalty, cost or charge, including without limitation attorneys' fees, court costs and expenses. The Licensee further agrees in the event of any such action, upon notice thereof being provided by the Railroad, to defend such action free of cost, charge, or expense to the Railroad.

Section 8 - SAFETY INSTRUCTIONS.

Safety of personnel, property, rail operations and the public is of paramount importance in the prosecution of the work pursuant to this Agreement. As reinforcement and in furtherance of overall safety measures to be observed by the Licensee (and not by way of limitation), the following special safety rules shall be followed:

a. The Licensee shall keep the job site free from safety and health hazards and ensure that its employees are competent and adequately trained in all safety and health aspects of the job. The Licensee shall have proper first aid supplies available on the job site so that prompt first aid services can be provided to any person that may be injured on the job site. The Licensee shall promptly notify the Railroad of any U.S. Occupational Safety and Health Administration reportable injuries occurring to any person that may arise during the work performed on the job site. The Licensee shall have a non-delegable duty to control its employees, while they are on the job site or any other property of the Railroad to be certain they do not use, be under the influence of, or have in their possession any alcoholic beverage or illegally obtained drug, narcotic or other substance that may inhibit the safe performance of work by an employee.

b. The employees of the Licensee shall be suitably dressed to perform their duties safely and in a manner that will not interfere with their vision, hearing or free use of their hands or feet. Only waist length shirts with sleeves and trousers that cover the entire leg are to be worn. If flare-legged trousers are worn, the trouser bottoms must be tied to prevent catching. The employees should wear sturdy and protective footwear. Employees shall not wear boots (other than work boots), sandals, canvas-type shoes or other shoes that have thin soles or heels that are higher than normal. In addition, the Licensee shall require its employees to wear personal protective equipment as specified by Railroad rules, regulations or Railroad officials overlooking the work at the job site. In particular, the protective equipment to be warn shall be:

(1) Protective head gear that meets American National Standard-Z89.1-latest revision. It is suggested that all hardhats be affixed with Licensee's or subcontractor's company logo or name.

(2) Eye protection that meets American National Standard for occupational and educational eye and face protection, Z87.1-latest revision. Additional eye protection must be provided to meet specific job situations such as welding, grinding, burning, etc.; and

(3) Hearing protection which affords enough attenuation to give protection from noise levels that will be occurring on the job site.

c. All heavy equipment provided or leased by the Licensee shall be equipped with audible back-up warning devices. If in the opinion of the Railroad Representative any of Licensee's or any of its subcontractors' equipment is unsafe for use on the Railroad's right-of-way, the Licensee, at the request of the Railroad Representative, shall remove such equipment from the Railroad's right-of-way.

Section 9 - <u>INDEMNITY</u>.

a. As used in this Section, "Railroad" includes other railroad companies using the Railroad's property at or near the location of the Licensee's installation and their officers, agents, and employees; "Loss" includes loss, damage, claims, demands, actions, causes of action, penalties, costs, and expenses of whatsoever nature, including court costs and attorneys' fees, which may result from: (i) injury to or death of persons whomsoever (including the Railroad's officers, agents, and employees, the Licensee's officers, agents, and employees, as well as any other person); and (ii) damage to or loss or destruction of property whatsoever (including Licensee's property, damage to the roadbed, tracks, equipment, or other property of the Railroad, or property in its care or custody).

b. As a major inducement and in consideration of the license and permission herein granted, the Licensee agrees to indemnify and hold harmless the Railroad from any Loss which is due to or arises from any cause and is associated in whole or in part with the work performed under this Agreement, a breach of the Agreement or the failure to observe the health and safety provisions herein, or any activity or omission arising out of performance or nonperformance of this Agreement; regardless of whether caused solely or contributed to in part by the negligence or fault of the Railroad.

c. Any liability of either party hereunder to one of its employees under any Workers' Compensation Act or the Federal Employers' Liability Act shall not be questioned or in any way challenged by the other party, nor shall any jury or court findings, resulting from any employee's suit against either party pursuant to any such Act(s), be relied upon or used by either party in any attempt to assert common law liability against the other.

Section 10 - <u>RESTORATION OF PROPERTY</u>.

In the event the Railroad authorizes the Licensee to take down any fence of the Railroad or in any manner move or disturb any of the other property of the Railroad in connection with the work to be performed by Licensee, then in that event the Licensee shall, as soon as possible and at Licensee's sole expense, restore such fence and other property to the same condition as the same were in before such fence was taken down or such other property was moved or disturbed, and the Licensee shall indemnify and hold harmless the Railroad, its officers, agents and employees, against and from any and all liability, loss, damages, claims, demands, costs and expenses of whatsoever nature, arising from the taking down of any fence or the moving or disturbance of any other property of the Railroad.

Section 11 - WAIVER OF BREACH.

The waiver by the Railroad of the breach of any condition, covenant or agreement herein contained to be kept, observed and performed by the Licensee shall in no way impair the right of the Railroad to avail itself of any remedy for any subsequent breach thereof.

Section 12 - ASSIGNMENT – SUBCONTRACTING.

The Licensee shall not assign, sublet or subcontract this Agreement, or any interest therein, without the written consent of the Railroad and any attempt to so assign, sublet or subcontract without the written consent of the Railroad shall be void. If the Railroad gives the Licensee permission to subcontract all or any portion of the work herein described, the Licensee is and shall remain responsible for all work of subcontractors and all work of subcontractors shall be governed by the terms of this Agreement.

Rev 090506

EXHIBIT C

Union Pacific Railroad
Contract Insurance Requirements

Right of Entry Agreement

Licensee shall, at its sole cost and expense, procure and maintain during the life of this Agreement (except as otherwise provided in this Agreement) the following insurance coverage:

A. **Commercial General Liability** insurance. Commercial general liability (CGL) with a limit of not less than $5,000,000 each occurrence and an aggregate limit of not less than $10,000,000. CGL insurance must be written on ISO occurrence form CG 00 01 12 04 (or a substitute form providing equivalent coverage).

The policy must also contain the following endorsement, which must be stated on the certificate of insurance:

- Contractual Liability Railroads ISO form CG 24 17 10 01 (or a substitute form providing equivalent coverage) showing "Union Pacific Railroad Company Property" as the Designated Job Site.

B. **Business Automobile Coverage** insurance. Business auto coverage written on ISO form CA 00 01 (or a substitute form providing equivalent liability coverage) with a combined single limit of not less $2,000,000 for each accident.

The policy must contain the following endorsements, which must be stated on the certificate of insurance:

- Coverage For Certain Operations In Connection With Railroads ISO form CA 20 70 10 01 (or a substitute form providing equivalent coverage) showing "Union Pacific Railroad Company Property" as the Designated Job Site.
- Motor Carrier Act Endorsement - Hazardous materials clean up (MCS-90) if required by law.

C. **Workers Compensation and Employers Liability** insurance. Coverage must include but not be limited to:
Licensee's statutory liability under the workers' compensation laws of the state(s) affected by this Agreement.
Employers' Liability (Part B) with limits of at least $500,000 each accident, $500,000 disease policy limit $500,000 each employee.

If Licensee is self-insured, evidence of state approval and excess workers compensation coverage must be provided. Coverage must include liability arising out of the U. S. Longshoremen's and Harbor Workers' Act, the Jones Act, and the Outer Continental Shelf Land Act, if applicable.

D. **Railroad Protective Liability** insurance. Licensee must maintain Railroad Protective Liability insurance written on ISO occurrence form CG 00 35 12 04 (or a substitute form providing equivalent coverage) on behalf of Railroad as named insured, with a limit of not less than $2,000,000 per occurrence and an aggregate of $6,000,000. A binder stating the policy is in place must be submitted to Railroad before the work may be commenced and until the original policy is forwarded to Railroad.

E. **Umbrella or Excess** insurance. If Licensee utilizes umbrella or excess policies, these policies must "follow form" and afford no less coverage than the primary policy.

F. **Pollution Liability** insurance. Pollution Liability coverage must be included when the scope of the work as defined in the Agreement includes installation, temporary storage, or disposal of any "hazardous" material that is injurious in or upon land, the atmosphere, or any watercourses; or may cause bodily injury at any time.

Pollution liability coverage must be written on ISO form Pollution Liability Coverage Form Designated Sites CG 00 39 12 04 (or a substitute form providing equivalent liability coverage), with limits of at least $5,000,000 per occurrence and an aggregate limit of $10,000,000.

If the scope of work as defined in this Agreement includes the disposal of any hazardous or non-hazardous materials from the job site, Licensee must furnish to Railroad evidence of pollution legal liability insurance maintained by the disposal site operator for losses arising from the insured facility accepting the materials, with coverage in minimum amounts of $1,000,000 per loss, and an annual aggregate of $2,000,000.

Other Requirements

G. All policy(ies) required above (except business automobile, worker's compensation and employers liability) must include Railroad as "Additional Insured" using ISO Additional Insured Endorsement CG 20 26, (or substitute form(s) providing equivalent coverage). The coverage provided to Railroad as additional insured shall not be limited by Licensee's liability under the indemnity provisions of this Agreement. BOTH LICENSEE AND RAILROAD EXPECT THAT UNION PACIFIC RAILROAD COMPANY WILL BE PROVIDED WITH THE BROADEST POSSIBLE COVERAGE AVAILABLE BY OPERATION OF LAW UNDER ISO ADDITIONAL INSURED FORM CG 20 26.

H. Punitive damages exclusion, if any, must be deleted (and the deletion indicated on the certificate of insurance), unless (a) insurance coverage may not lawfully be obtained for any punitive damages that may arise under this agreement, or (b) all punitive damages are prohibited by all states in which this agreement will be performed..

I. Licensee waives all rights against Railroad and its agents, officers, directors and employees for recovery of damages to the extent these damages are covered by the workers compensation and employers liability or commercial umbrella or excess liability insurance obtained by Licensee required by this agreement.

J. Prior to commencing the work, Licensee shall furnish Railroad with a certificate(s) of insurance, executed by a duly authorized representative of each insurer, showing compliance with the insurance requirements in this Agreement.

K. All insurance policies must be written by a reputable insurance company acceptable to Railroad or with a current Best's Insurance Guide Rating of A- and Class VII or better, and authorized to do business in the state(s) in which the work is to be performed.

L. The fact that insurance is obtained by Licensee will not be deemed to release or diminish the liability of Licensee, including, without limitation, liability under the indemnity provisions of this Agreement. Damages recoverable by Railroad from Licensee or any third party will not be limited by the amount of the required insurance coverage.

MATERIALS INFORMATION

7. Revised Foundation Report North San Miguel UC; dated January 5, 2016.

State of California
DEPARTMENT OF TRANSPORTATION

Business, Transportation and Housing Agency

M e m o r a n d u m

Serious drought,
Help Save Water!

To: JOEY AQUINO, Senior Project Engineer
Bridge Design Branch 3
Office of Bridge Design West
DIVISION OF ENGINEERING SERVICES
STRUCTURE DESIGN – MS 9 4/6F

Date: January 5, 2016

File: 05-SLO-101-63.2/R69.3
05-Mon-101-R0.0/1.9
North San Miguel UC L/R
Bridge No. 49-0164L/R
Project ID 0500020020
EA: 05-0G0401

From: **DEPARTMENT OF TRANSPORTATION**
DIVISION OF ENGINEERING SERVICES
GEOTECHNICAL SERVICES

Subject: Revised Foundation Report North San Miguel Undercrossing

Scope of Work

A Revised Foundation Report (FR) is provided for the North San Miguel Undercrossing left and right bridges. Widening of the existing northbound and southbound bridge structures is part of the North Paso Robles Rehab project, located on State Route 101 in the vicinity of San Miguel, in the counties of San Luis Obispo and Monterey. Rehabilitation of the distressed portland cement concrete (PCC) pavement is proposed, along with widening shoulders to standard widths, widening and construction of new bridges and retaining walls, improvement of highway access, and construction of drainage facilities. Review of published geologic data and previous geotechnical reports, field reconnaissance, and geotechnical analysis were performed as part of the geotechnical investigation.

The purpose of this report is to document geotechnical conditions and provide foundation recommendations. This report supercedes the Foundation Report (September 25, 2015).

Introduction

The existing North San Miguel interchange consists of two three-span bridges carrying 101 over the southbound off-ramp, which provides access to Mission Street at the north end of San Miguel. Widening of the both bridges is proposed, with additional foundations supporting new columns and widened abutments on the inside of the left bridge. The right bridge will be widened by constructing cantilevered bridge deck with no new foundations required. Refer to the attached preliminary General Plan and as-builts for additional details.

Pertinent Reports and Investigations

The following publications were used to assist in the assessment of site conditions:

1. *District Preliminary Geotechnical Report.* Jurasius, Mike. EA 05-0G0400. November 28, 2011.

2. *Pile Report 10th St UC, South San Miguel UC, North San Miguel UC.* Samuelson, R.S. May 16, 1957.

Field Investigation and Laboratory Testing Program

Mud rotary borings were advanced near support locations to determine the subsurface conditions to be used for foundation design. Refer to the project log of test borings for details of the borings at the bridge site. PS suspension logging was performed for the project to calculate an average shear wave velocity for use in generating the design ARS curve presented in the seismic section of this report. Refer to Table 1 for a summary of subsurface investigation information.

Table 1. Subsurface Exploration Summary

Boring	*Completion Date*	*Equipment*	*Hammer Type*	*Hammer Efficiency (%)*	*Approximate Ground Elevation (ft)*	*Depth (ft)*
RC-14-009	10/8/2014	CME55	Auto	86	617.92	97.75
RC-14-010	10/9/2014	CME75	Auto	83	632.27	100.0
RC-14-017	10/30/2014	CS2000	Auto	85	639.72	81.5

Site Geology and Conditions

Climate

The regional climate for northern-inland San Luis Obispo County is generally hot in the summer months and cool in the winter months. The average maximum temperature in July is 94 degrees Fahrenheit and the average minimum is 33 degrees Fahrenheit in December. Based on data recorded at a precipitation station in the vicinity of San Miguel since 1950, the average annual precipitation is about 12 inches.

Topography and Drainage

The project parallels the Salinas River and is underlain by alluvial terraces that have undergone various degrees of erosion. The older, elevated terraces generally form the hills to the east and west of the Salinas River corridor, and are rounded by erosion and incised by smaller tributary drainages such as San Marcos Creek at the southern end of the project. Younger terraces near highway elevations are relatively flat to gently sloped, with steeper slopes where the Salinas River or tributary drainages more recently flowed. The Salinas River is the primary regional drainage. It flows northward to Monterey Bay, and is locally parallel and adjacent to the proposed project area. Numerous smaller tributary drainages cross Highway 101 from the west, beneath bridges and in culverts.

Regional Geology

The project area lies within the Coast Ranges Geomorphic Province, characterized by northwest trending mountain ranges, controlled by movement along a system of similarly trending faults. Exposed highlands of the northern San Luis Obispo County region expose mostly Late Cretaceous to Tertiary age marine shale and sandstone, which are overlain by younger (Pleistocene to recent) alluvial deposits transported by the Salinas River and tributary drainages.

The proposed rehabilitation project follows the current path of the Salinas River, and is underlain by recent and older alluvial deposits of clay, silt, sand and gravel. Paso Robles Formation (QTp), covers most of the slopes on either side of the Salinas River as well as underlying portions of the 101 alignment. The sand and gravel portion of the Paso Robles Formation is variably cemented, and appears to retain global stability at slopes up to approximately 1:1, as seen in cut-slopes north of the 10th Street off-ramp, bounding the southbound 101 shoulder.

Groundwater

An open standpipe observation well was installed in boring RC-14-010 to observe fluctuations in groundwater levels and determine if groundwater will influence construction and foundation design. Results of the groundwater-monitoring program are summarized in Table 2.

Table 2. Groundwater Elevations

Boring	Date	Depth to Groundwater (ft)	Groundwater Elevation(ft)
RC-14-010	11/19/2014	39.0	593.3
RC-14-010	1/20/2015	38.5	593.8
RC-14-010	2/24/2015	38.3	594.0

Corrosion Evaluation

The department considers a site to be corrosive to the foundation elements if the following conditions exist for the representative soil and/or water samples taken at the site: minimum resistivity of 1000 ohm-cm or less and/or PH of 5.5 or less. Samples found to be potentially corrosive based on this criteria are sent to the Headquarters Material Laboratory for additional corrosion testing based on chloride and sulphate content.

Soil samples were obtained during the subsurface investigation and tested for corrosion potential at the District and Headquarters Materials Laboratories. The results of the corrosion testing are presented as an attachment to the project Geotechnical Design Report. Based on the results of the testing, soils are not considered corrosive to foundation elements.

Seismic Recommendations

Based on the *Caltrans Seismic Design Procedure*, the following active and potentially active faults are located within the vicinity of the project site. The Caltrans ARS Online Tool was used to develop ARS curves for deterministic and probabilistic seismic prediction models. An estimated shear wave velocity of 1327 ft/sec was obtained for the project site using down-hole P-S suspension logging methods. Probabilistic methods control the response spectra at all periods, the design envelope ARS is presented in figure 1. A basin factor of 1.0 was assumed for this location and the Caltrans ARS Online Tool applied a near fault factor to the data. Tabular data are included as an attachment.

Table 3. Active and Potentially Active Faults

Fault Name	*Fault Type*	*Moment magnitude of maximum credible earthquake*	*Distance from fault to project site (miles)*	*Peak ground acceleration T=0 sec (gravity)*
Rinconada	Strike-Slip	7.4	6.8	0.30
San Andreas (Parkfield)	Strike-Slip	7.9	17.0	0.19
San Andreas (Creeping Section)	Strike-Slip	7.9	17.0	0.19
USGS 5% in 50 yr. Hazard	N/A	N/A	N/A	0.49

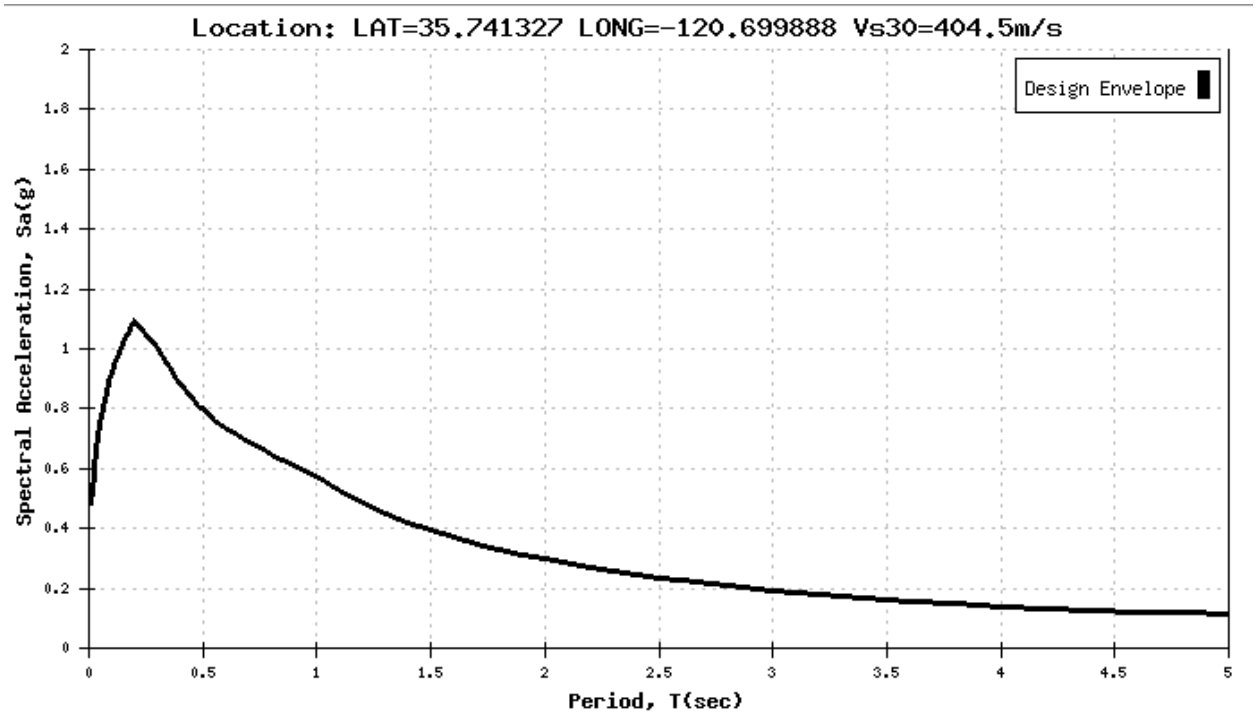

Figure 1. Design ARS Curve

Liquefaction is the partial or complete loss of soil shear strength due to the build-up of excess pore water pressure during a seismic event. Soils with a potential for liquefaction are loose cohesionless soils below the groundwater table. Based on soil types and site conditions

encountered at the project site, potential for liquefaction is low due to the dense nature of the soils, presence of fine-grained soils, and depth to groundwater.

As-Built Foundation Data

The as-built log of test borings from 1956 (right) and 1963 (left) for the existing bridges (Bridge Nos. 49-0164L/R) indicate that the site is underlain by very loose to very dense interbedded layers of sand, silt, clay, and gravel over lithified deposits of the Paso Robles Formation. Groundwater was encountered at approximately elevation 590 feet in the 1956 subsurface exploration. The existing abutments at both bridges and bent 3 of the right bridge are supported on 45 ton 16" diameter CIDH piles, and the other bents are supported on spread footings.

Foundation Recommendations

Structure Design proposes to widen the right bridge by constructing cantilevered bridge deck with barrier to the inside. No additional foundations will be constructed for the right bridge widening. Widening of the left bridge is proposed by adding precast-prestressed girders supported on two new columns and widened abutments to the inside.

Standard Plan 16" Diameter Cast in Drilled Hole (CIDH) Concrete Piles

16" diameter CIDH concrete piles are the recommended foundation type for the widening at the abutments and bents. Caving in the loose alluvial soils at the surface may occur, requiring the use of temporary casings to maintain hole stability. The existing bridge abutments and bents were successfully constructed on 16" diameter CIDH piles. Groundwater at approximately elevation 590 feet and caving were encountered in the original construction; casing was required in most holes to maintain stability. Current observations indicate that groundwater is at approximately elevation 594 feet, and will likely not be encountered in the excavations for new foundations, allowing the use of Standard Plan 16" CIDH piles constructed using the dry method.

Load Factor Design (LFD or Strength Design) methodology was utilized for the bent widening design, and Allowable Stress Design (ASD or Service Load Design) methodology was utilized for the abutment widening. A resistance (performance) factor of 0.75 for LFD of pile foundations is recommended in Caltrans Bridge Design Specifications Section 4.10.6 (LFD-November 2003), and a factor of safety of 2.0 is recommended for ASD of drilled shafts in Section 4.6.5.4. Factored loads (LFD) and Service Loads (ASD) were provided by Structure Design and used to calculate the required nominal axial compression and tension resistances of the piles. The required nominal resistances reported in the following tables are equal to the factored load divided by the resistance factor of 0.75 for LFD design at the bents, and the service load multiplied by a safety factor of 2.0 for ASD at the abutments. Estimated bent settlements were calculated at the provided service loads at each column support by analyzing the pile group as an equivalent footing at a depth equal to 2/3 of the pile length. Widening of the abutments includes drilling and bonding dowels into the existing abutment, which will not allow the widened portion to settle differentially from the existing structure. Service loads will be distributed to the entire

abutment support, therefore calculating the settlement of the new abutment separately from the rest of the existing structure does not represent the field conditions. An estimate of settlement based on the ratio of the service load to the failure load indicates that the magnitude of the settlement per individual pile is on the order of 0.1 inches, which is negligible. Foundation recommendations are provided in the following tables:

Foundation Design Recommendations

Support Location	Pile Type	Cut-off Elevation (ft)	LFD Factored Loads (kips) per pile		ASD Service Compression Load (kips)	Required Nominal Resistance (kips)		Design Tip Elevation (ft)	Specified Tip Elevation (ft)
			Compression	Tension		Compression	Tension		
Abut. 1	16” CIDH	630.7	N/A	N/A	65 per pile/ 130 per support	130	0	612.0	612.0
Bent 2	16” CIDH	609.8	71	18	172 per support	95	24	597.0	597.0
Bent 3	16” CIDH	613.3	71	18	172 per support	95	24	597.0	597.0
Abut. 4	16” CIDH	627.5	N/A	N/A	65 per pile/ 130 per support	130	0	606.0	606.0

Pile Data Table

Support Location	Pile Type	Nominal Axial Resistance (kips)		Specified Tip Elevation (ft)	Estimated Settlement (inches)
		Compression	Tension		
Abut. 1	16” CIDH	130	N/A	612.0	N/A
Bent 2	16” CIDH	100	30	597.0	1
Bent 3	16” CIDH	100	30	597.0	1
Abut. 4	16” CIDH	130	N/A	606.0	N/A

1) *The specified tip elevation shall not be raised.*

Construction Considerations

Loose soils in the approach embankment fills and deposits of sand and gravel at depth may cave during pile excavation. Temporary casing was required to excavate to the specified tip elevations of the existing 16” CIDH concrete piles, and may be required to maintain hole stability for the new excavations. Temporary slopes or shoring required to construct the widening should be proposed by the contractor and reviewed by the Engineer.

Coarse gravels and cobbles in the alluvial deposits may require special tooling and techniques to construct the pile excavations to the specified tip elevations.

Specified pile tips are above the highest observed groundwater elevation. However, if groundwater is encountered and infiltrates into the base of pile excavations, pump out the water immediately before placing concrete to prevent defects in the pile concrete. Notify Geotechnical personnel if groundwater is encountered.

Additional Information

Standard Specifications 2010 Section 2-1.6.B, "Supplemental Project Information", discloses to bidders and contractors a list of pertinent information available for their inspection prior to bid opening. Items listed to be included in the Information Handout will be provided in Acrobat (.pdf) format to the Addressee of this report via electronic mail.

Data and information attached with the project plans are:

A. Log of Test Borings.

Data and information included in the Information Handout provided to the Bidders and Contractors are:

A. Foundation Report dated January 5, 2016.

If you have any questions or comments, please contact Ryan Turner at (805) 549-3750.
.

MICHAEL J. JURASIUS, P.G., C.E.G.
Engineering Geologist
Geotechnical Design – North
Branch D

Signed: 1-5-2016

RYAN TURNER, P.E., G.E.
Transportation Engineer Civil
Geotechnical Design – North
Branch D

c: Job File / Branch D Records
Structure Construction RE Pending File
Craig Whitten / DES Office Engineer
Andrew Tan / PCE
Eric Karlson/ DME

LIST OF ATTACHMENTS

Vicinity Map	Attachment 1
General Plans	Attachment 2
Geologic Map and Legend	Attachment 3
As-Built LOTB	Attachment 4
ARS Tabular Data	Attachment 5

INDEX OF PLANS

STATE OF CALIFORNIA
DEPARTMENT OF TRANSPORTATION

PROJECT PLANS FOR CONSTRUCTION ON
STATE HIGHWAY

IN SAN LUIS OBISPO COUNTY AND MONTEREY COUNTY
FROM MONTEREY ROAD
TO 0.2 MILE SOUTH OF BRADLEY Rd OVERCROSSING

TO BE SUPPLEMENTED BY STANDARD PLANS DATED MAY 2006

Dist	COUNTY	ROUTE	POST MILES TOTAL PROJECT	SHEET No.	TOTAL SHEETS
05	SLO/Mon	101	63.2/69.3 R0.0/R1.9		

LOCATION MAP

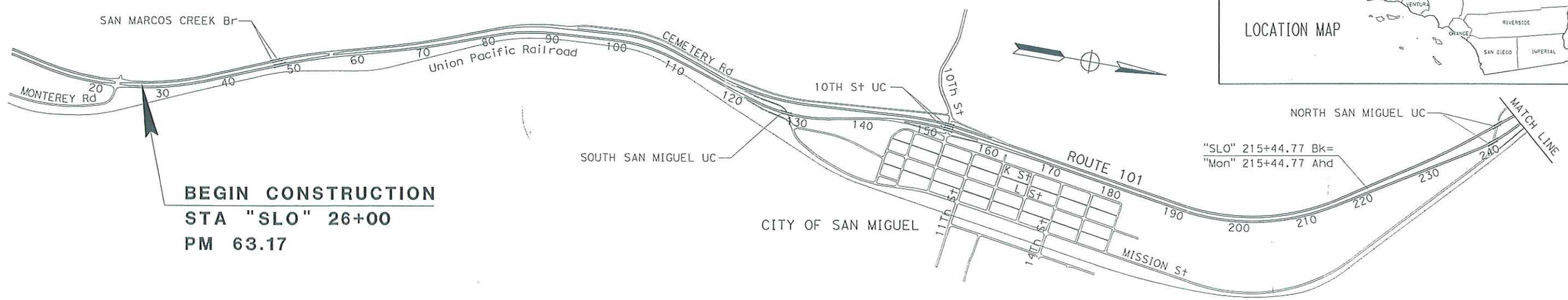

BEGIN CONSTRUCTION
STA "SLO" 26+00
PM 63.17

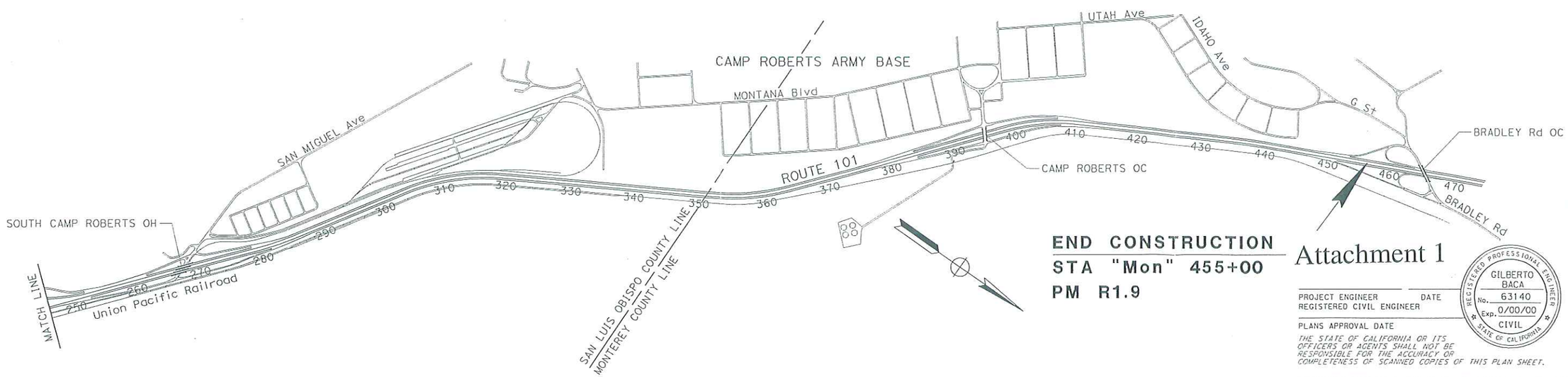

END CONSTRUCTION
STA "Mon" 455+00
PM R1.9

Attachment 1

PROJECT ENGINEER DATE
REGISTERED CIVIL ENGINEER

PLANS APPROVAL DATE

THE STATE OF CALIFORNIA OR ITS OFFICERS OR AGENTS SHALL NOT BE RESPONSIBLE FOR THE ACCURACY OR COMPLETENESS OF SCANNED COPIES OF THIS PLAN SHEET.

REGISTERED PROFESSIONAL ENGINEER
GILBERTO BACA
No. 63140
Exp. 0/00/00
CIVIL
STATE OF CALIFORNIA

CONTRACT No.	00-000004
PROJECT ID	0000000000

PROJECT MANAGER

DESIGN ENGINEER ROBERTO BANDA

THE CONTRACTOR SHALL POSSESS THE CLASS (OR CLASSES) OF LICENSE AS SPECIFIED IN THE "NOTICE TO BIDDERS."

LAST REVISION 01-02-11 DATE PLOTTED => 07-JUN-2011 TIME PLOTTED => 09:08

DIST	COUNTY	ROUTE	POST MILES TOTAL PROJECT	SHEET No.	TOTAL SHEETS
05	SLO/Mon	101			

INCOMPLETE PLAN FOR DESIGN STUDY PRINTED
DATE: 18-SEP-2015
Office of Structure Design
STATE OF CALIFORNIA

REGISTERED CIVIL ENGINEER X DATE

PLANS APPROVAL DATE

REGISTERED PROFESSIONAL ENGINEER Jose M Aquino III No. 58386 Exp. 12-31-16 CIVIL STATE OF CALIFORNIA

The State of California or its officers or agents shall not be responsible for the accuracy or completeness of scanned copies of this plan sheet.

DRAFT PS&E

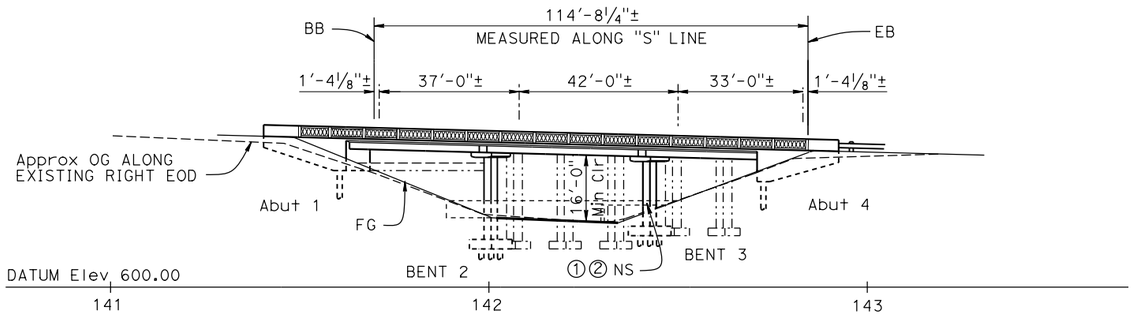

ELEVATION

1" = 20'

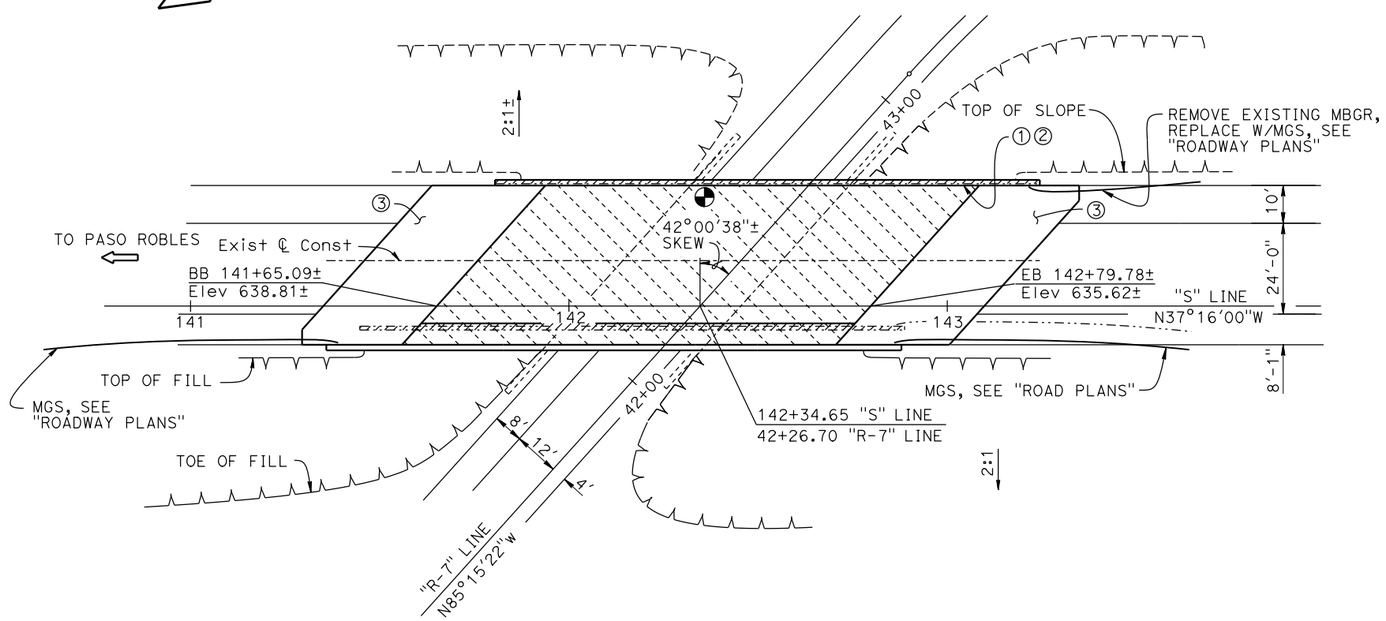

PLAN

1" = 20'

LEGEND:
- - - - Indicates existing bridge
——— Indicates new construction
Indicates existing barrier removal
Indicates limits of prepare bridge deck and place 1" Polyester Concrete Overlay
Point of minimum vertical clearance

NOTES:
① Paint "Br. No. 49-0164L"
② Paint "NORTH SAN MIGUEL UC"
③ Structure Approach Type R (30D)

1. For "TYPICAL SECTION" see "GENERAL PLAN No. 2" sheet
2. For "GENERAL NOTES" and "INDEX TO PLANS", see "INDEX TO PLANS" sheet

NOTE:
THE CONTRACTOR MUST VERIFY ALL CONTROLLING FIELD DIMENSIONS BEFORE ORDERING OR FABRICATING ANY MATERIAL.

Joseph E Downing
DESIGN ENGINEER

	BY	CHECKED
DESIGN	Mufeed Khalaf	Eric G Burgeson
DETAILS	Nancy C Gwynn	Eric G Burgeson
QUANTITIES	Raman Guraya	Arturo V Herrera

LOAD FACTOR DESIGN — LIVE LOADING: HS20-44 AND ALTERNATIVE AND PERMIT DESIGN LOAD
LAYOUT BY X CHECKED X
SPECIFICATIONS BY X PLANS AND SPECS COMPARED X

ORIGINAL SCALE IN INCHES FOR REDUCED PLANS 0 1 2 3

STATE OF CALIFORNIA
DEPARTMENT OF TRANSPORTATION

DIVISION OF ENGINEERING SERVICES
STRUCTURE DESIGN
DESIGN BRANCH 3

BRIDGE NO. 49-0164L
POST MILE 67.3

NORTH SAN MIGUEL UC (WIDEN)
GENERAL PLAN No. 1

UNIT: 3578
PROJECT NUMBER & PHASE: 05000200201
CONTRACT NO.: 05-0G0404

DISREGARD PRINTS BEARING EARLIER REVISION DATES
REVISION DATES: 12-09-13 5-7-15 3-4-15
SHEET 1 OF 22

FILE => 49-0164l-g-gp01.dgn

STRUCTURES DESIGN GENERAL PLAN SHEET (ENGLISH) (REV 09-01-10)

USERNAME => s12483? DATE PLOTTED => 18-SEP-2015 TIME PLOTTED => 14:03

DIST	COUNTY	ROUTE	POST MILES TOTAL PROJECT	SHEET No.	TOTAL SHEETS
05	SLO/Mon	101			

INCOMPLETE PLAN FOR DESIGN STUDY PRINTED
DATE: 18-SEP-2015
Office of Structure Design
STATE OF CALIFORNIA

REGISTERED CIVIL ENGINEER X DATE

PLANS APPROVAL DATE

REGISTERED PROFESSIONAL ENGINEER Jose M Aquino III No. 58386 Exp. 12-31-16 CIVIL STATE OF CALIFORNIA

The State of California or its officers or agents shall not be responsible for the accuracy or completeness of scanned copies of this plan sheet.

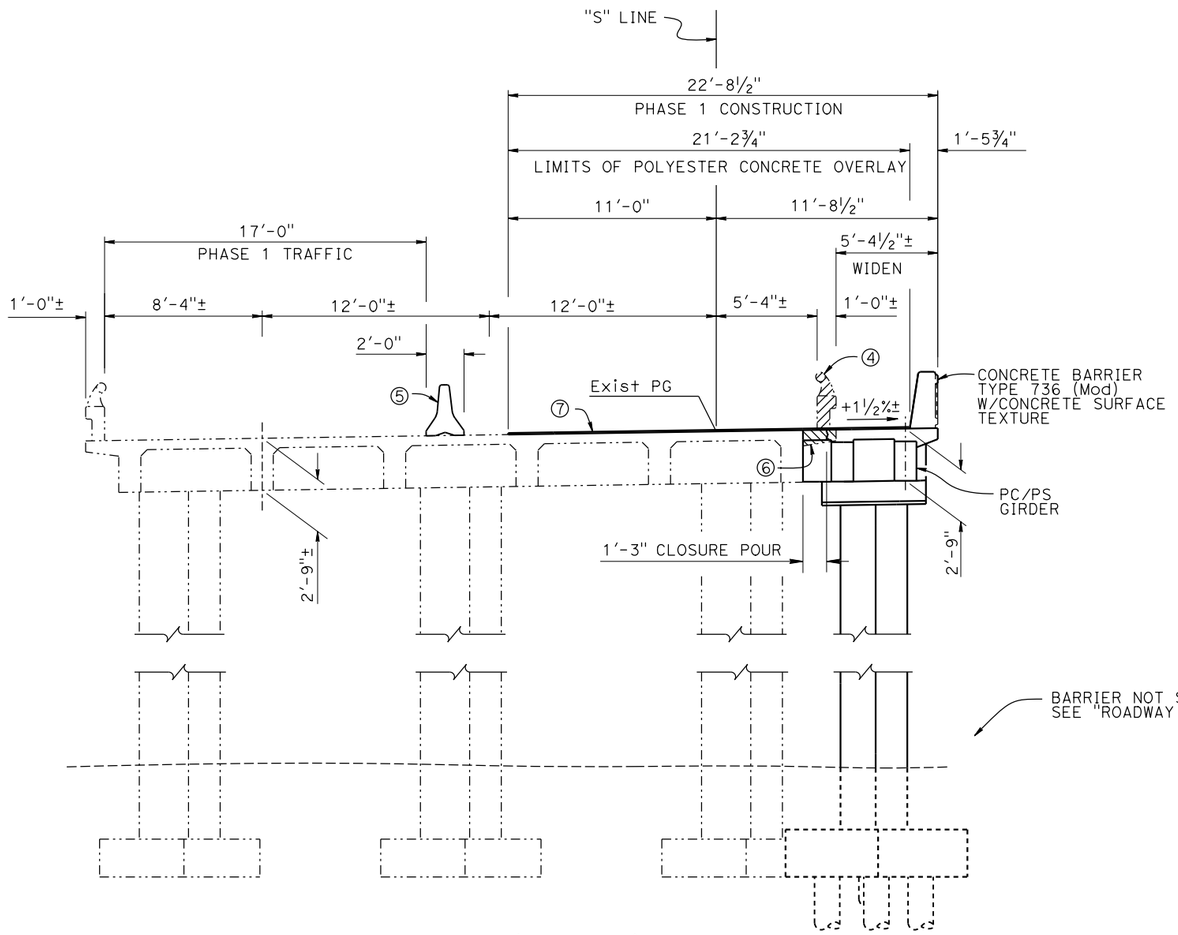

STAGE 4 (PHASE 1)
TYPICAL SECTION
¼" = 1'-0"

BARRIER NOT SHOWN, SEE "ROADWAY PLANS"

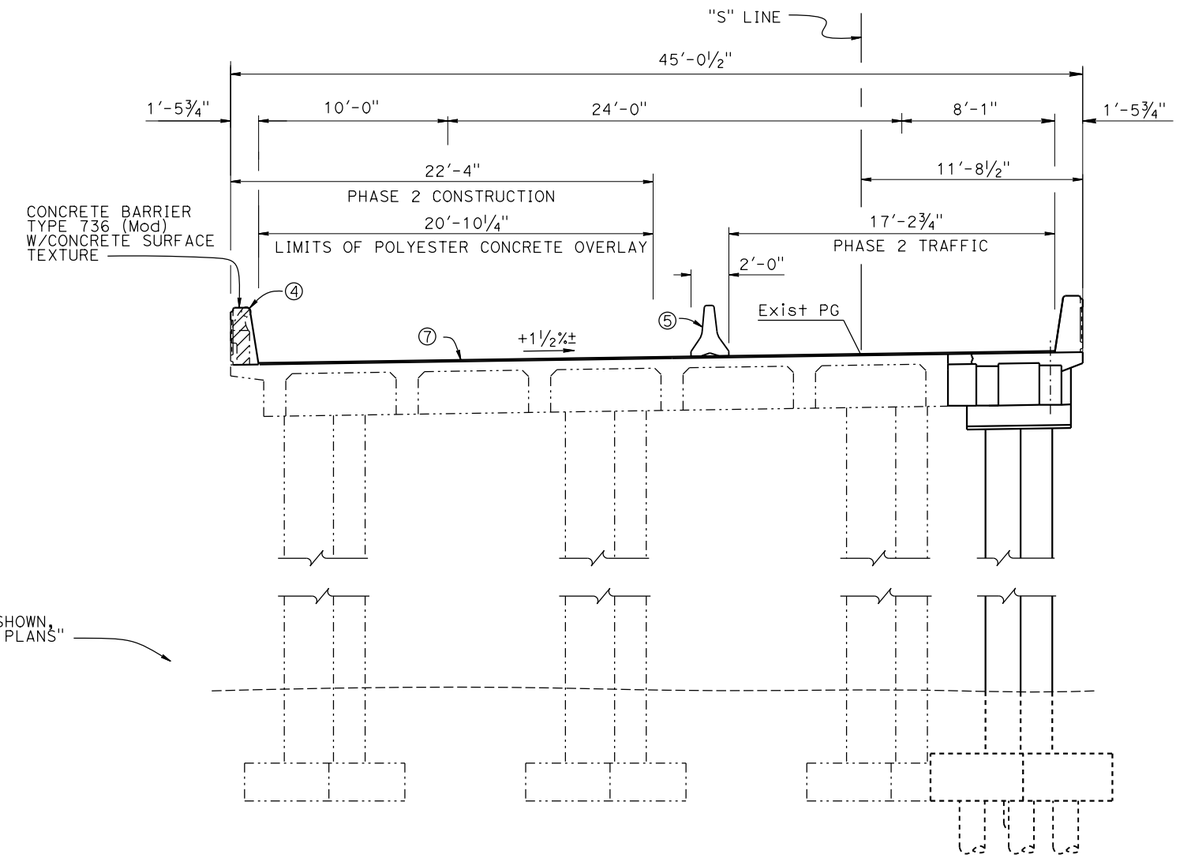

STAGE 4 (PHASE 2)
TYPICAL SECTION
¼" = 1'-0"

LEGEND:
- Indicates existing bridge
- Indicates new construction
- Indicates existing bridge removal, portion
- Indicates existing barrier removal

NOTES:
④ Existing barrier to be removed
⑤ Temporary Railing (Type K), see "ROADWAY PLANS"
⑥ Remove existing overhang
⑦ 1" & Var Polyester Concrete Overlay
1. Other Stages not shown, see "ROADWAY PLANS"
2. Structure Approach work must be performed inside each Phase Construction limits shown

NOTE:
THE CONTRACTOR MUST VERIFY ALL CONTROLLING FIELD DIMENSIONS BEFORE ORDERING OR FABRICATING ANY MATERIAL.

DESIGN	BY Mufeed Khalaf	CHECKED Eric G Burgeson	LOAD FACTOR DESIGN	LIVE LOADING: HS20-44 AND ALTERNATIVE AND PERMIT DESIGN LOAD
DETAILS	BY Nancy C Gwynn	CHECKED Eric G Burgeson	LAYOUT BY X	CHECKED X
QUANTITIES	BY Raman Guraya	CHECKED Arturo V Herrera	SPECIFICATIONS BY X	PLANS AND SPECS COMPARED X

Joseph E Downing
DESIGN ENGINEER

ORIGINAL SCALE IN INCHES FOR REDUCED PLANS 0 1 2 3

STATE OF CALIFORNIA
DEPARTMENT OF TRANSPORTATION

DIVISION OF ENGINEERING SERVICES
STRUCTURE DESIGN
DESIGN BRANCH 3

BRIDGE NO. 49-0164L
POST MILE 67.3

NORTH SAN MIGUEL UC (WIDEN)
GENERAL PLAN No. 2

UNIT: 3578
PROJECT NUMBER & PHASE: 05000200201
CONTRACT NO.: 05-0G0404

DISREGARD PRINTS BEARING EARLIER REVISION DATES

REVISION DATES: 12-09-13 5-1-15 7-27-15

SHEET 2 OF 22

STRUCTURES DESIGN GENERAL PLAN SHEET (ENGLISH) (REV 09-01-10)

FILE => 49-0164l-g-gp02.dgn

USERNAME => s124832 DATE PLOTTED => 18-SEP-2015 TIME PLOTTED => 14:03

GEOLOGIC MAP
SLO-MON-101-63.2/R69.3
North Paso Robles 101 Rehab

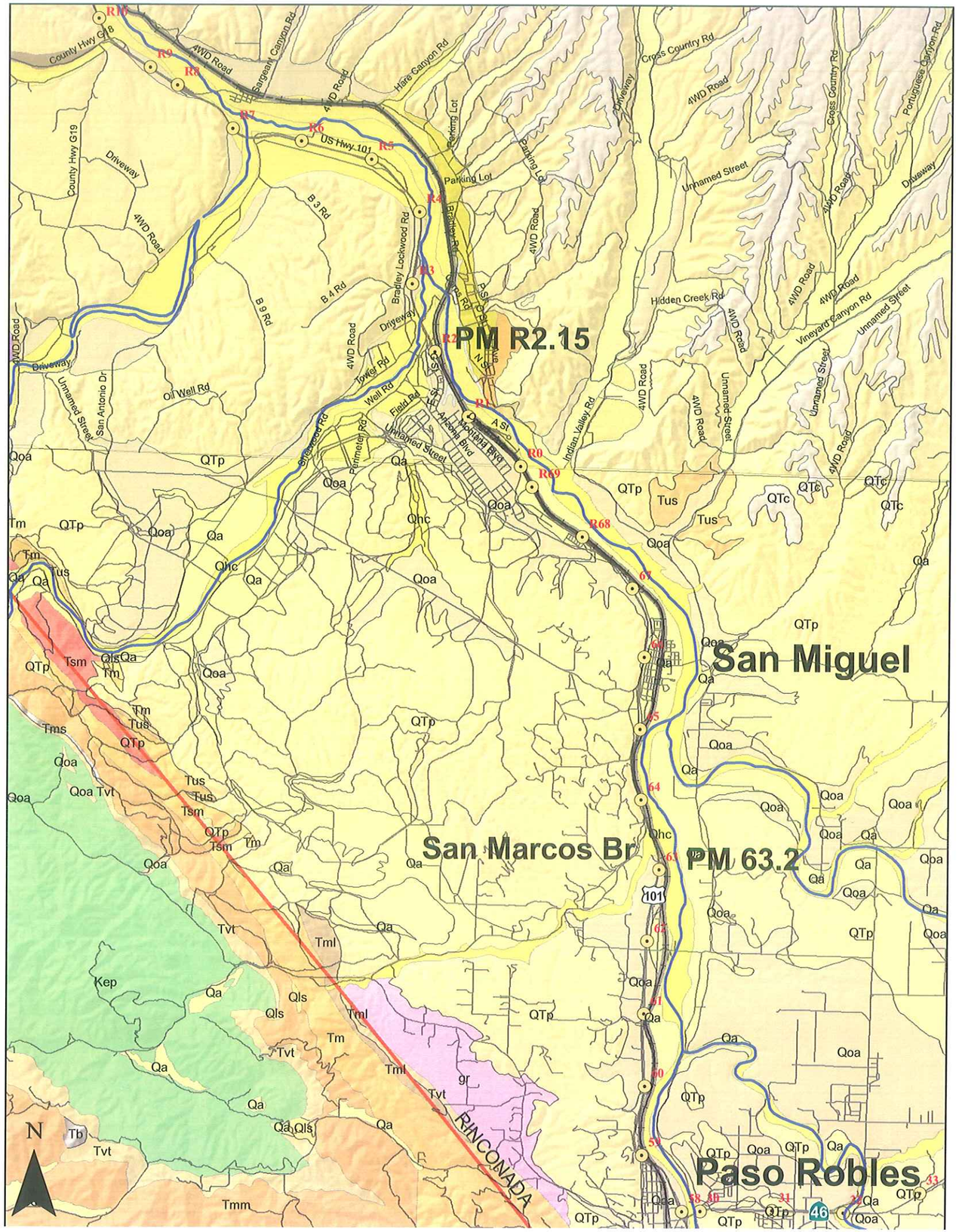

Legend

Geologic Units

UNIT

- QTc-Clay of the Paso Robles Formation
- QTp-Paso Robles Formation (valley sediments)
- Qa-Latest Pleistocene to Holocene alluvium, undiffer
- Qhc-Recent stream channel deposits
- Qls-Landslide deposits
- Qoa-Early to late Pleistocene alluvial deposits, undiferentiated
- Qrs-Modern stream channel deposits
- Tm-Monterey Formation, undifferentiated
- Tml-Monterey Formation, silty shale
- Tmm-Sandholt Member (Monterey Formation)
- Tsm-Santa Margarita Sandstone
- Tus-Sandstone, conglomerate, minor mudstone
- Tvt-Vaqueros Sandstone
- gr-Granitic rocks, undivided
- Kep-El Piojo Formation, L. Cret. mud stone, sandstone, and cong.

1 0.5 0 1 2 3 4 Miles

Attachment 3

FED. ROAD DIV. NO.	STATE	PROJ. NO.	FISCAL YEAR	SHEET NO.	TOTAL SHEETS
7	CAL.			148	169

DIST.	COUNTY	ROUTE	SECTION	SHEET NO.	TOTAL SHEETS
7	SLO	2	1	8	8

BRIDGE ENGINEER — CIVIL ENGINEER—LICENSE NO.

DATE APPROVED September 3, 1963

BRIDGE DEPARTMENT

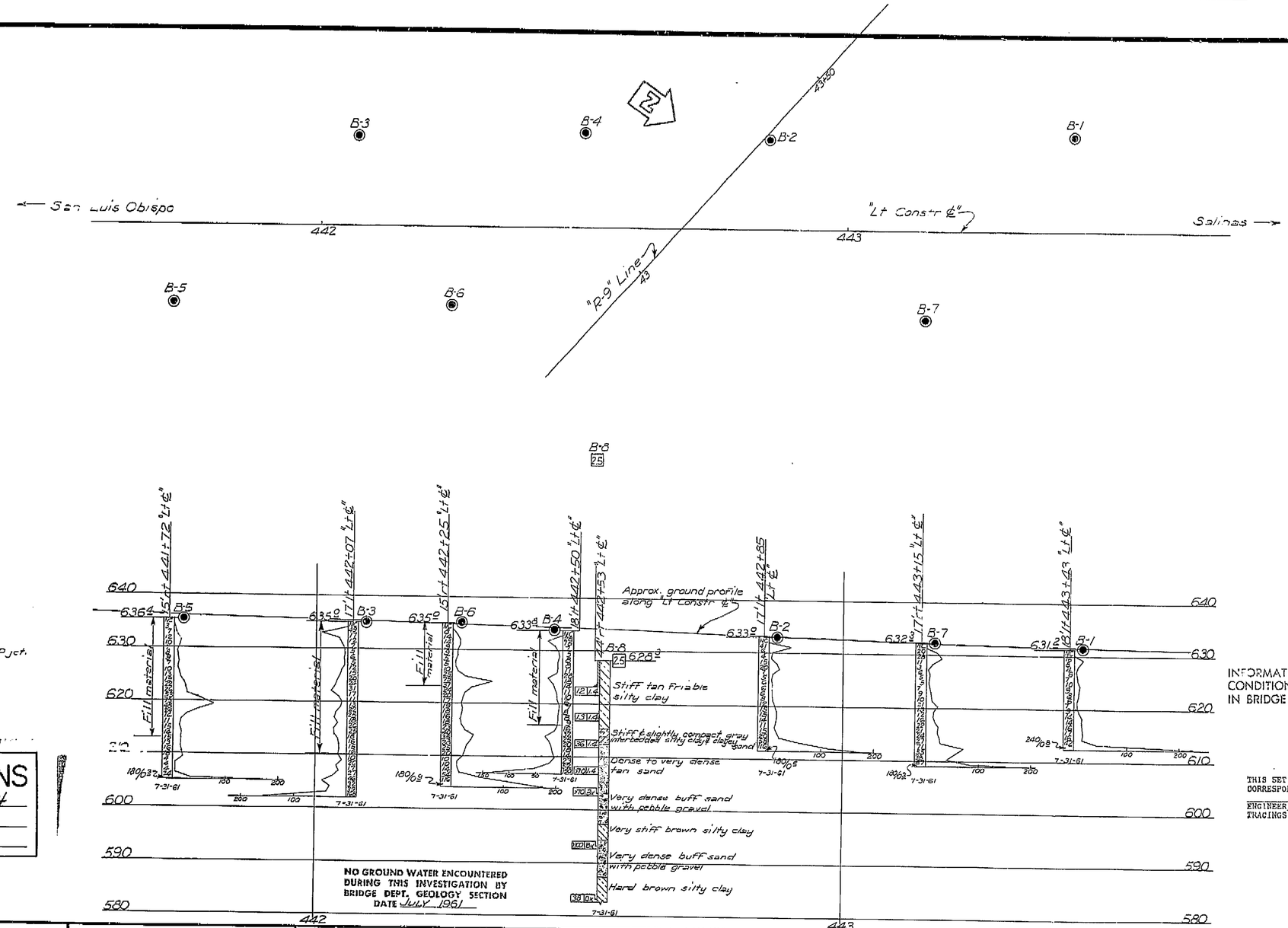

BM

SE cor. conc. D.I. for 30"&66" RCP jct. 130'± rt "Lt ℄" 441+91
Elev. 619.93

NO GROUND WATER ENCOUNTERED DURING THIS INVESTIGATION BY BRIDGE DEPT. GEOLOGY SECTION
DATE JULY 1961

INFORMATION ON ACTUAL FOUNDATION CONDITIONS ENCOUNTERED IS ON FILE IN BRIDGE GEOLOGY SECTION

THIS SET OF PLANS HAS BEEN CORRECTED TO CORRESPOND TO THE "AS BUILT" PRINTS DATED _____, AS SUBMITTED BY RESIDENT ENGINEER _____.
TRACINGS CORRECTED BY: _____ DATE: _____

Sheet	of
8	8

FIELD STUDY	by Dell	7-61
DRAWN	by Darr	12-61
CHECKED	by Dell	12-61

Approval Recommended by: Chief, Geology Section — Chief, Bridge Design Section

AS BUILT PLANS
Contract No. 05-028604
Date Completed _____
Document No. 5000 1067

CLASSIFICATION OF MATERIAL BASED ON STANDARD GRADE SIZE LIMITS

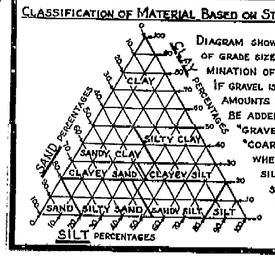

DIAGRAM SHOWING THE BASIS FOR ESTIMATES OF GRADE SIZE DISTRIBUTION USED IN DETERMINATION OF CLASS NAMES.

IF GRAVEL IS PRESENT IN APPRECIABLE AMOUNTS THE TERM "GRAVELLY" MAY BE ADDED TO THE CLASS NAME, VIZ. "GRAVELLY SAND." THE TERMS "COARSE", "MEDIUM" AND "FINE" WHEN USED TO DESCRIBE SAND, SILT AND GRAVEL REFER TO STANDARD GRADE SIZE LIMITS.

LEGEND OF EARTH MATERIALS

- Gravel
- Sand
- Silt
- Clay
- Sandy Clay or Clayey Sand
- Sandy Silt or Silty Sand
- Silty Clay or Clayey Silt
- Peat and/or Organic Matter
- Fill Material
- Igneous Rock
- Sedimentary Rock
- Metamorphic Rock

LEGEND OF BORING OPERATIONS

- Plan of any boring
- Penetrometer
- 2¼" Cone Penetrometer
- Sampler boring (dry)
- Rotary boring (wet)
- Auger boring (dry)
- Jet boring
- Core boring
- Test pit

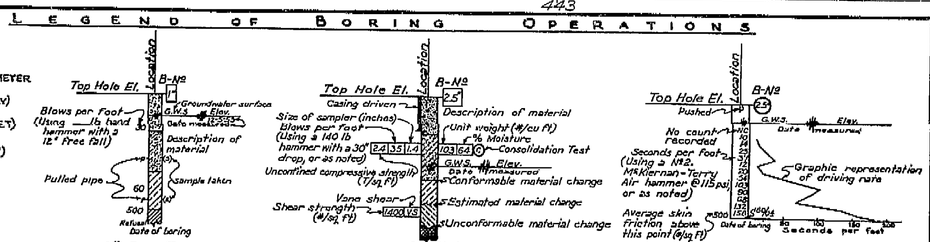

NOTE

Classification of earth material as shown on this sheet is based upon field inspection and is not to be construed to imply mechanical analysis.

STATE OF CALIFORNIA
DEPARTMENT OF PUBLIC WORKS
DIVISION OF HIGHWAYS

NORTH SAN MIGUEL UC

LOG OF TEST BORINGS

SCALE	BRIDGE	FILE	DRAWING
1" = 10'	49-164 L		49164-8

148

PRL. DRAWING NO. P. -

PR-49164-5 377

I HEREBY CERTIFY THAT THIS IS A TRUE AND ACCURATE COPY OF THE ABOVE DOCUMENT TAKEN UNDER MY DIRECTION AND CONTROL ON THIS DATE IN SACRAMENTO, CALIFORNIA PURSUANT TO AUTHORIZATION BY THE DIRECTOR OF PUBLIC WORKS.

DATE 2-10-70 SIGNATURE [illegible] TITLE Sr. [illegible]

ClibPDF - www.fastio.com

V-1

F-99(21)

FED. ROAD DIV. NO.	STATE	PROJ. NO.	FISCAL YEAR	SHEET NO.	TOTAL SHEETS
7	CAL.			63	63

DIST.	COUNTY	ROUTE	SECTION	SHEET NO.	TOTAL SHEETS
IV	SLO	101-2	A	5	5

DISTRICT ENGINEER — CIVIL ENGINEER — LICENSE NO. 5999

DATE APPROVED OCTOBER 15 1956

AS BUILT
CORRECTED BY:
DATE: 10-9-57

AS BUILT PLANS
Contract No. 57-SVC14
Date Completed
Document No. 50000987

NOTES
NO CHANGES IN PLAN FTG GRADE
DESIGN PILE LOADING : 45 T
TYPE PILE : CAST IN DRILLED HOLE
DIAMETER : 1'-3½"
TOTAL NO PILES - ~~28~~ Los Angeles
LF PILES "AS BUILT": 727.3
LF PILES CALLED FOR ON PLANS : 665

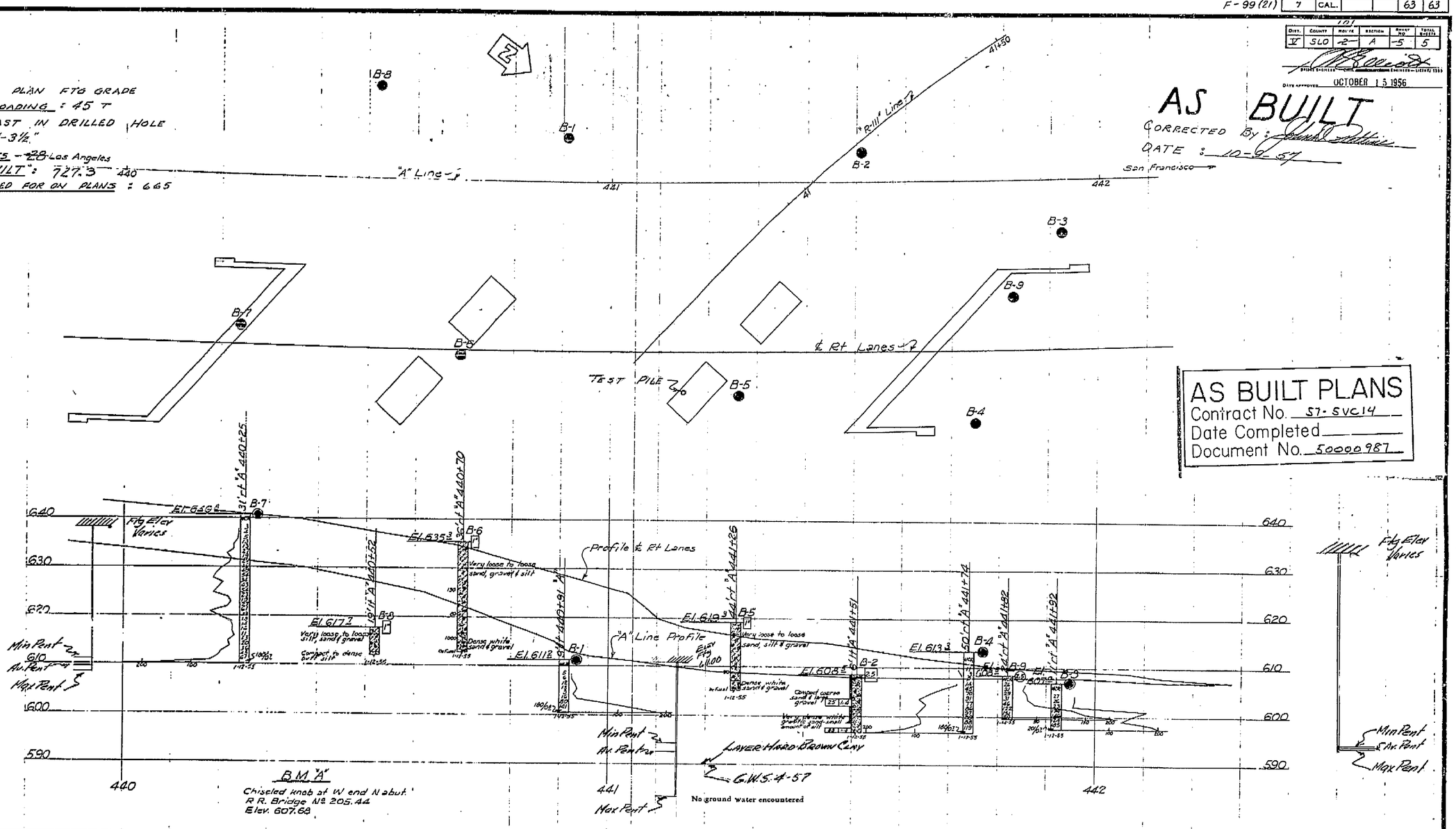

BRIDGE DEPARTMENT

FIELD STUDY	by C.E. Marek	1-55
DRAWN	by J.D. Dorr	1-55
CHECKED	by C.E. Marek	2-55

Approval Recommended by: [signature] Bridge Engineer
Approved: [signature] Chief Engineer
Director of Public Works

CLASSIFICATION OF MATERIAL BASED ON STANDARD GRADE SIZE LIMITS

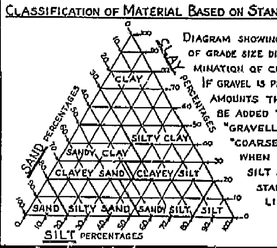

DIAGRAM SHOWING THE BASIS FOR ESTIMATES OF GRADE SIZE DISTRIBUTION USED IN DETERMINATION OF CLASS NAMES.

IF GRAVEL IS PRESENT IN APPRECIABLE AMOUNTS THE TERM "GRAVELLY" MAY BE ADDED TO THE CLASS NAME, VIZ. "GRAVELLY SAND." THE TERMS "COARSE", "MEDIUM" AND "FINE" WHEN USED TO DESCRIBE SAND, SILT AND GRAVEL REFER TO STANDARD GRADE SIZE LIMITS.

LEGEND OF EARTH MATERIALS

- GRAVEL
- SAND
- SILT
- CLAY
- SANDY CLAY OR CLAYEY SAND
- SANDY SILT OR SILTY SAND
- SILTY CLAY OR CLAYEY SILT
- PEAT AND/OR ORGANIC MATTER
- FILL MATERIAL
- IGNEOUS ROCK
- SEDIMENTARY ROCK
- METAMORPHIC ROCK

LEGEND OF BORING OPERATIONS

- PLAN OF ANY BORING
- PENETROMETER
- 2¼" CORE PENETROMETER
- SAMPLER BORING (DRY)
- ROTARY BORING (WET)
- AUGER BORING (DRY)
- JET BORING
- CORE BORING
- TEST PIT

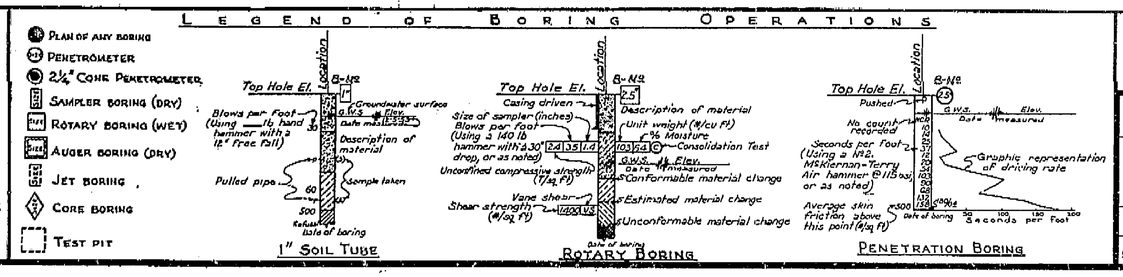

NOTES

The contractor's attention is directed to Section 2, Article (c) of the Standard Specifications and to the Special Provisions accompanying this set of plans.

Classification of earth material as shown on this sheet is based upon field inspection and is not to be construed to imply mechanical analysis.

STATE OF CALIFORNIA
DEPARTMENT OF PUBLIC WORKS
DIVISION OF HIGHWAYS

NORTH SAN MIGUEL UNDERCROSSING

LOG OF TEST BORINGS

SCALE	BRIDGE	FILE	DRAWING
1" = 10'	49-164R		C-4176-5

PREL. DRAWING NO. P-4176 7

63

I HEREBY CERTIFY THAT THIS IS A TRUE AND ACCURATE COPY OF THE ABOVE DOCUMENT TAKEN UNDER MY DIRECTION AND CONTROL ON THIS DATE IN SACRAMENTO, CALIFORNIA PURSUANT TO AUTHORIZATION BY THE DIRECTOR OF PUBLIC WORKS.

DATE 1/ SIGNATURE [signature] TITLE [illegible]

ClibPDF - www.fastio.com

N. San Miguel UC ARS Curve

Bridge No. **49-0164R/L** **SDC Controlling Procedure :** **Probabalistic**

Period (s)	SDC
0.010	0.488
0.050	0.774
0.100	0.943
0.150	1.042
0.200	1.119
0.250	1.070
0.300	1.032
0.400	0.904
0.500	0.816
0.600	0.754
0.700	0.709
0.850	0.643
1.000	0.590
1.200	0.497
1.500	0.402
2.000	0.307
3.000	0.199
4.000	0.143
5.000	0.116

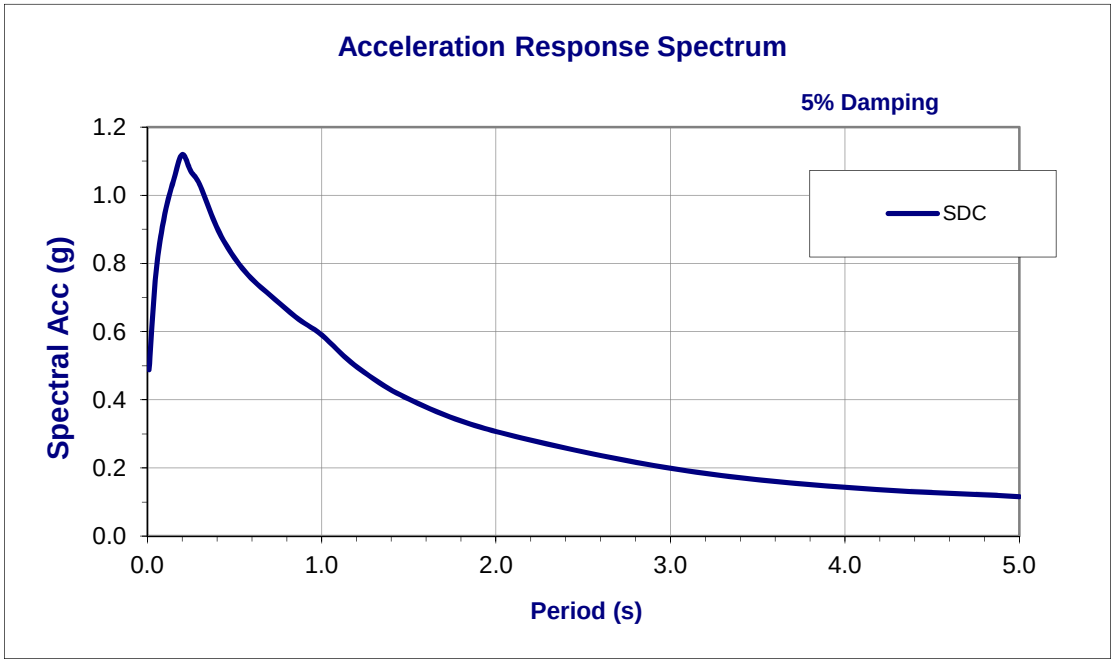

Notes

ARS curve was modified for Near Fault Directivity Effect

MATERIALS INFORMATION

8. Revised Foundation Report San Marcos Creek Bridge R/L; dated January 5, 2016.

State of California
DEPARTMENT OF TRANSPORTATION

Business, Transportation and Housing Agency

M e m o r a n d u m

Serious drought,
Help Save Water!

To: JOEY AQUINO, Senior Project Engineer
Bridge Design Branch 3
Office of Bridge Design West
DIVISION OF ENGINEERING SERVICES
STRUCTURE DESIGN – MS 9 4/6F

Date: January 5, 2016

File: 05-SLO-101-63.2/R69.3
05-Mon-101-R0.0/1.9
San Marcos Creek Bridge
Bridge No. 49-0263R/L
Project ID 0500020020
EA: 05-0G0401

From: **DEPARTMENT OF TRANSPORTATION**
DIVISION OF ENGINEERING SERVICES
GEOTECHNICAL SERVICES

Subject: Revised Foundation Report San Marcos Creek Bridge Right/Left

Scope of Work

A Revised Foundation Report (FR) is provided for the San Marcos Creek right and left bridges. Replacement of the existing bridges is part of the North Paso Robles Rehab project, located on State Route 101 in the vicinity of San Miguel, in the Counties of San Luis Obispo and Monterey. Rehabilitation of the distressed portland cement concrete (PCC) pavement is proposed, along with widening shoulders to standard widths, widening and construction of new bridges and retaining walls, improvement of highway access, and construction of drainage facilities. Review of published geologic data and previous geotechnical reports, field reconnaissance, and geotechnical analysis were performed as part of the geotechnical investigation.

The purpose of this report is to document geotechnical conditions and provide foundation recommendations. This report supercedes the Foundation Report (September 25, 2015).

Introduction

Replacement of the right and left San Marcos Creek Bridges with two-span precast-prestressed bulb-tee girder bridges is proposed. The existing southbound left structure, built in 1953, contains reactive aggregate and is recommended for replacement by the Office of Structure Maintenance and Investigations. The northbound right structure, built in 1931, is approximately 5 feet lower than the southbound structure; raising the profile and construction of a new northbound bridge is proposed. Both existing structures are founded on spread footings. The new San Marcos Creek Bridges will be designed and constructed to meet standard lane and shoulder widths proposed throughout the project.

Pertinent Reports and Investigations

The following publications were used to assist in the assessment of site conditions and for foundation design:

1. *District Preliminary Geotechnical Report.* Jurasius, Mike. EA 05-0G0400. November 28, 2011.

2. *Geotechnical Engineering Circular 10:* **"**Drilled Shafts: Construction Procedures and LRFD Design Methods." Publication FHWA-NHI-10-016. May, 2010.

Field Investigation and Laboratory Testing Program

Mud rotary borings and one cone penetrometer test (CPT) sounding were advanced near support locations to determine the subsurface conditions to be used for foundation design. Refer to the project log of test borings for details of the borings and sounding at the bridge site. P-S suspension logging was performed for the project to calculate an average shear wave velocity for use in generating the design ARS curve presented in the seismic section of this report. Refer to Table 1 for a summary of subsurface investigation information.

Table 1. Subsurface Exploration Summary

Boring	*Completion Date*	*Equipment*	*Hammer Type*	*Hammer Efficiency (%)*	*Approximate Ground Elevation (ft)*	*Depth (ft)*
RC-14-001	9/23/2014	CME75	Auto	83	626.08	96.5
RC-14-002	9/24/2014	CME55	Auto	86	626.37	99.0
RC-14-003	9/25/2014	CME75	Auto	83	646.71	82.0
RC-14-004	9/26/2014	CME55/75	Auto	86/83	640.16	86.8
RC-14-011	10/22/2014	CS2000	Auto	93	652.27	101.5
RC-14-012	10/22/2014	CS2000	Auto	93	645.75	101.5
CPT-14-001	2/26/2014	CPT	N/A	N/A	672.00	39.0

Site Geology and Conditions

Climate

The regional climate for northern-inland San Luis Obispo County is generally hot in the summer months and cool in the winter months. The average maximum temperature in July is 94 degrees Fahrenheit and the average minimum is 33 degrees Fahrenheit in December. Based on data recorded at a precipitation station in the vicinity of San Miguel since 1950, the average annual precipitation is about 12 inches.

Topography and Drainage

The project parallels the Salinas River and is underlain by alluvial terraces that have undergone various degrees of erosion. The older, elevated terraces generally form the hills to the east and

west of the Salinas River corridor, and are rounded by erosion and incised by smaller tributary drainages such as San Marcos Creek at the southern end of the project. Younger terraces near highway elevations are relatively flat to gently sloped, with steeper slopes where the Salinas River or tributary drainages more recently flowed. The Salinas River is the primary regional drainage. It flows northward to Monterey Bay, and is locally parallel and adjacent to the proposed project area. Numerous smaller tributary drainages cross Highway 101 from the west, beneath bridges and in culverts.

Regional Geology

The project area lies within the Coast Ranges Geomorphic Province, characterized by northwest trending mountain ranges, controlled by movement along a system of similarly trending faults. Exposed highlands of the northern San Luis Obispo County region expose mostly Late Cretaceous to Tertiary age marine shale and sandstone, which are overlain by younger (Pleistocene to recent) alluvial deposits transported by the Salinas River and tributary drainages.

The proposed rehabilitation project follows the current path of the Salinas River, and is underlain by recent and older alluvial deposits of clay, silt, sand and gravel. Paso Robles Formation (QTp), covers most of the slopes on either side of the Salinas River as well as underlying portions of the 101 alignment. The sand and gravel portion of the Paso Robles Formation is variably cemented, and appears to retain global stability at slopes up to approximately 1:1, as seen in cut-slopes north of the 10th Street off-ramp, bounding the southbound 101 shoulder.

Groundwater

An open standpipe observation well was installed in boring RC-14-004 to observe fluctuations in groundwater levels and determine if groundwater will influence construction and foundation design. Results of the groundwater-monitoring program are summarized in Table 2.

Table 2. Groundwater Elevations

Boring	Date	Depth to Groundwater (ft)	Groundwater Elevation(ft)
RC-14-004	11/19/2014	52.3	587.9
RC-14-004	1/20/2015	39.1	601.1
RC-14-004	2/24/2015	43.2	597.0

Corrosion Evaluation

The department considers a site to be corrosive to the foundation elements if the following conditions exist for the representative soil and/or water samples taken at the site: minimum resistivity of 1000 ohm-cm or less and/or PH of 5.5 or less. Samples found to be potentially corrosive based on this criteria are sent to the Headquarters Material Laboratory for additional corrosion testing based on chloride and sulphate content.

Soil samples were obtained during the subsurface investigation and tested for corrosion potential at the District and Headquarters Materials Laboratories. The results of the corrosion testing are

presented as an attachment to the project Geotechnical Design Report. Based on the results of the testing, soils are not considered corrosive to foundation elements.

Scour Evaluation

Scour data was provided by Structure Hydraulics and is presented Table 4. Resistance within the depth of local scour was not considered to contribute to the factored pile lateral or axial resistances.

Table 3. Scour Data Table

Support	Long-term (degradation/contraction) scour elevation	Short term scour depth
Abutment 1	N/A	N/A
Pier 2	N/A	9.1' Left Bridge 11.2' Right Bridge
Abutment 3	N/A	N/A

Seismic Recommendations

Based on the *Caltrans Seismic Design Procedure*, the following active and potentially active faults are located within the vicinity of the project site. The Caltrans ARS Online Tool was used to develop ARS curves for deterministic and probabilistic seismic prediction models. An estimated shear wave velocity of 1327 ft/sec was obtained for the project site using down-hole P-S suspension logging methods. Probabilistic methods control the response spectra at all periods, the design envelope ARS is presented in figure 1. A basin factor of 1.0 was assumed for this location and the Caltrans ARS Online Tool applied a near fault factor to the data. Tabular data are included as an attachment.

Table 4. Active and Potentially Active Faults

Fault Name	*Fault Type*	*Moment magnitude of maximum credible earthquake*	*Distance from fault to project site (miles)*	*Peak ground acceleration T=0 sec (gravity)*
Rinconada	Strike-Slip	7.4	4.7	0.37
San Andreas (Parkfield)	Strike-Slip	7.9	18.8	0.18
San Andreas (Creeping Section)	Strike-Slip	7.9	19.3	0.17
USGS 5% in 50 yr. Hazard	N/A	N/A	N/A	0.47

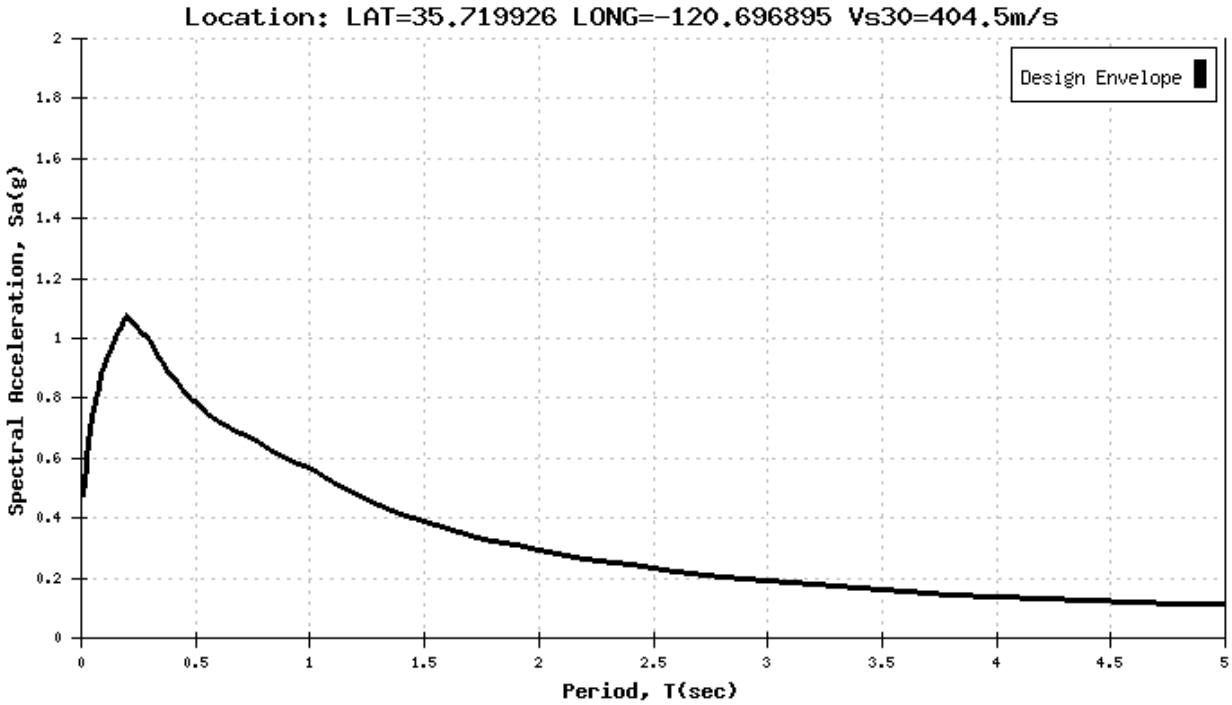

Figure 1. Design ARS Curve

Liquefaction is the partial or complete loss of soil shear strength due to the build-up of excess pore water pressure during a seismic event. Soils with a potential for liquefaction are loose cohesionless soils below the groundwater table. Based on soil types and site conditions encountered at the project site, potential for liquefaction is low due to the dense nature of the soils, presence of fine-grained soils, and depth to groundwater.

As-Built Foundation Data

The as-built log of test borings in 1953 for the left bridge and excavation records in 1931 for the right bridge indicate that the site is underlain by alluvial soil deposits of sand, silt, clay, and gravel over lithified alluvial deposits of the Paso Robles Formation. Excavations and borings encountered cemented layers identified as hard pan sandstone or hard clayey sandstone beneath the alluvial soil deposits at varying depth. Groundwater was encountered at elevation 611 feet during foundation construction in 1931.

Foundation Recommendations

Structure Design proposes construction of two-span bridges supported on two column piers at the San Marcos Creek right and left bridges. Bridge foundation recommendations and details are provided in the following sections.

Cast in Drilled Hole (CIDH) Concrete Piles

24" diameter standard plan CIDH concrete piles are the recommended foundation type at the abutments and 72" diameter CIDH concrete piles are recommended at the piers. Current observations at the site show that the highest recent groundwater elevation is at approximately elevation 600 feet, requiring wet-method construction of the piles. Settlement at abutment supports was estimated for the pile group assuming uniform settlement of the group. Settlements at the pier supports for the single drilled shafts were estimated for the design pile length using published load-deformation curves (GEC 10, 2010). The curves use the ratio of the axial compressive force at the service limit state to the axial failure threshold to estimate the vertical displacement as a function of the shaft diameter. At the specified tip elevations the displacement of the pier foundations is estimated to be on the order of ¼", less than the permissible settlement of 1". Foundation design recommendations are provided in the following tables:

Foundation Design Recommendations

Support	Pile Type	Service-I Limit State Load Per Support (kips)	Total Permissible Support Settlement (inches)	Required Factored Axial Resistance per Pile (kips)				Cut-off Elevation (ft)	Design Tip Elevations (ft)	Specified Tip Elevation (ft)
				Strength Limit		Extreme Limit				
				Comp.	Tension	Comp.	Tension			
Abut 1 Left	24" CIDH	1810	1	280	0	N/A	0	630.25	588.0(a) 612.0 (c)	588.0
Pier 2 Left	72" CIDH	1300	1	2200	0	1300	0	616.00	552.0 (a) 610.0 (b) 556.0 (c) 552.0 (d)	552.0
Abut 3 Left	24" CIDH	1810	1	280	0	N/A	0	635.75	607.0 (a) 618.0 (c)	607.0
Abut 1 Right	24" CIDH	1810	1	280	0	N/A	0	630.25	588.0 (a) 612.0 (c)	588.0
Pier 2 Right	72" CIDH	1300	1	2200	0	1300	0	616.00	552.0 (a) 610.0 (b) 556.0 (c) 552.0 (d)	552.0
Abut 3 Right	24" CIDH	1810	1	280	0	N/A	0	635.75	607.0 (a) 618.0 (c)	607.0

Notes:

1) *Design tip elevations are controlled by: (a) Compression (Strength Limit), (b) Compression (Extreme Event), (c) Settlement, and (d) Lateral- to be provided by Structure Design, respectively.*
2) *The specified tip elevation shall not be raised.*

Pile Data Table					
Location	Pile Type	Nominal Axial Resistance (kips)		Design Tip Elevation (ft)	Specified Tip Elevation (ft)
		Compression	Tension		
Abut 1 Left	24" CIDH	400	N/A	588.0(a) 612.0 (c)	588.0
Pier 2 Left	72" CIDH	3900	N/A	552.0 (a) 610.0 (b) 556.0 (c) 552.0 (d)	552.0
Abut 3 Left	24" CIDH	400	N/A	607.0 (a) 618.0 (c)	607.0
Abut 1 Right	24" CIDH	400	N/A	588.0 (a) 612.0 (c)	588.0
Pier 2 Right	72" CIDH	3680	N/A	552.0 (a) 610.0 (b) 556.0 (c) 552.0 (d)	552.0
Abut 3 Right	24" CIDH	400	N/A	607.0 (a) 618.0 (c)	607.0

Notes:

1) *Design tip elevations are controlled by: (a) Compression (Strength Limit), (b) Compression (Extreme Event), (c) Settlement, and (d) Lateral- to be provided by Structure Design, respectively.*
2) *The specified tip elevation shall not be raised.*

Construction Considerations

Loose soils and cohesionless deposits of sand and gravel at depth may cave during pile excavation. Temporary casings may be required to maintain hole stability in the loose soils near the ground surface in the river channel. Groundwater will be encountered during pile excavation, requiring the use of drilling slurry to maintain hole stability and prevent development of an inward hydraulic gradient, which can degrade the available side resistance. Maintain an offsetting hydrostatic head by excavating for the piles and placing concrete under slurry. Pier foundations rely on side and base resistance to resist axial loads, requiring a clean base. Methods to clean the bottom of the holes and provide quality assurance that the base is clean should be proposed by the contractor in the pile placement plan and reviewed and approved by the Engineer. The bottom of the hole must be level, clean, and free of loose material prior to placing the reinforcing cage, and the condition of the bottom of the hole should be re-verified after placing the cage and prior to placing concrete using a tremie per the requirements of 2010 Standard Specification 49-3.02C(8).

Coarse gravels and cobbles in the alluvial deposits may require special tooling and techniques to construct the pile excavations to the specified tip elevations.

Additional Information

Standard Specifications 2010 Section 2-1.6.B, "Supplemental Project Information", discloses to bidders and contractors a list of pertinent information available for their inspection prior to bid opening. Items listed to be included in the Information Handout will be provided in Acrobat (.pdf) format to the Addressee of this report via electronic mail.

Data and information attached with the project plans are:

A. Log of Test Borings.

Data and information included in the Information Handout provided to the Bidders and Contractors are:

A. Foundation Report dated January 5, 2016.

If you have any questions or comments, please contact Ryan Turner at (805) 549-3750.

MICHAEL J. JURASIUS, P.G., C.E.G.
Engineering Geologist
Geotechnical Design – North
Branch D

Signed: 1-5-2016

RYAN TURNER, P.E., G.E.
Transportation Engineer Civil
Geotechnical Design – North
Branch D

c: Job File / Branch D Records
Structure Construction RE Pending File
Craig Whitten / DES Office Engineer
Andrew Tan / PCE
Eric Karlson/ DME

LIST OF ATTACHMENTS

Vicinity Map	Attachment 1
General Plans	Attachment 2
Geologic Map and Legend	Attachment 3
As-Built LOTB	Attachment 4
ARS Tabular Data	Attachment 5

INDEX OF PLANS

STATE OF CALIFORNIA
DEPARTMENT OF TRANSPORTATION

PROJECT PLANS FOR CONSTRUCTION ON
STATE HIGHWAY

IN SAN LUIS OBISPO COUNTY AND MONTEREY COUNTY
FROM MONTEREY ROAD
TO 0.2 MILE SOUTH OF BRADLEY Rd OVERCROSSING

TO BE SUPPLEMENTED BY STANDARD PLANS DATED MAY 2006

Dist	COUNTY	ROUTE	POST MILES TOTAL PROJECT	SHEET No.	TOTAL SHEETS
05	SLO/Mon	101	63.2/69.3 R0.0/R1.9		

LOCATION MAP

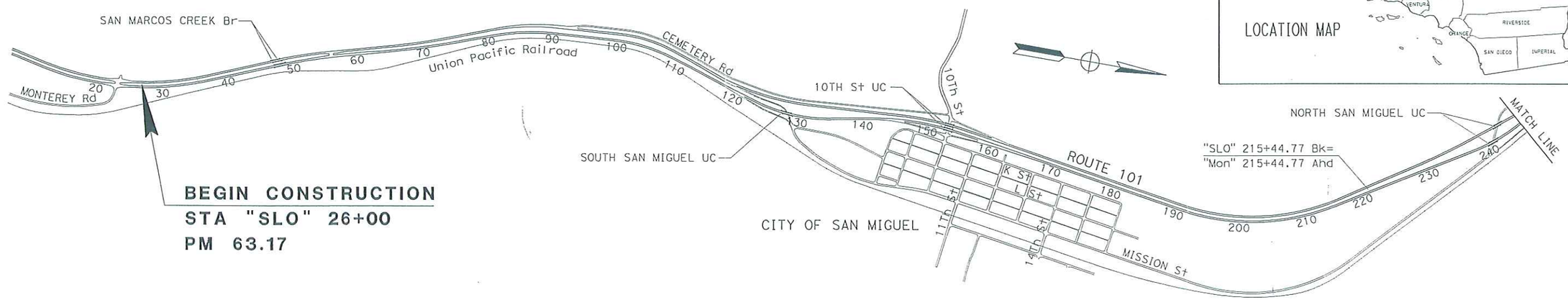

BEGIN CONSTRUCTION
STA "SLO" 26+00
PM 63.17

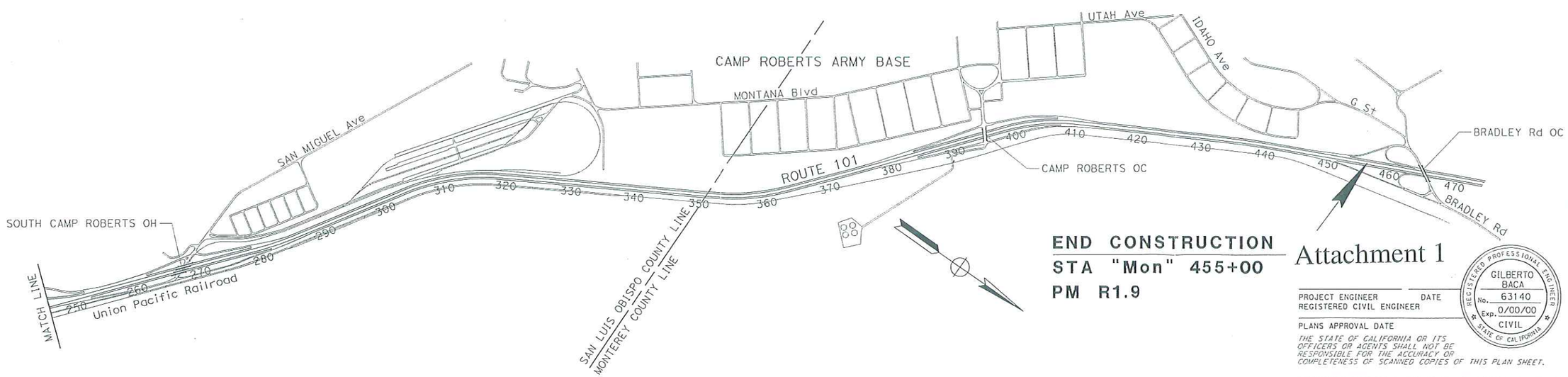

END CONSTRUCTION
STA "Mon" 455+00
PM R1.9

Attachment 1

PROJECT ENGINEER DATE
REGISTERED CIVIL ENGINEER

PLANS APPROVAL DATE

THE STATE OF CALIFORNIA OR ITS OFFICERS OR AGENTS SHALL NOT BE RESPONSIBLE FOR THE ACCURACY OR COMPLETENESS OF SCANNED COPIES OF THIS PLAN SHEET.

REGISTERED PROFESSIONAL ENGINEER
GILBERTO BACA
No. 63140
Exp. 0/00/00
CIVIL
STATE OF CALIFORNIA

CONTRACT No.	00-000004
PROJECT ID	0000000000

PROJECT MANAGER

DESIGN ENGINEER ROBERTO BANDA

THE CONTRACTOR SHALL POSSESS THE CLASS (OR CLASSES) OF LICENSE AS SPECIFIED IN THE "NOTICE TO BIDDERS."

LAST REVISION 01-02-11 DATE PLOTTED => 07-JUN-2011 TIME PLOTTED => 09:08

DIST	COUNTY	ROUTE	POST MILES TOTAL PROJECT	SHEET No.	TOTAL SHEETS
05	SLO/Mon	101			

REGISTERED CIVIL ENGINEER — DATE X

PLANS APPROVAL DATE

REGISTERED PROFESSIONAL ENGINEER — Jose M Aquino III — No. 58386 — Exp. 12-31-16 — CIVIL — STATE OF CALIFORNIA

The State of California or its officers or agents shall not be responsible for the accuracy or completeness of scanned copies of this plan sheet.

INCOMPLETE PLAN FOR DESIGN STUDY PRINTED
DATE: 18-SEP-2015
Office of Structure Design
STATE OF CALIFORNIA

DRAFT PS&E

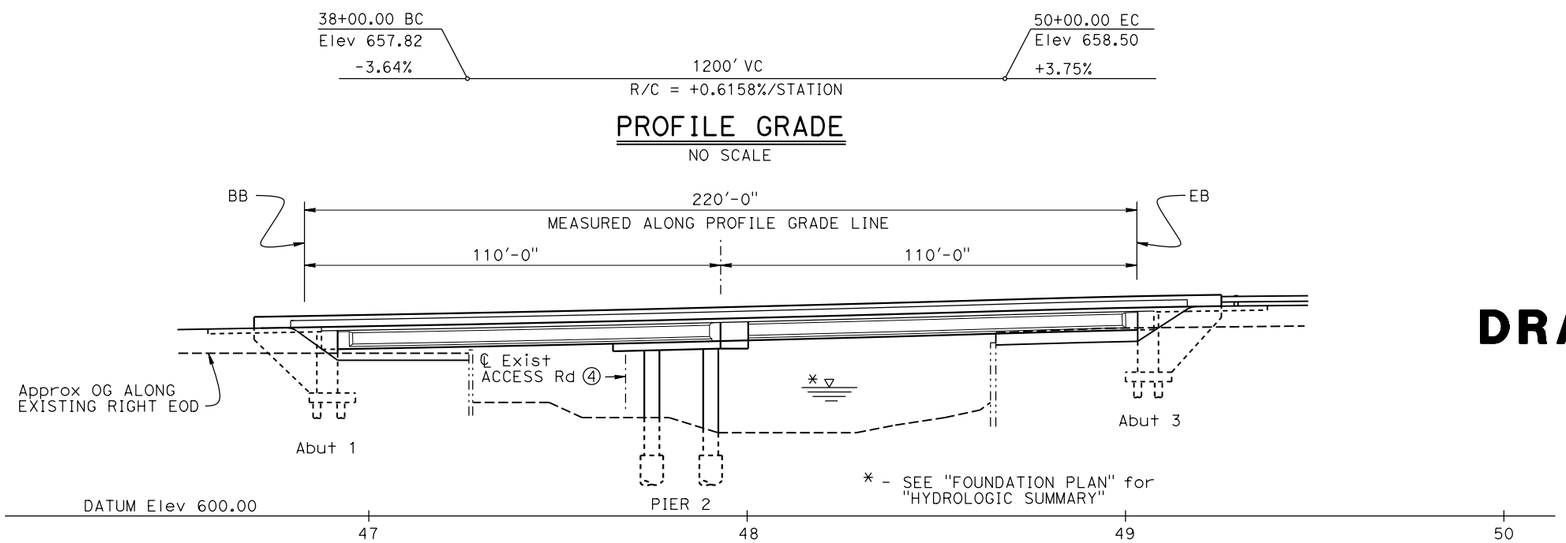

LEGEND:

- Indicates existing bridge
- Indicates new construction
- Indicates existing bridge removal

NOTES:

① Paint "Br. No. 49-0263L"
② Paint "SAN MARCOS Cr Br"
③ Structure Approach Type N (30S)
④ Access Rd (min 12' vertical clearance) to remain open during construction

For "TYPICAL SECTION" see "GENERAL PLAN NO. 2" sheet

For "GENERAL NOTES" and "INDEX TO PLANS", see "INDEX TO PLANS" sheet

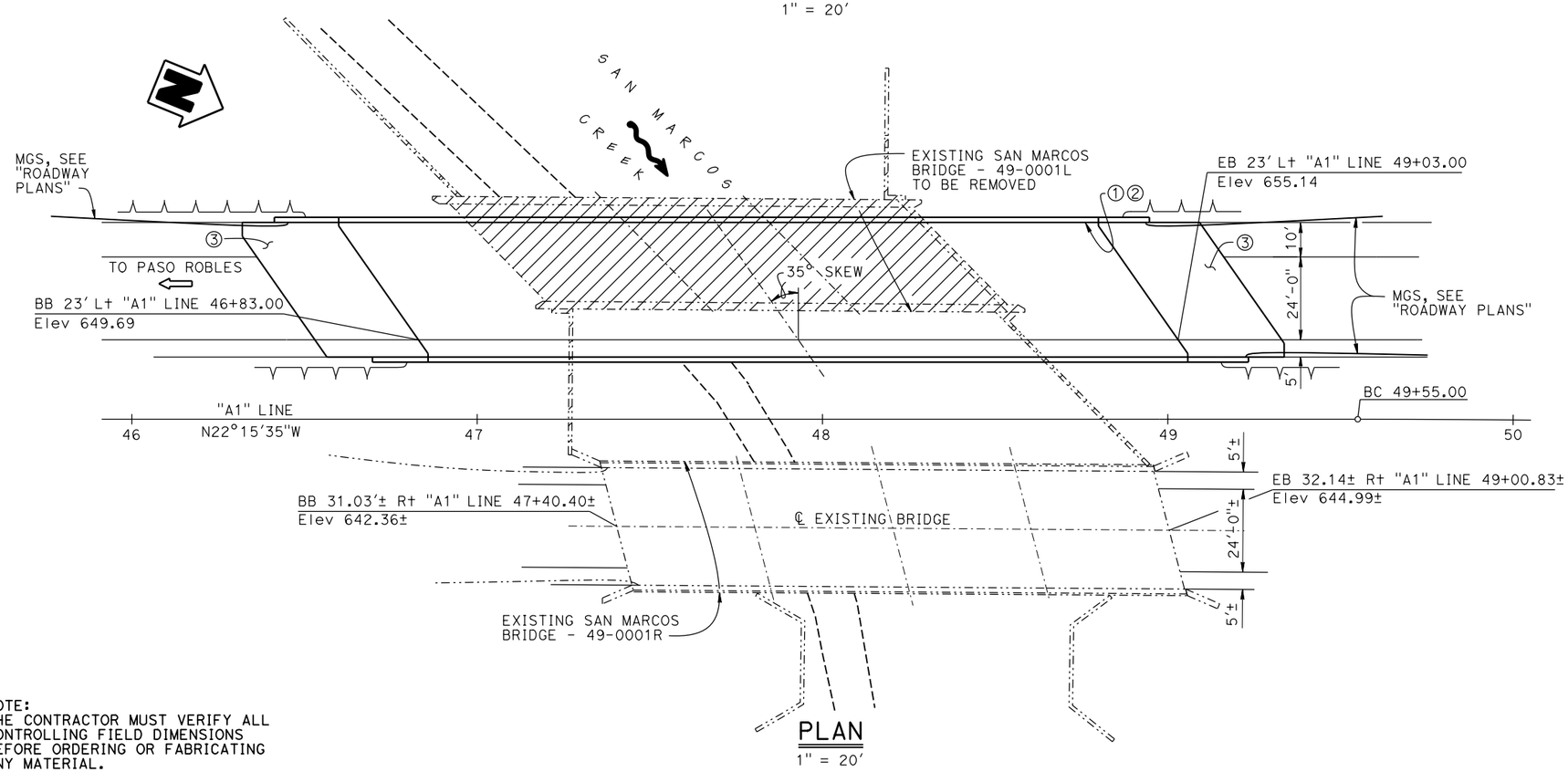

NOTE:
THE CONTRACTOR MUST VERIFY ALL CONTROLLING FIELD DIMENSIONS BEFORE ORDERING OR FABRICATING ANY MATERIAL.

Joseph E Downing
DESIGN ENGINEER

	BY	CHECKED
DESIGN	Lewis L Shen	Sharon Yen
DETAILS	Nancy C Gwynn	Sharon Yen
QUANTITIES	Seung Pyo Hong	Mufeed Khalaf

LOAD & RESISTANCE FACTOR DESIGN — LIVE LOADING: HL93 W/"LOW-BOY": PERMIT DESIGN VEHICLE

	BY	CHECKED
LAYOUT	X	X
SPECIFICATIONS	X	PLANS AND SPECS COMPARED X

ORIGINAL SCALE IN INCHES FOR REDUCED PLANS 0 1 2 3

STATE OF CALIFORNIA
DEPARTMENT OF TRANSPORTATION

DIVISION OF ENGINEERING SERVICES
STRUCTURE DESIGN
DESIGN BRANCH 3

BRIDGE NO. 49-0263L
POST MILE 63.58

SAN MARCOS CREEK Br (REPLACE)
GENERAL PLAN NO. 1

UNIT: 3578
PROJECT NUMBER & PHASE: 05000200201
CONTRACT NO.: 05-0G0404

DISREGARD PRINTS BEARING EARLIER REVISION DATES — REVISION DATES 1-7-14 6-15-15

SHEET 1 OF X

FILE => 49-0263l-g-gp01.dgn

STRUCTURES DESIGN GENERAL PLAN SHEET (ENGLISH) (REV 09-01-10)

USERNAME => s124832 DATE PLOTTED => 18-SEP-2015 TIME PLOTTED => 13:38

DIST	COUNTY	ROUTE	POST MILES TOTAL PROJECT	SHEET No.	TOTAL SHEETS
05	SLO/Mon	101			

REGISTERED CIVIL ENGINEER X DATE

PLANS APPROVAL DATE

REGISTERED PROFESSIONAL ENGINEER Jose M Aquino III No. 58386 Exp. 12-31-16 CIVIL STATE OF CALIFORNIA

The State of California or its officers or agents shall not be responsible for the accuracy or completeness of scanned copies of this plan sheet.

INCOMPLETE PLAN FOR DESIGN STUDY PRINTED

DATE: 18-SEP-2015

Office of Structure Design

STATE OF CALIFORNIA

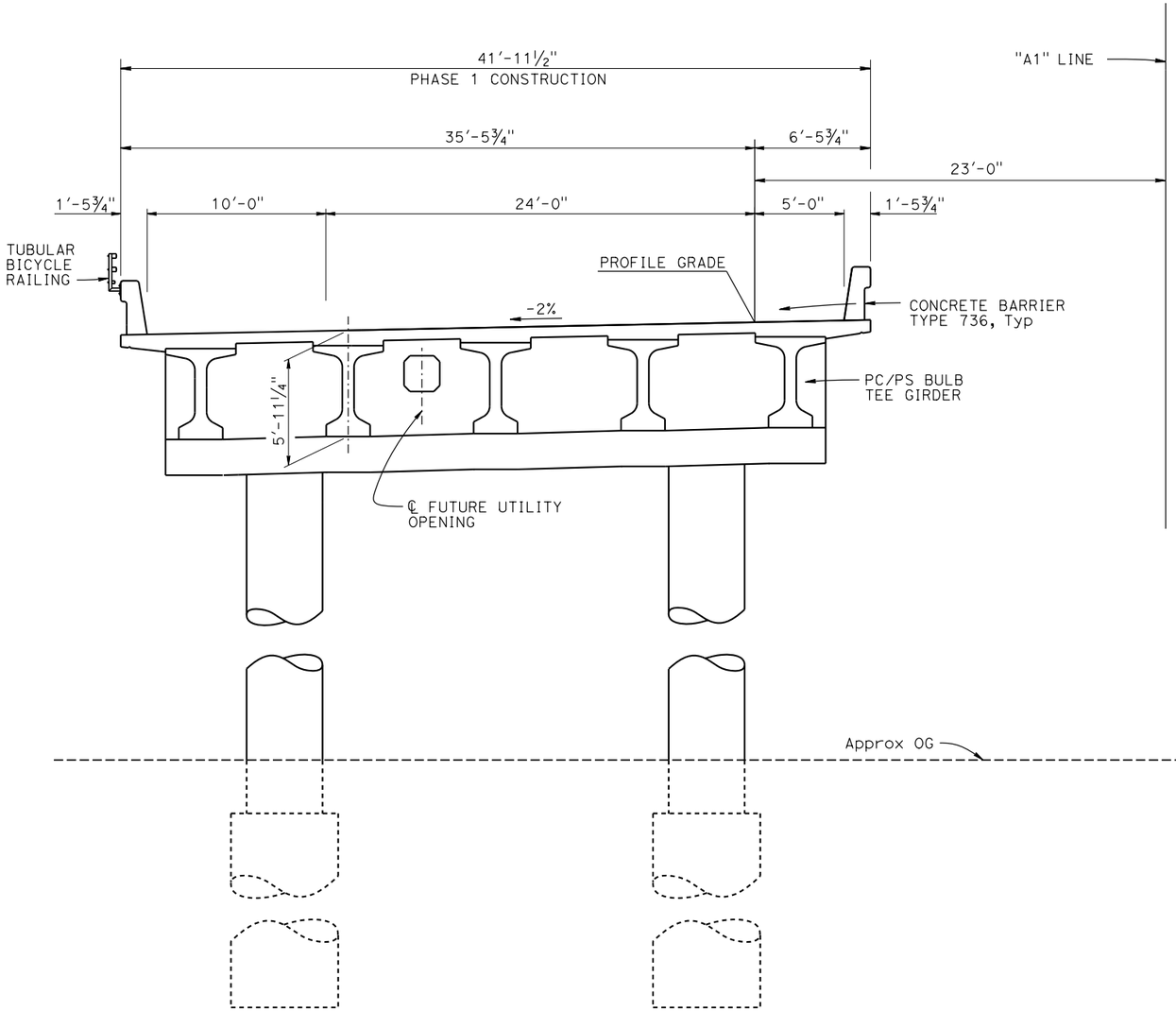

STAGE 2 (PHASE 1)
TYPICAL SECTION
¼" = 1'-0"

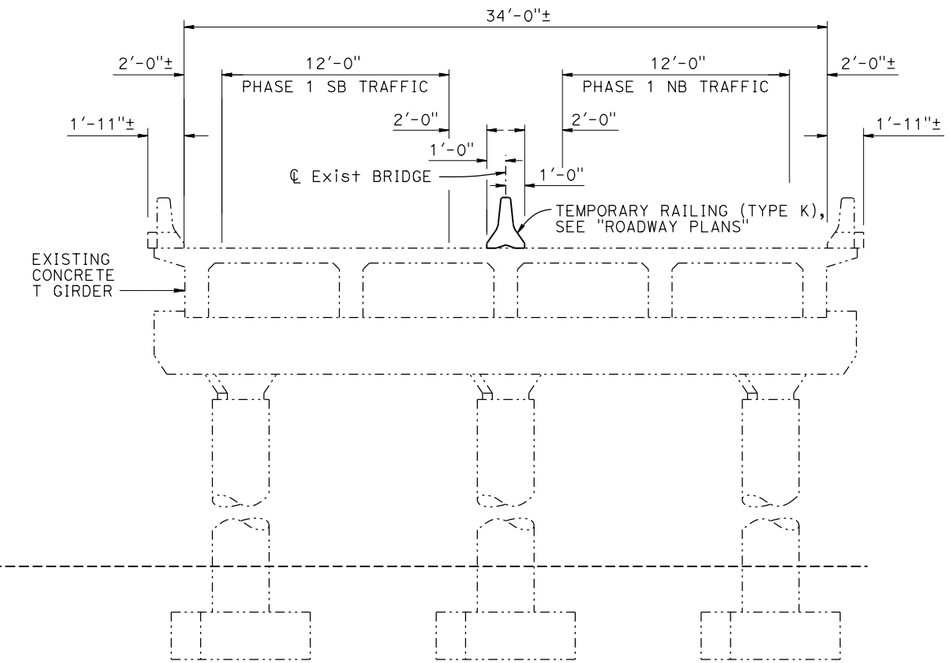

LEGEND:

-·-·-·- Indicates existing bridge

——— Indicates new construction

NOTE:
Other Stages not shown, see "ROADWAY PLANS"

NOTE:
THE CONTRACTOR MUST VERIFY ALL CONTROLLING FIELD DIMENSIONS BEFORE ORDERING OR FABRICATING ANY MATERIAL.

Joseph E Downing DESIGN ENGINEER	DESIGN	BY Lewis L Shen	CHECKED Sharon Yen	LOAD & RESISTANCE FACTOR DESIGN	LIVE LOADING: HL93 W/"LOW-BOY": PERMIT DESIGN VEHICLE
	DETAILS	BY Nancy C Gwynn	CHECKED Sharon Yen	LAYOUT BY X	CHECKED X
	QUANTITIES	BY Seung Pyo Hong	CHECKED Mufeed Khalaf	SPECIFICATIONS BY X	PLANS AND SPECS COMPARED X

ORIGINAL SCALE IN INCHES FOR REDUCED PLANS 0 1 2 3

STATE OF CALIFORNIA
DEPARTMENT OF TRANSPORTATION

DIVISION OF ENGINEERING SERVICES
STRUCTURE DESIGN
DESIGN BRANCH 3

BRIDGE NO. 49-0263L
POST MILE 63.58

SAN MARCOS CREEK Br (REPLACE)
GENERAL PLAN NO. 2

UNIT: 3578
PROJECT NUMBER & PHASE: 05000200201
CONTRACT NO.: 05-0G0404

DISREGARD PRINTS BEARING EARLIER REVISION DATES

REVISION DATES 1-7-14 9-17-15 7-21-15

SHEET 2 OF X

STRUCTURES DESIGN GENERAL PLAN SHEET (ENGLISH) (REV 09-01-10)

FILE => 49-0263l-g-gp02.dgn

USERNAME => s17248832 DATE PLOTTED => 18-SEP-2015 TIME PLOTTED => 13:38

DIST	COUNTY	ROUTE	POST MILES TOTAL PROJECT	SHEET No.	TOTAL SHEETS
05	SLO/Mon	101			

REGISTERED CIVIL ENGINEER — X — DATE

PLANS APPROVAL DATE

REGISTERED PROFESSIONAL ENGINEER — Jose M Aquino III — No. 58386 — Exp. 12-31-16 — CIVIL — STATE OF CALIFORNIA

The State of California or its officers or agents shall not be responsible for the accuracy or completeness of scanned copies of this plan sheet.

INCOMPLETE PLAN FOR DESIGN STUDY PRINTED
DATE: 18-SEP-2015
Office of Structure Design
STATE OF CALIFORNIA

DRAFT PS&E

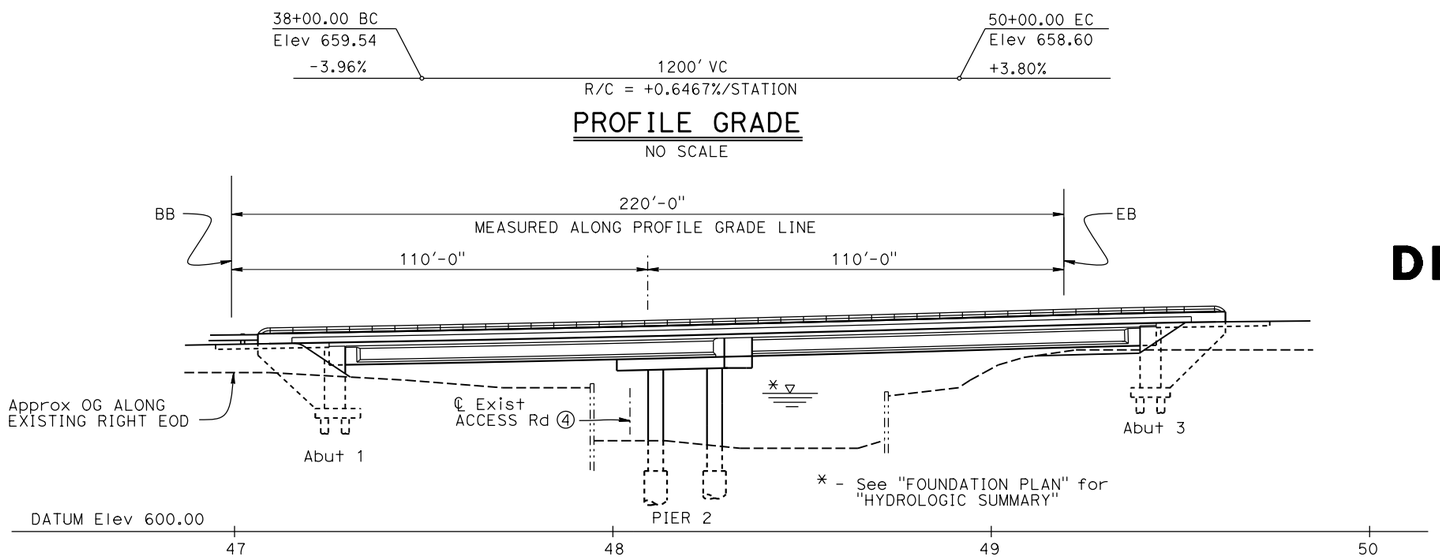

LEGEND:

- - Indicates existing bridge
- - Indicates new construction
- - Indicates existing bridge removal

NOTES:

① Paint "Br. No. 49-0263R"
② Paint "SAN MARCOS Cr Br"
③ Structure Approach Type N (30S)
④ Access Rd (min 12' vertical clearance) to remain open during construction

For "TYPICAL SECTION" see "GENERAL PLAN NO. 2" sheet

For "GENERAL NOTES" and "INDEX TO PLANS", see "INDEX TO PLANS" sheet

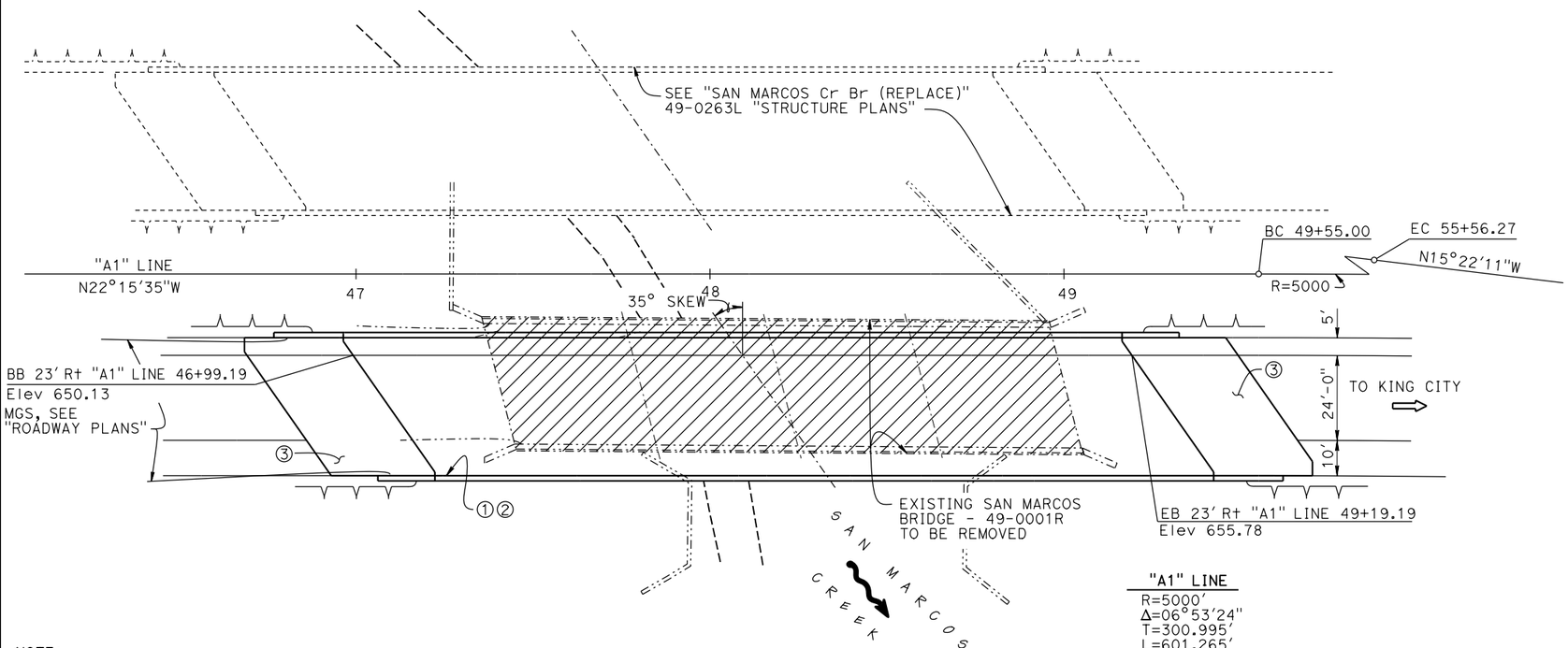

NOTE:
THE CONTRACTOR MUST VERIFY ALL CONTROLLING FIELD DIMENSIONS BEFORE ORDERING OR FABRICATING ANY MATERIAL.

Joseph E Downing, DESIGN ENGINEER	DESIGN	BY Lewis L Shen	CHECKED Sharon Yen	LOAD & RESISTANCE FACTOR DESIGN	LIVE LOADING: HL93 W/"LOW-BOY": PERMIT DESIGN VEHICLE
	DETAILS	BY Nancy C Gwynn	CHECKED Sharon Yen	LAYOUT BY X	CHECKED X
	QUANTITIES	BY Seung Pyo Hong	CHECKED Mufeed Khalaf	SPECIFICATIONS BY X	PLANS AND SPECS COMPARED X

ORIGINAL SCALE IN INCHES FOR REDUCED PLANS 0 1 2 3

STATE OF CALIFORNIA
DEPARTMENT OF TRANSPORTATION

DIVISION OF ENGINEERING SERVICES
STRUCTURE DESIGN
DESIGN BRANCH 3

BRIDGE NO. 49-0263R
POST MILE 63.58

SAN MARCOS CREEK Br (REPLACE)
GENERAL PLAN NO. 1

UNIT: 3578
PROJECT NUMBER & PHASE: 05000200201
CONTRACT NO.: 05-0G0404

DISREGARD PRINTS BEARING EARLIER REVISION DATES
REVISION DATES: 1-7-14 2-18-15 9-17-15

SHEET 1 OF X

STRUCTURES DESIGN GENERAL PLAN SHEET (ENGLISH) (REV 09-01-10)

FILE => 49-0263r-g-gp01.dgn

USERNAME => s172483? DATE PLOTTED => 18-SEP-2015 TIME PLOTTED => 13:35

DIST	COUNTY	ROUTE	POST MILES TOTAL PROJECT	SHEET No.	TOTAL SHEETS
05	SLO/Mon	101			

INCOMPLETE PLAN FOR DESIGN STUDY PRINTED
DATE: 18-SEP-2015
Office of Structure Design
STATE OF CALIFORNIA

REGISTERED CIVIL ENGINEER X DATE

PLANS APPROVAL DATE

REGISTERED PROFESSIONAL ENGINEER
Jose M Aquino III
No. 58386
Exp. 12-31-16
CIVIL
STATE OF CALIFORNIA

The State of California or its officers or agents shall not be responsible for the accuracy or completeness of scanned copies of this plan sheet.

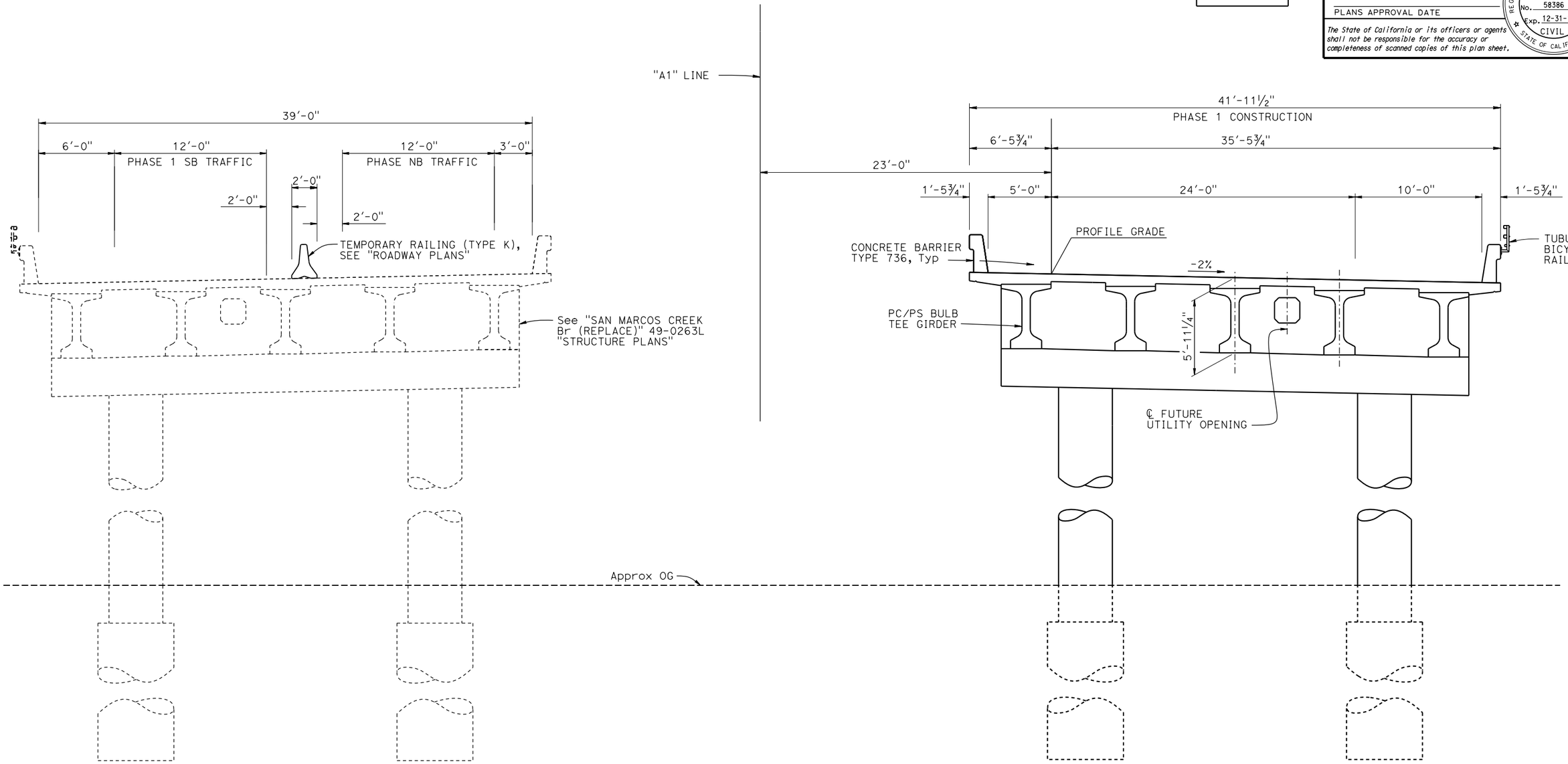

STAGE 4 (PHASE 1)
TYPICAL SECTION
¼" = 1'-0"

NOTE:
THE CONTRACTOR MUST VERIFY ALL CONTROLLING FIELD DIMENSIONS BEFORE ORDERING OR FABRICATING ANY MATERIAL.

NOTE:
Other Stages not shown, see "ROADWAY PLANS"

Joseph E Downing DESIGN ENGINEER	DESIGN	BY Lewis L Shen	CHECKED Sharon Yen	LOAD & RESISTANCE FACTOR DESIGN	LIVE LOADING: HL93 W/"LOW-BOY"; PERMIT DESIGN VEHICLE
	DETAILS	BY Nancy C Gwynn	CHECKED Sharon Yen	LAYOUT BY X	CHECKED X
	QUANTITIES	BY Seung Pyo Hong	CHECKED Mufeed Khalaf	SPECIFICATIONS BY X	PLANS AND SPECS COMPARED X

ORIGINAL SCALE IN INCHES FOR REDUCED PLANS 0 1 2 3

STATE OF CALIFORNIA
DEPARTMENT OF TRANSPORTATION

DIVISION OF ENGINEERING SERVICES
STRUCTURE DESIGN
DESIGN BRANCH 3

BRIDGE NO. 49-0263R
POST MILE 63.58

SAN MARCOS CREEK Br (REPLACE)
GENERAL PLAN NO. 2

UNIT: 3578
PROJECT NUMBER & PHASE: 05000200201
CONTRACT NO.: 05-0G0404

DISREGARD PRINTS BEARING EARLIER REVISION DATES

REVISION DATES: 1-7-14 7-27-15 6-26-15
SHEET 2 OF X

STRUCTURES DESIGN GENERAL PLAN SHEET (ENGLISH) (REV 09-01-10)
FILE => 49-0263r-g-gp02.dgn
USERNAME => s124832 DATE PLOTTED => 18-SEP-2015 TIME PLOTTED => 13:35

GEOLOGIC MAP
SLO-MON-101-63.2/R69.3
North Paso Robles 101 Rehab

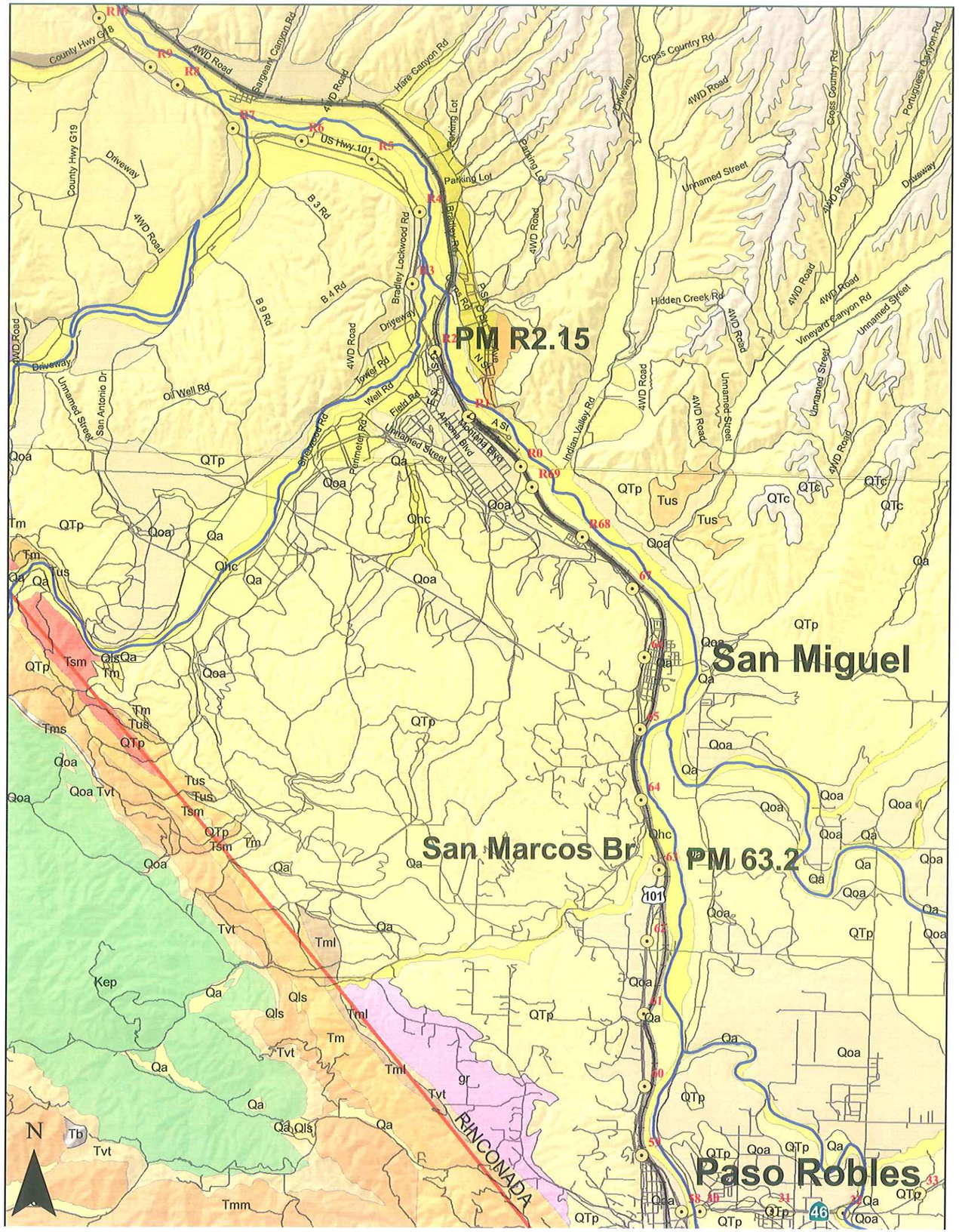

Legend

Geologic Units

UNIT

- QTc-Clay of the Paso Robles Formation
- QTp-Paso Robles Formation (valley sediments)
- Qa-Latest Pleistocene to Holocene alluvium, undiffer
- Qhc-Recent stream channel deposits
- Qls-Landslide deposits
- Qoa-Early to late Pleistocene alluvial deposits, undiferentiated
- Qrs-Modern stream channel deposits
- Tm-Monterey Formation, undifferentiated
- Tml-Monterey Formation, silty shale
- Tmm-Sandholt Member (Monterey Formation)
- Tsm-Santa Margarita Sandstone
- Tus-Sandstone, conglomerate, minor mudstone
- Tvt-Vaqueros Sandstone
- gr-Granitic rocks, undivided
- Kep-El Piojo Formation, L. Cret. mud stone, sandstone, and cong.

1 0.5 0 1 2 3 4 Miles

Attachment 3

AF-99 (17)

FED. ROAD DIST. No.	STATE	PROJ. No.	FISCAL YEAR	SHEET No.	TOTAL SHEETS
2	CAL.			55	55

DIST.	COUNTY	ROUTE	SECTION	SHEET No.	TOTAL SHEETS
V	SLO	2	A	8	8

BRIDGE ENGINEER — CIVIL ENGINEER—LICENSE [illegible]

APPROVED March 23, 1953

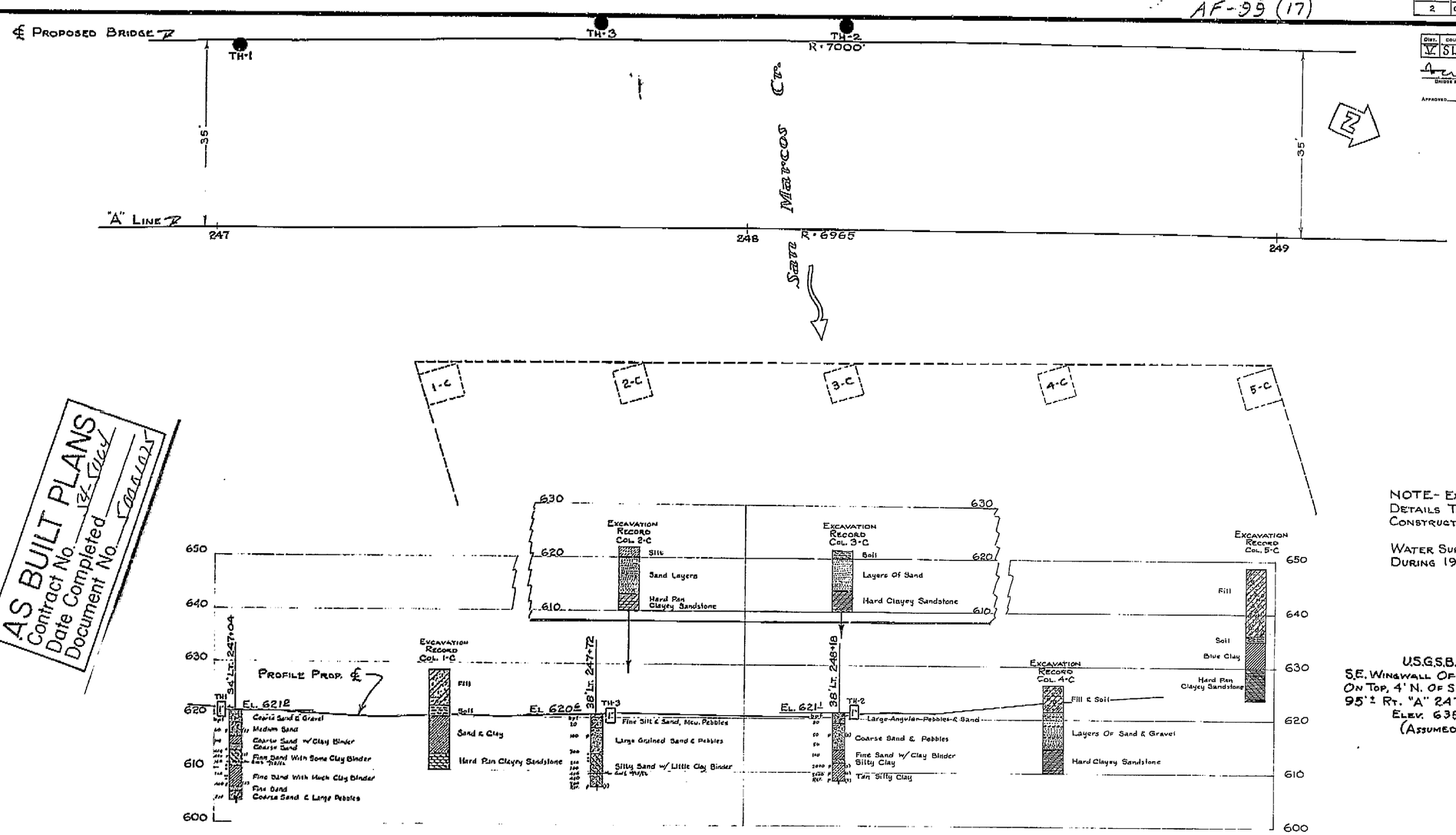

AS BUILT PLANS
Contract No. 12-SLO-2
Date Completed 12-15-53
Document No. 5000105

NOTE- EXCAVATION RECORD DETAILS TAKEN FROM 1931 CONSTRUCTION SURVEY BOOK

WATER SURFACE @ EL. 611 DURING 1931 CONSTRUCTION

U.S.G.S.B.M.
S.E. WINGWALL OF ABANDONED BR. ON TOP, 4' N. OF S. END OF W.W. 95'± RT. "A" 247+96
ELEV. 635.50
(ASSUMED)

CLASSIFICATION OF MATERIAL BASED ON STANDARD GRADE SIZE LIMITS

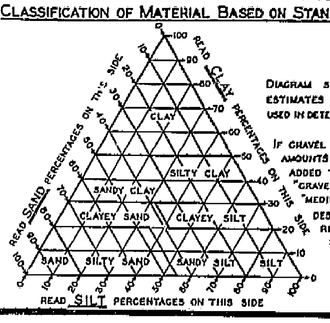

DIAGRAM SHOWING THE BASIS FOR ESTIMATES OF GRADE SIZE DISTRIBUTION USED IN DETERMINATION OF CLASS NAMES

IF GRAVEL IS PRESENT IN APPRECIABLE AMOUNTS THE TERM "GRAVELLY" MAY BE ADDED TO THE CLASS NAME, VIS. "GRAVELLY SAND". THE TERMS "COARSE", "MEDIUM" AND "FINE" WHEN USED TO DESCRIBE GRAVEL, SAND AND SILT REFER TO STANDARD GRADE SIZE LIMITS.

LEGEND OF EARTH MATERIALS

- GRAVEL
- SAND
- SILT
- CLAY
- SANDY CLAY OR CLAYEY SAND
- SANDY SILT OR SILTY SAND
- SILTY CLAY OR CLAYEY SILT
- PEAT AND/OR ORGANIC CLAY
- FILLED MATERIAL
- IGNEOUS ROCK
- SEDIMENTARY ROCK
- METAMORPHIC ROCK

LEGEND OF BORING OPERATIONS

- PLAN OF ANY BORING
- PENETROMETER
- 2¼" CONE PENETROMETER
- SAMPLER BORING (DRY)
- ROTARY BORING (WET)
- AUGER BORING (DRY)
- JET BORING
- CORE BORING
- TEST PIT

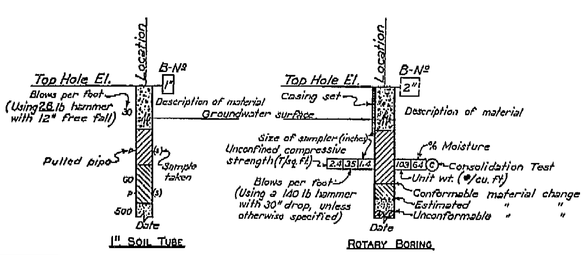

NOTES

THE CONTRACTOR'S ATTENTION IS DIRECTED TO SECTION 2, ARTICLE (c) OF THE STANDARD SPECIFICATIONS AND TO THE SPECIAL PROVISIONS ACCOMPANYING THIS SET OF PLANS.

CLASSIFICATION OF EARTH MATERIAL AS SHOWN ON THIS SHEET IS BASED UPON FIELD INSPECTION AND IS NOT TO BE CONSTRUED TO IMPLY MECHANICAL ANALYSIS.

PENETROMETER BORINGS HAVING A RATE OF PENETRATION MEASURED IN SECONDS PER FOOT ARE DRIVEN WITH A Nº 2 MCKIERNAN-TERRY AIR HAMMER AT 115 PSI.

STATE OF CALIFORNIA
DEPARTMENT OF PUBLIC WORKS
DIVISION OF HIGHWAYS

BRIDGE ACROSS SAN MARCOS CREEK

LOG OF TEST BORINGS

SCALE: HORIZ. 1" = 10' VERT. 1" = 10' | BRIDGE 49-01 | FILE | DRAWING C-3118-8

FIELD STUDY | DRAWN | CHECKED | Approval Recommended by | Chief Bridge Engineer | Chief Highway Engineer

BRIDGE DEPARTMENT

I HEREBY CERTIFY THAT THIS IS A TRUE AND ACCURATE COPY OF THE ABOVE DOCUMENT TAKEN UNDER MY DIRECTION AND CONTROL ON THIS DATE IN SACRAMENTO, CALIFORNIA PURSUANT TO AUTHORIZATION BY THE DIRECTOR OF PUBLIC WORKS.

ClibPDF - www.fastio.com

San Marcos Creek Bridge ARS Curve

Bridge No. **49-0263R/L** **SDC Controlling Procedure :** **Probabalistic**

Period (s)	SDC
0.010	0.470
0.050	0.743
0.100	0.904
0.150	1.000
0.200	1.075
0.250	1.028
0.300	0.991
0.400	0.868
0.500	0.784
0.600	0.724
0.700	0.680
0.850	0.618
1.000	0.567
1.200	0.478
1.500	0.387
2.000	0.295
3.000	0.191
4.000	0.137
5.000	0.112

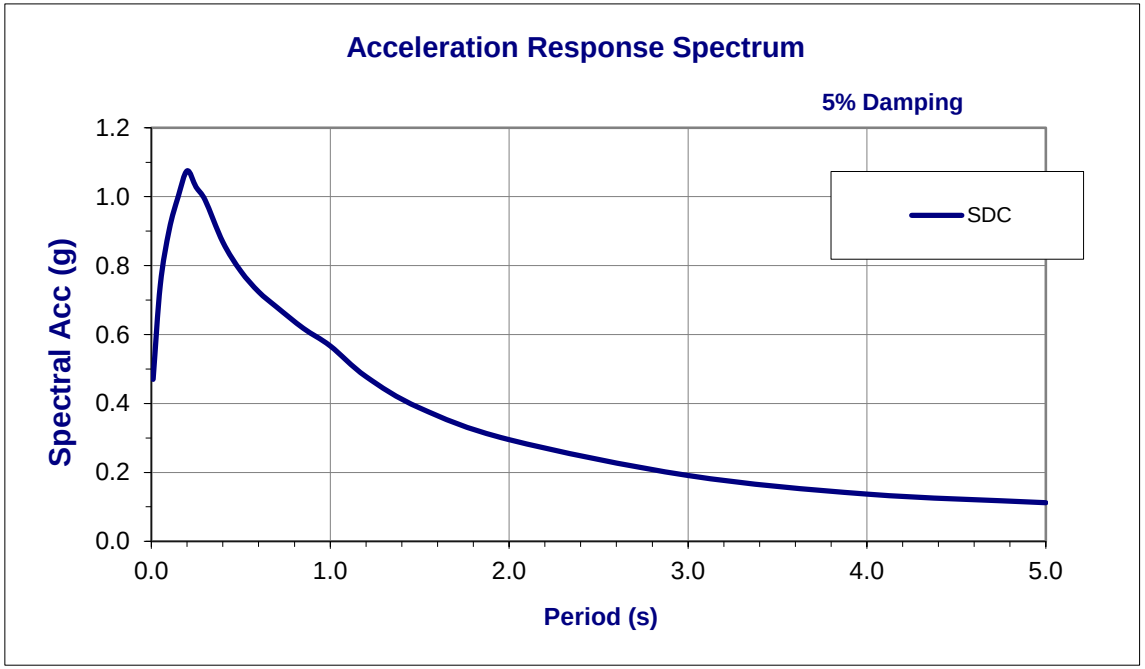

Notes

ARS curve was modified for Near Fault Directivity Effect

MATERIALS INFORMATION

9. Revised Foundation Report South San Miquel UC Left; dated January 5, 2016.

State of California
DEPARTMENT OF TRANSPORTATION

Business, Transportation and Housing Agency

M e m o r a n d u m

Serious drought,
Help Save Water!

To: JOEY AQUINO, Senior Project Engineer
Bridge Design Branch 3
Office of Bridge Design West
DIVISION OF ENGINEERING SERVICES
STRUCTURE DESIGN – MS 9 4/6F

Date: January 5, 2016

File: 05-SLO-101-63.2/R69.3
05-Mon-101-R0.0/1.9
South San Miguel UC Left
Bridge No. 49-0162L
Project ID 0500020020
EA: 05-0G0401

From: **DEPARTMENT OF TRANSPORTATION**
DIVISION OF ENGINEERING SERVICES
GEOTECHNICAL SERVICES

Subject: Revised Foundation Report South San Miguel Undercrossing Left

Scope of Work

A Revised Foundation Report (FR) is provided for the South San Miguel Undercrossing Left Bridge. Construction of a new southbound bridge structure is part of the North Paso Robles Rehab project, located on State Route 101 in the vicinity of San Miguel, in the Counties of San Luis Obispo and Monterey. Rehabilitation of the distressed portland cement concrete (PCC) pavement is proposed, along with widening shoulders to standard widths, widening and construction of new bridges and retaining walls, improvement of highway access, and construction of drainage facilities. Review of published geologic data and previous geotechnical reports, field reconnaissance, and geotechnical analysis were performed as part of the geotechnical investigation.

The purpose of this report is to document geotechnical conditions and provide foundation recommendations. This report supercedes the Foundation Report (September 25, 2015).

Introduction

The existing interchange at South San Miguel consists of a three span cast-in-place concrete T-beam bridge carrying northbound 101 over the southbound on-ramp, which merges with southbound 101 from the median side. Widening of the existing right bridge, construction of a new southbound structure, and realignment of the southbound on-ramp to the outside are proposed. Refer to the attached preliminary General Plan and as-builts for additional details.

Pertinent Reports and Investigations

The following publication was used to assist in the assessment of site conditions:

1. *District Preliminary Geotechnical Report*. Jurasius, Mike. EA 05-0G0400. November 28, 2011.

Field Investigation and Laboratory Testing Program

Mud rotary borings were advanced near support locations to determine the subsurface conditions to be used for foundation design. Refer to the project log of test borings for details of the borings at the bridge site. P-S suspension logging was performed for the project to calculate an average shear wave velocity for use in generating the design ARS curve presented in the seismic section of this report. Refer to Table 1 for a summary of subsurface investigation information.

Table 1. Subsurface Exploration Summary

Boring	*Completion Date*	*Equipment*	*Hammer Type*	*Hammer Efficiency (%)*	*Approximate Ground Elevation (ft)*	*Depth (ft)*
RC-14-013	10/23/2014	CS2000	Auto	93	684.7	101.5
RC-14-014	10/23/2014	CS2000	Auto	93	685.0	101.8
RC-14-018	11/4/2014	CS2000	Auto	93	666.0	81.5
RC-14-019	11/5/2014	CS2000	Auto	93	665.6	81.5

Site Geology and Conditions

Climate

The regional climate for northern-inland San Luis Obispo County is generally hot in the summer months and cool in the winter months. The average maximum temperature in July is 94 degrees Fahrenheit and the average minimum is 33 degrees Fahrenheit in December. Based on data recorded at a precipitation station in the vicinity of San Miguel since 1950, the average annual precipitation is about 12 inches.

Topography and Drainage

The project parallels the Salinas River and is underlain by alluvial terraces that have undergone various degrees of erosion. The older, elevated terraces generally form the hills to the east and west of the Salinas River corridor, and are rounded by erosion and incised by smaller tributary drainages such as San Marcos Creek at the southern end of the project. Younger terraces near highway elevations are relatively flat to gently sloped, with steeper slopes where the Salinas River or tributary drainages more recently flowed. The Salinas River is the primary regional drainage. It flows northward to Monterey Bay, and is locally parallel and adjacent to the proposed project area. Numerous smaller tributary drainages cross Highway 101 from the west, beneath bridges and in culverts.

Regional Geology

The project area lies within the Coast Ranges Geomorphic Province, characterized by northwest trending mountain ranges, controlled by movement along a system of similarly trending faults. Exposed highlands of the northern San Luis Obispo County region expose mostly Late Cretaceous to Tertiary age marine shale and sandstone, which are overlain by younger (Pleistocene to recent) alluvial deposits transported by the Salinas River and tributary drainages.

The proposed rehabilitation project follows the current path of the Salinas River, and is underlain by recent and older alluvial deposits of clay, silt, sand and gravel. Paso Robles Formation (QTp), covers most of the slopes on either side of the Salinas River as well as underlying portions of the 101 alignment. The sand and gravel portion of the Paso Robles Formation is variably cemented, and appears to retain global stability at slopes up to approximately 1:1, as seen in cut-slopes north of the 10th Street off-ramp, bounding the southbound 101 shoulder.

Groundwater

An open standpipe observation well was installed in boring RC-14-008 to observe fluctuations in groundwater levels at the site and determine if groundwater will influence construction and foundation design. Results of the groundwater-monitoring program are summarized in Table 2.

Table 2. Groundwater Elevations

Boring	Date	Depth to Groundwater (ft)	Groundwater Elevation(ft)
RC-14-008	11/19/2014	39.5	601.2
RC-14-008	1/20/2015	40.5	600.2
RC-14-008	2/24/2015	40.7	600.0

Corrosion Evaluation

The department considers a site to be corrosive to the foundation elements if the following conditions exist for the representative soil and/or water samples taken at the site: minimum resistivity of 1000 ohm-cm or less and/or PH of 5.5 or less. Samples found to be potentially corrosive based on this criteria are sent to the Headquarters Material Laboratory for additional corrosion testing based on chloride and sulphate content.

Soil samples were obtained during the subsurface investigation and tested for corrosion potential at the District and Headquarters Materials Laboratories. The results of the corrosion testing are presented as an attachment to the project Geotechnical Design Report. Based on the results of the testing, soils are not considered corrosive to foundation elements.

Seismic Recommendations

Based on the *Caltrans Seismic Design Procedure*, the following active and potentially active faults are located within the vicinity of the project site. The Caltrans ARS Online Tool was used to develop ARS curves for deterministic and probabilistic seismic prediction models. An estimated shear wave velocity of 1327 ft/sec was obtained for the project site using down-hole P-S suspension logging methods. Probabilistic methods control the response spectra at all periods, the design envelope ARS is presented in figure 1. A basin factor of 1.0 was assumed for this location and the Caltrans ARS Online Tool applied a near fault factor to the data. Tabular data are included as an attachment.

Table 3. Active and Potentially Active Faults

Fault Name	*Fault Type*	*Moment magnitude of maximum credible earthquake*	*Distance from fault to project site (miles)*	*Peak ground acceleration T=0 sec (gravity)*
Rinconada	Strike-Slip	7.4	5.7	0.32
San Andreas (Parkfield)	Strike-Slip	7.9	18.0	0.17
San Andreas (Creeping Section)	Strike-Slip	7.9	18.3	0.17
USGS 5% in 50 yr. Hazard	N/A	N/A	N/A	0.43

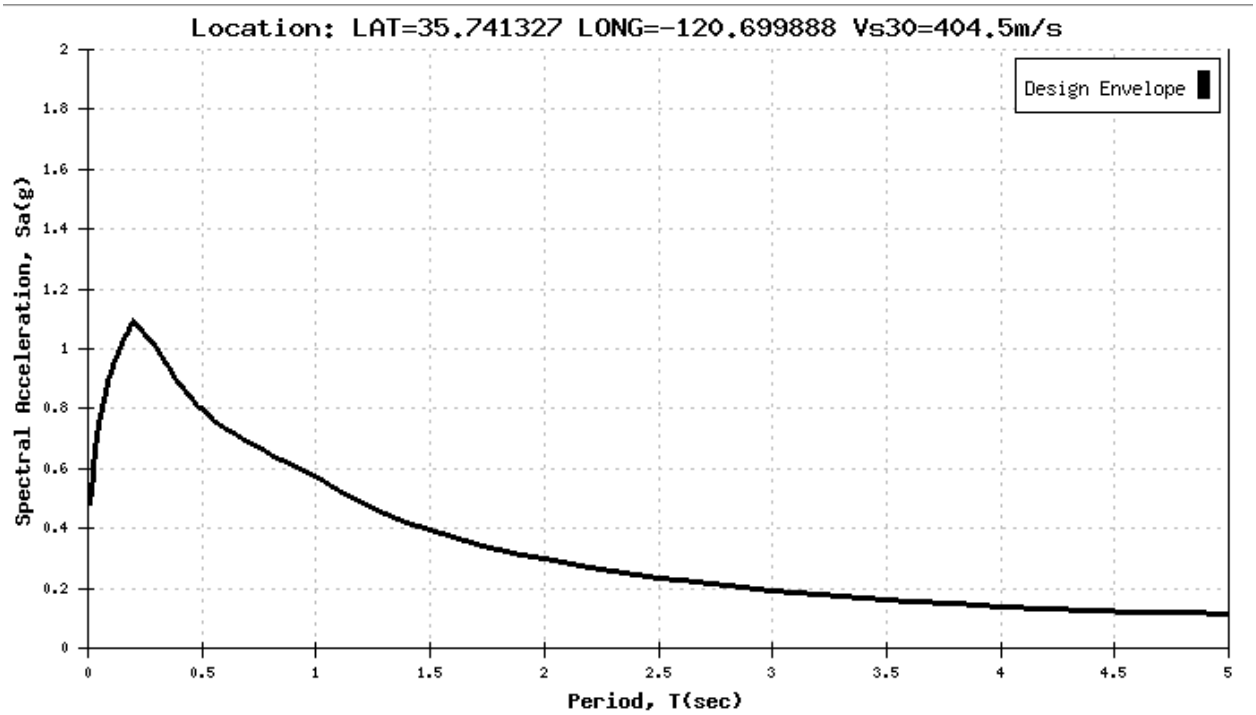

Liquefaction is the partial or complete loss of soil shear strength due to the build-up of excess pore water pressure during a seismic event. Soils with a potential for liquefaction are loose cohesionless soils below the groundwater table. Based on soil types and site conditions encountered at the project site, potential for liquefaction is low due to the dense nature of the soils, presence of fine-grained soils, and depth to groundwater.

As-Built Foundation Data

The as-built log of test borings from 1956 for the existing right bridge (Bridge No. 49-0162R) indicate that the site is underlain by slightly compact to dense sand, silty sand, clayey sand, and gravel over lithified deposits of the Paso Robles Formation. Groundwater was not encountered in the exploration to approximately elevation 617 feet.

Foundation Recommendations

Structure Design proposes construction of a three-span precast-prestressed concrete I-girder bridge to carry southbound 101 over the realigned southbound on-ramp. The following foundation alternatives were evaluated:

Standard Plan Cast in Drilled Hole (CIDH) Concrete Piles

16" diameter CIDH concrete piles are the recommended foundation type at abutments, and 24" diameter CIDH concrete piles are the recommended foundation type at the bents. Pile design was completed using LRFD design methodology specified in *Memo to Designers 3-1 Deep Foundations*, dated June, 2014. Foundation design recommendations are provided in the following table:

Foundation Design Recommendations

Support	Pile Type	Service-I Limit State Load Per Support (kips)	Total Permissible Support Settlement (inches)	Required Factored Axial Resistance per Pile (kips)				Cut-off Elevation (ft)	Design Tip Elevations (ft)	Specified Tip Elevation (ft)
				Strength Limit		Extreme Limit				
				Comp.	Tension	Comp.	Tension			
Abut 1 Left	16" CIDH	1374	1	190	18	N/A	0	644.50	605.00 (a) 625.00 (c)	605.00
Bent 2 Left	24" CIDH	900	1	270	N/A	370	50	629.25	595.00 (a) 598.00 (b) 611.00 (c) 595.00 (d)	595.00
Bent 3 Left	24" CIDH	900	1	270	N/A	370	50	629.25	595.00 (a) 598.00 (b) 611.00 (c) 595.00 (d)	595.00
Abut 4 Left	16" CIDH	1339	1	191	24	N/A	0	648.00	616.00 (a) 627.00 (c)	616.00

Notes:

1) *Design tip elevations are controlled by: (a) Compression (Strength Limit), (b) Compression (Extreme Event), (c) Settlement, and (d) Lateral, respectively. Tension does not control by inspection.*
2) *The specified tip elevation shall not be raised.*

Pile Data Table					
Location	Pile Type	Nominal Axial Resistance (kips)		Design Tip Elevation (ft)	Specified Tip Elevation (ft)
		Compression	Tension		
Abut 1 Left	16” CIDH	280	20	605.0(a) 612.0 (c)	605.0
Bent 2 Left	24” CIDH	390	50	595.00 (a) 598.00 (b) 611.00 (c) 595.00 (d)	595.0
Bent 3 Left	24” CIDH	390	50	595.00 (a) 598.00 (b) 611.00 (c) 595.00 (d)	595.0
Abut 4 Left	16” CIDH	280	30	616.0 (a) 627.0 (c)	616.0

Notes:

1) *Design tip elevations are controlled by: (a) Compression (Strength Limit), (b) Compression (Extreme Event), (c) Settlement, and (d) Lateral- to be provided by Structure Design, respectively.*
2) *The specified tip elevation shall not be raised.*

Construction Considerations

Loose soils in the approach embankment fills and cohesionless deposits of sand and gravel at depth may cave during pile excavation. The existing abutments for the right bridge were successfully constructed on 16” diameter CIDH piles. Groundwater at approximately elevation 598 feet and caving were encountered in the original construction; temporary casing was required in some holes to maintain stability. Specified pile tips at the bents are near the highest observed groundwater elevation. Groundwater may be encountered, requiring use of the wet method to construct the foundations.

Coarse gravels and cobbles in the alluvial deposits may require special tooling and techniques to construct the pile excavations to the specified tip elevations.

Additional Information

Standard Specifications 2010 Section 2-1.6.B, “Supplemental Project Information”, discloses to bidders and contractors a list of pertinent information available for their inspection prior to bid opening. Items listed to be included in the Information Handout will be provided in Acrobat (.pdf) format to the Addressee of this report via electronic mail.

Data and information attached with the project plans are:

A. Log of Test Borings.

Data and information included in the Information Handout provided to the Bidders and Contractors are:

A. Foundation Report dated January 5, 2016.

If you have any questions or comments, please contact Ryan Turner at (805) 549-3750.

MICHAEL J. JURASIUS, P.G., C.E.G.
Engineering Geologist
Geotechnical Design – North
Branch D

Signed: 1-5-2016

RYAN TURNER, P.E., G.E.
Transportation Engineer Civil
Geotechnical Design – North
Branch D

c: Job File / Branch D Records
Structure Construction RE Pending File
Craig Whitten / DES Office Engineer
Andrew Tan / PCE
Eric Karlson/ DME

LIST OF ATTACHMENTS

Vicinity Map	Attachment 1
General Plans	Attachment 2
Geologic Map and Legend	Attachment 3
As-Built LOTB	Attachment 4
ARS Tabular Data	Attachment 5

INDEX OF PLANS

STATE OF CALIFORNIA
DEPARTMENT OF TRANSPORTATION

PROJECT PLANS FOR CONSTRUCTION ON
STATE HIGHWAY

IN SAN LUIS OBISPO COUNTY AND MONTEREY COUNTY
FROM MONTEREY ROAD
TO 0.2 MILE SOUTH OF BRADLEY Rd OVERCROSSING

TO BE SUPPLEMENTED BY STANDARD PLANS DATED MAY 2006

Dist	COUNTY	ROUTE	POST MILES TOTAL PROJECT	SHEET No.	TOTAL SHEETS
05	SLO/Mon	101	63.2/69.3 R0.0/R1.9		

LOCATION MAP

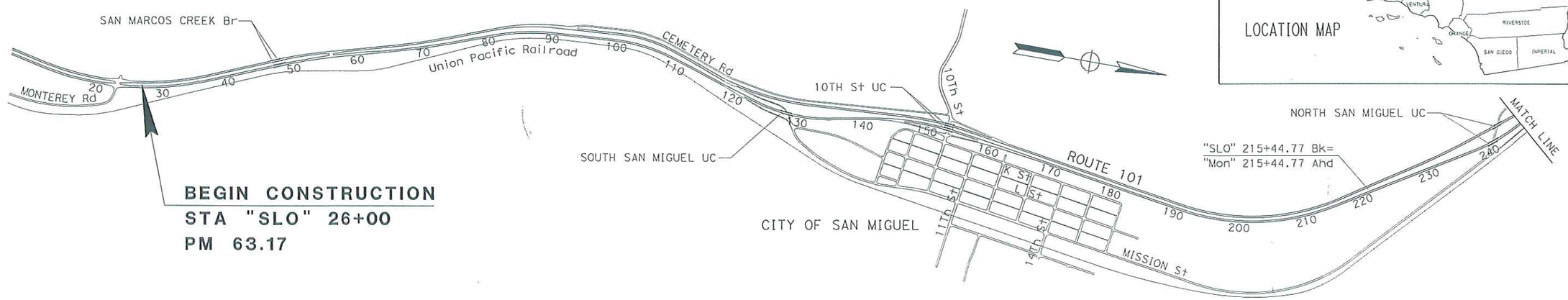

BEGIN CONSTRUCTION
STA "SLO" 26+00
PM 63.17

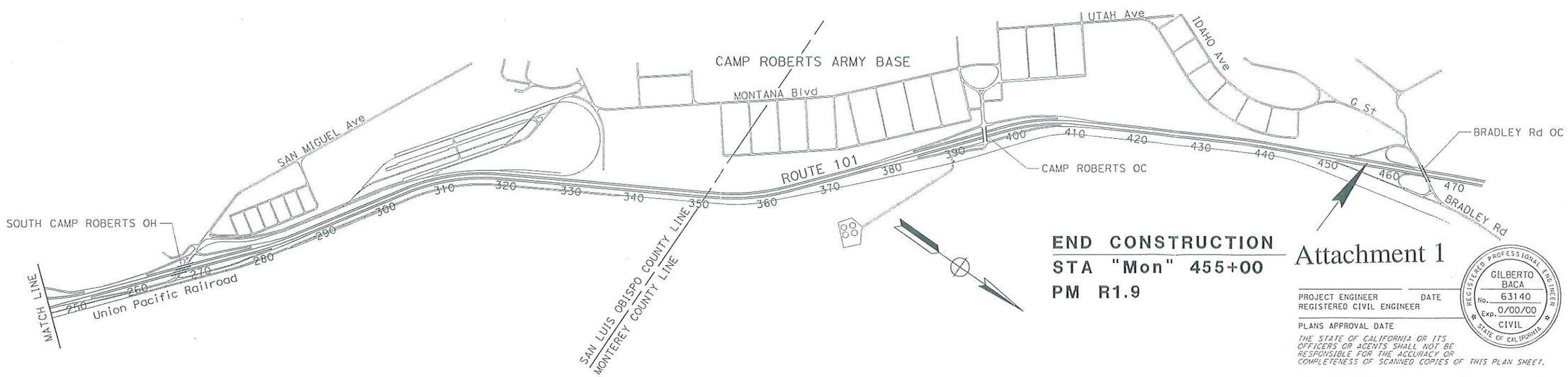

END CONSTRUCTION
STA "Mon" 455+00
PM R1.9

Attachment 1

PROJECT ENGINEER DATE
REGISTERED CIVIL ENGINEER

PLANS APPROVAL DATE

THE STATE OF CALIFORNIA OR ITS OFFICERS OR AGENTS SHALL NOT BE RESPONSIBLE FOR THE ACCURACY OR COMPLETENESS OF SCANNED COPIES OF THIS PLAN SHEET.

REGISTERED PROFESSIONAL ENGINEER
GILBERTO BACA
No. 63140
Exp. 0/00/00
CIVIL
STATE OF CALIFORNIA

CONTRACT No.	00-000004
PROJECT ID	0000000000

PROJECT MANAGER

DESIGN ENGINEER ROBERTO BANDA

THE CONTRACTOR SHALL POSSESS THE CLASS (OR CLASSES) OF LICENSE AS SPECIFIED IN THE "NOTICE TO BIDDERS."

LAST REVISION 01-02-11 DATE PLOTTED => 07-JUN-2011 TIME PLOTTED => 09:08

DIST	COUNTY	ROUTE	POST MILES TOTAL PROJECT	SHEET No.	TOTAL SHEETS
05	SLO/Mon	101			

REGISTERED CIVIL ENGINEER — DATE

PLANS APPROVAL DATE

REGISTERED PROFESSIONAL ENGINEER — Jose M Aquino III — No. 58386 — Exp. 12-31-16 — CIVIL — STATE OF CALIFORNIA

The State of California or its officers or agents shall not be responsible for the accuracy or completeness of scanned copies of this plan sheet.

INCOMPLETE PLAN FOR DESIGN STUDY PRINTED
DATE: 18-SEP-2015
Office of Structure Design
STATE OF CALIFORNIA

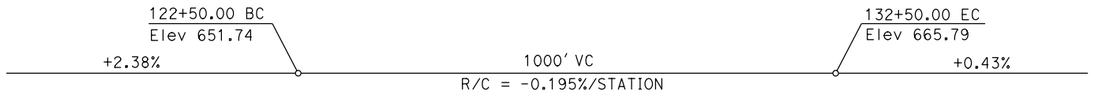

PROFILE GRADE

NO SCALE

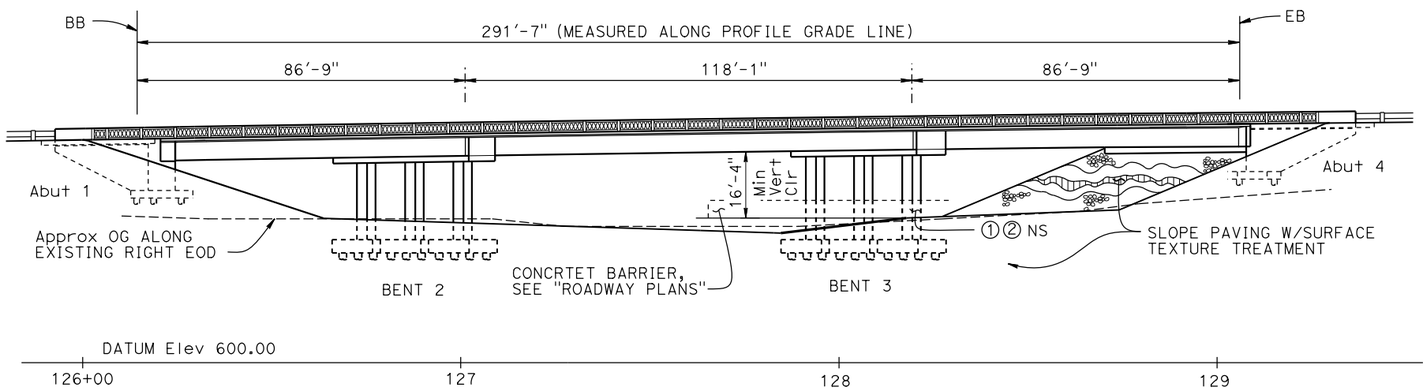

ELEVATION

1" = 20'

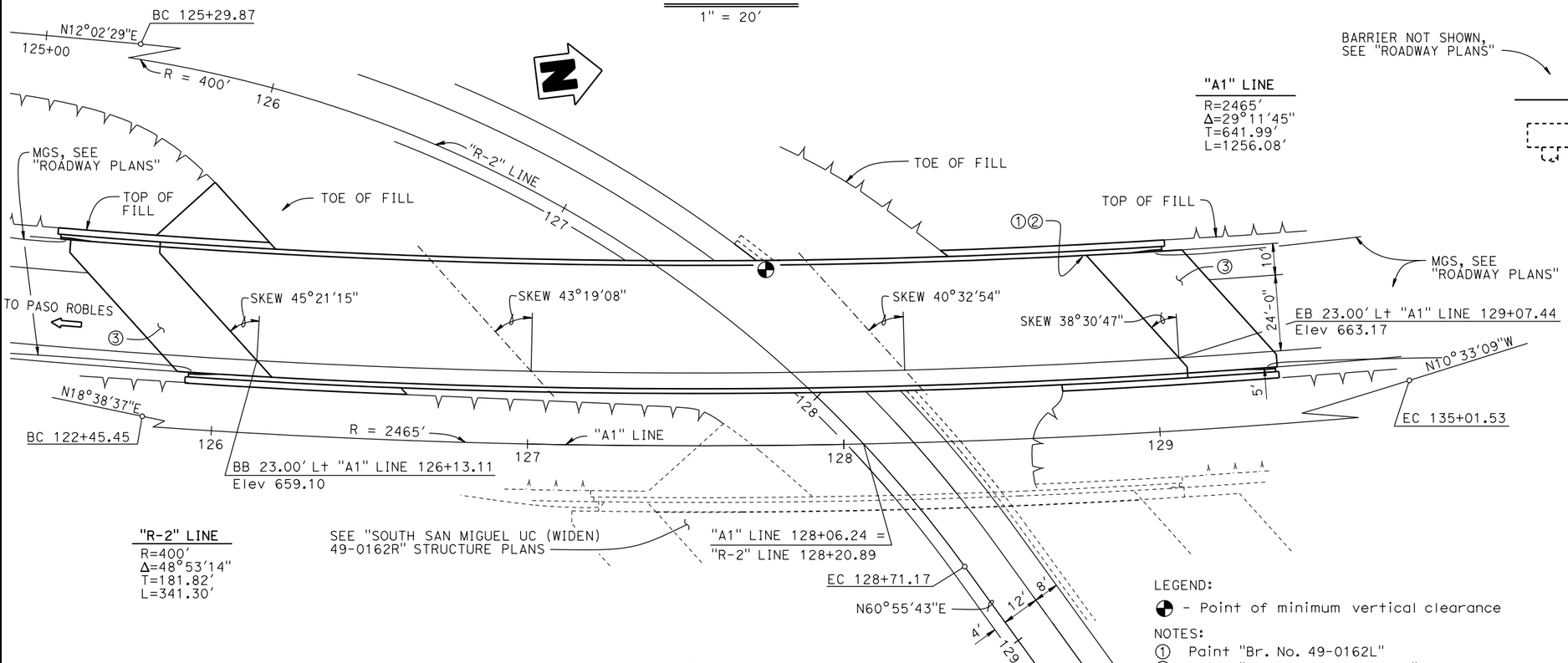

"A1" LINE
R=2465'
Δ=29°11'45"
T=641.99'
L=1256.08'

"R-2" LINE
R=400'
Δ=48°53'14"
T=181.82'
L=341.30'

PLAN

1" = 20'

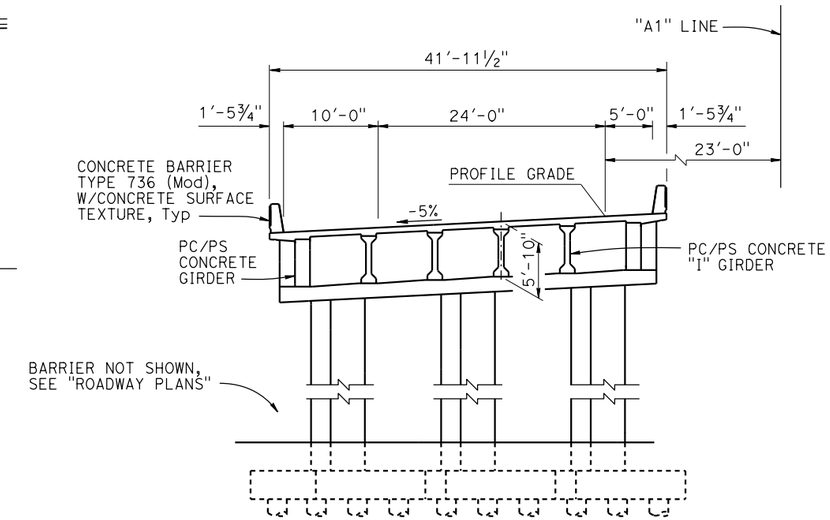

TYPICAL SECTION

⅛" = 1'-0"

DRAFT PS&E

LEGEND:
◐ - Point of minimum vertical clearance

NOTES:
① Paint "Br. No. 49-0162L"
② Paint "SOUTH SAN MIGUEL UC"
③ STRUCTURE APPROACH TYPE N (30S)
For "GENERAL NOTES" and "INDEX TO PLANS", see "INDEX TO PLANS" sheet

Joseph E Downing
DESIGN ENGINEER

	BY	CHECKED			
DESIGN	Eric G Burgeson	Arturo V Herrera	LOAD & RESISTANCE FACTOR DESIGN	LIVE LOADING: HL93 W/"LOW-BOY"; PERMIT DESIGN VEHICLE	
DETAILS	Nancy C Gwynn	Arturo V Herrera	LAYOUT	BY X	CHECKED X
QUANTITIES	Sharon Yen	Mufeed Khalaf	SPECIFICATIONS	BY X	PLANS AND SPECS COMPARED X

ORIGINAL SCALE IN INCHES FOR REDUCED PLANS 0 1 2 3

STATE OF CALIFORNIA
DEPARTMENT OF TRANSPORTATION

DIVISION OF ENGINEERING SERVICES
STRUCTURE DESIGN
DESIGN BRANCH 3

BRIDGE NO. 49-0162L
POST MILE 65.1

SOUTH SAN MIGUEL UC
GENERAL PLAN

UNIT: 3578
PROJECT NUMBER & PHASE: 05000200201
CONTRACT NO.: 05-0G0404

DISREGARD PRINTS BEARING EARLIER REVISION DATES

REVISION DATES: 2-7-14 12-09-14 4-7-15

SHEET 1 OF 30

STRUCTURES DESIGN GENERAL PLAN SHEET (ENGLISH) (REV 09-01-10)

FILE => 49-0162l-g-gp.dgn

USERNAME => S124832 DATE PLOTTED => 18-SEP-2015 TIME PLOTTED => 13:49

GEOLOGIC MAP
SLO-MON-101-63.2/R69.3
North Paso Robles 101 Rehab

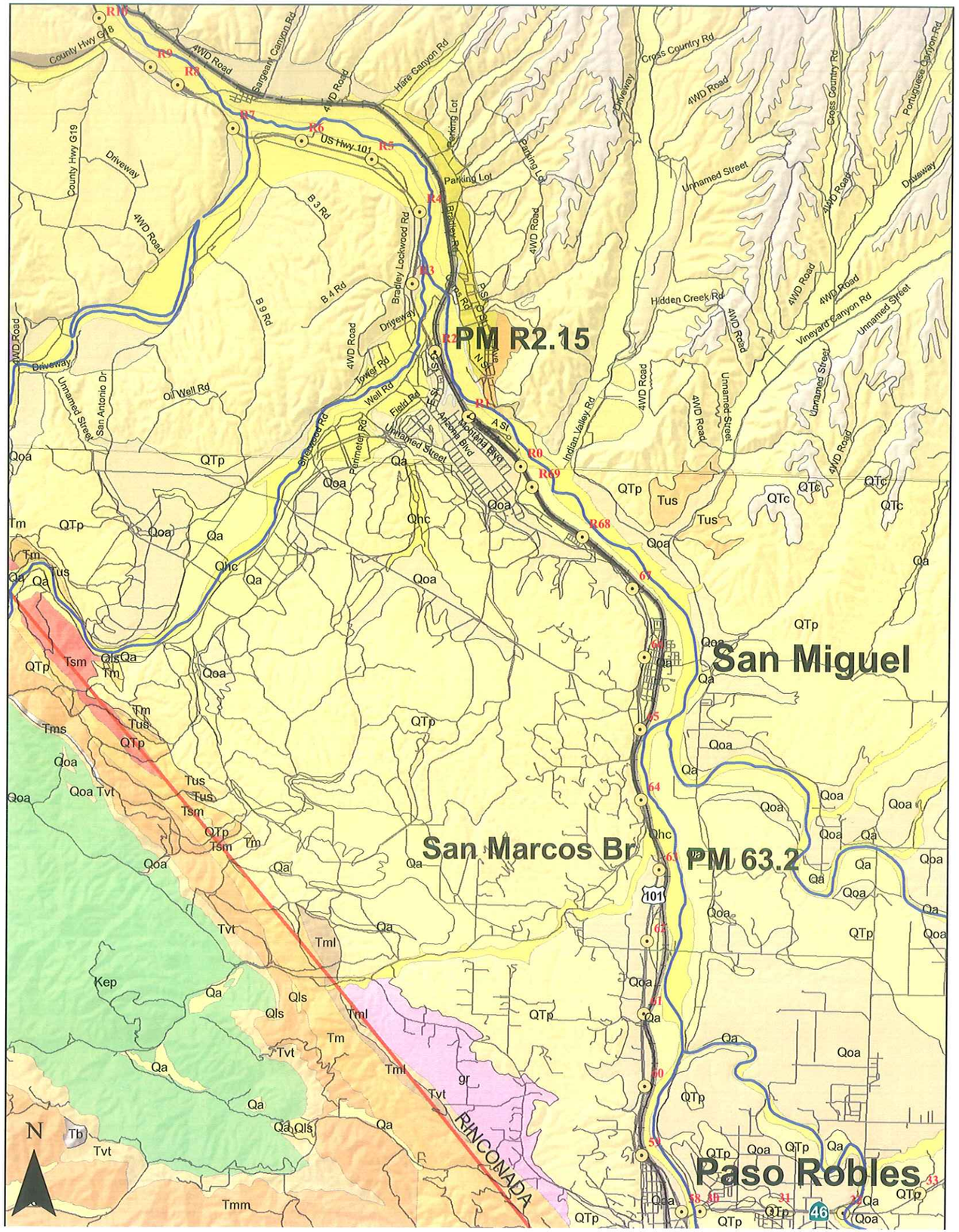

Legend

Geologic Units

UNIT

- QTc-Clay of the Paso Robles Formation
- QTp-Paso Robles Formation (valley sediments)
- Qa-Latest Pleistocene to Holocene alluvium, undiffer
- Qhc-Recent stream channel deposits
- Qls-Landslide deposits
- Qoa-Early to late Pleistocene alluvial deposits, undiferentiated
- Qrs-Modern stream channel deposits
- Tm-Monterey Formation, undifferentiated
- Tml-Monterey Formation, silty shale
- Tmm-Sandholt Member (Monterey Formation)
- Tsm-Santa Margarita Sandstone
- Tus-Sandstone, conglomerate, minor mudstone
- Tvt-Vaqueros Sandstone
- gr-Granitic rocks, undivided
- Kep-El Piojo Formation, L. Cret. mud stone, sandstone, and cong.

1 0.5 0 1 2 3 4 Miles

Attachment 3

FED. ROAD DIV. NO.	STATE	PROJ. No.	FISCAL YEAR	SHEET NO.	TOTAL SHEETS
7	CAL.			50	63

F-99(21)

DIST.	COUNTY	ROUTE	SECTION	SHEET No.	TOTAL SHEETS
V	SLO	2	A	5	5

DATE APPROVED OCTOBER 15 1956

BRIDGE DEPARTMENT

NOTES:
No changes in plan or grade
DESIGN PILE LOADING : 45 T
TYPE PILE . CAST IN DRILLED HOLES
DIAMETER : 1'-3½"
TOTAL No. PILES : 13
LF PILES "AS BUILT" : 479.0
LF PILES CALLED FOR ON PLANS 410

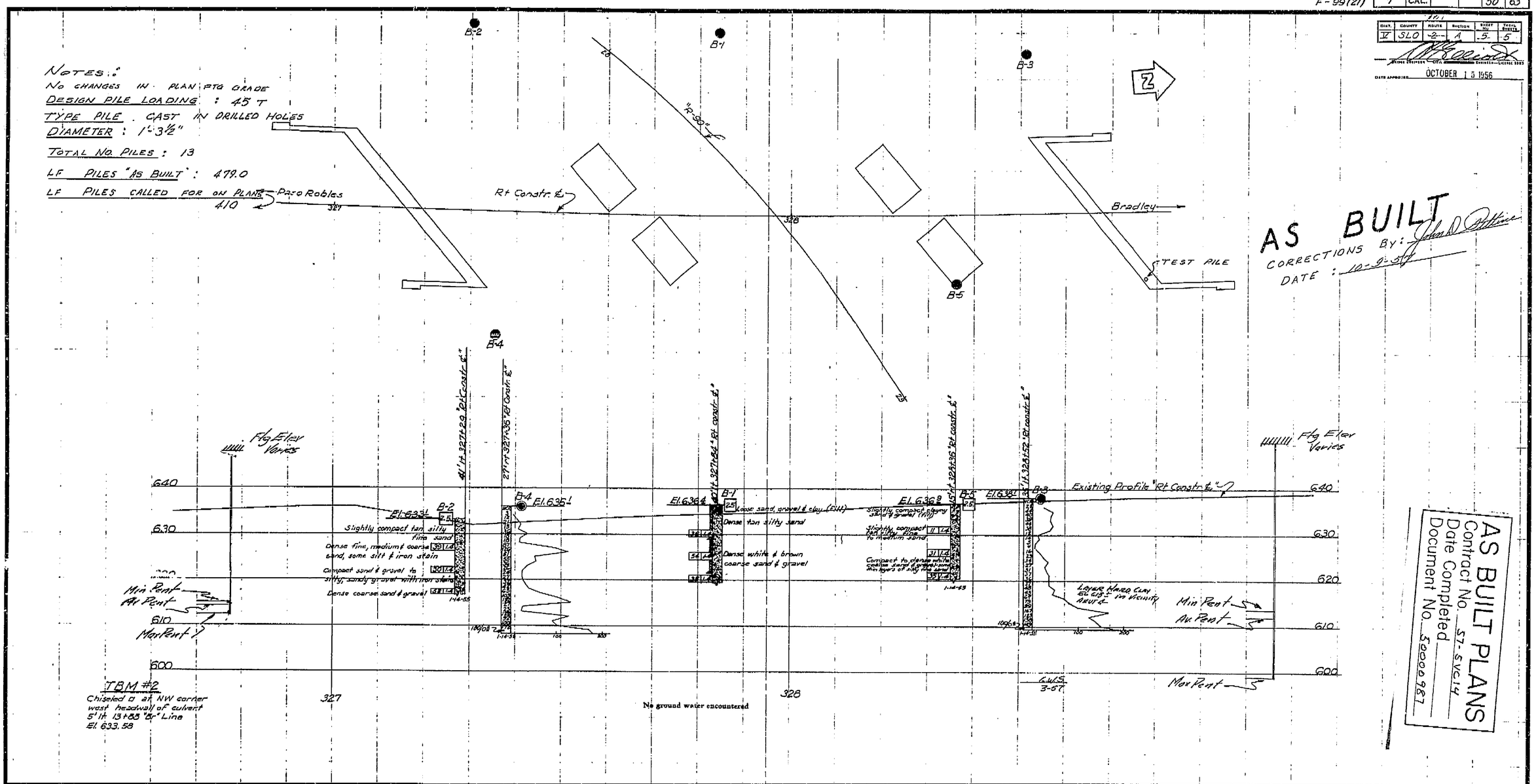

TBM #2
Chiseled □ at NW corner west headwall of culvert 5' lt. 13+88 "B" Line
El. 633.58

AS BUILT
CORRECTIONS BY: John D. Pettine
DATE : 10-9-57

AS BUILT PLANS
Contract No. 57-SVC14
Date Completed
Document No. 50000987

DRAWN	H. C. Lapiz	7-55	
CHECKED	H. C. E. Hedrick	2-55	
Approval Recommended by:	Chief Bridge Engineer		

CLASSIFICATION OF MATERIAL BASED ON STANDARD GRADE SIZE LIMITS

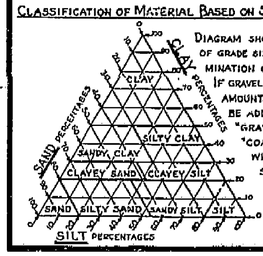

DIAGRAM SHOWING THE BASIS FOR ESTIMATES OF GRADE SIZE DISTRIBUTION USED IN DETERMINATION OF CLASS NAMES. IF GRAVEL IS PRESENT IN APPRECIABLE AMOUNTS THE TERM "GRAVELLY" MAY BE ADDED TO THE CLASS NAME, VIZ. "GRAVELLY SAND." THE TERMS "COARSE", "MEDIUM" AND "FINE" WHEN USED TO DESCRIBE SAND, SILT AND GRAVEL REFER TO STANDARD GRADE SIZE LIMITS.

LEGEND OF EARTH MATERIALS

- GRAVEL
- SAND
- SILT
- CLAY
- SANDY CLAY OR CLAYEY SAND
- SANDY SILT OR SILTY SAND
- SILTY CLAY OR CLAYEY SILT
- PEAT AND/OR ORGANIC MATTER
- FILL MATERIAL
- IGNEOUS ROCK
- SEDIMENTARY ROCK
- METAMORPHIC ROCK

LEGEND OF BORING OPERATIONS

- PLAN OF ANY BORING
- PEN PENETROMETER
- 2¼" CONE PENETROMETER
- SB SAMPLER BORING (DRY)
- RB ROTARY BORING (WET)
- AB AUGER BORING (DRY)
- JB JET BORING
- CB CORE BORING
- TP TEST PIT

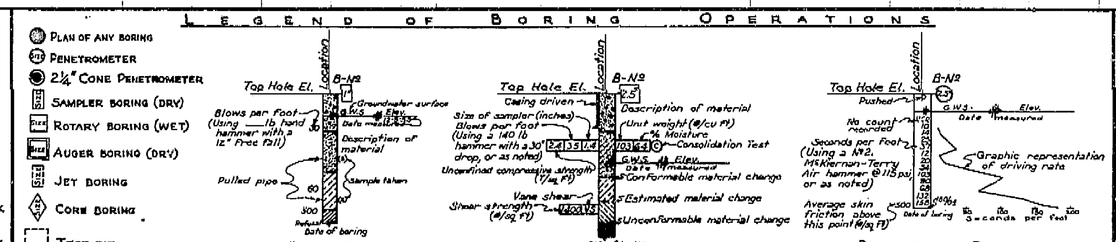

NOTES

The contractor's attention is directed to Section 2, Article (c) of the Standard Specifications and to the Special Provisions accompanying this set of plans.

Classification of earth material as shown on this sheet is based upon field inspection and is not to be construed to imply mechanical analysis.

STATE OF CALIFORNIA
DEPARTMENT OF PUBLIC WORKS
DIVISION OF HIGHWAYS

SOUTH SAN MIGUEL UNDERCROSSING

LOG OF TEST BORINGS

SCALE 1"=10'	BRIDGE 49-162(R)	FILE	DRAWING C-4174-5

PREL. DRAWING NO. P-4174 9

1-A

I HEREBY CERTIFY THAT THIS IS A TRUE AND ACCURATE COPY OF THE ABOVE DOCUMENT TAKEN UNDER MY DIRECTION AND CONTROL ON THIS DATE IN SACRAMENTO, CALIFORNIA PURSUANT TO AUTHORIZATION BY THE DIRECTOR OF PUBLIC WORKS.

DATE 1/ 3 SIGNATURE M. S. Kuff TITLE Jr C II

ClibPDF - www.fastio.com

South San Miguel ARS Curve

SDC Controlling Procedure : **Probabalistic**

Period (s)	SDC
0.010	0.477
0.050	0.754
0.100	0.918
0.150	1.015
0.200	1.090
0.250	1.043
0.300	1.005
0.400	0.881
0.500	0.795
0.600	0.734
0.700	0.690
0.850	0.627
1.000	0.575
1.200	0.484
1.500	0.392
2.000	0.299
3.000	0.194
4.000	0.139
5.000	0.113

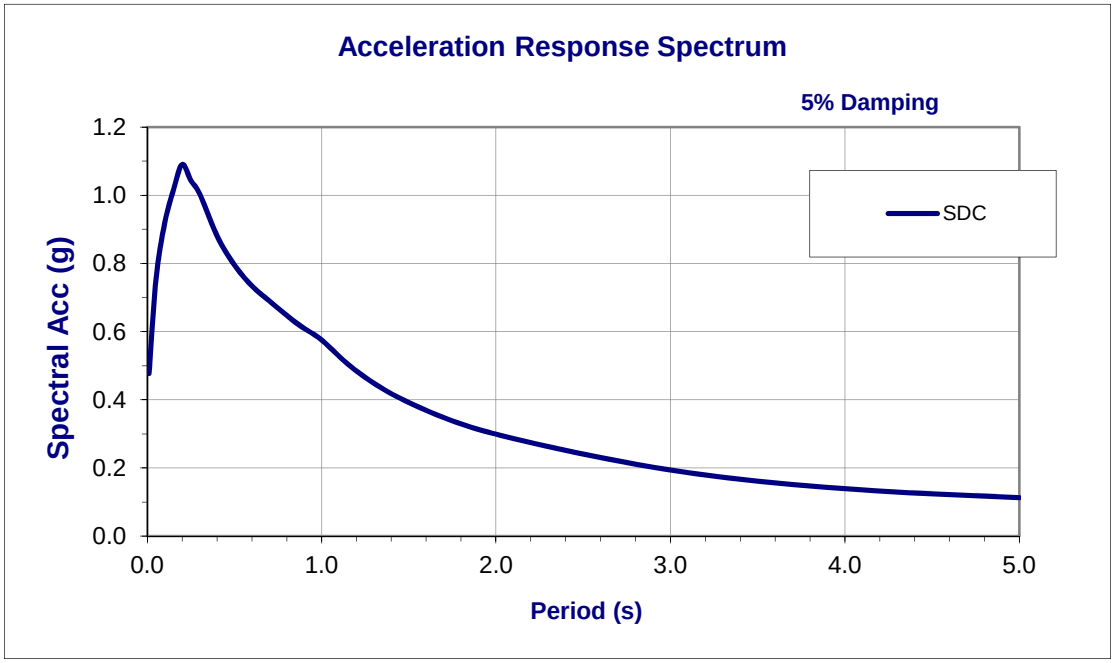

Notes

ARS curve was modified for Near Fault Directivity Effect

MATERIALS INFORMATION

10. Revised Foundation Report South San Miquel UC Right; dated January 5, 2016.

State of California
DEPARTMENT OF TRANSPORTATION

Business, Transportation and Housing Agency

M e m o r a n d u m

Serious drought,
Help Save Water!

To: JOEY AQUINO, Senior Project Engineer
Bridge Design Branch 3
Office of Bridge Design West
DIVISION OF ENGINEERING SERVICES
STRUCTURE DESIGN – MS 9 4/6F

Date: January 5, 2016

File: 05-SLO-101-63.2/R69.3
05-Mon-101-R0.0/1.9
South San Miguel UC Right
Bridge No. 49-0162R
Project ID 0500020020
EA: 05-0G0401

From: **DEPARTMENT OF TRANSPORTATION**
DIVISION OF ENGINEERING SERVICES
GEOTECHNICAL SERVICES

Subject: Revised Foundation Report South San Miguel Undercrossing Right

Scope of Work

A Revised Foundation Report (FR) is provided for the South San Miguel Undercrossing Right Bridge. Widening of the existing northbound bridge structure is part of the North Paso Robles Rehab project, located on State Route 101 in the vicinity of San Miguel, in the Counties of San Luis Obispo and Monterey. Rehabilitation of the distressed portland cement concrete (PCC) pavement is proposed, along with widening shoulders to standard widths, widening and construction of new bridges and retaining walls, improvement of highway access, and construction of drainage facilities. Review of published geologic data and previous geotechnical reports, field reconnaissance, and geotechnical analysis were performed as part of the geotechnical investigation.

The purpose of this report is to document geotechnical conditions and provide foundation recommendations. This report supercedes the Foundation Report (September 25, 2015).

Introduction

The existing interchange at South San Miguel consists of a three span cast-in-place concrete T-beam bridge carrying northbound 101 over the southbound on-ramp, which merges with southbound 101 from the median side. Widening of the existing right bridge, construction of a new southbound structure, and realignment of the southbound on-ramp to the outside are proposed. Refer to the attached preliminary General Plan and as-builts for additional details.

Pertinent Reports and Investigations

The following publications were used to assist in the assessment of site conditions:

1. *District Preliminary Geotechnical Report*. Jurasius, Mike. EA 05-0G0400. November 28, 2011.

2. *Pile Report 10th St UC, South San Miguel UC, North San Miguel UC.* Samuelson, R.S. May 16, 1957.

Field Investigation and Laboratory Testing Program

Mud rotary borings were advanced near each support location to determine the subsurface conditions to be used for foundation design. Refer to the project log of test borings for details of the borings at the proposed bridge site. PS suspension logging was performed for the project to calculate an average shear wave velocity for use in generating the design ARS curve presented in the seismic section of this report. Refer to Table 1 for a summary of subsurface investigation information.

Table 1. Subsurface Exploration Summary

Boring	*Completion Date*	*Equipment*	*Hammer Type*	*Hammer Efficiency (%)*	*Approximate Ground Elevation (ft)*	*Depth (ft)*
RC-14-006	10/2/2014	CME75	Auto	83	635.10	101.5
RC-14-015	10/29/2014	CS2000	Auto	84	659.42	97.5
RC-14-016	10/29/2014	CS2000	Auto	68	655.22	101.0

Site Geology and Conditions

Climate

The regional climate for northern-inland San Luis Obispo County is generally more extreme in temperature between summer and winter. The average maximum temperature in July is 94 degrees Fahrenheit and the average minimum is 33 degrees Fahrenheit in December. Based on data recorded at a precipitation station in the vicinity of San Miguel since 1950, the average annual precipitation is about 12 inches.

Topography and Drainage

The project parallels the Salinas River and is underlain by alluvial terraces that have undergone various degrees of erosion. The older, elevated terraces generally form the hills to the east and west of the Salinas River corridor, and are rounded by erosion and incised by smaller tributary drainages such as San Marcos Creek at the southern end of the project. Younger terraces near highway elevations are relatively flat to gently sloped, with steeper slopes where the Salinas River or tributary drainages more recently flowed. The Salinas River is the primary regional drainage. It flows northward to Monterey Bay, and is locally parallel and adjacent to the proposed project area. Numerous smaller tributary drainages cross Highway 101 from the west, beneath bridges and in culverts.

Regional Geology

The project area lies within the Coast Ranges Geomorphic Province, characterized by northwest trending mountain ranges, controlled by movement along a system of similarly trending faults. Exposed highlands of the northern San Luis Obispo County region expose mostly Late Cretaceous to Tertiary age marine shale and sandstone, which are overlain by younger (Pleistocene to recent) alluvial deposits transported by the Salinas River and tributary drainages.

The proposed rehabilitation project follows the current path of the Salinas River, and is underlain by 3 to 15-feet of recent and older channel deposits of clay, silt, sand and gravel. Paso Robles Formation (QTp), covers most of the slopes on either side of the Salinas River as well as underlying portions of the 101 alignment. The sand and gravel portion of the Paso Robles Formation is variably cemented, and appears to retain global stability at slopes up to approximately 1:1, as seen in cut-slopes north of the 10th Street off-ramp, bounding the southbound 101 shoulder. Most of the deposits underlying the highway within the project area consist of sandy well-graded gravel and various grades of sand with lenses of silt and clay.

Groundwater

An open standpipe observation well was installed in boring RC-14-008 near the proposed left bridge structure to observe fluctuations in groundwater levels at the site and determine if groundwater will influence construction and foundation design. Results of the groundwater-monitoring program are summarized in Table 2.

Table 2. Groundwater Elevations

Boring	Date	Depth to Groundwater (ft)	Groundwater Elevation(ft)
RC-14-008	11/19/2014	39.5	601.2
RC-14-008	1/20/2015	40.5	600.2
RC-14-008	2/24/2015	40.7	600.0

Corrosion Evaluation

The department considers a site to be corrosive to the foundation elements if the following conditions exist for the representative soil and/or water samples taken at the site: minimum resistivity of 1000 ohm-cm or less and/or PH of 5.5 or less. Samples found to be potentially corrosive based on this criteria are sent to the Headquarters Material Laboratory for additional corrosion testing based on chloride and sulphate content.

Soil samples were obtained during the subsurface investigation and tested for corrosion potential at the District and Headquarters Materials Laboratories. The results of the corrosion testing are presented as an attachment to the project Geotechnical Design Report. Based on the results of the testing, soils are not considered corrosive to foundation elements.

Seismic Recommendations

Based on the *Caltrans Seismic Design Procedure*, the following active and potentially active faults are located within the vicinity of the project site. The Caltrans ARS Online Tool was used to develop ARS curves for deterministic and probabilistic seismic prediction models. An estimated shear wave velocity of 1327 ft/sec was obtained for the project site using down-hole P-S suspension logging methods. Probabilistic methods control the response spectra at all periods, the design envelope ARS is presented in figure 1. A basin factor of 1.0 was assumed for this location and the Caltrans ARS Online Tool applied a near fault factor to the data. Tabular data are included as an attachment.

Table 3. Active and Potentially Active Faults

Fault Name	*Fault Type*	*Moment magnitude of maximum credible earthquake*	*Distance from fault to project site (miles)*	*Peak ground acceleration T=0 sec (gravity)*
Rinconada	Strike-Slip	7.4	5.7	0.32
San Andreas (Parkfield)	Strike-Slip	7.9	18.0	0.17
San Andreas (Creeping Section)	Strike-Slip	7.9	18.3	0.17
USGS 5% in 50 yr. Hazard	N/A	N/A	N/A	0.43

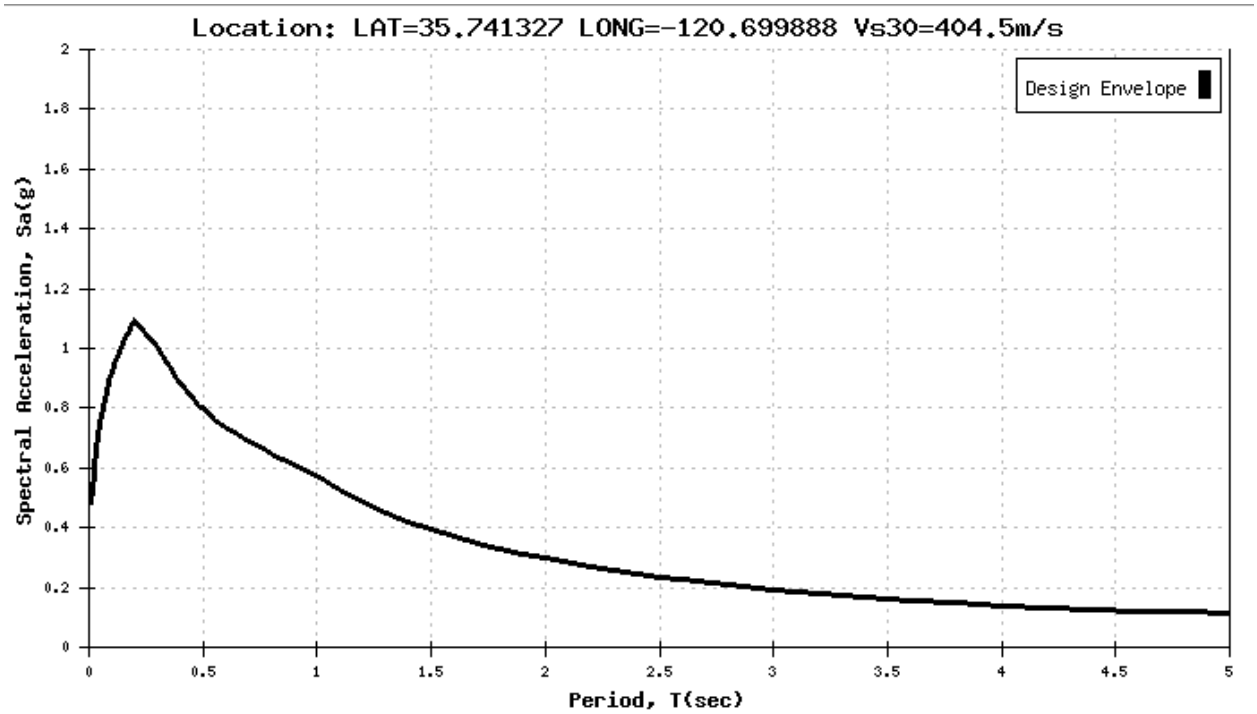

Figure 1. Design ARS Curve

Liquefaction is the partial or complete loss of soil shear strength due to the build-up of excess pore water pressure during a seismic event. Soils with a potential for liquefaction are loose cohesionless soils below the groundwater table. Based on soil types and site conditions

encountered at the project site, potential for liquefaction is low due to the dense nature of the soils, presence of fine-grained soils, and depth to groundwater.

As-Built Foundation Data

The as-built log of test borings from 1956 for the existing right bridge (Bridge No. 49-0162R) indicate that the site is underlain by slightly compact to dense sand, silty sand, clayey sand, and gravel over lithified deposits of the Paso Robles Formation.

Foundation Recommendations

Structure Design proposes to widen the bridge by constructing a cantilever bridge deck with barrier to the inside, and adding a reinforced concrete T-beam section supported on two new columns and widened abutments to the outside. The existing abutments are supported on 45 ton 16” diameter CIDH piles, and the bents are supported on spread footings.

Standard Plan 16” Diameter Cast in Drilled Hole (CIDH) Concrete Piles and Spread Footings

16” diameter CIDH concrete piles are the recommended foundation type at abutments and spread footings are recommended at the bents. Caving in the loose alluvial soils at the surface may occur, requiring the use of temporary casings to maintain hole stability for the CIDH foundations. The existing bridge abutments were successfully constructed on 16” diameter CIDH piles. Groundwater at approximately elevation 598 feet and caving were encountered in the original construction; casing was required in some holes to maintain stability. Groundwater is not expected to be encountered in excavations to the specified pile tip elevations for the widening, allowing the use of 16” diameter piles.

Load Factor Design (LFD or Strength Design) methodology was utilized for the bent widening design, and Allowable Stress Design (ASD or Service Load Design) methodology was utilized for the abutment widening. A resistance (performance) factor of 0.5 for LFD of spread footing bearing capacity is recommended in Caltrans Bridge Design Specifications Section 4.10.6 (LFD-November 2003), and a factor of safety of 2.0 is recommended for ASD of drilled shafts in Section 4.6.5.4. Factored loads (LFD) and Service Loads (ASD) were provided by Structure Design. The required nominal axial resistances reported in the abutment foundation design recommendation table are equal to the service load multiplied by a safety factor of 2.0 for ASD. Pile cutoff elevations are provided for each of the two proposed piles at the abutments. Widening of the abutments includes drilling and bonding dowels into the existing abutment, which will not allow the widened portion to settle differentially from the existing structure. Service loads will be distributed to the entire abutment support, therefore calculating the settlement of the new abutment separately from the rest of the existing structure does not represent the field conditions. An estimate of settlement based on the ratio of the service load to the failure load indicates that the magnitude of the settlement per individual pile is on the order of 0.1 inches, which is negligible. Foundation recommendations are provided in the following tables:

Abutment Foundation Design Recommendations									
Support Location	Pile Type	Cut-off Elevation (ft)	LFD Factored Loads (kips) per pile		ASD Service Load (kips) per pile (Compression)	Required Nominal Resistance (kips)		Design Tip Elevation (ft)	Specified Tip Elevation (ft)
			Compression	Tension		Compression	Tension		
Abut. 1	16” CIDH	649.7/649.9	N/A	N/A	82	164	0	622.7	622.7
Abut. 4	16” CIDH	652.2/652.4	N/A	N/A	82	164	0	626.2	626.2

Pile Data Table					
Support Location	Pile Type	Nominal Axial Resistance (kips)		Specified Tip Elevation (ft)	Estimated Settlement (inches)
		Compression	Tension		
Abut. 1	16” CIDH	170	N/A	622.7	N/A
Abut. 4	16” CIDH	170	N/A	626.2	N/A

1) *The specified tip elevation shall not be raised.*

Bent Foundation Design Recommendations									
Support Location	Dimensions (Width x Length)	LFD Factored load per support (kips)	Gross uniform bearing stress (ksf)	Service Load per Support (kips)	Net uniform bearing stress (ksf)	Bearing Resistance (ksf)		Specified B.O.F. Elevation (ft)	Estimated Settlement at Service Load
						Gross Nominal	Gross Factored		
Bent 2	12’-0” x 12’-0”	680.2	4.7	426.9	3.0	20.0	10.0	628.64	1”
Bent 3	12’-0” x 12’-0”	632.2	4.4	402.5	2.8	20.0	10.0	628.64	1”

Construction Considerations

Loose soils in the approach embankment fills and cohesionless deposits of sand and gravel at depth may cave during pile excavation. Temporary casing was required to excavate to the specified tip elevations of the existing 16” CIDH concrete piles, and will likely be required to maintain hole stability for the new foundation excavations.

Coarse gravels and cobbles in the alluvial deposits may require special tooling and techniques to construct the pile excavations to the specified tip elevations.

Additional Information

Standard Specifications 2010 Section 2-1.6.B, "Supplemental Project Information", discloses to bidders and contractors a list of pertinent information available for their inspection prior to bid opening. Items listed to be included in the Information Handout will be provided in Acrobat (.pdf) format to the Addressee of this report via electronic mail.

Data and information attached with the project plans are:

A. Log of Test Borings.

Data and information included in the Information Handout provided to the Bidders and Contractors are:

A. Foundation Report dated January 5, 2016.

If you have any questions or comments, please contact Ryan Turner at (805) 549-3750.

MICHAEL J. JURASIUS, P.G., C.E.G.
Engineering Geologist
Geotechnical Design – North
Branch D

Signed: 1-5-2016

RYAN TURNER, P.E., G.E.
Transportation Engineer Civil
Geotechnical Design – North
Branch D

c: Job File / Branch D Records
Structure Construction RE Pending File
Craig Whitten / DES Office Engineer
Andrew Tan / PCE
Eric Karlson/ DME

LIST OF ATTACHMENTS

Vicinity Map	Attachment 1
General Plan	Attachment 2
Geologic Map and Legend	Attachment 3
As-Built LOTB	Attachment 4
ARS Tabular Data	Attachment 5

INDEX OF PLANS

STATE OF CALIFORNIA
DEPARTMENT OF TRANSPORTATION

PROJECT PLANS FOR CONSTRUCTION ON
STATE HIGHWAY

IN SAN LUIS OBISPO COUNTY AND MONTEREY COUNTY
FROM MONTEREY ROAD
TO 0.2 MILE SOUTH OF BRADLEY Rd OVERCROSSING

TO BE SUPPLEMENTED BY STANDARD PLANS DATED MAY 2006

Dist	COUNTY	ROUTE	POST MILES TOTAL PROJECT	SHEET No.	TOTAL SHEETS
05	SLO/Mon	101	63.2/69.3 R0.0/R1.9		

LOCATION MAP

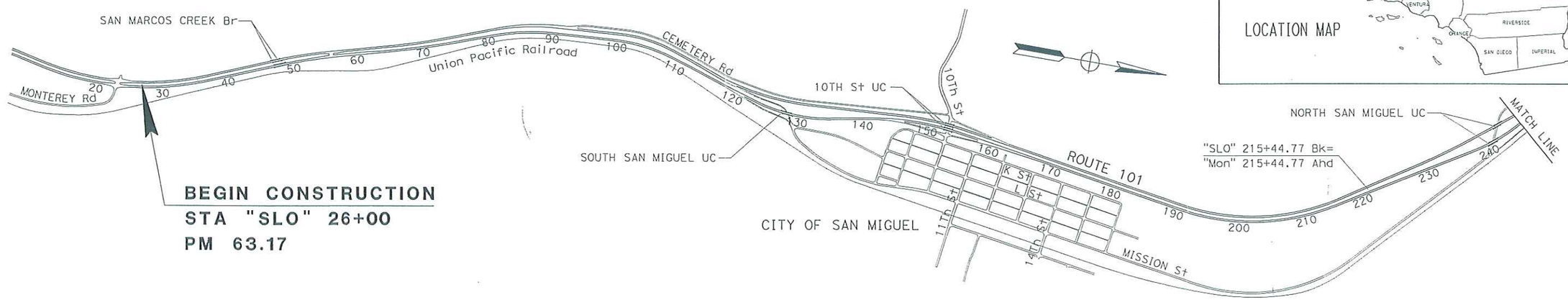

BEGIN CONSTRUCTION
STA "SLO" 26+00
PM 63.17

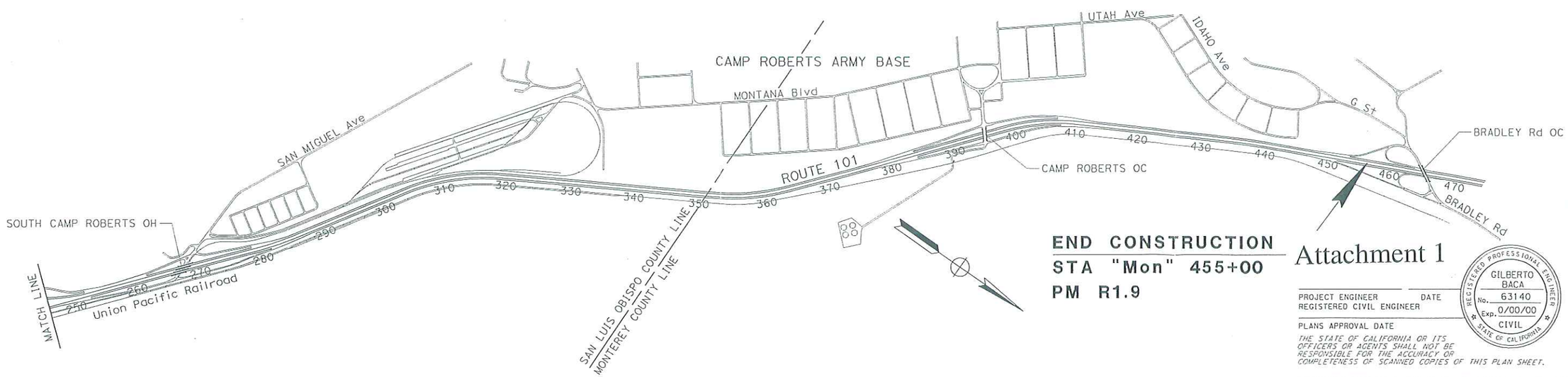

END CONSTRUCTION
STA "Mon" 455+00
PM R1.9

Attachment 1

PROJECT ENGINEER DATE
REGISTERED CIVIL ENGINEER

PLANS APPROVAL DATE

THE STATE OF CALIFORNIA OR ITS OFFICERS OR AGENTS SHALL NOT BE RESPONSIBLE FOR THE ACCURACY OR COMPLETENESS OF SCANNED COPIES OF THIS PLAN SHEET.

REGISTERED PROFESSIONAL ENGINEER
GILBERTO BACA
No. 63140
Exp. 0/00/00
CIVIL
STATE OF CALIFORNIA

CONTRACT No.	00-000004
PROJECT ID	0000000000

PROJECT MANAGER

DESIGN ENGINEER ROBERTO BANDA

THE CONTRACTOR SHALL POSSESS THE CLASS (OR CLASSES) OF LICENSE AS SPECIFIED IN THE "NOTICE TO BIDDERS."

LAST REVISION 01-02-11 DATE PLOTTED => 07-JUN-2011 TIME PLOTTED => 09:08

DIST	COUNTY	ROUTE	POST MILES TOTAL PROJECT	SHEET No.	TOTAL SHEETS
05	SLO/Mon	101			

REGISTERED CIVIL ENGINEER — DATE

PLANS APPROVAL DATE

REGISTERED PROFESSIONAL ENGINEER — Jose M Aquino III — No. 58386 — Exp. 12-31-16 — CIVIL — STATE OF CALIFORNIA

The State of California or its officers or agents shall not be responsible for the accuracy or completeness of scanned copies of this plan sheet.

INCOMPLETE PLAN FOR DESIGN STUDY PRINTED
DATE: 18-SEP-2015
Office of Structure Design
STATE OF CALIFORNIA

DRAFT PS&E

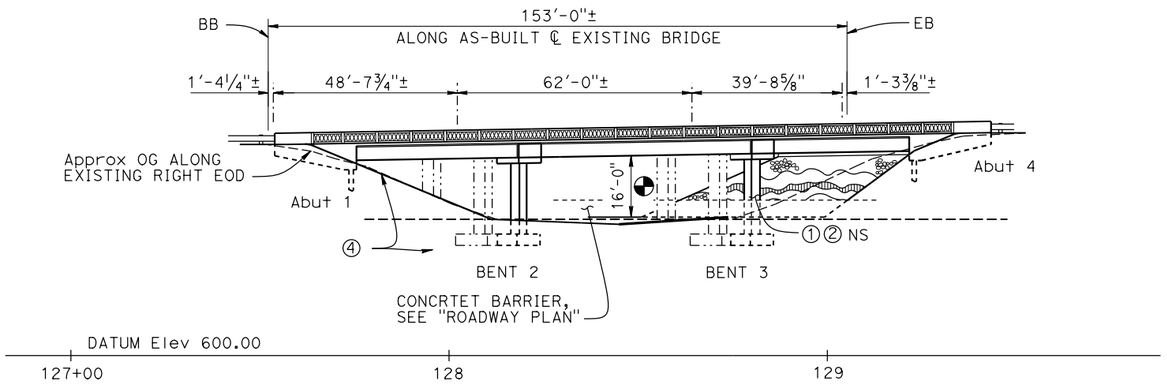

ELEVATION
1" = 20'

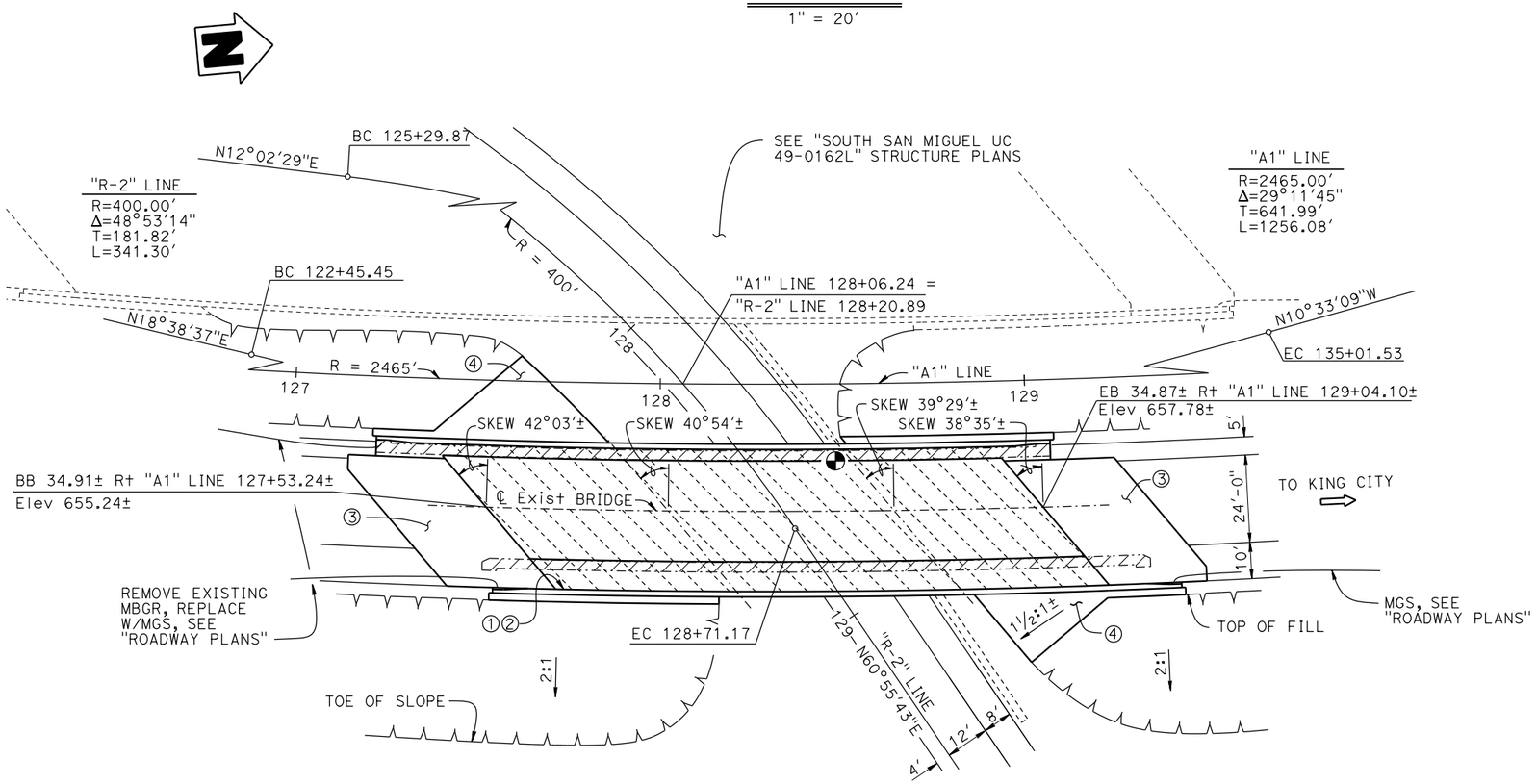

PLAN
1" = 20'

LEGEND:
- - - - - Indicates existing bridge
——— Indicates new construction
Indicates existing barrier removal
Indicates limits of prepare bridge deck and place Polyester Concrete Overlay
Point of minimum vertical clearance

NOTES:
① Paint "Br. No. 49-0162R"
② Paint "SOUTH SAN MIGUEL UC"
③ Structure Approach Type R (30D)
④ Slope paving w/surface texture treatment

For "TYPICAL SECTION", see "GENERAL PLAN NO. 2" sheet
For "GENERAL NOTES" and "INDEX TO PLANS", see "INDEX TO PLANS" sheet

NOTE:
THE CONTRACTOR MUST VERIFY ALL CONTROLLING FIELD DIMENSIONS BEFORE ORDERING OR FABRICATING ANY MATERIAL.

Joseph E Downing
DESIGN ENGINEER

	BY	CHECKED
DESIGN	Arturo V Herrera	Mufeed Khalaf
DETAILS	Nancy C Gwynn	Mufeed Khalaf
QUANTITIES	Lewis L Shen	Raman Guraya

LOAD FACTOR DESIGN — LIVE LOADING: HS20-44 AND ALTERNATIVE AND PERMIT DESIGN LOAD
LAYOUT BY X CHECKED X
SPECIFICATIONS BY X PLANS AND SPECS COMPARED X

ORIGINAL SCALE IN INCHES FOR REDUCED PLANS 0 1 2 3

STATE OF CALIFORNIA
DEPARTMENT OF TRANSPORTATION

DIVISION OF ENGINEERING SERVICES
STRUCTURE DESIGN
DESIGN BRANCH 3

BRIDGE NO. 49-0162R
POST MILE 65.1

SOUTH SAN MIGUEL UC (WIDEN)
GENERAL PLAN NO. 1

UNIT: 3578
PROJECT NUMBER & PHASE: 05000200201
CONTRACT NO.: 05-0G0404

DISREGARD PRINTS BEARING EARLIER REVISION DATES
REVISION DATES: 4-16-14 9-15-15 5-29-15
SHEET 1 OF 32

STRUCTURES DESIGN GENERAL PLAN SHEET (ENGLISH) (REV 09-01-10)
FILE => 49-0162r-g-gp01.dgn
USERNAME => s12483z2 DATE PLOTTED => 18-SEP-2015 TIME PLOTTED => 13:53

GEOLOGIC MAP
SLO-MON-101-63.2/R69.3
North Paso Robles 101 Rehab

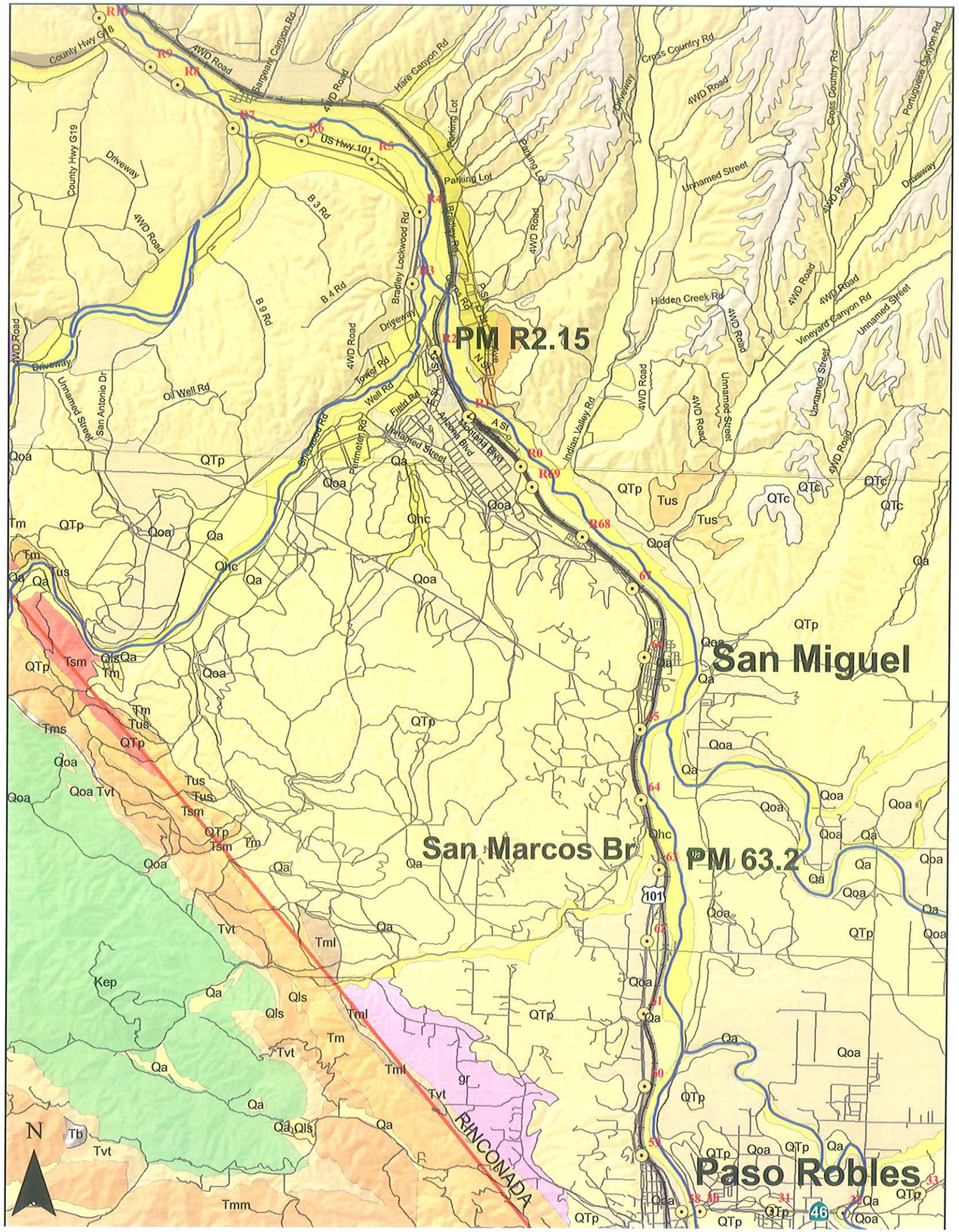

Legend

Geologic Units

UNIT

- QTc-Clay of the Paso Robles Formation
- QTp-Paso Robles Formation (valley sediments)
- Qa-Latest Pleistocene to Holocene alluvium, undiffer
- Qhc-Recent stream channel deposits
- Qls-Landslide deposits
- Qoa-Early to late Pleistocene alluvial deposits, undiferentiated
- Qrs-Modern stream channel deposits
- Tm-Monterey Formation, undifferentiated
- Tml-Monterey Formation, silty shale
- Tmm-Sandholt Member (Monterey Formation)
- Tsm-Santa Margarita Sandstone
- Tus-Sandstone, conglomerate, minor mudstone
- Tvt-Vaqueros Sandstone
- gr-Granitic rocks, undivided
- Kep-El Piojo Formation, L. Cret. mud stone, sandstone, and cong.

1 0.5 0 1 2 3 4 Miles

Attachment 3

FED. ROAD DIV. NO.	STATE	PROJ. No.	FISCAL YEAR	SHEET NO.	TOTAL SHEETS
7	CAL.			50	63

F-99(21)

DIST.	COUNTY	ROUTE	SECTION	SHEET No.	TOTAL SHEETS
V	SLO	2	A	5	5

DATE APPROVED OCTOBER 15 1956

BRIDGE DEPARTMENT

NOTES:
No changes in plan or grade
DESIGN PILE LOADING : 45 T
TYPE PILE . CAST IN DRILLED HOLES
DIAMETER : 1'-3½"
TOTAL No. PILES : 13
LF PILES "AS BUILT" : 479.0
LF PILES CALLED FOR ON PLANS 410

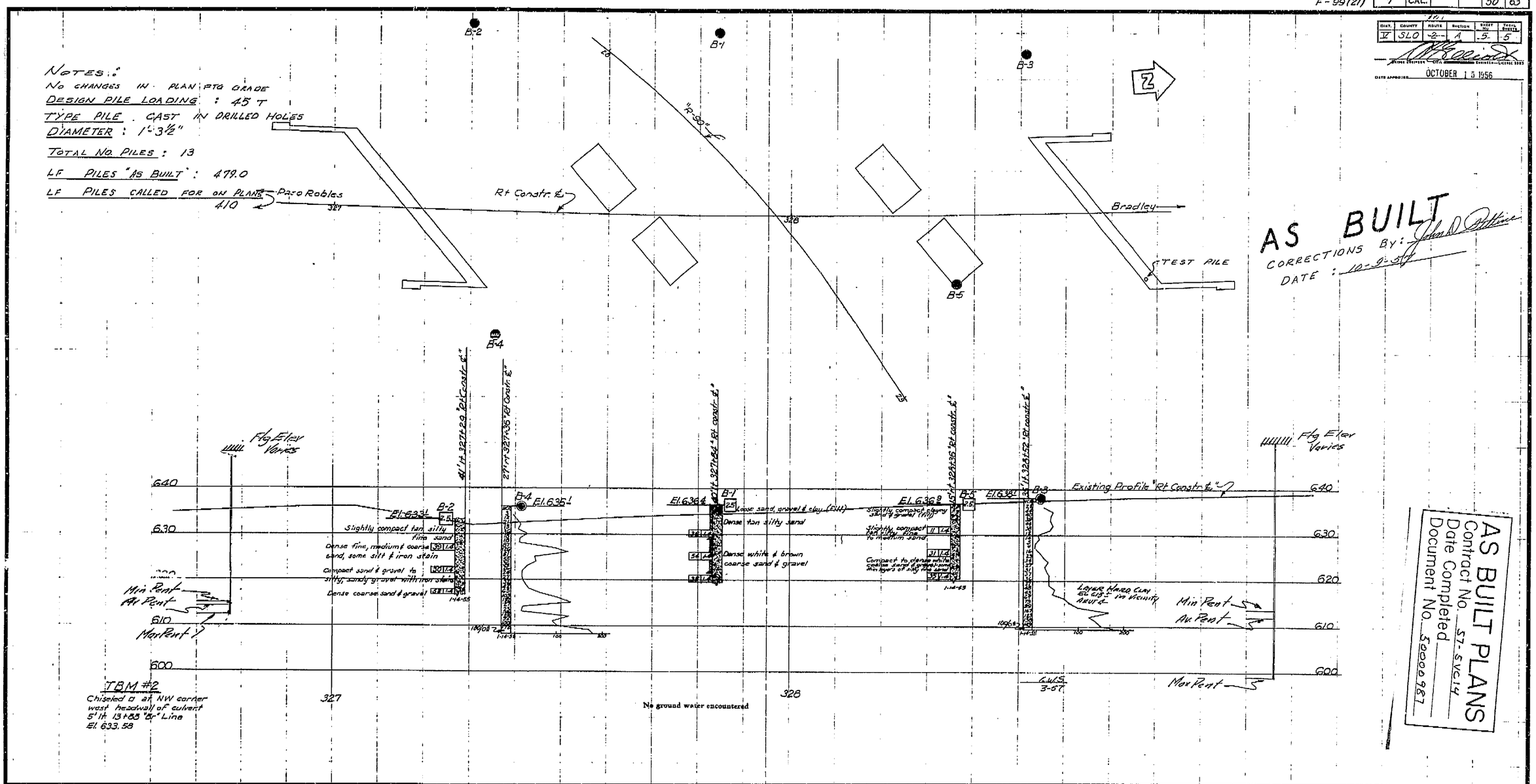

TBM #2
Chiseled □ at NW corner west headwall of culvert 5' lt. 13+88 "B" Line
El. 633.58

AS BUILT
CORRECTIONS BY: John D. Pettine
DATE : 10-9-57

AS BUILT PLANS
Contract No. 57-SVC14
Date Completed
Document No. 50000987

DRAWN	H. C. Lapiz	7-55	
CHECKED	H. C. E. Hedrick	2-55	
Approval Recommended by:	Chief Bridge Engineer		

CLASSIFICATION OF MATERIAL BASED ON STANDARD GRADE SIZE LIMITS

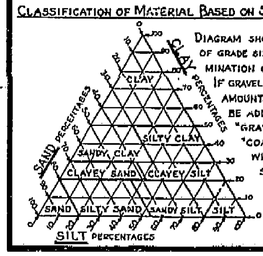

DIAGRAM SHOWING THE BASIS FOR ESTIMATES OF GRADE SIZE DISTRIBUTION USED IN DETERMINATION OF CLASS NAMES. IF GRAVEL IS PRESENT IN APPRECIABLE AMOUNTS THE TERM "GRAVELLY" MAY BE ADDED TO THE CLASS NAME, VIZ. "GRAVELLY SAND." THE TERMS "COARSE", "MEDIUM" AND "FINE" WHEN USED TO DESCRIBE SAND, SILT AND GRAVEL REFER TO STANDARD GRADE SIZE LIMITS.

LEGEND OF EARTH MATERIALS

- GRAVEL
- SAND
- SILT
- CLAY
- SANDY CLAY OR CLAYEY SAND
- SANDY SILT OR SILTY SAND
- SILTY CLAY OR CLAYEY SILT
- PEAT AND/OR ORGANIC MATTER
- FILL MATERIAL
- IGNEOUS ROCK
- SEDIMENTARY ROCK
- METAMORPHIC ROCK

LEGEND OF BORING OPERATIONS

- PLAN OF ANY BORING
- PEN PENETROMETER
- 2¼" CONE PENETROMETER
- SB SAMPLER BORING (DRY)
- RB ROTARY BORING (WET)
- AB AUGER BORING (DRY)
- JB JET BORING
- CB CORE BORING
- TP TEST PIT

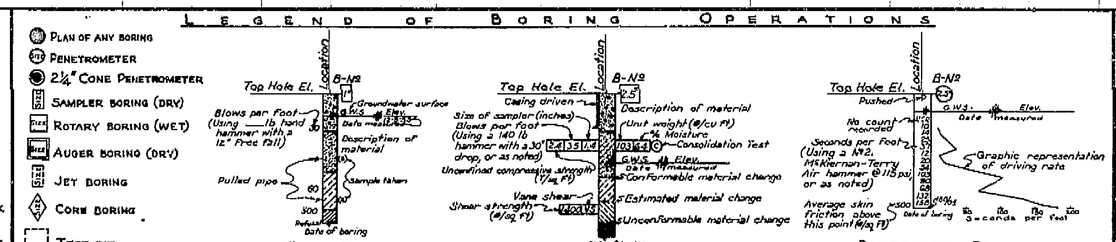

NOTES

The contractor's attention is directed to Section 2, Article (c) of the Standard Specifications and to the Special Provisions accompanying this set of plans.

Classification of earth material as shown on this sheet is based upon field inspection and is not to be construed to imply mechanical analysis.

STATE OF CALIFORNIA
DEPARTMENT OF PUBLIC WORKS
DIVISION OF HIGHWAYS

SOUTH SAN MIGUEL UNDERCROSSING

LOG OF TEST BORINGS

SCALE 1"=10'	BRIDGE 49-162(R)	FILE	DRAWING C-4174-5

PREL. DRAWING NO. P-4174 9

1-A

I HEREBY CERTIFY THAT THIS IS A TRUE AND ACCURATE COPY OF THE ABOVE DOCUMENT TAKEN UNDER MY DIRECTION AND CONTROL ON THIS DATE IN SACRAMENTO, CALIFORNIA PURSUANT TO AUTHORIZATION BY THE DIRECTOR OF PUBLIC WORKS.

DATE 1/ 3 SIGNATURE M. S. Kuff TITLE Jr C II

ClibPDF - www.fastio.com

DIST	COUNTY	ROUTE	POST MILES TOTAL PROJECT	SHEET No.	TOTAL SHEETS
05	SLO/Mon	101			

INCOMPLETE PLAN FOR DESIGN STUDY PRINTED
DATE: 04-MAR-2015
Office of Structure Design
STATE OF CALIFORNIA

REGISTERED CIVIL ENGINEER X DATE

PLANS APPROVAL DATE

REGISTERED PROFESSIONAL ENGINEER
Jose M Aquino III
No. 58386
Exp. 12-31-14
CIVIL
STATE OF CALIFORNIA

The State of California or its officers or agents shall not be responsible for the accuracy or completeness of scanned copies of this plan sheet.

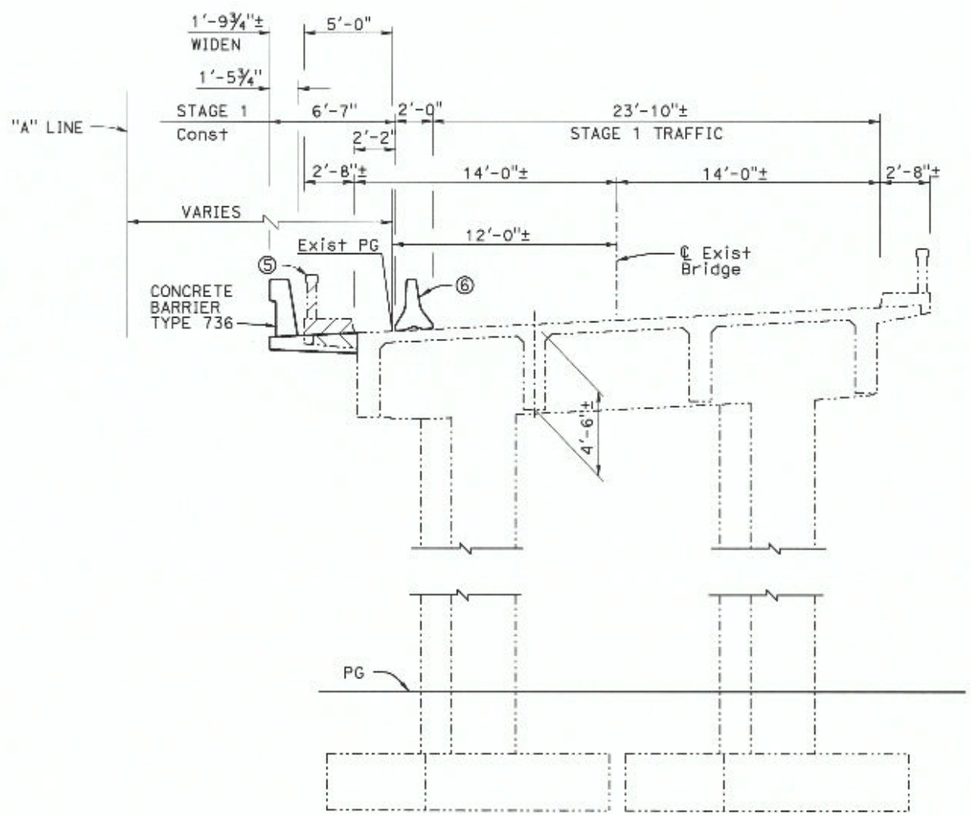

STAGE 1
TYPICAL SECTION
¼" = 1'-0"

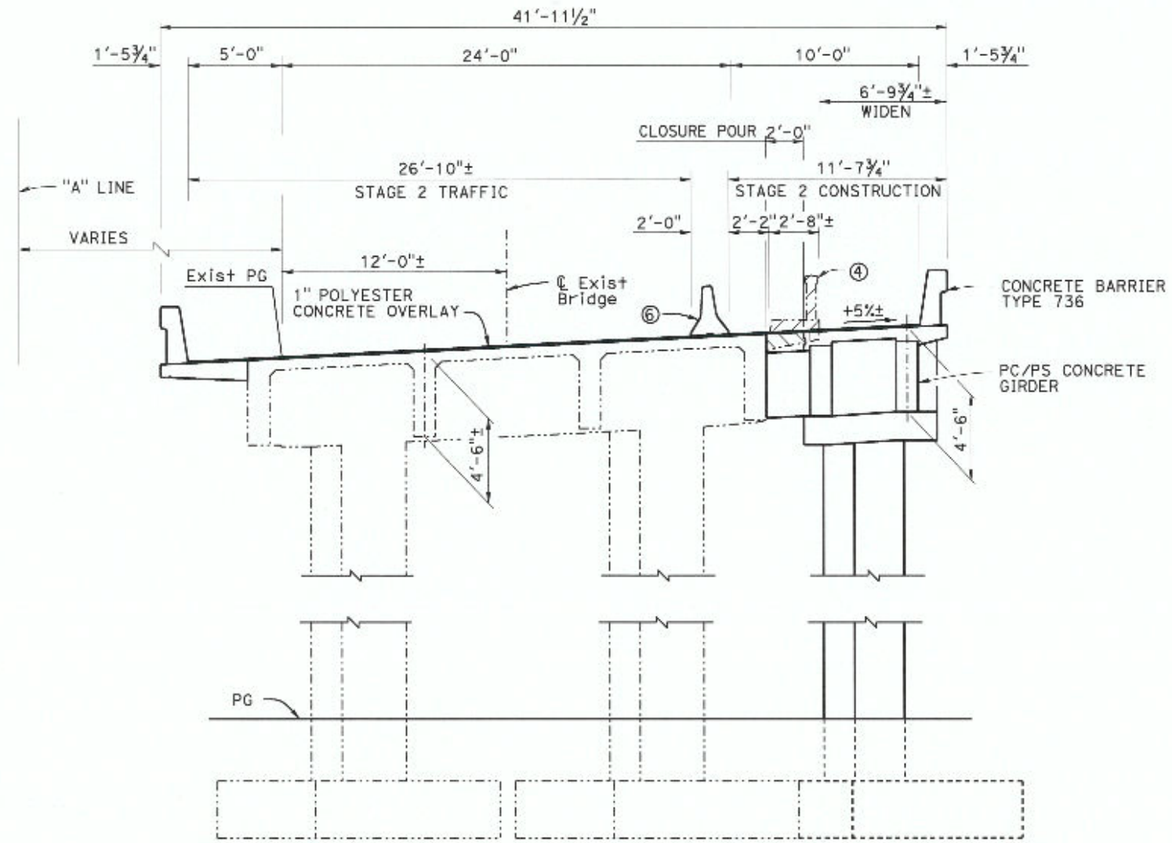

STAGE 2
TYPICAL SECTION
¼" = 1'-0"

LEGEND:
- - - - - - Indicates existing bridge
——— Indicates new construction
Indicates existing bridge removal
Indicates existing barrier removal

NOTES:
⑤ Existing barrier to be removed
⑥ Temporary Railing (Type K), see "ROADWAY PLANS"

NOTE:
THE CONTRACTOR SHALL VERIFY ALL CONTROLLING FIELD DIMENSIONS BEFORE ORDERING OR FABRICATING ANY MATERIAL.

Joseph E Downing
DESIGN ENGINEER

	BY	CHECKED
DESIGN	Arturo V Herrera	X
DETAILS	Nancy C Gwynn	X
QUANTITIES	X	X

LOAD FACTOR DESIGN — LIVE LOADING: HS20-44 AND ALTERNATIVE AND PERMIT DESIGN LOAD
LAYOUT BY X CHECKED X
SPECIFICATIONS BY X PLANS AND SPECS COMPARED X

ORIGINAL SCALE IN INCHES FOR REDUCED PLANS 0 1 2 3

STATE OF CALIFORNIA
DEPARTMENT OF TRANSPORTATION

DIVISION OF ENGINEERING SERVICES
STRUCTURE DESIGN
DESIGN BRANCH 3

BRIDGE NO. 49-0162R
POST MILE 65.1

SOUTH SAN MIGUEL UC (WIDEN)
GENERAL PLAN NO. 2

UNIT: 3578
PROJECT NUMBER & PHASE: 05000200201
CONTRACT NO.: 05-0G0404

DISREGARD PRINTS BEARING EARLIER REVISION DATES
REVISION DATES 5-30-14 12-10-14
SHEET 2 OF X

FILE => 49-0162r-g-p002.dgn

South San Miguel ARS Curve

SDC Controlling Procedure : **Probabalistic**

Period (s)	SDC
0.010	0.477
0.050	0.754
0.100	0.918
0.150	1.015
0.200	1.090
0.250	1.043
0.300	1.005
0.400	0.881
0.500	0.795
0.600	0.734
0.700	0.690
0.850	0.627
1.000	0.575
1.200	0.484
1.500	0.392
2.000	0.299
3.000	0.194
4.000	0.139
5.000	0.113

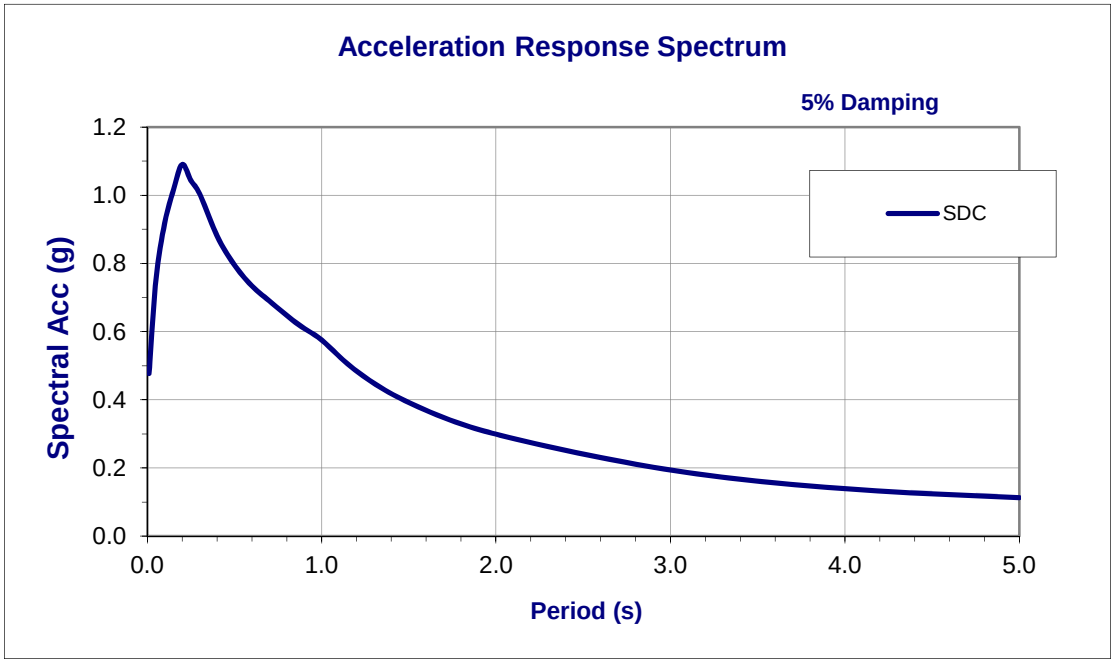

Notes

ARS curve was modified for Near Fault Directivity Effect

MATERIALS INFORMATION

11. Revised Foundation Report Retaining Wall at PM 65.08; dated January 21, 2016.

State of California
DEPARTMENT OF TRANSPORTATION

Business, Transportation and Housing Agency

M e m o r a n d u m

Serious drought,
Help Save Water!

To: JOEY AQUINO, Senior Project Engineer
Bridge Design Branch 3
Office of Bridge Design West
DIVISION OF ENGINEERING SERVICES
STRUCTURE DESIGN – MS 9 4/6F

Date: January 21, 2016

File: 05-SLO-101-63.2/R69.3
05-Mon-101-R0.0/1.9
Retaining Wall at PM 65.08
Bridge No. 49-E0023
Project ID 0500020020
EA: 05-0G0401

From: **DEPARTMENT OF TRANSPORTATION**
DIVISION OF ENGINEERING SERVICES
GEOTECHNICAL SERVICES

Subject: Revised Foundation Report Retaining Wall at PM 65.08

Scope of Work

A Revised Foundation Report (FR) is provided for the proposed retaining wall near post mile 65.08, adjacent to the realigned southbound on-ramp at the South San Miguel Interchange. The proposed retaining wall is part of the North Paso Robles Rehab project, located on State Route 101 in the vicinity of San Miguel, in the counties of San Luis Obispo and Monterey. Rehabilitation of the distressed portland cement concrete (PCC) pavement is proposed, along with widening shoulders to standard widths, widening and construction of new bridges and retaining walls, improvement of highway access, and construction of drainage facilities. Review of published geologic data and previous geotechnical reports, field reconnaissance, and geotechnical analysis were performed as part of the geotechnical investigation.

The purpose of this report is to document geotechnical conditions and provide foundation recommendations. This report supercedes the Foundation Report (September 25, 2015).

Introduction

The existing interchange at South San Miguel consists of a three span cast-in-place concrete T-beam bridge carrying northbound 101 over the southbound on-ramp, which merges with southbound 101 from the median side. Widening of the existing right bridge, construction of a new southbound structure, and realignment of the southbound on-ramp to the outside are proposed. In order to accommodate the realigned southbound on-ramp, construction of a retaining wall between the on-ramp and Cemetery Road is required. Cemetery Road is a local north-south frontage road located to the west of State Route 101, and is separated from the highway corridor by a 2:1 slope approximately 20 feet high. Refer to the attached preliminary General Plan and cross sections for additional details.

Pertinent Reports and Investigations

The following publications were used to assist in the assessment of site conditions:

1. *District Preliminary Geotechnical Report.* Jurasius, Mike. EA 05-0G0400. November 28, 2011.

2. *Pile Report 10th St UC, South San Miguel UC, North San Miguel UC.* Samuelson, R.S. May 16, 1957.

Field Investigation

Hollow stem auger borings were advanced behind the wall layout line to determine the subsurface conditions to be used for soil nail and wall facing designs. Refer to the project log of test borings for details of the borings. Refer to Table 1 for a summary of subsurface investigation information.

Table 1. Subsurface Exploration Summary

Boring	*Completion Date*	*Equipment*	*Hammer Type*	*Hammer Efficiency (%)*	*Approximate Ground Elevation (ft)*	*Depth (ft)*
A-14-020	11/18/2014	CS2000	Auto	85	659.01	36.5
A-14-021	11/18/2014	CS2000	Auto	85	661.03	41.5
A-14-022	11/18/2014	CS2000	Auto	85	653.32	41.5
A-14-023	11/19/2014	CS2000	Auto	85	658.43	51.5
A-14-024	11/19/2014	CS2000	Auto	85	662.52	41.5

Site Geology and Conditions

Climate

The regional climate for northern-inland San Luis Obispo County is generally hot in the summer months and cool in the winter months. The average maximum temperature in July is 94 degrees Fahrenheit and the average minimum is 33 degrees Fahrenheit in December. Based on data recorded at a precipitation station in the vicinity of San Miguel since 1950, the average annual precipitation is about 12 inches.

Topography and Drainage

The project parallels the Salinas River and is underlain by alluvial terraces that have undergone various degrees of erosion. The older, elevated terraces generally form the hills to the east and west of the Salinas River corridor, and are rounded by erosion and incised by smaller tributary drainages such as San Marcos Creek at the southern end of the project. Younger terraces near highway elevations are relatively flat to gently sloped, with steeper slopes where the Salinas River or tributary drainages more recently flowed. The Salinas River is the primary regional drainage. It flows northward to Monterey Bay, and is locally parallel and adjacent to the proposed

project area. Numerous smaller tributary drainages cross Highway 101 from the west, beneath bridges and in culverts.

Regional Geology

The project area lies within the Coast Ranges Geomorphic Province, characterized by northwest trending mountain ranges, controlled by movement along a system of similarly trending faults. Exposed highlands of the northern San Luis Obispo County region expose mostly Late Cretaceous to Tertiary age marine shale and sandstone, which are overlain by younger (Pleistocene to recent) alluvial deposits transported by the Salinas River and tributary drainages.

The proposed rehabilitation project follows the current path of the Salinas River, and is underlain by recent and older alluvial deposits of clay, silt, sand and gravel. Paso Robles Formation (QTp), covers most of the slopes on either side of the Salinas River as well as underlying portions of the 101 alignment. The sand and gravel portion of the Paso Robles Formation is variably cemented, and appears to retain global stability at slopes up to approximately 1:1, as seen in cut-slopes north of the 10th Street off-ramp, bounding the southbound 101 shoulder.

Site Subsurface Conditions

Auger borings performed behind the wall layout line on Cemetery Road encountered primarily cemented deposits of sand, silt, clay, and gravel in varying proportions. Relative density of granular soils varied from medium dense to very dense. Interspersed layers and lenses of hard lean clay and sandy lean clay were also encountered in the borings. Refer to the project log of test borings for complete soil descriptions and sequences encountered at the site.

Groundwater

Groundwater was not encountered within the depth of investigation of the auger borings performed behind the wall. Groundwater is not expected to be encountered or influence construction of the soil nail wall.

Corrosion Evaluation

The department considers a site to be corrosive to the foundation elements if the following conditions exist for the representative soil and/or water samples taken at the site: minimum resistivity of 1000 ohm-cm or less and/or PH of 5.5 or less. Samples found to be potentially corrosive based on this criteria are sent to the Headquarters Material Laboratory for additional corrosion testing based on chloride and sulphate content.

Soil samples were obtained during the subsurface investigation and tested for corrosion potential at the District and Headquarters Materials Laboratories. The results of the corrosion testing are presented as an attachment to the project Geotechnical Design Report. Based on the results of the testing, soils are not considered corrosive to foundation elements.

Seismic Recommendations

Based on the *Caltrans Seismic Design Procedure*, the following active and potentially active faults are located within the vicinity of the project site. The Caltrans ARS Online Tool was used to develop ARS curves for deterministic and probabilistic seismic prediction models. An estimated shear wave velocity of 1327 ft/sec was obtained for the project site using down-hole P-S suspension logging methods.

Table 2. Active and Potentially Active Faults

Fault Name	*Fault Type*	*Moment magnitude of maximum credible earthquake*	*Distance from fault to project site (miles)*	*Peak ground acceleration T=0 sec (gravity)*
Rinconada	Strike-Slip	7.4	5.6	0.34
San Andreas (Parkfield)	Strike-Slip	7.9	18.1	0.18
San Andreas (Creeping Section)	Strike-Slip	7.9	18.3	0.18
USGS 5% in 50 yr. Hazard	N/A	N/A	N/A	0.48

Liquefaction is the partial or complete loss of soil shear strength due to the build-up of excess pore water pressure during a seismic event. Soils with a potential for liquefaction are loose cohesionless soils below the groundwater table. Based on soil types and site conditions encountered at the project site, potential for liquefaction is low due to the dense nature of the soils, presence of fine-grained soils, and depth to groundwater.

Geotechnical Analysis and Design

Design of the soil nail wall was completed using the Caltrans design software *Snail Version 1.3 (Dec, 2014)*. Snail performs stability analysis of a soil nail wall using force limit equilibrium, and structural facing analysis using the procedures recommended in *Geotechnical Engineering Circular (GEC) 7: Soil Nail Walls*. The program was used to calculate a minimum factor of safety for a critical failure surface and to determine the service load at the nail head resulting from the critical failure surface, which is used to design the wall facing. Structural design of the facing is performed by choosing a trail wall facing design and corresponding factored facing resistance built into the program, and then comparing the factored facing resistance to the service load at the nail head (T_0) calculated by Snail using the equation by Clouterre (1991) from GEC 7. A minimum static factor of safety of 1.5 and a minimum factor of safety of 1.1 for psuedostatic seismic analysis were used per GEC 7. The factors of safety/resistance factors for nail tensile yield strength, nail pullout, and facing resistance recommended in GEC 7 were used in the Snail analysis. The factor of safety computed by Snail is calculated as the resisting force divided by the driving force, with the driving force being reduced by the controlling factored resistance of the soil nail tensile yield strength, soil nail pullout resistance, or structural facing resistance. Psuedostatic seismic analysis was performed by applying a horizontal acceleration at the center of mass of the mobilized soil block equal to 1/2 of the normalized horizontal acceleration, or k_h = 0.23g, as recommended in GEC 7. Potential for a deep-seated failure below the bottom of the wall was checked using a tri-linear surface below the wall exiting in front of the wall. An additional slope stability analysis of the critical wall height was performed using SLOPE-W to

verify global stability. A minimum global factor of safety of 1.33, or resistance factor of 0.75, was used to verify overall stability as recommended in AASHTO Bridge Design Specifications Section 11.6.2.3. Refer to attachments 4 and 5 for analyses results from Snail and SLOPE-W.

Soil Nail Wall Design Recommendations

The following parameters used in the geotechnical and structural wall analysis are provided for use in developing the soil nail wall plans and specifications. A summary of the design recommendations in table format is provided as an attachment to this report.

- Soil nail horizontal and vertical spacing (maximum) = 5 feet
- Soil unit weight = 120 pounds per cubic foot
- Soil friction angle = 33 degrees
- Soil cohesion = 200 pounds per square foot
- Design nail pullout resistance = 2000 pounds per foot/length
- #6 ASTM A615 Grade 60 steel soil nails
- Soil nail declination from horizontal = 15 degrees
- 16” wide geocomposite drain strips centered horizontally between columns of nails with PVC weep holes through the facing and barrier
- First row of nails approximately 2 feet below original ground at the wall layout line
- Bottom row of nails at pavement grade
- Intermediate nails spaced equally between top and bottom rows with 5-foot maximum vertical spacing
- Extend facing 2 feet below bottom row of nails

Facing Design

Facing design is the responsibility of Structure Design with aesthetic input from the District Landscape Architecture Branch. The structural facing design used in *Snail* with a factored facing resistance exceeding the service load at the nail head has the following features and is recommended for use in the design:

- Temporary shotcrete facing thickness = 4 inches
- Welded wire shotcrete reinforcing 6x6-w4.0 x w4.0
- #4 horizontal and vertical whaler bars
- Permanent facing thickness = 8 inches
- 8”x8”x¾” bearing plate w/ ¾” diameter headed stud w/ 1¼” diameter head, 5¼” stud length, 0.31” thick head
- Permanent facing reinforcing #4 at 12” horizontal and vertical
- Calculated factored facing resistance = 28.0 kips

Soil Nail Lengths and Wall Zones

Recommended soil nail lengths and wall zones for verification nail and stability testing are provided in Table 3. Per the 2010 Standard Specification Section 46-3.01D(2)(b)(ii), install 2 verification test soil nails for each wall zone. Proof test nail locations are shown on the wall elevation view in the project plans.

Table 3. Recommended Soil Nail Lengths and Wall Zones

Wall Station Limits	*Wall Zone*	*Maximum Design Height (feet)*	*Number of Rows*	*Recommended Soil Nail Length (feet)*
6+15.0 to 6+22.5	1	5	1	6
6+27.5 to 7+55.0	1	9	2	6
7+55.0 to 10+52.5	2	14	3	11
10+57.5 to 11+55.0	2	15	4	11
11+55.0 to 12+92.5	3	14	3	11
12+97.5 to 13+27.5	3	9	2	6
13+32.5 to 13+50.0	3	5	1	6

Construction Considerations

Lenses of gravels were encountered in the auger borings and will likely be encountered in the drilled holes for the soil nails. Drilling equipment should be capable of drilling through gravel zones. Exploratory borings for the soil nail wall design were performed with 6 inch hollow stem augers; similar drilling methods and equipment are suitable for the soil nail wall construction.

It is anticipated that construction of the wall will be performed with equipment working from a bench in front of the wall. Limit disturbance of the vegetated slope above the wall to prevent erosion and sloughing of material into the gutter behind the wall after construction. Refer to the District Landscape Architecture Branch for erosion control and planting requirements for areas where slope disturbance is planned.

Minor cutting and filling will be required to construct the proposed gutter behind the wall parapet.

Additional Information

Standard Specifications 2010 Section 2-1.6.B, “Supplemental Project Information”, discloses to bidders and contractors a list of pertinent information available for their inspection prior to bid opening. Items listed to be included in the Information Handout will be provided in Acrobat (.pdf) format to the Addressee of this report via electronic mail.

Data and information attached with the project plans are:

A. Log of Test Borings.

Data and information included in the Information Handout provided to the Bidders and Contractors are:

A. Revised Foundation Report dated January 21, 2016.

If you have any questions or comments, please contact Ryan Turner at (805) 549-3750.

MICHAEL J. JURASIUS, P.G., C.E.G.
Engineering Geologist
Geotechnical Design – North
Branch D

Signed: January 21, 2016

RYAN TURNER, P.E., G.E.
Transportation Engineer Civil
Geotechnical Design – North
Branch D

c: Job File / Branch D Records
Structure Construction RE Pending File
Craig Whitten / DES Office Engineer
Andrew Tan / PCE
Eric Karlson/ DME

LIST OF ATTACHMENTS

Vicinity Map	Attachment 1
General Plan	Attachment 2
Geologic Map and Legend	Attachment 3
Snail Analysis Results	Attachment 4
SLOPE-W Analysis Results	Attachment 5
Soil Nail Wall Design Recommendations	Attachment 6

INDEX OF PLANS

STATE OF CALIFORNIA
DEPARTMENT OF TRANSPORTATION

PROJECT PLANS FOR CONSTRUCTION ON
STATE HIGHWAY

IN SAN LUIS OBISPO COUNTY AND MONTEREY COUNTY
FROM MONTEREY ROAD
TO 0.2 MILE SOUTH OF BRADLEY Rd OVERCROSSING

TO BE SUPPLEMENTED BY STANDARD PLANS DATED MAY 2006

Dist	COUNTY	ROUTE	POST MILES TOTAL PROJECT	SHEET No.	TOTAL SHEETS
05	SLO/Mon	101	63.2/69.3 R0.0/R1.9		

LOCATION MAP

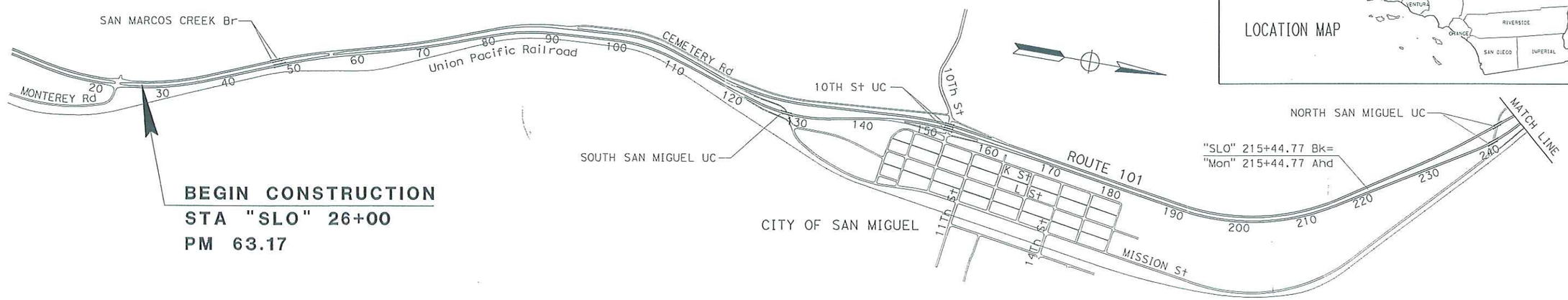

BEGIN CONSTRUCTION
STA "SLO" 26+00
PM 63.17

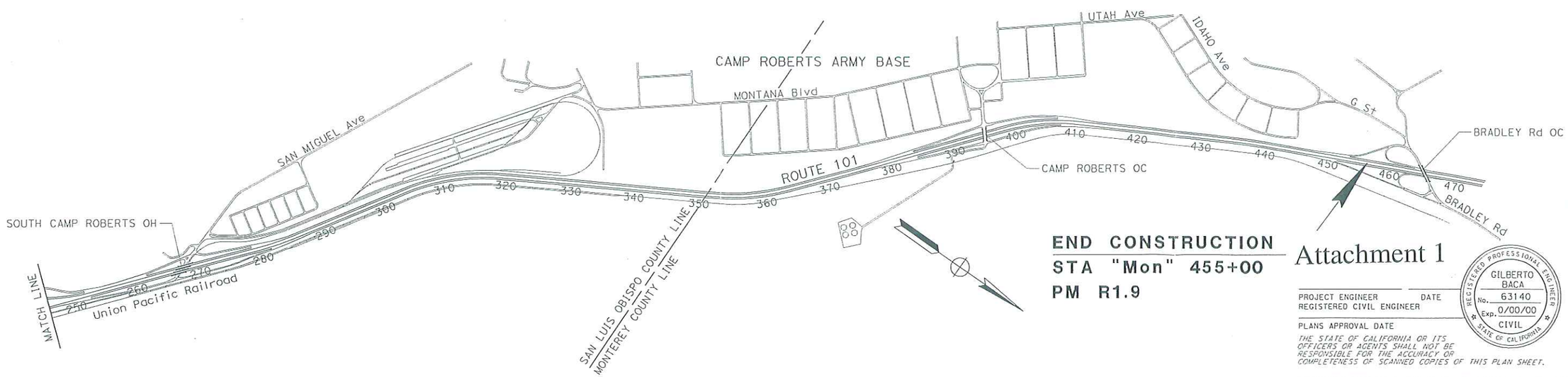

END CONSTRUCTION
STA "Mon" 455+00
PM R1.9

Attachment 1

PROJECT ENGINEER DATE
REGISTERED CIVIL ENGINEER

PLANS APPROVAL DATE

THE STATE OF CALIFORNIA OR ITS OFFICERS OR AGENTS SHALL NOT BE RESPONSIBLE FOR THE ACCURACY OR COMPLETENESS OF SCANNED COPIES OF THIS PLAN SHEET.

REGISTERED PROFESSIONAL ENGINEER
GILBERTO BACA
No. 63140
Exp. 0/00/00
CIVIL
STATE OF CALIFORNIA

CONTRACT No.	00-000004
PROJECT ID	0000000000

PROJECT MANAGER

DESIGN ENGINEER ROBERTO BANDA

THE CONTRACTOR SHALL POSSESS THE CLASS (OR CLASSES) OF LICENSE AS SPECIFIED IN THE "NOTICE TO BIDDERS."

LAST REVISION 01-02-11 DATE PLOTTED => 07-JUN-2011 TIME PLOTTED => 09:08

DIST	COUNTY	ROUTE	POST MILES TOTAL PROJECT	SHEET No.	TOTAL SHEETS
05	SLO/Mon	101			

REGISTERED CIVIL ENGINEER — X DATE

PLANS APPROVAL DATE

REGISTERED PROFESSIONAL ENGINEER — Jose M Aquino III — No. 58386 — Exp. 12-31-16 — CIVIL — STATE OF CALIFORNIA

The State of California or its officers or agents shall not be responsible for the accuracy or completeness of scanned copies of this plan sheet.

INCOMPLETE PLAN FOR DESIGN STUDY PRINTED
DATE: 11-DEC-2015
Office of Structure Design
STATE OF CALIFORNIA

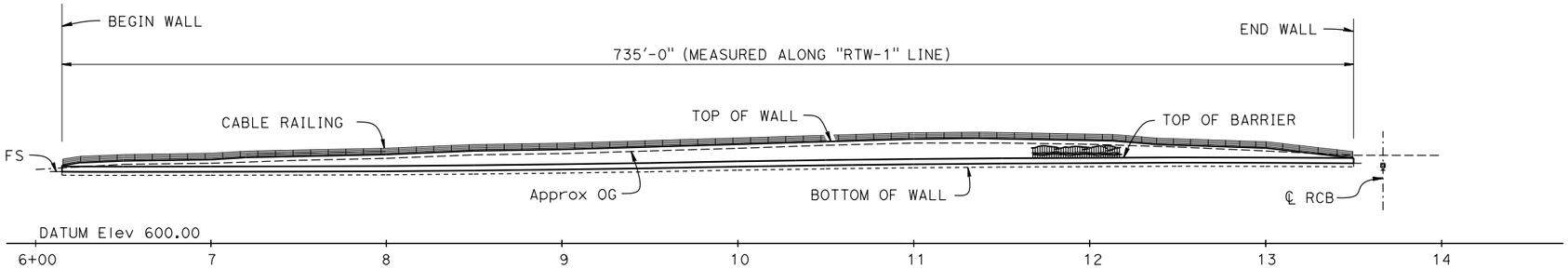

ELEVATION

1" = 40'

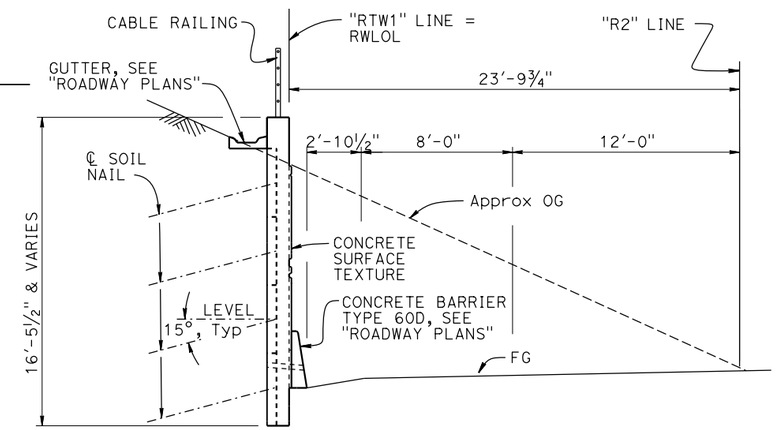

TYPICAL SECTION

¼" = 1'-0"

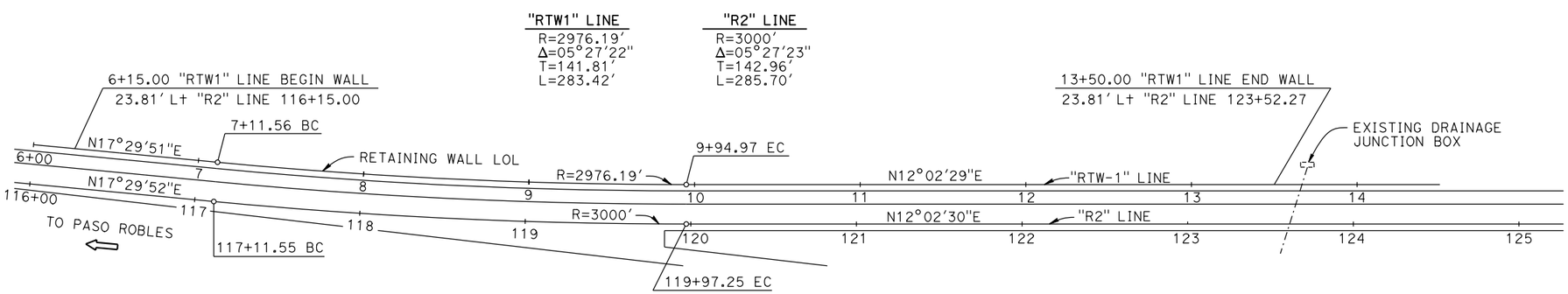

PLAN

1" = 40'

Attachment 2

Joseph E Downing, DESIGN ENGINEER	DESIGN	BY Eric G Burgeson	CHECKED Seung Pyo Hong	LOAD FACTOR DESIGN	LIVE LOADING: N/A
	DETAILS	BY Nancy C Gwynn	CHECKED Seung Pyo Hong	LAYOUT BY X	CHECKED X
	QUANTITIES	BY Sharon Yen	CHECKED Lewis L Shen	SPECIFICATIONS BY X	PLANS AND SPECS COMPARED X

ORIGINAL SCALE IN INCHES FOR REDUCED PLANS 0 1 2 3

STATE OF CALIFORNIA
DEPARTMENT OF TRANSPORTATION

DIVISION OF ENGINEERING SERVICES
STRUCTURE DESIGN
DESIGN BRANCH 3

BRIDGE NO. 49E0023
POST MILE 65.08

RETAINING WALL AT POST MILE 65.08
GENERAL PLAN

UNIT: 3578
PROJECT NUMBER & PHASE: 05000200201
CONTRACT NO.: 05-0G0404

DISREGARD PRINTS BEARING EARLIER REVISION DATES
REVISION DATES: 1-30-14 9-30-15 12-10-15

SHEET 1 OF 22

STRUCTURES DESIGN GENERAL PLAN SHEET (ENGLISH) (REV 09-01-10)

FILE => 49e0023-g-gp.dgn

USERNAME => s124832 DATE PLOTTED => 11-DEC-2015 TIME PLOTTED => 06:52

GEOLOGIC MAP
SLO-MON-101-63.2/R69.3
North Paso Robles 101 Rehab

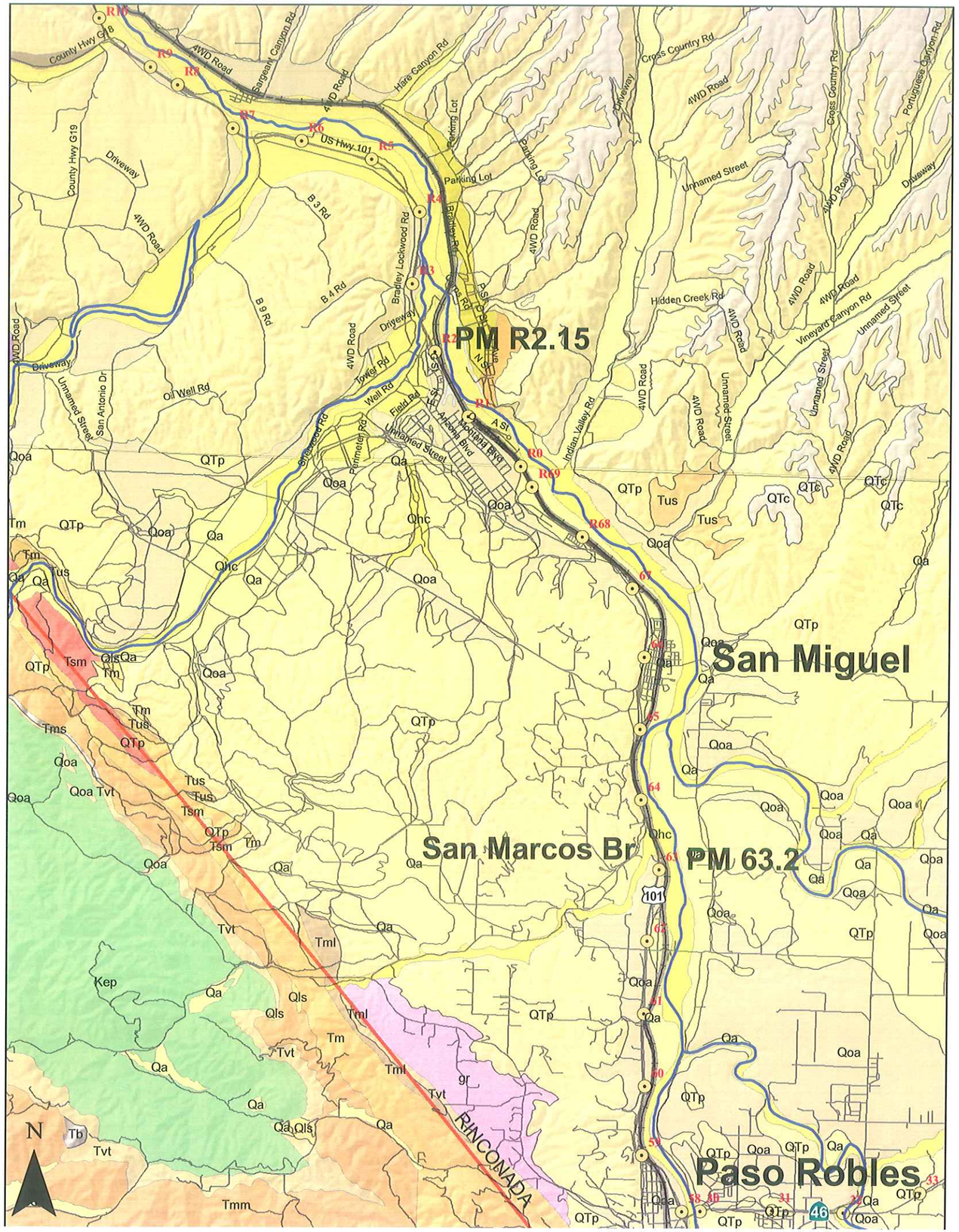

Legend

Geologic Units

UNIT

- QTc-Clay of the Paso Robles Formation
- QTp-Paso Robles Formation (valley sediments)
- Qa-Latest Pleistocene to Holocene alluvium, undiffer
- Qhc-Recent stream channel deposits
- Qls-Landslide deposits
- Qoa-Early to late Pleistocene alluvial deposits, undiferentiated
- Qrs-Modern stream channel deposits
- Tm-Monterey Formation, undifferentiated
- Tml-Monterey Formation, silty shale
- Tmm-Sandholt Member (Monterey Formation)
- Tsm-Santa Margarita Sandstone
- Tus-Sandstone, conglomerate, minor mudstone
- Tvt-Vaqueros Sandstone
- gr-Granitic rocks, undivided
- Kep-El Piojo Formation, L. Cret. mud stone, sandstone, and cong.

1 0.5 0 1 2 3 4 Miles

Attachment 3

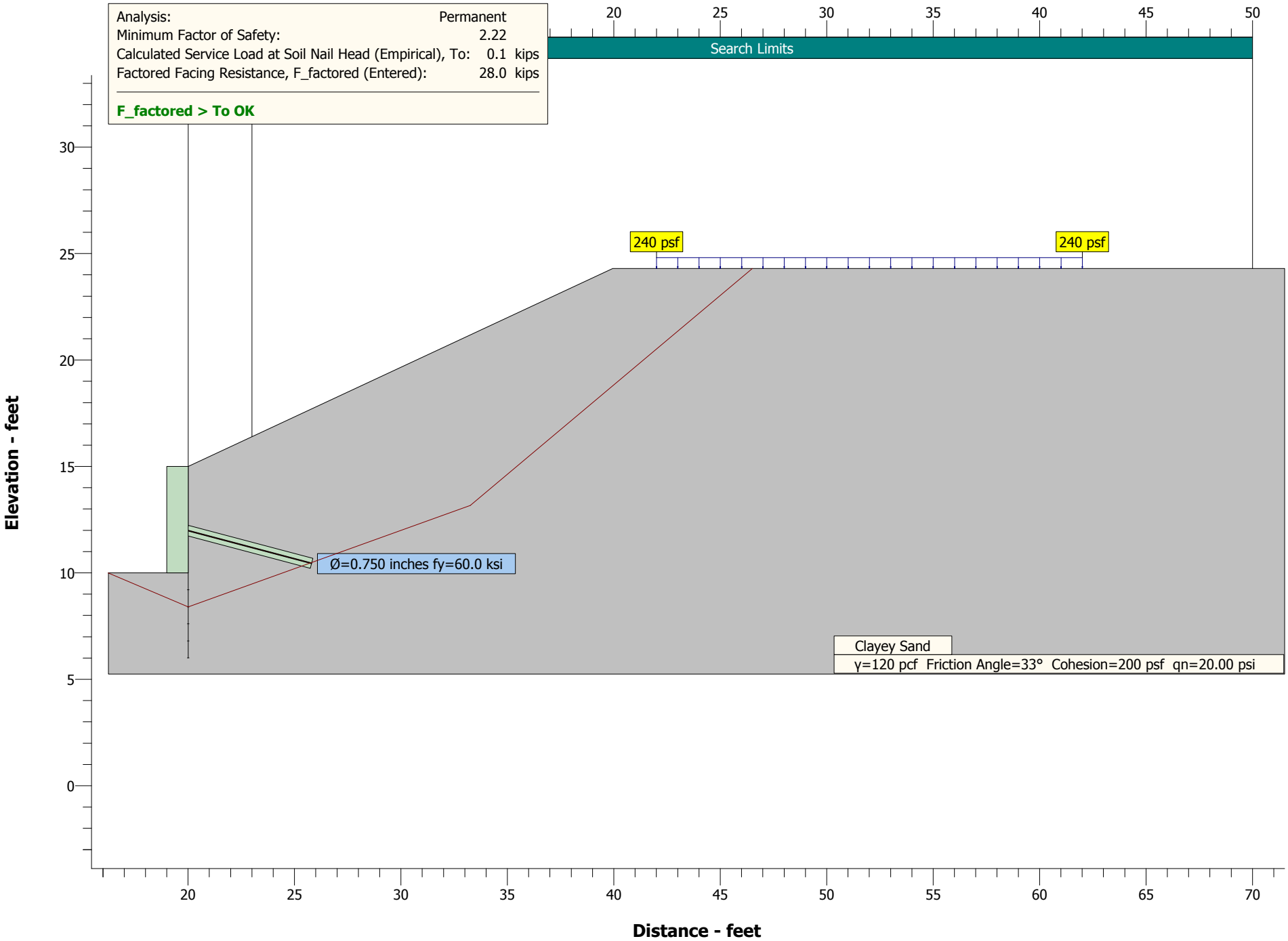
Analysis: Permanent
Minimum Factor of Safety: 2.22
Calculated Service Load at Soil Nail Head (Empirical), To: 0.1 kips
Factored Facing Resistance, F_factored (Entered): 28.0 kips
F_factored > To OK
Search Limits
240 psf
240 psf
Ø=0.750 inches fy=60.0 ksi
Clayey Sand
γ=120 pcf Friction Angle=33° Cohesion=200 psf qn=20.00 psi
Elevation - feet
Distance - feet

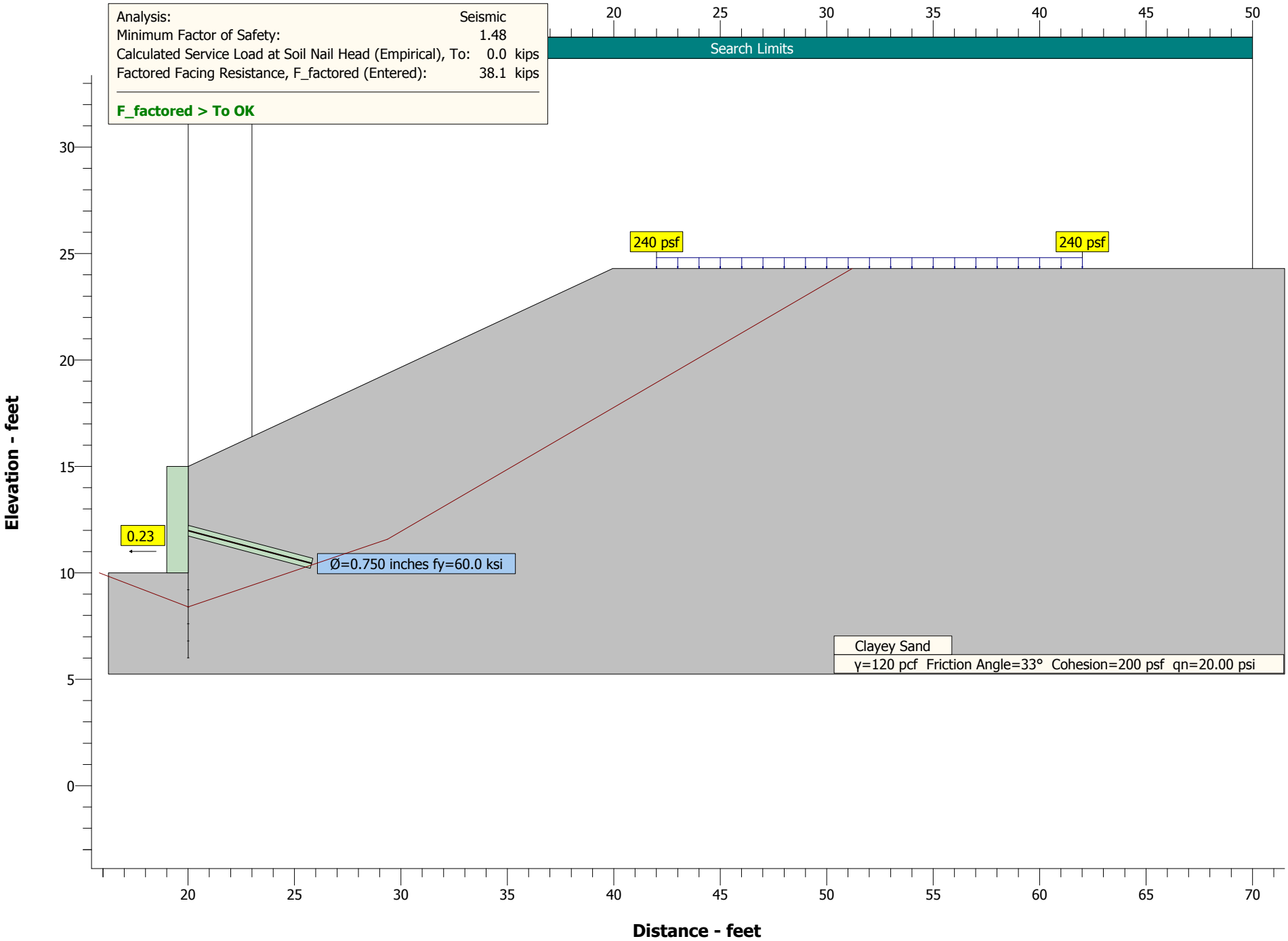
Analysis: Seismic
Minimum Factor of Safety: 1.48
Calculated Service Load at Soil Nail Head (Empirical), To: 0.0 kips
Factored Facing Resistance, F_factored (Entered): 38.1 kips
F_factored > To OK
Search Limits
240 psf
240 psf
0.23
Ø=0.750 inches fy=60.0 ksi
Clayey Sand
γ=120 pcf Friction Angle=33° Cohesion=200 psf qn=20.00 psi
Elevation - feet
Distance - feet

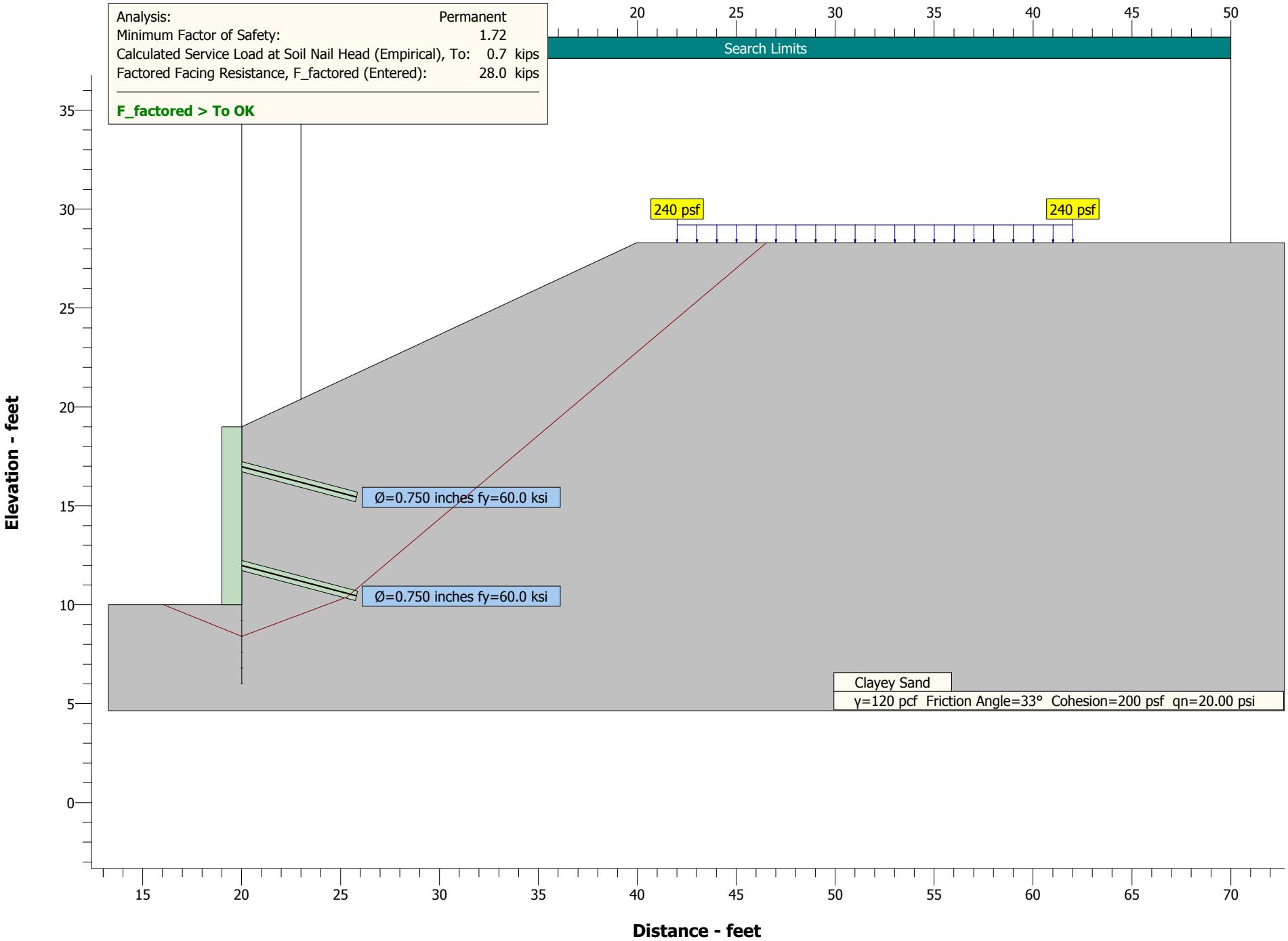
Analysis: Permanent
Minimum Factor of Safety: 1.72
Calculated Service Load at Soil Nail Head (Empirical), To: 0.7 kips
Factored Facing Resistance, F_factored (Entered): 28.0 kips
F_factored > To OK
Search Limits
240 psf
240 psf
Ø=0.750 inches fy=60.0 ksi
Ø=0.750 inches fy=60.0 ksi
Clayey Sand
γ=120 pcf Friction Angle=33° Cohesion=200 psf qn=20.00 psi
Elevation - feet
Distance - feet

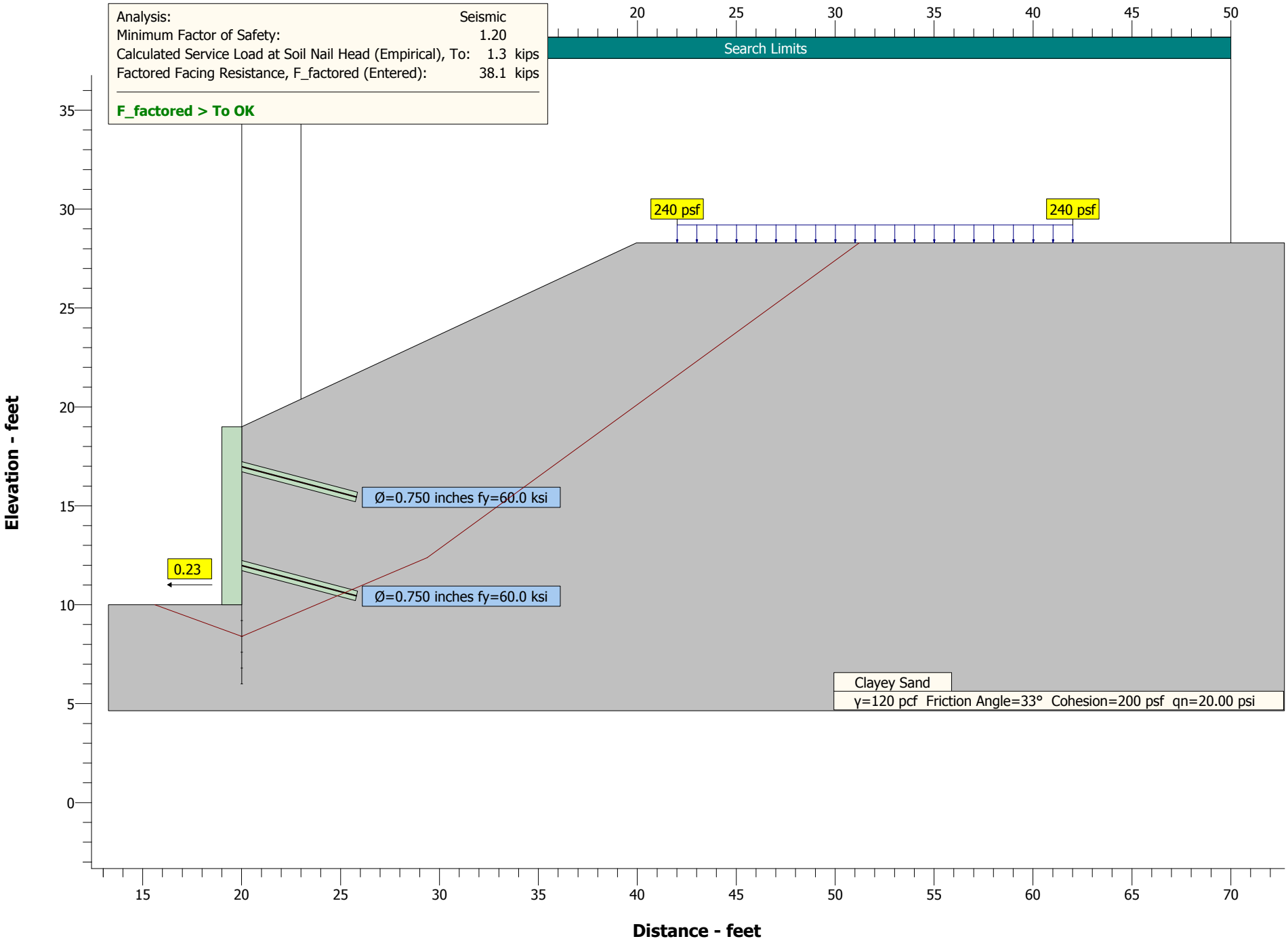
Analysis: Seismic
Minimum Factor of Safety: 1.20
Calculated Service Load at Soil Nail Head (Empirical), To: 1.3 kips
Factored Facing Resistance, F_factored (Entered): 38.1 kips
F_factored > To OK
Search Limits
240 psf
240 psf
Ø=0.750 inches fy=60.0 ksi
Ø=0.750 inches fy=60.0 ksi
0.23
Clayey Sand
γ=120 pcf Friction Angle=33° Cohesion=200 psf qn=20.00 psi
Elevation - feet
Distance - feet

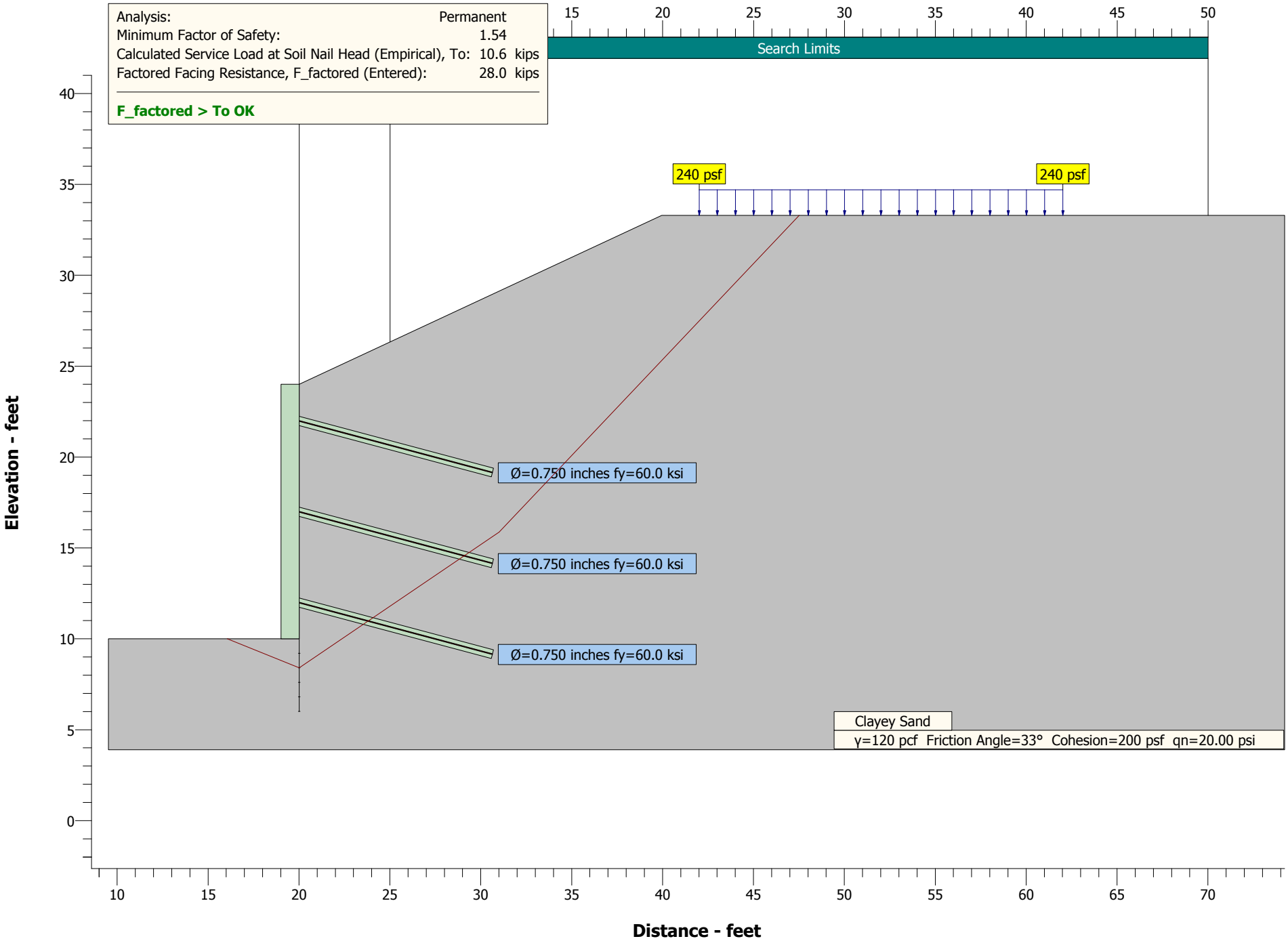
Analysis: Permanent
Minimum Factor of Safety: 1.54
Calculated Service Load at Soil Nail Head (Empirical), To: 10.6 kips
Factored Facing Resistance, F_factored (Entered): 28.0 kips
F_factored > To OK
Search Limits
240 psf
240 psf
Ø=0.750 inches fy=60.0 ksi
Ø=0.750 inches fy=60.0 ksi
Ø=0.750 inches fy=60.0 ksi
Clayey Sand
γ=120 pcf Friction Angle=33° Cohesion=200 psf qn=20.00 psi
Elevation - feet
Distance - feet

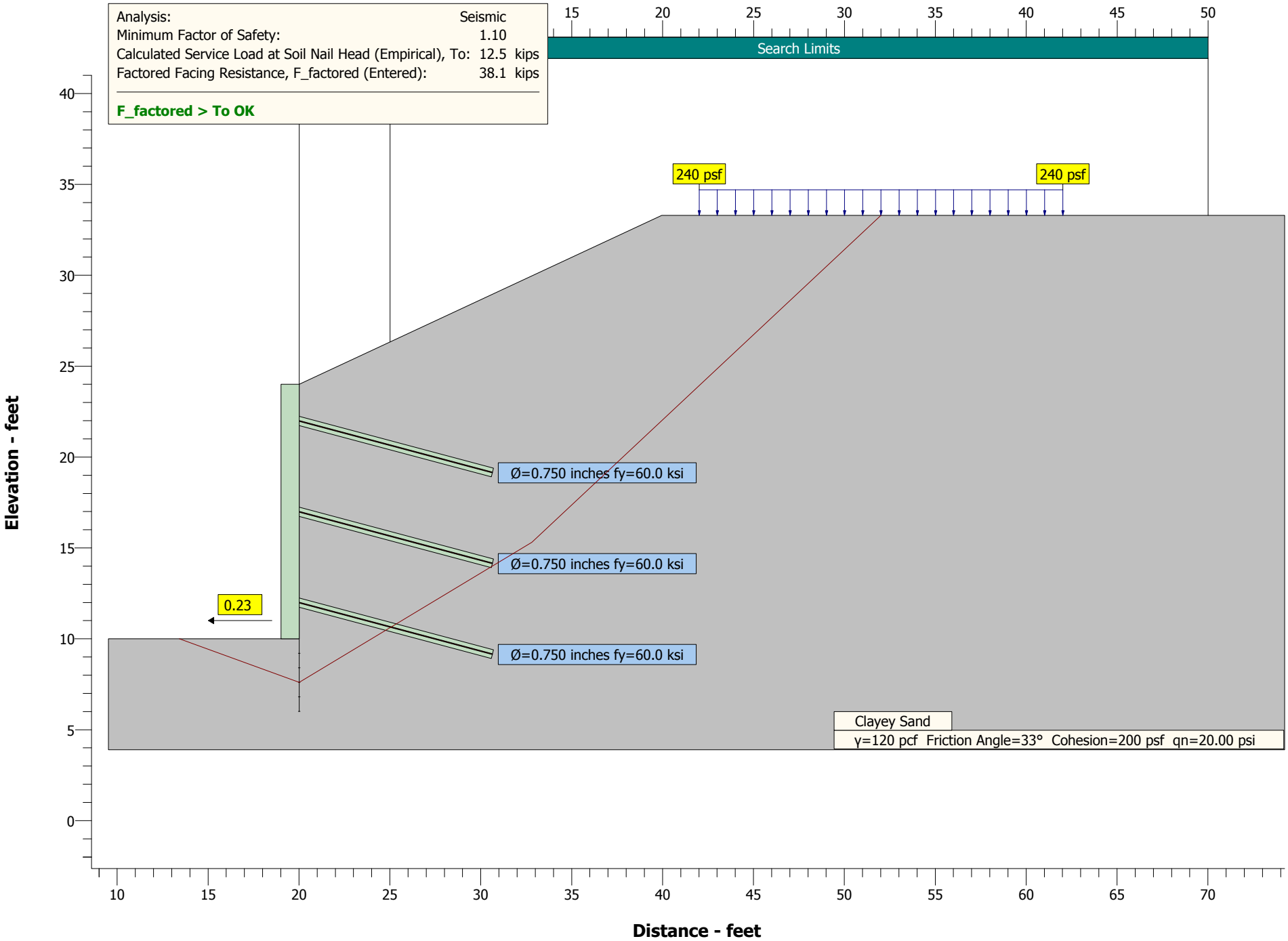
Analysis: Seismic
Minimum Factor of Safety: 1.10
Calculated Service Load at Soil Nail Head (Empirical), To: 12.5 kips
Factored Facing Resistance, F_factored (Entered): 38.1 kips
F_factored > To OK
Search Limits
240 psf
240 psf
Ø=0.750 inches fy=60.0 ksi
Ø=0.750 inches fy=60.0 ksi
Ø=0.750 inches fy=60.0 ksi
0.23
Clayey Sand
γ=120 pcf Friction Angle=33° Cohesion=200 psf qn=20.00 psi
Elevation - feet
Distance - feet

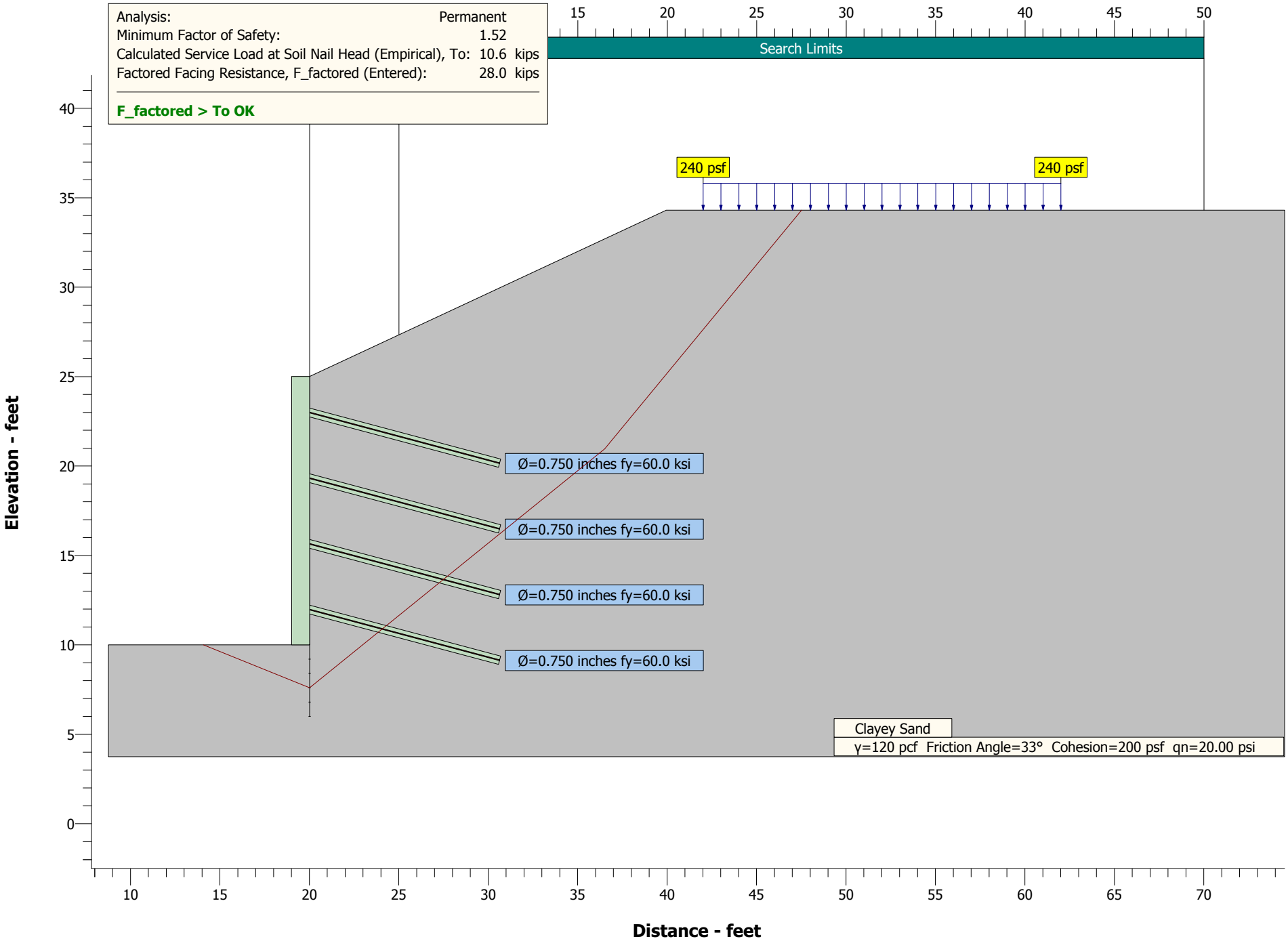
Analysis: Permanent
Minimum Factor of Safety: 1.52
Calculated Service Load at Soil Nail Head (Empirical), To: 10.6 kips
Factored Facing Resistance, F_factored (Entered): 28.0 kips
F_factored > To OK
Search Limits
240 psf
240 psf
Ø=0.750 inches fy=60.0 ksi
Ø=0.750 inches fy=60.0 ksi
Ø=0.750 inches fy=60.0 ksi
Ø=0.750 inches fy=60.0 ksi
Clayey Sand
γ=120 pcf Friction Angle=33° Cohesion=200 psf qn=20.00 psi
Elevation - feet
Distance - feet

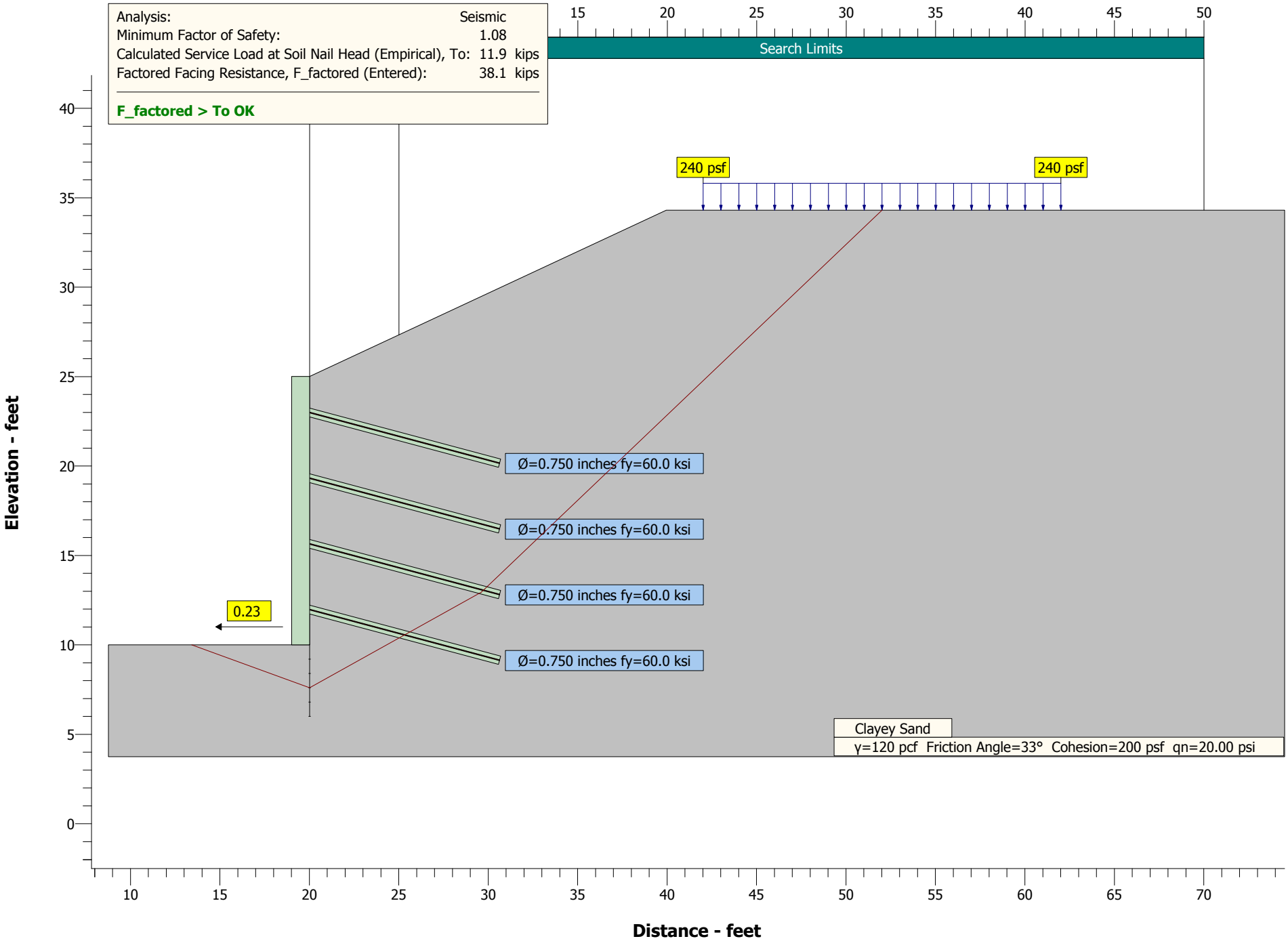
Analysis: Seismic
Minimum Factor of Safety: 1.08
Calculated Service Load at Soil Nail Head (Empirical), To: 11.9 kips
Factored Facing Resistance, F_factored (Entered): 38.1 kips
F_factored > To OK
Search Limits
240 psf
240 psf
Ø=0.750 inches fy=60.0 ksi
Ø=0.750 inches fy=60.0 ksi
Ø=0.750 inches fy=60.0 ksi
Ø=0.750 inches fy=60.0 ksi
0.23
Clayey Sand
γ=120 pcf Friction Angle=33° Cohesion=200 psf qn=20.00 psi
Elevation - feet
Distance - feet

North Paso Robles Rehab
05-0G0401
South San Miguel Soil Nail Wall
Global Stability Analysis

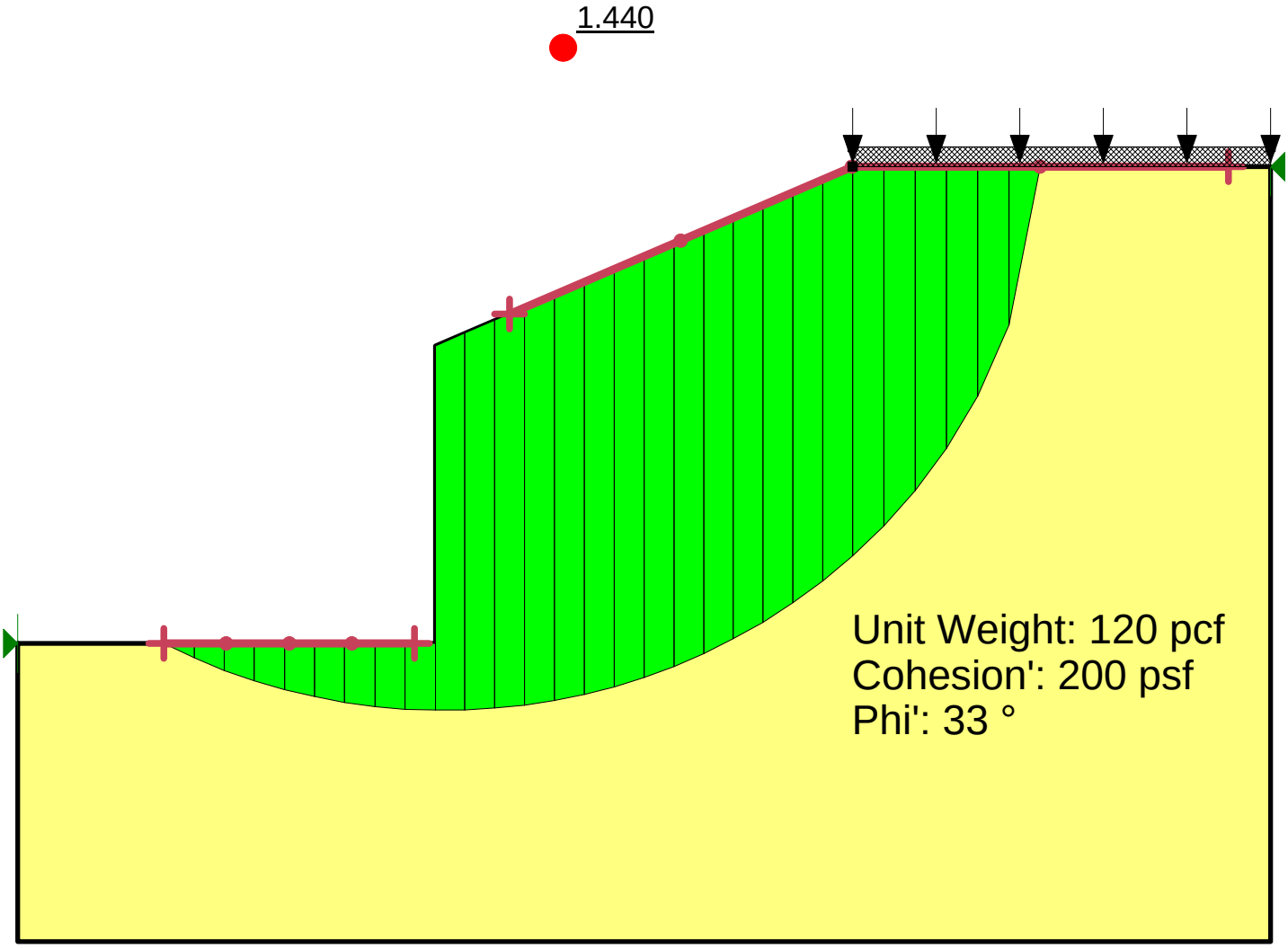

Attachment 5

Soil Nail Wall Design Recommendations

Wall Configuration					Nail Configuration[5,6,7,8]							Nail Properties			
Wall Segment		Max. Height (ft)	Batter (H:V)	Wall Position[1]	MNR[2]	Min. Nail Length (ft)	Max. Horiz. Spacing (ft)	Max. Vert. Spacing (ft)	Nail Inclination from Horiz. (°)	Dtop[3] (ft)	Dbot[4] (ft)	Nail Yield Strength (ksi)	Bar Diam. (in)	Q_d[9] (kips/ft)	Minimum Factored Facing Resistance (kips)
Beg Sta.	End Sta.														
6+15.0	6+22.5	5	12:1	BS	1	6	5	5	15	2	2	60	¾”	2.0	28
6+27.5	7+55.0	9	12:1	BS	2	6	5	5	15	2	2	60	¾”	2.0	28
7+55.0	10+52.5	14	12:1	BS	3	11	5	5	15	2	2	60	¾”	2.0	28
10+57.5	11+55.0	15	12:1	BS	4	11	5	5	15	2	2	60	¾”	2.0	28
11+55.0	12+92.5	14	12:1	BS	3	11	5	5	15	2	2	60	¾”	2.0	28
12+97.5	13+27.5	9	12:1	BS	2	6	5	5	15	2	2	60	¾”	2.0	28
13+32.5	13+50.0	5	12:1	BS	1	6	5	5	15	2	2	60	¾”	2.0	28

Wall Configuration Notes:

1. Wall Position refers to:
   - Bottom of slope (BS)
   - Mid-slope (MS)
   - Top of slope (TS)
   - Grade separation (GS)

Nail Configuration Notes:

2. MNR = Minimum number of nail rows.
3. Dtop = Approximate distance from O.G. to the top row of nails.
4. Dbot = Distance from the bottom of the wall to the bottom row of nails.
5. Minimum horizontal nail spacing = 5 feet
6. Minimum vertical nail spacing = 5 feet
7. Minimum distance from facing edge to nail = 2 feet
8. Maximum distance from facing edge to nail = 2.5 feet

Nail Property Notes:

9. Q_d = Design pullout resistance.

Attachment 6
05-Mon-101-R0.0/1.9
Retaining Wall at PM 65.08

MATERIALS INFORMATION

12. Revised Foundation Report 10th Street UC; dated January 5, 2016

State of California
DEPARTMENT OF TRANSPORTATION

Business, Transportation and Housing Agency

M e m o r a n d u m

Serious drought,
Help Save Water!

To: JOEY AQUINO, Senior Project Engineer
Bridge Design Branch 3
Office of Bridge Design West
DIVISION OF ENGINEERING SERVICES
STRUCTURE DESIGN – MS 9 4/6F

Date: January 5, 2016

File: 05-SLO-101-63.2/R69.3
05-Mon-101-R0.0/1.9
10th Street UC R/L
Bridge No. 49-0163R/L
Project ID 0500020020
EA: 05-0G0401

From: **DEPARTMENT OF TRANSPORTATION**
DIVISION OF ENGINEERING SERVICES
GEOTECHNICAL SERVICES

Subject: Revised Foundation Report 10th Street Undercrossing

Scope of Work

A Revised Foundation Report (FR) is provided for the 10th Street Undercrossing right and left bridges. Widening of the existing northbound and southbound bridge structures is part of the North Paso Robles Rehab project, located on State Route 101 in the vicinity of San Miguel, in the counties of San Luis Obispo and Monterey. Rehabilitation of the distressed portland cement concrete (PCC) pavement is proposed, along with widening shoulders to standard widths, widening and construction of new bridges and retaining walls, improvement of highway access, and construction of drainage facilities. Review of published geologic data and previous geotechnical reports, field reconnaissance, and geotechnical analysis were performed as part of the geotechnical investigation.

The purpose of this report is to document geotechnical conditions and provide foundation recommendations. This report supercedes the Foundation Report (September 25, 2015).

Introduction

The existing interchange at 10th Street and 101 consists of two three-span cast-in-place concrete T-beam bridges carrying 101 over 10th Street. Widening of the both bridges by construction of cantilevered deck sections to the outside and additional T-girder sections supported on new columns and widened abutments in the existing median. Refer to the attached General Plan and as-builts for additional details.

Pertinent Reports and Investigations

The following publications were used to assist in the assessment of site conditions:

1. *District Preliminary Geotechnical Report.* Jurasius, Mike. EA 05-0G0400. November 28, 2011.

2. *Pile Report 10th St UC, South San Miguel UC, North San Miguel UC.* Samuelson, R.S. May 16, 1957.

Field Investigation and Laboratory Testing Program

Mud rotary borings were advanced near support locations to determine the subsurface conditions to be used for foundation design. Refer to the project log of test borings for details of the borings at the bridge site. P-S suspension logging was performed for the project to calculate an average shear wave velocity for use in generating the design ARS curve presented in the seismic section of this report. Refer to Table 1 for a summary of subsurface investigation information.

Table 1. Subsurface Exploration Summary

Boring	*Completion Date*	*Equipment*	*Hammer Type*	*Hammer Efficiency (%)*	*Approximate Ground Elevation (ft)*	*Depth (ft)*
RC-14-013	10/23/2014	CS2000	Auto	93	684.7	101.5
RC-14-014	10/23/2014	CS2000	Auto	93	685.0	101.8
RC-14-018	11/4/2014	CS2000	Auto	93	666.0	81.5
RC-14-019	11/5/2014	CS2000	Auto	93	665.6	81.5

Site Geology and Conditions

Climate

The regional climate for northern-inland San Luis Obispo County is generally hot in the summer months and cool in the winter months. The average maximum temperature in July is 94 degrees Fahrenheit and the average minimum is 33 degrees Fahrenheit in December. Based on data recorded at a precipitation station in the vicinity of San Miguel since 1950, the average annual precipitation is about 12 inches.

Topography and Drainage

The project parallels the Salinas River and is underlain by alluvial terraces that have undergone various degrees of erosion. The older, elevated terraces generally form the hills to the east and west of the Salinas River corridor, and are rounded by erosion and incised by smaller tributary drainages such as San Marcos Creek at the southern end of the project. Younger terraces near highway elevations are relatively flat to gently sloped, with steeper slopes where the Salinas River or tributary drainages more recently flowed. The Salinas River is the primary regional drainage. It flows northward to Monterey Bay, and is locally parallel and adjacent to the proposed project area. Numerous smaller tributary drainages cross Highway 101 from the west, beneath bridges and in culverts.

Regional Geology

The project area lies within the Coast Ranges Geomorphic Province, characterized by northwest trending mountain ranges, controlled by movement along a system of similarly trending faults. Exposed highlands of the northern San Luis Obispo County region expose mostly Late Cretaceous to Tertiary age marine shale and sandstone, which are overlain by younger (Pleistocene to recent) alluvial deposits transported by the Salinas River and tributary drainages.

The proposed rehabilitation project follows the current path of the Salinas River, and is underlain by recent and older alluvial deposits of clay, silt, sand and gravel. Paso Robles Formation (QTp), covers most of the slopes on either side of the Salinas River as well as underlying portions of the 101 alignment. The sand and gravel portion of the Paso Robles Formation is variably cemented, and appears to retain global stability at slopes up to approximately 1:1, as seen in cut-slopes north of the 10th Street off-ramp, bounding the southbound 101 shoulder.

Groundwater

An open standpipe observation well was installed in boring RC-14-013 to observe fluctuations in groundwater levels and determine if groundwater will influence construction and foundation design. Results of the groundwater-monitoring program are summarized in Table 2.

Table 2. Groundwater Elevations

Boring	Date	Depth to Groundwater (ft)	Groundwater Elevation(ft)
RC-14-013	11/19/2014	65.8	618.1
RC-14-013	1/20/2015	66.0	617.9
RC-14-013	2/24/2015	66.6	617.3

Corrosion Evaluation

The department considers a site to be corrosive to the foundation elements if the following conditions exist for the representative soil and/or water samples taken at the site: minimum resistivity of 1000 ohm-cm or less and/or PH of 5.5 or less. Samples found to be potentially corrosive based on this criteria are sent to the Headquarters Material Laboratory for additional corrosion testing based on chloride and sulphate content.

Soil samples were obtained during the subsurface investigation and tested for corrosion potential at the District and Headquarters Materials Laboratories. The results of the corrosion testing are presented as an attachment to the project Geotechnical Design Report. Based on the results of the testing, soils are not considered corrosive to foundation elements.

Seismic Recommendations

Based on the *Caltrans Seismic Design Procedure*, the following active and potentially active faults are located within the vicinity of the project site. The Caltrans ARS Online Tool was used to develop ARS curves for deterministic and probabilistic seismic prediction models. An

estimated shear wave velocity of 1327 ft/sec was obtained for the project site using down-hole P-S suspension logging methods. Probabilistic methods control the response spectra at all periods, the design envelope ARS is presented in figure 1. A basin factor of 1.0 was assumed for this location and the Caltrans ARS Online Tool applied a near fault factor to the data. Tabular data are included as an attachment.

Table 3. Active and Potentially Active Faults

Fault Name	*Fault Type*	*Moment magnitude of maximum credible earthquake*	*Distance from fault to project site (miles)*	*Peak ground acceleration T=0 sec (gravity)*
Rinconada	Strike-Slip	7.4	5.7	0.33
San Andreas (Parkfield)	Strike-Slip	7.9	18.0	0.18
San Andreas (Creeping Section)	Strike-Slip	7.9	18.3	0.18
USGS 5% in 50 yr. Hazard	N/A	N/A	N/A	0.48

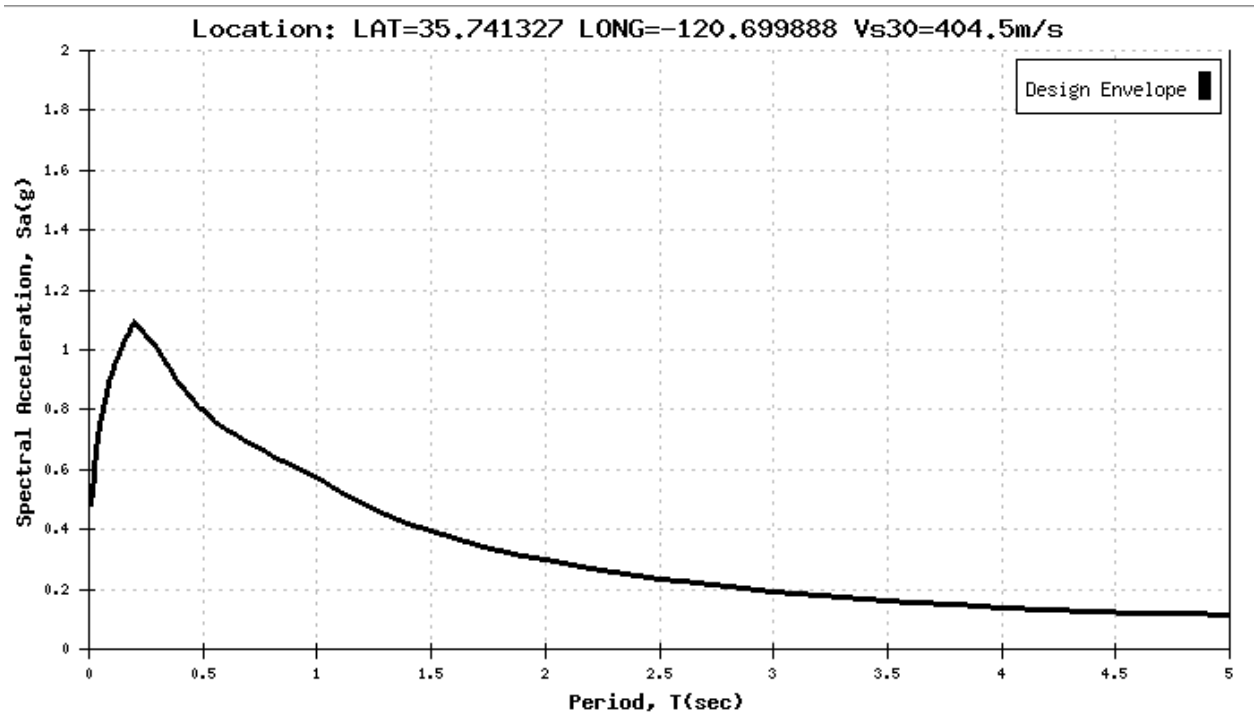

Figure 1. Design ARS Curve

Liquefaction is the partial or complete loss of soil shear strength due to the build-up of excess pore water pressure during a seismic event. Soils with a potential for liquefaction are loose cohesionless soils below the groundwater table. Based on soil types and site conditions encountered at the project site, potential for liquefaction is low due to the dense nature of the soils, presence of fine-grained soils, and depth to groundwater.

As-Built Foundation Data

The as-built log of test borings for the existing bridges (Bridge Nos. 49-0163R/L) indicate that the site is underlain by slightly compact to dense interbedded layers of sand, silt, and gravel over lithified deposits of the Paso Robles Formation. Groundwater was encountered at approximately elevation 640 feet during foundation construction in 1957. The existing bridge abutments and bents are supported on 16" diameter CIDH piles. A load test was performed on a test pile at bent 2 of the right bridge in 1957 to verify the design resistance. A total axial load of 80 tons was reached when one of the anchor piles began to pull out of the ground. Caving soils were encountered in the original construction, and temporary casing was required in most holes to maintain stability.

Foundation Recommendations

Structure Design proposes to widen the existing bridges by constructing cantilever bridge deck with barrier to the outside, and adding reinforced concrete T-beam sections supported on two new columns and widened abutments in the existing median. The existing abutments and bents are supported on 45 ton 16" diameter CIDH piles.

Standard Plan 24" Diameter Cast in Drilled Hole (CIDH) Concrete Piles

24" diameter CIDH concrete piles are the recommended foundation type for the widening at the abutments and bents. Caving in the loose alluvial soils at the surface may occur, requiring the use of temporary casings to maintain hole stability. The existing bridge abutments and bents were successfully constructed on 16" diameter CIDH piles. Current measurements in the open observation well installed in the median at the southern bridge approach show that groundwater is at approximately elevation 618 feet, but groundwater elevations observed in nearby monitoring wells for a gas station hazardous waste cleanup in 2005 and groundwater elevations recorded during the original construction and subsurface investigation indicate groundwater is near elevation 640 feet. Unknown issues with the well installation or perched/variable water tables may be causing this discrepancy. To avoid potential issues with encountering groundwater and requiring a change order to increase the pile diameter from 16" to 24", the use of Standard Plan 24" CIDH piles to facilitate construction using the wet method and installation of inspection tubes (if required) is recommended.

Load Factor Design (LFD or Strength Design) methodology was utilized for the bent widening design, and Allowable Stress Design (ASD or Service Load Design) methodology was utilized for the abutment widening. A resistance (performance) factor of 0.75 for LFD of pile foundations is recommended in Caltrans Bridge Design Specifications Section 4.10.6 (LFD-November 2003), and a factor of safety of 2.0 is recommended for ASD of drilled shafts in Section 4.6.5.4. Factored loads (LFD) and service loads (ASD) were provided by Structure Design and used to calculate the required nominal axial compression resistances of the piles. The required nominal resistances reported in the following tables are equal to the factored load divided by the resistance factor of 0.75 for LFD design at the bents, and the service load multiplied by a safety

factor of 2.0 for ASD at the abutments. Estimated bent settlements were calculated at the provided service loads at each column support by analyzing the pile group as an equivalent footing at a depth equal to 2/3 of the pile length. Widening of the abutments includes drilling and bonding dowels into the existing abutment, which will not allow the widened portion to settle differentially from the existing structure. Service loads will be distributed to the entire abutment support, therefore calculating the settlement of the new abutment separately from the rest of the existing structure does not represent the field conditions. An estimate of settlement based on the ratio of the service load to the failure load indicates that the magnitude of the settlement per individual pile is on the order of 0.1 inches, which is negligible. Foundation recommendations are provided in the following tables:

Left Bridge Foundation Design Recommendations

Support Location	Pile Type	Cut-off Elevation (ft)	LFD Factored Loads (kips) per pile		ASD Loads (kips) (Compression)	Required Nominal Resistance (kips)		Design Tip Elevation (ft)	Specified Tip Elevation (ft)
			Compression	Tension		Compression	Tension		
Abut. 1	24” CIDH	678.64	N/A	N/A	45 per pile	90	0	656.00	656.00
Bent 2	24” CIDH	658.86	111	20	250 per support	148	27	639.00	639.00
Bent 3	24” CIDH	658.86	111	20	250 per support	148	27	639.00	639.00
Abut. 4	24” CIDH	678.63	N/A	N/A	45 per pile	90	0	656.00	656.00

Left Bridge Pile Data Table

Support Location	Pile Type	Nominal Axial Resistance (kips)		Specified Tip Elevation (ft)	Estimated Settlement (inches)
		Compression	Tension		
Abut. 1	24” CIDH	90	N/A	656.00	N/A
Bent 2	24” CIDH	150	30	639.00	1.0
Bent 3	24” CIDH	150	30	639.00	1.0
Abut. 4	24” CIDH	90	N/A	656.00	N/A

1) *The specified tip elevation shall not be raised.*

Right Bridge Foundation Design Recommendations									
Support Location	Pile Type	Cut-off Elevation (ft)	LFD Factored Loads (kips) per pile		ASD Loads (kips) (Compression)	Required Nominal Resistance (kips)		Design Tip Elevation (ft)	Specified Tip Elevation (ft)
			Compression	Tension		Compression	Tension		
Abut. 1	24” CIDH	677.78	N/A	N/A	45 per pile	90	0	656.00	656.00
Bent 2	24” CIDH	658.86	111	20	250 per support	148	27	639.00	639.00
Bent 3	24” CIDH	658.86	111	20	250 per support	148	27	639.00	639.00
Abut. 4	24” CIDH	677.83	N/A	N/A	45 per pile	90	0	656.00	656.00

Right Bridge Pile Data Table					
Support Location	Pile Type	Nominal Axial Resistance (kips)		Specified Tip Elevation (ft)	Estimated Settlement (inches)
		Compression	Tension		
Abut. 1	24” CIDH	90	N/A	656.00	N/A
Bent 2	24” CIDH	150	30	639.00	1.0
Bent 3	24” CIDH	150	30	639.00	1.0
Abut. 4	24” CIDH	90	N/A	656.00	N/A

1) *The specified tip elevation shall not be raised.*

Construction Considerations

Loose soils in the approach embankment fills and deposits of sand and gravel at depth may cave during pile excavation. Temporary casing was required to excavate to the specified tip elevations of the existing 16” CIDH concrete piles, and may be required to maintain hole stability for the new excavations. Temporary slopes or shoring required to construct the widening should be proposed by the contractor and reviewed by the Engineer.

Coarse gravels and cobbles in the alluvial deposits may require special tooling and techniques to construct the pile excavations to the specified tip elevations.

Specified pile tips are near the highest observed groundwater elevation. Groundwater may be encountered, requiring use of the wet method to construct the foundations. Notify Geotechnical personnel if groundwater is encountered.

Additional Information

Standard Specifications 2010 Section 2-1.6.B, "Supplemental Project Information", discloses to bidders and contractors a list of pertinent information available for their inspection prior to bid opening. Items listed to be included in the Information Handout will be provided in Acrobat (.pdf) format to the Addressee of this report via electronic mail.

Data and information attached with the project plans are:

A. Log of Test Borings.

Data and information included in the Information Handout provided to the Bidders and Contractors are:

A. Foundation Report dated January 5, 2016.

If you have any questions or comments, please contact Ryan Turner at (805) 549-3750.

MICHAEL J. JURASIUS, P.G., C.E.G.
Engineering Geologist
Geotechnical Design – North
Branch D

Signed: 1-5-2016

RYAN TURNER, P.E., G.E.
Transportation Engineer Civil
Geotechnical Design – North
Branch D

c: Job File / Branch D Records
Structure Construction RE Pending File
Craig Whitten / DES Office Engineer
Andrew Tan / PCE
Eric Karlson/ DME

LIST OF ATTACHMENTS

Vicinity Map	Attachment 1
General Plans	Attachment 2
Geologic Map and Legend	Attachment 3
As-Built LOTB	Attachment 4
ARS Tabular Data	Attachment 5

INDEX OF PLANS

STATE OF CALIFORNIA
DEPARTMENT OF TRANSPORTATION

PROJECT PLANS FOR CONSTRUCTION ON
STATE HIGHWAY

IN SAN LUIS OBISPO COUNTY AND MONTEREY COUNTY
FROM MONTEREY ROAD
TO 0.2 MILE SOUTH OF BRADLEY Rd OVERCROSSING

TO BE SUPPLEMENTED BY STANDARD PLANS DATED MAY 2006

Dist	COUNTY	ROUTE	POST MILES TOTAL PROJECT	SHEET No.	TOTAL SHEETS
05	SLO/Mon	101	63.2/69.3 R0.0/R1.9		

LOCATION MAP

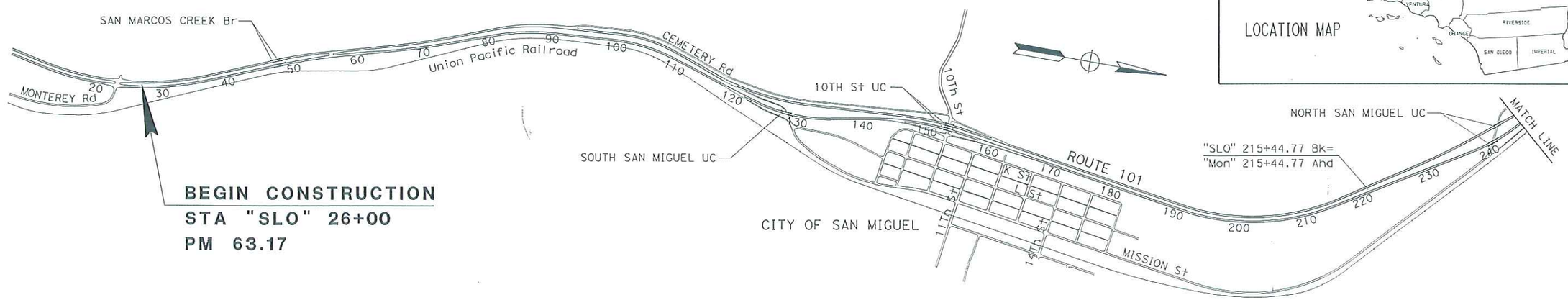

BEGIN CONSTRUCTION
STA "SLO" 26+00
PM 63.17

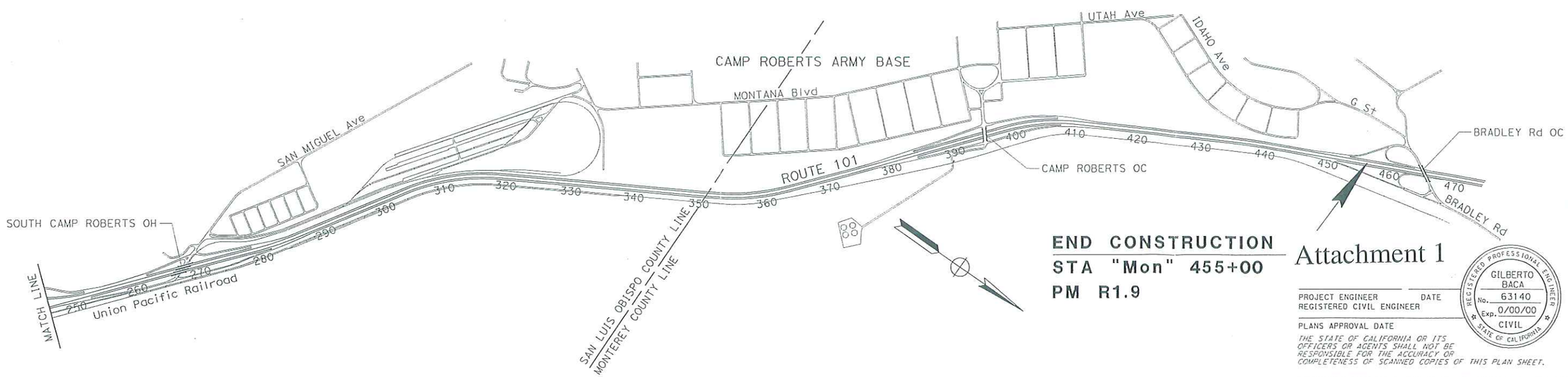

END CONSTRUCTION
STA "Mon" 455+00
PM R1.9

Attachment 1

PROJECT ENGINEER DATE
REGISTERED CIVIL ENGINEER

PLANS APPROVAL DATE

THE STATE OF CALIFORNIA OR ITS OFFICERS OR AGENTS SHALL NOT BE RESPONSIBLE FOR THE ACCURACY OR COMPLETENESS OF SCANNED COPIES OF THIS PLAN SHEET.

REGISTERED PROFESSIONAL ENGINEER
GILBERTO BACA
No. 63140
Exp. 0/00/00
CIVIL
STATE OF CALIFORNIA

CONTRACT No.	00-000004
PROJECT ID	0000000000

PROJECT MANAGER

DESIGN ENGINEER ROBERTO BANDA

THE CONTRACTOR SHALL POSSESS THE CLASS (OR CLASSES) OF LICENSE AS SPECIFIED IN THE "NOTICE TO BIDDERS."

LAST REVISION 01-02-11 DATE PLOTTED => 07-JUN-2011 TIME PLOTTED => 09:08

DIST	COUNTY	ROUTE	POST MILES TOTAL PROJECT	SHEET No.	TOTAL SHEETS
05	SLO/Mon	101			

INCOMPLETE PLAN FOR DESIGN STUDY PRINTED
DATE: 18-SEP-2015
Office of Structure Design
STATE OF CALIFORNIA

REGISTERED CIVIL ENGINEER X DATE

PLANS APPROVAL DATE

REGISTERED PROFESSIONAL ENGINEER
JOSE M Aquino III
No. 58386
Exp. 12-31-16
CIVIL
STATE OF CALIFORNIA

The State of California or its officers or agents shall not be responsible for the accuracy or completeness of scanned copies of this plan sheet.

DRAFT PS&E

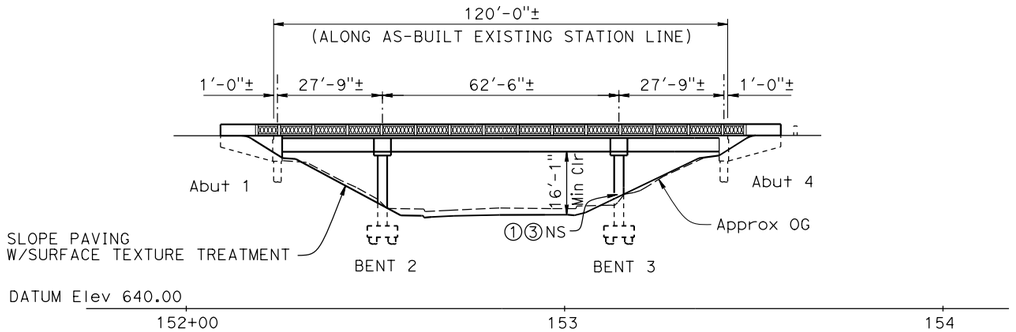

ELEVATION A-A

1" = 20'

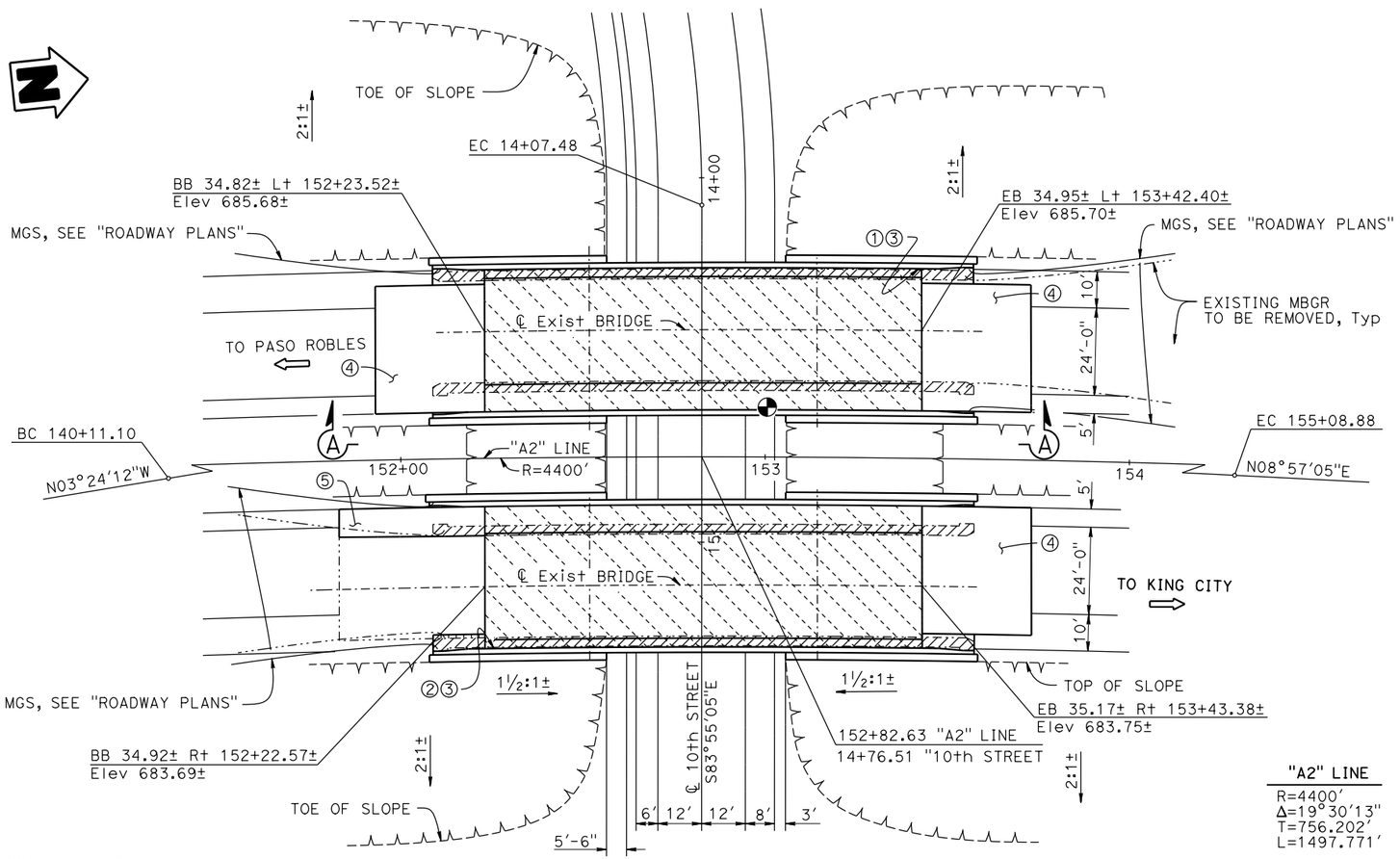

PLAN

1" = 20'

"A2" LINE
R=4400'
Δ=19°30'13"
T=756.202'
L=1497.771'

LEGEND:
- Indicates existing bridge
- Indicates new construction
- Indicates existing barrier removal
- Indicates existing approach slab removal (portion)
- Indicates limits of prepare bridge deck and place Polyester Concrete Overlay
- Point of minimum vertical clearance

NOTES:
① Paint "Br. No. 49-0163L"
② Paint "Br. No. 49-0163R"
③ Paint "10TH STREET UC"
④ Structure Approach Type R(30D)
⑤ Structure Approach Type R(30D), match existing

For "TYPICAL SECTION", see "GENERAL PLAN NO. 2" sheet
For "GENERAL NOTES" and "INDEX TO PLANS", see "INDEX TO PLANS" sheet

NOTE:
THE CONTRACTOR MUST VERIFY ALL CONTROLLING FIELD DIMENSIONS BEFORE ORDERING OR FABRICATING ANY MATERIAL.

Joseph E Downing
DESIGN ENGINEER

	BY	CHECKED
DESIGN	Ashraf Ahmed	Michael K Bergman
DETAILS	S Motalebi, N C Gwynn	Michael K Bergman
QUANTITIES	Jose M Aquino III	Eric G Burgeson

LOAD FACTOR DESIGN — LIVE LOADING: HS20-44 AND ALTERNATIVE AND PERMIT DESIGN LOAD
LAYOUT BY X CHECKED X
SPECIFICATIONS BY X PLANS AND SPECS COMPARED X

ORIGINAL SCALE IN INCHES FOR REDUCED PLANS 0 1 2 3

STATE OF CALIFORNIA
DEPARTMENT OF TRANSPORTATION

DIVISION OF ENGINEERING SERVICES
STRUCTURE DESIGN
DESIGN BRANCH 3

BRIDGE NO. 49-0163L/R
POST MILE 65.6

10TH STREET UC (WIDEN)
GENERAL PLAN No. 1

UNIT: 3578
PROJECT NUMBER & PHASE: 05000200201
CONTRACT NO.: 05-0G0404

DISREGARD PRINTS BEARING EARLIER REVISION DATES
REVISION DATES: 5-20-14 7-20-15 7-8-15
SHEET 1 OF 30

USERNAME => s124832 DATE PLOTTED => 18-SEP-2015 TIME PLOTTED => 13:58

STRUCTURES DESIGN GENERAL PLAN SHEET (ENGLISH) (REV 09-01-10)
FILE => 49-0163lr-g-gp01.dgn

DIST	COUNTY	ROUTE	POST MILES TOTAL PROJECT	SHEET No.	TOTAL SHEETS
05	SLO/Mon	101			

INCOMPLETE PLAN FOR DESIGN STUDY PRINTED

DATE: 18-SEP-2015

Office of Structure Design
STATE OF CALIFORNIA

REGISTERED CIVIL ENGINEER X DATE

PLANS APPROVAL DATE

REGISTERED PROFESSIONAL ENGINEER
JOSE M Aquino III
No. 58386
Exp. 12-31-16
CIVIL
STATE OF CALIFORNIA

The State of California or its officers or agents shall not be responsible for the accuracy or completeness of scanned copies of this plan sheet.

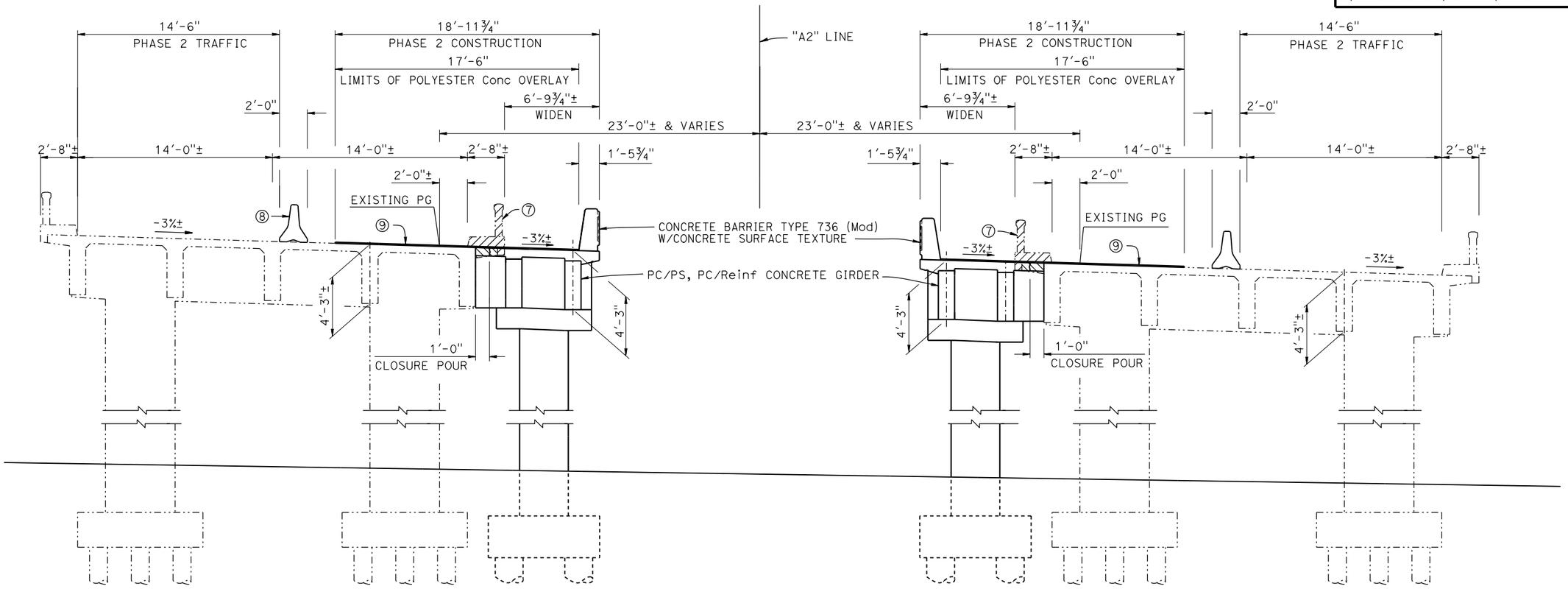

STAGE 1 (PHASE 2)
TYPICAL SECTION
¼" = 1'-0"

LEGEND:
- Indicates existing bridge
- Indicates new construction
- Indicates existing bridge removal (Portion)
- Indicates existing barrier removal

NOTES:
⑦ Existing barrier to be removed
⑧ Temporary Railing (Type K), see "ROADWAY PLANS"
⑨ 1" & Var Polyester Concrete Overlay

1. Other Stages not shown, see "ROADWAY PLANS"
2. Structure Approach work must be performed inside each Phase Construction limits shown

NOTE:
THE CONTRACTOR MUST VERIFY ALL CONTROLLING FIELD DIMENSIONS BEFORE ORDERING OR FABRICATING ANY MATERIAL.

DESIGN	BY Ashraf Ahmed	CHECKED Michael K Bergman	LOAD FACTOR DESIGN	LIVE LOADING: HS20-44 AND ALTERNATIVE AND PERMIT DESIGN LOAD
DETAILS	BY S Motalebi, N C Gwynn	CHECKED Michael K Bergman	LAYOUT BY X	CHECKED X
QUANTITIES	BY Jose M Aquino III	CHECKED Eric G Burgeson	SPECIFICATIONS BY X	PLANS AND SPECS COMPARED X

Joseph E Downing
DESIGN ENGINEER

ORIGINAL SCALE IN INCHES FOR REDUCED PLANS 0 1 2 3

STATE OF CALIFORNIA
DEPARTMENT OF TRANSPORTATION

DIVISION OF ENGINEERING SERVICES
STRUCTURE DESIGN
DESIGN BRANCH 3

BRIDGE NO. 49-0163L/R
POST MILE 65.6

10TH STREET UC (WIDEN)
GENERAL PLAN No. 2

UNIT: 3578
PROJECT NUMBER & PHASE: 05000200201
CONTRACT NO.: 05-0G0404

DISREGARD PRINTS BEARING EARLIER REVISION DATES

REVISION DATES: 5-28-14 | 7-24-15 | 8-24-15

SHEET 2 OF 30

DIST	COUNTY	ROUTE	POST MILES TOTAL PROJECT	SHEET No.	TOTAL SHEETS
05	SLO/Mon	101			

INCOMPLETE PLAN FOR DESIGN STUDY PRINTED

DATE: 18-SEP-2015

Office of Structure Design
STATE OF CALIFORNIA

REGISTERED CIVIL ENGINEER X DATE

PLANS APPROVAL DATE

REGISTERED PROFESSIONAL ENGINEER
JOSE M Aquino III
No. 58386
Exp. 12-31-16
CIVIL
STATE OF CALIFORNIA

The State of California or its officers or agents shall not be responsible for the accuracy or completeness of scanned copies of this plan sheet.

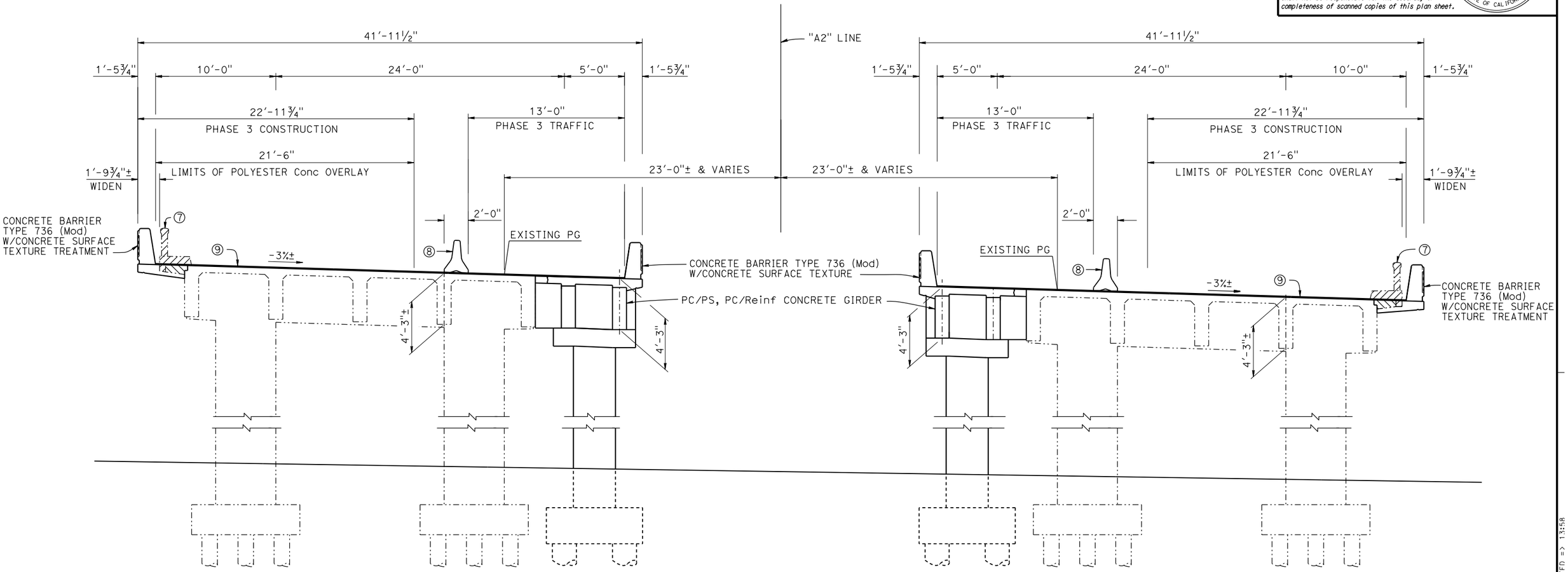

STAGE 1 (PHASE 3)
TYPICAL SECTION
¼" = 1'-0"

LEGEND:
- Indicates existing bridge
- Indicates new construction
- Indicates existing bridge removal (Portion)
- Indicates existing barrier removal

NOTES:
⑦ Existing barrier to be removed
⑧ Temporary Railing (Type K), see "ROADWAY PLANS"
⑨ 1" & Var Polyester Concrete Overlay
1. Other Stages not shown, see "ROADWAY PLANS"
2. Structure Approach work must be performed inside each Phase Construction limits shown

NOTE:
THE CONTRACTOR MUST VERIFY ALL CONTROLLING FIELD DIMENSIONS BEFORE ORDERING OR FABRICATING ANY MATERIAL.

Joseph E Downing
DESIGN ENGINEER

	BY	CHECKED
DESIGN	Ashraf Ahmed	Michael K Bergman
DETAILS	S Motalebi, N C Gwynn	Michael K Bergman
QUANTITIES	Jose M Aquino III	Eric G Burgeson

LOAD FACTOR DESIGN — LIVE LOADING: HS20-44 AND ALTERNATIVE AND PERMIT DESIGN LOAD

LAYOUT BY X CHECKED X

SPECIFICATIONS BY X PLANS AND SPECS COMPARED X

ORIGINAL SCALE IN INCHES FOR REDUCED PLANS 0 1 2 3

STATE OF CALIFORNIA
DEPARTMENT OF TRANSPORTATION

DIVISION OF ENGINEERING SERVICES
STRUCTURE DESIGN
DESIGN BRANCH 3

BRIDGE NO. 49-0163L/R
POST MILE 65.6

10TH STREET UC (WIDEN)
GENERAL PLAN No. 3

UNIT: 3578
PROJECT NUMBER & PHASE: 05000200201
CONTRACT NO.: 05-0G0404

DISREGARD PRINTS BEARING EARLIER REVISION DATES

REVISION DATES: 5-28-14 7-24-15 8-24-15

SHEET 3 OF 30

STRUCTURES DESIGN GENERAL PLAN SHEET (ENGLISH) (REV 09-01-10)

FILE => 49-0163lr-g-gp03.dgn

USERNAME => s12482 DATE PLOTTED => 18-SEP-2015 TIME PLOTTED => 13:58

GEOLOGIC MAP
SLO-MON-101-63.2/R69.3
North Paso Robles 101 Rehab

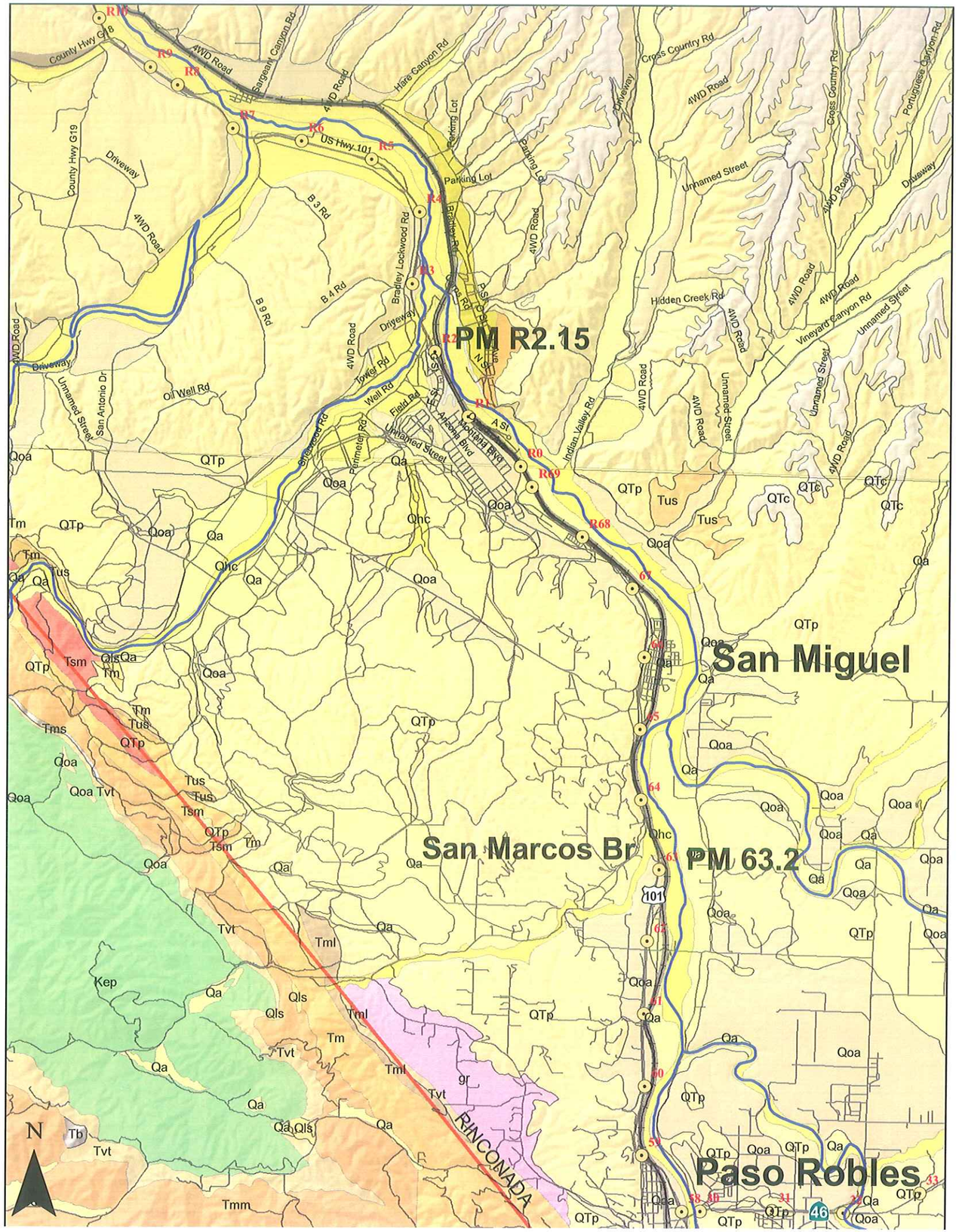

Legend

Geologic Units

UNIT

- QTc-Clay of the Paso Robles Formation
- QTp-Paso Robles Formation (valley sediments)
- Qa-Latest Pleistocene to Holocene alluvium, undiffer
- Qhc-Recent stream channel deposits
- Qls-Landslide deposits
- Qoa-Early to late Pleistocene alluvial deposits, undiferentiated
- Qrs-Modern stream channel deposits
- Tm-Monterey Formation, undifferentiated
- Tml-Monterey Formation, silty shale
- Tmm-Sandholt Member (Monterey Formation)
- Tsm-Santa Margarita Sandstone
- Tus-Sandstone, conglomerate, minor mudstone
- Tvt-Vaqueros Sandstone
- gr-Granitic rocks, undivided
- Kep-El Piojo Formation, L. Cret. mud stone, sandstone, and cong.

1 0.5 0 1 2 3 4 Miles

Attachment 3

FED. ROAD DIV. NO.	STATE	PROJ. NO.	FISCAL YEAR	SHEET NO.	TOTAL SHEETS
7	CAL.			58	63

F-99(21)

DIST.	COUNTY	ROUTE	SECTION	SHEET NO.	TOTAL SHEETS
V	SLO	2	A	8	8

REGISTERED CIVIL ENGINEER — REGISTERED LICENSE NUMBER

DATE APPROVED OCTOBER 1, 1956

NOTES:
NO CHANGES IN PLAN FTG GRADE
DESIGN PILE LOADING : 45 T
TYPE PILE : CAST IN DRILLED HOLES
DIAMETER : 1'-3½"
TOTAL NO. PILES : 65
L.F. PILES "AS BUILT" : 1484.9
L.F. PILES CALLED FOR ON PLANS : 1425

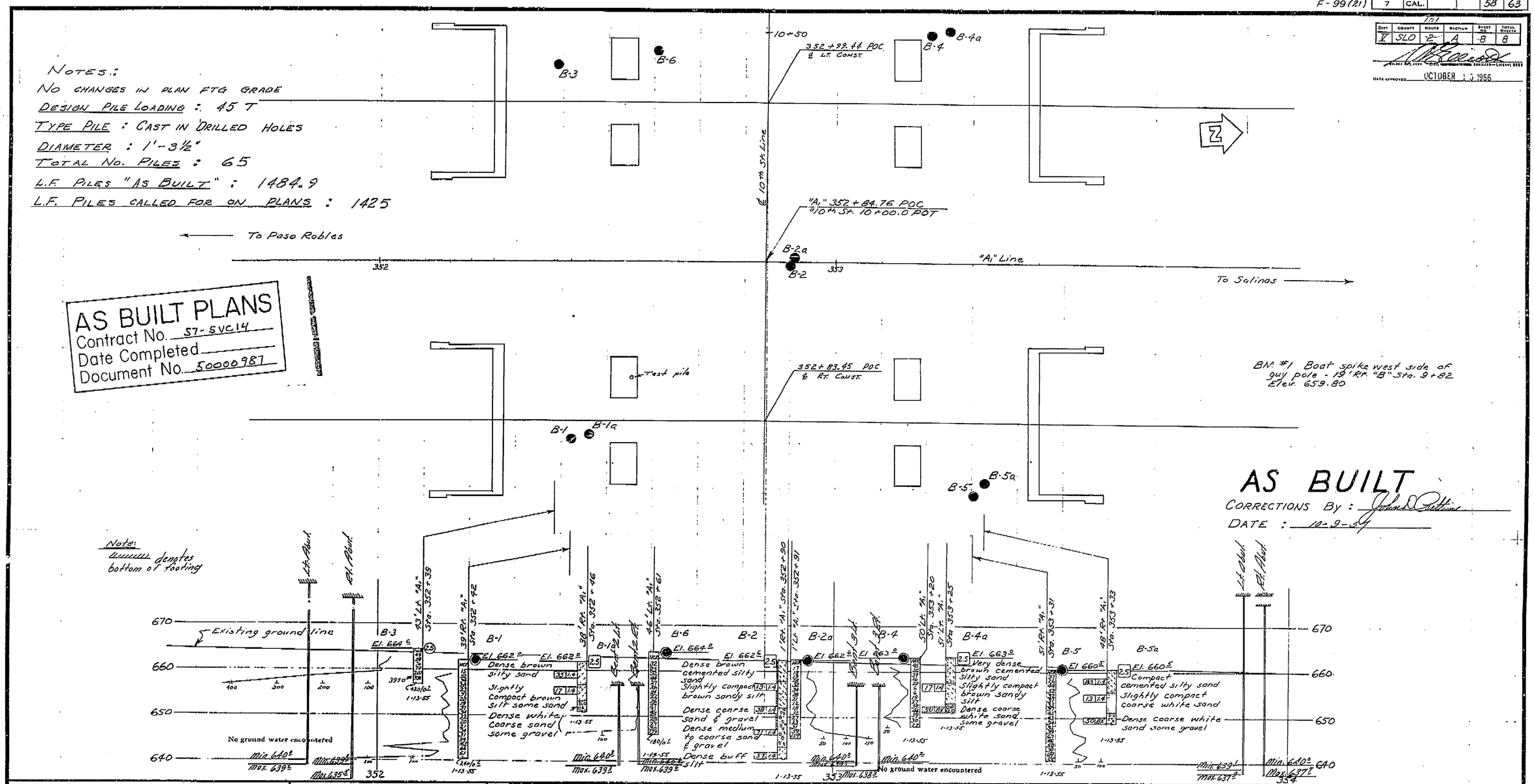

AS BUILT PLANS
Contract No. 57-SVC14
Date Completed
Document No. 50000987

BRIDGE DEPARTMENT

FIELD STUDY	H. C. Marek	Jan 1955
DRAWN	H. Mooney	1-26-55
CHECKED	H. C. Marek	2-17-55

Approved Recommended by: Engineering Geologist — Chief Bridge Engineer

58

CLASSIFICATION OF MATERIAL BASED ON STANDARD GRADE SIZE LIMITS

DIAGRAM SHOWING THE BASIS FOR ESTIMATES OF GRADE SIZE DISTRIBUTION USED IN DETERMINATION OF CLASS NAMES. IF GRAVEL IS PRESENT IN APPRECIABLE AMOUNTS THE TERM "GRAVELLY" MAY BE ADDED TO THE CLASS NAME, VIZ. "GRAVELLY SAND." THE TERMS "COARSE", "MEDIUM" AND "FINE" WHEN USED TO DESCRIBE SAND, SILT AND GRAVEL REFER TO STANDARD GRADE SIZE LIMITS.

LEGEND OF EARTH MATERIALS

GRAVEL; SAND; SILT; CLAY; SANDY CLAY OR CLAYEY SAND; SANDY SILT OR SILTY SAND; SILTY CLAY OR CLAYEY SILT; PEAT AND/OR ORGANIC MATTER; FILL MATERIAL; IGNEOUS ROCK; SEDIMENTARY ROCK; METAMORPHIC ROCK

LEGEND OF BORING OPERATIONS

PLAN OF ANY BORING; PENETROMETER; 2¼" CONE PENETROMETER; SAMPLER BORING (DRY); ROTARY BORING (WET); AUGER BORING (DRY); JET BORING; CORE BORING; TEST PIT

1" SOIL TUBE — ROTARY BORING — PENETRATION BORING

NOTES

The Contractor's attention is directed to Section 2, Article (c) of the Standard Specifications and to the Special Provisions accompanying this set of plans.
Classification of earth material as shown on this sheet is based upon field inspection and is not to be construed to imply mechanical analysis.

STATE OF CALIFORNIA
DEPARTMENT OF PUBLIC WORKS
DIVISION OF HIGHWAYS

TENTH STREET UNDERCROSSING

LOG OF TEST BORINGS

SCALE	BRIDGE	FILE	DRAWING
1" = 10'	49-163 R/L		C-4175-8

PREL. DRAWING NO. P-4175 1-A

I HEREBY CERTIFY THAT THIS IS A TRUE AND ACCURATE COPY OF THE ABOVE DOCUMENT TAKEN UNDER MY DIRECTION AND CONTROL ON THIS DATE IN SACRAMENTO, CALIFORNIA PURSUANT TO AUTHORIZATION BY THE DIRECTOR OF PUBLIC WORKS.

DATE 11/ SIGNATURE TITLE

ClibPDF - www.fastio.com

10th Street UC ARS Curve

Bridge No. **49-0163R/L** **SDC Controlling Procedure :** **Probabalistic**

Period (s)	SDC
0.010	0.477
0.050	0.755
0.100	0.919
0.150	1.017
0.200	1.092
0.250	1.044
0.300	1.007
0.400	0.882
0.500	0.796
0.600	0.735
0.700	0.691
0.850	0.627
1.000	0.576
1.200	0.485
1.500	0.393
2.000	0.299
3.000	0.194
4.000	0.140
5.000	0.114

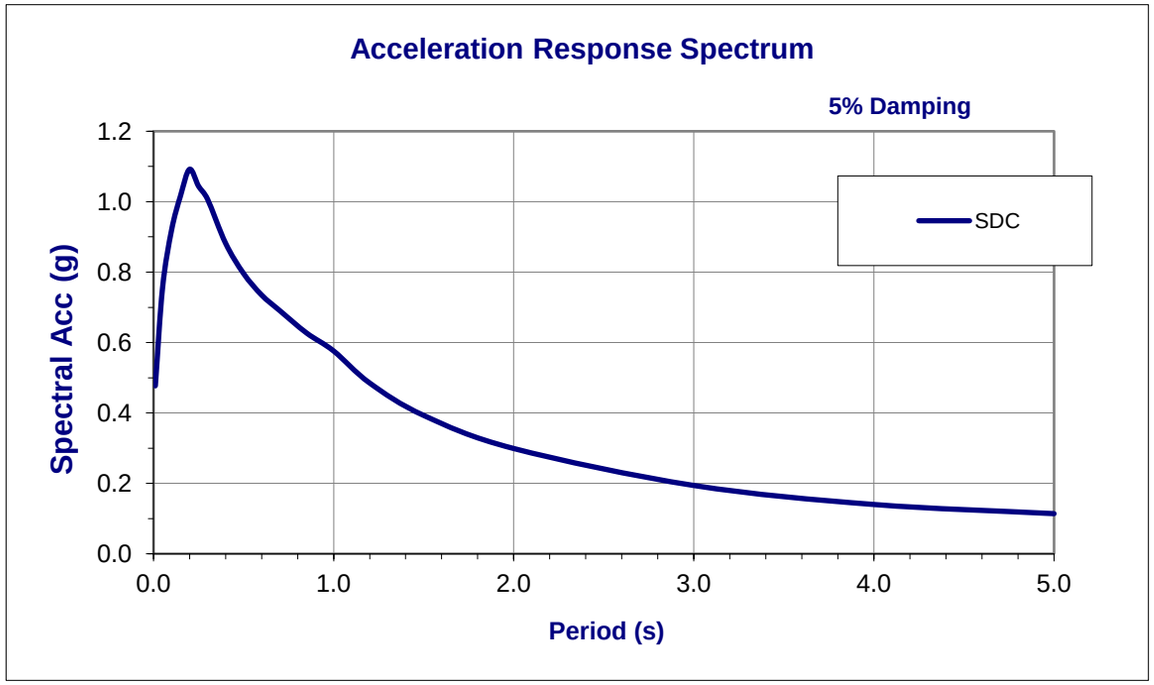

Notes

ARS curve was modified for Near Fault Directivity Effect

MATERIALS INFORMATION

13. Water Source Information

March 8, 2016

Mr. Roberto Banda, PE
Transportation Engineer, Civil
Project Development Design II, Branch N
2015 E. Shields Ave, Suite 100
Fresno, CA. 93726

Re: Paso Robles Rehab Project, Non-Potable Water
SLO & MON- 101 PM 64.8/R69.3 & PM R0.0/R2.0 EA 05-1G5104

The amount of non-potable water needed is 7 million gallons.

Per your request, I can confirm that AL Webster / The Jail Flat Ranch in Creston CA can easily and efficiently provide the above mentioned project with the required non-potable water volume (approximately 7 million gallons) through the duration of the project's construction. The water source is located at the Jail Flat Ranch, 6101 Webster Road Creston CA 93432 (approximately half a mile from JCT Route 229/41, Post Mile 27.97). The source irrigation well is hi-flow over head fill.

When you are ready for the water and rates, please contact ranch owner, AL Webster at (805) 235-7664.

If you have any questions regarding the availability of the above said water source, please do not hesitate to call.

Thank you,

Al Webster

MATERIALS INFORMATION

14. Temporary Alternative Crash Cushion System

ABSORB 350® | NON-REDIRECTIVE CRASH CUSHION - SACRIFICIAL

- ANCHORLESS INSTALLATION - NO FOUNDATION REQUIRED
- COST EFFECTIVE PROTECTION FROM CONCRETE BARRIER ENDS
- WORLDWIDE PROVEN PERFORMANCE
- NCHRP 350 ACCEPTED

BARRIER SYSTEMS®
BY LINDSAY

ABSORB 350® | NON-REDIRECTIVE CRASH CUSHION - SACRIFICIAL

PHYSICAL SPECIFICATIONS

Classification	NR-S	
TL-3 Length	32′	9.7 m
Width	24″	610 mm
Height	32″	813 mm
Module Weight Empty	110 lb.	50 kg
Test Level	NCHRP 350	TL 1/2/3

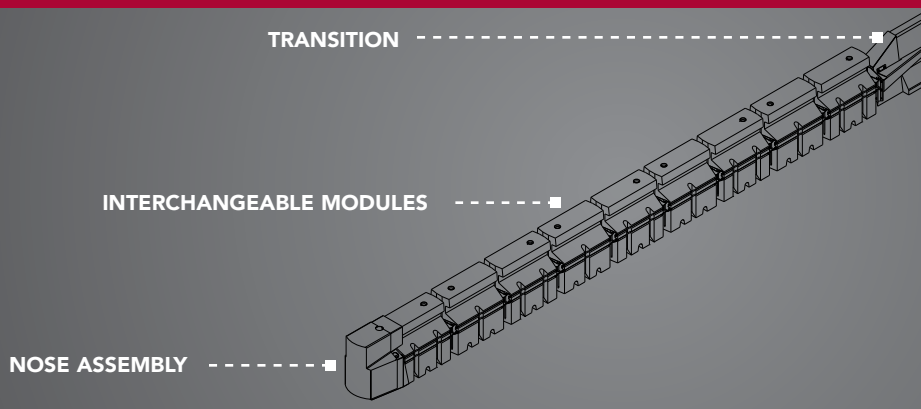

NARROW ANCHORLESS WATER FILLED CRASH CUSHION

No ground anchoring, the largest selection of transitions and modular technology allow the ABSORB 350 System to be used in multiple speed conditions. The ABSORB 350 System is ideal for contractors due to the ease of maintenance after an impact and quick deployment. At 24″ (610 mm) wide, it is ideally suited for narrow areas where road and workspace is limited. The ABSORB 350 System is easy to restore after an impact because the System uses uniform modular components. The use of standardized modular components also helps to reduce inventory costs.

FREQUENTLY ASKED QUESTIONS

Can the nose be angled off the barrier to better face traffic?

Yes, as long as all of the ABSORB 350 modules remain pinned and connected. For larger angles, it is recommended that the last barrier section be moved to face traffic.

Can the ABSORB 350 System be moved while filled with water?

Yes, the System is rigid enough to be repositioned filled with water by sliding the optional wheel / jack assembly under each element.

What transitions are available?

Dozens of transition options are available, including attachments to; Standard NJ / J / K / F, Wide / X-Wide NJ, I-Lock, Smooth Face, JJ Hook, QMB, ArmorGuard®, Orion®, BarrierGuard® and ZoneGuard®.

Can the ABSORB 350 System be used during cold weather?

Since ABSORB 350 modules have no internal steel parts, the use of any approved anti icing chemical is acceptable.

FEATURES

- Rapid deployment and retrieval
- No ground anchoring required
- Low initial price
- Narrow footprint
- Can be deployed on almost any road surface
- Meets NCHRP 350 TL-1, TL-2, TL-3 test criteria
- Easily transitioned to multiple widths and shapes of barriers
- Nose and transition are reusable after most design impacts
- Approved for use in permanent and work zone locations

DISTRIBUTED BY:

LINDSAY™ TRANSPORTATION SOLUTIONS | BARRIER SYSTEMS® BY LINDSAY | RAILROAD PRODUCTS BY LINDSAY | SNOLINE™ BY LINDSAY

Lindsay Transportation Solutions Sales and Services, Inc.
180 River Road • Rio Vista, CA 94571 • +1 707.374.6800 U.S. Toll Free: 888.800.3691 • www.barrriersystemsinc.com

General details for the ABSORB 350 System are subject to change without notice to reflect improvements and upgrades.

Additional information is available from Lindsay Transportation Solutions Sales and Services, Inc. © Lindsay Transportation Solutions, Inc.

PT # ABS04-03252013

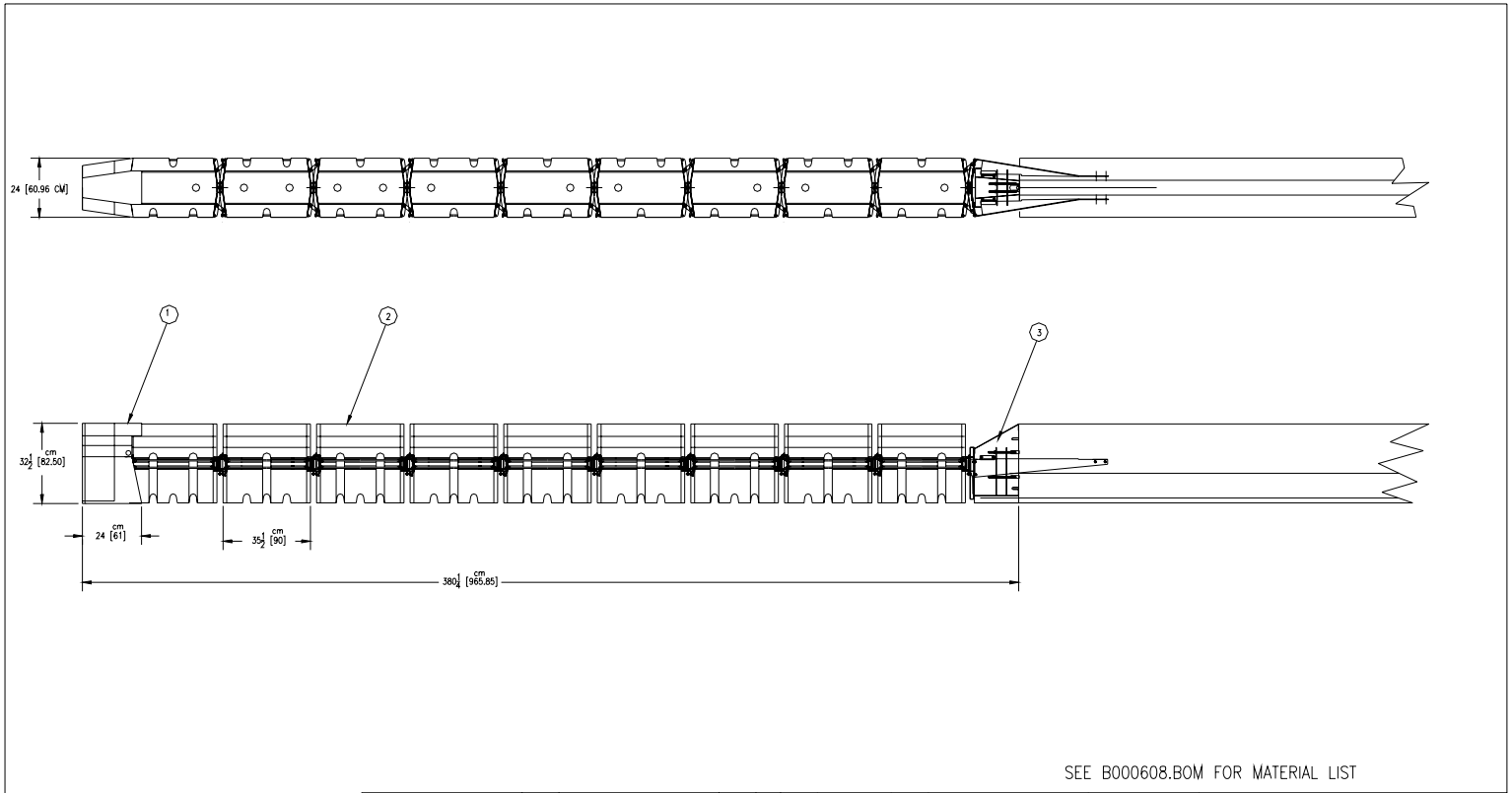

SEE B000608.BOM FOR MATERIAL LIST

NOTE:
THICKNESS OF WELD TO BE EQUAL TO THE THINNER OF 2 PIECES BEING JOINED. WELD TO BE ALL AROUND UNLESS OTHERWISE NOTED.

© 2000 Barrier Systems, Inc.

The information heron is proprietary to Barrier Systems Inc. and shall not be disclosed, duplicated or used otherwise without the express written approval of Barrier Systems Inc.

REV.	CHANGES	DATE	BY	REQ'D	NEXT ASSY.	ITEM

SCALE: 1=40

	DATE	INIT.
DRAWN BY	5/24/00	DGB
APPR'D BY		

Standard Tolerance
Angular ± 1/2°
Fractional ± 1/16
Decimal ± .010

TITLE : ASSEMBLY SYSTEM, ABSORB TL3 P.C.B.

MODEL

DRAWING NUMBER: B000608

REV.

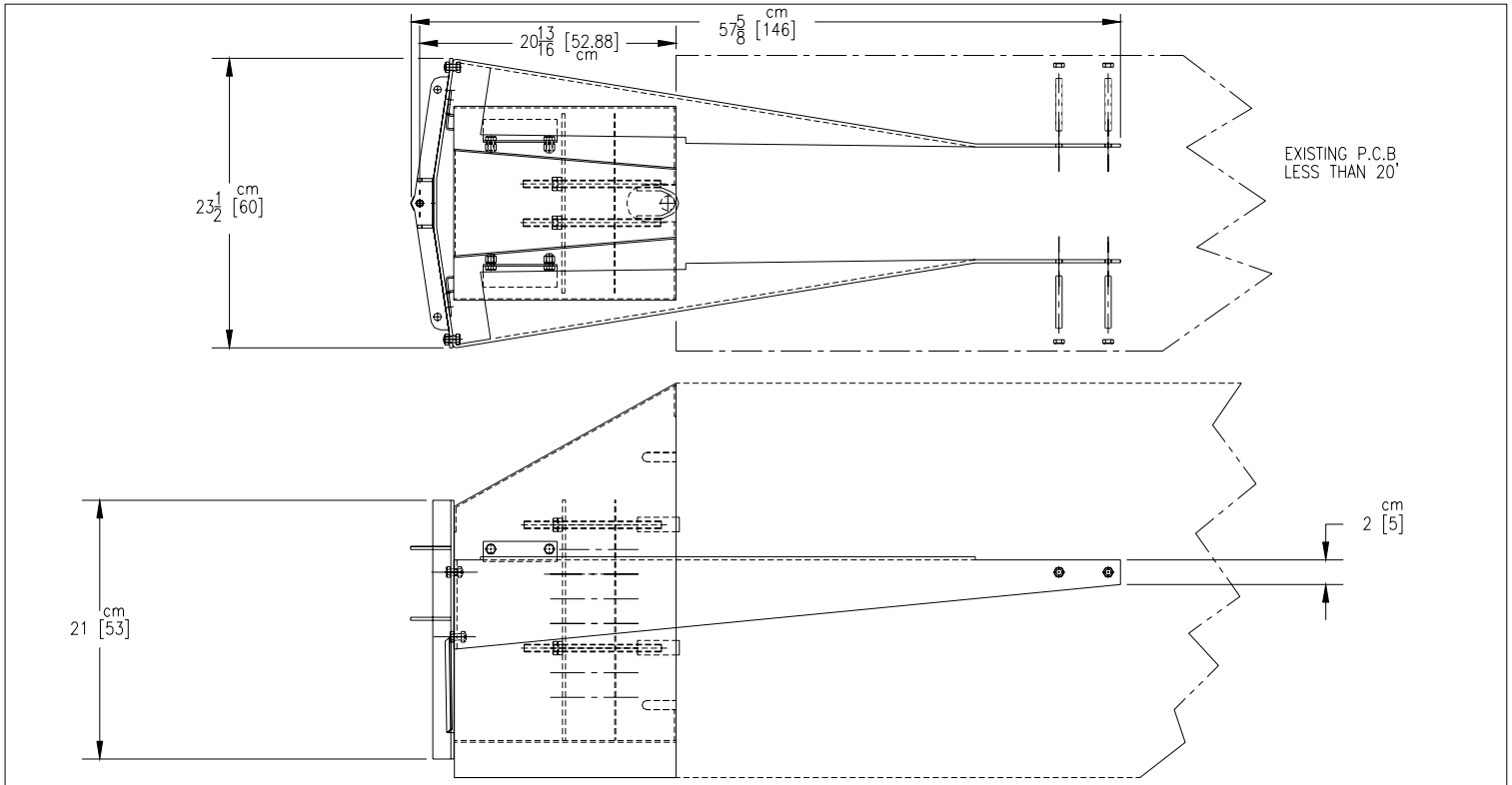

NOTE:
THICKNESS OF WELD TO BE EQUAL TO THE THINNER OF 2 PIECES BEING JOINED. WELD TO BE ALL AROUND UNLESS OTHERWISE NOTED.

© 2000 Barrier Systems, Inc.

The information heron is proprietary to Barrier Systems Inc. and shall not be disclosed, duplicated or used otherwise without the express written approval of Barrier Systems Inc.

REV.	CHANGES	DATE	BY	REQ'D	NEXT ASSY.	ITEM

SCALE: EIGHTH

	DATE	INIT.
DRAWN BY	05/24/00	R.R.C.
APPR'D BY		JM

Standard Tolerance
Angular ± 1/2°
Fractional ± 1/16
Decimal ± .010

TITLE : TRANSITION HARDWARE
ABSORB 350 TL2
P.C.B.

MODEL	DRAWING NUMBER	REV.
	B000531	

TrafFix Devices Inc.

SLED™

Sentry Longitudinal Energy Dissipater

PRODUCT BULLETIN

SLED™ TL-3 in use on a Missouri Highway

SLED™ TL-2 in Illinois

SLED™ TL-3 in Downtown Cincinnati, Ohio

- FHWA Accepted for Shielding the Blunt End of Concrete, Steel and Water Filled Barriers
- Quick and Easy Set-Up, No Foundation Anchoring, Minimized Installation Exposure Time
- Cost Effective End Treatment for Concrete, Steel or Water Filled Barriers
- Universal Transition Quickly and Easily Attaches to a Variety of Barrier Shapes and Sizes
- *SLED's* Stout Design Virtually Eliminates Vaulting
- Narrow Footprint is Ideal for Work Zones or Roads with Minimal Shoulder Spacing
- Shortest Length TL-3 Water Filled Crash Cushion, Fewer Incidental Impacts
- Containment Impact *SLED* Minimizes Debris Field
- Visual "Drive By" Fill Indicators Quickly Verify Water Module's are Properly Filled
- FHWA Accepted for Use in Uni- and Bi- Directional Applications
- Internal Steel Cables Help Envelop Vehicle After an Impact, Creating a Truly "Limited Gating" System

Scan for Instant QR Video

www.traffixdevices.com

SLED™

Sentry Longitudinal Energy Dissipater

Inline TL-3 Truck Test Pre Impact

Inline TL-3 Truck Test Post Impact

SLED™ Sentry Longitudinal Energy Dissipater

The Sentry Longitudinal Energy Dissipater (SLED) is a narrow, non-redirective gating crash cushion. SLED is designed to shield the end of all permanent and temporary portable barrier shapes including concrete, steel and plastic. SLED's unique design incorporates four internal steel cables which help envelop the impacting vehicle, reducing the possibility of secondary accidents. The SLED End Treatment does not require foundation anchor bolts to be attached to the road or bridge deck. The complete crash cushion can be installed quickly, with as little as one pick up truck and two workers on compacted dirt, gravel, decomposed granite, asphalt or concrete.

Each SLED module is manufactured from a high visibility yellow polyethylene that is UV stabilized to minimize degradation. It is designed to deform and rupture on impact, absorbing the energy of the errant vehicle. SLED has the most versatile transition for shielding all permanent and temporary portable barriers. The combination of hinging and contouring, allows the transition panels of the SLED End Treatment to be attached to narrow, wide or other profile shapes with either converging, or diverging angles, up to 10 degrees.

SLED™ TL-3 4500 lb. Pick-Up Truck Impact Attached to Concrete Median Barrier Wall

TL-3 SPECIFICATIONS	
Length:	25' 3"
Width:	22'-1/2"
Height:	42"
Weight (Empty):	995 lb.
Weight (Full):	6505 lb.

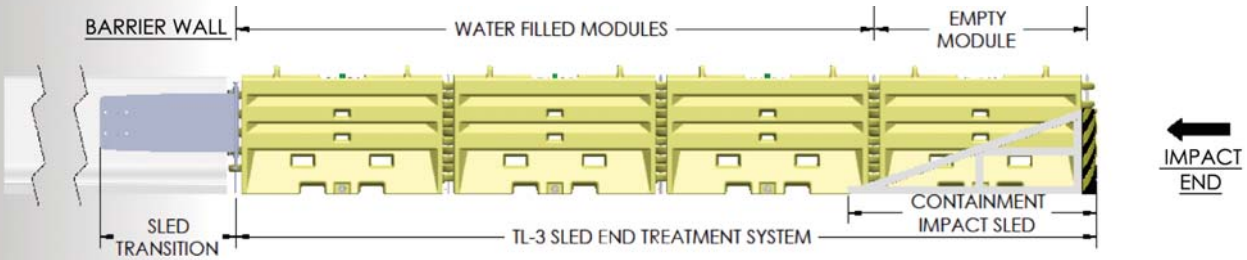

Steel Barrier Attachment

SLED™ TL-3 Transports in a Pick-Up Truck

Concrete Barrier Attachment

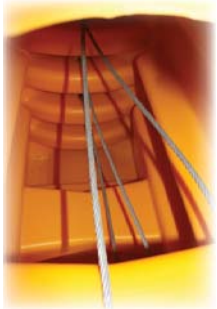

SLED™ Internal Cables

Distributed by:

TrafFix Devices Inc.

160 Avenida La Pata, San Clemente, CA 92673
(949) 361-5663 FAX (949) 361-9205
www.traffixdevices.com

SLED End Treatment System Installation

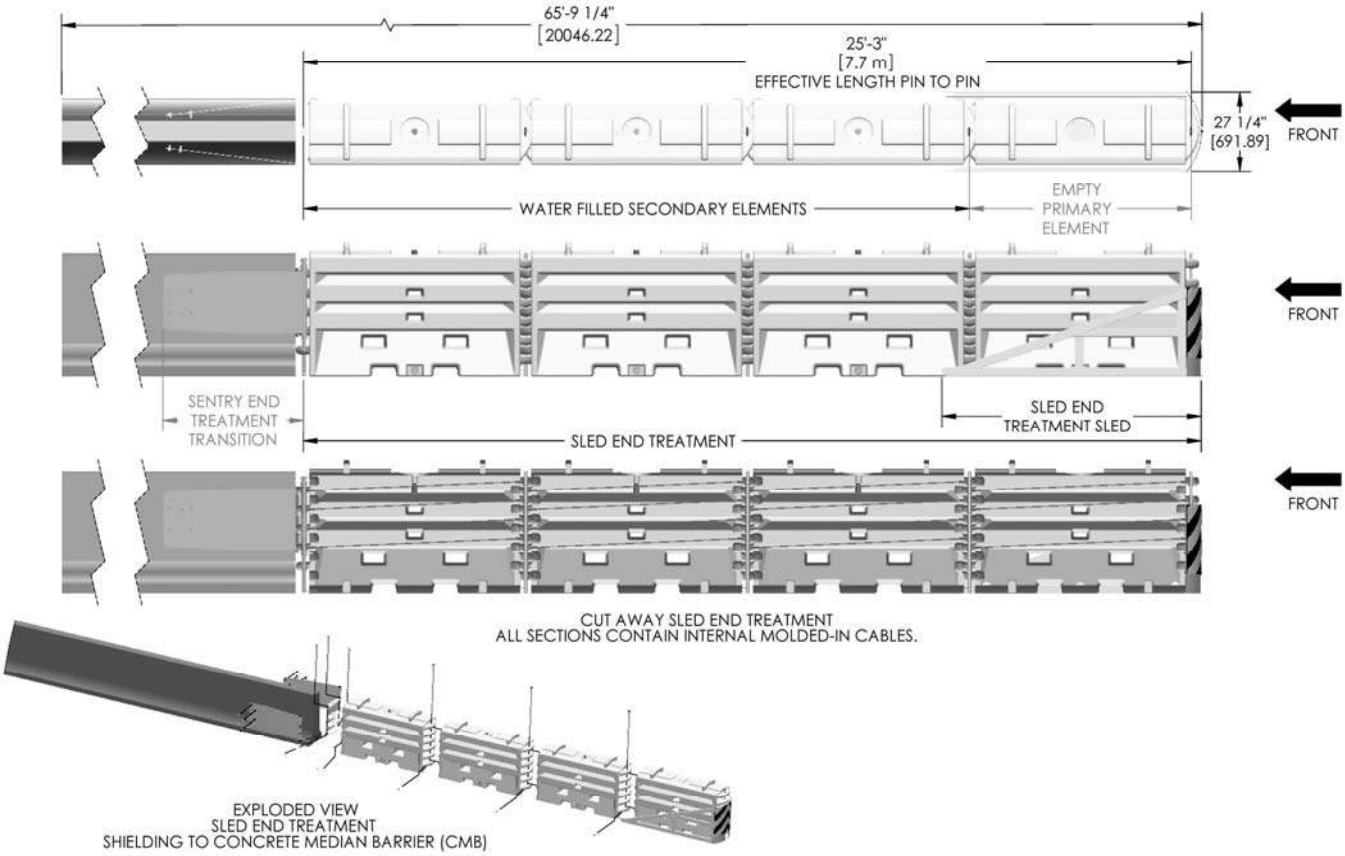

Figure 18: General specifications of installed TL-3 SLED End Treatment system with Transition (or on pg. 51).

Installation procedure to begin on next page

ACZ-350™

PORTABLE TL-2 & TL-3 END TREATMENT

OVERVIEW

The ACZ-350 System combines ease of use and NCHRP 350, gating, non-redirective TL-2 and TL-3 crash cushion performance for work zone protection. This partially reuseable crash cushion can be easily transported, and installed with No Roadway Anchors.

SUPERIOR IMPACT PERFORMANCE

The unique design of the ACZ-350 systems protects errant drivers from impacting concrete barrier ends, and also contains the errant vehicle from vaulting into the workzone.

FEATURES AND BENEFITS

- No Vaulting
- Safely contains errant vehicle
- Accommodates impacts up to 2,000 kg, (4,500 lbs) traveling at speeds up to 100 km/h (62 mph)
- Simple and Fast Installation
- Protects Permanent or Temporary, Steel or Concrete Barrier
- Ideal for Work Zones
- No Foundation or Anchoring

EASY CLEAN-UP
NARROW PROFILE
MINIMUM INTRUSION
LOW COST/ AFFORDABLE
QUICK/EASY TO MOVE

NON-REDIRECTIVE, GATING CRASH CUSHION SYSTEM

All Crash Cushions defined as Non-redirective and Gating require a clear zone. Clear Zones are areas behind the crash cushion that NO workers, machinery, obstructions or other debris could interfere with an errant vehicle. This area should also remain relatively flat. If there are any questions or concerns, please contact your local Energy Absorption Systems, Inc. representative.

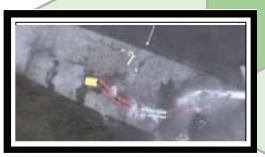

ACZ-350™

ENERGY ABSORPTION SYSTEMS, INC.

SAVING LIVES BY DESIGN®

www.energyabsorption.com

ACZ-350™

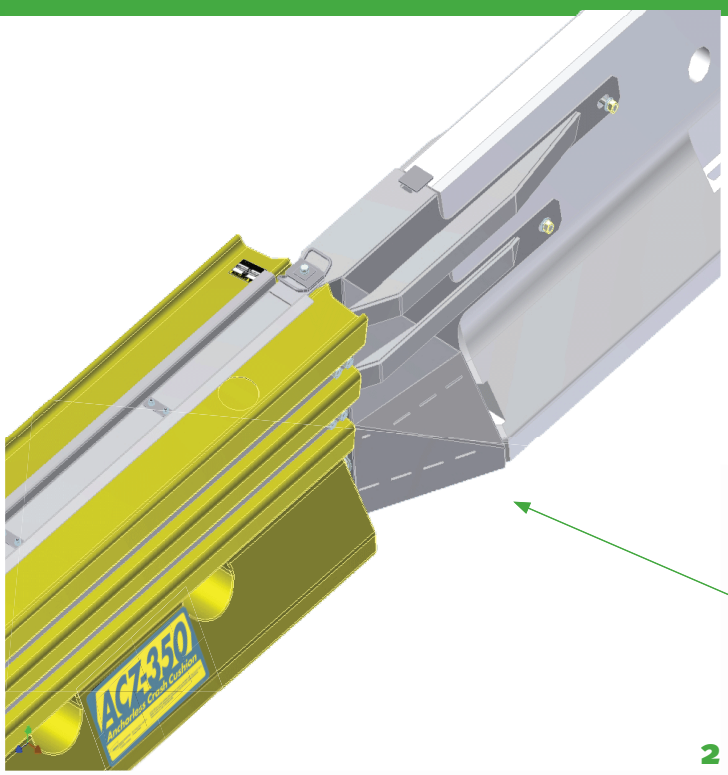

EASY DEPLOYMENT AND REMOVAL

The ACZ-350 System can be easily unloaded and positioned without cranes or heavy equipment. Deployment involves three simple steps:

1. Unload
2. Position and pin barrier sections.
3. Fill Segments with water

SPECIFICATIONS	TL-3
Length	31'-7" (9.6 m)
Width	1'-10" (.6m)
Height	2' 9" (.8m)
Weight (empty)	1350 lbs
Weight (full)	6160 lbs

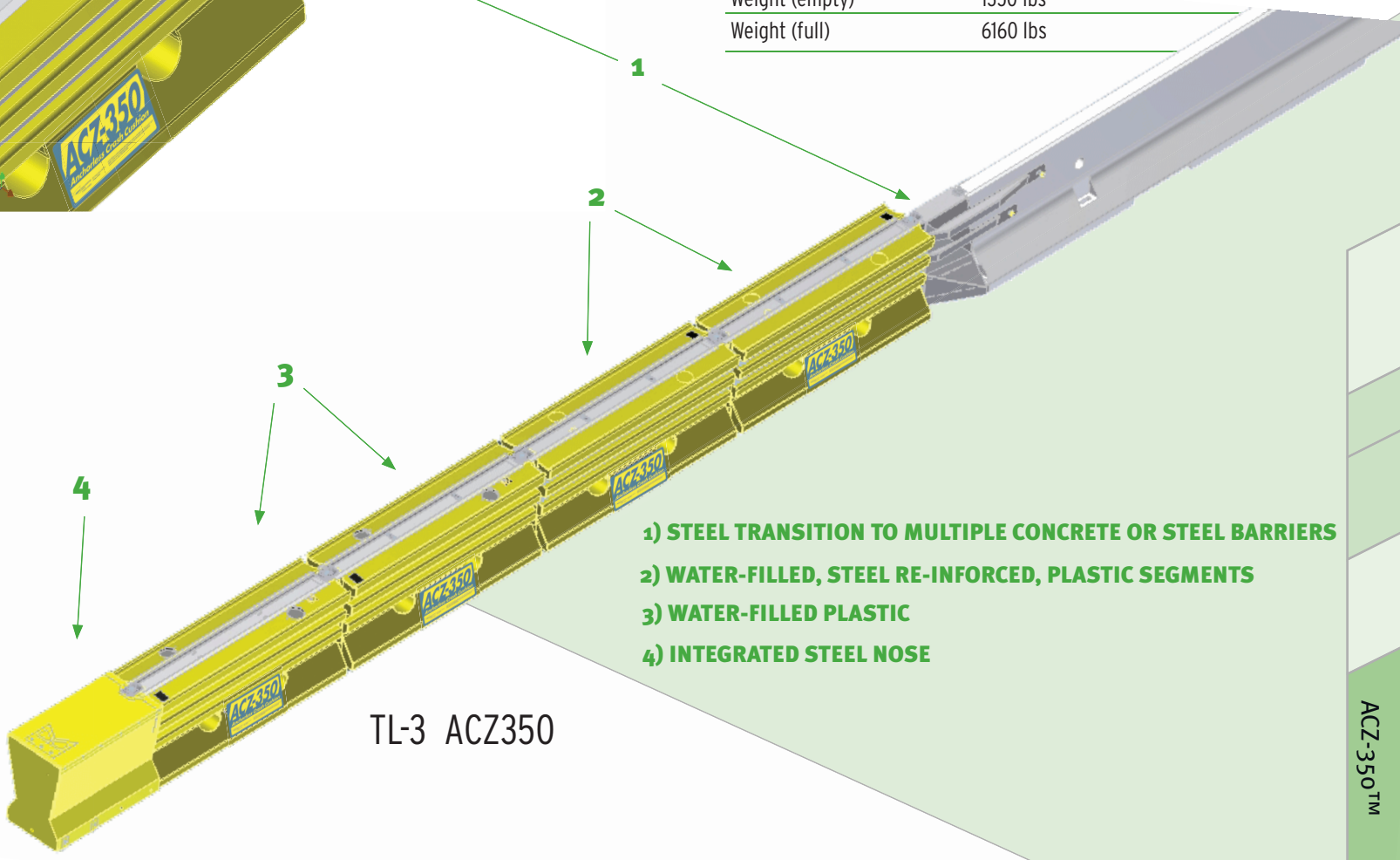

1) STEEL TRANSITION TO MULTIPLE CONCRETE OR STEEL BARRIERS

2) WATER-FILLED, STEEL RE-INFORCED, PLASTIC SEGMENTS

3) WATER-FILLED PLASTIC

4) INTEGRATED STEEL NOSE

TL-3 ACZ350

DISTRIBUTED BY:

Quixote Transportation Safety

35 East Wacker Drive • Chicago, IL 60601
Tel: (312) 467-6750 • Fax: (312) 467-9625
www.energyabsorption.com

ENERGY ABSORPTION SYSTEMS, INC.

www.quixtrans.com

PARTS LIST			
ITEM	STOCK NO.	DESCRIPTION	QTY.
1		ACZ-350 SECTION 2	1
2		ACZ-350 TRANSITION ASSY	1
3		ACZ-350 SECTION 1	1
4		ACZ-350 NOSE ASSY	1

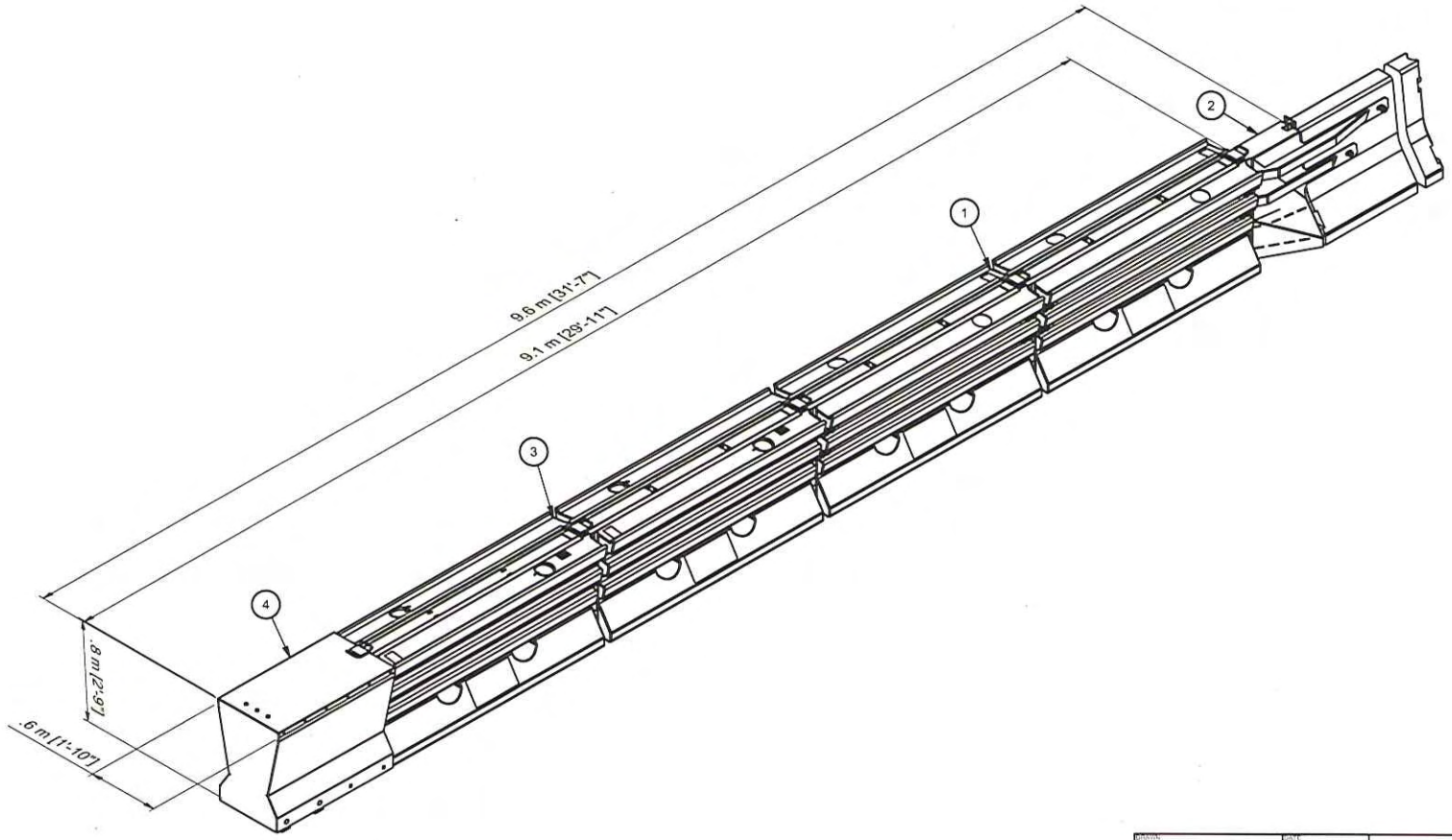

DRAWN aaron.cox	DATE 11/12/2008	ENERGY ABSORPTION SYSTEMS, INC. ENGINEERING AND RESEARCH DEPARTMENT
DESIGNED aaron.cox	DATE	ACZ-350 TL-3 CRASH CUSHION
CHECKED	DATE	
APPROVED	DATE	
Q.C.	DATE	
UNLESS OTHERWISE NOTED ALL DIMENSIONS ARE IN INCHES DIMENSIONS ACCORDING TO ASME Y14.5M-1994 UNLESS OTHERWISE SPECIFIED		DRAWING / SHEET 1 of 1 / REV

Figure 1

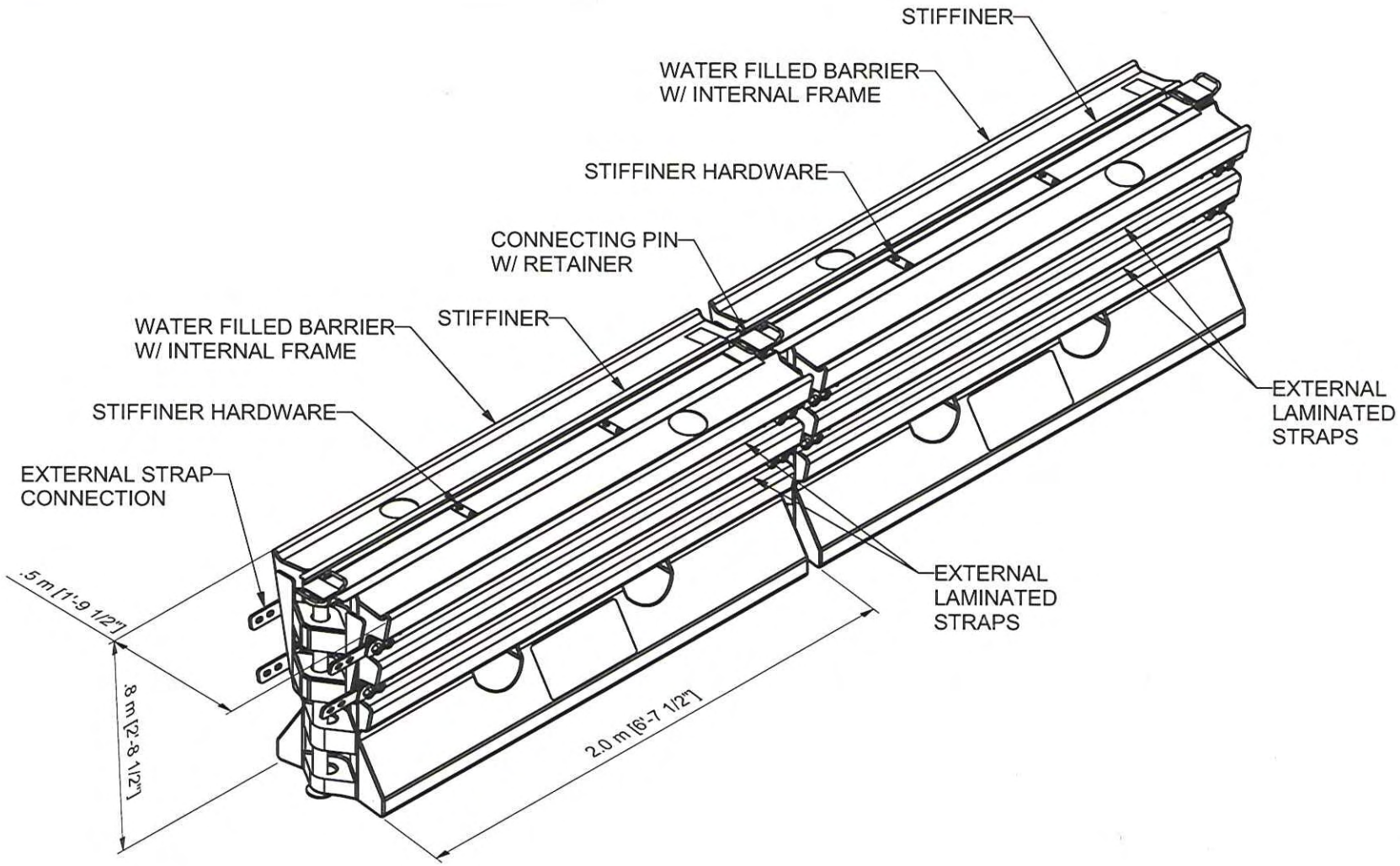

DRAWN: aaron.cox	DATE: 11/13/2008	ENERGY ABSORPTION SYSTEMS, INC. ENGINEERING AND RESEARCH DEPARTMENT
DESIGNED: aaron.cox	DATE:	
CHECKED:	DATE:	ACZ-350 SECTION 2
APPROVED:	DATE:	
Q.C.	DATE:	
UNLESS OTHERWISE NOTED, ALL DIMENSIONS ARE IN INCHES. DIMENSIONS ACCORDING TO ASME Y14.5M-1994 UNLESS OTHERWISE SPECIFIED.	DRAWING:	SHEET: 1 of 1 / REV

Figure 4

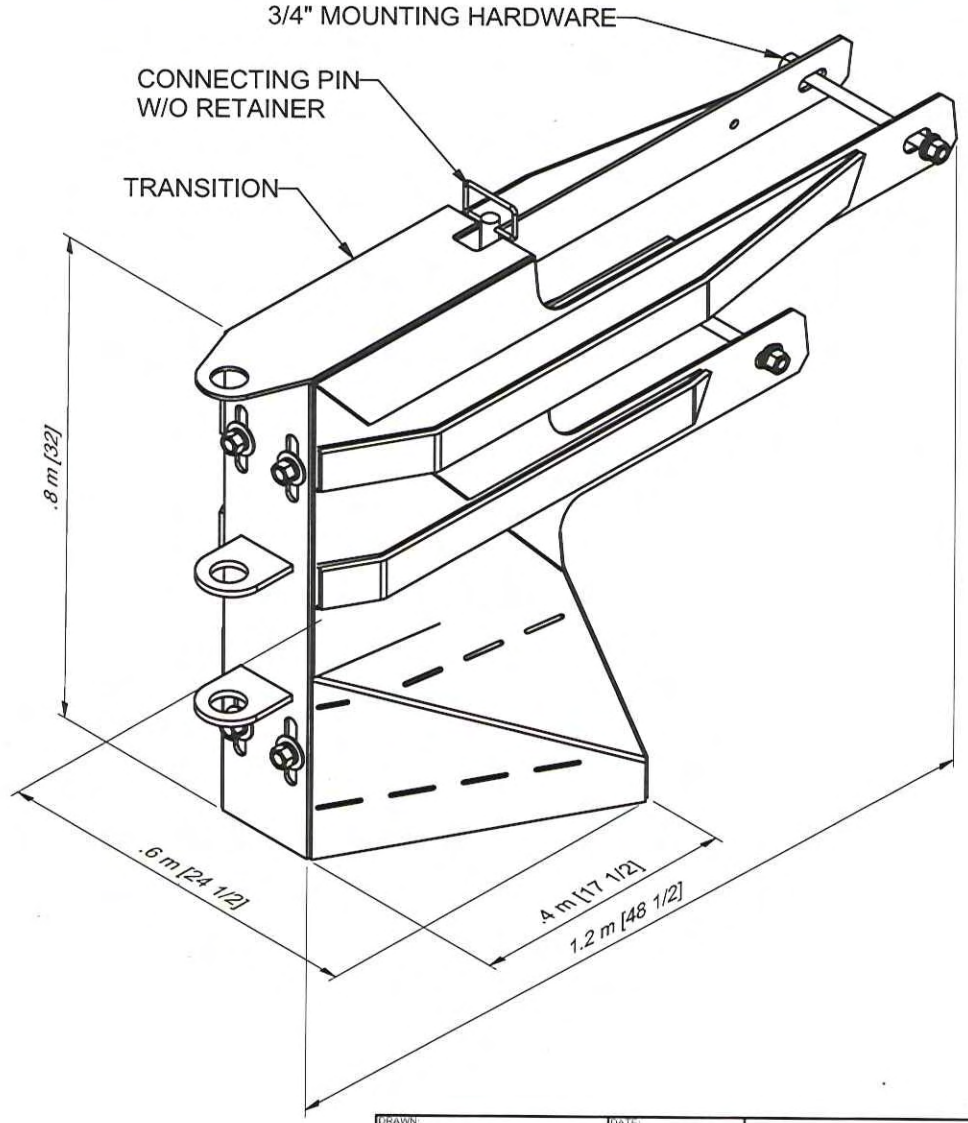

DRAWN: aaron.cox	DATE: 11/13/2008	ENERGY ABSORPTION SYSTEMS, INC. ENGINEERING AND RESEARCH DEPARTMENT
DESIGNED: aaron.cox	DATE:	
CHECKED:	DATE:	ACZ-350 TRANSITION ASSY
APPROVED:	DATE:	
Q.C.	DATE:	
UNLESS OTHERWISE NOTED, ALL DIMENSIONS ARE IN INCHES. DIMENSIONS ACCORDING TO ASME Y14.5M-1994 UNLESS OTHERWISE SPECIFIED.	DRAWING:	SHEET: 1 of 1 / REV

Figure 3

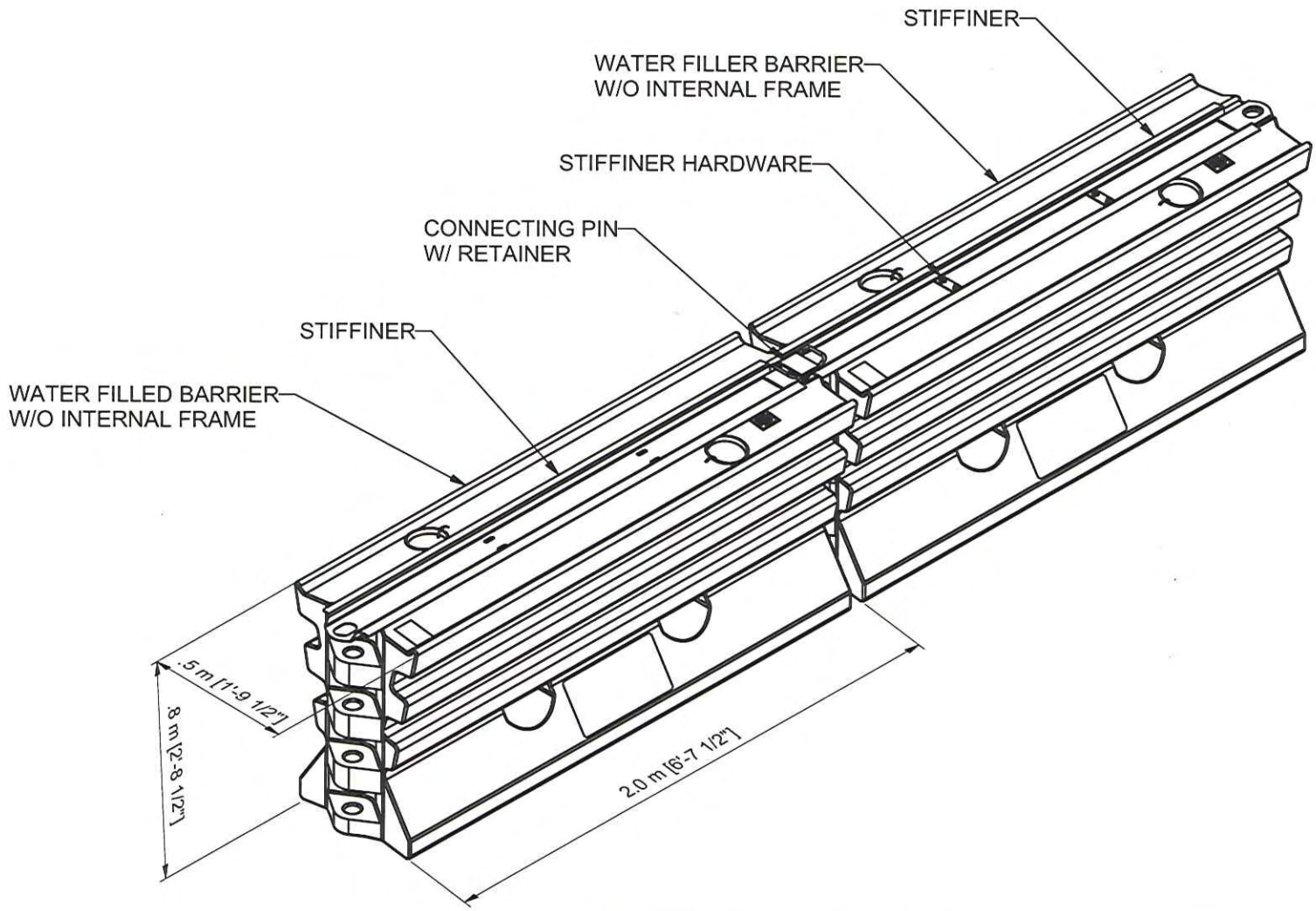

DRAWN: aaron.cox	DATE: 11/12/2008	ENERGY ABSORPTION SYSTEMS, INC. ENGINEERING AND RESEARCH DEPARTMENT
DESIGNED: aaron.cox	DATE:	
CHECKED:	DATE:	ACZ-350 SECTION 1
APPROVED:	DATE:	
Q.C.	DATE:	
UNLESS OTHERWISE NOTED, ALL DIMENSIONS ARE IN INCHES. DIMENSIONS ACCORDING TO ASME Y14.5M-1994 UNLESS OTHERWISE SPECIFIED.		DRAWING: / SHEET: 1 of 1 / REV

Figure 2

MATERIALS INFORMATION

15. Alternative Flared Terminal System

Assembly Instructions for

SKT-SP-MGS *Tangent Terminal*

and

FLEAT-SP-MGS *Flared Terminal*

SP – Standard Post System Terminals For
31" MGS (Midwest Guardrail System)

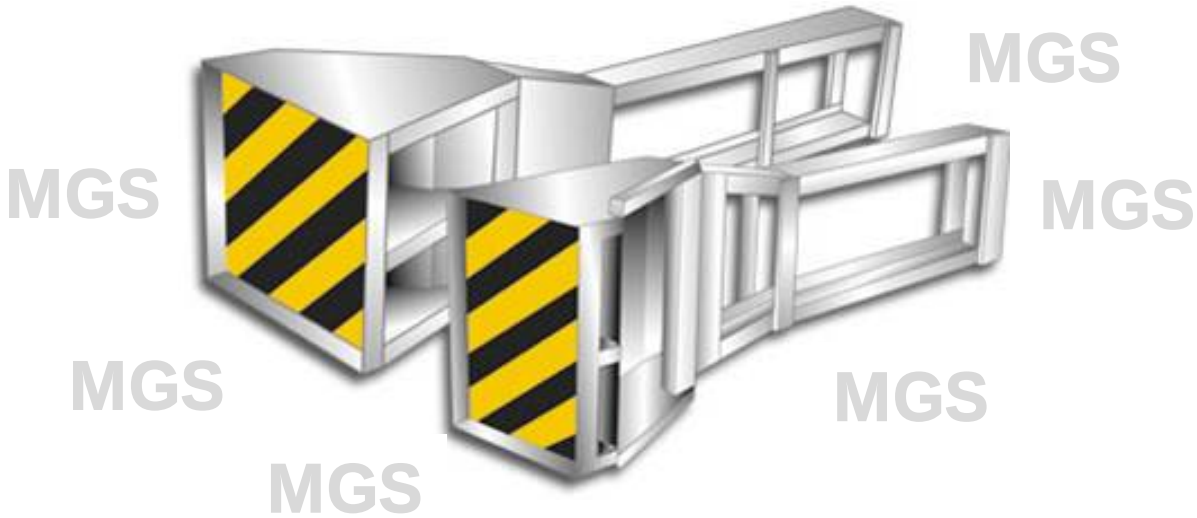

ROAD SYSTEMS, INC.

P. O. Box 2163
Big Spring, Texas 79721
Phone: (432) 263-2435 FAX: (432) 267-4039

Technical Support & Marketing Phone: (330) 346-0721
Technical Support & Marketing Fax: (330) 346-0722

All RSI Installation Manuals can be downloaded from RSI web site
www.roadsystems.com

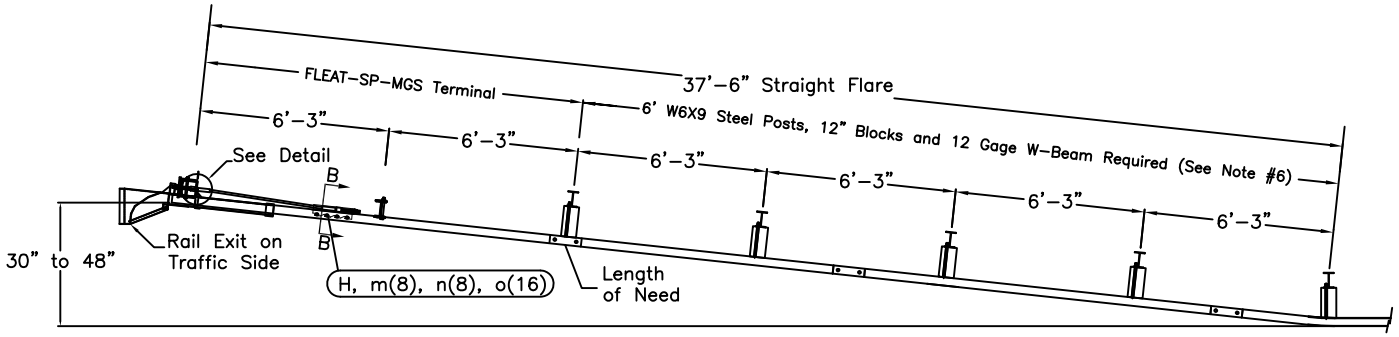

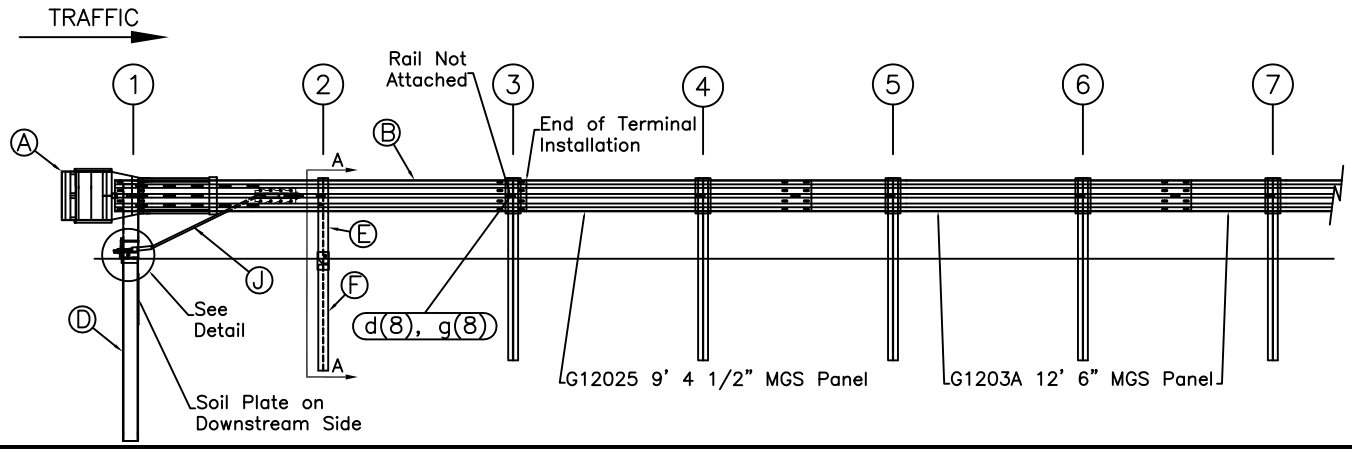

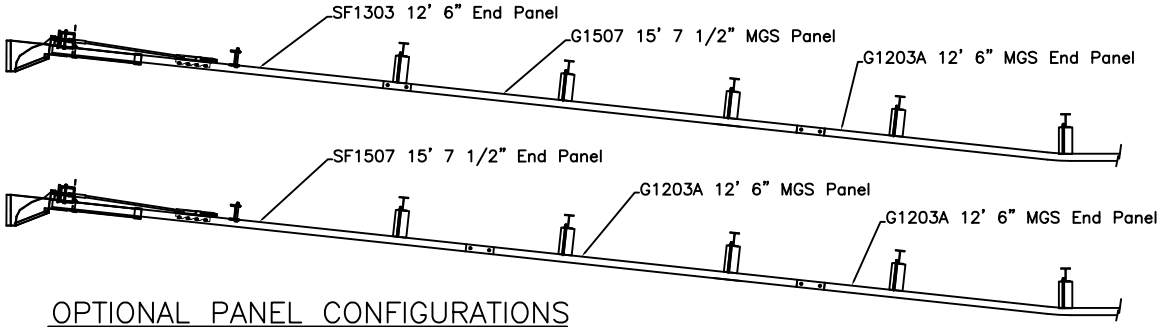

OPTIONAL PANEL CONFIGURATIONS

ITEM	QTY	BILL OF MATERIALS (TERMINAL)	ITEM NO.
A	1	IMPACT HEAD	F3000
B	1	W-BEAM GUARDRAIL END SECTION, 12 Ga.	SF1303
C	1	FIRST POST TOP (6X6X1/8" Tube)	TPHP1A
D	1	FIRST POST BOTTOM (6' W6X15)	TPHP1B
E	1	SECOND POST ASSEMBLY TOP	UHP2A
F	1	SECOND POST ASSEMBLY BOTTOM	HP3B
G	1	BEARING PLATE	E750
H	1	CABLE ANCHOR BOX	S760
J	1	BCT CABLE ANCHOR ASSEMBLY	E770
K	1	BEARING PLATE RETAINER TIE	CT-100S
		HARDWARE (ALL DIMENSIONS IN INCHES)	
a	2	5/16 x 1 HEX BOLT GRD 5	B5160104A
b	4	5/16 WASHER	W0516
c	2	5/16 HEX NUT	N0516
d	9	5/8 Dia. x 1 1/4 SPLICE BOLT	B580122
e	1	5/8 Dia. x 9 HEX BOLT GRD 5	B580904A
f	3	5/8 WASHER	W050
g	10	5/8 Dia. H.G.R NUT	N050
h	1	3/4 Dia. x 8 1/2 HEX BOLT GRD A449	B340854A
j	1	3/4 Dia. HEX NUT	N030
k	2	1 ANCHOR CABLE HEX NUT	N100
l	2	1 ANCHOR CABLE WASHER	W100
m	8	CABLE ANCHOR BOX SHOULDER BOLT	SB58A
n	8	1/2 A325 STRUCTURAL NUT	N055A
o	16	1 1/16 OD x 9/16 ID A325 STR. WASHER	W050A

GENERAL NOTES:

1. All bolts, nuts, cable assemblies, cable anchors and bearing plates shall be galvanized.
2. The lower sections of the Posts 1&2 shall not protrude more than 4 in above the ground (measured along a 5' cord). Site grading may be necessary to meet this requirement.
3. The lower sections of the hinged posts should not be driven with the upper post attached. If the post is placed in a drilled hole, the backfill material must be satisfactorily compacted to prevent settlement.
4. When competent rock is encountered, a 12" Ø post hole, 20 in. deep cored into the rock surface may be used if approved by the engineer for post 1. Granular material will be placed in the bottom of the hole, approximately 2.5" deep to provide drainage. The first post can be field cut to length, placed in the hole and backfilled with suitable backfill. The soil plate may be trimmed if required.
5. The breakaway cable assembly must be taut. A locking device (vice grips or channel lock pliers) should be used to prevent the cable from twisting when tightening nuts.
6. Additional components required downstream of terminal (see plan for required w-beam rail sections):

QTY	Desc.	Item#
8	5/8" x 1 1/4" Splice Bolt	B580122
13	5/8" Dia. H.G.R. Nut	N030
5	6x9 Steel Post	P621
5	MGS Block	P618
5	5/8" x 14" H.G.R. Bolt	B581402

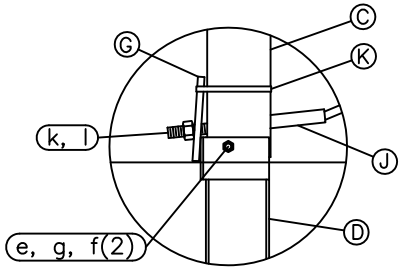

Post #1 Connection Detail

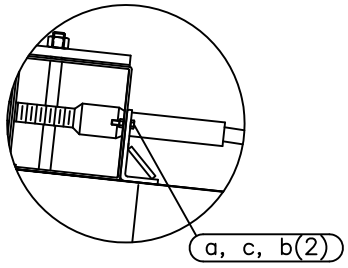

Impact Head Connection Detail

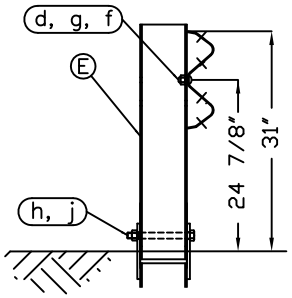

SECTION A–A
Post #2

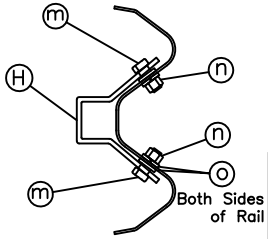

SECTION B–B
Anchor Bracket

RSI
Road Systems, Inc.
Big Spring, TX
Sales: 432-263-2435
Technical: 330-346-0721

FLEAT-SP-MGS Terminal
Midwest Guardrail System
31" Top of Rail

Sheet: 1
Date: 01/15/12
By: JRR
Drawing Name: FLT-SP-S-MGS
Scale: None
Rev: 0

Appendix A - System Configuration, 37' 6" MGS

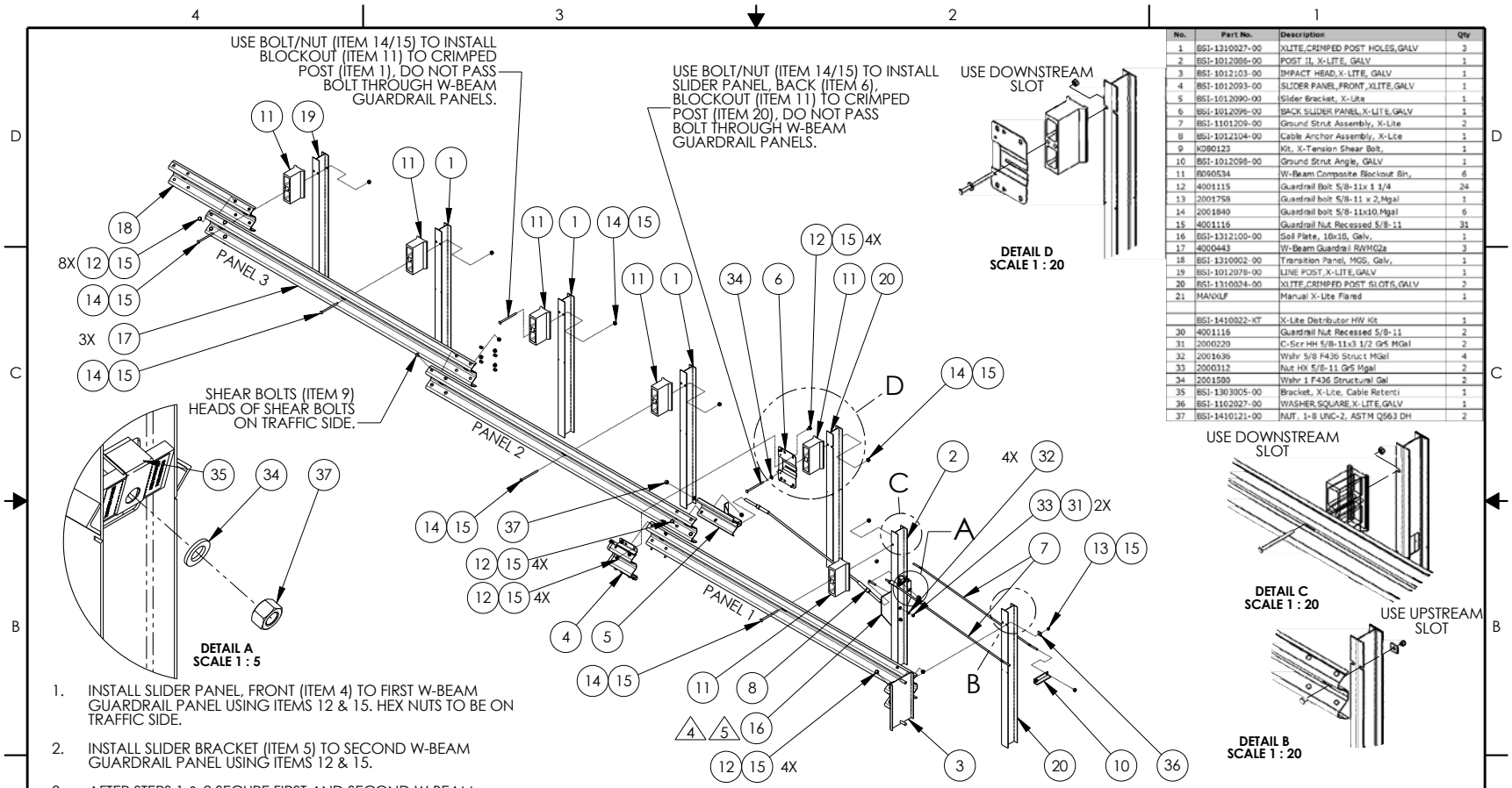

No.	Part No.	Description	Qty
1	BSI-1310027-00	XLITE,CRIMPED POST HOLES,GALV	3
2	BSI-1012086-00	POST II, X-LITE, GALV	1
3	BSI-1012103-00	IMPACT HEAD,X-LITE, GALV	1
4	BSI-1012093-00	SLIDER PANEL,FRONT,XLITE,GALV	1
5	BSI-1012090-00	Slider Bracket, X-Lite	1
6	BSI-1012096-00	BACK SLIDER PANEL,X-LITE,GALV	1
7	BSI-1101209-00	Ground Strut Assembly, X-Lite	2
8	BSI-1012104-00	Cable Anchor Assembly, X-Lite	1
9	K080123	Kit, X-Tension Shear Bolt,	1
10	BSI-1012098-00	Ground Strut Angle, GALV	1
11	B090534	W-Beam Composite Blockout Bln,	6
12	4001115	Guardrail Bolt 5/8-11x 1 1/4	24
13	2001758	Guardrail bolt 5/8-11 x 2,Mgal	1
14	2001840	Guardrail bolt 5/8-11x10,Mgal	6
15	4001116	Guardrail Nut Recessed 5/8-11	31
16	BSI-1312100-00	Soil Plate, 10x10, Galv,	1
17	4000443	W-Beam Guardrail RWM02a	3
18	BSI-1310002-00	Transition Panel, MGS, Galv,	1
19	BSI-1012078-00	LINE POST,X-LITE,GALV	1
20	BSI-1310024-00	XLITE,CRIMPED POST SLOTS,GALV	2
21	MANXLF	Manual X-Lite Flared	1
	BSI-1410022-KT	X-Lite Distributor HW Kit	1
30	4001116	Guardrail Nut Recessed 5/8-11	2
31	2000220	C-Scr HH 5/8-11x3 1/2 Gr5 MGal	2
32	2001636	Wshr 5/8 F436 Struct MGal	4
33	2000312	Nut HX 5/8-11 Gr5 Mgal	2
34	2001500	Wshr 1 F436 Structural Gal	2
35	BSI-1303005-00	Bracket, X-Lite, Cable Retenti	1
36	BSI-1102027-00	WASHER,SQUARE,X-LITE,GALV	1
37	BSI-1410121-00	NUT, 1-8 UNC-2, ASTM Q563 DH	2

1. INSTALL SLIDER PANEL, FRONT (ITEM 4) TO FIRST W-BEAM GUARDRAIL PANEL USING ITEMS 12 & 15. HEX NUTS TO BE ON TRAFFIC SIDE.
2. INSTALL SLIDER BRACKET (ITEM 5) TO SECOND W-BEAM GUARDRAIL PANEL USING ITEMS 12 & 15.
3. AFTER STEPS 1 & 2 SECURE FIRST AND SECOND W-BEAM GUARDRAIL PANEL USING ITEMS 6, 12 & 15. HEX NUTS TO BE ON TRAFFIC SIDE.
4. IF ROCK OR STIFF SOIL IS ENCOUNTERED, THE POST AND SOIL PLATE MAY BE INSTALLED BY AUGERING AND BACKFILLING THE HOLE. EXTRA CARE MUST BE TAKEN TO PREVENT SETTLEMENT OR LATERAL DISPLACEMENT OF THE POST. BACKFILL MATERIAL SHALL BE COMPACTED TO OPTIMUM COMPACTION.
5. IF ROCK IS ENCOUNTERED, THE SOIL PLATE MAY BE MODIFIED IF APPROVED BY THE PROJECT ENGINEER.

© 2010 BARRIER SYSTEMS INC. THE INFORMATION CONTAINED IN THIS DRAWING IS THE SOLE PROPERTY OF BARRIER SYSTEMS INC. ANY REPRODUCTION IN PART OR WHOLE WITHOUT THE WRITTEN PERMISSION OF BARRIER SYSTEMS INC. IS PROHIBITED.

APPROVALS

DRAWN BY:	JMT
DRAWN DATE:	10/09/13
APPR'D BY:	GAD
APPR'D DATE:	10/09/13

UNLESS OTHERWISE SPECIFIED DIMENSIONS ARE IN INCHES. TOLERANCES ARE:
FRACTIONS ±1/16 DECIMAL .XX = ±.03 .XXX = ±.010 ANGLES ±1/2°
INTERPRET DIMENSIONS AND TOLERANCES PER ASME Y14.5-1994

THIRD ANGLE PROJECTION

DO NOT SCALE DRAWING

REV	ECN#	DATE
F	2540	12/12/14
E	2533	12/01/12
D	2444	09/26/14
C	2253	03/25/14
B	2220	01/23/14
A	2165	11/13/13
0	2151	10/09/13

LINDSAY™ TRANSPORTATION SOLUTIONS

BARRIER SYSTEMS
180 River Road
Rio Vista, CA 94571
Tel: 888-800-3691
www.barriersystemsinc.com

TITLE
X-LITE SYSTEM ASSEMBLY FLARED TRANSITION TO MGS

SIZE B | DWG NO. XLFSUS-MGS | REV. F
SCALE 1:40 | SHEET 1 OF 2

Doc. B100108

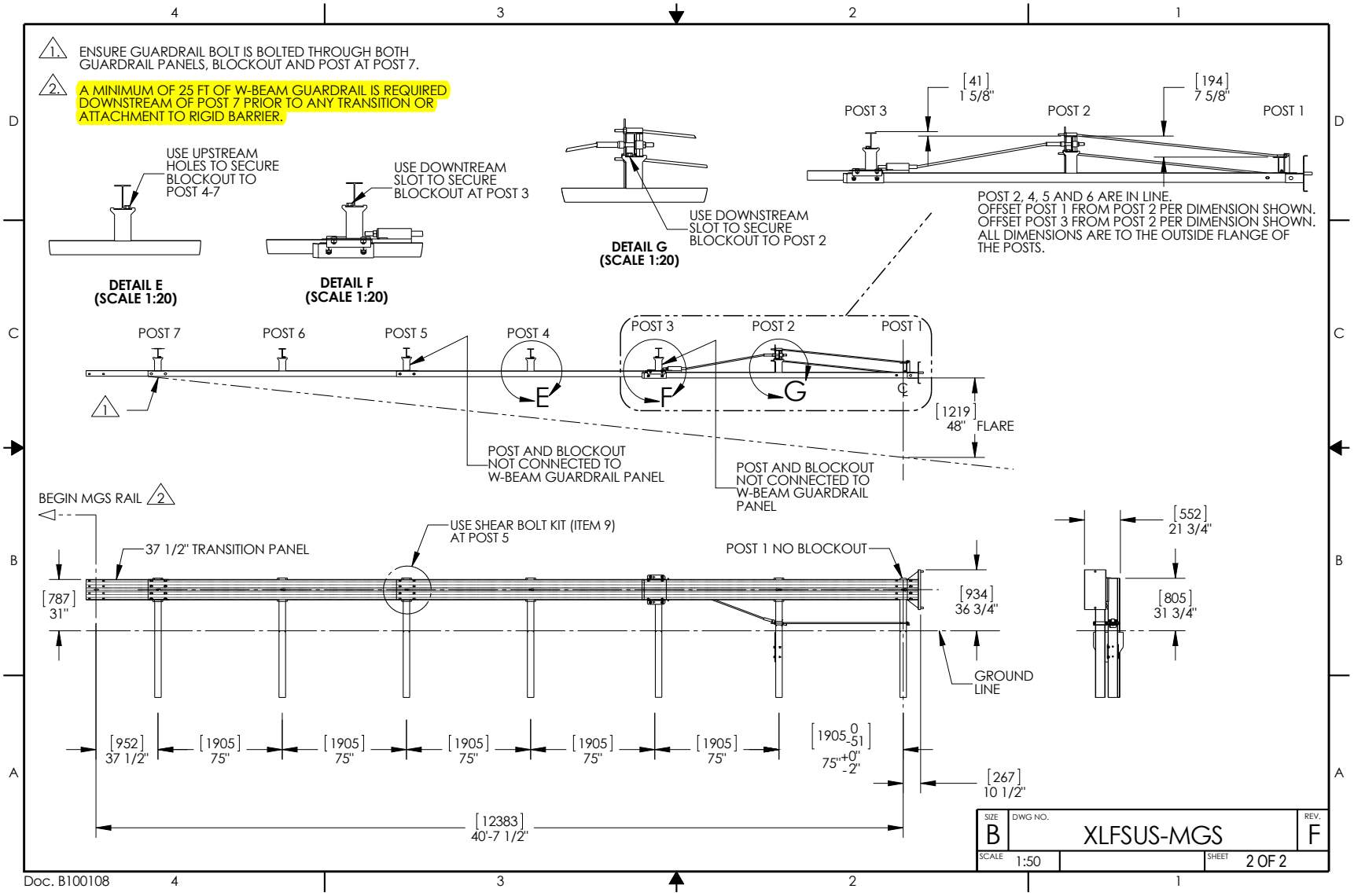
1. ENSURE GUARDRAIL BOLT IS BOLTED THROUGH BOTH GUARDRAIL PANELS, BLOCKOUT AND POST AT POST 7.
2. A MINIMUM OF 25 FT OF W-BEAM GUARDRAIL IS REQUIRED DOWNSTREAM OF POST 7 PRIOR TO ANY TRANSITION OR ATTACHMENT TO RIGID BARRIER.
USE UPSTREAM HOLES TO SECURE BLOCKOUT TO POST 4-7
DETAIL E (SCALE 1:20)
USE DOWNTREAM SLOT TO SECURE BLOCKOUT AT POST 3
DETAIL F (SCALE 1:20)
USE DOWNSTREAM SLOT TO SECURE BLOCKOUT TO POST 2
DETAIL G (SCALE 1:20)
[41] 1 5/8"
[194] 7 5/8"
POST 3
POST 2
POST 1
POST 2, 4, 5 AND 6 ARE IN LINE.
OFFSET POST 1 FROM POST 2 PER DIMENSION SHOWN.
OFFSET POST 3 FROM POST 2 PER DIMENSION SHOWN.
ALL DIMENSIONS ARE TO THE OUTSIDE FLANGE OF THE POSTS.
POST 7
POST 6
POST 5
POST 4
POST 3
POST 2
POST 1
E
F
G
[1219] 48" FLARE
POST AND BLOCKOUT NOT CONNECTED TO W-BEAM GUARDRAIL PANEL
POST AND BLOCKOUT NOT CONNECTED TO W-BEAM GUARDRAIL PANEL
BEGIN MGS RAIL
37 1/2" TRANSITION PANEL
USE SHEAR BOLT KIT (ITEM 9) AT POST 5
POST 1 NO BLOCKOUT
[787] 31"
[934] 36 3/4"
GROUND LINE
[552] 21 3/4"
[805] 31 3/4"
[952] 37 1/2"
[1905] 75"
[1905] 75"
[1905] 75"
[1905] 75"
[1905] 75"
[1905 0 -51] 75" +0" -2"
[267] 10 1/2"
[12383] 40'-7 1/2"
SIZE B
DWG NO. XLFSUS-MGS
REV. F
SCALE 1:50
SHEET 2 OF 2
Doc. B100108

ITEM NO.	PART NUMBER	DESCRIPTION	QTY	UOM
1	BSI-1301252-KT	X-Tension Terminal Comp, 31 in	1	EACH
2	K070202	X-Tension Hardware Kit, GT,	1	EACH
3	K070206	X-Tension System Hardware Kit,	1	EACH
4	K070210	X-Tension GT Guardrail	1	EACH
5	B061100	BSI, I-Beam Post, Middle, X350	1	EACH
6	MANXT1	X-TENSION Installation Manual	1	EACH

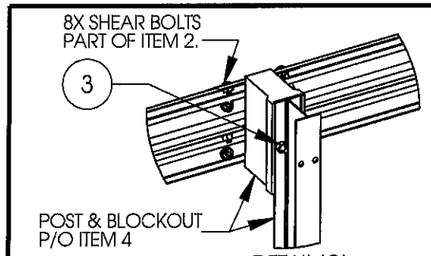

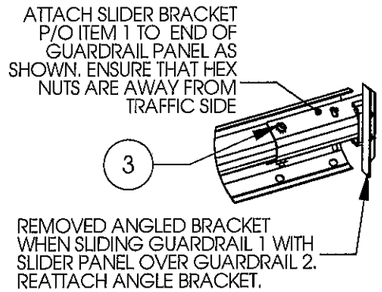

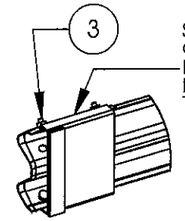

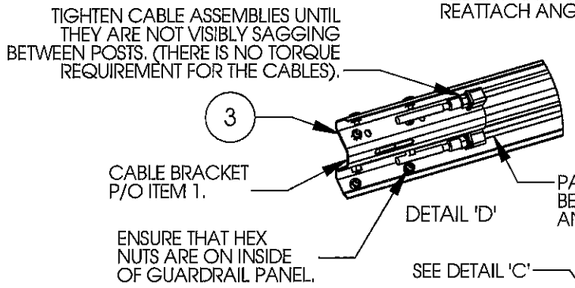

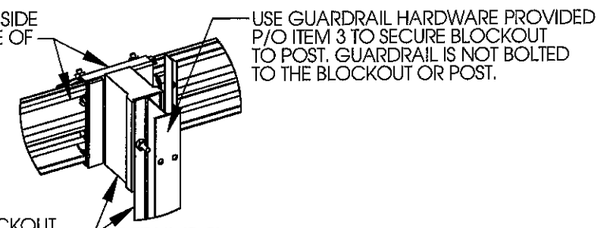

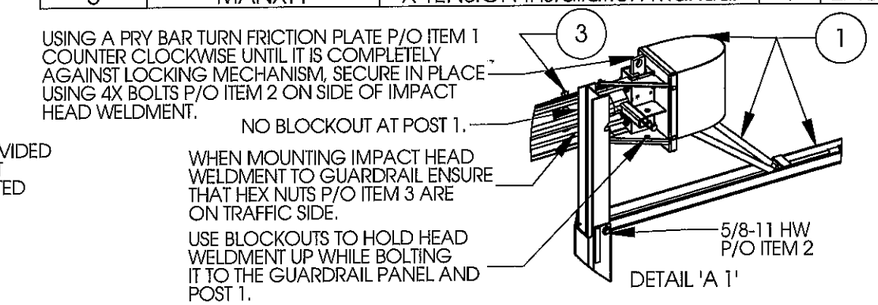

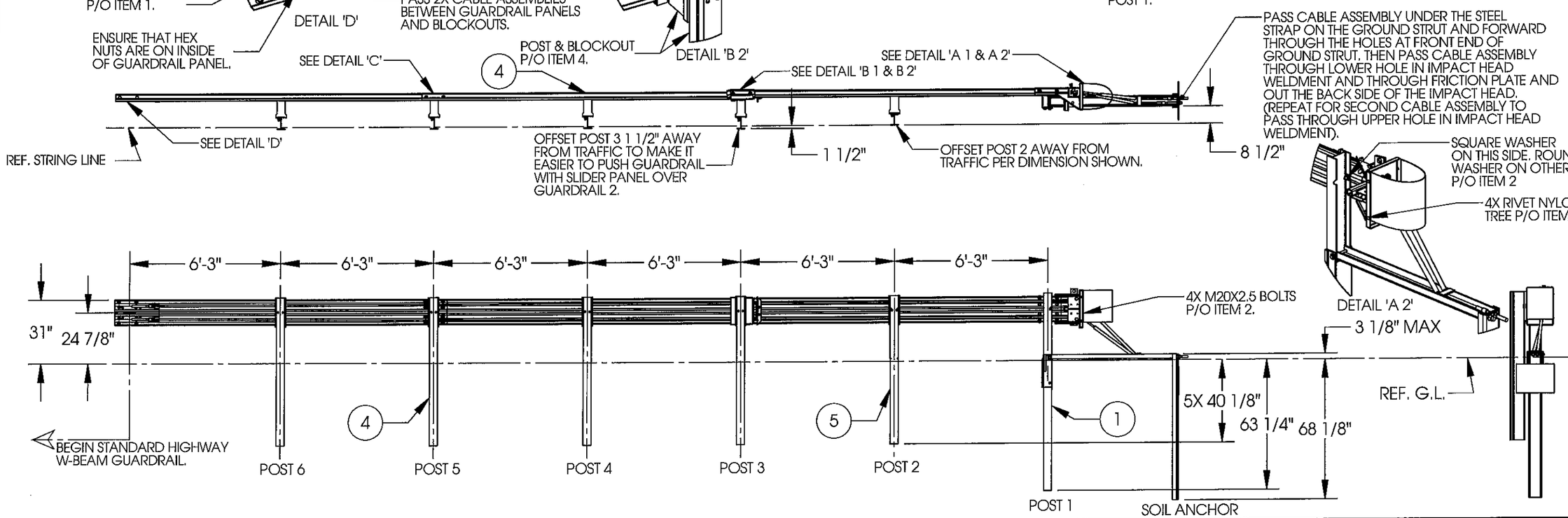

NOTES: UNLESS OTHERWISE SPECIFIED.

1. SYSTEM TO BE INSTALLED PER MANUFACTURER SPECIFICATIONS.
2. ONLY TIGHTEN THE CABLE ASSEMBLIES USING THE NUTS AT THE CABLE BRACKET (SEE DETAIL 'D'). DO NOT TIGHTEN THE CABLES AT THE FRONT OF THE GROUND ANCHOR.
3. WHEN DRIVING STEEL POST, ENSURE THAT A DRIVING CAP WITH TIMBER OR PLASTIC INSERT IS USED TO PREVENT DAMAGE TO THE GALVANIZING TO THE TOP OF THE POST.

© 2012 BARRIER SYSTEMS INC. THE INFORMATION CONTAINED IN THIS DRAWING IS THE SOLE PROPERTY OF BARRIER SYSTEMS INC. ANY REPRODUCTION IN PART OR WHOLE WITHOUT THE WRITTEN PERMISSION OF BARRIER SYSTEMS INC. IS PROHIBITED.

UNLESS OTHERWISE SPECIFIED DIMENSIONS ARE IN INCHES. TOLERANCES ARE:
FRACTIONS ±1/16 DECIMAL .XX = ±.03 .XXX = ±.010 ANGLES ±1/2°
INTERPRET DIMENSIONS AND TOLERANCES PER ASME Y14.5-1994

THIRD ANGLE PROJECTION

DO NOT SCALE DRAWING

APPROVALS	
DRAWN BY:	NMV
DRAWN DATE:	2/08/13
APPR'D BY:	JMT
APPR'D DATE:	2/08/13

REV	ECN#	DATE
B	2067	05/02/13
A	2022	2/08/13

LINDSAY™ TRANSPORTATION SOLUTIONS

BARRIER SYSTEMS INC.
3333 Vaca Valley Parkway Ste 800
Vacaville, CA 95688
Tel: 888-800-3691
www.barriersystemsinc.com

TITLE
X-TENSION GUARDRAIL TERMINAL SYSTEM STEEL POST WITH COMPOSITE BLOCKOUT 31" RAIL HEIGHT

SIZE	DWG NO.	REV.
B	XTGTSS5	B

SCALE 1:50 SHEET 1 OF 1

Doc. B100108

Last Saved by: jeff.thompson; Friday, May 03, 2013 1:23:29 PM

Dist	COUNTY	ROUTE	POST MILES TOTAL PROJECT	SHEET No.	TOTAL SHEETS
05	SLO,Mon	101	63.2/R69.3, R0.0/R1.9	161	???

REGISTERED CIVIL ENGINEER DATE

PLANS APPROVAL DATE

REGISTERED PROFESSIONAL ENGINEER PETER CHANDER No. 63988 Exp. 9/30/16 CIVIL STATE OF CALIFORNIA

THE STATE OF CALIFORNIA OR ITS OFFICERS OR AGENTS SHALL NOT BE RESPONSIBLE FOR THE ACCURACY OR COMPLETENESS OF SCANNED COPIES OF THIS PLAN SHEET.

NOTES:

1. USE 15'-7½" LENGTH RAIL.
2. THIS DETAIL USED FOR BOTH ALTERNATIVE TERMINAL SYSTEMS OPTION 3 TYPE 31" X-TENSION.

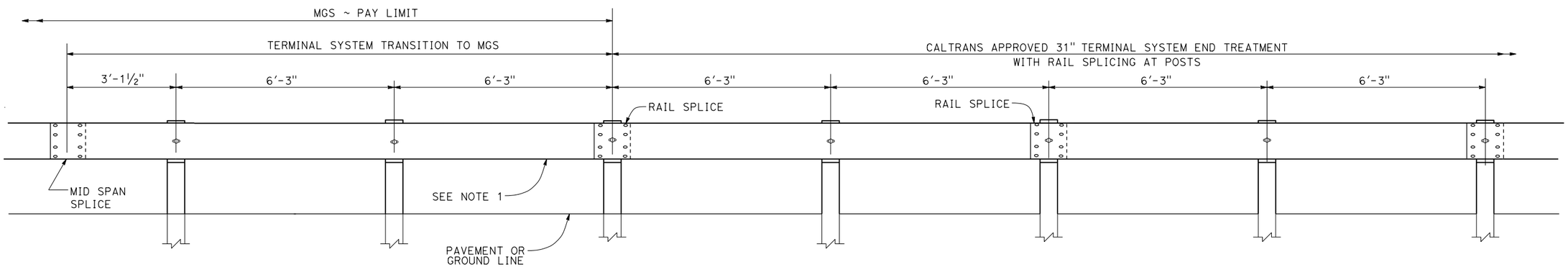

TRANSITION DETAIL FOR 31" X-TENSION TERMINAL SYSTEM END TREATMENT WITH RAIL SPLICING AT POSTS TO MIDWEST GUARDRAIL SYSTEM

(SEE NOTE 2)

CONSTRUCTION DETAILS

NO SCALE

C-33

REVISED BY | DATE REVISED

PETER CHANDER | HAL KENYON

CALCULATED-DESIGNED BY | CHECKED BY

FUNCTIONAL SUPERVISOR | ROBERTO BANDA

STATE OF CALIFORNIA - DEPARTMENT OF TRANSPORTATION

Caltrans® 06-DESIGN

LAST REVISION 12-30-15 | DATE PLOTTED => 25-JAN-2016 | TIME PLOTTED => 12:19

MATERIALS INFORMATION

16. Alternative In-Line Terminal System

Assembly Instructions for

SKT-SP Tangent Terminal

&

FLEAT-SP Flared Terminal

SP – Standard Post System Guardrail Terminals

ROAD SYSTEMS, INC.

P. O. Box 2163
Big Spring, Texas 79721
Phone: (432) 263-2435 FAX: (432) 267-4039

Technical Support & Marketing Phone: (330) 346-0721
Technical Support & Marketing Fax: (330) 346-0722

All RSI Installation Manuals can be downloaded from RSI web site
www.roadsystems.com

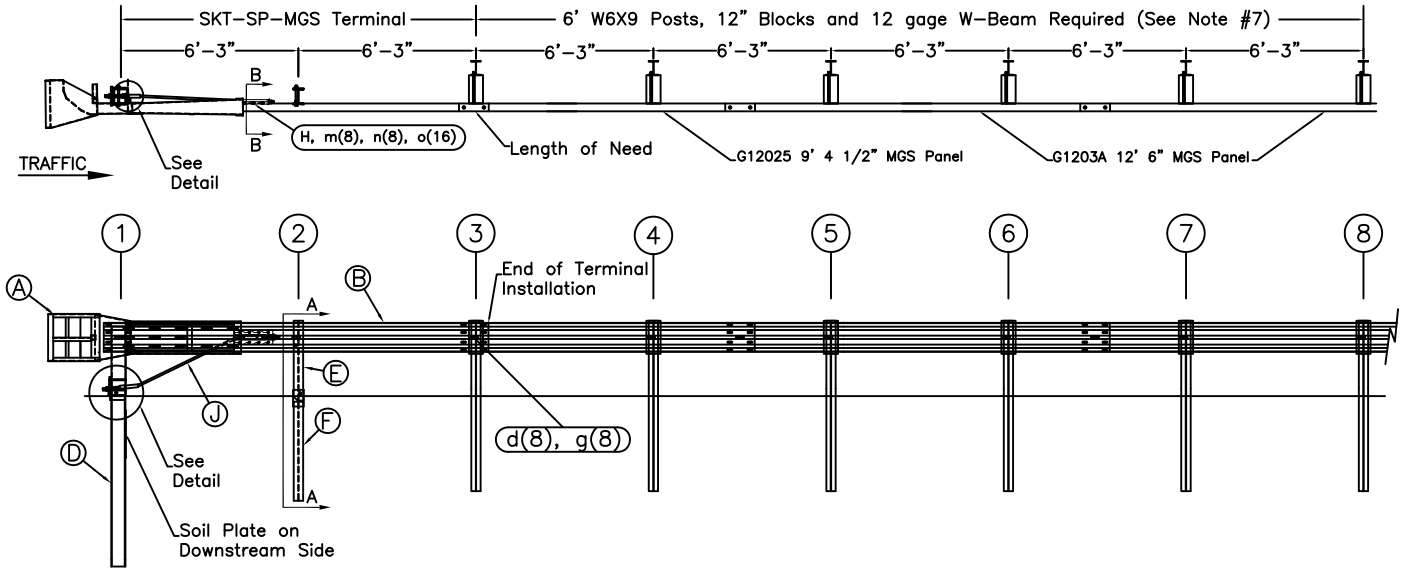

ITEM	QTY	BILL OF MATERIALS (TERMINAL)	ITEM NO.
A	1	IMPACT HEAD	S3000
B	1	W-BEAM GUARDRAIL END SECTION, 12 Ga.	SF1303
C	1	FIRST POST TOP (6X6X⅛" Tube)	TPHP1A
D	1	FIRST POST BOTTOM (6' W6X15)	TPHP1B
E	1	SECOND POST ASSEMBLY TOP	UHP2A
F	1	SECOND POST ASSEMBLY BOTTOM	HP3B
G	1	BEARING PLATE	E750
H	1	CABLE ANCHOR BOX	S760
J	1	BCT CABLE ANCHOR ASSEMBLY	E770
K	1	BEARING PLATE RETAINER TIE	CT-100S
		HARDWARE (ALL DIMENSIONS IN INCHES)	
a	2	5/16 x 1 HEX BOLT GRD 5	B5160104A
b	4	5/16 WASHER	W0516
c	2	5/16 HEX NUT	N0516
d	9	5/8 Dia. x 1 1/4 SPLICE BOLT	B580122
e	1	5/8 Dia. x 9 HEX BOLT GRD 5	B580904A
f	3	5/8 WASHER	W050
g	10	5/8 Dia. H.G.R NUT	N050
h	1	3/4 Dia. x 8 1/2 HEX BOLT GRD A449	B340854A
j	1	3/4 Dia. HEX NUT	N030
k	2	1 ANCHOR CABLE HEX NUT	N100
l	2	1 ANCHOR CABLE WASHER	W100
m	8	CABLE ANCHOR BOX SHOULDER BOLT	SB58A
n	8	1/2 A325 STRUCTURAL NUT	N055A
o	16	1 1/16 OD x 9/16 ID A325 STR. WASHER	W050A

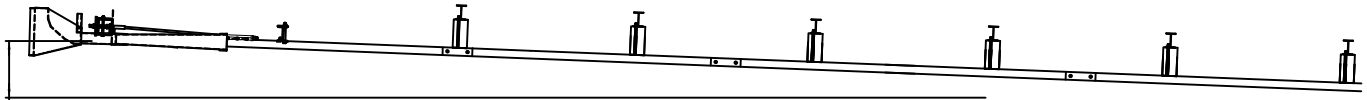

0 to 24" Rail Offset Over 50'
0 to 18" Rail Offset Over 37.5'

OPTIONAL FLARED INSTALLATION
25:1 maximum flare rate

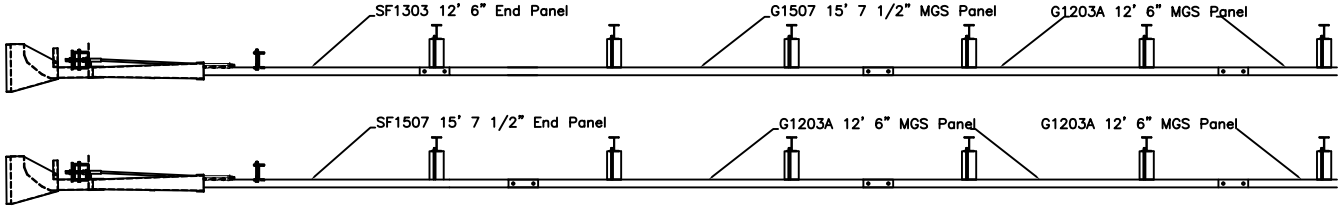

OPTIONAL PANEL CONFIGURATIONS

GENERAL NOTES:
1. All bolts, nuts, cable assemblies, cable anchors and bearing plates shall be galvanized.
2. The lower sections of the Posts 1&2 shall not protrude more than 4 in above the ground (measured along a 5' cord). Site grading may be necessary to meet this requirement.
3. The lower sections of the hinged posts should not be driven with the upper post attached. If the post is placed in a drilled hole, the backfill material must be satisfactorily compacted to prevent settlement.
4. When competent rock is encountered, a 12" Ø post hole, 20 in. deep cored into the rock surface may be used if approved by the engineer for post 1. Granular material will be placed in the bottom of the hole, approximately 2.5" deep to provide drainage. The first post can be field cut to length, placed in the hole and backfilled with suitable backfill. The soil plate may be trimmed if required.
5. A site evaluation should be considered if there is less than 25' between the outlet side of the terminal and any adjacent driving lane.
6. The breakaway cable assembly must be taut. A locking device (vice grips or channel lock pliers) should be used to prevent the cable from twisting when tightening nuts.
7. Additional components required downstream of terminal (see plan for required w-beam rail sections):

QTY	Desc.	Item#
16	5/8" x 1 1/4" Splice Bolt	B580122
22	5/8" Dia. H.G.R. Nut	N050
6	6x9 Steel Post	P621
6	MGS Blocks	P618
6	5/8" x 14" H.G.R. Bolt	B581402

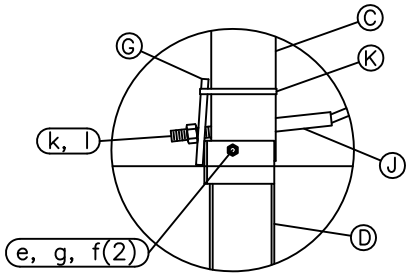

Post #1 Connection Detail

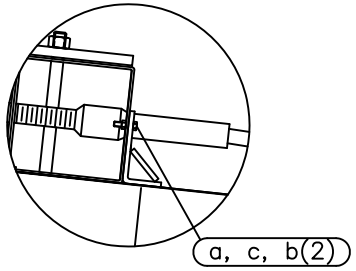

Impact Head Connection Detail

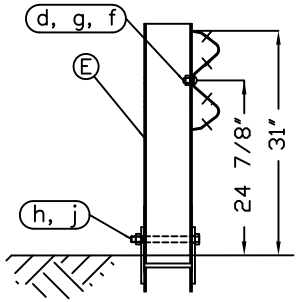

SECTION A–A
Post #2

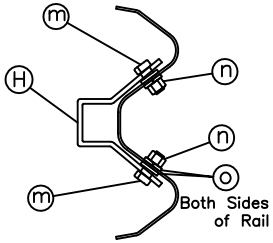

SECTION B–B
Anchor Bracket

RSI
Road Systems, Inc.
Big Spring, TX
Sales: 432-263-2435
Technical: 330-346-0721

SKT-SP-MGS Terminal
Midwest Guardrail System
31" Top of Rail

Sheet: 1
Date: 01/15/12
By: JRR
Drawing Name: SKT-SP-S-MGS
Scale: None
Rev: 0

X-LITE® | REDIRECTIVE, GATING GUARDRAIL TERMINAL

- LOW COST HAZARD PROTECTION
- AVAILABLE AS A TANGENT OR FLARED SYSTEM
- SIMPLE INSTALLATION
- NCHRP 350 TL-3 ACCEPTED

BARRIER SYSTEMS®
BY LINDSAY

X-LITE® | REDIRECTIVE, GATING END TERMINAL

PHYSICAL SPECIFICATIONS

Classification	R-G	
Length	37′ 6″	11.43 m
Width	Tangent or Flared	
Height	27 ⅝″or 31″	710 or 790 mm
Straight / Variable Flare	4′	1.2 m
Test Level	NCHRP 350	TL-3

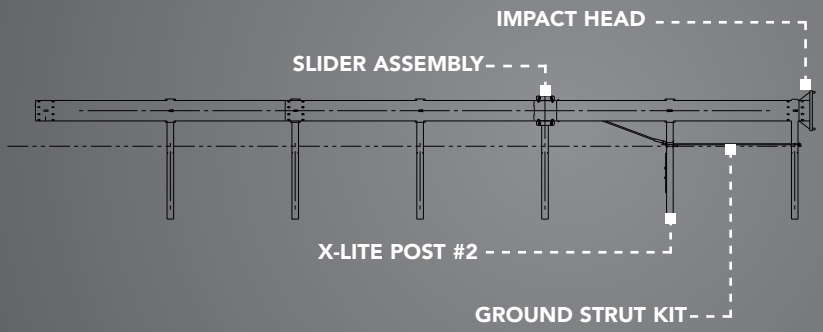

CRASHWORTHY, AFFORDABLE NCHRP 350 TL-3 END TERMINAL

The Redirective, Gating, NCHRP 350 TL-3 X-LITE Guardrail End Terminal features excellent impact performance at an affordable price. Utilizing a superior telescoping, non-extruding design, the X-LITE Guardrail End Terminal provides the life saving performance of a redirective, gating terminal without the high cost. The X-LITE Terminal has been engineered to allow maximum interchangeably for flared and tangent roadside applications. This results in significant savings in inventory and maintenance costs. In addition, The X-LITE Terminal has been designed using many standard, non-proprietary guardrail components. The Terminal is available with I-Beam steel posts using wood or composite blockouts.

FREQUENTLY ASKED QUESTIONS

What makes the X-LITE Terminal different from the other redirective, gating terminals on the market?

The X-LITE Terminal utilizes a telescoping, non-extruding design to provide safe and consistant performance. The X-LITE Terminal is also engineered with maximum interchangeability between flared and tangent roadside applications. Lastly, The X-LITE Terminal is engineered using simple design and standard guardrail components that can be procured in kit or system form.

Can the X-LITE Terminal be attached to concrete barrier?

Yes, The X-LITE Terminal can be attached to concrete barrier with the addition of standard transitions.

Can the X-LITE Terminal be installed using composite blockouts?

Yes, The X-LITE Terminal can be installed using either wood or composite blockouts.

FEATURES

- Utilizes a non-extruding, fixed impact head design
- Uses similar components for tangent and flared systems
- W-Beam telescopes during impact
- 27 ⅝″ or 31″ (710 mm or 790 mm) height option
- Easy to install
- Designed using many standard non-proprietary W-Beam guardrail components
- BLON begins at post 3

WHERE TO USE

Side of road where a recommended clear zone and recoverable slope is attainable.

DISTRIBUTED BY:

Lindsay Transportation Solutions Sales and Services, Inc.
180 River Road • Rio Vista, CA 94571 • +1 707.374.6800 U.S. Toll Free: 888.800.3691 • www.barrriersystemsinc.com

General details for the X-LITE System are subject to change without notice to reflect improvements and upgrades.
Additional information is available from Lindsay Transportation Solutions Sales and Services, Inc. © Lindsay Transportation Solutions, Inc.

PT # XL04-03252013

Appendix A - System Configuration, 37’ 6”

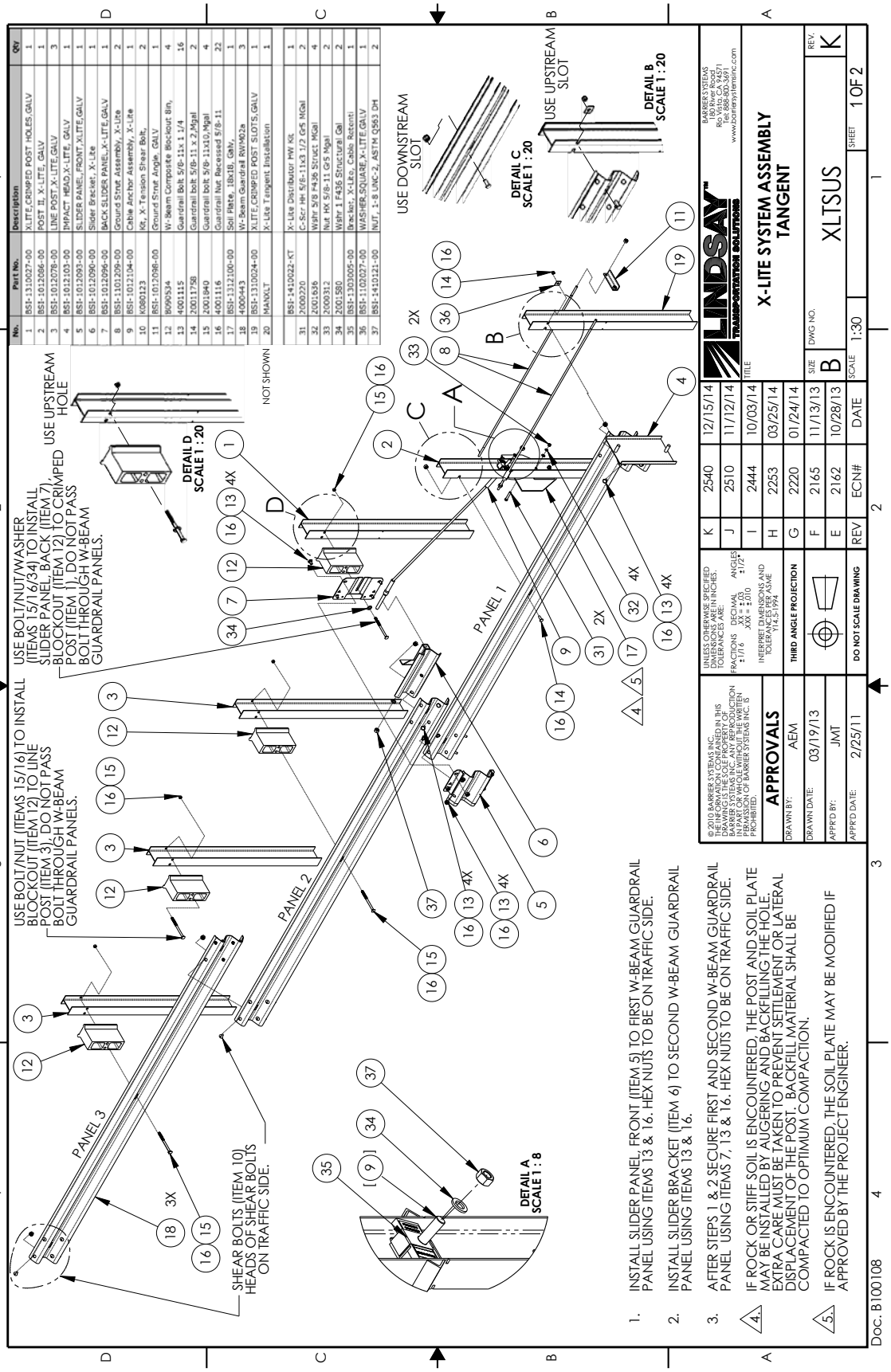

No.	Part No.	Description	Qty
1	BSI-1310027-00	X-LITE,CRIMPED POST HOLES,GALV	1
2	BSI-1012086-00	POST II, X-LITE, GALV	1
3	BSI-1012076-00	LINE POST X-LITE,GALV	3
4	BSI-1012103-00	IMPACT HEAD,X-LITE, GALV	1
5	BSI-1012093-00	SLIDER PANEL, FRONT,X-LITE,GALV	1
6	BSI-1012090-00	Slider Bracket, X-Lite	1
7	BSI-1012096-00	BACK SLIDER PANEL,X-LITE,GALV	1
8	BSI-1101299-00	Ground Strut Assembly, X-Lite	2
9	BSI-1012104-00	Cable Anchor Assembly, X-Lite	1
10	K080123	Kit, X-Tension Shear Bolt,	2
11	BSI-1012098-00	Ground Strut Angle, GALV	1
12	B090324	W-Beam Composite Blockout Bin,	4
13	4001115	Guardrail Bolt 5/8-11x 1 1/4	16
14	20011780	Guardrail bolt 5/8-11 x 2,Mgal	2
15	2001840	Guardrail bolt 5/8-11x10,Mgal	4
16	4001116	Guardrail Nut Recessed 5/8-11	22
17	BSI-1312100-00	Soil Plate, 18x18, Galv,	1
18	4000443	W-Beam Guardrail RWM62a	3
19	BSI-1310024-00	X-LITE,CRIMPED POST SLOTS,GALV	1
20	MANXLT	X-Lite Tangent Installation	1
	BSI-1410022-KT	X-Lite Distributor HW Kit	1
31	2000220	C-Scr HH 5/8-11x3 1/2 Gr5 MGal	2
32	2001535	WSHr 5/8 F436 Strucl MGal	4
33	2000312	Nut HX 5/8-11 Gr5 Mgal	2
34	2001380	WSHr 1 F436 Structural Gal	2
35	BSI-1303005-00	Bracket, X-Lite, Cable Retent	1
36	BSI-1102027-00	WASHER,SQUARE,X-LITE,GALV	1
37	BSI-1410121-00	NUT, 1-8 UNC-2, ASTM Q563 DH	2

NOT SHOWN

Appendix A - System Configuration, 37’ 6”

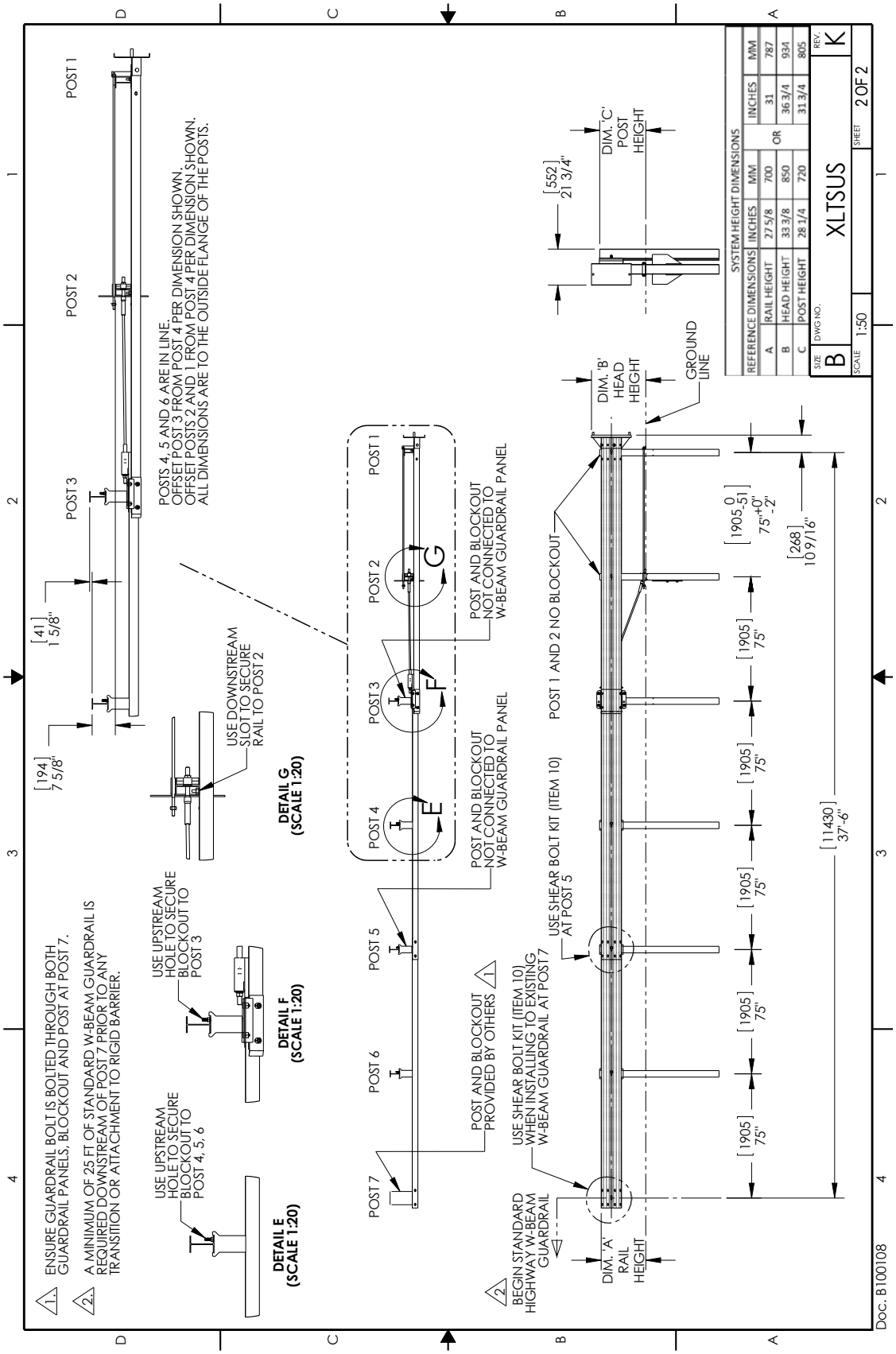

ITEM NO.	PART NUMBER	DESCRIPTION	QTY	UOM
1	BSI-1301252-KT	X-Tension Terminal Comp, 31 in	1	EACH
2	K070202	X-Tension Hardware Kit, GT,	1	EACH
3	K070206	X-Tension System Hardware Kit,	1	EACH
4	K070210	X-Tension GT Guardrail	1	EACH
5	B061100	BSI, I-Beam Post, Middle, X350	1	EACH
6	MANXT1	X-TENSION Installation Manual	1	EACH

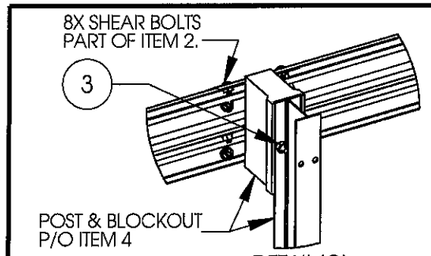

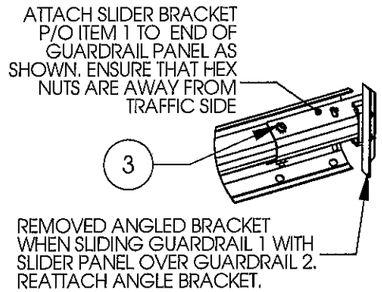

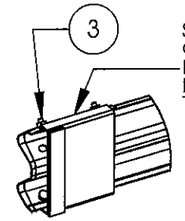

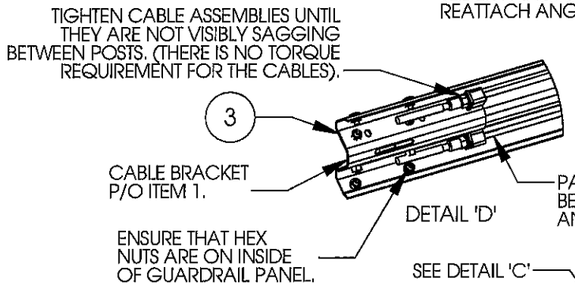

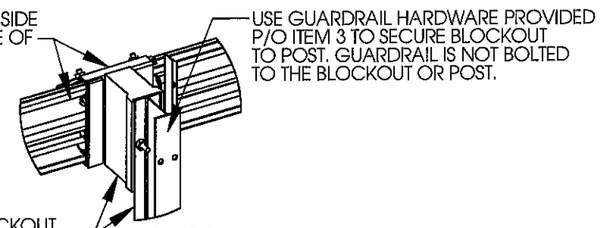

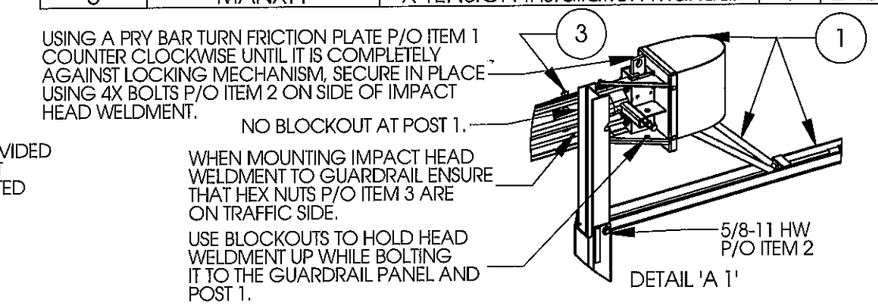

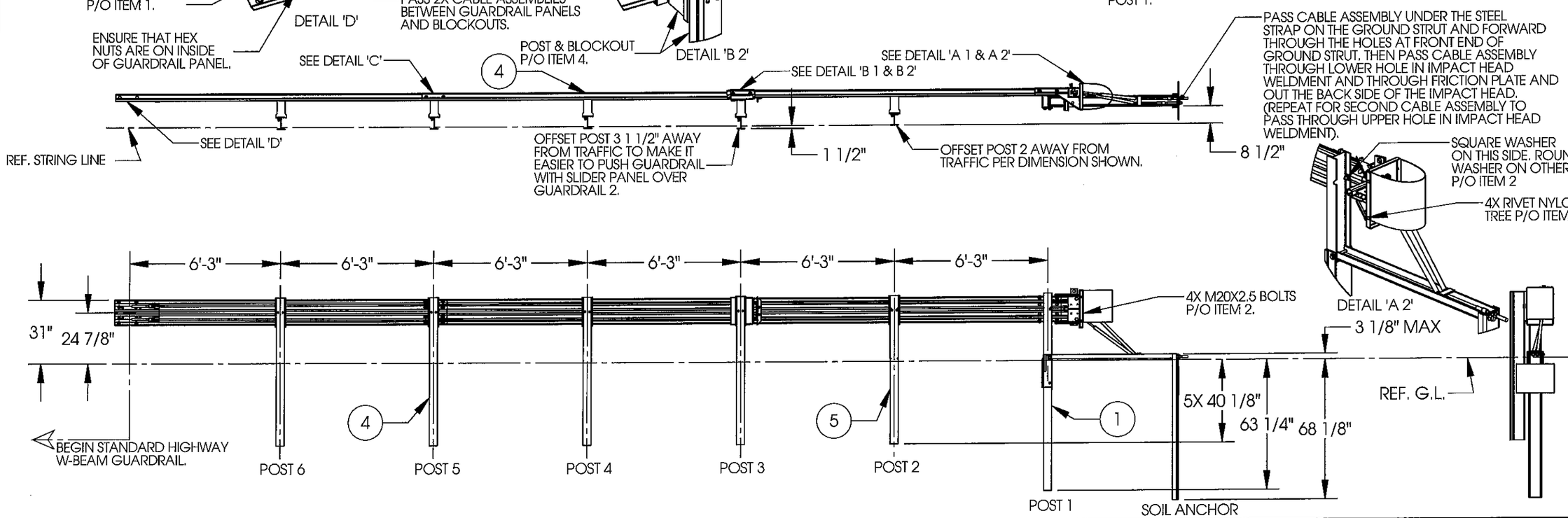

NOTES: UNLESS OTHERWISE SPECIFIED.

1. SYSTEM TO BE INSTALLED PER MANUFACTURER SPECIFICATIONS.
2. ONLY TIGHTEN THE CABLE ASSEMBLIES USING THE NUTS AT THE CABLE BRACKET (SEE DETAIL 'D'). DO NOT TIGHTEN THE CABLES AT THE FRONT OF THE GROUND ANCHOR.
3. WHEN DRIVING STEEL POST, ENSURE THAT A DRIVING CAP WITH TIMBER OR PLASTIC INSERT IS USED TO PREVENT DAMAGE TO THE GALVANIZING TO THE TOP OF THE POST.

© 2012 BARRIER SYSTEMS INC. THE INFORMATION CONTAINED IN THIS DRAWING IS THE SOLE PROPERTY OF BARRIER SYSTEMS INC. ANY REPRODUCTION IN PART OR WHOLE WITHOUT THE WRITTEN PERMISSION OF BARRIER SYSTEMS INC. IS PROHIBITED.

UNLESS OTHERWISE SPECIFIED DIMENSIONS ARE IN INCHES. TOLERANCES ARE:
FRACTIONS ±1/16 DECIMAL .XX = ±.03 .XXX = ±.010 ANGLES ±1/2°
INTERPRET DIMENSIONS AND TOLERANCES PER ASME Y14.5-1994

THIRD ANGLE PROJECTION

DO NOT SCALE DRAWING

APPROVALS	
DRAWN BY:	NMV
DRAWN DATE:	2/08/13
APPR'D BY:	JMT
APPR'D DATE:	2/08/13

REV	ECN#	DATE
B	2067	05/02/13
A	2022	2/08/13

LINDSAY™ TRANSPORTATION SOLUTIONS

BARRIER SYSTEMS INC.
3333 Vaca Valley Parkway Ste 800
Vacaville, CA 95688
Tel: 888-800-3691
www.barriersystemsinc.com

TITLE
X-TENSION GUARDRAIL TERMINAL SYSTEM STEEL POST WITH COMPOSITE BLOCKOUT 31" RAIL HEIGHT

SIZE	DWG NO.	REV.
B	XTGTSS5	B

SCALE 1:50 SHEET 1 OF 1

Doc. B100108

Last Saved by: jeff.thompson; Friday, May 03, 2013 1:23:29 PM

Dist	COUNTY	ROUTE	POST MILES TOTAL PROJECT	SHEET No.	TOTAL SHEETS
05	SLO,Mon	101	63.2/R69.3, R0.0/R1.9	161	???

REGISTERED CIVIL ENGINEER DATE

PLANS APPROVAL DATE

REGISTERED PROFESSIONAL ENGINEER PETER CHANDER No. 63988 Exp. 9/30/16 CIVIL STATE OF CALIFORNIA

THE STATE OF CALIFORNIA OR ITS OFFICERS OR AGENTS SHALL NOT BE RESPONSIBLE FOR THE ACCURACY OR COMPLETENESS OF SCANNED COPIES OF THIS PLAN SHEET.

NOTES:

1. USE 15'-7½" LENGTH RAIL.
2. THIS DETAIL USED FOR BOTH ALTERNATIVE TERMINAL SYSTEMS OPTION 3 TYPE 31" X-TENSION.

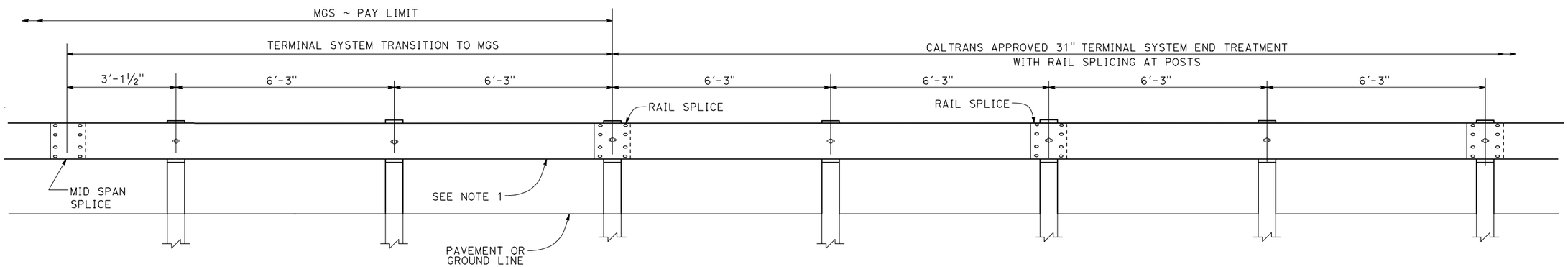

TRANSITION DETAIL FOR 31" X-TENSION TERMINAL SYSTEM END TREATMENT WITH RAIL SPLICING AT POSTS TO MIDWEST GUARDRAIL SYSTEM

(SEE NOTE 2)

CONSTRUCTION DETAILS

NO SCALE

C-33

REVISED BY | DATE REVISED

PETER CHANDER | HAL KENYON

CALCULATED-DESIGNED BY | CHECKED BY

FUNCTIONAL SUPERVISOR | ROBERTO BANDA

STATE OF CALIFORNIA - DEPARTMENT OF TRANSPORTATION

Caltrans® 06-DESIGN

LAST REVISION 12-30-15 | DATE PLOTTED => 25-JAN-2016 | TIME PLOTTED => 12:19

End Terminals

MASH Compliant

SoftStop® System

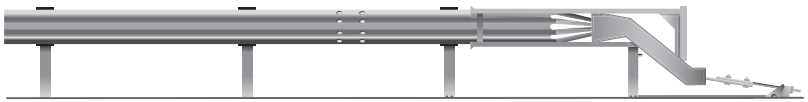

TRINITY HIGHWAY

Ahead of the Curve™

SoftStop® System

The SoftStop® System is a tangent, single-sided, energy absorbing, redirective and gating end terminal. The SoftStop System is the first end terminal to meet the evaluation criteria set forth in the Manual for Assessing Roadside Safety Hardware (MASH). It is also available in Test Level 1 and Test Level 2 configurations.

During head-on impacts within MASH criteria, the SoftStop System is designed to dissipate energy by the head traveling down the anchored panels. During length-of-need side impacts within MASH criteria, the SoftStop System is designed to contain and redirect the impacting vehicle.

FRONT ANCHOR TECHNOLOGY

Features

- The front anchorage is designed to allow the rail panels to remain anchored during end-on impacts within MASH criteria.
- Narrow head design helps minimize nuisance impacts from vehicles and maintenance operations, such as mowing and snow removal.

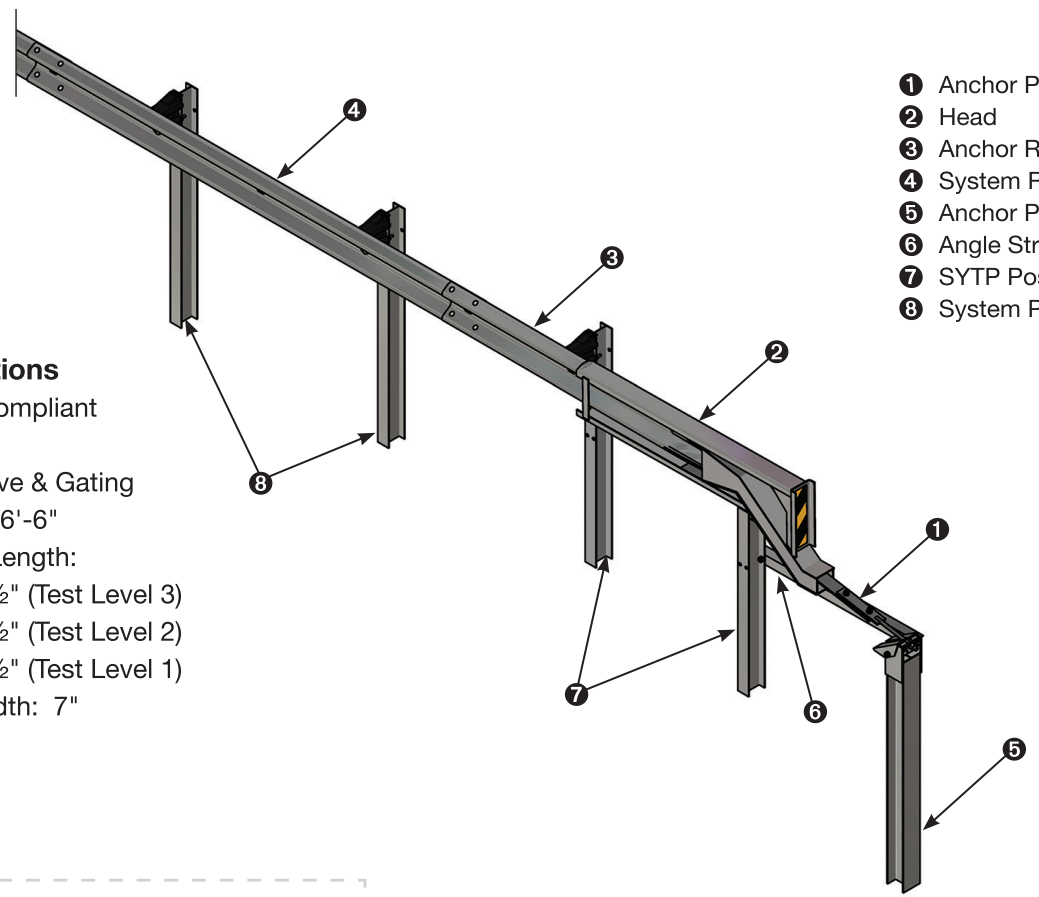

Specifications

- MASH Compliant
- Tangent
- Redirective & Gating
- BLON: 16'-6"
- System Length:
  - 50'-9 ½" (Test Level 3)
  - 38'-3 ½" (Test Level 2)
  - 25'-9 ½" (Test Level 1)
- Head Width: 7"

Distributed by:

12-15

www.trinityhighway.com

1.888.323.6374

TRINITY HIGHWAY

Copyright © 2015 Trinity Highway Products, LLC. All Rights Reserved.

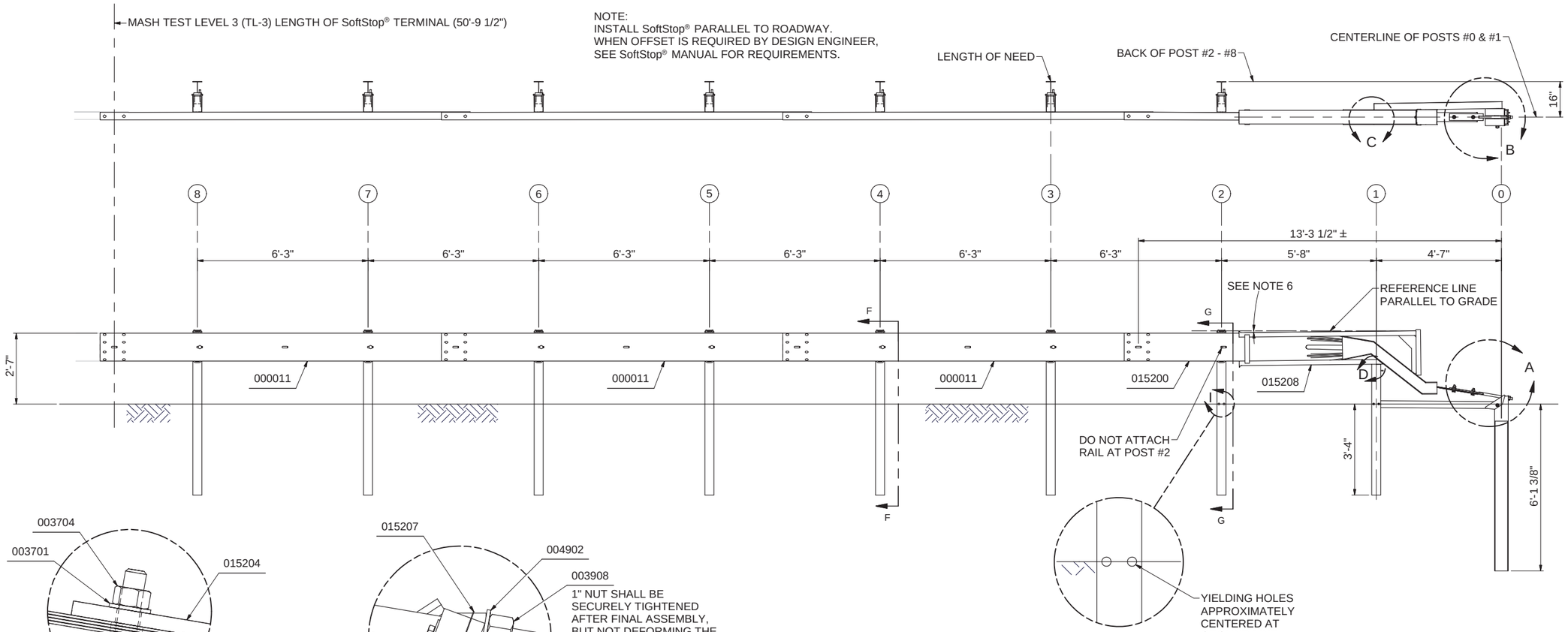

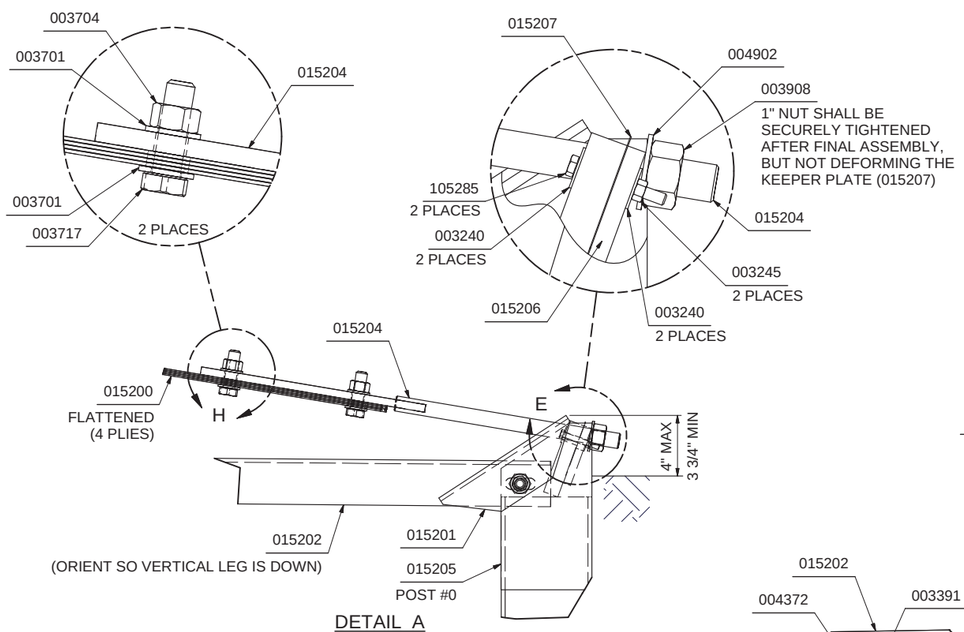

DETAIL A

DETAIL I
POSTS #1 & #2

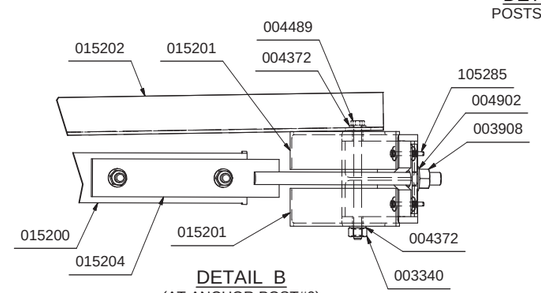

DETAIL B
(AT ANCHOR POST#0)

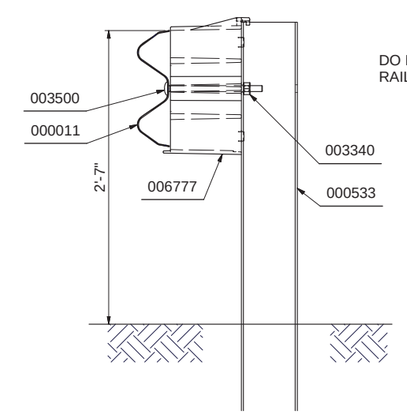

SECTION F-F
(POST #3 - #8)

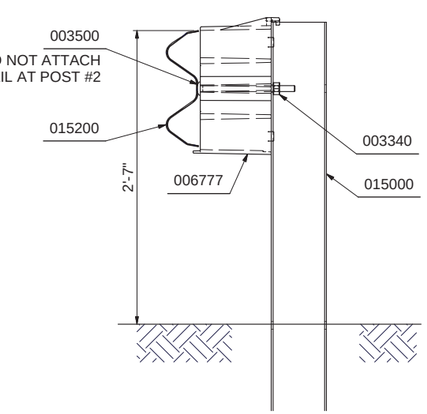

SECTION G-G
(POST #2)

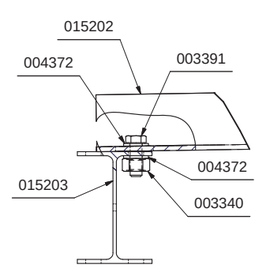

DETAIL C
(POST #1, SHOWN NEAR GROUND)

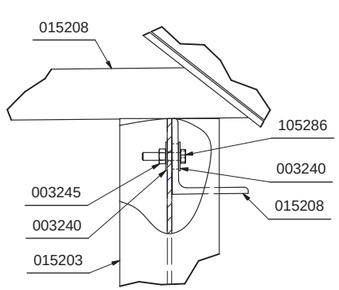

DETAIL D
(POST #1)

NOTES:
1. REFER TO SoftStop® ASSEMBLY MANUAL.
2. PROPER SITE GRADING SHOULD BE ACCOMPLISHED IN ACCORDANCE WITH LOCAL SPECIFYING AGENCY GUIDELINES AND THE AASHTO ROADSIDE DESIGN GUIDE.
3. DO NOT ATTACH THE SoftStop® DIRECTLY TO A RIGID BARRIER.
4. UNDER NO CIRCUMSTANCES SHALL THE GUARDRAIL WITHIN THE SoftStop® BE CURVED.
5. MANUFACTURER SUGGESTS CUSTOMER TO PROVIDE REFLECTORIZATION OF THE TERMINAL.
6. IT IS ACCEPTABLE TO INSTALL THE SoftStop® IMPACT HEAD PARALLEL TO THE GRADE LINE OR WITH AN UPWARD TILT. SEE SoftStop® ASSEMBLY MANUAL FOR SPECIFIC DETAILS.

PARTS LIST

PART NO.	QTY.	DESCRIPTION
000011	3	12/12'6/3'1.5/S
000533	6	6'0 POST - W6 x 8.5
006777	7	KING BLOCK
015000	1	6'0 SYT PST/8.5/31" GR HT
015200	1	SFST-ANCHOR G.RAIL 12'-6"
015201	2	SFST-ANCHOR ANGLE
015202	1	SFST-ANGLE STRUT
015203	1	SFST-POST#1 SYTP
015204	1	SFST-ANCHOR PADDLE
015205	1	SFST-POST#0
015206	1	SFST-PLATE WASHER
015207	1	SFST-KEEPER PLATE
015208	1	SFST-IMPACT HEAD
		~ HARDWARE ~
003240	6	5/16 ROUND WASHER WIDE
003245	3	5/16 HEX NUT
003340	41	5/8" GR HEX NUT
003360	32	5/8"X1.25" GR BOLT
003391	1	5/8"X1.75" HEX BOLT A325
003500	7	5/8 GUARD RAIL BOLT x 10"
003701	4	3/4" ROUND WASHER F436
003704	2	3/4" HVY HEX NUT A563 DH
003717	2	3/4"X2.5" HEX BOLT A325
003908	1	1" HVY HEX NUT A563 DH
004372	4	5/8" WASHER F436
004489	1	5/8"X9" HEX BOLT A325
004902	1	1" ROUND WASHER F436
105285	2	5/16"X2.5" HEX BOLT GRD 5
105286	1	5/16"X1.5" HEX BOLT GRD 5

MATERIAL: SEE PARTS LIST	DRAWN: BT	DATE: 11/14/2012	TOLERANCES PER CEMC-THP-SF-001, UNLESS OTHERWISE SPECIFIED.
	CHECKED: BS	DATE: 11/14/2012	
FINISH: N/A	UNLESS OTHERWISE NOTED, ALL DIMENSIONS ARE IN FEET-INCHES. DIMENSIONS ACCORDING TO ASME Y14.5M-1994 UNLESS OTHERWISE SPECIFIED.		DO NOT SCALE DRAWING
ESTIMATED WEIGHT: 1221.7 lbmass			

SoftStop® TERMINAL (8" BLOCKS)
PLAN, ELEVATION & SECTION
MASH TEST LEVEL 3 (TL-3)
P/N: 500646B

DRAWING: SS 646 SHEET: 1 of 1

TRINITY HIGHWAY

© 2012-2015 Trinity Highway Products, LLC. All rights reserved.

MATERIALS INFORMATION

17. Alternative Crash Cushion System

UNIVERSAL TAU-II® | REDIRECTIVE, NON-GATING CRASH CUSHION - PARTIALLY REUSABLE

- SHIELDS MULTIPLE WIDTH HAZARDS
- PARTIALLY REUSABLE DESIGN
- QUICK AND EASY TO INSTALL
- NCHRP 350 ACCEPTED

BARRIER SYSTEMS®
BY LINDSAY

UNIVERSAL TAU-II® | REDIRECTIVE, NON-GATING CRASH CUSHION - PARTIALLY REUSABLE

PHYSICAL SPECIFICATIONS

Classification	R-NG-PR	
TL-3 Length	23′ 10″	7.3 m
Width	27 - 102″	0.7 - 3 m
Height	31 ½″	800 mm
TL-3 Weight	2700 lb.	1225 kg
Test Level	NCHRP 350	TL 1/2/3

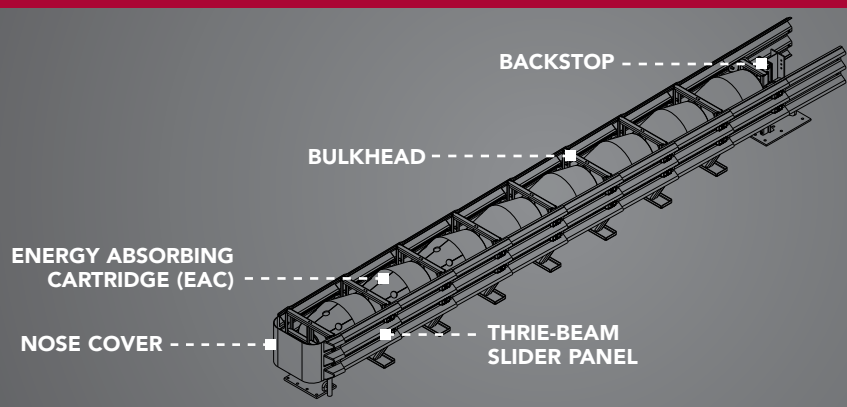

DESIGNED TO SHIELD MULTIPLE WIDTH HAZARDS

The Redirective, Non-Gating, Partially Reusable (R-NG-PR) Universal TAU-II Crash Cushion consists of a full family of systems designed to meet the requirements of NCHRP Report 350, TL-2 & TL-3 to shield almost any width hazard. The system is available in lengths and capacities for both low and high speed applications from 30-75 mph (50-120 km/h). The Universal TAU-II System can shield hazards with widths up to 102″ (2.6 m). The Universal TAU-II System is ideally suited for roadway hazards located on the side of a road or in a median. Ease of installation, low profile foundation, numerous transition options, and low priced replacement components make the Universal TAU-II System an ideal crash cushion to shield most roadside and median hazards.

FREQUENTLY ASKED QUESTIONS

What components of the Universal TAU-II System need to be replaced after a design impact?

Typically only the damaged cartridges will need to be replaced. The nose and slider panels are designed to withstand multiple design impacts.

What type of foundation is needed for the Universal TAU-II System?

A 6″ (152 mm) reinforced concrete pad is required. The Universal TAU-II System can also also be ordered to be installed on asphalt.

What transitions are available?

Since Universal TAU-II transitions are non-proprietary, all approved thrie-beam barrier transitions will work with the system.

Can the TAU-II System be used for low and high speeds?

The Universal TAU-II System is designed for speeds from 31 to 75 mph (50 to 120 km/h).

FEATURES

- High speed designs available
- Minimum number of anchors needed to secure the system
- Can be installed over bridge expansion joints
- Low profile foundation ideal for deployment on bridge decks
- Numerous transition options
- Low priced replacement components
- Standard reusable nose
- Designed for use with standard, thrie beam transitions

DISTRIBUTED BY:

LINDSAY™ TRANSPORTATION SOLUTIONS | BARRIER SYSTEMS® BY LINDSAY | RAILROAD PRODUCTS BY LINDSAY | SNOLINE™ BY LINDSAY

Lindsay Transportation Solutions Sales and Services, Inc.
180 River Road • Rio Vista, CA 94571 • +1 707.374.6800 U.S. Toll Free: 888.800.3691 • www.barrriersystemsinc.com

General details for the Universal TAU-II System are subject to change without notice to reflect improvements and upgrades.

Additional information is available from Lindsay Transportation Solutions Sales and Services, Inc. © Lindsay Transportation Solutions, Inc.

PT # TAU04-03252013

1 TORQUE TO 200 FT-LBF

2 TORQUE TO 20 FT-LBF

3 TORQUE TO 500 FT-LBF

ITEM	QTY / DWG	PART DESCRIPTION	SPECIFICATION	PART #
1	1	FRONT SUPPORT ASSEMBLY	NA	B010528
2	7	MID SUPPORT ASSEMBLY	NA	B010530
3	1	COMPACT END SUPPORT ASSEMBLY	NA	B010537
4	3	ENERGY ABSORBING CARTRIDGE, TYPE A	NA	B010802
5	5	ENERGY ABSORBING CARTRIDGE, TYPE B	NA	B010722
6	1	ANCHORING PACKAGE	NA	B010713
7	2	FRONT SUPPORT LEG	NA	B010712
8	2	COMPACT CABLE	NA	B100113
9	14	CABLE GUIDE ASSEMBLY	NA	B010721
10	16	SLIDING PANEL	NA	B010202
11	32	SLIDING BOLT	NA	B100130
12	2	END PANEL	NA	B010659
13	4	PIPE PANEL MOUNT	NA	B010651
14	2	END PANEL CROSS PIECE	NA	B100133
15	1	FRONT CABLE ANCHOR	NA	B010248
16	1	NOSE PIECE	NA	B010711
17	4	EXTRA THICK FLAT WASHER	SS - 1 1/2"OD X 13/16"ID X 7/32"	2001009
18	8	HEX BOLT	SS-20MM-2.5 X 50MM	2001005
19	12	WASHER	SS-20MM	2001006
20	8	HEX NUT	SS-20MM-2.5	2001007
21	4	FENDER WASHER	SS-13/16"ID X 1 7/8"OD	2001009

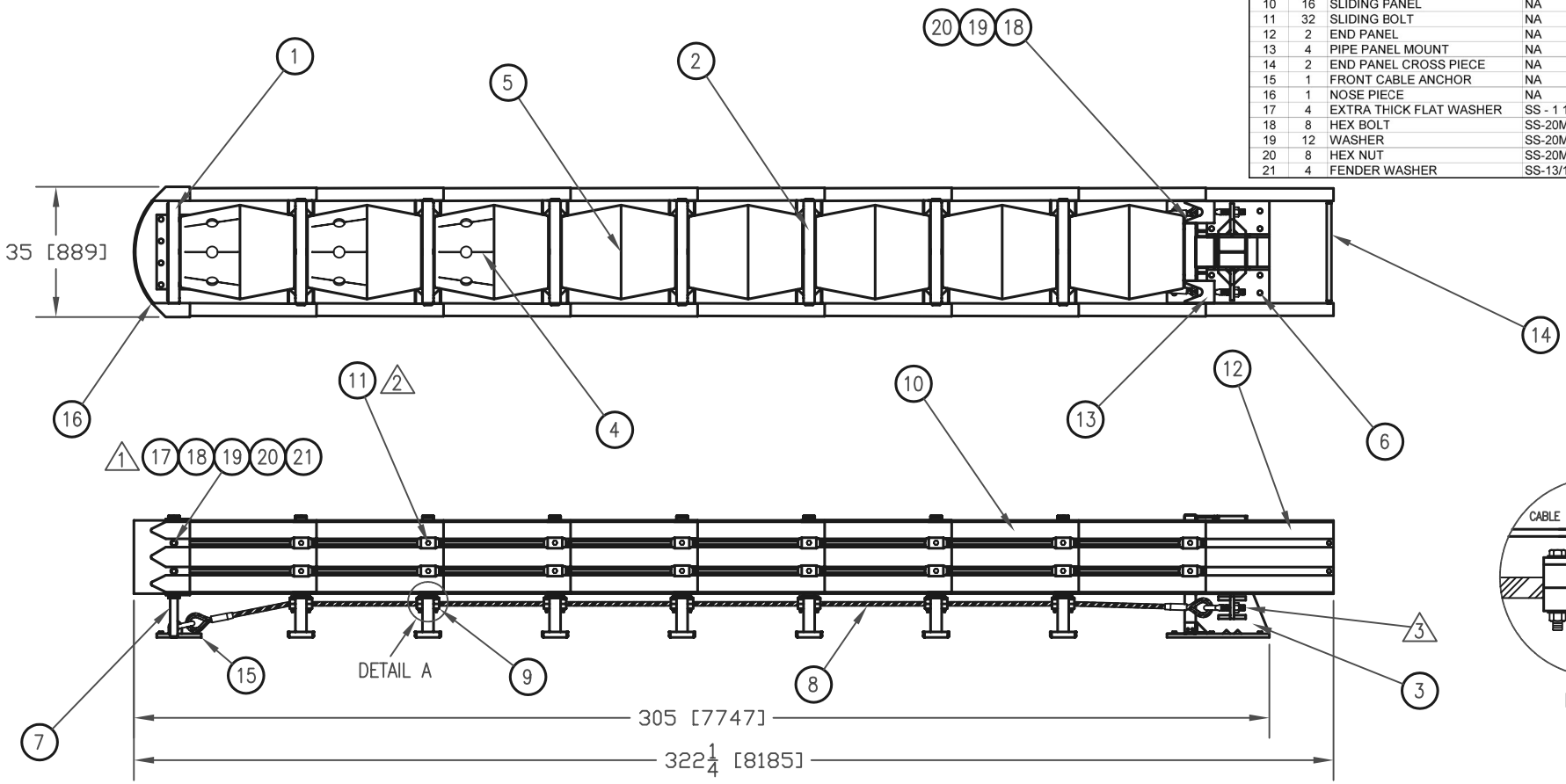

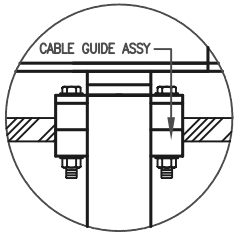

DETAIL A

NOTE:
THICKNESS OF WELD TO BE EQUAL TO THE THINNER OF 2 PIECES BEING JOINED. WELD TO BE ALL AROUND UNLESS OTHERWISE NOTED.

© 2001 Barrier Systems, Inc.

The information heron is proprietary to Barrier Systems Inc. and shall not be disclosed, duplicated or used otherwise without the express written approval of Barrier Systems Inc.

REV.	CHANGES	DATE	BY	REQ'D	NEXT ASSY.	ITEM

SCALE: 1:30

	DATE	INIT.
DRAWN BY	07/09/01	GAD
APPR'D BY		

Standard Tolerance
Angular ± 1/2°
Fractional ± 1/16
Dec .XXX= ± .010
Dec .XX= ± .030

TITLE: TAU-II TL-3 SYSTEM
BARRIER SYSTEMS, INC

MODEL	DRAWING NUMBER	REV.
	B010708	1

ITEM	QTY / DWG	PART DESCRIPTION	SPECIFICATION	DWG #
1	1	TAU II™ CRASH CUSHION	LENGTH AS REQUIRED	N/A
2	8	STRONG POST	STANDARD WOOD OR STEEL STRONG POST	N/A
3	14	BLOCKOUT	STANDARD WOOD OR STEEL THRIE BEAM BLOCKOUT	N/A
4	5	4-SPACE THRIE-BEAM	AASHTO HARDWARE SPEC. (RTM04a)	N/A
5	26	RECTANGULAR GUARDRAIL WASHER	AASHTO HARDWARE SPEC. (FWR03)	N/A
6	30	GALVANIZED HEX BOLT AND NUT	AASHTO HARDWARE SPEC. (FBX16a)	N/A
7	8	SPACER BLOCKOUT	STANDARD WOOD OR STEEL TRANSITION SPACER	N/A
8	2	W-THRIE BEAM TRANSITON SECTION	AASHTO HARDWARE SPEC. (RWT01b)	N/A
9	2	BLOCKOUT	STANDARD WOOD OR STEEL W-BEAM BLOCKOUT	N/A
10	2	4-SPACE W-BEAM	AASHTO HARDWARE SPEC. (RWM04b)	N/A

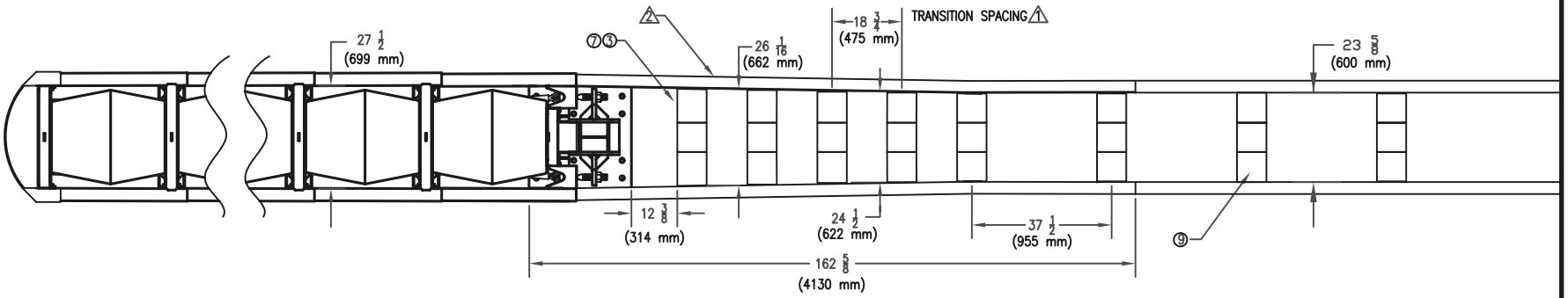

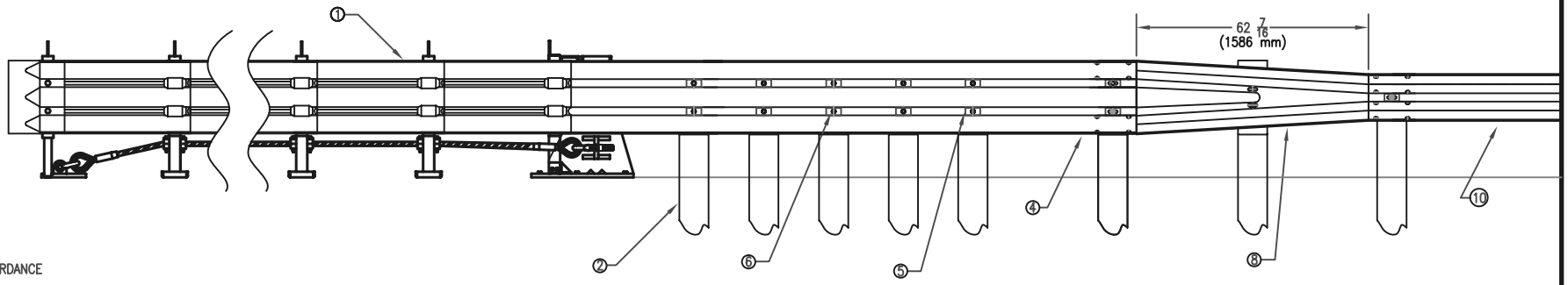

NOTES:

1. TRANSITION SPACING IS IN ACCORDANCE WITH AASHTO SPEC STB06 AND NEVADA DOT SPEC. R-8.4.3.
2. TWO SECTIONS OF RTM04a GUARDRAIL ONE SET INSIDE THE OTHER USED ON THIS SIDE FOR BI-DIRECTIONAL TRAFFIC CONDITIONS.

NOTE:
THICKNESS OF WELD TO BE EQUAL TO THE THINNER OF 2 PIECES BEING JOINED. WELD TO BE ALL AROUND UNLESS OTHERWISE NOTED.

© 2001 Barrier Systems, Inc.

The information heron is proprietary to Barrier Systems Inc. and shall not be disclosed, duplicated or used otherwise without the express written approval of Barrier Systems Inc.

REV.	CHANGES	DATE	BY

REQ'D	NEXT ASSY.	ITEM

SCALE: 1:30

	DATE	INIT.
DRAWN BY	09/05/01	RGC
APPR'D BY		

Standard Tolerance
Angular ± 1/2°
Fractional ± 1/16
Dec .XXX= ± .010
Dec .XX= ± .030

TITLE: TAU II CRASH CUSHION TRANSITION TO W-BEAM BARRIER SYSTEMS, INC.

MODEL	DRAWING NUMBER	REV.
	B010728-PD	

QuadGuard® II

The New Standard in Crash Cushions

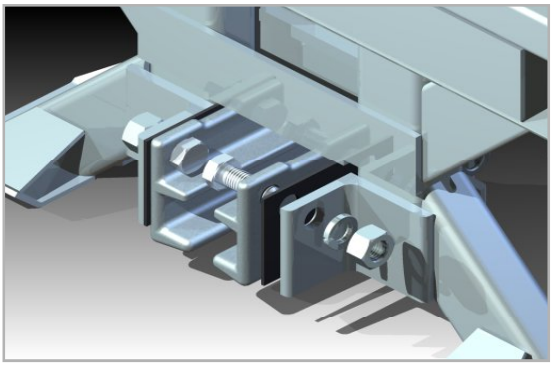

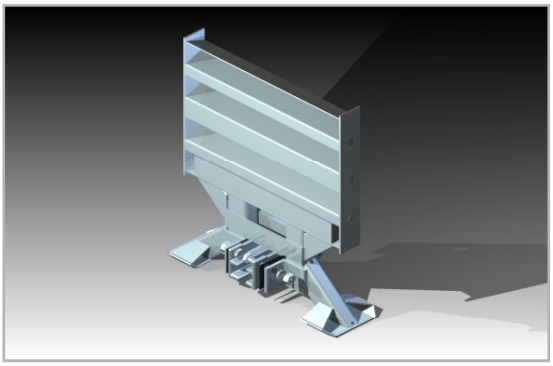

OVERVIEW

The QuadGuard family has evolved again! Using the existing framework of the QuadGuard, the QuadGuard II provides TL-2 and TL-3 protection using less length. The TL-2 QuadGuard II is 25% shorter than the original QuadGuard measuring less than 3m (10'). The TL-3 model is also nearly a meter, 3 feet, shorter than its predecessor.

The only modifications are the addition of the revolutionary Steel Nose, and the monorail Guide Stabilizers. The remaining components are identical to the existing NCHRP 350 systems that have been installed globally since the mid 1990's.

The QuadGuard II will telescope rearward on head-on impacts by both the light car and the high center-of-gravity pickup truck at speeds up to 100 km/h (62 mph) and safely redirect errant vehicles on impact up to 20 angles into the side of the unit without gating.

POST IMPACT DEBRIS

The design of the QuadGuard II does an excellent job of minimizing debris affecting other vehicles in the roadway.

FEATURES AND BENEFITS

- More is LESS!
- QuadGuard II has up to 25% less footprint reducing installation cost
- Steel Nose provides excellent visibly
- Majority of system is identical to QuadGuard- reduced inventory requirements
- Shorter Systems are less likely to be impacted
- Offers hazard protection from 40 km/h (25mph) to 115 km/h to (70mph)

QUADGUARD ® II

ENERGY ABSORPTION SYSTEMS, INC.

SAVING LIVES BY DESIGN®

www.energyabsorption.com

QuadGuard® II

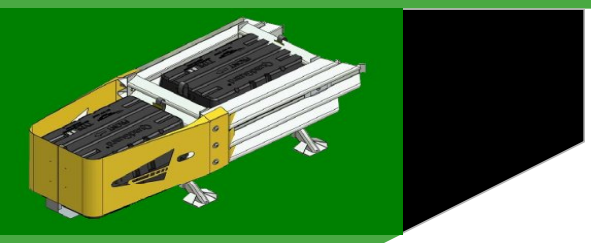

SPECIFICATIONS

Minimum Width at Backup	610 mm	(2′)
Maximum Width at Backup	2.3 m	(8′)
TL-2 Effective Length	2.6 m	(8′8″)
TL-3 Effective Length	5.4 m	(8′8″)

1 ENGINEERED STEEL NOSE
2 MONORAIL
3 STEEL BACKUP
4 FENDER PANEL

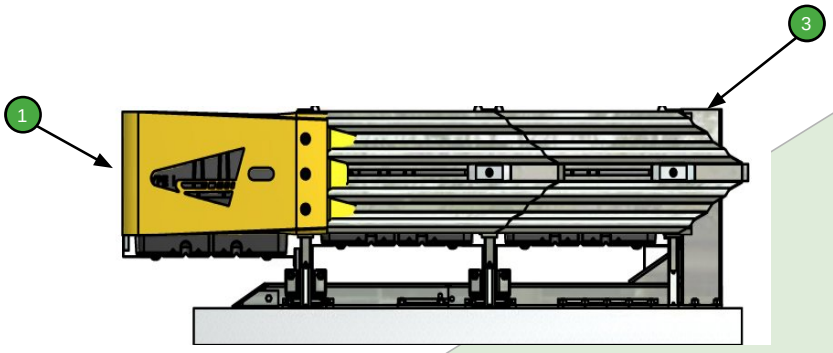

TL-2

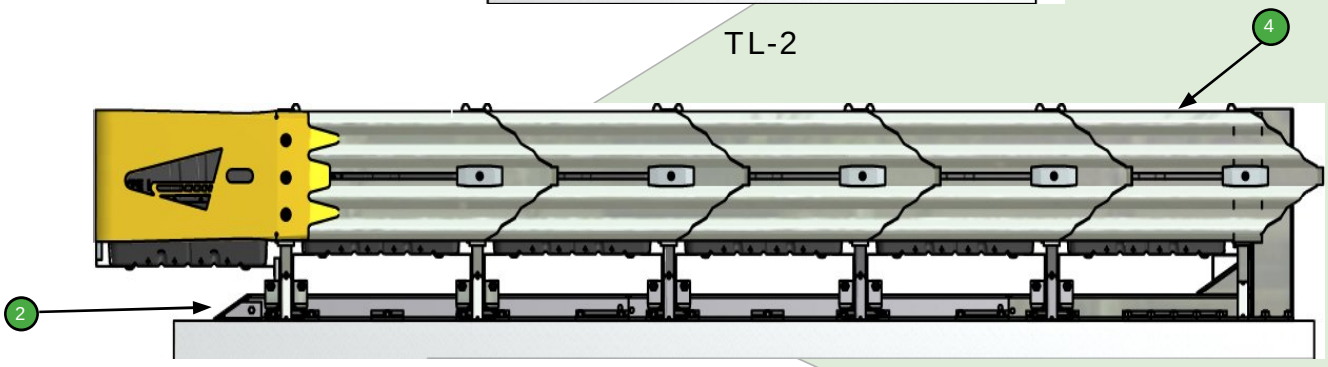

TL-3

DISTRIBUTED BY:

Quixote Transportation Safety
www.quixtrans.com

35 E. Wacker Drive • Chicago, IL 60601
Tel: (312) 467-6750 • Fax: (312) 467-9625

Crown House, Crown Street • Ipswich, 1P1 3HS
Tel: 44-1473-221-105 • Fax: 44-1473-221-106

www.energyabsorption.com

ENERGY ABSORPTION SYSTEMS, INC.

SMART CUSHION®

The World's Only

Speed-Dependent

Crash Attenuators

SMART CUSHION INNOVATIONS®

NCHRP 350 Approved

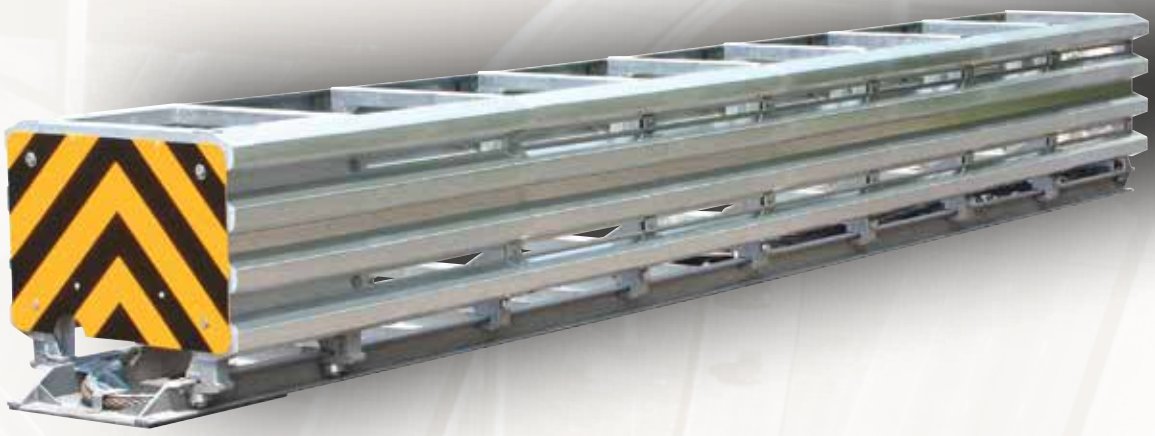

Marketed and Distributed by

Work Area Protection Corp.

PARTS LIST
01 - Front Sled
02 - Cable Assembly
05 - Sled Panel
07 - Terminal Brace
09 - Anchor Bolts
12 - Side Panels
14 - Mobile Sheave Asbly
17 - Cable Adjuster Bolt
18-23 - Mobile frames 1-6
26 - Cylinder
27 - Rear Panel
08 - Sled Side Keeper
06 - Center Side Keeper
29 - Rear Side Keeper

APPENDIX D - SMART CUSHION , TEST LEVEL III

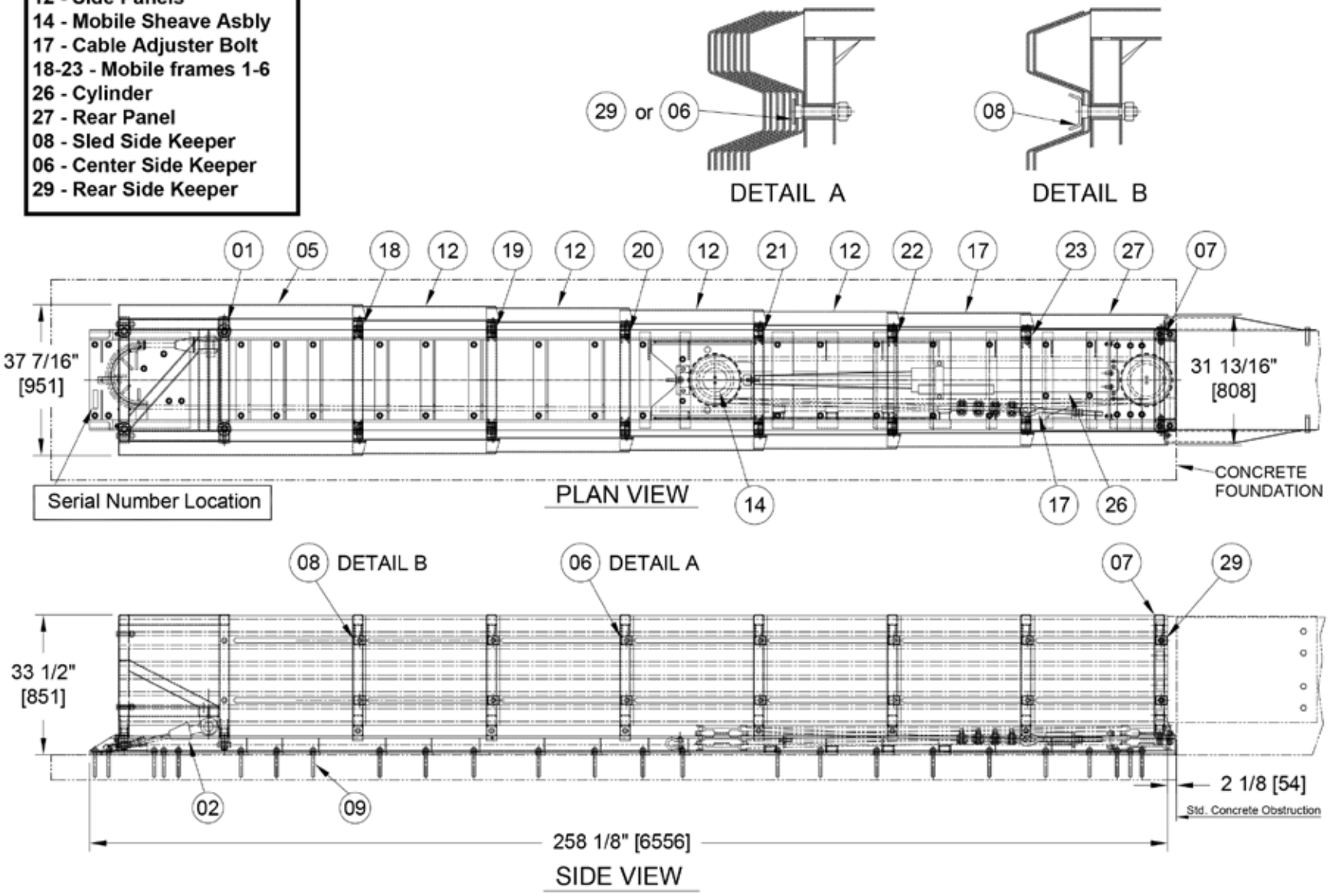

APPENDIX E1 - TEST LEVEL II FOUNDATION

Cross Slope at Top Surface not to Exceed 1 in 10
Foundation must be a Level Plane

* * * * * Wide Hazards and Transitions may require the foundation to be longer. See Transition Drawings.

SPECIFICIATIONS

All reinforcing steel - straight #4 ASTM-A36

Embedment requirements:

- 6" reinforced concrete pad with anchor embedment of 5 1/2"
- 8" nonreinforced concrete pad with anchor embedment of 5 1/2"
- 3" asphalt over 3" concrete with anchor embedment of 16 1/2"
- 6" asphalt over 6" of compacted subbase with anchor embedment of 16 1/2"
- 8" asphalt with anchor embedment of 16 1/2"

The contractor shall furnish a certification for material installed to the following requirements:

- 6" reinforced concrete (PCC) sampling per ASTM C31-84, testing per ASTM C39-84
- 8" nonreinforced concrete (PCC) sampling per ASTM C31-84, testing per ASTM 39-84
- 3" asphalt over 3" concrete - Type SP 12.5 Level C or higher
- 6" asphalt over 6" of compacted subbase - same as above
- 8" asphalt (AC) - Type SP 12.5 Traffic Level C or higher

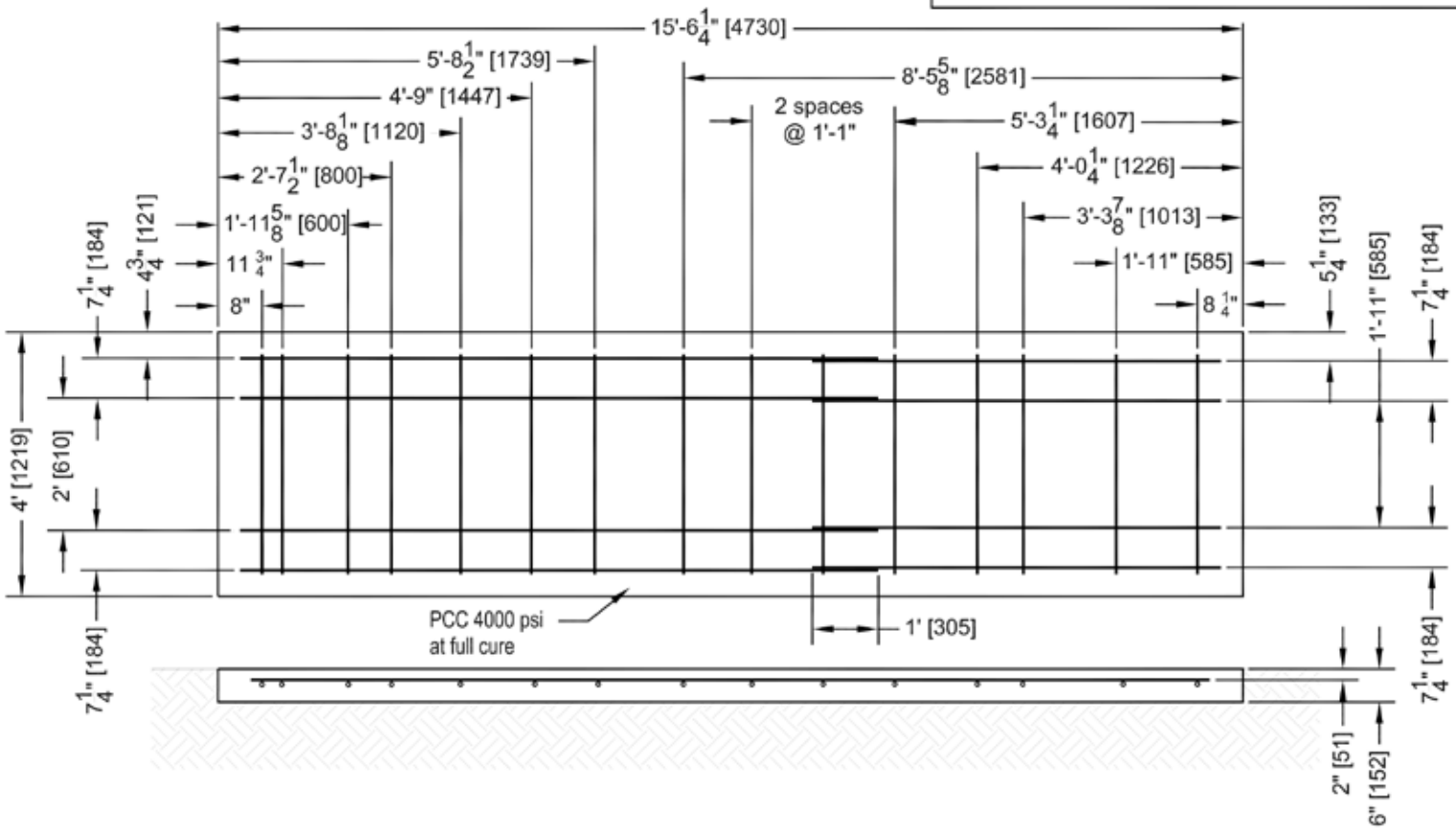

Front

SCI170GM
Level 2 System

MATERIALS INFORMATION

18. Geotechnical Design Report

State of California
DEPARTMENT OF TRANSPORTATION

Business, Transportation and Housing Agency

M e m o r a n d u m

Serious drought,
Help Save Water!

To: ROBERTO BANDA
Senior Design Engineer
Central Region Design II, Branch N

Attn: Peter Chander, Project Engineer

From: **DEPARTMENT OF TRANSPORTATION**
DIVISION OF ENGINEERING SERVICES
GEOTECHNICAL SERVICES

Date: September 14, 2015

File: 05-SLO-101-63.2/R69.3
05-Mon-101-R0.0/1.9
EA 05-0G0401
Project ID 0500020020
N. Paso Robles Rehab
05-0G0401

Subject: Geotechnical Design Report

Introduction

A Geotechnical Design Report (GDR) is provided for the North Paso Robles Rehab project. The project is located on State Route 101 in the vicinity of San Miguel, in the counties of San Luis Obispo and Monterey. Rehabilitation of the distressed portland cement concrete (PCC) pavement is proposed, along with widening shoulders to standard widths, widening and construction of new bridges and retaining walls, improvement of highway access, and construction of drainage facilities. Review of published geologic data and previous geotechnical reports, field reconnaissance, and geotechnical analysis were performed as part of the geotechnical investigation.

The purpose of this report is to document geotechnical conditions and recommend design and construction criteria. It is intended for use by the project design engineer, construction personnel, bidders, and contractors. This report supercedes the District Preliminary Geotechnical Report (November 28, 2011).

Existing Facilities and Proposed Improvements

Route 101 within the project limits is a divided, rural, four-lane expressway/freeway with (2) 12-foot PCC lanes in each direction, 1 to 5-foot inside shoulders, and 8 to 10-foot outside shoulders. A variable-width landscaped median provides approximately 46 to 165 feet of separation between the northbound and southbound lanes.

Five highway interchanges are within the project limits: South San Miguel Undercrossing, 10th Street Undercrossing, North San Miguel Undercrossing, South Camp Roberts Overhead, and Camp Roberts Overcrossing. Northbound and southbound bridges over San Marcos Creek are located at the southern project limits. The existing southbound on-ramp at the South San Miguel interchange is a left side on-ramp in the median to the south of the interchange. Refer to the project plans and as-builts for additional information and proposed project improvements.

Replacement of the northbound and southbound San Marcos Creek Bridges is proposed. The southbound structure contains reactive aggregate and requires replacement. The northbound structure, built in 1931, is approximately 5 feet lower than the southbound structure; raising the profile and construction of a new northbound bridge is proposed. The new San Marcos Creek Bridges will be designed and constructed to meet standard shoulder widths proposed throughout the project.

Realignment of the existing southbound on-ramp to the west side of the southbound lanes and construction of a new southbound bridge structure over the realigned ramp at the South San Miguel Interchange is proposed. Realigning the southbound on-ramp will require construction of a soil nail wall along the west side of the on-ramp to provide grade separation between the ramp and Cemetery Road to the west.

Widening of the 101 mainline and north and southbound bridge structures at the North San Miguel, 10th Street Undercrossing, South Camp Roberts Overhead, and Camp Roberts Overcrossing is proposed. Replacement of existing barrier with Type 736 barrier is proposed at the bridge structures.

Jacking a 72-inch diameter by approximately 140-foot long welded steel pipe is proposed to the north of the North San Miguel Undercrossing Right Bridge, beneath of the northbound lanes and bridge approach embankment.

Replacement and abandonment of an existing concrete arch culvert near “A Line” Station 54+30 is proposed by jacking a 42-inch diameter by approximately 270-foot long welded steel pipe with a higher outlet invert elevation than the existing culvert. Reconstruction of the existing junction structure to incorporate the inlet of the new drainage system on the west side of the highway will be required.

Construction of a Standard Plan Type 1A Retaining Wall at the toe of the northern approach embankment at the South Camp Roberts Overhead Left Bridge is proposed to repair a shallow slope failure that is advancing toward the outside shoulder of the southbound number two lane at the bridge approach. The retaining wall is required to maintain a maximum embankment slope angle of 2:1 (Horizontal:Vertical) without encroaching on the railroad spur at the toe of the existing embankment slope.

Pertinent Reports and Investigations

The following publication was used to assist in the assessment of site conditions:

1. *District Preliminary Geotechnical Report.* Jurasius, Mike. EA 05-0G0400. November 28, 2011.

Physical Setting

Climate

The regional climate for northern-inland San Luis Obispo County is generally hot in the summer months and cool in the winter months. The average maximum temperature in July is 94 degrees Fahrenheit and the average minimum is 33 degrees Fahrenheit in December. Based on data recorded at a precipitation station in the vicinity of San Miguel since 1950, the average annual precipitation is about 12 inches.

Topography and Drainage

The project parallels the Salinas River and is underlain by alluvial terraces that have undergone various degrees of erosion. The older, elevated terraces generally form the hills to the east and west of the Salinas River corridor, and are rounded by erosion and incised by smaller tributary drainages such as San Marcos Creek at the southern end of the project. Younger terraces near highway elevations are relatively flat to gently sloped, with steeper slopes where the Salinas River or tributary drainages more recently flowed. The Salinas River is the primary regional drainage. It flows northward to Monterey Bay, and is locally parallel and adjacent to the proposed project area. Numerous smaller tributary drainages cross Highway 101 from the west, beneath bridges and in culverts.

Regional Geology

The project area lies within the Coast Ranges Geomorphic Province, characterized by northwest trending mountain ranges, controlled by movement along a system of similarly trending faults. Exposed highlands of the northern San Luis Obispo County region expose mostly Late Cretaceous to Tertiary age marine shale and sandstone, which are overlain by younger (Pleistocene to recent) alluvial deposits transported by the Salinas River and tributary drainages.

The proposed rehabilitation project follows the current path of the Salinas River, and is underlain by recent and older alluvial deposits of clay, silt, sand and gravel. Paso Robles Formation (QTp), covers most of the slopes on either side of the Salinas River as well as underlying portions of the 101 alignment. The sand and gravel portion of the Paso Robles Formation is variably cemented, and appears to retain global stability at slopes up to approximately 1:1, as seen in cut-slopes north of the 10th Street off-ramp, bounding the southbound 101 shoulder.

Exploration

Drilling and Sampling

Subsurface investigations for the project began in 2014 and consisted of mud rotary borings, auger borings, and a cone penetrometer test (CPT) sounding along the highway corridor and near existing bridge structures. 19 mud rotary borings (RC-14-001 through RC-14-019), five auger borings (A-14-020 through A-14-024), and one CPT sounding (CPT-14-001) were performed. Representative samples were obtained and sent to materials laboratories for index testing. Rotary

drilling was performed using self-casing wireline equipment with continuous sampling and in-situ strength testing of cohesionless soils at five-foot intervals using the Standard Penetration Test (SPT).

Table 1. Subsurface Exploration Summary

Boring	*Completion Date*	*Equipment*	*Hammer Type*	*Hammer Efficiency (%)*	*Approximate Ground Elevation (ft)*	*Depth (ft)*
RC-14-001	9/23/2014	CME75	Auto	83	626.08	96.5
RC-14-002	9/24/2014	CME55	Auto	86	626.37	99.0
RC-14-003	9/25/2014	CME75	Auto	83	646.71	82.0
RC-14-004	9/26/2014	CME55/75	Auto	86/83	640.16	86.8
RC-14-005	9/29/2014	CME55	Auto	86	635.96	98.9
RC-14-006	10/2/2014	CME75	Auto	83	635.10	101.5
RC-14-007	10/3/2014	CME55	Auto	86	636.45	120.0
RC-14-008	10/7/2014	CME75	Auto	83	640.73	86.5
RC-14-009	10/8/2014	CME55	Auto	86	617.92	97.75
RC-14-010	10/9/2014	CME75	Auto	83	632.27	100.0
RC-14-011	10/22/2014	CS2000	Auto	93	652.27	101.5
RC-14-012	10/22/2014	CS2000	Auto	93	645.75	101.5
RC-14-013	10/23/2014	CS2000	Auto	86	684.69	101.5
RC-14-014	10/23/2014	CS2000	Auto	68	684.96	101.75
RC-14-015	10/29/2014	CS2000	Auto	84	659.42	97.5
RC-14-016	10/29/2014	CS2000	Auto	68	655.22	101.0
RC-14-017	10/30/2014	CS2000	Auto	85	639.72	81.5
RC-14-018	11/4/2014	CS2000	Auto	85	665.99	81.5
RC-14-019	11/5/2014	CS2000	Auto	85	665.55	81.5
A-14-020	11/18/2014	CS2000	Auto	85	659.01	36.5
A-14-021	11/18/2014	CS2000	Auto	85	661.03	41.5
A-14-022	11/18/2014	CS2000	Auto	85	653.32	41.5
A-14-023	11/19/2014	CS2000	Auto	85	658.43	51.5
A-14-024	11/19/2014	CS2000	Auto	85	662.52	41.5
CPT-14-001	2/26/2014	CPT	N/A	N/A	672.00	39.0

Geotechnical Testing

In Situ Testing

Standard penetration tests (SPT) were performed at 5-foot intervals in all of the mud-rotary and auger borings drilled for the project. Results of the SPT were correlated to relative density and soil strength parameters for soils encountered in the borings. Data from the CPT sounding was also used to correlate to relative density and undrained shear strength of encountered soils.

Laboratory Testing

Soil gradation, Atterberg Limits, moisture content, and corrosion testing were performed to classify the encountered soils and identify potential material issues.

Geotechnical Conditions

Groundwater

Open observation wells were installed to observe fluctuations in groundwater levels and determine if groundwater will influence construction and foundation design. Results of the groundwater monitoring program are summarized in Table 2.

Table 2. Groundwater Elevations

Boring	Date	Depth to Groundwater (ft)	Groundwater Elevation(ft)	Structure Location
RC-14-004	11/19/2014	52.3	587.9	San Marcos Creek
RC-14-008	11/19/2014	39.5	601.2	South San Miguel UC
RC-14-010	11/19/2014	39.0	593.3	North San Miguel UC
RC-14-013	11/19/2014	65.8	618.9	10th Street UC
RC-14-004	1/20/2015	39.1	601.1	San Marcos Creek
RC-14-008	1/20/2015	40.5	600.2	South San Miguel UC
RC-14-010	1/20/2015	38.5	593.8	North San Miguel UC
RC-14-013	1/20/2015	66.0	618.7	10th Street UC
RC-14-004	2/24/2015	43.2	597.0	San Marcos Creek
RC-14-008	2/24/2015	40.7	600.0	South San Miguel UC
RC-14-010	2/24/2015	38.3	594.0	North San Miguel UC
RC-14-013	2/24/2015	66.6	618.1	10th Street UC
RC-14-004	8/12/2015	56.5	583.6	San Marcos Creek
RC-14-008	8/12/2015	41.9	598.8	South San Miguel UC
RC-14-010	8/12/2015	39.1	593.2	North San Miguel UC
RC-14-013	8/12/2015	67.9	616.8	10th Street UC

Corrosion Evaluation

The department considers a site to be potentially corrosive to foundation elements if the following conditions exist for the representative soil and/or water samples taken at the site: minimum resistivity of 1000 ohm-cm or less and/or PH of 5.5 or less. Samples found to be

potentially corrosive based on this criteria are sent to the Headquarters Laboratory for additional corrosion testing based on chloride and sulphate content.

Representative soil samples were obtained during the subsurface investigation and tested for corrosion potential at the Headquarters Geotechnical Laboratory. The results of the laboratory testing are presented as an attachment to this report. Based upon the results of the testing, the site is not considered corrosive to foundation elements.

Embankment and Cut Slopes

The majority of the shoulder widening for the rehabilitation project will be achieved by shifting the centerline alignments and constructing the widened pavement section in the existing median. Minor cuts and fills will be required for most of the alignment to accommodate the widening. Cut slopes at 1.5:1 maximum (Horizontal:Vertical) and embankment slopes at 2:1 maximum are recommended. Refer to the Landscape Architecture Branch for erosion control and vegetation recommendations.

Reconfiguration of the South San Miguel Interchange includes construction of a new southbound undercrossing structure in the area that is now a depressed median section and inside southbound on-ramp between northbound and southbound 101. Construction of bridge approach embankments to support the new southbound alignment will be required. The maximum height of the proposed embankments is approximately 22 feet above the current ground elevation. An estimated settlement of approximately 3 inches was calculated at the both approach embankments using the soil properties collected during the subsurface investigation in borings at each location. Settlement is expected to be nearly immediate in the cohesionless soils and thin interbedded fine-grained lenses. Significant long-term consolidation is not expected to occur due to the absence of continuous layers of fine-grained soil such as normally consolidated clays that can continue to consolidate long after construction of embankments. A 30 fill-delay period is recommended for new embankment construction within 150 feet of the new bridge structure prior to beginning construction of the new bridge structure.

Raising the profile of the highway by a maximum of approximately 10 feet above the existing ground elevation near the San Marcos Creek Bridges is proposed to improve vertical curve geometry. An estimated settlement of 2 inches was calculated using soil properties obtained from boring RC-14-012, which is near the highest proposed embankment height in the median on the south side of the bridge structures near Station 46+50. A 30-day fill delay for the embankment placed within 150 feet of the new bridge structures is recommended prior to beginning construction of the new bridge structures.

Embankment Materials

Material generated from cuts within the project limits is suitable for use as roadway embankment material. Imported borrow for embankment construction should be obtained per the requirements of 2010 Standard Specification 6-2.04 and approved for use by the Engineer after testing for suitability.

Standard Plan Retaining Wall at South Camp Roberts OH

Design proposes to construct a retaining wall at the toe of the northern approach embankment at the South Camp Roberts Overhead Left Bridge to repair a shallow slope failure that is advancing toward the outside shoulder of the southbound number two lane at the bridge approach. A Standard Plan Type 1A wall is recommended. Reconstructed embankment slopes above the retaining wall up to the new hinge point should be constructed at a maximum slope of 2:1. Standard plan wing walls are recommended at the ends of the retaining walls to conform to the existing embankment slopes. Refer to Table 3 for foundation recommendations and the retaining wall plans for additional information. Design bearing stresses and effective footings widths were obtained from Revised Standard Plan B3-3B for a Case 2 loading condition with a retained 2:1 slope behind the wall. Hand auger borings with 1" drive penetration tests attempted along the wall layout line reached refusal of greater than 100 blows for 6 inches above the bottom of footing elevation, indicating that the soils are very dense. Hand dug test holes excavated to refusal along the layout line encountered cemented silty sand with gravel. The top elevation of boring B-3 in the as-built log of test borings from the left bridge was approximately 4 feet below the proposed bottom of footing elevation, indicating that the retaining wall will be constructed in compacted embankment material placed when the left bridge was constructed. A friction angle of 34 degrees was assumed for embankment soils compacted to 95% relative compaction within 150 feet of the bridge per the recommendations of the Caltrans Geotechnical Manual. Field observations of soil strength support that assumption. Soils encountered below the proposed bottom of footing elevation in boring B-3 were dense silty sands overlying dense cemented silts and very dense gravels, indicating that overall settlements will be minimal and differential settlements will be within tolerable limits. Groundwater is not expected to be encountered. The assumed friction angle was used to analyze bearing capacity of the retaining wall and check that the factored bearing resistances exceed the factored bearing stresses for each limit state. Calculated nominal bearing resistances are significantly greater than the required design bearing stresses, and were limited to 5 tons/square foot (10,000 psf) in the table.

Table 3. Retaining Wall Foundation Recommendations

Wall Station (ft)	*Design Height (ft)*	*Bottom of Footing Elevation (ft)*	*Footing Width (ft)*	*Strength Limit Factored Bearing Resistance (psf)* Φq_N Φ=0.45	*Extreme Limit Factored Bearing Resistance (psf)* Φq_N Φ=1.0	*Strength Limit Factored Gross Uniform Bearing Stress (psf)* q_0	*Extreme Limit Factored Gross Uniform Bearing Stress(psf)* q_0	*Service Limit State Net Bearing Stress(psf)* q'_0
2+75 to 2+90	8	608.67	9'-0"	4500	10,000	2300	3900	1100
2+90 to 3+50	12	608.67	12'-5"	4500	10,000	2500	4500	1600
3+50 to 3+60	8	608.67	9'-0"	4500	10,000	2300	3900	1100

Drainage Systems

Jacking a 72-inch diameter by approximately 140-foot welded steel pipe is proposed to the north of the North San Miguel Undercrossing, beneath of the northbound lanes and bridge approach embankment. Boring RC-14-010 was drilled in the northern approach embankment between the right and left undercrossings, and encountered loose to medium dense silt, sand, clay, gravel, and few cobbles near the ground surface. Groundwater is not anticipated encountered within the proposed depth of construction. Based on the conditions encountered in the boring, jacking is considered a viable alternative to install the RCP. Refer to the project log of test borings for more information.

Replacement of an existing reinforced concrete arch culvert southwest of the 101 and San Marcos Road intersection is proposed. The invert of the culvert is failing and Maintenance personnel are unable to clean or repair the culvert due to safety concerns with access. Abandonment of the existing arch culvert and replacement along the same alignment with a 42-inch diameter welded steel pipe with a higher outlet elevation and lesser slope is the proposed. Reconfiguration of the existing junction structure at the inlet side of the new pipe will be required. Refer to the project plans for additional details. Temporary slopes and/or shoring systems proposed by the contractor should be reviewed and approved by the Engineer. Refer to boring RC-14-003 and CPT-14-001 for subsurface information in the vicinity of the culvert. Based on the conditions encountered in the boring and CPT sounding, jacking is considered a viable alternative to install the proposed drainage system.

Construction Considerations

Widening of existing embankment sections will require keying new compacted material into the existing slopes a minimum of 6 feet per Standard Specification 19-6.03A. Temporary lane reconfigurations may be required to achieve the minimum key-in distance where the existing edge of shoulder is near the hinge point.

Temporary slope and shoring designs should be submitted by the contractor and approved by the Engineer. Contact Geotechnical Design North for assistance in reviewing excavation and shoring plans and calculations.

If you have any questions or comments, please contact Ryan Turner at (805) 549-3750.

Signed September 14, 2015

MICHAEL J. JURASIUS, P.G., C.E.G.
Engineering Geologist
Geotechnical Design – North
Branch D

Signed September 14, 2015

RYAN TURNER, P.E., G.E.
Transportation Engineer Civil
Geotechnical Design – North
Branch D

c: Job File / Branch D Records
Structure Construction RE Pending File (email RE_pending_file@dot.ca.gov)
Craig Whitten / DES Office Engineer
Andrew Tan / PCE
Eric Karlson/ DME

LIST OF ATTACHMENTS

Vicinity Map	Attachment 1
Geologic Map and Legend	Attachment 2
Material Properties and Lab Testing Summary	Attachment 3
Retaining Wall Plans	Attachment 4

INDEX OF PLANS

STATE OF CALIFORNIA
DEPARTMENT OF TRANSPORTATION

PROJECT PLANS FOR CONSTRUCTION ON
STATE HIGHWAY

IN SAN LUIS OBISPO AND MONTEREY COUNTIES NEAR PASO ROBLES FROM 0.5 MILE SOUTH OF SAN MARCOS CREEK BRIDGE TO 0.2 MILE SOUTH OF BRADLEY ROAD OVERCROSSING

TO BE SUPPLEMENTED BY STANDARD PLANS DATED 2010

Dist	COUNTY	ROUTE	POST MILES TOTAL PROJECT	SHEET No.	TOTAL SHEETS
05	SLO,Mon	101	63.2/R69.3 R0.0/R1.9		

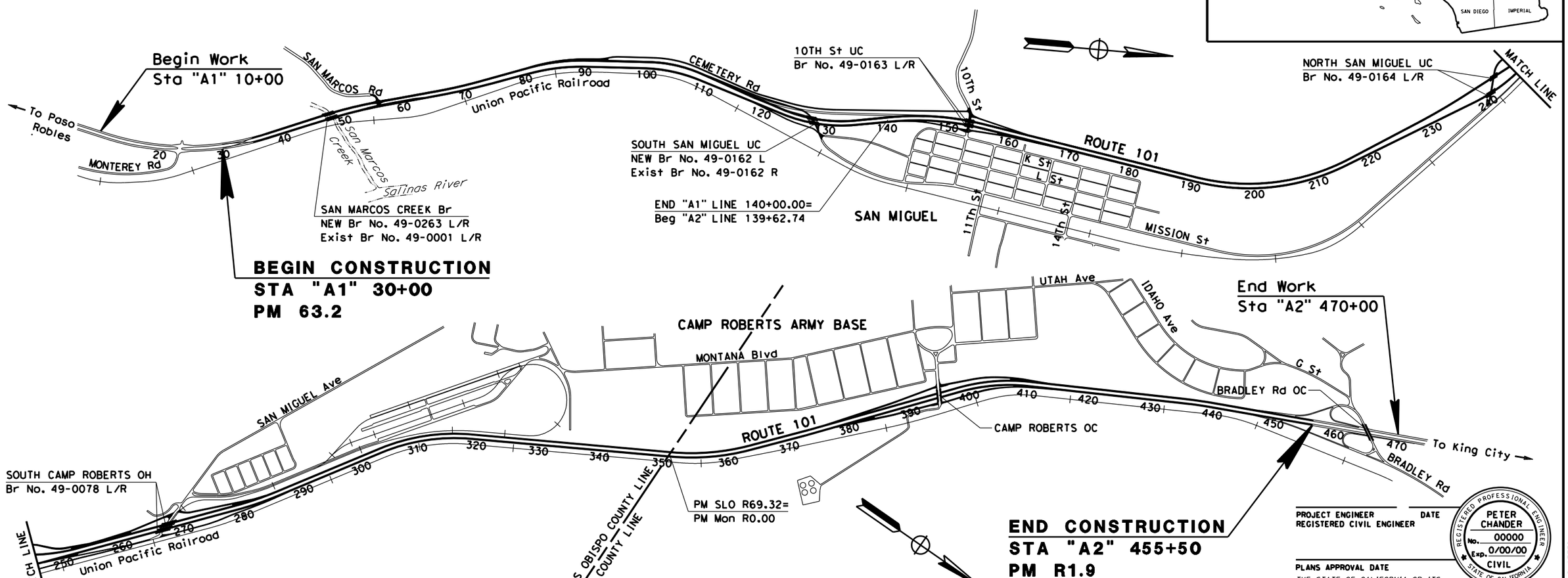

PROJECT ENGINEER
REGISTERED CIVIL ENGINEER
DATE

REGISTERED PROFESSIONAL ENGINEER
PETER CHANDER
No. 00000
Exp. 0/00/00
CIVIL
STATE OF CALIFORNIA

PLANS APPROVAL DATE

THE STATE OF CALIFORNIA OR ITS OFFICERS OR AGENTS SHALL NOT BE RESPONSIBLE FOR THE ACCURACY OR COMPLETENESS OF SCANNED COPIES OF THIS PLAN SHEET.

Attachment 1

NO SCALE

THE CONTRACTOR SHALL POSSESS THE CLASS (OR CLASSES) OF LICENSE AS SPECIFIED IN THE "NOTICE TO BIDDERS."

CONTRACT No.	05-0G0404
PROJECT ID	0500020020

PROJECT MANAGER AMY DONATELLO
DESIGN ENGINEER ROBERTO BANDA

LAST REVISION 09-22-14
DATE PLOTTED => $DATE
TIME PLOTTED => $TIME

GEOLOGIC MAP
SLO-MON-101-63.2/R69.3
North Paso Robles 101 Rehab

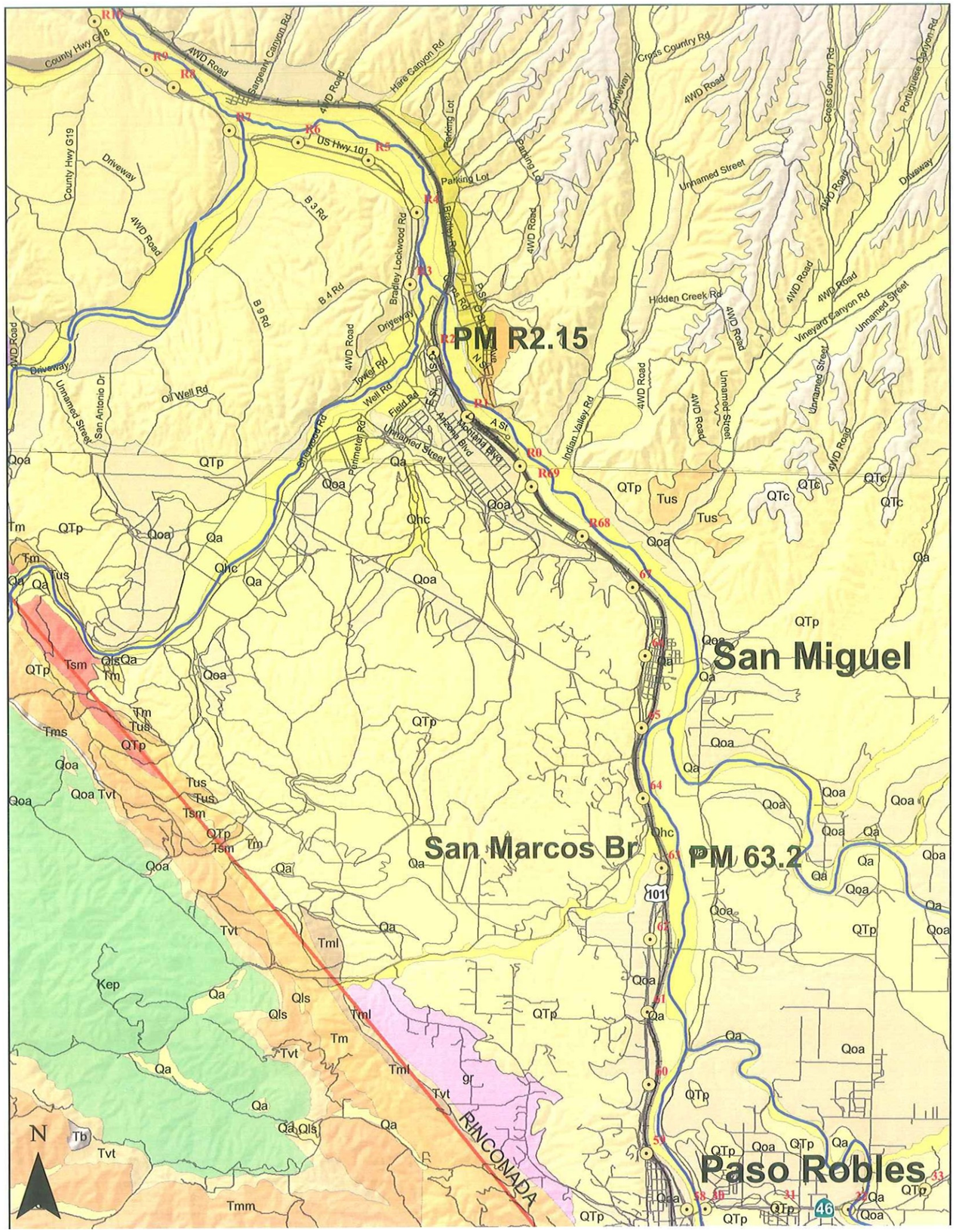

Legend

Geologic Units

UNIT

- QTc-Clay of the Paso Robles Formation
- QTp-Paso Robles Formation (valley sediments)
- Qa-Latest Pleistocene to Holocene alluvium, undiffer
- Qhc-Recent stream channel deposits
- Qls-Landslide deposits
- Qoa-Early to late Pleistocene alluvial deposits, undiferentiated
- Qrs-Modern stream channel deposits
- Tm-Monterey Formation, undifferentiated
- Tml-Monterey Formation, silty shale
- Tmm-Sandholt Member (Monterey Formation)
- Tsm-Santa Margarita Sandstone
- Tus-Sandstone, conglomerate, minor mudstone
- Tvt-Vaqueros Sandstone
- gr-Granitic rocks, undivided
- Kep-El Piojo Formation, L. Cret. mud stone, sandstone, and cong.

1 0.5 0 1 2 3 4 Miles

Attachment 2- Geologic Map

MATERIAL PROPERTIES SUMMARY

	BORING OR SAMPLE No.	RC-14-001	RC-14-001	RC-14-001	RC-14-001	RC-14-001	RC-14-002	RC-14-002	RC-14-002	RC-14-002	RC-14-002	RC-14-003	RC-14-003	RC-14-004	RC-14-004	RC-14-005
DESCRIPTION	STATION	247+12.00	247+12.00	247+12.00	247+12.00	247+12.00	248+03.00	248+03.00	248+03.00	248+03.00	248+03.00	250+26.00	250+26.00	247+15.00	247+15.00	326+52.00
	LINE	101	101	101	101	101	101	101	101	101	101	101	101	101	101	101
	DISTANCE FROM LINE (Rt. OR Lt.)	60' Lt	60' Lt	60' Lt	60' Lt	60' Lt	69' Rt	69' Rt	69' Rt	69' Rt	69' Rt	87' Rt	87' Rt	68' Rt	68' Rt	67' Rt
	DEPTH OR ELEVATION (FEET)	1.0-3.0	17.0-18.5	20.0-25.0	40.0-41.5	61.0-64.0	0.0-4.0	5.0-8.0	31.0-34.0	59.7-60.3	87.0-89.0	12.0-15.0	30.5-32.0	0.0-2.5	41.8-45.3	0.0-2.5
	USCS CLASSIFICATION															
SIEVE ANALYSIS	3															
	2 1/2															
	2							100								
	1 1/2						100	99								
	1						98	96								
	3/4						92	95								
	1/2						85	89								
	3/8					100	81	86								
	4			100		99	71	74								
	8			99		98	63	61								
	16			99		98	55	47								
	30			97		96	43	34								
	50			88		88	29	21								
	100			71		62	18	12								
	200			52.4		44.4	13.1	7.5								
	5 μm															
	1μm															
CLASSIFICATION TEST SUMMARY	IN-PLACE DENSITY (DRY WT. lb/cu ft)															
	IN-PLACE MOISTURE (PERCENT)		23.1		30.8					31.8	15.4	29.3	23.5			
	SPECIFIC GRAVITY															
	LIQUID LIMIT		55		55					46	35	53	65			
	PLASTICITY INDEX		28		22					14	13	22	34			
	SAND EQUIVALENT															
SOIL STRENGTH Direct Shear Test	EFFECTIVE STRESS															
	FRICTION ANGLE (DEGREES)															
	COHESION (psf)															
	TOTAL STRESS															
	FRICTION ANGLE (DEGREES)															
	COHESION (psf)															
CORROSION	RESISTIVITY (ohm-cm)	4528		1362		1443	2454	5124	2597					3531	1713	1824
	pH	8.3		7.92		8.23	8.53	8.68	8.29					7.68	8.14	7.73
	SULFATES (ppm)															
	CHLORIDES (ppm)															

MATERIAL PROPERTIES SUMMARY

RC-14-005	RC-14-005	RC-14-006	RC-14-006	RC-14-006	RC-14-007	RC-14-007	RC-14-007	RC-14-008	RC-14-008	RC-14-009	RC-14-009	RC-14-009	RC-14-009	RC-14-009
326+52.00	326+52.00	328+20.00	328+20.00	328+20.00	328+55.00	328+55.00	328+55.00	327+69.00	327+69.00	442+70.00	442+70.00	442+70.00	442+70.00	442+70.00
101	101	101	101	101	101	101	101	101	101	101	101	101	101	101
67' Rt	67' Rt	179' Rt	179' Rt	179' Rt	41' Rt	41' Rt	41' Rt	56' Rt	56' Rt	126' Lt	126' Lt	126' Lt	126' Lt	126' Lt
15.0-17.0	30.0-32.0	0.0-5.0	15.0-20.0	20.0-25.0	0.0-25.0	25.0-30.0	30.0-32.0	0.0-5.0	30.0-32.0	1.0-3.0	10.0-12.5	45.0-47.0	55.0-56.0	85.0-87.0
												CL		
								100						
								99		100				
								99		98	100			
								97		87	99			
								96		81	98			
								92		67	94			100
								87		56	89			99
								81		44	80			99
								72		34	58			98
								63		25	22			92
								50		19	8			75
								38.3		15.7	3.8			55.6
24.8	19		26.6						24.5				31.5	
42	29		48						38			45	43	
16	10		22						17			26	22	
		1951		1180	5635	1276	1173	2281		3662		1170		1965
		7.08		7.72	7.86	7.47	7.85	7.47		8.57		8.12		8.4

Dist	COUNTY	ROUTE	POST MILES TOTAL PROJECT	SHEET No.	TOTAL SHEETS
05	SLO/Mon	101	65.8/69.3 R0.0/R1.9		

REGISTERED CIVIL ENGINEER DATE

PLANS APPROVAL DATE

REGISTERED PROFESSIONAL ENGINEER No. Exp. CIVIL STATE OF CALIFORNIA

THE STATE OF CALIFORNIA OR ITS OFFICERS OR AGENTS SHALL NOT BE RESPONSIBLE FOR THE ACCURACY OR COMPLETENESS OF SCANNED COPIES OF THIS PLAN SHEET.

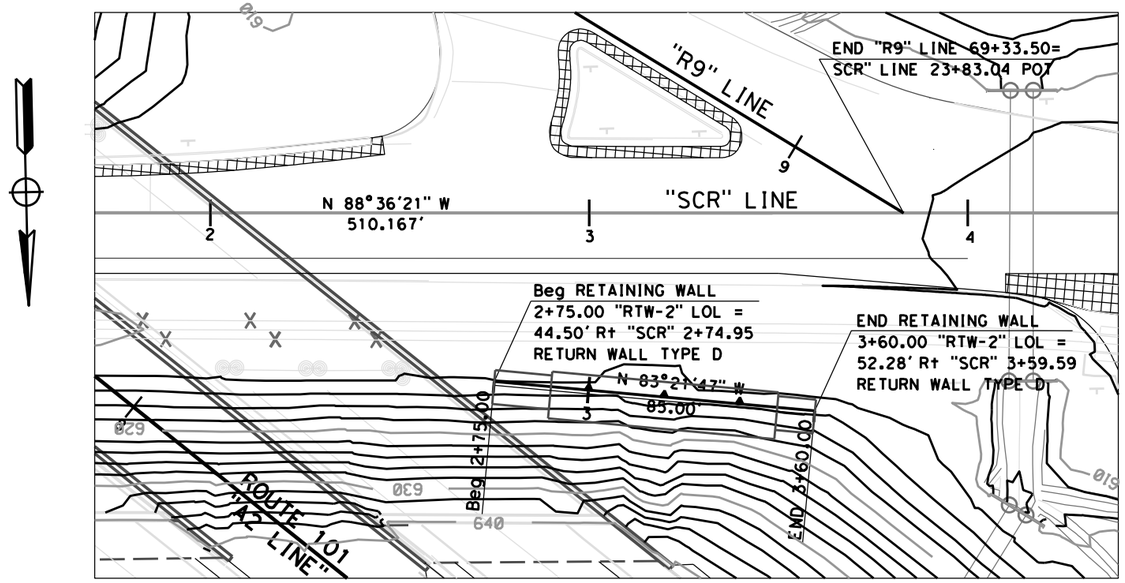

PLAN

SCALE: 1" = 20'

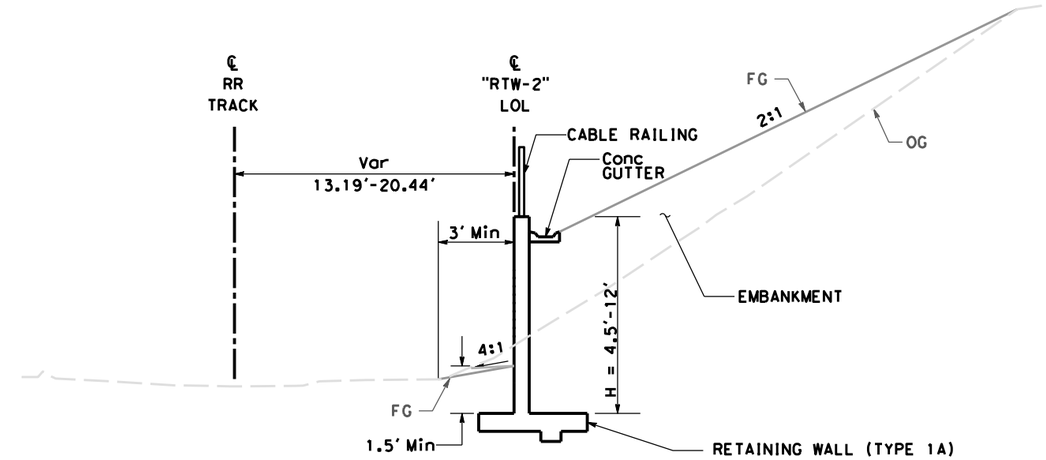

TYPICAL DETAIL

NO SCALE

APPROVED FOR RETAINING WALL WORK ONLY

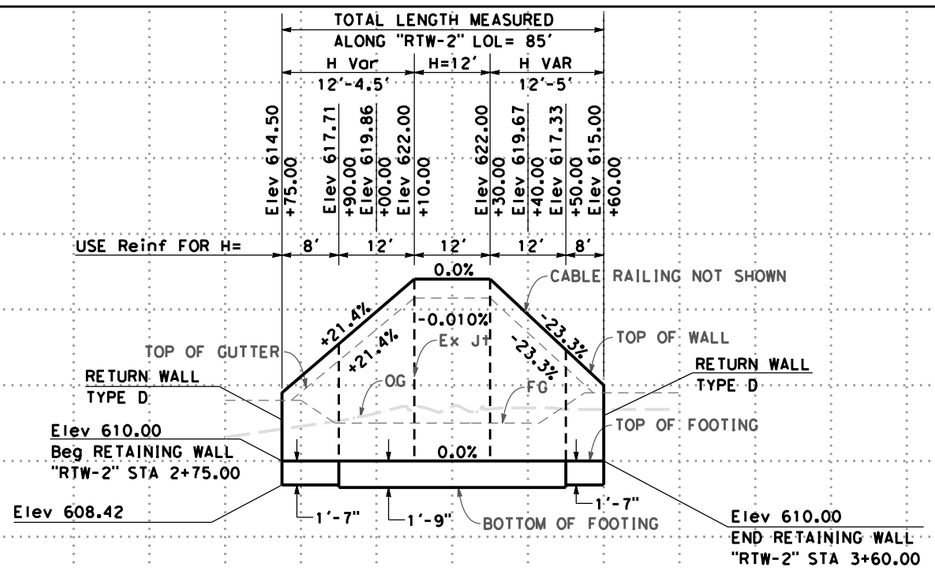

"RTW-2" PROFILE

1. THE CONTRACTOR SHALL VERIFY ALL CONTROLLING DIMENSIONS BEFORE ORDERING OR FABRICATING ANY MATERIAL.
2. RETURN WALL TO HAVE RIPPED TEXTURE. SEE RW DETAILS
3. XX' DRAINS @ XX' MAXIMUM CENTER TO CENTER. EXPOSED WALL DRAINS SHALL BE LOCATED XX' + ABOVE FINISH GRADE.
4. GEOCOMPOSITE DRAIN, CEMENT TREATED PERMEABLE BASE, AND XX. DIAM SLOTTED PLASTIC PIPE CONTINUOUS BEHIND RETAINING WALL. CAP ENDS OF POIPE. PROVIDE "TEE" CONNECTION AT EACH XX' DIAM DRAIN.
5. CONNECT THE LOW END OF PLASTIC PIPE TO THE MAIN OUTLET PIPE AS APPLICABLE.
6. FOR DETAILS NOT SHOWN SEE STANDARD PLANS.

Attachment 4

RETAINING WALL PLAN

SCALE: Horiz 1" = 20'
Vert 1" = 5'

R-1

STATION		2	3	4	TOTAL
CY	Exc				
	Emb				

REVISED BY | DATE REVISED
MICAELA GARCIA | GILBERTO BACA
CALCULATED-DESIGNED BY | CHECKED BY
FUNCTIONAL SUPERVISOR: ROBERTO BANDA

STATE OF CALIFORNIA - DEPARTMENT OF TRANSPORTATION
Caltrans DESIGN DIVISION

LAST REVISION 03-02-15 | DATE PLOTTED => $DATE | TIME PLOTTED => $TIME

MATERIALS INFORMATION

19. Temporary Water Pollution Control Plans

Dist	COUNTY	ROUTE	POST MILES TOTAL PROJECT	SHEET No.	TOTAL SHEETS
05	SLO,Mon	101	63.2/R69.3, R0.0/R1.9	1	29

REGISTERED CIVIL ENGINEER DATE

X-XX-XX

PLANS APPROVAL DATE

REGISTERED PROFESSIONAL ENGINEER PETER CHANDER No. 63988 Exp. 9/30/16 CIVIL STATE OF CALIFORNIA

THE STATE OF CALIFORNIA OR ITS OFFICERS OR AGENTS SHALL NOT BE RESPONSIBLE FOR THE ACCURACY OR COMPLETENESS OF SCANNED COPIES OF THIS PLAN SHEET.

LEGEND

- TEMPORARY CHECK DAM
- TFESA — TEMPORARY FENCE (TYPE ESA)
- TFR — TEMPORARY FIBER ROLL
- TSF — TEMPORARY LARGE SEDIMENT BARRIER
- TEMPORARY DRAINAGE INLET PROTECTION
- FINISHED GRADE SHEET FLOW TO MEDIAN INFILTRATION AREAS
- ESA — ENVIRONMENTALLY SENSITIVE AREA
- INFILTRATION AREAS (EROSION CONTROL TYPE 3 WITH INCORPORATED MATERIALS)
- TEMPORARY CONTRACTOR YARD

NOTES:

1. FOR ACCURATE RIGHT OF WAY DATA, CONTACT RIGHT OF WAY ENGINEERING AT THE DISTRICT OFFICE.
2. WATER POLLUTION CONTROL LOCATIONS SHOWN ARE APPROXIMATE. EXACT LOCATION TO BE DETERMINED IN THE FIELD BY THE ENGINEER.

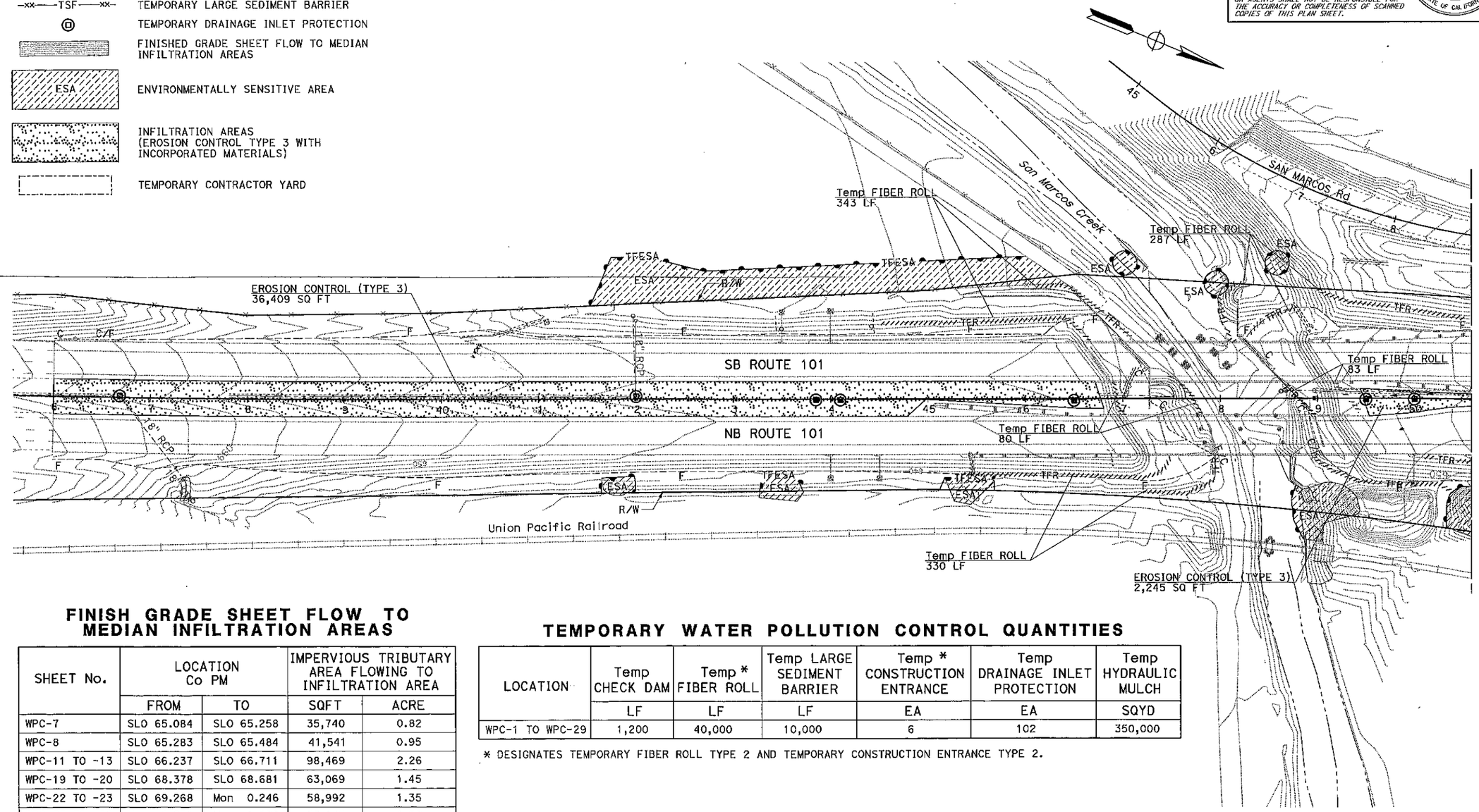

FINISH GRADE SHEET FLOW TO MEDIAN INFILTRATION AREAS

SHEET No.	LOCATION Co PM		IMPERVIOUS TRIBUTARY AREA FLOWING TO INFILTRATION AREA	
	FROM	TO	SQFT	ACRE
WPC-7	SLO 65.084	SLO 65.258	35,740	0.82
WPC-8	SLO 65.283	SLO 65.484	41,541	0.95
WPC-11 TO -13	SLO 66.237	SLO 66.711	98,469	2.26
WPC-19 TO -20	SLO 68.378	SLO 68.681	63,069	1.45
WPC-22 TO -23	SLO 69.268	Mon 0.246	58,992	1.35
WPC-25 TO -26	Mon 0.871	Mon 1.006	53,146	1.22
TOTAL	TOTAL		350,957	8.05

TEMPORARY WATER POLLUTION CONTROL QUANTITIES

LOCATION	Temp CHECK DAM	Temp * FIBER ROLL	Temp LARGE SEDIMENT BARRIER	Temp * CONSTRUCTION ENTRANCE	Temp DRAINAGE INLET PROTECTION	Temp HYDRAULIC MULCH
	LF	LF	LF	EA	EA	SQYD
WPC-1 TO WPC-29	1,200	40,000	10,000	6	102	350,000

* DESIGNATES TEMPORARY FIBER ROLL TYPE 2 AND TEMPORARY CONSTRUCTION ENTRANCE TYPE 2.

APPROVED FOR TEMPORARY WATER POLLUTION CONTROL WORK ONLY

TEMPORARY WATER POLLUTION CONTROL

SCALE: 1"=50'

WPC-1

STATE OF CALIFORNIA - DEPARTMENT OF TRANSPORTATION

06-DESIGN

FUNCTIONAL SUPERVISOR: ROBERTO BANDA

PETER CHANDER | HAL KENYON

CALCULATED-DESIGNED BY | CHECKED BY

REVISED BY | DATE REVISED

LAST REVISION 00-00-00

DATE PLOTTED => 14-APR-2016
TIME PLOTTED => 10:26

Dist	COUNTY	ROUTE	POST MILES TOTAL PROJECT	SHEET No.	TOTAL SHEETS
05	SLO,Mon	101	63.2/R69.3, R0.0/R1.9	2	29

REGISTERED CIVIL ENGINEER DATE

X-XX-XX
PLANS APPROVAL DATE

REGISTERED PROFESSIONAL ENGINEER PETER CHANDER No. 63988 Exp. 9/30/16 CIVIL STATE OF CALIFORNIA

THE STATE OF CALIFORNIA OR ITS OFFICERS OR AGENTS SHALL NOT BE RESPONSIBLE FOR THE ACCURACY OR COMPLETENESS OF SCANNED COPIES OF THIS PLAN SHEET.

NOTES:

FOR ACCURATE RIGHT OF WAY DATA, CONTACT RIGHT OF WAY ENGINEERING AT THE DISTRICT OFFICE.

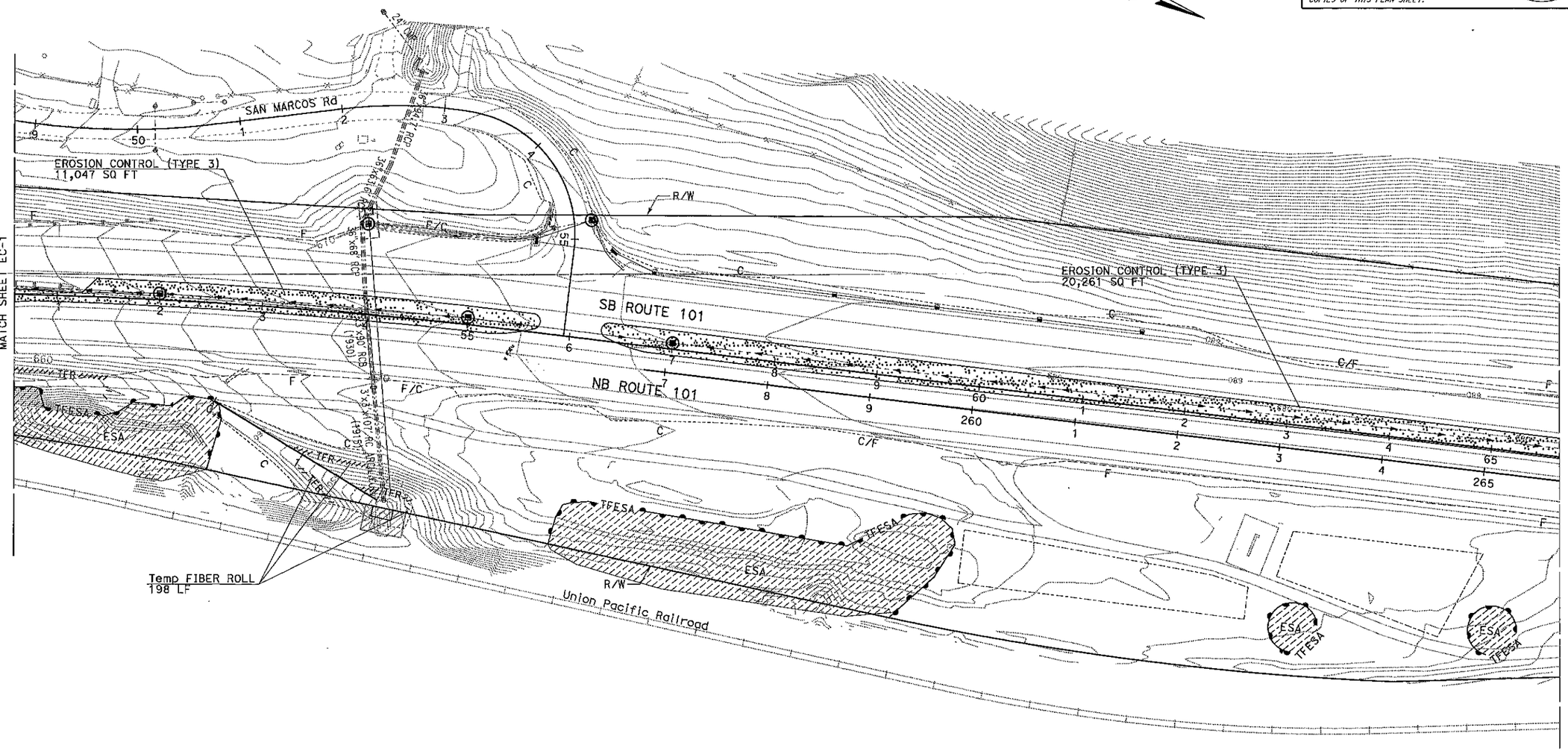

APPROVED FOR TEMPORARY WATER POLLUTION CONTROL WORK ONLY

TEMPORARY WATER POLLUTION CONTROL

SCALE: 1"=50'

WPC-2

STATE OF CALIFORNIA - DEPARTMENT OF TRANSPORTATION

Caltrans 06-DESIGN

FUNCTIONAL SUPERVISOR: ROBERTO BANDA

CALCULATED-DESIGNED BY: PETER CHANDER

CHECKED BY: HAL KENYON

REVISED BY / DATE REVISED

LAST REVISION 00-00-00 | DATE PLOTTED => 14-APR-2016 | TIME PLOTTED => 10:26

BORDER LAST REVISED 7/2/2010 | USERNAME => s132888 | DGN FILE => 0500020020gb002.dgn | RELATIVE BORDER SCALE IS IN INCHES 0 1 2 3 | UNIT 0000 | PROJECT NUMBER & PHASE 00000000001

Dist	COUNTY	ROUTE	POST MILES TOTAL PROJECT	SHEET No.	TOTAL SHEETS
05	SLO,Mon	101	63.2/R69.3, R0.0/R1.9	3	29

REGISTERED CIVIL ENGINEER DATE

X-XX-XX
PLANS APPROVAL DATE

REGISTERED PROFESSIONAL ENGINEER PETER CHANDER No. 63988 Exp. 9/30/16 CIVIL STATE OF CALIFORNIA

THE STATE OF CALIFORNIA OR ITS OFFICERS OR AGENTS SHALL NOT BE RESPONSIBLE FOR THE ACCURACY OR COMPLETENESS OF SCANNED COPIES OF THIS PLAN SHEET.

NOTES:

FOR ACCURATE RIGHT OF WAY DATA, CONTACT RIGHT OF WAY ENGINEERING AT THE DISTRICT OFFICE.

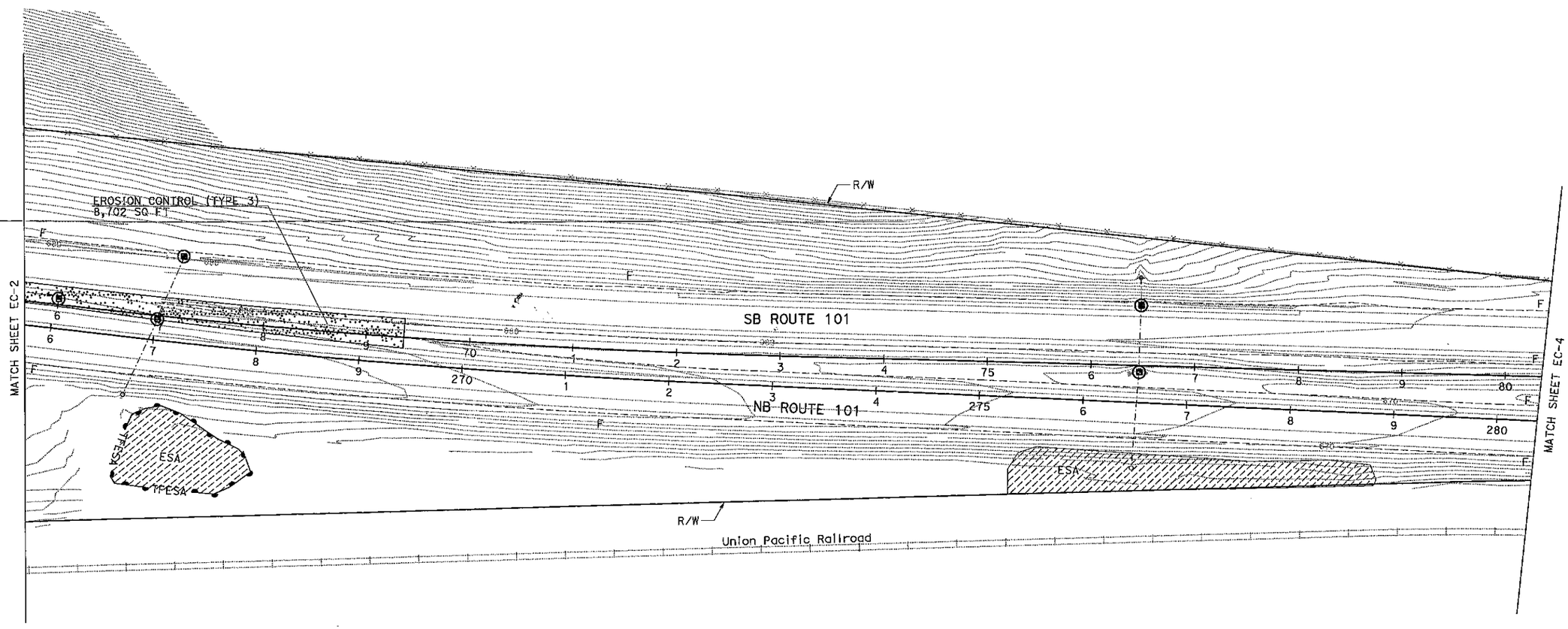

APPROVED FOR TEMPORARY WATER POLLUTION CONTROL WORK ONLY

TEMPORARY WATER POLLUTION CONTROL

SCALE: 1"=50'

WPC-3

STATE OF CALIFORNIA - DEPARTMENT OF TRANSPORTATION

Caltrans 06-DESIGN

FUNCTIONAL SUPERVISOR: ROBERTO BANDA

CALCULATED-DESIGNED BY: PETER CHANDER

CHECKED BY: HAL KENYON

REVISED BY

DATE REVISED

LAST REVISION 00-00-00

DATE PLOTTED => 14-APR-2016
TIME PLOTTED => 10:26

Dist	COUNTY	ROUTE	POST MILES TOTAL PROJECT	SHEET No.	TOTAL SHEETS
05	SLO,Mon	101	63.2/R69.3, R0.0/R1.9	4	29

REGISTERED CIVIL ENGINEER DATE

X-XX-XX
PLANS APPROVAL DATE

REGISTERED PROFESSIONAL ENGINEER PETER CHANDER No. 63988 Exp. 9/30/16 CIVIL STATE OF CALIFORNIA

THE STATE OF CALIFORNIA OR ITS OFFICERS OR AGENTS SHALL NOT BE RESPONSIBLE FOR THE ACCURACY OR COMPLETENESS OF SCANNED COPIES OF THIS PLAN SHEET.

NOTES:

FOR ACCURATE RIGHT OF WAY DATA, CONTACT RIGHT OF WAY ENGINEERING AT THE DISTRICT OFFICE.

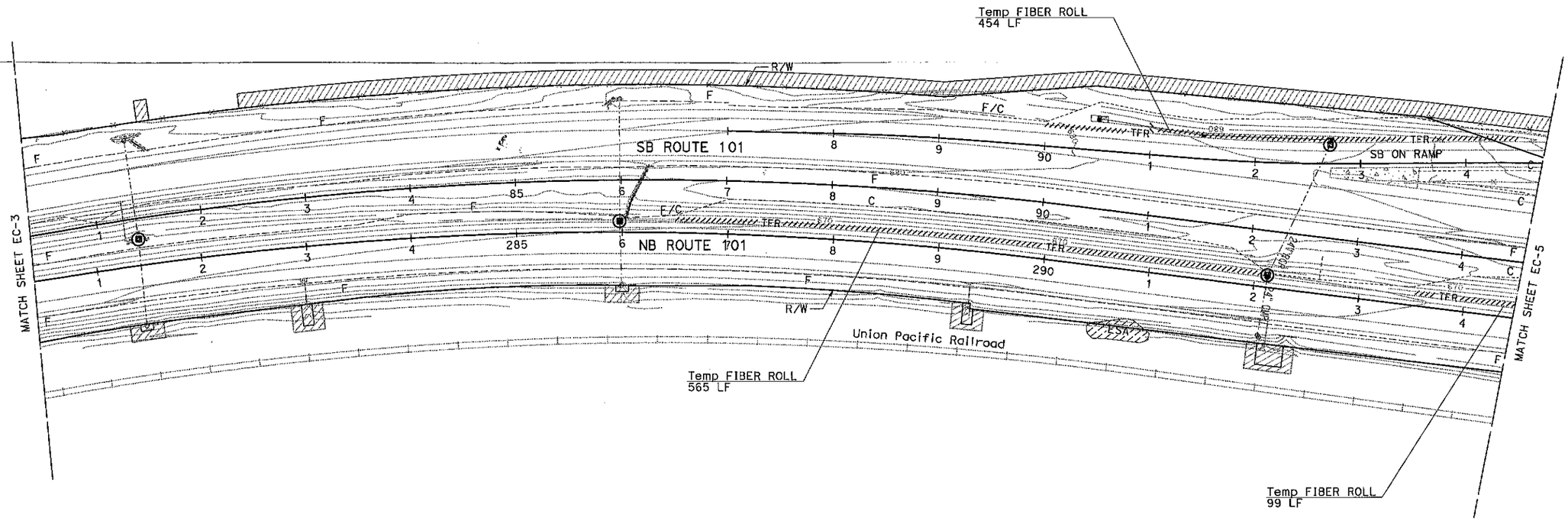

APPROVED FOR TEMPORARY WATER POLLUTION CONTROL WORK ONLY

TEMPORARY WATER POLLUTION CONTROL

SCALE: 1"=50'

WPC- 4

STATE OF CALIFORNIA - DEPARTMENT OF TRANSPORTATION

Caltrans®

06-DESIGN

FUNCTIONAL SUPERVISOR: ROBERTO BANDA

CALCULATED-DESIGNED BY: PETER CHANDER

CHECKED BY: HAL KENYON

REVISED BY

DATE REVISED

LAST REVISION 00-00-00

DATE PLOTTED => 14-APR-2016
TIME PLOTTED => 10:26

Dist	COUNTY	ROUTE	POST MILES TOTAL PROJECT	SHEET No.	TOTAL SHEETS
05	SLO,Mon	101	63.2/R69.3, R0.0/R1.9	5	29

REGISTERED CIVIL ENGINEER DATE

X-XX-XX
PLANS APPROVAL DATE

REGISTERED PROFESSIONAL ENGINEER PETER CHANDER No. 63988 Exp. 9/30/16 CIVIL STATE OF CALIFORNIA

THE STATE OF CALIFORNIA OR ITS OFFICERS OR AGENTS SHALL NOT BE RESPONSIBLE FOR THE ACCURACY OR COMPLETENESS OF SCANNED COPIES OF THIS PLAN SHEET.

NOTES:

FOR ACCURATE RIGHT OF WAY DATA, CONTACT RIGHT OF WAY ENGINEERING AT THE DISTRICT OFFICE.

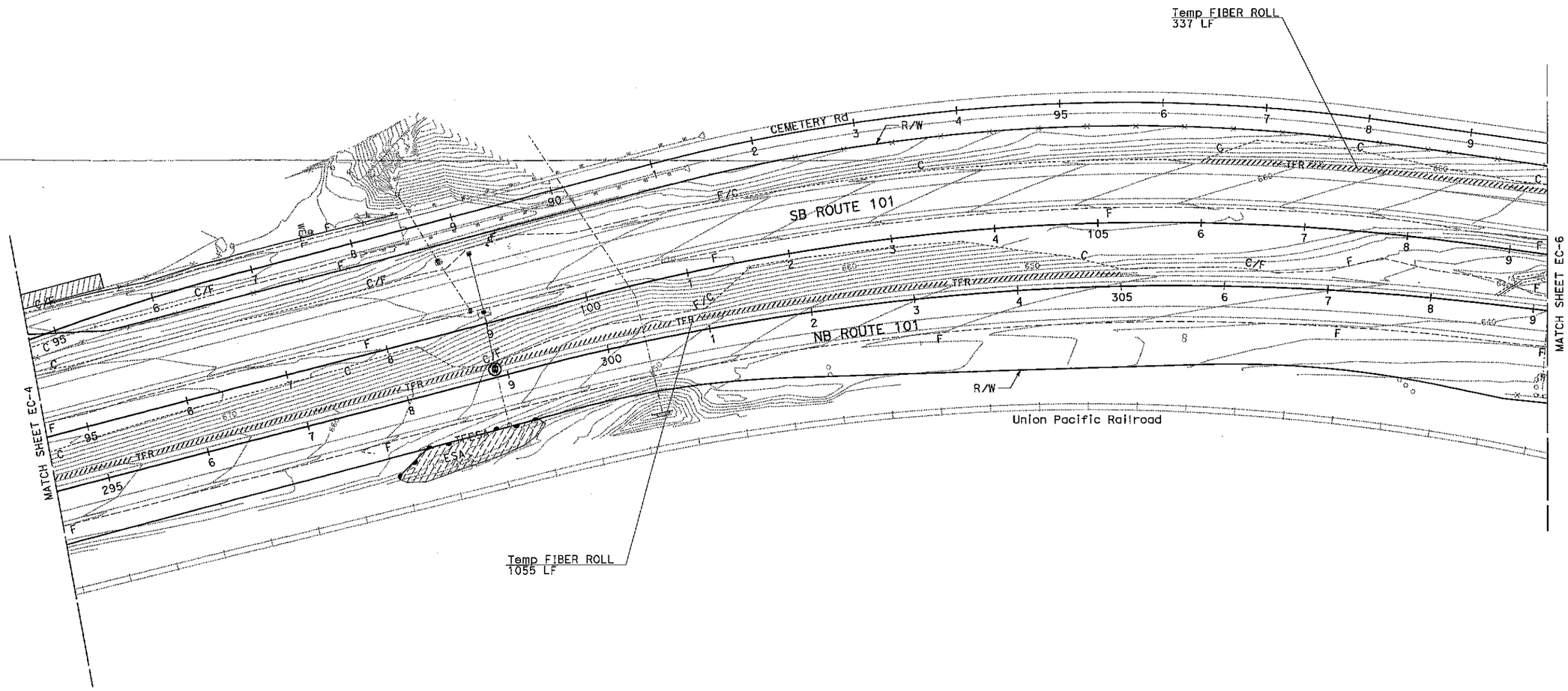

TEMPORARY WATER POLLUTION CONTROL

SCALE: 1"=50'

WPC-5

APPROVED FOR TEMPORARY WATER POLLUTION CONTROL WORK ONLY

STATE OF CALIFORNIA - DEPARTMENT OF TRANSPORTATION

Caltrans

06-DESIGN

FUNCTIONAL SUPERVISOR: ROBERTO BANDA

CALCULATED-DESIGNED BY: PETER CHANDER

CHECKED BY: HAL KENYON

REVISED BY

DATE REVISED

LAST REVISION 00-00-00

DATE PLOTTED => 14-APR-2016
TIME PLOTTED => 10:26

BORDER LAST REVISED 7/2/2010

USERNAME => s132888
DGN FILE => 05000020020gb005.dgn

RELATIVE BORDER SCALE IS IN INCHES 0 1 2 3

UNIT 0000

PROJECT NUMBER & PHASE 00000000001

Dist	COUNTY	ROUTE	POST MILES TOTAL PROJECT	SHEET No.	TOTAL SHEETS
05	SLO,Mon	101	63.2/R69.3, R0.0/R1.9	6	29

REGISTERED CIVIL ENGINEER DATE

X-XX-XX

PLANS APPROVAL DATE

THE STATE OF CALIFORNIA OR ITS OFFICERS OR AGENTS SHALL NOT BE RESPONSIBLE FOR THE ACCURACY OR COMPLETENESS OF SCANNED COPIES OF THIS PLAN SHEET.

REGISTERED PROFESSIONAL ENGINEER PETER CHANDER No. 63988 Exp. 9/30/16 CIVIL STATE OF CALIFORNIA

NOTES:

FOR ACCURATE RIGHT OF WAY DATA, CONTACT RIGHT OF WAY ENGINEERING AT THE DISTRICT OFFICE.

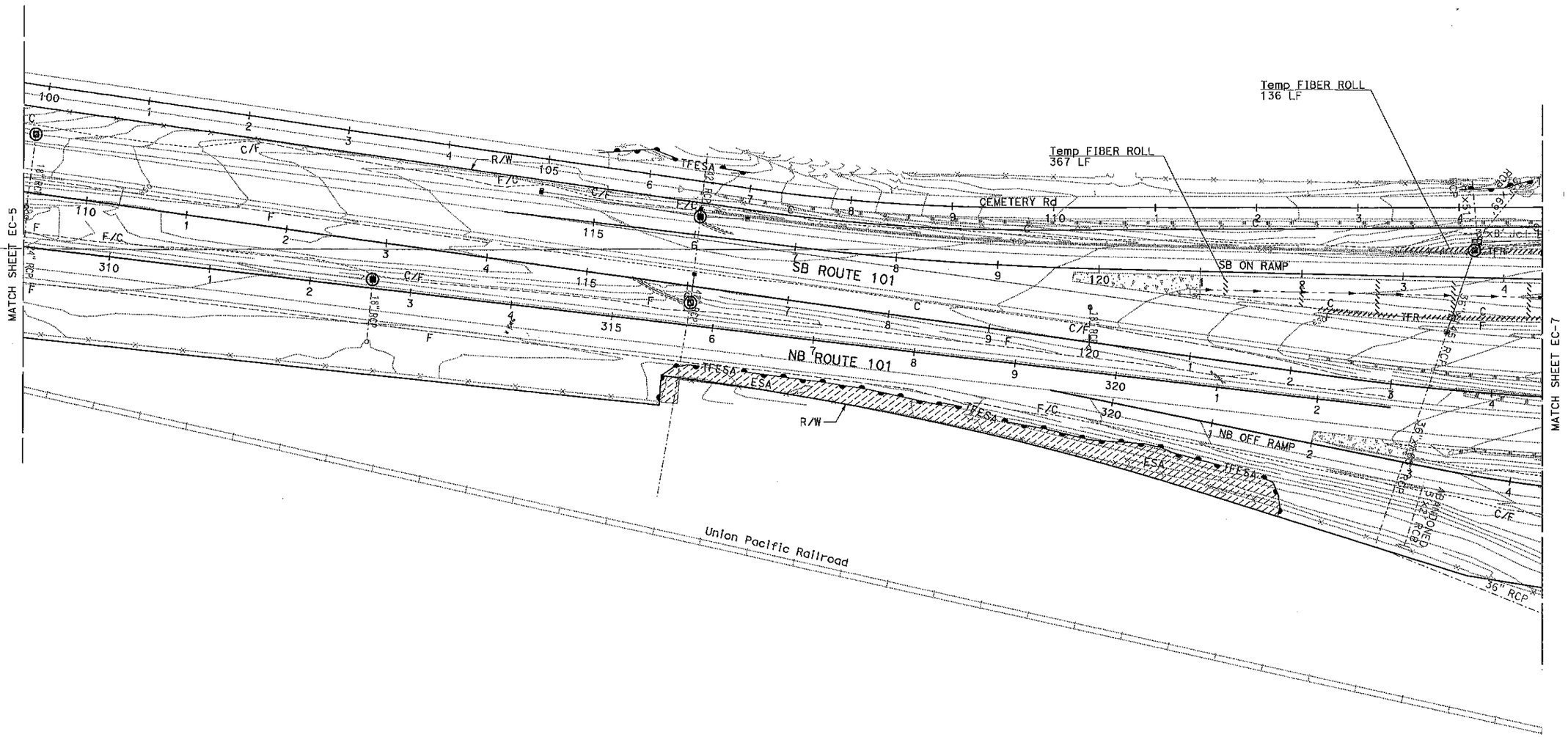

TEMPORARY WATER POLLUTION CONTROL

SCALE: 1"=50'

WPC- 6

APPROVED FOR TEMPORARY WATER POLLUTION CONTROL AND EROSION CONTROL WORK ONLY

STATE OF CALIFORNIA - DEPARTMENT OF TRANSPORTATION

Caltrans

06-DESIGN

FUNCTIONAL SUPERVISOR: ROBERTO BANDA

CALCULATED-DESIGNED BY: PETER CHANDER

CHECKED BY: HAL KENYON

REVISED BY

DATE REVISED

LAST REVISION 00-00-00

DATE PLOTTED => 14-APR-2016

TIME PLOTTED => 10:26

BORDER LAST REVISED 7/2/2010

USERNAME => s132888

DGN FILE => 0500020020gb006.dgn

RELATIVE BORDER SCALE IS IN INCHES 0 1 2 3

UNIT 0000

PROJECT NUMBER & PHASE 00000000001

Dist	COUNTY	ROUTE	POST MILES TOTAL PROJECT	SHEET No.	TOTAL SHEETS
05	SLO,Mon	101	63.2/R69.3, R0.0/R1.9	7	29

REGISTERED CIVIL ENGINEER DATE

X-XX-XX
PLANS APPROVAL DATE

THE STATE OF CALIFORNIA OR ITS OFFICERS OR AGENTS SHALL NOT BE RESPONSIBLE FOR THE ACCURACY OR COMPLETENESS OF SCANNED COPIES OF THIS PLAN SHEET.

REGISTERED PROFESSIONAL ENGINEER PETER CHANDER No. 63988 Exp. 9/30/16 CIVIL STATE OF CALIFORNIA

NOTES:

FOR ACCURATE RIGHT OF WAY DATA, CONTACT RIGHT OF WAY ENGINEERING AT THE DISTRICT OFFICE.

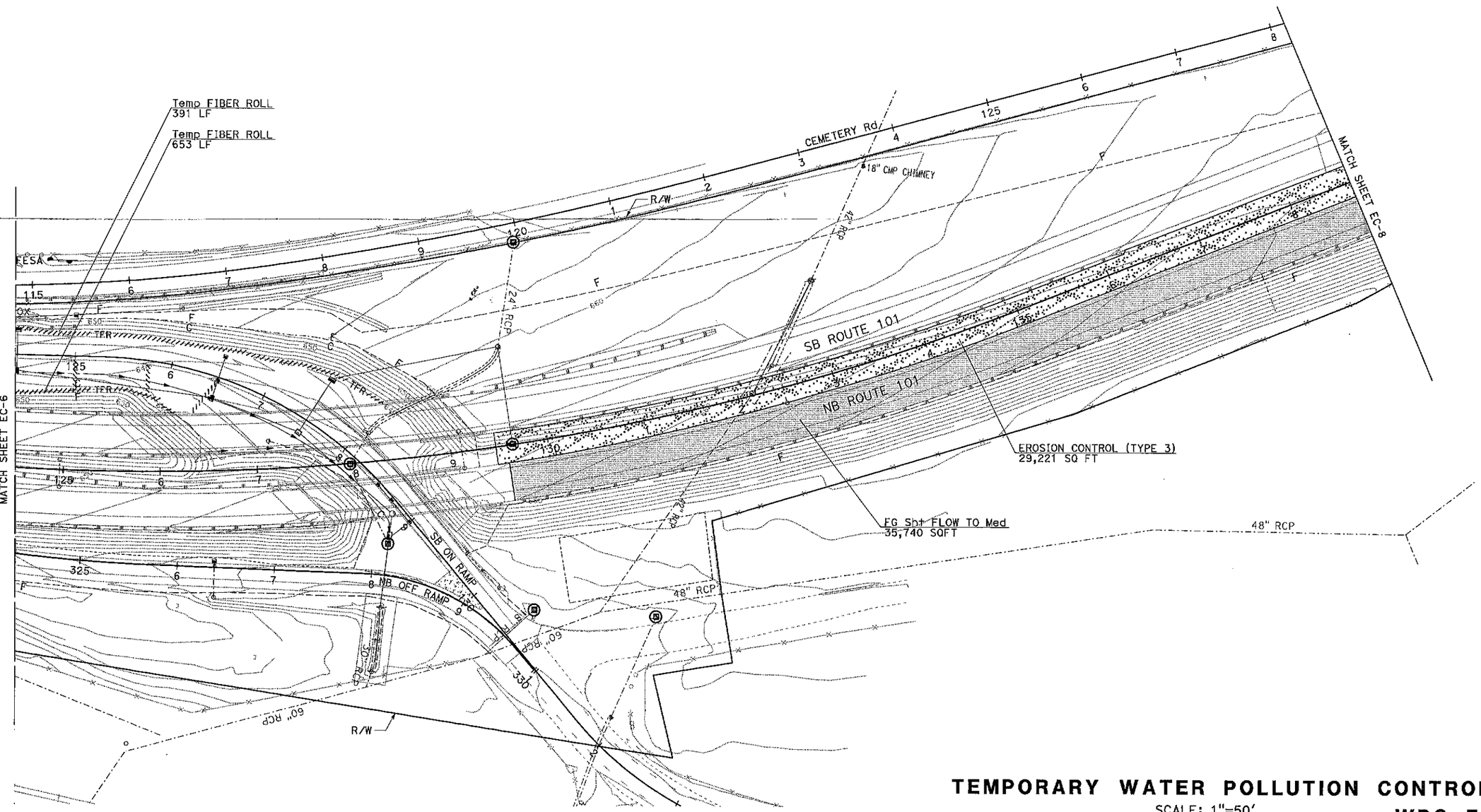

APPROVED FOR TEMPORARY WATER POLLUTION CONTROL WORK ONLY

TEMPORARY WATER POLLUTION CONTROL

SCALE: 1"=50'

WPC-7

REVISED BY	DATE REVISED
PETER CHANDER	HAL KENYON

CALCULATED-DESIGNED BY	CHECKED BY

FUNCTIONAL SUPERVISOR: ROBERTO BANDA

STATE OF CALIFORNIA - DEPARTMENT OF TRANSPORTATION
Caltrans® 06-DESIGN

LAST REVISION 00-00-00 | DATE PLOTTED => 14-APR-2016 | TIME PLOTTED => 10:26

BORDER LAST REVISED 7/2/2010 | USERNAME => s132888 | DGN FILE => 0500020020gb007.dgn | RELATIVE BORDER SCALE IS IN INCHES 0 1 2 3 | UNIT 0000 | PROJECT NUMBER & PHASE 00000000001

Dist	COUNTY	ROUTE	POST MILES TOTAL PROJECT	SHEET No.	TOTAL SHEETS
05	SLO,Mon	101	63.2/R69.3, R0.0/R1.9	8	29

REGISTERED CIVIL ENGINEER DATE

X-XX-XX
PLANS APPROVAL DATE

REGISTERED PROFESSIONAL ENGINEER PETER CHANDER No. 63988 Exp. 9/30/16 CIVIL STATE OF CALIFORNIA

THE STATE OF CALIFORNIA OR ITS OFFICERS OR AGENTS SHALL NOT BE RESPONSIBLE FOR THE ACCURACY OR COMPLETENESS OF SCANNED COPIES OF THIS PLAN SHEET.

NOTES:

FOR ACCURATE RIGHT OF WAY DATA, CONTACT RIGHT OF WAY ENGINEERING AT THE DISTRICT OFFICE.

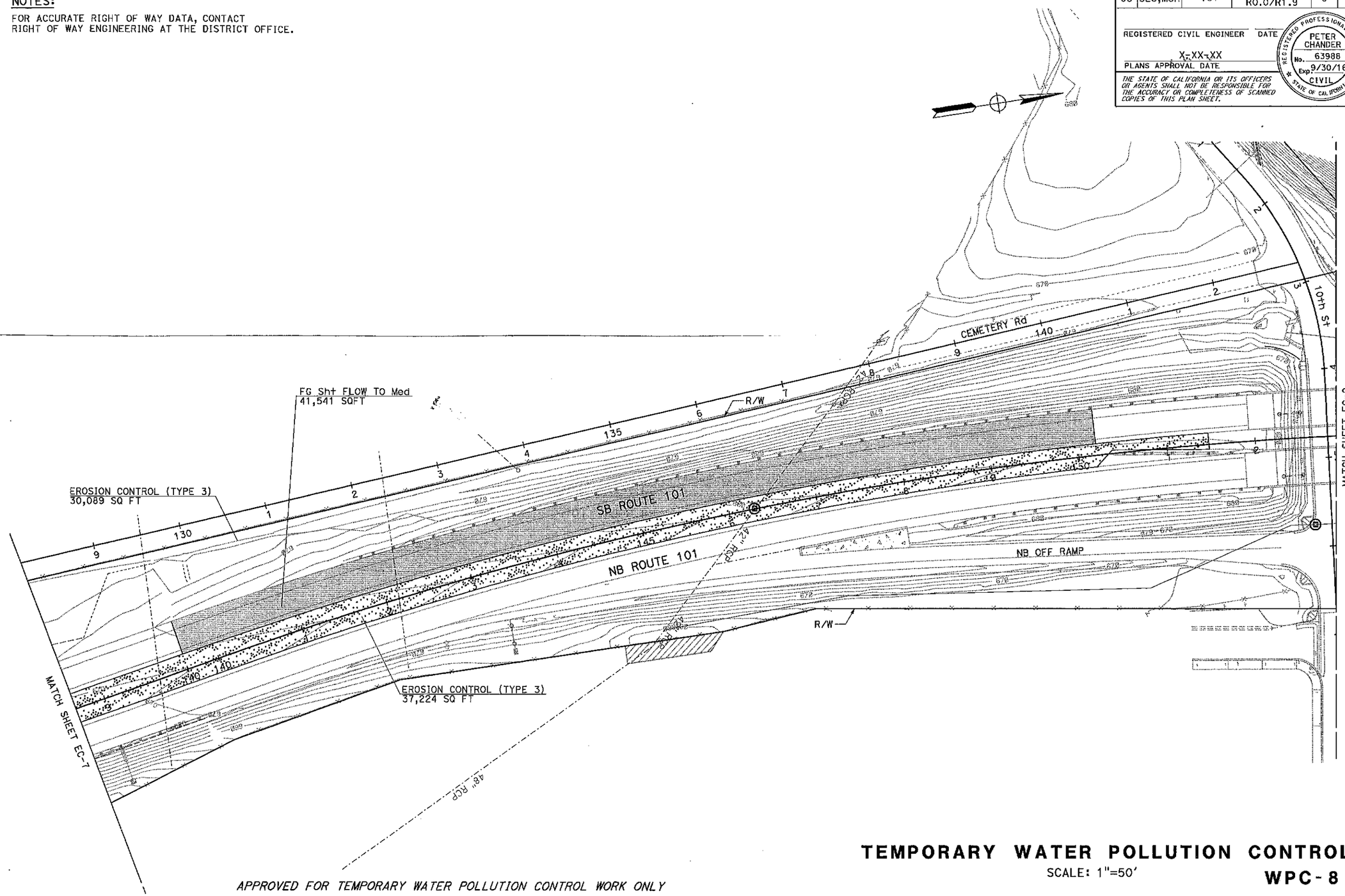

APPROVED FOR TEMPORARY WATER POLLUTION CONTROL WORK ONLY

TEMPORARY WATER POLLUTION CONTROL

SCALE: 1"=50'

WPC-8

STATE OF CALIFORNIA - DEPARTMENT OF TRANSPORTATION
Caltrans
06-DESIGN

FUNCTIONAL SUPERVISOR: ROBERTO BANDA

CALCULATED-DESIGNED BY: PETER CHANDER
CHECKED BY: HAL KENYON

REVISED BY
DATE REVISED

LAST REVISION 00-00-00
DATE PLOTTED => 14-APR-2016
TIME PLOTTED => 10:26

Dist	COUNTY	ROUTE	POST MILES TOTAL PROJECT	SHEET No.	TOTAL SHEETS
05	SLO,Mon	101	63.2/R69.3, R0.0/R1.9	9	29

REGISTERED CIVIL ENGINEER DATE

X-XX-XX
PLANS APPROVAL DATE

REGISTERED PROFESSIONAL ENGINEER PETER CHANDER No. 63988 Exp. 9/30/16 CIVIL STATE OF CALIFORNIA

THE STATE OF CALIFORNIA OR ITS OFFICERS OR AGENTS SHALL NOT BE RESPONSIBLE FOR THE ACCURACY OR COMPLETENESS OF SCANNED COPIES OF THIS PLAN SHEET.

NOTES:

FOR ACCURATE RIGHT OF WAY DATA, CONTACT RIGHT OF WAY ENGINEERING AT THE DISTRICT OFFICE.

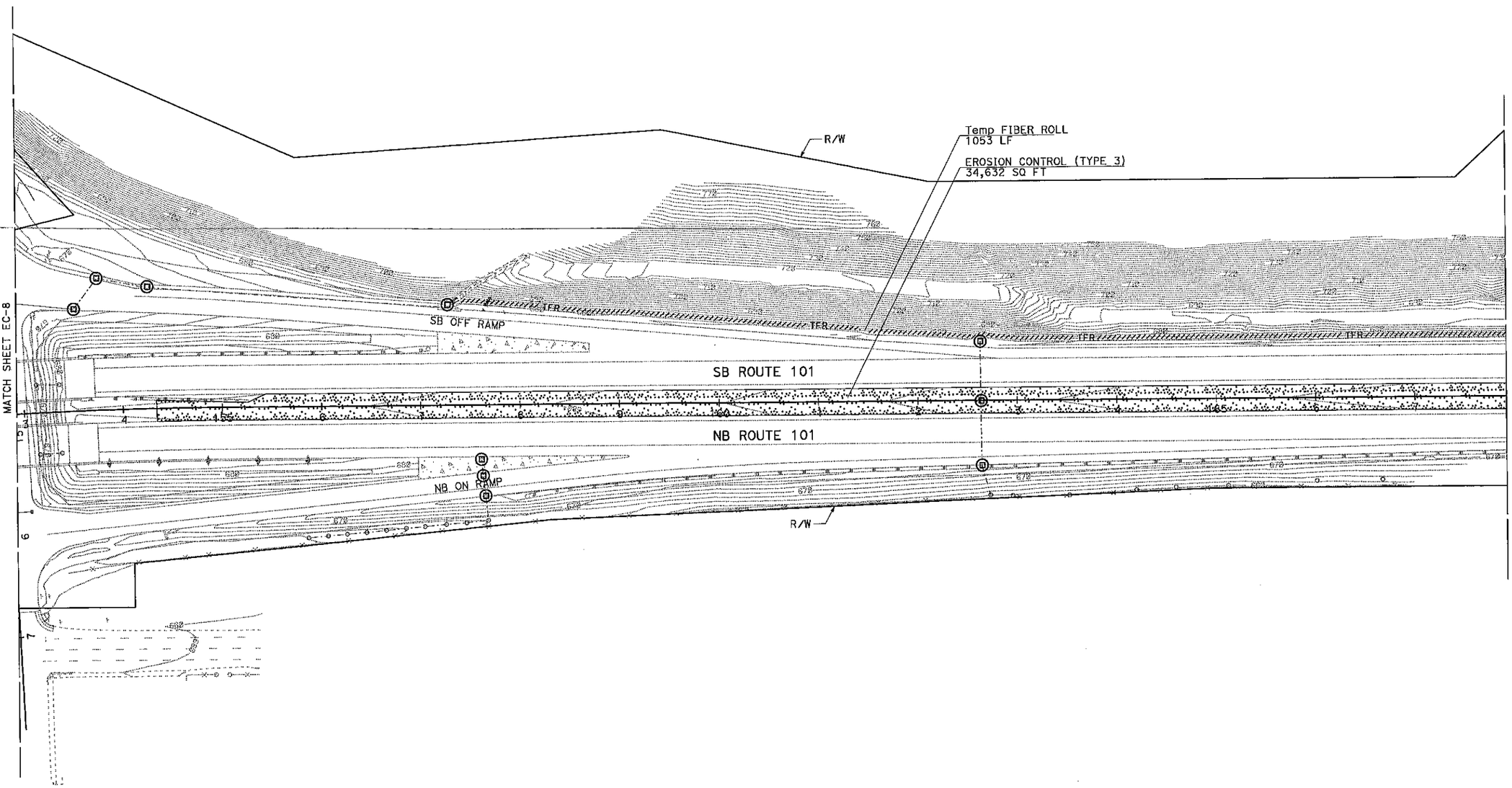

TEMPORARY WATER POLLUTION CONTROL

SCALE: 1"=50'

WPC-9

APPROVED FOR TEMPORARY WATER POLLUTION CONTROL WORK ONLY

STATE OF CALIFORNIA - DEPARTMENT OF TRANSPORTATION
Caltrans
06-DESIGN

FUNCTIONAL SUPERVISOR: ROBERTO BANDA
CALCULATED-DESIGNED BY: PETER CHANDER
CHECKED BY: HAL KENYON
REVISED BY
DATE REVISED

LAST REVISION 00-00-00
DATE PLOTTED => 14-APR-2016
TIME PLOTTED => 10:26

BORDER LAST REVISED 7/2/2010
USERNAME => s132888
DGN FILE => 0500020020gb009.dgn
RELATIVE BORDER SCALE IS IN INCHES 0 1 2 3
UNIT 0000
PROJECT NUMBER & PHASE 00000000001

Dist	COUNTY	ROUTE	POST MILES TOTAL PROJECT	SHEET No.	TOTAL SHEETS
05	SLO,Mon	101	63.2/R69.3, R0.0/R1.9	10	29

REGISTERED CIVIL ENGINEER DATE

X-XX-XX
PLANS APPROVAL DATE

REGISTERED PROFESSIONAL ENGINEER PETER CHANDER No. 63988 Exp. 9/30/16 CIVIL STATE OF CALIFORNIA

THE STATE OF CALIFORNIA OR ITS OFFICERS OR AGENTS SHALL NOT BE RESPONSIBLE FOR THE ACCURACY OR COMPLETENESS OF SCANNED COPIES OF THIS PLAN SHEET.

NOTES:

FOR ACCURATE RIGHT OF WAY DATA, CONTACT RIGHT OF WAY ENGINEERING AT THE DISTRICT OFFICE.

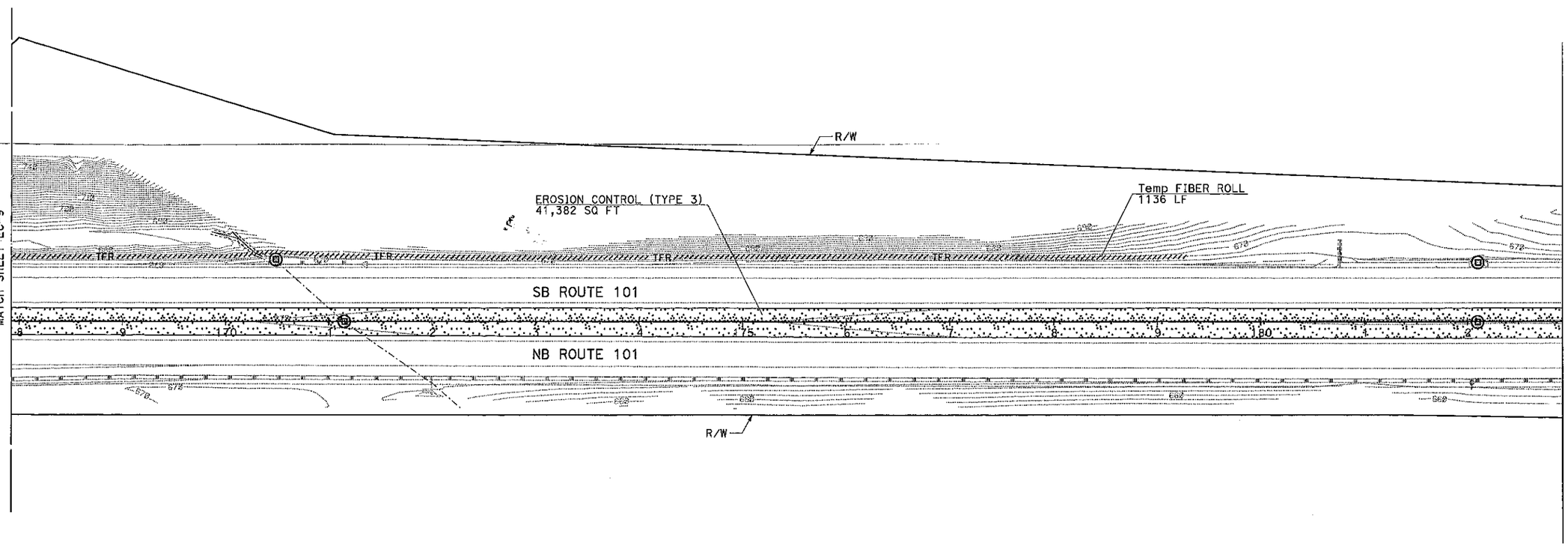

APPROVED FOR TEMPORARY WATER POLLUTION CONTROL WORK ONLY

TEMPORARY WATER POLLUTION CONTROL

SCALE: 1"=50'

WPC-10

REVISED BY	PETER CHANDER
DATE REVISED	HAL KENYON
CALCULATED-DESIGNED BY	FUNCTIONAL SUPERVISOR
CHECKED BY	ROBERTO BANDA

STATE OF CALIFORNIA - DEPARTMENT OF TRANSPORTATION

Caltrans® 06-DESIGN

LAST REVISION 00-00-00 | DATE PLOTTED => 14-APR-2016 | TIME PLOTTED => 10:26

Dist	COUNTY	ROUTE	POST MILES TOTAL PROJECT	SHEET No.	TOTAL SHEETS
05	SLO,Mon	101	63.2/R69.3, R0.0/R1.9	11	29

REGISTERED CIVIL ENGINEER DATE

X-XX-XX

PLANS APPROVAL DATE

REGISTERED PROFESSIONAL ENGINEER PETER CHANDER No. 63988 Exp. 9/30/16 CIVIL STATE OF CALIFORNIA

THE STATE OF CALIFORNIA OR ITS OFFICERS OR AGENTS SHALL NOT BE RESPONSIBLE FOR THE ACCURACY OR COMPLETENESS OF SCANNED COPIES OF THIS PLAN SHEET.

NOTES:

FOR ACCURATE RIGHT OF WAY DATA, CONTACT RIGHT OF WAY ENGINEERING AT THE DISTRICT OFFICE.

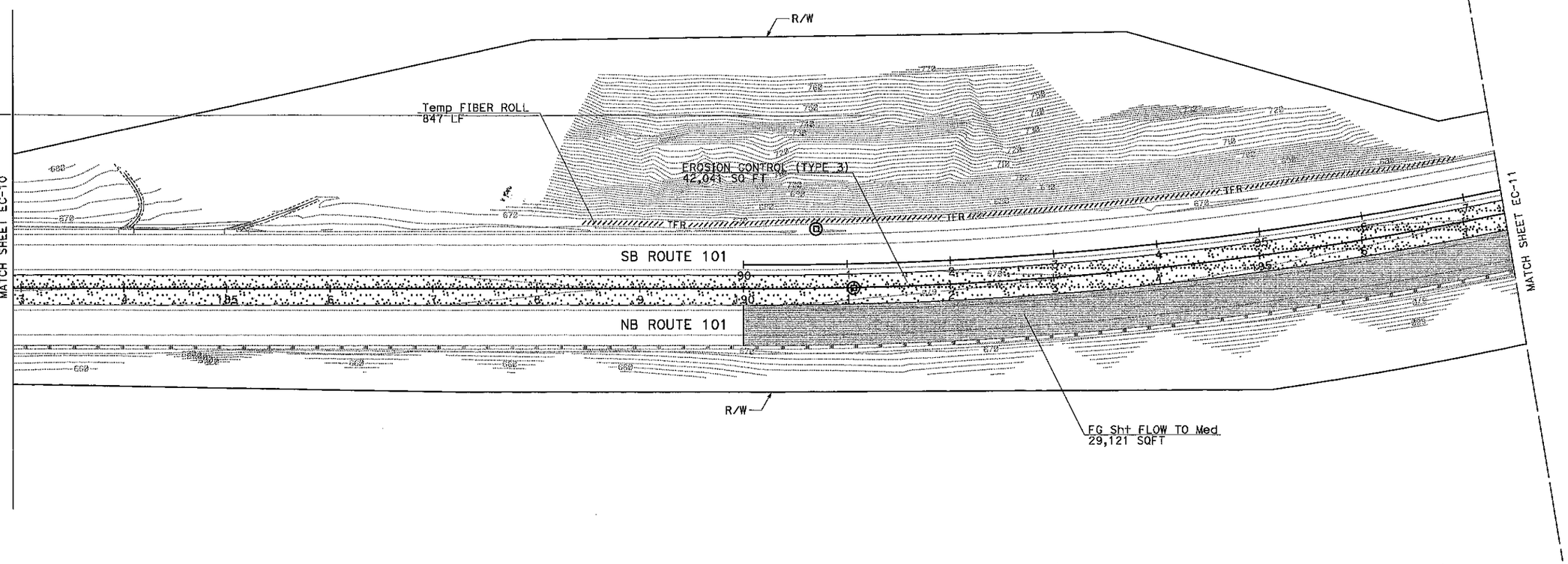

APPROVED FOR TEMPORARY WATER POLLUTION CONTROL WORK ONLY

TEMPORARY WATER POLLUTION CONTROL

SCALE: 1"=50'

WPC-11

STATE OF CALIFORNIA – DEPARTMENT OF TRANSPORTATION

Caltrans

06-DESIGN

FUNCTIONAL SUPERVISOR: ROBERTO BANDA

CALCULATED-DESIGNED BY: PETER CHANDER

CHECKED BY: HAL KENYON

REVISED BY

DATE REVISED

LAST REVISION 00-00-00

DATE PLOTTED => 14-APR-2016
TIME PLOTTED => 10:26

Dist	COUNTY	ROUTE	POST MILES TOTAL PROJECT	SHEET No.	TOTAL SHEETS
05	SLO,Mon	101	63.2/R69.3, R0.0/R1.9	12	29

REGISTERED CIVIL ENGINEER DATE

XX-XX-XX
PLANS APPROVAL DATE

REGISTERED PROFESSIONAL ENGINEER PETER CHANDER No. 63988 Exp. 9/30/16 CIVIL STATE OF CALIFORNIA

THE STATE OF CALIFORNIA OR ITS OFFICERS OR AGENTS SHALL NOT BE RESPONSIBLE FOR THE ACCURACY OR COMPLETENESS OF SCANNED COPIES OF THIS PLAN SHEET.

NOTES:

FOR ACCURATE RIGHT OF WAY DATA, CONTACT RIGHT OF WAY ENGINEERING AT THE DISTRICT OFFICE.

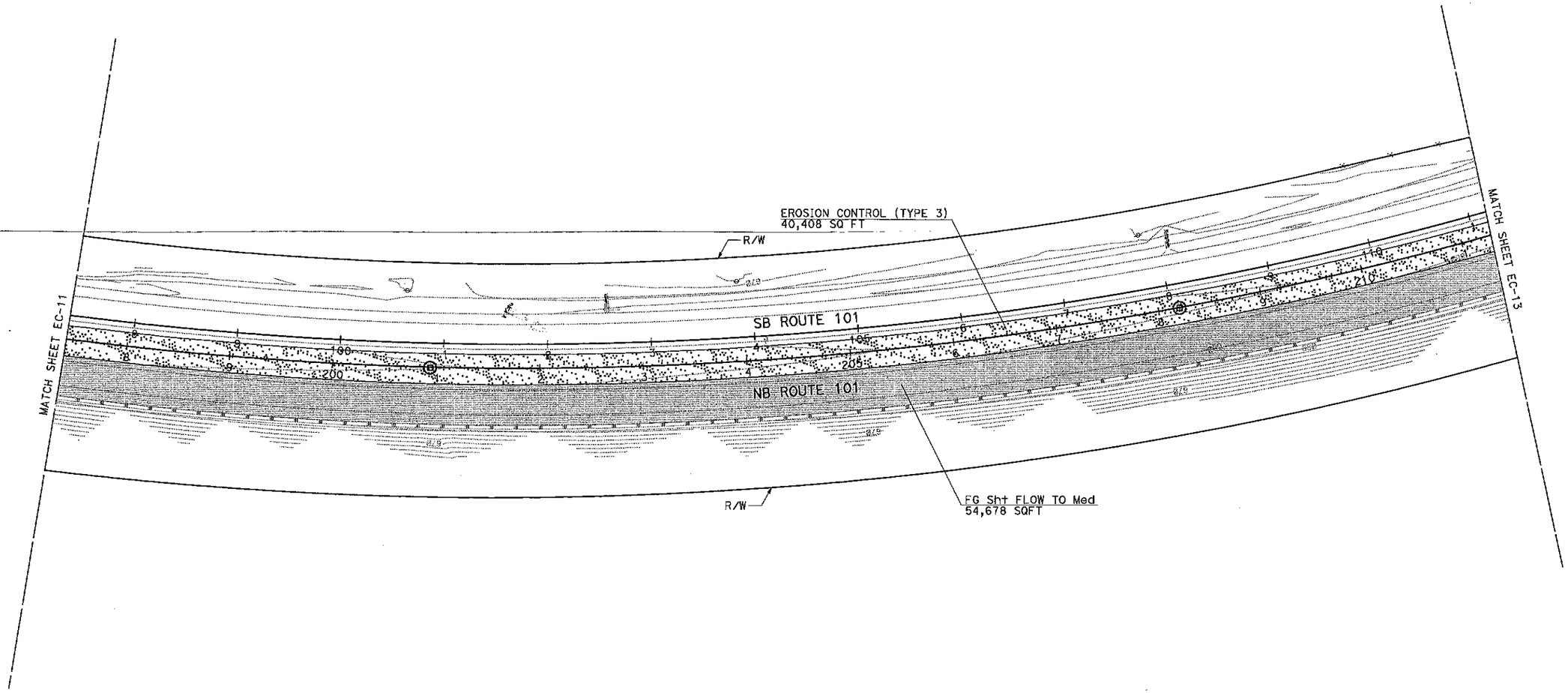

APPROVED FOR TEMPORARY WATER POLLUTION CONTROL WORK ONLY

TEMPORARY WATER POLLUTION CONTROL

SCALE: 1"=50'

WPC-12

REVISED BY	DATE REVISED

CALCULATED-DESIGNED BY: PETER CHANDER
CHECKED BY: HAL KENYON

FUNCTIONAL SUPERVISOR: ROBERTO BANDA

STATE OF CALIFORNIA - DEPARTMENT OF TRANSPORTATION
Caltrans
06-DESIGN

LAST REVISION 00-00-00 | DATE PLOTTED => 14-APR-2016 | TIME PLOTTED => 10:26

BORDER LAST REVISED 7/2/2010 | USERNAME => s132888 | DGN FILE => 0500020020gb012.dgn | RELATIVE BORDER SCALE IS IN INCHES 0 1 2 3 | UNIT 0000 | PROJECT NUMBER & PHASE 00000000001

Dist	COUNTY	ROUTE	POST MILES TOTAL PROJECT	SHEET No.	TOTAL SHEETS
05	SLO,Mon	101	63.2/R69.3, R0.0/R1.9	13	29

REGISTERED CIVIL ENGINEER DATE

X-XX-XX
PLANS APPROVAL DATE

THE STATE OF CALIFORNIA OR ITS OFFICERS OR AGENTS SHALL NOT BE RESPONSIBLE FOR THE ACCURACY OR COMPLETENESS OF SCANNED COPIES OF THIS PLAN SHEET.

REGISTERED PROFESSIONAL ENGINEER
PETER CHANDER
No. 63988
Exp. 9/30/16
CIVIL
STATE OF CALIFORNIA

NOTES:

FOR ACCURATE RIGHT OF WAY DATA, CONTACT RIGHT OF WAY ENGINEERING AT THE DISTRICT OFFICE.

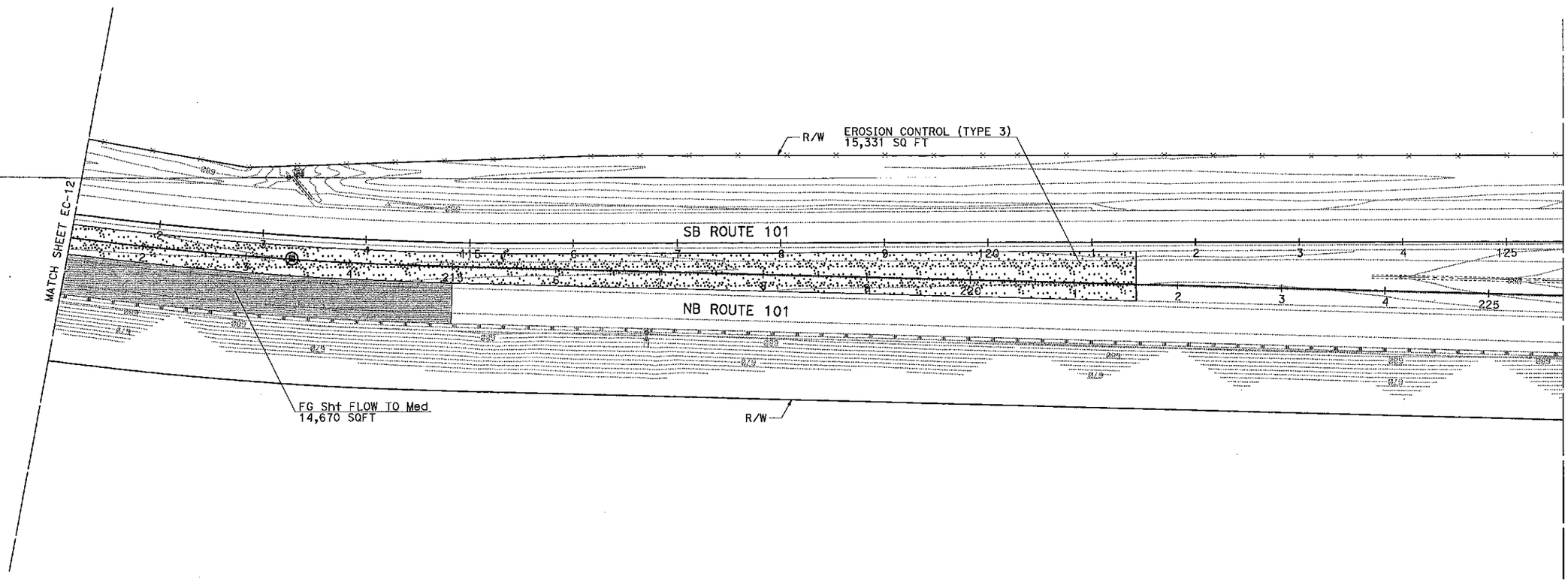

APPROVED FOR TEMPORARY WATER POLLUTION CONTROL WORK ONLY

TEMPORARY WATER POLLUTION CONTROL

SCALE: 1"=50'

WPC-13

REVISED BY	DATE REVISED

CALCULATED-DESIGNED BY	PETER CHANDER
CHECKED BY	HAL KENYON
FUNCTIONAL SUPERVISOR	ROBERTO BANDA

STATE OF CALIFORNIA - DEPARTMENT OF TRANSPORTATION
Caltrans
06-DESIGN

LAST REVISION 00-00-00
DATE PLOTTED => 14-APR-2016
TIME PLOTTED => 10:26

BORDER LAST REVISED 7/2/2010 | USERNAME => s132888 DGN FILE => 0500020020gb013.dgn | RELATIVE BORDER SCALE IS IN INCHES 0 1 2 3 | UNIT 0000 | PROJECT NUMBER & PHASE 00000000001

Dist	COUNTY	ROUTE	POST MILES TOTAL PROJECT	SHEET No.	TOTAL SHEETS
05	SLO,Mon	101	63.2/R69.3, R0.0/R1.9	14	29

REGISTERED CIVIL ENGINEER DATE

X-XX-XX
PLANS APPROVAL DATE

REGISTERED PROFESSIONAL ENGINEER PETER CHANDER No. 63988 Exp. 9/30/16 CIVIL STATE OF CALIFORNIA

THE STATE OF CALIFORNIA OR ITS OFFICERS OR AGENTS SHALL NOT BE RESPONSIBLE FOR THE ACCURACY OR COMPLETENESS OF SCANNED COPIES OF THIS PLAN SHEET.

NOTES:

FOR ACCURATE RIGHT OF WAY DATA, CONTACT RIGHT OF WAY ENGINEERING AT THE DISTRICT OFFICE.

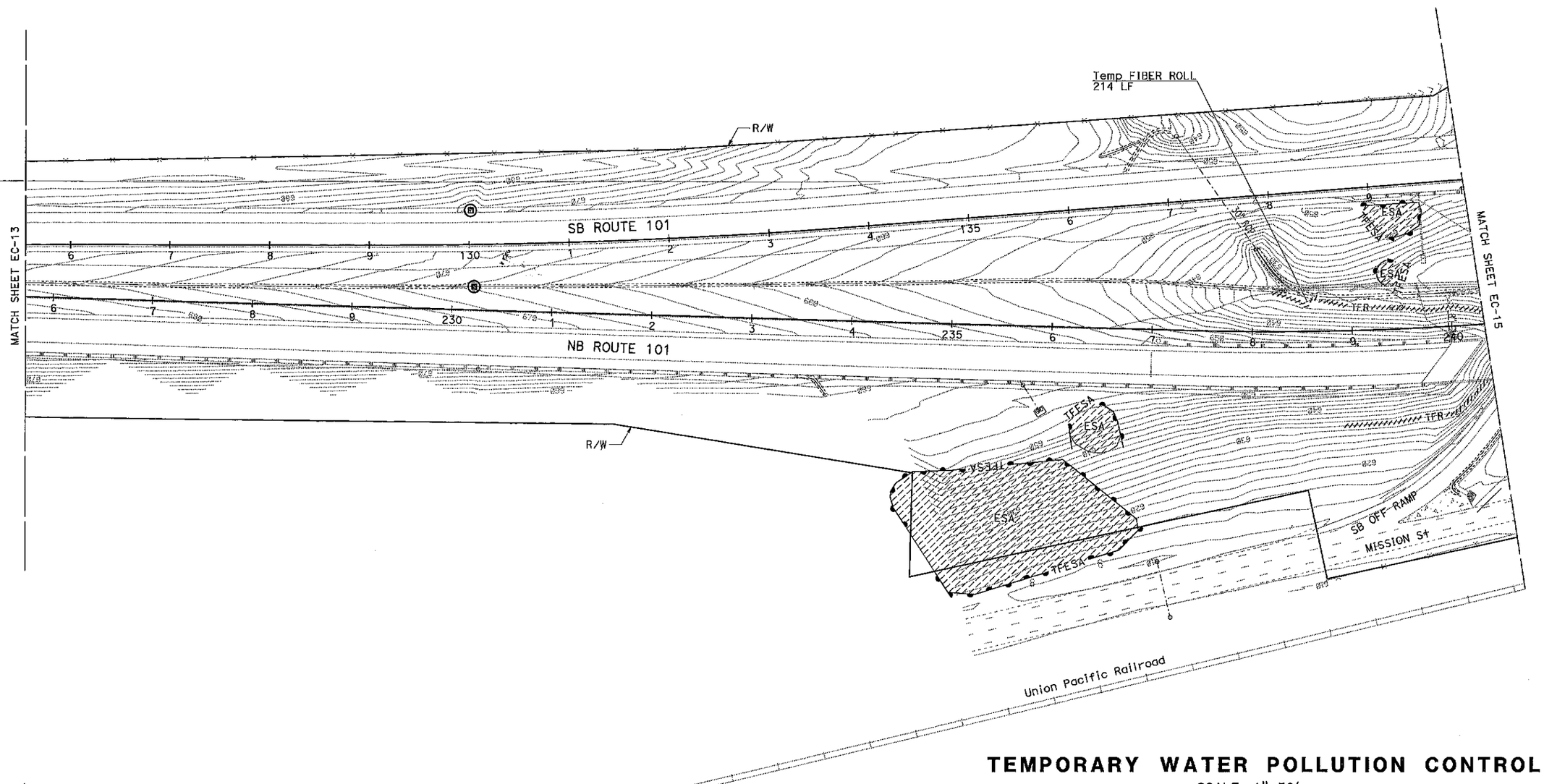

APPROVED FOR TEMPORARY WATER POLLUTION CONTROL WORK ONLY

TEMPORARY WATER POLLUTION CONTROL

SCALE: 1"=50'

WPC-14

REVISED BY	DATE REVISED
PETER CHANDER	HAL KENYON

CALCULATED-DESIGNED BY / CHECKED BY

FUNCTIONAL SUPERVISOR: ROBERTO BANDA

STATE OF CALIFORNIA - DEPARTMENT OF TRANSPORTATION

Caltrans 06-DESIGN

LAST REVISION 00-00-00 | DATE PLOTTED => 14-APR-2016 | TIME PLOTTED => 10:26

BORDER LAST REVISED 7/2/2010 | USERNAME => s132888 | DGN FILE => 0500020020gb014.dgn | RELATIVE BORDER SCALE IS IN INCHES 0 1 2 3 | UNIT 0000 | PROJECT NUMBER & PHASE 00000000001

Dist	COUNTY	ROUTE	POST MILES TOTAL PROJECT	SHEET No.	TOTAL SHEETS
05	SLO,Mon	101	63.2/R69.3, R0.0/R1.9	15	29

REGISTERED CIVIL ENGINEER DATE

X-XX-XX
PLANS APPROVAL DATE

REGISTERED PROFESSIONAL ENGINEER PETER CHANDER No. 63988 Exp. 9/30/16 CIVIL STATE OF CALIFORNIA

THE STATE OF CALIFORNIA OR ITS OFFICERS OR AGENTS SHALL NOT BE RESPONSIBLE FOR THE ACCURACY OR COMPLETENESS OF SCANNED COPIES OF THIS PLAN SHEET.

NOTES:

FOR ACCURATE RIGHT OF WAY DATA, CONTACT RIGHT OF WAY ENGINEERING AT THE DISTRICT OFFICE.

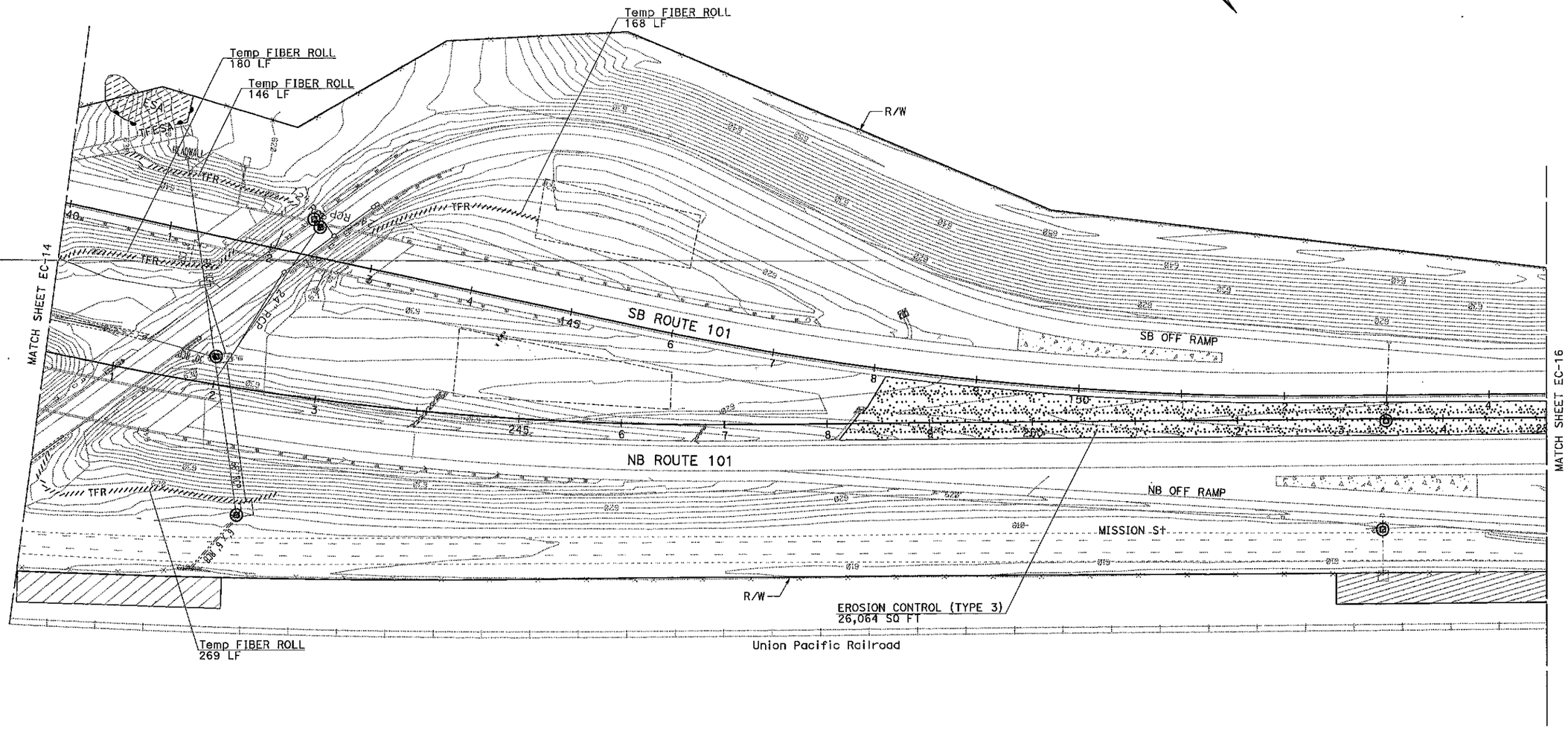

TEMPORARY WATER POLLUTION CONTROL

SCALE: 1"=50'

WPC-15

APPROVED FOR TEMPORARY WATER POLLUTION CONTROL WORK ONLY

STATE OF CALIFORNIA - DEPARTMENT OF TRANSPORTATION
06-DESIGN

FUNCTIONAL SUPERVISOR: ROBERTO BANDA
CALCULATED-DESIGNED BY: PETER CHANDER
CHECKED BY: HAL KENYON
REVISED BY
DATE REVISED

LAST REVISION 00-00-00
DATE PLOTTED => 14-APR-2016
TIME PLOTTED => 10:26

BORDER LAST REVISED 7/2/2010
USERNAME => s132888
DGN FILE => 0500020020gb015.dgn
RELATIVE BORDER SCALE IS IN INCHES 0 1 2 3
UNIT 0000
PROJECT NUMBER & PHASE 00000000001

Dist	COUNTY	ROUTE	POST MILES TOTAL PROJECT	SHEET No.	TOTAL SHEETS
05	SLO,Mon	101	63.2/R69.3, R0.0/R1.9	16	29

REGISTERED CIVIL ENGINEER DATE

X-XX-XX
PLANS APPROVAL DATE

THE STATE OF CALIFORNIA OR ITS OFFICERS OR AGENTS SHALL NOT BE RESPONSIBLE FOR THE ACCURACY OR COMPLETENESS OF SCANNED COPIES OF THIS PLAN SHEET.

REGISTERED PROFESSIONAL ENGINEER
PETER CHANDER
No. 63988
Exp. 9/30/16
CIVIL
STATE OF CALIFORNIA

NOTES:

FOR ACCURATE RIGHT OF WAY DATA, CONTACT RIGHT OF WAY ENGINEERING AT THE DISTRICT OFFICE.

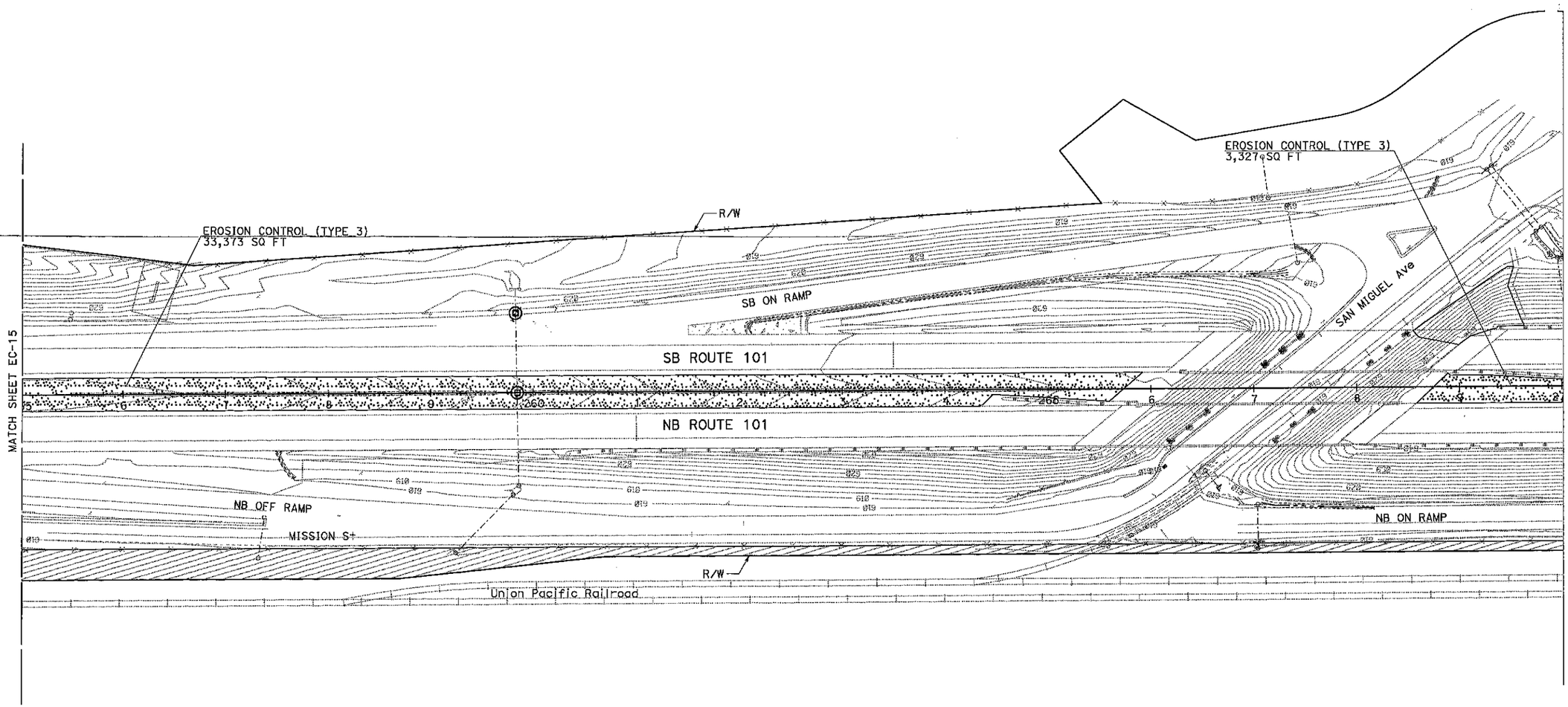

APPROVED FOR TEMPORARY WATER POLLUTION CONTROL WORK ONLY

TEMPORARY WATER POLLUTION CONTROL

SCALE: 1"=50'

WPC-16

STATE OF CALIFORNIA - DEPARTMENT OF TRANSPORTATION
Caltrans
06-DESIGN

FUNCTIONAL SUPERVISOR: ROBERTO BANDA
CALCULATED-DESIGNED BY: PETER CHANDER
CHECKED BY: HAL KENYON
REVISED BY
DATE REVISED

LAST REVISION 00-00-00
DATE PLOTTED => 14-APR-2016
TIME PLOTTED => 10:26

Dist	COUNTY	ROUTE	POST MILES TOTAL PROJECT	SHEET No.	TOTAL SHEETS
05	SLO,Mon	101	63.2/R69.3, R0.0/R1.9	17	29

REGISTERED CIVIL ENGINEER DATE

X-XX-XX

PLANS APPROVAL DATE

THE STATE OF CALIFORNIA OR ITS OFFICERS OR AGENTS SHALL NOT BE RESPONSIBLE FOR THE ACCURACY OR COMPLETENESS OF SCANNED COPIES OF THIS PLAN SHEET.

REGISTERED PROFESSIONAL ENGINEER PETER CHANDER No. 63988 Exp. 9/30/16 CIVIL STATE OF CALIFORNIA

NOTES:

FOR ACCURATE RIGHT OF WAY DATA, CONTACT RIGHT OF WAY ENGINEERING AT THE DISTRICT OFFICE.

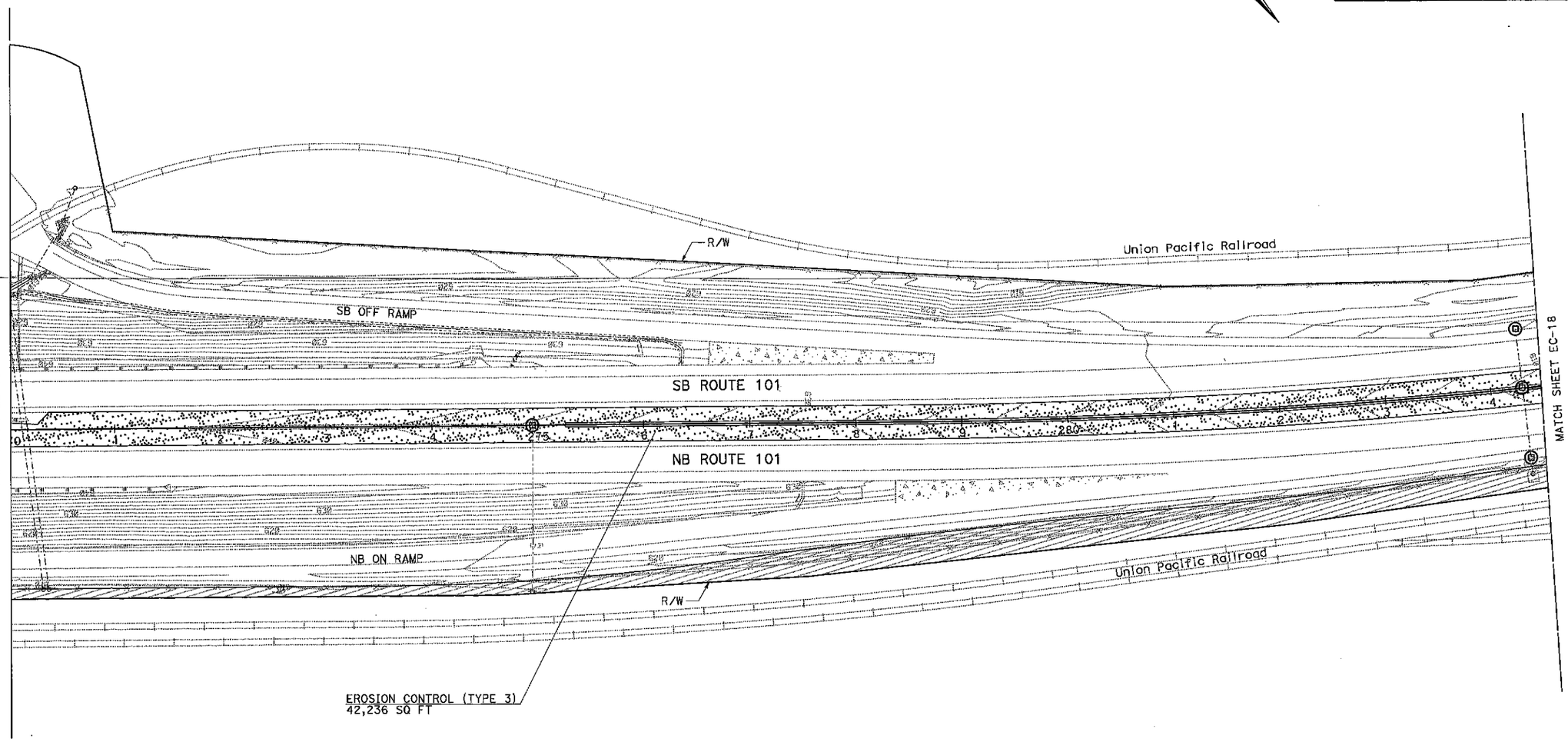

APPROVED FOR TEMPORARY WATER POLLUTION CONTROL WORK ONLY

TEMPORARY WATER POLLUTION CONTROL

SCALE: 1"=50'

WPC-17

STATE OF CALIFORNIA - DEPARTMENT OF TRANSPORTATION

Caltrans 06-DESIGN

FUNCTIONAL SUPERVISOR: ROBERTO BANDA

CALCULATED-DESIGNED BY: PETER CHANDER

CHECKED BY: HAL KENYON

REVISED BY

DATE REVISED

LAST REVISION 00-00-00

DATE PLOTTED => 14-APR-2016
TIME PLOTTED => 10:26

Dist	COUNTY	ROUTE	POST MILES TOTAL PROJECT	SHEET No.	TOTAL SHEETS
05	SLO,Mon	101	63.2/R69.3, R0.0/R1.9	18	29

REGISTERED CIVIL ENGINEER DATE

X-XX-XX
PLANS APPROVAL DATE

THE STATE OF CALIFORNIA OR ITS OFFICERS OR AGENTS SHALL NOT BE RESPONSIBLE FOR THE ACCURACY OR COMPLETENESS OF SCANNED COPIES OF THIS PLAN SHEET.

REGISTERED PROFESSIONAL ENGINEER PETER CHANDER No. 63988 Exp. 9/30/16 CIVIL STATE OF CALIFORNIA

NOTES:

FOR ACCURATE RIGHT OF WAY DATA, CONTACT RIGHT OF WAY ENGINEERING AT THE DISTRICT OFFICE.

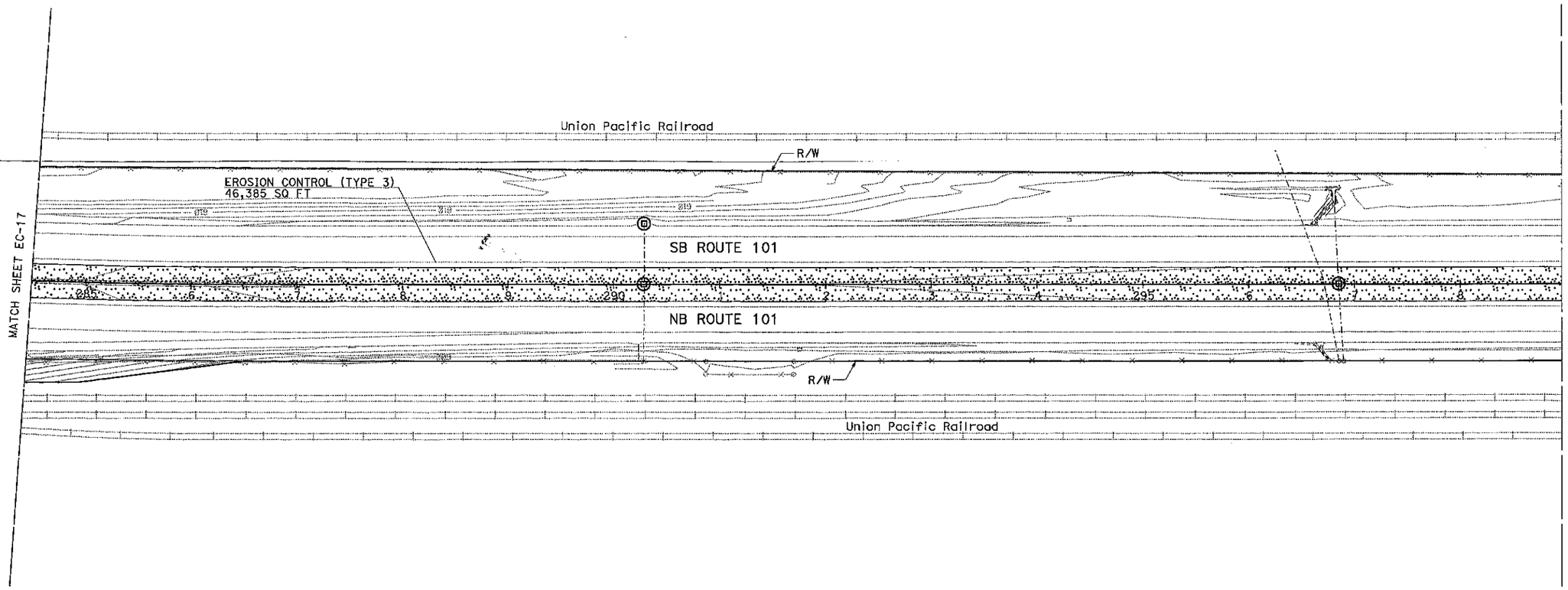

APPROVED FOR TEMPORARY WATER POLLUTION CONTROL WORK ONLY

TEMPORARY WATER POLLUTION CONTROL

SCALE: 1"=50'

WPC-18

STATE OF CALIFORNIA - DEPARTMENT OF TRANSPORTATION

Caltrans

06-DESIGN

FUNCTIONAL SUPERVISOR: ROBERTO BANDA

CALCULATED-DESIGNED BY: PETER CHANDER

CHECKED BY: HAL KENYON

REVISED BY

DATE REVISED

LAST REVISION 00-00-00

DATE PLOTTED => 14-APR-2016
TIME PLOTTED => 10:27

BORDER LAST REVISED 7/2/2010

USERNAME => s132888
DGN FILE => 0500020020gb018.dgn

RELATIVE BORDER SCALE IS IN INCHES 0 1 2 3

UNIT 0000

PROJECT NUMBER & PHASE 00000000001

Dist	COUNTY	ROUTE	POST MILES TOTAL PROJECT	SHEET No.	TOTAL SHEETS
05	SLO,Mon	101	63.2/R69.3, R0.0/R1.9	19	29

REGISTERED CIVIL ENGINEER DATE

X-XX-XX
PLANS APPROVAL DATE

THE STATE OF CALIFORNIA OR ITS OFFICERS OR AGENTS SHALL NOT BE RESPONSIBLE FOR THE ACCURACY OR COMPLETENESS OF SCANNED COPIES OF THIS PLAN SHEET.

REGISTERED PROFESSIONAL ENGINEER
PETER CHANDER
No. 63988
Exp. 9/30/16
CIVIL
STATE OF CALIFORNIA

NOTES:

FOR ACCURATE RIGHT OF WAY DATA, CONTACT RIGHT OF WAY ENGINEERING AT THE DISTRICT OFFICE.

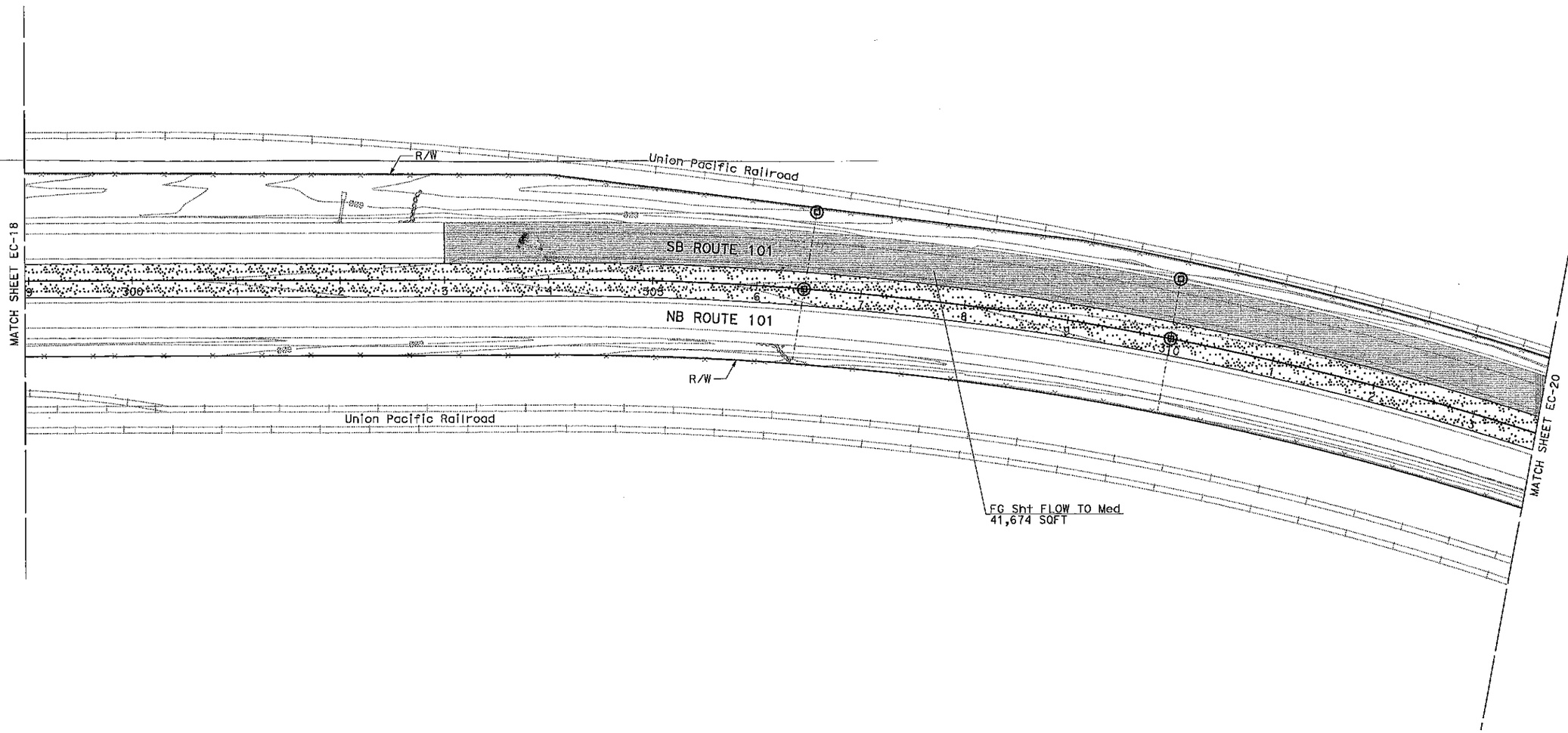

TEMPORARY WATER POLLUTION CONTROL

SCALE: 1" = 50'

WPC-19

APPROVED FOR TEMPORARY WATER POLLUTION CONTROL WORK ONLY

STATE OF CALIFORNIA - DEPARTMENT OF TRANSPORTATION
Caltrans
06-DESIGN

FUNCTIONAL SUPERVISOR: ROBERTO BANDA
CALCULATED-DESIGNED BY: PETER CHANDER
CHECKED BY: HAL KENYON
REVISED BY
DATE REVISED

LAST REVISION 00-00-00
DATE PLOTTED => 14-APR-2016
TIME PLOTTED => 10:27

District	COUNTY	ROUTE	POST MILES TOTAL PROJECT	SHEET No.	TOTAL SHEETS
05	SLO,Mon	101	63.2/R69.3, R0.0/R1.9	20	29

REGISTERED CIVIL ENGINEER DATE

X-XX-XX

PLANS APPROVAL DATE

THE STATE OF CALIFORNIA OR ITS OFFICERS OR AGENTS SHALL NOT BE RESPONSIBLE FOR THE ACCURACY OR COMPLETENESS OF SCANNED COPIES OF THIS PLAN SHEET.

REGISTERED PROFESSIONAL ENGINEER PETER CHANDER No. 63988 Exp. 9/30/16 CIVIL STATE OF CALIFORNIA

NOTES:

FOR ACCURATE RIGHT OF WAY DATA, CONTACT RIGHT OF WAY ENGINEERING AT THE DISTRICT OFFICE.

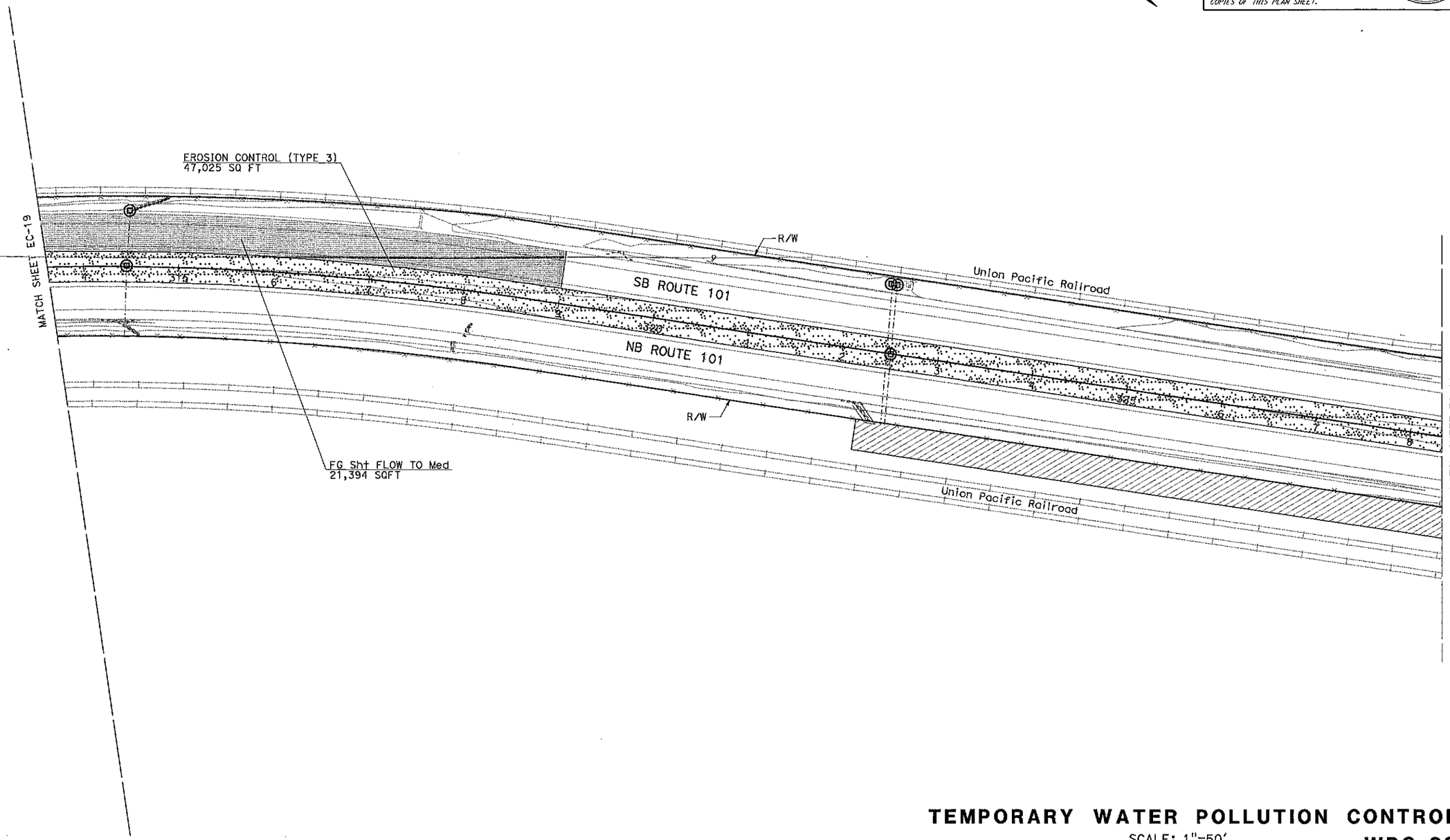

TEMPORARY WATER POLLUTION CONTROL

SCALE: 1"=50'

WPC-20

APPROVED FOR TEMPORARY WATER POLLUTION CONTROL WORK ONLY

STATE OF CALIFORNIA - DEPARTMENT OF TRANSPORTATION

Caltrans 06-DESIGN

FUNCTIONAL SUPERVISOR: ROBERTO BANDA

CALCULATED-DESIGNED BY: PETER CHANDER

CHECKED BY: HAL KENYON

REVISED BY

DATE REVISED

LAST REVISION 00-00-00

DATE PLOTTED => 14-APR-2016

TIME PLOTTED => 10:27

Dist	COUNTY	ROUTE	POST MILES TOTAL PROJECT	SHEET No.	TOTAL SHEETS
05	SLO,Mon	101	63.2/R69.3, R0.0/R1.9	21	29

REGISTERED CIVIL ENGINEER DATE

X-XX-XX
PLANS APPROVAL DATE

REGISTERED PROFESSIONAL ENGINEER PETER CHANDER No. 63988 Exp. 9/30/16 CIVIL STATE OF CALIFORNIA

THE STATE OF CALIFORNIA OR ITS OFFICERS OR AGENTS SHALL NOT BE RESPONSIBLE FOR THE ACCURACY OR COMPLETENESS OF SCANNED COPIES OF THIS PLAN SHEET.

NOTES:

FOR ACCURATE RIGHT OF WAY DATA, CONTACT RIGHT OF WAY ENGINEERING AT THE DISTRICT OFFICE.

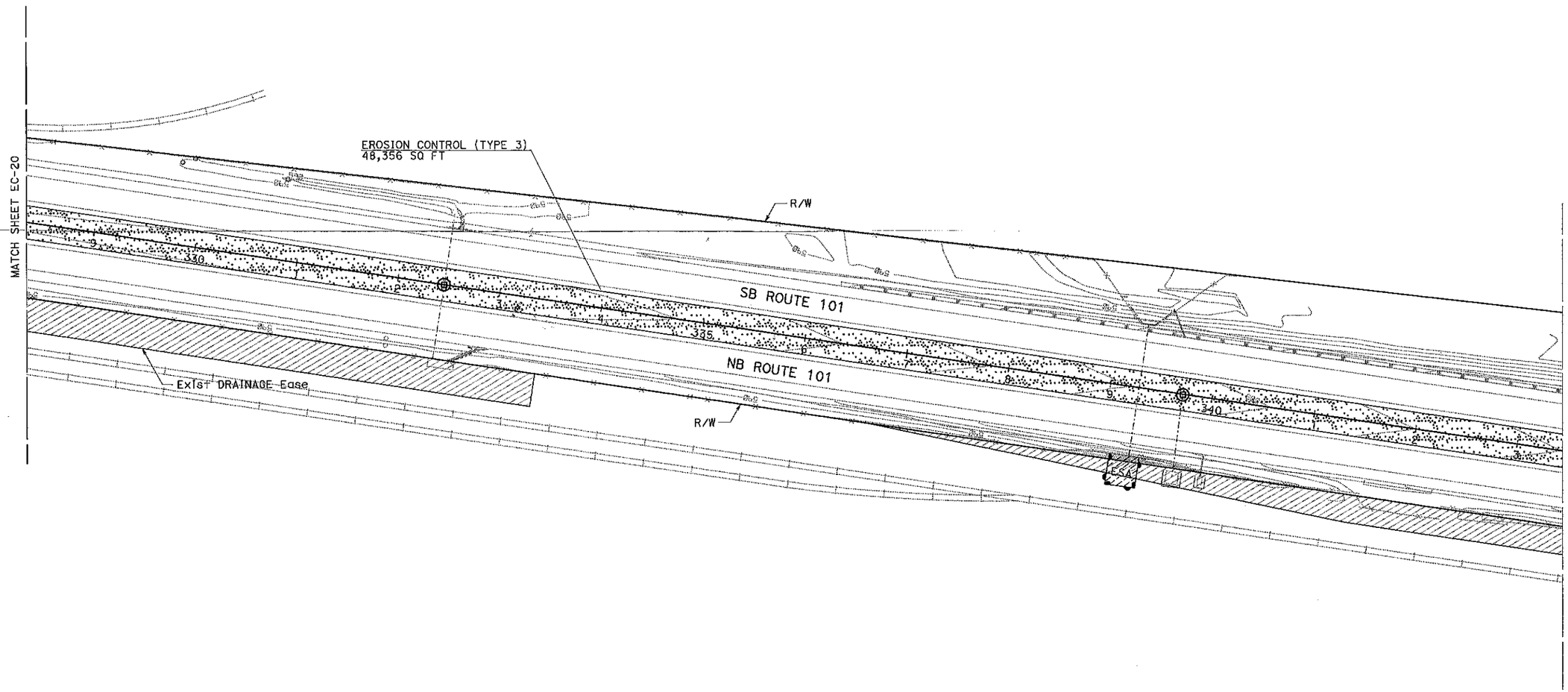

TEMPORARY WATER POLLUTION CONTROL

SCALE: 1"=50'

WPC-21

APPROVED FOR TEMPORARY WATER POLLUTION CONTROL WORK ONLY

STATE OF CALIFORNIA - DEPARTMENT OF TRANSPORTATION
Caltrans
06-DESIGN

FUNCTIONAL SUPERVISOR: ROBERTO BANDA
CALCULATED-DESIGNED BY: PETER CHANDER
CHECKED BY: HAL KENYON
REVISED BY
DATE REVISED

LAST REVISION 00-00-00
DATE PLOTTED => 14-APR-2016
TIME PLOTTED => 10:27

Dist	COUNTY	ROUTE	POST MILES TOTAL PROJECT	SHEET No.	TOTAL SHEETS
05	SLO,Mon	101	63.2/R69.3, R0.0/R1.9	22	29

REGISTERED CIVIL ENGINEER DATE

X-XX-XX
PLANS APPROVAL DATE

REGISTERED PROFESSIONAL ENGINEER PETER CHANDER No. 63988 Exp. 9/30/16 CIVIL STATE OF CALIFORNIA

THE STATE OF CALIFORNIA OR ITS OFFICERS OR AGENTS SHALL NOT BE RESPONSIBLE FOR THE ACCURACY OR COMPLETENESS OF SCANNED COPIES OF THIS PLAN SHEET.

NOTES:

FOR ACCURATE RIGHT OF WAY DATA, CONTACT RIGHT OF WAY ENGINEERING AT THE DISTRICT OFFICE.

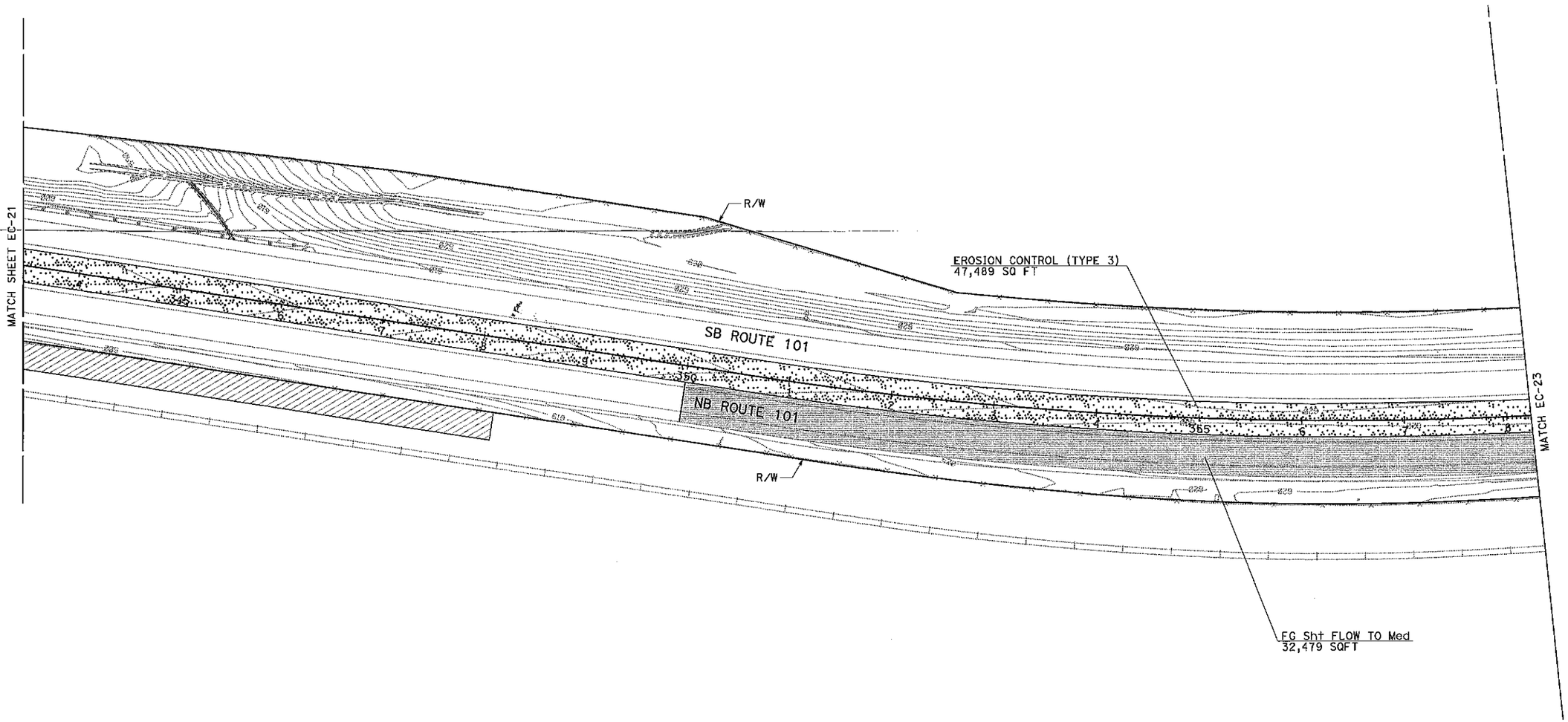

TEMPORARY WATER POLLUTION CONTROL

SCALE: 1"=50'

WPC-22

APPROVED FOR TEMPORARY WATER POLLUTION CONTROL WORK ONLY

STATE OF CALIFORNIA - DEPARTMENT OF TRANSPORTATION

Caltrans

06-DESIGN

FUNCTIONAL SUPERVISOR: ROBERTO BANDA

CALCULATED-DESIGNED BY: PETER CHANDER

CHECKED BY: HAL KENYON

REVISED BY

DATE REVISED

LAST REVISION 00-00-00

DATE PLOTTED => 14-APR-2016
TIME PLOTTED => 10:27

Dist	COUNTY	ROUTE	POST MILES TOTAL PROJECT	SHEET No.	TOTAL SHEETS
05	SLO,Mon	101	63.2/R69.3, R0.0/R1.9	23	29

REGISTERED CIVIL ENGINEER DATE

X-XX-XX
PLANS APPROVAL DATE

THE STATE OF CALIFORNIA OR ITS OFFICERS OR AGENTS SHALL NOT BE RESPONSIBLE FOR THE ACCURACY OR COMPLETENESS OF SCANNED COPIES OF THIS PLAN SHEET.

REGISTERED PROFESSIONAL ENGINEER PETER CHANDER No. 63988 Exp. 9/30/16 CIVIL STATE OF CALIFORNIA

NOTES:

FOR ACCURATE RIGHT OF WAY DATA, CONTACT RIGHT OF WAY ENGINEERING AT THE DISTRICT OFFICE.

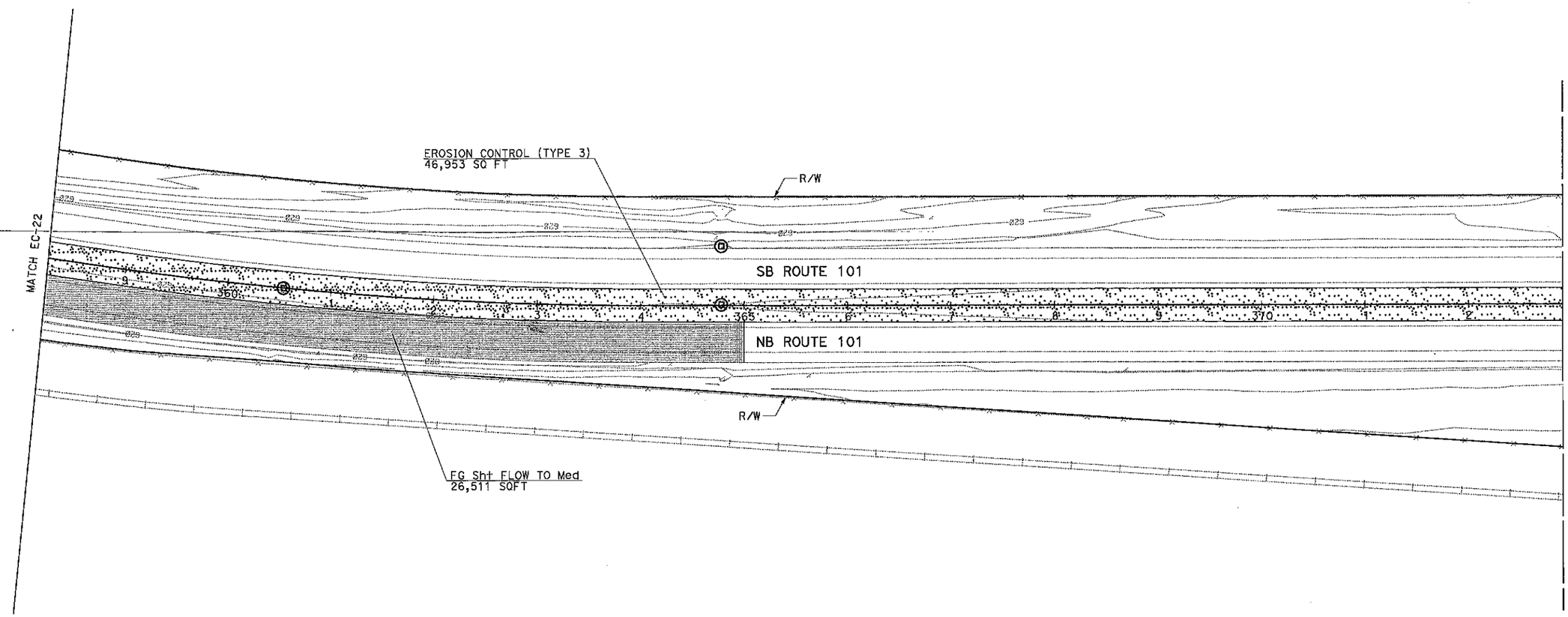

TEMPORARY WATER POLLUTION CONTROL

SCALE: 1"=50'

WPC-23

APPROVED FOR TEMPORARY WATER POLLUTION CONTROL WORK ONLY

STATE OF CALIFORNIA - DEPARTMENT OF TRANSPORTATION
Caltrans
06-DESIGN

FUNCTIONAL SUPERVISOR: ROBERTO BANDA
CALCULATED-DESIGNED BY: PETER CHANDER
CHECKED BY: HAL KENYON
REVISED BY
DATE REVISED

LAST REVISION 00-00-00
DATE PLOTTED => 14-APR-2016
TIME PLOTTED => 10:27

Dist	COUNTY	ROUTE	POST MILES TOTAL PROJECT	SHEET No.	TOTAL SHEETS
05	SLO,Mon	101	63.2/R69.3, R0.0/R1.9	24	29

REGISTERED CIVIL ENGINEER DATE

X-XX-XX
PLANS APPROVAL DATE

REGISTERED PROFESSIONAL ENGINEER PETER CHANDER No. 63988 Exp. 9/30/16 CIVIL STATE OF CALIFORNIA

THE STATE OF CALIFORNIA OR ITS OFFICERS OR AGENTS SHALL NOT BE RESPONSIBLE FOR THE ACCURACY OR COMPLETENESS OF SCANNED COPIES OF THIS PLAN SHEET.

NOTES:

FOR ACCURATE RIGHT OF WAY DATA, CONTACT RIGHT OF WAY ENGINEERING AT THE DISTRICT OFFICE.

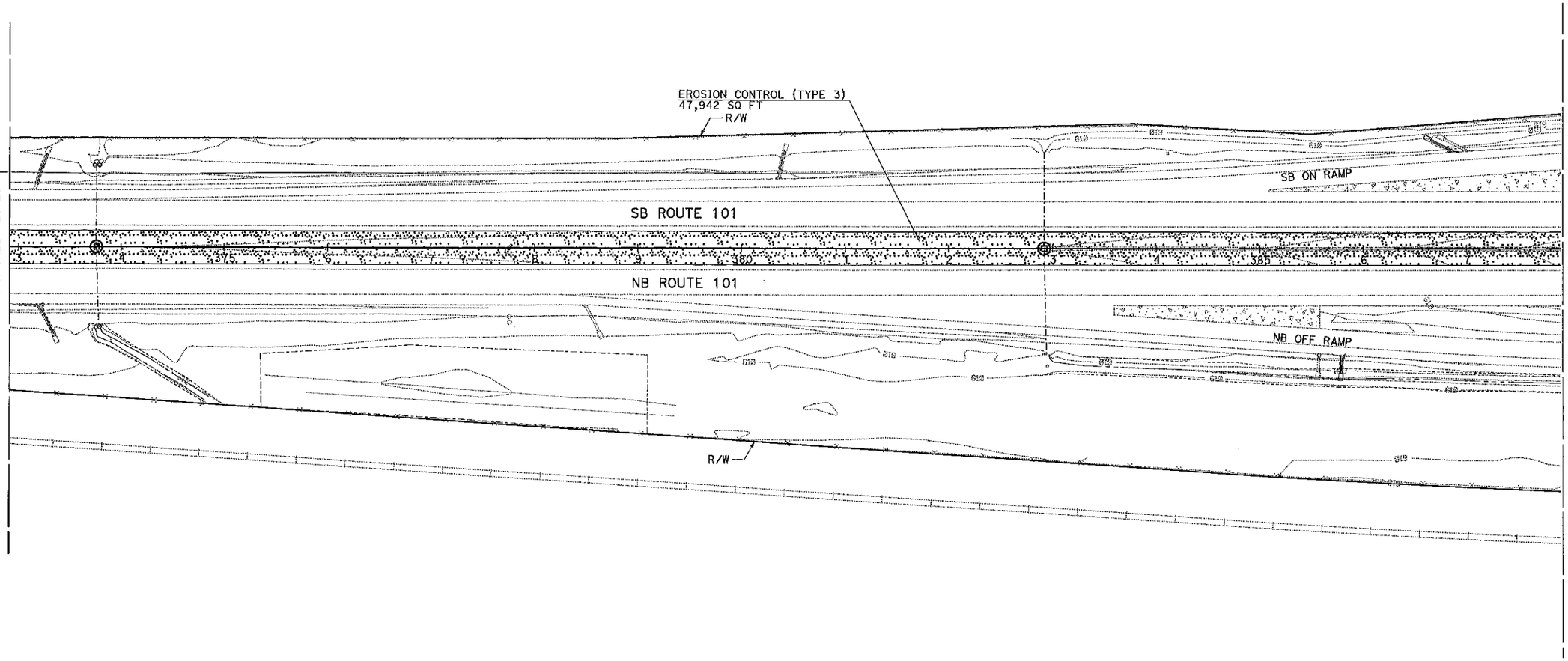

APPROVED FOR TEMPORARY WATER POLLUTION CONTROL WORK ONLY

TEMPORARY WATER POLLUTION CONTROL

SCALE: 1"=50'

WPC-24

STATE OF CALIFORNIA - DEPARTMENT OF TRANSPORTATION
Caltrans®
06-DESIGN

FUNCTIONAL SUPERVISOR: ROBERTO BANDA
CALCULATED-DESIGNED BY: PETER CHANDER
CHECKED BY: HAL KENYON
REVISED BY
DATE REVISED

LAST REVISION 00-00-00
DATE PLOTTED => 14-APR-2016
TIME PLOTTED => 10:27

BORDER LAST REVISED 7/2/2010
USERNAME => s132888
DGN FILE => 0500020020gb024.dgn
RELATIVE BORDER SCALE IS IN INCHES 0 1 2 3
UNIT 0000
PROJECT NUMBER & PHASE 00000000001

Dist	COUNTY	ROUTE	POST MILES TOTAL PROJECT	SHEET No.	TOTAL SHEETS
05	SLO,Mon	101	63.2/R69.3, R0.0/R1.9	25	29

REGISTERED CIVIL ENGINEER DATE

X-XX-XX
PLANS APPROVAL DATE

REGISTERED PROFESSIONAL ENGINEER PETER CHANDER No. 63988 Exp. 9/30/16 CIVIL STATE OF CALIFORNIA

THE STATE OF CALIFORNIA OR ITS OFFICERS OR AGENTS SHALL NOT BE RESPONSIBLE FOR THE ACCURACY OR COMPLETENESS OF SCANNED COPIES OF THIS PLAN SHEET.

NOTES:

FOR ACCURATE RIGHT OF WAY DATA, CONTACT
RIGHT OF WAY ENGINEERING AT THE DISTRICT OFFICE.

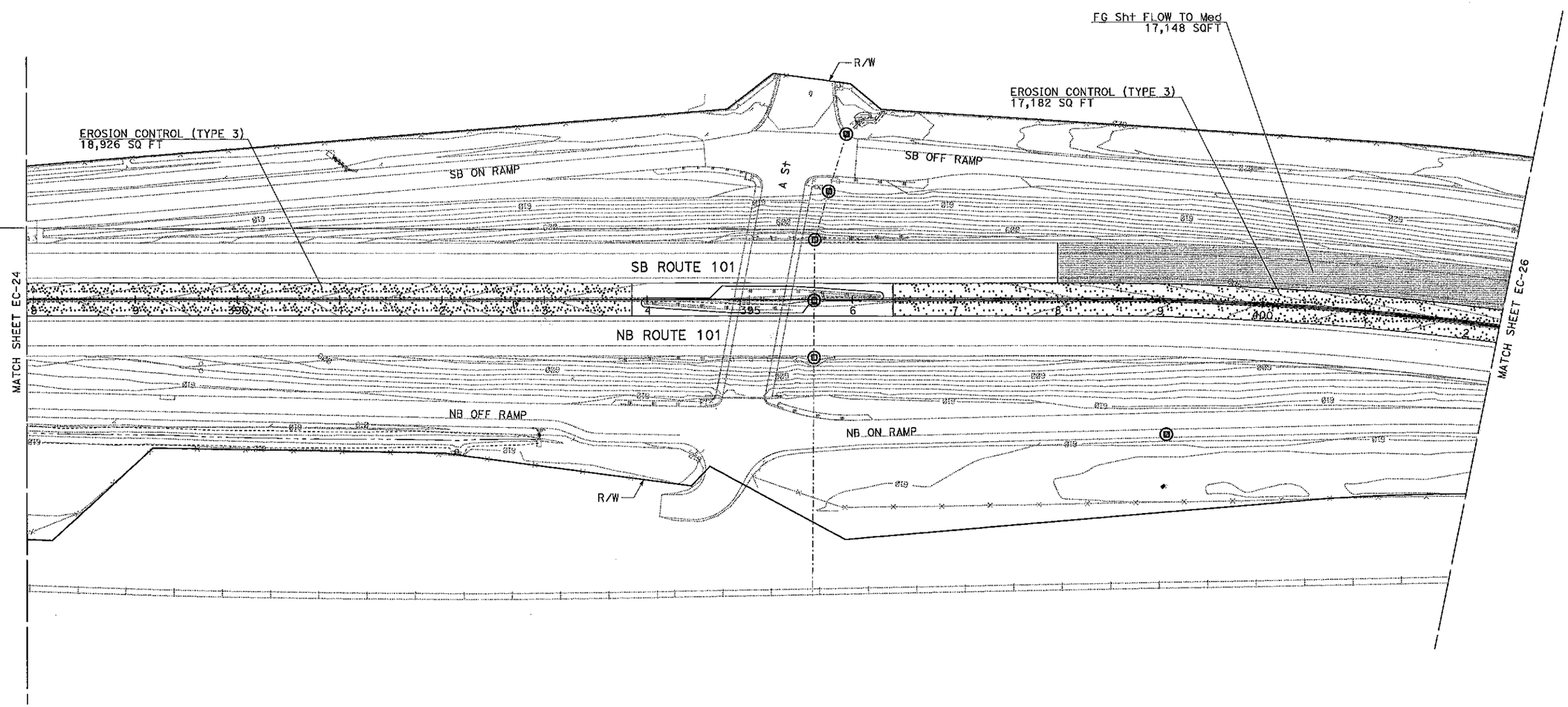

APPROVED FOR TEMPORARY WATER POLLUTION CONTROL WORK ONLY

TEMPORARY WATER POLLUTION CONTROL

SCALE: 1"=50'

WPC-25

STATE OF CALIFORNIA – DEPARTMENT OF TRANSPORTATION
Caltrans
06-DESIGN

FUNCTIONAL SUPERVISOR: ROBERTO BANDA
CALCULATED-DESIGNED BY: PETER CHANDER
CHECKED BY: HAL KENYON
REVISED BY
DATE REVISED

LAST REVISION 00-00-00
DATE PLOTTED => 14-APR-2016
TIME PLOTTED => 10:27

BORDER LAST REVISED 7/2/2010 | USERNAME => s132888 | DGN FILE => 0500020020gb025.dgn | RELATIVE BORDER SCALE IS IN INCHES 0 1 2 3 | UNIT 0000 | PROJECT NUMBER & PHASE 00000000001

Dist	COUNTY	ROUTE	POST MILES TOTAL PROJECT	SHEET No.	TOTAL SHEETS
05	SLO,Mon	101	63.2/R69.3, R0.0/R1.9	26	29

REGISTERED CIVIL ENGINEER DATE

X-XX-XX

PLANS APPROVAL DATE

THE STATE OF CALIFORNIA OR ITS OFFICERS OR AGENTS SHALL NOT BE RESPONSIBLE FOR THE ACCURACY OR COMPLETENESS OF SCANNED COPIES OF THIS PLAN SHEET.

REGISTERED PROFESSIONAL ENGINEER PETER CHANDER No. 63988 Exp. 9/30/16 CIVIL STATE OF CALIFORNIA

NOTES:

FOR ACCURATE RIGHT OF WAY DATA, CONTACT RIGHT OF WAY ENGINEERING AT THE DISTRICT OFFICE.

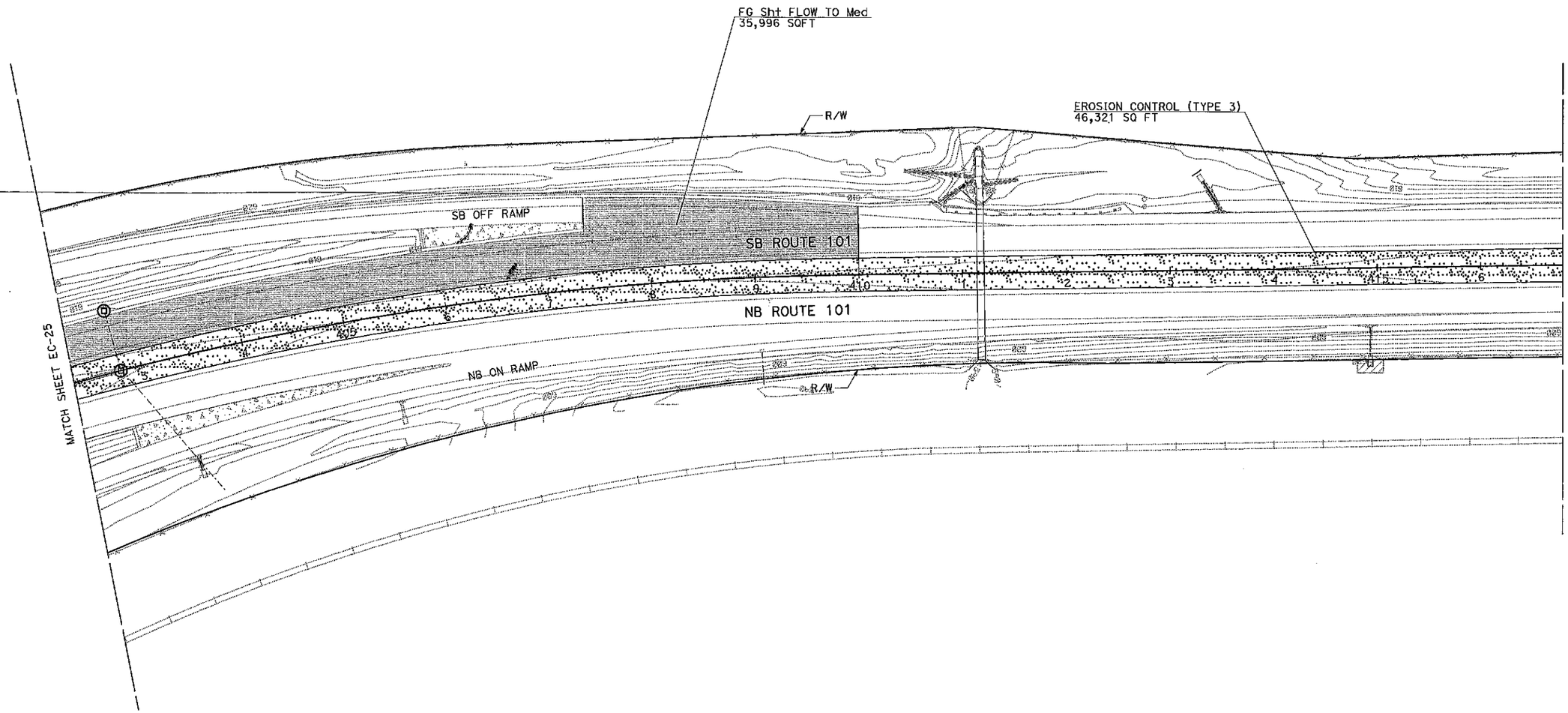

APPROVED FOR TEMPORARY WATER POLLUTION CONTROL WORK ONLY

TEMPORARY WATER POLLUTION CONTROL

SCALE: 1"=50'

WPC-26

STATE OF CALIFORNIA - DEPARTMENT OF TRANSPORTATION

Caltrans 06-DESIGN

FUNCTIONAL SUPERVISOR: ROBERTO BANDA

CALCULATED-DESIGNED BY: PETER CHANDER

CHECKED BY: HAL KENYON

REVISED BY / DATE REVISED

LAST REVISION 00-00-00 | DATE PLOTTED => 14-APR-2016 | TIME PLOTTED => 10:27

BORDER LAST REVISED 7/2/2010 | USERNAME => s132888 | DGN FILE => 0500020020gb026.dgn | RELATIVE BORDER SCALE IS IN INCHES 0 1 2 3 | UNIT 0000 | PROJECT NUMBER & PHASE 00000000001

Dist	COUNTY	ROUTE	POST MILES TOTAL PROJECT	SHEET No.	TOTAL SHEETS
05	SLO,Mon	101	63.2/R69.3, R0.0/R1.9	27	29

REGISTERED CIVIL ENGINEER DATE

X-XX-XX
PLANS APPROVAL DATE

THE STATE OF CALIFORNIA OR ITS OFFICERS OR AGENTS SHALL NOT BE RESPONSIBLE FOR THE ACCURACY OR COMPLETENESS OF SCANNED COPIES OF THIS PLAN SHEET.

REGISTERED PROFESSIONAL ENGINEER PETER CHANDER No. 63988 Exp. 9/30/16 CIVIL STATE OF CALIFORNIA

NOTES:

FOR ACCURATE RIGHT OF WAY DATA, CONTACT
RIGHT OF WAY ENGINEERING AT THE DISTRICT OFFICE.

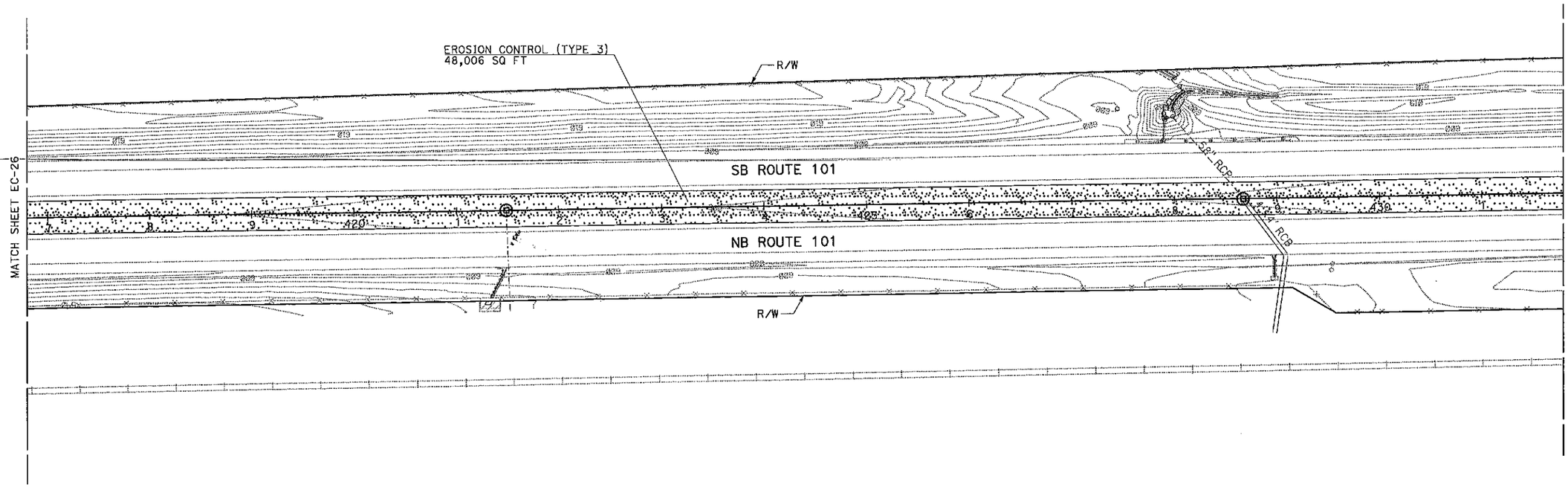

APPROVED FOR TEMPORARY WATER POLLUTION CONTROL WORK ONLY

TEMPORARY WATER POLLUTION CONTROL

SCALE: 1"=50'

WPC-27

STATE OF CALIFORNIA - DEPARTMENT OF TRANSPORTATION
Caltrans
06-DESIGN

FUNCTIONAL SUPERVISOR: ROBERTO BANDA
CALCULATED-DESIGNED BY: PETER CHANDER
CHECKED BY: HAL KENYON
REVISED BY
DATE REVISED

LAST REVISION 00-00-00
DATE PLOTTED => 14-APR-2016
TIME PLOTTED => 10:27

Dist	COUNTY	ROUTE	POST MILES TOTAL PROJECT	SHEET No.	TOTAL SHEETS
05	SLO,Mon	101	63.2/R69.3, R0.0/R1.9	28	29

REGISTERED CIVIL ENGINEER DATE

X:XX-XX

PLANS APPROVAL DATE

REGISTERED PROFESSIONAL ENGINEER PETER CHANDER No. 63988 Exp. 9/30/16 CIVIL STATE OF CALIFORNIA

THE STATE OF CALIFORNIA OR ITS OFFICERS OR AGENTS SHALL NOT BE RESPONSIBLE FOR THE ACCURACY OR COMPLETENESS OF SCANNED COPIES OF THIS PLAN SHEET.

NOTES:

FOR ACCURATE RIGHT OF WAY DATA, CONTACT RIGHT OF WAY ENGINEERING AT THE DISTRICT OFFICE.

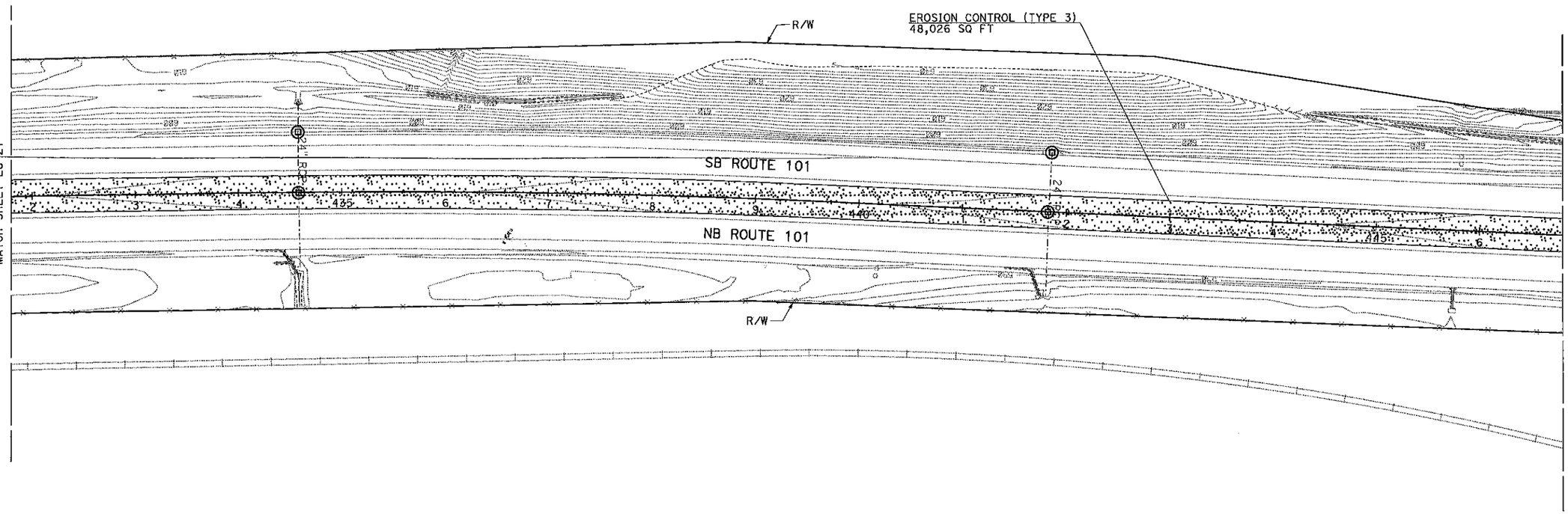

APPROVED FOR TEMPORARY WATER POLLUTION CONTROL WORK ONLY

TEMPORARY WATER POLLUTION CONTROL

SCALE: 1"=50'

WPC-28

STATE OF CALIFORNIA - DEPARTMENT OF TRANSPORTATION

Caltrans 06-DESIGN

FUNCTIONAL SUPERVISOR: ROBERTO BANDA

CALCULATED-DESIGNED BY: PETER CHANDER

CHECKED BY: HAL KENYON

REVISED BY

DATE REVISED

LAST REVISION 00-00-00

DATE PLOTTED => 14-APR-2016

TIME PLOTTED => 10:27

Dist	COUNTY	ROUTE	POST MILES TOTAL PROJECT	SHEET No.	TOTAL SHEETS
05	SLO,Mon	101	63.2/R69.3, R0.0/R1.9	29	29

REGISTERED CIVIL ENGINEER DATE

X-XX-XX
PLANS APPROVAL DATE

REGISTERED PROFESSIONAL ENGINEER PETER CHANDER No. 63988 Exp. 9/30/16 CIVIL STATE OF CALIFORNIA

THE STATE OF CALIFORNIA OR ITS OFFICERS OR AGENTS SHALL NOT BE RESPONSIBLE FOR THE ACCURACY OR COMPLETENESS OF SCANNED COPIES OF THIS PLAN SHEET.

NOTES:

FOR ACCURATE RIGHT OF WAY DATA, CONTACT RIGHT OF WAY ENGINEERING AT THE DISTRICT OFFICE.

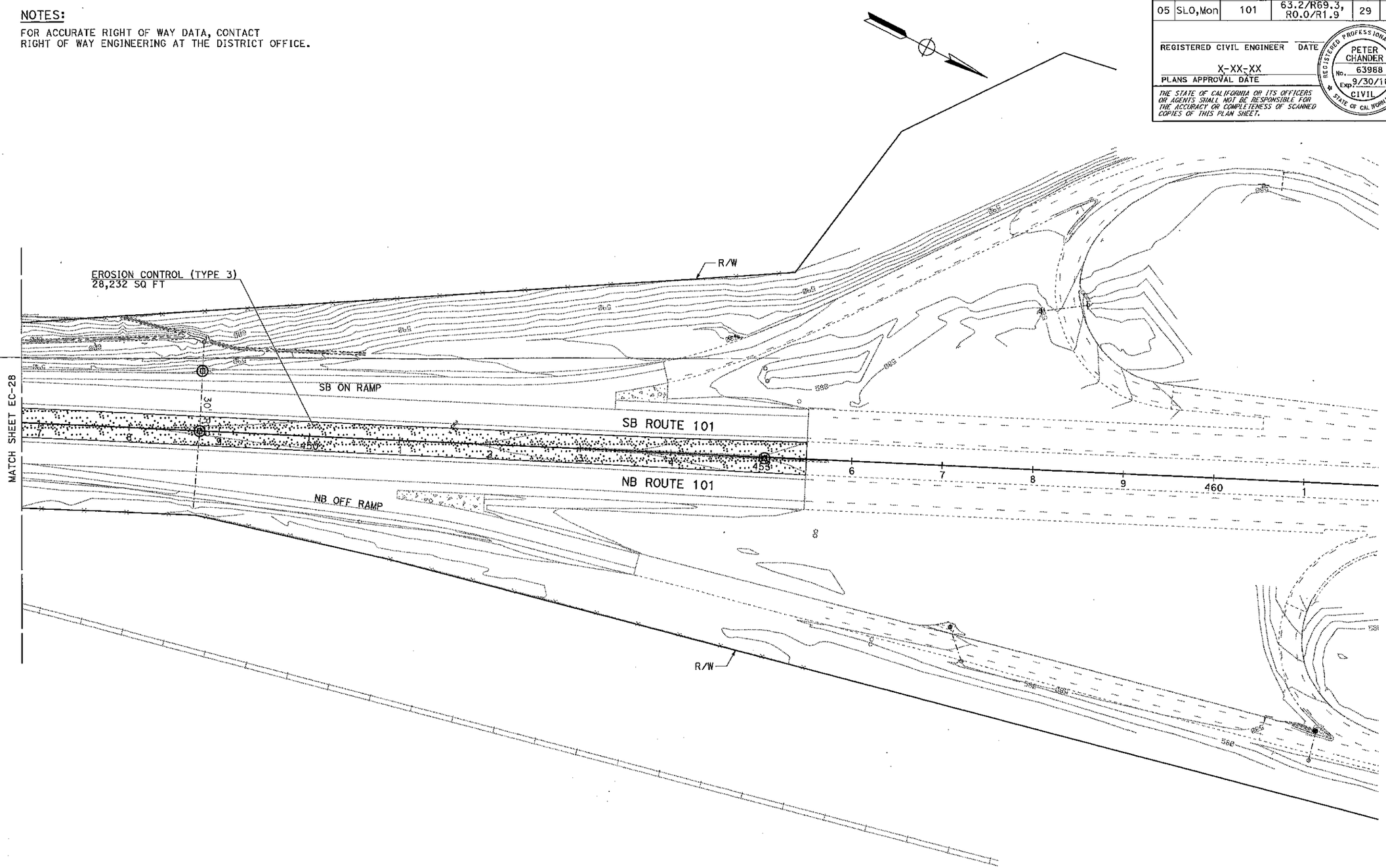

APPROVED FOR TEMPORARY WATER POLLUTION CONTROL WORK ONLY

TEMPORARY WATER POLLUTION CONTROL

SCALE: 1"=50'

WPC-29

STATE OF CALIFORNIA - DEPARTMENT OF TRANSPORTATION
06-DESIGN

FUNCTIONAL SUPERVISOR: ROBERTO BANDA
CALCULATED-DESIGNED BY: PETER CHANDER
CHECKED BY: HAL KENYON
REVISED BY
DATE REVISED

LAST REVISION 00-00-00
DATE PLOTTED => 14-APR-2016
TIME PLOTTED => 10:27