DIST	COUNTY	ROUTE	POST MILES TOTAL PROJECT	SHEET No.	TOTAL SHEETS
05	SLO,Mon	101	63.2/R69.3, R0.0/R1.9	701	858

Jose M. Aquino III 4-22-16
REGISTERED CIVIL ENGINEER DATE

5-2-16
PLANS APPROVAL DATE

REGISTERED PROFESSIONAL ENGINEER
Jose M Aquino III
No. 58386
Exp. 12-31-16
CIVIL
STATE OF CALIFORNIA

The State of California or its officers or agents shall not be responsible for the accuracy or completeness of scanned copies of this plan sheet.

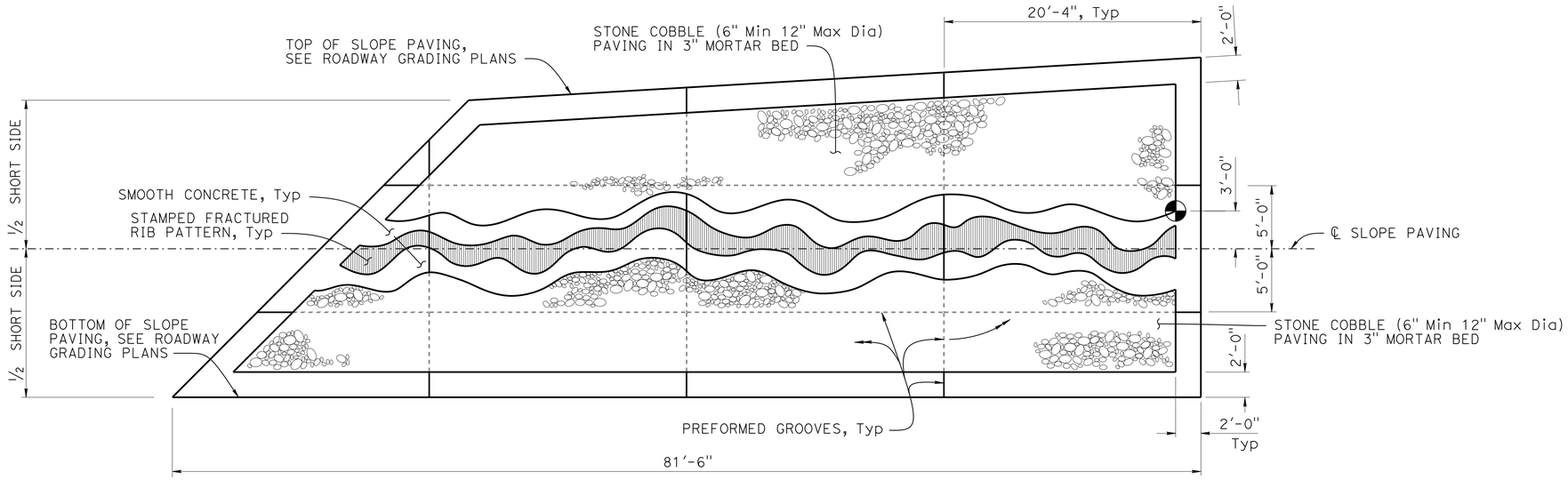

ABUTMENT 4 - SLOPE PAVING SURFACE TEXTURE

3/16" = 1'-0"

NOTE:
For details not shown, see "SLOPE PAVING SURFACE TEXTURE Det No. 3" and "SLOPE PAVING-FULL SLOPE-NO SKEW" sheets

LEGEND:

(A)(1) Working point at grid

Working point

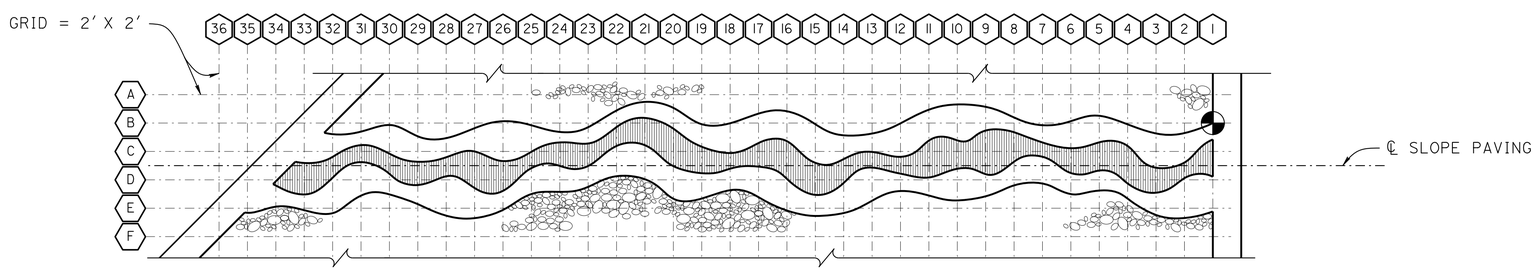

ABUTMENT 4 - SLOPE PAVING SURFACE TEXTURE GRID

3/16" = 1'-0"

NOTE:
THE CONTRACTOR MUST VERIFY ALL CONTROLLING FIELD DIMENSIONS BEFORE ORDERING OR FABRICATING ANY MATERIAL.

	BY	CHECKED
DESIGN	David Fowkes	Kantima Green
DETAILS	Nancy C Gwynn	Kantima Green
QUANTITIES	Lewis L Shen	Raman Guraya

STATE OF CALIFORNIA
DEPARTMENT OF TRANSPORTATION

DIVISION OF ENGINEERING SERVICES
STRUCTURE DESIGN
DESIGN BRANCH 3

BRIDGE NO. 49-0162R
POST MILE 65.1

SOUTH SAN MIGUEL UC (WIDEN)
SLOPE PAVING SURFACE TEXTURE Det No. 2

STRUCTURES DESIGN DETAIL SHEET (ENGLISH) (REV. 09-01-10)

ORIGINAL SCALE IN INCHES FOR REDUCED PLANS 0 1 2 3

UNIT: 3578
PROJECT NUMBER & PHASE: 05000200201
CONTRACT NO.: 05-0G0404

DISREGARD PRINTS BEARING EARLIER REVISION DATES

REVISION DATES 5-12-16 3-28-16 3-28-16

SHEET 25 OF 33

FILE => 49-0162r-v-slpavsur02.dgn

USERNAME => s115755 DATE PLOTTED => 22-JUL-2016 TIME PLOTTED => 17:54

DIST	COUNTY	ROUTE	POST MILES TOTAL PROJECT	SHEET No.	TOTAL SHEETS
05	SLO,Mon	101	63.2/R69.3, R0.0/R1.9	702	858

REGISTERED CIVIL ENGINEER 4-22-16 DATE

5-2-16
PLANS APPROVAL DATE

REGISTERED PROFESSIONAL ENGINEER
Jose M Aquino III
No. 58386
Exp. 12-31-16
CIVIL
STATE OF CALIFORNIA

The State of California or its officers or agents shall not be responsible for the accuracy or completeness of scanned copies of this plan sheet.

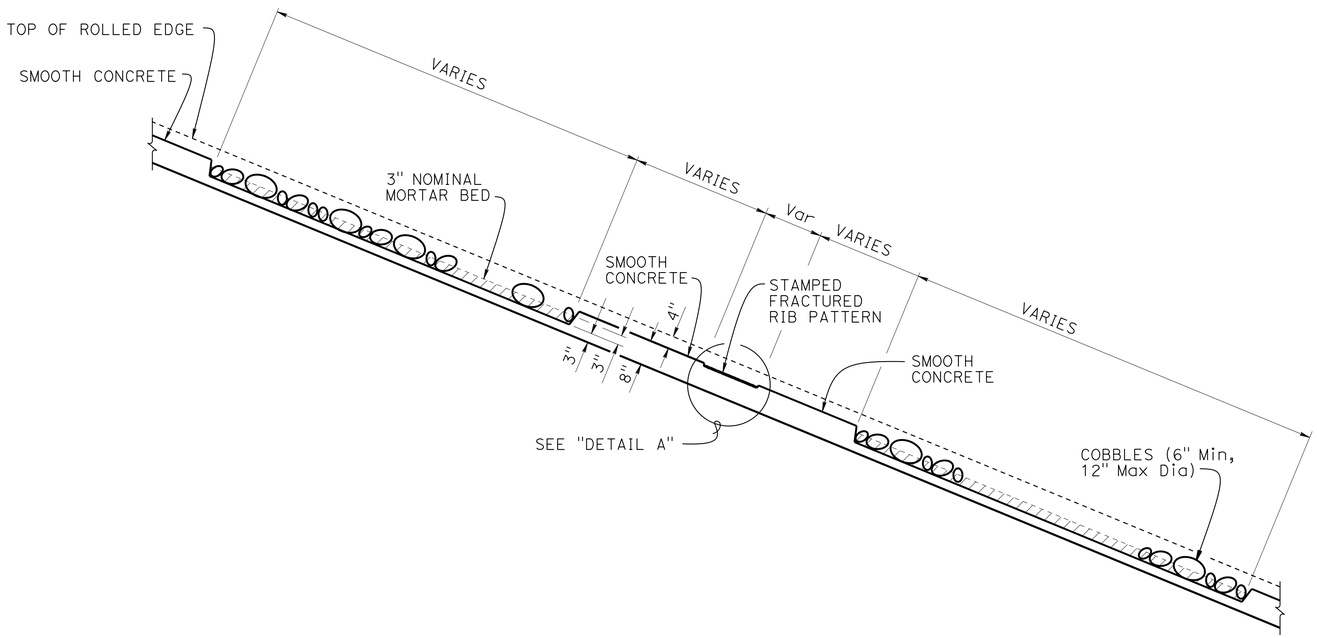

PART SLOPE PAVING SECTION

½" = 1'-0"

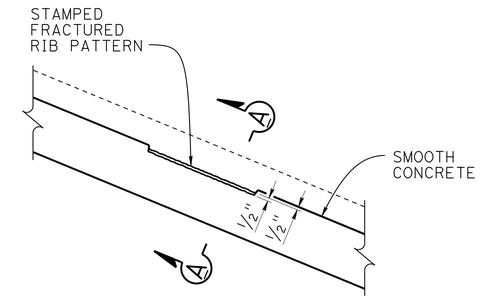

DETAIL A

1" = 1'-0"

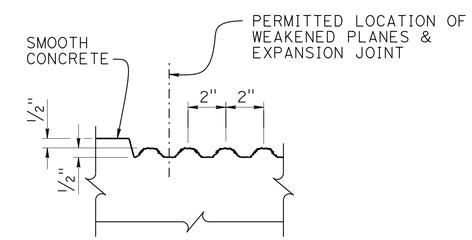

SECTION A-A

3" = 1'-0"

NOTE:
THE CONTRACTOR MUST VERIFY ALL CONTROLLING FIELD DIMENSIONS BEFORE ORDERING OR FABRICATING ANY MATERIAL.

	BY	CHECKED
DESIGN	David Fowkes	Kantima Green
DETAILS	Nancy C Gwynn	Kantima Green
QUANTITIES	Lewis L Shen	Raman Guraya

STATE OF CALIFORNIA
DEPARTMENT OF TRANSPORTATION

DIVISION OF ENGINEERING SERVICES
STRUCTURE DESIGN
DESIGN BRANCH 3

BRIDGE NO. 49-0162R
POST MILE 65.1

SOUTH SAN MIGUEL UC (WIDEN)
SLOPE PAVING SURFACE TEXTURE Det No. 3

STRUCTURES DESIGN DETAIL SHEET (ENGLISH) (REV. 09-01-10)

ORIGINAL SCALE IN INCHES FOR REDUCED PLANS 0 1 2 3

UNIT: 3578
PROJECT NUMBER & PHASE: 05000200201
CONTRACT NO.: 05-0G0404

DISREGARD PRINTS BEARING EARLIER REVISION DATES

REVISION DATES 5-1-15 5-12-15 12-18-15 3-28-16

SHEET 26 OF 33

FILE => 49-0162r-v-slpavsur03.dgn

USERNAME => s115755 DATE PLOTTED => 22-JUL-2016 TIME PLOTTED => 17:54

DIST	COUNTY	ROUTE	POST MILES TOTAL PROJECT	SHEET No.	TOTAL SHEETS
05	SLO,Mon	101	63.2/R69.3, R0.0/R1.9	703	858

Jose M. Aquino III 4-22-16
REGISTERED CIVIL ENGINEER DATE

5-2-16
PLANS APPROVAL DATE

REGISTERED PROFESSIONAL ENGINEER
Jose M Aquino III
No. 58386
Exp. 12-31-16
CIVIL
STATE OF CALIFORNIA

The State of California or its officers or agents shall not be responsible for the accuracy or completeness of scanned copies of this plan sheet.

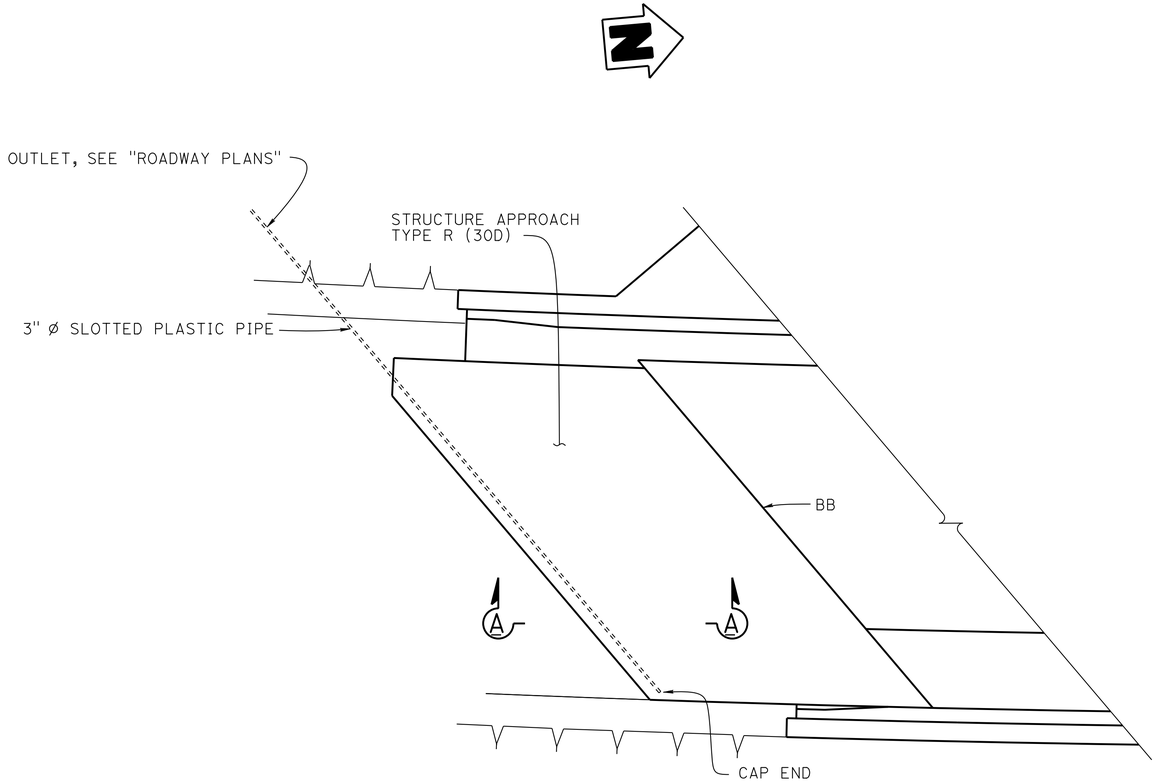

PLAN
1/8" = 1'-0"

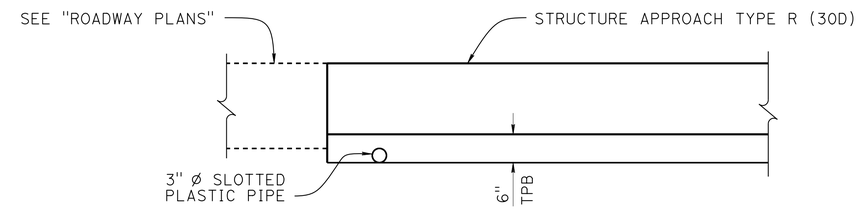

SECTION A-A
3/4" = 1'-0"

NOTES:
1. Structure approach at BB shown, structure approach at EB similar
2. For structure approach slab details not shown, see "STRUCTURE APPROACH TYPE R (30D)" sheet

NOTE:
THE CONTRACTOR MUST VERIFY ALL CONTROLLING FIELD DIMENSIONS BEFORE ORDERING OR FABRICATING ANY MATERIAL.

	BY	CHECKED
DESIGN	Arturo V Herrera	Mufeed Khalaf
DETAILS	Nancy C Gwynn	Mufeed Khalaf
QUANTITIES	Lewis L Shen	Raman Guraya

STATE OF CALIFORNIA
DEPARTMENT OF TRANSPORTATION

DIVISION OF ENGINEERING SERVICES
STRUCTURE DESIGN
DESIGN BRANCH 3

BRIDGE NO. 49-0162R
POST MILE 65.1

SOUTH SAN MIGUEL UC (WIDEN)
STRUCTURE APPROACH DRAINAGE DETAILS

STRUCTURES DESIGN DETAIL SHEET (ENGLISH) (REV. 09-01-10)

ORIGINAL SCALE IN INCHES FOR REDUCED PLANS 0 1 2 3

UNIT: 3578
PROJECT NUMBER & PHASE: 05000200201
CONTRACT NO.: 05-0G0404

DISREGARD PRINTS BEARING EARLIER REVISION DATES

REVISION DATES 1-14-15 9-10-15

SHEET 27 OF 33

FILE => 49-0162r-x-sappdr.dgn

USERNAME => s115755 DATE PLOTTED => 22-JUL-2016 TIME PLOTTED => 17:54

DIST	COUNTY	ROUTE	POST MILES TOTAL PROJECT	SHEET No.	TOTAL SHEETS
05	SLO,Mon	101	63.2/R69.3, R0.0/R1.9	704	858

REGISTERED CIVIL ENGINEER 4-22-16 DATE

5-2-16
PLANS APPROVAL DATE

REGISTERED PROFESSIONAL ENGINEER Jose M Aquino III No. 58386 Exp. 12-31-16 CIVIL STATE OF CALIFORNIA

The State of California or its officers or agents shall not be responsible for the accuracy or completeness of electronic copies of this plan sheet.

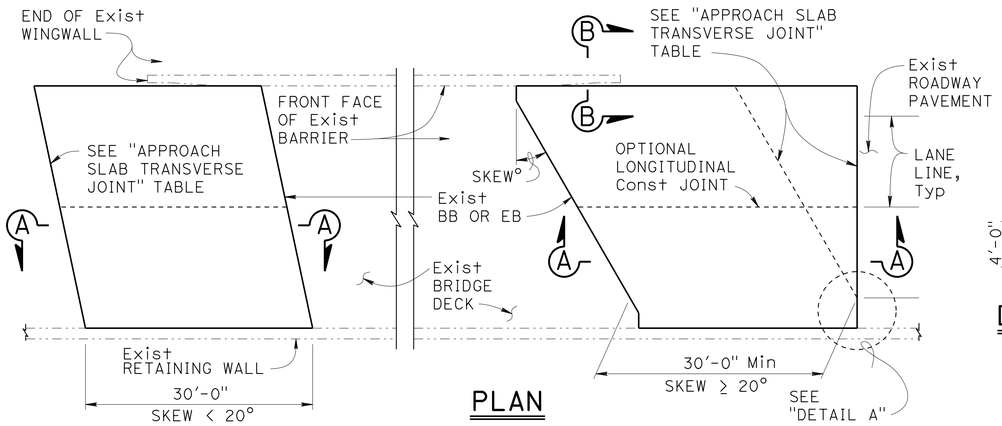

PLAN
1" = 10'

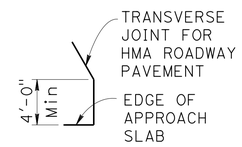

DETAIL A
No Scale

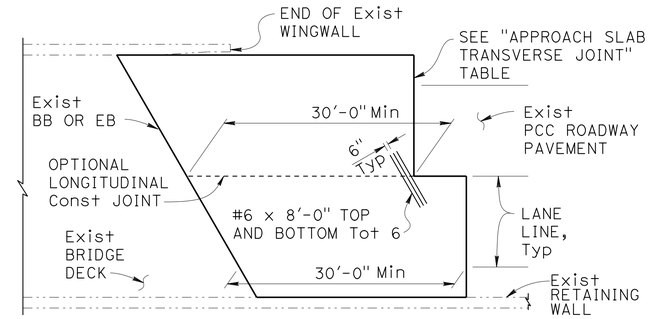

END STAGGER DETAIL
1" = 10'

APPROACH SLAB TRANSVERSE JOINT		
APPROACH SKEW	WITH HMA ROADWAY PAVEMENT	WITH PCC ROADWAY PAVEMENT
< 20°	PARALLEL TO BB OR EB	PARALLEL TO BB OR EB
20° - 45°	PARALLEL TO BB OR EB USE "DETAIL A"	STAGGER AT LANE LINES 24' TO 36' APART, SEE "END STAGGER DETAIL"
> 45°	PARALLEL TO BB OR EB USE "DETAIL A"	STAGGER AT EACH LANE LINE, SEE "END STAGGER DETAIL"

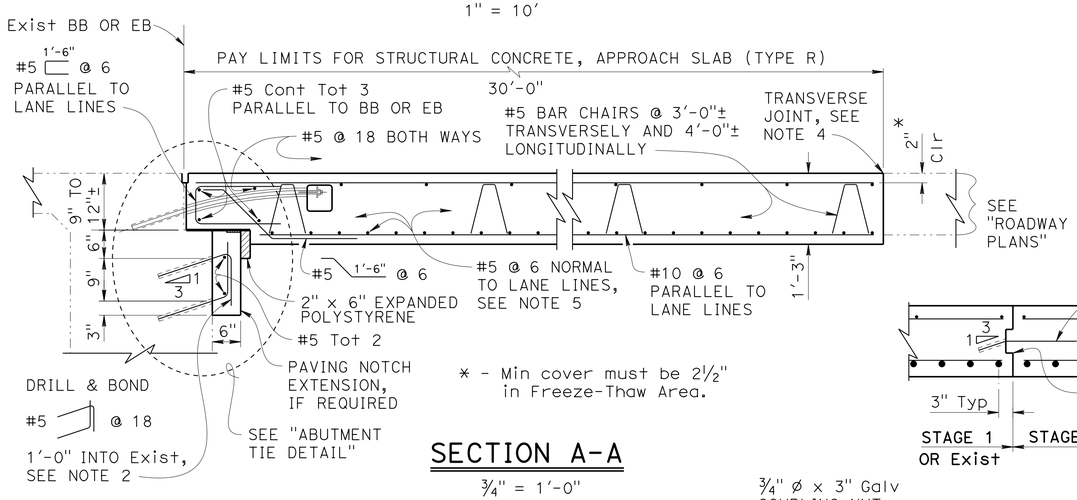

* - Min cover must be 2½" in Freeze-Thaw Area.

SECTION A-A
¾" = 1'-0"

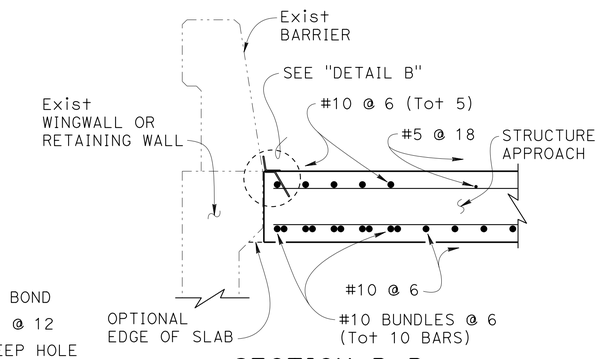

SECTION B-B
¾" = 1'-0"

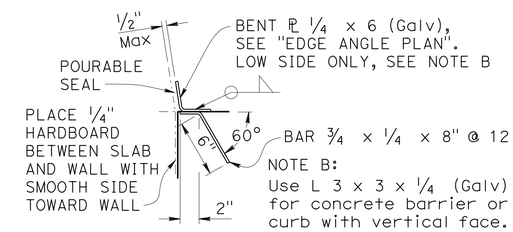

DETAIL B
1½" = 1'-0"

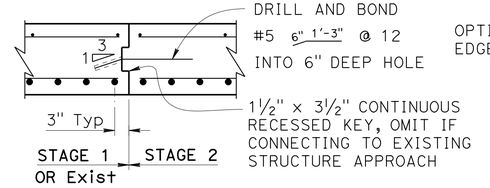

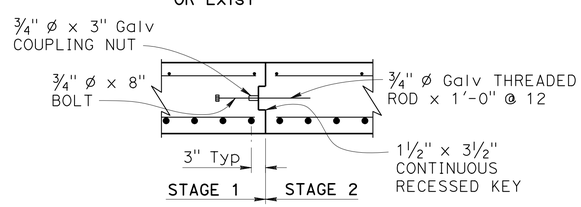

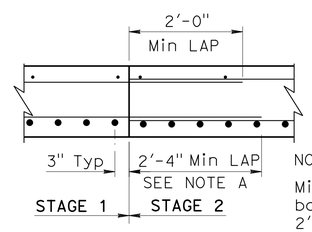

NOTE A:
Min lap splice for bottom Reinf must be 2'-9" in Freeze-Thaw Area.

LONGITUDINAL CONSTRUCTION JOINT ALTERNATIVES
¾" = 1'-0"

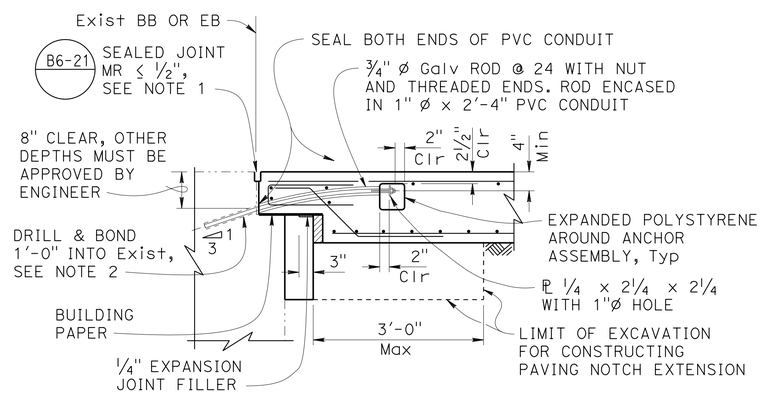

NOTE: For details not shown, see "SECTION A-A".

NOTE:
The contractor must verify all controlling field dimensions before ordering or fabricating any material.

ABUTMENT TIE DETAIL
¾" = 1'-0"

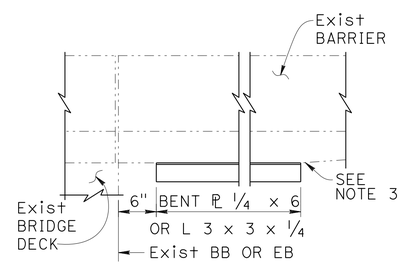

EDGE ANGLE PLAN
1" = 1'-0"

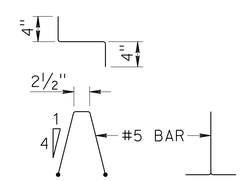

BAR CHAIR DETAIL
1" = 1'-0"

DESIGN NOTES

DESIGN: AASHTO LRFD Bridge Design Specifications, 2012 Edition with Caltrans Amendments, preface dated January 2014

LIMIT STATES: Service I, Strength I & II, Extreme II and Fatigue I (γ_{FAT} = 1.0)

DEAD LOAD: Includes 35 psf for future wearing surface

LIVE LOAD: HL93 and permit design load
Equivalent strip width method: W_1 = 12 ft
Slab span: L_1 = 24.5 ft

REINFORCED CONCRETE:
f_y = 60 ksi
f'_c = 3.6 ksi
n = 8

NOTES:

1. For details not shown, see other plan sheets. Adjust reinforcement to clear sawcut for sealed joint.
2. Space reinforcement to avoid existing prestress anchorages and other abutment reinforcement.
3. End the plate or edge angle at beginning of barrier transition, end of wingwall, or end of structure approach as applicable.
4. Transverse Joint must be a minimum of 5'-0" from an existing or constructed weakened plane joint in approach PCC roadway pavement. Refer to Standard Plans P10 and P14.
5. At the Contractor's option, approach slab transverse reinforcement may be placed parallel to BB or EB. Spacing of transverse reinforcement is measured along ℄ roadway.

—·—·— Indicates Existing Structure

STANDARD DRAWING
FILE NO. xs3-150
APPROVAL DATE January 2015

The components of this Bridge Standard Drawing have been prepared under the responsible charge of the Technical Owner, a registered civil engineer in the State of California. Refer to: http//www.dot.ca.gov/hq/esc/techpubs/manual/bridgemanuals/bridge-standard-detail-sheet/index.html. The selection and proper application of the component design and any modifications shown have been prepared under the responsible charge of the registered civil engineer for the project.

STATE OF CALIFORNIA
DEPARTMENT OF TRANSPORTATION

DIVISION OF ENGINEERING SERVICES 3

BRIDGE NO. 49-0162R
POST MILE 65.6

SOUTH SAN MIGUEL UC (WIDEN)
STRUCTURE APPROACH TYPE R (30D)

DS OSD 2147A (ENGLISH STANDARD DRAWING "XS" BORDER REV. (10-01-14)

ORIGINAL SCALE IN INCHES FOR REDUCED PLANS 0 1 2 3

UNIT: 3578
PROJECT NUMBER & PHASE: 05000200201
CONTRACT NO.: 05-0G0404

DISREGARD PRINTS BEARING EARLIER REVISION DATES

REVISION DATES

SHEET 28 OF 33

FILE => 49-0162r-x-sapprr30.dgn

USERNAME => s115755 DATE PLOTTED => 22-JUL-2016 TIME PLOTTED => 17:54

DIST	COUNTY	ROUTE	POST MILES TOTAL PROJECT	SHEET No.	TOTAL SHEETS
05	SLO,Mon	101	63.2/R69.3, R0.0/R1.9	705	858

REGISTERED CIVIL ENGINEER 4-22-16 DATE

5-2-16
PLANS APPROVAL DATE

REGISTERED PROFESSIONAL ENGINEER Jose M Aquino III No. 58386 Exp. 12-31-16 CIVIL STATE OF CALIFORNIA

The State of California or its officers or agents shall not be responsible for the accuracy or completeness of electronic copies of this plan sheet.

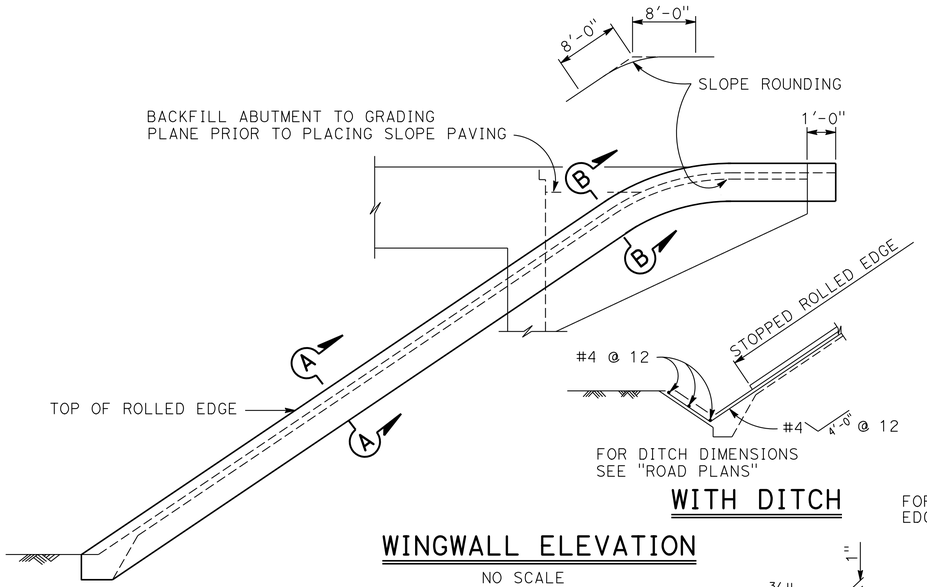

WITH DITCH

WINGWALL ELEVATION

NO SCALE

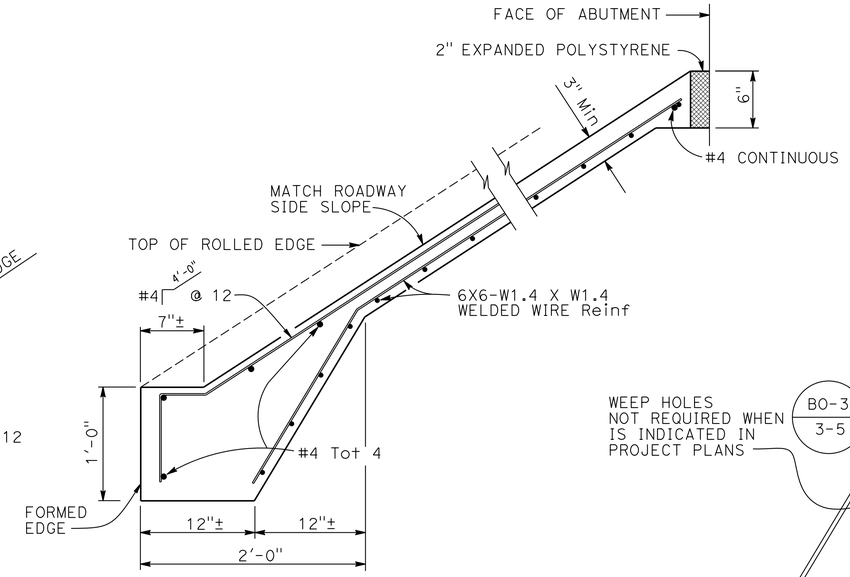

TYPICAL SECTION - CONCRETE PAVING

NO SCALE

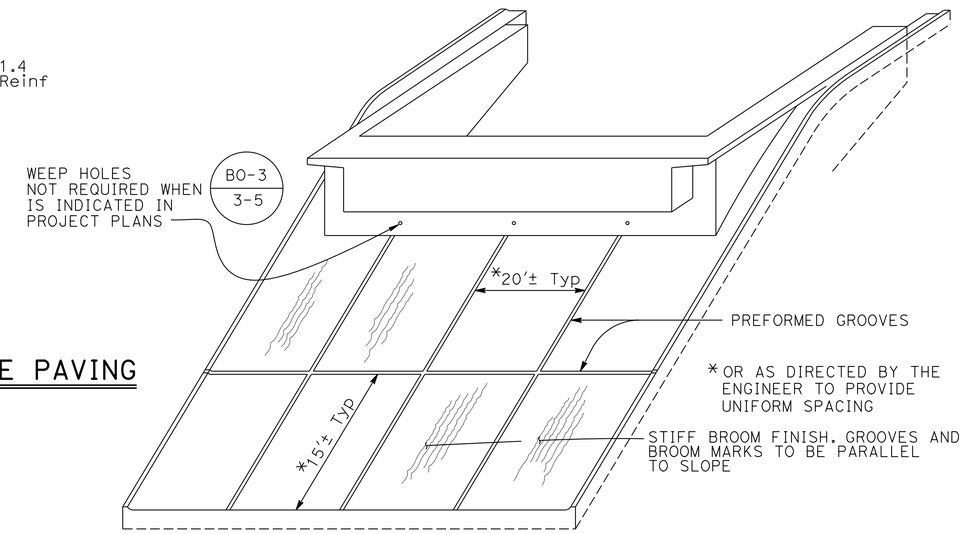

PICTORIAL VIEW OF TYPICAL INSTALLATION

See Note (E)

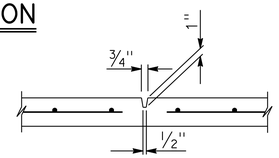

PREFORMED GROOVE

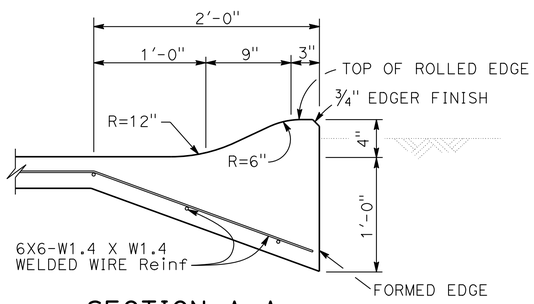

SECTION A-A

NO SCALE

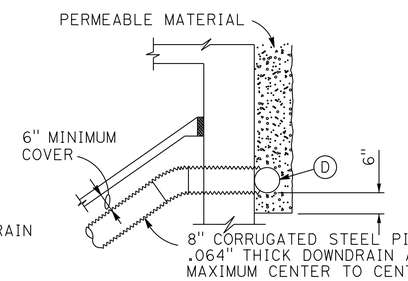

TYPICAL - DRAIN CONNECTION

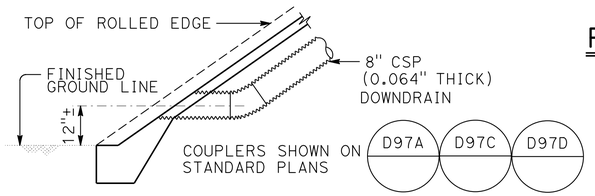

TYPICAL - NO CURB

NOTES

(A) Top of rolled edge

(B) Conduit:
0.064" galv corrugated steel or 0.109" smooth galv steel

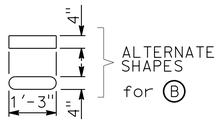

(C) Taper: { 0.064" galv corrugated steel or 0.109" smooth galv steel

(D) 8" perforated steel pipe (0.064" thick) underdrain behind abutment.

(E) See Project Plans for limits of Slope Paving & Drainage layout.

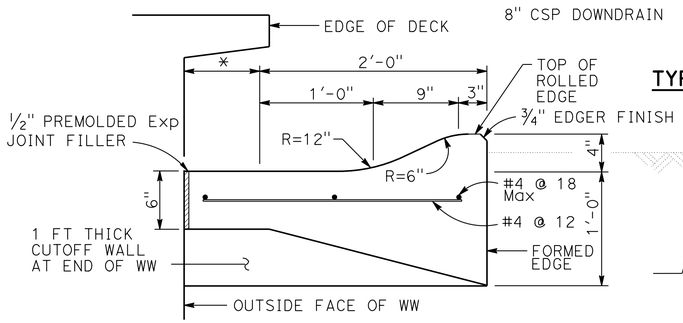

SECTION B-B

NO SCALE

* THIS DIMENSION BECOMES ZERO WHEN EDGE OF DECK IS AT OUTSIDE FACE OF WW

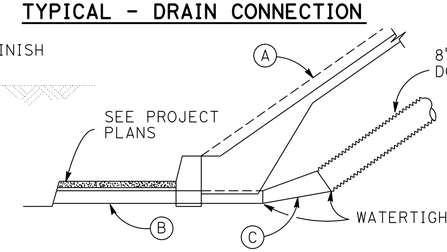

TYPICAL - WITH SIDEWALK

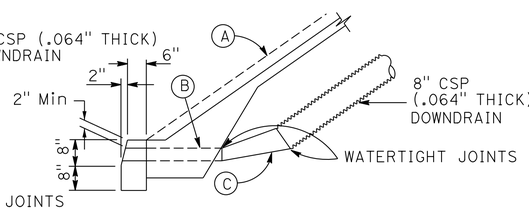

TYPICAL - WITH CURB

DRAINAGE DETAILS

NO SCALE

Drainage details are only applicable when is indicated in project plans (B0-3 / 3-5)

NO SCALE

STANDARD DRAWING		
FILE NO. xs4-210	APPROVAL DATE July 2014	The components of this Bridge Standard Drawing have been prepared under the responsible charge of the Technical Owner, a registered civil engineer in the State of California. Refer to: http://www.dot.ca.gov/hq/esc/techpubs/manual/bridgemanuals/bridge-standard-detail-sheet/index.html. The selection and proper application of the component design and any modifications shown have been prepared under the responsible charge of the registered civil engineer for the project.

STATE OF CALIFORNIA DEPARTMENT OF TRANSPORTATION

DIVISION OF ENGINEERING SERVICES 3

BRIDGE NO. 49-0162R

POST MILE 65.1

SOUTH SAN MIGUEL UC (WIDEN)

SLOPE PAVING-FULL SLOPE-NO SKEW

DS OSD 2147A (ENGLISH STANDARD DRAWING "XS" BORDER REV. (02-02-11)

ORIGINAL SCALE IN INCHES FOR REDUCED PLANS 0 1 2 3

UNIT: 3578
PROJECT NUMBER & PHASE: 05000200201
CONTRACT NO.: 05-0G0404

DISREGARD PRINTS BEARING EARLIER REVISION DATES

REVISION DATES 6-23-14

SHEET 29 OF 33

FILE => 49-0162r-x-slopp.dgn

USERNAME => s115755 DATE PLOTTED => 22-JUL-2016 TIME PLOTTED => 17:54

DIST	COUNTY	ROUTE	POST MILES TOTAL PROJECT	SHEET No.	TOTAL SHEETS
05	SLO,Mon	101	63.2/R69.3, R0.0/R1.9	706	858

REGISTERED CIVIL ENGINEER 11-16-15 DATE

5-2-16
PLANS APPROVAL DATE

REGISTERED PROFESSIONAL ENGINEER Ryan Turner No. 73956 Exp. 6-30-17 CIVIL STATE OF CALIFORNIA

The State of California or its officers or agents shall not be responsible for the accuracy or completeness of electronic copies of this plan sheet.

This LOTB sheet was prepared in accordance with the Caltrans Soil & Rock Logging, Classification, & Presentation Manual (2010 Edition).

See 2010 Standard Plans A10F and A10G for Soil Legend, and A10H for Rock Legend.

BENCH MARK

SLO-101-PM 65.05
NAVD88 639.198-Approx NAD83
N 2466835.618
E: 5760565.907
NGS brass disk.

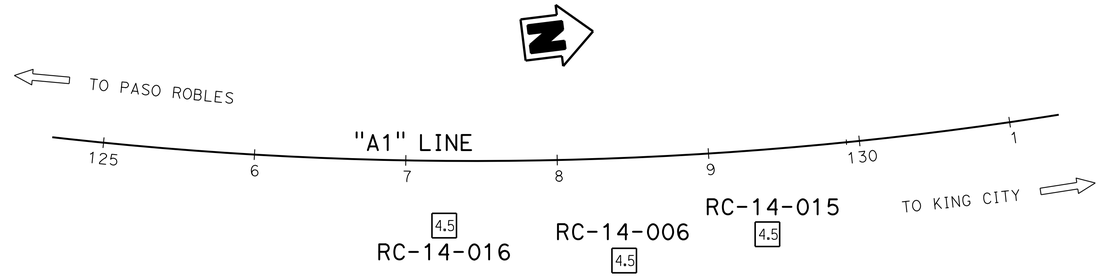

PLAN
1" = 50'

Note: Groundwater encountered but not measured during field investigation.

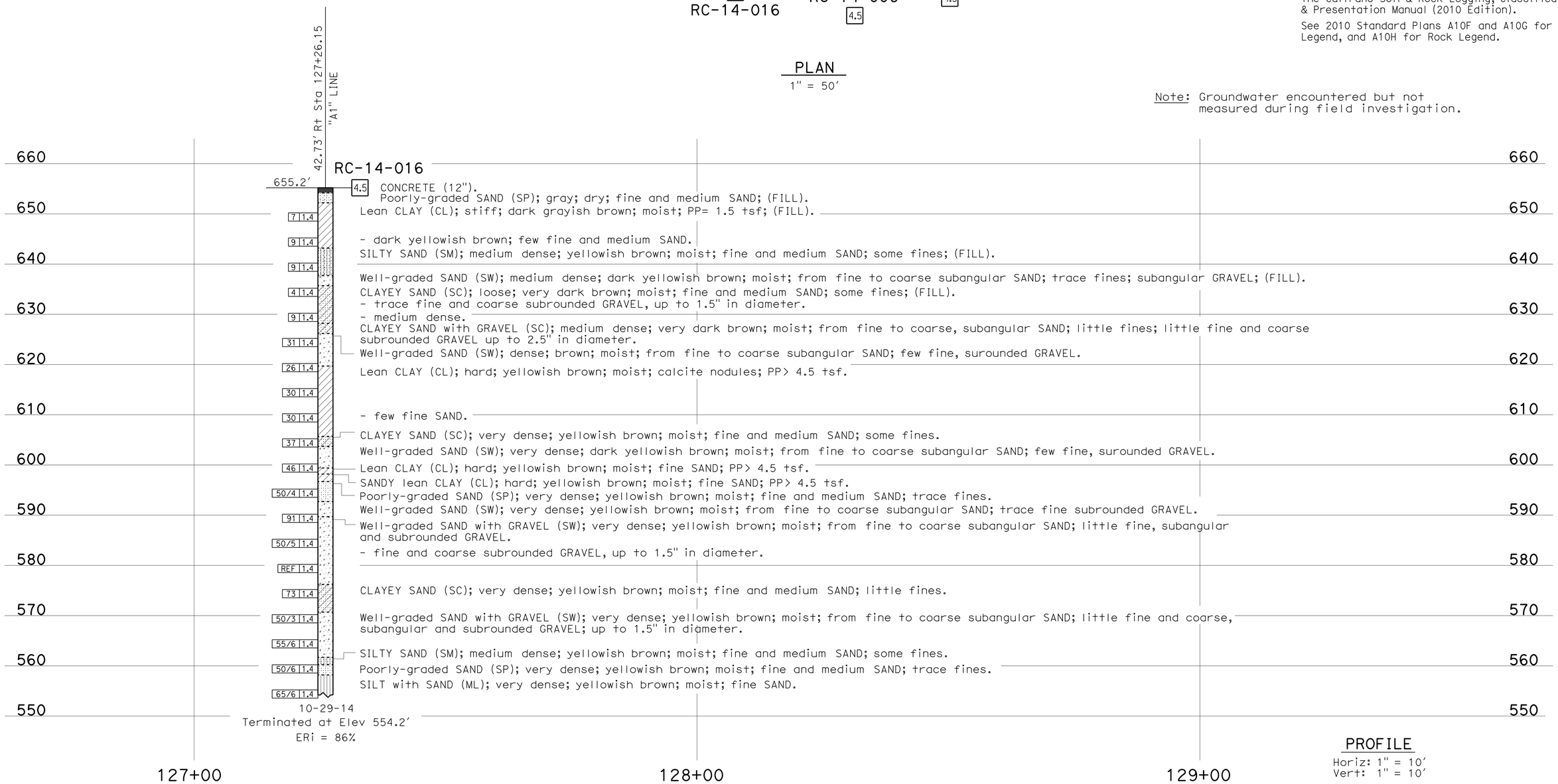

PROFILE
Horiz: 1" = 10'
Vert: 1" = 10'

ENGINEERING SERVICES	MATERIALS AND GEOTECHNICAL SERVICES	STATE OF CALIFORNIA DEPARTMENT OF TRANSPORTATION	DIVISION OF ENGINEERING SERVICES STRUCTURE DESIGN DESIGN BRANCH 3	BRIDGE NO. 49-0162R POST MILE 65.1	SOUTH SAN MIGUEL UC (WIDEN) LOG OF TEST BORINGS 1 OF 4
FUNCTIONAL SUPERVISOR NAME: T. Menard	DRAWN BY: F. Nguyen CHECKED BY: M. Jurasius	FIELD INVESTIGATION BY: R. Turner/ J. Scardine			

OGS CIVIL LOG OF TEST BORINGS SHEET

ORIGINAL SCALE IN INCHES FOR REDUCED PLANS 0 1 2 3

UNIT: 3650
PROJECT NUMBER & PHASE: 05000200201 CONTRACT NO.: 05-0G0404

DISREGARD PRINTS BEARING EARLIER REVISION DATES → 06-29-15 09-25-15 10-28-15 11-16-15

SHEET 30 OF 33

FILE => 49-0162r-y-ltb1of4.dgn

USERNAME => s115755 DATE PLOTTED => 22-JUL-2016 TIME PLOTTED => 17:54

DIST	COUNTY	ROUTE	POST MILES TOTAL PROJECT	SHEET No.	TOTAL SHEETS
05	SLO,Mon	101	63.2/R69.3, R0.0/R1.9	707	858

REGISTERED CIVIL ENGINEER — DATE 11-16-15

5-2-16
PLANS APPROVAL DATE

REGISTERED PROFESSIONAL ENGINEER — Ryan Turner — No. 73956 — Exp. 6-30-17 — CIVIL — STATE OF CALIFORNIA

The State of California or its officers or agents shall not be responsible for the accuracy or completeness of electronic copies of this plan sheet.

This LOTB sheet was prepared in accordance with the Caltrans Soil & Rock Logging, Classification, & Presentation Manual (2010 Edition).

See 2010 Standard Plans A10F and A10G for Soil Legend, and A10H for Rock Legend.

FOR PLAN VIEW, SEE
"LOG OF TEST BORINGS 1 OF 4"

Note: Groundwater encountered but not measured during field investigation.

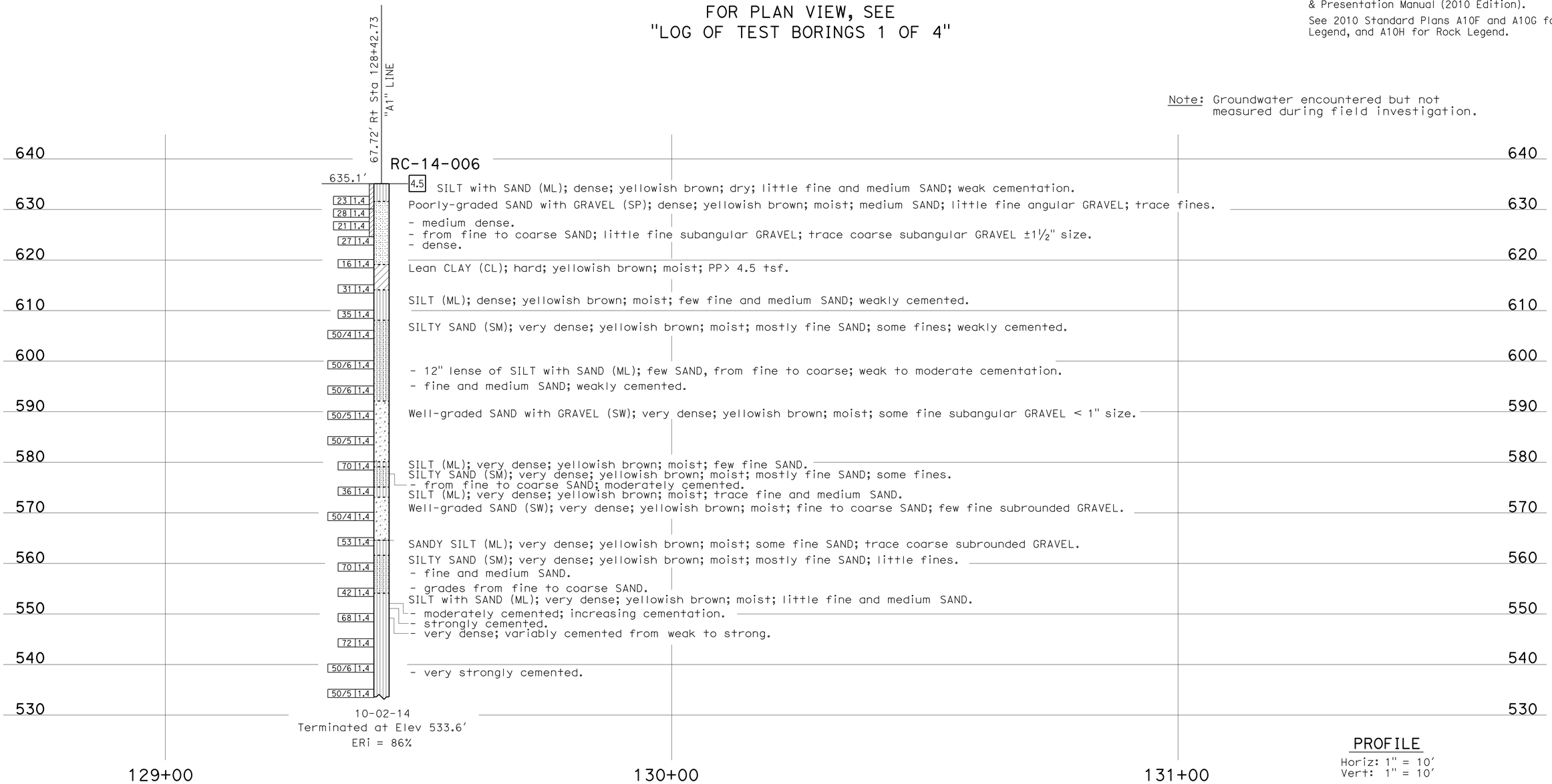

PROFILE
Horiz: 1" = 10'
Vert: 1" = 10'

ENGINEERING SERVICES	MATERIALS AND GEOTECHNICAL SERVICES	STATE OF CALIFORNIA DEPARTMENT OF TRANSPORTATION	DIVISION OF ENGINEERING SERVICES STRUCTURE DESIGN DESIGN BRANCH 3	BRIDGE NO. 49-0162R POST MILE 65.1	SOUTH SAN MIGUEL UC (WIDEN)
FUNCTIONAL SUPERVISOR NAME: R. Turner	DRAWN BY: F. Nguyen CHECKED BY: M. Jurasius	FIELD INVESTIGATION BY: R. Turner/ J. Scardine			LOG OF TEST BORINGS 2 OF 4

OGS CIVIL LOG OF TEST BORINGS SHEET

ORIGINAL SCALE IN INCHES FOR REDUCED PLANS 0 1 2 3

UNIT: 3650
PROJECT NUMBER & PHASE: 05000200201 CONTRACT NO.: 05-0G0404

DISREGARD PRINTS BEARING EARLIER REVISION DATES → 06-29-15 09-25-15 10-28-15 11-16-15

SHEET 31 OF 33

FILE => 49-0162r-y-ltb2of4.dgn

USERNAME => s115755 DATE PLOTTED => 22-JUL-2016 TIME PLOTTED => 17:54

DIST	COUNTY	ROUTE	POST MILES TOTAL PROJECT	SHEET No.	TOTAL SHEETS
05	SLO,Mon	101	63.2/R69.3, R0.0/R1.9	708	858

REGISTERED CIVIL ENGINEER 11-16-15 DATE

5-2-16
PLANS APPROVAL DATE

REGISTERED PROFESSIONAL ENGINEER Ryan Turner No. 73956 Exp. 6-30-17 CIVIL STATE OF CALIFORNIA

The State of California or its officers or agents shall not be responsible for the accuracy or completeness of electronic copies of this plan sheet.

This LOTB sheet was prepared in accordance with the Caltrans Soil & Rock Logging, Classification, & Presentation Manual (2010 Edition).

See 2010 Standard Plans A10F and A10G for Soil Legend, and A10H for Rock Legend.

FOR PLAN VIEW, SEE
"LOG OF TEST BORINGS 1 OF 4"

Note: Groundwater encountered but not measured during field investigation.

55.90' Rt Sta 129+35.46 "A1" LINE

RC-14-015

659.4'

660 — 4.5 SANDY lean CLAY (CL); very stiff; yellowish brown; moist; some from fine to coarse SAND; (FILL); PP= 2.5 tsf.

650 — 8 1.4; 13 1.4; 9 1.4; 6 1.4; 10 1.4 — CLAYEY SAND (SC); medium dense; yellowish brown; moist; mostly SAND from fine to coarse, subangular; some fines; trace fine subangular GRAVEL; (FILL).

640 — SANDY SILT (ML); medium dense; yellowish brown; moist; some fine and medium SAND; trace fines, subangular GRAVEL; (FILL).

CLAYEY SAND (SC); loose; brown; moist; trace fine to coarse subangular SAND; some fines; trace fine subangular GRAVEL; (FILL).

630 — 17 1.4 — - yellowish brown; 3-6" lenses of lean CLAY (CL); very stiff; few SAND, from fine to coarse, subanglar; PP=2.5 tsf.

Well-graded SAND with GRAVEL (SW); medium dense; yellowish brown; moist; little fine subrounded GRAVEL; trace fines.

620 — 26 1.4 — - dense.

22 1.4 — SILT (ML); dense; yellowish brown; moist; few fine SAND.

27 1.4 — - lenses of SANDY SILT (ML); little fine SAND 6" thick.

610 — 38 1.4 — - very dense.

27 1.4

600 — SILTY SAND (SM); dense; yellowish brown; moist; little fine SAND; some fines.

REF 1.4 — Well-graded SAND with GRAVEL (SW); very dense; yellowish brown; moist; little fine subangular GRAVEL; trace fines.

- random 6" lenses of SILTY SAND (SM); little from fine to medium SAND; some fines.

88 1.4

590 — SANDY SILT (ML); very dense; yellowish brown; moist; mostly fines; some fine SAND.

37 1.4 — SILTY SAND (SM); very dense; yellowish brown; moist; mostly fine SAND; some fines.

57 1.4

580 — 52 1.4 — - 12" lense of SILT (ML).

64 1.4 — - from fine to coarse SAND.

570 — REF 1.4 — Well-graded SAND with GRAVEL (SW); very dense; yellowish brown; moist; little fine subangular and subrounded GRAVEL; few fines.

REF 1.4

560

10-28-14
Terminated at Elev 561.9'
ERi = 86%

129+00 130+00 131+00

PROFILE
Horiz: 1" = 10'
Vert: 1" = 10'

ENGINEERING SERVICES	MATERIALS AND GEOTECHNICAL SERVICES	STATE OF CALIFORNIA DEPARTMENT OF TRANSPORTATION	DIVISION OF ENGINEERING SERVICES STRUCTURE DESIGN DESIGN BRANCH 3	BRIDGE NO. 49-0162R POST MILE 65.1	SOUTH SAN MIGUEL UC (WIDEN) LOG OF TEST BORINGS 3 OF 4
FUNCTIONAL SUPERVISOR NAME: T. Menard	DRAWN BY: F. Nguyen CHECKED BY: M. Jurasius	FIELD INVESTIGATION BY: R. Turner			

OGS CIVIL LOG OF TEST BORINGS SHEET

ORIGINAL SCALE IN INCHES FOR REDUCED PLANS 0 1 2 3

UNIT: 3650
PROJECT NUMBER & PHASE: 05000200201 CONTRACT NO.: 05-0G0404

DISREGARD PRINTS BEARING EARLIER REVISION DATES → REVISION DATES 06-29-15 09-25-15 10-28-15 11-16-15 SHEET 32 OF 33

FILE => 49-0162r-y-ltb3of4.dgn

USERNAME => s115755 DATE PLOTTED => 22-JUL-2016 TIME PLOTTED => 17:54

FED. ROAD DIV. NO.	STATE	PROJ. No.	FISCAL YEAR	SHEET NO.	TOTAL SHEETS
7	CAL.			50	63

F-99(21)

DIST.	COUNTY	ROUTE	SECTION	SHEET No.	TOTAL SHEETS
V	SLO	2	A	5	5

DATE APPROVED OCTOBER 15 1956

BRIDGE DEPARTMENT

NOTES:
No CHANGES IN PLAN PTG GRADE
DESIGN PILE LOADING : 45 T
TYPE PILE . CAST IN DRILLED HOLES
DIAMETER : 1'-3½"
TOTAL No. PILES : 13
LF PILES "AS BUILT" : 479.0
LF PILES CALLED FOR ON PLANS 410

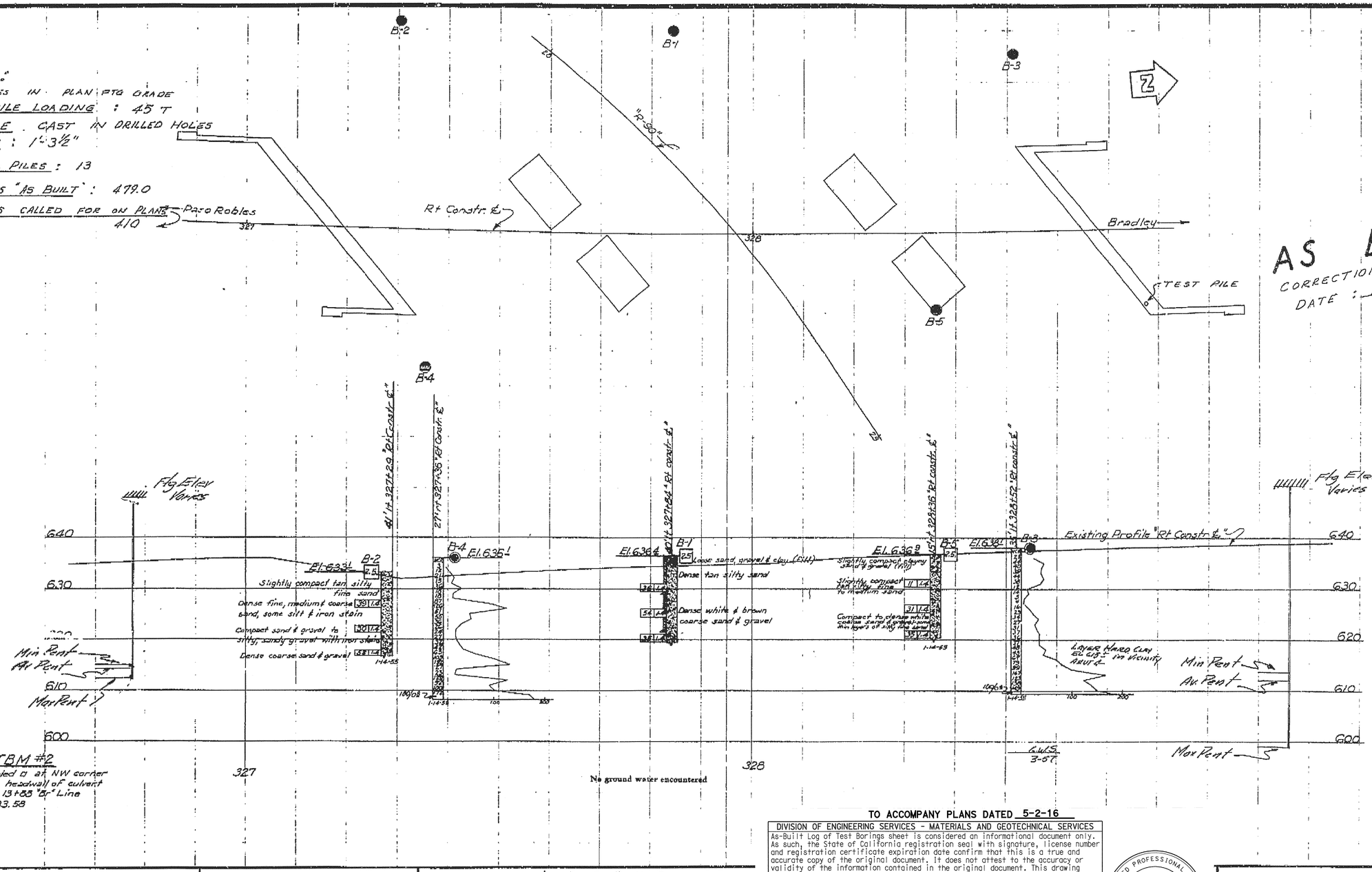

AS BUILT
CORRECTIONS BY: John D. Pettine
DATE : 10-9-57

AS BUILT PLANS
Contract No. 57-SVC.14
Date Completed
Document No. 50000987

CHECKED by C.E. Marek 2-55
Approval Recommended by: Structure Maintenance Engineer
Bridge Design Engineer

TO ACCOMPANY PLANS DATED 5-2-16

DIVISION OF ENGINEERING SERVICES - MATERIALS AND GEOTECHNICAL SERVICES

As-Built Log of Test Borings sheet is considered an informational document only. As such, the State of California registration seal with signature, license number and registration certificate expiration date confirm that this is a true and accurate copy of the original document. It does not attest to the accuracy or validity of the information contained in the original document. This drawing is available and presented only for the convenience of any bidder, contractor or other interested party.

DIST.	COUNTY	ROUTE	POST MILE-TOTAL PROJECT	Sheet No.	Total Sheets
05	SLO,Mon	101	63.2/R69.3, R0.0/R1.9	709	858

Ryan Turner 11/16/15
REGISTERED CIVIL ENGINEER DATE

REGISTERED PROFESSIONAL ENGINEER Ryan Turner No. C73956 Exp. 6-30-17 CIVIL STATE OF CALIFORNIA

SOUTH SAN MIGUEL UC (WIDEN)

LOG OF TEST BORINGS 4 OF 4

UNIT: 3650	CONTRACT No.	BRIDGE No.
PROJ. No. & PHASE: 05000200201	05-0G0404	49-0162R
AS-BUILT VERT DATUM: UNKNOWN CONVERSION: N/A	Sheet	of
NOTE: A COPY OF THIS LOG OF TEST BORINGS IS AVAILABLE AT OFFICE OF STRUCTURE MAINTENANCE AND INVESTIGATIONS, SACRAMENTO, CALIFORNIA	33	33

NOTES

The contractor's attention is directed to Section 2, Article (c) of the Standard Specifications and to the Special Provisions accompanying this set of plans.
Classification of earth material as shown on this sheet is based upon field inspection and is not to be construed to imply mechanical analysis.

STATE OF CALIFORNIA
DEPARTMENT OF PUBLIC WORKS
DIVISION OF HIGHWAYS

SOUTH SAN MIGUEL UNDERCROSSING

LOG OF TEST BORINGS

SCALE 1"=10' | BRIDGE 49-162(R) | FILE | DRAWING C-4174-5

PREL. DRAWING NO. P. 4174 9

1-A

CLASSIFICATION OF MATERIAL BASED ON STANDARD GRADE SIZE LIMITS

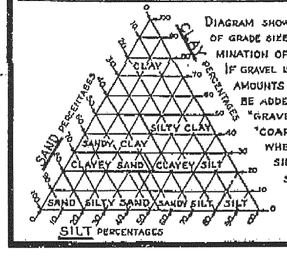

DIAGRAM SHOWING THE BASIS FOR ESTIMATES OF GRADE SIZE DISTRIBUTION USED IN DETERMINATION OF CLASS NAMES.
IF GRAVEL IS PRESENT IN APPRECIABLE AMOUNTS THE TERM "GRAVELLY" MAY BE ADDED TO THE CLASS NAME, VIZ. "GRAVELLY SAND". THE TERMS "COARSE", "MEDIUM" AND "FINE" WHEN USED TO DESCRIBE SAND, SILT AND GRAVEL REFER TO STANDARD GRADE SIZE LIMITS.

LEGEND OF EARTH MATERIALS

- GRAVEL
- SAND
- SILT
- CLAY
- SANDY CLAY OR CLAYEY SAND
- SANDY SILT OR SILTY SAND
- SILTY CLAY OR CLAYEY SILT
- PEAT AND/OR ORGANIC MATTER
- FILL MATERIAL
- IGNEOUS ROCK
- SEDIMENTARY ROCK
- METAMORPHIC ROCK

LEGEND OF

- PLAN OF ANY BORING
- PENETROMETER
- 2¼" CONE PENETROMETER
- SAMPLER BORING (DRY)
- ROTARY BORING (WET)
- AUGER BORING (DRY)
- JET BORING
- CORE BORING
- TEST PIT

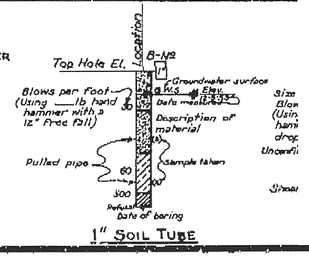

1" SOIL TUBE

DIST	COUNTY	ROUTE	POST MILES TOTAL PROJECT	SHEET No.	TOTAL SHEETS
05	SLO,Mon	101	63.2/R69.3, R0.0/R1.9	710	858

REGISTERED CIVIL ENGINEER — DATE 4-22-16

5-2-16
PLANS APPROVAL DATE

REGISTERED PROFESSIONAL ENGINEER — JOSE M Aquino III — No. 58386 — Exp. 12-31-16 — CIVIL — STATE OF CALIFORNIA

The State of California or its officers or agents shall not be responsible for the accuracy or completeness of scanned copies of this plan sheet.

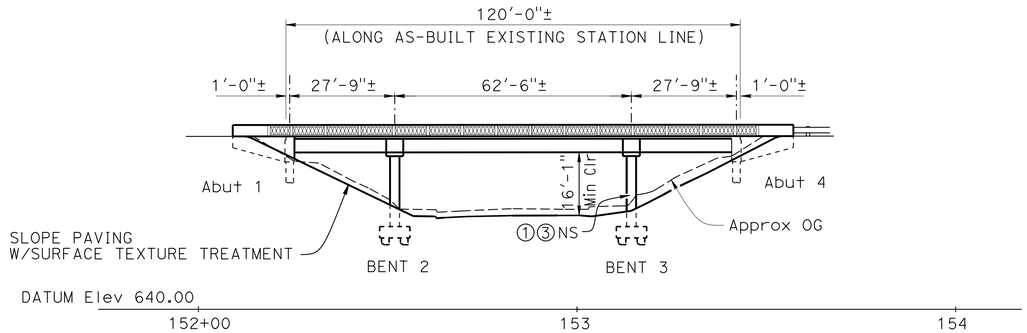

ELEVATION A-A

1" = 20'

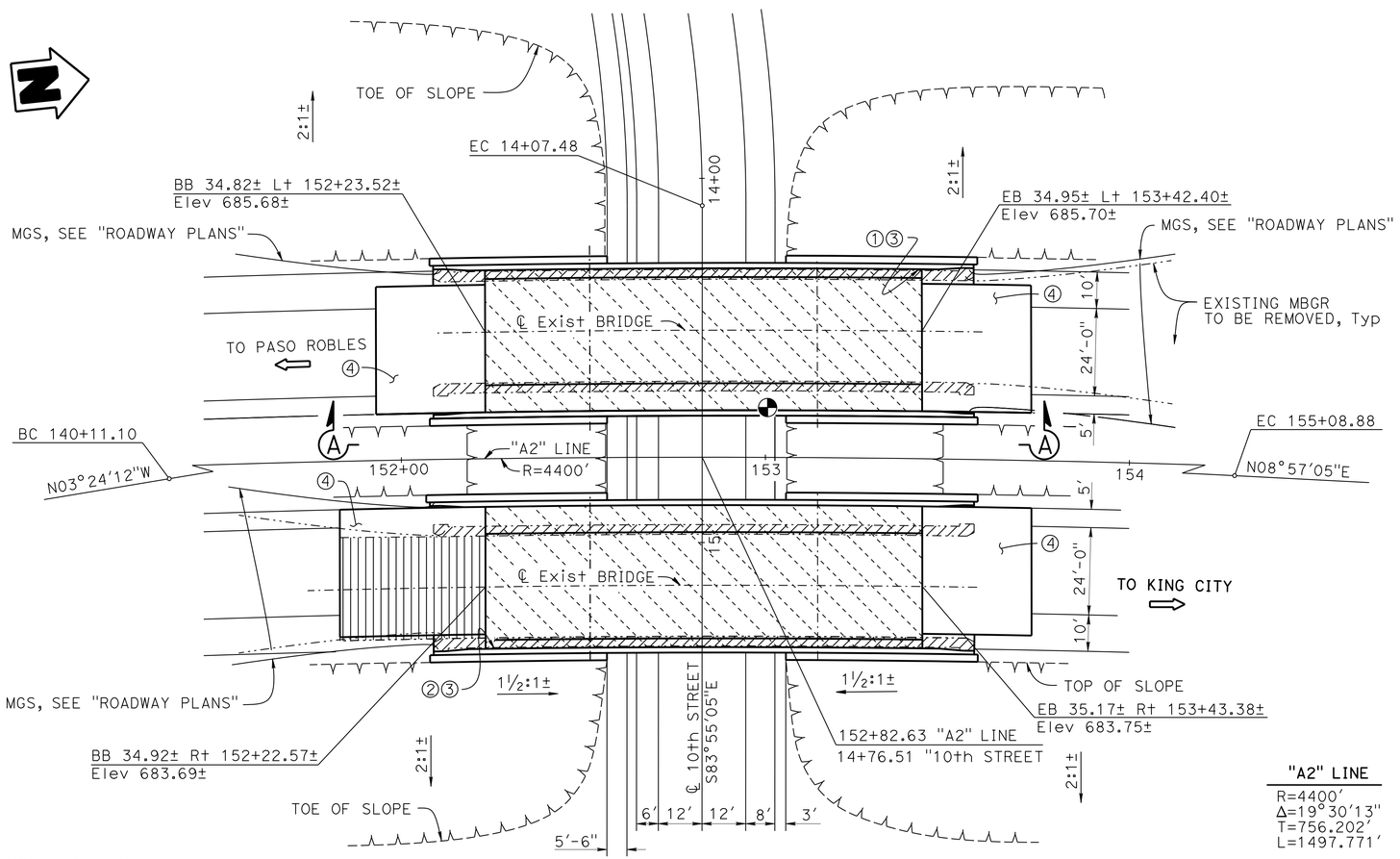

PLAN

1" = 20'

"A2" LINE

R=4400'
Δ=19°30'13"
T=756.202'
L=1497.771'

LEGEND:

- Indicates existing bridge
- Indicates new construction
- Indicates existing barrier removal
- Indicates existing approach slab removal
- Indicates limits of prepare bridge deck and place Polyester Concrete Overlay
- Point of minimum vertical clearance

NOTES:

① Paint "Br. No. 49-0163L"
② Paint "Br. No. 49-0163R"
③ Paint "10TH STREET UC"
④ Structure Approach Type R(30D)

For "TYPICAL SECTION", see "GENERAL PLAN NO. 2" sheet
For "GENERAL NOTES" and "INDEX TO PLANS", see "INDEX TO PLANS" sheet

QUANTITIES

PREPARE CONCRETE BRIDGE DECK SURFACE	9,360	SQFT
FURNISH POLYESTER CONCRETE OVERLAY	780	CF
PLACE POLYESTER CONCRETE OVERLAY	9,360	SQFT
BRIDGE REMOVAL (PORTION), LOCATION B	LUMP	SUM
STRUCTURE EXCAVATION (BRIDGE)	182	CY
STRUCTURE BACKFILL (BRIDGE)	182	CY
24" CAST-IN-DRILLED-HOLE CONCRETE PILING	414	LF
STRUCTURAL CONCRETE, BRIDGE FOOTING	28	CY
STRUCTURAL CONCRETE, BRIDGE	70	CY
STRUCTURAL CONCRETE, BRIDGE (POLYMER FIBER)	84	CY
STRUCTURAL CONCRETE, APPROACH SLAB (TYPE R)	210	CY
PAVING NOTCH EXTENSION	61	CF
DRILL AND PRESSURE GROUT BAR REINFORCING	126	LF
DRILL AND BOND DOWEL	96	LF
DRILL AND BOND DOWEL (CHEMICAL ADHESIVE)	694	EA
FURNISH PRECAST CONCRETE GIRDER (20'-30')	8	EA
FURNISH PRECAST PRESTRESSED CONCRETE GIRDER (50'-60')	4	EA
ERECT PRECAST CONCRETE GIRDER	8	EA
ERECT PRECAST PRESTRESSED CONCRETE GIRDER	4	EA
JOINT SEAL (MR 1/2")	142	LF
BAR REINFORCING STEEL (BRIDGE)	64,200	LB
HEADED BAR REINFORCEMENT	64	EA
PREPARE AND PAINT CONCRETE	860	SQFT
SLOPE PAVING (CONCRETE)	36	CY
CONCRETE BARRIER (TYPE 736 MODIFIED)	594	LF

NOTE:
THE CONTRACTOR MUST VERIFY ALL CONTROLLING FIELD DIMENSIONS BEFORE ORDERING OR FABRICATING ANY MATERIAL.

Joseph E Downing
DESIGN ENGINEER

	BY	CHECKED
DESIGN	Ashraf Ahmed	Michael K Bergman
DETAILS	S Motalebi, N C Gwynn	Michael K Bergman
QUANTITIES	Jose M Aquino III	Eric G Burgeson

LOAD FACTOR DESIGN — LIVE LOADING: HS20-44 AND ALTERNATIVE AND PERMIT DESIGN LOAD
LAYOUT — BY Ashraf Ahmed — CHECKED Michael K Bergman
SPECIFICATIONS — BY Jim Corrado — PLANS AND SPECS COMPARED Jim Corrado

ORIGINAL SCALE IN INCHES FOR REDUCED PLANS 0 1 2 3

STATE OF CALIFORNIA
DEPARTMENT OF TRANSPORTATION

DIVISION OF ENGINEERING SERVICES
STRUCTURE DESIGN
DESIGN BRANCH 3

BRIDGE NO. 49-0163L/R
POST MILE 65.6

10TH STREET UC (WIDEN)
GENERAL PLAN No. 1

UNIT: 3578
PROJECT NUMBER & PHASE: 05000200201
CONTRACT NO.: 05-0G0404

DISREGARD PRINTS BEARING EARLIER REVISION DATES
REVISION DATES: 5-2-14 3-28-16 1-26-16
SHEET 1 OF 31

USERNAME => s115755 DATE PLOTTED => 22-JUL-2016 TIME PLOTTED => 17:54

STRUCTURES DESIGN GENERAL PLAN SHEET (ENGLISH) (REV.09-01-10)

FILE => 49-0163lr-a-gp01.dgn

DIST	COUNTY	ROUTE	POST MILES TOTAL PROJECT	SHEET No.	TOTAL SHEETS
05	SLO,Mon	101	63.2/R69.3, R0.0/R1.9	711	858

REGISTERED CIVIL ENGINEER 4-22-16 DATE

5-2-16
PLANS APPROVAL DATE

REGISTERED PROFESSIONAL ENGINEER JOSE M Aquino III No. 58386 Exp. 12-31-16 CIVIL STATE OF CALIFORNIA

The State of California or its officers or agents shall not be responsible for the accuracy or completeness of scanned copies of this plan sheet.

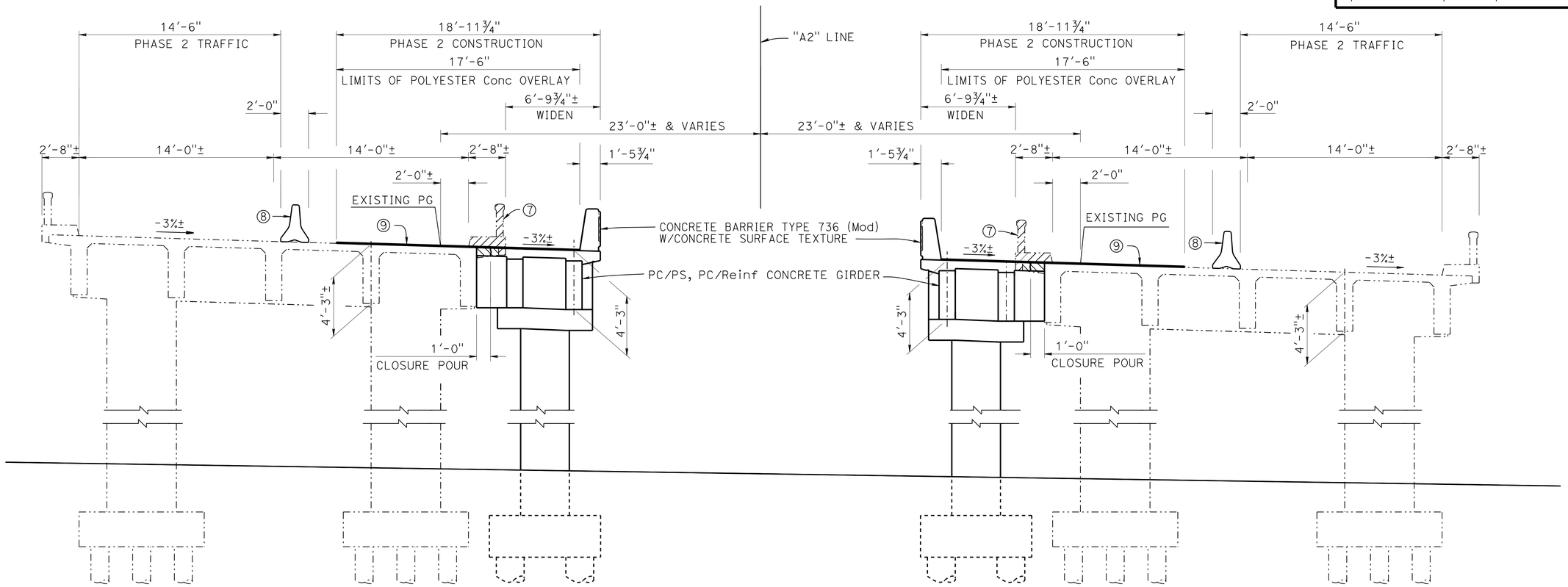

STAGE 1 (PHASE 2)
TYPICAL SECTION
¼" = 1'-0"

LEGEND:
- Indicates existing bridge
- Indicates new construction
- Indicates existing bridge removal (Portion)
- Indicates existing barrier removal

NOTES:
⑦ Existing barrier to be removed
⑧ Temporary Railing (Type K), see "ROADWAY PLANS"
⑨ 1" & Var Polyester Concrete Overlay

1. Other Stages not shown, see "ROADWAY PLANS"
2. Structure Approach work must be performed inside each Phase Construction limits shown

NOTE:
THE CONTRACTOR MUST VERIFY ALL CONTROLLING FIELD DIMENSIONS BEFORE ORDERING OR FABRICATING ANY MATERIAL.

Joseph E Downing
DESIGN ENGINEER

	BY	CHECKED
DESIGN	Ashraf Ahmed	Michael K Bergman
DETAILS	S Motalebi, N C Gwynn	Michael K Bergman
QUANTITIES	Jose M Aquino III	Eric G Burgeson

LOAD FACTOR DESIGN — LIVE LOADING: HS20-44 AND ALTERNATIVE AND PERMIT DESIGN LOAD

	BY	CHECKED
LAYOUT	Ashraf Ahmed	Michael K Bergman
SPECIFICATIONS	Jim Corrado	PLANS AND SPECS COMPARED Jim Corrado

ORIGINAL SCALE IN INCHES FOR REDUCED PLANS 0 1 2 3

STATE OF CALIFORNIA
DEPARTMENT OF TRANSPORTATION

DIVISION OF ENGINEERING SERVICES
STRUCTURE DESIGN
DESIGN BRANCH 3

BRIDGE NO. 49-0163L/R
POST MILE 65.6

10TH STREET UC (WIDEN)
GENERAL PLAN No. 2

UNIT: 3578
PROJECT NUMBER & PHASE: 05000200201
CONTRACT NO.: 05-0G0404

DISREGARD PRINTS BEARING EARLIER REVISION DATES

REVISION DATES: 5-28-14 | 7-24-15 | 8-24-15 | 10/26/15 | 10/27/15

SHEET 2 OF 31

USERNAME => s115755 DATE PLOTTED => 22-JUL-2016 TIME PLOTTED => 17:54

DIST	COUNTY	ROUTE	POST MILES TOTAL PROJECT	SHEET No.	TOTAL SHEETS
05	SLO,Mon	101	63.2/R69.3, R0.0/R1.9	712	858

REGISTERED CIVIL ENGINEER 4-22-16 DATE

5-2-16
PLANS APPROVAL DATE

REGISTERED PROFESSIONAL ENGINEER
JOSE M Aquino III
No. 58386
Exp.12-31-16
CIVIL
STATE OF CALIFORNIA

The State of California or its officers or agents shall not be responsible for the accuracy or completeness of scanned copies of this plan sheet.

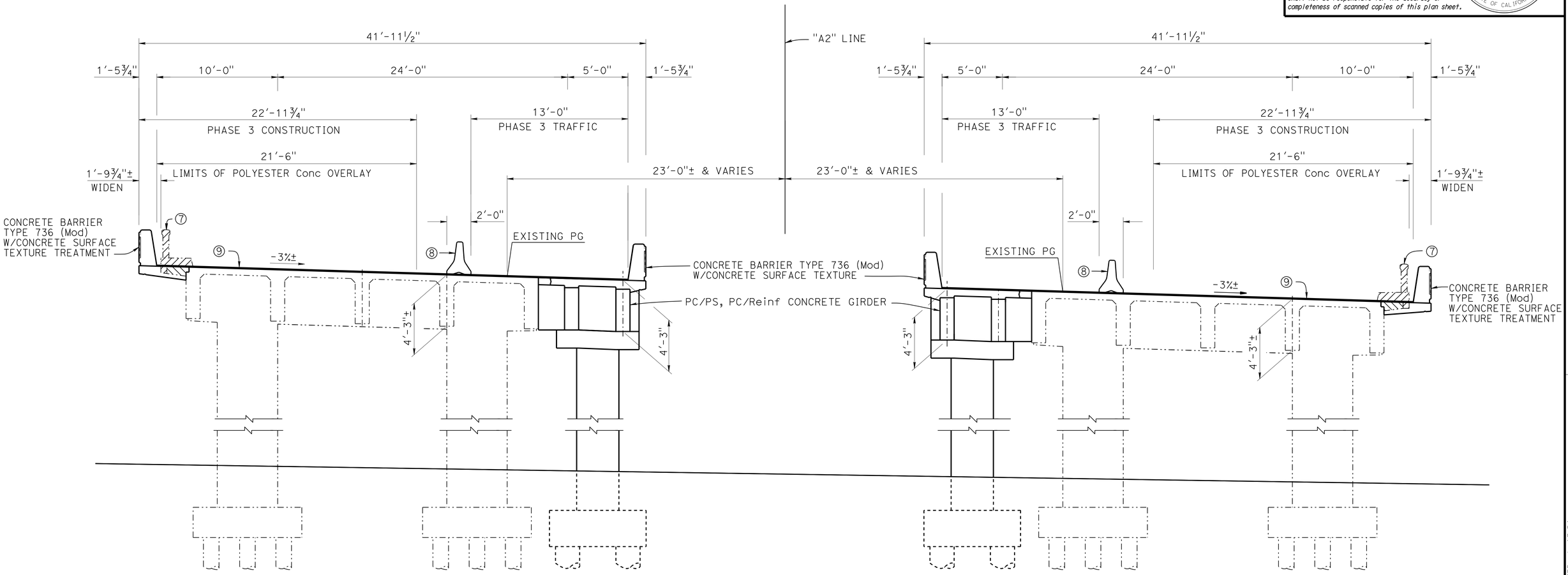

STAGE 1 (PHASE 3)
TYPICAL SECTION
¼" = 1'-0"

LEGEND:
- Indicates existing bridge
- Indicates new construction
- Indicates existing bridge removal (Portion)
- Indicates existing barrier removal

NOTES:
⑦ Existing barrier to be removed
⑧ Temporary Railing (Type K), see "ROADWAY PLANS"
⑨ 1" & Var Polyester Concrete Overlay
1. Other Stages not shown, see "ROADWAY PLANS"
2. Structure Approach work must be performed inside each Phase Construction limits shown

NOTE:
THE CONTRACTOR MUST VERIFY ALL CONTROLLING FIELD DIMENSIONS BEFORE ORDERING OR FABRICATING ANY MATERIAL.

Joseph E Downing
DESIGN ENGINEER

	BY	CHECKED
DESIGN	Ashraf Ahmed	Michael K Bergman
DETAILS	S Motalebi, N C Gwynn	Michael K Bergman
QUANTITIES	Jose M Aquino III	Eric G Burgeson

LOAD FACTOR DESIGN — LIVE LOADING: HS20-44 AND ALTERNATIVE AND PERMIT DESIGN LOAD

	BY	CHECKED
LAYOUT	Ashraf Ahmed	Michael K Bergman
SPECIFICATIONS	Jim Corrado	PLANS AND SPECS COMPARED Jim Corrado

ORIGINAL SCALE IN INCHES FOR REDUCED PLANS 0 1 2 3

STATE OF CALIFORNIA
DEPARTMENT OF TRANSPORTATION

DIVISION OF ENGINEERING SERVICES
STRUCTURE DESIGN
DESIGN BRANCH 3

BRIDGE NO. 49-0163L/R
POST MILE 65.6

10TH STREET UC (WIDEN)
GENERAL PLAN No. 3

UNIT: 3578
PROJECT NUMBER & PHASE: 05000200201
CONTRACT NO.: 05-0G0404

DISREGARD PRINTS BEARING EARLIER REVISION DATES

REVISION DATES: 5-28-14 1-22-15 8-24-15

SHEET 3 OF 31

USERNAME => s115755 DATE PLOTTED => 22-JUL-2016 TIME PLOTTED => 17:54

DIST	COUNTY	ROUTE	POST MILES TOTAL PROJECT	SHEET No.	TOTAL SHEETS
05	SLO,Mon	101	63.2/R69.3, R0.0/R1.9	713	858

REGISTERED CIVIL ENGINEER 4-22-16 DATE

5-2-16
PLANS APPROVAL DATE

REGISTERED PROFESSIONAL ENGINEER Jose M Aquino III No. 58386 Exp. 12-31-16 CIVIL STATE OF CALIFORNIA

The State of California or its officers or agents shall not be responsible for the accuracy or completeness of scanned copies of this plan sheet.

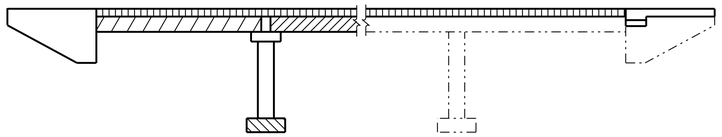

RIGHT SIDE WIDENING LEFT SIDE WIDENING

NOTE:
Left bridge shown, right bridge similar by opposite hand

LEGEND:

- Structural Concrete, Bridge
- Structural Concrete, Bridge (Polymer Fiber), (4000 psi @ 28 days)
- Precast/PS Concrete Girder, Bridge
- Precast/Reinforced Concrete Girder, Bridge
- Structural Concrete, Bridge Footing

CONCRETE STRENGTH AND TYPE LIMITS

NO SCALE

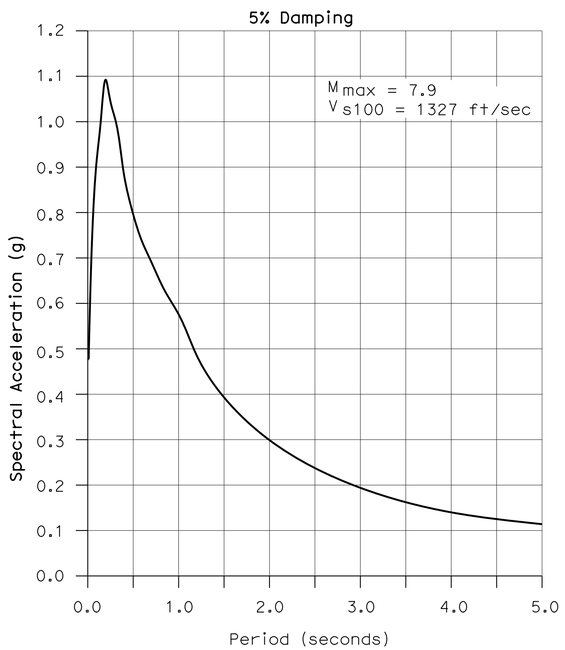

SITE SPECIFIC ARS CURVE

NO SCALE

NOTE:
THE CONTRACTOR SHALL VERIFY ALL CONTROLLING FIELD DIMENSIONS BEFORE ORDERING OR FABRICATING ANY MATERIAL.

GENERAL NOTES

DESIGN:
Bridge Design Specifications-April 2000 (LFD)
(1996 AASHTO with Interims and Revisions by CALTRANS)

DEAD LOAD:
Includes 11.67 psf for 1" polyester concrete overlay.
No future additional deck surfacing/overlay allowed

LIVE LOADING:
HS20-44 and alternative permit load

SEISMIC DESIGN:
See "SITE SPECIFIC ARS CURVE"

REINFORCED CONCRETE:
fy = 60 ksi
f'c = 3.6 ksi
n = 8

PILE DATA TABLE

LOCATION	PILE TYPE	NOMINAL AXIAL RESISTANCE (kips) (LFD)		DESIGN TIP ELEVATION	SPECIFIED TIP ELEVATION
		COMPRESSION	TENSION		
Abutment 1	24" CIDH	90	N/A	656.00	656.00
Bent 2	24" CIDH	150	30	639.00	639.00
Bent 3	24" CIDH	150	30	639.00	639.00
Abutment 4	24" CIDH	90	N/A	656.00	656.00

NOTES:
1. Table above applies to both left and right bridges
2. Specified Tip elevation shall not be raised

INDEX TO PLANS

SHEET No.	TITLE
1	GENERAL PLAN No. 1
2	GENERAL PLAN No. 2
3	GENERAL PLAN No. 3
4	INDEX TO PLANS
5	FOUNDATION PLAN
6	ABUTMENT DETAILS No. 1
7	ABUTMENT DETAILS No. 2
8	ABUTMENT DETAILS No. 3
9	ABUTMENT DETAILS No. 4
10	ABUTMENT DETAILS No. 5
11	BENT DETAILS No. 1
12	BENT DETAILS No. 2
13	BENT DETAILS No. 3
14	TYPICAL SECTION
15	GIRDER LAYOUT
16	PRECAST REINFORCED CONCRETE GIRDER
17	PRECAST PRESTRESSED GIRDER
18	CONCRETE REMOVAL DETAILS No. 1
19	CONCRETE REMOVAL DETAILS No. 2
20	BARRIER SURFACE TEXTURE
21	SLOPE PAVING SURFACE TEXTURE Det No. 1
22	SLOPE PAVING SURFACE TEXTURE Det No. 2
23	SLOPE PAVING SURFACE TEXTURE Det No. 3
24	STRUCTURE APPROACH DRAINAGE DETAILS
25	STRUCTURE APPROACH TYPE R (30D)
26	SLOPE PAVING-FULL SLOPE-NO SKEW
27	LOG OF TEST BORINGS 1 OF 5
28	LOG OF TEST BORINGS 2 OF 5
29	LOG OF TEST BORINGS 3 OF 5
30	LOG OF TEST BORINGS 4 OF 5
31	LOG OF TEST BORINGS 5 OF 5

STANDARD PLANS DATED 2010

	A10A	ABBREVIATIONS (SHEET 1 OF 2)
RSP	A10B	ABBREVIATIONS (SHEET 2 OF 2)
	A10C	LINES AND SYMBOLS (SHEET 1 OF 3)
	A10D	LINES AND SYMBOLS (SHEET 2 OF 3)
	A10E	LINES AND SYMBOLS (SHEET 3 OF 3)
RSP	A10F	LEGEND - SOIL (SHEET 1 OF 2)
RSP	A10G	LEGEND - SOIL (SHEET 2 OF 2)
	A10H	LEGEND - ROCK
	A62C	LIMITS OF PAYMENT FOR EXCAVATION AND BACKFILL BRIDGE
	B0-1	BRIDGE DETAILS
	B0-3	BRIDGE DETAILS
	B0-5	BRIDGE DETAILS
	B2-3	16" and 24" CAST-IN-DRILLED-HOLE CONCRETE PILE
RSP	B6-21	JOINT SEALS (MAXIMUM MOVEMENT RATING = 2")
RSP	B11-56	CONCRETE BARRIER TYPE 736

STANDARD PLAN SHEET No.

DETAIL No.

	BY	CHECKED
DESIGN	Ashraf Ahmed	Michael K Bergman
DETAILS	Nancy C Gwynn	Michael K Bergman
QUANTITIES	Jose M Aquino III	Eric G Burgeson

STATE OF CALIFORNIA
DEPARTMENT OF TRANSPORTATION

DIVISION OF ENGINEERING SERVICES
STRUCTURE DESIGN
DESIGN BRANCH 3

BRIDGE NO. 49-0163L/R
POST MILE 65.6

10TH STREET UC (WIDEN)
INDEX TO PLANS

STRUCTURES DESIGN DETAIL SHEET (ENGLISH) (REV. 09-01-10)

ORIGINAL SCALE IN INCHES FOR REDUCED PLANS 0 1 2 3

UNIT: 3578
PROJECT NUMBER & PHASE: 05000200201
CONTRACT NO.: 05-0G0404

DISREGARD PRINTS BEARING EARLIER REVISION DATES

REVISION DATES 5-2-16 .....

SHEET 4 OF 31

FILE => 49-0163lr-a-itp.dgn

USERNAME => s115755 DATE PLOTTED => 22-JUL-2016 TIME PLOTTED => 17:54

DIST	COUNTY	ROUTE	POST MILES TOTAL PROJECT	SHEET No.	TOTAL SHEETS
05	SLO,Mon	101	63.2/R69.3, R0.0/R1.9	714	858

REGISTERED CIVIL ENGINEER 4-22-16 DATE

5-2-16
PLANS APPROVAL DATE

REGISTERED PROFESSIONAL ENGINEER Jose M Aquino III No. 58386 Exp. 12-31-16 CIVIL STATE OF CALIFORNIA

The State of California or its officers or agents shall not be responsible for the accuracy or completeness of electronic copies of this plan sheet.

CURVE DATA

No.	R	Δ	T	L
1	4400.00	19°30'13"	756.20	1497.77
2	360.00	39°32'46"	129.42	248.48

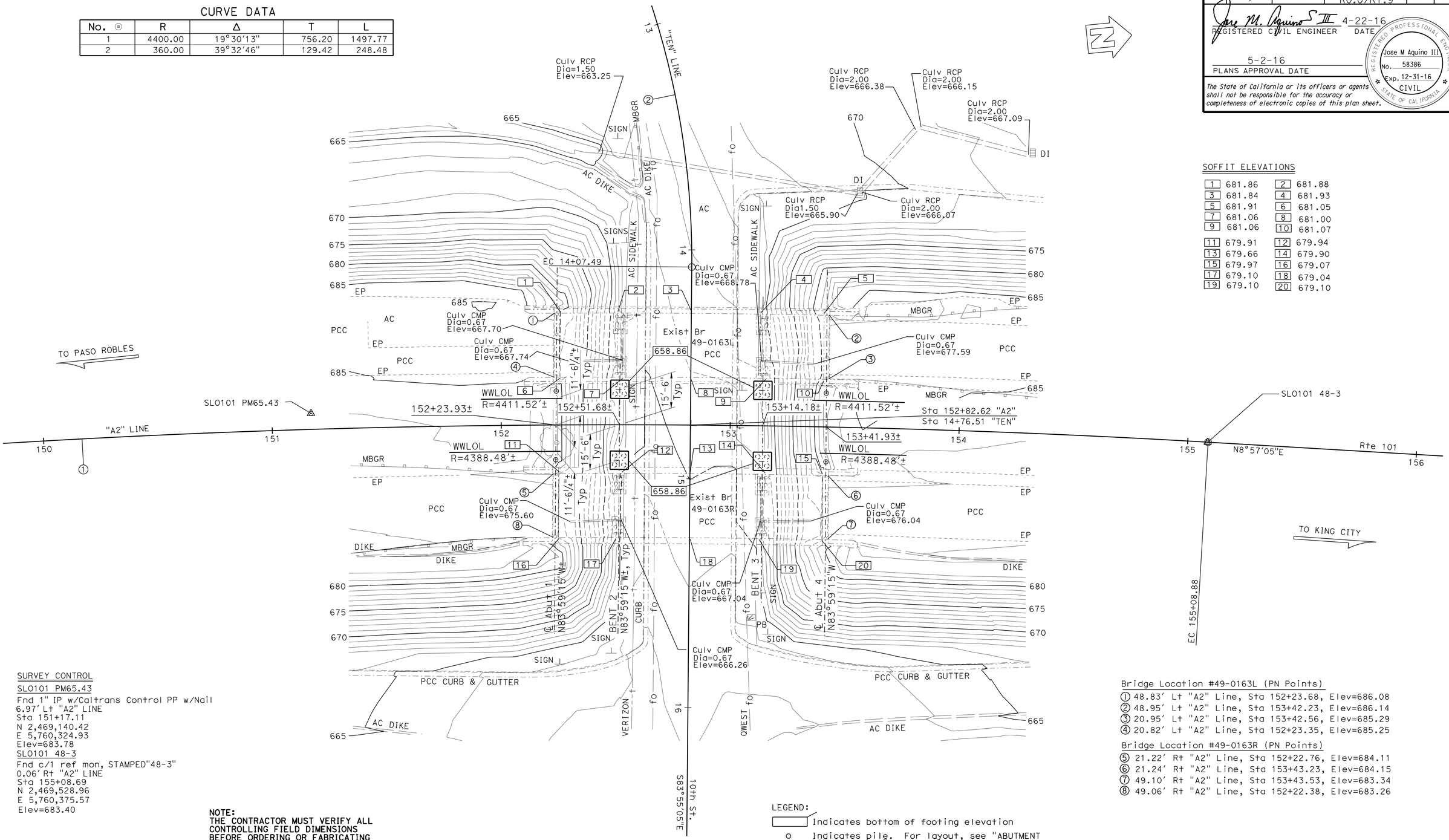

SOFFIT ELEVATIONS

1	681.86	2	681.88
3	681.84	4	681.93
5	681.91	6	681.05
7	681.06	8	681.00
9	681.06	10	681.07
11	679.91	12	679.94
13	679.66	14	679.90
15	679.97	16	679.07
17	679.10	18	679.04
19	679.10	20	679.10

SURVEY CONTROL

SLO101 PM65.43
Fnd 1" IP w/Caltrans Control PP w/Nail
6.97' Lt "A2" LINE
Sta 151+17.11
N 2,469,140.42
E 5,760,324.93
Elev=683.78

SLO101 48-3
Fnd c/1 ref mon, STAMPED"48-3"
0.06' Rt "A2" LINE
Sta 155+08.69
N 2,469,528.96
E 5,760,375.57
Elev=683.40

NOTE:
THE CONTRACTOR MUST VERIFY ALL CONTROLLING FIELD DIMENSIONS BEFORE ORDERING OR FABRICATING ANY MATERIAL.

LEGEND:
▭ Indicates bottom of footing elevation
○ Indicates pile. For layout, see "ABUTMENT DETAILS No. 1" sheet

Bridge Location #49-0163L (PN Points)

① 48.83' Lt "A2" Line, Sta 152+23.68, Elev=686.08
② 48.95' Lt "A2" Line, Sta 153+42.23, Elev=686.14
③ 20.95' Lt "A2" Line, Sta 153+42.56, Elev=685.29
④ 20.82' Lt "A2" Line, Sta 152+23.35, Elev=685.25

Bridge Location #49-0163R (PN Points)

⑤ 21.22' Rt "A2" Line, Sta 152+22.76, Elev=684.11
⑥ 21.24' Rt "A2" Line, Sta 153+43.23, Elev=684.15
⑦ 49.10' Rt "A2" Line, Sta 153+43.53, Elev=683.34
⑧ 49.06' Rt "A2" Line, Sta 152+22.38, Elev=683.26

PRELIMINARY INVESTIGATION SECTION

SCALE 1"=20'	VERT.DATUM NAVD88	PHOTOGRAMMETRY AS OF: X			
	HORZ.DATUM NAD83 (92)	SURVEYED	BY DISTRICT	CHECKED	BY C. FASSETT 08/2014
ALIGNMENT TIES Dist. Traverse Sheet		DRAFTED	BY S. ZHENG 08/2014	CHECKED	BY S. SOU 08/2014

DESIGN	BY Ashraf Ahmed	CHECKED Michael K Bergman
DETAILS	BY Nancy C Gwynn	CHECKED Michael K Bergman
QUANTITIES	BY Jose M Aquino III	CHECKED Eric G Burgeson

STATE OF CALIFORNIA
DEPARTMENT OF TRANSPORTATION

DIVISION OF ENGINEERING SERVICES
STRUCTURE DESIGN
DESIGN BRANCH 3

BRIDGE NO. 49-0163R/L
POST MILE 65.56

10th STREET UC (WIDEN)
FOUNDATION PLAN

STRUCTURES FOUNDATION PLAN SHEET (ENGLISH) (REV. 09-01-10)

ORIGINAL SCALE IN INCHES FOR REDUCED PLANS 0 1 2 3

UNIT: 3646
PROJECT NUMBER & PHASE: 05000200201
CONTRACT NO.: 05-0G0404

DISREGARD PRINTS BEARING EARLIER REVISION DATES

REVISION DATES 07-17-15 8-25-15

SHEET 5 OF 31

FILE => 49-0163lr-e-fpl01.dgn

USERNAME => s115755 DATE PLOTTED => 22-JUL-2016 TIME PLOTTED => 17:54

DIST	COUNTY	ROUTE	POST MILES TOTAL PROJECT	SHEET No.	TOTAL SHEETS
05	SLO,Mon	101	63.2/R69.3, R0.0/R1.9	716	858

REGISTERED CIVIL ENGINEER 4-22-16 DATE

5-2-16
PLANS APPROVAL DATE

REGISTERED PROFESSIONAL ENGINEER Jose M Aquino III No. 58386 Exp. 12-31-16 CIVIL STATE OF CALIFORNIA

The State of California or its officers or agents shall not be responsible for the accuracy or completeness of scanned copies of this plan sheet.

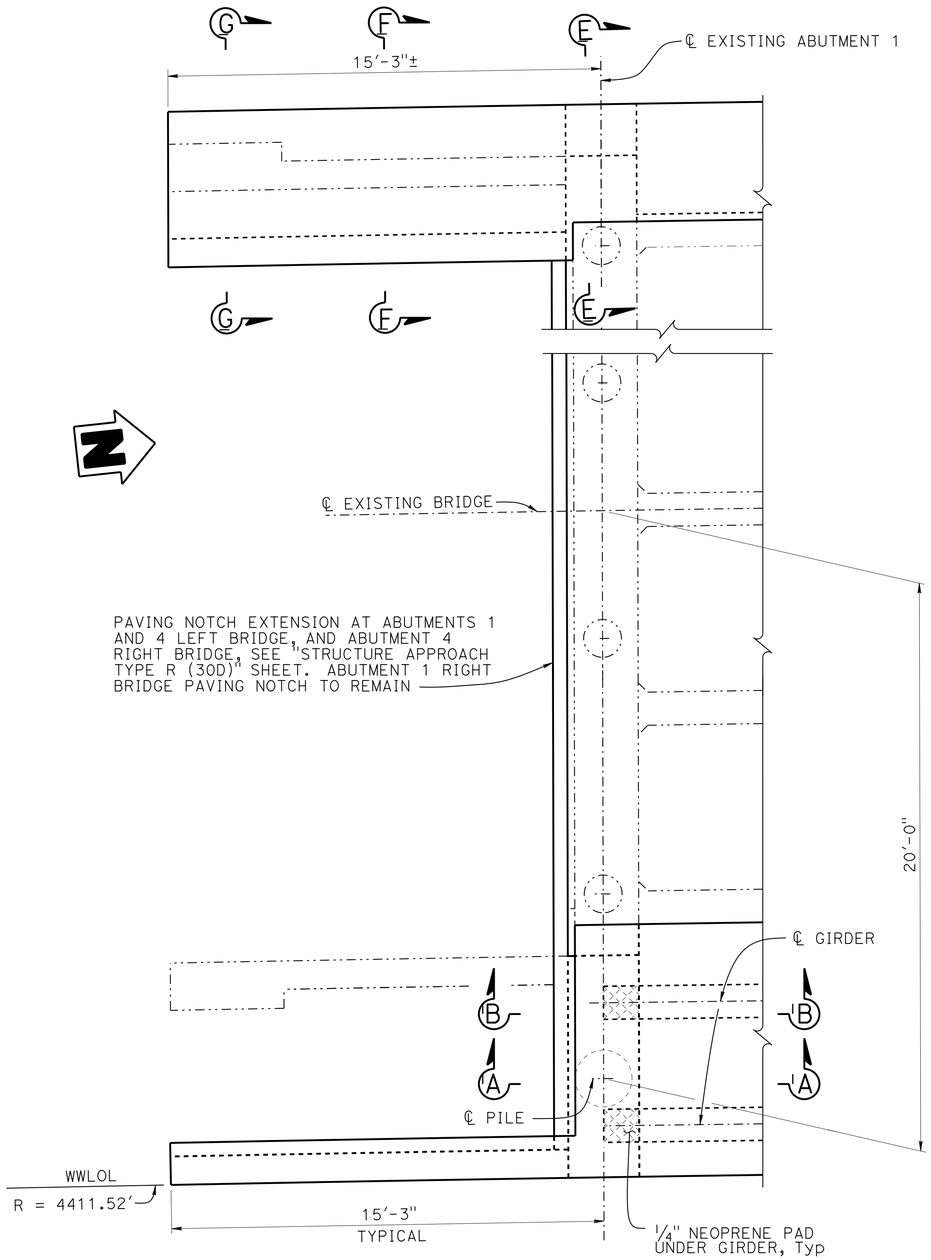

PART PLAN

3/8" = 1'-0"

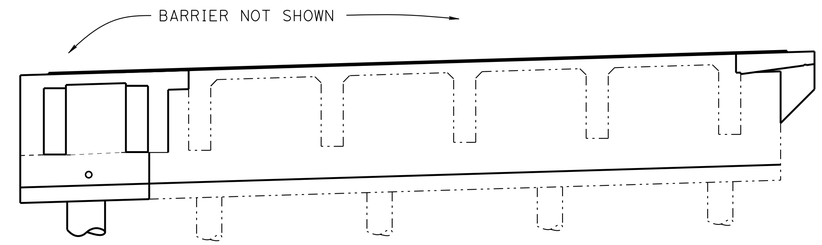

ELEVATION

1/4" = 1'-0"

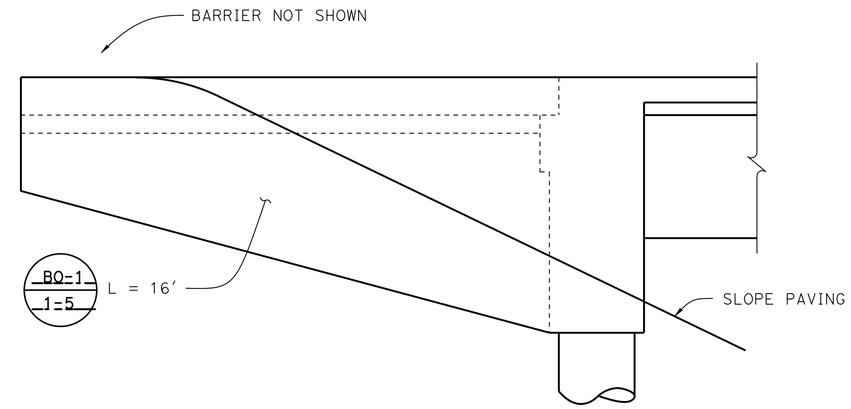

RIGHT WINGWALL ELEVATION

1/2" = 1'-0"

NOTE:
THE CONTRACTOR SHALL VERIFY ALL CONTROLLING FIELD DIMENSIONS BEFORE ORDERING OR FABRICATING ANY MATERIAL.

NOTES:

1. Left bridge shown, right bridge similar
2. For "SECTION A-A" and "SECTION B-B", see "ABUTMENT DETAILS No. 2" sheet
3. For "SECTION E-E", "SECTION F-F" and "SECTION G-G", see "ABUTMENT DETAILS No. 4" sheet

	BY	CHECKED
DESIGN	Ashraf Ahmed	Michael K Bergman
DETAILS	Nancy C Gwynn	Michael K Bergman
QUANTITIES	Jose M Aquino III	Eric G Burgeson

STATE OF CALIFORNIA
DEPARTMENT OF TRANSPORTATION

DIVISION OF ENGINEERING SERVICES
STRUCTURE DESIGN
DESIGN BRANCH 3

BRIDGE NO. 49-0163L/R
POST MILE 65.6

10TH STREET UC (WIDEN)
ABUTMENT DETAILS No. 1

STRUCTURES DESIGN DETAIL SHEET (ENGLISH) (REV. 09-01-10)

ORIGINAL SCALE IN INCHES FOR REDUCED PLANS 0 1 2 3

UNIT: 3578
PROJECT NUMBER & PHASE: 05000200201
CONTRACT NO.: 05-0G0404

DISREGARD PRINTS BEARING EARLIER REVISION DATES

REVISION DATES 8-18-15 8-24-15 8-28-15 1-22-16

SHEET 6 OF 31

FILE => 49-0163lr-f-abdet01.dgn

USERNAME => s115755 DATE PLOTTED => 22-JUL-2016 TIME PLOTTED => 17:54

DIST	COUNTY	ROUTE	POST MILES TOTAL PROJECT	SHEET No.	TOTAL SHEETS
05	SLO,Mon	101	63.2/R69.3, R0.0/R1.9	716	858

REGISTERED CIVIL ENGINEER 4-22-16 DATE

5-2-16
PLANS APPROVAL DATE

REGISTERED PROFESSIONAL ENGINEER Jose M Aquino III No. 58386 Exp. 12-31-16 CIVIL STATE OF CALIFORNIA

The State of California or its officers or agents shall not be responsible for the accuracy or completeness of scanned copies of this plan sheet.

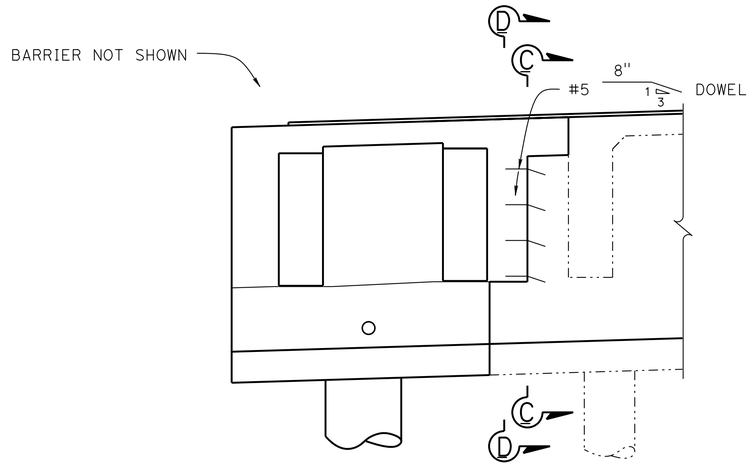

PART ELEVATION
½" = 1'-0"

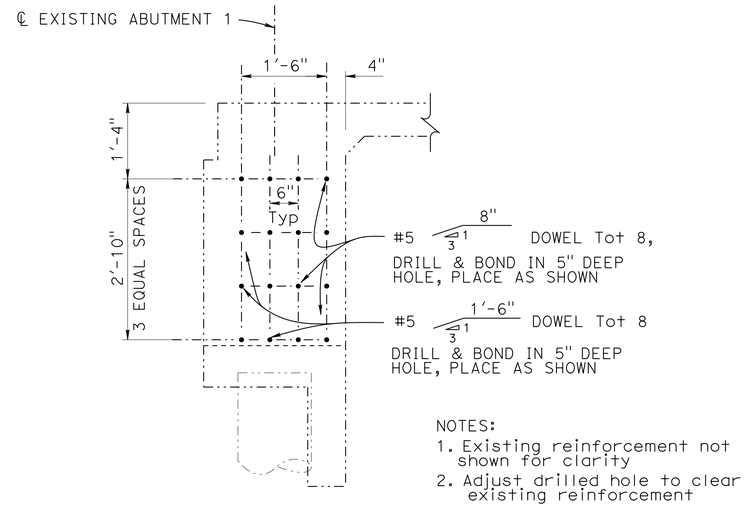

NOTES:
1. Existing reinforcement not shown for clarity
2. Adjust drilled hole to clear existing reinforcement

SECTION C-C
¾" = 1'-0"

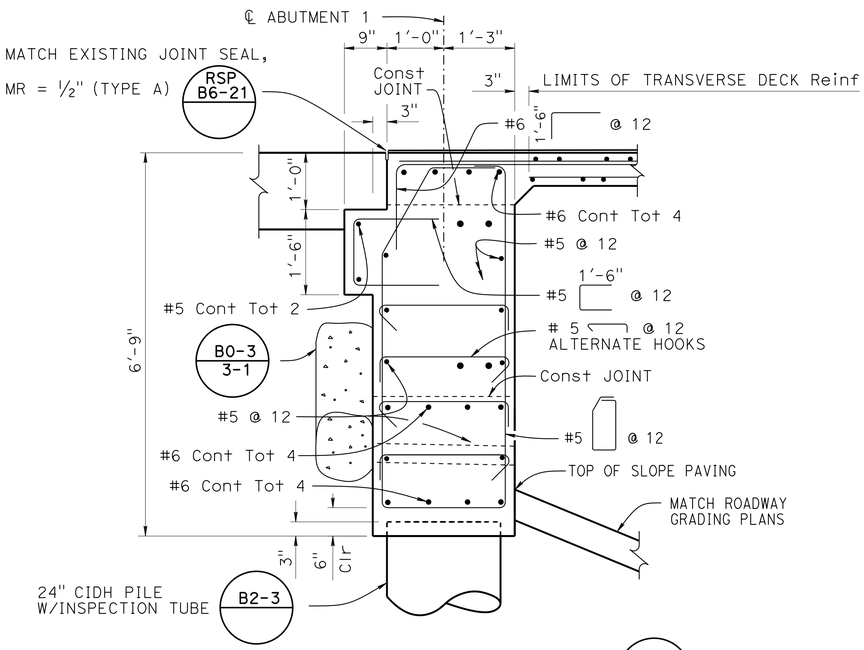

NOTES:
1. For alternative to Standard Plan see "WEEP HOLE AND GEOCOMPOSITE DRAIN" detail, "ABUTMENT DETAILS NO. 3" sheet B0-3 3-1
2. For details not shown, see "SECTION B-B"

SECTION A-A
¾" = 1'-0"

NOTE:
THE CONTRACTOR MUST VERIFY ALL CONTROLLING FIELD DIMENSIONS BEFORE ORDERING OR FABRICATING ANY MATERIAL.

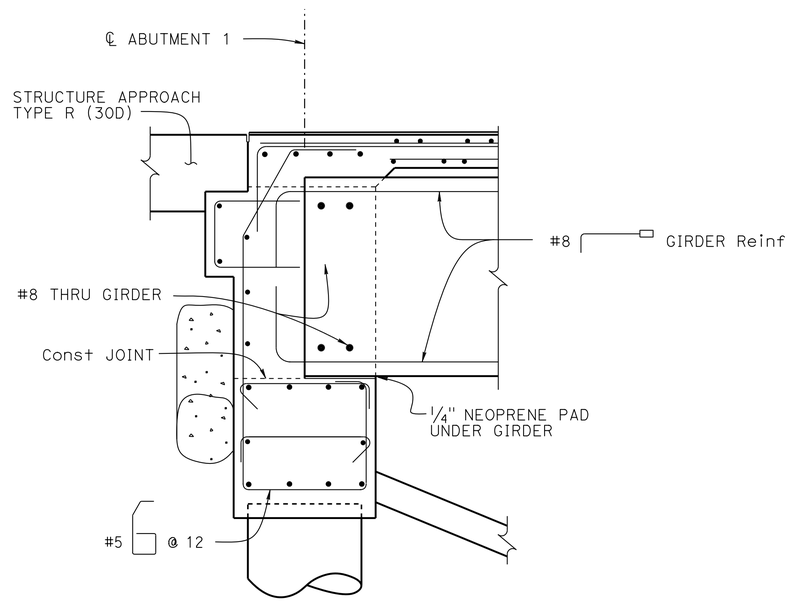

NOTES:
1. For details not shown, see "SECTION A-A"
2. For girder details, see "PRECAST PRESTRESSED GIRDER" details sheet

SECTION B-B
¾" = 1'-0"

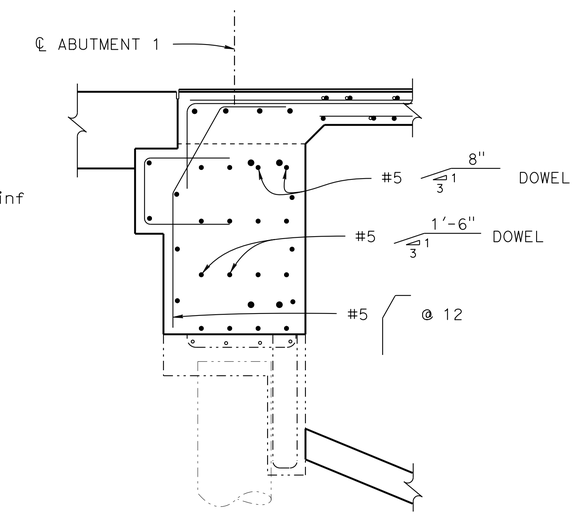

NOTE:
For details not shown, see "SECTION A-A", and "SECTION C-C"

SECTION D-D
¾" = 1'-0"

DESIGN	BY Ashraf Ahmed	CHECKED Michael K Bergman
DETAILS	BY Nancy C Gwynn	CHECKED Michael K Bergman
QUANTITIES	BY Jose M Aquino III	CHECKED Eric G Burgeson

STATE OF CALIFORNIA
DEPARTMENT OF TRANSPORTATION

DIVISION OF ENGINEERING SERVICES
STRUCTURE DESIGN
DESIGN BRANCH 3

BRIDGE NO. 49-0163L/R
POST MILE 65.6

10TH STREET UC (WIDEN)
ABUTMENT DETAILS No. 2

STRUCTURES DESIGN DETAIL SHEET (ENGLISH) (REV. 09-01-10)

ORIGINAL SCALE IN INCHES FOR REDUCED PLANS 0 1 2 3

UNIT: 3578
PROJECT NUMBER & PHASE: 05000200201
CONTRACT NO.: 05-0G0404

DISREGARD PRINTS BEARING EARLIER REVISION DATES

REVISION DATES 4-15-15 8-24-15 1-20-16

SHEET 7 OF 31

FILE => 49-0163lr-f-abdet02.dgn

USERNAME => s115755 DATE PLOTTED => 22-JUL-2016 TIME PLOTTED => 17:54

DIST	COUNTY	ROUTE	POST MILES TOTAL PROJECT	SHEET No.	TOTAL SHEETS
05	SLO,Mon	101	63.2/R69.3, R0.0/R1.9	717	858

REGISTERED CIVIL ENGINEER 4-22-16 DATE

5-2-16
PLANS APPROVAL DATE

REGISTERED PROFESSIONAL ENGINEER Jose M Aquino III No. 58386 Exp. 12-31-16 CIVIL STATE OF CALIFORNIA

The State of California or its officers or agents shall not be responsible for the accuracy or completeness of scanned copies of this plan sheet.

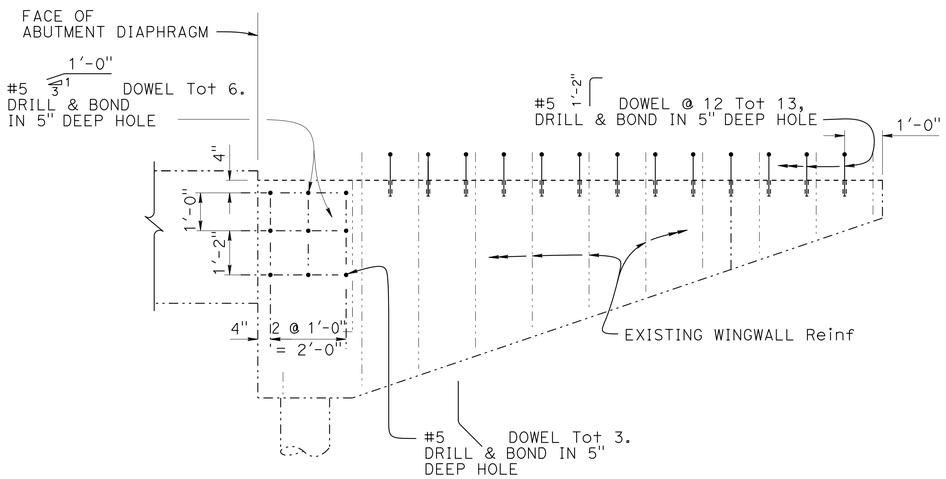

DRILL & BOND

½" = 1'-0"

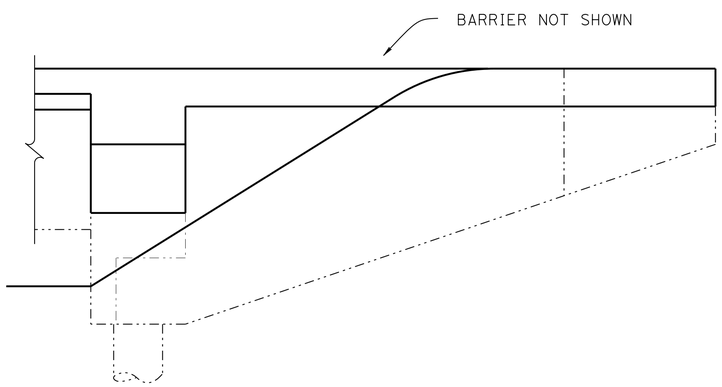

LEFT WINGWALL ELEVATION

½" = 1'-0"

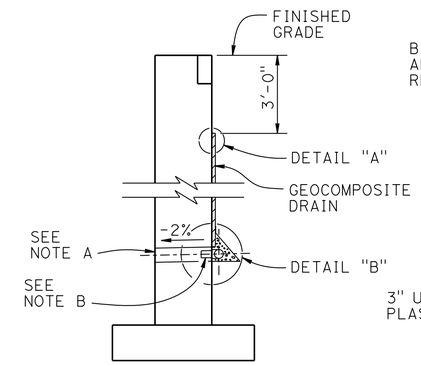

WALL SECTION

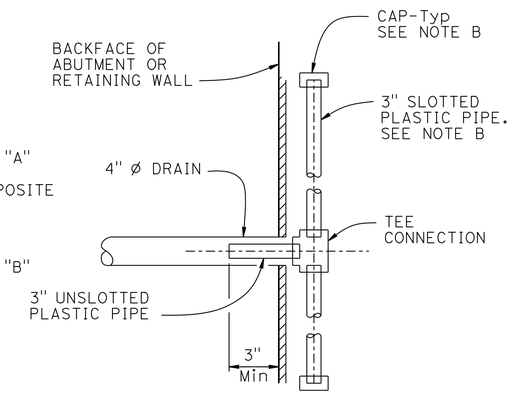

SECTION A-A

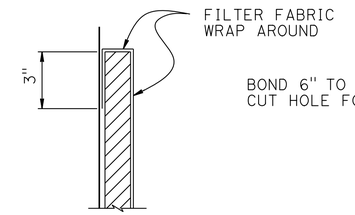

DETAIL "A"

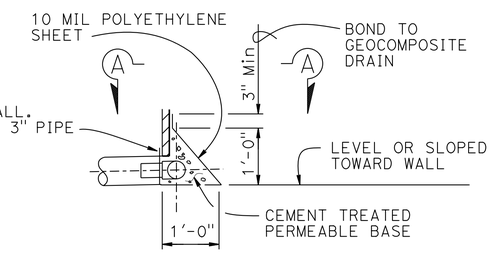

DETAIL "B"

WEEP HOLE AND GEOCOMPOSITE DRAIN

ALTERNATIVE TO BRIDGE DETAIL (B0-3 / 3-1)

NOTES:

A. 4" Ø drains at intermediate sag points and at 25' max center to center (9' c-c for Type 3 and 9'-3" c-c for Type 4 retaining walls).
For walls adjacent to sidewalks or curbs, provide 4" Ø plastic pipe under the sidewalk to discharge through curb face.
Exposed wall drains shall be located 3"± above finished grade.

B. Geocomposite drain, cement treated permeable base, and 3"Ø slotted plastic pipe continuous behind retaining wall or abutment. Cap ends of pipe. Provide "Tee" connection at each 4" Ø drain.

C. Connect the low end of plastic pipe to the main outlet pipe as applicable.

NOTE:
THE CONTRACTOR MUST VERIFY ALL CONTROLLING FIELD DIMENSIONS BEFORE ORDERING OR FABRICATING ANY MATERIAL.

NOTES:
1. Abutment 1 shown, Abutment 4 similar
2. Left bridge shown, right bridge similar

	BY	CHECKED
DESIGN	Ashraf Ahmed	Michael K Bergman
DETAILS	Nancy C Gwynn	Michael K Bergman
QUANTITIES	Jose M Aquino III	Eric G Burgeson

STATE OF CALIFORNIA
DEPARTMENT OF TRANSPORTATION

DIVISION OF ENGINEERING SERVICES
STRUCTURE DESIGN
DESIGN BRANCH 3

BRIDGE NO. 49-0163L/R
POST MILE 65.6

10TH STREET UC (WIDEN)
ABUTMENT DETAILS No. 3

STRUCTURES DESIGN DETAIL SHEET (ENGLISH) (REV. 09-01-10)

ORIGINAL SCALE IN INCHES FOR REDUCED PLANS 0 1 2 3

UNIT: 3578
PROJECT NUMBER & PHASE: 05000200201
CONTRACT NO.: 05-0G0404

DISREGARD PRINTS BEARING EARLIER REVISION DATES

REVISION DATES 8-24-15 8-26-15 8-24-15

SHEET 8 OF 31

FILE => 49-0163lr-f-abdet03.dgn

USERNAME => s115755 DATE PLOTTED => 22-JUL-2016 TIME PLOTTED => 17:54

DIST	COUNTY	ROUTE	POST MILES TOTAL PROJECT	SHEET No.	TOTAL SHEETS
05	SLO,Mon	101	63.2/R69.3, R0.0/R1.9	718	858

REGISTERED CIVIL ENGINEER 4-22-16 DATE

5-2-16
PLANS APPROVAL DATE

REGISTERED PROFESSIONAL ENGINEER Jose M Aquino III No. 58386 Exp. 12-31-16 CIVIL STATE OF CALIFORNIA

The State of California or its officers or agents shall not be responsible for the accuracy or completeness of scanned copies of this plan sheet.

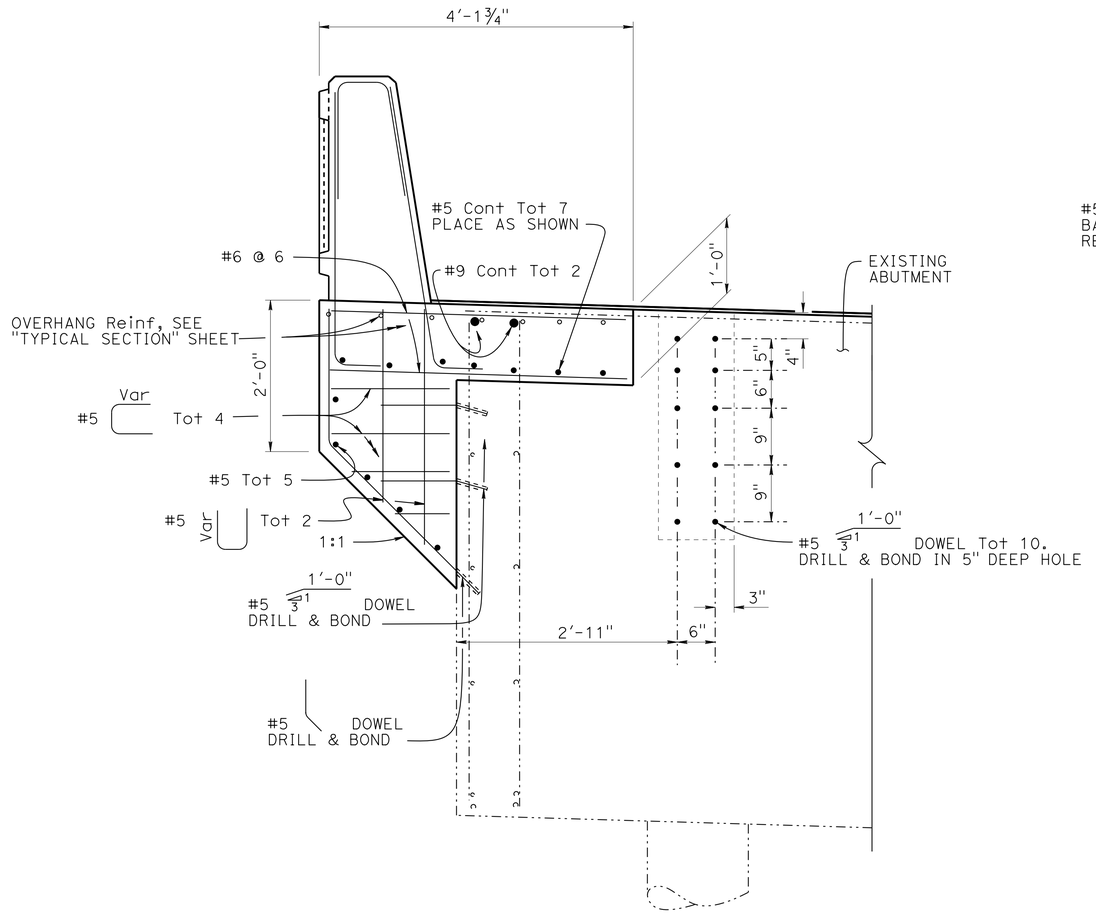

SECTION E-E

1" = 1'-0"

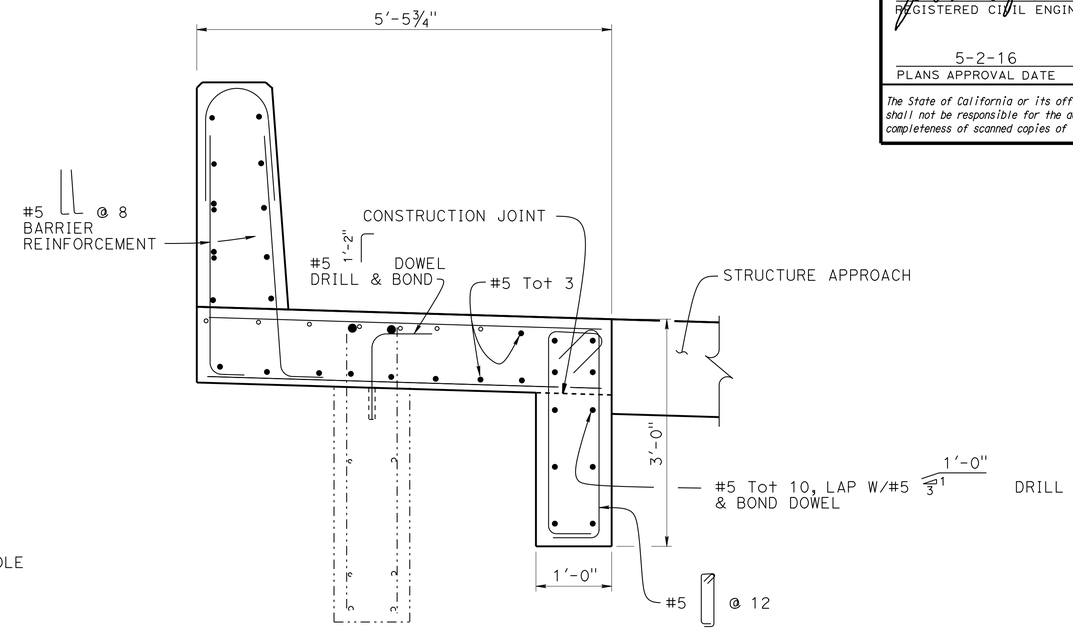

NOTE:
For details not shown, see "SECTION F-F"

SECTION F-F

1" = 1'-0"

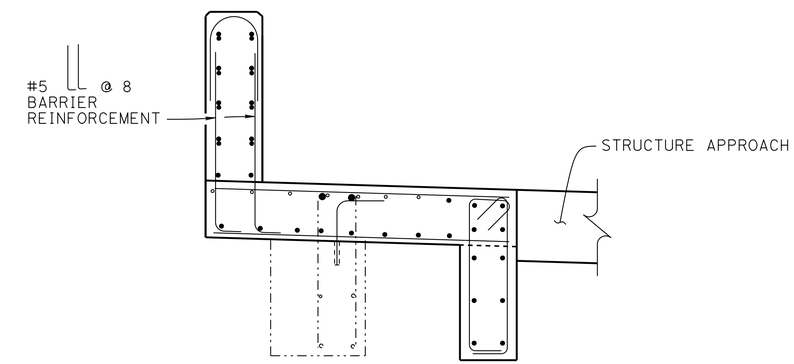

NOTE:
For details not shown, see "SECTION F-F"

SECTION G-G

¾" = 1'-0"

NOTES:
1. For barrier details not shown, see and "TYPICAL SECTION" sheet (RSP B11-56)
2. Abutment 1 shown, Abutment 4 similar
3. Left bridge shown, right bridge similar

NOTE:
THE CONTRACTOR MUST VERIFY ALL CONTROLLING FIELD DIMENSIONS BEFORE ORDERING OR FABRICATING ANY MATERIAL.

	BY	CHECKED
DESIGN	Ashraf Ahmed	Michael K Bergman
DETAILS	Nancy C Gwynn	Michael K Bergman
QUANTITIES	Jose M Aquino III	Eric G Burgeson

STATE OF CALIFORNIA
DEPARTMENT OF TRANSPORTATION

DIVISION OF ENGINEERING SERVICES
STRUCTURE DESIGN
DESIGN BRANCH 3

BRIDGE NO. 49-0163L/R
POST MILE 65.6

10TH STREET UC (WIDEN)
ABUTMENT DETAILS No. 4

STRUCTURES DESIGN DETAIL SHEET (ENGLISH) (REV. 09-01-10)

ORIGINAL SCALE IN INCHES FOR REDUCED PLANS 0 1 2 3

UNIT: 3578
PROJECT NUMBER & PHASE: 05000200201
CONTRACT NO.: 05-0G0404

DISREGARD PRINTS BEARING EARLIER REVISION DATES

REVISION DATES 4-15-15 7-20-15 8-24-15

SHEET 9 OF 31

FILE => 49-0163lr-f-abdet04.dgn

USERNAME => s115755 DATE PLOTTED => 22-JUL-2016 TIME PLOTTED => 17:54

DIST	COUNTY	ROUTE	POST MILES TOTAL PROJECT	SHEET No.	TOTAL SHEETS
05	SLO,Mon	101	63.2/R69.3, R0.0/R1.9	719	858

REGISTERED CIVIL ENGINEER 4-22-16 DATE

5-2-16
PLANS APPROVAL DATE

REGISTERED PROFESSIONAL ENGINEER
Jose M Aquino III
No. 58386
Exp. 12-31-16
CIVIL
STATE OF CALIFORNIA

The State of California or its officers or agents shall not be responsible for the accuracy or completeness of scanned copies of this plan sheet.

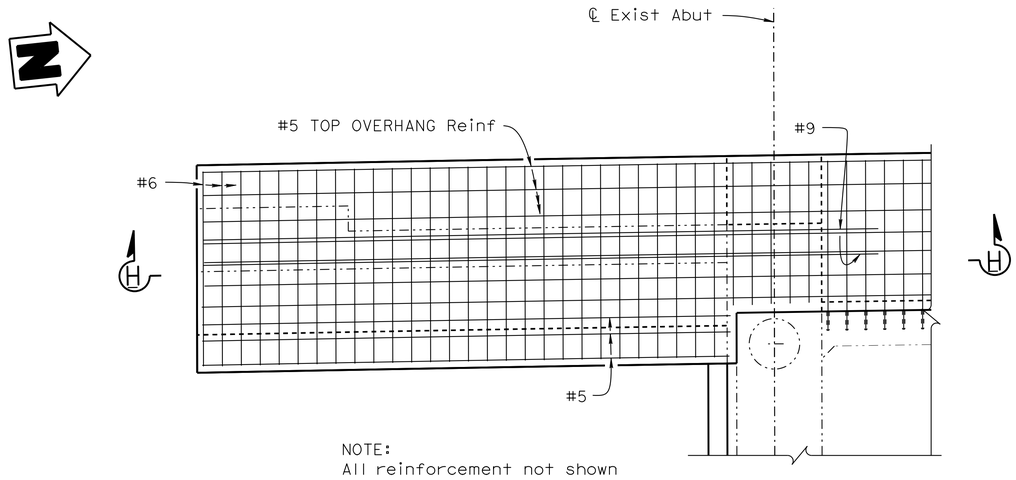

NOTE:
All reinforcement not shown

PART PLAN
½" = 1'-0"

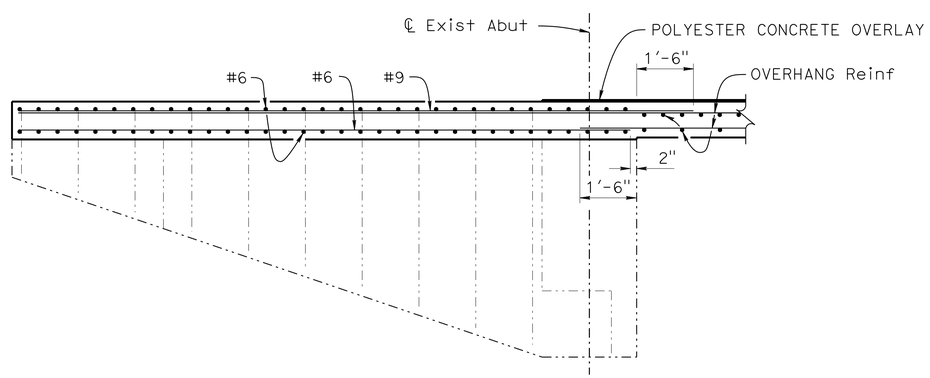

SECTION H-H
½" = 1'-0"

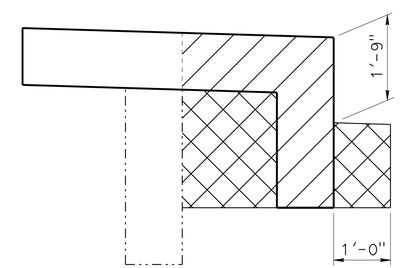

Structure Excavation

Structure Excavation

LIMITS OF EXCAVATION & BACKFILL
NO SCALE

NOTE:
THE CONTRACTOR MUST VERIFY ALL CONTROLLING FIELD DIMENSIONS BEFORE ORDERING OR FABRICATING ANY MATERIAL.

	BY	CHECKED
DESIGN	Ashraf Ahmed	Michael K Bergman
DETAILS	Nancy C Gwynn	Michael K Bergman
QUANTITIES	Jose M Aquino III	Eric G Burgeson

STATE OF CALIFORNIA
DEPARTMENT OF TRANSPORTATION

DIVISION OF ENGINEERING SERVICES
STRUCTURE DESIGN
DESIGN BRANCH 3

BRIDGE NO. 49-0163L/R
POST MILE 65.6

10TH STREET UC (WIDEN)
ABUTMENT DETAILS No. 5

STRUCTURES DESIGN DETAIL SHEET (ENGLISH) (REV. 09-01-10)

ORIGINAL SCALE IN INCHES FOR REDUCED PLANS 0 1 2 3

UNIT: 3578
PROJECT NUMBER & PHASE: 05000200201
CONTRACT NO.: 05-0G0404

DISREGARD PRINTS BEARING EARLIER REVISION DATES

REVISION DATES 4-18-15 7-28-15 8-18-15

SHEET 10 OF 31

FILE => 49-0163lr-f-abdet05.dgn

USERNAME => s115755 DATE PLOTTED => 22-JUL-2016 TIME PLOTTED => 17:54

DIST	COUNTY	ROUTE	POST MILES TOTAL PROJECT	SHEET No.	TOTAL SHEETS
05	SLO,Mon	101	63.2/R69.3, R0.0/R1.9	720	858

REGISTERED CIVIL ENGINEER 4-22-16 DATE

5-2-16
PLANS APPROVAL DATE

REGISTERED PROFESSIONAL ENGINEER Jose M Aquino III No. 58386 Exp. 12-31-16 CIVIL STATE OF CALIFORNIA

The State of California or its officers or agents shall not be responsible for the accuracy or completeness of scanned copies of this plan sheet.

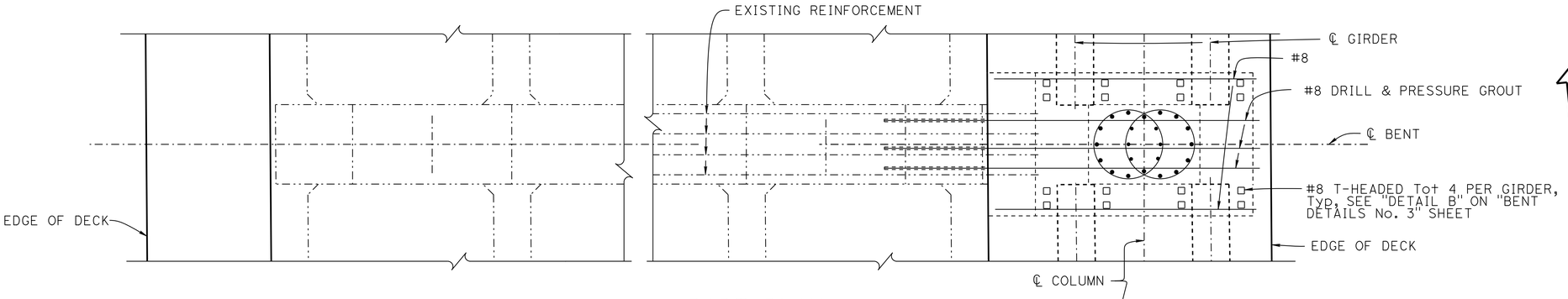

PART PLAN
3/8" = 1'-0"

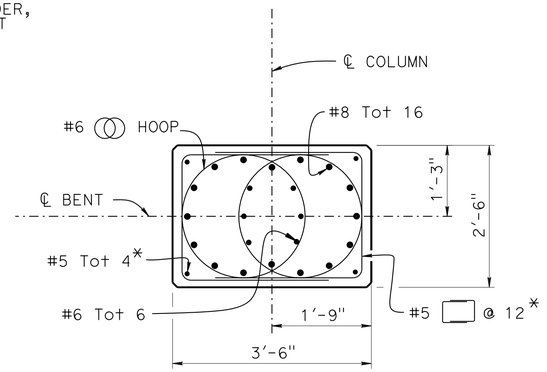

LEGEND:
* Not to extend into Bent Cap

SECTION A-A
3/4" = 1'-0"

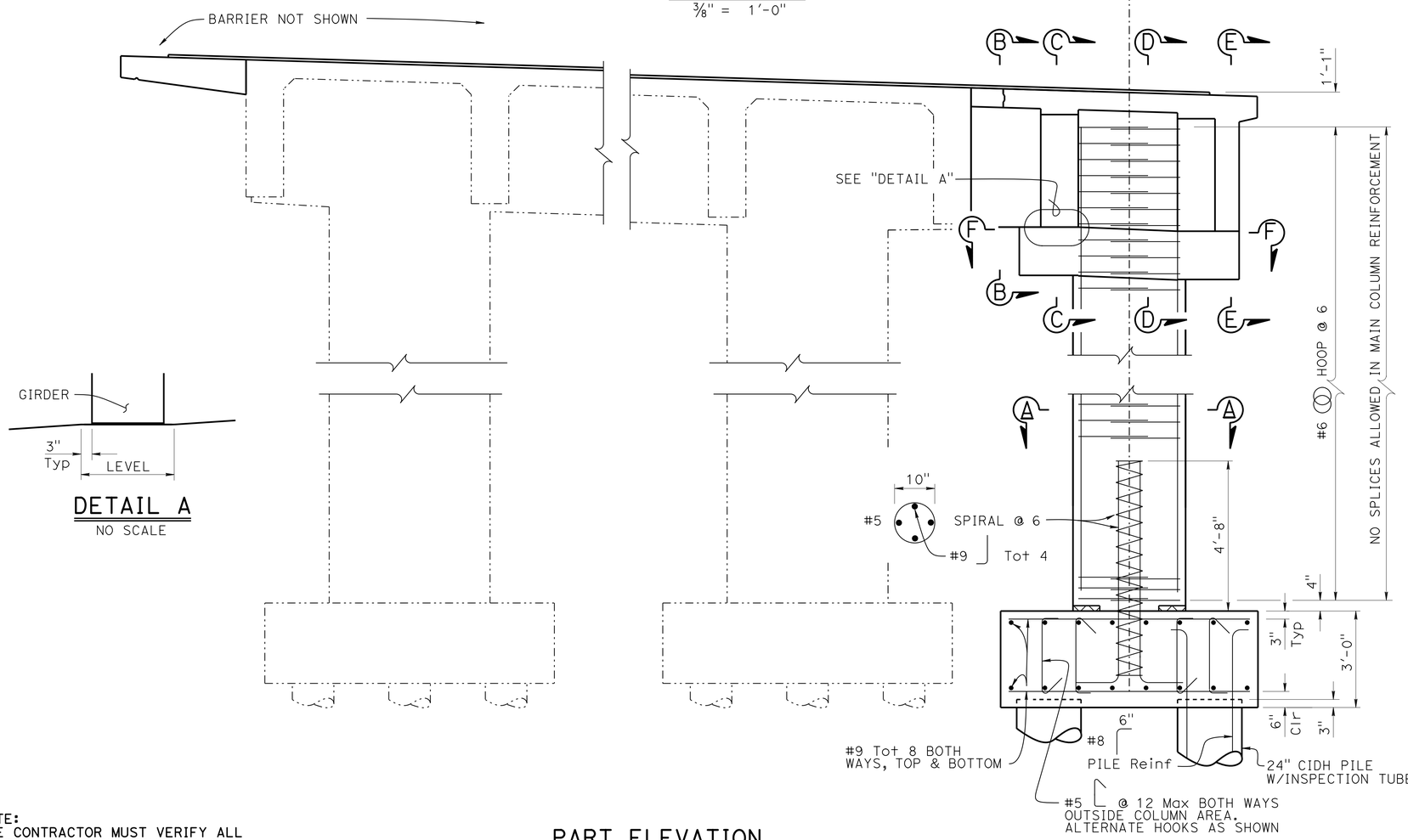

DETAIL A
NO SCALE

PART ELEVATION
1/2" = 1'-0"

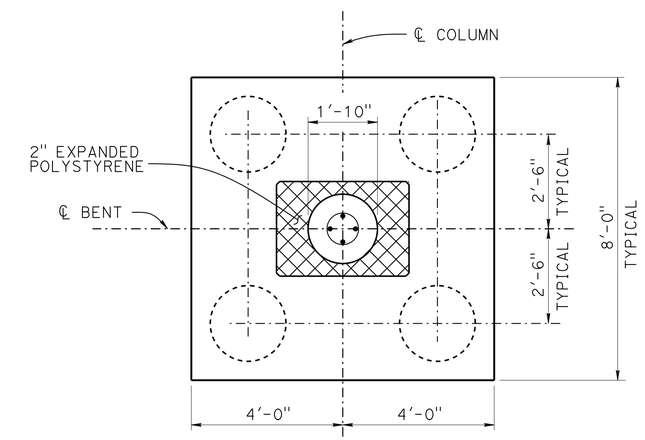

FOOTING PLAN
1/2" = 1'-0"

NOTES:
1. For "SECTION B-B", "SECTION C-C", "SECTION D-D" and "SECTION E-E" and details not shown, see "BENT DETAILS No. 2" sheet
2. For "SECTION F-F", see "BENT DETAILS No. 3" sheet
3. Lapped splices in spiral column pin reinf shall be lapped at least 80 bar diameters. Spiral pin reinf at splices and at ends shall be terminated with a 135° hook with a 6" tail hooked around a longitudinal bar

NOTE:
THE CONTRACTOR MUST VERIFY ALL CONTROLLING FIELD DIMENSIONS BEFORE ORDERING OR FABRICATING ANY MATERIAL.

	BY	CHECKED
DESIGN	Ashraf Ahmed	Michael K Bergman
DETAILS	Nancy C Gwynn	Michael K Bergman
QUANTITIES	Jose M Aquino III	Eric G Burgeson

STATE OF CALIFORNIA
DEPARTMENT OF TRANSPORTATION

DIVISION OF ENGINEERING SERVICES
STRUCTURE DESIGN
DESIGN BRANCH 3

BRIDGE NO. 49-0163L/R
POST MILE 65.6

10TH STREET UC (WIDEN)
BENT DETAILS No. 1

STRUCTURES DESIGN DETAIL SHEET (ENGLISH) (REV. 09-01-10)

ORIGINAL SCALE IN INCHES FOR REDUCED PLANS 0 1 2 3

UNIT: 3578
PROJECT NUMBER & PHASE: 05000200201
CONTRACT NO.: 05-0G0404

DISREGARD PRINTS BEARING EARLIER REVISION DATES

REVISION DATES 4-8-15 5-12-15 1-8-16 8-24-15

SHEET 11 OF 31

FILE => 49-0163lr-h-bnt01.dgn

USERNAME => s115755 DATE PLOTTED => 22-JUL-2016 TIME PLOTTED => 17:54

DIST	COUNTY	ROUTE	POST MILES TOTAL PROJECT	SHEET No.	TOTAL SHEETS
05	SLO,Mon	101	63.2/R69.3, R0.0/R1.9	721	858

REGISTERED CIVIL ENGINEER 4-22-16 DATE

5-2-16
PLANS APPROVAL DATE

REGISTERED PROFESSIONAL ENGINEER Jose M Aquino III No. 58386 Exp. 12-31-16 CIVIL STATE OF CALIFORNIA

The State of California or its officers or agents shall not be responsible for the accuracy or completeness of scanned copies of this plan sheet.

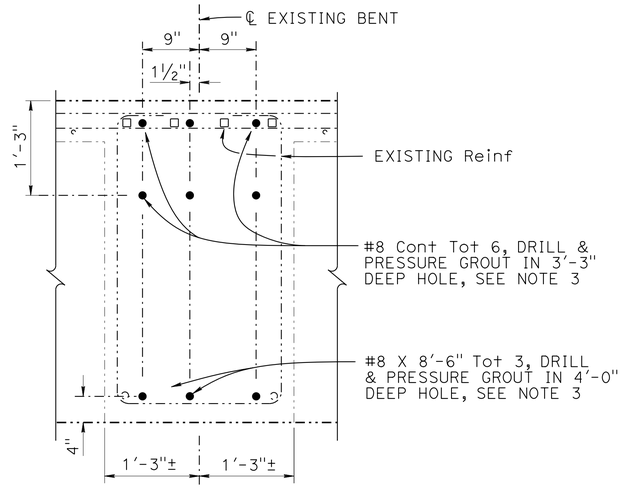

DRILL & BOND DETAIL

1" = 1'-0"

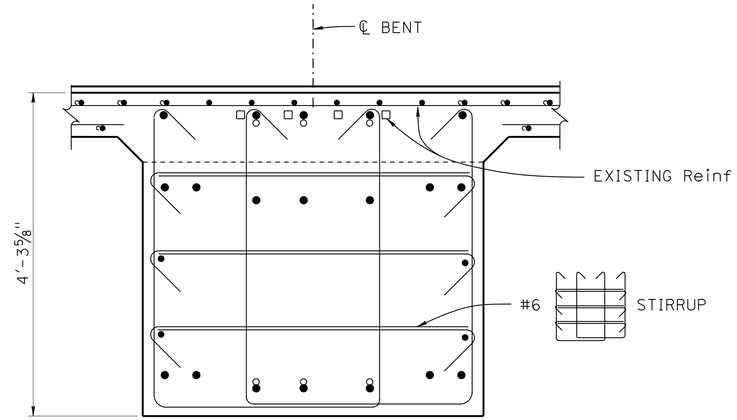

NOTE:
For details not shown, see "SECTION E-E"

SECTION B-B

1" = 1'-0"

NOTES:

1. For details not shown, see "SECTION F-F", "BENT DETAILS No. 3" sheet
2. For girder details, see "PRECAST PRESTRESSED GIRDER" and "PRECAST REINFORCED CONCRETE GIRDER" sheets
3. Adjust drilled hole location to clear existing reinforcement

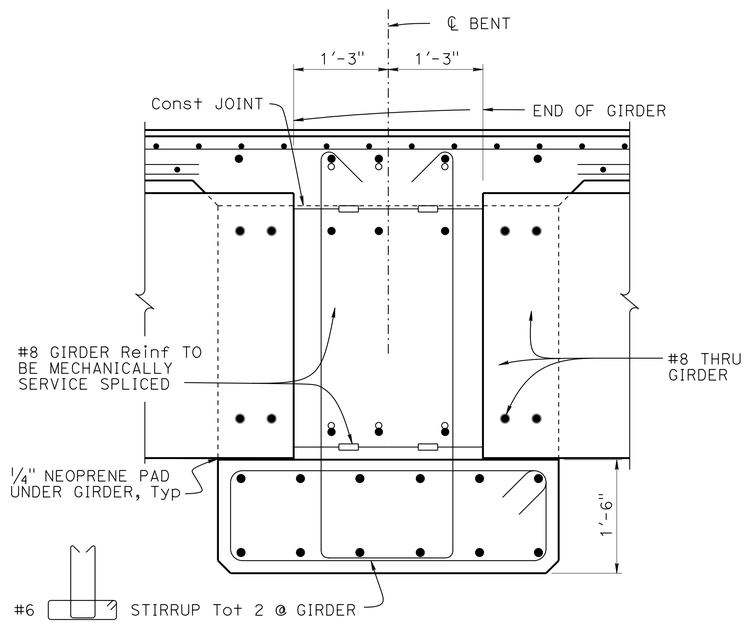

SECTION C-C

1" = 1'-0"

NOTE:
THE CONTRACTOR MUST VERIFY ALL CONTROLLING FIELD DIMENSIONS BEFORE ORDERING OR FABRICATING ANY MATERIAL.

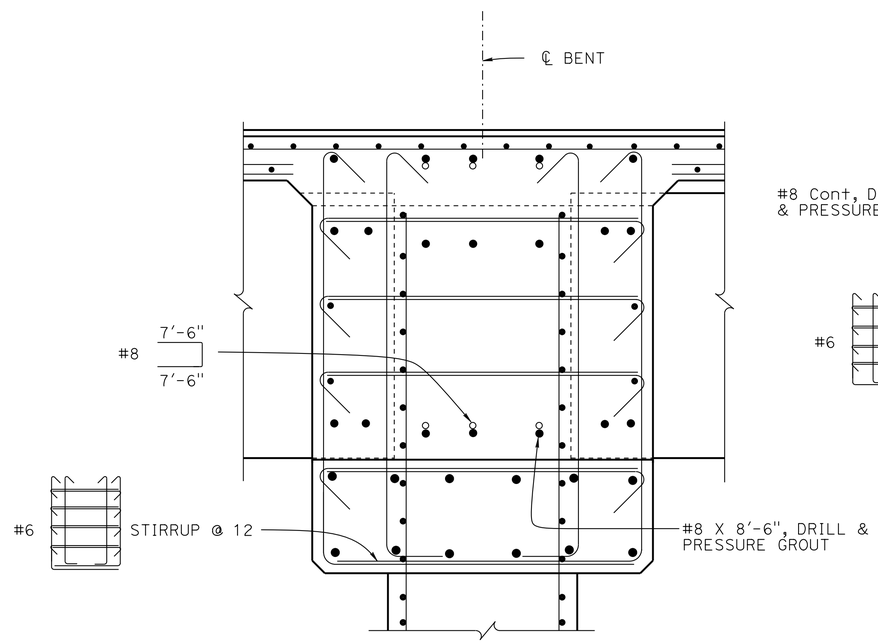

NOTE:
For details not shown, see "SECTION E-E"

SECTION D-D

1" = 1'-0"

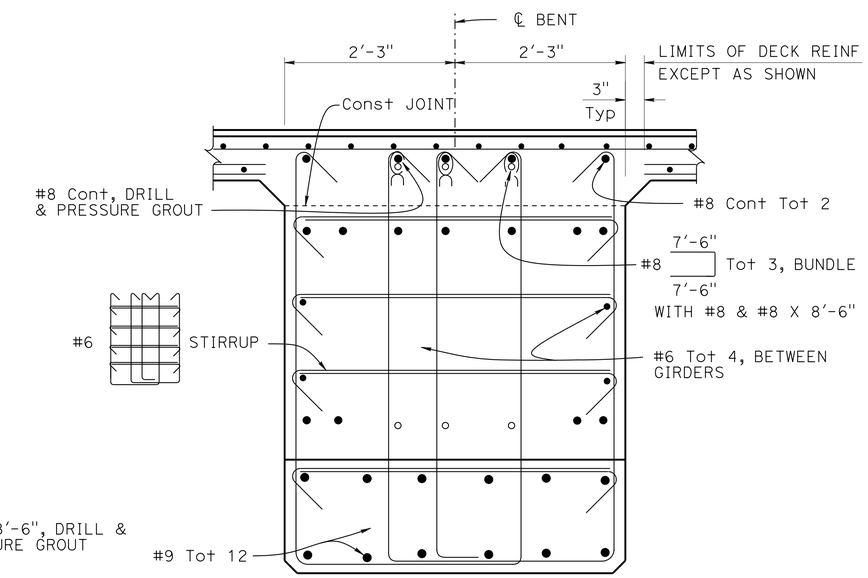

NOTE:
For details not shown, see "SECTION C-C" and "DRILL & BOND DETAIL"

SECTION E-E

1" = 1'-0"

DESIGN	BY Ashraf Ahmed	CHECKED Michael K Bergman	
DETAILS	BY Nancy C Gwynn	CHECKED Michael K Bergman	
QUANTITIES	BY Jose M Aquino III	CHECKED Eric G Burgeson	

STATE OF CALIFORNIA
DEPARTMENT OF TRANSPORTATION

DIVISION OF ENGINEERING SERVICES
STRUCTURE DESIGN
DESIGN BRANCH 3

BRIDGE NO. 49-0163L/R
POST MILE 65.6

10TH STREET UC (WIDEN)
BENT DETAILS No. 2

STRUCTURES DESIGN DETAIL SHEET (ENGLISH) (REV. 09-01-10)

ORIGINAL SCALE IN INCHES FOR REDUCED PLANS 0 1 2 3

UNIT: 3578
PROJECT NUMBER & PHASE: 05000200201
CONTRACT NO.: 05-0G0404

DISREGARD PRINTS BEARING EARLIER REVISION DATES

REVISION DATES 1-2-15 1-14-15 1-22-16

SHEET 12 OF 31

FILE => 49-0163lr-h-bnt02.dgn

USERNAME => s115755 DATE PLOTTED => 22-JUL-2016 TIME PLOTTED => 17:54

DIST	COUNTY	ROUTE	POST MILES TOTAL PROJECT	SHEET No.	TOTAL SHEETS
05	SLO,Mon	101	63.2/R69.3, R0.0/R1.9	722	858

REGISTERED CIVIL ENGINEER 4-22-16 DATE

5-2-16
PLANS APPROVAL DATE

REGISTERED PROFESSIONAL ENGINEER
Jose M Aquino III
No. 58386
Exp. 12-31-16
CIVIL
STATE OF CALIFORNIA

The State of California or its officers or agents shall not be responsible for the accuracy or completeness of scanned copies of this plan sheet.

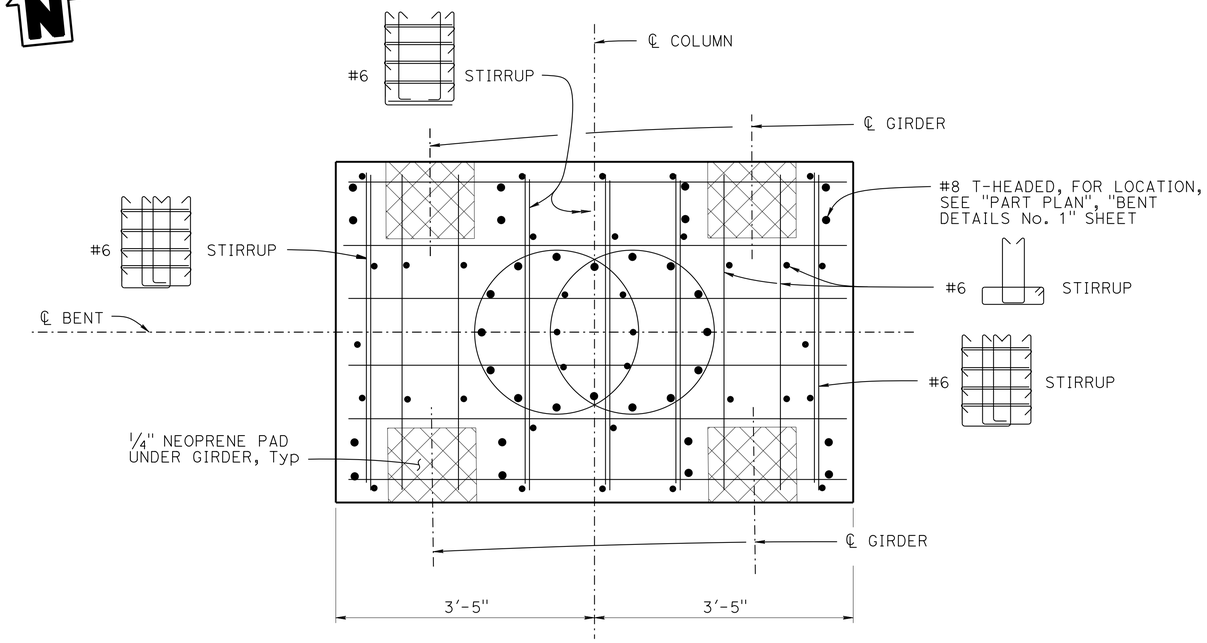

SECTION F-F
1" = 1'-0"

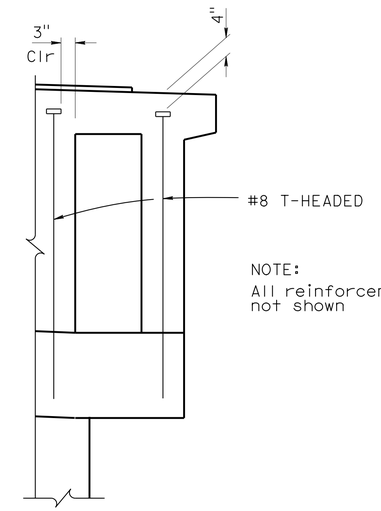

NOTE:
All reinforcement not shown

DETAIL B
3/4" = 1'-0"

LEGEND:

Indicates 1/4" Neoprene pad

NOTE:
THE CONTRACTOR MUST VERIFY ALL CONTROLLING FIELD DIMENSIONS BEFORE ORDERING OR FABRICATING ANY MATERIAL.

	BY	CHECKED
DESIGN	Ashraf Ahmed	Michael K Bergman
DETAILS	Nancy C Gwynn	Michael K Bergman
QUANTITIES	Jose M Aquino III	Eric G Burgeson

STATE OF CALIFORNIA
DEPARTMENT OF TRANSPORTATION

DIVISION OF ENGINEERING SERVICES
STRUCTURE DESIGN
DESIGN BRANCH 3

BRIDGE NO. 49-0163L/R
POST MILE 65.6

10TH STREET UC (WIDEN)
BENT DETAILS No. 3

STRUCTURES DESIGN DETAIL SHEET (ENGLISH) (REV. 09-01-10)

ORIGINAL SCALE IN INCHES FOR REDUCED PLANS 0 1 2 3

UNIT: 3578
PROJECT NUMBER & PHASE: 05000200201
CONTRACT NO.: 05-0G0404

DISREGARD PRINTS BEARING EARLIER REVISION DATES

REVISION DATES

SHEET 13 OF 31

FILE => 49-0163lr-h-bnt03.dgn

USERNAME => s115755 DATE PLOTTED => 22-JUL-2016 TIME PLOTTED => 17:54

DIST	COUNTY	ROUTE	POST MILES TOTAL PROJECT	SHEET No.	TOTAL SHEETS
05	SLO,Mon	101	63.2/R69.3, R0.0/R1.9	723	858

REGISTERED CIVIL ENGINEER 4-22-16 DATE

5-2-16
PLANS APPROVAL DATE

REGISTERED PROFESSIONAL ENGINEER Jose M Aquino III No. 58386 Exp. 12-31-16 CIVIL STATE OF CALIFORNIA

The State of California or its officers or agents shall not be responsible for the accuracy or completeness of scanned copies of this plan sheet.

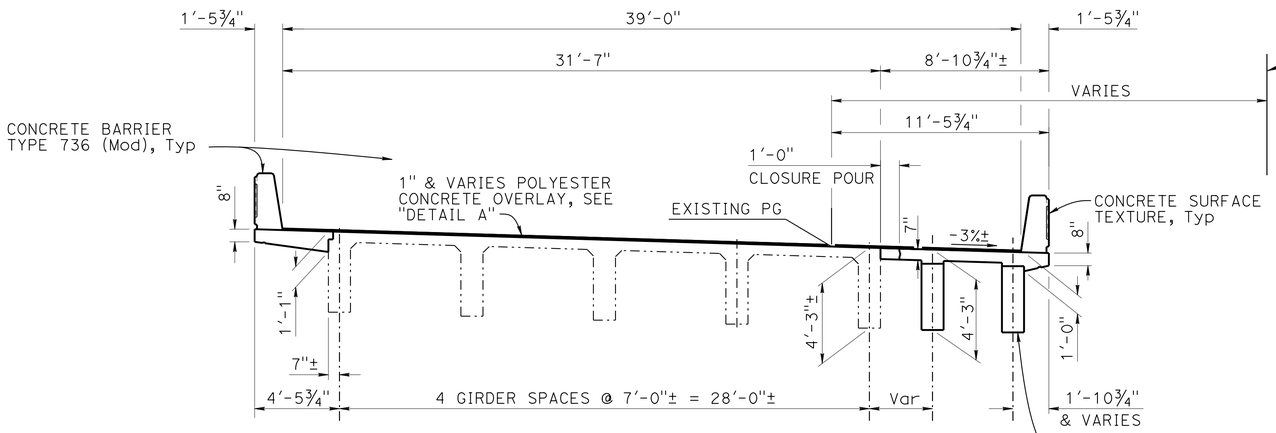

NOTE:
Closure pour concrete shall not be placed until 15 days after adjacent deck pours are completed

TYPICAL SECTION
¼" = 1'-0"

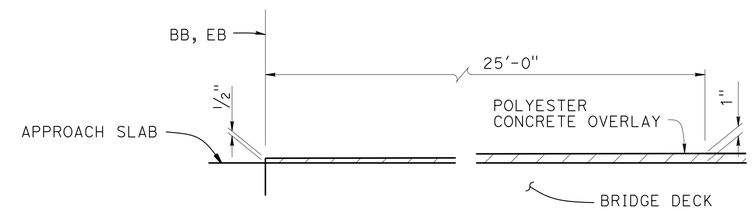

DETAIL A
1½" = 1'-0"

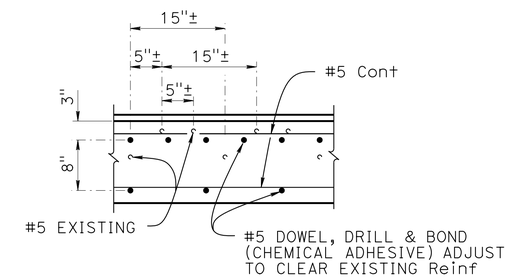

SECTION A-A
1" = 1'-0"

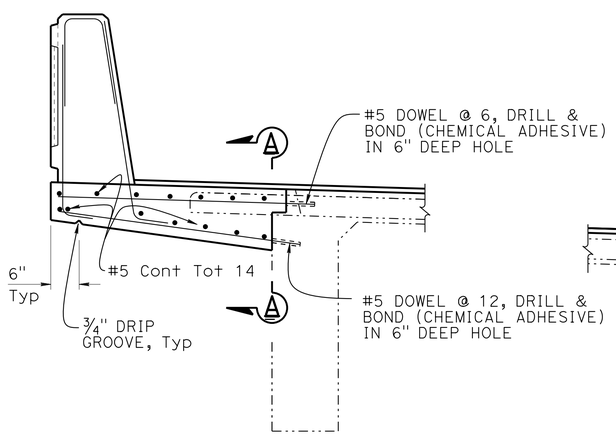

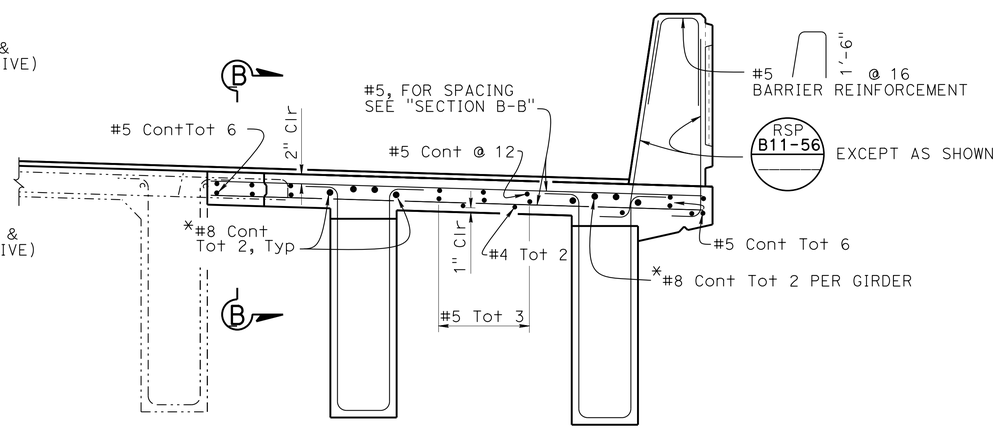

LEGEND:
* Only service butt splice allowed. See "DETAIL K", "GIRDER LAYOUT" sheet for no splice zone

PART TYPICAL SECTION
¾" = 1'-0"

BO-5 / 5-2

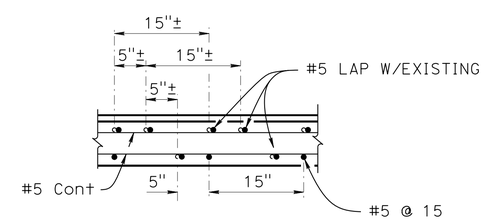

SECTION B-B
1" = 1'-0"

NOTE:
THE CONTRACTOR MUST VERIFY ALL CONTROLLING FIELD DIMENSIONS BEFORE ORDERING OR FABRICATING ANY MATERIAL.

NOTES:
1. See "PRECAST PRESTRESSED GIRDER" and "PRECAST REINFORCED CONCRETE GIRDER" sheets for girder reinforcement
2. For concrete surface texture, see "BARRIER SURFACE TEXTURE" sheet

	BY	CHECKED
DESIGN	Ashraf Ahmed	Michael K Bergman
DETAILS	Nancy C Gwynn	Michael K Bergman
QUANTITIES	Jose M Aquino III	Eric G Burgeson

STATE OF CALIFORNIA
DEPARTMENT OF TRANSPORTATION

DIVISION OF ENGINEERING SERVICES
STRUCTURE DESIGN
DESIGN BRANCH 3

BRIDGE NO. 49-0163L/R
POST MILE 65.6

10TH STREET UC (WIDEN)
TYPICAL SECTION

STRUCTURES DESIGN DETAIL SHEET (ENGLISH) (REV. 09-01-10)

ORIGINAL SCALE IN INCHES FOR REDUCED PLANS 0 1 2 3

UNIT: 3578
PROJECT NUMBER & PHASE: 05000200201
CONTRACT NO.: 05-0G0404

DISREGARD PRINTS BEARING EARLIER REVISION DATES

REVISION DATES 2-9-15 1-2-15 1-20-15 8-26-15

SHEET 14 OF 31

FILE => 49-0163lr-k-typ.dgn

USERNAME => s115755 DATE PLOTTED => 22-JUL-2016 TIME PLOTTED => 17:54

DIST	COUNTY	ROUTE	POST MILES TOTAL PROJECT	SHEET No.	TOTAL SHEETS
05	SLO,Mon	101	63.2/R69.3, R0.0/R1.9	724	858

REGISTERED CIVIL ENGINEER 4-22-16 DATE

5-2-16
PLANS APPROVAL DATE

REGISTERED PROFESSIONAL ENGINEER
Jose M Aquino III
No. 58386
Exp. 12-31-16
CIVIL
STATE OF CALIFORNIA

The State of California or its officers or agents shall not be responsible for the accuracy or completeness of scanned copies of this plan sheet.

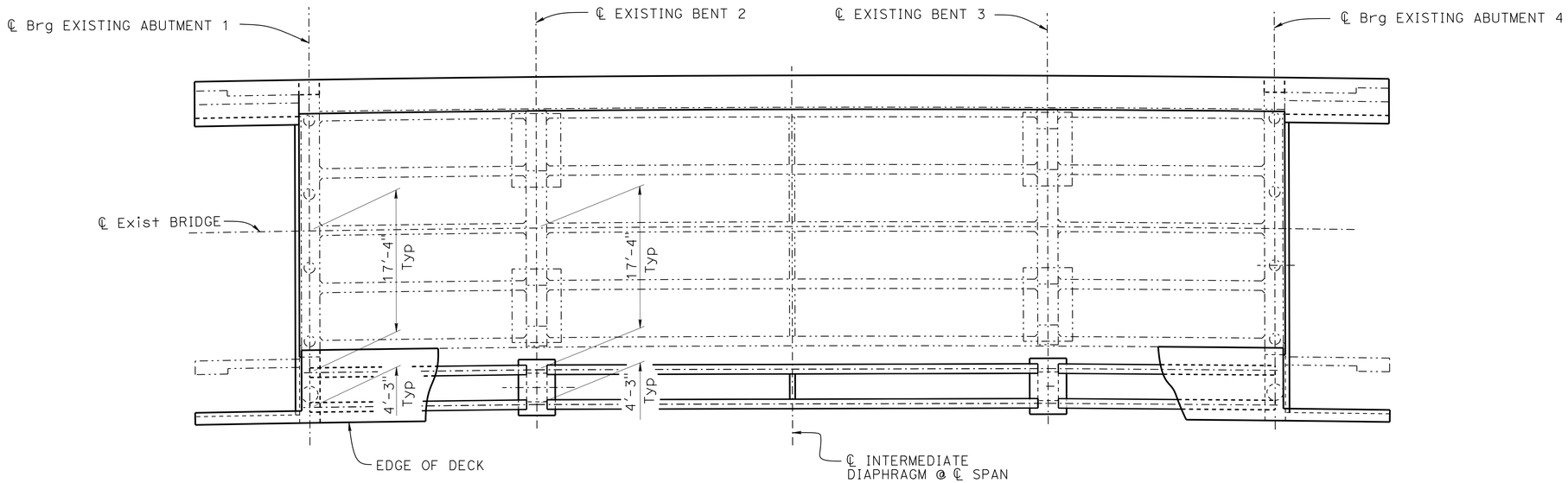

PLAN
1/8" = 1'-0"

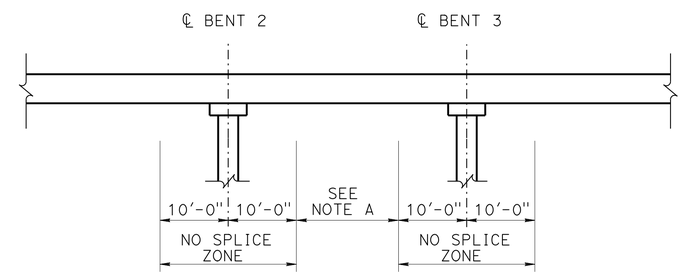

NOTE A:
Only service butt splices are allowed in #8 cont bars

DETAIL K
NO SCALE

NOTE:
THE CONTRACTOR MUST VERIFY ALL CONTROLLING FIELD DIMENSIONS BEFORE ORDERING OR FABRICATING ANY MATERIAL.

NOTE:
Left bridge shown, right bridge similar

	BY	CHECKED
DESIGN	Ashraf Ahmed	Michael K Bergman
DETAILS	Nancy C Gwynn	Michael K Bergman
QUANTITIES	Jose M Aquino III	Eric G Burgeson

STATE OF CALIFORNIA
DEPARTMENT OF TRANSPORTATION

DIVISION OF ENGINEERING SERVICES
STRUCTURE DESIGN
DESIGN BRANCH 3

BRIDGE NO. 49-0163L/R
POST MILE 65.6

10TH STREET UC (WIDEN)
GIRDER LAYOUT

STRUCTURES DESIGN DETAIL SHEET (ENGLISH) (REV. 09-01-10)

ORIGINAL SCALE IN INCHES FOR REDUCED PLANS 0 1 2 3

UNIT: 3578
PROJECT NUMBER & PHASE: 05000200201
CONTRACT NO.: 05-0G0404

DISREGARD PRINTS BEARING EARLIER REVISION DATES

REVISION DATES: 4-20-15 8-24-15

SHEET 15 OF 31

FILE => 49-0163lr-1-grdla.dgn

USERNAME => s115755 DATE PLOTTED => 22-JUL-2016 TIME PLOTTED => 17:54

DIST	COUNTY	ROUTE	POST MILES TOTAL PROJECT	SHEET No.	TOTAL SHEETS
05	SLO,Mon	101	63.2/R69.3, R0.0/R1.9	725	858

REGISTERED CIVIL ENGINEER 4-22-16 DATE

5-2-16
PLANS APPROVAL DATE

REGISTERED PROFESSIONAL ENGINEER Jose M Aquino III No. 58386 Exp. 12-31-16 CIVIL STATE OF CALIFORNIA

The State of California or its officers or agents shall not be responsible for the accuracy or completeness of scanned copies of this plan sheet.

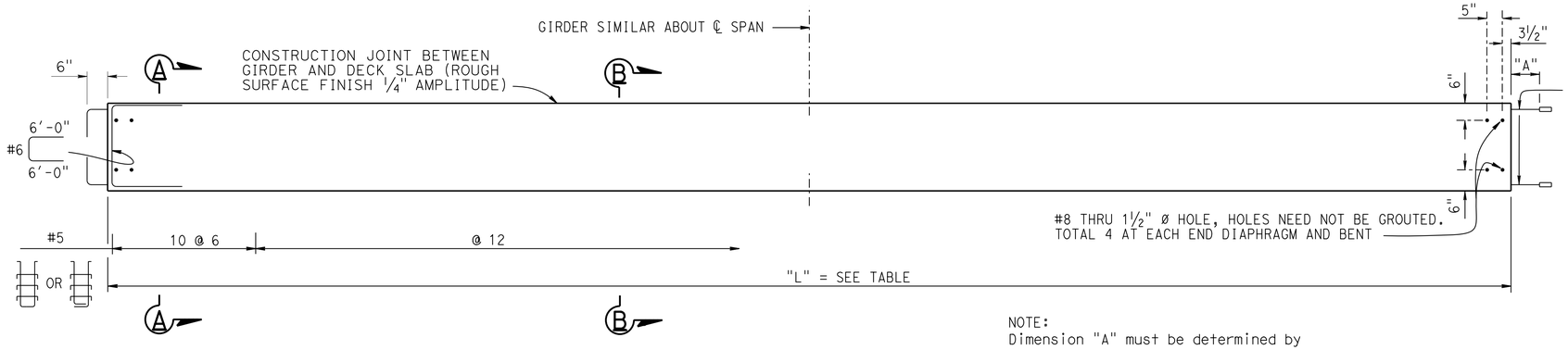

NOTE:
Dimension "A" must be determined by the contracter per manufacturer

ELEVATION
NO SCALE

Girder location and length		Concrete Strength (ksi)	Midspan Dead Load Deflection (inches)	
		f'_c	Deck	Rail
Spans 1 & 3	Exterior L = 26'-6"	5.0	0.02	0.01
Spans 1 & 3	Interior L = 26'-6"	5.0	0.02	0.01

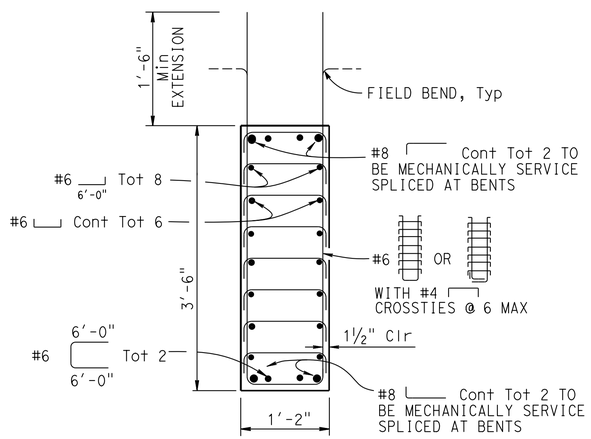

AT SPANS 1 & 3
SECTION A-A
1" = 1'-0"

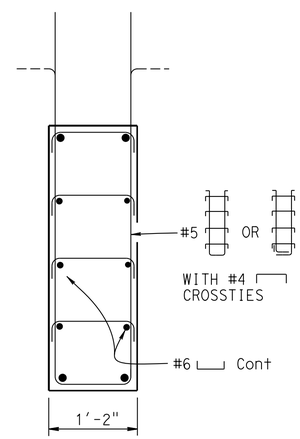

NOTE:
For details not shown, see "SECTION A-A"

AT SPANS 1 & 3
SECTION B-B
1" = 1'-0"

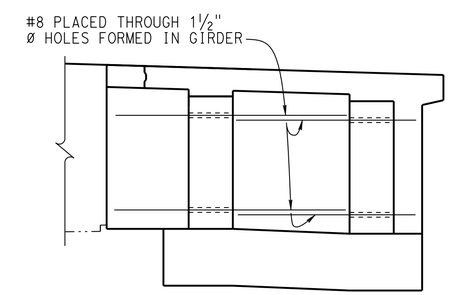

NOTE:
Bent cap shown, abutment diaphragm similar

BENT CAP/Abut DIAPHRAGM
1/2" = 1'-0"

DESIGN	BY Ashraf Ahmed	CHECKED Michael K Bergman	
DETAILS	BY Nancy C Gwynn	CHECKED Michael K Bergman	
QUANTITIES	BY Jose M Aquino III	CHECKED Eric G Burgeson	

STATE OF CALIFORNIA
DEPARTMENT OF TRANSPORTATION

DIVISION OF ENGINEERING SERVICES
STRUCTURE DESIGN
DESIGN BRANCH 3

BRIDGE NO. 49-0163L/R
POST MILE 65.6

10TH STREET UC (WIDEN)
PRECAST REINFORCED CONCRETE GIRDER

STRUCTURES DESIGN DETAIL SHEET (ENGLISH) (REV. 09-01-10)

ORIGINAL SCALE IN INCHES FOR REDUCED PLANS 0 1 2 3

UNIT: 3578
PROJECT NUMBER & PHASE: 05000200201
CONTRACT NO.: 05-0G0404

DISREGARD PRINTS BEARING EARLIER REVISION DATES

REVISION DATES 3-24-15 6-26-15 8-24-15

SHEET 16 OF 31

FILE => 49-0163lr-n-gir01.dgn

USERNAME => s115755 DATE PLOTTED => 22-JUL-2016 TIME PLOTTED => 17:55

DIST	COUNTY	ROUTE	POST MILES TOTAL PROJECT	SHEET No.	TOTAL SHEETS
05	SLO,Mon	101	63.2/R69.3, R0.0/R1.9	726	858

REGISTERED CIVIL ENGINEER 4-22-16 DATE

5-2-16
PLANS APPROVAL DATE

REGISTERED PROFESSIONAL ENGINEER Jose M Aquino III No. 58386 Exp. 12-31-16 CIVIL STATE OF CALIFORNIA

The State of California or its officers or agents shall not be responsible for the accuracy or completeness of scanned copies of this plan sheet.

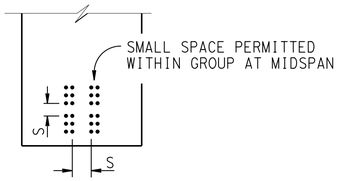

CLEARANCES FOR PRETENSIONED STRANDS

1. Strands may be bundled in groups consisting of 3 vertically, 2 horizontally and separated at the ends
2. The Min distance "S" between groups or individual strands is 1½" for ⅜" Ø strands, 1¾" for ½" Ø strands, 2" for 0.6" Ø strands
3. "S" is measured between centers of adjacent strands
4. Approval by the Engineer is required for deviation

GENERAL NOTES

JACKING FORCE (P): The jacking force required at the point of control along the span. The jacking force does not include any fabrication specific losses.

The maximum tensile stress in the prestressing steel upon release shall not exceed 75% of the specified minimum ultimate tensile strength of the prestressing steel.

The maximum temporary tensile stress (jacking stress) in the prestressing steel shall not exceed 80% of the specified minimum ultimate tensile strength of the prestressing steel.

CONCRETE STRENGTH: f'ci is at time of initial stressing
f'c is at 28 days

DEFLECTION COMPONENTS: Informational - to be used in setting screed line elevations

Screed line elevations for deck concrete will be determined by the Engineer.

Contractor may interpolate "P" and "X" values between limits shown,

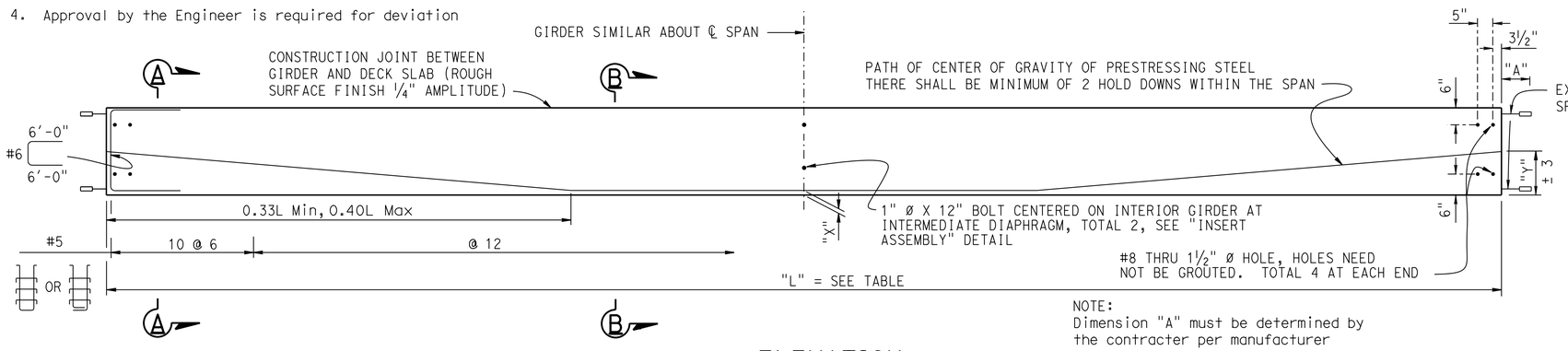

NOTE:
Dimension "A" must be determined by the contracter per manufacturer

Girder location and length		"X"	Jacking Force (P) (Kips)	"Y" (in)	Concrete Strength (ksi) f'ci	Concrete Strength (ksi) f'c	Midspan Dead Load Deflection (inches) Deck	Midspan Dead Load Deflection (inches) Rail
Span 2	Exterior L = 60'-0"	4"	320	22.5	4.0	5.0	-0.76	-0.2
		6"	340					
	Interior L = 60'-0"	4"	320	22.5	4.0	5.0	-0.76	-0.2
		6"	340					

ELEVATION
NO SCALE

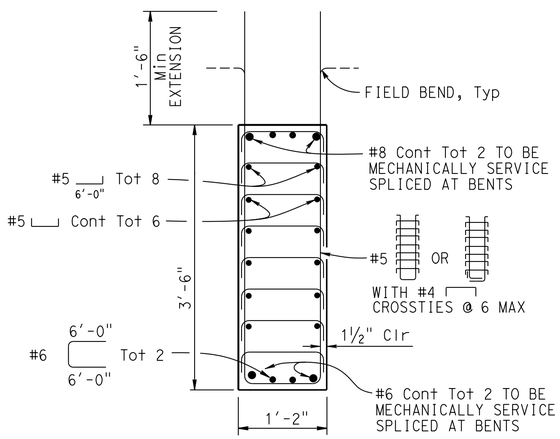

AT SPAN 2
SECTION A-A
1" = 1'-0"

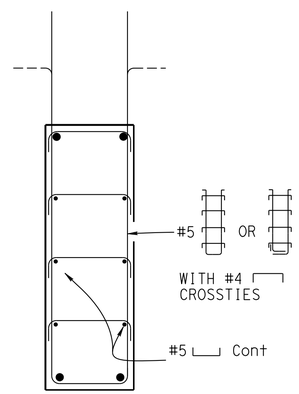

NOTE:
For details not shown, see "SECTION A-A"

AT SPAN 2
SECTION B-B
1" = 1'-0"

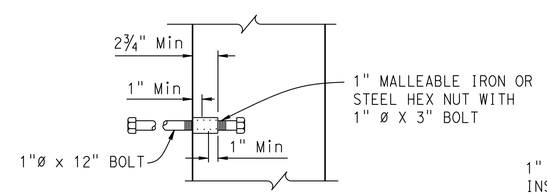

INSERT ASSEMBLY
NO SCALE

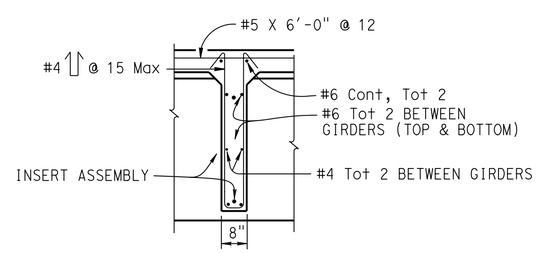

SECTION C-C
½" = 1'-0"

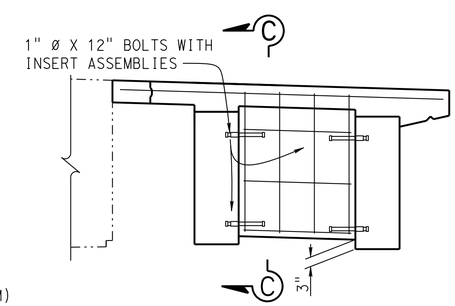

INTERMEDIATE DIAPHRAGM
½" = 1'-0"

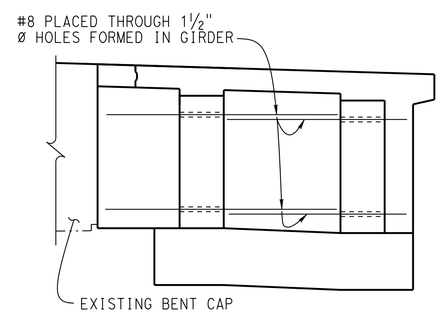

BENT CAP
½" = 1'-0"

	BY	CHECKED
DESIGN	Ashraf Ahmed	Michael K Bergman
DETAILS	Nancy C Gwynn	Michael K Bergman
QUANTITIES	Jose M Aquino III	Eric G Burgeson

STATE OF CALIFORNIA
DEPARTMENT OF TRANSPORTATION

DIVISION OF ENGINEERING SERVICES
STRUCTURE DESIGN
DESIGN BRANCH 3

BRIDGE NO. 49-0163L/R
POST MILE 65.6

10TH STREET UC (WIDEN)
PRECAST PRESTRESSED GIRDER

STRUCTURES DESIGN DETAIL SHEET (ENGLISH) (REV. 09-01-10)

ORIGINAL SCALE IN INCHES FOR REDUCED PLANS 0 1 2 3

UNIT: 3578
PROJECT NUMBER & PHASE: 05000200201
CONTRACT NO.: 05-0G0404

DISREGARD PRINTS BEARING EARLIER REVISION DATES

REVISION DATES 8-8-15 8-28-15

SHEET 17 OF 31

FILE => 49-0163lr-n-gir02.dgn

USERNAME => s115755 DATE PLOTTED => 22-JUL-2016 TIME PLOTTED => 17:55

DIST	COUNTY	ROUTE	POST MILES TOTAL PROJECT	SHEET No.	TOTAL SHEETS
05	SLO,Mon	101	63.2/R69.3, R0.0/R1.9	727	858

REGISTERED CIVIL ENGINEER 4-22-16 DATE

5-2-16
PLANS APPROVAL DATE

REGISTERED PROFESSIONAL ENGINEER
Jose M Aquino III
No. 58386
Exp. 12-31-16
CIVIL
STATE OF CALIFORNIA

The State of California or its officers or agents shall not be responsible for the accuracy or completeness of scanned copies of this plan sheet.

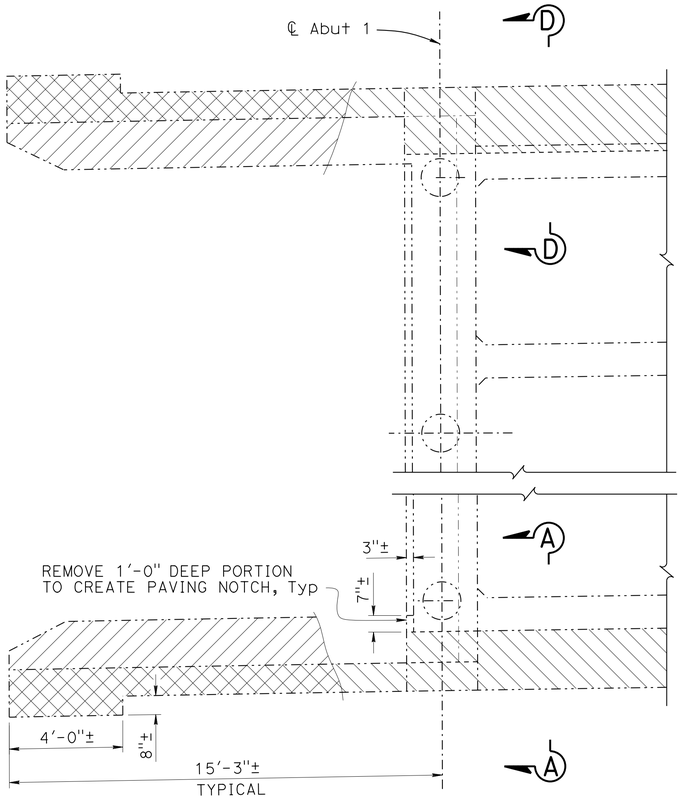

PART PLAN
3/8" = 1'-0"

NOTES:
1. Left bridge shown, right bridge similar, except as noted
2. Abutment 1 shown, Abutment 4 similar
3. For "ELEVATION D-D" and details not shown, see "CONCRETE REMOVAL Det No. 2" sheet

LEGEND:
- Indicates existing bridge
- Indicates existing bridge removal
- Indicates existing barrier removal

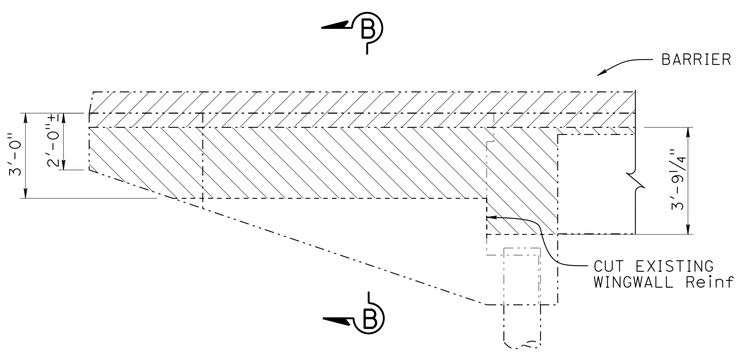

WINGWALL ELEVATION
3/8" = 1'-0"

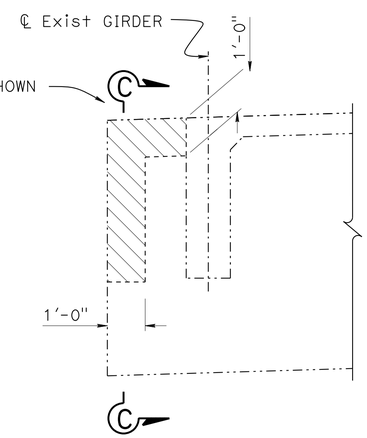

ELEVATION A-A
1/2" = 1'-0"

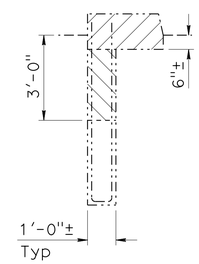

NOTE:
Existing reinf to be removed, cut stirrups

SECTION B-B
3/8" = 1'-0"

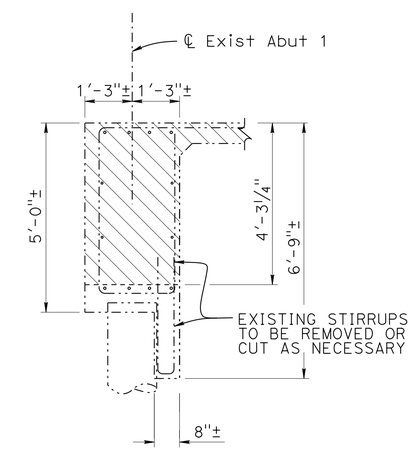

SECTION C-C
1/2" = 1'-0"

NOTE:
THE CONTRACTOR MUST VERIFY ALL CONTROLLING FIELD DIMENSIONS BEFORE ORDERING OR FABRICATING ANY MATERIAL.

	BY	CHECKED
DESIGN	Ashraf Ahmed	Michael K Bergman
DETAILS	Nancy C Gwynn	Michael K Bergman
QUANTITIES	Jose M Aquino III	Eric G Burgeson

STATE OF CALIFORNIA
DEPARTMENT OF TRANSPORTATION

DIVISION OF ENGINEERING SERVICES
STRUCTURE DESIGN
DESIGN BRANCH 3

BRIDGE NO. 49-0163L/R
POST MILE 65.6

10TH STREET UC (WIDEN)
CONCRETE REMOVAL Det No. 1

STRUCTURES DESIGN DETAIL SHEET (ENGLISH) (REV. 09-01-10)

ORIGINAL SCALE IN INCHES FOR REDUCED PLANS 0 1 2 3

UNIT: 3578
PROJECT NUMBER & PHASE: 05000200201
CONTRACT NO.: 05-0G0404

DISREGARD PRINTS BEARING EARLIER REVISION DATES

REVISION DATES 8-24-15 8-24-15 8-24-15

SHEET 18 OF 31

FILE => 49-0163lr-r-conrem01.dgn

USERNAME => s115755 DATE PLOTTED => 22-JUL-2016 TIME PLOTTED => 17:55

DIST	COUNTY	ROUTE	POST MILES TOTAL PROJECT	SHEET No.	TOTAL SHEETS
05	SLO,Mon	101	63.2/R69.3, R0.0/R1.9	728	858

REGISTERED CIVIL ENGINEER 4-22-16 DATE

5-2-16
PLANS APPROVAL DATE

REGISTERED PROFESSIONAL ENGINEER Jose M Aquino III No. 58386 Exp. 12-31-16 CIVIL STATE OF CALIFORNIA

The State of California or its officers or agents shall not be responsible for the accuracy or completeness of scanned copies of this plan sheet.

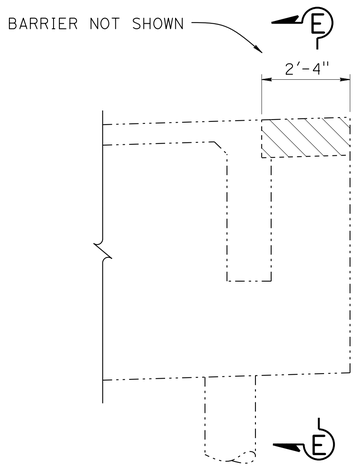

ELEVATION D-D

1/2" = 1'-0"

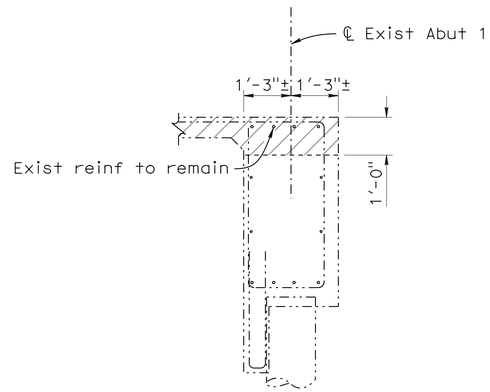

SECTION E-E

1/2" = 1'-0"

NOTES:

Left bridge shown, right bridge similar, except as noted

LEGEND:

- Indicates existing bridge
- Indicates existing bridge removal
- Indicates existing barrier removal

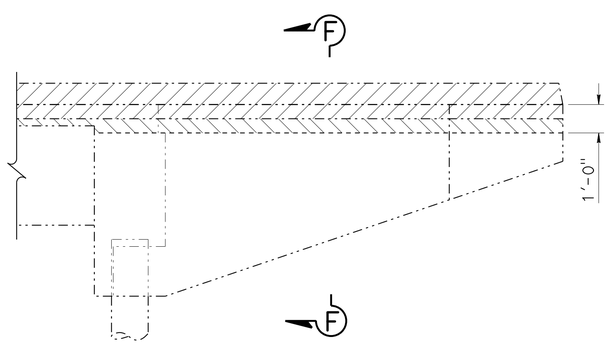

LEFT WINGWALL ELEVATION

3/8" = 1'-0"

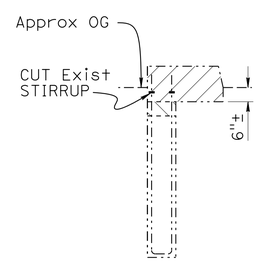

NOTE:
Existing railing reinf to be removed, cut stirrups 3" below approx OG

SECTION F-F

3/8" = 1'-0"

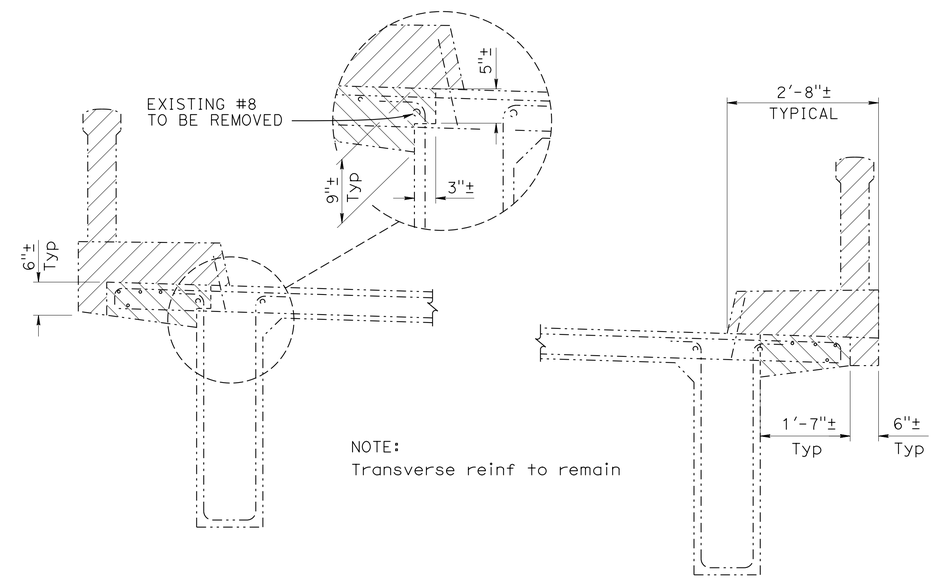

NOTE:
Transverse reinf to remain

PART TYPICAL SECTION

3/4" = 1'-0"

NOTE:
THE CONTRACTOR MUST VERIFY ALL CONTROLLING FIELD DIMENSIONS BEFORE ORDERING OR FABRICATING ANY MATERIAL.

	BY	CHECKED
DESIGN	Ashraf Ahmed	Michael K Bergman
DETAILS	Nancy C Gwynn	Michael K Bergman
QUANTITIES	Jose M Aquino III	Eric G Burgeson

STATE OF CALIFORNIA
DEPARTMENT OF TRANSPORTATION

DIVISION OF ENGINEERING SERVICES
STRUCTURE DESIGN
DESIGN BRANCH 3

BRIDGE NO. 49-0163L/R
POST MILE 65.6

10TH STREET UC (WIDEN)
CONCRETE REMOVAL Det No. 2

STRUCTURES DESIGN DETAIL SHEET (ENGLISH) (REV. 09-01-10)

ORIGINAL SCALE IN INCHES FOR REDUCED PLANS 0 1 2 3

UNIT: 3578
PROJECT NUMBER & PHASE: 05000200201
CONTRACT NO.: 05-0G0404

DISREGARD PRINTS BEARING EARLIER REVISION DATES

REVISION DATES 9-9-15 1-8-16 3-8-16 3-21-16

SHEET 19 OF 31

FILE => 49-0163lr-r-conrem02.dgn

USERNAME => s115755 DATE PLOTTED => 22-JUL-2016 TIME PLOTTED => 17:55

DIST	COUNTY	ROUTE	POST MILES TOTAL PROJECT	SHEET No.	TOTAL SHEETS
05	SLO,Mon	101	63.2/R69.3, R0.0/R1.9	729	858

REGISTERED CIVIL ENGINEER 4-22-16 DATE

5-2-16
PLANS APPROVAL DATE

REGISTERED PROFESSIONAL ENGINEER Jose M Aquino III No. 58386 Exp. 12-31-16 CIVIL STATE OF CALIFORNIA

The State of California or its officers or agents shall not be responsible for the accuracy or completeness of scanned copies of this plan sheet.

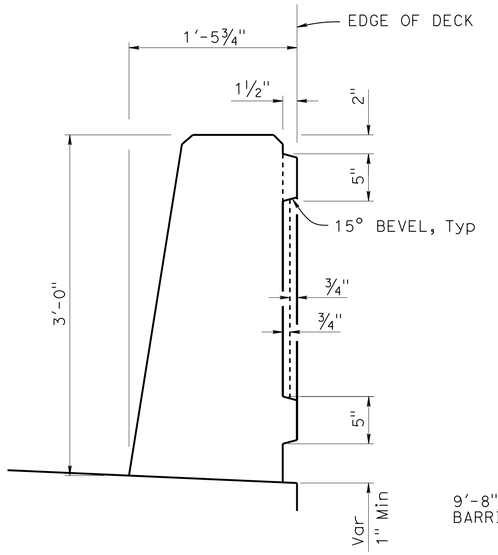

SECTION A-A
1½" = 1'-0"

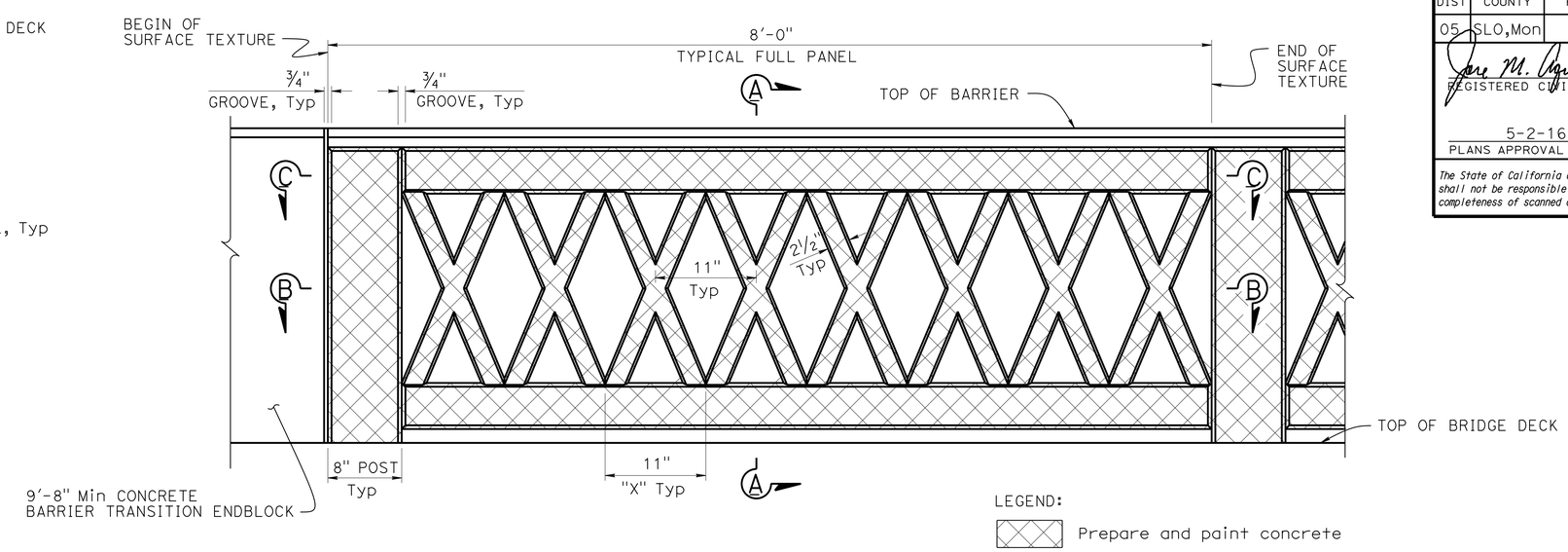

BARRIER MOTIF
1½" = 1'-0"

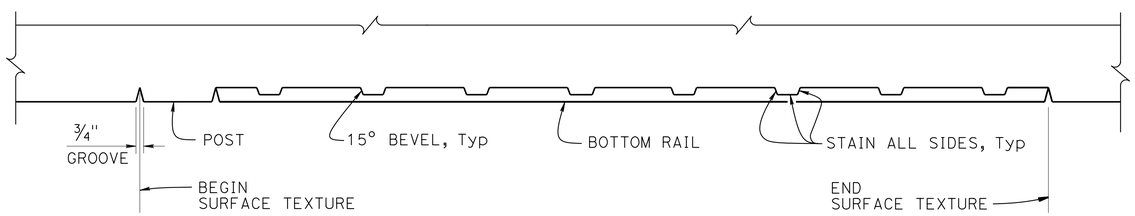

SECTION B-B
1½" = 1'-0"

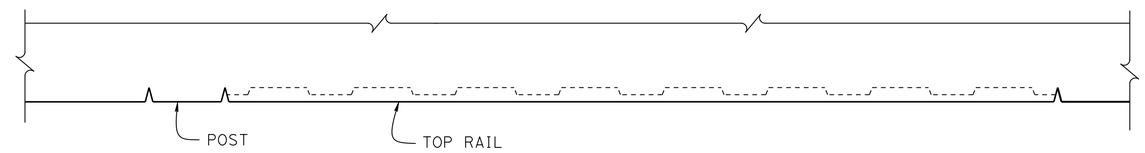

SECTION C-C
1½" = 1'-0"

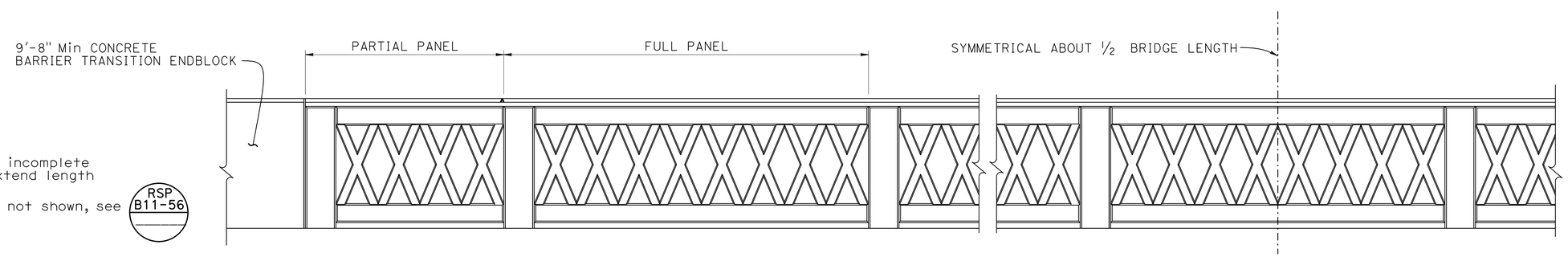

ELEVATION
¾" = 1'-0"

NOTES:

1. If partial panel ends with an incomplete "X", shorten last panel and extend length of concrete barrier endblock
2. For Concrete Barrier details not shown, see RSP B11-56

DESIGN	BY David Fowkes	CHECKED Kantima Green	
DETAILS	BY Nancy C Gwynn	CHECKED Kantima Green	
QUANTITIES	BY Jose M Aquino III	CHECKED Eric G Burgeson	

STATE OF CALIFORNIA
DEPARTMENT OF TRANSPORTATION

DIVISION OF ENGINEERING SERVICES
STRUCTURE DESIGN
DESIGN BRANCH 3

BRIDGE NO. 49-0163L/R
POST MILE 65.6

10TH STREET UC (WIDEN)
BARRIER SURFACE TEXTURE

STRUCTURES DESIGN DETAIL SHEET (ENGLISH) (REV. 09-01-10)

ORIGINAL SCALE IN INCHES FOR REDUCED PLANS 0 1 2 3

UNIT: 3578
PROJECT NUMBER & PHASE: 05000200201
CONTRACT NO.: 05-0G0404

DISREGARD PRINTS BEARING EARLIER REVISION DATES

REVISION DATES 1-15-15 3-28-16 1-12-16

SHEET 20 OF 31

FILE => 49-0163lr-s-barsur.dgn

USERNAME => s113755 DATE PLOTTED => 22-JUL-2016 TIME PLOTTED => 17:55

DIST	COUNTY	ROUTE	POST MILES TOTAL PROJECT	SHEET No.	TOTAL SHEETS
05	SLO,Mon	101	63.2/R69.3, R0.0/R1.9	730	858

REGISTERED CIVIL ENGINEER — DATE 4-22-16

5-2-16
PLANS APPROVAL DATE

REGISTERED PROFESSIONAL ENGINEER — Jose M Aquino III — No. 58386 — Exp. 12-31-16 — CIVIL — STATE OF CALIFORNIA

The State of California or its officers or agents shall not be responsible for the accuracy or completeness of scanned copies of this plan sheet.

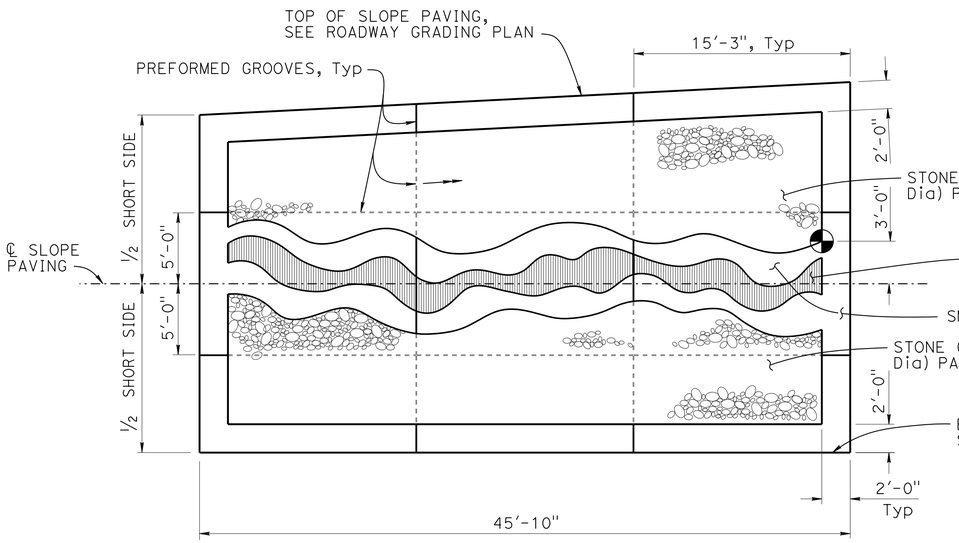

LEFT BRIDGE ABUTMENT 1
SLOPE PAVING SURFACE TEXTURE

3/16" = 1'-0"

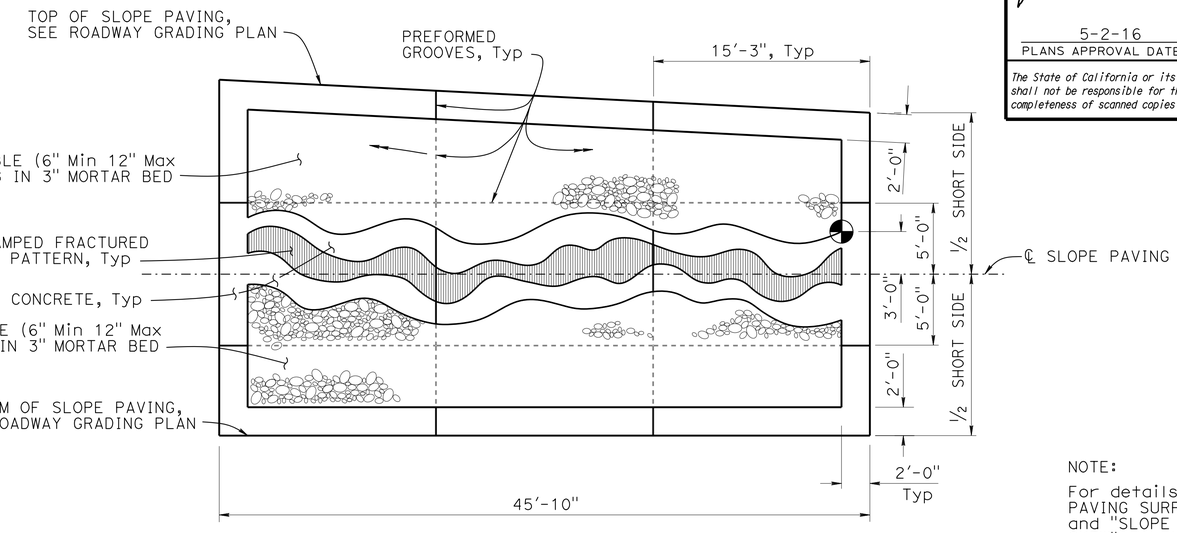

LEFT BRIDGE ABUTMENT 1
SLOPE PAVING SURFACE TEXTURE

3/16" = 1'-0"

NOTE:
For details not shown, see "SLOPE PAVING SURFACE TEXTURE Det No. 3" and "SLOPE PAVING-FULL SLOPE-NO SKEW" sheets

LEGEND:

(A)(I) Working point at grid

Working point

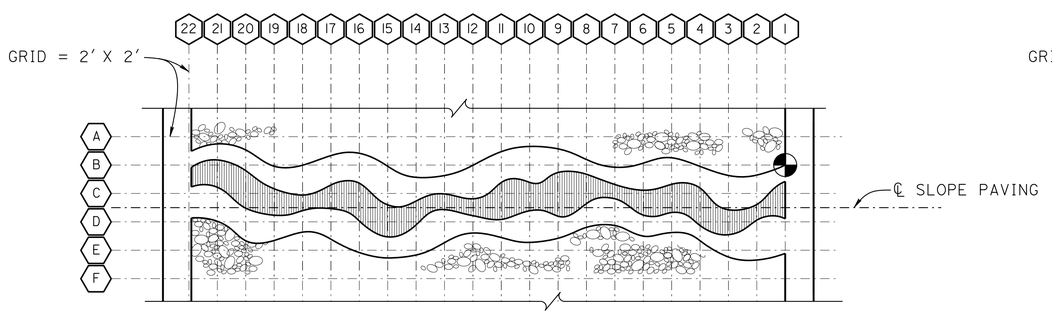

LEFT BRIDGE ABUTMENT 1
SLOPE PAVING SURFACE TEXTURE GRID

3/16" = 1'-0"

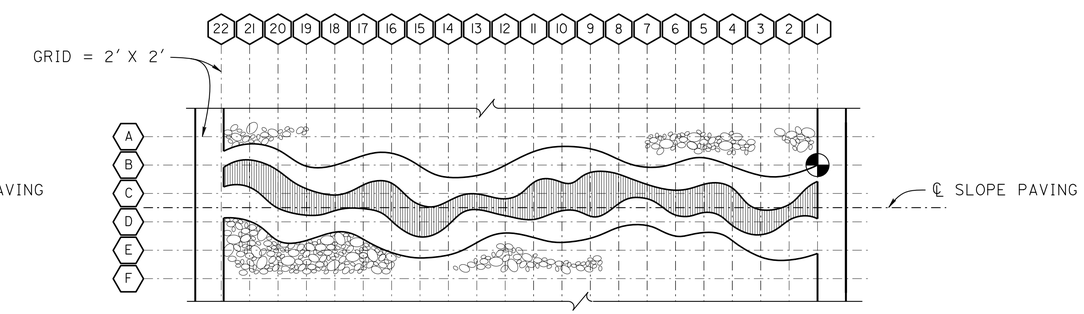

LEFT BRIDGE ABUTMENT 4
SLOPE PAVING SURFACE TEXTURE GRID

3/16" = 1'-0"

NOTE:
THE CONTRACTOR MUST VERIFY ALL CONTROLLING FIELD DIMENSIONS BEFORE ORDERING OR FABRICATING ANY MATERIAL.

	BY	CHECKED
DESIGN	David Fowkes	Kantima Green
DETAILS	Nancy C Gwynn	Kantima Green
QUANTITIES	Jose M Aquino III	Eric G Burgeson

STATE OF CALIFORNIA
DEPARTMENT OF TRANSPORTATION

DIVISION OF ENGINEERING SERVICES
STRUCTURE DESIGN
DESIGN BRANCH 3

BRIDGE NO. 49-0163L/R
POST MILE 65.6

10TH STREET UC (WIDEN)
SLOPE PAVING SURFACE TEXTURE Det No. 1

STRUCTURES DESIGN DETAIL SHEET (ENGLISH) (REV. 09-01-10)

ORIGINAL SCALE IN INCHES FOR REDUCED PLANS 0 1 2 3

UNIT: 3578
PROJECT NUMBER & PHASE: 05000200201
CONTRACT NO.: 05-0G0404

DISREGARD PRINTS BEARING EARLIER REVISION DATES

REVISION DATES: 1-28-16 1-28-16 1-28-16

SHEET 21 OF 31

FILE => 49-0163lr-v-slpavsur01.dgn

USERNAME => s115755 DATE PLOTTED => 22-JUL-2016 TIME PLOTTED => 17:55

DIST	COUNTY	ROUTE	POST MILES TOTAL PROJECT	SHEET No.	TOTAL SHEETS
05	SLO,Mon	101	63.2/R69.3, R0.0/R1.9	731	858

REGISTERED CIVIL ENGINEER 4-22-16 DATE

5-2-16
PLANS APPROVAL DATE

REGISTERED PROFESSIONAL ENGINEER Jose M Aquino III No. 58386 Exp. 12-31-16 CIVIL STATE OF CALIFORNIA

The State of California or its officers or agents shall not be responsible for the accuracy or completeness of scanned copies of this plan sheet.

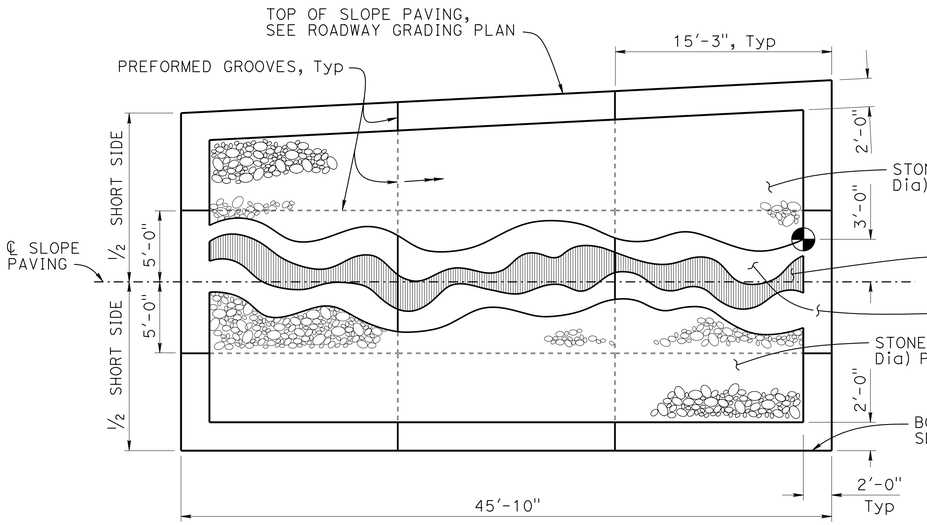

RIGHT BRIDGE ABUTMENT 1
SLOPE PAVING SURFACE TEXTURE

3/16" = 1'-0"

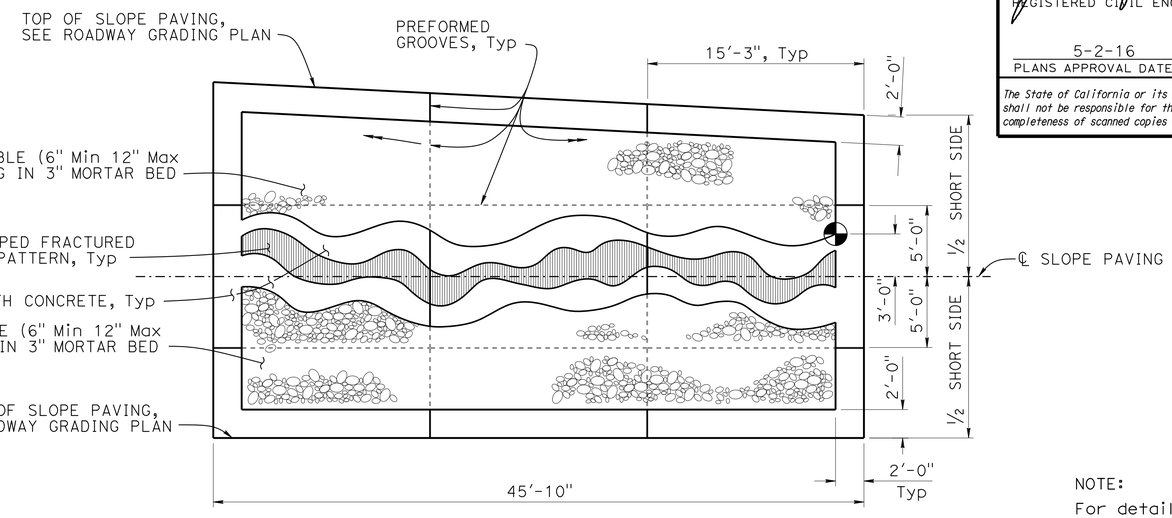

RIGHT BRIDGE ABUTMENT 4
SLOPE PAVING SURFACE TEXTURE

3/16" = 1'-0"

NOTE:
For details not shown, see "SLOPE PAVING SURFACE TEXTURE Det No. 3" and "SLOPE PAVING-FULL SLOPE-NO SKEW" sheets

LEGEND:

(A)(1) Working point at grid

Working point

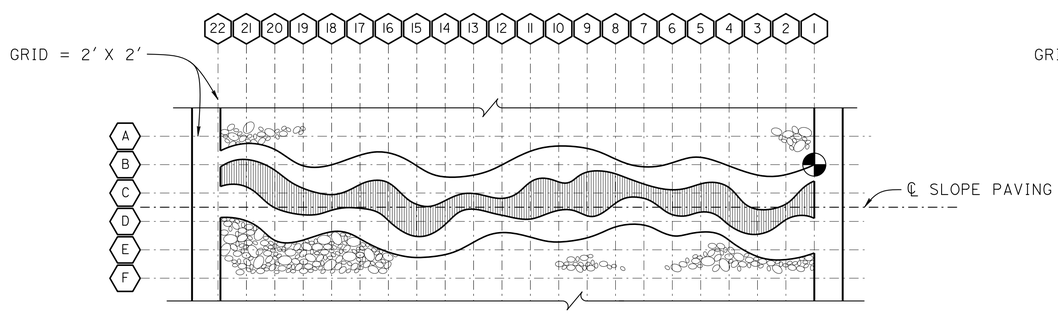

RIGHT BRIDGE ABUTMENT 1
SLOPE PAVING SURFACE TEXTURE GRID

3/16" = 1'-0"

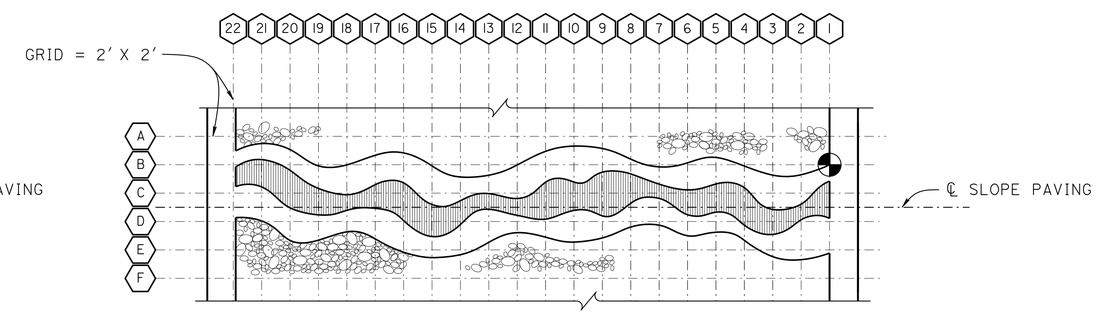

RIGHT BRIDGE ABUTMENT 4
SLOPE PAVING SURFACE TEXTURE GRID

3/16" = 1'-0"

NOTE:
THE CONTRACTOR MUST VERIFY ALL CONTROLLING FIELD DIMENSIONS BEFORE ORDERING OR FABRICATING ANY MATERIAL.

	BY	CHECKED
DESIGN	David Fowkes	Kantima Green
DETAILS	Nancy C Gwynn	Kantima Green
QUANTITIES	Jose M Aquino III	Eric G Burgeson

STATE OF CALIFORNIA
DEPARTMENT OF TRANSPORTATION

DIVISION OF ENGINEERING SERVICES
STRUCTURE DESIGN
DESIGN BRANCH 3

BRIDGE NO. 49-0163L/R
POST MILE 65.6

10TH STREET UC (WIDEN)
SLOPE PAVING SURFACE TEXTURE Det No. 2

STRUCTURES DESIGN DETAIL SHEET (ENGLISH) (REV. 09-01-10)

ORIGINAL SCALE IN INCHES FOR REDUCED PLANS 0 1 2 3

UNIT: 3578
PROJECT NUMBER & PHASE: 05000200201
CONTRACT NO.: 05-0G0404

DISREGARD PRINTS BEARING EARLIER REVISION DATES

REVISION DATES 1-28-16 1-28-16 1-28-16

SHEET 22 OF 31

FILE => 49-0163lr-v-slpavsur02.dgn

USERNAME => s115755 DATE PLOTTED => 22-JUL-2016 TIME PLOTTED => 17:55

DIST	COUNTY	ROUTE	POST MILES TOTAL PROJECT	SHEET No.	TOTAL SHEETS
05	SLO,Mon	101	63.2/R69.3, R0.0/R1.9	732	858

REGISTERED CIVIL ENGINEER 4-22-16 DATE

5-2-16
PLANS APPROVAL DATE

REGISTERED PROFESSIONAL ENGINEER
Jose M Aquino III
No. 58386
Exp. 12-31-16
CIVIL
STATE OF CALIFORNIA

The State of California or its officers or agents shall not be responsible for the accuracy or completeness of scanned copies of this plan sheet.

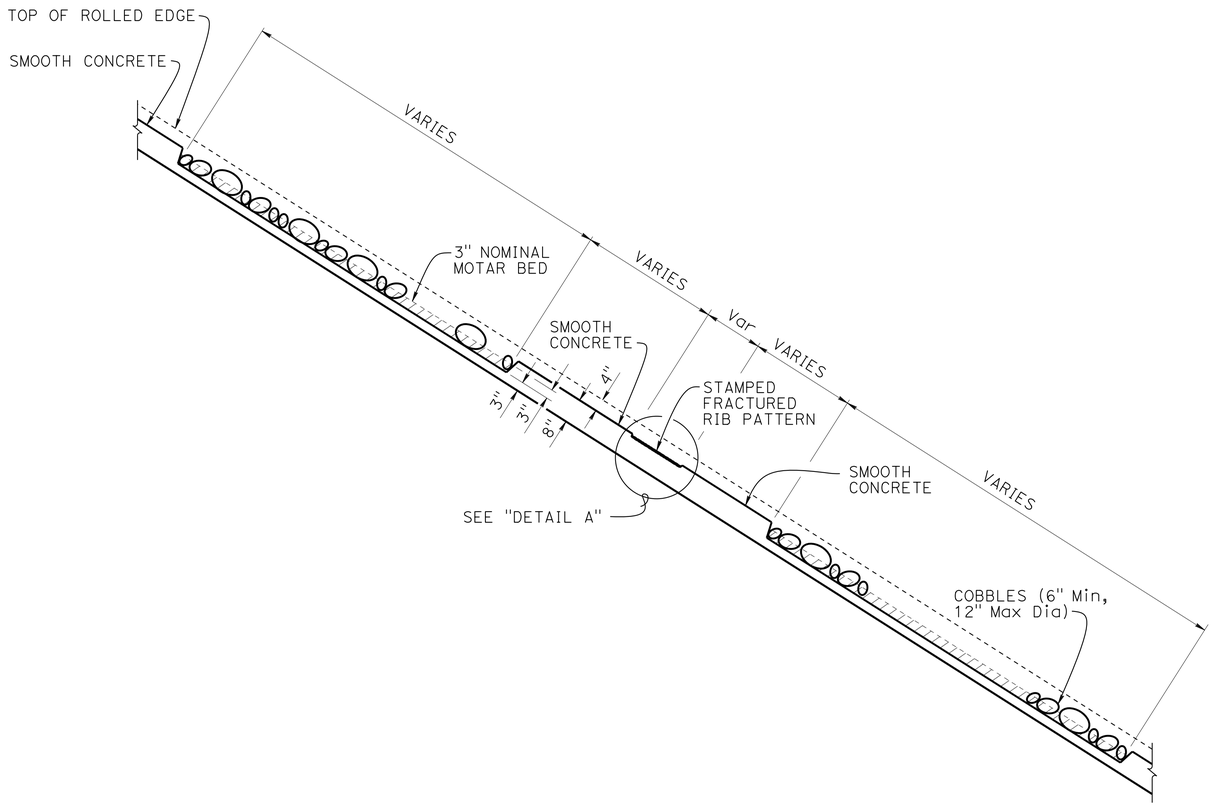

PART SLOPE PAVING SECTION

½" = 1'-0"

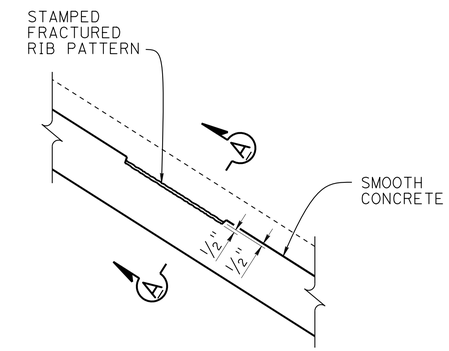

DETAIL A

1" = 1'-0"

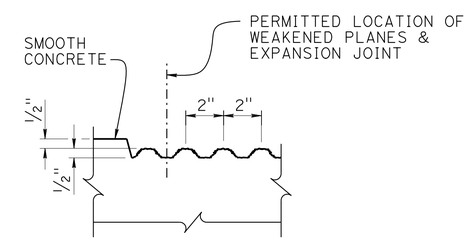

SECTION A-A

3" = 1'-0"

NOTE:
THE CONTRACTOR MUST VERIFY ALL CONTROLLING FIELD DIMENSIONS BEFORE ORDERING OR FABRICATING ANY MATERIAL.

	BY	CHECKED
DESIGN	David Fowkes	Kantima Green
DETAILS	Nancy C Gwynn	Kantima Green
QUANTITIES	Jose M Aquino III	Eric G Burgeson

STATE OF CALIFORNIA
DEPARTMENT OF TRANSPORTATION

DIVISION OF ENGINEERING SERVICES
STRUCTURE DESIGN
DESIGN BRANCH 3

BRIDGE NO. 49-0163L/R
POST MILE 65.6

10TH STREET UC (WIDEN)
SLOPE PAVING SURFACE TEXTURE Det No. 3

STRUCTURES DESIGN DETAIL SHEET (ENGLISH) (REV. 09-01-10)

ORIGINAL SCALE IN INCHES FOR REDUCED PLANS 0 1 2 3

UNIT: 3578
PROJECT NUMBER & PHASE: 05000200201
CONTRACT NO.: 05-0G0404

DISREGARD PRINTS BEARING EARLIER REVISION DATES

REVISION DATES 6-8-16 7-18-16 7-28-16

SHEET 23 OF 31

FILE => 49-0163lr-v-slpavsur03.dgn

USERNAME => s115755 DATE PLOTTED => 22-JUL-2016 TIME PLOTTED => 17:55

DIST	COUNTY	ROUTE	POST MILES TOTAL PROJECT	SHEET No.	TOTAL SHEETS
05	SLO,Mon	101	63.2/R69.3, R0.0/R1.9	733	858

REGISTERED CIVIL ENGINEER 4-22-16 DATE

5-2-16
PLANS APPROVAL DATE

REGISTERED PROFESSIONAL ENGINEER Jose M Aquino III No. 58386 Exp. 12-31-16 CIVIL STATE OF CALIFORNIA

The State of California or its officers or agents shall not be responsible for the accuracy or completeness of scanned copies of this plan sheet.

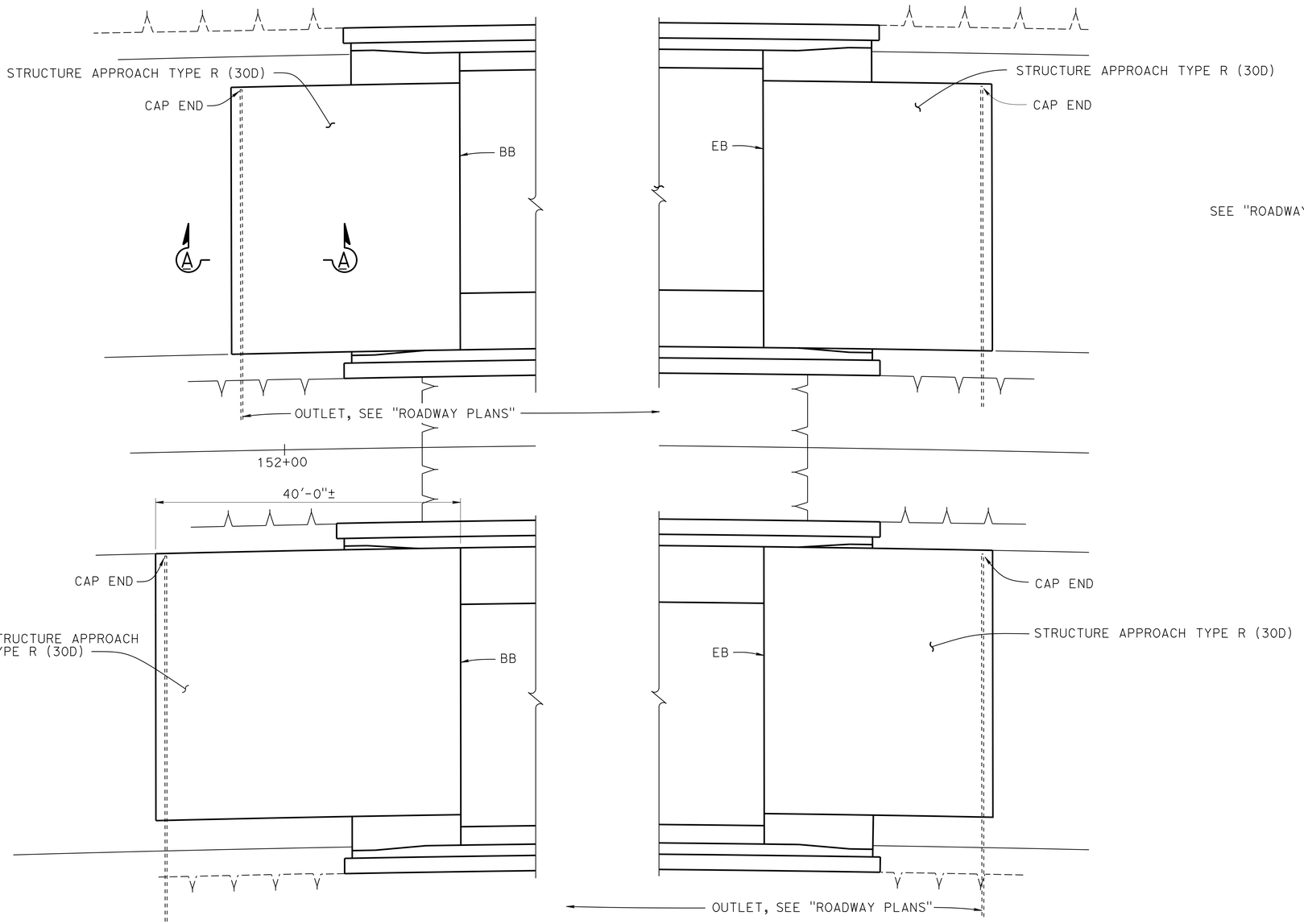

PLAN
1/8" = 1'-0"

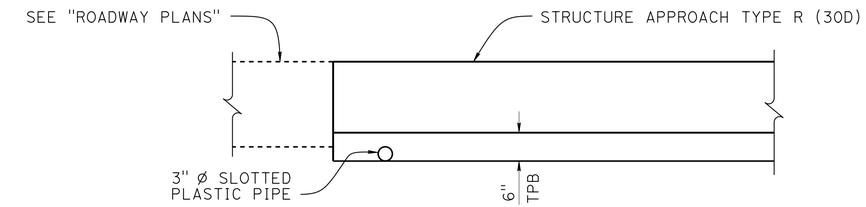

SECTION A-A
3/4" = 1'-0"

NOTE:
THE CONTRACTOR MUST VERIFY ALL CONTROLLING FIELD DIMENSIONS BEFORE ORDERING OR FABRICATING ANY MATERIAL.

NOTE:
For structure approach slab details not shown, see "STRUCTURE APPROACH TYPE R (30D)" sheet

	BY	CHECKED
DESIGN	Ashraf Ahmed	Michael K Bergman
DETAILS	Nancy C Gwynn	Michael K Bergman
QUANTITIES	Jose M Aquino III	Eric G Burgeson

STATE OF CALIFORNIA
DEPARTMENT OF TRANSPORTATION

DIVISION OF ENGINEERING SERVICES
STRUCTURE DESIGN
DESIGN BRANCH 3

BRIDGE NO. 49-0163L/R
POST MILE 65.6

10TH STREET UC (WIDEN)
STRUCTURE APPROACH DRAINAGE DETAILS

STRUCTURES DESIGN DETAIL SHEET (ENGLISH) (REV. 09-01-10)

ORIGINAL SCALE IN INCHES FOR REDUCED PLANS 0 1 2 3

UNIT: 3578
PROJECT NUMBER & PHASE: 05000200201
CONTRACT NO.: 05-0G0404

DISREGARD PRINTS BEARING EARLIER REVISION DATES

REVISION DATES 1-20-15 2-12-15 1-21-16

SHEET 24 OF 31

FILE => 49-0163lr-x-sapprdr.dgn

USERNAME => s115755 DATE PLOTTED => 22-JUL-2016 TIME PLOTTED => 17:55

DIST	COUNTY	ROUTE	POST MILES TOTAL PROJECT	SHEET No.	TOTAL SHEETS
05	SLO,Mon	101	63.2/R69.3, R0.0/R1.9	734	858

REGISTERED CIVIL ENGINEER 4-22-16 DATE

5-2-16
PLANS APPROVAL DATE

REGISTERED PROFESSIONAL ENGINEER Jose M Aquino III No. 58386 Exp. 12-31-16 CIVIL STATE OF CALIFORNIA

The State of California or its officers or agents shall not be responsible for the accuracy or completeness of electronic copies of this plan sheet.

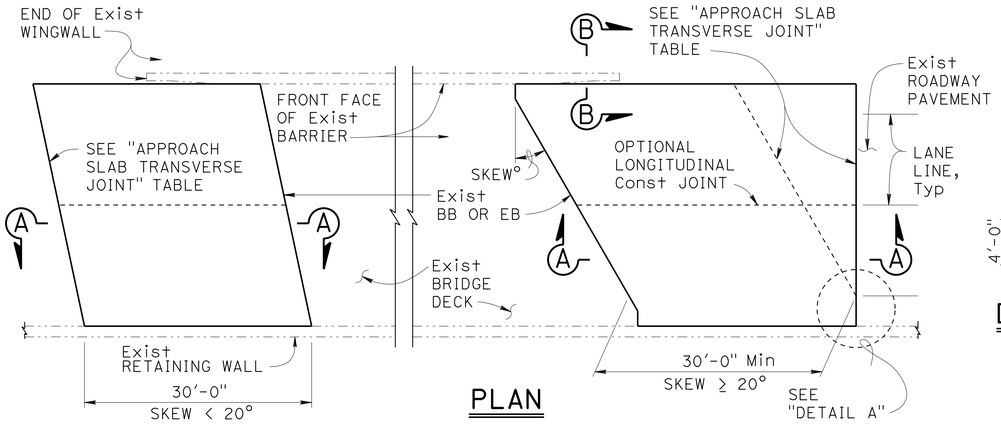

PLAN
1" = 10'

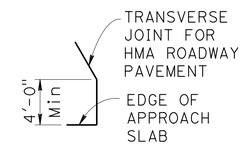

DETAIL A
No Scale

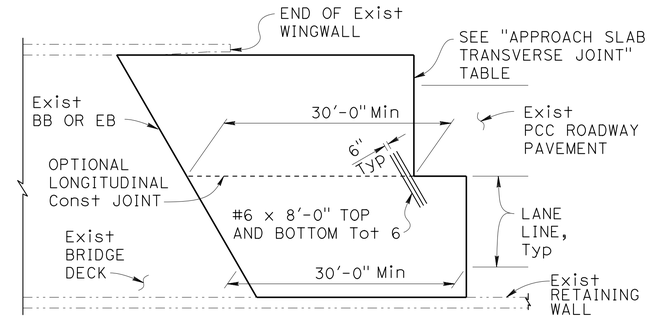

END STAGGER DETAIL
1" = 10'

APPROACH SLAB TRANSVERSE JOINT		
APPROACH SKEW	WITH HMA ROADWAY PAVEMENT	WITH PCC ROADWAY PAVEMENT
< 20°	PARALLEL TO BB OR EB	PARALLEL TO BB OR EB
20° - 45°	PARALLEL TO BB OR EB USE "DETAIL A"	STAGGER AT LANE LINES 24' TO 36' APART, SEE "END STAGGER DETAIL"
> 45°	PARALLEL TO BB OR EB USE "DETAIL A"	STAGGER AT EACH LANE LINE, SEE "END STAGGER DETAIL"

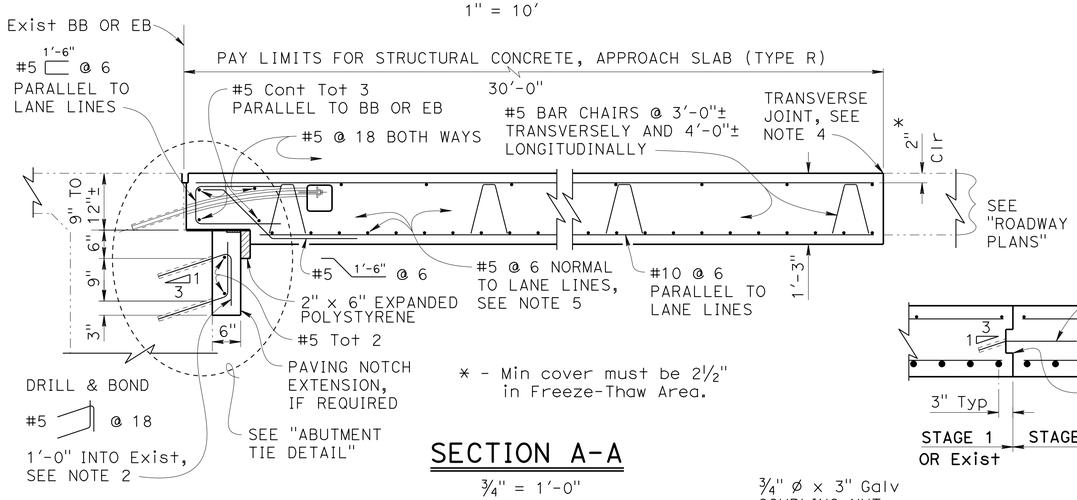

* - Min cover must be 2½" in Freeze-Thaw Area.

SECTION A-A
¾" = 1'-0"

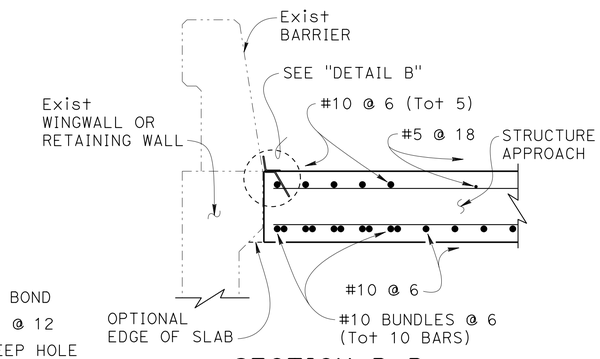

SECTION B-B
¾" = 1'-0"

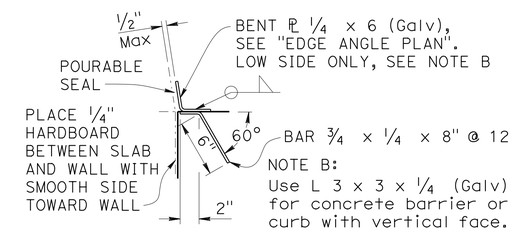

DETAIL B
1½" = 1'-0"

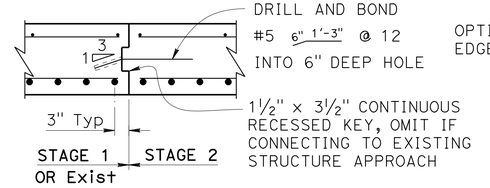

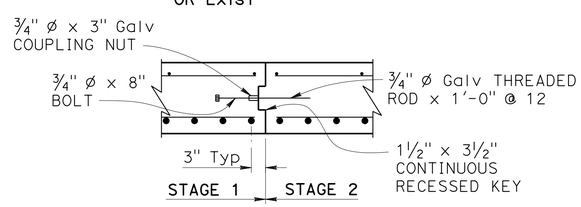

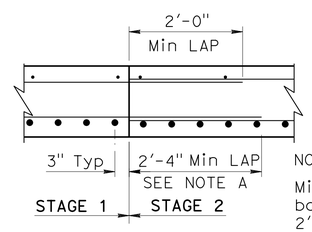

NOTE A:
Min lap splice for bottom Reinf must be 2'-9" in Freeze-Thaw Area.

LONGITUDINAL CONSTRUCTION JOINT ALTERNATIVES
¾" = 1'-0"

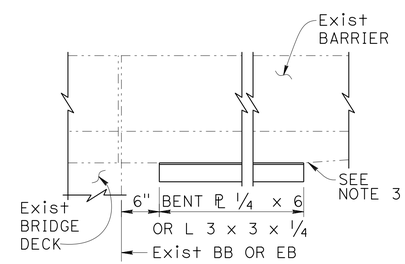

EDGE ANGLE PLAN
1" = 1'-0"

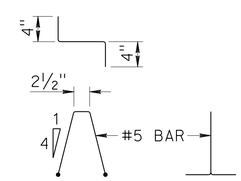

BAR CHAIR DETAIL
1" = 1'-0"

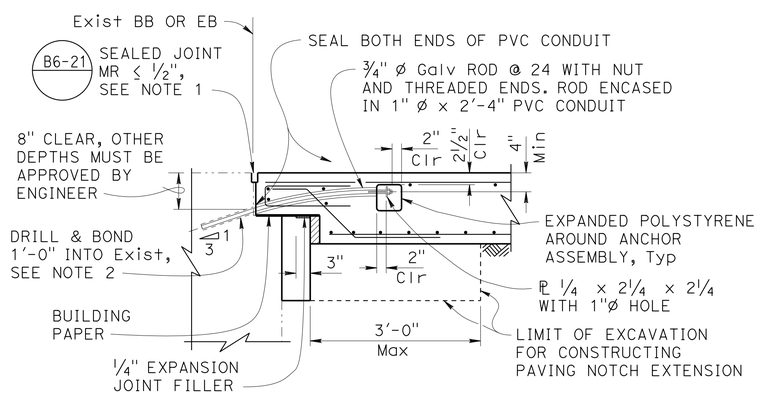

NOTE: For details not shown, see "SECTION A-A".

NOTE:
The contractor must verify all controlling field dimensions before ordering or fabricating any material.

ABUTMENT TIE DETAIL
¾" = 1'-0"

DESIGN NOTES

DESIGN: AASHTO LRFD Bridge Design Specifications, 2012 Edition with Caltrans Amendments, preface dated January 2014

LIMIT STATES: Service I, Strength I & II, Extreme II and Fatigue I (γ_{FAT} = 1.0)

DEAD LOAD: Includes 35 psf for future wearing surface

LIVE LOAD: HL93 and permit design load
Equivalent strip width method: W_1 = 12 ft
Slab span: L_1 = 24.5 ft

REINFORCED CONCRETE:
f_y = 60 ksi
f'_c = 3.6 ksi
n = 8

NOTES:
1. For details not shown, see other plan sheets. Adjust reinforcement to clear sawcut for sealed joint.
2. Space reinforcement to avoid existing prestress anchorages and other abutment reinforcement.
3. End the plate or edge angle at beginning of barrier transition, end of wingwall, or end of structure approach as applicable.
4. Transverse Joint must be a minimum of 5'-0" from an existing or constructed weakened plane joint in approach PCC roadway pavement. Refer to Standard Plans P10 and P14.
5. At the Contractor's option, approach slab transverse reinforcement may be placed parallel to BB or EB. Spacing of transverse reinforcement is measured along ℄ roadway.

—·—·— Indicates Existing Structure

STANDARD DRAWING
FILE NO. xs3-150
APPROVAL DATE January 2015

The components of this Bridge Standard Drawing have been prepared under the responsible charge of the Technical Owner, a registered civil engineer in the State of California. Refer to: http//www.dot.ca.gov/hq/esc/techpubs/manual/bridgemanuals/bridge-standard-detail-sheet/index.html. The selection and proper application of the component design and any modifications shown have been prepared under the responsible charge of the registered civil engineer for the project.

STATE OF CALIFORNIA
DEPARTMENT OF TRANSPORTATION

DIVISION OF ENGINEERING SERVICES 3

BRIDGE NO. 49-0163L/R
POST MILE 65.6

10TH STREET UC (WIDEN)
STRUCTURE APPROACH TYPE R (30D)

DS OSD 2147A (ENGLISH STANDARD DRAWING "XS" BORDER REV. (10-01-14)

ORIGINAL SCALE IN INCHES FOR REDUCED PLANS 0 1 2 3

UNIT: 3578
PROJECT NUMBER & PHASE: 05000200201
CONTRACT NO.: 05-0G0404

DISREGARD PRINTS BEARING EARLIER REVISION DATES

REVISION DATES 1-20-16

SHEET 25 OF 31

FILE => 49-0163lr-x-sapprr30.dgn

USERNAME => s115755 DATE PLOTTED => 22-JUL-2016 TIME PLOTTED => 17:55

DIST	COUNTY	ROUTE	POST MILES TOTAL PROJECT	SHEET No.	TOTAL SHEETS
05	SLO,Mon	101	63.2/R69.3, R0.0/R1.9	735	858

REGISTERED CIVIL ENGINEER — DATE 4-22-16

5-2-16
PLANS APPROVAL DATE

REGISTERED PROFESSIONAL ENGINEER — Jose M Aquino III — No. 58386 — Exp. 12-31-16 — CIVIL — STATE OF CALIFORNIA

The State of California or its officers or agents shall not be responsible for the accuracy or completeness of electronic copies of this plan sheet.

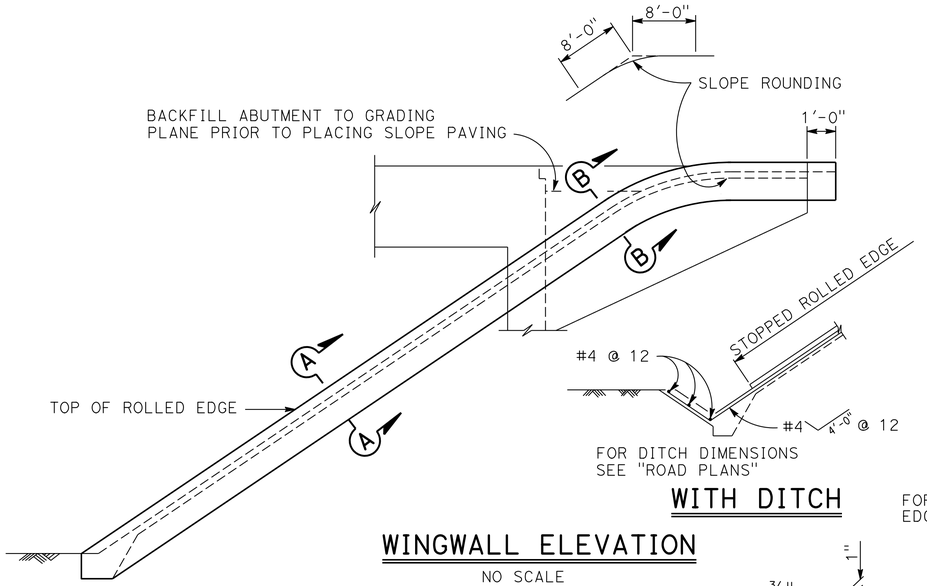

WITH DITCH

WINGWALL ELEVATION

NO SCALE

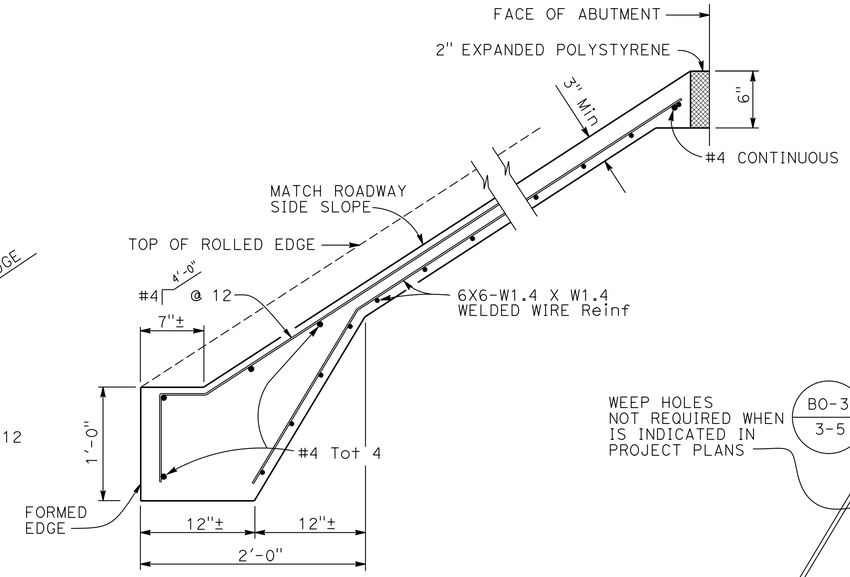

TYPICAL SECTION - CONCRETE PAVING

NO SCALE

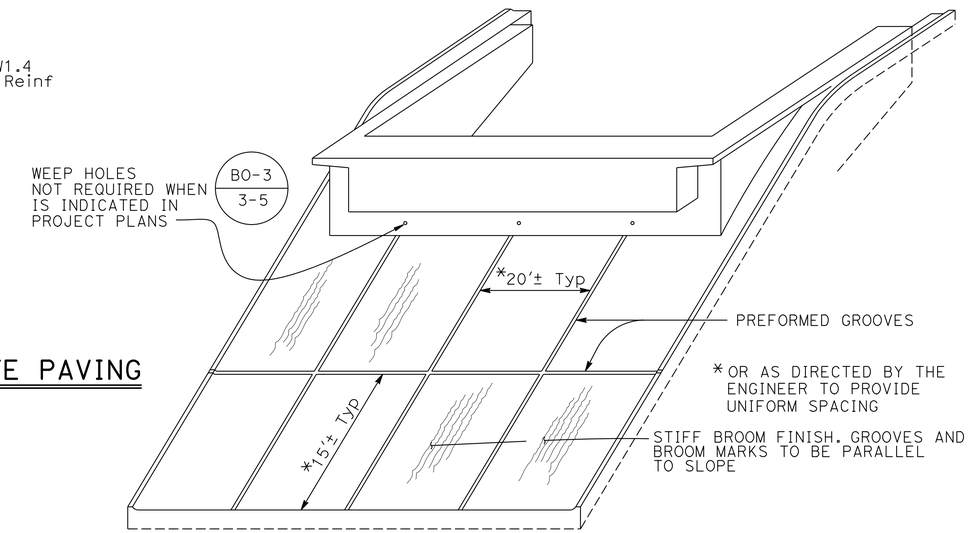

PICTORIAL VIEW OF TYPICAL INSTALLATION

See Note (E)

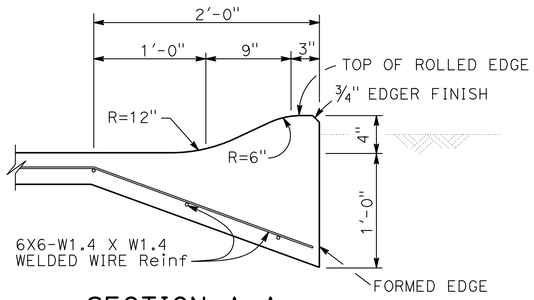

SECTION A-A

NO SCALE

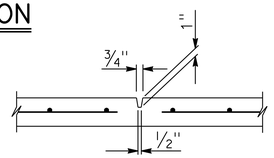

PREFORMED GROOVE

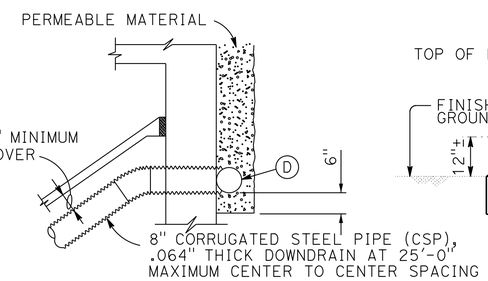

TYPICAL - DRAIN CONNECTION

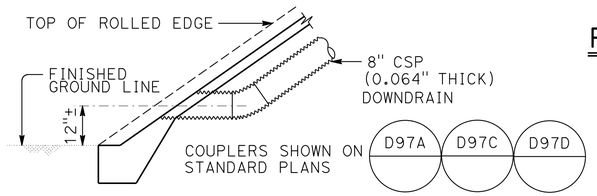

TYPICAL - NO CURB

NOTES

(A) Top of rolled edge

(B) Conduit:
0.064" galv corrugated steel or 0.109" smooth galv steel

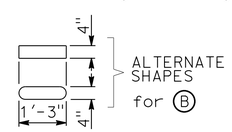

(C) Taper: { 0.064" galv corrugated steel or 0.109" smooth galv steel

(D) 8" perforated steel pipe (0.064" thick) underdrain behind abutment.

(E) See Project Plans for limits of Slope Paving & Drainage layout.

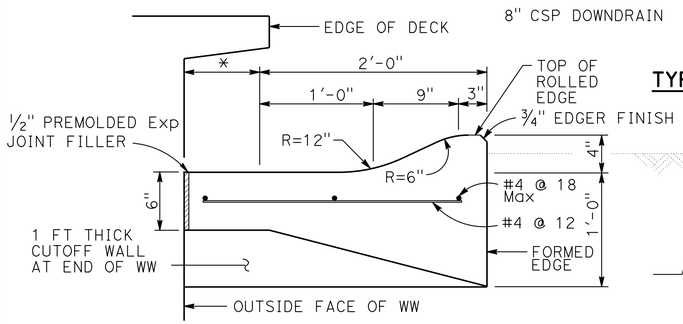

SECTION B-B

NO SCALE

* THIS DIMENSION BECOMES ZERO WHEN EDGE OF DECK IS AT OUTSIDE FACE OF WW

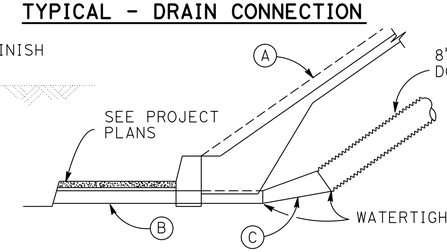

TYPICAL - WITH SIDEWALK

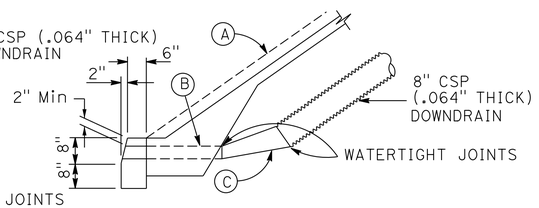

TYPICAL - WITH CURB

DRAINAGE DETAILS

NO SCALE

Drainage details are only applicable when is indicated in project plans (B0-3 / 3-5)

NO SCALE

STANDARD DRAWING		
FILE NO. xs4-210	APPROVAL DATE July 2014	The components of this Bridge Standard Drawing have been prepared under the responsible charge of the Technical Owner, a registered civil engineer in the State of California. Refer to: http://www.dot.ca.gov/hq/esc/techpubs/manual/bridgemanuals/bridge-standard-detail-sheet/index.html. The selection and proper application of the component design and any modifications shown have been prepared under the responsible charge of the registered civil engineer for the project.

STATE OF CALIFORNIA — DEPARTMENT OF TRANSPORTATION

DIVISION OF ENGINEERING SERVICES 3

BRIDGE NO. 49-0163L/R — POST MILE 65.6

10TH STREET UC (WIDEN)

SLOPE PAVING-FULL SLOPE-NO SKEW

DS OSD 2147A (ENGLISH STANDARD DRAWING "XS" BORDER REV. (02-02-11)

ORIGINAL SCALE IN INCHES FOR REDUCED PLANS 0 1 2 3

UNIT: 3578
PROJECT NUMBER & PHASE: 05000200201
CONTRACT NO.: 05-0G0404

DISREGARD PRINTS BEARING EARLIER REVISION DATES — REVISION DATES 6-23-14

SHEET 26 OF 31

FILE => 49-0163lr-x-slopp.dgn

USERNAME => s115755 DATE PLOTTED => 22-JUL-2016 TIME PLOTTED => 17:55

DIST	COUNTY	ROUTE	POST MILES TOTAL PROJECT	SHEET No	TOTAL SHEETS
05	SLO,Mon	101	63.2/R69.3, R0.0/R1.9	736	858

REGISTERED CIVIL ENGINEER 11-16-15 DATE

5-2-16
PLANS APPROVAL DATE

REGISTERED PROFESSIONAL ENGINEER Ryan Turner No. C73956 Exp. 6-30-17 CIVIL STATE OF CALIFORNIA

The State of California or its officers or agents shall not be responsible for the accuracy or completeness of electronic copies of this plan sheet.

This LOTB sheet was prepared in accordance with the Caltrans Soil & Rock Logging, Classification, & Presentation Manual (2010 Edition).

See 2010 Standard Plans A10F and A10G for Soil Legend, and A10H for Rock Legend.

BENCH MARK

SLO-101-PM65.46
1" ip with Caltrans
control pp w/nail
NAVD88 662.656
NAD83
N 2,469,259.023
E 5,760,509.127

SLO-101-PM65.54
c/l ref mon. stamped
48-3, brass disk in conc.
NAVD88 683.397
NAD83
N 2,469,528.958
E 5,760,375.571

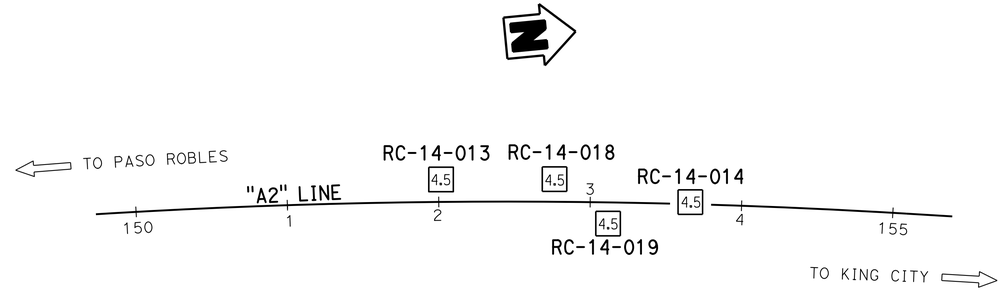

PLAN
1" = 50'

PROFILE
Horiz. 1" = 10'
Vert. 1" = 10'

ENGINEERING SERVICES	MATERIALS AND GEOTECHNICAL SERVICES	STATE OF CALIFORNIA DEPARTMENT OF TRANSPORTATION	DIVISION OF ENGINEERING SERVICES STRUCTURE DESIGN DESIGN BRANCH 3	BRIDGE NO. 49-0163LR POST MILE 65.6	10TH STREET UC (WIDEN)
FUNCTIONAL SUPERVISOR NAME: T. Menard	DRAWN BY: F. Nguyen, I. G-Remmen CHECKED BY: M. Jurasius	FIELD INVESTIGATION BY: R. Turner, J. Scardine			LOG OF TEST BORINGS 1 OF 5

OGS CIVIL LOG OF TEST BORINGS SHEET

ORIGINAL SCALE IN INCHES FOR REDUCED PLANS 0 1 2 3

UNIT: 3650
PROJECT NUMBER & PHASE: 05000200201 CONTRACT NO.: 05-0G0404

DISREGARD PRINTS BEARING EARLIER REVISION DATES

REVISION DATES 06-23-15 09-23-15 10-28-15 11-10-16 SHEET 27 OF 31

FILE => 49-0163lr-y-ltb1of5.dgn

USERNAME => s115755 DATE PLOTTED => 22-JUL-2016 TIME PLOTTED => 17:55

DIST	COUNTY	ROUTE	POST MILES TOTAL PROJECT	SHEET No	TOTAL SHEETS
05	SLO,Mon	101	63.2/R69.3, R0.0/R1.9	737	858

Ryan Turner 11-16-15
REGISTERED CIVIL ENGINEER DATE

5-2-16
PLANS APPROVAL DATE

REGISTERED PROFESSIONAL ENGINEER Ryan Turner No. C73956 Exp. 6-30-17 CIVIL STATE OF CALIFORNIA

The State of California or its officers or agents shall not be responsible for the accuracy or completeness of electronic copies of this plan sheet.

This LOTB sheet was prepared in accordance with the Caltrans Soil & Rock Logging, Classification, & Presentation Manual (2010 Edition).

See 2010 Standard Plans A10F and A10G for Soil Legend, and A10H for Rock Legend.

FOR PLAN VIEW, SEE
"LOG OF TEST BORINGS 1 OF 5"

Note: Groundwater was encountered but not measured in Boring RC-14-018.

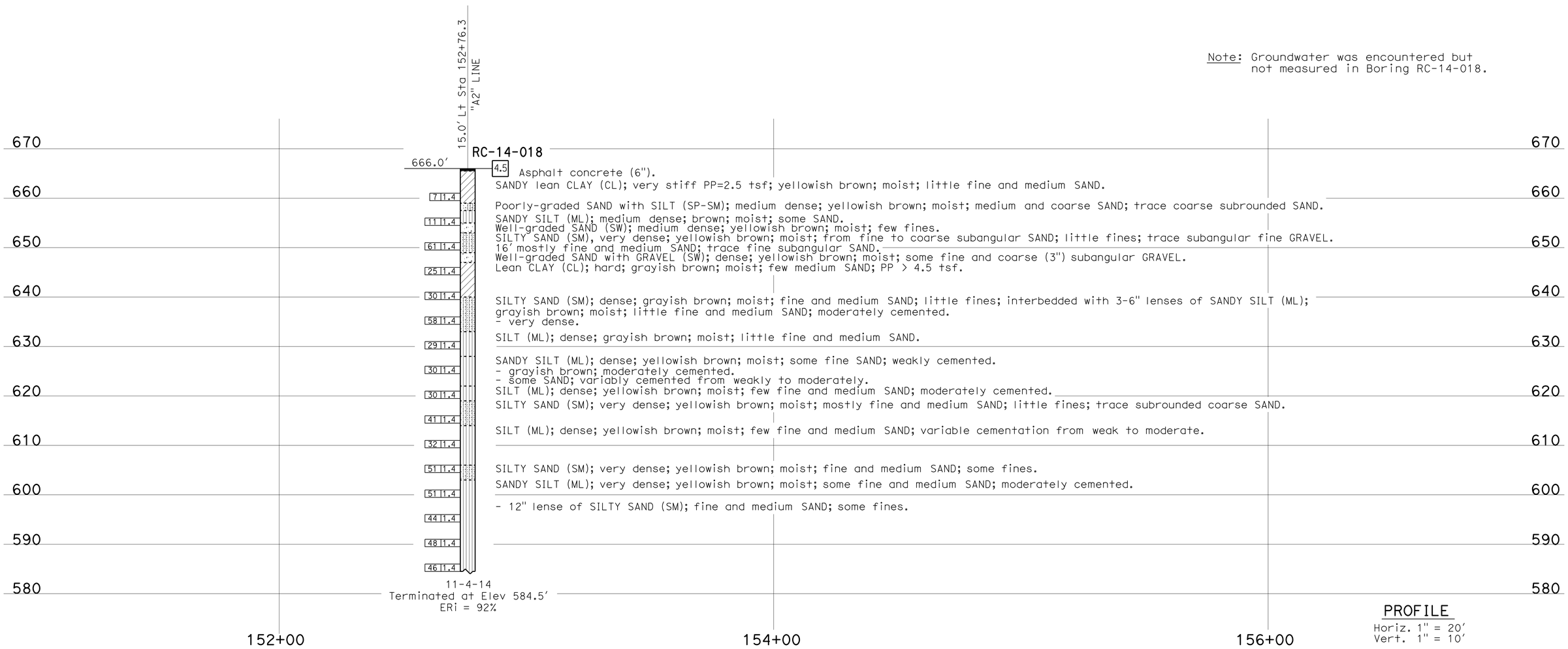

PROFILE
Horiz. 1" = 20'
Vert. 1" = 10'

ENGINEERING SERVICES	MATERIALS AND GEOTECHNICAL SERVICES	STATE OF CALIFORNIA DEPARTMENT OF TRANSPORTATION	DIVISION OF ENGINEERING SERVICES STRUCTURE DESIGN DESIGN BRANCH 3	BRIDGE NO. 49-0163LR POST MILE 65.6	10TH STREET UC (WIDEN) LOG OF TEST BORINGS 2 OF 5
FUNCTIONAL SUPERVISOR NAME: T. Menard	DRAWN BY: F. Nguyen, I. G-Remmen CHECKED BY: M. Jurasius	FIELD INVESTIGATION BY: R. Turner			

OGS CIVIL LOG OF TEST BORINGS SHEET

ORIGINAL SCALE IN INCHES FOR REDUCED PLANS 0 1 2 3

UNIT: 3650
PROJECT NUMBER & PHASE: 05000200201 CONTRACT NO.: 05-0G0404

DISREGARD PRINTS BEARING EARLIER REVISION DATES

REVISION DATES: 06-23-15 09-28-15 10-28-15 11-16-15

SHEET 28 OF 31

FILE => 49-0163lr-y-ltb2of5.dgn

USERNAME => s115755 DATE PLOTTED => 22-JUL-2016 TIME PLOTTED => 17:55

DIST	COUNTY	ROUTE	POST MILES TOTAL PROJECT	SHEET No	TOTAL SHEETS
05	SLO,Mon	101	63.2/R69.3, R0.0/R1.9	738	858

REGISTERED CIVIL ENGINEER 11-16-15 DATE

5-2-16
PLANS APPROVAL DATE

REGISTERED PROFESSIONAL ENGINEER Ryan Turner No. C73956 Exp. 6-30-17 CIVIL STATE OF CALIFORNIA

The State of California or its officers or agents shall not be responsible for the accuracy or completeness of electronic copies of this plan sheet.

This LOTB sheet was prepared in accordance with the Caltrans Soil & Rock Logging, Classification, & Presentation Manual (2010 Edition).

See 2010 Standard Plans A10F and A10G for Soil Legend, and A10H for Rock Legend.

FOR PLAN VIEW, SEE
"LOG OF TEST BORINGS 1 OF 5"

Note: Groundwater was encountered but not measured in Boring RC-14-019.

PROFILE
Horiz. 1" = 10'
Vert. 1" = 10'

ENGINEERING SERVICES	MATERIALS AND GEOTECHNICAL SERVICES	STATE OF CALIFORNIA DEPARTMENT OF TRANSPORTATION	DIVISION OF ENGINEERING SERVICES STRUCTURE DESIGN DESIGN BRANCH 3	BRIDGE NO. 49-0163LR POST MILE 65.6	10TH STREET UC (WIDEN) LOG OF TEST BORINGS 3 OF 5
FUNCTIONAL SUPERVISOR NAME: T. Menard	DRAWN BY: F. Nguyen, I. G-Remmen CHECKED BY: M. Jurasius	FIELD INVESTIGATION BY: R. Turner, J. Scardine			

OGS CIVIL LOG OF TEST BORINGS SHEET

ORIGINAL SCALE IN INCHES FOR REDUCED PLANS 0 1 2 11-10-15

UNIT: 3650
PROJECT NUMBER & PHASE: 05000200201 CONTRACT NO.: 05-0G0404

DISREGARD PRINTS BEARING EARLIER REVISION DATES → REVISION DATES 06-23-15 09-21-15 10-29-15 11-16-15

SHEET 29 OF 31

FILE => 49-0163lr-y-ltb3of5.dgn

USERNAME => s8115755 DATE PLOTTED => 22-JUL-2016 TIME PLOTTED => 17:55

DIST	COUNTY	ROUTE	POST MILES TOTAL PROJECT	SHEET No	TOTAL SHEETS
05	SLO,Mon	101	63.2/R69.3, R0.0/R1.9	739	858

REGISTERED CIVIL ENGINEER — DATE: 11-16-15

5-2-16
PLANS APPROVAL DATE

REGISTERED PROFESSIONAL ENGINEER — Ryan Turner — No. C73956 — Exp. 6-30-17 — CIVIL — STATE OF CALIFORNIA

The State of California or its officers or agents shall not be responsible for the accuracy or completeness of electronic copies of this plan sheet.

This LOTB sheet was prepared in accordance with the Caltrans Soil & Rock Logging, Classification, & Presentation Manual (2010 Edition).

See 2010 Standard Plans A10F and A10G for Soil Legend, and A10H for Rock Legend.

FOR PLAN VIEW, SEE
"LOG OF TEST BORINGS 1 OF 5"

Note: Groundwater was encountered but not measured in Boring RC-14-014.

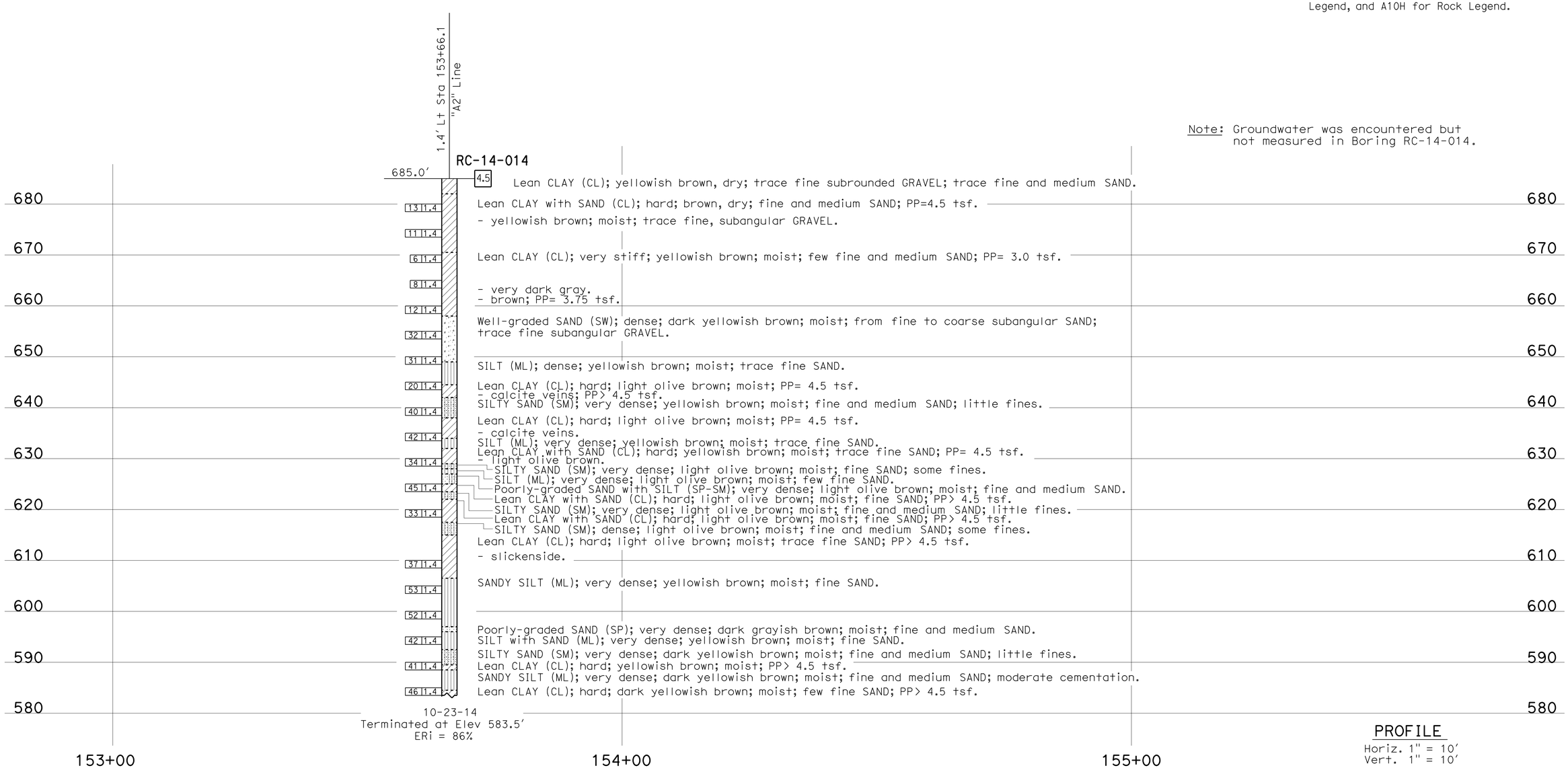

PROFILE
Horiz. 1" = 10'
Vert. 1" = 10'

ENGINEERING SERVICES	MATERIALS AND GEOTECHNICAL SERVICES	STATE OF CALIFORNIA DEPARTMENT OF TRANSPORTATION	DIVISION OF ENGINEERING SERVICES STRUCTURE DESIGN DESIGN BRANCH 3	BRIDGE NO. 49-0163LR / POST MILE 65.6	10TH STREET UC (WIDEN)
FUNCTIONAL SUPERVISOR NAME: T. Menard	DRAWN BY: F. Nguyen, I. G-Remmen / CHECKED BY: M. Jurasius	FIELD INVESTIGATION BY: R. Turner			LOG OF TEST BORINGS 4 OF 5

OGS CIVIL LOG OF TEST BORINGS SHEET — ORIGINAL SCALE IN INCHES FOR REDUCED PLANS 0 1 2 3

UNIT: 3650
PROJECT NUMBER & PHASE: 05000200201 — CONTRACT NO.: 05-0G0404

DISREGARD PRINTS BEARING EARLIER REVISION DATES → REVISION DATES: 06-25-15, 09-22-15, 10-28-15, 11-16-15 — SHEET 30 OF 31

FILE => 49-0163lr-y-ltb4of5.dgn

USERNAME => s115755 DATE PLOTTED => 22-JUL-2016 TIME PLOTTED => 17:55

F-99(21)

FED. ROAD DIV. NO	STATE	PROJ. NO	FISCAL YEAR	SHEET NO	TOTAL SHEETS
7	CAL.			58	63

DIST.	COUNTY	ROUTE	BRIDGE NO.	SHEET NO.	TOTAL SHEETS
V	SLO	1	A	8	8

DATE APPROVED OCTOBER 1, 1956

NOTES:
NO CHANGES IN PLAN FTG GRADE
DESIGN PILE LOADING : 45 T
TYPE PILE : CAST IN DRILLED HOLES
DIAMETER : 1'-3½"
TOTAL NO. PILES : 65
L.F. PILES "AS BUILT" : 1484.9
L.F. PILES CALLED FOR ON PLANS : 1425

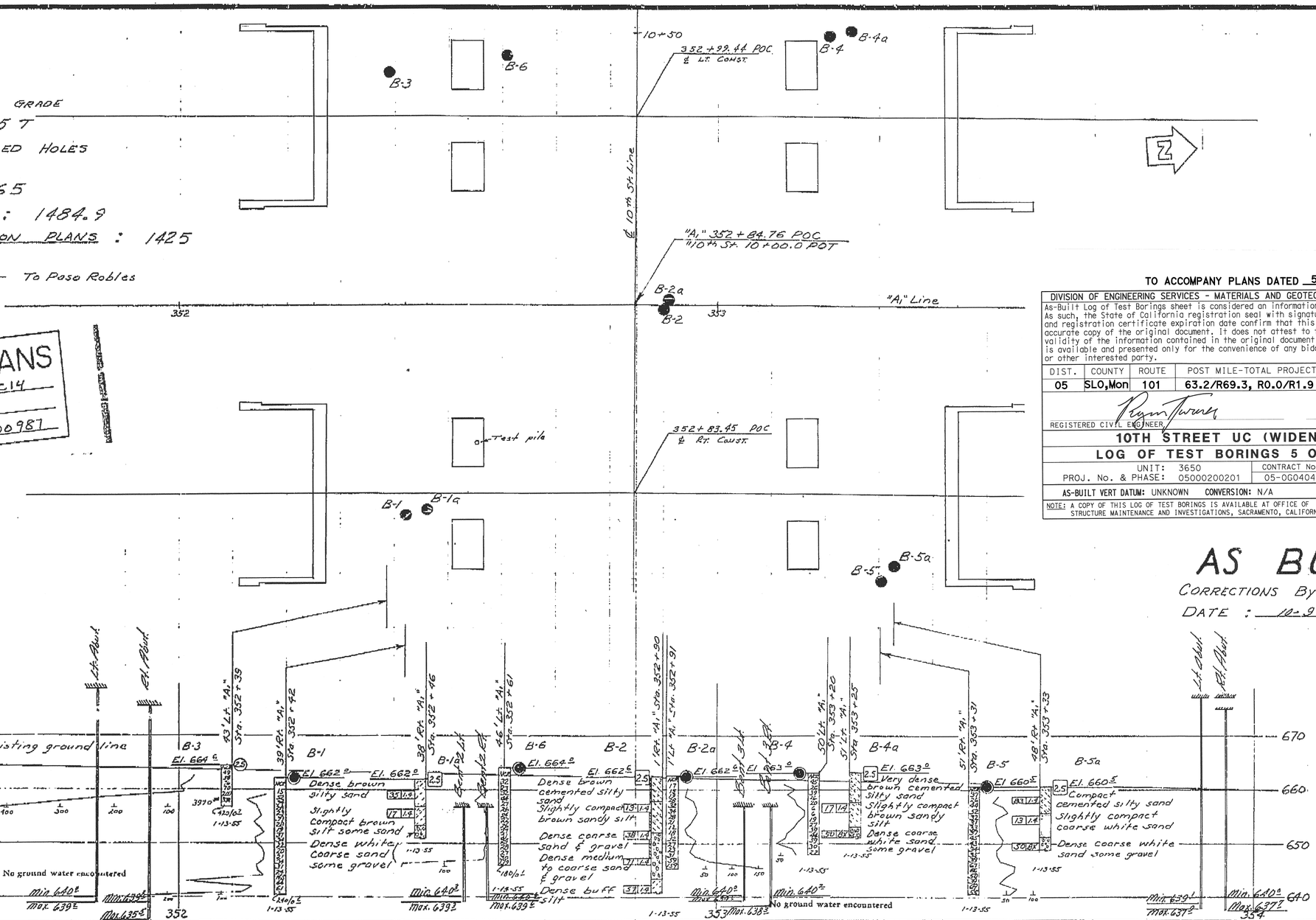

AS BUILT PLANS
Contract No. 57-SVC14
Date Completed
Document No. 50000987

TO ACCOMPANY PLANS DATED 5-2-16

DIVISION OF ENGINEERING SERVICES - MATERIALS AND GEOTECHNICAL SERVICES
As-Built Log of Test Borings sheet is considered an informational document only. As such, the State of California registration seal with signature, license number and registration certificate expiration date confirm that this is a true and accurate copy of the original document. It does not attest to the accuracy or validity of the information contained in the original document. This drawing is available and presented only for the convenience of any bidder, contractor or other interested party.

DIST.	COUNTY	ROUTE	POST MILE-TOTAL PROJECT	Sheet No.	Total Sheets
05	SLO,Mon	101	63.2/R69.3, R0.0/R1.9	740	858

REGISTERED CIVIL ENGINEER — DATE 11/16/15

REGISTERED PROFESSIONAL ENGINEER — Ryan Turner — No. C73956 — Exp. 6-30-17 — CIVIL — STATE OF CALIFORNIA

10TH STREET UC (WIDEN)
LOG OF TEST BORINGS 5 OF 5

UNIT: 3650 — CONTRACT NO. 05-0G0404 — BRIDGE NO. 49-0163LR
PROJ. No. & PHASE: 05000200201
AS-BUILT VERT DATUM: UNKNOWN CONVERSION: N/A — Sheet 31 of 31
NOTE: A COPY OF THIS LOG OF TEST BORINGS IS AVAILABLE AT OFFICE OF STRUCTURE MAINTENANCE AND INVESTIGATIONS, SACRAMENTO, CALIFORNIA

AS BUILT
CORRECTIONS BY : John D. Stettine
DATE : 10-9-84

Note: ⌒⌒⌒ denotes bottom of footing

CLASSIFICATION OF MATERIAL BASED ON STANDARD GRADE SIZE LIMITS

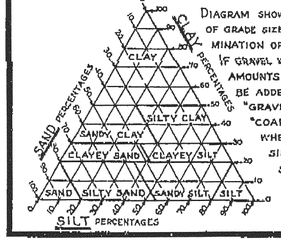

DIAGRAM SHOWING THE BASIS FOR ESTIMATES OF GRADE SIZE DISTRIBUTION USED IN DETERMINATION OF CLASS NAMES.
IF GRAVEL IS PRESENT IN APPRECIABLE AMOUNTS THE TERM "GRAVELLY" MAY BE ADDED TO THE CLASS NAME, VIZ. "GRAVELLY SAND." THE TERMS "COARSE", "MEDIUM" AND "FINE" WHEN USED TO DESCRIBE SAND, SILT AND GRAVEL REFER TO STANDARD GRADE SIZE LIMITS.

LEGEND OF EARTH MATERIALS

GRAVEL
SAND
SILT
CLAY
SANDY CLAY OR CLAYEY SAND
SANDY SILT OR SILTY SAND
SILTY CLAY OR CLAYEY SILT
PEAT AND/OR ORGANIC MATTER
FILL MATERIAL
IGNEOUS ROCK
SEDIMENTARY ROCK
METAMORPHIC ROCK

LEGEND OF BORING OPERATIONS

PLAN OF ANY BORING
PENETROMETER
2¼" CONE PENETROMETER
SAMPLER BORING (DRY)
ROTARY BORING (WET)
AUGER BORING (DRY)
JET BORING
CORE BORING
TEST PIT

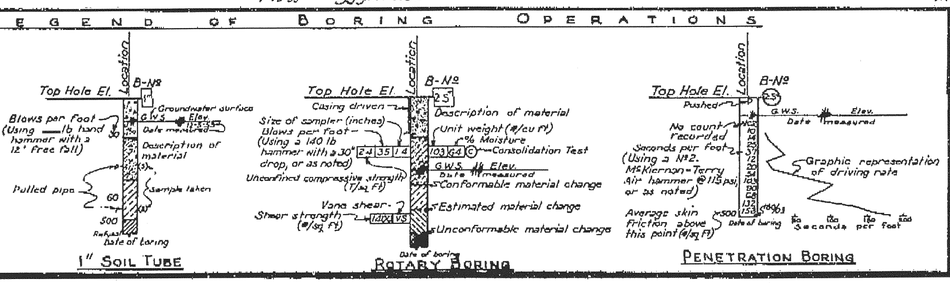

NOTES

The Contractor's attention is directed to Section 2, Article (c) of the Standard Specifications and to the Special Provisions accompanying this set of plans.
Classification of earth material as shown on this sheet is based upon field inspection and is not to be construed to imply mechanical analysis.

STATE OF CALIFORNIA
DEPARTMENT OF PUBLIC WORKS
DIVISION OF HIGHWAYS

TENTH STREET UNDERCROSSING
LOG OF TEST BORINGS

SCALE 1" = 10' — BRIDGE 49-163 R/L — FILE — DRAWING C-4175-8

PREL. DRAWING NO. P-4175 8

BRIDGE DEPARTMENT

DRAWN	H. Hanley	1-26-55
CHECKED	C. Hasek	2-10-55

Approval Recommended by: Bridge Engineer
Approved: Chief Bridge Engineer
Director of Public Works

1-A

DIST	COUNTY	ROUTE	POST MILES TOTAL PROJECT	SHEET No.	TOTAL SHEETS
05	SLO,Mon	101	63.2/R69.3, R0.0/R1.9	741	858

REGISTERED CIVIL ENGINEER 4-22-16 DATE

5-2-16
PLANS APPROVAL DATE

REGISTERED PROFESSIONAL ENGINEER Jose M Aquino III No. 58386 Exp. 12-31-16 CIVIL STATE OF CALIFORNIA

The State of California or its officers or agents shall not be responsible for the accuracy or completeness of scanned copies of this plan sheet.

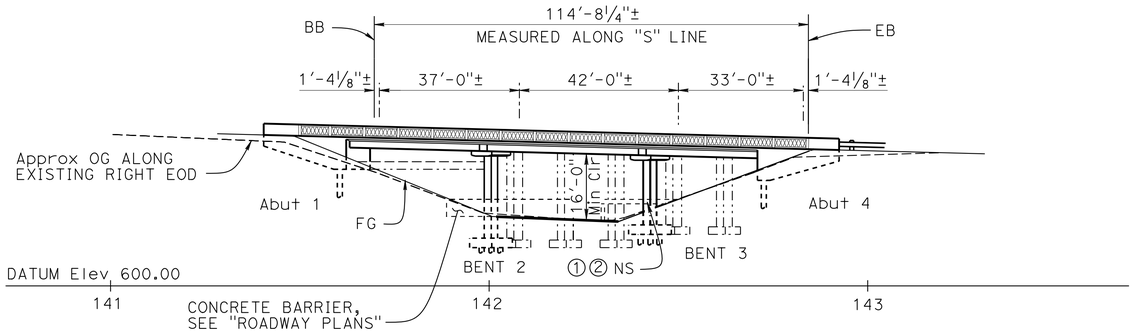

ELEVATION

1" = 20'

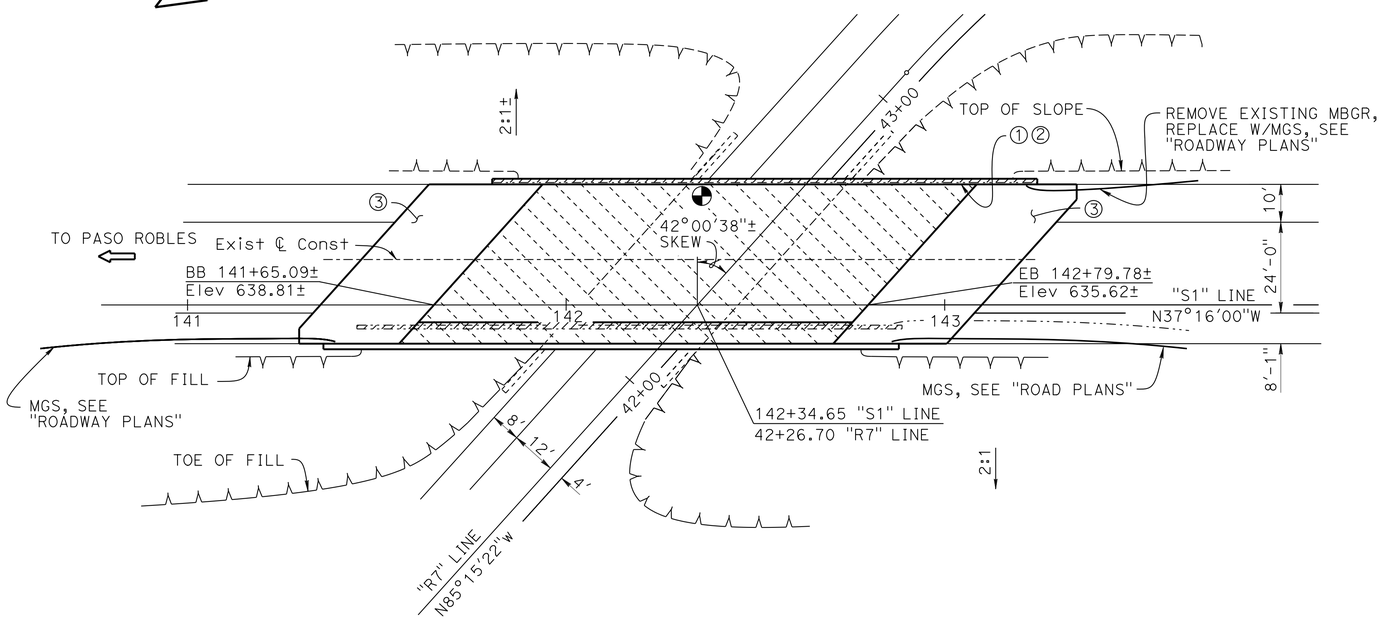

PLAN

1" = 20'

LEGEND:

- Indicates existing bridge
- Indicates new construction
- Indicates existing barrier removal
- Indicates limits of prepare bridge deck and place 1" Polyester Concrete Overlay
- Point of minimum vertical clearance

NOTES:

① Paint "Br. No. 49-0164L"
② Paint "NORTH SAN MIGUEL UC"
③ Structure Approach Type R (30D)

1. For "TYPICAL SECTION" see "GENERAL PLAN No. 2" sheet
2. For "GENERAL NOTES" and "INDEX TO PLANS", see "INDEX TO PLANS" sheet

QUANTITIES

PREPARE CONCRETE BRIDGE DECK SURFACE	4,826	SQFT
FURNISH POLYESTER CONCRETE OVERLAY	430	CF
PLACE POLYESTER CONCRETE OVERLAY	4,826	SQFT
BRIDGE REMOVAL (PORTION), LOCATION C	LUMP	SUM
STRUCTURE EXCAVATION (BRIDGE)	90	CY
STRUCTURE BACKFILL (BRIDGE)	64	CY
16" CAST-IN-DRILLED-HOLE CONCRETE PILING	185	LF
STRUCTURAL CONCRETE, BRIDGE FOOTING	12	CY
STRUCTURAL CONCRETE, BRIDGE	38	CY
STRUCTURAL CONCRETE, BRIDGE (POLYMER FIBER)	20	CY
STRUCTURAL CONCRETE, APPROACH SLAB (TYPE R)	120	CY
PAVING NOTCH EXTENSION	74	CF
DRILL AND PRESSURE GROUT BAR REINFORCING	16	LF
DRILL AND BOND DOWEL	296	LF
DRILL AND BOND DOWEL (CHEMICAL ADHESIVE)	6	EA
FURNISH PRECAST PRESTRESSED CONCRETE GIRDER (30'-40')	6	EA
ERECT PRECAST PRESTRESSED CONCRETE GIRDER	6	EA
JOINT SEAL (MR 1/2")	113	LF
BAR REINFORCING STEEL (BRIDGE)	23,850	LB
HEADED BAR REINFORCEMENT	32	EA
PREPARE AND PAINT CONCRETE	425	SQFT
CONCRETE BARRIER (TYPE 736 MODIFIED)	296	LF

NOTE:
THE CONTRACTOR MUST VERIFY ALL CONTROLLING FIELD DIMENSIONS BEFORE ORDERING OR FABRICATING ANY MATERIAL.

Joseph E Downing
DESIGN ENGINEER

	BY	CHECKED
DESIGN	Mufeed Khalaf	Eric G Burgeson
DETAILS	Nancy C Gwynn	Eric G Burgeson
QUANTITIES	Raman Guraya	Arturo V Herrera

LOAD FACTOR DESIGN — LIVE LOADING: HS20-44 AND ALTERNATIVE AND PERMIT DESIGN LOAD

	BY	CHECKED
LAYOUT	Mufeed Khalaf	Eric G Burgeson
SPECIFICATIONS	Jim Corrado	PLANS AND SPECS COMPARED Jim Corrado

ORIGINAL SCALE IN INCHES FOR REDUCED PLANS 0 1 2 3

STATE OF CALIFORNIA
DEPARTMENT OF TRANSPORTATION

DIVISION OF ENGINEERING SERVICES
STRUCTURE DESIGN
DESIGN BRANCH 3

BRIDGE NO. 49-0164L
POST MILE 67.3

NORTH SAN MIGUEL UC (WIDEN)
GENERAL PLAN No. 1

UNIT: 3578
PROJECT NUMBER & PHASE: 05000200201
CONTRACT NO.: 05-0G0404

DISREGARD PRINTS BEARING EARLIER REVISION DATES

REVISION DATES: 12-06-13 3-28-16 12-14-15

SHEET 1 OF 23

USERNAME => s115755 DATE PLOTTED => 22-JUL-2016 TIME PLOTTED => 17:55

DIST	COUNTY	ROUTE	POST MILES TOTAL PROJECT	SHEET No.	TOTAL SHEETS
05	SLO,Mon	101	63.2/R69.3, R0.0/R1.9	742	858

Jose M. Aquino III 4-22-16
REGISTERED CIVIL ENGINEER DATE

5-2-16
PLANS APPROVAL DATE

REGISTERED PROFESSIONAL ENGINEER
Jose M Aquino III
No. 58386
Exp. 12-31-16
CIVIL
STATE OF CALIFORNIA

The State of California or its officers or agents shall not be responsible for the accuracy or completeness of scanned copies of this plan sheet.

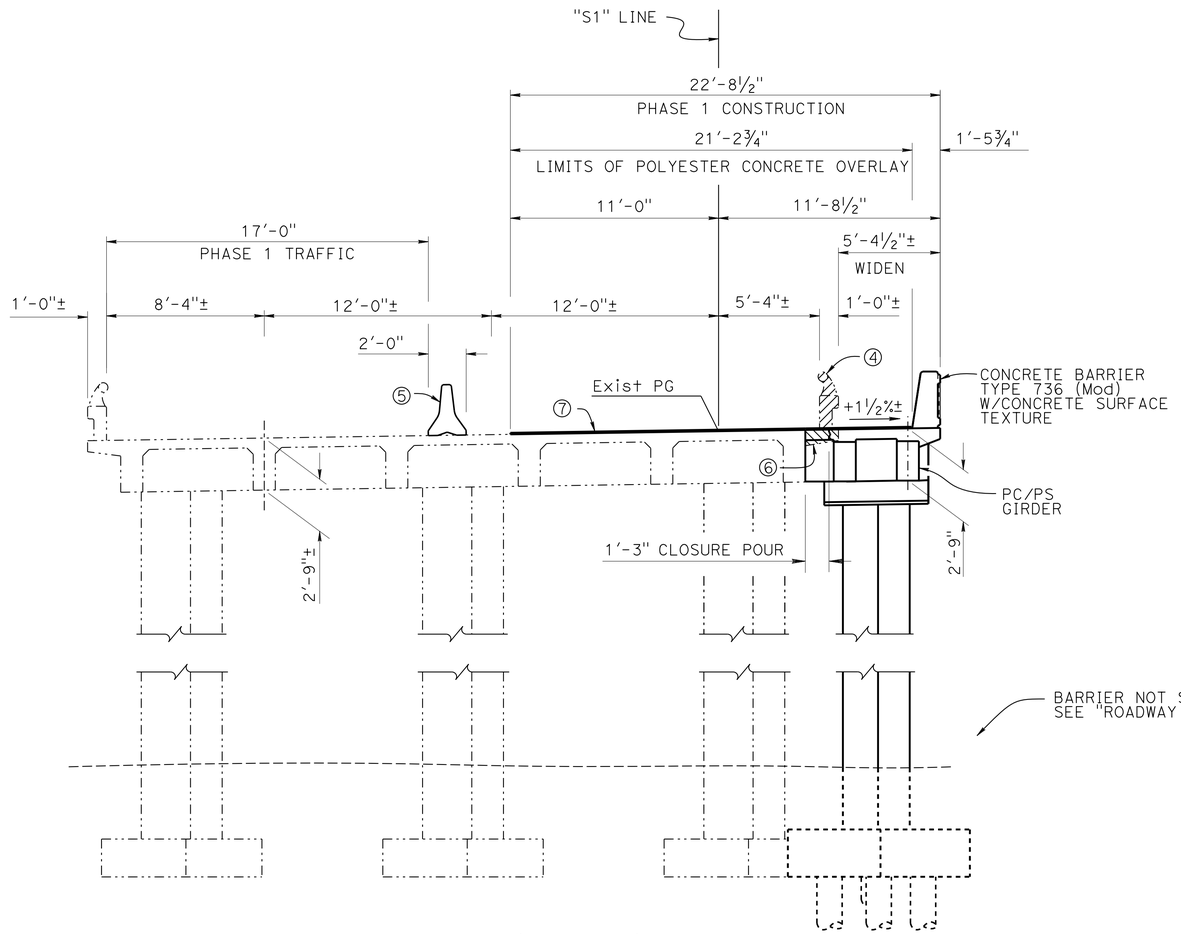

STAGE 4 (PHASE 1)
TYPICAL SECTION
¼" = 1'-0"

BARRIER NOT SHOWN, SEE "ROADWAY PLANS"

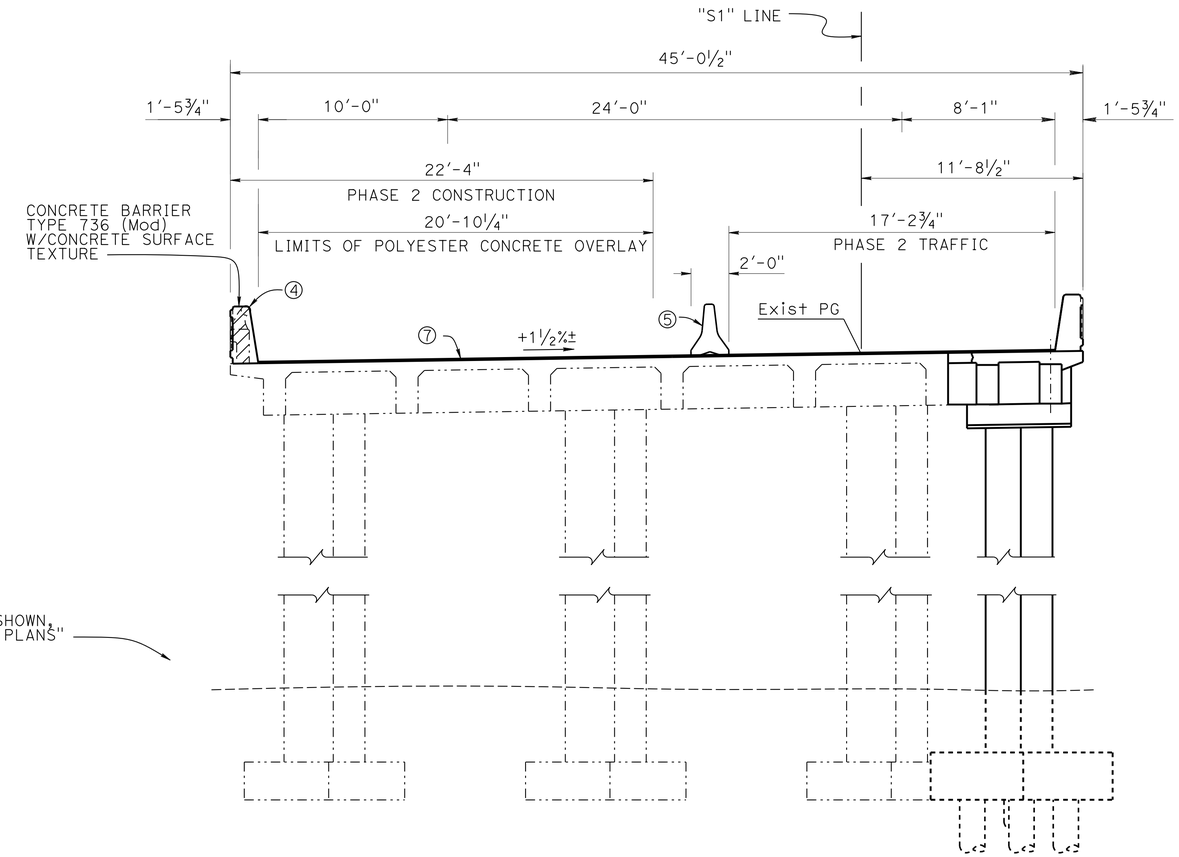

STAGE 4 (PHASE 2)
TYPICAL SECTION
¼" = 1'-0"

LEGEND:
- Indicates existing bridge
- Indicates new construction
- Indicates existing bridge removal, portion
- Indicates existing barrier removal

NOTES:
④ Existing barrier to be removed
⑤ Temporary Railing (Type K), see "ROADWAY PLANS"
⑥ Remove existing overhang
⑦ 1" & Var Polyester Concrete Overlay
1. Other Stages not shown, see "ROADWAY PLANS"
2. Structure Approach work must be performed inside each Phase Construction limits shown

NOTE:
THE CONTRACTOR MUST VERIFY ALL CONTROLLING FIELD DIMENSIONS BEFORE ORDERING OR FABRICATING ANY MATERIAL.

Joseph E Downing
DESIGN ENGINEER

	BY	CHECKED
DESIGN	Mufeed Khalaf	Eric G Burgeson
DETAILS	Nancy C Gwynn	Eric G Burgeson
QUANTITIES	Raman Guraya	Arturo V Herrera

LOAD FACTOR DESIGN — LIVE LOADING: HS20-44 AND ALTERNATIVE AND PERMIT DESIGN LOAD

	BY	CHECKED
LAYOUT	Mufeed Khalaf	Eric G Burgeson
SPECIFICATIONS	Jim Corrado	PLANS AND SPECS COMPARED Jim Corrado

ORIGINAL SCALE IN INCHES FOR REDUCED PLANS 0 1 2 3

STATE OF CALIFORNIA
DEPARTMENT OF TRANSPORTATION

DIVISION OF ENGINEERING SERVICES
STRUCTURE DESIGN
DESIGN BRANCH 3

BRIDGE NO. 49-0164L
POST MILE 67.3

NORTH SAN MIGUEL UC (WIDEN)
GENERAL PLAN No. 2

UNIT: 3578
PROJECT NUMBER & PHASE: 05000200201
CONTRACT NO.: 05-0G0404

DISREGARD PRINTS BEARING EARLIER REVISION DATES

REVISION DATES: 12-06-13 12-10-15 7-22-15

SHEET 2 OF 23

USERNAME => s115755 DATE PLOTTED => 22-JUL-2016 TIME PLOTTED => 17:55

DIST	COUNTY	ROUTE	POST MILES TOTAL PROJECT	SHEET No.	TOTAL SHEETS
05	SLO,Mon	101	63.2/R69.3, R0.0/R1.9	743	858

REGISTERED CIVIL ENGINEER 4-22-16 DATE

5-2-16
PLANS APPROVAL DATE

REGISTERED PROFESSIONAL ENGINEER Jose M Aquino III No. 58386 Exp. 12-31-16 CIVIL STATE OF CALIFORNIA

The State of California or its officers or agents shall not be responsible for the accuracy or completeness of scanned copies of this plan sheet.

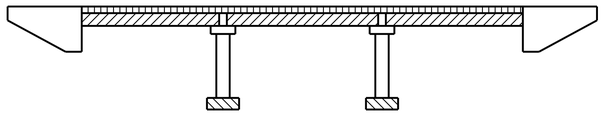

LEGEND:

- Structural Concrete, Bridge (3.6 ksi @ 28 days)
- Structural Concrete, Bridge (Polymer Fiber) (4000 psi @ 28 days)
- Structural Concrete, Bridge Footing (4.0 ksi @ 28 days)
- PC/PS Concrete Girder (See "PRECAST PRESTRESSED GIRDER" sheet)

CONCRETE STRENGTH AND TYPE LIMITS

NO SCALE

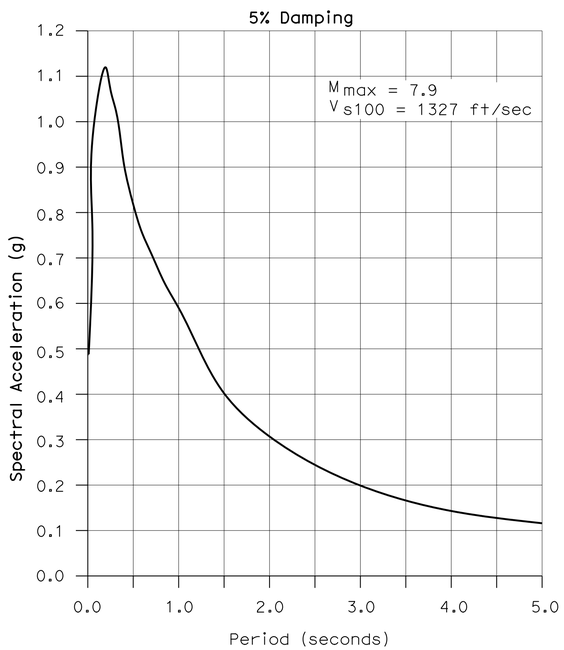

SITE SPECIFIC ARS CURVE

NO SCALE

GENERAL NOTES
LOAD FACTOR DESIGN

DESIGN:
Bridge Design Specifications-April 2000 (LFD)
(1996 AASHTO w/Revisions by Caltrans)

SEISMIC DESIGN:
Caltrans Seismic Design Criteria (SDC), Version 1.7 dated 2013

DEAD LOAD:
Includes 11.67 psf for 1" Polyester concrete overlay.
No future additional deck surfacing/overlay allowed

LIVE LOADING:
HS20-44 and alternative and permit design load

SEISMIC LOADING:
See "SITE SPECIFIC ARS CURVE"

CONCRETE:
fy = 60 ksi
f'c = 3.6 ksi
n = 8

PILE DATA TABLE

LOCATION	PILE TYPE	NOMINAL AXIAL RESISTANCE (kips) (LFD)		DESIGN TIP ELEVATION	SPECIFIED TIP ELEVATION
		COMPRESSION	TENSION		
Abutment 1	16" CIDH	130	N/A	612.00	612.00
Bent 2	16" CIDH	100	30	597.00	597.00
Bent 3	16" CIDH	100	30	597.00	597.00
Abutment 4	16" CIDH	130	N/A	606.00	606.00

NOTE: The Specified Tip elevation shall not be raised

INDEX TO PLANS

SHEET No.	TITLE
1	GENERAL PLAN No. 1
2	GENERAL PLAN No. 2
3	INDEX TO PLANS
4	FOUNDATION PLAN
5	ABUTMENT DETAILS No. 1
6	ABUTMENT DETAILS No. 2
7	ABUTMENT DETAILS No. 3
8	ABUTMENT DETAILS No. 4
9	BENT DETAILS No. 1
10	BENT DETAILS No. 2
11	BENT DETAILS No. 3
12	TYPICAL SECTION
13	GIRDER LAYOUT
14	PRECAST PRESTRESSED GIRDER
15	CONCRETE REMOVAL Det No. 1
16	CONCRETE REMOVAL Det No. 2
17	BARRIER SURFACE TEXTURE
18	STRUCTURE APPROACH DRAINAGE DETAILS
19	STRUCTURE APPROACH TYPE R (30D)
20	LOG OF TEST BORINGS 1 OF 4
21	LOG OF TEST BORINGS 2 OF 4
22	LOG OF TEST BORINGS 3 OF 4
23	LOG OF TEST BORINGS 4 OF 4

STANDARD PLANS DATED 2010

	A10A	ABBREVIATIONS (SHEET 1 OF 2)
RSP	A10B	ABBREVIATIONS (SHEET 2 OF 2)
	A10C	LINES AND SYMBOLS (SHEET 1 OF 3)
	A10D	LINES AND SYMBOLS (SHEET 2 OF 3)
	A10E	LINES AND SYMBOLS (SHEET 3 OF 3)
RSP	A10F	LEGEND - SOIL (SHEET 1 OF 2)
RSP	A10G	LEGEND - SOIL (SHEET 2 OF 2)
	A10H	LEGEND - ROCK
	A62C	LIMITS OF PAYMENT FOR EXCAVATION AND BACKFILL BRIDGE
	BO-1	BRIDGE DETAILS
	BO-5	BRIDGE DETAILS
	B2-3	16" AND 24" CAST-IN-DRILLED-HOLE CONCRETE PILE
RSP	B6-21	JOINT SEALS (MAXIMUM MOVEMENT RATING = 2")
RSP	B11-56	CONCRETE BARRIER TYPE 736

STANDARD PLAN SHEET No.

DETAIL No.

NOTE:
THE CONTRACTOR MUST VERIFY ALL CONTROLLING FIELD DIMENSIONS BEFORE ORDERING OR FABRICATING ANY MATERIAL.

	BY	CHECKED
DESIGN	Mufeed Khalaf	Eric G Burgeson
DETAILS	Nancy C Gwynn	Eric G Burgeson
QUANTITIES	Raman Guraya	Arturo V Herrera

STATE OF CALIFORNIA
DEPARTMENT OF TRANSPORTATION

DIVISION OF ENGINEERING SERVICES
STRUCTURE DESIGN
DESIGN BRANCH 3

BRIDGE NO. 49-0164L
POST MILE 67.3

NORTH SAN MIGUEL UC (WIDEN)
INDEX TO PLANS

STRUCTURES DESIGN DETAIL SHEET (ENGLISH) (REV. 09-01-10)

ORIGINAL SCALE IN INCHES FOR REDUCED PLANS 0 1 2 3

UNIT: 3578
PROJECT NUMBER & PHASE: 05000200201
CONTRACT NO.: 05-0G0404

DISREGARD PRINTS BEARING EARLIER REVISION DATES

REVISION DATES 8-12-15 1-19-16 12-2-15

SHEET 3 OF 23

FILE => 49-0164l-a-itp.dgn

USERNAME => s115755 DATE PLOTTED => 22-JUL-2016 TIME PLOTTED => 17:55

DIST	COUNTY	ROUTE	POST MILES TOTAL PROJECT	SHEET No.	TOTAL SHEETS
05	SLO,Mon	101	63.2/R69.3, R0.0/R1.9	744	858

REGISTERED CIVIL ENGINEER 4-22-16 DATE

5-2-16
PLANS APPROVAL DATE

The State of California or its officers or agents shall not be responsible for the accuracy or completeness of electronic copies of this plan sheet.

REGISTERED PROFESSIONAL ENGINEER — Jose M Aquino III — No. 58386 — Exp. 12-31-16 — CIVIL — STATE OF CALIFORNIA

CURVE DATA

No. ⊕	R	Δ	T	L
30	3000.00	18°40'50"	493.43	978.11

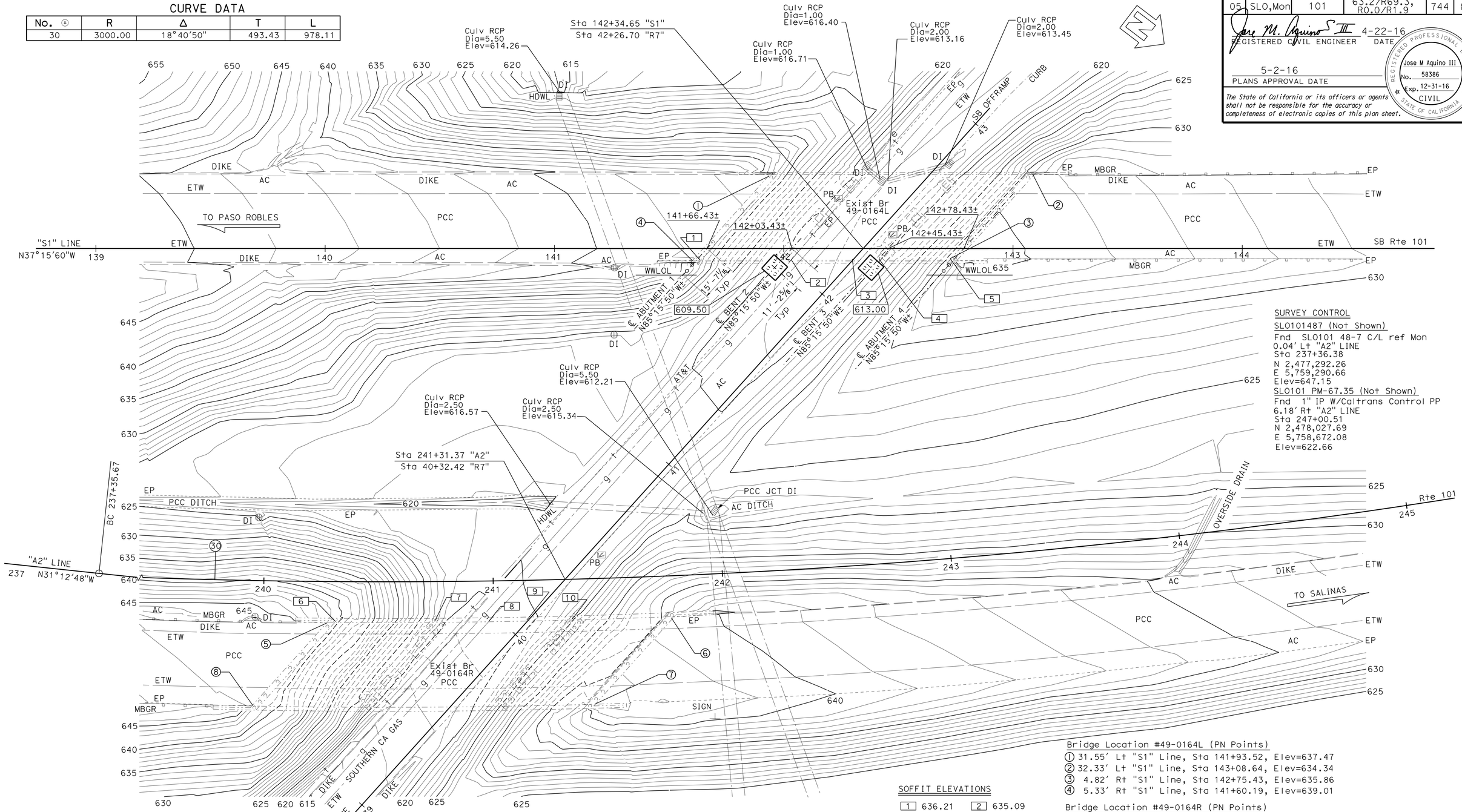

SURVEY CONTROL

SL0101487 (Not Shown)
Fnd SL0101 48-7 C/L ref Mon
0.04' Lt "A2" LINE
Sta 237+36.38
N 2,477,292.26
E 5,759,290.66
Elev=647.15

SL0101 PM-67.35 (Not Shown)
Fnd 1" IP W/Caltrans Control PP
6.18' Rt "A2" LINE
Sta 247+00.51
N 2,478,027.69
E 5,758,672.08
Elev=622.66

Bridge Location #49-0164L (PN Points)
① 31.55' Lt "S1" Line, Sta 141+93.52, Elev=637.47
② 32.33' Lt "S1" Line, Sta 143+08.64, Elev=634.34
③ 4.82' Rt "S1" Line, Sta 142+75.43, Elev=635.86
④ 5.33' Rt "S1" Line, Sta 141+60.19, Elev=639.01

Bridge Location #49-0164R (PN Points)
⑤ 18.13' Rt "A2" Line, Sta 240+27.50, Elev=644.61
⑥ 18.31' Rt "A2" Line, Sta 241+76.98, Elev=640.40
⑦ 54.67' Rt "A2" Line, Sta 241+42.92, Elev=642.85
⑧ 54.53' Rt "A2" Line, Sta 239+96.22, Elev=646.92

SOFFIT ELEVATIONS

1	636.21	2	635.09
3	634.32	4	634.08
5	633.31	6	639.97
7	638.71	8	638.04
9	637.64	10	637.09

LEGEND:
▭ Indicates bottom of footing elevation
○ Indicates pile. For layout, see "ABUTAMENT DETAILS NO. 1" sheet

NOTE:
THE CONTRACTOR SHALL VERIFY ALL CONTROLLING FIELD DIMENSIONS BEFORE ORDERING OR FABRICATING ANY MATERIAL.

PRELIMINARY INVESTIGATION SECTION

SCALE 1"=20'	VERT.DATUM NAVD88	PHOTOGRAMMETRY AS OF: X			
	HORZ.DATUM NAD83 (92)	SURVEYED	BY DISTRICT	CHECKED	BY C. FASSETT 08/2014
	ALIGNMENT TIES Dist. Traverse Sheet	DRAFTED	BY S. ZHENG 08/2014	CHECKED	BY S. SOU 08/2014

DESIGN	BY Mufeed Khalaf	CHECKED Eric G Burgeson
DETAILS	BY Nancy C Gwynn	CHECKED Eric G Burgeson
QUANTITIES	BY Raman Guraya	CHECKED Arturo V Herrera

STATE OF CALIFORNIA
DEPARTMENT OF TRANSPORTATION

DIVISION OF ENGINEERING SERVICES
STRUCTURE DESIGN
DESIGN BRANCH 3

BRIDGE NO. 49-0164L
POST MILE PM67.30

NORTH SAN MIGUEL UC (WIDEN)
FOUNDATION PLAN

STRUCTURES FOUNDATION PLAN SHEET (ENGLISH) (REV. 09-01-10)

ORIGINAL SCALE IN INCHES FOR REDUCED PLANS 0 1 2 3

UNIT: 3646
PROJECT NUMBER & PHASE: 05000200201
CONTRACT NO.: 05-0G0404

DISREGARD PRINTS BEARING EARLIER REVISION DATES

REVISION DATES 07/17/15

SHEET 4 OF 23

FILE => 49-0164l-e-fpl01.dgn

USERNAME => s115755 DATE PLOTTED => 22-JUL-2016 TIME PLOTTED => 17:55

DIST	COUNTY	ROUTE	POST MILES TOTAL PROJECT	SHEET No.	TOTAL SHEETS
05	SLO,Mon	101	63.2/R69.3, R0.0/R1.9	745	858

REGISTERED CIVIL ENGINEER 4-22-16 DATE

5-2-16
PLANS APPROVAL DATE

REGISTERED PROFESSIONAL ENGINEER
Jose M Aquino III
No. 58386
Exp. 12-31-16
CIVIL
STATE OF CALIFORNIA

The State of California or its officers or agents shall not be responsible for the accuracy or completeness of scanned copies of this plan sheet.

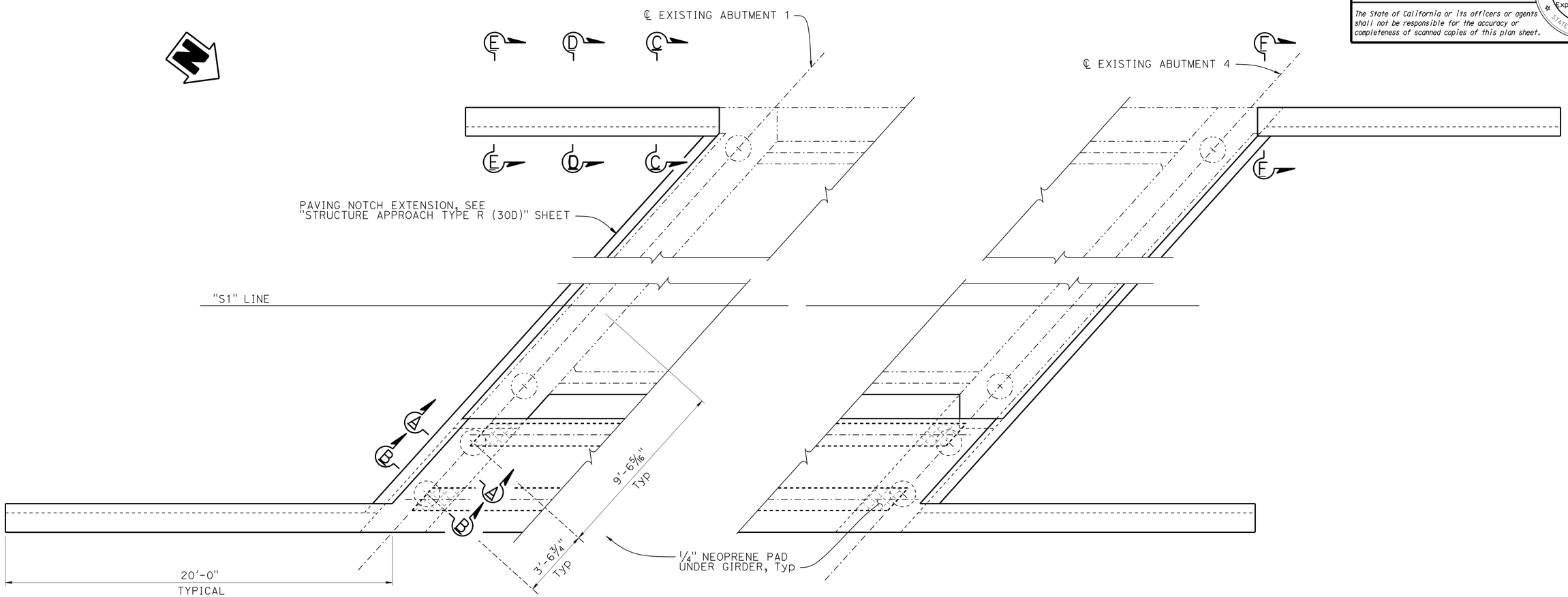

PART PLAN

3/8" = 1'-0"

NOTES:

1. For "SECTION A-A" and "SECTION B-B", see "ABUTMENT DETAILS NO. 2" sheet
2. For "SECTION C-C", "SECTION D-D", "SECTION E-E" and "SECTION F-F", see "ABUTMENT DETAILS NO. 4" sheet
3. For details not shown, see "CONCRETE REMOVAL DET NO. 1" sheet

NOTE:
THE CONTRACTOR MUST VERIFY ALL CONTROLLING FIELD DIMENSIONS BEFORE ORDERING OR FABRICATING ANY MATERIAL.

	BY	CHECKED
DESIGN	Mufeed Khalaf	Eric G Burgeson
DETAILS	Nancy C Gwynn	Eric G Burgeson
QUANTITIES	Raman Guraya	Arturo V Herrera

STATE OF CALIFORNIA
DEPARTMENT OF TRANSPORTATION

DIVISION OF ENGINEERING SERVICES
STRUCTURE DESIGN
DESIGN BRANCH 3

BRIDGE NO. 49-0164L
POST MILE 67.3

NORTH SAN MIGUEL UC (WIDEN)
ABUTMENT DETAILS No. 1

STRUCTURES DESIGN DETAIL SHEET (ENGLISH) (REV. 09-01-10)

ORIGINAL SCALE IN INCHES FOR REDUCED PLANS 0 1 2 3

UNIT: 3578
PROJECT NUMBER & PHASE: 05000200201
CONTRACT NO.: 05-0G0404

DISREGARD PRINTS BEARING EARLIER REVISION DATES

REVISION DATES

SHEET 5 OF 23

FILE => 49-0164l-f-ab01.dgn

USERNAME => s115755 DATE PLOTTED => 22-JUL-2016 TIME PLOTTED => 17:55

DIST	COUNTY	ROUTE	POST MILES TOTAL PROJECT	SHEET No.	TOTAL SHEETS
05	SLO,Mon	101	63.2/R69.3, R0.0/R1.9	746	858

REGISTERED CIVIL ENGINEER 4-22-16 DATE

5-2-16
PLANS APPROVAL DATE

REGISTERED PROFESSIONAL ENGINEER
Jose M Aquino III
No. 58386
Exp. 12-31-16
CIVIL
STATE OF CALIFORNIA

The State of California or its officers or agents shall not be responsible for the accuracy or completeness of scanned copies of this plan sheet.

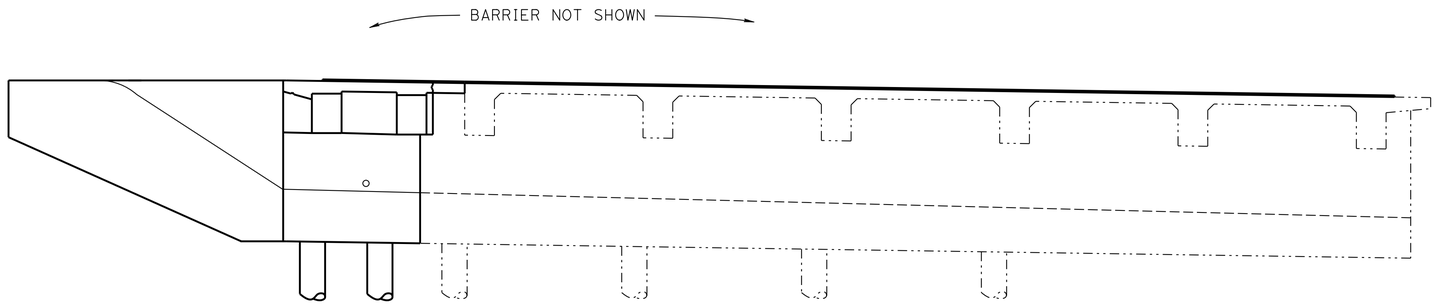

ELEVATION
1/4" = 1'-0"

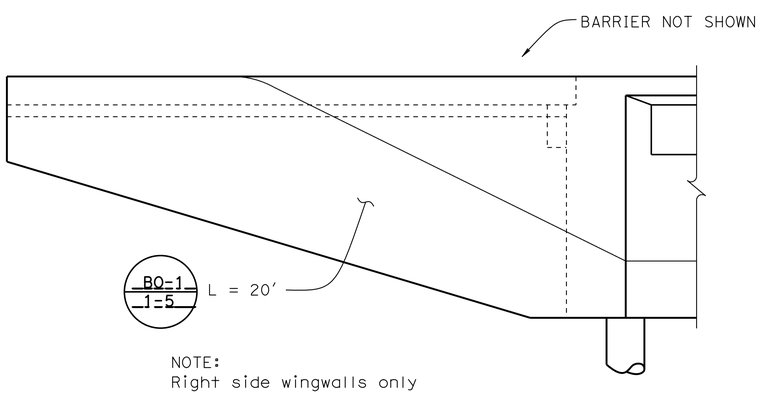

NOTE:
Right side wingwalls only

WINGWALL ELEVATION
3/8" = 1'-0"

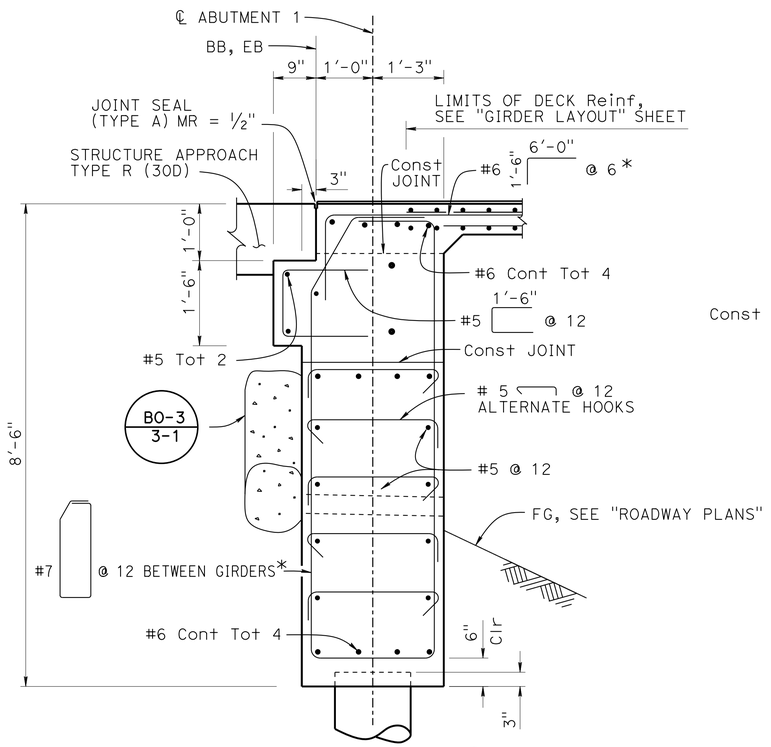

NOTES:
1. For alternative to Standard Plan see "WEEP HOLE AND GEOCOMPOSITE DRAIN" detail, "ABUTMENT DETAILS NO. 3" sheet
2. For details not shown, see "SECTION B-B"

BO-3
3-1

SECTION A-A
3/4" = 1'-0"

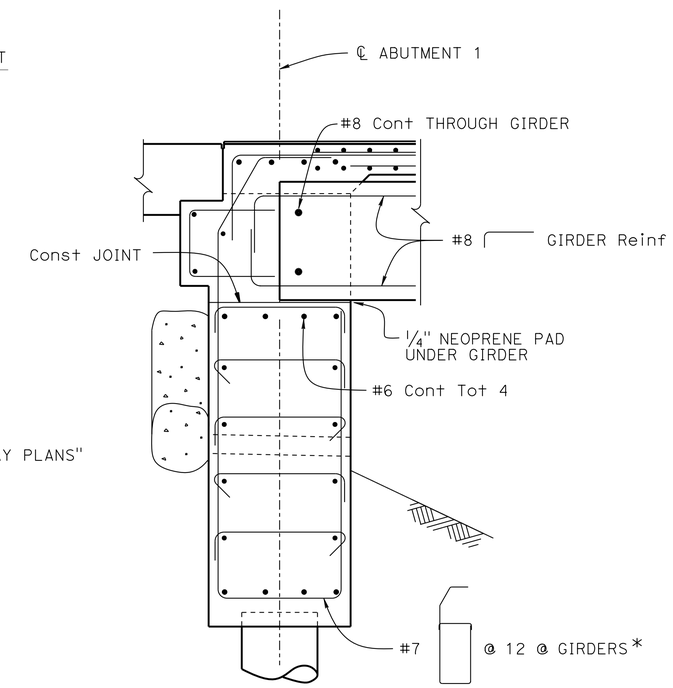

NOTES:
1. For details not shown, see "SECTION A-A"
2. For girder details, see "PRECAST PRESTRESSED GIRDER" sheet

SECTION B-B
3/4" = 1'-0"

NOTE:
THE CONTRACTOR MUST VERIFY ALL CONTROLLING FIELD DIMENSIONS BEFORE ORDERING OR FABRICATING ANY MATERIAL.

LEGEND:
* Place parallel to ℄ girders

	BY	CHECKED
DESIGN	Mufeed Khalaf	Eric G Burgeson
DETAILS	Nancy C Gwynn	Eric G Burgeson
QUANTITIES	Raman Guraya	Arturo V Herrera

STATE OF CALIFORNIA
DEPARTMENT OF TRANSPORTATION

DIVISION OF ENGINEERING SERVICES
STRUCTURE DESIGN
DESIGN BRANCH 3

BRIDGE NO. 49-0164L
POST MILE 67.3

NORTH SAN MIGUEL UC (WIDEN)
ABUTMENT DETAILS No. 2

STRUCTURES DESIGN DETAIL SHEET (ENGLISH) (REV. 09-01-10)

ORIGINAL SCALE IN INCHES FOR REDUCED PLANS 0 1 2 3

UNIT: 3578
PROJECT NUMBER & PHASE: 05000200201
CONTRACT NO.: 05-0G0404

DISREGARD PRINTS BEARING EARLIER REVISION DATES

REVISION DATES: 9-8-14 1-26-16 8-8-2016

SHEET 6 OF 23

FILE => 49-0164l-f-ab02.dgn

USERNAME => s115755 DATE PLOTTED => 22-JUL-2016 TIME PLOTTED => 17:55

DIST	COUNTY	ROUTE	POST MILES TOTAL PROJECT	SHEET No.	TOTAL SHEETS
05	SLO,Mon	101	63.2/R69.3, R0.0/R1.9	747	858

REGISTERED CIVIL ENGINEER 4-22-16 DATE

5-2-16
PLANS APPROVAL DATE

REGISTERED PROFESSIONAL ENGINEER Jose M Aquino III No. 58386 Exp. 12-31-16 CIVIL STATE OF CALIFORNIA

The State of California or its officers or agents shall not be responsible for the accuracy or completeness of scanned copies of this plan sheet.

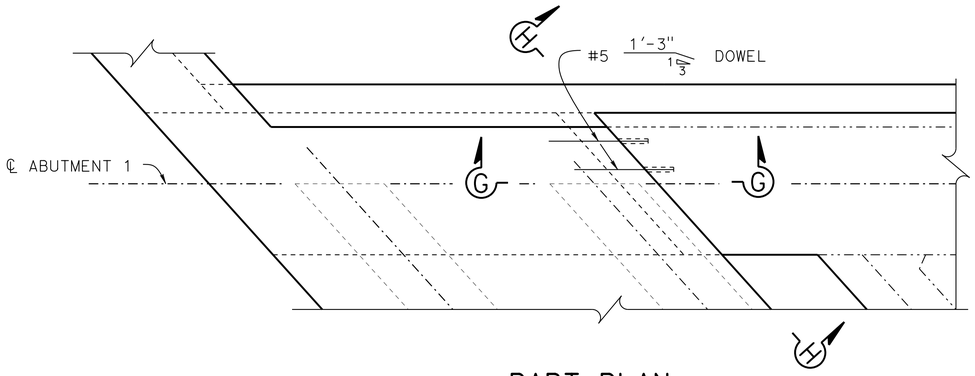

PART PLAN
3/4" = 1'-0"

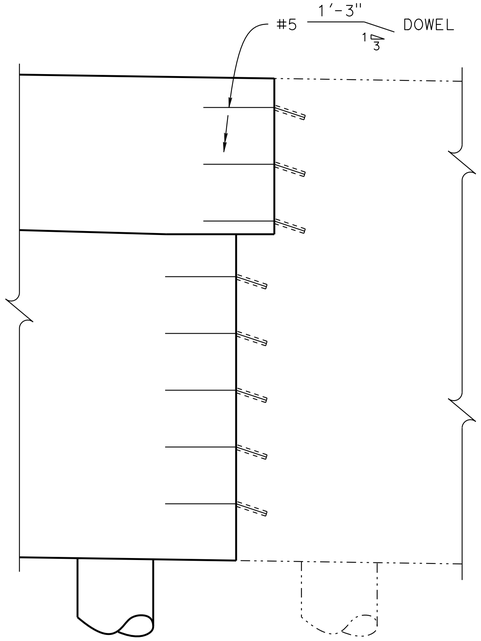

SECTION G-G
3/4" = 1'-0"

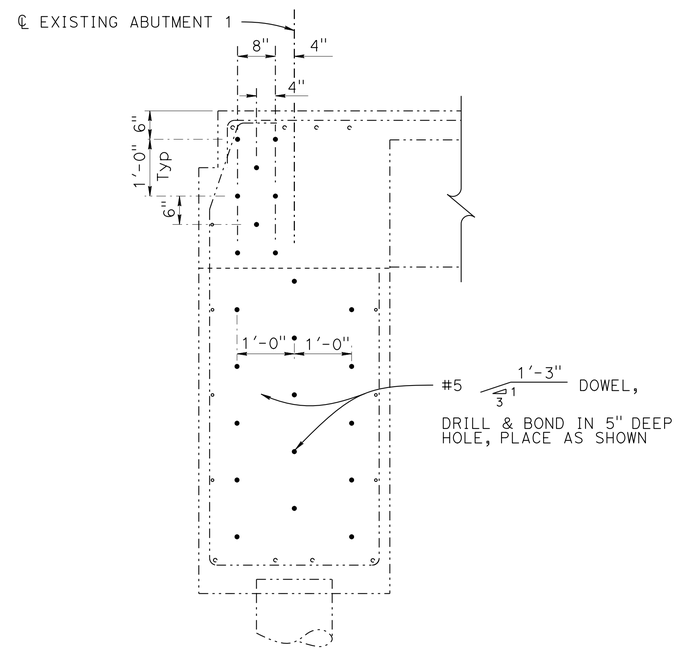

SECTION H-H
3/4" = 1'-0"

NOTE:
ABUTMENT 1 SHOWN, ABUTMENT 4 SIMILAR

NOTE:
THE CONTRACTOR MUST VERIFY ALL CONTROLLING FIELD DIMENSIONS BEFORE ORDERING OR FABRICATING ANY MATERIAL.

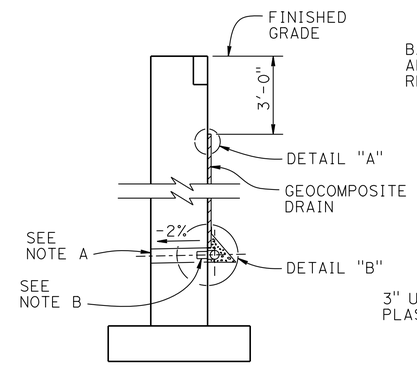

WALL SECTION

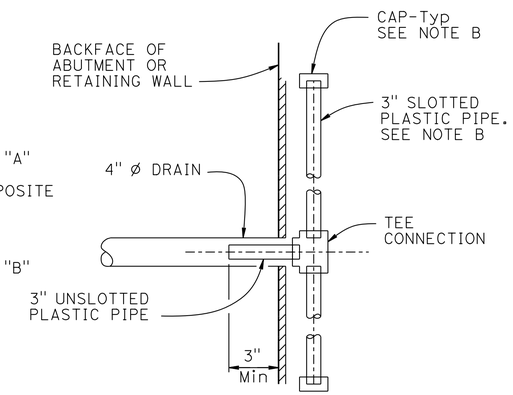

SECTION A-A

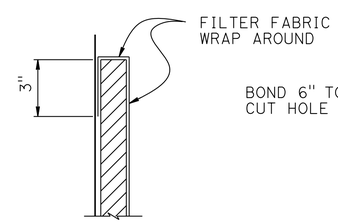

DETAIL "A"

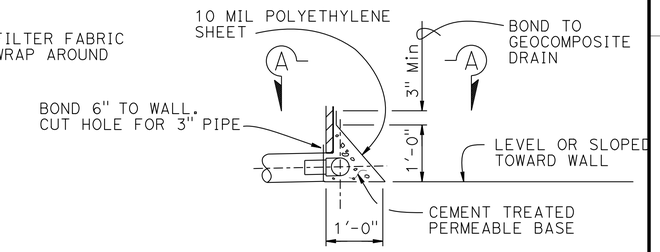

DETAIL "B"

WEEP HOLE AND GEOCOMPOSITE DRAIN

ALTERNATIVE TO BRIDGE DETAIL BO-3 / 3-1

NOTES:

A. 4" Ø drains at intermediate sag points and at 25' max center to center (9' c-c for Type 3 and 9'-3" c-c for Type 4 retaining walls).
For walls adjacent to sidewalks or curbs, provide 4" Ø plastic pipe under the sidewalk to discharge through curb face.
Exposed wall drains shall be located 3"± above finished grade.

B. Geocomposite drain, cement treated permeable base, and 3"Ø slotted plastic pipe continuous behind retaining wall or abutment. Cap ends of pipe. Provide "Tee" connection at each 4" Ø drain.

C. Connect the low end of plastic pipe to the main outlet pipe as applicable.

	BY	CHECKED
DESIGN	Mufeed Khalaf	Eric G Burgeson
DETAILS	Nancy C Gwynn	Eric G Burgeson
QUANTITIES	Raman Guraya	Arturo V Herrera

STATE OF CALIFORNIA
DEPARTMENT OF TRANSPORTATION

DIVISION OF ENGINEERING SERVICES
STRUCTURE DESIGN
DESIGN BRANCH 3

BRIDGE NO. 49-0164L
POST MILE 67.3

NORTH SAN MIGUEL UC (WIDEN)
ABUTMENT DETAILS No. 3

STRUCTURES DESIGN DETAIL SHEET (ENGLISH) (REV. 09-01-10)

ORIGINAL SCALE IN INCHES FOR REDUCED PLANS 0 1 2 3

UNIT: 3578
PROJECT NUMBER & PHASE: 05000200201
CONTRACT NO.: 05-0G0404

DISREGARD PRINTS BEARING EARLIER REVISION DATES

REVISION DATES 9:18:14

SHEET 7 OF 23

FILE => 49-01641-f-ab03.dgn

USERNAME => s115755 DATE PLOTTED => 22-JUL-2016 TIME PLOTTED => 17:55

DIST	COUNTY	ROUTE	POST MILES TOTAL PROJECT	SHEET No.	TOTAL SHEETS
05	SLO,Mon	101	63.2/R69.3, R0.0/R1.9	748	858

Jose M. Aquino III 4-22-16
REGISTERED CIVIL ENGINEER DATE

5-2-16
PLANS APPROVAL DATE

REGISTERED PROFESSIONAL ENGINEER
Jose M Aquino III
No. 58386
Exp. 12-31-16
CIVIL
STATE OF CALIFORNIA

The State of California or its officers or agents shall not be responsible for the accuracy or completeness of scanned copies of this plan sheet.

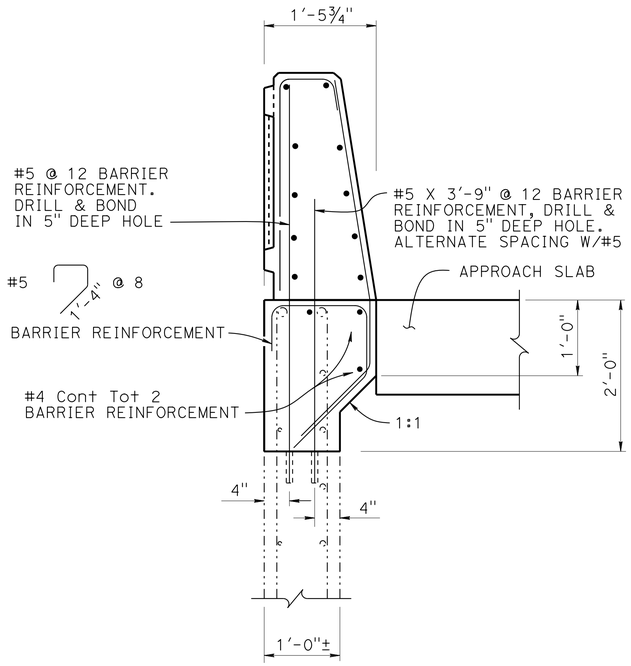

SECTION C-C
1" = 1'-0"

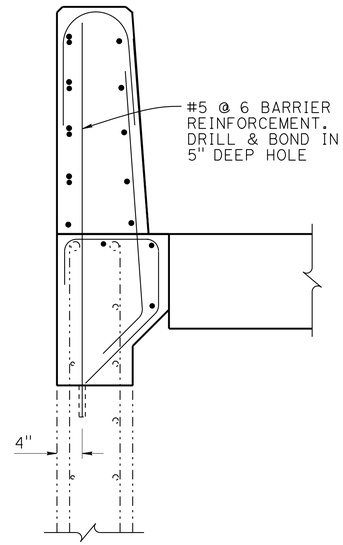

NOTE:
For details not shown see "SECTION C-C"

TRANSITION SECTION D-D
1" = 1'-0"

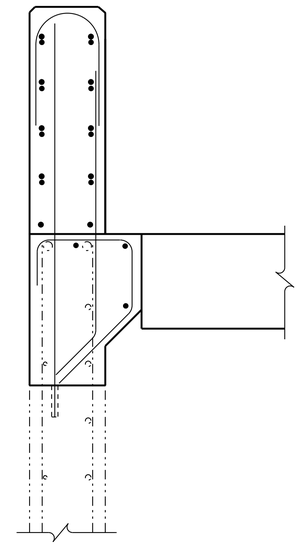

NOTE:
For details not shown see "SECTION D-D"

SECTION E-E
1" = 1'-0"

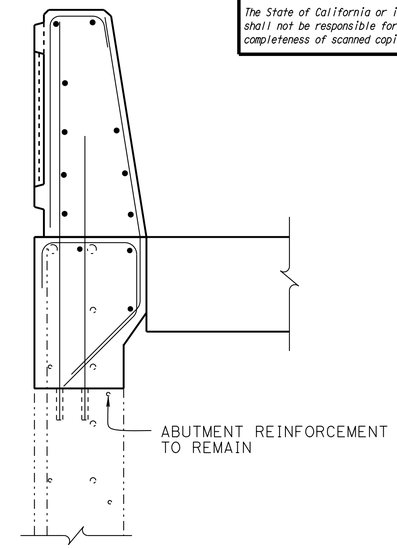

NOTES:
1. For details not shown see "SECTION C-C"
2. All abutment reinforcement not shown

SECTION F-F
1" = 1'-0"

NOTE:
For barrier details not shown, see RSP B11-56 and "TYPICAL SECTION" sheet

NOTE:
THE CONTRACTOR MUST VERIFY ALL CONTROLLING FIELD DIMENSIONS BEFORE ORDERING OR FABRICATING ANY MATERIAL.

DESIGN	BY Mufeed Khalaf	CHECKED Eric G Burgeson	
DETAILS	BY Nancy C Gwynn	CHECKED Eric G Burgeson	
QUANTITIES	BY Raman Guraya	CHECKED Arturo V Herrera	

STATE OF CALIFORNIA
DEPARTMENT OF TRANSPORTATION

DIVISION OF ENGINEERING SERVICES
STRUCTURE DESIGN
DESIGN BRANCH 3

BRIDGE NO. 49-0164L
POST MILE 67.3

NORTH SAN MIGUEL UC (WIDEN)
ABUTMENT DETAILS No. 4

STRUCTURES DESIGN DETAIL SHEET (ENGLISH) (REV. 09-01-10)

ORIGINAL SCALE IN INCHES FOR REDUCED PLANS 0 1 2 3

UNIT: 3578
PROJECT NUMBER & PHASE: 05000200201
CONTRACT NO.: 05-0G0404

DISREGARD PRINTS BEARING EARLIER REVISION DATES

REVISION DATES: 9-8-14 12-28-14 5-2-15 1-9-15

SHEET 8 OF 23

FILE => 49-0164l-f-ab04.dgn

USERNAME => s115755 DATE PLOTTED => 22-JUL-2016 TIME PLOTTED => 17:55

DIST	COUNTY	ROUTE	POST MILES TOTAL PROJECT	SHEET No.	TOTAL SHEETS
05	SLO,Mon	101	63.2/R69.3, R0.0/R1.9	749	858

REGISTERED CIVIL ENGINEER 4-22-16 DATE

5-2-16
PLANS APPROVAL DATE

REGISTERED PROFESSIONAL ENGINEER Jose M Aquino III No. 58386 Exp. 12-31-16 CIVIL STATE OF CALIFORNIA

The State of California or its officers or agents shall not be responsible for the accuracy or completeness of scanned copies of this plan sheet.

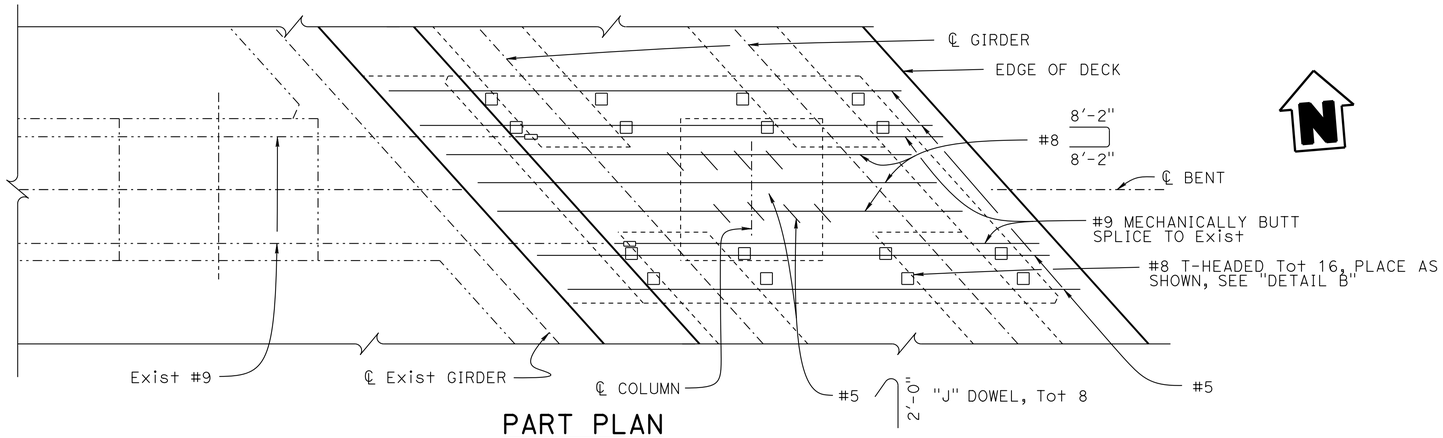

PART PLAN

3/4" = 1'-0"

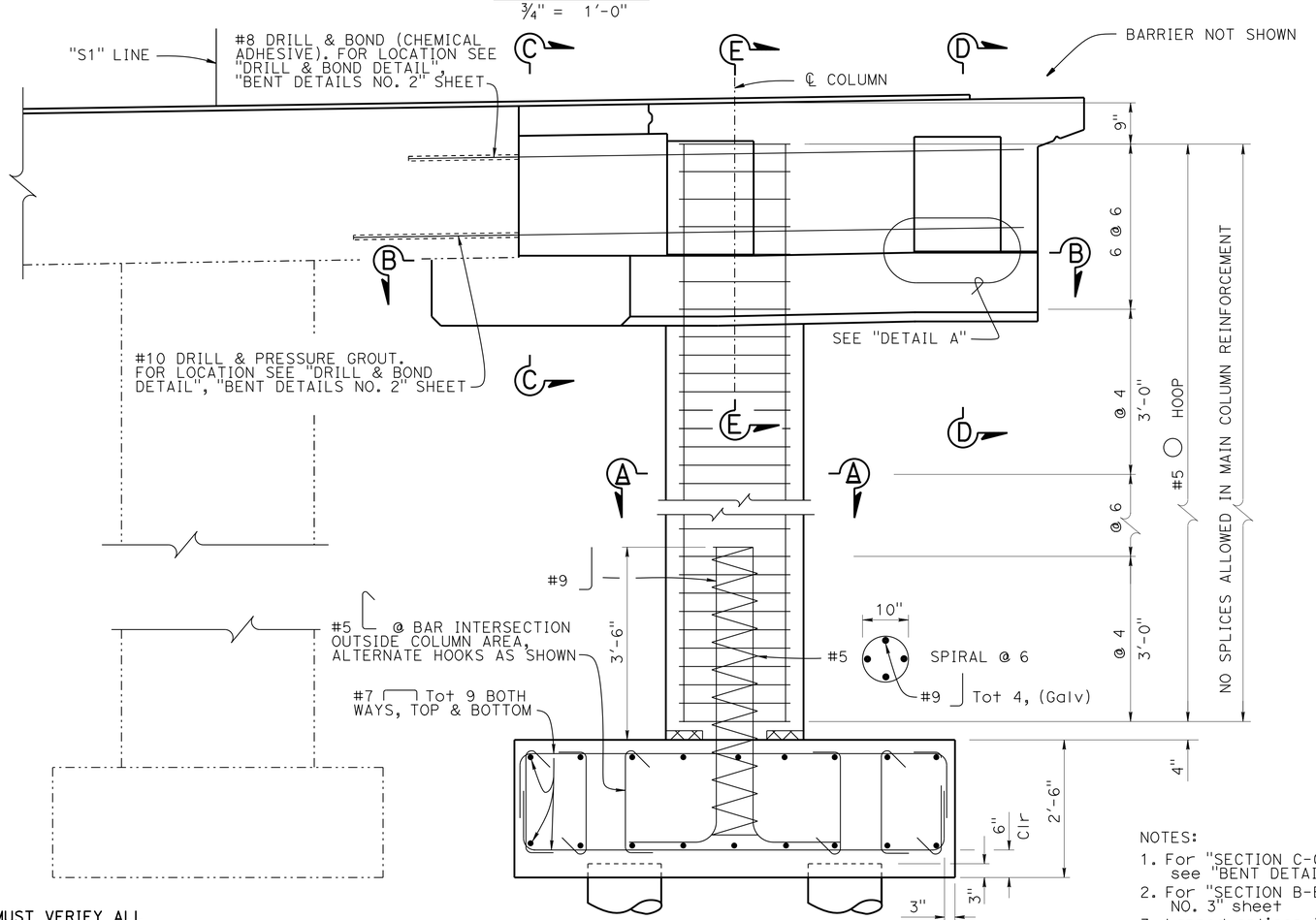

PART ELEVATION

3/4" = 1'-0"

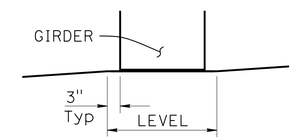

DETAIL A

NO SCALE

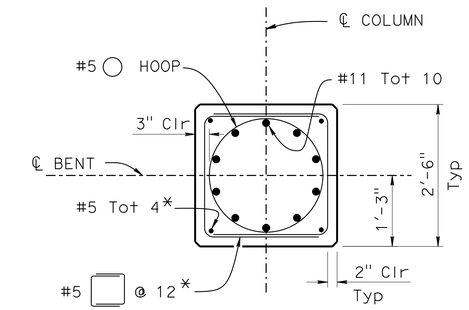

*Not to extend into Bent Cap

SECTION A-A

3/4" = 1'-0"

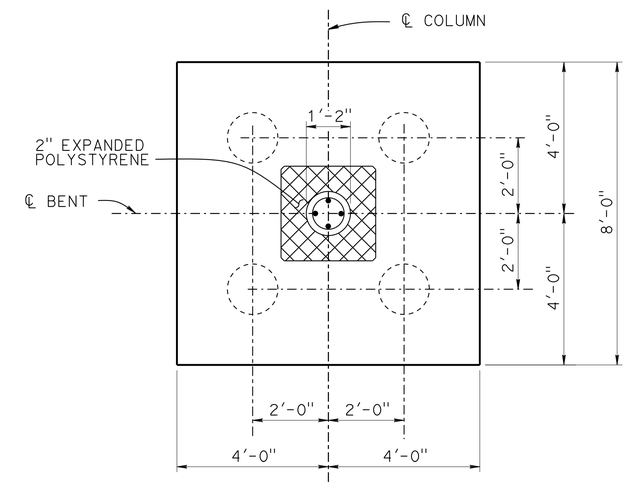

FOOTING PLAN

1/2" = 1'-0"

NOTES:

1. For "SECTION C-C", "SECTION D-D" and "SECTION E-E", see "BENT DETAILS NO. 2" sheet
2. For "SECTION B-B" and "DETAIL B", see "BENT DETAILS NO. 3" sheet
3. Lapped splices in spiral column pin reinf shall be lapped at least 80 bar diameters. Spiral pin reinf at splices and at ends shall be terminated with a 135° hook with a 6" tail hooked around a longitudinal bar

NOTE:
THE CONTRACTOR MUST VERIFY ALL CONTROLLING FIELD DIMENSIONS BEFORE ORDERING OR FABRICATING ANY MATERIAL.

	BY	CHECKED
DESIGN	Mufeed Khalaf	Eric G Burgeson
DETAILS	Nancy C Gwynn	Eric G Burgeson
QUANTITIES	Raman Guraya	Arturo V Herrera

STATE OF CALIFORNIA
DEPARTMENT OF TRANSPORTATION

DIVISION OF ENGINEERING SERVICES
STRUCTURE DESIGN
DESIGN BRANCH 3

BRIDGE NO. 49-0164L
POST MILE 67.3

NORTH SAN MIGUEL UC (WIDEN)
BENT DETAILS No. 1

STRUCTURES DESIGN DETAIL SHEET (ENGLISH) (REV. 09-01-10)

ORIGINAL SCALE IN INCHES FOR REDUCED PLANS 0 1 2 3

UNIT: 3578
PROJECT NUMBER & PHASE: 05000200201
CONTRACT NO.: 05-0G0404

DISREGARD PRINTS BEARING EARLIER REVISION DATES

REVISION DATES 9-10-15 SHEET 9 OF 23

FILE => 49-0164l-h-bnt01.dgn

USERNAME => s115755 DATE PLOTTED => 22-JUL-2016 TIME PLOTTED => 17:55

DIST	COUNTY	ROUTE	POST MILES TOTAL PROJECT	SHEET No.	TOTAL SHEETS
05	SLO,Mon	101	63.2/R69.3, R0.0/R1.9	750	858

REGISTERED CIVIL ENGINEER 4-22-16 DATE

5-2-16
PLANS APPROVAL DATE

REGISTERED PROFESSIONAL ENGINEER Jose M Aquino III No. 58386 Exp. 12-31-16 CIVIL STATE OF CALIFORNIA

The State of California or its officers or agents shall not be responsible for the accuracy or completeness of scanned copies of this plan sheet.

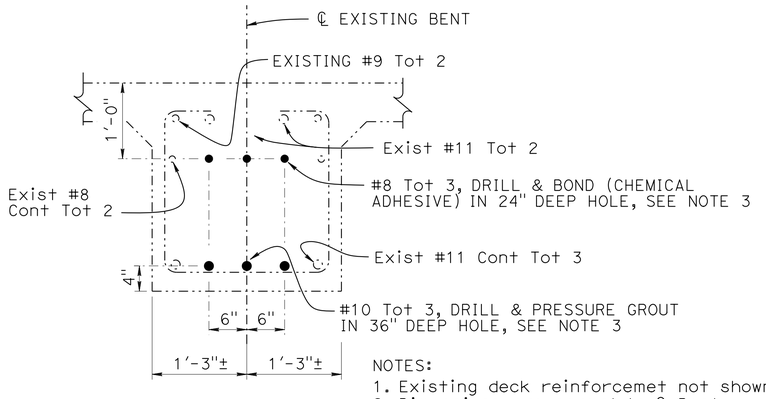

NOTES:
1. Existing deck reinforcemet not shown
2. Dimensions are normal to ℄ Bent
3. Adjust drilled hole location to clear existing reinforcement

DRILL & BOND DETAIL

1" = 1'-0"

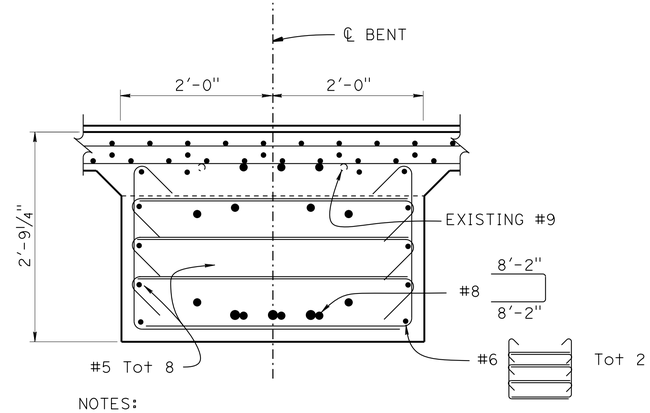

NOTES:
1. Existing deck reinforcemet not shown
2. For details not shown, see "SECTION E-E" and "DRILL & BOND DETAIL"

SECTION C-C

1" = 1'-0"

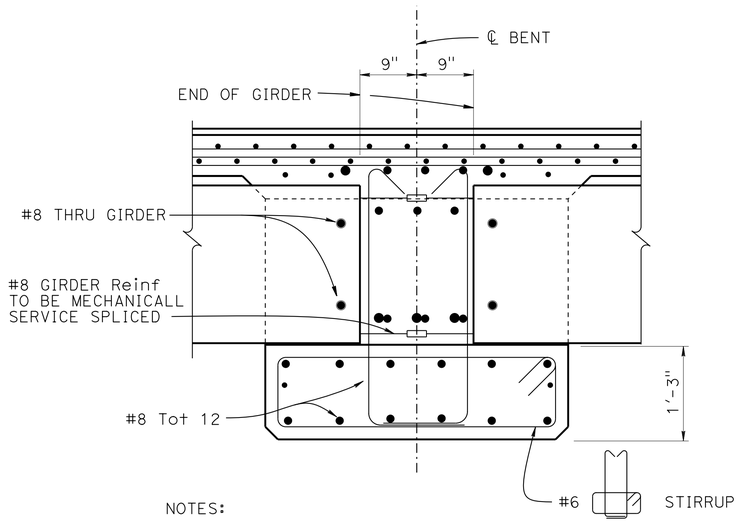

NOTES:
1. For stirrup spacing, see "SECTION B-B"
2. For details not shown, see "SECTION E-E"

SECTION D-D

1" = 1'-0"

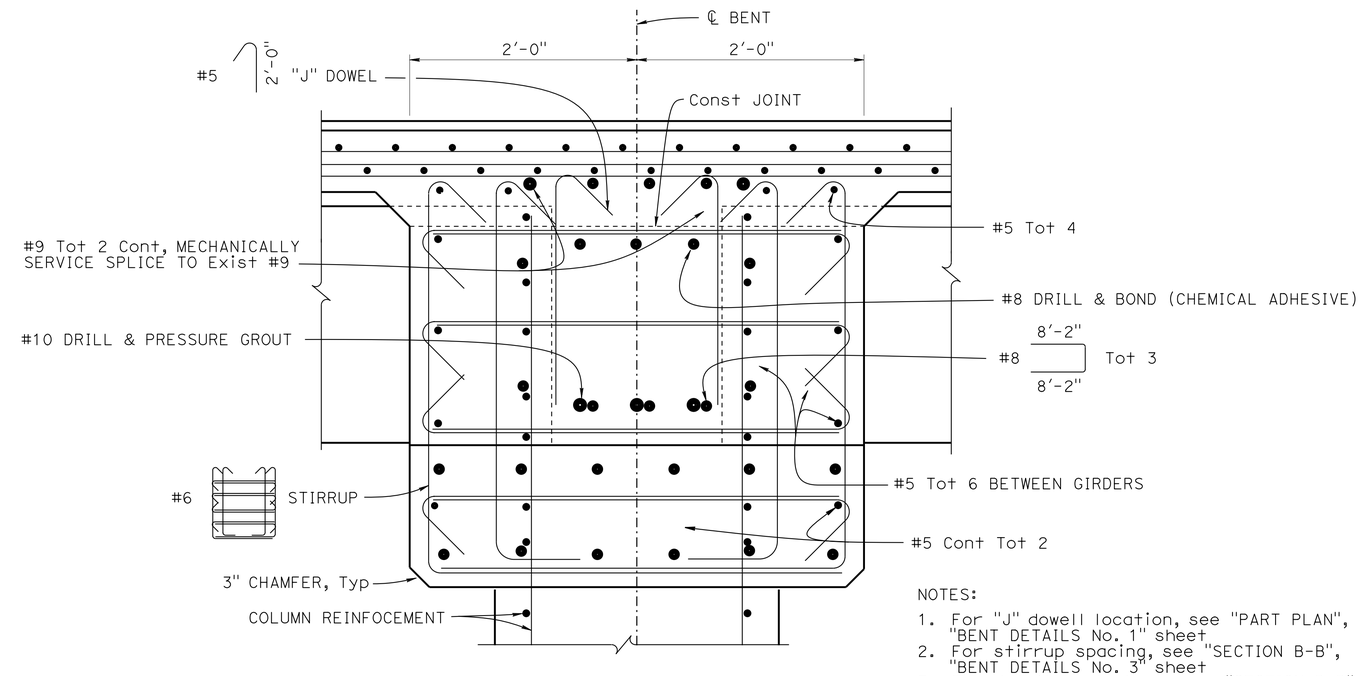

NOTES:
1. For "J" dowell location, see "PART PLAN", "BENT DETAILS No. 1" sheet
2. For stirrup spacing, see "SECTION B-B", "BENT DETAILS No. 3" sheet
3. For details not shown, see "SECTION D-D" and "DRILL & BOND DETAIL"

SECTION E-E

1½" = 1'-0"

NOTE:
THE CONTRACTOR MUST VERIFY ALL CONTROLLING FIELD DIMENSIONS BEFORE ORDERING OR FABRICATING ANY MATERIAL.

NOTE:
For girder details, see "PRECAST PRESTRESSED GIRDER" details sheet

	BY	CHECKED
DESIGN	Mufeed Khalaf	Eric G Burgeson
DETAILS	Nancy C Gwynn	Eric G Burgeson
QUANTITIES	Raman Guraya	Arturo V Herrera

STATE OF CALIFORNIA
DEPARTMENT OF TRANSPORTATION

DIVISION OF ENGINEERING SERVICES
STRUCTURE DESIGN
DESIGN BRANCH 3

BRIDGE NO. 49-0164L
POST MILE 67.3

NORTH SAN MIGUEL UC (WIDEN)
BENT DETAILS No. 2

STRUCTURES DESIGN DETAIL SHEET (ENGLISH) (REV. 09-01-10)

ORIGINAL SCALE IN INCHES FOR REDUCED PLANS 0 1 2 3

UNIT: 3578
PROJECT NUMBER & PHASE: 05000200201
CONTRACT NO.: 05-0G0404

DISREGARD PRINTS BEARING EARLIER REVISION DATES

REVISION DATES 3-9-15 3-18-15 1-21-16

SHEET 10 OF 23

FILE => 49-0164l-h-bnt02.dgn

USERNAME => s113755 DATE PLOTTED => 22-JUL-2016 TIME PLOTTED => 17:56

DIST	COUNTY	ROUTE	POST MILES TOTAL PROJECT	SHEET No.	TOTAL SHEETS
05	SLO,Mon	101	63.2/R69.3, R0.0/R1.9	751	858

REGISTERED CIVIL ENGINEER 4-22-16 DATE

5-2-16
PLANS APPROVAL DATE

REGISTERED PROFESSIONAL ENGINEER
Jose M Aquino III
No. 58386
Exp. 12-31-16
CIVIL
STATE OF CALIFORNIA

The State of California or its officers or agents shall not be responsible for the accuracy or completeness of scanned copies of this plan sheet.

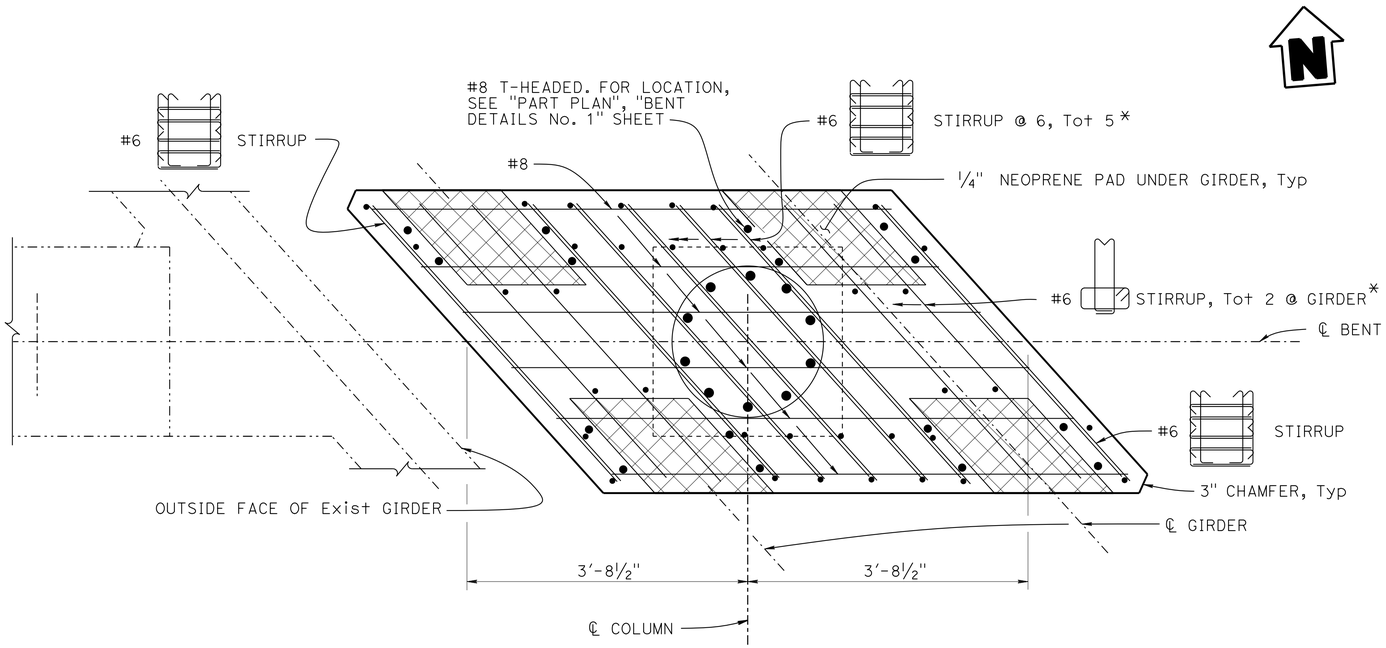

LEGEND:

* Place and space parallel to ℄ Girder

1/4" NEOPRENE PAD UNDER GIRDER, Typ

SECTION B-B

1" = 1'-0"

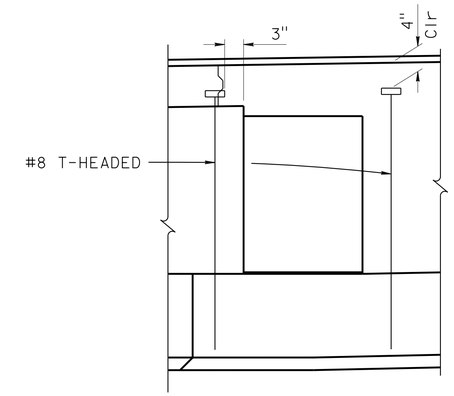

NOTE:
All reinforcement not shown

DETAIL B

NO SCALE

NOTE:
THE CONTRACTOR MUST VERIFY ALL CONTROLLING FIELD DIMENSIONS BEFORE ORDERING OR FABRICATING ANY MATERIAL.

	BY	CHECKED
DESIGN	Mufeed Khalaf	Eric G Burgeson
DETAILS	Nancy C Gwynn	Eric G Burgeson
QUANTITIES	Raman Guraya	Arturo V Herrera

STATE OF CALIFORNIA
DEPARTMENT OF TRANSPORTATION

DIVISION OF ENGINEERING SERVICES
STRUCTURE DESIGN
DESIGN BRANCH 3

BRIDGE NO. 49-0164L
POST MILE 67.3

NORTH SAN MIGUEL UC (WIDEN)
BENT DETAILS No. 3

STRUCTURES DESIGN DETAIL SHEET (ENGLISH) (REV. 09-01-10)

ORIGINAL SCALE IN INCHES FOR REDUCED PLANS 0 1 2 3

UNIT: 3578
PROJECT NUMBER & PHASE: 05000200201
CONTRACT NO.: 05-0G0404

DISREGARD PRINTS BEARING EARLIER REVISION DATES

REVISION DATES: 9-9-14 1-5-15 6-29-15 7-30-15

SHEET 11 OF 23

FILE => 49-0164l-h-bnt03.dgn

USERNAME => s115755 DATE PLOTTED => 22-JUL-2016 TIME PLOTTED => 17:56

DIST	COUNTY	ROUTE	POST MILES TOTAL PROJECT	SHEET No.	TOTAL SHEETS
05	SLO,Mon	101	63.2/R69.3, R0.0/R1.9	752	858

REGISTERED CIVIL ENGINEER 4-22-16 DATE

5-2-16
PLANS APPROVAL DATE

REGISTERED PROFESSIONAL ENGINEER Jose M Aquino III No. 58386 Exp. 12-31-16 CIVIL STATE OF CALIFORNIA

The State of California or its officers or agents shall not be responsible for the accuracy or completeness of scanned copies of this plan sheet.

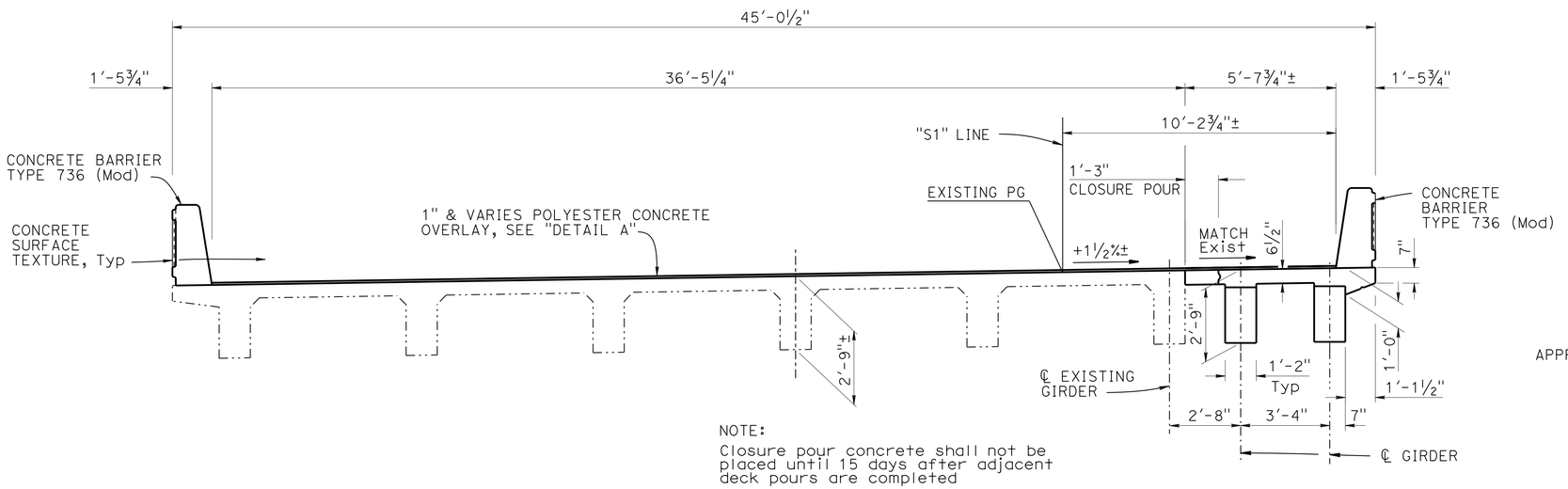

NOTE:
Closure pour concrete shall not be placed until 15 days after adjacent deck pours are completed

TYPICAL SECTION
⅜" = 1'-0"

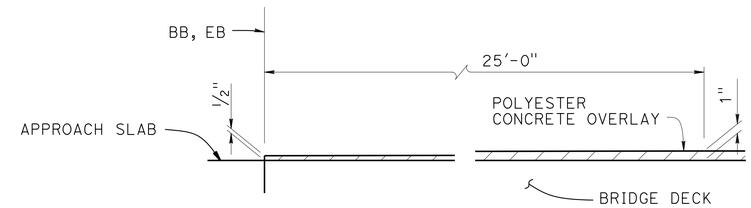

DETAIL A
1½" = 1'-0"

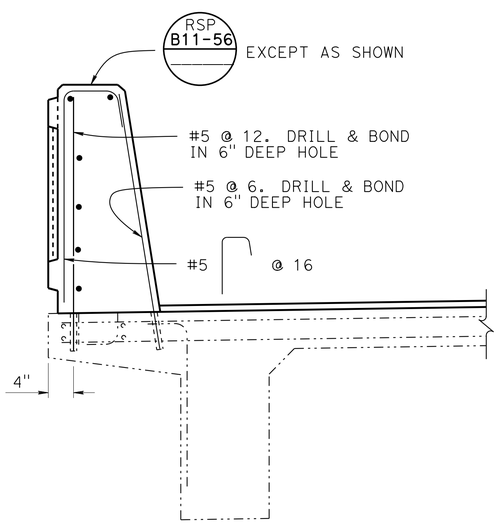

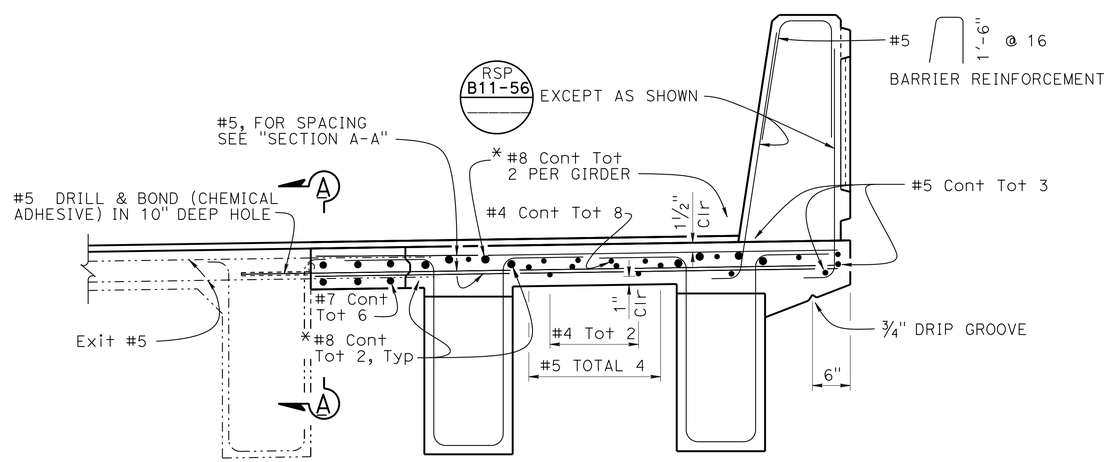

LEGEND:
* Only service splice allowed. See "DETAIL K", "GIRDER LAYOUT" sheet for no splice zone

PART TYPICAL SECTION
BO-5 / 5-2
1" = 1'-0"

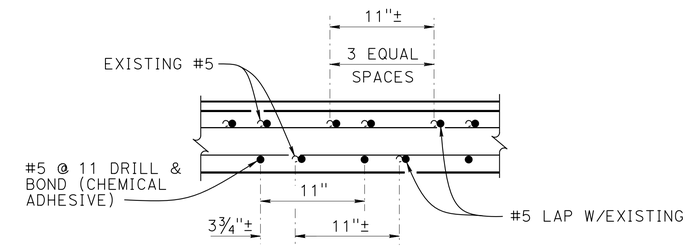

SPACING A

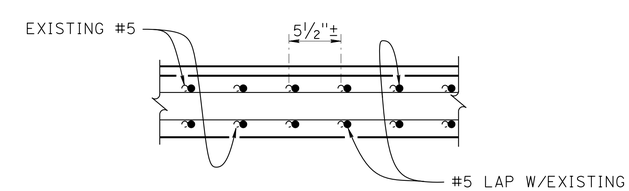

SPACING B

SECTION A-A
1½" = 1'-0"

NOTE:
THE CONTRACTOR MUST VERIFY ALL CONTROLLING FIELD DIMENSIONS BEFORE ORDERING OR FABRICATING ANY MATERIAL.

NOTES:
1. For limits of "SPACING A" and "SPACING B", see "GIRDER LAYOUT" sheet
2. See "PRECAST PRESTRESSED GIRDER" sheet for girder reinforcement
3. For concrete surface texture, see "BARRIER SURFACE TEXTURE" sheet

	BY	CHECKED
DESIGN	Mufeed Khalaf	Eric G Burgeson
DETAILS	Nancy C Gwynn	Eric G Burgeson
QUANTITIES	Raman Guraya	Arturo V Herrera

STATE OF CALIFORNIA
DEPARTMENT OF TRANSPORTATION

DIVISION OF ENGINEERING SERVICES
STRUCTURE DESIGN
DESIGN BRANCH 3

BRIDGE NO. 49-0164L
POST MILE 67.3

NORTH SAN MIGUEL UC (WIDEN)
TYPICAL SECTION

STRUCTURES DESIGN DETAIL SHEET (ENGLISH) (REV. 09-01-10)

ORIGINAL SCALE IN INCHES FOR REDUCED PLANS 0 1 2 3

UNIT: 3578
PROJECT NUMBER & PHASE: 05000200201
CONTRACT NO.: 05-0G0404

DISREGARD PRINTS BEARING EARLIER REVISION DATES

REVISION DATES 9-9-14 8-5-15

SHEET 12 OF 23

FILE => 49-0164l-k-typ.dgn

USERNAME => s115755 DATE PLOTTED => 22-JUL-2016 TIME PLOTTED => 17:56

DIST	COUNTY	ROUTE	POST MILES TOTAL PROJECT	SHEET No.	TOTAL SHEETS
05	SLO,Mon	101	63.2/R69.3, R0.0/R1.9	753	858

REGISTERED CIVIL ENGINEER 4-22-16 DATE

5-2-16
PLANS APPROVAL DATE

REGISTERED PROFESSIONAL ENGINEER
Jose M Aquino III
No. 58386
Exp. 12-31-16
CIVIL
STATE OF CALIFORNIA

The State of California or its officers or agents shall not be responsible for the accuracy or completeness of scanned copies of this plan sheet.

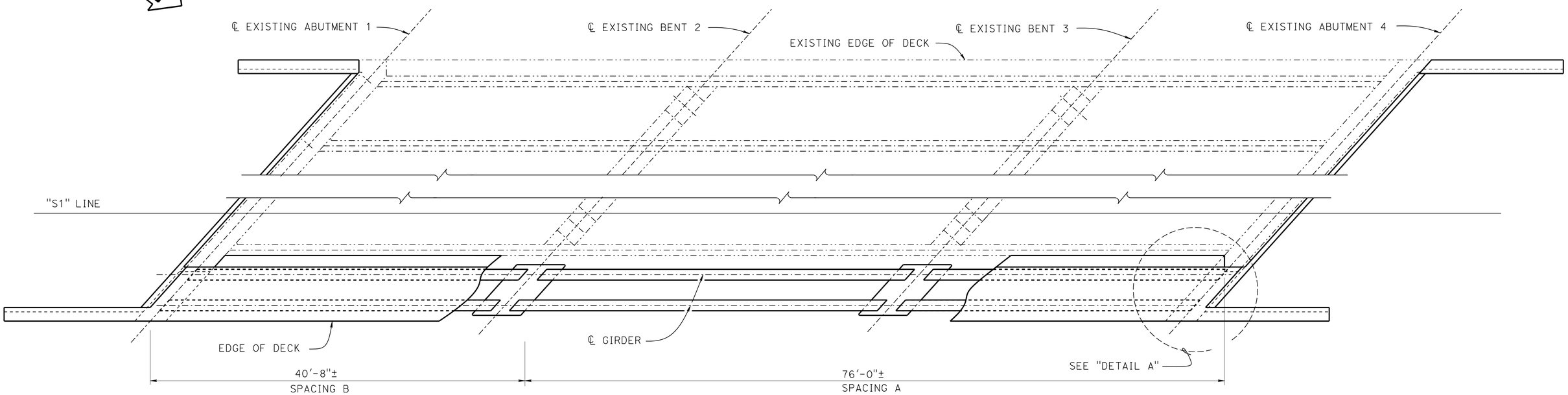

PART PLAN

3/16" = 1'-0"

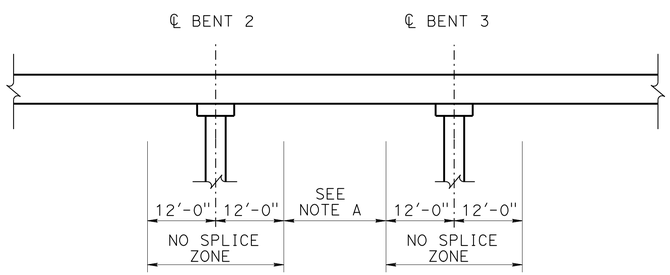

NOTE A:
Only service splices are allowed in #8 cont bars

DETAIL K

NO SCALE

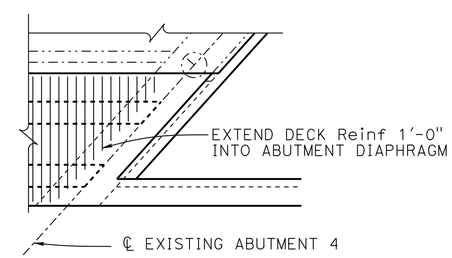

DETAIL A

1/4" = 1'-0"

NOTE:
THE CONTRACTOR MUST VERIFY ALL CONTROLLING FIELD DIMENSIONS BEFORE ORDERING OR FABRICATING ANY MATERIAL.

	BY	CHECKED
DESIGN	Mufeed Khalaf	Eric G Burgeson
DETAILS	Nancy C Gwynn	Eric G Burgeson
QUANTITIES	Raman Guraya	Arturo V Herrera

STATE OF CALIFORNIA
DEPARTMENT OF TRANSPORTATION

DIVISION OF ENGINEERING SERVICES
STRUCTURE DESIGN
DESIGN BRANCH 3

BRIDGE NO. 49-0164L
POST MILE 67.3

NORTH SAN MIGUEL UC (WIDEN)
GIRDER LAYOUT

STRUCTURES DESIGN DETAIL SHEET (ENGLISH) (REV. 09-01-10)

ORIGINAL SCALE IN INCHES FOR REDUCED PLANS 0 1 2 3

UNIT: 3578
PROJECT NUMBER & PHASE: 05000200201
CONTRACT NO.: 05-0G0404

DISREGARD PRINTS BEARING EARLIER REVISION DATES

REVISION DATES 8-26-14 1-12-15 9-10-15

SHEET 13 OF 23

FILE => 49-01641-1-grdla.dgn

USERNAME => s115755 DATE PLOTTED => 22-JUL-2016 TIME PLOTTED => 17:56

DIST	COUNTY	ROUTE	POST MILES TOTAL PROJECT	SHEET No.	TOTAL SHEETS
05	SLO,Mon	101	63.2/R69.3, R0.0/R1.9	754	858

REGISTERED CIVIL ENGINEER 4-22-16 DATE

5-2-16
PLANS APPROVAL DATE

REGISTERED PROFESSIONAL ENGINEER Jose M Aquino III No. 58386 Exp. 12-31-16 CIVIL STATE OF CALIFORNIA

The State of California or its officers or agents shall not be responsible for the accuracy or completeness of scanned copies of this plan sheet.

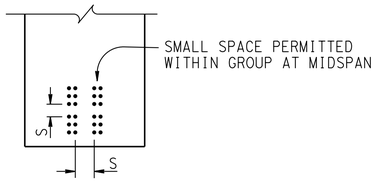

CLEARANCES FOR PRETENSIONED STRANDS

1. Strands may be bundled in groups consisting of 3 vertically, 2 horizontally and separated at the ends
2. The Min distance "S" between groups or individual strands is 1½" for ⅜" Ø strands, 1¾" for ½" Ø strands, 2" for 0.6" Ø strands
3. "S" is measured between centers of adjacent strands
4. Approval by the Engineer is required for deviation

GENERAL NOTES

JACKING FORCE (P): The jacking force required at the point of control along the span. The jacking force does not include any fabrication specific losses.

The maximum tensile stress in the prestressing steel upon release shall not exceed 75% of the specified minimum ultimate tensile strength of the prestressing steel.

The maximum temporary tensile stress (jacking stress) in the prestressing steel shall not exceed 80% of the specified minimum ultimate tensile strength of the prestressing steel.

CONCRETE STRENGTH: f'ci is at time of initial stressing
f'c is at 28 days

DEFLECTION COMPONENTS: Informational - to be used in setting screed line elevations

Screed line elevations for deck concrete will be determined by the Engineer.

Contractor may interpolate "P" and "X" values between limits shown, as approved by the Engineer.

Use epoxy coated reinforcement in Environmental Area III

Girder location and length		"X"	Jacking Force (P) (Kips)	"Y" (in)	Concrete Strength (ksi) f'ci	Concrete Strength (ksi) f'c	Midspan Dead Load Deflection (inches) Deck	Midspan Dead Load Deflection (inches) Rail
Span 1	Exterior L = 36'-0"	4"	225	12.7	4.0	5.0	-0.38	-0.03
		6"	225					
	Interior L = 36'-0"	4"	230	12.7	4.0	5.0	-0.53	-0.03
		6"	275					

Girder location and length		"X"	Jacking Force (P) (Kips)	"Y" (in)	Concrete Strength (ksi) f'ci	Concrete Strength (ksi) f'c	Midspan Dead Load Deflection (inches) Deck	Midspan Dead Load Deflection (inches) Rail
Span 2	Exterior L = 40'-0"	4"	230	12.7	4.0	5.0	-0.58	-0.02
		6"	230					
	Interior L = 40'-0"	4"	260	12.7	4.0	5.0	-0.82	-0.02
		6"	305					

Girder location and length		"X"	Jacking Force (P) (Kips)	"Y" (in)	Concrete Strength (ksi) f'ci	Concrete Strength (ksi) f'c	Midspan Dead Load Deflection (inches) Deck	Midspan Dead Load Deflection (inches) Rail
Span 3	Exterior L = 32'-0"	4"	225	12.7	4.0	5.0	-0.23	-0.02
		6"	225					
	Interior L = 32'-0"	4"	225	12.7	4.0	5.0	-0.33	-0.01
		6"	225					

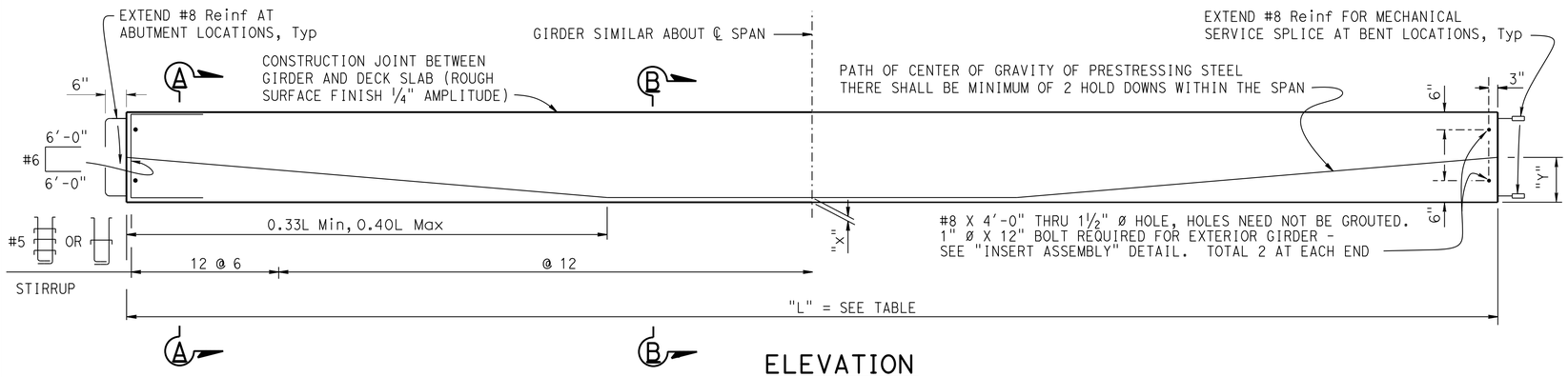

ELEVATION

NO SCALE

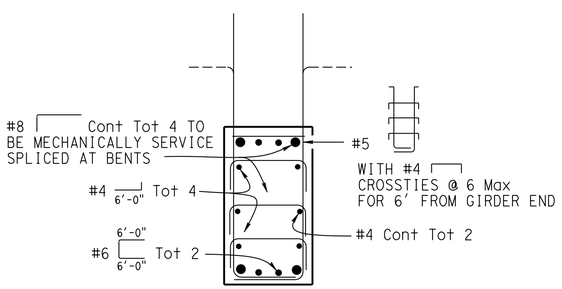

SECTION A-A

1" = 1'-0"

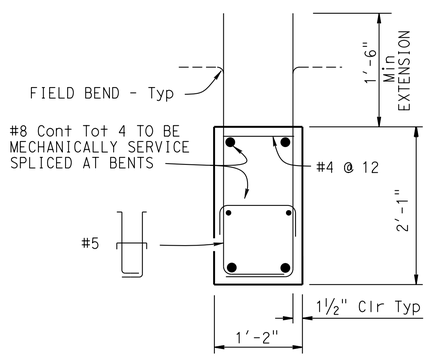

SECTION B-B

1" = 1'-0"

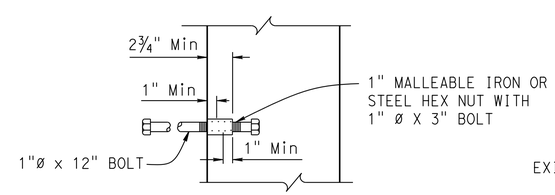

INSERT ASSEMBLY

NO SCALE

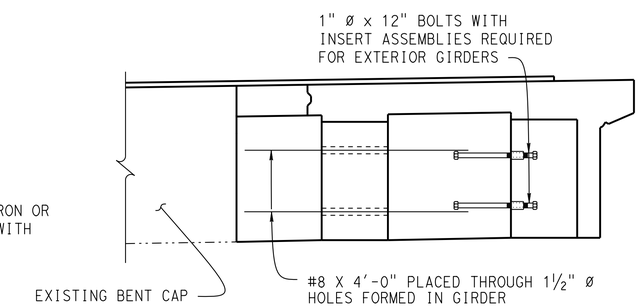

BENT CAP

¾" = 1'-0"

	BY	CHECKED
DESIGN	Mufeed Khalaf	Eric G Burgeson
DETAILS	Nancy C Gwynn	Eric G Burgeson
QUANTITIES	Raman Guraya	Arturo V Herrera

STATE OF CALIFORNIA
DEPARTMENT OF TRANSPORTATION

DIVISION OF ENGINEERING SERVICES
STRUCTURE DESIGN
DESIGN BRANCH 3

BRIDGE NO. 49-0164L
POST MILE 67.3

NORTH SAN MIGUEL UC (WIDEN)
PRECAST PRESTRESSED GIRDER

STRUCTURES DESIGN DETAIL SHEET (ENGLISH) (REV. 09-01-10)

ORIGINAL SCALE IN INCHES FOR REDUCED PLANS 0 1 2 3

UNIT: 3578
PROJECT NUMBER & PHASE: 05000200201
CONTRACT NO.: 05-0G0404

DISREGARD PRINTS BEARING EARLIER REVISION DATES

REVISION DATES 9-30-14 9-8-15 1-21-16

SHEET 14 OF 23

FILE => 49-0164l-m-grd.dgn

USERNAME => s115755 DATE PLOTTED => 22-JUL-2016 TIME PLOTTED => 17:56

DIST	COUNTY	ROUTE	POST MILES TOTAL PROJECT	SHEET No.	TOTAL SHEETS
05	SLO,Mon	101	63.2/R69.3, R0.0/R1.9	755	858

REGISTERED CIVIL ENGINEER 4-22-16 DATE

5-2-16
PLANS APPROVAL DATE

REGISTERED PROFESSIONAL ENGINEER Jose M Aquino III No. 58386 Exp. 12-31-16 CIVIL STATE OF CALIFORNIA

The State of California or its officers or agents shall not be responsible for the accuracy or completeness of scanned copies of this plan sheet.

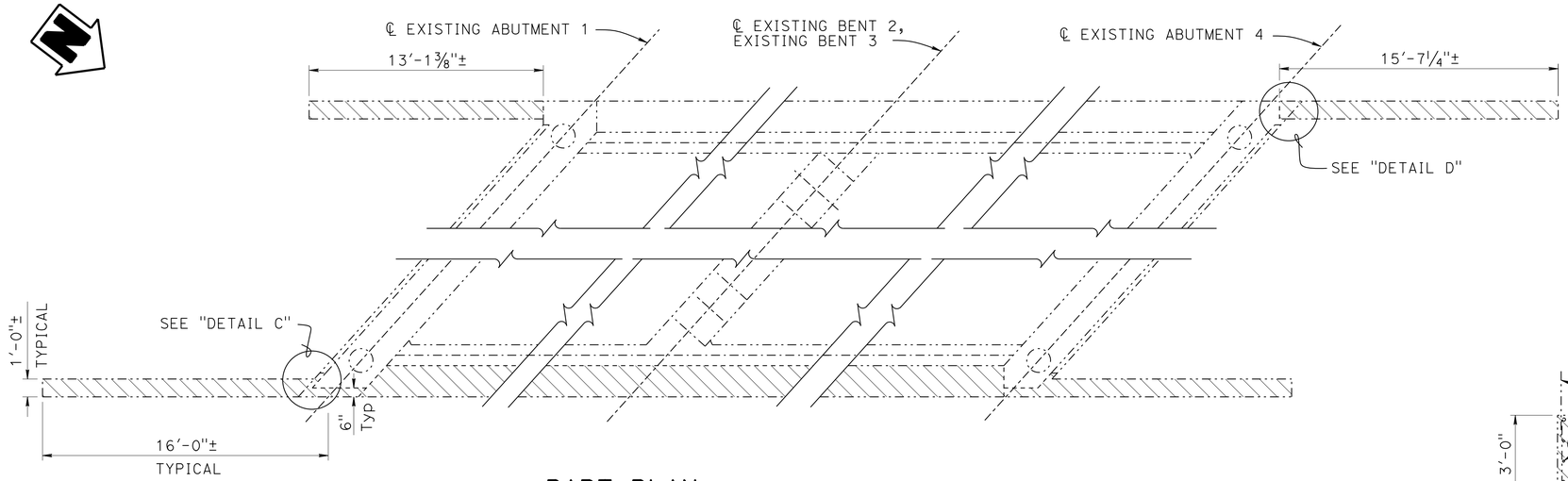

PART PLAN
1/4" = 1'-0"

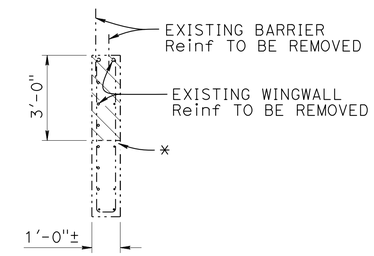

SECTION A-A
3/8" = 1'-0"

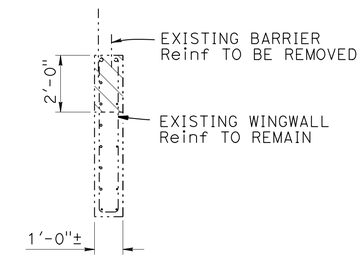

SECTION B-B
3/8" = 1'-0"

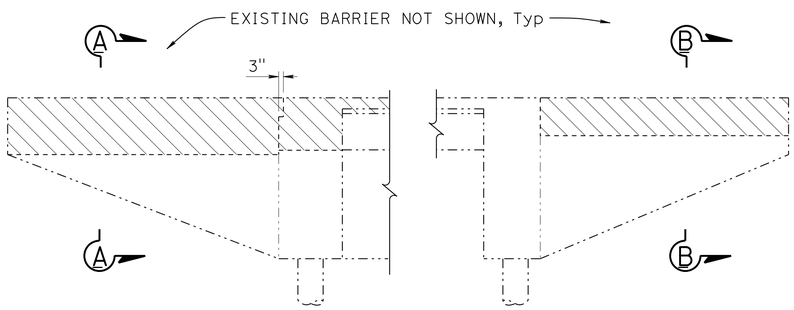

RIGHT SIDE LEFT SIDE

ABUTMENT 1 WINGWALL ELEVATION
1/4" = 1'-0"

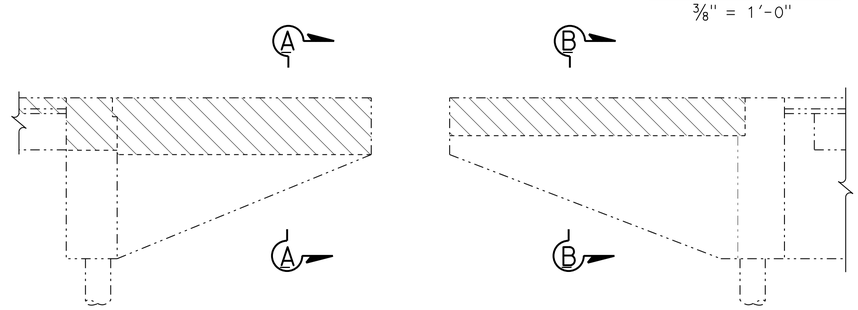

RIGHT SIDE LEFT SIDE

ABUTMENT 4 WINGWALL ELEVATION
1/4" = 1'-0"

NOTE:
For "DETAIL C" and "DETAIL D", see "CONCRETE REMOVAL Det NO. 2" sheet

LEGEND:
Indicates existing bridge
Indicates existing bridge removal
* Cut bar 1" below surface. Abrasion blast clean and fill holes w/magnesium phosphate

NOTE:
THE CONTRACTOR MUST VERIFY ALL CONTROLLING FIELD DIMENSIONS BEFORE ORDERING OR FABRICATING ANY MATERIAL.

	BY	CHECKED
DESIGN	Mufeed Khalaf	Eric G Burgeson
DETAILS	Nancy C Gwynn	Eric G Burgeson
QUANTITIES	Raman Guraya	Arturo V Herrera

STATE OF CALIFORNIA DEPARTMENT OF TRANSPORTATION

DIVISION OF ENGINEERING SERVICES STRUCTURE DESIGN DESIGN BRANCH 3

BRIDGE NO. 49-0164L
POST MILE 67.3

NORTH SAN MIGUEL UC (WIDEN)
CONCRETE REMOVAL Det No. 1

STRUCTURES DESIGN DETAIL SHEET (ENGLISH) (REV. 09-01-10)

ORIGINAL SCALE IN INCHES FOR REDUCED PLANS 0 1 2 3

UNIT: 3578
PROJECT NUMBER & PHASE: 05000200201
CONTRACT NO.: 05-0G0404

DISREGARD PRINTS BEARING EARLIER REVISION DATES

REVISION DATES 8-22-16

SHEET 15 OF 23

FILE => 49-0164l-r-conrem01.dgn

USERNAME => s115755 DATE PLOTTED => 22-JUL-2016 TIME PLOTTED => 17:56

DIST	COUNTY	ROUTE	POST MILES TOTAL PROJECT	SHEET No.	TOTAL SHEETS
05	SLO,Mon	101	63.2/R69.3, R0.0/R1.9	756	858

REGISTERED CIVIL ENGINEER 4-22-16 DATE

5-2-16
PLANS APPROVAL DATE

REGISTERED PROFESSIONAL ENGINEER Jose M Aquino III No. 58386 Exp. 12-31-16 CIVIL STATE OF CALIFORNIA

The State of California or its officers or agents shall not be responsible for the accuracy or completeness of scanned copies of this plan sheet.

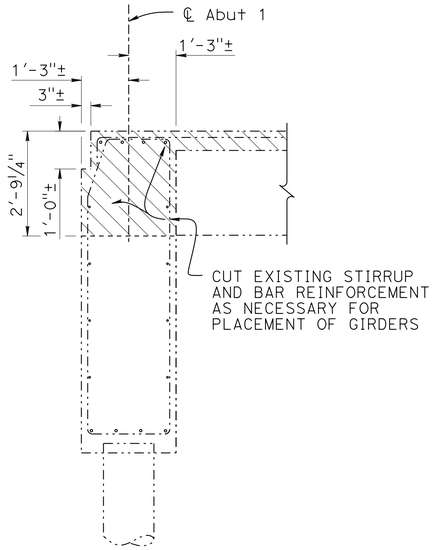

EXISTING ABUTMENT

½" = 1'-0"

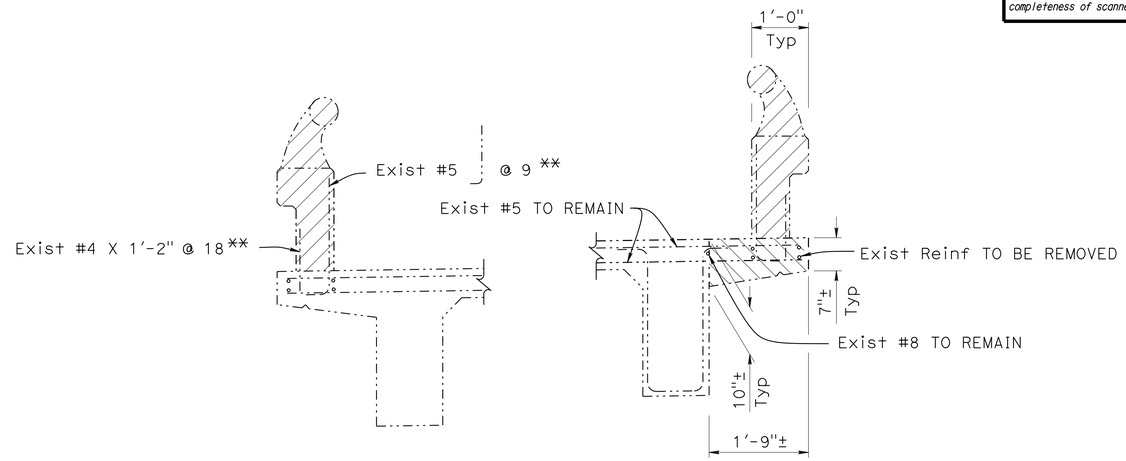

PART TYPICAL SECTION

¾" = 1'-0"

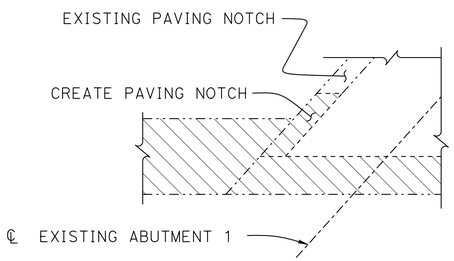

NOTE:
Abutment 1 shown,
Abutment 4 similar

DETAIL C

1" = 1'-0"

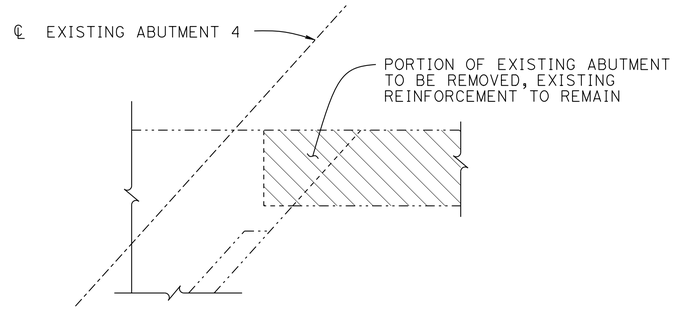

DETAIL D

1" = 1'-0"

LEGEND:

- Indicates existing bridge
- Indicates existing bridge removal
- Indicates existing barrier removal

** Cut bar flush to deck

NOTE:
THE CONTRACTOR MUST VERIFY ALL CONTROLLING FIELD DIMENSIONS BEFORE ORDERING OR FABRICATING ANY MATERIAL.

	BY	CHECKED
DESIGN	Mufeed Khalaf	Eric G Burgeson
DETAILS	Nancy C Gwynn	Eric G Burgeson
QUANTITIES	Raman Guraya	Arturo V Herrera

STATE OF CALIFORNIA
DEPARTMENT OF TRANSPORTATION

DIVISION OF ENGINEERING SERVICES
STRUCTURE DESIGN
DESIGN BRANCH 3

BRIDGE NO. 49-0164L
POST MILE 67.3

NORTH SAN MIGUEL UC (WIDEN)
CONCRETE REMOVAL Det No. 2

STRUCTURES DESIGN DETAIL SHEET (ENGLISH) (REV. 09-01-10)

ORIGINAL SCALE IN INCHES FOR REDUCED PLANS 0 1 2 3

UNIT: 3578
PROJECT NUMBER & PHASE: 05000200201
CONTRACT NO.: 05-0G0404

DISREGARD PRINTS BEARING EARLIER REVISION DATES

REVISION DATES 9.29.16

SHEET 16 OF 23

FILE => 49-0164l-r-conrem02.dgn

USERNAME => s115755 DATE PLOTTED => 22-JUL-2016 TIME PLOTTED => 17:56

DIST	COUNTY	ROUTE	POST MILES TOTAL PROJECT	SHEET No.	TOTAL SHEETS
05	SLO,Mon	101	63.2/R69.3, R0.0/R1.9	757	858

REGISTERED CIVIL ENGINEER 4-22-16 DATE

5-2-16
PLANS APPROVAL DATE

REGISTERED PROFESSIONAL ENGINEER Jose M Aquino III No. 58386 Exp. 12-31-16 CIVIL STATE OF CALIFORNIA

The State of California or its officers or agents shall not be responsible for the accuracy or completeness of scanned copies of this plan sheet.

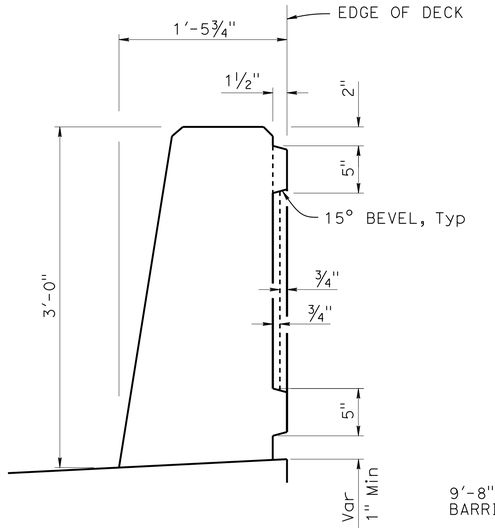

SECTION A-A
1½" = 1'-0"

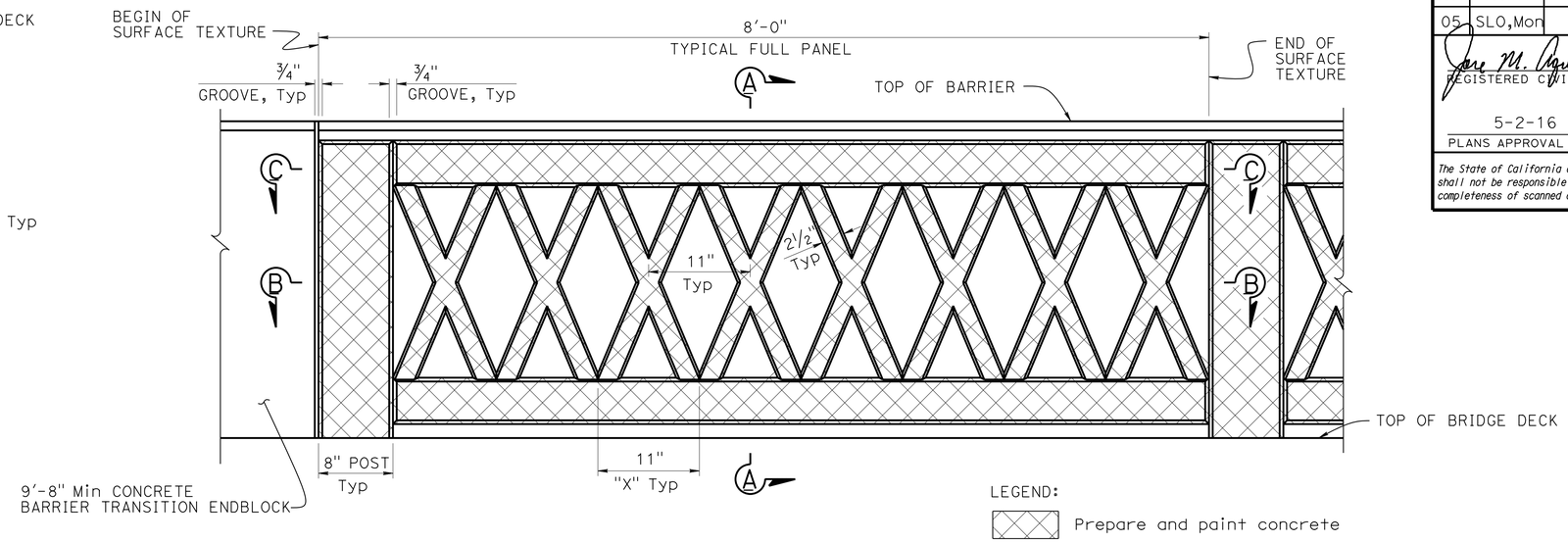

BARRIER MOTIF
1½" = 1'-0"

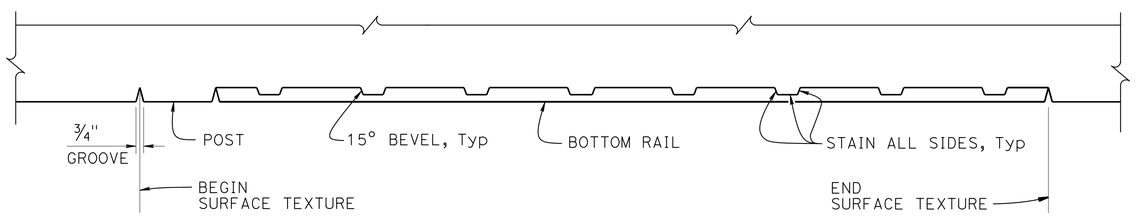

SECTION B-B
1½" = 1'-0"

SECTION C-C
1½" = 1'-0"

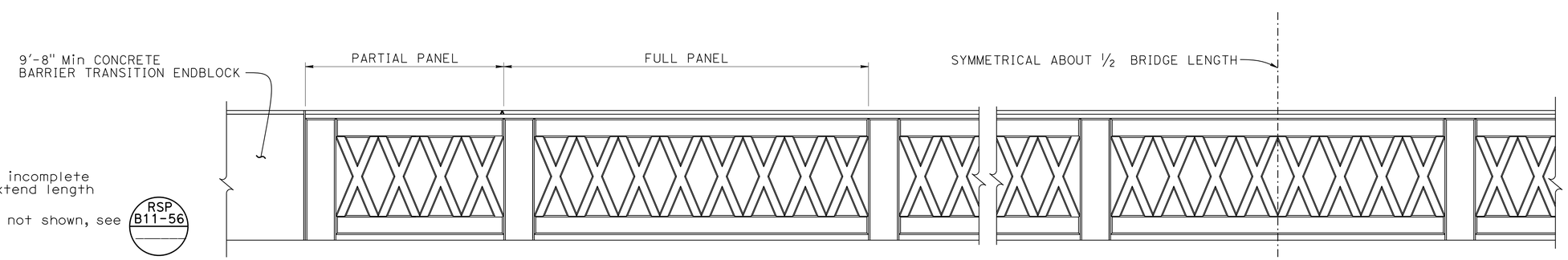

ELEVATION
¾" = 1'-0"

NOTES:
1. If partial panel ends with an incomplete "X", shorten last panel and extend length of concrete barrier endblock
2. For Concrete Barrier details not shown, see RSP B11-56

DESIGN	BY David Fowkes	CHECKED Kantima Green	
DETAILS	BY Nancy C Gwynn	CHECKED Kantima Green	
QUANTITIES	BY Raman Guraya	CHECKED Arturo V Herrera	

STATE OF CALIFORNIA
DEPARTMENT OF TRANSPORTATION

DIVISION OF ENGINEERING SERVICES
STRUCTURE DESIGN
DESIGN BRANCH 3

BRIDGE NO. 49-0164L
POST MILE 67.3

NORTH SAN MIGUEL UC (WIDEN)
BARRIER SURFACE TEXTURE

STRUCTURES DESIGN DETAIL SHEET (ENGLISH) (REV. 09-01-10)

ORIGINAL SCALE IN INCHES FOR REDUCED PLANS 0 1 2 3

UNIT: 3578
PROJECT NUMBER & PHASE: 05000200201
CONTRACT NO.: 05-0G0404

DISREGARD PRINTS BEARING EARLIER REVISION DATES

REVISION DATES 11-12-15 3-28-16 11-22-16

SHEET 17 OF 23

FILE => 49-0164l-s-barsur.dgn

USERNAME => s115755 DATE PLOTTED => 22-JUL-2016 TIME PLOTTED => 17:56

DIST	COUNTY	ROUTE	POST MILES TOTAL PROJECT	SHEET No.	TOTAL SHEETS
05	SLO,Mon	101	63.2/R69.3, R0.0/R1.9	758	858

REGISTERED CIVIL ENGINEER 4-22-16 DATE

5-2-16
PLANS APPROVAL DATE

REGISTERED PROFESSIONAL ENGINEER
Jose M Aquino III
No. 58386
Exp. 12-31-16
CIVIL
STATE OF CALIFORNIA

The State of California or its officers or agents shall not be responsible for the accuracy or completeness of scanned copies of this plan sheet.

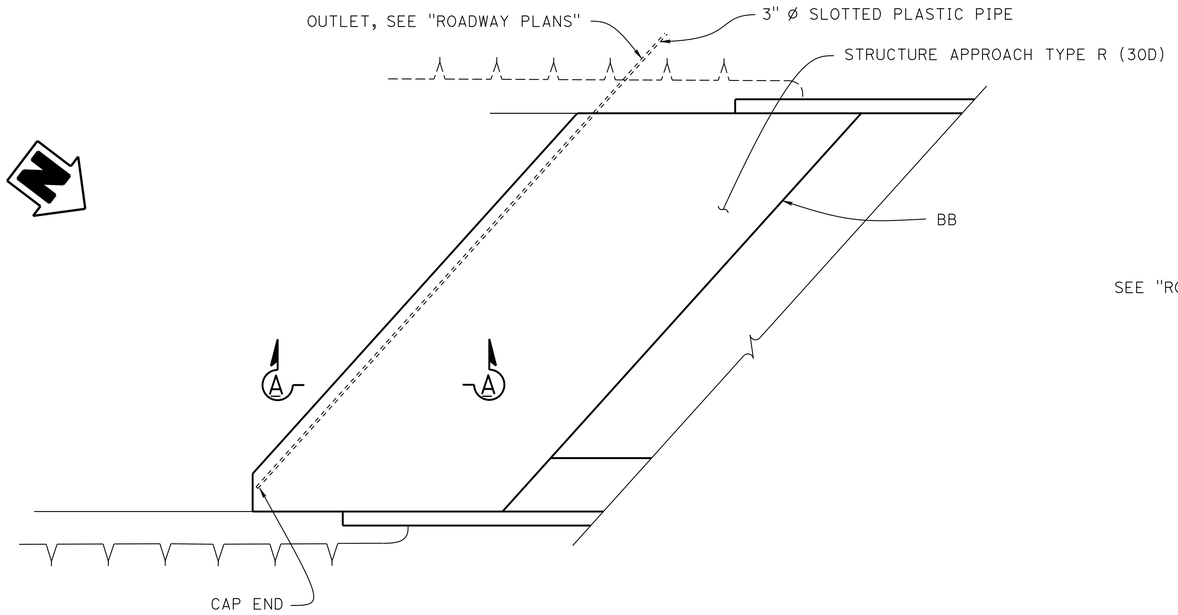

PLAN
1/8" = 1'-0"

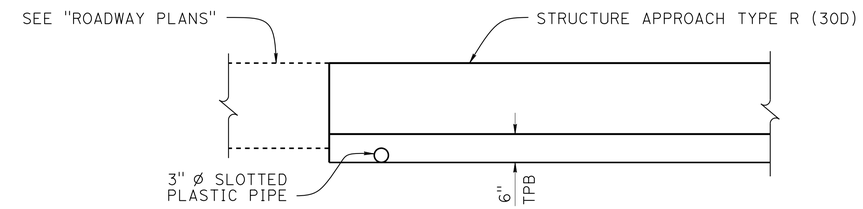

SECTION A-A
3/4" = 1'-0"

NOTES:
1. Structure approach at BB shown, structure approach at EB similar
2. For structure approach slab details not shown, see "STRUCTURE APPROACH TYPE R (30D)" sheet

NOTE:
THE CONTRACTOR SHALL VERIFY ALL CONTROLLING FIELD DIMENSIONS BEFORE ORDERING OR FABRICATING ANY MATERIAL.

	BY	CHECKED
DESIGN	Mufeed Khalaf	Eric G Burgeson
DETAILS	Nancy C Gwynn	Eric G Burgeson
QUANTITIES	Raman Guraya	Arturo V Herrera

STATE OF CALIFORNIA
DEPARTMENT OF TRANSPORTATION

DIVISION OF ENGINEERING SERVICES
STRUCTURE DESIGN
DESIGN BRANCH 3

BRIDGE NO. 49-0164L
POST MILE 67.3

NORTH SAN MIGUEL UC (WIDEN)
STRUCTURE APPROACH DRAINAGE DETAILS

STRUCTURES DESIGN DETAIL SHEET (ENGLISH) (REV. 09-01-10)

ORIGINAL SCALE IN INCHES FOR REDUCED PLANS 0 1 2 3

UNIT: 3578
PROJECT NUMBER & PHASE: 05000200201
CONTRACT NO.: 05-0G0404

DISREGARD PRINTS BEARING EARLIER REVISION DATES

REVISION DATES: 7-30-15 9-10-15

SHEET 18 OF 23

FILE => 49-0164l-x-sapprdr.dgn

USERNAME => s115755 DATE PLOTTED => 22-JUL-2016 TIME PLOTTED => 17:56

DIST	COUNTY	ROUTE	POST MILES TOTAL PROJECT	SHEET No.	TOTAL SHEETS
05	SLO,Mon	101	63.2/R69.3, R0.0/R1.9	759	858

REGISTERED CIVIL ENGINEER 4-22-16 DATE

5-2-16
PLANS APPROVAL DATE

REGISTERED PROFESSIONAL ENGINEER Jose M Aquino III No. 58386 Exp. 12-31-16 CIVIL STATE OF CALIFORNIA

The State of California or its officers or agents shall not be responsible for the accuracy or completeness of electronic copies of this plan sheet.

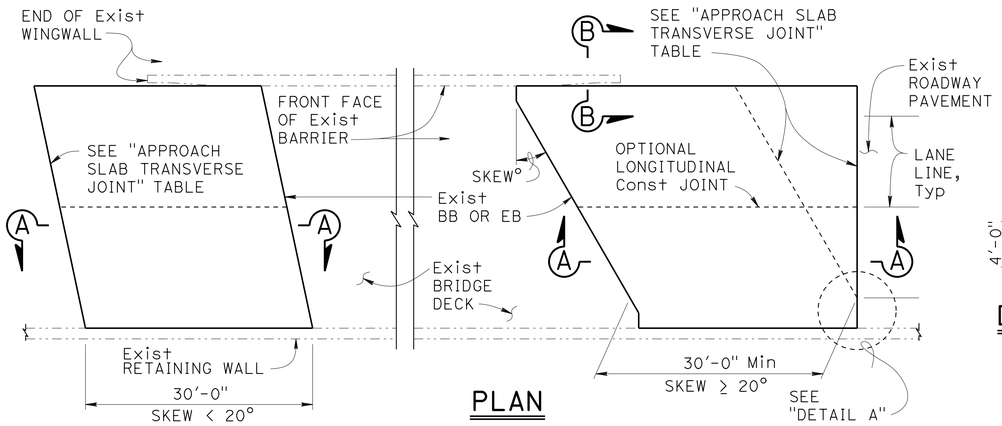

PLAN
1" = 10'

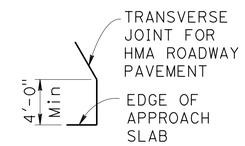

DETAIL A
No Scale

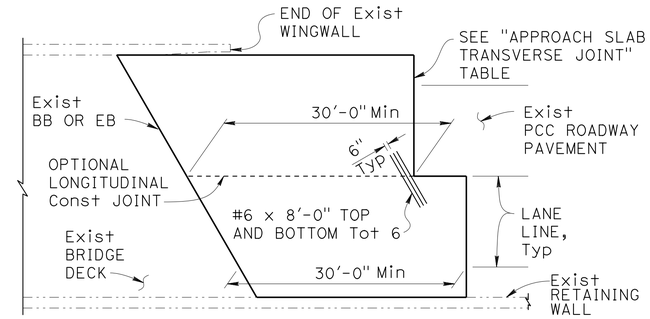

END STAGGER DETAIL
1" = 10'

APPROACH SLAB TRANSVERSE JOINT		
APPROACH SKEW	WITH HMA ROADWAY PAVEMENT	WITH PCC ROADWAY PAVEMENT
< 20°	PARALLEL TO BB OR EB	PARALLEL TO BB OR EB
20° - 45°	PARALLEL TO BB OR EB USE "DETAIL A"	STAGGER AT LANE LINES 24' TO 36' APART, SEE "END STAGGER DETAIL"
> 45°	PARALLEL TO BB OR EB USE "DETAIL A"	STAGGER AT EACH LANE LINE, SEE "END STAGGER DETAIL"

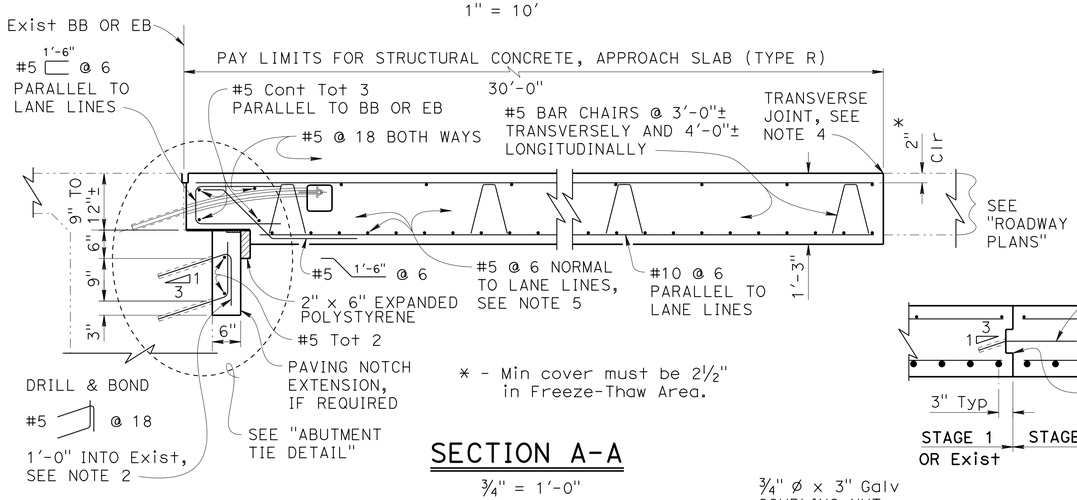

* - Min cover must be 2½" in Freeze-Thaw Area.

SECTION A-A
¾" = 1'-0"

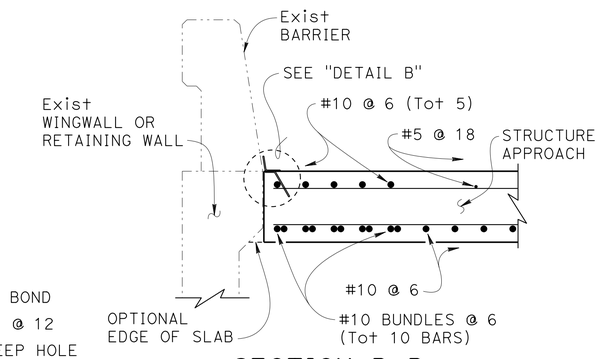

SECTION B-B
¾" = 1'-0"

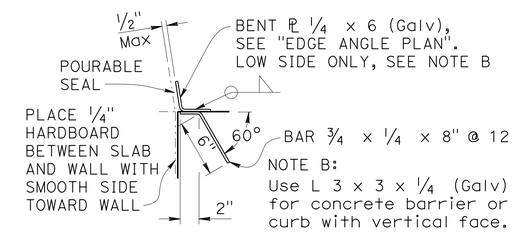

DETAIL B
1½" = 1'-0"

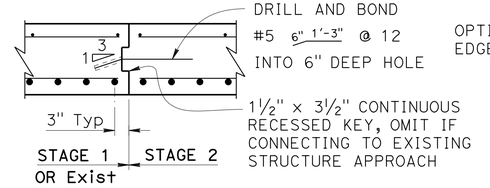

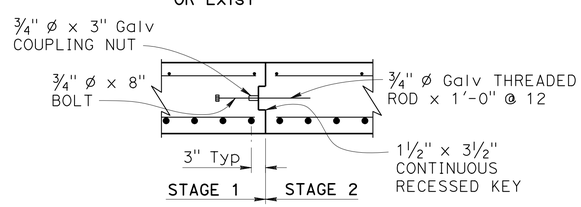

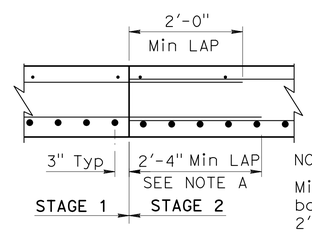

NOTE A:
Min lap splice for bottom Reinf must be 2'-9" in Freeze-Thaw Area.

LONGITUDINAL CONSTRUCTION JOINT ALTERNATIVES
¾" = 1'-0"

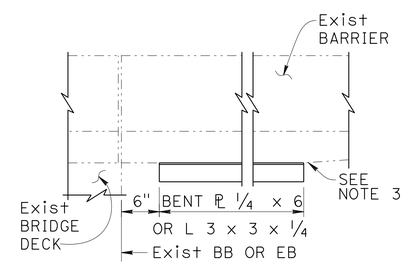

EDGE ANGLE PLAN
1" = 1'-0"

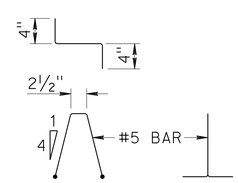

BAR CHAIR DETAIL
1" = 1'-0"

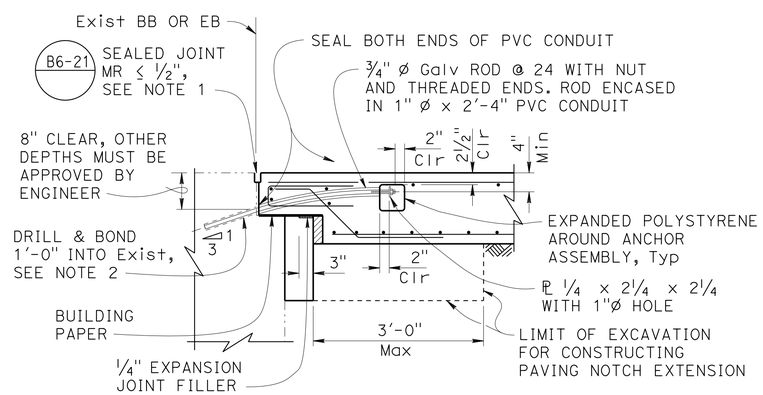

NOTE: For details not shown, see "SECTION A-A".

NOTE:
The contractor must verify all controlling field dimensions before ordering or fabricating any material.

ABUTMENT TIE DETAIL
¾" = 1'-0"

DESIGN NOTES

DESIGN: AASHTO LRFD Bridge Design Specifications, 2012 Edition with Caltrans Amendments, preface dated January 2014

LIMIT STATES: Service I, Strength I & II, Extreme II and Fatigue I (γ_{FAT} = 1.0)

DEAD LOAD: Includes 35 psf for future wearing surface

LIVE LOAD: HL93 and permit design load
Equivalent strip width method: W_1 = 12 ft
Slab span: L_1 = 24.5 ft

REINFORCED CONCRETE:
f_y = 60 ksi
f'_c = 3.6 ksi
n = 8

NOTES:

1. For details not shown, see other plan sheets. Adjust reinforcement to clear sawcut for sealed joint.
2. Space reinforcement to avoid existing prestress anchorages and other abutment reinforcement.
3. End the plate or edge angle at beginning of barrier transition, end of wingwall, or end of structure approach as applicable.
4. Transverse Joint must be a minimum of 5'-0" from an existing or constructed weakened plane joint in approach PCC roadway pavement. Refer to Standard Plans P10 and P14.
5. At the Contractor's option, approach slab transverse reinforcement may be placed parallel to BB or EB. Spacing of transverse reinforcement is measured along ℄ roadway.

—·—·— Indicates Existing Structure

STANDARD DRAWING
FILE NO. xs3-150
APPROVAL DATE January 2015

The components of this Bridge Standard Drawing have been prepared under the responsible charge of the Technical Owner, a registered civil engineer in the State of California. Refer to: http//www.dot.ca.gov/hq/esc/techpubs/manual/bridgemanuals/bridge-standard-detail-sheet/index.html. The selection and proper application of the component design and any modifications shown have been prepared under the responsible charge of the registered civil engineer for the project.

STATE OF CALIFORNIA DEPARTMENT OF TRANSPORTATION
DIVISION OF ENGINEERING SERVICES 3
BRIDGE NO. 49-0164L
POST MILE 67.3

NORTH SAN MIGUEL UC (WIDEN)
STRUCTURE APPROACH TYPE R (30D)

DS OSD 2147A (ENGLISH STANDARD DRAWING "XS" BORDER REV. (10-01-14)

ORIGINAL SCALE IN INCHES FOR REDUCED PLANS 0 1 2 3

UNIT: 3578
PROJECT NUMBER & PHASE: 05000200201
CONTRACT NO.: 05-0G0404
DISREGARD PRINTS BEARING EARLIER REVISION DATES
REVISION DATES 5-7-15
SHEET 19 OF 23

FILE => 49-0164l-x-sapprr30.dgn

USERNAME => s115755 DATE PLOTTED => 22-JUL-2016 TIME PLOTTED => 17:56

DIST	COUNTY	ROUTE	POST MILES TOTAL PROJECT	SHEET No	TOTAL SHEETS
05	SLO,Mon	101	63.2/R69.3, R0.0/R1.9	760	858

Ryan Turner 11-16-15
REGISTERED CIVIL ENGINEER DATE

5-2-16
PLANS APPROVAL DATE

REGISTERED PROFESSIONAL ENGINEER Ryan Turner No. C73956 Exp. 6-30-17 CIVIL STATE OF CALIFORNIA

The State of California or its officers or agents shall not be responsible for the accuracy or completeness of electronic copies of this plan sheet.

This LOTB sheet was prepared in accordance with the Caltrans Soil & Rock Logging, Classification, & Presentation Manual (2010 Edition).

See 2010 Standard Plans A10F and A10G for Soil Legend, and A10H for Rock Legend.

BENCH MARK

SLO-101 PM 67.23
1" ip with Caltrans
control pp w/nail
N 2,477,585.923
E 5,759,007.410
Elev 622.661
NAVD 88

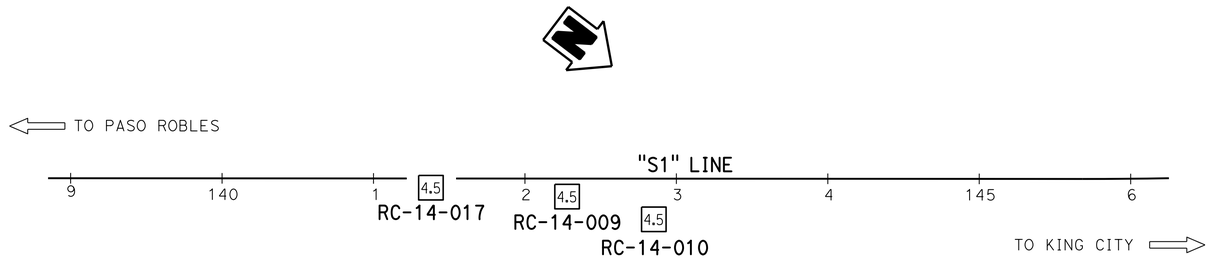

PLAN

1" = 50'

Note: Groundwater was encountered but not measured in Boring RC-14-017.

PROFILE

Horiz. 1" = 10'
Vert. 1" = 10'

ENGINEERING SERVICES	MATERIALS AND GEOTECHNICAL SERVICES	STATE OF CALIFORNIA DEPARTMENT OF TRANSPORTATION	DIVISION OF ENGINEERING SERVICES STRUCTURE DESIGN DESIGN BRANCH 3	BRIDGE NO. 49-0164L POST MILE 67.3	NORTH SAN MIGUEL UC (WIDEN) LOG OF TEST BORINGS 1 OF 4
FUNCTIONAL SUPERVISOR NAME: T. Menard	DRAWN BY: F. Nguyen CHECKED BY: M. Jurasius	FIELD INVESTIGATION BY: R. Turner, J. Scardine			

OGS CIVIL LOG OF TEST BORINGS SHEET

ORIGINAL SCALE IN INCHES FOR REDUCED PLANS 0 1 2 3

UNIT: 3650
PROJECT NUMBER & PHASE: 05000200201 CONTRACT NO.: 05-0G0404

DISREGARD PRINTS BEARING EARLIER REVISION DATES

REVISION DATES: 06-23-15 09-28-15 10-29-15 11-16-15 SHEET 20 OF 23

FILE => 49-0164l-y-ltb1of4.dgn

USERNAME => s115755 DATE PLOTTED => 22-JUL-2016 TIME PLOTTED => 17:56

DIST	COUNTY	ROUTE	POST MILES TOTAL PROJECT	SHEET No	TOTAL SHEETS
05	SLO,Mon	101	63.2/R69.3, R0.0/R1.9	761	858

REGISTERED CIVIL ENGINEER 11-16-15 DATE

5-2-16
PLANS APPROVAL DATE

REGISTERED PROFESSIONAL ENGINEER Ryan Turner No. C73956 Exp. 6-30-17 CIVIL STATE OF CALIFORNIA

The State of California or its officers or agents shall not be responsible for the accuracy or completeness of electronic copies of this plan sheet.

This LOTB sheet was prepared in accordance with the Caltrans Soil & Rock Logging, Classification, & Presentation Manual (2010 Edition).

See 2010 Standard Plans A10F and A10G for Soil Legend, and A10H for Rock Legend.

FOR PLAN VIEW, SEE
"LOG OF TEST BORINGS 1 OF 4"

Note: Groundwater was encountered but not measured in Boring RC-14-009.

11.9' Rt Sta 142+28.6 "S1" LINE

RC-14-009

617.9'

4.5 Asphalt concrete (6").

9 11.4 CLAYEY SAND with GRAVEL (SC); medium dense; brown, moist; from fine to coarse SAND; some fines; some fine subangular GRAVEL.

17 11.4 Poorly-graded SAND (SP); medium dense; yellowish brown; dry; fine and medium SAND; trace fines.

30 11.4 Poorly-graded SAND (SP); dense; pale yellowish brown; few fine subrounded GRAVEL; trace fines.

29 11.4 Lean CLAY (CL); hard; yellowish brown; moist; trace fine SAND; PP> 4.5 tsf.

SILT with SAND (ML); dense; yellowish brown; moist; few fine SAND; interbedded 2-6" lenses of lean CLAY with SAND (CL); very stiff (PP= 3.0 tsf); yellowish brown; moist; little fine SAND.

30 11.4 SILTY SAND (SM); very dense; yellowish brown; moist; mostly fine and medium SAND; some fines; trace subrounded coarse SAND; lenses of SANDY SILT (ML); some fine SAND.

60 11.4 - lense of well-graded SAND.

Lean CLAY (CL); hard; yellowish brown; moist; trace fine and medium SAND; PP> 4.5 tsf.

40 11.4

26 11.4 SILT with SAND (ML); dense; yellowish brown; moist; little fine and medium SAND; weak and moderate cementation.

50/4 11.4 - very dense.

Lean CLAY (CL); hard; yellowish brown; moist; trace fine SAND; weak to moderate cementation.

66 11.4

38 11.4

SILT with SAND (ML); very dense; yellowish brown; moist; few fine and medium SAND.

26 11.4 - 6" lean CLAY (CL); hard; yellowish brown; moist; PP= 4.5 tsf.

REF 11.4 - very dense; strongly cemented.

- 6" lense of well-graded SAND.

SILTY SAND (SM); very dense; yellowish brown; moist; from fine and medium SAND; some fines.

REF 11.4 - 18" SANDSTONE; massive; yellowish brown; fresh; soft; from fine to coarse GRAVEL.

79 11.4 SILTY SAND (SM); very dense; yellowish brown; moist; from fine to coarse SAND; little fines; weak to moderate cementation.

Well-graded SAND with SILT and GRAVEL (SW-SM); very dense; yellowish brown; moist; from fine to coarse SAND; little fines; weak to moderate cementation.

36 11.4

REF 11.4 - coarse subangular GRAVEL.

SANDY SILT (ML); very dense; yellowish brown; moist; some fine and medium SAND; trace fine subrounded coarse SAND; trace fine subrounded GRAVEL; weakly cemented (partly indurated SILTSTONE).

REF 11.4 - lenses with some fine SAND; lenses with from fine to coarse SAND; trace subrounded fine GRAVEL.

54 11.4 SEDIMENTARY ROCK (SANDSTONE); massive; varies from fine to coarse-grained with occasional fine subrounded GRAVEL; yellowish brown; fresh; soft; (Poorly-indurated well-graded SAND with SILT and trace fine GRAVEL).

50/4 11.4

REF 11.4

10-8-14
Terminated at Elev 520.1'
ERi = 86%

620 610 600 590 580 570 560 550 540 530 520 510

142+00 143+00 144+00

PROFILE
Horiz. 1" = 20'
Vert. 1" = 10'

ENGINEERING SERVICES	MATERIALS AND GEOTECHNICAL SERVICES	STATE OF CALIFORNIA DEPARTMENT OF TRANSPORTATION	DIVISION OF ENGINEERING SERVICES STRUCTURE DESIGN DESIGN BRANCH 3	BRIDGE NO. 49-0164L POST MILE 67.3	NORTH SAN MIGUEL UC (WIDEN)
FUNCTIONAL SUPERVISOR NAME: T. Menard	DRAWN BY: F. Nguyen CHECKED BY: M. Jurasius	FIELD INVESTIGATION BY: R. Turner, J. Scardine			LOG OF TEST BORINGS 2 OF 4

OGS CIVIL LOG OF TEST BORINGS SHEET

ORIGINAL SCALE IN INCHES FOR REDUCED PLANS 0 1 2 3

UNIT: 3650
PROJECT NUMBER & PHASE: 05000200201 CONTRACT NO.: 05-0G0404

DISREGARD PRINTS BEARING EARLIER REVISION DATES → 03-13-15 09-22-15 10-28-15 11-16-15

SHEET 21 OF 23

FILE => 49-0164l-y-ltb2of4.dgn

USERNAME => s115755 DATE PLOTTED => 22-JUL-2016 TIME PLOTTED => 17:56

DIST	COUNTY	ROUTE	POST MILES TOTAL PROJECT	SHEET No	TOTAL SHEETS
05	SLO,Mon	101	63.2/R69.3, R0.0/R1.9	762	858

REGISTERED CIVIL ENGINEER 11-16-15 DATE

5-2-16
PLANS APPROVAL DATE

REGISTERED PROFESSIONAL ENGINEER Ryan Turner No. C73956 Exp. 6-30-17 CIVIL STATE OF CALIFORNIA

The State of California or its officers or agents shall not be responsible for the accuracy or completeness of electronic copies of this plan sheet.

This LOTB sheet was prepared in accordance with the Caltrans Soil & Rock Logging, Classification, & Presentation Manual (2010 Edition).

See 2010 Standard Plans A10F and A10G for Soil Legend, and A10H for Rock Legend.

FOR PLAN VIEW, SEE
"LOG OF TEST BORINGS 1 OF 4"

26.1' Rt Sta 142+85.2
"S1" LINE

RC-14-010

632.3'

4.5 Well-graded SAND with SILT and GRAVEL (SW-SM); dense; moist; little coarse and fine subrounded and subangular GRAVEL; few subrounded COBBLES; (FILL).

SILT (ML); medium dense; yellowish brown; moist; trace subangular SAND.

Elastic SILT (MH); medium dense; yellowish brown; moist; few high plasticity fines.

- random <2" thick lenses SANDY fat CLAY (CH);localized iron oxide staining.

Poorly-graded SAND (SP); very dense; yellowish brown; moist; mostly medium SAND; trace nonplastic fines.

Well-graded SAND (SW); very dense; yellowish brown; moist; angular SAND.

SILTY SAND (SM); very dense; yellowish brown; moist; mostly fine and medium SAND; few subrounded fine GRAVEL; little fines.

- fine subangular and subrounded GRAVEL stringer.
- >3" lens poorly-graded SAND.

GWS Elev 594.0
2-24-15

- very dense; few coarse subangular SAND.

SANDY SILT (ML); very dense; yellowish brown; moist; mostly fines; some fine SAND; few fine subrounded GRAVEL.

Lean CLAY (CL); hard; yellowish brown; moist; mostly fines; trace fine and medium SAND; PP >4.5 tsf.
- 1" lens SANDY fat CLAY.

SANDY SILT (ML); very dense; yellowish brown; moist; mostly fines; some fine SAND; few fine subrounded GRAVEL.

SILTY SAND (SM); mostly fine to medium SAND; some fines.

SANDY SILT (ML); very dense; yellowish brown; moist; mostly fines; some fine SAND very dense with partial cementation blocky.

SILT (ML); dense; yellowish brown; moist; few medium plasticity fines; random 2" lenses lean CLAY.

SILTY SAND (SM); very dense; yellowish brown; wet; medium and fine SAND; little fines; trace subangular coarse SAND; (older ALLUVIUM).

Poorly-graded SAND (SP); very dense; yellowish brown; wet; mostly medium angular SAND; some fine SAND; few nonplastic fines.

SANDY SILT (ML); very dense; yellowish brown; wet; random > 0.5' lenses of medium fine SAND; partial calcite cementation (older ALLUVIUM).

SILTY SAND (SM); very dense; dark yellowish brown; wet; mostly medium and fine angular SAND; random >2" layers SANDY SILT.

- >0.5' lens of fine and coarse GRAVEL, subangular and subrounded.

SANDY SILT (ML); very dense; yellowish brown; moist; some fine SAND; random >2" lenses SILTY SAND; trace subangular coarse SAND.

10-8-14
Terminated at Elev 520.1'
ERi = 83%

630 620 610 600 590 580 570 560 550 540 530

142+00 144+00 146+00

PROFILE
Horiz. 1" = 20'
Vert. 1" = 10'

ENGINEERING SERVICES	MATERIALS AND GEOTECHNICAL SERVICES	STATE OF CALIFORNIA DEPARTMENT OF TRANSPORTATION	DIVISION OF ENGINEERING SERVICES STRUCTURE DESIGN DESIGN BRANCH 3	BRIDGE NO. 49-0164L POST MILE 67.3	NORTH SAN MIGUEL UC (WIDEN)
FUNCTIONAL SUPERVISOR NAME: T. Menard	DRAWN BY: F. Nguyen CHECKED BY: J. Scardine	FIELD INVESTIGATION BY: M. Jurasius			LOG OF TEST BORINGS 3 OF 4

OGS CIVIL LOG OF TEST BORINGS SHEET

ORIGINAL SCALE IN INCHES FOR REDUCED PLANS 0 1 2 3

UNIT: 3650
PROJECT NUMBER & PHASE: 05000200201 CONTRACT NO.: 05-0G0404

DISREGARD PRINTS BEARING EARLIER REVISION DATES

REVISION DATES: 06-25-15 09-24-15 10-29-15 11-16-15

SHEET 22 OF 23

FILE => 49-0164l-y-ltb3of4.dgn

USERNAME => s115755 DATE PLOTTED => 22-JUL-2016 TIME PLOTTED => 17:56

FED. ROAD DIV. No.	STATE	PROJ. No.	FISCAL YEAR	SHEET No.	TOTAL SHEETS
7	CAL.			148	169

DIST	COUNTY	ROUTE	SECTION	SHEET No.	TOTAL SHEETS
12	SLO	2		8	8

BRIDGE ENGINEER — CIVIL ENGINEER—LICENSE NO.

DATE APPROVED September 3, 1963

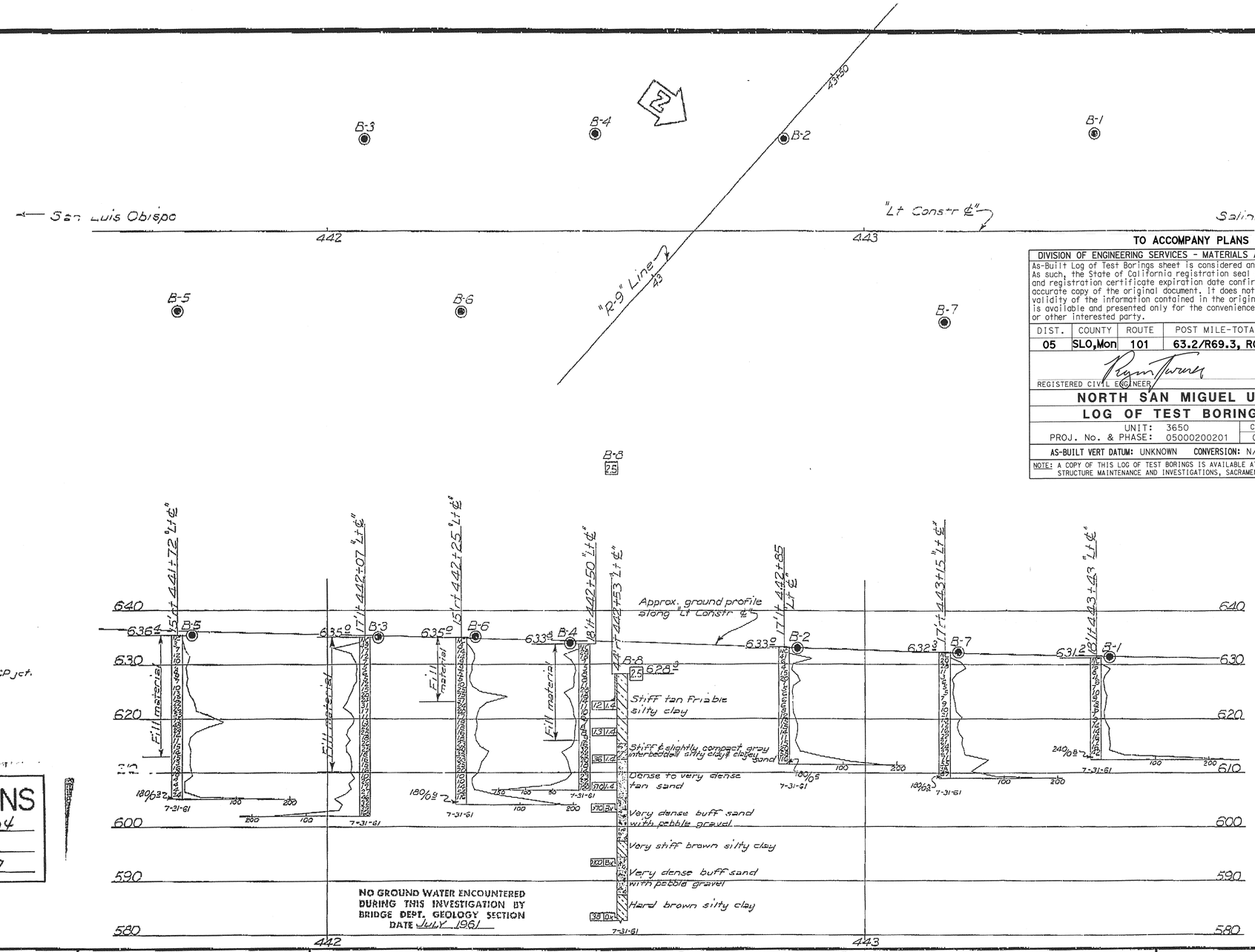

BM

SE cor. conc. D.I. for 30"&66" RCP jct. 130' ± rt "Lt ℄" 441+91
Elev. 618.93

NO GROUND WATER ENCOUNTERED DURING THIS INVESTIGATION BY BRIDGE DEPT. GEOLOGY SECTION
DATE July 1961

INFORMATION ON ACTUAL FOUNDATION CONDITIONS ENCOUNTERED IS ON FILE IN BRIDGE GEOLOGY SECTION

TO ACCOMPANY PLANS DATED 5-2-16

DIVISION OF ENGINEERING SERVICES - MATERIALS AND GEOTECHNICAL SERVICES

As-Built Log of Test Borings sheet is considered an informational document only. As such, the State of California registration seal with signature, license number and registration certificate expiration date confirm that this is a true and accurate copy of the original document. It does not attest to the accuracy or validity of the information contained in the original document. This drawing is available and presented only for the convenience of any bidder, contractor or other interested party.

DIST.	COUNTY	ROUTE	POST MILE-TOTAL PROJECT	Sheet No.	Total Sheets
05	SLO,Mon	101	63.2/R69.3, R0.0/R1.9	763	858

Ryan Turner — REGISTERED CIVIL ENGINEER — 11/16/15 DATE

REGISTERED PROFESSIONAL ENGINEER — Ryan Turner — No. C73956 — Exp. 6-30-17 — CIVIL — STATE OF CALIFORNIA

NORTH SAN MIGUEL UC (WIDEN)

LOG OF TEST BORINGS 4 OF 4

UNIT: 3650	CONTRACT No.	BRIDGE No.
PROJ. No. & PHASE: 05000200201	05-0G0404	49-0164L

AS-BUILT VERT DATUM: UNKNOWN CONVERSION: N/A — Sheet 23 of 23

NOTE: A COPY OF THIS LOG OF TEST BORINGS IS AVAILABLE AT OFFICE OF STRUCTURE MAINTENANCE AND INVESTIGATIONS, SACRAMENTO, CALIFORNIA

THIS SET OF PLANS HAS BEEN CORRECTED TO CORRESPOND TO THE "AS BUILT" PRINTS DATED _____, AS SUBMITTED BY RESIDENT ENGINEER _____
TRACINGS CORRECTED BY: _____ DATE: _____

AS BUILT PLANS
Contract No. 05-028604
Date Completed _____
Document No. 50001067

FIELD STUDY	By: Bell	7-61
DRAWN	By: Barr	12-61
CHECKED	By: Bell	12-61

Approval Recommended by: Chief, Structure Design — Bridge Engineer

BRIDGE DEPARTMENT

Sheet	of
8	8

CLASSIFICATION OF MATERIAL BASED ON STANDARD GRADE SIZE LIMITS

DIAGRAM SHOWING THE BASIS FOR ESTIMATES OF GRADE SIZE DISTRIBUTION USED IN DETERMINATION OF CLASS NAMES.

IF GRAVEL IS PRESENT IN APPRECIABLE AMOUNTS THE TERM "GRAVELLY" MAY BE ADDED TO THE CLASS NAME, VIZ. "GRAVELLY SAND." THE TERMS "COARSE", "MEDIUM" AND "FINE" WHEN USED TO DESCRIBE SAND, SILT AND GRAVEL REFER TO STANDARD GRADE SIZE LIMITS.

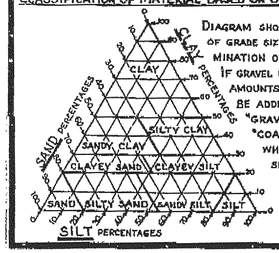

LEGEND OF EARTH MATERIALS

- Gravel
- Sand
- Silt
- Clay
- Sandy Clay or Clayey Sand
- Sandy Silt or Silty Sand
- Silty Clay or Clayey Silt
- Peat and/or Organic Matter
- Fill Material
- Igneous Rock
- Sedimentary Rock
- Metamorphic Rock

LEGEND OF BORING OPERATIONS

- Plan of any boring
- Penetrometer
- 2¼" Cone Penetrometer
- Sampler boring (DRY)
- Rotary boring (WET)
- Auger boring (DRY)
- Jet boring
- Core boring
- Test pit

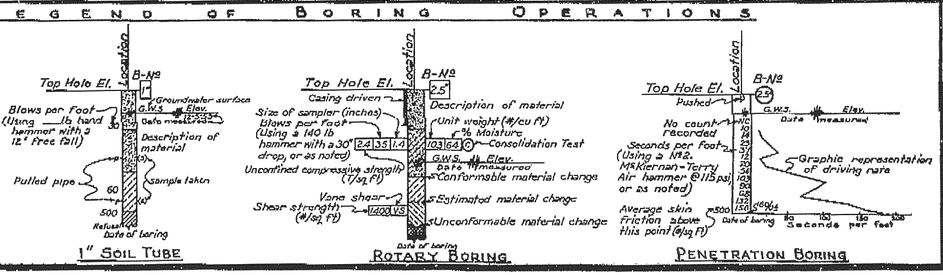

NOTE

Classification of earth material as shown on this sheet is based upon field inspection and is not to be construed to imply mechanical analysis.

STATE OF CALIFORNIA
DEPARTMENT OF PUBLIC WORKS
DIVISION OF HIGHWAYS

NORTH SAN MIGUEL UC

LOG OF TEST BORINGS

SCALE 1" = 10'	BRIDGE 49-164 L	FILE	DRAWING 49164-8

REL. DRAWING NO. P.

PR-49164-5 377

18

DIST	COUNTY	ROUTE	POST MILES TOTAL PROJECT	SHEET No.	TOTAL SHEETS
05	SLO,Mon	101	63.2/R69.3, R0.0/R1.9	764	858

REGISTERED CIVIL ENGINEER 4-22-16 DATE

5-2-16
PLANS APPROVAL DATE

REGISTERED PROFESSIONAL ENGINEER Jose M Aquino III No. 58386 Exp. 12-31-16 CIVIL STATE OF CALIFORNIA

The State of California or its officers or agents shall not be responsible for the accuracy or completeness of scanned copies of this plan sheet.

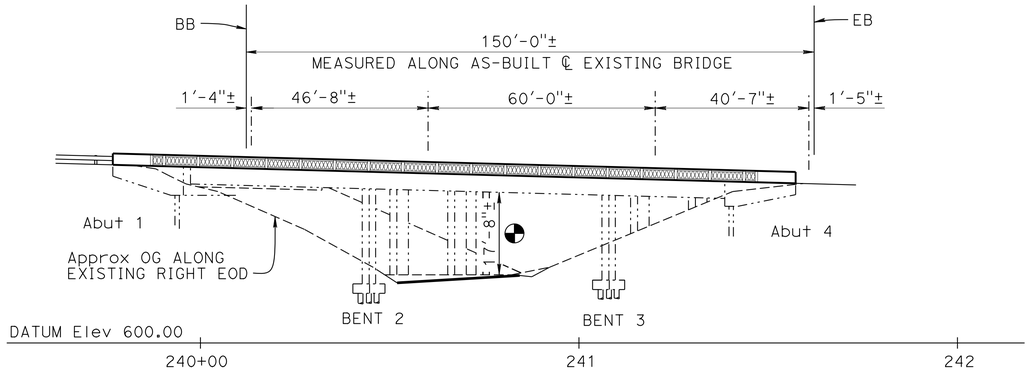

ELEVATION
1" = 20'

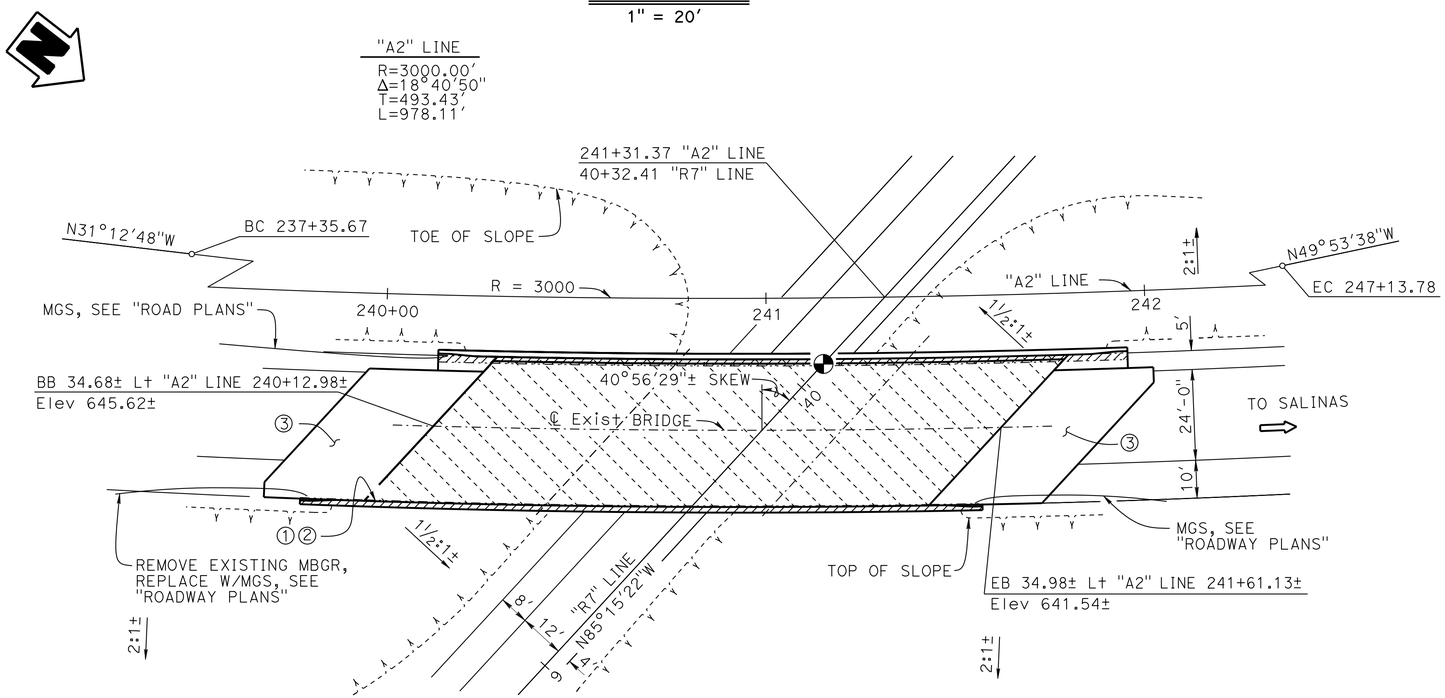

PLAN
1" = 20'

LEGEND:
- - - - Indicates existing bridge
——— Indicates new construction
Indicates existing barrier removal
Indicates limits of prepare bridge deck and place Polyester Concrete Overlay
Point of minimum vertical clearance

NOTES:
① Paint "Br. No. 49-0164R"
② Paint "NORTH SAN MIGUEL UC"
③ Structure Approach Type R (30D)

1. For "TYPICAL SECTION" see "GENERAL PLAN No. 2" sheet
2. For "GENERAL NOTES" and "INDEX TO PLANS", see "INDEX TO PLANS" sheet

NOTE:
THE CONTRACTOR MUST VERIFY ALL CONTROLLING FIELD DIMENSIONS BEFORE ORDERING OR FABRICATING ANY MATERIAL.

QUANTITIES

PREPARE CONCRETE BRIDGE DECK SURFACE	5,850	SQFT
FURNISH POLYESTER CONCRETE OVERLAY	488	CF
PLACE POLYESTER CONCRETE OVERLAY	5,850	SQFT
BRIDGE REMOVAL (PORTION), LOCATION D	LUMP	SUM
STRUCTURE EXCAVATION (BRIDGE)	11	CY
STRUCTURE BACKFILL (BRIDGE)	9	CY
STRUCTURAL CONCRETE, BRIDGE	13	CY
STRUCTURAL CONCRETE, BRIDGE (POLYMER FIBER)	12	CY
STRUCTURAL CONCRETE, APPROACH SLAB (TYPE R)	97	CY
PAVING NOTCH EXTENSION	70	CF
DRILL AND BOND DOWEL	78	LF
DRILL AND BOND DOWEL (CHEMICAL ADHESIVE)	363	EA
JOINT SEAL (MR 1/2")	94	LF
BAR REINFORCING STEEL (BRIDGE)	7,510	LB
PREPARE AND PAINT CONCRETE	537	SQFT
CONCRETE BARRIER (TYPE 736 MODIFIED)	368	LF

Joseph E Downing
DESIGN ENGINEER

	BY	CHECKED
DESIGN	Quang H Nguyen	Eric G Burgeson
DETAILS	Nancy C Gwynn	Eric G Burgeson
QUANTITIES	Eric G Burgeson	Jay Reid

LOAD FACTOR DESIGN — LIVE LOADING: HS20-44 & ALTERNATIVE

	BY	CHECKED
LAYOUT	Quang H Nguyen	Eric G Burgeson
SPECIFICATIONS	Jim Corrado	Jim Corrado (PLANS AND SPECS COMPARED)

STATE OF CALIFORNIA
DEPARTMENT OF TRANSPORTATION

DIVISION OF ENGINEERING SERVICES
STRUCTURE DESIGN
DESIGN BRANCH 3

BRIDGE NO. 49-0164R
POST MILE 67.2

NORTH SAN MIGUEL UC (WIDEN)
GENERAL PLAN No. 1

ORIGINAL SCALE IN INCHES FOR REDUCED PLANS 0 1 2 3

UNIT: 3578
PROJECT NUMBER & PHASE: 05000200201
CONTRACT NO.: 05-0G0404

DISREGARD PRINTS BEARING EARLIER REVISION DATES
REVISION DATES 1-9-14 7-22-15 3-28-16
SHEET 1 OF 16

USERNAME => s115755 DATE PLOTTED => 22-JUL-2016 TIME PLOTTED => 17:56

STRUCTURES DESIGN GENERAL PLAN SHEET (ENGLISH) (REV.09-01-10)

FILE => 49-0164r-a-gp01.dgn

DIST	COUNTY	ROUTE	POST MILES TOTAL PROJECT	SHEET No.	TOTAL SHEETS
05	SLO,Mon	101	63.2/R69.3, R0.0/R1.9	765	858

REGISTERED CIVIL ENGINEER 4-22-16 DATE

5-2-16
PLANS APPROVAL DATE

REGISTERED PROFESSIONAL ENGINEER Jose M Aquino III No. 58386 Exp. 12-31-16 CIVIL STATE OF CALIFORNIA

The State of California or its officers or agents shall not be responsible for the accuracy or completeness of scanned copies of this plan sheet.

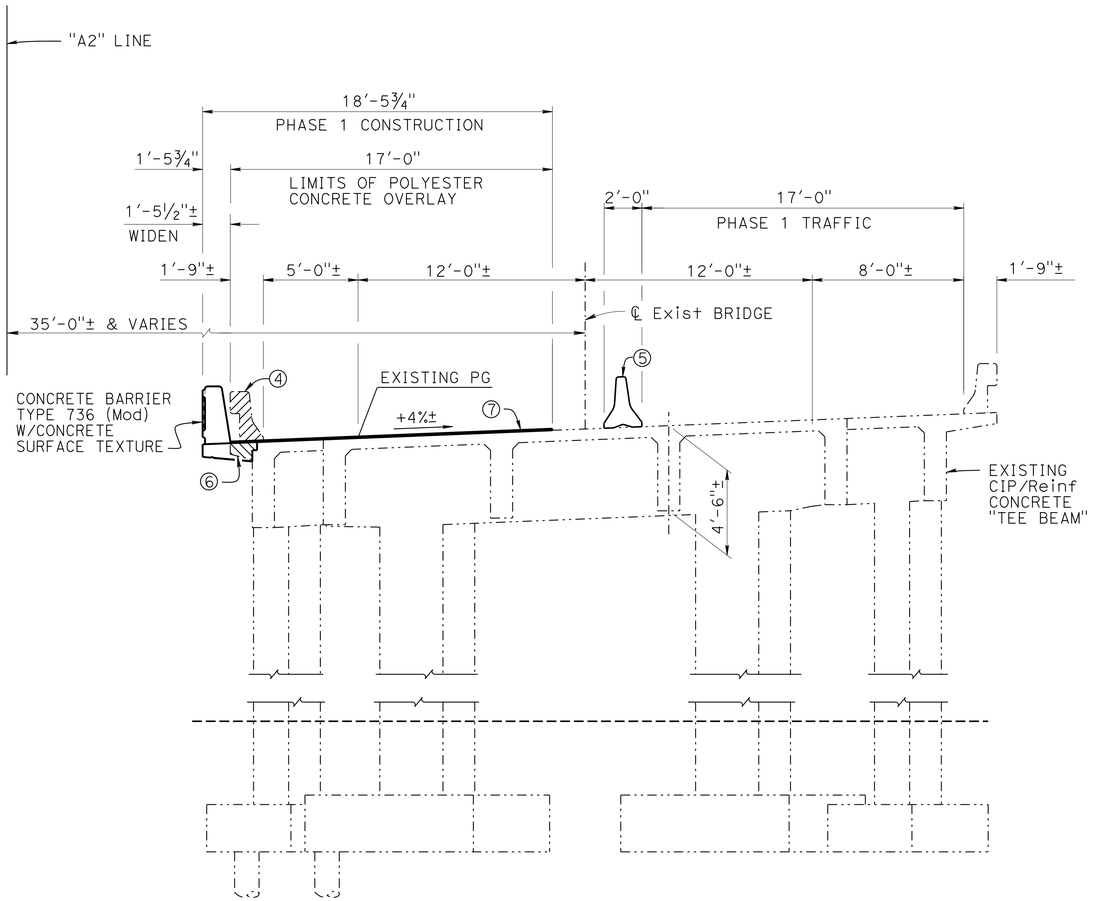

STAGE 4 (PHASE 1)
TYPICAL SECTION
¼" = 1'-0"

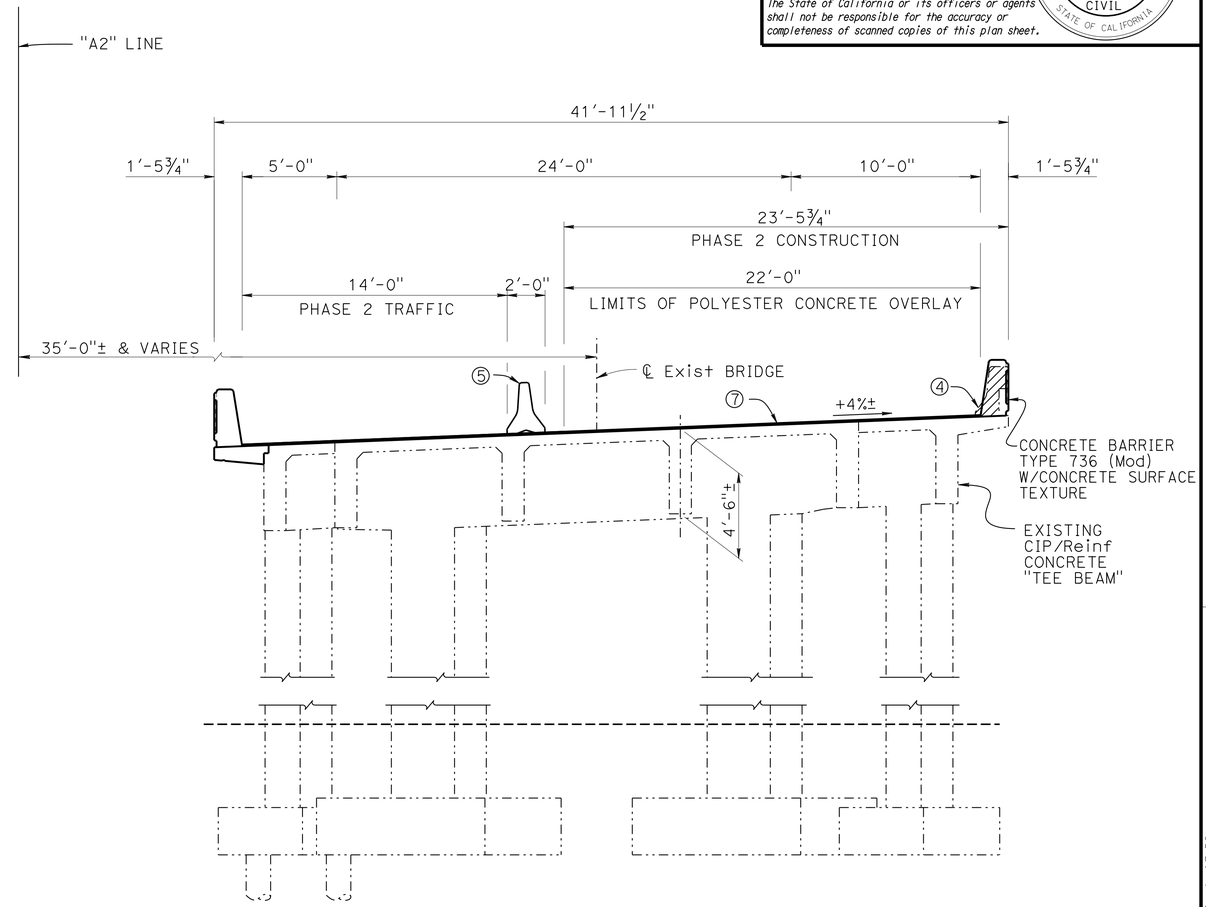

STAGE 4 (PHASE 2)
TYPICAL SECTION
¼" = 1'-0"

LEGEND:
- Indicates existing bridge
- Indicates new construction
- Indicates existing bridge removal, portion
- Indicates existing barrier removal

NOTES:
④ Existing barrier to be removed
⑤ Temporary Railing (Type K), see "ROADWAY PLANS"
⑥ Remove existing overhang
⑦ 1" & Var Polyester Concrete Overlay

1. Other Stages not shown, see "ROADWAY PLANS"
2. Structure Approach work must be performed inside each Phase Construction limits shown

NOTE:
THE CONTRACTOR MUST VERIFY ALL CONTROLLING FIELD DIMENSIONS BEFORE ORDERING OR FABRICATING ANY MATERIAL.

Joseph E Downing
DESIGN ENGINEER

	BY	CHECKED
DESIGN	Quang H Nguyen	Eric G Burgeson
DETAILS	Nancy C Gwynn	Eric G Burgeson
QUANTITIES	Eric G Burgeson	Jay Reid

LOAD FACTOR DESIGN — LIVE LOADING: HS20-44 & ALTERNATIVE

	BY	CHECKED
LAYOUT	Quang H Nguyen	Eric G Burgeson
SPECIFICATIONS	Jim Corrado	PLANS AND SPECS COMPARED Jim Corrado

ORIGINAL SCALE IN INCHES FOR REDUCED PLANS 0 1 2 3

STATE OF CALIFORNIA
DEPARTMENT OF TRANSPORTATION

DIVISION OF ENGINEERING SERVICES
STRUCTURE DESIGN
DESIGN BRANCH 3

BRIDGE NO. 49-0164R
POST MILE 67.2

NORTH SAN MIGUEL UC (WIDEN)
GENERAL PLAN No. 2

UNIT: 3578
PROJECT NUMBER & PHASE: 05000200201
CONTRACT NO.: 05-0G0404

DISREGARD PRINTS BEARING EARLIER REVISION DATES 7-22-15

REVISION DATES | SHEET 2 OF 16

STRUCTURES DESIGN GENERAL PLAN SHEET (ENGLISH) (REV.09-01-10)

FILE => 49-0164r-a-gp02.dgn

USERNAME => s115755 DATE PLOTTED => 22-JUL-2016 TIME PLOTTED => 17:56

DIST	COUNTY	ROUTE	POST MILES TOTAL PROJECT	SHEET No.	TOTAL SHEETS
05	SLO,Mon	101	63.2/R69.3, R0.0/R1.9	766	858

Jose M. Aquino III 4-22-16
REGISTERED CIVIL ENGINEER DATE

5-2-16
PLANS APPROVAL DATE

REGISTERED PROFESSIONAL ENGINEER
Jose M Aquino III
No. 58386
Exp. 12-31-16
CIVIL
STATE OF CALIFORNIA

The State of California or its officers or agents shall not be responsible for the accuracy or completeness of scanned copies of this plan sheet.

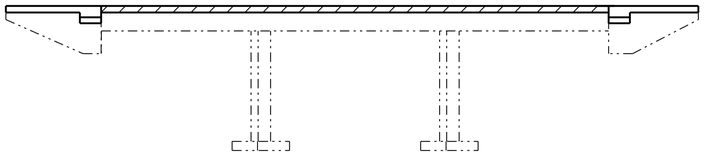

LEGEND:

Structural Concrete, Bridge

Structural Concrete, Bridge (Polymer Fiber) (4000 psi @ 28 days)

CONCRETE STRENGTH AND TYPE LIMITS

NO SCALE

GENERAL NOTES

DESIGN:
Bridge Design Specifications-April 2000 (LFD)
(1996 AASHTO with Interims and Revisions by CALTRANS)

DEAD LOAD:
Includes 11.67 psf for 1" polyester concrete overlay.
No future additional deck surfacing/overlay allowed

LIVE LOADING:
HS20-44 and alternative design load

REINFORCED CONCRETE:
fy = 60 ksi
f'c = 4 ksi
n = 9

INDEX TO PLANS

SHEET No.	TITLE
1	GENERAL PLAN No. 1
2	GENERAL PLAN No. 2
3	INDEX TO PLANS
4	FOUNDATION PLAN
5	ABUTMENT DETAILS No. 1
6	ABUTMENT DETAILS No. 2
7	ABUTMENT DETAILS No. 3
8	ABUTMENT DETAILS No. 4
9	ABUTMENT DETAILS No. 5
10	TYPICAL SECTION
11	MISCELLANEOUS DETAILS
12	CONCRETE REMOVAL Det No. 1
13	CONCRETE REMOVAL Det No. 2
14	BARRIER SURFACE TEXTURE
15	STRUCTURE APPROACH DRAINAGE DETAILS
16	STRUCTURE APPROACH TYPE R (30D)

STANDARD PLANS DATED 2010

	A10A	ABBREVIATIONS (SHEET 1 OF 2)
RSP	A10B	ABBREVIATIONS (SHEET 2 OF 2)
	A10C	LINES AND SYMBOLS (SHEET 1 OF 3)
	A10D	LINES AND SYMBOLS (SHEET 2 OF 3)
	A10E	LINES AND SYMBOLS (SHEET 3 OF 3)
	A62C	LIMITS OF PAYMENT FOR EXCAVATION AND BACKFILL BRIDGE
RSP	B6-21	JOINT SEALS (MAXIMUM MOVEMENT RATING = 2")
RSP	B11-56	CONCRETE BARRIER TYPE 736

STANDARD PLAN SHEET No.

DETAIL No.

NOTE:
THE CONTRACTOR MUST VERIFY ALL CONTROLLING FIELD DIMENSIONS BEFORE ORDERING OR FABRICATING ANY MATERIAL.

	BY	CHECKED
DESIGN	Quang H Nguyen	Eric G Burgeson
DETAILS	Nancy C Gwynn	Eric G Burgeson
QUANTITIES	Eric G Burgeson	Jay Reid

STATE OF CALIFORNIA
DEPARTMENT OF TRANSPORTATION

DIVISION OF ENGINEERING SERVICES
STRUCTURE DESIGN
DESIGN BRANCH 3

BRIDGE NO. 49-0164R
POST MILE 67.2

NORTH SAN MIGUEL UC (WIDEN)
INDEX TO PLANS

STRUCTURES DESIGN DETAIL SHEET (ENGLISH) (REV. 09-01-10)

ORIGINAL SCALE IN INCHES FOR REDUCED PLANS 0 1 2 3

UNIT: 3578
PROJECT NUMBER & PHASE: 05000200201
CONTRACT NO.: 05-0G0404

DISREGARD PRINTS BEARING EARLIER REVISION DATES

REVISION DATES 1-22-15 3-10-15

SHEET 3 OF 16

FILE => 49-0164r-a-itp.dgn

USERNAME => s115755 DATE PLOTTED => 22-JUL-2016 TIME PLOTTED => 17:56

DIST	COUNTY	ROUTE	POST MILES TOTAL PROJECT	SHEET No.	TOTAL SHEETS
05	SLO,Mon	101	63.2/R69.3, R0.0/R1.9	767	858

REGISTERED CIVIL ENGINEER 4-22-16 DATE

5-2-16
PLANS APPROVAL DATE

REGISTERED PROFESSIONAL ENGINEER Jose M Aquino III No. 58386 Exp. 12-31-16 CIVIL STATE OF CALIFORNIA

The State of California or its officers or agents shall not be responsible for the accuracy or completeness of electronic copies of this plan sheet.

CURVE DATA

No. Ⓗ	R	Δ	T	L
30	3000.00	18°40'50"	493.43	978.11

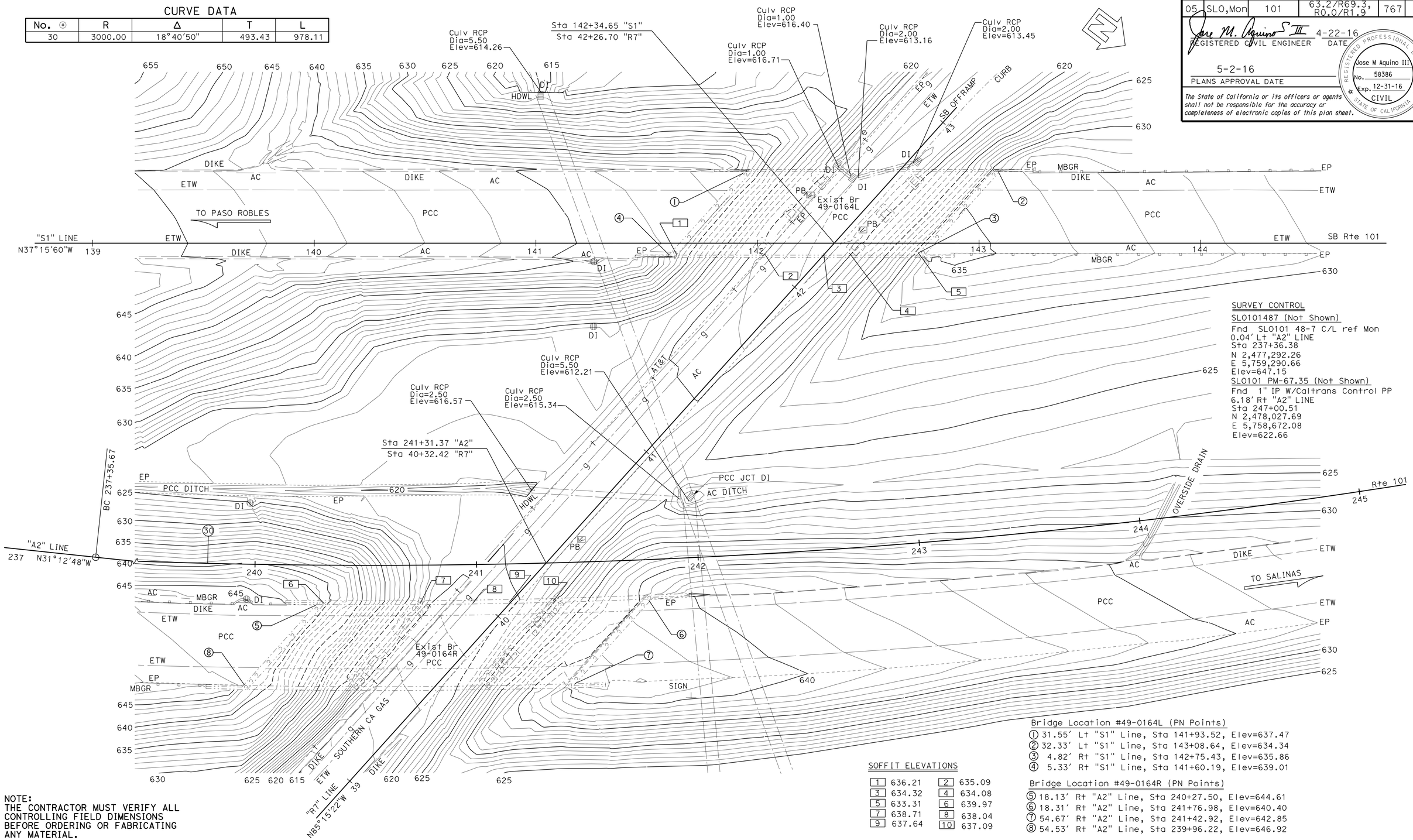

SURVEY CONTROL

SL0101487 (Not Shown)
Fnd SL0101 48-7 C/L ref Mon
0.04' Lt "A2" LINE
Sta 237+36.38
N 2,477,292.26
E 5,759,290.66
Elev=647.15

SL0101 PM-67.35 (Not Shown)
Fnd 1" IP W/Caltrans Control PP
6.18' Rt "A2" LINE
Sta 247+00.51
N 2,478,027.69
E 5,758,672.08
Elev=622.66

SOFFIT ELEVATIONS

1	636.21	2	635.09
3	634.32	4	634.08
5	633.31	6	639.97
7	638.71	8	638.04
9	637.64	10	637.09

Bridge Location #49-0164L (PN Points)
① 31.55' Lt "S1" Line, Sta 141+93.52, Elev=637.47
② 32.33' Lt "S1" Line, Sta 143+08.64, Elev=634.34
③ 4.82' Rt "S1" Line, Sta 142+75.43, Elev=635.86
④ 5.33' Rt "S1" Line, Sta 141+60.19, Elev=639.01

Bridge Location #49-0164R (PN Points)
⑤ 18.13' Rt "A2" Line, Sta 240+27.50, Elev=644.61
⑥ 18.31' Rt "A2" Line, Sta 241+76.98, Elev=640.40
⑦ 54.67' Rt "A2" Line, Sta 241+42.92, Elev=642.85
⑧ 54.53' Rt "A2" Line, Sta 239+96.22, Elev=646.92

NOTE:
THE CONTRACTOR MUST VERIFY ALL CONTROLLING FIELD DIMENSIONS BEFORE ORDERING OR FABRICATING ANY MATERIAL.

PRELIMINARY INVESTIGATION SECTION

SCALE 1"=20'	VERT.DATUM NAVD88	PHOTOGRAMMETRY AS OF: X			
	HORZ.DATUM NAD83 (92)	SURVEYED	BY DISTRICT	CHECKED	BY C. FASSETT 08/2014
	ALIGNMENT TIES Dist. Traverse Sheet	DRAFTED	BY S. ZHENG 08/2014	CHECKED	BY S. SOU 08/2014

DESIGN	BY Quang H Nguyen	CHECKED Eric G Burgeson
DETAILS	BY Nancy C Gwynn	CHECKED Eric G Burgeson
QUANTITIES	BY Eric G Burgeson	CHECKED Jay Reid

STATE OF CALIFORNIA
DEPARTMENT OF TRANSPORTATION

DIVISION OF ENGINEERING SERVICES
STRUCTURE DESIGN
DESIGN BRANCH 3

BRIDGE NO. 49-0164R
POST MILE PM67.30

NORTH SAN MIGUEL UC (WIDEN)
FOUNDATION PLAN

STRUCTURES FOUNDATION PLAN SHEET (ENGLISH) (REV. 09-01-10)

ORIGINAL SCALE IN INCHES FOR REDUCED PLANS 0 1 2 3

UNIT: 3646
PROJECT NUMBER & PHASE: 05000200201
CONTRACT NO.: 05-0G0404

DISREGARD PRINTS BEARING EARLIER REVISION DATES

REVISION DATES 07/17/15

SHEET 4 OF 16

FILE => 49-0164r-e-fp101.dgn

USERNAME => s115755 DATE PLOTTED => 22-JUL-2016 TIME PLOTTED => 17:56

DIST	COUNTY	ROUTE	POST MILES TOTAL PROJECT	SHEET No.	TOTAL SHEETS
05	SLO,Mon	101	63.2/R69.3, R0.0/R1.9	768	858

REGISTERED CIVIL ENGINEER 4-22-16 DATE

5-2-16
PLANS APPROVAL DATE

REGISTERED PROFESSIONAL ENGINEER
Jose M Aquino III
No. 58386
Exp. 12-31-16
CIVIL
STATE OF CALIFORNIA

The State of California or its officers or agents shall not be responsible for the accuracy or completeness of scanned copies of this plan sheet.

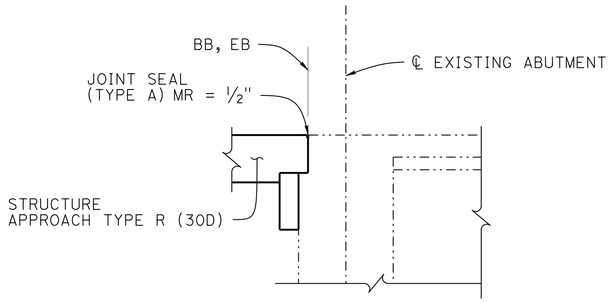

SECTION H-H

1/2" = 1'-0"

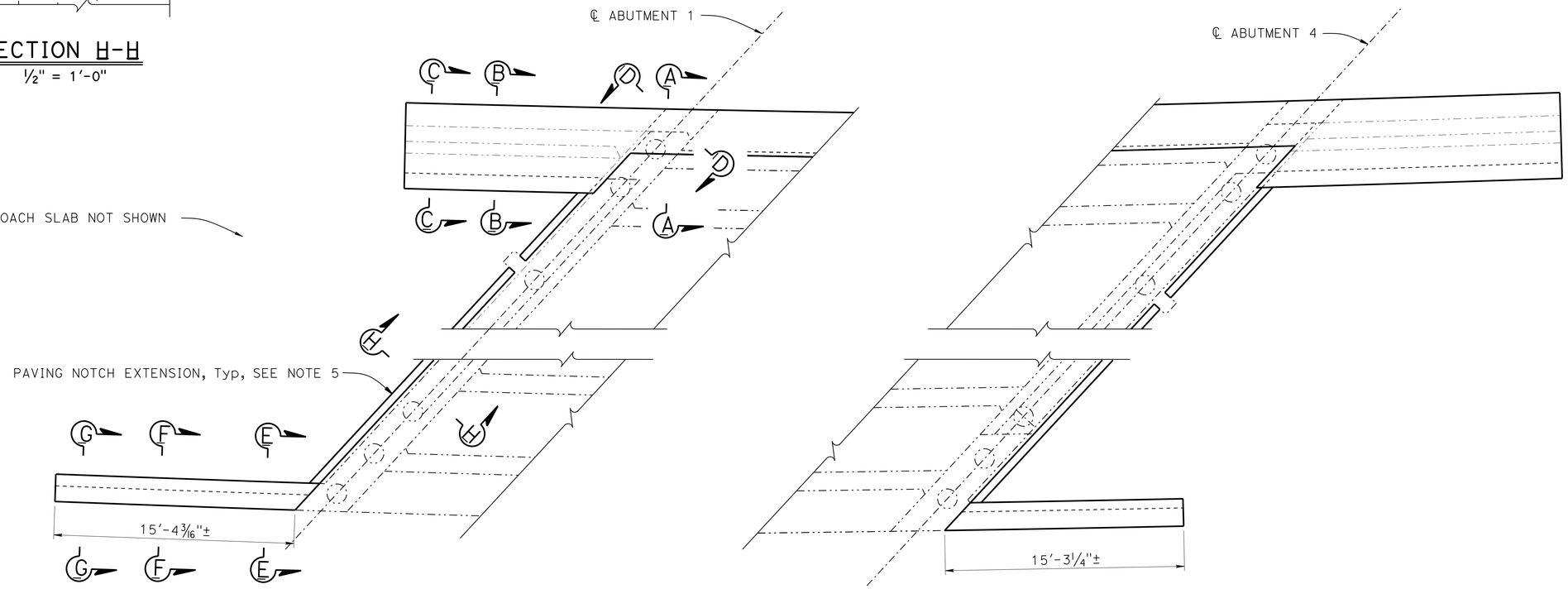

PART PLAN

1/4" = 1'-0"

NOTES:

1. For "SECTION A-A", "SECTION B-B" and "SECTION C-C" a see "ABUTMENT DETAILS No. 3" sheet
2. For "SECTION D-D", see "ABUTMENT DETAILS No. 2" sheet
3. For "SECTION E-E", "SECTION F-F", and "SECTION G-G" see "ABUTMENT DETAILS No. 5" sheet
4. For details not shown, see "CONCRETE REMOVAL Det No. 1" and "CONCRETE REMOVAL Det No. 2" sheets
5. For Approach Slab details not shown, see "STRUCTURE APPROACH TYPE R (30D)" sheet

NOTE:
THE CONTRACTOR MUST VERIFY ALL CONTROLLING FIELD DIMENSIONS BEFORE ORDERING OR FABRICATING ANY MATERIAL.

	BY	CHECKED
DESIGN	Quang H Nguyen	Eric G Burgeson
DETAILS	Nancy C Gwynn	Eric G Burgeson
QUANTITIES	Eric G Burgeson	Jay Reid

STATE OF CALIFORNIA
DEPARTMENT OF TRANSPORTATION

DIVISION OF ENGINEERING SERVICES
STRUCTURE DESIGN
DESIGN BRANCH 3

BRIDGE NO. 49-0164R
POST MILE 67.2

NORTH SAN MIGUEL UC (WIDEN)
ABUTMENT DETAILS No. 1

STRUCTURES DESIGN DETAIL SHEET (ENGLISH) (REV. 09-01-10)

ORIGINAL SCALE IN INCHES FOR REDUCED PLANS 0 1 2 3

UNIT: 3578
PROJECT NUMBER & PHASE: 05000200201
CONTRACT NO.: 05-0G0404

DISREGARD PRINTS BEARING EARLIER REVISION DATES

REVISION DATES: 12-18-15 6-8-15 9-11-15 1-21-16

SHEET 5 OF 16

FILE => 49-0164r-f-ab01.dgn

USERNAME => s115755 DATE PLOTTED => 22-JUL-2016 TIME PLOTTED => 17:56

DIST	COUNTY	ROUTE	POST MILES TOTAL PROJECT	SHEET No.	TOTAL SHEETS
05	SLO,Mon	101	63.2/R69.3, R0.0/R1.9	769	858

Jose M. Aquino III 4-22-16
REGISTERED CIVIL ENGINEER DATE

5-2-16
PLANS APPROVAL DATE

REGISTERED PROFESSIONAL ENGINEER
Jose M Aquino III
No. 58386
Exp. 12-31-16
CIVIL
STATE OF CALIFORNIA

The State of California or its officers or agents shall not be responsible for the accuracy or completeness of scanned copies of this plan sheet.

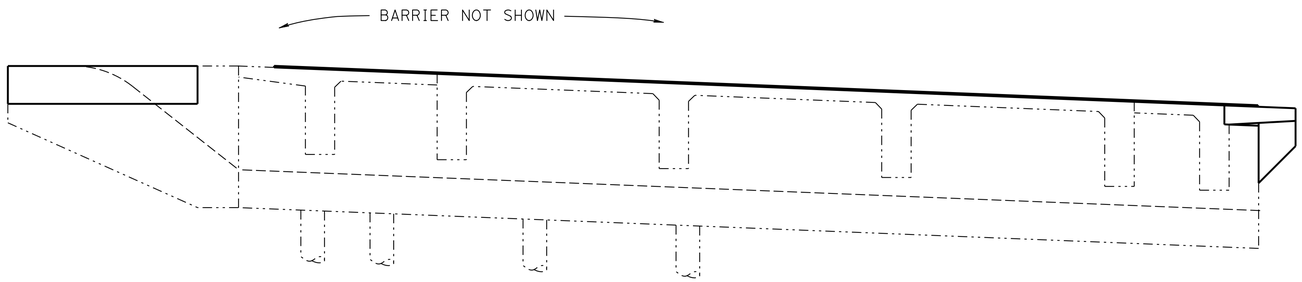

ELEVATION
1/4" = 1'-0"

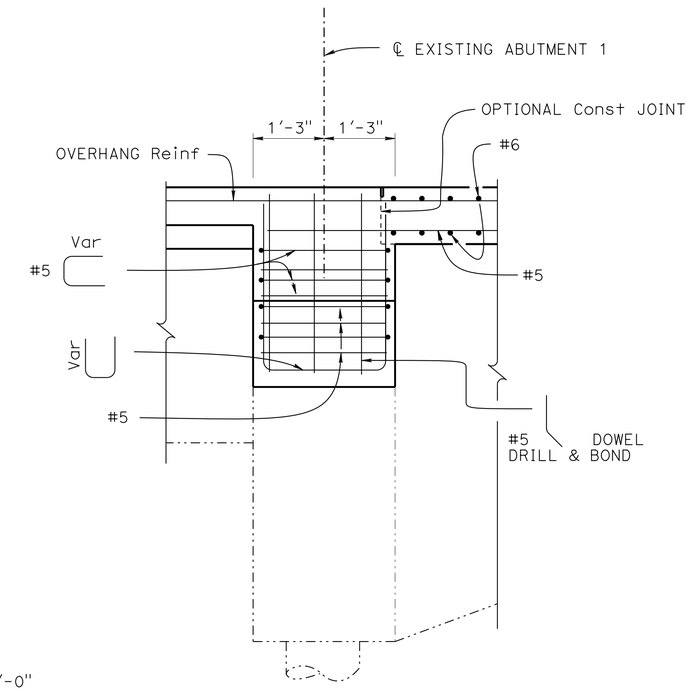

NOTES:
1. Barrier reinforcement not shown
2. For details not shown, see "SECTION A-A", "ABUTMENT DETAILT No. 3" sheet

SECTION D-D
3/4" = 1'-0"

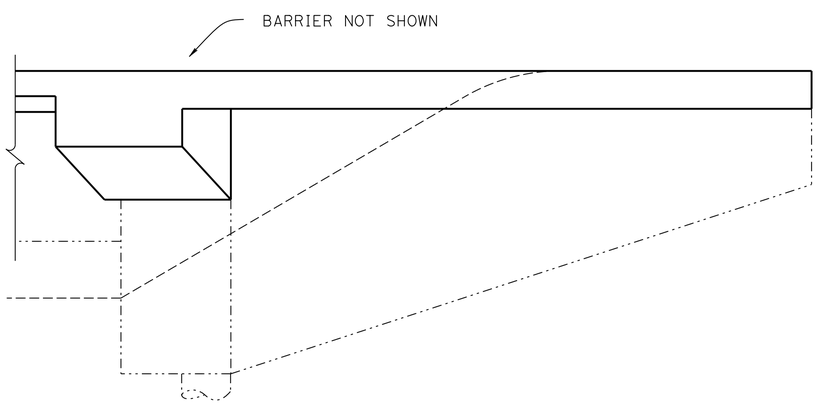

ABUTMENT 1 LEFT WINGWALL ELEVATION
1/2" = 1'-0"

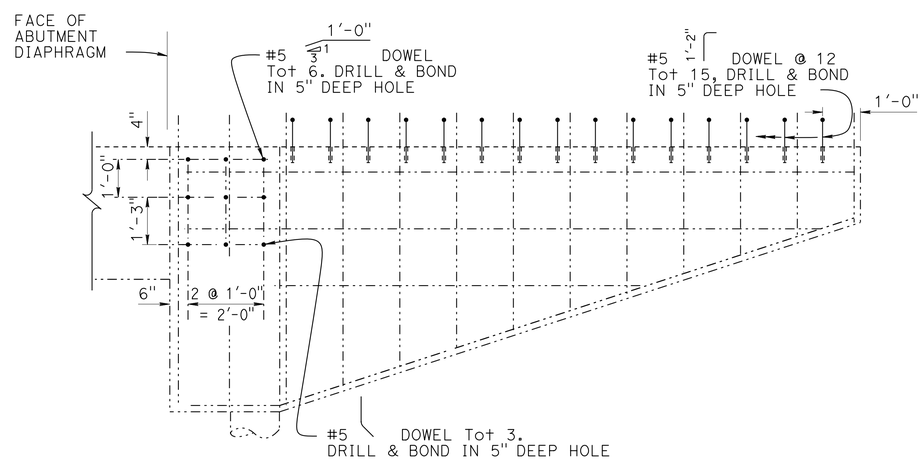

DRILL & BOND
1/2" = 1'-0"

NOTE:
THE CONTRACTOR MUST VERIFY ALL CONTROLLING FIELD DIMENSIONS BEFORE ORDERING OR FABRICATING ANY MATERIAL.

	BY	CHECKED
DESIGN	Quang H Nguyen	Eric G Burgeson
DETAILS	Nancy C Gwynn	Eric G Burgeson
QUANTITIES	Eric G Burgeson	Jay Reid

STATE OF CALIFORNIA
DEPARTMENT OF TRANSPORTATION

DIVISION OF ENGINEERING SERVICES
STRUCTURE DESIGN
DESIGN BRANCH 3

BRIDGE NO. 49-0164R
POST MILE 67.2

NORTH SAN MIGUEL UC (WIDEN)
ABUTMENT DETAILS No. 2

STRUCTURES DESIGN DETAIL SHEET (ENGLISH) (REV. 09-01-10)

ORIGINAL SCALE IN INCHES FOR REDUCED PLANS 0 1 2 3

UNIT: 3578
PROJECT NUMBER & PHASE: 05000200201
CONTRACT NO.: 05-0G0404

DISREGARD PRINTS BEARING EARLIER REVISION DATES

REVISION DATES: 6-2-15 8-11-15

SHEET 6 OF 16

FILE => 49-0164r-f-ab02.dgn

USERNAME => s115755 DATE PLOTTED => 22-JUL-2016 TIME PLOTTED => 17:56

DIST	COUNTY	ROUTE	POST MILES TOTAL PROJECT	SHEET No.	TOTAL SHEETS
05	SLO,Mon	101	63.2/R69.3, R0.0/R1.9	770	858

REGISTERED CIVIL ENGINEER 4-22-16 DATE

5-2-16
PLANS APPROVAL DATE

REGISTERED PROFESSIONAL ENGINEER Jose M Aquino III No. 58386 Exp. 12-31-16 CIVIL STATE OF CALIFORNIA

The State of California or its officers or agents shall not be responsible for the accuracy or completeness of scanned copies of this plan sheet.

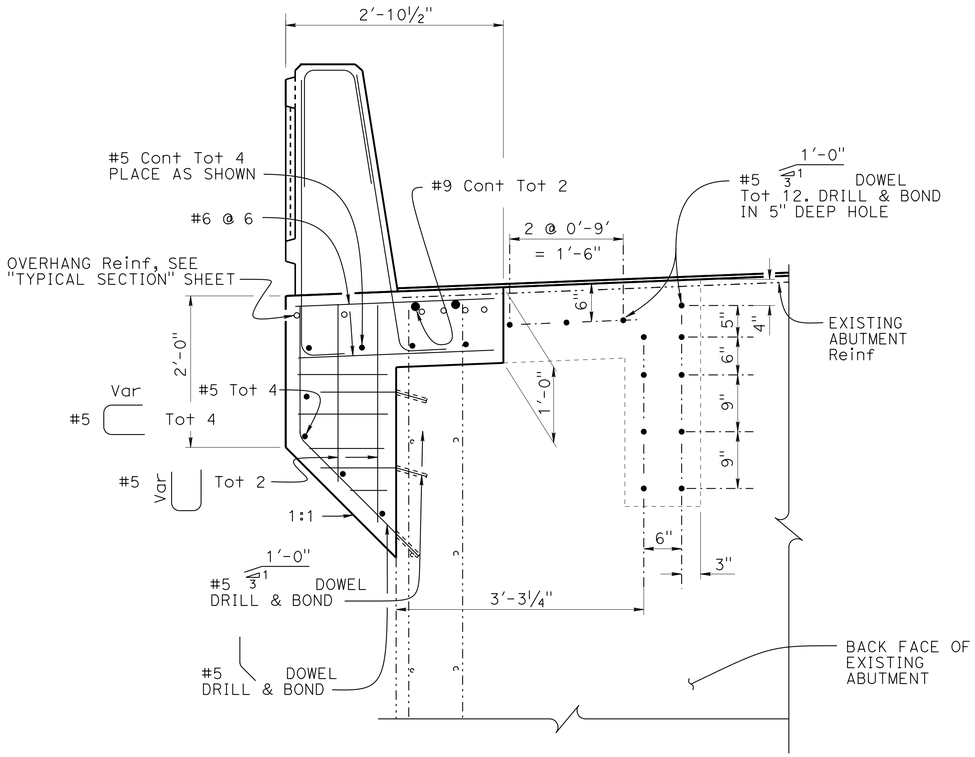

SECTION A-A

1" = 1'-0"

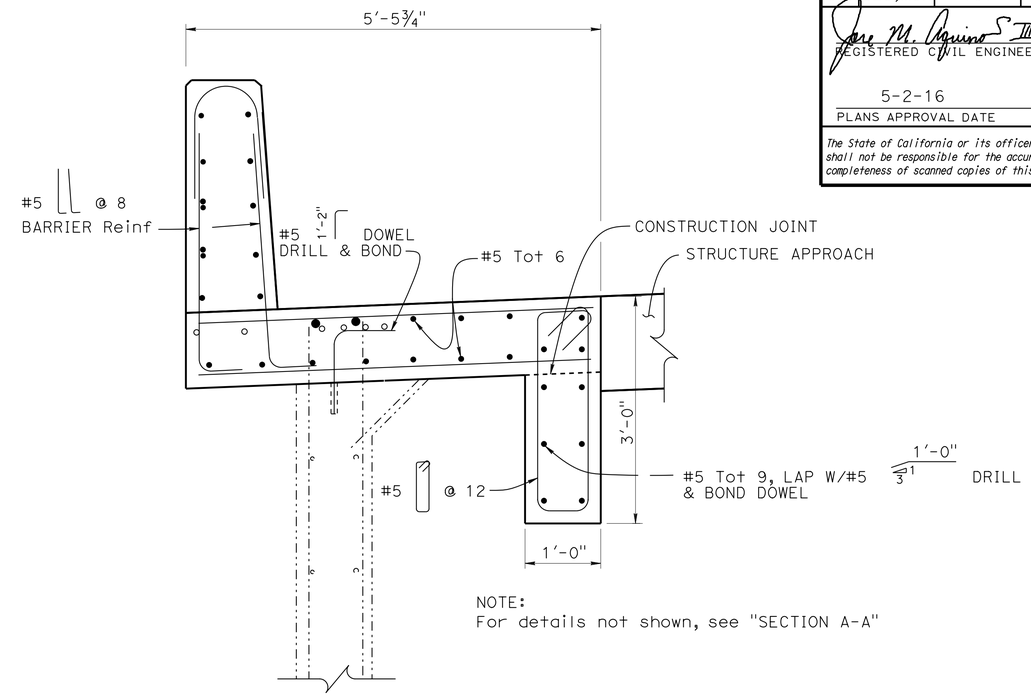

NOTE:
For details not shown, see "SECTION A-A"

SECTION B-B

1" = 1'-0"

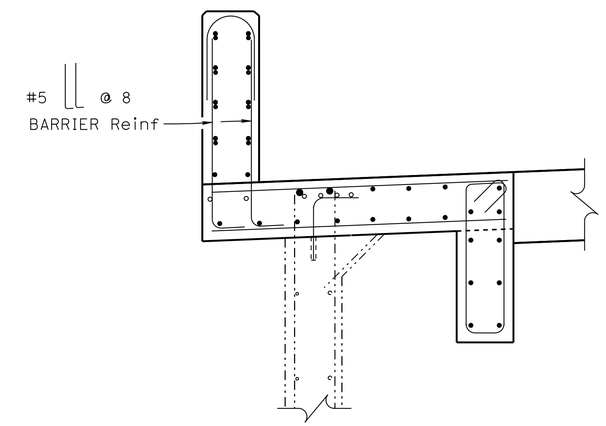

NOTE:
For details not shown, see "SECTION B-B"

SECTION C-C

¾" = 1'-0"

NOTES:
1. For Concrete Barrier Type 736 details not shown, see and "TYPICAL SECTION" sheet
2. Abutment 1 shown, Abutment 4 similar

RSP B11-56

NOTE:
THE CONTRACTOR MUST VERIFY ALL CONTROLLING FIELD DIMENSIONS BEFORE ORDERING OR FABRICATING ANY MATERIAL.

	BY	CHECKED
DESIGN	Quang H Nguyen	Eric G Burgeson
DETAILS	Nancy C Gwynn	Eric G Burgeson
QUANTITIES	Eric G Burgeson	Jay Reid

STATE OF CALIFORNIA
DEPARTMENT OF TRANSPORTATION

DIVISION OF ENGINEERING SERVICES
STRUCTURE DESIGN
DESIGN BRANCH 3

BRIDGE NO. 49-0164R
POST MILE 67.2

NORTH SAN MIGUEL UC (WIDEN)
ABUTMENT DETAILS No. 3

STRUCTURES DESIGN DETAIL SHEET (ENGLISH) (REV. 09-01-10)

ORIGINAL SCALE IN INCHES FOR REDUCED PLANS 0 1 2 3

UNIT: 3578
PROJECT NUMBER & PHASE: 05000200201
CONTRACT NO.: 05-0G0404

DISREGARD PRINTS BEARING EARLIER REVISION DATES

REVISION DATES 12-22-14 6-2-15 1-22-16 8-12-16

SHEET 7 OF 16

FILE => 49-0164r-f-ab03.dgn

USERNAME => s115755 DATE PLOTTED => 22-JUL-2016 TIME PLOTTED => 17:56

DIST	COUNTY	ROUTE	POST MILES TOTAL PROJECT	SHEET No.	TOTAL SHEETS
05	SLO,Mon	101	63.2/R69.3, R0.0/R1.9	771	858

REGISTERED CIVIL ENGINEER 4-22-16 DATE

5-2-16
PLANS APPROVAL DATE

REGISTERED PROFESSIONAL ENGINEER Jose M Aquino III No. 58386 Exp. 12-31-16 CIVIL STATE OF CALIFORNIA

The State of California or its officers or agents shall not be responsible for the accuracy or completeness of scanned copies of this plan sheet.

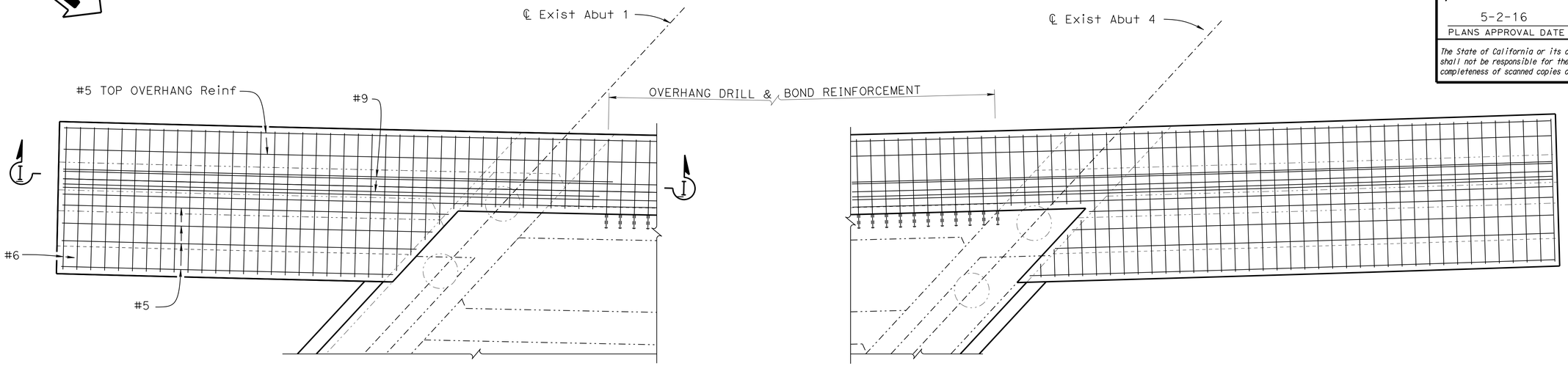

NOTE:
All reinforcement not shown

PART PLAN
½" = 1'-0"

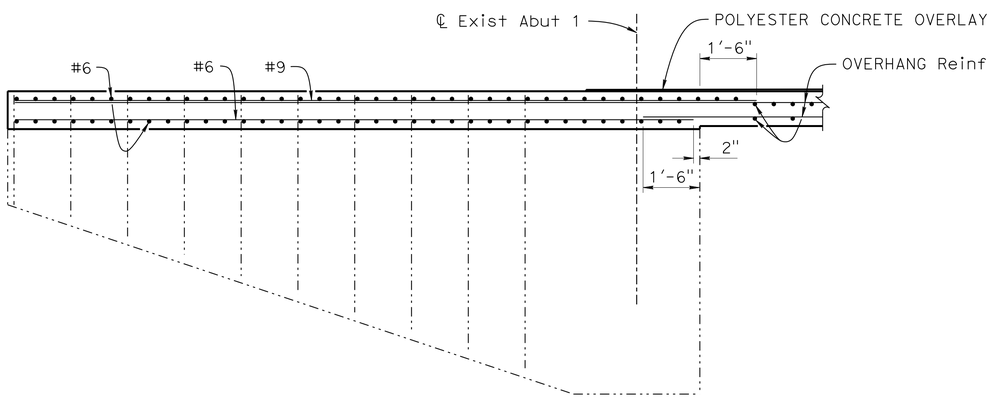

SECTION I-I
½" = 1'-0"

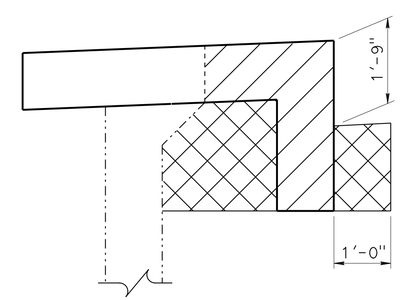

Structure Excavation

Structure Excavation

LIMITS OF EXCAVATION & BACKFILL
NO SCALE

NOTE:
THE CONTRACTOR MUST VERIFY ALL CONTROLLING FIELD DIMENSIONS BEFORE ORDERING OR FABRICATING ANY MATERIAL.

	BY	CHECKED
DESIGN	Quang H Nguyen	Eric G Burgeson
DETAILS	Nancy C Gwynn	Eric G Burgeson
QUANTITIES	Eric G Burgeson	Jay Reid

STATE OF CALIFORNIA
DEPARTMENT OF TRANSPORTATION

DIVISION OF ENGINEERING SERVICES
STRUCTURE DESIGN
DESIGN BRANCH 3

BRIDGE NO. 49-0164R
POST MILE 67.2

NORTH SAN MIGUEL UC (WIDEN)
ABUTMENT DETAILS No. 4

STRUCTURES DESIGN DETAIL SHEET (ENGLISH) (REV. 09-01-10)

ORIGINAL SCALE IN INCHES FOR REDUCED PLANS 0 1 2 3

UNIT: 3578
PROJECT NUMBER & PHASE: 05000200201
CONTRACT NO.: 05-0G0404

DISREGARD PRINTS BEARING EARLIER REVISION DATES

REVISION DATES 8-11-15

SHEET 8 OF 16

FILE => 49-0164r-f-ab04.dgn

USERNAME => s115755 DATE PLOTTED => 22-JUL-2016 TIME PLOTTED => 17:56

DIST	COUNTY	ROUTE	POST MILES TOTAL PROJECT	SHEET No.	TOTAL SHEETS
05	SLO,Mon	101	63.2/R69.3, R0.0/R1.9	772	858

REGISTERED CIVIL ENGINEER 4-22-16 DATE

5-2-16
PLANS APPROVAL DATE

REGISTERED PROFESSIONAL ENGINEER
Jose M Aquino III
No. 58386
Exp. 12-31-16
CIVIL
STATE OF CALIFORNIA

The State of California or its officers or agents shall not be responsible for the accuracy or completeness of scanned copies of this plan sheet.

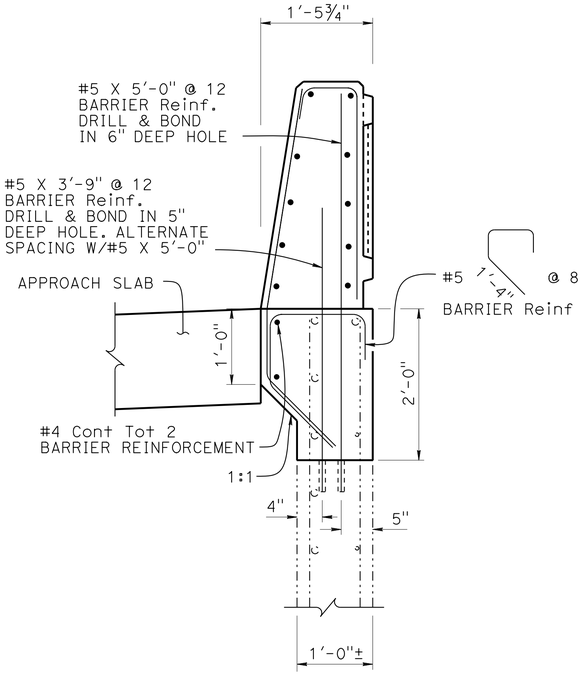

SECTION E-E
1" = 1'-0"

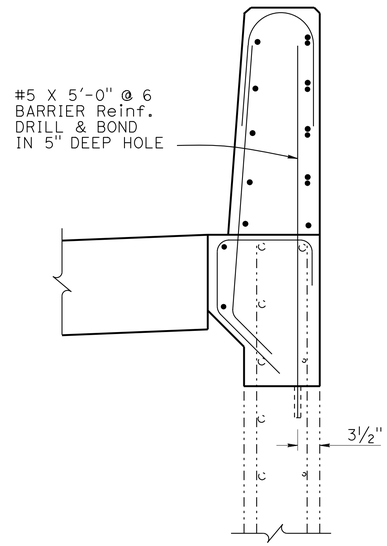

NOTE:
For details not shown see "SECTION E-E"

TRANSITION SECTION F-F
1" = 1'-0"

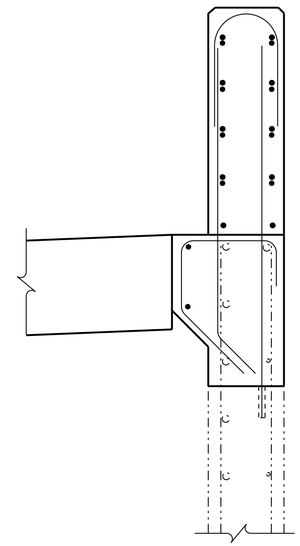

NOTE:
For details not shown see "SECTION F-F"

SECTION G-G
1" = 1'-0"

NOTE:
For barrier details not shown, see and "TYPICAL SECTION" sheet

RSP B11-56

NOTE:
THE CONTRACTOR MUST VERIFY ALL CONTROLLING FIELD DIMENSIONS BEFORE ORDERING OR FABRICATING ANY MATERIAL.

	BY	CHECKED
DESIGN	Quang H Nguyen	Eric G Burgeson
DETAILS	Nancy C Gwynn	Eric G Burgeson
QUANTITIES	Eric G Burgeson	Jay Reid

STATE OF CALIFORNIA
DEPARTMENT OF TRANSPORTATION

DIVISION OF ENGINEERING SERVICES
STRUCTURE DESIGN
DESIGN BRANCH 3

BRIDGE NO. 49-0164R
POST MILE 67.2

NORTH SAN MIGUEL UC (WIDEN)
ABUTMENT DETAILS No. 5

STRUCTURES DESIGN DETAIL SHEET (ENGLISH) (REV. 09-01-10)

ORIGINAL SCALE IN INCHES FOR REDUCED PLANS 0 1 2 3

UNIT: 3578
PROJECT NUMBER & PHASE: 05000200201
CONTRACT NO.: 05-0G0404

DISREGARD PRINTS BEARING EARLIER REVISION DATES

REVISION DATES 12-18-14 5-8-15 8-11-15

SHEET 9 OF 16

FILE => 49-0164r-f-ab05.dgn

USERNAME => s115755 DATE PLOTTED => 22-JUL-2016 TIME PLOTTED => 17:57

DIST	COUNTY	ROUTE	POST MILES TOTAL PROJECT	SHEET No.	TOTAL SHEETS
05	SLO,Mon	101	63.2/R69.3, R0.0/R1.9	773	858

REGISTERED CIVIL ENGINEER 4-22-16 DATE

5-2-16
PLANS APPROVAL DATE

REGISTERED PROFESSIONAL ENGINEER Jose M Aquino III No. 58386 Exp. 12-31-16 CIVIL STATE OF CALIFORNIA

The State of California or its officers or agents shall not be responsible for the accuracy or completeness of scanned copies of this plan sheet.

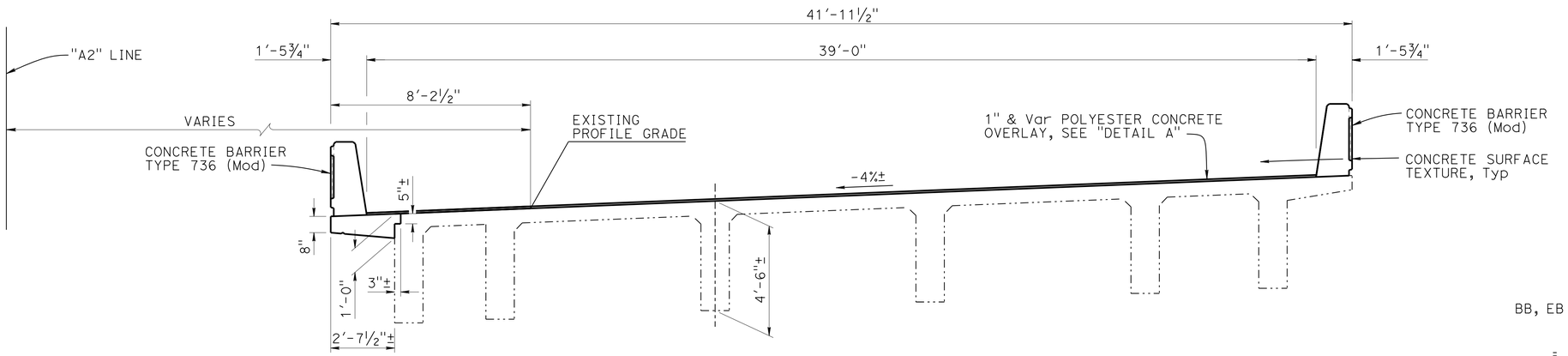

TYPICAL SECTION

⅜" = 1'-0"

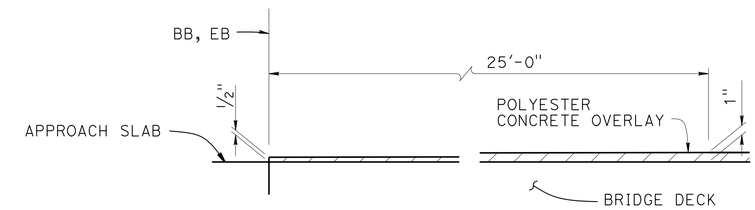

DETAIL A

1½" = 1'-0"

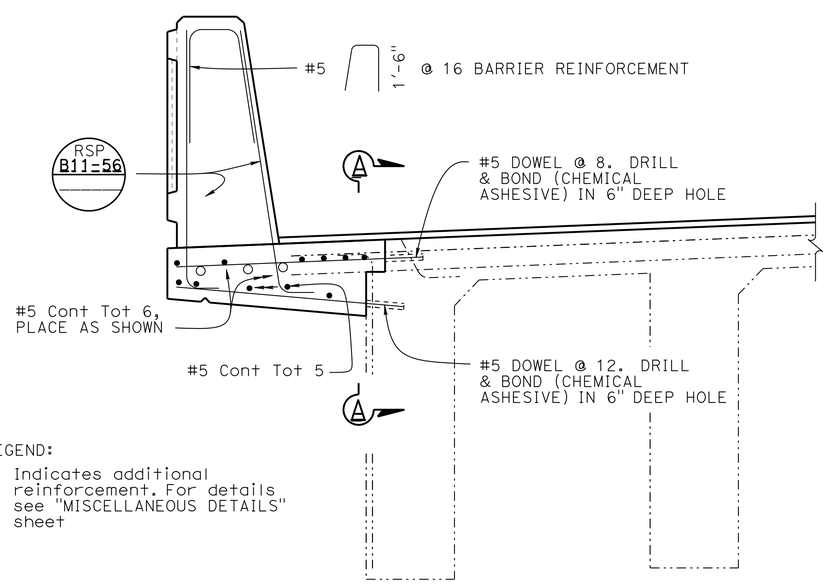

LEGEND:

o Indicates additional reinforcement. For details see "MISCELLANEOUS DETAILS" sheet

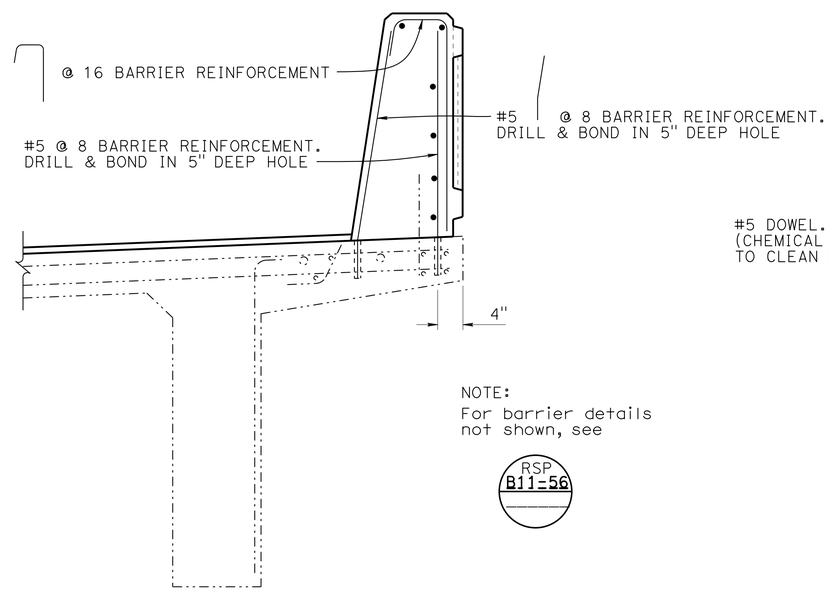

NOTE:
For barrier details not shown, see RSP B11-56

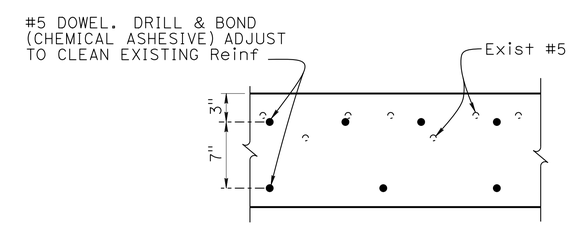

SECTION A-A

1½" = 1'-0"

NOTE:
THE CONTRACTOR MUST VERIFY ALL CONTROLLING FIELD DIMENSIONS BEFORE ORDERING OR FABRICATING ANY MATERIAL.

PART TYPICAL SECTION

1" = 1'-0"

NOTE:
For concrete surface texture, see "BARRIER SURFACE TEXTURE" sheet

	BY	CHECKED
DESIGN	Quang H Nguyen	Eric G Burgeson
DETAILS	Nancy C Gwynn	Eric G Burgeson
QUANTITIES	Eric G Burgeson	Jay Reid

STATE OF CALIFORNIA
DEPARTMENT OF TRANSPORTATION

DIVISION OF ENGINEERING SERVICES
STRUCTURE DESIGN
DESIGN BRANCH 3

BRIDGE NO. 49-0164R
POST MILE 67.2

NORTH SAN MIGUEL UC (WIDEN)
TYPICAL SECTION

STRUCTURES DESIGN DETAIL SHEET (ENGLISH) (REV. 09-01-10)

ORIGINAL SCALE IN INCHES FOR REDUCED PLANS 0 1 2 3

UNIT: 3578
PROJECT NUMBER & PHASE: 05000200201
CONTRACT NO.: 05-0G0404

DISREGARD PRINTS BEARING EARLIER REVISION DATES

REVISION DATES 9-9-15 9-9-15 1-22-16

SHEET 10 OF 16

FILE => 49-0164r-k-typ.dgn

USERNAME => s115755 DATE PLOTTED => 22-JUL-2016 TIME PLOTTED => 17:57

DIST	COUNTY	ROUTE	POST MILES TOTAL PROJECT	SHEET No.	TOTAL SHEETS
05	SLO,Mon	101	63.2/R69.3, R0.0/R1.9	774	858

REGISTERED CIVIL ENGINEER 4-22-16 DATE

5-2-16
PLANS APPROVAL DATE

REGISTERED PROFESSIONAL ENGINEER
Jose M Aquino III
No. 58386
Exp. 12-31-16
CIVIL
STATE OF CALIFORNIA

The State of California or its officers or agents shall not be responsible for the accuracy or completeness of scanned copies of this plan sheet.

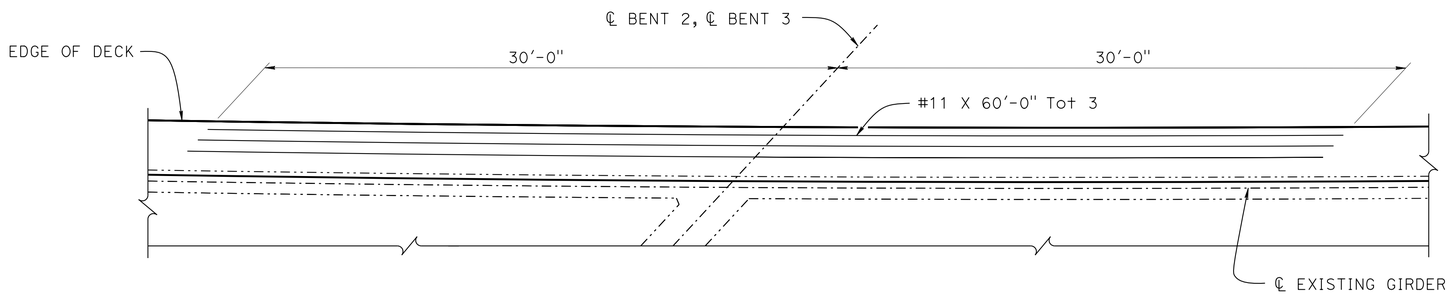

PART PLAN

1/4" = 1'-0"

NOTE:
THE CONTRACTOR MUST VERIFY ALL CONTROLLING FIELD DIMENSIONS BEFORE ORDERING OR FABRICATING ANY MATERIAL.

	BY	CHECKED
DESIGN	Quang H Nguyen	Eric G Burgeson
DETAILS	Nancy C Gwynn	Eric G Burgeson
QUANTITIES	Eric G Burgeson	Jay Reid

STATE OF CALIFORNIA
DEPARTMENT OF TRANSPORTATION

DIVISION OF ENGINEERING SERVICES
STRUCTURE DESIGN
DESIGN BRANCH 3

BRIDGE NO. 49-0164R
POST MILE 67.2

NORTH SAN MIGUEL UC (WIDEN)
MISCELLANEOUS DETAILS

STRUCTURES DESIGN DETAIL SHEET (ENGLISH) (REV. 09-01-10)

ORIGINAL SCALE IN INCHES FOR REDUCED PLANS 0 1 2 3

UNIT: 3578
PROJECT NUMBER & PHASE: 05000200201
CONTRACT NO.: 05-0G0404

DISREGARD PRINTS BEARING EARLIER REVISION DATES

REVISION DATES

SHEET 11 OF 16

FILE => 49-0164r-m-misc.dgn

USERNAME => s115755 DATE PLOTTED => 22-JUL-2016 TIME PLOTTED => 17:57

DIST	COUNTY	ROUTE	POST MILES TOTAL PROJECT	SHEET No.	TOTAL SHEETS
05	SLO,Mon	101	63.2/R69.3, R0.0/R1.9	775	858

REGISTERED CIVIL ENGINEER 4-22-16 DATE

5-2-16
PLANS APPROVAL DATE

REGISTERED PROFESSIONAL ENGINEER Jose M Aquino III No. 58386 Exp. 12-31-16 CIVIL STATE OF CALIFORNIA

The State of California or its officers or agents shall not be responsible for the accuracy or completeness of scanned copies of this plan sheet.

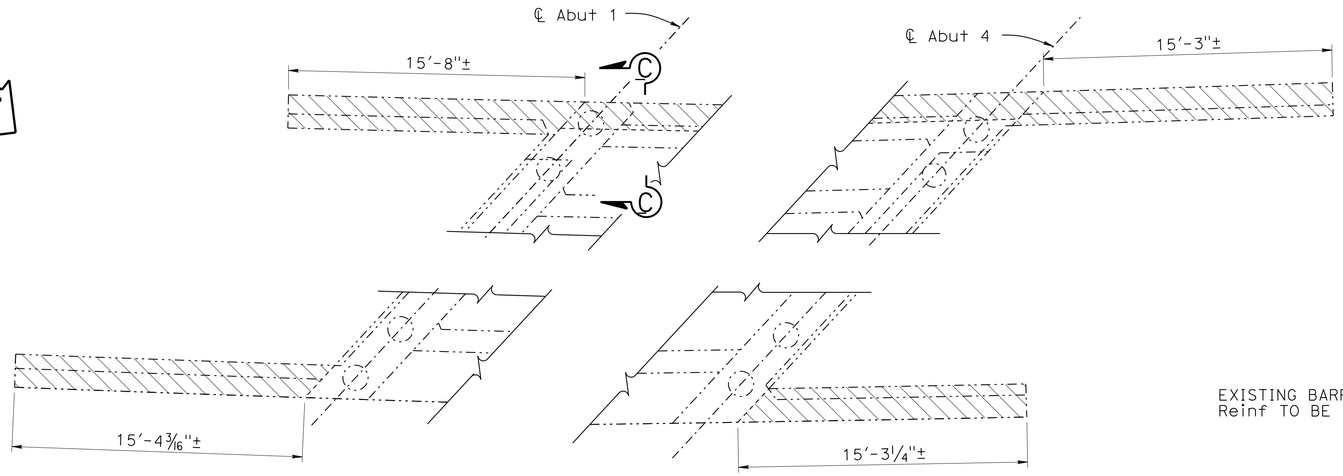

PART PLAN
1/4" = 1'-0"

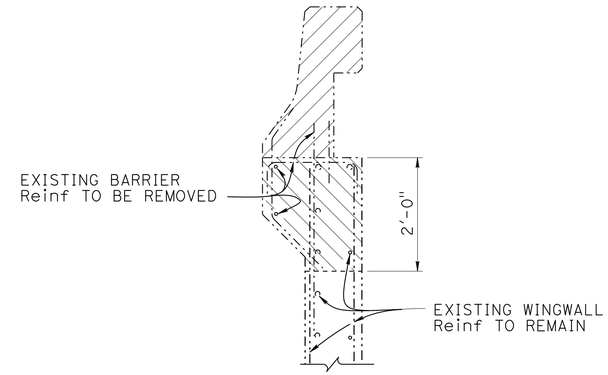

SECTION A-A
3/4" = 1'-0"

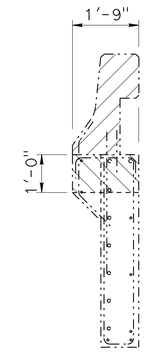

NOTE:
For details not shown, see "SECTION A-A"

SECTION B-B
1/2" = 1'-0"

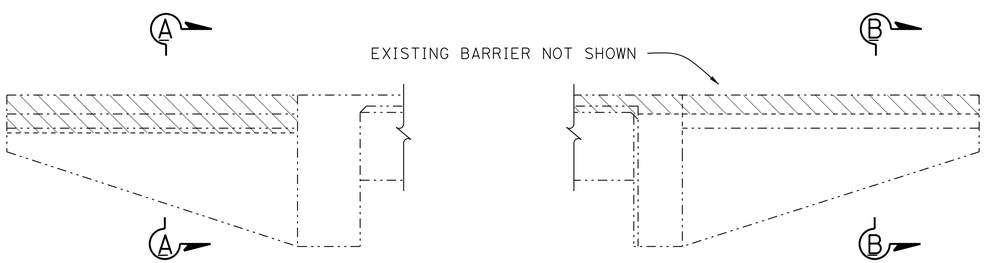

RIGHT SIDE LEFT SIDE

ABUTMENT 1 WINGWALL ELEVATION
1/4" = 1'-0"

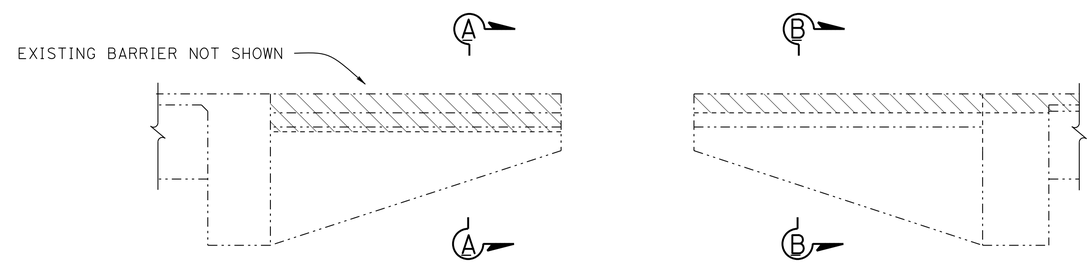

RIGHT SIDE LEFT SIDE

ABUTMENT 4 WINGWALL ELEVATION
1/4" = 1'-0"

NOTE:
THE CONTRACTOR MUST VERIFY ALL CONTROLLING FIELD DIMENSIONS BEFORE ORDERING OR FABRICATING ANY MATERIAL.

NOTE:
For "SECTION C-C", see "CONCRETE REMOVAL Det No. 2" sheet

LEGEND:
- Indicates existing bridge
- Indicates existing bridge removal
- Indicates existing barrier removal

	BY	CHECKED
DESIGN	Quang H Nguyen	Eric G Burgeson
DETAILS	Nancy C Gwynn	Eric G Burgeson
QUANTITIES	Eric G Burgeson	Jay Reid

STATE OF CALIFORNIA
DEPARTMENT OF TRANSPORTATION

DIVISION OF ENGINEERING SERVICES
STRUCTURE DESIGN
DESIGN BRANCH 3

BRIDGE NO. 49-0164R
POST MILE 67.2

NORTH SAN MIGUEL UC (WIDEN)
CONCRETE REMOVAL Det No. 1

STRUCTURES DESIGN DETAIL SHEET (ENGLISH) (REV. 09-01-10)

ORIGINAL SCALE IN INCHES FOR REDUCED PLANS 0 1 2 3

UNIT: 3578
PROJECT NUMBER & PHASE: 05000200201
CONTRACT NO.: 05-0G0404

DISREGARD PRINTS BEARING EARLIER REVISION DATES

REVISION DATES 12-06-13 3-24-15 7-21-15

SHEET 12 OF 16

FILE => 49-0164r-r-conrem01.dgn

USERNAME => s115755 DATE PLOTTED => 22-JUL-2016 TIME PLOTTED => 17:57

DIST	COUNTY	ROUTE	POST MILES TOTAL PROJECT	SHEET No.	TOTAL SHEETS
05	SLO,Mon	101	63.2/R69.3, R0.0/R1.9	776	858

REGISTERED CIVIL ENGINEER 4-22-16 DATE

5-2-16
PLANS APPROVAL DATE

REGISTERED PROFESSIONAL ENGINEER Jose M Aquino III No. 58386 Exp. 12-31-16 CIVIL STATE OF CALIFORNIA

The State of California or its officers or agents shall not be responsible for the accuracy or completeness of scanned copies of this plan sheet.

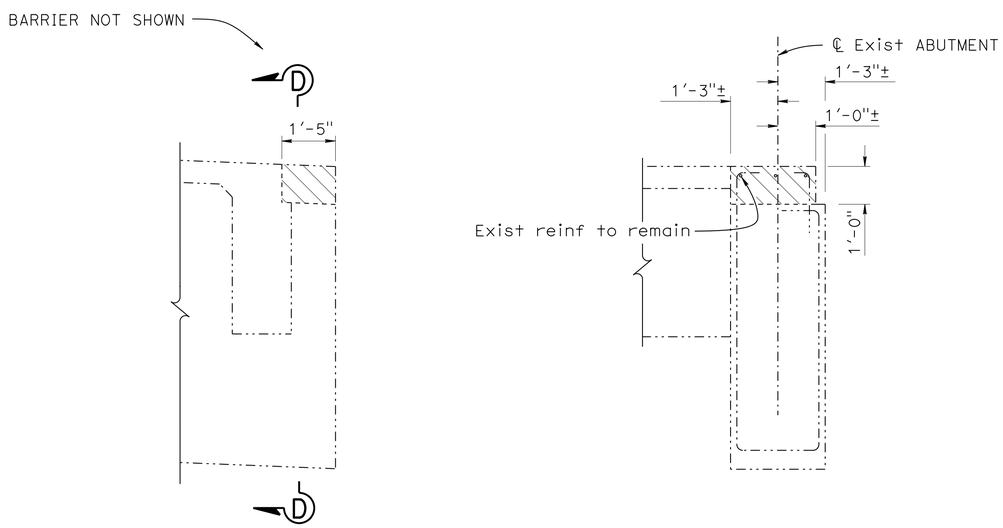

SECTION C-C
½" = 1'-0"

SECTION D-D
½" = 1'-0"

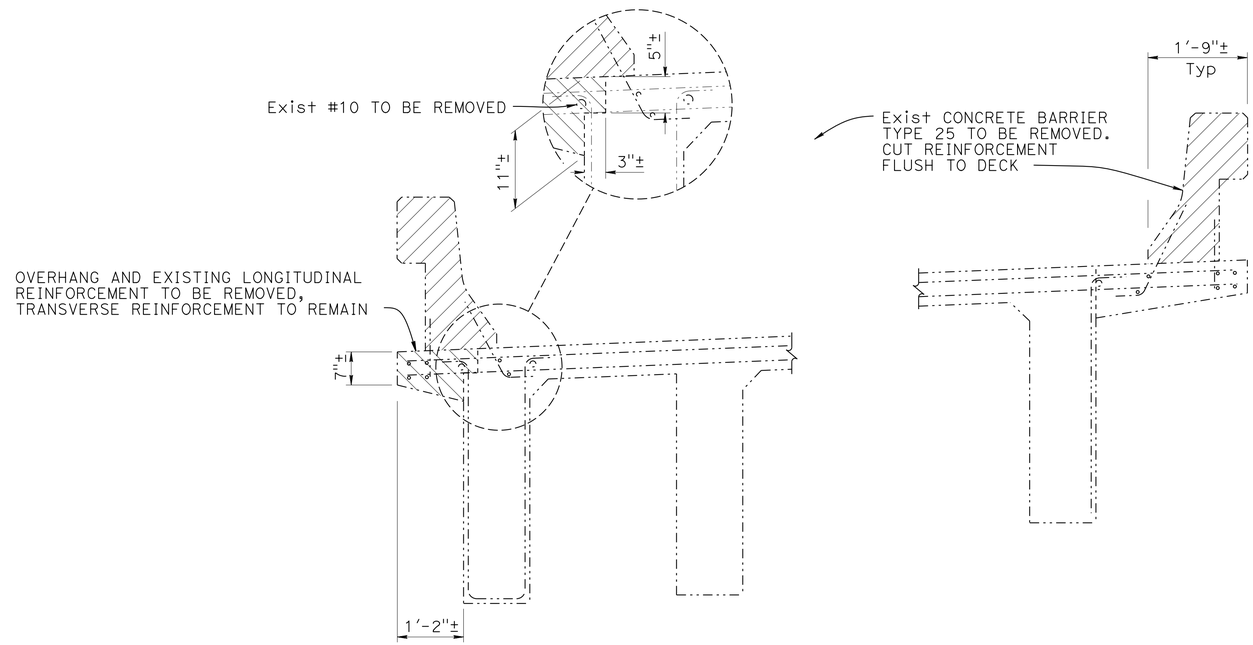

PART TYPICAL SECTION
½" = 1'-0"

LEGEND:
-·-·- Indicates existing bridge
Indicates existing bridge removal
Indicates existing barrier removal

NOTE:
THE CONTRACTOR MUST VERIFY ALL CONTROLLING FIELD DIMENSIONS BEFORE ORDERING OR FABRICATING ANY MATERIAL.

	BY	CHECKED
DESIGN	Quang H Nguyen	Eric G Burgeson
DETAILS	Nancy C Gwynn	Eric G Burgeson
QUANTITIES	Eric G Burgeson	Jay Reid

STATE OF CALIFORNIA
DEPARTMENT OF TRANSPORTATION

DIVISION OF ENGINEERING SERVICES
STRUCTURE DESIGN
DESIGN BRANCH 3

BRIDGE NO. 49-0164R
POST MILE 67.2

NORTH SAN MIGUEL UC (WIDEN)
CONCRETE REMOVAL Det No. 2

STRUCTURES DESIGN DETAIL SHEET (ENGLISH) (REV. 09-01-10)

ORIGINAL SCALE IN INCHES FOR REDUCED PLANS 0 1 2 3

UNIT: 3578
PROJECT NUMBER & PHASE: 05000200201
CONTRACT NO.: 05-0G0404

DISREGARD PRINTS BEARING EARLIER REVISION DATES

REVISION DATES 12-06-14 6-5-15

SHEET 13 OF 16

FILE => 49-0164r-r-conrem02.dgn

USERNAME => s115755 DATE PLOTTED => 22-JUL-2016 TIME PLOTTED => 17:57

DIST	COUNTY	ROUTE	POST MILES TOTAL PROJECT	SHEET No.	TOTAL SHEETS
05	SLO,Mon	101	63.2/R69.3, R0.0/R1.9	777	858

REGISTERED CIVIL ENGINEER 4-22-16 DATE

5-2-16
PLANS APPROVAL DATE

REGISTERED PROFESSIONAL ENGINEER
Jose M Aquino III
No. 58386
Exp. 12-31-16
CIVIL
STATE OF CALIFORNIA

The State of California or its officers or agents shall not be responsible for the accuracy or completeness of scanned copies of this plan sheet.

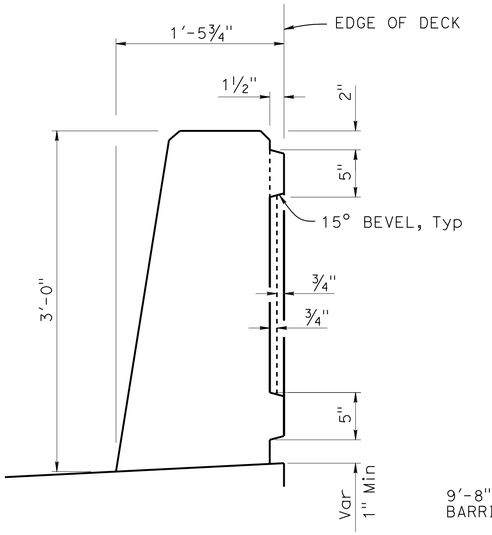

SECTION A-A
1½" = 1'-0"

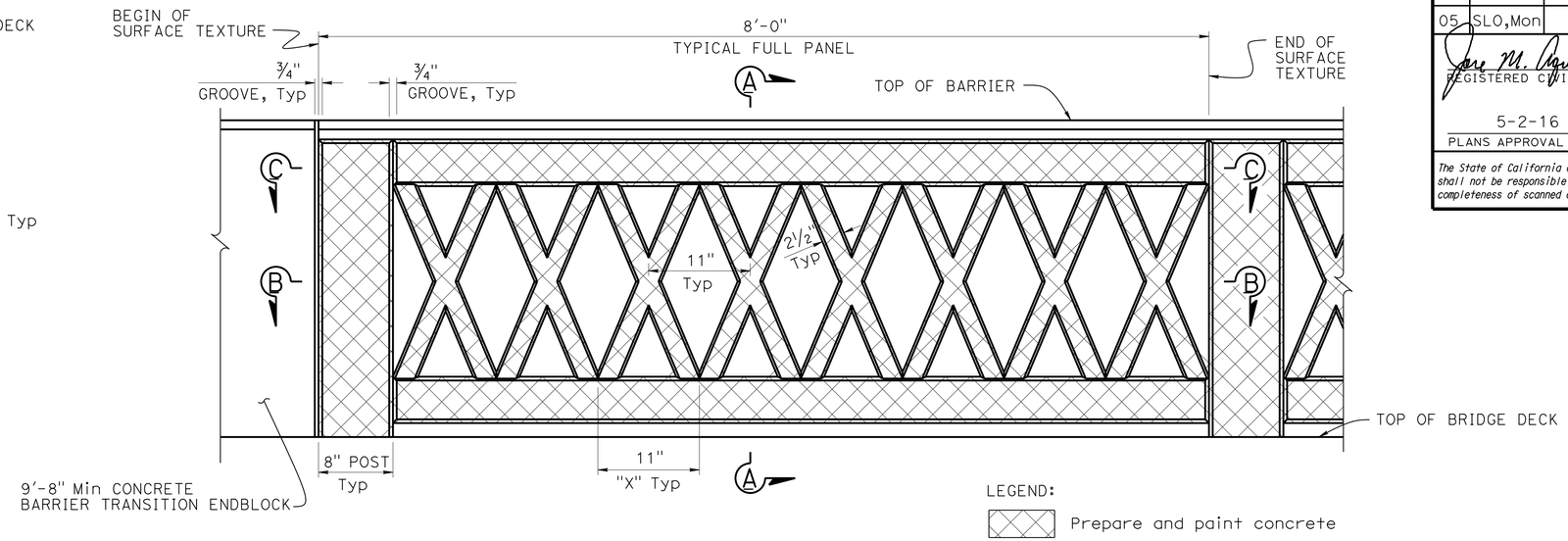

BARRIER MOTIF
1½" = 1'-0"

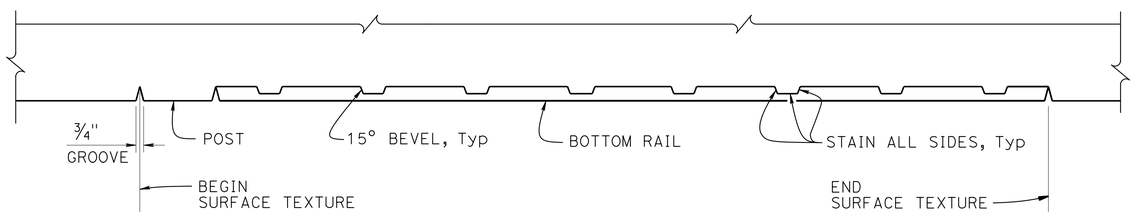

SECTION B-B
1½" = 1'-0"

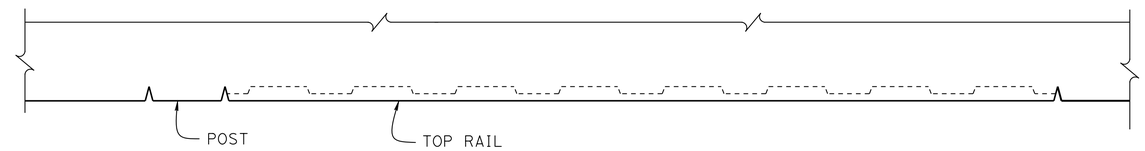

SECTION C-C
1½" = 1'-0"

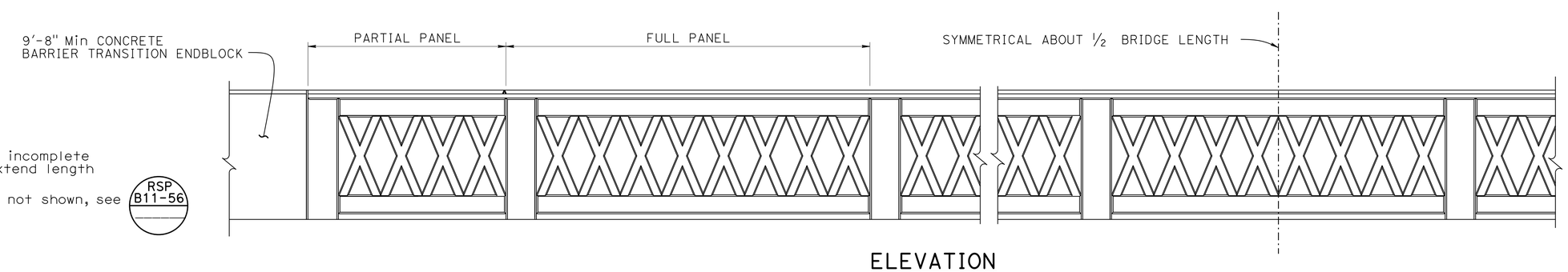

ELEVATION
¾" = 1'-0"

NOTES:

1. If partial panel ends with an incomplete "X", shorten last panel and extend length of concrete barrier endblock
2. For Concrete Barrier details not shown, see RSP B11-56

DESIGN	BY David Fowkes	CHECKED Kantima Green	
DETAILS	BY Nancy C Gwynn	CHECKED Kantima Green	
QUANTITIES	BY Eric G Burgeson	CHECKED Jay Reid	

STATE OF CALIFORNIA
DEPARTMENT OF TRANSPORTATION

DIVISION OF ENGINEERING SERVICES
STRUCTURE DESIGN
DESIGN BRANCH 3

BRIDGE NO. 49-0164R
POST MILE 67.2

NORTH SAN MIGUEL UC
BARRIER SURFACE TEXTURE

STRUCTURES DESIGN DETAIL SHEET (ENGLISH) (REV. 09-01-10)

ORIGINAL SCALE IN INCHES FOR REDUCED PLANS 0 1 2 3

UNIT: 3578
PROJECT NUMBER & PHASE: 05000200201
CONTRACT NO.: 05-0G0404

DISREGARD PRINTS BEARING EARLIER REVISION DATES

REVISION DATES 4-12-16 11-12-16 3-28-16

SHEET 14 OF 16

FILE => 49-0164r-s-barsur.dgn

USERNAME => s115755 DATE PLOTTED => 22-JUL-2016 TIME PLOTTED => 17:57

DIST	COUNTY	ROUTE	POST MILES TOTAL PROJECT	SHEET No.	TOTAL SHEETS
05	SLO,Mon	101	63.2/R69.3, R0.0/R1.9	778	858

REGISTERED CIVIL ENGINEER 4-22-16 DATE

5-2-16
PLANS APPROVAL DATE

REGISTERED PROFESSIONAL ENGINEER
Jose M Aquino III
No. 58386
Exp. 12-31-16
CIVIL
STATE OF CALIFORNIA

The State of California or its officers or agents shall not be responsible for the accuracy or completeness of scanned copies of this plan sheet.

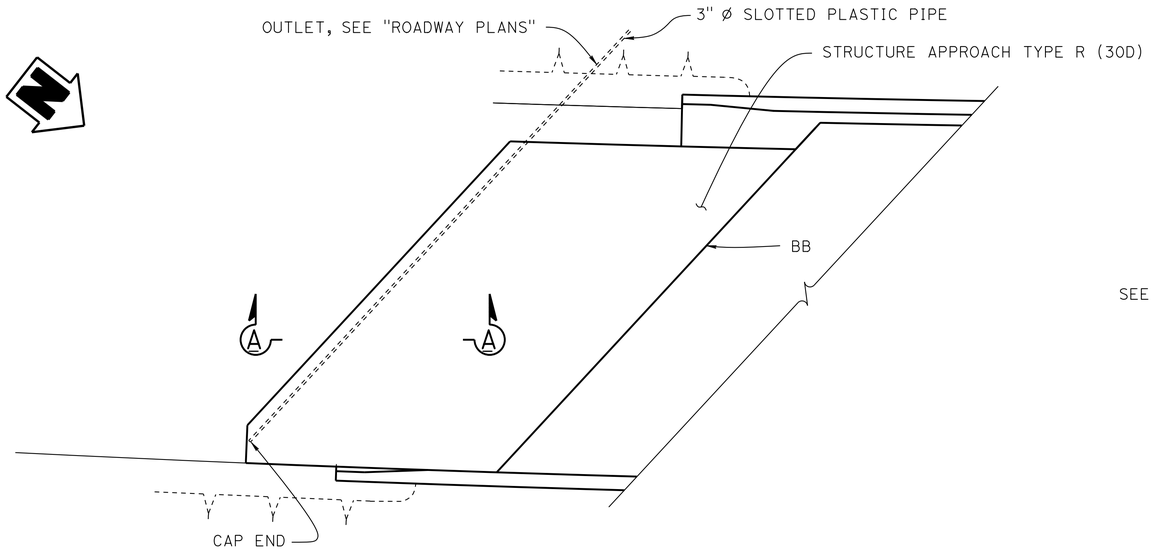

PLAN
1/8" = 1'-0"

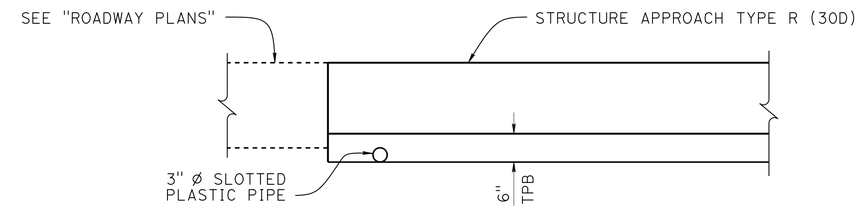

SECTION A-A
3/4" = 1'-0"

NOTES:
1. Structure approach at BB shown, structure approach at EB similar
2. For structure approach slab details not shown, see "STRUCTURE APPROACH TYPE R (30D)" sheet

NOTE:
THE CONTRACTOR MUST VERIFY ALL CONTROLLING FIELD DIMENSIONS BEFORE ORDERING OR FABRICATING ANY MATERIAL.

	BY	CHECKED
DESIGN	Quang H Nguyen	Eric G Burgeson
DETAILS	Nancy C Gwynn	Eric G Burgeson
QUANTITIES	Eric G Burgeson	Jay Reid

STATE OF CALIFORNIA
DEPARTMENT OF TRANSPORTATION

DIVISION OF ENGINEERING SERVICES
STRUCTURE DESIGN
DESIGN BRANCH 3

BRIDGE NO. 49-0164R
POST MILE 67.2

NORTH SAN MIGUEL UC (WIDEN)
STRUCTURE APPROACH DRAINAGE DETAILS

STRUCTURES DESIGN DETAIL SHEET (ENGLISH) (REV. 09-01-10)

ORIGINAL SCALE IN INCHES FOR REDUCED PLANS 0 1 2 3

UNIT: 3578
PROJECT NUMBER & PHASE: 05000200201
CONTRACT NO.: 05-0G0404

DISREGARD PRINTS BEARING EARLIER REVISION DATES

REVISION DATES: 11-23-15 9-10-15

SHEET 15 OF 16

FILE => 49-0164r-x-sapprdr.dgn

USERNAME => s115755 DATE PLOTTED => 22-JUL-2016 TIME PLOTTED => 17:57

DIST	COUNTY	ROUTE	POST MILES TOTAL PROJECT	SHEET No.	TOTAL SHEETS
05	SLO,Mon	101	63.2/R69.3, R0.0/R1.9	779	858

REGISTERED CIVIL ENGINEER 4-22-16 DATE

5-2-16
PLANS APPROVAL DATE

REGISTERED PROFESSIONAL ENGINEER Jose M Aquino III No. 58386 Exp. 12-31-16 CIVIL STATE OF CALIFORNIA

The State of California or its officers or agents shall not be responsible for the accuracy or completeness of electronic copies of this plan sheet.

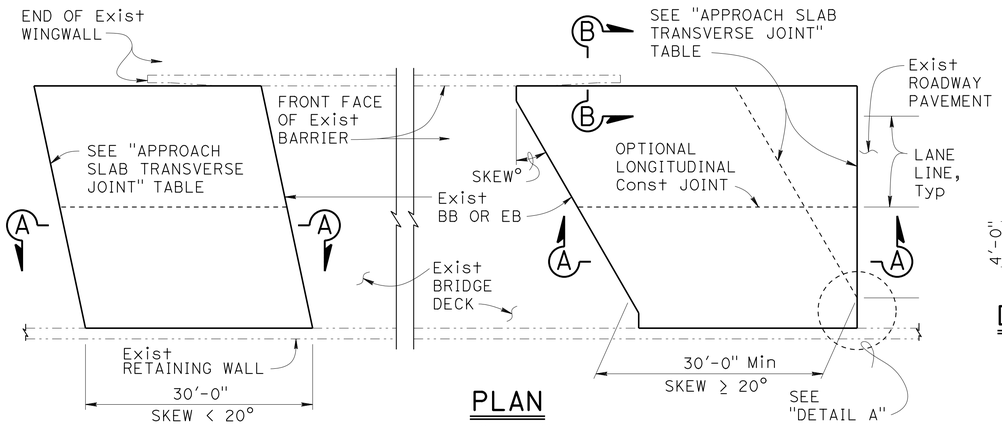

PLAN
1" = 10'

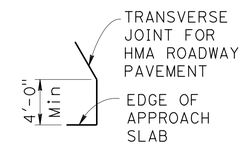

DETAIL A
No Scale

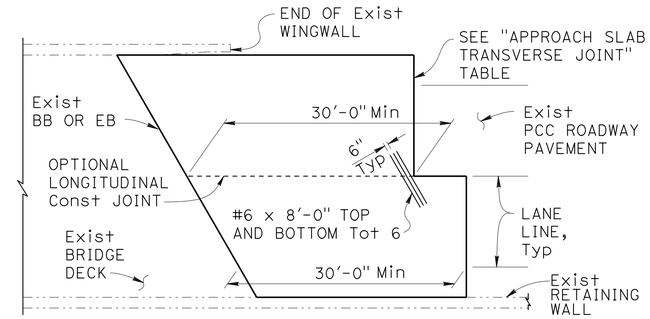

END STAGGER DETAIL
1" = 10'

APPROACH SLAB TRANSVERSE JOINT		
APPROACH SKEW	WITH HMA ROADWAY PAVEMENT	WITH PCC ROADWAY PAVEMENT
< 20°	PARALLEL TO BB OR EB	PARALLEL TO BB OR EB
20° - 45°	PARALLEL TO BB OR EB USE "DETAIL A"	STAGGER AT LANE LINES 24' TO 36' APART, SEE "END STAGGER DETAIL"
> 45°	PARALLEL TO BB OR EB USE "DETAIL A"	STAGGER AT EACH LANE LINE, SEE "END STAGGER DETAIL"

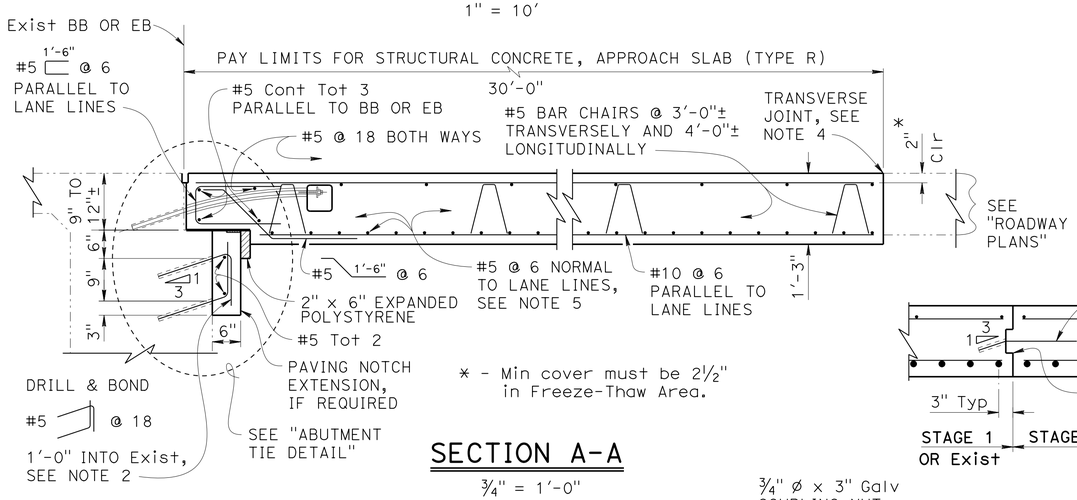

* - Min cover must be 2½" in Freeze-Thaw Area.

SECTION A-A
¾" = 1'-0"

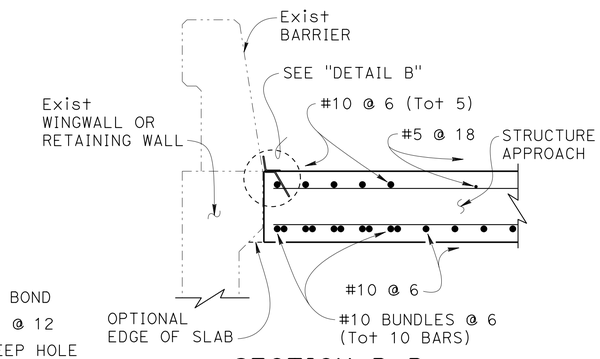

SECTION B-B
¾" = 1'-0"

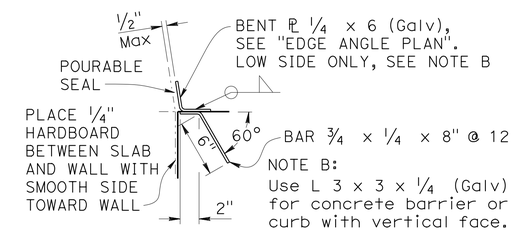

DETAIL B
1½" = 1'-0"

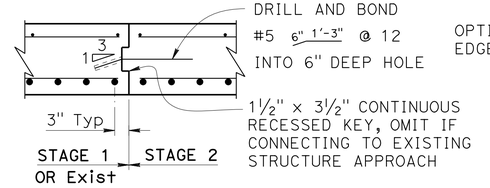

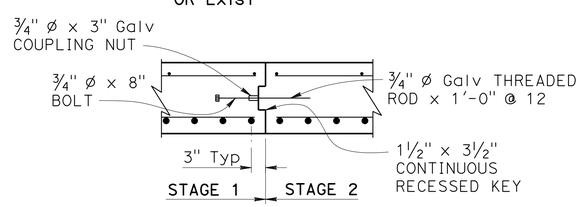

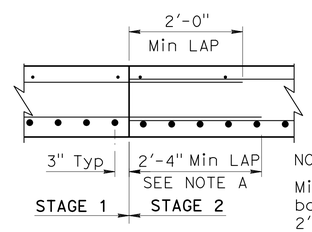

NOTE A:
Min lap splice for bottom Reinf must be 2'-9" in Freeze-Thaw Area.

LONGITUDINAL CONSTRUCTION JOINT ALTERNATIVES
¾" = 1'-0"

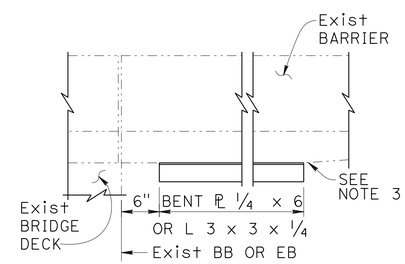

EDGE ANGLE PLAN
1" = 1'-0"

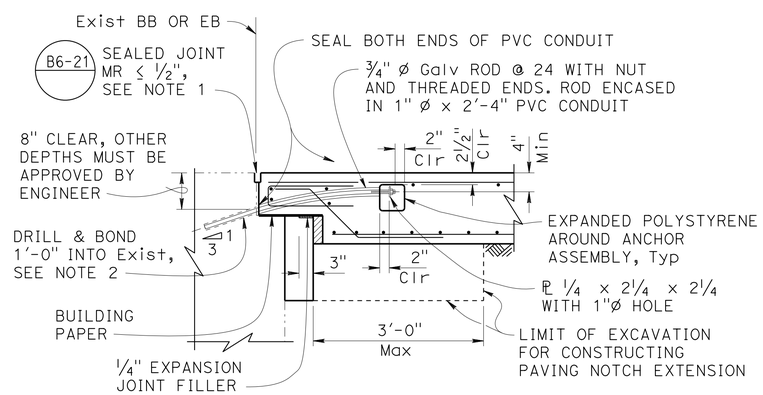

NOTE: For details not shown, see "SECTION A-A".

NOTE:
The contractor must verify all controlling field dimensions before ordering or fabricating any material.

ABUTMENT TIE DETAIL
¾" = 1'-0"

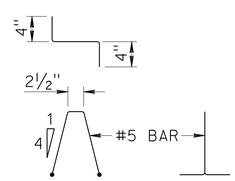

BAR CHAIR DETAIL
1" = 1'-0"

DESIGN NOTES

DESIGN: AASHTO LRFD Bridge Design Specifications, 2012 Edition with Caltrans Amendments, preface dated January 2014

LIMIT STATES: Service I, Strength I & II, Extreme II and Fatigue I (γ_{FAT} = 1.0)

DEAD LOAD: Includes 35 psf for future wearing surface

LIVE LOAD: HL93 and permit design load
Equivalent strip width method: W_1 = 12 ft
Slab span: L_1 = 24.5 ft

REINFORCED CONCRETE:
f_y = 60 ksi
f'_c = 3.6 ksi
n = 8

NOTES:

1. For details not shown, see other plan sheets. Adjust reinforcement to clear sawcut for sealed joint.
2. Space reinforcement to avoid existing prestress anchorages and other abutment reinforcement.
3. End the plate or edge angle at beginning of barrier transition, end of wingwall, or end of structure approach as applicable.
4. Transverse Joint must be a minimum of 5'-0" from an existing or constructed weakened plane joint in approach PCC roadway pavement. Refer to Standard Plans P10 and P14.
5. At the Contractor's option, approach slab transverse reinforcement may be placed parallel to BB or EB. Spacing of transverse reinforcement is measured along ℄ roadway.

—·—·— Indicates Existing Structure

STANDARD DRAWING
FILE NO. xs3-150
APPROVAL DATE January 2015

The components of this Bridge Standard Drawing have been prepared under the responsible charge of the Technical Owner, a registered civil engineer in the State of California. Refer to: http//www.dot.ca.gov/hq/esc/techpubs/manual/bridgemanuals/bridge-standard-detail-sheet/index.html. The selection and proper application of the component design and any modifications shown have been prepared under the responsible charge of the registered civil engineer for the project.

STATE OF CALIFORNIA
DEPARTMENT OF TRANSPORTATION

DIVISION OF ENGINEERING SERVICES 3

BRIDGE NO. 49-0164R
POST MILE 67.2

NORTH SAN MIGUEL UC (WIDEN)
STRUCTURE APPROACH TYPE R (30D)

DS OSD 2147A (ENGLISH STANDARD DRAWING "XS" BORDER REV. (10-01-14)

ORIGINAL SCALE IN INCHES FOR REDUCED PLANS 0 1 2 3

UNIT: 3578
PROJECT NUMBER & PHASE: 05000200201
CONTRACT NO.: 05-0G0404

DISREGARD PRINTS BEARING EARLIER REVISION DATES

REVISION DATES 5-7-15

SHEET 16 OF 16

FILE => 49-0164r-x-sapprr30.dgn

USERNAME => s115755 DATE PLOTTED => 22-JUL-2016 TIME PLOTTED => 17:57

DIST	COUNTY	ROUTE	POST MILES TOTAL PROJECT	SHEET No.	TOTAL SHEETS
05	SLO,Mon	101	63.2/R69.3, R0.0/R1.9	780	858

REGISTERED CIVIL ENGINEER 4-22-16 DATE

5-2-16
PLANS APPROVAL DATE

REGISTERED PROFESSIONAL ENGINEER Jose M Aquino III No. 58386 Exp. 12-31-16 CIVIL STATE OF CALIFORNIA

The State of California or its officers or agents shall not be responsible for the accuracy or completeness of scanned copies of this plan sheet.

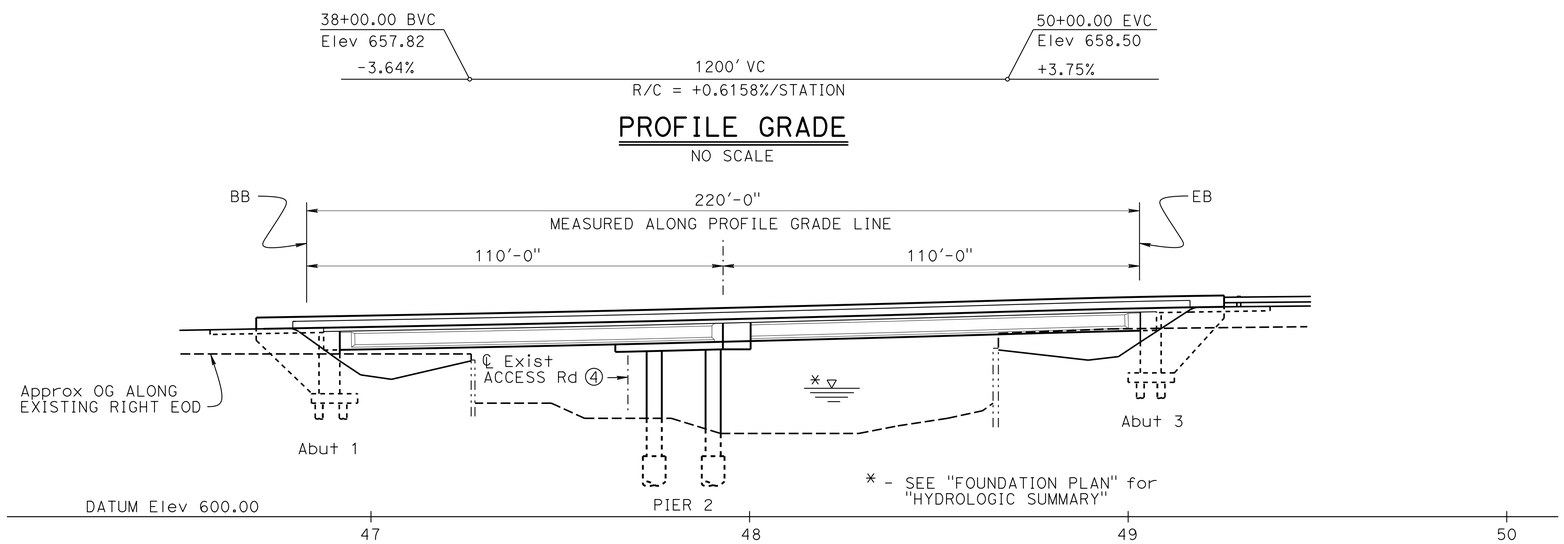

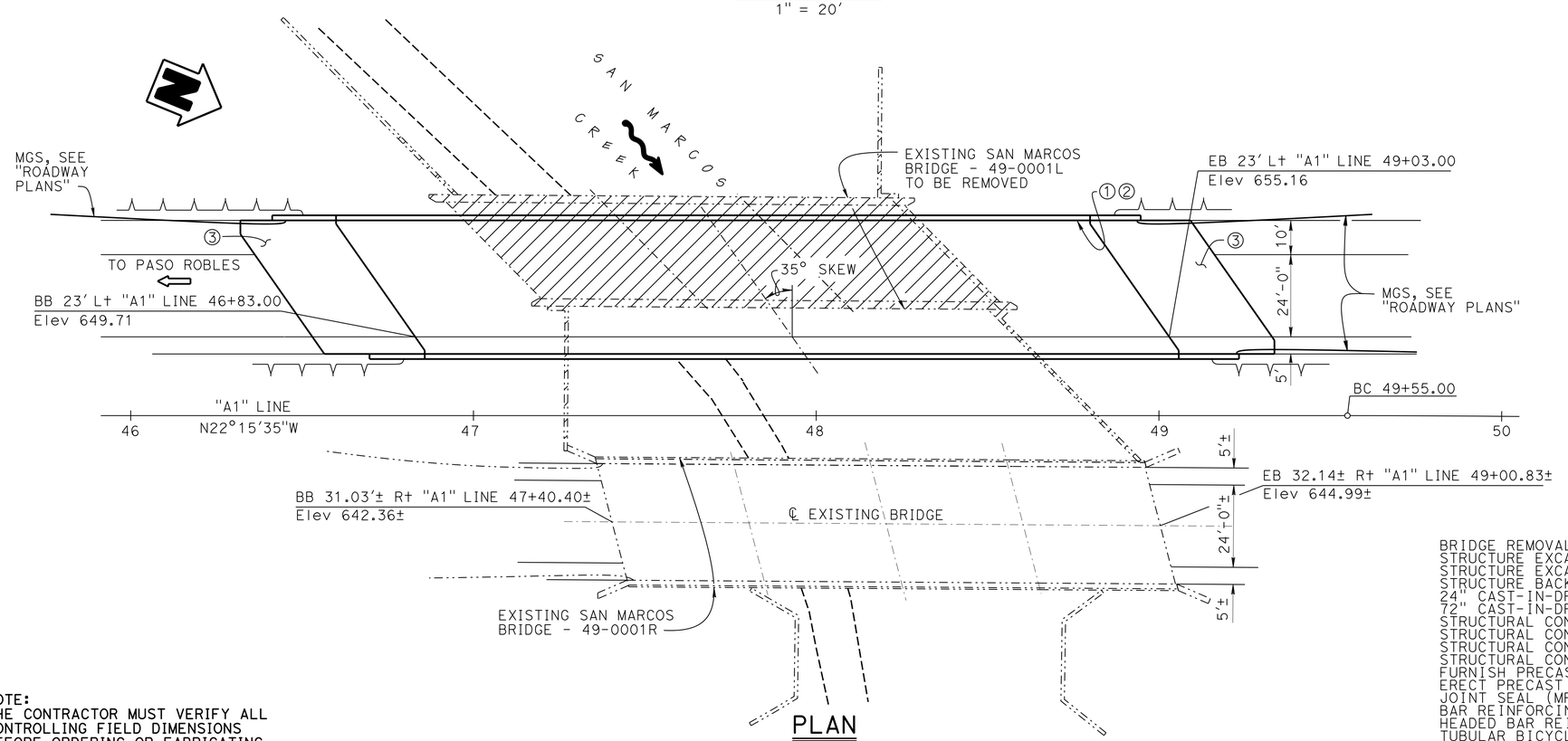

LEGEND:

- Indicates existing bridge
- Indicates new construction
- Indicates existing bridge removal

NOTES:

① Paint "Br. No. 49-0263L"
② Paint "SAN MARCOS Cr Br"
③ Structure Approach Type N (30S)
④ Access Rd (min 12' vertical clearance) to remain open during construction

For "TYPICAL SECTION" see "GENERAL PLAN NO. 2" sheet

For "GENERAL NOTES" and "INDEX TO PLANS", see "INDEX TO PLANS" sheet

QUANTITIES

	LUMP SUM	
BRIDGE REMOVAL, LOCATION A		
STRUCTURE EXCAVATION (BRIDGE)	755	CY
STRUCTURE EXCAVATION (TYPE D)	13	CY
STRUCTURE BACKFILL (BRIDGE)	268	CY
24" CAST-IN-DRILLED-HOLE CONCRETE PILING	1,136	LF
72" CAST-IN-DRILLED-HOLE CONCRETE PILING	128	LF
STRUCTURAL CONCRETE, BRIDGE FOOTING	140	CY
STRUCTURAL CONCRETE, BRIDGE	369	CY
STRUCTURAL CONCRETE, BRIDGE (POLYMER FIBER)	255	CY
STRUCTURAL CONCRETE, APPROACH SLAB (TYPE N)	110	CY
FURNISH PRECAST PRESTRESSED CONCRETE BULB-TEE GIRDER (100'-110')	10	EA
ERECT PRECAST PRESTRESSED CONCRETE GIRDER	10	EA
JOINT SEAL (MR 1")	96	LF
BAR REINFORCING STEEL (BRIDGE)	221,100	LB
HEADED BAR REINFORCEMENT	40	EA
TUBULAR BICYCLE RAILING	257	LF
CONCRETE BARRIER (TYPE 736)	514	LF

NOTE:
THE CONTRACTOR MUST VERIFY ALL CONTROLLING FIELD DIMENSIONS BEFORE ORDERING OR FABRICATING ANY MATERIAL.

Joseph E Downing
DESIGN ENGINEER

	BY	CHECKED
DESIGN	Lewis L Shen	Sharon Yen
DETAILS	Nancy C Gwynn	Sharon Yen
QUANTITIES	Seung Pyo Hong	Mufeed Khalaf

LOAD & RESISTANCE FACTOR DESIGN — LIVE LOADING: HL93 W/"LOW-BOY"; PERMIT DESIGN VEHICLE

	BY	CHECKED
LAYOUT	Lewis L Shen	Sharon Yen
SPECIFICATIONS	Jim Corrado	PLANS AND SPECS COMPARED Jim Corrado

ORIGINAL SCALE IN INCHES FOR REDUCED PLANS 0 1 2 3

STATE OF CALIFORNIA
DEPARTMENT OF TRANSPORTATION

DIVISION OF ENGINEERING SERVICES
STRUCTURE DESIGN
DESIGN BRANCH 3

BRIDGE NO. 49-0263L
POST MILE 63.58

SAN MARCOS Cr Br (REPLACE LEFT)
GENERAL PLAN NO. 1

UNIT: 3578
PROJECT NUMBER & PHASE: 05000200201
CONTRACT NO.: 05-0G0404

DISREGARD PRINTS BEARING EARLIER REVISION DATES
REVISION DATES 1-7-14 6-12-15 10-9-15 12-14-15 07/21/2016 07/22/2016
SHEET 1 OF 29

DIST	COUNTY	ROUTE	POST MILES TOTAL PROJECT	SHEET No.	TOTAL SHEETS
05	SLO,Mon	101	63.2/R69.3, R0.0/R1.9	781	858

REGISTERED CIVIL ENGINEER 4-22-16 DATE

5-2-16
PLANS APPROVAL DATE

REGISTERED PROFESSIONAL ENGINEER Jose M Aquino III No. 58386 Exp. 12-31-16 CIVIL STATE OF CALIFORNIA

The State of California or its officers or agents shall not be responsible for the accuracy or completeness of scanned copies of this plan sheet.

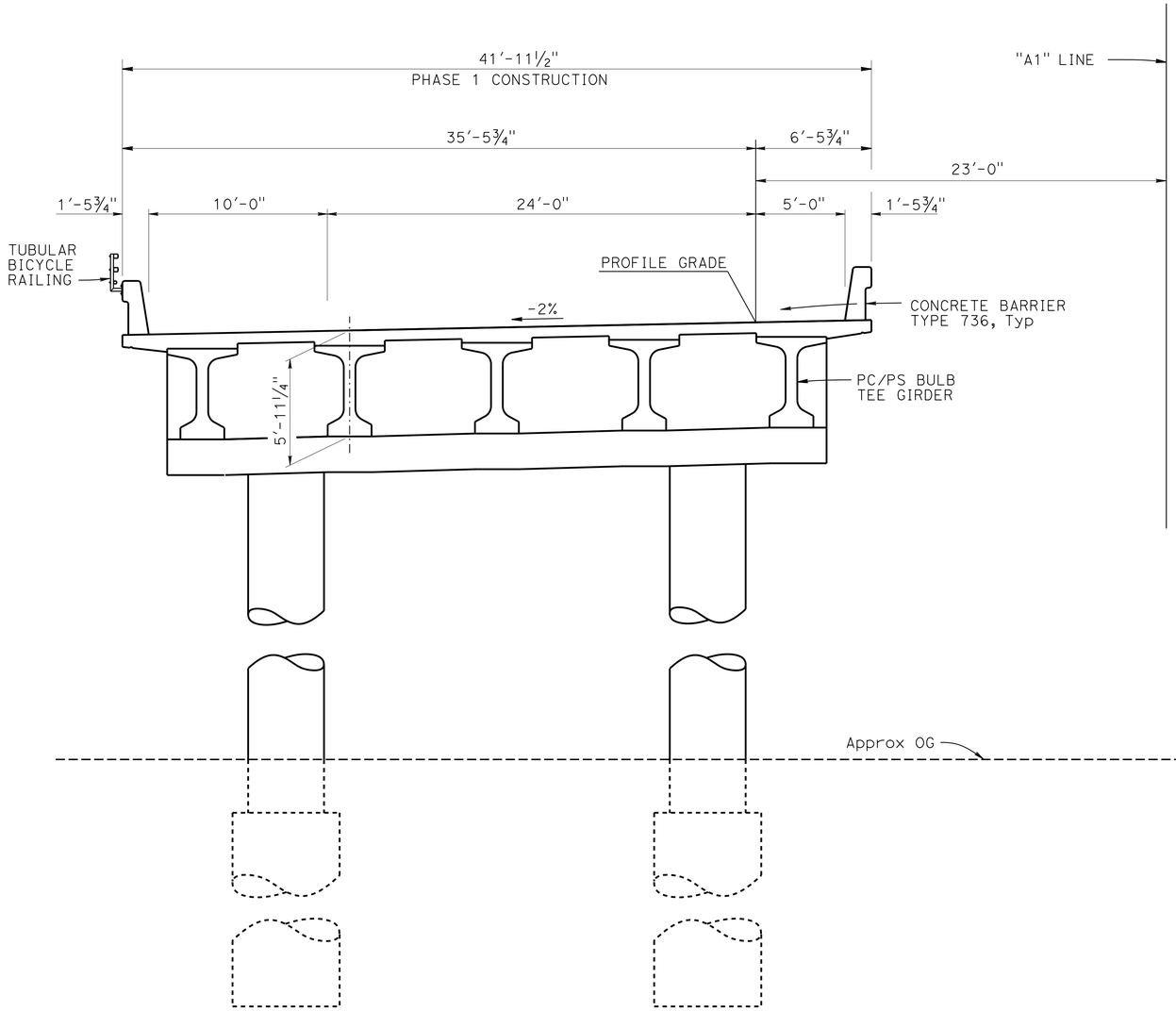

STAGE 2 (PHASE 1) TYPICAL SECTION

¼" = 1'-0"

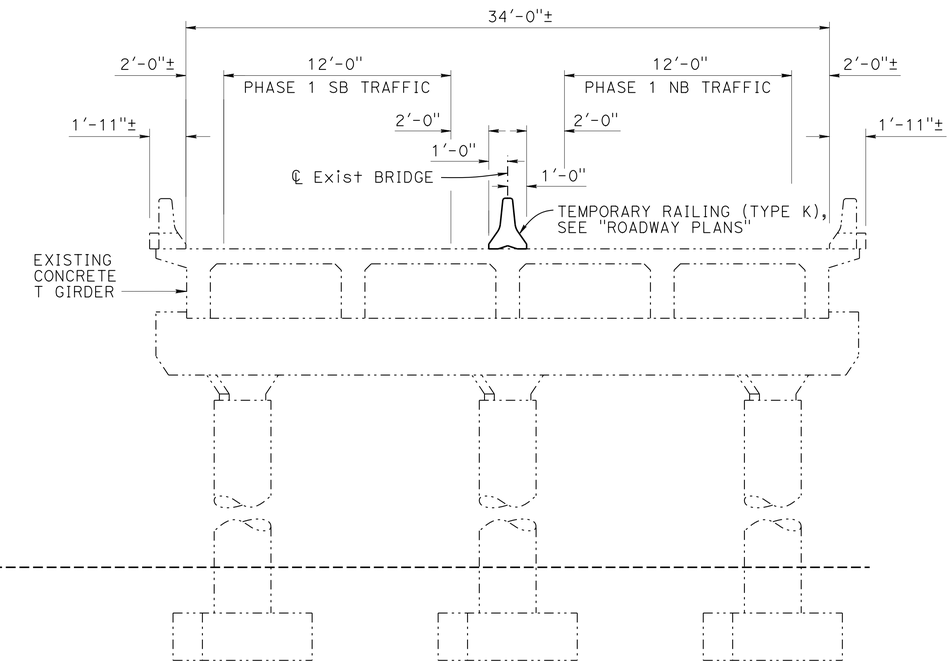

LEGEND:

-·-·-·- Indicates existing bridge

——— Indicates new construction

NOTE:
Other Stages not shown, see "ROADWAY PLANS"

NOTE:
THE CONTRACTOR MUST VERIFY ALL CONTROLLING FIELD DIMENSIONS BEFORE ORDERING OR FABRICATING ANY MATERIAL.

Joseph E Downing, DESIGN ENGINEER	DESIGN	BY Lewis L Shen	CHECKED Sharon Yen	LOAD & RESISTANCE FACTOR DESIGN	LIVE LOADING: HL93 W/"LOW-BOY": PERMIT DESIGN VEHICLE
	DETAILS	BY Nancy C Gwynn	CHECKED Sharon Yen	LAYOUT: BY Lewis L Shen	CHECKED Sharon Yen
	QUANTITIES	BY Seung Pyo Hong	CHECKED Mufeed Khalaf	SPECIFICATIONS: BY Jim Corrado	PLANS AND SPECS COMPARED Jim Corrado

ORIGINAL SCALE IN INCHES FOR REDUCED PLANS 0 1 2 3

STATE OF CALIFORNIA
DEPARTMENT OF TRANSPORTATION

DIVISION OF ENGINEERING SERVICES
STRUCTURE DESIGN
DESIGN BRANCH 3

BRIDGE NO. 49-0263L
POST MILE 63.58

SAN MARCOS Cr Br (REPLACE LEFT)
GENERAL PLAN NO. 2

UNIT: 3578
PROJECT NUMBER & PHASE: 05000200201
CONTRACT NO.: 05-0G0404

DISREGARD PRINTS BEARING EARLIER REVISION DATES

REVISION DATES: 1-7-14 9-17-15 10-1-15 10/0/0 10/0/0

SHEET 2 OF 29

STRUCTURES DESIGN GENERAL PLAN SHEET (ENGLISH) (REV.09-01-10)

FILE => 49-0263l-a-gp02.dgn

USERNAME => s115755 DATE PLOTTED => 22-JUL-2016 TIME PLOTTED => 17:57

DIST	COUNTY	ROUTE	POST MILES TOTAL PROJECT	SHEET No.	TOTAL SHEETS
05	SLO,Mon	101	63.2/R69.3, R0.0/R1.9	782	858

REGISTERED CIVIL ENGINEER 4-22-16 DATE

5-2-16
PLANS APPROVAL DATE

REGISTERED PROFESSIONAL ENGINEER Jose M Aquino III No. 58386 Exp. 12-31-16 CIVIL STATE OF CALIFORNIA

The State of California or its officers or agents shall not be responsible for the accuracy or completeness of scanned copies of this plan sheet.

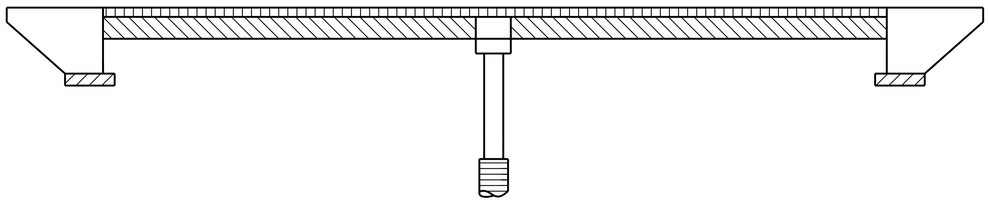

Structural Concrete, Bridge

Structural Concrete, Bridge (Polymer fiber) (4.0 ksi @ 28 days)

Prestressed Bulb-Tee Girder, see "PC/PS BULT-TEE GIRDER (HARPED STRANDS)" sheet

Structural Concrete, Bridge Footing

Cast-In-Drilled Hole Concrete Piling (4.0 ksi @ 28 days)

CONCRETE STRENGTH AND TYPE LIMITS

GENERAL NOTES
LOAD AND RESISTANCE FACTOR DESIGN

DESIGN:

AASHTO LRFD Bridge Design Specifications, 6th edition with the California Amendments

SEISMIC DESIGN:

Caltrans Seismic Design Criteria (SDC), Version 1.7 dated November 2013

DEAD LOAD:

Includes 12 psf for future polyester overlay

LIVE LOADING:

HL93 and permit design load.

SEISMIC LOADING:

See "SITE SPECIFIC ARS CURVE"

REINFORCED CONCRETE:

fy = 60 ksi
f'c = 3.6 ksi
See prestressing notes, "PC/PS BULB-TEE GIRDER" sheets

INDEX TO PLANS

SHEET No.	TITLE
1	GENERAL PLAN No. 1
2	GENERAL PLAN No. 2
3	INDEX TO PLANS No. 1
4	INDEX TO PLANS No. 2
5	DECK CONTOURS
6	FOUNDATION PLAN
7	ABUTMENT DETAILS No. 1
8	ABUTMENT DETAILS No. 2
9	ABUTMENT DETAILS No. 3
10	ABUTMENT DETAILS No. 4
11	PIER DETAILS No. 1
12	PIER DETAILS No. 2
13	PIER DETAILS No. 3
14	TYPICAL SECTION
15	GIRDER LAYOUT
16	GIRDER REINFORCEMENT
17	CONCRETE REMOVAL Det No. 1
18	CONCRETE REMOVAL Det No. 2
19	CONCRETE REMOVAL Det No. 3
20	PC/PS BULB-TEE GIRDER (HARPED STRANDS)
21	PC/PS BULB-TEE GIRDER (MISCELLANEOUS DETAILS)
22	72" Ø CIDH PILE DETAILS
23	CONCRETE BARRIER TYPE 80, 732 & 736 TUBULAR BICYCLE RAILING DETAILS
24	STRUCTURE APPROACH TYPE N (30S)
25	STRUCTURE APPROACH DRAINAGE DETAILS
26	LOG OF TEST BORINGS 1 OF 4
27	LOG OF TEST BORINGS 2 OF 4
28	LOG OF TEST BORINGS 3 OF 4
29	LOG OF TEST BORINGS 4 OF 4

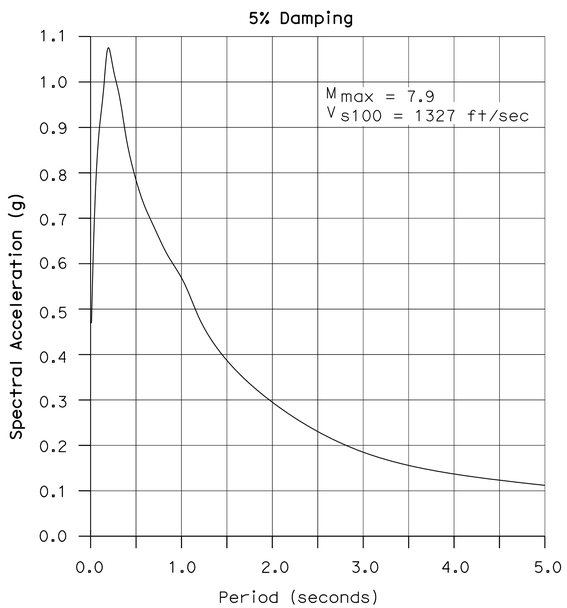

SITE SPECIFIC ARS CURVE

NO SCALE

PILE DATA TABLE

LOCATION	PILE TYPE	NOMINAL AXIAL RESISTANCE (kips)		CUT-OFF ELEVATION	DESIGN TIP ELEVATION	SPECIFIED TIP ELEVATION
		COMPRESSION	TENSION			
Abutment 1	24" Ø CIDH	400	N/A	-	588.00 (a) 612.00 (c)	588.00
Pier 2	72" Ø CIDH	3900	N/A	616.00	552.00 (a), (d) 610.00 (b) 556.00 (c)	552.00
Abutment 3	24" Ø CIDH	400	N/A	-	607.00 (a) 618.00 (c)	607.00

NOTES:

1. Design tip elevations are controlled by: (a) Compression (Strength Limit), (b) Compression (Extreme Event), (c) Settlement, and (d) Lateral respectively
2. The specified tip elevation shall not be raised

STANDARD PLANS DATED 2010

	A10A	ABBREVIATIONS (SHEET 1 OF 2)
RSP	A10B	ABBREVIATIONS (SHEET 2 OF 2)
	A10C	LINES AND SYMBOLS (SHEET 1 OF 3)
	A10D	LINES AND SYMBOLS (SHEET 2 OF 3)
	A10E	LINES AND SYMBOLS (SHEET 3 OF 3)
RSP	A10F	LEGEND - SOIL (SHEET 1 OF 2)
RSP	A10G	LEGEND - SOIL (SHEET 2 OF 2)
	A10H	LEGEND - ROCK
	A62C	LIMITS OF PAYMENT FOR EXCAVATION AND BACKFILL BRIDGE
	BO-1	BRIDGE DETAILS
	BO-2	BRIDGE DETAILS
	BO-5	BRIDGE DETAILS
	BO-13	BRIDGE DETAILS
	B2-3	16" AND 24" CAST-IN-DRILLED-HOLE CONCRETE PILING
RSP	B6-21	JOINT SEALS (MAXIMUM MOVEMENT RATING = 2")
RSP	B11-56	CONCRETE BARRIER TYPE 736

STANDARD PLAN SHEET No.

DETAIL No.

	BY	CHECKED
DESIGN	Lewis L Shen	Sharon Yen
DETAILS	Nancy C Gwynn	Sharon Yen
QUANTITIES	Seung Pyo Hong	Mufeed Khalaf

STATE OF CALIFORNIA
DEPARTMENT OF TRANSPORTATION

DIVISION OF ENGINEERING SERVICES
STRUCTURE DESIGN
DESIGN BRANCH 3

BRIDGE NO. 49-0263L
POST MILE 63.58

SAN MARCOS Cr Br (REPLACE LEFT)
INDEX TO PLANS No. 1

STRUCTURES DESIGN DETAIL SHEET (ENGLISH) (REV. 09-01-10)

ORIGINAL SCALE IN INCHES FOR REDUCED PLANS 0 1 2 3

UNIT: 3578
PROJECT NUMBER & PHASE: 05000200201
CONTRACT NO.: 05-0G0404

DISREGARD PRINTS BEARING EARLIER REVISION DATES

REVISION DATES 4-30-15 9-30-15 12-30-15 1-20-16

SHEET 3 OF 29

FILE => 49-0263l-a-itp01.dgn

USERNAME => s115755 DATE PLOTTED => 22-JUL-2016 TIME PLOTTED => 17:57

DIST	COUNTY	ROUTE	POST MILES TOTAL PROJECT	SHEET No.	TOTAL SHEETS
05	SLO,Mon	101	63.2/R69.3, R0.0/R1.9	783	858

REGISTERED CIVIL ENGINEER 4-22-16 DATE

5-2-16
PLANS APPROVAL DATE

REGISTERED PROFESSIONAL ENGINEER Jose M Aquino III No. 58386 Exp. 12-31-16 CIVIL STATE OF CALIFORNIA

The State of California or its officers or agents shall not be responsible for the accuracy or completeness of scanned copies of this plan sheet.

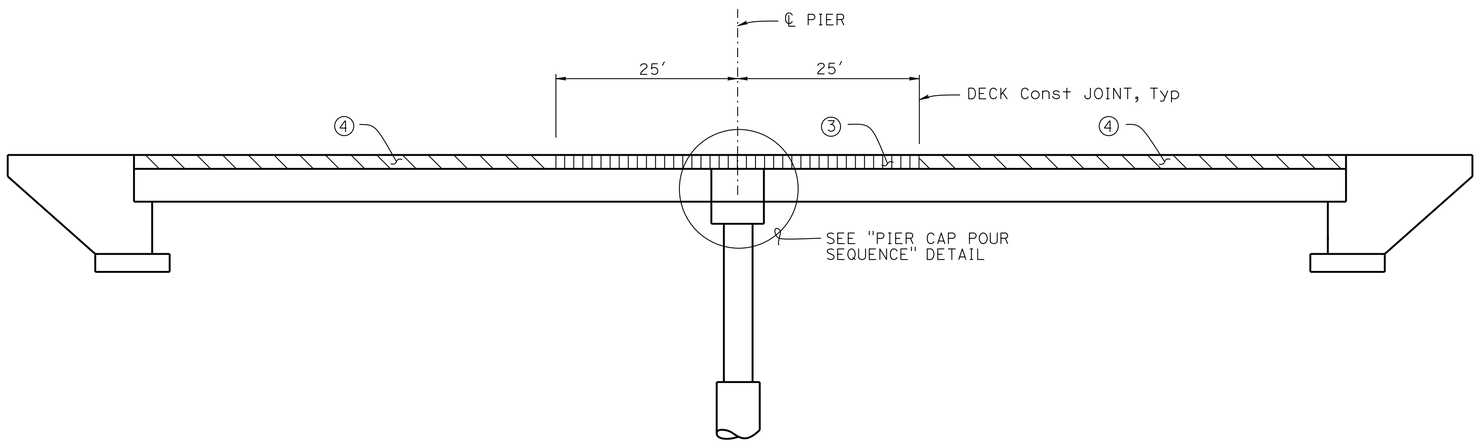

DECK POUR SEQUENCE

NO SCALE

BO-5 / 5-2

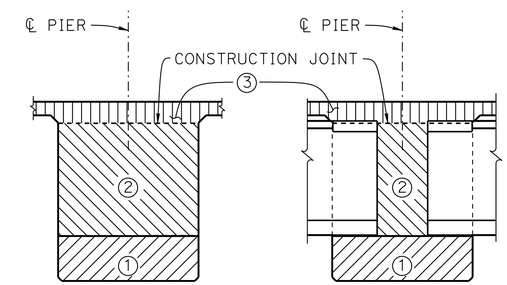

BETWEEN GIRDERS

AT GIRDER

PIER CAP POUR SEQUENCE

NO SCALE

① Pour drop cap. Allow a minimum of 7 day cure and f′c = 3250 psi prior to girder erection

② Pour pier cap diaphragm after girder erection. Allow a minimum of 7 day cure and f′c = 3250 psi prior to falsework removal and deck pour portion

③ Pour deck portion over piers within limits shown. Allow a minimum of 7 day water cure and f′c = 3250 psi prior to complete deck pour

④ Complete deck pour

CONCRETE POUR SEQUENCE

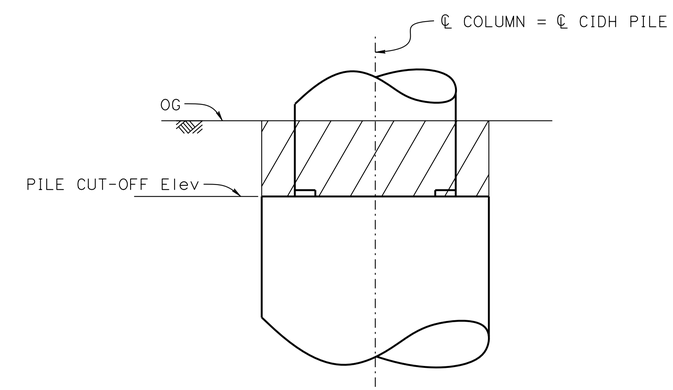

Structure Excavation (Type D)

LIMITS OF STRUCTURE EXCAVATON @ PIER 2

NO SCALE

DESIGN	BY Lewis L Shen	CHECKED Sharon Yen	
DETAILS	BY Nancy C Gwynn	CHECKED Sharon Yen	
QUANTITIES	BY Seung Pyo Hong	CHECKED Mufeed Khalaf	

STATE OF CALIFORNIA
DEPARTMENT OF TRANSPORTATION

DIVISION OF ENGINEERING SERVICES
STRUCTURE DESIGN
DESIGN BRANCH 3

BRIDGE NO. 49-0263L
POST MILE 63.58

SAN MARCOS Cr Br (REPLACE LEFT)
INDEX TO PLANS No. 2

STRUCTURES DESIGN DETAIL SHEET (ENGLISH) (REV. 09-01-10)

ORIGINAL SCALE IN INCHES FOR REDUCED PLANS 0 1 2 3

UNIT: 3578
PROJECT NUMBER & PHASE: 05000200201
CONTRACT NO.: 05-0G0404

DISREGARD PRINTS BEARING EARLIER REVISION DATES

REVISION DATES 9-9-15 9-9-15 1-26-16

SHEET 4 OF 29

FILE => 49-0263l-a-itp02.dgn

USERNAME => s115755 DATE PLOTTED => 22-JUL-2016 TIME PLOTTED => 17:57

DIST	COUNTY	ROUTE	POST MILES TOTAL PROJECT	SHEET No.	TOTAL SHEETS
05	SLO,Mon	101	63.2/R69.3, R0.0/R1.9	784	858

REGISTERED CIVIL ENGINEER 4-22-16 DATE

5-2-16
PLANS APPROVAL DATE

REGISTERED PROFESSIONAL ENGINEER
Jose M Aquino III
No. 58386
Exp. 12-31-16
CIVIL
STATE OF CALIFORNIA

The State of California or its officers or agents shall not be responsible for the accuracy or completeness of scanned copies of this plan sheet.

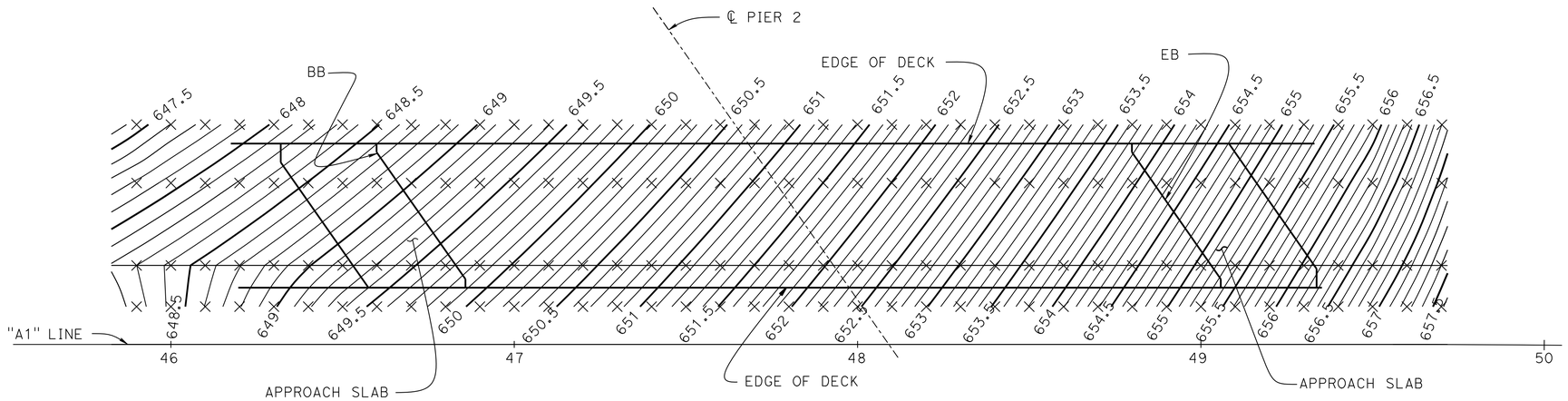

PLAN
1" = 20'

NOTES:
1. Contours are at 0.1' intervals
2. Contours do not include camber

LEGEND:
× Indicates 10' intervals along Station Line

DESIGN	BY Lewis L Shen	CHECKED Sharon Yen	
DETAILS	BY Nancy C Gwynn	CHECKED Sharon Yen	
QUANTITIES	BY Seung Pyo Hong	CHECKED Mufeed Khalaf	

STATE OF CALIFORNIA
DEPARTMENT OF TRANSPORTATION

DIVISION OF ENGINEERING SERVICES
STRUCTURE DESIGN
DESIGN BRANCH 3

BRIDGE NO. 49-0263L
POST MILE 63.58

SAN MARCOS Cr Br (REPLACE LEFT)
DECK CONTOURS

STRUCTURES DESIGN DETAIL SHEET (ENGLISH) (REV. 09-01-10)

ORIGINAL SCALE IN INCHES FOR REDUCED PLANS 0 1 2 3

UNIT: 3578
PROJECT NUMBER & PHASE: 05000200201
CONTRACT NO.: 05-0G0404

DISREGARD PRINTS BEARING EARLIER REVISION DATES

REVISION DATES 12-2-15 12-9-15 12-9-15

SHEET 5 OF 29

FILE => 49-0263l-e-dkcon.dgn

USERNAME => s115755 DATE PLOTTED => 22-JUL-2016 TIME PLOTTED => 17:57

DIST	COUNTY	ROUTE	POST MILES TOTAL PROJECT	SHEET No.	TOTAL SHEETS
05	SLO,Mon	101	63.2/R69.3, R0.0/R1.9	785	858

REGISTERED CIVIL ENGINEER 4-22-16 DATE

5-2-16
PLANS APPROVAL DATE

REGISTERED PROFESSIONAL ENGINEER Jose M Aquino III No. 58386 Exp. 12-31-16 CIVIL STATE OF CALIFORNIA

The State of California or its officers or agents shall not be responsible for the accuracy or completeness of electronic copies of this plan sheet.

CURVE DATA

No. ⊛	R	Δ	T	L
1	5000.00	06°53'24"	301.00	601.27

NOTE:
ALL UTILITY LINES ARE PER DISTRICT UTILITY MAP

SCOUR DATA TABLE

SUPPORT No.	LONG TERM (DEGRADATION & CONTRACTION) SCOUR Elev (ft)	SHORT TERM (LOCAL) SCOUR DEPTH (ft)
Abut 1	N/A	N/A
Pier 2	N/A	9.1
Abut 3	N/A	N/A

NOTE:
Approx channel thalweg Elev = 621.37

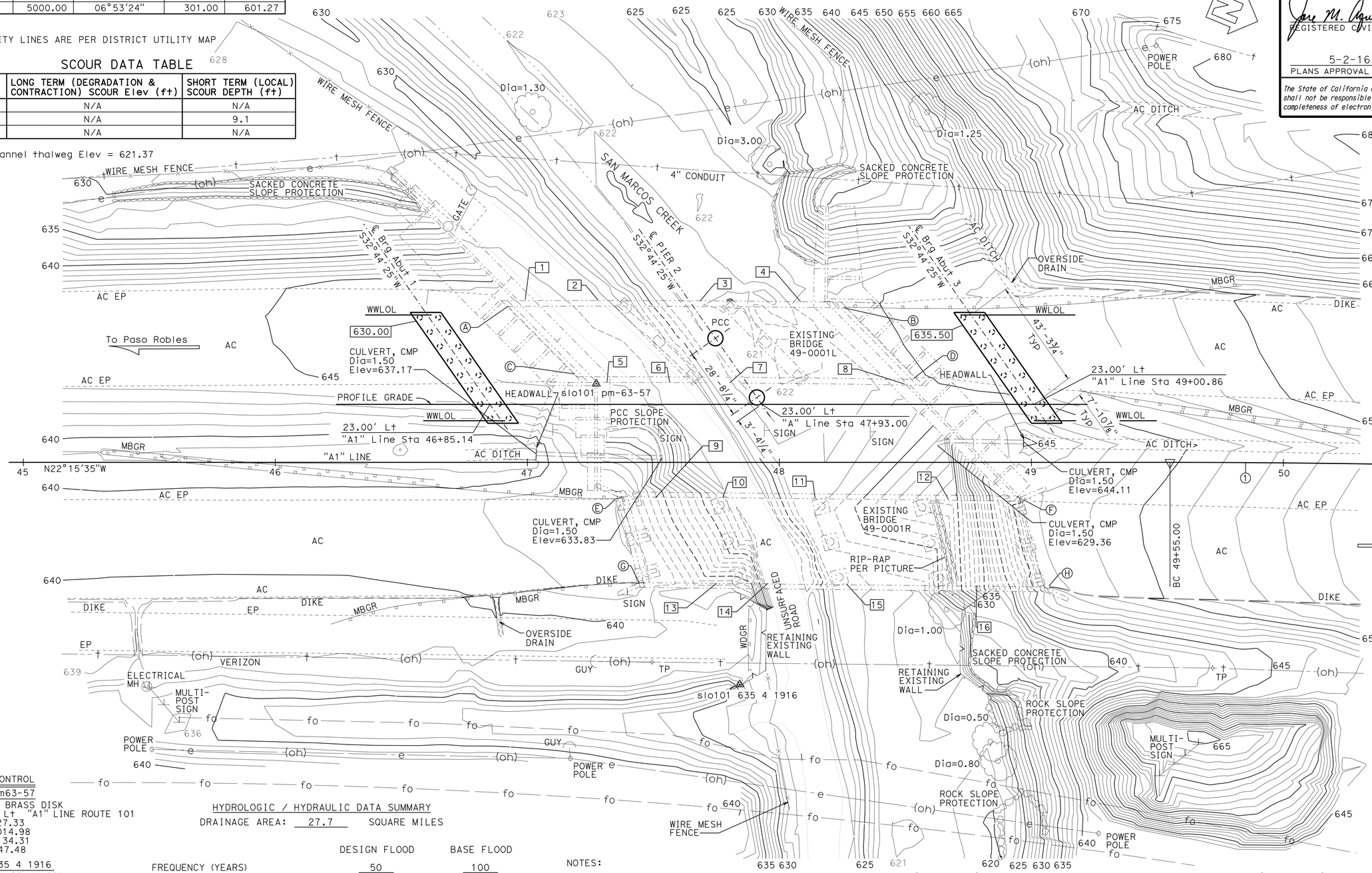

SOFFIT ELEVATIONS

LEFT BRIDGE

1	644.63	5	644.70
2	645.18	6	645.22
3	646.04	7	645.68
4	647.07	8	647.48

RIGHT BRIDGE

9	638.46	13	638.90
10	639.21	14	639.50
11	640.49	15	640.57
12	642.52	16	642.62

SURVEY CONTROL

slo101 pm63-57
Fnd NGS BRASS DISK
31.19 Ft Lt "A1" LINE ROUTE 101
Sta. 47+27.33
N 2,459,014.98
E 5,761,134.31
Elev = 647.48

slo101 635 4 1916
Fnd USGS BRASS DISK
88.13 Ft Rt "A1" LINE ROUTE 101
Sta. 47+84.24
N 2,459,112.85
E 5,761,223.17
Elev = 638.15

HYDROLOGIC / HYDRAULIC DATA SUMMARY

DRAINAGE AREA: 27.7 SQUARE MILES

	DESIGN FLOOD	BASE FLOOD
FREQUENCY (YEARS)	50	100
DISCHARGE (CUBIC FEET PER SECOND)	3290	4360
WATER SURFACE ELEV. (FEET)	630.87	631.90

FLOOD PLAIN DATA ARE BASED UPON INFORMATION AVAILABLE WHEN THE PLANS WERE PREPARED AND ARE SHOWN TO MEET FEDERAL REQUIREMENTS. THE ACCURACY OF SAID INFORMATION IS NOT WARRANTED BY THE STATE AND INTERESTED OR AFFECTED PARTIES SHOULD MAKE THEIR OWN INVESTIGATIONS.

NOTES:

Indicates bottom of footing elevation

Indicates 72" Ø CIDH Pile

Indicates 24" Ø CIDH pile. For layout, see "ABUTMENT DETAILS No. 1" sheet

Bridge Location Br # 49-0001L

Ⓐ - 61.91 Lt "A1" LINE Sta 46+92.30, Elev=646.62 ±
Ⓑ - 61.30 Lt "A1" LINE Sta 48+35.59, Elev=649.64 ±
Ⓒ - 35.03 Lt "A1" LINE Sta 47+18.85, Elev=646.59 ±
Ⓓ - 33.22 Lt "A1" LINE Sta 48+53.19, Elev=649.83 ±

Bridge Location Br # 49-0001R

Ⓔ - 14.67 Rt "A1" LINE Sta 47+34.89, Elev=641.99 ±
Ⓕ - 14.92 Rt "A1" LINE Sta 48+97.04, Elev=647.66 ±
Ⓖ - 47.95 Rt "A1" LINE Sta 49+44.43, Elev=641.85 ±
Ⓗ - 49.11 Rt "A1" LINE Sta 49+06.97, Elev=647.68 ±

PRELIMINARY INVESTIGATION SECTION

SCALE 1"=20'	VERT.DATUM NAVD88	PHOTOGRAMMETRY AS OF: X			
	HORZ.DATUM NAD83 (92)	SURVEYED	BY DISTRICT	CHECKED	BY C. FASSETT 08/2014
ALIGNMENT TIES Dist TRAVERSE SHEET		DRAFTED	BY T. ZOLNIKOV 08/2014	CHECKED	BY S. SOU 08/2014

	BY	CHECKED
DESIGN	Lewis L Shen	Sharon Yen
DETAILS	Nancy C Gwynn	Sharon Yen
QUANTITIES	Seung Pyo Hong	Mufeed Khalaf

STATE OF CALIFORNIA
DEPARTMENT OF TRANSPORTATION

DIVISION OF ENGINEERING SERVICES
STRUCTURE DESIGN
DESIGN BRANCH 3

BRIDGE NO. 49-0263L
POST MILE 63.58

SAN MARCOS Cr Br (REPLACE LEFT)
FOUNDATION PLAN

STRUCTURES FOUNDATION PLAN SHEET (ENGLISH) (REV. 09-01-10)

ORIGINAL SCALE IN INCHES FOR REDUCED PLANS 0 1 2 3

UNIT: 3646
PROJECT NUMBER & PHASE: 05000200201
CONTRACT NO.: 05-0G0404

DISREGARD PRINTS BEARING EARLIER REVISION DATES

REVISION DATES 08/04/14 08/11/14 01/17/15

SHEET 6 OF 29

FILE => 49-0263l-e-fpl01.dgn

USERNAME => s15755 DATE PLOTTED => 22-JUL-2016 TIME PLOTTED => 17:57

DIST	COUNTY	ROUTE	POST MILES TOTAL PROJECT	SHEET No.	TOTAL SHEETS
05	SLO,Mon	101	63.2/R69.3, R0.0/R1.9	786	858

REGISTERED CIVIL ENGINEER 4-22-16 DATE

5-2-16
PLANS APPROVAL DATE

REGISTERED PROFESSIONAL ENGINEER
Jose M Aquino III
No. 58386
Exp. 12-31-16
CIVIL
STATE OF CALIFORNIA

The State of California or its officers or agents shall not be responsible for the accuracy or completeness of scanned copies of this plan sheet.

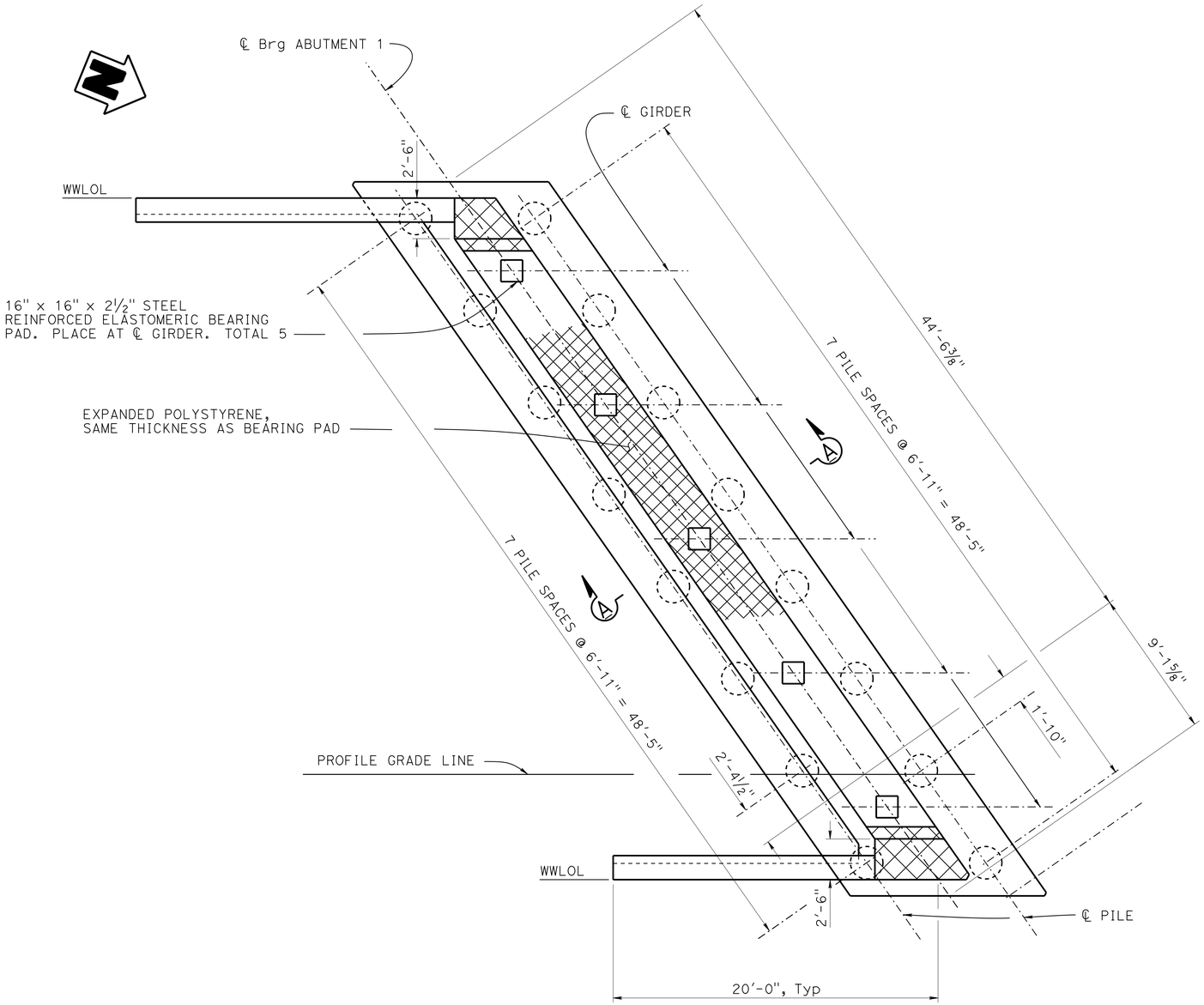

PLAN

¼" = 1'-0"

NOTES:

1. Abutment 1 shown, Abutment 3 similar
2. For "SECTION A-A", see "ABUTMENT DETAILS No. 2" sheet

LEGEND:

Indicates 24" ø CIDH Pile

DESIGN	BY Lewis L Shen	CHECKED Sharon Yen	
DETAILS	BY Nancy C Gwynn	CHECKED Sharon Yen	
QUANTITIES	BY Seung Pyo Hong	CHECKED Mufeed Khalaf	

STATE OF CALIFORNIA
DEPARTMENT OF TRANSPORTATION

DIVISION OF ENGINEERING SERVICES
STRUCTURE DESIGN
DESIGN BRANCH 3

BRIDGE NO. 49-0263L
POST MILE 63.58

SAN MARCOS Cr Br (REPLACE LEFT)
ABUTMENT DETAILS No. 1

STRUCTURES DESIGN DETAIL SHEET (ENGLISH) (REV. 09-01-10)

ORIGINAL SCALE IN INCHES FOR REDUCED PLANS 0 1 2 3

UNIT: 3578
PROJECT NUMBER & PHASE: 05000200201
CONTRACT NO.: 05-0G0404

DISREGARD PRINTS BEARING EARLIER REVISION DATES

REVISION DATES: 4-22-16 | 6-24-16 | 10-1-16 | .....

SHEET 7 OF 29

FILE => 49-0263l-f-abdt01.dgn

USERNAME => s115755 DATE PLOTTED => 22-JUL-2016 TIME PLOTTED => 17:57

DIST	COUNTY	ROUTE	POST MILES TOTAL PROJECT	SHEET No.	TOTAL SHEETS
05	SLO,Mon	101	63.2/R69.3, R0.0/R1.9	787	858

REGISTERED CIVIL ENGINEER 4-22-16 DATE

5-2-16
PLANS APPROVAL DATE

REGISTERED PROFESSIONAL ENGINEER
Jose M Aquino III
No. 58386
Exp. 12-31-16
CIVIL
STATE OF CALIFORNIA

The State of California or its officers or agents shall not be responsible for the accuracy or completeness of scanned copies of this plan sheet.

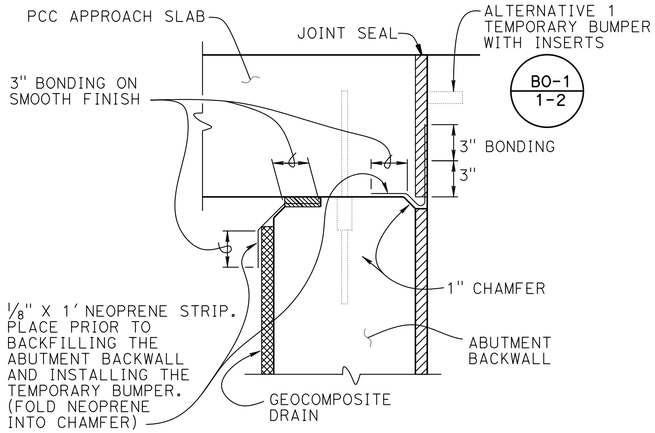

JOINT PROTECTION DETAIL

No Scale

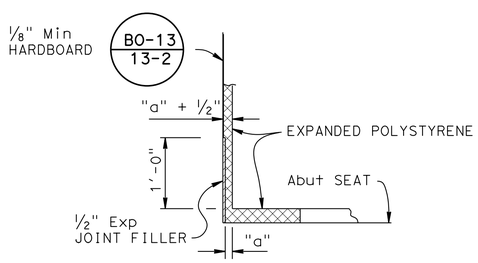

DETAIL A

No Scale

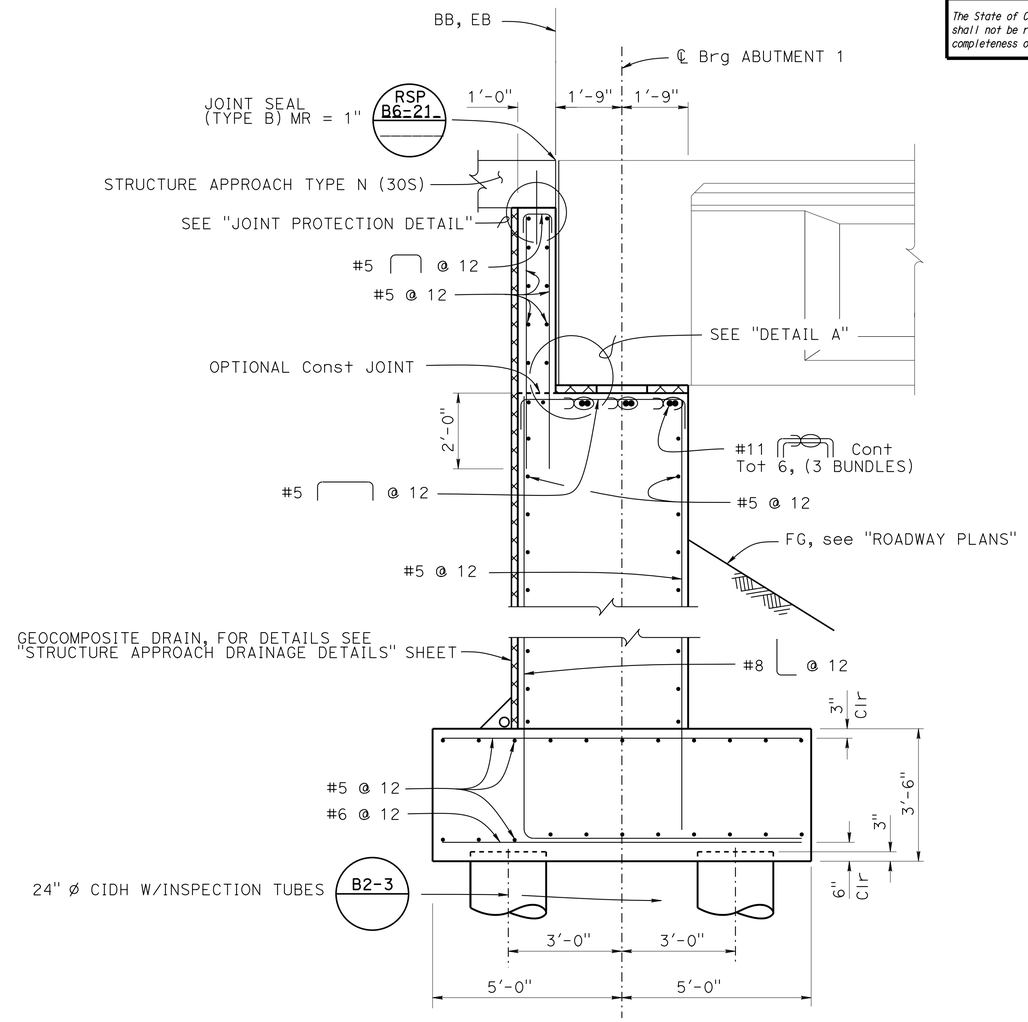

NOTE:

For footing reinforcement details see "ABUTMENT DETAILS No. 3" sheet

SECTION A-A

1/2" = 1'-0"

DESIGN	BY Lewis L Shen	CHECKED Sharon Yen	
DETAILS	BY Nancy C Gwynn	CHECKED Sharon Yen	
QUANTITIES	BY Seung Pyo Hong	CHECKED Mufeed Khalaf	

STATE OF CALIFORNIA
DEPARTMENT OF TRANSPORTATION

DIVISION OF ENGINEERING SERVICES
STRUCTURE DESIGN
DESIGN BRANCH 3

BRIDGE NO. 49-0263L
POST MILE 63.58

SAN MARCOS Cr Br (REPLACE LEFT)
ABUTMENT DETAILS No. 2

STRUCTURES DESIGN DETAIL SHEET (ENGLISH) (REV. 09-01-10)

ORIGINAL SCALE IN INCHES FOR REDUCED PLANS 0 1 2 3

UNIT: 3578
PROJECT NUMBER & PHASE: 05000200201
CONTRACT NO.: 05-0G0404

DISREGARD PRINTS BEARING EARLIER REVISION DATES

REVISION DATES 9-22-15 1-20-16 1-26-16

SHEET 8 OF 29

FILE => 49-0263l-f-abdt02.dgn

USERNAME => s115755 DATE PLOTTED => 22-JUL-2016 TIME PLOTTED => 17:57

DIST	COUNTY	ROUTE	POST MILES TOTAL PROJECT	SHEET No.	TOTAL SHEETS
05	SLO,Mon	101	63.2/R69.3, R0.0/R1.9	788	858

REGISTERED CIVIL ENGINEER 4-22-16 DATE

5-2-16
PLANS APPROVAL DATE

REGISTERED PROFESSIONAL ENGINEER
Jose M Aquino III
No. 58386
Exp. 12-31-16
CIVIL
STATE OF CALIFORNIA

The State of California or its officers or agents shall not be responsible for the accuracy or completeness of scanned copies of this plan sheet.

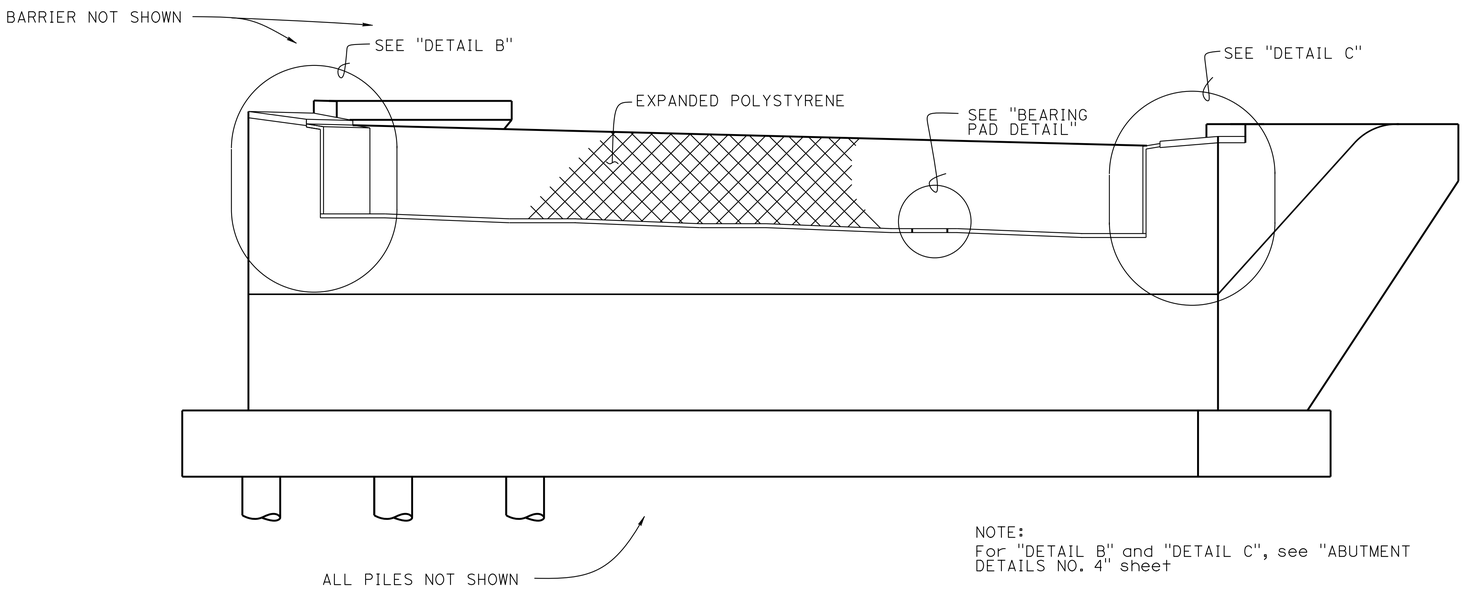

NOTE:
For "DETAIL B" and "DETAIL C", see "ABUTMENT DETAILS NO. 4" sheet

ELEVATION
1/4" = 1'-0"

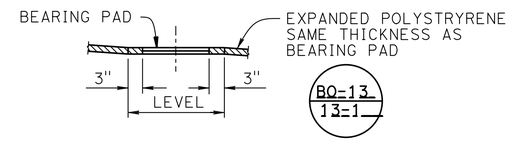

Details typical at all bearing pads

BEARING PAD DETAIL
No Scale

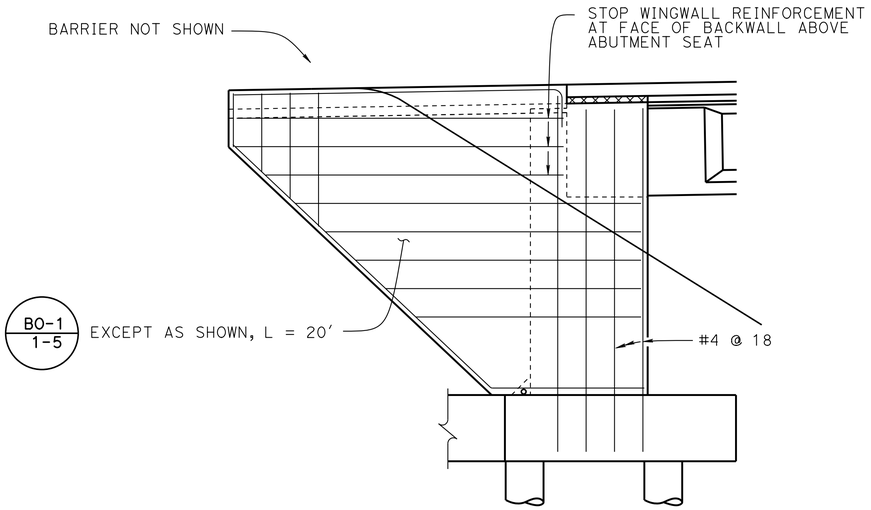

WINGWALL ELEVATION
1/4" = 1'-0"

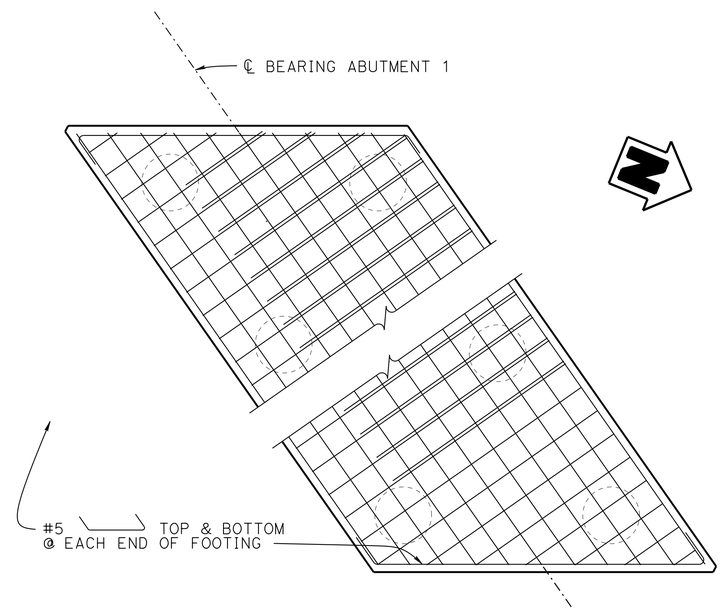

PART FOOTING PLAN
3/8" = 1'-0"

	BY	CHECKED
DESIGN	Lewis L Shen	Sharon Yen
DETAILS	Nancy C Gwynn	Sharon Yen
QUANTITIES	Seung Pyo Hong	Mufeed Khalaf

STATE OF CALIFORNIA
DEPARTMENT OF TRANSPORTATION

DIVISION OF ENGINEERING SERVICES
STRUCTURE DESIGN
DESIGN BRANCH 3

BRIDGE NO. 49-0263L
POST MILE 63.58

SAN MARCOS Cr Br (REPLACE LEFT)
ABUTMENT DETAILS No. 3

STRUCTURES DESIGN DETAIL SHEET (ENGLISH) (REV. 09-01-10)

ORIGINAL SCALE IN INCHES FOR REDUCED PLANS 0 1 2 3

UNIT: 3578
PROJECT NUMBER & PHASE: 05000200201
CONTRACT NO.: 05-0G0404

DISREGARD PRINTS BEARING EARLIER REVISION DATES

REVISION DATES 4-23-15

SHEET 9 OF 29

FILE => 49-0263l-f-abdt03.dgn

USERNAME => s115755 DATE PLOTTED => 22-JUL-2016 TIME PLOTTED => 17:57

DIST	COUNTY	ROUTE	POST MILES TOTAL PROJECT	SHEET No.	TOTAL SHEETS
05	SLO,Mon	101	63.2/R69.3, R0.0/R1.9	789	858

REGISTERED CIVIL ENGINEER 4-22-16 DATE

5-2-16
PLANS APPROVAL DATE

REGISTERED PROFESSIONAL ENGINEER
Jose M Aquino III
No. 58386
Exp. 12-31-16
CIVIL
STATE OF CALIFORNIA

The State of California or its officers or agents shall not be responsible for the accuracy or completeness of scanned copies of this plan sheet.

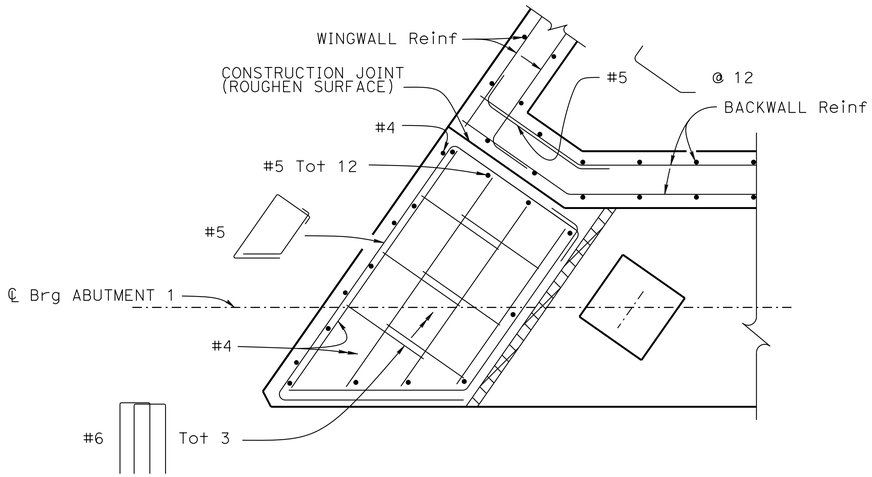

SECTION B-B

1/4" = 1'-0"

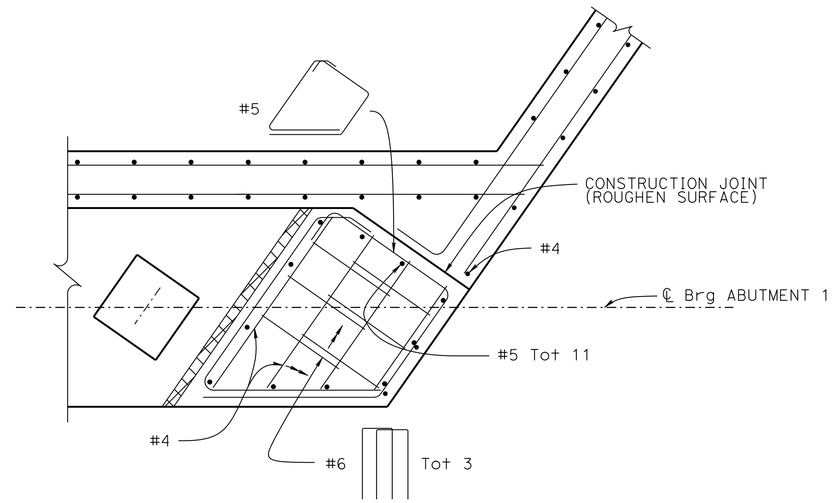

SECTION C-C

1/4" = 1'-0"

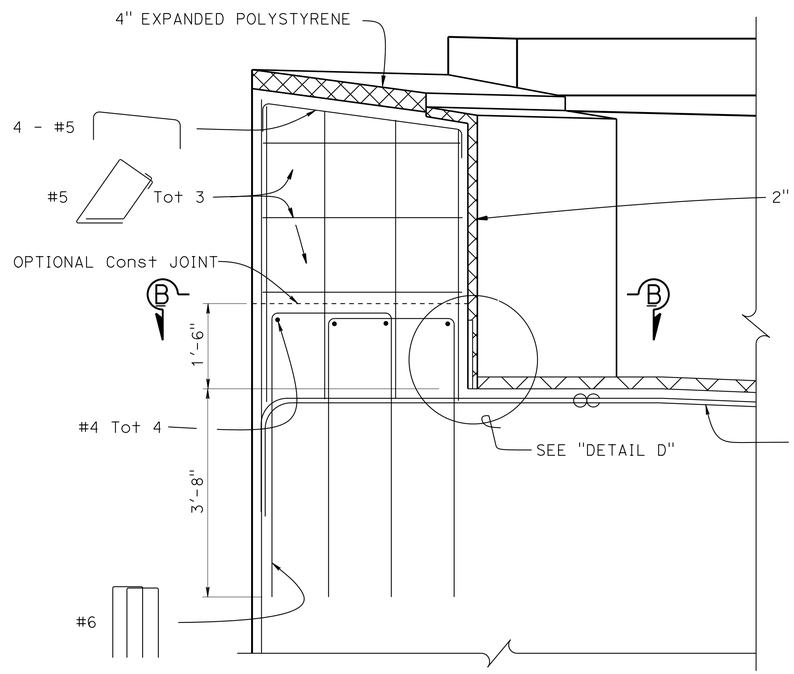

DETAIL B

3/4" = 1'-0"

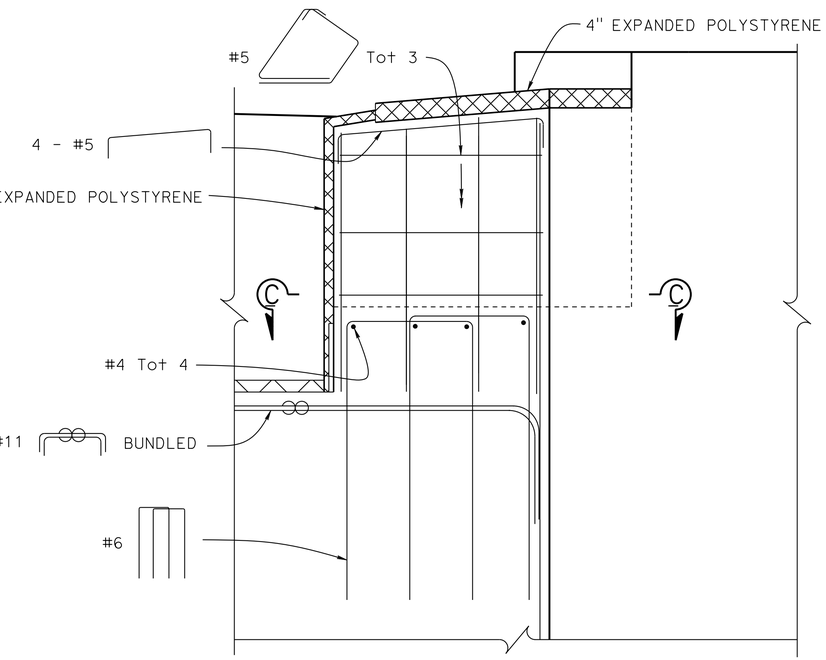

DETAIL C

3/4" = 1'-0"

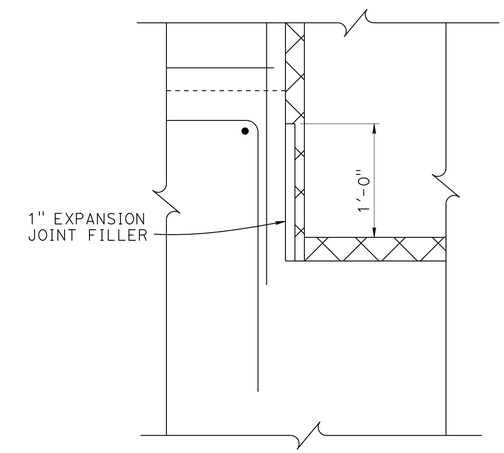

DETAIL D

1 1/2" = 1'-0"

DESIGN	BY Lewis L Shen	CHECKED Sharon Yen	
DETAILS	BY Nancy C Gwynn	CHECKED Sharon Yen	
QUANTITIES	BY Seung Pyo Hong	CHECKED Mufeed Khalaf	

STATE OF CALIFORNIA
DEPARTMENT OF TRANSPORTATION

DIVISION OF ENGINEERING SERVICES
STRUCTURE DESIGN
DESIGN BRANCH 3

BRIDGE NO. 49-0263L
POST MILE 63.58

SAN MARCOS Cr Br (REPLACE LEFT)
ABUTMENT DETAILS No. 4

STRUCTURES DESIGN DETAIL SHEET (ENGLISH) (REV. 09-01-10)

ORIGINAL SCALE IN INCHES FOR REDUCED PLANS 0 1 2 3

UNIT: 3578
PROJECT NUMBER & PHASE: 05000200201
CONTRACT NO.: 05-0G0404

DISREGARD PRINTS BEARING EARLIER REVISION DATES

REVISION DATES 6-24-15 9-17-15 1-26-16

SHEET 10 OF 29

FILE => 49-0263l-f-abdt04.dgn

USERNAME => s115755 DATE PLOTTED => 22-JUL-2016 TIME PLOTTED => 17:57

DIST	COUNTY	ROUTE	POST MILES TOTAL PROJECT	SHEET No.	TOTAL SHEETS
05	SLO,Mon	101	63.2/R69.3, R0.0/R1.9	790	858

REGISTERED CIVIL ENGINEER 4-22-16 DATE

5-2-16
PLANS APPROVAL DATE

REGISTERED PROFESSIONAL ENGINEER Jose M Aquino III No. 58386 Exp. 12-31-16 CIVIL STATE OF CALIFORNIA

The State of California or its officers or agents shall not be responsible for the accuracy or completeness of scanned copies of this plan sheet.

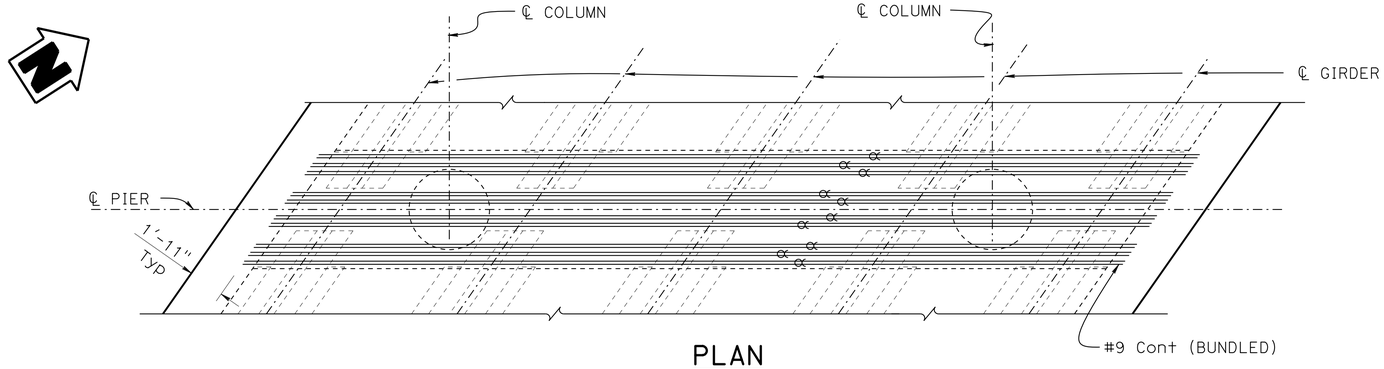

PLAN
1/4 = 1'-0"

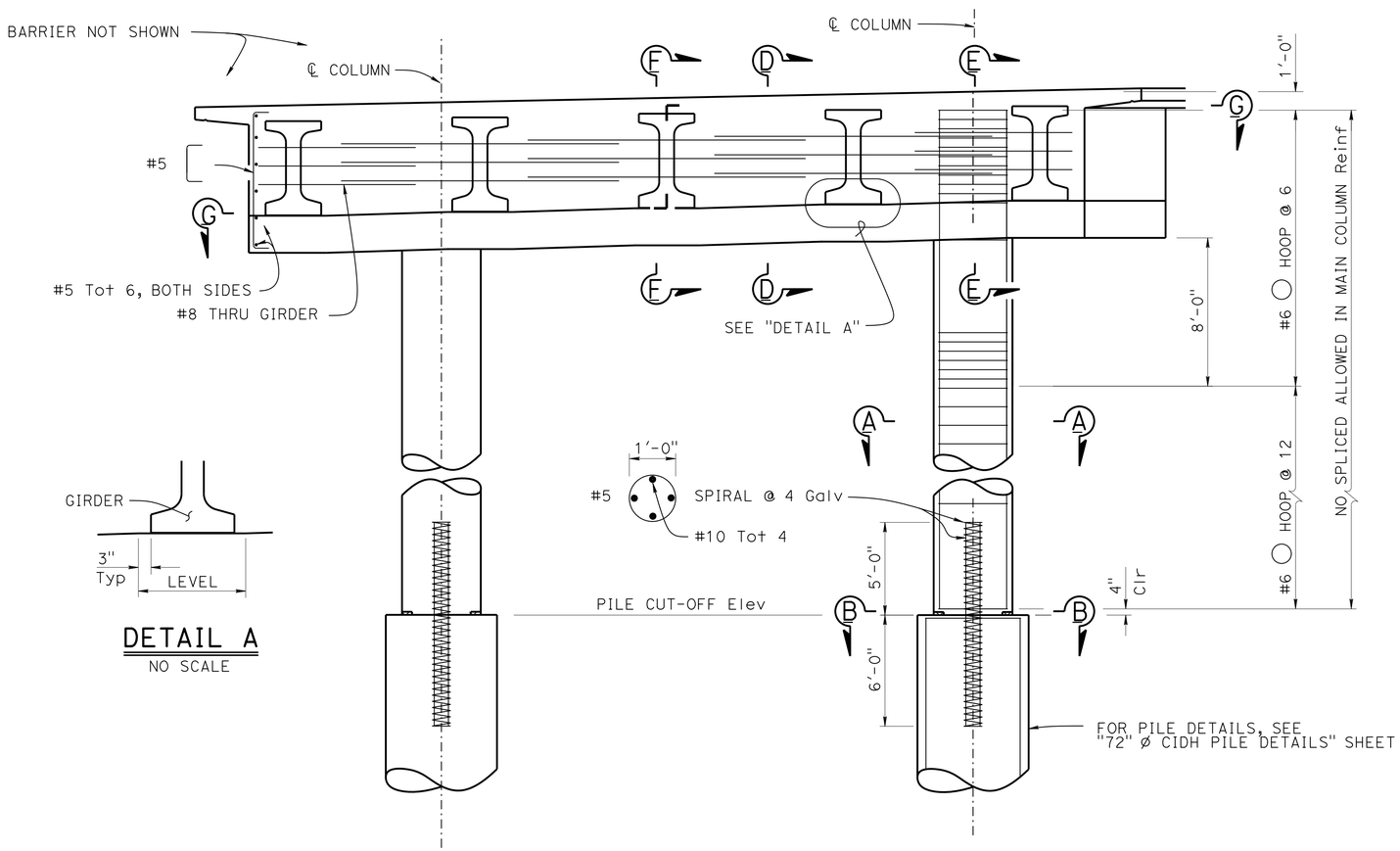

DETAIL A
NO SCALE

ELEVATION
1/4" = 1'-0"

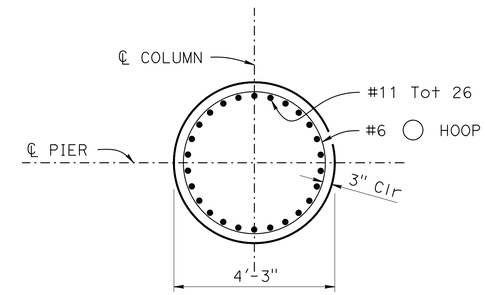

SECTION A-A
1/2" = 1'-0"

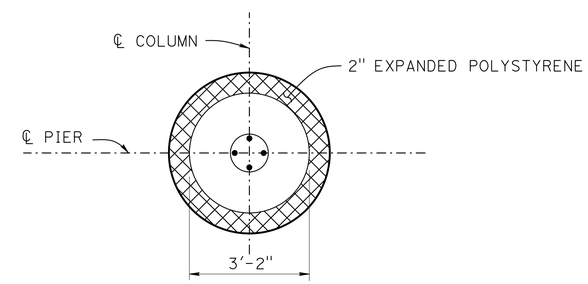

SECTION B-B
1/2" = 1'-0"

NOTES:

1. All hoops are "ultimate" butt spliced continuous
2. For pile cut-off elev, see "PILE DATA TABLE" ON "INDEX TO PLANS" sheet
3. For "SECTION D-D", "SECTION E-E" and "SECITON F-F", see "PIER DETAILS No. 2" sheet
4. For "SECTION G-G", see "PIER DETAILS No. 3" sheet
5. Lapped splices in spiral column pin reinf shall be lapped at least 80 bar diameters. Spiral pin reinf at splices and at ends shall be terminated with a 135° with a 6" tail hooked around a longitudinal bar

	BY	CHECKED
DESIGN	Lewis L Shen	Sharon Yen
DETAILS	Nancy C Gwynn	Sharon Yen
QUANTITIES	Seung Pyo Hong	Mufeed Khalaf

STATE OF CALIFORNIA
DEPARTMENT OF TRANSPORTATION

DIVISION OF ENGINEERING SERVICES
STRUCTURE DESIGN
DESIGN BRANCH 3

BRIDGE NO. 49-0263L
POST MILE 63.58

SAN MARCOS Cr Br (REPLACE LEFT)
PIER DETAILS No. 1

STRUCTURES DESIGN DETAIL SHEET (ENGLISH) (REV. 09-01-10)

ORIGINAL SCALE IN INCHES FOR REDUCED PLANS 0 1 2 3

UNIT: 3578
PROJECT NUMBER & PHASE: 05000200201
CONTRACT NO.: 05-0G0404

DISREGARD PRINTS BEARING EARLIER REVISION DATES

REVISION DATES 3-14-15 6-12-15 9-11-15 10-1-15

SHEET 11 OF 29

FILE => 49-0263l-h-pier01.dgn

USERNAME => s113755 DATE PLOTTED => 22-JUL-2016 TIME PLOTTED => 17:57

DIST	COUNTY	ROUTE	POST MILES TOTAL PROJECT	SHEET No.	TOTAL SHEETS
05	SLO,Mon	101	63.2/R69.3, R0.0/R1.9	791	858

REGISTERED CIVIL ENGINEER 4-22-16 DATE

5-2-16
PLANS APPROVAL DATE

REGISTERED PROFESSIONAL ENGINEER Jose M Aquino III No. 58386 Exp. 12-31-16 CIVIL STATE OF CALIFORNIA

The State of California or its officers or agents shall not be responsible for the accuracy or completeness of scanned copies of this plan sheet.

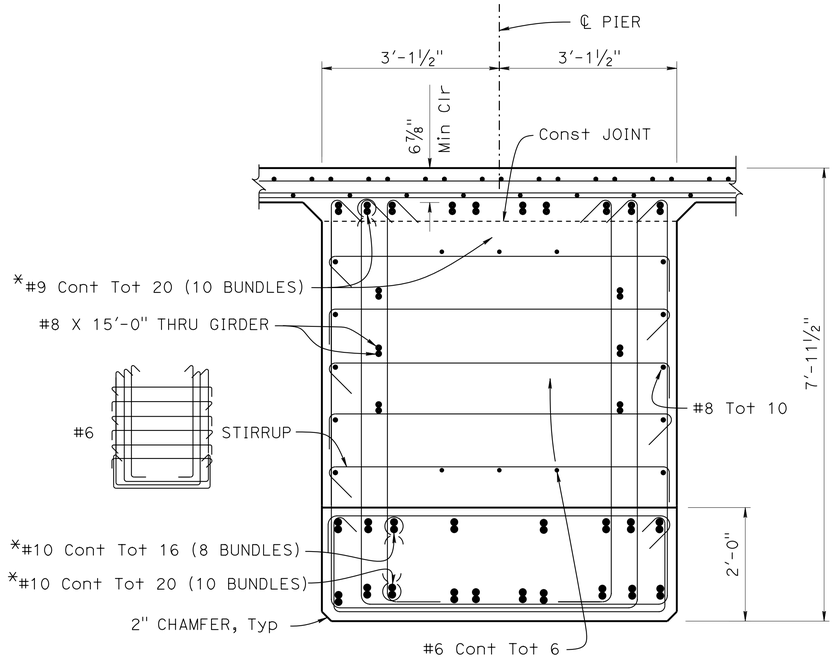

SECTION D-D

¾" = 1'-0"

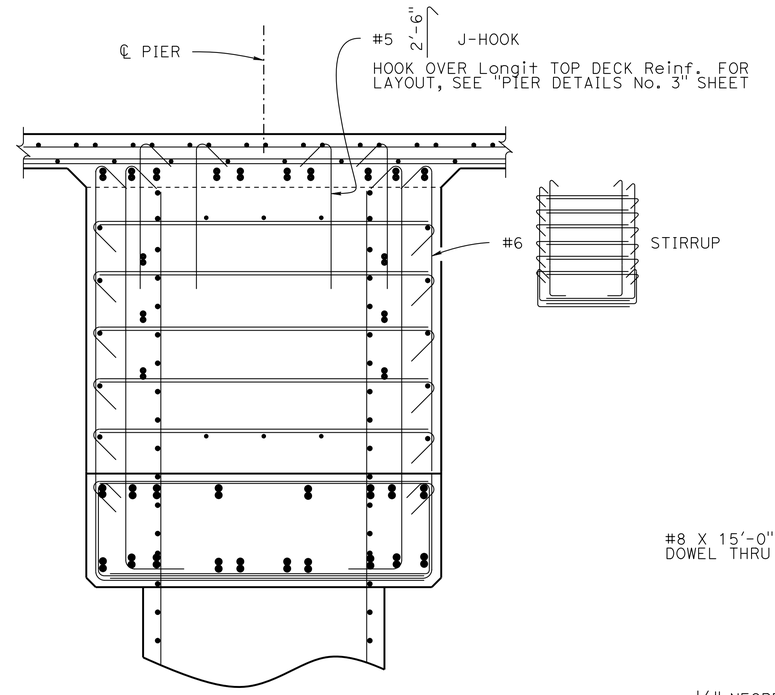

NOTE:
For details not shown, see "SECTION D-D"

SECTION E-E

¾" = 1'-0"

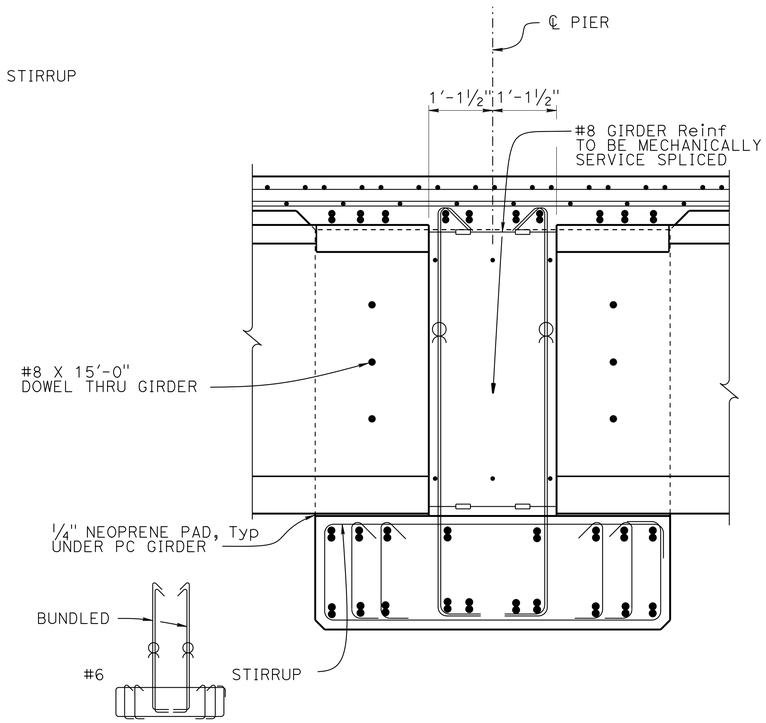

NOTE:
For details not shown, see "SECTION D-D"

SECTION F-F

¾" = 1'-0"

LEGEND:
* No splice allowed
Indicates bundled bars

NOTE:
For details not shown, see "PIER DETAILS No. 3" sheet

DESIGN	BY Lewis L Shen	CHECKED Sharon Yen
DETAILS	BY Nancy C Gwynn	CHECKED Sharon Yen
QUANTITIES	BY Seung Pyo Hong	CHECKED Mufeed Khalaf

STATE OF CALIFORNIA
DEPARTMENT OF TRANSPORTATION

DIVISION OF ENGINEERING SERVICES
STRUCTURE DESIGN
DESIGN BRANCH 3

BRIDGE NO. 49-0263L
POST MILE 63.58

SAN MARCOS Cr Br (REPLACE LEFT)
PIER DETAILS No. 2

STRUCTURES DESIGN DETAIL SHEET (ENGLISH) (REV. 09-01-10)

ORIGINAL SCALE IN INCHES FOR REDUCED PLANS 0 1 2 3

UNIT: 3578
PROJECT NUMBER & PHASE: 05000200201
CONTRACT NO.: 05-0G0404

DISREGARD PRINTS BEARING EARLIER REVISION DATES

REVISION DATES 1-26-15 9-24-15 10-27-15 1-22-16

SHEET 12 OF 29

FILE => 49-0263l-h-pier02.dgn

USERNAME => s115755 DATE PLOTTED => 22-JUL-2016 TIME PLOTTED => 17:57

DIST	COUNTY	ROUTE	POST MILES TOTAL PROJECT	SHEET No.	TOTAL SHEETS
05	SLO,Mon	101	63.2/R69.3, R0.0/R1.9	792	858

REGISTERED CIVIL ENGINEER 4-22-16 DATE

5-2-16
PLANS APPROVAL DATE

REGISTERED PROFESSIONAL ENGINEER
Jose M Aquino III
No. 58386
Exp. 12-31-16
CIVIL
STATE OF CALIFORNIA

The State of California or its officers or agents shall not be responsible for the accuracy or completeness of scanned copies of this plan sheet.

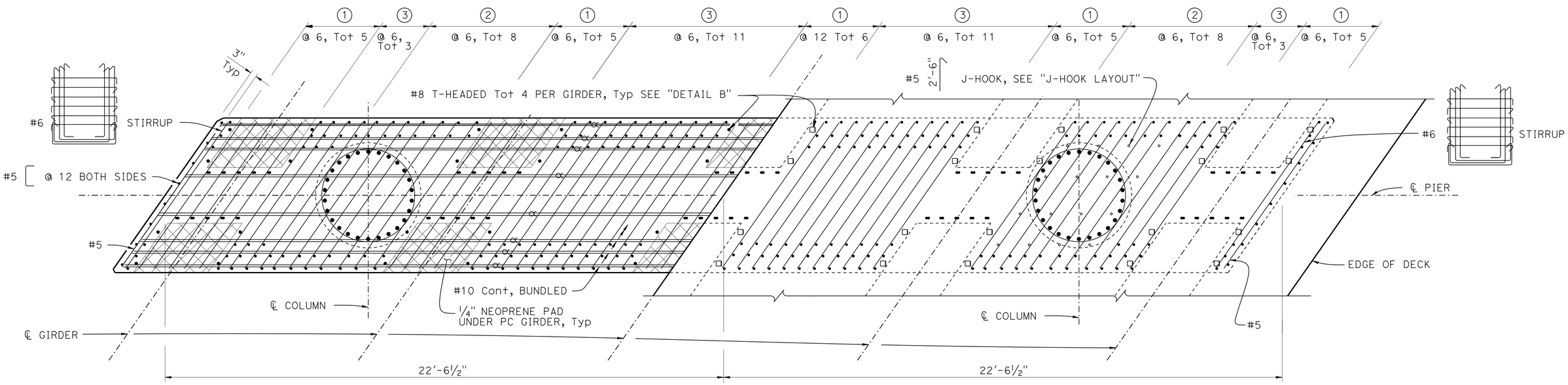

NOTES:
1. All reinforcement not shown
2. Stirrups are placed parallel to girder and spaced normal to ℄ girder
3. For details not shown, see "PIER DETAILS No. 2" sheet

LEGEND:

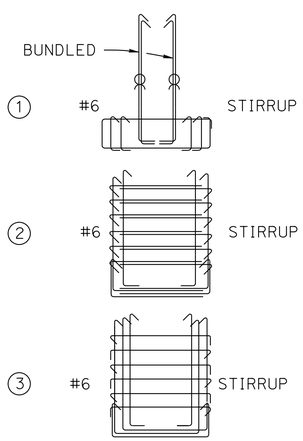

Indicates 1/4" Neoprene pad

SECTION G-G
1/2" = 1'-0"

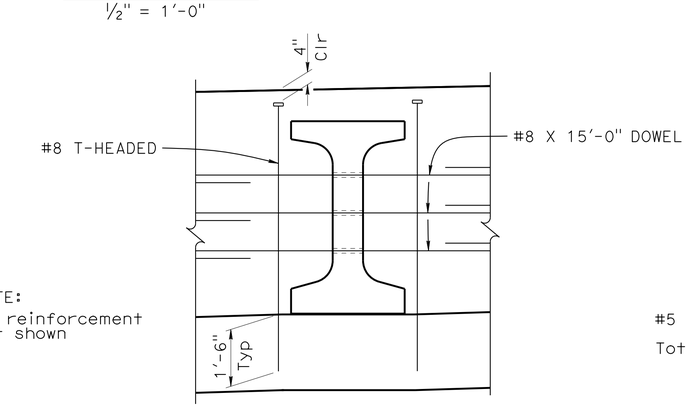

NOTE:
All reinforcement not shown

DETAIL B
1/2" = 1'-0"

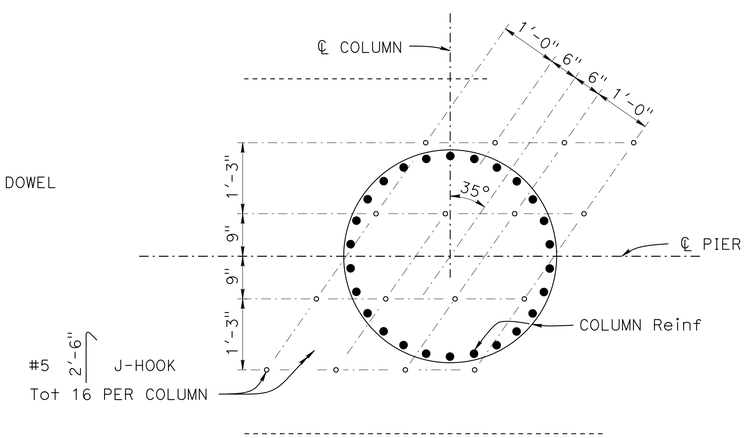

J-HOOK LAYOUT
3/4" = 1'-0"

DESIGN	BY Lewis L Shen	CHECKED Sharon Yen	
DETAILS	BY Nancy C Gwynn	CHECKED Sharon Yen	
QUANTITIES	BY Seung Pyo Hong	CHECKED Mufeed Khalaf	

STATE OF CALIFORNIA
DEPARTMENT OF TRANSPORTATION

DIVISION OF ENGINEERING SERVICES
STRUCTURE DESIGN
DESIGN BRANCH 3

BRIDGE NO. 49-0263L
POST MILE 63.58

SAN MARCOS Cr Br (REPLACE LEFT)
PIER DETAILS No. 3

STRUCTURES DESIGN DETAIL SHEET (ENGLISH) (REV. 09-01-10)

ORIGINAL SCALE IN INCHES FOR REDUCED PLANS 0 1 2 3

UNIT: 3578
PROJECT NUMBER & PHASE: 05000200201
CONTRACT NO.: 05-0G0404

DISREGARD PRINTS BEARING EARLIER REVISION DATES

REVISION DATES 6-22-15 9-17-15

SHEET 13 OF 29

FILE => 49-0263l-h-pier03.dgn

USERNAME => s115755 DATE PLOTTED => 22-JUL-2016 TIME PLOTTED => 17:57

DIST	COUNTY	ROUTE	POST MILES TOTAL PROJECT	SHEET No.	TOTAL SHEETS
05	SLO,Mon	101	63.2/R69.3, R0.0/R1.9	793	858

REGISTERED CIVIL ENGINEER 4-22-16 DATE

5-2-16
PLANS APPROVAL DATE

REGISTERED PROFESSIONAL ENGINEER Jose M Aquino III No. 58386 Exp. 12-31-16 CIVIL STATE OF CALIFORNIA

The State of California or its officers or agents shall not be responsible for the accuracy or completeness of scanned copies of this plan sheet.

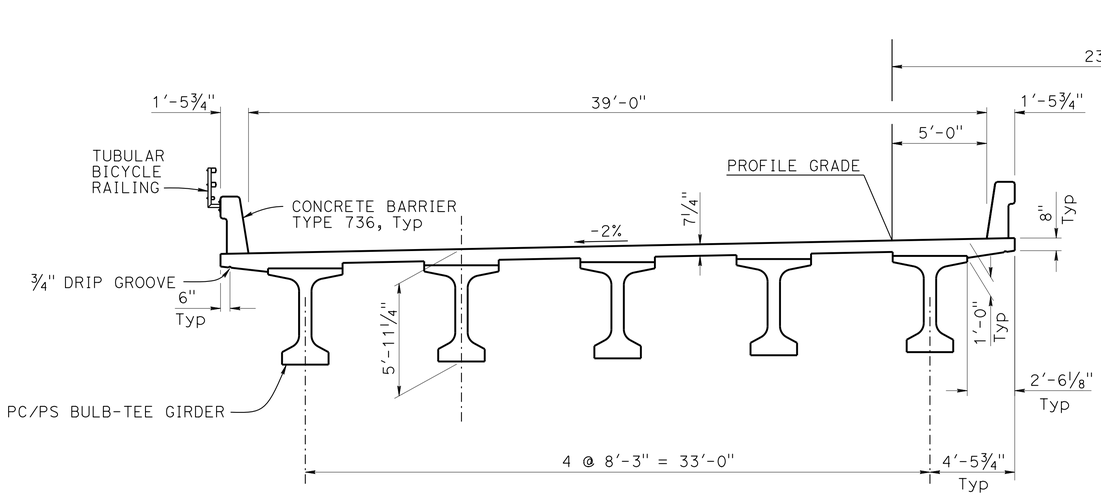

TYPICAL SECTION

¼" = 1'-0"

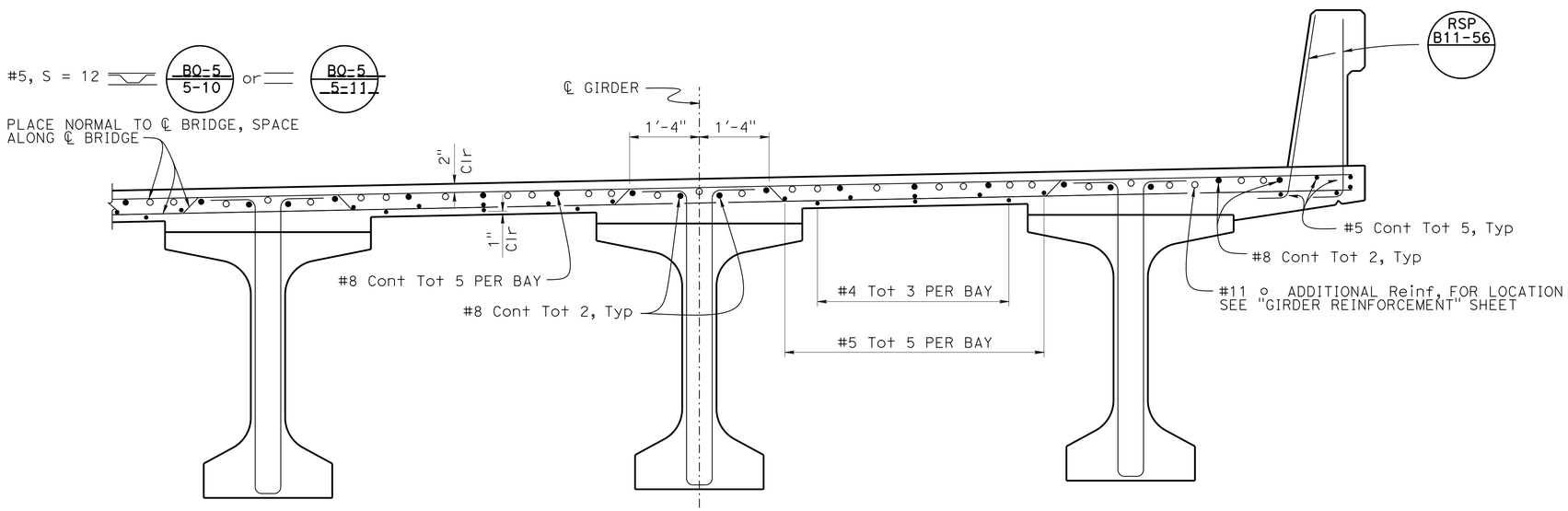

PART TYPICAL SECTION

¾" = 1'-0"

DESIGN	BY Lewis L Shen	CHECKED Sharon Yen	
DETAILS	BY Nancy C Gwynn	CHECKED Sharon Yen	
QUANTITIES	BY Seung Pyo Hong	CHECKED Mufeed Khalaf	

STATE OF CALIFORNIA DEPARTMENT OF TRANSPORTATION

DIVISION OF ENGINEERING SERVICES STRUCTURE DESIGN DESIGN BRANCH 3

BRIDGE NO. 49-0263L
POST MILE 63.58

SAN MARCOS Cr Br (REPLACE LEFT)
TYPICAL SECTION

STRUCTURES DESIGN DETAIL SHEET (ENGLISH) (REV. 09-01-10)

ORIGINAL SCALE IN INCHES FOR REDUCED PLANS 0 1 2 3

UNIT: 3578
PROJECT NUMBER & PHASE: 05000200201
CONTRACT NO.: 05-0G0404

DISREGARD PRINTS BEARING EARLIER REVISION DATES

REVISION DATES 12-16-15 12-18-15 10-1-15

SHEET 14 OF 29

FILE => 49-0263l-k-ts.dgn

USERNAME => s115755 DATE PLOTTED => 22-JUL-2016 TIME PLOTTED => 17:57

DIST	COUNTY	ROUTE	POST MILES TOTAL PROJECT	SHEET No.	TOTAL SHEETS
05	SLO,Mon	101	63.2/R69.3, R0.0/R1.9	794	858

REGISTERED CIVIL ENGINEER 4-22-16 DATE

5-2-16
PLANS APPROVAL DATE

REGISTERED PROFESSIONAL ENGINEER
Jose M Aquino III
No. 58386
Exp. 12-31-16
CIVIL
STATE OF CALIFORNIA

The State of California or its officers or agents shall not be responsible for the accuracy or completeness of scanned copies of this plan sheet.

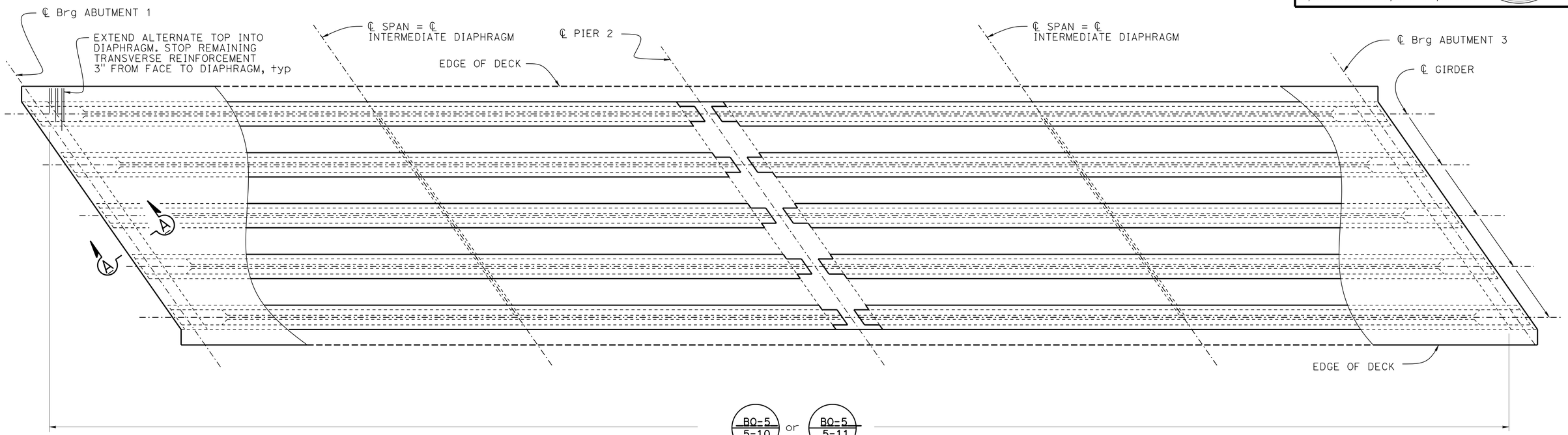

PLAN

1/8" = 1'-0"

NOTES:
For "SECTION A-A", see "GRIDER REINFORCEMENT" sheet

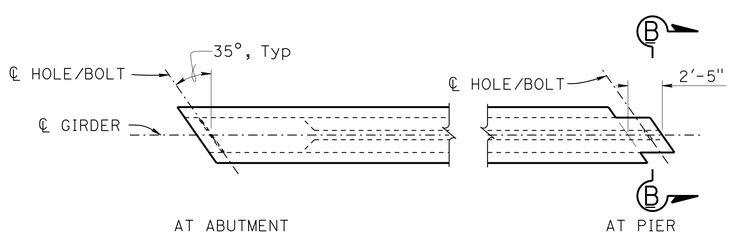

PART GIRDER PLAN

3/16" = 1'-0"

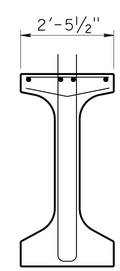

SECTION B-B

1/2" = 1'-0"

NOTE:
For details not shown, see "SECTION A-A" on "PC/PS BULB-TEE GIRDER (HARPED STRANDS)" sheet

	BY	CHECKED
DESIGN	Lewis L Shen	Sharon Yen
DETAILS	Nancy C Gwynn	Sharon Yen
QUANTITIES	Seung Pyo Hong	Mufeed Khalaf

STATE OF CALIFORNIA
DEPARTMENT OF TRANSPORTATION

DIVISION OF ENGINEERING SERVICES
STRUCTURE DESIGN
DESIGN BRANCH 3

BRIDGE NO. 49-0263L
POST MILE 63.58

SAN MARCOS Cr Br (REPLACE LEFT)
GIRDER LAYOUT

STRUCTURES DESIGN DETAIL SHEET (ENGLISH) (REV. 09-01-10)

ORIGINAL SCALE IN INCHES FOR REDUCED PLANS 0 1 2 3

UNIT: 3578
PROJECT NUMBER & PHASE: 05000200201
CONTRACT NO.: 05-0G0404

DISREGARD PRINTS BEARING EARLIER REVISION DATES

REVISION DATES 3-2-15 3-27-15 3-27-15 10-1-15

SHEET 15 OF 29

FILE => 49-0263l-l-girlo.dgn

USERNAME => s115755 DATE PLOTTED => 22-JUL-2016 TIME PLOTTED => 17:57

DIST	COUNTY	ROUTE	POST MILES TOTAL PROJECT	SHEET No.	TOTAL SHEETS
05	SLO,Mon	101	63.2/R69.3, R0.0/R1.9	795	858

REGISTERED CIVIL ENGINEER 4-22-16 DATE

5-2-16
PLANS APPROVAL DATE

REGISTERED PROFESSIONAL ENGINEER
Jose M Aquino III
No. 58386
Exp. 12-31-16
CIVIL
STATE OF CALIFORNIA

The State of California or its officers or agents shall not be responsible for the accuracy or completeness of scanned copies of this plan sheet.

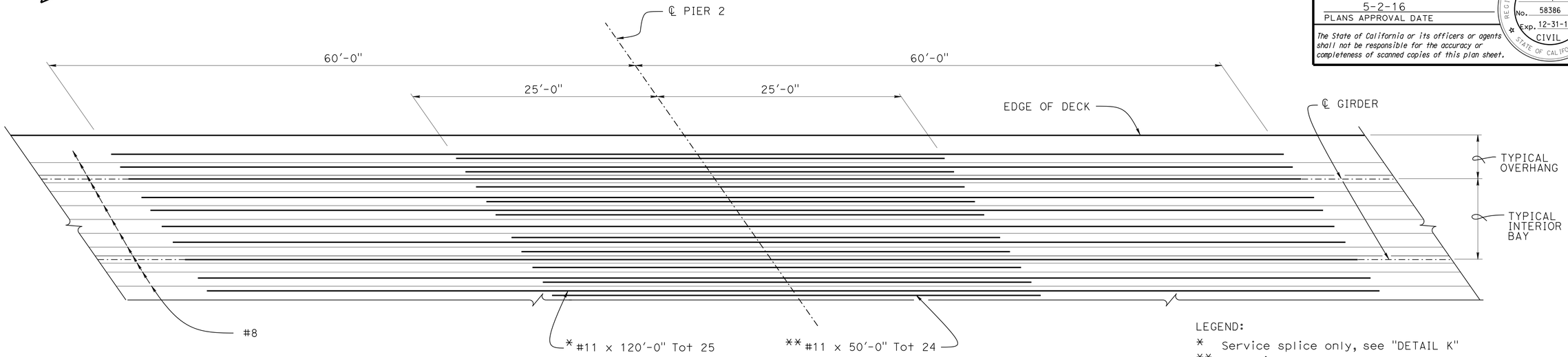

LEGEND:

* Service splice only, see "DETAIL K"
** No splice allowed

NOTES:

1. All reinforcement #11 unless otherwise shown
2. For details not shown, see "TYPICAL SECTION" sheet

PART PLAN

3/16" = 1'-0"

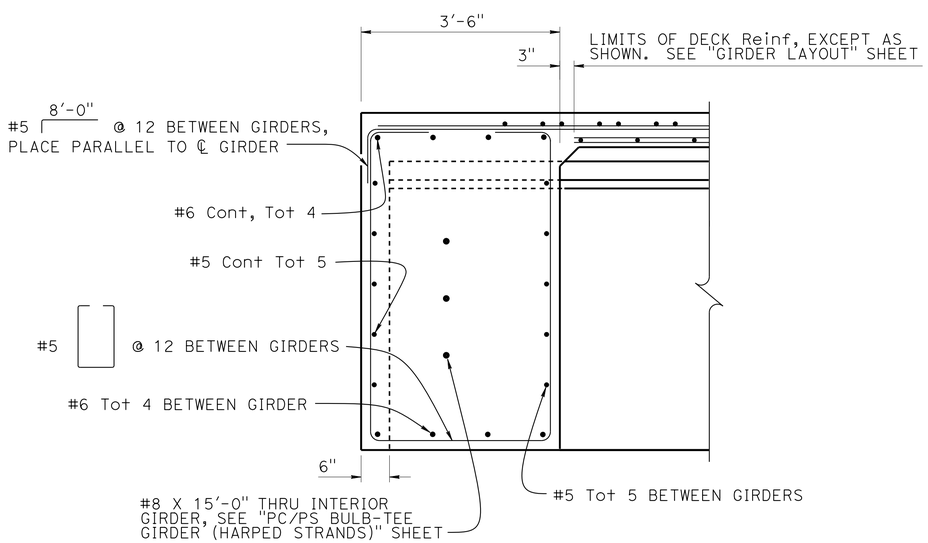

SECTION A-A

3/4" = 1'-0"

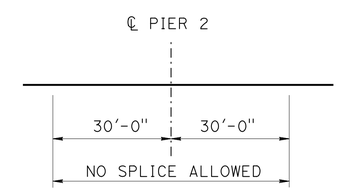

DETAIL K

NO SCALE

DESIGN	BY Lewis L Shen	CHECKED Sharon Yen	
DETAILS	BY Nancy C Gwynn	CHECKED Sharon Yen	
QUANTITIES	BY Seung Pyo Hong	CHECKED Mufeed Khalaf	

STATE OF CALIFORNIA
DEPARTMENT OF TRANSPORTATION

DIVISION OF ENGINEERING SERVICES
STRUCTURE DESIGN
DESIGN BRANCH 3

BRIDGE NO. 49-0263L
POST MILE 63.58

SAN MARCOS Cr Br (REPLACE LEFT)
GIRDER REINFORCEMENT

STRUCTURES DESIGN DETAIL SHEET (ENGLISH) (REV. 09-01-10)

ORIGINAL SCALE IN INCHES FOR REDUCED PLANS 0 1 2 3

UNIT: 3578
PROJECT NUMBER & PHASE: 05000200201
CONTRACT NO.: 05-0G0404

DISREGARD PRINTS BEARING EARLIER REVISION DATES

REVISION DATES 2-26-15 3-11-15

SHEET 16 OF 29

FILE => 49-0263l-l-girref.dgn

USERNAME => s115755 DATE PLOTTED => 22-JUL-2016 TIME PLOTTED => 17:57

DIST	COUNTY	ROUTE	POST MILES TOTAL PROJECT	SHEET No.	TOTAL SHEETS
05	SLO,Mon	101	63.2/R69.3, R0.0/R1.9	796	858

REGISTERED CIVIL ENGINEER 4-22-16 DATE

5-2-16
PLANS APPROVAL DATE

REGISTERED PROFESSIONAL ENGINEER Jose M Aquino III No. 58386 Exp. 12-31-16 CIVIL STATE OF CALIFORNIA

The State of California or its officers or agents shall not be responsible for the accuracy or completeness of scanned copies of this plan sheet.

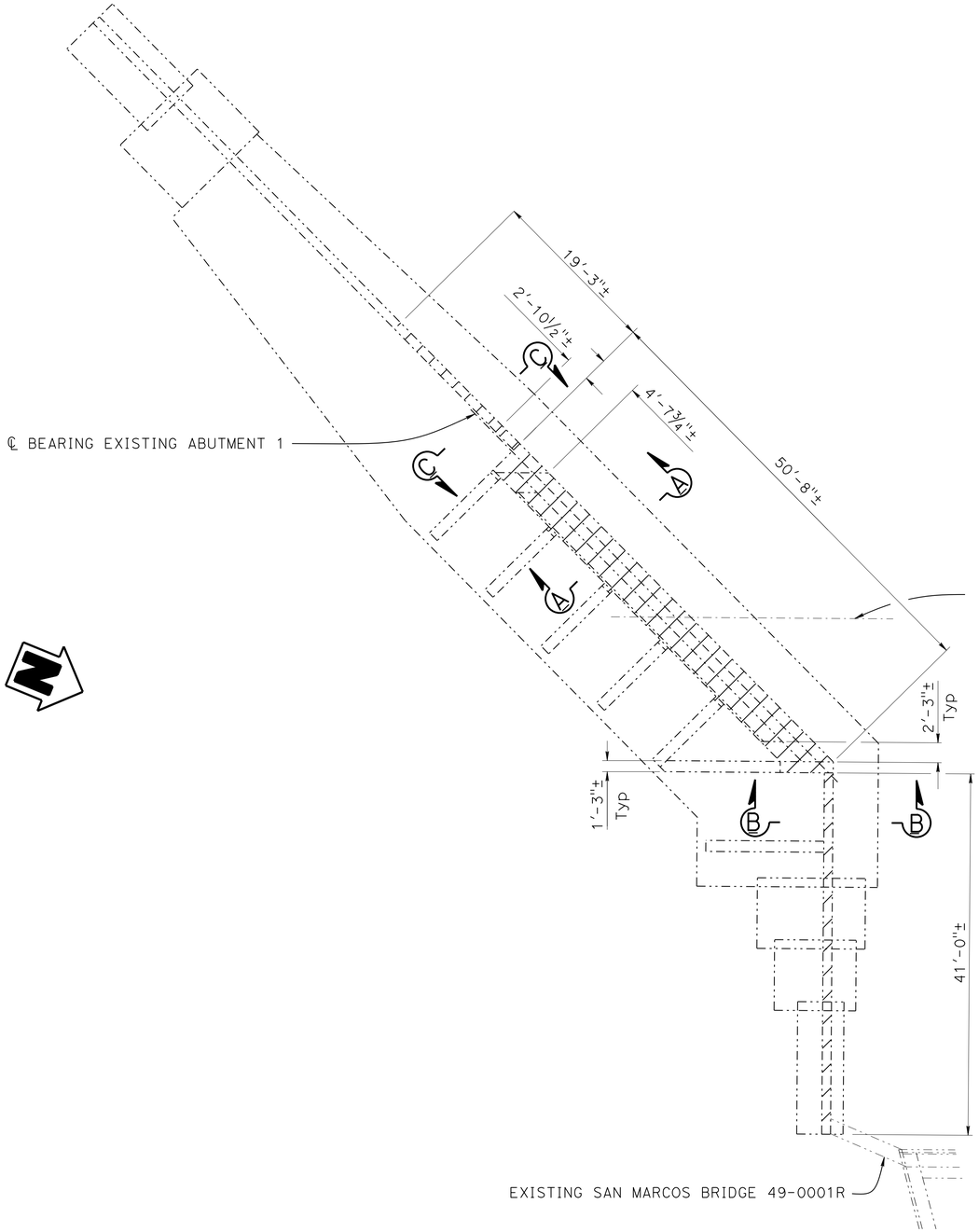

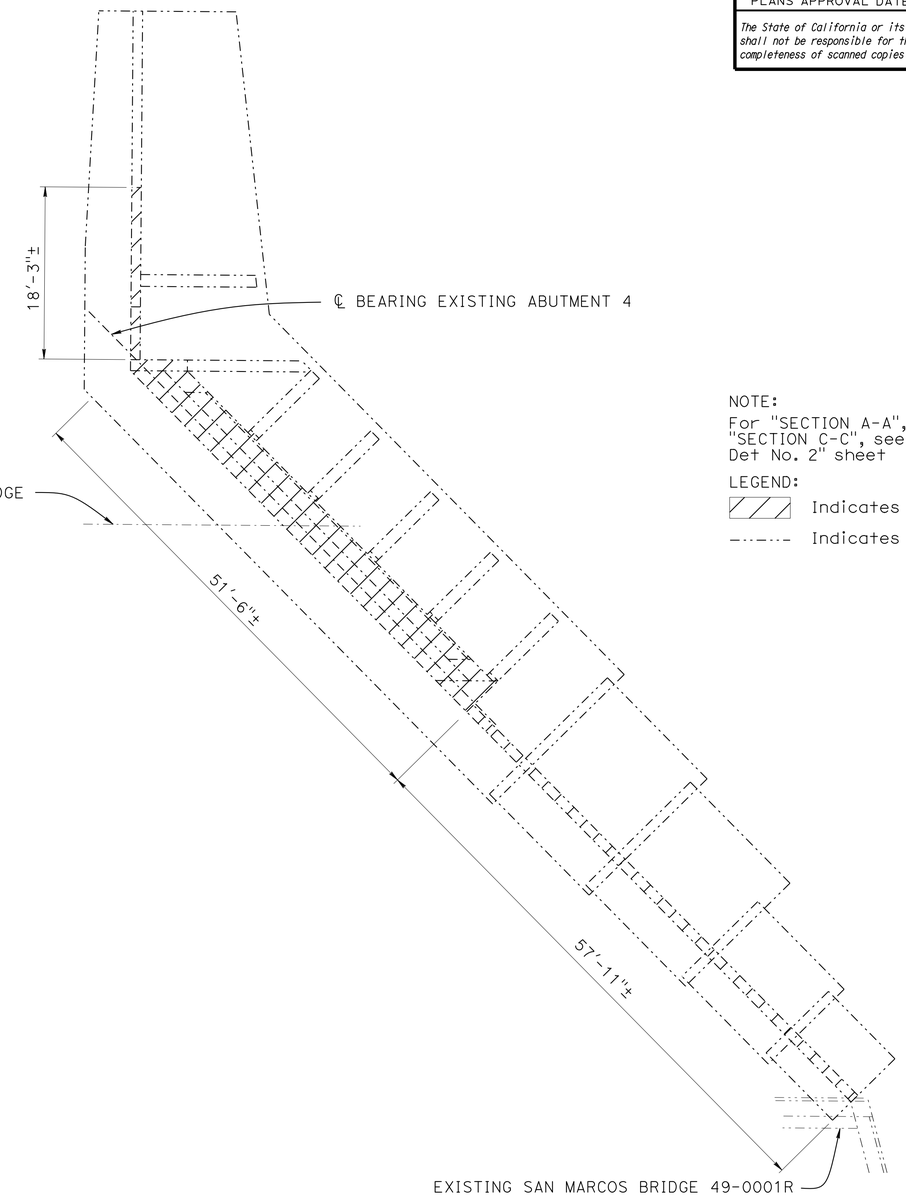

NOTE:
For "SECTION A-A", "SECTION B-B" and "SECTION C-C", see "CONCRETE REMOVAL Det No. 2" sheet

LEGEND:
Indicates concrete removal
Indicates existing structure

NOTE:
THE CONTRACTOR MUST VERIFY ALL CONTROLLING FIELD DIMENSIONS BEFORE ORDERING OR FABRICATING ANY MATERIAL.

ABUTMENT PLAN

⅛" = 1'-0"

	BY	CHECKED
DESIGN	Lewis L Shen	Sharon Yen
DETAILS	Nancy C Gwynn	Sharon Yen
QUANTITIES	Seung Pyo Hong	Mufeed Khalaf

STATE OF CALIFORNIA
DEPARTMENT OF TRANSPORTATION

DIVISION OF ENGINEERING SERVICES
STRUCTURE DESIGN
DESIGN BRANCH 3

BRIDGE NO. 49-0263L
POST MILE 63.58

SAN MARCOS Cr Br (REPLACE LEFT)
CONCRETE REMOVAL Det No. 1

STRUCTURES DESIGN DETAIL SHEET (ENGLISH) (REV. 09-01-10)

ORIGINAL SCALE IN INCHES FOR REDUCED PLANS 0 1 2 3

UNIT: 3578
PROJECT NUMBER & PHASE: 05000200201
CONTRACT NO.: 05-0G0404

DISREGARD PRINTS BEARING EARLIER REVISION DATES

REVISION DATES 10-7-15

SHEET 17 OF 29

FILE => 49-0263l-r-conrem01.dgn

USERNAME => s115755 DATE PLOTTED => 22-JUL-2016 TIME PLOTTED => 17:57

DIST	COUNTY	ROUTE	POST MILES TOTAL PROJECT	SHEET No.	TOTAL SHEETS
05	SLO,Mon	101	63.2/R69.3, R0.0/R1.9	797	858

REGISTERED CIVIL ENGINEER 4-22-16 DATE

5-2-16
PLANS APPROVAL DATE

REGISTERED PROFESSIONAL ENGINEER
Jose M Aquino III
No. 58386
Exp. 12-31-16
CIVIL
STATE OF CALIFORNIA

The State of California or its officers or agents shall not be responsible for the accuracy or completeness of scanned copies of this plan sheet.

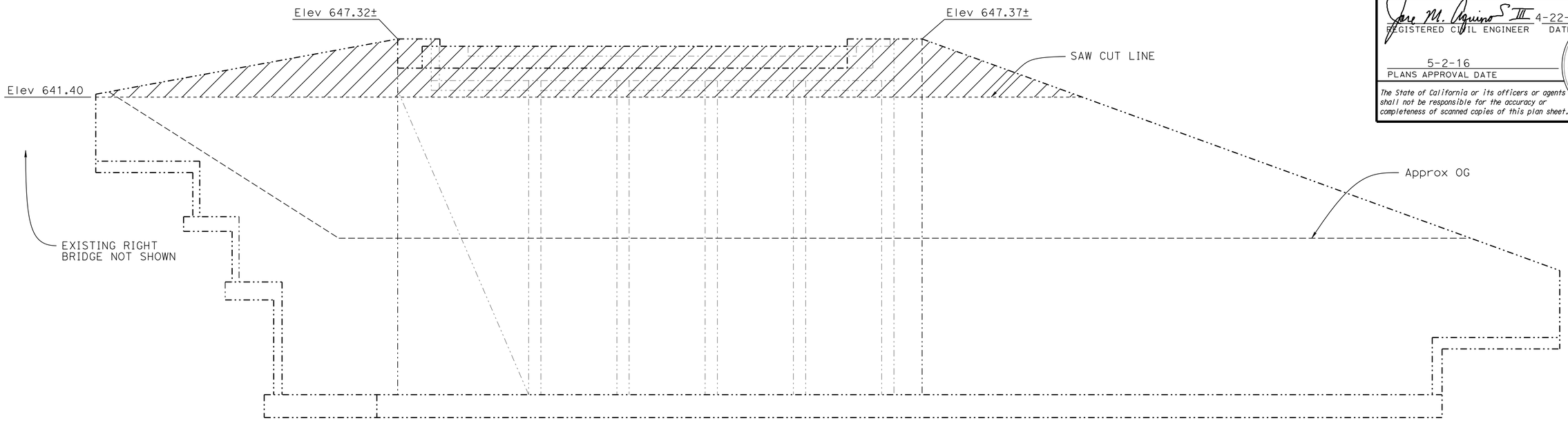

ABUTMENT 1 ELEVATION

3/16" = 1'-0"

NOTES:

1. Details shown for Abutment 1, Abutment 4 similar
2. For details not shown, see "CONCRETE REMOVAL DET NO. 1" sheet

LEGEND:

Indicates concrete removal

Indicates existing structure

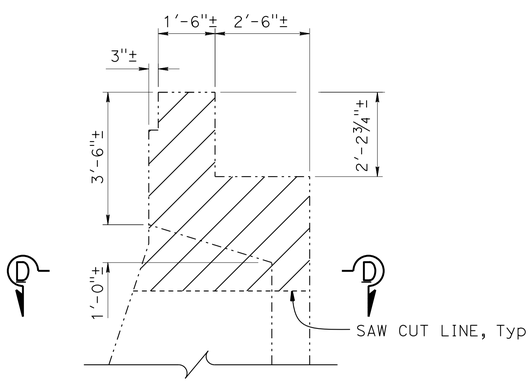

SECTION A-A

1/2" = 1'-0"

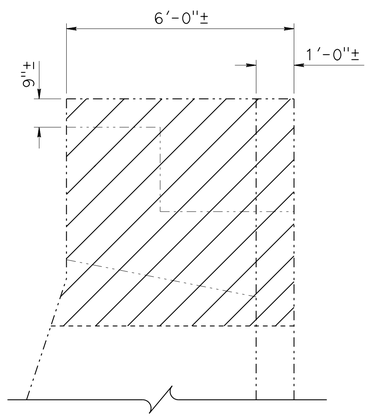

SECTION B-B

1/2" = 1'-0"

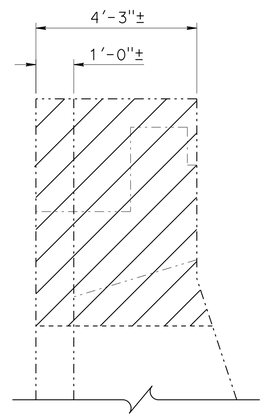

SECTION C-C

1/2" = 1'-0"

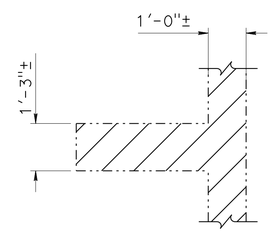

SECTION D-D

1/2" = 1'-0"

NOTE:
THE CONTRACTOR MUST VERIFY ALL CONTROLLING FIELD DIMENSIONS BEFORE ORDERING OR FABRICATING ANY MATERIAL.

	BY	CHECKED
DESIGN	Lewis L Shen	Sharon Yen
DETAILS	Nancy C Gwynn	Sharon Yen
QUANTITIES	Seung Pyo Hong	Mufeed Khalaf

STATE OF CALIFORNIA
DEPARTMENT OF TRANSPORTATION

DIVISION OF ENGINEERING SERVICES
STRUCTURE DESIGN
DESIGN BRANCH 3

BRIDGE NO. 49-0263L
POST MILE 63.58

SAN MARCOS Cr Br (REPLACE LEFT)
CONCRETE REMOVAL Det No. 2

STRUCTURES DESIGN DETAIL SHEET (ENGLISH) (REV. 09-01-10)

ORIGINAL SCALE IN INCHES FOR REDUCED PLANS 0 1 2 3

UNIT: 3578
PROJECT NUMBER & PHASE: 05000200201
CONTRACT NO.: 05-0G0404

DISREGARD PRINTS BEARING EARLIER REVISION DATES

REVISION DATES 10-7-15

SHEET 18 OF 29

FILE => 49-0263l-r-conrem02.dgn

USERNAME => s115755 DATE PLOTTED => 22-JUL-2016 TIME PLOTTED => 17:57

DIST	COUNTY	ROUTE	POST MILES TOTAL PROJECT	SHEET No.	TOTAL SHEETS
05	SLO,Mon	101	63.2/R69.3, R0.0/R1.9	798	858

REGISTERED CIVIL ENGINEER 4-22-16 DATE

5-2-16
PLANS APPROVAL DATE

REGISTERED PROFESSIONAL ENGINEER
Jose M Aquino III
No. 58386
Exp. 12-31-16
CIVIL
STATE OF CALIFORNIA

The State of California or its officers or agents shall not be responsible for the accuracy or completeness of scanned copies of this plan sheet.

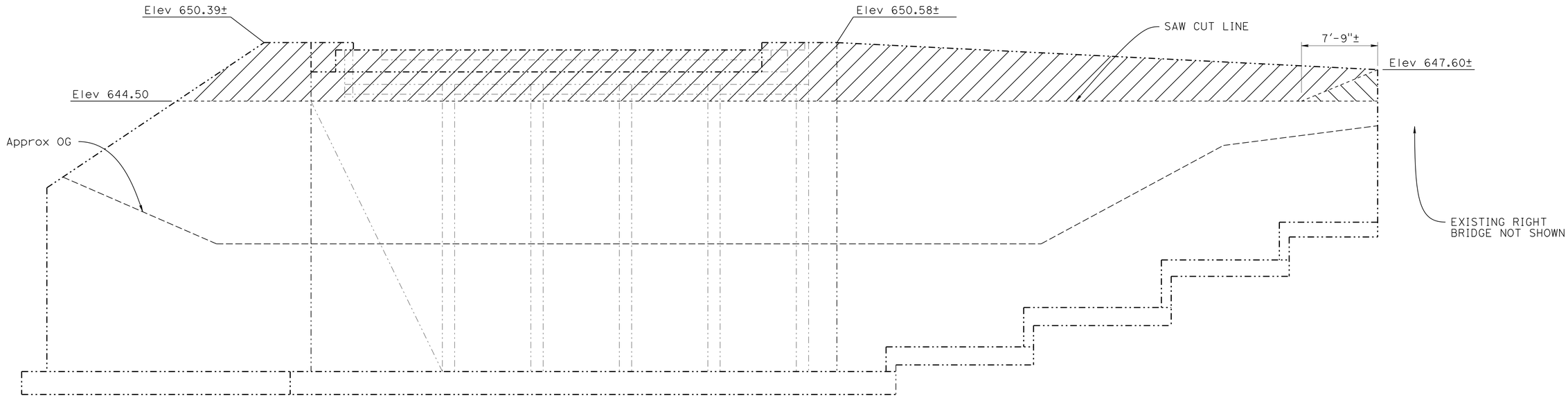

ABUTMENT 4 ELEVATION

3/16" = 1'-0"

NOTE:
For details not shown, see "CONCRETE REMOVAL DET NO. 1" sheet

LEGEND:

Indicates concrete removal

See "SAN MARCOS CREEK Br (REPLACE RIGHT)" 49-0263R, "CONCRETE REMOVAL Det No. 2" sheet

Indicates existing structure

NOTE:
THE CONTRACTOR MUST VERIFY ALL CONTROLLING FIELD DIMENSIONS BEFORE ORDERING OR FABRICATING ANY MATERIAL.

	BY	CHECKED
DESIGN	Lewis L Shen	Sharon Yen
DETAILS	Nancy C Gwynn	Sharon Yen
QUANTITIES	Seung Pyo Hong	Mufeed Khalaf

STATE OF CALIFORNIA
DEPARTMENT OF TRANSPORTATION

DIVISION OF ENGINEERING SERVICES
STRUCTURE DESIGN
DESIGN BRANCH 3

BRIDGE NO. 49-0263L
POST MILE 63.58

SAN MARCOS Cr Br (REPLACE LEFT)
CONCRETE REMOVAL Det No. 3

STRUCTURES DESIGN DETAIL SHEET (ENGLISH) (REV. 09-01-10)

ORIGINAL SCALE IN INCHES FOR REDUCED PLANS 0 1 2 3

UNIT: 3578
PROJECT NUMBER & PHASE: 05000200201
CONTRACT NO.: 05-0G0404

DISREGARD PRINTS BEARING EARLIER REVISION DATES

REVISION DATES: 10-9-15

SHEET 19 OF 29

FILE => 49-0263l-r-conrem03.dgn

USERNAME => s115755 DATE PLOTTED => 22-JUL-2016 TIME PLOTTED => 17:57

DIST	COUNTY	ROUTE	POST MILES TOTAL PROJECT	SHEET No.	TOTAL SHEETS
05	SLO,Mon	101	63.2/R69.3, R0.0/R1.9	799	858

REGISTERED CIVIL ENGINEER 4-22-16 DATE

5-2-16
PLANS APPROVAL DATE

REGISTERED PROFESSIONAL ENGINEER Jose M Aquino III No. 58386 Exp. 12-31-16 CIVIL STATE OF CALIFORNIA

The State of California or its officers or agents shall not be responsible for the accuracy or completeness of scanned copies of this plan sheet.

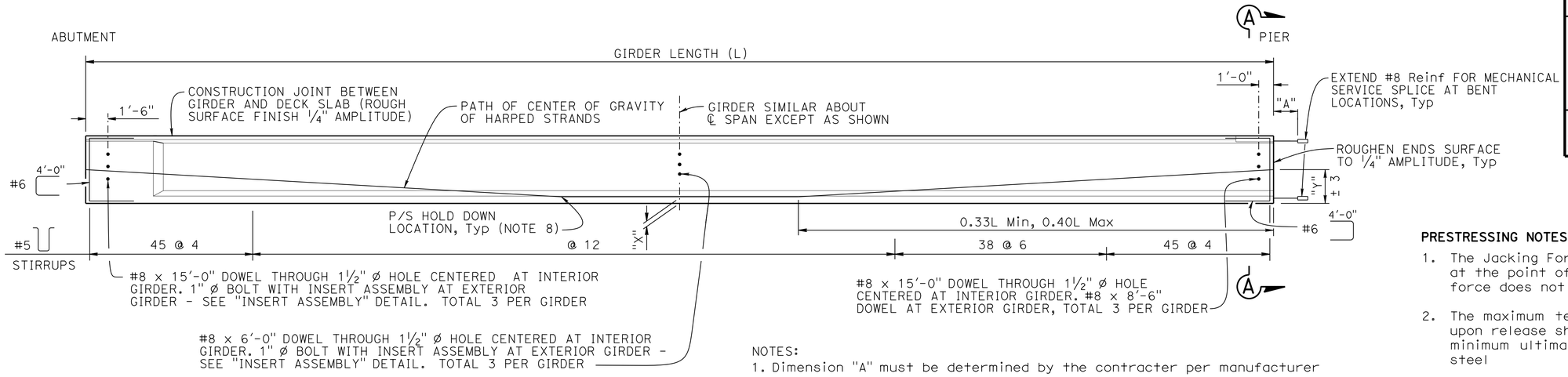

NOTES:
1. Dimension "A" must be determined by the contracter per manufacturer
2. Girder ends to be cast such that a level surface is provided at bearing pads
3. For abutment end block details, see "PC/PS BULB-TEE GIRDER (MISCELLANEOUS DETAILS)" sheet

GIRDER ELEVATION

NO SCALE

LOCATION	GIRDER LENGTH (L)	"X" (in)	JACKING FORCE (P) (kips)	As, Min (in²)	"Y" (in)	CONCRETE STRENGTH (ksi)		MIDSPAN DEAD LOAD DEFLECTION (in)	
						f'ci	f'c	DECK	RAIL
ALL	107'-10"	4	1400	7.0	36	5.0	5.5	3"	1/4"
		6	1500	7.5					

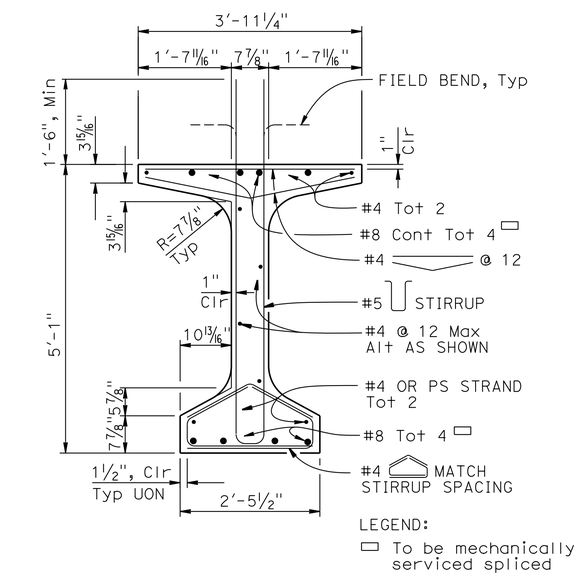

TYPICAL GIRDER SECTION

3/4" = 1'-0"

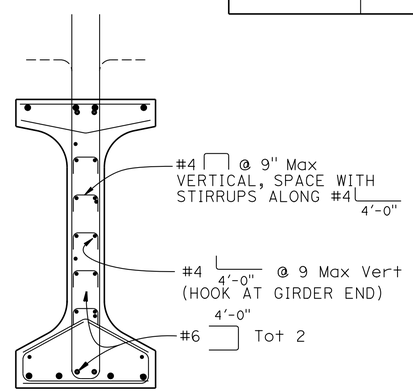

NOTE:
For details not shown, see "TYPICAL GIRDER SECTION"

SECTION A-A

3/4" = 1'-0"

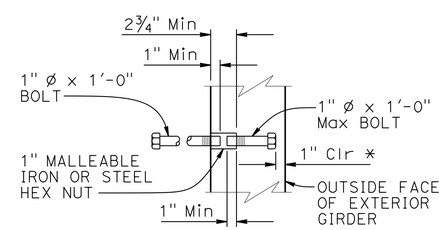

* DIMENSION MAY BE INCREASED WHEN INSERT ASSEMBLY IS USED AT END BLOCK

INSERT ASSEMBLY

NO SCALE

PRESTRESSING NOTES:

1. The Jacking Force (P) is the jacking force required at the point of control along the span. The jacking force does not include any fabrication specific losses
2. The maximum tensile stress in the prestressing steel upon release shall not exceed 75% of the specified minimum ultimate tensile strength of the prestressing steel
3. The maximum temporary tensile stress (jacking stress) in the prestressing steel shall not exceed 80% of the specified minimum ultimate tensile strength of the prestressing steel
4. Concrete strength:
   f'ci is at time of initial stressing
   f'c is at 28 days
5. Deflection components are informational and will be used to set screed line elevations
6. Screed line elevations for deck concrete will be determined by the Engineer
7. Contractor may interpolate "P" and "X" values between the limits shown, as approved by the Engineer
8. There shall be a minimum of two hold downs per girder for the prestressing
9. Prestressing strand shall be 270 ksi low relaxation
10. As, Min is the minimum area required of prestressing steel

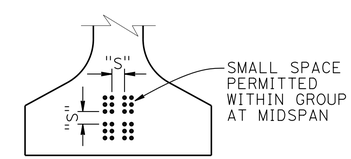

CLEARANCES FOR PRETENSIONED STRANDS

NOTES:

1. Strands may be bundled in groups consisting of 3 vertically, 2 horizontally, and separated at the ends
2. The minimum distance "S" between groups or individual strands is 1 3/4" for 0.5" Ø strand and 2" for 0.6" Ø strand
3. "S" is measured between centers of adjacent strands
4. No deviation allowed

NOTE: For "WELDED WIRE REINFORCEMENT (WWR) ALTERNATIVE", see "PC/PS BULB-TEE GIRDER (MISCELLANEOUS DETAILS)" sheet

	BY	CHECKED
DESIGN	Lewis L Shen	Sharon Yen
DETAILS	Nancy C Gwynn	Sharon Yen
QUANTITIES	Seung Pyo Hong	Mufeed Khalaf

STATE OF CALIFORNIA
DEPARTMENT OF TRANSPORTATION

DIVISION OF ENGINEERING SERVICES
STRUCTURE DESIGN
DESIGN BRANCH 3

BRIDGE NO. 49-0263L
POST MILE 63.58

SAN MARCOS Cr Br (REPLACE LEFT)
PC/PS BULB-TEE GIRDER (HARPED STRANDS)

STRUCTURES DESIGN DETAIL SHEET (ENGLISH) (REV. 09-01-10)

ORIGINAL SCALE IN INCHES FOR REDUCED PLANS 0 1 2 3

UNIT: 3578
PROJECT NUMBER & PHASE: 05000200201
CONTRACT NO.: 05-0G0404

DISREGARD PRINTS BEARING EARLIER REVISION DATES

REVISION DATES 6-30-15 8-3-15

SHEET 20 OF 29

FILE => 49-0263l-t-girdet01.dgn

USERNAME => s115755 DATE PLOTTED => 22-JUL-2016 TIME PLOTTED => 17:57

DIST	COUNTY	ROUTE	POST MILES TOTAL PROJECT	SHEET No.	TOTAL SHEETS
05	SLO,Mon	101	63.2/R69.3, R0.0/R1.9	800	858

REGISTERED CIVIL ENGINEER 4-22-16 DATE

5-2-16
PLANS APPROVAL DATE

REGISTERED PROFESSIONAL ENGINEER Jose M Aquino III No. 58386 Exp. 12-31-16 CIVIL STATE OF CALIFORNIA

The State of California or its officers or agents shall not be responsible for the accuracy or completeness of scanned copies of this plan sheet.

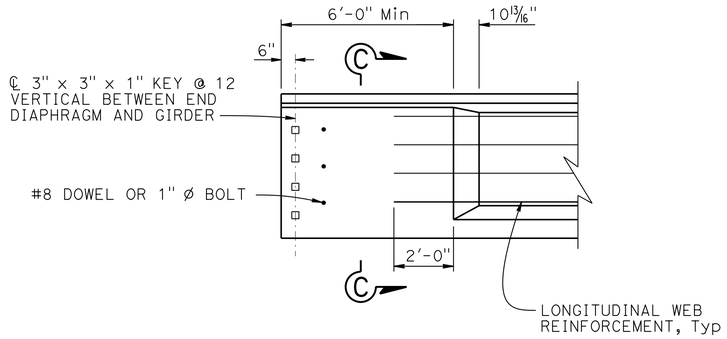

ABUTMENT END BLOCK - ELEVATION

3/8" = 1'-0"

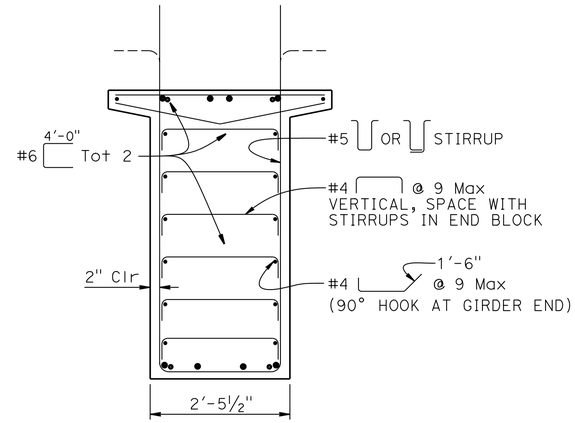

NOTE:
For details not shown, see "TYPICAL GIRDER SECTION" detail

SECTION C-C

3/4" = 1'-0"

NOTES:
1. For details shown but not noted, see "TYPICAL GIRDER SECTION" detail
2. W8 WWR not shown

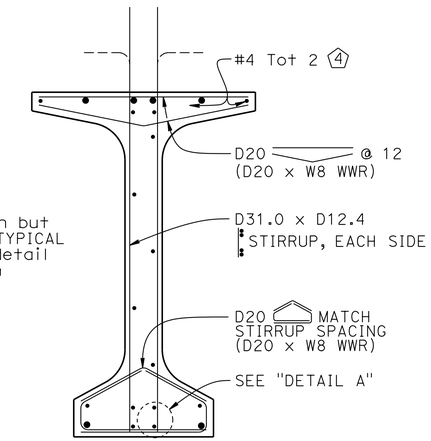

WELDED WIRE REINFORCEMENT (WWR) ALTERNATIVE

NO SCALE

NOTE:
For details not shown, see "PC/PS BULB-TEE GIRDER (HARPED STRANDS)" sheet

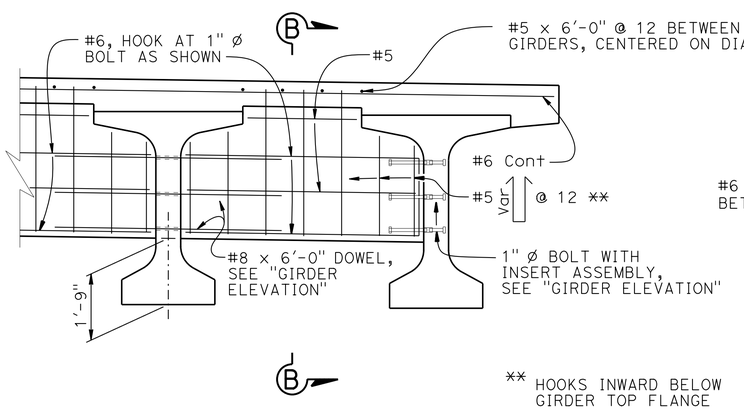

** HOOKS INWARD BELOW GIRDER TOP FLANGE

INTERMEDIATE DIAPHRAGM

1/2" = 1'-0"

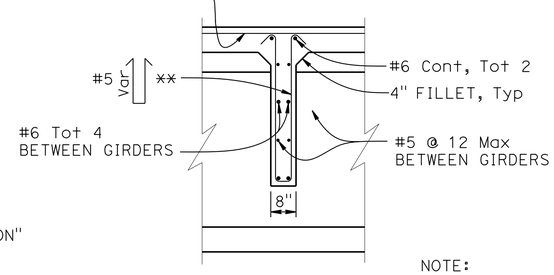

NOTE:
Diaphragm may be vertical or normal to deck grade

SECTION B-B

1/2" = 1'-0"

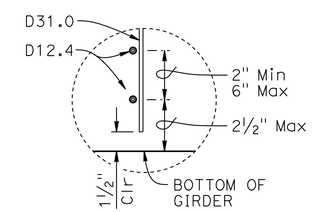

DETAIL A

NO SCALE

NOTES:
1. Bottom of stirrup WWR detail shown, top similar
2. Longitudinal wire area shall be 40% or greater of vertical deformed wire's area

	BY	CHECKED
DESIGN	Lewis L Shen	Sharon Yen
DETAILS	Nancy C Gwynn	Sharon Yen
QUANTITIES	Seung Pyo Hong	Mufeed Khalaf

STATE OF CALIFORNIA
DEPARTMENT OF TRANSPORTATION

DIVISION OF ENGINEERING SERVICES
STRUCTURE DESIGN
DESIGN BRANCH 3

BRIDGE NO. 49-0263L
POST MILE 63.58

SAN MARCOS Cr Br (REPLACE LEFT)

PC/PS BULB-TEE GIRDER (MISCELLANEOUS DETAILS)

STRUCTURES DESIGN DETAIL SHEET (ENGLISH) (REV. 09-01-10)

ORIGINAL SCALE IN INCHES FOR REDUCED PLANS 0 1 2 3

UNIT: 3578
PROJECT NUMBER & PHASE: 05000200201
CONTRACT NO.: 05-0G0404

DISREGARD PRINTS BEARING EARLIER REVISION DATES

REVISION DATES 6-30-15

SHEET 21 OF 29

FILE => 49-0263l-t-girdet02.dgn

USERNAME => s115755 DATE PLOTTED => 22-JUL-2016 TIME PLOTTED => 17:57

DIST	COUNTY	ROUTE	POST MILES TOTAL PROJECT	SHEET No.	TOTAL SHEETS
05	SLO,Mon	101	63.2/R69.3, R0.0/R1.9	801	858

REGISTERED CIVIL ENGINEER 4-22-16 DATE

5-2-16
PLANS APPROVAL DATE

REGISTERED PROFESSIONAL ENGINEER
Jose M Aquino III
No. 58386
Exp. 12-31-16
CIVIL
STATE OF CALIFORNIA

The State of California or its officers or agents shall not be responsible for the accuracy or completeness of scanned copies of this plan sheet.

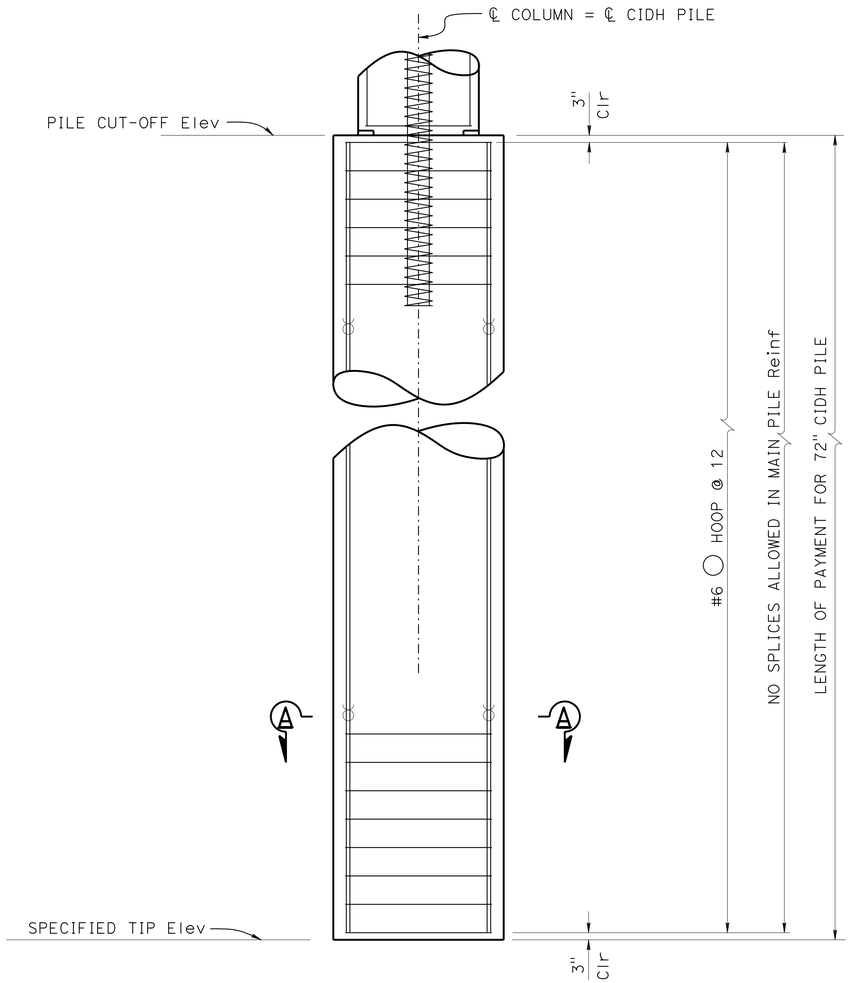

72" Ø CIDH PILE

3/8" = 1'-0"

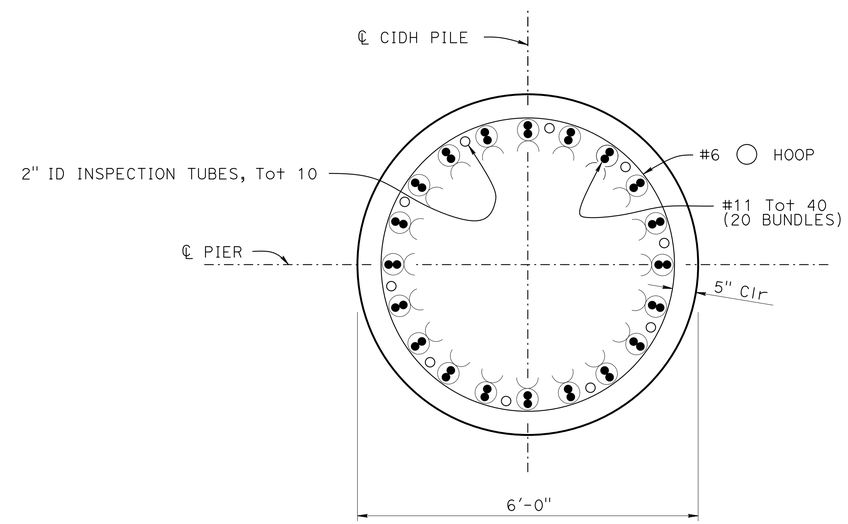

SECTION A-A

3/4" = 1'-0"

LEGEND:

◯◯ Indicates bundled bars

NOTES:

1. All hoops are "ultimate" butt spliced continuous
2. For "PILE DATA TABLE", see "INDEX TO PLANS No. 1" sheet

DESIGN	BY Lewis L Shen	CHECKED Sharon Yen	
DETAILS	BY Nancy C Gwynn	CHECKED Sharon Yen	
QUANTITIES	BY Seung Pyo Hong	CHECKED Mufeed Khalaf	

STATE OF CALIFORNIA
DEPARTMENT OF TRANSPORTATION

DIVISION OF ENGINEERING SERVICES
STRUCTURE DESIGN
DESIGN BRANCH 3

BRIDGE NO. 49-0263L
POST MILE 63.58

SAN MARCOS Cr Br (REPLACE LEFT)
72" Ø CIDH PILE DETAILS

STRUCTURES DESIGN DETAIL SHEET (ENGLISH) (REV. 09-01-10)

ORIGINAL SCALE IN INCHES FOR REDUCED PLANS 0 1 2 3

UNIT: 3578
PROJECT NUMBER & PHASE: 05000200201
CONTRACT NO.: 05-0G0404

DISREGARD PRINTS BEARING EARLIER REVISION DATES

REVISION DATES 3-16-15 6-18-15

SHEET 22 OF 29

FILE => 49-0263l-v-72cidh.dgn

USERNAME => s115755 DATE PLOTTED => 22-JUL-2016 TIME PLOTTED => 17:58

DIST	COUNTY	ROUTE	POST MILES TOTAL PROJECT	SHEET No.	TOTAL SHEETS
05	SLO,Mon	101	63.2/R69.3, R0.0/R1.9	802	858

REGISTERED CIVIL ENGINEER 4-22-16 DATE

5-2-16
PLANS APPROVAL DATE

REGISTERED PROFESSIONAL ENGINEER Jose M Aquino III No. 58386 Exp. 12-31-16 CIVIL STATE OF CALIFORNIA

The State of California or its officers or agents shall not be responsible for the accuracy or completeness of electronic copies of this plan sheet.

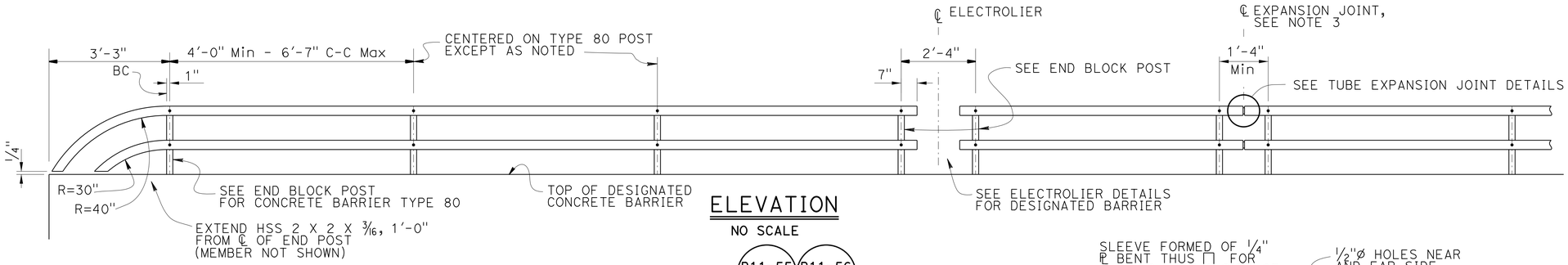

ELEVATION
NO SCALE

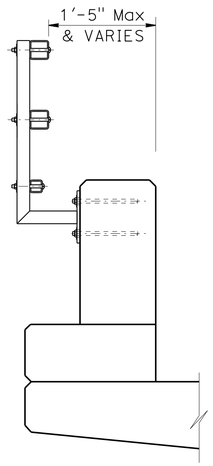

NOTE:
For details not shown, see "TYPE 732 OR 736"

TYPE 80 END BLOCK POST
1" = 1'-0"

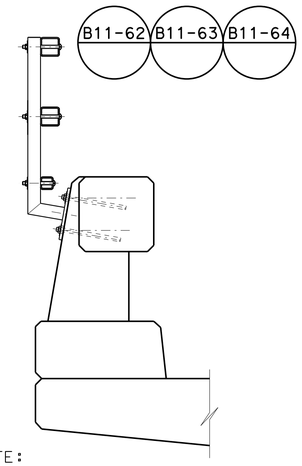

NOTE:
For details not shown, see "TYPE 732 OR 736"

TYPE 80
1" = 1'-0"

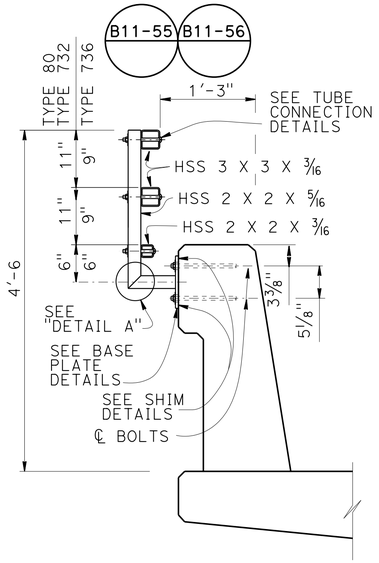

TYPE 732 OR 736
1" = 1'-0"

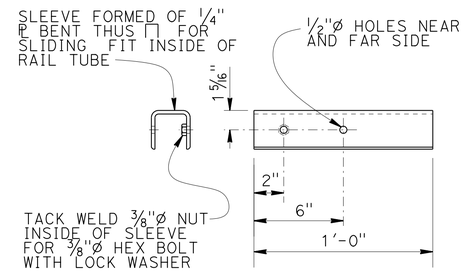

SLEEVE DETAIL
NO SCALE

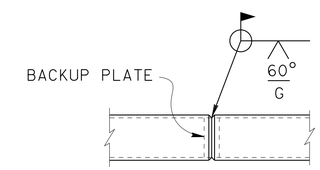

WELDED SPLICE DETAIL
NO SCALE

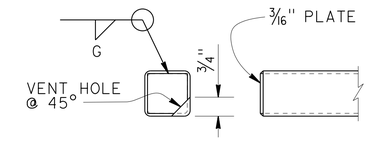

RAIL CAP DETAIL
NO SCALE

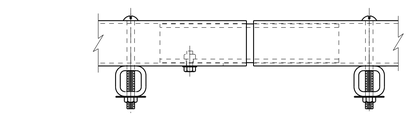

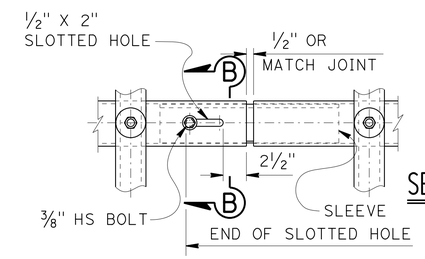

SECTION B-B
NO SCALE

TUBE EXPANSION JOINT DETAILS
NO SCALE

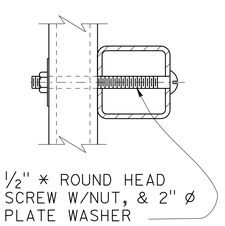

TUBE CONNECTION DETAIL
NO SCALE

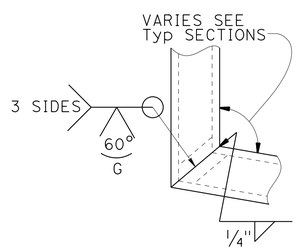

DETAIL A
NO SCALE

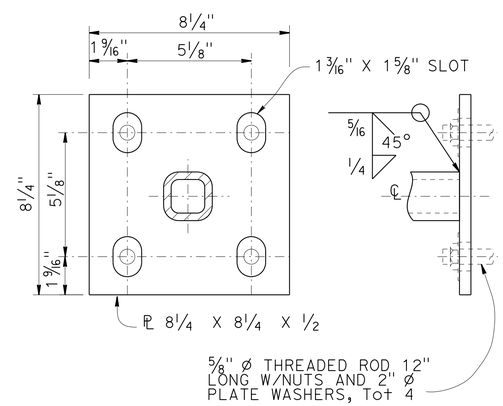

BASE PLATE DETAIL
NO SCALE

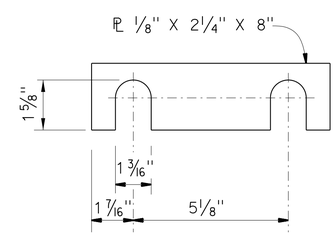

SHIM DETAILS
NO SCALE

NOTES:

1. Post must be normal to railing.
2. Rail tubes must be shop bent or fabricated to fit horizontal curve when radius is less than 950'.
3. Tube expansion joints must be located in the tubes spanning deck or wall joints. Increase joint width in tubes to match expansion joint width and increase sleeve length correspondingly.
4. Top rail tube must be continuous over not less than two posts except a short post spacing is permitted near deck or wall joints, electroliers, or other rail discontinuities as noted.
5. See Project Plans for limits of tubular bicycle railing.

STANDARD DRAWING
FILE NO. xs16-035
APPROVAL DATE October 2014

The components of this Bridge Standard Drawing have been prepared under the responsible charge of the Technical Owner, a registered civil engineer in the State of California. Refer to: http//www.dot.ca.gov/hq/esc/techpubs/manual/bridgemanuals/bridge-standard-detail-sheet/index.html. The selection and proper application of the component design and any modifications shown have been prepared under the responsible charge of the registered civil engineer for the project.

STATE OF CALIFORNIA
DEPARTMENT OF TRANSPORTATION

DIVISION OF ENGINEERING SERVICES 3

BRIDGE NO. 49-0263L
POST MILE 63.58

SAN MARCOS Cr Br (REPLACE LEFT)
CONCRETE BARRIER TYPE 80, 732 & 736
TUBULAR BICYCLE RAILING DETAILS

DS OSD 2147A (ENGLISH STANDARD DRAWING "XS" BORDER REV. (02-02-11)

ORIGINAL SCALE IN INCHES FOR REDUCED PLANS 0 1 2 3

UNIT: 3578
PROJECT NUMBER & PHASE: 05000200201
CONTRACT NO.: 05-0G0404

DISREGARD PRINTS BEARING EARLIER REVISION DATES

REVISION DATES: 8/19/12 10-1-14

SHEET 23 OF 29

FILE => 49-0263l-x-bikerl.dgn

USERNAME => s115755 DATE PLOTTED => 22-JUL-2016 TIME PLOTTED => 17:58

DIST	COUNTY	ROUTE	POST MILES TOTAL PROJECT	SHEET No.	TOTAL SHEETS
05	SLO,Mon	101	63.2/R69.3, R0.0/R1.9	803	858

REGISTERED CIVIL ENGINEER 4-22-16 DATE

5-2-16
PLANS APPROVAL DATE

REGISTERED PROFESSIONAL ENGINEER Jose M Aquino III No. 58386 Exp. 12-31-16 CIVIL STATE OF CALIFORNIA

The State of California or its officers or agents shall not be responsible for the accuracy or completeness of electronic copies of this plan sheet.

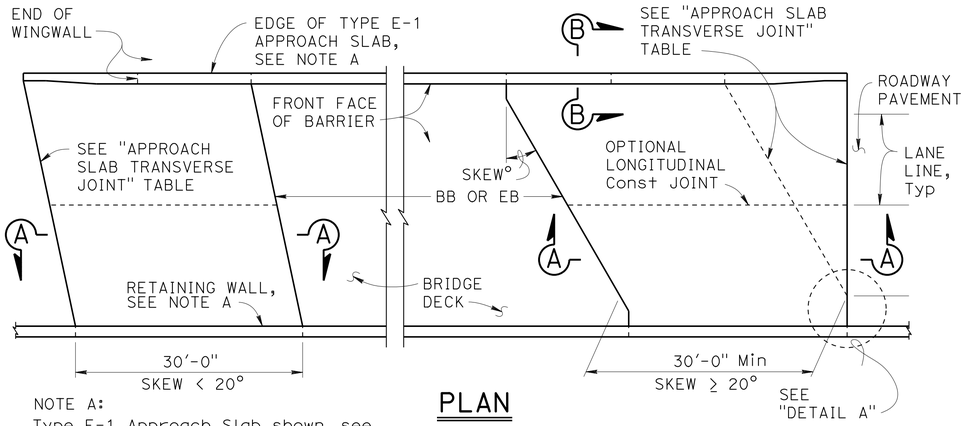

NOTE A:
Type E-1 Approach Slab shown, see "SECTION B-B" for Type E-2 details.

PLAN
1" = 10'

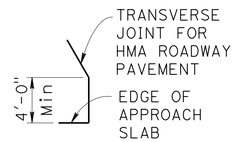

DETAIL A
No Scale

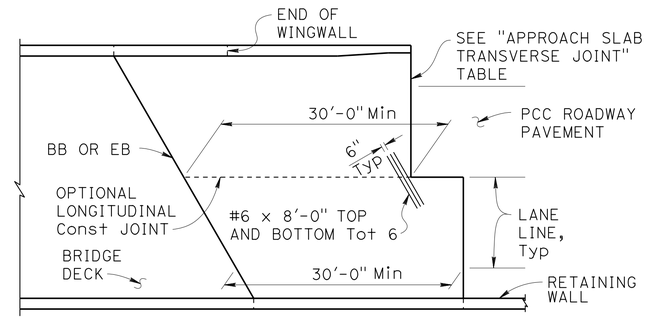

END STAGGER DETAIL
1" = 10'

APPROACH SLAB TRANSVERSE JOINT		
APPROACH SKEW	WITH HMA ROADWAY PAVEMENT	WITH PCC ROADWAY PAVEMENT
< 20°	PARALLEL TO BB OR EB	PARALLEL TO BB OR EB
20° - 45°	PARALLEL TO BB OR EB USE "DETAIL A"	STAGGER AT LANE LINES 24' TO 36' APART, SEE "END STAGGER DETAIL"
> 45°	PARALLEL TO BB OR EB USE "DETAIL A"	STAGGER AT EACH LANE LINE, SEE "END STAGGER DETAIL"

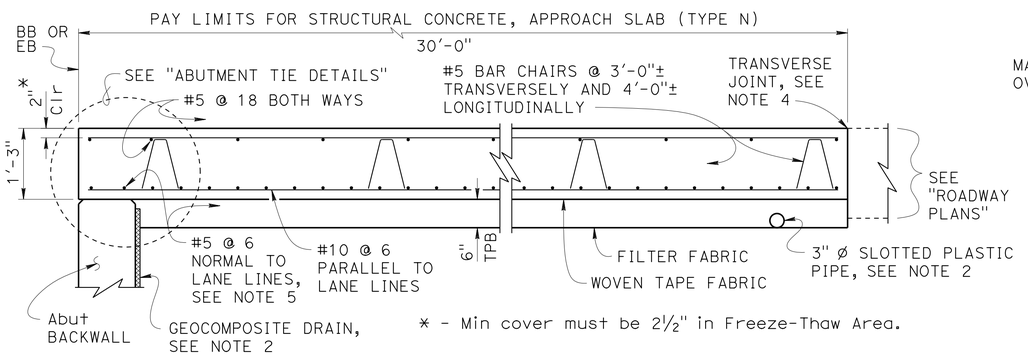

* - Min cover must be 2½" in Freeze-Thaw Area.

SECTION A-A
¾" = 1'-0"

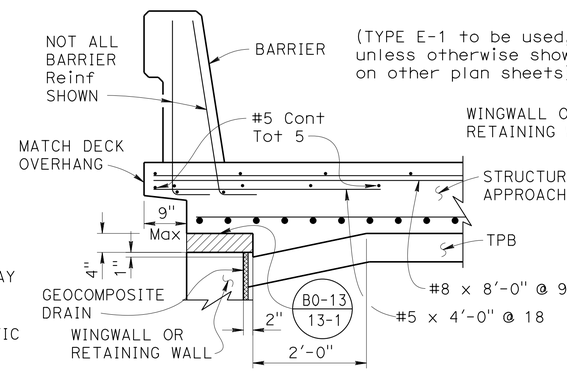

TYPE E-1

Indicates Expanded Polystyrene, remove after concrete is placed.

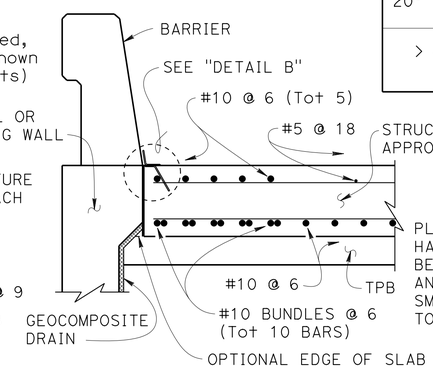

TYPE E-2

SECTION B-B
¾" = 1'-0"

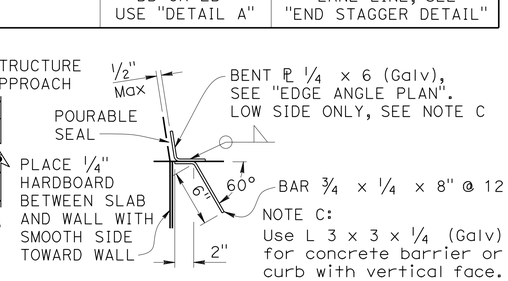

NOTE C:
Use L 3 x 3 x ¼ (Galv) for concrete barrier or curb with vertical face.

DETAIL B
1½" = 1'-0"

DESIGN NOTES

DESIGN: AASHTO LRFD Bridge Design Specifications, 2012 Edition with Caltrans Amendments, preface dated January 2014

LIMIT STATES: Service I, Strength I & II, Extreme II and Fatigue I (γ_{FAT} = 1.0)

DEAD LOAD: Includes 35 psf for future wearing surface

LIVE LOAD: HL93 and permit design load
Equivalent strip width method: W_1 = 12 ft
Slab span: L_1 = 24.5 ft

REINFORCED CONCRETE:
f_y = 60 ksi
f'_c = 3.6 ksi
n = 8

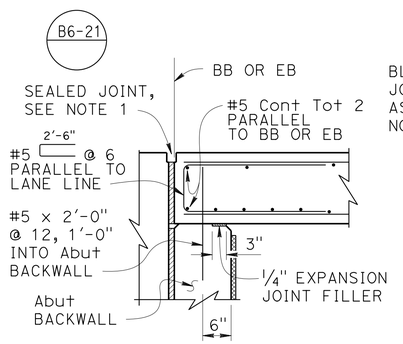

MR ≤ 2"

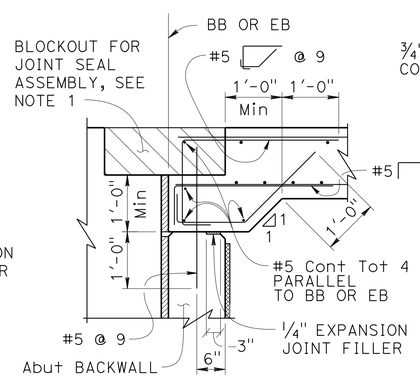

MR > 2"

ABUTMENT TIE DETAILS
¾" = 1'-0"

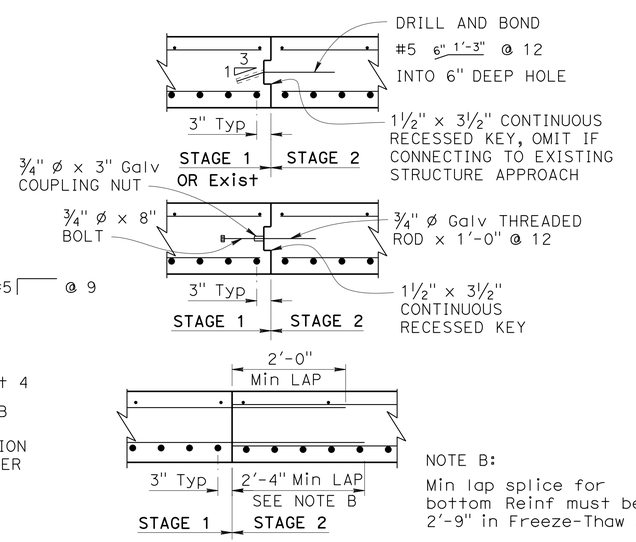

NOTE B:
Min lap splice for bottom Reinf must be 2'-9" in Freeze-Thaw Area.

LONGITUDINAL CONSTRUCTION JOINT ALTERNATIVES
¾" = 1'-0"

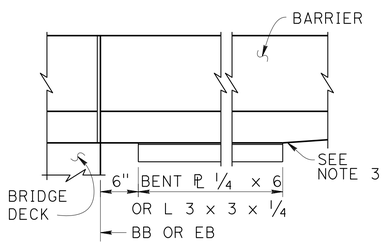

EDGE ANGLE PLAN
1" = 1'-0"

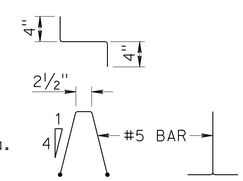

BAR CHAIR DETAIL
1" = 1'-0"

NOTES:

1. For joint protection details, blockout dimensions for joint seal assembly, and other details not shown, see other plan sheets. For MR ≤ 2", adjust reinforcement to clear sawcut for sealed joint. For MR > 2", haunch reinforcement placed for joint seal assembly blockout must be normal to BB or EB and spaced to avoid joint seal assembly anchorage.
2. For drainage details, see "STRUCTURE APPROACH DRAINAGE DETAILS" sheet.
3. End the plate or edge angle at beginning of barrier transition, end of wingwall, or end of structure approach as applicable.
4. Transverse Joint must be a minimum of 5'-0" from an existing or constructed weakened plane joint in approach PCC roadway pavement. Refer to Standard Plans P10 and P14.
5. At the Contractor's option, approach slab transverse reinforcement may be placed parallel to BB or EB. Spacing of transverse reinforcement is measured along ℄ roadway.

STANDARD DRAWING
FILE NO. xs3-120
APPROVAL DATE January 2015

The components of this Bridge Standard Drawing have been prepared under the responsible charge of the Technical Owner, a registered civil engineer in the State of California. Refer to: http://www.dot.ca.gov/hq/esc/techpubs/manual/bridgemanuals/bridge-standard-detail-sheet/index.html. The selection and proper application of the component design and any modifications shown have been prepared under the responsible charge of the registered civil engineer for the project.

STATE OF CALIFORNIA DEPARTMENT OF TRANSPORTATION

DIVISION OF ENGINEERING SERVICES 3

BRIDGE NO. 49-0263L
POST MILE 63.58

SAN MARCOS Cr Br (REPLACE LEFT)
STRUCTURE APPROACH TYPE N (30S)

DS OSD 2147A (ENGLISH STANDARD DRAWING "XS" BORDER REV. (10-01-14)

ORIGINAL SCALE IN INCHES FOR REDUCED PLANS 0 1 2 3

UNIT: 3578
PROJECT NUMBER & PHASE: 05000200201
CONTRACT NO.: 05-0G0404

DISREGARD PRINTS BEARING EARLIER REVISION DATES

REVISION DATES 4-30-15

SHEET 24 OF 29

FILE => 49-0263l-x-sapp30.dgn

USERNAME => s115755 DATE PLOTTED => 22-JUL-2016 TIME PLOTTED => 17:58

DIST	COUNTY	ROUTE	POST MILES TOTAL PROJECT	SHEET No.	TOTAL SHEETS
05	SLO,Mon	101	63.2/R69.3, R0.0/R1.9	804	858

REGISTERED CIVIL ENGINEER 4-22-16 DATE

5-2-16
PLANS APPROVAL DATE

REGISTERED PROFESSIONAL ENGINEER Jose M Aquino III No. 58386 Exp. 12-31-16 CIVIL STATE OF CALIFORNIA

The State of California or its officers or agents shall not be responsible for the accuracy or completeness of electronic copies of this plan sheet.

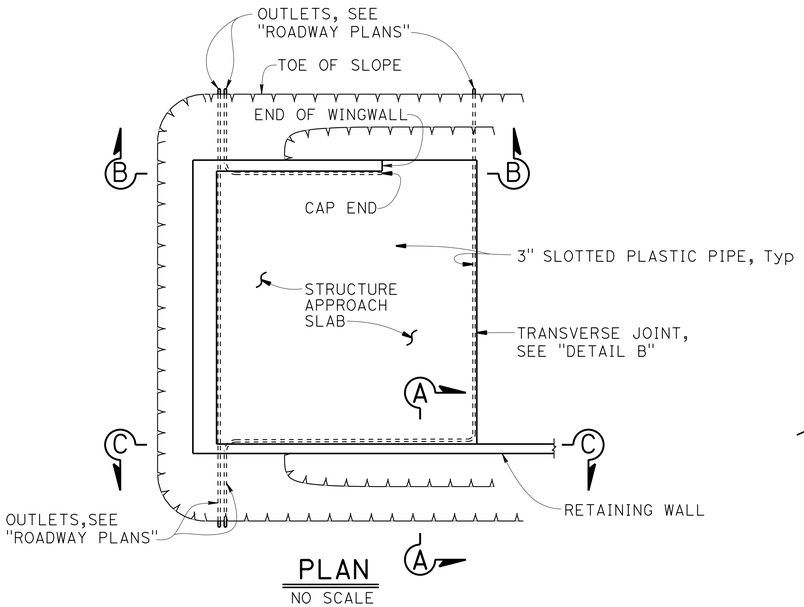

PLAN
NO SCALE

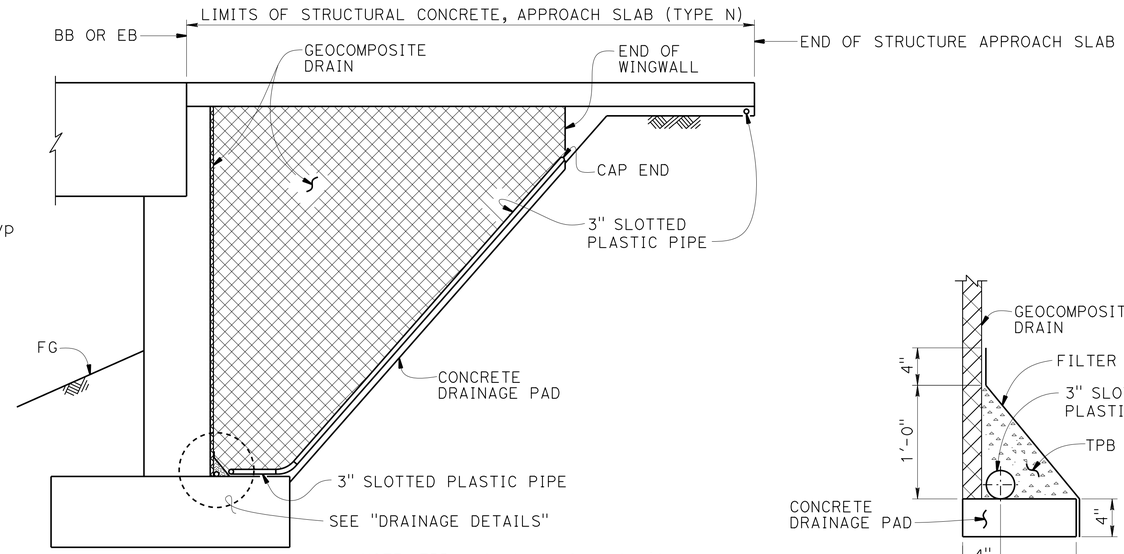

NOTE: TPB not shown for clarity.

SECTION B-B
NO SCALE

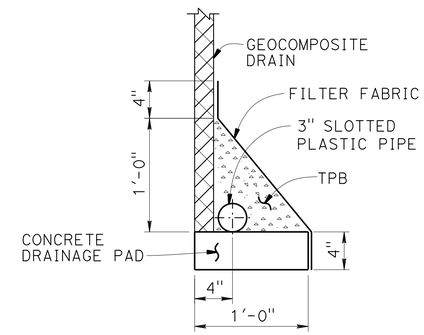

DRAINAGE PAD

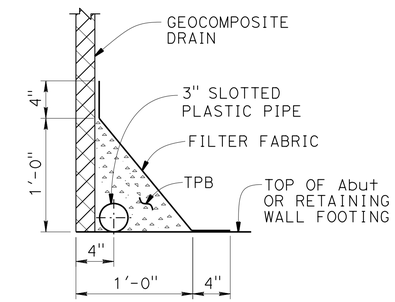

FOOTING

DRAINAGE DETAILS
1½" = 1'-0"

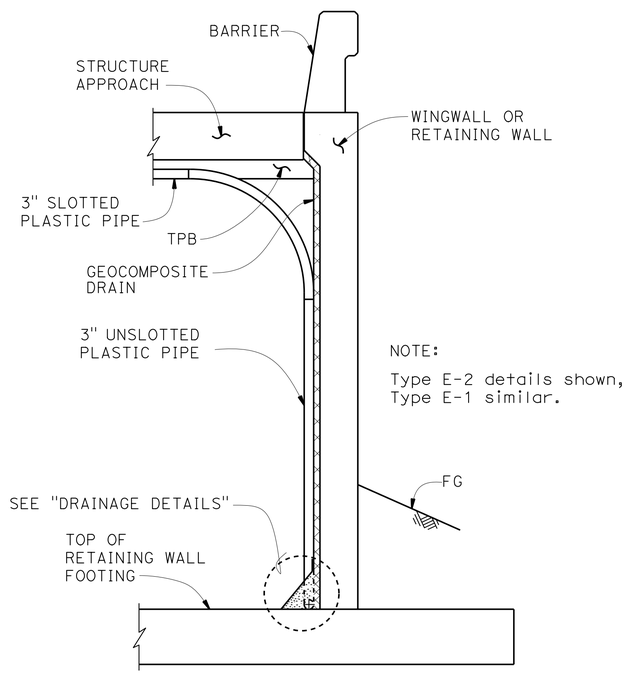

NOTE:

Type E-2 details shown, Type E-1 similar.

SECTION A-A
NO SCALE

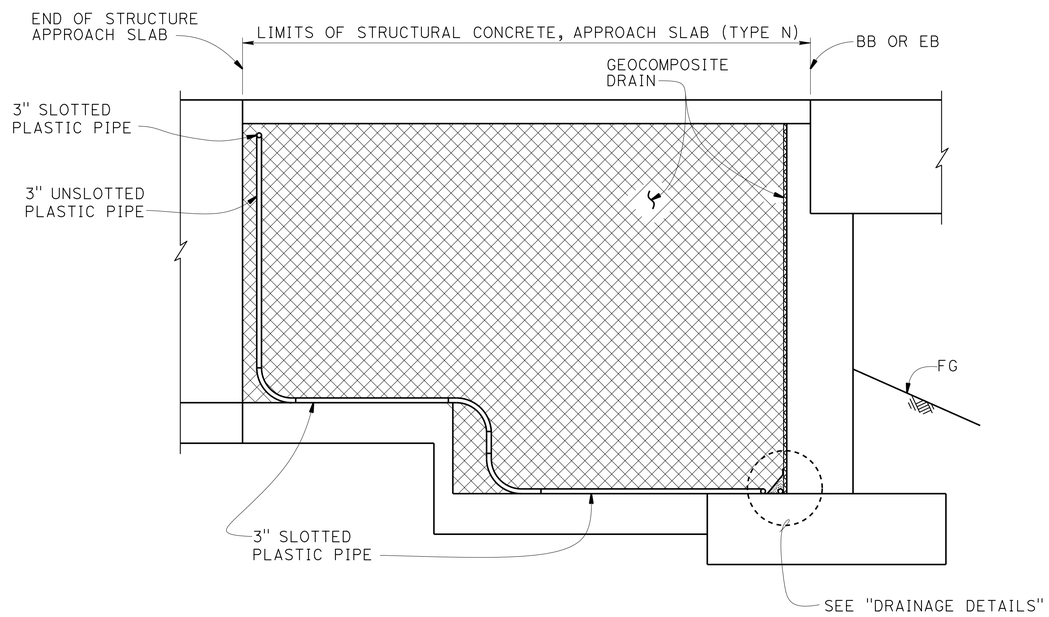

SECTION C-C
NO SCALE

NOTE: TPB not shown for clarity.

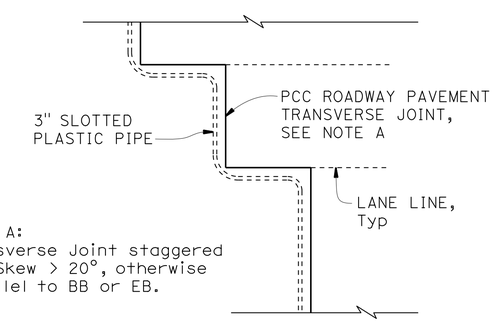

NOTE A:
Transverse Joint staggered for Skew > 20°, otherwise parallel to BB or EB.

DETAIL B
NO SCALE

NOTES:

1. For structural approach and other details not shown, see other plan sheets.
2. All bends in plastic pipe must have 3'-0" minimum radius. Plastic pipe used for bends is not required to be slotted.

STANDARD DRAWING

FILE NO. xs3-110

APPROVAL DATE January 2015

The components of this Bridge Standard Drawing have been prepared under the responsible charge of the Technical Owner, a registered civil engineer in the State of California. Refer to: http//www.dot.ca.gov/hq/esc/techpubs/manual/bridgemanuals/bridge-standard-detail-sheet/index.html. The selection and proper application of the component design and any modifications shown have been prepared under the responsible charge of the registered civil engineer for the project.

STATE OF CALIFORNIA DEPARTMENT OF TRANSPORTATION

DIVISION OF ENGINEERING SERVICES 3

BRIDGE NO. 49-0263L
POST MILE 63.58

SAN MARCOS Cr Br (REPLACE LEFT)
STRUCTURE APPROACH DRAINAGE DETAILS

DS OSD 2147A (ENGLISH STANDARD DRAWING "XS" BORDER REV. (10-01-14)

ORIGINAL SCALE IN INCHES FOR REDUCED PLANS 0 1 2 3

UNIT: X
PROJECT NUMBER & PHASE: 05000200201
CONTRACT NO.: 05-0G0404

DISREGARD PRINTS BEARING EARLIER REVISION DATES

REVISION DATES 4-29-15

SHEET 25 OF 29

FILE => 49-0263l-x-sappdrg.dgn

USERNAME => s115755 DATE PLOTTED => 22-JUL-2016 TIME PLOTTED => 17:58

DIST	COUNTY	ROUTE	POST MILES TOTAL PROJECT	SHEET No.	TOTAL SHEETS
05	SLO,Mon	101	63.2/R69.3, R0.0/R1.9	805	858

REGISTERED CIVIL ENGINEER 11-16-15 DATE

5-2-16
PLANS APPROVAL DATE

REGISTERED PROFESSIONAL ENGINEER Ryan Turner No. 73956 Exp. 6-30-17 CIVIL STATE OF CALIFORNIA

The State of California or its officers or agents shall not be responsible for the accuracy or completeness of electronic copies of this plan sheet.

This LOTB sheet was prepared in accordance with the Caltrans Soil & Rock Logging, Classification, & Presentation Manual (2010 Edition).

See 2010 Standard Plans A10F and A10G for Soil Legend, and A10H for Rock Legend.

BENCH MARK

SLO-101-PM63.57-NAVD88
647.476 NAD83
N: 2459014.982
E: 5761134.312
ngs brass disk.

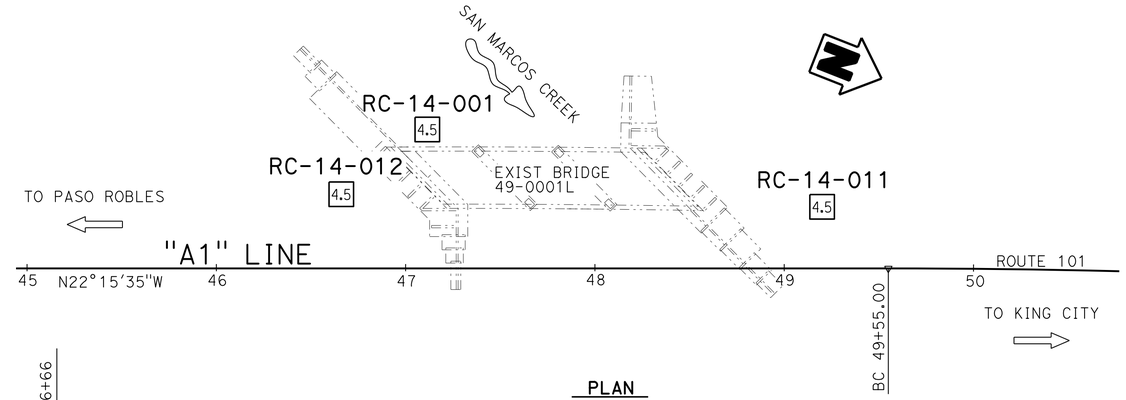

PLAN
1" = 40'

Note: Groundwater encountered but not measured during field investigation.

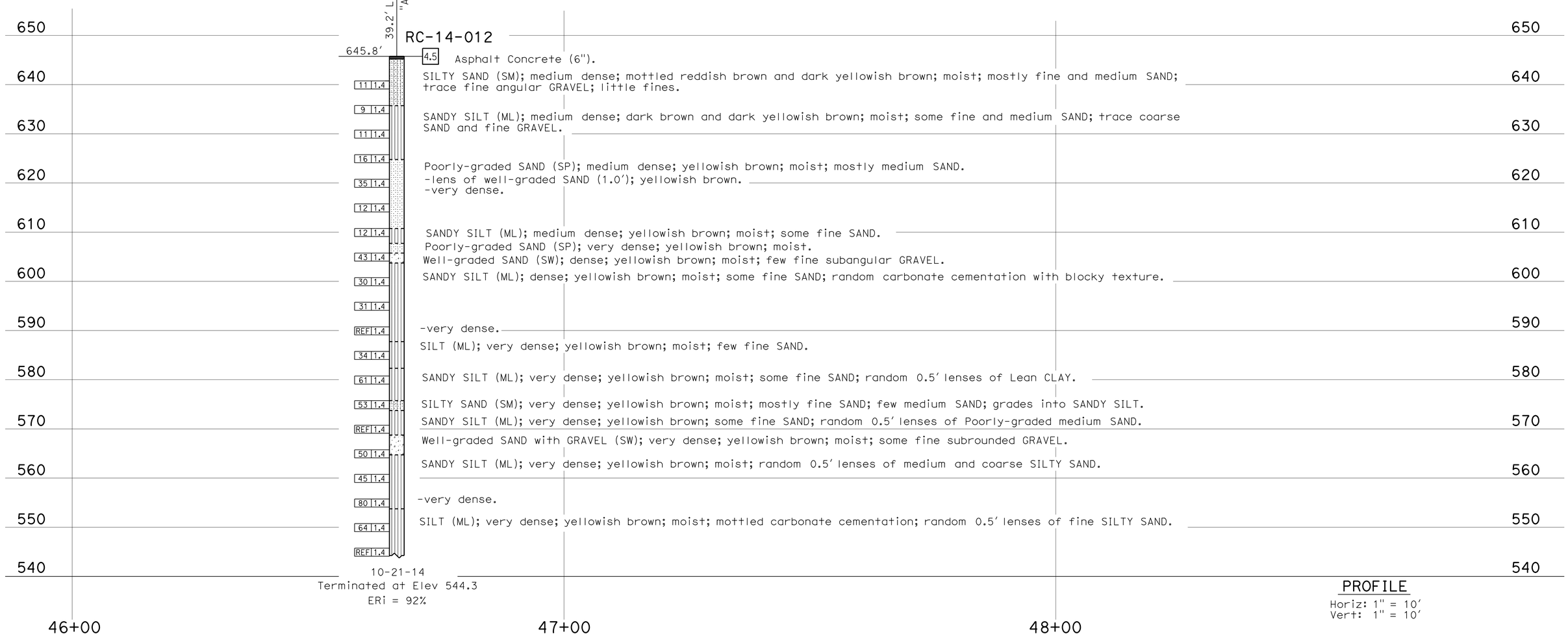

PROFILE
Horiz: 1" = 10'
Vert: 1" = 10'

ENGINEERING SERVICES	MATERIALS AND GEOTECHNICAL SERVICES	STATE OF CALIFORNIA DEPARTMENT OF TRANSPORTATION	DIVISION OF ENGINEERING SERVICES STRUCTURE DESIGN DESIGN BRANCH 3	BRIDGE NO. 49-0263L POST MILE 63.58	SAN MARCOS CR BR (REPLACE LEFT) LOG OF TEST BORINGS 1 OF 4
FUNCTIONAL SUPERVISOR NAME: T. Menard	DRAWN BY: I. G-Remmen CHECKED BY: J. Scardine	FIELD INVESTIGATION BY: M. Jurasius			

OGS CIVIL LOG OF TEST BORINGS SHEET

ORIGINAL SCALE IN INCHES FOR REDUCED PLANS 0 1 2 3

UNIT: 3650
PROJECT NUMBER & PHASE: 05000200201 CONTRACT NO.: 05-0G0404

DISREGARD PRINTS BEARING EARLIER REVISION DATES

REVISION DATES: 06-23-15 09-21-15 10-22-15 11-16-15

SHEET 26 OF 29

FILE => 49-02631-y-ltb1of4.dgn

USERNAME => s115755 DATE PLOTTED => 22-JUL-2016 TIME PLOTTED => 17:58

DIST	COUNTY	ROUTE	POST MILES TOTAL PROJECT	SHEET No.	TOTAL SHEETS
05	SLO,Mon	101	63.2/R69.3, R0.0/R1.9	806	858

REGISTERED CIVIL ENGINEER — DATE 11-16-15

5-2-16
PLANS APPROVAL DATE

REGISTERED PROFESSIONAL ENGINEER — Ryan Turner — No. 73956 — Exp. 6-30-17 — CIVIL — STATE OF CALIFORNIA

The State of California or its officers or agents shall not be responsible for the accuracy or completeness of electronic copies of this plan sheet.

This LOTB sheet was prepared in accordance with the Caltrans Soil & Rock Logging, Classification, & Presentation Manual (2010 Edition).

See 2010 Standard Plans A10F and A10G for Soil Legend, and A10H for Rock Legend.

FOR PLAN VIEW, SEE
"LOG OF TEST BORINGS 1 OF 4"

Note: Groundwater encountered but not measured during field investigation.

73.3' Lt Sta 47+12 "A1" Line

RC-14-001

626.1'

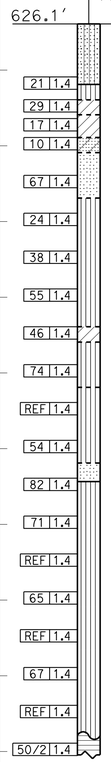

620 — SILTY SAND with GRAVEL (SM); medium dense; brown; moist; mostly from fine to coarse subangular SAND; some fines; little fine subangular and subrounded GRAVEL.

SILT (ML); medium dense; yellowish brown; dry; trace fine SAND.

SANDY lean CLAY with GRAVEL (CL); hard; yellowish brown; moist; some fine and coarse SAND; little subangular fine GRAVEL; PP >4.0 tsf.

610 — Lean CLAY (CL); hard; yellowish brown; moist; few fine SAND; 1" lenses of fine angular GRAVEL; strong cementation; PP >4.0 tsf.

CLAYEY SAND (SC); medium dense; yellowish brown; moist; mostly fine SAND; some fines; lenses of lean CLAY with SAND 4"-6" thick.

Poorly-graded SAND with GRAVEL (SP); very dense; yellowish brown; moist; mostly fine and medium SAND; little fine angular GRAVEL.

600 — SILT (ML); dense; yellowish brown; moist; few fine SAND; few fine subangular GRAVEL; from strong to weak cementation.

-very dense.

590 — -no GRAVEL; trace fine SAND.

Lean CLAY (CL); hard; yellowish brown; moist; trace fine SAND; laminated; PP >4.0 tsf.

580 — SILT with SAND (ML); very dense; pale yellowish brown; moist; little fine SAND; moderately cemented.

SANDY SILT (ML); very dense; yellowish brown; moist; some fine SAND.

570

Poorly-graded SAND with GRAVEL (SP); very dense; yellowish brown; moist; mostly fine and medium SAND; little fine and coarse subrounded GRAVEL; few fines.

560 — SILT (ML); very dense; yellowish brown; moist; few fine SAND; moderately to weakly cemented.

12" lense of lean CLAY (CL); hard; yellowish brown; moist; trace SAND; PP >4.5 tsf.

550 — -lenses with little fine SAND and little lean CLAY interbedded zones with varying fine SAND and lean CLAY from trace to little (6"-18")

540

530 — SEDIMENTARY ROCK (SANDSTONE); massive; yellowish brown; fresh; moderately hard.

9-22-14
Terminated at Elev 529.6
ERi = 85%

520

47+00 48+00 49+00

PROFILE
Horiz: 1" = 10'
Vert: 1" = 10'

ENGINEERING SERVICES	MATERIALS AND GEOTECHNICAL SERVICES	STATE OF CALIFORNIA DEPARTMENT OF TRANSPORTATION	DIVISION OF ENGINEERING SERVICES STRUCTURE DESIGN DESIGN BRANCH 3	BRIDGE NO. 49-0263L POST MILE 63.58	SAN MARCOS CR BR (REPLACE LEFT) LOG OF TEST BORINGS 2 OF 4
FUNCTIONAL SUPERVISOR NAME: T. Menard	DRAWN BY: I. G-Remmen CHECKED BY: M. Jurasius	FIELD INVESTIGATION BY: R. Turner			

OGS CIVIL LOG OF TEST BORINGS SHEET — ORIGINAL SCALE IN INCHES FOR REDUCED PLANS 0 1 2 3 — UNIT: 3650 — PROJECT NUMBER & PHASE: 05000200201 — CONTRACT NO.: 05-0G0404 — DISREGARD PRINTS BEARING EARLIER REVISION DATES → REVISION DATES 06-25-15 09-21-15 10-22-15 11-16-15 — SHEET 27 OF 29

FILE => 49-0263l-y-lrtb2of4.dgn

USERNAME => s115755 DATE PLOTTED => 22-JUL-2016 TIME PLOTTED => 17:58

DIST	COUNTY	ROUTE	POST MILES TOTAL PROJECT	SHEET No.	TOTAL SHEETS
05	SLO,Mon	101	63.2/R69.3, R0.0/R1.9	807	858

REGISTERED CIVIL ENGINEER — DATE 11-16-15

5-2-16
PLANS APPROVAL DATE

REGISTERED PROFESSIONAL ENGINEER — Ryan Turner — No. 73956 — Exp. 6-30-17 — CIVIL — STATE OF CALIFORNIA

The State of California or its officers or agents shall not be responsible for the accuracy or completeness of electronic copies of this plan sheet.

This LOTB sheet was prepared in accordance with the Caltrans Soil & Rock Logging, Classification, & Presentation Manual (2010 Edition).

See 2010 Standard Plans A10F and A10G for Soil Legend, and A10H for Rock Legend.

FOR PLAN VIEW, SEE
"LOG OF TEST BORINGS 1 OF 4"

Note: Groundwater encountered but not measured during field investigation.

PROFILE
Horiz: 1" = 10'
Vert: 1" = 10'

ENGINEERING SERVICES	MATERIALS AND GEOTECHNICAL SERVICES	STATE OF CALIFORNIA DEPARTMENT OF TRANSPORTATION	DIVISION OF ENGINEERING SERVICES STRUCTURE DESIGN DESIGN BRANCH 3	BRIDGE NO. 49-0263L POST MILE 63.58	SAN MARCOS CR BR (REPLACE LEFT) LOG OF TEST BORINGS 3 OF 4
FUNCTIONAL SUPERVISOR NAME: T. Menard	DRAWN BY: I. G-Remmen CHECKED BY: M. Jurasius	FIELD INVESTIGATION BY: D. Appelbaum			

OGS CIVIL LOG OF TEST BORINGS SHEET — ORIGINAL SCALE IN INCHES FOR REDUCED PLANS 0 1 2 3

UNIT: 3650
PROJECT NUMBER & PHASE: 05000200201 — CONTRACT NO.: 05-0G0404

DISREGARD PRINTS BEARING EARLIER REVISION DATES → REVISION DATES 06-25-15 09-21-15 10-22-15 11-16-15 — SHEET 28 OF 29

FILE => 49-0263l-y-ltb3of4.dgn

USERNAME => s115755 DATE PLOTTED => 22-JUL-2016 TIME PLOTTED => 17:58

AF-99 (17)

FED. ROAD DIST. No.	STATE	PROJ. No.	FISCAL YEAR	SHEET No.	TOTAL SHEETS
2	CAL.			55	55

DIST.	COUNTY	ROUTE	SECTION	SHEET No.	TOTAL SHEETS
V	SLO	2	A	8	8

BRIDGE ENGINEER — CIVIL ENGINEER—LICENSE 18716

APPROVED March 23, 1953

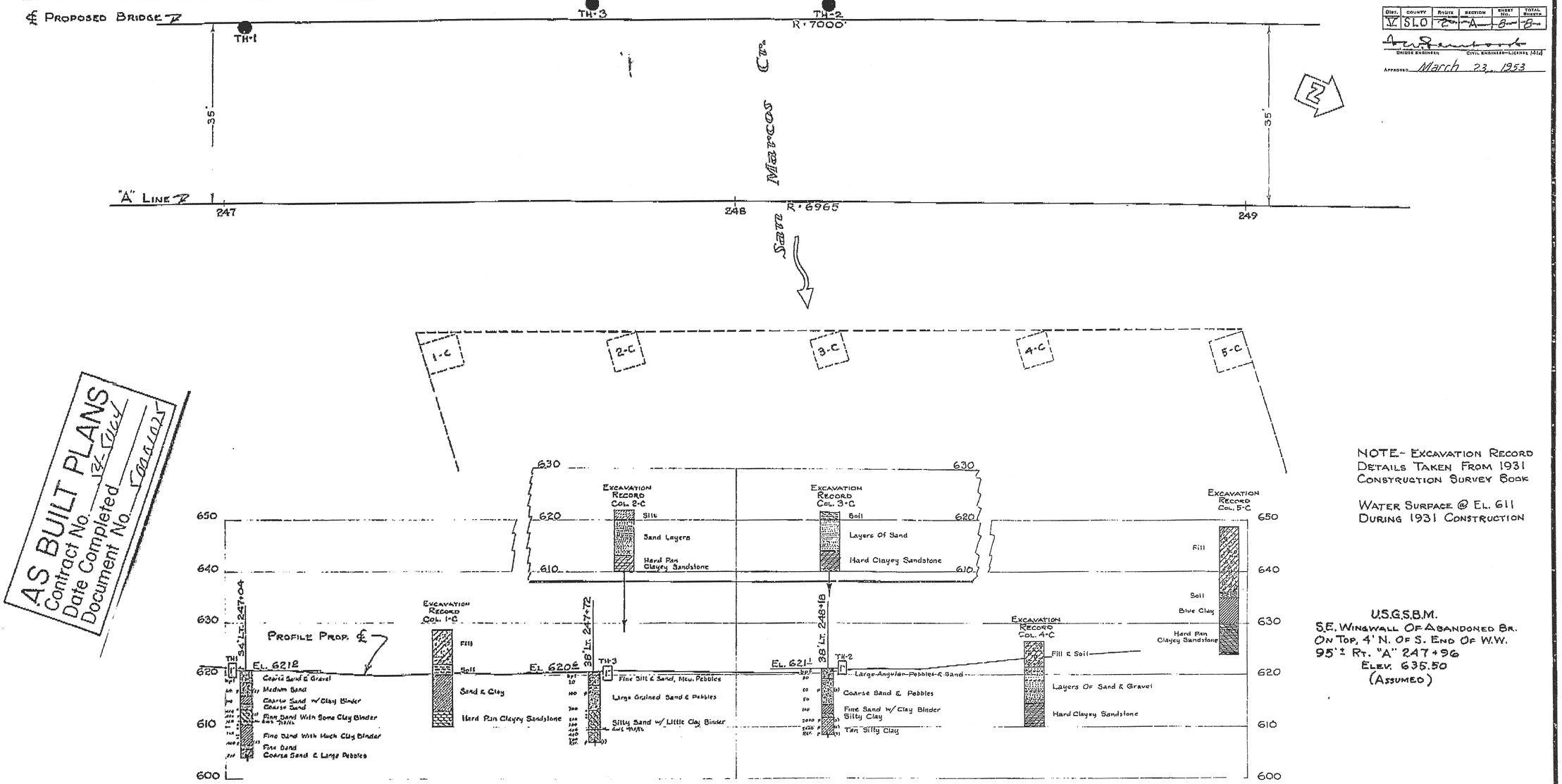

NOTE- EXCAVATION RECORD DETAILS TAKEN FROM 1931 CONSTRUCTION SURVEY BOOK

WATER SURFACE @ EL. 611 DURING 1931 CONSTRUCTION

U.S.G.S.B.M.
S.E. WINGWALL OF ABANDONED BR.
ON TOP, 4' N. OF S. END OF W.W.
95'± RT. "A" 247+96
ELEV. 635.50
(ASSUMED)

AS BUILT PLANS
Contract No. 12-Cuc/
Date Completed
Document No. Contract

FIELD STUDY	
DRAWN	
CHECKED	

Approval Recommended by: Engineering Geologist, Materials & Research Engineer

CLASSIFICATION OF MATERIAL BASED ON STANDARD GRADE SIZE LIMITS

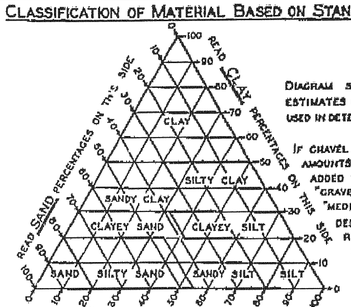

DIAGRAM SHOWING THE BASIS FOR ESTIMATES OF GRADE SIZE DISTRIBUTION USED IN DETERMINATION OF CLASS NAMES

IF GRAVEL IS PRESENT IN APPRECIABLE AMOUNTS THE TERM "GRAVELLY" MAY BE ADDED TO THE CLASS NAME, VIS. "GRAVELLY SAND". THE TERMS "COARSE", "MEDIUM" AND "FINE" WHEN USED TO DESCRIBE GRAVEL, SAND AND SILT REFER TO STANDARD GRADE SIZE LIMITS.

LEGEND OF EARTH MATERIALS

- GRAVEL
- SAND
- SILT
- CLAY
- SANDY CLAY OR CLAYEY SAND
- SANDY SILT OR SILTY SAND
- SILTY CLAY OR CLAYEY SILT
- PEAT AND/OR ORGANIC CLAY
- FILLED MATERIAL
- IGNEOUS ROCK
- SEDIMENTARY ROCK
- METAMORPHIC ROCK

- PLAN OF ANY BORING
- PENETROMETER
- 2½" CONE PENETROMETER
- SAMPLER BORING (DRY)
- ROTARY BORING (WET)
- AUGER BORING (DRY)
- JEY BORING
- CORE BORING
- TEST PIT

TO ACCOMPANY PLANS DATED 5-2-16

DIVISION OF ENGINEERING SERVICES - MATERIALS AND GEOTECHNICAL SERVICES

As-Built Log of Test Borings sheet is considered an informational document only. As such, the State of California registration seal with signature, license number and registration certificate expiration date confirm that this is a true and accurate copy of the original document. It does not attest to the accuracy or validity of the information contained in the original document. This drawing is available and presented only for the convenience of any bidder, contractor or other interested party.

DIST.	COUNTY	ROUTE	POST MILE-TOTAL PROJECT	Sheet No.	Total Sheets
05	SLO, Mon	101	63.2/R69.3, R0.0/R1.9	808	858

REGISTERED CIVIL ENGINEER — DATE 11/16/15

REGISTERED PROFESSIONAL ENGINEER — Ryan Turner — No. C73956 — Exp. 6-30-17 — CIVIL — STATE OF CALIFORNIA

SAN MARCOS CR BR (REPLACE LEFT)

LOG OF TEST BORINGS 4 OF 4

UNIT: 3650	CONTRACT No.	BRIDGE No.
PROJ. No. & PHASE: 05000200201	05-0G0404	49-0263L

AS-BUILT VERT DATUM: UNKNOWN CONVERSION: N/A — Sheet of

NOTE: A COPY OF THIS LOG OF TEST BORINGS IS AVAILABLE AT OFFICE OF STRUCTURE MAINTENANCE AND INVESTIGATIONS, SACRAMENTO, CALIFORNIA — 29 of 29

NOTES

THE CONTRACTOR'S ATTENTION IS DIRECTED TO SECTION 2, ARTICLE (c) OF THE STANDARD SPECIFICATIONS AND TO THE SPECIAL PROVISIONS ACCOMPANYING THIS SET OF PLANS.

CLASSIFICATION OF EARTH MATERIAL AS SHOWN ON THIS SHEET IS BASED UPON FIELD INSPECTION AND IS NOT TO BE CONSTRUED TO IMPLY MECHANICAL ANALYSIS.

PENETROMETER BORINGS HAVING A RATE OF PENETRATION MEASURED IN SECONDS PER FOOT ARE DRIVEN WITH A Nº 2 MCKIERNAN-TERRY AIR HAMMER AT 115 PSI.

STATE OF CALIFORNIA
DEPARTMENT OF PUBLIC WORKS
DIVISION OF HIGHWAYS

BRIDGE ACROSS SAN MARCOS CREEK

LOG OF TEST BORINGS

SCALE: HORIZ. 1" = 10' VERT. 1" = 10' — BRIDGE 49-01 — FILE — DRAWING C-3118-8

BRIDGE DEPARTMENT

DIST	COUNTY	ROUTE	POST MILES TOTAL PROJECT	SHEET No.	TOTAL SHEETS
05	SLO,Mon	101	63.2/R69.3, R0.0/R1.9	809	858

REGISTERED CIVIL ENGINEER 4-22-16 DATE

5-2-16
PLANS APPROVAL DATE

REGISTERED PROFESSIONAL ENGINEER Jose M Aquino III No. 58386 Exp. 12-31-16 CIVIL STATE OF CALIFORNIA

The State of California or its officers or agents shall not be responsible for the accuracy or completeness of scanned copies of this plan sheet.

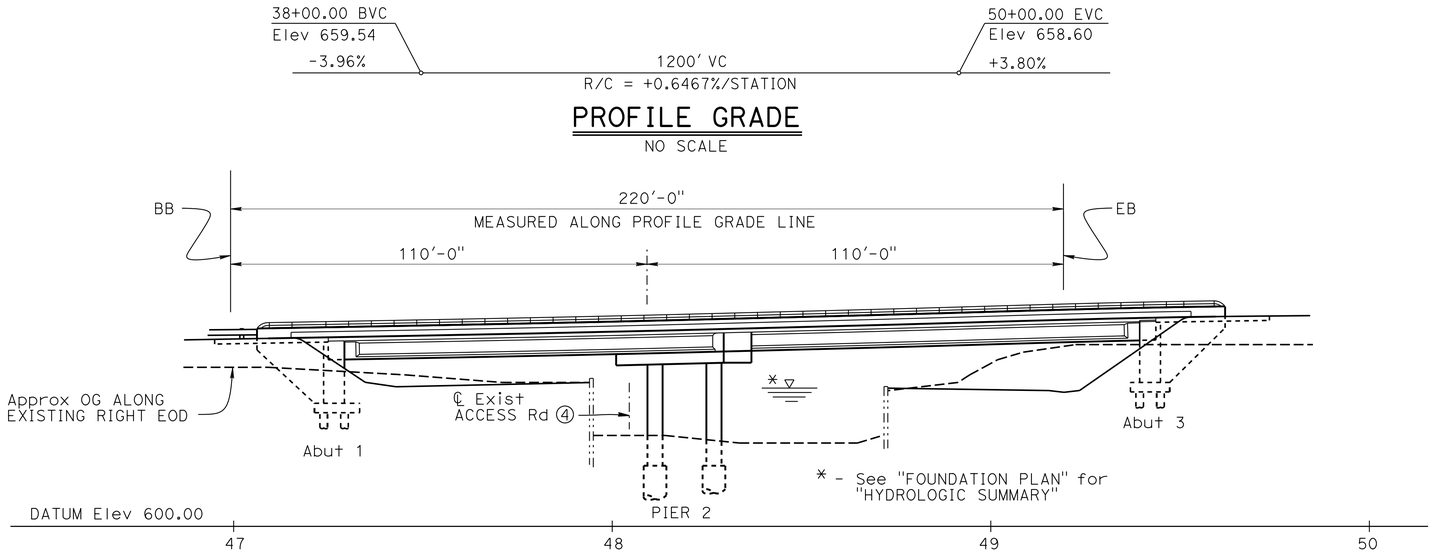

PROFILE GRADE

NO SCALE

ELEVATION

1" = 20'

LEGEND:

- - - - - - Indicates existing bridge
——— Indicates new construction
Indicates existing bridge removal

NOTES:

① Paint "Br. No. 49-0263R"
② Paint "SAN MARCOS Cr Br"
③ Structure Approach Type N (30S)
④ Access Rd (min 12' vertical clearance) to remain open during construction

For "TYPICAL SECTION" see "GENERAL PLAN NO. 2" sheet

For "GENERAL NOTES" and "INDEX TO PLANS", see "INDEX TO PLANS" sheet

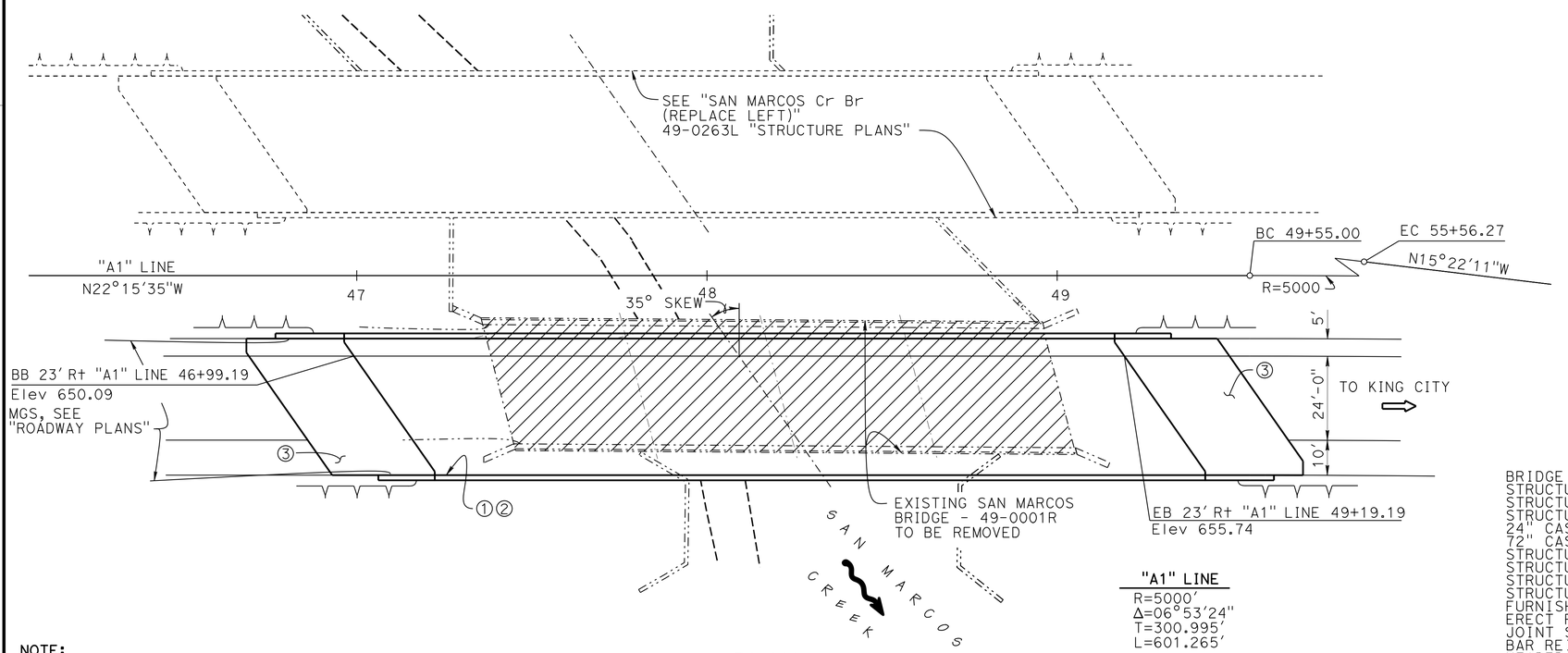

"A1" LINE
R=5000'
Δ=06°53'24"
T=300.995'
L=601.265'

PLAN

1" = 20'

QUANTITIES

	LUMP SUM	
BRIDGE REMOVAL, LOCATION B		
STRUCTURE EXCAVATION (BRIDGE)	550	CY
STRUCTURE EXCAVATION (TYPE D)	14	CY
STRUCTURE BACKFILL (BRIDGE)	270	CY
24" CAST-IN-DRILLED-HOLE CONCRETE PILING	1,136	LF
72" CAST-IN-DRILLED-HOLE CONCRETE PILING	128	LF
STRUCTURAL CONCRETE, BRIDGE FOOTING	140	CY
STRUCTURAL CONCRETE, BRIDGE	382	CY
STRUCTURAL CONCRETE, BRIDGE (POLYMER FIBER)	255	CY
STRUCTURAL CONCRETE, APPROACH SLAB (TYPE N)	110	CY
FURNISH PRECAST PRESTRESSED CONCRETE BULB-TEE GIRDER (100'-110')	10	EA
ERECT PRECAST PRESTRESSED CONCRETE GIRDER	10	EA
JOINT SEAL (MR 1")	96	LF
BAR REINFORCING STEEL (BRIDGE)	221,200	LB
HEADED BAR REINFORCEMENT	40	EA
TUBULAR BICYCLE RAILING	257	LF
CONCRETE BARRIER (TYPE 736)	514	LF

NOTE:
THE CONTRACTOR MUST VERIFY ALL CONTROLLING FIELD DIMENSIONS BEFORE ORDERING OR FABRICATING ANY MATERIAL.

Joseph E Downing
DESIGN ENGINEER

	BY	CHECKED
DESIGN	Lewis L Shen	Sharon Yen
DETAILS	Nancy C Gwynn	Sharon Yen
QUANTITIES	Seung Pyo Hong	Mufeed Khalaf

LOAD & RESISTANCE FACTOR DESIGN — LIVE LOADING: HL93 W/"LOW-BOY"; PERMIT DESIGN VEHICLE

	BY	CHECKED
LAYOUT	Lewis L Shen	Sharon Yen
SPECIFICATIONS	Jim Corrado	Jim Corrado (PLANS AND SPECS COMPARED)

STATE OF CALIFORNIA
DEPARTMENT OF TRANSPORTATION

DIVISION OF ENGINEERING SERVICES
STRUCTURE DESIGN
DESIGN BRANCH 3

BRIDGE NO. 49-0263R
POST MILE 63.58

SAN MARCOS Cr Br (REPLACE RIGHT)
GENERAL PLAN No. 1

ORIGINAL SCALE IN INCHES FOR REDUCED PLANS 0 1 2 3

UNIT: 3578
PROJECT NUMBER & PHASE: 05000200201
CONTRACT NO.: 05-0G0404

DISREGARD PRINTS BEARING EARLIER REVISION DATES

REVISION DATES 1-7-14 12-2-15 12-14-15

SHEET 1 OF 28

USERNAME => s115755 DATE PLOTTED => 22-JUL-2016 TIME PLOTTED => 17:58

FILE => 49-0263r-a-gp01.dgn

STRUCTURES DESIGN GENERAL PLAN SHEET (ENGLISH) (REV.09-01-10)

DIST	COUNTY	ROUTE	POST MILES TOTAL PROJECT	SHEET No.	TOTAL SHEETS
05	SLO,Mon	101	63.2/R69.3, R0.0/R1.9	810	858

REGISTERED CIVIL ENGINEER 4-22-16 DATE

5-2-16
PLANS APPROVAL DATE

REGISTERED PROFESSIONAL ENGINEER
Jose M Aquino III
No. 58386
Exp. 12-31-16
CIVIL
STATE OF CALIFORNIA

The State of California or its officers or agents shall not be responsible for the accuracy or completeness of scanned copies of this plan sheet.

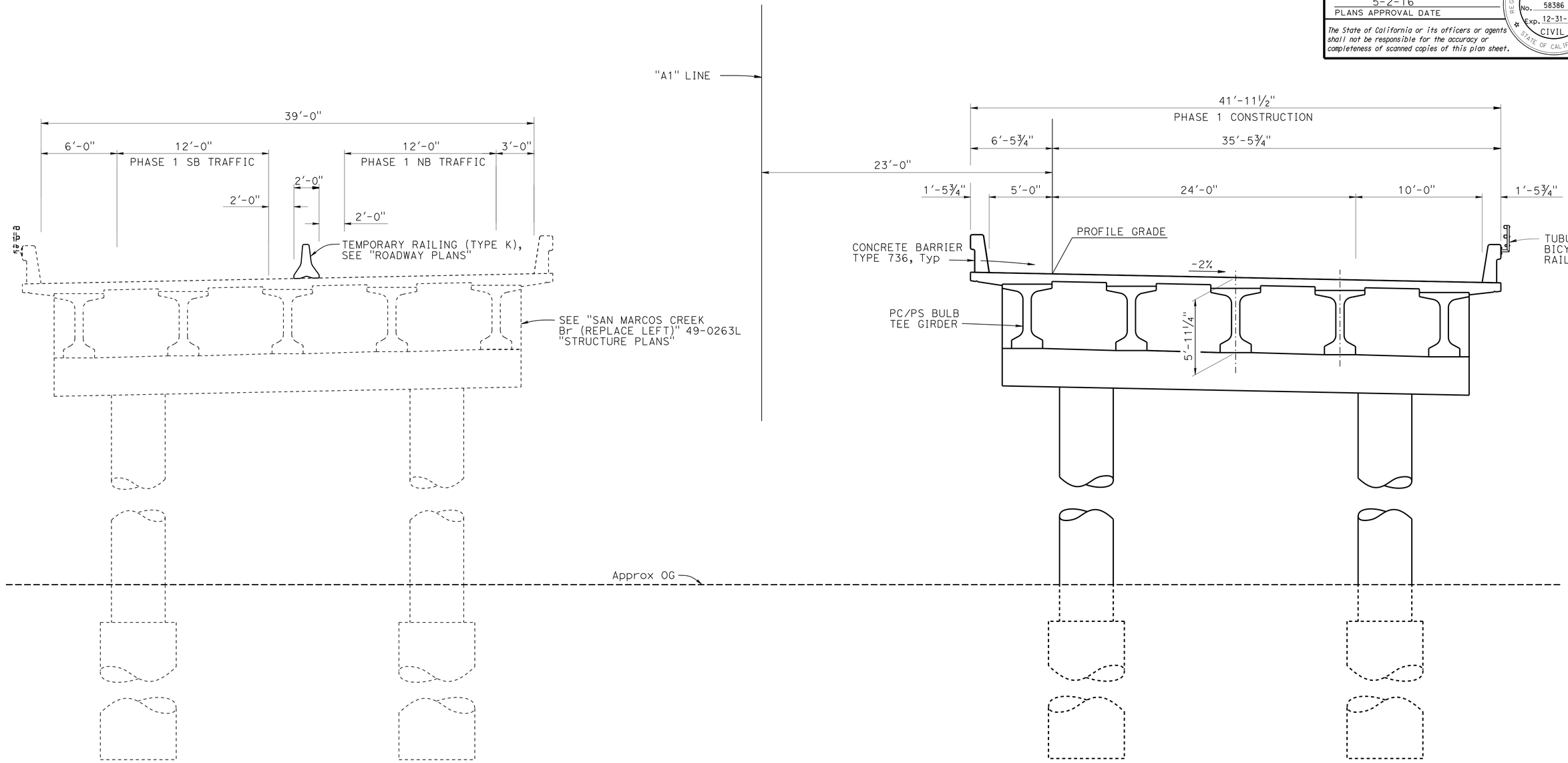

STAGE 4 (PHASE 1)
TYPICAL SECTION
¼" = 1'-0"

NOTE:
THE CONTRACTOR MUST VERIFY ALL CONTROLLING FIELD DIMENSIONS BEFORE ORDERING OR FABRICATING ANY MATERIAL.

NOTE:
Other Stages not shown, see "ROADWAY PLANS"

		BY	CHECKED			
Joseph E Downing DESIGN ENGINEER	DESIGN	Lewis L Shen	Sharon Yen	LOAD & RESISTANCE FACTOR DESIGN	LIVE LOADING: HL93 W/"LOW-BOY"; PERMIT DESIGN VEHICLE	
	DETAILS	Nancy C Gwynn	Sharon Yen	LAYOUT	Lewis L Shen	Sharon Yen
	QUANTITIES	Seung Pyo Hong	Mufeed Khalaf	SPECIFICATIONS	Jim Corrado	PLANS AND SPECS COMPARED Jim Corrado

ORIGINAL SCALE IN INCHES FOR REDUCED PLANS 0 1 2 3

STATE OF CALIFORNIA
DEPARTMENT OF TRANSPORTATION

DIVISION OF ENGINEERING SERVICES
STRUCTURE DESIGN
DESIGN BRANCH 3

BRIDGE NO. 49-0263R
POST MILE 63.58

SAN MARCOS Cr Br (REPLACE RIGHT)
GENERAL PLAN No. 2

UNIT: 3578
PROJECT NUMBER & PHASE: 05000200201
CONTRACT NO.: 05-0G0404

DISREGARD PRINTS BEARING EARLIER REVISION DATES

REVISION DATES 1-7-14 1-22-15 10-1-15

SHEET 2 OF 28

USERNAME => s115755 DATE PLOTTED => 22-JUL-2016 TIME PLOTTED => 17:58

STRUCTURES DESIGN GENERAL PLAN SHEET (ENGLISH) (REV.09-01-10)

FILE => 49-0263r-a-gp02.dgn

DIST	COUNTY	ROUTE	POST MILES TOTAL PROJECT	SHEET No.	TOTAL SHEETS
05	SLO,Mon	101	63.2/R69.3, R0.0/R1.9	811	858

Jose M. Aquino III 4-22-16
REGISTERED CIVIL ENGINEER DATE

5-2-16
PLANS APPROVAL DATE

REGISTERED PROFESSIONAL ENGINEER
Jose M Aquino III
No. 58386
Exp. 12-31-16
CIVIL
STATE OF CALIFORNIA

The State of California or its officers or agents shall not be responsible for the accuracy or completeness of scanned copies of this plan sheet.

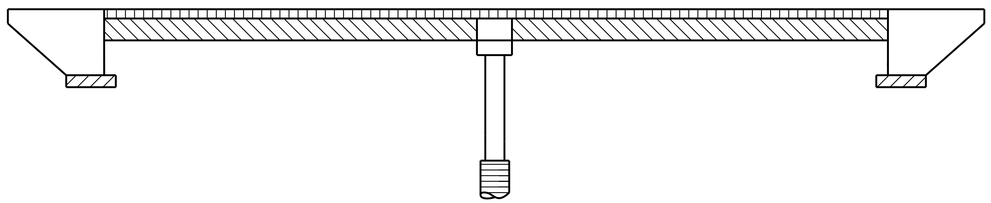

Structural Concrete, Bridge

Structural Concrete, Bridge (Polymer Fiber) (4.0 ksi @ 28 days)

Prestressed Bulb-Tee Girder, see "PRESTRESSED I GIRDER" sheet

Structural Concrete, Bridge Footing

Cast-In-Drilled Hole Concrete Piling (4.0ksi @ 28 days)

CONCRETE STRENGTH AND TYPE LIMITS

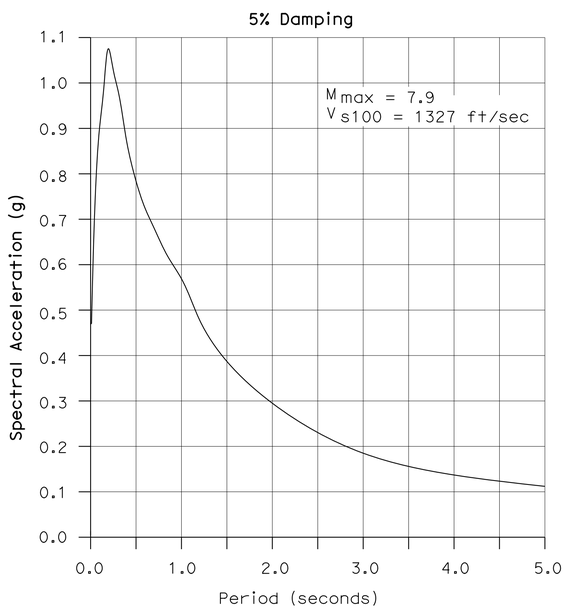

SITE SPECIFIC ARS CURVE

NO SCALE

GENERAL NOTES
LOAD AND RESISTANCE FACTOR DESIGN

DESIGN:

AASHTO LRFD Bridge Design Specifications, 6th edition with the California Amendments

SEISMIC DESIGN:

Caltrans Seismic Design Criteria (SDC), Version 1.7 dated November 2013

DEAD LOAD:

Includes 12 psf for future polyester overlay

LIVE LOADING:

HL93 and permit design load.

SEISMIC LOADING:

See "SITE SPECIFIC ARS CURVE"

REINFORCED CONCRETE:

fy = 60 ksi
f'c = 3.6 ksi
See prestressing notes, "PC/PS BULB-TEE GIRDER" sheets

PILE DATA TABLE

LOCATION	PILE TYPE	NOMINAL AXIAL RESISTANCE (kips)		CUT-OFF ELEVATION	DESIGN TIP ELEVATION	SPECIFIED TIP ELEVATION
		COMPRESSION	TENSION			
Abutment 1	24" ø CIDH	400	N/A	-	588.00 (a) 612.00 (c)	588.00
Pier 2	72" ø CIDH	3680	N/A	616.00	552.00 (a), (d) 610.00 (b) 556.00 (c)	552.00
Abutment 3	24" ø CIDH	400	N/A	-	607.00 (a) 618.00 (c)	607.00

NOTES:
1. Design tip elevations are controlled by: (a) Compression (Strength Limit), (b) Compression (Extreme Event), (c) Settlement, and (d) Lateral respectively
2. The specified tip elevation shall not be raised

INDEX TO PLANS

SHEET No.	TITLE
1	GENERAL PLAN No. 1
2	GENERAL PLAN No. 2
3	INDEX TO PLANS No. 1
4	INDEX TO PLANS No. 2
5	DECK CONTOURS
6	FOUNDATION PLAN
7	ABUTMENT DETAILS No. 1
8	ABUTMENT DETAILS No. 2
9	ABUTMENT DETAILS No. 3
10	ABUTMENT DETAILS No. 4
11	PIER DETAILS No. 1
12	PIER DETAILS No. 2
13	PIER DETAILS No. 3
14	TYPICAL SECTION
15	GIRDER LAYOUT
16	GIRDER REINFORCEMENT
17	CONCRETE REMOVAL Det No. 1
18	CONCRETE REMOVAL Det No. 2
19	PC/PS BULB-TEE GIRDER (HARPED STRANDS)
20	PC/PS BULB-TEE GIRDER (MISCELLANEOUS DETAILS)
21	72" ø CIDH PILE DETAILS
22	CONCRETE BARRIER TYPE 80, 732 & 736 TUBULAR BICYCLE RAILING DETAILS
23	STRUCTURE APPROACH TYPE N (30S)
24	STRUCTURE APPROACH DRAINAGE DETAILS
25	LOG OF TEST BORINGS 1 OF 4
26	LOG OF TEST BORINGS 2 OF 4
27	LOG OF TEST BORINGS 3 OF 4
28	LOG OF TEST BORINGS 4 OF 4

STANDARD PLANS DATED 2010

	A10A	ABBREVIATIONS (SHEET 1 OF 2)
RSP	A10B	ABBREVIATIONS (SHEET 2 OF 2)
	A10C	LINES AND SYMBOLS (SHEET 1 OF 3)
	A10D	LINES AND SYMBOLS (SHEET 2 OF 3)
	A10E	LINES AND SYMBOLS (SHEET 3 OF 3)
RSP	A10F	LEGEND - SOIL (SHEET 1 OF 2)
RSP	A10G	LEGEND - SOIL (SHEET 2 OF 2)
	A10H	LEGEND - ROCK
	A62C	LIMITS OF PAYMENT FOR EXCAVATION AND BACKFILL BRIDGE
	BO-1	BRIDGE DETAILS
	BO-2	BRIDGE DETAILS
	BO-5	BRIDGE DETAILS
	BO-13	BRIDGE DETAILS
	B2-3	16" AND 24" CAST-IN-DRILLED-HOLE CONCRETE PILE
RSP	B6-21	JOINT SEALS (MAXIMUM MOVEMENT RATING = 2")
RSP	B11-56	CONCRETE BARRIER TYPE 736

STANDARD PLAN SHEET No.

DETAIL No.

	BY	CHECKED
DESIGN	Lewis L Shen	Sharon Yen
DETAILS	Nancy C Gwynn	Sharon Yen
QUANTITIES	Seung Pyo Hong	Mufeed Khalaf

STATE OF CALIFORNIA
DEPARTMENT OF TRANSPORTATION

DIVISION OF ENGINEERING SERVICES
STRUCTURE DESIGN
DESIGN BRANCH 3

BRIDGE NO. 49-0263R
POST MILE 63.58

SAN MARCOS Cr Br (REPLACE RIGHT)
INDEX TO PLANS No. 1

STRUCTURES DESIGN DETAIL SHEET (ENGLISH) (REV. 09-01-10)

ORIGINAL SCALE IN INCHES FOR REDUCED PLANS 0 1 2 3

UNIT: 3578
PROJECT NUMBER & PHASE: 05000200201
CONTRACT NO.: 05-0G0404

DISREGARD PRINTS BEARING EARLIER REVISION DATES

REVISION DATES 6-16-15 9-16-15 1-20-16

SHEET 3 OF 28

FILE => 49-0263r-a-ltp01.dgn

USERNAME => s115255 DATE PLOTTED => 22-JUL-2016 TIME PLOTTED => 17:58

DIST	COUNTY	ROUTE	POST MILES TOTAL PROJECT	SHEET No.	TOTAL SHEETS
05	SLO,Mon	101	63.2/R69.3, R0.0/R1.9	812	858

REGISTERED CIVIL ENGINEER 4-22-16 DATE

5-2-16
PLANS APPROVAL DATE

REGISTERED PROFESSIONAL ENGINEER Jose M Aquino III No. 58386 Exp. 12-31-16 CIVIL STATE OF CALIFORNIA

The State of California or its officers or agents shall not be responsible for the accuracy or completeness of scanned copies of this plan sheet.

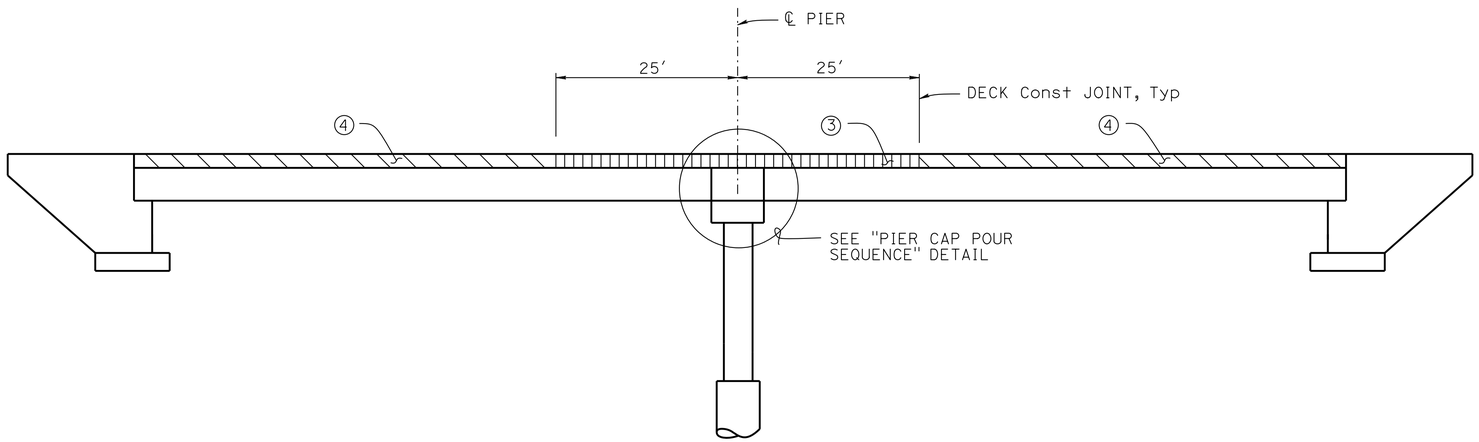

DECK POUR SEQUENCE

NO SCALE

BO-5
5-2

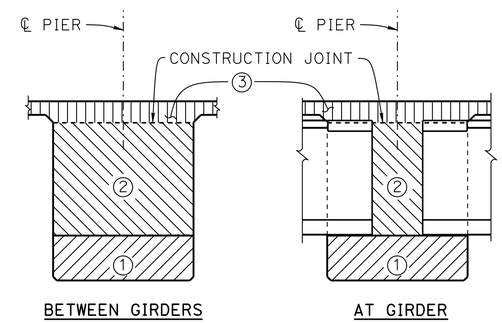

PIER CAP POUR SEQUENCE

NO SCALE

① Pour drop cap. Allow a minimum of 7 day cure and f′c = 3250 psi prior to girder erection

② Pour pier cap diaphragm after girder erection. Allow a minimum of 7 day cure and f′c = 3250 psi prior to falsework removal and deck pour portion

③ Pour deck portion over piers within limits shown. Allow a minimum of 7 day water cure and f′c = 3250 psi prior to complete deck pour

④ Complete deck pour

CONCRETE POUR SEQUENCE

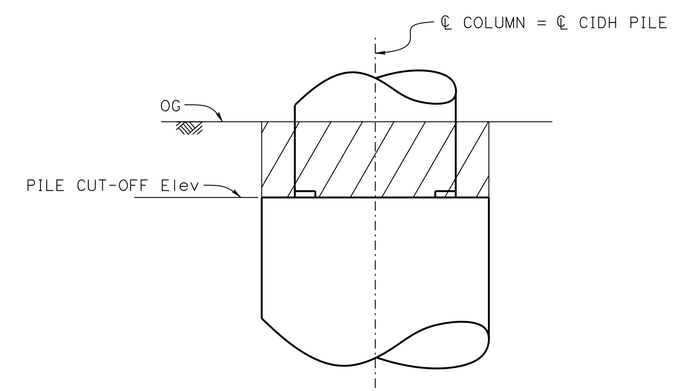

Structure Excavation (Type D)

LIMITS OF STRUCTURE EXCAVATON @ PIER 2

NO SCALE

DESIGN	BY Lewis L Shen	CHECKED Sharon Yen	
DETAILS	BY Nancy C Gwynn	CHECKED Sharon Yen	
QUANTITIES	BY Seung Pyo Hong	CHECKED Mufeed Khalaf	

STATE OF CALIFORNIA
DEPARTMENT OF TRANSPORTATION

DIVISION OF ENGINEERING SERVICES
STRUCTURE DESIGN
DESIGN BRANCH 3

BRIDGE NO. 49-0263R
POST MILE 63.58

SAN MARCOS Cr Br (REPLACE RIGHT)
INDEX TO PLANS No. 2

STRUCTURES DESIGN DETAIL SHEET (ENGLISH) (REV. 09-01-10)

ORIGINAL SCALE IN INCHES FOR REDUCED PLANS 0 1 2 3

UNIT: 3578
PROJECT NUMBER & PHASE: 05000200201
CONTRACT NO.: 05-0G0404

DISREGARD PRINTS BEARING EARLIER REVISION DATES

REVISION DATES 8-8-2015 9-11-2015 1-26-16

SHEET 4 OF 28

FILE => 49-0263r-a-itp02.dgn

USERNAME => s115755 DATE PLOTTED => 22-JUL-2016 TIME PLOTTED => 17:58

DIST	COUNTY	ROUTE	POST MILES TOTAL PROJECT	SHEET No.	TOTAL SHEETS
05	SLO,Mon	101	63.2/R69.3, R0.0/R1.9	813	858

REGISTERED CIVIL ENGINEER 4-22-16 DATE

5-2-16
PLANS APPROVAL DATE

REGISTERED PROFESSIONAL ENGINEER
Jose M Aquino III
No. 58386
Exp. 12-31-16
CIVIL
STATE OF CALIFORNIA

The State of California or its officers or agents shall not be responsible for the accuracy or completeness of scanned copies of this plan sheet.

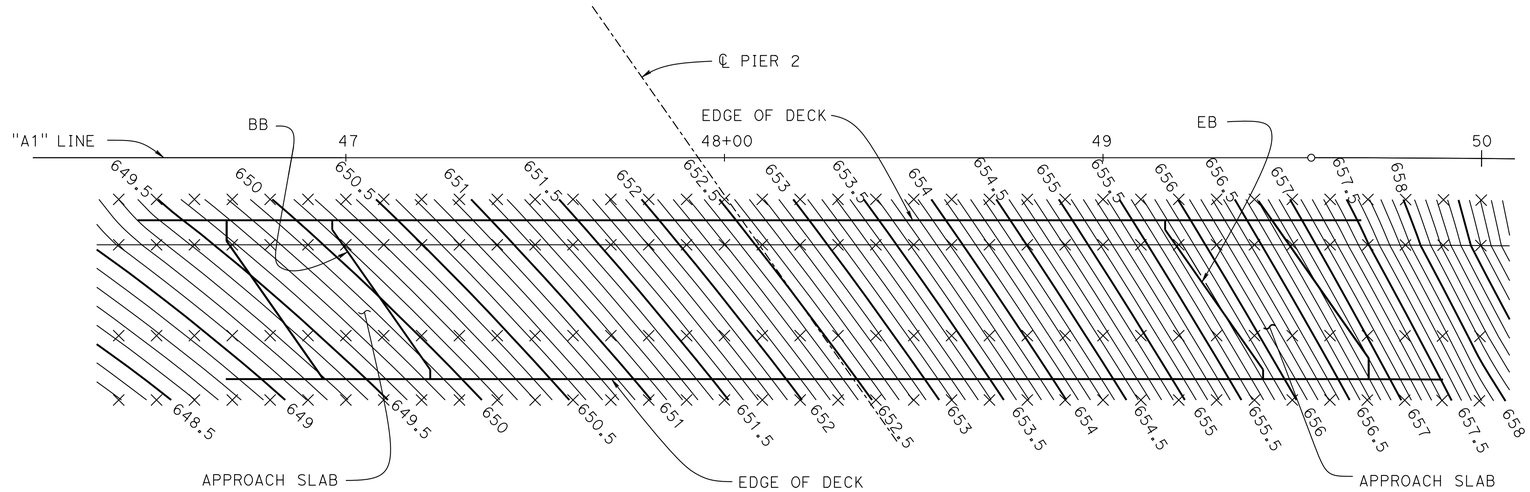

PLAN

1" = 20'

NOTES:

1. Contours are at 0.1' intervals
2. Contours do not include camber

LEGEND:

× Indicates 10' intervals along Station Line

DESIGN	BY Lewis L Shen	CHECKED Sharon Yen	
DETAILS	BY Nancy C Gwynn	CHECKED Sharon Yen	
QUANTITIES	BY Seung Pyo Hong	CHECKED Mufeed Khalaf	

STATE OF CALIFORNIA
DEPARTMENT OF TRANSPORTATION

DIVISION OF ENGINEERING SERVICES
STRUCTURE DESIGN
DESIGN BRANCH 3

BRIDGE NO. 49-0263R
POST MILE 63.58

SAN MARCOS Cr Br (REPLACE RIGHT)
DECK CONTOURS

STRUCTURES DESIGN DETAIL SHEET (ENGLISH) (REV. 09-01-10)

ORIGINAL SCALE IN INCHES FOR REDUCED PLANS 0 1 2 3

UNIT: 3578
PROJECT NUMBER & PHASE: 05000200201
CONTRACT NO.: 05-0G0404

DISREGARD PRINTS BEARING EARLIER REVISION DATES

REVISION DATES: 8-20-15 12-2-15

SHEET 5 OF 28

FILE => 49-0263r-d-dcon.dgn

USERNAME => s115755 DATE PLOTTED => 22-JUL-2016 TIME PLOTTED => 17:58

DIST	COUNTY	ROUTE	POST MILES TOTAL PROJECT	SHEET No.	TOTAL SHEETS
05	SLO,Mon	101	63.2/R69.3, R0.0/R1.9	814	858

REGISTERED CIVIL ENGINEER 4-22-16 DATE

5-2-16
PLANS APPROVAL DATE

REGISTERED PROFESSIONAL ENGINEER Jose M Aquino III No. 58386 Exp. 12-31-16 CIVIL STATE OF CALIFORNIA

The State of California or its officers or agents shall not be responsible for the accuracy or completeness of electronic copies of this plan sheet.

CURVE DATA

No. ⊛	R	Δ	T	L
1	5000.00	06°53'24"	301.00	601.27

NOTE:
ALL UTILITY LINES ARE PER DISTRICT UTILITY MAP

SCOUR DATA TABLE

SUPPORT No.	LONG TERM (DEGRADATION & CONTRACTION) SCOUR Elev (ft)	SHORT TERM (LOCAL) SCOUR DEPTH (ft)
Abut 1	N/A	N/A
Pier 2	N/A	11.2
Abut 3	N/A	N/A

NOTE:
Approx channel thalweg Elev = 622.09

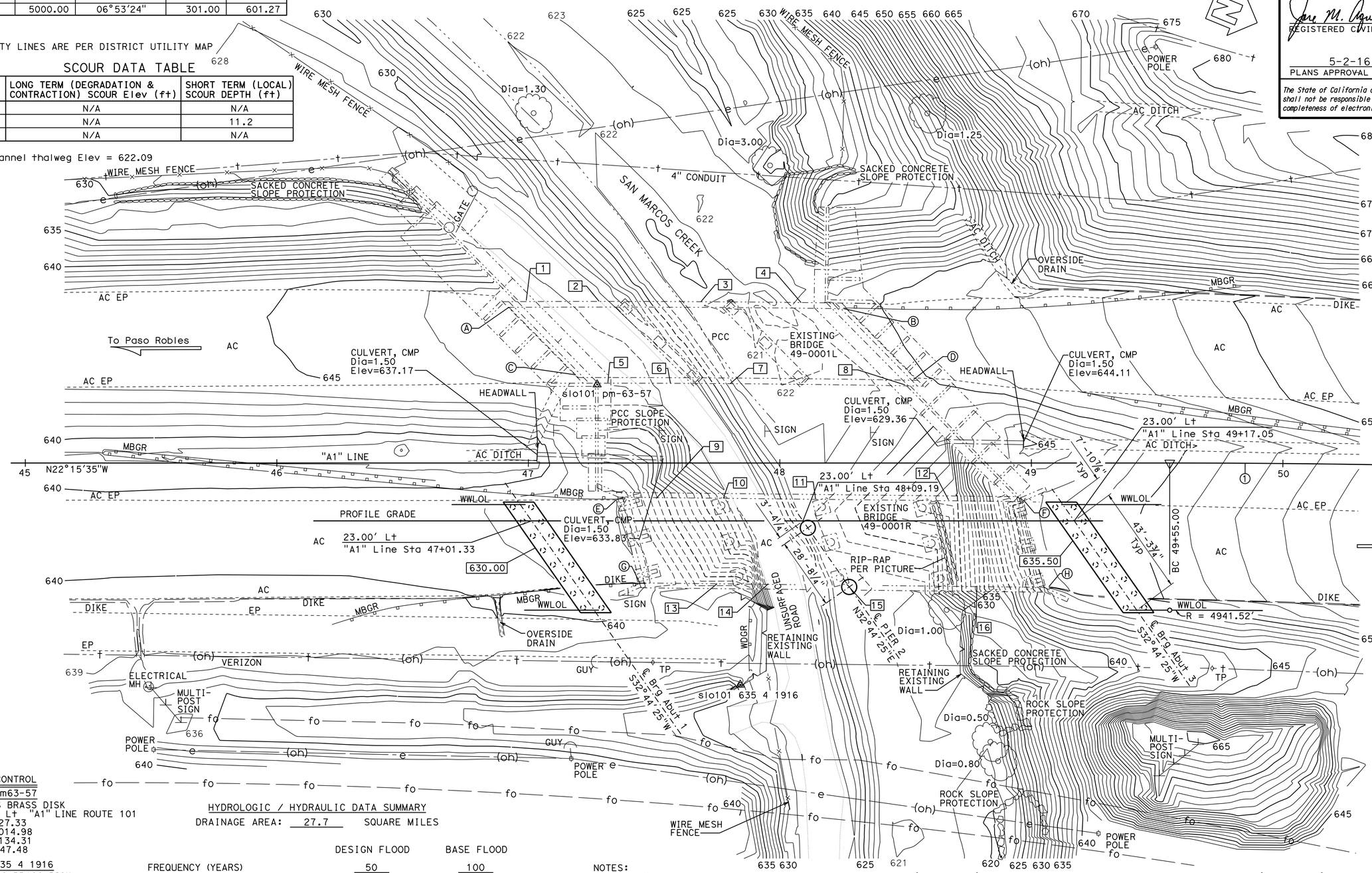

SOFFIT ELEVATIONS

LEFT BRIDGE

1	644.63	5	644.70
2	645.18	6	645.22
3	646.04	7	645.68
4	647.07	8	647.48

RIGHT BRIDGE

9	638.46	13	638.90
10	639.21	14	639.50
11	640.49	15	640.57
12	642.52	16	642.62

SURVEY CONTROL

slo101 pm63-57
Fnd NGS BRASS DISK
31.19 Ft Lt "A1" LINE ROUTE 101
Sta. 47+27.33
N 2,459,014.98
E 5,761,134.31
Elev = 647.48

slo101 635 4 1916
Fnd USGS BRASS DISK
88.13 Ft Rt "A1" LINE ROUTE 101
Sta. 47+84.24
N 2,459,112.85
E 5,761,223.17
Elev = 638.15

HYDROLOGIC / HYDRAULIC DATA SUMMARY

DRAINAGE AREA: 27.7 SQUARE MILES

	DESIGN FLOOD	BASE FLOOD
FREQUENCY (YEARS)	50	100
DISCHARGE (CUBIC FEET PER SECOND)	3290	4360
WATER SURFACE ELEV. (FEET)	630.87	631.90

FLOOD PLAIN DATA ARE BASED UPON INFORMATION AVAILABLE WHEN THE PLANS WERE PREPARED AND ARE SHOWN TO MEET FEDERAL REQUIREMENTS. THE ACCURACY OF SAID INFORMATION IS NOT WARRANTED BY THE STATE AND INTERESTED OR AFFECTED PARTIES SHOULD MAKE THEIR OWN INVESTIGATIONS.

NOTES:

Indicates bottom of footing elevation

Indicates 72" Ø CIDH Pile

Indicates 24" Ø CIDH pile. For layout, see "ABUTMENT DETAILS No. 1" sheet

Bridge Location Br # 49-0001L

Ⓐ - 61.91 Lt "A1" LINE Sta 46+92.30, Elev=646.62 ±
Ⓑ - 61.30 Lt "A1" LINE Sta 48+35.59, Elev=649.64 ±
Ⓒ - 35.03 Lt "A1" LINE Sta 47+18.85, Elev=646.59 ±
Ⓓ - 33.22 Lt "A1" LINE Sta 48+53.19, Elev=649.83 ±

Bridge Location Br # 49-0001R

Ⓔ - 14.67 Rt "A1" LINE Sta 47+34.89, Elev=641.99 ±
Ⓕ - 14.92 Rt "A1" LINE Sta 48+97.04, Elev=647.66 ±
Ⓖ - 47.95 Rt "A1" LINE Sta 47+44.43, Elev=641.85 ±
Ⓗ - 49.11 Rt "A1" LINE Sta 49+06.97, Elev=647.68 ±

PRELIMINARY INVESTIGATION SECTION

SCALE	VERT.DATUM NAVD88	PHOTOGRAMMETRY AS OF: X			
1"=20'	HORZ.DATUM NAD83 (92)	SURVEYED	BY DISTRICT	CHECKED	BY C. FASSETT 08/2014
ALIGNMENT TIES Dist TRAVERSE SHEET		DRAFTED	BY T. ZOLNIKOV 08/2014	CHECKED	BY S. SOU 08/2014

DESIGN	BY Lewis L Shen	CHECKED Sharon Yen
DETAILS	BY Nancy C Gwynn	CHECKED Sharon Yen
QUANTITIES	BY Seung Pyo Hong	CHECKED Mufeed Khalaf

STATE OF CALIFORNIA
DEPARTMENT OF TRANSPORTATION

DIVISION OF ENGINEERING SERVICES
STRUCTURE DESIGN
DESIGN BRANCH 3

BRIDGE NO. 49-0263R
POST MILE 63.58

SAN MARCOS Cr Br (REPLACE RIGHT)
FOUNDATION PLAN

STRUCTURES FOUNDATION PLAN SHEET (ENGLISH) (REV. 09-01-10)

ORIGINAL SCALE IN INCHES FOR REDUCED PLANS 0 1 2 3

UNIT: 3646
PROJECT NUMBER & PHASE: 05000200201
CONTRACT NO.: 05-0G0404

DISREGARD PRINTS BEARING EARLIER REVISION DATES 09/04/14 07/14/14 07/17/15

SHEET 6 OF 28

FILE => 49-0263r-e-fp101.dgn

USERNAME => s115755 DATE PLOTTED => 22-JUL-2016 TIME PLOTTED => 17:58

DIST	COUNTY	ROUTE	POST MILES TOTAL PROJECT	SHEET No.	TOTAL SHEETS
05	SLO,Mon	101	63.2/R69.3, R0.0/R1.9	815	858

REGISTERED CIVIL ENGINEER 4-22-16 DATE

5-2-16
PLANS APPROVAL DATE

REGISTERED PROFESSIONAL ENGINEER
Jose M Aquino III
No. 58386
Exp. 12-31-16
CIVIL
STATE OF CALIFORNIA

The State of California or its officers or agents shall not be responsible for the accuracy or completeness of scanned copies of this plan sheet.

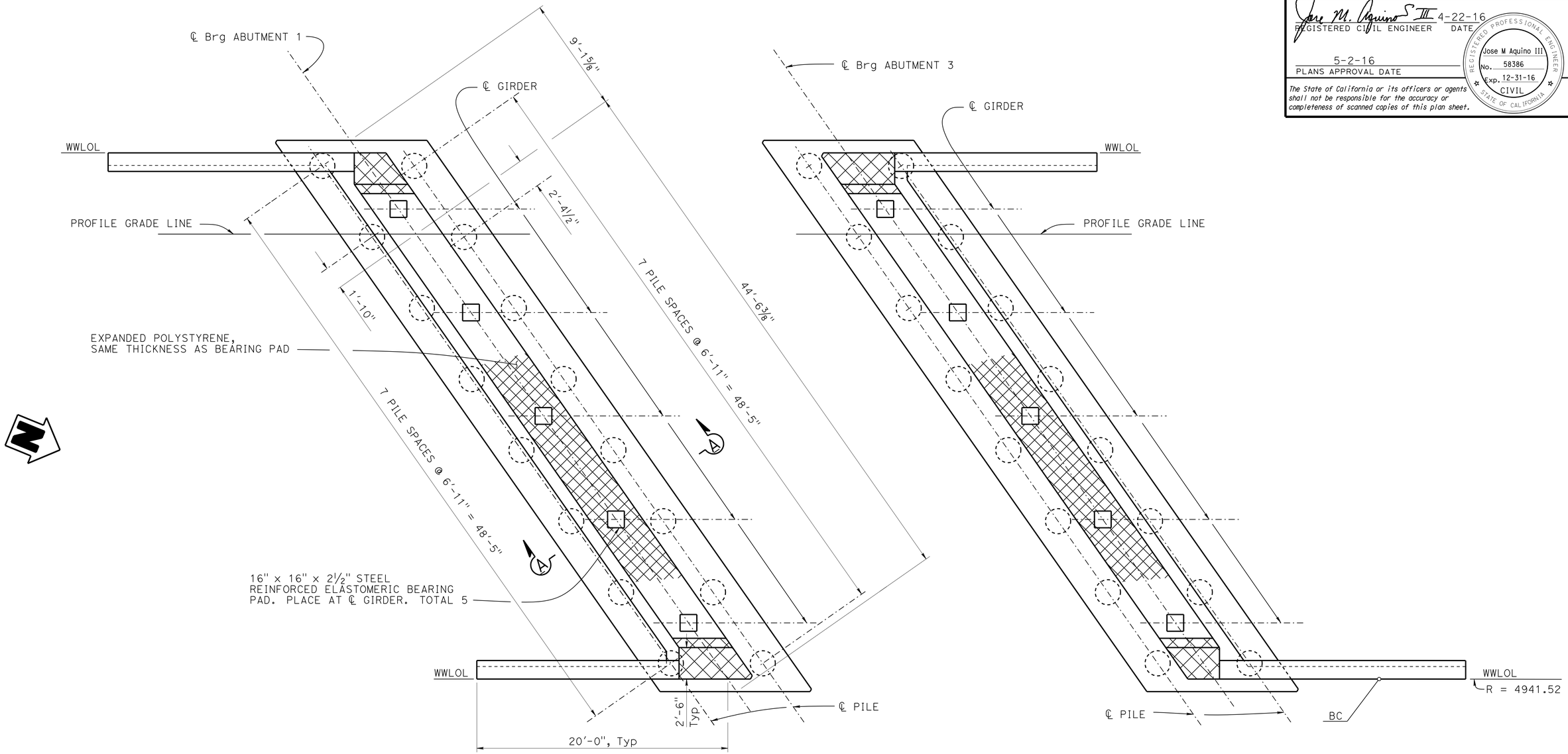

PLAN

1/4" = 1'-0"

NOTES:

1. Pile spacing is the same for both abutments
2. For "SECTION A-A", see "ABUTMENT DETAILS No. 2" sheet

LEGEND:

Indicates 24" ø CIDH Pile

	BY	CHECKED
DESIGN	Lewis L Shen	Sharon Yen
DETAILS	Nancy C Gwynn	Sharon Yen
QUANTITIES	Seung Pyo Hong	Mufeed Khalaf

STATE OF CALIFORNIA
DEPARTMENT OF TRANSPORTATION

DIVISION OF ENGINEERING SERVICES
STRUCTURE DESIGN
DESIGN BRANCH 3

BRIDGE NO. 49-0263R
POST MILE 63.58

SAN MARCOS Cr Br (REPLACE RIGHT)
ABUTMENT DETAILS No. 1

STRUCTURES DESIGN DETAIL SHEET (ENGLISH) (REV. 09-01-10)

ORIGINAL SCALE IN INCHES FOR REDUCED PLANS 0 1 2 3

UNIT: 3578
PROJECT NUMBER & PHASE: 05000200201
CONTRACT NO.: 05-0G0404

DISREGARD PRINTS BEARING EARLIER REVISION DATES

REVISION DATES 9-22-15 9-30-15 10-1-15

SHEET 7 OF 28

FILE => 49-0263r-f-abdt01.dgn

USERNAME => s115755 DATE PLOTTED => 22-JUL-2016 TIME PLOTTED => 17:58

DIST	COUNTY	ROUTE	POST MILES TOTAL PROJECT	SHEET No.	TOTAL SHEETS
05	SLO,Mon	101	63.2/R69.3, R0.0/R1.9	816	858

REGISTERED CIVIL ENGINEER 4-22-16 DATE

5-2-16
PLANS APPROVAL DATE

REGISTERED PROFESSIONAL ENGINEER
Jose M Aquino III
No. 58386
Exp. 12-31-16
CIVIL
STATE OF CALIFORNIA

The State of California or its officers or agents shall not be responsible for the accuracy or completeness of scanned copies of this plan sheet.

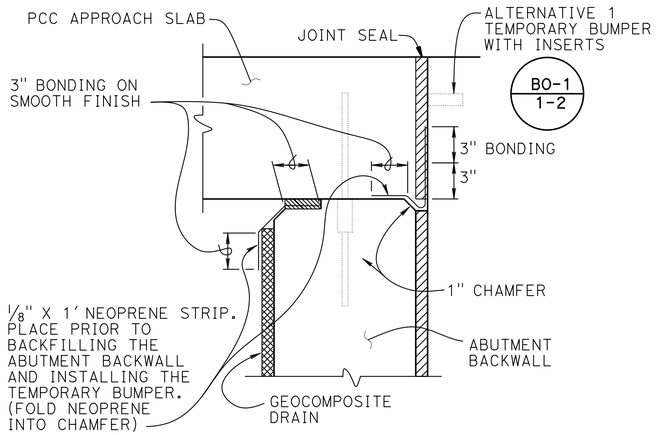

JOINT PROTECTION DETAIL

No Scale

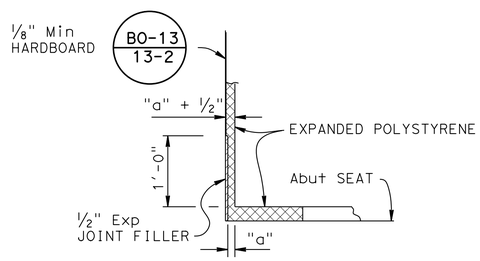

DETAIL A

No Scale

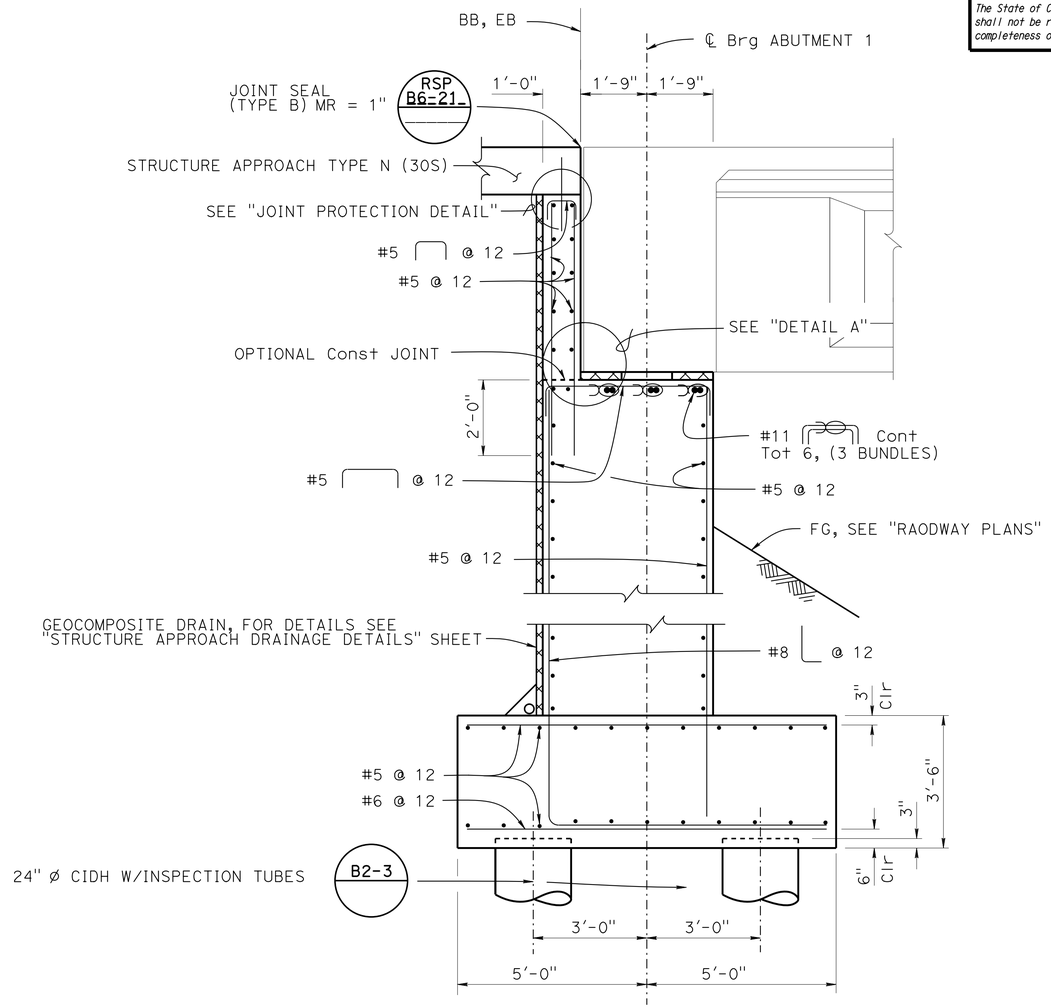

NOTE:

For footing reinforcement details see "ABUTMENT DETAILS No. 3" sheet

SECTION A-A

1/2" = 1'-0"

DESIGN	BY Lewis L Shen	CHECKED Sharon Yen	
DETAILS	BY Nancy C Gwynn	CHECKED Sharon Yen	
QUANTITIES	BY Seung Pyo Hong	CHECKED Mufeed Khalaf	

STATE OF CALIFORNIA
DEPARTMENT OF TRANSPORTATION

DIVISION OF ENGINEERING SERVICES
STRUCTURE DESIGN
DESIGN BRANCH 3

BRIDGE NO. 49-0263R
POST MILE 63.58

SAN MARCOS Cr Br (REPLACE RIGHT)
ABUTMENT DETAILS No. 2

STRUCTURES DESIGN DETAIL SHEET (ENGLISH) (REV. 09-01-10)

ORIGINAL SCALE IN INCHES FOR REDUCED PLANS 0 1 2 3

UNIT: 3578
PROJECT NUMBER & PHASE: 05000200201
CONTRACT NO.: 05-0G0404

DISREGARD PRINTS BEARING EARLIER REVISION DATES

REVISION DATES 1-26-15 1-26-15 1-26-15 1-26-16

SHEET 8 OF 28

FILE => 49-0263r-f-abdt02.dgn

USERNAME => s115755 DATE PLOTTED => 22-JUL-2016 TIME PLOTTED => 17:58

DIST	COUNTY	ROUTE	POST MILES TOTAL PROJECT	SHEET No.	TOTAL SHEETS
05	SLO,Mon	101	63.2/R69.3, R0.0/R1.9	817	858

REGISTERED CIVIL ENGINEER 4-22-16 DATE

5-2-16
PLANS APPROVAL DATE

REGISTERED PROFESSIONAL ENGINEER
Jose M Aquino III
No. 58386
Exp. 12-31-16
CIVIL
STATE OF CALIFORNIA

The State of California or its officers or agents shall not be responsible for the accuracy or completeness of scanned copies of this plan sheet.

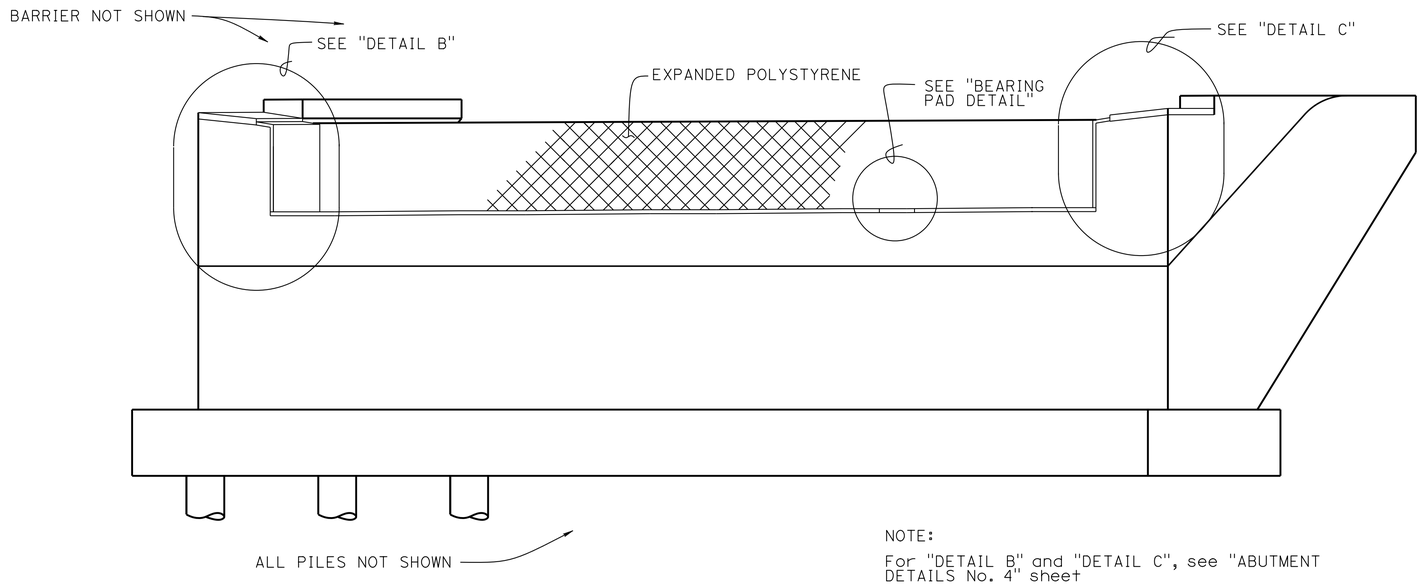

NOTE:

For "DETAIL B" and "DETAIL C", see "ABUTMENT DETAILS No. 4" sheet

ELEVATION

1/4" = 1'-0"

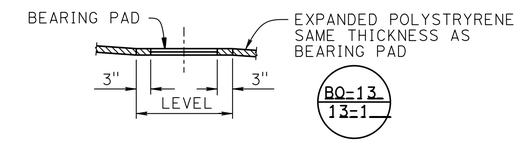

Details typical at all bearing pads

BEARING PAD DETAIL

No Scale

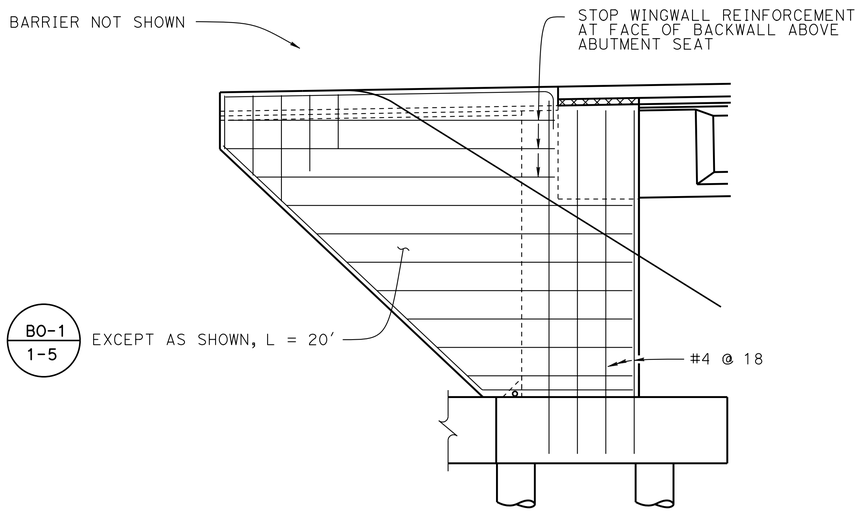

WINGWALL ELEVATION

1/4" = 1'-0"

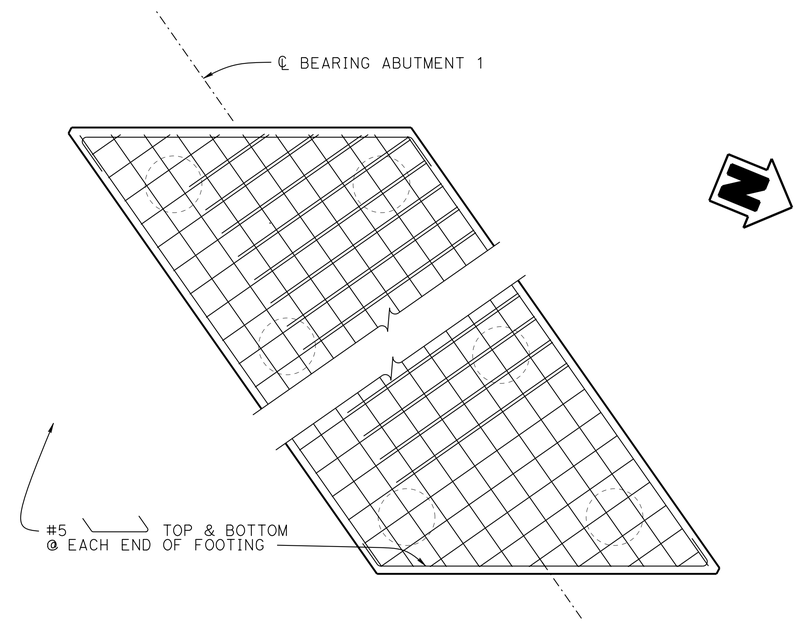

PART FOOTING PLAN

3/8" = 1'-0"

DESIGN	BY Lewis L Shen	CHECKED Sharon Yen	
DETAILS	BY Nancy C Gwynn	CHECKED Sharon Yen	
QUANTITIES	BY Seung Pyo Hong	CHECKED Mufeed Khalaf	

STATE OF CALIFORNIA
DEPARTMENT OF TRANSPORTATION

DIVISION OF ENGINEERING SERVICES
STRUCTURE DESIGN
DESIGN BRANCH 3

BRIDGE NO. 49-0263R
POST MILE 63.58

SAN MARCOS Cr Br (REPLACE RIGHT)
ABUTMENT DETAILS No. 3

STRUCTURES DESIGN DETAIL SHEET (ENGLISH) (REV. 09-01-10)

ORIGINAL SCALE IN INCHES FOR REDUCED PLANS 0 1 2 3

UNIT: 3578
PROJECT NUMBER & PHASE: 05000200201
CONTRACT NO.: 05-0G0404

DISREGARD PRINTS BEARING EARLIER REVISION DATES

REVISION DATES 8-22-15 8-27-15 10-1-15

SHEET 9 OF 28

FILE => 49-0263r-f-abdt03.dgn

USERNAME => s115255 DATE PLOTTED => 22-JUL-2016 TIME PLOTTED => 17:58

DIST	COUNTY	ROUTE	POST MILES TOTAL PROJECT	SHEET No.	TOTAL SHEETS
05	SLO,Mon	101	63.2/R69.3, R0.0/R1.9	818	858

REGISTERED CIVIL ENGINEER 4-22-16 DATE

5-2-16
PLANS APPROVAL DATE

REGISTERED PROFESSIONAL ENGINEER
Jose M Aquino III
No. 58386
Exp. 12-31-16
CIVIL
STATE OF CALIFORNIA

The State of California or its officers or agents shall not be responsible for the accuracy or completeness of scanned copies of this plan sheet.

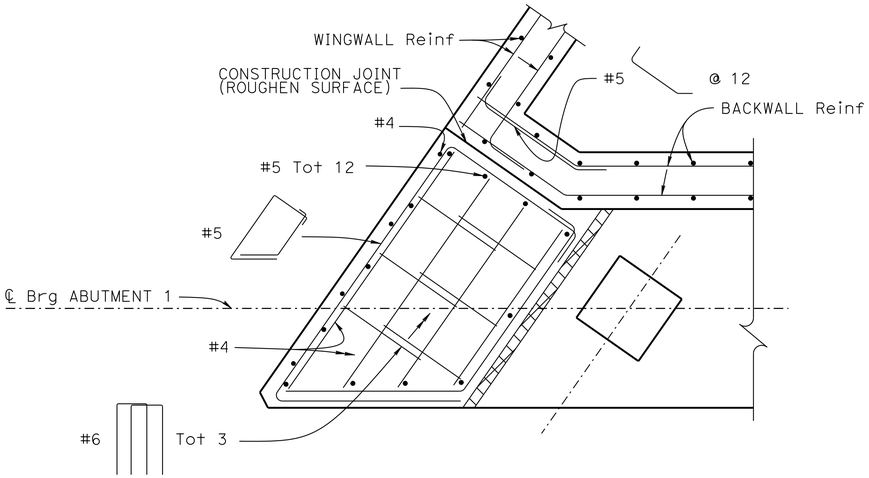

SECTION B-B

1/4" = 1'-0"

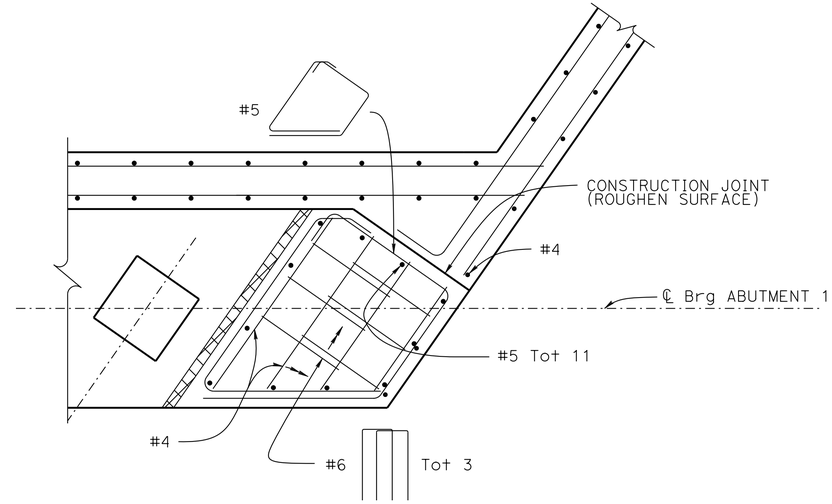

SECTION C-C

1/4" = 1'-0"

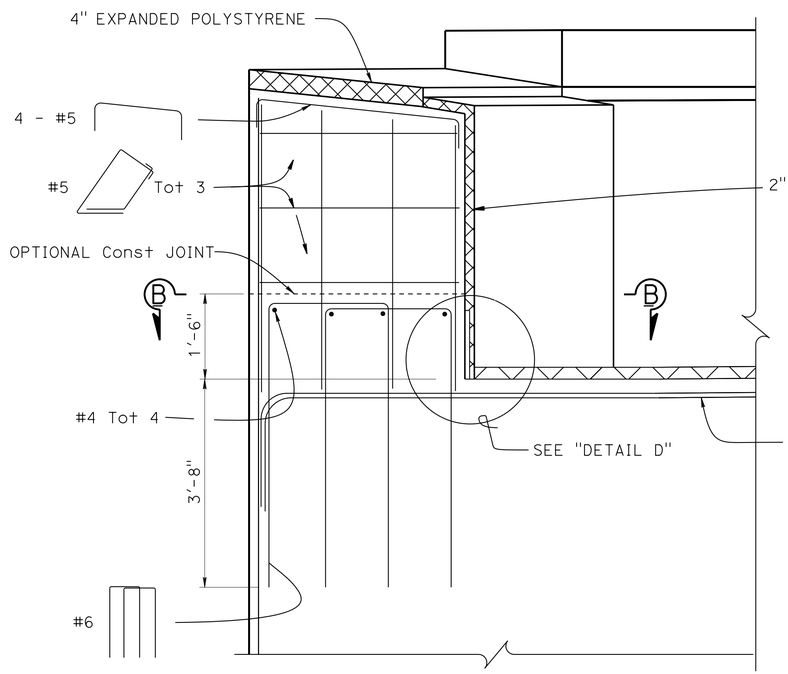

DETAIL B

3/4" = 1'-0"

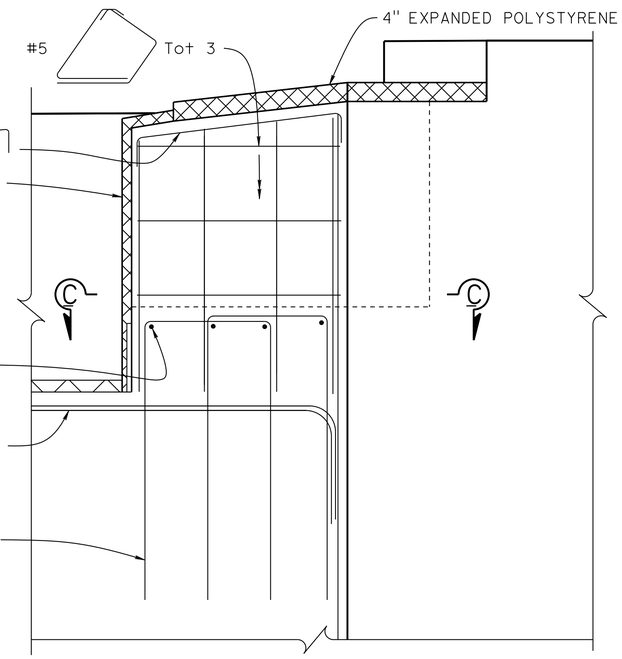

DETAIL C

3/4" = 1'-0"

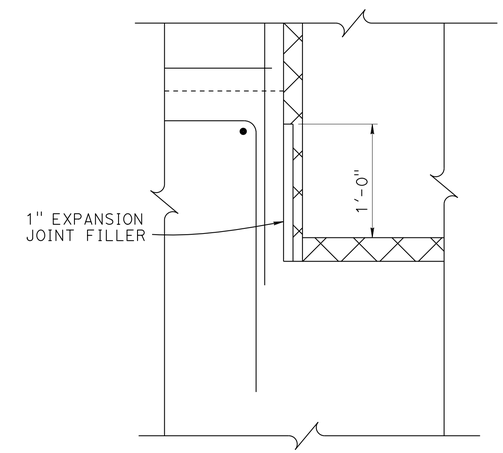

DETAIL D

1 1/2" = 1'-0"

DESIGN	BY Lewis L Shen	CHECKED Sharon Yen	
DETAILS	BY Nancy C Gwynn	CHECKED Sharon Yen	
QUANTITIES	BY Seung Pyo Hong	CHECKED Mufeed Khalaf	

STATE OF CALIFORNIA
DEPARTMENT OF TRANSPORTATION

DIVISION OF ENGINEERING SERVICES
STRUCTURE DESIGN
DESIGN BRANCH 3

BRIDGE NO. 49-0263R
POST MILE 63.58

SAN MARCOS Cr Br (REPLACE RIGHT)
ABUTMENT DETAILS No. 4

STRUCTURES DESIGN DETAIL SHEET (ENGLISH) (REV. 09-01-10)

ORIGINAL SCALE IN INCHES FOR REDUCED PLANS 0 1 2 3

UNIT: 3578
PROJECT NUMBER & PHASE: 05000200201
CONTRACT NO.: 05-0G0404

DISREGARD PRINTS BEARING EARLIER REVISION DATES

REVISION DATES 6-26-15 6-30-15 9-22-15 1-26-16

SHEET 10 OF 28

FILE => 49-0263r-f-abdt04.dgn

USERNAME => s115755 DATE PLOTTED => 22-JUL-2016 TIME PLOTTED => 17:58

DIST	COUNTY	ROUTE	POST MILES TOTAL PROJECT	SHEET No.	TOTAL SHEETS
05	SLO,Mon	101	63.2/R69.3, R0.0/R1.9	819	858

REGISTERED CIVIL ENGINEER — DATE 4-22-16

5-2-16
PLANS APPROVAL DATE

REGISTERED PROFESSIONAL ENGINEER — Jose M Aquino III — No. 58386 — Exp. 12-31-16 — CIVIL — STATE OF CALIFORNIA

The State of California or its officers or agents shall not be responsible for the accuracy or completeness of scanned copies of this plan sheet.

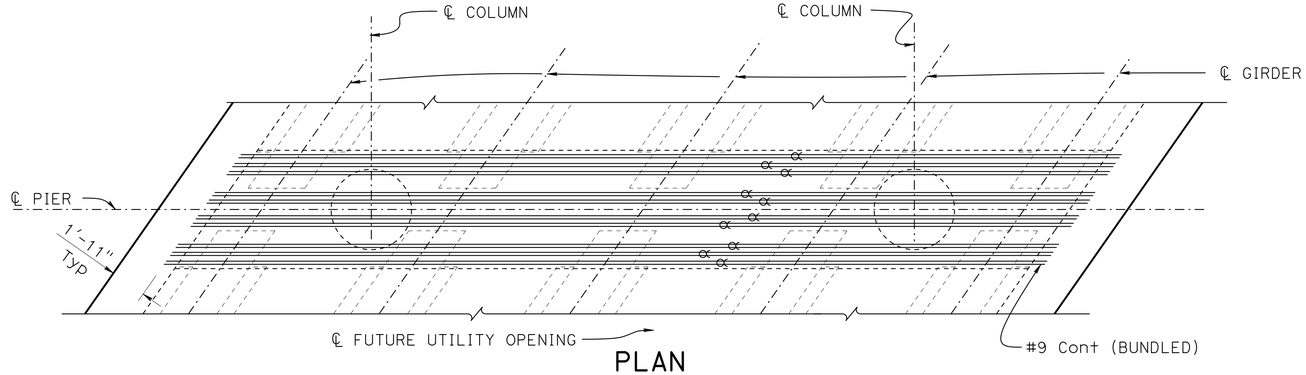

PLAN
1/4 = 1'-0"

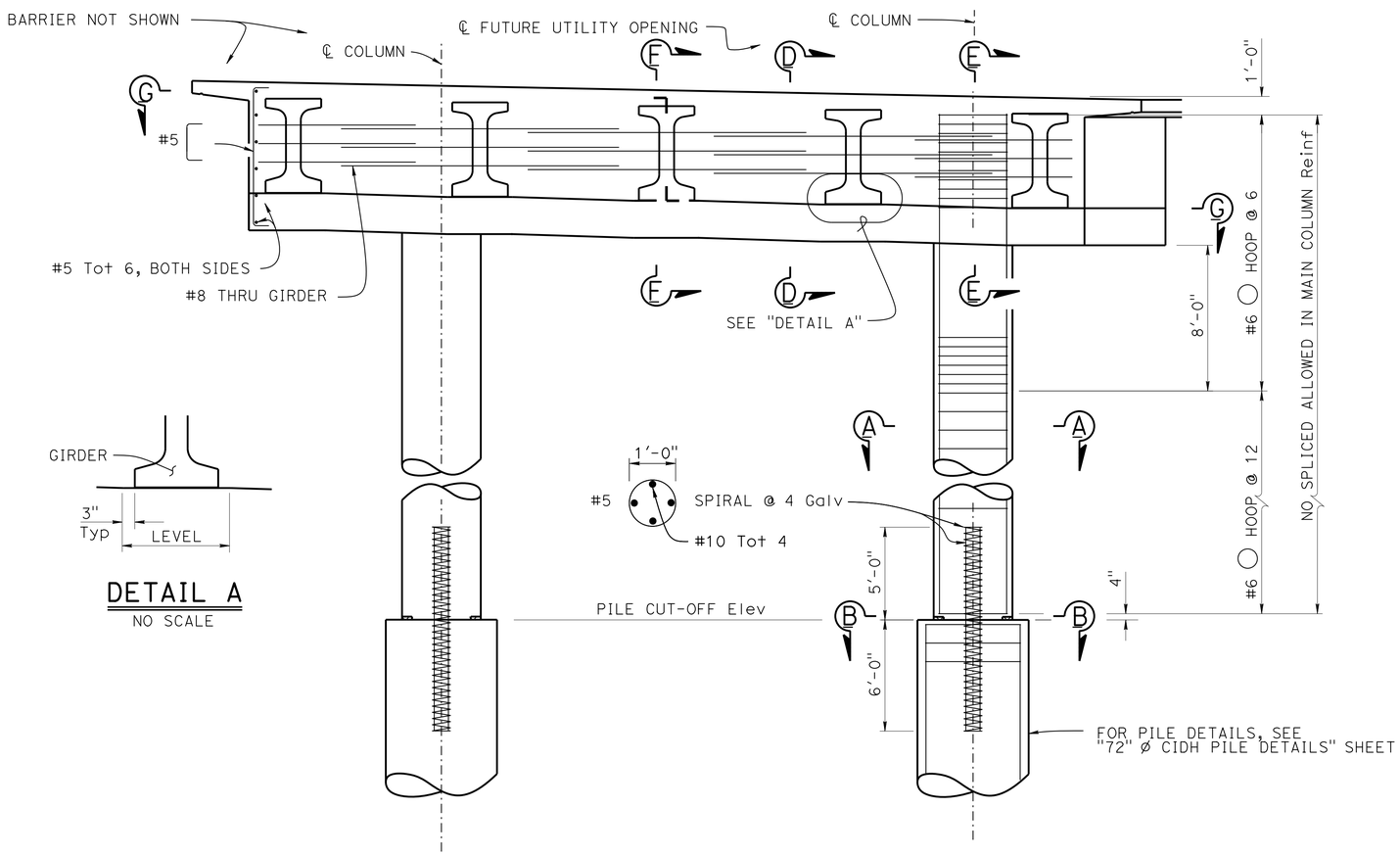

DETAIL A
NO SCALE

ELEVATION
1/4" = 1'-0"

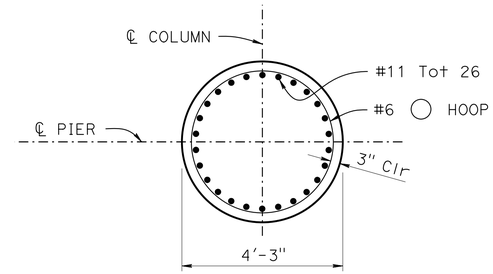

SECTION A-A
1/2" = 1'-0"

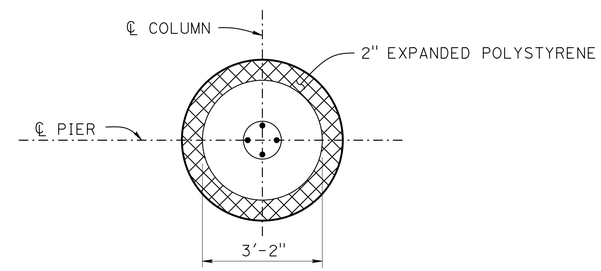

SECTION B-B
1/2" = 1'-0"

NOTES:

1. All hoops are "ultimate" butt spliced continuous
2. For pile cut-off elev, see "PILE DATA TABLE" ON "INDEX TO PLANS" sheet
3. For "SECTION D-D", "SECTION E-E" and "SECITON F-F", see "PIER DETAILS No. 2" sheet
4. For "SECTION G-G", see "PIER DETAILS No. 3" sheet
5. Lapped splices in spiral column pin reinf shall be lapped at least 80 bar diameters. Spiral pin reinf at splices and at ends shall be terminated with a 135° with a 6" tail hooked around a longitudinal bar

	BY	CHECKED
DESIGN	Lewis L Shen	Sharon Yen
DETAILS	Nancy C Gwynn	Sharon Yen
QUANTITIES	Seung Pyo Hong	Mufeed Khalaf

STATE OF CALIFORNIA
DEPARTMENT OF TRANSPORTATION

DIVISION OF ENGINEERING SERVICES
STRUCTURE DESIGN
DESIGN BRANCH 3

BRIDGE NO. 49-0263R
POST MILE 63.58

SAN MARCOS Cr Br (REPLACE RIGHT)
PIER DETAILS No. 1

STRUCTURES DESIGN DETAIL SHEET (ENGLISH) (REV. 09-01-10)

ORIGINAL SCALE IN INCHES FOR REDUCED PLANS 0 1 2 3

UNIT: 3578
PROJECT NUMBER & PHASE: 05000200201
CONTRACT NO.: 05-0G0404

DISREGARD PRINTS BEARING EARLIER REVISION DATES
REVISION DATES 8-18-15 8-18-15 9-17-15

SHEET 11 OF 28

FILE => 49-0263r-h-pier01.dgn

USERNAME => s113255 DATE PLOTTED => 22-JUL-2016 TIME PLOTTED => 17:58

DIST	COUNTY	ROUTE	POST MILES TOTAL PROJECT	SHEET No.	TOTAL SHEETS
05	SLO,Mon	101	63.2/R69.3, R0.0/R1.9	820	858

REGISTERED CIVIL ENGINEER 4-22-16 DATE

5-2-16
PLANS APPROVAL DATE

REGISTERED PROFESSIONAL ENGINEER Jose M Aquino III No. 58386 Exp. 12-31-16 CIVIL STATE OF CALIFORNIA

The State of California or its officers or agents shall not be responsible for the accuracy or completeness of scanned copies of this plan sheet.

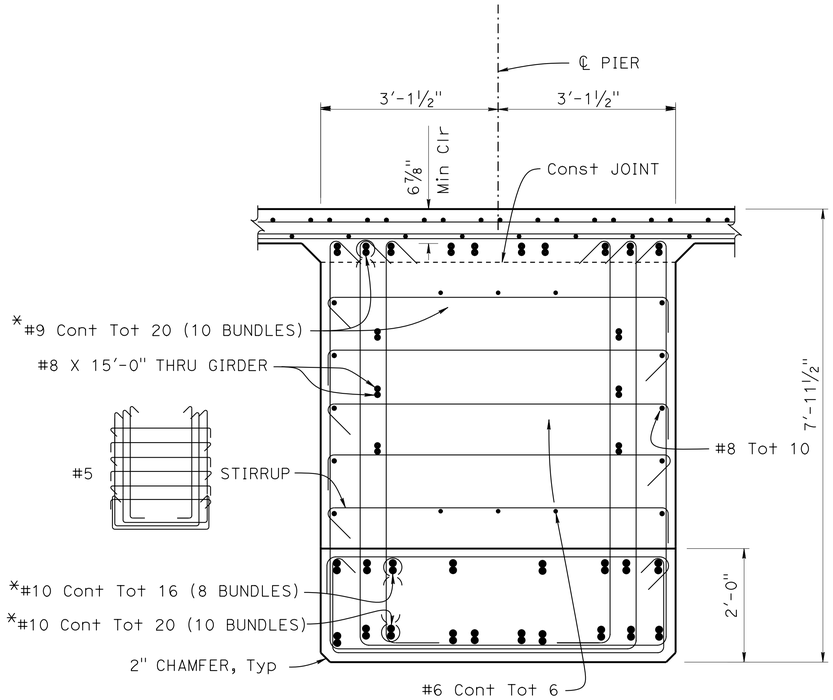

SECTION D-D

¾" = 1'-0"

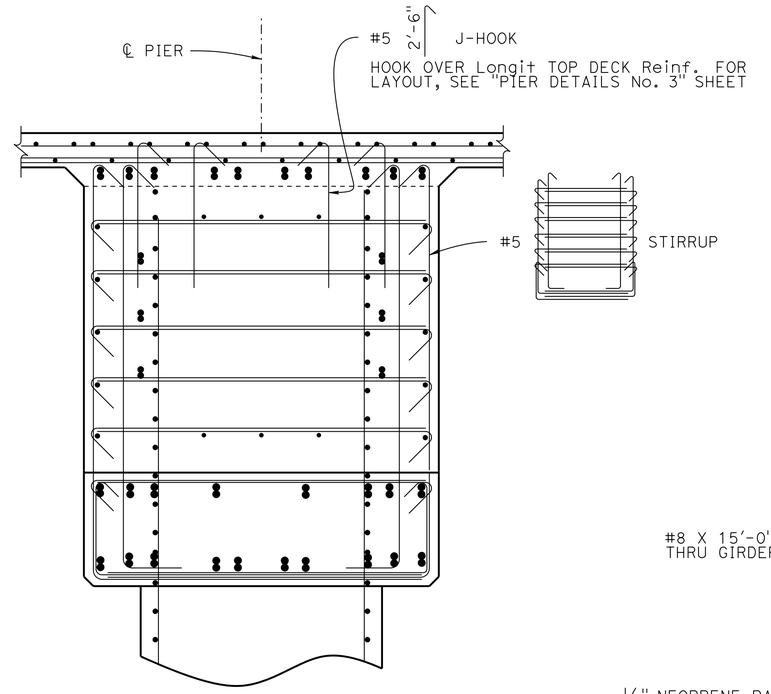

NOTE:
For details not shown, see "SECTION D-D"

SECTION E-E

¾" = 1'-0"

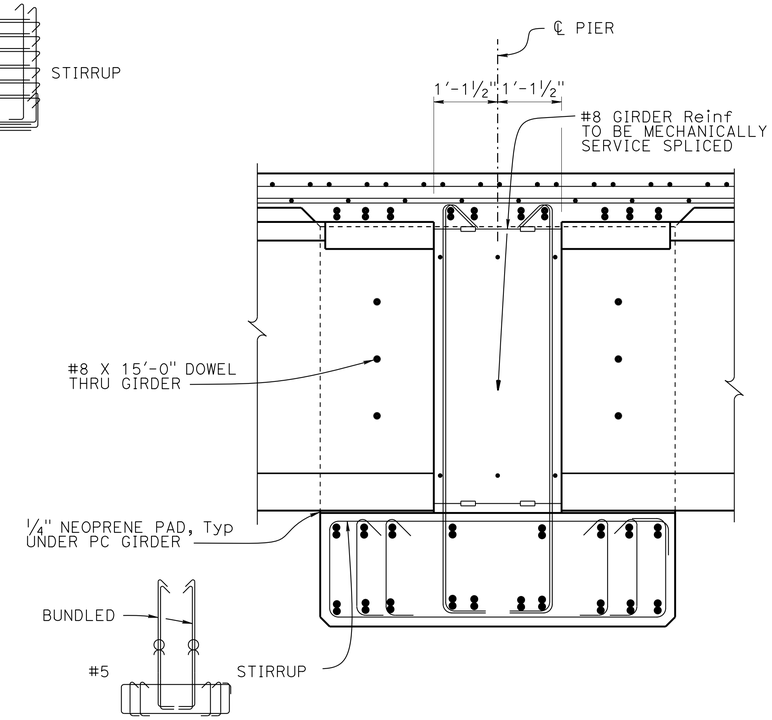

NOTE:
For details not shown, see "SECTION D-D"

SECTION F-F

¾" = 1'-0"

LEGEND:
* No splice allowed
Indicates bundled bars

NOTE:
For details not shown, see "PIER DETAILS No. 3" sheet

	BY	CHECKED
DESIGN	Lewis L Shen	Sharon Yen
DETAILS	Nancy C Gwynn	Sharon Yen
QUANTITIES	Seung Pyo Hong	Mufeed Khalaf

STATE OF CALIFORNIA
DEPARTMENT OF TRANSPORTATION

DIVISION OF ENGINEERING SERVICES
STRUCTURE DESIGN
DESIGN BRANCH 3

BRIDGE NO. 49-0263R
POST MILE 63.58

SAN MARCOS Cr Br (REPLACE RIGHT)
PIER DETAILS No. 2

STRUCTURES DESIGN DETAIL SHEET (ENGLISH) (REV. 09-01-10)

ORIGINAL SCALE IN INCHES FOR REDUCED PLANS 0 1 2 3

UNIT: 3578
PROJECT NUMBER & PHASE: 05000200201
CONTRACT NO.: 05-0G0404

DISREGARD PRINTS BEARING EARLIER REVISION DATES

REVISION DATES 1-22-15 6-22-15 9-11-15

SHEET 12 OF 28

FILE => 49-0263r-h-pier02.dgn

USERNAME => s115755 DATE PLOTTED => 22-JUL-2016 TIME PLOTTED => 17:58

DIST	COUNTY	ROUTE	POST MILES TOTAL PROJECT	SHEET No.	TOTAL SHEETS
05	SLO,Mon	101	63.2/R69.3, R0.0/R1.9	821	858

REGISTERED CIVIL ENGINEER 4-22-16 DATE

5-2-16
PLANS APPROVAL DATE

REGISTERED PROFESSIONAL ENGINEER
Jose M Aquino III
No. 58386
Exp. 12-31-16
CIVIL
STATE OF CALIFORNIA

The State of California or its officers or agents shall not be responsible for the accuracy or completeness of scanned copies of this plan sheet.

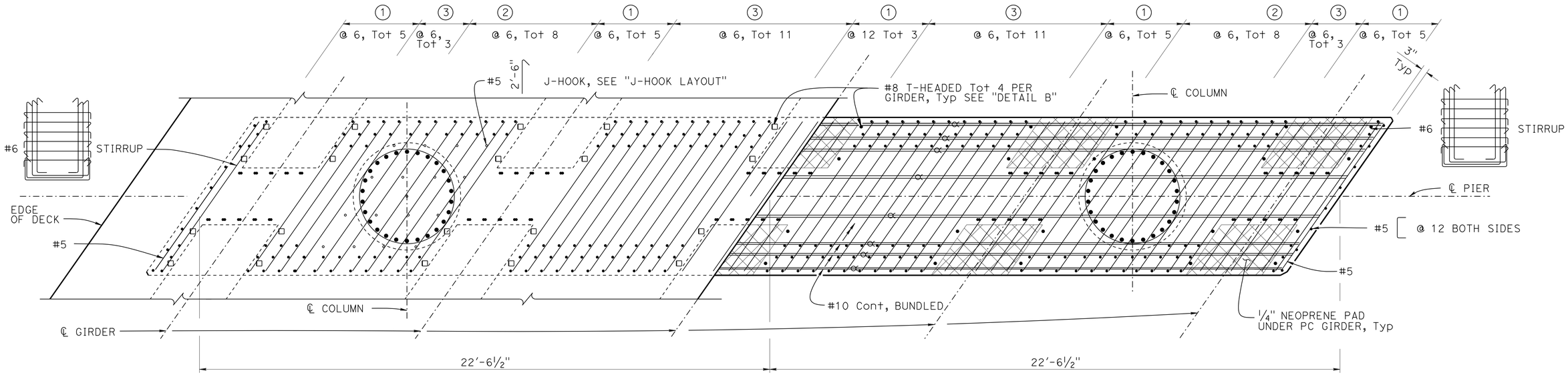

NOTES:
1. All reinforcement not shown
2. Stirrups are placed parallel to girder and spaced normal to ℄ girder
3. For details not shown, see "BENT DETAILS No. 2" sheet

SECTION G-G

½" = 1'-0"

LEGEND:

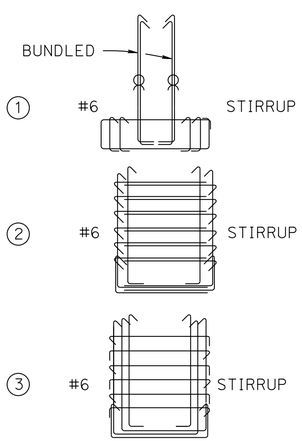

Indicates 1/4" Neoprene pad

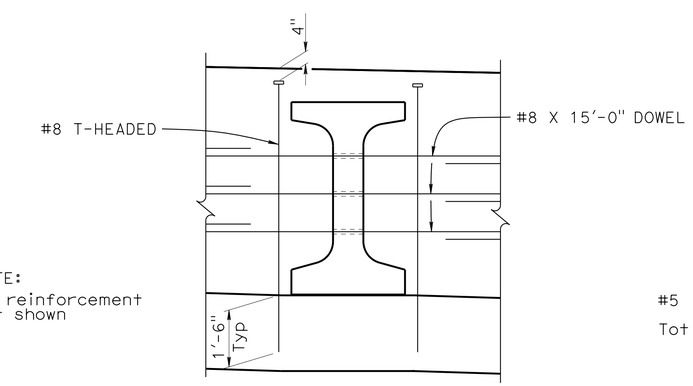

NOTE:
All reinforcement not shown

DETAIL B

½" = 1'-0"

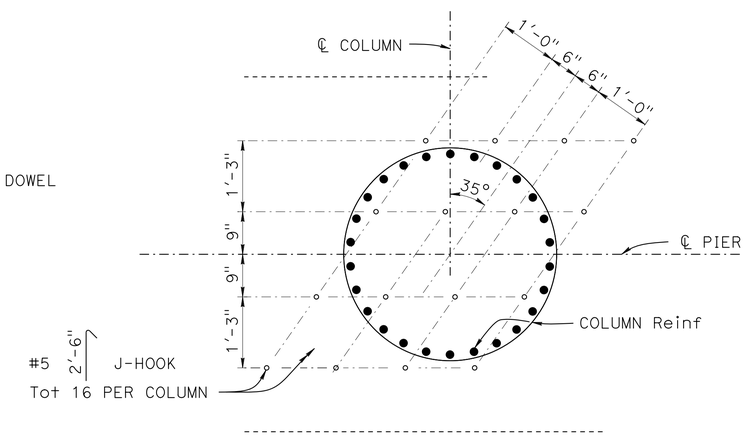

J-HOOK LAYOUT

¾" = 1'-0"

DESIGN	BY Lewis L Shen	CHECKED Sharon Yen	
DETAILS	BY Nancy C Gwynn	CHECKED Sharon Yen	
QUANTITIES	BY Seung Pyo Hong	CHECKED Mufeed Khalaf	

STATE OF CALIFORNIA
DEPARTMENT OF TRANSPORTATION

DIVISION OF ENGINEERING SERVICES
STRUCTURE DESIGN
DESIGN BRANCH 3

BRIDGE NO. 49-0263R
POST MILE 63.58

SAN MARCOS Cr Br (REPLACE RIGHT)
PIER DETAILS No. 3

STRUCTURES DESIGN DETAIL SHEET (ENGLISH) (REV. 09-01-10)

ORIGINAL SCALE IN INCHES FOR REDUCED PLANS 0 1 2 3

UNIT: 3578
PROJECT NUMBER & PHASE: 05000200201
CONTRACT NO.: 05-0G0404

DISREGARD PRINTS BEARING EARLIER REVISION DATES

REVISION DATES 1-11-15 2-11-15

SHEET 13 OF 28

FILE => 49-0263r-h-pier03.dgn

USERNAME => s113755 DATE PLOTTED => 22-JUL-2016 TIME PLOTTED => 17:58

DIST	COUNTY	ROUTE	POST MILES TOTAL PROJECT	SHEET No.	TOTAL SHEETS
05	SLO,Mon	101	63.2/R69.3, R0.0/R1.9	822	858

REGISTERED CIVIL ENGINEER 4-22-16 DATE

5-2-16
PLANS APPROVAL DATE

REGISTERED PROFESSIONAL ENGINEER Jose M Aquino III No. 58386 Exp. 12-31-16 CIVIL STATE OF CALIFORNIA

The State of California or its officers or agents shall not be responsible for the accuracy or completeness of scanned copies of this plan sheet.

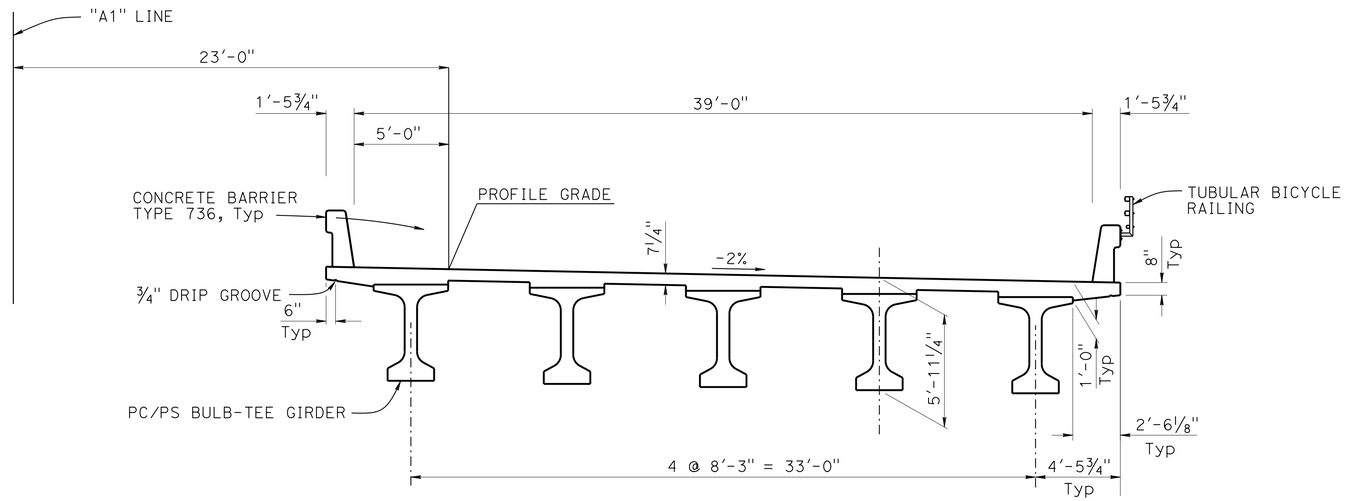

TYPICAL SECTION

¼" = 1'-0"

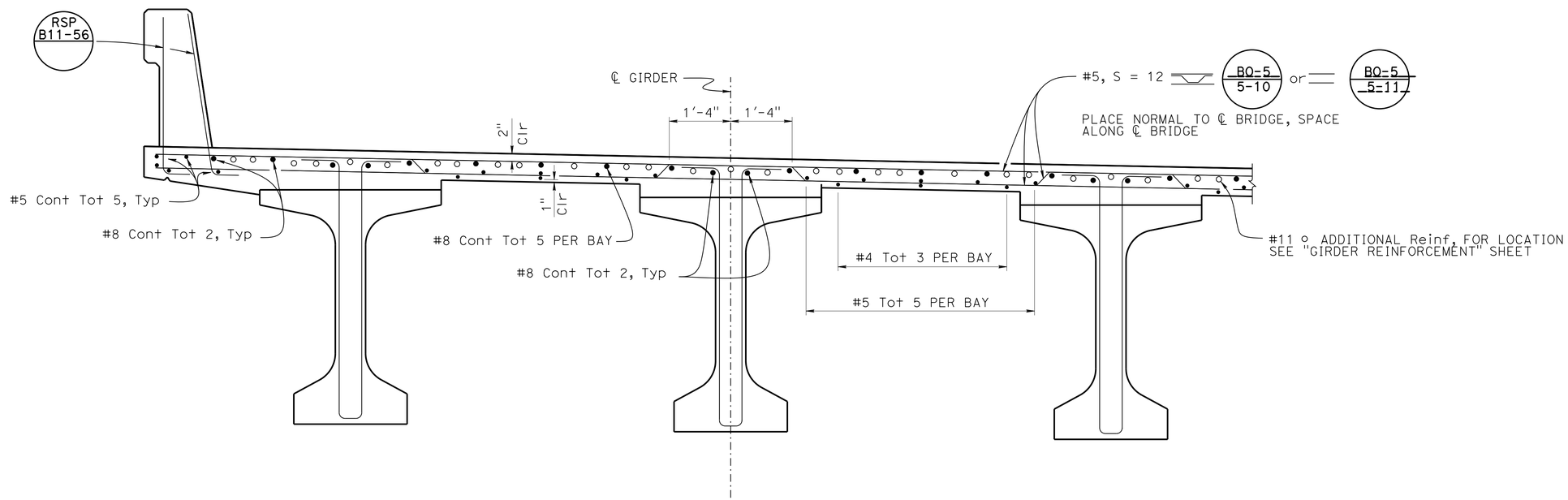

PART TYPICAL SECTION

¾" = 1'-0"

	BY	CHECKED
DESIGN	Lewis L Shen	Sharon Yen
DETAILS	Nancy C Gwynn	Sharon Yen
QUANTITIES	Seung Pyo Hong	Mufeed Khalaf

STATE OF CALIFORNIA
DEPARTMENT OF TRANSPORTATION

DIVISION OF ENGINEERING SERVICES
STRUCTURE DESIGN
DESIGN BRANCH 3

BRIDGE NO. 49-0263R
POST MILE 63.58

SAN MARCOS Cr Br (REPLACE RIGHT)
TYPICAL SECTION

STRUCTURES DESIGN DETAIL SHEET (ENGLISH) (REV. 09-01-10)

ORIGINAL SCALE IN INCHES FOR REDUCED PLANS 0 1 2 3

UNIT: 3578
PROJECT NUMBER & PHASE: 05000200201
CONTRACT NO.: 05-0G0404

DISREGARD PRINTS BEARING EARLIER REVISION DATES

REVISION DATES 2-26-15 9-17-15 10-1-15

SHEET 14 OF 28

FILE => 49-0263r-k-ts.dgn

USERNAME => s115755 DATE PLOTTED => 22-JUL-2016 TIME PLOTTED => 17:58

DIST	COUNTY	ROUTE	POST MILES TOTAL PROJECT	SHEET No.	TOTAL SHEETS
05	SLO,Mon	101	63.2/R69.3, R0.0/R1.9	823	858

REGISTERED CIVIL ENGINEER 4-22-16 DATE

5-2-16
PLANS APPROVAL DATE

REGISTERED PROFESSIONAL ENGINEER
Jose M Aquino III
No. 58386
Exp. 12-31-16
CIVIL
STATE OF CALIFORNIA

The State of California or its officers or agents shall not be responsible for the accuracy or completeness of scanned copies of this plan sheet.

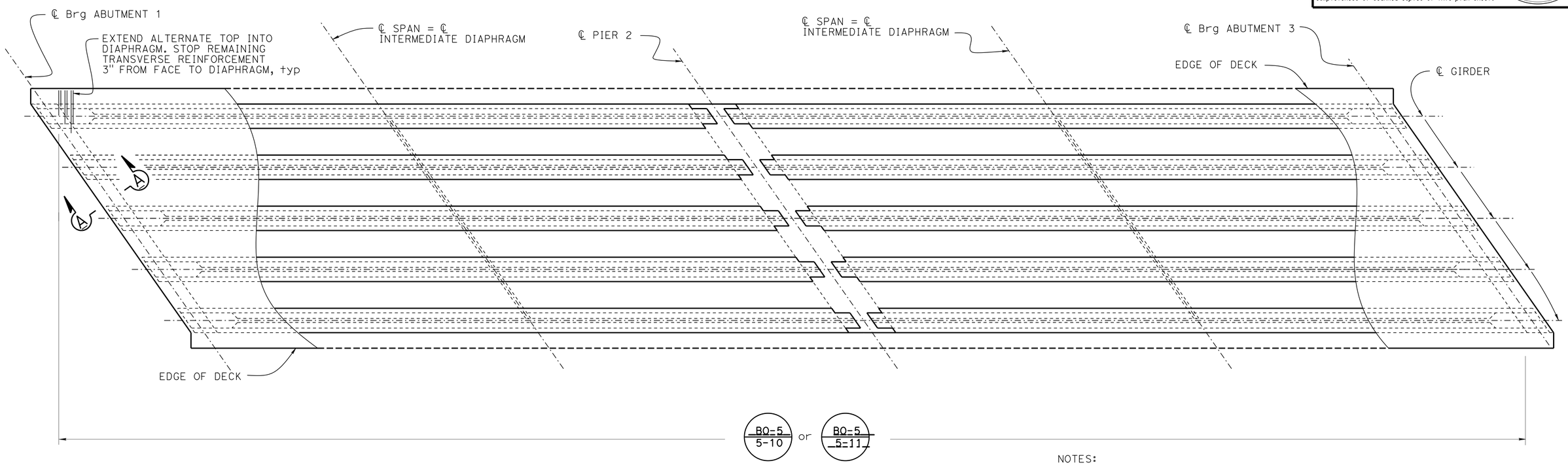

NOTES:
For "SECTION A-A", see "GRIDER REINFORCEMENT" sheet

PLAN
1/8" = 1'-0"

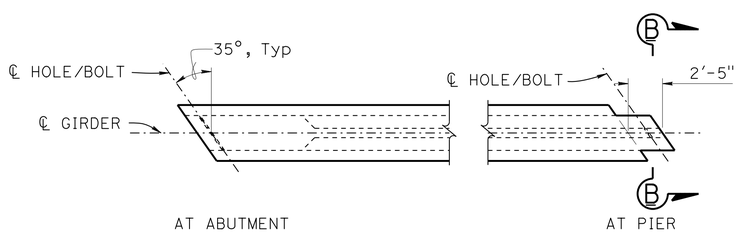

PART GIRDER PLAN
3/16" = 1'-0"

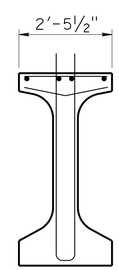

NOTE:
For details not shown, see "SECTION A-A" on "PC/PS BULB-TEE GIRDER (HARPED STRANDS)" sheet

SECTION B-B
1/2" = 1'-0"

DESIGN	BY Lewis L Shen	CHECKED Sharon Yen	
DETAILS	BY Nancy C Gwynn	CHECKED Sharon Yen	
QUANTITIES	BY Seung Pyo Hong	CHECKED Mufeed Khalaf	

STATE OF CALIFORNIA
DEPARTMENT OF TRANSPORTATION

DIVISION OF ENGINEERING SERVICES
STRUCTURE DESIGN
DESIGN BRANCH 3

BRIDGE NO. 49-0263R
POST MILE 63.58

SAN MARCOS Cr Br (REPLACE RIGHT)
GIRDER LAYOUT

STRUCTURES DESIGN DETAIL SHEET (ENGLISH) (REV. 09-01-10)

ORIGINAL SCALE IN INCHES FOR REDUCED PLANS 0 1 2 3

UNIT: 3578
PROJECT NUMBER & PHASE: 05000200201
CONTRACT NO.: 05-0G0404

DISREGARD PRINTS BEARING EARLIER REVISION DATES

REVISION DATES 5-6-15 6-18-15 9-11-15

SHEET 15 OF 28

FILE => 49-0263r-1-girlo.dgn

USERNAME => s115755 DATE PLOTTED => 22-JUL-2016 TIME PLOTTED => 17:58

DIST	COUNTY	ROUTE	POST MILES TOTAL PROJECT	SHEET No.	TOTAL SHEETS
05	SLO,Mon	101	63.2/R69.3, R0.0/R1.9	824	858

REGISTERED CIVIL ENGINEER 4-22-16 DATE

5-2-16
PLANS APPROVAL DATE

REGISTERED PROFESSIONAL ENGINEER Jose M Aquino III No. 58386 Exp. 12-31-16 CIVIL STATE OF CALIFORNIA

The State of California or its officers or agents shall not be responsible for the accuracy or completeness of scanned copies of this plan sheet.

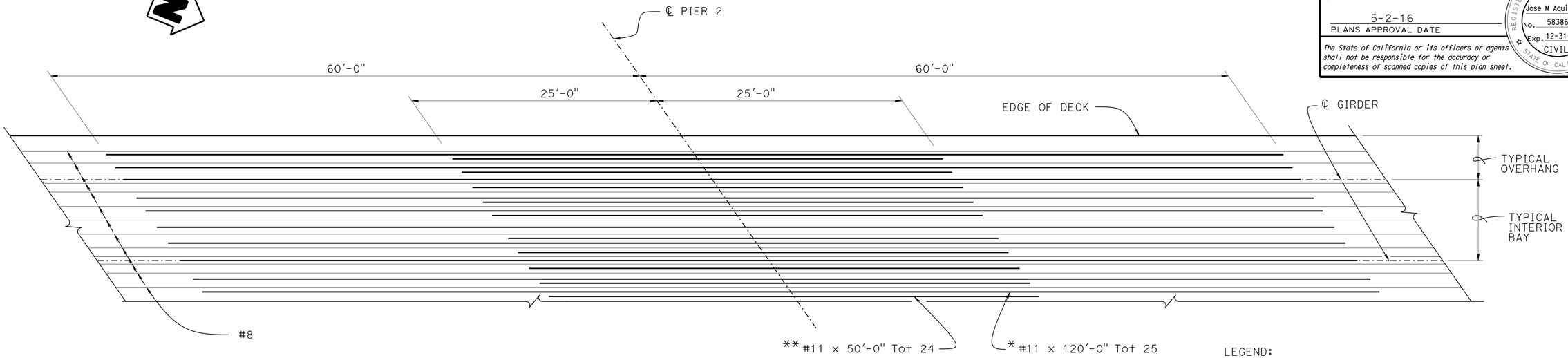

LEGEND:

* Service splice only, see "DETAIL K"

** No splice allowed

NOTES:

1. All reinforcement #11 unless otherwise shown
2. For details not shown, see "TYPICAL SECTION" sheet

PART PLAN

3/16" = 1'-0"

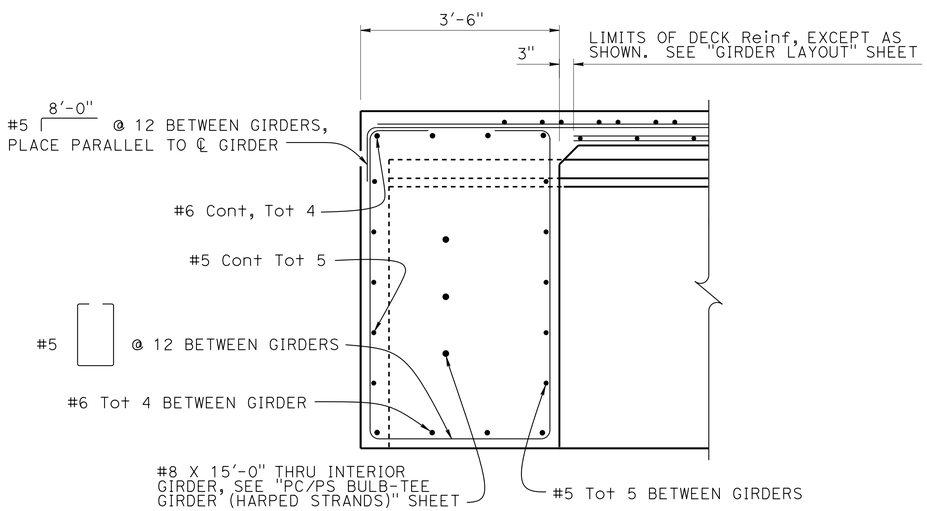

SECTION A-A

3/4" = 1'-0"

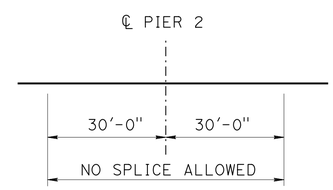

DETAIL K

NO SCALE

DESIGN	BY Lewis L Shen	CHECKED Sharon Yen	
DETAILS	BY Nancy C Gwynn	CHECKED Sharon Yen	
QUANTITIES	BY Seung Pyo Hong	CHECKED Mufeed Khalaf	

STATE OF CALIFORNIA
DEPARTMENT OF TRANSPORTATION

DIVISION OF ENGINEERING SERVICES
STRUCTURE DESIGN
DESIGN BRANCH 3

BRIDGE NO. 49-0263R
POST MILE 63.58

SAN MARCOS Cr Br (REPLACE RIGHT)
GIRDER REINFORCEMENT

STRUCTURES DESIGN DETAIL SHEET (ENGLISH) (REV. 09-01-10)

ORIGINAL SCALE IN INCHES FOR REDUCED PLANS 0 1 2 3

UNIT: 3578
PROJECT NUMBER & PHASE: 05000200201
CONTRACT NO.: 05-0G0404

DISREGARD PRINTS BEARING EARLIER REVISION DATES

REVISION DATES 5-6-15 9-17-15 SHEET 16 OF 28

FILE => 49-0263r-1-girre.dgn

USERNAME => s115755 DATE PLOTTED => 22-JUL-2016 TIME PLOTTED => 17:58

DIST	COUNTY	ROUTE	POST MILES TOTAL PROJECT	SHEET No.	TOTAL SHEETS
05	SLO,Mon	101	63.2/R69.3, R0.0/R1.9	825	858

REGISTERED CIVIL ENGINEER 4-22-16 DATE

5-2-16
PLANS APPROVAL DATE

REGISTERED PROFESSIONAL ENGINEER
Jose M Aquino III
No. 58386
Exp. 12-31-16
CIVIL
STATE OF CALIFORNIA

The State of California or its officers or agents shall not be responsible for the accuracy or completeness of scanned copies of this plan sheet.

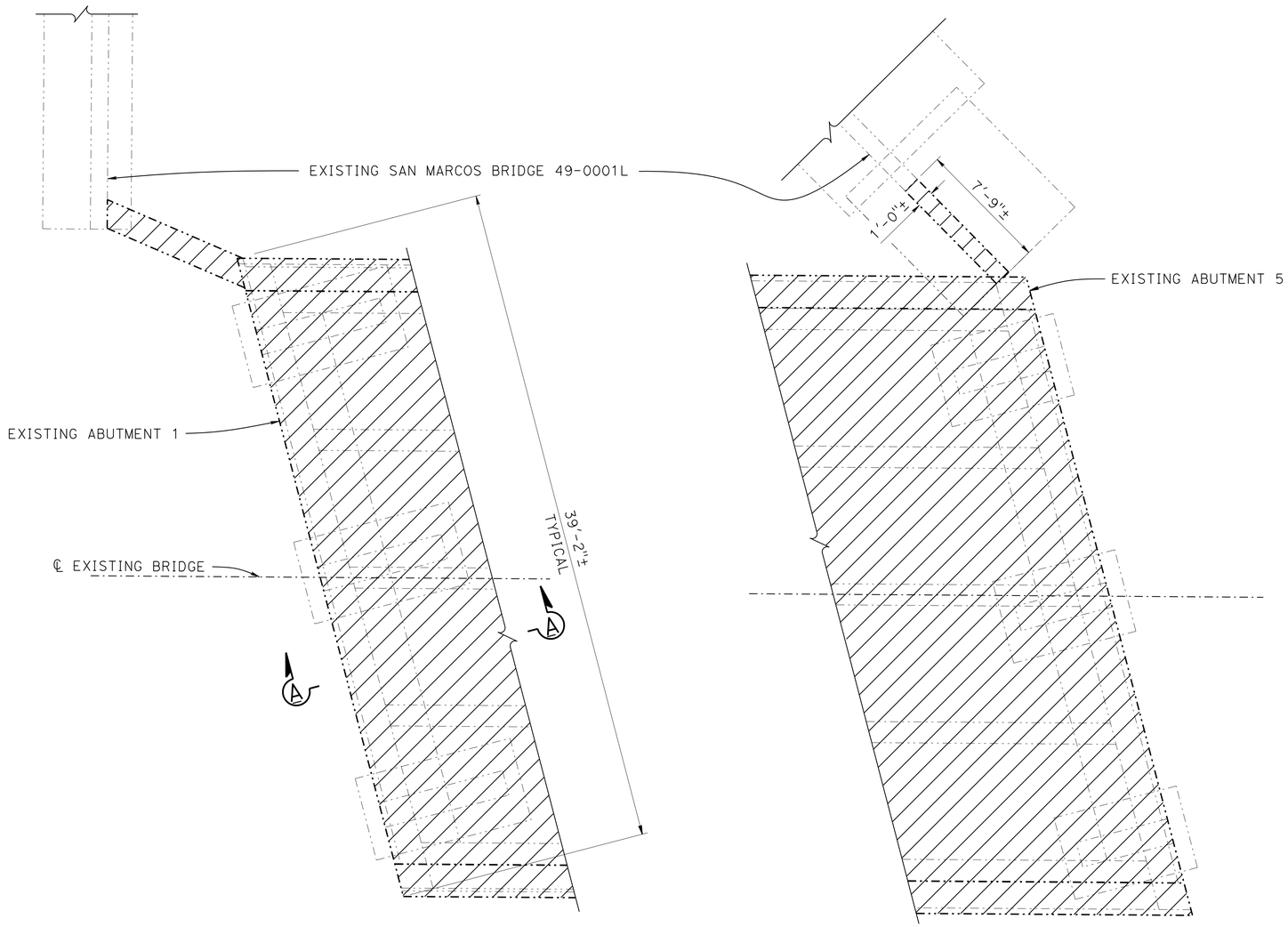

PART PLAN
1/4" = 1'-0"

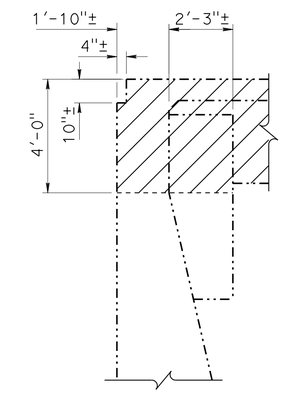

NOTE:
Abutment 1 shown,
Abutment 5 similar

SECTION A-A
3/8" = 1'-0"

NOTE:
For details not shown, see "CONCRETE REMOVAL Det No. 2" sheet

LEGEND:
Indicates concrete removal
Indicates existing structure

NOTE:
THE CONTRACTOR MUST VERIFY ALL CONTROLLING FIELD DIMENSIONS BEFORE ORDERING OR FABRICATING ANY MATERIAL.

	BY	CHECKED
DESIGN	Lewis L Shen	Sharon Yen
DETAILS	Nancy C Gwynn	Sharon Yen
QUANTITIES	Seung Pyo Hong	Mufeed Khalaf

STATE OF CALIFORNIA
DEPARTMENT OF TRANSPORTATION

DIVISION OF ENGINEERING SERVICES
STRUCTURE DESIGN
DESIGN BRANCH 3

BRIDGE NO. 49-0263R
POST MILE 63.58

SAN MARCOS Cr Br (REPLACE RIGHT)
CONCRETE REMOVAL Det No. 1

STRUCTURES DESIGN DETAIL SHEET (ENGLISH) (REV. 09-01-10)

ORIGINAL SCALE IN INCHES FOR REDUCED PLANS 0 1 2 3

UNIT: 3578
PROJECT NUMBER & PHASE: 05000200201
CONTRACT NO.: 05-0G0404

DISREGARD PRINTS BEARING EARLIER REVISION DATES

REVISION DATES 10-12-15

SHEET 17 OF 28

FILE => 49-0263r-r-conrem01.dgn

USERNAME => s115755 DATE PLOTTED => 22-JUL-2016 TIME PLOTTED => 17:58

DIST	COUNTY	ROUTE	POST MILES TOTAL PROJECT	SHEET No.	TOTAL SHEETS
05	SLO,Mon	101	63.2/R69.3, R0.0/R1.9	826	858

REGISTERED CIVIL ENGINEER 4-22-16 DATE

5-2-16
PLANS APPROVAL DATE

REGISTERED PROFESSIONAL ENGINEER
Jose M Aquino III
No. 58386
Exp. 12-31-16
CIVIL
STATE OF CALIFORNIA

The State of California or its officers or agents shall not be responsible for the accuracy or completeness of scanned copies of this plan sheet.

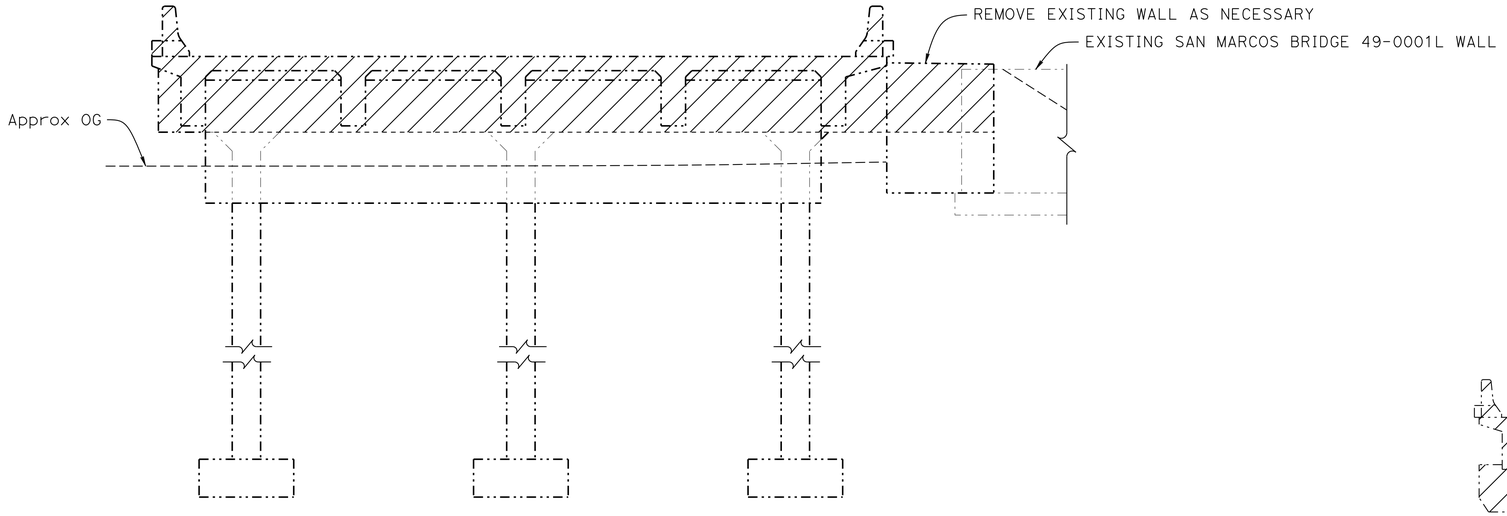

ABUTMENT 1 ELEVATION

1/4" = 1'-0"

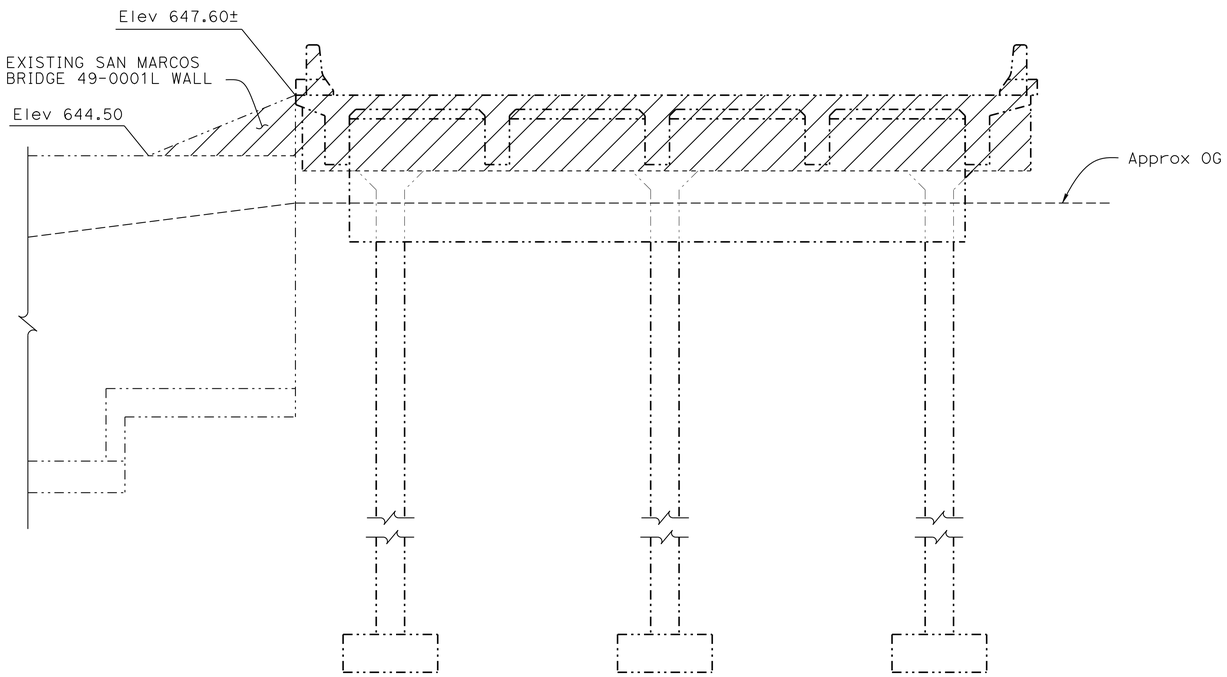

ABUTMENT 5 ELEVATION

1/4" = 1'-0"

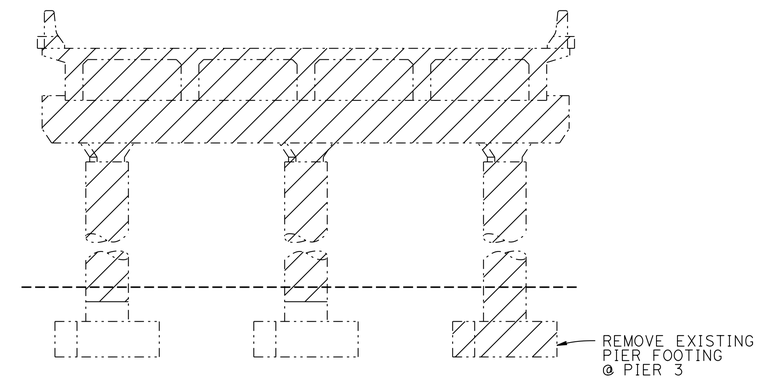

EXISTING PIER ELEVATION

3/16" = 1'-0"

NOTE:
For details not shown, see "CONCRETE REMOVAL Det No. 1" sheet

LEGEND:

Indicates concrete removal

Indicates existing structure

NOTE:
THE CONTRACTOR MUST VERIFY ALL CONTROLLING FIELD DIMENSIONS BEFORE ORDERING OR FABRICATING ANY MATERIAL.

	BY	CHECKED
DESIGN	Lewis L Shen	Sharon Yen
DETAILS	Nancy C Gwynn	Sharon Yen
QUANTITIES	Seung Pyo Hong	Mufeed Khalaf

STATE OF CALIFORNIA
DEPARTMENT OF TRANSPORTATION

DIVISION OF ENGINEERING SERVICES
STRUCTURE DESIGN
DESIGN BRANCH 3

BRIDGE NO. 49-0263R
POST MILE 63.58

SAN MARCOS Cr Br (REPLACE RIGHT)
CONCRETE REMOVAL Det No. 2

STRUCTURES DESIGN DETAIL SHEET (ENGLISH) (REV. 09-01-10)

ORIGINAL SCALE IN INCHES FOR REDUCED PLANS 0 1 2 3

UNIT: 3578
PROJECT NUMBER & PHASE: 05000200201
CONTRACT NO.: 05-0G0404

DISREGARD PRINTS BEARING EARLIER REVISION DATES

REVISION DATES 10:13:15

SHEET 18 OF 28

FILE => 49-0263r-r-conrem02.dgn

USERNAME => s115755 DATE PLOTTED => 22-JUL-2016 TIME PLOTTED => 17:58

DIST	COUNTY	ROUTE	POST MILES TOTAL PROJECT	SHEET No.	TOTAL SHEETS
05	SLO,Mon	101	63.2/R69.3, R0.0/R1.9	827	858

REGISTERED CIVIL ENGINEER 4-22-16 DATE

5-2-16
PLANS APPROVAL DATE

REGISTERED PROFESSIONAL ENGINEER Jose M Aquino III No. 58386 Exp. 12-31-16 CIVIL STATE OF CALIFORNIA

The State of California or its officers or agents shall not be responsible for the accuracy or completeness of scanned copies of this plan sheet.

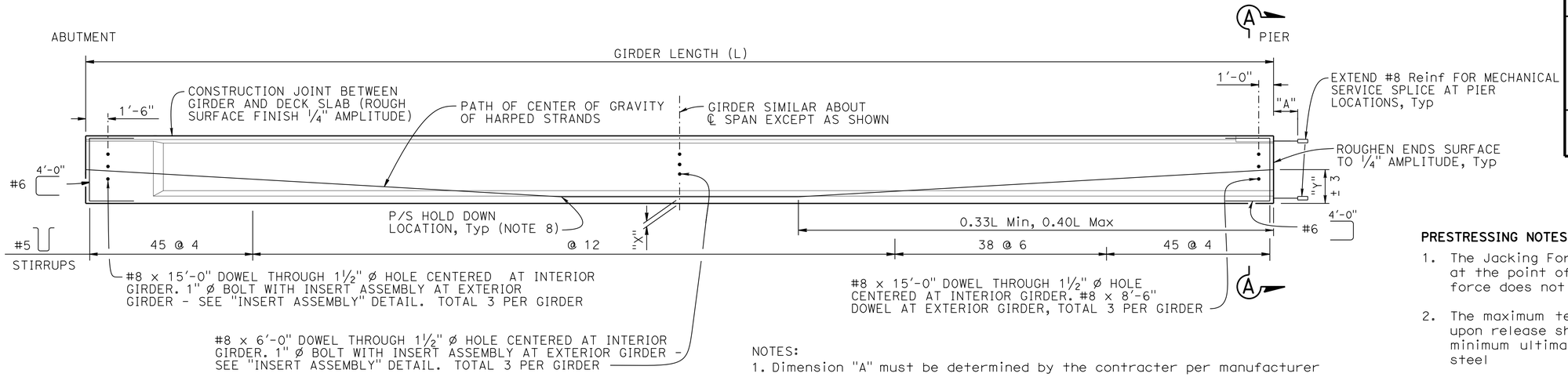

NOTES:
1. Dimension "A" must be determined by the contracter per manufacturer
2. Girder ends to be cast such that a level surface is provided at bearing pads
3. For abutment end block details, see "PC/PS BULB-TEE GIRDER (MISCELLANEOUS DETAILS)" sheet

GIRDER ELEVATION

NO SCALE

LOCATION	GIRDER LENGTH (L)	"X" (in)	JACKING FORCE (P) (kips)	As, Min (in²)	"Y" (in)	CONCRETE STRENGTH (ksi)		MIDSPAN DEAD LOAD DEFLECTION (in)	
						f'ci	f'c	DECK	RAIL
ALL	107'-10"	4	1400	7.0	36	5.0	5.5	3"	1/4"
		6	1500	7.5					

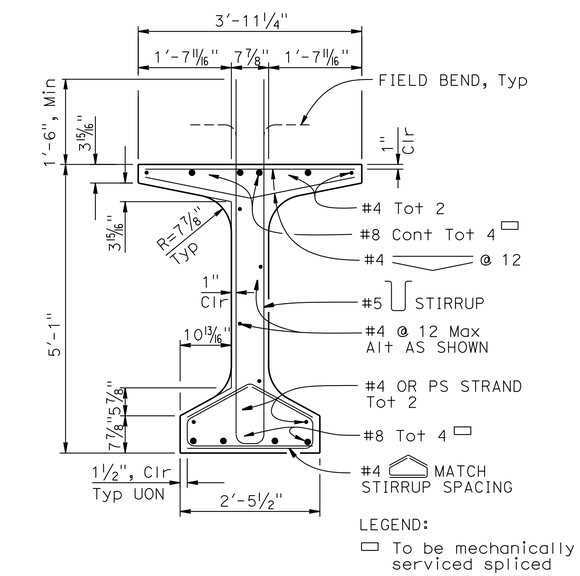

TYPICAL GIRDER SECTION

3/4" = 1'-0"

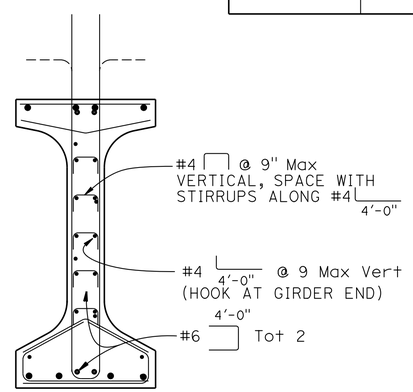

NOTE:
For details not shown, see "TYPICAL GIRDER SECTION"

SECTION A-A

3/4" = 1'-0"

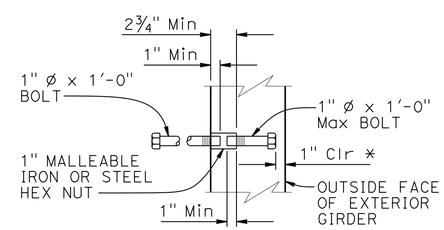

* DIMENSION MAY BE INCREASED WHEN INSERT ASSEMBLY IS USED AT END BLOCK

INSERT ASSEMBLY

NO SCALE

PRESTRESSING NOTES:

1. The Jacking Force (P) is the jacking force required at the point of control along the span. The jacking force does not include any fabrication specific losses
2. The maximum tensile stress in the prestressing steel upon release shall not exceed 75% of the specified minimum ultimate tensile strength of the prestressing steel
3. The maximum temporary tensile stress (jacking stress) in the prestressing steel shall not exceed 80% of the specified minimum ultimate tensile strength of the prestressing steel
4. Concrete strength:
   f'ci is at time of initial stressing
   f'c is at 28 days
5. Deflection components are informational and will be used to set screed line elevations
6. Screed line elevations for deck concrete will be determined by the Engineer
7. Contractor may interpolate "P" and "X" values between the limits shown, as approved by the Engineer
8. There shall be a minimum of two hold downs per girder for the prestressing
9. Prestressing strand shall be 270 ksi low relaxation
10. As, Min is the minimum area required of prestressing steel

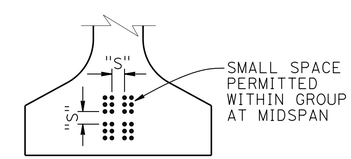

CLEARANCES FOR PRETENSIONED STRANDS

NOTES:

1. Strands may be bundled in groups consisting of 3 vertically, 2 horizontally, and separated at the ends
2. The minimum distance "S" between groups or individual strands is 1 3/4" for 0.5" Ø strand and 2" for 0.6" Ø strand
3. "S" is measured between centers of adjacent strands
4. No deviation allowed

NOTE: For "WELDED WIRE REINFORCEMENT (WWR) ALTERNATIVE", see "PC/PS BULB-TEE GIRDER (MISCELLANEOUS DETAILS)" sheet

	BY	CHECKED
DESIGN	Lewis L Shen	Sharon Yen
DETAILS	Nancy C Gwynn	Sharon Yen
QUANTITIES	Seung Pyo Hong	Mufeed Khalaf

STATE OF CALIFORNIA
DEPARTMENT OF TRANSPORTATION

DIVISION OF ENGINEERING SERVICES
STRUCTURE DESIGN
DESIGN BRANCH 3

BRIDGE NO. 49-0263R
POST MILE 63.58

SAN MARCOS Cr Br (REPLACE RIGHT)
PC/PS BULB-TEE GIRDER (HARPED STRANDS)

STRUCTURES DESIGN DETAIL SHEET (ENGLISH) (REV. 09-01-10)

ORIGINAL SCALE IN INCHES FOR REDUCED PLANS 0 1 2 3

UNIT: 3578
PROJECT NUMBER & PHASE: 05000200201
CONTRACT NO.: 05-0G0404

DISREGARD PRINTS BEARING EARLIER REVISION DATES

REVISION DATES 6-30-14 8-1-15 9-11-15

SHEET 19 OF 28

FILE => 49-0263r-t-girder01.dgn

USERNAME => s115755 DATE PLOTTED => 22-JUL-2016 TIME PLOTTED => 17:58

DIST	COUNTY	ROUTE	POST MILES TOTAL PROJECT	SHEET No.	TOTAL SHEETS
05	SLO,Mon	101	63.2/R69.3, R0.0/R1.9	828	858

REGISTERED CIVIL ENGINEER 4-22-16 DATE

5-2-16
PLANS APPROVAL DATE

REGISTERED PROFESSIONAL ENGINEER Jose M Aquino III No. 58386 Exp. 12-31-16 CIVIL STATE OF CALIFORNIA

The State of California or its officers or agents shall not be responsible for the accuracy or completeness of scanned copies of this plan sheet.

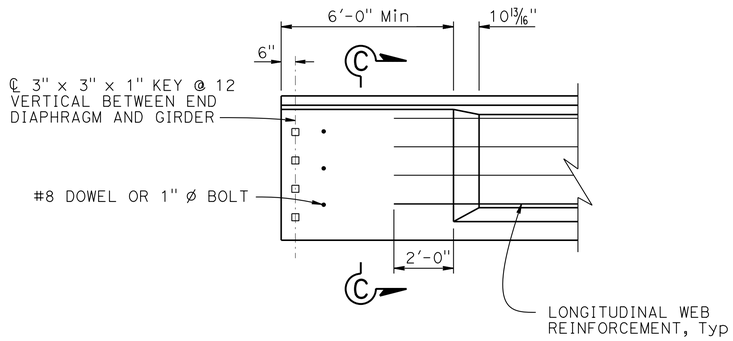

ABUTMENT END BLOCK - ELEVATION

3/8" = 1'-0"

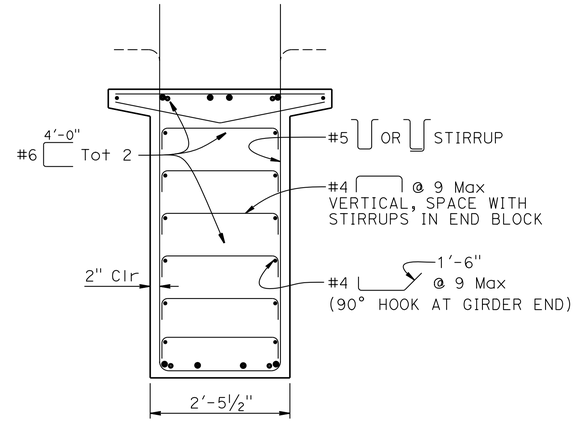

NOTE:
For details not shown, see "TYPICAL GIRDER SECTION" detail

SECTION C-C

3/4" = 1'-0"

NOTES:
1. For details shown but not noted, see "TYPICAL GIRDER SECTION" detail
2. W8 WWR not shown

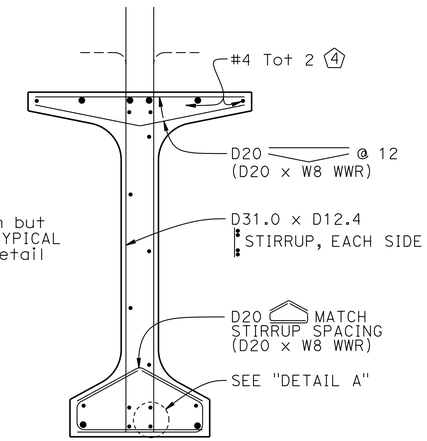

WELDED WIRE REINFORCEMENT (WWR) ALTERNATIVE

NO SCALE

NOTE:
For details not shown, see "PC/PS BULB-TEE GIRDER (HARPED STRANDS)" sheet

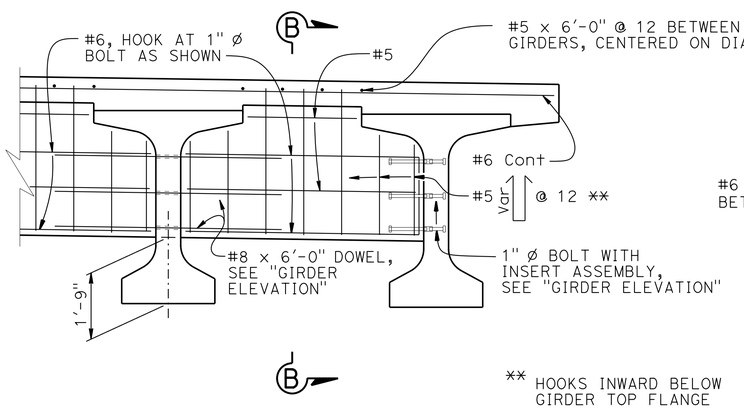

** HOOKS INWARD BELOW GIRDER TOP FLANGE

INTERMEDIATE DIAPHRAGM

1/2" = 1'-0"

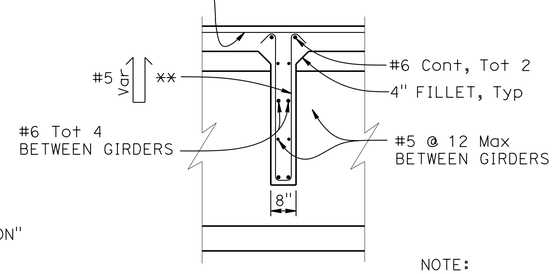

NOTE:
Diaphragm may be vertical or normal to deck grade

SECTION B-B

1/2" = 1'-0"

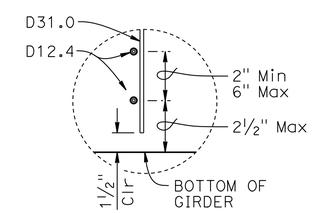

DETAIL A

NO SCALE

NOTES:
1. Bottom of stirrup WWR detail shown, top similar
2. Longitudinal wire area shall be 40% or greater of vertical deformed wire's area

	BY	CHECKED
DESIGN	Lewis L Shen	Sharon Yen
DETAILS	Nancy C Gwynn	Sharon Yen
QUANTITIES	Seung Pyo Hong	Mufeed Khalaf

STATE OF CALIFORNIA DEPARTMENT OF TRANSPORTATION

DIVISION OF ENGINEERING SERVICES STRUCTURE DESIGN DESIGN BRANCH 3

BRIDGE NO. 49-0263R
POST MILE 63.58

SAN MARCOS Cr Br (REPLACE RIGHT)
PC/PS BULB-TEE GIRDER (MISCELLANEOUS DETAILS)

STRUCTURES DESIGN DETAIL SHEET (ENGLISH) (REV. 09-01-10)

ORIGINAL SCALE IN INCHES FOR REDUCED PLANS 0 1 2 3

UNIT: 3578
PROJECT NUMBER & PHASE: 05000200201
CONTRACT NO.: 05-0G0404

DISREGARD PRINTS BEARING EARLIER REVISION DATES 4-30-15

REVISION DATES

SHEET 20 OF 28

FILE => 49-0263r-t-girdet02.dgn

USERNAME => s115755 DATE PLOTTED => 22-JUL-2016 TIME PLOTTED => 17:58

DIST	COUNTY	ROUTE	POST MILES TOTAL PROJECT	SHEET No.	TOTAL SHEETS
05	SLO,Mon	101	63.2/R69.3, R0.0/R1.9	829	858

REGISTERED CIVIL ENGINEER 4-22-16 DATE

5-2-16
PLANS APPROVAL DATE

REGISTERED PROFESSIONAL ENGINEER
Jose M Aquino III
No. 58386
Exp. 12-31-16
CIVIL
STATE OF CALIFORNIA

The State of California or its officers or agents shall not be responsible for the accuracy or completeness of scanned copies of this plan sheet.

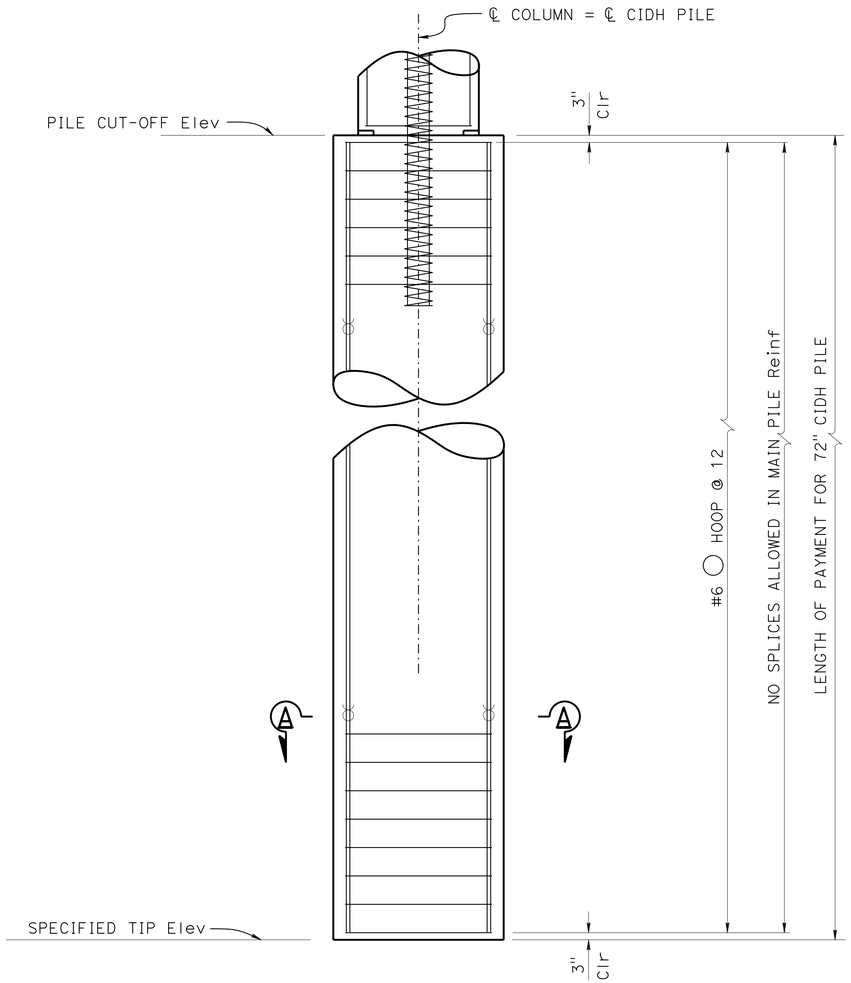

72" Ø CIDH PILE

3/8" = 1'-0"

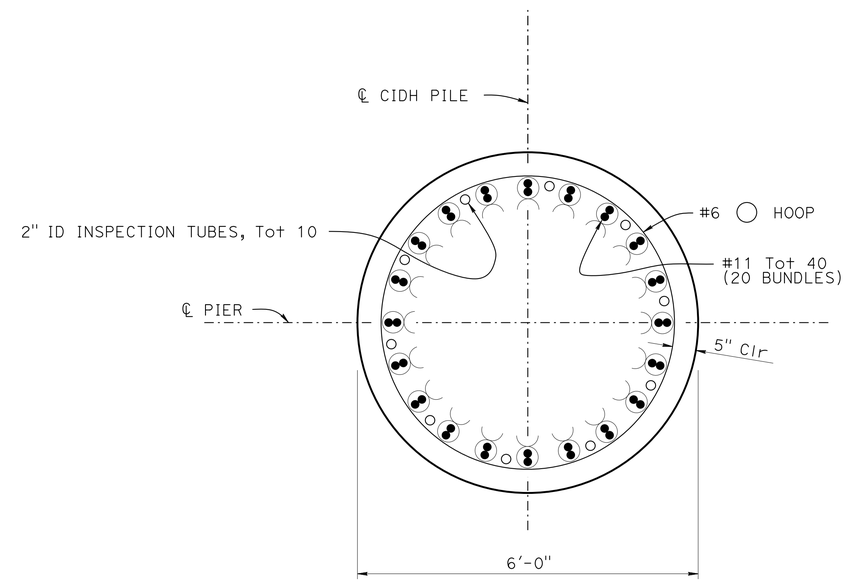

SECTION A-A

3/4" = 1'-0"

LEGEND:

◯◯ Indicates bundled bars

NOTES:

1. All hoops are "ultimate" butt spliced continuous
2. For "PILE DATA TABLE", see "INDEX TO PLANS NO. 1" sheet

	BY	CHECKED
DESIGN	Lewis L Shen	Sharon Yen
DETAILS	Nancy C Gwynn	Sharon Yen
QUANTITIES	Seung Pyo Hong	Mufeed Khalaf

STATE OF CALIFORNIA
DEPARTMENT OF TRANSPORTATION

DIVISION OF ENGINEERING SERVICES
STRUCTURE DESIGN
DESIGN BRANCH 3

BRIDGE NO. 49-0263R
POST MILE 63.58

SAN MARCOS Cr Br (REPLACE RIGHT)
72" Ø CIDH PILE DETAILS

STRUCTURES DESIGN DETAIL SHEET (ENGLISH) (REV. 09-01-10)

ORIGINAL SCALE IN INCHES FOR REDUCED PLANS 0 1 2 3

UNIT: 3578
PROJECT NUMBER & PHASE: 05000200201
CONTRACT NO.: 05-0G0404

DISREGARD PRINTS BEARING EARLIER REVISION DATES

REVISION DATES 3-16-15 6-18-15

SHEET 21 OF 28

FILE => 49-0263r-v-72cidh.dgn

USERNAME => s113755 DATE PLOTTED => 22-JUL-2016 TIME PLOTTED => 17:58

DIST	COUNTY	ROUTE	POST MILES TOTAL PROJECT	SHEET No.	TOTAL SHEETS
05	SLO,Mon	101	63.2/R69.3, R0.0/R1.9	830	858

REGISTERED CIVIL ENGINEER 4-22-16 DATE

5-2-16
PLANS APPROVAL DATE

REGISTERED PROFESSIONAL ENGINEER Jose M Aquino III No. 58386 Exp. 12-31-16 CIVIL STATE OF CALIFORNIA

The State of California or its officers or agents shall not be responsible for the accuracy or completeness of electronic copies of this plan sheet.

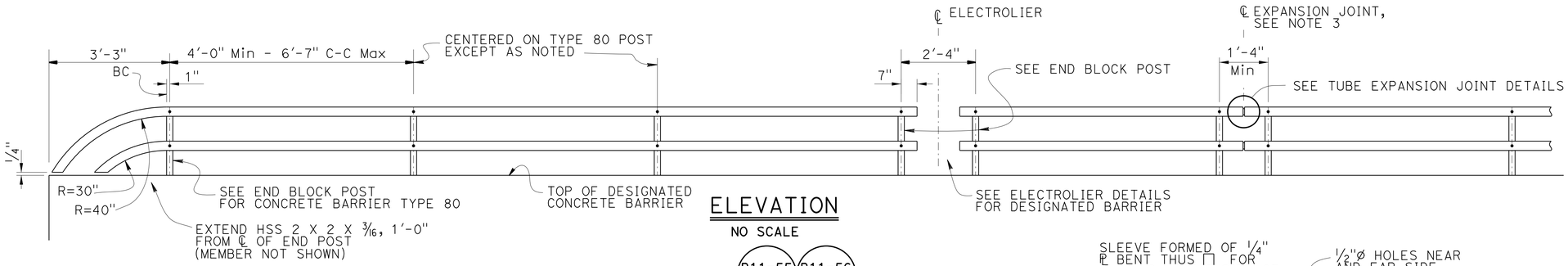

ELEVATION
NO SCALE

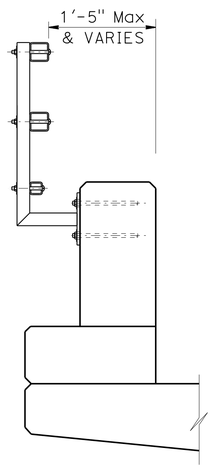

NOTE:
For details not shown, see "TYPE 732 OR 736"

TYPE 80 END BLOCK POST
1" = 1'-0"

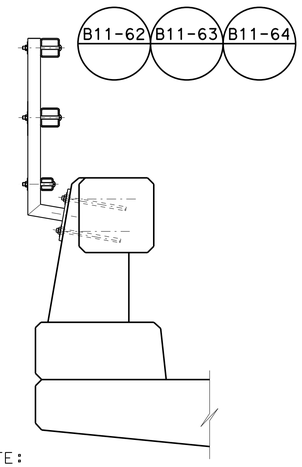

NOTE:
For details not shown, see "TYPE 732 OR 736"

TYPE 80
1" = 1'-0"

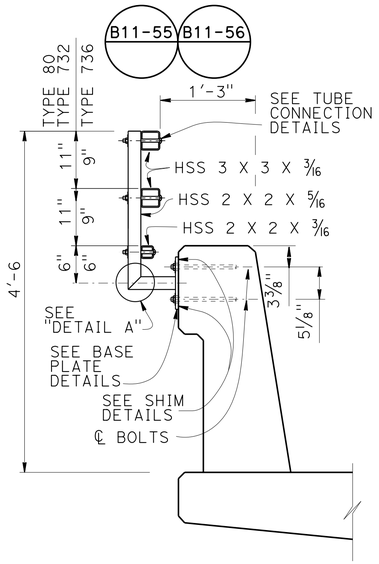

TYPE 732 OR 736
1" = 1'-0"

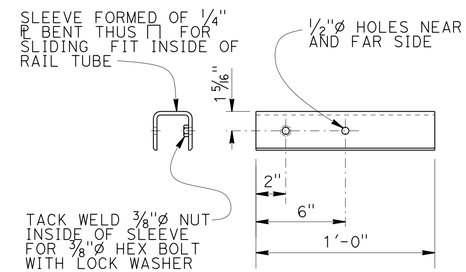

SLEEVE DETAIL
NO SCALE

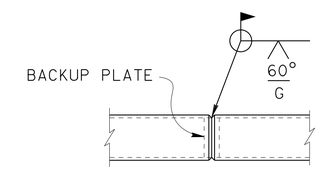

WELDED SPLICE DETAIL
NO SCALE

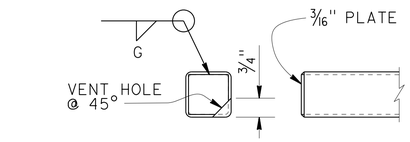

RAIL CAP DETAIL
NO SCALE

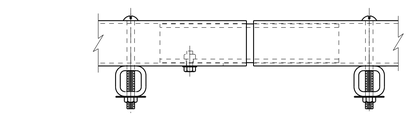

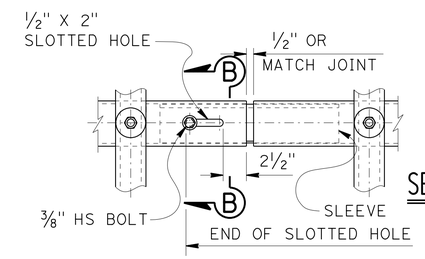

SECTION B-B
NO SCALE

TUBE EXPANSION JOINT DETAILS
NO SCALE

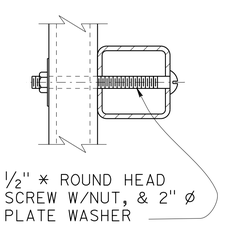

TUBE CONNECTION DETAIL
NO SCALE

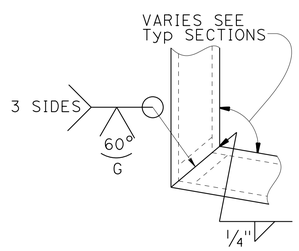

DETAIL A
NO SCALE

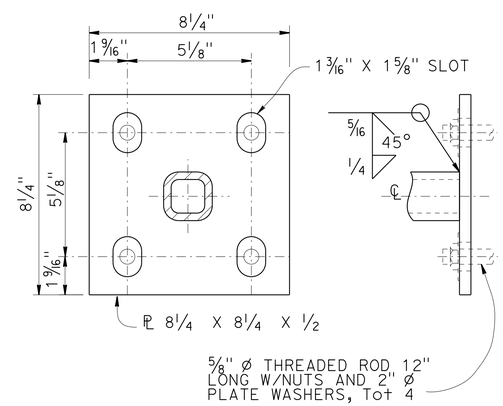

BASE PLATE DETAIL
NO SCALE

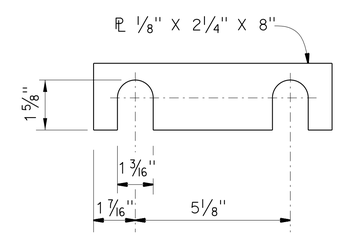

SHIM DETAILS
NO SCALE

NOTES:

1. Post must be normal to railing.
2. Rail tubes must be shop bent or fabricated to fit horizontal curve when radius is less than 950'.
3. Tube expansion joints must be located in the tubes spanning deck or wall joints. Increase joint width in tubes to match expansion joint width and increase sleeve length correspondingly.
4. Top rail tube must be continuous over not less than two posts except a short post spacing is permitted near deck or wall joints, electroliers, or other rail discontinuities as noted.
5. See Project Plans for limits of tubular bicycle railing.

STANDARD DRAWING
FILE NO. xs16-035
APPROVAL DATE October 2014

The components of this Bridge Standard Drawing have been prepared under the responsible charge of the Technical Owner, a registered civil engineer in the State of California. Refer to: http//www.dot.ca.gov/hq/esc/techpubs/manual/bridgemanuals/bridge-standard-detail-sheet/index.html. The selection and proper application of the component design and any modifications shown have been prepared under the responsible charge of the registered civil engineer for the project.

STATE OF CALIFORNIA
DEPARTMENT OF TRANSPORTATION

DIVISION OF ENGINEERING SERVICES 3

BRIDGE NO. 49-0263R
POST MILE 63.58

SAN MARCOS CR BR (REPLACE RIGHT)
CONCRETE BARRIER TYPE 80, 732 & 736
TUBULAR BICYCLE RAILING DETAILS

DS OSD 2147A (ENGLISH STANDARD DRAWING "XS" BORDER REV. (02-02-11)

ORIGINAL SCALE IN INCHES FOR REDUCED PLANS 0 1 2 3

UNIT: 3578
PROJECT NUMBER & PHASE: 05000200201
CONTRACT NO.: 05-0G0404

DISREGARD PRINTS BEARING EARLIER REVISION DATES

REVISION DATES: 8/19/12 10-1-14

SHEET 22 OF 28

FILE => 49-0263r-x-bikerl.dgn

USERNAME => s115755 DATE PLOTTED => 22-JUL-2016 TIME PLOTTED => 17:58

DIST	COUNTY	ROUTE	POST MILES TOTAL PROJECT	SHEET No.	TOTAL SHEETS
05	SLO,Mon	101	63.2/R69.3, R0.0/R1.9	831	858

REGISTERED CIVIL ENGINEER 4-22-16 DATE

5-2-16
PLANS APPROVAL DATE

REGISTERED PROFESSIONAL ENGINEER Jose M Aquino III No. 58386 Exp. 12-31-16 CIVIL STATE OF CALIFORNIA

The State of California or its officers or agents shall not be responsible for the accuracy or completeness of electronic copies of this plan sheet.

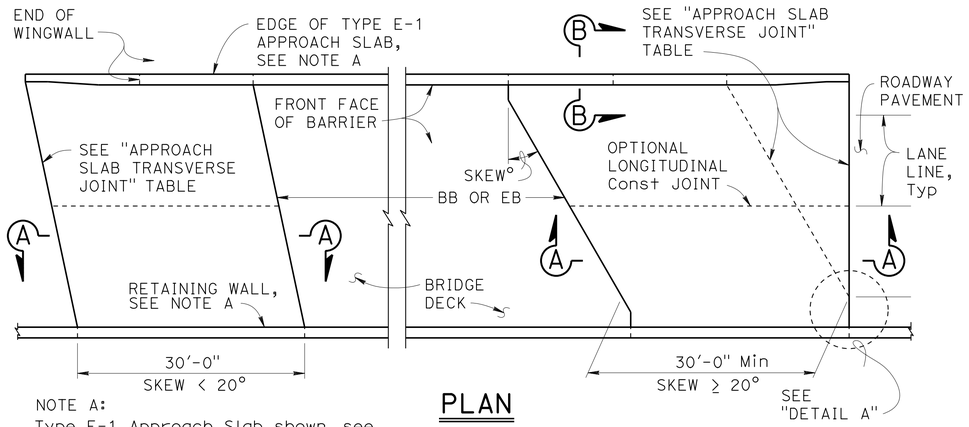

NOTE A:
Type E-1 Approach Slab shown, see "SECTION B-B" for Type E-2 details.

PLAN
1" = 10'

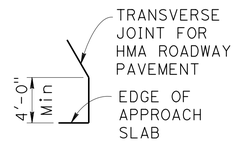

DETAIL A
No Scale

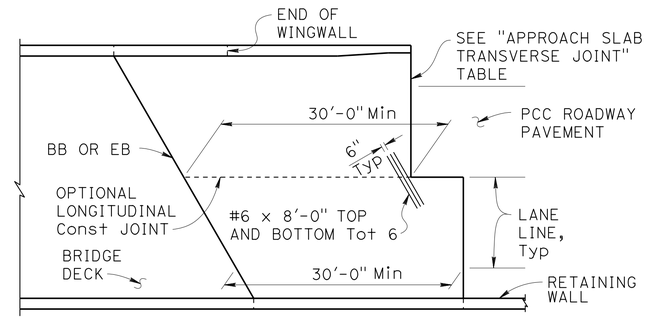

END STAGGER DETAIL
1" = 10'

APPROACH SLAB TRANSVERSE JOINT		
APPROACH SKEW	WITH HMA ROADWAY PAVEMENT	WITH PCC ROADWAY PAVEMENT
< 20°	PARALLEL TO BB OR EB	PARALLEL TO BB OR EB
20° - 45°	PARALLEL TO BB OR EB USE "DETAIL A"	STAGGER AT LANE LINES 24' TO 36' APART, SEE "END STAGGER DETAIL"
> 45°	PARALLEL TO BB OR EB USE "DETAIL A"	STAGGER AT EACH LANE LINE, SEE "END STAGGER DETAIL"

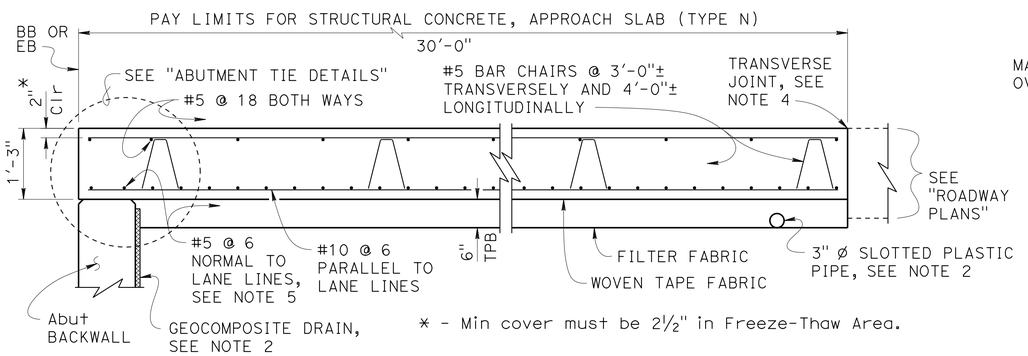

* - Min cover must be 2½" in Freeze-Thaw Area.

SECTION A-A
¾" = 1'-0"

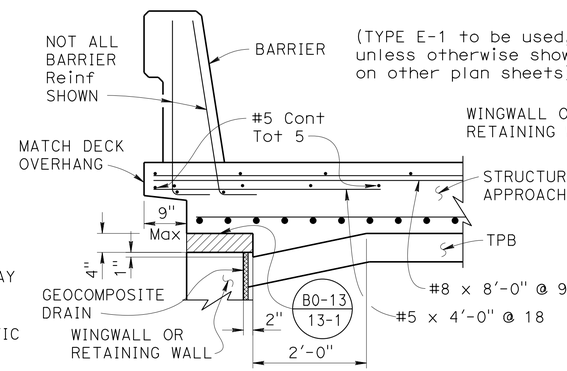

TYPE E-1

Indicates Expanded Polystyrene, remove after concrete is placed.

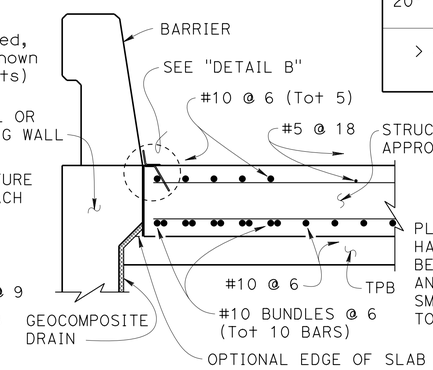

TYPE E-2

SECTION B-B
¾" = 1'-0"

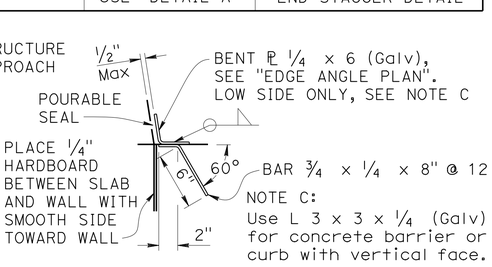

DETAIL B
1½" = 1'-0"

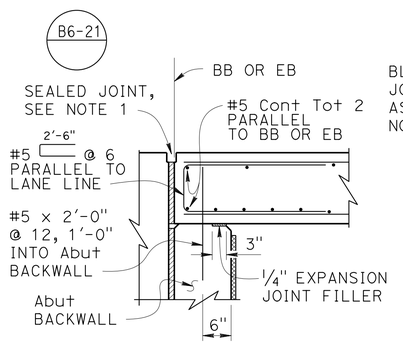

MR ≤ 2"

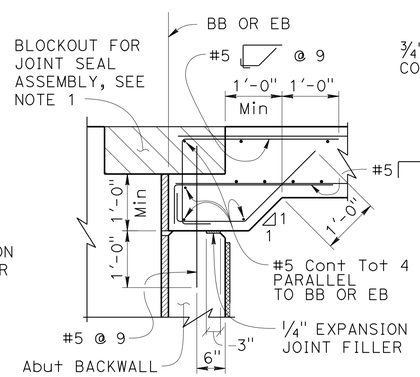

MR > 2"

ABUTMENT TIE DETAILS
¾" = 1'-0"

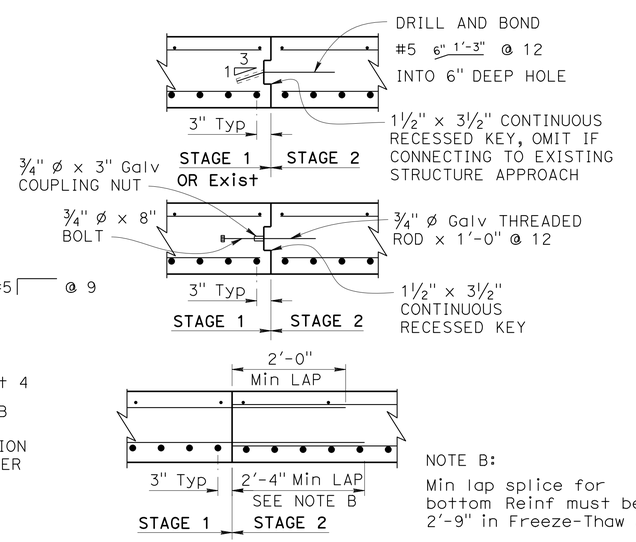

NOTE B:
Min lap splice for bottom Reinf must be 2'-9" in Freeze-Thaw Area.

LONGITUDINAL CONSTRUCTION JOINT ALTERNATIVES
¾" = 1'-0"

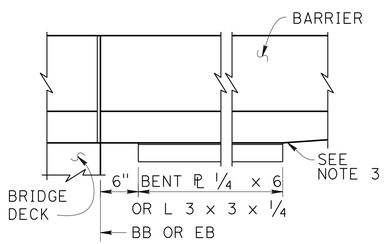

EDGE ANGLE PLAN
1" = 1'-0"

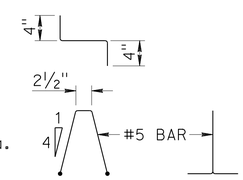

BAR CHAIR DETAIL
1" = 1'-0"

DESIGN NOTES

DESIGN: AASHTO LRFD Bridge Design Specifications, 2012 Edition with Caltrans Amendments, preface dated January 2014

LIMIT STATES: Service I, Strength I & II, Extreme II and Fatigue I (γ_{FAT} = 1.0)

DEAD LOAD: Includes 35 psf for future wearing surface

LIVE LOAD: HL93 and permit design load
Equivalent strip width method: W_1 = 12 ft
Slab span: L_1 = 24.5 ft

REINFORCED CONCRETE:
f_y = 60 ksi
f'_c = 3.6 ksi
n = 8

NOTES:

1. For joint protection details, blockout dimensions for joint seal assembly, and other details not shown, see other plan sheets. For MR ≤ 2", adjust reinforcement to clear sawcut for sealed joint. For MR > 2", haunch reinforcement placed for joint seal assembly blockout must be normal to BB or EB and spaced to avoid joint seal assembly anchorage.
2. For drainage details, see "STRUCTURE APPROACH DRAINAGE DETAILS" sheet.
3. End the plate or edge angle at beginning of barrier transition, end of wingwall, or end of structure approach as applicable.
4. Transverse Joint must be a minimum of 5'-0" from an existing or constructed weakened plane joint in approach PCC roadway pavement. Refer to Standard Plans P10 and P14.
5. At the Contractor's option, approach slab transverse reinforcement may be placed parallel to BB or EB. Spacing of transverse reinforcement is measured along ℄ roadway.

STANDARD DRAWING
FILE NO. xs3-120
APPROVAL DATE January 2015

The components of this Bridge Standard Drawing have been prepared under the responsible charge of the Technical Owner, a registered civil engineer in the State of California. Refer to: http://www.dot.ca.gov/hq/esc/techpubs/manual/bridgemanuals/bridge-standard-detail-sheet/index.html. The selection and proper application of the component design and any modifications shown have been prepared under the responsible charge of the registered civil engineer for the project.

STATE OF CALIFORNIA DEPARTMENT OF TRANSPORTATION
DIVISION OF ENGINEERING SERVICES 3

BRIDGE NO. 49-0263R
POST MILE 63.58

SAN MARCOS Cr Br (REPLACE RIGHT)
STRUCTURE APPROACH TYPE N (30S)

DS OSD 2147A (ENGLISH STANDARD DRAWING "XS" BORDER REV. (10-01-14)

ORIGINAL SCALE IN INCHES FOR REDUCED PLANS 0 1 2 3

UNIT: 3578
PROJECT NUMBER & PHASE: 05000200201
CONTRACT NO.: 05-0G0404

DISREGARD PRINTS BEARING EARLIER REVISION DATES

REVISION DATES 4-29-15

SHEET 23 OF 28

FILE => 49-0263r-x-sapp30.dgn

USERNAME => s115755 DATE PLOTTED => 22-JUL-2016 TIME PLOTTED => 17:59

DIST	COUNTY	ROUTE	POST MILES TOTAL PROJECT	SHEET No.	TOTAL SHEETS
05	SLO,Mon	101	63.2/R69.3, R0.0/R1.9	832	858

REGISTERED CIVIL ENGINEER 4-22-16 DATE

5-2-16
PLANS APPROVAL DATE

REGISTERED PROFESSIONAL ENGINEER Jose M Aquino III No. 58386 Exp. 12-31-16 CIVIL STATE OF CALIFORNIA

The State of California or its officers or agents shall not be responsible for the accuracy or completeness of electronic copies of this plan sheet.

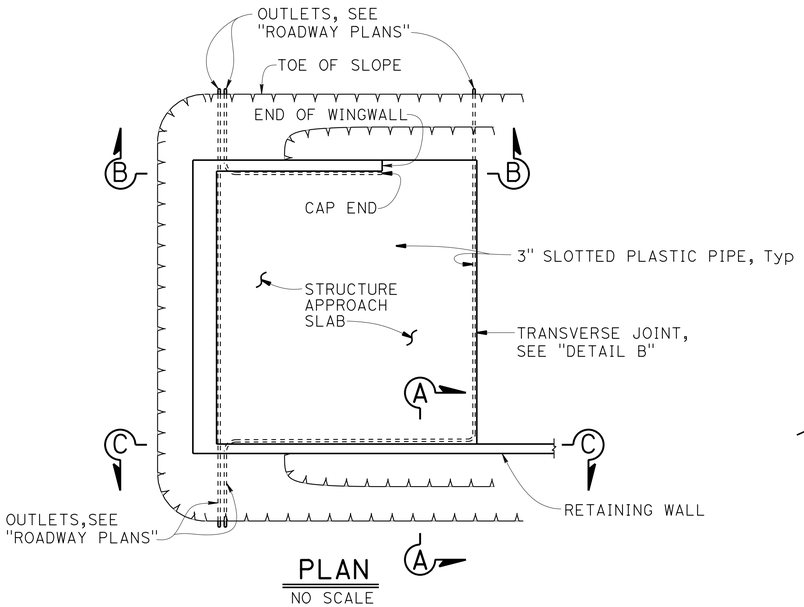

PLAN
NO SCALE

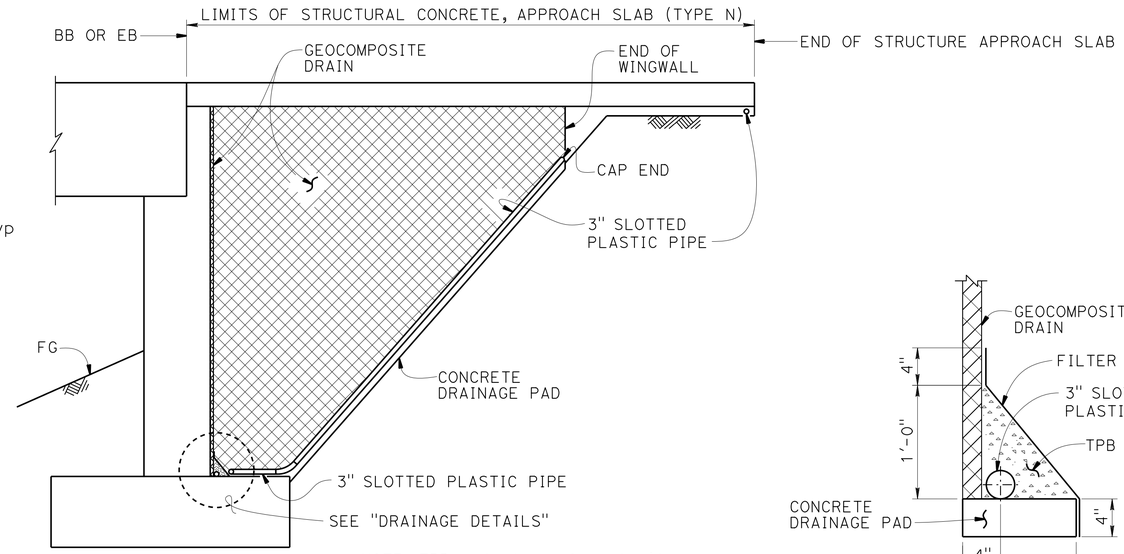

NOTE: TPB not shown for clarity.

SECTION B-B
NO SCALE

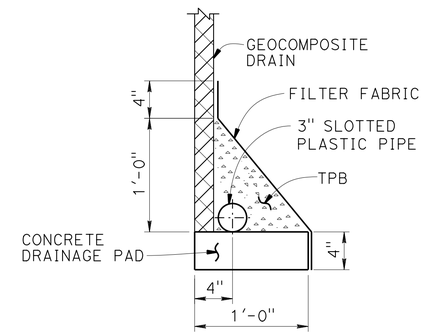

DRAINAGE PAD

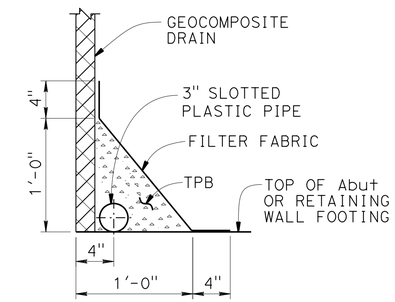

FOOTING

DRAINAGE DETAILS
1½" = 1'-0"

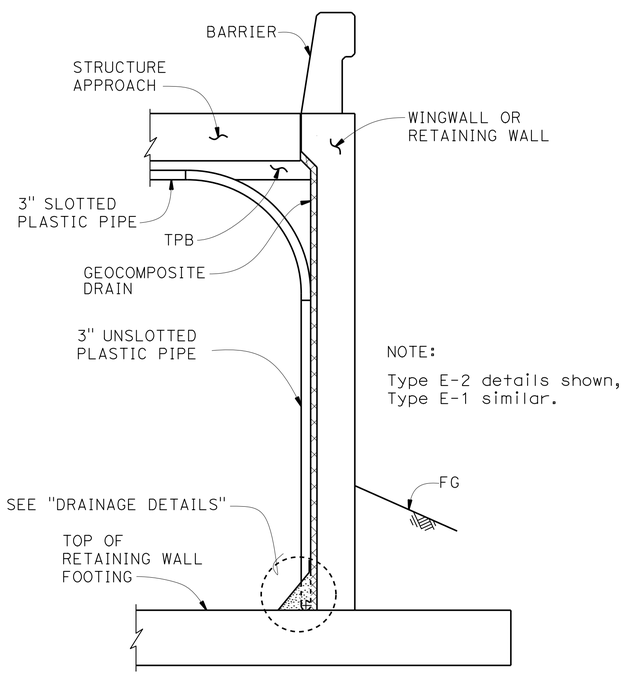

NOTE:

Type E-2 details shown, Type E-1 similar.

SECTION A-A
NO SCALE

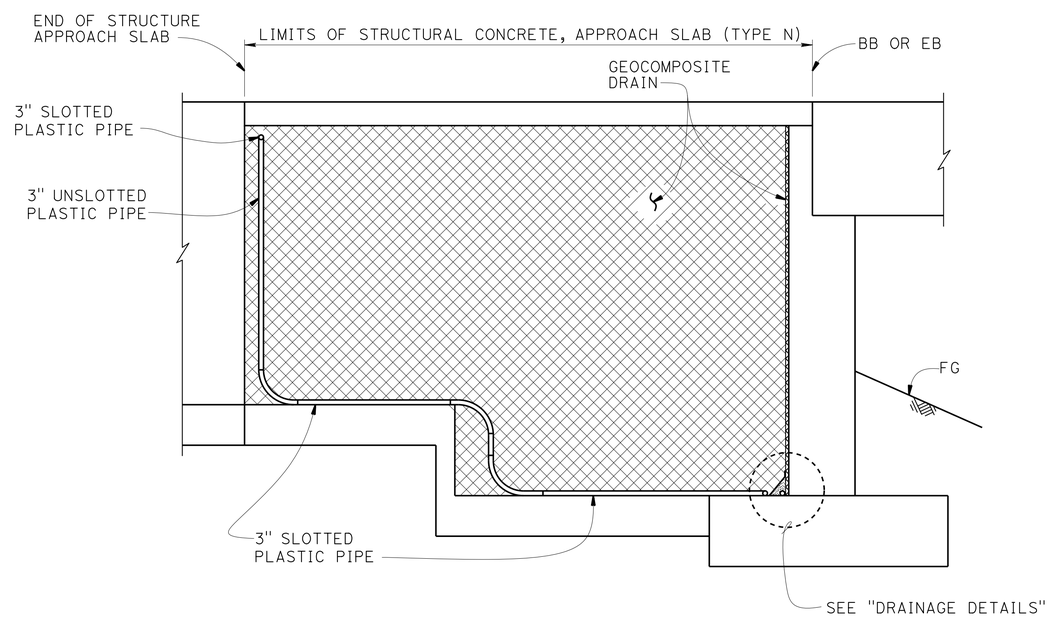

SECTION C-C
NO SCALE

NOTE: TPB not shown for clarity.

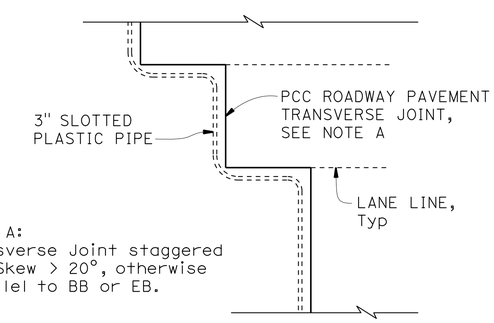

NOTE A:
Transverse Joint staggered for Skew > 20°, otherwise parallel to BB or EB.

DETAIL B
NO SCALE

NOTES:

1. For structural approach and other details not shown, see other plan sheets.
2. All bends in plastic pipe must have 3'-0" minimum radius. Plastic pipe used for bends is not required to be slotted.

STANDARD DRAWING

FILE NO. xs3-110

APPROVAL DATE January 2015

The components of this Bridge Standard Drawing have been prepared under the responsible charge of the Technical Owner, a registered civil engineer in the State of California. Refer to: http//www.dot.ca.gov/hq/esc/techpubs/manual/bridgemanuals/bridge-standard-detail-sheet/index.html. The selection and proper application of the component design and any modifications shown have been prepared under the responsible charge of the registered civil engineer for the project.

STATE OF CALIFORNIA DEPARTMENT OF TRANSPORTATION

DIVISION OF ENGINEERING SERVICES 3

BRIDGE NO. 49-0263R

POST MILE 63.58

SAN MARCOS Cr Br (REPLACE RIGHT)

STRUCTURE APPROACH DRAINAGE DETAILS

DS OSD 2147A (ENGLISH STANDARD DRAWING "XS" BORDER REV. (10-01-14)

ORIGINAL SCALE IN INCHES FOR REDUCED PLANS 0 1 2 3

UNIT: 3578
PROJECT NUMBER & PHASE: 05000200201
CONTRACT NO.: 05-0G0404

DISREGARD PRINTS BEARING EARLIER REVISION DATES

REVISION DATES 4-29-15

SHEET 24 OF 28

FILE => 49-0263r-x-sappdrg.dgn

USERNAME => s115755 DATE PLOTTED => 22-JUL-2016 TIME PLOTTED => 17:59

DIST	COUNTY	ROUTE	POST MILES TOTAL PROJECT	SHEET No.	TOTAL SHEETS
05	SLO,Mon	101	63.2/R69.3, R0.0/R1.9	833	858

REGISTERED CIVIL ENGINEER 11-16-15 DATE

5-2-16
PLANS APPROVAL DATE

REGISTERED PROFESSIONAL ENGINEER Ryan Turner No. 73956 Exp. 6-30-17 CIVIL STATE OF CALIFORNIA

The State of California or its officers or agents shall not be responsible for the accuracy or completeness of electronic copies of this plan sheet.

This LOTB sheet was prepared in accordance with the Caltrans Soil & Rock Logging, Classification, & Presentation Manual (2010 Edition).

See 2010 Standard Plans A10F and A10G for Soil Legend, and A10H for Rock Legend.

BENCH MARK

SLO-101-PM63.57-NAVD88
647.476 NAD83
N: 2459014.982
E: 5761134.312
ngs brass disk.

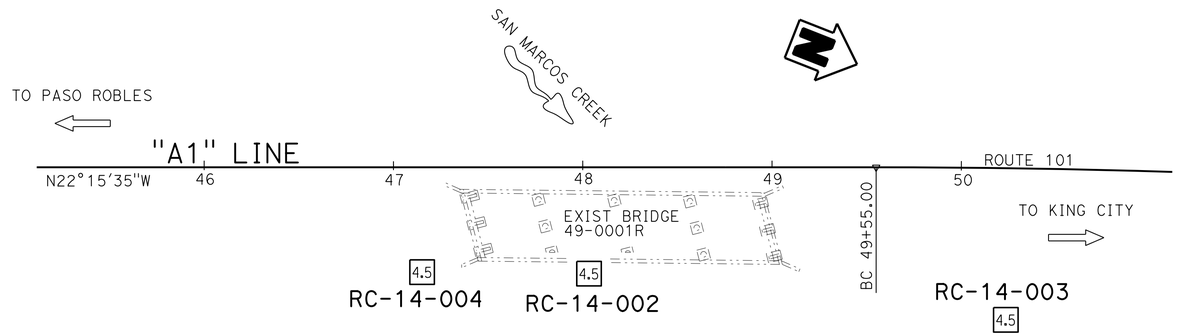

PLAN
1" = 40'

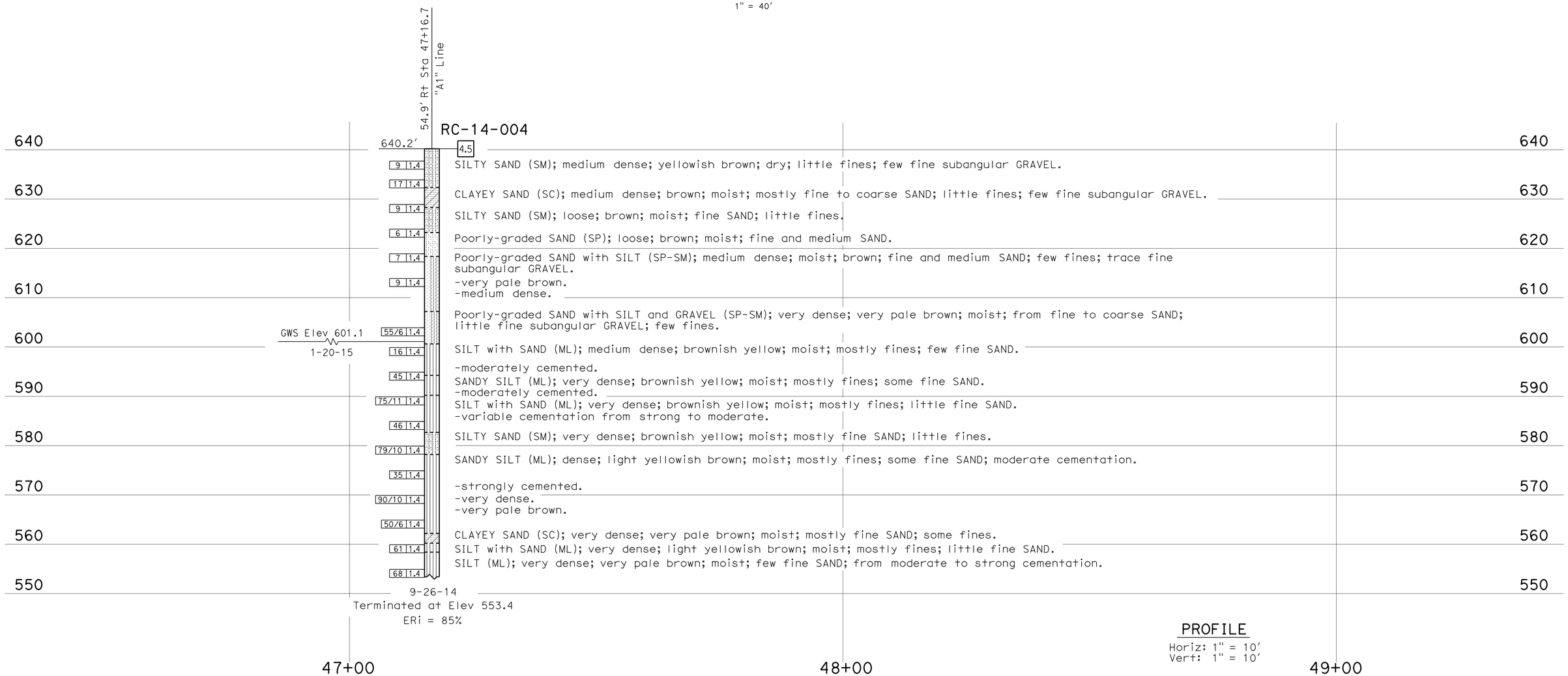

PROFILE
Horiz: 1" = 10'
Vert: 1" = 10'

ENGINEERING SERVICES	MATERIALS AND GEOTECHNICAL SERVICES	STATE OF CALIFORNIA DEPARTMENT OF TRANSPORTATION	DIVISION OF ENGINEERING SERVICES STRUCTURE DESIGN DESIGN BRANCH 3	BRIDGE NO. 49-0263R POST MILE 63.58	SAN MARCOS CR BR (REPLACE RIGHT) LOG OF TEST BORINGS 1 OF 4
FUNCTIONAL SUPERVISOR NAME: T. Menard	DRAWN BY: I. G-Remmen CHECKED BY: M. Jurasius	FIELD INVESTIGATION BY: J. Scardine / D. Appelbaum			

OGS CIVIL LOG OF TEST BORINGS SHEET

ORIGINAL SCALE IN INCHES FOR REDUCED PLANS 0 1 2 3

UNIT: 3650
PROJECT NUMBER & PHASE: 05000200201 CONTRACT NO.: 05-0G0404

DISREGARD PRINTS BEARING EARLIER REVISION DATES

REVISION DATES 06-23-15 09-21-15 10-22-15 11-16-15 SHEET 25 OF 28

FILE => 49-0263r-y-ltb1of4.dgn

USERNAME => s115755 DATE PLOTTED => 22-JUL-2016 TIME PLOTTED => 17:59

DIST	COUNTY	ROUTE	POST MILES TOTAL PROJECT	SHEET No.	TOTAL SHEETS
05	SLO,Mon	101	63.2/R69.3, R0.0/R1.9	834	858

Ryan Turner 11-16-15
REGISTERED CIVIL ENGINEER DATE

5-2-16
PLANS APPROVAL DATE

REGISTERED PROFESSIONAL ENGINEER Ryan Turner No. 73956 Exp. 6-30-17 CIVIL STATE OF CALIFORNIA

The State of California or its officers or agents shall not be responsible for the accuracy or completeness of electronic copies of this plan sheet.

This LOTB sheet was prepared in accordance with the Caltrans Soil & Rock Logging, Classification, & Presentation Manual (2010 Edition).

See 2010 Standard Plans A10F and A10G for Soil Legend, and A10H for Rock Legend.

FOR PLAN VIEW, SEE
"LOG OF TEST BORINGS 1 OF 4"

Note: Groundwater encountered but not measured in Boring RC-14-002.

56.3' Rt Sta 48+03 "A1" Line

RC-14-002

626.4'

4.5 SILTY SAND with GRAVEL (SM); medium dense; yellowish brown; moist; mostly from fine to coarse SAND; little fines; some fine subangular GRAVEL.

19 1.4 — Poorly-graded SAND with SILT and GRAVEL (SP-SM); dense; very pale brown; moist; from fine to coarse SAND; few fines; little fine subangular GRAVEL.

21 1.4 — SILTY SAND (SM); dense; yellowish brown; moist; mostly fine SAND; little fines; trace fine subangular GRAVEL.

28 1.4 — SILTY SAND with GRAVEL (SM); dense; very pale brown; moist; little fine SAND; little fine subangular GRAVEL.

31 1.4 — Well-graded SAND with GRAVEL (SW); dense; dark yellowish brown; moist; some fine to coarse GRAVEL; trace fines.

44 1.4 — Poorly-graded SAND with SILT (SP-SM); very dense; dark yellowish brown; from fine and medium SAND; trace coarse subangular GRAVEL; trace fines.

16 1.4 — SANDY SILT with GRAVEL (ML); medium dense; yellowish brown; moist; some fine SAND; trace fine GRAVEL.

SILT with SAND (ML); medium dense; light yellowish brown; moist; few fine SAND.
-moderate cementation (hard).

40 1.4 — SILTY SAND with GRAVEL (SM); very dense; dark yellowish brown; moist; little fine and medium SAND; little fine subangular GRAVEL.

47 1.4 — SILTY SAND (SM); very dense; yellowish brown; moist; fine SAND; variably cemented, from weak to moderate.
-lense strongly cemented.

34 1.4 — SILT with SAND (ML); very dense; yellowish brown; moist; little fine SAND.

41 1.4 — SILT (ML); dense; yellowish brown; moist; few fine SAND; from moderately to weakly cemented.
-strongly cemented.
-very dense.

41 1.4 — -trace fine SAND.
-moderately cemented with calcite.

49 1.4

39 1.4 — Poorly-graded SAND (SP); very dense; very pale brown; moist; mostly fine SAND.

68 1.4 — SANDY SILT (ML); very dense; yellowish brown; little fine SAND; trace fine subrounded GRAVEL.

48 1.4 — SILT with SAND (ML); very dense; yellowish brown; moist; little fine SAND.

57 1.4 — SEDIMENTARY ROCK (SILTSTONE); laminated; yellowish brown; fresh; soft to very soft; moderate cementation; (SILT (ML); very dense; yellowish brown; moist; trace fine SAND; moderately cemented).

50/6 1.4 — -yellowish brown.

47 1.4

73 1.4 — -light yellowish brown.

50/6 1.4 — -yellowish brown.

9-22-14
Terminated at Elev 525.7
ERi = 86%

620 610 600 590 580 570 560 550 540 530 520

48+00 49+00 50+00

PROFILE
Horiz: 1" = 10'
Vert: 1" = 10'

ENGINEERING SERVICES	MATERIALS AND GEOTECHNICAL SERVICES	STATE OF CALIFORNIA DEPARTMENT OF TRANSPORTATION	DIVISION OF ENGINEERING SERVICES STRUCTURE DESIGN DESIGN BRANCH 3	BRIDGE NO. 49-0263R POST MILE 63.58	SAN MARCOS CR BR (REPLACE RIGHT) LOG OF TEST BORINGS 2 OF 4
FUNCTIONAL SUPERVISOR NAME: T. Menard	DRAWN BY: I. G-Remmen CHECKED BY: M. Jurasius	FIELD INVESTIGATION BY: J. Scardine, D. Appelbaum			

OGS CIVIL LOG OF TEST BORINGS SHEET — ORIGINAL SCALE IN INCHES FOR REDUCED PLANS 0 1 2 3

UNIT: 3650
PROJECT NUMBER & PHASE: 05000200201 CONTRACT NO.: 05-0G0404

DISREGARD PRINTS BEARING EARLIER REVISION DATES → REVISION DATES 06-25-15 09-21-15 10-22-15 11-16-15 SHEET 26 OF 28

FILE => 49-0263r-y-ltb2of4.dgn

USERNAME => s115755 DATE PLOTTED => 22-JUL-2016 TIME PLOTTED => 17:59

DIST	COUNTY	ROUTE	POST MILES TOTAL PROJECT	SHEET No.	TOTAL SHEETS
05	SLO,Mon	101	63.2/R69.3, R0.0/R1.9	835	858

Ryan Turner 11-16-15
REGISTERED CIVIL ENGINEER DATE

5-2-16
PLANS APPROVAL DATE

REGISTERED PROFESSIONAL ENGINEER Ryan Turner No. 73956 Exp. 6-30-17 CIVIL STATE OF CALIFORNIA

The State of California or its officers or agents shall not be responsible for the accuracy or completeness of electronic copies of this plan sheet.

This LOTB sheet was prepared in accordance with the Caltrans Soil & Rock Logging, Classification, & Presentation Manual (2010 Edition).

See 2010 Standard Plans A10F and A10G for Soil Legend, and A10H for Rock Legend.

FOR PLAN VIEW, SEE
"LOG OF TEST BORINGS 1 OF 4"

Note: Groundwater encountered but not measured in Boring RC-14-003.

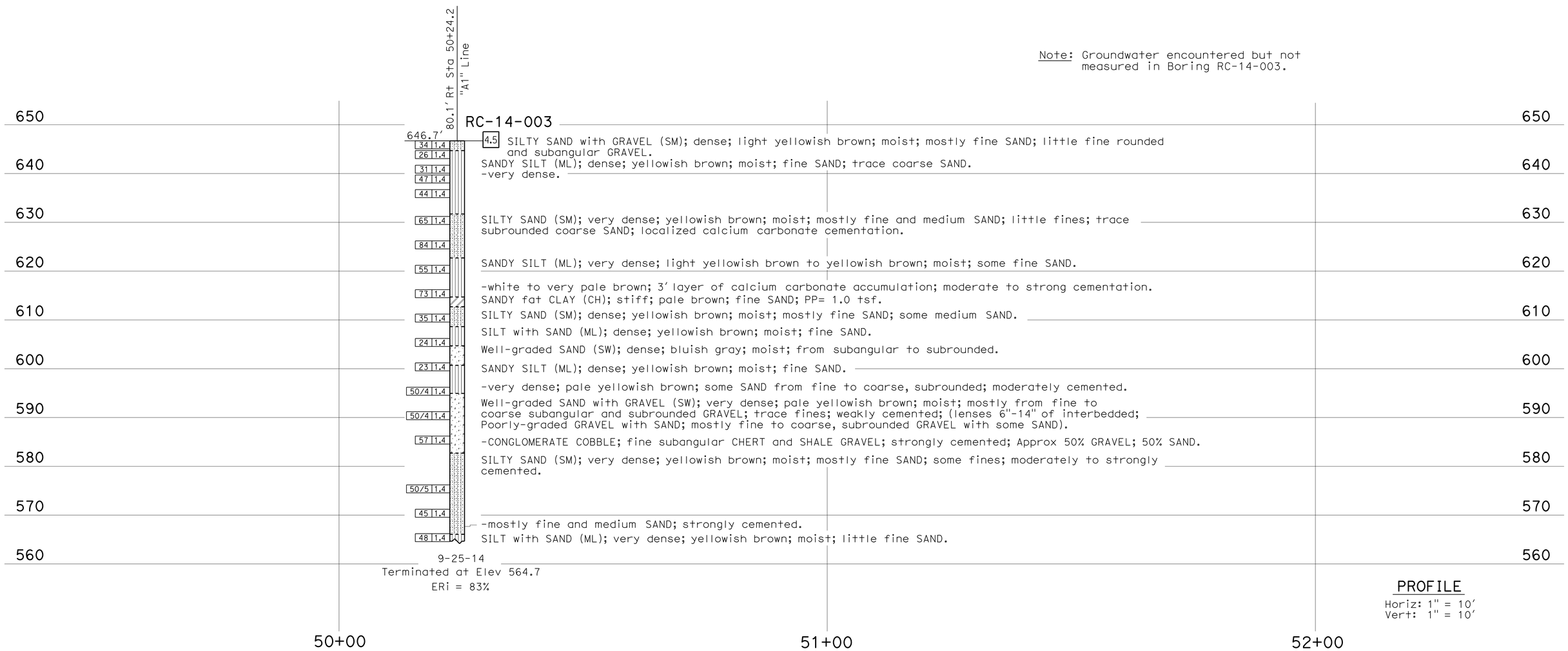

ENGINEERING SERVICES	MATERIALS AND GEOTECHNICAL SERVICES	STATE OF CALIFORNIA DEPARTMENT OF TRANSPORTATION	DIVISION OF ENGINEERING SERVICES STRUCTURE DESIGN DESIGN BRANCH 3	BRIDGE NO. 49-0263R POST MILE 63.58	SAN MARCOS CR BR (REPLACE RIGHT) LOG OF TEST BORINGS 3 OF 4
FUNCTIONAL SUPERVISOR NAME: T. Menard	DRAWN BY: I. G-Remmen CHECKED BY: J. Scardine	FIELD INVESTIGATION BY: M. Jurasius			

OGS CIVIL LOG OF TEST BORINGS SHEET

ORIGINAL SCALE IN INCHES FOR REDUCED PLANS 0 1 2 3

UNIT: 3650
PROJECT NUMBER & PHASE: 05000200201 CONTRACT NO.: 05-0G0404

DISREGARD PRINTS BEARING EARLIER REVISION DATES

REVISION DATES: 06-25-15 09-21-15 10-22-15 11-16-15

SHEET 27 OF 28

FILE => 49-0263r-y-lrtb3of4.dgn

USERNAME => s115755 DATE PLOTTED => 22-JUL-2016 TIME PLOTTED => 17:59

AF-99 (17)

FED. ROAD DIST. NO.	STATE	PROJ. NO.	FISCAL YEAR	SHEET NO.	TOTAL SHEETS
2	CAL.			55	55

DIST.	COUNTY	ROUTE	SECTION	SHEET NO.	TOTAL SHEETS
V	SLO	2	A	8	8

BRIDGE ENGINEER — CIVIL ENGINEER—LICENSE [illegible]

APPROVED March 23, 1953

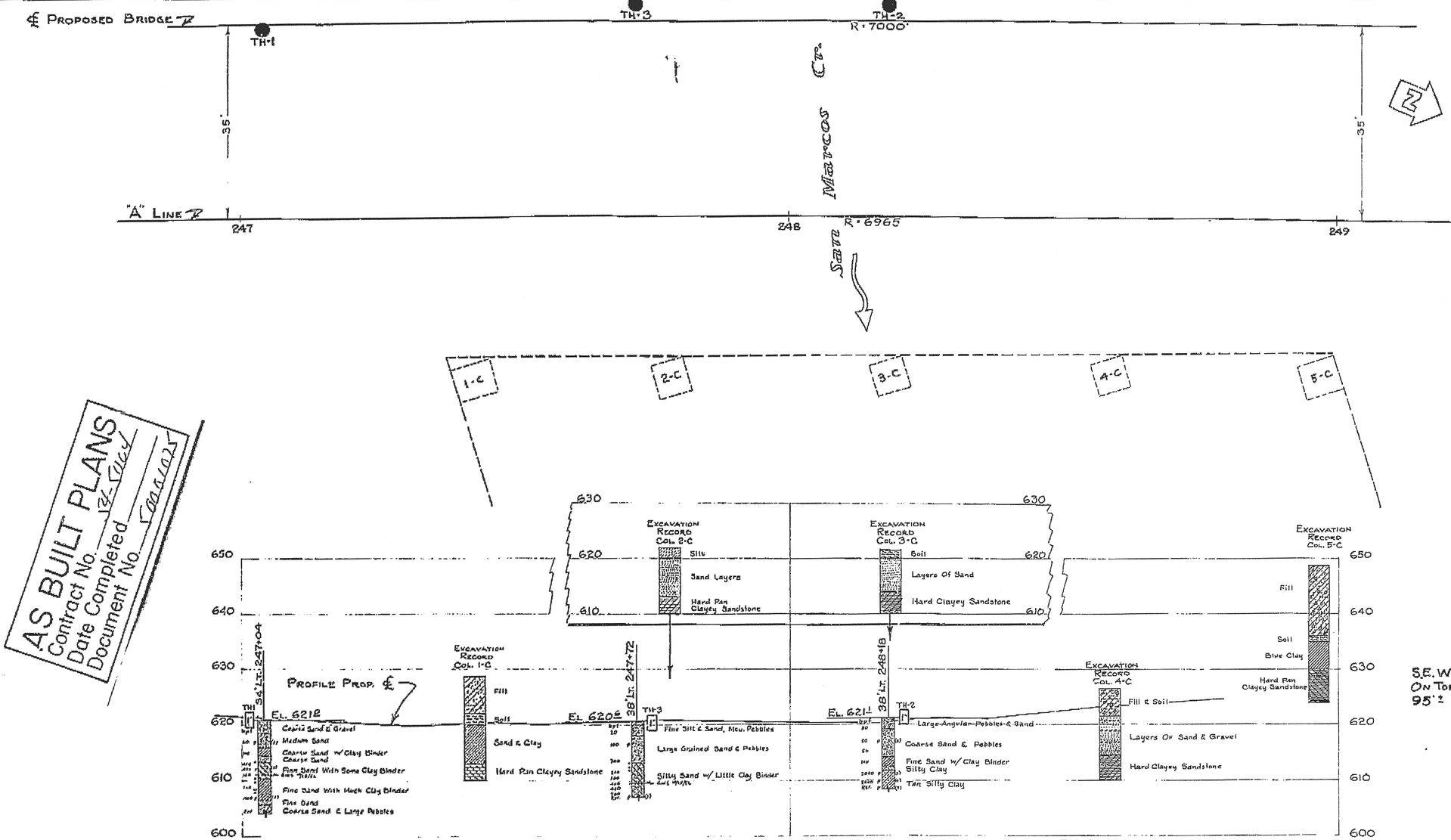

AS BUILT PLANS
Contract No. 12-Cu/
Date Completed
Document No. Contract

NOTE- EXCAVATION RECORD DETAILS TAKEN FROM 1931 CONSTRUCTION SURVEY BOOK

WATER SURFACE @ EL. 611 DURING 1931 CONSTRUCTION

U.S.G.S.B.M.
S.E. WINGWALL OF ABANDONED BR. ON TOP, 4' N. OF S. END OF W.W. 95'± RT. "A" 247+96
ELEV. 635.50
(ASSUMED)

TO ACCOMPANY PLANS DATED 5-2-16

DIVISION OF ENGINEERING SERVICES - MATERIALS AND GEOTECHNICAL SERVICES

As-Built Log of Test Borings sheet is considered an informational document only. As such, the State of California registration seal with signature, license number and registration certificate expiration date confirm that this is a true and accurate copy of the original document. It does not attest to the accuracy or validity of the information contained in the original document. This drawing is available and presented only for the convenience of any bidder, contractor or other interested party.

DIST.	COUNTY	ROUTE	POST MILE-TOTAL PROJECT	Sheet No.	Total Sheets
05	SLO,Mon	101	63.2/R69.3, R0.0/R1.9	836	858

Ryan Turner — 11/16/15
REGISTERED CIVIL ENGINEER — DATE

REGISTERED PROFESSIONAL ENGINEER — Ryan Turner — No. C73956 — Exp. 6-30-17 — CIVIL — STATE OF CALIFORNIA

SAN MARCOS CR BR (REPLACE RIGHT)

LOG OF TEST BORINGS 4 OF 4

UNIT: 3650	CONTRACT No.	BRIDGE No.
PROJ. No. & PHASE: 05000200201	05-0G0404	49-0263R

AS-BUILT VERT DATUM: UNKNOWN CONVERSION: N/A — Sheet 28 of 28

NOTE: A COPY OF THIS LOG OF TEST BORINGS IS AVAILABLE AT OFFICE OF STRUCTURE MAINTENANCE AND INVESTIGATIONS, SACRAMENTO, CALIFORNIA

CLASSIFICATION OF MATERIAL BASED ON STANDARD GRADE SIZE LIMITS

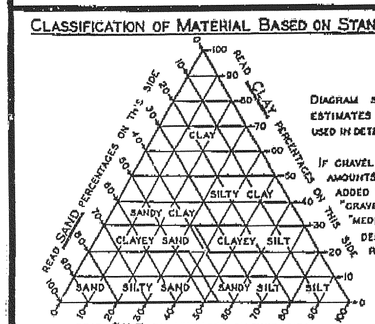

DIAGRAM SHOWING THE BASIS FOR ESTIMATES OF GRADE SIZE DISTRIBUTION USED IN DETERMINATION OF CLASS NAMES

IF GRAVEL IS PRESENT IN APPRECIABLE AMOUNTS THE TERM "GRAVELLY" MAY BE ADDED TO THE CLASS NAME, VIS. "GRAVELLY SAND". THE TERMS "COARSE", "MEDIUM" AND "FINE" WHEN USED TO DESCRIBE GRAVEL, SAND AND SILT REFER TO STANDARD GRADE SIZE LIMITS.

LEGEND OF EARTH MATERIALS

- GRAVEL
- SAND
- SILT
- CLAY
- SANDY CLAY OR CLAYEY SAND
- SANDY SILT OR SILTY SAND
- SILTY CLAY OR CLAYEY SILT
- PEAT AND/OR ORGANIC CLAY
- FILLED MATERIAL
- IGNEOUS ROCK
- SEDIMENTARY ROCK
- METAMORPHIC ROCK

- PLAN OF ANY BORING
- PENETROMETER
- 2 1/4" CONE PENETROMETER
- SAMPLER BORING (DRY)
- ROTARY BORING (WET)
- AUGER BORING (DRY)
- JET BORING
- CORE BORING
- TEST PIT

NOTES

THE CONTRACTOR'S ATTENTION IS DIRECTED TO SECTION 2, ARTICLE (c) OF THE STANDARD SPECIFICATIONS AND TO THE SPECIAL PROVISIONS ACCOMPANYING THIS SET OF PLANS. CLASSIFICATION OF EARTH MATERIAL AS SHOWN ON THIS SHEET IS BASED UPON FIELD INSPECTION AND IS NOT TO BE CONSTRUED TO IMPLY MECHANICAL ANALYSIS.

PENETROMETER BORINGS HAVING A RATE OF PENETRATION MEASURED IN SECONDS PER FOOT ARE DRIVEN WITH A Nº 2 MCKIERNAN-TERRY AIR HAMMER AT 115 PSI.

STATE OF CALIFORNIA
DEPARTMENT OF PUBLIC WORKS
DIVISION OF HIGHWAYS

BRIDGE ACROSS SAN MARCOS CREEK

LOG OF TEST BORINGS

SCALE: HORIZ. 1" = 10' VERT. 1" = 10' — BRIDGE 49-01 — FILE — DRAWING C-3118-8

FIELD STUDY — DRAWN — CHECKED — Approval Recommended by — Engineering Geologist — Materials Engineer — Chief, Bridge Dept.

BRIDGE DEPARTMENT

DIST	COUNTY	ROUTE	POST MILES TOTAL PROJECT	SHEET No.	TOTAL SHEETS
05	SLO,Mon	101	63.2/R69.3, R0.0/R1.9	837	858

REGISTERED CIVIL ENGINEER 4-22-16 DATE

5-2-16
PLANS APPROVAL DATE

REGISTERED PROFESSIONAL ENGINEER Jose M Aquino III No. 58386 Exp. 12-31-16 CIVIL STATE OF CALIFORNIA

The State of California or its officers or agents shall not be responsible for the accuracy or completeness of scanned copies of this plan sheet.

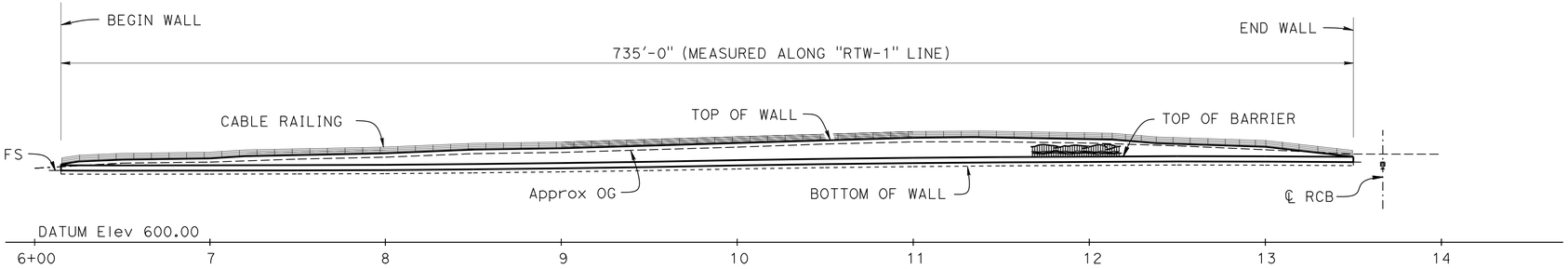

ELEVATION

1" = 40'

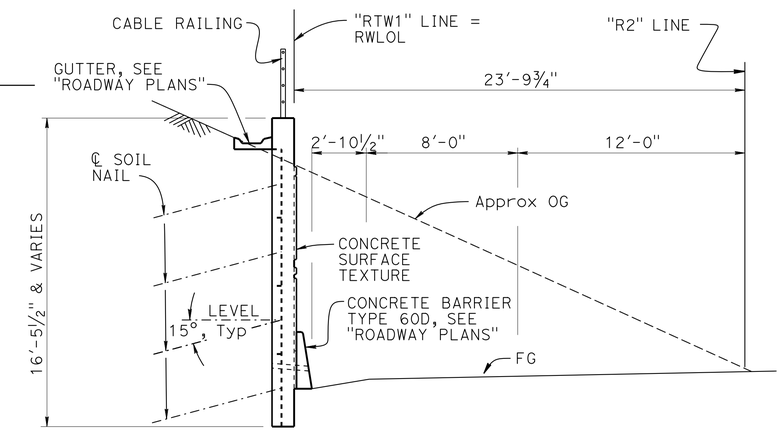

TYPICAL SECTION

¼" = 1'-0"

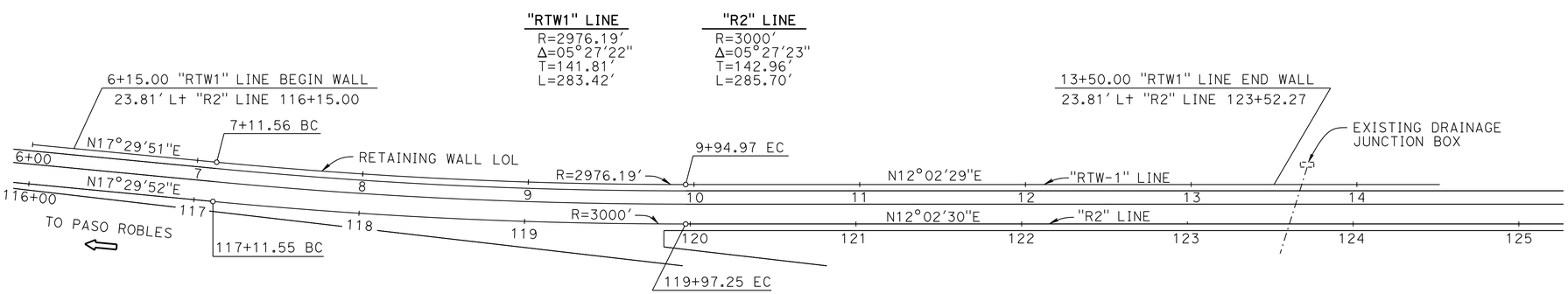

PLAN

1" = 40'

QUANTITIES

STRUCTURE EXCAVATION (SOIL NAIL WALL)	625	CY
STRUCTURE BACKFILL (SOIL NAIL WALL)	57	CY
SOIL NAIL	3,981	LF
STRUCTURAL CONCRETE, SOIL NAIL WALL	245	CY
ARCHITECTURAL TREATMENT (MOTIF)	4,070	SQFT
BAR REINFORCING STEEL (SOIL NAIL WALL)	40,750	LB
SHOTCRETE	144	CY
GEOCOMPOSITE DRAIN	910	SQFT
CABLE RAILING	735	LF

Joseph E Downing
DESIGN ENGINEER

	BY	CHECKED
DESIGN	Eric G Burgeson	Seung Pyo Hong
DETAILS	Nancy C Gwynn	Seung Pyo Hong
QUANTITIES	Sharon Yen	Lewis L Shen

LOAD FACTOR DESIGN — LIVE LOADING: N/A

	BY	CHECKED
LAYOUT	Eric G Burgeson	Seung Pyo Hong
SPECIFICATIONS	Jim Corrado	PLANS AND SPECS COMPARED Jim Corrado

ORIGINAL SCALE IN INCHES FOR REDUCED PLANS 0 1 2 3

STATE OF CALIFORNIA
DEPARTMENT OF TRANSPORTATION

DIVISION OF ENGINEERING SERVICES
STRUCTURE DESIGN
DESIGN BRANCH 3

BRIDGE NO. 49E0023
POST MILE 65.08

RETAINING WALL AT POST MILE 65.08
GENERAL PLAN

UNIT: 3578
PROJECT NUMBER & PHASE: 05000200201
CONTRACT NO.: 05-0G0404

DISREGARD PRINTS BEARING EARLIER REVISION DATES

REVISION DATES: 1-30-14 4-7-16 12-30-15 MM/DD/YYYY

SHEET 1 OF 22

STRUCTURES DESIGN GENERAL PLAN SHEET (ENGLISH) (REV.09-01-10)

FILE => 49e0023-g-gp.dgn

USERNAME => s115755 DATE PLOTTED => 22-JUL-2016 TIME PLOTTED => 17:59

DIST	COUNTY	ROUTE	POST MILES TOTAL PROJECT	SHEET No.	TOTAL SHEETS
05	SLO,Mon	101	63.2/R69.3, R0.0/R1.9	838	858

REGISTERED CIVIL ENGINEER — DATE 4-22-16

5-2-16
PLANS APPROVAL DATE

REGISTERED PROFESSIONAL ENGINEER — Jose M Aquino III — No. 58386 — Exp. 12-31-16 — CIVIL — STATE OF CALIFORNIA

The State of California or its officers or agents shall not be responsible for the accuracy or completeness of scanned copies of this plan sheet.

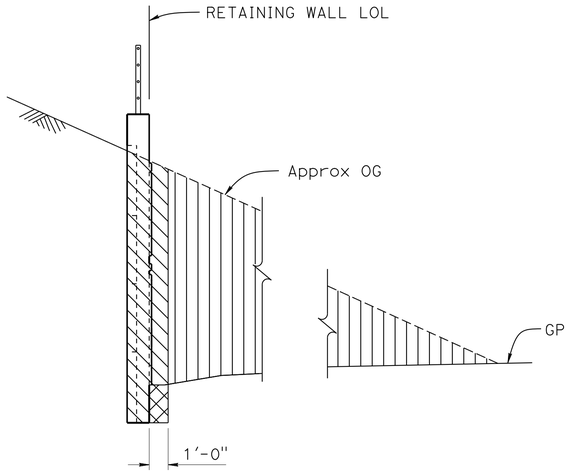

Structure Excavation (Soil Nail Wall)
Structure Backfill (Soil Nail Wall)
Roadway Excavation, see "ROADWAY PLANS"

LIMITS OF EXCAVATION AND BACKFILL

No Scale

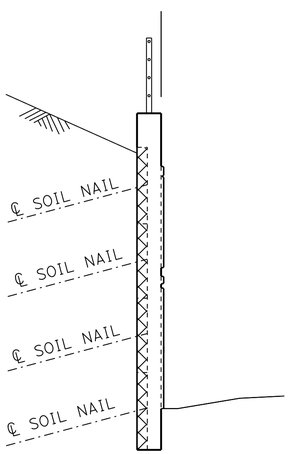

Structural Concrete, Soil Nail Wall
Shotcrete, Soil Nail Wall

CONCRETE STRENGTH & TYPE LIMITS

No Scale

GENERAL NOTES

DESIGN:

AASHTO LRFD Bridge Design Specification, 6th Edition with California Amendments

Geotechnical Engineering Circular No. 7, Soil Nail Walls. (FHWAO-IF-03-017) March 2003

SOIL/ROCK PARAMETERS:

(For determination of lateral earth pressures)

ϕ = 33°

γ = 120 pcf

SOIL PARAMETERS FOR NAIL DESIGN

ϕ = 33°

γ = 120 pcf

Cohesion = 200 psf

REINFORCED CONCRETE:

f'_c = 3.60 ksi

f_y = 60 ksi

SHOTCRETE:

f'_c = 3.60 ksi

f_y = 60 ksi (bar reinf)

f_y = 65 ksi (welded wire fabric))

SOIL NAIL:

Bar size: #6

DESIGN PULLOUT RESISTANCE, Q_d = 2000 lb/ft

f_y = 60 ksi

GROUT:

f'_c = 3.25 psi at 28 days

STRUCTURE STEEL (BEARING PLATES):

ASTM Designation: 709

f_y = 36 ksi

INDEX TO PLANS

SHEET No.	TITLE
1	GENERAL PLAN
2	INDEX TO PLANS
3	STRUCTURE PLAN No. 1
4	STRUCTURE PLAN No. 2
5	STRUCTURE PLAN No. 3
6	SOIL NAIL TABLE
7	FOUNDATION PLAN No. 1
8	FOUNDATION PLAN No. 2
9	TYPICAL SECTION
10	WALL DETAILS No. 1
11	WALL DETAILS No. 2
12	CONCRETE SURFACE TEXTURE LAYOUT No. 1
13	CONCRETE SURFACE TEXTURE LAYOUT No. 2
14	CONCRETE SURFACE TEXTURE DETAILS No. 1
15	CONCRETE SURFACE TEXTURE DETAILS No. 2
16	CONCRETE SURFACE TEXTURE DETAILS No. 3
17	CONCRETE SURFACE TEXTURE DETAILS No. 4
18	WALL DRAIN DETAILS
19	TEST NAIL DETAILS
20	LOG OF TEST BORINGS 1 OF 3
21	LOG OF TEST BORINGS 2 OF 3
22	LOG OF TEST BORINGS 3 OF 3

STANDARD PLANS DATED 2010

	A10A	ABBREVIATIONS (SHEET 1 OF 2)
RSP	A10B	ABBREVIATIONS (SHEET 2 OF 2)
	A10C	LINES AND SYMBOLS (SHEET 1 OF 3)
	A10D	LINES AND SYMBOLS (SHEET 2 OF 3)
	A10E	LINES AND SYMBOLS (SHEET 3 OF 3)
	A10F	LEGEND - SOIL (SHEET 1 OF 2)
	A10G	LEGEND - SOIL (SHEET 2 OF 2)
	A10H	LEGEND - ROCK
	A62C	LIMITS OF PAYMENT FOR EXCAVATION AND BACKFILL BRIDGE
RSP	B11-47	CABLE RAILING
RSP	B11-56	CONCRETE BARRIER TYPE 736

STANDARD PLAN SHEET No.

DETAIL No.

DESIGN	BY Eric G Burgeson	CHECKED Seung Pyo Hong	
DETAILS	BY Nancy C Gwynn	CHECKED Seung Pyo Hong	
QUANTITIES	BY Sharon Yen	CHECKED Lewis L Shen	

STATE OF CALIFORNIA
DEPARTMENT OF TRANSPORTATION

DIVISION OF ENGINEERING SERVICES
STRUCTURE DESIGN
DESIGN BRANCH 3

BRIDGE NO. 49E0023
POST MILE 65.08

RETAINING WALL AT POST MILE 65.08
INDEX TO PLANS

STRUCTURES DESIGN DETAIL SHEET (ENGLISH) (REV. 09-01-10)

ORIGINAL SCALE IN INCHES FOR REDUCED PLANS 0 1 2 3

UNIT: 3578
PROJECT NUMBER & PHASE: 05000200201
CONTRACT NO.: 05-0G0404

DISREGARD PRINTS BEARING EARLIER REVISION DATES

REVISION DATES: 12-08-14 9-29-15 9-16-15

SHEET 2 OF 22

FILE => 49e0023-a-itp.dgn

USERNAME => s115755 DATE PLOTTED => 22-JUL-2016 TIME PLOTTED => 17:59

DIST	COUNTY	ROUTE	POST MILES TOTAL PROJECT	SHEET No.	TOTAL SHEETS
05	SLO,Mon	101	63.2/R69.3, R0.0/R1.9	839	858

REGISTERED CIVIL ENGINEER 4-22-16 DATE

5-2-16
PLANS APPROVAL DATE

REGISTERED PROFESSIONAL ENGINEER
Jose M Aquino III
No. 58386
Exp. 12-31-16
CIVIL
STATE OF CALIFORNIA

The State of California or its officers or agents shall not be responsible for the accuracy or completeness of scanned copies of this plan sheet.

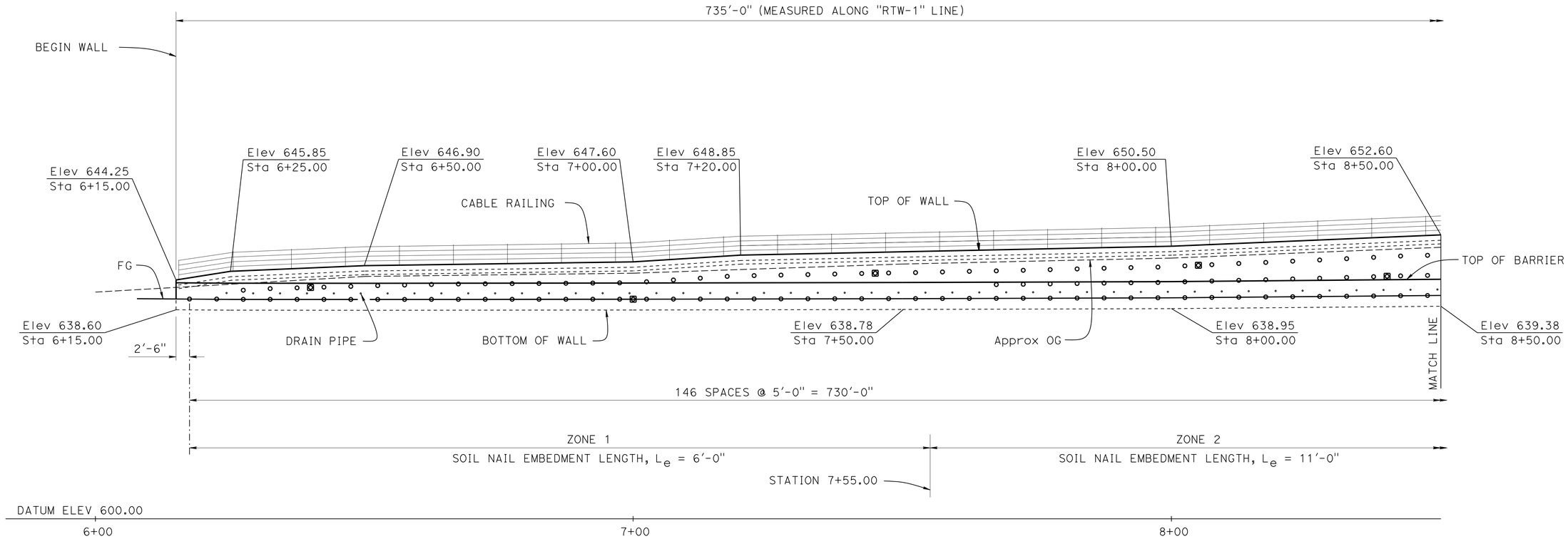

PART ELEVATION

1" = 10'

LEGEND:

- ∘ Indicates soil nail location
- ⊠ Indicates proof test nail location

NOTES:

1. For soil nail elevations, see "SOIL NAIL TABLE" sheet
2. Concrete surface texture not shown

	BY	CHECKED
DESIGN	Eric G Burgeson	Seung Pyo Hong
DETAILS	Nancy C Gwynn	Seung Pyo Hong
QUANTITIES	Sharon Yen	Lewis L Shen

STATE OF CALIFORNIA
DEPARTMENT OF TRANSPORTATION

DIVISION OF ENGINEERING SERVICES
STRUCTURE DESIGN
DESIGN BRANCH 3

BRIDGE NO. 49E0023
POST MILE 65.08

RETAINING WALL AT POST MILE 65.08
STRUCTURE PLAN No. 1

STRUCTURES DESIGN DETAIL SHEET (ENGLISH) (REV. 09-01-10)

ORIGINAL SCALE IN INCHES FOR REDUCED PLANS 0 1 2 3

UNIT: 3578
PROJECT NUMBER & PHASE: 05000200201
CONTRACT NO.: 05-0G0404

DISREGARD PRINTS BEARING EARLIER REVISION DATES

REVISION DATES 1-22-15 1-22-15 8-11-15

SHEET 3 OF 22

FILE => 49e0023-c-sp01.dgn

USERNAME => s115755 DATE PLOTTED => 22-JUL-2016 TIME PLOTTED => 17:59

DIST	COUNTY	ROUTE	POST MILES TOTAL PROJECT	SHEET No.	TOTAL SHEETS
05	SLO,Mon	101	63.2/R69.3, R0.0/R1.9	840	858

REGISTERED CIVIL ENGINEER — DATE 4-22-16

5-2-16
PLANS APPROVAL DATE

REGISTERED PROFESSIONAL ENGINEER — Jose M Aquino III — No. 58386 — Exp. 12-31-16 — CIVIL — STATE OF CALIFORNIA

The State of California or its officers or agents shall not be responsible for the accuracy or completeness of scanned copies of this plan sheet.

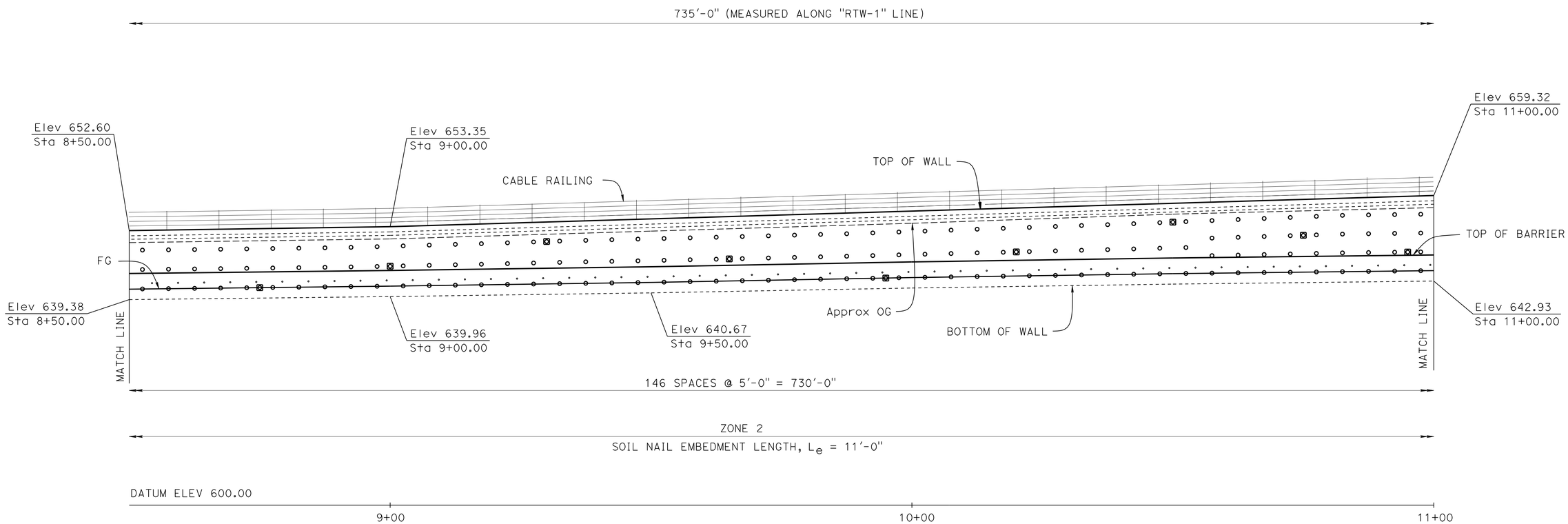

PART ELEVATION

1" = 10'

LEGEND:

- ○ Indicates soil nail location
- ⊠ Indicates proof test nail location

NOTES:

1. For soil nail elevations, see "SOIL NAIL TABLE" sheet
2. Concrete surface texture not shown

DESIGN	BY Eric G Burgeson	CHECKED Seung Pyo Hong	
DETAILS	BY Nancy C Gwynn	CHECKED Seung Pyo Hong	
QUANTITIES	BY Sharon Yen	CHECKED Lewis L Shen	

STATE OF CALIFORNIA
DEPARTMENT OF TRANSPORTATION

DIVISION OF ENGINEERING SERVICES
STRUCTURE DESIGN
DESIGN BRANCH 3

BRIDGE NO. 49E0023
POST MILE 65.08

RETAINING WALL AT POST MILE 65.08
STRUCTURE PLAN No. 2

STRUCTURES DESIGN DETAIL SHEET (ENGLISH) (REV. 09-01-10)

ORIGINAL SCALE IN INCHES FOR REDUCED PLANS 0 1 2 3

UNIT: 3578
PROJECT NUMBER & PHASE: 05000200201
CONTRACT NO.: 05-0G0404

DISREGARD PRINTS BEARING EARLIER REVISION DATES → 12-05-14 8-12-15 1-04-16

SHEET 4 OF 22

FILE => 49e0023-c-sp02.dgn

USERNAME => s115755 DATE PLOTTED => 22-JUL-2016 TIME PLOTTED => 17:59

DIST	COUNTY	ROUTE	POST MILES TOTAL PROJECT	SHEET No.	TOTAL SHEETS
05	SLO,Mon	101	63.2/R69.3, R0.0/R1.9	841	858

REGISTERED CIVIL ENGINEER 4-22-16 DATE

5-2-16
PLANS APPROVAL DATE

REGISTERED PROFESSIONAL ENGINEER
Jose M Aquino III
No. 58386
Exp. 12-31-16
CIVIL
STATE OF CALIFORNIA

The State of California or its officers or agents shall not be responsible for the accuracy or completeness of scanned copies of this plan sheet.

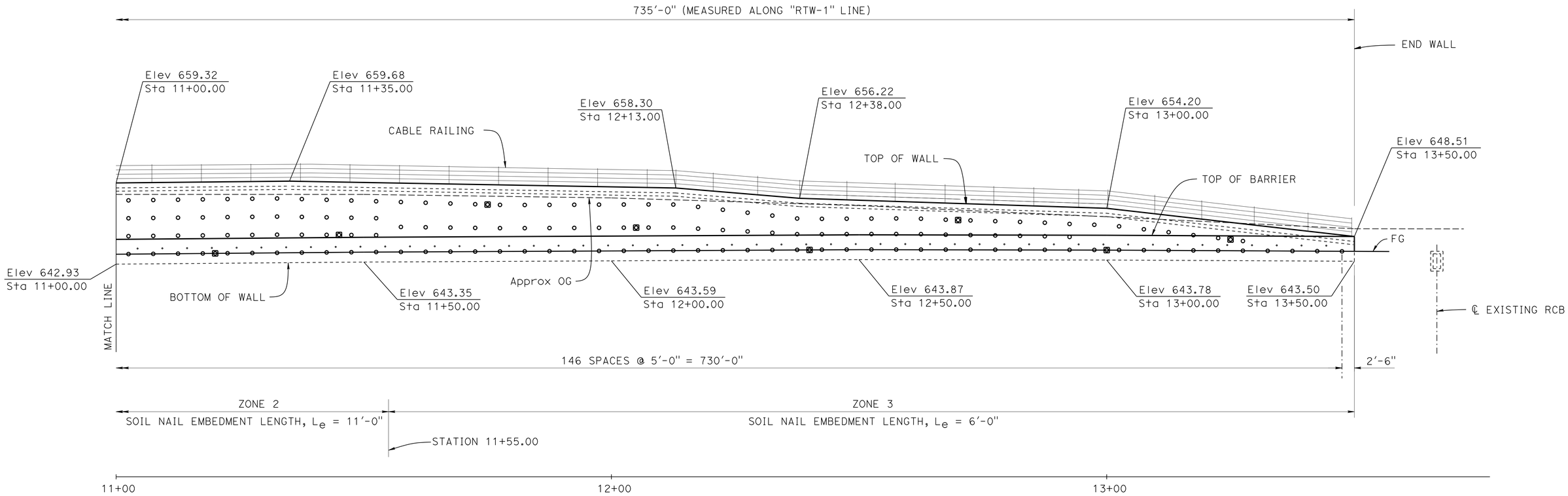

PART ELEVATION

1" = 10'

LEGEND:
- ∘ Indicates soil nail location
- ⊠ Indicates proof test nail location

NOTES:
1. For soil nail elevations, see "SOIL NAIL TABLE" sheet
2. Concrete surface texture not shown

	BY	CHECKED
DESIGN	Eric G Burgeson	Seung Pyo Hong
DETAILS	Nancy C Gwynn	Seung Pyo Hong
QUANTITIES	Sharon Yen	Lewis L Shen

STATE OF CALIFORNIA
DEPARTMENT OF TRANSPORTATION

DIVISION OF ENGINEERING SERVICES
STRUCTURE DESIGN
DESIGN BRANCH 3

BRIDGE NO. 49E0023
POST MILE 65.08

RETAINING WALL AT POST MILE 65.08
STRUCTURE PLAN No. 3

STRUCTURES DESIGN DETAIL SHEET (ENGLISH) (REV. 09-01-10)

ORIGINAL SCALE IN INCHES FOR REDUCED PLANS 0 1 2 3

UNIT: 3578
PROJECT NUMBER & PHASE: 05000200201
CONTRACT NO.: 05-0G0404

DISREGARD PRINTS BEARING EARLIER REVISION DATES

REVISION DATES: 1-12-15 1-22-15 1-22-15 8-12-15

SHEET 5 OF 22

FILE => 49e0023-c-sp03.dgn

USERNAME => s115755 DATE PLOTTED => 22-JUL-2016 TIME PLOTTED => 17:59

DIST	COUNTY	ROUTE	POST MILES TOTAL PROJECT	SHEET No.	TOTAL SHEETS
05	SLO,Mon	101	63.2/R69.3, R0.0/R1.9	842	858

Jose M. Aquino III 4-22-16
REGISTERED CIVIL ENGINEER DATE

5-2-16
PLANS APPROVAL DATE

REGISTERED PROFESSIONAL ENGINEER
Jose M Aquino III
No. 58386
Exp. 12-31-16
CIVIL
STATE OF CALIFORNIA

The State of California or its officers or agents shall not be responsible for the accuracy or completeness of scanned copies of this plan sheet.

STATION	SOIL NAIL ELEVATION			
6+17.50	640.70			
6+22.50	640.70			
6+27.50	642.34	640.65		
6+32.50	642.64	640.64		
6+37.50	642.78	640.64		
6+42.50	642.91	640.64		
6+47.50	643.05	640.63		
6+52.50	643.19	640.63		
6+57.50	643.30	640.64		
6+62.50	643.41	640.64		
6+67.50	643.49	640.65		
6+72.50	643.53	640.65		
6+77.50	643.57	640.66		
6+82.50	643.60	640.66		
6+87.50	643.63	640.67		
6+92.50	643.66	640.67		
6+97.50	643.70	640.68		
7+02.50	643.90	640.68		
7+07.50	644.24	640.69		
7+12.50	644.57	640.70		
7+17.50	644.90	640.71		
7+22.50	645.05	640.72		
7+27.50	645.14	640.73		
7+32.50	645.24	640.74		
7+37.50	645.34	640.75		
7+42.50	645.44	640.76		
7+47.50	645.53	640.77		
7+52.50	645.61	640.79		
7+57.50	645.72	640.80		
7+62.50	645.84	640.82		
7+67.50	645.93	643.38	640.84	
7+72.50	646.03	643.44	640.85	
7+77.50	646.15	643.51	640.87	
7+82.50	646.28	643.58	640.88	
7+87.50	646.41	643.66	640.90	
7+92.50	646.53	643.72	640.92	
7+97.50	646.63	643.78	640.93	
8+02.50	646.85	643.90	640.96	
8+07.50	647.07	644.04	941.01	
8+12.50	647.29	644.17	641.05	
8+17.50	647.49	644.29	641.09	
8+22.50	647.72	644.43	641.14	
8+27.50	647.94	644.56	641.18	
8+32+50	648.18	644.70	641.23	
8+37.50	648.43	644.85	641.27	
8+42.50	648.67	644.99	641.31	
8+47.50	648.80	645.08	641.36	
8+52.50	648.86	645.13	641.41	
8+57.50	648.91	645.19	641.47	

STATION	SOIL NAIL ELEVATION			
8+62.50	648.96	645.24	641.52	
8+67.50	649.02	645.30	641.58	
8+72.50	649.08	645.36	641.64	
8+77.50	649.16	645.43	641.70	
8+82.50	649.22	645.49	641.76	
8+87.50	649.29	645.55	641.81	
8+92.50	649.38	645.63	641.87	
8+97.50	649.51	645.72	641.93	
9+02.50	649.66	645.83	642.00	
9+07.50	649.81	645.94	642.07	
9+12.50	649.96	646.05	642.14	
9+17.50	650.08	646.15	642.21	
9+22.50	650.25	646.26	642.28	
9+27.50	650.41	646.38	642.35	
9+32.50	650.58	646.50	642.42	
9+37.50	650.72	646.61	642.49	
9+42.50	650.84	646.70	642.56	
9+47.50	650.96	646.80	642.63	
9+52.50	651.08	646.90	642.72	
9+57.50	651.20	647.01	642.81	
9+62.50	651.32	647.11	642.90	
9+67.50	651.45	647.22	643.00	
9+72.50	651.59	647.34	643.09	
9+77.50	651.72	647.45	643.18	
9+82.50	651.86	647.57	643.27	
9+87.50	651.99	647.68	643.37	
9+92.50	652.14	647.80	643.46	
9+97.50	652.32	647.94	643.55	
10+02.50	652.50	648.07	643.64	
10+07.50	657.68	648.20	643.71	
10+12.50	652.86	648.32	643.79	
10+17.50	653.02	648.44	643.86	
10+22.50	653.20	648.57	643.94	
10+27.50	653.38	648.70	644.01	
10+32.50	653.56	648.83	644.09	
10+37.50	653.73	648.94	644.16	
10+42.50	653.91	649.07	644.24	
10+47.50	654.11	649.21	644.31	
10+52.50	654.31	649.35	644.38	
10+57.50	654.51	651.15	647.80	644.44
10+62.50	654.71	651.31	647.90	644.49
10+67.50	654.91	651.46	648.01	644.55
10+72.50	655.11	651.61	648.11	644.61
10+77.50	655.31	651.77	648.22	644.67
10+82.50	655.51	651.92	648.32	644.73
10+87.50	655.59	651.99	648.39	644.78
10+92.50	655.66	652.05	648.45	644.84
10+97.50	655.73	652.12	648.51	644.90
11+02.50	655.79	652.18	648.56	644.95

STATION	SOIL NAIL ELEVATION			
11+07.50	655.86	652.24	648.61	644.99
11+12.50	655.92	652.29	648.66	645.03
11+17.50	655.99	652.35	648.71	645.08
11+22.50	656.05	652.41	648.76	645.12
11+27.50	656.12	652.47	648.81	645.16
11+32.50	656.17	652.52	648.86	645.20
11+37.50	656.05	652.45	648.85	645.24
11+42.50	655.90	652.37	648.83	645.29
11+47.50	655.76	652.28	648.80	645.33
11+52.50	655.61	652.19	648.78	645.36
11+57.50	655.46	650.42	645.39	
11+62.50	655.31	650.36	645.41	
11+67.50	655.16	650.30	645.43	
11+72.50	655.01	650.23	645.46	
11+77.50	654.88	650.18	645.48	
11+82.50	654.86	650.18	645.51	
11+87.50	654.88	650.21	645.53	
11+92.50	654.91	650.23	645.55	
11+97.50	654.93	650.25	645.58	
12+02.50	654.95	650.28	645.60	
12+07.50	654.97	650.30	645.63	
12+12.50	654.95	650.30	645.66	
12+17.50	654.48	650.08	645.69	
12+22.50	653.89	649.80	645.72	
12+27.50	653.30	649.52	645.74	
12+32.50	652.72	649.24	645.77	
12+37.50	652.13	648.96	645.80	
12+42.50	652.07	648.95	645.83	
12+47.50	652.09	648.97	645.86	
12+52.50	652.12	648.99	645.87	
12+57.50	652.14	649.00	645.86	
12+62.50	652.09	648.97	645.85	
12+67.50	651.88	648.86	645.84	
12+72.50	651.74	648.78	645.83	
12+77.50	651.59	648.71	645.82	
12+82.50	651.45	648.63	645.81	
12+87.50	651.28	648.54	645.80	
12+92.50	651.03	648.81	645.79	
12+97.50	650.86	645.78		
13+02.50	650.55	645.77		
13+07.50	649.96	645.74		
13+12.50	649.36	645.71		
13+17.50	648.77	645.68		
13+22.50	648.18	645.55		
13+27.50	647.59	645.62		
13+32.50	645.60			
13+37.50	645.57			
13+42.50	645.54			
13+47.50	645.51			

	BY	CHECKED
DESIGN	Eric G Burgeson	Seung Pyo Hong
DETAILS	Nancy C Gwynn	Seung Pyo Hong
QUANTITIES	Sharon Yen	Lewis L Shen

STATE OF CALIFORNIA
DEPARTMENT OF TRANSPORTATION

DIVISION OF ENGINEERING SERVICES
STRUCTURE DESIGN
DESIGN BRANCH 3

BRIDGE NO. 49E0023
POST MILE 65.08

RETAINING WALL AT POST MILE 65.08
SOIL NAIL TABLE

STRUCTURES DESIGN DETAIL SHEET (ENGLISH) (REV. 09-01-10)

ORIGINAL SCALE IN INCHES FOR REDUCED PLANS 0 1 2 3

UNIT: 3578
PROJECT NUMBER & PHASE: 05000200201
CONTRACT NO.: 05-0G0404

DISREGARD PRINTS BEARING EARLIER REVISION DATES

REVISION DATES 12-3-14

SHEET 6 OF 22

FILE => 49e0023-d-snail.dgn

USERNAME => s115755 DATE PLOTTED => 22-JUL-2016 TIME PLOTTED => 17:59

DIST	COUNTY	ROUTE	POST MILES TOTAL PROJECT	SHEET No.	TOTAL SHEETS
05	SLO,Mon	101	63.2/R69.3, R0.0/R1.9	843	858

REGISTERED CIVIL ENGINEER — DATE 4-22-16

5-2-16
PLANS APPROVAL DATE

REGISTERED PROFESSIONAL ENGINEER — Jose M Aquino III — No. 58386 — Exp. 12-31-16 — CIVIL — STATE OF CALIFORNIA

The State of California or its officers or agents shall not be responsible for the accuracy or completeness of electronic copies of this plan sheet.

CURVE DATA

No.	R	Δ	T	L
13	2976.19	05°27'22"	141.82	283.42
14	3000.00	05°27'23"	142.96	285.70

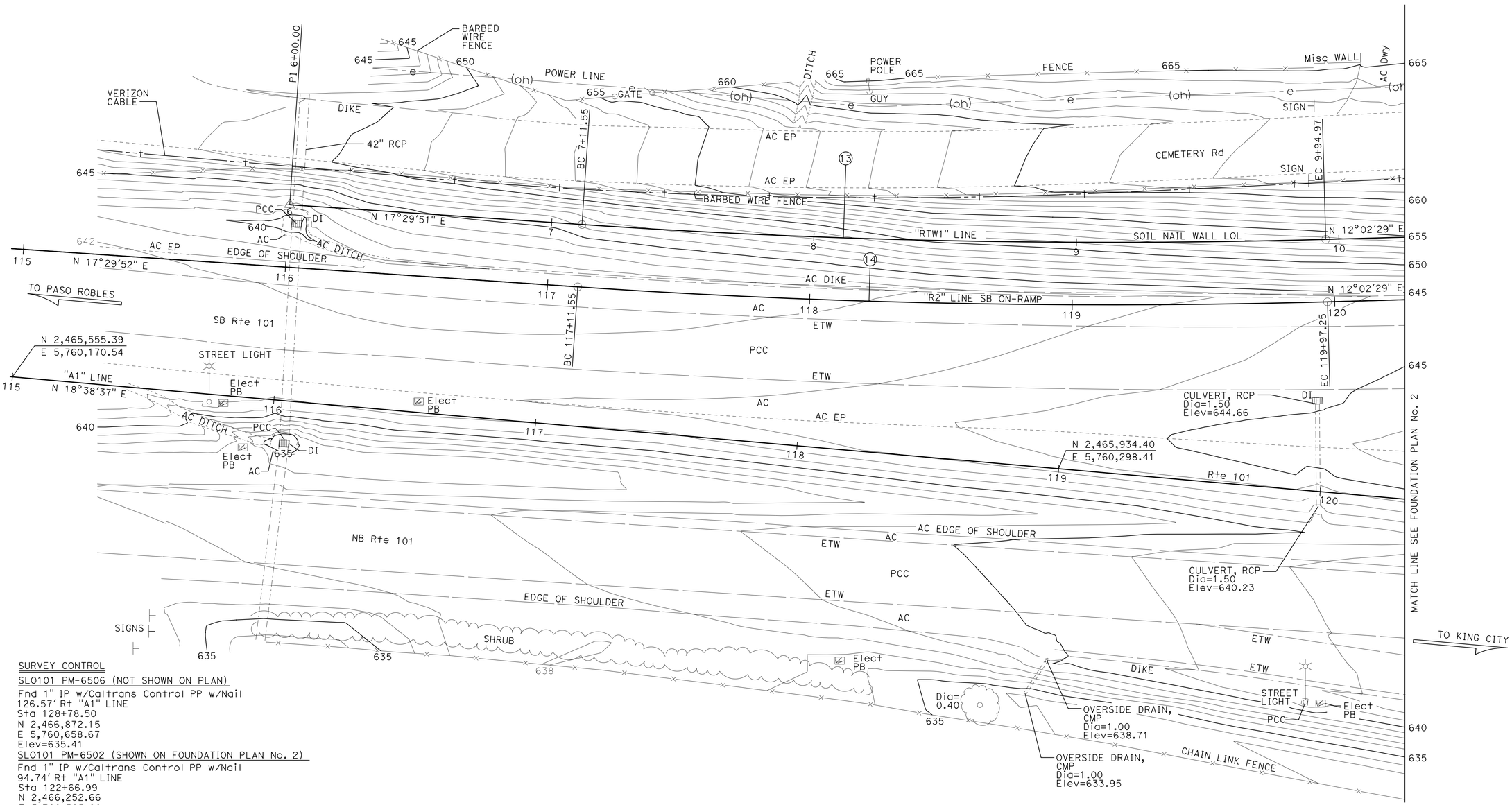

SURVEY CONTROL

SLO101 PM-6506 (NOT SHOWN ON PLAN)
Fnd 1" IP w/Caltrans Control PP w/Nail
126.57' Rt "A1" LINE
Sta 128+78.50
N 2,466,872.15
E 5,760,658.67
Elev=635.41

SLO101 PM-6502 (SHOWN ON FOUNDATION PLAN No. 2)
Fnd 1" IP w/Caltrans Control PP w/Nail
94.74' Rt "A1" LINE
Sta 122+66.99
N 2,466,252.66
E 5,760,505.68
Elev=654.48

PRELIMINARY INVESTIGATION SECTION

SCALE	VERT.DATUM NAVD88	PHOTOGRAMMETRY AS OF: X			
1"=20'	HORZ.DATUM NAD83 (92)	SURVEYED	BY DISTRICT	CHECKED	BY C. FASSETT 8/28/2014
ALIGNMENT TIES Dist TRAVERSE SHEET		DRAFTED	BY L. YOUNG	CHECKED	BY S. SOU 8/27/2014

DESIGN	BY Eric G Burgeson	CHECKED Seung Pyo Hong
DETAILS	BY Nancy C Gwynn	CHECKED Seung Pyo Hong
QUANTITIES	BY Sharon Yen	CHECKED Lewis L Shen

STATE OF CALIFORNIA
DEPARTMENT OF TRANSPORTATION

DIVISION OF ENGINEERING SERVICES
STRUCTURE DESIGN
DESIGN BRANCH 3

BRIDGE NO. 49E0023
POST MILE 65.08

RETAINING WALL AT POST MILE 65.08
FOUNDATION PLAN No. 1

STRUCTURES FOUNDATION PLAN SHEET (ENGLISH) (REV. 09-01-10)

ORIGINAL SCALE IN INCHES FOR REDUCED PLANS 0 1 2 3

UNIT: 3646
PROJECT NUMBER & PHASE: 05000200201
CONTRACT NO.: 05-0G0404

DISREGARD PRINTS BEARING EARLIER REVISION DATES

REVISION DATES 6/23/2014 9/12/2014 07/17/15

SHEET 7 OF 22

FILE => 49e0023-e-fp101.dgn

USERNAME => s115755 DATE PLOTTED => 22-JUL-2016 TIME PLOTTED => 17:59

DIST	COUNTY	ROUTE	POST MILES TOTAL PROJECT	SHEET No.	TOTAL SHEETS
05	SLO,Mon	101	63.2/R69.3, R0.0/R1.9	844	858

REGISTERED CIVIL ENGINEER 4-22-16 DATE

5-2-16
PLANS APPROVAL DATE

REGISTERED PROFESSIONAL ENGINEER Jose M Aquino III No. 58386 Exp. 12-31-16 CIVIL STATE OF CALIFORNIA

The State of California or its officers or agents shall not be responsible for the accuracy or completeness of electronic copies of this plan sheet.

CURVE DATA

No. ⊕	R	Δ	T	L
15	2465.00	29°11′45"	641.99	1256.08

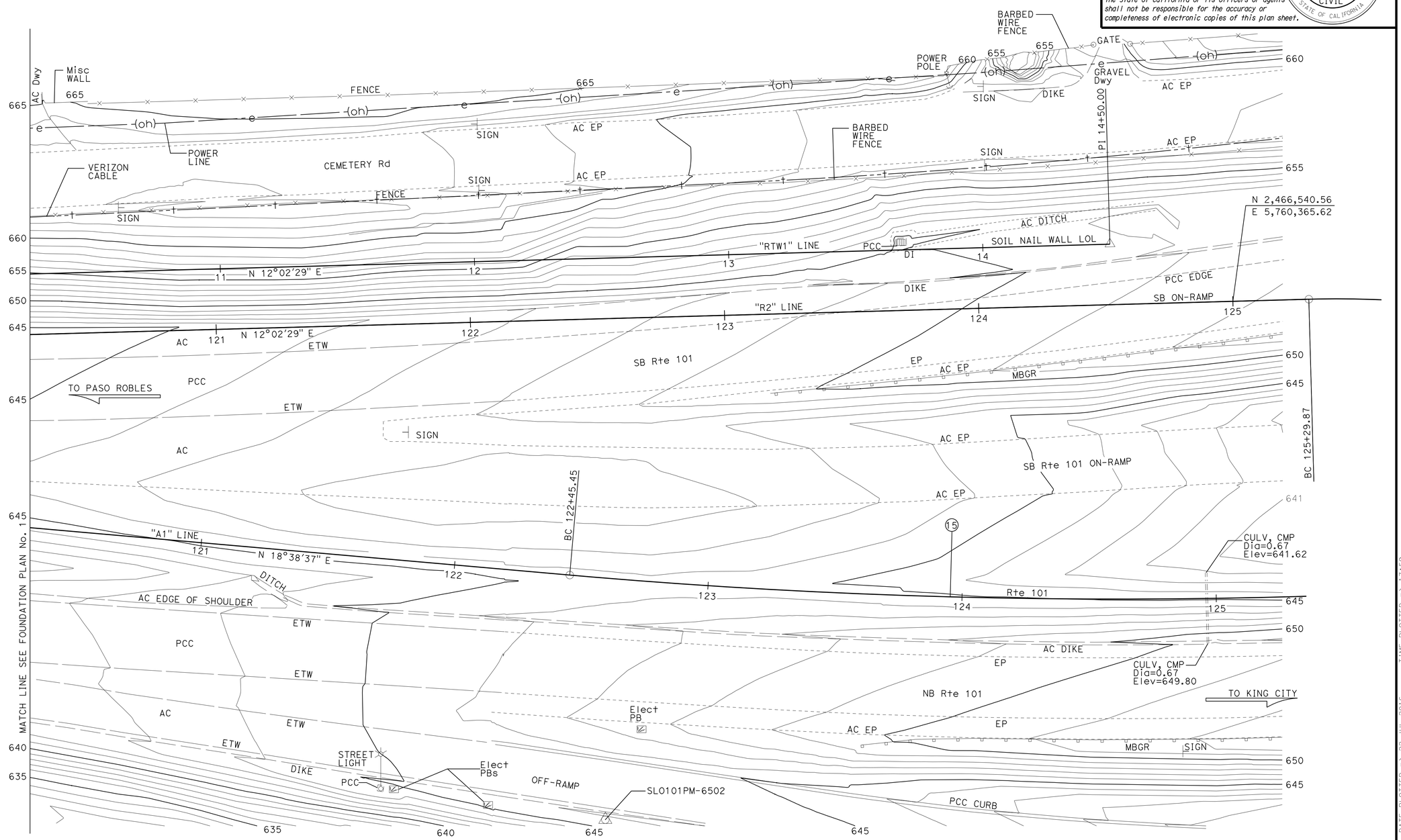

PRELIMINARY INVESTIGATION SECTION					
SCALE 1"=20′	VERT.DATUM NAVD88	PHOTOGRAMMETRY AS OF: X			
	HORZ.DATUM NAD83 (92)	SURVEYED	BY DISTRICT	CHECKED	BY C. FASSETT 8/28/2014
ALIGNMENT TIES Dist TRAVERSE SHEET		DRAFTED	BY L. YOUNG 8/2014	CHECKED	BY S. SOU 8/27/2014

DESIGN	BY Eric G Burgeson	CHECKED Seung Pyo Hong
DETAILS	BY Nancy C Gwynn	CHECKED Seung Pyo Hong
QUANTITIES	BY Sharon Yen	CHECKED Lewis L Shen

STATE OF CALIFORNIA
DEPARTMENT OF TRANSPORTATION

DIVISION OF ENGINEERING SERVICES
STRUCTURE DESIGN
DESIGN BRANCH 3

BRIDGE NO. 49E0023
POST MILE PM 65.08

RETAINING WALL AT POST MILE 65.08
FOUNDATION PLAN No. 2

STRUCTURES FOUNDATION PLAN SHEET (ENGLISH) (REV. 09-01-10)

ORIGINAL SCALE IN INCHES FOR REDUCED PLANS 0 1 2 3

UNIT: 3646
PROJECT NUMBER & PHASE: 05000200201
CONTRACT NO.: 05-0G0404

DISREGARD PRINTS BEARING EARLIER REVISION DATES

REVISION DATES 8/29/2014 9/12/2014 7/17/2015

SHEET 8 OF 22

USERNAME => s115755 DATE PLOTTED => 22-JUL-2016 TIME PLOTTED => 17:59

FILE => 49e0023-e-fp102.dgn

DIST	COUNTY	ROUTE	POST MILES TOTAL PROJECT	SHEET No.	TOTAL SHEETS
05	SLO,Mon	101	63.2/R69.3, R0.0/R1.9	845	858

REGISTERED CIVIL ENGINEER 4-22-16 DATE

5-2-16
PLANS APPROVAL DATE

REGISTERED PROFESSIONAL ENGINEER Jose M Aquino III No. 58386 Exp. 12-31-16 CIVIL STATE OF CALIFORNIA

The State of California or its officers or agents shall not be responsible for the accuracy or completeness of scanned copies of this plan sheet.

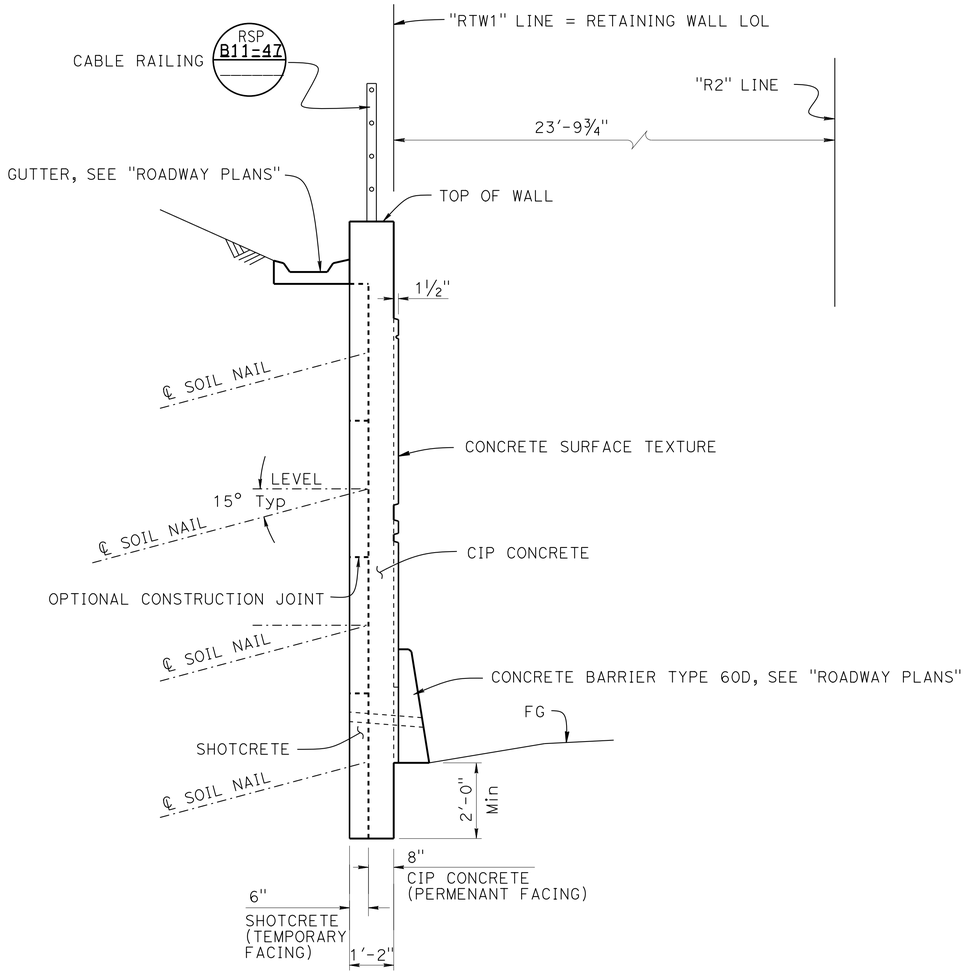

TYPICAL SECTION

½" = 1'-0"

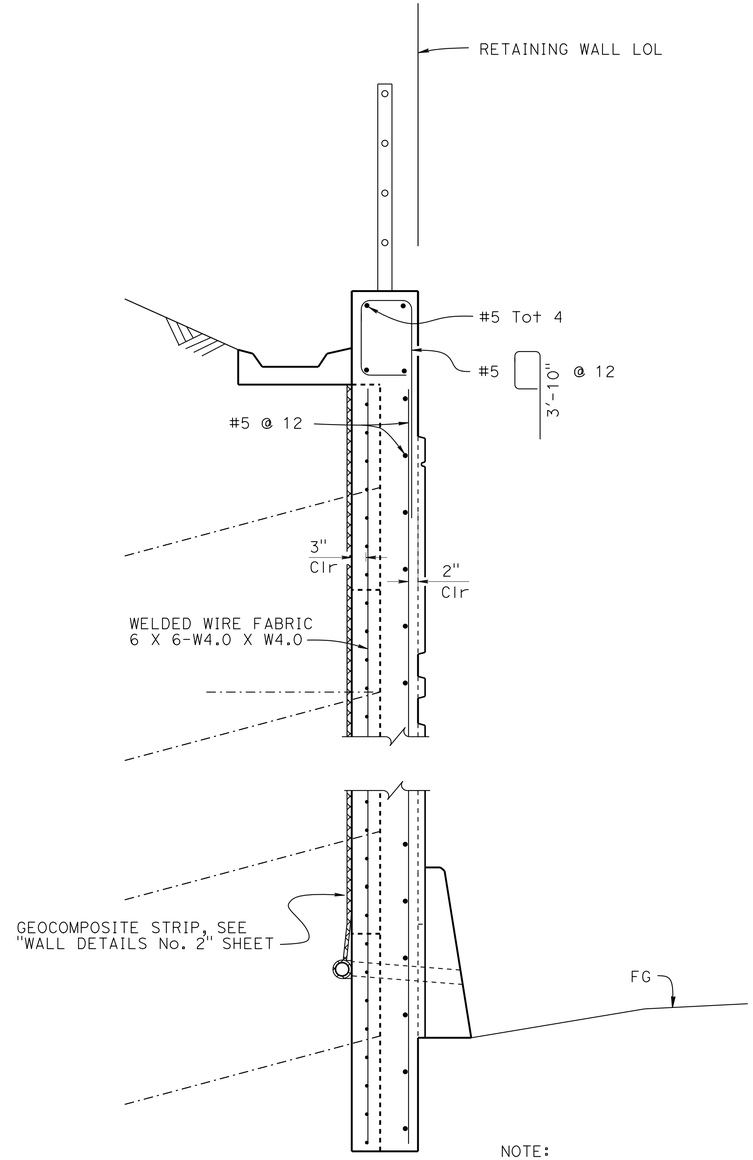

NOTE:
For details not shown, see "TYPICAL SECTION"

PART TYPICAL SECTION

¾" = 1'-0"

DESIGN	BY Eric G Burgeson	CHECKED Seung Pyo Hong	
DETAILS	BY Nancy C Gwynn	CHECKED Seung Pyo Hong	
QUANTITIES	BY Sharon Yen	CHECKED Lewis L Shen	

STATE OF CALIFORNIA
DEPARTMENT OF TRANSPORTATION

DIVISION OF ENGINEERING SERVICES
STRUCTURE DESIGN
DESIGN BRANCH 3

BRIDGE NO. 49E0023
POST MILE 65.08

RETAINING WALL AT POST MILE 65.08
TYPICAL SECTION

STRUCTURES DESIGN DETAIL SHEET (ENGLISH) (REV. 09-01-10)

ORIGINAL SCALE IN INCHES FOR REDUCED PLANS 0 1 2 3

UNIT: 3578
PROJECT NUMBER & PHASE: 05000200201
CONTRACT NO.: 05-0G0404

DISREGARD PRINTS BEARING EARLIER REVISION DATES

REVISION DATES 9-30-15 9-30-15 9-30-15

SHEET 9 OF 22

FILE => 49e0023-k-typ.dgn

USERNAME => s113755 DATE PLOTTED => 22-JUL-2016 TIME PLOTTED => 17:59

DIST	COUNTY	ROUTE	POST MILES TOTAL PROJECT	SHEET No.	TOTAL SHEETS
05	SLO,Mon	101	63.2/R69.3, R0.0/R1.9	846	858

REGISTERED CIVIL ENGINEER 4-22-16 DATE

5-2-16
PLANS APPROVAL DATE

REGISTERED PROFESSIONAL ENGINEER Jose M Aquino III No. 58386 Exp. 12-31-16 CIVIL STATE OF CALIFORNIA

The State of California or its officers or agents shall not be responsible for the accuracy or completeness of scanned copies of this plan sheet.

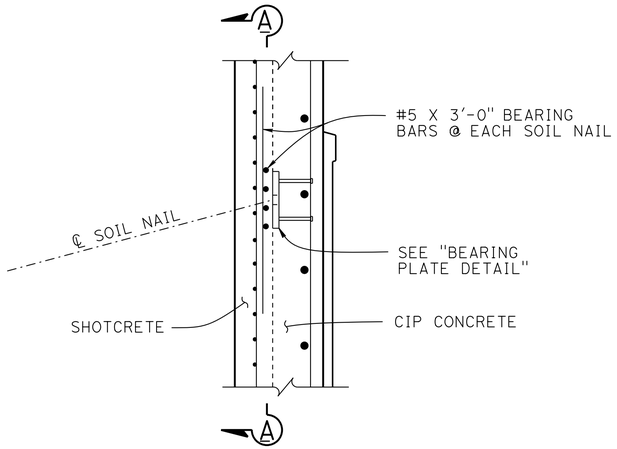

PART TYPICAL SECTION

3" = 1'-0"

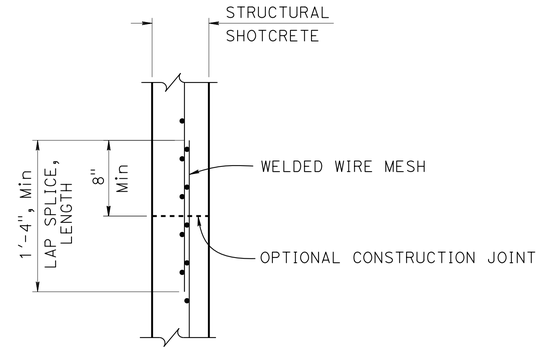

NOTE:
Dimensions same for all other splices not at a construction joint

WELDED WIRE MESH LAP SPLICE

1½" = 1'-0"

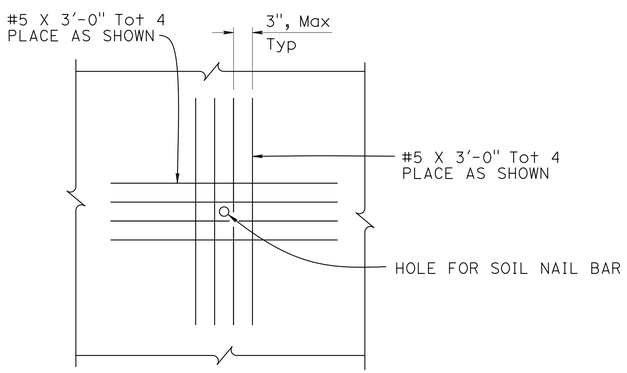

SECTION A-A

1" = 1'-0"

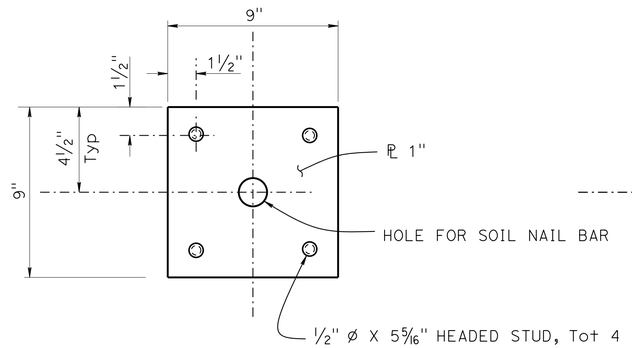

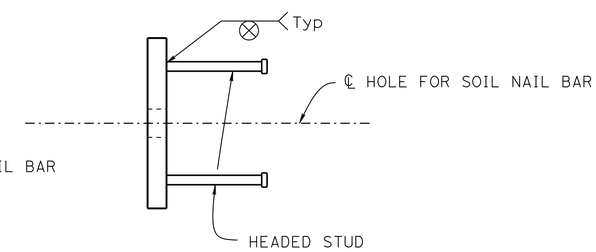

BEARING PLATE DETAIL

3" = 1'-0"

DESIGN	BY Eric G Burgeson	CHECKED Seung Pyo Hong	
DETAILS	BY Nancy C Gwynn	CHECKED Seung Pyo Hong	
QUANTITIES	BY Sharon Yen	CHECKED Lewis L Shen	

STATE OF CALIFORNIA
DEPARTMENT OF TRANSPORTATION

DIVISION OF ENGINEERING SERVICES
STRUCTURE DESIGN
DESIGN BRANCH 3

BRIDGE NO. 49E0023
POST MILE 65.08

RETAINING WALL AT POST MILE 65.08
WALL DETAILS No. 1

STRUCTURES DESIGN DETAIL SHEET (ENGLISH) (REV. 09-01-10)

ORIGINAL SCALE IN INCHES FOR REDUCED PLANS 0 1 2 3

UNIT: 3578
PROJECT NUMBER & PHASE: 05000200201
CONTRACT NO.: 05-0G0404

DISREGARD PRINTS BEARING EARLIER REVISION DATES

REVISION DATES

SHEET 10 OF 22

FILE => 49e0023-l-walldet01.dgn

USERNAME => s115755 DATE PLOTTED => 22-JUL-2016 TIME PLOTTED => 17:59

DIST	COUNTY	ROUTE	POST MILES TOTAL PROJECT	SHEET No.	TOTAL SHEETS
05	SLO,Mon	101	63.2/R69.3, R0.0/R1.9	847	858

REGISTERED CIVIL ENGINEER 4-22-16 DATE

5-2-16
PLANS APPROVAL DATE

REGISTERED PROFESSIONAL ENGINEER Jose M Aquino III No. 58386 Exp. 12-31-16 CIVIL STATE OF CALIFORNIA

The State of California or its officers or agents shall not be responsible for the accuracy or completeness of scanned copies of this plan sheet.

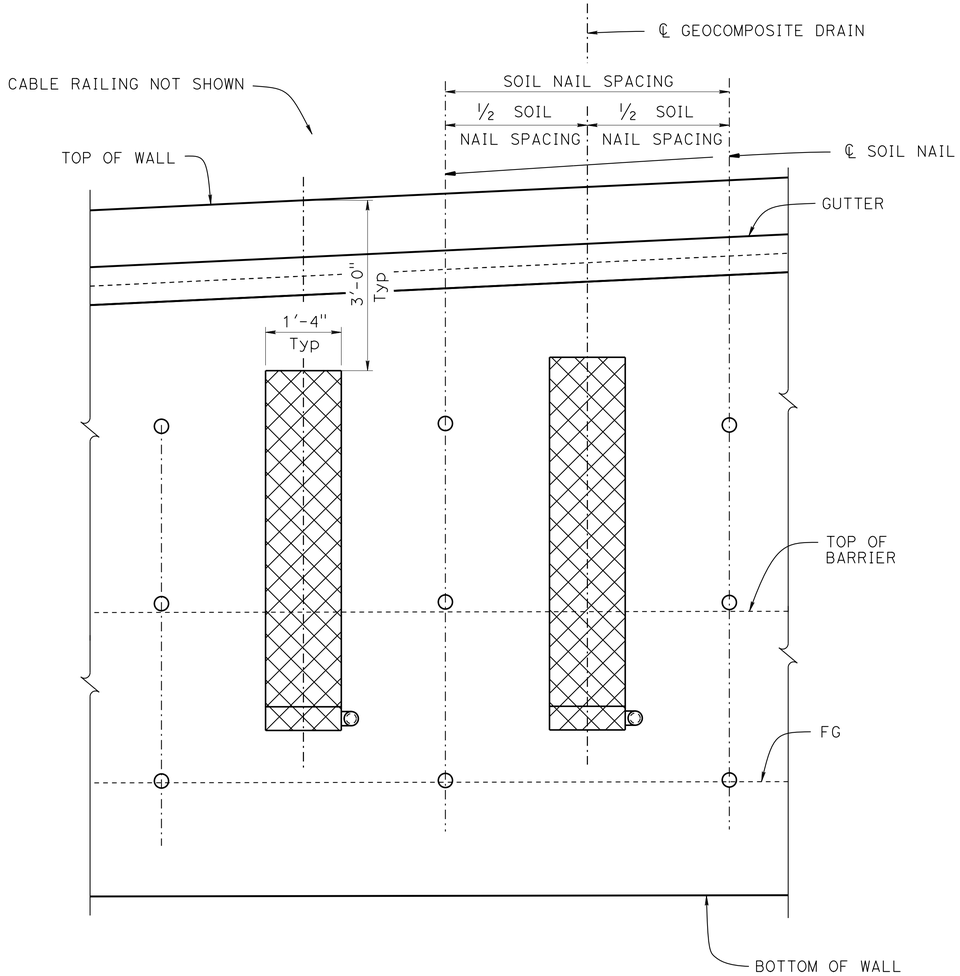

NOTE:
For details not shown, see "WALL DRAIN DETAILS" sheet

LEGEND:

○ Indicates Soil Nail

▨ Indicates Geocomposite Drain

DRAINAGE PART ELEVATION

¾" = 1'-0"

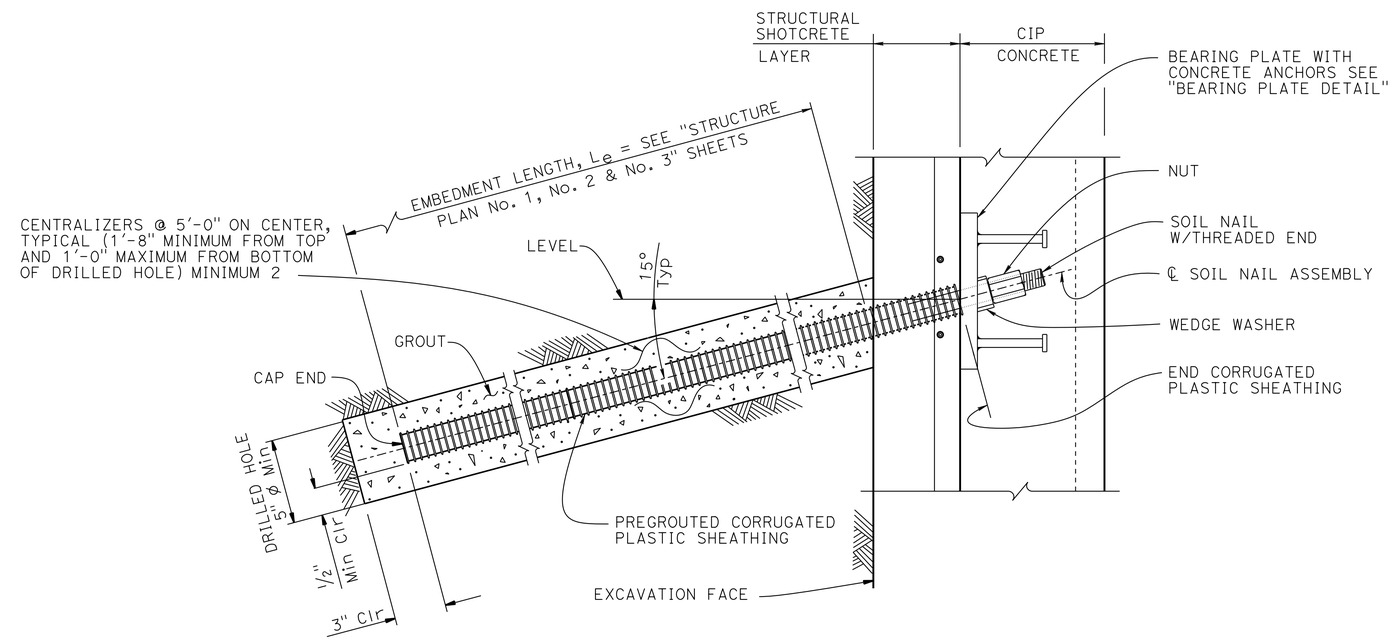

NOTES:

1. All wall reinforcement not shown
2. The centralizer should be made from a plastic material to be attached to the nail in a way that will not impead the free flow of grout, and be sized to position the nail tendon within approx 1" of the center of the drilled hole
3. For Wall Reinforcing Details, see "TYPICAL SECTION" and "WALL DETAILS No. 1" sheets
4. For Test Soil Nail Details, see "TEST NAIL DETAILS" sheet

SOIL NAIL AND BEARING PLATE DETAILS

NO SCALE

DESIGN	BY Eric G Burgeson	CHECKED Seung Pyo Hong	
DETAILS	BY Nancy C Gwynn	CHECKED Seung Pyo Hong	
QUANTITIES	BY Sharon Yen	CHECKED Lewis L Shen	

STATE OF CALIFORNIA
DEPARTMENT OF TRANSPORTATION

DIVISION OF ENGINEERING SERVICES
STRUCTURE DESIGN
DESIGN BRANCH 3

BRIDGE NO. 49E0023
POST MILE 65.08

RETAINING WALL AT POST MILE 65.08
WALL DETAILS No. 2

STRUCTURES DESIGN DETAIL SHEET (ENGLISH) (REV. 09-01-10)

ORIGINAL SCALE IN INCHES FOR REDUCED PLANS 0 1 2 3

UNIT: 3578
PROJECT NUMBER & PHASE: 05000200201
CONTRACT NO.: 05-0G0404

DISREGARD PRINTS BEARING EARLIER REVISION DATES

REVISION DATES 12-02-14 2-12-15

SHEET 11 OF 22

FILE => 49e0023-1-walldet02.dgn

USERNAME => s115755 DATE PLOTTED => 22-JUL-2016 TIME PLOTTED => 17:59

DIST	COUNTY	ROUTE	POST MILES TOTAL PROJECT	SHEET No.	TOTAL SHEETS
05	SLO,Mon	101	63.2/R69.3, R0.0/R1.9	848	858

REGISTERED CIVIL ENGINEER — DATE 4-22-16

5-2-16
PLANS APPROVAL DATE

REGISTERED PROFESSIONAL ENGINEER — Jose M Aquino III — No. 58386 — Exp. 12-31-16 — CIVIL — STATE OF CALIFORNIA

The State of California or its officers or agents shall not be responsible for the accuracy or completeness of scanned copies of this plan sheet.

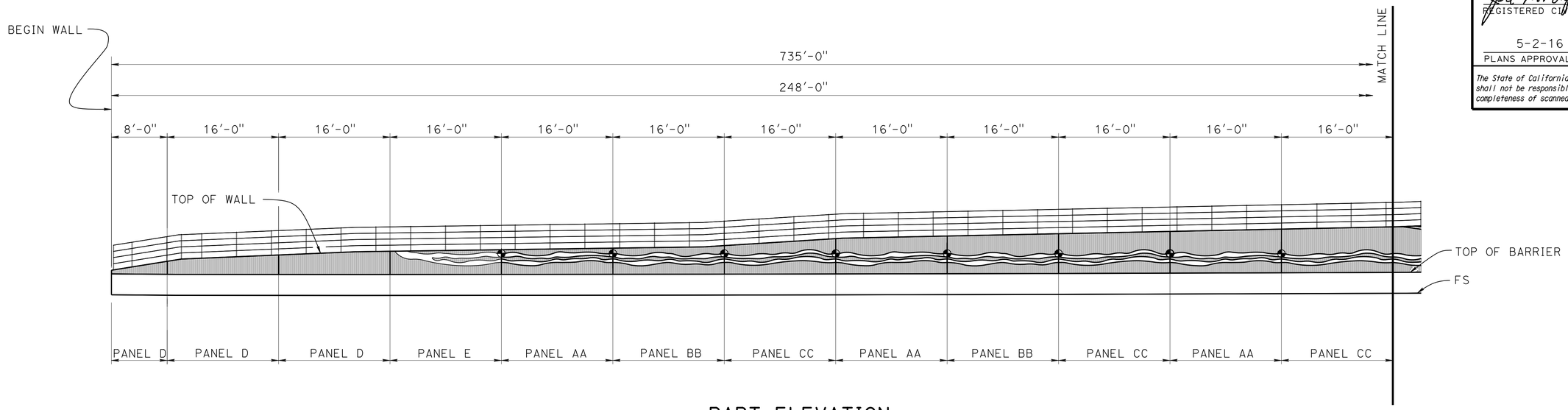

PART ELEVATION

1/8" = 1'-0"

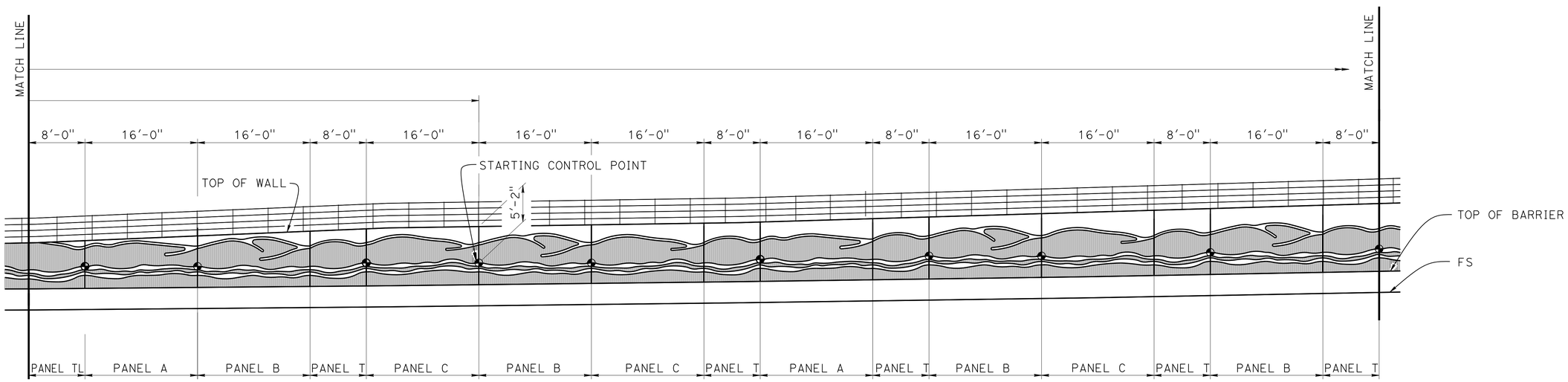

PART ELEVATION

1/8" = 1'-0"

NOTE:

For panel motif details, see "CONCRETE SURFACE TEXTURE DETAIL" sheets

	BY	CHECKED
DESIGN	David Fowkes	Kantima Green
DETAILS	Nancy C Gwynn	Kantima Green
QUANTITIES	Sharon Yen	Lewis L Shen

STATE OF CALIFORNIA
DEPARTMENT OF TRANSPORTATION

DIVISION OF ENGINEERING SERVICES
STRUCTURE DESIGN
DESIGN BRANCH 3

BRIDGE NO. 49E0023
POST MILE 65.08

RETAINING WALL AT POST MILE 65.08
CONCRETE SURFACE TEXTURE LAYOUT No. 1

STRUCTURES DESIGN DETAIL SHEET (ENGLISH) (REV. 09-01-10)

ORIGINAL SCALE IN INCHES FOR REDUCED PLANS 0 1 2 3

UNIT: 3578
PROJECT NUMBER & PHASE: 05000200201
CONTRACT NO.: 05-0G0404

DISREGARD PRINTS BEARING EARLIER REVISION DATES

REVISION DATES 1-26-15 8-14-15 9-28-15

SHEET 12 OF 22

FILE => 49e0023-s-surtxla01.dgn

USERNAME => s115755 DATE PLOTTED => 22-JUL-2016 TIME PLOTTED => 17:59

DIST	COUNTY	ROUTE	POST MILES TOTAL PROJECT	SHEET No.	TOTAL SHEETS
05	SLO,Mon	101	63.2/R69.3, R0.0/R1.9	849	858

REGISTERED CIVIL ENGINEER 4-22-16 DATE

5-2-16
PLANS APPROVAL DATE

REGISTERED PROFESSIONAL ENGINEER Jose M Aquino III No. 58386 Exp. 12-31-16 CIVIL STATE OF CALIFORNIA

The State of California or its officers or agents shall not be responsible for the accuracy or completeness of scanned copies of this plan sheet.

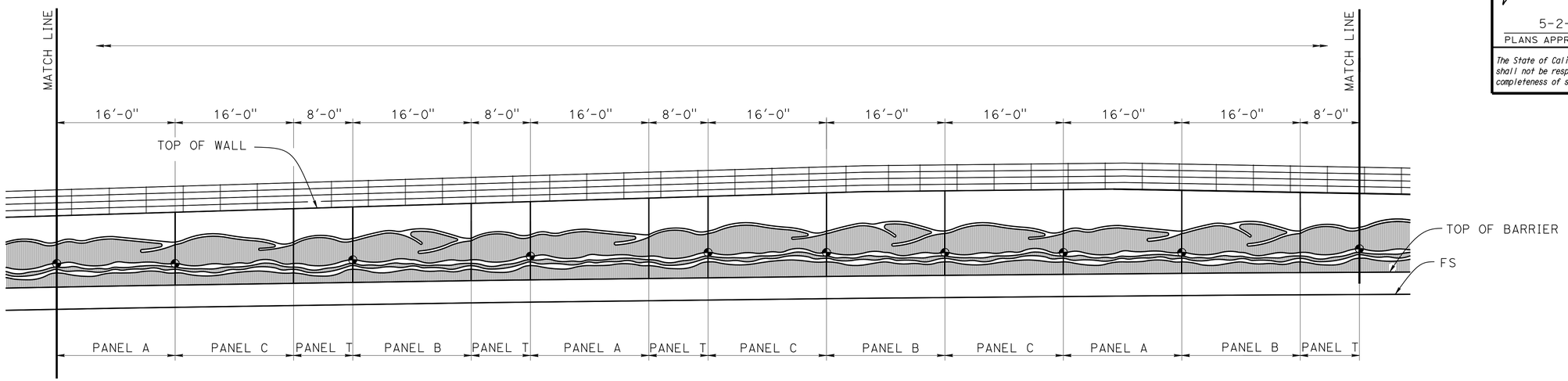

PART ELEVATION

1/8" = 1'-0"

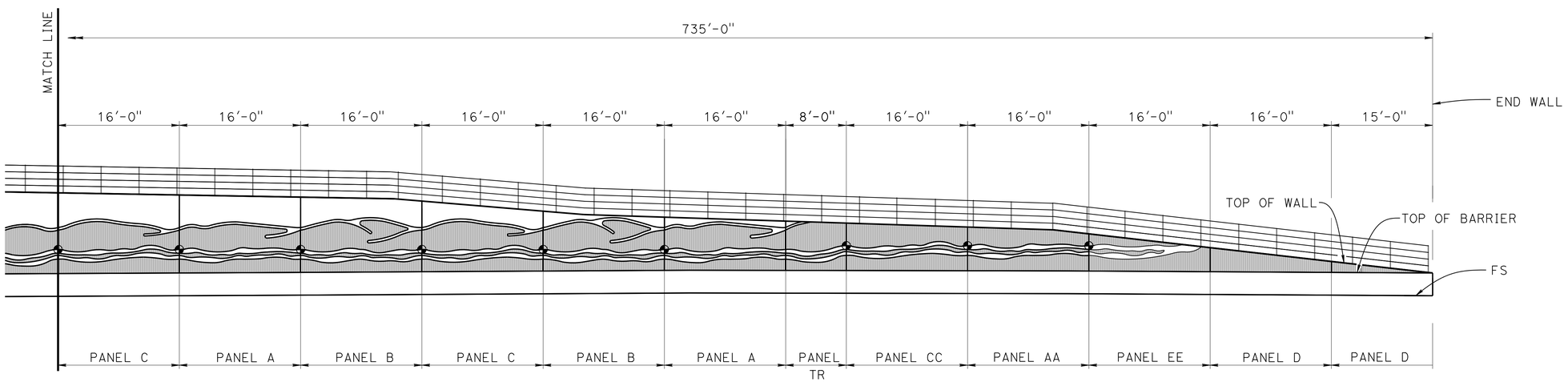

PART ELEVATION

1/8" = 1'-0"

NOTE:

For panel motif details, see "CONCRETE SURFACE TEXTURE DETAIL" sheets

	BY	CHECKED
DESIGN	David Fowkes	Kantima Green
DETAILS	Nancy C Gwynn	Kantima Green
QUANTITIES	Sharon Yen	Lewis L Shen

STATE OF CALIFORNIA
DEPARTMENT OF TRANSPORTATION

DIVISION OF ENGINEERING SERVICES
STRUCTURE DESIGN
DESIGN BRANCH 3

BRIDGE NO. 49E0023
POST MILE 65.08

RETAINING WALL AT POST MILE 65.08
CONCRETE SURFACE TEXTURE LAYOUT No. 2

STRUCTURES DESIGN DETAIL SHEET (ENGLISH) (REV. 09-01-10)

ORIGINAL SCALE IN INCHES FOR REDUCED PLANS 0 1 2 3

UNIT: 3578
PROJECT NUMBER & PHASE: 05000200201
CONTRACT NO.: 05-0G0404

DISREGARD PRINTS BEARING EARLIER REVISION DATES

REVISION DATES 1-22-13 8-21-13 9-20-13

SHEET 13 OF 22

FILE => 49e0023-s-surtxla02.dgn

USERNAME => s115755 DATE PLOTTED => 22-JUL-2016 TIME PLOTTED => 17:59

DIST	COUNTY	ROUTE	POST MILES TOTAL PROJECT	SHEET No.	TOTAL SHEETS
05	SLO,Mon	101	63.2/R69.3, R0.0/R1.9	850	858

REGISTERED CIVIL ENGINEER 4-22-16 DATE

5-2-16
PLANS APPROVAL DATE

REGISTERED PROFESSIONAL ENGINEER
Jose M Aquino III
No. 58386
Exp. 12-31-16
CIVIL
STATE OF CALIFORNIA

The State of California or its officers or agents shall not be responsible for the accuracy or completeness of scanned copies of this plan sheet.

NOTE:

Contractor to supply sufficient form liner height to accommodate all panel locations with varying heights

LEGEND:

Working point

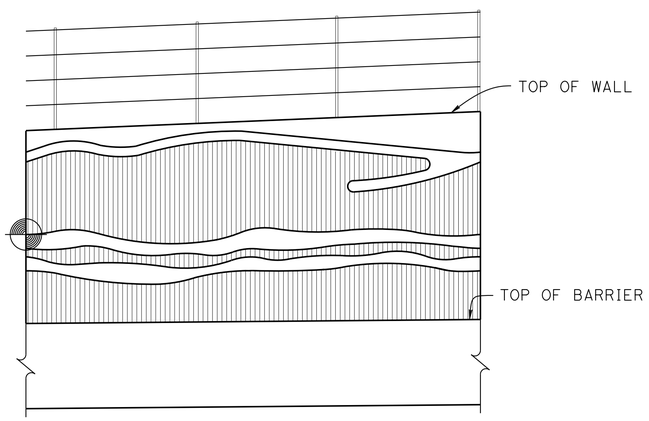

PANEL A MOTIF
3/8" = 1'-0"

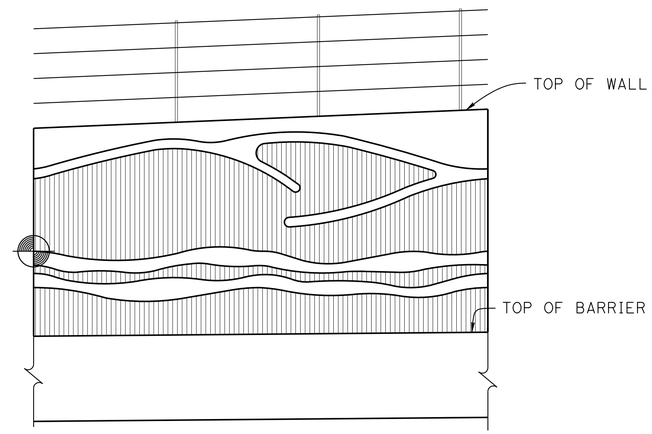

PANEL B MOTIF
3/8" = 1'-0"

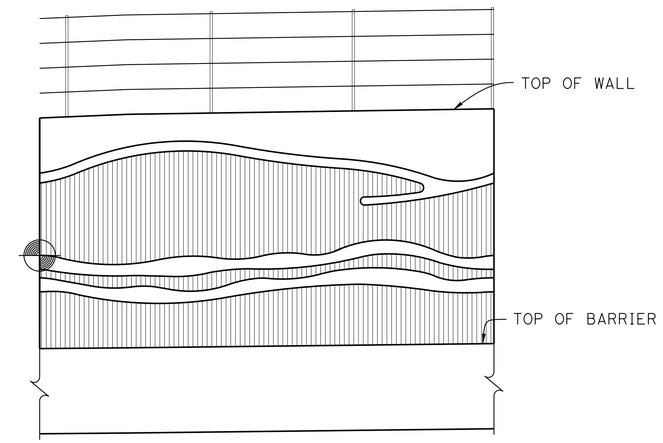

PANEL C MOTIF
3/8" = 1'-0"

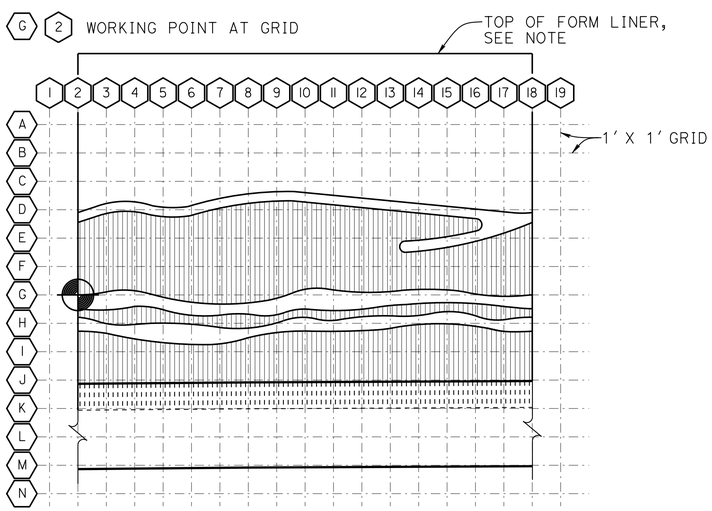

PANEL A MOTIF GRID
3/8" = 1'-0"

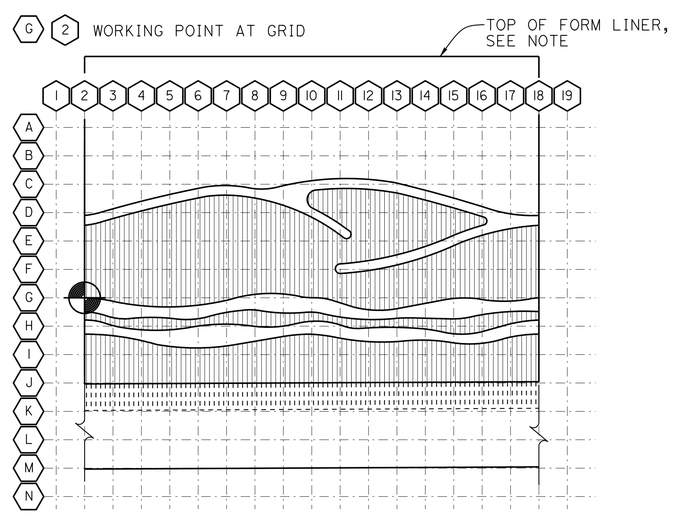

PANEL B MOTIF GRID
3/8" = 1'-0"

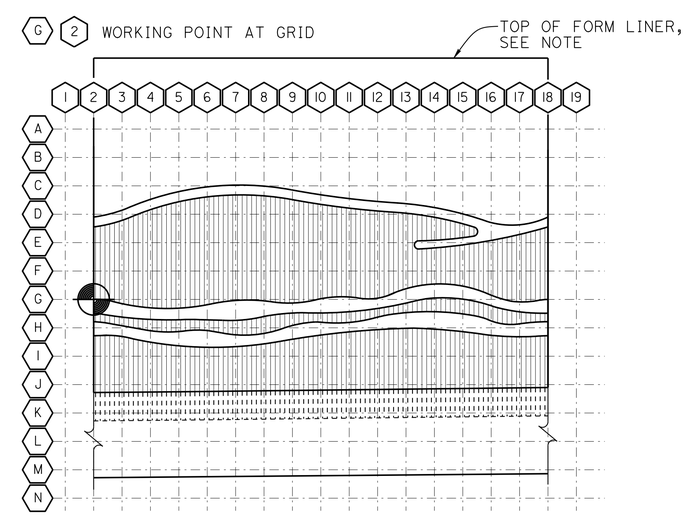

PANEL C MOTIF GRID
3/8" = 1'-0"

	BY	CHECKED
DESIGN	David Fowkes	Kantima Green
DETAILS	Nancy C Gwynn	Kantima Green
QUANTITIES	Sharon Yen	Lewis L Shen

STATE OF CALIFORNIA
DEPARTMENT OF TRANSPORTATION

DIVISION OF ENGINEERING SERVICES
STRUCTURE DESIGN
DESIGN BRANCH 3

BRIDGE NO. 49E0023
POST MILE 65.08

RETAINING WALL AT POST MILE 65.08
CONCRETE SURFACE TEXTURE DETAILS No. 1

STRUCTURES DESIGN DETAIL SHEET (ENGLISH) (REV. 09-01-10)

ORIGINAL SCALE IN INCHES FOR REDUCED PLANS 0 1 2 3

UNIT: 3578
PROJECT NUMBER & PHASE: 05000200201
CONTRACT NO.: 05-0G0404

DISREGARD PRINTS BEARING EARLIER REVISION DATES

REVISION DATES 1-15-15 2-17-15 3-23-15

SHEET 14 OF 22

FILE => 49e0023-t-surtx01.dgn

USERNAME => s115755 DATE PLOTTED => 22-JUL-2016 TIME PLOTTED => 17:59

DIST	COUNTY	ROUTE	POST MILES TOTAL PROJECT	SHEET No.	TOTAL SHEETS
05	SLO,Mon	101	63.2/R69.3, R0.0/R1.9	851	858

REGISTERED CIVIL ENGINEER 4-22-16 DATE

5-2-16
PLANS APPROVAL DATE

REGISTERED PROFESSIONAL ENGINEER
Jose M Aquino III
No. 58386
Exp. 12-31-16
CIVIL
STATE OF CALIFORNIA

The State of California or its officers or agents shall not be responsible for the accuracy or completeness of scanned copies of this plan sheet.

NOTE:
Contractor to supply sufficient form liner height to accommodate all panel locations with varying heights

LEGEND:
Working point

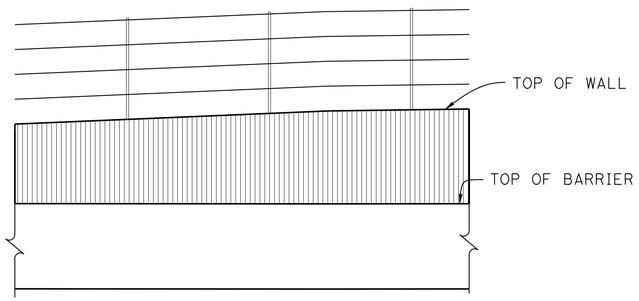

PANEL D MOTIF
3/8" = 1'-0"

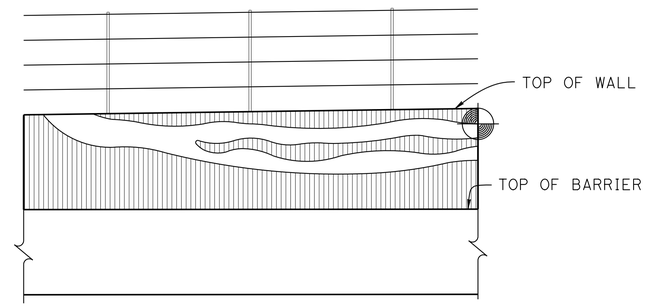

PANEL E MOTIF
3/8" = 1'-0"

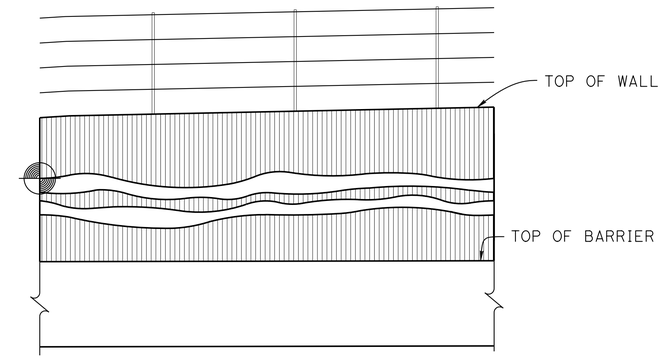

PANEL AA MOTIF
3/8" = 1'-0"

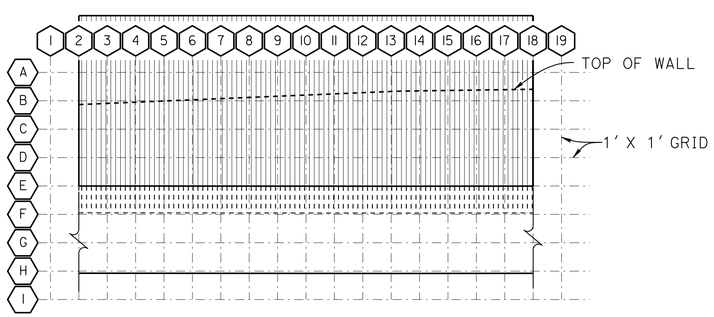

PANEL D MOTIF GRID
3/8" = 1'-0"

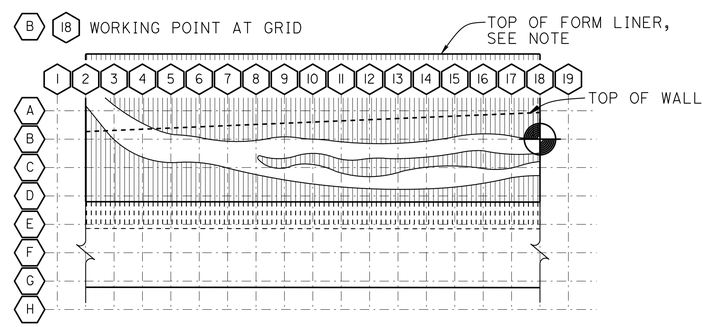

PANEL E MOTIF GRID
3/8" = 1'-0"

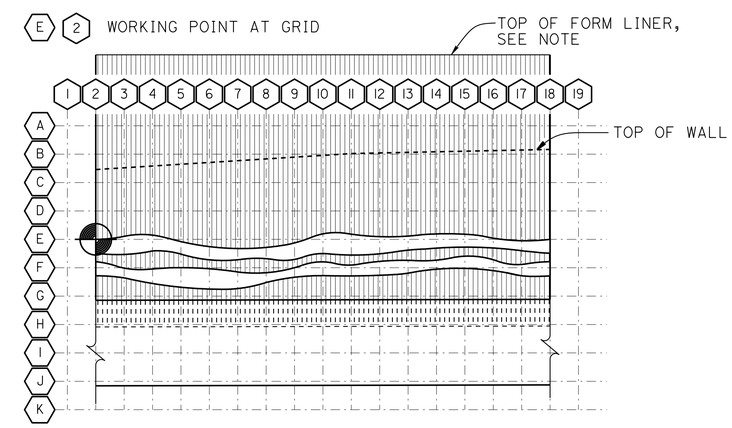

PANEL AA MOTIF GRID
3/8" = 1'-0"

DESIGN	BY David Fowkes	CHECKED Kantima Green	
DETAILS	BY Nancy C Gwynn	CHECKED Kantima Green	
QUANTITIES	BY Sharon Yen	CHECKED Lewis L Shen	

STATE OF CALIFORNIA
DEPARTMENT OF TRANSPORTATION

DIVISION OF ENGINEERING SERVICES
STRUCTURE DESIGN
DESIGN BRANCH 3

BRIDGE NO. 49E0023
POST MILE 65.08

RETAINING WALL AT POST MILE 65.08
CONCRETE SURFACE TEXTURE DETAILS No. 2

STRUCTURES DESIGN DETAIL SHEET (ENGLISH) (REV. 09-01-10)

ORIGINAL SCALE IN INCHES FOR REDUCED PLANS 0 1 2 3

UNIT: 3578
PROJECT NUMBER & PHASE: 05000200201
CONTRACT NO.: 05-0G0404

DISREGARD PRINTS BEARING EARLIER REVISION DATES

REVISION DATES 1-15-15 2-17-15 3-23-15

SHEET 15 OF 22

FILE => 49e0023-t-surtx02.dgn

USERNAME => s115755 DATE PLOTTED => 22-JUL-2016 TIME PLOTTED => 17:59

DIST	COUNTY	ROUTE	POST MILES TOTAL PROJECT	SHEET No.	TOTAL SHEETS
05	SLO,Mon	101	63.2/R69.3, R0.0/R1.9	852	858

REGISTERED CIVIL ENGINEER 4-22-16 DATE

5-2-16
PLANS APPROVAL DATE

REGISTERED PROFESSIONAL ENGINEER
Jose M Aquino III
No. 58386
Exp. 12-31-16
CIVIL
STATE OF CALIFORNIA

The State of California or its officers or agents shall not be responsible for the accuracy or completeness of scanned copies of this plan sheet.

NOTE:

Contractor to supply sufficient form liner height to accommodate all panel locations with varying heights

LEGEND:

Working point

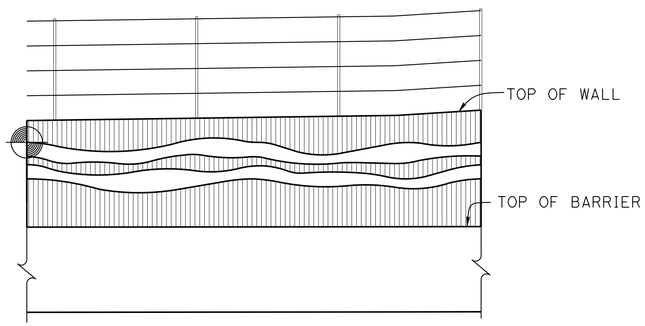

PANEL BB MOTIF
3/8" = 1'-0"

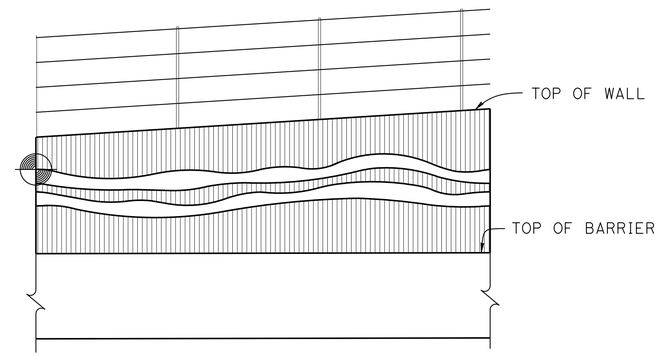

PANEL CC MOTIF
3/8" = 1'-0"

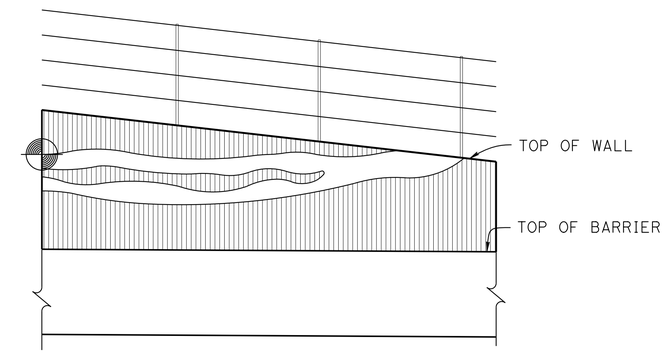

PANEL EE MOTIF
3/8" = 1'-0"

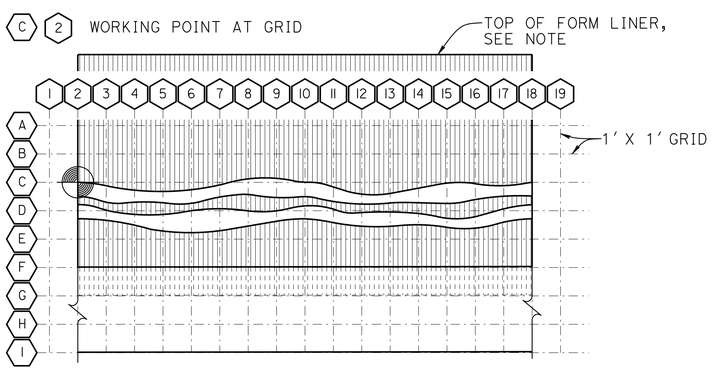

PANEL BB MOTIF GRID
3/8" = 1'-0"

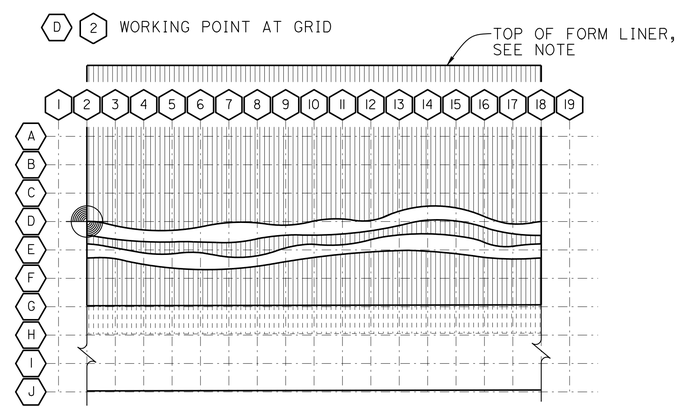

PANEL CC MOTIF GRID
3/8" = 1'-0"

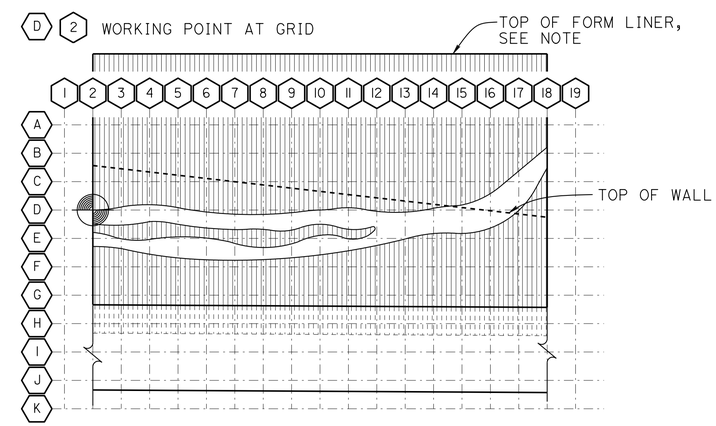

PANEL EE MOTIF GRID
3/8" = 1'-0"

DESIGN	BY David Fowkes	CHECKED Kantima Green	
DETAILS	BY Nancy C Gwynn	CHECKED Kantima Green	
QUANTITIES	BY Sharon Yen	CHECKED Lewis L Shen	

STATE OF CALIFORNIA
DEPARTMENT OF TRANSPORTATION

DIVISION OF ENGINEERING SERVICES
STRUCTURE DESIGN
DESIGN BRANCH 3

BRIDGE NO. 49E0023
POST MILE 65.08

RETAINING WALL AT POST MILE 65.08
CONCRETE SURFACE TEXTURE DETAILS No. 3

STRUCTURES DESIGN DETAIL SHEET (ENGLISH) (REV. 09-01-10)

ORIGINAL SCALE IN INCHES FOR REDUCED PLANS 0 1 2 3

UNIT: 3578
PROJECT NUMBER & PHASE: 05000200201
CONTRACT NO.: 05-0G0404

DISREGARD PRINTS BEARING EARLIER REVISION DATES

REVISION DATES 11-13-15 12-17-15 3-29-16

SHEET 16 OF 22

FILE => 49e0023-t-surtx03.dgn

USERNAME => s115755 DATE PLOTTED => 22-JUL-2016 TIME PLOTTED => 17:59

DIST	COUNTY	ROUTE	POST MILES TOTAL PROJECT	SHEET No.	TOTAL SHEETS
05	SLO,Mon	101	63.2/R69.3, R0.0/R1.9	853	858

REGISTERED CIVIL ENGINEER 4-22-16 DATE

5-2-16
PLANS APPROVAL DATE

REGISTERED PROFESSIONAL ENGINEER Jose M Aquino III No. 58386 Exp. 12-31-16 CIVIL STATE OF CALIFORNIA

The State of California or its officers or agents shall not be responsible for the accuracy or completeness of scanned copies of this plan sheet.

NOTE:
Contractor to supply sufficient form liner height to accommodate all panel locations with varying heights

LEGEND:

Working point

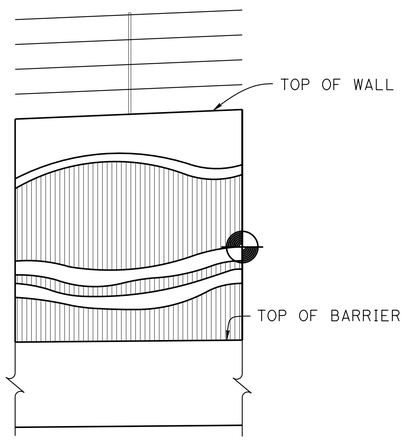

PANEL A MOTIF
3/8" = 1'-0"

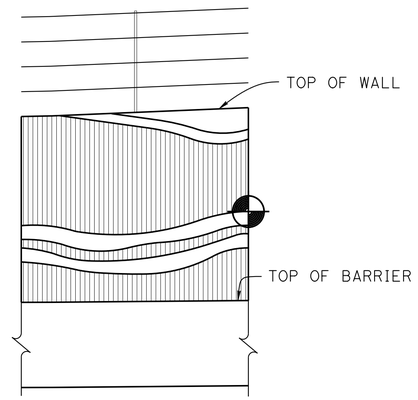

PANEL TL MOTIF
3/8" = 1'-0"

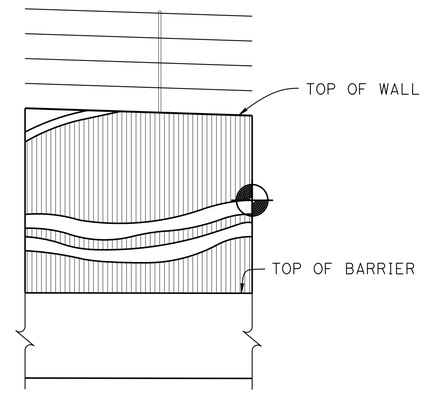

PANEL TR MOTIF
3/8" = 1'-0"

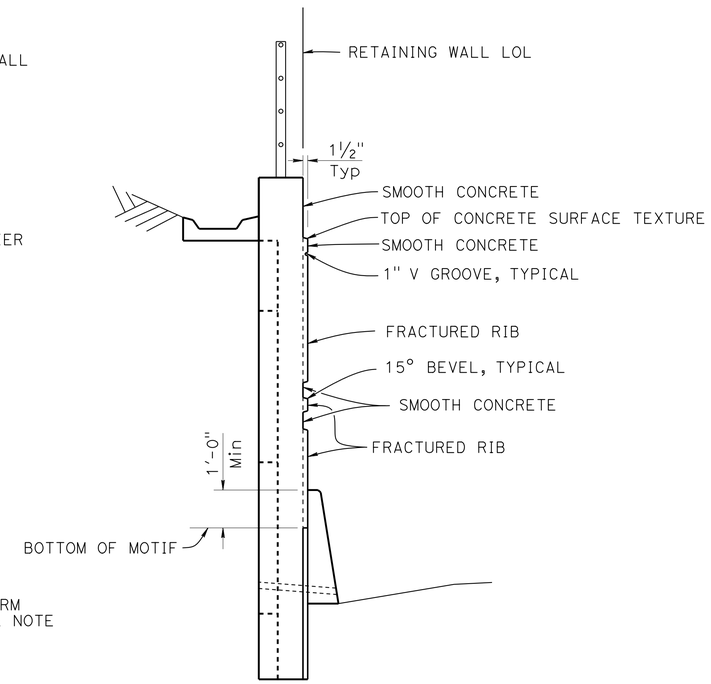

TYPICAL SECTION
1/2" = 1'-0"

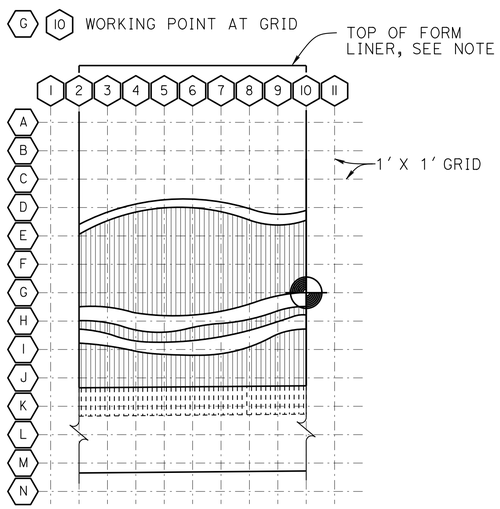

PANEL T MOTIF GRID
3/8" = 1'-0"

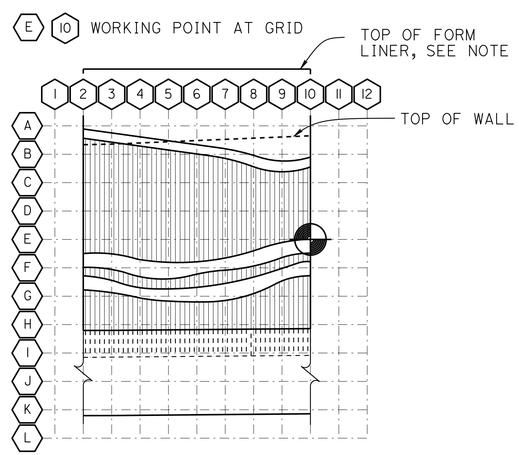

PANEL TL MOTIF GRID
3/8" = 1'-0"

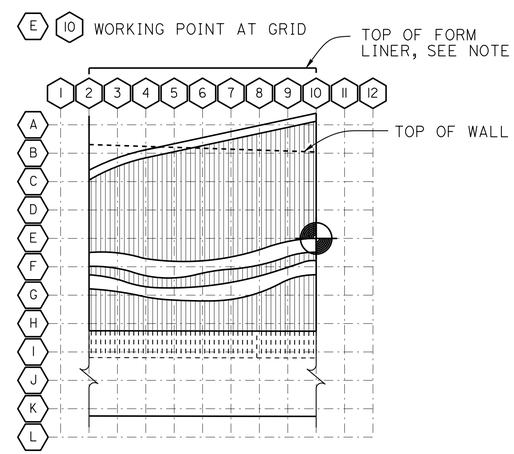

PANEL TR MOTIF GRID
3/8" = 1'-0"

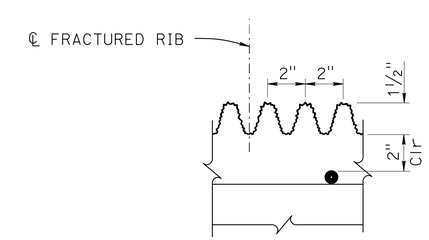

FRACTURED RIB DETAIL
3" = 1'-0"

	BY	CHECKED
DESIGN	David Fowkes	Kantima Green
DETAILS	Nancy C Gwynn	Kantima Green
QUANTITIES	Sharon Yen	Lewis L Shen

STATE OF CALIFORNIA
DEPARTMENT OF TRANSPORTATION

DIVISION OF ENGINEERING SERVICES
STRUCTURE DESIGN
DESIGN BRANCH 3

BRIDGE NO. 49E0023
POST MILE 65.08

RETAINING WALL AT POST MILE 65.08
CONCRETE SURFACE TEXTURE DETAILS No. 4

STRUCTURES DESIGN DETAIL SHEET (ENGLISH) (REV. 09-01-10)

ORIGINAL SCALE IN INCHES FOR REDUCED PLANS 0 1 2 3

UNIT: 3578
PROJECT NUMBER & PHASE: 05000200201
CONTRACT NO.: 05-0G0404

DISREGARD PRINTS BEARING EARLIER REVISION DATES

REVISION DATES 1-13-15 2-17-15 3-20-15

SHEET 17 OF 22

FILE => 49e0023-t-surtx04.dgn

USERNAME => s115755 DATE PLOTTED => 22-JUL-2016 TIME PLOTTED => 17:59

DIST	COUNTY	ROUTE	POST MILES TOTAL PROJECT	SHEET No.	TOTAL SHEETS
05	SLO,Mon	101	63.2/R69.3, R0.0/R1.9	854	858

REGISTERED CIVIL ENGINEER 4-22-16 DATE

5-2-16
PLANS APPROVAL DATE

REGISTERED PROFESSIONAL ENGINEER Jose M Aquino III No. 58386 Exp. 12-31-16 CIVIL STATE OF CALIFORNIA

The State of California or its officers or agents shall not be responsible for the accuracy or completeness of electronic copies of this plan sheet.

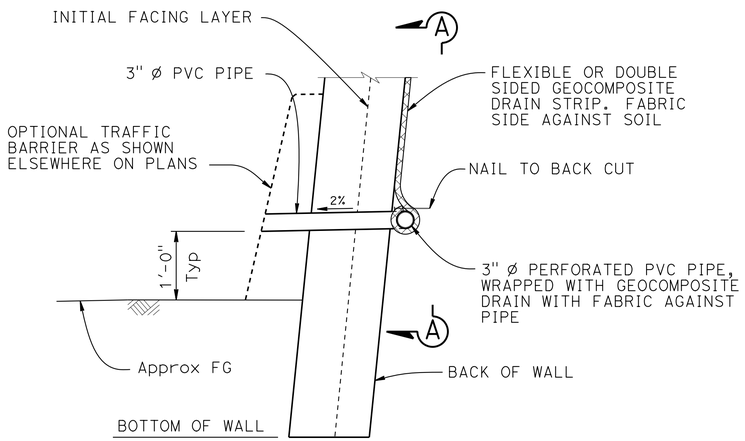

WALL DRAIN DETAIL AT WEEPHOLE
OPTION A
No scale

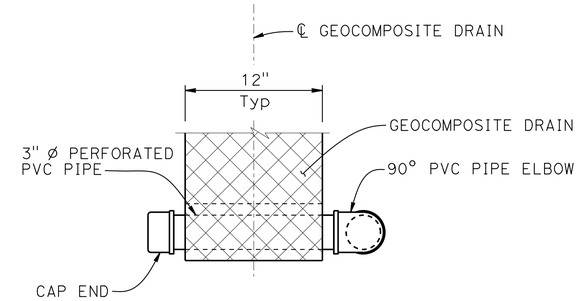

VIEW A-A
No scale

NOTES:

1. Geocomposite drain strip per Section 88 Geosynthetics of the Standard Specifications
2. Elevation of drains and weepholes as shown elsewhere on plans

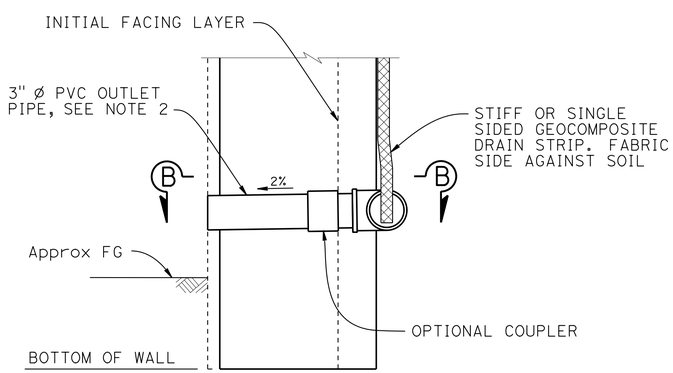

WALL DRAIN DETAIL AT WEEPHOLE
OPTION B
No scale

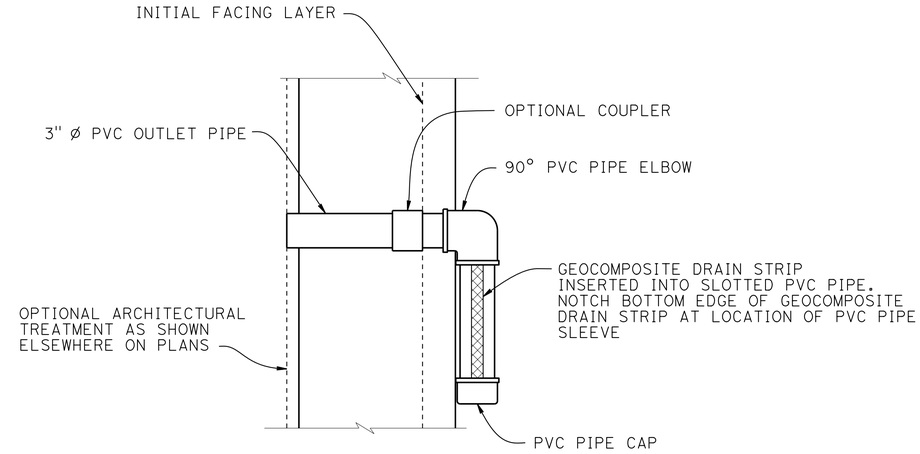

SECTION B-B
No Scale

STANDARD DRAWING		
FILE NO. xs12-021	APPROVAL DATE July 2014	The components of this Bridge Standard Drawing have been prepared under the responsible charge of the Technical Owner, a registered civil engineer in the State of California. Refer to: http//www.dot.ca.gov/hq/esc/techpubs/manual/bridgemanuals/bridge-standard-detail-sheet/index.html. The selection and proper application of the component design and any modifications shown have been prepared under the responsible charge of the registered civil engineer for the project.

STATE OF CALIFORNIA DEPARTMENT OF TRANSPORTATION

DIVISION OF ENGINEERING SERVICES 3

BRIDGE NO. 49E0023
POST MILE 65.08

RETAINING WALL AT POST MILE 65.08
WALL DRAIN DETAILS

DS OSD 2147A (ENGLISH STANDARD DRAWING "XS" BORDER REV. (02-02-11)

ORIGINAL SCALE IN INCHES FOR REDUCED PLANS 0 1 2 3

UNIT: 3578
PROJECT NUMBER & PHASE: 05000200201
CONTRACT NO.: 05-0G0404

DISREGARD PRINTS BEARING EARLIER REVISION DATES → 6-19-14

REVISION DATES | SHEET 18 | OF 22

FILE => 49e0023-w-wldrain.dgn

USERNAME => s115755 DATE PLOTTED => 01-AUG-2016 TIME PLOTTED => 10:13

DIST	COUNTY	ROUTE	POST MILES TOTAL PROJECT	SHEET No.	TOTAL SHEETS
05	SLO,Mon	101	63.2/R69.3, R0.0/R1.9	855	858

REGISTERED CIVIL ENGINEER 4-22-16 DATE

5-2-16
PLANS APPROVAL DATE

REGISTERED PROFESSIONAL ENGINEER
Jose M Aquino III
No. 58386
Exp. 12-31-16
CIVIL
STATE OF CALIFORNIA

The State of California or its officers or agents shall not be responsible for the accuracy or completeness of electronic copies of this plan sheet.

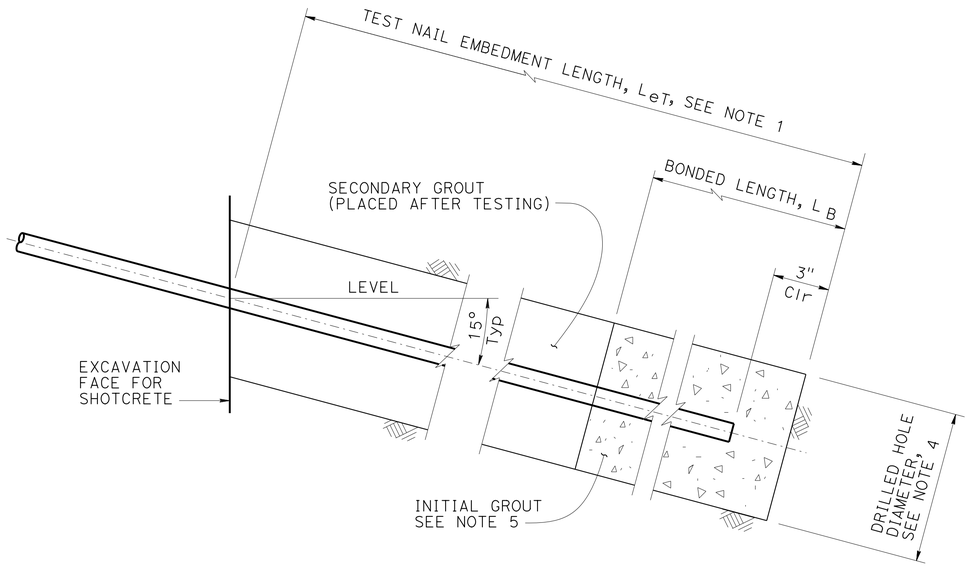

TEST NAIL DETAIL

3" = 1'-0

NOTES:

1. The test nail embedment length L_{eT}, shall be equal to 2/3 of the embedment length, Le, of adjacent production soil nail assemblies, but not less than 12'-0".
2. The total length of the test nail assembly equals the embedment length plus the length required for jacking equipment.
3. For location of proof test nail see "STRUCTURE PLAN" sheets. Additional proof test nails will be installed and tested per special provisions.
4. Contractor to determine drilled hole diameter.
5. Finished grout surface to be normal to the bar.

STANDARD DRAWING

FILE NO. xs12-020

APPROVAL DATE July 2014

The components of this Bridge Standard Drawing have been prepared under the responsible charge of the Technical Owner, a registered civil engineer in the State of California. Refer to: http//www.dot.ca.gov/hq/esc/techpubs/manual/bridgemanuals/bridge-standard-detail-sheet/index.html. The selection and proper application of the component design and any modifications shown have been prepared under the responsible charge of the registered civil engineer for the project.

STATE OF CALIFORNIA
DEPARTMENT OF TRANSPORTATION

DIVISION OF ENGINEERING SERVICES 3

BRIDGE NO. 49E0023
POST MILE 65.08

RETAINING WALL AT POST MILE 65.08
TEST NAIL DETAILS

DS OSD 2147A (ENGLISH STANDARD DRAWING "XS" BORDER REV. (02-02-11)

ORIGINAL SCALE IN INCHES FOR REDUCED PLANS 0 1 2 3

UNIT: 3578
PROJECT NUMBER & PHASE: 05000200201
CONTRACT NO.: 05-0G0404

DISREGARD PRINTS BEARING EARLIER REVISION DATES

REVISION DATES 6-19-14

SHEET 19 OF 22

FILE => 49e0023-x-sntest.dgn

USERNAME => s115755 DATE PLOTTED => 22-JUL-2016 TIME PLOTTED => 17:59

DIST	COUNTY	ROUTE	POST MILES TOTAL PROJECT	SHEET No	TOTAL SHEETS
05	SLO,Mon	101	63.2/R69.3, R0.0/R1.9	856	858

REGISTERED CIVIL ENGINEER 11-16-15 DATE

5-2-16
PLANS APPROVAL DATE

REGISTERED PROFESSIONAL ENGINEER
Ryan Turner
No. C73956
Exp. 6-30-17
CIVIL
STATE OF CALIFORNIA

The State of California or its officers or agents shall not be responsible for the accuracy or completeness of electronic copies of this plan sheet.

This LOTB sheet was prepared in accordance with the Caltrans Soil & Rock Logging, Classification, & Presentation Manual (2010 Edition).

See 2010 Standard Plans A10F and A10G for Soil Legend, and A10H for Rock Legend.

BENCH MARK

SLO-101 PM 65.02
1" ip w/Caltrans
control pp w/nail
N 2466252.657
E 5760505.675
Elev 645.479
NAVD88

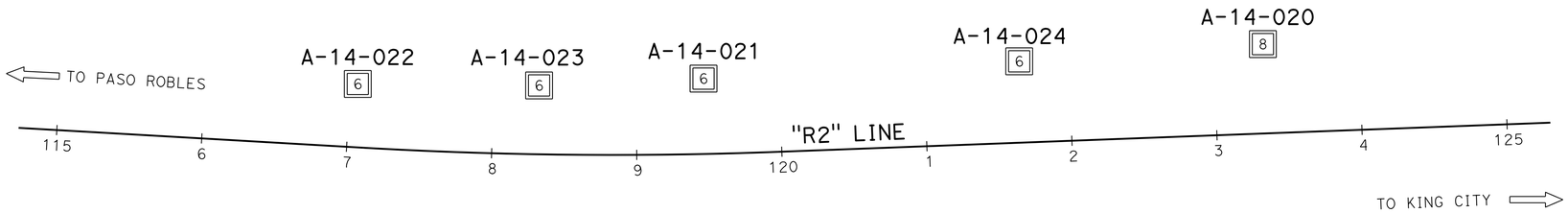

PLAN

1" = 40'

Note: Groundwater was not encountered in Boring A-14-022.

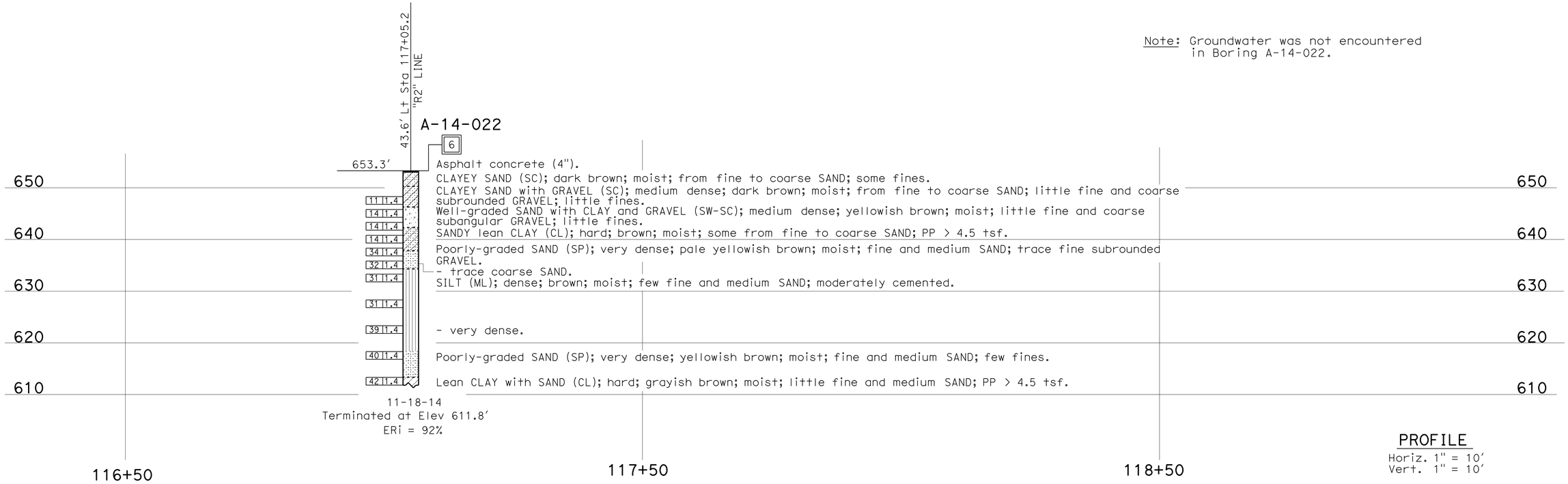

PROFILE

Horiz. 1" = 10'
Vert. 1" = 10'

ENGINEERING SERVICES	MATERIALS AND GEOTECHNICAL SERVICES	STATE OF CALIFORNIA DEPARTMENT OF TRANSPORTATION	DIVISION OF ENGINEERING SERVICES STRUCTURE DESIGN DESIGN BRANCH 3	BRIDGE NO. 49-E0023 POST MILE 65.08	RETAINING WALL AT PM 65.08 LOG OF TEST BORINGS 1 OF 3
FUNCTIONAL SUPERVISOR NAME: T. Menard	DRAWN BY: F. Nguyen CHECKED BY: J. Scardine	FIELD INVESTIGATION BY: M. Jurasius			

OGS CIVIL LOG OF TEST BORINGS SHEET

ORIGINAL SCALE IN INCHES FOR REDUCED PLANS 0 1 2 3

UNIT: 3650
PROJECT NUMBER & PHASE: 05000200201 CONTRACT NO.: 05-0G0404

DISREGARD PRINTS BEARING EARLIER REVISION DATES

REVISION DATES 03-18-15 09-25-15 10-28-15 11-10-15

SHEET 20 OF 22

FILE => 49e0023-y-ltb1of3.dgn

USERNAME => s115755 DATE PLOTTED => 22-JUL-2016 TIME PLOTTED => 18:00

DIST	COUNTY	ROUTE	POST MILES TOTAL PROJECT	SHEET No	TOTAL SHEETS
05	SLO,Mon	101	63.2/R69.3, R0.0/R1.9	857	858

REGISTERED CIVIL ENGINEER 11-16-15 DATE

5-2-16
PLANS APPROVAL DATE

REGISTERED PROFESSIONAL ENGINEER Ryan Turner No. C73956 Exp. 6-30-17 CIVIL STATE OF CALIFORNIA

The State of California or its officers or agents shall not be responsible for the accuracy or completeness of electronic copies of this plan sheet.

This LOTB sheet was prepared in accordance with the Caltrans Soil & Rock Logging, Classification, & Presentation Manual (2010 Edition).

See 2010 Standard Plans A10F and A10G for Soil Legend, and A10H for Rock Legend.

FOR PLAN VIEW, SEE
"LOG OF TEST BORINGS 1 OF 3"

Note: Groundwater was not encountered in Borings A-14-021 and A-14-023.

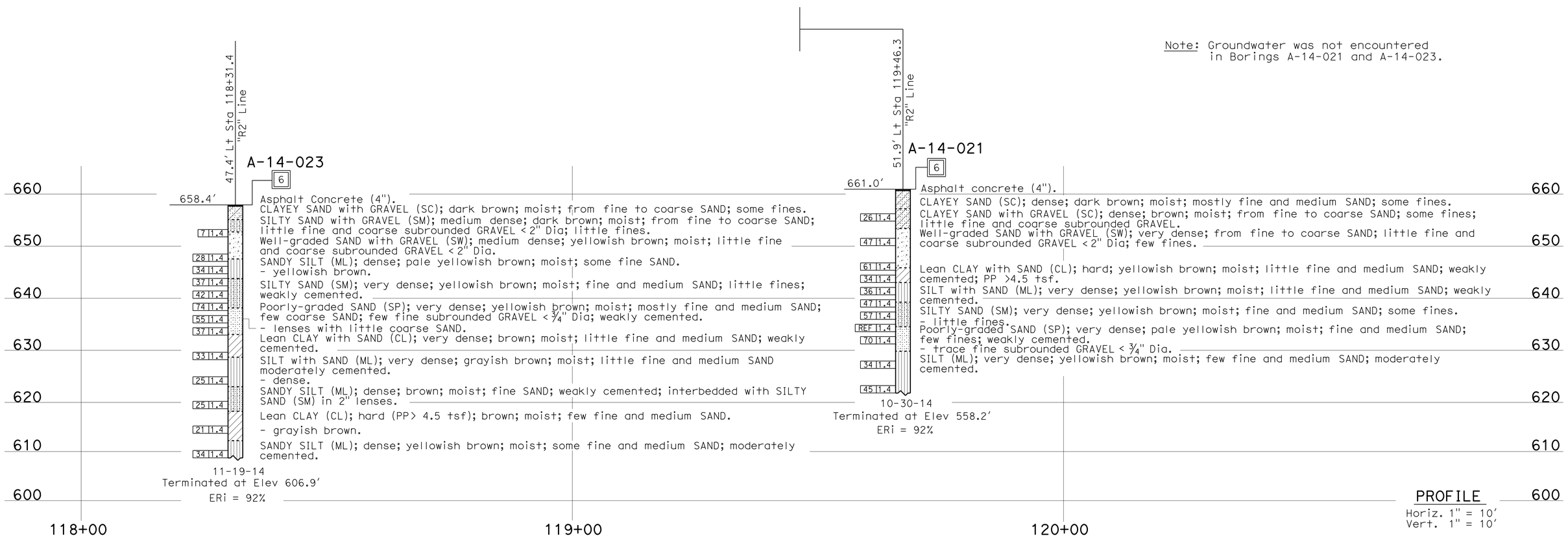

ENGINEERING SERVICES	MATERIALS AND GEOTECHNICAL SERVICES	STATE OF CALIFORNIA DEPARTMENT OF TRANSPORTATION	DIVISION OF ENGINEERING SERVICES STRUCTURE DESIGN DESIGN BRANCH 3	BRIDGE NO. 49-E0023 POST MILE 65.6	RETAINING WALL AT PM 65.08 LOG OF TEST BORINGS 2 OF 3
FUNCTIONAL SUPERVISOR NAME: T. Menard	DRAWN BY: F. Nguyen CHECKED BY: M. Jurasius	FIELD INVESTIGATION BY: R. Turner			

OGS CIVIL LOG OF TEST BORINGS SHEET

ORIGINAL SCALE IN INCHES FOR REDUCED PLANS 0 1 2 3

UNIT: 3650
PROJECT NUMBER & PHASE: 05000200201 CONTRACT NO.: 05-0G0404

DISREGARD PRINTS BEARING EARLIER REVISION DATES

REVISION DATES 03-19-15 09-25-15 10-29-15 11-10-15 SHEET 21 OF 22

FILE => 49e0023-y-ltb2of3.dgn

USERNAME => s115755 DATE PLOTTED => 22-JUL-2016 TIME PLOTTED => 18:00

DIST	COUNTY	ROUTE	POST MILES TOTAL PROJECT	SHEET No	TOTAL SHEETS
05	SLO,Mon	101	63.2/R69.3, R0.0/R1.9	858	858

REGISTERED CIVIL ENGINEER 11-16-15 DATE

5-2-16
PLANS APPROVAL DATE

REGISTERED PROFESSIONAL ENGINEER Ryan Turner No. C73956 Exp. 6-30-17 CIVIL STATE OF CALIFORNIA

The State of California or its officers or agents shall not be responsible for the accuracy or completeness of electronic copies of this plan sheet.

This LOTB sheet was prepared in accordance with the Caltrans Soil & Rock Logging, Classification, & Presentation Manual (2010 Edition).

See 2010 Standard Plans A10F and A10G for Soil Legend, and A10H for Rock Legend.

FOR PLAN VIEW, SEE
"LOG OF TEST BORINGS 1 OF 3"

Note: Groundwater was not encountered in Borings A-14-020 and A-14-024.

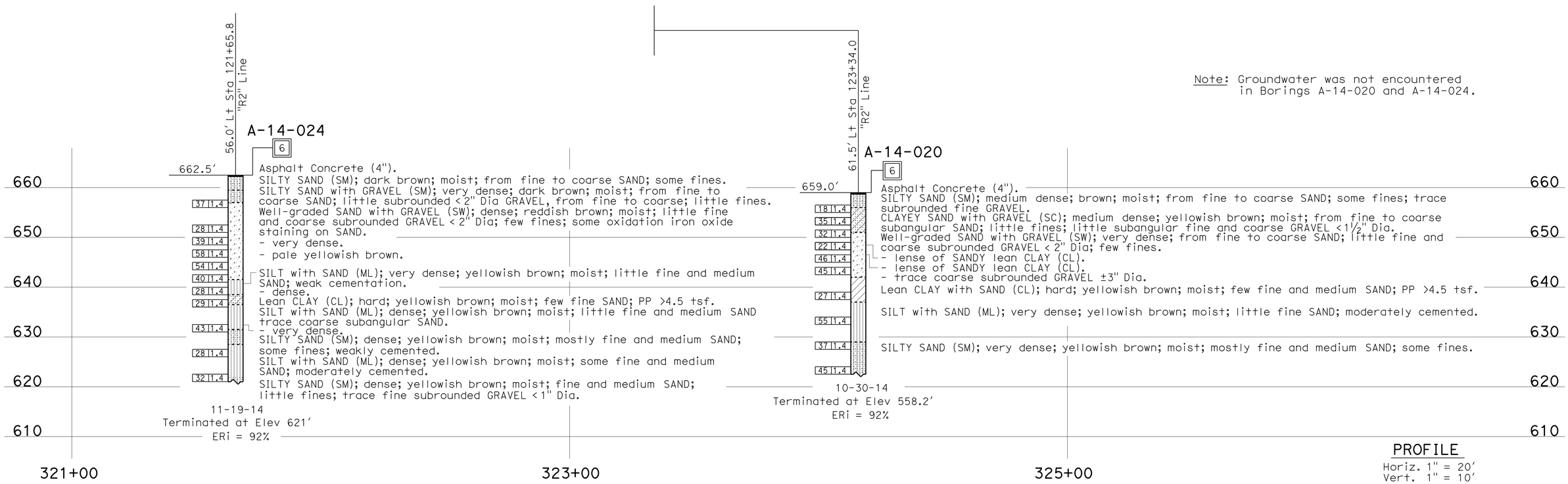

PROFILE
Horiz. 1" = 20'
Vert. 1" = 10'

ENGINEERING SERVICES	MATERIALS AND GEOTECHNICAL SERVICES	STATE OF CALIFORNIA DEPARTMENT OF TRANSPORTATION	DIVISION OF ENGINEERING SERVICES STRUCTURE DESIGN DESIGN BRANCH 3	BRIDGE NO. 49-E0023 POST MILE 65.6	RETAINING WALL AT PM 65.08 LOG OF TEST BORINGS 3 OF 3
FUNCTIONAL SUPERVISOR NAME: T. Menard	DRAWN BY: F. Nguyen CHECKED BY: M. Jurasius	FIELD INVESTIGATION BY: R. Turner			

OGS CIVIL LOG OF TEST BORINGS SHEET

ORIGINAL SCALE IN INCHES FOR REDUCED PLANS 0 1 2 3

UNIT: 3650
PROJECT NUMBER & PHASE: 05000200201 CONTRACT NO.: 05-0G0404

DISREGARD PRINTS BEARING EARLIER REVISION DATES

REVISION DATES 03-18-15 09-25-15 10-29-15 11-10-15

SHEET 22 OF 22

FILE => 49e0023-y-ltb3of3.dgn

USERNAME => s115755 DATE PLOTTED => 22-JUL-2016 TIME PLOTTED => 18:00