Dist	COUNTY	ROUTE	POST MILES TOTAL PROJECT	SHEET No.	TOTAL SHEETS
05	SCr	9	3.8/18.7	1	73

ACSTP-S009(020)E

STATE OF CALIFORNIA
DEPARTMENT OF TRANSPORTATION

PROJECT PLANS FOR CONSTRUCTION ON
STATE HIGHWAY
IN SANTA CRUZ COUNTY
AT VARIOUS LOCATIONS
FROM 0.9 MILE SOUTH OF GLENGARRY ROAD
TO 0.2 MILE NORTH OF MCGAFFIGAN MILL ROAD

TO BE SUPPLEMENTED BY STANDARD PLANS DATED 2010

INDEX OF PLANS

SHEET No.	DESCRIPTION
1	TITLE AND LOCATION MAP
2-3	TYPICAL CROSS SECTIONS
4-5	LAYOUTS
6	SUPERELEVATION DIAGRAM
7	CONSTRUCTION DETAILS
8-20	DRAINAGE PLANS, PROFILES, DETAILS AND QUANTITIES
21-23	UTILITY PLANS
24	CONSTRUCTION AREA SIGNS
25-27	MOTORIST INFORMATION PLANS, DETAILS AND QUANTITIES
28-30	PAVEMENT DELINEATION PLANS AND QUANTITIES
31	SUMMARY OF QUANTITIES
32-33	HIGHWAY PLANTING PLANS
34	EROSION CONTROL
35-46	REVISED STANDARD PLANS

STRUCTURE PLANS

47-73	SIDEHILL VIADUCT/RETAINING WALL

THIS STANDARD PLANS LIST APPLICABLE TO THIS CONNTRACT IS INCLUDED IN THE NOTICE TO CONTRACTORS AND SPECIAL PROVISIONS BOOK

LOCATION MAP

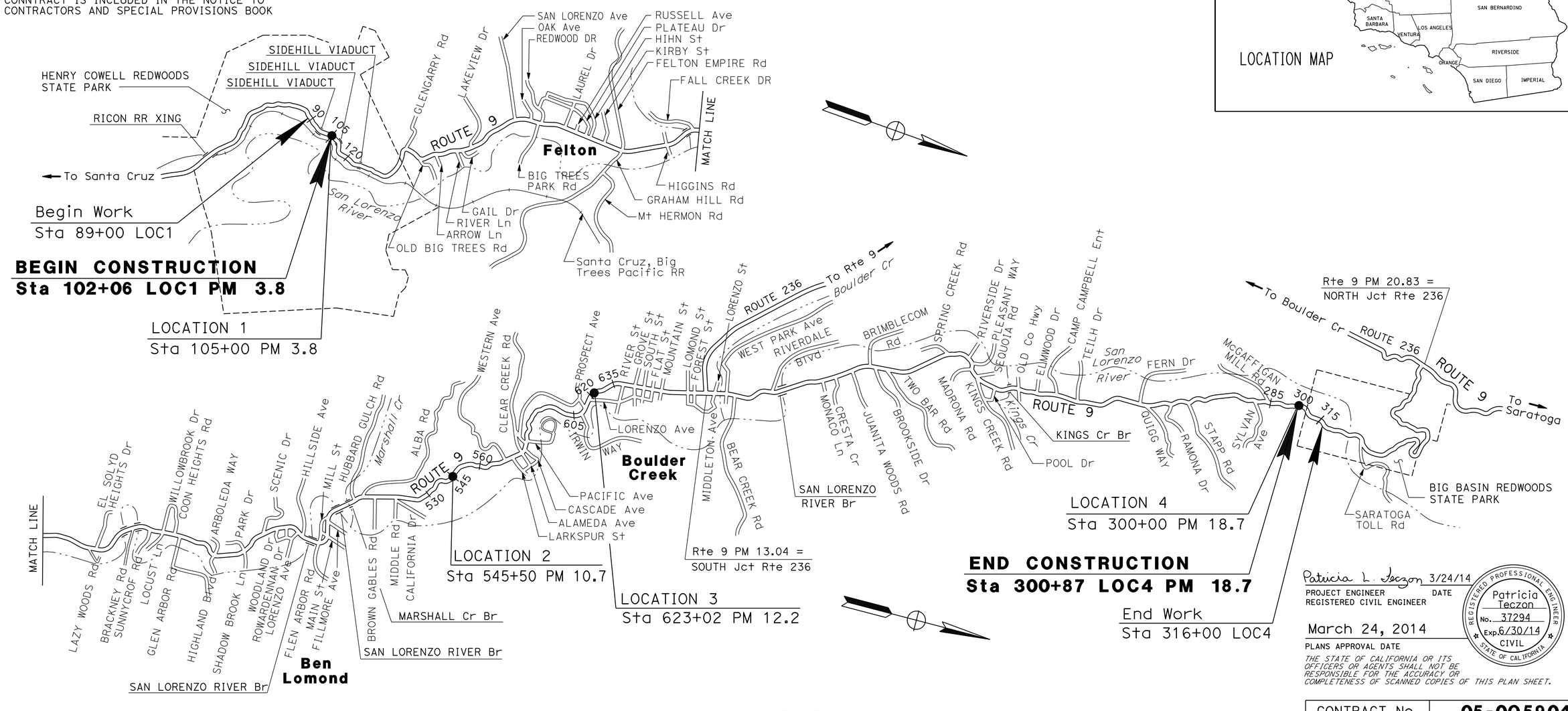

THE CONTRACTOR SHALL POSSESS THE CLASS (OR CLASSES) OF LICENSE AS SPECIFIED IN THE "NOTICE TO BIDDERS."

NO SCALE

Patricia L. Teczon 3/24/14
PROJECT ENGINEER DATE
REGISTERED CIVIL ENGINEER

March 24, 2014
PLANS APPROVAL DATE

REGISTERED PROFESSIONAL ENGINEER Patricia Teczon No. 37294 Exp. 6/30/14 CIVIL STATE OF CALIFORNIA

THE STATE OF CALIFORNIA OR ITS OFFICERS OR AGENTS SHALL NOT BE RESPONSIBLE FOR THE ACCURACY OR COMPLETENESS OF SCANNED COPIES OF THIS PLAN SHEET.

CONTRACT No.	05-0Q5904
PROJECT ID	0500000317

PROJECT MANAGER: DOUG HESSING
DESIGN ENGINEER: CAROLINE REYES

LAST REVISION 00-00-00
DATE PLOTTED => 12-JUN-2014
TIME PLOTTED => 1414

Dist	COUNTY	ROUTE	POST MILES TOTAL PROJECT	SHEET No.	TOTAL SHEETS
05	SCr	9	3.8/18.7	2	73

Patricia L. Teczon 3/24/14
REGISTERED CIVIL ENGINEER DATE

03-24-14
PLANS APPROVAL DATE

REGISTERED PROFESSIONAL ENGINEER Patricia Teczon No. 37294 Exp 6/30/14 CIVIL STATE OF CALIFORNIA

THE STATE OF CALIFORNIA OR ITS OFFICERS OR AGENTS SHALL NOT BE RESPONSIBLE FOR THE ACCURACY OR COMPLETENESS OF SCANNED COPIES OF THIS PLAN SHEET.

NOTES:

1. DIMENSIONS OF THE PAVEMENT STRUCTURES (STRUCTURAL SECTIONS) ARE SUBJECT TO TOLERANCES SPECIFIED IN THE STANDARD SPECIFICATIONS.
2. SUPERELEVATION ARE SHOWN ON THE SUPERELEVATION DIAGRAMS.
3. SEE STRUCTURE PLANS FOR VIADUCT AND RATAINING WALL DETAILS.

DESIGN DESIGNATION

ADT (2013)	5782	D	70%
ADT (2033)	6508	T	1%
DHV	853	V	30 MPH

PAVEMENT CLIMATE REGION

CENTRAL COAST

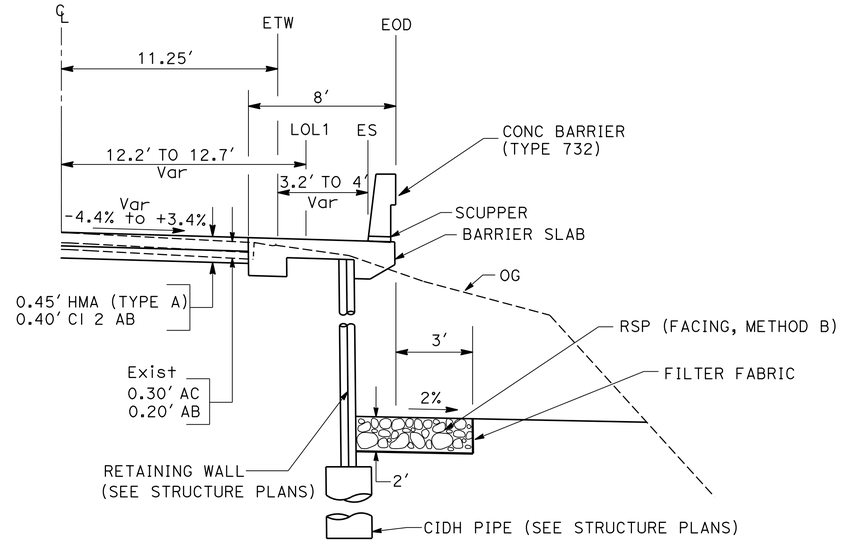

LIMITS OF RSP

102+31 LOC1 TO 104+28 LOC1
105+57 LOC1 TO 105+88 LOC1

Sta 103+54.48 LOC1 Rt TO Sta 104+91.61 LOC1 Rt

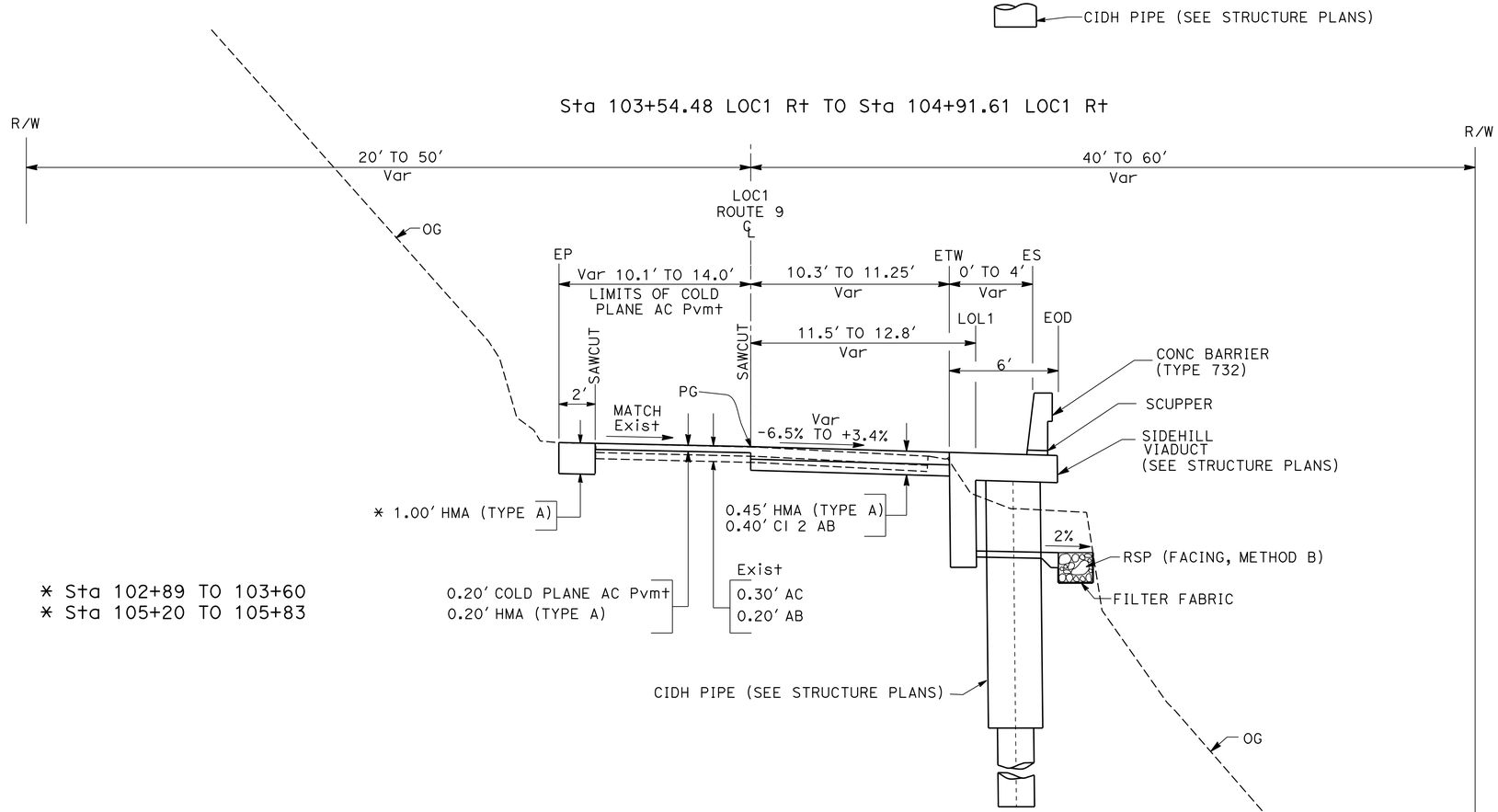

* Sta 102+89 TO 103+60
* Sta 105+20 TO 105+83

Sta 102+05.73 LOC1 Lt TO Sta 105+87.04 LOC1 Lt

Sta 102+05.73 LOC1 Rt TO Sta 103+54.48 LOC1 Rt
Sta 104+91.61 LOC1 Rt TO Sta 105+87.20 LOC1 Rt

LOCATION 1

ROUTE 9

TYPICAL CROSS SECTIONS

NO SCALE

X-1

STATE OF CALIFORNIA - DEPARTMENT OF TRANSPORTATION
Caltrans® **10-DESIGN**

FUNCTIONAL SUPERVISOR: CAROLINE REYES
CALCULATED-DESIGNED BY: HAI HOANG
CHECKED BY: PATRICIA TECZON
REVISED BY: SL
DATE REVISED: 10/31/13

LAST REVISION 00-00-00
DATE PLOTTED => 27-MAR-2014
TIME PLOTTED => 14:59

Dist	COUNTY	ROUTE	POST MILES TOTAL PROJECT	SHEET No.	TOTAL SHEETS
05	SCr	9	3.8/18.7	3	73

Patricia L. Teczon 3/24/14
REGISTERED CIVIL ENGINEER DATE

03-24-14
PLANS APPROVAL DATE

REGISTERED PROFESSIONAL ENGINEER Patricia Teczon No. 37294 Exp. 6/30/14 CIVIL STATE OF CALIFORNIA

THE STATE OF CALIFORNIA OR ITS OFFICERS OR AGENTS SHALL NOT BE RESPONSIBLE FOR THE ACCURACY OR COMPLETENESS OF SCANNED COPIES OF THIS PLAN SHEET.

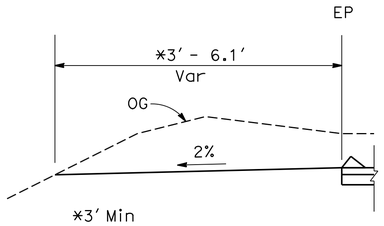

Sta 300+56 TO 300+86.6 LOC4

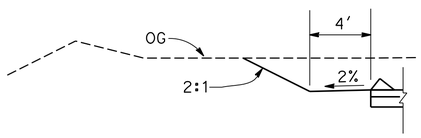

Sta 300+21 TO 300+56 LOC4

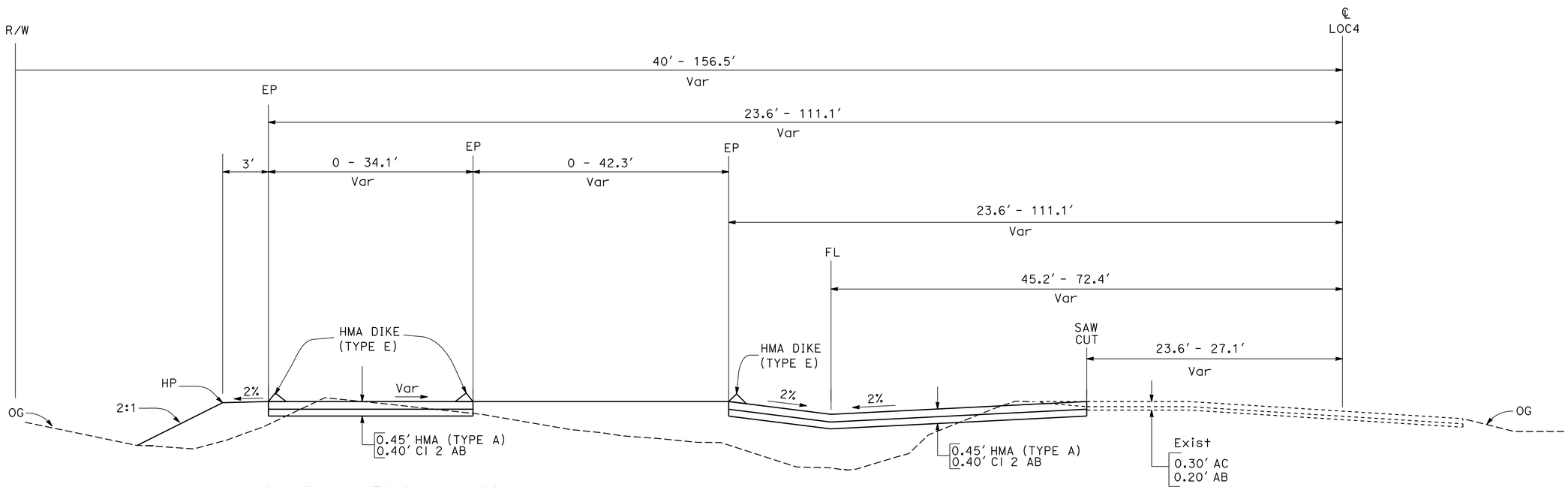

Sta 300+22 TO 300+24 LOC4

Sta 299+94.76 TO 300+87.03 LOC4
LOCATION 4

ROUTE 9

TYPICAL CROSS SECTIONS

NO SCALE

X-2

REVISED BY	DATE REVISED
HH	08/16/12

CALCULATED-DESIGNED BY: HAI HOANG
CHECKED BY: PATRICIA TECZON
FUNCTIONAL SUPERVISOR: CAROLINE REYES

STATE OF CALIFORNIA - DEPARTMENT OF TRANSPORTATION
Caltrans®
10-DESIGN

LAST REVISION 00-00-00
DATE PLOTTED => 27-MAR-2014
TIME PLOTTED => 14:59

Dist	COUNTY	ROUTE	POST MILES TOTAL PROJECT	SHEET No.	TOTAL SHEETS
05	SCr	9	3.8/18.7	4	73

Patricia L. Teczon 3/24/14
REGISTERED CIVIL ENGINEER DATE

03-24-14
PLANS APPROVAL DATE

REGISTERED PROFESSIONAL ENGINEER Patricia Teczon No. 37294 Exp. 6/30/14 CIVIL STATE OF CALIFORNIA

THE STATE OF CALIFORNIA OR ITS OFFICERS OR AGENTS SHALL NOT BE RESPONSIBLE FOR THE ACCURACY OR COMPLETENESS OF SCANNED COPIES OF THIS PLAN SHEET.

NOTES:

1. FOR ACCURATE RIGHT OF WAY DATA, CONTACT RIGHT OF WAY ENGINEERING AT THE DISTRICT OFFICE.
2. SEE STRUCTURAL GENERAL PLAN FOR LOL1 CURVE DATA AND BEARING INFORMATION.
3. PLACE LANDSCAPE BOULDERS NO CLOSER THAN 30′ FROM ETW.

ABBREVIATION:

LOL1 - RETAINING WALL STATION LINE
LOC# - LOCATION CENTERLINE

LEGEND:

- HMA (TYPE A) (1.00′ IN DEPTH)
- Temp FENCE (TYPE ESA)
- LANDSCAPE BOULDERS

CURVE DATA

No. ⊛	R	Δ	T	L
1	310′	12°42′08"	34.50′	68.73′
2	260′	48°59′54"	118.48′	222.35′
3	150′	31°42′45"	42.60′	83.02′
4	83′	27°16′04"	20.13′	39.50′

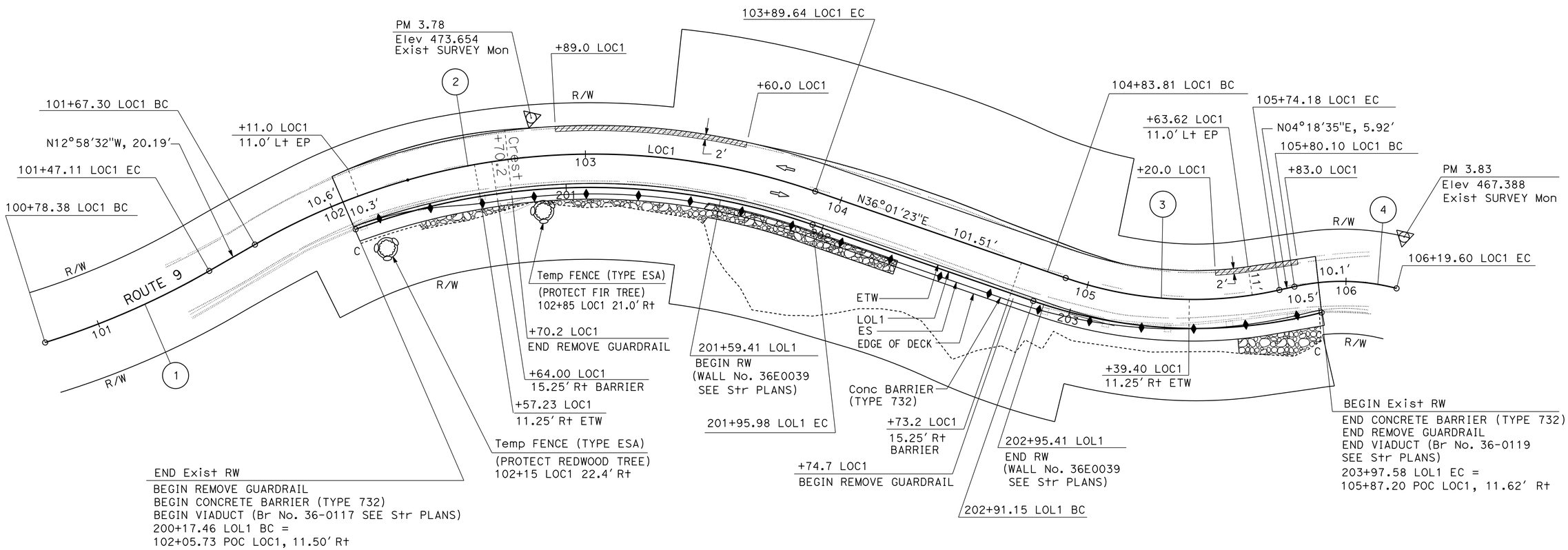

LOCATION 1
PM 3.8

LAYOUT
SCALE: 1" = 20′

L-1

REVISED BY	DATE REVISED
SL	10/31/13

CALCULATED-DESIGNED BY: HAI HOANG
CHECKED BY: PATRICIA TECZON
FUNCTIONAL SUPERVISOR: CAROLINE REYES

STATE OF CALIFORNIA - DEPARTMENT OF TRANSPORTATION
Caltrans
10-DESIGN

LAST REVISION 00-00-00 | DATE PLOTTED => 27-MAR-2014 | TIME PLOTTED => 14:59

Dist	COUNTY	ROUTE	POST MILES TOTAL PROJECT	SHEET No.	TOTAL SHEETS
05	SCr	9	3.8/18.7	5	73

Patricia L. Teczon 3/24/14
REGISTERED CIVIL ENGINEER DATE

03-14-14
PLANS APPROVAL DATE

REGISTERED PROFESSIONAL ENGINEER Patricia Teczon No. 37294 Exp 6/30/14 CIVIL STATE OF CALIFORNIA

THE STATE OF CALIFORNIA OR ITS OFFICERS OR AGENTS SHALL NOT BE RESPONSIBLE FOR THE ACCURACY OR COMPLETENESS OF SCANNED COPIES OF THIS PLAN SHEET.

NOTE:

FOR ACCURATE RIGHT OF WAY DATA, CONTACT
RIGHT OF WAY ENGINEERING AT THE DISTRICT OFFICE.

CURVE DATA

No. ⊕	R	Δ	T	L
1	300′	53°40′00″	151.75′	280.98′

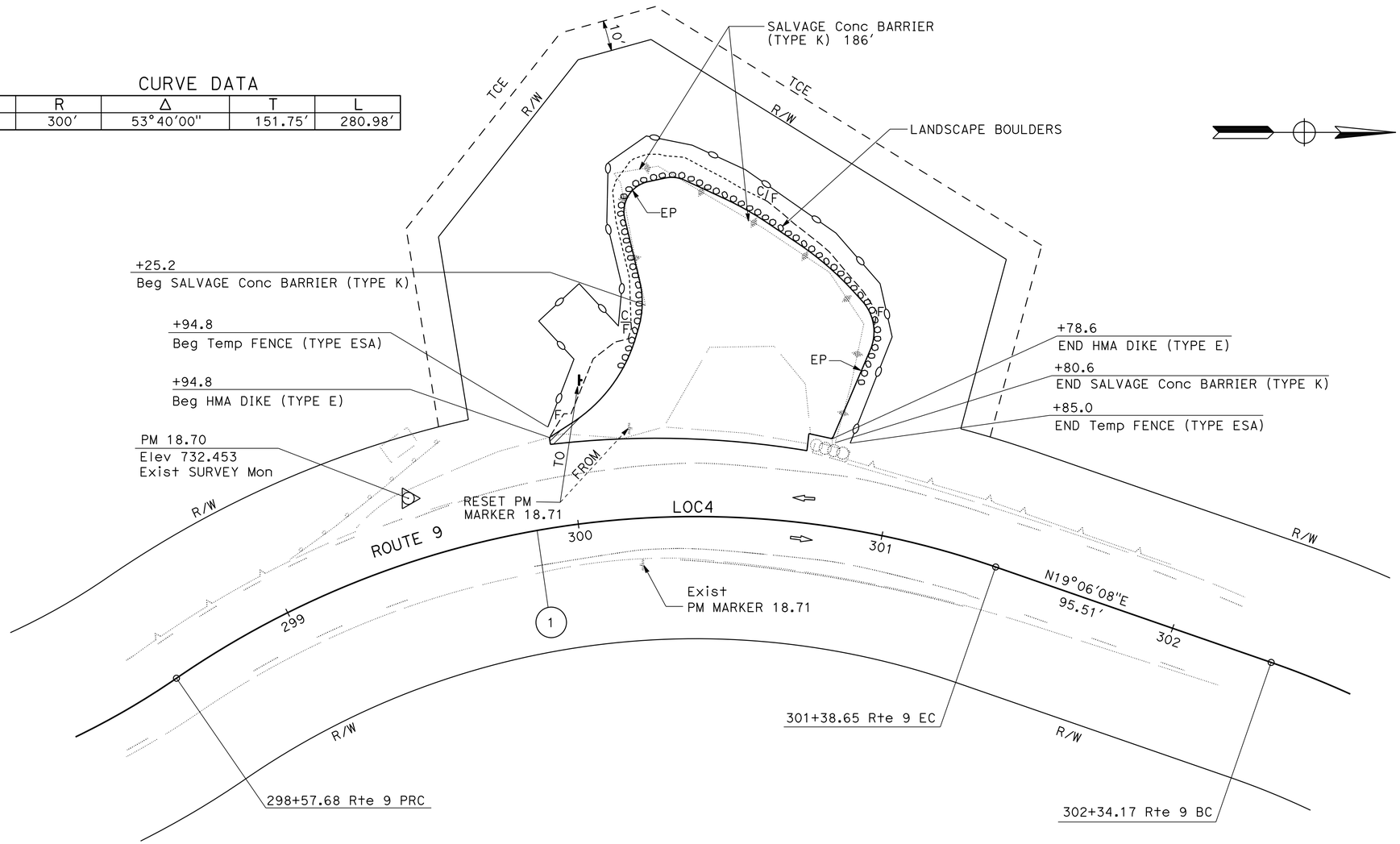

LOCATION 4
(PM 18.7)

LAYOUT
SCALE: 1" = 20′ **L-2**

HH 12/04/13 REVISED BY DATE REVISED
HAI HOANG PATRICIA TECZON CALCULATED-DESIGNED BY CHECKED BY
FUNCTIONAL SUPERVISOR CAROLINE REYES
STATE OF CALIFORNIA - DEPARTMENT OF TRANSPORTATION
Caltrans 10-DESIGN

LAST REVISION 00-00-00 DATE PLOTTED => 27-MAR-2014 TIME PLOTTED => 14:59

Dist	COUNTY	ROUTE	POST MILES TOTAL PROJECT	SHEET No.	TOTAL SHEETS
05	SCr	9	3.8/18.7	6	73

Patricia L. Teczon 3/24/14
REGISTERED CIVIL ENGINEER DATE

03-24-14
PLANS APPROVAL DATE

REGISTERED PROFESSIONAL ENGINEER Patricia Teczon No. 37294 Exp 6/30/14 CIVIL STATE OF CALIFORNIA

THE STATE OF CALIFORNIA OR ITS OFFICERS OR AGENTS SHALL NOT BE RESPONSIBLE FOR THE ACCURACY OR COMPLETENESS OF SCANNED COPIES OF THIS PLAN SHEET.

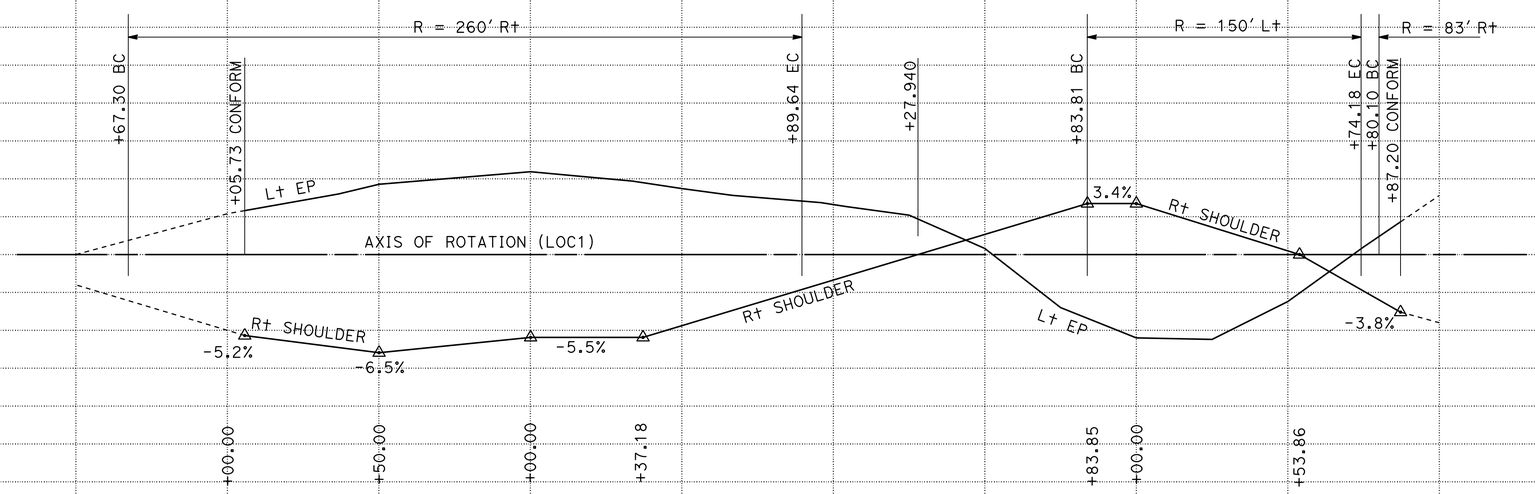

ROUTE 9
LOCATION 1

SUPERELEVATION DIAGRAM

SCALE: 1" = 25'

SE-1

STATION		102+00	103+00	104+00	105+00	106+00	TOTAL
CY	Exc						
	Emb						

REVISED BY	DATE REVISED
SL	12/04/13

CALCULATED-DESIGNED BY: HAI HOANG
CHECKED BY: PATRICIA TECZON
FUNCTIONAL SUPERVISOR: CAROLINE REYES

STATE OF CALIFORNIA - DEPARTMENT OF TRANSPORTATION
Caltrans®
10-DESIGN

LAST REVISION 00-00-00
DATE PLOTTED => 27-MAR-2014
TIME PLOTTED => 14:59

Dist	COUNTY	ROUTE	POST MILES TOTAL PROJECT	SHEET No.	TOTAL SHEETS
05	SCr	9	3.8/18.7	7	73

Patricia L. Teczon 3/24/14
REGISTERED CIVIL ENGINEER DATE

03-24-14
PLANS APPROVAL DATE

REGISTERED PROFESSIONAL ENGINEER Patricia Teczon No. 37294 Exp. 6/30/14 CIVIL STATE OF CALIFORNIA

THE STATE OF CALIFORNIA OR ITS OFFICERS OR AGENTS SHALL NOT BE RESPONSIBLE FOR THE ACCURACY OR COMPLETENESS OF SCANNED COPIES OF THIS PLAN SHEET.

NOTE:

FOR ACCURATE RIGHT OF WAY DATA, CONTACT RIGHT OF WAY ENGINEERING AT THE DISTRICT OFFICE.

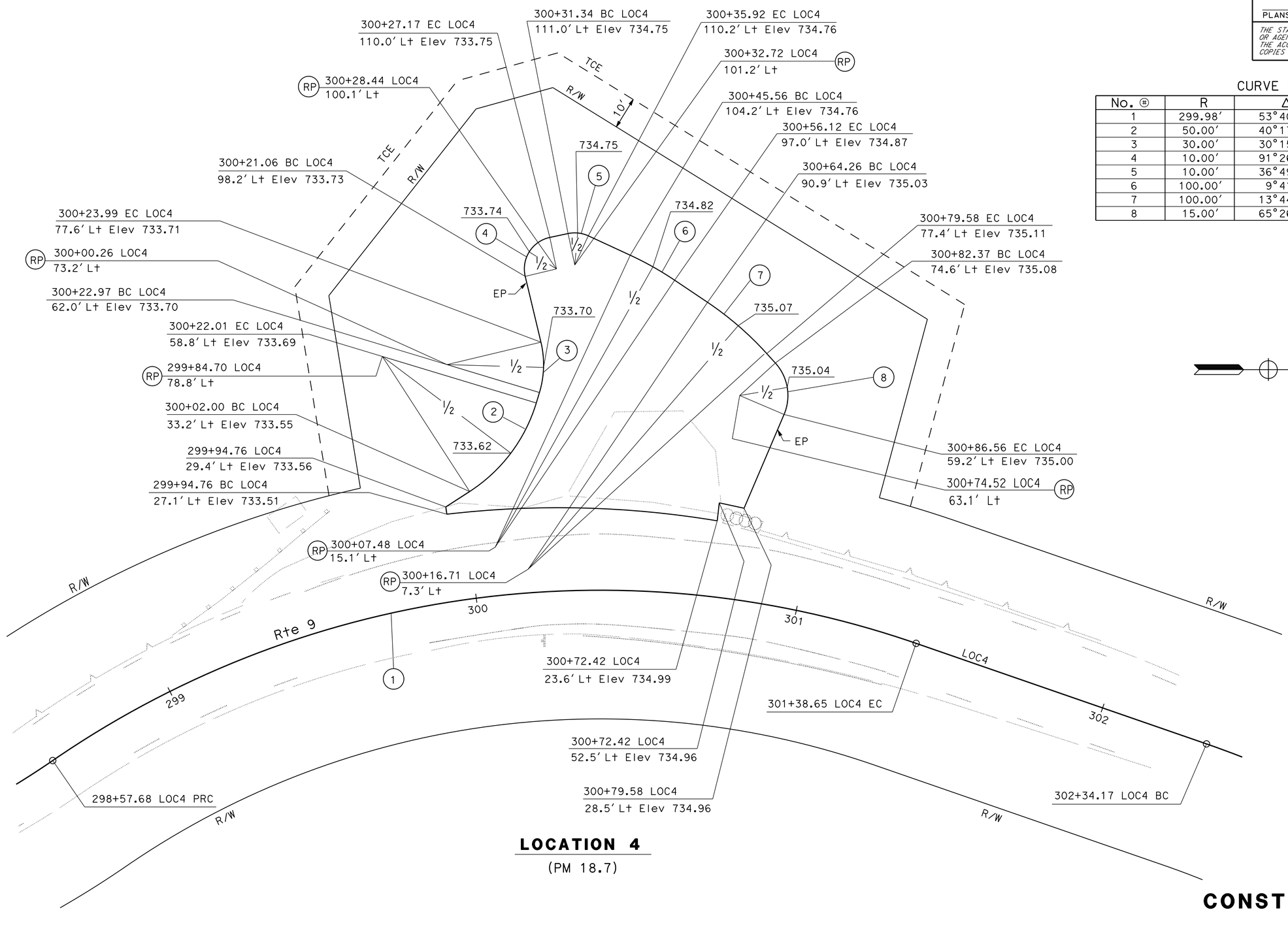

LOCATION 4

(PM 18.7)

CURVE DATA

No. ⊛	R	Δ	T	L
1	299.98'	53°40'01"	151.75'	280.98'
2	50.00'	40°17'29"	18.34'	35.16'
3	30.00'	30°15'12"	8.11'	15.84'
4	10.00'	91°26'22"	10.26'	15.96'
5	10.00'	36°49'25"	3.33'	6.43'
6	100.00'	9°4'51"	7.94'	15.85'
7	100.00'	13°44'25"	12.05'	23.98'
8	15.00'	65°26'48"	9.64'	17.13'

CONSTRUCTION DETAILS

NO SCALE

C-1

STATE OF CALIFORNIA - DEPARTMENT OF TRANSPORTATION
10-DESIGN
Caltrans

FUNCTIONAL SUPERVISOR: CAROLINE REYES
CALCULATED-DESIGNED BY: HAI HOANG
CHECKED BY: PATRICIA TECZON
REVISED BY: IS
DATE REVISED: 12/04/13

LAST REVISION 00-00-00
DATE PLOTTED => 27-MAR-2014
TIME PLOTTED => 14:59

Dist	COUNTY	ROUTE	POST MILES TOTAL PROJECT	SHEET No.	TOTAL SHEETS
05	SCr	9	3.8/18.7	8	73

Patricia L. Teczon 3/24/14
REGISTERED CIVIL ENGINEER DATE

03-24-14
PLANS APPROVAL DATE

REGISTERED PROFESSIONAL ENGINEER Patricia Teczon No. 37294 Exp 6/30/14 CIVIL STATE OF CALIFORNIA

THE STATE OF CALIFORNIA OR ITS OFFICERS OR AGENTS SHALL NOT BE RESPONSIBLE FOR THE ACCURACY OR COMPLETENESS OF SCANNED COPIES OF THIS PLAN SHEET.

NOTE:

FOR ACCURATE RIGHT OF WAY DATA, CONTACT RIGHT OF WAY ENGINEERING AT THE DISTRICT OFFICE.

ABBREVIATIONS:

LOL1 - RETAINING WALL STATION LINE
LOC# - LOCATION CENTERLINE
CIPP - CURED-IN-PLACE PIPELINER
CSPI - CORRUGATED STEEL PIPE INLET

LEGEND:

- EXISTING SURVEY MONUMENT

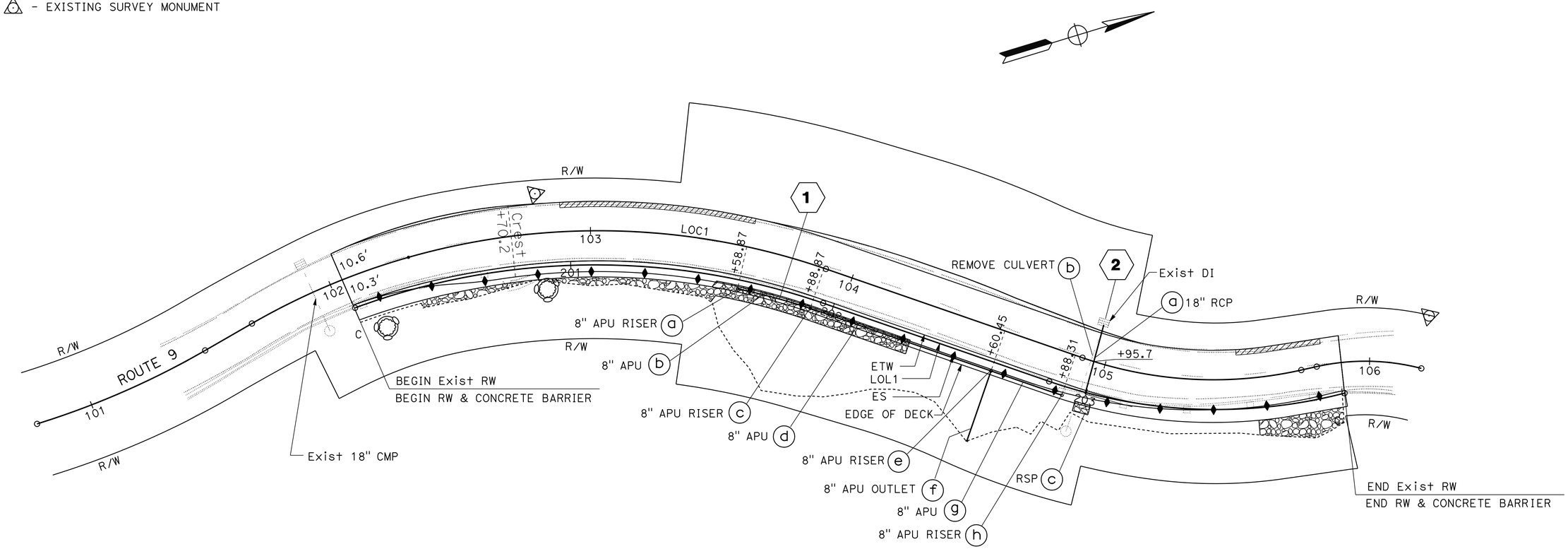

LOCATION 1
PM 3.8

APPROVED FOR DRAINAGE WORK ONLY

DRAINAGE PLAN

SCALE: 1" = 20'

D-1

STATE OF CALIFORNIA - DEPARTMENT OF TRANSPORTATION
Caltrans® **10-DESIGN**

FUNCTIONAL SUPERVISOR: CAROLINE REYES
CALCULATED-DESIGNED BY: HAI HOANG
CHECKED BY: PATRICIA TECZON
REVISED BY: SL
DATE REVISED: 08/13/13

LAST REVISION 00-00-00
DATE PLOTTED => 27-MAR-2014
TIME PLOTTED => 14:59

Dist	COUNTY	ROUTE	POST MILES TOTAL PROJECT	SHEET No.	TOTAL SHEETS
05	SCr	9	3.8/18.7	9	73

Patricia L. Teczon 3/24/14
REGISTERED CIVIL ENGINEER DATE

03-24-14
PLANS APPROVAL DATE

REGISTERED PROFESSIONAL ENGINEER Patricia Teczon No. 37294 Exp 6/30/14 CIVIL STATE OF CALIFORNIA

THE STATE OF CALIFORNIA OR ITS OFFICERS OR AGENTS SHALL NOT BE RESPONSIBLE FOR THE ACCURACY OR COMPLETENESS OF SCANNED COPIES OF THIS PLAN SHEET.

NOTE:

FOR ACCURATE RIGHT OF WAY DATA, CONTACT RIGHT OF WAY ENGINEERING AT THE DISTRICT OFFICE.

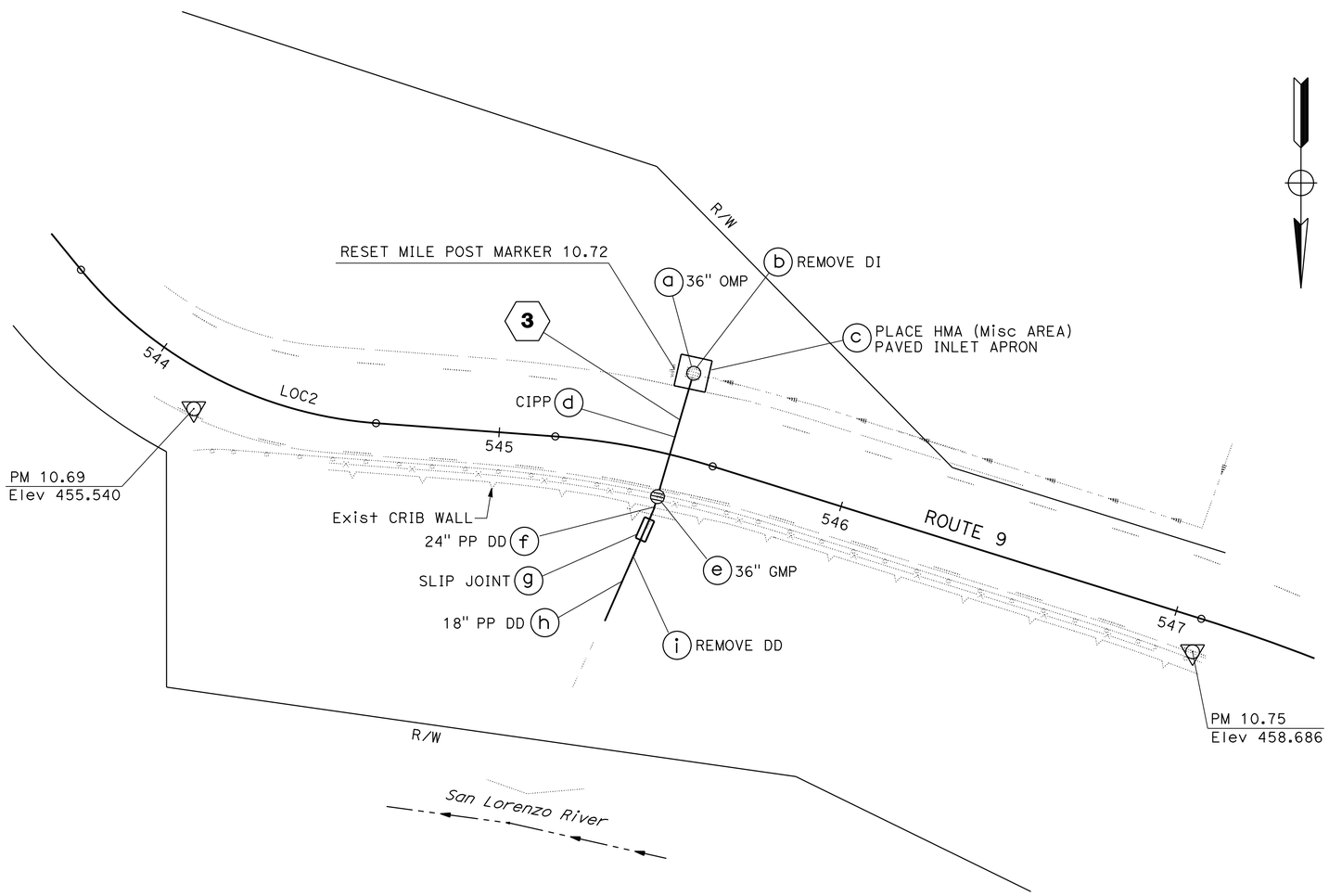

LOCATION 2
(PM 10.7)

APPROVED FOR DRAINAGE WORK ONLY

DRAINAGE PLAN

SCALE: 1" = 20'

D-2

HAI HOANG	REVISED BY: HH
PATRICIA TECZON	DATE REVISED: 12/04/13
CALCULATED-DESIGNED BY	
CHECKED BY	
FUNCTIONAL SUPERVISOR	CAROLINE REYES

STATE OF CALIFORNIA - DEPARTMENT OF TRANSPORTATION
Caltrans
10-DESIGN

LAST REVISION 00-00-00
DATE PLOTTED => 27-MAR-2014
TIME PLOTTED => 14:59

Dist	COUNTY	ROUTE	POST MILES TOTAL PROJECT	SHEET No.	TOTAL SHEETS
05	SCr	9	3.8/18.7	10	73

Patricia L. Teczon 3/24/14
REGISTERED CIVIL ENGINEER DATE

03-24-14
PLANS APPROVAL DATE

REGISTERED PROFESSIONAL ENGINEER Patricia Teczon No. 37294 Exp 6/30/14 CIVIL STATE OF CALIFORNIA

THE STATE OF CALIFORNIA OR ITS OFFICERS OR AGENTS SHALL NOT BE RESPONSIBLE FOR THE ACCURACY OR COMPLETENESS OF SCANNED COPIES OF THIS PLAN SHEET.

NOTE:

FOR ACCURATE RIGHT OF WAY DATA, CONTACT
RIGHT OF WAY ENGINEERING AT THE DISTRICT OFFICE.

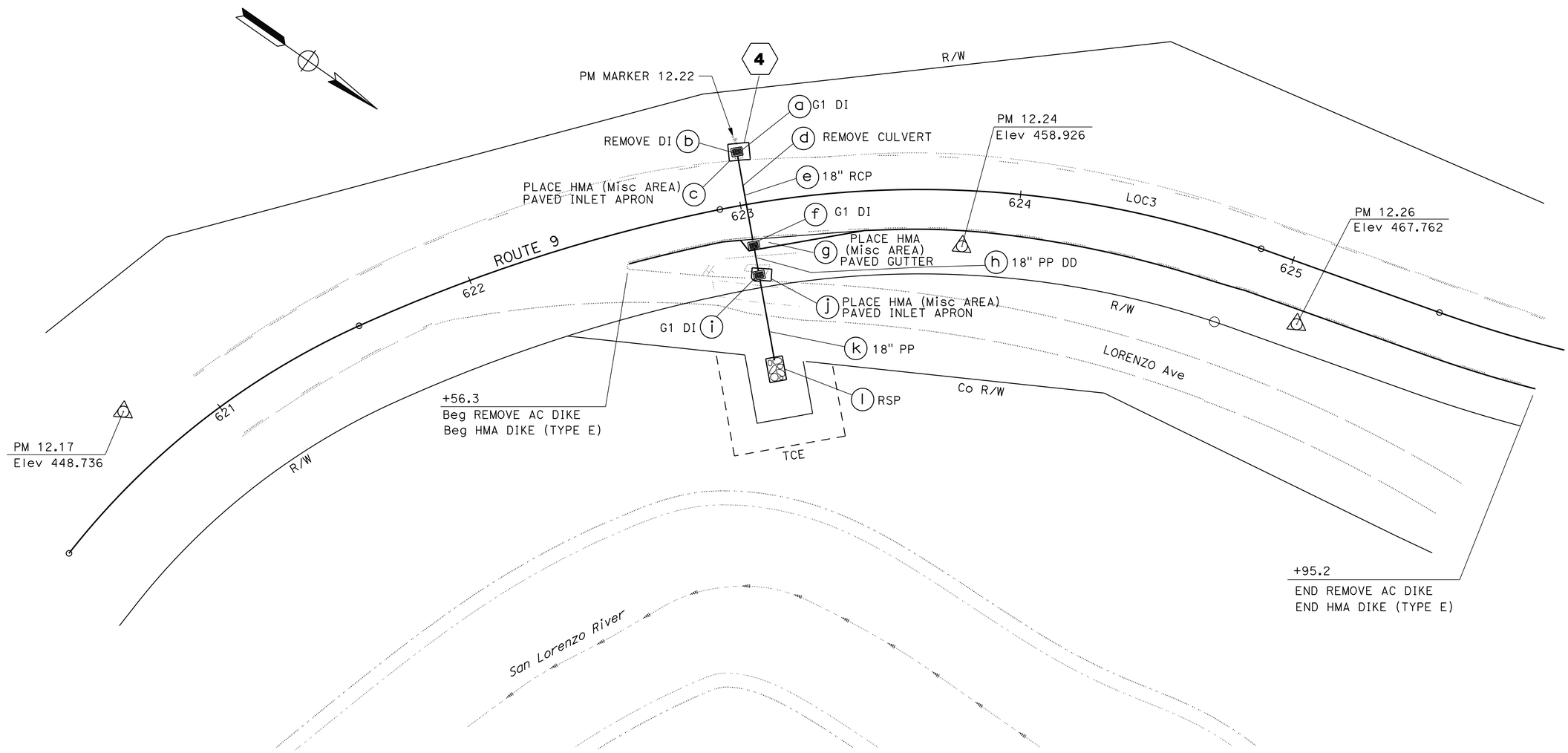

LOCATION 3

(PM 12.2)

APPROVED FOR DRAINAGE WORK ONLY

DRAINAGE PLAN

SCALE: 1" = 20'

D-3

STATE OF CALIFORNIA - DEPARTMENT OF TRANSPORTATION
Caltrans
10-DESIGN

FUNCTIONAL SUPERVISOR: CAROLINE REYES
CALCULATED-DESIGNED BY: HAI HOANG
CHECKED BY: PATRICIA TECZON
REVISED BY: HH
DATE REVISED: 12/04/13

LAST REVISION 00-00-00
DATE PLOTTED => 27-MAR-2014
TIME PLOTTED => 14:59

Dist	COUNTY	ROUTE	POST MILES TOTAL PROJECT	SHEET No.	TOTAL SHEETS
05	SCr	9	3.8/18.7	11	73

Patricia L. Teczon 3/24/14
REGISTERED CIVIL ENGINEER DATE

03-24-14
PLANS APPROVAL DATE

REGISTERED PROFESSIONAL ENGINEER Patricia Teczon No. 37294 Exp 6/30/14 CIVIL STATE OF CALIFORNIA

THE STATE OF CALIFORNIA OR ITS OFFICERS OR AGENTS SHALL NOT BE RESPONSIBLE FOR THE ACCURACY OR COMPLETENESS OF SCANNED COPIES OF THIS PLAN SHEET.

NOTE:

FOR ACCURATE RIGHT OF WAY DATA, CONTACT RIGHT OF WAY ENGINEERING AT THE DISTRICT OFFICE.

CURVE DATA

No. ⊛	R	Δ	T	L
1	25.00′	93°28′51"	26.57′	40.79′

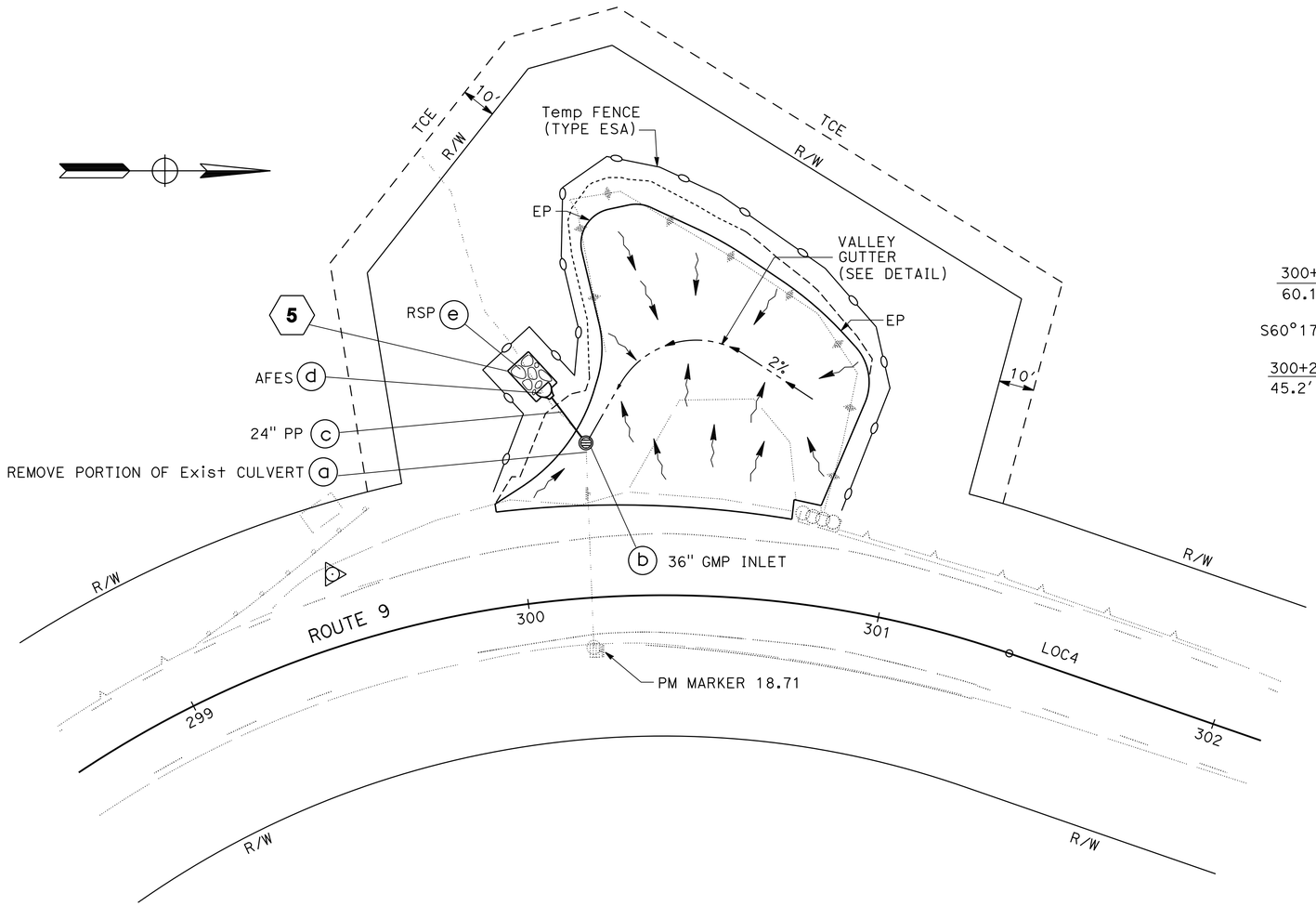

LOCATION 4

(PM 18.7)

SCALE: 1" = 20′

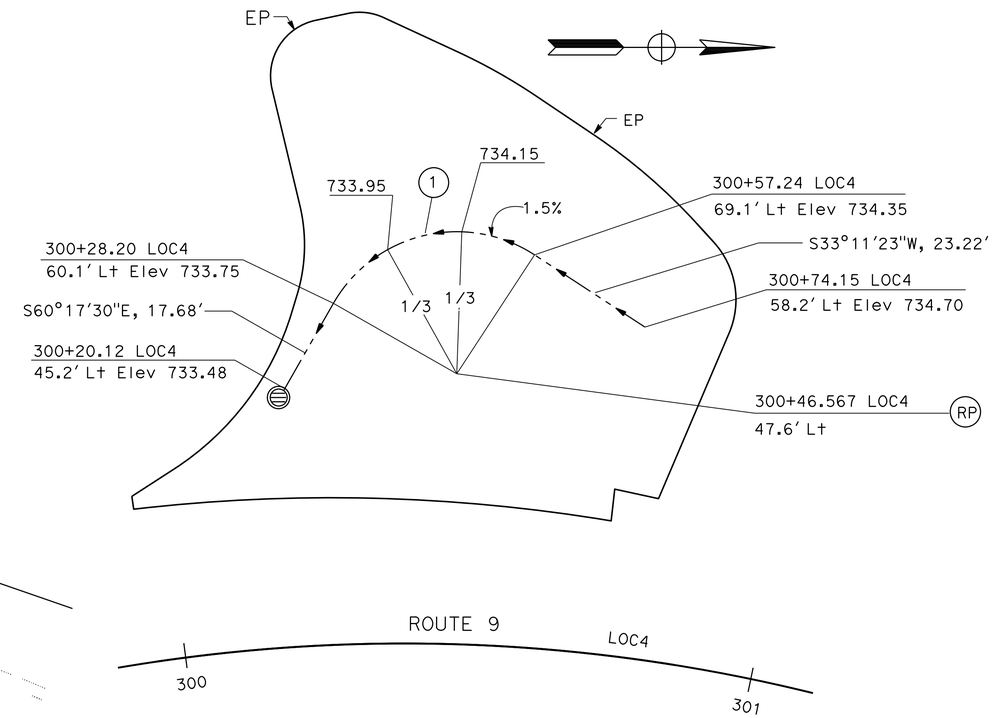

VALLEY GUTTER DETAIL

LOCATION 4

NO SCALE

APPROVED FOR DRAINAGE WORK ONLY

DRAINAGE PLAN AND DETAILS

SCALE AS SHOWN

D-4

REVISED BY	DATE REVISED
HH	10/31/13

CALCULATED-DESIGNED BY: HAI HOANG
CHECKED BY: PATRICIA TECZON
FUNCTIONAL SUPERVISOR: CAROLINE REYES

STATE OF CALIFORNIA - DEPARTMENT OF TRANSPORTATION
Caltrans
10-DESIGN

LAST REVISION 00-00-00
DATE PLOTTED => 27-MAR-2014
TIME PLOTTED => 14:59

Dist	COUNTY	ROUTE	POST MILES TOTAL PROJECT	SHEET No.	TOTAL SHEETS
05	SCr	9	3.8/18.7	12	73

Patricia L. Teczon 3/25/14
REGISTERED CIVIL ENGINEER DATE

03-24-14
PLANS APPROVAL DATE

REGISTERED PROFESSIONAL ENGINEER Patricia Teczon No. 37294 Exp 6/30/14 CIVIL STATE OF CALIFORNIA

THE STATE OF CALIFORNIA OR ITS OFFICERS OR AGENTS SHALL NOT BE RESPONSIBLE FOR THE ACCURACY OR COMPLETENESS OF SCANNED COPIES OF THIS PLAN SHEET.

NOTES:

1. LOCATIONS AND ELEVATIONS AS SHOWN OR AS DIRECTED BY THE ENGINEER.
2. FOR UNDERDRAIN DETAILS NOT SHOWN SEE STANDARD PLAN D102.
3. TOP OF CLASS III PERMEABLE MATERIAL IS 2.5' BELOW FG BENCH (SEE DRAINAGE DETAILS).
4. SEE STRUCTURE PLANS FOR RETAINING WALL DETAILS.

LEGEND:

- CONCRETE BACKFILL

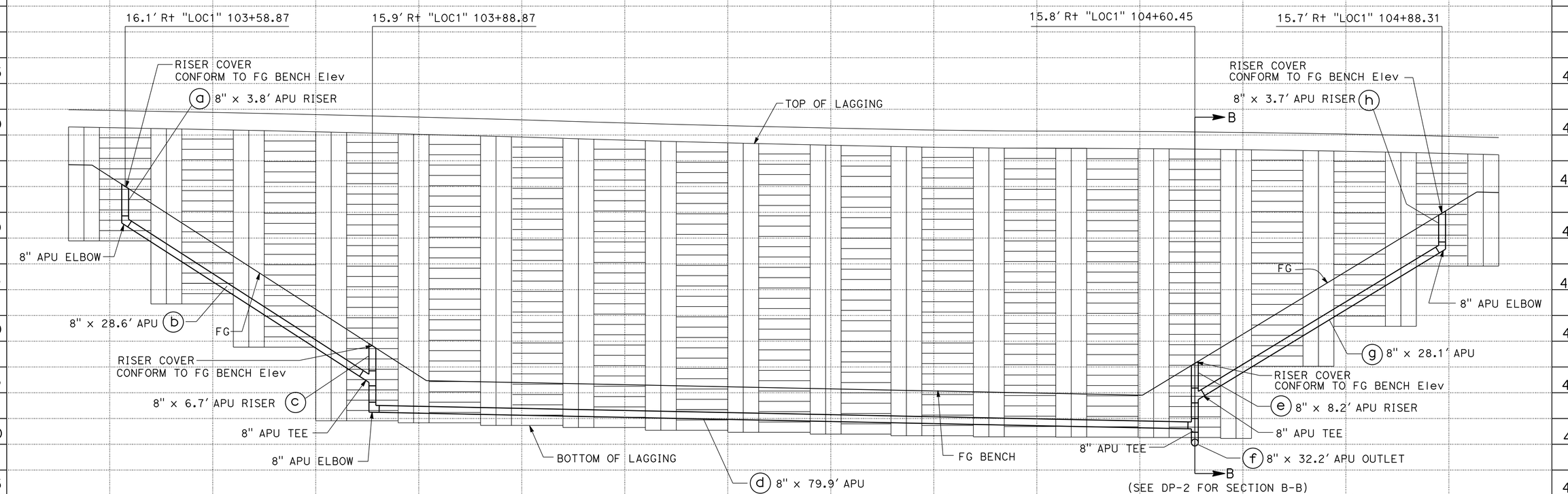

DRAINAGE SYSTEM No. 1

LOCATION 1
UNDERDRAIN

DRAINAGE PROFILES

SCALE: Horiz 1" = 5'
Vert 1" = 5'

DP-1

REVISED BY	DATE REVISED
HH	08/13/13

CALCULATED-DESIGNED BY: HAI HOANG
CHECKED BY: PATRICIA TECZON
FUNCTIONAL SUPERVISOR: CAROLINE REYES

STATE OF CALIFORNIA - DEPARTMENT OF TRANSPORTATION
Caltrans
10-DESIGN

LAST REVISION 00-00-00
DATE PLOTTED => 27-MAR-2014
TIME PLOTTED => 15:00

Dist	COUNTY	ROUTE	POST MILES TOTAL PROJECT	SHEET No.	TOTAL SHEETS
05	SCr	9	3.8/18.7	13	73

Patricia L. Teczon 3/25/14
REGISTERED CIVIL ENGINEER DATE

03-24-14
PLANS APPROVAL DATE

REGISTERED PROFESSIONAL ENGINEER Patricia Teczon No. 37294 Exp 6/30/14 CIVIL STATE OF CALIFORNIA

THE STATE OF CALIFORNIA OR ITS OFFICERS OR AGENTS SHALL NOT BE RESPONSIBLE FOR THE ACCURACY OR COMPLETENESS OF SCANNED COPIES OF THIS PLAN SHEET.

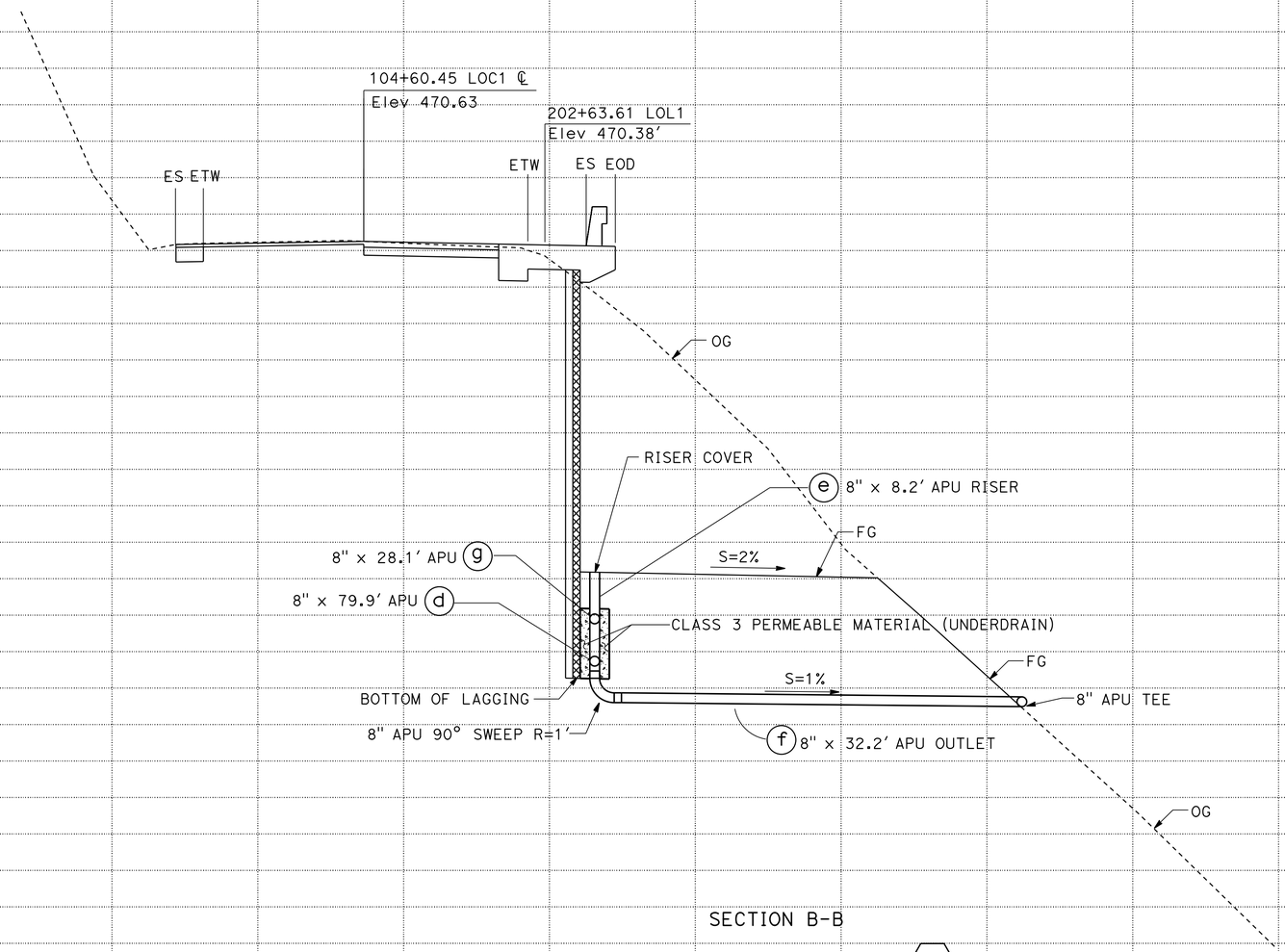

SECTION B-B

DRAINAGE SYSTEM No. 1

LOCATION 1
UNDERDRAIN

DRAINAGE PROFILES

SCALE: Horiz 1" = 5'
Vert 1" = 5'

DP-2

REVISED BY	DATE REVISED
HH	08/23/13

HAI HOANG — PATRICIA TECZON
CALCULATED-DESIGNED BY — CHECKED BY
FUNCTIONAL SUPERVISOR — CAROLINE REYES

STATE OF CALIFORNIA - DEPARTMENT OF TRANSPORTATION
Caltrans® 10-DESIGN

LAST REVISION 00-00-00 | DATE PLOTTED => 27-MAR-2014 | TIME PLOTTED => 15:00

Dist	COUNTY	ROUTE	POST MILES TOTAL PROJECT	SHEET No.	TOTAL SHEETS
05	SCr	9	3.8/18.7	14	73

Patricia L. Teczon 3/25/14
REGISTERED CIVIL ENGINEER DATE

03-24-14
PLANS APPROVAL DATE

REGISTERED PROFESSIONAL ENGINEER Patricia Teczon No. 37294 Exp. 6/30/14 CIVIL STATE OF CALIFORNIA

THE STATE OF CALIFORNIA OR ITS OFFICERS OR AGENTS SHALL NOT BE RESPONSIBLE FOR THE ACCURACY OR COMPLETENESS OF SCANNED COPIES OF THIS PLAN SHEET.

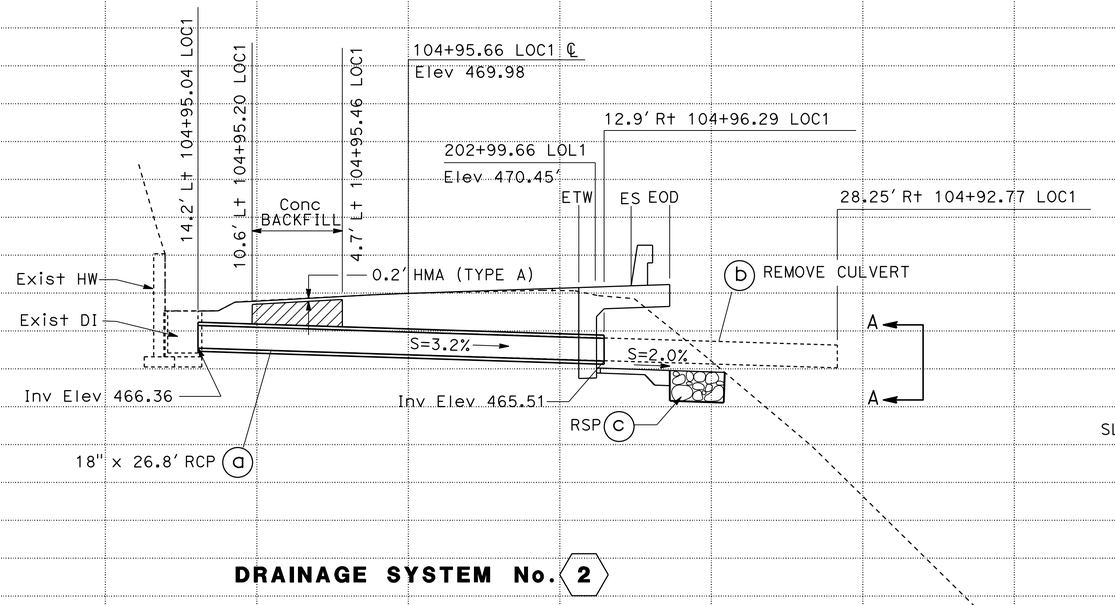

DRAINAGE SYSTEM No. 2

Skew=02°15'37"
LOCATION 1

SCALE: Horiz 1" = 5'
Vert 1" = 5'

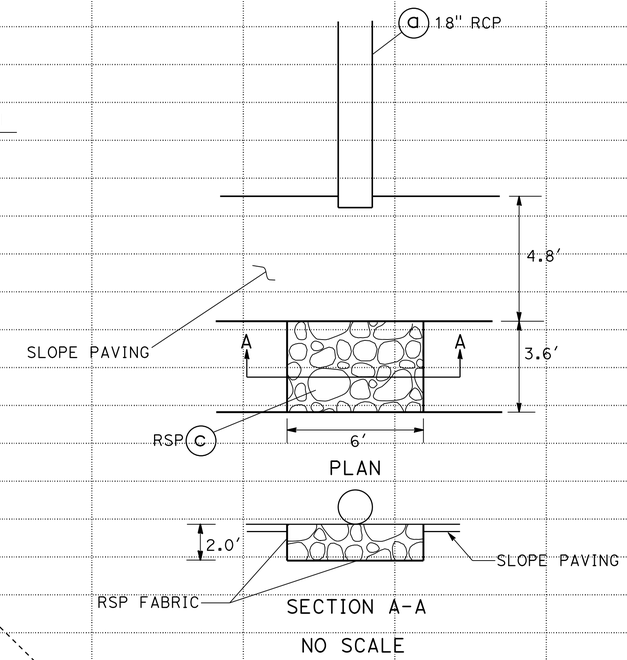

DRAINAGE PROFILES

SCALE AS SHOWN

DP-3

STATE OF CALIFORNIA - DEPARTMENT OF TRANSPORTATION
Caltrans® 10-DESIGN

FUNCTIONAL SUPERVISOR: CAROLINE REYES
CALCULATED-DESIGNED BY: HAI HOANG
CHECKED BY: PATRICIA TECZON
REVISED BY: HH
DATE REVISED: 08/16/13

LAST REVISION 00-00-00
DATE PLOTTED => 27-MAR-2014
TIME PLOTTED => 15:00

Dist	COUNTY	ROUTE	POST MILES TOTAL PROJECT	SHEET No.	TOTAL SHEETS
05	SCr	9	3.8/18.7	15	73

Patricia L. Teczon 3/24/14
REGISTERED CIVIL ENGINEER DATE

03-24-14
PLANS APPROVAL DATE

REGISTERED PROFESSIONAL ENGINEER Patricia Teczon No. 37294 Exp 6/30/14 CIVIL STATE OF CALIFORNIA

THE STATE OF CALIFORNIA OR ITS OFFICERS OR AGENTS SHALL NOT BE RESPONSIBLE FOR THE ACCURACY OR COMPLETENESS OF SCANNED COPIES OF THIS PLAN SHEET.

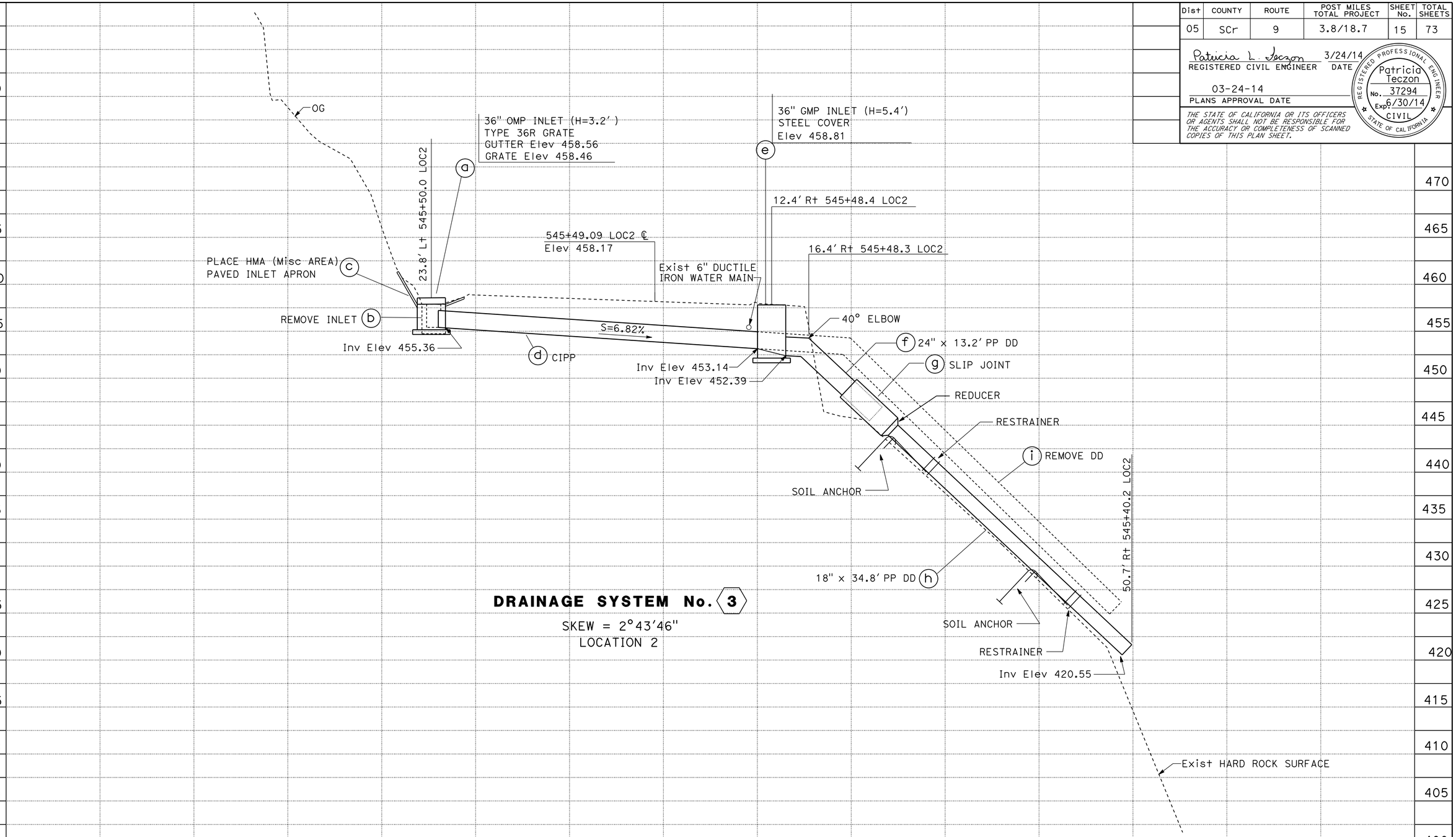

DRAINAGE SYSTEM No. 3

SKEW = 2°43'46"
LOCATION 2

DRAINAGE PROFILES

SCALE: Horiz 1" = 5'
Vert 1" = 5'

DP-4

REVISED BY	DATE REVISED
HH	12/04/13

HAI HOANG — PATRICIA TECZON

CALCULATED-DESIGNED BY — CHECKED BY

FUNCTIONAL SUPERVISOR — CAROLINE REYES

STATE OF CALIFORNIA - DEPARTMENT OF TRANSPORTATION

Caltrans® **10-DESIGN**

LAST REVISION 00-00-00 — DATE PLOTTED => 27-MAR-2014 — TIME PLOTTED => 15:00

Dist	COUNTY	ROUTE	POST MILES TOTAL PROJECT	SHEET No.	TOTAL SHEETS
05	SCr	9	3.8/18.7	16	73

Patricia L. Teczon 3/24/14
REGISTERED CIVIL ENGINEER DATE

03-24-14
PLANS APPROVAL DATE

REGISTERED PROFESSIONAL ENGINEER Patricia Teczon No. 37294 Exp 6/30/14 CIVIL STATE OF CALIFORNIA

THE STATE OF CALIFORNIA OR ITS OFFICERS OR AGENTS SHALL NOT BE RESPONSIBLE FOR THE ACCURACY OR COMPLETENESS OF SCANNED COPIES OF THIS PLAN SHEET.

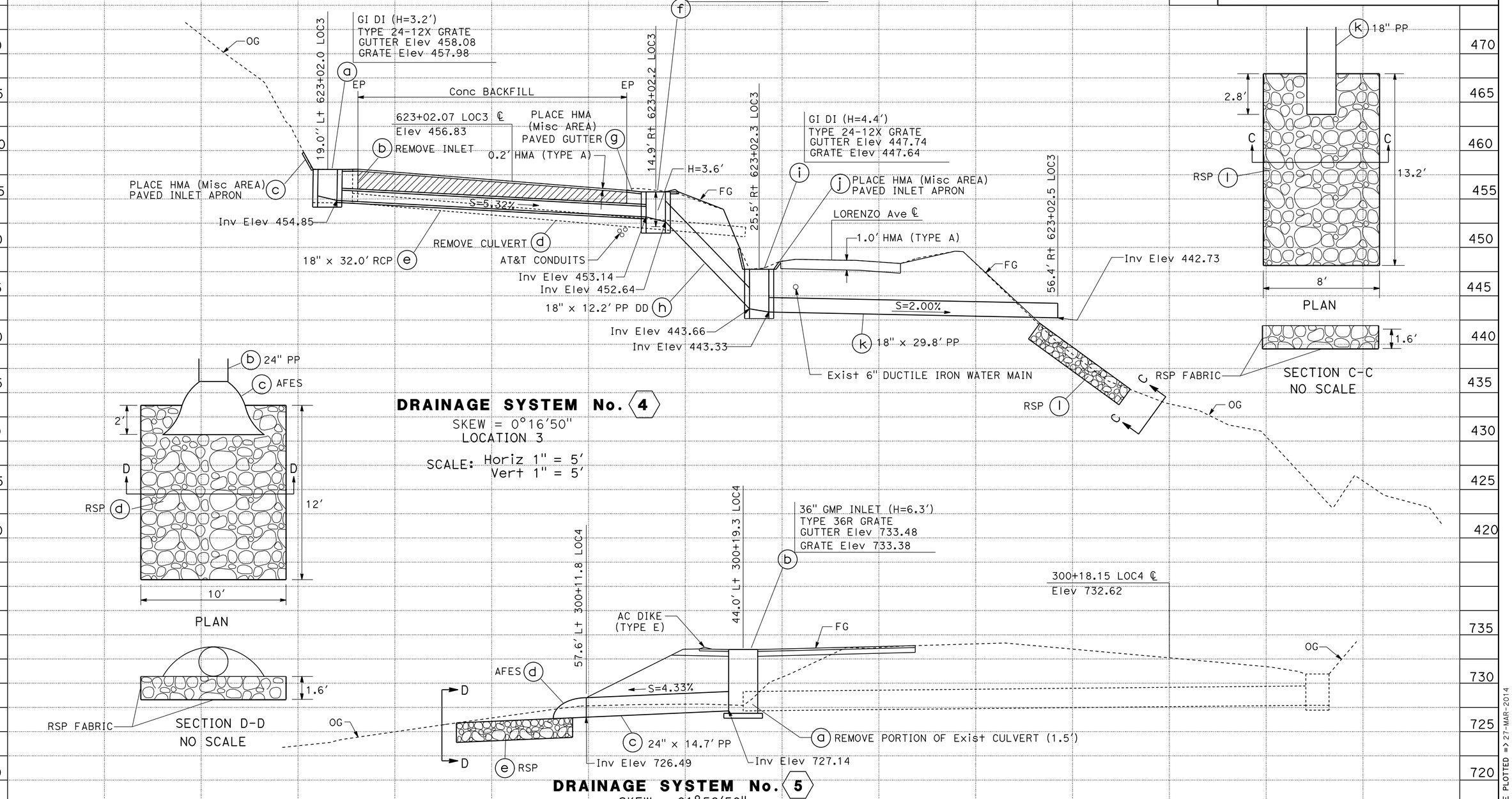

DRAINAGE PROFILES

SCALE AS SHOWN

DP-5

HAI HOANG	REVISED BY
12/04/13	DATE REVISED
PATRICIA TECZON	CALCULATED-DESIGNED BY
	CHECKED BY
CAROLINE REYES	FUNCTIONAL SUPERVISOR

STATE OF CALIFORNIA - DEPARTMENT OF TRANSPORTATION
Caltrans
10-DESIGN

LAST REVISION 00-00-00
DATE PLOTTED => 27-MAR-2014
TIME PLOTTED => 15:00

Dist	COUNTY	ROUTE	POST MILES TOTAL PROJECT	SHEET No.	TOTAL SHEETS
05	SCr	9	3.8/18.7	17	73

Patricia L. Teczon 3/24/14
REGISTERED CIVIL ENGINEER DATE

03-24-14
PLANS APPROVAL DATE

REGISTERED PROFESSIONAL ENGINEER Patricia Teczon No. 37294 Exp 6/30/14 CIVIL STATE OF CALIFORNIA

THE STATE OF CALIFORNIA OR ITS OFFICERS OR AGENTS SHALL NOT BE RESPONSIBLE FOR THE ACCURACY OR COMPLETENESS OF SCANNED COPIES OF THIS PLAN SHEET.

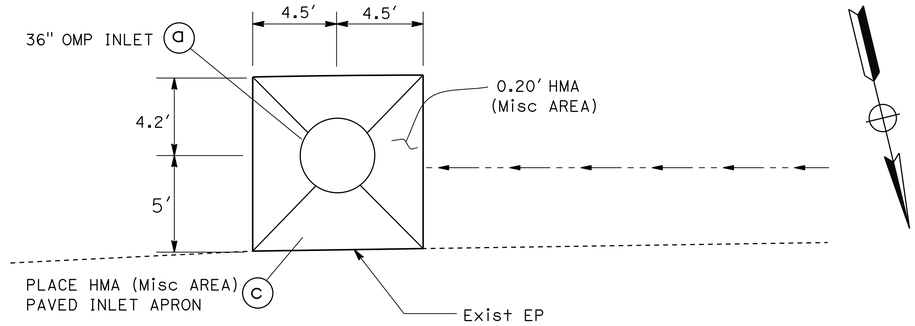

23.8′ Lt 545+50 Rte 9
PAVED INLET APRON
DRAINAGE SYSTEM No. 3
LOCATION 2

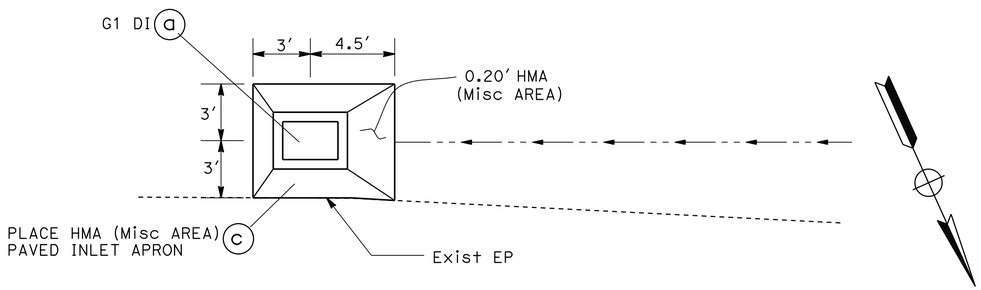

19.0′ Lt 623+02 Rte 9
PAVED INLET APRON
DRAINAGE SYSTEM No. 4
LOCATION 3

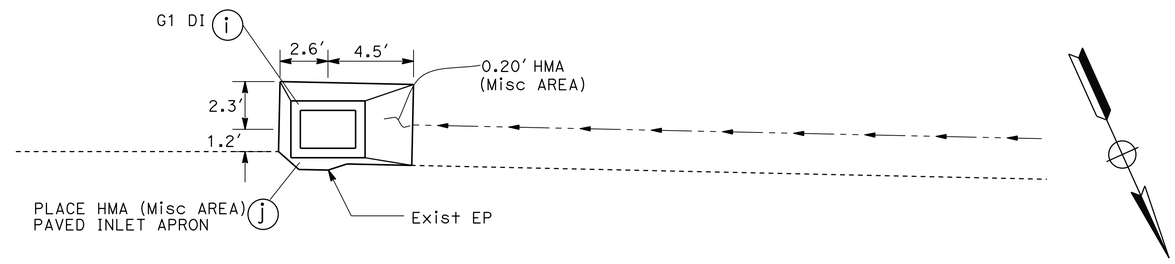

25.5′ Rt 623+02 Rte 9
PAVED INLET APRON
DRAINAGE SYSTEM No. 4
LOCATION 3

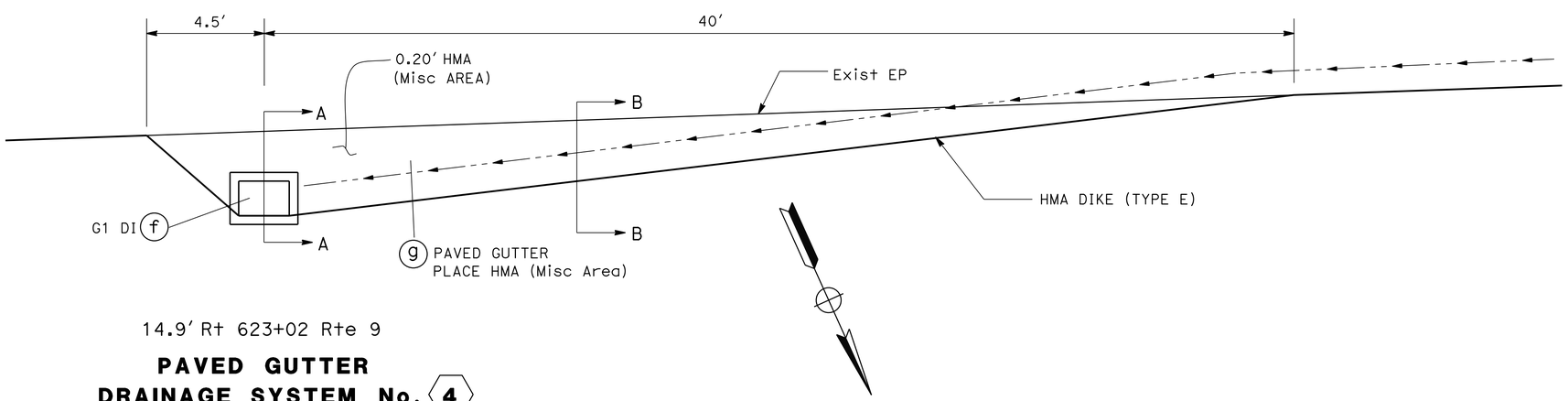

14.9′ Rt 623+02 Rte 9
PAVED GUTTER
DRAINAGE SYSTEM No. 4
LOCATION 3

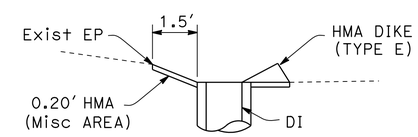

SECTION A-A

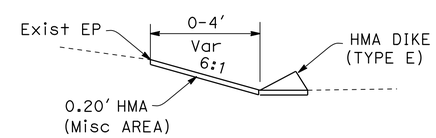

SECTION B-B

DRAINAGE DETAILS
NO SCALE

DD-1

REVISED BY	DATE REVISED
HH	12/04/13

CALCULATED-DESIGNED BY: HAI HOANG
CHECKED BY: PATRICIA TECZON
FUNCTIONAL SUPERVISOR: CAROLINE REYES

STATE OF CALIFORNIA - DEPARTMENT OF TRANSPORTATION
Caltrans
10-DESIGN

LAST REVISION 00-00-00
DATE PLOTTED => 27-MAR-2014
TIME PLOTTED => 15:00

Dist	COUNTY	ROUTE	POST MILES TOTAL PROJECT	SHEET No.	TOTAL SHEETS
05	SCr	9	3.8/18.7	18	73

Patricia L. Teczon 3/24/14
REGISTERED CIVIL ENGINEER DATE

03-24-14
PLANS APPROVAL DATE

REGISTERED PROFESSIONAL ENGINEER Patricia Teczon No. 37294 Exp. 6/30/14 CIVIL STATE OF CALIFORNIA

THE STATE OF CALIFORNIA OR ITS OFFICERS OR AGENTS SHALL NOT BE RESPONSIBLE FOR THE ACCURACY OR COMPLETENESS OF SCANNED COPIES OF THIS PLAN SHEET.

NOTES:

1. FOR ADDITIONAL DETAILS OF THE SOIL ANCHOR REFER TO THE MANUFACTURER'S INSTALLATION INSTRUCTIONS.
2. FOR DETAILS OF RESTRAINER, REFER TO THE MANUFACTURER'S INSTALLATION INSTRUCTIONS.
3. PIPE AND FITTINGS USED FOR DOWN DRAIN SHALL BE FROM ONE MANUFACTURER FOR EACH INSTALLATION.
4. ATTACH 2 CABLES TO JOINT RESTRAINER.
5. EACH SOIL ANCHOR MUST BE PROOF TESTED AND SHALL BE INSTALLED IN CONFORMANCE WITH THE MANUFACTURER'S PRINTED INSTRUCTIONS.

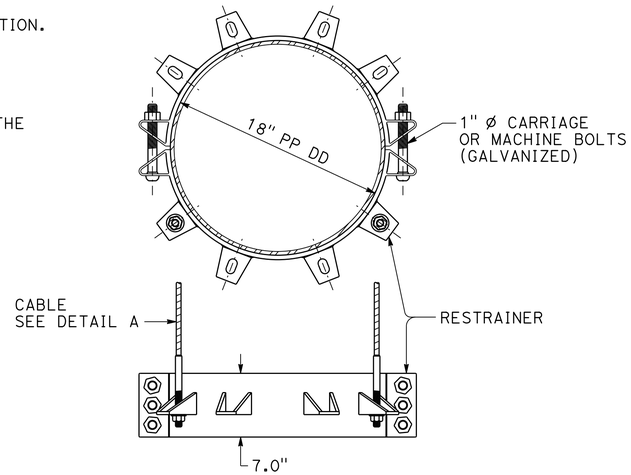

DETAIL C
RESTRAINER ASSEMBLY

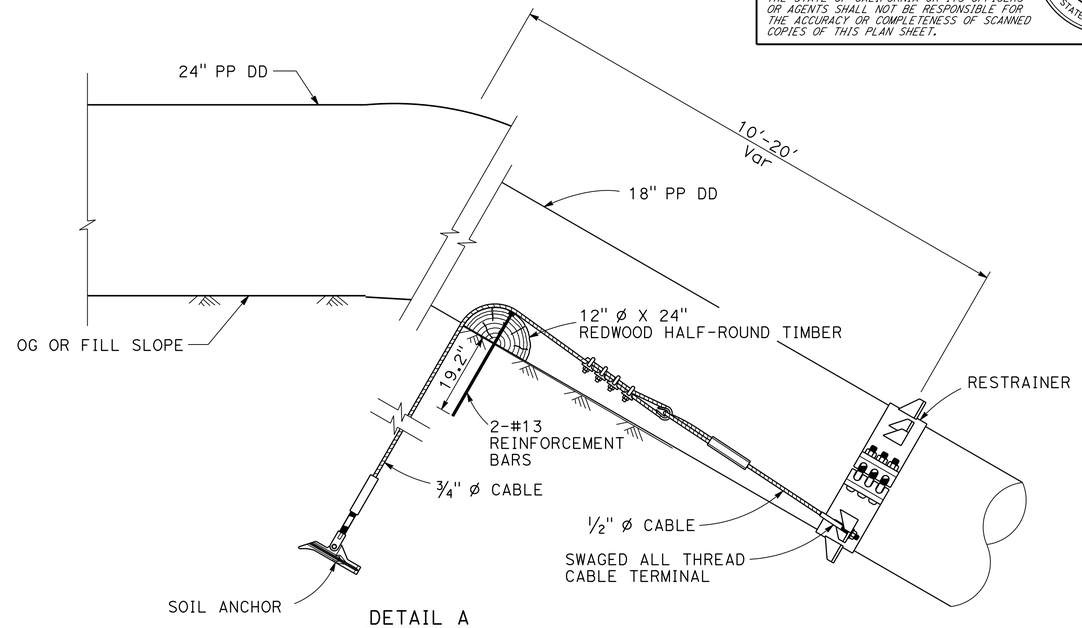

DETAIL A
EARTH ANCHORAGE SYSTEM DETAILS

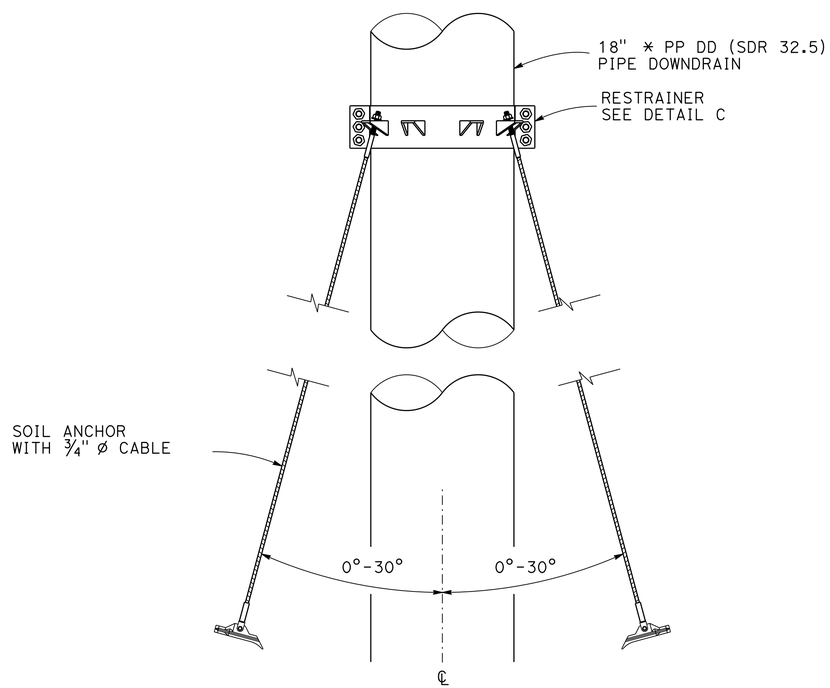

PLAN

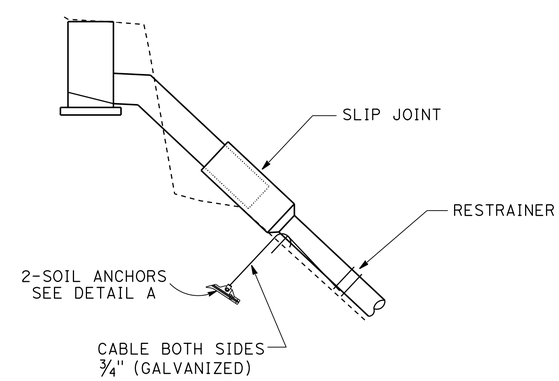

EARTH ANCHORAGE SYSTEM
LOCATION 2

DRAINAGE DETAILS
NO SCALE

DD-2

FUNCTIONAL SUPERVISOR	CAROLINE REYES
CALCULATED-DESIGNED BY	HAI HOANG
CHECKED BY	PATRICIA TECZON
REVISED BY	HH
DATE REVISED	07/15/13

STATE OF CALIFORNIA - DEPARTMENT OF TRANSPORTATION
Caltrans
10-DESIGN

LAST REVISION 00-00-00 | DATE PLOTTED => 27-MAR-2014 | TIME PLOTTED => 15:00

Dist	COUNTY	ROUTE	POST MILES TOTAL PROJECT	SHEET No.	TOTAL SHEETS
05	SCr	9	3.8/18.7	19	73

Patricia L. Teczon 3/24/14
REGISTERED CIVIL ENGINEER DATE

03-24-14
PLANS APPROVAL DATE

REGISTERED PROFESSIONAL ENGINEER Patricia Teczon No. 37294 Exp. 6/30/14 CIVIL STATE OF CALIFORNIA

THE STATE OF CALIFORNIA OR ITS OFFICERS OR AGENTS SHALL NOT BE RESPONSIBLE FOR THE ACCURACY OR COMPLETENESS OF SCANNED COPIES OF THIS PLAN SHEET.

NOTES:

1. FOR UNDERDRAIN DETAILS NOT SHOWN SEE STANDARD PLAN D102.
2. TOP OF CLASS III PERMEABLE MATERIAL IS 2.0' BELOW FG BENCH .

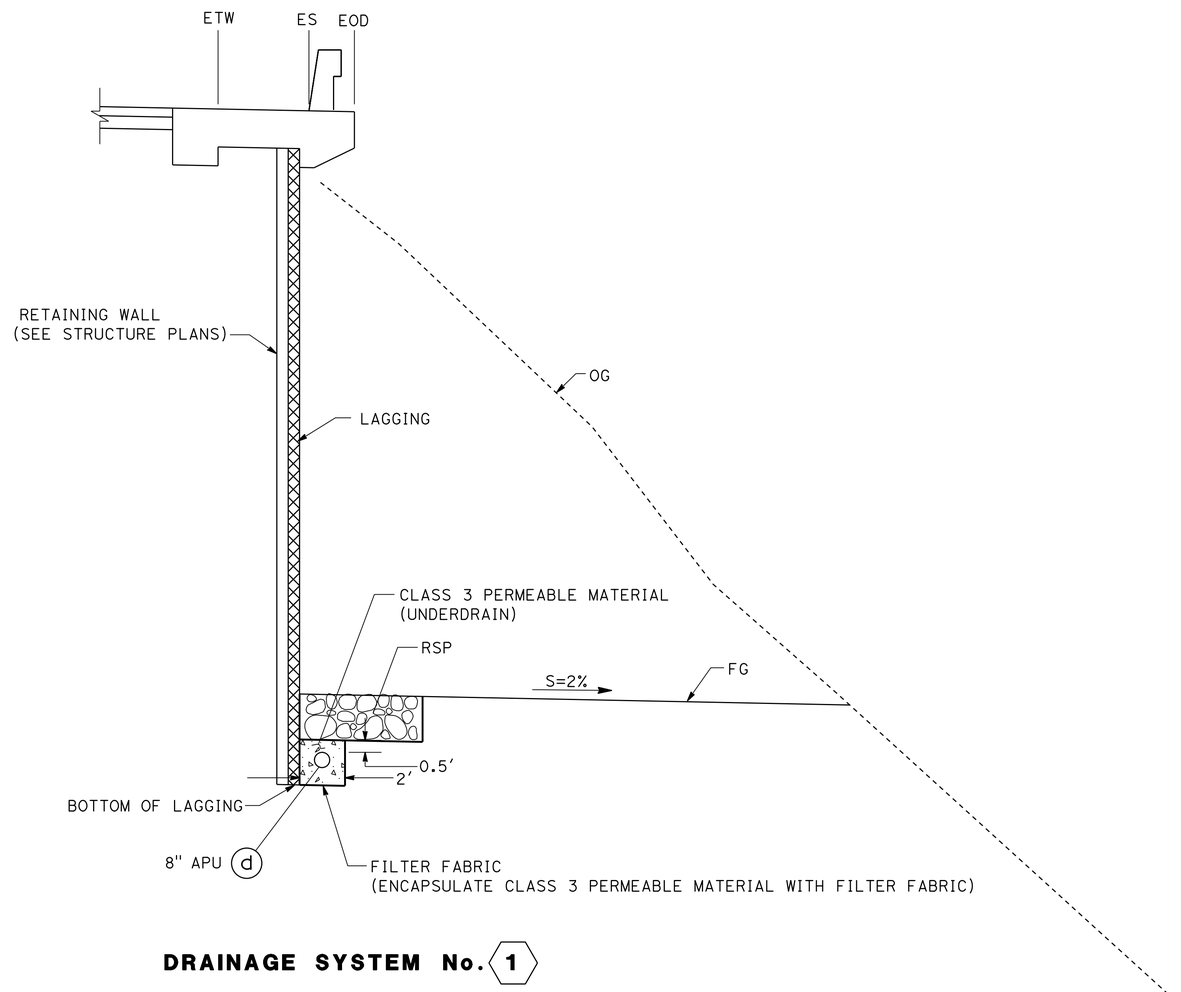

DRAINAGE SYSTEM No. 1

UNDERDRAIN DETAIL

LOCATION 1

DRAINAGE DETAILS

NO SCALE

DD-3

HAI HOANG	REVISED BY: HH
PATRICIA TECZON	DATE REVISED: 08/13/13
CALCULATED-DESIGNED BY	
CHECKED BY	
FUNCTIONAL SUPERVISOR	
CAROLINE REYES	

STATE OF CALIFORNIA - DEPARTMENT OF TRANSPORTATION
Caltrans
10-DESIGN

LAST REVISION 00-00-00
DATE PLOTTED => 27-MAR-2014
TIME PLOTTED => 15:00

Dist	COUNTY	ROUTE	POST MILES TOTAL PROJECT	SHEET No.	TOTAL SHEETS
05	SCr	9	3.8/18.7	20	73

Patricia L. Teczon 3/24/14
REGISTERED CIVIL ENGINEER DATE

03-24-14
PLANS APPROVAL DATE

REGISTERED PROFESSIONAL ENGINEER Patricia Teczon No. 37294 Exp. 6/30/14 CIVIL STATE OF CALIFORNIA

THE STATE OF CALIFORNIA OR ITS OFFICERS OR AGENTS SHALL NOT BE RESPONSIBLE FOR THE ACCURACY OR COMPLETENESS OF SCANNED COPIES OF THIS PLAN SHEET.

NOTES:

1. *-QUANTITY INCLUDED IN SUMMARY OF QUANTITIES
2. (N)-NOT A SEPARATE PAY ITEM, FOR INFORMATION ONLY

ALLOWABLE PIPE MATERIAL AND PROTECTION

DESIGNATION	CSP		PLASTIC
	SIZE (INCH)	THICKNESS (INCH)	SMOOTH INTERIOR (INCH)
APU	8	0.109	8

DRAINAGE ITEMS

DRAINAGE SYSTEM No. ⬡	DRAINAGE UNIT ○	REMOVE CULVERT LF	REMOVE DOWNDRAIN EA	REMOVE INLET EA	8" APU LF	18" RCP LF	21" CURED-IN-PLACE PIPELINER LF	18" PLASTIC PIPE DOWNDRAIN LF	24" PLASTIC PIPE DOWNDRAIN LF	18" PLASTIC PIPE LF	24" PLASTIC PIPE LF	18" ANCHOR ASSEMBLY EA	30" DOWNDRAIN SLIP JOINT EA	(N) REDUCER EA	24" AFES EA	36" CSPI (0.109" THICK) LF	(N) 8" APC RISER COVER EA	(N) 8" APC TEE EA	(N) 8" ABC ELBOW EA	(N) 8" APC 90° SWEEP R=1' EA	CONCRETE BAKCFILL (PIPE TRENCH) CY	PLACE HMA (MISCELLANEOUS AREA) SQYD	MISCELLANEOUS IRON & STEEL LB	MINOR CONCRETE (MINOR STRUCTURE) CY	RSP (LIGHT, METHOD B) CY	RSP FABRIC (CLASS 8) SQYD	(N) FILTER FABRIC (UNDERDRAIN) SQYD	(N) CLASS 3 PERMEABLE MATERIAL (UNDERDRAIN) CY	(N) PIPE JOINT CLASSIFICATON	(N) MAXIMUM COVER F+	(N) HEIGHT OF INLET F+	DESCRIPTION	STATION	DRAINAGE SYSTEM No. ⬡	DRAINAGE UNIT ○
1	a				3.8																											8" APU RISER	16.1' R+ 103+58.87 LOC1	1	a
																	1		1													8" APU RISER COVER/ELBOW			
	b				28.6																						40.1	8.1				8" APU PERFORATED			b
	c				6.7																											8" APU RISER	15.9' R+ 103+88.87 LOC1		c
																	1	1	1													8" APU RISER COVER/ELBOW/TEE			
	d				79.9																						81.1	13.3				8" APU PERFORATED			d
	e				8.2																											8" APU RISER	15.8' R+ 104+60.45 LOC1		e
																	1	2														8" APU RISER COVER/TEE			
	f				32.2																											8" APU OUTLET			f
																		1		1												8" APU 90° SWEEP R=1'/TEE			
	g				28.1																						38.8	7.7				8" APU PERFORATED			g
	h				3.7																											8" APU RISER	15.7' R+ 104+88.31 LOC1		h
																	1		1													8" APU RISER COVER/ELBOW			
2	a					26.8															3.9								S	3.1		18" RCP	104+95.66 LOC1 ℄	2	a
	b	42.2																														REMOVE CULVERT			b
	c																								1.6	5.8						RSP	23.7' R+ 104+96.46 LOC1		c
3	a															3.7							177								3.2	36" OMP INLET	23.8' L+ 545+50.0 LOC2	3	a
	b			1																												REMOVE INLET	23.8' L+ 545+50.0 LOC2		b
	c																					8.4										PAVED INLET APRON	23.8' L+ 545+50.0 LOC2		c
	d						43.2																									21" CIPP	545+49.09 LOC2 ℄		d
	e															5.9							236								5.4	36" GMP INLET	12.4' R+ 545+48.4 LOC2		e
	f								13.2																				DD			24" PP DD			f
	g												1	1																		30" x 6' SLIP JOINT			g
	h							34.8				2																	DD			18" PP DD			h
	i		1																													REMOVE DD			i
4	a																						239	1.0							3.2	G1 DI WITH 24-12X GRATE	19.0' L+ 623+02.0 LOC3	4	a
	b			1																												REMOVE INLET	19.0' L+ 623+02.0 LOC3		b
	c																					3.7										PAVED INLET APRON	19.0' L+ 623+02.0 LOC3		c
	d	40.8																														REMOVE CULVERT			d
	e					32.0															17.9								S	2.1		18" RCP	623+02.07 LOC3 ℄		e
	f																						239	1.1							3.6	G1 DI WITH 24-12X GRATE	14.4' R+ 623+02.2 LOC3		f
	g																					6.9										PAVED GUTTER	14.4' R+ 623+02.2 LOC3		g
	h							12.2																					DD	3.7		18" PP DD			h
	i																						239	1.3							4.4	G1 DI WITH 24-12X GRATE	25.5' R+ 623+02.3 LOC3		i
	j																					2.1										PAVED INLET APRON	25.5' R+ 623+02.3 LOC2		j
	k									29.8																			S	5.1		18" PP	LORENZO Ave		k
	l																								6.3	19.3						RSP	56.4' R+ 623+02.5 LOC3		l
5	a																															REMOVE PORTION OF Exist CULVERT	44.0' L+ 300+19.3 LOC4	5	a
	b	1.5														6.8							236								6.3	36" GMP INLET	44.0' L+ 300+19.3 LOC4		b
	c										14.7																		S	4.6		24" PP			c
	d														1																	24" AFES	57.6' L+ 300+11.8 LOC4		d
	e																								7.1	21.2						RSP	57.6' L+ 300+11.8 LOC4		e
		84.5	1	2	191.2	58.8	43.2	47.0	13.2	29.8	14.7	2	1		1	16.4					21.8	21.1*	1366	3.4	15.0*	46.3*						TOTAL			

DRAINAGE QUANTITIES DQ-1

HAI HOANG	PATRICIA TECZON	CAROLINE REYES	10-DESIGN
IS	12/04/13		
REVISED BY	DATE REVISED		
CALCULATED-DESIGNED BY	CHECKED BY	FUNCTIONAL SUPERVISOR	

STATE OF CALIFORNIA - DEPARTMENT OF TRANSPORTATION

Caltrans®

LAST REVISION 00-00-00 | DATE PLOTTED => 27-MAR-2014 | TIME PLOTTED => 15:00

Dist	COUNTY	ROUTE	POST MILES TOTAL PROJECT	SHEET No.	TOTAL SHEETS
05	SCr	9	3.8/18.7	21	73

Patricia L. Teczon 3/24/14
REGISTERED CIVIL ENGINEER DATE

03-24-14
PLANS APPROVAL DATE

REGISTERED PROFESSIONAL ENGINEER Patricia Teczon No. 37294 Exp. 6/30/14 CIVIL STATE OF CALIFORNIA

THE STATE OF CALIFORNIA OR ITS OFFICERS OR AGENTS SHALL NOT BE RESPONSIBLE FOR THE ACCURACY OR COMPLETENESS OF SCANNED COPIES OF THIS PLAN SHEET.

NOTES:

1. FOR ACCURATE RIGHT OF WAY DATA, CONTACT RIGHT OF WAY ENGINEERING AT THE DISTRICT OFFICE.
2. NO UTILITIES AT LOCATION 1.

LEGEND

- —— w —— —— —— w - SAN LORENZO WATER DISTRICT
- —— - t —— —— - -{oh}- AT&T
- —— - e —— —— -{oh} PG&E
- —— fo —— —— —— fo — AT&T

ABBREVIATIONS

AT&T - AMERICAN TELEPHONE AND TELEGRAPH

PG&E - PACIFIC GAS AND ELECTRIC

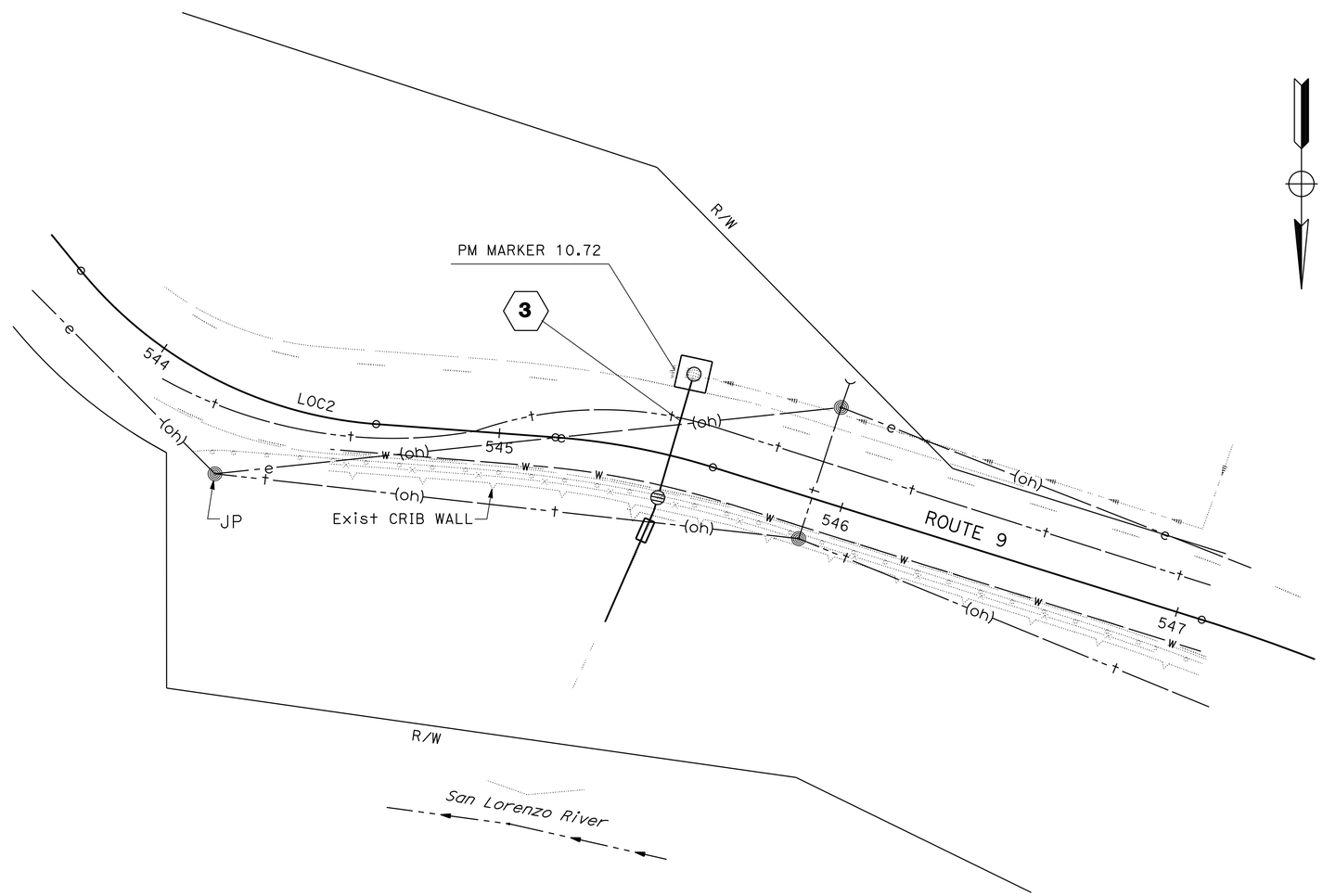

LOCATION 2
(PM 10.7)

APPROVED FOR UTILITY INFORMATION ONLY

UTILITY PLAN

SCALE: 1" = 20'

U-1

HAI HOANG	REVISED BY	HH	FUNCTIONAL SUPERVISOR
PATRICIA TECZON	DATE REVISED	05/03/13	CAROLINE REYES
CALCULATED-DESIGNED BY			
CHECKED BY			

STATE OF CALIFORNIA - DEPARTMENT OF TRANSPORTATION
Caltrans
10-DESIGN

LAST REVISION 00-00-00 | DATE PLOTTED => 27-MAR-2014 | TIME PLOTTED => 15:00

Dist	COUNTY	ROUTE	POST MILES TOTAL PROJECT	SHEET No.	TOTAL SHEETS
05	SCr	9	3.8/18.7	22	73

Patricia L. Teczon 3/24/14
REGISTERED CIVIL ENGINEER DATE

03-24-14
PLANS APPROVAL DATE

REGISTERED PROFESSIONAL ENGINEER Patricia Teczon No. 37294 Exp 6/30/14 CIVIL STATE OF CALIFORNIA

THE STATE OF CALIFORNIA OR ITS OFFICERS OR AGENTS SHALL NOT BE RESPONSIBLE FOR THE ACCURACY OR COMPLETENESS OF SCANNED COPIES OF THIS PLAN SHEET.

NOTE:

FOR ACCURATE RIGHT OF WAY DATA, CONTACT RIGHT OF WAY ENGINEERING AT THE DISTRICT OFFICE.

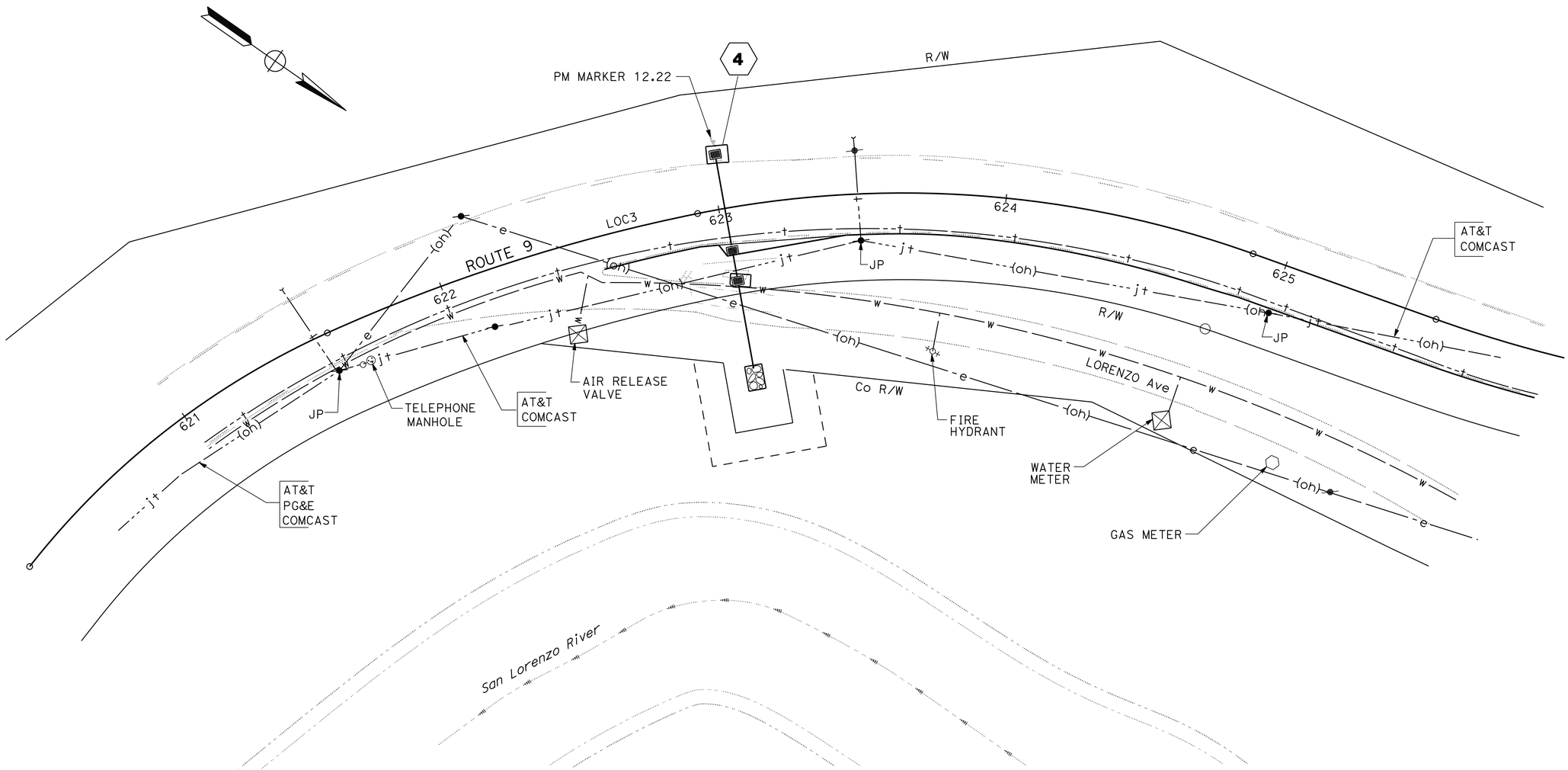

LOCATION 3

(PM 12.2)

APPROVED FOR UTILITY INFORMATION ONLY

UTILITY PLAN

SCALE: 1" = 20'

U-2

STATE OF CALIFORNIA - DEPARTMENT OF TRANSPORTATION
Caltrans® 10-DESIGN

FUNCTIONAL SUPERVISOR: CAROLINE REYES
CALCULATED-DESIGNED BY: HAI HOANG
CHECKED BY: PATRICIA TECZON
REVISED BY: HH
DATE REVISED: 08/14/13

LAST REVISION 00-00-00
DATE PLOTTED => 12-JUN-2014
TIME PLOTTED => 14:42

Dist	COUNTY	ROUTE	POST MILES TOTAL PROJECT	SHEET No.	TOTAL SHEETS
05	SCr	9	3.8/18.7	23	73

Patricia L. Teczon 3/24/14
REGISTERED CIVIL ENGINEER DATE

03-24-14
PLANS APPROVAL DATE

REGISTERED PROFESSIONAL ENGINEER Patricia Teczon No. 37294 Exp 6/30/14 CIVIL STATE OF CALIFORNIA

THE STATE OF CALIFORNIA OR ITS OFFICERS OR AGENTS SHALL NOT BE RESPONSIBLE FOR THE ACCURACY OR COMPLETENESS OF SCANNED COPIES OF THIS PLAN SHEET.

NOTE:

FOR ACCURATE RIGHT OF WAY DATA, CONTACT
RIGHT OF WAY ENGINEERING AT THE DISTRICT OFFICE.

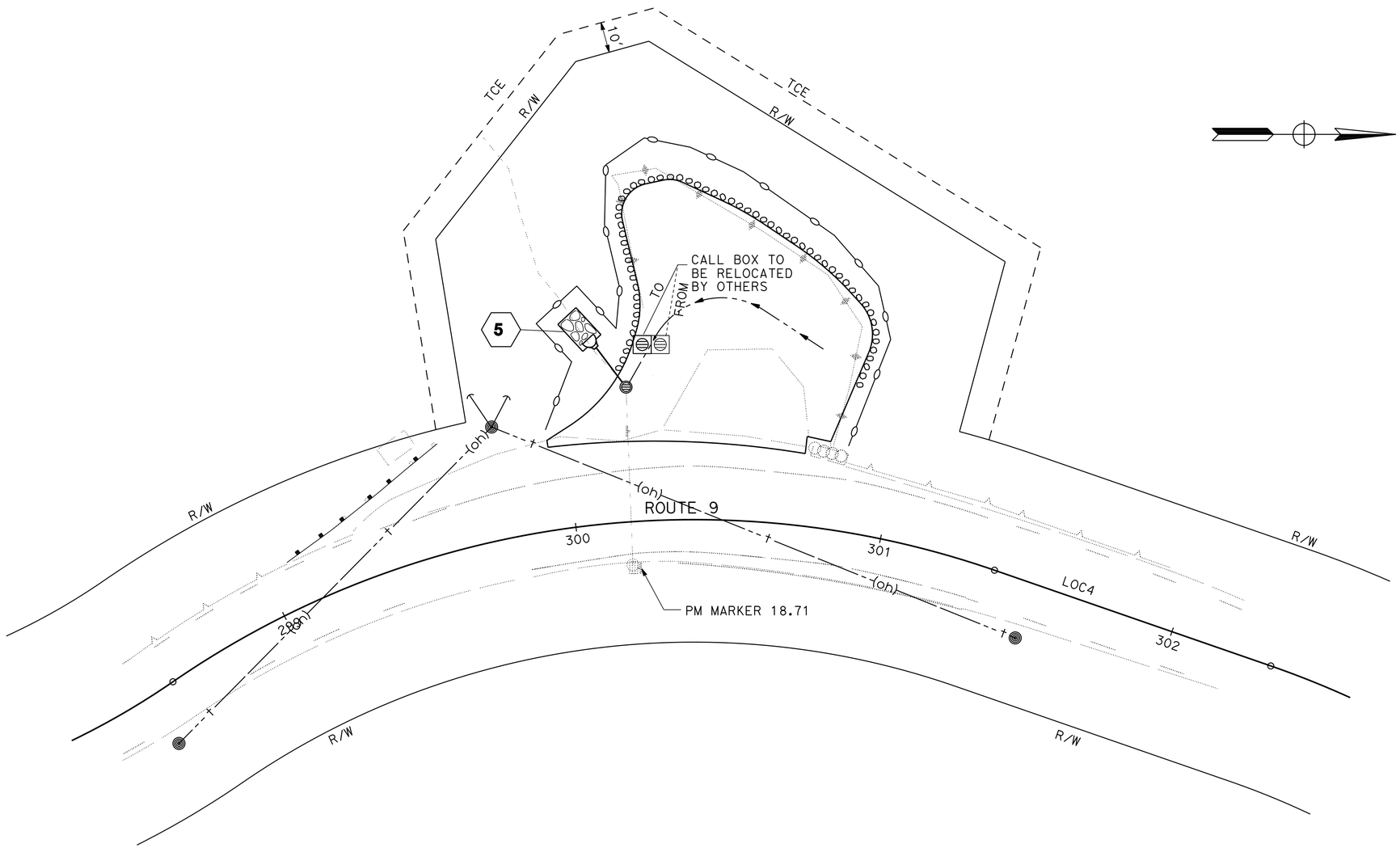

LOCATION 4
(PM 18.7)

APPROVED FOR UTILITY INFORMATION ONLY

UTILITY PLAN

SCALE: 1" = 20'

U-3

STATE OF CALIFORNIA - DEPARTMENT OF TRANSPORTATION
Caltrans®
10-DESIGN

FUNCTIONAL SUPERVISOR: CAROLINE REYES
CALCULATED-DESIGNED BY: HAI HOANG
CHECKED BY: PATRICIA TECZON
REVISED BY: HH
DATE REVISED: 08/14/13

LAST REVISION 00-00-00
DATE PLOTTED => 27-MAR-2014
TIME PLOTTED => 15:00

Dist	COUNTY	ROUTE	POST MILES TOTAL PROJECT	SHEET No.	TOTAL SHEETS
05	SCr	9	3.8/18.7	24	73

REGISTERED CIVIL ENGINEER 3/24/14 DATE

03-24-14
PLANS APPROVAL DATE

REGISTERED PROFESSIONAL ENGINEER HUE NGUYEN No. 74484 Exp. 12/31/15 CIVIL STATE OF CALIFORNIA

THE STATE OF CALIFORNIA OR ITS OFFICERS OR AGENTS SHALL NOT BE RESPONSIBLE FOR THE ACCURACY OR COMPLETENESS OF SCANNED COPIES OF THIS PLAN SHEET.

STATIONARY MOUNTED CONSTRUCTION AREA SIGNS

SIGN (X)	SIGN CODE FEDERAL	SIGN CODE CALIFORNIA	PANEL SIZE	SIGN MESSAGE	No. OF POST AND SIZE	No. OF SIGNS
(A)	G20-1		60" x 36"	ROAD WORK NEXT XX MILES	2 - 4" x 6"	2
(B)	G20-2		36" x 18"	END ROAD WORK	1 - 4" x 4"	2
(C)	W20-1		36" x 36"	ROAD WORK AHEAD	1 - 4" x 6"	7
(D)		C40(CA)	72" x 36"	TRAFFIC FINES DOUBLED IN CONSTRUCTION ZONES	2 - 4" x 6"	2
(E)		SC6(CA)(Mod)	96" x 60"	SPECIAL MESSAGE SIGN	2 - 6" x 6"	3
(F)		CPFIS	90" x 60"	CONSTRUCTION PROJECT FUNDING IDENTIFICATION SIGN	2 - 6" x 6"	2

NOTES:

1. LOCATION OF CONSTRUCTION AREA SIGNS ARE APPROXIMATE, EXACT LOCATION WILL BE DETERMINED BY THE ENGINEER.
2. FOR ADDITIONAL CONSTRUCTION AREA SIGNS, SEE MOTORIST INFORMATION PLANS MI-1, MI-2.

(E) SPECIAL MESSAGE SIGN

SC6(CA)(Modified)

ROAD WILL BE CLOSED
--- AM TO ---PM
(X) MILES AHEAD
BEGIN_____

60" x 96"

BLK/OR (6" D Caps)

Install 7 days before work requiring closure:
* CONTRACTOR TO INSERT MONTH AND DATE

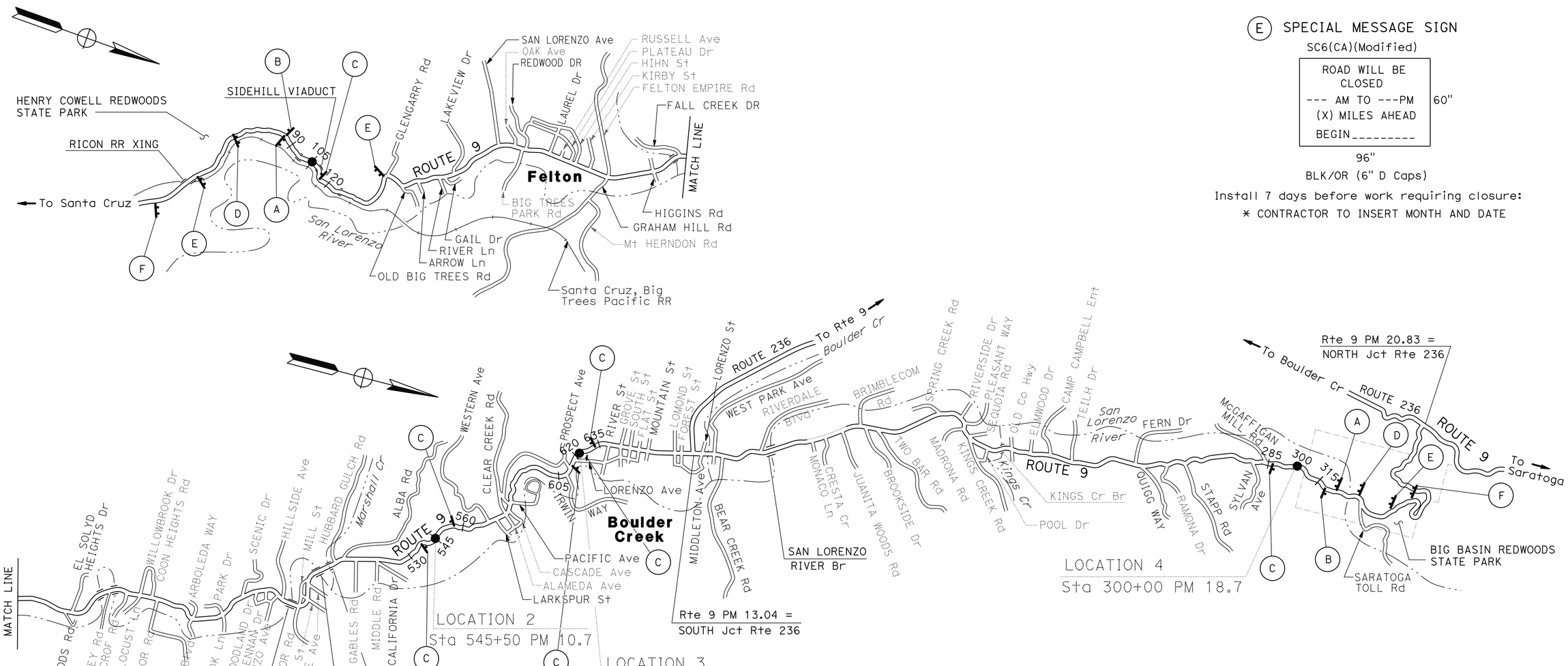

APPROVED FOR CONSTRUCTION AREA SIGN WORK ONLY

CONSTRUCTION AREA SIGNS

NO SCALE

CS-1

STATE OF CALIFORNIA - DEPARTMENT OF TRANSPORTATION
Caltrans® 10-TRAFFIC DESIGN

FUNCTIONAL SUPERVISOR: MOHAMMED QATAMI
CALCULATED-DESIGNED BY: FERNANDO LOPEZ
CHECKED BY: HUE NGUYEN
REVISED BY: RT
DATE REVISED: 07/17/13

LAST REVISION 00-00-00
DATE PLOTTED => 27-MAR-2014
TIME PLOTTED => 15:00

BORDER LAST REVISED 7/2/2010
USERNAME => s123936
DGN FILE => 50q5901a001.dgn
RELATIVE BORDER SCALE IS IN INCHES 0 1 2 3
UNIT 1512
PROJECT NUMBER & PHASE 05000003171

Dist	COUNTY	ROUTE	POST MILES TOTAL PROJECT	SHEET No.	TOTAL SHEETS
05	Scr	9	3.8/18.7	25	73

REGISTERED CIVIL ENGINEER 3/24/14 DATE

03-24-14
PLANS APPROVAL DATE

REGISTERED PROFESSIONAL ENGINEER HUE NGUYEN No. 74484 Exp. 12/31/15 CIVIL STATE OF CALIFORNIA

THE STATE OF CALIFORNIA OR ITS OFFICERS OR AGENTS SHALL NOT BE RESPONSIBLE FOR THE ACCURACY OR COMPLETENESS OF SCANNED COPIES OF THIS PLAN SHEET.

LEGEND:

- CONSTRUCTION AREA SIGN
- (XX) CONSTRUCTION AREA SIGN No.
- COVER EXISTING ROADSIDE OR OVERHEAD SIGN
- REPLACE MESSAGE
- INSTALL CONSTRUCTION AREA SIGNS
- PCMS = PORTABLE CHANGEABLE MESSAGE SIGN
- TYPE III BARRICADE
- COVER EXISTING PORTION OF SIGN MESSAGE

NOTES:

1. BLACK ON ORANGE.
2. USE CALTRANS ALPHABET, SERIES C FOR LETTERING.
3. FOR ADDITIONAL CONSTRUCTION AREA SIGNS, SEE SHEET CS-1.
4. SIGNS WILL BE PLACED AT LOCATIONS AS DETERMINED BY THE ENGINEER.
5. COVER ALL CONFLICTING SIGNS.

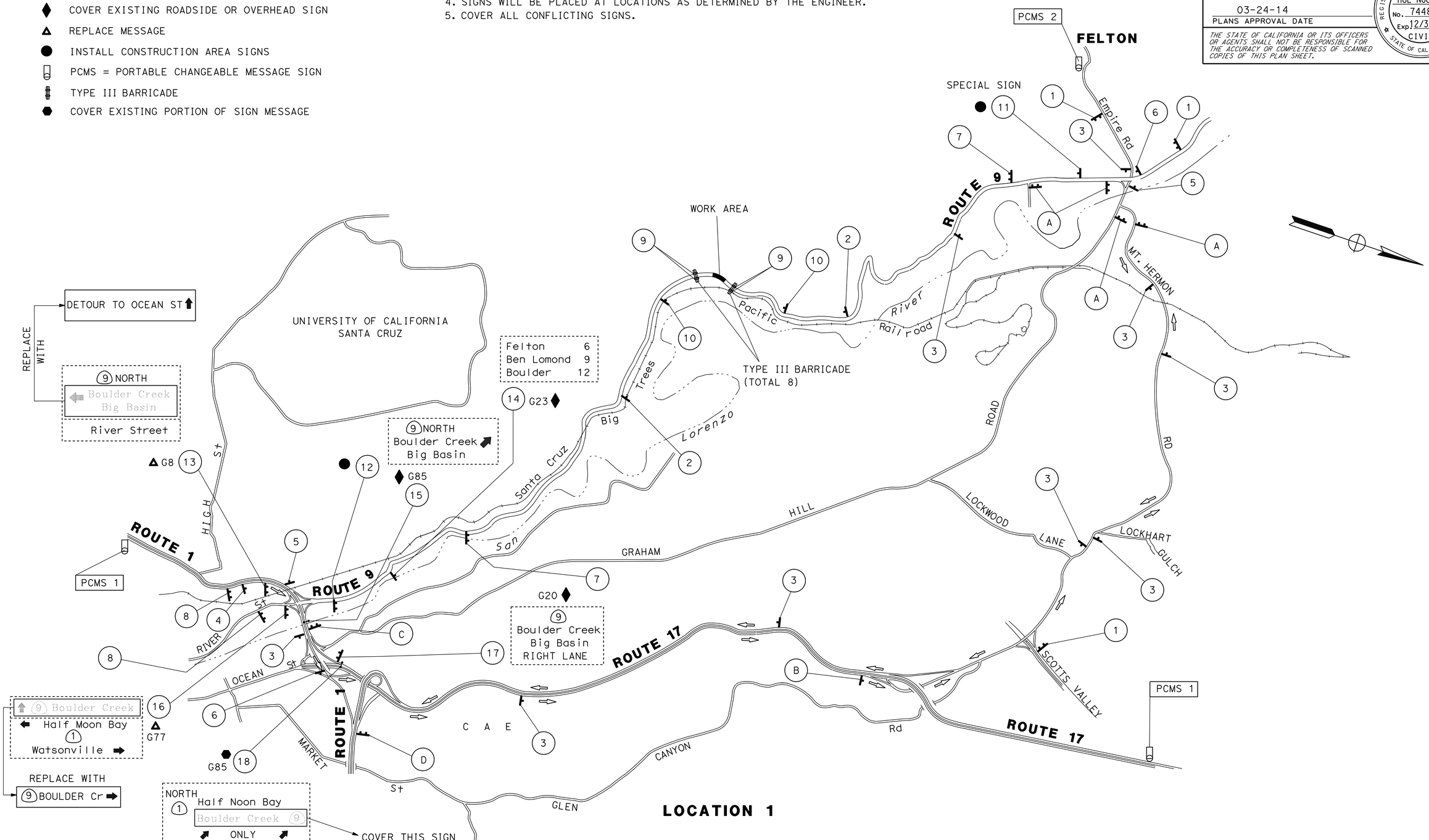

MOTORIST INFORMATION PLAN

NO SCALE

MI-1

APPROVED FOR MOTORIST INFORMATION WORK ONLY

RT	07/18/13		
FL	03/05/13		
REVISED BY	DATE REVISED		
FERNANDO LOPEZ	HUE NGUYEN		
CALCULATED-DESIGNED BY	CHECKED BY		
FUNCTIONAL SUPERVISOR	MOHAMMED QATAMI		

STATE OF CALIFORNIA - DEPARTMENT OF TRANSPORTATION
Caltrans 10-TRAFFIC DESIGN

LAST REVISION 00-00-00
DATE PLOTTED => 27-MAR-2014
TIME PLOTTED => 15:00

Dist	COUNTY	ROUTE	POST MILES TOTAL PROJECT	SHEET No.	TOTAL SHEETS
05	Scr	9	3.8/18.7	26	73

REGISTERED CIVIL ENGINEER 3/24/14 DATE

03-24-14
PLANS APPROVAL DATE

REGISTERED PROFESSIONAL ENGINEER HUE NGUYEN No. 74484 Exp. 12/31/15 CIVIL STATE OF CALIFORNIA

THE STATE OF CALIFORNIA OR ITS OFFICERS OR AGENTS SHALL NOT BE RESPONSIBLE FOR THE ACCURACY OR COMPLETENESS OF SCANNED COPIES OF THIS PLAN SHEET.

(1) SC7(CA)(SPECIAL)

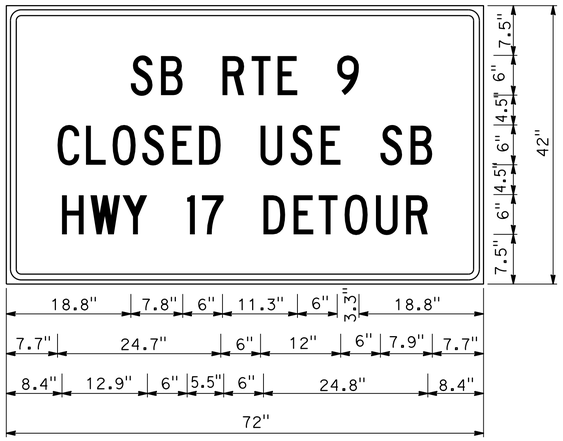

2.3" RADIUS, 0.9" BORDER, 0.6" INDENT, BLACK ON ORANGE;
[SB RTE 9] C; [CLOSED USE SB] C;
[HWY 17 DETOUR] C;

LOCATION 1

(8) SC7(CA)(SPECIAL) MIQ-1

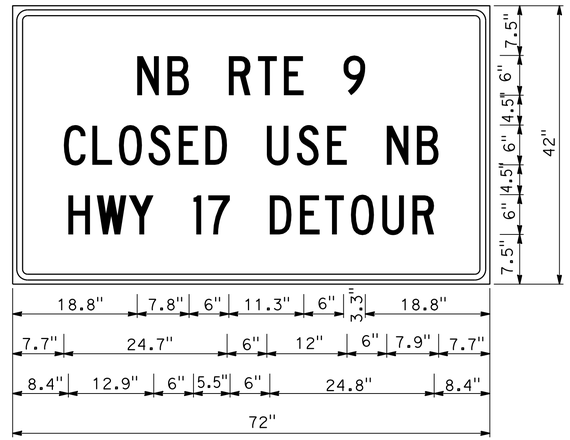

2.3" RADIUS, 0.9" BORDER, 0.6" INDENT, BLACK ON ORANGE;
[SB RTE 9] C; [CLOSED USE SB] C;
[HWY 17 DETOUR] C;

LOCATION 1

(13) MESSAGE OVERLAY SIGN

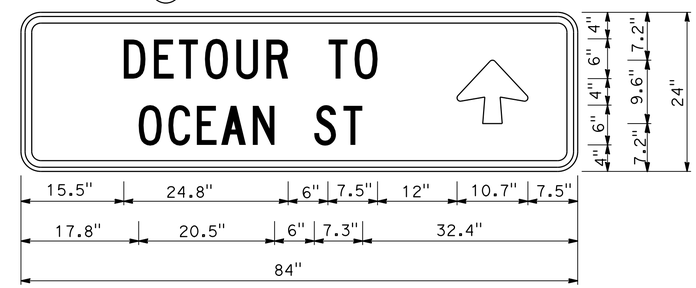

3.0" RADIUS, 1.0" BORDER, 0.6" INDENT, BLACK ON ORANGE;
[DETOUR TO] C; [OCEAN ST] C;
ARROW 6UC-2LH - 9.6" 90°;

LOCATION 1

(11) SPECIAL SIGN

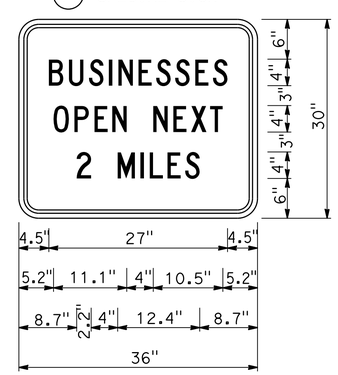

3.0" RADIUS, 0.5" BORDER, 0.8" INDENT, BLACK ON ORANGE;
[BUSINESSES] C;
[OPEN NEXT] C;
[2 MILES] C;

LOCATION 1

(12) ADVANCE MESSAGE SIGN

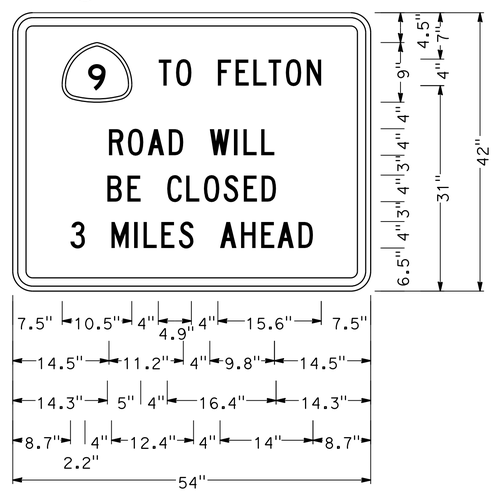

3.0" RADIUS, 1.3" BORDER, 0.8" INDENT, BLACK ON ORANGE;
[TO FELTON] C;
[ROAD WILL] C;
[BE CLOSED] C;
[3 MILES AHEAD] C;

LOCATION 1

(16) MESSAGE OVERLAY SIGN

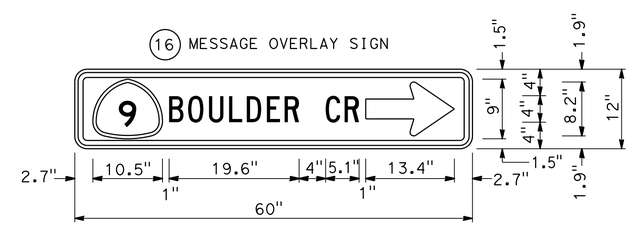

1.9" RADIUS, 0.8" BORDER, 0.5" INDENT, BLACK ON ORANGE;
[BOULDER CR] C;
STANDARD ARROW CUSTOM 13.4" X 8.1" 0°;

LOCATION 1

MOTORIST INFORMATION DETAILS

NO SCALE

MID-1

RT	02/24/14
FL	03/11/13
REVISED BY	DATE REVISED
FERNANDO LOPEZ	HUE NGUYEN
CALCULATED-DESIGNED BY	CHECKED BY
FUNCTIONAL SUPERVISOR	MOHAMMED QATAMI

STATE OF CALIFORNIA - DEPARTMENT OF TRANSPORTATION
Caltrans 10-TRAFFIC DESIGN

LAST REVISION 00-00-00 | DATE PLOTTED => 27-MAR-2014 | TIME PLOTTED => 15:00

Dist	COUNTY	ROUTE	POST MILES TOTAL PROJECT	SHEET No.	TOTAL SHEETS
05	SCr	9	3.8/18.7	27	73

REGISTERED CIVIL ENGINEER 3/24/14 DATE

03-24-14
PLANS APPROVAL DATE

REGISTERED PROFESSIONAL ENGINEER HUE NGUYEN No. 74484 Exp. 12/31/15 CIVIL STATE OF CALIFORNIA

THE STATE OF CALIFORNIA OR ITS OFFICERS OR AGENTS SHALL NOT BE RESPONSIBLE FOR THE ACCURACY OR COMPLETENESS OF SCANNED COPIES OF THIS PLAN SHEET.

STATIONARY MOUNTED CONSTRUCTION AREA SIGNS

SIGN No. (X)	SIGN CODE FEDERAL	SIGN CODE CALIFORNIA	PANEL SIZE	SIGN MESSAGE	NUMBER OF POSTS AND SIZE	NUMBER OF SIGNS	TYPE III BARRICADE EA	REMARKS
1		SC7(CA)(SPECIAL)	72" x 42"	SB RTE 9 CLOSED USE SB HWY 17 DETOUR	2 - 4" x 6"	3		
2		C19(CA)	36" x 36"	ROAD CLOSED AHEAD	1 - 4" x 4"	2		
3		SC3(CA)	48" x 18"	DETOUR WITH ARROW	1 - 4" x 6"	9		
4	W20-2		36" x 36"	DETOUR AHEAD	1 - 4" x 4"	1		
5	M4-8a		24" x 18"	END DETOUR	1 - 4" x 4"	2		
6	M4-10(Lt)		48" x 18"	DETOUR ARROW	1 - 4" x 6"	2		
7	R11-4		60" x 30"	ROAD CLOSED TO THRU TRAFFIC	2 - 4" x 6"	2		
8		SC7(CA)(SPECIAL)	72" x 42"	NB RTE 9 CLOSED USE NB HWY 17 DETOUR	2 - 4" x 6"	2		
9	R11-2		48" x 30"	ROAD CLOSED		4	8	MOUNT ON TYPE III BARRICADE
10	W20-3		36" x 36"	ROAD CLOSED AHEAD	1 - 4" x 4"	2		
11	SPECIAL SIGN		36" x 30"	BUSINESSES OPEN NEXT 2 MILES	1 - 4" x 6"	1		
12	SPECIAL SIGN		54" x 42"	9 TO FELTON ROAD WILL BE CLOSED 3 MILES AHEAD	2 - 6" x 6"	1		
13		G8(CA)	84" x 24"	DETOUR TO OCEAN ST ↑		1		COVER "← Boulder Creek Big Basin"
14		G23(CA)				1		COVER EXISTING ROADSIDE SIGN
15		G85(CA)				1		COVER EXISTING OVERHEAD SIGN
16		G77(CA)	60" x 12"	9 BOULDER Cr →		1		COVER "↑ 9 Boulder Creek"
17		G20(CA)				1		COVER EXISTING ROADSIDE SIGN
18		G85(CA)	216" x 18"			1		COVER "Boulder Creek 9"
A		SC7(CA)(SPECIAL)	72" x 42"	SB RTE 9 CLOSED USE SB HWY 17 DETOUR	2 - 4" x 6"	4		
	M4-10(Rt)		48" x 18"	DETOUR ARROW				
B	M4-10(Rt)		48" x 18"	DETOUR ARROW	1 - 6" x 6"	1		
	M4-5		24" x 12"	TO				
		G28-2(CA)(9)	21" x 18"	STATE ROUTE MARKER (9)				
C		SC7(CA)(SPECIAL)	72" x 42"	NB RTE 9 CLOSED USE NB HWY 17 DETOUR	2 - 4" x 6"	1		
	M4-5		24" x 12"	TO				
		G28-2(CA)(9)	21" x 18"	STATE ROUTE MARKER (9)				
D		SC7(CA)(SPECIAL)	72" x 42"	NB RTE 9 CLOSED USE NB HWY 17 DETOUR	2 - 4" x 6"	1		
	M4-10(Rt)		48" x 18"	DETOUR ARROW				
	M4-5		24" x 12"	TO				
		G28-2(CA)(9)	21" x 18"	STATE ROUTE MARKER (9)				

NOTES:

1. DURING THE NB ROUTE 9 COMPLETE CLOSURE THE PCMS MESSAGE AT PCMS 1 SHOULD READ

NB RTE 9 CLOSED	→	USE DETOUR
1ST FRAME		2ND FRAME

2. DURING THE SB ROUTE 9 COMPLETE CLOSURE THE PCMS MESSAGE AT PCMS 2 SHOULD READ

SB RTE 9 CLOSED	→	USE DETOUR
1ST FRAME		2ND FRAME

MOTORIST INFORMATION DETAILS AND QUANTITIES

(LOCATION 1)

MIQ-1

HN	RT	FL	REVISED BY	CALCULATED-DESIGNED BY	FUNCTIONAL SUPERVISOR
11/01/13	07/18/13	03/05/13	DATE REVISED	CHECKED BY	
			FERNANDO LOPEZ	HUE NGUYEN	MOHAMMED QATAMI

STATE OF CALIFORNIA - DEPARTMENT OF TRANSPORTATION
Caltrans® 10-TRAFFIC DESIGN

LAST REVISION 00-00-00 DATE PLOTTED => 27-MAR-2014 TIME PLOTTED => 15:00

Dist	COUNTY	ROUTE	POST MILES TOTAL PROJECT	SHEET No.	TOTAL SHEETS
05	SCr	9	3.8/18.7	28	73

REGISTERED CIVIL ENGINEER 3/24/14 DATE

03-24-14
PLANS APPROVAL DATE

REGISTERED PROFESSIONAL ENGINEER HUE NGUYEN No. 74484 Exp. 12/31/15 CIVIL STATE OF CALIFORNIA

THE STATE OF CALIFORNIA OR ITS OFFICERS OR AGENTS SHALL NOT BE RESPONSIBLE FOR THE ACCURACY OR COMPLETENESS OF SCANNED COPIES OF THIS PLAN SHEET.

LEGEND:

- XX - 4" THERMOPLASTIC TRAFFIC STRIPE DETAIL No.
- F - DELINEATOR (CLASS 1) TYPE F
- CONCRETE BARRIER DELINEATOR
- S - DELINEATOR SPACING
- DIRECTION OF TRAFFIC
- REMOVE MARKER (TYPE P)
- RESET MILEPOST MARKER
- REMOVE DELINEATOR
- REMOVE MARKER (TYPE L-1)
- OBJECT MARKER (TYPE P)

NOTE:

FOR ACCURATE RIGHT OF WAY DATA, CONTACT RIGHT OF WAY ENGINEERING AT THE DISTRICT OFFICE.

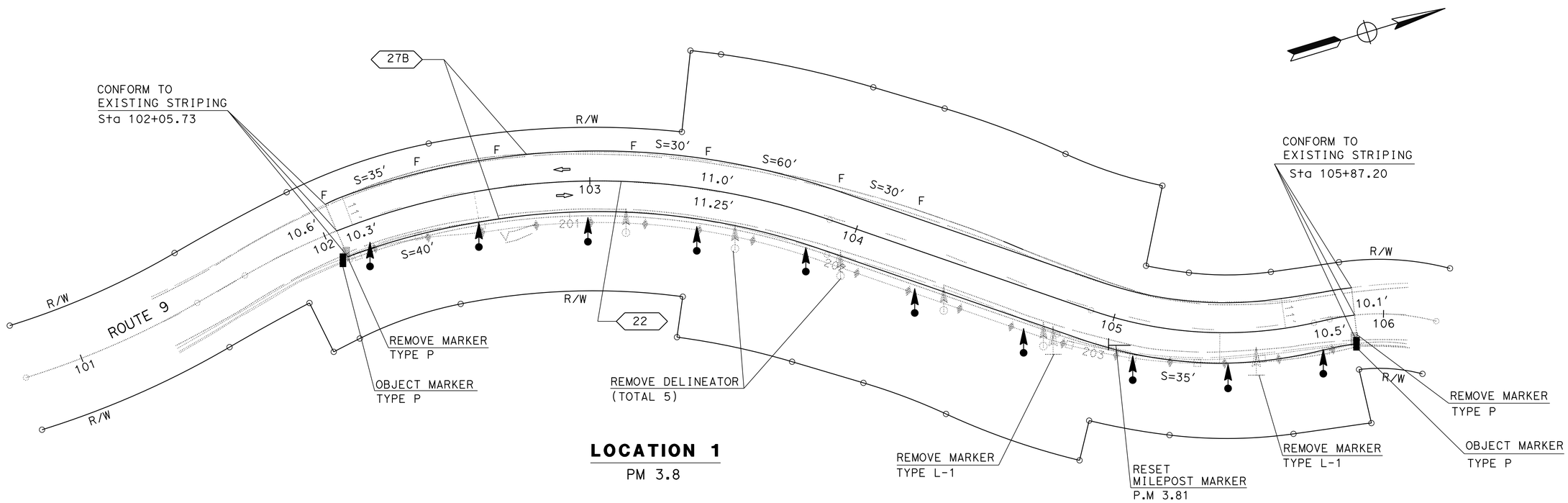

LOCATION 1
PM 3.8

PAVEMENT DELINEATION PLAN

SCALE: 1" = 20′

PD-1

APPROVED FOR PAVEMENT DELINEATION WORK ONLY

REVISED BY	DATE REVISED
RT	07/18/13
FL	03/06/13

FERNANDO LOPEZ — CALCULATED-DESIGNED BY
HUE NGUYEN — CHECKED BY
MOHAMMED QATAMI — FUNCTIONAL SUPERVISOR

STATE OF CALIFORNIA - DEPARTMENT OF TRANSPORTATION
Caltrans® 10-TRAFFIC DESIGN

LAST REVISION 00-00-00 | DATE PLOTTED => 27-MAR-2014 | TIME PLOTTED => 15:00

Dist	COUNTY	ROUTE	POST MILES TOTAL PROJECT	SHEET No.	TOTAL SHEETS
05	SCr	9	3.8/18.7	29	73

REGISTERED CIVIL ENGINEER 3/24/14 DATE

03-24-14
PLANS APPROVAL DATE

REGISTERED PROFESSIONAL ENGINEER HUE NGUYEN No. 74484 Exp. 12/31/15 CIVIL STATE OF CALIFORNIA

THE STATE OF CALIFORNIA OR ITS OFFICERS OR AGENTS SHALL NOT BE RESPONSIBLE FOR THE ACCURACY OR COMPLETENESS OF SCANNED COPIES OF THIS PLAN SHEET.

NOTE:

FOR ACCURATE RIGHT OF WAY DATA, CONTACT RIGHT OF WAY ENGINEERING AT THE DISTRICT OFFICE.

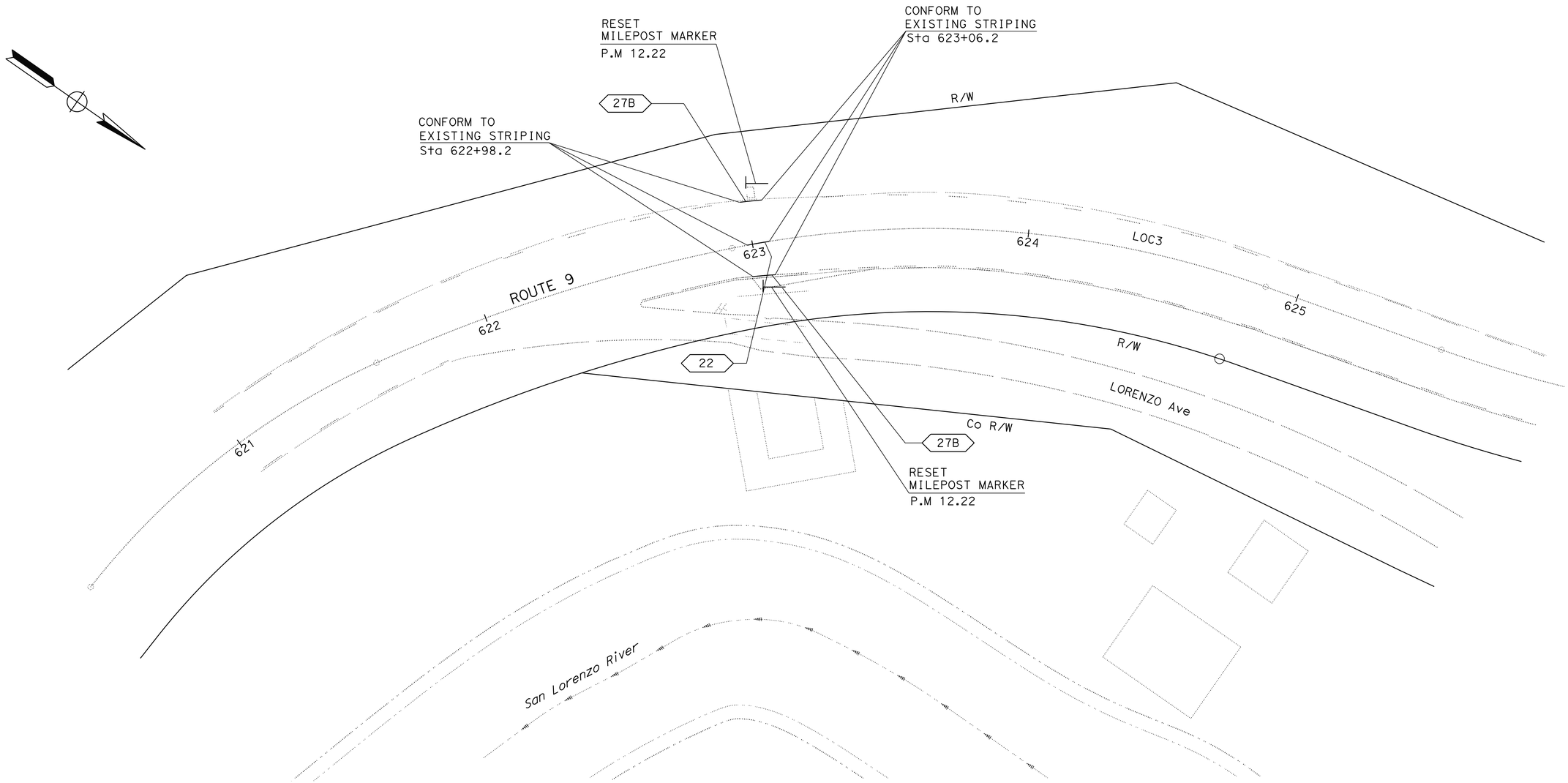

LOCATION 3

(PM 12.2)

PAVEMENT DELINEATION PLAN

SCALE: 1" = 20'

PD-2

APPROVED FOR PAVEMENT DELINEATION WORK ONLY

REVISED BY	DATE REVISED
RT	02/24/14

CALCULATED-DESIGNED BY: RAJINI TEKALKOTE
CHECKED BY: HUE NGUYEN

FUNCTIONAL SUPERVISOR: MOHAMMED QATAMI

STATE OF CALIFORNIA - DEPARTMENT OF TRANSPORTATION
Caltrans® 10-TRAFFIC DESIGN

LAST REVISION 00-00-00
DATE PLOTTED => 27-MAR-2014
TIME PLOTTED => 15:00

Dist	COUNTY	ROUTE	POST MILES TOTAL PROJECT	SHEET No.	TOTAL SHEETS
05	SCr	9	3.8/18.7	30	73

REGISTERED CIVIL ENGINEER 3/24/14 DATE

03-24-14
PLANS APPROVAL DATE

REGISTERED PROFESSIONAL ENGINEER HUE NGUYEN No. 74484 Exp. 12/31/15 CIVIL STATE OF CALIFORNIA

THE STATE OF CALIFORNIA OR ITS OFFICERS OR AGENTS SHALL NOT BE RESPONSIBLE FOR THE ACCURACY OR COMPLETENESS OF SCANNED COPIES OF THIS PLAN SHEET.

PAVEMENT DELINEATION QUANTITIES

SHEET No.	LOCATION/ STATION	DIRECTION	THERMOPLASTIC TRAFFIC STRIPE (SPRAYABLE) 4" YELLOW DETAIL 22	THERMOPLASTIC TRAFFIC STRIPE (SPRAYABLE) 4" WHITE DETAIL 27B	REMOVE MARKER TYPE P	REMOVE MARKER TYPE L-1	REMOVE DELINEATOR	RESET MILEPOST MARKER	PAVEMENT MARKER (RETRO-REFLECTIVE) TYPE D	CONCRETE BARRIER DELINEATOR (FLEXIBLE POST)	DELINEATOR (CLASS 1) TYPE F	OBJECT MARKER TYPE P	REMARKS
			LF	LF	EA	EA	EA	EA	EA	EA	EA	EA	
PD-1	102+05 TO 105+87	NB	764	382	2	2	5	1	34	10		2	PM 3.81
		SB		382							7		
PD-2	622+98.2 TO 623+06.2	NB	16	8				1	2				PM 12.22
		SB		8				1					
D-2	LOCATION 2	SB						1					PM 10.72
L-2	LOCATION 4	SB						1					PM 18.71
SUBTOTAL			780	780	2	2							
TOTAL			1560		4		5	5	36	10	7	2	

PAVEMENT DELINEATION QUANTITIES

PDQ-1

STATE OF CALIFORNIA - DEPARTMENT OF TRANSPORTATION
Caltrans 10-TRAFFIC DESIGN

FUNCTIONAL SUPERVISOR: MOHAMMED QATAMI
CALCULATED-DESIGNED BY: RAJINI TEKALKOTE
CHECKED BY: HUE NGUYEN
REVISED BY: HN
DATE REVISED: 12/04/13

LAST REVISION 00-00-00
DATE PLOTTED => 27-MAR-2014
TIME PLOTTED => 15:00

Dist	COUNTY	ROUTE	POST MILES TOTAL PROJECT	SHEET No.	TOTAL SHEETS
05	SCr	9	3.8/18.7	31	73

Patricia L. Teczon 3/24/14
REGISTERED CIVIL ENGINEER DATE

03-24-14
PLANS APPROVAL DATE

REGISTERED PROFESSIONAL ENGINEER Patricia Teczon No. 37294 Exp. 6/30/14 CIVIL STATE OF CALIFORNIA

THE STATE OF CALIFORNIA OR ITS OFFICERS OR AGENTS SHALL NOT BE RESPONSIBLE FOR THE ACCURACY OR COMPLETENESS OF SCANNED COPIES OF THIS PLAN SHEET.

NOTES:

1. (N) - NOT A SEPARATE PAY ITEM, FOR INFORMATION ONLY.
2. * - QUANTITY INCLUDED IN THE PAVEMENT STRUCTURAL SECTION ITEMS TABLE.
3. TEMPORARY LARGE SEDIMENT BARRIER MUST CONFORM WITH FIBER ROLL SHOWN ON SHEET ECL-1.

ROCK SLOPE PROTECTION

LOCATION	STATION TO STATION	RSP (LIGHT, METHOD B)	RSP (FACING, METHOD B)	RSP (FABRIC, CLASS 8)	ROCK STAIN
		CY	CY	SQYD	SQFT
1	102+31.0 TO 104+28.2 R+ LOC1		53.8	165.4	726.8
	105+56.5 TO 105+88.0 R+ LOC1		18.3	44.4	247.3
2,3,4	SEE DQ-1 FOR DRAINAGE RSP	15.0		46.3	247.2
	TOTAL	15.0	72.1	256.1	1221.3

PAVEMENT STRUCTURAL SECTION ITEMS

LOCATION	STATION TO STATION	HMA (TYPE A)	CI 2 AB	COLD PLANE AC PAVEMENT	TACK COAT	PLACE HMA (Misc AREA)	GEOSYNTHETIC Pvmt INTERLAYER (PAVING FABRIC)
		TON	CY	SQYD	TON	SQYD	SQYD
1	102+05.7 TO 105+87.0 LOC1	223.0	81.1	489.8	0.14		169.5
4	299+94.8 TO 300+86.56 LOC4	153.5	68.2		0.11		
	HMA DIKE	19.7			0.01		
	MISC AREA (FROM DQ-1)	2.8				21.1	
3	DRAINAGE SYSTEM NO. 4	2.4					
	LORENZO Ave	5.0					
	TOTAL	406.4	149.3	489.8	0.26	21.1	169.5

EARTHWORK SUMMARY

LOCATION	STATION TO STATION	ROADWAY EXCAVATION	EMBANKMENT (N)
		CY	CY
1	102+05.73 TO 103+47.68 R+ LOC1	241	
	103+47.68 TO 104+83.68 R+ LOC1	1781	445
	104+83.68 TO 105+87.20 R+ LOC1	241	
	102+89.0 TO 103+60.0 L+ LOC1	5	
	105+20.0 TO 105+83.0 L+ LOC1	5	
4	299+94.76 TO 300+86.56 L+ LOC4	239	27
	TOTAL	2512	

TEMPORARY FIBER ROLL

LOCATION	DRAINAGE SYSTEM No.	STATION TO STATION	LF
3	3	55.0' R+ 623+02.5 LOC3	12
4		300+06 TO 300+85 L+ LOC4	284
		TOTAL	296

TEMPORARY DRAINAGE INLET PROTECTION

LOCATION	DRAINAGE SYSTEM No.	STATION	EA
1	2	10.3 L+ 101+92.8 LOC1	1
	2	13.7 L+ 104+95.8 LOC1	1
4	4	44.0' L+ 300+19.3 LOC4	1
		TOTAL	3

LANDSCAPE BOULDERS

LOCATION	STATION TO STATION	EA
4	300+16 TO 300+87	60

EXISTING TREES WITHIN LIMITS OF GRADING (N)

Loc	STATION	L+	R+	TYPE	BREAST HEIGHT DIAMETER
1	102+09.6 LOC1		X	REDWOOD	1.30'
	102+14.9 LOC1		X	REDWOOD	7.00'
	103+69.4 LOC1		X	TANOAK	2.00'
	103+99.2 LOC1		X	REDWOOD	3.00'
	104+01.1 LOC1		X	REDWOOD	2.00'
	104+01.3 LOC1		X	REDWOOD	2.00'
	104+08.1 LOC1		X	REDWOOD	2.50'
	104+09.2 LOC1		X	REDWOOD	3.00'
	104+18.7 LOC1		X	REDWOOD	3.00'
	104+26.3 LOC1		X	REDWOOD	3.00'
	104+34.4 LOC1		X	REDWOOD	3.50'
	104+36.2 LOC1		X	REDWOOD	2.50'
	104+37.3 LOC1		X	REDWOOD	4.00'
	104+42.0 LOC1		X	REDWOOD	2.50'
	104+42.0 LOC1		X	REDWOOD	2.50'
	104+43.4 LOC1		X	REDWOOD	3.00'
	104+55.1 LOC1		X	REDWOOD	3.50'

REMOVE GUARDRAIL

LOCATION	STATION TO STATION	REMOVE GR	TREATED WOOD WASTE
		LF	LB
1	102+05.7 TO 102+70.2 R+ LOC1	64.5	931.2
	104+74.7 TO 105+87.2 R+ LOC1	112.5	1520.4
	TOTAL	177.0	2451.6

PLACE HMA DIKE (TYPE E)

LOCATION	STATION TO STATION	LF	HMA (TYPE A)
			TON
3	622+56.3 TO 625+95.2 L+ LOC3	333.0	11.8
4	299+94.8 TO 300+78.6 R+ LOC4	224.2	7.9
	TOTAL	567.2	19.7 *

TEMPORARY LARGE SEDIMENT BARRIER

LOCATION	STATION TO STATION	LF
1	102+05.7 TO 105+87.0	380

TEMPORARY FENCE (ESA)

LOCATION	STATION TO STATION	LF
1	22.4' R+ 102+15.0 LOC1	25.0
	21.0' R+ 102+85 LOC1	25.0
4	299+94.8 TO 300+85.0 L+ LOC4	295.2
	TOTAL	345.2

SALVAGE CONCRETE BARRIER (TYPE K)

LOCATION	STATION TO STATION	LF
4	300+25.2 TO 300+80.6 L+ LOC4	186

REMOVE AC DIKE

LOCATION	STATION TO STATION	LF
3	622+56.3 TO 625+95.2 L+ LOC3	339

SUMMARY OF QUANTITIES
Q-1

REVISED BY	DATE REVISED	CALCULATED-DESIGNED BY	CHECKED BY	FUNCTIONAL SUPERVISOR
SL	03/07/14	HAI HOANG	PATRICIA TECZON	CAROLINE REYES

STATE OF CALIFORNIA - DEPARTMENT OF TRANSPORTATION
Caltrans® 10-DESIGN

LAST REVISION 00-00-00 | DATE PLOTTED => 27-MAR-2014 | TIME PLOTTED => 15:00

Dist	COUNTY	ROUTE	POST MILES TOTAL PROJECT	SHEET No.	TOTAL SHEETS
5	SCr	9	3.8/18.7	32	73

LICENSED LANDSCAPE ARCHITECT

03-24-14

PLANS APPROVAL DATE

LICENSED LANDSCAPE ARCHITECT Bryan D. Parker No. 4398 Signature 12-31-15 Renewal Date 03-24-14 Date STATE OF CALIFORNIA

THE STATE OF CALIFORNIA OR ITS OFFICERS OR AGENTS SHALL NOT BE RESPONSIBLE FOR THE ACCURACY OR COMPLETENESS OF SCANNED COPIES OF THIS PLAN SHEET.

NOTE:

FOR ACCURATE RIGHT OF WAY DATA, CONTACT RIGHT OF WAY ENGINEERING AT THE DISTRICT OFFICE.

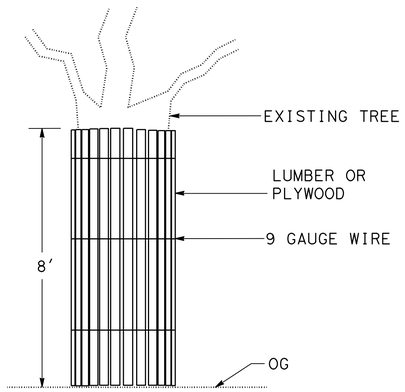

ELEVATION

TREE PROTECTION

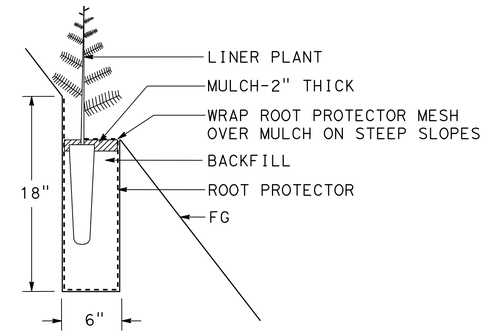

SECTION

PLANT (GROUP M)

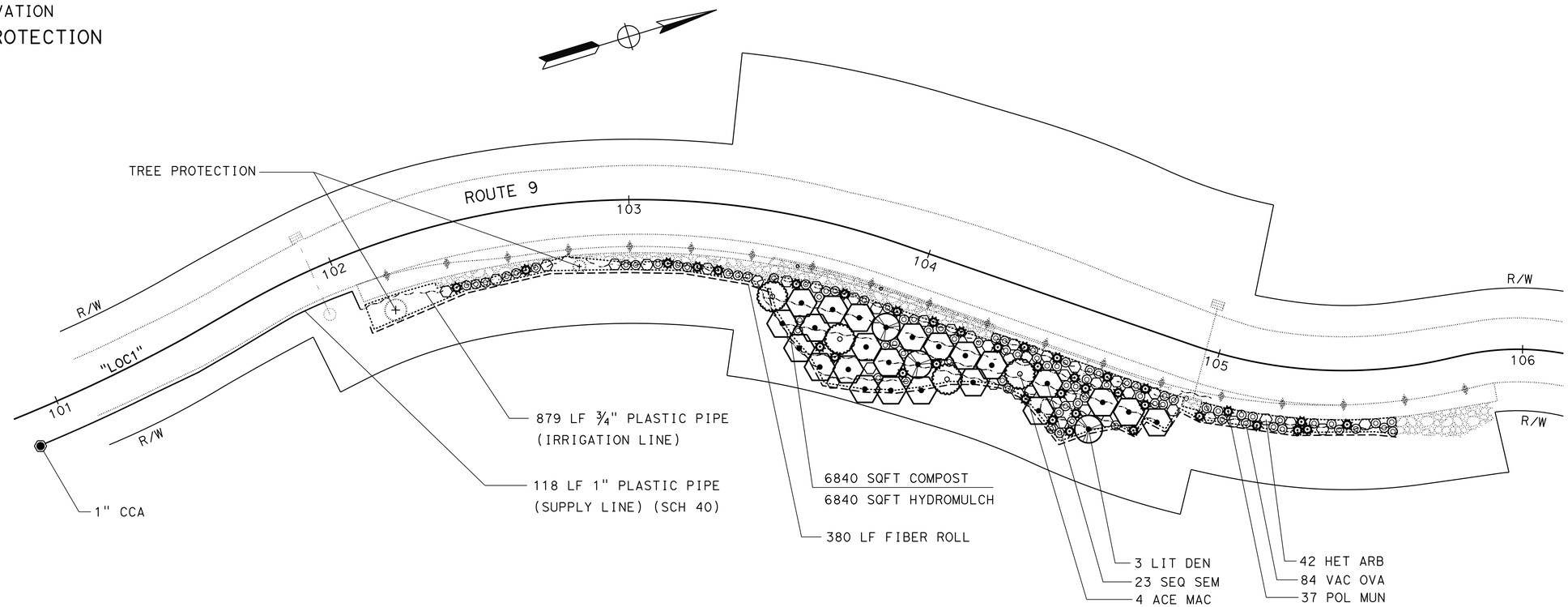

LOCATION 1

(PM 3.8) Sta 100+90 to 105+58

APPROVED FOR IRRIGATION AND PLANTING WORK ONLY

IRRIGATION AND PLANTING PLAN AND DETAILS

SCALE: 1" = 20'

IPP-1

STATE OF CALIFORNIA - DEPARTMENT OF TRANSPORTATION

Caltrans® LANDSCAPE ARCHITECTURE

SENIOR LANDSCAPE ARCHITECT: DENNIS REEVES

CALCULATED-DESIGNED BY: BRYAN PARKER

CHECKED BY: JO JACKSON

REVISED BY: BP

DATE REVISED: 07-23-13

LAST REVISION 00-00-00

DATE PLOTTED => 27-MAR-2014

TIME PLOTTED => 15:00

Dist	COUNTY	ROUTE	POST MILES TOTAL PROJECT	SHEET No.	TOTAL SHEETS
05	SCr	9	3.8/18.7	33	73

LICENSED LANDSCAPE ARCHITECT

03-24-14
PLANS APPROVAL DATE

LICENSED LANDSCAPE ARCHITECT Bryan D. Parker No. 5608 Signature 12-31-15 Renewal Date 03-24-14 Date STATE OF CALIFORNIA

THE STATE OF CALIFORNIA OR ITS OFFICERS OR AGENTS SHALL NOT BE RESPONSIBLE FOR THE ACCURACY OR COMPLETENESS OF SCANNED COPIES OF THIS PLAN SHEET.

PLANT LIST AND PLANTING SPECIFICATIONS

PLANT GROUP	PLANT No.	SYMBOL	BOTANICAL NAME	COMMON NAME	SIZE	QUANTITY EACH	HOLE SIZE (INCH) Dia	HOLE SIZE (INCH) DEPTH	BASIN TYPE	IRON SULFATE	SOIL AMEND ①	COMMERCIAL FERTILIZER ① PLANTING	COMMERCIAL FERTILIZER ① PLT ESTB	MULCH ①	STAKING	PLANTING LIMITS MINIMUM DISTANCE (Ft) FROM DOWN DRAIN	PVMT	FENCE	WALL	PAVED DITCH	EARTH DITCH	ON CENTER (Ft)	REMARKS
A	1		LITHOCARPUS DENSIFLORUS	TANBARK OAK	1 GAL	3	②	②	II	–	0.3 CF	2 PKT	–	0.3 CF	–	8	–	–	10	–	–	9	TREE ⑤
	2		SEQUOIA SEMPERVIRENS	COAST REDWOOD	1 GAL	23	②	②	II	–	0.3 CF	2 PKT	–	0.3 CF	–	8	–	–	10	–	–	9	TREE ⑤
	3		ACER MACROPHYLLUM	BIGLEAF MAPLE	1 GAL	4	②	②	II	–	0.3 CF	2 PKT	–	0.3 CF	–	8	–	–	10	–	–	9	TREE ⑤
M	4		HETEROMELES ARBUTIFOLIA	TOYON	LINER	42	⑥	⑥	–	–	0.1 CF	1 PKT	–	0.1 CF	–	–	–	–	–	–	–	3	SHRUB ⑤
	5		POLYSTICHUM MUNITUM	WESTERN SWORD FERN	LINER	37	⑥	⑥	–	–	0.1 CF	1 PKT	–	0.1 CF	–	–	–	–	–	–	–	3	SHRUB ⑤
	6		VACCINIUM OVATUM	CALIFORNIA HUCKLEBERRY	LINER	84	⑥	⑥	–	–	0.1 CF	1 PKT	–	0.1 CF	–	–	–	–	–	–	–	3	SHRUB ⑤

APPLICABLE WHEN CIRCLED:

① - Quantities shown are "per plant" unless shown as SQFT or SQYD application rates.
② - Sufficient to receive root protector.
3 - Does not apply to mulch areas.
4 - As shown on plans.
⑤ - Root protector required.
⑥ - See detail.
7 - See Special Provisions.

NOTE:
Underlined portions of botanical name indicate abbreviations used on Planting Plans.

SPRINKLER SCHEDULE

SYMBOL	TYPE	DESCRIPTION	SPRAY PATTERN	OPERATING PRESSURE (PSI)	PRESSURE COMPENSATING	PLUS/MINUS 5% ① DISCHARGE GALLONS PER MINUTE (GPM)	DISCHARGE GALLONS PER HOUR (GPH)	RADIUS (Ft)	WIDTH x LENGTH (Ft)	MATERIAL	INLET CONNECTION (NPT INCH)	POSITIVE-LOCKING ADJ ARC STOP	BACKSPLASH PREVENTER	DIFFUSER PIN	DISTANCE CONTROL FLAP	ADJ DISCHARGE	RISER TYPE	RISER MATERIAL PLASTIC	RISER MATERIAL GALVANIZED	RISER SIZE (IPS INCH)	RISER HEIGHT (INCH)	RISER FLOW SHUTOFF DEVICE	SWING JOINT (TYPE)	RISER SUPPORT	SPRINKLER PROTECTOR (TYPE)	REMARKS
	D-1	EMITTER	–	15	X	–	0.5	–	–	–	–	–	–	–	–	–	–	–	–	–	–	–	–	–	–	② ③

X IN BOX DENOTES REQUIREMENT

APPLICABLE WHEN CIRCLED BELOW:

① - If a pressure compensating device is specified, the discharge shown reflects its use.
② - Locate emitter on the uphill side of plant basin.
③ - 1 emitter per liner plant and 2 emitters per 1 gal plant.

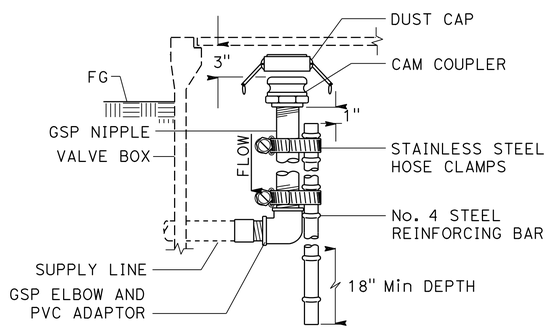

SECTION
CAM COUPLER ASSEMBLY

LANDSCAPE DETAILS

NO SCALE

LD-1

STATE OF CALIFORNIA - DEPARTMENT OF TRANSPORTATION
Caltrans LANDSCAPE ARCHITECTURE
SENIOR LANDSCAPE ARCHITECT: DENNIS J REEVES
CALCULATED-DESIGNED BY: BRYAN PARKER
CHECKED BY: JO JACKSON
REVISED BY: BP
DATE REVISED: 07-23-13

LAST REVISION 00-00-00
DATE PLOTTED => 27-MAR-2014
TIME PLOTTED => 15:00

Dist	COUNTY	ROUTE	POST MILES TOTAL PROJECT	SHEET No.	TOTAL SHEETS
05	SCr	9	3.8/18.7	34	73

LICENSED LANDSCAPE ARCHITECT

03-24-14
PLANS APPROVAL DATE

LICENSED LANDSCAPE ARCHITECT
Bryan D. Parker No. 3866
Signature
12-31-15
Renewal Date
03-24-14
Date
STATE OF CALIFORNIA

THE STATE OF CALIFORNIA OR ITS OFFICERS OR AGENTS SHALL NOT BE RESPONSIBLE FOR THE ACCURACY OR COMPLETENESS OF SCANNED COPIES OF THIS PLAN SHEET.

NOTES:

1. FIBER ROLL MUST BE 100 PERCENT COIR (COCONUT) FIBER.
2. STAKES MUST BE WOOD.
3. FIBER ROLLS MUST FIT TIGHTLY TOGETHER.

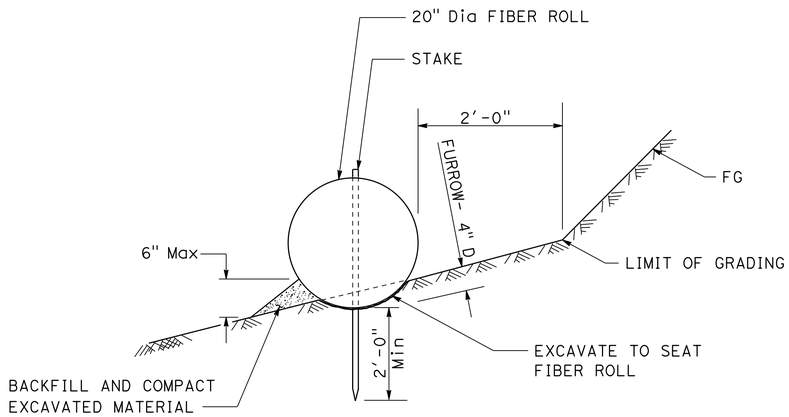

SECTION

PLACEMENT DETAIL FOR FIBER ROLLS

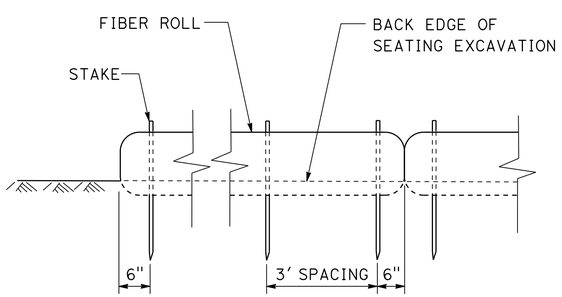

ELEVATION

STAKING FIBER ROLLS

EROSION CONTROL

SEQUENCE	ITEM	MATERIAL DESCRIPTION	MATERIAL TYPE	APPLICATION RATE
STEP 1	FIBER ROLLS	FIBER ROLL	20" Dia	-
STEP 2	COMPOST	COMPOST	MEDIUM	130 CY/ACRE
		SEED	MIX	40 LB/ACRE
STEP 3	HYDROMULCH	FIBER	WOOD	1,500 LB/ACRE
		TACKIFIER	PSYLLIUM	125 LB/ACRE

SEED MIX

SEED	BOTANICAL NAME (COMMON NAME)	PERCENT GERMINATION (MINIMUM)	POUNDS PURE LIVE SEED PER ACRE (SLOPE MEASUREMENT)
MIX	BROMUS CARINATUS (CALIFORNIA BROME)	70	10
	HORDEUM BRACHYANTHERUM (MEADOW BARLEY)	70	15
	LEYMUS GLAUCUS (BLUE WILDRYE)	70	15
		TOTAL	40

EROSION CONTROL QUANTITIES

SHEET	COMPOST SQFT	HYDROMULCH SQFT	FIBER ROLLS LF	REMARKS
IPP-1	6,840	6,840	380	ROADSIDE CUT/FILL SLOPE

EROSION CONTROL LEGEND, DETAILS, AND QUANTITIES

NO SCALE

ECL-1

STATE OF CALIFORNIA - DEPARTMENT OF TRANSPORTATION
Caltrans® LANDSCAPE ARCHITECTURE

SENIOR LANDSCAPE ARCHITECT: DENNIS REEVES
CALCULATED-DESIGNED BY: BRYAN PARKER
CHECKED BY: JO JACKSON
REVISED BY: BP
DATE REVISED: 11/01/13

LAST REVISION 00-00-00
DATE PLOTTED => 27-MAR-2014
TIME PLOTTED => 15:00

M

Maint	MAINTENANCE
Max	MAXIMUM
MB	METAL BEAM
MBB	METAL BEAM BARRIER
MBGR	METAL BEAM GUARD RAILING
Med	MEDIAN
MGS	MIDWEST GUARDRAIL SYSTEM
MH	MANHOLE
Min	MINIMUM
Misc	MISCELLANEOUS
Misc I & S	MISCELLANEOUS IRON AND STEEL
Mkr	MARKER
Mod	MODIFIED,
	MODIFY
Mon	MONUMENT
MP	METAL PLATE
MPGR	METAL PLATE GUARD RAILING
MR	MOVEMENT RATING
MSE	MECHANICALLY STABILIZED EMBANKMENT
Mt	MOUNTAIN, MOUNT
Mtl	MATERIAL
MVP	MAINTENANCE VEHICLE PULLOUT

N

N	NORTH
NB	NORTHBOUND
No.	NUMBER (MUST HAVE PERIOD)
Nos.	NUMBERS (MUST HAVE PERIOD)
NPS	NOMINAL PIPE SIZE
NS	NEAR SIDE
NSP	NEW STANDARD PLAN
NTS	NOT TO SCALE

O

Oblr	OBLITERATE
OC	OVERCROSSING
OD	OUTSIDE DIAMETER
OF	OUTSIDE FACE
OG	ORIGINAL GROUND
OGAC	OPEN GRADED ASPHALT CONCRETE
OGFC	OPEN GRADED FRICTION COURSE
OH	OVERHEAD
OHWM	ORDINARY HIGH WATER MARK
O-O	OUT TO OUT
Opp	OPPOSITE
OSD	OVERSIDE DRAIN

P

P	PAGE
PAP	PERFORATED ALUMINUM PIPE
PB	PULL BOX
PC	POINT OF CURVATURE,
	PRECAST
PCC	POINT OF COMPOUND CURVE,
	PORTLAND CEMENT CONCRETE
PCMS	PORTABLE CHANGEABLE MESSAGE SIGN
PCP	PERFORATED CONCRETE PIPE,
	PRESTRESSED CONCRETE PIPE
PCVC	POINT OF COMPOUND VERTICAL CURVE
PEC	PERMIT TO ENTER AND CONSTRUCT
Ped	PEDESTRIAN
Ped OC	PEDESTRIAN OVERCROSSING
Ped UC	PEDESTRIAN UNDERCROSSING
Perm Mtl	PERMEABLE MATERIAL

P continued

PG	PROFILE GRADE
PI	POINT OF INTERSECTION
PJP	PARTIAL JOINT PENETRATION
Pkwy	PARKWAY
ℙ,PL	PLATE
P/L	PROPERTY LINE
PM	POST MILE,
	TIME FROM NOON TO MIDNIGHT
PN	PAVING NOTCH
POC	POINT OF HORIZONTAL CURVE
POT	POINT OF TANGENT
POVC	POINT OF VERTICAL CURVE
PP	PIPE PILE,
	PLASTIC PIPE,
	POWER POLE
PPL	PREFORMED PERMEABLE LINER
PPP	PERFORATED PLASTIC PIPE
PRC	POINT OF REVERSE CURVE
PRF	PAVEMENT REINFORCING FABRIC
PRVC	POINT OF REVERSE VERTICAL CURVE
PS&E	PLANS, SPECIFICATIONS AND ESTIMATES
PS, P/S	PRESTRESSED
PSP	PERFORATED STEEL PIPE
PT	POINT OF TANGENCY
PVC	POLYVINYL CHLORIDE
Pvmt	PAVEMENT

Q

Qty	QUANTITY

R

R	RADIUS
R & D	REMOVE AND DISPOSE
R & S	REMOVE AND SALVAGE
R/C	RATE OF CHANGE
RCA	REINFORCED CONCRETE ARCH
RCB	REINFORCED CONCRETE BOX
RCP	REINFORCED CONCRETE PIPE
RCPA	REINFORCED CONCRETE PIPE ARCH
Rd	ROAD
Reinf	REINFORCED,
	REINFORCEMENT,
	REINFORCING
Rel	RELOCATE
Repl	REPLACEMENT
Ret	RETAINING
Rev	REVISED, REVISION
Rdwy	ROADWAY
RHMA	RUBBERIZED HOT MIX ASPHALT
Riv	RIVER
RM	ROAD-MIXED
RP	RADIUS POINT,
	REFERENCE POINT
RR	RAILROAD
RSP	ROCK SLOPE PROTECTION,
	REVISED STANDARD PLAN
Rt	RIGHT
Rte	ROUTE
RW	REDWOOD,
	RETAINING WALL
R/W	RIGHT OF WAY
Rwy	RAILWAY

S

S	SOUTH,
	SUPPLEMENT
SAE	STRUCTURE APPROACH EMBANKMENT
Salv	SALVAGE
SAPP	STRUCTURAL ALUMINUM PLATE PIPE
SB	SOUTHBOUND
SC	SAND CUSHION
SCSP	SLOTTED CORRUGATED STEEL PIPE
SD	STORM DRAIN
Sec	SECOND,
	SECTION
Sep	SEPARATION
SG	SUBGRADE
Shld	SHOULDER
Sht	SHEET
Sim	SIMILAR
℄	STATION LINE
SM	SELECTED MATERIAL
Spec	SPECIAL,
	SPECIFICATIONS
SPP	SLOTTED PLASTIC PIPE
SS	SLOPE STAKE
SSBM	STRAP AND SADDLE BRACKET METHOD
SSD	STRUCTURAL SECTION DRAIN
SSPA	STRUCTURAL STEEL PLATE ARCH
SSPP	STRUCTURAL STEEL PLATE PIPE
SSPPA	STRUCTURAL STEEL PLATE PIPE ARCH
SSRP	STEEL SPIRAL RIB PIPE
St	STREET
Sta	STATION
STBB	SINGLE THRIE BEAM BARRIER
Std	STANDARD
Str	STRUCTURE
Surf	SURFACING
SW	SIDEWALK,
	SOUND WALL
Swr	SEWER
Sym	SYMMETRICAL
S4S	SURFACE 4 SIDES

T

T	SEMI-TANGENT
Tan	TANGENT
TBB	THRIE BEAM BARRIER
Tbr	TIMBER
TC	TOP OF CURB
TCB	TRAFFIC CONTROL BOX
TCE	TEMPORARY CONSTRUCTION EASEMENT
Tel	TELEPHONE
Temp	TEMPORARY
TG	TOP OF GRADE
Tot	TOTAL
TP	TELEPHONE POLE
TPB	TREATED PERMEABLE BASE
TPM	TREATED PERMEABLE MATERIAL
Trans	TRANSITION

T continued

TS	TRANSVERSE,
	TRAFFIC SIGNAL,
	TUBULAR STEEL
Typ	TYPICAL

U

UC	UNDERCROSSING
UD	UNDERDRAIN
UG	UNDERGROUND
UON	UNLESS OTHERWISE NOTED
UP	UNDERPASS

V

V	VALVE,
	DESIGN SPEED
Var	VARIABLE,
	VARIES
VC	VERTICAL CURVE
VCP	VITRIFIED CLAY PIPE
Vert	VERTICAL
Via	VIADUCT
Vol	VOLUME

W

W	WEST,
	WIDTH
WB	WESTBOUND
WH	WEEP HOLE
WM	WIRE MESH
WS	WATER SURFACE
WSP	WELDED STEEL PIPE
Wt	WEIGHT
WV	WATER VALVE
WW	WINGWALL
WWLOL	WINGWALL LAYOUT LINE

X

X Sec	CROSS SECTION
Xing	CROSSING

Y

Yr	YEAR
Yrs	YEARS

Dist	COUNTY	ROUTE	POST MILES TOTAL PROJECT	SHEET No.	TOTAL SHEETS
10	SCr	9	3.8/18.7	35	73

Grace M. Tsushima
REGISTERED CIVIL ENGINEER

July 19, 2013
PLANS APPROVAL DATE

REGISTERED PROFESSIONAL ENGINEER
Grace M. Tsushima
No. C49814
Exp. 9-30-14
CIVIL
STATE OF CALIFORNIA

THE STATE OF CALIFORNIA OR ITS OFFICERS OR AGENTS SHALL NOT BE RESPONSIBLE FOR THE ACCURACY OR COMPLETENESS OF SCANNED COPIES OF THIS PLAN SHEET.

TO ACCOMPANY PLANS DATED 03-24-14

UNIT OF MEASUREMENT SYMBOLS:

Some of the symbols used in the project plan quantity tables and in the Bid Item List are:

TABLE A

SYMBOL USED	DEFINITIONS
ACRE	ACRE
CF	CUBIC FOOT
CY	CUBIC YARD
EA	EACH
GAL	GALLON
LB	POUND
LF	LINEAR FOOT
SQFT	SQUARE FOOT
SQYD	SQUARE YARD
STA	100 FEET
TAB	TABLET
TON	2,000 POUNDS

Some of the symbols used in the plans other than in the project plan quantity tables are:

TABLE B

SYMBOL USED	DEFINITIONS
ksi	KIPS PER SQUARE INCH
ksf	KIPS PER SQUARE FOOT
psi	POUNDS PER SQUARE INCH
psf	POUNDS PER SQUARE FOOT
lb/ft^3, pcf	POUNDS PER CUBIC FOOT
tsf	TONS PER SQUARE FOOT
mph, MPH *	MILES PER HOUR
ø	NOMINAL DIAMETER
oz	OUNCE
lb	POUND
kip	1,000 POUNDS
cal	CALORIE
ft	FOOT OR FEET
gal	GALLON

* For use on a sign panel only

STATE OF CALIFORNIA
DEPARTMENT OF TRANSPORTATION

ABBREVIATIONS (SHEET 2 OF 2)

NO SCALE

RSP A10B DATED JULY 19, 2013 SUPERSEDES STANDARD PLAN A10B DATED MAY 20, 2011 - PAGE 2 OF THE STANDARD PLANS BOOK DATED 2010.

REVISED STANDARD PLAN RSP A10B

2010 REVISED STANDARD PLAN RSP A10B

6-7-13

Dist	COUNTY	ROUTE	POST MILES TOTAL PROJECT	SHEET No.	TOTAL SHEETS
05	SCr	9	3.8/18.7	36	73

REGISTERED CIVIL ENGINEER

July 19, 2013
PLANS APPROVAL DATE

REGISTERED PROFESSIONAL ENGINEER
Michael Janzen
No. 44788
Exp. 03-31-14
CIVIL
STATE OF CALIFORNIA

THE STATE OF CALIFORNIA OR ITS OFFICERS OR AGENTS SHALL NOT BE RESPONSIBLE FOR THE ACCURACY OR COMPLETENESS OF SCANNED COPIES OF THIS PLAN SHEET.

TO ACCOMPANY PLANS DATED 03-24-14

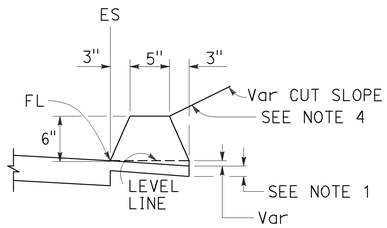

TYPE A
See Note 3

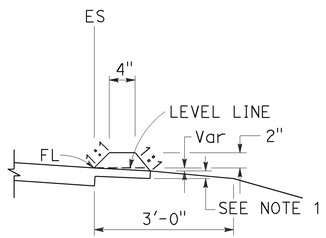

TYPE C

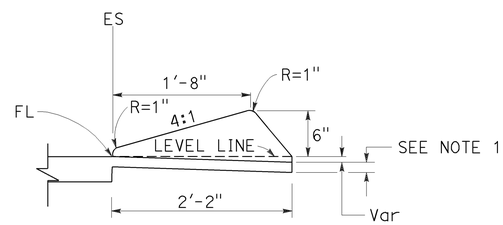

TYPE D

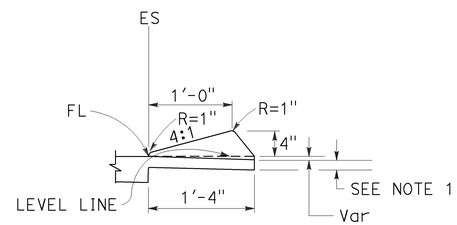

TYPE E

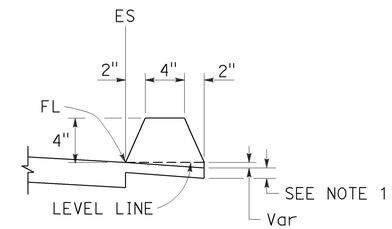

TYPE F
See Note 5

DIKES

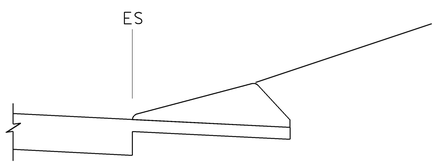

CASE C-1
Cut Slope

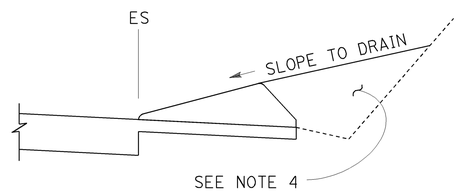

CASE C-2
Cut Slope

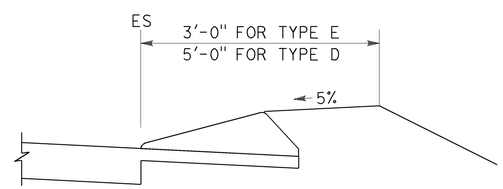

CASE F

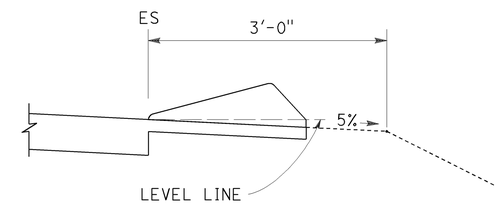

CASE R
See Note 2

TYPE D AND E BACKFILL DETAILS

NOTES:

1. For HMA shoulders only, extend top layer of HMA placed on the shoulder under dike with no joint at the ES. For projects with OGFC shoulders, do not extend OGFC under dike. See project plans for modified dike detail.
2. Case R applies to retrofit only projects where restrictive conditions do not provide enough width for Case F backfill.
3. Type A dike only to be used where restrictive slope conditions do not provide enough width to use Type D or Type E dike.
4. Fill and compact with excavated material to top of dike.
5. Use Type F dike, where dike is required with guard railing installations. See Revised Standard Plan RSP A77N4 for dike positioning details.

DIKE QUANTITIES

TYPE	CUBIC YARDS PER LINEAR FOOT
A	0.0135
C	0.0038
D	0.0293
E	0.0130
F	0.0066

Quantities based on 5% cross slope.

STATE OF CALIFORNIA
DEPARTMENT OF TRANSPORTATION

HOT MIX ASPHALT DIKES

NO SCALE

RSP A87B DATED JULY 19, 2013 SUPERSEDES STANDARD PLAN A87B DATED MAY 20, 2011 - PAGE 120 OF THE STANDARD PLANS BOOK DATED 2010.

REVISED STANDARD PLAN RSP A87B

2010 REVISED STANDARD PLAN RSP A87B

6-27-13

TO ACCOMPANY PLANS DATED 03-24-14

Dist	COUNTY	ROUTE	POST MILES TOTAL PROJECT	SHEET No.	TOTAL SHEETS
10	SCr	9	3.8/18.7	37	73

REGISTERED CIVIL ENGINEER

October 19, 2012
PLANS APPROVAL DATE

REGISTERED PROFESSIONAL ENGINEER Glenn DeCou No. C34547 Exp. 9-30-13 CIVIL STATE OF CALIFORNIA

THE STATE OF CALIFORNIA OR ITS OFFICERS OR AGENTS SHALL NOT BE RESPONSIBLE FOR THE ACCURACY OR COMPLETENESS OF SCANNED COPIES OF THIS PLAN SHEET.

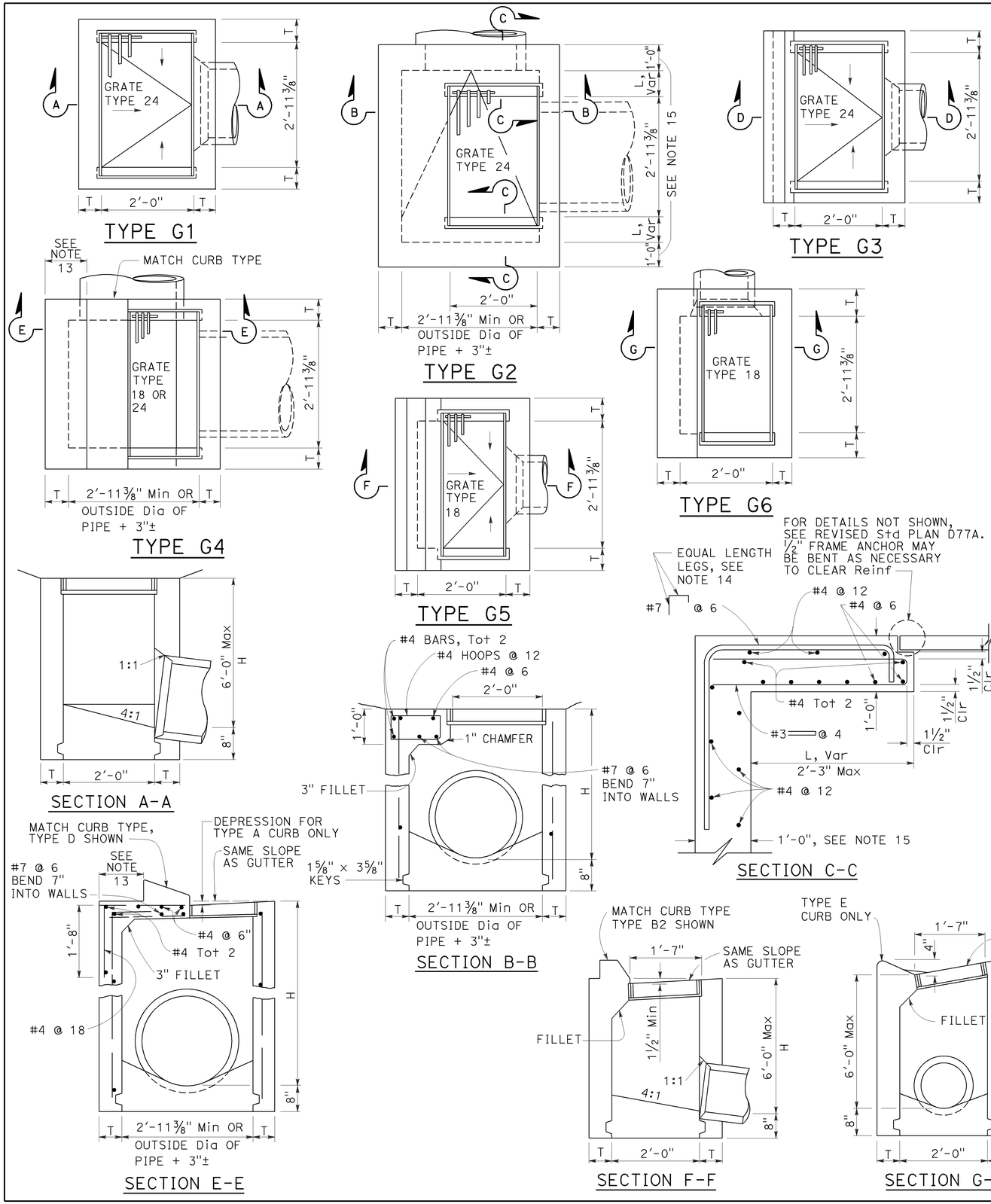

NOTES:

1. "H" is the difference in elevation between the outlet pipe flow line and the normal gutter grade line undepressed.
2. For "T" wall thickness, see Table A below.
3. Wall reinforcing not required when "H" is 8'-0" or less and the unsupported width or length is 7'-0" or less. Walls exceeding these limits shall be reinforced with #4 bars @ 1'-6" ± centers placed 1½" clear to inside of box unless otherwise shown.
4. Inlet bottom reinforcing not required. See Standard Plan D74C for alternative reinforced bottom and alternative half round bottom.
5. Steps-None required where "H" is less than 2'-6". Where "H" is 2'-6" or more, install steps with lowest rung 1'-0" above the floor and highest rung not more than 6" below top of inlet. The distance between steps shall not exceed 1'-0" and shall be uniform throughout the length of the wall. Place steps in the wall without an opening. Steps inserts may be substituted for the bar steps. Step inserts shall comply with State Industrial Safety requirements. See Standard Plan D74C for step details.
6. Details shown apply to both metal and concrete pipe.
7. Pipe(s) can be placed in any wall.
8. Curb section shall match adjacent curb.
9. Basin floors shall have wood trowel finish and a minimum slope of 12:3 from all directions toward outlet pipe.
10. Set inlet so that grate bars are parallel to direction of principal surface flow.
11. See Revised Standard Plans D77A and D77B for grate and frame details and weights of miscellaneous iron and steel.
12. See Standard Plan D78A for gutter depression details.
13. This dimenison will vary with different grates, curbs types, box width and wall thickness.
14. Bar may be rotated as necessary to clear opening. Where "L" is 6" or less, bar may be omitted.
15. Where "L" is 6" or less, wall thickness shall be as shown in Table A.
16. Cast-in-place inlets to be formed around all pipes/stubs intersecting the inlet, and concrete poured in one continuous operation. Precast inlets shall have mortared connections conforming to details for Type GCP Inlet shown on Standard Plan D75B. See Standard Specifications for mortar composition.

TABLE A

CONCRETE QUANTITIES				
TYPE	H=3'-0" TO 8'-0" (T=6")		H=8'-1" TO 20'-0" (T=8")	
	H=3'-0" (CY)	ADDITIONAL PCC PER FOOT (CY)	H=8'-1" (CY)	ADDITIONAL PCC PER FOOT (CY)
G-1	0.95	0.220	See Note A	SEE NOTE A
G-2*	1.31	0.255	3.50	0.357
G-3	1.03	0.220	See Note A	SEE NOTE A
G-4* (TYPE 24)	1.27	0.255	3.48	0.357
G-4* (TYPE 18)	1.30	0.255	3.50	0.357
G-5	1.02	0.220	SEE NOTE A	SEE NOTE A
G-6	1.04	0.220	SEE NOTE A	SEE NOTE A

TABLE BASED ON 8" FLOOR SLAB. NO DEDUCTIONS ARE TO BE MADE TO THESE QUANTITIES BECAUSE OF PIPE OPENINGS, DIFFERENT FLOOR ALTERNATIVES OR DIFFERENT CURB TYPES. * QUANTITIES FOR TYPE G-2 AND G-4 INLETS BASED ON THE MINIMUM INTERIOR DIMENSIONS.

NOTE A:

Maximum allowable height 6'-0".

STATE OF CALIFORNIA
DEPARTMENT OF TRANSPORTATION

DRAINAGE INLETS

NO SCALE

RSP D73 DATED OCTOBER 19, 2012 SUPERSEDES STANDARD PLAN D73 DATED MAY 20, 2011 - PAGE 156 OF THE STANDARD PLANS BOOK DATED 2010.

REVISED STANDARD PLAN RSP D73

2010 REVISED STANDARD PLAN RSP D73

7-19-12

Dist	COUNTY	ROUTE	POST MILES TOTAL PROJECT	SHEET No.	TOTAL SHEETS
05	SCr	9	3.8/18.7	38	73

REGISTERED CIVIL ENGINEER

April 19, 2013
PLANS APPROVAL DATE

Raymond Don Tsztoo No. C37332 Exp. 6-30-14 CIVIL STATE OF CALIFORNIA REGISTERED PROFESSIONAL ENGINEER

THE STATE OF CALIFORNIA OR ITS OFFICERS OR AGENTS SHALL NOT BE RESPONSIBLE FOR THE ACCURACY OR COMPLETENESS OF SCANNED COPIES OF THIS PLAN SHEET.

TO ACCOMPANY PLANS DATED 03-24-14

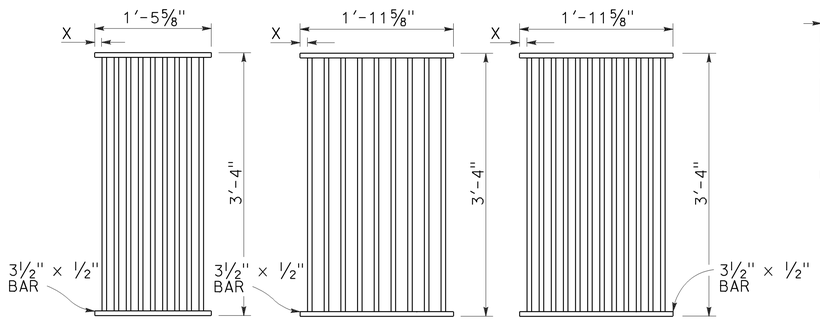

TYPE 18-9

1⅜" Clear spacing. Use within the roadbed on highways where bicycles and pedestrians are excluded.

TYPE 24-9

2" Clear spacing. Use in locations off the roadbed on all types of highways.

TYPE 24-12

1⅜" Clear spacing. Use within the roadbed on highways where bicycles and pedestrians are excluded.

RECTANGULAR GRATE DETAILS

(See table below)

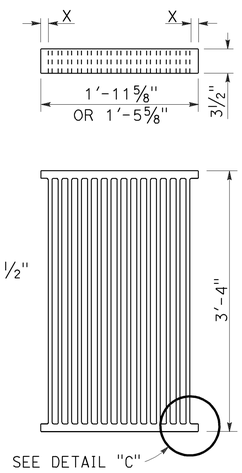

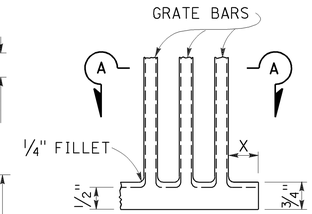

DETAIL "C"

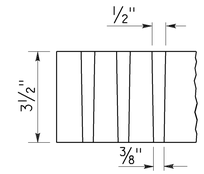

SECTION A-A

ALTERNATIVE CAST DUCTILE IRON GRATE OR CAST CARBON STEEL GRATE

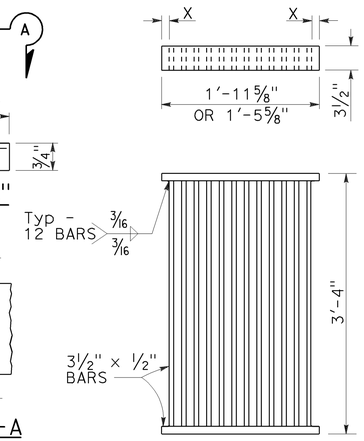

ALTERNATIVE WELDED GRATE

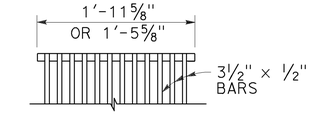

CAST END BLOCK

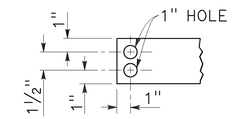

END OF BAR

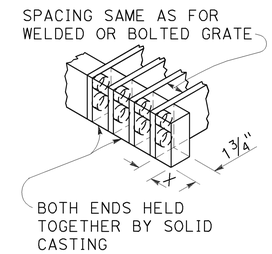

ALTERNATIVE CAST DUCTILE IRON OR CAST CARBON STEEL END BLOCK GRATE

NOTES:

1. Grate type numbers refer to approximate width of grate in inches and number of bars, respectively.
2. Contractor has the option of using cast ductile iron, cast carbon steel, welded, bolted, or cast end block grate.
3. Rounded top of bars optional on all grates.
4. Pipe inlets with a grate shall be placed so that bars parallel direction of principle surface flow.
5. Complete joint penetration butt welds may be substituted for the fillet welds on all anchors.
6. Standard square, hexagon, round or equivalent headed anchors may be substituted for the right angle hooks on the anchors shown on this plan.
7. Grate and frame weights are based on welded grates (weights of face angles, steps, protection bars, etc. are not included).
8. Connect chain to grate and frame only at locations shown on the plans. When chain is required, do not use cast ductile iron grates.

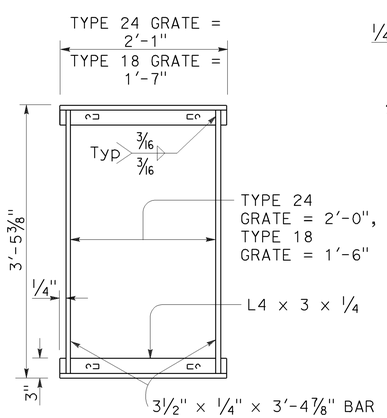

TYPICAL FRAME

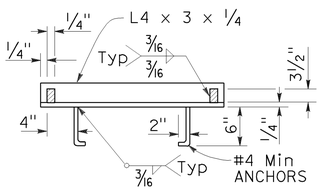

CROSS SECTION

(Thru frame)

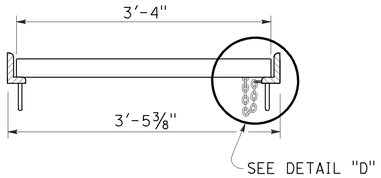

LONGITUDINAL SECTION

(Thru frame and grate)

RECTANGULAR FRAME DETAILS

(For all rectangular grates)

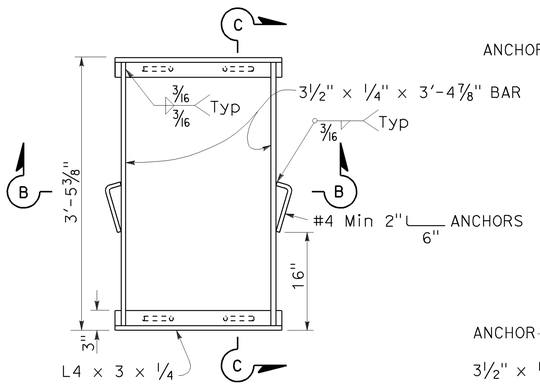

TYPICAL FRAME

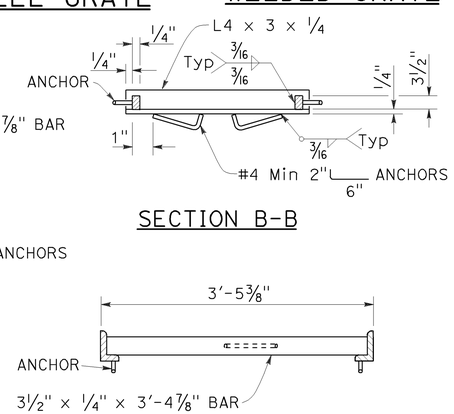

SECTION B-B

SECTION C-C

ALTERNATIVE ANCHOR FOR RECTANGULAR FRAME

(For details not shown, See Rectangular Frame Details)

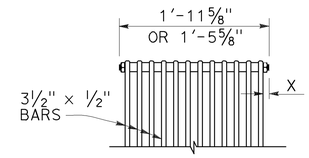

BOLTED END BLOCK

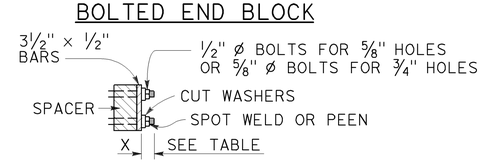

BOLTING DETAIL

ALTERNATIVE BOLTED GRATE

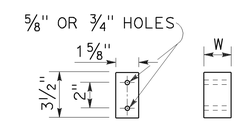

BAR SPACER

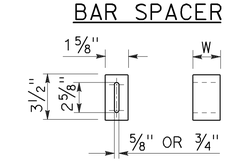

ALTERNATIVE SPACER

W = 1⅜" or 2"

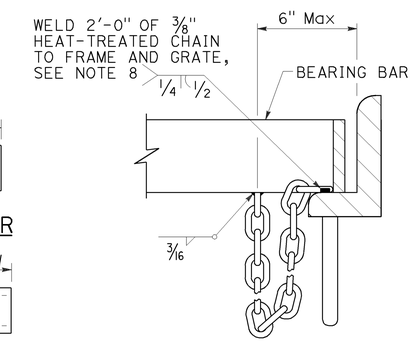

DETAIL "D"

(Steel grates only)

GRATE BAR SPACING TABLE

TYPE	No. OF BARS	CLEAR BAR SPACING	X
18-9	9	1⅜"	1 1/16"
24-9	9	2"	1 9/16"
24-12	12	1⅜"	1¼"

INLET TYPE	COVER TYPE	WEIGHT LB
OS	PLATE	174
OL-7	PLATE	170
OL-10	PLATE	170
OL-14	PLATE	170
OL-21	PLATE	170
OCP	PLATE	112
OCPI	PLATE	112
OCPI	REDWOOD	42
OMP	PLATE	177
OMPI	PLATE	177

INLET TYPE	GRATE TYPE	No. OF GRATES	WEIGHT LB
GDO	24-12	2	634
GOL-7	24-12	1	326
GOL-10	24-12	1	326
GO,G1,G2,G3,G4 (TYPE 24)	24-9	1	263
	24-12	1	326
G4 (TYPE 18),G5,G6	18-9	1	249
GT1	18-9	2	498
GT2	18-9	2	498
GT3	24-12	2	652
GT4	24-12	2	652
TRASH RACK			22
GRATE CHAIN			3

BASIS FOR Misc IRON & STEEL FINAL PAY WEIGHTS FOR DRAINAGE INLETS

(See Note 7)

STATE OF CALIFORNIA
DEPARTMENT OF TRANSPORTATION

GRATE DETAILS No. 1

NO SCALE

RSP D77A DATED APRIL 19, 2013 SUPERSEDES RSP D77A DATED JULY 20, 2012 AND STANDARD PLAN D77A DATED MAY 20, 2011 - PAGE 164 OF THE STANDARD PLANS BOOK DATED 2010.

REVISED STANDARD PLAN RSP D77A

2010 REVISED STANDARD PLAN RSP D77A

4-4-13

Dist	COUNTY	ROUTE	POST MILES TOTAL PROJECT	SHEET No.	TOTAL SHEETS
05	SCr	9	3.8/18.7	39	73

Raymond Don Tsztoo
REGISTERED CIVIL ENGINEER

April 19, 2013
PLANS APPROVAL DATE

REGISTERED PROFESSIONAL ENGINEER
Raymond Don Tsztoo
No. C37332
Exp. 6-30-14
CIVIL
STATE OF CALIFORNIA

THE STATE OF CALIFORNIA OR ITS OFFICERS OR AGENTS SHALL NOT BE RESPONSIBLE FOR THE ACCURACY OR COMPLETENESS OF SCANNED COPIES OF THIS PLAN SHEET.

TO ACCOMPANY PLANS DATED 03-24-14

2010 REVISED STANDARD PLAN RSP D77B

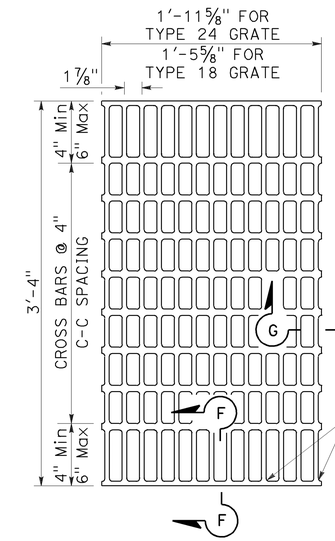

NOTES:

Bearing bars to be 3½" × ¼" bars on 1⅞" centers.

⅜"± ø Cross bars may be fillet welded, resistance welded or electroforged to bearing bars.

Weight of Type 24 grate = 141 LBS.

Weight of Type 18 grate = 107 LBS. (Type 24 grate shown).

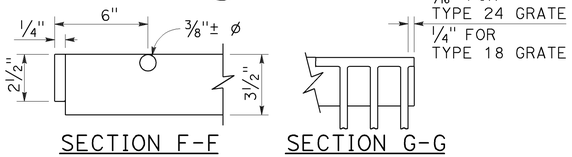

SECTION F-F SECTION G-G

TYPE 18-10 AND 24-13 GRATE

(Welded Steel)

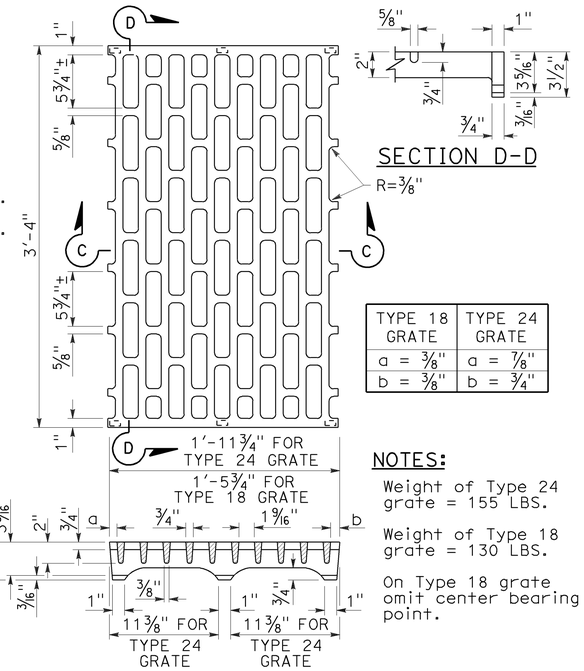

SECTION D-D

TYPE 18 GRATE	TYPE 24 GRATE
a = ⅜"	a = ⅞"
b = ⅜"	b = ¾"

NOTES:

Weight of Type 24 grate = 155 LBS.

Weight of Type 18 grate = 130 LBS.

On Type 18 grate omit center bearing point.

SECTION C-C

TYPE 18-8C AND 24-10C GRATE

(Cast ductile iron)

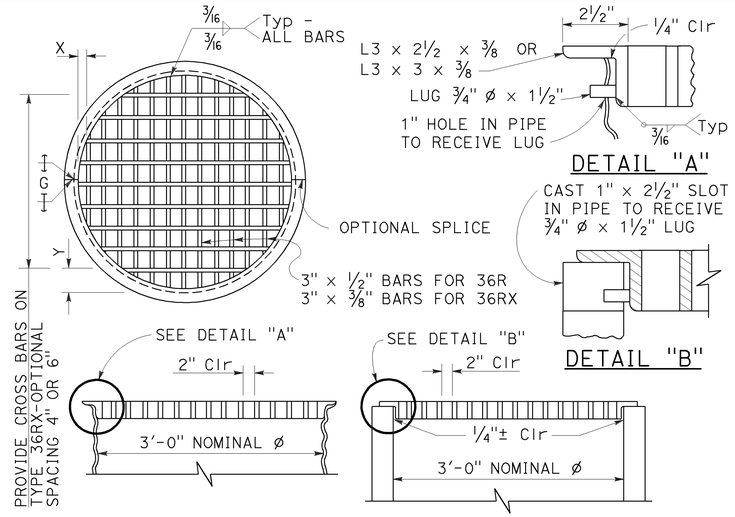

DETAIL "A"

DETAIL "B"

TYPE 36R AND 36RX GRATE DETAILS

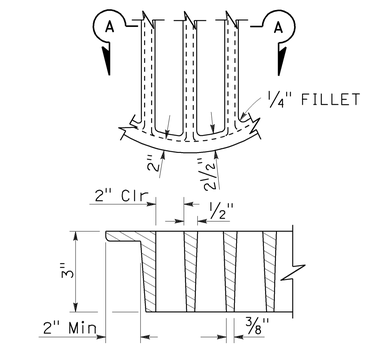

SECTION A-A

ALTERNATIVE CAST DUCTILE IRON GRATE OR CAST CARBON STEEL GRATE TYPE 36R AND 36RX

BASIS FOR Misc IRON AND STEEL FINAL PAY WEIGHTS FOR DRAINAGE INLETS

INLET TYPE	GRATE TYPE	No. OF GRATES	WEIGHT LB
GDO (SEE NOTE 4)	24-10C	2	391
	24-10S	2	456
	24-12X	2	473
	24-13	2	374
GO,GOL,G1,G2, G3,G4 (TYPE 24)	24-10C	1	202
	24-10S	1	229
	24-12X	1	239
	24-13	1	188
G4 (TYPE 18) G5,G6	18-8S	1	187
	18-9X	1	187
	18-10	1	149
GT1,GT2	18-8S	2	374
	18-9X	2	374
	18-10	2	298
GT3,GT4	24-10C	2	404
	24-10S	2	458
	24-12X	2	478
	24-13	2	376
ODI	36RX (Mod)	1	196
GMP,GCP,GCPI	36RX	1	215
ODI	36R (Mod)	1	220
GMP,GCP,GCPI	36R	1	236
TRASH RACK			22
GRATE CHAIN			3

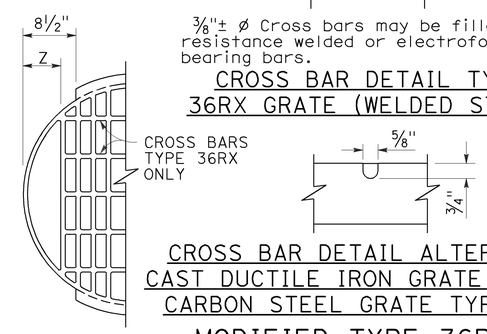

⅜"± ø Cross bars may be fillet welded, resistance welded or electroforged to bearing bars.

CROSS BAR DETAIL TYPE 36RX GRATE (WELDED STEEL)

CROSS BAR DETAIL ALTERNATIVE CAST DUCTILE IRON GRATE OR CAST CARBON STEEL GRATE TYPE 36RX

MODIFIED TYPE 36R AND 36RX GRATE FOR ODI INLET

NOTES:

1. When alternative grates are allowed - Final pay based on alternative with the lesser weight.
2. Use frame shown on Standard Plan D74A, D74B or RSP D77A as appropriate.
3. When Type 24-10S, 24-12X or 24-13 grates are used with GDO Inlets, a ¼" × 3½" × 3'-4⅞" steel bar shall be welded across the center of inlet frame to separate the individual grates.
4. See Revised Standard Plan RSP D77A for connecting chain to welded grate and frame. When chain is required, do not use cast ductile iron grate.

GRATE BAR SPACING TABLE

TYPE	No. OF BARS	CLEAR BAR SPACING	X	Y 4" SPACING	Y 6" SPACING	Z
36R	13	2"	2⅛"	-	-	-
36RX (STEEL)	15	2"	9/16"	3¾"	5¾"	-
36RX (CAST)	13	2"	2⅛"	3¾"	5¾"	-
36R Mod	12	2"	2⅛"	-	-	5"
36RX Mod (STEEL)	13	2"	9/16"	3¾"	5¾"	5 11/16"
36RX Mod (CAST)	12	2"	2⅛"	3¾"	5¾"	5"

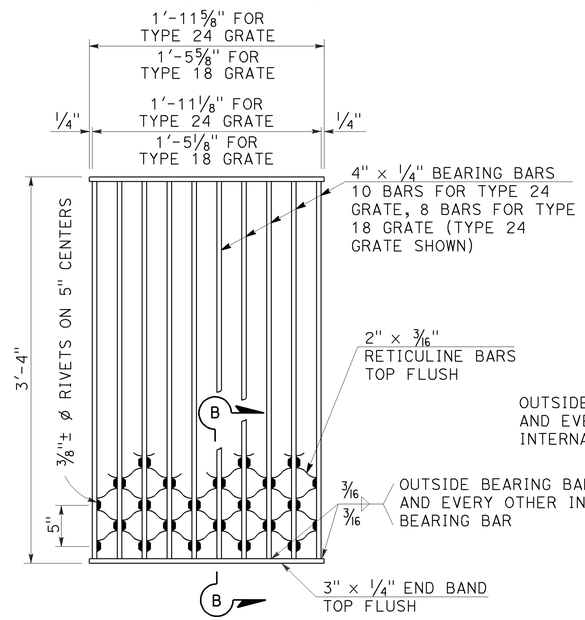

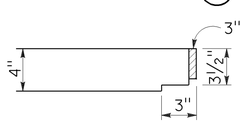

NOTES:

Weight of Type 24 grate = 182 LBS.
Weight of Type 18 grate = 145 LBS.

SECTION B-B

TYPE 18-8S AND 24-10S GRATE

(Welded Steel) Reticuline type

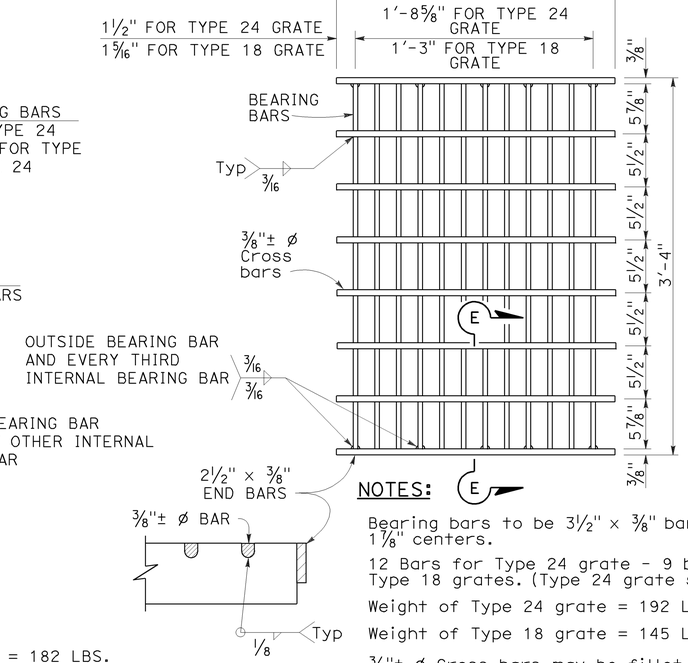

SECTION E-E

NOTES:

Bearing bars to be 3½" × ⅜" bars on 1⅞" centers.

12 Bars for Type 24 grate - 9 bars for Type 18 grates. (Type 24 grate shown).

Weight of Type 24 grate = 192 LBS.

Weight of Type 18 grate = 145 LBS.

⅜"± ø Cross bars may be fillet welded, resistance welded or electroforged to bearing bars.

TYPE 18-9X AND 24-12X GRATE

(Welded Steel)

STATE OF CALIFORNIA
DEPARTMENT OF TRANSPORTATION

GRATE DETAILS No. 2

NO SCALE

RSP D77B DATED APRIL 19, 2013 SUPERSEDES RSP D77B DATED JULY 20, 2012 AND STANDARD PLAN D77B DATED MAY 20, 2011 - PAGE 165 OF THE STANDARD PLANS BOOK DATED 2010.

REVISED STANDARD PLAN RSP D77B

4-4-13

Dist	COUNTY	ROUTE	POST MILES TOTAL PROJECT	SHEET No.	TOTAL SHEETS
05	SCr	9	3.8/18.7	40	73

LICENSED LANDSCAPE ARCHITECT

July 19, 2013
PLANS APPROVAL DATE

THE STATE OF CALIFORNIA OR ITS OFFICERS OR AGENTS SHALL NOT BE RESPONSIBLE FOR THE ACCURACY OR COMPLETENESS OF SCANNED COPIES OF THIS PLAN SHEET.

LICENSED LANDSCAPE ARCHITECT — Gregory A. Balzer — 2516 — 02-28-15 Renewal Date — 7-19-13 Date — STATE OF CALIFORNIA

TO ACCOMPANY PLANS DATED 03-24-14

A

AB	AGGREGATE BASE
ABS	ACRYLONITRILE-BUTADIENE-STYRENE
AC	ASPHALT CONCRETE
ACC	ARMOR-CLAD CONDUCTORS
Adj	ADJACENT/ADJUSTABLE
AIC	AUXILIARY IRRIGATION CONTROLLER
Alt	ALTERNATIVE
AMEND	AMENDMENT
ARV	AIR RELEASE VALVE
AUTO	AUTOMATIC
AUX	AUXILIARY
AVB	ATMOSPHERIC VACUUM BREAKER

B

B&B	BALLED AND BURLAPPED
B/B	BRASS/BRONZE
B/B/PL	BRASS/BRONZE/PLASTIC
B/PL	BRASS/PLASTIC
BFM	BONDED FIBER MATRIX
Bit Ctd	BITUMINOUS COATED
BP	BOOSTER PUMP
BPA	BACKFLOW PREVENTER ASSEMBLY
BPE	BACKFLOW PREVENTER ENCLOSURE
BV	BALL VALVE

C

C	CONDUIT
CAP	CORRUGATED ALUMINUM PIPE
CARV	COMBINATION AIR RELEASE VALVE
CB	COUPLING BAND
CCA	CAM COUPLER ASSEMBLY
CEC	CONTROLLER ENCLOSURE CABINET
CHDPE	CORRUGATED HIGH DENSITY POLYETHYLENE
CL	CHAIN LINK
CNC	CONTROL AND NEUTRAL CONDUCTORS
Conc	CONCRETE
CP	COPPER PIPE
CS	COMPOST SOCK
CSP	CORRUGATED STEEL PIPE
CST	CENTER STRIP
CV	CHECK VALVE

D

Dia	DIAMETER
DIP	DUCTILE IRON PIPE
DIT	DRIP IRRIGATION TUBING
DG	DECOMPOSED GRANITE
DN	DIAMETER NOMINAL
DVA	DRIP VALVE ASSEMBLY

E

EC	EROSION CONTROL
ECTC	EROSION CONTROL TECHNOLOGY COUNCIL
Elect	ELECTRIC/ELECTRICAL
Elev	ELEVATION
ELL	ELBOW
ENCL	ENCLOSURE
EP	EDGE OF PAVEMENT
ES	EDGE OF SHOULDER
EST	END STRIP
ESTB	ESTABLISHMENT
ETW	EDGE OF TRAVELED WAY

F

F	FULL CIRCLE
F/P	FULL/PART CIRCLE
FCV	FLOW CONTROL VALVE
FERT	FERTILIZER
FG	FINISHED GRADE
FH	FLEXIBLE HOSE
FIPT	FEMALE IRON PIPE THREAD
FIS	FERTILIZER INJECTOR SYSTEM
FL	FLOW LINE
FR	FIBER ROLL
FS	FLOW SENSOR
FSC	FLOW SENSOR CABLE
FV	FLUSH VALVE

G

Galv	GALVANIZED
GARV	GARDEN VALVE
GARVA	GARDEN VALVE ASSEMBLY
GM	GRAVEL MULCH
GPH	GALLONS PER HOUR
GPM	GALLONS PER MINUTE
GSP	GALVANIZED STEEL PIPE
GV	GATE VALVE

H

H	HALF CIRCLE
HDPE	HIGH DENSITY POLYETHYLENE
HP	HORSEPOWER/HINGE POINT
HPL	HIGH PRESSURE LINE
Hwy	HIGHWAY

I

IC	IRRIGATION CONTROLLER
ICC	IRRIGATION CONTROLLER(S) IN CONTROLLER ENCLOSURE CABINET
ID	INSIDE DIAMETER
IFS	IRRIGATION FILTRATION SYSTEM
IPS	IRON PIPE SIZE
IPT	IRON PIPE THREAD
Irr	IRRIGATION

L

L	LENGTH

M

Max	MAXIMUM
MBGR	METAL BEAM GUARD RAILING
MCV	MANUAL CONTROL VALVE
MIC	MASTER IRRIGATION CONTROLLER
Min	MINIMUM
MIPT	MALE IRON PIPE THREAD
Misc	MISCELLANEOUS
Mtl	MATERIAL
MVP	MAINTENANCE VEHICLE PULLOUT

N

NCN	NO COMMON NAME
NL	NOZZLE LINE
No.	NUMBER
NPT	NATIONAL PIPE THREAD

O

O/C	ON CENTER
OD	OUTSIDE DIAMETER
OL	OVERLAP

P

P	PART CIRCLE
PB	PULL BOX
PCC	PORTLAND CEMENT CONCRETE
PE	POLYETHYLENE
Pkt	PACKET
PL	PLASTIC
PLS	PURE LIVE SEED
PLT	PLANT/PLANTING
PLT ESTB	PLANT ESTABLISHMENT
PM	POST MILE
PR	PRESSURE RATED
PRLV	PRESSURE RELIEF VALVE
PRV	PRESSURE REGULATING VALVE
PVC	POLYVINYL CHLORIDE
Pvmt	PAVEMENT

Q

Q	QUARTER CIRCLE
QCV	QUICK COUPLING VALVE

R

R	RADIUS
RCP	REINFORCED CONCRETE PIPE
RCV	REMOTE CONTROL VALVE
RCVM	REMOTE CONTROL VALVE (MASTER)
RCVMF	REMOTE CONTROL VALVE (MASTER) W/FLOW SENSOR
RCVP	REMOTE CONTROL VALVE W/PRESSURE REGULATOR
RCW	RECYCLED WATER
RECP	ROLLED EROSION CONTROL PRODUCT
REQ	REQUIRED
RICS	REMOTE IRRIGATION CONTROL SYSTEM
R/W	RIGHT OF WAY

S

S	SLIP
SCH	SCHEDULE
SF	STATE-FURNISHED
Shld	SHOULDER
Sq	SQUARE
SST	SIDE STRIP
Sta	STATION
Std	STANDARD
SW	SIDEWALK/SOUND WALL

T

T	THIRD CIRCLE/THREAD
TLS	TRUCK LOADING STANDPIPE
TQ	THREE QUARTER CIRCLE
TRM	TURF REINFORCEMENT MAT
TT	TWO-THIRDS CIRCLE
TWSA	TREE WELL SPRINKLER ASSEMBLY
Typ	TYPICAL

U

UG	UNDERGROUND

W

W	WIDTH
W/	WITH
WM	WATER METER
WS	WYE STRAINER
WSA	WYE STRAINER ASSEMBLY
WSP	WELDED STEEL PIPE
WWM	WELDED WIRE MESH

NOTE:
For additional abbreviations, see Standard Plans A10A and A10B.

STATE OF CALIFORNIA
DEPARTMENT OF TRANSPORTATION

LANDSCAPE AND EROSION CONTROL ABBREVIATIONS

NO SCALE

RSP H1 DATED JULY 19, 2013 SUPERSEDES STANDARD PLAN H1 DATED MAY 20, 2011 - PAGE 218 OF THE STANDARD PLANS BOOK DATED 2010.

REVISED STANDARD PLAN RSP H1

2010 REVISED STANDARD PLAN RSP H1

6-28-13

Dist	COUNTY	ROUTE	POST MILES TOTAL PROJECT	SHEET No.	TOTAL SHEETS
05	SCr	9	3.8/18.7	41	73

LICENSED LANDSCAPE ARCHITECT

November 15, 2013
PLANS APPROVAL DATE

LICENSED LANDSCAPE ARCHITECT Gregory A. Balzer 2516 STATE OF CALIFORNIA
02-28-15 Renewal Date
11-15-13 Date

THE STATE OF CALIFORNIA OR ITS OFFICERS OR AGENTS SHALL NOT BE RESPONSIBLE FOR THE ACCURACY OR COMPLETENESS OF SCANNED COPIES OF THIS PLAN SHEET.

TO ACCOMPANY PLANS DATED 03-24-14

EXISTING	NEW	ITEM DESCRIPTION
		WATER METER (WM)
		BACKFLOW PREVENTER ASSEMBLY (BPA)
		BACKFLOW PREVENTER ENCLOSURE (BPE)
		BOOSTER PUMP (BP)
		TRUCK LOADING STANDPIPE (TLS)
	FS	FLOW SENSOR (FS)
		MASTER IRRIGATION CONTROLLER (MIC)
		AUXILIARY IRRIGATION CONTROLLER (AIC)
		IRRIGATION CONTROLLER (IC) IRRIGATION CONTROLLER (IC) (BATTERY) IRRIGATION CONTROLLER (IC) (SOLAR) IRRIGATION CONTROLLER (IC) (TWO WIRE) IRRIGATION CONTROLLER(S) IN CONTROLLER ENCLOSURE CABINET (ICC)
acc	ACC	ARMOR-CLAD CONDUCTORS (ACC)
cnc	CNC	CONTROL AND NEUTRAL CONDUCTORS (CNC)
		IRRIGATION CONDUIT
		EXTEND IRRIGATION CONDUIT
dip	DIP	DUCTILE IRON PIPE (SUPPLY LINE) (MAIN) (DIP)
		GALVANIZED STEEL PIPE (SUPPLY LINE) (MAIN) (GSP)
		GALVANIZED STEEL PIPE (SUPPLY LINE) (LATERAL) (GSP)
		PLASTIC PIPE (SUPPLY LINE) (MAIN)
		PLASTIC PIPE (SUPPLY LINE) (LATERAL)
cp	CP	COPPER PIPE (SUPPLY LINE)
dit	DIT	DRIP IRRIGATION TUBING
		REMOTE CONTROL VALVE (RCV) REMOTE CONTROL VALVE (MASTER) (RCVM) REMOTE CONTROL VALVE (MASTER) W/FLOW METER (RCVMF)
P	P	REMOTE CONTROL VALVE W/PRESSURE REGULATOR (RCVP)
		EXISTING MANUAL CONTROL VALVE (MCV)
	V	DRIP VALVE ASSEMBLY (DVA)
	Y	WYE STRAINER ASSEMBLY (WSA)

EXISTING	NEW	ITEM DESCRIPTION
		GATE VALVE (GV)
		BALL VALVE (BV)
		QUICK COUPLING VALVE (QCV)
		CAM COUPLER ASSEMBLY (CCA)
		GARDEN VALVE ASSEMBLY (GARVA)
		PRESSURE REGULATING VALVE (PRV)
		PRESSURE RELIEF VALVE (PRLV)
		FLOW CONTROL VALVE (FCV)
		COMBINATION AIR RELEASE VALVE (CARV)
		CHECK VALVE (CV)
		FLUSH VALVE (FV)
		EXISTING NOZZLE LINE W/TURNING UNION
		EXISTING IRRIGATION SYSTEM
		EXISTING IRRIGATION SYSTEM TO BE REMOVED
		CHAIN LINK GATE
		QUICK COUPLING VALVE W/SPRINKLER PROTECTOR
3	3	SPRINKLER W/SPRINKLER PROTECTOR
	C	CONNECT TO EXISTING SYSTEM
		CAP
		CAP EXISTING
	FR	FIBER ROLL
	CS	COMPOST SOCK

- RCV SIZE
- IRRIGATION CONTROLLER
- CONTROLLER STATION
- VALVE IN PARALLEL (IF APPLICABLE)
- GPM
- QUANTITY OF SPRINKLERS (WHEN SHOWN)

* 2½"-A-2b-40-60

VALVE CODE

* VALVE CODES FOR EXISTING VALVES ARE SHOWN IN A DASHED ENCLOSURE.

STATE OF CALIFORNIA
DEPARTMENT OF TRANSPORTATION

LANDSCAPE AND EROSION CONTROL SYMBOLS

NO SCALE

RSP H2 DATED NOVEMBER 15, 2013 SUPERSEDES RSP H2 DATED JULY 19, 2013 AND STANDARD PLAN H2 DATED MAY 20, 2011 - PAGE 219 OF THE STANDARD PLANS BOOK DATED 2010.

REVISED STANDARD PLAN RSP H2

2010 REVISED STANDARD PLAN RSP H2

10-9-13

Dist	COUNTY	ROUTE	POST MILES TOTAL PROJECT	SHEET No.	TOTAL SHEETS
05	SCr	9	3.8/18.7	42	73

LICENSED LANDSCAPE ARCHITECT

July 19, 2013
PLANS APPROVAL DATE

THE STATE OF CALIFORNIA OR ITS OFFICERS OR AGENTS SHALL NOT BE RESPONSIBLE FOR THE ACCURACY OR COMPLETENESS OF SCANNED COPIES OF THIS PLAN SHEET.

LICENSED LANDSCAPE ARCHITECT
Gregory A. Balzer 2576
02-28-15
Renewal Date
7-19-13
Date
STATE OF CALIFORNIA

TO ACCOMPANY PLANS DATED 03-24-14

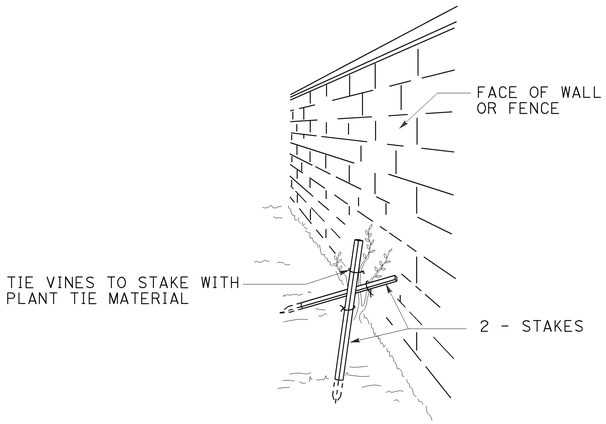

PERSPECTIVE
VINE STAKING

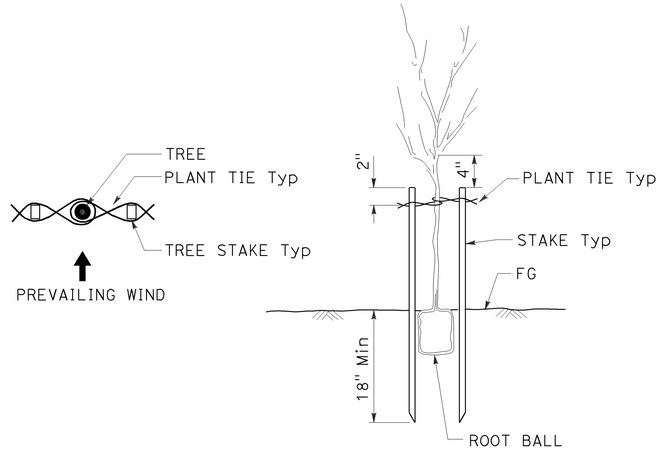

TREE STAKING

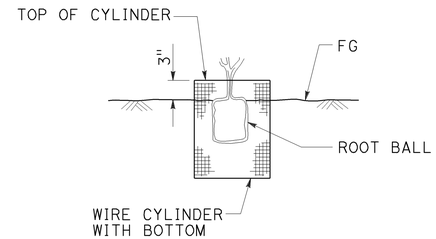

SECTION
ROOT PROTECTOR

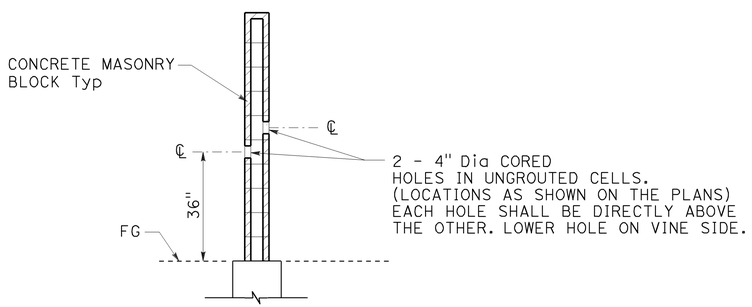

SECTION
CORE HOLE (VINE)

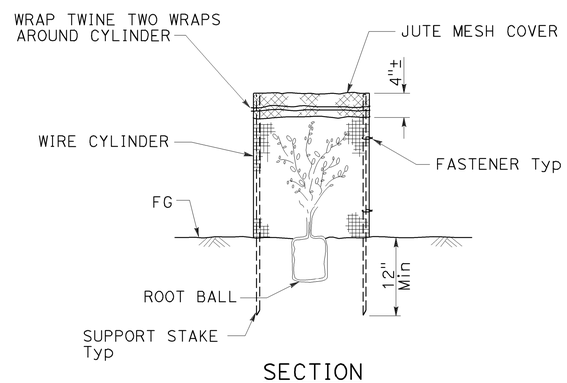

SECTION
FOLIAGE PROTECTOR

STATE OF CALIFORNIA
DEPARTMENT OF TRANSPORTATION

LANDSCAPE DETAILS

NO SCALE

RSP H4 DATED JULY 19, 2013 SUPERSEDES STANDARD PLAN H4
DATED MAY 20, 2011 - PAGE 221 OF THE STANDARD PLANS BOOK DATED 2010.

REVISED STANDARD PLAN RSP H4

2010 REVISED STANDARD PLAN RSP H4

6-28-13

Dist	COUNTY	ROUTE	POST MILES TOTAL PROJECT	SHEET No.	TOTAL SHEETS
05	Scr	9	3.8/18.7	43	73

Gregory A. Balzer
LICENSED LANDSCAPE ARCHITECT

July 19, 2013
PLANS APPROVAL DATE

LICENSED LANDSCAPE ARCHITECT
Gregory A. Balzer 2576
Expires 2-28-15
Renewal Date
7-19-13
Date
STATE OF CALIFORNIA

THE STATE OF CALIFORNIA OR ITS OFFICERS OR AGENTS SHALL NOT BE RESPONSIBLE FOR THE ACCURACY OR COMPLETENESS OF SCANNED COPIES OF THIS PLAN SHEET.

TO ACCOMPANY PLANS DATED 03-24-14

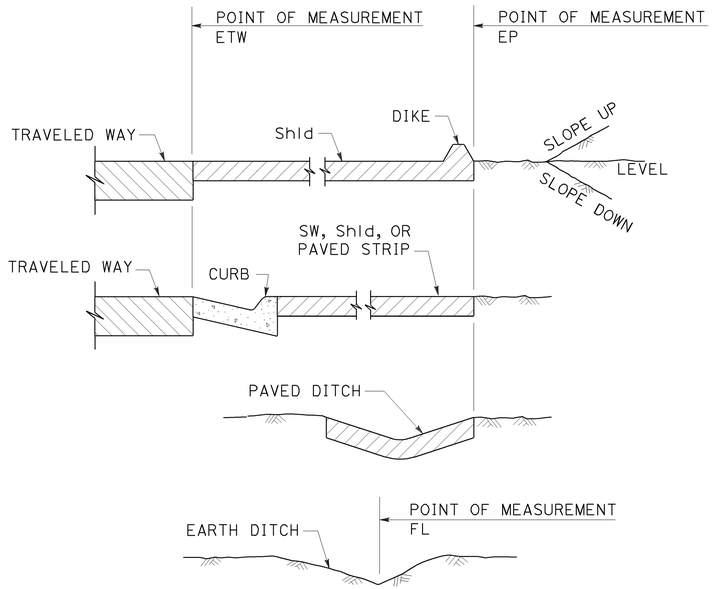

SECTION
POINTS OF MEASUREMENT

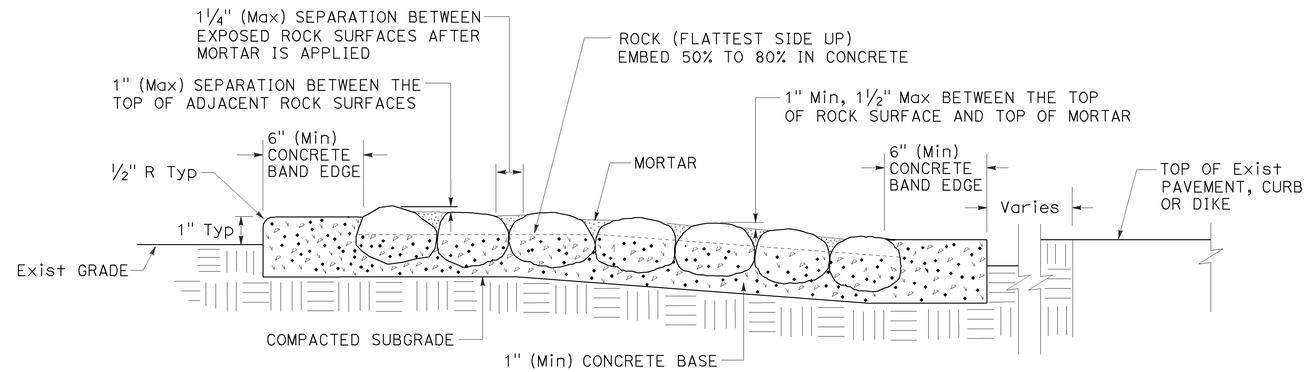

SECTION
ROCK BLANKET

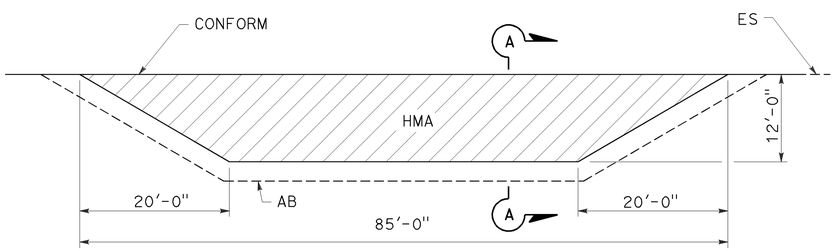

PLAN

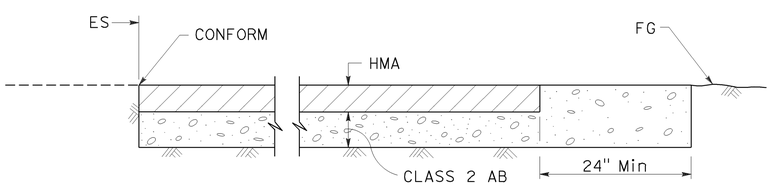

SECTION A-A
MAINTENANCE VEHICLE PULLOUT

STATE OF CALIFORNIA
DEPARTMENT OF TRANSPORTATION

LANDSCAPE DETAILS

NO SCALE

RSP H9A DATED JULY 19, 2013 SUPPLEMENTS THE STANDARD PLANS BOOK DATED 2010.

REVISED STANDARD PLAN RSP H9A

2010 REVISED STANDARD PLAN RSP H9A

6-21-13

Dist	COUNTY	ROUTE	POST MILES TOTAL PROJECT	SHEET No.	TOTAL SHEETS
05	SCr	9	3.8/18.7	44	73

REGISTERED CIVIL ENGINEER

July 19, 2013
PLANS APPROVAL DATE

REGISTERED PROFESSIONAL ENGINEER
Gurinderpal Bhullar
No. C48815
Exp. 9-30-14
CIVIL
STATE OF CALIFORNIA

THE STATE OF CALIFORNIA OR ITS OFFICERS OR AGENTS SHALL NOT BE RESPONSIBLE FOR THE ACCURACY OR COMPLETENESS OF SCANNED COPIES OF THIS PLAN SHEET.

TO ACCOMPANY PLANS DATED 03-24-14

2010 REVISED STANDARD PLAN RSP T9

TABLE 1

TAPER LENGTH CRITERIA AND CHANNELIZING DEVICE SPACING

SPEED (S)	MINIMUM TAPER LENGTH * FOR WIDTH OF OFFSET 12 FEET (W)				MAXIMUM CHANNELIZING DEVICE SPACING		
					X	Y	Z **
	TANGENT 2L	MERGING L	SHIFTING L/2	SHOULDER L/3	TAPER	TANGENT	CONFLICT
mph	ft	ft	ft	ft	ft	ft	ft
20	160	80	40	27	20	40	10
25	250	125	63	42	25	50	12
30	360	180	90	60	30	60	15
35	490	245	123	82	35	70	17
40	640	320	160	107	40	80	20
45	1080	540	270	180	45	90	22
50	1200	600	300	200	50	100	25
55	1320	660	330	220	55	110	27
60	1440	720	360	240	60	120	30
65	1560	780	390	260	65	130	32
70	1680	840	420	280	70	140	35

* - For other offsets, use the following merging taper length formula for L:
For speed of 40 mph or less, $L = WS^2/60$
For speed of 45 mph or more, $L = WS$

Where: L = Taper length in feet
W = Width of offset in feet
S = Posted speed limit, off-peak 85th-percentile speed prior to work starting, or the anticipated operating speed in mph

** - Use for taper and tangent sections where there are no pavement markings or where there is a conflict between existing pavement markings and channelizers (CA).

TABLE 2

LONGITUDINAL BUFFER SPACE AND FLAGGER STATION SPACING

SPEED *	Min D **	DOWNGRADE Min D ***		
		-3%	-6%	-9%
mph	ft	ft	ft	ft
20	115	116	120	126
25	155	158	165	173
30	200	205	215	227
35	250	257	271	287
40	305	315	333	354
45	360	378	400	427
50	425	446	474	507
55	495	520	553	593
60	570	598	638	686
65	645	682	728	785
70	730	771	825	891

* - Speed is posted speed limit, off-peak 85th-percentile speed prior to work starting, or the anticipated operating speed in mph

** - Longitudinal buffer space or flagger station spacing

*** - Use on sustained downgrade steeper than -3 percent and longer than 1 mile.

TABLE 3

ADVANCE WARNING SIGN SPACING

ROAD TYPE	DISTANCE BETWEEN SIGNS *		
	A	B	C
	ft	ft	ft
URBAN - 25 mph OR LESS	100	100	100
URBAN - MORE THAN 25 mph TO 40 mph	250	250	250
URBAN - MORE THAN 40 mph	350	350	350
RURAL	500	500	500
EXPRESSWAY / FREEWAY	1000	1500	2640

* - The distances are approximate, are intended for guidance purposes only, and should be applied with engineering judgment. These distances should be adjusted by the Engineer for field conditions, if necessary, by increasing or decreasing the recommmended distances.

STATE OF CALIFORNIA
DEPARTMENT OF TRANSPORTATION

TRAFFIC CONTROL SYSTEM TABLES FOR LANE AND RAMP CLOSURES

NO SCALE

RSP T9 DATED JULY 19, 2013 SUPERSEDES RSP T9 DATED APRIL 19, 2013 THAT SUPPLEMENTS THE STANDARD PLANS BOOK DATED 2010.

REVISED STANDARD PLAN RSP T9

Dist	COUNTY	ROUTE	POST MILES TOTAL PROJECT	SHEET No.	TOTAL SHEETS
05	SCr	9	3.8/18.7	45	73

REGISTERED CIVIL ENGINEER

April 19, 2013
PLANS APPROVAL DATE

REGISTERED PROFESSIONAL ENGINEER Gurinderpal Bhullar No. C48815 Exp. 9-30-14 CIVIL STATE OF CALIFORNIA

THE STATE OF CALIFORNIA OR ITS OFFICERS OR AGENTS SHALL NOT BE RESPONSIBLE FOR THE ACCURACY OR COMPLETENESS OF SCANNED COPIES OF THIS PLAN SHEET.

TO ACCOMPANY PLANS DATED 03-24-14

2010 REVISED STANDARD PLAN RSP T13

NOTES:

See Revised Standard Plan RSP T9 for tables.

Use cone spacing X for taper segment, Y for tangent segment or Z for conflict situations, as approriate, per Table 1, unless X, Y, or Z cone spacing is shown on this sheet.

Unless otherwise specified in the special provisions, all temporary warning signs shall have black legend on fluorescent orange background.

California codes are designated by (CA). Otherwise, Federal (MUTCD) codes are shown.

TYPICAL LANE CLOSURE WITH REVERSIBLE CONTROL

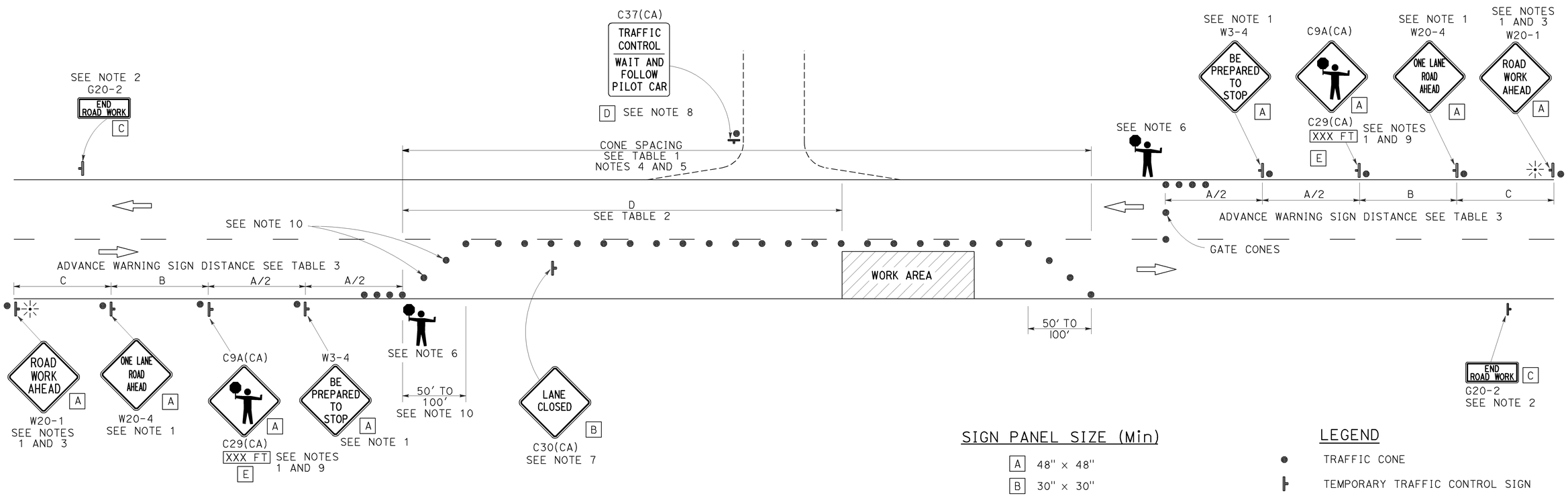

SIGN PANEL SIZE (Min)

A	48" × 48"
B	30" × 30"
C	36" × 18"
D	36" × 42"
E	20" × 7"

LEGEND

- TRAFFIC CONE
- TEMPORARY TRAFFIC CONTROL SIGN
- PORTABLE FLASHING BEACON
- FLAGGER

NOTES:

1. Each advance warning sign in each direction of travel shall be equipped with at least two flags for daytime closure. Each flag shall be at least 16" x 16" in size and shall be orange or fluorescent red-orange in color. Flashing beacons shall be placed at the locations indicated for lane closure during hours of darkness.
2. A G20-2 "END ROAD WORK" sign, as appropriate, shall be placed at the end of the lane control unless the end of work area is obvious, or ends within a larger project's limits.
3. If the W20-1 sign would follow within 2000' of a stationary W20-1 or G20-1 "ROAD WORK NEXT _____ MILES", use a W20-4 sign for the first advance warning sign.
4. All cones used for lane closures during the hours of darkness shall be fitted with retroreflective bands (or sleeves) as specified in the specifications.
5. Portable delineators, placed at one-half the spacing indicated for traffic cones, may be used instead of cones for daytime closures only.
6. Additional advance flaggers may be required. Flagger should stand in a conspicuous place, be visible to approaching traffic as well as approaching vehicles after the first vehicle has stopped. During the hours of darkness, the flagging-station and flagger shall be illuminated and clearly visible to approaching traffic. The illumination footprint of the lighting on the ground shall be at least 20' in diameter. Place a minimum of four cones at 50' intervals in advance of flagger station as shown.
7. Place C30(CA) "LANE CLOSED" sign at 500' to 1000' intervals throughout extended work areas. They are optional if the work area is visible from the flagger station.
8. When a pilot car is used, place a C37(CA) "TRAFFIC CONTROL-WAIT AND FOLLOW PILOT CAR" sign with black legend on white background at all intersections, driveways and alleys without a flagger within traffic control area. Signs shall be clean and visible at all times. Where traffic can not be effectively self-regulated, at least one flagger shall be used at each intersection within traffic control area.
9. An optional C29(CA) sign may be placed below the C9A(CA) sign.
10. Either traffic cones or barricades shall be placed on the taper. Barricades shall be Type I, II, or III.

STATE OF CALIFORNIA
DEPARTMENT OF TRANSPORTATION

TRAFFIC CONTROL SYSTEM FOR LANE CLOSURE ON TWO LANE CONVENTIONAL HIGHWAYS

NO SCALE

RSP T13 DATED APRIL 19, 2013 SUPERSEDES STANDARD PLAN T13 DATED MAY 20, 2011 - PAGE 241 OF THE STANDARD PLANS BOOK DATED 2010.

REVISED STANDARD PLAN RSP T13

Dist	COUNTY	ROUTE	POST MILES TOTAL PROJECT	SHEET No.	TOTAL SHEETS
05	SCr	9	3.8/18.7	46	73

REGISTERED CIVIL ENGINEER

November 15, 2013
PLANS APPROVAL DATE

REGISTERED PROFESSIONAL ENGINEER
Tillat Satter
No. C42892
Exp. 3-31-14
CIVIL
STATE OF CALIFORNIA

THE STATE OF CALIFORNIA OR ITS OFFICERS OR AGENTS SHALL NOT BE RESPONSIBLE FOR THE ACCURACY OR COMPLETENESS OF SCANNED COPIES OF THIS PLAN SHEET.

TO ACCOMPANY PLANS DATED 03-24-14

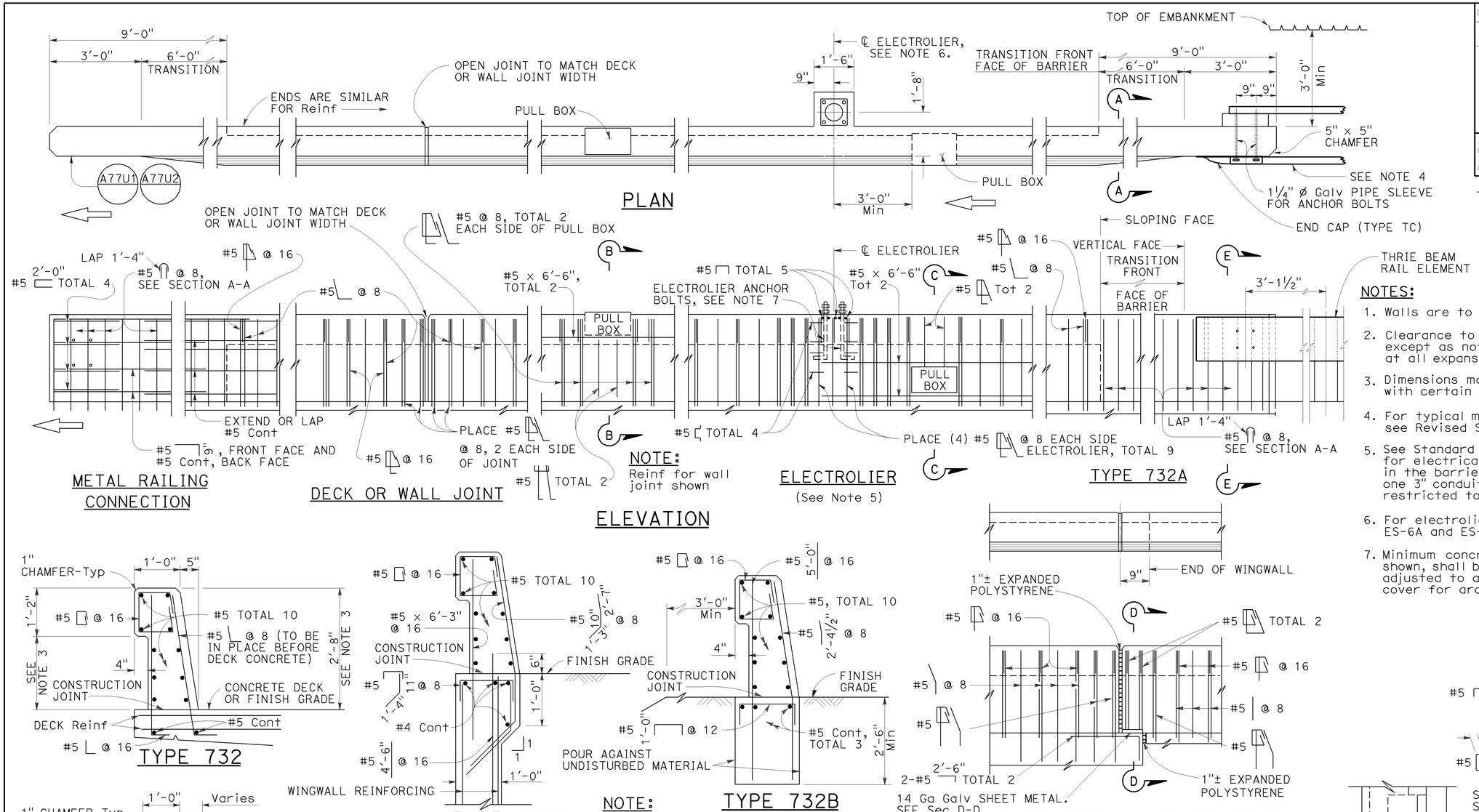

NOTES:

1. Walls are to be backfilled before barrier is placed.
2. Clearance to reinforcing steel in barrier to be 1", except as noted. Longitudinal reinforcement to stop at all expansion joints.
3. Dimensions may vary with roadway cross slope and with certain thickness of surfacing. See Project Plans.
4. For typical metal railing connection details not shown, see Revised Standard Plans RSP A77U1 and RSP A77U2.
5. See Standard Plans ES-9A, ES-9B, ES-9C, ES-9D and ES-9E for electrical details. The maximum number of conduits in the barrier is limited to two 2" conduits along with one 3" conduit. When a 3" conduit is used, it is restricted to the base of the barrier.
6. For electrolier mounting details, See Standard Plans ES-6A and ES-6B.
7. Minimum concrete edge distance, to the reinforcing shown, shall be maintained. Edge distance may be adjusted to accommodate increase in concrete cover for architectual treatment.

NOTE: Types 732A and 732B are similar to Type 732 except as noted.

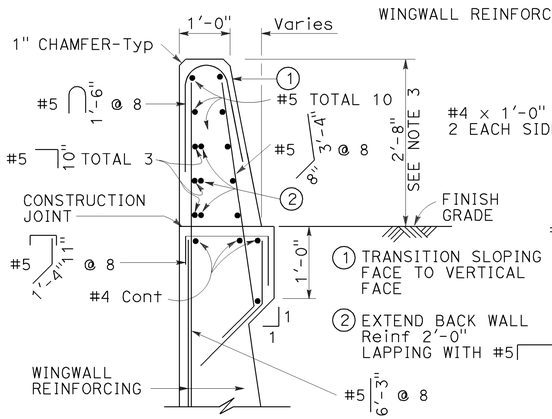

Details shown for barrier anchorage to Type 732A. Anchorage for barrier Types 732 and 732A are similar to their respective details.

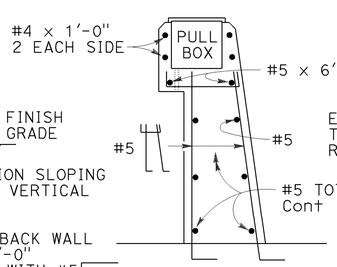

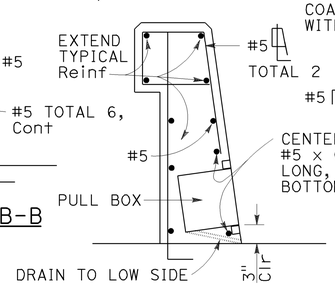

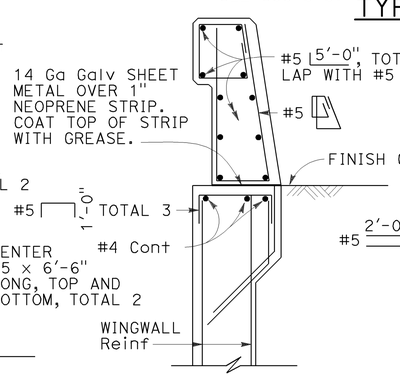

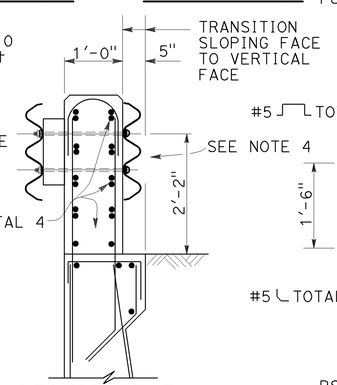

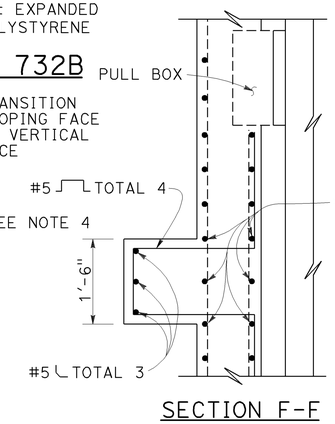

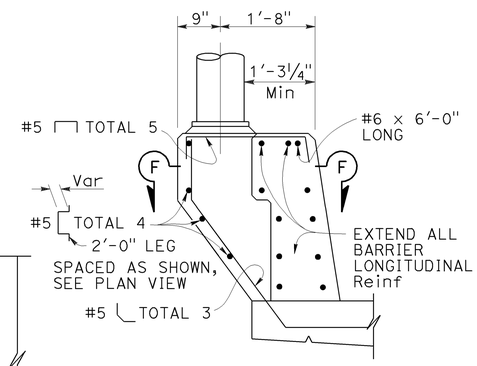

STATE OF CALIFORNIA
DEPARTMENT OF TRANSPORTATION

CONCRETE BARRIER TYPE 732

NO SCALE

RSP B11-55 DATED NOVEMBER 15, 2013 SUPERSEDES
RSP B11-55 DATED JULY 19, 2013 AND STANDARD PLAN B11-55
DATED MAY 20, 2011 - PAGE 297 OF THE STANDARD PLANS BOOK DATED 2010.

REVISED STANDARD PLAN RSP B11-55

2010 REVISED STANDARD PLAN RSP B11-55

10-4-13

DIST	COUNTY	ROUTE	POST MILES TOTAL PROJECT	SHEET No.	TOTAL SHEETS
05	SCr	9	3.8/18.7	47	73

REGISTERED CIVIL ENGINEER 7-9-2013 DATE

03-24-14
PLANS APPROVAL DATE

REGISTERED PROFESSIONAL ENGINEER Michael K Bergman No. 78483 Exp. 9-30-13 CIVIL STATE OF CALIFORNIA

The State of California or its officers or agents shall not be responsible for the accuracy or completeness of electronic copies of this plan sheet.

NOTES:

1. Paint "SIDEHILL VIADUCT @ PM 3.76"
2. Paint "BRIDGE NO 36-0117"
3. Paint "RETAINING WALL @ PM 3.76"
4. Paint "WALL NO 36E0039"
5. Paint " BRIDGE No 36-0119
6. 36" ø CIDH Piles with permanent steel casing and 24" ø CIDH rock socket
7. Rock Slope Protection, see "ROAD PLANS"

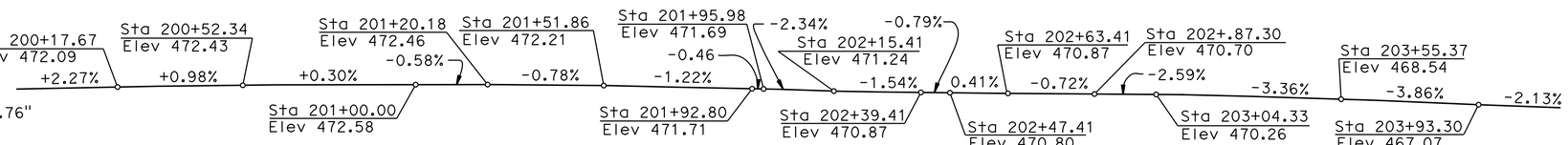

PROFILE GRADE

NO SCALE

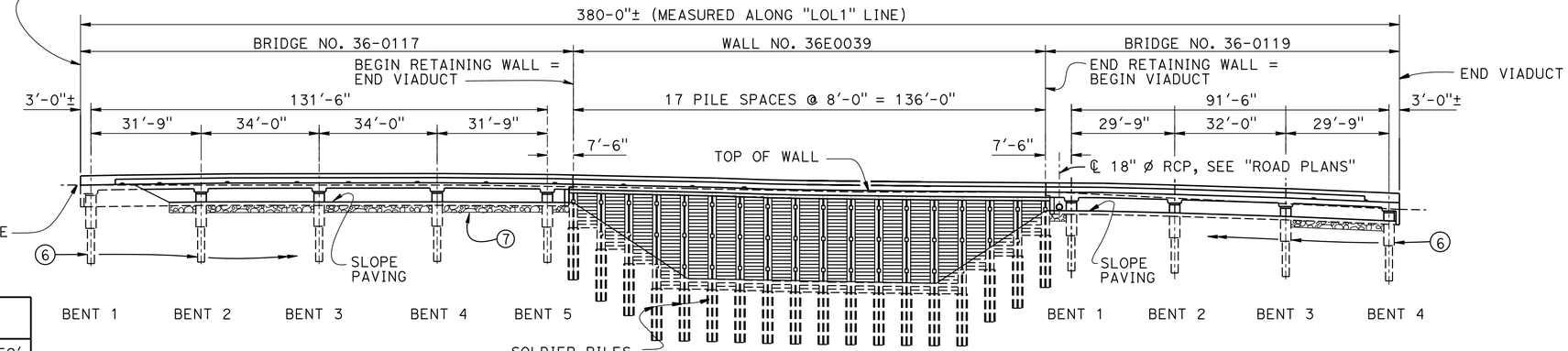

CURVE DATA "LOL1" LINE

No.	R	Δ	T	L
E	260.28'	39°17'56"	92.93'	178.52'
F	191.32'	33°35'07"	57.74'	112.14'

DATUM Elev 400.00

200 201 202 203 204

DEVELOPED ELEVATION

1" = 20'

CURVE DATA "ES" LINE

No.	R	Δ	T	L
G	134.37'	16°24'53"	19.38'	38.50'
H	200.00'	5°00'23"	8.74'	17.48'
I	244.75'	27°41'26"	60.32'	118.29'
J	200.00'	32°56'25"	59.13'	114.98
K	110.00'	3°36'00"	3.46'	6.91'

CURVE DATA "LOC1" LINE

No.	R	Δ	T	L
A	310.00'	12°42'08"	34.50'	68.73'
B	260.00'	48°59'54"	118.48'	222.35'
C	150.00'	31°42'45"	42.60'	83.02'
D	83.00'	27°16'04"	20.13'	39.50'

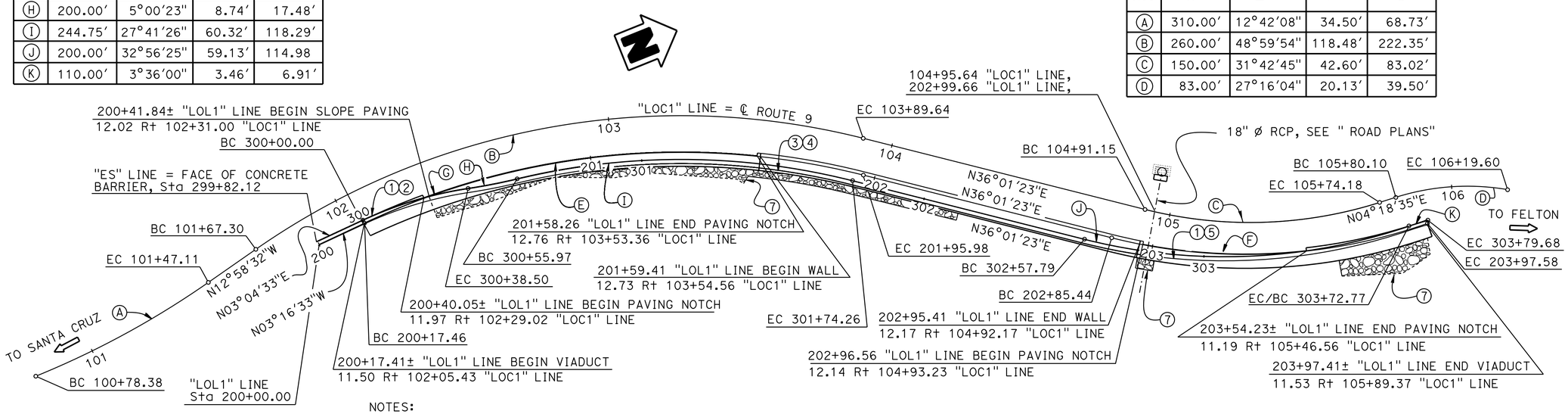

NOTES:

1. For "INDEX TO PLANS", "GENERAL NOTES" and "PILE DATA", see "INDEX TO PLANS No. 1 & 2" sheets
2. For " TYPICAL SECTION", see "GENERAL PLAN NO. 2" sheet

PLAN

1" = 20'

NOTE:
THE CONTRACTOR SHALL VERIFY ALL CONTROLLING FIELD DIMENSIONS BEFORE ORDERING OR FABRICATING ANY MATERIAL.

HIGHWAY 9 STORMWATER MITIGATION

SIDEHILL VIADUCT/RETAINING WALL @ PM 3.76

GENERAL PLAN NO. 1

Joseph E Downing
DESIGN ENGINEER

	BY	CHECKED
DESIGN	M Bergman/A V Herrera	Q Nguyen/A Asnaashari
DETAILS	S Motalebi/N Gwynn	Q Nguyen/A Asnaashari
QUANTITIES	Joey Aquino	Eric Burgeson

LOAD & RESISTANCE FACTOR DESIGN — LIVE LOADING: HL93 W/"LOW-BOY": PERMIT DESIGN VEHICLE

	BY	CHECKED
LAYOUT	Mike Bergman	Art V Herrera
SPECIFICATIONS	Todd Geerts	PLANS AND SPECS COMPARED Todd Geerts

ORIGINAL SCALE IN INCHES FOR REDUCED PLANS 0 1 2 3

STATE OF CALIFORNIA
DEPARTMENT OF TRANSPORTATION

DIVISION OF ENGINEERING SERVICES
STRUCTURE DESIGN
DESIGN BRANCH 3

BRIDGE NO. Varies
POST MILE 3.76

UNIT: 3578
PROJECT NUMBER & PHASE: 05000003171
CONTRACT NO.: 05-005901

DISREGARD PRINTS BEARING EARLIER REVISION DATES

REVISION DATES: 5-22-12 10-3-12 3-12-13

SHEET 1 OF 27

STRUCTURES DESIGN GENERAL PLAN SHEET (ENGLISH) (REV.09-01-10)

FILE => 36-0117-a-gp1.dgn

USERNAME => s123336 DATE PLOTTED => 27-MAR-2014 TIME PLOTTED => 15:04

DIST	COUNTY	ROUTE	POST MILES TOTAL PROJECT	SHEET No.	TOTAL SHEETS
05	SCr	9	3.8/18.7	48	73

REGISTERED CIVIL ENGINEER 7-9-2013 DATE

03-24-14
PLANS APPROVAL DATE

REGISTERED PROFESSIONAL ENGINEER Michael K Bergman No. 78483 Exp. 9-30-13 CIVIL STATE OF CALIFORNIA

The State of California or its officers or agents shall not be responsible for the accuracy or completeness of electronic copies of this plan sheet.

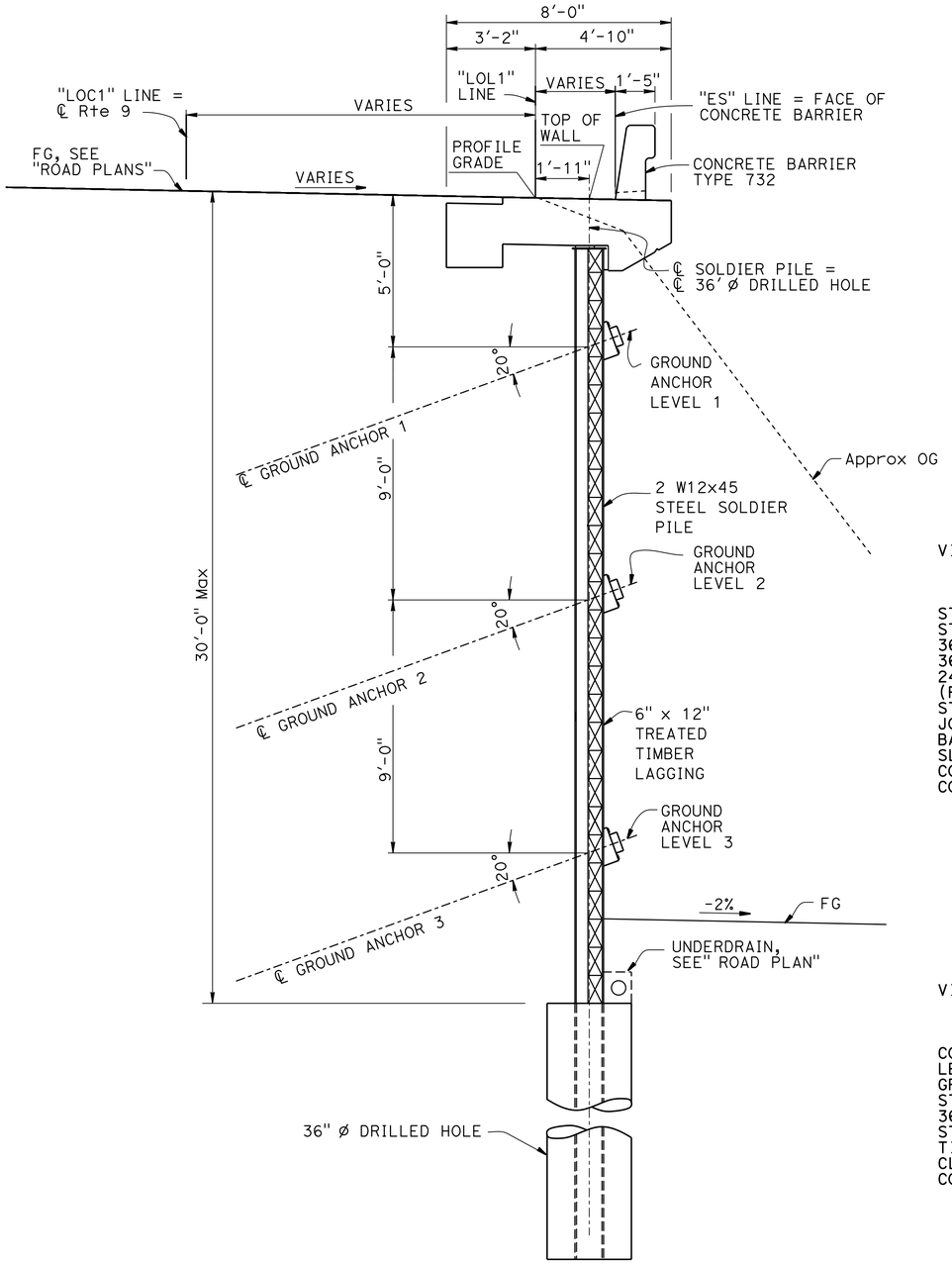

TYPICAL SECTION - RETAINING WALL

3/8" = 1'-0"

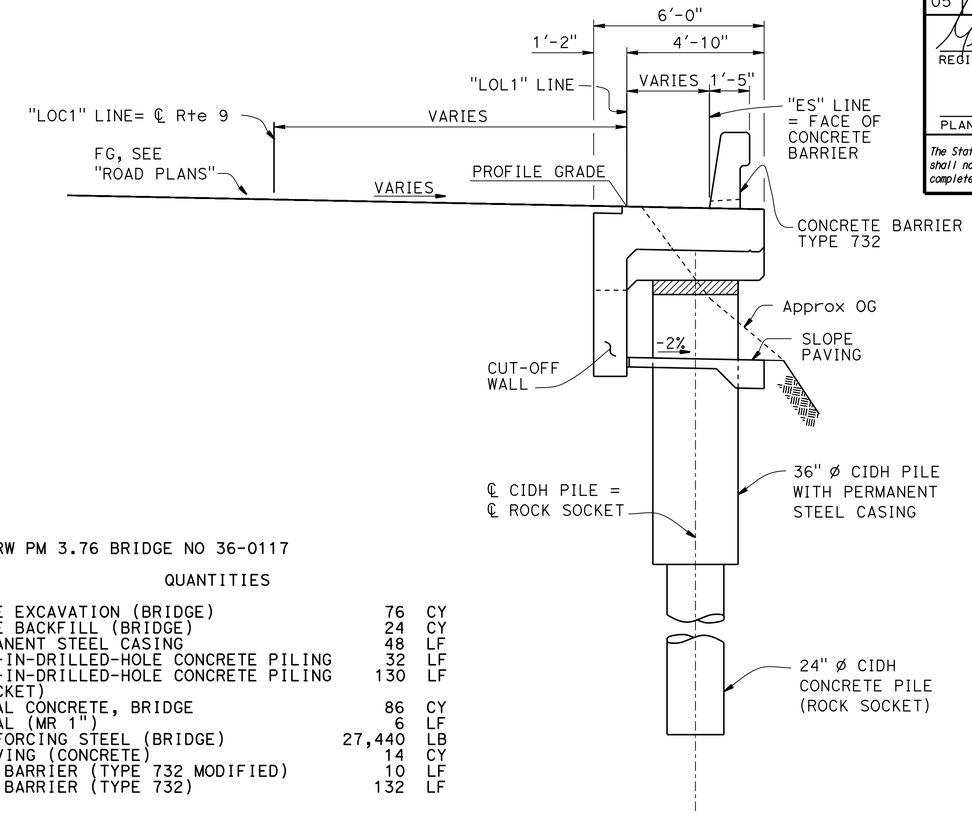

TYPICAL SECTION - SIDEHILL VIADUCT

3/8" = 1'-0"

VIADUCT/RW PM 3.76 BRIDGE NO 36-0117

QUANTITIES

STRUCTURE EXCAVATION (BRIDGE)	76	CY
STRUCTURE BACKFILL (BRIDGE)	24	CY
36" PERMANENT STEEL CASING	48	LF
36" CAST-IN-DRILLED-HOLE CONCRETE PILING	32	LF
24" CAST-IN-DRILLED-HOLE CONCRETE PILING (ROCK SOCKET)	130	LF
STRUCTURAL CONCRETE, BRIDGE	86	CY
JOINT SEAL (MR 1")	6	LF
BAR REINFORCING STEEL (BRIDGE)	27,440	LB
SLOPE PAVING (CONCRETE)	14	CY
CONCRETE BARRIER (TYPE 732 MODIFIED)	10	LF
CONCRETE BARRIER (TYPE 732)	132	LF

VIADUCT/RW PM 3.76 BRIDGE NO 36E0039

QUANTITIES

CONCRETE BACKFILL (SOLDIER PILE WALL)	66	CY
LEAN CONCRETE BACKFILL	118	CY
GROUND ANCHOR (SUBHORIZONTAL)	46	EA
STEEL SOLDIER PILE (W 12 X 45)	1,410	LF
36" DRILLED HOLE	705	LF
STRUCTURAL CONCRETE, BARRIER SLAB	73	CY
TIMBER LAGGING	15	MFBM
CLEAN AND PAINT STEEL SOLDIER PILING	LUMP	SUM
CONCRETE BARRIER (TYPE 732)	136	LF

VIADUCT/RW PM 3.76 BRIDGE NO 36-0119

QUANTITIES

STRUCTURE EXCAVATION (BRIDGE)	53	CY
STRUCTURE BACKFILL (BRIDGE)	17	CY
36" PERMANENT STEEL CASING	38	LF
36" CAST-IN-DRILLED-HOLE CONCRETE PILING	24	LF
24" CAST-IN-DRILLED-HOLE CONCRETE PILING (ROCK SOCKET)	100	LF
STRUCTURAL CONCRETE, BRIDGE	59	CY
JOINT SEAL (MR 1")	6	LF
BAR REINFORCING STEEL (BRIDGE)	20,460	LB
SLOPE PAVING (CONCRETE)	9	CY
CONCRETE BARRIER (TYPE 732 MODIFIED)	10	LF
CONCRETE BARRIER (TYPE 732)	92	LF

NOTE:
THE CONTRACTOR SHALL VERIFY ALL CONTROLLING FIELD DIMENSIONS BEFORE ORDERING OR FABRICATING ANY MATERIAL.

HIGHWAY 9 STORMWATER MITIGATION

SIDEHILL VIADUCT/RETAINING WALL @ PM 3.76

GENERAL PLAN NO. 2

	BY	CHECKED
DESIGN	M Bergman/A V Herrera	Q Nguyen/A Asnaashari
DETAILS	S Motalebi/N Gwynn	Q Nguyen/A Asnaashari
QUANTITIES	Joey Aquino	Eric Burgeson

LOAD & RESISTANCE FACTOR DESIGN — LIVE LOADING: HL93 W/"LOW-BOY": PERMIT DESIGN VEHICLE

	BY	CHECKED
LAYOUT	Mike Bergman	Art V Herrera
SPECIFICATIONS	Todd Geerts	PLANS AND SPECS COMPARED: Todd Geerts

Joseph E Downing
DESIGN ENGINEER

STATE OF CALIFORNIA
DEPARTMENT OF TRANSPORTATION

DIVISION OF ENGINEERING SERVICES
STRUCTURE DESIGN
DESIGN BRANCH 3

BRIDGE NO. Varies
POST MILE 3.76

ORIGINAL SCALE IN INCHES FOR REDUCED PLANS 0 1 2 3

UNIT: 3578
PROJECT NUMBER & PHASE: 05000003171
CONTRACT NO.: 05-005901

DISREGARD PRINTS BEARING EARLIER REVISION DATES

REVISION DATES: 5-22-12 10-3-12 3-12-13

SHEET 2 OF 27

FILE => 36-0117-a-gp2.dgn

STRUCTURES DESIGN GENERAL PLAN SHEET (ENGLISH) (REV.09-01-10)

USERNAME => s123936 DATE PLOTTED => 27-MAR-2014 TIME PLOTTED => 15:04

DIST	COUNTY	ROUTE	POST MILES TOTAL PROJECT	SHEET No.	TOTAL SHEETS
05	SCr	9	3.8/18.7	49	73

REGISTERED CIVIL ENGINEER 7-9-2013 DATE

03-24-14
PLANS APPROVAL DATE

REGISTERED PROFESSIONAL ENGINEER Michael K Bergman No. 78483 Exp. 9-30-13 CIVIL STATE OF CALIFORNIA

The State of California or its officers or agents shall not be responsible for the accuracy or completeness of electronic copies of this plan sheet.

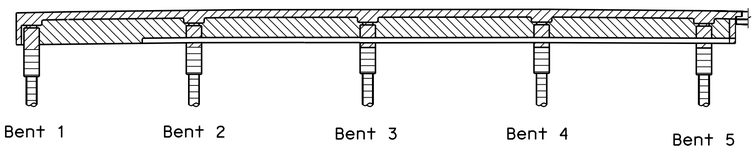

BRIDGE NO. 36-0117

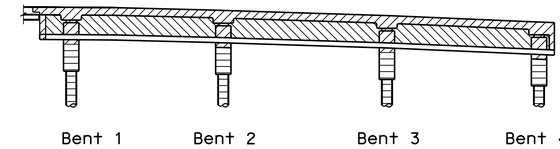

BRIDGE NO. 36-0119

Slope Paving (Concrete)
Structural Concrete, Bridge (3600 psi at 28 days)
Cast-in-Drilled Hole Concrete Piling (3600 psi at 28 days)
Structure Concrete, Bridge

CONCRETE STRENGTH AND TYPE LIMITS

No Scale

GENERAL NOTES (VIADUCT)
LOAD AND RESISTANCE FACTOR DESIGN
SUPERSTRUCTURE AND SUBSTRUCTURE

DESIGN:

AASHTO LRFD Bridge Design Specifications, 4th edition with the California Amendments; except that piles are designed using Bridge Design Specifications April 2000 (LFD) (1996 AASHTO w/Revisions by Caltrans).

SEISMIC DESIGN:

Caltrans Seismic Design Criteria (SDC), Version 1.6 dated November 2010

DEAD LOAD:

Includes 35 psf for future wearing surface.

LIVE LOADING:

HL93 and Permit Design Load.

SEISMIC LOADING:

See "SITE SPECIFIC ARS CURVE"

REINFORCED CONCRETE:

f_y = 60 ksi
f'_c = 3.6 ksi
n = 8

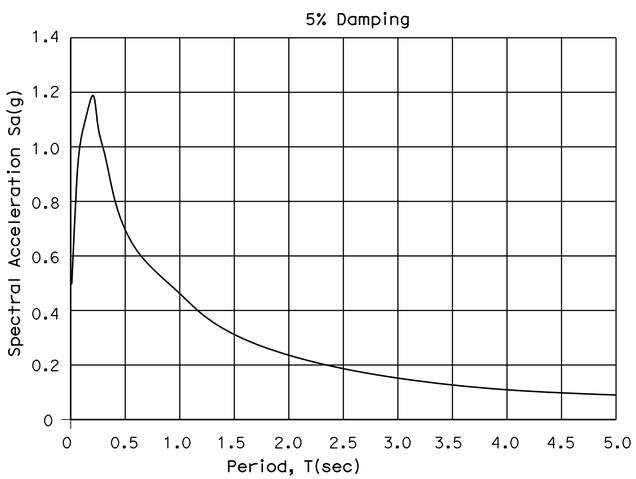

SITE SPECIFIC ARS CURVE

No Scale

SIDEHILL VIADUCT PILE DATA TABLE

Bridge No. 36-0117 Support Location	Pile Type	Pile Cut-off Elevation (Ft)	Nominal Resistance (kips)		Design Tip Elevation (Ft)	36" Permanent Steel Casing Specified Tip Elevation (ft)	Specified 24" Rock Socket Tip Elevation (Ft)
			Compression	Tension			
Bent 1	36" CIDH pile w/Permanent Steel Casing & 24" CIDH Rock Socket	465.81	382	0	441.5 (a), (b), (c) 433.5 (d)	459.50	433.50
Bent 2	36" CIDH pile w/Permanent Steel Casing & 24" CIDH Rock Socket	466.12	653	0	433.78 (a), (b), (c), (d)	459.78	433.78
Bent 3	36" CIDH pile w/Permanent Steel Casing & 24" CIDH Rock Socket	466.21	604	0	434.87 (a), (b), (c) 433.87 (d)	459.87	433.87
Bent 4	36" CIDH pile w/Permanent Steel Casing & 24" CIDH Rock Socket	466.20	649	0	433.91 (a), (b), (c), (d)	459.91	433.91
Bent 5	36" CIDH pile w/Permanent Steel Casing & 24" CIDH Rock Socket	465.77	382	0	441.45 (a), (b), (c) 433.45 (d)	459.45	433.45

Bridge No. 36-0119 Support Location	Pile Type	Pile Cut-off Elevation (Ft)	Nominal Resistance (kips)		Design Tip Elevation (Ft)	36" Permanent Steel Casing Specified Tip Elevation (ft)	Specified 24" Rock Socket Tip Elevation (Ft)
			Compression	Tension			
Bent 1	36" CIDH pile w/Permanent Steel Casing & 24" CIDH Rock Socket	463.87	369	0	440.83 (a), (b), (c) 432.83 (d)	457.83	432.83
Bent 2	36" CIDH pile w/Permanent Steel Casing & 24" CIDH Rock Socket	463.07	620	0	432.07 (a), (b), (c), (d)	457.07	432.07
Bent 3	36" CIDH pile w/Permanent Steel Casing & 24" CIDH Rock Socket	462.08	620	0	431.01 (a), (b), (c), (d)	456.01	431.01
Bent 4	36" CIDH pile w/Permanent Steel Casing & 24" CIDH Rock Socket	460.75	369	0	437.49 (a), (b), (c) 429.49 (d)	454.49	429.49

Note:
Design tip elevations for Bents are controlled by: (a) Compression, (b) Tension, (c) Settlement, (d) Lateral

INDEX TO PLANS

SHEET No.	TITLE
1	GENERAL PLAN NO. 1
2	GENERAL PLAN NO. 2
3	INDEX TO PLANS NO. 1
4	INDEX TO PLANS NO. 2
5	STRUCTURE PLAN NO. 1
6	STRUCTURE PLAN NO. 2
7	STRUCTURE PLAN NO. 3
8	FOUNDATION PLAN
9	BENT DETAILS
10	CIDH CONCRETE PILE DETAILS
11	TYPICAL SECTION NO. 1
12	TYPICAL SECTION NO. 2
13	BOTTOM SLAB REINFORCEMENT NO. 1
14	BOTTOM SLAB REINFORCEMENT NO. 2
15	TOP SLAB REINFORCEMENT NO. 1
16	TOP SLAB REINFORCEMENT NO. 2
17	BEGIN/END OF VIADUCT DETAILS NO. 1
18	BEGIN/END OF VIADUCT DETAILS NO. 2
19	BEGIN/END OF VIADUCT DETAILS NO. 3
20	DRAINAGE DETAILS
21	BARRIER TRANSITION DETAILS
22	SOLDIER PILE WALL LAGGING DETAILS
23	EXCAVATION AND BACKFILL
24	SUB HORIZONTAL GROUND ANCHOR DETAILS
25	SOLDIER PILE WALL WITH GROUND ANCHORS
26	LOG OF TEST BORINGS 1 OF 2
27	LOG OF TEST BORINGS 2 OF 2

STANDARD PLANS DATED 2010

A10A	ABBREVIATIONS (SHEET 1 OF 2)
A10B	ABBREVIATIONS (SHEET 2 OF 2)
A10C	LINES AND SYMBOLS (SHEET 1 OF 3)
A10D	LINES AND SYMBOLS (SHEET 2 OF 3)
A10E	LINES AND SYMBOLS (SHEET 3 OF 3)
A10F	LEGEND - SOIL (SHEET 1 OF 2)
A10G	LEGEND - SOIL (SHEET 2 OF 2)
A10H	LEGEND - ROCK
A62C	LIMITS OF PAYMENT FOR EXCAVATION AND BACKFILL BRIDGE
B0-3	BRIDGE DETAILS
B6-21	JOINT SEAL (MAXIMUM MOVEMENT RATING = 2")
B7-8	DECK DRAINAGE DETAILS
B11-55	CONCRETE BARRIER TYPE 732

STANDARD PLAN SHEET No.
DETAIL No.

	BY	CHECKED
DESIGN	Art V Herrera	Ali Asnaashari
DETAILS	Shadi Motalebi	Ali Asnaashari
QUANTITIES	Joey Aquino	Eric Burgeson

STATE OF CALIFORNIA
DEPARTMENT OF TRANSPORTATION

DIVISION OF ENGINEERING SERVICES
STRUCTURE DESIGN
DESIGN BRANCH 3

BRIDGE NO. Varies
POST MILE 3.76

HIGHWAY 9 STORMWATER MITIGATION
SIDEHILL VIADUCT/RETAINING WALL @ PM 3.76
INDEX TO PLANS NO. 1

STRUCTURES DESIGN DETAIL SHEET (ENGLISH) (REV. 09-01-10)

ORIGINAL SCALE IN INCHES FOR REDUCED PLANS 0 1 2 3

UNIT: 3578
PROJECT NUMBER & PHASE: 05000003171
CONTRACT NO.: 05-005901

DISREGARD PRINTS BEARING EARLIER REVISION DATES

REVISION DATES 11-28-12 1-18-13 2-19-13

SHEET 3 OF 27

FILE => 36-0117-a-itp1.dgn

USERNAME => s123936 DATE PLOTTED => 27-MAR-2014 TIME PLOTTED => 15:04

DIST	COUNTY	ROUTE	POST MILES TOTAL PROJECT	SHEET No.	TOTAL SHEETS
05	SCr	9	3.8/18.7	50	73

REGISTERED CIVIL ENGINEER 7-9-2013 DATE

03-24-14
PLANS APPROVAL DATE

REGISTERED PROFESSIONAL ENGINEER Michael K Bergman No. 78483 Exp. 9-30-13 CIVIL STATE OF CALIFORNIA

The State of California or its officers or agents shall not be responsible for the accuracy or completeness of electronic copies of this plan sheet.

GENERAL NOTES (RETAINING WALL)

DESIGN: AASHTO LRFD Bridge Design Specifications, 4th Edition with California Amendments.

LIVE LOAD: 240 psf on traveled way (for slope stability analysis)

SOIL PARAMETERS: (For determination of Design lateral earth pressure and slope stability analysis)
Backfill soil weight = 120 lb/ft^3
ϕ = 32°, γ=125 pcf 0 ft-30 ft
ϕ = 38°, γ=140 pcf 30 ft and below
STR I: Coulomb Theory
SER I: Limit Equilibrium slope stability analysis

Extreme Event: Mononobe-Okabe Equation
K_h = 0.135

STEEL SOLDIER PILES: ASTM A572, Grade 50 Min

REINFORCED CONCRETE (BARRIER SLAB):
f'_c = 4 ksi
f_y = 60 ksi

STRUCTURAL TIMBER: Treated Douglas Fir, Grade No.1 or better. Timber to be full sawn.

PRESTRESSING STEEL (GROUND ANCHORS):
FDL= Factored Design Load on ground anchor (kips)
FTL= Factored Test Load (kips)
LL= Lock-Off Load (kips)

fpu = Minimum ultimate tensile strength of ground anchor steel (ksi)

As (Min) = Minimum cross sectional area of steel in ground anchor. (square inch)

Steel = ASTM designation: A416 (HS Strands)

$$As\ (Min) = \frac{1.0\ FTL}{0.75\ fpu}$$

Steel = ASTM designation: A722 (HS Bars)

$$As\ (Min) = \frac{1.0\ FTL}{0.80\ fpu}$$

FDL = SEE TABLE
FTL = 1.5 FDL
LL = 1.0 FDL

GROUND ANCHOR LEVEL	UNBONDED LENGTH
1	35 ft
2	30 ft
3	25 ft

RETAINING WALL PILE DATA TABLE

Pile No	"LOL1" line Station	Top of Pile Elevation (ft)	Top of Wall Elevation (ft)	FDL		
				Ground Anchor 1 (kips)	Ground Anchor 2 (kips)	Ground Anchor 3 (kips)
1	201+59.41	470.32	472.07	55	X	X
2	201+67.41	470.25	472.00	105	65	X
3	201+75.41	470.16	471.91	100	100	X
4	201+83.41	470.08	471.83	90	90	90
5	201+91.41	469.95	471.70	90	90	90
6	201+99.41	469.82	471.57	90	90	90
7	202+07.41	469.64	471.39	90	90	90
8	202+15.41	469.48	471.23	90	90	90
9	202+23.41	469.34	471.09	90	90	90
10	202+31.41	470.23	471.98	90	90	90
11	202+39.41	469.13	470.88	90	90	90
12	202+47.41	469.08	470.83	90	90	90
13	202+55.41	469.12	470.87	90	90	90
14	202+63.41	469.16	470.91	90	90	90
15	202+71.41	469.15	470.90	90	90	90
16	202+79.41	469.10	470.85	100	100	X
17	202+87.41	469.02	470.77	105	65	X
18	202+95.41	468.83	470.58	55	X	X

NOTE: Slope stability (Service I Limit State) controls

HIGHWAY 9 STORMWATER MITIGATION
SIDEHILL VIADUCT/RETAINING WALL @ PM 3.76
INDEX TO PLANS NO. 2

	BY	CHECKED
DESIGN	Mike Bergman	Quang Nguyen
DETAILS	Shadi Motalebi	Quang Nguyen
QUANTITIES	Joey Aquino	Eric Burgeson

STATE OF CALIFORNIA DEPARTMENT OF TRANSPORTATION

DIVISION OF ENGINEERING SERVICES STRUCTURE DESIGN DESIGN BRANCH 3

BRIDGE NO. 36E0039
POST MILE 3.76

STRUCTURES DESIGN DETAIL SHEET (ENGLISH) (REV. 09-01-10)

ORIGINAL SCALE IN INCHES FOR REDUCED PLANS 0 1 2 3

UNIT: 3578
PROJECT NUMBER & PHASE: 05000003171 CONTRACT NO.: 05-005901

DISREGARD PRINTS BEARING EARLIER REVISION DATES

REVISION DATES: ~~11-29-12~~ 1-9-13

SHEET 4 OF 27

FILE => 36-0117-a-ltp2.dgn

USERNAME => s123936 DATE PLOTTED => 27-MAR-2014 TIME PLOTTED => 15:04

DIST	COUNTY	ROUTE	POST MILES TOTAL PROJECT	SHEET No.	TOTAL SHEETS
05	SCr	9	3.8/18.7	51	73

REGISTERED CIVIL ENGINEER 7-9-2013 DATE

03-24-14
PLANS APPROVAL DATE

REGISTERED PROFESSIONAL ENGINEER Michael K Bergman No. 78483 Exp. 9-30-13 CIVIL STATE OF CALIFORNIA

The State of California or its officers or agents shall not be responsible for the accuracy or completeness of electronic copies of this plan sheet.

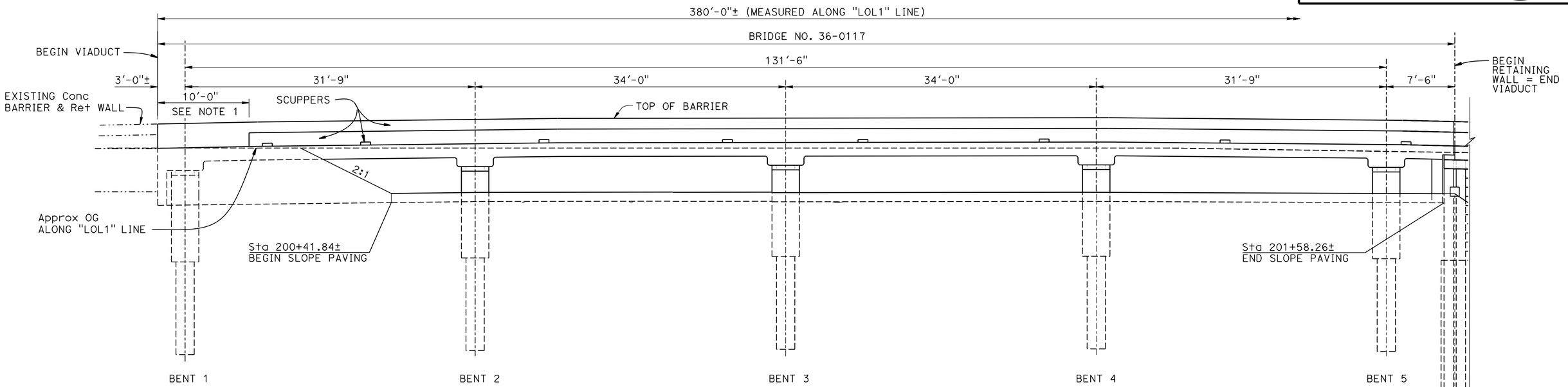

NOTE:

1. Limits of Barrier Transition. For details, see "BARRIER TRANSITION DETAILS" sheet

DEVELOPED ELEVATION

3/16" = 1'-0"

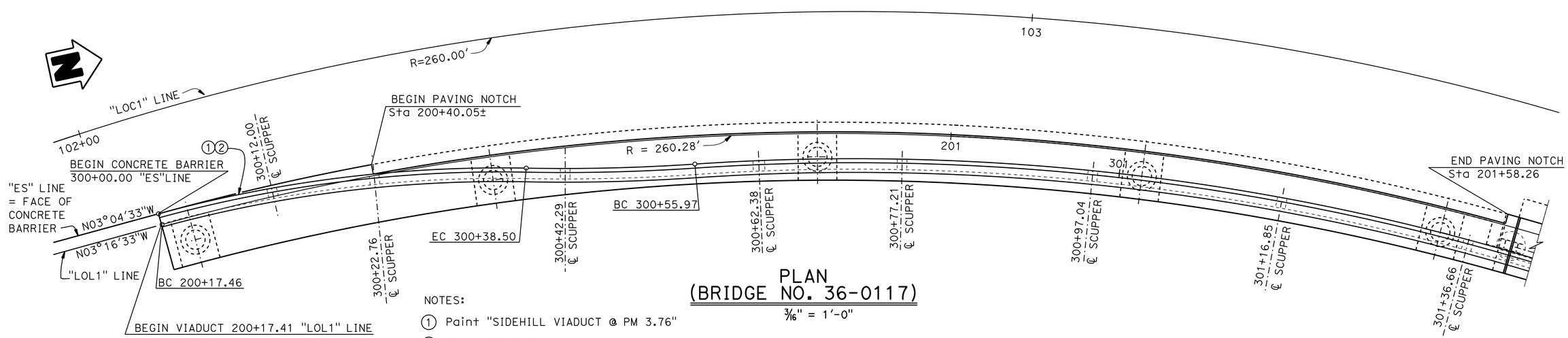

NOTES:

1. Paint "SIDEHILL VIADUCT @ PM 3.76"
2. Paint "BRIDGE NO 36-0117"

PLAN (BRIDGE NO. 36-0117)

3/16" = 1'-0"

HIGHWAY 9 STORMWATER MITIGATION

SIDEHILL VIADUCT/RETAINING WALL @ PM 3.76

STRUCTURE PLAN NO. 1

	BY	CHECKED
DESIGN	Art V Herrera	Ali Asnaashari
DETAILS	S Motalebi / N Gwynn	Ali Asnaashari
QUANTITIES	Joey Aquino	Eric Burgeson

STATE OF CALIFORNIA DEPARTMENT OF TRANSPORTATION

DIVISION OF ENGINEERING SERVICES STRUCTURE DESIGN DESIGN BRANCH 3

BRIDGE NO. 36-0117
POST MILE 3.76

STRUCTURES DESIGN DETAIL SHEET (ENGLISH) (REV. 09-01-10)

ORIGINAL SCALE IN INCHES FOR REDUCED PLANS 0 1 2 3

UNIT: 3578
PROJECT NUMBER & PHASE: 05000003171
CONTRACT NO.: 05-005901

DISREGARD PRINTS BEARING EARLIER REVISION DATES

REVISION DATES 11-9-12 12-27-12

SHEET 5 OF 27

FILE => 36-0117-c-sp1.dgn

USERNAME => s123936 DATE PLOTTED => 27-MAR-2014 TIME PLOTTED => 15:04

DIST	COUNTY	ROUTE	POST MILES TOTAL PROJECT	SHEET No.	TOTAL SHEETS
05	SCr	9	3.8/18.7	52	73

REGISTERED CIVIL ENGINEER 7-9-2013 DATE

03-24-14
PLANS APPROVAL DATE

REGISTERED PROFESSIONAL ENGINEER Michael K Bergman No. 78483 Exp. 9-30-13 CIVIL STATE OF CALIFORNIA

The State of California or its officers or agents shall not be responsible for the accuracy or completeness of electronic copies of this plan sheet.

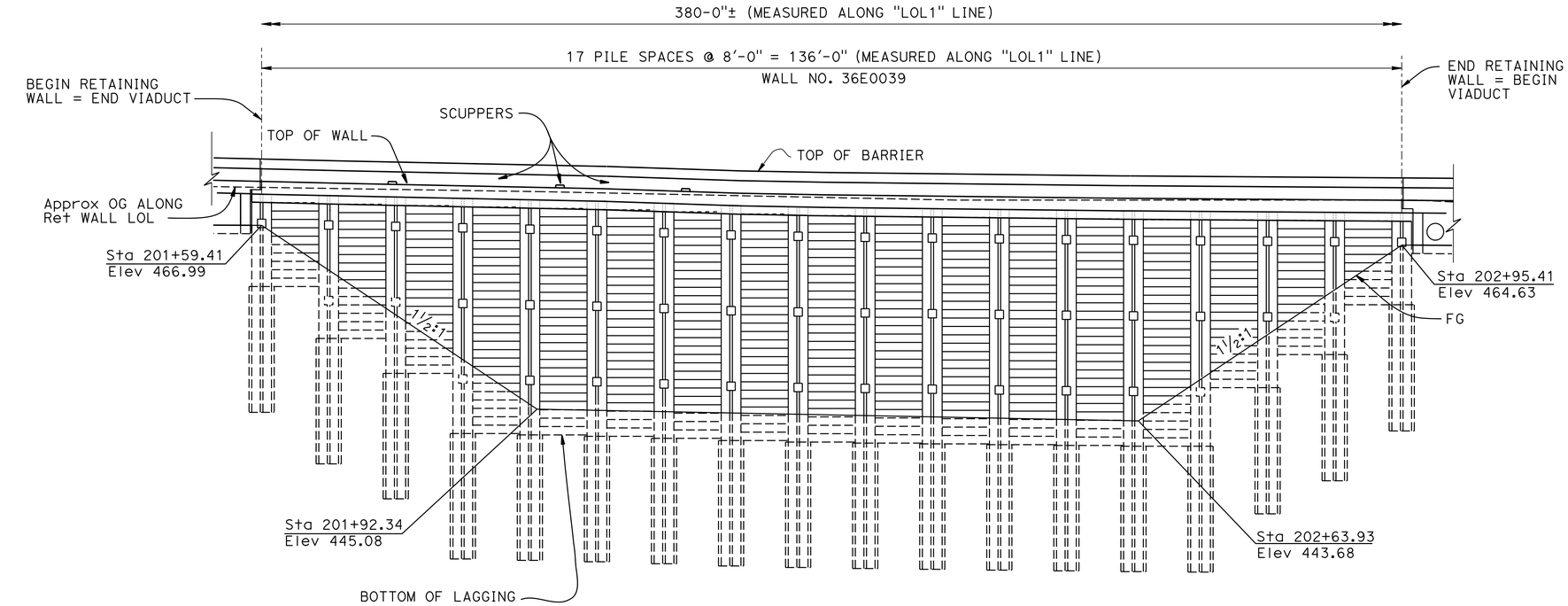

Pile Number	1	2	3	4	5	6	7	8	9	10	11	12	13	14	15	16	17	18
Pile Length	26	32	36	43	43	43	43	43	43	43	43	43	43	43	43	36	32	26
Number of Lagging Members	11	17	21	28	28	28	28	28	28	28	28	28	28	28	21	17	11	
Number of Ground Anchors	1	2	2	3	3	3	3	3	3	3	3	3	3	3	3	2	2	1

DATUM Elev 400.00

202+00 203+00

DEVELOPED ELEVATION

1/8" = 1'-0"

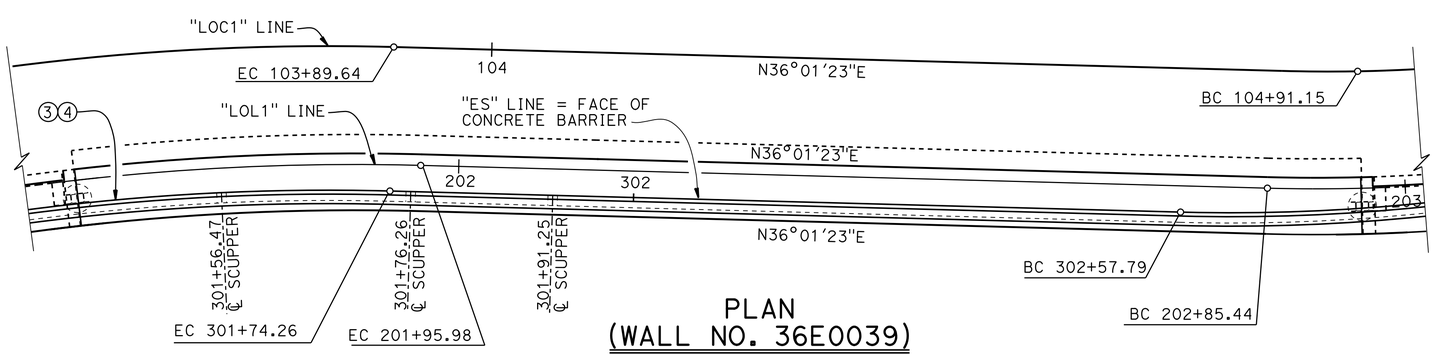

PLAN (WALL NO. 36E0039)

1/8" = 1'-0"

NOTES:

3. Paint "RETAINING WALL @ PM 3.76"
4. Paint "WALL NO 36E0039"

HIGHWAY 9 STORMWATER MITIGATION

SIDEHILL VIADUCT/RETAINING WALL @ PM 3.76

STRUCTURE PLAN NO. 2

	BY	CHECKED
DESIGN	Mike Bergman	Quang Nguyen
DETAILS	S Motalebi/N Gwynn	Quang Nguyen
QUANTITIES	Joey Aquino	Eric Burgeson

STATE OF CALIFORNIA
DEPARTMENT OF TRANSPORTATION

DIVISION OF ENGINEERING SERVICES
STRUCTURE DESIGN
DESIGN BRANCH 3

BRIDGE NO. 36E0039
POST MILE 3.76

STRUCTURES DESIGN DETAIL SHEET (ENGLISH) (REV. 09-01-10)

ORIGINAL SCALE IN INCHES FOR REDUCED PLANS 0 1 2 3

UNIT: 3578
PROJECT NUMBER & PHASE: 05000003171
CONTRACT NO.: 05-005901

DISREGARD PRINTS BEARING EARLIER REVISION DATES

REVISION DATES 1-11-13 2-21-13

SHEET 6 OF 27

FILE => 36-0117-c-sp2.dgn

USERNAME => s123936 DATE PLOTTED => 27-MAR-2014 TIME PLOTTED => 15:04

DIST	COUNTY	ROUTE	POST MILES TOTAL PROJECT	SHEET No.	TOTAL SHEETS
05	SCr	9	3.8/18.7	53	73

REGISTERED CIVIL ENGINEER 7-9-2013 DATE

03-24-14
PLANS APPROVAL DATE

REGISTERED PROFESSIONAL ENGINEER Michael K Bergman No. 78483 Exp. 9-30-13 CIVIL STATE OF CALIFORNIA

The State of California or its officers or agents shall not be responsible for the accuracy or completeness of electronic copies of this plan sheet.

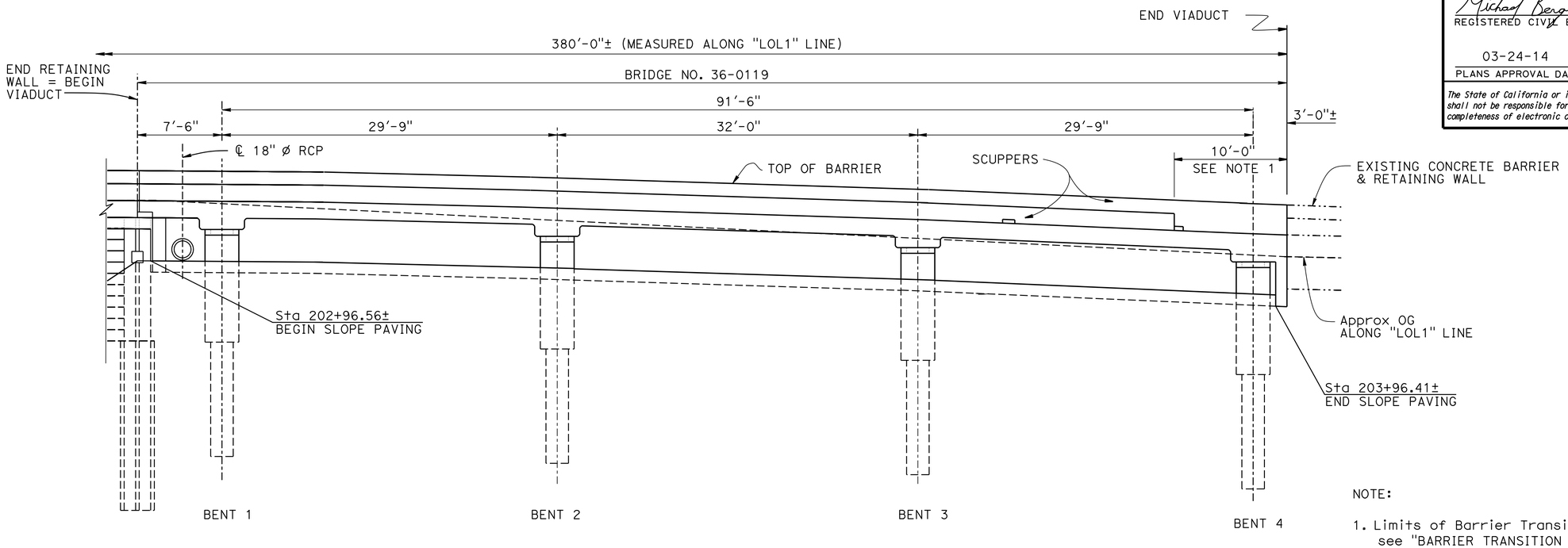

NOTE:

1. Limits of Barrier Transition. For details, see "BARRIER TRANSITION DETAILS" sheet

DEVELOPED ELEVATION

3/16" = 1'-0"

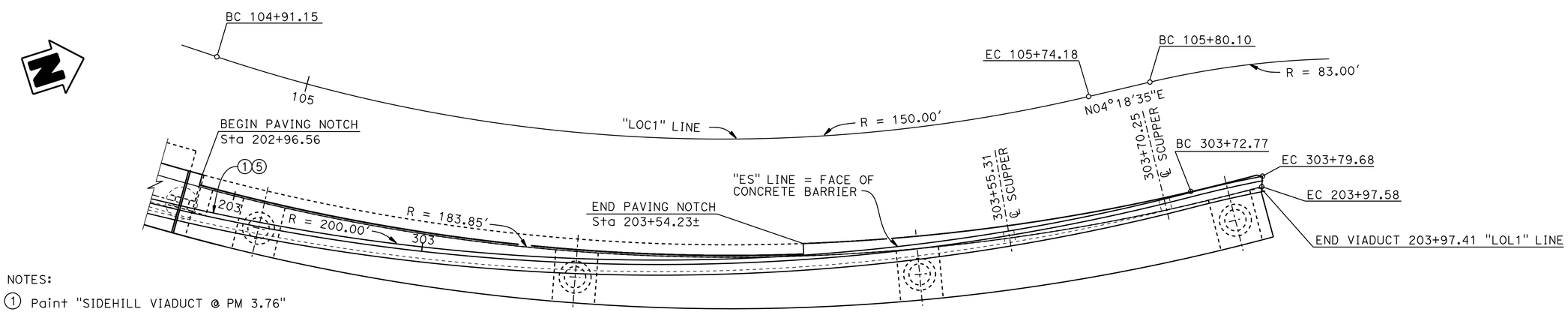

NOTES:

1. Paint "SIDEHILL VIADUCT @ PM 3.76"
5. Paint " BRIDGE No 36-0119

PLAN (BRIDGE NO. 36-0119)

3/16" = 1'-0"

HIGHWAY 9 STORMWATER MITIGATION

SIDEHILL VIADUCT/RETAINING WALL @ PM 3.76

STRUCTURE PLAN NO. 3

	BY	CHECKED
DESIGN	Art V Herrera	Ali Asnaashari
DETAILS	S Motalebi/ N Gwynn	Ali Asnaashari
QUANTITIES	Joey Aquino	Eric Burgeson

STATE OF CALIFORNIA DEPARTMENT OF TRANSPORTATION

DIVISION OF ENGINEERING SERVICES STRUCTURE DESIGN DESIGN BRANCH 3

BRIDGE NO. 36-0119
POST MILE 3.76

STRUCTURES DESIGN DETAIL SHEET (ENGLISH) (REV. 09-01-10)

ORIGINAL SCALE IN INCHES FOR REDUCED PLANS 0 1 2 3

UNIT: 3578
PROJECT NUMBER & PHASE: 05000003171
CONTRACT NO.: 05-005901

DISREGARD PRINTS BEARING EARLIER REVISION DATES

REVISION DATES 11-9-12 12-27-12

SHEET 7 OF 27

FILE => 36-0117-c-sp3.dgn

USERNAME => s123936 DATE PLOTTED => 27-MAR-2014 TIME PLOTTED => 15:04

DIST	COUNTY	ROUTE	POST MILES TOTAL PROJECT	SHEET No.	TOTAL SHEETS
05	SCr	9	3.8/18.7	54	73

REGISTERED CIVIL ENGINEER 7-9-2013 DATE

03-24-14
PLANS APPROVAL DATE

REGISTERED PROFESSIONAL ENGINEER Michael K Bergman No. 78483 Exp. 9-30-13 CIVIL STATE OF CALIFORNIA

The State of California or its officers or agents shall not be responsible for the accuracy or completeness of electronic copies of this plan sheet.

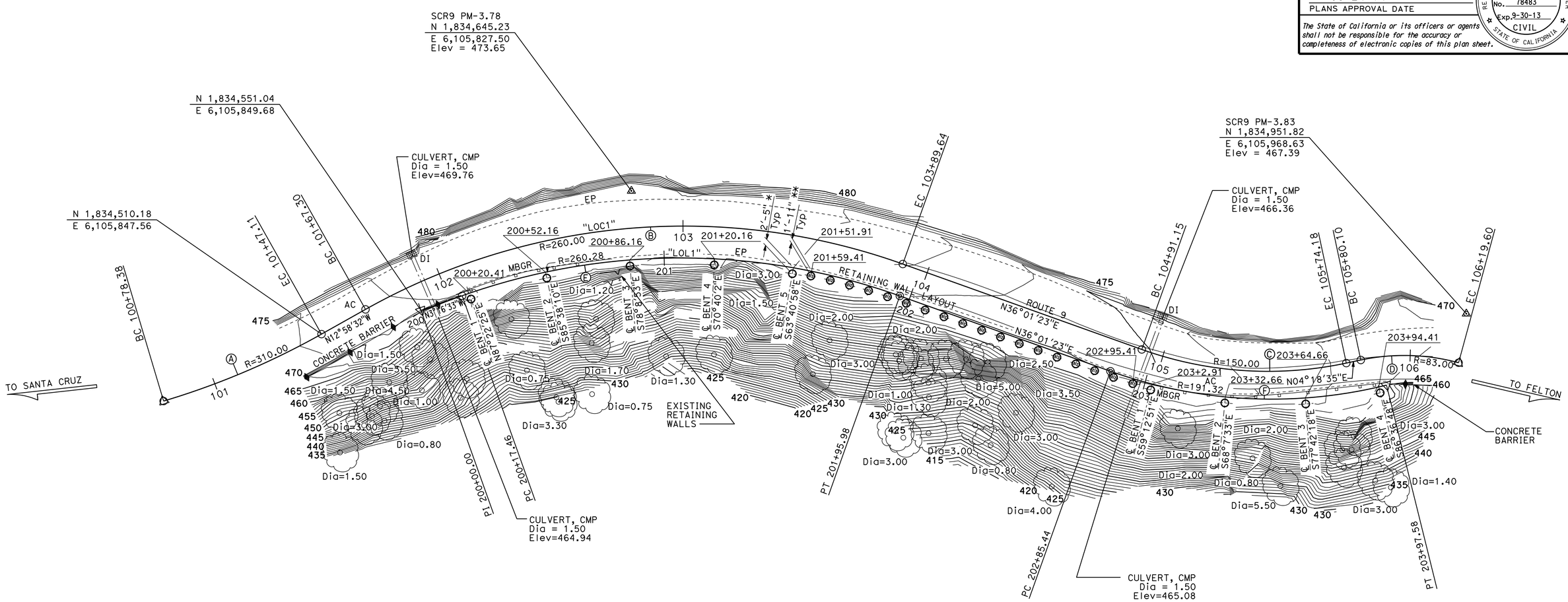

SURVEY CONTROL

SCR9 PM-3.78

Fnd 1"IP w/ CALTRANS CONTROL PP w/NAIL
14.87 FT Lt. ROUTE 9
Sta. 102+80.48
N 1,834,645.23
E 6,105,827.50
Elev. = 473.65

SCR9 PM-3.83

Fnd LEAD AND TACK, FLUSH IN CONCRETE
19.75 FT Lt. ROUTE 9
Sta. 106+17.86
N 1,834,951.82
E 6,105,968.63
Elev. = 467.39

NOTES:

* Indicates typical Viaduct pile distance from "LOL1" Line

** Indicates typical Retaining Wall Pile distance from "LOL1" Line

Indicates 36" Ø CIDH Concrete Pile

Indicates 36" Ø Soldier Pile

CURVE DATA "LOL1" LINE

No.	R	Δ	T	L
E	260.28	39°17'56"	92.93	178.52
F	191.32	33°35'07"	57.74	112.14

CURVE DATA "LOC1" LINE

No.	R	Δ	T	L
A	310.00	12°42'08"	34.50	68.73
B	260.00	48°59'54"	118.48	222.35
C	150.00	31°42'45"	42.60	83.02
D	83.00	27°16'04"	20.13	39.50

HIGHWAY 9 STORMWATER MITIGATION
SIDEHILL VIADUCT/RETAINING WALL @ PM 3.76
FOUNDATION PLAN

PRELIMINARY INVESTIGATION SECTION

SCALE 1"=20'	VERT.DATUM NAVD88	PHOTOGRAMMETRY AS OF: X			
	HORZ.DATUM NAD83(92)(1991.35)	SURVEYED	BY DISTRICT	CHECKED	BY D. IVY 04/2012
ALIGNMENT TIES Dist. Traverse Sheet		DRAFTED	BY T. ZOLNIKOV 04/2012	CHECKED	BY L. LEW 04/2012

	BY	CHECKED
DESIGN	M Bergman/ A V Herrera	Q Nguyen/A Asnaashari
DETAILS	Shadi Motalebi	Q Nguyen/A Asnaashari
QUANTITIES	Joey Aquino	Eric Burgeson

STATE OF CALIFORNIA
DEPARTMENT OF TRANSPORTATION

DIVISION OF ENGINEERING SERVICES
STRUCTURE DESIGN
DESIGN BRANCH 3

BRIDGE NO. Varies
POST MILE 3.76

STRUCTURES FOUNDATION PLAN SHEET (ENGLISH) (REV. 09-01-10)

ORIGINAL SCALE IN INCHES FOR REDUCED PLANS 0 1 2 3

UNIT: 3646
PROJECT NUMBER & PHASE: 05000003171
CONTRACT NO.: 05-005901

DISREGARD PRINTS BEARING EARLIER REVISION DATES

REVISION DATES 03/19/13 01/31/13 02/04/13

SHEET 8 OF 27

FILE => 36-0117-e-fpl01.dgn

USERNAME => s123936 DATE PLOTTED => 27-MAR-2014 TIME PLOTTED => 15:04

DIST	COUNTY	ROUTE	POST MILES TOTAL PROJECT	SHEET No.	TOTAL SHEETS
05	SCr	9	3.8/18.7	55	73

REGISTERED CIVIL ENGINEER 7-9-2013 DATE

03-24-14
PLANS APPROVAL DATE

REGISTERED PROFESSIONAL ENGINEER Michael K Bergman No. 78483 Exp. 9-30-13 CIVIL STATE OF CALIFORNIA

The State of California or its officers or agents shall not be responsible for the accuracy or completeness of electronic copies of this plan sheet.

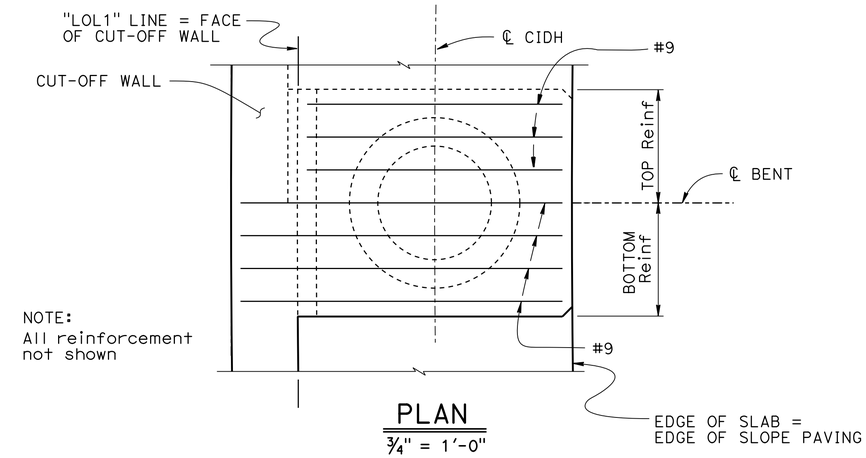

NOTE:
All reinforcement not shown

PLAN
3/4" = 1'-0"

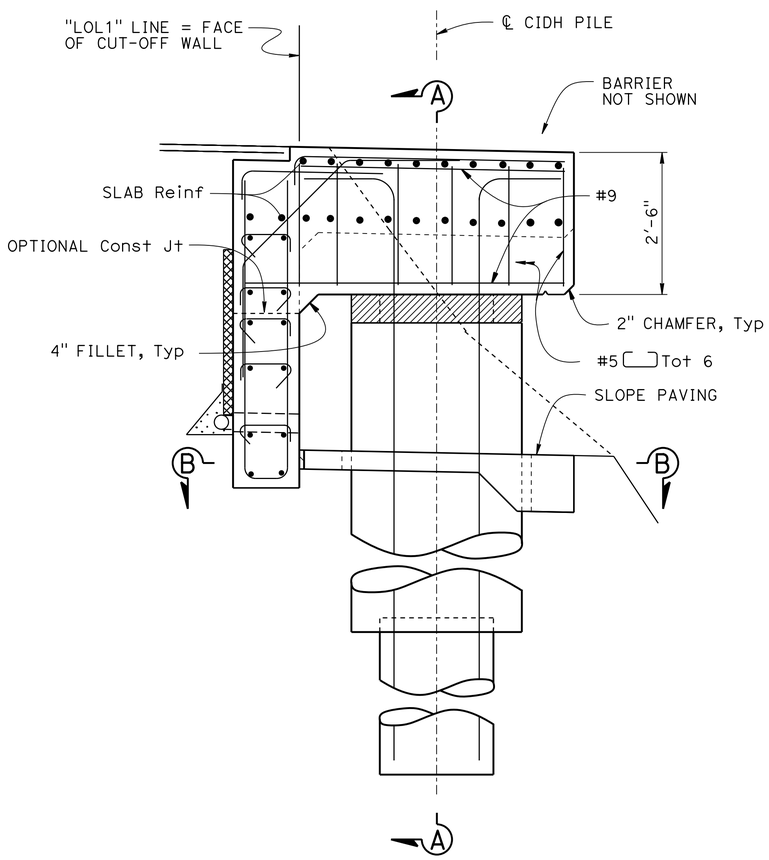

ELEVATION
3/4" = 1'-0"

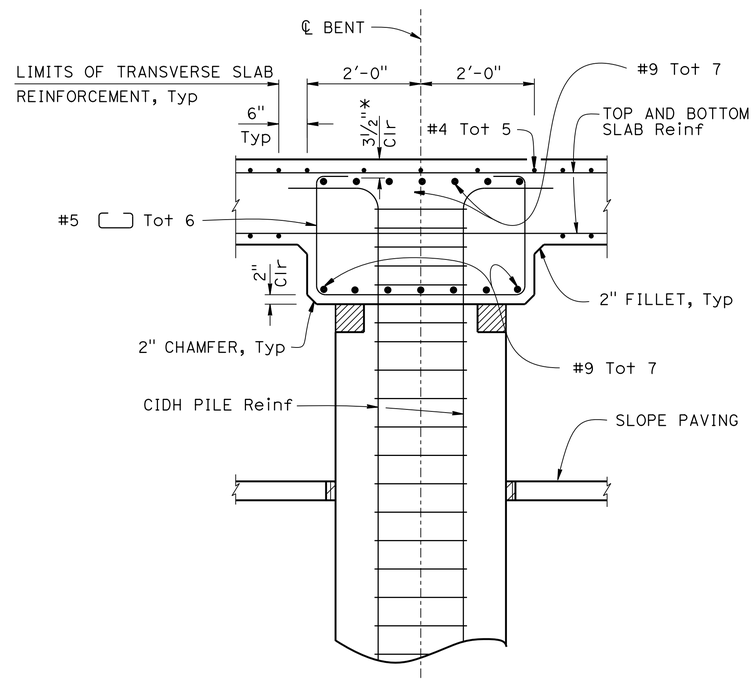

* - Clearance to main cap reinforcement

SECTION A-A
1" = 1'-0"

LEGEND:

- Indicates 2" expanded polystyrene
- Indicates 6" expanded polystyrene
- Indicates 1" premolded expansion joint filler

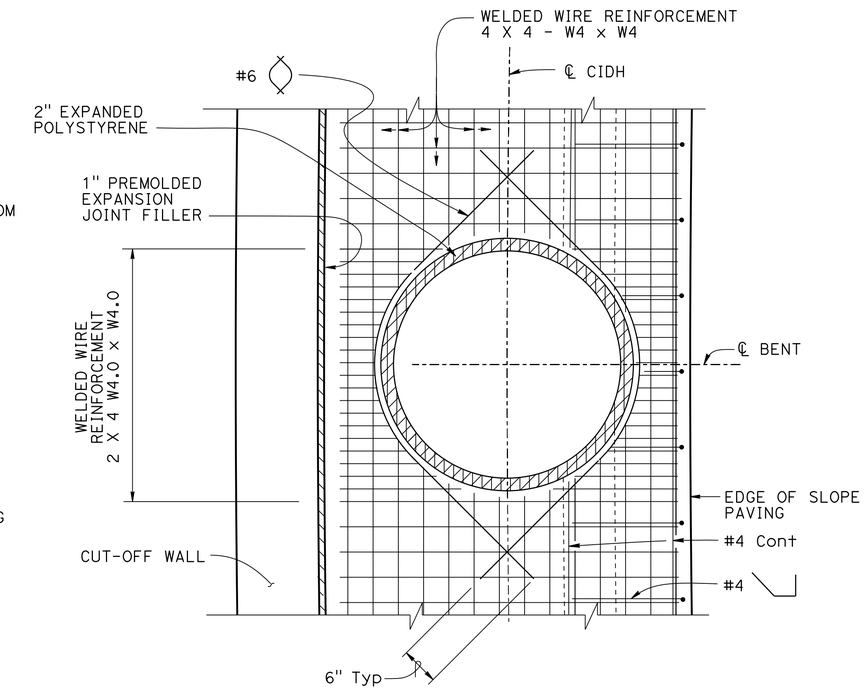

SECTION B-B
1" = 1'-0"

NOTES:

1. For details not shown, see " CIDH CONCRETE PILE DETAILS" and "TYPICAL SECTION NO. 1" sheets
2. Slope Paving shown, for limits of Slope Paving see "GENERAL PLAN NO. 1" and "STRUCTURE PLAN NO. 1" sheets

HIGHWAY 9 STORMWATER MITIGATION
SIDEHILL VIADUCT/RETAINING WALL @ PM 3.76
BENT DETAILS

	BY	CHECKED
DESIGN	Art V Herrera	Ali Asnaashari
DETAILS	S Motalebi/ N Gwynn	Ali Asnaashari
QUANTITIES	Joey Aquino	Eric Burgeson

STATE OF CALIFORNIA
DEPARTMENT OF TRANSPORTATION

DIVISION OF ENGINEERING SERVICES
STRUCTURE DESIGN
DESIGN BRANCH 3

BRIDGE NO. Varies
POST MILE 3.76

STRUCTURES DESIGN DETAIL SHEET (ENGLISH) (REV. 09-01-10)

ORIGINAL SCALE IN INCHES FOR REDUCED PLANS 0 1 2 3

UNIT: 3578
PROJECT NUMBER & PHASE: 05000003171
CONTRACT NO.: 05-0Q5901

DISREGARD PRINTS BEARING EARLIER REVISION DATES

REVISION DATES: 11-9-12 1-7-13

SHEET 9 OF 27

FILE => 36-0117-f-btdet.dgn

USERNAME => s123936 DATE PLOTTED => 27-MAR-2014 TIME PLOTTED => 15:04

DIST	COUNTY	ROUTE	POST MILES TOTAL PROJECT	SHEET No.	TOTAL SHEETS
05	SCr	9	3.8/18.7	56	73

REGISTERED CIVIL ENGINEER 7-9-2013 DATE

03-24-14
PLANS APPROVAL DATE

REGISTERED PROFESSIONAL ENGINEER Michael K Bergman No. 78483 Exp. 9-30-13 CIVIL STATE OF CALIFORNIA

The State of California or its officers or agents shall not be responsible for the accuracy or completeness of electronic copies of this plan sheet.

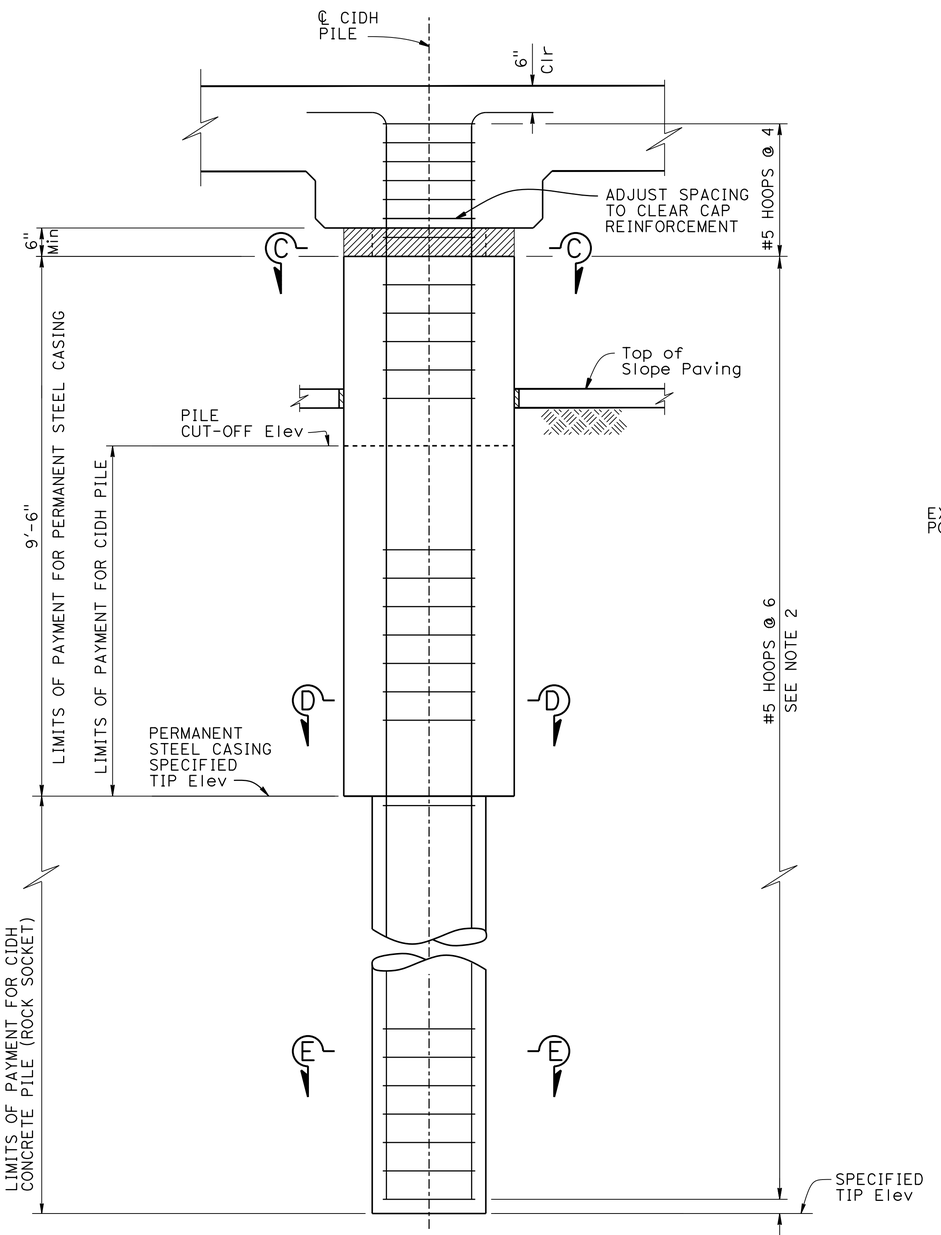

ELEVATION

3/4" = 1'-0"

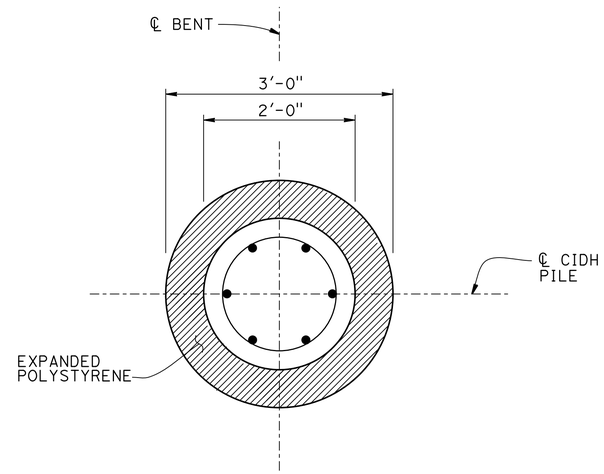

SECTION C-C

1" = 1'-0"

For details not shown see "SECTION C-C"

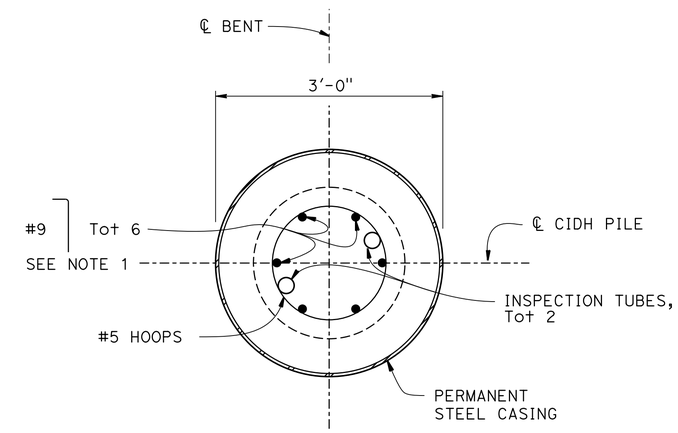

SECTION D-D

1" = 1'-0"

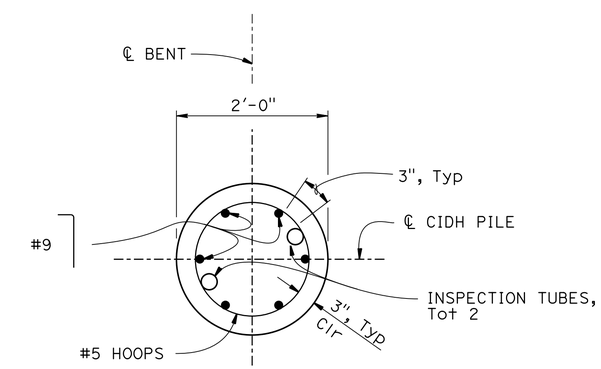

SECTION E-E

1" = 1'-0"

LEGEND:

Indicates 6" expanded polystyrene

NOTES:

1. No splices allowed in main CIDH reinforcement
2. All hoops shall be "Ultimate" butt spliced continuous

	BY	CHECKED
DESIGN	Art V Herrera	Ali Asnaashari
DETAILS	S Motalebi/N Gwynn	Ali Asnaashari
QUANTITIES	Joey Aquino	Eric Burgeson

STATE OF CALIFORNIA
DEPARTMENT OF TRANSPORTATION

DIVISION OF ENGINEERING SERVICES
STRUCTURE DESIGN
DESIGN BRANCH 3

BRIDGE NO. Varies
POST MILE 3.76

HIGHWAY 9 STORMWATER MITIGATION
SIDEHILL VIADUCT/RETAINING WALL @ PM 3.76
CIDH CONCRETE PILE DETAILS

STRUCTURES DESIGN DETAIL SHEET (ENGLISH) (REV. 09-01-10)

ORIGINAL SCALE IN INCHES FOR REDUCED PLANS 0 1 2 3

UNIT: 3578
PROJECT NUMBER & PHASE: 05000003171
CONTRACT NO.: 05-005901

DISREGARD PRINTS BEARING EARLIER REVISION DATES

REVISION DATES 11-9-12 1-7-13

SHEET 10 OF 27

FILE => 36-0117-h-cidh.dgn

USERNAME => s123936 DATE PLOTTED => 27-MAR-2014 TIME PLOTTED => 15:04

DIST	COUNTY	ROUTE	POST MILES TOTAL PROJECT	SHEET No.	TOTAL SHEETS
05	SCr	9	3.8/18.7	57	73

REGISTERED CIVIL ENGINEER 7-9-2013 DATE

03-24-14
PLANS APPROVAL DATE

REGISTERED PROFESSIONAL ENGINEER Michael K Bergman No. 78483 Exp. 9-30-13 CIVIL STATE OF CALIFORNIA

The State of California or its officers or agents shall not be responsible for the accuracy or completeness of electronic copies of this plan sheet.

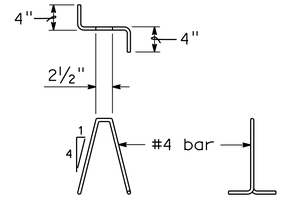

BAR CHAIR DETAIL

NO SCALE

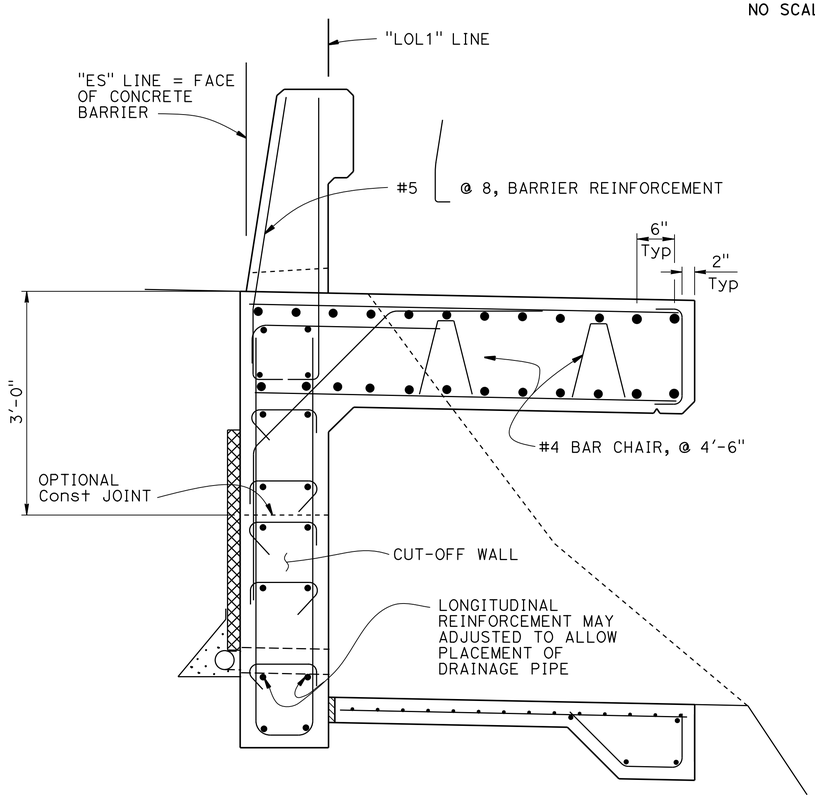

NOTE:
1. For limits of Typical Section without paving notch, see "TOP SLAB REINOFRCEMENT NO. 1" and "TOP SLAB REINFORCEMENT NO. 2" sheets

TYPICAL SECTION WITHOUT PAVING NOTCH

1" = 1'-0"

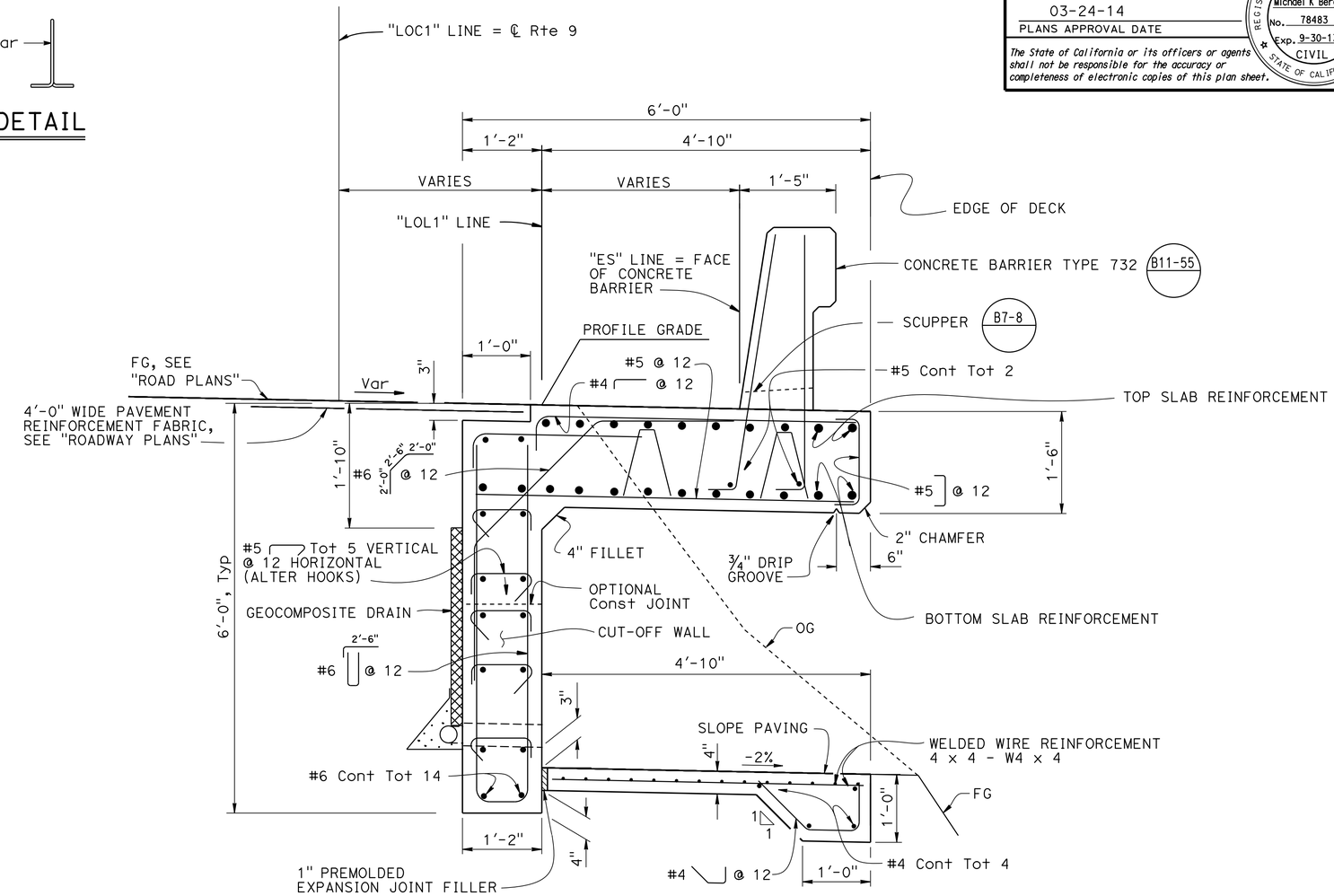

NOTES:
1. For Scupper locations, see "STRUCTURE PLANS NO. 1", and "STRUCTURE PLANS NO. 3" sheets
2. For slab reinforcement not shown, see "BOTTOM SLAB REINFORCEMENT NO. 1", "BOTTOM SLAB REINFORCEMENT NO. 2", TOP SLAB REINFORCEMENT NO. 1" and "TOP SLAB REINFORCEMENT NO. 2" sheets
3. For details not shown, see "TYPICAL SECTION WITHOUT PAVING NOTCH"
4. For "GEOCOMPOSITE DRAIN" details, see "DRAINAGE DETAILS" sheet
5. For slope paving reinforcement not shown see "SECTION B-B" on "BENT DETAILS" sheet

TYPICAL SECTION WITH PAVING NOTCH

1" = 1'-0"

HIGHWAY 9 STORMWATER MITIGATION
SIDEHILL VIADUCT/RETAINING WALL @ PM 3.76
TYPICAL SECTION NO. 1

	BY	CHECKED
DESIGN	Art V Herrera	Ali Asnaashari
DETAILS	S Motalebi/N Gwynn	Ali Asnaashari
QUANTITIES	Joey Aquino	Eric Burgeson

STATE OF CALIFORNIA DEPARTMENT OF TRANSPORTATION

DIVISION OF ENGINEERING SERVICES STRUCTURE DESIGN DESIGN BRANCH 3

BRIDGE NO. Varies
POST MILE 3.76

STRUCTURES DESIGN DETAIL SHEET (ENGLISH) (REV. 09-01-10)

ORIGINAL SCALE IN INCHES FOR REDUCED PLANS 0 1 2 3

UNIT: 3578
PROJECT NUMBER & PHASE: 05000003171
CONTRACT NO.: 05-005901

DISREGARD PRINTS BEARING EARLIER REVISION DATES

REVISION DATES: ~~11-21-12~~ 1-14-13

SHEET 11 OF 27

FILE => 36-0117-1-ts01.dgn

USERNAME => s123936 DATE PLOTTED => 27-MAR-2014 TIME PLOTTED => 15:04

DIST	COUNTY	ROUTE	POST MILES TOTAL PROJECT	SHEET No.	TOTAL SHEETS
05	SCr	9	3.8/18.7	58	73

REGISTERED CIVIL ENGINEER 7-9-2013 DATE

03-24-14
PLANS APPROVAL DATE

REGISTERED PROFESSIONAL ENGINEER Michael K Bergman No. 78483 Exp. 9-30-13 CIVIL STATE OF CALIFORNIA

The State of California or its officers or agents shall not be responsible for the accuracy or completeness of electronic copies of this plan sheet.

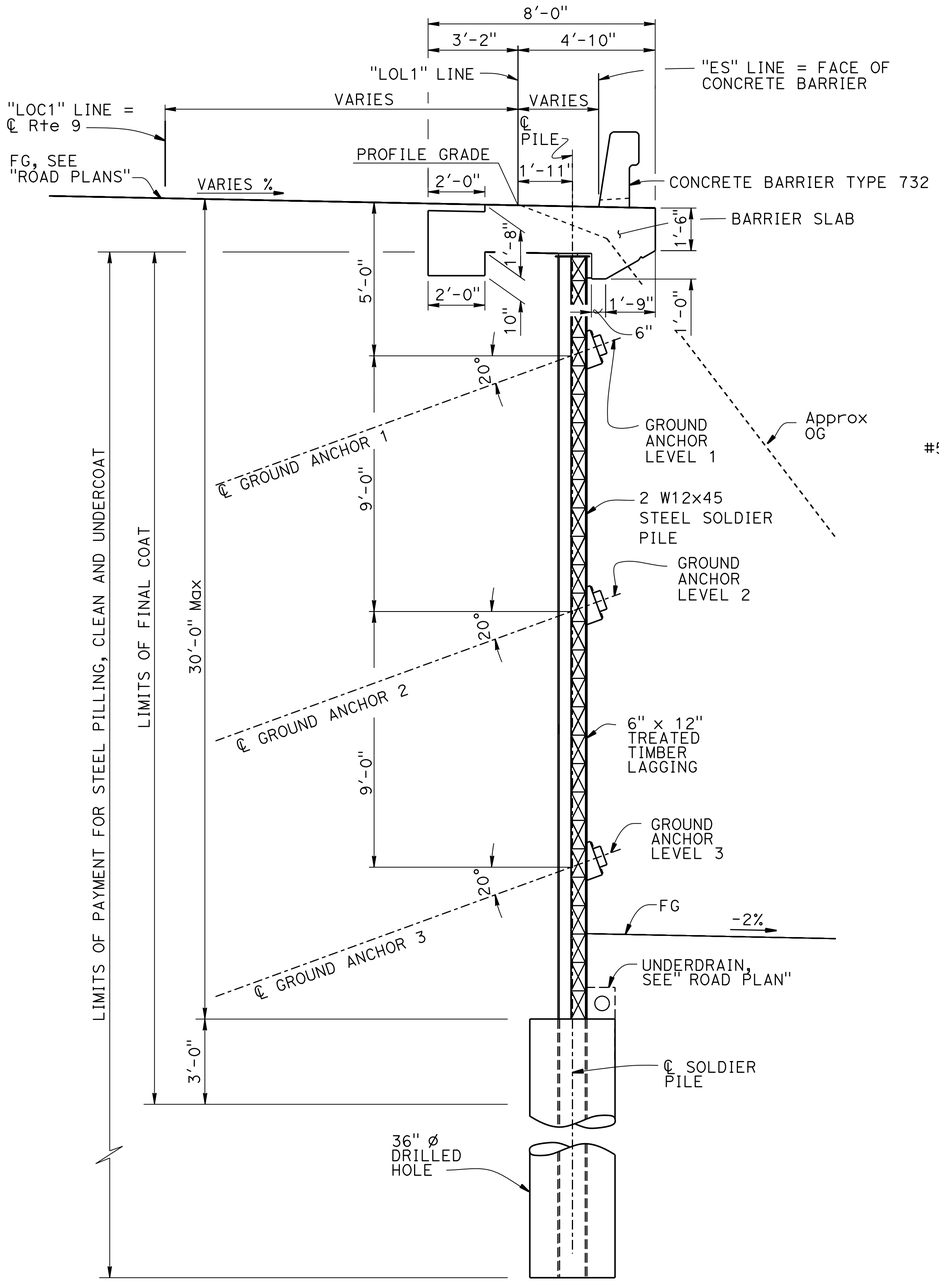

TYPICAL SECTION - RETAINING WALL

3/8" = 1'-0"

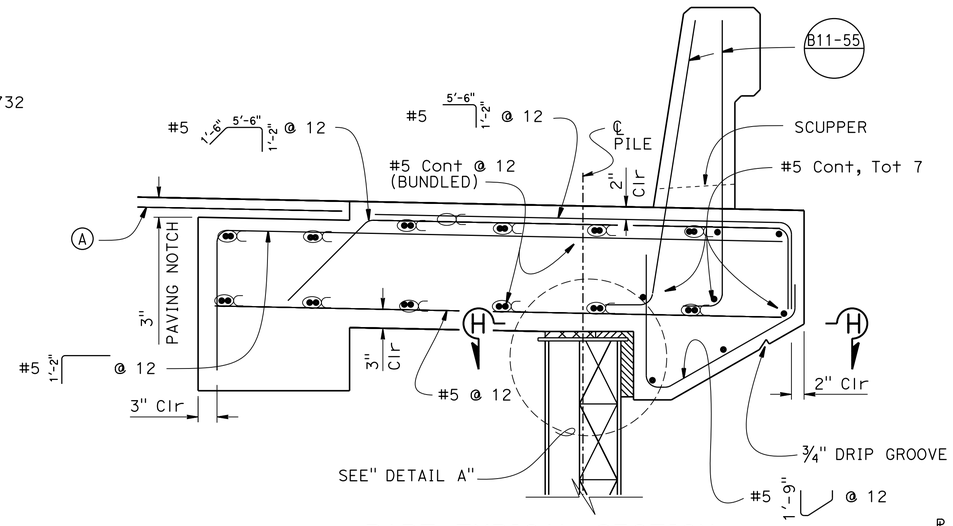

PART TYPICAL SECTION

1" = 1'-0"

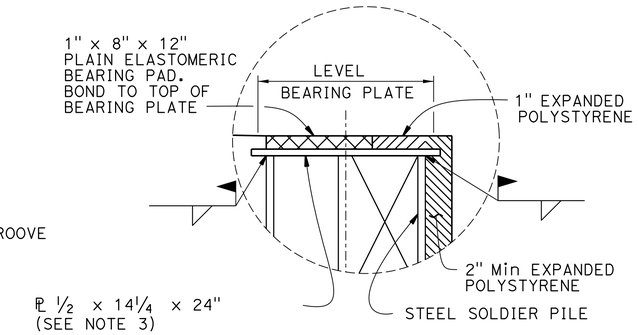

DETAIL A

NO SCALE

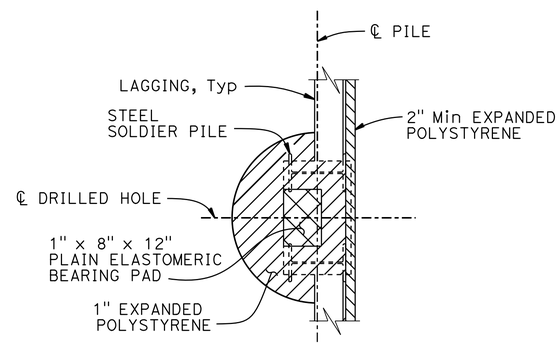

SECTION H-H

3/4" = 1'-0"

NOTES:

1. Not all barrier reinforcement shown
2. No expansion joints in concrete barrier or barrier slab within wall limits
3. Shape the top treated timber lagging to be parallel with the bottom of concrete barrier slab
4. Place treated timber lagging level
5. For details not shown see " SOLDIER PILE WALL WITH GROUND ANCHORS" sheet
6. For Scupper locations see "STRUCTURE PLANS NO. 2" sheet

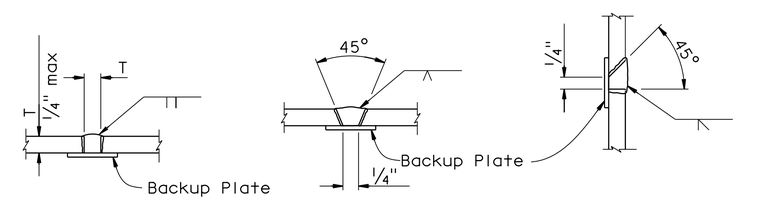

SQUARE GROOVE SINGLE VEE-GROOVE SINGLE BEVEL-GROOVE

PILE WELDING DETAIL-BUTT JOINTS

NOTES:

1. Single Vee-Groove And Square Groove Permitted for all positions.
2. Single Bevel-Groove permitted for horizontal joints only
3. Clean and paint steel plate

LEGEND:

(A) 4'-0" wide pavement reinforcing fabric, see "ROADWAY PLANS"

∝ Indicates bundled bars

HIGHWAY 9 STORMWATER MITIGATION

SIDEHILL VIADUCT/RETAINING WALL @ PM 3.76

TYPICAL SECTION NO. 2

	BY	CHECKED
DESIGN	Mike Bergman	Quang Nguyen
DETAILS	S Motalebi/N Gwynn	Quang Nguyen
QUANTITIES	Joey Aquino	Eric Burgeson

STATE OF CALIFORNIA DEPARTMENT OF TRANSPORTATION

DIVISION OF ENGINEERING SERVICES STRUCTURE DESIGN DESIGN BRANCH 3

BRIDGE NO. 36E0039 POST MILE 3.76

STRUCTURES DESIGN DETAIL SHEET (ENGLISH) (REV. 09-01-10)

ORIGINAL SCALE IN INCHES FOR REDUCED PLANS 0 1 2 3

UNIT: 3578
PROJECT NUMBER & PHASE: 05000003171 CONTRACT NO.: 05-0Q5901

DISREGARD PRINTS BEARING EARLIER REVISION DATES

REVISION DATES 11-21-12 1-14-13

SHEET 12 OF 27

FILE => 36-0117-1-ts02.dgn

USERNAME => s123936 DATE PLOTTED => 27-MAR-2014 TIME PLOTTED => 15:04

DIST	COUNTY	ROUTE	POST MILES TOTAL PROJECT	SHEET No.	TOTAL SHEETS
05	SCr	9	3.8/18.7	59	73

REGISTERED CIVIL ENGINEER 7-9-2013 DATE

03-24-14
PLANS APPROVAL DATE

REGISTERED PROFESSIONAL ENGINEER Michael K Bergman No. 78483 Exp. 9-30-13 CIVIL STATE OF CALIFORNIA

The State of California or its officers or agents shall not be responsible for the accuracy or completeness of electronic copies of this plan sheet.

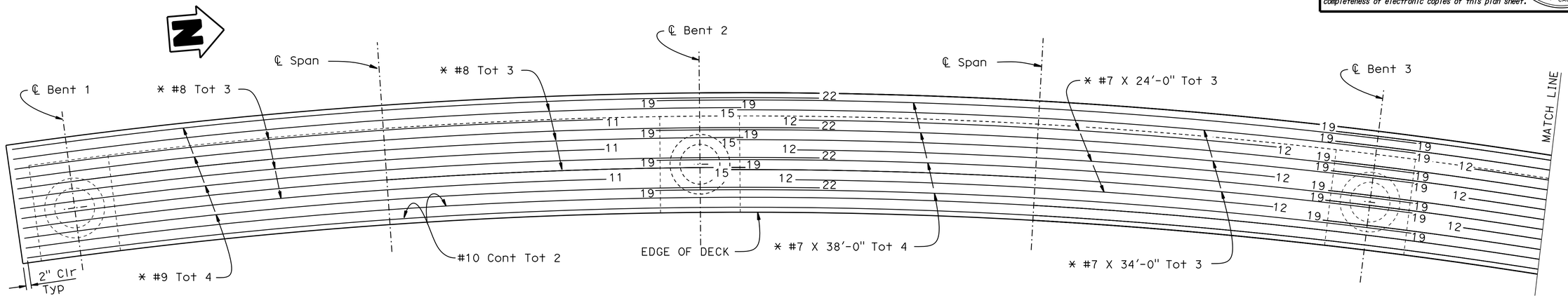

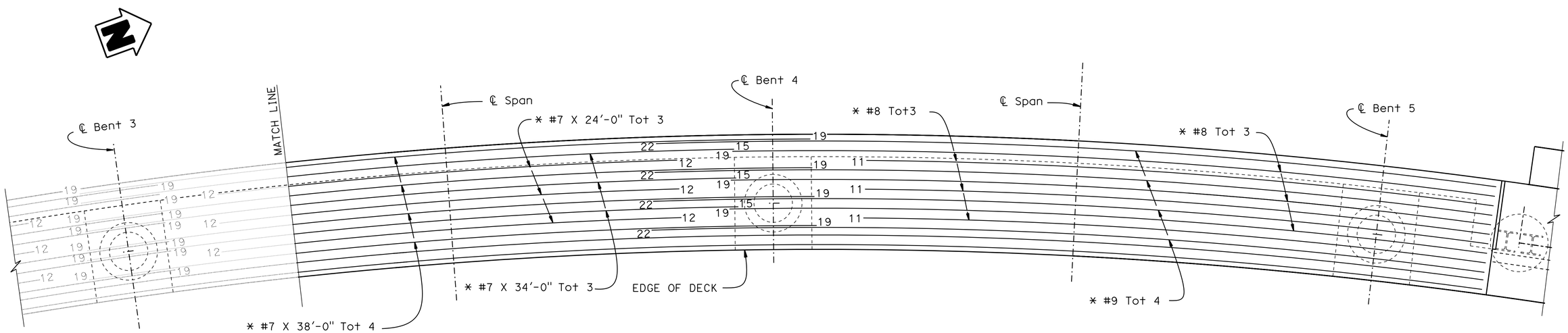

PLAN
(BRIDGE NO. 36-0117)
3/8" = 1'-0"

NOTES:

1. Numbers at the ends of bars indicates distance, in feet, from ℄ Span
2. No splice allowed for #10 bars within 12'-0" from ℄ Span, Typ

LEGEND:
* No splice allowed

HIGHWAY 9 STORMWATER MITIGATION
SIDEHILL VIADUCT/RETAINING WALL @ PM 3.76
BOTTOM SLAB REINFORCEMENT NO. 1

	BY	CHECKED
DESIGN	Art V Herrera	Ali Asnaashari
DETAILS	S Motalebi/ N Gwynn	Ali Asnaashari
QUANTITIES	Joey Aquino	Eric Burgeson

STATE OF CALIFORNIA
DEPARTMENT OF TRANSPORTATION

DIVISION OF ENGINEERING SERVICES
STRUCTURE DESIGN
DESIGN BRANCH 3

BRIDGE NO. 36-0117
POST MILE 3.76

STRUCTURES DESIGN DETAIL SHEET (ENGLISH) (REV. 09-01-10)

ORIGINAL SCALE IN INCHES FOR REDUCED PLANS 0 1 2 3

UNIT: 3578
PROJECT NUMBER & PHASE: 05000003171
CONTRACT NO.: 05-005901

DISREGARD PRINTS BEARING EARLIER REVISION DATES 11-9-12 12-28-12

SHEET 13 OF 27

FILE => 36-0117-m-bslabre01.dgn

USERNAME => s123936 DATE PLOTTED => 27-MAR-2014 TIME PLOTTED => 15:04

DIST	COUNTY	ROUTE	POST MILES TOTAL PROJECT	SHEET No.	TOTAL SHEETS
05	SCr	9	3.8/18.7	60	73

REGISTERED CIVIL ENGINEER 7-9-2013 DATE

03-24-14
PLANS APPROVAL DATE

REGISTERED PROFESSIONAL ENGINEER
Michael K Bergman
No. 78483
Exp. 9-30-13
CIVIL
STATE OF CALIFORNIA

The State of California or its officers or agents shall not be responsible for the accuracy or completeness of electronic copies of this plan sheet.

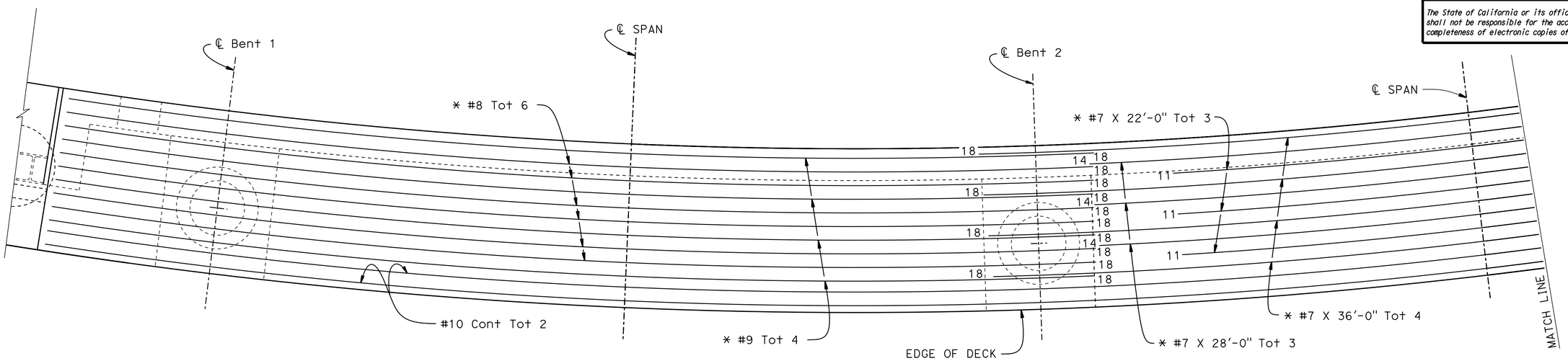

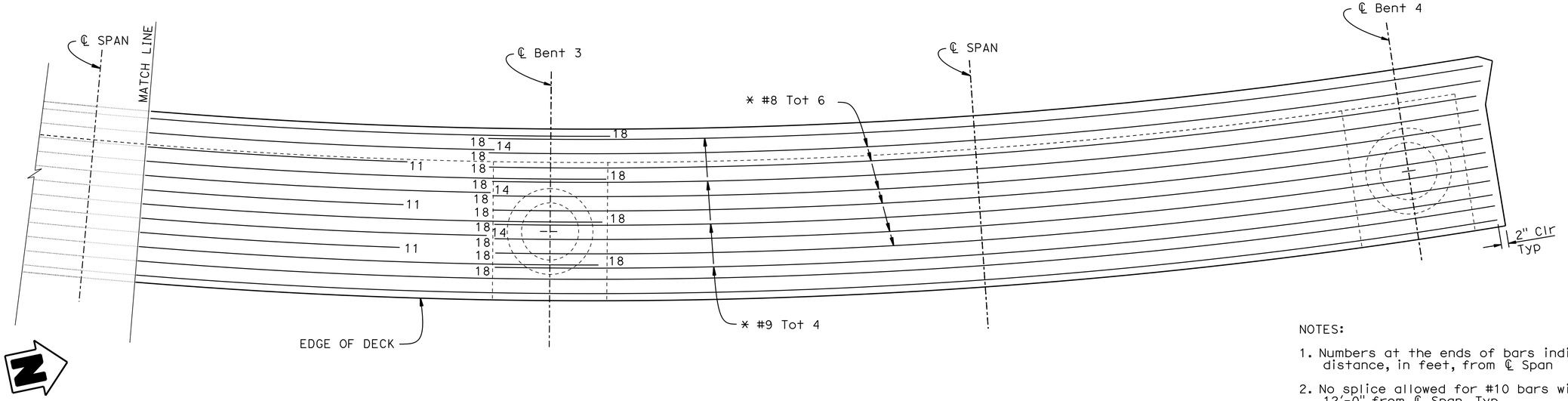

NOTES:

1. Numbers at the ends of bars indicates distance, in feet, from ℄ Span
2. No splice allowed for #10 bars within 12'-0" from ℄ Span, Typ

LEGEND:
* No splice allowed

PLAN
(BRIDGE NO. 36-0119)
½" = 1'-0"

HIGHWAY 9 STORMWATER MITIGATION
SIDEHILL VIADUCT/RETAINING WALL @ PM 3.76
BOTTOM SLAB REINFORCEMENT NO. 2

	BY	CHECKED
DESIGN	Art V Herrera	Ali Asnaashari
DETAILS	Nancy C Gwynn	Ali Asnaashari
QUANTITIES	Joey Aquino	Eric Burgeson

STATE OF CALIFORNIA
DEPARTMENT OF TRANSPORTATION

DIVISION OF ENGINEERING SERVICES
STRUCTURE DESIGN
DESIGN BRANCH 3

BRIDGE NO. 36-0119
POST MILE 3.76

STRUCTURES DESIGN DETAIL SHEET (ENGLISH) (REV. 09-01-10)

ORIGINAL SCALE IN INCHES FOR REDUCED PLANS 0 1 2 3

UNIT: 3578
PROJECT NUMBER & PHASE: 05000003171
CONTRACT NO.: 05-005901

DISREGARD PRINTS BEARING EARLIER REVISION DATES

REVISION DATES: 1-7-13

SHEET 14 OF 27

FILE => 36-0117-m-bslabre02.dgn

USERNAME => s123936 DATE PLOTTED => 27-MAR-2014 TIME PLOTTED => 15:04

DIST	COUNTY	ROUTE	POST MILES TOTAL PROJECT	SHEET No.	TOTAL SHEETS
05	SCr	9	3.8/18.7	61	73

REGISTERED CIVIL ENGINEER 7-9-2013 DATE

03-24-14
PLANS APPROVAL DATE

REGISTERED PROFESSIONAL ENGINEER Michael K Bergman No. 78483 Exp. 9-30-13 CIVIL STATE OF CALIFORNIA

The State of California or its officers or agents shall not be responsible for the accuracy or completeness of electronic copies of this plan sheet.

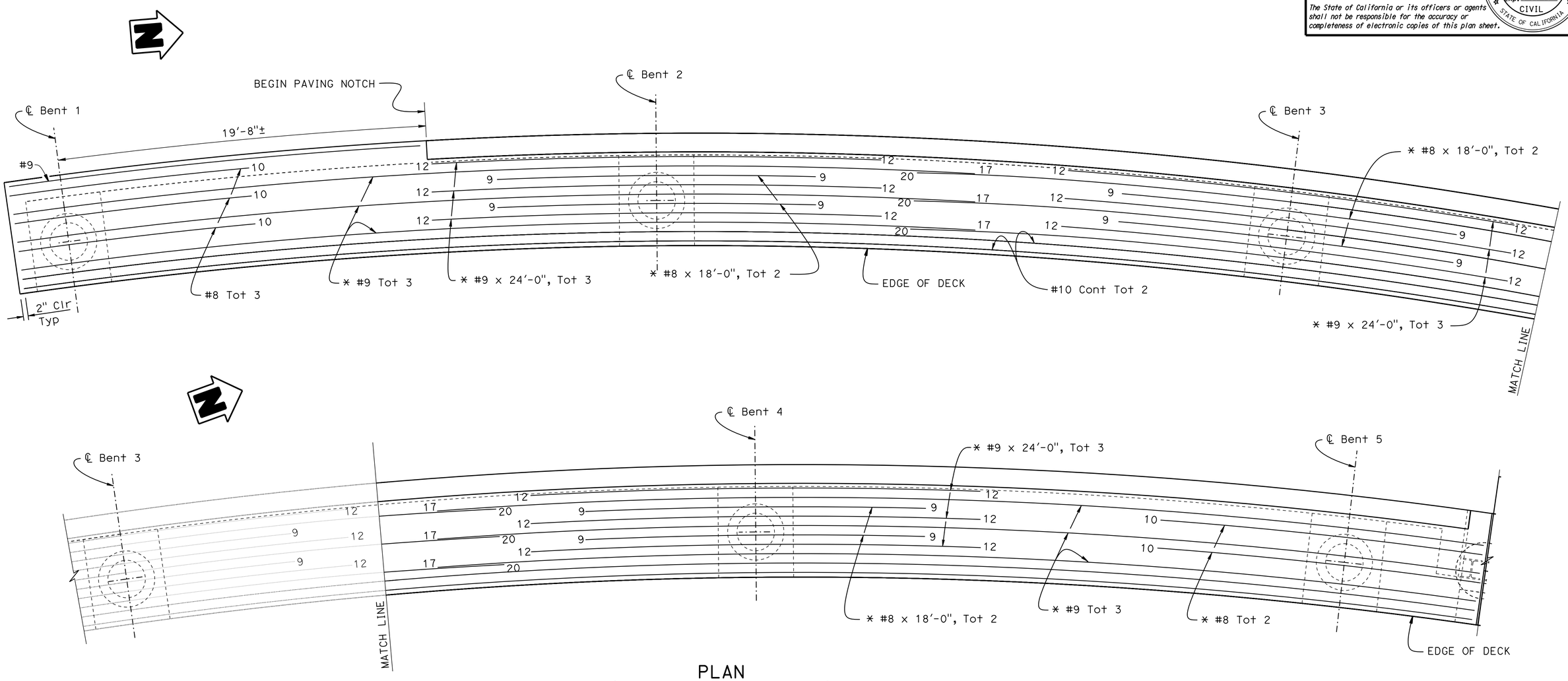

PLAN
(BRIDGE NO. 36-0117)

3/8" = 1'-0"

NOTES:

1. Numbers at the ends of bars indicates distance, in feet, from ℄ Bent
2. No splice allowed for #10 bars within 12'-0" from ℄ Bent, Typ

LEGEND:

* No splice allowed

HIGHWAY 9 STORMWATER MITIGATION
SIDEHILL VIADUCT/RETAINING WALL @ PM 3.76
TOP SLAB REINFORCEMENT NO. 1

	BY	CHECKED
DESIGN	Art V Herrera	Ali Asnaashari
DETAILS	S Motalebi/N Gwynn	Ali Asnaashari
QUANTITIES	Joey Aquino	Eric Burgeson

STATE OF CALIFORNIA
DEPARTMENT OF TRANSPORTATION

DIVISION OF ENGINEERING SERVICES
STRUCTURE DESIGN
DESIGN BRANCH 3

BRIDGE NO. 36-0117
POST MILE 3.76

STRUCTURES DESIGN DETAIL SHEET (ENGLISH) (REV. 09-01-10)

ORIGINAL SCALE IN INCHES FOR REDUCED PLANS 0 1 2 3

UNIT: 3578
PROJECT NUMBER & PHASE: 05000003171
CONTRACT NO.: 05-005901

DISREGARD PRINTS BEARING EARLIER REVISION DATES

REVISION DATES: 11-9-12 1-4-13 2-26-13

SHEET 15 OF 27

FILE => 36-0117-m-tslabre01.dgn

USERNAME => s123936 DATE PLOTTED => 27-MAR-2014 TIME PLOTTED => 15:04

DIST	COUNTY	ROUTE	POST MILES TOTAL PROJECT	SHEET No.	TOTAL SHEETS
05	SCr	9	3.8/18.7	62	73

REGISTERED CIVIL ENGINEER 7-9-2013 DATE

03-24-14
PLANS APPROVAL DATE

REGISTERED PROFESSIONAL ENGINEER Michael K Bergman No. 78483 Exp. 9-30-13 CIVIL STATE OF CALIFORNIA

The State of California or its officers or agents shall not be responsible for the accuracy or completeness of electronic copies of this plan sheet.

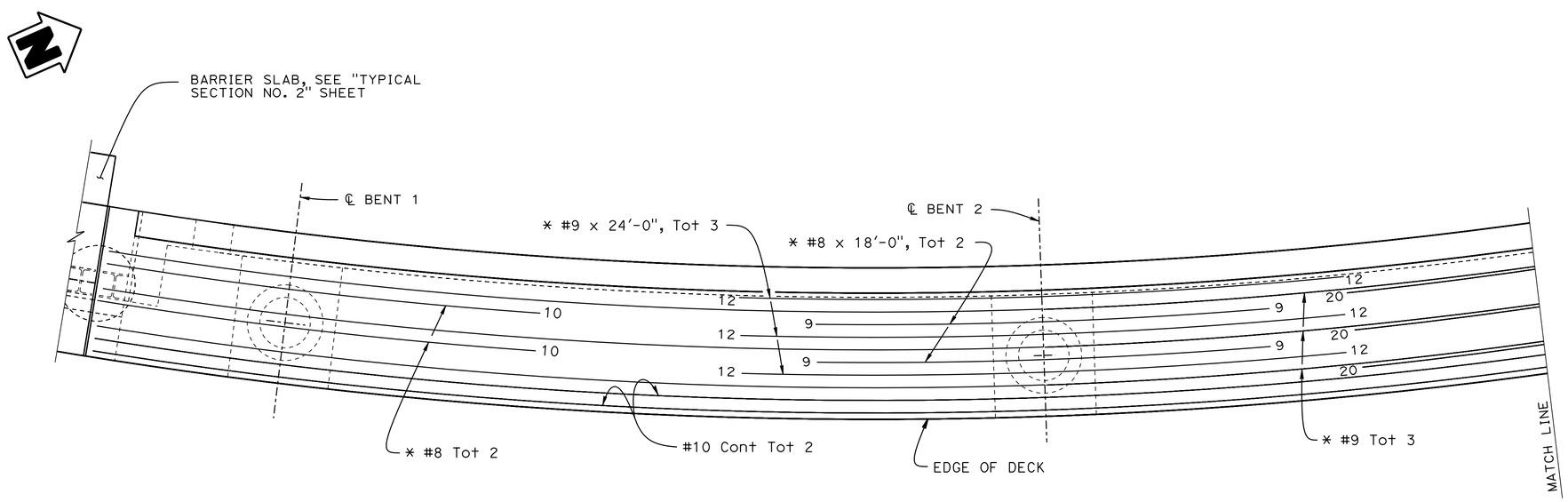

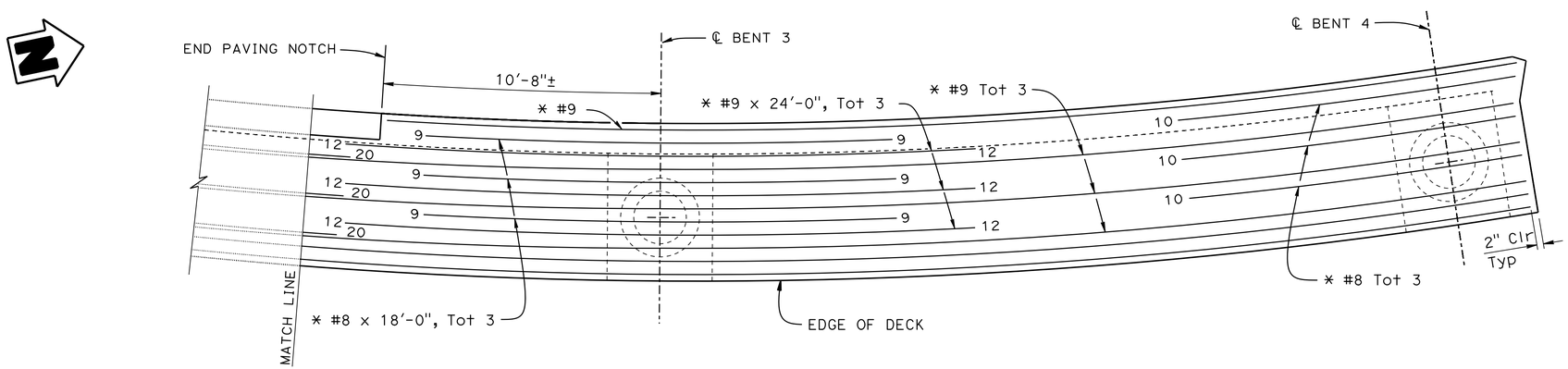

PLAN
(BRIDGE NO. 36-0119)

3/8" = 1'-0"

NOTES:

1. Numbers at the ends of bars indicates distance, in feet, from ℄ Bent
2. No splice allowed for #10 bars within 12'-0" from ℄ Bent, Typ

LEGEND:
* No splice allowed

HIGHWAY 9 STORMWATER MITIGATION
SIDEHILL VIADUCT/RETAINING WALL @ PM 3.76
TOP SLAB REINFORCEMENT NO. 2

	BY	CHECKED
DESIGN	Art V Herrera	Ali Asnaashari
DETAILS	Nancy C Gwynn	Ali Asnaashari
QUANTITIES	Joey Aquino	Eric Burgeson

STATE OF CALIFORNIA
DEPARTMENT OF TRANSPORTATION

DIVISION OF ENGINEERING SERVICES
STRUCTURE DESIGN
DESIGN BRANCH 3

BRIDGE NO. 36-0119
POST MILE 3.76

STRUCTURES DESIGN DETAIL SHEET (ENGLISH) (REV. 09-01-10)

ORIGINAL SCALE IN INCHES FOR REDUCED PLANS 0 1 2 3

UNIT: 3578
PROJECT NUMBER & PHASE: 05000003171
CONTRACT NO.: 05-005901

DISREGARD PRINTS BEARING EARLIER REVISION DATES

REVISION DATES 1-4-13 2-26-13

SHEET 16 OF 27

FILE => 36-0117-m-tslabre02.dgn

USERNAME => s123936 DATE PLOTTED => 27-MAR-2014 TIME PLOTTED => 15:04

DIST	COUNTY	ROUTE	POST MILES TOTAL PROJECT	SHEET No.	TOTAL SHEETS
05	SCr	9	3.8/18.7	63	73

REGISTERED CIVIL ENGINEER 7-9-2013 DATE

03-24-14
PLANS APPROVAL DATE

REGISTERED PROFESSIONAL ENGINEER Michael K Bergman No. 78483 Exp. 9-30-13 CIVIL STATE OF CALIFORNIA

The State of California or its officers or agents shall not be responsible for the accuracy or completeness of electronic copies of this plan sheet.

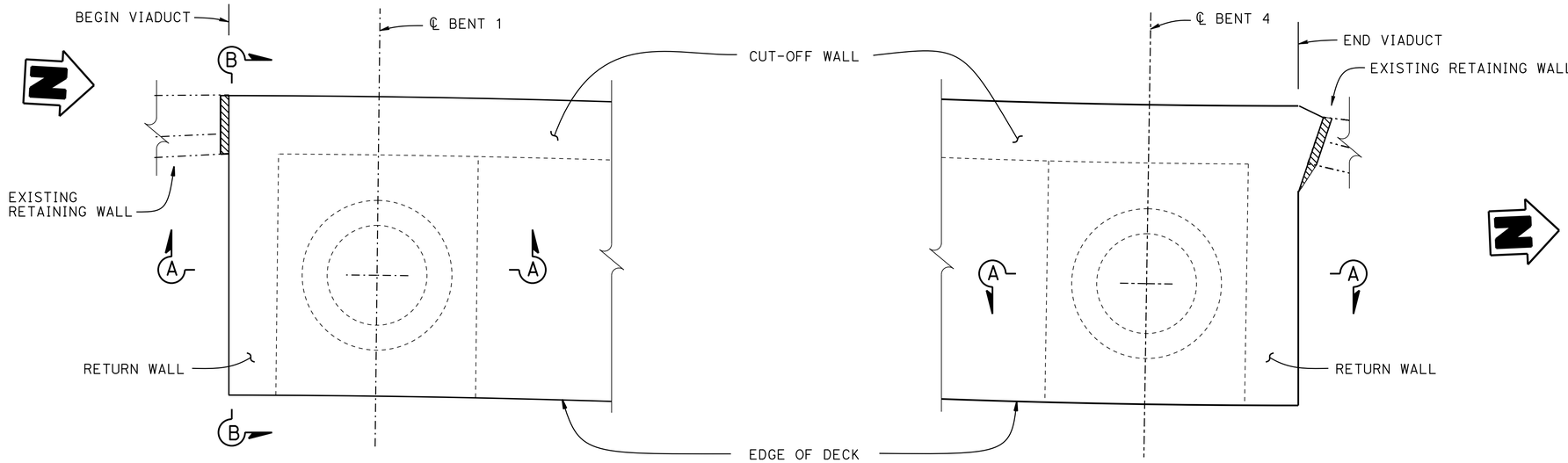

BRIDGE NO. 36-0117

BRIDGE NO. 36-0119

PART PLAN

3/4" = 1'-0"

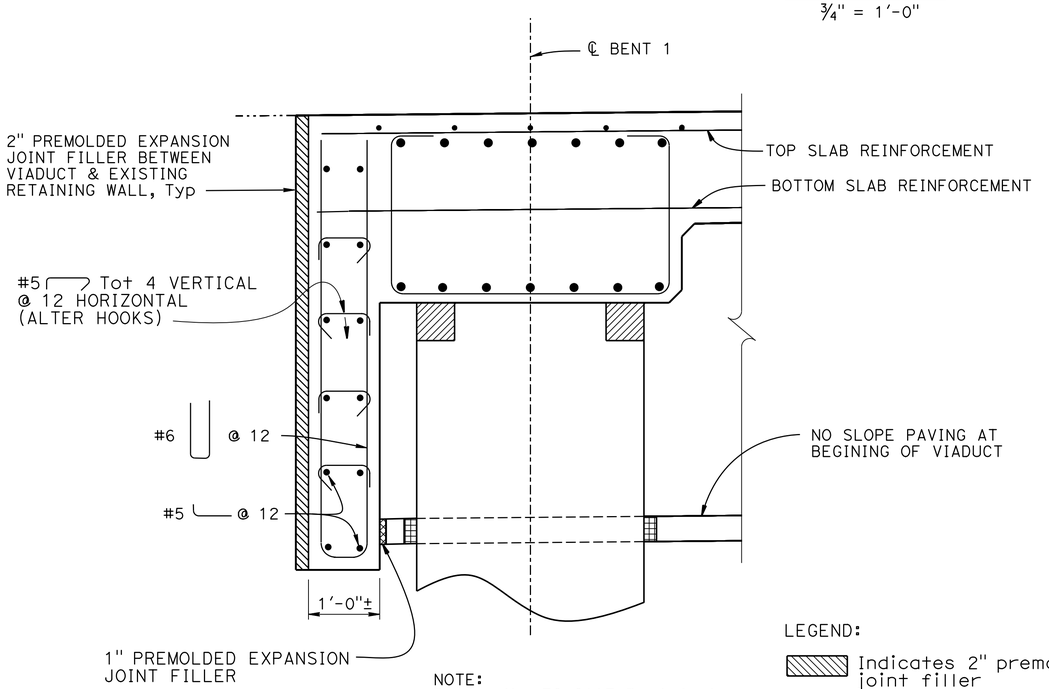

NOTE:
Bridge No. 36-0117 Bent 1 shown,
Bridge No. 36-0119 Bent 4 similar

SECTION A - A

1" = 1'-0"

LEGEND:

Indicates 2" premolded expansion joint filler

NOTE:
For details not shown, see "TYPICAL SECTION NO. 1" and "BENT DETAILS" sheets

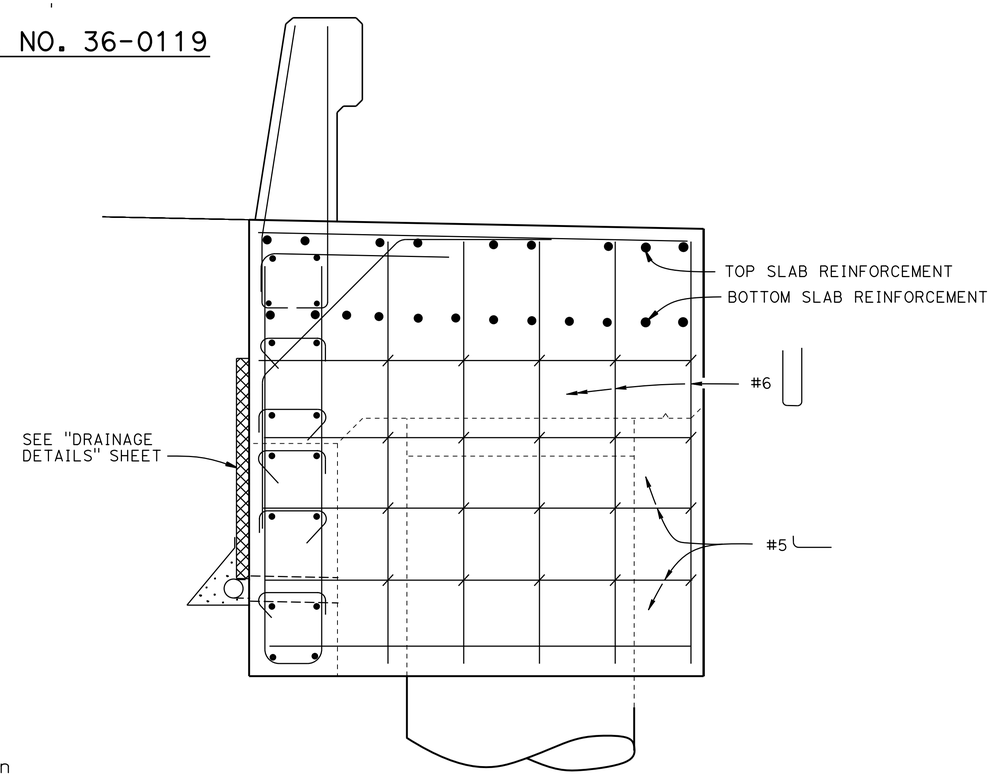

SECTION B - B

1" = 1'-0"

NOTE:
THE CONTRACTOR SHALL VERIFY ALL CONTROLLING FIELD DIMENSIONS BEFORE ORDERING OR FABRICATING ANY MATERIAL.

HIGHWAY 9 STORMWATER MITIGATION
SIDEHILL VIADUCT/RETAINING WALL @ PM 3.76
BEGIN/END OF VIADUCT DETAILS NO. 1

	BY	CHECKED
DESIGN	Art V Herrera	Ali Asnaashari
DETAILS	Nancy C Gwynn	Ali Asnaashari
QUANTITIES	Joey Aquino	Eric Burgeson

STATE OF CALIFORNIA
DEPARTMENT OF TRANSPORTATION

DIVISION OF ENGINEERING SERVICES
STRUCTURE DESIGN
DESIGN BRANCH 3

BRIDGE NO. Varies
POST MILE 3.76

STRUCTURES DESIGN DETAIL SHEET (ENGLISH) (REV. 09-01-10)

ORIGINAL SCALE IN INCHES FOR REDUCED PLANS 0 1 2 3

UNIT: 3578
PROJECT NUMBER & PHASE: 05000003171
CONTRACT NO.: 05-005901

DISREGARD PRINTS BEARING EARLIER REVISION DATES 1-8-13 2-27-13

SHEET 17 OF 27

FILE => 36-0117-n-beg01.dgn

USERNAME => s123936 DATE PLOTTED => 27-MAR-2014 TIME PLOTTED => 15:04

DIST	COUNTY	ROUTE	POST MILES TOTAL PROJECT	SHEET No.	TOTAL SHEETS
05	SCr	9	3.8/18.7	64	73

REGISTERED CIVIL ENGINEER 7-9-2013 DATE

03-24-14
PLANS APPROVAL DATE

REGISTERED PROFESSIONAL ENGINEER Michael K Bergman No. 78483 Exp. 9-30-13 CIVIL STATE OF CALIFORNIA

The State of California or its officers or agents shall not be responsible for the accuracy or completeness of electronic copies of this plan sheet.

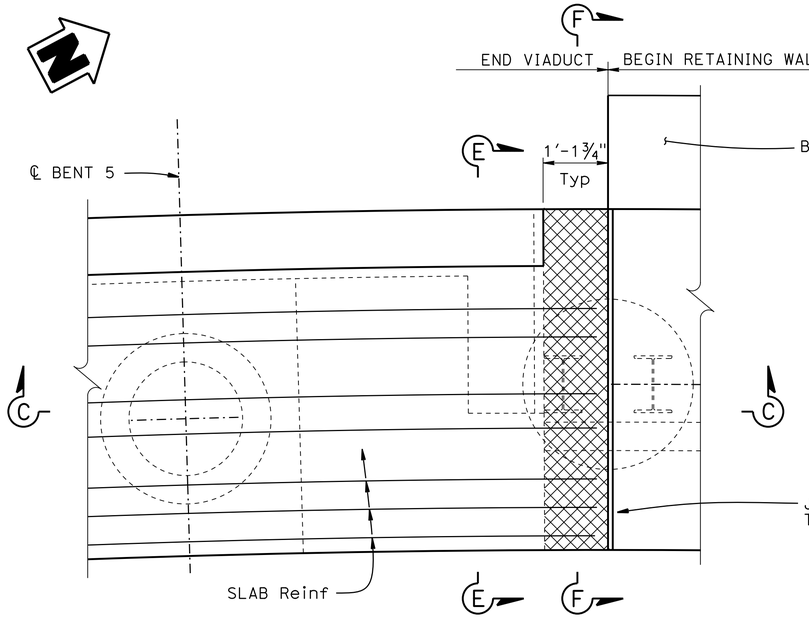

PART PLAN - BEGIN RETAINING WALL

¾" = 1'-0"

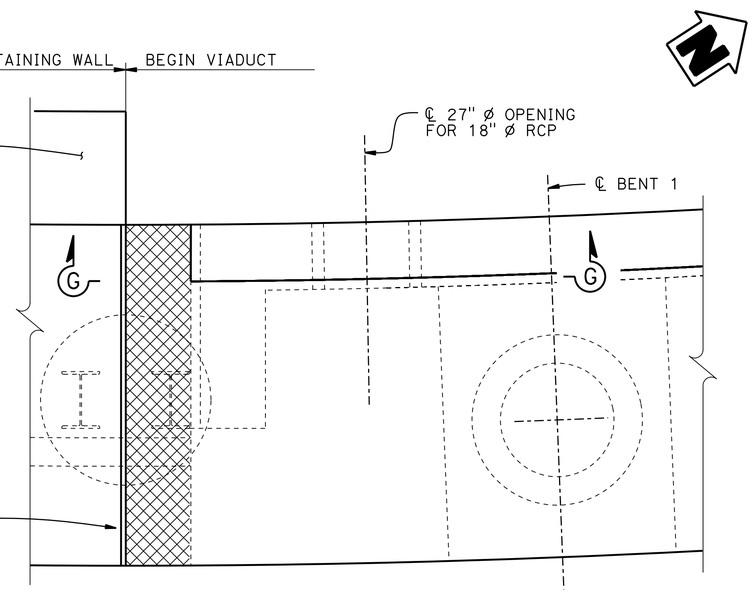

PART PLAN - END RETAINING WALL

¾" = 1'-0"

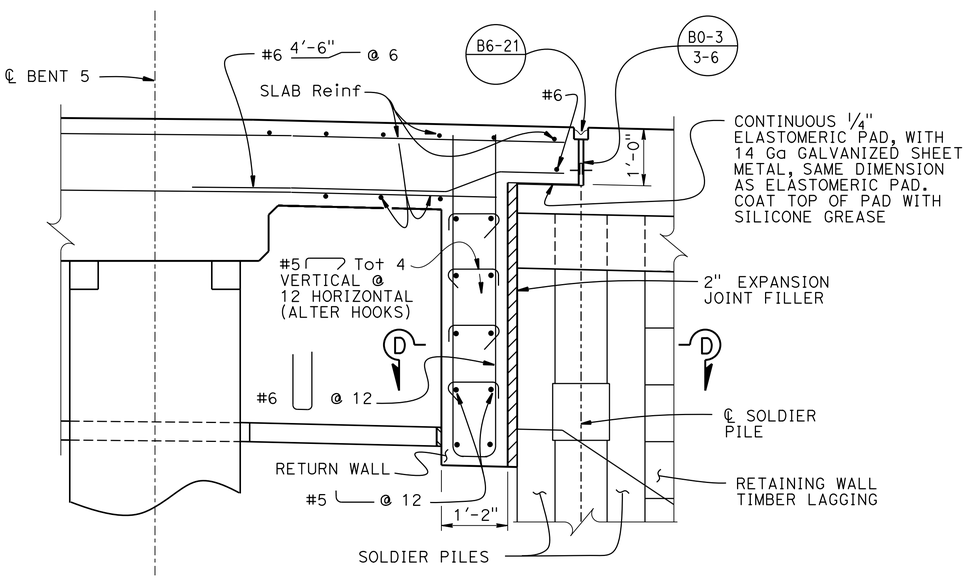

SECTION C-C

¾" = 1'-0"

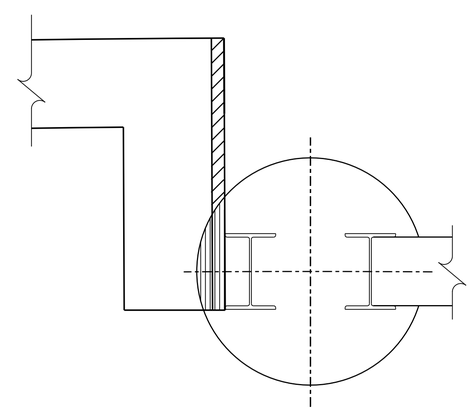

NOTE:
Wall Reinf not shown

SECTION D-D

1" = 1'-0"

LEGEND:

- Indicates elastomeric pad
- Indicates 2" expansion joint filler
- Indicates additional lean concrete removal

NOTES:

1. For "SECTION E-E", "SECTION F-F" and "SECTION G-G", see "BEGIN/END OF VIADUCT DETAILS NO. 3" sheet
2. Begin Retaining Wall shown, End Retaining Wall similar
3. Extend joint seal to edge of deck

HIGHWAY 9 STORMWATER MITIGATION

SIDEHILL VIADUCT/RETAINING WALL @ PM 3.76

BEGIN/END OF VIADUCT DETAILS NO. 2

	BY	CHECKED
DESIGN	Art V Herrera	Ali Asnaashari
DETAILS	Nancy C Gwynn	Ali Asnaashari
QUANTITIES	Joey Aquino	Eric Burgeson

STATE OF CALIFORNIA
DEPARTMENT OF TRANSPORTATION

DIVISION OF ENGINEERING SERVICES
STRUCTURE DESIGN
DESIGN BRANCH 3

BRIDGE NO. Varies
POST MILE 3.76

STRUCTURES DESIGN DETAIL SHEET (ENGLISH) (REV. 09-01-10)

ORIGINAL SCALE IN INCHES FOR REDUCED PLANS 0 1 2 3

UNIT: 3578
PROJECT NUMBER & PHASE: 05000003171
CONTRACT NO.: 05-005901

DISREGARD PRINTS BEARING EARLIER REVISION DATES

REVISION DATES 1-1-13 2-27-13

SHEET 18 OF 27

FILE => 36-0117-n-beg02.dgn

USERNAME => s123936 DATE PLOTTED => 27-MAR-2014 TIME PLOTTED => 15:04

DIST	COUNTY	ROUTE	POST MILES TOTAL PROJECT	SHEET No.	TOTAL SHEETS
05	SCr	9	3.8/18.7	65	73

REGISTERED CIVIL ENGINEER 7-9-2013 DATE

03-24-14
PLANS APPROVAL DATE

REGISTERED PROFESSIONAL ENGINEER Michael K Bergman No. 78483 Exp. 9-30-13 CIVIL STATE OF CALIFORNIA

The State of California or its officers or agents shall not be responsible for the accuracy or completeness of electronic copies of this plan sheet.

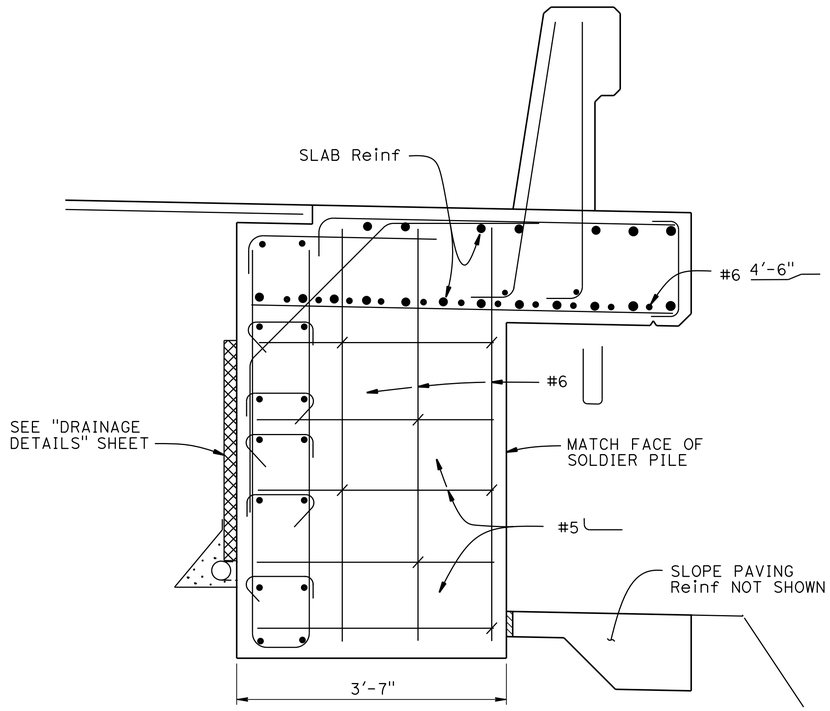

SECTION E-E

1" = 1'-0"

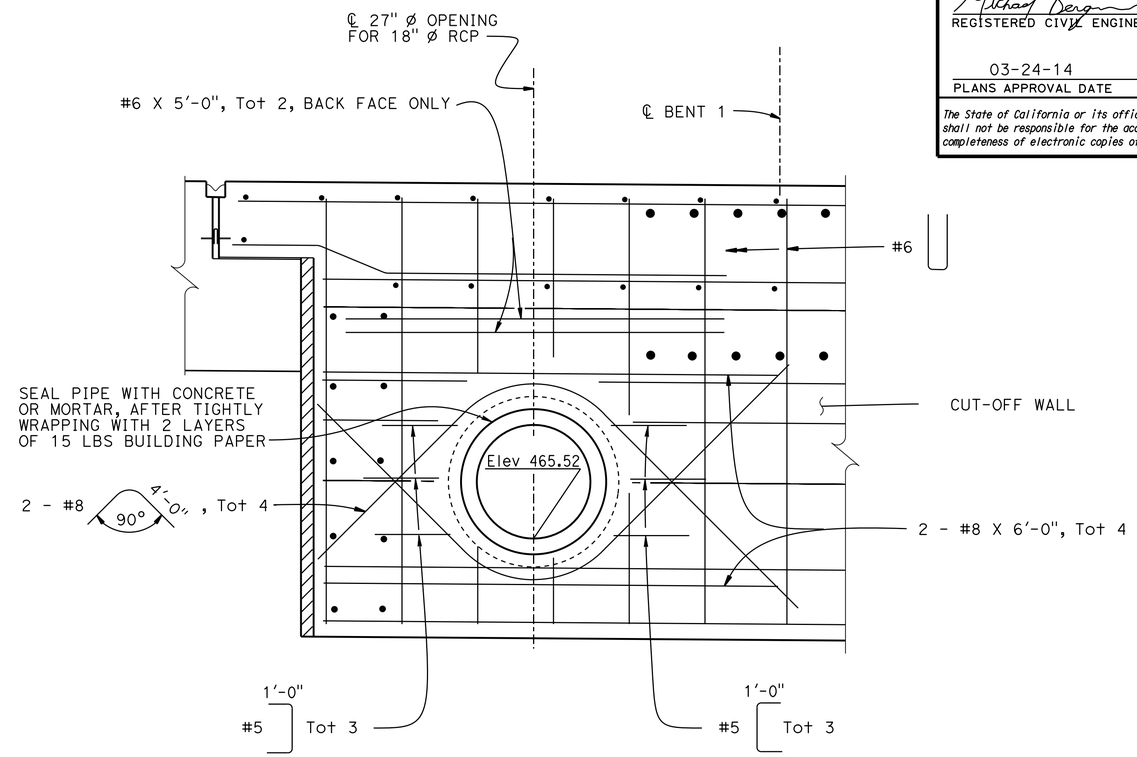

SECTION G-G

1" = 1'-0"

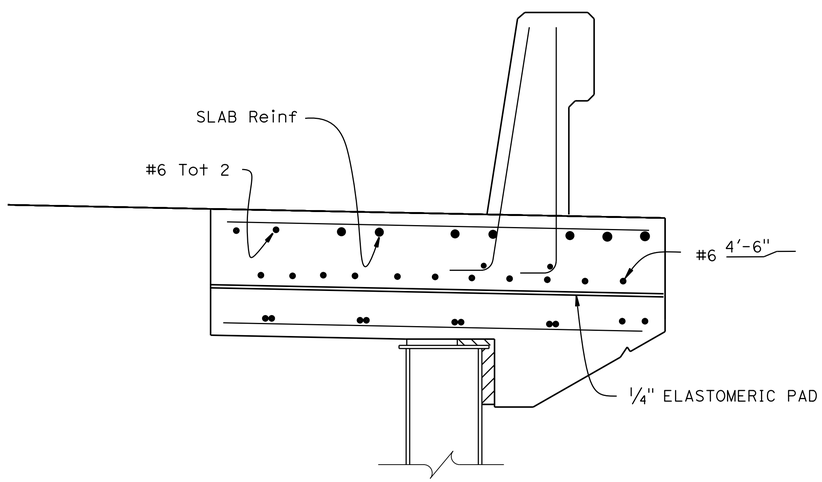

SECTION F-F

1" = 1'-0"

NOTE:

For details not shown, see "TYPICAL SECTION NO. 1" and "TYPICAL SECTION NO. 2" sheets and "SECTION C-C" on "BEGIN/END OF VIADUCT DETAILS NO. 2" sheet

	BY	CHECKED
DESIGN	Art V Herrera	Ali Asnaashari
DETAILS	Nancy C Gwynn	Ali Asnaashari
QUANTITIES	Joey Aquino	Eric Burgeson

STATE OF CALIFORNIA
DEPARTMENT OF TRANSPORTATION

DIVISION OF ENGINEERING SERVICES
STRUCTURE DESIGN
DESIGN BRANCH 3

BRIDGE NO. Varies
POST MILE 3.76

HIGHWAY 9 STORMWATER MITIGATION
SIDEHILL VIADUCT/RETAINING WALL @ PM 3.76
BEGIN/END OF VIADUCT DETAILS NO. 3

STRUCTURES DESIGN DETAIL SHEET (ENGLISH) (REV. 09-01-10)

ORIGINAL SCALE IN INCHES FOR REDUCED PLANS 0 1 2 3

UNIT: 3578
PROJECT NUMBER & PHASE: 05000003171
CONTRACT NO.: 05-005901

DISREGARD PRINTS BEARING EARLIER REVISION DATES

REVISION DATES: 1-11-13 2-27-13

SHEET 19 OF 27

FILE => 36-0117-n-beg03.dgn

USERNAME => s123936 DATE PLOTTED => 27-MAR-2014 TIME PLOTTED => 15:04

DIST	COUNTY	ROUTE	POST MILES TOTAL PROJECT	SHEET No.	TOTAL SHEETS
05	SCr	9	3.8/18.7	66	73

REGISTERED CIVIL ENGINEER 7-9-2013 DATE

03-24-14
PLANS APPROVAL DATE

REGISTERED PROFESSIONAL ENGINEER Michael K Bergman No. 78483 Exp. 9-30-13 CIVIL STATE OF CALIFORNIA

The State of California or its officers or agents shall not be responsible for the accuracy or completeness of electronic copies of this plan sheet.

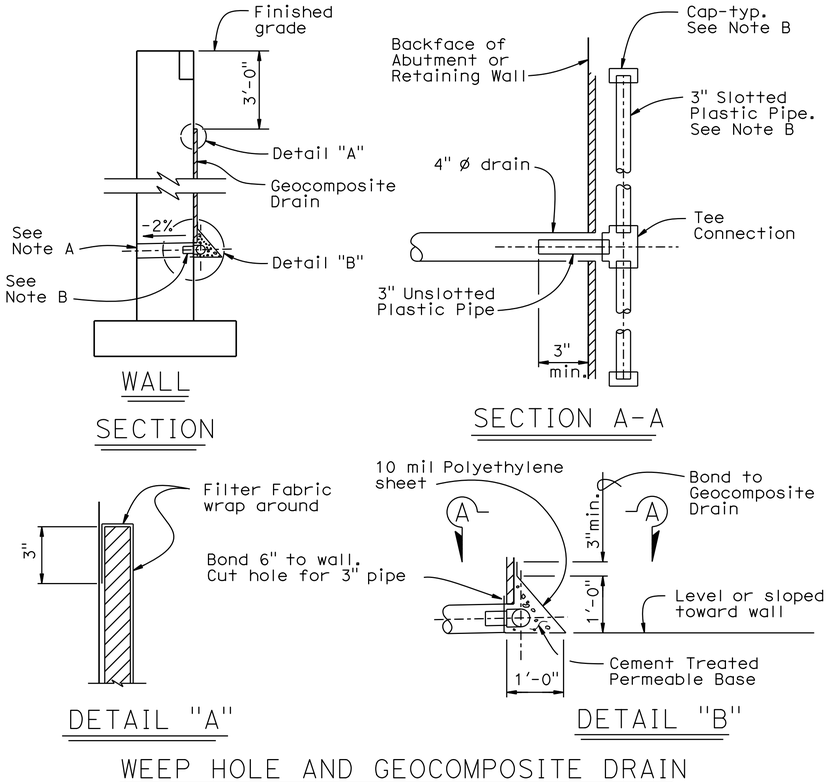

ALTERNATIVE TO BRIDGE DETAIL BO-3 / 3-1

Notes:

A. 4" ø drains at intermediate sag points and at 25' max center to center (9' c-c for Type 3 and 9'-3" c-c for Type 4 retaining walls).
For walls adjacent to sidewalks or curbs, provide 4" cast iron or asbestos cement pipe under the sidewalk to discharge through curb face.
Exposed wall drains shall be located 3"± above finished grade.

B. Geocomposite drain, cement treated permeable base, and 3" ø slotted plastic pipe continuous behind retaining wall or abutment. Cap ends of pipe. Provide "Tee" connection at each 4" ø drain.

C. Connect the low end of plastic pipe to the main outlet pipe as applicable.

HIGHWAY 9 STORMWATER MITIGATION
SIDEHILL VIADUCT/RETAINING WALL @ PM 3.76
DRAINAGE DETAILS

	BY	CHECKED
DESIGN	M Bergman/ A V Herrera	Q Nguyen/ A Asnaashari
DETAILS	Nancy Gwynn	Q Nguyen/ A Asnaashari
QUANTITIES	Joey Aquino	Eric Burgeson

STATE OF CALIFORNIA
DEPARTMENT OF TRANSPORTATION

DIVISION OF ENGINEERING SERVICES
STRUCTURE DESIGN
DESIGN BRANCH 3

BRIDGE NO. Varies
POST MILE 3.76

STRUCTURES DESIGN DETAIL SHEET (ENGLISH) (REV. 09-01-10)

ORIGINAL SCALE IN INCHES FOR REDUCED PLANS 0 1 2 3

UNIT: 3578
PROJECT NUMBER & PHASE: 05000003171
CONTRACT NO.: 05-005901

DISREGARD PRINTS BEARING EARLIER REVISION DATES → 1-4-13

REVISION DATES

SHEET 20 OF 27

FILE => 36-0117-p-dd.dgn

USERNAME => s123936 DATE PLOTTED => 27-MAR-2014 TIME PLOTTED => 15:04

DIST	COUNTY	ROUTE	POST MILES TOTAL PROJECT	SHEET No.	TOTAL SHEETS
05	SCr	9	3.8/18.7	67	73

REGISTERED CIVIL ENGINEER 7-9-2013 DATE

03-24-14
PLANS APPROVAL DATE

REGISTERED PROFESSIONAL ENGINEER Michael K Bergman No. 78483 Exp. 9-30-13 CIVIL STATE OF CALIFORNIA

The State of California or its officers or agents shall not be responsible for the accuracy or completeness of electronic copies of this plan sheet.

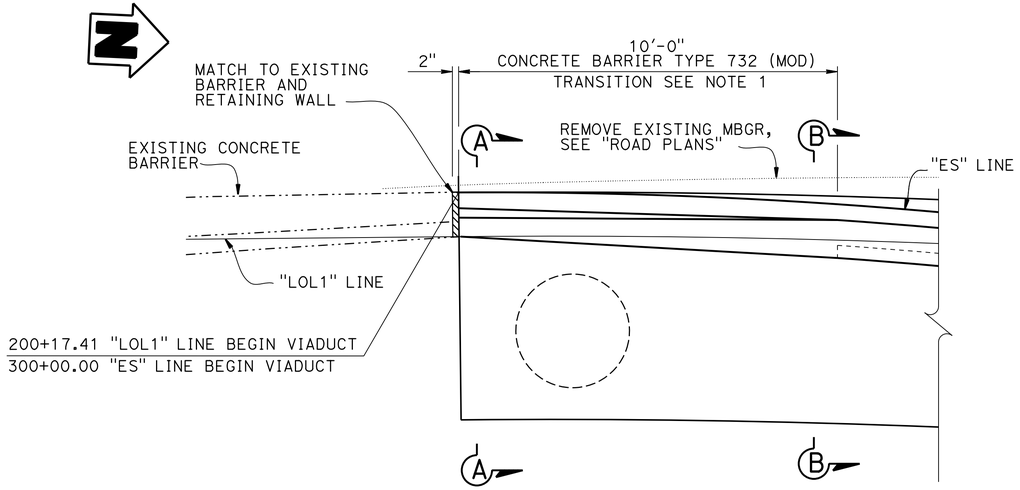

PLAN
(BRIDGE NO. 36-0117)
½" = 1' 0"

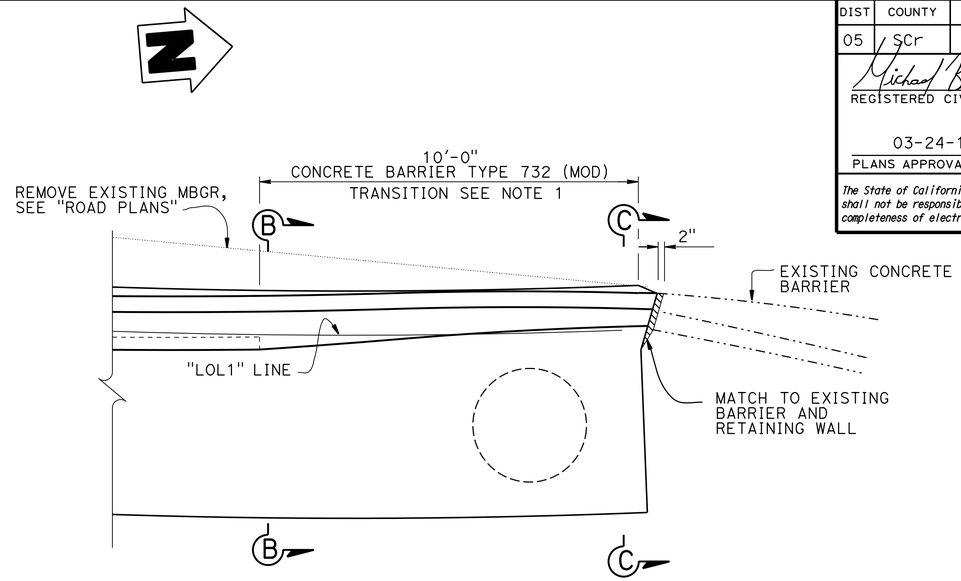

PLAN
(BRIDGE NO. 36-0119)
½" = 1' 0"

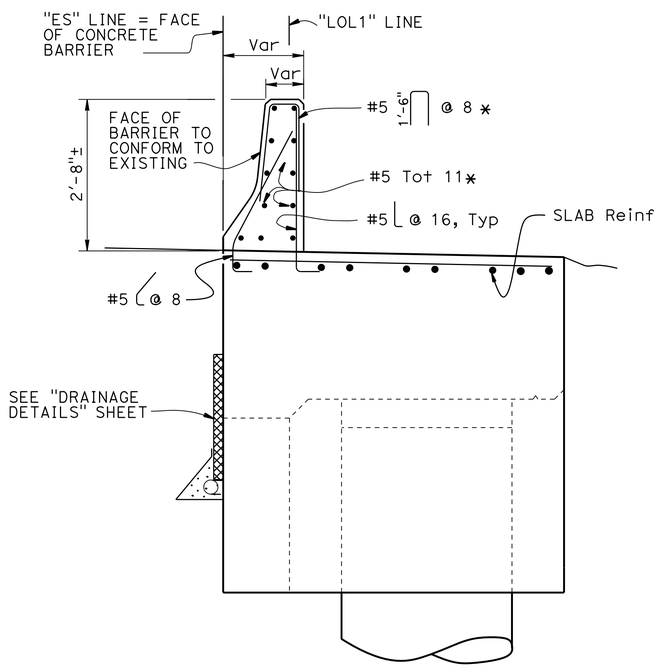

SECTION A-A
¾" = 1'-0"

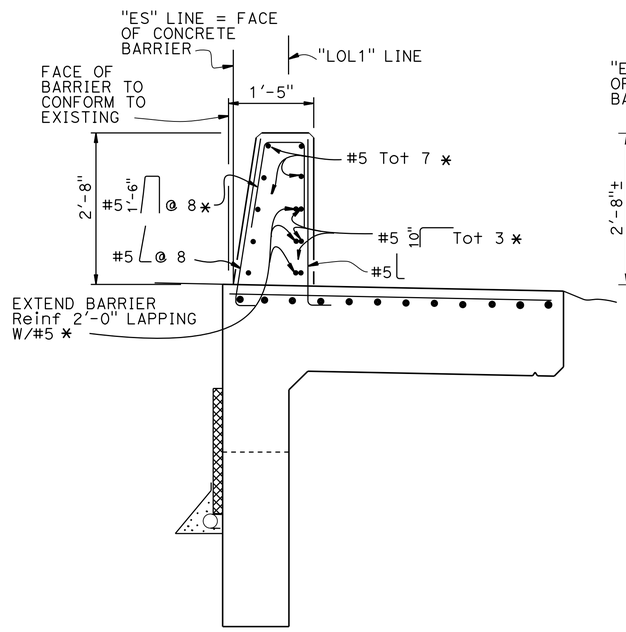

SECTION B-B
¾" = 1'-0"

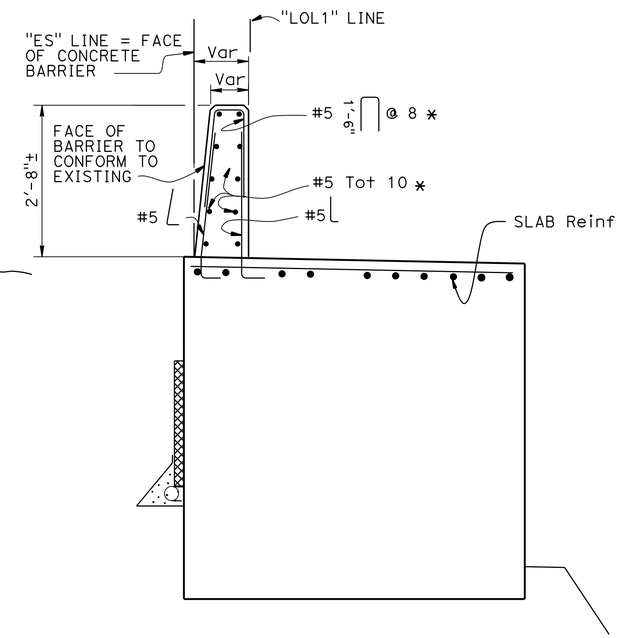

SECTION C-C
¾" = 1'-0"

NOTES:

1. Transition Concrete Barrier Type 732 face to existing Concrete Barrier Type 27 face at beginning and end of viaduct
2. Dimension may vary with cross slope and with thickness of surfacing
3. Slope Paving not shown

LEGEND:

..._..._ Denotes existing concrete barrier

* Denotes barrier reinforcement

NOTE:
THE CONTRACTOR SHALL VERIFY ALL CONTROLLING FIELD DIMENSIONS BEFORE ORDERING OR FABRICATING ANY MATERIAL.

	BY	CHECKED
DESIGN	Mike Bergman	Ali Asnaashari
DETAILS	Shadi Motalebi	Ali Asnaashari
QUANTITIES	Joey Aquino	Eric Burgeson

STATE OF CALIFORNIA
DEPARTMENT OF TRANSPORTATION

DIVISION OF ENGINEERING SERVICES
STRUCTURE DESIGN
DESIGN BRANCH 3

BRIDGE NO. Varies
POST MILE 3.76

HIGHWAY 9 STORMWATER MITIGATION
SIDEHILL VIADUCT/RETAINING WALL @ PM 3.76
BARRIER TRANSITION DETAILS

STRUCTURES DESIGN DETAIL SHEET (ENGLISH) (REV. 09-01-10)

ORIGINAL SCALE IN INCHES FOR REDUCED PLANS 0 1 2 3

UNIT: 3578
PROJECT NUMBER & PHASE: 05000003171
CONTRACT NO.: 05-005901

DISREGARD PRINTS BEARING EARLIER REVISION DATES → 1-7-13

REVISION DATES

SHEET 21 OF 27

FILE => 36-0117-q-bar.dgn

USERNAME => s123936 DATE PLOTTED => 27-MAR-2014 TIME PLOTTED => 15:04

DIST	COUNTY	ROUTE	POST MILES TOTAL PROJECT	SHEET No.	TOTAL SHEETS
05	SCr	9	3.8/18.7	68	73

REGISTERED CIVIL ENGINEER 7-9-2013 DATE

03-24-14
PLANS APPROVAL DATE

REGISTERED PROFESSIONAL ENGINEER Michael K Bergman No. 78483 Exp. 9-30-13 CIVIL STATE OF CALIFORNIA

The State of California or its officers or agents shall not be responsible for the accuracy or completeness of electronic copies of this plan sheet.

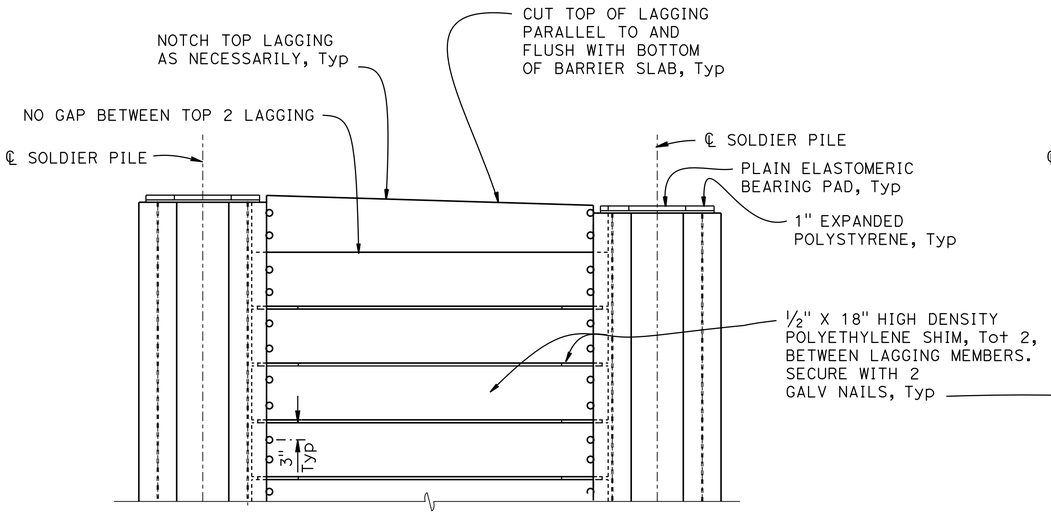

PART ELEVATION
LAGGING DETAILS (ALTERNATIVE 1)
¾"= 1'-0"

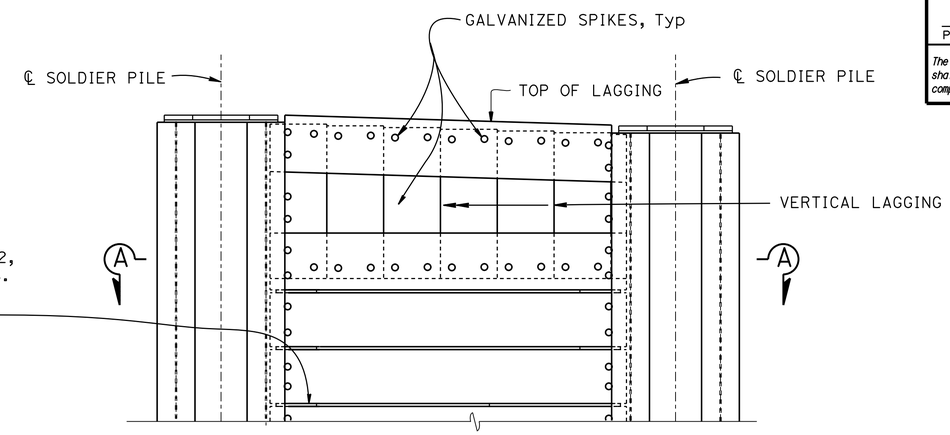

PART ELEVATION
LAGGING DETAILS (ALTERNATIVE 2)
¾"= 1'-0"

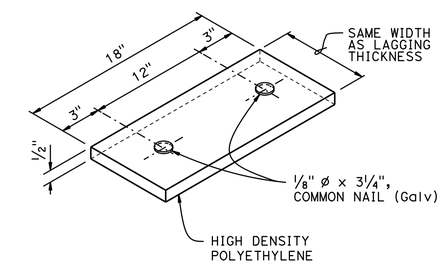

SHIM DETAIL
NO SCALE

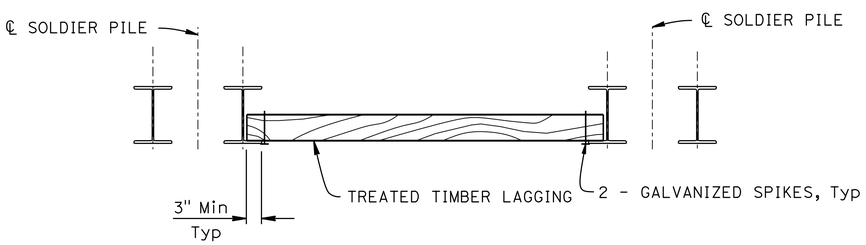

PART PLAN
¾"= 1'-0"

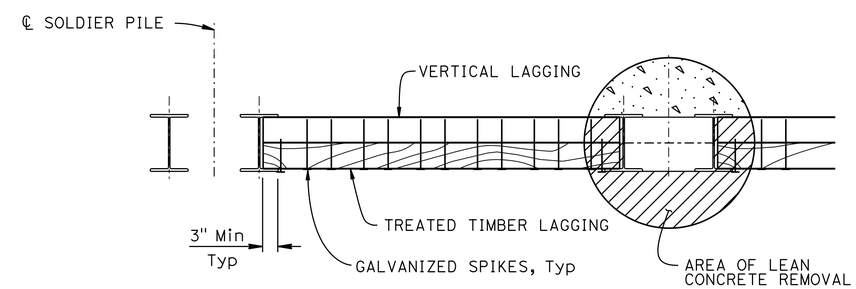

SECTION A-A
¾"= 1'-0"

NOTES:

1. No clipping of timber lagging corners allowed
2. Use 40d Galv wire spikes for 6 x 12 lagging
3. Spikes shall not be bent
4. Barrier Slab and ground anchor not shown

HIGHWAY 9 STORMWATER MITIGATION
SIDEHILL VIADUCT/RETAINING WALL @ PM 3.76
SOLDIER PILE WALL LAGGING DETAILS

	BY	CHECKED
DESIGN	Mike Bergman	Quang Nguyen
DETAILS	Shadi Motalebi	Quang Nguyen
QUANTITIES	Joey Aquino	Eric Burgeson

STATE OF CALIFORNIA
DEPARTMENT OF TRANSPORTATION

DIVISION OF ENGINEERING SERVICES
STRUCTURE DESIGN
DESIGN BRANCH 3

BRIDGE NO. 36E0039
POST MILE 3.76

STRUCTURES DESIGN DETAIL SHEET (ENGLISH) (REV. 09-01-10)

ORIGINAL SCALE IN INCHES FOR REDUCED PLANS 0 1 2 3

UNIT: 3578
PROJECT NUMBER & PHASE: 05000003171
CONTRACT NO.: 05-005901

DISREGARD PRINTS BEARING EARLIER REVISION DATES 3-6-13

REVISION DATES

SHEET 22 OF 27

FILE => 36-0117-q-splag.dgn

USERNAME => s123936 DATE PLOTTED => 27-MAR-2014 TIME PLOTTED => 15:04

DIST	COUNTY	ROUTE	POST MILES TOTAL PROJECT	SHEET No.	TOTAL SHEETS
05	SCr	9	3.8/18.7	69	73

REGISTERED CIVIL ENGINEER 7-9-2013 DATE

03-24-14
PLANS APPROVAL DATE

REGISTERED PROFESSIONAL ENGINEER Michael K Bergman No. 78483 Exp. 9-30-13 CIVIL STATE OF CALIFORNIA

The State of California or its officers or agents shall not be responsible for the accuracy or completeness of electronic copies of this plan sheet.

LEGEND:

- Denotes limits of structure excavation (Bridge)
- Denotes limits of structure backfill (Bridge)
- Denotes limits of roadway excavation, see "SEE ROAD PLANS"
- Denotes limits of roadway backfill, see "SEE ROAD PLANS"

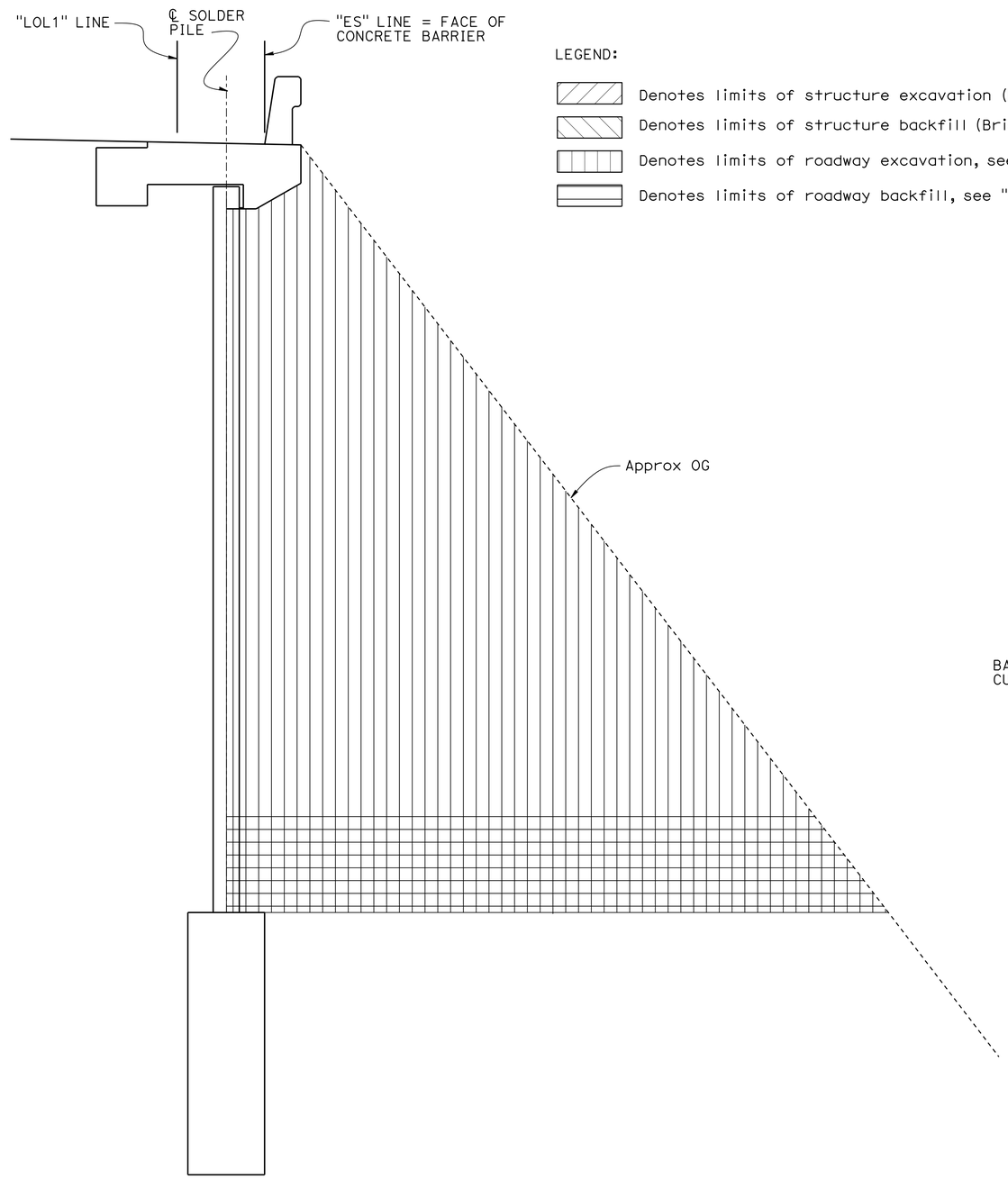

RETAINING WALL
3/8" = 1'-0"

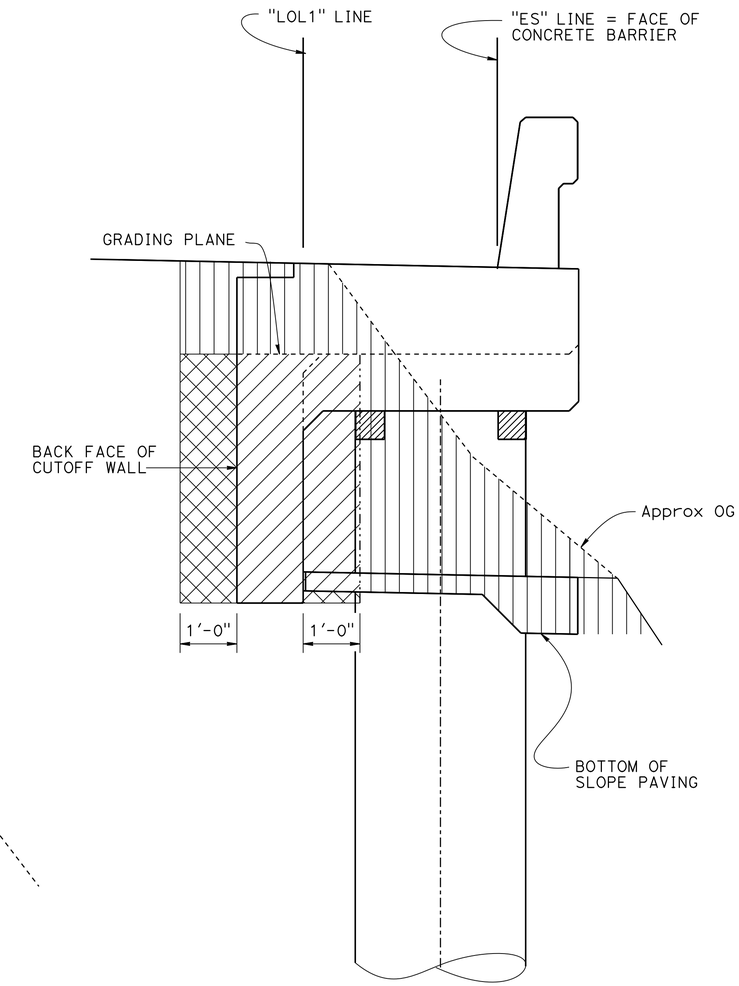

VIADUCT
3/4" = 1'-0"

HIGHWAY 9 STORMWATER MITIGATION
SIDEHILL VIADUCT/RETAINING WALL @ PM 3.76
EXCAVATION AND BACKFILL

	BY	CHECKED
DESIGN	M Bergman/ A V Herrera	Q Nguen/ A Asnaashari
DETAILS	Shadi Motalebi	Q Nguen/ A Asnaashari
QUANTITIES	Joey Aquino	Eric Burgeson

STATE OF CALIFORNIA
DEPARTMENT OF TRANSPORTATION

DIVISION OF ENGINEERING SERVICES
STRUCTURE DESIGN
DESIGN BRANCH 3

BRIDGE NO. Varies
POST MILE 3.76

STRUCTURES DESIGN DETAIL SHEET (ENGLISH) (REV. 09-01-10)

ORIGINAL SCALE IN INCHES FOR REDUCED PLANS 0 1 2 3

UNIT: 3578
PROJECT NUMBER & PHASE: 05000003171
CONTRACT NO.: 05-005901

DISREGARD PRINTS BEARING EARLIER REVISION DATES 11-9-12

REVISION DATES

SHEET 23 OF 27

FILE => 36-0117-r-ex-bkfill.dgn

USERNAME => s123936 DATE PLOTTED => 27-MAR-2014 TIME PLOTTED => 15:04

DIST	COUNTY	ROUTE	POST MILES TOTAL PROJECT	SHEET No.	TOTAL SHEETS
05	Scr	9	3.8/18.7	70	73

REGISTERED CIVIL ENGINEER — DATE 7-3-2013

03-24-14
PLANS APPROVAL DATE

The State of California or its officers or agents shall not be responsible for the accuracy or completeness of electronic copies of this plan sheet.

REGISTERED PROFESSIONAL ENGINEER — Gerrard Hight — No. 52364 — Exp. 12/31/14 — CIVIL — STATE OF CALIFORNIA

GENERAL NOTES

DESIGN:

AASHTO LRFD Bridge Design Specifications, 4th Edition with California Amendments.

PRESTRESSING STEEL:

Bars - ASTM Designation: A722 Type II (150 ksi)

Strand Tendons-ASTM Designation: A416 (270 Ksi Low Relaxation steel)

FTL = Factored Test Load per anchor (Kips)

fpu = Minimum tensile strength of prestressing steel

As = Minimum cross sectional area of prestressing steel in ground anchor (square inch)

$$As(Min) = \frac{1.0\ FTL}{0.75\ fpu} \quad \text{(Strands)}$$

$$As(Min) = \frac{1.0\ FTL}{0.80\ fpu} \quad \text{(Bars)}$$

NOTES:

(A) Level of initial grouting for drilled hole 6" in diameter or smaller

(B) Level of secondary grouting

(C) Level of initial grouting inside corrugated sheathing

(D) Bonded length shall be determined by the contractor

(E) For unbonded length, see PROJECT PLANS

(F) For inclination, see PROJECT PLANS

(G) Face of Wall Excavation

NOTES:

1. Anchorage enclosure shall only be used when anchor head assembly is not enclosed in concrete.
2. Anchorage enclosure shall have provisions to allow injecting grout at low end and venting at high end. Galvanize after fabrication.
3. Silicone sealant to cover full width of flange.
4. Steel tube (Min thickness = 1/4") welded to bearing plate. Galvanize assembly after fabrication
5. Steel tube welded to bearing plate. Inside diameter of steel tube (Min thickness = 1/4") to be 1" greater than outside diameter of smooth sheathing.
6. Galvanize assembly after fabrication.
7. For other wall details, see PROJECT PLANS.

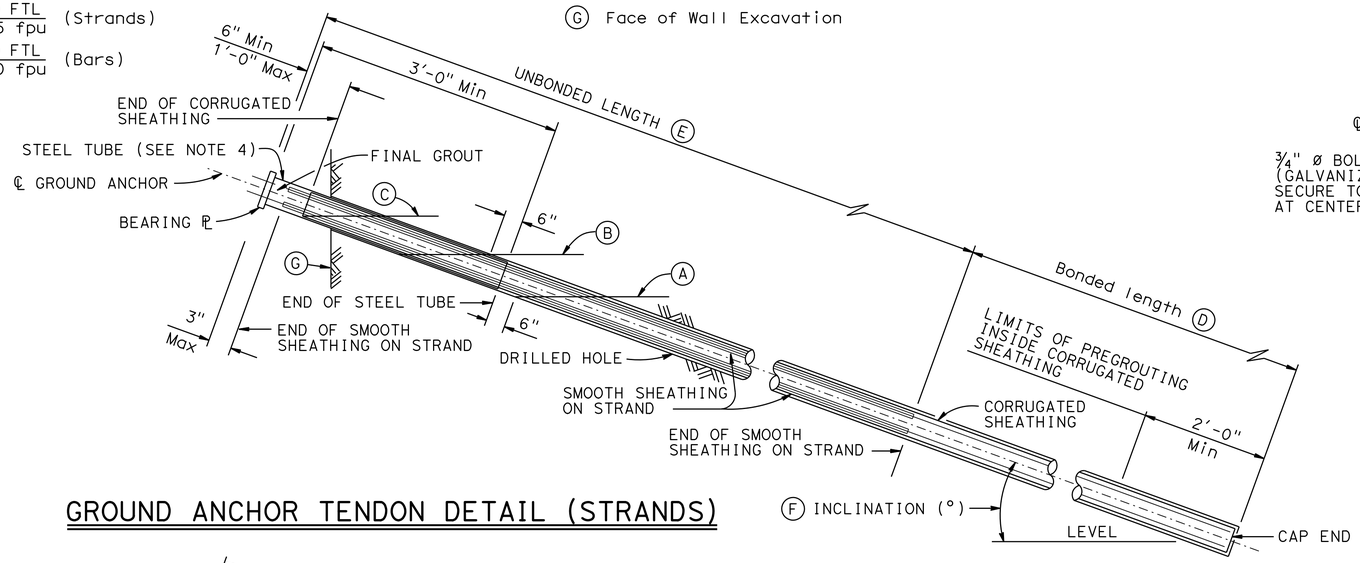

GROUND ANCHOR TENDON DETAIL (STRANDS)

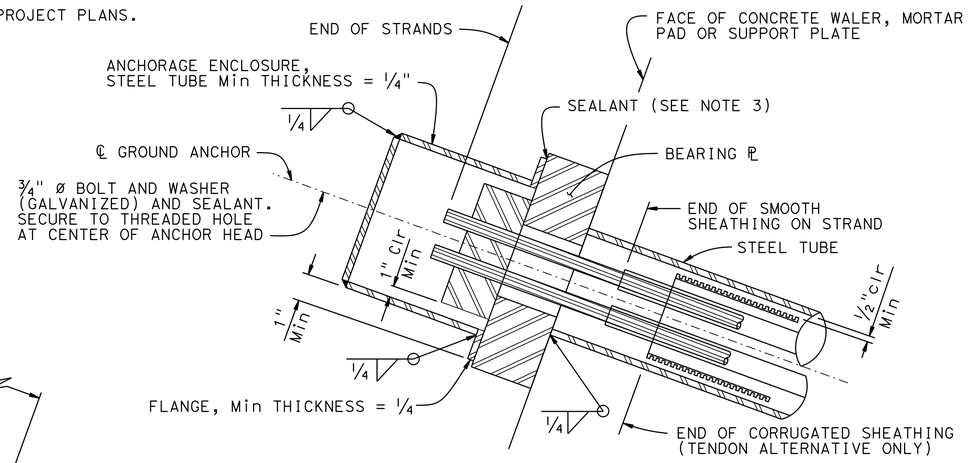

ALTERNATIVE X

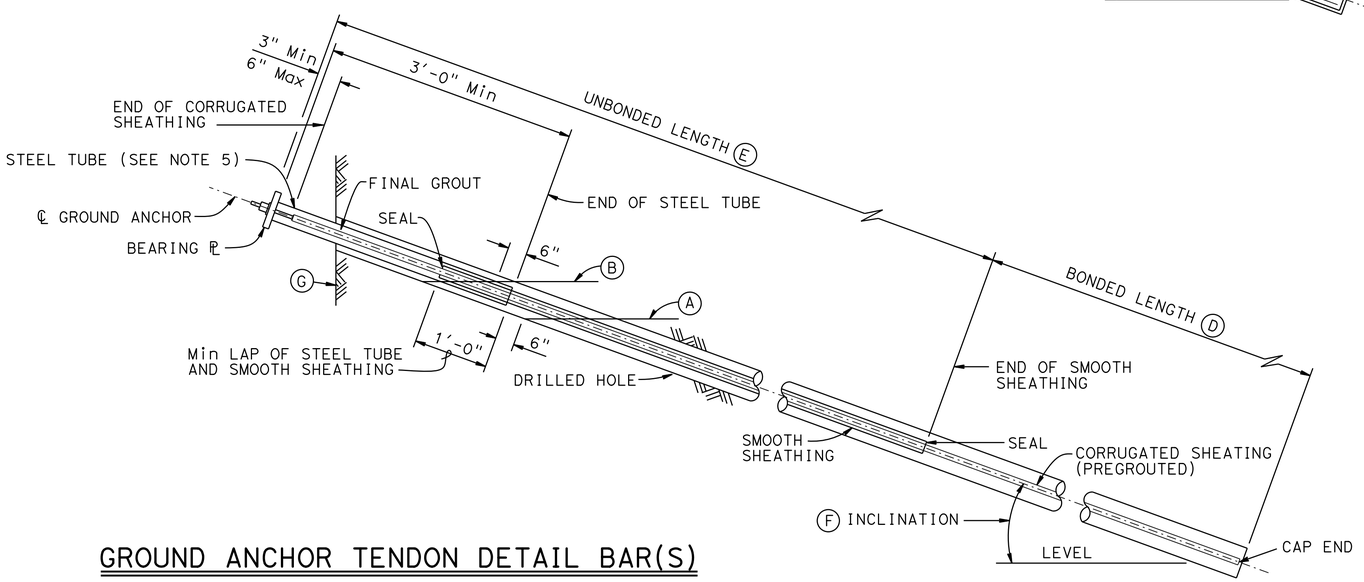

GROUND ANCHOR TENDON DETAIL BAR(S)

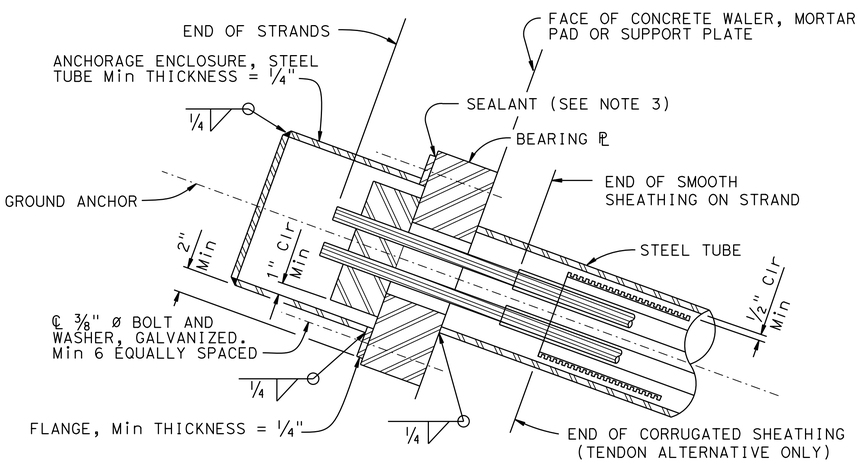

ALTERNATIVE Y

ANCHORAGE ENCLOSURE DETAILS

NO SCALE

STANDARD DRAWING					
FILE NO. xs12-040	APPROVAL DATE January 2012	STATE OF CALIFORNIA DEPARTMENT OF TRANSPORTATION	DIVISION OF ENGINEERING SERVICES	BRIDGE NO. 36E0039 / POST MILE 3.76	HIGHWAY 9 STORMWATER MITIGATION SIDEHILL VIADUCT/RETAINING WALL @ PM 3.76 SUB HORIZONTAL GROUND ANCHOR DETAILS

DS OSD 2147A (ENGLISH STANDARD DRAWING "XS" BORDER REV. (02-02-11))

ORIGINAL SCALE IN INCHES FOR REDUCED PLANS 0 1 2 3

UNIT: 3578
PROJECT NUMBER & PHASE: 05000003171
CONTRACT NO.: 05-0q5901

DISREGARD PRINTS BEARING EARLIER REVISION DATES

REVISION DATES

SHEET 24 OF 27

FILE => 36-0117-s-gad.dgn

USERNAME => s123936 DATE PLOTTED => 27-MAR-2014 TIME PLOTTED => 15:04

DIST	COUNTY	ROUTE	POST MILES TOTAL PROJECT	SHEET No.	TOTAL SHEETS
05	Scr	9	3.8/18.7	71	73

REGISTERED CIVIL ENGINEER 7-3-2013 DATE

03-24-14
PLANS APPROVAL DATE

REGISTERED PROFESSIONAL ENGINEER Gerrard Hight No. 52364 Exp. 12/31/14 CIVIL STATE OF CALIFORNIA

The State of California or its officers or agents shall not be responsible for the accuracy or completeness of electronic copies of this plan sheet.

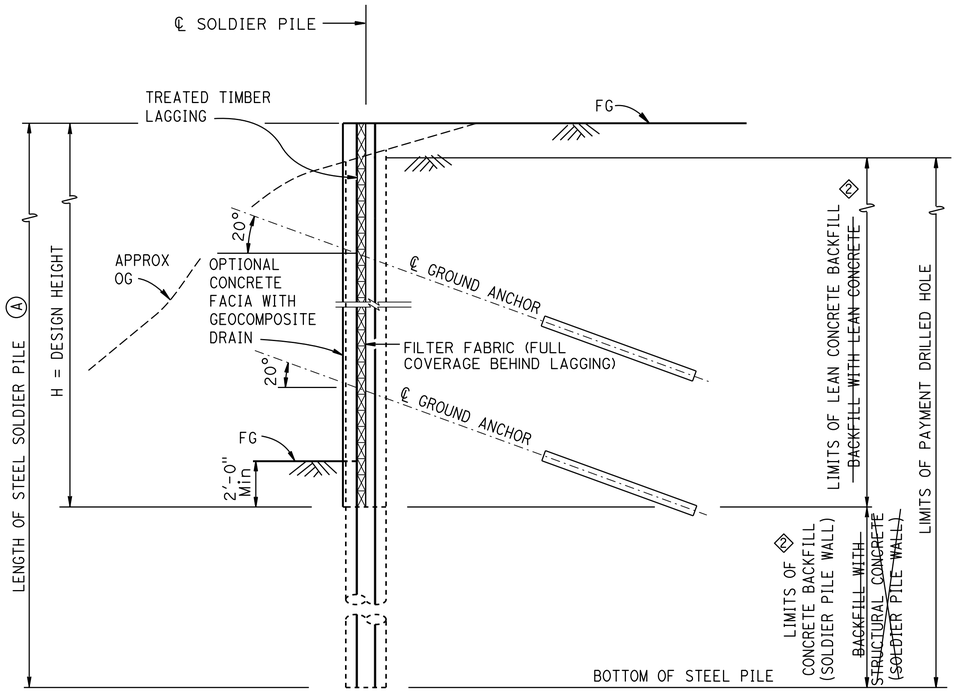

TYPICAL SECTION

NO SCALE

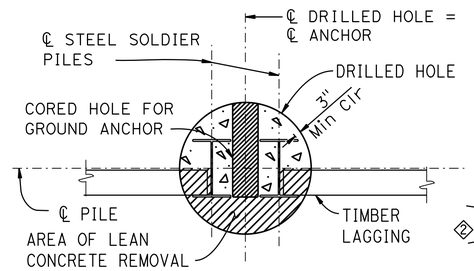

SECTION A-A

NO SCALE

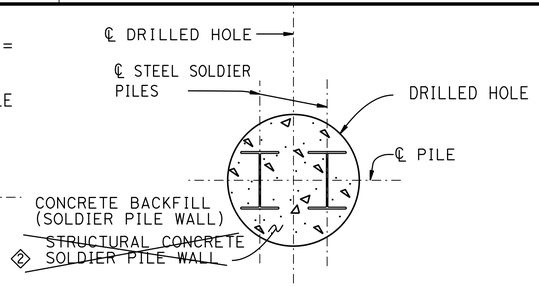

SECTION B-B

NO SCALE

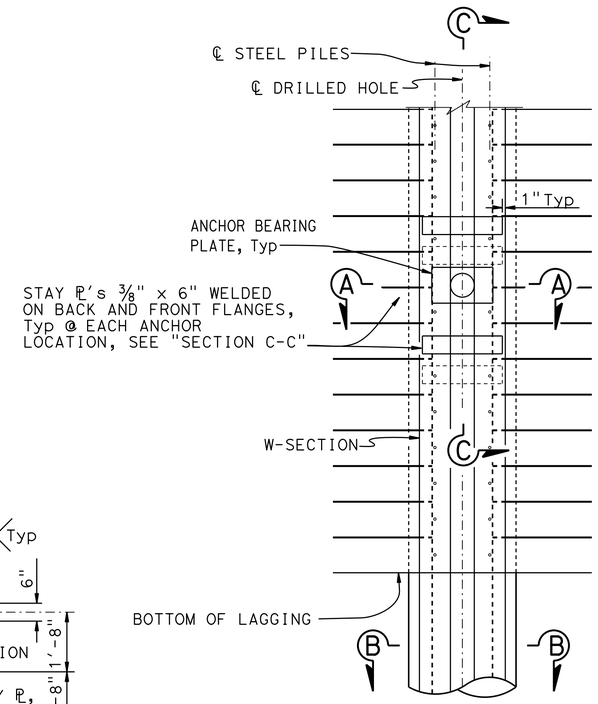

PART ELEVATION

NO SCALE

GENERAL NOTES

DESIGN:	AASHTO LRFD Bridge Design Specifications, 4th Edition with California Amendments.
LIVE LOAD:	240 psf equivalent to 2 feet soil weight
SOIL PARAMETERS:	(For determination of Design Lateral Earth Pressures) Backfill soil weight = _____ lb/ft³ Friction Angle = _____ ° Active Pressure coefficent, Ka = _____ Bedrock Unit Weight = _____ lb/ft³ Slope Angle = _____ °
STEEL SOLDIER PILES:	ASTM A572/A, ASTM 572M Grade 50 Min, or ASTM A36/A36M
REINFORCED CONCRETE (FACIA):	f'c = 4000 psi fy = 60 ksi
STRUCTURAL TIMBER:	Treated Douglas Fir, Grade No.1 or better. Timber to be full sawn.
PRESTRESSING STEEL (GROUND ANCHORS):	FDL= Factored Design Load on ground anchor (kips) FTL=Factored Test Load (kips) LL=Lock-Off Load (kips) fpu = Minimum ultimate tensile strength of ground anchor steel (ksi) As (Min) = Minimum cross sectional area of steel in ground anchor. (square inch) Steel = ASTM designation: A416 (HS Strands) $As\ (Min) = \frac{1.0\ FTL}{0.75\ fpu}$ Steel= ASTM designation: A722 (HS Bars) $As\ (Min) = \frac{1.0\ FTL}{0.80\ fpu}$ FDL= _____ Kips FTL= _____ Kips LL= _____ Kips

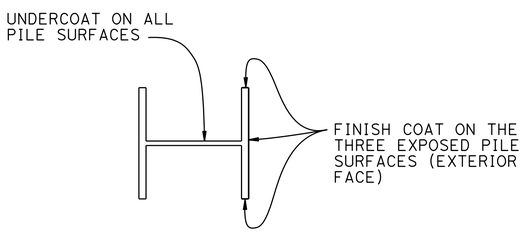

LIMITS OF CLEAN & PAINT STEEL SOLDIER PILE

NO SCALE

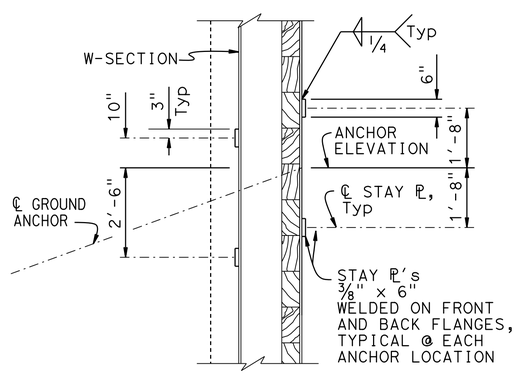

SECTION C-C STAY PLATE DETAILS

NO SCALE

NOTES:

1. For details not shown, see "PROJECT PLANS"

Ⓐ Clean and paint Steel Soldier Pile from top of pile to 5 feet Min below bottom of lagging

For revised " GENERAL NOTES" see " INDEX TO PLANS NO. 2" sheet

STANDARD DRAWING

FILE NO. xs12-070 APPROVAL DATE January 2012

① Does Not Apply
② Revised Note

STATE OF CALIFORNIA DEPARTMENT OF TRANSPORTATION

DIVISION OF ENGINEERING SERVICES

BRIDGE NO. 36E0039
POST MILE 3.76

HIGHWAY 9 STORMWATER MITIGATION
SIDEHILL VIADUCT/RETAINING WALL @ PM 3.76
SOLDIER PILE WALL WITH GROUND ANCHORS

DS OSD 2147A (ENGLISH STANDARD DRAWING "XS" BORDER REV. (02-02-11)

ORIGINAL SCALE IN INCHES FOR REDUCED PLANS 0 1 2 3

UNIT: 3578
PROJECT NUMBER & PHASE: 05000003171
CONTRACT NO.: 05-005901

DISREGARD PRINTS BEARING EARLIER REVISION DATES

REVISION DATES

SHEET 25 OF 27

FILE => 36-0117-s-spga.dgn

USERNAME => s123936 DATE PLOTTED => 27-MAR-2014 TIME PLOTTED => 15:04

DIST	COUNTY	ROUTE	POST MILES TOTAL PROJECT	SHEET No.	TOTAL SHEETS
05	SCr	9	3.8/18.7	72	73

CERTIFIED ENGINEERING GEOLOGIST 01-08-13 DATE

PROFESSIONAL GEOLOGIST Mike Jurasius No. 2567 Exp. 3-31-13 CERTIFIED ENGINEERING GEOLOGIST STATE OF CALIFORNIA

03-24-14
PLANS APPROVAL DATE

The State of California or its officers or agents shall not be responsible for the accuracy or completeness of electronic copies of this plan sheet.

This LOTB sheet was prepared in accordance with the Caltrans Soil & Rock Logging, Classification, & Presentation Manual (2010 Edition).

See 2010 Standard Plans A10F and A10G for Soil Legend, and A10H for Rock Legend.

BENCH MARK

SCr 9 PM 3.75 1" IP w/ PP & Nail
Elev= 468.44', NAVD88 Vertical Datum
N: 1834392.37
E: 6105862.78
NAD83 Horizontal Datum

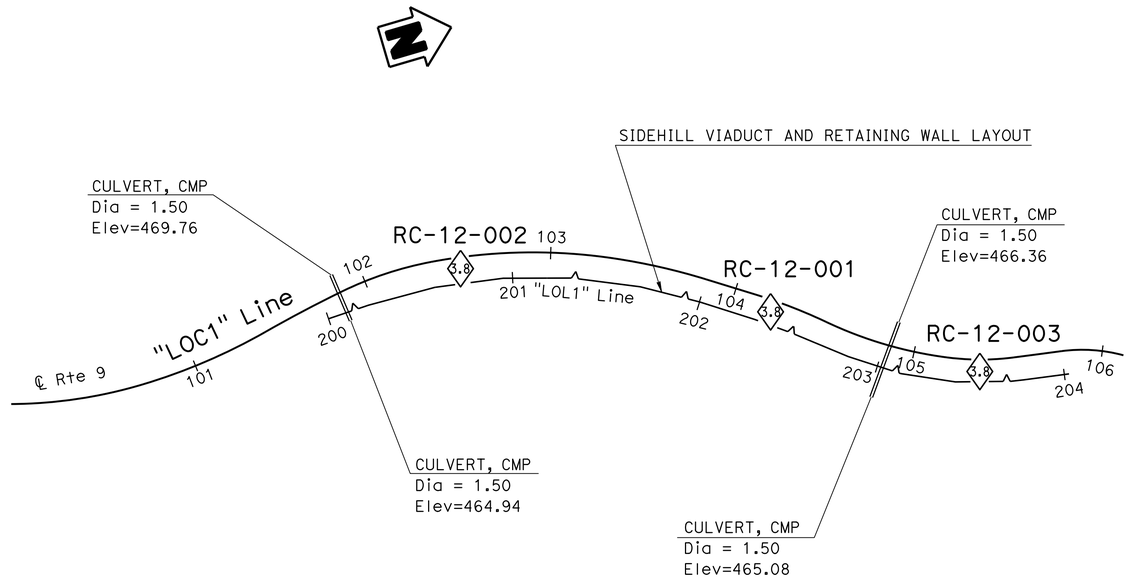

PLAN
1" = 40'

Note: No ground water encountered during field investigation.

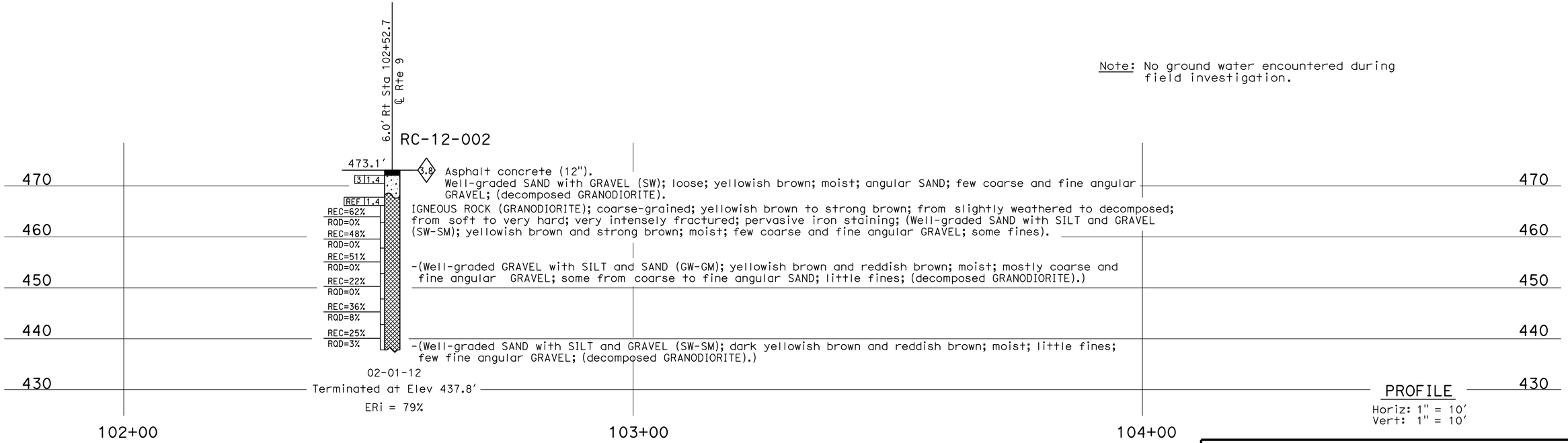

PROFILE
Horiz: 1" = 10'
Vert: 1" = 10'

ENGINEERING SERVICES	MATERIALS AND GEOTECHNICAL SERVICES	STATE OF CALIFORNIA DEPARTMENT OF TRANSPORTATION	DIVISION OF ENGINEERING SERVICES STRUCTURE DESIGN DESIGN BRANCH 3	BRIDGE NO. Varies / POST MILE 3.76	HIGHWAY 9 STORMWATER MITIGATION SIDEHILL VIADUCT/RETAINING WALL @ PM 3.76 LOG OF TEST BORINGS 1 OF 2
FUNCTIONAL SUPERVISOR NAME: M. Finegan	DRAWN BY: F. Nguyen CHECKED BY: R. Turner	FIELD INVESTIGATION BY: M. Jurasius			

OGS CIVIL LOG OF TEST BORINGS SHEET

ORIGINAL SCALE IN INCHES FOR REDUCED PLANS 0 1 2 3

UNIT: 3643
PROJECT NUMBER & PHASE: 05000003171 CONTRACT NO.: 05-005901

DISREGARD PRINTS BEARING EARLIER REVISION DATES → REVISION DATES 10-31-12 12-14-12 01-08-13

SHEET 26 OF 27

FILE => 36-0117-z-ltb01.dgn

USERNAME => s123936 DATE PLOTTED => 27-MAR-2014 TIME PLOTTED => 15:04

DIST	COUNTY	ROUTE	POST MILES TOTAL PROJECT	SHEET No.	TOTAL SHEETS
05	SCr	9	3.8/18.7	73	73

CERTIFIED ENGINEERING GEOLOGIST — DATE 01-08-13

PROFESSIONAL GEOLOGIST — Mike Jurasius — No. 2567 — Exp. 3-31-13 — CERTIFIED ENGINEERING GEOLOGIST — STATE OF CALIFORNIA

03-24-14
PLANS APPROVAL DATE

The State of California or its officers or agents shall not be responsible for the accuracy or completeness of electronic copies of this plan sheet.

This LOTB sheet was prepared in accordance with the Caltrans Soil & Rock Logging, Classification, & Presentation Manual (2010 Edition).

See 2010 Standard Plans A10F and A10G for Soil Legend, and A10H for Rock Legend.

FOR PLAN VIEW, SEE
"LOG OF TEST BORINGS 1 OF 2"

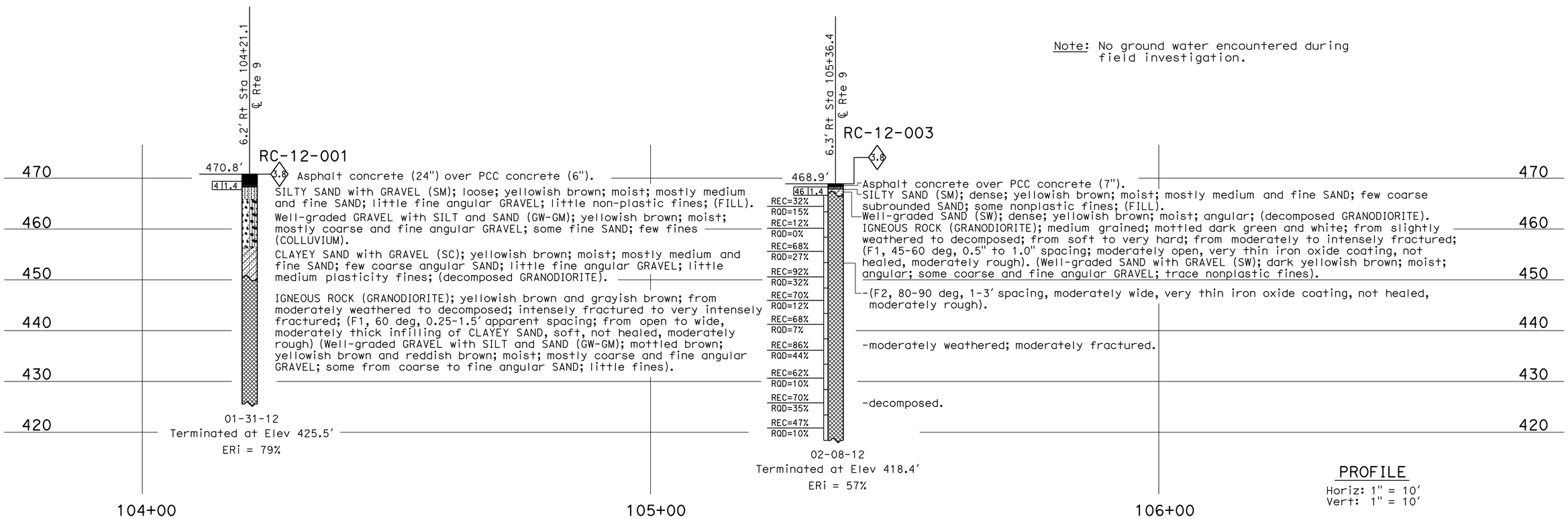

Note: No ground water encountered during field investigation.

PROFILE
Horiz: 1" = 10'
Vert: 1" = 10'

HIGHWAY 9 STORMWATER MITIGATION

SIDEHILL VIADUCT/RETAINING WALL @ PM 3.76

LOG OF TEST BORINGS 2 OF 2

ENGINEERING SERVICES	MATERIALS AND GEOTECHNICAL SERVICES	STATE OF CALIFORNIA DEPARTMENT OF TRANSPORTATION	DIVISION OF ENGINEERING SERVICES STRUCTURE DESIGN DESIGN BRANCH 3	BRIDGE NO. Varies / POST MILE 3.76
FUNCTIONAL SUPERVISOR NAME: M. Finegan	DRAWN BY: F. Nguyen / CHECKED BY: R. Turner	FIELD INVESTIGATION BY: M. Jurasius		

OGS CIVIL LOG OF TEST BORINGS SHEET

ORIGINAL SCALE IN INCHES FOR REDUCED PLANS 0 1 2 3

UNIT: 3643
PROJECT NUMBER & PHASE: 05000003171 CONTRACT NO.: 05-005901

DISREGARD PRINTS BEARING EARLIER REVISION DATES

REVISION DATES				SHEET	OF
10-31-12	12-19-12	01-08-13		27	27

FILE => 36-0117-z-ltb02.dgn

USERNAME => s123936 DATE PLOTTED => 27-MAR-2014 TIME PLOTTED => 15:04