Dist	COUNTY	ROUTE	POST MILES TOTAL PROJECT	SHEET No.	TOTAL SHEETS
05	SCr	17	8.3/9.4	1	96

STATE OF CALIFORNIA **ACHSNHPG-P017(110)E**

DEPARTMENT OF TRANSPORTATION

PROJECT PLANS FOR CONSTRUCTION ON

STATE HIGHWAY

IN SANTA CRUZ COUNTY
NEAR SCOTTS VALLEY
FROM 0.4 MILE SOUTH OF SUGARLOAF ROAD
TO 0.1 MILE SOUTH OF LAUREL ROAD

TO BE SUPPLEMENTED BY STANDARD PLANS DATED 2010

INDEX OF PLANS

SHEET No.	DESCRIPTION
1	TITLE AND LOCATION MAP
2-4	TYPICAL CROSS SECTIONS
5-8	LAYOUTS
9	CONSTRUCTION DETAILS
10-31	DRAINAGE PLANS, PROFILES, DETAILS AND QUANTITIES
32	CONSTRUCTION AREA SIGNS
33-46	STAGE CONSTRUCTION, TRAFFIC HANDLING PLAN AND QUANTITIES
47-51	PAVEMENT DELINEATION, SIGN PLAN AND QUANTITIES
52	SUMMARY OF QUANTITIES
53	EROSION CONTROL QUANTITIES
54	ELECTRICAL PLAN
55-67	REVISED STANDARD PLANS

STRUCTURE PLANS

68-77	SUGARLOAF ROAD SIDEHILL VIADUCT Br No. 36-0120
78-86	GLENWOOD CUT-OFF SIDEHILL VIADUCT Br No. 36-0121
87-96	SUGARLOAF ROAD SOIL NAIL WALL WALL No. 36e0044

THE STANDARD PLANS LIST APPLICABLE TO THIS CONTRACT IS INCLUDED IN THE NOTICE TO BIDDERS AND SPECIAL PROVISIONS BOOK.

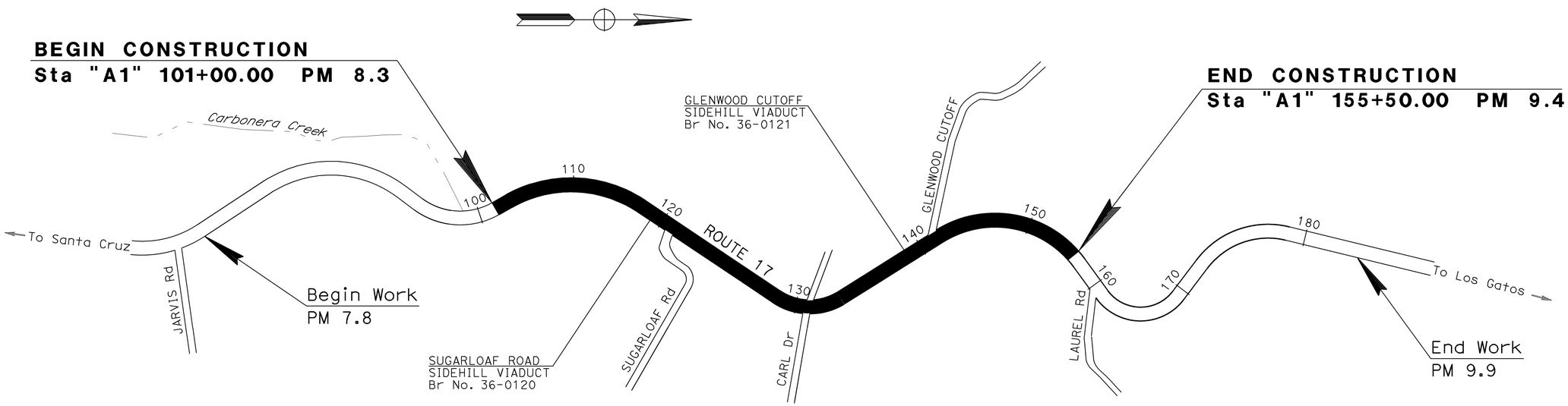

NO SCALE

THE CONTRACTOR SHALL POSSESS THE CLASS (OR CLASSES) OF LICENSE AS SPECIFIED IN THE "NOTICE TO BIDDERS."

PROJECT MANAGER: DOUG HESSING

DESIGN MANAGER: STEVE WYATT

6-15-15

PROJECT ENGINEER REGISTERED CIVIL ENGINEER — DATE

June 15, 2015

PLANS APPROVAL DATE

REGISTERED PROFESSIONAL ENGINEER — SCOTT D KIRKISH — No. 76829 — Exp. 12-31-16 — CIVIL — STATE OF CALIFORNIA

THE STATE OF CALIFORNIA OR ITS OFFICERS OR AGENTS SHALL NOT BE RESPONSIBLE FOR THE ACCURACY OR COMPLETENESS OF SCANNED COPIES OF THIS PLAN SHEET.

CONTRACT No.	05-0T9804
PROJECT ID	0500020244

LAST REVISION 06-15-15 — DATE PLOTTED => 05-AUG-2015 — TIME PLOTTED => 09:29

Dist	COUNTY	ROUTE	POST MILES TOTAL PROJECT	SHEET No.	TOTAL SHEETS
05	SCr	17	8.3/9.4	2	96

REGISTERED CIVIL ENGINEER 6-15-15 DATE

6-15-15
PLANS APPROVAL DATE

REGISTERED PROFESSIONAL ENGINEER SCOTT D KIRKISH No. 76829 Exp. 12-31-16 CIVIL STATE OF CALIFORNIA

THE STATE OF CALIFORNIA OR ITS OFFICERS OR AGENTS SHALL NOT BE RESPONSIBLE FOR THE ACCURACY OR COMPLETENESS OF SCANNED COPIES OF THIS PLAN SHEET.

NOTES:

1. DIMENSIONS OF THE PAVEMENT STRUCTURES (STRUCTURAL SECTIONS) ARE SUBJECT TO TOLERANCES SPECIFIED IN THE STANDARD SPECIFICATIONS
2. FOR EXACT LOCATIONS AND TYPES OF HOT MIX ASPHALT DIKE, SEE LAYOUT SHEETS
3. FOR EXACT LOCATIONS OF CONCRETE BARRIER PLACEMENT AND REMOVAL, SEE LAYOUT SHEETS

DESIGN DESIGNATION

PM 5.453 TO PM 12.55

ADT (2008)	57,000
ADT (2031)	57,277
DHV (2008)	5,700
DHV (2031)	5,977
D	65%
T	3%
% TRUCKS	14.5%
TI (10 Yr , 20 Yr)	10 , 11
TI Shld (10 Yr , 20 Yr)	6 , 7
DESIGN SPEED	50 MPH

STRUCTURAL SECTIONS

1
- Exist
- 0.10' OGAC
- 0.55' - 2.00' AC
- 0.00' - 0.80' CI 2 AB

2
- 0.10' HMA - OPEN GRADED (OPEN GRADED FRICTION COURSE)
- 0.10' COLD PLANE AC PAVEMENT

3
- 0.10' HMA - OPEN GRADED (OPEN GRADED FRICTION COURSE)
- 0.55' HMA (TYPE A)
- 1.20' CI 2 AB

PAVEMENT CLIMATE REGION

CENTRAL COAST

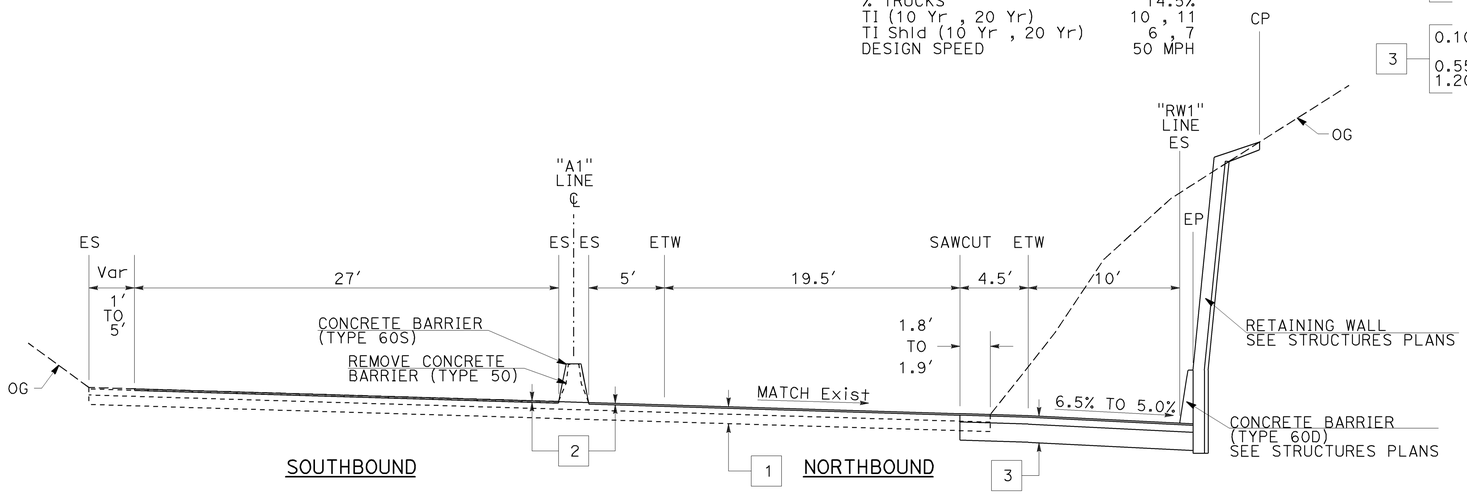

"A1" 113+97.15 TO 115+88.00

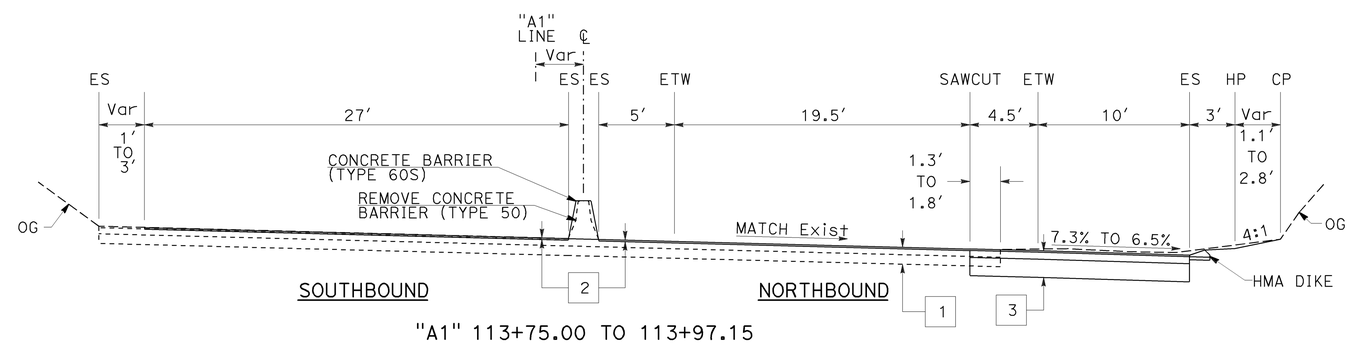

"A1" 113+75.00 TO 113+97.15

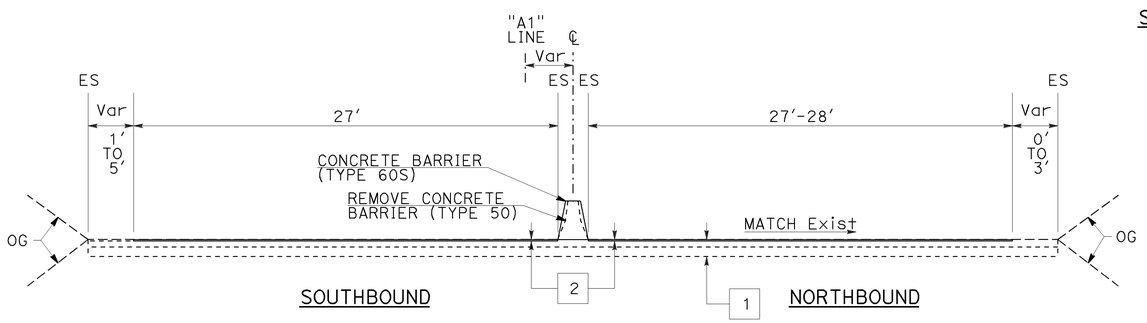

"A1" 140+30.00 TO 155+50.00
"A1" 118+86.61 TO 135+68.00
"A1" 101+00.00 TO 113+75.00

ROUTE 17

TYPICAL CROSS SECTIONS

NO SCALE

X-1

STATE OF CALIFORNIA - DEPARTMENT OF TRANSPORTATION
DESIGN
FUNCTIONAL SUPERVISOR: STEVE WYATT
CALCULATED-DESIGNED BY: SCOTT KIRKISH
CHECKED BY: MICHAEL O'NEAL
REVISED BY
DATE REVISED

LAST REVISION 06-15-15
DATE PLOTTED => 26-JUN-2015
TIME PLOTTED => 10:19

Dist	COUNTY	ROUTE	POST MILES TOTAL PROJECT	SHEET No.	TOTAL SHEETS
05	SCr	17	8.3/9.4	3	96

REGISTERED CIVIL ENGINEER 6-15-15 DATE

6-15-15
PLANS APPROVAL DATE

REGISTERED PROFESSIONAL ENGINEER SCOTT D KIRKISH No. 76829 Exp. 12-31-16 CIVIL STATE OF CALIFORNIA

THE STATE OF CALIFORNIA OR ITS OFFICERS OR AGENTS SHALL NOT BE RESPONSIBLE FOR THE ACCURACY OR COMPLETENESS OF SCANNED COPIES OF THIS PLAN SHEET.

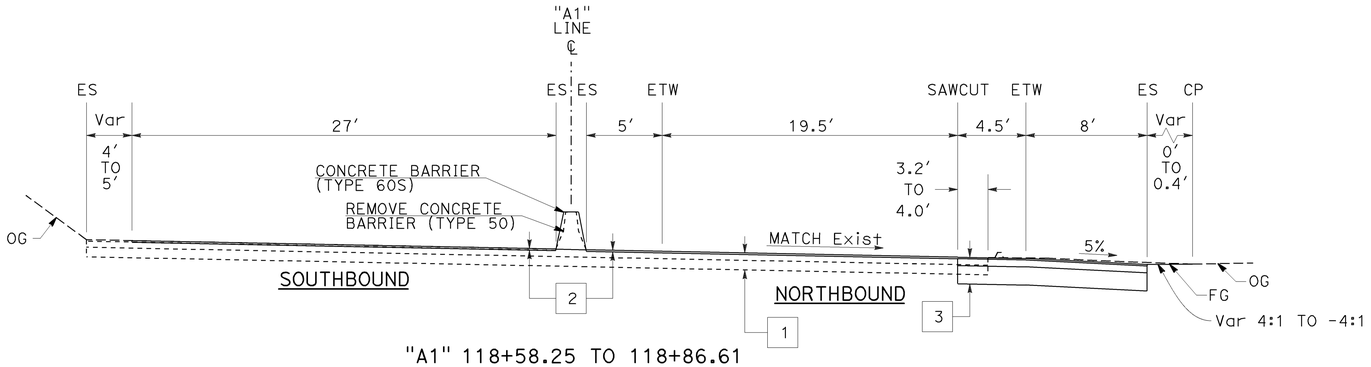

"A1" 118+58.25 TO 118+86.61

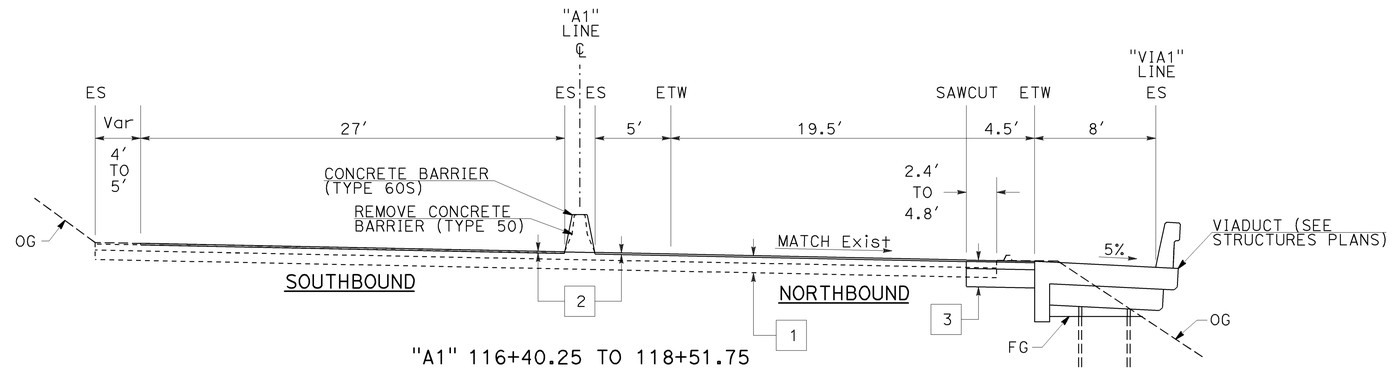

"A1" 116+40.25 TO 118+51.75

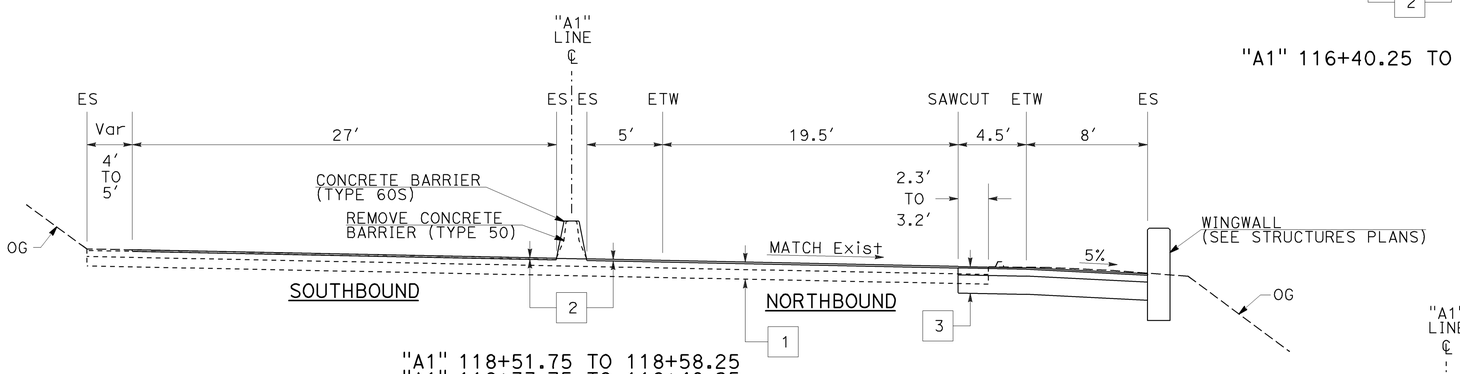

"A1" 118+51.75 TO 118+58.25
"A1" 116+33.75 TO 116+40.25

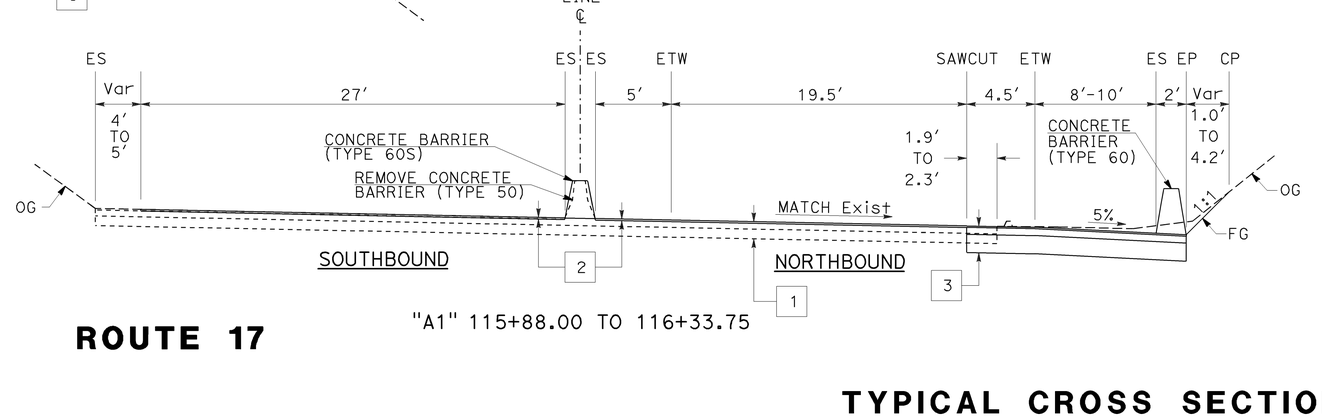

"A1" 115+88.00 TO 116+33.75

ROUTE 17

TYPICAL CROSS SECTIONS X-2

NO SCALE

STATE OF CALIFORNIA - DEPARTMENT OF TRANSPORTATION
DESIGN

FUNCTIONAL SUPERVISOR: STEVE WYATT
CALCULATED-DESIGNED BY: SCOTT KIRKISH
CHECKED BY: MICHAEL O'NEAL
REVISED BY
DATE REVISED

LAST REVISION 06-15-15
DATE PLOTTED => 26-JUN-2015
TIME PLOTTED => 10:19

Dist	COUNTY	ROUTE	POST MILES TOTAL PROJECT	SHEET No.	TOTAL SHEETS
05	SCr	17	8.3/9.4	4	96

REGISTERED CIVIL ENGINEER 6-15-15 DATE

6-15-15
PLANS APPROVAL DATE

REGISTERED PROFESSIONAL ENGINEER SCOTT D KIRKISH No. 76829 Exp. 12-31-16 CIVIL STATE OF CALIFORNIA

THE STATE OF CALIFORNIA OR ITS OFFICERS OR AGENTS SHALL NOT BE RESPONSIBLE FOR THE ACCURACY OR COMPLETENESS OF SCANNED COPIES OF THIS PLAN SHEET.

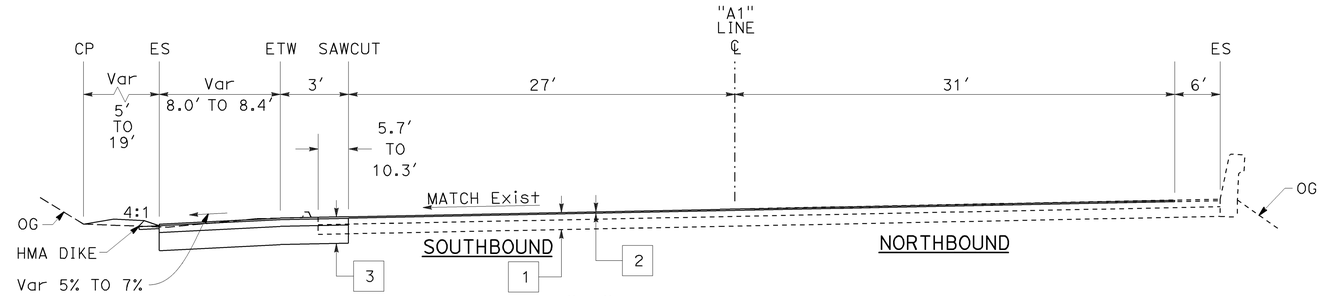

"A1" 139+83.50 TO 140+30.00

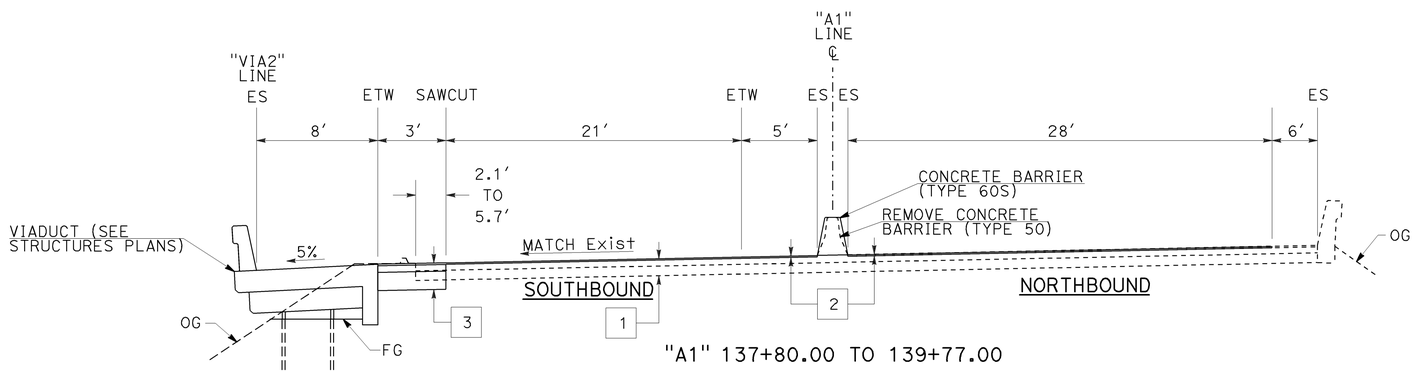

"A1" 137+80.00 TO 139+77.00

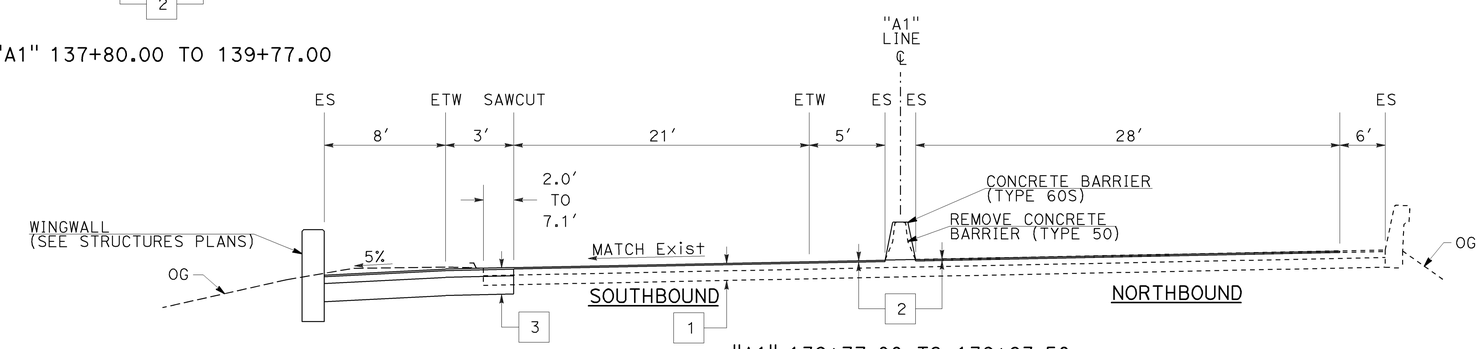

"A1" 139+77.00 TO 139+83.50
"A1" 137+73.50 TO 137+80.00

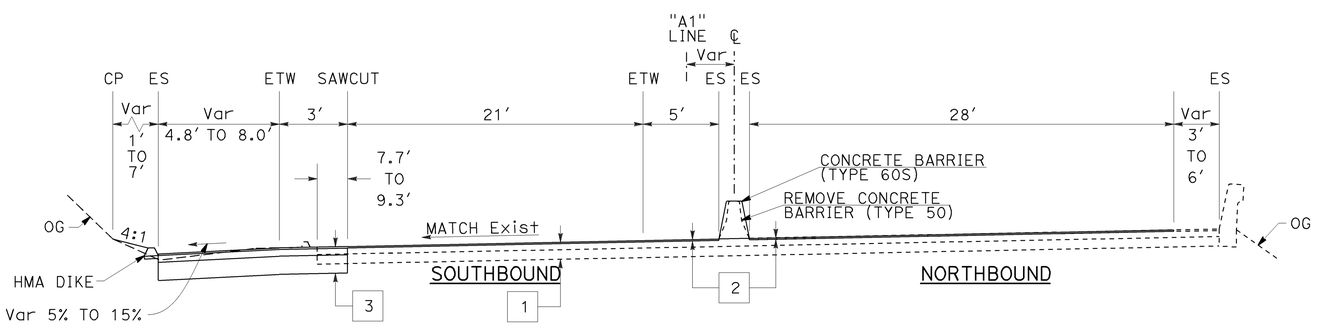

"A1" 135+68.00 TO 137+73.50

ROUTE 17

TYPICAL CROSS SECTIONS
NO SCALE

X-3

STATE OF CALIFORNIA - DEPARTMENT OF TRANSPORTATION
DESIGN
FUNCTIONAL SUPERVISOR: STEVE WYATT
CALCULATED-DESIGNED BY: SCOTT KIRKISH
CHECKED BY: MICHAEL O'NEAL
REVISED BY
DATE REVISED

LAST REVISION 06-15-15
DATE PLOTTED => 26-JUN-2015
TIME PLOTTED => 10:19

Dist	COUNTY	ROUTE	POST MILES TOTAL PROJECT	SHEET No.	TOTAL SHEETS
05	SCr	17	8.3/9.4	5	96

REGISTERED CIVIL ENGINEER 6-15-15 DATE

6-15-15
PLANS APPROVAL DATE

REGISTERED PROFESSIONAL ENGINEER SCOTT D KIRKISH No. 76829 Exp. 12-31-16 CIVIL STATE OF CALIFORNIA

THE STATE OF CALIFORNIA OR ITS OFFICERS OR AGENTS SHALL NOT BE RESPONSIBLE FOR THE ACCURACY OR COMPLETENESS OF SCANNED COPIES OF THIS PLAN SHEET.

NOTES:

1. FOR ACCURATE RIGHT OF WAY DATA, CONTACT RIGHT OF WAY ENGINEERING AT THE DISTRICT OFFICE.
2. UTILITY OWNERSHIP:
   ELECTRICAL - PACIFIC GAS & ELECTRIC
   TELEPHONE - VERIZON/GTE

LEGEND:

-·-·-·- ESA

CURVE DATA

No. ⊕	R	Δ	T	L
1	690	17°34′31″	106.61	211.56
2	925	63°50′46″	576.28	1030.75

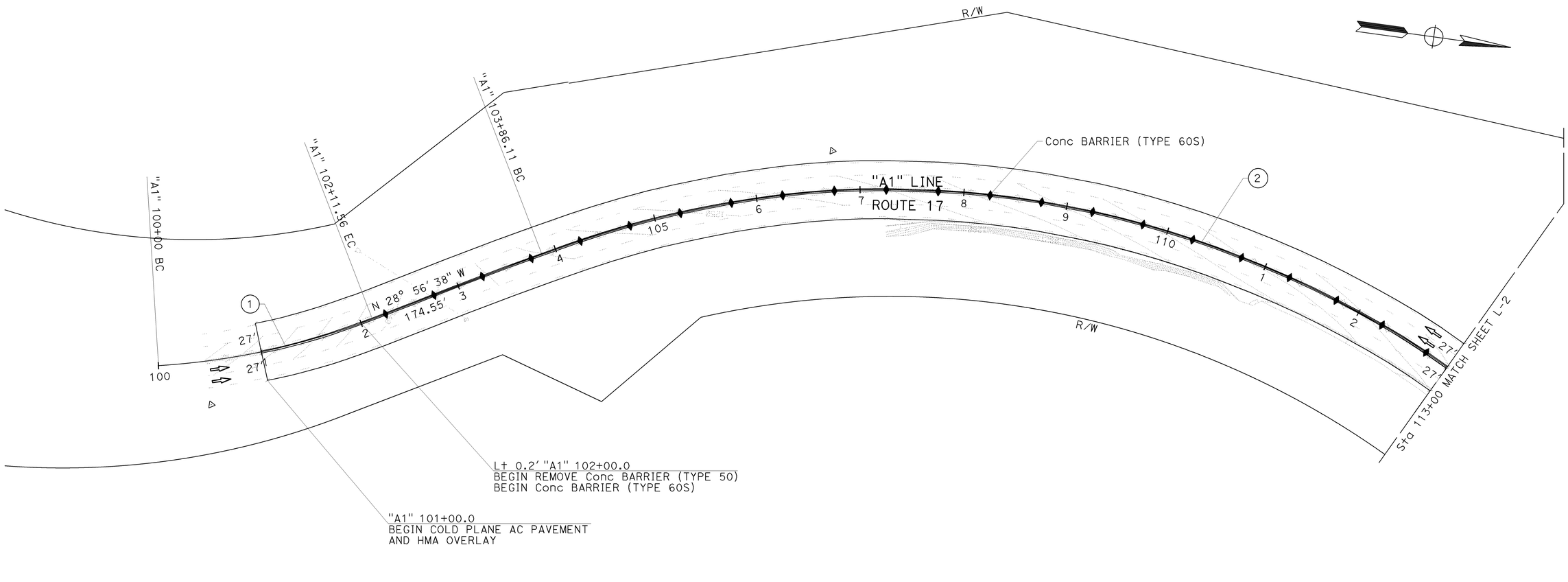

SCALE : 1" = 50′

LAYOUT L-1

STATE OF CALIFORNIA - DEPARTMENT OF TRANSPORTATION
Caltrans DESIGN

FUNCTIONAL SUPERVISOR: STEVE WYATT
CALCULATED-DESIGNED BY: SCOTT KIRKISH
CHECKED BY: MICHAEL O'NEAL
REVISED BY / DATE REVISED

LAST REVISION 06-15-15 | DATE PLOTTED => 26-JUN-2015 | TIME PLOTTED => 10:19

Dist	COUNTY	ROUTE	POST MILES TOTAL PROJECT	SHEET No.	TOTAL SHEETS
05	SCr	17	8.3/9.4	6	96

REGISTERED CIVIL ENGINEER 6-15-15 DATE

6-15-15
PLANS APPROVAL DATE

REGISTERED PROFESSIONAL ENGINEER SCOTT D KIRKISH No. 76829 Exp. 12-31-16 CIVIL STATE OF CALIFORNIA

THE STATE OF CALIFORNIA OR ITS OFFICERS OR AGENTS SHALL NOT BE RESPONSIBLE FOR THE ACCURACY OR COMPLETENESS OF SCANNED COPIES OF THIS PLAN SHEET.

NOTE:

FOR ACCURATE RIGHT OF WAY DATA, CONTACT RIGHT OF WAY ENGINEERING AT THE DISTRICT OFFICE.

CURVE DATA

No. ⊕	R	Δ	T	L
2	925	63°50′46″	576.28	1030.75

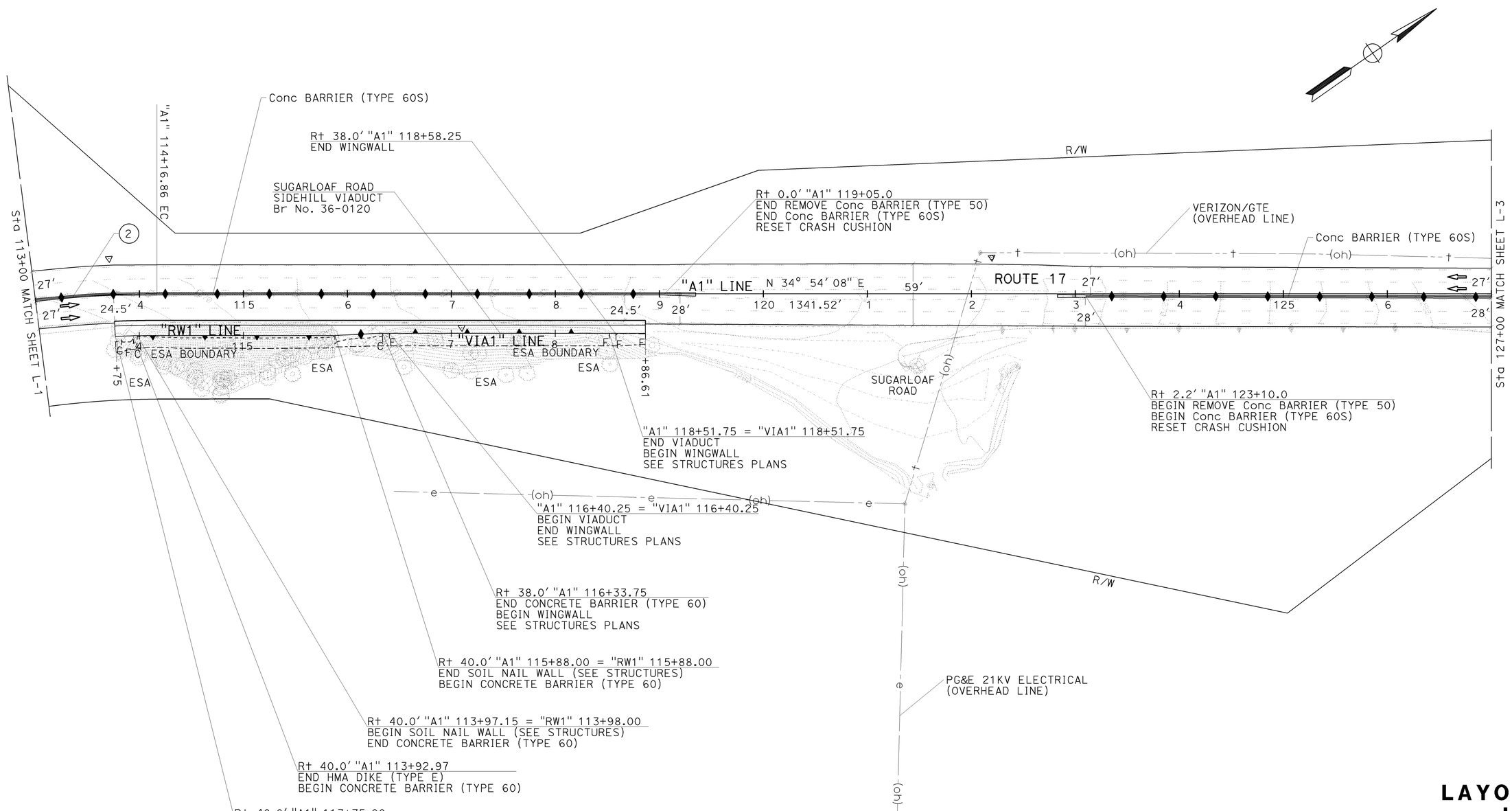

SCALE : 1" = 50′

LAYOUT L-2

REVISED BY | DATE REVISED
SCOTT KIRKISH | MICHAEL O'NEAL
CALCULATED-DESIGNED BY | CHECKED BY
FUNCTIONAL SUPERVISOR: STEVE WYATT

STATE OF CALIFORNIA - DEPARTMENT OF TRANSPORTATION
DESIGN
Caltrans

LAST REVISION 06-15-15 | DATE PLOTTED => 29-JUN-2015 | TIME PLOTTED => 10:26

Dist	COUNTY	ROUTE	POST MILES TOTAL PROJECT	SHEET No.	TOTAL SHEETS
05	SCr	17	8.3/9.4	7	96

REGISTERED CIVIL ENGINEER 6-15-15 DATE

6-15-15
PLANS APPROVAL DATE

REGISTERED PROFESSIONAL ENGINEER SCOTT D KIRKISH No. 76829 Exp. 12-31-16 CIVIL STATE OF CALIFORNIA

THE STATE OF CALIFORNIA OR ITS OFFICERS OR AGENTS SHALL NOT BE RESPONSIBLE FOR THE ACCURACY OR COMPLETENESS OF SCANNED COPIES OF THIS PLAN SHEET.

NOTE:

FOR ACCURATE RIGHT OF WAY DATA, CONTACT RIGHT OF WAY ENGINEERING AT THE DISTRICT OFFICE.

CURVE DATA

No. ⊕	R	Δ	T	L
3	595	66°55'43"	393.29	695.03

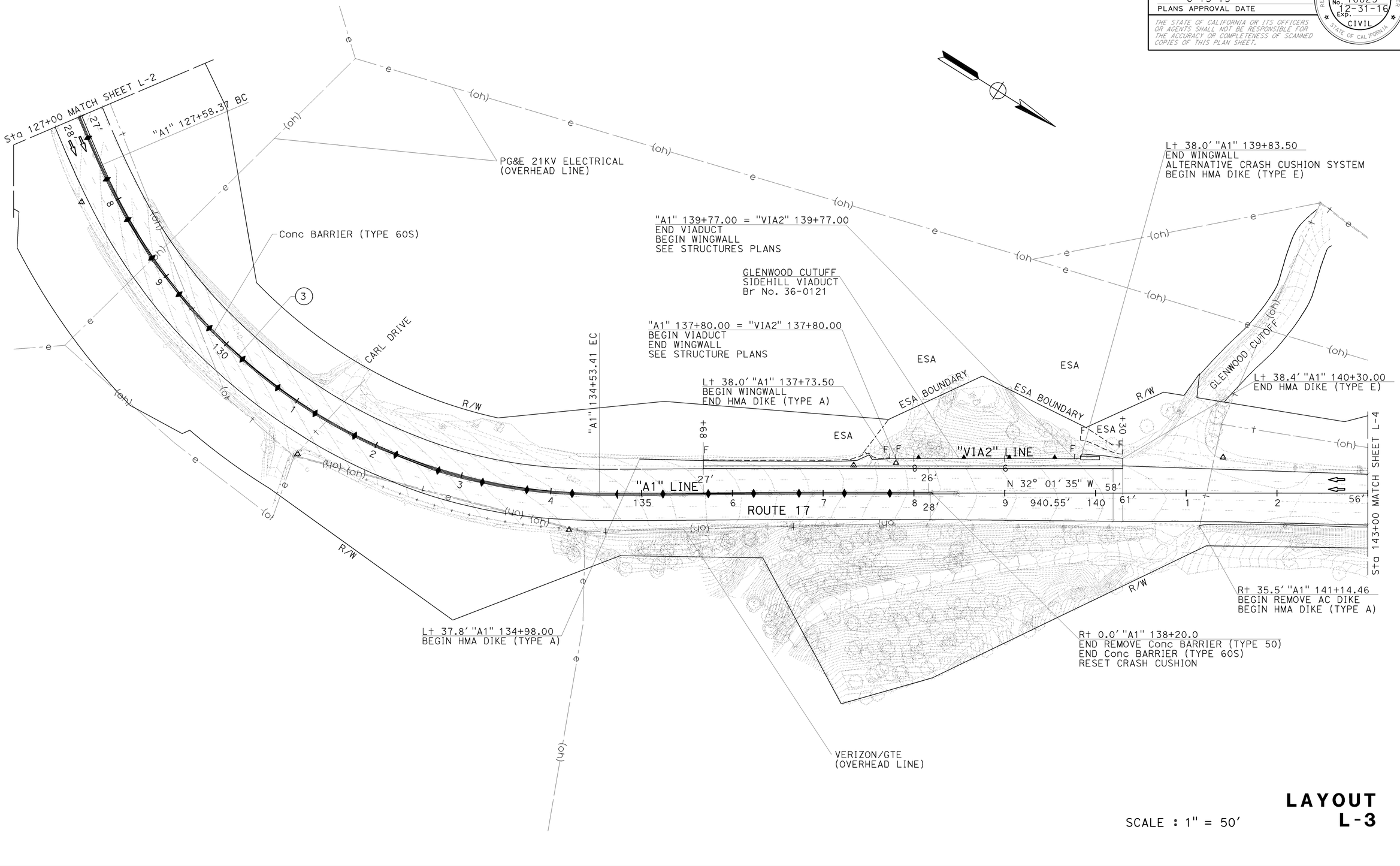

SCALE : 1" = 50'

LAYOUT L-3

STATE OF CALIFORNIA - DEPARTMENT OF TRANSPORTATION
DESIGN
Caltrans

FUNCTIONAL SUPERVISOR: STEVE WYATT
CALCULATED-DESIGNED BY: SCOTT KIRKISH
CHECKED BY: MICHAEL O'NEAL
REVISED BY
DATE REVISED

LAST REVISION 06-15-15
DATE PLOTTED => 26-JUN-2015
TIME PLOTTED => 10:19

Dist	COUNTY	ROUTE	POST MILES TOTAL PROJECT	SHEET No.	TOTAL SHEETS
05	SCr	17	8.3/9.4	8	96

REGISTERED CIVIL ENGINEER 6-15-15 DATE

6-15-15
PLANS APPROVAL DATE

REGISTERED PROFESSIONAL ENGINEER SCOTT D KIRKISH No. 76829 Exp. 12-31-16 CIVIL STATE OF CALIFORNIA

THE STATE OF CALIFORNIA OR ITS OFFICERS OR AGENTS SHALL NOT BE RESPONSIBLE FOR THE ACCURACY OR COMPLETENESS OF SCANNED COPIES OF THIS PLAN SHEET.

NOTE:

FOR ACCURATE RIGHT OF WAY DATA, CONTACT RIGHT OF WAY ENGINEERING AT THE DISTRICT OFFICE.

CURVE DATA

No. ⊕	R	Δ	T	L
4	760	88°26'26"	739.59	1173.12

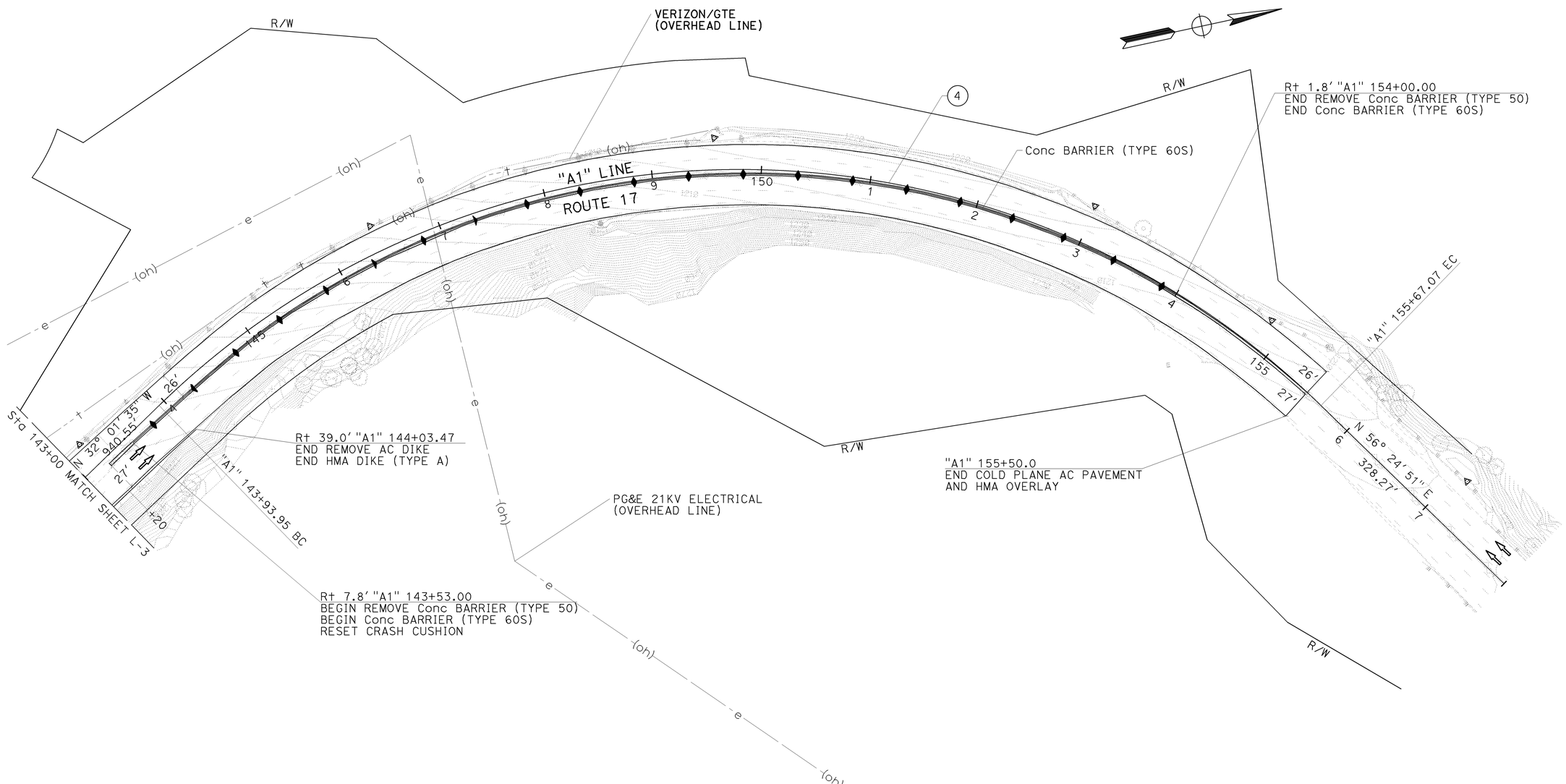

SCALE : 1" = 50'

LAYOUT L-4

STATE OF CALIFORNIA - DEPARTMENT OF TRANSPORTATION
DESIGN
Caltrans

FUNCTIONAL SUPERVISOR: STEVE WYATT
CALCULATED-DESIGNED BY: SCOTT KIRKISH
CHECKED BY: MICHAEL O'NEAL
REVISED BY
DATE REVISED

LAST REVISION 06-15-15
DATE PLOTTED => 26-JUN-2015
TIME PLOTTED => 10:19

Dist	COUNTY	ROUTE	POST MILES TOTAL PROJECT	SHEET No.	TOTAL SHEETS
05	SCr	17	8.3/9.4	9	96

REGISTERED CIVIL ENGINEER 6-15-15 DATE

6-15-15
PLANS APPROVAL DATE

REGISTERED PROFESSIONAL ENGINEER SCOTT D KIRKISH No. 76829 Exp. 12-31-16 CIVIL STATE OF CALIFORNIA

THE STATE OF CALIFORNIA OR ITS OFFICERS OR AGENTS SHALL NOT BE RESPONSIBLE FOR THE ACCURACY OR COMPLETENESS OF SCANNED COPIES OF THIS PLAN SHEET.

LEGEND:

ROADWAY EXCAVATION (TYPE Z-2) (AERIALLY DEPOSITED LEAD)

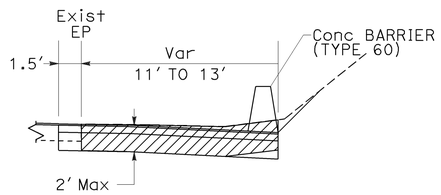

"A1" 115+88.00 TO 116+33.75

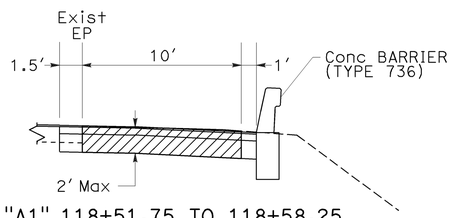

"A1" 118+51.75 TO 118+58.25
"A1" 116+33.75 TO 116+40.25

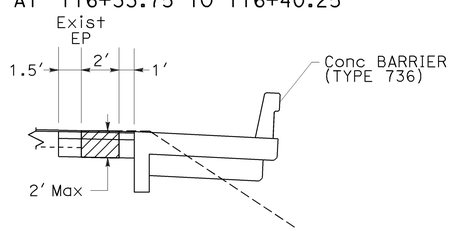

"A1" 116+40.25 TO 118+51.75

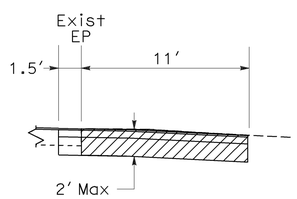

"A1" 118+58.25 TO 118+86.61

ROADWAY EXCAVATION AERIALLY DEPOSITED LEAD

LOCATION	DESCRIPTION	ROADWAY EXCAVATION (TYPE Z-2) (AERIALLY DEPOSITED LEAD) CY
"A1" 115+88.00 TO 116+33.75	NB OUTSIDE SHOULDER	49.29
"A1" 116+33.75 TO 116+40.25	NB OUTSIDE SHOULDER	4.61
"A1" 116+40.25 TO 118+51.75	NB OUTSIDE SHOULDER	30.59
"A1" 118+51.75 TO 118+58.25	NB OUTSIDE SHOULDER	4.41
"A1" 118+58.25 TO 118+86.61	NB OUTSIDE SHOULDER	20.76
	TOTAL	*109.66

* QUANTITY INCLUDED IN ROADWAY QUANTITIES TABLE

CONSTRUCTION DETAILS

NO SCALE

C-1

STATE OF CALIFORNIA - DEPARTMENT OF TRANSPORTATION
Caltrans®
DESIGN

FUNCTIONAL SUPERVISOR: STEVE WYATT
CALCULATED-DESIGNED BY: SCOTT KIRKISH
CHECKED BY: MICHAEL O'NEAL
REVISED BY
DATE REVISED

LAST REVISION 06-15-15
DATE PLOTTED => 26-JUN-2015
TIME PLOTTED => 10:19

Dist	COUNTY	ROUTE	POST MILES TOTAL PROJECT	SHEET No.	TOTAL SHEETS
05	SCr	17	8.3/9.4	10	96

REGISTERED CIVIL ENGINEER 6-15-15 DATE

6-15-15
PLANS APPROVAL DATE

REGISTERED PROFESSIONAL ENGINEER SCOTT D KIRKISH No. 76829 Exp. 12-31-16 CIVIL STATE OF CALIFORNIA

THE STATE OF CALIFORNIA OR ITS OFFICERS OR AGENTS SHALL NOT BE RESPONSIBLE FOR THE ACCURACY OR COMPLETENESS OF SCANNED COPIES OF THIS PLAN SHEET.

NOTE:

FOR ACCURATE RIGHT OF WAY DATA, CONTACT RIGHT OF WAY ENGINEERING AT THE DISTRICT OFFICE.

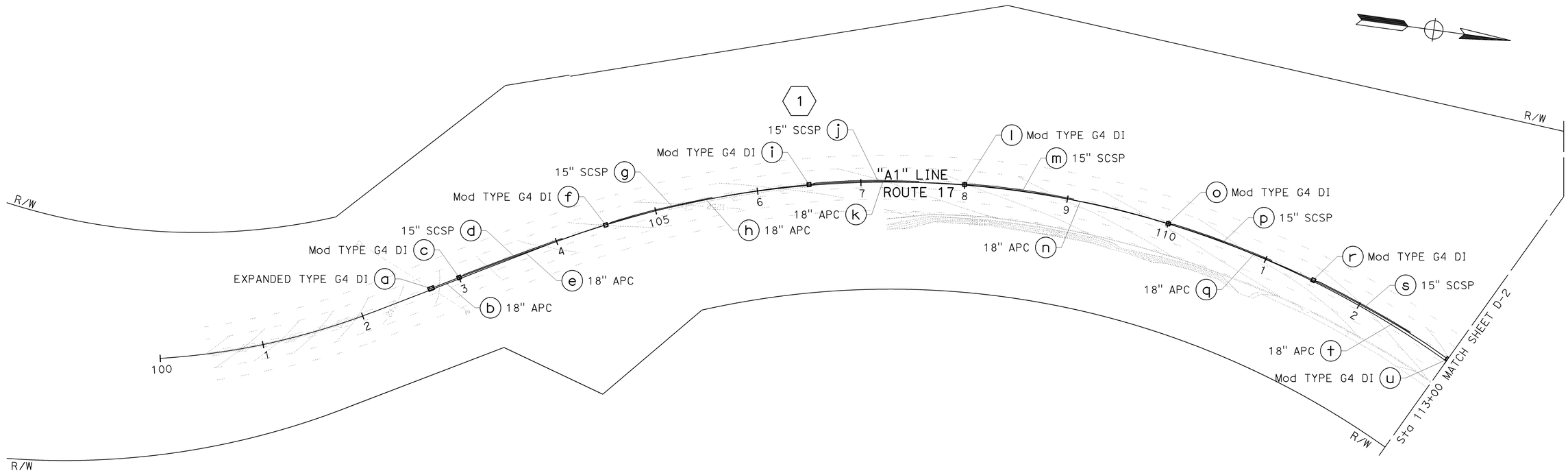

APPROVED FOR DRAINAGE WORK ONLY

DRAINAGE PLAN
D-1

SCALE : 1" = 50'

STATE OF CALIFORNIA - DEPARTMENT OF TRANSPORTATION
DESIGN

FUNCTIONAL SUPERVISOR: STEVE WYATT
CALCULATED-DESIGNED BY: SCOTT KIRKISH
CHECKED BY: MICHAEL O'NEAL
REVISED BY
DATE REVISED

LAST REVISION 06-15-15
DATE PLOTTED => 26-JUN-2015
TIME PLOTTED => 10:19

Dist	COUNTY	ROUTE	POST MILES TOTAL PROJECT	SHEET No.	TOTAL SHEETS
05	SCr	17	8.3/9.4	11	96

REGISTERED CIVIL ENGINEER 6-15-15 DATE

6-15-15
PLANS APPROVAL DATE

REGISTERED PROFESSIONAL ENGINEER SCOTT D KIRKISH No. 76829 Exp. 12-31-16 CIVIL STATE OF CALIFORNIA

THE STATE OF CALIFORNIA OR ITS OFFICERS OR AGENTS SHALL NOT BE RESPONSIBLE FOR THE ACCURACY OR COMPLETENESS OF SCANNED COPIES OF THIS PLAN SHEET.

NOTE:

FOR ACCURATE RIGHT OF WAY DATA, CONTACT RIGHT OF WAY ENGINEERING AT THE DISTRICT OFFICE.

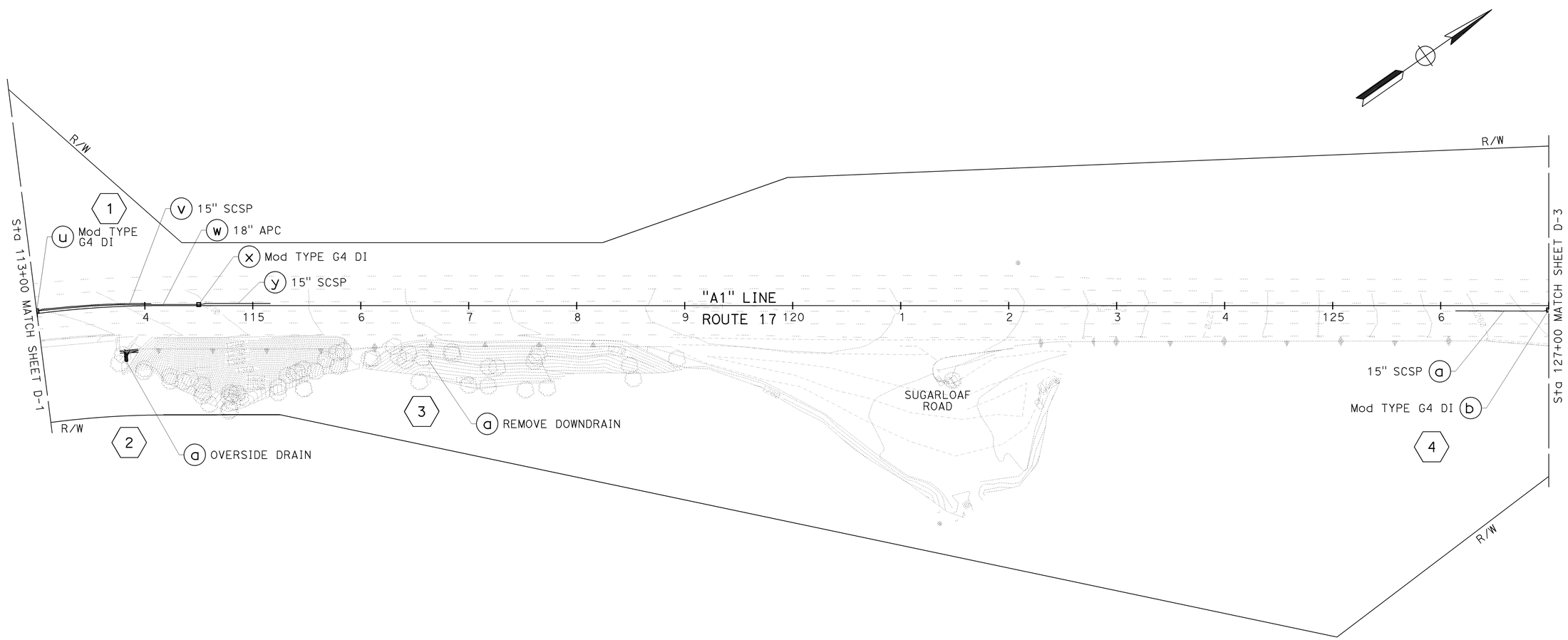

APPROVED FOR DRAINAGE WORK ONLY

DRAINAGE PLAN D-2

SCALE : 1" = 50'

STATE OF CALIFORNIA - DEPARTMENT OF TRANSPORTATION
Caltrans
DESIGN

FUNCTIONAL SUPERVISOR: STEVE WYATT
CALCULATED-DESIGNED BY: SCOTT KIRKISH
CHECKED BY: MICHAEL O'NEAL
REVISED BY
DATE REVISED

LAST REVISION 06-15-15
DATE PLOTTED => 26-JUN-2015
TIME PLOTTED => 10:19

Dist	COUNTY	ROUTE	POST MILES TOTAL PROJECT	SHEET No.	TOTAL SHEETS
05	SCr	17	8.3/9.4	12	96

REGISTERED CIVIL ENGINEER 6-15-15 DATE

6-15-15
PLANS APPROVAL DATE

REGISTERED PROFESSIONAL ENGINEER SCOTT D KIRKISH No. 76829 Exp. 12-31-16 CIVIL STATE OF CALIFORNIA

THE STATE OF CALIFORNIA OR ITS OFFICERS OR AGENTS SHALL NOT BE RESPONSIBLE FOR THE ACCURACY OR COMPLETENESS OF SCANNED COPIES OF THIS PLAN SHEET.

NOTE:

FOR ACCURATE RIGHT OF WAY DATA, CONTACT RIGHT OF WAY ENGINEERING AT THE DISTRICT OFFICE.

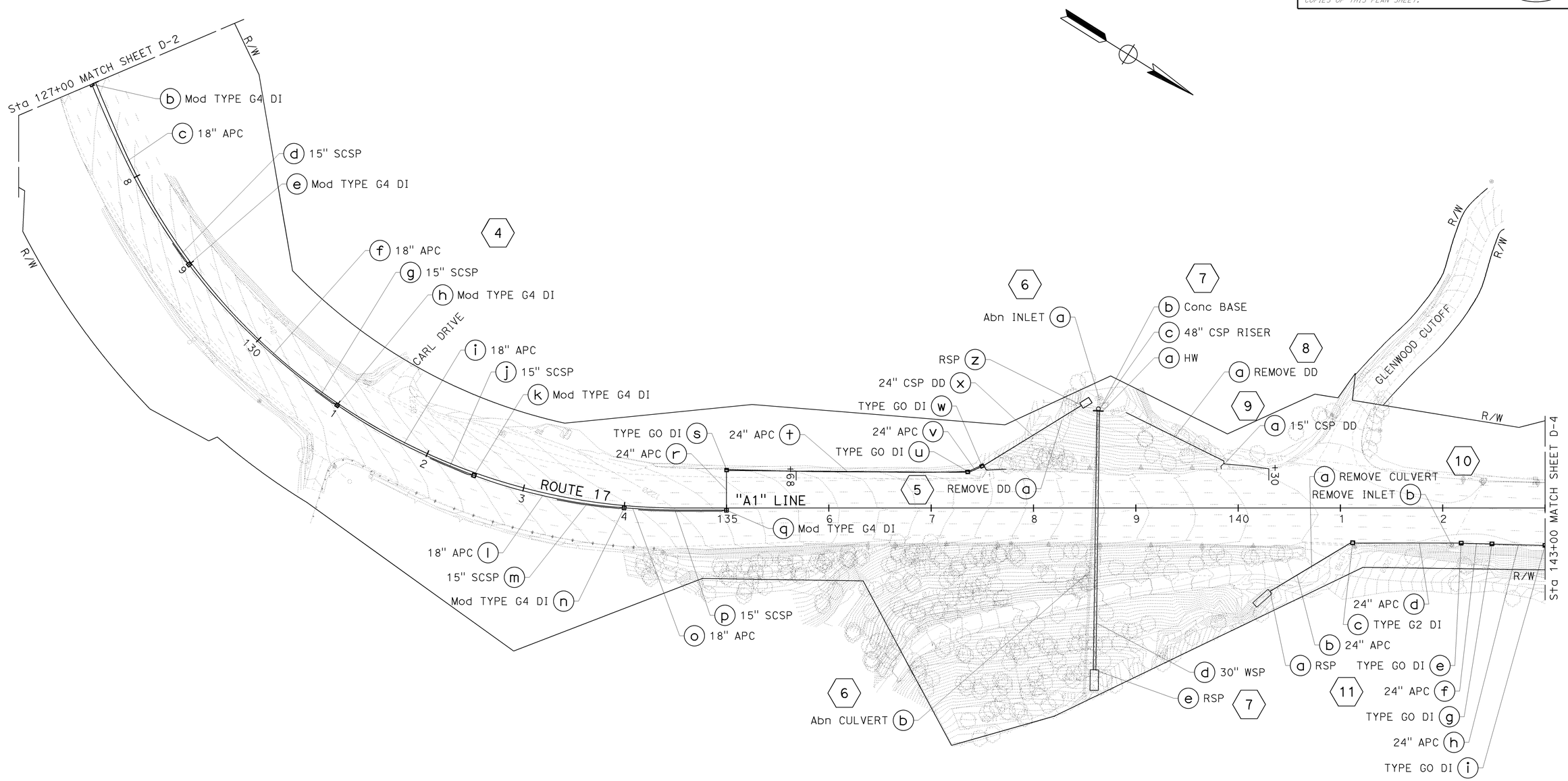

APPROVED FOR DRAINAGE WORK ONLY

DRAINAGE PLAN
D-3

SCALE : 1" = 50'

STATE OF CALIFORNIA - DEPARTMENT OF TRANSPORTATION
Caltrans
DESIGN

FUNCTIONAL SUPERVISOR: STEVE WYATT
CALCULATED-DESIGNED BY: SCOTT KIRKISH
CHECKED BY: MICHAEL O'NEAL
REVISED BY
DATE REVISED

LAST REVISION 06-15-15
DATE PLOTTED => 26-JUN-2015
TIME PLOTTED => 10:19

Dist	COUNTY	ROUTE	POST MILES TOTAL PROJECT	SHEET No.	TOTAL SHEETS
05	SCr	17	8.3/9.4	13	96

REGISTERED CIVIL ENGINEER 6-15-15 DATE

6-15-15
PLANS APPROVAL DATE

REGISTERED PROFESSIONAL ENGINEER SCOTT D KIRKISH No. 76829 Exp. 12-31-16 CIVIL STATE OF CALIFORNIA

THE STATE OF CALIFORNIA OR ITS OFFICERS OR AGENTS SHALL NOT BE RESPONSIBLE FOR THE ACCURACY OR COMPLETENESS OF SCANNED COPIES OF THIS PLAN SHEET.

NOTE:

FOR ACCURATE RIGHT OF WAY DATA, CONTACT RIGHT OF WAY ENGINEERING AT THE DISTRICT OFFICE.

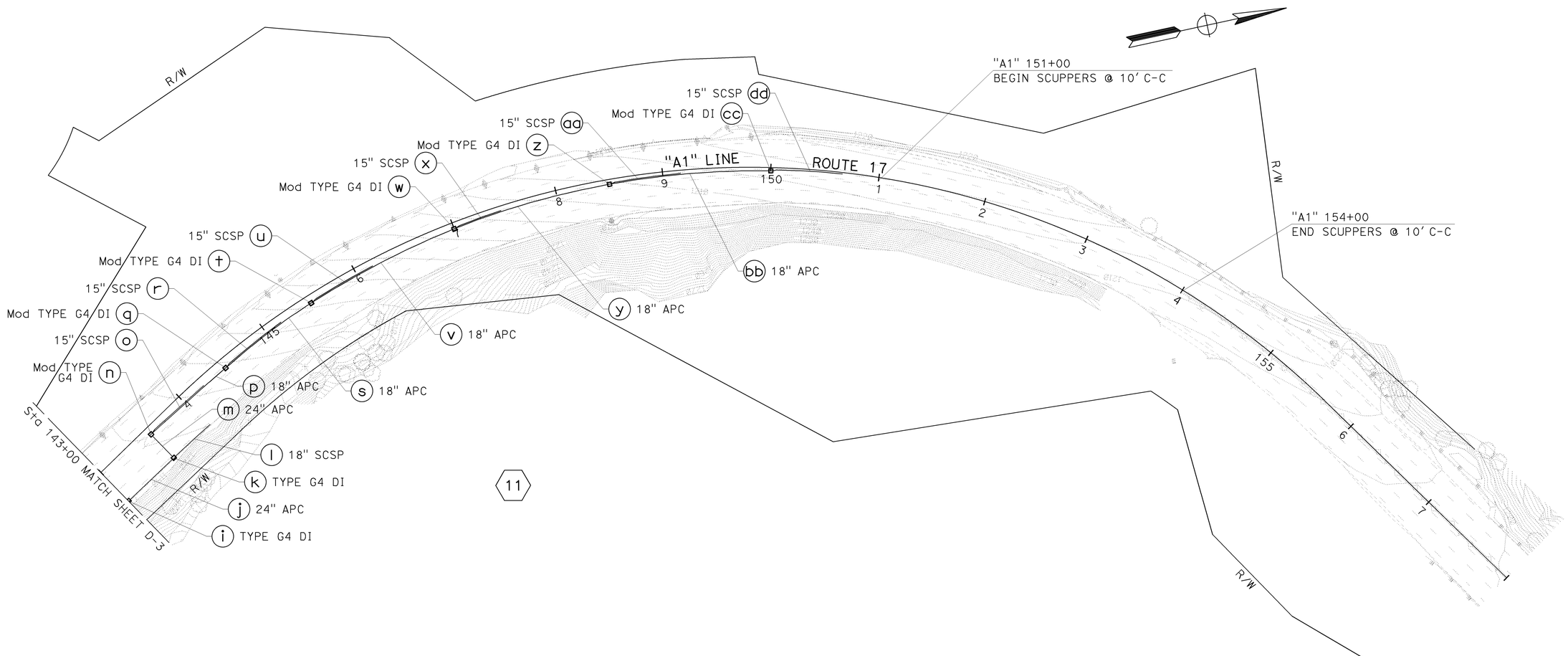

APPROVED FOR DRAINAGE WORK ONLY

DRAINAGE PLAN D-4

SCALE : 1" = 50'

STATE OF CALIFORNIA - DEPARTMENT OF TRANSPORTATION
DESIGN

FUNCTIONAL SUPERVISOR: STEVE WYATT
CALCULATED-DESIGNED BY: SCOTT KIRKISH
CHECKED BY: MICHAEL O'NEAL
REVISED BY
DATE REVISED

LAST REVISION 06-15-15
DATE PLOTTED => 26-JUN-2015
TIME PLOTTED => 10:19

Dist	COUNTY	ROUTE	POST MILES TOTAL PROJECT	SHEET No.	TOTAL SHEETS
05	SCr	17	8.3/9.4	14	96

REGISTERED CIVIL ENGINEER 6-15-15 DATE

6-15-15
PLANS APPROVAL DATE

REGISTERED PROFESSIONAL ENGINEER SCOTT D KIRKISH No. 76829 Exp. 12-31-16 CIVIL STATE OF CALIFORNIA

THE STATE OF CALIFORNIA OR ITS OFFICERS OR AGENTS SHALL NOT BE RESPONSIBLE FOR THE ACCURACY OR COMPLETENESS OF SCANNED COPIES OF THIS PLAN SHEET.

NOTES:

1. ALL STATION, OFFSETS, AND CORRESPONDING SHOWN LEADER LINES ARE TO THE CENTER OF BOX (COB) OR FLOW LINE AT DIKE (FLD) UNLESS OTHERWISE SHOWN.
2. ALL DRAINAGE STRUCTURES ARE RADIAL TO THE REFERENCED ALIGNMENT UNLESS OTHERWISE SHOWN.

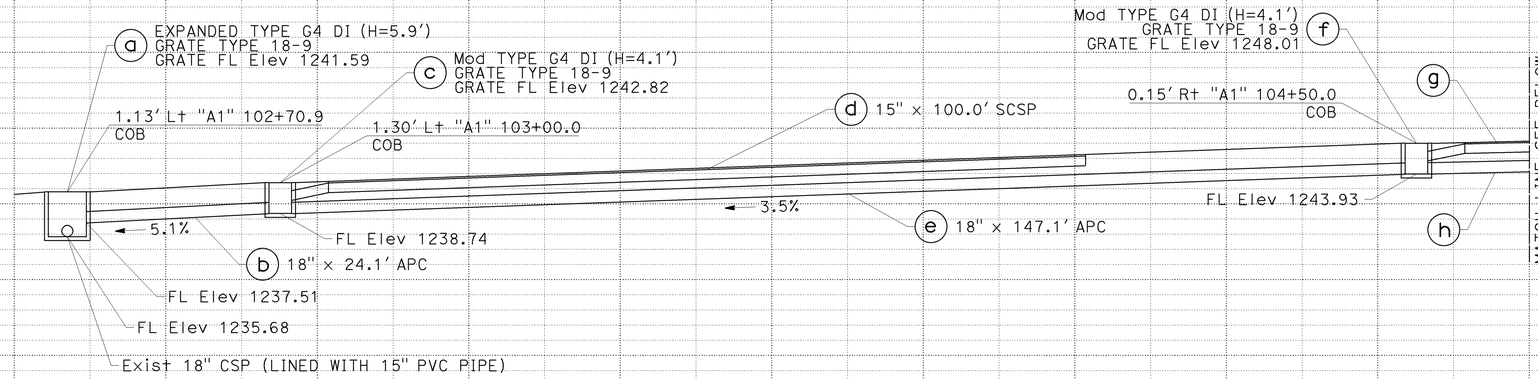

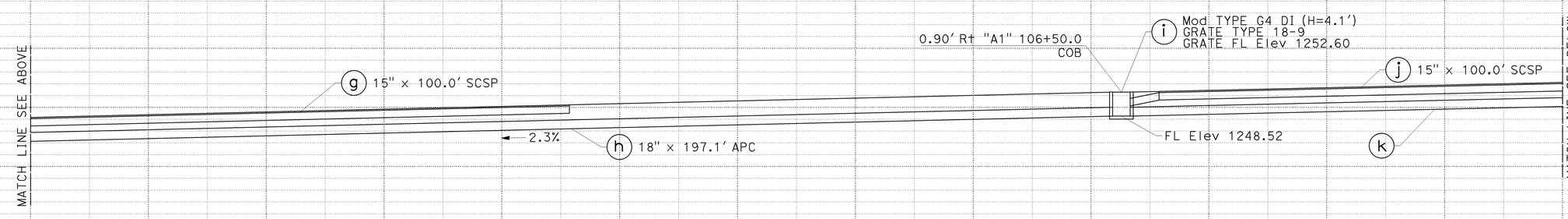

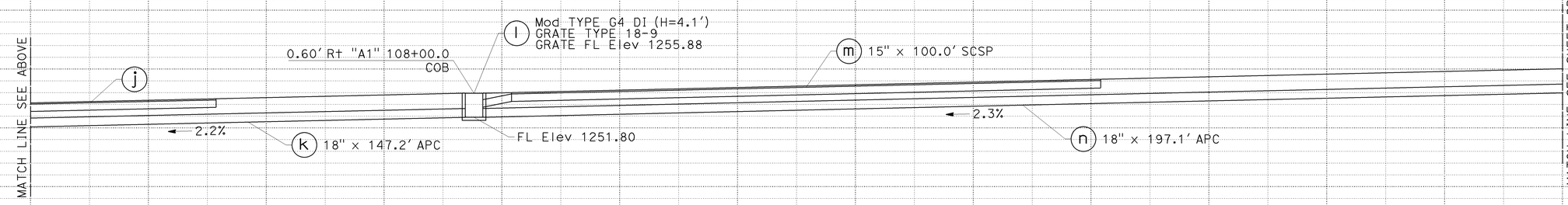

DRAINAGE SYSTEM No. 1

"A1" 102+70.9 TO 115+16.4

DRAINAGE PROFILE

SCALE : Horiz 1" = 10'
Vert 1" = 10'

DP-1

STATION		TOTAL
CY	Exc	
	Emb	

STATE OF CALIFORNIA - DEPARTMENT OF TRANSPORTATION
Caltrans
DESIGN

FUNCTIONAL SUPERVISOR: STEVE WYATT
CALCULATED-DESIGNED BY: SCOTT KIRKISH
CHECKED BY: MICHAEL O'NEAL
REVISED BY
DATE REVISED

LAST REVISION 06-15-15
DATE PLOTTED => 26-JUN-2015
TIME PLOTTED => 10:19

Dist	COUNTY	ROUTE	POST MILES TOTAL PROJECT	SHEET No.	TOTAL SHEETS
05	SCr	17	8.3/9.4	15	96

REGISTERED CIVIL ENGINEER 6-15-15 DATE

6-15-15
PLANS APPROVAL DATE

REGISTERED PROFESSIONAL ENGINEER SCOTT D KIRKISH No. 76829 Exp. 12-31-16 CIVIL STATE OF CALIFORNIA

THE STATE OF CALIFORNIA OR ITS OFFICERS OR AGENTS SHALL NOT BE RESPONSIBLE FOR THE ACCURACY OR COMPLETENESS OF SCANNED COPIES OF THIS PLAN SHEET.

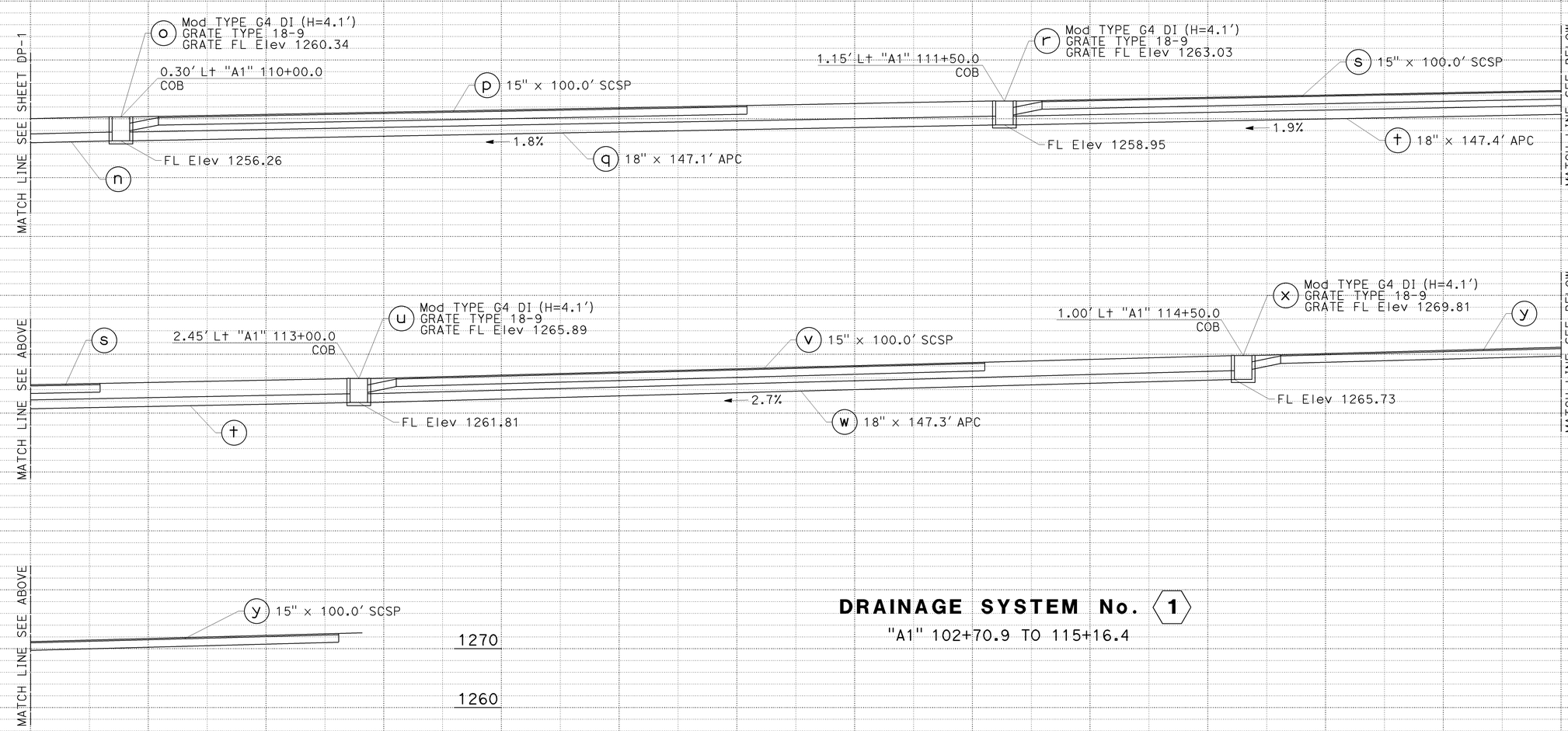

DRAINAGE SYSTEM No. 1

"A1" 102+70.9 TO 115+16.4

DRAINAGE PROFILE

SCALE : Horiz 1" = 10′
Vert 1" = 10′

DP-2

STATION		TOTAL
CY	Exc	
	Emb	

STATE OF CALIFORNIA - DEPARTMENT OF TRANSPORTATION
DESIGN
Caltrans

FUNCTIONAL SUPERVISOR: STEVE WYATT
CALCULATED-DESIGNED BY: SCOTT KIRKISH
CHECKED BY: MICHAEL O'NEAL
REVISED BY
DATE REVISED

LAST REVISION 06-15-15
DATE PLOTTED => 26-JUN-2015
TIME PLOTTED => 10:19

Dist	COUNTY	ROUTE	POST MILES TOTAL PROJECT	SHEET No.	TOTAL SHEETS
05	SCr	17	8.3/9.4	16	96

REGISTERED CIVIL ENGINEER 6-15-15 DATE

6-15-15
PLANS APPROVAL DATE

REGISTERED PROFESSIONAL ENGINEER SCOTT D KIRKISH No. 76829 Exp. 12-31-16 CIVIL STATE OF CALIFORNIA

THE STATE OF CALIFORNIA OR ITS OFFICERS OR AGENTS SHALL NOT BE RESPONSIBLE FOR THE ACCURACY OR COMPLETENESS OF SCANNED COPIES OF THIS PLAN SHEET.

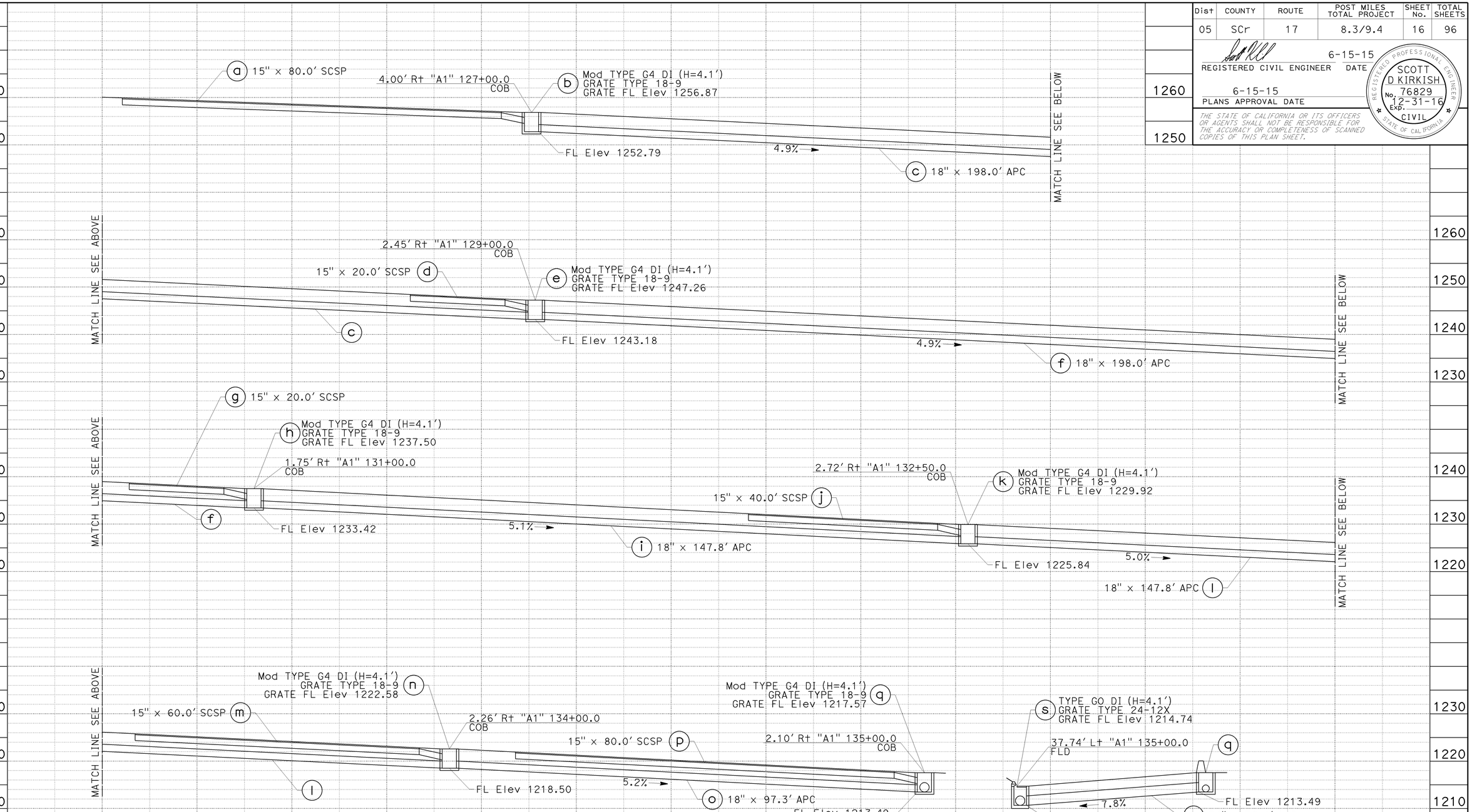

DRAINAGE SYSTEM No. 4

"A1" 126+13.6 TO 138+45.6

DRAINAGE PROFILE

SCALE : Horiz 1" = 10'
Vert 1" = 10'

DP-3

STATION		TOTAL
CY	Exc	
	Emb	

STATE OF CALIFORNIA - DEPARTMENT OF TRANSPORTATION
Caltrans
DESIGN

FUNCTIONAL SUPERVISOR: STEVE WYATT
CALCULATED-DESIGNED BY: SCOTT KIRKISH
CHECKED BY: MICHAEL O'NEAL
REVISED BY
DATE REVISED

LAST REVISION 06-15-15
DATE PLOTTED => 26-JUN-2015
TIME PLOTTED => 10:19

Dist	COUNTY	ROUTE	POST MILES TOTAL PROJECT	SHEET No.	TOTAL SHEETS
05	SCr	17	8.3/9.4	17	96

REGISTERED CIVIL ENGINEER 6-15-15 DATE

6-15-15
PLANS APPROVAL DATE

REGISTERED PROFESSIONAL ENGINEER SCOTT D KIRKISH No. 76829 Exp. 12-31-16 CIVIL STATE OF CALIFORNIA

THE STATE OF CALIFORNIA OR ITS OFFICERS OR AGENTS SHALL NOT BE RESPONSIBLE FOR THE ACCURACY OR COMPLETENESS OF SCANNED COPIES OF THIS PLAN SHEET.

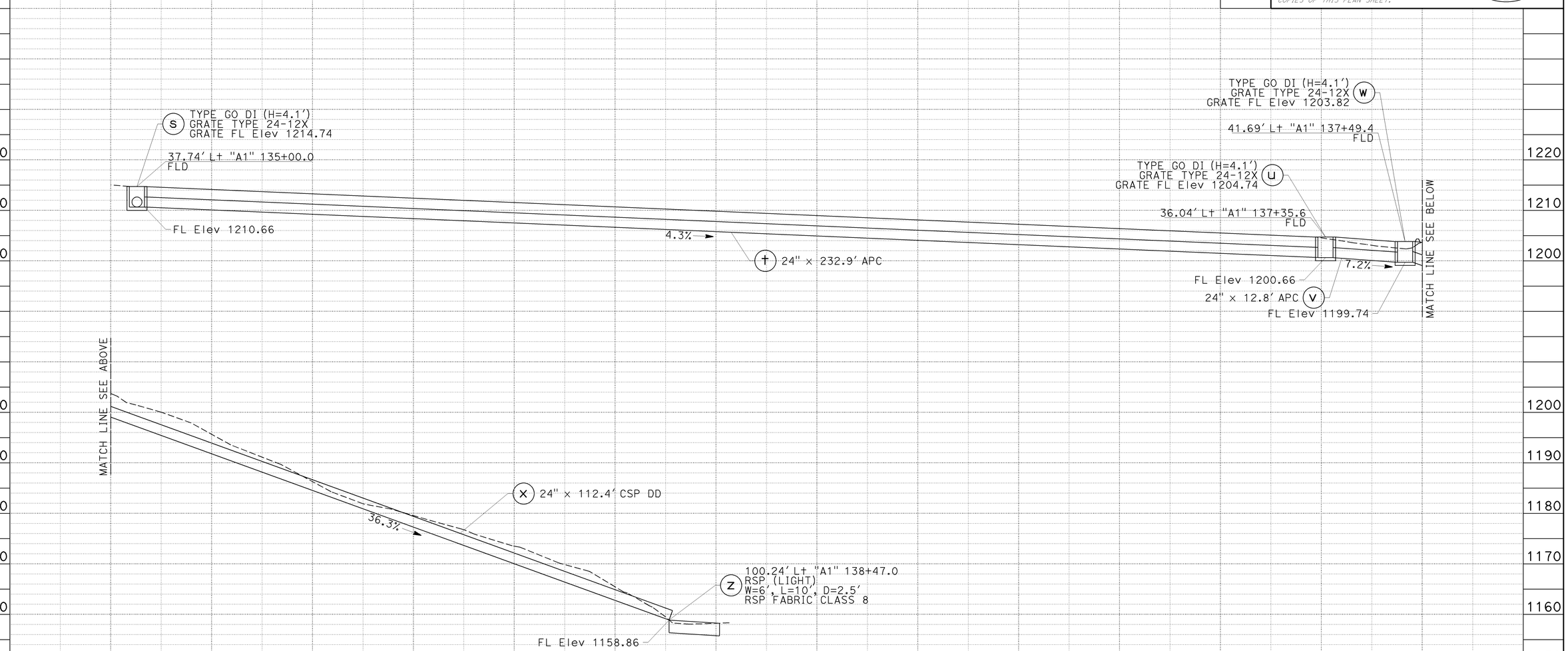

DRAINAGE SYSTEM No. 4

"A1" 126+13.6 TO 138+45.6

DRAINAGE PROFILE

SCALE : Horiz 1" = 10'
Vert 1" = 10'

DP-4

STATION		TOTAL
CY	Exc	
	Emb	

STATE OF CALIFORNIA - DEPARTMENT OF TRANSPORTATION
Caltrans
DESIGN

FUNCTIONAL SUPERVISOR: STEVE WYATT
CALCULATED-DESIGNED BY: MICHAEL O'NEAL
CHECKED BY: SCOTT KIRKISH
REVISED BY
DATE REVISED

LAST REVISION 06-15-15
DATE PLOTTED => 26-JUN-2015
TIME PLOTTED => 10:19

Dist	COUNTY	ROUTE	POST MILES TOTAL PROJECT	SHEET No.	TOTAL SHEETS
05	SCr	17	8.3/9.4	18	96

REGISTERED CIVIL ENGINEER — DATE 6-15-15

PLANS APPROVAL DATE 6-15-15

REGISTERED PROFESSIONAL ENGINEER SCOTT D KIRKISH No. 76829 Exp. 12-31-16 CIVIL STATE OF CALIFORNIA

THE STATE OF CALIFORNIA OR ITS OFFICERS OR AGENTS SHALL NOT BE RESPONSIBLE FOR THE ACCURACY OR COMPLETENESS OF SCANNED COPIES OF THIS PLAN SHEET.

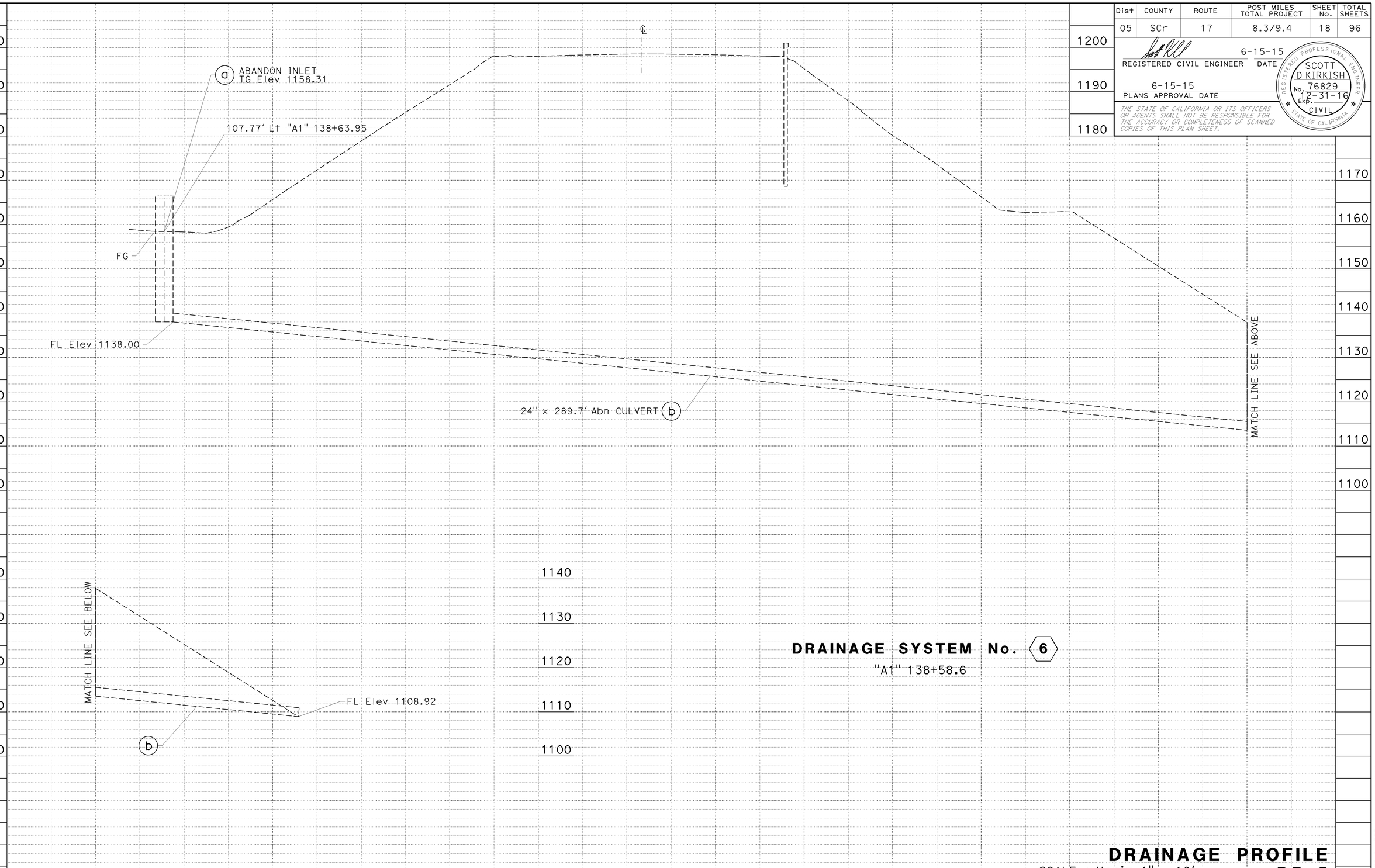

DRAINAGE SYSTEM No. 6

"A1" 138+58.6

DRAINAGE PROFILE

SCALE : Horiz 1" = 10'
Vert 1" = 10'

DP-5

STATION		TOTAL
CY	Exc	
	Emb	

STATE OF CALIFORNIA - DEPARTMENT OF TRANSPORTATION

Caltrans

DESIGN

FUNCTIONAL SUPERVISOR: STEVE WYATT

CALCULATED-DESIGNED BY: SCOTT KIRKISH

CHECKED BY: MICHAEL O'NEAL

REVISED BY | DATE REVISED

LAST REVISION 06-15-15

DATE PLOTTED => 26-JUN-2015
TIME PLOTTED => 10:19

Dist	COUNTY	ROUTE	POST MILES TOTAL PROJECT	SHEET No.	TOTAL SHEETS
05	SCr	17	8.3/9.4	19	96

REGISTERED CIVIL ENGINEER 6-15-15 DATE

6-15-15
PLANS APPROVAL DATE

REGISTERED PROFESSIONAL ENGINEER
SCOTT D KIRKISH
No. 76829
Exp. 12-31-16
CIVIL
STATE OF CALIFORNIA

THE STATE OF CALIFORNIA OR ITS OFFICERS OR AGENTS SHALL NOT BE RESPONSIBLE FOR THE ACCURACY OR COMPLETENESS OF SCANNED COPIES OF THIS PLAN SHEET.

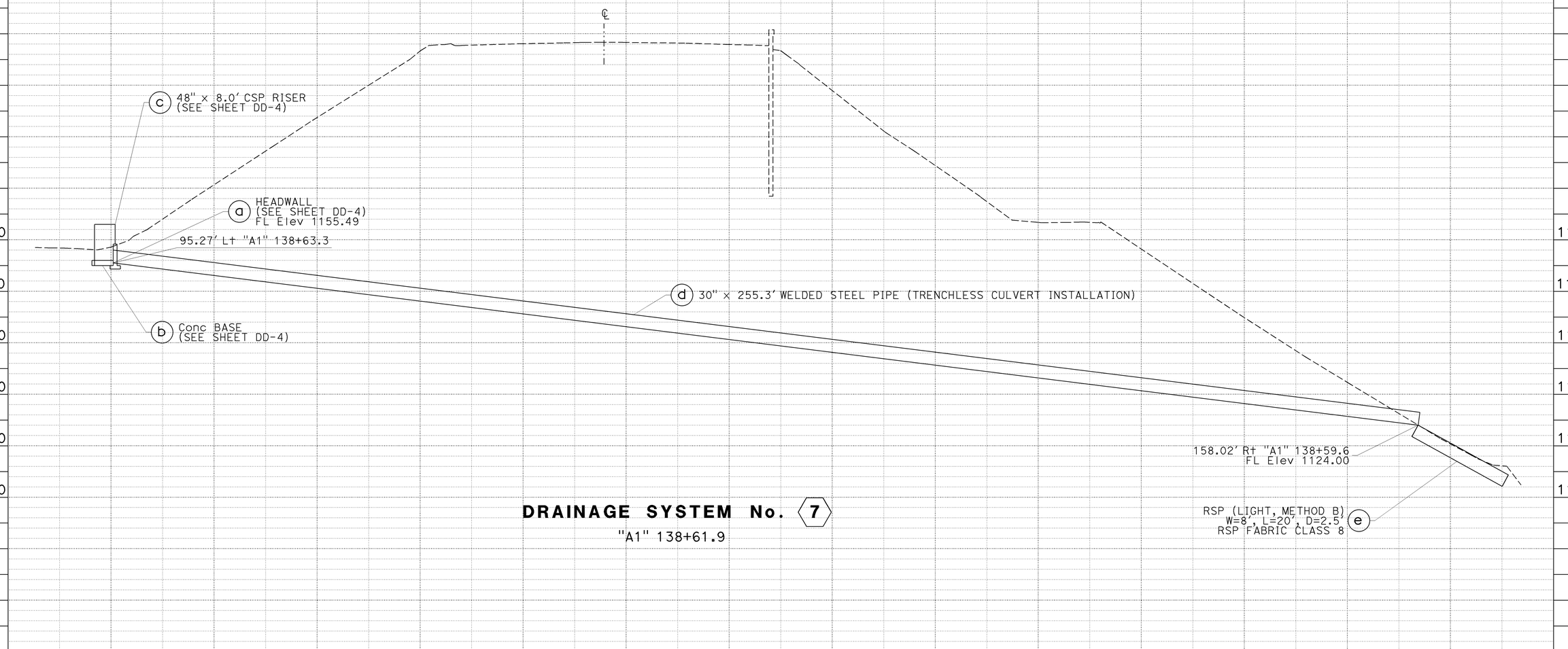

DRAINAGE SYSTEM No. 7

"A1" 138+61.9

DRAINAGE PROFILE

SCALE : Horiz 1" = 10'
Vert 1" = 10'

DP-6

STATION		TOTAL
CY	Exc	
	Emb	

STATE OF CALIFORNIA - DEPARTMENT OF TRANSPORTATION
Caltrans
DESIGN

FUNCTIONAL SUPERVISOR: STEVE WYATT
CALCULATED-DESIGNED BY: SCOTT KIRKISH
CHECKED BY: MICHAEL O'NEAL
REVISED BY
DATE REVISED

LAST REVISION 06-15-15
DATE PLOTTED => 26-JUN-2015
TIME PLOTTED => 10:19

Dist	COUNTY	ROUTE	POST MILES TOTAL PROJECT	SHEET No.	TOTAL SHEETS
05	SCr	17	8.3/9.4	20	96

REGISTERED CIVIL ENGINEER — DATE 6-15-15

PLANS APPROVAL DATE 6-15-15

REGISTERED PROFESSIONAL ENGINEER SCOTT D KIRKISH No. 76829 Exp. 12-31-16 CIVIL STATE OF CALIFORNIA

THE STATE OF CALIFORNIA OR ITS OFFICERS OR AGENTS SHALL NOT BE RESPONSIBLE FOR THE ACCURACY OR COMPLETENESS OF SCANNED COPIES OF THIS PLAN SHEET.

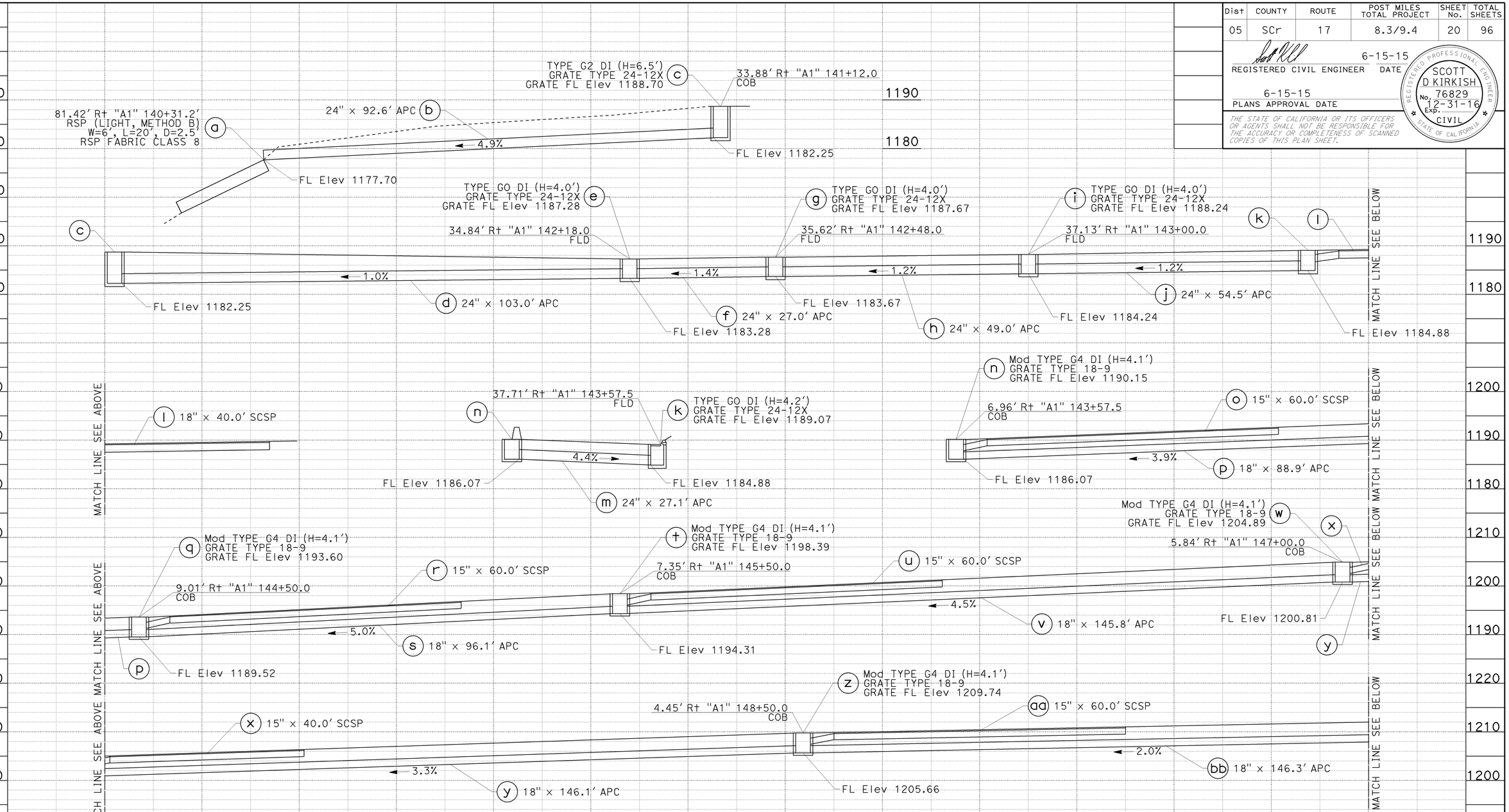

DRAINAGE SYSTEM No. 11

"A1" 140+31.2 TO 150+66.5

DRAINAGE PROFILE

SCALE : Horiz 1" = 10'
Vert 1" = 10'

DP-7

STATION		TOTAL
CY	Exc	
	Emb	

STATE OF CALIFORNIA - DEPARTMENT OF TRANSPORTATION

Caltrans® DESIGN

FUNCTIONAL SUPERVISOR: STEVE WYATT

CALCULATED-DESIGNED BY: SCOTT KIRKISH

CHECKED BY: MICHAEL O'NEAL

REVISED BY / DATE REVISED

LAST REVISION 06-15-15

DATE PLOTTED => 26-JUN-2015
TIME PLOTTED => 10:19

DIST	COUNTY	ROUTE	POST MILES TOTAL PROJECT	SHEET No.	TOTAL SHEETS
05	SCr	17	8.3/9.4	21	96

REGISTERED CIVIL ENGINEER 6-15-15 DATE

6-15-15
PLANS APPROVAL DATE

REGISTERED PROFESSIONAL ENGINEER Dan Appelbaum No. C50001 Exp. 6-30-15 CIVIL STATE OF CALIFORNIA

The State of California or its officers or agents shall not be responsible for the accuracy or completeness of electronic copies of this plan sheet.

This LOTB sheet was prepared in accordance with the Caltrans Soil & Rock Logging, Classification, & Presentation Manual (2010 Edition).

See 2010 Standard Plans A10F and A10G for Soil Legend, and A10H for Rock Legend.

BENCH MARK

SCr 17 PM 9.02

Fnd 1" ip w/Caltrans control pp
w/nail 33.29′ Lt "A1" Line
Sta 137+80.30
N 1,861,990,305
E 6,131,172.912
Elev = 1202.327′
NAVD88

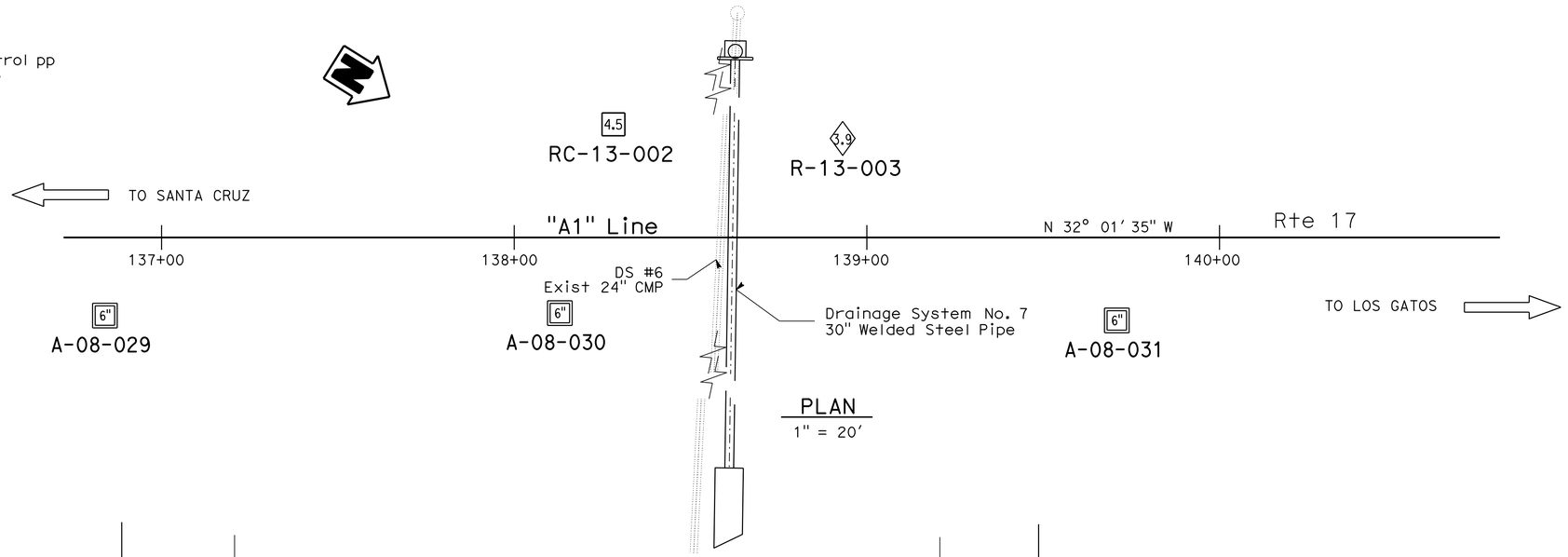

PLAN
1" = 20′

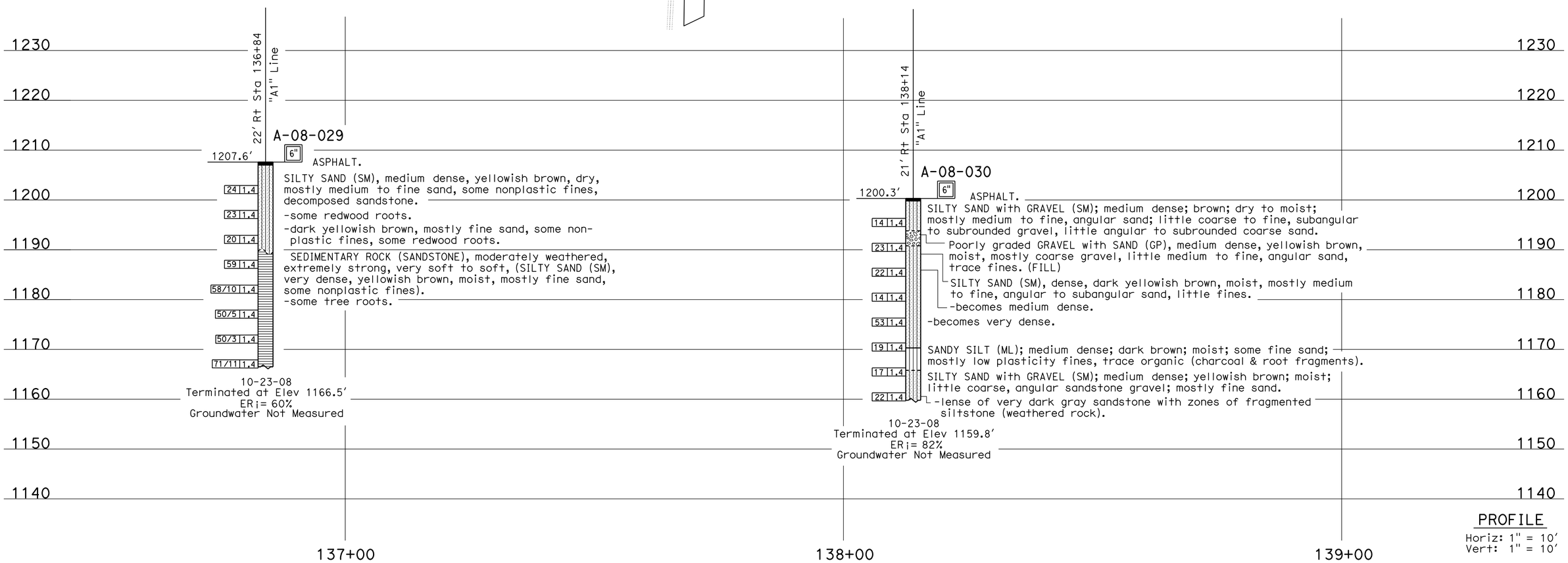

PROFILE
Horiz: 1" = 10′
Vert: 1" = 10′

ENGINEERING SERVICES	MATERIALS AND GEOTECHNICAL SERVICES	STATE OF CALIFORNIA DEPARTMENT OF TRANSPORTATION	DIVISION OF ENGINEERING SERVICES STRUCTURE DESIGN	BRIDGE NO. N/A	DRAINAGE SYSTEM NO. 7
FUNCTIONAL SUPERVISOR	DRAWN BY: D. Appelbaum	FIELD INVESTIGATION BY:	DESIGN BRANCH X	POST MILE 9.02	LOG OF TEST BORINGS 1 OF 3
NAME: M. Finegan	CHECKED BY:	W. Hoon, M. Jurasius			

OGS CIVIL LOG OF TEST BORINGS SHEET

ORIGINAL SCALE IN INCHES FOR REDUCED PLANS 0 1 2 3

UNIT: 3657
PROJECT NUMBER & PHASE: 05000202441 CONTRACT NO.: 05-0T9801

DISREGARD PRINTS BEARING EARLIER REVISION DATES

REVISION DATES 06-03-14 06-16-14 SHEET X OF X

FILE => 0500020244ib008.dgn

USERNAME => s123239 DATE PLOTTED => 26-JUN-2015 TIME PLOTTED => 13:37

DIST	COUNTY	ROUTE	POST MILES TOTAL PROJECT	SHEET No.	TOTAL SHEETS
05	SCr	17	8.3/9.4	22	96

REGISTERED CIVIL ENGINEER 6-15-15 DATE

6-15-15
PLANS APPROVAL DATE

REGISTERED PROFESSIONAL ENGINEER Dan Appelbaum No. C50001 Exp. 6-30-15 CIVIL STATE OF CALIFORNIA

The State of California or its officers or agents shall not be responsible for the accuracy or completeness of electronic copies of this plan sheet.

This LOTB sheet was prepared in accordance with the Caltrans Soil & Rock Logging, Classification, & Presentation Manual (2010 Edition).

See 2010 Standard Plans A10F and A10G for Soil Legend, and A10H for Rock Legend.

FOR PLAN VIEW, SEE
"LOG OF TEST BORINGS 1 OF 3"

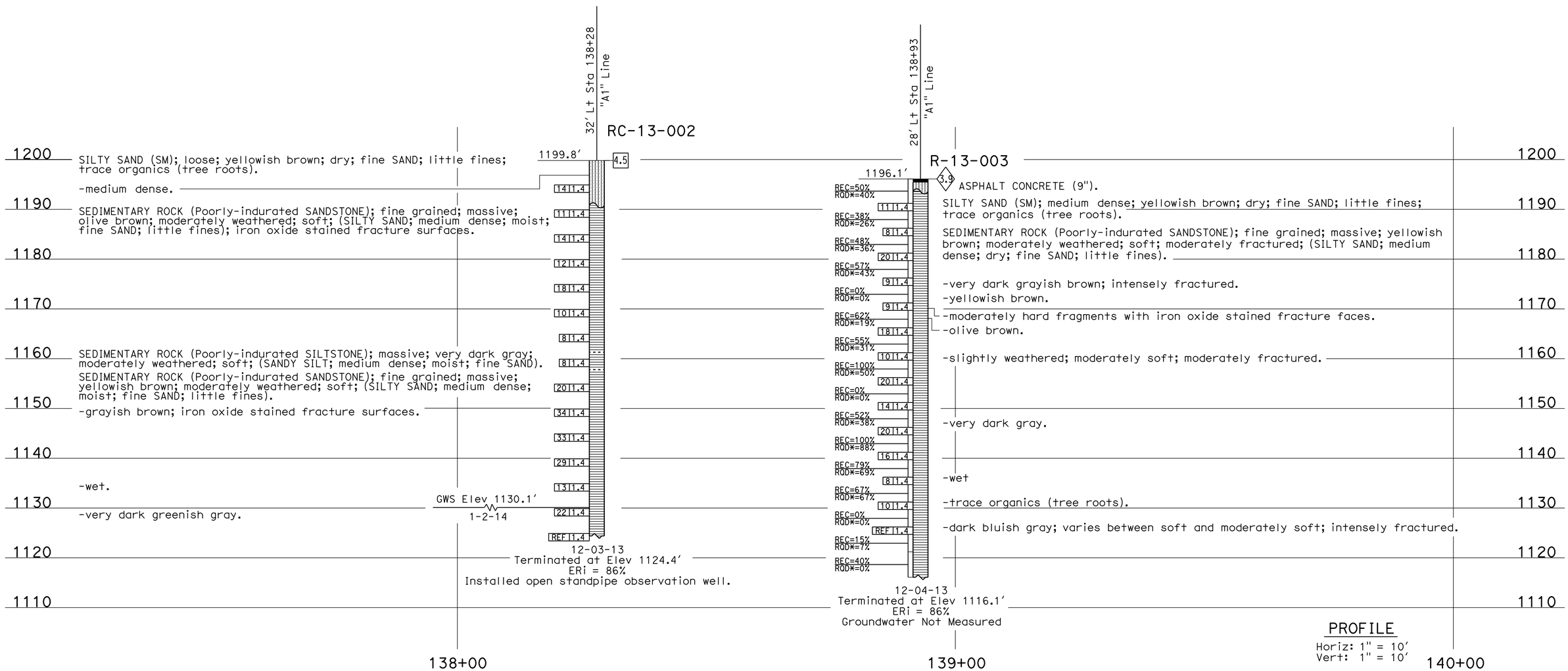

ENGINEERING SERVICES	MATERIALS AND GEOTECHNICAL SERVICES	STATE OF CALIFORNIA DEPARTMENT OF TRANSPORTATION	DIVISION OF ENGINEERING SERVICES STRUCTURE DESIGN DESIGN BRANCH X	BRIDGE NO. N/A POST MILE 9.02	DRAINAGE SYSTEM NO. 7 LOG OF TEST BORINGS 2 OF 3
FUNCTIONAL SUPERVISOR NAME: M. Finegan	DRAWN BY: F. Nguyen CHECKED BY: J. Scardine	FIELD INVESTIGATION BY: D. Appelbaum			

OGS CIVIL LOG OF TEST BORINGS SHEET

ORIGINAL SCALE IN INCHES FOR REDUCED PLANS 0 1 2 3

UNIT: 3643
PROJECT NUMBER & PHASE: 05000202441 CONTRACT NO.: 05-0T9801

DISREGARD PRINTS BEARING EARLIER REVISION DATES

REVISION DATES: 06-05-14 06-16-14 SHEET X OF X

FILE => 0500020244ib009.dgn

USERNAME => s123239 DATE PLOTTED => 26-JUN-2015 TIME PLOTTED => 13:42

DIST	COUNTY	ROUTE	POST MILES TOTAL PROJECT	SHEET No.	TOTAL SHEETS
05	SCr	17	8.3/9.4	23	96

REGISTERED CIVIL ENGINEER 6-15-15 DATE

6-15-15
PLANS APPROVAL DATE

REGISTERED PROFESSIONAL ENGINEER
Dan Appelbaum
No. C50001
Exp. 6-30-15
CIVIL
STATE OF CALIFORNIA

The State of California or its officers or agents shall not be responsible for the accuracy or completeness of electronic copies of this plan sheet.

This LOTB sheet was prepared in accordance with the Caltrans Soil & Rock Logging, Classification, & Presentation Manual (2010 Edition).

See 2010 Standard Plans A10F and A10G for Soil Legend, and A10H for Rock Legend.

FOR PLAN VIEW, SEE
"LOG OF TEST BORINGS 1 OF 3"

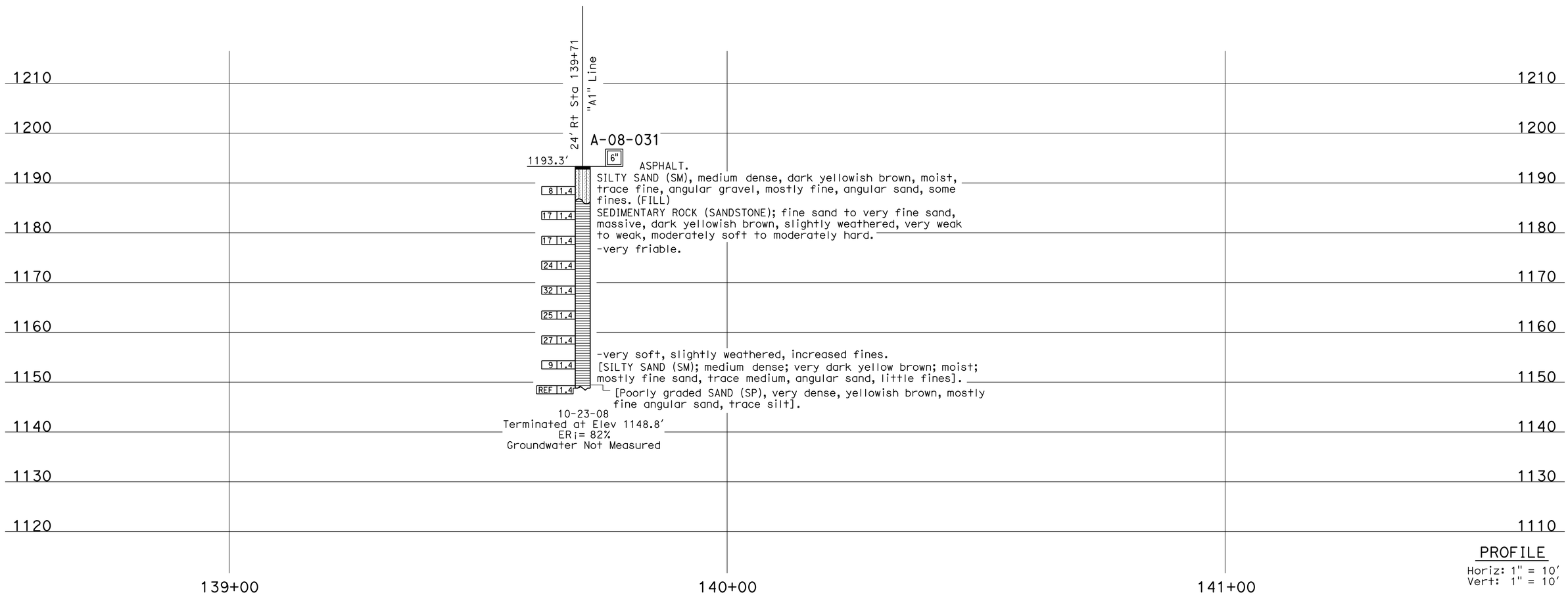

PROFILE
Horiz: 1" = 10'
Vert: 1" = 10'

ENGINEERING SERVICES	MATERIALS AND GEOTECHNICAL SERVICES	STATE OF CALIFORNIA DEPARTMENT OF TRANSPORTATION	DIVISION OF ENGINEERING SERVICES STRUCTURE DESIGN DESIGN BRANCH X	BRIDGE NO. N/A POST MILE 9.02	DRAINAGE SYSTEM NO. 7 LOG OF TEST BORINGS 3 OF 3
FUNCTIONAL SUPERVISOR NAME: M. Finegan	DRAWN BY: D. Appelbaum CHECKED BY:	FIELD INVESTIGATION BY: W. Hoon			

OGS CIVIL LOG OF TEST BORINGS SHEET

ORIGINAL SCALE IN INCHES FOR REDUCED PLANS 0 1 2 3

UNIT: 3643
PROJECT NUMBER & PHASE: 05000202441 CONTRACT NO.: 05-0T9801

DISREGARD PRINTS BEARING EARLIER REVISION DATES

REVISION DATES: 06-03-14 06-16-14 SHEET X OF X

FILE => 05000202441b010.dgn

USERNAME => s123239 DATE PLOTTED => 26-JUN-2015 TIME PLOTTED => 13:43

Dist	COUNTY	ROUTE	POST MILES TOTAL PROJECT	SHEET No.	TOTAL SHEETS
05	SCr	17	8.3/9.4	24	96

REGISTERED CIVIL ENGINEER 6-15-15 DATE

6-15-15
PLANS APPROVAL DATE

REGISTERED PROFESSIONAL ENGINEER SCOTT D KIRKISH No. 76829 Exp. 12-31-16 CIVIL STATE OF CALIFORNIA

THE STATE OF CALIFORNIA OR ITS OFFICERS OR AGENTS SHALL NOT BE RESPONSIBLE FOR THE ACCURACY OR COMPLETENESS OF SCANNED COPIES OF THIS PLAN SHEET.

NOTE:

FOR DETAILS NOT SHOWN SEE STANDARD PLAN D73A AND D98A

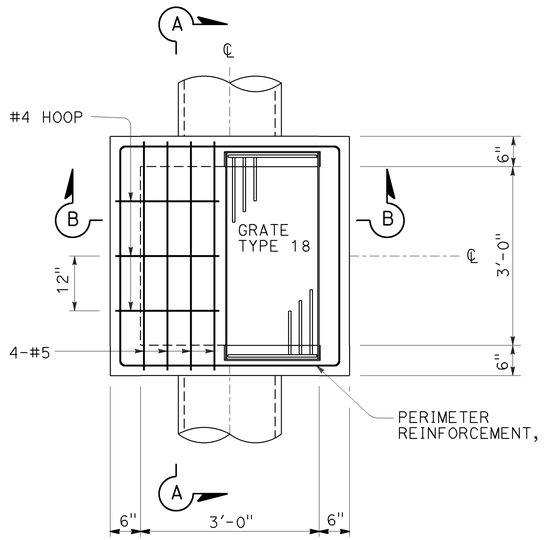

MODIFIED TYPE G4 (PRECAST)

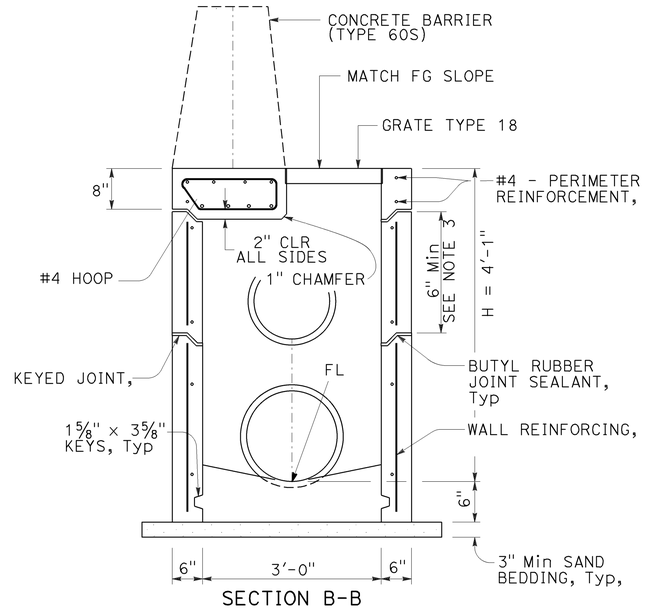

SECTION B-B

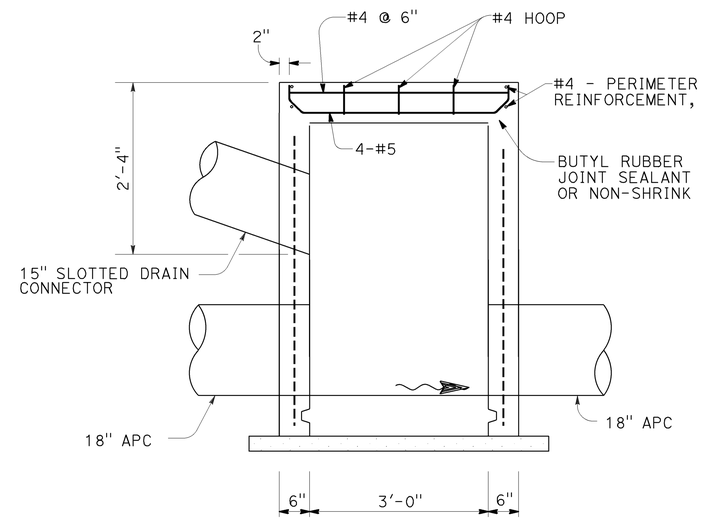

SECTION A-A

DRAINAGE SYSTEM 1 c f i l o r u x

DRAINAGE SYSTEM 4 b e h k n q

DRAINAGE SYSTEM 11 n q t w z cc

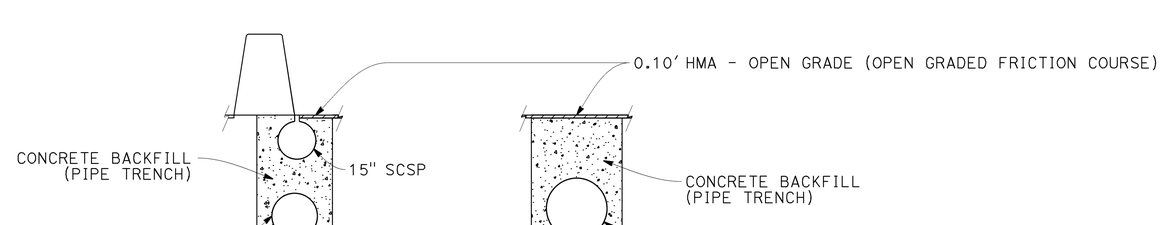

CONCRETE BACKFILL (PIPE TRENCH)

DRAINAGE DETAILS

NO SCALE

DD-1

STATE OF CALIFORNIA - DEPARTMENT OF TRANSPORTATION
Caltrans
DESIGN

FUNCTIONAL SUPERVISOR: STEVE WYATT
CALCULATED-DESIGNED BY: SCOTT KIRKISH
CHECKED BY: MICHAEL O'NEAL
REVISED BY
DATE REVISED

LAST REVISION 06-15-15 | DATE PLOTTED => 26-JUN-2015 | TIME PLOTTED => 10:19

Dist	COUNTY	ROUTE	POST MILES TOTAL PROJECT	SHEET No.	TOTAL SHEETS
05	SCr	17	8.3/9.4	25	96

REGISTERED CIVIL ENGINEER 6-15-15 DATE

6-15-15
PLANS APPROVAL DATE

REGISTERED PROFESSIONAL ENGINEER SCOTT D KIRKISH No. 76829 Exp. 12-31-16 CIVIL STATE OF CALIFORNIA

THE STATE OF CALIFORNIA OR ITS OFFICERS OR AGENTS SHALL NOT BE RESPONSIBLE FOR THE ACCURACY OR COMPLETENESS OF SCANNED COPIES OF THIS PLAN SHEET.

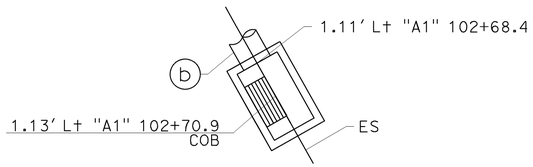

DRAINAGE SYSTEM 1 a

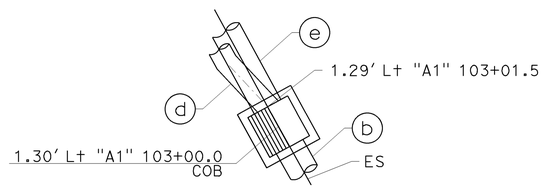

DRAINAGE SYSTEM 1 c

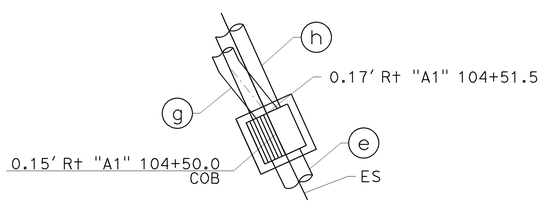

DRAINAGE SYSTEM 1 f

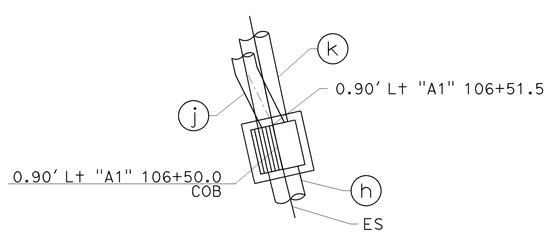

DRAINAGE SYSTEM 1 i

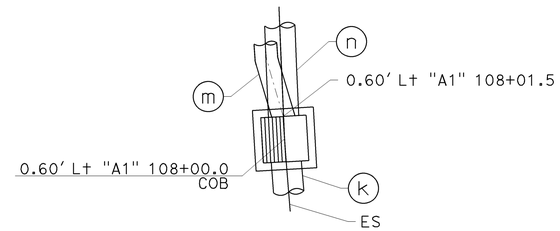

DRAINAGE SYSTEM 1 l

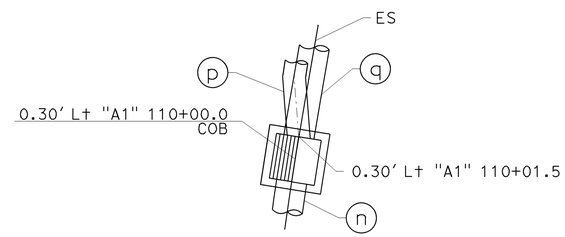

DRAINAGE SYSTEM 1 o

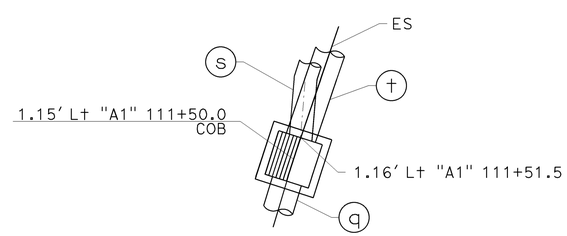

DRAINAGE SYSTEM 1 r

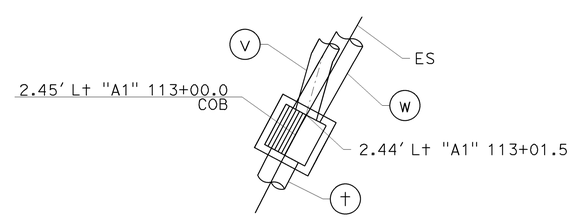

DRAINAGE SYSTEM 1 u

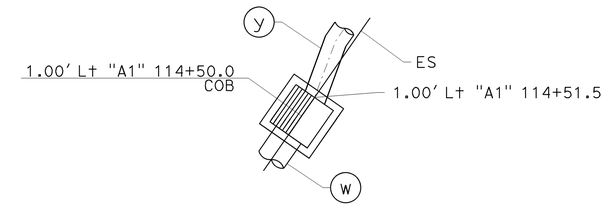

DRAINAGE SYSTEM 1 x

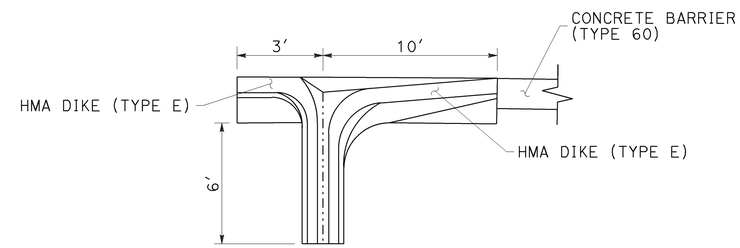

DRAINAGE SYSTEM 2 a

OVERSIDE DRAIN

DRAINAGE DETAILS
NO SCALE

DD-2

STATE OF CALIFORNIA - DEPARTMENT OF TRANSPORTATION
Caltrans
DESIGN

FUNCTIONAL SUPERVISOR: STEVE WYATT
CALCULATED-DESIGNED BY: SCOTT KIRKISH
CHECKED BY: MICHAEL O'NEAL
REVISED BY
DATE REVISED

LAST REVISION 06-15-15
DATE PLOTTED => 26-JUN-2015
TIME PLOTTED => 10:19

Dist	COUNTY	ROUTE	POST MILES TOTAL PROJECT	SHEET No.	TOTAL SHEETS
05	SCr	17	8.3/9.4	26	96

REGISTERED CIVIL ENGINEER 6-15-15 DATE

6-15-15
PLANS APPROVAL DATE

REGISTERED PROFESSIONAL ENGINEER SCOTT D KIRKISH No. 76829 Exp. 12-31-16 CIVIL STATE OF CALIFORNIA

THE STATE OF CALIFORNIA OR ITS OFFICERS OR AGENTS SHALL NOT BE RESPONSIBLE FOR THE ACCURACY OR COMPLETENESS OF SCANNED COPIES OF THIS PLAN SHEET.

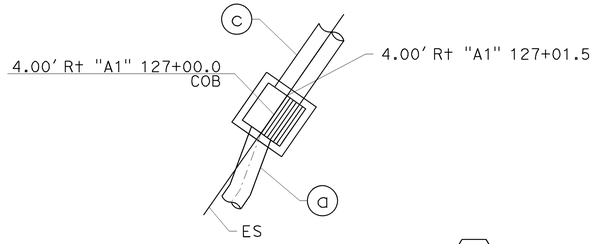

DRAINAGE SYSTEM 4 b

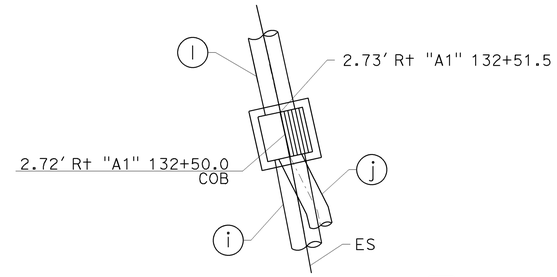

DRAINAGE SYSTEM 4 k

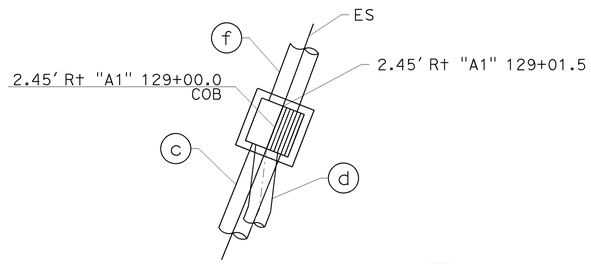

DRAINAGE SYSTEM 4 e

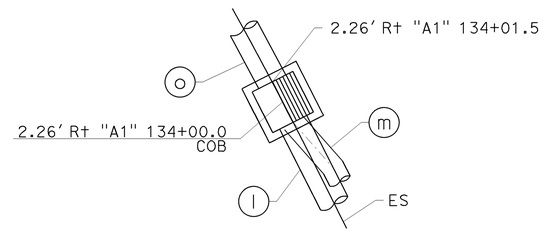

DRAINAGE SYSTEM 4 n

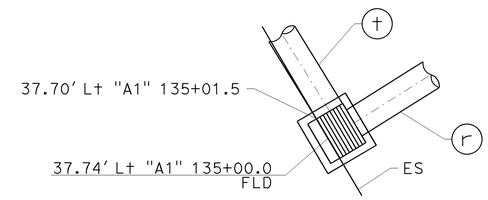

DRAINAGE SYSTEM 4 s

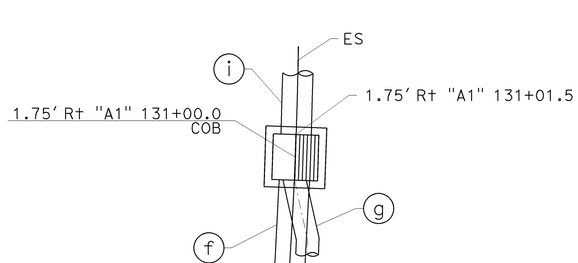

DRAINAGE SYSTEM 4 h

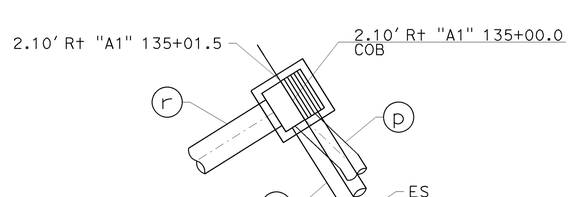

DRAINAGE SYSTEM 4 q

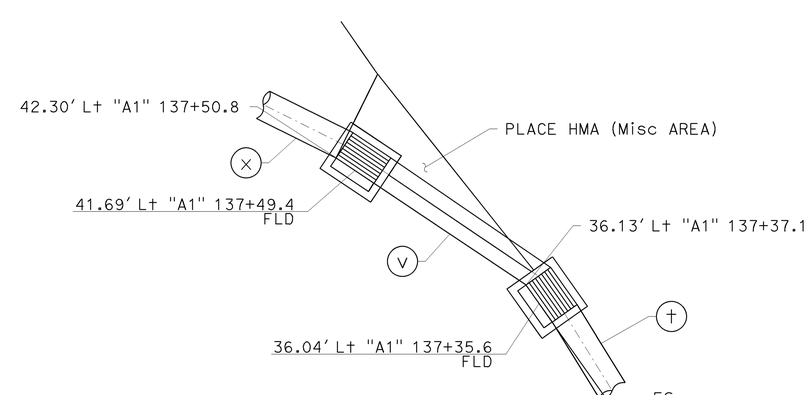

DRAINAGE SYSTEM 4 u w

DRAINAGE DETAILS
DD-3

NO SCALE

STATE OF CALIFORNIA - DEPARTMENT OF TRANSPORTATION
Caltrans
DESIGN

FUNCTIONAL SUPERVISOR: STEVE WYATT
CALCULATED-DESIGNED BY: SCOTT KIRKISH
CHECKED BY: MICHAEL O'NEAL
REVISED BY
DATE REVISED

LAST REVISION 06-15-15
DATE PLOTTED => 26-JUN-2015
TIME PLOTTED => 10:19

Dist	COUNTY	ROUTE	POST MILES TOTAL PROJECT	SHEET No.	TOTAL SHEETS
05	SCr	17	8.3/9.4	27	96

REGISTERED CIVIL ENGINEER 6-15-15 DATE

6-15-15
PLANS APPROVAL DATE

REGISTERED PROFESSIONAL ENGINEER SCOTT D KIRKISH No. 76829 Exp. 12-31-16 CIVIL STATE OF CALIFORNIA

THE STATE OF CALIFORNIA OR ITS OFFICERS OR AGENTS SHALL NOT BE RESPONSIBLE FOR THE ACCURACY OR COMPLETENESS OF SCANNED COPIES OF THIS PLAN SHEET.

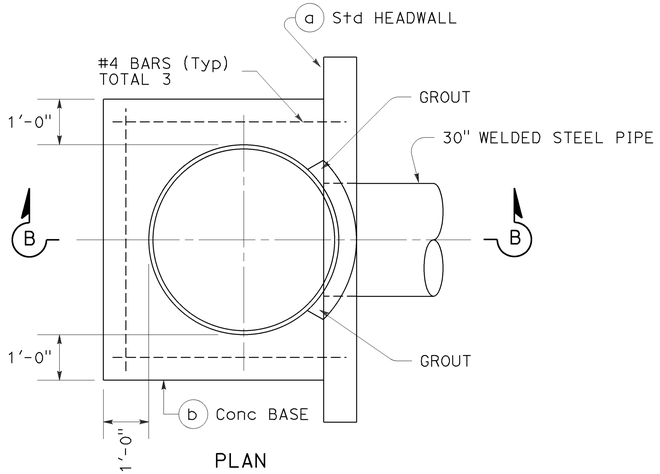

PLAN

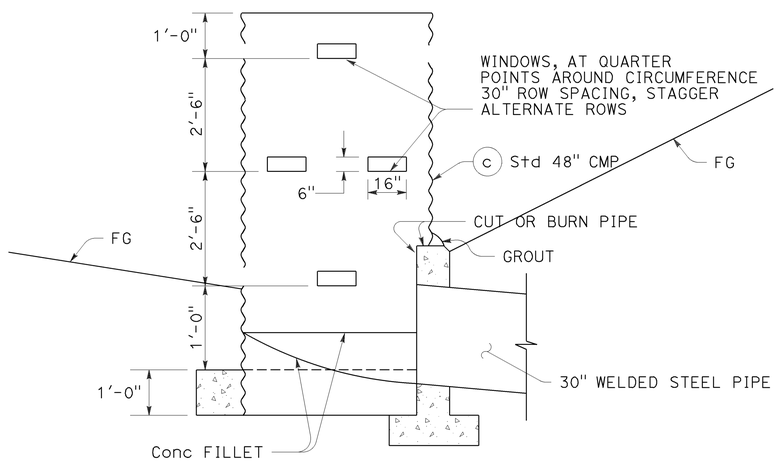

SECTION B-B

CSP RISER

DRAINAGE SYSTEM 7 a b c

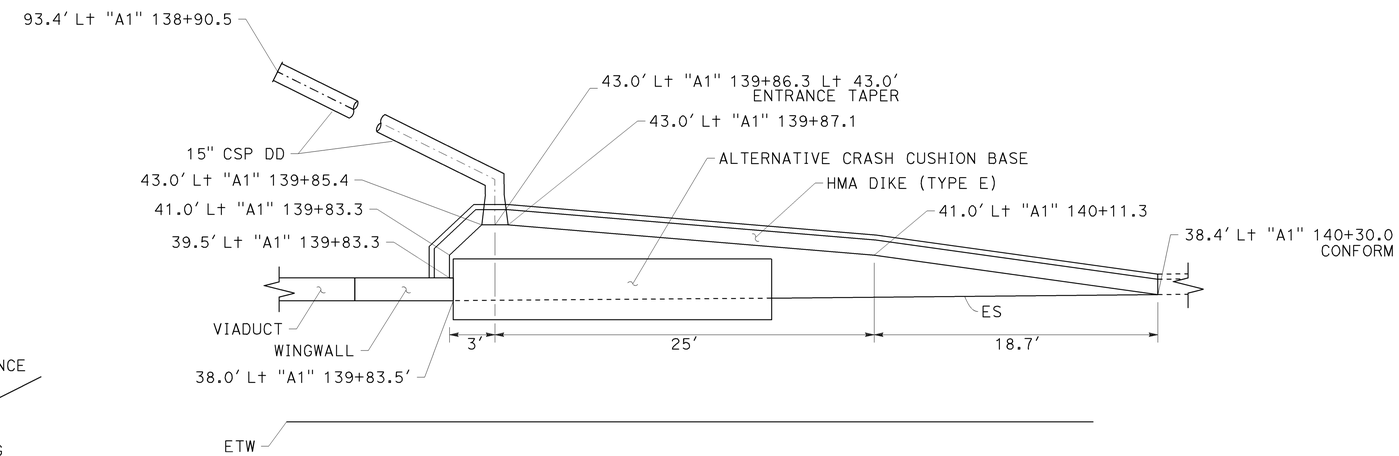

DRAINAGE SYSTEM 9 a

CORRUGATED STEEL PIPE
DOWNDRAIN

DRAINAGE DETAILS
NO SCALE

DD-4

STATE OF CALIFORNIA - DEPARTMENT OF TRANSPORTATION
Caltrans® DESIGN

FUNCTIONAL SUPERVISOR: STEVE WYATT
CALCULATED-DESIGNED BY: SCOTT KIRKISH
CHECKED BY: MICHAEL O'NEAL
REVISED BY
DATE REVISED

LAST REVISION 06-15-15
DATE PLOTTED => 26-JUN-2015
TIME PLOTTED => 10:19

Dist	COUNTY	ROUTE	POST MILES TOTAL PROJECT	SHEET No.	TOTAL SHEETS
05	SCr	17	8.3/9.4	28	96

REGISTERED CIVIL ENGINEER 6-15-15 DATE

6-15-15
PLANS APPROVAL DATE

REGISTERED PROFESSIONAL ENGINEER SCOTT D KIRKISH No. 76829 Exp. 12-31-16 CIVIL STATE OF CALIFORNIA

THE STATE OF CALIFORNIA OR ITS OFFICERS OR AGENTS SHALL NOT BE RESPONSIBLE FOR THE ACCURACY OR COMPLETENESS OF SCANNED COPIES OF THIS PLAN SHEET.

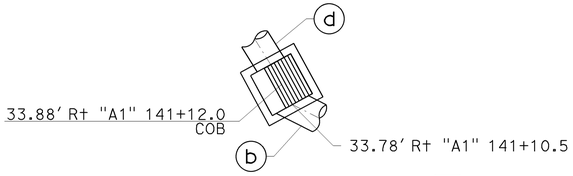

DRAINAGE SYSTEM 11 c

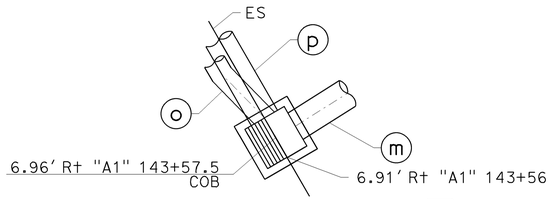

DRAINAGE SYSTEM 11 n

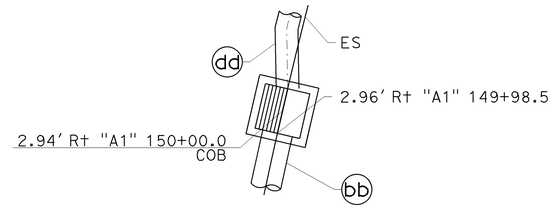

DRAINAGE SYSTEM 11 cc

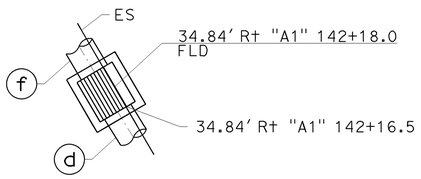

DRAINAGE SYSTEM 11 e

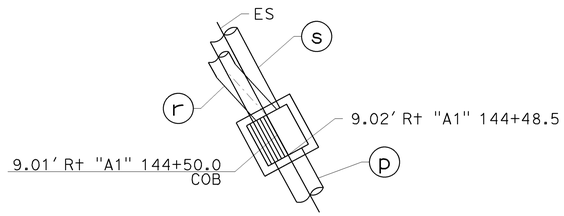

DRAINAGE SYSTEM 11 q

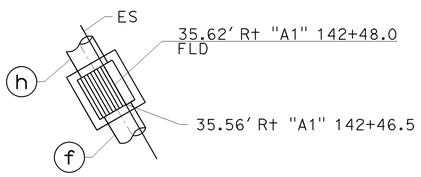

DRAINAGE SYSTEM 11 g

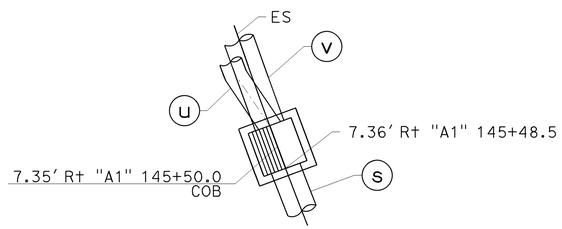

DRAINAGE SYSTEM 11 t

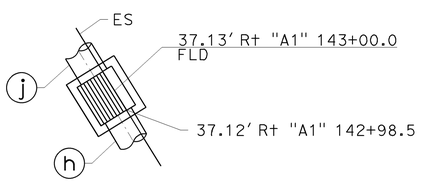

DRAINAGE SYSTEM 11 i

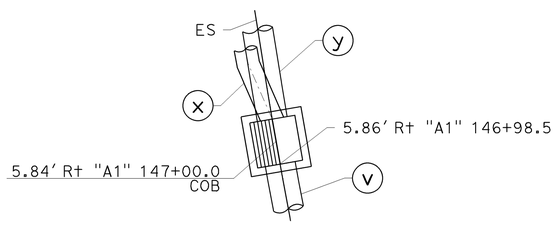

DRAINAGE SYSTEM 11 w

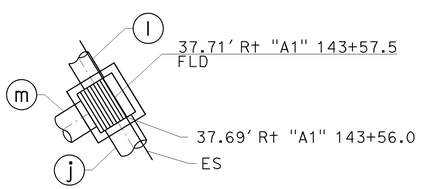

DRAINAGE SYSTEM 11 k

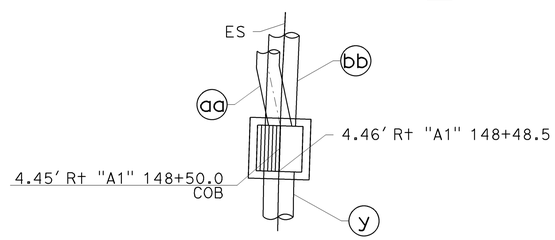

DRAINAGE SYSTEM 11 z

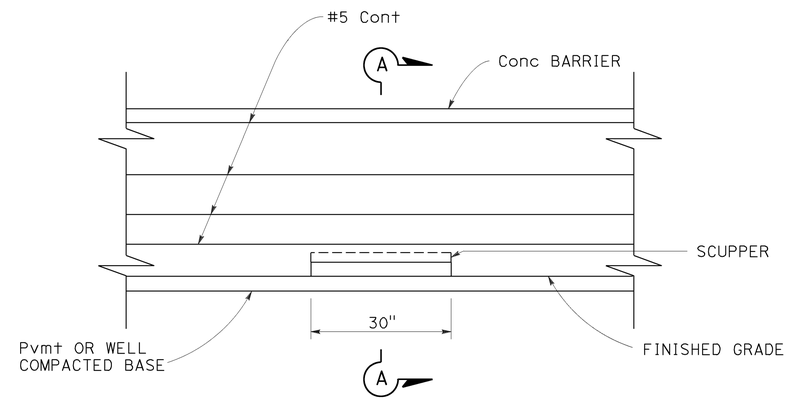

ELEVATION
(SEE NOTES 1 AND 2)

NOTES:

1. SCUPPER SHALL BE ORIENTED SO THE 5" OPENING IS ON THE OUTLET SIDE AND THE 3" OPENING IS ON THE INLET SIDE.
2. SEE STANDARD PLAN A76A FOR TYPICAL DETAILS OF CONCRETE BARRIER (Type 60).
3. SCUPPERS TO BE PLACED AT 10' C-C FOR STATIONS SHOWN

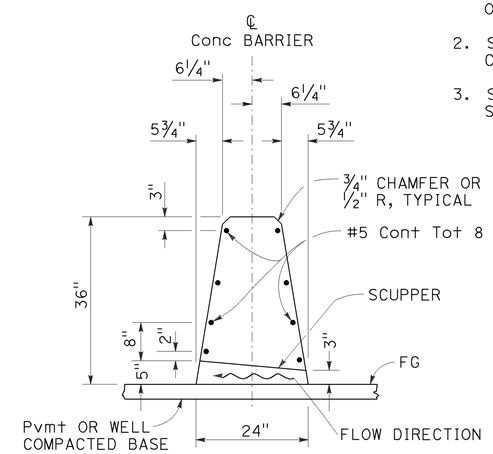

SECTION A-A
(CONCRETE BARRIER (TYPE 60) SHOWN)

CONCRETE BARRIER SCUPPER DETAIL

CONCRETE BARRIER SCUPPERS

STATION	FLOW DIRECTION
"A1" 151+00 to 154+00	SB to NB

DRAINAGE DETAILS DD-5

NO SCALE

STATE OF CALIFORNIA - DEPARTMENT OF TRANSPORTATION
Caltrans
DESIGN

FUNCTIONAL SUPERVISOR: STEVE WYATT
CALCULATED-DESIGNED BY: SCOTT KIRKISH
CHECKED BY: MICHAEL O'NEAL
REVISED BY
DATE REVISED

LAST REVISION 06-15-15
DATE PLOTTED => 26-JUN-2015
TIME PLOTTED => 10:19

Dist	COUNTY	ROUTE	POST MILES TOTAL PROJECT	SHEET No.	TOTAL SHEETS
05	SCr	17	8.3/9.4	29	96

REGISTERED CIVIL ENGINEER 6-15-15 DATE

6-15-15
PLANS APPROVAL DATE

REGISTERED PROFESSIONAL ENGINEER SCOTT D KIRKISH No. 76829 Exp. 12-31-16 CIVIL STATE OF CALIFORNIA

THE STATE OF CALIFORNIA OR ITS OFFICERS OR AGENTS SHALL NOT BE RESPONSIBLE FOR THE ACCURACY OR COMPLETENESS OF SCANNED COPIES OF THIS PLAN SHEET.

APC ALLOWABLE PIPE MATERIAL

TYPE	Min THICKNESS/CLASS
CMP	0.079 INCHES
PLASTIC	SEE STANDARD Specs
RCP	SEE STANDARD Specs

DRAINAGE QUANTITIES

DRAINAGE SHEET No.	DRAINAGE SYSTEM No. ⬡	DRAINAGE UNIT ○	ABANDON CULVERT (LF) LF	ABANDON INLET EA	REMOVE CULVERT (LF) LF	REMOVE DOWNDRAIN (EA) EA	REMOVE INLET EA	SAND BACKFILL CY	HOT MIX ASPHALT (TYPE A) TON	PLACE HOT MIX ASPHALT (MISCELLANEOUS AREA) SQYD	MINOR CONCRETE (MINOR STRUCTURE) CY	CONCRETE BACKFILL (PIPE TRENCH) CY	18" ALTERNATIVE PIPE CULVERT LF	24" ALTERNATIVE PIPE CULVERT LF	15" SLOTTED CORRUGATED STEEL PIPE (.079" THICK) LF	18" SLOTTED CORRUGATED STEEL PIPE (.079" THICK) LF	15" CORRUGATED STEEL PIPE DOWNDRAIN (.079" THICK) LF	24" CORRUGATED STEEL PIPE DOWNDRAIN (.079" THICK) LF	15" ENTRANCE TAPER EA	15" ANCHOR ASSEBLY EA	24" ANCHOR ASSEMBLY EA	48" CORRUGATED STEEL PIPE RISER (.079" THICK) LF	30" WELDED STEEL PIPE (.5" THICK) TRENCHLESS CULVERT INSTALLATION LF	ROCK SLOPE PROTECTION (LIGHT, METHOD B) (CY) CY	ROCK SLOPE PROTECTION FABRIC (CLASS 8) SQYD	MISCELLANOUS IRON AND STEEL LB	(N) HEIGHT OF INLET FT	DESCRIPTION	STATION	DRAINAGE SHEET No.	DRAINAGE SYSTEM No. ⬡	DRAINAGE UNIT ○
D-1/2	1	a									2.40															249	5.9	EXPANDED G4 DI, GRATE TYPE 18-9	"A1" 102+70.9	D-1/2	1	a
		b										10.6	24.1															18" APC				b
		c									0.89															249	4.1	Mod G4 DI, GRATE TYPE 18-9	"A1" 103+00.0			c
		d													100.0													15" SCSP				d
		e										45.0	147.1															18" APC				e
		f									0.89															249	4.1	Mod G4 DI, GRATE TYPE 18-9	"A1" 104+50.0			f
		g													100.0													15" SCSP				g
		h										61.9	197.1															18" APC				h
		i									0.89															249	4.1	Mod G4 DI, GRATE TYPE 18-9	"A1" 106+50.0			i
		j													100.0													15" SCSP				j
		k										45.1	147.2															18" APC				k
		l									0.89															249	4.1	Mod G4 DI, GRATE TYPE 18-9	"A1" 108+00.0			l
		m													100.0													15" SCSP				m
		n										61.9	197.1															18" APC				n
		o									0.89															249	4.1	Mod G4 DI, GRATE TYPE 18-9	"A1" 110+00.0			o
		p													100.0													15" SCSP				p
		q										45.0	147.1															18" APC				q
		r									0.89															249	4.1	Mod G4 DI, GRATE TYPE 18-9	"A1" 111+50.0			r
		s													100.0													15" SCSP				s
		t										45.1	147.4															18" APC				t
		u									0.89															249	4.1	Mod G4 DI, GRATE TYPE 18-9	"A1" 113+00.0			u
		v													100.0													15" SCSP				v
		w										45.1	147.3															18" APC				w
		x									1.16															249	4.1	Mod G4 DI, GRATE TYPE 18-9	"A1" 114+50.0			x
		y													100.0													15" SCSP				y
D-2	2	a							0.1	0.7																		OSD	"A1" 113+79.0	D-2	2	a
D-2	3	a				1																						REMOVE DD	"A1" 116+60.9	D-2	3	a
D-2/3	4	a													80.0													15" SCSP		D-2/3	4	a
		b									1.16															249	4.1	Mod G4 DI, GRATE TYPE 18-9	"A1" 127+00.0			b
		c										65.8	198.0															18" APC				c
		d													20.0													15" SCSP				d
		e									0.89															249	4.1	Mod G4 DI, GRATE TYPE 18-9	"A1" 129+00.0			e
		f										65.8	198.0															18" APC				f
		g													20.0													15" SCSP				g
		h									0.89															249	4.1	Mod G4 DI, GRATE TYPE 18-9	"A1" 131+00.0			h
						1			0.1*	0.7	12.73	491.3	1,550.4		920.0											2,988		DQ-1 SHEET TOTAL				

* - QUANTITY INCLUDED IN PAVEMENT STRUCTURE QUANTITIES SUMMARY.
(N) - NOT A SEPARATE PAY ITEM, FOR INFORMATION ONLY

DRAINAGE QUANTITIES
DQ-1

STATE OF CALIFORNIA - DEPARTMENT OF TRANSPORTATION
Caltrans DESIGN
FUNCTIONAL SUPERVISOR: STEVE WYATT
CALCULATED-DESIGNED BY: SCOTT KIRKISH
CHECKED BY: MICHAEL O'NEAL
REVISED BY
DATE REVISED

LAST REVISION 06-15-15
DATE PLOTTED => 26-JUN-2015
TIME PLOTTED => 10:19

Dist	COUNTY	ROUTE	POST MILES TOTAL PROJECT	SHEET No.	TOTAL SHEETS
05	SCr	17	8.3/9.4	30	96

REGISTERED CIVIL ENGINEER 6-15-15 DATE

6-15-15
PLANS APPROVAL DATE

REGISTERED PROFESSIONAL ENGINEER SCOTT D KIRKISH No. 76829 Exp. 12-31-16 CIVIL STATE OF CALIFORNIA

THE STATE OF CALIFORNIA OR ITS OFFICERS OR AGENTS SHALL NOT BE RESPONSIBLE FOR THE ACCURACY OR COMPLETENESS OF SCANNED COPIES OF THIS PLAN SHEET.

DRAINAGE QUANTITIES

DRAINAGE SHEET No.	DRAINAGE SYSTEM No. ⬡	DRAINAGE UNIT ○	ABANDON CULVERT (LF)	ABANDON INLET	REMOVE CULVERT (LF)	REMOVE DOWNDRAIN (EA)	REMOVE INLET	SAND BACKFILL	HOT MIX ASPHALT (TYPE A)	PLACE HOT MIX ASPHALT (MISCELLANEOUS AREA)	MINOR CONCRETE (MINOR STRUCTURE)	CONCRETE BACKFILL (PIPE TRENCH)	18" ALTERNATIVE PIPE CULVERT	24" ALTERNATIVE PIPE CULVERT	15" SLOTTED CORRUGATED STEEL PIPE (.079" THICK)	18" SLOTTED CORRUGATED STEEL PIPE (.079" THICK)	15" CORRUGATED STEEL PIPE DOWNDRAIN (.079" THICK)	24" CORRUGATED STEEL PIPE DOWNDRAIN (.079" THICK)	15" ENTRANCE TAPER	15" ANCHOR ASSEBLY	24" ANCHOR ASSEMBLY	48" CORRUGATED STEEL PIPE RISER (.079" THICK)	30" WELDED STEEL PIPE (.5" THICK) TRENCHLESS CULVERT INSTALLATION	ROCK SLOPE PROTECTION (LIGHT, METHOD B) (CY)	ROCK SLOPE PROTECTION FABRIC (CLASS 8)	MISCELLANOUS IRON AND STEEL	(N) HEIGHT OF INLET	DESCRIPTION	STATION	DRAINAGE SHEET No.	DRAINAGE SYSTEM No. ⬡	DRAINAGE UNIT ○
			LF	EA	LF	EA	EA	CY	TON	SQYD	CY	CY	LF	LF	LF	LF	LF	LF	EA	EA	EA	LF	LF	CY	SQYD	LB	FT					
D-2/3	4	i										48.0	147.8															18" APC		D-2/3	4	i
		j													40.0													15" SCSP				j
		k									0.89															249	4.1	Mod G4 DI, GRATE TYPE 18-9	"A1" 132+50.0			k
		l										47.1	147.8															18" APC				l
		m													60.0													15" SCSP				m
		n									0.89															249	4.1	Mod G4 DI, GRATE TYPE 18-9	"A1" 134+00.0			n
		o										29.2	97.3															18" APC				o
		p													80.0													15" SCSP				p
		q									0.69															249	4.1	Mod G4 DI, GRATE TYPE 18-9	"A1" 135+00.0			q
		r										15.0		36.4														24" APC				r
		s									1.50															239	4.1	GO DI, GRATE TYPE 24-12X	"A1" 135+00.0			s
		t										122.4		232.9														24" APC				t
		u									1.50															239	4.1	GO DI, GRATE TYPE 24-12X	"A1" 137+35.6			u
		v										6.0		12.8														24" APC				v
		w							0.5	3.8	1.50															239	4.1	GO DI, GRATE TYPE 24-12X	"A1" 137+49.4			w
		x																112.4			1							24" CSP DD				x
		z																						5.6	60.0			RSP AND RSP FABRIC				z
D-3	5	a				1																						REMOVE DD	"A1" 137+51.4	D-3	5	a
D-3	6	a		1																								ABANDON 48" RISER AND DI	"A1" 138+58.6	D-3	6	a
		b	289.7					33.7																				ABANDON 24" CMP				b
D-3	7	a									1.52																	HEADWALL, H=4.17	"A1" 138+61.9	D-3	7	a
		b									1.15																	CONCRETE BASE				b
		c																				8.0						48" CSP RISER				c
		d																					255.3					30" WSP JACKED				d
		e																						14.8	160.0			RSP AND RSP FABRIC				e
D-3	8	a				1																						REMOVE DD	"A1" 139+89.3	D-3	8	a
D-3	9	a							1.2	8.9							110.0		1	1								15" CSP DD	"A1" 139+86.3	D-3	9	a
D-3	10	a			190.0																							REMOVE 18" CMP	"A1" 142+08.8	D-3	10	a
		b					1																					REMOVE Mod G2 DI (4' x 4' BOX)				b
			289.7	1	190.0	2	1	33.7	1.7*	12.7	9.64	267.7	392.9	282.1	180.0		110.0	112.4	1	1	1	8.0	255.3	20.4	220.0	1464		DQ-2 SHEET TOTAL			

* - QUANTITY INCLUDED IN PAVEMENT STRUCTURE QUANTITIES SUMMARY.
(N) - NOT A SEPARATE PAY ITEM, FOR INFORMATION ONLY

DRAINAGE QUANTITIES
DQ-2

REVISED BY | DATE REVISED
SCOTT KIRKISH | MICHAEL O'NEAL
CALCULATED-DESIGNED BY | CHECKED BY
FUNCTIONAL SUPERVISOR: STEVE WYATT
STATE OF CALIFORNIA - DEPARTMENT OF TRANSPORTATION
Caltrans
DESIGN

LAST REVISION 06-15-15 | DATE PLOTTED => 26-JUN-2015 | TIME PLOTTED => 10:19

Dist	COUNTY	ROUTE	POST MILES TOTAL PROJECT	SHEET No.	TOTAL SHEETS
05	SCr	17	8.3/9.4	31	96

REGISTERED CIVIL ENGINEER 6-15-15 DATE

6-15-15
PLANS APPROVAL DATE

REGISTERED PROFESSIONAL ENGINEER SCOTT D KIRKISH No. 76829 Exp. 12-31-16 CIVIL STATE OF CALIFORNIA

THE STATE OF CALIFORNIA OR ITS OFFICERS OR AGENTS SHALL NOT BE RESPONSIBLE FOR THE ACCURACY OR COMPLETENESS OF SCANNED COPIES OF THIS PLAN SHEET.

DRAINAGE QUANTITIES

DRAINAGE SHEET No.	DRAINAGE SYSTEM No. ⬡	DRAINAGE UNIT ○	ABANDON CULVERT (LF) LF	ABANDON INLET EA	REMOVE CULVERT (LF) LF	REMOVE DOWNDRAIN (EA) EA	REMOVE INLET EA	SAND BACKFILL CY	HOT MIX ASPHALT (TYPE A) TON	PLACE HOT MIX ASPHALT (MISCELLANEOUS AREA) SQYD	MINOR CONCRETE (MINOR STRUCTURE) CY	CONCRETE BACKFILL (PIPE TRENCH) CY	18" ALTERNATIVE PIPE CULVERT LF	24" ALTERNATIVE PIPE CULVERT LF	15" SLOTTED CORRUGATED STEEL PIPE (.079" THICK) LF	18" SLOTTED CORRUGATED STEEL PIPE (.079" THICK) LF	15" CORRUGATED STEEL PIPE DOWNDRAIN (.079" THICK) LF	24" CORRUGATED STEEL PIPE DOWNDRAIN (.079" THICK) LF	15" ENTRANCE TAPER EA	15" ANCHOR ASSEBLY EA	24" ANCHOR ASSEMBLY EA	48" CORRUGATED STEEL PIPE RISER (.079" THICK) LF	30" WELDED STEEL PIPE (.5" THICK) TRENCHLESS CULVERT INSTALLATION LF	ROCK SLOPE PROTECTION (LIGHT, METHOD B) (CY) CY	ROCK SLOPE PROTECTION FABRIC (CLASS 8) SQYD	MISCELLANOUS IRON AND STEEL LB	(N) HEIGHT OF INLET FT	DESCRIPTION	STATION	DRAINAGE SHEET No.	DRAINAGE SYSTEM No. ⬡	DRAINAGE UNIT ○
D-3/4	11	a																					11.1	120.0			RSP AND RSP FABRIC		D-3/4	11	a
		b												92.6													24" APC				b
		c									2.19														239	6.5	G2 DI, GRATE TYPE 24-12X	"A1" 141+12.0			c
		d										68.8		103.0													24" APC				d
		e									1.49														239	4.0	GO DI, GRATE TYPE 24-12X	"A1" 142+18.0			e
		f										13.3		27.0													24" APC				f
		g									1.49														239	4.0	GO DI, GRATE TYPE 24-12X	"A1" 142+48.0			g
		h										24.7		49.0													24" APC				h
		i									1.49														239	4.0	GO DI, GRATE TYPE 24-12X	"A1" 143+00.0			i
		j										28.2		54.5													24" APC				j
		k									1.53														239	4.2	GO DI, GRATE TYPE 24-12X	"A1" 143+57.5			k
		l														40.0											18" SCSP				l
		m										13.8		27.1													24" APC				m
		n									0.69														249	4.1	Mod G4 DI, GRATE TYPE 18-9	"A1" 143+57.5			n
		o													60.0												15" SCSP				o
		p										27.2	88.9														18" APC				p
		q									0.89														249	4.1	Mod G4 DI, GRATE TYPE 18-9	"A1" 144+50.0			q
		r													60.0												15" SCSP				r
		s										29.7	96.1														18" APC				s
		t									0.89														249	4.1	Mod G4 DI, GRATE TYPE 18-9	"A1" 145+50.0			t
		u													60.0												15" SCSP				u
		v										46.4	145.8														18" APC				v
		w									0.89														249	4.1	Mod G4 DI, GRATE TYPE 18-9	"A1" 147+00.0			w
		x													40.0												15" SCSP				x
		y										47.4	146.1														18" APC				y
		z									0.89														249	4.1	Mod G4 DI, GRATE TYPE 18-9	"A1" 148+50.0			z
		aa													60.0												15" SCSP				aa
		bb										46.6	146.3														18" APC				bb
		cc									1.16														249	4.1	Mod G4 DI, GRATE TYPE 18-9	"A1" 150+00.0			cc
		dd													60.0												15" SCSP				dd
											13.60	346.1	623.2	353.2	340.0	40.0							11.1	120.0	2,689		DQ-3 SHEET TOTAL				
			289.7	1	190.0	2	1	33.7	1.7*	12.7	9.64	267.7	392.9	282.1	180.0		110.0	112.4	1	1	1	8.0	255.3	20.4	220.0	1,464		DQ-2 SHEET TOTAL				
						1			0.1*	0.7	12.73	491.3	1,550.4		920.0											2,988		DQ-1 SHEET TOTAL				
			289.7	1	190.0	3	1	33.7	1.8*	13.4	35.97	1,105.1	2,566.5	635.3	1,440.0	40.0	110.0	112.4	1	1	1	8.0	255.3	31.5	340.0	7,141		TOTAL				

* - QUANTITY INCLUDED IN PAVEMENT STRUCTURE QUANTITIES SUMMARY.
(N) - NOT A SEPARATE PAY ITEM, FOR INFORMATION ONLY

DRAINAGE QUANTITIES
DQ-3

STATE OF CALIFORNIA - DEPARTMENT OF TRANSPORTATION
Caltrans
DESIGN

FUNCTIONAL SUPERVISOR: STEVE WYATT
CALCULATED-DESIGNED BY: SCOTT KIRKISH
CHECKED BY: MICHAEL O'NEAL
REVISED BY
DATE REVISED

LAST REVISION 06-15-15
DATE PLOTTED => 26-JUN-2015
TIME PLOTTED => 10:19

Dist	COUNTY	ROUTE	POST MILES TOTAL PROJECT	SHEET No.	TOTAL SHEETS
05	SCr	17	8.3/9.4	32	96

REGISTERED CIVIL ENGINEER 6-15-15 DATE

6-15-15
PLANS APPROVAL DATE

REGISTERED PROFESSIONAL ENGINEER SCOTT D KIRKISH No. 76829 Exp. 12-31-16 CIVIL STATE OF CALIFORNIA

THE STATE OF CALIFORNIA OR ITS OFFICERS OR AGENTS SHALL NOT BE RESPONSIBLE FOR THE ACCURACY OR COMPLETENESS OF SCANNED COPIES OF THIS PLAN SHEET.

NOTE:

LOCATION OF CONSTRUCTION AREA SIGNS ARE APPROXIMATE.
EXACT LOCATIONS TO BE DETERMINED BY THE ENGINEER.

STATIONARY MOUNTED CONSTRUCTION AREA SIGNS

SIGN No. (X)	SIGN CODE FEDERAL	SIGN CODE CALIFORNIA	PANEL SIZE	SIGN MESSAGE	NUMBER OF POSTS AND SIZE	NUMBER OF SIGNS
A	W20-1		60" x 60"	ROAD WORK AHEAD	2 - 4" x 6"	2
B	G20-2		24" x 48"	END ROAD WORK	2 - 4" x 4"	2
C	W20-1		36" x 36"	ROAD WORK AHEAD	1 - 4" x 6"	5
D		C40	48" x 48"	TRAFFIC FINES DOUBLED IN CONSTRUCTION ZONES	1 - 4" x 6"	2
E	W3-5		36" x 36"	45 MPH SPEED ZONE AHEAD	1 - 4" x 6"	2
F	G20-5aP		24" x 18"	WORK ZONE	1 - 4" x 6"	2
	R2-1		24" x 30"	SPEED LIMIT 45		2
G	R2-12		24" x 36"	END WORK ZONE SPEED LIMIT	1 - 4" x 6"	2

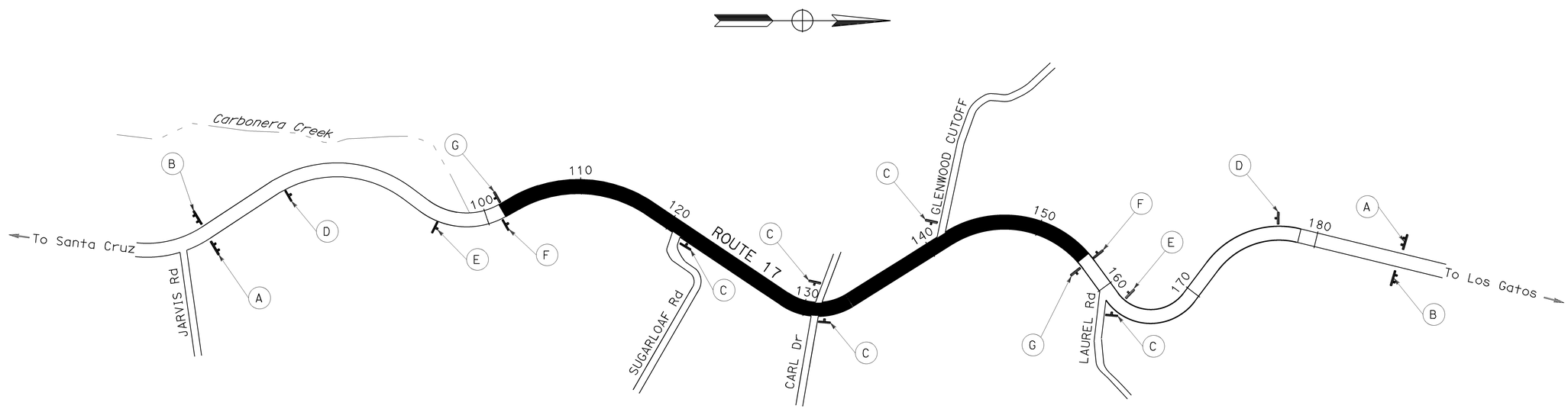

APPROVED FOR CONSTRUCTION AREA SIGN WORK ONLY

CONSTRUCTION AREA SIGNS
NO SCALE

CS-1

STATE OF CALIFORNIA - DEPARTMENT OF TRANSPORTATION
Caltrans
DESIGN

FUNCTIONAL SUPERVISOR: STEVE WYATT
CALCULATED-DESIGNED BY: SCOTT KIRKISH
CHECKED BY: MICHAEL O'NEAL
REVISED BY
DATE REVISED

LAST REVISION 06-15-15
DATE PLOTTED => 26-JUN-2015
TIME PLOTTED => 10:19

Dist	COUNTY	ROUTE	POST MILES TOTAL PROJECT	SHEET No.	TOTAL SHEETS
05	SCr	17	8.3/9.4	33	96

REGISTERED CIVIL ENGINEER 6-15-15 DATE

6-15-15
PLANS APPROVAL DATE

REGISTERED PROFESSIONAL ENGINEER SCOTT D KIRKISH No. 76829 Exp. 12-31-16 CIVIL STATE OF CALIFORNIA

THE STATE OF CALIFORNIA OR ITS OFFICERS OR AGENTS SHALL NOT BE RESPONSIBLE FOR THE ACCURACY OR COMPLETENESS OF SCANNED COPIES OF THIS PLAN SHEET.

NOTES:

1. AGBS TO REPLACE THE EXISTING Conc BARRIER (TYPE 50) FROM "B1" 102+00 TO "B1" 105+12. DURING CLOSURE HOURS, AGBS CAN BE OPENED TO ALLOW FOR MEDIAN CROSS OVER OF NB TRAFFIC. OPENINGS AT SUGARLOAF ROAD AND GLENWOOD CUTOFF ARE TO BE USED AS ADDITIONAL CROSS OVER LOCATIONS.
2. SEE RSP T12 FOR DETAILS OF CROSS OVER CLOSURES

STAGE 1 CONSTRUCTION NOTES:

1. REMOVE EXISTING Conc BARRIER (TYPE 50)
2. PLACE AGBS AND QCMB
3. CONSTRUCT RETAINING WALL AND VIADUCTS
4. CONSTRUCT NON-MEDIAN DRAINAGE SYSTEMS
5. CONSTRUCT NEW SHOULDER TO HMA (TYPE A) LAYER

LEGEND:

CONSTRUCTION THIS STAGE

XX — TEMPORARY TRAFFIC STRIPE (PAINT) DETAIL NUMBER

XX — REMOVE EXISTING TRAFFIC STRIPE DETAIL NUMBER

ABBREVIATIONS:

QCMB QUICKCHANGE MOVEABLE BARRIER
AGBS ARMORGUARD BARRIER SYSTEM

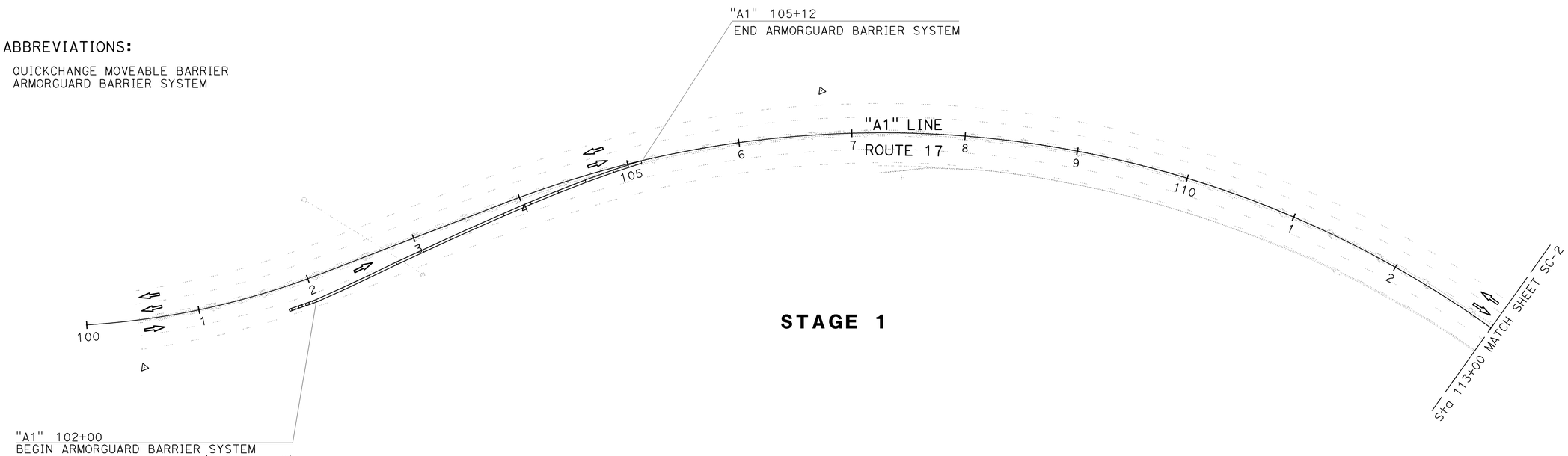

STAGE 1

APPROVED FOR STAGE CONSTRUCTION AND TRAFFIC HANDLING WORK ONLY

STAGE CONSTRUCTION AND TRAFFIC HANDLING PLAN

SCALE : 1" = 50'

SC-1

STATE OF CALIFORNIA - DEPARTMENT OF TRANSPORTATION
Caltrans DESIGN

FUNCTIONAL SUPERVISOR STEVE WYATT
CALCULATED-DESIGNED BY SCOTT KIRKISH
CHECKED BY MICHAEL O'NEAL
REVISED BY
DATE REVISED

LAST REVISION 06-15-15
DATE PLOTTED => 26-JUN-2015
TIME PLOTTED => 10:19

Dist	COUNTY	ROUTE	POST MILES TOTAL PROJECT	SHEET No.	TOTAL SHEETS
05	SCr	17	8.3/9.4	34	96

REGISTERED CIVIL ENGINEER 6-15-15 DATE

6-15-15
PLANS APPROVAL DATE

REGISTERED PROFESSIONAL ENGINEER SCOTT D KIRKISH No. 76829 Exp. 12-31-16 CIVIL STATE OF CALIFORNIA

THE STATE OF CALIFORNIA OR ITS OFFICERS OR AGENTS SHALL NOT BE RESPONSIBLE FOR THE ACCURACY OR COMPLETENESS OF SCANNED COPIES OF THIS PLAN SHEET.

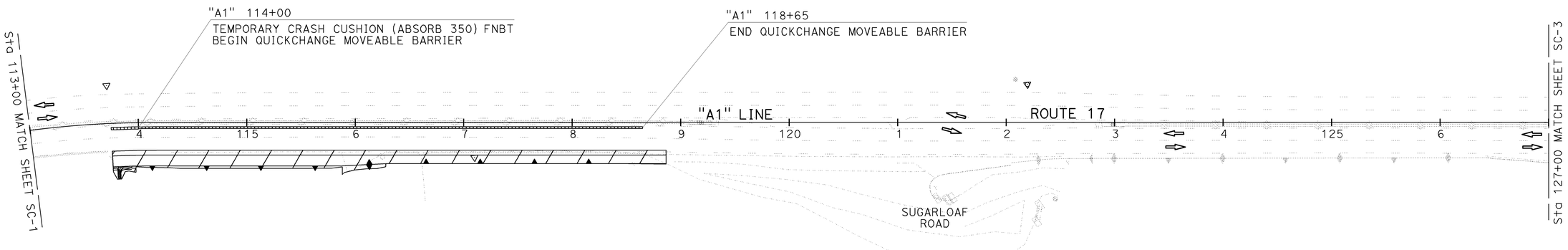

STAGE 1

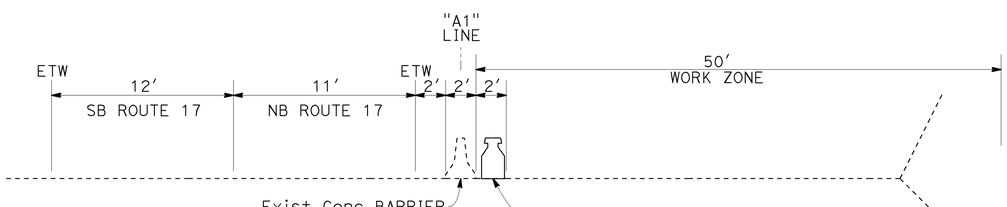

"A1" 114+00 TO 118+65

CROSS SECTION DURING CLOSURE HOURS

NO SCALE

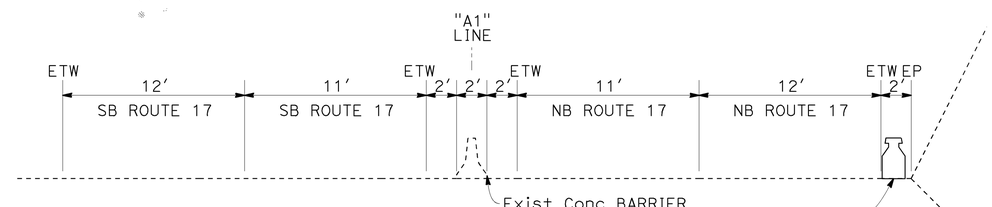

"A1" 114+00 TO 118+65

CROSS SECTION DURING NON-CLOSURE HOURS

NO SCALE

APPROVED FOR STAGE CONSTRUCTION AND TRAFFIC HANDLING WORK ONLY

STAGE CONSTRUCTION AND TRAFFIC HANDLING PLAN

SCALE : 1" = 50′

SC-2

STATE OF CALIFORNIA - DEPARTMENT OF TRANSPORTATION
Caltrans
DESIGN

FUNCTIONAL SUPERVISOR: STEVE WYATT
CALCULATED-DESIGNED BY: SCOTT KIRKISH
CHECKED BY: MICHAEL O'NEAL
REVISED BY
DATE REVISED

LAST REVISION 06-15-15
DATE PLOTTED => 26-JUN-2015
TIME PLOTTED => 10:19

Dist	COUNTY	ROUTE	POST MILES TOTAL PROJECT	SHEET No.	TOTAL SHEETS
05	SCr	17	8.3/9.4	35	96

REGISTERED CIVIL ENGINEER 6-15-15 DATE

6-15-15
PLANS APPROVAL DATE

REGISTERED PROFESSIONAL ENGINEER SCOTT D KIRKISH No. 76829 Exp. 12-31-16 CIVIL STATE OF CALIFORNIA

THE STATE OF CALIFORNIA OR ITS OFFICERS OR AGENTS SHALL NOT BE RESPONSIBLE FOR THE ACCURACY OR COMPLETENESS OF SCANNED COPIES OF THIS PLAN SHEET.

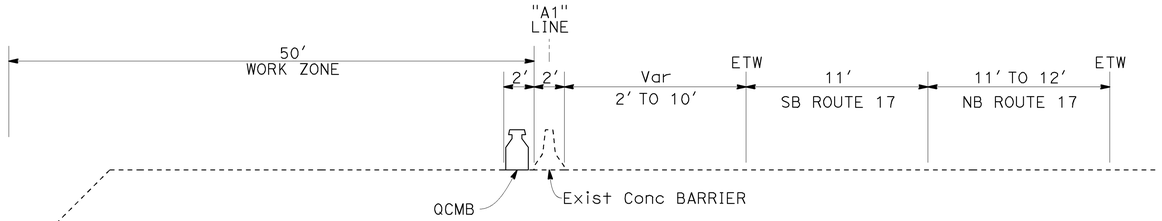

"A1" 137+60 TO 140+00

CROSS SECTION DURING CLOSURE HOURS

NO SCALE

"A1" 137+60 TO 140+00

CROSS SECTION DURING NON-CLOSURE HOURS

NO SCALE

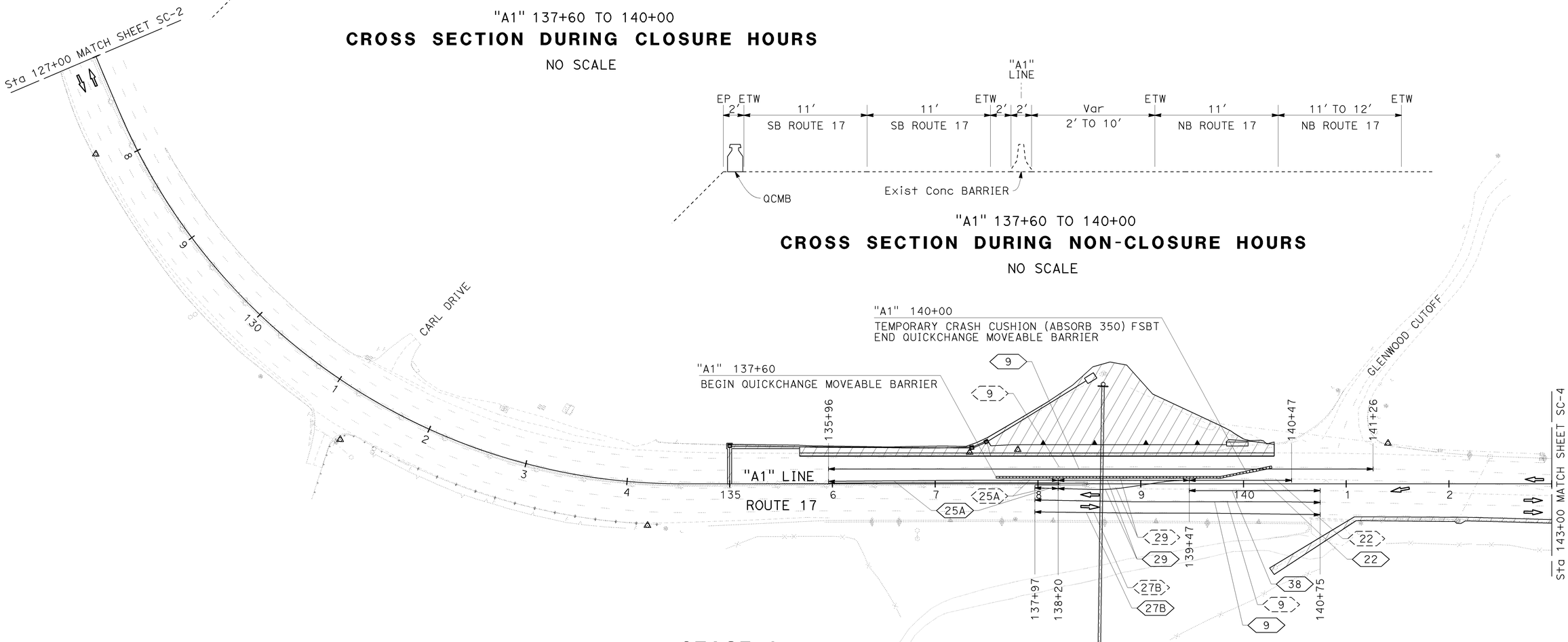

STAGE 1

APPROVED FOR STAGE CONSTRUCTION AND TRAFFIC HANDLING WORK ONLY

STAGE CONSTRUCTION AND TRAFFIC HANDLING PLAN

SCALE : 1" = 50'

SC-3

STATE OF CALIFORNIA - DEPARTMENT OF TRANSPORTATION

Caltrans®

DESIGN

FUNCTIONAL SUPERVISOR: STEVE WYATT

CALCULATED-DESIGNED BY: SCOTT KIRKISH

CHECKED BY: MICHAEL O'NEAL

REVISED BY

DATE REVISED

LAST REVISION 06-15-15

DATE PLOTTED => 26-JUN-2015
TIME PLOTTED => 10:19

Dist	COUNTY	ROUTE	POST MILES TOTAL PROJECT	SHEET No.	TOTAL SHEETS
05	SCr	17	8.3/9.4	36	96

REGISTERED CIVIL ENGINEER 6-15-15 DATE

6-15-15
PLANS APPROVAL DATE

REGISTERED PROFESSIONAL ENGINEER
SCOTT D KIRKISH
No. 76829
Exp. 12-31-16
CIVIL
STATE OF CALIFORNIA

THE STATE OF CALIFORNIA OR ITS OFFICERS OR AGENTS SHALL NOT BE RESPONSIBLE FOR THE ACCURACY OR COMPLETENESS OF SCANNED COPIES OF THIS PLAN SHEET.

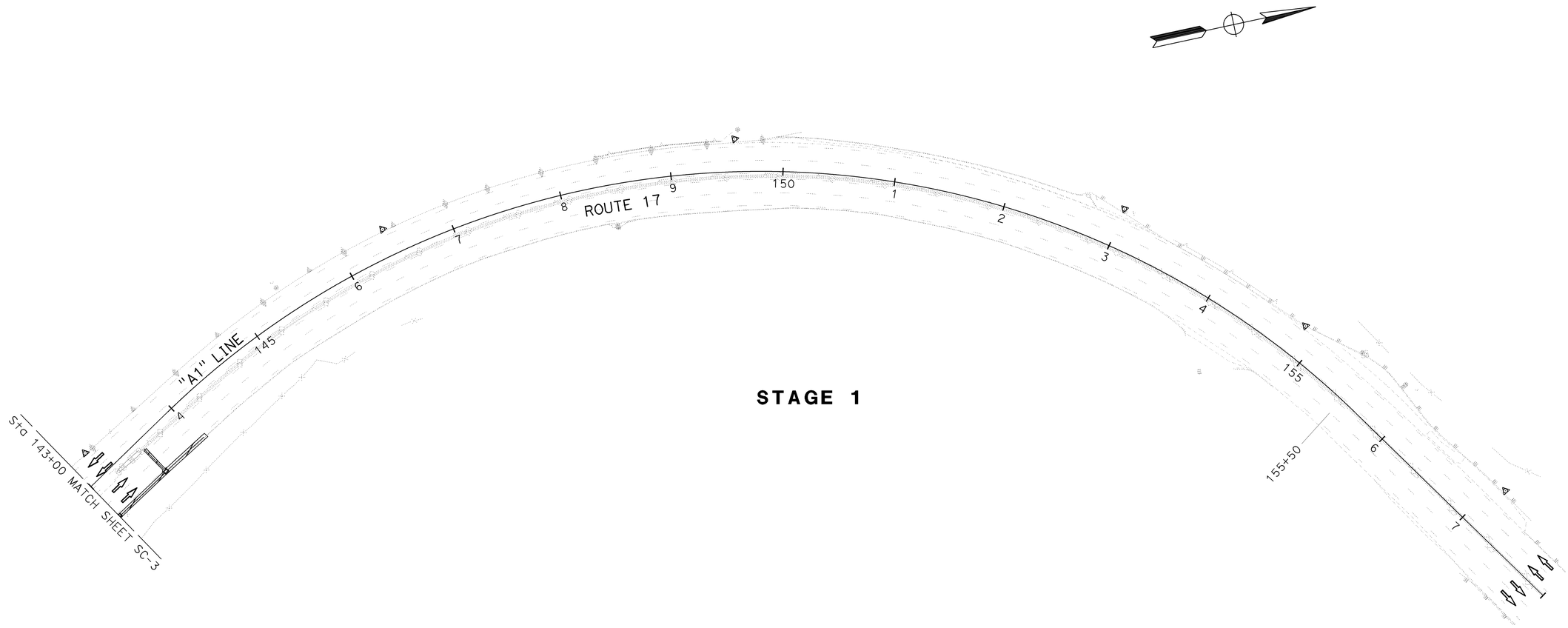

STAGE 1

APPROVED FOR STAGE CONSTRUCTION AND TRAFFIC HANDLING WORK ONLY

STAGE CONSTRUCTION AND TRAFFIC HANDLING PLAN

SCALE : 1" = 50'

SC-4

STATE OF CALIFORNIA - DEPARTMENT OF TRANSPORTATION
Caltrans
DESIGN

FUNCTIONAL SUPERVISOR: STEVE WYATT
CALCULATED-DESIGNED BY: SCOTT KIRKISH
CHECKED BY: MICHAEL O'NEAL
REVISED BY
DATE REVISED

LAST REVISION 06-15-15
DATE PLOTTED => 26-JUN-2015
TIME PLOTTED => 10:19

Dist	COUNTY	ROUTE	POST MILES TOTAL PROJECT	SHEET No.	TOTAL SHEETS
05	SCr	17	8.3/9.4	37	96

REGISTERED CIVIL ENGINEER 6-15-15 DATE

6-15-15
PLANS APPROVAL DATE

REGISTERED PROFESSIONAL ENGINEER SCOTT D KIRKISH No. 76829 Exp. 12-31-16 CIVIL STATE OF CALIFORNIA

THE STATE OF CALIFORNIA OR ITS OFFICERS OR AGENTS SHALL NOT BE RESPONSIBLE FOR THE ACCURACY OR COMPLETENESS OF SCANNED COPIES OF THIS PLAN SHEET.

STAGE 2 CONSTRUCTION NOTES:

1. REMOVE Conc BARRIER (TYPE 50)
2. CONSTRUCT MEDIAN DRAINAGE SYSTEMS

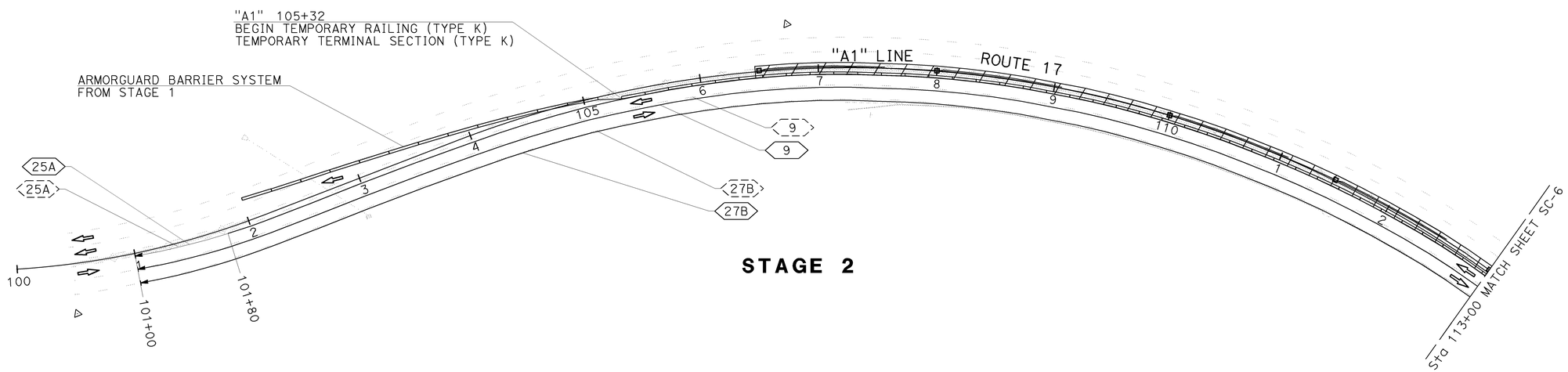

STAGE 2

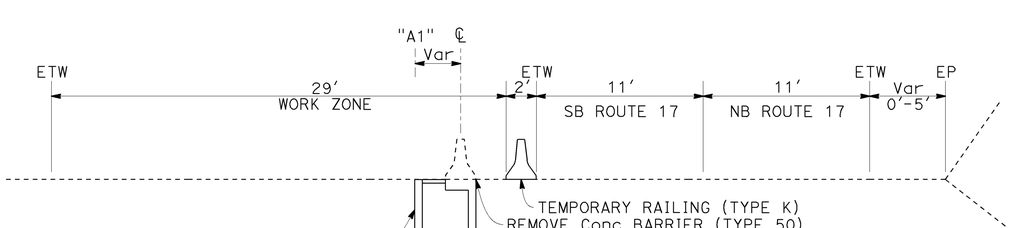

"A1" 105+12 TO 119+17
"A1" 143+52 TO 150+02

CROSS SECTION DURING CLOSURE HOURS

NO SCALE

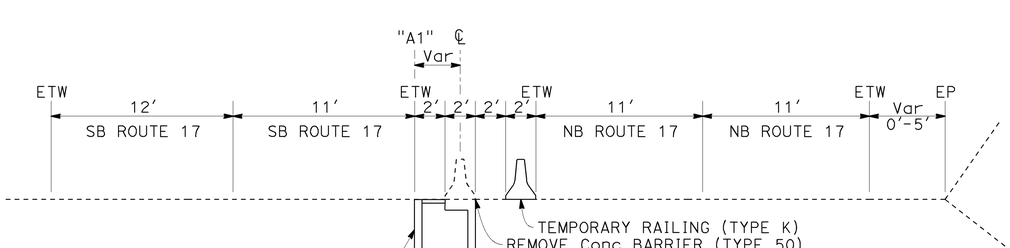

"A1" 105+12 TO 119+17
"A1" 143+52 TO 150+02

CROSS SECTION DURING NON-CLOSURE HOURS

NO SCALE

APPROVED FOR STAGE CONSTRUCTION AND TRAFFIC HANDLING WORK ONLY

STAGE CONSTRUCTION AND TRAFFIC HANDLING PLAN

SCALE : 1" = 50'

SC-5

STATE OF CALIFORNIA - DEPARTMENT OF TRANSPORTATION
Caltrans
DESIGN

FUNCTIONAL SUPERVISOR: STEVE WYATT
CALCULATED-DESIGNED BY: SCOTT KIRKISH
CHECKED BY: MICHAEL O'NEAL
REVISED BY
DATE REVISED

LAST REVISION 06-15-15
DATE PLOTTED => 26-JUN-2015
TIME PLOTTED => 10:19

Dist	COUNTY	ROUTE	POST MILES TOTAL PROJECT	SHEET No.	TOTAL SHEETS
05	SCr	17	8.3/9.4	38	96

REGISTERED CIVIL ENGINEER 6-15-15 DATE

6-15-15
PLANS APPROVAL DATE

REGISTERED PROFESSIONAL ENGINEER SCOTT D KIRKISH No. 76829 Exp. 12-31-16 CIVIL STATE OF CALIFORNIA

THE STATE OF CALIFORNIA OR ITS OFFICERS OR AGENTS SHALL NOT BE RESPONSIBLE FOR THE ACCURACY OR COMPLETENESS OF SCANNED COPIES OF THIS PLAN SHEET.

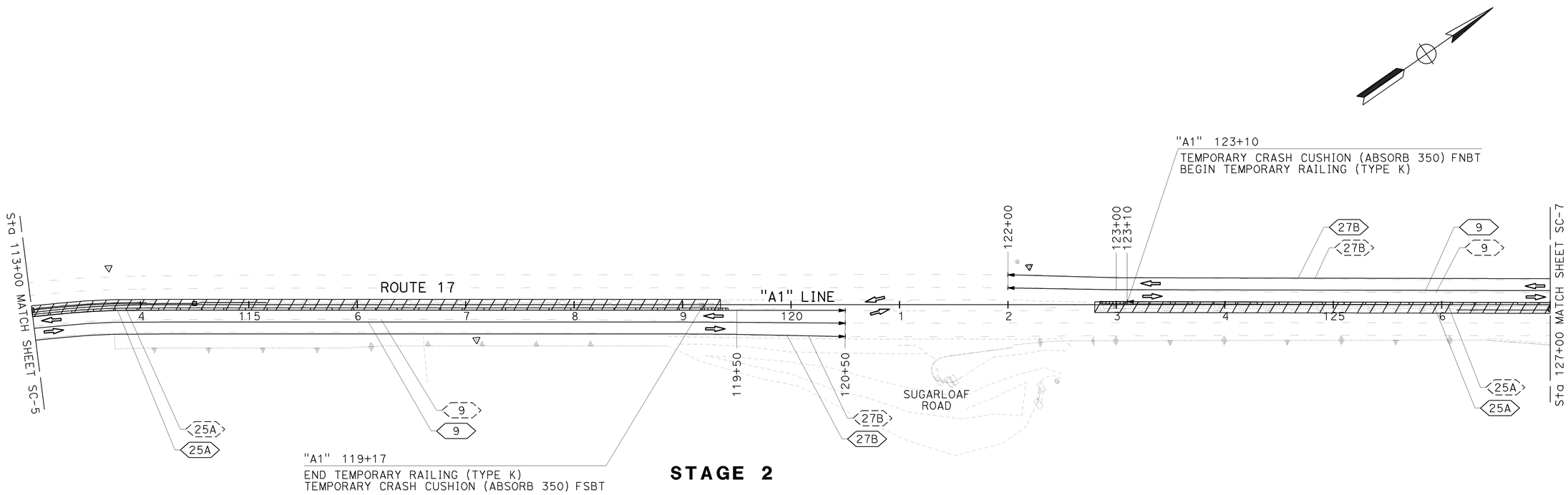

STAGE 2

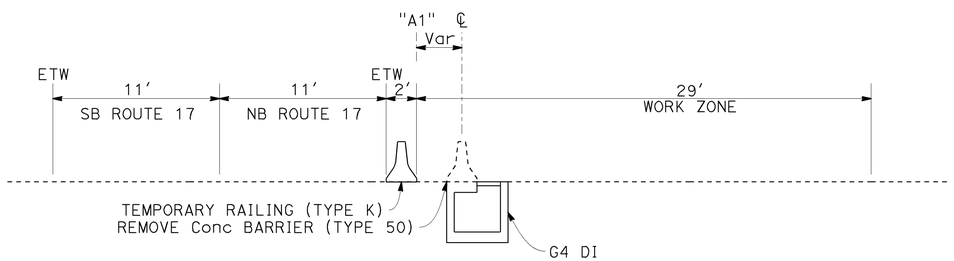

"A1" 123+10 TO 138+34

CROSS SECTION DURING CLOSURE HOURS

NO SCALE

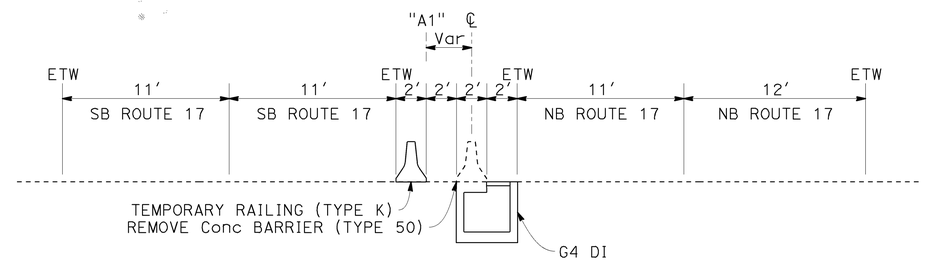

"A1" 123+10 TO 138+34

CROSS SECTION DURING NON-CLOSURE HOURS

NO SCALE

APPROVED FOR STAGE CONSTRUCTION AND TRAFFIC HANDLING WORK ONLY

STAGE CONSTRUCTION AND TRAFFIC HANDLING PLAN

SCALE : 1" = 50′

SC-6

STATE OF CALIFORNIA - DEPARTMENT OF TRANSPORTATION
Caltrans® DESIGN

FUNCTIONAL SUPERVISOR: STEVE WYATT
CALCULATED-DESIGNED BY: SCOTT KIRKISH
CHECKED BY: MICHAEL O'NEAL
REVISED BY
DATE REVISED

LAST REVISION 06-15-15
DATE PLOTTED => 26-JUN-2015
TIME PLOTTED => 10:19

Dist	COUNTY	ROUTE	POST MILES TOTAL PROJECT	SHEET No.	TOTAL SHEETS
05	SCr	17	8.3/9.4	39	96

REGISTERED CIVIL ENGINEER 6-15-15 DATE

6-15-15
PLANS APPROVAL DATE

REGISTERED PROFESSIONAL ENGINEER SCOTT D KIRKISH No. 76829 Exp. 12-31-16 CIVIL STATE OF CALIFORNIA

THE STATE OF CALIFORNIA OR ITS OFFICERS OR AGENTS SHALL NOT BE RESPONSIBLE FOR THE ACCURACY OR COMPLETENESS OF SCANNED COPIES OF THIS PLAN SHEET.

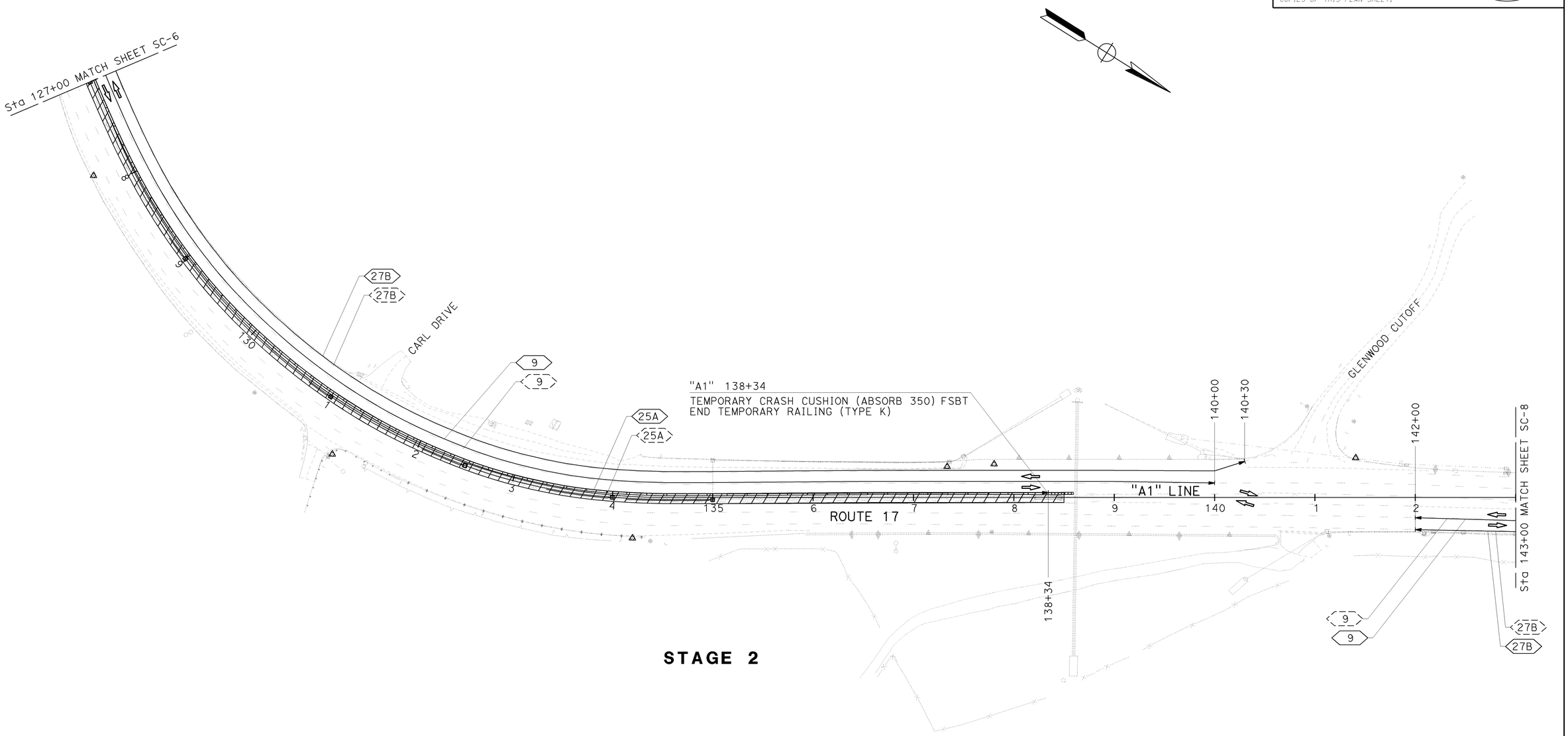

STAGE 2

STAGE CONSTRUCTION AND TRAFFIC HANDLING PLAN

SCALE : 1" = 50'

SC-7

APPROVED FOR STAGE CONSTRUCTION AND TRAFFIC HANDLING WORK ONLY

STATE OF CALIFORNIA - DEPARTMENT OF TRANSPORTATION

DESIGN

FUNCTIONAL SUPERVISOR: STEVE WYATT

CALCULATED-DESIGNED BY: SCOTT KIRKISH

CHECKED BY: MICHAEL O'NEAL

REVISED BY

DATE REVISED

LAST REVISION 06-15-15

DATE PLOTTED => 26-JUN-2015
TIME PLOTTED => 10:19

Dist	COUNTY	ROUTE	POST MILES TOTAL PROJECT	SHEET No.	TOTAL SHEETS
05	SCr	17	8.3/9.4	40	96

REGISTERED CIVIL ENGINEER 6-15-15 DATE

6-15-15
PLANS APPROVAL DATE

REGISTERED PROFESSIONAL ENGINEER SCOTT D KIRKISH No. 76829 Exp. 12-31-16 CIVIL STATE OF CALIFORNIA

THE STATE OF CALIFORNIA OR ITS OFFICERS OR AGENTS SHALL NOT BE RESPONSIBLE FOR THE ACCURACY OR COMPLETENESS OF SCANNED COPIES OF THIS PLAN SHEET.

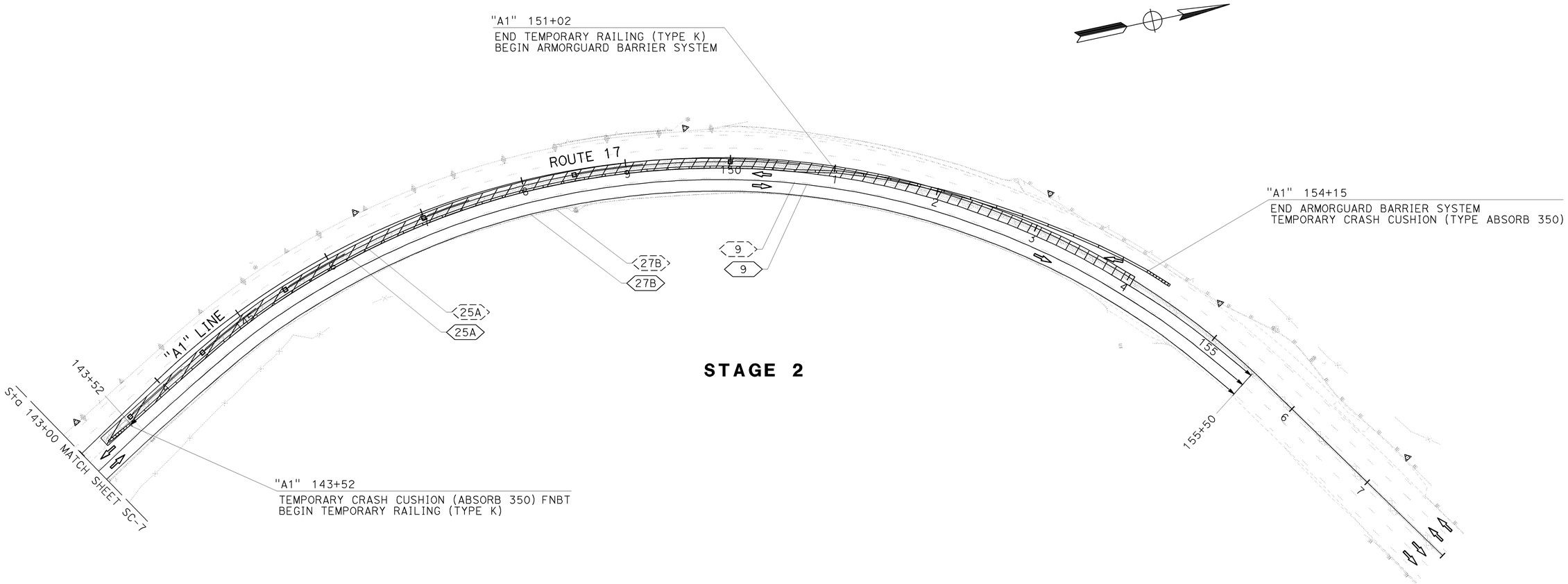

STAGE 2

APPROVED FOR STAGE CONSTRUCTION AND TRAFFIC HANDLING WORK ONLY

STAGE CONSTRUCTION AND TRAFFIC HANDLING PLAN

SCALE : 1" = 50'

SC-8

STATE OF CALIFORNIA - DEPARTMENT OF TRANSPORTATION
Caltrans
DESIGN

FUNCTIONAL SUPERVISOR: STEVE WYATT
CALCULATED-DESIGNED BY: SCOTT KIRKISH
CHECKED BY: MICHAEL O'NEAL
REVISED BY
DATE REVISED

LAST REVISION 06-15-15 | DATE PLOTTED => 26-JUN-2015 | TIME PLOTTED => 10:19

Dist	COUNTY	ROUTE	POST MILES TOTAL PROJECT	SHEET No.	TOTAL SHEETS
05	SCr	17	8.3/9.4	41	96

REGISTERED CIVIL ENGINEER 6-15-15 DATE

6-15-15
PLANS APPROVAL DATE

REGISTERED PROFESSIONAL ENGINEER SCOTT D KIRKISH No. 76829 Exp. 12-31-16 CIVIL STATE OF CALIFORNIA

THE STATE OF CALIFORNIA OR ITS OFFICERS OR AGENTS SHALL NOT BE RESPONSIBLE FOR THE ACCURACY OR COMPLETENESS OF SCANNED COPIES OF THIS PLAN SHEET.

STAGE 3 CONSTRUCTION NOTES:

1. REMOVE REMAINDER OF Conc BARRIER (TYPE 50)
2. CONSTRUCT REMAINDER OF MEDIAN DRAINAGE SYSTEMS
3. CONSTRUCT Conc BARRIER (TYPE 60S)
4. COLD PLANE AREAS
5. PAVE HMA (OPEN GRADED) LAYER
6. FINAL PAVEMENT DELINATION
7. INSTALL LUMINARIES

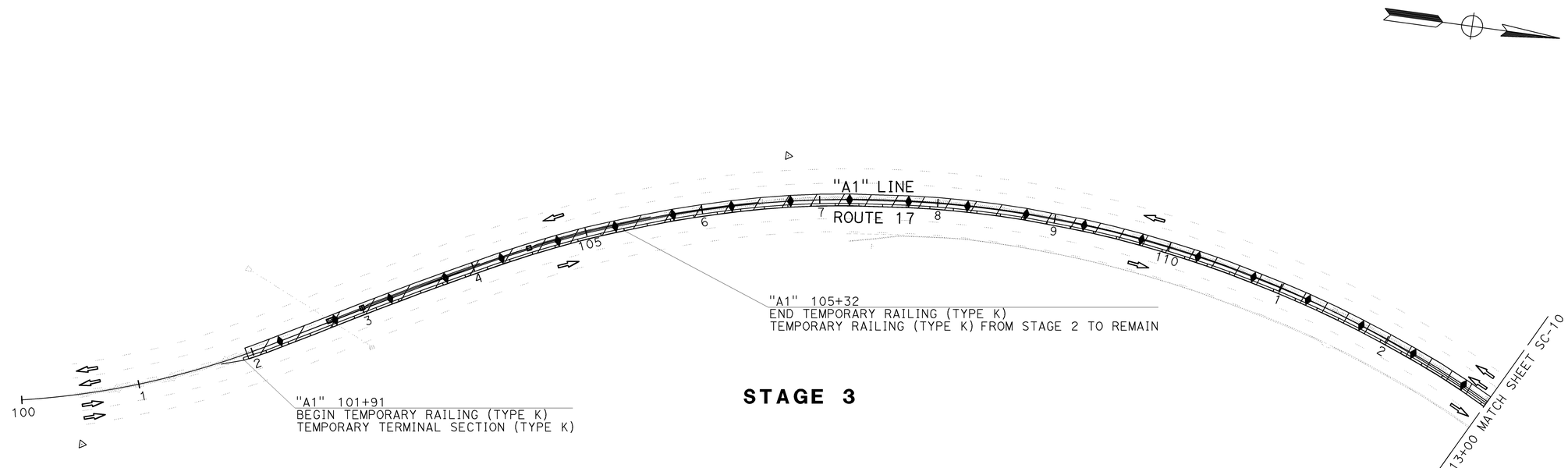

STAGE 3

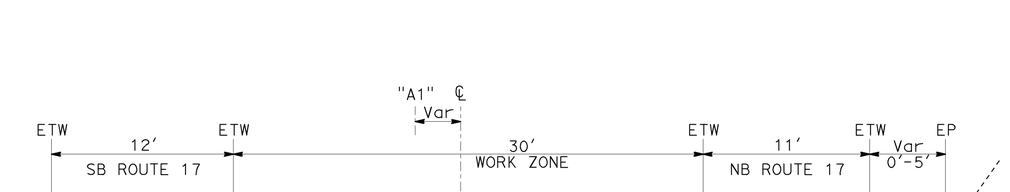

"A1" 101+91 TO 119+17
"A1" 143+52 TO 154+25

CROSS SECTION DURING CLOSURE HOURS

NO SCALE

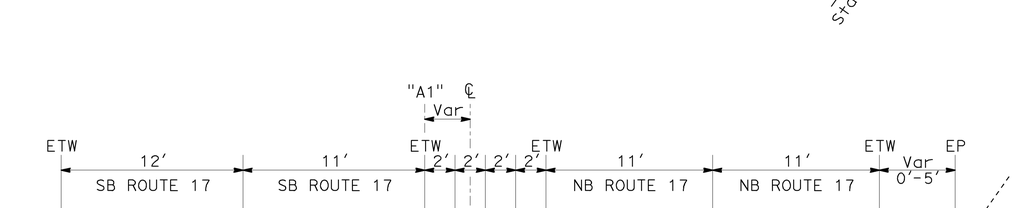

"A1" 101+91 TO 119+17
"A1" 143+52 TO 154+25

CROSS SECTION DURING NON-CLOSURE HOURS

NO SCALE

APPROVED FOR STAGE CONSTRUCTION AND TRAFFIC HANDLING WORK ONLY

STAGE CONSTRUCTION AND TRAFFIC HANDLING PLAN

SCALE : 1" = 50'

SC-9

STATE OF CALIFORNIA - DEPARTMENT OF TRANSPORTATION
Caltrans
DESIGN

FUNCTIONAL SUPERVISOR: STEVE WYATT
CALCULATED-DESIGNED BY: SCOTT KIRKISH
CHECKED BY: MICHAEL O'NEAL
REVISED BY
DATE REVISED

LAST REVISION 06-15-15
DATE PLOTTED => 26-JUN-2015
TIME PLOTTED => 10:19

Dist	COUNTY	ROUTE	POST MILES TOTAL PROJECT	SHEET No.	TOTAL SHEETS
05	SCr	17	8.3/9.4	42	96

REGISTERED CIVIL ENGINEER 6-15-15 DATE

6-15-15
PLANS APPROVAL DATE

REGISTERED PROFESSIONAL ENGINEER SCOTT D KIRKISH No. 76829 Exp. 12-31-16 CIVIL STATE OF CALIFORNIA

THE STATE OF CALIFORNIA OR ITS OFFICERS OR AGENTS SHALL NOT BE RESPONSIBLE FOR THE ACCURACY OR COMPLETENESS OF SCANNED COPIES OF THIS PLAN SHEET.

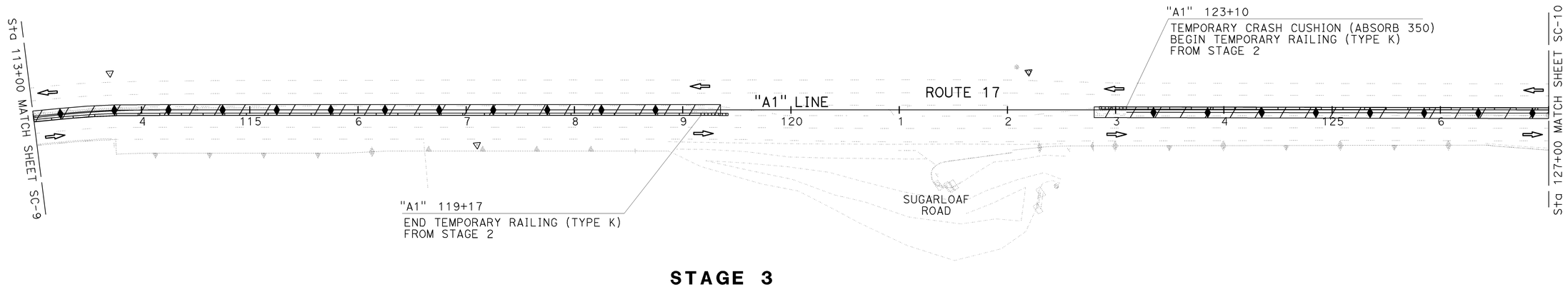

STAGE 3

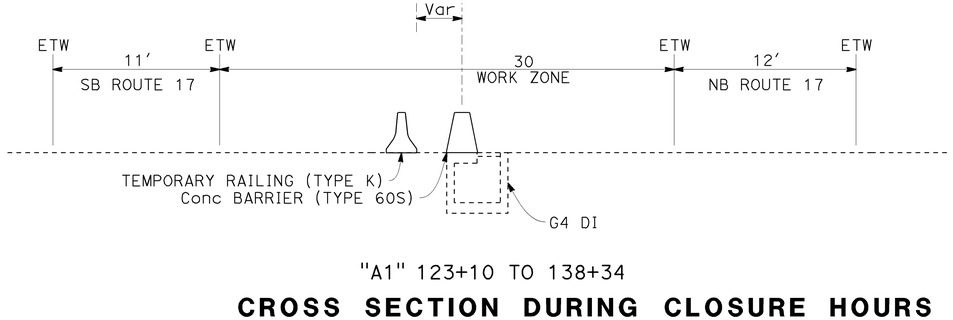

"A1" 123+10 TO 138+34

CROSS SECTION DURING CLOSURE HOURS

NO SCALE

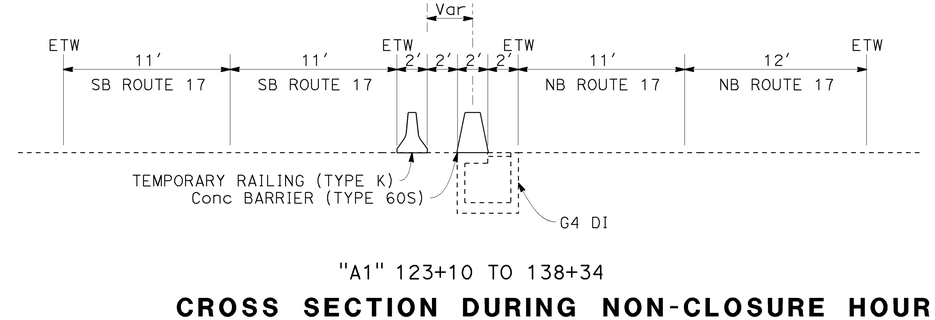

"A1" 123+10 TO 138+34

CROSS SECTION DURING NON-CLOSURE HOURS

NO SCALE

APPROVED FOR STAGE CONSTRUCTION AND TRAFFIC HANDLING WORK ONLY

STAGE CONSTRUCTION AND TRAFFIC HANDLING PLAN

SCALE : 1" = 50′

SC-10

STATE OF CALIFORNIA - DEPARTMENT OF TRANSPORTATION
Caltrans® DESIGN

FUNCTIONAL SUPERVISOR: STEVE WYATT
CALCULATED-DESIGNED BY: SCOTT KIRKISH
CHECKED BY: MICHAEL O'NEAL
REVISED BY
DATE REVISED

LAST REVISION 06-15-15
DATE PLOTTED => 26-JUN-2015
TIME PLOTTED => 10:19

Dist	COUNTY	ROUTE	POST MILES TOTAL PROJECT	SHEET No.	TOTAL SHEETS
05	SCr	17	8.3/9.4	43	96

REGISTERED CIVIL ENGINEER 6-15-15 DATE

6-15-15
PLANS APPROVAL DATE

REGISTERED PROFESSIONAL ENGINEER SCOTT D KIRKISH No. 76829 Exp. 12-31-16 CIVIL STATE OF CALIFORNIA

THE STATE OF CALIFORNIA OR ITS OFFICERS OR AGENTS SHALL NOT BE RESPONSIBLE FOR THE ACCURACY OR COMPLETENESS OF SCANNED COPIES OF THIS PLAN SHEET.

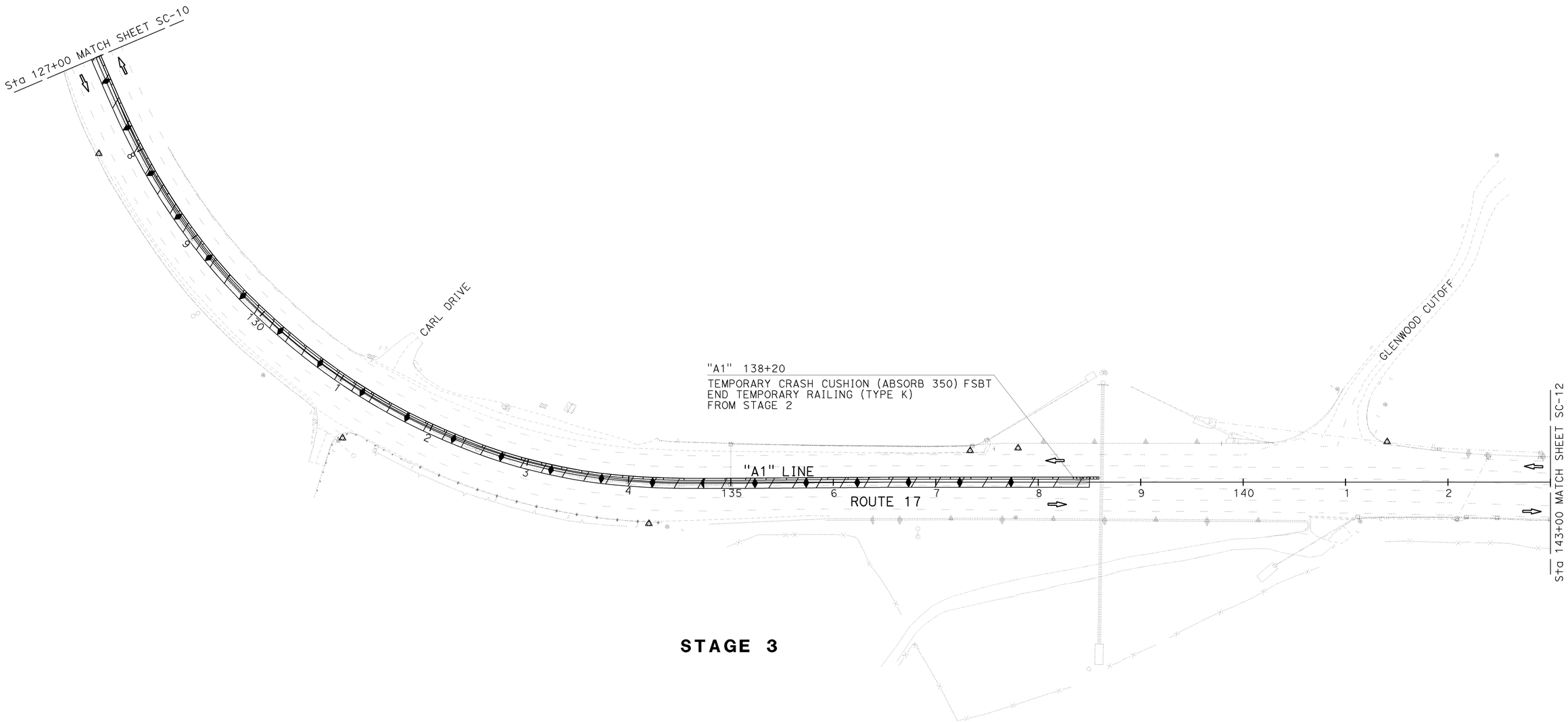

STAGE 3

APPROVED FOR STAGE CONSTRUCTION AND TRAFFIC HANDLING WORK ONLY

STAGE CONSTRUCTION AND TRAFFIC HANDLING PLAN

SCALE : 1" = 50'

SC-11

STATE OF CALIFORNIA - DEPARTMENT OF TRANSPORTATION
Caltrans
DESIGN

FUNCTIONAL SUPERVISOR: STEVE WYATT
CALCULATED-DESIGNED BY: SCOTT KIRKISH
CHECKED BY: MICHAEL O'NEAL
REVISED BY
DATE REVISED

LAST REVISION 06-15-15
DATE PLOTTED => 26-JUN-2015
TIME PLOTTED => 10:19

Dist	COUNTY	ROUTE	POST MILES TOTAL PROJECT	SHEET No.	TOTAL SHEETS
05	SCr	17	8.3/9.4	44	96

REGISTERED CIVIL ENGINEER 6-15-15 DATE

6-15-15
PLANS APPROVAL DATE

REGISTERED PROFESSIONAL ENGINEER
SCOTT D KIRKISH
No. 76829
Exp. 12-31-16
CIVIL
STATE OF CALIFORNIA

THE STATE OF CALIFORNIA OR ITS OFFICERS OR AGENTS SHALL NOT BE RESPONSIBLE FOR THE ACCURACY OR COMPLETENESS OF SCANNED COPIES OF THIS PLAN SHEET.

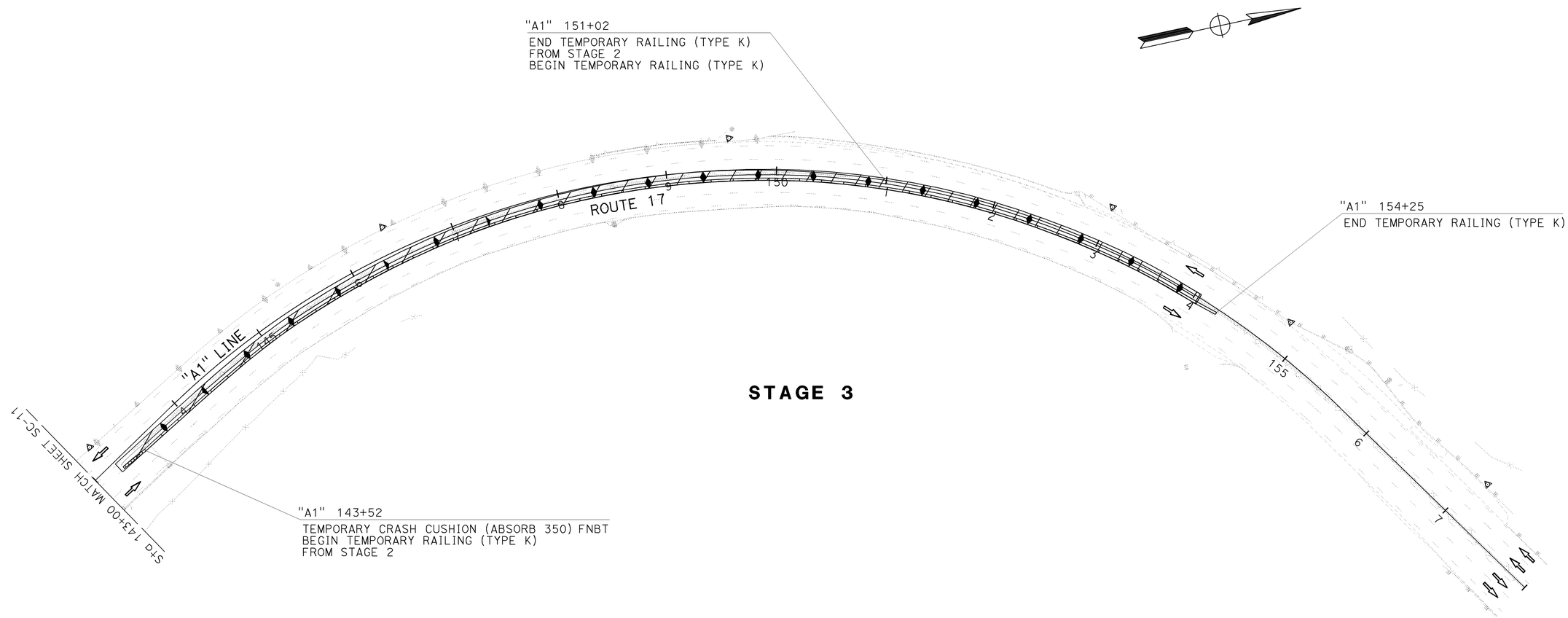

APPROVED FOR STAGE CONSTRUCTION AND TRAFFIC HANDLING WORK ONLY

STAGE CONSTRUCTION AND TRAFFIC HANDLING PLAN

SCALE : 1" = 50'

SC-12

STATE OF CALIFORNIA - DEPARTMENT OF TRANSPORTATION
Caltrans®
DESIGN

FUNCTIONAL SUPERVISOR: STEVE WYATT
CALCULATED-DESIGNED BY: SCOTT KIRKISH
CHECKED BY: MICHAEL O'NEAL
REVISED BY
DATE REVISED

LAST REVISION 06-15-15
DATE PLOTTED => 26-JUN-2015
TIME PLOTTED => 10:19

Dist	COUNTY	ROUTE	POST MILES TOTAL PROJECT	SHEET No.	TOTAL SHEETS
05	SCr	17	8.3/9.4	45	96

REGISTERED CIVIL ENGINEER 6-15-15 DATE

6-15-15
PLANS APPROVAL DATE

REGISTERED PROFESSIONAL ENGINEER SCOTT D KIRKISH No. 76829 Exp. 12-31-16 CIVIL STATE OF CALIFORNIA

THE STATE OF CALIFORNIA OR ITS OFFICERS OR AGENTS SHALL NOT BE RESPONSIBLE FOR THE ACCURACY OR COMPLETENESS OF SCANNED COPIES OF THIS PLAN SHEET.

TEMPORARY PAVEMENT DELINEATION

SHEET No.	LOCATION	DIRECTION	STAGE	TEMPORARY TRAFFIC STRIPE (PAINT) DETAIL 9	22	25A	27B	29	38	REMOVE YELLOW THERMOPLASTIC TRAFFIC STRIPE (HAZARDOUS WASTE) DETAIL 22	25A	29	REMOVE THERMOPLASTIC TRAFFIC STRIPE DETAIL 9,10	27B	38	REMOVE PAVEMENT MARKER	TEMPORARY PAVEMENT MARKER TYPE D	TYPE G	TYPE H
				LF	LF	LF	LF	LF	LF	LF	LF	LF	LF	LF	LF	EA	EA	EA	EA
SC-1	Sta "A1" 102+00 TO 105+12	NB	1																
SC-2	Sta "A1" 114+00 TO 118+65	NB	1																
SC-3	Sta "A1" 135+96 TO 138+20	SB	1			224					224					5			9
SC-3	Sta "A1" 135+96 TO 141+26	SB	1	530									155			77		11	
SC-3	Sta "A1" 137+60 TO 140+00	SB	1																
SC-3	Sta "A1" 137+97 TO 138+20	SB	1			23					23					1			1
SC-3	Sta "A1" 137+97 TO 140+75	SB	1	278			278						81	278		41		6	
SC-3	Sta "A1" 138+20 TO 139+47	SB	1					128				512				11	11		
SC-3	Sta "A1" 139+47 TO 140+47	SB	1		100					200						8	8		
SC-3	Sta "A1" 139+47 TO 140+75	SB	1						128						256	11		5	
SC-5/6	Sta "A1" 101+00 TO 120+50	NB	2/3	1,950		1,950	1,950				1,950		569	1,950		325		41	81
SC-5	Sta "A1" 105+32	NB	2																
SC-5/6	Sta "A1" 105+32 TO 119+17	NB	2/3																
SC-6/7	Sta "A1" 122+00 TO 140+30	SB	2/3	1,800		1,524	1,830				1,600		525	1,830		296		38	64
SC-6/7	Sta "A1" 123+10 TO 138+34	SB	2/3																
SC-7/8	Sta "A1" 142+00 TO 155+50	NB	2/3	1,350		1,200	1,350				1,200		394	1,350		222		28	50
SC-8	Sta "A1" 143+52 TO 151+02	NB	2/3																
SC-8	Sta "A1" 151+02 TO 154+15	SB	2																
SC-9	Sta "A1" 101+91	NB	3																
SC-9	Sta "A1" 101+91 TO 105+32	NB	3																
SC-12	Sta "A1" 151+02 TO 154+25	NB	3																
SUBTOTAL				5,908	100	4,997	5,408	128	128	200	4,997	512	1,724	5,408	256		19	128	205
TOTAL				16,593						5,709			7,388			997	352		

STAGE CONSTRUCTION AND TRAFFIC HANDLING QUANTITIES
SCQ-1

STATE OF CALIFORNIA - DEPARTMENT OF TRANSPORTATION
DESIGN
FUNCTIONAL SUPERVISOR: STEVE WYATT
CALCULATED-DESIGNED BY: SCOTT KIRKISH
CHECKED BY: MICHAEL O'NEAL
REVISED BY
DATE REVISED

LAST REVISION 06-15-15
DATE PLOTTED => 26-JUN-2015
TIME PLOTTED => 10:19

Dist	COUNTY	ROUTE	POST MILES TOTAL PROJECT	SHEET No.	TOTAL SHEETS
05	SCr	17	8.3/9.4	46	96

REGISTERED CIVIL ENGINEER 6-15-15 DATE

6-15-15
PLANS APPROVAL DATE

REGISTERED PROFESSIONAL ENGINEER SCOTT D KIRKISH No. 76829 Exp. 12-31-16 CIVIL STATE OF CALIFORNIA

THE STATE OF CALIFORNIA OR ITS OFFICERS OR AGENTS SHALL NOT BE RESPONSIBLE FOR THE ACCURACY OR COMPLETENESS OF SCANNED COPIES OF THIS PLAN SHEET.

TRAFFIC HANDLING

SHEET No.	LOCATION	DIRECTION	STAGE	TEMPORARY TERMINAL SECTION (TYPE K)	TEMPORARY RAILING (TYPE K)	QUICKCHANGE MOVEABLE BARRIER	ARMORGUARD BARRIER SYSTEM	TEMPORARY CRASH CUSHION (ABSORB 350)
				EA	EA	LF	LF	EA
SC-1	Sta "A1" 102+00 TO 105+12	NB	1				312	1
SC-2	Sta "A1" 114+00 TO 118+65	NB	1			465		1
SC-3	Sta "A1" 135+96 TO 138+20	SB	1					
SC-3	Sta "A1" 135+96 TO 141+26	SB	1					
SC-3	Sta "A1" 137+60 TO 140+00	SB	1			245		1
SC-3	Sta "A1" 137+97 TO 138+20	SB	1					
SC-3	Sta "A1" 137+97 TO 140+75	SB	1					
SC-3	Sta "A1" 138+20 TO 139+47	SB	1					
SC-3	Sta "A1" 139+47 TO 140+47	SB	1					
SC-3	Sta "A1" 139+47 TO 140+75	SB	1					
SC-5/6	Sta "A1" 101+00 TO 120+50	NB	2/3					
SC-5	Sta "A1" 105+32	NB	2	1				
SC-5/6	Sta "A1" 105+32 TO 119+17	NB	2/3		1,380			1
SC-6/7	Sta "A1" 122+00 TO 140+30	SB	2/3					
SC-6/7	Sta "A1" 123+10 TO 138+34	SB	2/3		1,520			2
SC-7/8	Sta "A1" 142+00 TO 155+50	NB	2/3					
SC-8	Sta "A1" 143+52 TO 151+02	NB	2/3		740			2
SC-8	Sta "A1" 151+02 TO 154+15	SB	2				312	
SC-9	Sta "A1" 101+91	NB	3	1				
SC-9	Sta "A1" 101+91 TO 105+32	NB	3		340			
SC-12	Sta "A1" 151+02 TO 154+25	NB	3		320			
TOTAL				2	4,300	710	624	8

STAGE CONSTRUCTION AND TRAFFIC HANDLING QUANTITIES
SCQ-2

STATE OF CALIFORNIA - DEPARTMENT OF TRANSPORTATION
DESIGN

FUNCTIONAL SUPERVISOR: STEVE WYATT
CALCULATED-DESIGNED BY: SCOTT KIRKISH
CHECKED BY: MICHAEL O'NEAL
REVISED BY
DATE REVISED

LAST REVISION 06-15-15
DATE PLOTTED => 26-JUN-2015
TIME PLOTTED => 10:19

Dist	COUNTY	ROUTE	POST MILES TOTAL PROJECT	SHEET No.	TOTAL SHEETS
05	SCr	17	8.3/9.4	47	96

REGISTERED CIVIL ENGINEER 6-15-15 DATE

6-15-15
PLANS APPROVAL DATE

REGISTERED PROFESSIONAL ENGINEER SCOTT D KIRKISH No. 76829 Exp. 12-31-16 CIVIL STATE OF CALIFORNIA

THE STATE OF CALIFORNIA OR ITS OFFICERS OR AGENTS SHALL NOT BE RESPONSIBLE FOR THE ACCURACY OR COMPLETENESS OF SCANNED COPIES OF THIS PLAN SHEET.

LEGEND:

- XX THERMOPLASTIC TRAFFIC STRIPE (SPRAYABLE)
- PAVEMENT MARKING (TYPE V ARROW)
- PAVEMENT MARKING (TYPE III (L) ARROW)
- ● RESET ROADSIDE SIGN
- ○ RELOCATE ROADSIDE SIGN

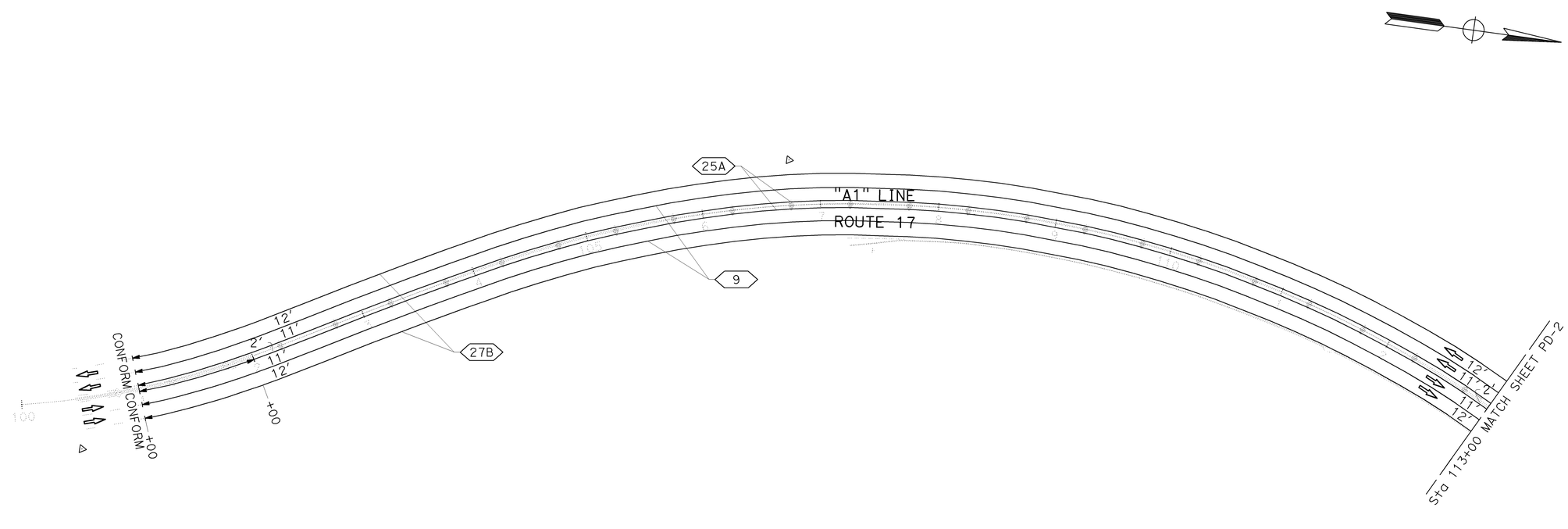

APPROVED FOR PAVEMENT DELINEATION AND SIGN WORK ONLY

PAVEMENT DELINEATION AND SIGN PLAN

SCALE : 1" = 50'

PD-1

STATE OF CALIFORNIA - DEPARTMENT OF TRANSPORTATION
Caltrans® DESIGN

FUNCTIONAL SUPERVISOR: STEVE WYATT
CALCULATED-DESIGNED BY: SCOTT KIRKISH
CHECKED BY: MICHAEL O'NEAL
REVISED BY / DATE REVISED

LAST REVISION 06-15-15
DATE PLOTTED => 26-JUN-2015
TIME PLOTTED => 10:19

Dist	COUNTY	ROUTE	POST MILES TOTAL PROJECT	SHEET No.	TOTAL SHEETS
05	SCr	17	8.3/9.4	48	96

REGISTERED CIVIL ENGINEER 6-15-15 DATE

6-15-15
PLANS APPROVAL DATE

REGISTERED PROFESSIONAL ENGINEER SCOTT D KIRKISH No. 76829 Exp. 12-31-16 CIVIL STATE OF CALIFORNIA

THE STATE OF CALIFORNIA OR ITS OFFICERS OR AGENTS SHALL NOT BE RESPONSIBLE FOR THE ACCURACY OR COMPLETENESS OF SCANNED COPIES OF THIS PLAN SHEET.

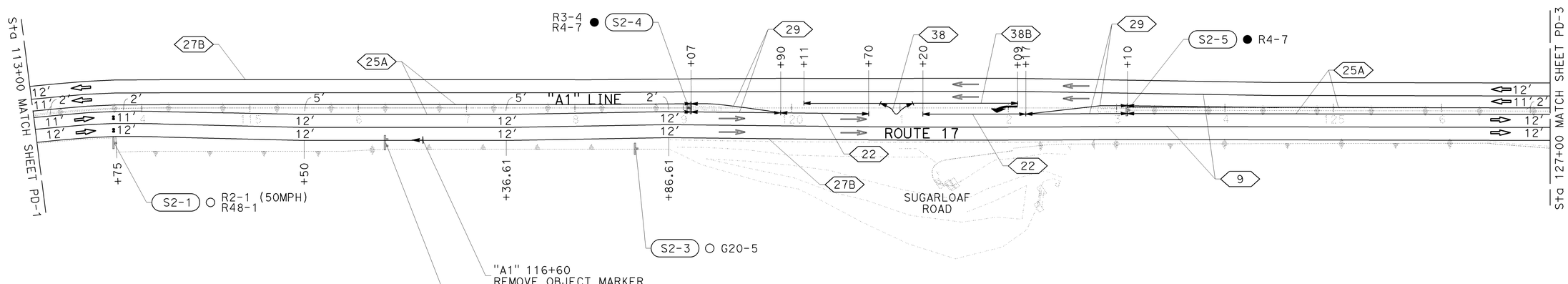

APPROVED FOR PAVEMENT DELINEATION AND SIGN WORK ONLY

PAVEMENT DELINEATION AND SIGN PLAN

SCALE : 1" = 50′

PD-2

STATE OF CALIFORNIA - DEPARTMENT OF TRANSPORTATION
Caltrans®
DESIGN

FUNCTIONAL SUPERVISOR: STEVE WYATT
CALCULATED-DESIGNED BY: SCOTT KIRKISH
CHECKED BY: MICHAEL O'NEAL
REVISED BY
DATE REVISED

LAST REVISION 06-15-15
DATE PLOTTED => 26-JUN-2015
TIME PLOTTED => 10:19

Dist	COUNTY	ROUTE	POST MILES TOTAL PROJECT	SHEET No.	TOTAL SHEETS
05	SCr	17	8.3/9.4	49	96

REGISTERED CIVIL ENGINEER 6-15-15 DATE

6-15-15
PLANS APPROVAL DATE

REGISTERED PROFESSIONAL ENGINEER SCOTT D KIRKISH No. 76829 Exp. 12-31-16 CIVIL STATE OF CALIFORNIA

THE STATE OF CALIFORNIA OR ITS OFFICERS OR AGENTS SHALL NOT BE RESPONSIBLE FOR THE ACCURACY OR COMPLETENESS OF SCANNED COPIES OF THIS PLAN SHEET.

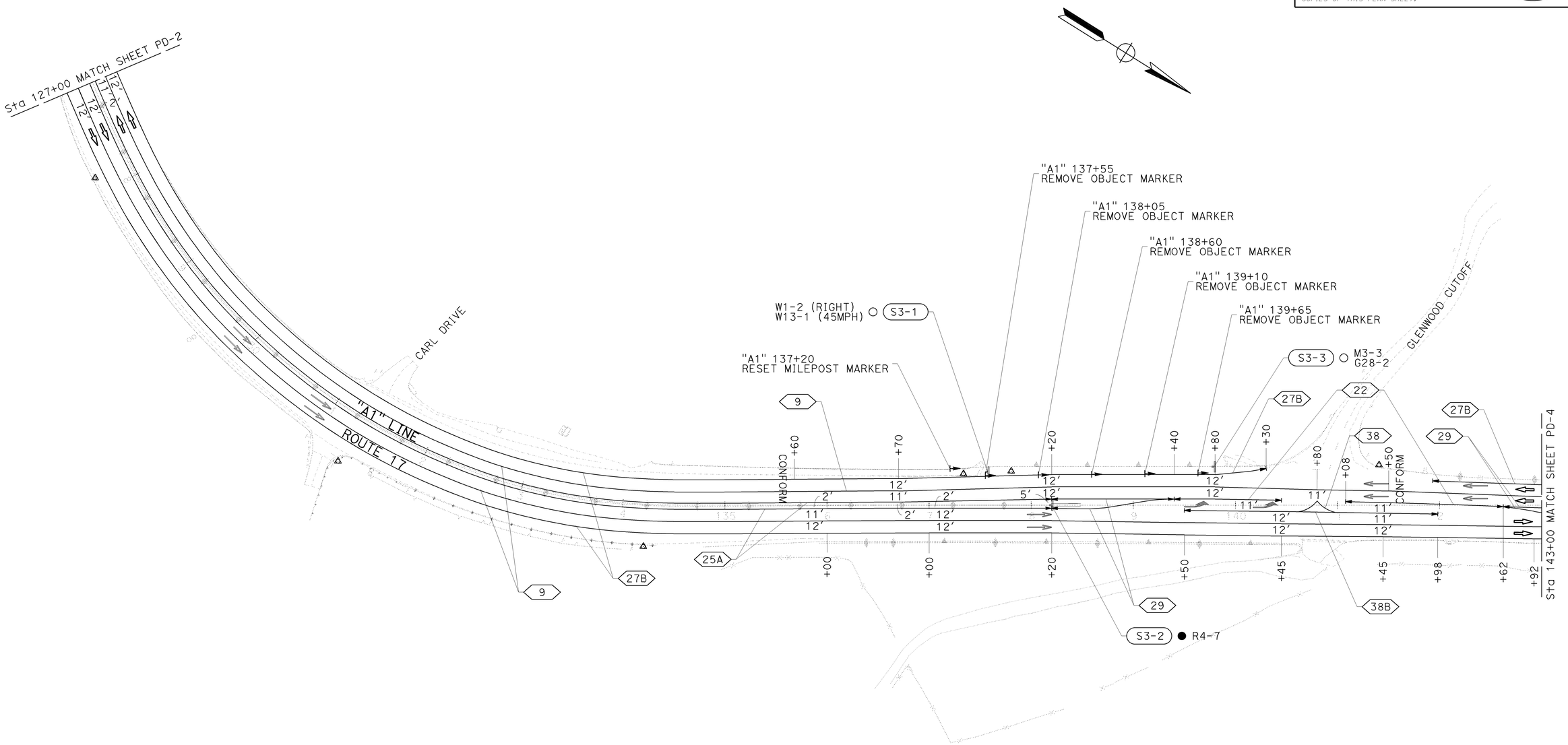

PAVEMENT DELINEATION AND SIGN PLAN

SCALE : 1" = 50'

PD-3

APPROVED FOR PAVEMENT DELINEATION AND SIGN WORK ONLY

STATE OF CALIFORNIA - DEPARTMENT OF TRANSPORTATION

DESIGN

FUNCTIONAL SUPERVISOR: STEVE WYATT

CALCULATED-DESIGNED BY: SCOTT KIRKISH

CHECKED BY: MICHAEL O'NEAL

REVISED BY

DATE REVISED

LAST REVISION 06-15-15 | DATE PLOTTED => 26-JUN-2015 | TIME PLOTTED => 10:19

Dist	COUNTY	ROUTE	POST MILES TOTAL PROJECT	SHEET No.	TOTAL SHEETS
05	SCr	17	8.3/9.4	50	96

REGISTERED CIVIL ENGINEER 6-15-15 DATE

6-15-15
PLANS APPROVAL DATE

REGISTERED PROFESSIONAL ENGINEER
SCOTT D KIRKISH
No. 76829
Exp. 12-31-16
CIVIL
STATE OF CALIFORNIA

THE STATE OF CALIFORNIA OR ITS OFFICERS OR AGENTS SHALL NOT BE RESPONSIBLE FOR THE ACCURACY OR COMPLETENESS OF SCANNED COPIES OF THIS PLAN SHEET.

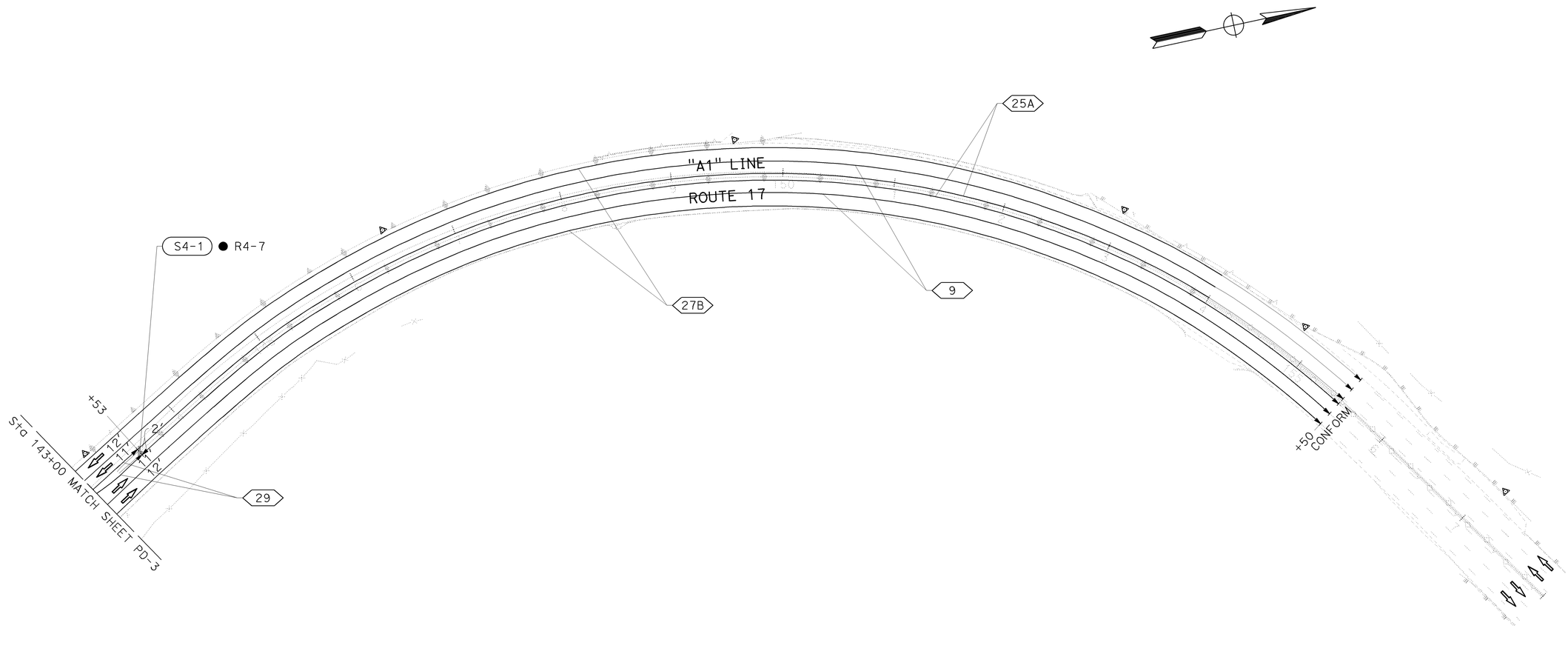

APPROVED FOR PAVEMENT DELINEATION AND SIGN WORK ONLY

PAVEMENT DELINEATION AND SIGN PLAN

SCALE : 1" = 50'

PD-4

STATE OF CALIFORNIA - DEPARTMENT OF TRANSPORTATION
Caltrans®
DESIGN

FUNCTIONAL SUPERVISOR: STEVE WYATT
CALCULATED-DESIGNED BY: SCOTT KIRKISH
CHECKED BY: MICHAEL O'NEAL
REVISED BY
DATE REVISED

LAST REVISION 06-15-15
DATE PLOTTED => 26-JUN-2015
TIME PLOTTED => 10:19

Dist	COUNTY	ROUTE	POST MILES TOTAL PROJECT	SHEET No.	TOTAL SHEETS
05	SCr	17	8.3/9.4	51	96

REGISTERED CIVIL ENGINEER 6-15-15 DATE

6-15-15
PLANS APPROVAL DATE

REGISTERED PROFESSIONAL ENGINEER SCOTT D KIRKISH No. 76829 Exp. 12-31-16 CIVIL STATE OF CALIFORNIA

THE STATE OF CALIFORNIA OR ITS OFFICERS OR AGENTS SHALL NOT BE RESPONSIBLE FOR THE ACCURACY OR COMPLETENESS OF SCANNED COPIES OF THIS PLAN SHEET.

ROADSIDE SIGN QUANTITIES

SIGN No. (SX-X)	SIGN CODE FEDERAL	SIGN CODE CALIFORNIA	SIGN MESSAGE	RESET ROADSIDE SIGN	RELOCATE ROADSIDE SIGN - ONE POST	RELOCATE ROADSIDE SIGN - TWO POST	REMARKS
				EA	EA	EA	
S2-1	R2-1		50 (MPH)		1		"A1" 113+75, Rt Shld
		R48-1	RADAR ENFORCED				
S2-2		G8-22	SUGARLOAF RD (RIGHT)			1	"A1" 116+25, Rt Shld
S2-3		G20-5	GLENWOOD CUTOFF LEFT LANE		1		"A1" 118+55, Rt Shld
S2-4	R3-4		NO U TURN	1			"A1" 119+07, ON BARRIER
	R4-7		STAY RIGHT				
S2-5	R4-7		NO U TURN	1			"A1" 123+10, ON BARRIER
S3-1	W1-2		CUVRE RIGHT		1		"A1" 137+55, Lt Shld
	W13-1		45 MPH				
S3-2	R4-7		STAY RIGHT	1			"A1" 138+20, ON BARRIER
S3-3	M3-3		SOUTH		1		"A1" 139+80, Lt Shld
		G28-2	CALIFORNIA 17				
S4-1	R4-7		STAY RIGHT	1			"A1" 143+53, ON BARRIER
			TOTAL	4	4	1	

PAVEMENT DELINEATION QUANTITIES

SHEET No.	LOCATION	DIRECTION	DETAIL No.	4" THERMOPLASTIC TRAFFIC STRIPE (BROKEN 17-7)	THERMOPLASTIC TRAFFIC STRIPE			THERMOPLASTIC PAVEMENT MARKING	PAVEMENT MARKER (RETROREFLECTIVE)			PAVEMENT MARKER (RETROREFLECTIVE -RECESSED)			REMOVE MARKER	RESET MILEPOST MARKER	COMMENTS
				4" WHITE BROKEN	4" WHITE SOLID	4" YELLOW SOLID	8" WHITE SOLID		TYPE D	TYPE G	TYPE H	TYPE D	TYPE G	TYPE H			
				LF	LF	LF	LF	SQFT	EA	EA	EA	EA	EA	EA	EA	EA	
PD-2	Sta "A1" 116+60	NB													1		OBJECT MARKER
PD-3	Sta "A1" 137+55	SB													1		OBJECT MARKER
PD-3	Sta "A1" 138+05	SB													1		OBJECT MARKER
PD-3	Sta "A1" 138+60	SB													1		OBJECT MARKER
PD-3	Sta "A1" 139+10	SB													1		OBJECT MARKER
PD-3	Sta "A1" 139+65	SB													1		OBJECT MARKER
PD-3	Sta "A1" 137+20	SB														1	
PD-1 - PD-4	Sta "A1" 101+00 TO 155+50	NB/SB	9,27B	10,900	10,630			594		167			60				TYPE V ARROWS
PD-1 - PD-2	Sta "A1" 101+00 TO 119+07	NB/SB	25A			3,614					151						
PD-2	Sta "A1" 119+07 TO 119+90	NB/SB	29			332			7								
PD-2	Sta "A1" 119+90 TO 120+70	NB	22			160			7								
PD-2	Sta "A1" 120+11 TO 122+09	SB	38,38B				235			19							
PD-2	Sta "A1" 121+20 TO 122+17	NB	22			194		42	8								TYPE III (L) ARROW
PD-2	Sta "A1" 122+17 TO 123+10	NB/SB	29			372			8								
PD-2 - PD-3	Sta "A1" 123+10 TO 138+20	NB/SB	25A			3,020					126						
PD-3	Sta "A1" 138+20 TO 139+40	NB/SB	29			480			10								
PD-3	Sta "A1" 139+40 TO 140+45	NB	22			210		84	9								TYPE III (L) ARROWS
PD-3	Sta "A1" 139+50 TO 141+98	NB/SB	38,38B				291			23							
PD-3	Sta "A1" 141+08 TO 142+62	NB	22			308						13					
PD-3 - PD-4	Sta "A1" 142+62 TO 143+53	NB/SB	29			364						8					
PD-4	Sta "A1" 143+53 TO 155+50	NB/SB	25A			2,394								100			
SUBTOTAL				10,900	10,630	11,448	526		48	209	276	20	60	100			
TOTAL				10,900	22,700			720	533			180			6	1	

PAVEMENT DELINEATION AND SIGN QUANTITIES
PDQ-1

STATE OF CALIFORNIA - DEPARTMENT OF TRANSPORTATION
DESIGN
Caltrans

FUNCTIONAL SUPERVISOR: STEVE WYATT
CALCULATED-DESIGNED BY: SCOTT KIRKISH
CHECKED BY: MICHAEL O'NEAL
REVISED BY
DATE REVISED

LAST REVISION 06-15-15
DATE PLOTTED => 26-JUN-2015
TIME PLOTTED => 10:19

Dist	COUNTY	ROUTE	POST MILES TOTAL PROJECT	SHEET No.	TOTAL SHEETS
05	SCr	17	8.3/9.4	52	96

REGISTERED CIVIL ENGINEER 6-15-15 DATE

6-15-15
PLANS APPROVAL DATE

REGISTERED PROFESSIONAL ENGINEER SCOTT D KIRKISH No. 76829 Exp. 12-31-16 CIVIL STATE OF CALIFORNIA

THE STATE OF CALIFORNIA OR ITS OFFICERS OR AGENTS SHALL NOT BE RESPONSIBLE FOR THE ACCURACY OR COMPLETENESS OF SCANNED COPIES OF THIS PLAN SHEET.

PAVEMENT STRUCTURE

STATION	COLD PLANE AC PAVEMENT	CLASS 2 AGGREGATE BASE	HOT MIX ASPHALT (TYPE A)	HOT MIX ASPHALT - OPEN GRADED (OPEN GRADED FRICTION COURSE)	HOT MIX ASPHALT (MISCELLANEOUS AREA)	TACK COAT
	SQYD	CY	TON	TON	TON	TON
Sta 101+00 TO 113+00	7,182.1			484.8		
Sta 113+00 TO 127+00	8,477.3			572.2		
Sta 127+00 TO 143+00	9,875.1			666.6		
Sta 143+00 TO 155+50	7,321.6			494.2		15.06
Sta 113+75.00 TO 113+97.15		14.3	13.2	2.4		0.16
Sta 113+97.15 TO 115+88.00		123.0	114.2	20.8		1.38
Sta 115+88.00 TO 116+28.00		27.6	25.6	4.7		0.31
Sta 116+28.00 TO 116+33.75		3.2	3.0	0.5		0.04
Sta 116+33.75 TO 116+40.25		3.6	3.4	0.6		0.04
Sta 116+40.25 TO 118+51.75		42.3	39.3	7.1		0.48
Sta 118+51.75 TO 118+58.25		3.6	3.4	0.6		0.04
Sta 118+58.25 TO 118+86.61		15.8	14.6	2.7		0.18
Sta 135+68.00 TO 137+73.50		78.4	72.7	13.2		0.88
Sta 137+73.50 TO 137+80.00		3.2	2.9	0.5		0.04
Sta 137+80.00 TO 138+20.00		5.3	5.0	0.9		0.06
Sta 138+20.00 TO 139+77.00		20.9	19.4	3.5		0.24
Sta 139+77.00 TO 139+83.50		3.2	2.9	0.9		0.04
Sta 139+83.50 TO 140+30.00		23.1	21.5	3.9		0.26
OVERSIDE AND DOWNDRAINS			1.8		13.4	
HMA DIKE			17.1			
TOTAL	32,856.2	367.4	359.9	2,279.8	13.4	19.19

PLACE HOT MIX ASPHALT DIKE

STATION	HOT MIX ASPHALT DIKE (TYPE A)	HOT MIX ASPHALT DIKE (TYPE E)	HOT MIX ASPHALT (TYPE A)
	LF	LF	TON
Sta 113+75 TO 113+96 Rt		17	0.4
Sta 134+98 TO 137+80 Lt	273		7.5
Sta 139+83.50 TO 140+30 Lt		48	1.3
Sta 141+15 TO 144+04 Rt	289		7.9
TOTAL	562	65	17.1*

* - QUANTITY INCLUDED IN PAVEMENT STRUCTURE QUANTITIES SUMMARY

CONCRETE BARRIER

STATION	LOCATION	RESET CRASH CUSHION	REMOVE CONCRETE BARRIER (TYPE 50)	(N) SCUPPERS	CONCRETE BARRIER (TYPE 60)	CONCRETE BARRIER (TYPE 60S)	(N) BARRIER MARKER	ALTERNATIVE CRASH CUSHION SYSTEM
		EA	LF	EA	LF	LF	EA	EA
Sta 102+00 TO 119+05	CL	1	1,705			1,705	36	
Sta 113+92.97 TO 113+97.15	Rt				4.0			
Sta 123+10 TO 138+20	CL	2	1,512			1,512	31	
Sta 143+53 TO 154+00	CL	1	1,040			1,040	22	
Sta 139+83.50	Lt							1
Sta 151+00 TO 154+00	CL			37				
Sta 115+88.00 TO 116+33.75	Rt				45.8			
TOTAL		4	4,257	37	49.8	4,257		1

(N) - NOT A SEPARATE PAY ITEM, FOR INFORMATION ONLY

REMOVE ASPHALT CONCRETE DIKE

STATION	HOT MIX ASPHALT DIKE (TYPE A)
	LF
Sta 141+14.46 TO 144+03.47 Rt	289
TOTAL	289

TEMPORARY WATER POLLUTION CONTROL QUANTITIES

STATION	SIDE Lt	SIDE Rt	TEMPORARY DRAINAGE INLET PROTECTION
			EA
103+00		X	1
106+50		X	1
108+50	X		1
120+10	X		1
131+10	X		1
133+00	X		1
141+85	X		1
142+10		X	1
142+90	X		1
148+50		X	1
154+30		X	1
TOTAL			11

EARTHWORK QUANTITIES SUMMARY

STATION	ROADWAY EXCAVATION	ROADWAY EXCAVATION (TYPE Z-2) (AERIALLY DEPOSITED LEAD)	(N) EMBANKMENT
	CY	CY	CY
Sta 113+75 TO 115+88.00	799.8		0.5
Sta 115+88 TO 118+86.61	48.3	109.7	
Sta 135+68 TO 140+30	173.7		23.1
TOTAL	1021.8	109.7	

(N) - NOT A SEPARATE PAY ITEM, FOR INFORMATION ONLY

TREES WITHIN CLEARING AND GRUBBING (N)

STATION	OFFSET	SIDE Lt	SIDE Rt	TYPE	BREAST HEIGHT DIAMETER
113+78	44.6′		X	REDWOOD	3.50′
115+68	49.9′		X	OAK	2.00′
115+78	43.8′		X	REDWOOD	4.00′
115+84	41.8′		X	OAK	2.00′
116+31	37.8′		X	REDWOOD	2.00′
116+45	44.2′		X	REDWOOD	4.00′
116+84	42.6′		X	REDWOOD	4.50′
116+85	45.3′		X	REDWOOD	4.70′
117+65	43.2′		X	REDWOOD	4.00′
137+73	42.5′	X		REDWOOD	0.70′
137+76	41.6′	X		REDWOOD	0.70′
137+84	43.8′	X		REDWOOD	1.40′
137+93	42.7′	X		REDWOOD	2.00′
138+26	43.7′	X		REDWOOD	1.60′
138+31	45.2′	X		REDWOOD	1.30′
138+35	42.8′	X		REDWOOD	2.50′
139+32	43.8′	X		REDWOOD	2.00′

(N) - NOT A SEPARATE PAY ITEM, FOR INFORMATION ONLY

SUMMARY OF QUANTITIES
Q-1

STATE OF CALIFORNIA - DEPARTMENT OF TRANSPORTATION
Caltrans DESIGN
FUNCTIONAL SUPERVISOR: STEVE WYATT
CALCULATED-DESIGNED BY: SCOTT KIRKISH
CHECKED BY: MICHAEL O'NEAL
REVISED BY / DATE REVISED

LAST REVISION 06-15-15 | DATE PLOTTED => 26-JUN-2015 | TIME PLOTTED => 10:19

Dist	COUNTY	ROUTE	POST MILES TOTAL PROJECT	SHEET No.	TOTAL SHEETS
05	SCr	17	8.3/9.4	53	96

LICENSED LANDSCAPE ARCHITECT

6-15-15
PLANS APPROVAL DATE

LICENSED LANDSCAPE ARCHITECT
Peter New No. 3093
Signature
3-31-17
Renewal Date
06-15-15
Date
STATE OF CALIFORNIA

THE STATE OF CALIFORNIA OR ITS OFFICERS OR AGENTS SHALL NOT BE RESPONSIBLE FOR THE ACCURACY OR COMPLETENESS OF SCANNED COPIES OF THIS PLAN SHEET.

COMPOST SOCK

SEQUENCE	ITEM	REMARKS
INSTALL COMPOST SOCK PRIOR TO OTHER EROSION CONTROL IN THE AREA	COMPOST SOCK	STAKING TYPE 1

EROSION CONTROL TYPE 1

SEQUENCE	ITEM	MATERIAL		APPLICATION RATE	REMARKS
		DESCRIPTION	TYPE		
STEP 1	COMPOST	COMPOST	MEDIUM	270 CY/ACRE	COMPOST RATE EQUALS APPROXIMATELY 2" DEPTH
		SEED	MIX	37 LB/ACRE	
STEP 2	HYDROMULCH	FIBER	WOOD	1,500 LB/ACRE	
		TACKIFIER	PSYLLIUM	125 LB/ACRE	

SEED MIX

BOTANICAL NAME (COMMON NAME)	PERCENT GERMINATION (MINIMUM)	POUNDS PURE LIVE SEED PER ACRE (SLOPE MEASUREMENT)
ACMISPON GLABER (DEERWEED)	80	1
BROMUS CARINATUS (CALIFORNIA BROME)	90	10
HORDEUM BRACHYANTHERUM (MEADOW BARLEY)	80	3
STIPA CERNUA, DEAWNED (NODDING NEEDLEGRASS)	78	10
STIPA PULCHRA, DEAWNED (PURPLE NEEDLEGRASS)	75	7
VULPIA MICROSTACHYS (SMALL FESCUE)	80	6

EROSION CONTROL QUANTITIES

LOCATION	DESCRIPTION	COMPOST SOCK	COMPOST	HYDROMULCH	REMARKS
		LF	SQFT	SQFT	
"A1" 113+70 TO 116+20 R†	EROSION CONTROL TYPE 1		1,250	1,250	ALONG RETAINING WALL. 5' WIDTH FROM CLEARING AND GRUBBING LIMIT TO TOP OF WALL, AND DISTURBANCE AT EACH END.
"A1" 116+20 TO 119+00 R†	EROSION CONTROL TYPE 1		2,800	2,800	ALONG VIADUCT. 10' WIDTH FROM CLEARING AND GRUBBING LIMIT TO VIADUCT PILES, AND DISTURBANCE AT EACH END.
	COMPOST SOCK	280			ALONG VIADUCT. LOCATE AT CLEARING AND GRUBBING LIMIT 5' FROM VIADUCT EDGE OF DECK.
"A1" 137+50 TO 140+30 L†	EROSION CONTROL TYPE 1		2,800	2,800	ALONG VIADUCT. 10' WIDTH FROM CLEARING AND GRUBBING LIMIT TO VIADUCT PILES, AND DISTURBANCE AT EACH END.
	COMPOST SOCK	280			ALONG VIADUCT. LOCATE AT CLEARING AND GRUBBING LIMIT 5' FROM VIADUCT EDGE OF DECK.
"A1" 138+62 L†	EROSION CONTROL TYPE 1		1,600	1,600	AREA OF JACKING PIT FOR DRAINAGE SYSTEM No. 7.
	TOTAL	560	8,450	8,450	

EROSION CONTROL LEGEND AND QUANTITIES
ECL-1

STATE OF CALIFORNIA - DEPARTMENT OF TRANSPORTATION
Caltrans LANDSCAPE ARCHITECTURE

SENIOR LANDSCAPE ARCHITECT: DENNIS REEVES
CALCULATED-DESIGNED BY: PETER NEW
CHECKED BY: JO JACKSON
REVISED BY
DATE REVISED

LAST REVISION 03-18-15
DATE PLOTTED => 26-JUN-2015
TIME PLOTTED => 10:19

Dist	COUNTY	ROUTE	POST MILES TOTAL PROJECT	SHEET No.	TOTAL SHEETS
05	SCr	17	8.3/9.4	54	96

Xavier Alfaro 6-15-15
REGISTERED ELECTRICAL ENGINEER

6-15-15
PLANS APPROVAL DATE

REGISTERED PROFESSIONAL ENGINEER XAVIER I. ALFARO No. E17488 Exp. 6-30-17 ELECTRICAL STATE OF CALIFORNIA

THE STATE OF CALIFORNIA OR ITS OFFICERS OR AGENTS SHALL NOT BE RESPONSIBLE FOR THE ACCURACY OR COMPLETENESS OF SCANNED COPIES OF THIS PLAN SHEET.

NOTE:

FOR ACCURATE RIGHT OF WAY DATA, CONTACT
RIGHT OF WAY ENGINEERING AT THE DISTRICT OFFICE.

LEGEND:

1 120/240 V, 1Ø, 3-WIRE TYPE III-BF SERVICE EQUIPMENT ENCLOSURE WITH THE FOLLOWING CIRCUIT BREAKERS:

Ctid No. 05360170009070

AMPERES	VOLTS	POLES	NAMEPLATE	METER	PHOTOELECTRIC CONTROL TYPE
100	240	2	MAIN BREAKER	YES	——
15	240	2	HIGHWAY LIGHTING	YES	——
15	120	1	CONTROL	YES	V *
20	240	2	SPARE	YES	——

* PEU WINDOW MUST BE INSTALLED FNBT

ABBREVIATIONS:

PG&E PACIFIC GAS AND ELECTRIC

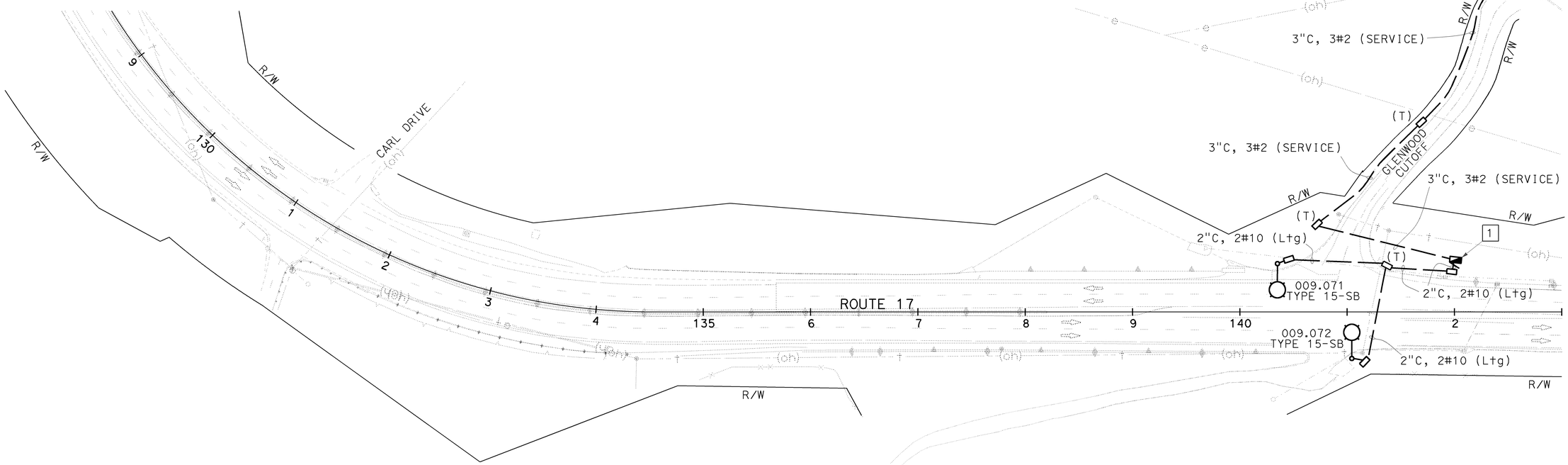

LIGHTING

SHEET No.	No. 2 CONDUCTORS	No. 6 CONDUCTORS (G)	No. 10 CONDUCTORS	No. 8 CONDUCTORS (G)	3"C, TYPE 3	2"C, TYPE 3	No. 5 PB	No.5 (T) PB	PG&E APPROVED PB	TYPE III-BF SERVICE EQUIPMENTENCLOSURE AND FOUNDATION	STANDARD TYPE 15 AND FOUNDATION
	LF						EA				
E-1	1300	700	800	300	450	300	3	3	1	1	2

THE QUANTITIES ON THIS TABLE ARE NOT A SEPARATE PAY ITEM, FOR INFORMATION ONLY.
FOR COMPLETE ELECTRICAL WORK, SEE ELECTRICAL PLAN SHEET.

APPROVED FOR ELECTRICAL WORK ONLY

SCALE: 1"=50'

LIGHTING
E-1

STATE OF CALIFORNIA - DEPARTMENT OF TRANSPORTATION
Caltrans 06-ELECTRICAL DESIGN

FUNCTIONAL SUPERVISOR: ALI BAKHDOUD
CALCULATED-DESIGNED BY: XAVIER ALFARO
CHECKED BY: PAUL MATOS
REVISED BY: XIA
DATE REVISED: 06-15-15

LAST REVISION 00-00-00
DATE PLOTTED => 26-JUN-2015
TIME PLOTTED => 10:19

M

Maint	MAINTENANCE
Max	MAXIMUM
MB	METAL BEAM
MBB	METAL BEAM BARRIER
MBGR	METAL BEAM GUARD RAILING
Med	MEDIAN
MGS	MIDWEST GUARDRAIL SYSTEM
MH	MANHOLE
Min	MINIMUM
Misc	MISCELLANEOUS
Misc I & S	MISCELLANEOUS IRON AND STEEL
Mkr	MARKER
Mod	MODIFIED,
	MODIFY
Mon	MONUMENT
MP	METAL PLATE
MPGR	METAL PLATE GUARD RAILING
MR	MOVEMENT RATING
MSE	MECHANICALLY STABILIZED EMBANKMENT
Mt	MOUNTAIN, MOUNT
Mtl	MATERIAL
MVP	MAINTENANCE VEHICLE PULLOUT

N

N	NORTH
NB	NORTHBOUND
No.	NUMBER (MUST HAVE PERIOD)
Nos.	NUMBERS (MUST HAVE PERIOD)
NPS	NOMINAL PIPE SIZE
NS	NEAR SIDE
NSP	NEW STANDARD PLAN
NTS	NOT TO SCALE

O

Oblr	OBLITERATE
OC	OVERCROSSING
OD	OUTSIDE DIAMETER
OF	OUTSIDE FACE
OG	ORIGINAL GROUND
OGAC	OPEN GRADED ASPHALT CONCRETE
OGFC	OPEN GRADED FRICTION COURSE
OH	OVERHEAD
OHWM	ORDINARY HIGH WATER MARK
O-O	OUT TO OUT
Opp	OPPOSITE
OSD	OVERSIDE DRAIN

P

P	PAGE
PAP	PERFORATED ALUMINUM PIPE
PB	PULL BOX
PC	POINT OF CURVATURE,
	PRECAST
PCC	POINT OF COMPOUND CURVE,
	PORTLAND CEMENT CONCRETE
PCMS	PORTABLE CHANGEABLE MESSAGE SIGN
PCP	PERFORATED CONCRETE PIPE,
	PRESTRESSED CONCRETE PIPE
PCVC	POINT OF COMPOUND VERTICAL CURVE
PEC	PERMIT TO ENTER AND CONSTRUCT
Ped	PEDESTRIAN
Ped OC	PEDESTRIAN OVERCROSSING
Ped UC	PEDESTRIAN UNDERCROSSING
Perm Mtl	PERMEABLE MATERIAL

P continued

PG	PROFILE GRADE
PI	POINT OF INTERSECTION
PJP	PARTIAL JOINT PENETRATION
Pkwy	PARKWAY
ℙ,PL	PLATE
P/L	PROPERTY LINE
PM	POST MILE,
	TIME FROM NOON TO MIDNIGHT
PN	PAVING NOTCH
POC	POINT OF HORIZONTAL CURVE
POT	POINT OF TANGENT
POVC	POINT OF VERTICAL CURVE
PP	PIPE PILE,
	PLASTIC PIPE,
	POWER POLE
PPL	PREFORMED PERMEABLE LINER
PPP	PERFORATED PLASTIC PIPE
PRC	POINT OF REVERSE CURVE
PRF	PAVEMENT REINFORCING FABRIC
PRVC	POINT OF REVERSE VERTICAL CURVE
PS&E	PLANS, SPECIFICATIONS AND ESTIMATES
PS, P/S	PRESTRESSED
PSP	PERFORATED STEEL PIPE
PT	POINT OF TANGENCY
PVC	POLYVINYL CHLORIDE
Pvmt	PAVEMENT

Q

Qty	QUANTITY

R

R	RADIUS
R & D	REMOVE AND DISPOSE
R & S	REMOVE AND SALVAGE
R/C	RATE OF CHANGE
RCA	REINFORCED CONCRETE ARCH
RCB	REINFORCED CONCRETE BOX
RCP	REINFORCED CONCRETE PIPE
RCPA	REINFORCED CONCRETE PIPE ARCH
Rd	ROAD
Reinf	REINFORCED,
	REINFORCEMENT,
	REINFORCING
Rel	RELOCATE
Repl	REPLACEMENT
Ret	RETAINING
Rev	REVISED, REVISION
Rdwy	ROADWAY
RHMA	RUBBERIZED HOT MIX ASPHALT
Riv	RIVER
RM	ROAD-MIXED
RP	RADIUS POINT,
	REFERENCE POINT
RR	RAILROAD
RSP	ROCK SLOPE PROTECTION,
	REVISED STANDARD PLAN
Rt	RIGHT
Rte	ROUTE
RW	REDWOOD,
	RETAINING WALL
R/W	RIGHT OF WAY
Rwy	RAILWAY

S

S	SOUTH,
	SUPPLEMENT
SAE	STRUCTURE APPROACH EMBANKMENT
Salv	SALVAGE
SAPP	STRUCTURAL ALUMINUM PLATE PIPE
SB	SOUTHBOUND
SC	SAND CUSHION
SCSP	SLOTTED CORRUGATED STEEL PIPE
SD	STORM DRAIN
Sec	SECOND,
	SECTION
Sep	SEPARATION
SG	SUBGRADE
Shld	SHOULDER
Sht	SHEET
Sim	SIMILAR
℄	STATION LINE
SM	SELECTED MATERIAL
Spec	SPECIAL,
	SPECIFICATIONS
SPP	SLOTTED PLASTIC PIPE
SS	SLOPE STAKE
SSBM	STRAP AND SADDLE BRACKET METHOD
SSD	STRUCTURAL SECTION DRAIN
SSPA	STRUCTURAL STEEL PLATE ARCH
SSPP	STRUCTURAL STEEL PLATE PIPE
SSPPA	STRUCTURAL STEEL PLATE PIPE ARCH
SSRP	STEEL SPIRAL RIB PIPE
St	STREET
Sta	STATION
STBB	SINGLE THRIE BEAM BARRIER
Std	STANDARD
Str	STRUCTURE
Surf	SURFACING
SW	SIDEWALK,
	SOUND WALL
Swr	SEWER
Sym	SYMMETRICAL
S4S	SURFACE 4 SIDES

T

T	SEMI-TANGENT
Tan	TANGENT
TBB	THRIE BEAM BARRIER
Tbr	TIMBER
TC	TOP OF CURB
TCB	TRAFFIC CONTROL BOX
TCE	TEMPORARY CONSTRUCTION EASEMENT
Tel	TELEPHONE
Temp	TEMPORARY
TG	TOP OF GRADE
Tot	TOTAL
TP	TELEPHONE POLE
TPB	TREATED PERMEABLE BASE
TPM	TREATED PERMEABLE MATERIAL
Trans	TRANSITION

T continued

TS	TRANSVERSE,
	TRAFFIC SIGNAL,
	TUBULAR STEEL
Typ	TYPICAL

U

UC	UNDERCROSSING
UD	UNDERDRAIN
UG	UNDERGROUND
UON	UNLESS OTHERWISE NOTED
UP	UNDERPASS

V

V	VALVE,
	DESIGN SPEED
Var	VARIABLE,
	VARIES
VC	VERTICAL CURVE
VCP	VITRIFIED CLAY PIPE
Vert	VERTICAL
Via	VIADUCT
Vol	VOLUME

W

W	WEST,
	WIDTH
WB	WESTBOUND
WH	WEEP HOLE
WM	WIRE MESH
WS	WATER SURFACE
WSP	WELDED STEEL PIPE
Wt	WEIGHT
WV	WATER VALVE
WW	WINGWALL
WWLOL	WINGWALL LAYOUT LINE

X

X Sec	CROSS SECTION
Xing	CROSSING

Y

Yr	YEAR
Yrs	YEARS

Dist	COUNTY	ROUTE	POST MILES TOTAL PROJECT	SHEET No.	TOTAL SHEETS
05	SCr	17	9.4/10.1	55	96

Grace M. Tsushima
REGISTERED CIVIL ENGINEER

July 19, 2013
PLANS APPROVAL DATE

REGISTERED PROFESSIONAL ENGINEER
Grace M. Tsushima
No. C49814
Exp. 9-30-14
CIVIL
STATE OF CALIFORNIA

THE STATE OF CALIFORNIA OR ITS OFFICERS OR AGENTS SHALL NOT BE RESPONSIBLE FOR THE ACCURACY OR COMPLETENESS OF SCANNED COPIES OF THIS PLAN SHEET.

TO ACCOMPANY PLANS DATED 6-15-15

UNIT OF MEASUREMENT SYMBOLS:

Some of the symbols used in the project plan quantity tables and in the Bid Item List are:

TABLE A

SYMBOL USED	DEFINITIONS
ACRE	ACRE
CF	CUBIC FOOT
CY	CUBIC YARD
EA	EACH
GAL	GALLON
LB	POUND
LF	LINEAR FOOT
SQFT	SQUARE FOOT
SQYD	SQUARE YARD
STA	100 FEET
TAB	TABLET
TON	2,000 POUNDS

Some of the symbols used in the plans other than in the project plan quantity tables are:

TABLE B

SYMBOL USED	DEFINITIONS
ksi	KIPS PER SQUARE INCH
ksf	KIPS PER SQUARE FOOT
psi	POUNDS PER SQUARE INCH
psf	POUNDS PER SQUARE FOOT
lb/ft^3, pcf	POUNDS PER CUBIC FOOT
tsf	TONS PER SQUARE FOOT
mph, MPH *	MILES PER HOUR
ø	NOMINAL DIAMETER
oz	OUNCE
lb	POUND
kip	1,000 POUNDS
cal	CALORIE
ft	FOOT OR FEET
gal	GALLON

* For use on a sign panel only

STATE OF CALIFORNIA
DEPARTMENT OF TRANSPORTATION

ABBREVIATIONS (SHEET 2 OF 2)

NO SCALE

RSP A10B DATED JULY 19, 2013 SUPERSEDES STANDARD PLAN A10B DATED MAY 20, 2011 - PAGE 2 OF THE STANDARD PLANS BOOK DATED 2010.

REVISED STANDARD PLAN RSP A10B

2010 REVISED STANDARD PLAN RSP A10B

6-7-13

Dist	COUNTY	ROUTE	POST MILES TOTAL PROJECT	SHEET No.	TOTAL SHEETS
05	SCr	17	9.4/10.1	56	96

REGISTERED CIVIL ENGINEER

April 20, 2012
PLANS APPROVAL DATE

REGISTERED PROFESSIONAL ENGINEER
Roberta L. McLaughlin
No. C40375
Exp. 3-31-13
CIVIL
STATE OF CALIFORNIA

THE STATE OF CALIFORNIA OR ITS OFFICERS OR AGENTS SHALL NOT BE RESPONSIBLE FOR THE ACCURACY OR COMPLETENESS OF SCANNED COPIES OF THIS PLAN SHEET.

TO ACCOMPANY PLANS DATED 6-15-15

2010 REVISED STANDARD PLAN RSP A24A

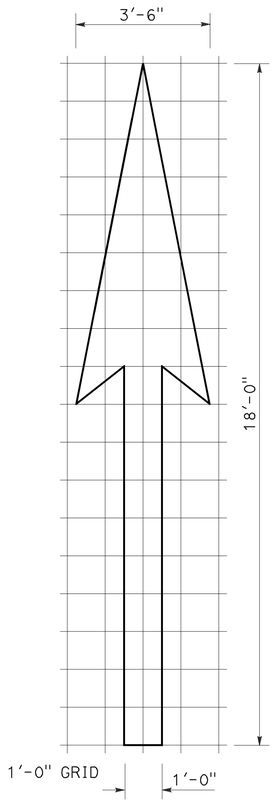

A=25 ft^2

TYPE I 18'-0" ARROW

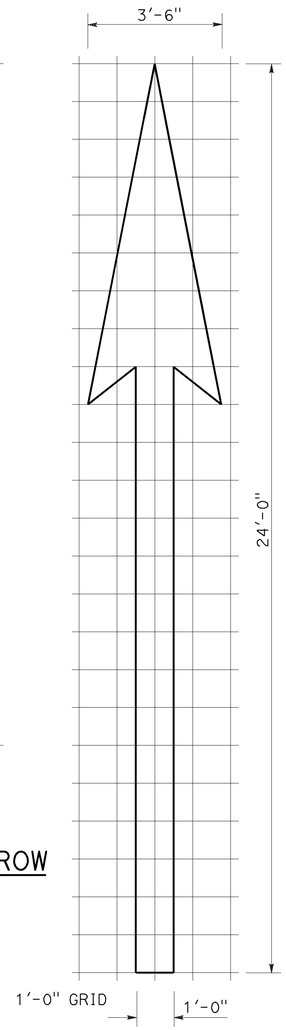

A=31 ft^2

TYPE I 24'-0" ARROW

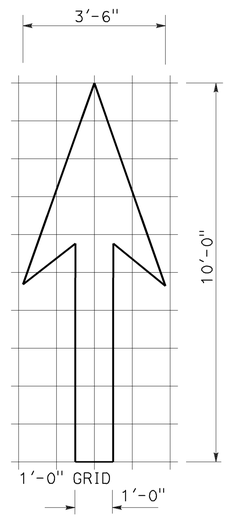

A=14 ft^2

TYPE I 10'-0" ARROW

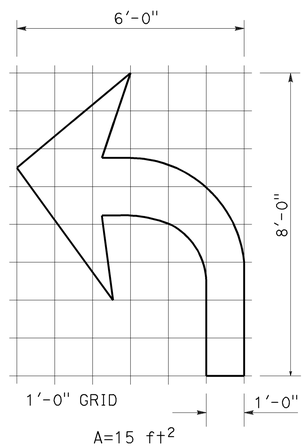

A=15 ft^2

TYPE IV (L) ARROW

(For Type IV (R) arrow, use mirror image)

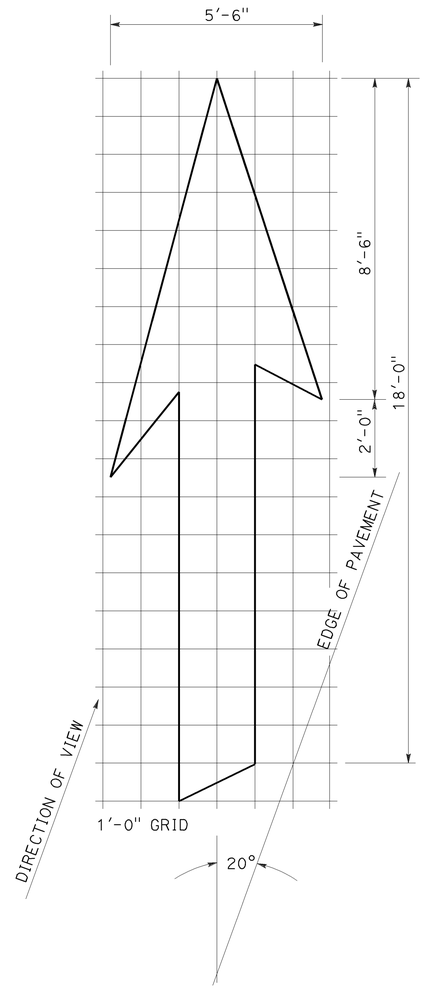

A=42 ft^2

TYPE VI ARROW

Right lane drop arrow
(For left lane, use mirror image)

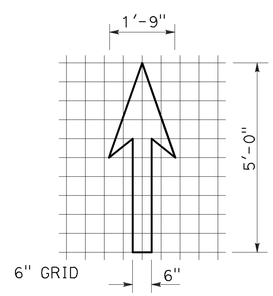

A=3.5 ft^2

BIKE LANE ARROW

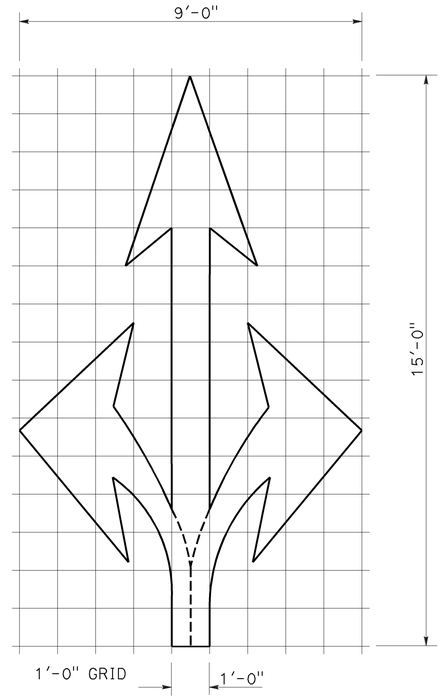

A=36 ft^2

TYPE VIII ARROW

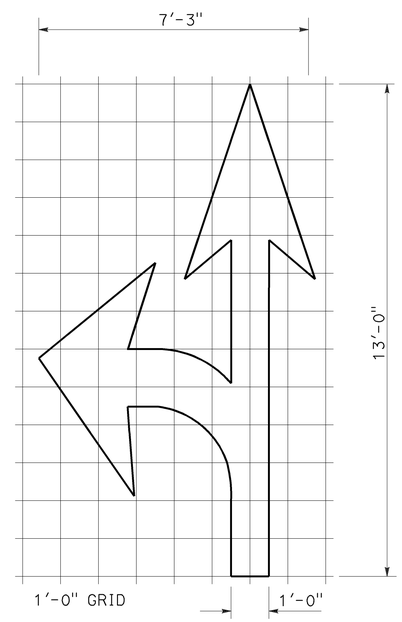

A=27 ft^2

TYPE VII (L) ARROW

(For Type VII (R) arrow, use mirror image)

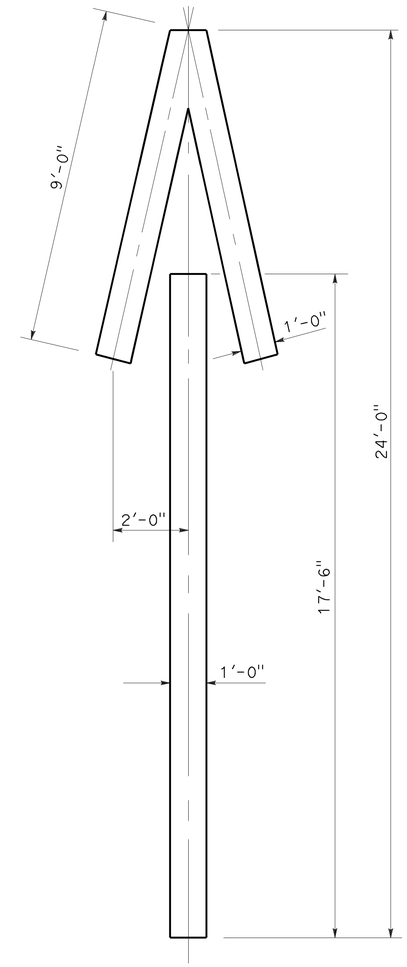

A=33 ft^2

TYPE V ARROW

NOTE:
Minor variations in dimensions may be accepted by the Engineer.

STATE OF CALIFORNIA
DEPARTMENT OF TRANSPORTATION

PAVEMENT MARKINGS ARROWS

NO SCALE

RSP A24A DATED APRIL 20, 2012 SUPERSEDES STANDARD PLAN A24A DATED MAY 20, 2011 - PAGE 13 OF THE STANDARD PLANS BOOK DATED 2010.

REVISED STANDARD PLAN RSP A24A

3-14-12

Dist	COUNTY	ROUTE	POST MILES TOTAL PROJECT	SHEET No.	TOTAL SHEETS
05	SCr	17	9.4/10.1	57	96

REGISTERED CIVIL ENGINEER

July 19, 2013
PLANS APPROVAL DATE

REGISTERED PROFESSIONAL ENGINEER
Michael Janzen
No. 44788
Exp. 03-31-14
CIVIL
STATE OF CALIFORNIA

THE STATE OF CALIFORNIA OR ITS OFFICERS OR AGENTS SHALL NOT BE RESPONSIBLE FOR THE ACCURACY OR COMPLETENESS OF SCANNED COPIES OF THIS PLAN SHEET.

TO ACCOMPANY PLANS DATED 6-15-15

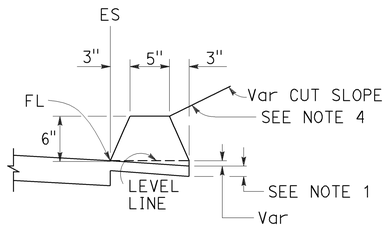

TYPE A
See Note 3

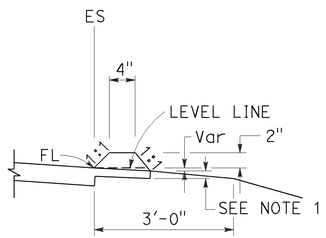

TYPE C

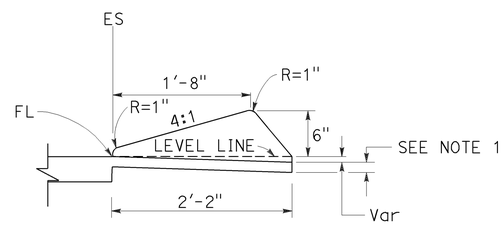

TYPE D

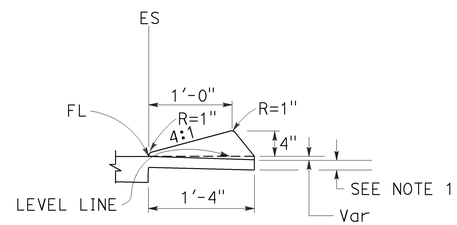

TYPE E

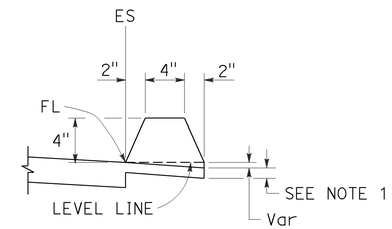

TYPE F
See Note 5

DIKES

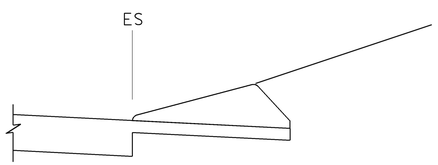

CASE C-1
Cut Slope

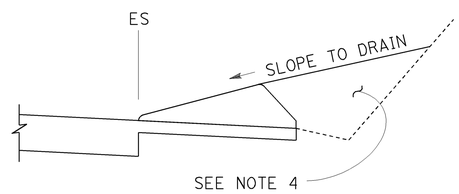

CASE C-2
Cut Slope

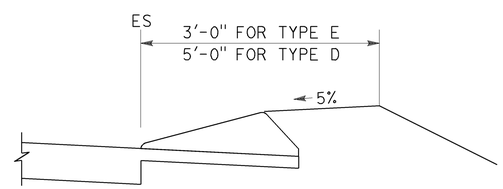

CASE F

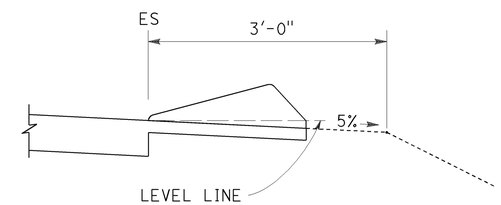

CASE R
See Note 2

TYPE D AND E BACKFILL DETAILS

NOTES:

1. For HMA shoulders only, extend top layer of HMA placed on the shoulder under dike with no joint at the ES. For projects with OGFC shoulders, do not extend OGFC under dike. See project plans for modified dike detail.
2. Case R applies to retrofit only projects where restrictive conditions do not provide enough width for Case F backfill.
3. Type A dike only to be used where restrictive slope conditions do not provide enough width to use Type D or Type E dike.
4. Fill and compact with excavated material to top of dike.
5. Use Type F dike, where dike is required with guard railing installations. See Revised Standard Plan RSP A77N4 for dike positioning details.

DIKE QUANTITIES

TYPE	CUBIC YARDS PER LINEAR FOOT
A	0.0135
C	0.0038
D	0.0293
E	0.0130
F	0.0066

Quantities based on 5% cross slope.

STATE OF CALIFORNIA
DEPARTMENT OF TRANSPORTATION

HOT MIX ASPHALT DIKES

NO SCALE

RSP A87B DATED JULY 19, 2013 SUPERSEDES STANDARD PLAN A87B DATED MAY 20, 2011 - PAGE 120 OF THE STANDARD PLANS BOOK DATED 2010.

REVISED STANDARD PLAN RSP A87B

2010 REVISED STANDARD PLAN RSP A87B

6-27-13

TO ACCOMPANY PLANS DATED 6-15-15

Dist	COUNTY	ROUTE	POST MILES TOTAL PROJECT	SHEET No.	TOTAL SHEETS
05	SCr	17	9.4/10.1	58	96

REGISTERED CIVIL ENGINEER

October 19, 2012
PLANS APPROVAL DATE

REGISTERED PROFESSIONAL ENGINEER Glenn DeCou No. C34547 Exp. 9-30-13 CIVIL STATE OF CALIFORNIA

THE STATE OF CALIFORNIA OR ITS OFFICERS OR AGENTS SHALL NOT BE RESPONSIBLE FOR THE ACCURACY OR COMPLETENESS OF SCANNED COPIES OF THIS PLAN SHEET.

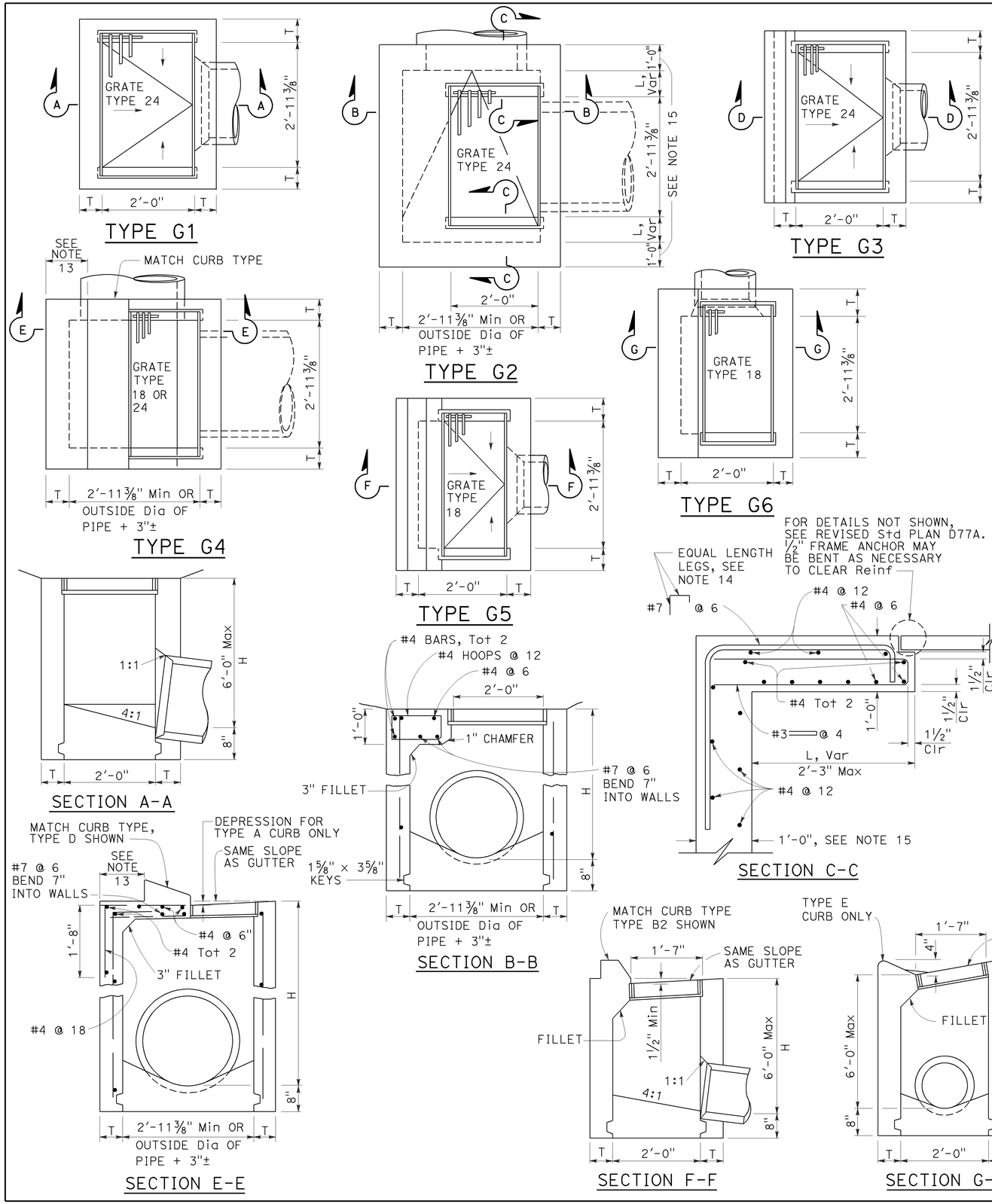

NOTES:

1. "H" is the difference in elevation between the outlet pipe flow line and the normal gutter grade line undepressed.
2. For "T" wall thickness, see Table A below.
3. Wall reinforcing not required when "H" is 8'-0" or less and the unsupported width or length is 7'-0" or less. Walls exceeding these limits shall be reinforced with #4 bars @ 1'-6" ± centers placed 1½" clear to inside of box unless otherwise shown.
4. Inlet bottom reinforcing not required. See Standard Plan D74C for alternative reinforced bottom and alternative half round bottom.
5. Steps-None required where "H" is less than 2'-6". Where "H" is 2'-6" or more, install steps with lowest rung 1'-0" above the floor and highest rung not more than 6" below top of inlet. The distance between steps shall not exceed 1'-0" and shall be uniform throughout the length of the wall. Place steps in the wall without an opening. Steps inserts may be substituted for the bar steps. Step inserts shall comply with State Industrial Safety requirements. See Standard Plan D74C for step details.
6. Details shown apply to both metal and concrete pipe.
7. Pipe(s) can be placed in any wall.
8. Curb section shall match adjacent curb.
9. Basin floors shall have wood trowel finish and a minimum slope of 12:3 from all directions toward outlet pipe.
10. Set inlet so that grate bars are parallel to direction of principal surface flow.
11. See Revised Standard Plans D77A and D77B for grate and frame details and weights of miscellaneous iron and steel.
12. See Standard Plan D78A for gutter depression details.
13. This dimenison will vary with different grates, curbs types, box width and wall thickness.
14. Bar may be rotated as necessary to clear opening. Where "L" is 6" or less, bar may be omitted.
15. Where "L" is 6" or less, wall thickness shall be as shown in Table A.
16. Cast-in-place inlets to be formed around all pipes/stubs intersecting the inlet, and concrete poured in one continuous operation. Precast inlets shall have mortared connections conforming to details for Type GCP Inlet shown on Standard Plan D75B. See Standard Specifications for mortar composition.

TABLE A

CONCRETE QUANTITIES				
TYPE	H=3'-0" TO 8'-0" (T=6")		H=8'-1" TO 20'-0" (T=8")	
	H=3'-0" (CY)	ADDITIONAL PCC PER FOOT (CY)	H=8'-1" (CY)	ADDITIONAL PCC PER FOOT (CY)
G-1	0.95	0.220	See Note A	SEE NOTE A
G-2*	1.31	0.255	3.50	0.357
G-3	1.03	0.220	See Note A	SEE NOTE A
G-4* (TYPE 24)	1.27	0.255	3.48	0.357
G-4* (TYPE 18)	1.30	0.255	3.50	0.357
G-5	1.02	0.220	SEE NOTE A	SEE NOTE A
G-6	1.04	0.220	SEE NOTE A	SEE NOTE A

TABLE BASED ON 8" FLOOR SLAB. NO DEDUCTIONS ARE TO BE MADE TO THESE QUANTITIES BECAUSE OF PIPE OPENINGS, DIFFERENT FLOOR ALTERNATIVES OR DIFFERENT CURB TYPES. * QUANTITIES FOR TYPE G-2 AND G-4 INLETS BASED ON THE MINIMUM INTERIOR DIMENSIONS.

NOTE A:

Maximum allowable height 6'-0".

STATE OF CALIFORNIA
DEPARTMENT OF TRANSPORTATION

DRAINAGE INLETS

NO SCALE

RSP D73 DATED OCTOBER 19, 2012 SUPERSEDES STANDARD PLAN D73 DATED MAY 20, 2011 - PAGE 156 OF THE STANDARD PLANS BOOK DATED 2010.

REVISED STANDARD PLAN RSP D73

2010 REVISED STANDARD PLAN RSP D73

7-19-12

Dist	COUNTY	ROUTE	POST MILES TOTAL PROJECT	SHEET No.	TOTAL SHEETS
05	SCr	17	9.4/10.1	59	96

Raymond Don Tsztoo
REGISTERED CIVIL ENGINEER

April 19, 2013
PLANS APPROVAL DATE

REGISTERED PROFESSIONAL ENGINEER Raymond Don Tsztoo No. C37332 Exp. 6-30-14 CIVIL STATE OF CALIFORNIA

THE STATE OF CALIFORNIA OR ITS OFFICERS OR AGENTS SHALL NOT BE RESPONSIBLE FOR THE ACCURACY OR COMPLETENESS OF SCANNED COPIES OF THIS PLAN SHEET.

TO ACCOMPANY PLANS DATED 6-15-15

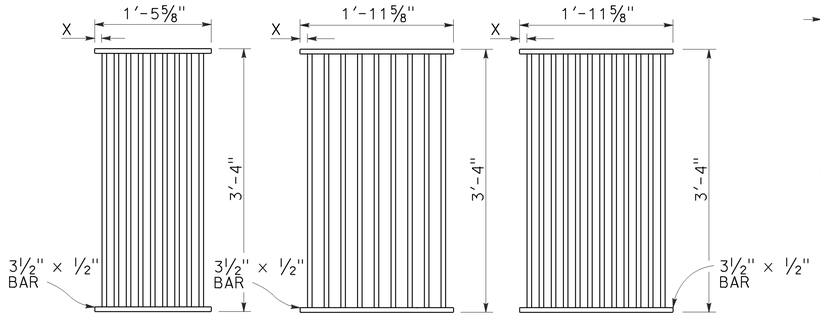

TYPE 18-9

1⅜" Clear spacing. Use within the roadbed on highways where bicycles and pedestrians are excluded.

TYPE 24-9

2" Clear spacing. Use in locations off the roadbed on all types of highways.

TYPE 24-12

1⅜" Clear spacing. Use within the roadbed on highways where bicycles and pedestrians are excluded.

RECTANGULAR GRATE DETAILS

(See table below)

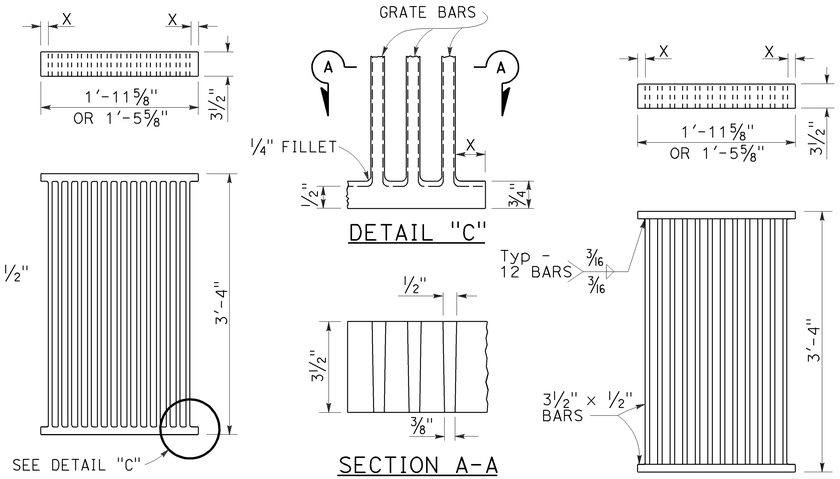

ALTERNATIVE CAST DUCTILE IRON GRATE OR CAST CARBON STEEL GRATE

ALTERNATIVE WELDED GRATE

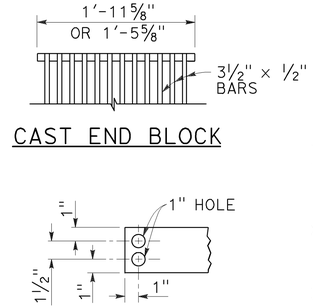

CAST END BLOCK

END OF BAR

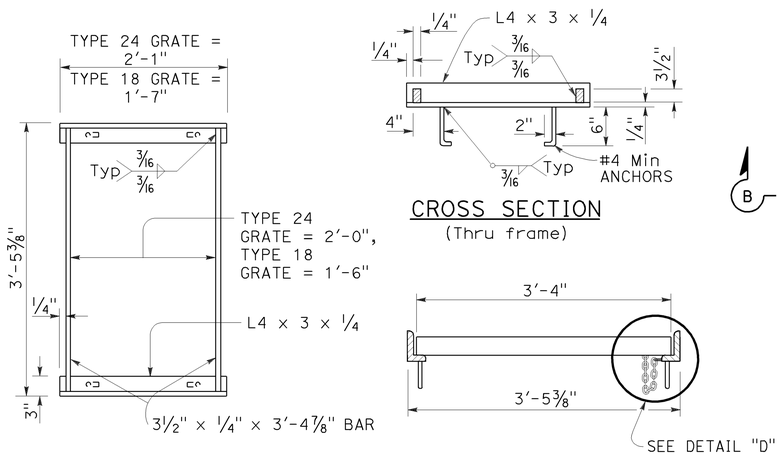

TYPICAL FRAME

CROSS SECTION
(Thru frame)

LONGITUDINAL SECTION
(Thru frame and grate)

RECTANGULAR FRAME DETAILS

(For all rectangular grates)

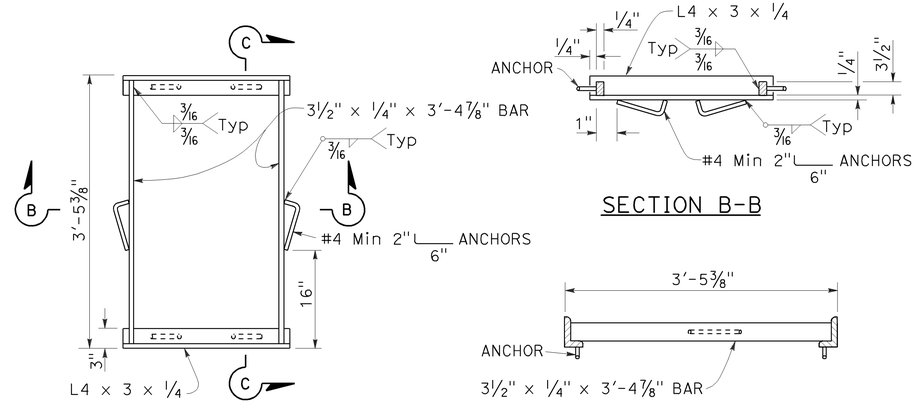

TYPICAL FRAME

SECTION B-B

SECTION C-C

ALTERNATIVE ANCHOR FOR RECTANGULAR FRAME

(For details not shown, See Rectangular Frame Details)

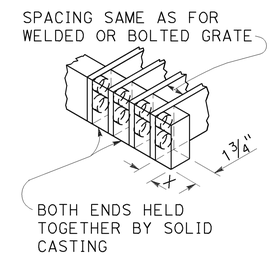

ALTERNATIVE CAST DUCTILE IRON OR CAST CARBON STEEL END BLOCK GRATE

NOTES:

1. Grate type numbers refer to approximate width of grate in inches and number of bars, respectively.
2. Contractor has the option of using cast ductile iron, cast carbon steel, welded, bolted, or cast end block grate.
3. Rounded top of bars optional on all grates.
4. Pipe inlets with a grate shall be placed so that bars parallel direction of principle surface flow.
5. Complete joint penetration butt welds may be substituted for the fillet welds on all anchors.
6. Standard square, hexagon, round or equivalent headed anchors may be substituted for the right angle hooks on the anchors shown on this plan.
7. Grate and frame weights are based on welded grates (weights of face angles, steps, protection bars, etc. are not included).
8. Connect chain to grate and frame only at locations shown on the plans. When chain is required, do not use cast ductile iron grates.

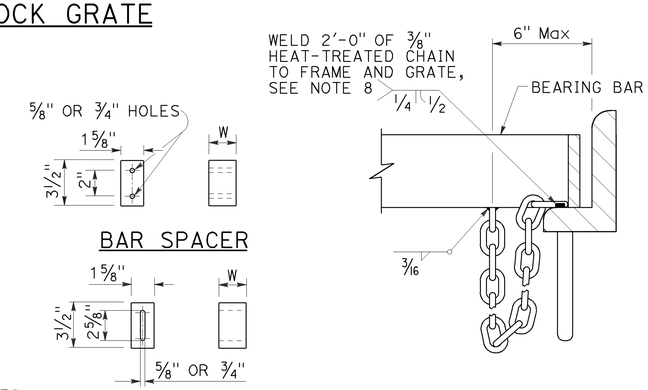

BAR SPACER

ALTERNATIVE SPACER
W = 1⅜" or 2"

DETAIL "D"
(Steel grates only)

BOLTED END BLOCK

BOLTING DETAIL

ALTERNATIVE BOLTED GRATE

GRATE BAR SPACING TABLE

TYPE	No. OF BARS	CLEAR BAR SPACING	X
18-9	9	1⅜"	1 1/16"
24-9	9	2"	1 9/16"
24-12	12	1⅜"	1¼"

INLET TYPE	COVER TYPE	WEIGHT LB
OS	PLATE	174
OL-7	PLATE	170
OL-10	PLATE	170
OL-14	PLATE	170
OL-21	PLATE	170
OCP	PLATE	112
OCPI	PLATE	112
OCPI	REDWOOD	42
OMP	PLATE	177
OMPI	PLATE	177

INLET TYPE	GRATE TYPE	No. OF GRATES	WEIGHT LB
GDO	24-12	2	634
GOL-7	24-12	1	326
GOL-10	24-12	1	326
GO,G1,G2,G3,G4 (TYPE 24)	24-9	1	263
	24-12	1	326
G4 (TYPE 18),G5,G6	18-9	1	249
GT1	18-9	2	498
GT2	18-9	2	498
GT3	24-12	2	652
GT4	24-12	2	652
TRASH RACK			22
GRATE CHAIN			3

BASIS FOR Misc IRON & STEEL FINAL PAY WEIGHTS FOR DRAINAGE INLETS

(See Note 7)

STATE OF CALIFORNIA
DEPARTMENT OF TRANSPORTATION

GRATE DETAILS No. 1

NO SCALE

RSP D77A DATED APRIL 19, 2013 SUPERSEDES RSP D77A DATED JULY 20, 2012 AND STANDARD PLAN D77A DATED MAY 20, 2011 - PAGE 164 OF THE STANDARD PLANS BOOK DATED 2010.

REVISED STANDARD PLAN RSP D77A

2010 REVISED STANDARD PLAN RSP D77A

4-4-13

Dist	COUNTY	ROUTE	POST MILES TOTAL PROJECT	SHEET No.	TOTAL SHEETS
05	SCr	17	9.4/10.1	60	96

Raymond Don Tsztoo
REGISTERED CIVIL ENGINEER

April 19, 2013
PLANS APPROVAL DATE

REGISTERED PROFESSIONAL ENGINEER Raymond Don Tsztoo No. C37332 Exp. 6-30-14 CIVIL STATE OF CALIFORNIA

THE STATE OF CALIFORNIA OR ITS OFFICERS OR AGENTS SHALL NOT BE RESPONSIBLE FOR THE ACCURACY OR COMPLETENESS OF SCANNED COPIES OF THIS PLAN SHEET.

TO ACCOMPANY PLANS DATED 6-15-15

2010 REVISED STANDARD PLAN RSP D77B

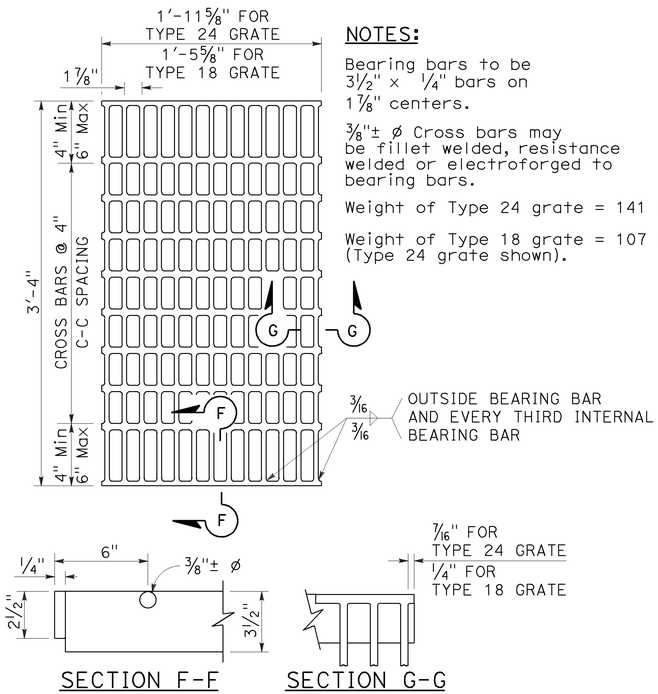

SECTION F-F SECTION G-G

TYPE 18-10 AND 24-13 GRATE

(Welded Steel)

NOTES:

Bearing bars to be 3½" × ¼" bars on 1⅞" centers.

⅜"± ø Cross bars may be fillet welded, resistance welded or electroforged to bearing bars.

Weight of Type 24 grate = 141 LBS.

Weight of Type 18 grate = 107 LBS. (Type 24 grate shown).

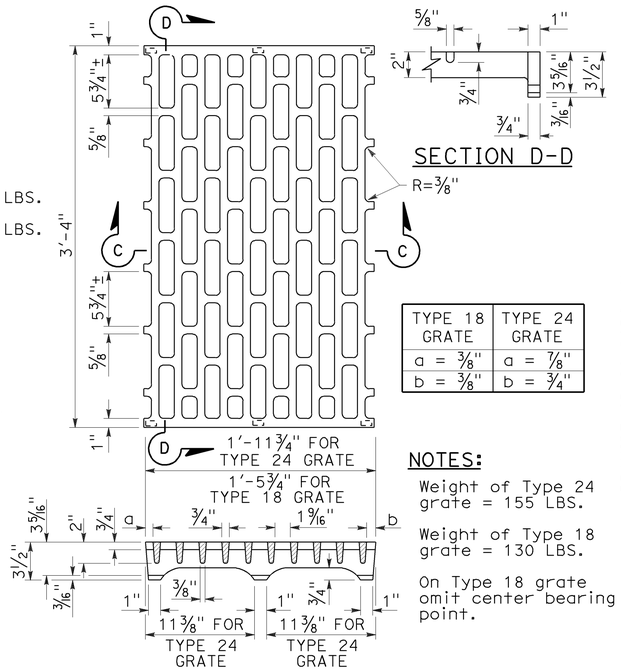

SECTION D-D

TYPE 18 GRATE	TYPE 24 GRATE
a = ⅜"	a = ⅞"
b = ⅜"	b = ¾"

NOTES:

Weight of Type 24 grate = 155 LBS.

Weight of Type 18 grate = 130 LBS.

On Type 18 grate omit center bearing point.

SECTION C-C

TYPE 18-8C AND 24-10C GRATE

(Cast ductile iron)

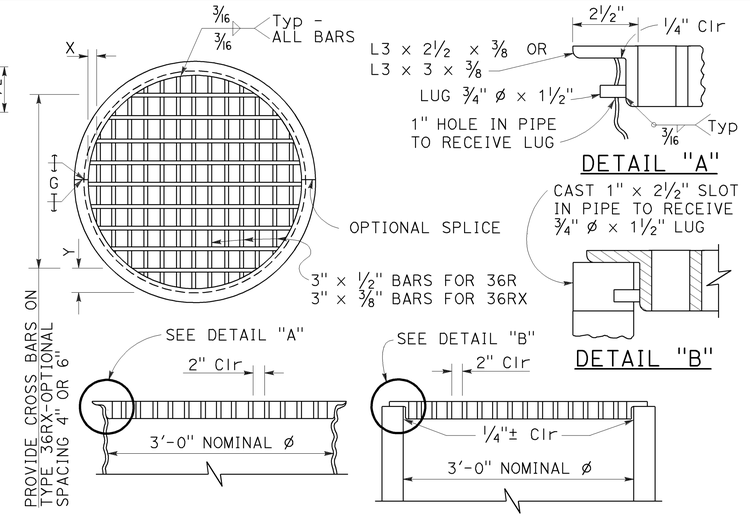

DETAIL "A"

DETAIL "B"

TYPE 36R AND 36RX GRATE DETAILS

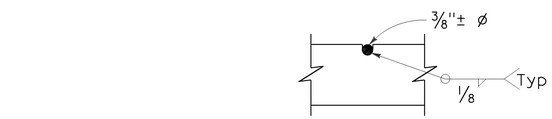

⅜"± ø Cross bars may be fillet welded, resistance welded or electroforged to bearing bars.

CROSS BAR DETAIL TYPE 36RX GRATE (WELDED STEEL)

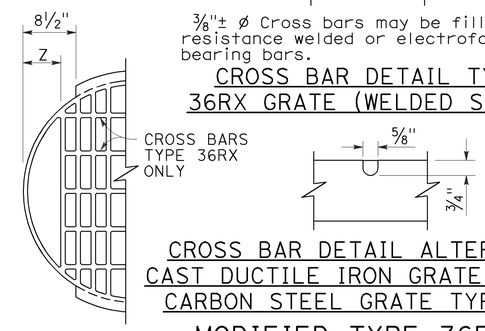

CROSS BAR DETAIL ALTERNATIVE CAST DUCTILE IRON GRATE OR CAST CARBON STEEL GRATE TYPE 36RX

MODIFIED TYPE 36R AND 36RX GRATE FOR ODI INLET

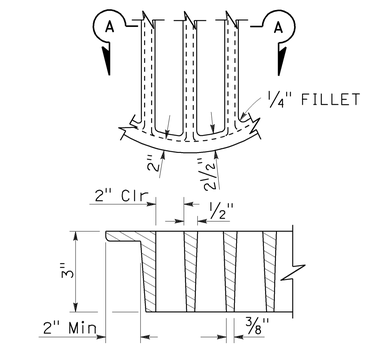

SECTION A-A

ALTERNATIVE CAST DUCTILE IRON GRATE OR CAST CARBON STEEL GRATE TYPE 36R AND 36RX

BASIS FOR Misc IRON AND STEEL FINAL PAY WEIGHTS FOR DRAINAGE INLETS

INLET TYPE	GRATE TYPE	No. OF GRATES	WEIGHT LB
GDO (SEE NOTE 4)	24-10C	2	391
	24-10S	2	456
	24-12X	2	473
	24-13	2	374
GO,GOL,G1,G2, G3,G4 (TYPE 24)	24-10C	1	202
	24-10S	1	229
	24-12X	1	239
	24-13	1	188
G4 (TYPE 18) G5,G6	18-8S	1	187
	18-9X	1	187
	18-10	1	149
GT1,GT2	18-8S	2	374
	18-9X	2	374
	18-10	2	298
GT3,GT4	24-10C	2	404
	24-10S	2	458
	24-12X	2	478
	24-13	2	376
ODI	36RX (Mod)	1	196
GMP,GCP,GCPI	36RX	1	215
ODI	36R (Mod)	1	220
GMP,GCP,GCPI	36R	1	236
TRASH RACK			22
GRATE CHAIN			3

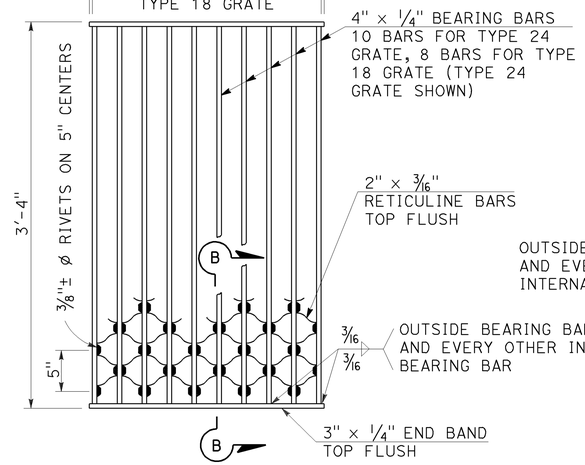

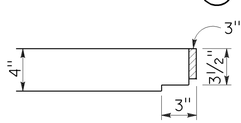

SECTION B-B

NOTES:

Weight of Type 24 grate = 182 LBS.
Weight of Type 18 grate = 145 LBS.

TYPE 18-8S AND 24-10S GRATE

(Welded Steel) Reticuline type

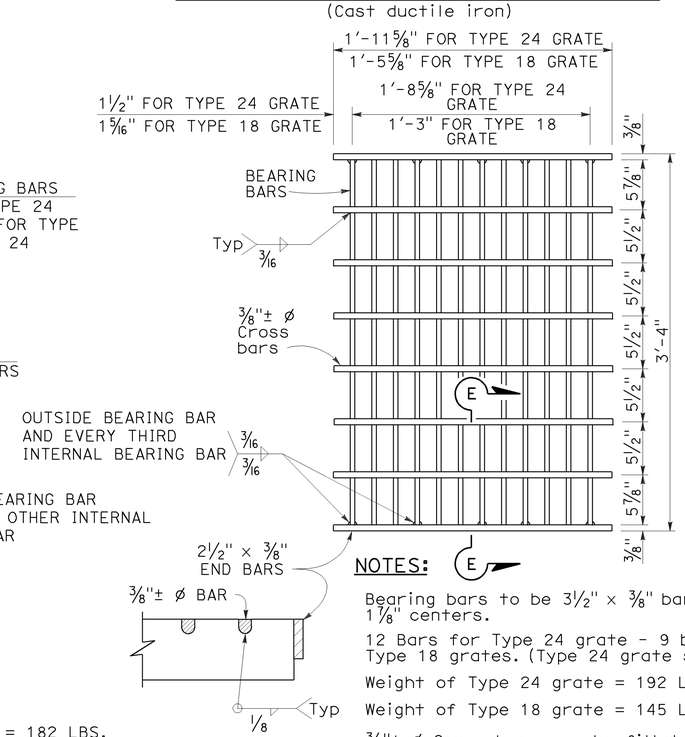

NOTES:

Bearing bars to be 3½" × ⅜" bars on 1⅞" centers.

12 Bars for Type 24 grate - 9 bars for Type 18 grates. (Type 24 grate shown).

Weight of Type 24 grate = 192 LBS.

Weight of Type 18 grate = 145 LBS.

⅜"± ø Cross bars may be fillet welded, resistance welded or electroforged to bearing bars.

SECTION E-E

TYPE 18-9X AND 24-12X GRATE

(Welded Steel)

NOTES:

1. When alternative grates are allowed - Final pay based on alternative with the lesser weight.
2. Use frame shown on Standard Plan D74A, D74B or RSP D77A as appropriate.
3. When Type 24-10S, 24-12X or 24-13 grates are used with GDO Inlets, a ¼" × 3½" × 3'-4⅞" steel bar shall be welded across the center of inlet frame to separate the individual grates.
4. See Revised Standard Plan RSP D77A for connecting chain to welded grate and frame. When chain is required, do not use cast ductile iron grate.

GRATE BAR SPACING TABLE

TYPE	No. OF BARS	CLEAR BAR SPACING	X	Y 4" SPACING	Y 6" SPACING	Z
36R	13	2"	2⅛"	-	-	-
36RX (STEEL)	15	2"	9/16"	3¾"	5¾"	-
36RX (CAST)	13	2"	2⅛"	3¾"	5¾"	-
36R Mod	12	2"	2⅛"	-	-	5"
36RX Mod (STEEL)	13	2"	9/16"	3¾"	5¾"	5 11/16"
36RX Mod (CAST)	12	2"	2⅛"	3¾"	5¾"	5"

STATE OF CALIFORNIA
DEPARTMENT OF TRANSPORTATION

GRATE DETAILS No. 2

NO SCALE

RSP D77B DATED APRIL 19, 2013 SUPERSEDES RSP D77B DATED JULY 20, 2012 AND STANDARD PLAN D77B DATED MAY 20, 2011 - PAGE 165 OF THE STANDARD PLANS BOOK DATED 2010.

REVISED STANDARD PLAN RSP D77B

4-4-13

Dist	COUNTY	ROUTE	POST MILES TOTAL PROJECT	SHEET No.	TOTAL SHEETS
05	SCr	17	9.4/10.1	61	96

REGISTERED CIVIL ENGINEER

July 19, 2013
PLANS APPROVAL DATE

REGISTERED PROFESSIONAL ENGINEER
Gurinderpal Bhullar
No. C48815
Exp. 9-30-14
CIVIL
STATE OF CALIFORNIA

THE STATE OF CALIFORNIA OR ITS OFFICERS OR AGENTS SHALL NOT BE RESPONSIBLE FOR THE ACCURACY OR COMPLETENESS OF SCANNED COPIES OF THIS PLAN SHEET.

TO ACCOMPANY PLANS DATED 6-15-15

2010 REVISED STANDARD PLAN RSP T9

TABLE 1

TAPER LENGTH CRITERIA AND CHANNELIZING DEVICE SPACING

SPEED (S)	MINIMUM TAPER LENGTH * FOR WIDTH OF OFFSET 12 FEET (W)				MAXIMUM CHANNELIZING DEVICE SPACING		
					X	Y	Z **
	TANGENT 2L	MERGING L	SHIFTING L/2	SHOULDER L/3	TAPER	TANGENT	CONFLICT
mph	ft	ft	ft	ft	ft	ft	ft
20	160	80	40	27	20	40	10
25	250	125	63	42	25	50	12
30	360	180	90	60	30	60	15
35	490	245	123	82	35	70	17
40	640	320	160	107	40	80	20
45	1080	540	270	180	45	90	22
50	1200	600	300	200	50	100	25
55	1320	660	330	220	55	110	27
60	1440	720	360	240	60	120	30
65	1560	780	390	260	65	130	32
70	1680	840	420	280	70	140	35

* - For other offsets, use the following merging taper length formula for L:
For speed of 40 mph or less, $L = WS^2/60$
For speed of 45 mph or more, $L = WS$

Where: L = Taper length in feet
W = Width of offset in feet
S = Posted speed limit, off-peak 85th-percentile speed prior to work starting, or the anticipated operating speed in mph

** - Use for taper and tangent sections where there are no pavement markings or where there is a conflict between existing pavement markings and channelizers (CA).

TABLE 2

LONGITUDINAL BUFFER SPACE AND FLAGGER STATION SPACING

SPEED *	Min D **	DOWNGRADE Min D ***		
		-3%	-6%	-9%
mph	ft	ft	ft	ft
20	115	116	120	126
25	155	158	165	173
30	200	205	215	227
35	250	257	271	287
40	305	315	333	354
45	360	378	400	427
50	425	446	474	507
55	495	520	553	593
60	570	598	638	686
65	645	682	728	785
70	730	771	825	891

* - Speed is posted speed limit, off-peak 85th-percentile speed prior to work starting, or the anticipated operating speed in mph

** - Longitudinal buffer space or flagger station spacing

*** - Use on sustained downgrade steeper than -3 percent and longer than 1 mile.

TABLE 3

ADVANCE WARNING SIGN SPACING

ROAD TYPE	DISTANCE BETWEEN SIGNS *		
	A	B	C
	ft	ft	ft
URBAN - 25 mph OR LESS	100	100	100
URBAN - MORE THAN 25 mph TO 40 mph	250	250	250
URBAN - MORE THAN 40 mph	350	350	350
RURAL	500	500	500
EXPRESSWAY / FREEWAY	1000	1500	2640

* - The distances are approximate, are intended for guidance purposes only, and should be applied with engineering judgment. These distances should be adjusted by the Engineer for field conditions, if necessary, by increasing or decreasing the recommmended distances.

STATE OF CALIFORNIA
DEPARTMENT OF TRANSPORTATION

TRAFFIC CONTROL SYSTEM TABLES FOR LANE AND RAMP CLOSURES

NO SCALE

RSP T9 DATED JULY 19, 2013 SUPERSEDES RSP T9 DATED APRIL 19, 2013 THAT SUPPLEMENTS THE STANDARD PLANS BOOK DATED 2010.

REVISED STANDARD PLAN RSP T9

Dist	COUNTY	ROUTE	POST MILES TOTAL PROJECT	SHEET No.	TOTAL SHEETS
05	SCr	17	9.4/10.1	62	96

REGISTERED CIVIL ENGINEER

April 19, 2013
PLANS APPROVAL DATE

REGISTERED PROFESSIONAL ENGINEER Gurinderpal Bhullar No. C48815 Exp. 9-30-14 CIVIL STATE OF CALIFORNIA

THE STATE OF CALIFORNIA OR ITS OFFICERS OR AGENTS SHALL NOT BE RESPONSIBLE FOR THE ACCURACY OR COMPLETENESS OF SCANNED COPIES OF THIS PLAN SHEET.

TO ACCOMPANY PLANS DATED 6-15-15

NOTES:

See Revised Standard Plan RSP T9 for tables.

Use cone spacing X for taper segment, Y for tangent segment or Z for conflict situations, as approriate, per Table 1, unless X, Y, or Z cone spacing is shown on this sheet.

Unless otherwise specified in the special provisions, all temporary warning signs shall have black legend on fluorescent orange background.

California codes are designated by (CA). Otherwise, Federal (MUTCD) codes are shown.

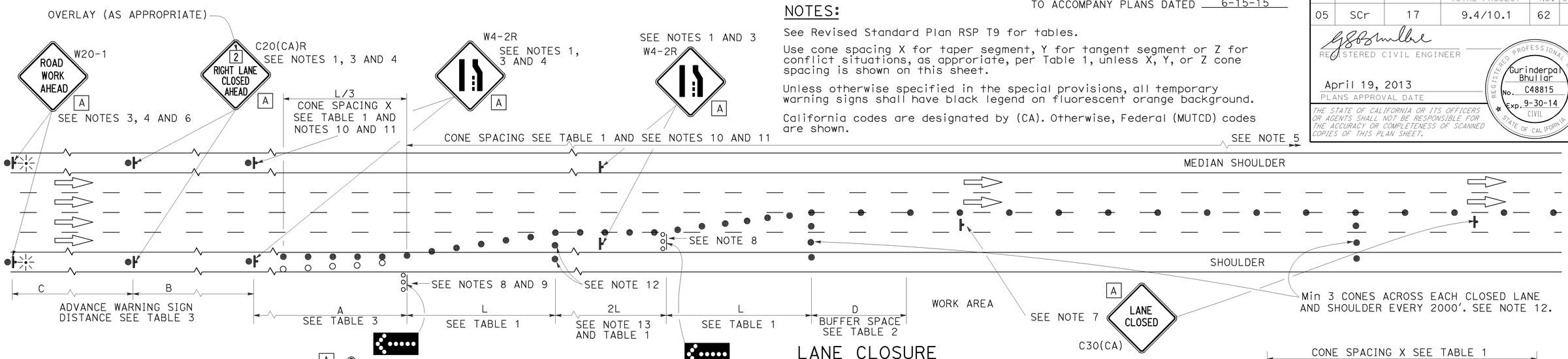

LANE CLOSURE

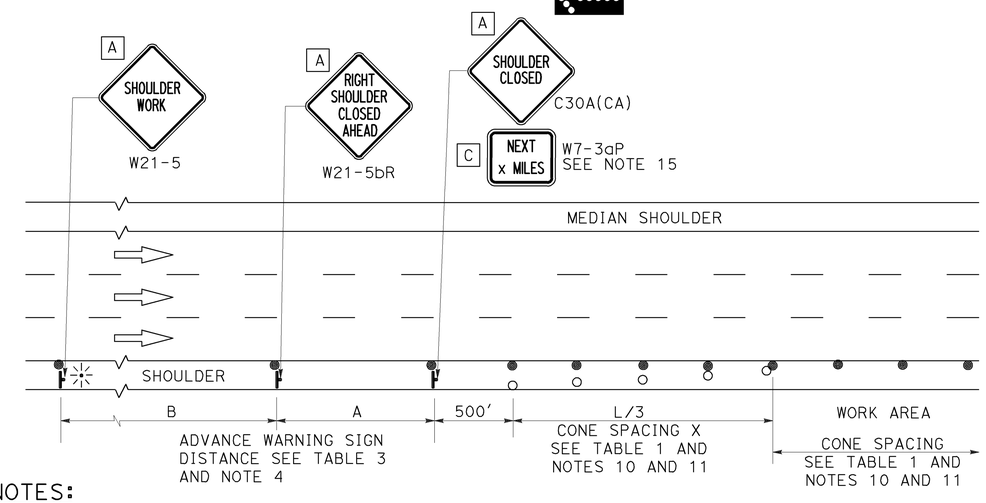

SHOULDER CLOSURE

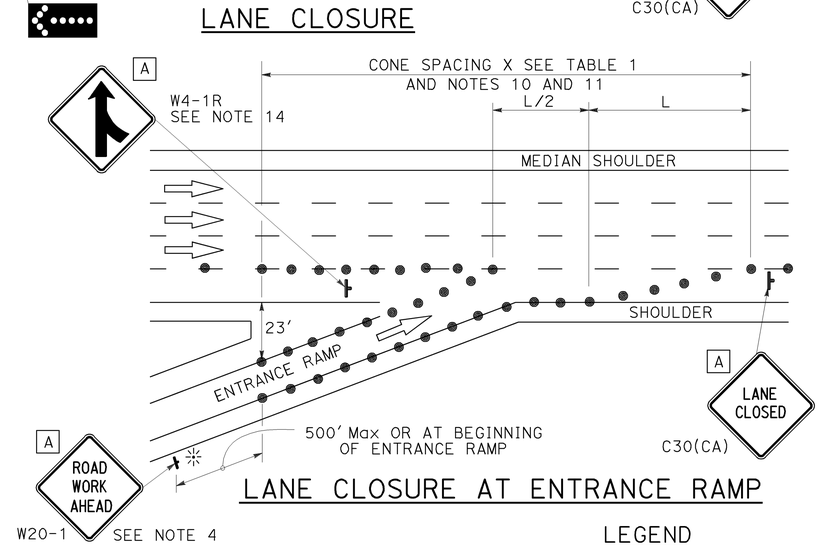

LANE CLOSURE AT ENTRANCE RAMP

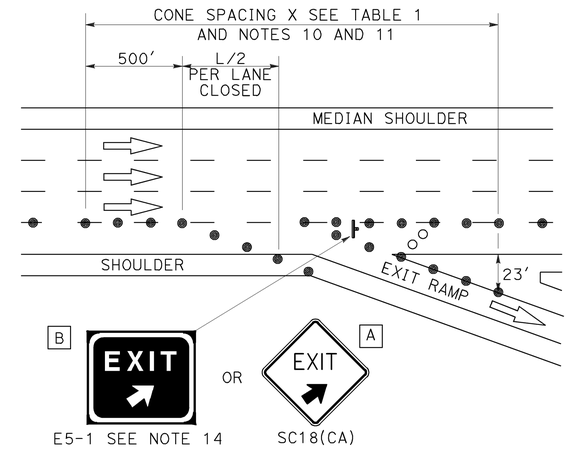

LANE CLOSURE AT EXIT RAMP

NOTES:

1. Median lane closures shall conform to the details as shown except that C20(CA)L and W4-2L signs shall be used.
2. At least one person shall be assigned to provide full time maintenance of traffic control devices for lane closures.
3. Duplicate sign installations are not required:
   a) On opposite shoulder if at least one-half of the available lanes remain open to traffic.
   b) In the median if the width of the median shoulder is less than 8' and the outside lanes are to be closed.
4. Each advance warning sign on each side of the roadway shall be equipped with at least two flags for daytime closure. Each flag shall be at least 16" x 16" in size and shall be orange or fluorescent red-orange in color. Flashing beacons shall be placed at the locations indicated for lane closure during hours of darkness.
5. A G20-2 "END ROAD WORK" sign, with minimum size of 48" x 24" as appropriate, shall be placed at the end of the lane closure unless the end of work area is obvious or ends within a larger project's limits.
6. If the W20-1 sign would follow within 2000' of a stationary W20-1 or G20-1 "ROAD WORK NEXT _____ MILES", use a C20(CA) sign for the first advance warning sign.
7. Place a C30(CA) sign every 2000' throughout length of lane closure.
8. One flashing arrow sign for each lane closed. The flashing arrow signs shall be Type I.
9. A minimum 1500' of sight distance shall be provided where possible for vehicles approaching the first flashing arrow sign. Lane closures shall not begin at top of crest vertical curve or on a horizontal curve.
10. All cones used for lane closures during the hours of darkness shall be fitted with retroreflective bands (or sleeves) as specified in the specifications.
11. Portable delineators, placed at one-half the spacing indicated for traffic cones may be used instead of cones for daytime closures only.
12. Unless otherwise specified in the special provisions, a minimum of 3 cones shall be placed transversely across each closed lane and shoulder at each location where a taper across a traffic lane ends and every 2000' as shown on the "Lane Closure" detail. Two Type II barricades may be used instead of the 3 cones. The transverse alignment of the cones or barricades on the closed shoulder may be shifted from the transverse alignment to provide access to the work.
13. Unless otherwise specified in the special provisions, the 2L tangent shown along lane lines shall be used between the L tapers required for each closed traffic lane.
14. Unless otherwise specified in the special provisions, the E5-1 or SC18(CA) and W4-1 signs shall be used as shown.
15. A W7-3aP "NEXT____ MILES" plaque must be used if theshoulder closure extends beyond the distance that can be perceived by road users.

LEGEND

- TRAFFIC CONE
- TRAFFIC CONE (OPTIONAL TAPER)
- TEMPORARY TRAFFIC CONTROL SIGN
- FLASHING ARROW SIGN (FAS)
- FAS SUPPORT OR TRAILER
- PORTABLE FLASHING BEACON

SIGN PANEL SIZE (Min)

A	48" x 48"
B	72" x 60"
C	36" x 30"

STATE OF CALIFORNIA
DEPARTMENT OF TRANSPORTATION

TRAFFIC CONTROL SYSTEM FOR LANE CLOSURE ON FREEWAYS AND EXPRESSWAYS

NO SCALE

RSP T10 DATED APRIL 19, 2013 SUPERSEDES STANDARD PLAN T10 DATED MAY 20, 2011 - PAGE 237 OF THE STANDARD PLANS BOOK DATED 2010.

REVISED STANDARD PLAN RSP T10

2010 REVISED STANDARD PLAN RSP T10

12-18-12

Dist	COUNTY	ROUTE	POST MILES TOTAL PROJECT	SHEET No.	TOTAL SHEETS
05	SCr	17	9.4/10.1	63	96

REGISTERED CIVIL ENGINEER

April 19, 2013
PLANS APPROVAL DATE

REGISTERED PROFESSIONAL ENGINEER
Gurinderpal Bhullar
No. C48815
Exp. 9-30-14
CIVIL
STATE OF CALIFORNIA

THE STATE OF CALIFORNIA OR ITS OFFICERS OR AGENTS SHALL NOT BE RESPONSIBLE FOR THE ACCURACY OR COMPLETENESS OF SCANNED COPIES OF THIS PLAN SHEET.

TO ACCOMPANY PLANS DATED 6-15-15

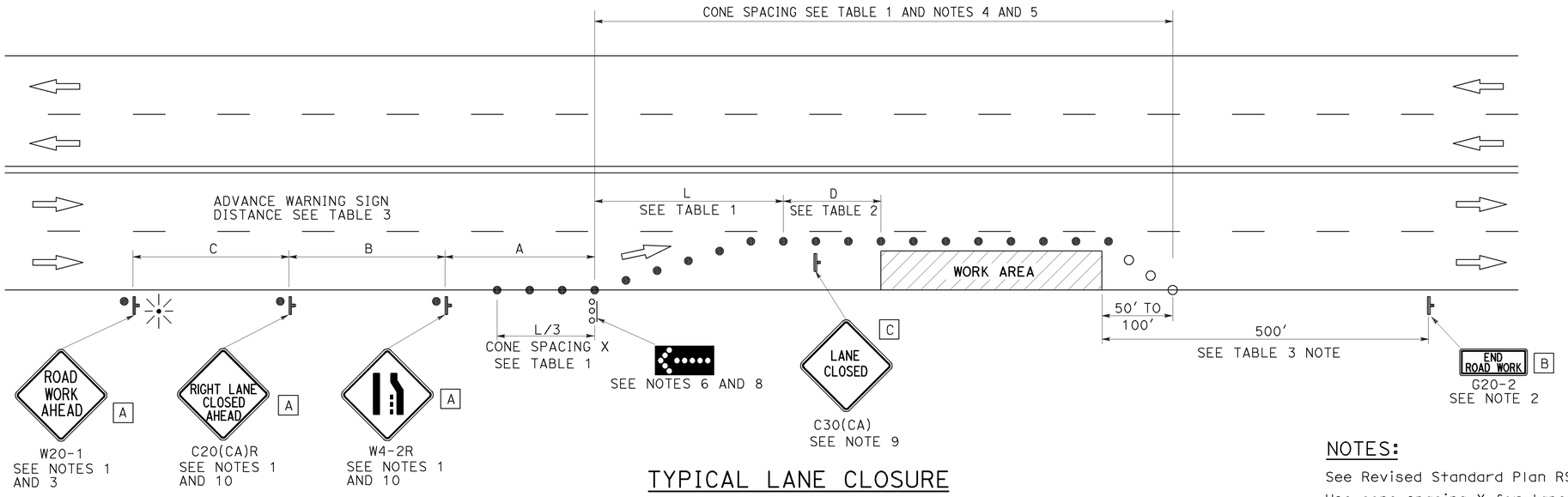

TYPICAL LANE CLOSURE

NOTES:

See Revised Standard Plan RSP T9 for tables.

Use cone spacing X for taper segment, Y for tangent segment or Z for conflict situations, as approriate, per Table 1, unless X, Y, or Z cone spacing is shown on this sheet.

Unless otherwise specified in the special provisions, all temporary warning signs shall have black legend on fluorescent orange background.

California codes are designated by (CA). Otherwise, Federal (MUTCD) codes are shown.

NOTES:

1. Each advance warning sign shall be equipped with at least two flags for daytime closure. Each flag shall be at least 16" x 16" in size and shall be orange or fluorescent red-orange in color. Flashing beacons shall be placed at the locations indicated for lane closure during hours of darkness.
2. A G20-2 "END ROAD WORK" sign, as appropriate, shall be placed at the end of the lane closure unless the end of work area is obvious, or ends within a larger project's limits.
3. If the W20-1 sign would follow within 2000' of a stationary W20-1 or G20-1 "ROAD WORK NEXT _____ MILES", use a C20(CA) sign for the first advance warning sign.
4. All cones used for lane closures during the hours of darkness shall be fitted with retroreflective bands (or sleeves) as specified in the specifications.
5. Portable delineators, placed at one-half the spacing indicated for traffic cones, may be used instead of cones for daytime closures only.
6. Flashing arrow sign shall be either Type I or Type II.
7. For approach speeds over 50 mph, use the "Traffic Control System for Lane Closure On Freeways And Expressways" plan for lane closure details and requirements.
8. A minimum 1500' of sight distance shall be provided where possible for vehicles approaching the first flashing arrow sign. Lane closures shall not begin at the top of crest vertical curve or on a horizontal curve.
9. Place a C30(CA) sign every 2000' throughout length of lane closure.
10. Median lane closures shall conform to the details as shown except that C20(CA)L and W4-2L signs shall be used.
11. At least one person shall be assigned to provide full time maintenance of traffic control devices for lane closure unless, otherwise directed by the Engineer.

LEGEND

- TRAFFIC CONE
- TRAFFIC CONE (OPTIONAL TAPER)
- TEMPORARY TRAFFIC CONTROL SIGN
- FLASHING ARROW SIGN (FAS)
- FAS SUPPORT OR TRAILER
- PORTABLE FLASHING BEACON

SIGN PANEL SIZE (Min)

A	48" x 48"
B	36" x 18"
C	30" x 30"

STATE OF CALIFORNIA
DEPARTMENT OF TRANSPORTATION

TRAFFIC CONTROL SYSTEM FOR LANE CLOSURE ON MULTILANE CONVENTIONAL HIGHWAYS

NO SCALE

RSP T11 DATED APRIL 19, 2013 SUPERSEDES STANDARD PLAN T11 DATED MAY 20, 2011 - PAGE 239 OF THE STANDARD PLANS BOOK DATED 2010.

REVISED STANDARD PLAN RSP T11

2010 REVISED STANDARD PLAN RSP T11

4-2-13

Dist	COUNTY	ROUTE	POST MILES TOTAL PROJECT	SHEET No.	TOTAL SHEETS
05	SCr	17	9.4/10.1	64	96

REGISTERED CIVIL ENGINEER

April 19, 2013
PLANS APPROVAL DATE

REGISTERED PROFESSIONAL ENGINEER Gurinderpal Bhullar No. C48815 Exp. 9-30-14 CIVIL STATE OF CALIFORNIA

THE STATE OF CALIFORNIA OR ITS OFFICERS OR AGENTS SHALL NOT BE RESPONSIBLE FOR THE ACCURACY OR COMPLETENESS OF SCANNED COPIES OF THIS PLAN SHEET.

TO ACCOMPANY PLANS DATED 6-15-15

LEGEND

- TRAFFIC CONE
- TEMPORARY TRAFFIC CONTROL SIGN
- FLASHING ARROW SIGN (FAS)
- FAS SUPPORT OR TRAILER
- PORTABLE FLASHING BEACON

SIGN PANEL SIZE (Min)

A	48" x 48"
B	24" x 24"
C	36" x 18"

NOTES:

See Revised Standard Plan RSP T9 for tables.

Use cone spacing X for taper segment, Y for tangent segment or Z for conflict situations, as approriate, per Table 1, unless X, Y, or Z cone spacing is shown on this sheet.

Unless otherwise specified in the special provisions, all temporary warning signs shall have black legend on fluorescent orange background.

California codes are designated by (CA). Otherwise, Federal (MUTCD) codes are shown.

TYPICAL HALF ROAD CLOSURE

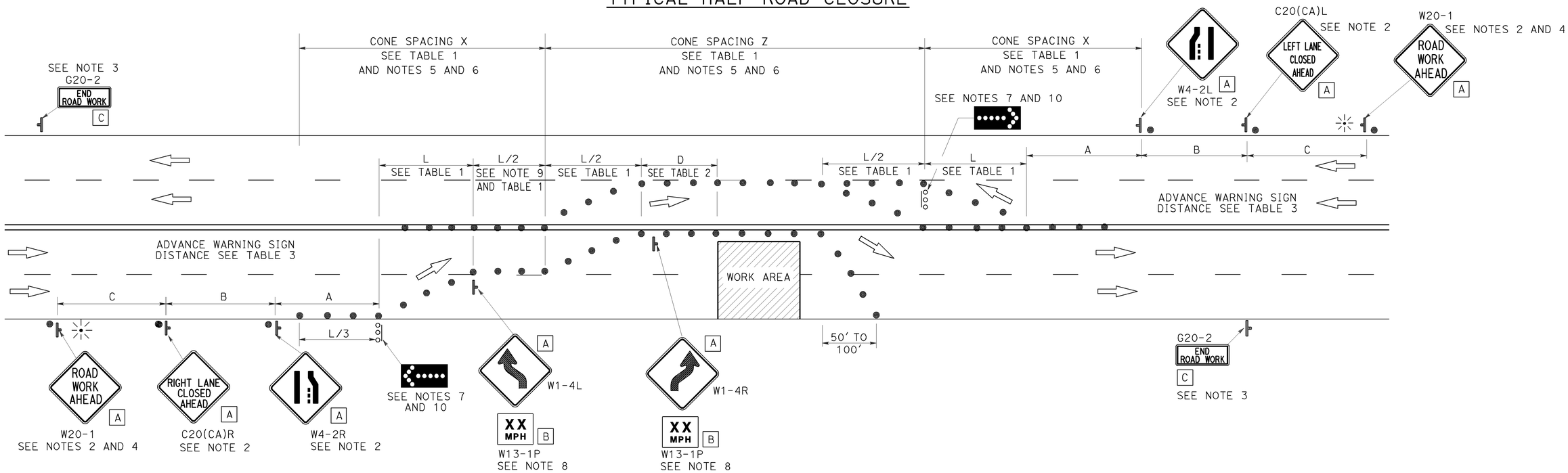

NOTES:

1. At least one person shall be assigned to provide full time maintenance of traffic control devices for lane closure unless, otherwise directed by the Engineer.
2. Each advance warning sign in each direction of travel shall be equipped with at least two flags for daytime closure. Each flag shall be at least 16" x 16" in size and shall be orange or fluorescent red-orange in color. Flashing beacons shall be placed at the locations indicated for lane closure during hours of darkness.
3. A G20-2 "END ROAD WORK" sign, as appropriate, shall be placed at the end of the lane closure unless the end of work area is obvious, or ends within a larger project's limits.
4. If the W20-1 sign would follow within 2000' of a stationary W20-1 or G20-1 "ROAD WORK NEXT _____ MILES", use a C20(CA) sign for the first advance warning sign.
5. All cones used for lane closures during the hours of darkness shall be fitted with retroreflective bands (or sleeves) as specified in the specifications.
6. Portable delineators, placed at one-half the spacing indicated for traffic cones, may be used instead of cones for daytime closures only.
7. Flashing arrow signs shall be either Type I or Type II.
8. Advisory speed will be determined by the Engineer. The W13-1P Plaque will not be required when advisory speed is more than the posted or maximum speed limit.
9. Unless otherwise specified in the special provisions, the tangent (L/2) shall be used.
10. A minimum 1500' of sight distance shall be provided where possible for vehicles approaching the first flashing arrow sign. Lane closures shall not begin at the top of crest vertical curve or on a horizontal curve.

STATE OF CALIFORNIA
DEPARTMENT OF TRANSPORTATION

TRAFFIC CONTROL SYSTEM FOR HALF ROAD CLOSURE ON MULTILANE CONVENTIONAL HIGHWAYS AND EXPRESSWAYS

NO SCALE

RSP T12 DATED APRIL 19, 2013 SUPERSEDES STANDARD PLAN T12
DATED MAY 20, 2011 - PAGE 240 OF THE STANDARD PLANS BOOK DATED 2010.

REVISED STANDARD PLAN RSP T12

2010 REVISED STANDARD PLAN RSP T12

4-2-13

Dist	COUNTY	ROUTE	POST MILES TOTAL PROJECT	SHEET No.	TOTAL SHEETS
05	SCr	17	9.4/10.1	65	96

REGISTERED CIVIL ENGINEER

April 19, 2013
PLANS APPROVAL DATE

REGISTERED PROFESSIONAL ENGINEER Gurinderpal Bhullar No. C48815 Exp. 9-30-14 CIVIL STATE OF CALIFORNIA

THE STATE OF CALIFORNIA OR ITS OFFICERS OR AGENTS SHALL NOT BE RESPONSIBLE FOR THE ACCURACY OR COMPLETENESS OF SCANNED COPIES OF THIS PLAN SHEET.

TO ACCOMPANY PLANS DATED 6-15-15

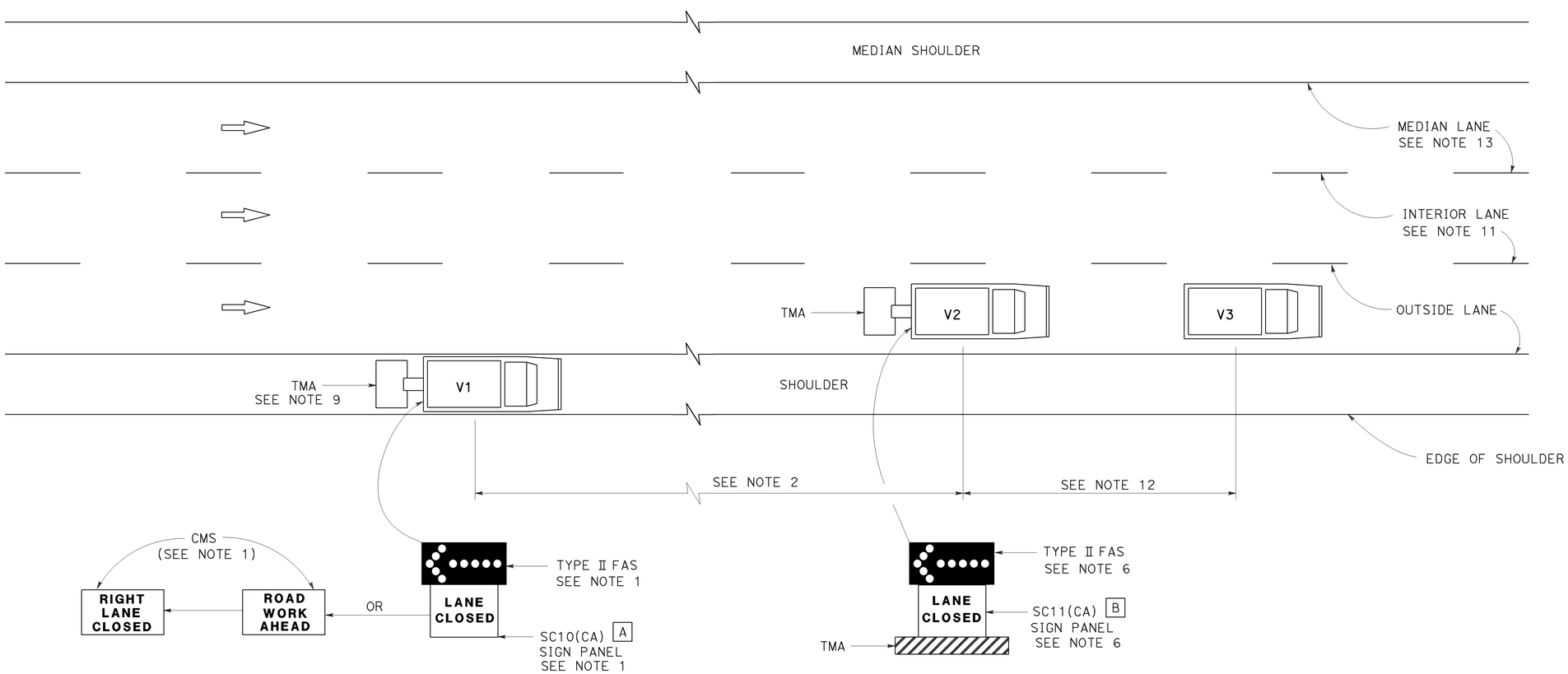

MOVING LANE CLOSURE ON MEDIAN LANE OR OUTSIDE LANE OF MULTILANE HIGHWAYS

SIGN PANEL SIZE (Min)

A 66" x 36"

B 54" x 42"

LEGEND

V1	SIGN VEHICLE
V2	SHADOW VEHICLE
V3	WORK/APPLICATION VEHICLE
	FLASHING ARROW SIGN (FAS)
CMS	CHANGEABLE MESSAGE SIGN
TMA	TRUCK-MOUNTED ATTENUATOR

NOTES:

1. Either a changeable message sign or a SC10(CA) sign panel and a Type II flashing arrow sign shall be mounted on the rear of sign vehicle V1. The changeable message sign shall be sequenced to show the "ROAD WORK AHEAD" message first, followed by the "RIGHT LANE CLOSED" message. For median lane closure, the flashing arrow symbol shall be reversed with the arrowhead on the right and the changeable message sign shall show "LEFT LANE CLOSED".
2. If traffic queues develop, sign vehicle V1 should be positioned upstream from the end of queue. Sign vehicle V1 shall be positioned where highly visible when shoulders are not available.
3. A minimum sight distance of 1500′ should be provided in advance of sign vehicle V1.
4. Sign vehicle V1 should remain at the beginning of horizontal or vertical curves until the other vehicles (V2 and V3) are far enough beyond the curve to resume the minimum sight distance of 1500′.
5. Vehicle-mounted sign panels shall have Type III or above retroreflective sheeting, black on white, or black on fluorescent orange, with 6" minimum series D letters per Caltrans sign specifications.
6. Shadow vehicle V2 shall be equipped with a truck-mounted attenuator. The sign panel shown and a Type II flashing arrow sign shall be mounted on the rear of shadow vehicle V2. For median lane closure the flashing arrow sign symbol shall be displayed with the arrowhead on the right.
7. All vehicles used for lane closures shall be equipped with two-way radios, and the vehicle operators shall maintain communication during the work or application operation.
8. All vehicles shall be equipped with flashing or rotating amber lights.
9. If sign vehicle V1 encroaches into the traffic lane due to insufficient shoulder width, sign vehicle V1 shall be equipped with a truck-mounted attenuator. Sign vehicle V1 shall stay as close to the edge of shoulder as practicable.
10. Where workers would be on foot in the work area, a stationary type lane closure (Revised Standard Plan T10, T11, etc., as applicable) shall be used instead of this plan.
11. For moving lane closure on interior lane of multilane highways, use Revised Standard Plan T16.
12. The spacing between work vehicle(s) and the shadow vehicles, and between each shadow vehicle should be minimized to deter road users from driving in between.
13. When the work/application vehicle V3 occupies the median lane, sign vehicle V1 should drive in the median shoulder and indicate left lane closed ahead.

STATE OF CALIFORNIA
DEPARTMENT OF TRANSPORTATION

TRAFFIC CONTROL SYSTEM FOR MOVING LANE CLOSURE ON MULTILANE HIGHWAYS

NO SCALE

RSP T15 DATED APRIL 19, 2013 SUPERSEDES STANDARD PLAN T15
DATED MAY 20, 2011 - PAGE 243 OF THE STANDARD PLANS BOOK DATED 2010.

REVISED STANDARD PLAN RSP T15

2010 REVISED STANDARD PLAN RSP T15

12-18-12

Dist	COUNTY	ROUTE	POST MILES TOTAL PROJECT	SHEET No.	TOTAL SHEETS
05	SCr	17	9.4/10.1	66	96

REGISTERED CIVIL ENGINEER

April 19, 2013
PLANS APPROVAL DATE

REGISTERED PROFESSIONAL ENGINEER Gurinderpal Bhullar No. C48815 Exp. 9-30-14 CIVIL STATE OF CALIFORNIA

THE STATE OF CALIFORNIA OR ITS OFFICERS OR AGENTS SHALL NOT BE RESPONSIBLE FOR THE ACCURACY OR COMPLETENESS OF SCANNED COPIES OF THIS PLAN SHEET.

TO ACCOMPANY PLANS DATED 6-15-15

2010 REVISED STANDARD PLAN RSP T16

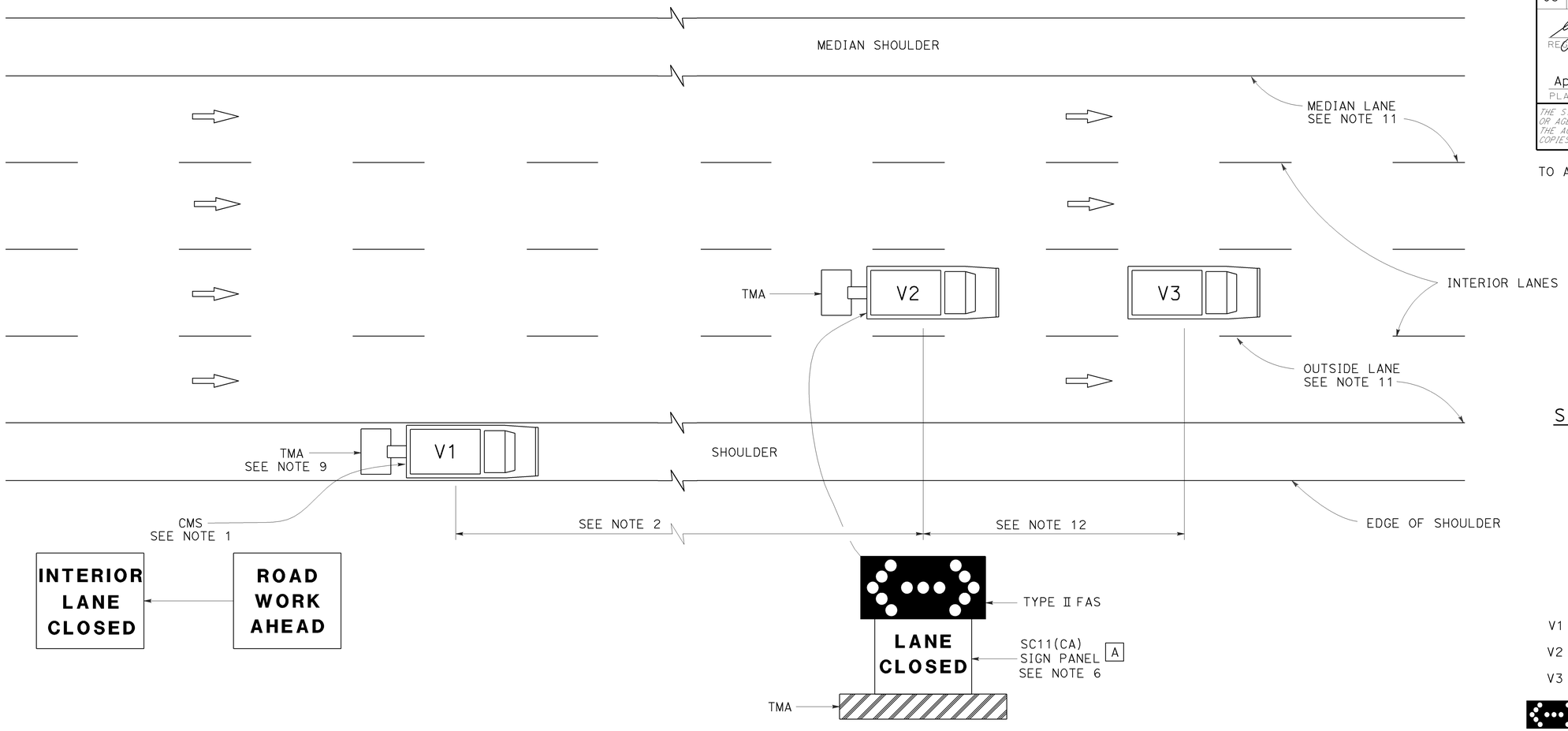

SIGN PANEL SIZE (Min)

A 54" x 42"

LEGEND

V1	SIGN VEHICLE
V2	SHADOW VEHICLE
V3	WORK/APPLICATION VEHICLE
	FLASHING ARROW SIGN (FAS) IN FLASHING DOUBLE ARROW MODE
CMS	CHANGEABLE MESSAGE SIGN
TMA	TRUCK-MOUNTED ATTENUATOR

MOVING LANE CLOSURE ON INTERIOR LANE OF MULTILANE HIGHWAYS

NOTES:

1. A changeable message sign shall be mounted on the rear of sign vehicle V1. The changeable message sign shall be sequenced to show the "ROAD WORK AHEAD" message first, followed by the "INTERIOR LANE CLOSED" message. The message "CENTER LANE CLOSED" may be used in place of the "INTERIOR LANE CLOSED" message.
2. If traffic queues develop, sign vehicle V1 should be positioned upstream from the end of queue. Sign vehicle V1 shall be positioned where highly visible when shoulders are not available.
3. A minimum sight distance of 1500′ should be provided in advance of sign vehicle V1.
4. Sign vehicle V1 should remain at the beginning of horizontal or vertical curves until the other vehicles (V2 and V3) are far enough beyond the curve to resume the minimum sight distance of 1500′.
5. Vehicle-mounted sign panels shall have Type III or above retroreflective sheeting, black on white, or black on fluorescent orange, with 6" minimum series D letters per Caltrans sign specifications.
6. Shadow vehicle V2 shall be equipped with a truck-mounted attenuator. The sign panel shown and a Type II flashing arrow sign shall be mounted on the rear of shadow vehicle V2.
7. All vehicles used for lane closures shall be equipped with two-way radios, and the vehicle operators shall maintain communication during the work or application operation.
8. All vehicles shall be equipped with flashing or rotating amber lights.
9. If sign vehicle V1 encroaches into the traffic lane due to insufficient shoulder width, sign vehicle V1 shall be equipped with a truck-mounted attenuator. Sign vehicle V1 shall stay as close to the edge of shoulder as practicable.
10. Where workers would be on foot in the work area, a stationary type lane closure (Revised Standard Plan T10, T11 etc., as applicable) shall be used instead of this plan.
11. For moving lane closure on median lane or outside lane of multilane highways, use Revised Standard Plan T15.
12. The spacing between work vehicle(s) and the shadow vehicles, and between each shadow vehicle should be minimized to deter road users from driving in between.

STATE OF CALIFORNIA
DEPARTMENT OF TRANSPORTATION

TRAFFIC CONTROL SYSTEM FOR MOVING LANE CLOSURE ON MULTILANE HIGHWAYS

NO SCALE

RSP T16 DATED APRIL 19, 2013 SUPERSEDES STANDARD PLAN T16
DATED MAY 20, 2011 - PAGE 244 OF THE STANDARD PLANS BOOK DATED 2010.

REVISED STANDARD PLAN RSP T16

12-18-12

Dist	COUNTY	ROUTE	POST MILES TOTAL PROJECT	SHEET No.	TOTAL SHEETS
05	SCr	17	9.4/10.1	67	96

REGISTERED CIVIL ENGINEER

November 15, 2013
PLANS APPROVAL DATE

REGISTERED PROFESSIONAL ENGINEER
Tillat Satter
No. C42892
Exp. 3-31-14
CIVIL
STATE OF CALIFORNIA

THE STATE OF CALIFORNIA OR ITS OFFICERS OR AGENTS SHALL NOT BE RESPONSIBLE FOR THE ACCURACY OR COMPLETENESS OF SCANNED COPIES OF THIS PLAN SHEET.

TO ACCOMPANY PLANS DATED 6-15-15

2010 REVISED STANDARD PLAN RSP B11-56

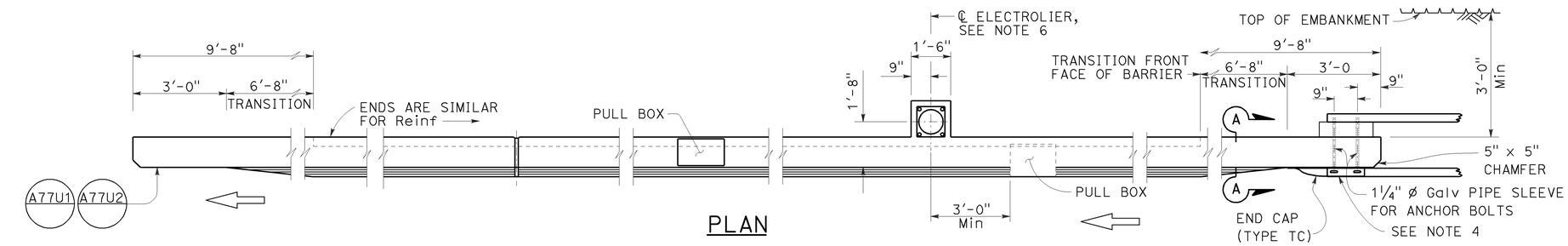

PLAN

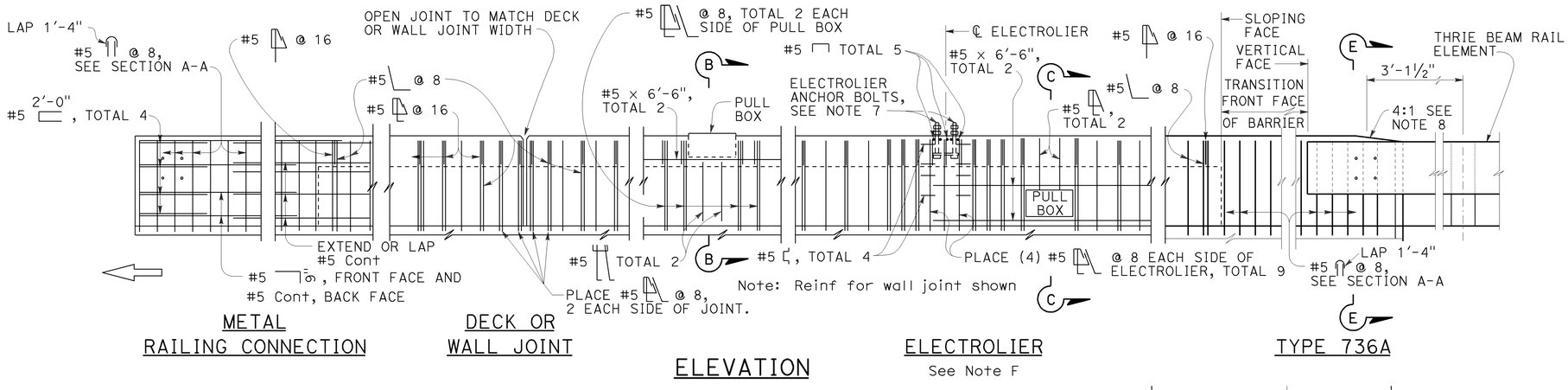

ELEVATION

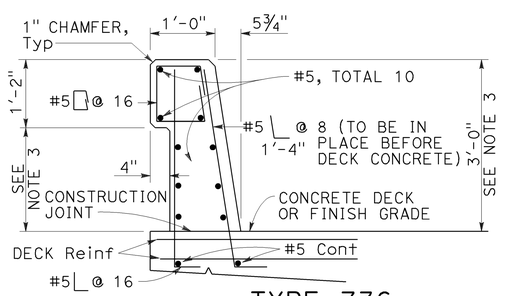

TYPE 736

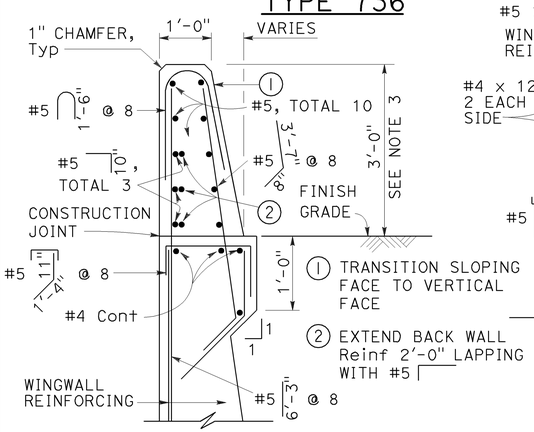

SECTION A-A

Details shown for barrier anchorage to Type 736A. Anchorgae for barrier Types 736 and 736B are similar to their respective details.

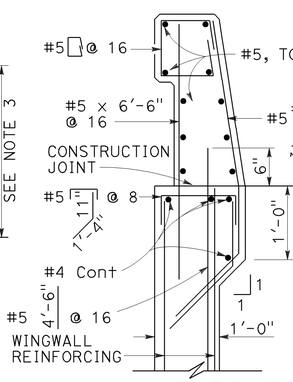

TYPE 736A

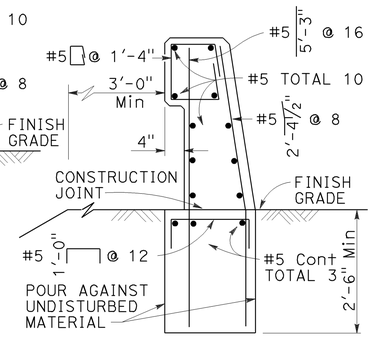

TYPE 736B

Note: Types 736A & 736B are similar to Type 736 except as noted

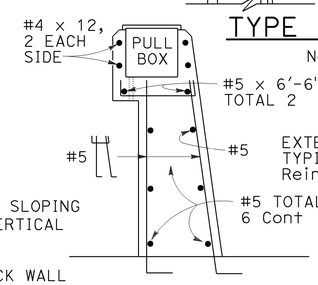

SECTION B-B

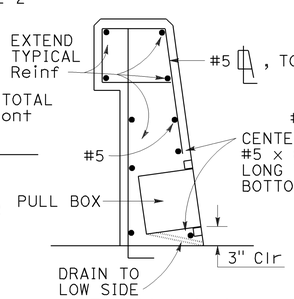

SECTION C-C

See Notes

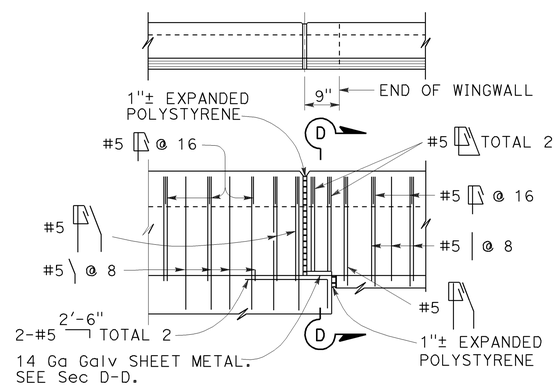

TYPE 736A TYPE 736B

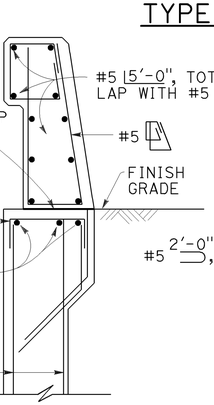

SECTION D-D

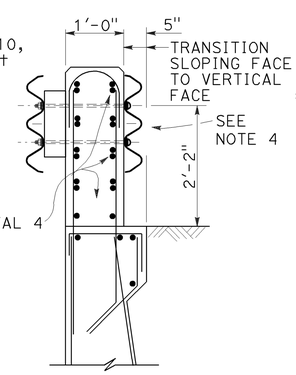

SECTION E-E

See Notes

NOTES:

1. Walls are to be backfilled before barrier is placed.
2. Clearance to reinforcing steel in barrier to be 1", except as noted. Longitudinal reinforcement to stop at all expansion joints.
3. Dimensions may vary with roadway cross slope and with certain thickness of surfacing. See Project Plans.
4. For typical metal railing connection details not shown, see Revised Standard Plans RSP A77U1 and RSP A77U2.
5. See Standard Plans ES-9A, ES-9B, ES-9C, ES-9D and ES-9E for electrical details. The maximum number of conduits in the barrier is limited to two 2" conduits along with one 3" conduit. When a 3" conduit is used, it is restricted to the base of the barrier.
6. For electrolier mounting details, See Standard Plans ES-6A and ES-6B.
7. Minimum concrete edge distance, to the reinforcing shown, shall be maintained. Edge distance may be adjusted to accommodate increase in concrete cover for architectual treatment.
8. Taper the top of the end of the bridge railing at 4:1 to match the top elevation of the thrie beam rail element.

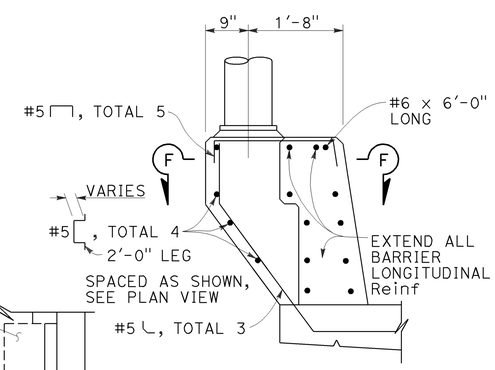

PEDESTAL ELEVATION

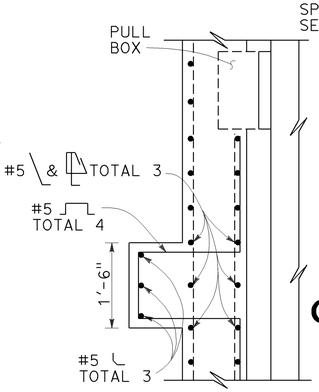

SECTION F-F

STATE OF CALIFORNIA
DEPARTMENT OF TRANSPORTATION

CONCRETE BARRIER TYPE 736

NO SCALE

RSP B11-56 DATED NOVEMBER 15, 2013 SUPERSEDES RSP B11-56 DATED JULY 19, 2013 AND STANDARD PLAN B11-56 DATED MAY 20, 2011 - PAGE 298 OF THE STANDARD PLANS BOOK DATED 2010.

REVISED STANDARD PLAN RSP B11-56

10-4-13

DIST	COUNTY	ROUTE	POST MILES TOTAL PROJECT	SHEET No.	TOTAL SHEETS
05	SCr	17	8.3/9.4	68	96

REGISTERED CIVIL ENGINEER 3-18-15 DATE

6-15-15
PLANS APPROVAL DATE

REGISTERED PROFESSIONAL ENGINEER
RENE CORIA
No. 78907
Exp. 3-31-16
CIVIL
STATE OF CALIFORNIA

The State of California or its officers or agents shall not be responsible for the accuracy or completeness of scanned copies of this plan sheet.

QUANTITIES

STRUCTURE EXCAVATION (BRIDGE)	257	CY
STRUCTURE BACKFILL (BRIDGE)	88	CY
30" CAST-IN-DRILLED-HOLE CONCRETE PILING	303	LF
STRUCTURAL CONCRETE, BRIDGE	168	CY
BAR REINFORCING STEEL (BRIDGE)	54,972	LB
BAR REINFORCING STEEL (EPOXY COATED) (BRIDGE)	5,901	LB
CONCRETE BARRIER (TYPE 736)	225	LF

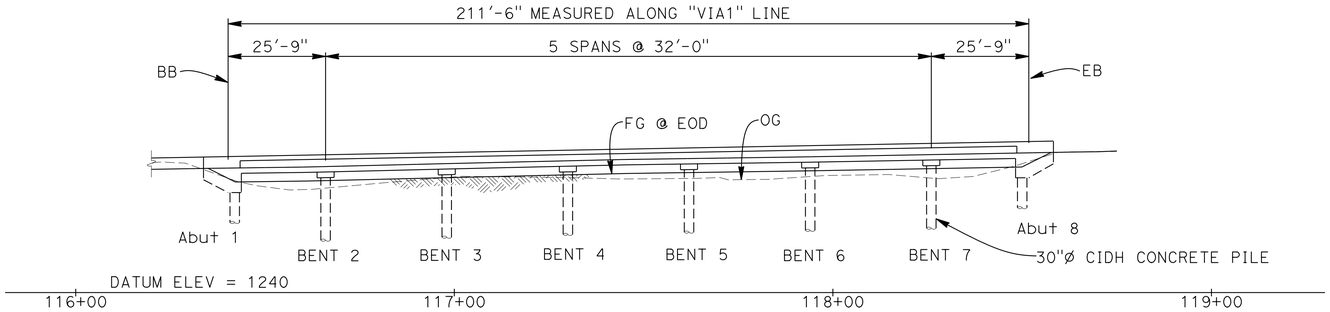

ELEVATION
1"=20'

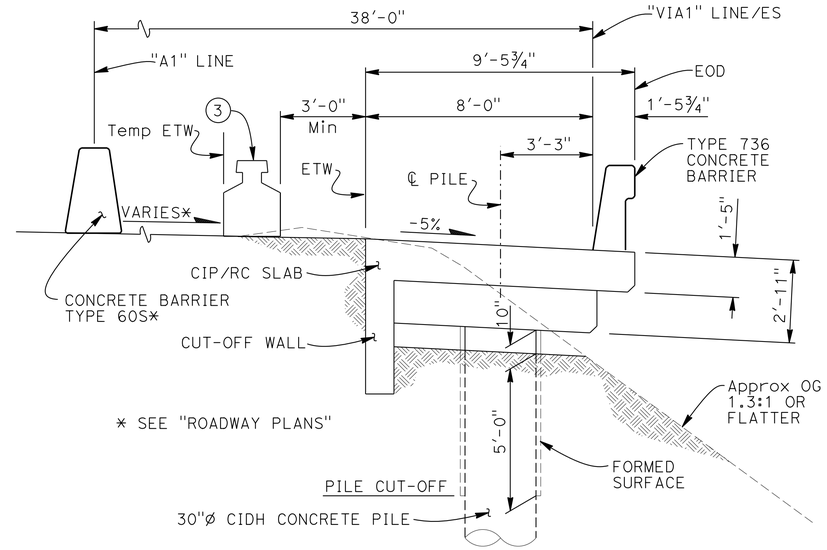

TYPICAL SECTION
3/8"=1'-0"

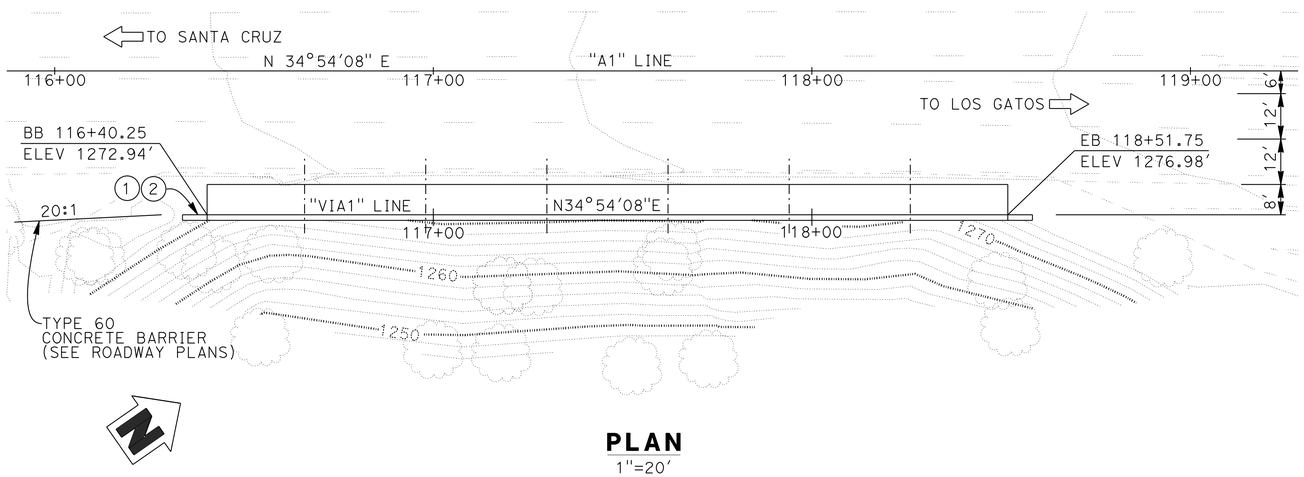

PLAN
1"=20'

NOTES:
For Index to Plans and General Notes, see "INDEX TO PLANS" sheet

QCMB = Quick Change Moveable Barrier

1. Paint "SUGARLOAF ROAD SIDEHILL VIADUCT"
2. Paint "BR. NO. 36-0120"
3. Temporary QCMB railing location shown during non-closure hours, see "ROADWAY PLANS"

NOTE:
VERIFY ALL CONTROLLING FIELD DIMENSIONS BEFORE ORDERING OR FABRICATING ANY MATERIAL.

Gary Joe
DESIGN ENGINEER

	BY	CHECKED
DESIGN	I. Chernioglo	R. Coria
DETAILS	A. Onodera	I. Chernioglo
QUANTITIES	R. Coria	T. Bui

LOAD & RESISTANCE FACTOR DESIGN — LIVE LOADING: HL93 W/"LOW-BOY"; PERMIT DESIGN VEHICLE

	BY	CHECKED
LAYOUT	I. Chernioglo	R. Coria
SPECIFICATIONS	D. Klein	PLANS AND SPECS COMPARED D. Klein

ORIGINAL SCALE IN INCHES FOR REDUCED PLANS 0 1 2 3

STATE OF CALIFORNIA
DEPARTMENT OF TRANSPORTATION

DIVISION OF ENGINEERING SERVICES
STRUCTURE DESIGN
DESIGN BRANCH 17

BRIDGE NO. 36-0120
POST MILE 8.59

SUGARLOAF ROAD SIDEHILL VIADUCT
GENERAL PLAN

UNIT: 3586
PROJECT NUMBER & PHASE: 05000202441
CONTRACT NO.: 05-0T9801

DISREGARD PRINTS BEARING EARLIER REVISION DATES

REVISION DATES: 8-16-13 8-28-13 5-28-14 6-12-14

SHEET 1 OF 10

USERNAME => s115755 DATE PLOTTED => 25-JUN-2015 TIME PLOTTED => 10:51

DIST	COUNTY	ROUTE	POST MILES TOTAL PROJECT	SHEET No.	TOTAL SHEETS
05	SCr	17	8.3/9.4	69	96

REGISTERED CIVIL ENGINEER 3-18-15 DATE

6-15-15
PLANS APPROVAL DATE

REGISTERED PROFESSIONAL ENGINEER RENE CORIA No. C78907 Exp. 3-31-16 CIVIL STATE OF CALIFORNIA

The State of California or its officers or agents shall not be responsible for the accuracy or completeness of scanned copies of this plan sheet.

PILE DATA TABLE

Location	Pile Type	Nominal Resistance (kips)		Cut-off Elevation (ft)	Design Tip Elevation (ft)	Specified Tip Elevation (ft)	Nominal Driving Resistance (kips)
		Compression	Tension				
Abut 1	30" CIDH	360	0	1266.25	1241.0(a) 1259.6(c)	1241.0	N/A
Bent 2	30" CIDH	640	0	1264.5	1224.5(a) 1255.5(c)	1224.5	N/A
Bent 3	30" CIDH	690	0	1265.5	1222.5(a) 1256.5(c)	1222.5	N/A
Bent 4	30" CIDH	690	0	1266.0	1223.0(a) 1257.0(c)	1223.0	N/A
Bent 5	30" CIDH	690	0	1266.5	1223.5(a) 1257.5(c)	1223.5	N/A
Bent 6	30" CIDH	690	0	1267.0	1224.0(a) 1258.0(c)	1224.0	N/A
Bent 7	30" CIDH	640	0	1267.5	1227.5(a) 1258.5(c)	1227.5	N/A
Abut 8	30" CIDH	360	0	1270.25	1245.0(a) 1262.6(c)	1245.0	N/A

NOTES:
1. Design tip elevations for Abutments controlled by: (a) compression, (c) settlement
2. Design tip elevations for Bents controlled by: (a) compression, (b) tension and (c) settlement
3. The specific tip elevation must not be raised

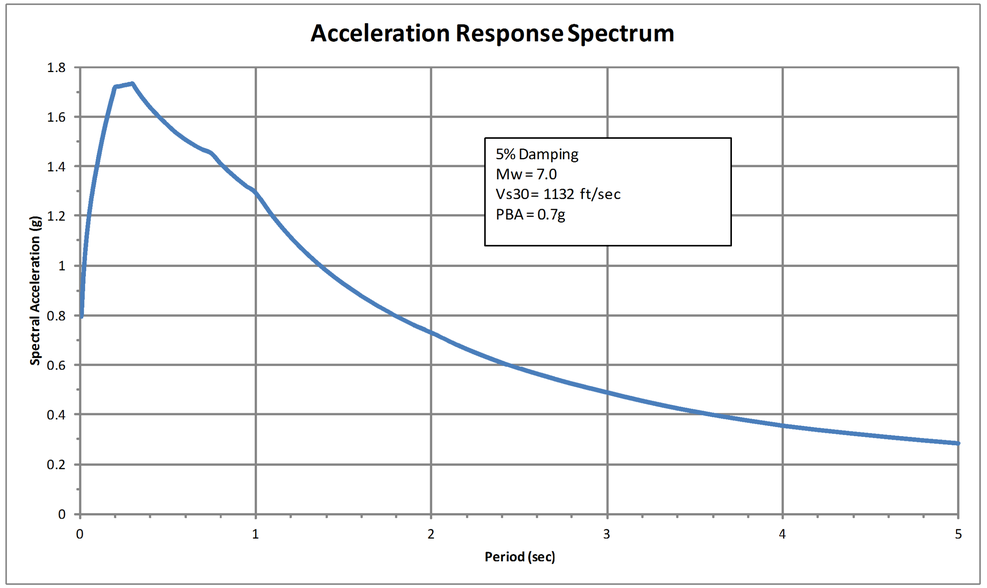

INDEX TO PLANS

SHEET NUMBER	TITLE
1.	General Plan
2.	Index to Plans
3.	Excavation and Backfill
4.	Foundation Plan
5.	Abutment Layout
6.	Abutment Details
7.	Bent Details
8.	Slab Reinforcement
9.	Log of Test Borings 1 of 2
10.	Log of Test Borings 2 of 2

STANDARD PLANS DATED 2010

SHEET NUMBER	TITLE
A10A	Abbreviations (Sheet 1 of 2)
RSP A10B	Abbreviations (Sheet 2 of 2)
A10C	Lines and Symbols (Sheet 1 of 3)
A10D	Lines and Symbols (Sheet 2 of 3)
A10E	Lines and Symbols (Sheet 3 of 3)
A62C	Limits of Payment for Excavation and Backfill-Bridge
B0-1	Bridge Details
B0-3	Bridge Details
RSP B11-56	Concrete Barrier Type 736

Standard Plan Sheet No.

Detail No.

GENERAL NOTES
LOAD AND RESISTANCE FACTOR DESIGN

DESIGN:
AASHTO LRFD Bridge Design Specifications, 4th edition with California Amendments, preface dated Nov. 2011

SEISMIC DESIGN:
Caltrans Seismic Design Criteria (SDC), Version 1.7 dated April 2013

DEAD LOAD:
Includes 35 psf for future wearing surface.

LIVE LOADING:
HL93 and permit design load.

SEISMIC LOADING:
Site specific ARS Curve (as shown)

REINFORCED CONCRETE:
fy = 60 ksi
f'c = 3.6 ksi
n = 8

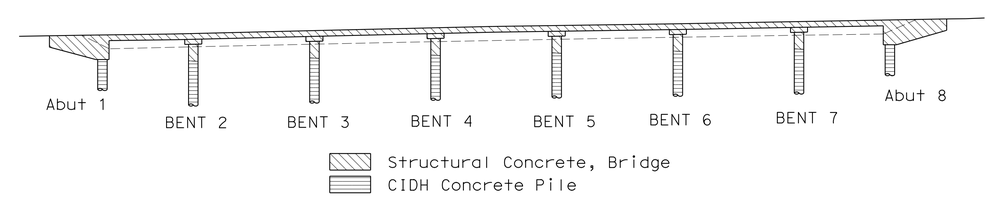

CONCRETE STRENGTH AND TYPE LIMITS

No scale

	BY	CHECKED
DESIGN	R. Coria	T. Bui
DETAILS	A. Onodera	R. Coria
QUANTITIES	R. Coria	T. Bui

STATE OF CALIFORNIA
DEPARTMENT OF TRANSPORTATION

DIVISION OF ENGINEERING SERVICES
STRUCTURE DESIGN
DESIGN BRANCH 17

BRIDGE NO. 36-0120
POST MILE 8.59

SUGARLOAF ROAD SIDEHILL VIADUCT
INDEX TO PLANS

STRUCTURES DESIGN DETAIL SHEET (ENGLISH) (REV. 09-01-10)

ORIGINAL SCALE IN INCHES FOR REDUCED PLANS 0 1 2 3

UNIT: 3586
PROJECT NUMBER & PHASE: 05000202441
CONTRACT NO.: 05-0T9801

DISREGARD PRINTS BEARING EARLIER REVISION DATES

REVISION DATES: 6-30-14 7-17-14 6-12-14 6-20-14

SHEET 2 OF 10

FILE => 36-0120-a-itp.dgn

USERNAME => s115755 DATE PLOTTED => 25-JUN-2015 TIME PLOTTED => 10:51

DIST	COUNTY	ROUTE	POST MILES TOTAL PROJECT	SHEET No.	TOTAL SHEETS
05	SCr	17	8.3/9.4	70	96

REGISTERED CIVIL ENGINEER 3-18-15 DATE

6-15-15
PLANS APPROVAL DATE

REGISTERED PROFESSIONAL ENGINEER
RENE CORIA
No. C78907
Exp. 3-31-16
CIVIL
STATE OF CALIFORNIA

The State of California or its officers or agents shall not be responsible for the accuracy or completeness of scanned copies of this plan sheet.

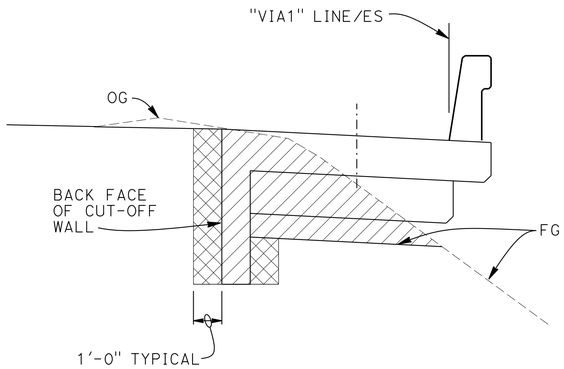

VIADUCT
3/8"=1'-0"

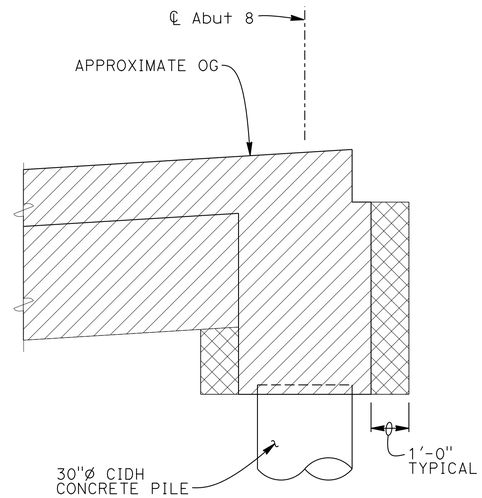

ABUTMENT
1/2"=1'-0"

NOTE:
Abutment 8 shown, Abutment 1 similar

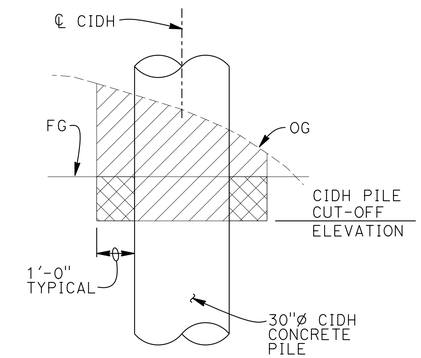

COLUMN
1/2"=1'-0"

LEGEND:
- Denotes limits of structure excavation (Bridge)
- Denotes limits of structure backfill (Bridge)

	BY	CHECKED
DESIGN	R. Coria	T. Bui
DETAILS	A. Onodera	R. Coria
QUANTITIES	R. Coria	T. Bui

STATE OF CALIFORNIA
DEPARTMENT OF TRANSPORTATION

DIVISION OF ENGINEERING SERVICES
STRUCTURE DESIGN
DESIGN BRANCH 17

BRIDGE NO. 36-0120
POST MILE 8.59

SUGARLOAF ROAD SIDEHILL VIADUCT
EXCAVATION AND BACKFILL

STRUCTURES DESIGN DETAIL SHEET (ENGLISH) (REV. 09-01-10)

ORIGINAL SCALE IN INCHES FOR REDUCED PLANS 0 1 2 3

UNIT: 3586
PROJECT NUMBER & PHASE: 05000202441
CONTRACT NO.: 05-0T9801

DISREGARD PRINTS BEARING EARLIER REVISION DATES

REVISION DATES: 6-17-14 6-20-14 6-27-14

SHEET 3 OF 10

FILE => 36-0120-d-x-b-fill01.dgn

USERNAME => s115755 DATE PLOTTED => 25-JUN-2015 TIME PLOTTED => 10:51

DIST	COUNTY	ROUTE	POST MILES TOTAL PROJECT	SHEET No.	TOTAL SHEETS
05	SCr	17	8.3/9.4	71	96

REGISTERED CIVIL ENGINEER 3-18-15 DATE

6-15-15
PLANS APPROVAL DATE

REGISTERED PROFESSIONAL ENGINEER
RENE CORIA
No. 78907
Exp. 3-31-16
CIVIL
STATE OF CALIFORNIA

The State of California or its officers or agents shall not be responsible for the accuracy or completeness of electronic copies of this plan sheet.

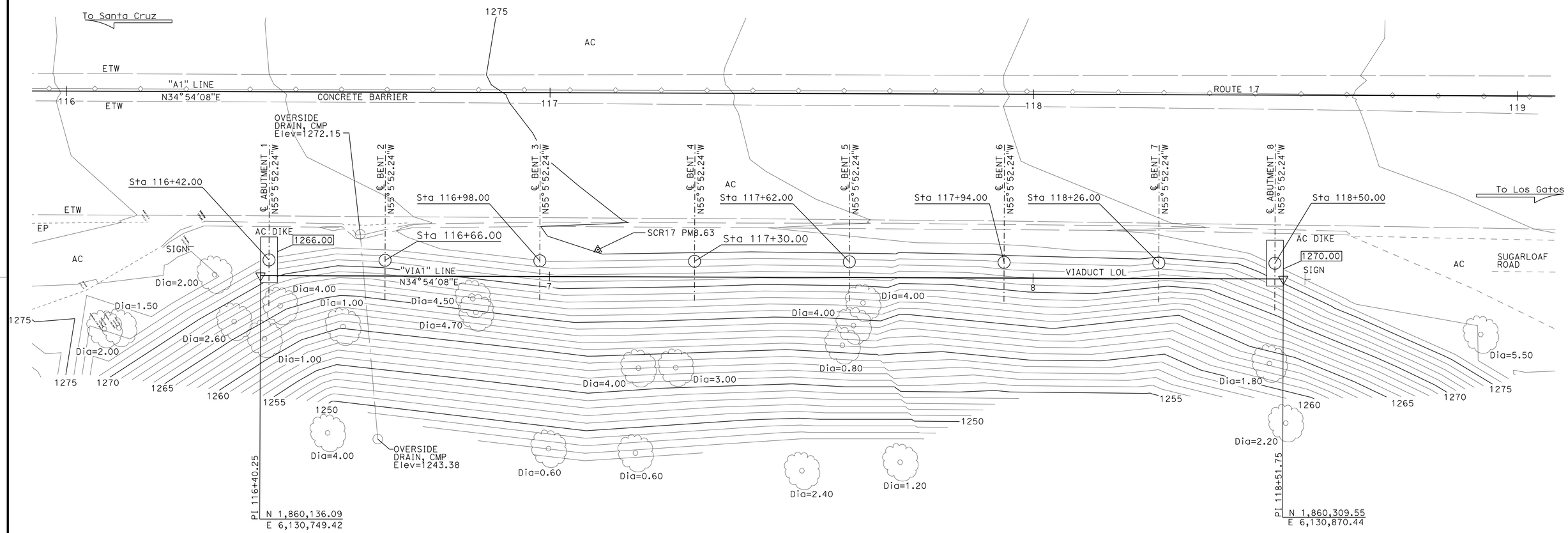

SURVEY CONTROL

SCR17 PM8.56 (NOT SHOWN ON PLAN SHEET)
Fnd 1" IP W/ CALTRANS CONTROL PP W/ NAIL
35.00 Ft Lt Rte 17 "A1" LINE
Sta 113+72.39
N 1,859,956.17
E 6,130,536.24
Elev = 1268.23

SCR17 PM8.63
Fnd 1"IP W/ CALTRANS CONTROL PP W/ NAIL
32.42 Ft Rt Rte 17 "A1" LINE
Sta 117+09.98
N 1,860,196.47
E 6,130,784.75
Elev = 1275.05

NOTES:

XXXX.XX Indicates bottom of Abutment elevation

◯ Indicates 30" ø CIDH pile

PRELIMINARY INVESTIGATION SECTION

SCALE	VERT.DATUM NAVD88	PHOTOGRAMMETRY AS OF: X				
1"=10'	HORZ.DATUM NAD83(1991.35)	SURVEYED	BY DISTRICT	CHECKED	BY C. FASSETT	06/14
ALIGNMENT TIES Dist TRAVERSE SHEET		DRAFTED	BY C. FASSETT 06/14	CHECKED	BY L. LEW	06/14

DESIGN	BY R. Coria	CHECKED T. Bui
DETAILS	BY A. Onodera	CHECKED R. Coria
QUANTITIES	BY R. Coria	CHECKED T. Bui

STATE OF CALIFORNIA
DEPARTMENT OF TRANSPORTATION

DIVISION OF ENGINEERING SERVICES
STRUCTURE DESIGN
DESIGN BRANCH 17

BRIDGE NO. 36-0120
POST MILE 8.59

SUGARLOAF ROAD SIDEHILL VIADUCT
FOUNDATION PLAN

STRUCTURES FOUNDATION PLAN SHEET (ENGLISH) (REV. 09-01-10)

ORIGINAL SCALE IN INCHES FOR REDUCED PLANS 0 1 2 3

UNIT: 3646
PROJECT NUMBER & PHASE: 0500020244 1
CONTRACT NO.: 05-0T9801

DISREGARD PRINTS BEARING EARLIER REVISION DATES

REVISION DATES 06/20/14 - | SHEET 4 OF 10

FILE => 36-0120-e-fp101.dgn

USERNAME => s115755 DATE PLOTTED => 25-JUN-2015 TIME PLOTTED => 10:52

DIST	COUNTY	ROUTE	POST MILES TOTAL PROJECT	SHEET No.	TOTAL SHEETS
05	SCr	17	8.3/9.4	72	96

REGISTERED CIVIL ENGINEER 3-18-15 DATE

6-15-15
PLANS APPROVAL DATE

REGISTERED PROFESSIONAL ENGINEER
RENE CORIA
No. C78907
Exp. 03-31-2015
CIVIL
STATE OF CALIFORNIA

The State of California or its officers or agents shall not be responsible for the accuracy or completeness of scanned copies of this plan sheet.

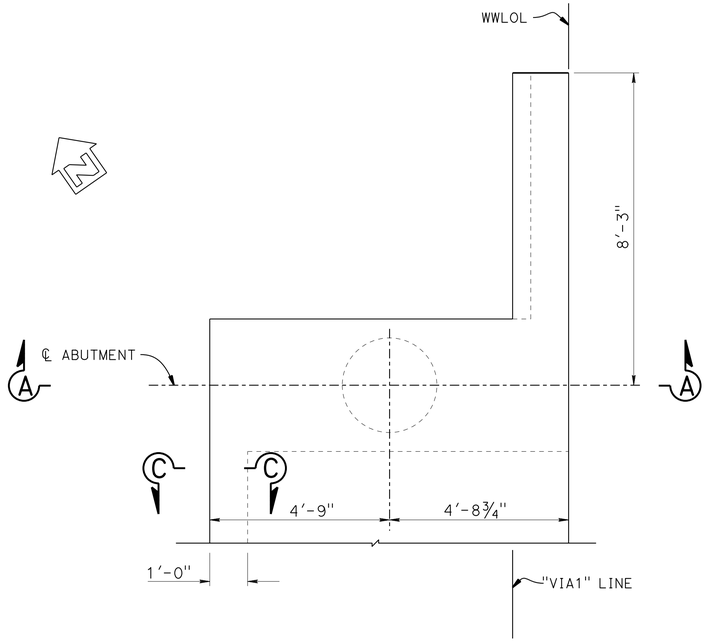

ABUTMENT PLAN
½" = 1'-0"

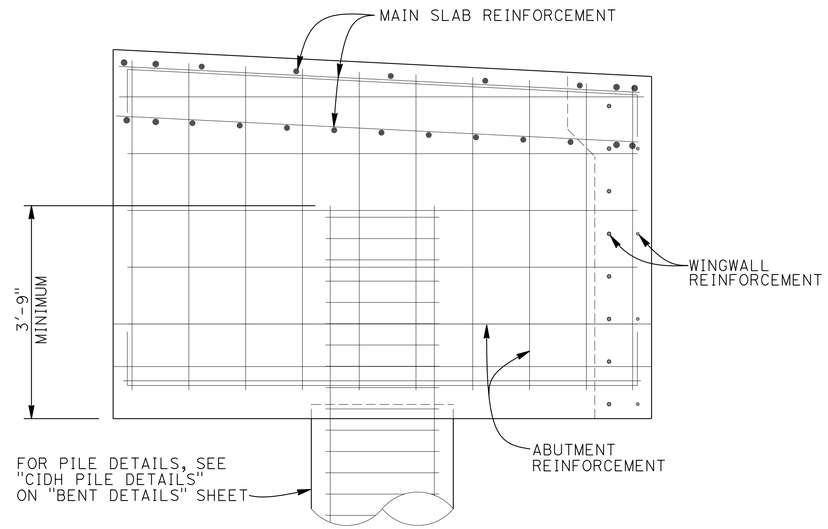

SECTION A-A
¾"=1'-0"

NOTES:
1. Abutment 8 shown, Abutment 1 similar
2. For Section E-E, see "ABUTMENT DETAILS" sheet
3. For Section D-D, see "BENT DETAILS" sheet
4. Epoxy Coated Reinforcement (ECR)

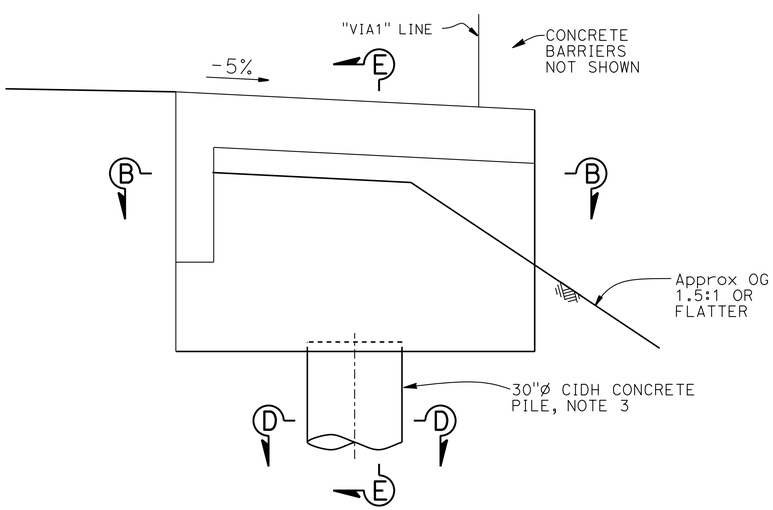

ABUTMENT ELEVATION
½" = 1'-0"

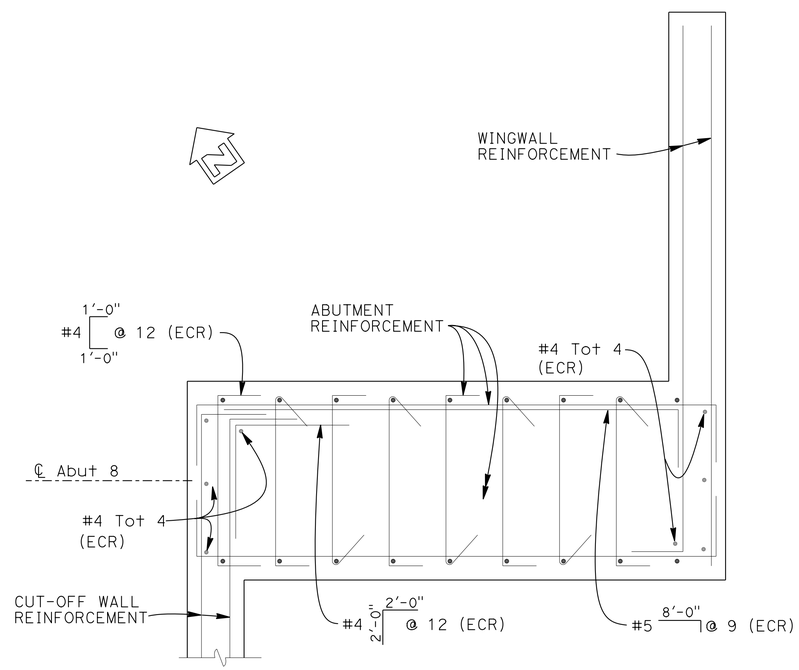

SECTION B-B
¾"=1'-0"

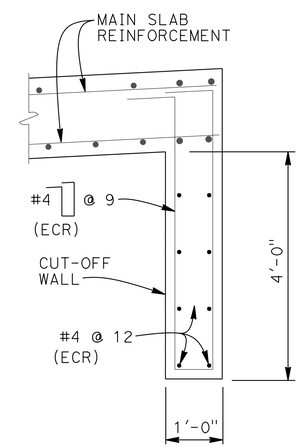

SECTION C-C
¾"=1'-0"

DESIGN	BY R. Coria	CHECKED T. Bui	
DETAILS	BY A. Onodera	CHECKED R. Coria	
QUANTITIES	BY R. Coria	CHECKED T. Bui	

STATE OF CALIFORNIA
DEPARTMENT OF TRANSPORTATION

DIVISION OF ENGINEERING SERVICES
STRUCTURE DESIGN
DESIGN BRANCH 17

BRIDGE NO. 36-0120
POST MILE 8.59

SUGARLOAF ROAD SIDEHILL VIADUCT
ABUTMENT LAYOUT

STRUCTURES DESIGN DETAIL SHEET (ENGLISH) (REV. 09-01-10)

ORIGINAL SCALE IN INCHES FOR REDUCED PLANS 0 1 2 3

UNIT: 3586
PROJECT NUMBER & PHASE: 05000202441
CONTRACT NO.: 05-0T9801

DISREGARD PRINTS BEARING EARLIER REVISION DATES

REVISION DATES: 5-5-14 6-27-14 6-20-14

SHEET 5 OF 10

FILE => 36-0120-f-a01_lo1.dgn

USERNAME => s115755 DATE PLOTTED => 25-JUN-2015 TIME PLOTTED => 10:52

DIST	COUNTY	ROUTE	POST MILES TOTAL PROJECT	SHEET No.	TOTAL SHEETS
05	SCr	17	8.3/9.4	73	96

REGISTERED CIVIL ENGINEER 3-18-15 DATE

6-15-15
PLANS APPROVAL DATE

REGISTERED PROFESSIONAL ENGINEER RENE CORIA No. C78907 Exp. 3-31-16 CIVIL STATE OF CALIFORNIA

The State of California or its officers or agents shall not be responsible for the accuracy or completeness of scanned copies of this plan sheet.

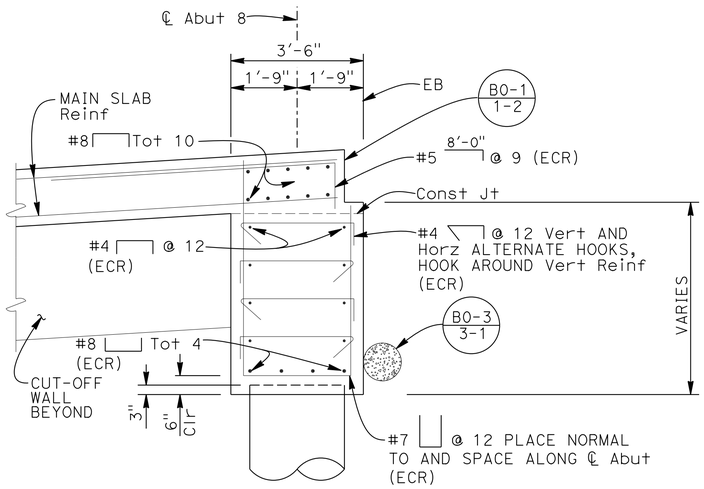

SECTION E-E
1/2"=1'-0"

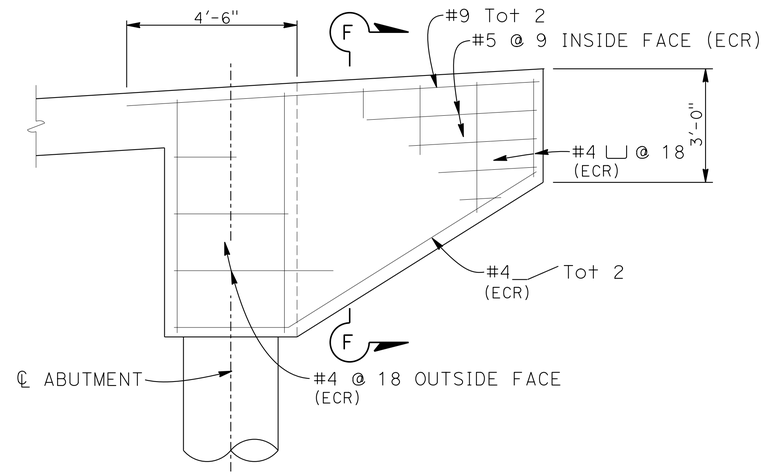

ELEVATION

VERTICAL ABUTMENT
1/2"=1'-0"

NOTES:

1. For location of Section E-E, see "ABUTMENT LAYOUT" sheet
2. Abutment 8 details shown, Abutment 1 similar
3. Epoxy Coated Reinforcement (ECR)

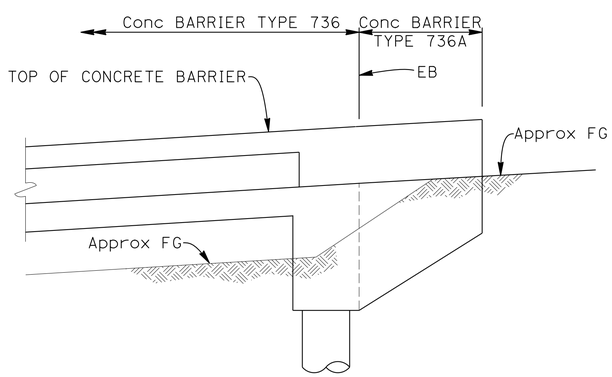

ABUTMENT WINGWALL RSP B11-56
1/4"=1'-0"

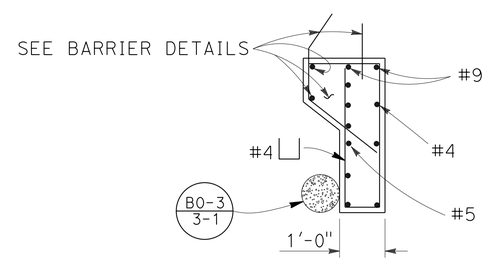

SECTION F-F
NO SCALE

DESIGN	BY R. Coria	CHECKED T. Bui	
DETAILS	BY A. Onodera	CHECKED R. Coria	
QUANTITIES	BY R. Coria	CHECKED T. Bui	

STATE OF CALIFORNIA
DEPARTMENT OF TRANSPORTATION

DIVISION OF ENGINEERING SERVICES
STRUCTURE DESIGN
DESIGN BRANCH 17

BRIDGE NO. 36-0120
POST MILE 8.59

SUGARLOAF ROAD SIDEHILL VIADUCT
ABUTMENT DETAILS

STRUCTURES DESIGN DETAIL SHEET (ENGLISH) (REV. 09-01-10)

ORIGINAL SCALE IN INCHES FOR REDUCED PLANS 0 1 2 3

UNIT: 3586
PROJECT NUMBER & PHASE: 05000202441
CONTRACT NO.: 05-0T9801

DISREGARD PRINTS BEARING EARLIER REVISION DATES

REVISION DATES: 5-5-14 6-27-14 6-20-14

SHEET 6 OF 10

FILE => 36-0120-f-a01dt01.dgn

USERNAME => s115755 DATE PLOTTED => 25-JUN-2015 TIME PLOTTED => 10:52

DIST	COUNTY	ROUTE	POST MILES TOTAL PROJECT	SHEET No.	TOTAL SHEETS
05	SCr	17	8.3/9.4	74	96

REGISTERED CIVIL ENGINEER 3-18-15 DATE

6-15-15
PLANS APPROVAL DATE

REGISTERED PROFESSIONAL ENGINEER RENE CORIA No. C78907 Exp. 03-31-2015 CIVIL STATE OF CALIFORNIA

The State of California or its officers or agents shall not be responsible for the accuracy or completeness of scanned copies of this plan sheet.

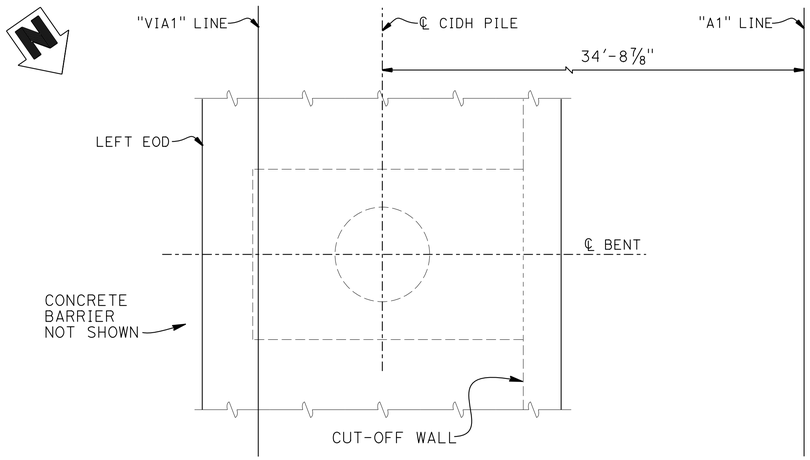

PLAN
½" = 1'-0"

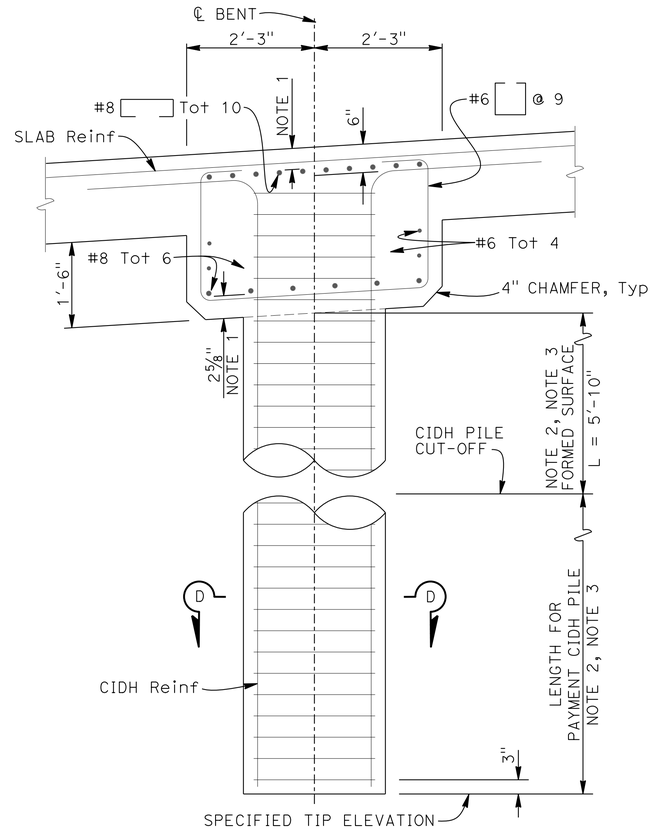

SECTION G-G
¾" = 1'-0"

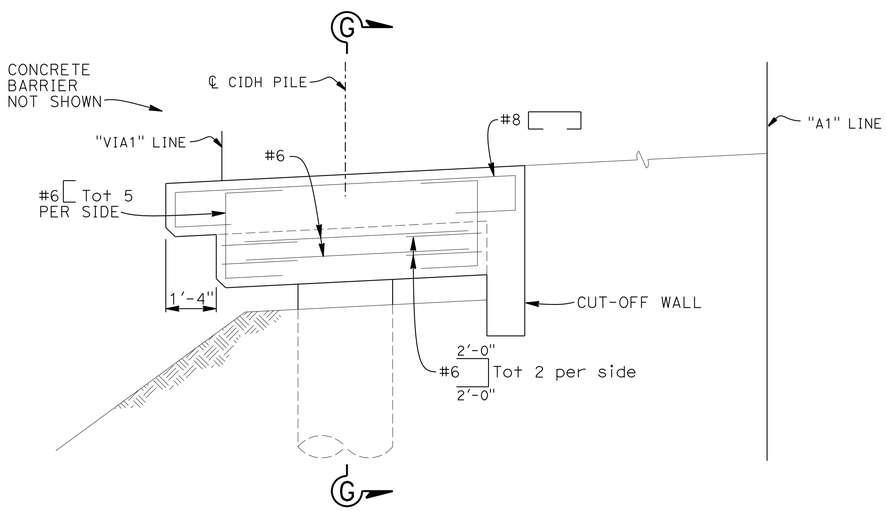

ELEVATION
½" = 1'-0"

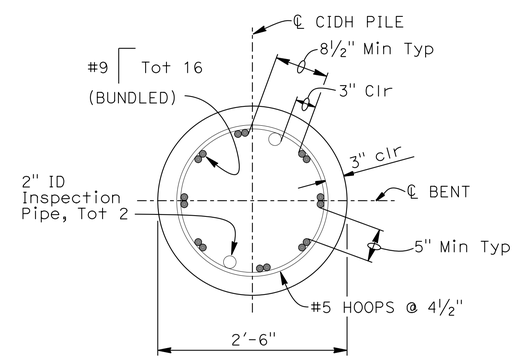

SECTION D-D
1" = 1'-0"

NOTES:

1. Clearance to main cap reinforcement
2. No splices allowed in main CIDH and column reinforcement
3. All hoops must be "Ultimate" butt spliced continuous

DESIGN	BY R. Coria	CHECKED T. Bui	
DETAILS	BY A. Onodera	CHECKED R. Coria	
QUANTITIES	BY R. Coria	CHECKED T. Bui	

STATE OF CALIFORNIA
DEPARTMENT OF TRANSPORTATION

DIVISION OF ENGINEERING SERVICES
STRUCTURE DESIGN
DESIGN BRANCH 17

BRIDGE NO. 36-0120
POST MILE 8.59

SUGARLOAF ROAD SIDEHILL VIADUCT
BENT DETAILS

STRUCTURES DESIGN DETAIL SHEET (ENGLISH) (REV. 09-01-10)

ORIGINAL SCALE IN INCHES FOR REDUCED PLANS 0 1 2 3

UNIT: 3586
PROJECT NUMBER & PHASE: 05000202441
CONTRACT NO.: 05-0T9801

DISREGARD PRINTS BEARING EARLIER REVISION DATES

REVISION DATES: 6-30-14 8-7-14 6-16-15 6-20-14

SHEET 7 OF 10

FILE => 36-0120-n-b2-lol.dgn

USERNAME => s115755 DATE PLOTTED => 25-JUN-2015 TIME PLOTTED => 10:52

DIST	COUNTY	ROUTE	POST MILES TOTAL PROJECT	SHEET No.	TOTAL SHEETS
05	SCr	17	8.3/9.4	75	96

REGISTERED CIVIL ENGINEER 3-18-15 DATE

6-15-15
PLANS APPROVAL DATE

REGISTERED PROFESSIONAL ENGINEER RENE CORIA No. C78907 Exp. 3-31-16 CIVIL STATE OF CALIFORNIA

The State of California or its officers or agents shall not be responsible for the accuracy or completeness of scanned copies of this plan sheet.

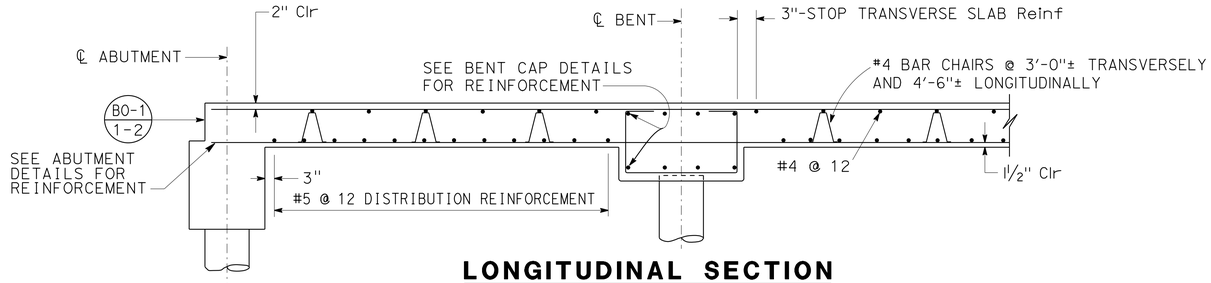

LONGITUDINAL SECTION
NO SCALE

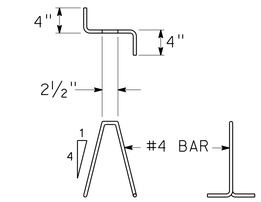

BAR CHAIR DETAIL
1" = 1'-0"

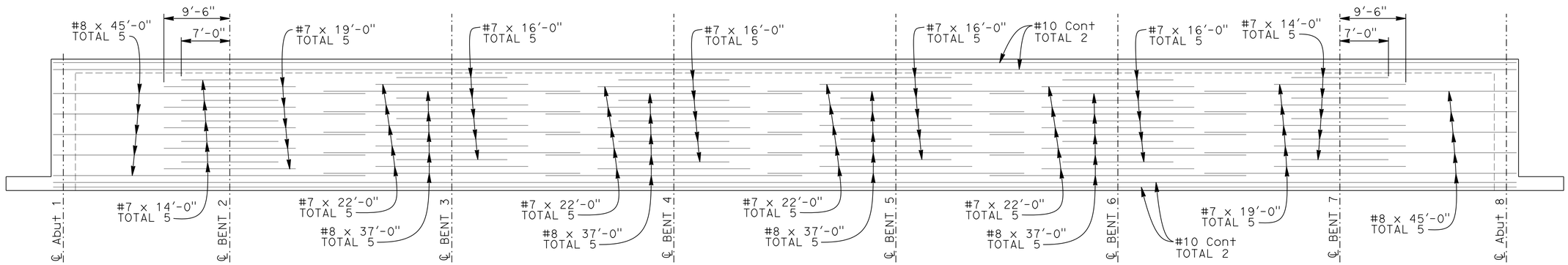

TOP SLAB REINFORCEMENT
1/8"=1'-0" HORIZONTALLY
1/4"=1'-0" VERTICALLY
NOTE 2

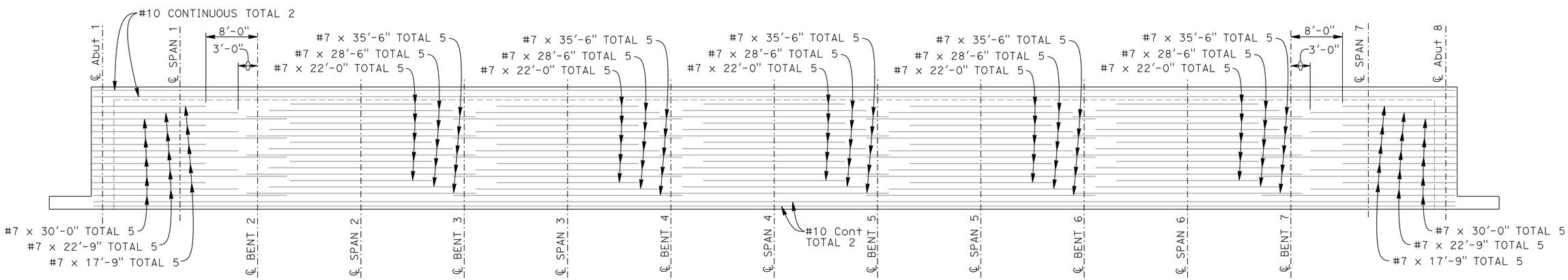

BOTTOM SLAB REINFORCEMENT
1/8"=1'-0" HORIZONTALLY
1/4"=1'-0" VERTICALLY
NOTE 3

NOTES:
1. Lap splices allowed only in continuous reinforcement
2. Rebar must be laid-out symetrically along centerline of bents, except where noted
3. Rebar must be laid-out symetrically along centerline of spans, except where noted

	BY	CHECKED
DESIGN	R. Coria	T. Bui
DETAILS	A. Onodera	R. Coria
QUANTITIES	R. Coria	T. Bui

STATE OF CALIFORNIA
DEPARTMENT OF TRANSPORTATION

DIVISION OF ENGINEERING SERVICES
STRUCTURE DESIGN
DESIGN BRANCH 17

BRIDGE NO. 36-0120
POST MILE 8.59

SUGARLOAF ROAD SIDEHILL VIADUCT
SLAB REINFORCEMENT

STRUCTURES DESIGN DETAIL SHEET (ENGLISH) (REV. 09-01-10)

ORIGINAL SCALE IN INCHES FOR REDUCED PLANS 0 1 2 3

UNIT: 3586
PROJECT NUMBER & PHASE: 05000202441
CONTRACT NO.: 05-0T9801

DISREGARD PRINTS BEARING EARLIER REVISION DATES

REVISION DATES: 5-5-14 5-29-14 6-12-14 6-20-14

SHEET 8 OF 10

FILE => 36-0120-m-add-slab01.dgn

USERNAME => s115755 DATE PLOTTED => 25-JUN-2015 TIME PLOTTED => 10:52

DIST	COUNTY	ROUTE	POST MILES TOTAL PROJECT	SHEET No.	TOTAL SHEETS
05	SCr	17	8.3/9.4	76	96

REGISTERED CIVIL ENGINEER — DATE 5-2-14

6-15-15
PLANS APPROVAL DATE

REGISTERED PROFESSIONAL ENGINEER — Dan Applebaum — No. C50001 — Exp. 6-30-15 — CIVIL — STATE OF CALIFORNIA

The State of California or its officers or agents shall not be responsible for the accuracy or completeness of electronic copies of this plan sheet.

This LOTB sheet was prepared in accordance with the Caltrans Soil & Rock Logging, Classification, & Presentation Manual (2010 Edition).

See 2010 Standard Plans A10F and A10G for Soil Legend, and A10H for Rock Legend.

BENCH MARK

SCR 17 PM 8.63

Fnd 1" IP w/Caltrans control PP w/nail
32.35 Rt "A1" Line
Sta 117+09.97
N 1,860,196.469
E 6,130,784.751
Elev = 1275.053
NAVD88

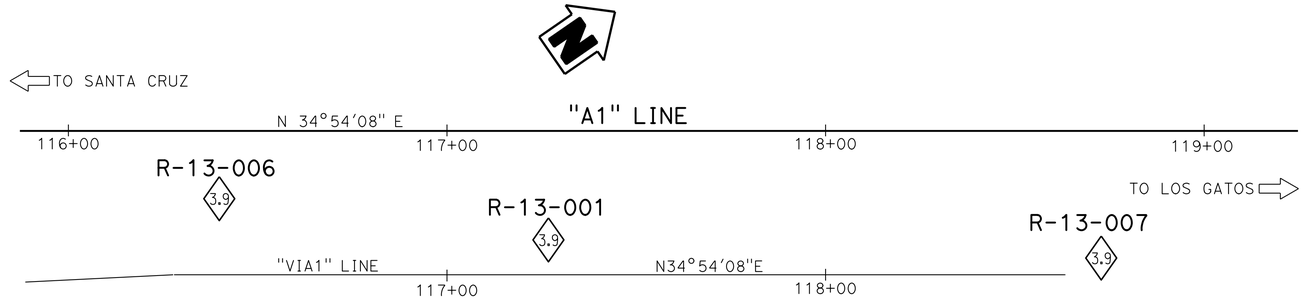

PLAN

1" = 20'

Note : Groundwater not measured during field investigation in Boring R-13-006

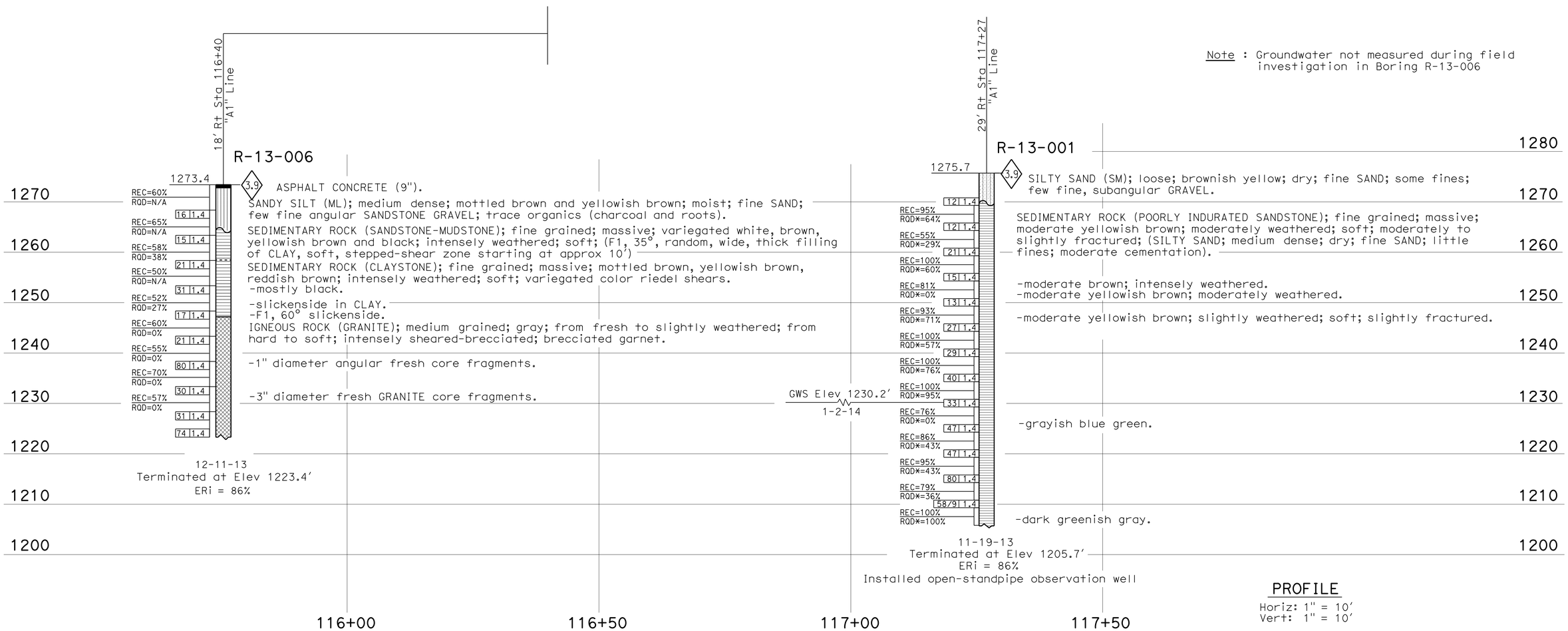

PROFILE

Horiz: 1" = 10'
Vert: 1" = 10'

ENGINEERING SERVICES	MATERIALS AND GEOTECHNICAL SERVICES	STATE OF CALIFORNIA DEPARTMENT OF TRANSPORTATION	DIVISION OF ENGINEERING SERVICES STRUCTURE DESIGN DESIGN BRANCH 17	BRIDGE NO. 36-0120 POST MILE 8.59	SUGARLOAF ROAD SIDEHILL VIADUCT
FUNCTIONAL SUPERVISOR	DRAWN BY: W. Tang 1/14	FIELD INVESTIGATION BY:			LOG OF TEST BORINGS 1 OF 2
NAME: M. Finegan	CHECKED BY: J. Scardine	M. Jurasius/D. Appelbaum			

OGS CIVIL LOG OF TEST BORINGS SHEET

ORIGINAL SCALE IN INCHES FOR REDUCED PLANS 0 1 2 3

UNIT: 3643
PROJECT NUMBER & PHASE: 05000202441 CONTRACT NO.: 05-0T9804

DISREGARD PRINTS BEARING EARLIER REVISION DATES

REVISION DATES 03-18-14 04-28-14 05-02-14

SHEET 9 OF 10

FILE => 36-0120-z-ltb01.dgn

USERNAME => s115755 DATE PLOTTED => 25-JUN-2015 TIME PLOTTED => 10:52

DIST	COUNTY	ROUTE	POST MILES TOTAL PROJECT	SHEET No.	TOTAL SHEETS
05	SCr	17	8.3/9.4	77	96

REGISTERED CIVIL ENGINEER 5-2-14 DATE

6-15-15
PLANS APPROVAL DATE

REGISTERED PROFESSIONAL ENGINEER
Dan Applebaum
No. C50001
Exp. 6-30-15
CIVIL
STATE OF CALIFORNIA

The State of California or its officers or agents shall not be responsible for the accuracy or completeness of electronic copies of this plan sheet.

This LOTB sheet was prepared in accordance with the Caltrans Soil & Rock Logging, Classification, & Presentation Manual (2010 Edition).

See 2010 Standard Plans A10F and A10G for Soil Legend, and A10H for Rock Legend.

FOR PLAN VIEW, SEE
"LOG OF TEST BORINGS 1 OF 2"

Note : Groundwater not measured during field investigation in Boring R-13-007

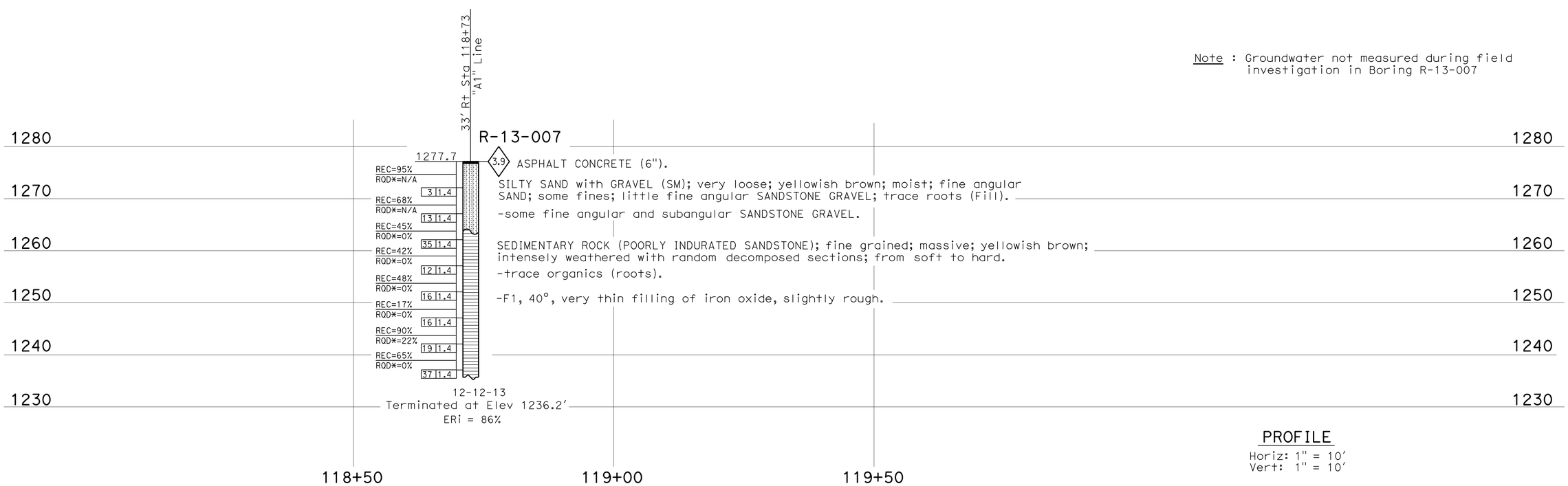

PROFILE
Horiz: 1" = 10'
Vert: 1" = 10'

ENGINEERING SERVICES	MATERIALS AND GEOTECHNICAL SERVICES	STATE OF CALIFORNIA DEPARTMENT OF TRANSPORTATION	DIVISION OF ENGINEERING SERVICES STRUCTURE DESIGN DESIGN BRANCH 17	BRIDGE NO. 36-0120 POST MILE 8.59	SUGARLOAF ROAD SIDEHILL VIADUCT
FUNCTIONAL SUPERVISOR NAME: M. Finegan	DRAWN BY: W. Tang 1/14 CHECKED BY: J. Scardine	FIELD INVESTIGATION BY: M. Jurasius/D. Appelbaum			LOG OF TEST BORINGS 2 OF 2

OGS CIVIL LOG OF TEST BORINGS SHEET

ORIGINAL SCALE IN INCHES FOR REDUCED PLANS 0 1 2 3

UNIT: 3643
PROJECT NUMBER & PHASE: 05000202441 CONTRACT NO.: 05-0T9804

DISREGARD PRINTS BEARING EARLIER REVISION DATES

REVISION DATES 03-18-14 04-25-14 05-02-14 SHEET 10 OF 10

FILE => 36-0120-z-1tb02.dgn

USERNAME => s115755 DATE PLOTTED => 25-JUN-2015 TIME PLOTTED => 10:52

DIST	COUNTY	ROUTE	POST MILES TOTAL PROJECT	SHEET No.	TOTAL SHEETS
05	SCr	17	8.3/9.4	78	96

REGISTERED CIVIL ENGINEER 3-18-15 DATE

6-15-15
PLANS APPROVAL DATE

REGISTERED PROFESSIONAL ENGINEER
RENE CORIA
No. C78907
Exp. 3-31-16
CIVIL
STATE OF CALIFORNIA

The State of California or its officers or agents shall not be responsible for the accuracy or completeness of scanned copies of this plan sheet.

QUANTITIES

STRUCTURE EXCAVATION (BRIDGE)	234	CY
STRUCTURE BACKFILL (BRIDGE)	82	CY
30" CAST-IN-DRILLED-HOLE CONCRETE PILING	317	LF
STRUCTURAL CONCRETE, BRIDGE	156	CY
BAR REINFORCING STEEL (BRIDGE)	60,470	LB
CONCRETE BARRIER (TYPE 736)	210	LF

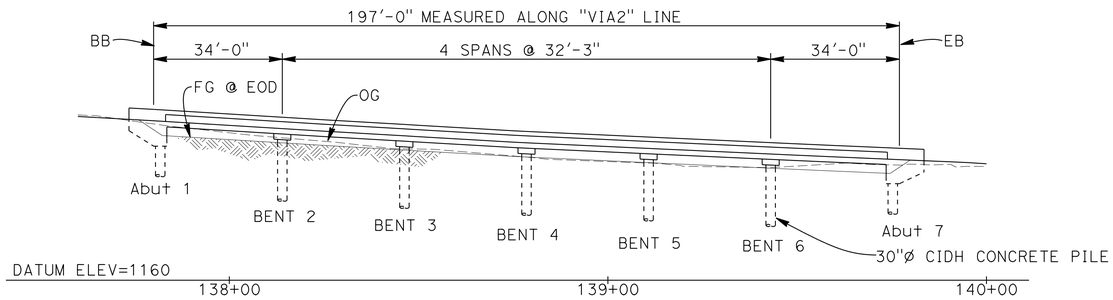

MIRROR ELEVATION
1"=20'

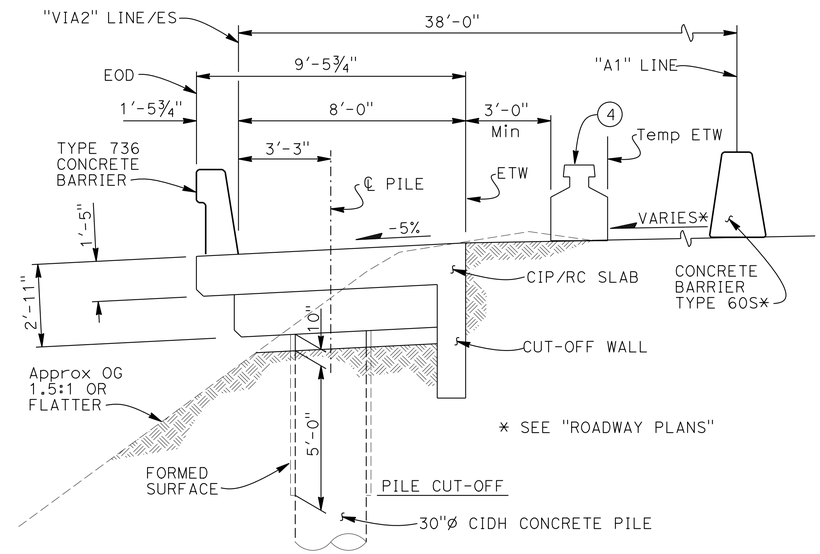

TYPICAL SECTION
3/8"=1'-0"

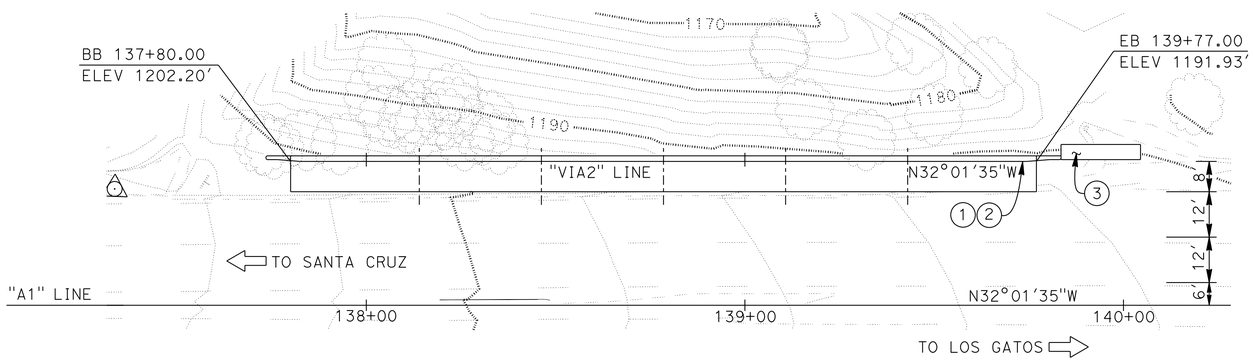

PLAN
1"=20'

NOTES:
For Index to Plans and General Notes, see "INDEX TO PLANS" sheet
QCMB = Quick Change Moveable Barrier
1. Paint "GLENWOOD CUT-OFF SIDEHILL VIADUCT"
2. Paint "BR. NO. 36-0121"
3. Alternative Crash Cushion, see "ROADWAY PLANS"
4. Temporary QCMB railing location shown during non-closure hours, see "ROADWAY PLANS"

NOTE:
VERIFY ALL CONTROLLING FIELD DIMENSIONS BEFORE ORDERING OR FABRICATING ANY MATERIAL.

Gary Joe
DESIGN ENGINEER

	BY	CHECKED			
DESIGN	I. Chernioglo	R. Coria	LOAD & RESISTANCE FACTOR DESIGN	LIVE LOADING: HL93 W/"LOW-BOY"; PERMIT DESIGN VEHICLE	
DETAILS	A. Onodera	R. Coria	LAYOUT	I. Chernioglo	R. Coria
QUANTITIES	R. Coria	T. Bui	SPECIFICATIONS	D. Klein	PLANS AND SPECS COMPARED D. Klein

ORIGINAL SCALE IN INCHES FOR REDUCED PLANS 0 1 2 3

STATE OF CALIFORNIA
DEPARTMENT OF TRANSPORTATION

DIVISION OF ENGINEERING SERVICES
STRUCTURE DESIGN
DESIGN BRANCH 17

BRIDGE NO. 36-0121
POST MILE 9.00

GLENWOOD CUT-OFF SIDEHILL VIADUCT
GENERAL PLAN

UNIT: 3586
PROJECT NUMBER & PHASE: 05000202441
CONTRACT NO.: 05-0T9801

DISREGARD PRINTS BEARING EARLIER REVISION DATES

REVISION DATES: 6-19-14 5-20-14 5-30-14 6-12-14

SHEET 1 OF 9

STRUCTURES DESIGN GENERAL PLAN SHEET (ENGLISH) (REV.09-01-10)

FILE => 36-0121-a-gp.dgn

USERNAME => s115755 DATE PLOTTED => 25-JUN-2015 TIME PLOTTED => 10:52

DIST	COUNTY	ROUTE	POST MILES TOTAL PROJECT	SHEET No.	TOTAL SHEETS
05	SCr	17	8.3/9.4	79	96

REGISTERED CIVIL ENGINEER 3-18-15 DATE

6-15-15
PLANS APPROVAL DATE

REGISTERED PROFESSIONAL ENGINEER RENE CORIA No. C78907 Exp. 3-31-16 CIVIL STATE OF CALIFORNIA

The State of California or its officers or agents shall not be responsible for the accuracy or completeness of scanned copies of this plan sheet.

PILE DATA TABLE

Location	Pile Type	Nominal Resistance (kips) Compression	Nominal Resistance (kips) Tension	Cut-off Elevation (ft)	Design Tip Elevation (ft)	Specified Tip Elevation (ft)	Nominal Driving Resistance (kips)
Abut 1	30" CIDH	420	0	1195.25	1162.0(a) 1185.7(c)	1162.0	N/A
Bent 2	30" CIDH	710	0	1191.0	1141.0(a) 1181.0(c)	1141.0	N/A
Bent 3	30" CIDH	710	0	1190.0	1140.0(a) 1180.0(c)	1140.0	N/A
Bent 4	30" CIDH	710	0	1188.5	1138.5(a) 1178.5(c)	1138.5	N/A
Bent 5	30" CIDH	710	0	1186.5	1136.5(a) 1176.5(c)	1136.5	N/A
Bent 6	30" CIDH	710	0	1185.0	1135.0(a) 1175.0(c)	1135.0	N/A
Abut 7	30" CIDH	420	0	1185.25	1152.0(a) 1175.7(c)	1152.0	N/A

NOTES:
1. Design tip elevations for Abutments controlled by: (a) compression, (c) settlement
2. Design tip elevations for Bents controlled by: (a) compression, (b) tension and (c) settlement
3. The specific tip elevation must not be raised

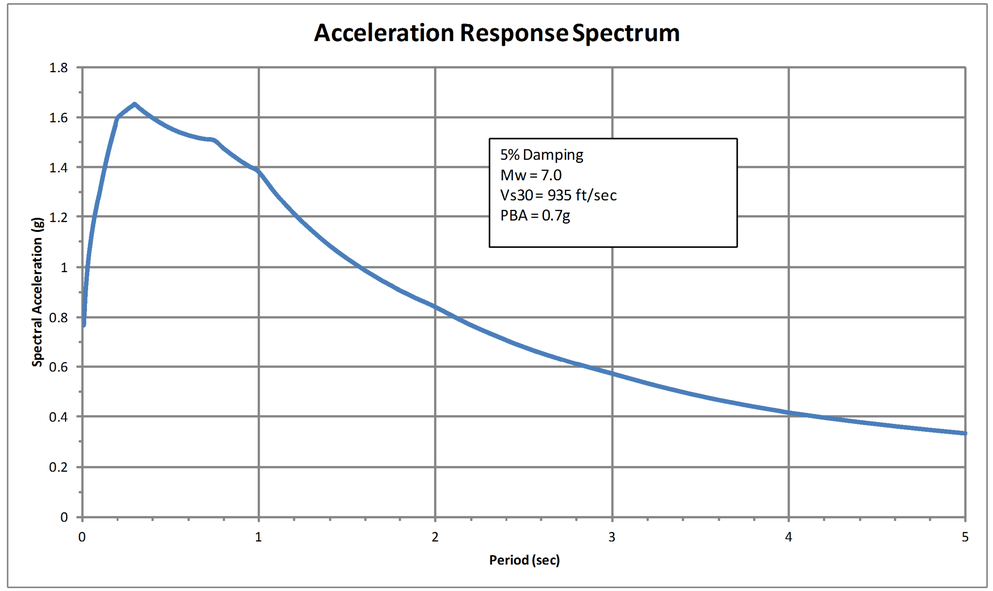

INDEX TO PLANS

SHEET NUMBER	TITLE
1.	General Plan
2.	Index to Plans
3.	Excavation and Backfill
4.	Foundation Plan
5.	Abutment Layout
6.	Abutment Details
7.	Bent Details
8.	Slab Reinforcement
9.	Log of Test Borings

STANDARD PLANS DATED 2010

SHEET NUMBER	TITLE
A10A	Abbreviations (Sheet 1 of 2)
RSP A10B	Abbreviations (Sheet 2 of 2)
A10C	Lines and Symbols (Sheet 1 of 3)
A10D	Lines and Symbols (Sheet 2 of 3)
A10E	Lines and Symbols (Sheet 3 of 3)
A62C	Limits of Payment for Excavation and Backfill-Bridge
B0-1	Bridge Details
B0-3	Bridge Details
RSP B11-56	Concrete Barrier Type 736

Standard Plan Sheet No.

Detail No.

GENERAL NOTES
LOAD AND RESISTANCE FACTOR DESIGN

DESIGN:
AASHTO LRFD Bridge Design Specifications, 4th edition with California Amendments, preface dated Nov. 2011

SEISMIC DESIGN:
Caltrans Seismic Design Criteria (SDC), Version 1.7 dated April 2013

DEAD LOAD:
Includes 35 psf for future wearing surface.

LIVE LOADING:
HL93 and permit design load.

SEISMIC LOADING:
Site specific ARS Curve (as shown)

REINFORCED CONCRETE:
fy = 60 ksi
f'c = 3.6 ksi
n = 8

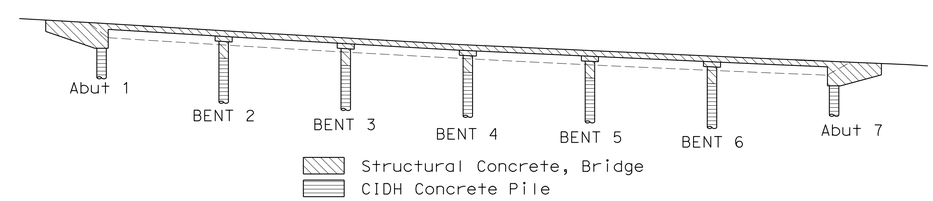

CONCRETE STRENGTH AND TYPE LIMITS

No scale

DESIGN	BY R. Coria	CHECKED T. Bui	
DETAILS	BY A. Onodera	CHECKED R. Coria	
QUANTITIES	BY R. Coria	CHECKED T. Bui	

STATE OF CALIFORNIA
DEPARTMENT OF TRANSPORTATION

DIVISION OF ENGINEERING SERVICES
STRUCTURE DESIGN
DESIGN BRANCH 17

BRIDGE NO. 36-0121
POST MILE 9.00

GLENWOOD CUT-OFF SIDEHILL VIADUCT
INDEX TO PLANS

STRUCTURES DESIGN DETAIL SHEET (ENGLISH) (REV. 09-01-10)

ORIGINAL SCALE IN INCHES FOR REDUCED PLANS 0 1 2 3

UNIT: 3586
PROJECT NUMBER & PHASE: 05000202441
CONTRACT NO.: 05-0T9801

DISREGARD PRINTS BEARING EARLIER REVISION DATES

REVISION DATES: 5-5-14 6-30-14 7-17-14 6-18-14

SHEET 2 OF 9

FILE => 36-0121-a-itp.dgn

USERNAME => s115755 DATE PLOTTED => 25-JUN-2015 TIME PLOTTED => 10:52

DIST	COUNTY	ROUTE	POST MILES TOTAL PROJECT	SHEET No.	TOTAL SHEETS
05	SCr	17	8.3/9.4	80	96

REGISTERED CIVIL ENGINEER 3-18-15 DATE

6-15-15
PLANS APPROVAL DATE

REGISTERED PROFESSIONAL ENGINEER
RENE CORIA
No. C78907
Exp. 3-31-16
CIVIL
STATE OF CALIFORNIA

The State of California or its officers or agents shall not be responsible for the accuracy or completeness of scanned copies of this plan sheet.

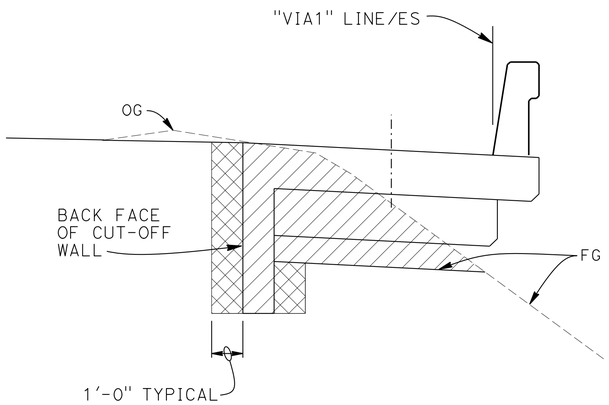

VIADUCT
3/8"=1'-0"

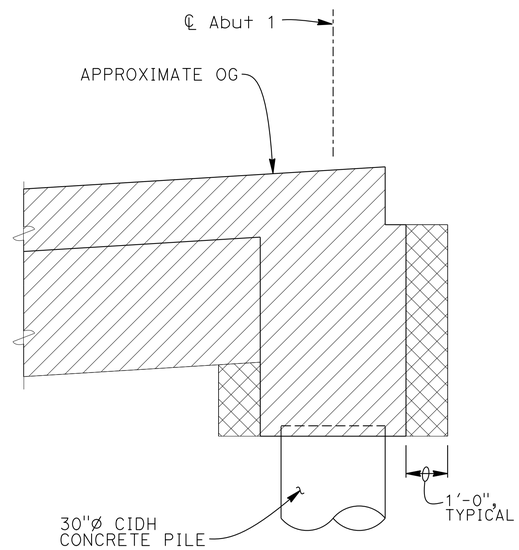

ABUTMENT
1/2"=1'-0"

NOTE:
Abutment 1 shown, Abutment 7 similar

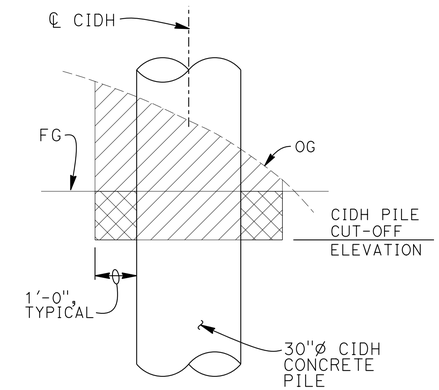

COLUMN
1/2"=1'-0"

LEGEND:
Denotes limits of structure excavation (Bridge)
Denotes limits of structure backfill (Bridge)

DESIGN	BY R. Coria	CHECKED T. Bui	
DETAILS	BY A. Onodera	CHECKED R. Coria	
QUANTITIES	BY R. Coria	CHECKED T. Bui	

STATE OF CALIFORNIA
DEPARTMENT OF TRANSPORTATION

DIVISION OF ENGINEERING SERVICES
STRUCTURE DESIGN
DESIGN BRANCH 17

BRIDGE NO. 36-0121
POST MILE 9.00

GLENWOOD CUT-OFF SIDEHILL VIADUCT
EXCAVATION AND BACKFILL

STRUCTURES DESIGN DETAIL SHEET (ENGLISH) (REV. 09-01-10)

ORIGINAL SCALE IN INCHES FOR REDUCED PLANS 0 1 2 3

UNIT: 3586
PROJECT NUMBER & PHASE: 05000202441
CONTRACT NO.: 05-0T9801

DISREGARD PRINTS BEARING EARLIER REVISION DATES

REVISION DATES: 6-18-14 6-27-14

SHEET 3 OF 9

FILE => 36-0121-d-x-b-fil01.dgn

USERNAME => s115755 DATE PLOTTED => 25-JUN-2015 TIME PLOTTED => 10:52

DIST	COUNTY	ROUTE	POST MILES TOTAL PROJECT	SHEET No.	TOTAL SHEETS
05	SCr	17	8.3/9.4	81	96

REGISTERED CIVIL ENGINEER 3-18-15 DATE

6-15-15
PLANS APPROVAL DATE

REGISTERED PROFESSIONAL ENGINEER
RENE CORIA
No. C78907
Exp. 3-31-16
CIVIL
STATE OF CALIFORNIA

The State of California or its officers or agents shall not be responsible for the accuracy or completeness of electronic copies of this plan sheet.

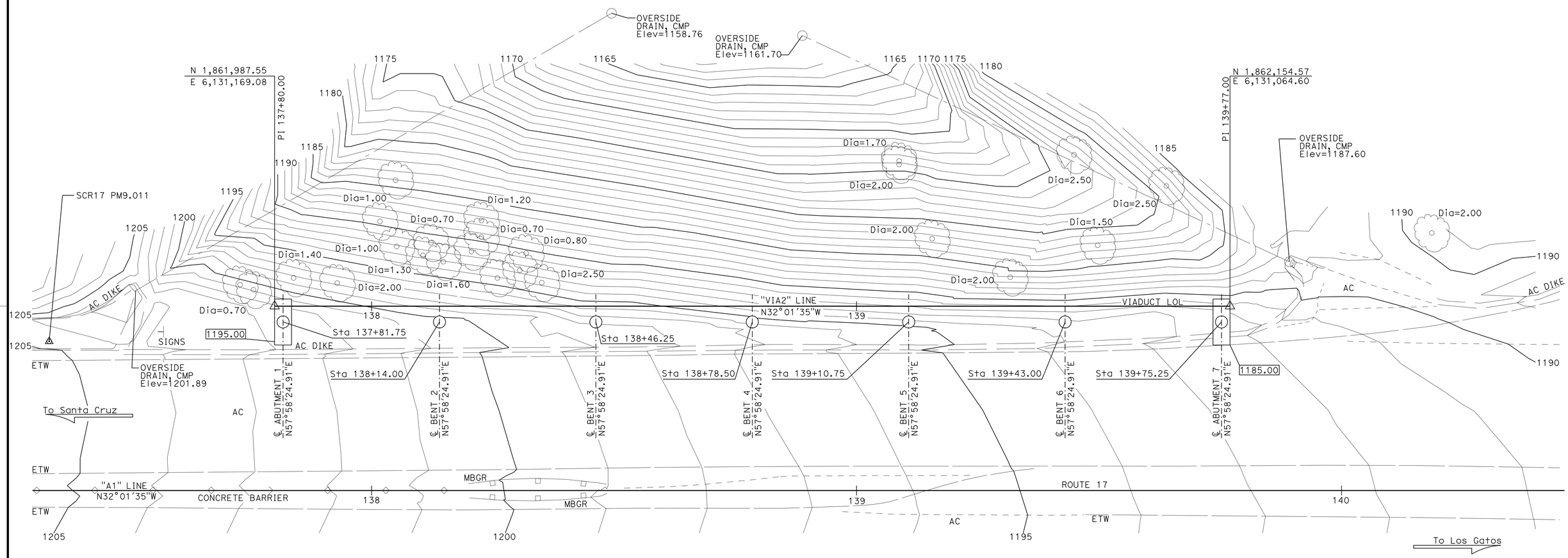

SURVEY CONTROL

SCR17 PM9.05 (NOT SHOWN ON PLAN SHEET)
Fnd 1" IP W/ CALTRANS CONTROL PP W/ NAIL
39.44 Ft Lt Rte 17 "A1" LINE
Sta 141+40.58
N 1,862,292.49
E 6,130,976.63
Elev = 1186.47

SCR17 PM9.011
Fnd 1"IP W/ CALTRANS CONTROL PP W/ NAIL
30.72 Ft Rt Rte 17 "A1" LINE
Sta 137+33.55
N 1,861,952.00
E 6,131,199.88
Elev = 1204.60

NOTES:

XXXX.XX Indicates bottom of Abutment elevation

◯ Indicates 30" Ø CIDH pile

PRELIMINARY INVESTIGATION SECTION

SCALE 1"=10'	VERT.DATUM NAVD88	PHOTOGRAMMETRY AS OF: X			
	HORZ.DATUM NAD83(1991.35)	SURVEYED	BY DISTRICT	CHECKED	BY C. FASSETT 06/14
ALIGNMENT TIES Dist TRAVERSE SHEET		DRAFTED	BY C. FASSETT 06/14	CHECKED	BY L. LEW 06/14

DESIGN	BY R. Coria	CHECKED T. Bui
DETAILS	BY G. Souza	CHECKED R. Coria
QUANTITIES	BY R. Coria	CHECKED T. Bui

STATE OF CALIFORNIA
DEPARTMENT OF TRANSPORTATION

DIVISION OF ENGINEERING SERVICES
STRUCTURE DESIGN
DESIGN BRANCH 17

BRIDGE NO. 36-0121
POST MILE 9.00

GLENWOOD CUTOFF SIDEHILL VIADUCT
FOUNDATION PLAN

STRUCTURES FOUNDATION PLAN SHEET (ENGLISH) (REV. 09-01-10)

ORIGINAL SCALE IN INCHES FOR REDUCED PLANS 0 1 2 3

UNIT: 3646
PROJECT NUMBER & PHASE: 0500020244 1
CONTRACT NO.: 05-0T9801

DISREGARD PRINTS BEARING EARLIER REVISION DATES

REVISION DATES: 06/20/14 06/27/14

SHEET 4 OF 9

FILE => 36-0121-e-fpl01.dgn

USERNAME => s115755 DATE PLOTTED => 25-JUN-2015 TIME PLOTTED => 10:52

DIST	COUNTY	ROUTE	POST MILES TOTAL PROJECT	SHEET No.	TOTAL SHEETS
05	SCr	17	8.3/9.4	82	96

REGISTERED CIVIL ENGINEER 3-18-15 DATE

6-15-15
PLANS APPROVAL DATE

REGISTERED PROFESSIONAL ENGINEER
RENE CORIA
No. C78907
Exp. 03-31-2015
CIVIL
STATE OF CALIFORNIA

The State of California or its officers or agents shall not be responsible for the accuracy or completeness of scanned copies of this plan sheet.

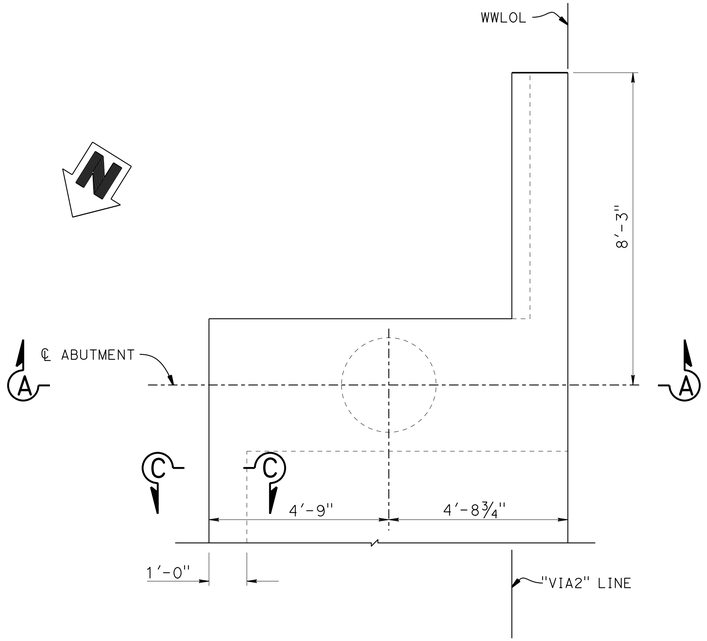

ABUTMENT PLAN
½" = 1'-0"

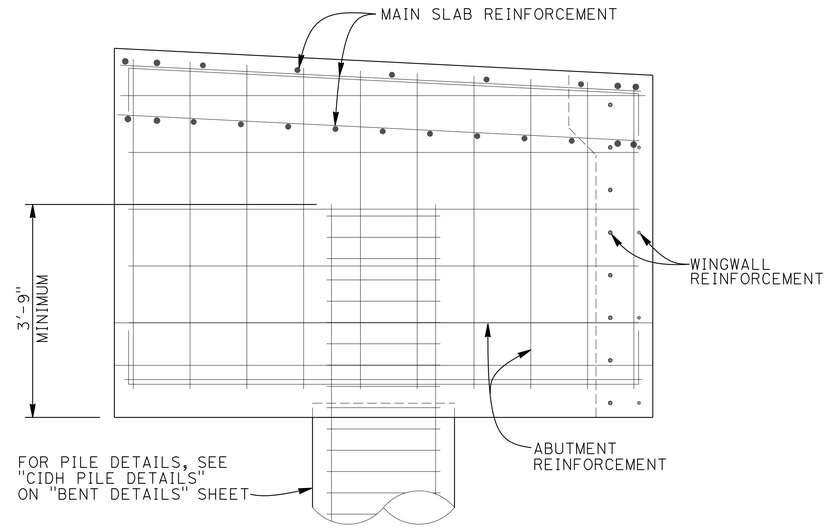

SECTION A-A
¾"=1'-0"

NOTES:
1. Abutment 1 shown, Abutment 7 similar
2. For Section E-E, see "ABUTMENT DETAILS" sheet
3. For Section D-D, see "BENT DETAILS" sheet

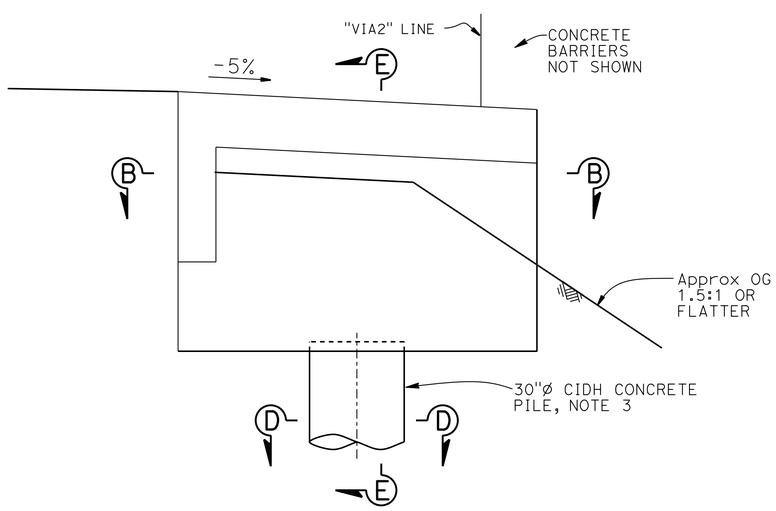

ABUTMENT ELEVATION
½" = 1'-0"

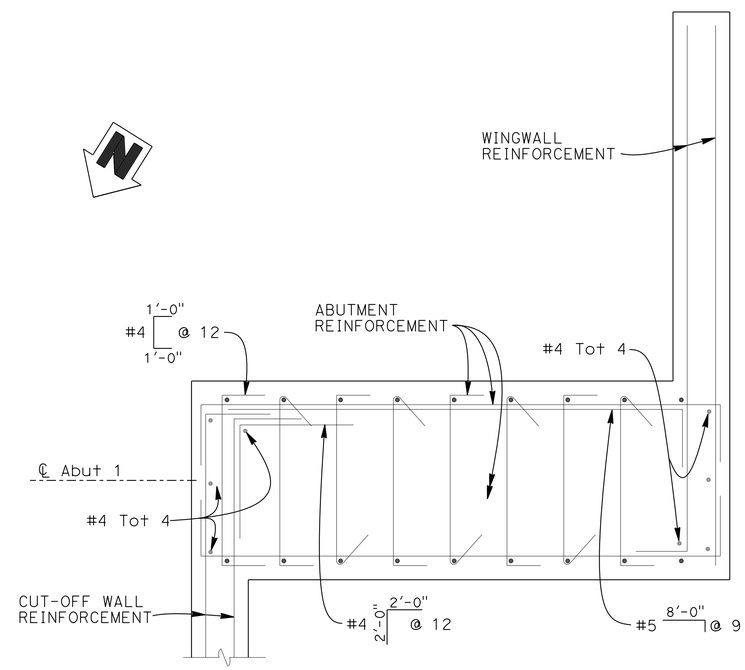

SECTION B-B
¾"=1'-0"

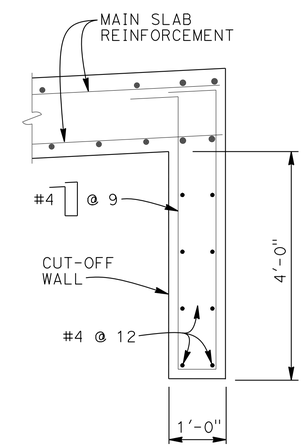

SECTION C-C
¾"=1'-0"

	BY	CHECKED
DESIGN	R. Coria	T. Bui
DETAILS	A. Onodera/L. Wang	R. Coria
QUANTITIES	R. Coria	T. Bui

STATE OF CALIFORNIA
DEPARTMENT OF TRANSPORTATION

DIVISION OF ENGINEERING SERVICES
STRUCTURE DESIGN
DESIGN BRANCH 17

BRIDGE NO. 36-0121
POST MILE 9.00

GLENWOOD CUT-OFF SIDEHILL VIADUCT
ABUTMENT LAYOUT

STRUCTURES DESIGN DETAIL SHEET (ENGLISH) (REV. 09-01-10)

ORIGINAL SCALE IN INCHES FOR REDUCED PLANS 0 1 2 3

UNIT: 3586
PROJECT NUMBER & PHASE: 05000202441
CONTRACT NO.: 05-0T9801

DISREGARD PRINTS BEARING EARLIER REVISION DATES

REVISION DATES: 5-20-14 6-18-14 4-14-14 4-15-14

SHEET 5 OF 9

FILE => 36-0121-f-a01_la1.dgn

USERNAME => s115755 DATE PLOTTED => 25-JUN-2015 TIME PLOTTED => 10:52

DIST	COUNTY	ROUTE	POST MILES TOTAL PROJECT	SHEET No.	TOTAL SHEETS
05	SCr	17	8.3/9.4	83	96

REGISTERED CIVIL ENGINEER 3-18-15 DATE

6-15-15
PLANS APPROVAL DATE

REGISTERED PROFESSIONAL ENGINEER RENE CORIA No. C78907 Exp. 3-31-16 CIVIL STATE OF CALIFORNIA

The State of California or its officers or agents shall not be responsible for the accuracy or completeness of scanned copies of this plan sheet.

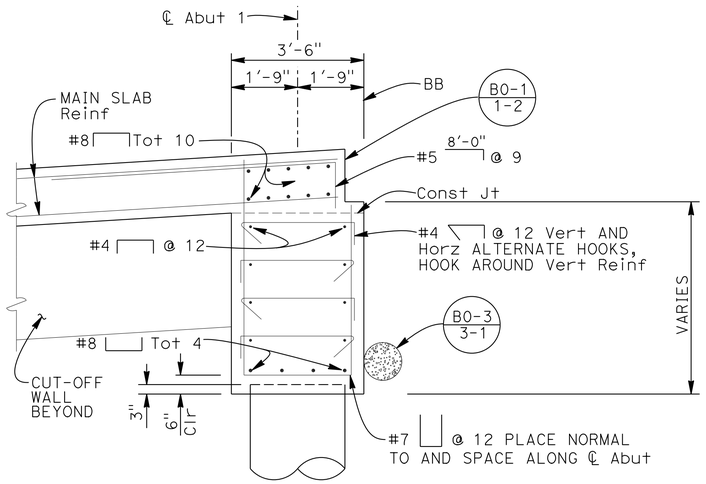

SECTION E-E
3/4"=1'-0"

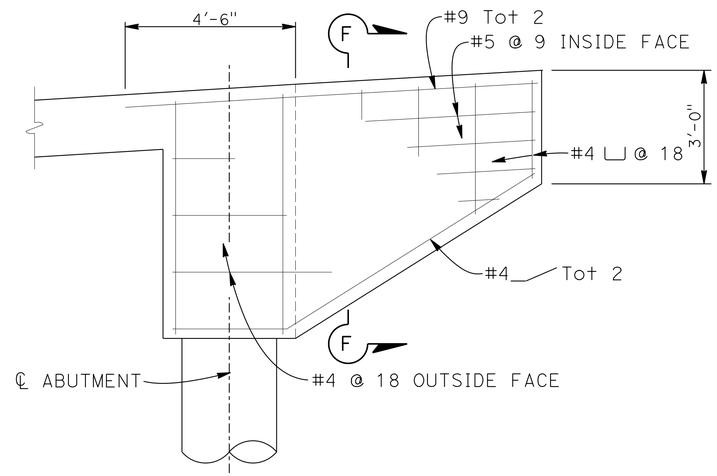

ELEVATION

VERTICAL ABUTMENT
1/2"=1'-0"

NOTES:
1. For location of Setion E-E, see "ABUTMENT LAYOUT" sheet
2. Abutment 1 details shown, Abutment 7 similar

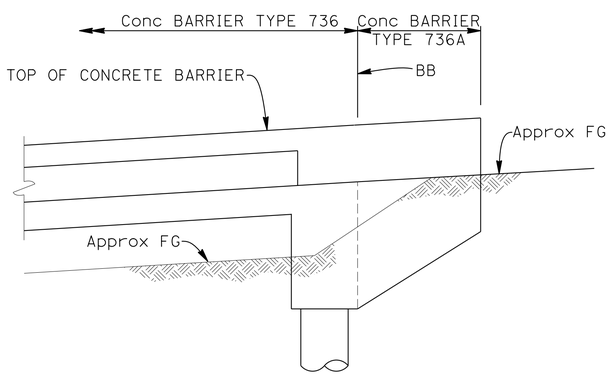

ABUTMENT WINGWALL RSP B11-56
1/4"=1'-0"

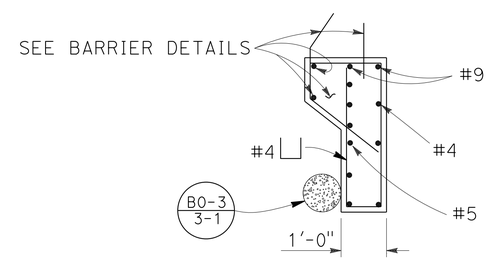

SECTION F-F
NO SCALE

DESIGN	BY R. Coria	CHECKED T. Bui	
DETAILS	BY A. Onodera/L. Wang	CHECKED R. Coria	
QUANTITIES	BY R. Coria	CHECKED T. Bui	

STATE OF CALIFORNIA
DEPARTMENT OF TRANSPORTATION

DIVISION OF ENGINEERING SERVICES
STRUCTURE DESIGN
DESIGN BRANCH 17

BRIDGE NO. 36-0121
POST MILE 9.00

GLENWOOD CUT-OFF SIDEHILL VIADUCT
ABUTMENT DETAILS

STRUCTURES DESIGN DETAIL SHEET (ENGLISH) (REV. 09-01-10)

ORIGINAL SCALE IN INCHES FOR REDUCED PLANS 0 1 2 3

UNIT: 3586
PROJECT NUMBER & PHASE: 05000202441
CONTRACT NO.: 05-0T9801

DISREGARD PRINTS BEARING EARLIER REVISION DATES

REVISION DATES: 6-18-14 6-19-14 5-1-14 5-20-14

SHEET 6 OF 9

FILE => 36-0121-f-a01dt01.dgn

USERNAME => s115755 DATE PLOTTED => 25-JUN-2015 TIME PLOTTED => 10:53

DIST	COUNTY	ROUTE	POST MILES TOTAL PROJECT	SHEET No.	TOTAL SHEETS
05	SCr	17	8.3/9.4	84	96

REGISTERED CIVIL ENGINEER 3-18-15 DATE

6-15-15
PLANS APPROVAL DATE

REGISTERED PROFESSIONAL ENGINEER RENE CORIA No. C78907 Exp. 03-31-2015 CIVIL STATE OF CALIFORNIA

The State of California or its officers or agents shall not be responsible for the accuracy or completeness of scanned copies of this plan sheet.

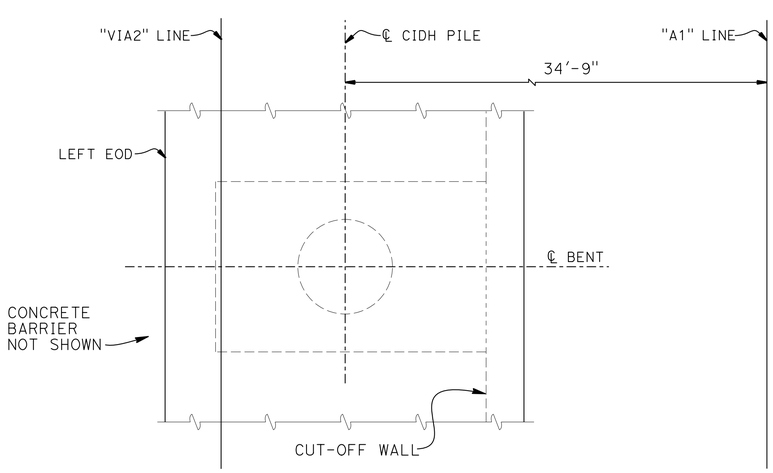

PLAN
½" = 1'-0"

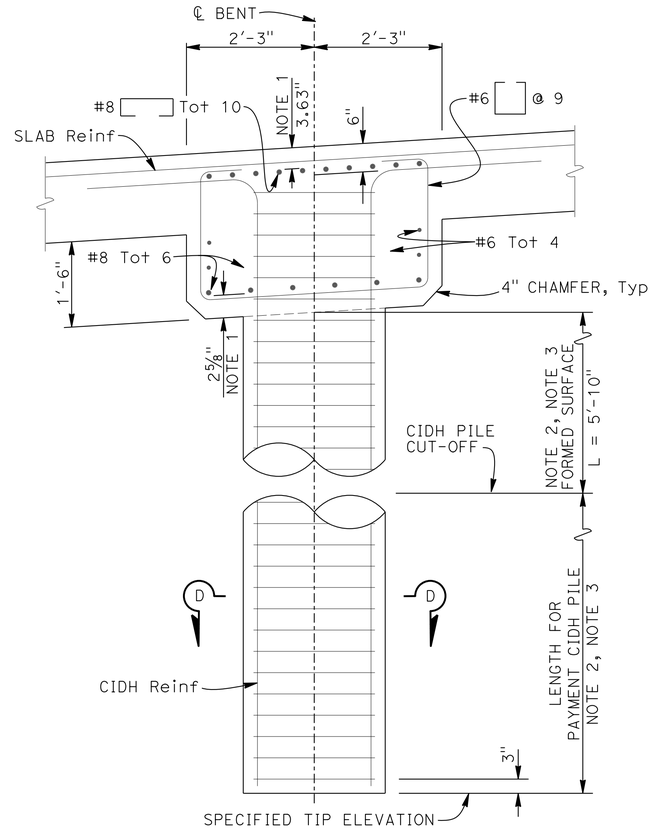

SECTION G-G
¾" = 1'-0"

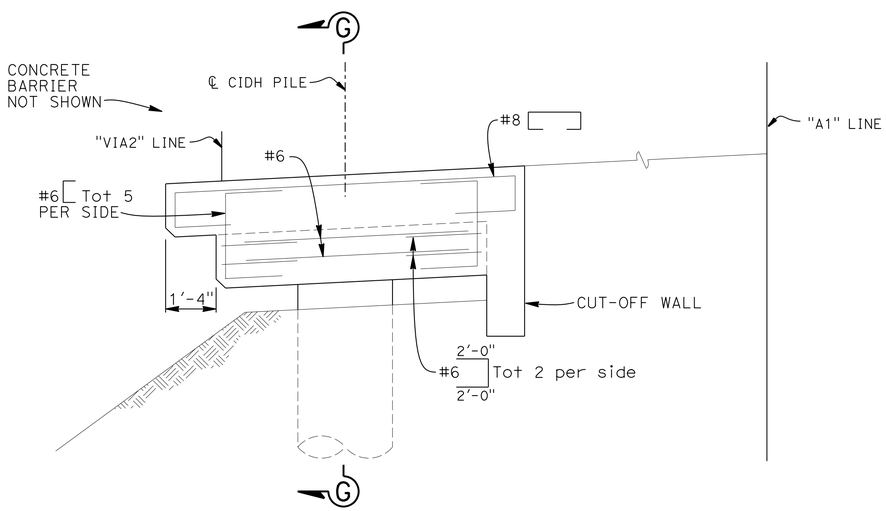

ELEVATION
½" = 1'-0"

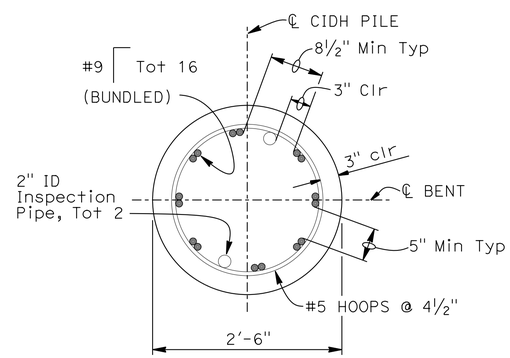

SECTION D-D
1" = 1'-0"

NOTES:

1. Clearance to main cap reinforcement
2. No splices allowed in main CIDH and column reinforcement
3. All hoops must Be "Ultimate" butt spliced continuous

DESIGN	BY R. Coria	CHECKED T. Bui	
DETAILS	BY A. Onodera/L. Wang	CHECKED R. Coria	
QUANTITIES	BY R. Coria	CHECKED T. Bui	

STATE OF CALIFORNIA
DEPARTMENT OF TRANSPORTATION

DIVISION OF ENGINEERING SERVICES
STRUCTURE DESIGN
DESIGN BRANCH 17

BRIDGE NO. 36-0121
POST MILE 9.00

GLENWOOD CUT-OFF SIDEHILL VIADUCT
BENT DETAILS

STRUCTURES DESIGN DETAIL SHEET (ENGLISH) (REV. 09-01-10)

ORIGINAL SCALE IN INCHES FOR REDUCED PLANS 0 1 2 3

UNIT: 3586
PROJECT NUMBER & PHASE: 05000202441
CONTRACT NO.: 05-0T9801

DISREGARD PRINTS BEARING EARLIER REVISION DATES

REVISION DATES: 6-16-15 ~~6-18-14~~ ~~6-30-14~~ ~~8-1-14~~

SHEET 7 OF 9

FILE => 36-0121-h-b2-101.dgn

USERNAME => s115755 DATE PLOTTED => 25-JUN-2015 TIME PLOTTED => 10:53

DIST	COUNTY	ROUTE	POST MILES TOTAL PROJECT	SHEET No.	TOTAL SHEETS
05	SCr	17	8.3/9.4	85	96

REGISTERED CIVIL ENGINEER 3-18-15 DATE

6-15-15
PLANS APPROVAL DATE

REGISTERED PROFESSIONAL ENGINEER RENE CORIA No. C78907 Exp. 3-31-16 CIVIL STATE OF CALIFORNIA

The State of California or its officers or agents shall not be responsible for the accuracy or completeness of scanned copies of this plan sheet.

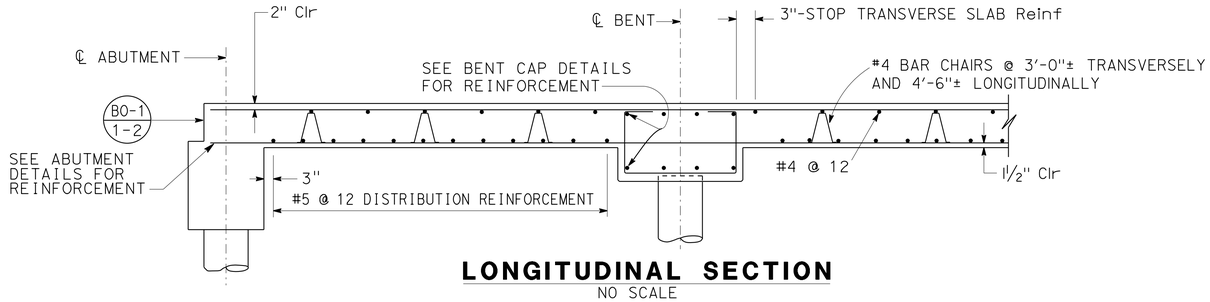

LONGITUDINAL SECTION

NO SCALE

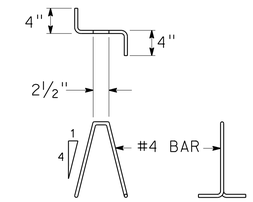

BAR CHAIR DETAIL

1" = 1'-0"

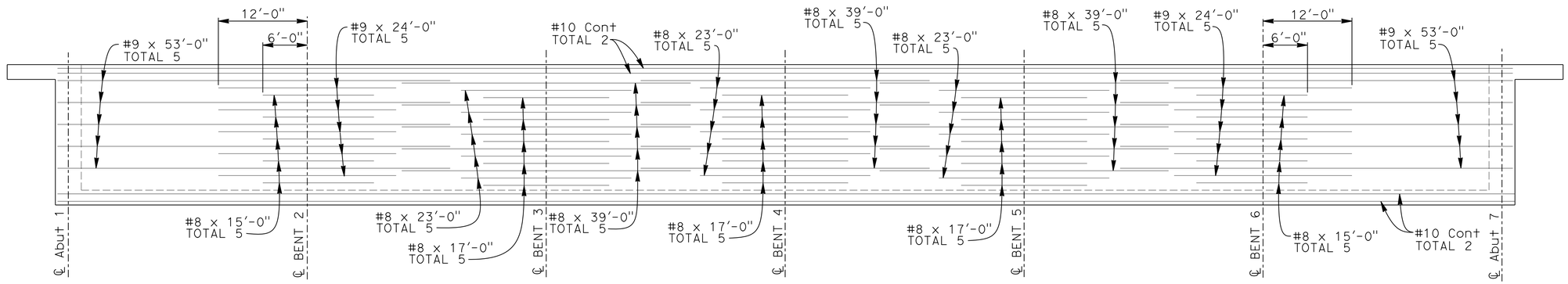

TOP SLAB REINFORCEMENT

⅛"=1'-0" HORIZONTALLY
¼"=1'-0" VERTICALLY
NOTE 2

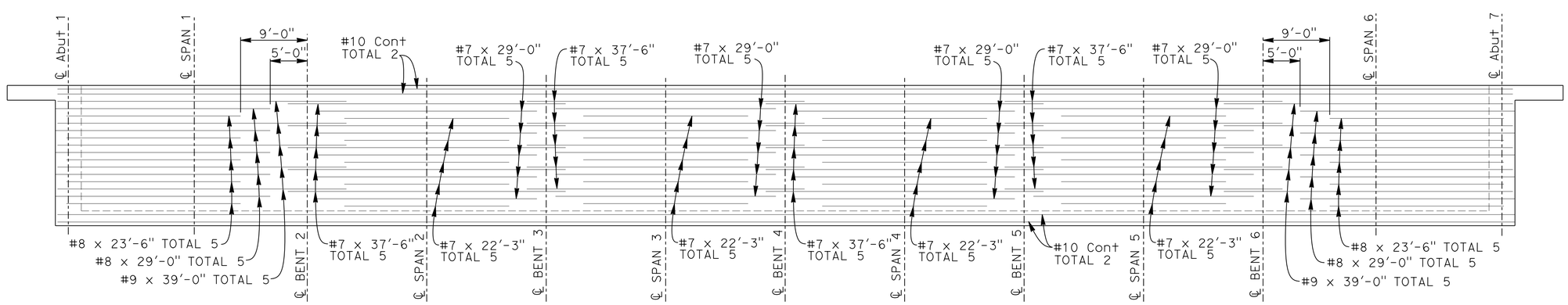

BOTTOM SLAB REINFORCEMENT

⅛"=1'-0" HORIZONTALLY
¼"=1'-0" VERTICALLY
NOTE 3

NOTES:

1. Lap splices allowed only in continuous reinforcement
2. Rebar must be laid-out symetrically along centerline of bents, except where noted
3. Rebar must be laid-out symetrically along centerline of spans, except where noted

DESIGN	BY R. Coria	CHECKED T. Bui	
DETAILS	BY A. Onodera	CHECKED R. Coria	
QUANTITIES	BY R. Coria	CHECKED T. Bui	

STATE OF CALIFORNIA
DEPARTMENT OF TRANSPORTATION

DIVISION OF ENGINEERING SERVICES
STRUCTURE DESIGN
DESIGN BRANCH 17

BRIDGE NO. 36-0121
POST MILE 9.00

GLENWOOD CUT-OFF SIDEHILL VIADUCT
SLAB REINFORCEMENT

STRUCTURES DESIGN DETAIL SHEET (ENGLISH) (REV. 09-01-10)

ORIGINAL SCALE IN INCHES FOR REDUCED PLANS 0 1 2 3

UNIT: 3586
PROJECT NUMBER & PHASE: 05000202441
CONTRACT NO.: 05-0T9801

DISREGARD PRINTS BEARING EARLIER REVISION DATES

REVISION DATES: 6-18-14 4-28-14 4-30-14 5-5-14

SHEET 8 OF 9

FILE => 36-0121-m-add-slab01.dgn

USERNAME => s115755 DATE PLOTTED => 25-JUN-2015 TIME PLOTTED => 10:53

DIST	COUNTY	ROUTE	POST MILES TOTAL PROJECT	SHEET No.	TOTAL SHEETS
05	SCr	17	8.3/9.4	86	96

REGISTERED CIVIL ENGINEER — DATE 4-30-14

6-15-15
PLANS APPROVAL DATE

The State of California or its officers or agents shall not be responsible for the accuracy or completeness of electronic copies of this plan sheet.

REGISTERED PROFESSIONAL ENGINEER — Dan Appelbaum — No. C50001 — Exp. 6-30-15 — CIVIL — STATE OF CALIFORNIA

This LOTB sheet was prepared in accordance with the Caltrans Soil & Rock Logging, Classification, & Presentation Manual (2010 Edition).

See 2010 Standard Plans A10F and A10G for Soil Legend, and A10H for Rock Legend.

BENCH MARK

SCr 17 PM 9.02

Fnd 1" ip w/Caltrans control pp
w/nail 33.29′ Lt "A1" Line
Sta 137+80.30
N 1,861,990,305
E 6,131,172.912
Elev = 1202.327′
NAVD88

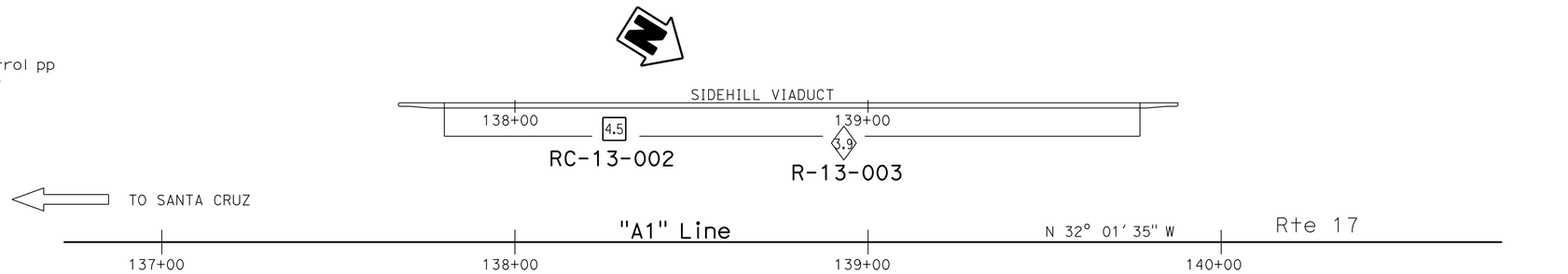

PLAN

1" = 20′

Note: Groundwater was not measured during field investigation in Boring R-13-003.

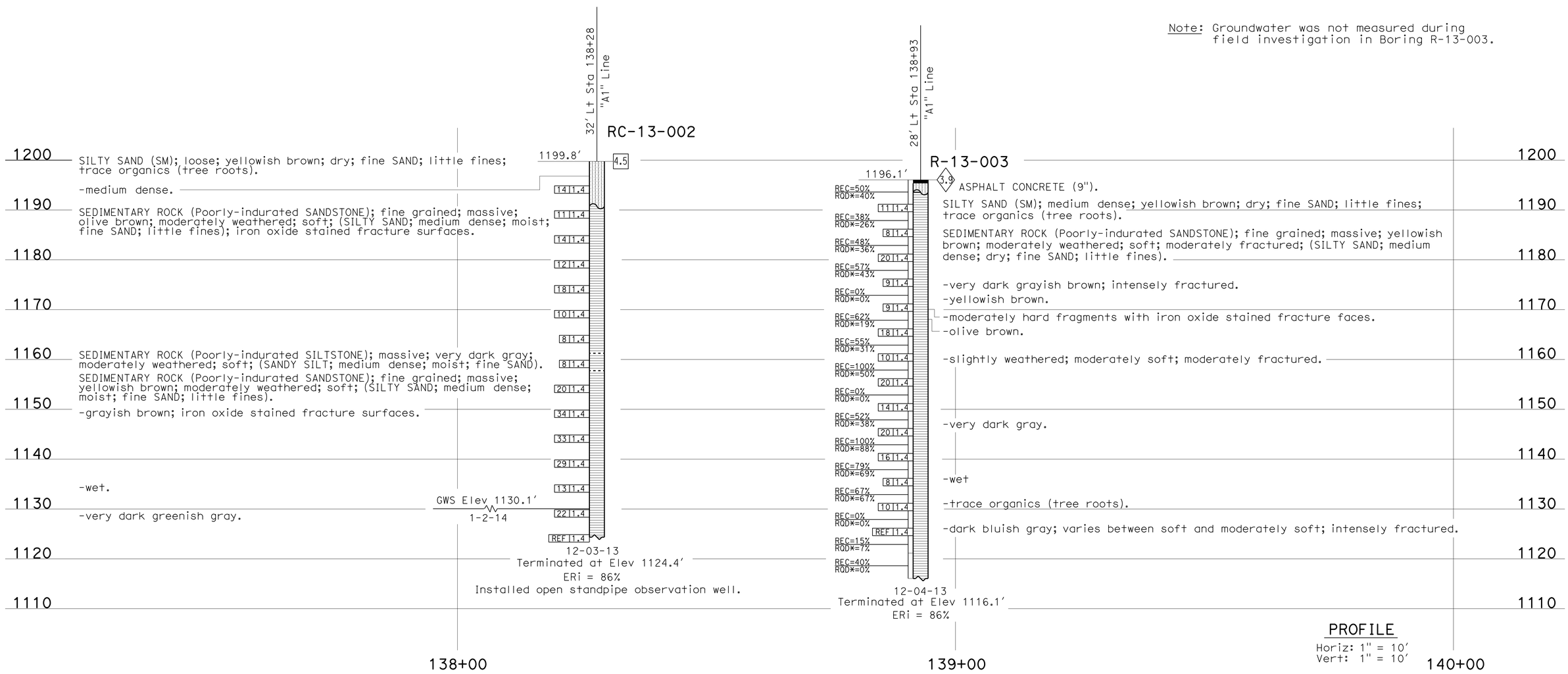

PROFILE

Horiz: 1" = 10′
Vert: 1" = 10′

ENGINEERING SERVICES	MATERIALS AND GEOTECHNICAL SERVICES	STATE OF CALIFORNIA DEPARTMENT OF TRANSPORTATION	DIVISION OF ENGINEERING SERVICES STRUCTURE DESIGN DESIGN BRANCH 17	BRIDGE NO. 36-0121 POST MILE 9.0	GLENWOOD CUT-OFF SIDEHILL VIADUCT LOG OF TEST BORINGS
FUNCTIONAL SUPERVISOR NAME: M. Fnegan	DRAWN BY: F. Nguyen CHECKED BY: J. Scardine	FIELD INVESTIGATION BY: D. Appelbaum			

OGS CIVIL LOG OF TEST BORINGS SHEET — ORIGINAL SCALE IN INCHES FOR REDUCED PLANS 0 1 2 3

UNIT: 3643
PROJECT NUMBER & PHASE: 05000202441 — CONTRACT NO.: 05-0T9801

DISREGARD PRINTS BEARING EARLIER REVISION DATES — REVISION DATES 03-24-14 04-22-14 04-29-14 — SHEET 9 OF 9

FILE => 36-0121-z-ltb01.dgn

USERNAME => s115755 DATE PLOTTED => 25-JUN-2015 TIME PLOTTED => 10:53

DIST	COUNTY	ROUTE	POST MILES TOTAL PROJECT	SHEET No.	TOTAL SHEETS
05	SCr	17	8.3/9.4	87	96

REGISTERED CIVIL ENGINEER 3-18-15 DATE

6-15-15
PLANS APPROVAL DATE

REGISTERED PROFESSIONAL ENGINEER Rene Coria No. 78907 Exp. 3-31-16 CIVIL STATE OF CALIFORNIA

The State of California or its officers or agents shall not be responsible for the accuracy or completeness of scanned copies of this plan sheet.

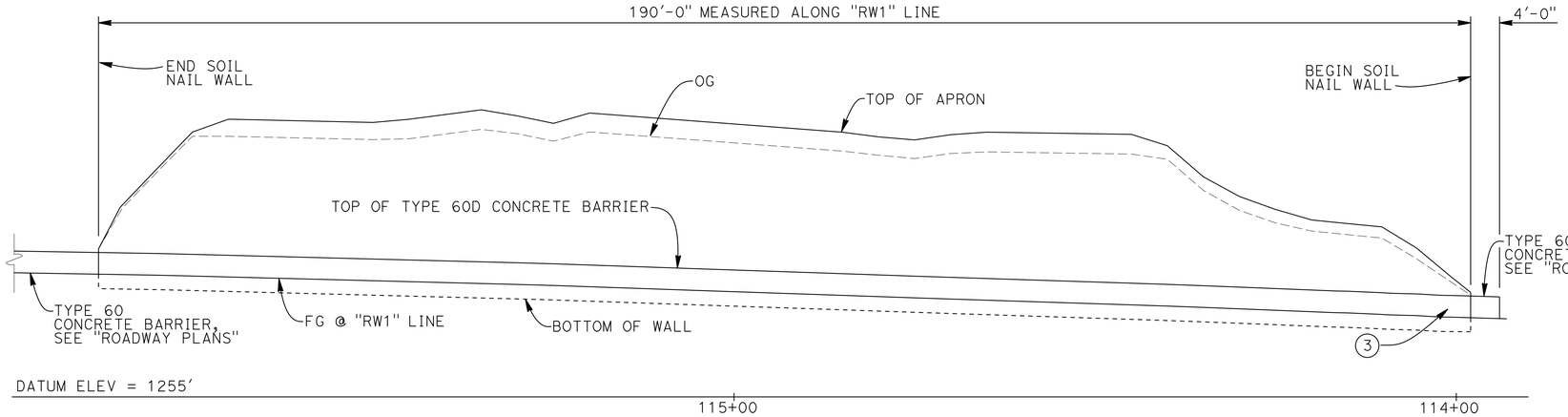

NOTE:
Sculpted shotcrete surface not shown for clarity

ELEVATION
1"=10'

QUANTITIES

STRUCTURE EXCAVATION (SOIL NAIL WALL)	279	CY
STRUCTURE BACKFILL (SOIL NAIL WALL)	16	CY
SOIL NAIL	3,973	LF
BAR REINFORCING STEEL (RETAINING WALL)	15,024	LB
SCULPTED SHOTCRETE	3,245	SQFT
STRUCTURAL SHOTCRETE	164	CY
PREPARE AND STAIN SHOTCRETE	3,245	SQFT
GEOCOMPOSITE DRAIN	812	SQFT
CONCRETE BARRIER (TYPE 60D)	190	LF

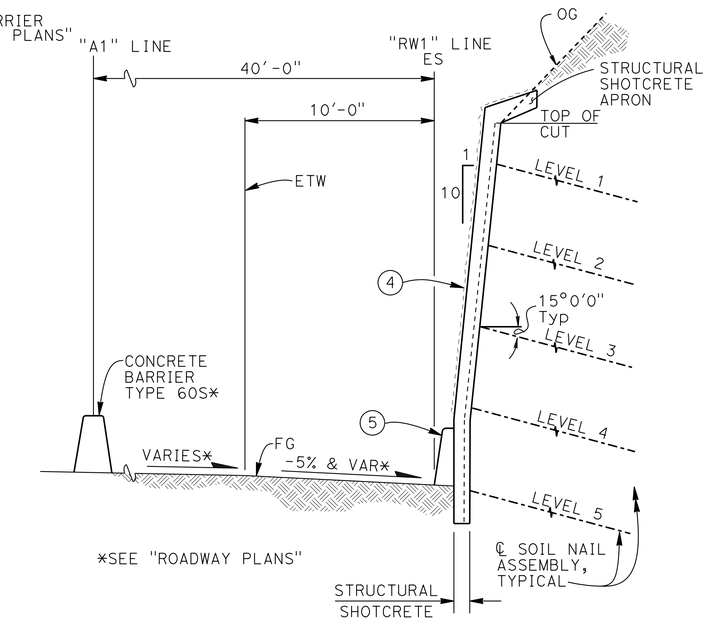

TYPICAL SECTION
1/4"=1'-0"

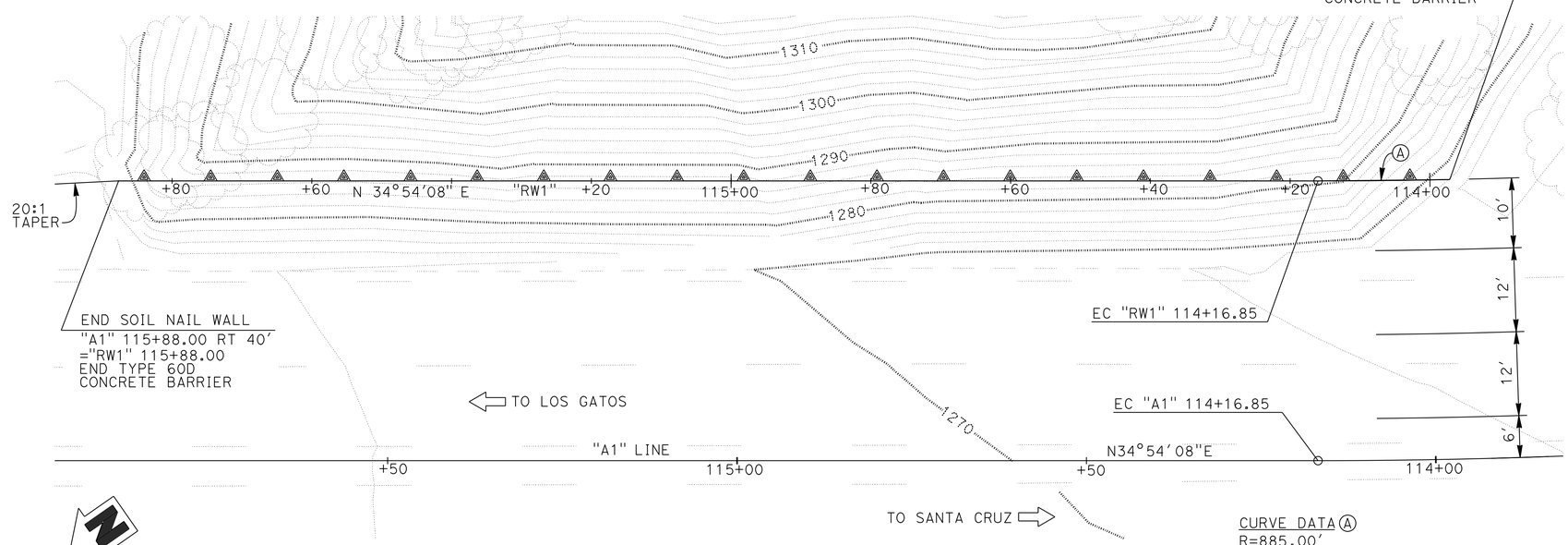

CURVE DATA (A)
R=885.00'
Δ=1°13'14"
T=9.43'
L=18.85'

PLAN
1"=10'

NOTES:

1. For traffic handling, temporary travel way, and Right of Way limits, see "Roadway Plans"
2. For details of wall facing, soil nail assembly, test soil nail assembly,drainage, and other miscellaneous details, see the appropriate DETAILS sheets
3. Paint "WALL NO. 36E0044"
4. Sculpted and stained shotcrete surface
5. Concrete Barrier (Type 60D)

NOTE:
VERIFY ALL CONTROLLING FIELD DIMENSIONS BEFORE ORDERING OR FABRICATING ANY MATERIAL.

Gary Joe
DESIGN ENGINEER

	BY	CHECKED
DESIGN	R. Coria	T. Bui
DETAILS	A. Onodera	R. Coria
QUANTITIES	R. Coria	T. Bui

LOAD & RESISTANCE FACTOR DESIGN — LIVE LOADING: HL93 W/"LOW-BOY"; PERMIT DESIGN VEHICLE

	BY	CHECKED
LAYOUT	I. Chernioglo	R. Coria
SPECIFICATIONS	D. Klein	PLANS AND SPECS COMPARED, D. Klein

ORIGINAL SCALE IN INCHES FOR REDUCED PLANS 0 1 2 3

STATE OF CALIFORNIA
DEPARTMENT OF TRANSPORTATION

DIVISION OF ENGINEERING SERVICES
STRUCTURE DESIGN
DESIGN BRANCH 17

BRIDGE NO. 36E0044
POST MILE 8.55

SUGARLOAF ROAD SOIL NAIL WALL
GENERAL PLAN

UNIT: 3586
PROJECT NUMBER & PHASE: 05000202441
CONTRACT NO.: 05-0T9801

DISREGARD PRINTS BEARING EARLIER REVISION DATES

REVISION DATES: 4-22-14 7-14-14 6-26-14 6-18-14

SHEET 1 OF 10

USERNAME => s115755 DATE PLOTTED => 25-JUN-2015 TIME PLOTTED => 10:53

FILE => 36e0044-a-gp01.dgn

DIST	COUNTY	ROUTE	POST MILES TOTAL PROJECT	SHEET No.	TOTAL SHEETS
05	SCr	17	8.3/9.4	88	96

REGISTERED CIVIL ENGINEER 3-18-15 DATE

6-15-15
PLANS APPROVAL DATE

REGISTERED PROFESSIONAL ENGINEER
Rene Coria
No. 78907
Exp. 3-31-16
CIVIL
STATE OF CALIFORNIA

The State of California or its officers or agents shall not be responsible for the accuracy or completeness of scanned copies of this plan sheet.

INDEX TO PLANS

SHEET NO.	TITLE
1.	General Plan
2.	Index to Plans
3.	Structure Plan
4.	Foundation Plan
5.	Typical Section
6.	Soil Nail Wall Details
7.	Wall Drain Details
8.	Architectural Details No. 1
9.	Architectural Details No. 2
10.	Log of Test Borings

STANDARD PLANS DATED 2010

SHEET NO.	TITLE
A10A	Abbreviations (Sheet 1 of 2)
RSP A10B	Abbreviations (Sheet 2 of 2)
A10C	Lines and Symbols (1 of 3)
A10D	Lines and Symbols (2 of 3)
A10E	Lines and Symbols (3 of 3)
A10F	Legend - Soil (1 of 2)
A10G	Legend - Soil (2 of 2)
A10H	Legend - Rock
A76A	Concrete barrier Type 60

Standard Plan Sheet No.

Detail No.

GENERAL NOTES

ALLOWABLE STRESS DESIGN

DESIGN:

Caltrans Bridge Design Specifications - April 2000 (LFD)
(1996 AASHTO with interims and revisions by Caltrans)

Federal Highway Administration Publication Geotechnical Engineering Circular No. 7 Soil Nail Walls, Publication No. FHWA0-IF-03-017

LIVE LOAD:

No Live Loading

SEISMIC LOADING:

V_{s30}=1132 ft/sec
M_w=7.0
PGA=0.79g
A_m=0.52
K_h=0.26

REINFORCED SHOTCRETE:

f'_c 4.0 ksi (Concrete compressive strength at 28 days)
f_y=60 ksi (Yield strength of Reinforcement)

STUD CONNECTORS:

ASTM A 108

STRUCTURAL PLATE:

f_y=36 ksi

SOIL NAILS:

ASTM Designation: A615/A615M, GRADE 75

Design Nail Pullout Resistance, Q_d 3000 lbs/ft

SOIL PARAMETERS-SOIL NAIL DESIGN:

Friction Angle, ϕ=36°
Cohesion, c=400 psf
Unit Weight, y=125 pcf

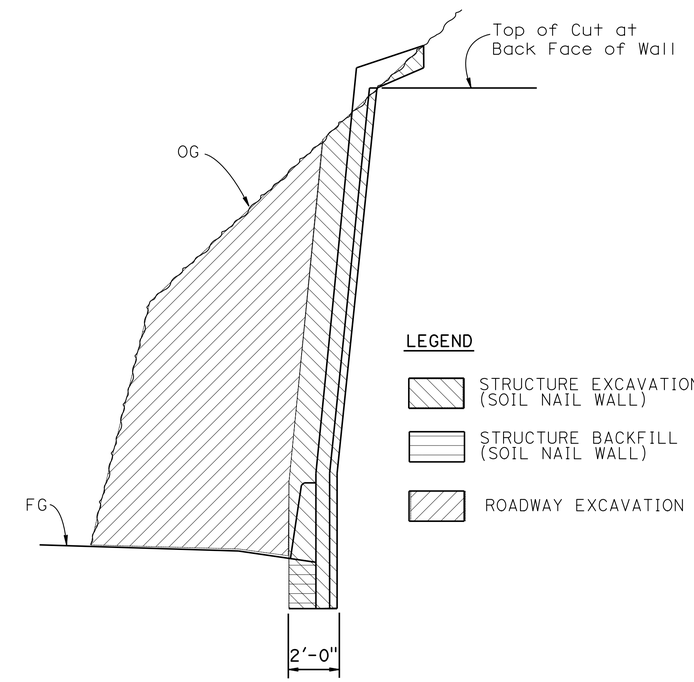

LIMITS OF EXCAVATION AND BACKFILL

No Scale

	BY	CHECKED
DESIGN	R. Coria	T. Bui
DETAILS	A. Onodera	R. Coria
QUANTITIES	R. Coria	T. Bui

STATE OF CALIFORNIA
DEPARTMENT OF TRANSPORTATION

DIVISION OF ENGINEERING SERVICES
STRUCTURE DESIGN
DESIGN BRANCH 17

BRIDGE NO. 36E0044
POST MILE 8.55

SUGARLOAF ROAD SOIL NAIL WALL
INDEX TO PLANS

STRUCTURES DESIGN DETAIL SHEET (ENGLISH) (REV. 09-01-10)

ORIGINAL SCALE IN INCHES FOR REDUCED PLANS 0 1 2 3

UNIT: 3586
PROJECT NUMBER & PHASE: 05000202441
CONTRACT NO.: 05-0T9801

DISREGARD PRINTS BEARING EARLIER REVISION DATES

REVISION DATES: 6-30-14 7-14-14 6-18-14 6-26-14

SHEET 2 OF 10

FILE => 36e0044-a-itp.dgn

USERNAME => s115755 DATE PLOTTED => 25-JUN-2015 TIME PLOTTED => 10:53

DIST	COUNTY	ROUTE	POST MILES TOTAL PROJECT	SHEET No.	TOTAL SHEETS
05	SCr	17	8.3/9.4	89	96

REGISTERED CIVIL ENGINEER 3-18-15 DATE

6-15-15
PLANS APPROVAL DATE

REGISTERED PROFESSIONAL ENGINEER
Rene Coria
No. 78907
Exp. 3-31-16
CIVIL
STATE OF CALIFORNIA

The State of California or its officers or agents shall not be responsible for the accuracy or completeness of scanned copies of this plan sheet.

NOTES:

1. Locate verification test nails between production nails. Test Nails not shown, locations to be provided by the Engineer.
2. Place Proof Test Nails to avoid adjacent Production Nails and drain strips.
3. For top of wall Apron detail at wall ends, see "DETAIL A" on "TYPICAL SECTION" sheet.

ST - Vertical distance from top of cut at back face of wall Elevation to first row of Soil Nails, ST = 2'-0"

SB - Vertical distance from bottom of wall to last row of Soil Nails, SB = 2'-0"

SV - Vertical spacing of Soil Nail Assembly, SV (min) = 2'-0"
SV (max) = 5'-0"

SH - Horizontal spacing of Soil Nail Assembly, SH = 5'-0"

SS - Horizontal distance between the beginning/end of wall and first/last Soil Nail column, SS = 2'-6"

Le - Soil Nail embedment length. See this sheet and "SOIL NAIL WALL DETAILS" sheet.

LEGEND:

o Location of production nail assembly. (Total 173)

△ Location of proof test nail. (Total 14)

(n) Indicates nail row number.

STA	ELEV @ TOP OF CUT	ELEV @ TOP OF APRON
115+88.00	1278.14	1278.14
115+80.00	1285.00	1286.48
115+70.00	1291.07	1293.44
115+60.00	1290.84	1293.22
115+50.00	1290.62	1292.99
115+40.00	1291.38	1294.08
115+30.00	1291.43	1293.90
115+20.00	1291.68	1294.29
115+10.00	1290.92	1293.53
115+00.00	1290.16	1292.78
114+90.00	1289.40	1292.01
114+80.00	1288.45	1290.99
114+70.00	1288.69	1291.30
114+60.00	1288.84	1291.57
114+50.00	1288.69	1291.42
114+40.00	1287.89	1289.77
114+30.00	1280.81	1282.73
114+20.00	1277.96	1279.49
114+10.00	1276.82	1278.35
114+00.00	1270.71	1271.10
113+98.00	1269.46	1269.46

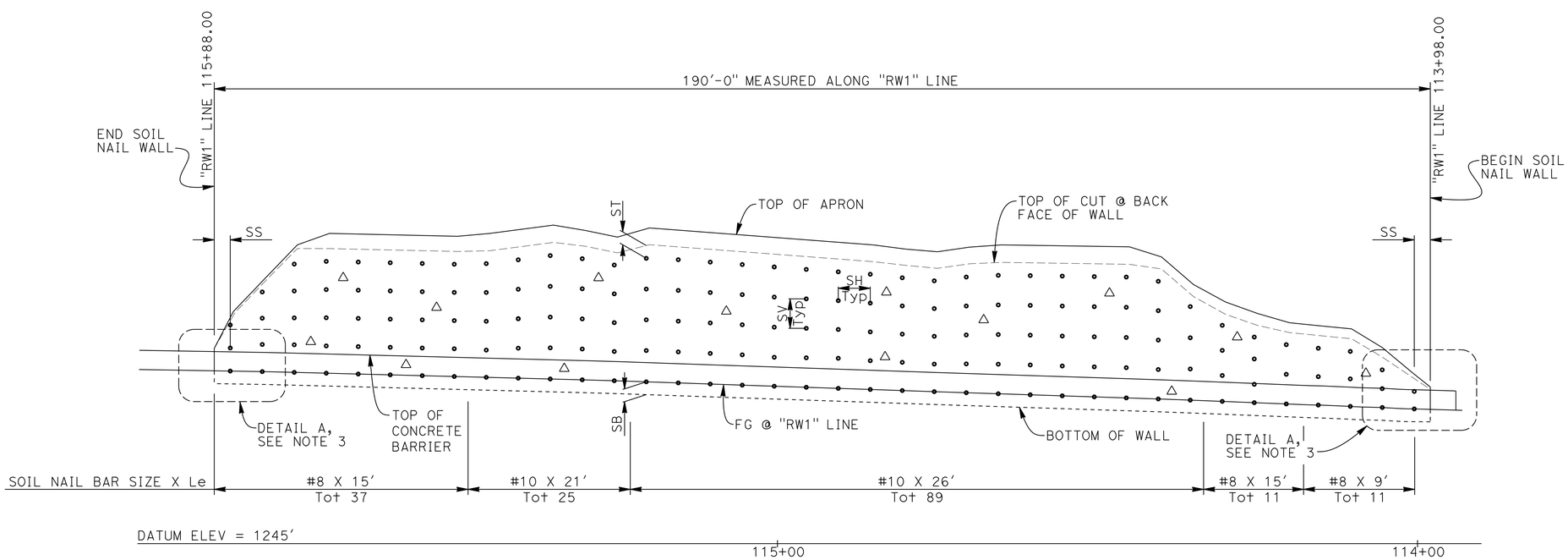

NOTE:
Sculpted shotcrete surface not shown for clarity

DEVELOPED ELEVATION

1"=10'

DESIGN	BY R. Coria	CHECKED T. Bui	
DETAILS	BY A. Onodera	CHECKED R. Coria	
QUANTITIES	BY R. Coria	CHECKED T. Bui	

STATE OF CALIFORNIA
DEPARTMENT OF TRANSPORTATION

DIVISION OF ENGINEERING SERVICES
STRUCTURE DESIGN
DESIGN BRANCH 17

BRIDGE NO. 36E0044
POST MILE 8.55

SUGARLOAF ROAD SOIL NAIL WALL
STRUCTURE PLAN

STRUCTURES DESIGN DETAIL SHEET (ENGLISH) (REV. 09-01-10)

ORIGINAL SCALE IN INCHES FOR REDUCED PLANS 0 1 2 3

UNIT: 3586
PROJECT NUMBER & PHASE: 05000202441
CONTRACT NO.: 05-0T9801

DISREGARD PRINTS BEARING EARLIER REVISION DATES

REVISION DATES: 7-17-14 6-16-15 6-26-14 7-14-14

SHEET 3 OF 10

FILE => 36e0044-c-sp01.dgn

USERNAME => s115755 DATE PLOTTED => 25-JUN-2015 TIME PLOTTED => 10:53

DIST	COUNTY	ROUTE	POST MILES TOTAL PROJECT	SHEET No.	TOTAL SHEETS
05	SCr	17	8.3/9.4	90	96

REGISTERED CIVIL ENGINEER 3-18-15 DATE

6-15-15
PLANS APPROVAL DATE

REGISTERED PROFESSIONAL ENGINEER
Rene Coria
No. 78907
Exp. 3-31-16
CIVIL
STATE OF CALIFORNIA

The State of California or its officers or agents shall not be responsible for the accuracy or completeness of electronic copies of this plan sheet.

CURVE DATA

No. ⑧	R	Δ	T	L
2	925.00	63°50′46"	576.28	1030.75
W1	885.00	01°13′14"	9.43	18.85

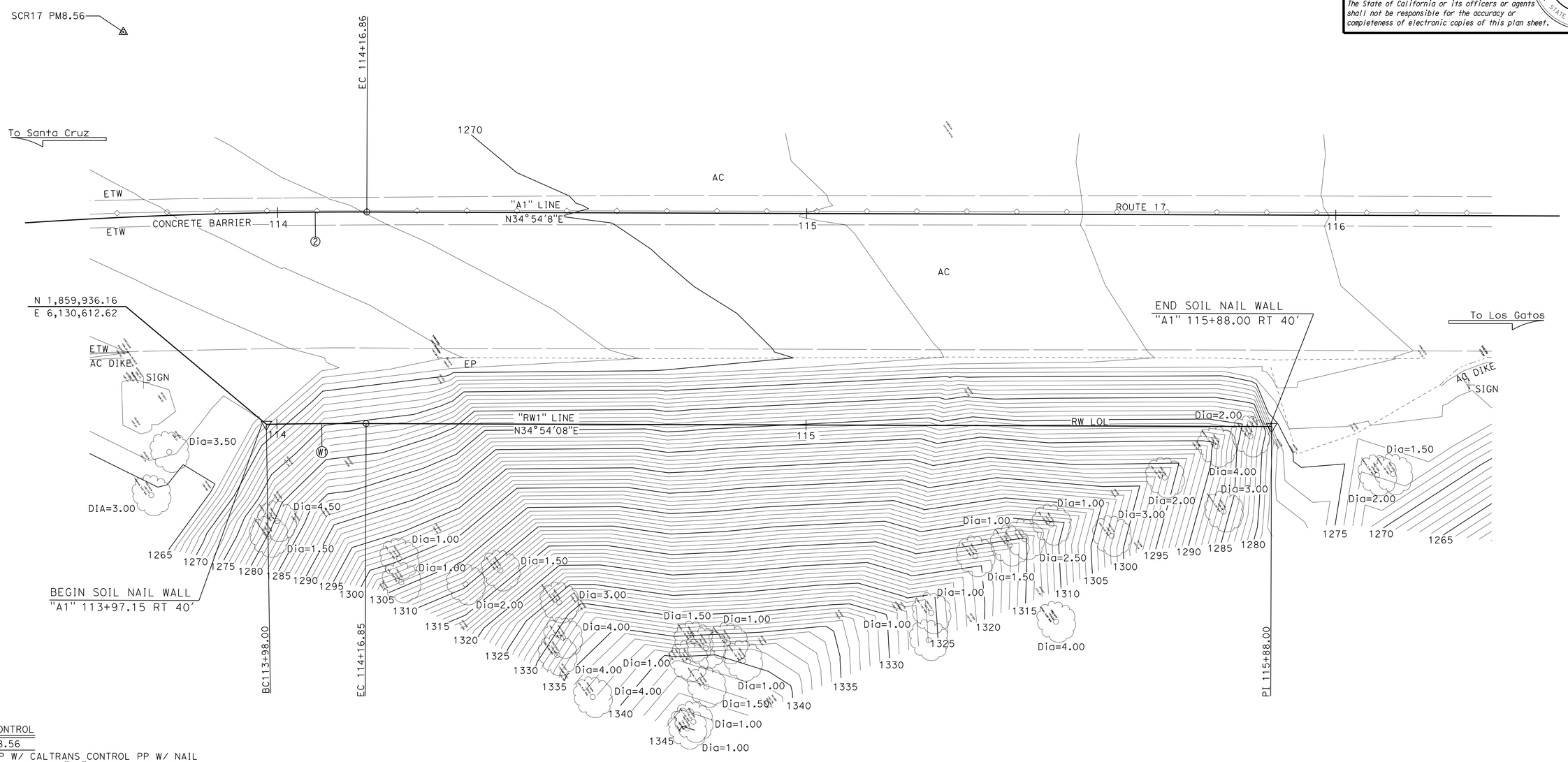

SURVEY CONTROL

SCR17 PM8.56

Fnd 1" IP W/ CALTRANS CONTROL PP W/ NAIL
35.00 Ft Lt Rte 17 "A1" LINE
Sta 113+72.39
N 1,859,956.17
E 6,130,536.24
Elev = 1268.23

SCR17 PM8.63 (NOT SHOWN ON PLAN SHEET)

Fnd 1"IP W/ CALTRANS CONTROL PP W/ NAIL
32.42 Ft Rt Rte 17 "A1" LINE
Sta117+09.98
N 1,860,196.47
E 6,130,784.75
Elev = 1275.05

PRELIMINARY INVESTIGATION SECTION

SCALE 1"=10′	VERT.DATUM NAVD88	PHOTOGRAMMETRY AS OF: X			
	HORZ.DATUM NAD83(1991.35)	SURVEYED	BY DISTRICT	CHECKED	BY C. FASSETT 06/14
	ALIGNMENT TIES Dist TRAVERSE SHEET	DRAFTED	BY C. FASSETT 06/14	CHECKED	BY L. LEW 06/14

DESIGN	BY R. Coria	CHECKED T. Bui
DETAILS	BY G. Souza	CHECKED R. Coria
QUANTITIES	BY R. Coria	CHECKED T. Bui

STATE OF CALIFORNIA
DEPARTMENT OF TRANSPORTATION

DIVISION OF ENGINEERING SERVICES
STRUCTURE DESIGN
DESIGN BRANCH 17

BRIDGE NO. 36E0044
POST MILE 8.55

SUGARLOAF ROAD SOIL NAIL WALL
FOUNDATION PLAN

STRUCTURES FOUNDATION PLAN SHEET (ENGLISH) (REV. 09-01-10)

ORIGINAL SCALE IN INCHES FOR REDUCED PLANS 0 1 2 3

UNIT: 3646
PROJECT NUMBER & PHASE: 0500020244 1
CONTRACT NO.: 05-0T9801

DISREGARD PRINTS BEARING EARLIER REVISION DATES

REVISION DATES: 06/27/14 06/27/14

SHEET 4 OF 10

FILE => 36e0044-e-fp101.dgn

USERNAME => s115755 DATE PLOTTED => 25-JUN-2015 TIME PLOTTED => 10:53

DIST	COUNTY	ROUTE	POST MILES TOTAL PROJECT	SHEET No.	TOTAL SHEETS
05	SCr	17	8.3/9.4	91	96

REGISTERED CIVIL ENGINEER 3-18-15 DATE

6-15-15
PLANS APPROVAL DATE

REGISTERED PROFESSIONAL ENGINEER
Rene Coria
No. 78907
Exp. 3-31-16
CIVIL
STATE OF CALIFORNIA

The State of California or its officers or agents shall not be responsible for the accuracy or completeness of scanned copies of this plan sheet.

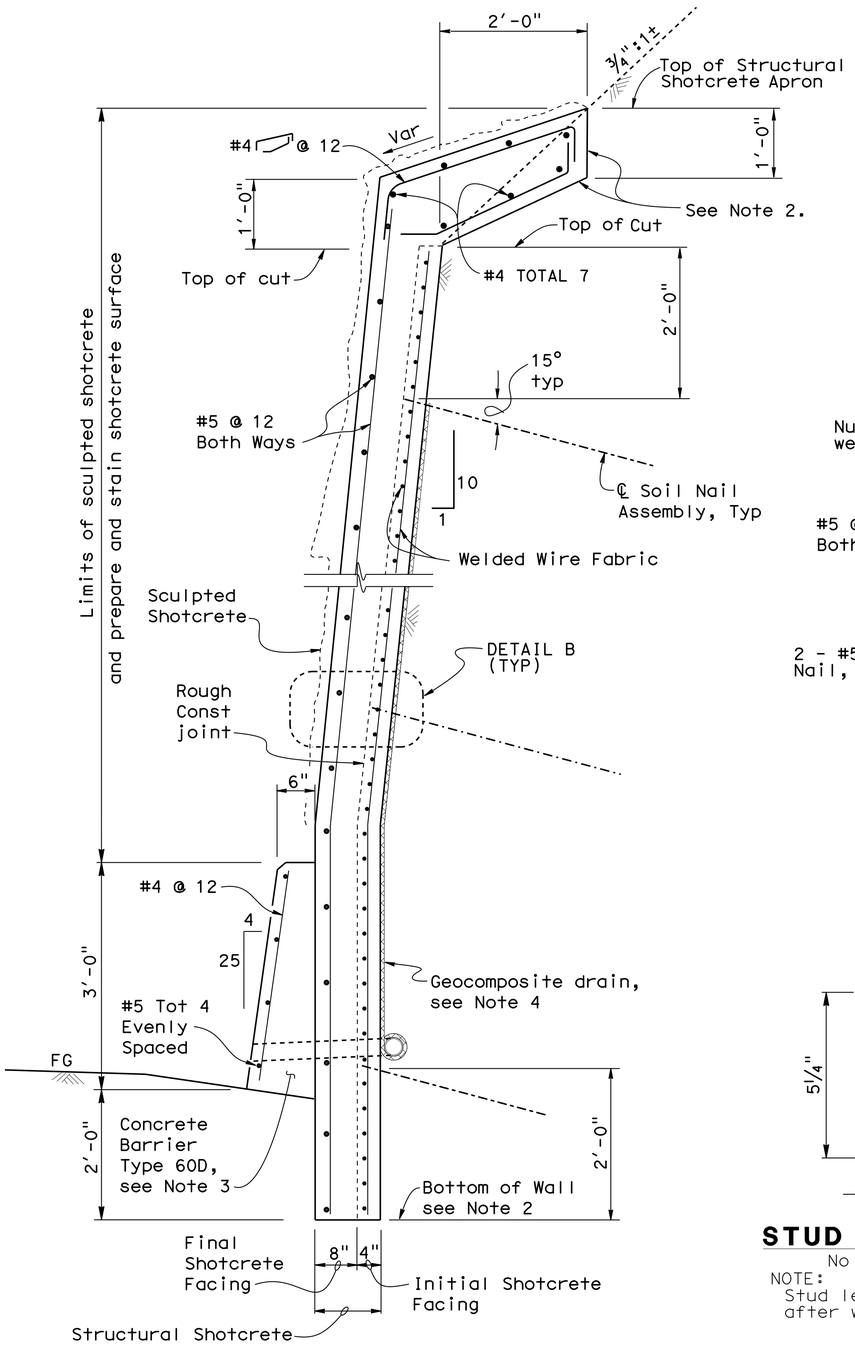

TYPICAL SECTION
1"=1'-0"

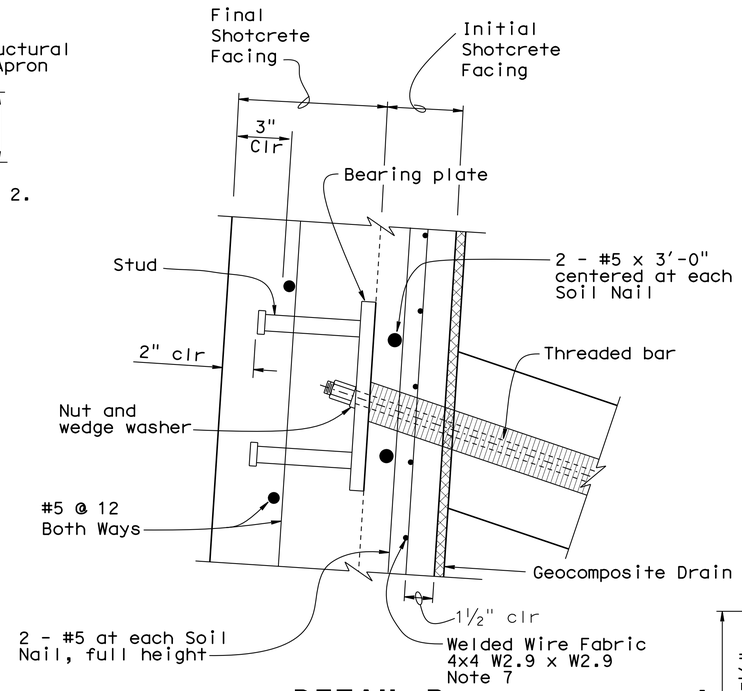

DETAIL B
3" = 1'

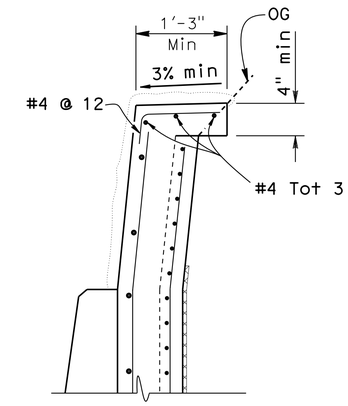

SECTION A-A
1"=1'-0"

NOTES:
1. For Soil Nail spacing, see "STRUCTURE PLAN" sheets
2. Place against undisturbed material
3. For Barrier details not shown, see Standard Plan A76A
4. For Drainage, see "WALL DRAIN DETAILS" sheet
5. For Sculpted Shotcrete details, see "ARCHITECTURAL DETAILS" sheets
6. Steel plates, studs and all hardware to be galvanized
7. 6" minimum lap splice length for welded wire fabric

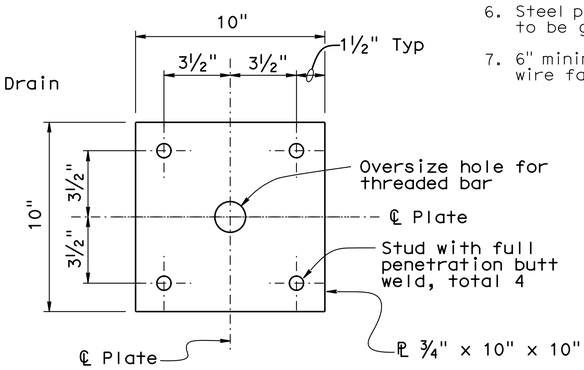

BEARING PLATE DETAIL
3"=1'-0"

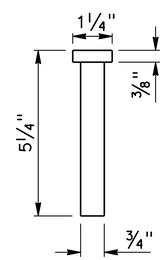

STUD DETAIL
No scale
NOTE:
Stud length shown after welding

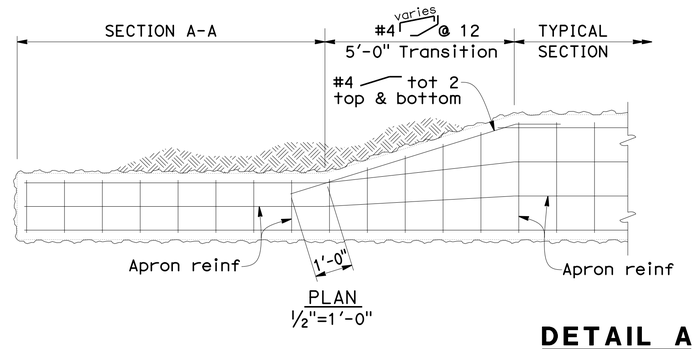

DETAIL A
Scale As Shown

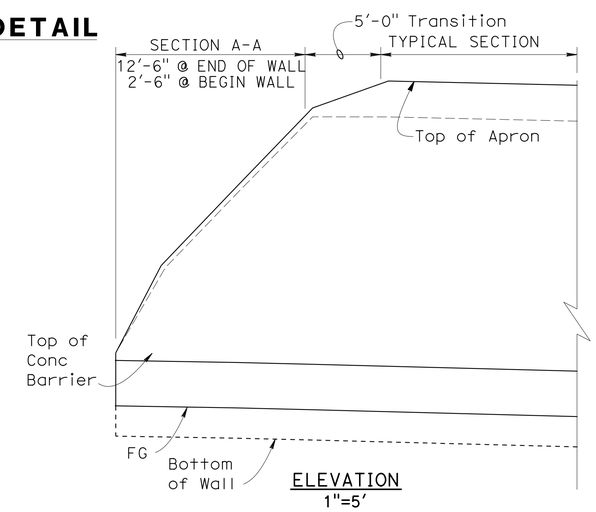

ELEVATION
1"=5'

DESIGN	BY R. Coria	CHECKED T. Bui	
DETAILS	BY A. Onodera/L. Wang	CHECKED R. Coria	
QUANTITIES	BY R. Coria	CHECKED T. Bui	

STATE OF CALIFORNIA
DEPARTMENT OF TRANSPORTATION

DIVISION OF ENGINEERING SERVICES
STRUCTURE DESIGN
DESIGN BRANCH 17

BRIDGE NO. 36E0044
POST MILE 8.55

SUGARLOAF ROAD SOIL NAIL WALL
TYPICAL SECTION

STRUCTURES DESIGN DETAIL SHEET (ENGLISH) (REV. 09-01-10)

ORIGINAL SCALE IN INCHES FOR REDUCED PLANS 0 1 2 3

UNIT: 3586
PROJECT NUMBER & PHASE: 05000202441
CONTRACT NO.: 05-0T9801

DISREGARD PRINTS BEARING EARLIER REVISION DATES

REVISION DATES: 7-14-14 7-17-14 8-26-14 8-7-14

SHEET 5 OF 10

FILE => 36e0044-k-tsd01.dgn

USERNAME => s113755 DATE PLOTTED => 25-JUN-2015 TIME PLOTTED => 10:53

DIST	COUNTY	ROUTE	POST MILES TOTAL PROJECT	SHEET No.	TOTAL SHEETS
05	SCr	17	8.3/9.4	92	96

REGISTERED CIVIL ENGINEER 3-18-15 DATE

6-15-15
PLANS APPROVAL DATE

REGISTERED PROFESSIONAL ENGINEER
Rene Coria
No. 78907
Exp. 3-31-16
CIVIL
STATE OF CALIFORNIA

The State of California or its officers or agents shall not be responsible for the accuracy or completeness of scanned copies of this plan sheet.

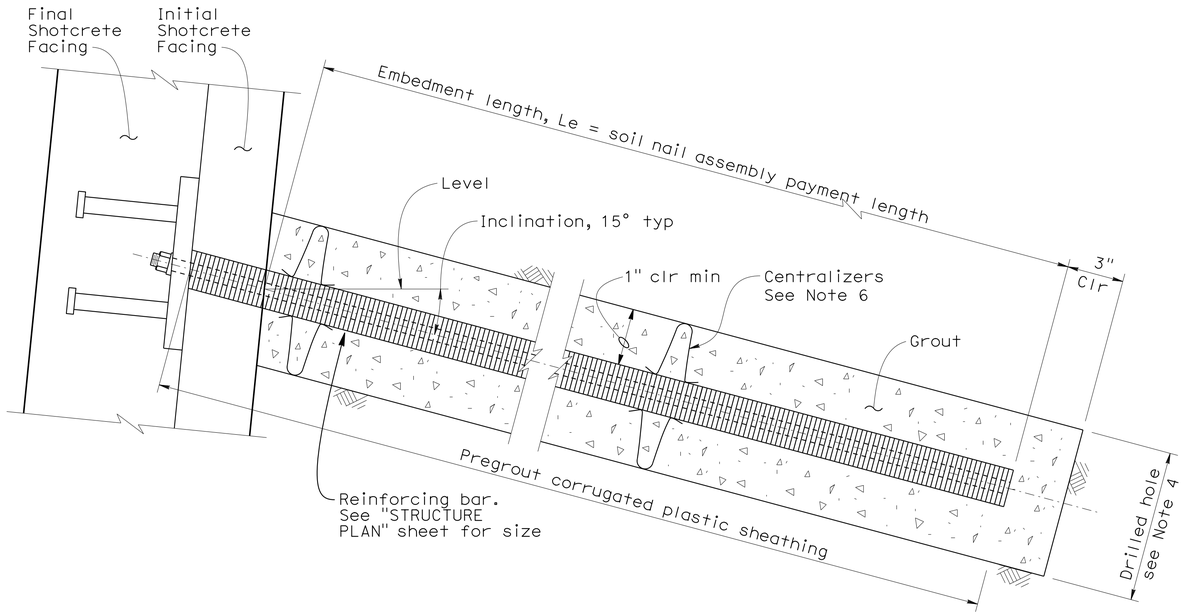

PRODUCTION SOIL NAIL

3" = 1'

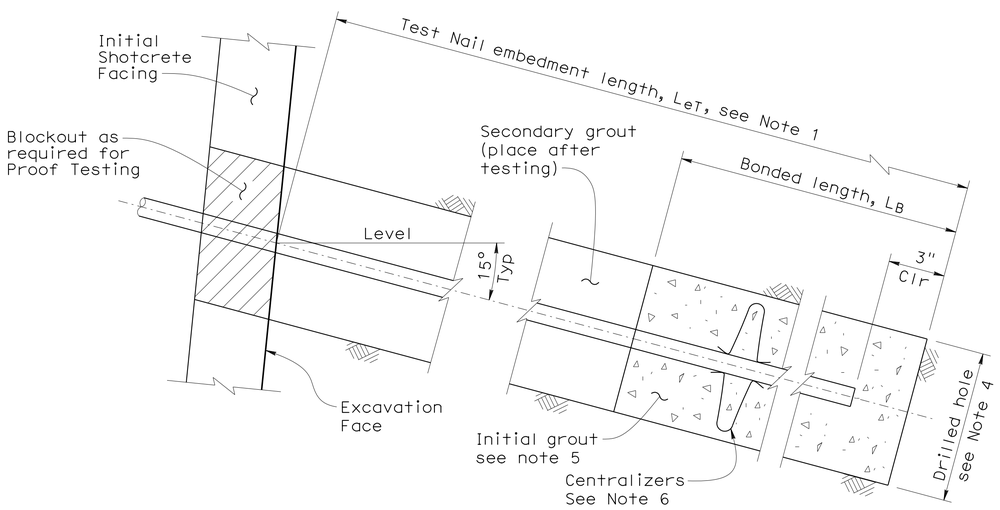

TEST SOIL NAIL

3" = 1'

NOTES:

1. The test nail embedment length L_{eT}, must be equal to ⅔ of the embedment length, Le, of adjacent production soil nail assemblies, but not less than 12'-0".
2. The total length of the test nail assembly equals the embedment length plus the length required for jacking equipment.
3. For location of proof test nails see "STRUCTURE PLAN" sheet.
4. Contractor to determine drilled hole diameter.
5. Finished grout surface to be normal to the bar.
6. Space centralizers at 7'-6" maximum center to center and 1'-6" from the hole ends.

	BY	CHECKED
DESIGN	R. Coria	T. Bui
DETAILS	A. Onodera	R. Coria
QUANTITIES	R. Coria	T. Bui

STATE OF CALIFORNIA
DEPARTMENT OF TRANSPORTATION

DIVISION OF ENGINEERING SERVICES
STRUCTURE DESIGN
DESIGN BRANCH 17

BRIDGE NO. 36E0044
POST MILE 8.55

SUGARLOAF ROAD SOIL NAIL WALL
SOIL NAIL WALL DETAILS

STRUCTURES DESIGN DETAIL SHEET (ENGLISH) (REV. 09-01-10)

ORIGINAL SCALE IN INCHES FOR REDUCED PLANS 0 1 2 3

UNIT: 3586
PROJECT NUMBER & PHASE: 05000202441
CONTRACT NO.: 05-0T9801

DISREGARD PRINTS BEARING EARLIER REVISION DATES

REVISION DATES: 5-30-14 6-13-14 6-26-14 6-16-15

SHEET 6 OF 10

FILE => 36e0044-t-sn1.dgn

USERNAME => s115755 DATE PLOTTED => 25-JUN-2015 TIME PLOTTED => 10:53

DIST	COUNTY	ROUTE	POST MILES TOTAL PROJECT	SHEET No.	TOTAL SHEETS
05	SCr	17	8.3/9.4	93	96

REGISTERED CIVIL ENGINEER 3-18-15 DATE

6-15-15
PLANS APPROVAL DATE

REGISTERED PROFESSIONAL ENGINEER
Rene Coria
No. 78907
Exp. 3-31-16
CIVIL
STATE OF CALIFORNIA

The State of California or its officers or agents shall not be responsible for the accuracy or completeness of scanned copies of this plan sheet.

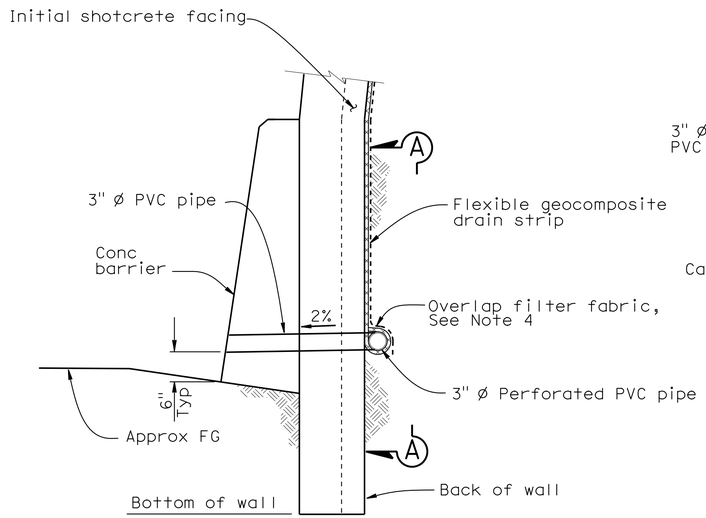

WALL DRAIN DETAIL AT WEEPHOLE OPTION A
No scale

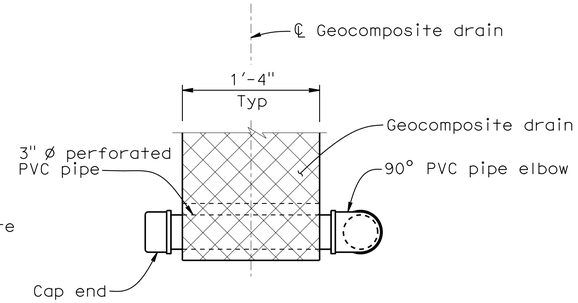

VIEW A-A
No scale

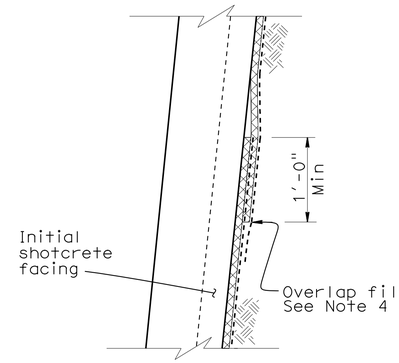

DRAIN SPLICE
No scale

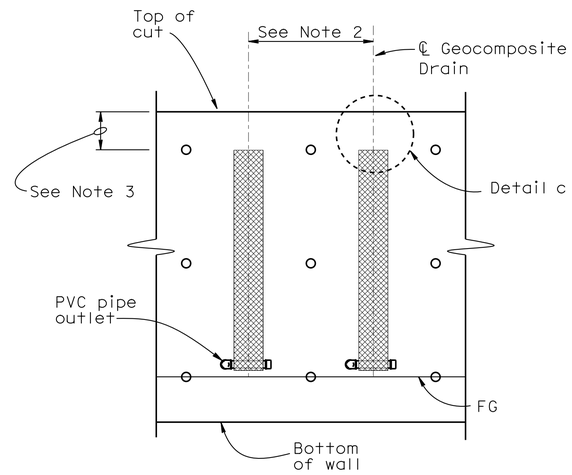

WALL PART ELEVATION
No scale

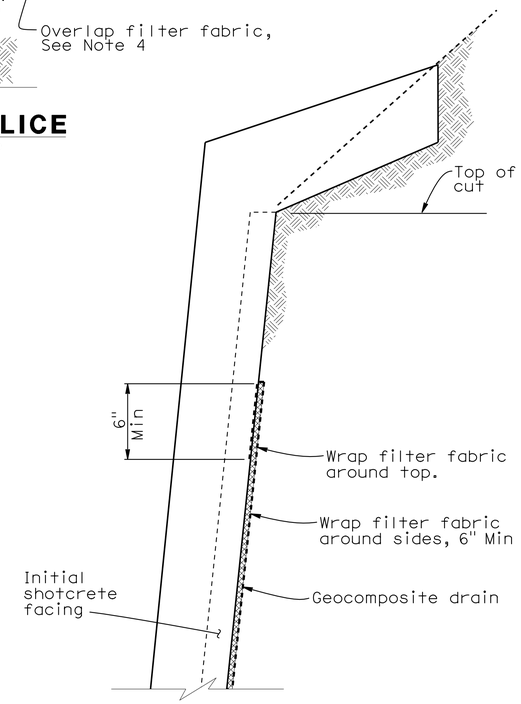

DETAIL C
No scale

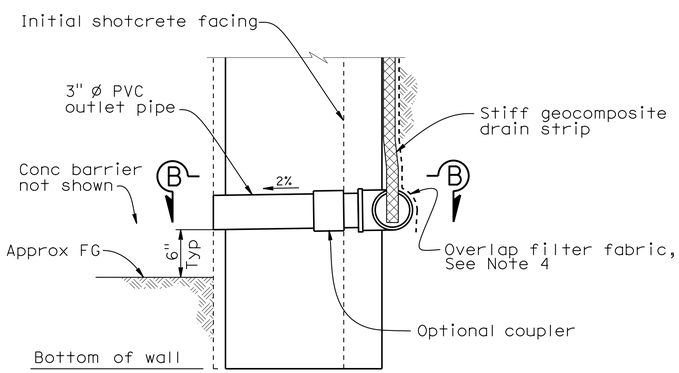

WALL DRAIN DETAIL AT WEEPHOLE OPTION B
No scale

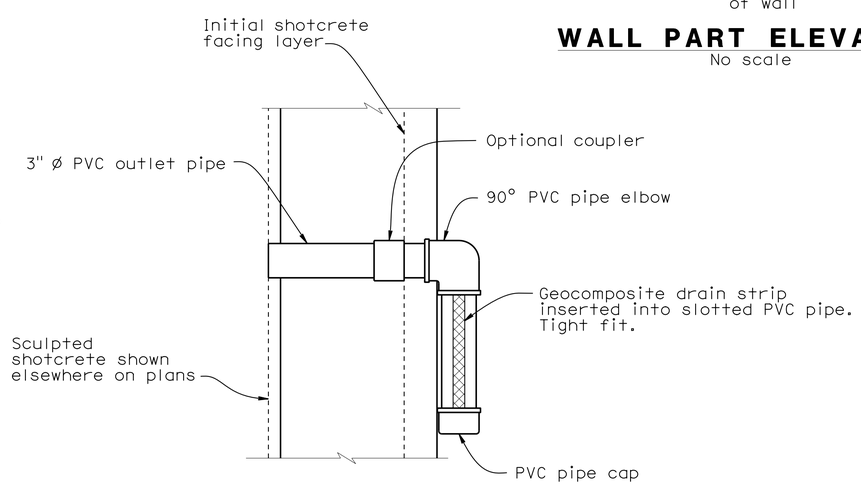

SECTION B-B
No scale

NOTES:

1. Center vertical Geocomposite drain strips between Soil Nail columns.
2. Begin Geocomposite drain at top soil nail row.
3. Geocomposite drains must have filter farbric on soil side and wrapped around all edges.
4. Overlap filter fabric where necessary to prevent soil from entering drain.

	BY	CHECKED
DESIGN	R. Coria	T. Bui
DETAILS	A. Onodera	R. Coria
QUANTITIES	R. Coria	T. Bui

STATE OF CALIFORNIA
DEPARTMENT OF TRANSPORTATION

DIVISION OF ENGINEERING SERVICES
STRUCTURE DESIGN
DESIGN BRANCH 17

BRIDGE NO. 36E0044
POST MILE 8.55

SUGARLOAF ROAD SOIL NAIL WALL
WALL DRAIN DETAILS

STRUCTURES DESIGN DETAIL SHEET (ENGLISH) (REV. 09-01-10)

ORIGINAL SCALE IN INCHES FOR REDUCED PLANS 0 1 2 3

UNIT: 3586
PROJECT NUMBER & PHASE: 05000202441
CONTRACT NO.: 05-0T9801

DISREGARD PRINTS BEARING EARLIER REVISION DATES

REVISION DATES: 6-19-14 7-17-14

SHEET 7 OF 10

FILE => 36e0044-u-wd1.dgn

USERNAME => s115755 DATE PLOTTED => 25-JUN-2015 TIME PLOTTED => 10:53

DIST	COUNTY	ROUTE	POST MILES TOTAL PROJECT	SHEET No.	TOTAL SHEETS
05	SCr	17	8.3/9.4	94	96

REGISTERED CIVIL ENGINEER 3-18-15 DATE

6-15-15
PLANS APPROVAL DATE

REGISTERED PROFESSIONAL ENGINEER Rene Coria No. 78907 Exp. 3-31-16 CIVIL STATE OF CALIFORNIA

The State of California or its officers or agents shall not be responsible for the accuracy or completeness of scanned copies of this plan sheet.

NOTES:

1. Primary Strata lines drawn on the front elevation are to be used as a guide for layout of Primary Strata line reinforcement.
2. Secondary Strata lines drawn on the front elevation are to be used as a General Guide. Strata lines must be sculpted to mimic local geology.
3. This sheet accurate for Shotcrete Sculpting only.
4. Shotcrete Sculpting must be continuous throughout the face of the wall and shotcrete apron.
5. A maximum 2" relief allowed within 3'-0" (vertical) of the top of concrete barrier. Etching or scoring may be used to carry through sculpting.
6. Additional shotcrete needed for carving the Primary Strata lines must be reinforced as shown on "Architectural Details No. 2" sheet.
7. Primary Strata lines must be tapered to the top of concrete barrier.
8. Secondary Strata lines are not to exceed 2" amplitude.
9. Primary and Secondary Strata lines must wrap onto Shotcrete Apron.

LEGEND

Primary Strata Lines:

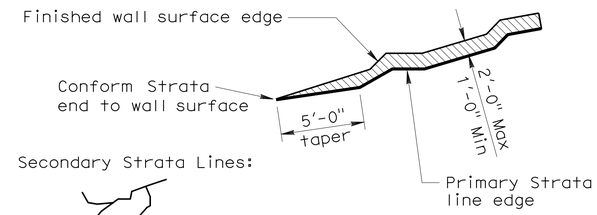

Secondary Strata Lines:

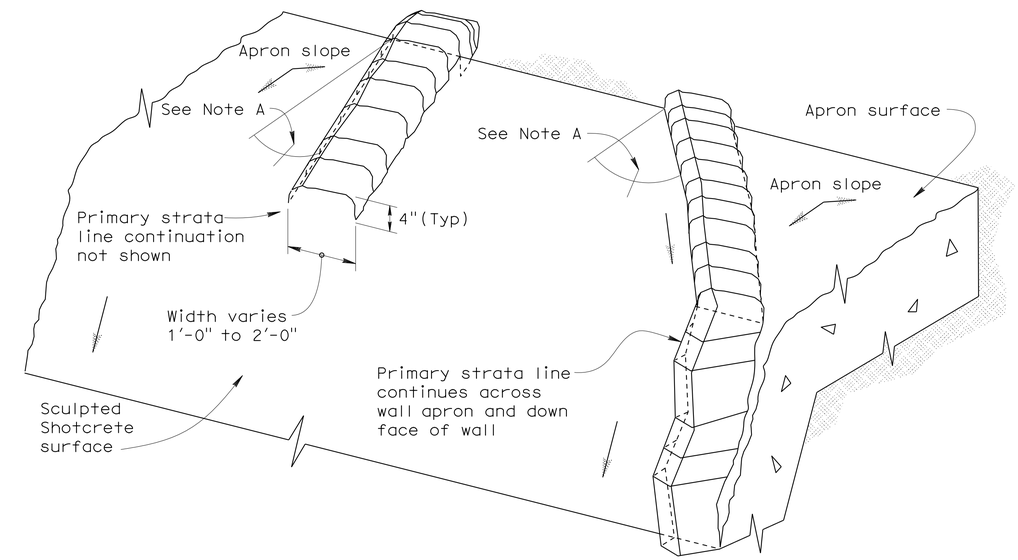

TOP OF WALL ISOMETRIC VIEW

No scale

NOTE

Ⓐ Angle of primary strata line across wall apron 15 degrees for longitudinal slopes 0-10%, 45 degrees for slopes greater than 10%

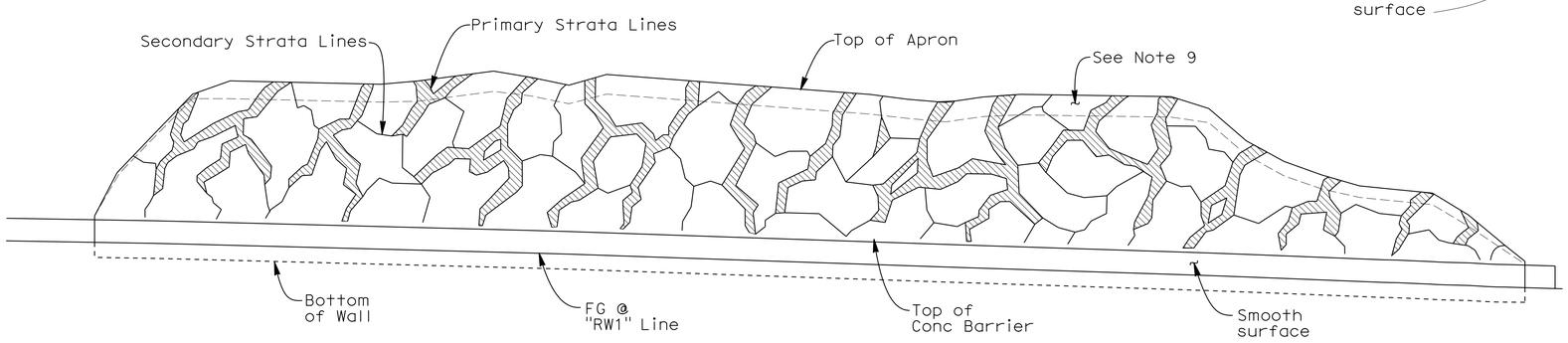

DATUM ELEVATION = 1255

115+00 114+00

SCULPTED SHOTCRETE WALL SURFACE

1"=10'

DESIGN	BY R. Coria	CHECKED T. Bui	
DETAILS	BY A. Onodera	CHECKED R. Coria	
QUANTITIES	BY R. Coria	CHECKED T. Bui	

STATE OF CALIFORNIA DEPARTMENT OF TRANSPORTATION

DIVISION OF ENGINEERING SERVICES STRUCTURE DESIGN DESIGN BRANCH 17

BRIDGE NO. 36E0044 POST MILE 8.55

SUGARLOAF ROAD SOIL NAIL WALL ARCHITECTURAL DETAILS NO. 1

STRUCTURES DESIGN DETAIL SHEET (ENGLISH) (REV. 09-01-10)

ORIGINAL SCALE IN INCHES FOR REDUCED PLANS 0 1 2 3

UNIT: 3586
PROJECT NUMBER & PHASE: 05000202441 CONTRACT NO.: 05-0T9801

DISREGARD PRINTS BEARING EARLIER REVISION DATES

REVISION DATES 5-1-14 6-19-14

SHEET 8 OF 10

FILE => 36e0044-w-arch01.dgn

USERNAME => s115755 DATE PLOTTED => 25-JUN-2015 TIME PLOTTED => 10:53

DIST	COUNTY	ROUTE	POST MILES TOTAL PROJECT	SHEET No.	TOTAL SHEETS
05	SCr	17	8.3/9.4	95	96

REGISTERED CIVIL ENGINEER 3-18-15 DATE

6-15-15
PLANS APPROVAL DATE

REGISTERED PROFESSIONAL ENGINEER
Rene Coria
No. 78907
Exp. 3-31-16
CIVIL
STATE OF CALIFORNIA

The State of California or its officers or agents shall not be responsible for the accuracy or completeness of scanned copies of this plan sheet.

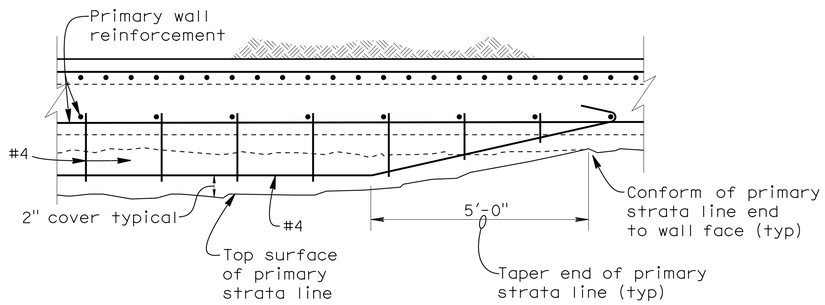

PLAN
PRIMARY STRATA LINE END DETAIL
No scale

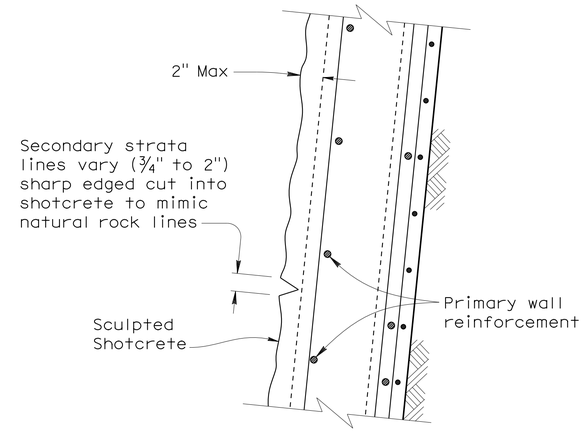

SECTION AT
SECONDARY STRATA LINE
No scale

NOTE:
1. For primary wall reinforcement, see "TYPICAL SECTION" sheet

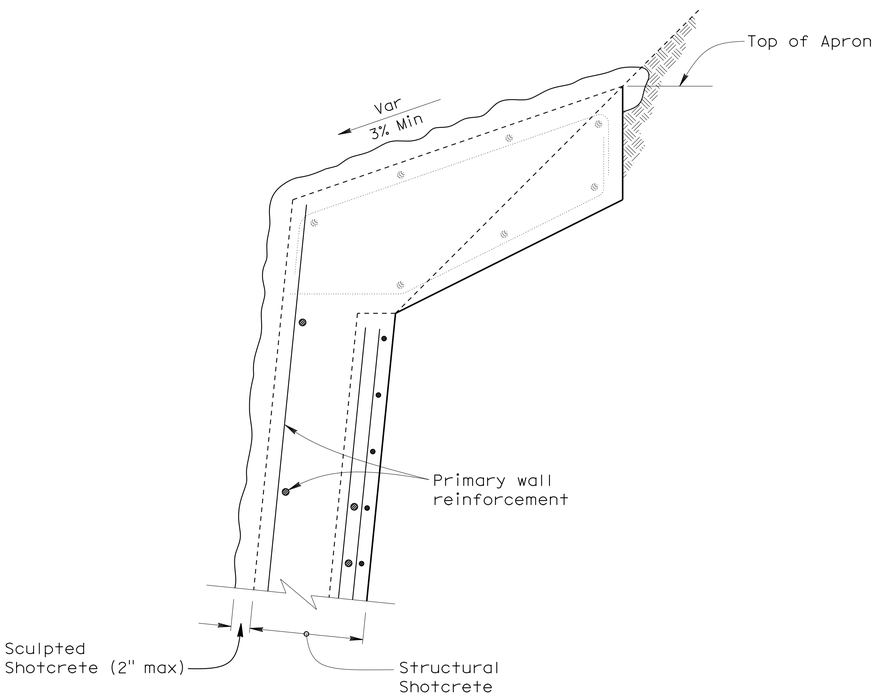

TYPICAL SECTION AT TOP OF WALL
No scale

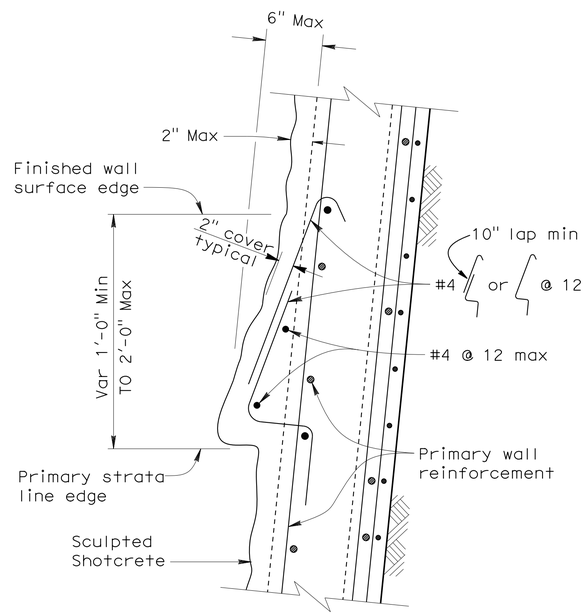

SECTION AT
PRIMARY STRATA LINE
No scale

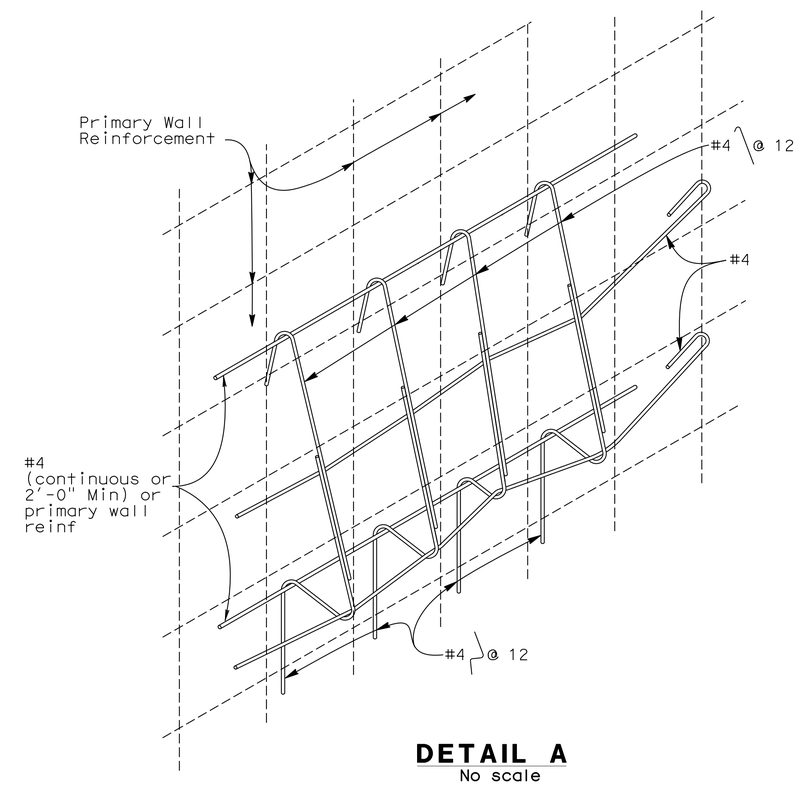

DETAIL A
No scale

	BY	CHECKED
DESIGN	R. Coria	T. Bui
DETAILS	A. Onodera	R. Coria
QUANTITIES	R. Coria	T. Bui

STATE OF CALIFORNIA
DEPARTMENT OF TRANSPORTATION

DIVISION OF ENGINEERING SERVICES
STRUCTURE DESIGN
DESIGN BRANCH 17

BRIDGE NO. 36E0044
POST MILE 8.55

SUGARLOAF ROAD SOIL NAIL WALL
ARCHITECTURAL DETAILS NO. 2

STRUCTURES DESIGN DETAIL SHEET (ENGLISH) (REV. 09-01-10)

ORIGINAL SCALE IN INCHES FOR REDUCED PLANS 0 1 2 3

UNIT: 3586
PROJECT NUMBER & PHASE: 05000202441
CONTRACT NO.: 05-0T9801

DISREGARD PRINTS BEARING EARLIER REVISION DATES

REVISION DATES: 5-5-14 5-30-14 6-26-14

SHEET 9 OF 10

FILE => 36e0044-w-arch03.dgn

USERNAME => s113755 DATE PLOTTED => 25-JUN-2015 TIME PLOTTED => 10:53

DIST	COUNTY	ROUTE	POST MILES TOTAL PROJECT	SHEET No.	TOTAL SHEETS
05	SCr	17	8.3/9.4	96	96

REGISTERED CIVIL ENGINEER — DATE 3-28-14

6-15-15
PLANS APPROVAL DATE

REGISTERED PROFESSIONAL ENGINEER — Dan Appelbaum — No. C50001 — Exp. 6-30-15 — CIVIL — STATE OF CALIFORNIA

The State of California or its officers or agents shall not be responsible for the accuracy or completeness of electronic copies of this plan sheet.

This LOTB sheet was prepared in accordance with the Caltrans Soil & Rock Logging, Classification, & Presentation Manual (2010 Edition).

See 2010 Standard Plans A10F and A10G for Soil Legend, and A10H for Rock Legend.

BENCH MARK

SCr 17 PM 8.63

Fnd 1" ip w/Caltrans control pp
w/nail 32.35′ Rt "A1" Line
Sta 117+09.97
N 1,860,196.469
E 6,130,784.751
Elev = 1275.053′
NAVD88

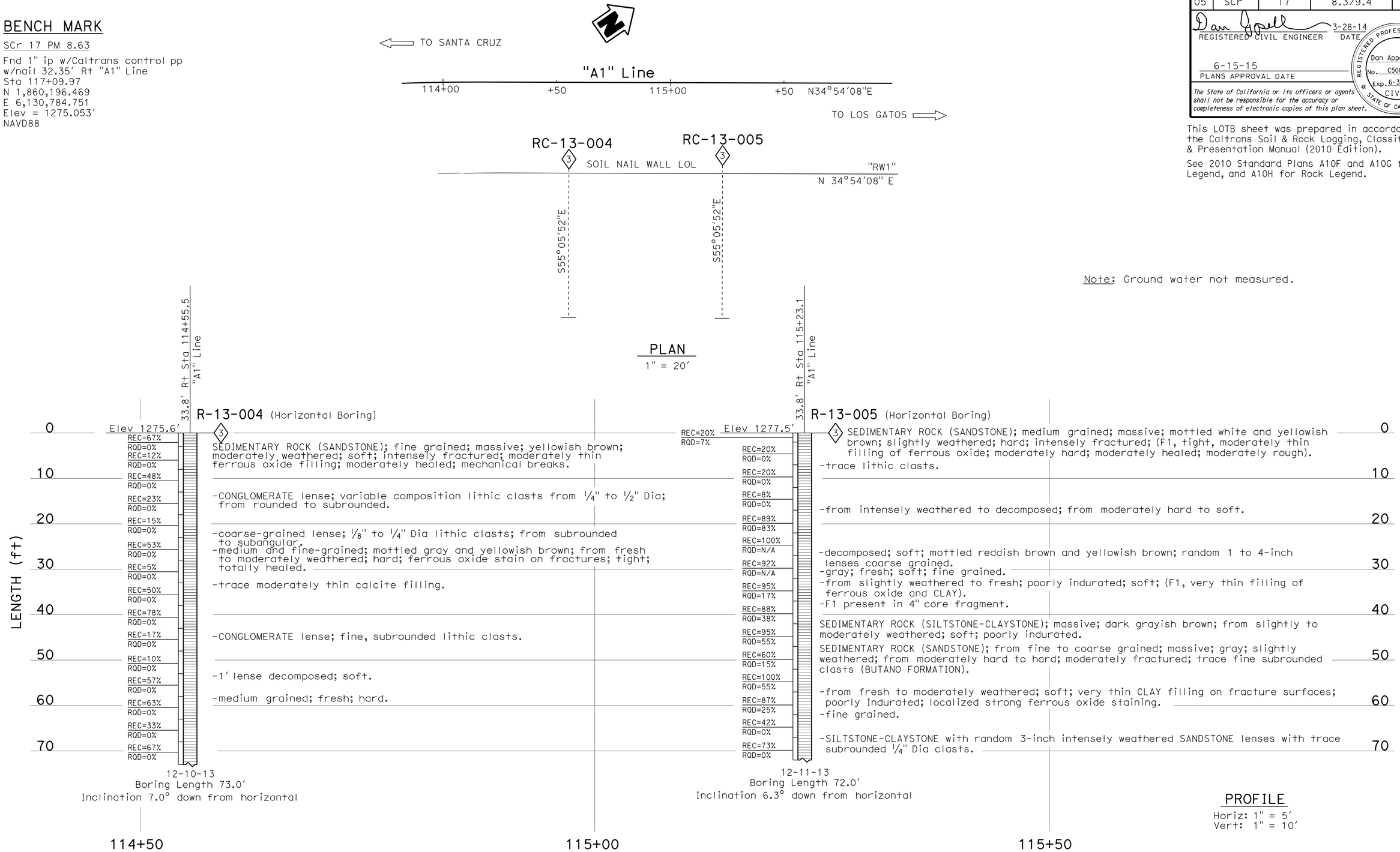

Note: Ground water not measured.

PROFILE
Horiz: 1" = 5′
Vert: 1" = 10′

ENGINEERING SERVICES	MATERIALS AND GEOTECHNICAL SERVICES	STATE OF CALIFORNIA DEPARTMENT OF TRANSPORTATION	DIVISION OF ENGINEERING SERVICES STRUCTURE DESIGN DESIGN BRANCH 17	BRIDGE NO. 36E0040 POST MILE 9.4/10.1	SUGARLOAF ROAD SOIL NAIL WALL LOG OF TEST BORINGS
FUNCTIONAL SUPERVISOR NAME: M. Finegan	DRAWN BY: I.G-Remmen CHECKED BY: J. Scardine	FIELD INVESTIGATION BY: M. Jurasius/D. Appelbaum			

OGS CIVIL LOG OF TEST BORINGS SHEET — ORIGINAL SCALE IN INCHES FOR REDUCED PLANS 0 1 2 3

UNIT: 3643
PROJECT NUMBER & PHASE: 05000202441 — CONTRACT NO.: 05-0T9801

DISREGARD PRINTS BEARING EARLIER REVISION DATES → REVISION DATES 01-22-14 03-11-14 03-18-14 03-24-14 — SHEET 10 OF 10

FILE => 36e0044-z-1tb01.dgn

USERNAME => s115755 DATE PLOTTED => 25-JUN-2015 TIME PLOTTED => 10:53