ACHSNHP-Q101(298)E

Dist	COUNTY	ROUTE	POST MILES TOTAL PROJECT	SHEET No.	TOTAL SHEETS
05	Mon	101	45.8/49.8	1	40

STATE OF CALIFORNIA

DEPARTMENT OF TRANSPORTATION

PROJECT PLANS FOR CONSTRUCTION ON

STATE HIGHWAY

IN MONTEREY COUNTY NEAR KING CITY FROM CENTRAL AVENUE TO LAGOMARSINO AVENUE

TO BE SUPPLEMENTED BY STANDARD PLANS DATED 2010

INDEX OF PLANS

SHEET No.	DESCRIPTION
1	TITLE AND LOCATION MAP
2	CONSTRUCTION DETAILS
3-6	DRAINAGE PLANS, PROFILES, DETAILS AND QUANTITIES
7-19	UTILITY PLANS
20	CONSTRUCTION AREA SIGNS
21	SUMMARY OF QUANTITIES
22-34	LANDSCAPE LAYOUT PLANS
35	EROSION CONTROL PLANS
36-40	REVISED STANDARD PLANS

THE STANDARD PLANS LIST APPLICABLE TO THIS CONTRACT IS INCLUDED IN THE NOTICE TO BIDDERS AND SPECIAL PROVISIONS BOOK.

LOCATION MAP

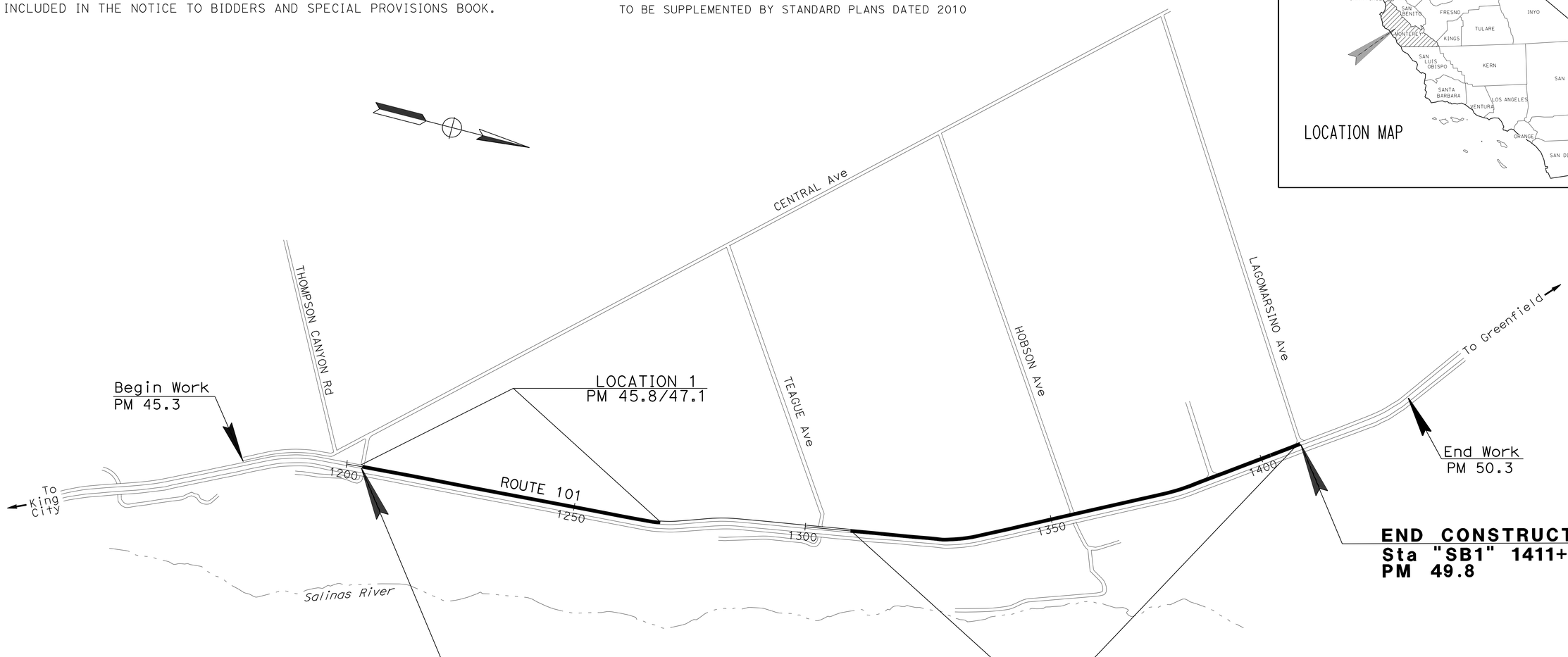

NO SCALE

LICENSED LANDSCAPE ARCHITECT

March 7, 2016

PLANS APPROVAL DATE

LICENSED LANDSCAPE ARCHITECT SCOTT P. DOWLAN No. 4410 STATE OF CALIFORNIA Signature 9/30/16 Renewal Date 03/07/16 Date

THE STATE OF CALIFORNIA OR ITS OFFICERS OR AGENTS SHALL NOT BE RESPONSIBLE FOR THE ACCURACY OR COMPLETENESS OF SCANNED COPIES OF THIS PLAN SHEET.

THE CONTRACTOR SHALL POSSESS THE CLASS (OR CLASSES) OF LICENSE AS SPECIFIED IN THE "NOTICE TO BIDDERS."

CONTRACT No.	05-0T9904
PROJECT ID	0500020243

PROJECT MANAGER: DAVID RASMUSSEN

SENIOR LANDSCAPE ARCHITECT: DENNIS REEVES

LAST REVISION 03-7-16

DATE PLOTTED => 24-AUG-2016
TIME PLOTTED => 13:24

Dist	COUNTY	ROUTE	POST MILES TOTAL PROJECT	SHEET No.	TOTAL SHEETS
05	Mon	101	45.8/49.8	2	40

REGISTERED CIVIL ENGINEER 3-7-16 DATE

3-7-16
PLANS APPROVAL DATE

REGISTERED PROFESSIONAL ENGINEER P.F.VALADAO No. 63987 Exp. 9-30-16 CIVIL STATE OF CALIFORNIA

THE STATE OF CALIFORNIA OR ITS OFFICERS OR AGENTS SHALL NOT BE RESPONSIBLE FOR THE ACCURACY OR COMPLETENESS OF SCANNED COPIES OF THIS PLAN SHEET.

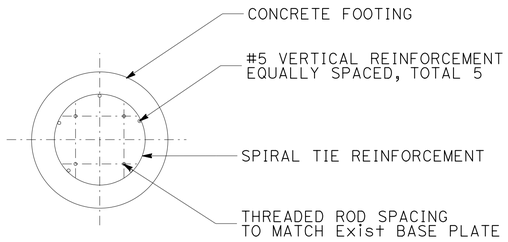

PLAN

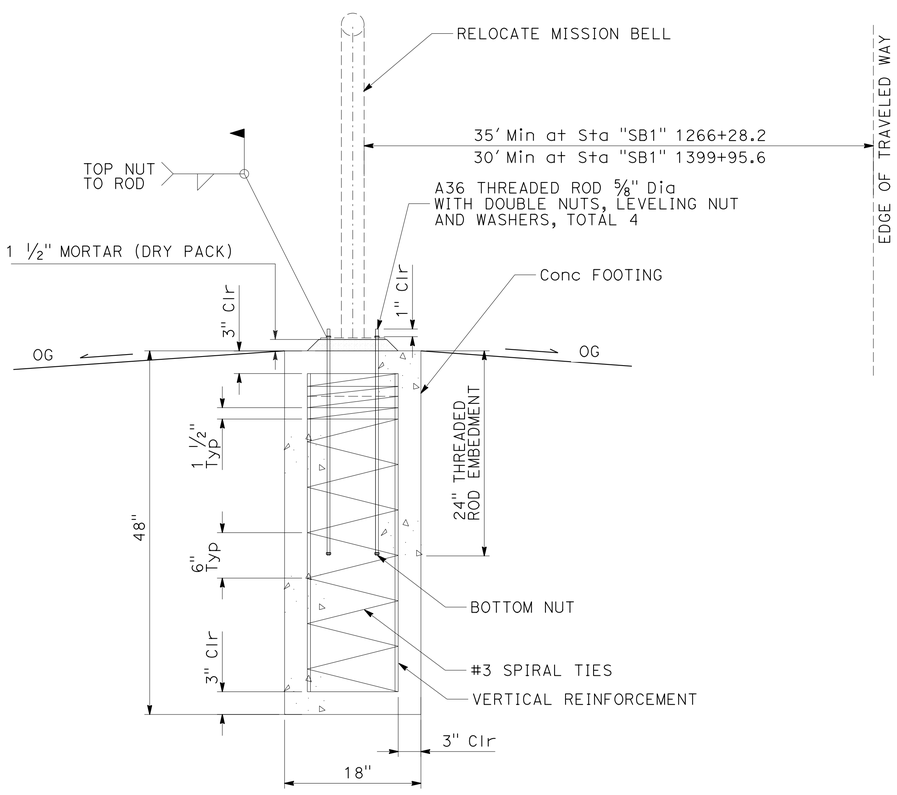

SECTION

RELOCATE MISSION BELL

"SB1" 1266+28.2 AND "SB1" 1399+95.6

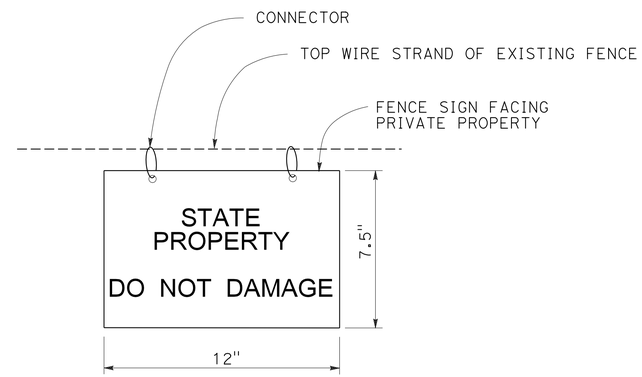

FENCE SIGN

CONSTRUCTION DETAILS

NO SCALE **C-1**

STATE OF CALIFORNIA - DEPARTMENT OF TRANSPORTATION
Caltrans DESIGN

FUNCTIONAL SUPERVISOR: CLAUDIA ESPINO
CALCULATED-DESIGNED BY: PAUL VALADAO
CHECKED BY: SCOTT DOWLAN
REVISED BY
DATE REVISED

LAST REVISION 03-07-16 | DATE PLOTTED => 19-AUG-2016 | TIME PLOTTED => 13:16

Dist	COUNTY	ROUTE	POST MILES TOTAL PROJECT	SHEET No.	TOTAL SHEETS
05	Mon	101	45.8/49.8	3	40

REGISTERED CIVIL ENGINEER 3-7-16 DATE

3-7-16
PLANS APPROVAL DATE

REGISTERED PROFESSIONAL ENGINEER JAMES L. MILLS No. 47620 Exp. 12-31-17 CIVIL STATE OF CALIFORNIA

THE STATE OF CALIFORNIA OR ITS OFFICERS OR AGENTS SHALL NOT BE RESPONSIBLE FOR THE ACCURACY OR COMPLETENESS OF SCANNED COPIES OF THIS PLAN SHEET.

NOTE:

1. ALL DRAINAGE STRUCTURES ARE RADIAL TO THE REFERENCED ALIGNMENT UNLESS OTHERWISE SHOWN.

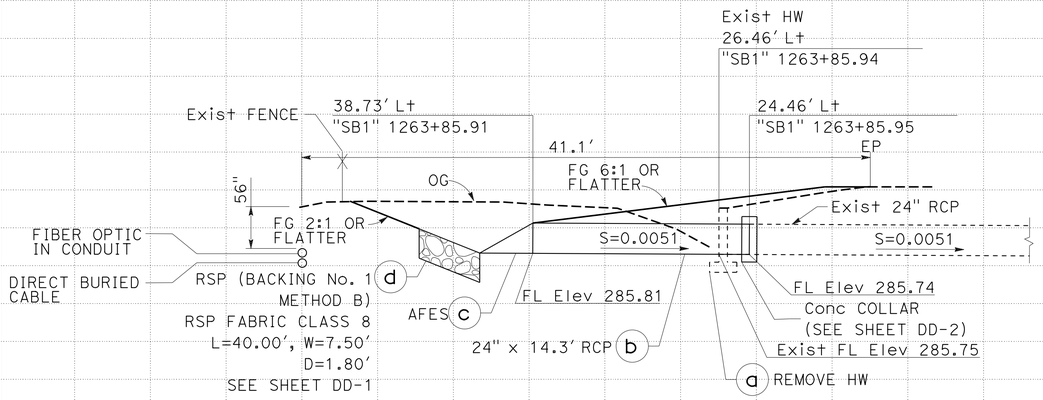

DRAINAGE SYSTEM No. 1

"SB1" 1263+85.9

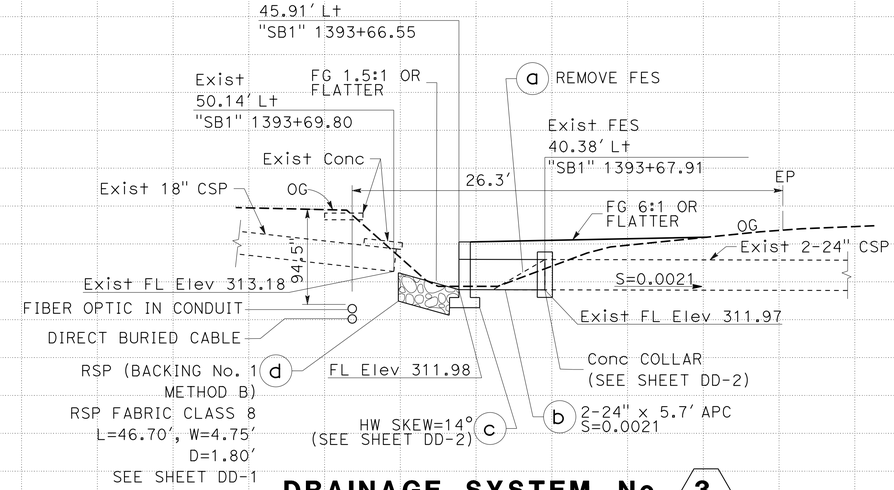

DRAINAGE SYSTEM No. 3

"SB1" 1393+67.7

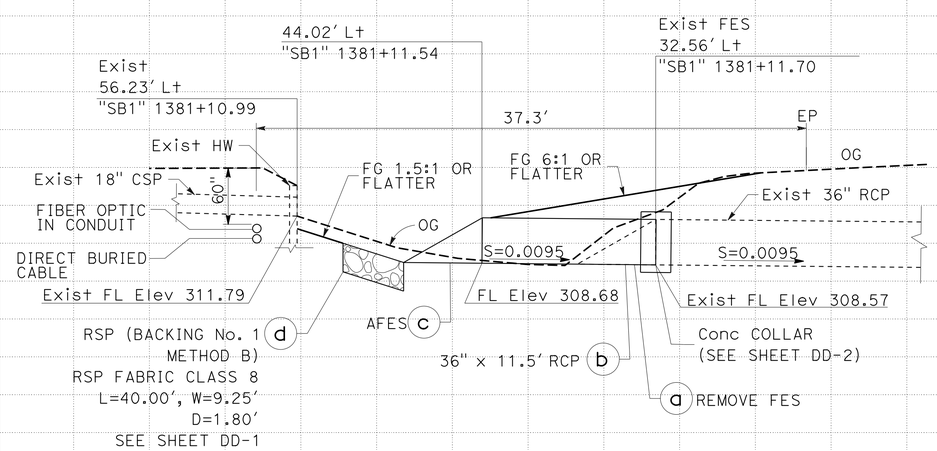

DRAINAGE SYSTEM No. 2

"SB1" 1381+11.7

DRAINAGE PROFILES

SCALE: Horiz 1" = 5'
Vert 1" = 5'

DP-1

STATION		TOTAL
CY	Exc	
	Emb	

STATE OF CALIFORNIA - DEPARTMENT OF TRANSPORTATION
06-HYDRAULICS
Caltrans

FUNCTIONAL SUPERVISOR: TOM FISHER
CALCULATED-DESIGNED BY: JIM MILLS
CHECKED BY: TOM FISHER
REVISED BY
DATE REVISED

LAST REVISION 03-07-16
DATE PLOTTED => 19-AUG-2016
TIME PLOTTED => 13:16

Dist	COUNTY	ROUTE	POST MILES TOTAL PROJECT	SHEET No.	TOTAL SHEETS
05	Mon	101	45.8/49.8	4	40

REGISTERED CIVIL ENGINEER 3-7-16 DATE

3-7-16
PLANS APPROVAL DATE

REGISTERED PROFESSIONAL ENGINEER JAMES L. MILLS No. 47620 Exp. 12-31-17 CIVIL STATE OF CALIFORNIA

THE STATE OF CALIFORNIA OR ITS OFFICERS OR AGENTS SHALL NOT BE RESPONSIBLE FOR THE ACCURACY OR COMPLETENESS OF SCANNED COPIES OF THIS PLAN SHEET.

LEGEND:

(#) POSITIVE LOCATION No. SEE UTILITY PLANS

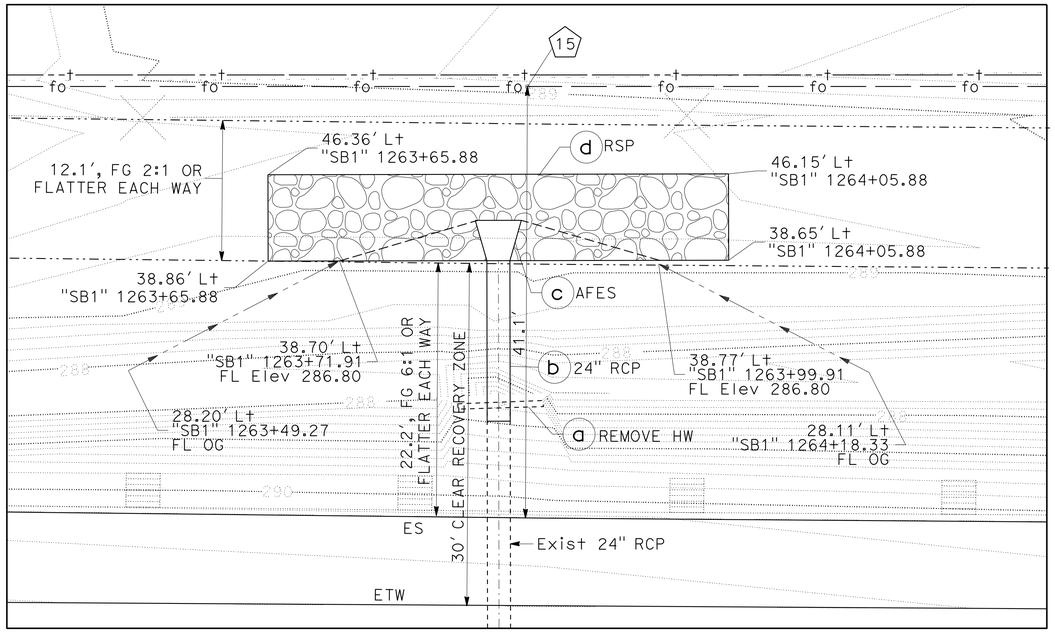

DRAINAGE SYSTEM No. 1

"SB1" 1263+85.9

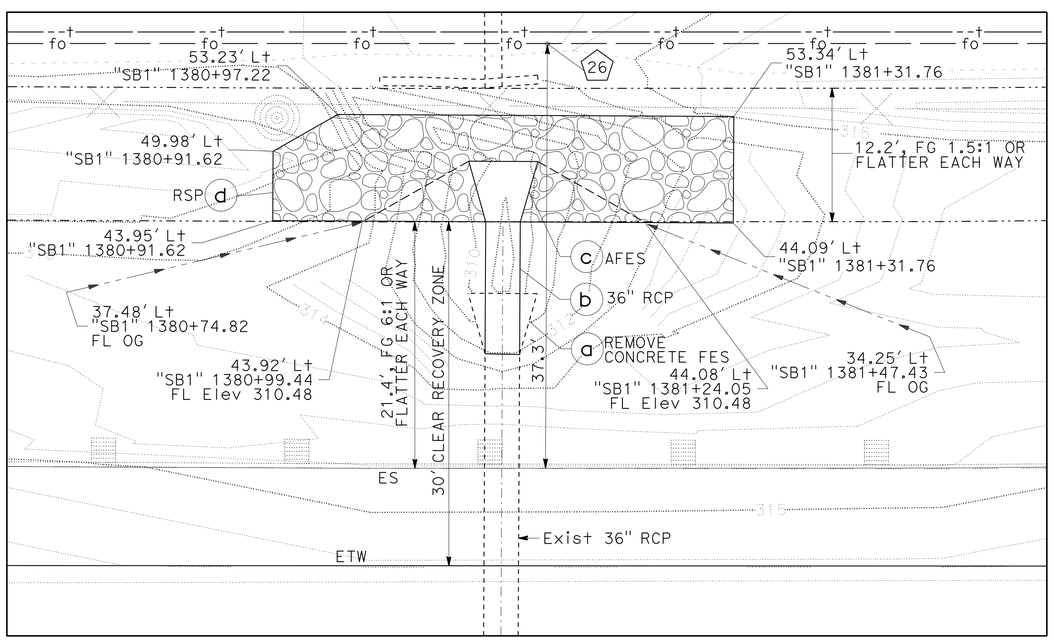

DRAINAGE SYSTEM No. 2

"SB1" 1381+11.7

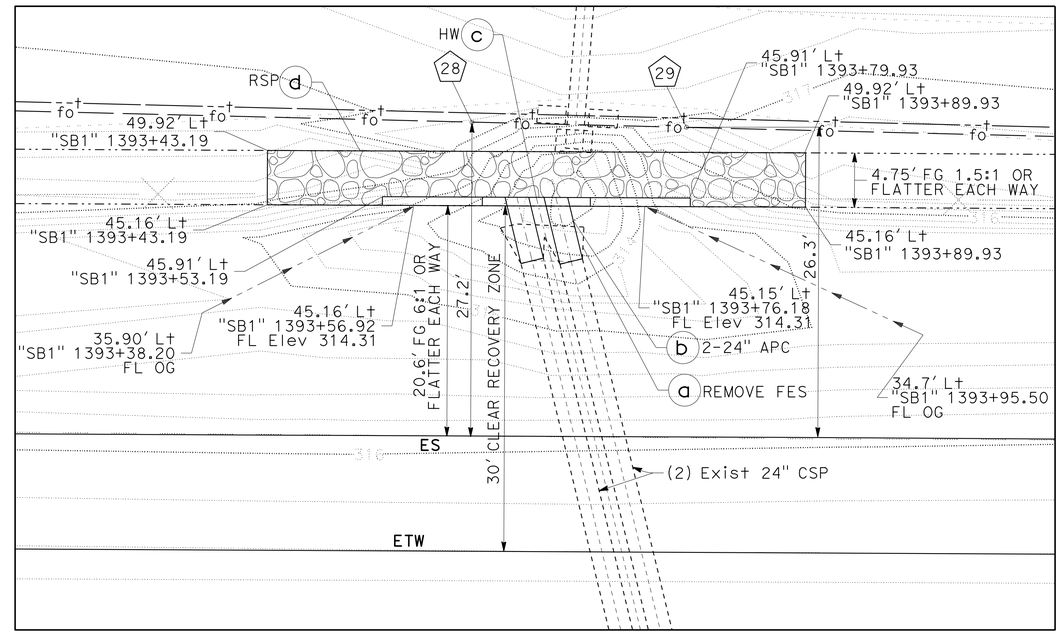

DRAINAGE SYSTEM No. 3

"SB1" 1393+67.7

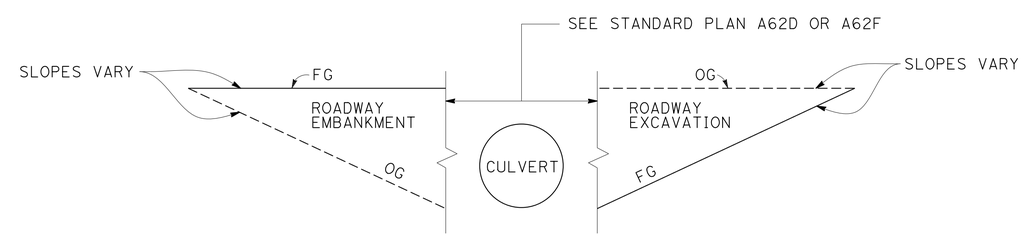

TYPICAL SECTION

DRAINAGE DETAILS

NO SCALE

DD-1

STATE OF CALIFORNIA - DEPARTMENT OF TRANSPORTATION
Caltrans
06-HYDRAULICS

FUNCTIONAL SUPERVISOR: TOM FISHER
CALCULATED-DESIGNED BY: JIM MILLS
CHECKED BY: TOM FISHER
REVISED BY / DATE REVISED

LAST REVISION 03-07-16
DATE PLOTTED => 19-AUG-2016
TIME PLOTTED => 13:16

Dist	COUNTY	ROUTE	POST MILES TOTAL PROJECT	SHEET No.	TOTAL SHEETS
05	Mon	101	45.8/49.8	5	40

REGISTERED CIVIL ENGINEER 3-7-16 DATE

3-7-16
PLANS APPROVAL DATE

REGISTERED PROFESSIONAL ENGINEER JAMES L. MILLS No. 47620 Exp. 12-31-17 CIVIL STATE OF CALIFORNIA

THE STATE OF CALIFORNIA OR ITS OFFICERS OR AGENTS SHALL NOT BE RESPONSIBLE FOR THE ACCURACY OR COMPLETENESS OF SCANNED COPIES OF THIS PLAN SHEET.

NOTES:

1. COLLAR TO BE USED WHEN A STANDARD JOINT CANNOT BE MADE DUE TO PIPES OF DIFFERENT SIZES OR MATERIALS, OR A CHANGE IN ALIGNMENT LESS THAN 10°, AS DIRECTED BY THE ENGINEER.
2. ALL REINFORCING STEEL #4 BARS. ALL VERTICAL AND HORIZONTAL TIE BARS 1'-0" MAXIMUM SPACING.

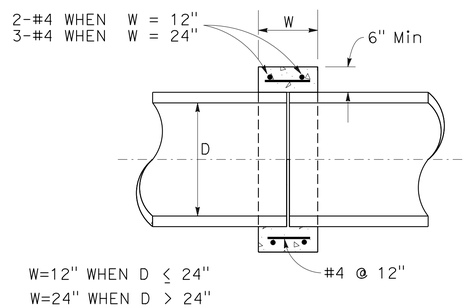

TYPICAL CONCRETE COLLAR
(SEE NOTE 1)

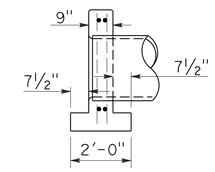

SECTION A-A

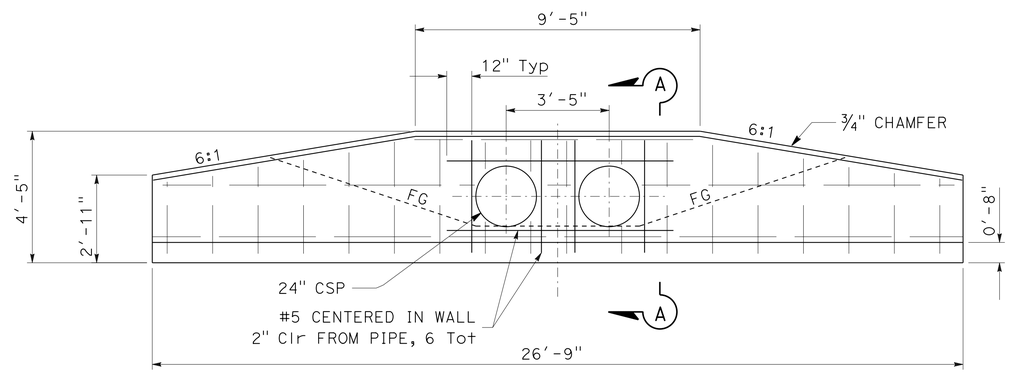

HEADWALL
(SEE NOTE 2)

DRAINAGE SYSTEM No. 3
"SB1" 1393+67.7

DRAINAGE DETAILS
NO SCALE
DD-2

STATE OF CALIFORNIA - DEPARTMENT OF TRANSPORTATION
Caltrans
06-HYDRAULICS

FUNCTIONAL SUPERVISOR: TOM FISHER
CALCULATED-DESIGNED BY: JIM MILLS
CHECKED BY: TOM FISHER
REVISED BY
DATE REVISED

LAST REVISION 03-07-16
DATE PLOTTED => 19-AUG-2016
TIME PLOTTED => 13:16

Dist	COUNTY	ROUTE	POST MILES TOTAL PROJECT	SHEET No.	TOTAL SHEETS
05	Mon	101	45.8/49.8	6	40

REGISTERED CIVIL ENGINEER 3-7-16 DATE

3-7-16
PLANS APPROVAL DATE

REGISTERED PROFESSIONAL ENGINEER JAMES L. MILLS No. 47620 Exp. 12-31-17 CIVIL STATE OF CALIFORNIA

THE STATE OF CALIFORNIA OR ITS OFFICERS OR AGENTS SHALL NOT BE RESPONSIBLE FOR THE ACCURACY OR COMPLETENESS OF SCANNED COPIES OF THIS PLAN SHEET.

ALLOWABLE PIPE MATERIAL AND PROTECTION

DESIGNATION	REINFORCED CONCRETE PIPE	CORRUGATED STEEL PIPE		CORRUGATED STEEL PIPE WITH POLYMERIC COATING		STEEL SPIRAL RIB PIPE		STEEL SPIRAL RIB PIPE WITH POLYMERIC COATING		PLASTIC-HDPE CORRUGATED-TYPE S
	SIZE	SIZE	Min THICKNESS	SIZE	Min THICKNESS	SIZE	Min THICKNESS	SIZE	Min THICKNESS	SIZE
24" APC	24"	24"	0.109"	24"	0.640"	24"	0.109"	24"	0.064"	24"

ALTERNATIVE FLARED END SECTIONS

ALLOWABLE MATERIAL
PRECAST CONCRETE
PREFABRICATED STEEL

DRAINAGE QUANTITIES

LANDSCAPE LAYOUT SHEET No.	DRAINAGE SYSTEM No.	DRAINAGE UNIT	PIPE JOINT TYPE	MAXIMUM COVER	REMOVE HEADWALL	REMOVE FLARED END SECTION	REMOVE CONCRETE FLARED END SECTION	REINFORCED CONCRETE PIPE 36"	REINFORCED CONCRETE PIPE 24"	ALTERNATIVE PIPE CULVERT 24"	ALTENATIVE FLARED END SECTION 36"	ALTENATIVE FLARED END SECTION 24"	ROCK SLOPE PROTECTION (150 lb, CLASS III, METHOD B)(CY)	ROCK SLOPE PROTECTION FABRIC (CLASS 8)	MINOR CONCRETE (MINOR STRUCTURE)	DESCRIPTION	STATION	LAYOUT PLAN SHEET No.	DRAINAGE SYSTEM No.	DRAINAGE UNIT
				FT	EA	EA	EA	LF	LF	LF	EA	EA	CY	SQYD	CY					
LL-5	1	a			1											REMOVE HEADWALL	"SB1" 1263+85.9	L-5	1	a
		b	S	1.6					14.3							24" ALTERNATIVE PIPE CULVERT				b
		c										1				24" ALTERNATIVE FLARED END SECTION				c
		d											19.3	52.3		RSP (BACKING #1) METHOD B				d
LL-11	2	a					1									REMOVE FLARED END SECTION	"SB1" 1381+11.7	L-13	2	a
		b	S	1.9				11.5								36" ALTERNATIVE PIPE CULVERT				b
		c									1					36" ALTERNATIVE FLARED END SECTION				c
		d											22.5	56.1		RSP (BACKING #1) METHOD B				d
LL-12	3	a				2										REMOVE FLARED END SECTION	"SB1" 1393+67.7	L-14	3	a
		b	S	1.3						11.4						2-24" ALTERNATIVE PIPE CULVERT				b
		c													3.6	HEADWALL				c
		d											13.5	37.6		RSP (BACKING #1) METHOD B				d
				TOTAL	1	2	1	11.5	14.3	11.4	1	1	55.3	146.0	3.6					

(N) - NOT A SEPARATE PAY ITEM, FOR INFORMATION ONLY

DRAINAGE QUANTITIES
DQ-1

REVISED BY | DATE REVISED
JIM MILLS | TOM FISHER
CALCULATED-DESIGNED BY | CHECKED BY
FUNCTIONAL SUPERVISOR: TOM FISHER

STATE OF CALIFORNIA - DEPARTMENT OF TRANSPORTATION
Caltrans
06 - HYDRAULICS

LAST REVISION 03-07-16 | DATE PLOTTED => 23-AUG-2016 | TIME PLOTTED => 11:11

Dist	COUNTY	ROUTE	POST MILES TOTAL PROJECT	SHEET No.	TOTAL SHEETS
05	Mon	101	45.8/49.8	7	40

REGISTERED CIVIL ENGINEER 3-7-16 DATE

3-7-16
PLANS APPROVAL DATE

REGISTERED PROFESSIONAL ENGINEER P.F.VALADAO No. 63987 Exp. 9-30-16 CIVIL STATE OF CALIFORNIA

THE STATE OF CALIFORNIA OR ITS OFFICERS OR AGENTS SHALL NOT BE RESPONSIBLE FOR THE ACCURACY OR COMPLETENESS OF SCANNED COPIES OF THIS PLAN SHEET.

NOTES:

1. FOR ACCURATE RIGHT OF WAY DATA, CONTACT RIGHT OF WAY ENGINEERING AT THE DISTRICT OFFICE.
2. EXACT LOCATION OF UTILITIES ARE UNKNOWN.
3. UTILITY OWNERSHIP:
   TELEPHONE - AMERICAN TELPHONE AND TELEGRAPH (AT&T)
   DIRECT BURIED CABLE - AMERICAN TELPHONE AND TELEGRAPH (AT&T)
   FIBER OPTIC IN CONDUIT - AMERICAN TELPHONE AND TELEGRAPH (AT&T)
   ELECTRICAL - PACIFIC GAS & ELECTRIC COMPANY (PG&E)

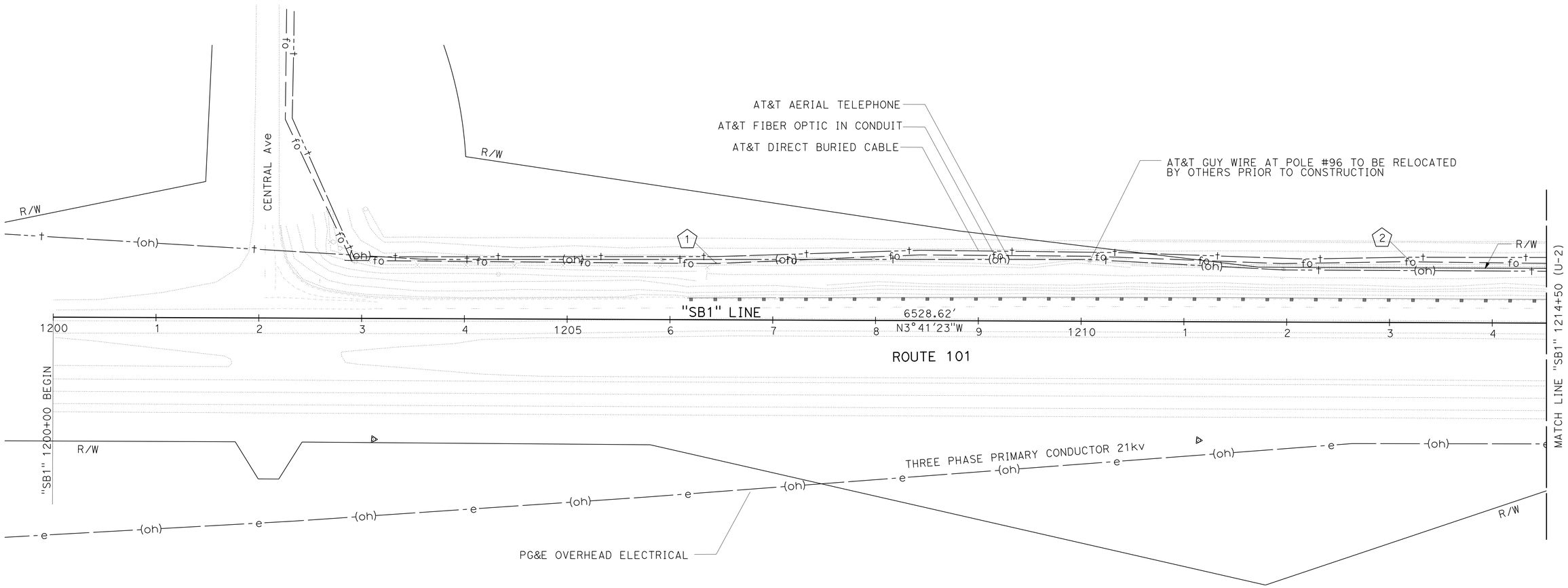

POSITIVE LOCATION INFORMATION

No. ⬠	DESCRIPTION	LOCATION	ELEVATION		METHOD
			OG	TOP OF PIPE	
1	FIBER OPTIC/BURIED CABLE/PVC CONDUIT	57.1' Lt "SB1" 1206+44	334.7	330.9	POTHOLING
2	FIBER OPTIC/BURIED CABLE/PVC CONDUIT	59.7' Lt "SB1" 1213+20	327.8	323.7	POTHOLING

THIS PLAN TO BE USED FOR UTILITY INFORMATION ONLY

UTILITY PLAN
LOCATION 1

SCALE: 1"=50' **U-1**

STATE OF CALIFORNIA - DEPARTMENT OF TRANSPORTATION
Caltrans® DESIGN
FUNCTIONAL SUPERVISOR: CLAUDIA ESPINO
CALCULATED-DESIGNED BY: PAUL VALADAO
CHECKED BY: SCOTT DOWLAN
REVISED BY
DATE REVISED

LAST REVISION 03-07-16
DATE PLOTTED => 19-AUG-2016
TIME PLOTTED => 13:16

Dist	COUNTY	ROUTE	POST MILES TOTAL PROJECT	SHEET No.	TOTAL SHEETS
05	Mon	101	45.8/49.8	8	40

REGISTERED CIVIL ENGINEER 3-7-16 DATE

3-7-16
PLANS APPROVAL DATE

REGISTERED PROFESSIONAL ENGINEER P.F.VALADAO No. 63987 Exp. 9-30-16 CIVIL STATE OF CALIFORNIA

THE STATE OF CALIFORNIA OR ITS OFFICERS OR AGENTS SHALL NOT BE RESPONSIBLE FOR THE ACCURACY OR COMPLETENESS OF SCANNED COPIES OF THIS PLAN SHEET.

NOTE:

1. FOR ACCURATE RIGHT OF WAY DATA, CONTACT RIGHT OF WAY ENGINEERING AT THE DISTRICT OFFICE.

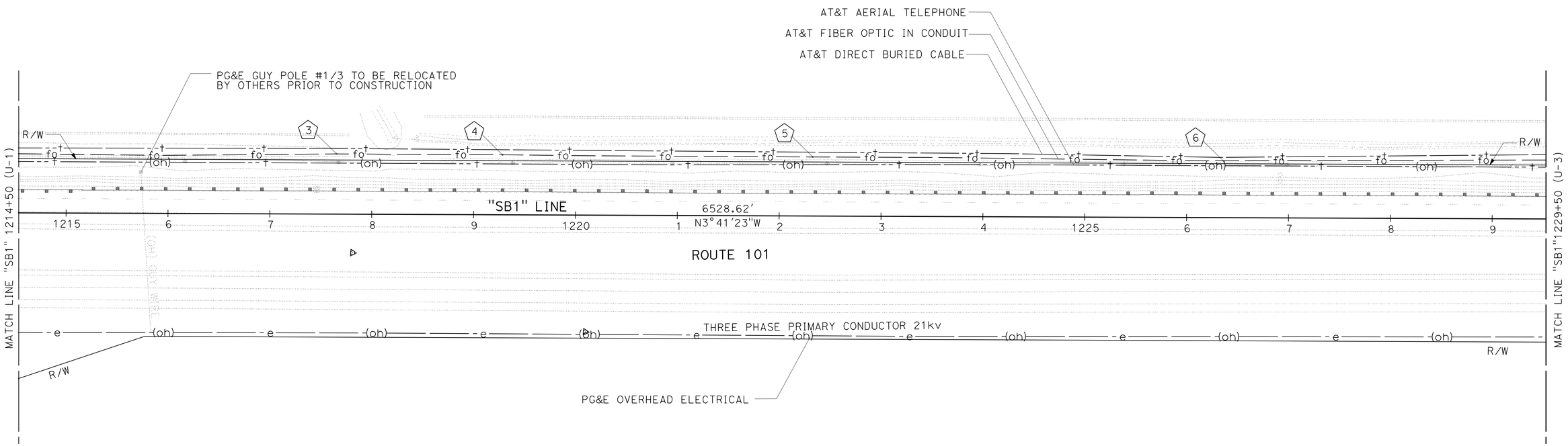

POSITIVE LOCATION INFORMATION

No. ⬠	DESCRIPTION	LOCATION	ELEVATION		METHOD
			OG	TOP OF PIPE	
3	FIBER OPTIC/BURIED CABLE/PVC CONDUIT	59.4' L+ "SB1" 1217+65	324.3	319.7	POTHOLING
4	FIBER OPTIC/BURIED CABLE/PVC CONDUIT	58.9' L+ "SB1" 1219+28	322.1	318.6	POTHOLING
5	FIBER OPTIC/BURIED CABLE/PVC CONDUIT	57.8' L+ "SB1" 1222+33	319.5	316.0	POTHOLING
6	FIBER OPTIC/BURIED CABLE/PVC CONDUIT	57.4' L+ "SB1" 1226+36	315.1	311.3	POTHOLING

THIS PLAN TO BE USED FOR UTILITY INFORMATION ONLY

UTILITY PLAN
LOCATION 1

SCALE: 1"=50' **U-2**

REVISED BY | DATE REVISED
PAUL VALADAO | SCOTT DOWLAN
CALCULATED-DESIGNED BY | CHECKED BY
FUNCTIONAL SUPERVISOR | CLAUDIA ESPINO
STATE OF CALIFORNIA - DEPARTMENT OF TRANSPORTATION
Caltrans® DESIGN

LAST REVISION 03-07-16 | DATE PLOTTED => 19-AUG-2016 | TIME PLOTTED => 13:16

Dist	COUNTY	ROUTE	POST MILES TOTAL PROJECT	SHEET No.	TOTAL SHEETS
05	Mon	101	45.8/49.8	9	40

REGISTERED CIVIL ENGINEER 3-7-16 DATE

3-7-16
PLANS APPROVAL DATE

REGISTERED PROFESSIONAL ENGINEER P.F.VALADAO No. 63987 Exp. 9-30-16 CIVIL STATE OF CALIFORNIA

THE STATE OF CALIFORNIA OR ITS OFFICERS OR AGENTS SHALL NOT BE RESPONSIBLE FOR THE ACCURACY OR COMPLETENESS OF SCANNED COPIES OF THIS PLAN SHEET.

NOTE:

1. FOR ACCURATE RIGHT OF WAY DATA, CONTACT RIGHT OF WAY ENGINEERING AT THE DISTRICT OFFICE.

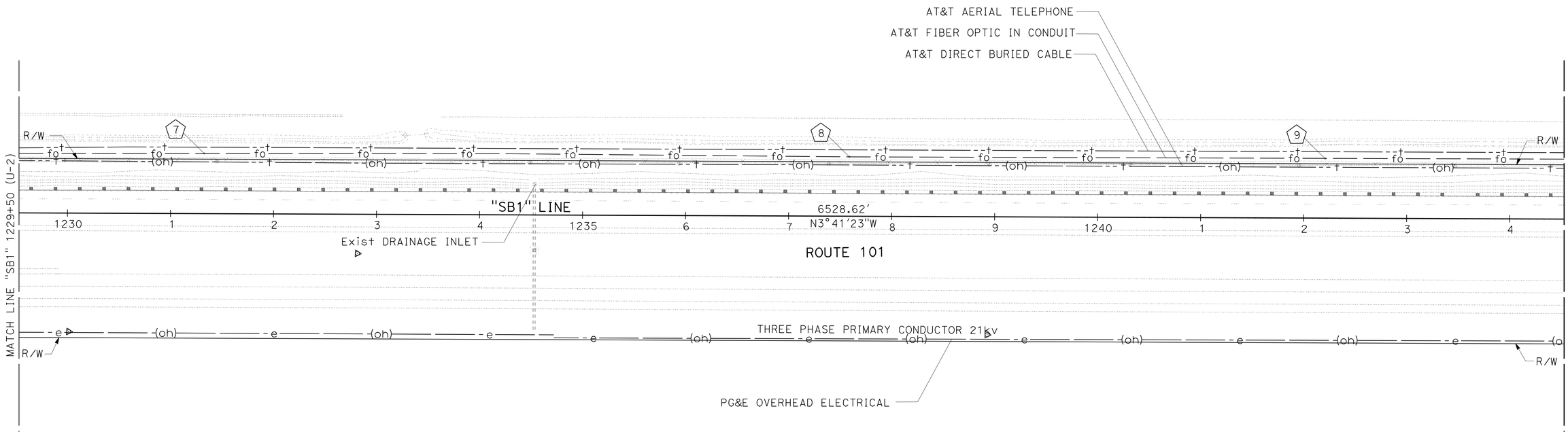

POSITIVE LOCATION INFORMATION

No. ⬠	DESCRIPTION	LOCATION	ELEVATION		METHOD
			OG	TOP OF PIPE	
7	FIBER OPTIC/BURIED CABLE/PVC CONDUIT	58.2' Lt "SB1" 1231+33	309.7	305.6	POTHOLING
8	FIBER OPTIC/BURIED CABLE/PVC CONDUIT	57.7' Lt "SB1" 1237+59	303.0	299.6	POTHOLING
9	FIBER OPTIC/BURIED CABLE/PVC CONDUIT	57.5' Lt "SB1" 1242+21	299.9	296.3	POTHOLING

THIS PLAN TO BE USED FOR UTILITY INFORMATION ONLY

UTILITY PLAN
LOCATION 1

SCALE: 1"=50' **U-3**

STATE OF CALIFORNIA - DEPARTMENT OF TRANSPORTATION
Caltrans® DESIGN

FUNCTIONAL SUPERVISOR: CLAUDIA ESPINO
CALCULATED-DESIGNED BY: PAUL VALADAO
CHECKED BY: SCOTT DOWLAN
REVISED BY
DATE REVISED

LAST REVISION 03-07-16
DATE PLOTTED => 19-AUG-2016
TIME PLOTTED => 13:16

Dist	COUNTY	ROUTE	POST MILES TOTAL PROJECT	SHEET No.	TOTAL SHEETS
05	Mon	101	45.8/49.8	10	40

REGISTERED CIVIL ENGINEER 3-7-16 DATE

3-7-16
PLANS APPROVAL DATE

REGISTERED PROFESSIONAL ENGINEER P.F.VALADAO No. 63987 Exp. 9-30-16 CIVIL STATE OF CALIFORNIA

THE STATE OF CALIFORNIA OR ITS OFFICERS OR AGENTS SHALL NOT BE RESPONSIBLE FOR THE ACCURACY OR COMPLETENESS OF SCANNED COPIES OF THIS PLAN SHEET.

NOTE:

1. FOR ACCURATE RIGHT OF WAY DATA, CONTACT RIGHT OF WAY ENGINEERING AT THE DISTRICT OFFICE.

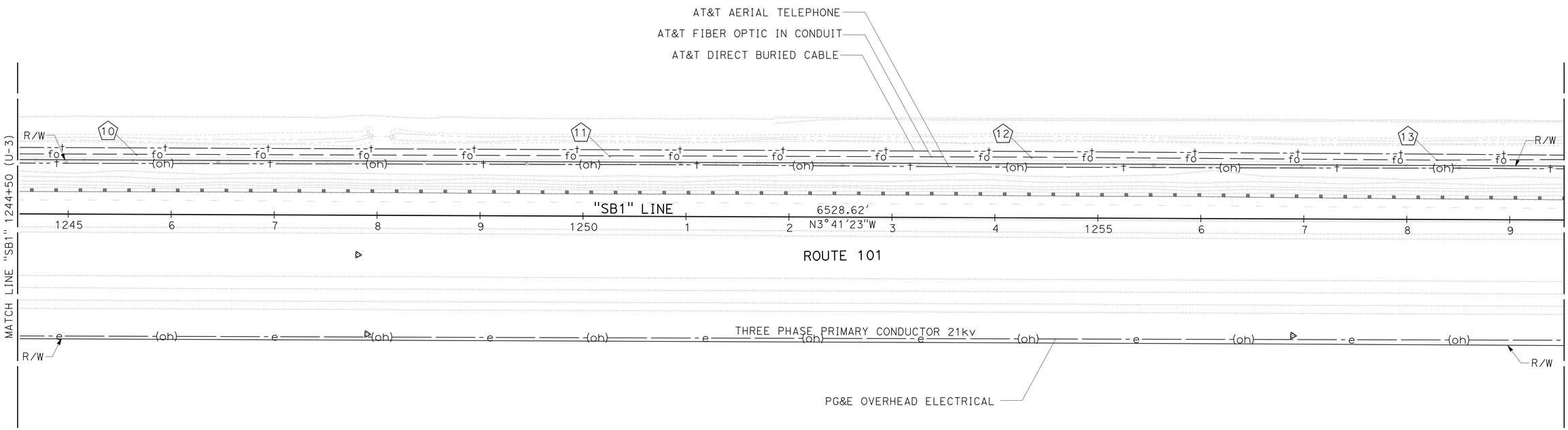

POSITIVE LOCATION INFORMATION

No. ⬠	DESCRIPTION	LOCATION	ELEVATION		METHOD
			OG	TOP OF PIPE	
10	FIBER OPTIC/BURIED CABLE/PVC CONDUIT	58.3' L+ "SB1" 1245+67	297.9	294.15	POTHOLING
11	FIBER OPTIC/BURIED CABLE/PVC CONDUIT	57.4' L+ "SB1" 1250+26	294.8	290.5	POTHOLING
12	FIBER OPTIC/BURIED CABLE/PVC CONDUIT	58.7' L+ "SB1" 1254+36	292.8	288.3	POTHOLING
13	FIBER OPTIC/BURIED CABLE/PVC CONDUIT	58.0' L+ "SB1" 1258+29	291.2	286.7	POTHOLING

THIS PLAN TO BE USED FOR UTILITY INFORMATION ONLY

UTILITY PLAN
LOCATION 1

SCALE: 1"=50' **U-4**

STATE OF CALIFORNIA - DEPARTMENT OF TRANSPORTATION
Caltrans® DESIGN
FUNCTIONAL SUPERVISOR: CLAUDIA ESPINO
CALCULATED-DESIGNED BY: PAUL VALADAO
CHECKED BY: SCOTT DOWLAN
REVISED BY
DATE REVISED

LAST REVISION 03-07-16
DATE PLOTTED => 19-AUG-2016
TIME PLOTTED => 13:16

Dist	COUNTY	ROUTE	POST MILES TOTAL PROJECT	SHEET No.	TOTAL SHEETS
05	Mon	101	45.8/49.8	11	40

REGISTERED CIVIL ENGINEER 3-7-16 DATE

PLANS APPROVAL DATE 3-7-16

REGISTERED PROFESSIONAL ENGINEER P.F.VALADAO No. 63987 Exp. 9-30-16 CIVIL STATE OF CALIFORNIA

THE STATE OF CALIFORNIA OR ITS OFFICERS OR AGENTS SHALL NOT BE RESPONSIBLE FOR THE ACCURACY OR COMPLETENESS OF SCANNED COPIES OF THIS PLAN SHEET.

NOTE:

1. FOR ACCURATE RIGHT OF WAY DATA, CONTACT RIGHT OF WAY ENGINEERING AT THE DISTRICT OFFICE.

CURVE DATA

No. ⊕	R	Δ	T	L
1	2928′	15°25′10″	396.39′	787.98′

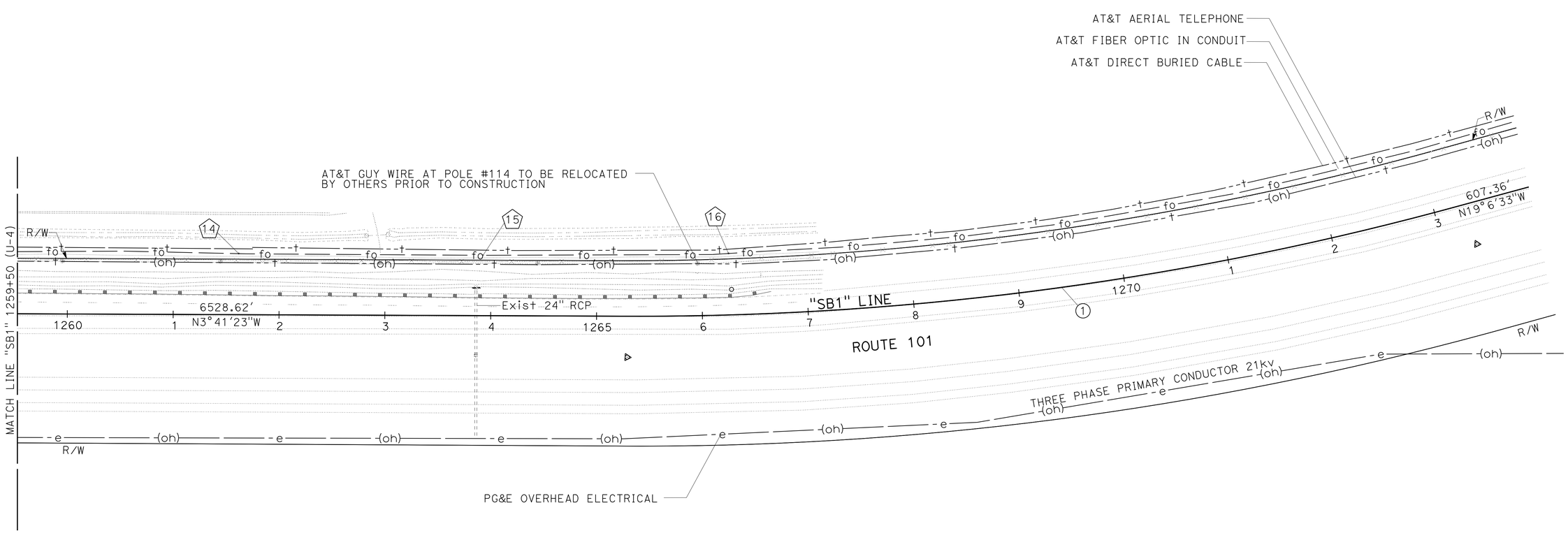

POSITIVE LOCATION INFORMATION

No. ⬠	DESCRIPTION	LOCATION	ELEVATION		METHOD
			OG	TOP OF PIPE	
14	FIBER OPTIC/BURIED CABLE/PVC CONDUIT	57.5′ L+ "SB1" 1261+61	290.1	285.4	POTHOLING
15	FIBER OPTIC/BURIED CABLE/PVC CONDUIT	57.4′ L+ "SB1" 1263+92	288.9	284.2	POTHOLING
16	FIBER OPTIC/BURIED CABLE/PVC CONDUIT	57.5′ L+ "SB1" 1266+26	288.1	283.6	POTHOLING

THIS PLAN TO BE USED FOR UTILITY INFORMATION ONLY

UTILITY PLAN
LOCATION 1

SCALE: 1"=50′ **U-5**

STATE OF CALIFORNIA - DEPARTMENT OF TRANSPORTATION
Caltrans DESIGN

FUNCTIONAL SUPERVISOR: CLAUDIA ESPINO
CALCULATED-DESIGNED BY: PAUL VALADAO
CHECKED BY: SCOTT DOWLAN
REVISED BY
DATE REVISED

LAST REVISION 03-07-16
DATE PLOTTED => 19-AUG-2016
TIME PLOTTED => 13:16

Dist	COUNTY	ROUTE	POST MILES TOTAL PROJECT	SHEET No.	TOTAL SHEETS
05	Mon	101	45.8/49.8	12	40

REGISTERED CIVIL ENGINEER 3-7-16 DATE

PLANS APPROVAL DATE 3-7-16

REGISTERED PROFESSIONAL ENGINEER P.F.VALADAO No. 63987 Exp. 9-30-16 CIVIL STATE OF CALIFORNIA

THE STATE OF CALIFORNIA OR ITS OFFICERS OR AGENTS SHALL NOT BE RESPONSIBLE FOR THE ACCURACY OR COMPLETENESS OF SCANNED COPIES OF THIS PLAN SHEET.

NOTE:

1. FOR ACCURATE RIGHT OF WAY DATA, CONTACT RIGHT OF WAY ENGINEERING AT THE DISTRICT OFFICE.

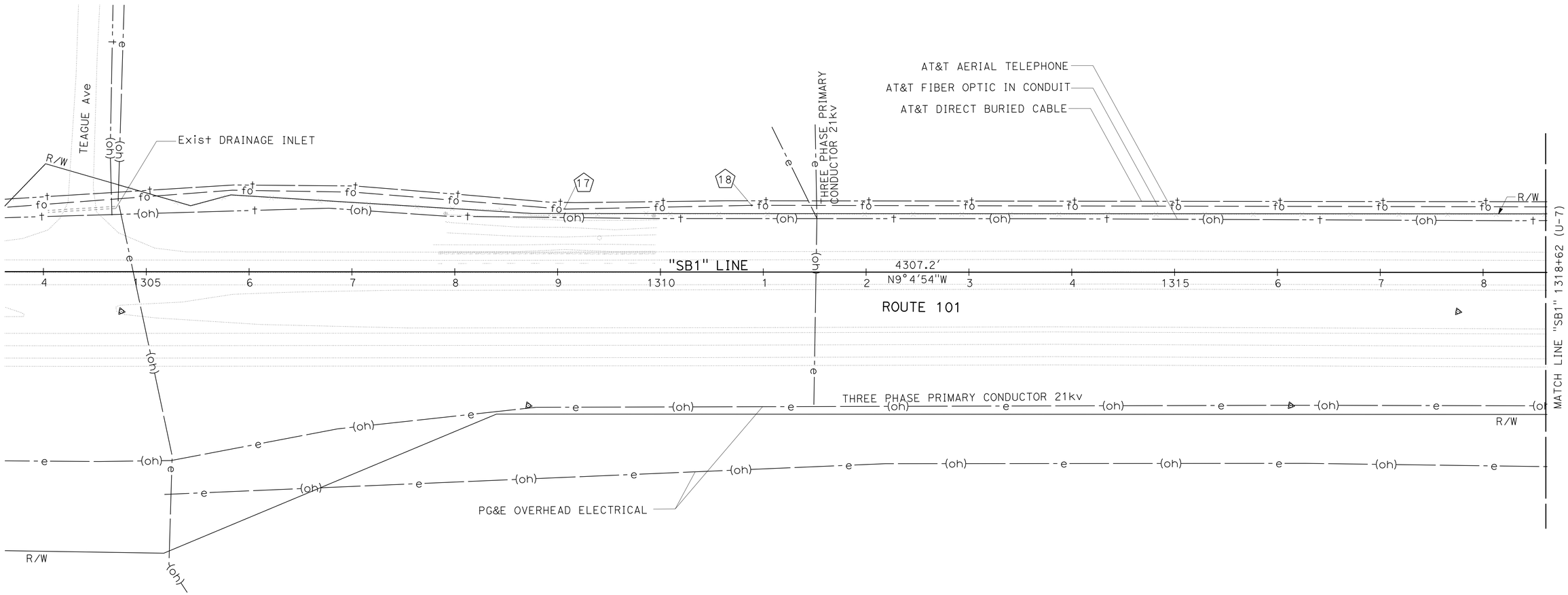

POSITIVE LOCATION INFORMATION

No. ⬠	DESCRIPTION	LOCATION	ELEVATION		METHOD
			OG	TOP OF PIPE	
17	FIBER OPTIC/BURIED CABLE/PVC CONDUIT	63.0' L+ "SB1" 1309+00	316.9	312.7	POTHOLING
18	FIBER OPTIC/BURIED CABLE/PVC CONDUIT	64.0' L+ "SB1" 1310+89	317.2	312.5	POTHOLING

THIS PLAN TO BE USED FOR UTILITY INFORMATION ONLY

UTILITY PLAN
LOCATION 2

SCALE: 1"=50' **U-6**

REVISED BY | DATE REVISED

PAUL VALADAO | SCOTT DOWLAN

CALCULATED-DESIGNED BY | CHECKED BY

FUNCTIONAL SUPERVISOR: CLAUDIA ESPINO

STATE OF CALIFORNIA - DEPARTMENT OF TRANSPORTATION

Caltrans® DESIGN

LAST REVISION 03-07-16 | DATE PLOTTED => 19-AUG-2016 | TIME PLOTTED => 13:16

Dist	COUNTY	ROUTE	POST MILES TOTAL PROJECT	SHEET No.	TOTAL SHEETS
05	Mon	101	45.8/49.8	13	40

REGISTERED CIVIL ENGINEER 3-7-16 DATE

3-7-16
PLANS APPROVAL DATE

REGISTERED PROFESSIONAL ENGINEER P.F.VALADAO No. 63987 Exp. 9-30-16 CIVIL STATE OF CALIFORNIA

THE STATE OF CALIFORNIA OR ITS OFFICERS OR AGENTS SHALL NOT BE RESPONSIBLE FOR THE ACCURACY OR COMPLETENESS OF SCANNED COPIES OF THIS PLAN SHEET.

NOTE:

1. FOR ACCURATE RIGHT OF WAY DATA, CONTACT RIGHT OF WAY ENGINEERING AT THE DISTRICT OFFICE.

CURVE DATA

No. ⊕	R	Δ	T	L
2	3028′	18°09′27″	483.85′	959.59′

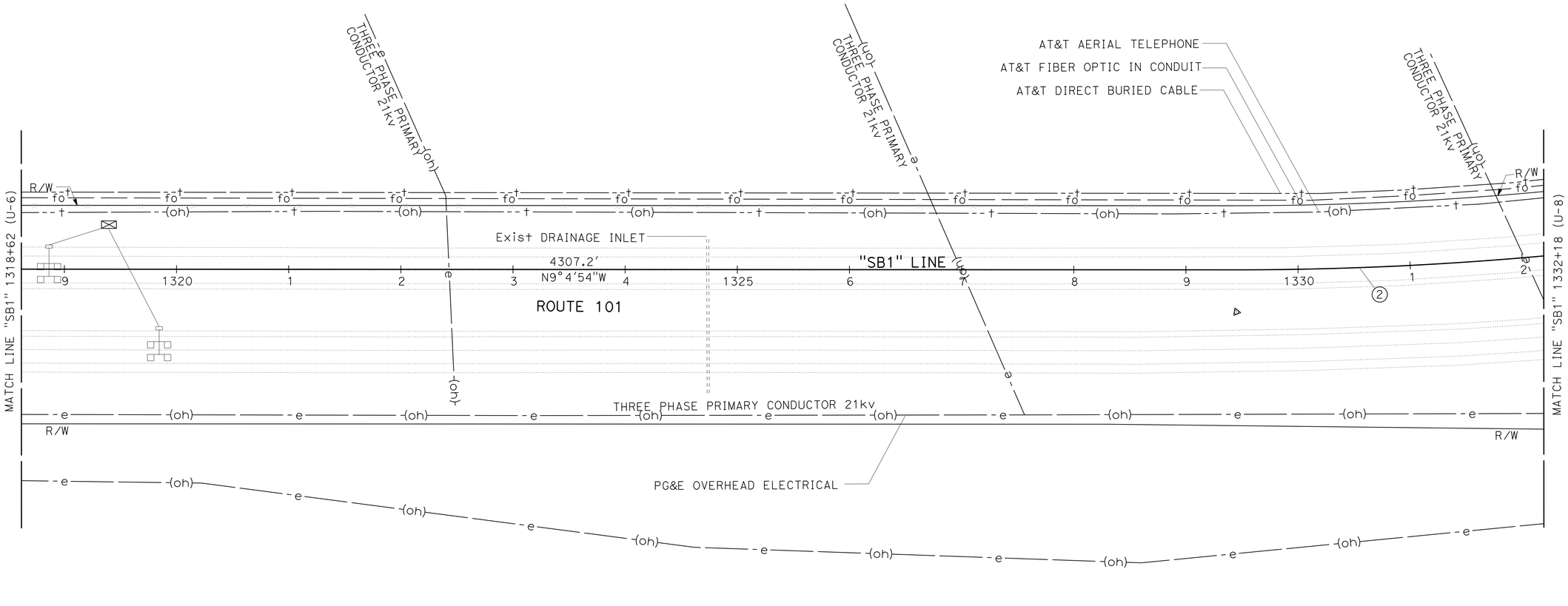

THIS PLAN TO BE USED FOR UTILITY INFORMATION ONLY

UTILITY PLAN
LOCATION 2

SCALE: 1"=50′ **U-7**

STATE OF CALIFORNIA - DEPARTMENT OF TRANSPORTATION
Caltrans DESIGN

FUNCTIONAL SUPERVISOR: CLAUDIA ESPINO
CALCULATED-DESIGNED BY: PAUL VALADAO
CHECKED BY: SCOTT DOWLAN
REVISED BY
DATE REVISED

LAST REVISION 03-07-16
DATE PLOTTED => 19-AUG-2016
TIME PLOTTED => 13:16

Dist	COUNTY	ROUTE	POST MILES TOTAL PROJECT	SHEET No.	TOTAL SHEETS
05	Mon	101	45.8/49.8	14	40

REGISTERED CIVIL ENGINEER 3-7-16 DATE

PLANS APPROVAL DATE 3-7-16

REGISTERED PROFESSIONAL ENGINEER P.F.VALADAO No. 63987 Exp. 9-30-16 CIVIL STATE OF CALIFORNIA

THE STATE OF CALIFORNIA OR ITS OFFICERS OR AGENTS SHALL NOT BE RESPONSIBLE FOR THE ACCURACY OR COMPLETENESS OF SCANNED COPIES OF THIS PLAN SHEET.

NOTE:

1. FOR ACCURATE RIGHT OF WAY DATA, CONTACT RIGHT OF WAY ENGINEERING AT THE DISTRICT OFFICE.

CURVE DATA

No. ⊕	R	Δ	T	L
2	3028′	18°09′27″	483.85′	959.59′

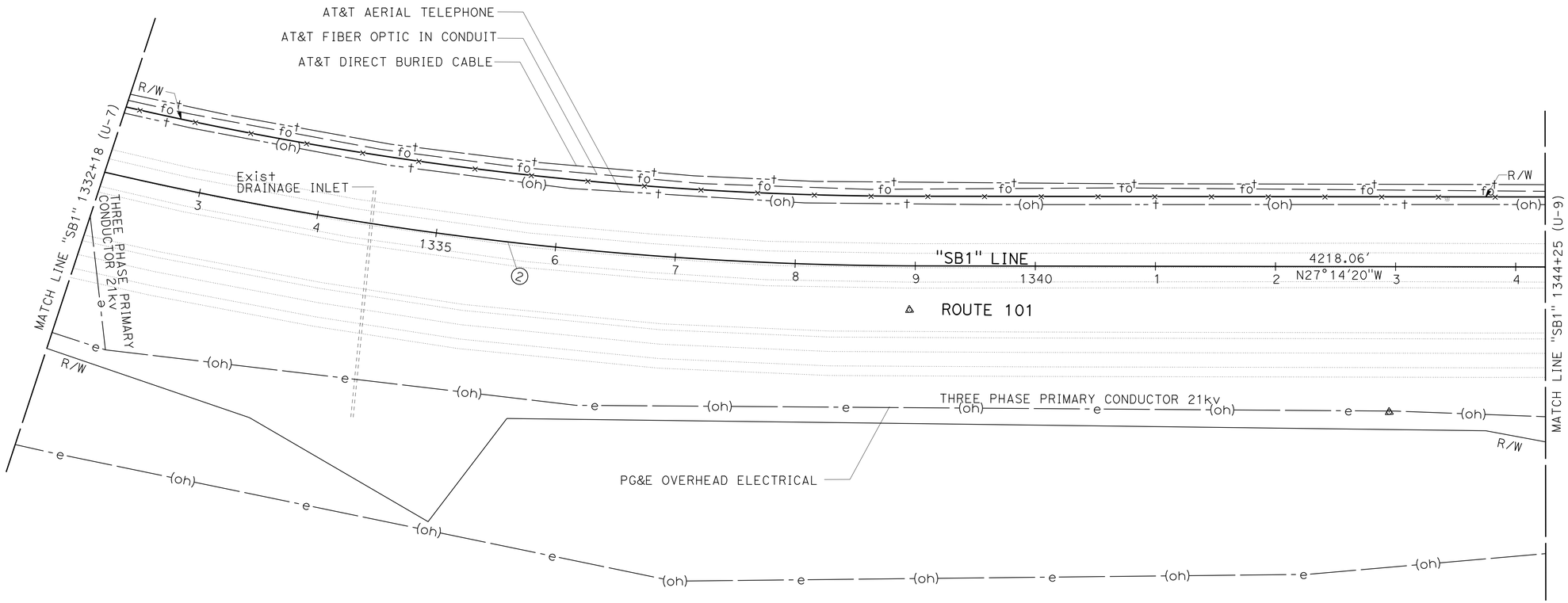

THIS PLAN TO BE USED FOR UTILITY INFORMATION ONLY

UTILITY PLAN
LOCATION 2

SCALE: 1"=50′ **U-8**

STATE OF CALIFORNIA - DEPARTMENT OF TRANSPORTATION
Caltrans® **DESIGN**

FUNCTIONAL SUPERVISOR: CLAUDIA ESPINO
CALCULATED-DESIGNED BY: PAUL VALADAO
CHECKED BY: SCOTT DOWLAN
REVISED BY
DATE REVISED

LAST REVISION 03-07-16 | DATE PLOTTED => 19-AUG-2016 | TIME PLOTTED => 13:16

Dist	COUNTY	ROUTE	POST MILES TOTAL PROJECT	SHEET No.	TOTAL SHEETS
05	Mon	101	45.8/49.8	15	40

REGISTERED CIVIL ENGINEER 3-7-16 DATE

PLANS APPROVAL DATE 3-7-16

REGISTERED PROFESSIONAL ENGINEER P.F.VALADAO No. 63987 Exp. 9-30-16 CIVIL STATE OF CALIFORNIA

THE STATE OF CALIFORNIA OR ITS OFFICERS OR AGENTS SHALL NOT BE RESPONSIBLE FOR THE ACCURACY OR COMPLETENESS OF SCANNED COPIES OF THIS PLAN SHEET.

NOTE:

1. FOR ACCURATE RIGHT OF WAY DATA, CONTACT RIGHT OF WAY ENGINEERING AT THE DISTRICT OFFICE.

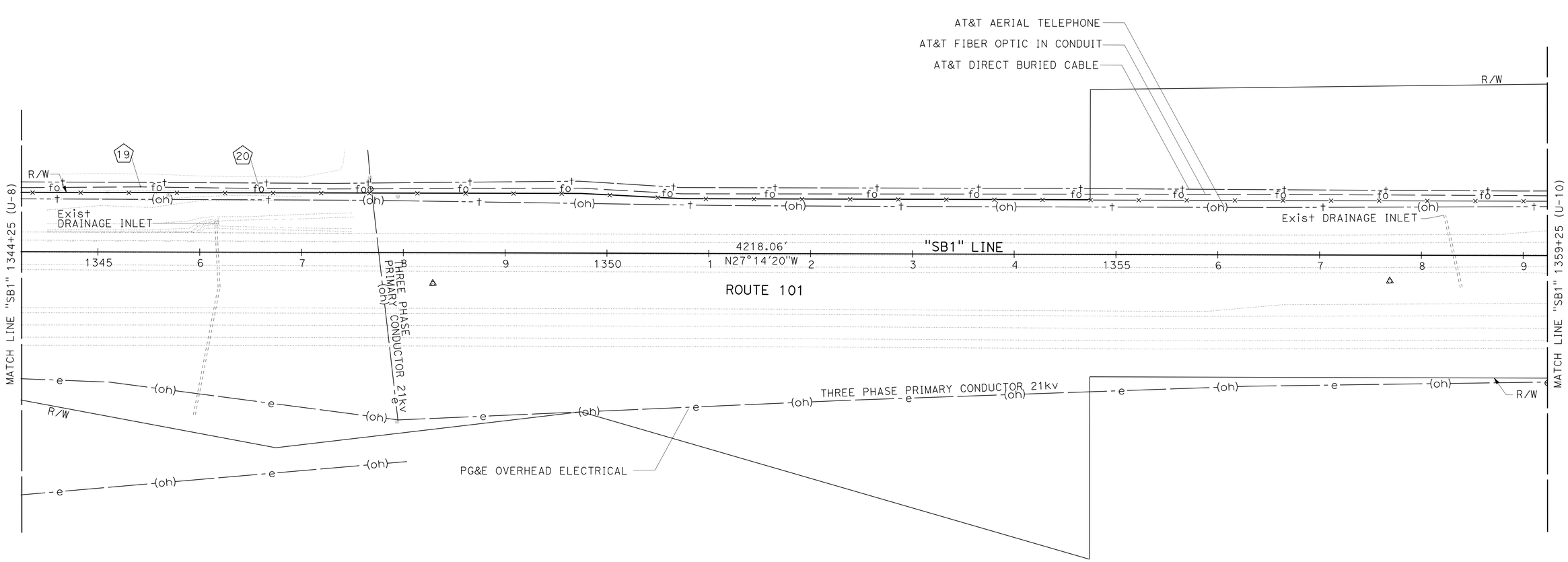

POSITIVE LOCATION INFORMATION

No. ⬠	DESCRIPTION	LOCATION	ELEVATION		METHOD
			OG	TOP OF PIPE	
19	FIBER OPTIC/BURIED CABLE/PVC CONDUIT	63.7' Lt "SB1" 1345+40	316.3	311.0	POTHOLING
20	FIBER OPTIC/BURIED CABLE/PVC CONDUIT	62.6' Lt "SB1" 1346+58	316.1	310.9	POTHOLING

THIS PLAN TO BE USED FOR UTILITY INFORMATION ONLY

UTILITY PLAN
LOCATION 2

SCALE: 1"=50' **U-9**

STATE OF CALIFORNIA - DEPARTMENT OF TRANSPORTATION
Caltrans DESIGN

FUNCTIONAL SUPERVISOR: CLAUDIA ESPINO
CALCULATED-DESIGNED BY: PAUL VALADAO
CHECKED BY: SCOTT DOWLAN
REVISED BY
DATE REVISED

LAST REVISION 03-07-16 DATE PLOTTED => 19-AUG-2016 TIME PLOTTED => 13:16

Dist	COUNTY	ROUTE	POST MILES TOTAL PROJECT	SHEET No.	TOTAL SHEETS
05	Mon	101	45.8/49.8	16	40

REGISTERED CIVIL ENGINEER 3-7-16 DATE

3-7-16
PLANS APPROVAL DATE

REGISTERED PROFESSIONAL ENGINEER P.F.VALADAO No. 63987 Exp. 9-30-16 CIVIL STATE OF CALIFORNIA

THE STATE OF CALIFORNIA OR ITS OFFICERS OR AGENTS SHALL NOT BE RESPONSIBLE FOR THE ACCURACY OR COMPLETENESS OF SCANNED COPIES OF THIS PLAN SHEET.

NOTE:

1. FOR ACCURATE RIGHT OF WAY DATA, CONTACT RIGHT OF WAY ENGINEERING AT THE DISTRICT OFFICE.

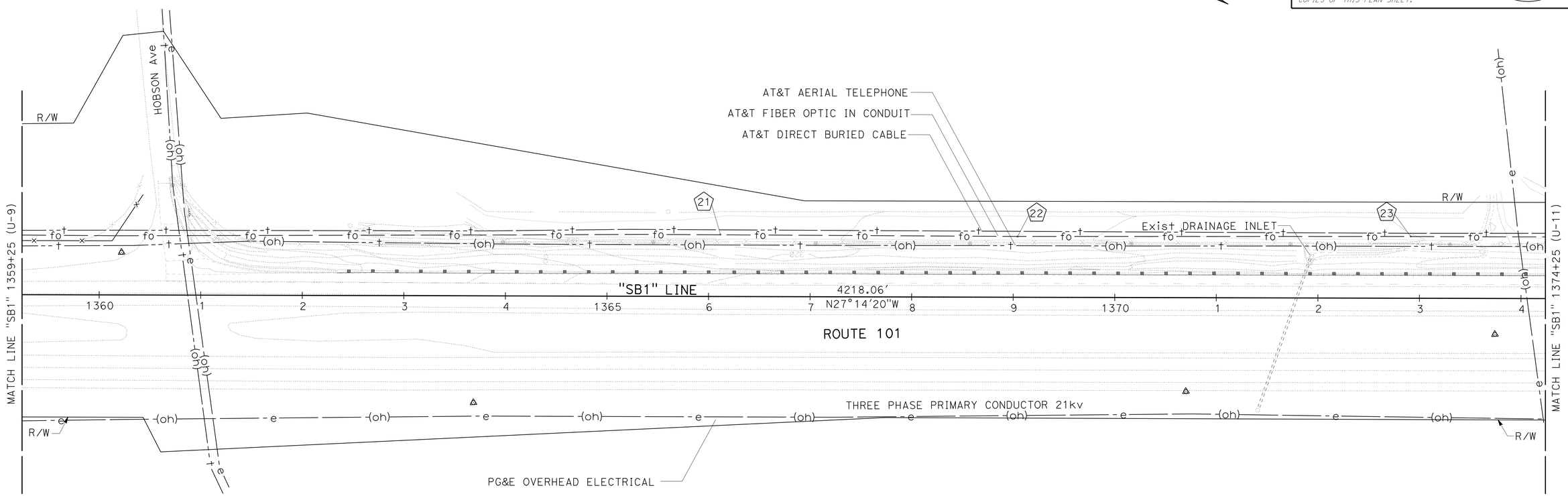

POSITIVE LOCATION INFORMATION

No. ⬠	DESCRIPTION	LOCATION	ELEVATION		METHOD
			OG	TOP OF PIPE	
21	FIBER OPTIC/BURIED CABLE/PVC CONDUIT	60.4' L+ "SB1" 1366+11	320.6	316.1	POTHOLING
22	FIBER OPTIC/BURIED CABLE/PVC CONDUIT	60.3' L+ "SB1" 1369+04	318.6	313.9	POTHOLING
23	FIBER OPTIC/BURIED CABLE/PVC CONDUIT	60.8' L+ "SB1" 1372+91	318.0	313.1	POTHOLING

THIS PLAN TO BE USED FOR UTILITY INFORMATION ONLY

UTILITY PLAN
LOCATION 2

SCALE: 1"=50' **U-10**

REVISED BY | DATE REVISED

PAUL VALADAO | SCOTT DOWLAN

CALCULATED-DESIGNED BY | CHECKED BY

FUNCTIONAL SUPERVISOR: CLAUDIA ESPINO

STATE OF CALIFORNIA - DEPARTMENT OF TRANSPORTATION

Caltrans® DESIGN

LAST REVISION 03-07-16 | DATE PLOTTED => 19-AUG-2016 | TIME PLOTTED => 13:16

Dist	COUNTY	ROUTE	POST MILES TOTAL PROJECT	SHEET No.	TOTAL SHEETS
05	Mon	101	45.8/49.8	17	40

REGISTERED CIVIL ENGINEER 3-7-16 DATE

3-7-16
PLANS APPROVAL DATE

REGISTERED PROFESSIONAL ENGINEER P.F.VALADAO No. 63987 Exp. 9-30-16 CIVIL STATE OF CALIFORNIA

THE STATE OF CALIFORNIA OR ITS OFFICERS OR AGENTS SHALL NOT BE RESPONSIBLE FOR THE ACCURACY OR COMPLETENESS OF SCANNED COPIES OF THIS PLAN SHEET.

NOTE:

1. FOR ACCURATE RIGHT OF WAY DATA, CONTACT RIGHT OF WAY ENGINEERING AT THE DISTRICT OFFICE.

CURVE DATA

No. ⊕	R	Δ	T	L
3	3928′	08°08′05"	279.32′	557.69′

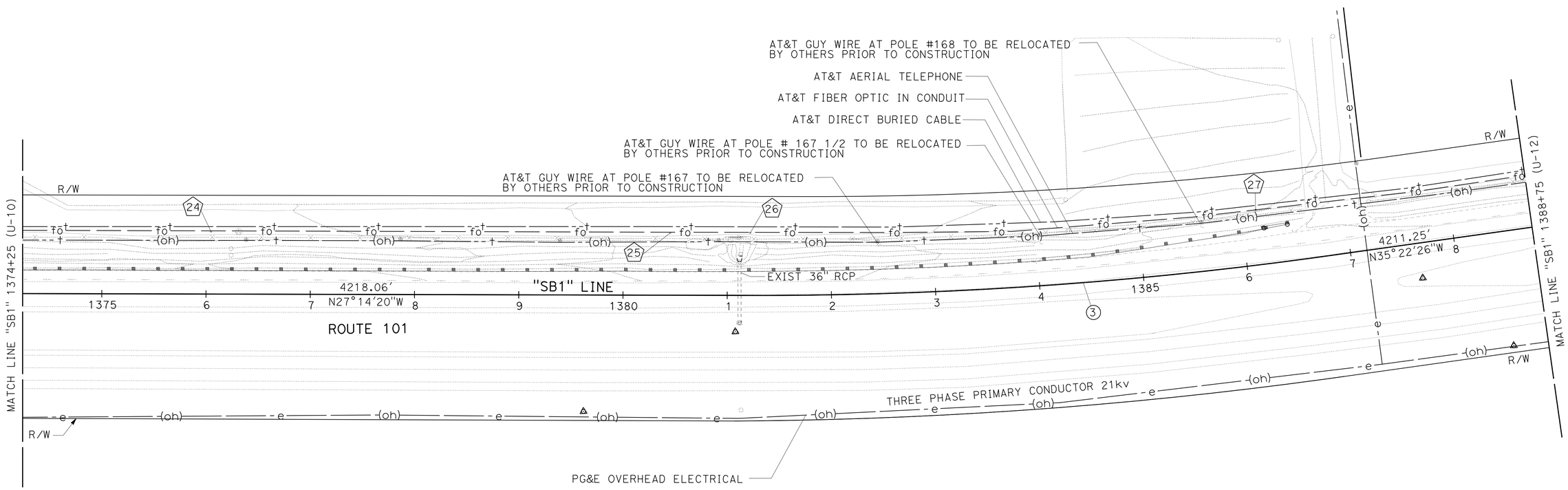

POSITIVE LOCATION INFORMATION

No. ⬠	DESCRIPTION	LOCATION	ELEVATION		METHOD
			OG	TOP OF PIPE	
24	FIBER OPTIC/BURIED CABLE/PVC CONDUIT	60.0′ L+ "SB1" 1376+05	318.6	312.6	POTHOLING
25	FIBER OPTIC/BURIED CABLE/PVC CONDUIT	59.4′ L+ "SB1" 1380+44	315.1	310.3	POTHOLING
26	FIBER OPTIC/BURIED CABLE/PVC CONDUIT	59.9′ L+ "SB1" 1381+22	315.1	310.1	POTHOLING
27	FIBER OPTIC/BURIED CABLE/PVC CONDUIT	53.2′ L+ "SB1" 1386+15	318.0	313.4	POTHOLING

THIS PLAN TO BE USED FOR UTILITY INFORMATION ONLY

UTILITY PLAN
LOCATION 2

SCALE: 1"=50′ **U-11**

STATE OF CALIFORNIA - DEPARTMENT OF TRANSPORTATION
Caltrans® DESIGN

FUNCTIONAL SUPERVISOR: CLAUDIA ESPINO
CALCULATED-DESIGNED BY: PAUL VALADAO
CHECKED BY: SCOTT DOWLAN
REVISED BY
DATE REVISED

LAST REVISION 03-07-16
DATE PLOTTED => 19-AUG-2016
TIME PLOTTED => 13:16

Dist	COUNTY	ROUTE	POST MILES TOTAL PROJECT	SHEET No.	TOTAL SHEETS
05	Mon	101	45.8/49.8	18	40

REGISTERED CIVIL ENGINEER 3-7-16 DATE

PLANS APPROVAL DATE 3-7-16

REGISTERED PROFESSIONAL ENGINEER P.F.VALADAO No. 63987 Exp. 9-30-16 CIVIL STATE OF CALIFORNIA

THE STATE OF CALIFORNIA OR ITS OFFICERS OR AGENTS SHALL NOT BE RESPONSIBLE FOR THE ACCURACY OR COMPLETENESS OF SCANNED COPIES OF THIS PLAN SHEET.

NOTE:

1. FOR ACCURATE RIGHT OF WAY DATA, CONTACT RIGHT OF WAY ENGINEERING AT THE DISTRICT OFFICE.

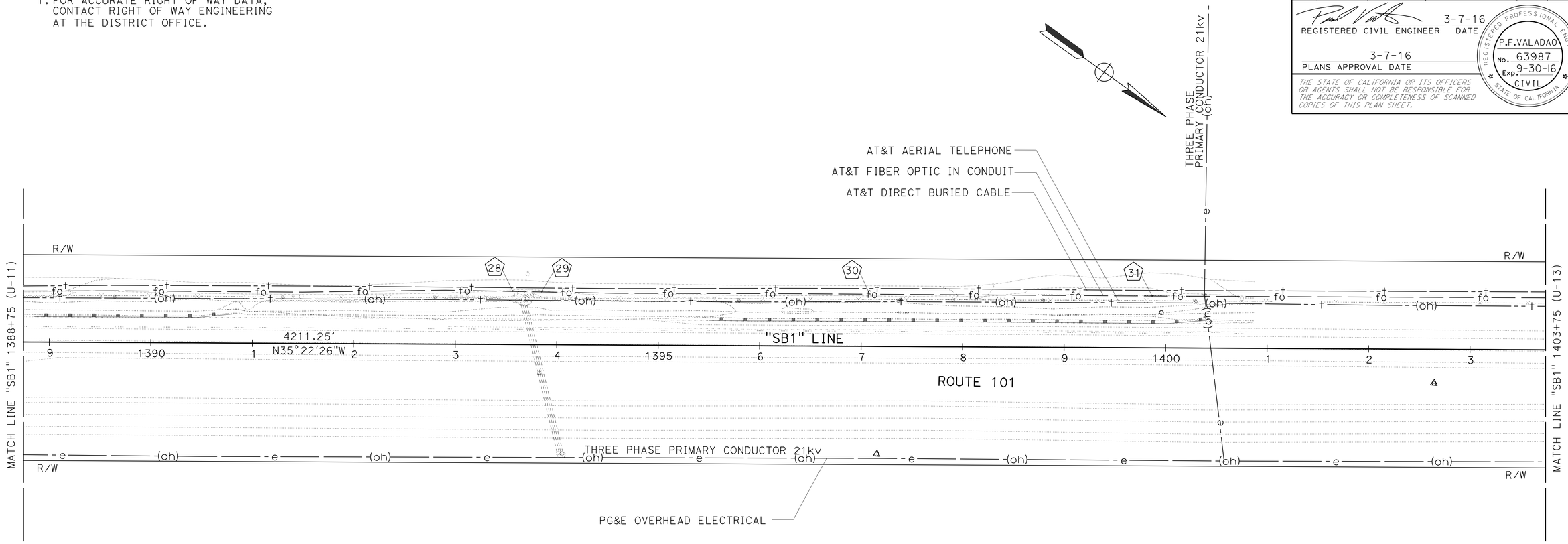

POSITIVE LOCATION INFORMATION

No. ⬠	DESCRIPTION	LOCATION	ELEVATION		METHOD
			OG	TOP OF PIPE	
28	FIBER OPTIC/BURIED CABLE/PVC CONDUIT	52.4' Lt "SB1" 1393+57	317.5	309.0	POTHOLING
29	FIBER OPTIC/BURIED CABLE/PVC CONDUIT	51.1' Lt "SB1" 1393+83	317.3	309.4	POTHOLING
30	FIBER OPTIC/BURIED CABLE/PVC CONDUIT	51.5' Lt "SB1" 1397+09	317.5	312.6	POTHOLING
31	FIBER OPTIC/BURIED CABLE/PVC CONDUIT	50.4' Lt "SB1" 1399+86	317.4	312.4	POTHOLING

THIS PLAN TO BE USED FOR UTILITY INFORMATION ONLY

UTILITY PLAN
LOCATION 2

SCALE: 1"=50' **U-12**

STATE OF CALIFORNIA - DEPARTMENT OF TRANSPORTATION
Caltrans® DESIGN

FUNCTIONAL SUPERVISOR: CLAUDIA ESPINO
CALCULATED-DESIGNED BY: PAUL VALADAO
CHECKED BY: SCOTT DOWLAN
REVISED BY
DATE REVISED

LAST REVISION 03-07-16
DATE PLOTTED => 19-AUG-2016
TIME PLOTTED => 13:16

Dist	COUNTY	ROUTE	POST MILES TOTAL PROJECT	SHEET No.	TOTAL SHEETS
05	Mon	101	45.8/49.8	19	40

REGISTERED CIVIL ENGINEER 3-7-16 DATE

PLANS APPROVAL DATE 3-7-16

REGISTERED PROFESSIONAL ENGINEER P.F.VALADAO No. 63987 Exp. 9-30-16 CIVIL STATE OF CALIFORNIA

THE STATE OF CALIFORNIA OR ITS OFFICERS OR AGENTS SHALL NOT BE RESPONSIBLE FOR THE ACCURACY OR COMPLETENESS OF SCANNED COPIES OF THIS PLAN SHEET.

NOTE:

1. FOR ACCURATE RIGHT OF WAY DATA, CONTACT RIGHT OF WAY ENGINEERING AT THE DISTRICT OFFICE.

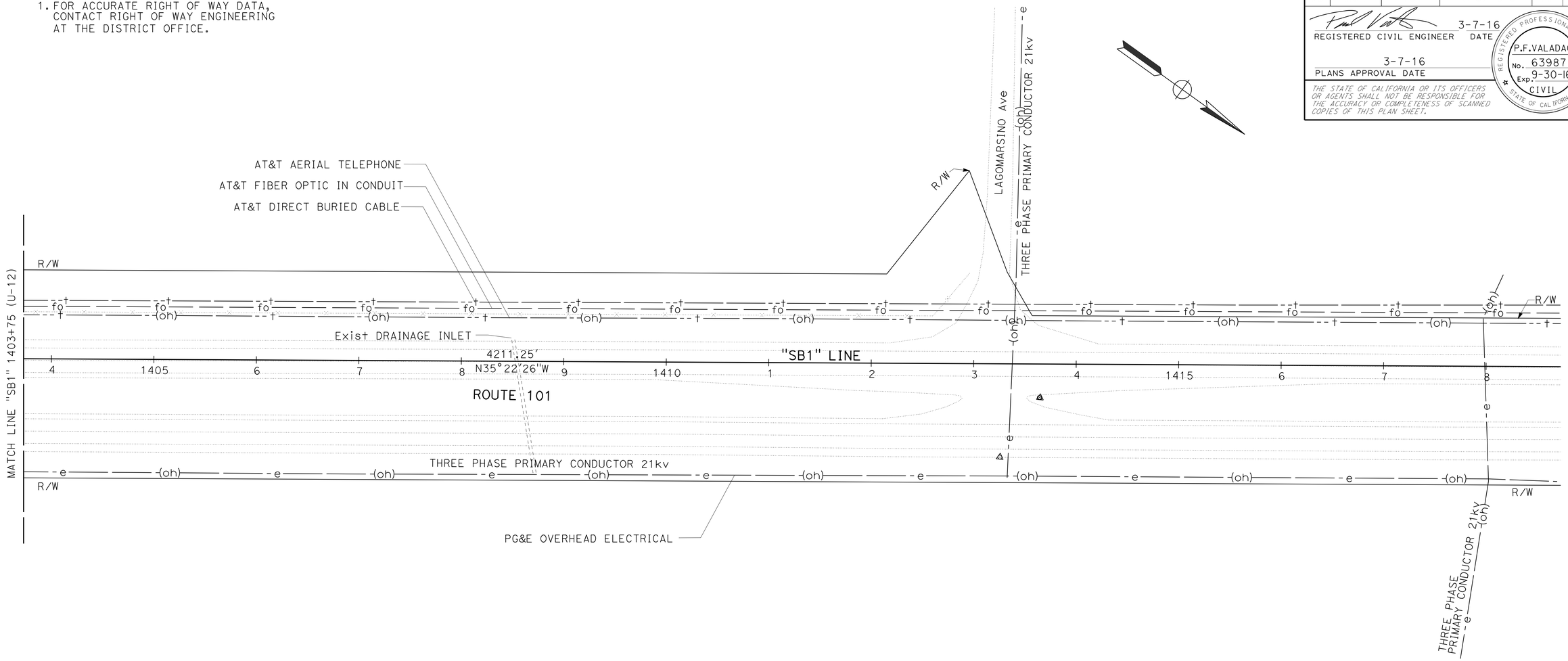

THIS PLAN TO BE USED FOR UTILITY INFORMATION ONLY

UTILITY PLAN
LOCATION 2

SCALE: 1"=50' **U-13**

STATE OF CALIFORNIA - DEPARTMENT OF TRANSPORTATION
Caltrans® DESIGN

FUNCTIONAL SUPERVISOR: CLAUDIA ESPINO
CALCULATED-DESIGNED BY: PAUL VALADAO
CHECKED BY: SCOTT DOWLAN
REVISED BY / DATE REVISED

LAST REVISION 03-07-16 | DATE PLOTTED => 19-AUG-2016 | TIME PLOTTED => 13:16

Dist	COUNTY	ROUTE	POST MILES TOTAL PROJECT	SHEET No.	TOTAL SHEETS
05	Mon	101	45.8/49.8	20	40

Hassan Taha 3-7-16
REGISTERED CIVIL ENGINEER DATE

3-7-16
PLANS APPROVAL DATE

REGISTERED PROFESSIONAL ENGINEER HASSAN M. TAHA No. 60130 Exp. 06/30/16 CIVIL STATE OF CALIFORNIA

THE STATE OF CALIFORNIA OR ITS OFFICERS OR AGENTS SHALL NOT BE RESPONSIBLE FOR THE ACCURACY OR COMPLETENESS OF SCANNED COPIES OF THIS PLAN SHEET.

LEGEND:

(X) CONSTRUCTION AREA SIGN NUMBER

NOTES:

1. EXACT LOCATIONS TO BE DETERMINED BY THE ENGINEER.
2. FOR SIGN "C40" (TRAFFIC FINES DOUBLED IN CONSTRUCTION ZONES), ALL LETTERS MUST BE BLACK ON WHITE BACKGROUND.

STATIONARY MOUNTED CONSTRUCTION AREA SIGNS

SIGN No.	SIGN CODE FEDERAL	SIGN CODE CALIFORNIA	PANEL SIZE	SIGN MESSAGE	No. OF POST AND POST SIZE	No. OF SIGN
A	W20-1		60" x 60"	ROAD WORK AHEAD	2 - 6" x 6"	2
B	W20-1		48" x 48"	ROAD WORK AHEAD	1 - 6" x 6"	4
C	G20-2		36" x 18"	END ROAD WORK	1 - 4" x 4"	6
D		C40	108" x 42"	TRAFFIC FINES DOUBLED IN CONSTRUCTION ZONES	2 - 6" x 6"	2

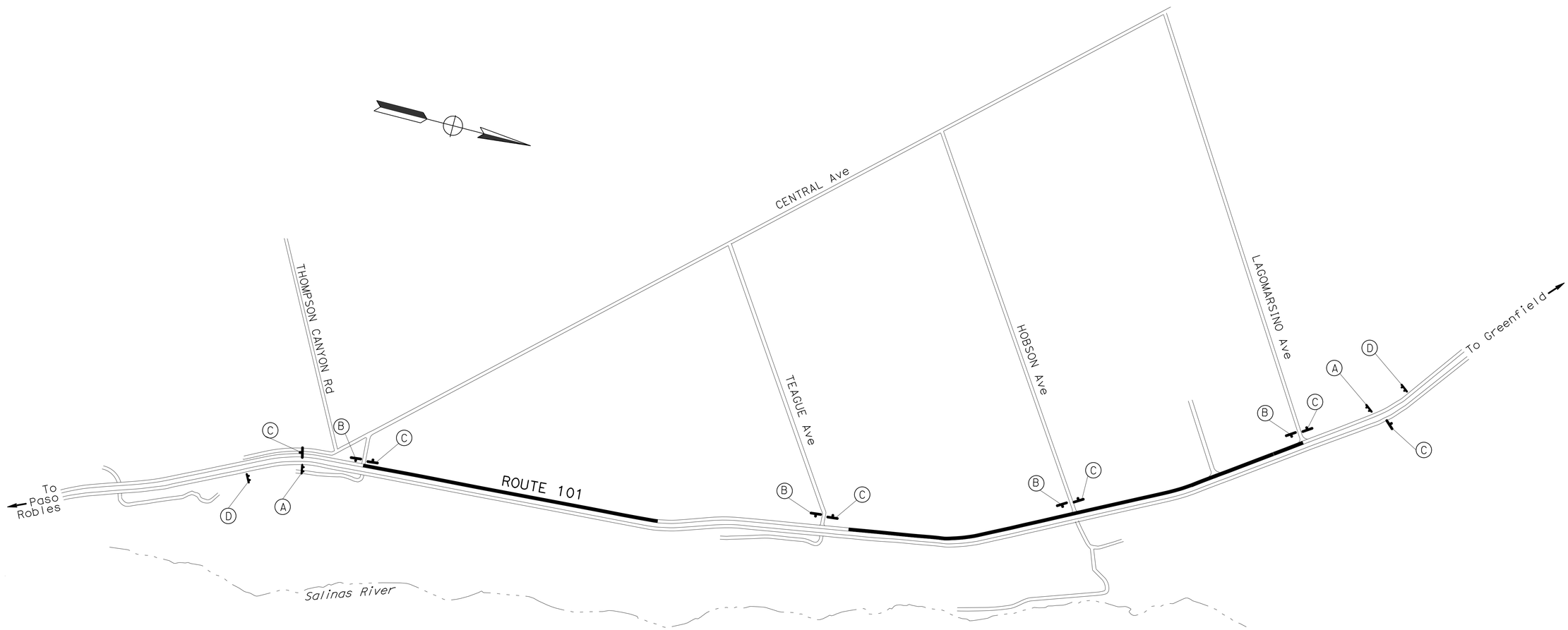

CONSTRUCTION AREA SIGNS

NO SCALE

CS-1

APPROVED FOR CONSTRUCTION AREA SIGN WORK ONLY

STATE OF CALIFORNIA - DEPARTMENT OF TRANSPORTATION
Caltrans® **TRAFFIC DESIGN**

FUNCTIONAL SUPERVISOR: MOHAMMED QATAMI

CALCULATED-DESIGNED BY: GURMIT GILL
CHECKED BY: HASSAN TAHA

REVISED BY
DATE REVISED

LAST REVISION 03-07-16
DATE PLOTTED => 19-AUG-2016
TIME PLOTTED => 13:16

Dist	COUNTY	ROUTE	POST MILES TOTAL PROJECT	SHEET No.	TOTAL SHEETS
05	Mon	101	45.8/49.8	21	40

LICENSED LANDSCAPE ARCHITECT

3-7-16
PLANS APPROVAL DATE

LICENSED LANDSCAPE ARCHITECT SCOTT P. DOWLAN No. 4410 STATE OF CALIFORNIA Expiration Date 09/30/16 Renewal Date 03/07/16 Date

THE STATE OF CALIFORNIA OR ITS OFFICERS OR AGENTS SHALL NOT BE RESPONSIBLE FOR THE ACCURACY OR COMPLETENESS OF SCANNED COPIES OF THIS PLAN SHEET.

REMOVE GUARDRAIL

STATION	REMOVE GUARDRAIL	TREATED WOOD WASTE	SALVAGE CRASH CUSHION	REMARKS
	LF	LB	EA	
"SB1" 1206+17.8 21.0′ L+ TO 1266+65.8 20.7′ L+	6,048	57,600		WOOD POST
"SB1" 1362+34.0 22.3′ L+ TO 1386+17.9 33.9′ L+	2,384			METAL POST
"SB1" 1386+44.5 33.9′ L+			1	
"SB1" 1388+88.7 25.1′ L+ TO 1390+85.0 29.2 L+	197			METAL POST
"SB1" 1395+50.4 24.8′ L+ TO 1400+39.3 27.3′ L+	489	4,660		WOOD POST
TOTAL	9,118	62,260	1	

RELOCATE MISSION BELL

STATION		RELOCATE MISSION BELL
FROM	TO	EA
"SB1" 1266+28.2 24.1′	"SB1" 1266+28.2 42.2′	1
"SB1" 1399+95.6 34.8′	"SB1" 1399+95.6 45.2′	1
	TOTAL	2

LANDSCAPE

STATION	ROADSIDE CLEARING		IMPORTED TOPSOIL	REMARKS
	TRASH AND DEBRIS REMOVAL (N)	TREE STUMP REMOVAL (N)		
	SQFT	EA	CY	
"SB1" 1206+00 L+ TO 1267+00 L+	183,000	295	442.5	SOUTHBOUND ROADSIDE (EDGE OF PAVEMENT TO FENCE)
"SB1" 1309+4.7 51.0′	500	1	1.5	
"SB1" 1311+2.4 51.8′	500	1	1.5	
"SB1" 1345+39 44.2′	500	1	1.5	
"SB1" 1346+58.4 48.4′	500	1	1.5	
"SB1" 1361+00 L+ TO 1386+60 L+	73,050	56	84.0	
"SB1" 1387+25 L+ TO 1411+00 L+	71,250	23	34.5	
TOTAL	329,300	378	567.0	

(N) NOT A SEPARATE PAY ITEM, FOR INFORMATION ONLY.

EARTHWORK

LOCATION		ROADWAY EXCAVATION	EMBANKMENT (N)	IMPORTED BORROW
DRAINAGE SYSTEM	STATION	CY	CY	CY
1	"SB1" 1263+85	18	18	
2	"SB1" 1381+11	2	23	21
3	"SB1" 1393+67	2	18	16
	TOTAL	22	59	37

(N) NOT A SEPARATE PAY ITEM, FOR INFORMATION ONLY.

TEMPORARY WATER POLLUTION CONTROL

STATION	TEMPORARY HYDRAULIC MULCH (BONDED FIBER MATRIX)	TEMPORARY FIBER ROLL	TEMPORARY CHECK DAM
	SQYD	LF	LF
"SB1" 1234+60 L+		40	
"SB1" 1346+00 L+		40	
"SB1" 1372+00 L+		40	
"SB1" 1373+75 L+		40	
"SB1" 1263+30 L+ TO 1264+70 L+	5,000	40	24
"SB1" 1380+30 L+ TO 1381+70 L+	5,000	40	24
"SB1" 1393+30 L+ TO 1394+70 L+	5,000	40	24
TOTAL	15,000	280	72

FENCE

STATION	REMOVE FENCE (TYPE BW)	FENCE (TYPE BW, 5-STRAND, METAL POST)	FENCE SIGN
	LF	LF	EA
"SB1" 1202+50.0 L+ TO 1267+00.0 L+			10
"SB1" 1308+00.0 L+ TO 1411+00.0 L+			20
"SB1" 1324+64.6 56.6′ L+ TO 1345+92.7 58.2′ L+	2,128		
"SB1" 1324+64.6 56.6′ L+ TO 1360+42.7 99.0′ L+		3,578	
"SB1" 1359+84.4 55.7′ L+ TO 1360+43.3 118.0′ L+	58		
"SB1" 1393+07.7 45.3′ L+ TO 1394+27.7 45.3′ L+	120	120	
TOTAL	2,306	3,698	30

DELINEATOR AND OBJECT MARKERS

SHEET No.	DELINEATOR (CLASS 1) (TYPE F)	OBJECT MARKER (TYPE L-1)
	EA	EA
LL-5	1	1
LL-11	1	1
LL-12	1	1
TOTAL	3	3

SUMMARY OF QUANTITIES

Q-1

STATE OF CALIFORNIA - DEPARTMENT OF TRANSPORTATION
Caltrans® LANDSCAPE ARCHITECTURE

SENIOR LANDSCAPE ARCHITECT: DENNIS REEVES
CALCULATED-DESIGNED BY: SCOTT DOWLAN
CHECKED BY: PAT BOLGER
REVISED BY
DATE REVISED

LAST REVISION 03-07-16
DATE PLOTTED => 19-AUG-2016
TIME PLOTTED => 13:16

Dist	COUNTY	ROUTE	POST MILES TOTAL PROJECT	SHEET No.	TOTAL SHEETS
05	Mon	101	45.8/49.8	22	40

LICENSED LANDSCAPE ARCHITECT

3-7-16
PLANS APPROVAL DATE

LICENSED LANDSCAPE ARCHITECT
SCOTT P. DOWLAN No. 4410
Expiration Date 09/30/16
Renewal Date 03/07/16
Date
STATE OF CALIFORNIA

THE STATE OF CALIFORNIA OR ITS OFFICERS OR AGENTS SHALL NOT BE RESPONSIBLE FOR THE ACCURACY OR COMPLETENESS OF SCANNED COPIES OF THIS PLAN SHEET.

NOTES:

1. FOR ACCURATE RIGHT OF WAY DATA, CONTACT RIGHT OF WAY ENGINEERING AT THE DISTRICT OFFICE.
2. CONSTRUCTION ACCESS AND WORK TO OCCUR BETWEEN HIGHWAY AND FENCE LINE FOR LOCATION 1 AND 2.

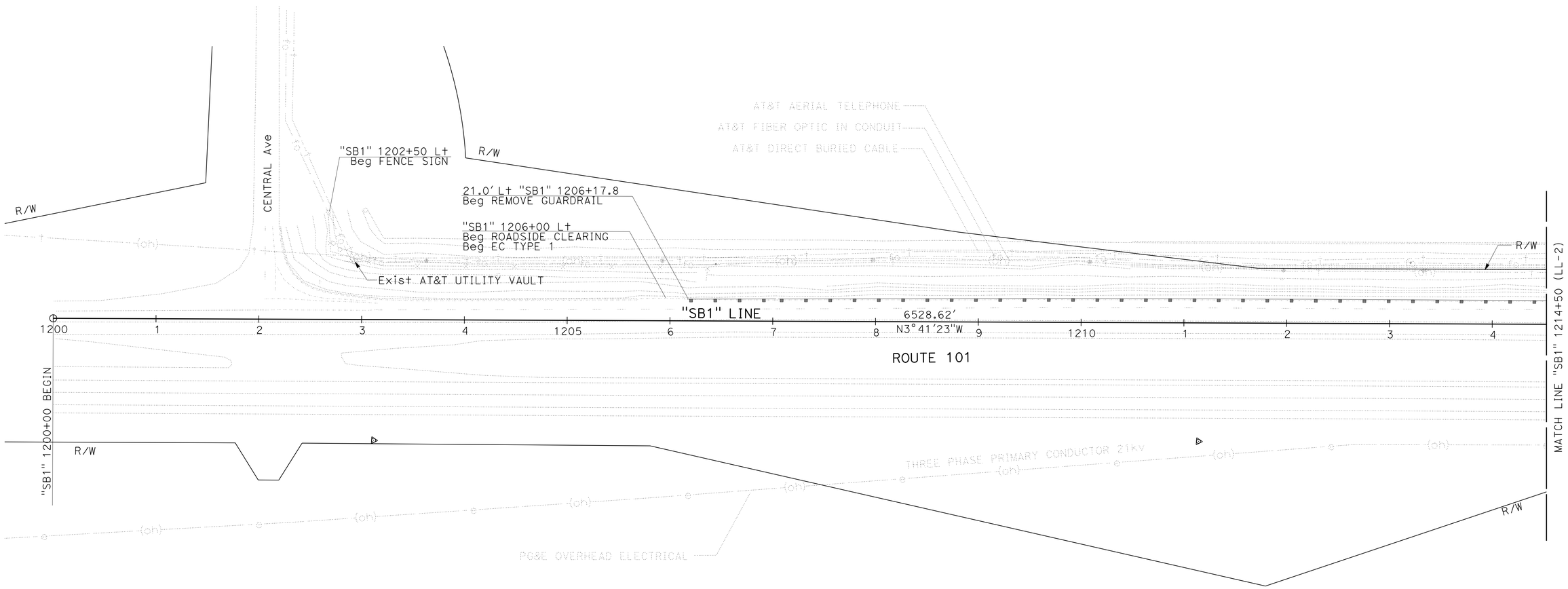

LANDSCAPE LAYOUT PLAN
LOCATION 1

SCALE: 1"=50'

LL-1

APPROVED FOR LANDSCAPE WORK ONLY

STATE OF CALIFORNIA - DEPARTMENT OF TRANSPORTATION
Caltrans® LANDSCAPE ARCHITECTURE

SENIOR LANDSCAPE ARCHITECT: DENNIS REEVES
CALCULATED-DESIGNED BY: SCOTT DOWLAN
CHECKED BY: PAT BOLGER
REVISED BY
DATE REVISED

LAST REVISION 03-07-16
DATE PLOTTED => 19-AUG-2016
TIME PLOTTED => 13:16

Dist	COUNTY	ROUTE	POST MILES TOTAL PROJECT	SHEET No.	TOTAL SHEETS
05	Mon	101	45.8/49.8	23	40

LICENSED LANDSCAPE ARCHITECT

3-7-16
PLANS APPROVAL DATE

LICENSED LANDSCAPE ARCHITECT
SCOTT P. DOWLAN No. 4410
Expiration Date 09/30/16
Renewal Date 03/07/16
Date
STATE OF CALIFORNIA

THE STATE OF CALIFORNIA OR ITS OFFICERS OR AGENTS SHALL NOT BE RESPONSIBLE FOR THE ACCURACY OR COMPLETENESS OF SCANNED COPIES OF THIS PLAN SHEET.

NOTE:

1. FOR ACCURATE RIGHT OF WAY DATA, CONTACT RIGHT OF WAY ENGINEERING AT THE DISTRICT OFFICE.

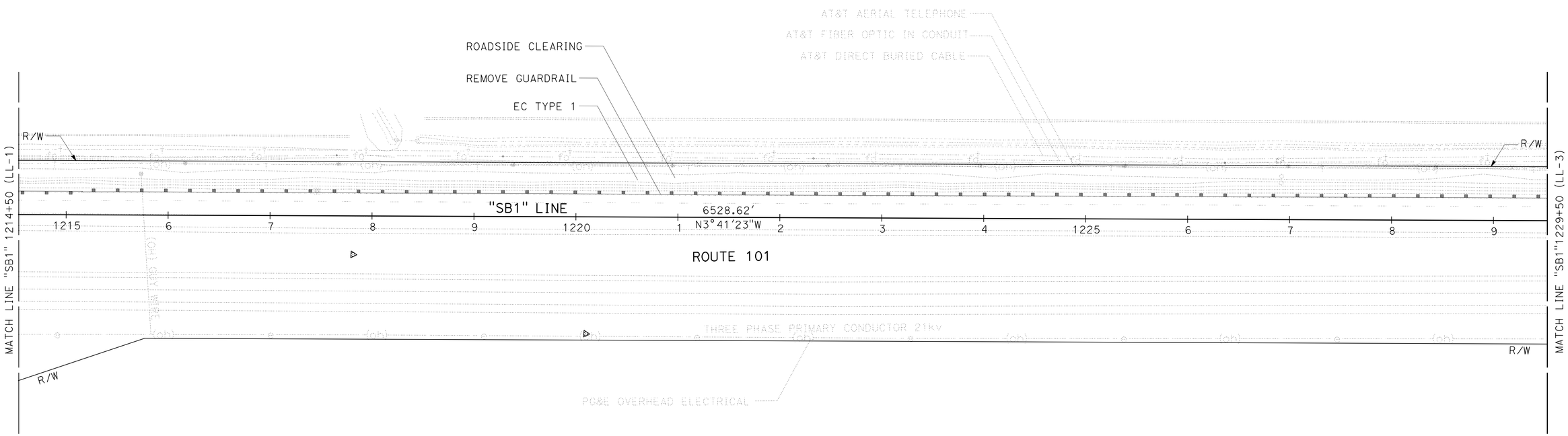

LANDSCAPE LAYOUT PLAN

LOCATION 1

SCALE: 1"=50'

LL-2

APPROVED FOR LANDSCAPE WORK ONLY

STATE OF CALIFORNIA - DEPARTMENT OF TRANSPORTATION
Caltrans® LANDSCAPE ARCHITECTURE

SENIOR LANDSCAPE ARCHITECT: DENNIS REEVES

CALCULATED-DESIGNED BY: SCOTT DOWLAN
CHECKED BY: PAT BOLGER

REVISED BY
DATE REVISED

LAST REVISION 03-07-16
DATE PLOTTED => 19-AUG-2016
TIME PLOTTED => 13:16

Dist	COUNTY	ROUTE	POST MILES TOTAL PROJECT	SHEET No.	TOTAL SHEETS
05	Mon	101	45.8/49.8	24	40

LICENSED LANDSCAPE ARCHITECT

3-7-16
PLANS APPROVAL DATE

LICENSED LANDSCAPE ARCHITECT
SCOTT P. DOWLAN No. 4410
Expiration 09/30/16
Renewal Date 03/07/16
Date
STATE OF CALIFORNIA

THE STATE OF CALIFORNIA OR ITS OFFICERS OR AGENTS SHALL NOT BE RESPONSIBLE FOR THE ACCURACY OR COMPLETENESS OF SCANNED COPIES OF THIS PLAN SHEET.

NOTE:

1. FOR ACCURATE RIGHT OF WAY DATA, CONTACT RIGHT OF WAY ENGINEERING AT THE DISTRICT OFFICE.

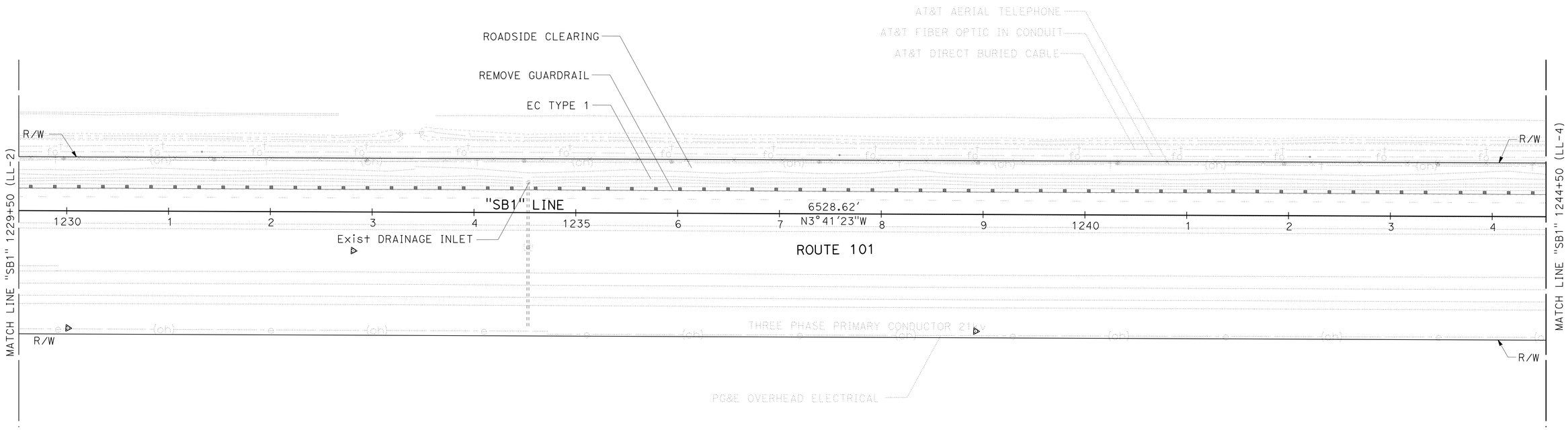

LANDSCAPE LAYOUT PLAN
LOCATION 1

APPROVED FOR LANDSCAPE WORK ONLY

SCALE: 1"=50'

LL-3

STATE OF CALIFORNIA - DEPARTMENT OF TRANSPORTATION
Caltrans® LANDSCAPE ARCHITECTURE

SENIOR LANDSCAPE ARCHITECT: DENNIS REEVES

CALCULATED-DESIGNED BY: SCOTT DOWLAN
CHECKED BY: PAT BOLGER

REVISED BY
DATE REVISED

LAST REVISION 03-07-16
DATE PLOTTED => 19-AUG-2016
TIME PLOTTED => 13:16

Dist	COUNTY	ROUTE	POST MILES TOTAL PROJECT	SHEET No.	TOTAL SHEETS
05	Mon	101	45.8/49.8	25	40

LICENSED LANDSCAPE ARCHITECT

3-7-16
PLANS APPROVAL DATE

LICENSED LANDSCAPE ARCHITECT
SCOTT P. DOWLAN No. 4410
Expiration Date 09/30/16
Renewal Date 03/07/16
Date
STATE OF CALIFORNIA

THE STATE OF CALIFORNIA OR ITS OFFICERS OR AGENTS SHALL NOT BE RESPONSIBLE FOR THE ACCURACY OR COMPLETENESS OF SCANNED COPIES OF THIS PLAN SHEET.

NOTE:

1. FOR ACCURATE RIGHT OF WAY DATA, CONTACT RIGHT OF WAY ENGINEERING AT THE DISTRICT OFFICE.

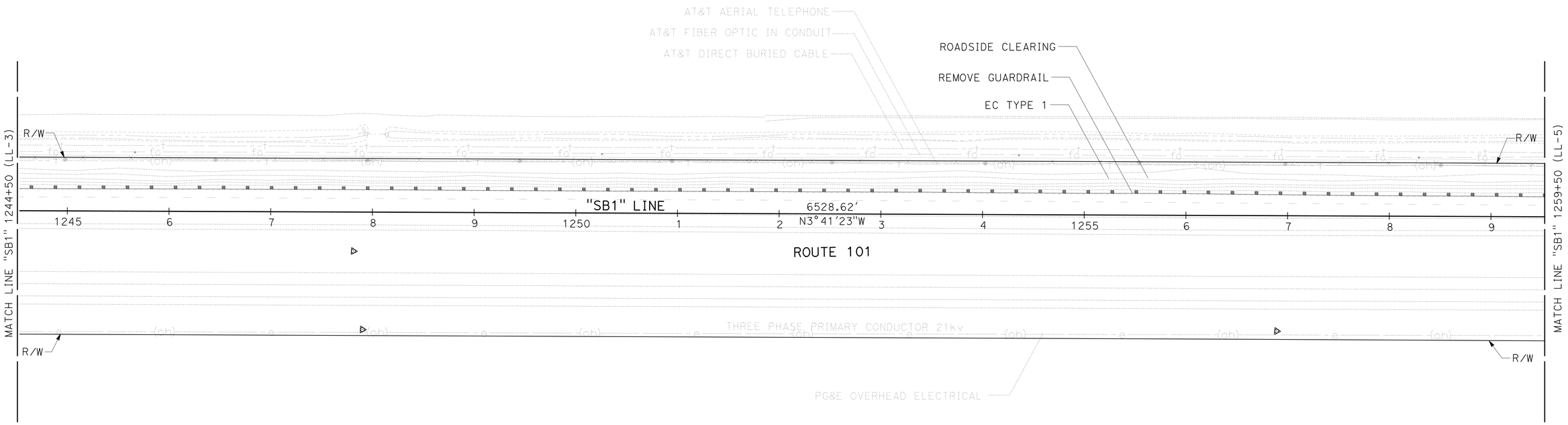

LANDSCAPE LAYOUT PLAN

LOCATION 1

SCALE: 1"=50'

LL-4

APPROVED FOR LANDSCAPE WORK ONLY

STATE OF CALIFORNIA - DEPARTMENT OF TRANSPORTATION
Caltrans® LANDSCAPE ARCHITECTURE

SENIOR LANDSCAPE ARCHITECT: DENNIS REEVES
CALCULATED-DESIGNED BY: SCOTT DOWLAN
CHECKED BY: PAT BOLGER
REVISED BY
DATE REVISED

LAST REVISION 03-07-16
DATE PLOTTED => 19-AUG-2016
TIME PLOTTED => 13:16

Dist	COUNTY	ROUTE	POST MILES TOTAL PROJECT	SHEET No.	TOTAL SHEETS
05	Mon	101	45.8/49.8	26	40

LICENSED LANDSCAPE ARCHITECT

3-7-16
PLANS APPROVAL DATE

LICENSED LANDSCAPE ARCHITECT
SCOTT P. DOWLAN No. 4410
Expiration Date
09/30/16
Renewal Date
03/07/16
Date
STATE OF CALIFORNIA

THE STATE OF CALIFORNIA OR ITS OFFICERS OR AGENTS SHALL NOT BE RESPONSIBLE FOR THE ACCURACY OR COMPLETENESS OF SCANNED COPIES OF THIS PLAN SHEET.

NOTE:

1. FOR ACCURATE RIGHT OF WAY DATA, CONTACT RIGHT OF WAY ENGINEERING AT THE DISTRICT OFFICE.

CURVE DATA

No. ⊕	R	Δ	T	L
1	2928′	15°25′10″	396.39′	787.98′

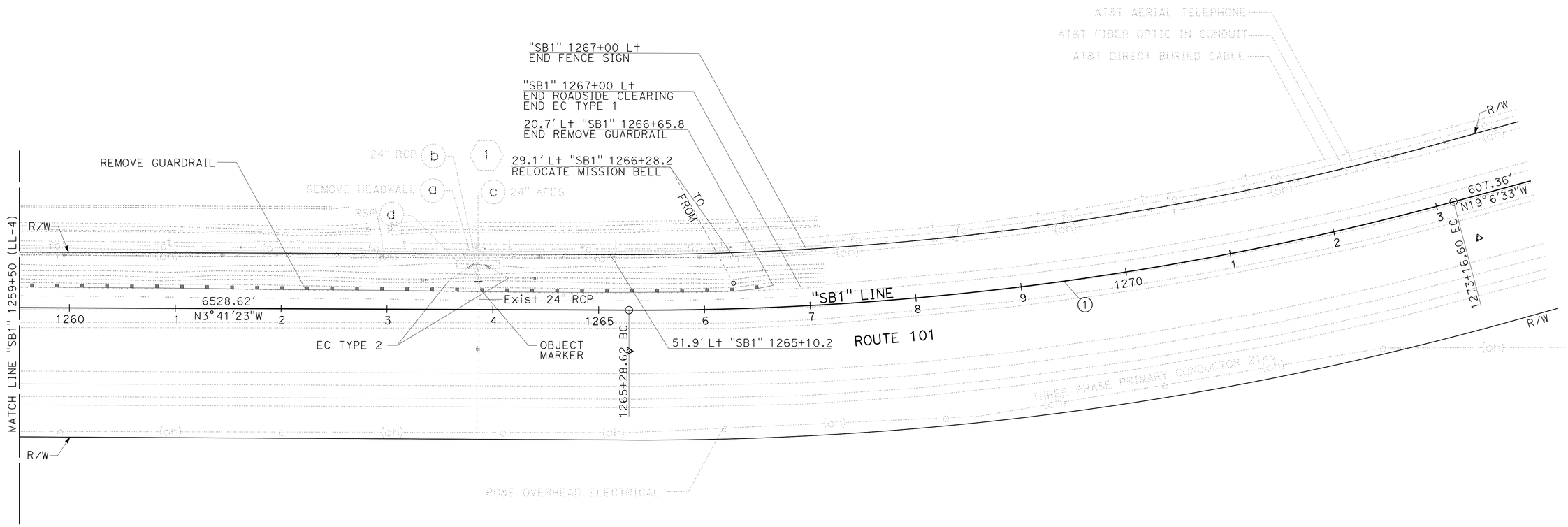

LANDSCAPE LAYOUT PLAN
LOCATION 1

SCALE: 1"=50′

LL-5

APPROVED FOR LANDSCAPE WORK ONLY

STATE OF CALIFORNIA - DEPARTMENT OF TRANSPORTATION
Caltrans® LANDSCAPE ARCHITECTURE

SENIOR LANDSCAPE ARCHITECT: DENNIS REEVES
CALCULATED-DESIGNED BY: SCOTT DOWLAN
CHECKED BY: PAT BOLGER
REVISED BY
DATE REVISED

LAST REVISION 03-07-16
DATE PLOTTED => 19-AUG-2016
TIME PLOTTED => 13:16

Dist	COUNTY	ROUTE	POST MILES TOTAL PROJECT	SHEET No.	TOTAL SHEETS
05	Mon	101	45.8/49.8	27	40

LICENSED LANDSCAPE ARCHITECT

3-7-16
PLANS APPROVAL DATE

LICENSED LANDSCAPE ARCHITECT
SCOTT P. DOWLAN No. 4410
Expiration Date 09/30/16
Renewal Date 03/07/16
Date
STATE OF CALIFORNIA

THE STATE OF CALIFORNIA OR ITS OFFICERS OR AGENTS SHALL NOT BE RESPONSIBLE FOR THE ACCURACY OR COMPLETENESS OF SCANNED COPIES OF THIS PLAN SHEET.

NOTE:

1. FOR ACCURATE RIGHT OF WAY DATA, CONTACT RIGHT OF WAY ENGINEERING AT THE DISTRICT OFFICE.

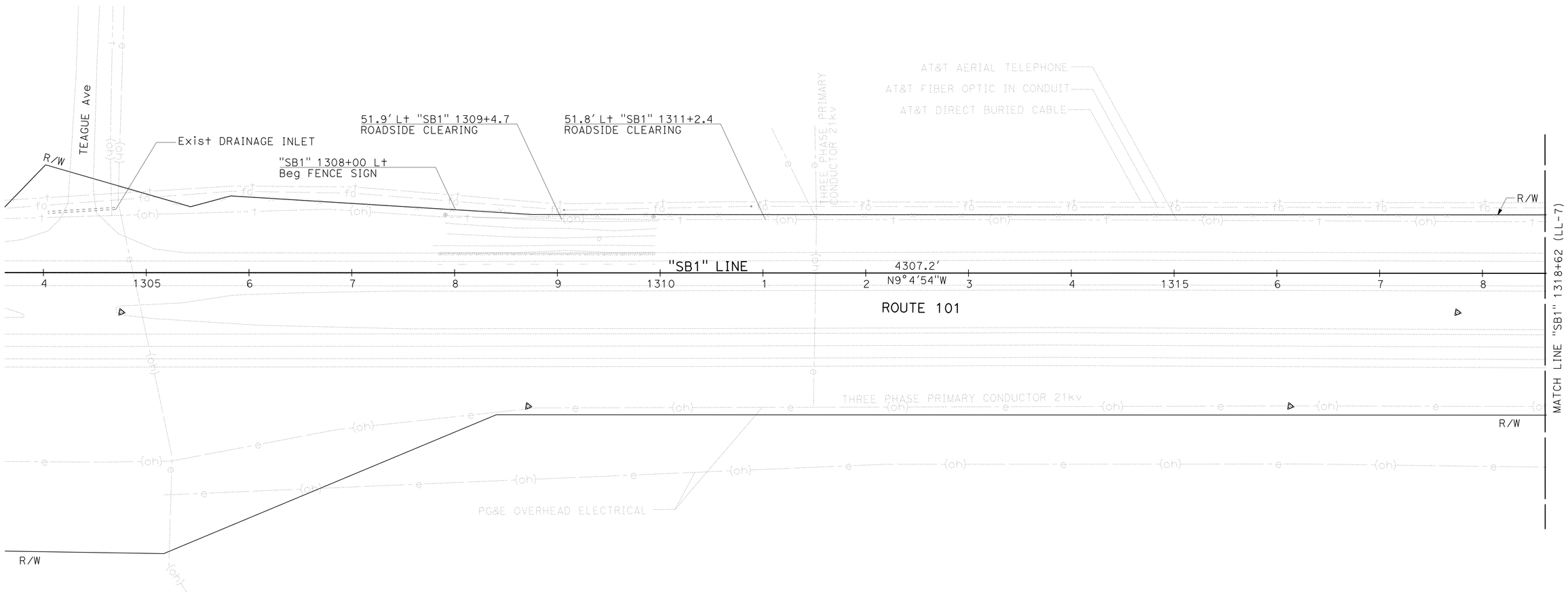

LANDSCAPE LAYOUT PLAN
LOCATION 2

APPROVED FOR LANDSCAPE WORK ONLY

SCALE: 1"=50'

LL-6

STATE OF CALIFORNIA - DEPARTMENT OF TRANSPORTATION
Caltrans® LANDSCAPE ARCHITECTURE

SENIOR LANDSCAPE ARCHITECT: DENNIS REEVES
CALCULATED-DESIGNED BY: SCOTT DOWLAN
CHECKED BY: PAT BOLGER
REVISED BY
DATE REVISED

LAST REVISION 03-07-16
DATE PLOTTED => 19-AUG-2016
TIME PLOTTED => 13:16

Dist	COUNTY	ROUTE	POST MILES TOTAL PROJECT	SHEET No.	TOTAL SHEETS
05	Mon	101	45.8/49.8	28	40

LICENSED LANDSCAPE ARCHITECT

3-7-16
PLANS APPROVAL DATE

LICENSED LANDSCAPE ARCHITECT
SCOTT P. DOWLAN No. 4410
Expiration 09/30/16
Renewal Date 03/07/16
Date
STATE OF CALIFORNIA

THE STATE OF CALIFORNIA OR ITS OFFICERS OR AGENTS SHALL NOT BE RESPONSIBLE FOR THE ACCURACY OR COMPLETENESS OF SCANNED COPIES OF THIS PLAN SHEET.

NOTE:

1. FOR ACCURATE RIGHT OF WAY DATA, CONTACT RIGHT OF WAY ENGINEERING AT THE DISTRICT OFFICE.

CURVE DATA

No. ⊕	R	Δ	T	L
2	3028′	18°09′27″	483.85′	959.59′

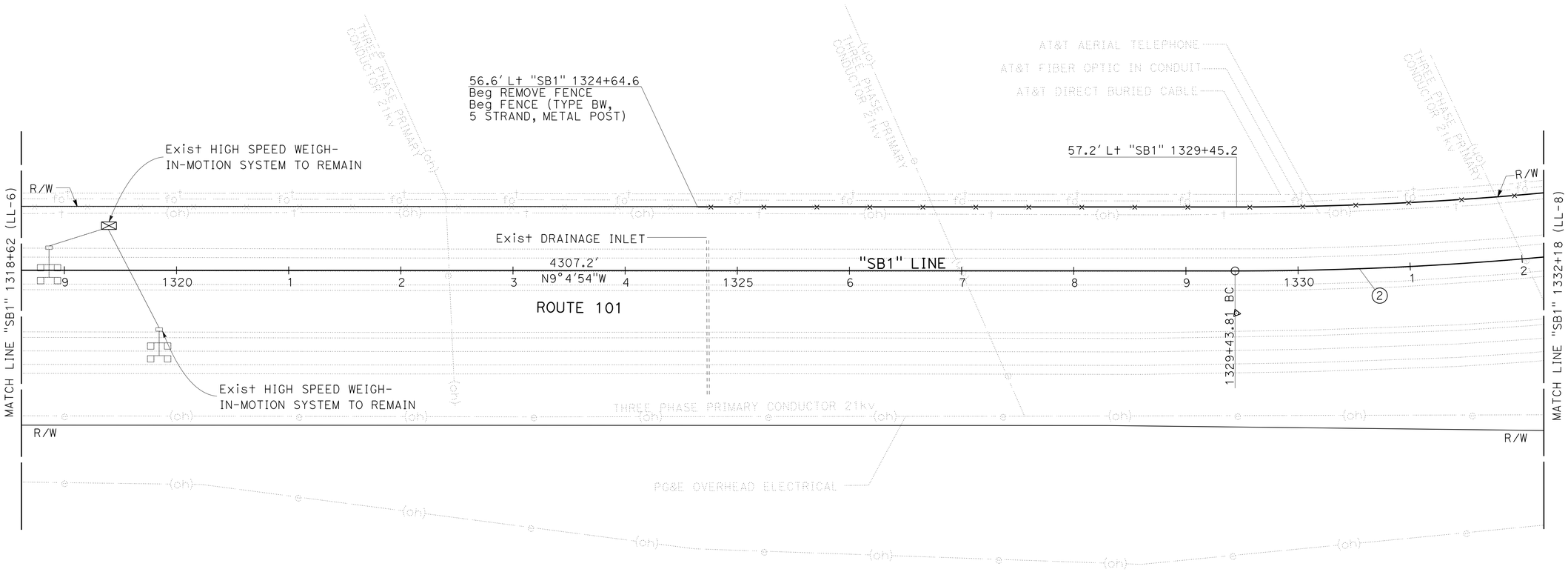

LANDSCAPE LAYOUT PLAN

LOCATION 2

SCALE: 1"=50′

LL - 7

APPROVED FOR LANDSCAPE WORK ONLY

STATE OF CALIFORNIA - DEPARTMENT OF TRANSPORTATION
Caltrans LANDSCAPE ARCHITECTURE

SENIOR LANDSCAPE ARCHITECT: DENNIS REEVES
CALCULATED-DESIGNED BY: SCOTT DOWLAN
CHECKED BY: PAT BOLGER
REVISED BY
DATE REVISED

LAST REVISION 03-07-16
DATE PLOTTED => 19-AUG-2016
TIME PLOTTED => 13:16

Dist	COUNTY	ROUTE	POST MILES TOTAL PROJECT	SHEET No.	TOTAL SHEETS
05	Mon	101	45.8/49.8	29	40

LICENSED LANDSCAPE ARCHITECT

3-7-16
PLANS APPROVAL DATE

LICENSED LANDSCAPE ARCHITECT
SCOTT P. DOWLAN No. 4410
Expiration Date 09/30/16
Renewal Date 03/07/16
Date
STATE OF CALIFORNIA

THE STATE OF CALIFORNIA OR ITS OFFICERS OR AGENTS SHALL NOT BE RESPONSIBLE FOR THE ACCURACY OR COMPLETENESS OF SCANNED COPIES OF THIS PLAN SHEET.

NOTE:

1. FOR ACCURATE RIGHT OF WAY DATA, CONTACT RIGHT OF WAY ENGINEERING AT THE DISTRICT OFFICE.

CURVE DATA

No. ⊕	R	Δ	T	L
2	3028′	18°09′27″	483.85′	959.59′

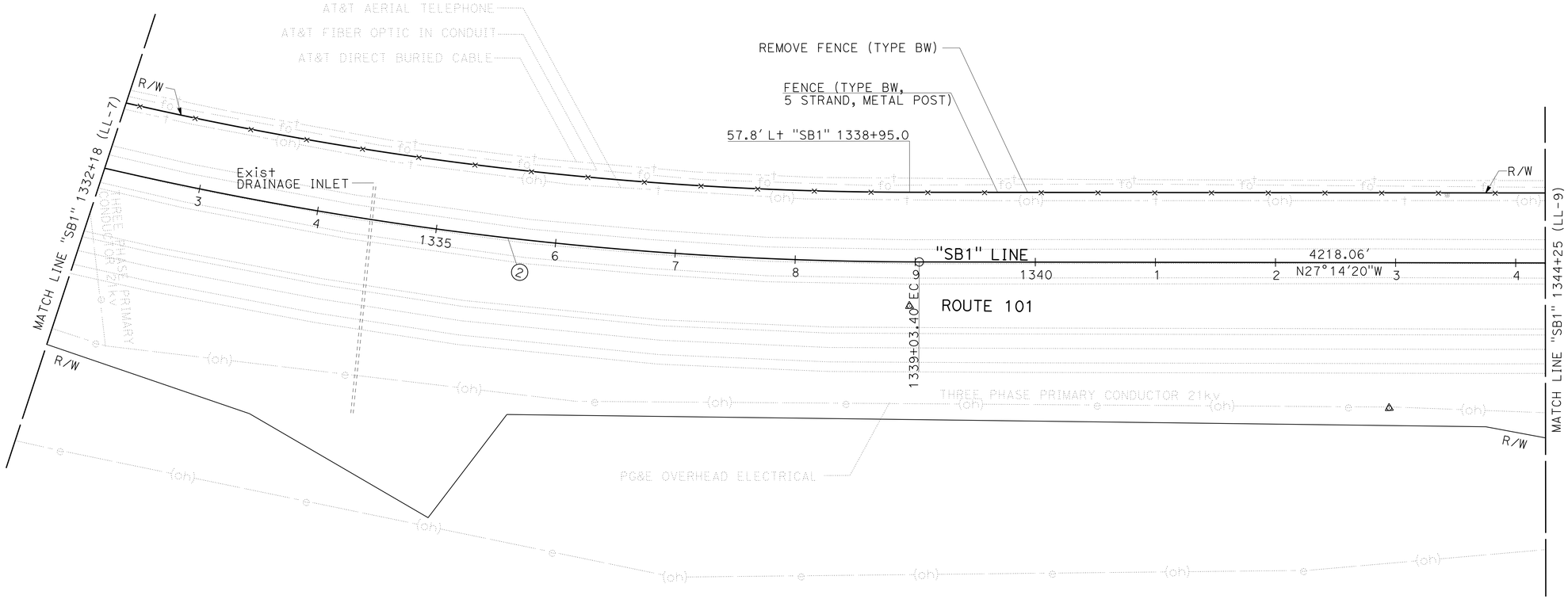

LANDSCAPE LAYOUT PLAN

LOCATION 2

SCALE: 1"=50′

LL-8

APPROVED FOR LANDSCAPE WORK ONLY

STATE OF CALIFORNIA - DEPARTMENT OF TRANSPORTATION
Caltrans® LANDSCAPE ARCHITECTURE

SENIOR LANDSCAPE ARCHITECT: DENNIS REEVES
CALCULATED-DESIGNED BY: SCOTT DOWLAN
CHECKED BY: PAT BOLGER
REVISED BY
DATE REVISED

LAST REVISION 03-07-16
DATE PLOTTED => 19-AUG-2016
TIME PLOTTED => 13:45

Dist	COUNTY	ROUTE	POST MILES TOTAL PROJECT	SHEET No.	TOTAL SHEETS
05	Mon	101	45.8/49.8	30	40

LICENSED LANDSCAPE ARCHITECT

3-7-16
PLANS APPROVAL DATE

LICENSED LANDSCAPE ARCHITECT
SCOTT P. DOWLAN No. 4410
Expiration Date 09/30/16
Renewal Date 03/07/16
Date
STATE OF CALIFORNIA

THE STATE OF CALIFORNIA OR ITS OFFICERS OR AGENTS SHALL NOT BE RESPONSIBLE FOR THE ACCURACY OR COMPLETENESS OF SCANNED COPIES OF THIS PLAN SHEET.

NOTE:

1. FOR ACCURATE RIGHT OF WAY DATA, CONTACT RIGHT OF WAY ENGINEERING AT THE DISTRICT OFFICE.

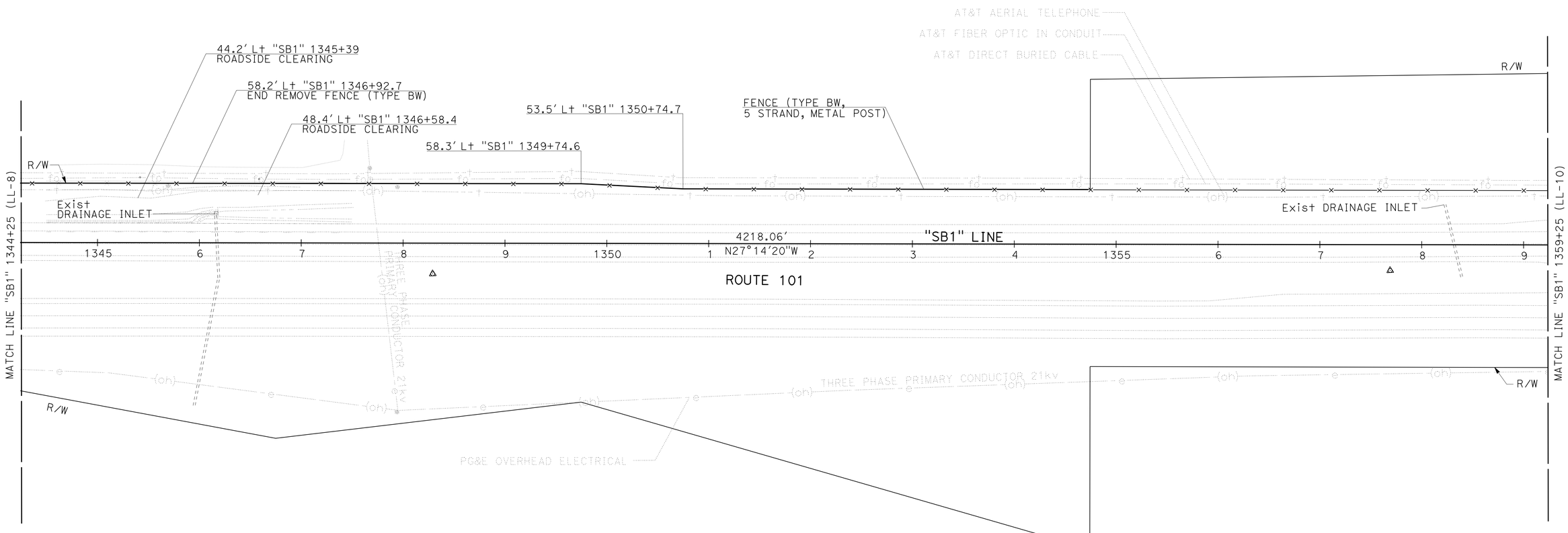

LANDSCAPE LAYOUT PLAN

LOCATION 2

SCALE: 1"=50'

LL-9

APPROVED FOR LANDSCAPE WORK ONLY

STATE OF CALIFORNIA - DEPARTMENT OF TRANSPORTATION
Caltrans® LANDSCAPE ARCHITECTURE

SENIOR LANDSCAPE ARCHITECT: DENNIS REEVES
CALCULATED-DESIGNED BY: SCOTT DOWLAN
CHECKED BY: PAT BOLGER
REVISED BY
DATE REVISED

LAST REVISION 03-07-16
DATE PLOTTED => 19-AUG-2016
TIME PLOTTED => 13:45

Dist	COUNTY	ROUTE	POST MILES TOTAL PROJECT	SHEET No.	TOTAL SHEETS
05	Mon	101	45.8/49.8	31	40

LICENSED LANDSCAPE ARCHITECT

3-7-16
PLANS APPROVAL DATE

LICENSED LANDSCAPE ARCHITECT
SCOTT P. DOWLAN No. 4410
Expiration Date
09/30/16
Renewal Date
03/07/16
Date
STATE OF CALIFORNIA

THE STATE OF CALIFORNIA OR ITS OFFICERS OR AGENTS SHALL NOT BE RESPONSIBLE FOR THE ACCURACY OR COMPLETENESS OF SCANNED COPIES OF THIS PLAN SHEET.

NOTE:

1. FOR ACCURATE RIGHT OF WAY DATA, CONTACT RIGHT OF WAY ENGINEERING AT THE DISTRICT OFFICE.

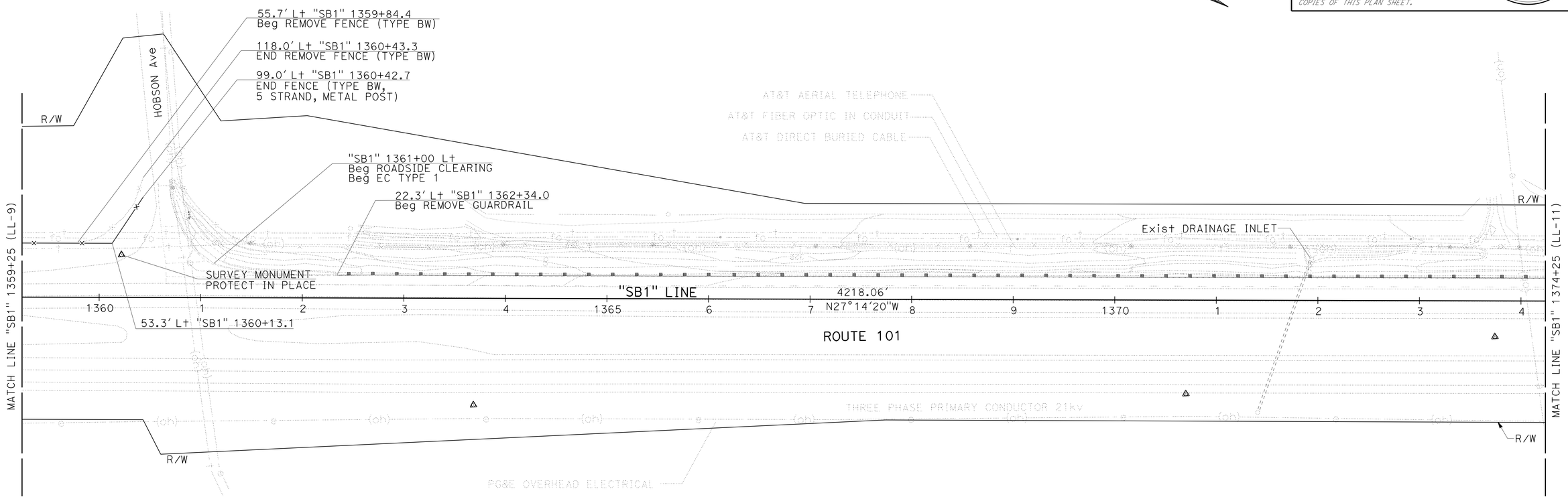

LANDSCAPE LAYOUT PLAN
LOCATION 2

SCALE: 1"=50'

LL-10

APPROVED FOR LANDSCAPE WORK ONLY

STATE OF CALIFORNIA - DEPARTMENT OF TRANSPORTATION
Caltrans® LANDSCAPE ARCHITECTURE

SENIOR LANDSCAPE ARCHITECT: DENNIS REEVES
CALCULATED-DESIGNED BY: SCOTT DOWLAN
CHECKED BY: PAT BOLGER
REVISED BY
DATE REVISED

LAST REVISION 03-07-16
DATE PLOTTED => 19-AUG-2016
TIME PLOTTED => 13:16

Dist	COUNTY	ROUTE	POST MILES TOTAL PROJECT	SHEET No.	TOTAL SHEETS
05	Mon	101	45.8/49.8	32	40

LICENSED LANDSCAPE ARCHITECT

3-7-16
PLANS APPROVAL DATE

LICENSED LANDSCAPE ARCHITECT
SCOTT P. DOWLAN No. 4410
Expiration Date
09/30/16
Renewal Date
03/07/16
Date
STATE OF CALIFORNIA

THE STATE OF CALIFORNIA OR ITS OFFICERS OR AGENTS SHALL NOT BE RESPONSIBLE FOR THE ACCURACY OR COMPLETENESS OF SCANNED COPIES OF THIS PLAN SHEET.

NOTE:

1. FOR ACCURATE RIGHT OF WAY DATA, CONTACT RIGHT OF WAY ENGINEERING AT THE DISTRICT OFFICE.

CURVE DATA

No. ⊕	R	Δ	T	L
3	3928′	08°08′05″	279.32′	557.69′

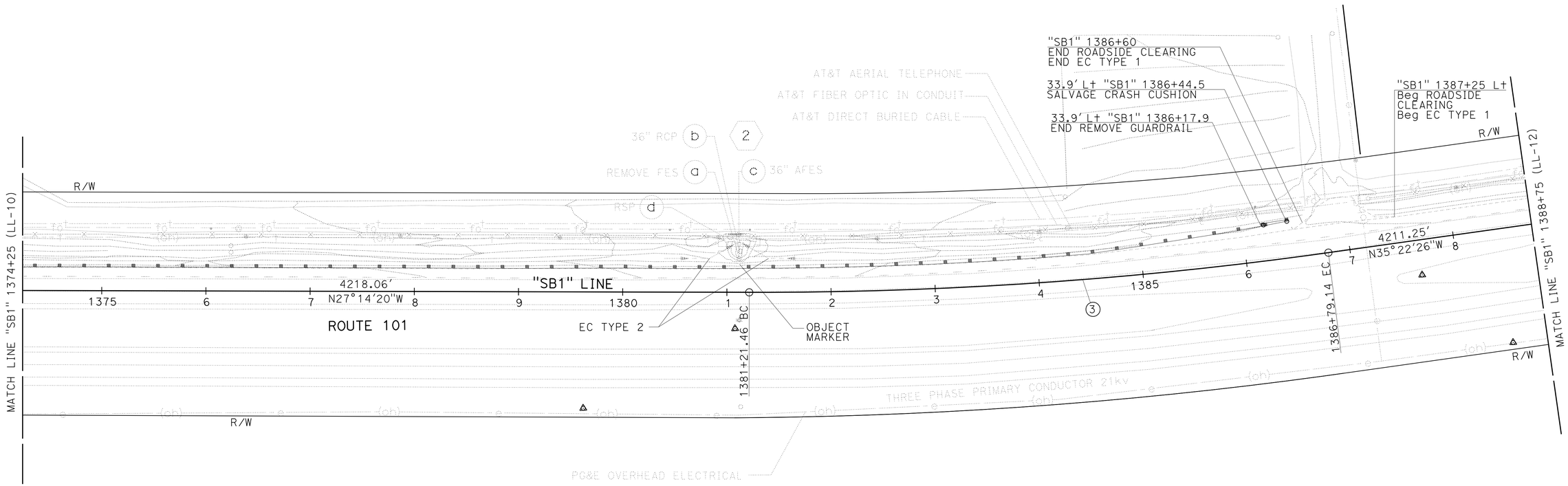

LANDSCAPE LAYOUT PLAN
LOCATION 2

SCALE: 1"=50′

LL-11

APPROVED FOR LANDSCAPE WORK ONLY

STATE OF CALIFORNIA - DEPARTMENT OF TRANSPORTATION
Caltrans LANDSCAPE ARCHITECTURE

SENIOR LANDSCAPE ARCHITECT: DENNIS REEVES
CALCULATED-DESIGNED BY: SCOTT DOWLAN
CHECKED BY: PAT BOLGER
REVISED BY
DATE REVISED

LAST REVISION 03-07-16
DATE PLOTTED => 19-AUG-2016
TIME PLOTTED => 13:16

Dist	COUNTY	ROUTE	POST MILES TOTAL PROJECT	SHEET No.	TOTAL SHEETS
05	Mon	101	45.8/49.8	33	40

LICENSED LANDSCAPE ARCHITECT

3-7-16
PLANS APPROVAL DATE

LICENSED LANDSCAPE ARCHITECT
SCOTT P. DOWLAN No. 4410
Expiration Date 09/30/16
Renewal Date 03/07/16
Date
STATE OF CALIFORNIA

THE STATE OF CALIFORNIA OR ITS OFFICERS OR AGENTS SHALL NOT BE RESPONSIBLE FOR THE ACCURACY OR COMPLETENESS OF SCANNED COPIES OF THIS PLAN SHEET.

NOTE:

1. FOR ACCURATE RIGHT OF WAY DATA, CONTACT RIGHT OF WAY ENGINEERING AT THE DISTRICT OFFICE.

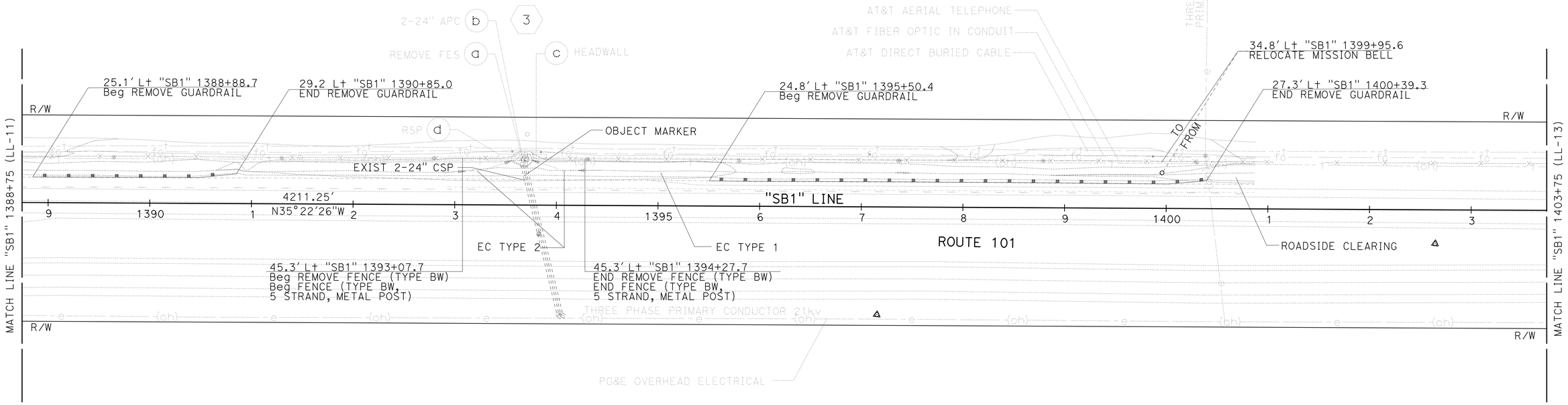

LANDSCAPE LAYOUT PLAN
LOCATION 2

APPROVED FOR LANDSCAPE WORK ONLY

SCALE: 1"=50'

LL-12

REVISED BY	DATE REVISED

CALCULATED-DESIGNED BY	CHECKED BY
SCOTT DOWLAN	PAT BOLGER

SENIOR LANDSCAPE ARCHITECT
DENNIS REEVES

STATE OF CALIFORNIA - DEPARTMENT OF TRANSPORTATION
Caltrans® LANDSCAPE ARCHITECTURE

LAST REVISION 03-07-16
DATE PLOTTED => 19-AUG-2016
TIME PLOTTED => 13:16

Dist	COUNTY	ROUTE	POST MILES TOTAL PROJECT	SHEET No.	TOTAL SHEETS
05	Mon	101	45.8/49.8	34	40

LICENSED LANDSCAPE ARCHITECT

3-7-16
PLANS APPROVAL DATE

LICENSED LANDSCAPE ARCHITECT
SCOTT P. DOWLAN No. 4410
Expiration Date 09/30/16
Renewal Date 03/07/16
Date
STATE OF CALIFORNIA

THE STATE OF CALIFORNIA OR ITS OFFICERS OR AGENTS SHALL NOT BE RESPONSIBLE FOR THE ACCURACY OR COMPLETENESS OF SCANNED COPIES OF THIS PLAN SHEET.

NOTE:

1. FOR ACCURATE RIGHT OF WAY DATA, CONTACT RIGHT OF WAY ENGINEERING AT THE DISTRICT OFFICE.

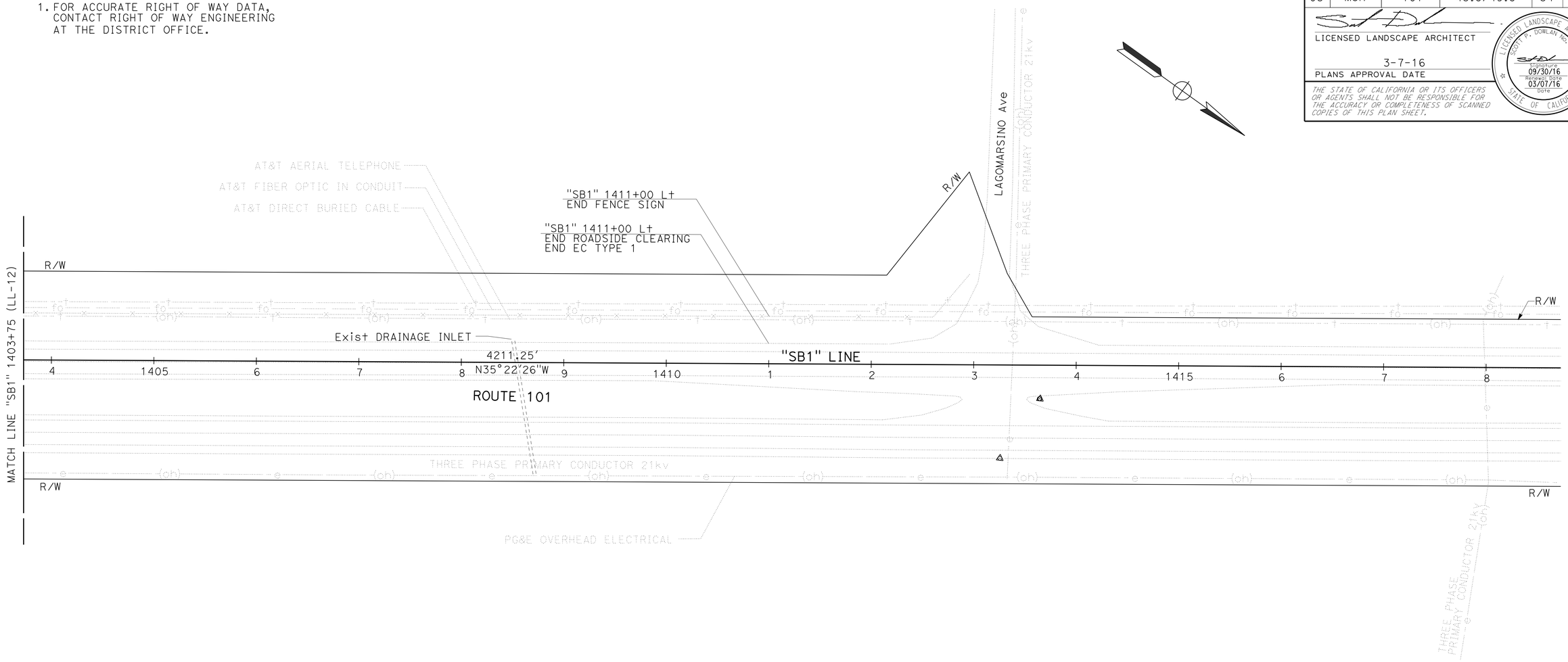

LANDSCAPE LAYOUT PLAN
LOCATION 2

SCALE: 1"=50'

LL - 13

APPROVED FOR LANDSCAPE WORK ONLY

STATE OF CALIFORNIA - DEPARTMENT OF TRANSPORTATION
Caltrans® LANDSCAPE ARCHITECTURE

SENIOR LANDSCAPE ARCHITECT: DENNIS REEVES

CALCULATED-DESIGNED BY: SCOTT DOWLAN
CHECKED BY: PAT BOLGER

REVISED BY
DATE REVISED

LAST REVISION 03-07-16
DATE PLOTTED => 19-AUG-2016
TIME PLOTTED => 13:17

Dist	COUNTY	ROUTE	POST MILES TOTAL PROJECT	SHEET No.	TOTAL SHEETS
05	Mon	101	45.8/49.8	35	40

LICENSED LANDSCAPE ARCHITECT

3-7-16
PLANS APPROVAL DATE

LICENSED LANDSCAPE ARCHITECT
SCOTT P. DOWLAN No. 4410
Expiration Date 09/30/16
Renewal Date 03/07/16
Date
STATE OF CALIFORNIA

THE STATE OF CALIFORNIA OR ITS OFFICERS OR AGENTS SHALL NOT BE RESPONSIBLE FOR THE ACCURACY OR COMPLETENESS OF SCANNED COPIES OF THIS PLAN SHEET.

SEED MIX

BOTANICAL NAME (COMMON NAME)	PERCENT GERMINATION (MINIMUM)	POUNDS PURE LIVE SEED PER ACRE (SLOPE MEASUREMENT)
ACHILLEA MILLEFOLIUM (WHITE YARROW)	80	0.5
BROMUS CARINATUS (CALIFORNIA BROME)	75	12.0
ESCHSCHOLZIA CALIFORNICA (CALIFORNIA POPPY)	75	4.0
LAYIA PLATYGLOSSA (TIDY TIPS)	85	2.0
LUPINUS BICOLOR (PIGMY-LEAF LUPINE)	65	3.0
NASSELLA PULCHRA (PURPLE NEEDLE GRASS)	80	8.0
VULPIA MICROSTACHYS (SMALL FESCUE)	80	8.0

EROSION CONTROL TYPE 1

SEQUENCE	ITEM	MATERIAL		APPLICATION RATE	DEPTH
		DESCRIPTION	TYPE		
STEP 1	COMPOST	COMPOST	MEDIUM	390 CY/ACRE	3"
STEP 2	INCORPORATE MATERIALS	COMPOST			8"
STEP 3	HYDROSEED	SEED	MIX	37.5 LB/ACRE	
		FIBER	WOOD	1,500 LB/ACRE	
		TACKIFIER	PSYLLIUM	125 LB/ACRE	

EROSION CONTROL TYPE 2

SEQUENCE	ITEM	MATERIAL		APPLICATION RATE	DEPTH
		DESCRIPTION	TYPE		
STEP 1	COMPOST	COMPOST	MEDIUM	390 CY/ACRE	3"
STEP 2	INCORPORATE MATERIALS	COMPOST			8"
STEP 3	HYDROSEED	SEED	MIX	37.5 LB/ACRE	
		FIBER	WOOD	1,500 LB/ACRE	
		TACKIFIER	PSYLLIUM	125 LB/ACRE	
STEP 4	RECP (NETTING)	NETTING	TYPE B		

EROSION CONTROL QUANTITIES

SHEET No.	STATION	DESCRIPTION	HYDROSEED	COMPOST	INCORPORATE MATERIALS	ROLLED EROSION CONTROL PRODUCT (NETTING)	REMARKS
			SQFT	SQFT	SQFT	SQFT	
LANDSCAPE LAYOUT SHEETS	"SB1" Sta 1206+00 Lt TO 1267+00 Lt	EROSION CONTROL TYPE 1	183,000	183,000	183,000		SOUTHBOUND ROADSIDE (3 FT FROM EP TO FENCE)
	"SB1" Sta 1361+00 Lt TO 1386+60 Lt	EROSION CONTROL TYPE 1	76,800	76,800	76,800		
	"SB1" Sta 1387+25 Lt TO 1411+00 Lt	EROSION CONTROL TYPE 1	71,250	71,250	71,250		
	"SB1" Sta 1263+00 Lt TO 1264+75 Lt	EROSION CONTROL TYPE 2	500	500	500	500	V-DITCH
	"SB1" Sta 1380+25 Lt TO 1381+80 Lt	EROSION CONTROL TYPE 2	500	500	500	500	
	"SB1" Sta 1392+90 Lt TO 1394+50 Lt	EROSION CONTROL TYPE 2	500	500	500	500	
		TOTAL	332,550	332,550	332,550	1,500	

EROSION CONTROL LEGEND AND QUANTITIES

ECL-1

REVISED BY | DATE REVISED
SCOTT DOWLAN | PAT BOLGER
CALCULATED-DESIGNED BY | CHECKED BY
SENIOR LANDSCAPE ARCHITECT | DENNIS REEVES
STATE OF CALIFORNIA - DEPARTMENT OF TRANSPORTATION
Caltrans® LANDSCAPE ARCHITECTURE

LAST REVISION 03-07-16 | DATE PLOTTED => 19-AUG-2016 | TIME PLOTTED => 13:17

M

Maint	MAINTENANCE
Max	MAXIMUM
MB	METAL BEAM
MBB	METAL BEAM BARRIER
MBGR	METAL BEAM GUARD RAILING
Med	MEDIAN
MGS	MIDWEST GUARDRAIL SYSTEM
MH	MANHOLE
Min	MINIMUM
Misc	MISCELLANEOUS
Misc I & S	MISCELLANEOUS IRON AND STEEL
Mkr	MARKER
Mod	MODIFIED,
	MODIFY
Mon	MONUMENT
MP	METAL PLATE
MPGR	METAL PLATE GUARD RAILING
MR	MOVEMENT RATING
MSE	MECHANICALLY STABILIZED EMBANKMENT
Mt	MOUNTAIN, MOUNT
Mtl	MATERIAL
MVP	MAINTENANCE VEHICLE PULLOUT

N

N	NORTH
NB	NORTHBOUND
No.	NUMBER (MUST HAVE PERIOD)
Nos.	NUMBERS (MUST HAVE PERIOD)
NPS	NOMINAL PIPE SIZE
NS	NEAR SIDE
NSP	NEW STANDARD PLAN
NTS	NOT TO SCALE

O

Oblr	OBLITERATE
OC	OVERCROSSING
OD	OUTSIDE DIAMETER
OF	OUTSIDE FACE
OG	ORIGINAL GROUND
OGAC	OPEN GRADED ASPHALT CONCRETE
OGFC	OPEN GRADED FRICTION COURSE
OH	OVERHEAD
OHWM	ORDINARY HIGH WATER MARK
O-O	OUT TO OUT
Opp	OPPOSITE
OSD	OVERSIDE DRAIN

P

P	PAGE
PAP	PERFORATED ALUMINUM PIPE
PB	PULL BOX
PC	POINT OF CURVATURE,
	PRECAST
PCC	POINT OF COMPOUND CURVE,
	PORTLAND CEMENT CONCRETE
PCMS	PORTABLE CHANGEABLE MESSAGE SIGN
PCP	PERFORATED CONCRETE PIPE,
	PRESTRESSED CONCRETE PIPE
PCVC	POINT OF COMPOUND VERTICAL CURVE
PEC	PERMIT TO ENTER AND CONSTRUCT
Ped	PEDESTRIAN
Ped OC	PEDESTRIAN OVERCROSSING
Ped UC	PEDESTRIAN UNDERCROSSING
Perm Mtl	PERMEABLE MATERIAL

P continued

PG	PROFILE GRADE
PI	POINT OF INTERSECTION
PJP	PARTIAL JOINT PENETRATION
Pkwy	PARKWAY
ℙ,PL	PLATE
P/L	PROPERTY LINE
PM	POST MILE,
	TIME FROM NOON TO MIDNIGHT
PN	PAVING NOTCH
POC	POINT OF HORIZONTAL CURVE
POT	POINT OF TANGENT
POVC	POINT OF VERTICAL CURVE
PP	PIPE PILE,
	PLASTIC PIPE,
	POWER POLE
PPL	PREFORMED PERMEABLE LINER
PPP	PERFORATED PLASTIC PIPE
PRC	POINT OF REVERSE CURVE
PRF	PAVEMENT REINFORCING FABRIC
PRVC	POINT OF REVERSE VERTICAL CURVE
PS&E	PLANS, SPECIFICATIONS AND ESTIMATES
PS, P/S	PRESTRESSED
PSP	PERFORATED STEEL PIPE
PT	POINT OF TANGENCY
PVC	POLYVINYL CHLORIDE
Pvmt	PAVEMENT

Q

Qty	QUANTITY

R

R	RADIUS
R & D	REMOVE AND DISPOSE
R & S	REMOVE AND SALVAGE
R/C	RATE OF CHANGE
RCA	REINFORCED CONCRETE ARCH
RCB	REINFORCED CONCRETE BOX
RCP	REINFORCED CONCRETE PIPE
RCPA	REINFORCED CONCRETE PIPE ARCH
Rd	ROAD
Reinf	REINFORCED,
	REINFORCEMENT,
	REINFORCING
Rel	RELOCATE
Repl	REPLACEMENT
Ret	RETAINING
Rev	REVISED, REVISION
Rdwy	ROADWAY
RHMA	RUBBERIZED HOT MIX ASPHALT
Riv	RIVER
RM	ROAD-MIXED
RP	RADIUS POINT,
	REFERENCE POINT
RR	RAILROAD
RSP	ROCK SLOPE PROTECTION,
	REVISED STANDARD PLAN
Rt	RIGHT
Rte	ROUTE
RW	REDWOOD,
	RETAINING WALL
R/W	RIGHT OF WAY
Rwy	RAILWAY

S

S	SOUTH,
	SUPPLEMENT
SAE	STRUCTURE APPROACH EMBANKMENT
Salv	SALVAGE
SAPP	STRUCTURAL ALUMINUM PLATE PIPE
SB	SOUTHBOUND
SC	SAND CUSHION
SCSP	SLOTTED CORRUGATED STEEL PIPE
SD	STORM DRAIN
Sec	SECOND,
	SECTION
Sep	SEPARATION
SG	SUBGRADE
Shld	SHOULDER
Sht	SHEET
Sim	SIMILAR
℄	STATION LINE
SM	SELECTED MATERIAL
Spec	SPECIAL,
	SPECIFICATIONS
SPP	SLOTTED PLASTIC PIPE
SS	SLOPE STAKE
SSBM	STRAP AND SADDLE BRACKET METHOD
SSD	STRUCTURAL SECTION DRAIN
SSPA	STRUCTURAL STEEL PLATE ARCH
SSPP	STRUCTURAL STEEL PLATE PIPE
SSPPA	STRUCTURAL STEEL PLATE PIPE ARCH
SSRP	STEEL SPIRAL RIB PIPE
St	STREET
Sta	STATION
STBB	SINGLE THRIE BEAM BARRIER
Std	STANDARD
Str	STRUCTURE
Surf	SURFACING
SW	SIDEWALK,
	SOUND WALL
Swr	SEWER
Sym	SYMMETRICAL
S4S	SURFACE 4 SIDES

T

T	SEMI-TANGENT
Tan	TANGENT
TBB	THRIE BEAM BARRIER
Tbr	TIMBER
TC	TOP OF CURB
TCB	TRAFFIC CONTROL BOX
TCE	TEMPORARY CONSTRUCTION EASEMENT
Tel	TELEPHONE
Temp	TEMPORARY
TG	TOP OF GRADE
Tot	TOTAL
TP	TELEPHONE POLE
TPB	TREATED PERMEABLE BASE
TPM	TREATED PERMEABLE MATERIAL
Trans	TRANSITION

T continued

TS	TRANSVERSE,
	TRAFFIC SIGNAL,
	TUBULAR STEEL
Typ	TYPICAL

U

UC	UNDERCROSSING
UD	UNDERDRAIN
UG	UNDERGROUND
UON	UNLESS OTHERWISE NOTED
UP	UNDERPASS

V

V	VALVE,
	DESIGN SPEED
Var	VARIABLE,
	VARIES
VC	VERTICAL CURVE
VCP	VITRIFIED CLAY PIPE
Vert	VERTICAL
Via	VIADUCT
Vol	VOLUME

W

W	WEST,
	WIDTH
WB	WESTBOUND
WH	WEEP HOLE
WM	WIRE MESH
WS	WATER SURFACE
WSP	WELDED STEEL PIPE
Wt	WEIGHT
WV	WATER VALVE
WW	WINGWALL
WWLOL	WINGWALL LAYOUT LINE

X

X Sec	CROSS SECTION
Xing	CROSSING

Y

Yr	YEAR
Yrs	YEARS

Dist	COUNTY	ROUTE	POST MILES TOTAL PROJECT	SHEET No.	TOTAL SHEETS
05	Mon	101	45.8/49.8	36	40

Grace M. Tsushima
REGISTERED CIVIL ENGINEER

July 19, 2013
PLANS APPROVAL DATE

REGISTERED PROFESSIONAL ENGINEER
Grace M. Tsushima
No. C49814
Exp. 9-30-14
CIVIL
STATE OF CALIFORNIA

THE STATE OF CALIFORNIA OR ITS OFFICERS OR AGENTS SHALL NOT BE RESPONSIBLE FOR THE ACCURACY OR COMPLETENESS OF SCANNED COPIES OF THIS PLAN SHEET.

TO ACCOMPANY PLANS DATED 3-7-16

UNIT OF MEASUREMENT SYMBOLS:

Some of the symbols used in the project plan quantity tables and in the Bid Item List are:

TABLE A

SYMBOL USED	DEFINITIONS
ACRE	ACRE
CF	CUBIC FOOT
CY	CUBIC YARD
EA	EACH
GAL	GALLON
LB	POUND
LF	LINEAR FOOT
SQFT	SQUARE FOOT
SQYD	SQUARE YARD
STA	100 FEET
TAB	TABLET
TON	2,000 POUNDS

Some of the symbols used in the plans other than in the project plan quantity tables are:

TABLE B

SYMBOL USED	DEFINITIONS
ksi	KIPS PER SQUARE INCH
ksf	KIPS PER SQUARE FOOT
psi	POUNDS PER SQUARE INCH
psf	POUNDS PER SQUARE FOOT
lb/ft^3, pcf	POUNDS PER CUBIC FOOT
tsf	TONS PER SQUARE FOOT
mph, MPH *	MILES PER HOUR
ø	NOMINAL DIAMETER
oz	OUNCE
lb	POUND
kip	1,000 POUNDS
cal	CALORIE
ft	FOOT OR FEET
gal	GALLON

* For use on a sign panel only

STATE OF CALIFORNIA
DEPARTMENT OF TRANSPORTATION

ABBREVIATIONS (SHEET 2 OF 2)

NO SCALE

RSP A10B DATED JULY 19, 2013 SUPERSEDES STANDARD PLAN A10B DATED MAY 20, 2011 - PAGE 2 OF THE STANDARD PLANS BOOK DATED 2010.

REVISED STANDARD PLAN RSP A10B

2010 REVISED STANDARD PLAN RSP A10B

6-7-13

Dist	COUNTY	ROUTE	POST MILES TOTAL PROJECT	SHEET No.	TOTAL SHEETS
05	Mon	101	45.8/49.8	37	40

REGISTERED CIVIL ENGINEER

October 30, 2015
PLANS APPROVAL DATE

REGISTERED PROFESSIONAL ENGINEER
Carl M. Duan
No. C59976
Exp. 6-30-16
CIVIL
STATE OF CALIFORNIA

THE STATE OF CALIFORNIA OR ITS OFFICERS OR AGENTS SHALL NOT BE RESPONSIBLE FOR THE ACCURACY OR COMPLETENESS OF SCANNED COPIES OF THIS PLAN SHEET.

TO ACCOMPANY PLANS DATED 3-7-16

2010 REVISED STANDARD PLAN RSP A62F

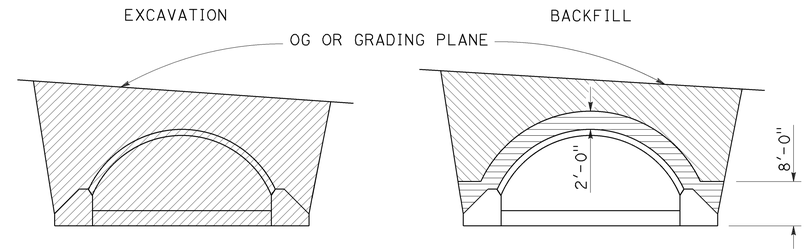

IN TRENCH

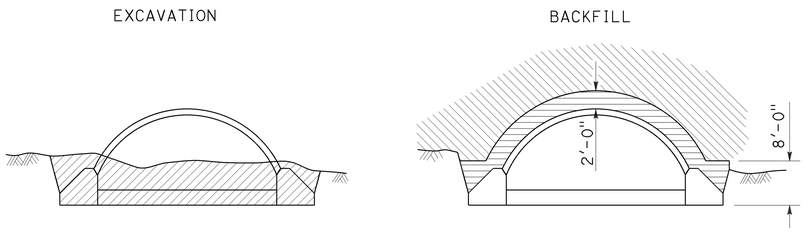

IN EMBANKMENT

STRUCTURAL STEEL PLATE ARCHES

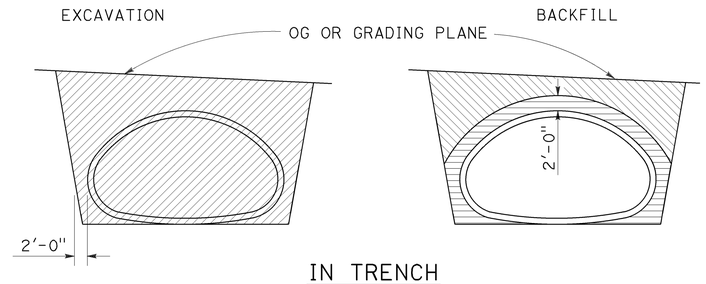

IN TRENCH

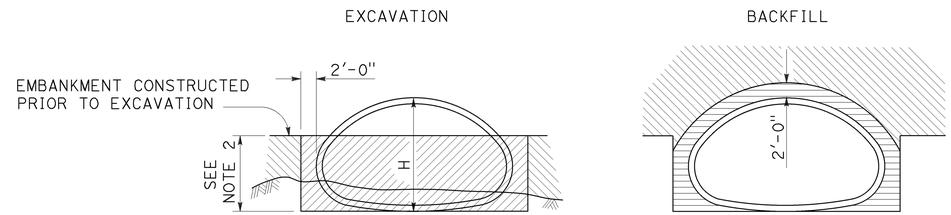

IN EMBANKMENT

STRUCTURAL STEEL PLATE PIPE ARCHES AND VEHICULAR UNDERCROSSING

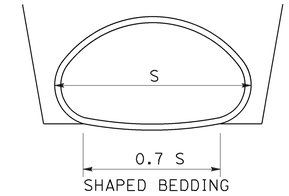

SHAPED BEDDING
S = Larger than 84"

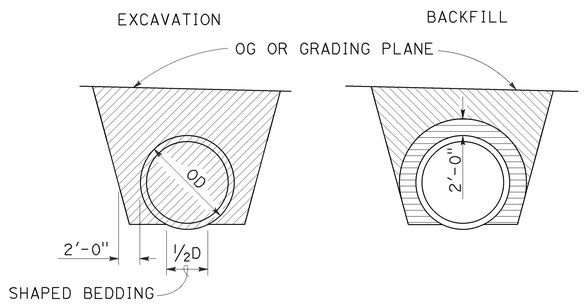

IN TRENCH

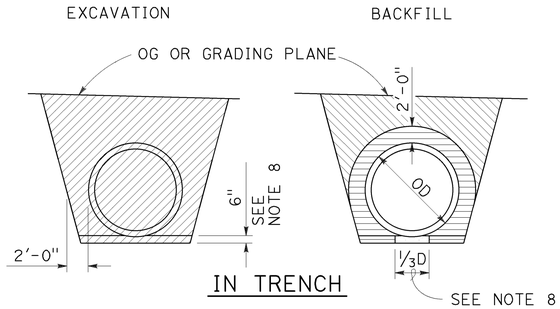

IN TRENCH

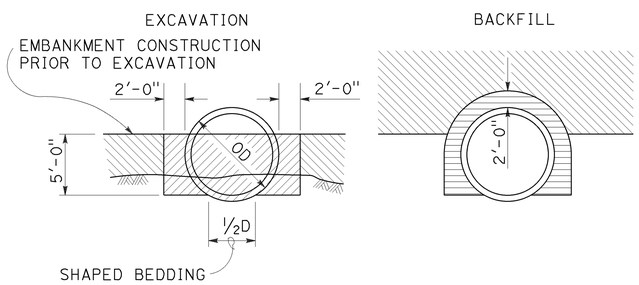

IN EMBANKMENT

PIPES

Larger than 84"

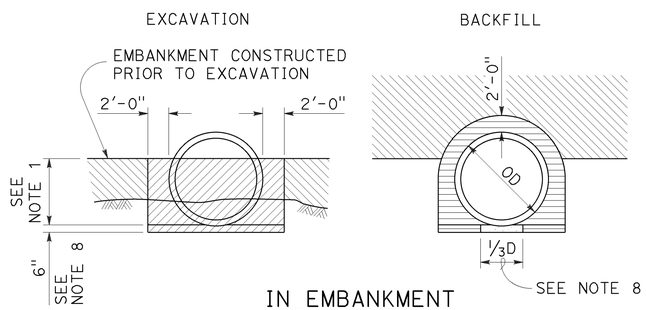

IN EMBANKMENT

METAL AND PLASTIC PIPES AND CORRUGATED METAL PIPE ARCHES

84" or Smaller

NOTES:

1. PIPES: 30" minimum for diameters up to and including 42" then ⅔ diameter but no more than 60" required. CORRUGATED METAL PIPE ARCHES: 30" maximum.
2. ⅔ H up to 60" maximum.
3. Slope or shore excavation sides as necessary.
4. Backfill shall be placed full width of excavation except as noted.
5. Diagrams do not apply to overside drains.
6. Dimensions shown are minimum.
7. Construction strutting of structural steel plate pipe, arches and vehicular undercrossing to be used when shown on the project plans. When shown, see Standard Plan D88A for strutting requirements.
8. Excavation below pipe and 80% relative compaction requirements for plastic pipes only.
9. D is the inside diameter (ID) of the pipe.

LEGEND

- STRUCTURE EXCAVATION (CULVERT)
- ROADWAY EMBANKMENT
- STRUCTURE BACKFILL (CULVERT) 95% RELATIVE COMPACTION
- STRUCTURE BACKFILL (CULVERT) 80% RELATIVE COMPACTION

STATE OF CALIFORNIA
DEPARTMENT OF TRANSPORTATION

EXCAVATION AND BACKFILL METAL AND PLASTIC CULVERTS

NO SCALE

RSP A62F DATED OCTOBER 30, 2015 SUPERSEDES STANDARD PLAN A62F DATED MAY 20, 2011 - PAGE 26 OF THE STANDARD PLANS BOOK DATED 2010.

REVISED STANDARD PLAN RSP A62F

10-13-15

Dist	COUNTY	ROUTE	POST MILES TOTAL PROJECT	SHEET No.	TOTAL SHEETS
05	Mon	101	45.8/49.8	38	40

REGISTERED CIVIL ENGINEER

July 15, 2016
PLANS APPROVAL DATE

REGISTERED PROFESSIONAL ENGINEER
Carl M. Duan
No. C59976
Exp. 6-30-18
CIVIL
STATE OF CALIFORNIA

THE STATE OF CALIFORNIA OR ITS OFFICERS OR AGENTS SHALL NOT BE RESPONSIBLE FOR THE ACCURACY OR COMPLETENESS OF SCANNED COPIES OF THIS PLAN SHEET.

TO ACCOMPANY PLANS DATED 3-7-16

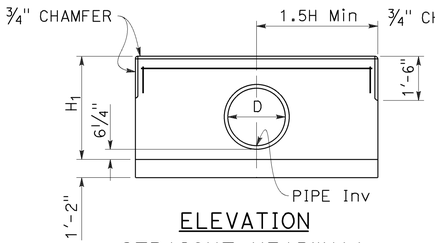

ELEVATION
STRAIGHT HEADWALL
SINGLE CIRCULAR PIPE

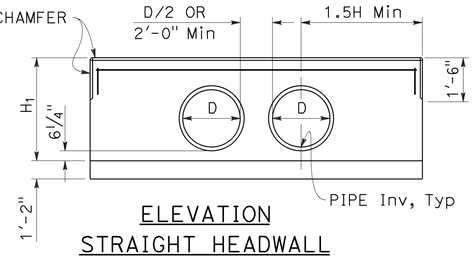

ELEVATION
STRAIGHT HEADWALL
DOUBLE CIRCULAR PIPE

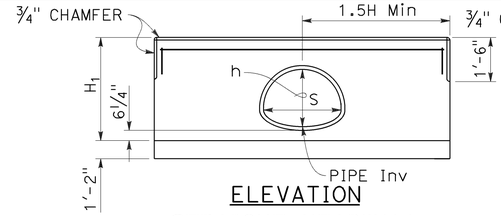

ELEVATION
STRAIGHT HEADWALL
SINGLE CMP

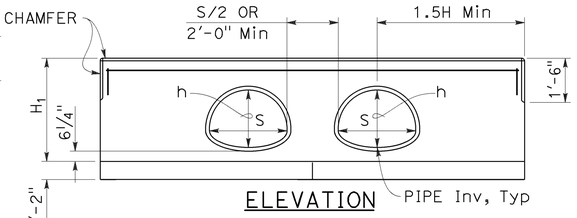

ELEVATION
STRAIGHT HEADWALL
DOUBLE CMP

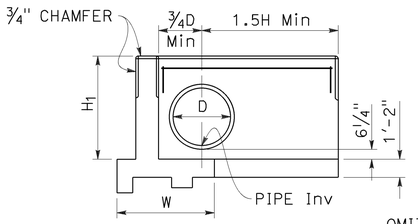

ELEVATION
"L" HEADWALL

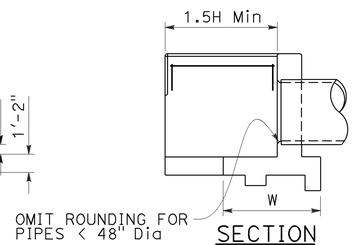

SECTION
"L" HEADWALL

CIRCULAR PIPE CULVERT HEADWALLS

See Note 2

H	CIRCULAR PIPE SIZE D	CMP ARCH SIZE S x h
2'-8"	12"	-
2'-11"	15"	21" x 15"
3'-2"	18"	24" x 18"
3'-5"	21"	28" x 20"
3'-8"	24"	35" x 24"
3'-11"	27"	-
4'-2"	30"	42" x 29"
4'-5"	33"	49" x 33"
4'-8"	36"	-
4'-11"	39"	57" x 38"
5'-2"	42"	64" x 43"
5'-5"	45"	-
5'-8"	48"	71" x 47"
5'-11"	51"	-
6'-2"	54"	-

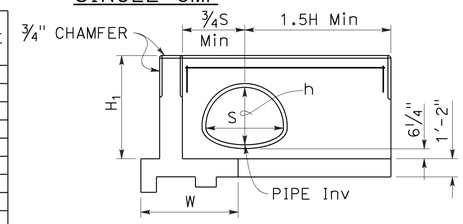

ELEVATION
"L" HEADWALL

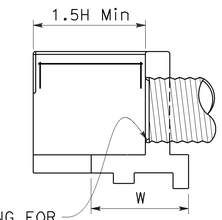

SECTION
"L" HEADWALL

CMP ARCH CULVERT HEADWALLS

See Note 2

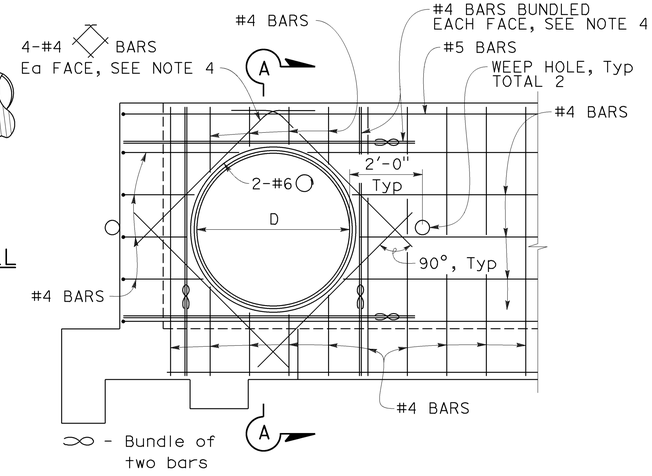

REINFORCEMENT MODIFICATION

"L" headwall shown. Straight headwall similar.
Circular pipe shown. CMP arch similar.

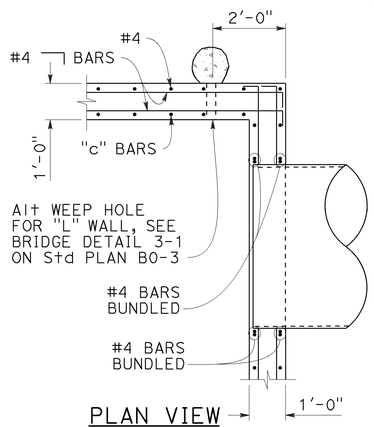

PLAN VIEW
STEM WALL

"L" headwall shown.
Straight headwall similar.

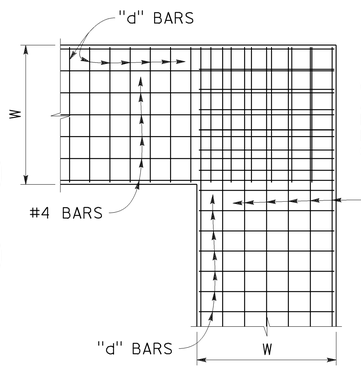

PLAN VIEW
FOOTING

"L" headwall shown.
Straight headwall similar.

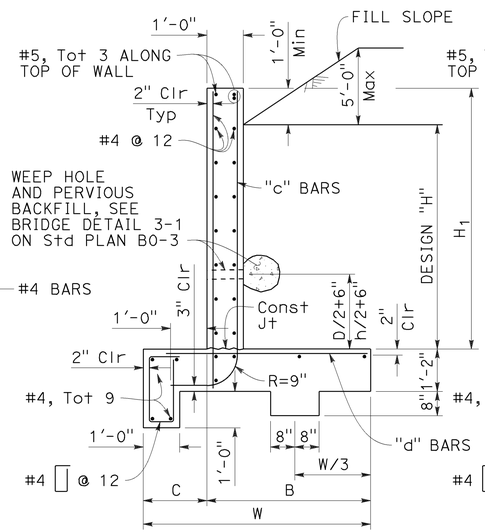

TYPICAL SECTION

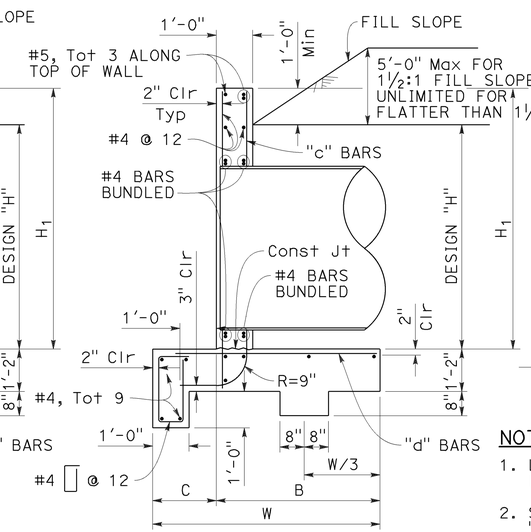

SECTION A-A

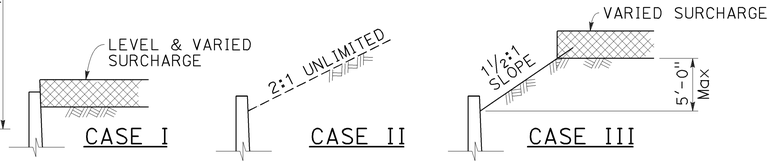

DETAIL OF DESIGN LOADING CASES

		H	2'-8"	2'-11"	3'-2"	3'-5"	3'-8"	3'-11"	4'-2"	4'-5"	4'-8"	4'-11"	5'-2"	5'-5"	5'-8"	5'-11"	6'-2"
		W	4'-7"	4'-9"	4'-10"	5'-0"	5'-1"	5'-2"	5'-3"	5'-5"	5'-6"	5'-7"	5'-8"	5'-9"	5'-11"	6'-0"	6'-3"
		C	1'-2"	1'-2"	1'-2"	1'-3"	1'-3"	1'-3"	1'-3"	1'-4"	1'-4"	1'-4"	1'-5"	1'-5"	1'-6"	1'-6"	1'-9"
		B	3'-5"	3'-7"	3'-8"	3'-9"	3'-10"	3'-11"	4'-0"	4'-1"	4'-2"	4'-3"	4'-3"	4'-4"	4'-5"	4'-6"	4'-6"
"c" BARS			#4 @ 12	#4 @ 12	#4 @ 12	#4 @ 12	#4 @ 12	#4 @ 12	#4 @ 12	#4 @ 12	#4 @ 12	#4 @ 12	#4 @ 12	#4 @ 12	#4 @ 12	#4 @ 12	#5 @ 12
"d" BARS			#4 @ 12	#4 @ 8	#4 @ 8	#4 @ 8	#4 @ 8	#5 @ 12	#5 @ 12	#5 @ 12	#5 @ 12	#5 @ 8	#5 @ 8	#5 @ 8	#5 @ 8	#6 @ 8	#6 @ 8
* Conc CY/LF			0.404	0.412	0.415	0.423	0.426	0.430	0.433	0.440	0.444	0.448	0.451	0.455	0.462	0.466	0.477
* Reinf LB/LF			23	24	24	25	25	26	27	27	28	28	29	29	30	31	32
**CASE I	Ser (q'o, B')		0.79, 4.66	0.83, 4.57	0.88, 4.58	0.89, 4.73	0.93, 4.74	0.93, 4.75	1.02, 4.75	1.02, 4.92	1.07, 4.93	1.11, 4.94	1.12, 4.98	1.16, 4.99	1.17, 5.16	1.21, 5.18	1.15, 5.53
	Str (q'o, B')		1.48, 1.75	1.53, 1.80	1.65, 1.76	1.64, 1.88	1.76, 1.85	1.89, 1.83	2.02, 1.80	1.97, 1.95	2.08, 1.94	2.20, 1.93	2.28, 1.92	2.39, 1.92	2.31, 2.08	2.41, 2.09	2.17, 2.41
	Extr (q'o, B')		0.65, 4.16	0.68, 4.27	0.72, 4.29	0.74, 4.44	0.78, 4.46	0.82, 4.47	0.86, 4.47	0.87, 4.63	0.92, 4.63	0.96, 4.64	0.98, 4.69	1.03, 4.69	1.04, 4.84	1.09, 4.84	1.05, 5.18
**CASE II	Ser (q'o, B')		0.41, 4.52	0.44, 4.67	0.48, 4.73	0.51, 4.90	0.55, 4.95	0.59, 5.00	0.63, 5.04	0.65, 5.21	0.70, 5.26	0.74, 5.30	0.77, 5.37	0.81, 5.40	0.83, 5.58	0.88, 5.61	0.86, 5.96
	Str (q'o, B')		1.05, 4.49	1.10, 4.64	1.15, 4.69	1.19, 4.86	1.24, 4.90	1.30, 4.94	1.36, 4.98	1.39, 5.15	1.46, 5.18	1.52, 5.22	1.56, 5.28	1.62, 5.31	1.62, 5.48	1.72, 5.51	1.69, 5.85
	Extr (q'o, B')		0.98, 3.90	1.03, 4.00	1.10, 4.01	1.13, 4.15	1.19, 4.15	1.26, 4.15	1.33, 4.14	1.37, 4.28	1.44, 4.27	1.52, 4.26	1.57, 4.29	1.65, 4.28	1.68, 4.41	1.77, 4.40	1.72, 4.71
**CASE III	Ser (q'o, B')		0.61, 4.53	0.64, 4.73	0.68, 4.76	0.70, 4.91	0.74, 4.91	0.79, 4.94	0.83, 4.93	0.85, 5.08	1.17, 4.03	1.23, 4.03	1.27, 4.06	1.34, 4.02	1.36, 4.15	1.43, 4.11	1.36, 4.45
	Str (q'o, B')		0.99, 4.28	1.04, 4.67	1.10, 4.69	1.13, 4.83	1.19, 4.82	1.25, 4.83	1.32, 4.82	1.35, 4.95	2.02, 2.66	2.16, 2.62	2.25, 2.59	2.44, 2.48	2.49, 2.54	2.70, 2.44	2.50, 2.72
	Extr (q'o, B')		0.90, 3.88	0.95, 3.93	1.01, 3.91	1.04, 4.02	1.11, 3.97	1.18, 3.92	1.25, 3.90	1.28, 4.00	1.35, 3.94	1.43, 3.92	1.11, 5.14	1.55, 3.87	1.58, 3.97	1.67, 3.91	1.60, 4.22

* Quantities include 1'-0" extension above the design "H" limit.
** q'o = net bearing stress (ksf), B' = effective footing width (ft)
Ser - service limit
Str - strength limit
Extr - extreme event

REINFORCED CONCRETE HEADWALL

Quantities do not include added diagonals and do not consider pipe occupancy.

NOTE: Reinforced Concrete: fy = 60,000 psi
f'c = 3,600 psi

Earth Density: 120 pcf
Equivalent Fluid Pressure: 36 pcf

NOTES:

1. Length of wall from ℄ pipe to end of wall is 1.5H Min, unless a greater length is shown on project plans.
2. Single circular pipe or single CMP shown for "L" headwall. For double pipe in "L" headwall, see "ELEVATION STRAIGHT HEADWALL DOUBLE CIRCULAR PIPE" or "ELEVATION STRAIGHT HEADWALL DOUBLE CMP" detail for additional information.
3. Cable railing to be installed on top of headwall when shown on Project Plans. See Revised Standard Plan RSP B11-47 for cable railing details.
4. Adjacent to each side of the opening, place additional reinforcement equivalent to half the interupted main reinforcement. For pipes 42" diameter and greater, add 4 diagonals, 1 bar each side. Extend bars one development length past the intersection with the adjacent diagonal bar, or where bars intersect mid thickness of adjacent wall, bottom slab or at top of wall, bend ends as required into same plane.
5. Quantities are approximate and for design purposes only. No deduction is made for pipe or arch occupancy.

STATE OF CALIFORNIA
DEPARTMENT OF TRANSPORTATION

PIPE CULVERT HEADWALLS STRAIGHT AND "L"

NO SCALE

RSP D89 DATED JULY 15, 2016 SUPERSEDES STANDARD PLAN D89
DATED MAY 20, 2011 - PAGE 188 OF THE STANDARD PLANS BOOK DATED 2010.

REVISED STANDARD PLAN RSP D89

2010 REVISED STANDARD PLAN RSP D89

6-20-16

Dist	COUNTY	ROUTE	POST MILES TOTAL PROJECT	SHEET No.	TOTAL SHEETS
05	Mon	101	45.8/49.8	39	40

REGISTERED CIVIL ENGINEER

July 19, 2013
PLANS APPROVAL DATE

REGISTERED PROFESSIONAL ENGINEER
Gurinderpal Bhullar
No. C48815
Exp. 9-30-14
CIVIL
STATE OF CALIFORNIA

THE STATE OF CALIFORNIA OR ITS OFFICERS OR AGENTS SHALL NOT BE RESPONSIBLE FOR THE ACCURACY OR COMPLETENESS OF SCANNED COPIES OF THIS PLAN SHEET.

TO ACCOMPANY PLANS DATED 3-7-16

2010 REVISED STANDARD PLAN RSP T9

TABLE 1

TAPER LENGTH CRITERIA AND CHANNELIZING DEVICE SPACING

SPEED (S)	MINIMUM TAPER LENGTH * FOR WIDTH OF OFFSET 12 FEET (W)				MAXIMUM CHANNELIZING DEVICE SPACING		
					X	Y	Z **
	TANGENT 2L	MERGING L	SHIFTING L/2	SHOULDER L/3	TAPER	TANGENT	CONFLICT
mph	ft	ft	ft	ft	ft	ft	ft
20	160	80	40	27	20	40	10
25	250	125	63	42	25	50	12
30	360	180	90	60	30	60	15
35	490	245	123	82	35	70	17
40	640	320	160	107	40	80	20
45	1080	540	270	180	45	90	22
50	1200	600	300	200	50	100	25
55	1320	660	330	220	55	110	27
60	1440	720	360	240	60	120	30
65	1560	780	390	260	65	130	32
70	1680	840	420	280	70	140	35

* - For other offsets, use the following merging taper length formula for L:
For speed of 40 mph or less, $L = WS^2/60$
For speed of 45 mph or more, $L = WS$

Where: L = Taper length in feet
W = Width of offset in feet
S = Posted speed limit, off-peak 85th-percentile speed prior to work starting, or the anticipated operating speed in mph

** - Use for taper and tangent sections where there are no pavement markings or where there is a conflict between existing pavement markings and channelizers (CA).

TABLE 2

LONGITUDINAL BUFFER SPACE AND FLAGGER STATION SPACING

SPEED *	Min D **	DOWNGRADE Min D ***		
		-3%	-6%	-9%
mph	ft	ft	ft	ft
20	115	116	120	126
25	155	158	165	173
30	200	205	215	227
35	250	257	271	287
40	305	315	333	354
45	360	378	400	427
50	425	446	474	507
55	495	520	553	593
60	570	598	638	686
65	645	682	728	785
70	730	771	825	891

* - Speed is posted speed limit, off-peak 85th-percentile speed prior to work starting, or the anticipated operating speed in mph

** - Longitudinal buffer space or flagger station spacing

*** - Use on sustained downgrade steeper than -3 percent and longer than 1 mile.

TABLE 3

ADVANCE WARNING SIGN SPACING

ROAD TYPE	DISTANCE BETWEEN SIGNS *		
	A	B	C
	ft	ft	ft
URBAN - 25 mph OR LESS	100	100	100
URBAN - MORE THAN 25 mph TO 40 mph	250	250	250
URBAN - MORE THAN 40 mph	350	350	350
RURAL	500	500	500
EXPRESSWAY / FREEWAY	1000	1500	2640

* - The distances are approximate, are intended for guidance purposes only, and should be applied with engineering judgment. These distances should be adjusted by the Engineer for field conditions, if necessary, by increasing or decreasing the recommmended distances.

STATE OF CALIFORNIA
DEPARTMENT OF TRANSPORTATION

TRAFFIC CONTROL SYSTEM TABLES FOR LANE AND RAMP CLOSURES

NO SCALE

RSP T9 DATED JULY 19, 2013 SUPERSEDES RSP T9 DATED APRIL 19, 2013 THAT SUPPLEMENTS THE STANDARD PLANS BOOK DATED 2010.

REVISED STANDARD PLAN RSP T9

4-30-13

TO ACCOMPANY PLANS DATED 3-7-16

Dist	COUNTY	ROUTE	POST MILES TOTAL PROJECT	SHEET No.	TOTAL SHEETS
05	Mon	101	45.8/49.8	40	40

REGISTERED CIVIL ENGINEER

April 19, 2013
PLANS APPROVAL DATE

REGISTERED PROFESSIONAL ENGINEER Gurinderpal Bhullar No. C48815 Exp. 9-30-14 CIVIL STATE OF CALIFORNIA

THE STATE OF CALIFORNIA OR ITS OFFICERS OR AGENTS SHALL NOT BE RESPONSIBLE FOR THE ACCURACY OR COMPLETENESS OF SCANNED COPIES OF THIS PLAN SHEET.

NOTES:

See Revised Standard Plan RSP T9 for tables.

Use cone spacing X for taper segment, Y for tangent segment or Z for conflict situations, as approriate, per Table 1, unless X, Y, or Z cone spacing is shown on this sheet.

Unless otherwise specified in the special provisions, all temporary warning signs shall have black legend on fluorescent orange background.

California codes are designated by (CA). Otherwise, Federal (MUTCD) codes are shown.

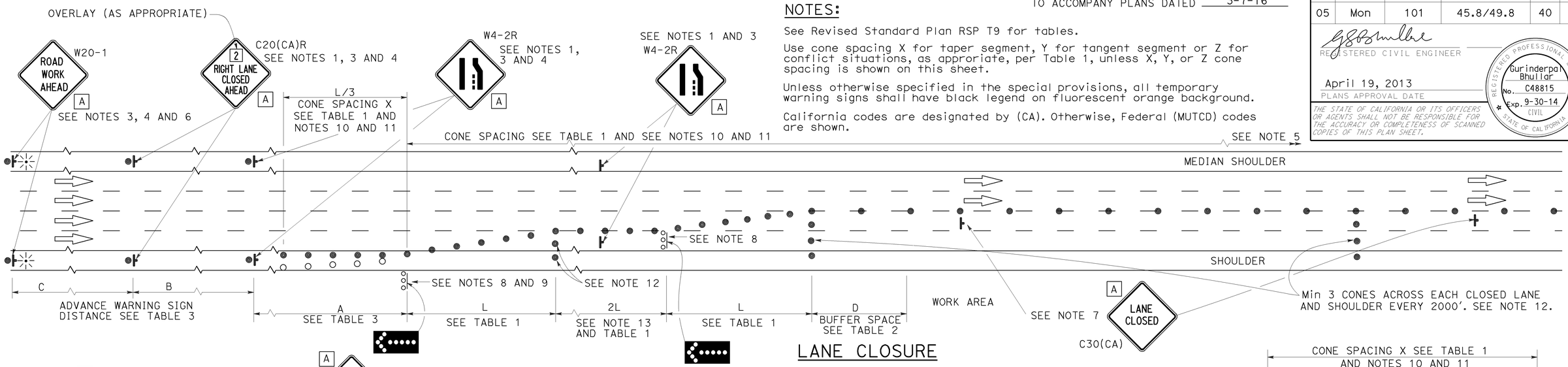

LANE CLOSURE

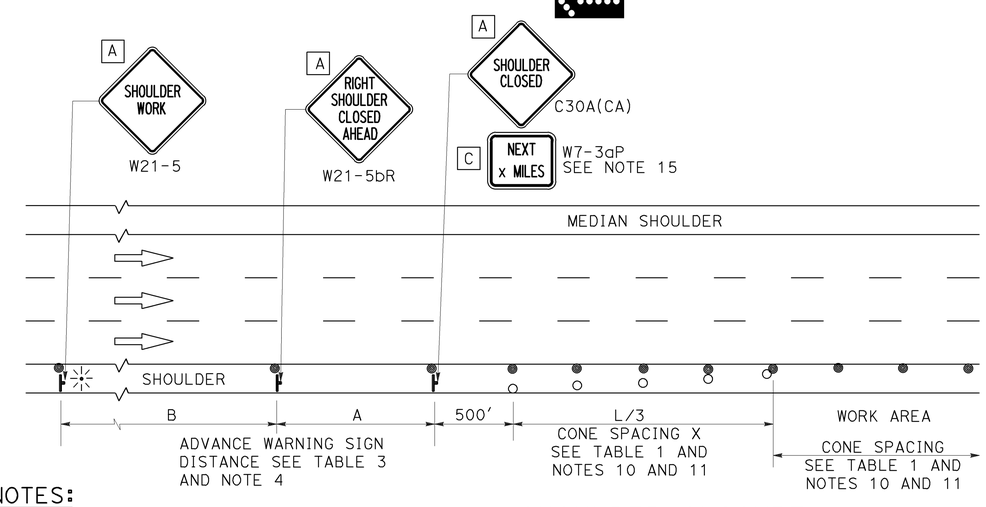

SHOULDER CLOSURE

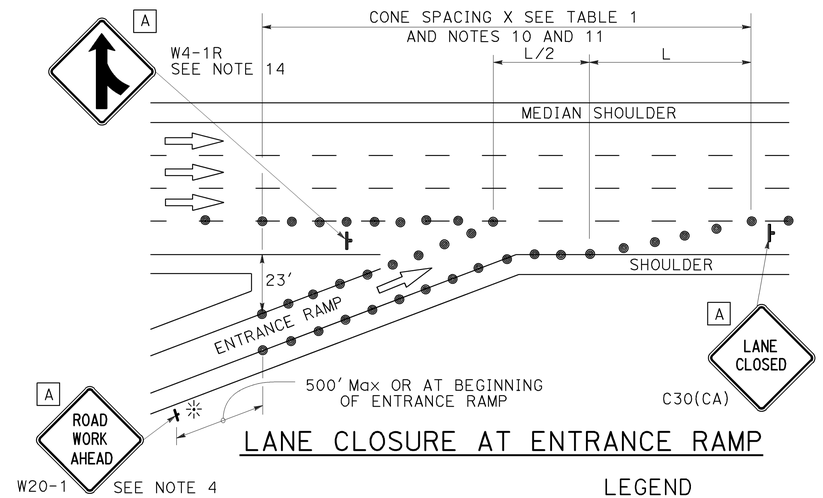

LANE CLOSURE AT ENTRANCE RAMP

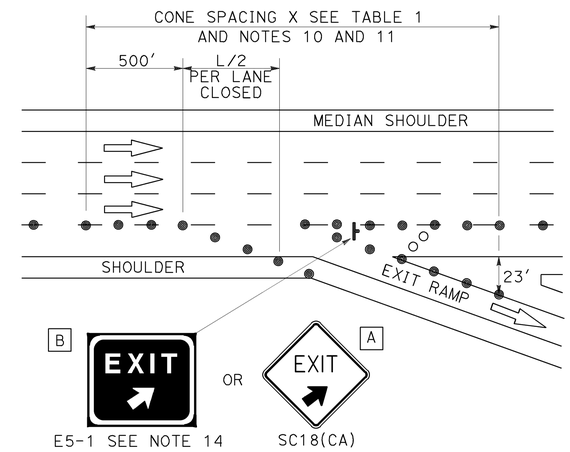

LANE CLOSURE AT EXIT RAMP

NOTES:

1. Median lane closures shall conform to the details as shown except that C20(CA)L and W4-2L signs shall be used.
2. At least one person shall be assigned to provide full time maintenance of traffic control devices for lane closures.
3. Duplicate sign installations are not required:
   a) On opposite shoulder if at least one-half of the available lanes remain open to traffic.
   b) In the median if the width of the median shoulder is less than 8' and the outside lanes are to be closed.
4. Each advance warning sign on each side of the roadway shall be equipped with at least two flags for daytime closure. Each flag shall be at least 16" x 16" in size and shall be orange or fluorescent red-orange in color. Flashing beacons shall be placed at the locations indicated for lane closure during hours of darkness.
5. A G20-2 "END ROAD WORK" sign, with minimum size of 48" x 24" as appropriate, shall be placed at the end of the lane closure unless the end of work area is obvious or ends within a larger project's limits.
6. If the W20-1 sign would follow within 2000' of a stationary W20-1 or G20-1 "ROAD WORK NEXT _____ MILES", use a C20(CA) sign for the first advance warning sign.
7. Place a C30(CA) sign every 2000' throughout length of lane closure.
8. One flashing arrow sign for each lane closed. The flashing arrow signs shall be Type I.
9. A minimum 1500' of sight distance shall be provided where possible for vehicles approaching the first flashing arrow sign. Lane closures shall not begin at top of crest vertical curve or on a horizontal curve.
10. All cones used for lane closures during the hours of darkness shall be fitted with retroreflective bands (or sleeves) as specified in the specifications.
11. Portable delineators, placed at one-half the spacing indicated for traffic cones may be used instead of cones for daytime closures only.
12. Unless otherwise specified in the special provisions, a minimum of 3 cones shall be placed transversely across each closed lane and shoulder at each location where a taper across a traffic lane ends and every 2000' as shown on the "Lane Closure" detail. Two Type II barricades may be used instead of the 3 cones. The transverse alignment of the cones or barricades on the closed shoulder may be shifted from the transverse alignment to provide access to the work.
13. Unless otherwise specified in the special provisions, the 2L tangent shown along lane lines shall be used between the L tapers required for each closed traffic lane.
14. Unless otherwise specified in the special provisions, the E5-1 or SC18(CA) and W4-1 signs shall be used as shown.
15. A W7-3aP "NEXT____ MILES" plaque must be used if theshoulder closure extends beyond the distance that can be perceived by road users.

LEGEND

- TRAFFIC CONE
- TRAFFIC CONE (OPTIONAL TAPER)
- TEMPORARY TRAFFIC CONTROL SIGN
- FLASHING ARROW SIGN (FAS)
- FAS SUPPORT OR TRAILER
- PORTABLE FLASHING BEACON

SIGN PANEL SIZE (Min)

A	48" x 48"
B	72" x 60"
C	36" x 30"

STATE OF CALIFORNIA
DEPARTMENT OF TRANSPORTATION

TRAFFIC CONTROL SYSTEM FOR LANE CLOSURE ON FREEWAYS AND EXPRESSWAYS

NO SCALE

RSP T10 DATED APRIL 19, 2013 SUPERSEDES STANDARD PLAN T10 DATED MAY 20, 2011 - PAGE 237 OF THE STANDARD PLANS BOOK DATED 2010.

REVISED STANDARD PLAN RSP T10

2010 REVISED STANDARD PLAN RSP T10

12-18-12