INFORMATION HANDOUT

For Contract No. 05-1A3304
At 05-SB,SLO-166-55.1/70.6

Identified by
Project ID 0500020313

WATER SOURCE INFORMATION

Cuyama Community Services District

MANUFACTUROR DRAWINGS

Alternative In Line Terminal Systems

Type SKT-SP-MGS

Type X-LITE

Type 31" X-TENSION

Alternative Flared Terminal System

FLEAT-MGS

Type SRT-31

Type 31" X-TENSION

Alternative Crash Cushion

Brakemaster

CAT

DETAILS

Transition Detail for 31" Terminal System End Treatment with Rail Splicing at Posts to MidWest Guardrail

CUYAMA COMMUNITY SERVICES DISTRICT

4853 Primero Street
P.O. Box 368
New Cuyama, CA 93254

Phone (661) 766-2780
Fax (661) 766-2632
ccsd@inreach.com

November 7, 2014

Troy Tong, P.E., T.E.
Maintenance Design/Caltrans DO5
50 Higuera Street
San Luis Obispo, CA 93401

Re: Water Supply for State Highway Construction

Dear Mr. Tong:

This letter serves as confirmation that Cuyama Community Services District agrees to make non-potable water available to your prospective asphalt concrete overlaying project on Route 166 in Santa Barbara County from post mile 55.1 to post mile 70.6.

Your contractor must provide a contract for water supply and payment to be approved by the CCSD Board of Directors to finalize your request.

If you have any questions, I can be reached at cell phone number (661) 619-1873 most of the time. In addition, the office telephone number is (661) 766-2780 and the fax number is (661) 766-2632. The District's e-mail address is ccsd@inreach.com.

Sincerely,

U.S. Wilson
Manager
Cuyama Community Services District

USW/viv

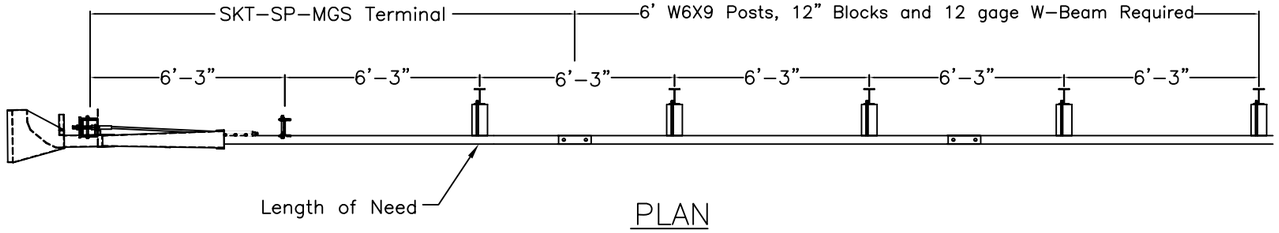

PLAN

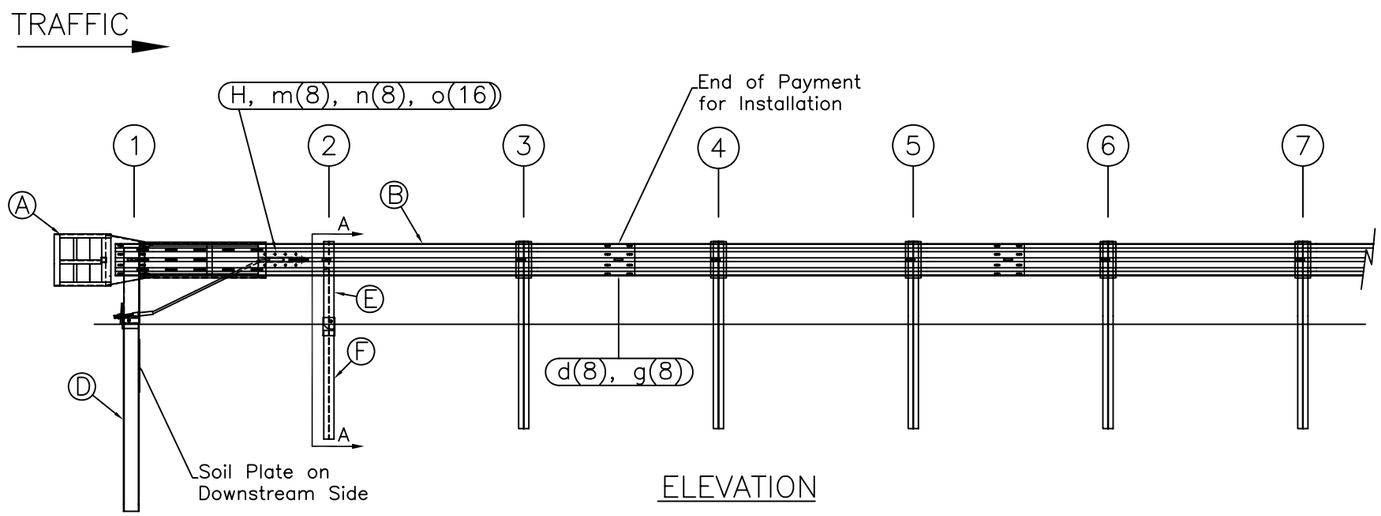

ELEVATION

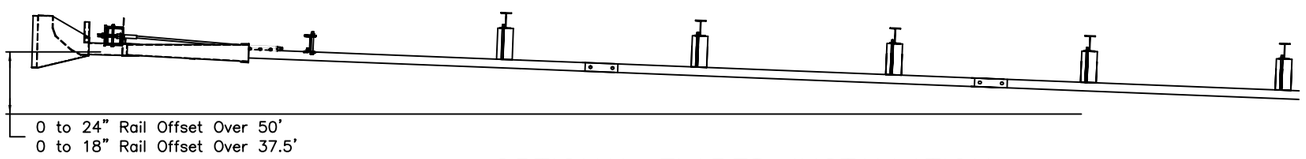

OPTIONAL FLARED INSTALLATION

25:1 maximum flare rate

ITEM	QTY	BILL OF MATERIALS	ITEM NO.
A	1	IMPACT HEAD	S3000
B	1	W-BEAM GUARDRAIL END SECTION, 12 Ga.	MGS-SF1303
C	1	FIRST POST TOP (6X6X$\frac{1}{8}$" Tube)	TPHP1A
D	1	FIRST POST BOTTOM (6' W6X15)	TPHP1B
E	1	SECOND POST ASSEMBLY TOP	UHP2A
F	1	SECOND POST ASSEMBLY BOTTOM	HP3B
G	1	BEARING PLATE	E750
H	1	CABLE ANCHOR BOX	S760
J	1	BCT CABLE ANCHOR ASSEMBLY	E770
		HARDWARE (ALL DIMENSIONS IN INCHES)	
a	2	5/16 x 1 HEX BOLT GRD 5	B5160104A
b	4	5/16 WASHER	W0516
c	2	5/16 HEX NUT	N0516
d	9	5/8 Dia. x 1 1/4 SPLICE BOLT (POST #2)	B580122
e	1	5/8 Dia. x 9 HEX BOLT GRD 5	B580904A
f	3	5/8 WASHER	W050
g	10	5/8 Dia. H.G.R NUT	N050
h	1	3/4 Dia. x 8 1/2 HEX BOLT GRD A449	B340854A
j	1	3/4 Dia. HEX NUT	N030
k	2	1 ANCHOR CABLE HEX NUT	N100
l	2	1 ANCHOR CABLE WASHER	W100
m	8	CABLE ANCHOR BOX SHOULDER BOLT	SB58A
n	8	1/2 A325 STRUCTURAL NUT	N055A
o	16	1 1/16 OD x 9/16 ID A325 STR. WASHER	W050A

GENERAL NOTES:

1. All bolts, nuts, cable assemblies, cable anchors and bearing plates shall be galvanized.
2. The lower sections of the Posts 1&2 shall not protrude more than 4 in above the ground (measured along a 5' cord). Site grading may be necessary to meet this requirement.
3. The lower sections of the hinged posts should not be driven with the upper post attached. If the post is placed in a drilled hole, the backfill material must be satisfactorily compacted to prevent settlement.
4. When competent rock is encountered, a 12" Ø post hole, 20 in. deep cored into the rock surface may be used if approved by the engineer for post 1. Granular material will be placed in the bottom of the hole, approximately 2.5" deep to provide drainage. The first post can be field cut to length, placed in the hole and backfilled with suitable backfill. The soil plate may be trimmed if required.
5. A site evaluation should be considered if there is less than 25' between the outlet side of the terminal and any adjacent driving lane.
6. The breakaway cable assembly must be taut. A locking device (vice grips or channel lock pliers) should be used to prevent the cable from twisting when tightening nuts.

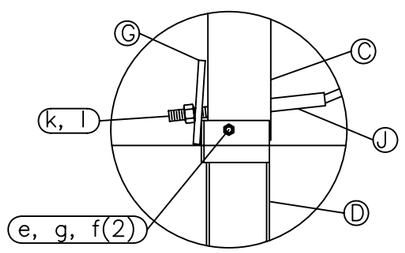

Post #1 Connection Detail

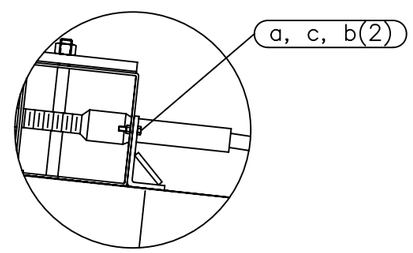

Impact Head Connection Detail

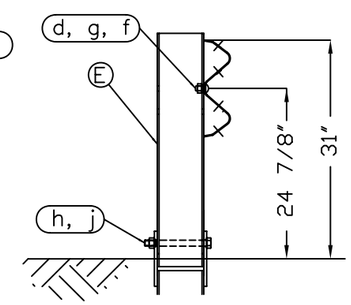

SECTION A-A

Post #2

RSI
Road Systems, Inc.
Big Spring, TX
Phone: 432-263-2435
or Phone: 330-346-0721

SKT-SP-MGS Terminal
Midwest Guardrail System
31" Top of Rail

Sheet: 1
Date: 02/24/10
By: JRR
Drawing Name: SKT-SP-S-MGS
Scale: None
Rev: 0

Appendix A - System Configuration, 37’ 6” MGS

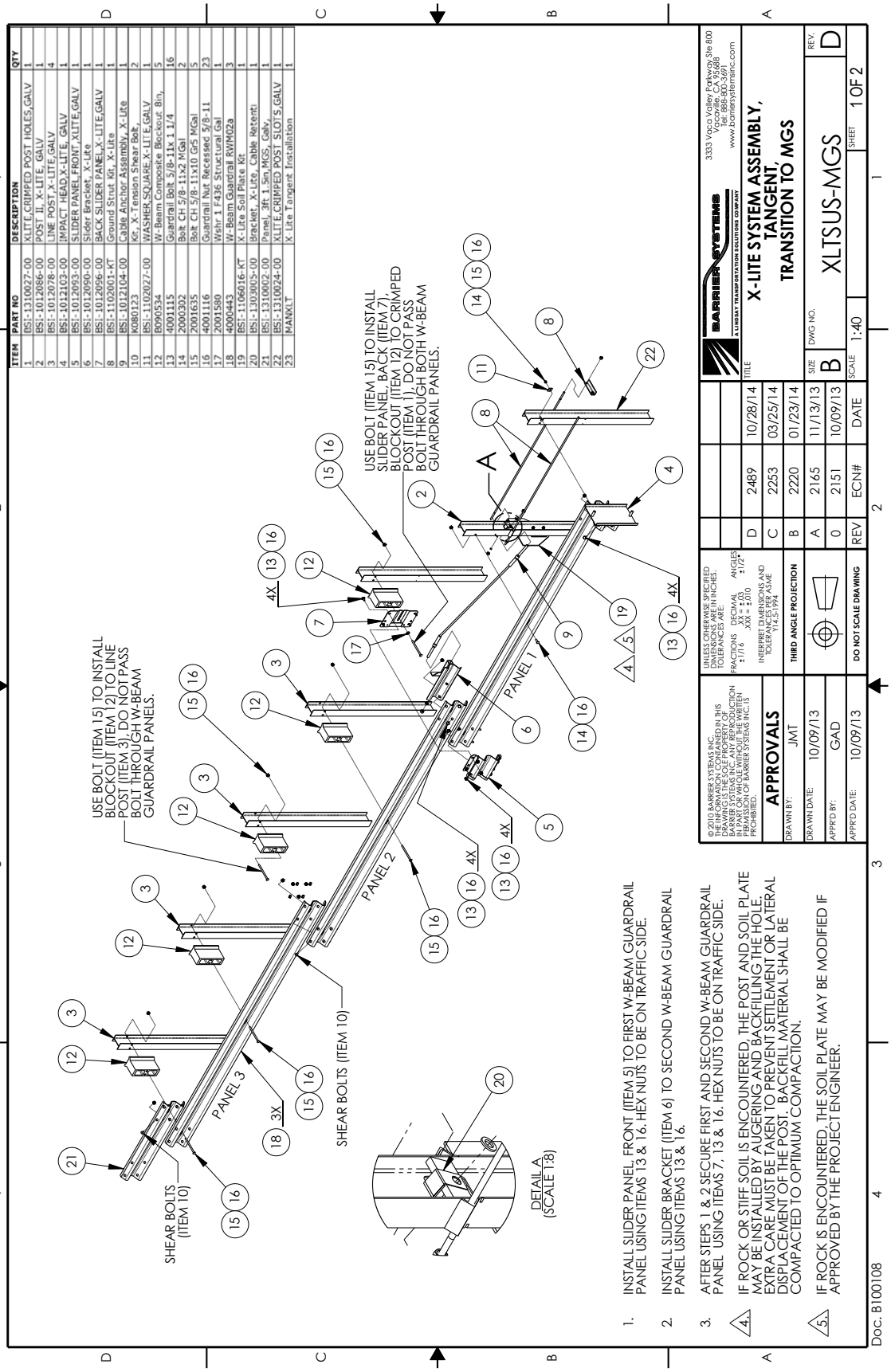

Appendix A - System Configuration, 37’ 6” MGS

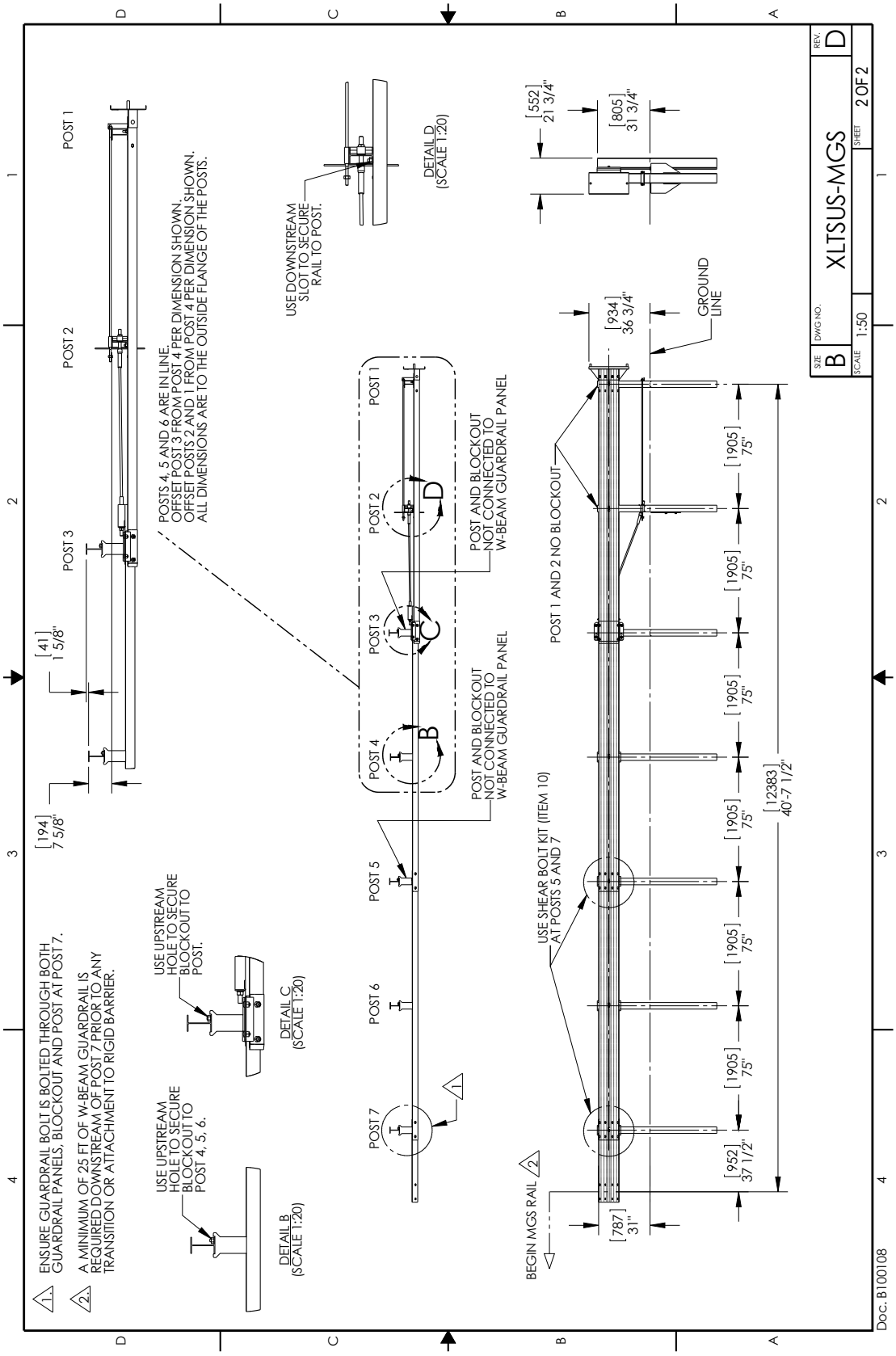

Lindsay Transportation Solutions Sales and Services, Inc.
180 River Road • Rio Vista, CA 94571 • +1 707.374.6800 U.S. Toll Free: 888.800.3691 • www.barrriersystemsinc.com

Installation manual for the X-LITE Tangent System are subject to change without notice to reflect improvements and upgrades.

Additional information is available from Lindsay Transportation Solutions Sales and Services, Inc. © Lindsay Transportation Solutions, Inc.

X-LITE TANGENT INSTALLATION 11212014 v10

ITEM NO.	PART NUMBER	DESCRIPTION	QTY	UOM
1	BSI-1301252-KT	X-Tension Terminal Comp, 31 in	1	EACH
2	K070202	X-Tension Hardware Kit, GT,	1	EACH
3	K070206	X-Tension System Hardware Kit,	1	EACH
4	K070210	X-Tension GT Guardrail	1	EACH
5	B061100	BSI, I-Beam Post, Middle, X350	1	EACH
6	MANXT1	X-TENSION Installation Manual	1	EACH

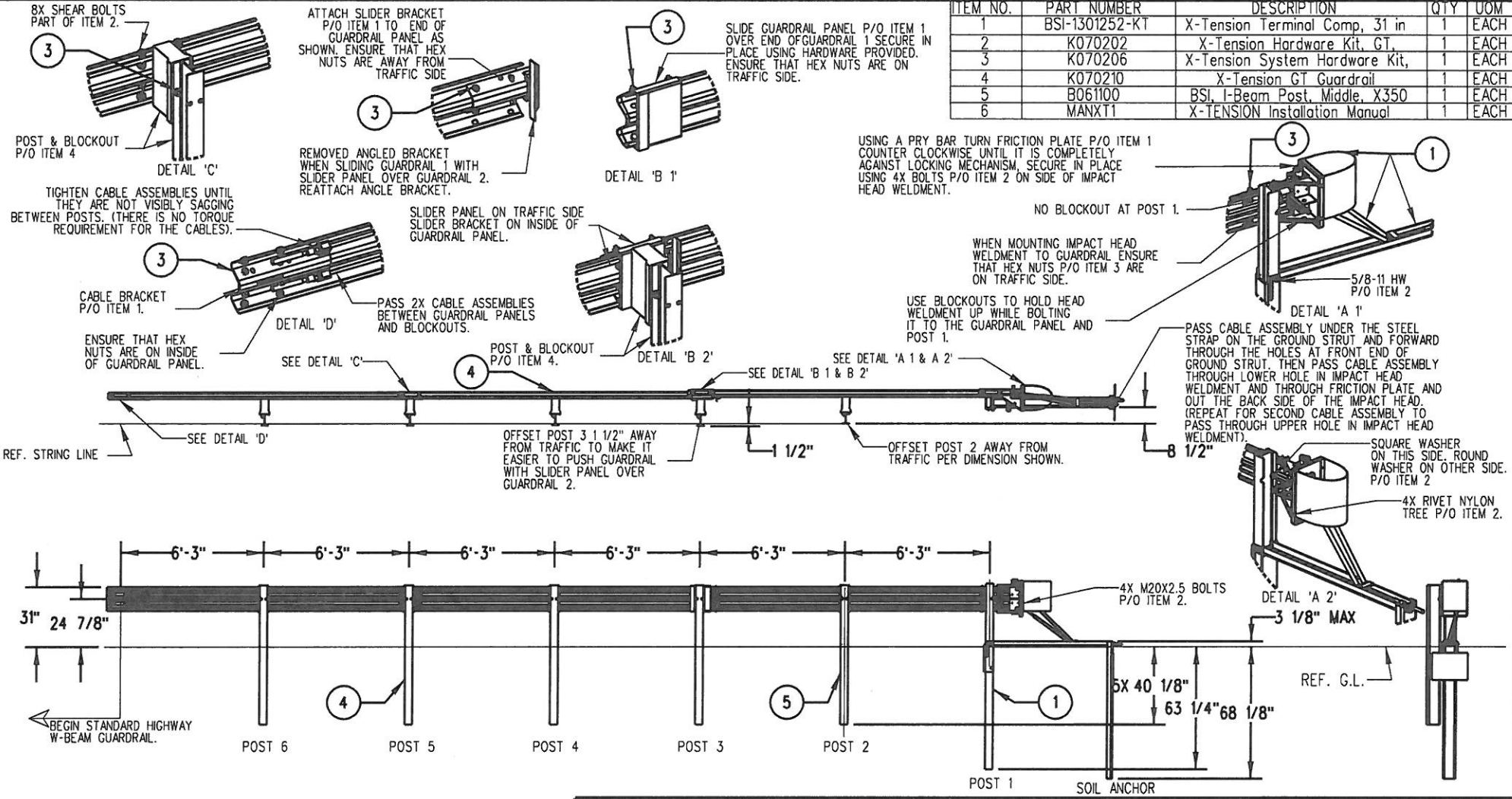

NOTES: UNLESS OTHERWISE SPECIFIED.

1. SYSTEM TO BE INSTALLED PER MANUFACTURER SPECIFICATIONS.
2. ONLY TIGHTEN THE CABLE ASSEMBLIES USING THE NUTS AT THE CABLE BRACKET (SEE DETAIL 'D'). DO NOT TIGHTEN THE CABLES AT THE FRONT OF THE GROUND ANCHOR.
3. WHEN DRIVING STEEL POST, ENSURE THAT A DRIVING CAP WITH TIMBER OR PLASTIC INSERT IS USED TO PREVENT DAMAGE TO THE GALVANIZING TO THE TOP OF THE POST.

© 2012 BARRIER SYSTEMS INC. THE INFORMATION CONTAINED IN THIS DRAWING IS THE SOLE PROPERTY OF BARRIER SYSTEMS INC. ANY REPRODUCTION IN PART OR WHOLE WITHOUT THE WRITTEN PERMISSION OF BARRIER SYSTEMS INC. IS PROHIBITED.

APPROVALS

DRAWN BY:	NMV
DRAWN DATE:	2/08/13
APPR'D BY:	JMT
APPR'D DATE:	2/08/13

UNLESS OTHERWISE SPECIFIED DIMENSIONS ARE IN INCHES. TOLERANCES ARE:
FRACTIONS ±1/16 DECIMAL .XX - ±.03 .XXX - ±.010 ANGLES ±1/2°
INTERPRET DIMENSIONS AND TOLERANCES PER ASME Y14.5-1994
THIRD ANGLE PROJECTION
DO NOT SCALE DRAWING

REV	ECN#	DATE
B	2067	03/02/15
A	2022	2/08/13

LINDSAY TRANSPORTATION SOLUTIONS™

BARRIER SYSTEMS INC.
3333 Vaca Valley Parkway Ste 800
Vacaville, CA 95688
Tel: 888-800-3691
www.barriersystemsinc.com

TITLE
X-TENSION GUARDRAIL TERMINAL SYSTEM STEEL POST WITH COMPOSITE BLOCKOUT 31" RAIL HEIGHT

SIZE	DWG NO.	REV.
B	XTGTSS5	B

SCALE 1:50 SHEET 1 OF 1

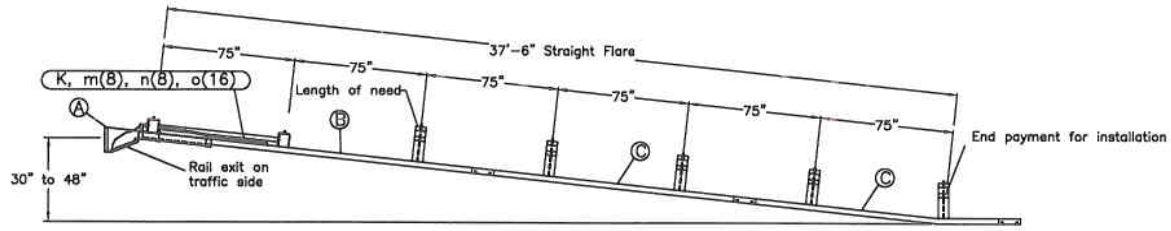

TRAFFIC

PLAN

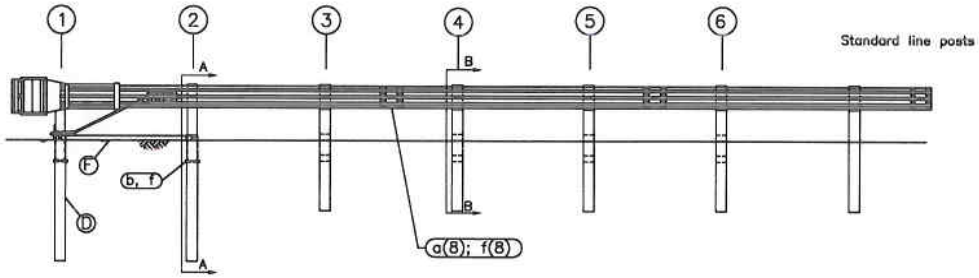

ELEVATION

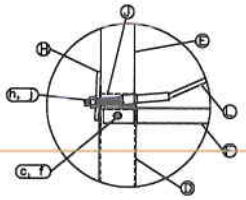

POST #1 CONNECTION DETAILS

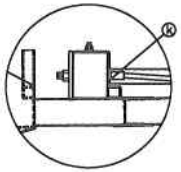

IMPACT HEAD CONNECTION DETAIL

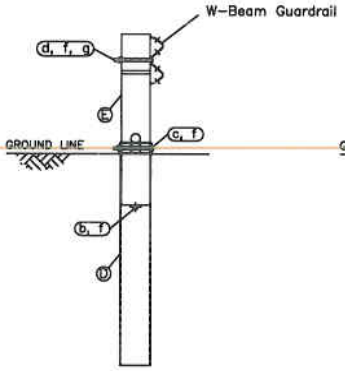

SECTION A-A
Post #2

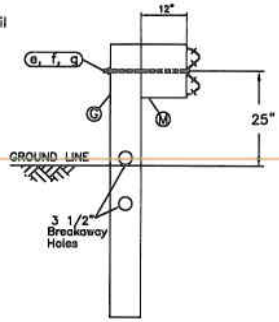

SECTION B-B
Posts 3 thru 6

ITEM	QTY	BILL OF MATERIALS	ITEM NO.
A	1	IMPACT HEAD	F3000
B	1	W-BEAM GUARDRAIL END SECTION, 12 Ga.	F1303 MGS
C	2	W-BEAM GUARDRAIL, 12 Ga.	G1203 MGS
D	2	FOUNDATION TUBE	E731
E	2	BCT WOOD POST	P650 MGS
F	1	GROUND STRUT	E780
G	4	CRT WOOD POST	P671 MGS
H	1	BEARING PLATE	E750
J	1	PIPE SLEEVE	E740
K	1	CABLE ANCHOR BOX	S760
L	1	BCT CABLE ANCHOR ASSEMBLY	E770
M	4	MGS TIMBER BLOCKOUT OR RECYC. EQUIV.	P618
HARDWARE (ALL DIMENSIONS IN INCHES)			
a	16	5/8ø x 1 1/4 SPLICE BOLT	B580122
b	2	5/8ø x 7 1/2 HEX BOLT	B580754
c	2	5/8ø x 10 HEX BOLT	B581004
d	1	5/8ø x 10 H.G.R. BOLT	B581002
e	4	5/8ø x 22 H.G.R. BOLT	B582202
f	25	5/8ø H.G.R. NUT	N050
g	5	H.G.R. WASHER	W050
h	2	1 ANCHOR CABLE HEX NUT	N100
j	2	1 ANCHOR CABLE WASHER	W100
k	2	3/8 x 3 LAG SCREW	E350
m	8	CABLE ANCHOR BOX SHOULDER BOLT	S858A
n	8	1/2 A325 STRUCTURAL NUT	N055A
o	16	1 1/16 OD x 9/16 ID A325 STR. WASHER	W050A

GENERAL NOTES:

1. Breakaway posts are required with the FLEAT.
2. All bolts, nuts, cable assemblies, cable anchors and bearing plates shall be galvanized.
3. The foundation tubes shall not protrude more than 4 in above the ground (measured along a 5' cord). Site grading may be necessary to meet this requirement.
4. When rock is encountered, a 12" Ø post hole, 20 in into the rock surface may be used if approved by the engineer. Granular material will be placed in the bottom of the hole, approximately 2.5" deep to provide drainage. The first two posts can be field cut to length, placed in the hole and backfilled with adequately compacted material excavated from the hole.
5. The breakaway cable assembly must be taut. A locking device (vice grips or channel lock pliers) should be used to prevent the cable from twisting when tightening nuts.
6. The soil tubes may be driven with an approved driving head. They shall not be driven with the post in the tube.
7. The wood blockouts should be "toe-nailed" to the rectangular wood posts to prevent them from turning when the wood shrinks.

RSI
Road Systems, Inc.
Big Spring, TX
Phone: 432-263-2435
or Phone: 330-346-0721

Flared Energy Absorbing Terminal - FLEAT Assembly
Midwest Guardrail System

Wood Post System

Sheet:	Date:	By:
A1	12/01/2004	JRR

Drawing Name:	Scale:	Rev:
FLT-MGS-W-US	None	0

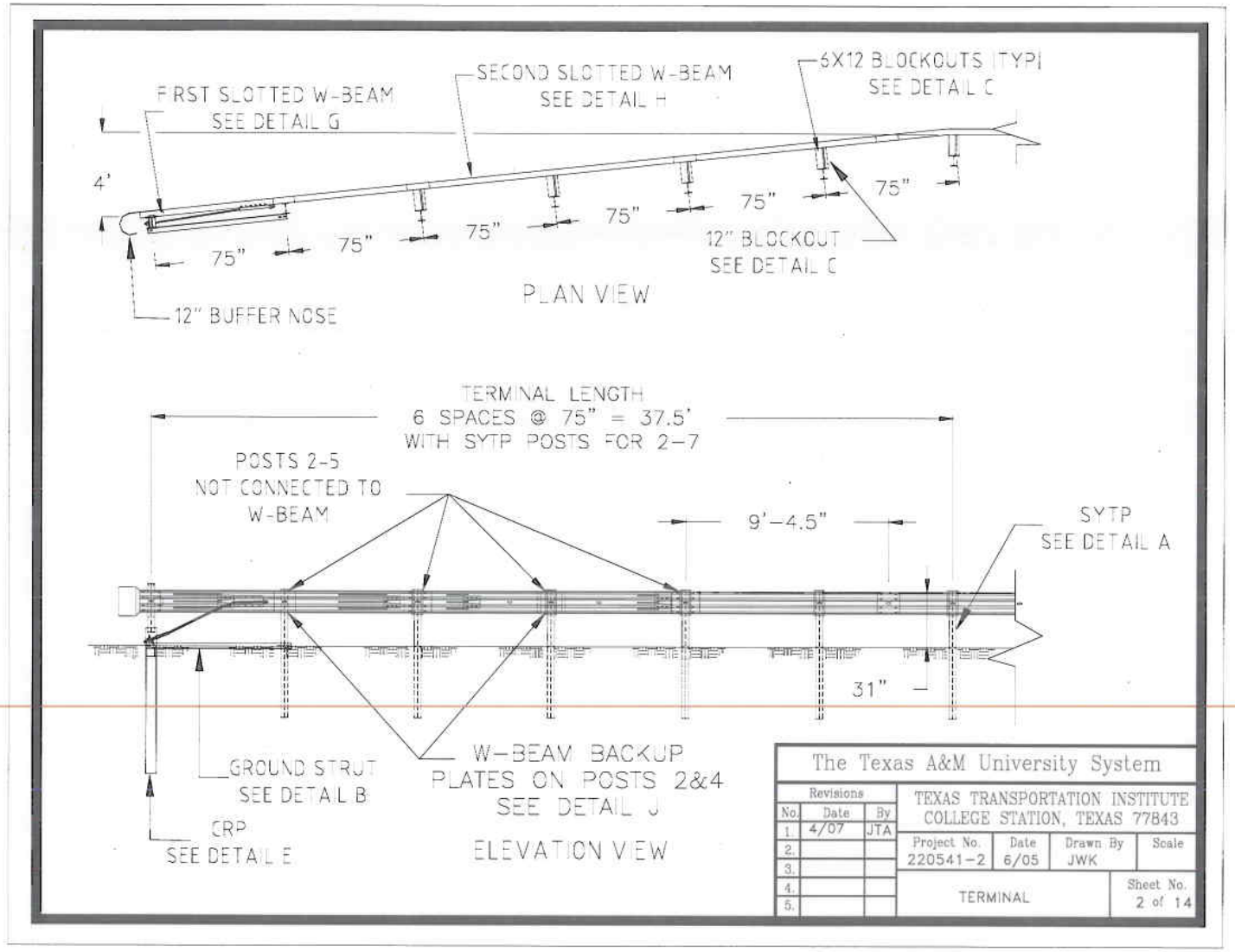

Figure 2. Layout of the SRT-31.

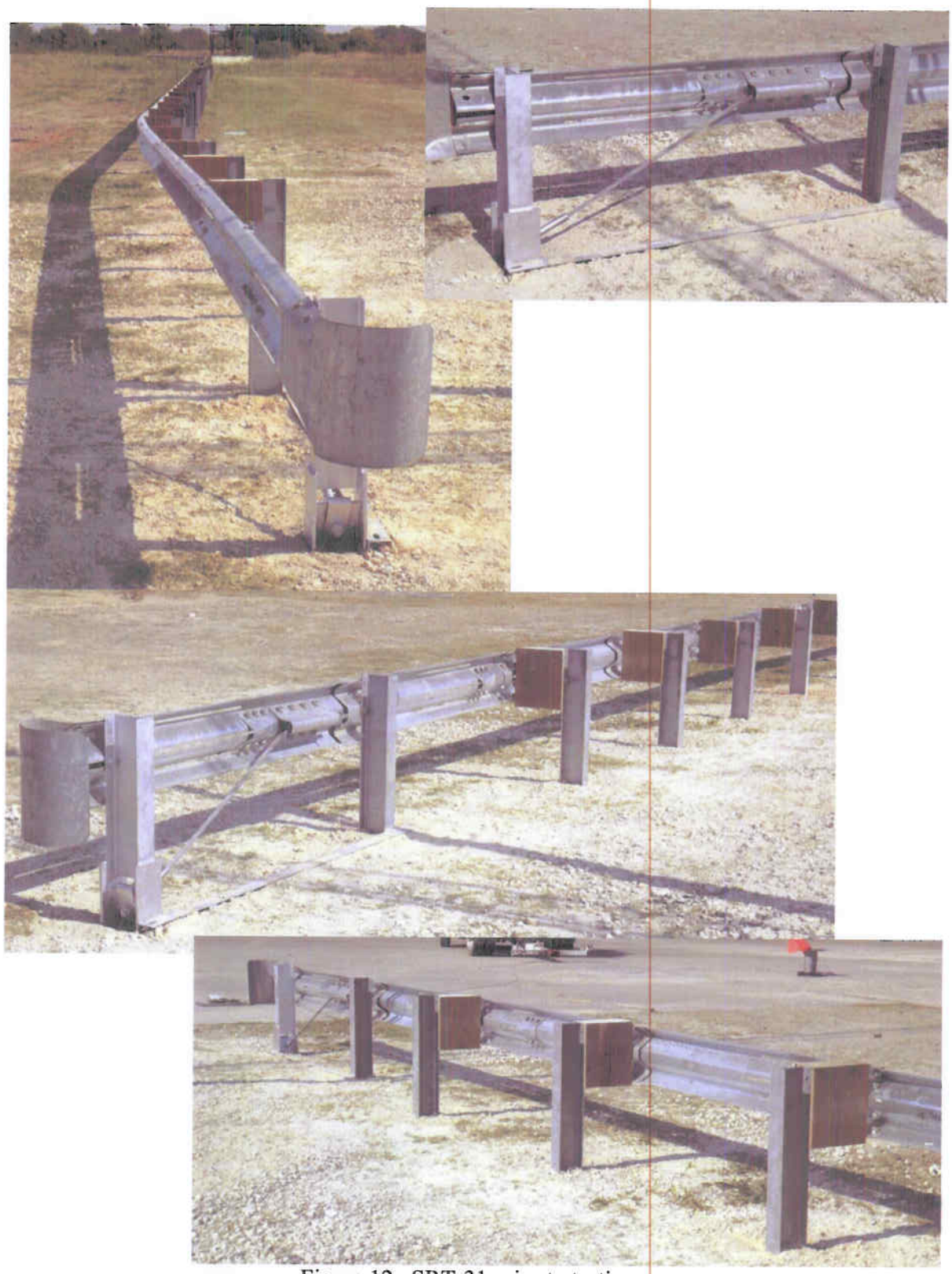

Figure 12. SRT-31 prior to testing.

ITEM NO.	PART NUMBER	DESCRIPTION	QTY	UOM
1	BSI-1301252-KT	X-Tension Terminal Comp, 31 in	1	EACH
2	K070202	X-Tension Hardware Kit, GT,	1	EACH
3	K070206	X-Tension System Hardware Kit,	1	EACH
4	K070210	X-Tension GT Guardrail	1	EACH
5	B061100	BSI, I-Beam Post, Middle, X350	1	EACH
6	MANXT1	X-TENSION Installation Manual	1	EACH

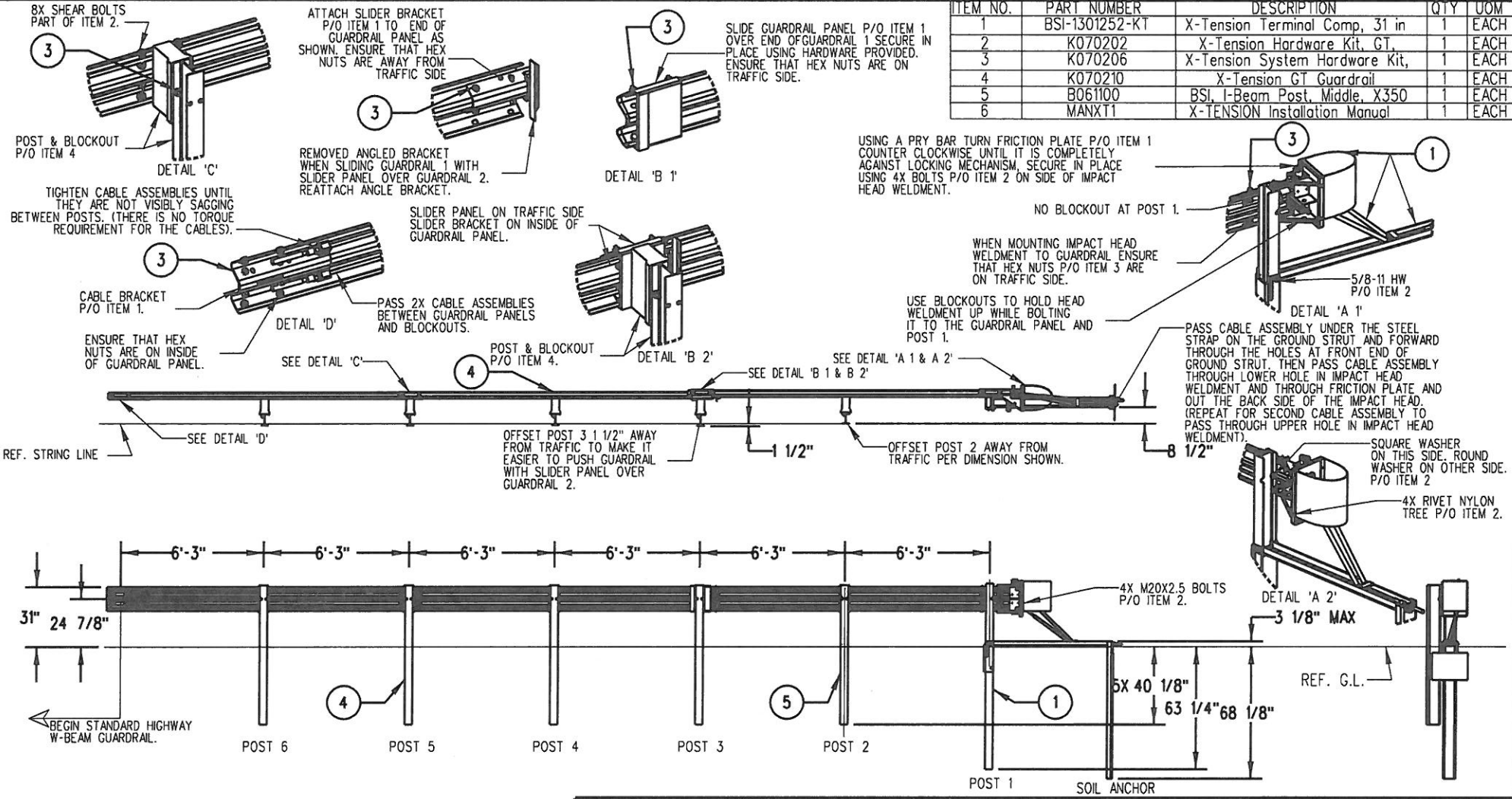

NOTES: UNLESS OTHERWISE SPECIFIED.

1. SYSTEM TO BE INSTALLED PER MANUFACTURER SPECIFICATIONS.
2. ONLY TIGHTEN THE CABLE ASSEMBLIES USING THE NUTS AT THE CABLE BRACKET (SEE DETAIL 'D'). DO NOT TIGHTEN THE CABLES AT THE FRONT OF THE GROUND ANCHOR.
3. WHEN DRIVING STEEL POST, ENSURE THAT A DRIVING CAP WITH TIMBER OR PLASTIC INSERT IS USED TO PREVENT DAMAGE TO THE GALVANIZING TO THE TOP OF THE POST.

© 2012 BARRIER SYSTEMS INC. THE INFORMATION CONTAINED IN THIS DRAWING IS THE SOLE PROPERTY OF BARRIER SYSTEMS INC. ANY REPRODUCTION IN PART OR WHOLE WITHOUT THE WRITTEN PERMISSION OF BARRIER SYSTEMS INC. IS PROHIBITED.

APPROVALS

DRAWN BY:	NMV
DRAWN DATE:	2/08/13
APPR'D BY:	JMT
APPR'D DATE:	2/08/13

UNLESS OTHERWISE SPECIFIED DIMENSIONS ARE IN INCHES. TOLERANCES ARE:
FRACTIONS ±1/16 DECIMAL .XX - ±.03 .XXX - ±.010 ANGLES ±1/2°
INTERPRET DIMENSIONS AND TOLERANCES PER ASME Y14.5-1994
THIRD ANGLE PROJECTION
DO NOT SCALE DRAWING

REV	ECN#	DATE
B	2067	03/02/15
A	2022	2/08/13

LINDSAY TRANSPORTATION SOLUTIONS™

BARRIER SYSTEMS INC.
3333 Vaca Valley Parkway Ste 800
Vacaville, CA 95688
Tel: 888-800-3691
www.barriersystemsinc.com

TITLE
X-TENSION GUARDRAIL TERMINAL SYSTEM STEEL POST WITH COMPOSITE BLOCKOUT 31" RAIL HEIGHT

SIZE	DWG NO.	REV.
B	XTGTSS5	B

SCALE 1:50 SHEET 1 OF 1

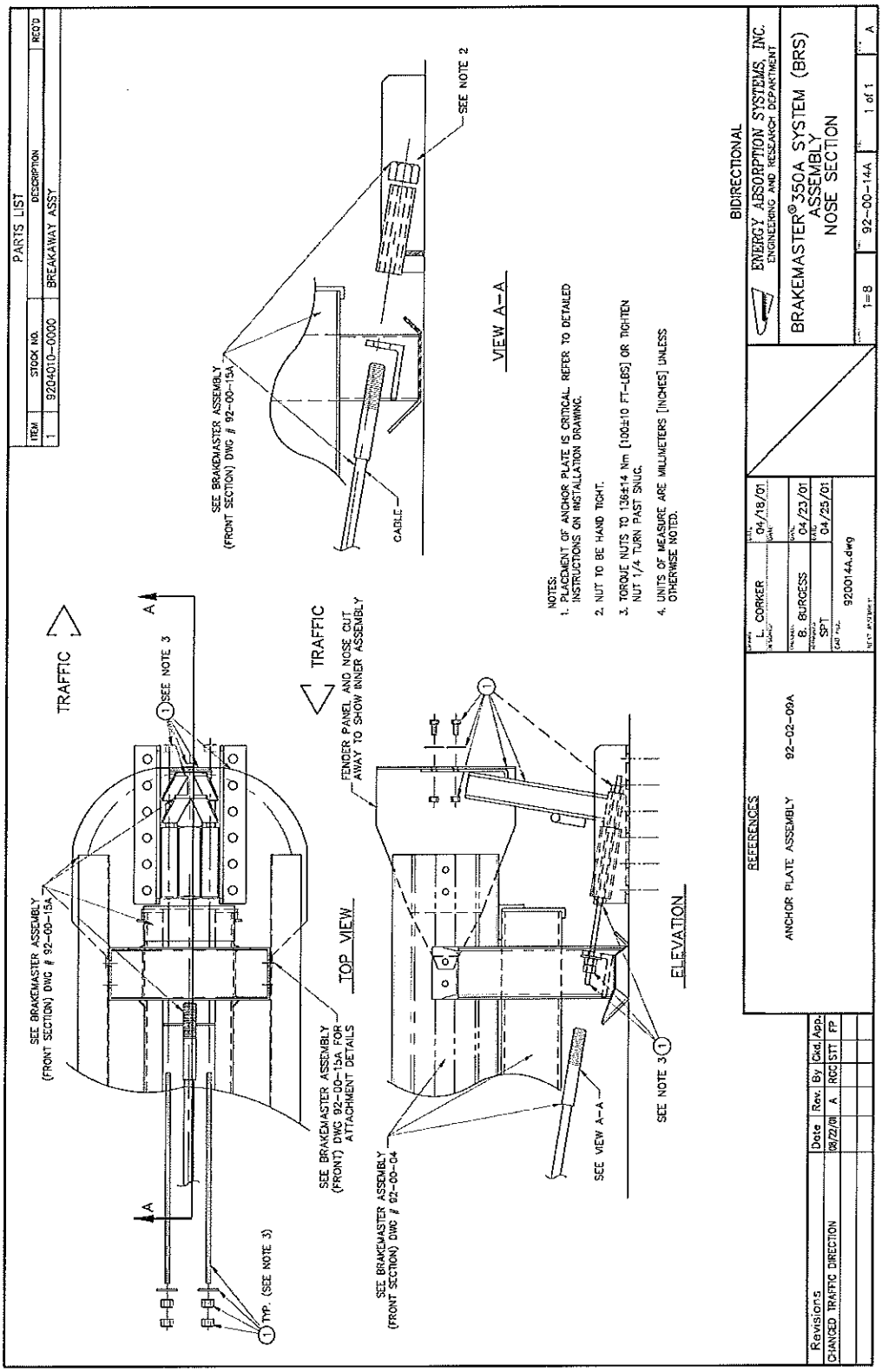

Brakemaster® 350A Assembly (Nose Section)

DWG 920014A

All rights in copyright reserved

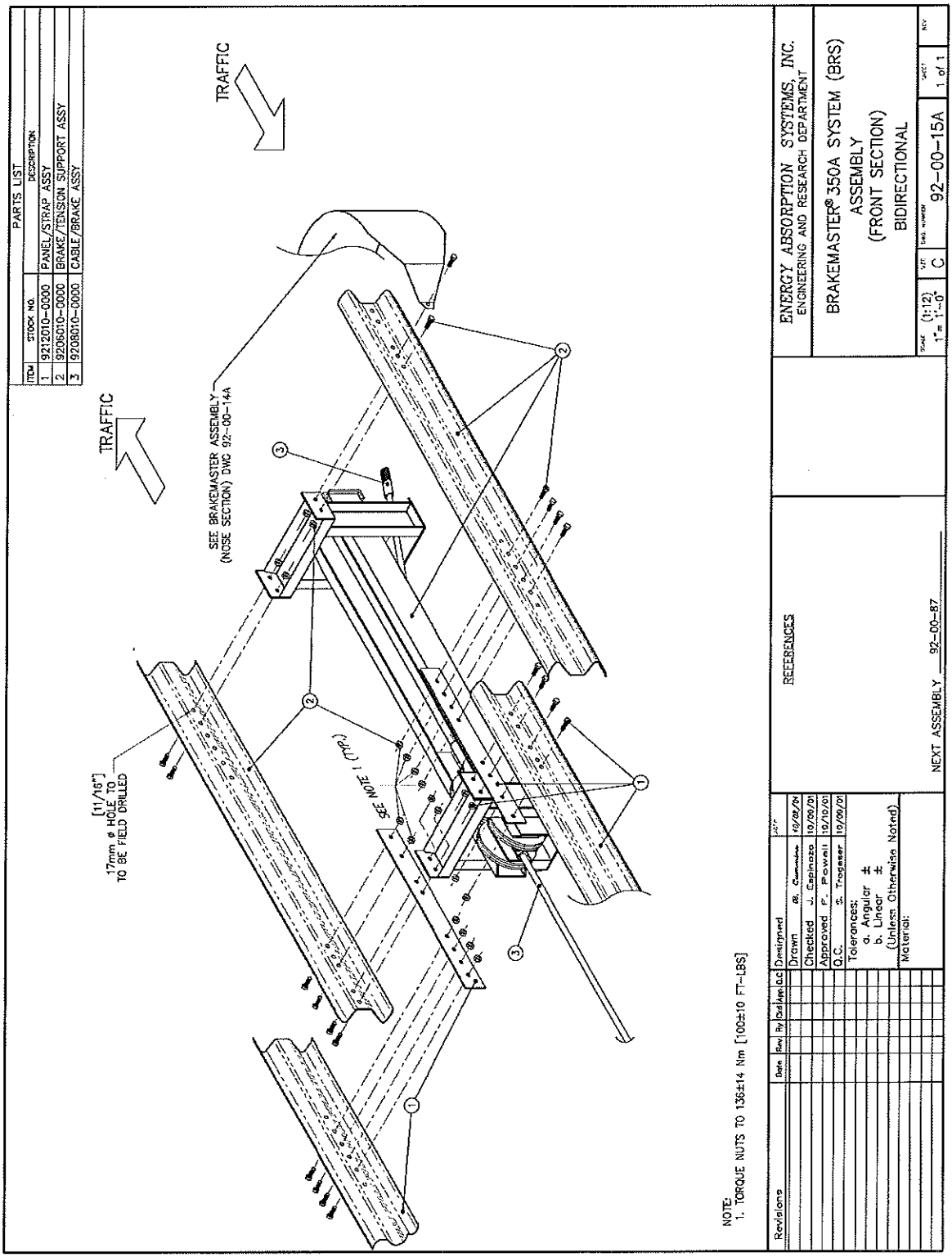

DWG 920015A

Brakemaster® 350A Assembly (Front Section) Bidirectional

All rights in copyright reserved

All rights in copyright reserved

DWG 920016A

PARTS LIST			
ITEM	STOCK NO.	DESCRIPTION	REQ'D
1	9212010-0000	PANEL/STRAP ASSY	
2	9210011-0000	DIAPHRAGM, BRS	
3	9216021-0000	STRAP, LAMINATED	

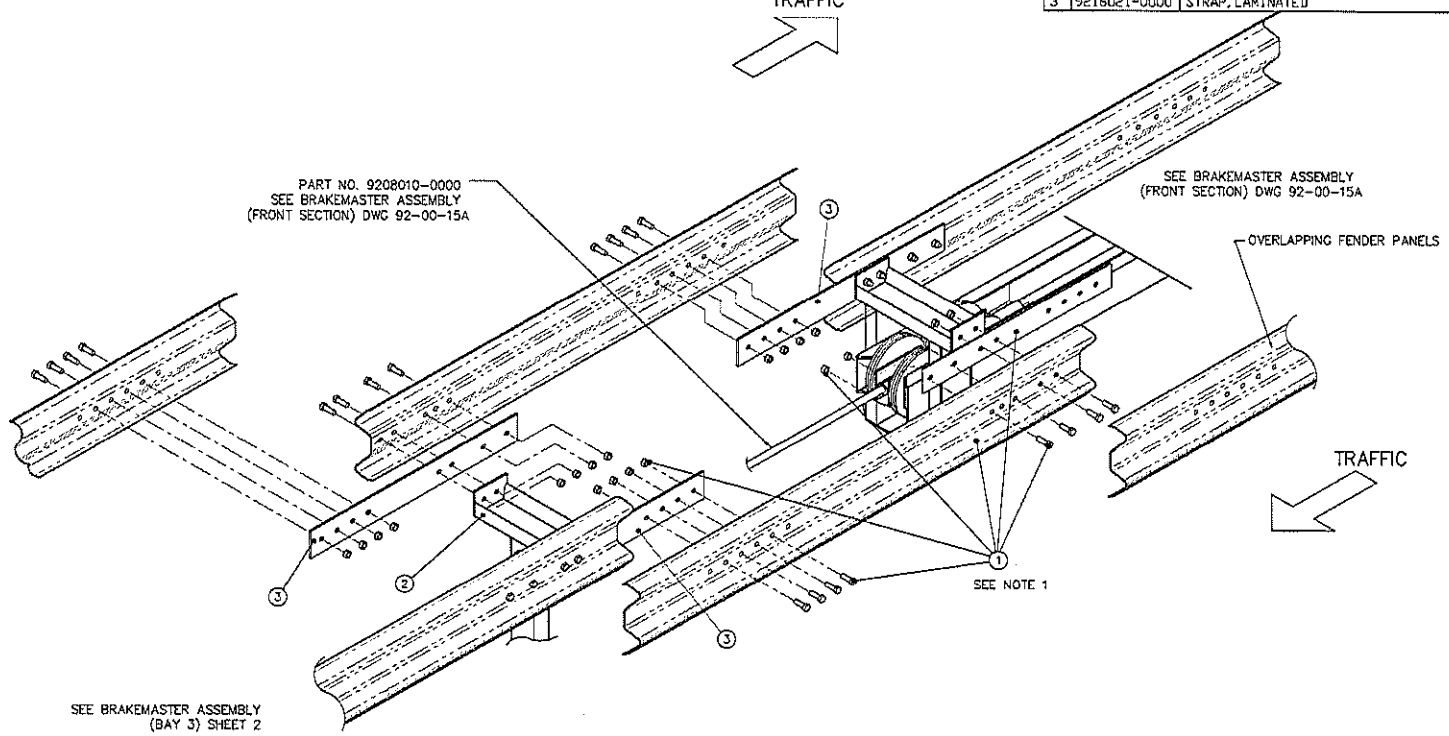

NOTE:
1. TORQUE NUTS TO 136±14 Nm [100±10 FT-LBS]

Revisions	Date	Rev.	By	Ckd	App	Q.C.

Designed		Date
Drawn	R. Cummins	10/02/01
Checked	S. Trogeser	10/09/01
Approved	F. Powell	10/11/01
Q.C.	J. Espinoza	10/09/01

Tolerances:
a. Angular ±
b. Linear ±
(Unless Otherwise Noted)

Material:

REFERENCES

NEXT ASSEMBLY 92-00-87

ENERGY ABSORPTION SYSTEMS, INC.
ENGINEERING AND RESEARCH DEPARTMENT

BRAKEMASTER® 350A SYSTEM (BRS)
ASSEMBLY (BAY 2)
BIDIRECTIONAL

SCALE	SIZE	DWG. NUMBER	SHEET	REV
(1:12) 1"= 1'-0"	C	92-00-16A	1 of 3	

Brakemaster® 350A System Assembly (Bay 2) Bidirectional

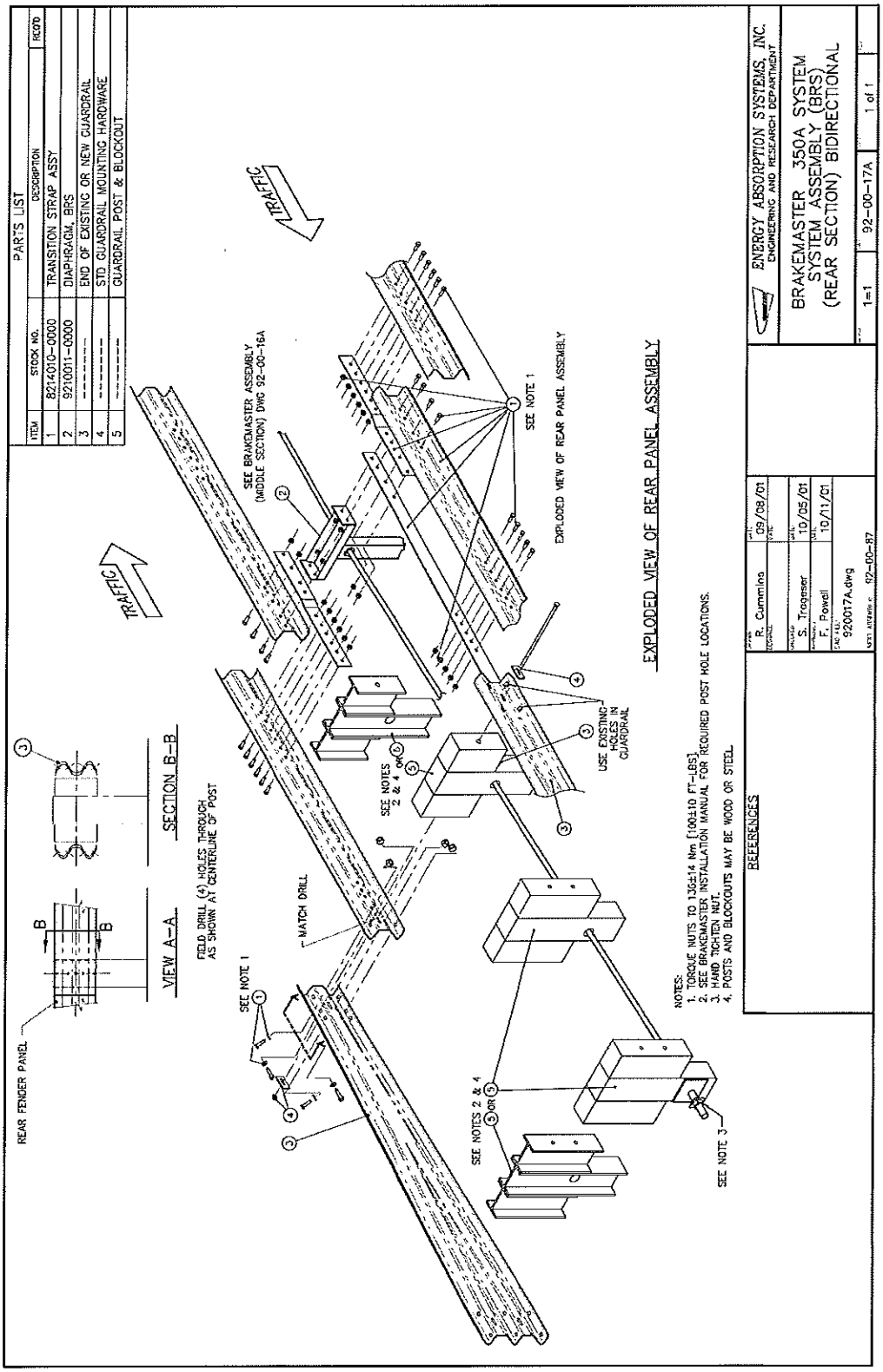

Brakemaster® 350A System Assembly (Rear Section) Bidirectional

DWG 920017A

All rights in copyright reserved

DWG 605655B

PARTS LIST			
ITEM	STOCK NO.	DESCRIPTION	REQ'D
1	9204021-0000	NOSE,BRS	1
2	9204031-0000	BREAKAWAY ARM	1
3	2699272-0500	ROD,THREADED,7/8X28,G5,G	2
4	2704441-0000	NUT,HX,7/8,G,GR DH	8
5	2708291-0000	WASHER,FLAT,5/8X1 3/4,G	2
6	2699081-0500	BOLT,HX,5/8X1 1/2,G5,G	2
7	2704191-0000	NUT,HX,5/8,G,RAIL	2
8	2708301-0000	WASHER,FLAT,7/8X2 1/4,G	2

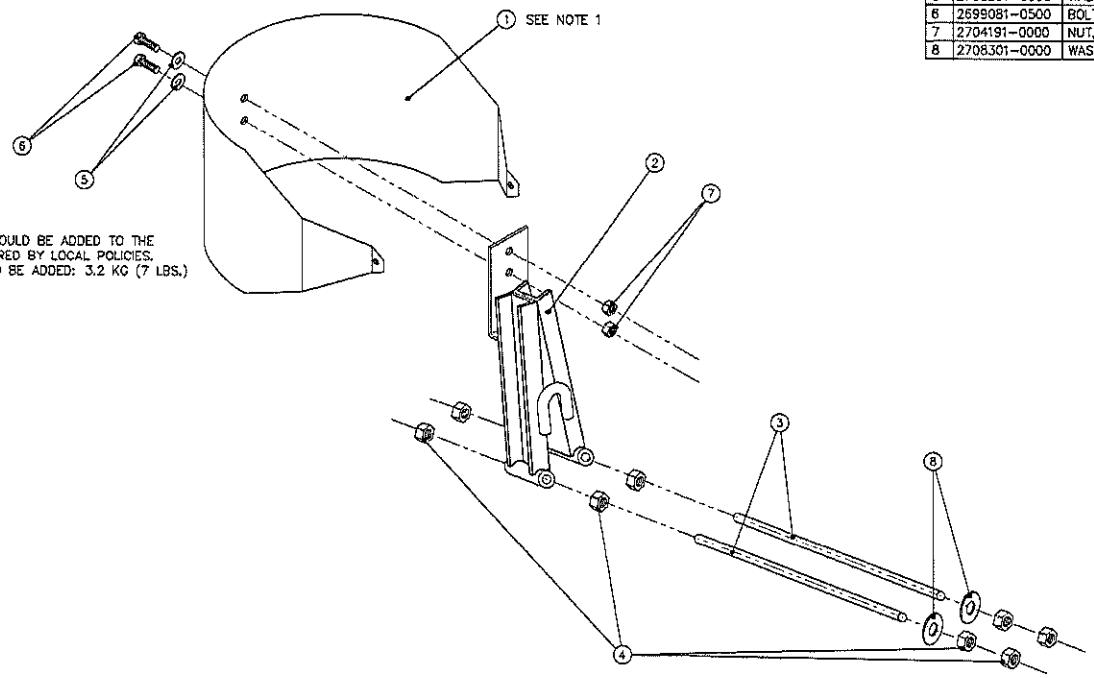

DELINEATION SHOULD BE ADDED TO THE NOSE AS REQUIRED BY LOCAL POLICIES. MAX. WEIGHT TO BE ADDED: 3.2 KG (7 LBS.)

NOTES:
1. FORM FROM FLAT IN FIELD.
2. SHIPPED DISASSEMBLED.

ASSEMBLY NO. 9204010-0000

Revisions	Date	Rev	By	Chkd	App	Q.C.
ADDED MAX. WEIGHT NOTE	5/9/90	A	JF	SPT	DDS	
ITEM 3 WAS 2699271-0500	8/7/91	B	TR	RR	SPT	
ADDED 350 TO TITLE	6/11/98	C	DDS	KM	SPT	STT

Designed		Date
Drawn	WELCH, JB	7/12/89
Checked	BD STEPHENS	11/2/89
Approved	D GERTZ	11/1/89
Q.C.	RL PORTEOUS	11/2/89

Tolerances:
a. Angular ±
b. Linear ±
(Unless Otherwise Noted)

Material:
SEE DETAIL DRAWINGS

REFERENCES

NEXT ASSEMBLY 92-00-03, 92-00-14

ENERGY ABSORPTION SYSTEMS, INC.
ENGINEERING AND RESEARCH DEPARTMENT

BRAKEMASTER®350 SYSTEM (BRS)
BREAKAWAY ASSEMBLY

SCALE	SIZE	DWG NUMBER	SHEET	REV
(1:8) 1/8"= 1"	C	92-04-01	1 of 1	C

Brakemaster® 350A System Breakaway Assembly

Revision E September 2012
All rights in copyright reserved

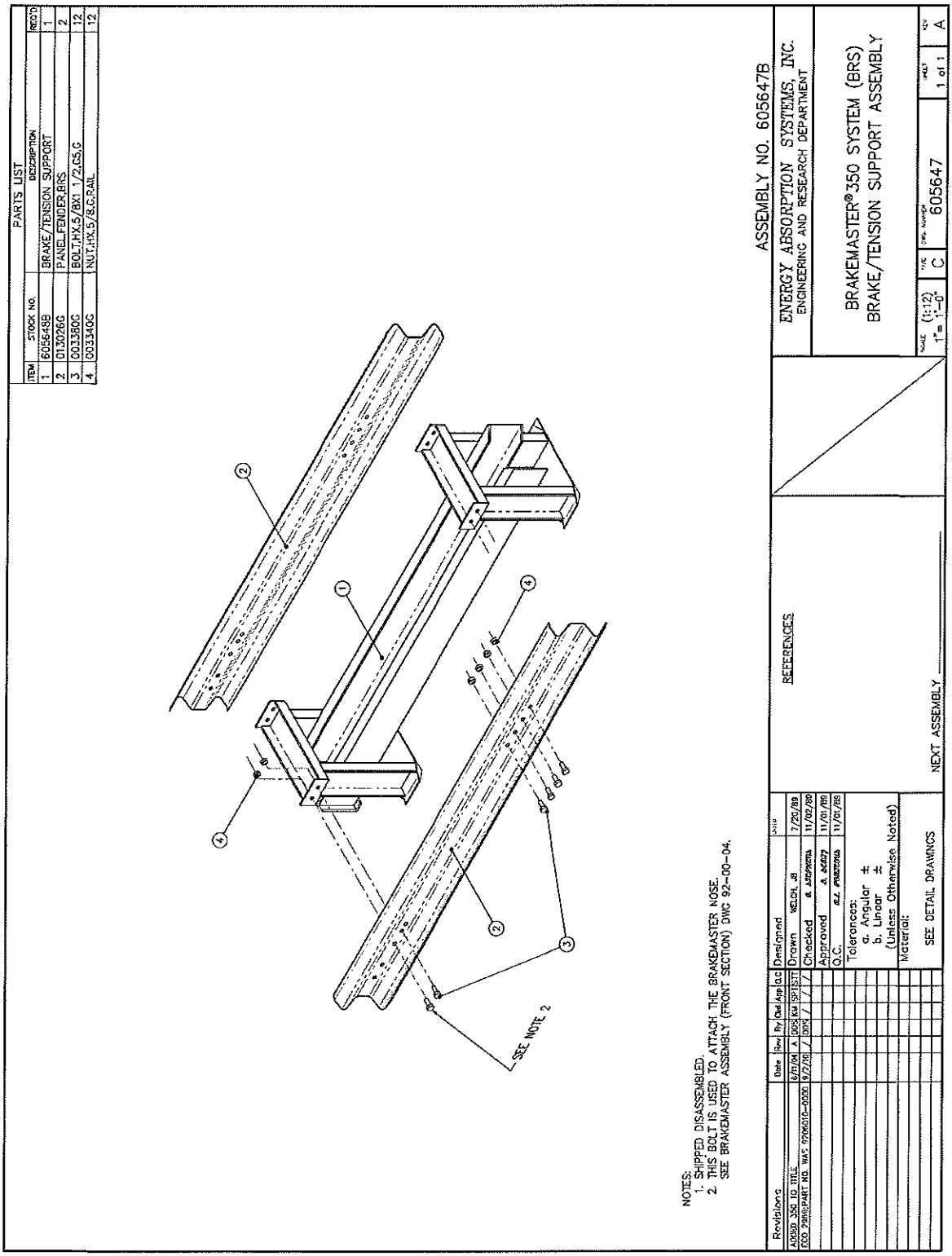

DWG 605647

Brakemaster® 350 System Brake/Tension Support Assembly

All rights in copyright reserved

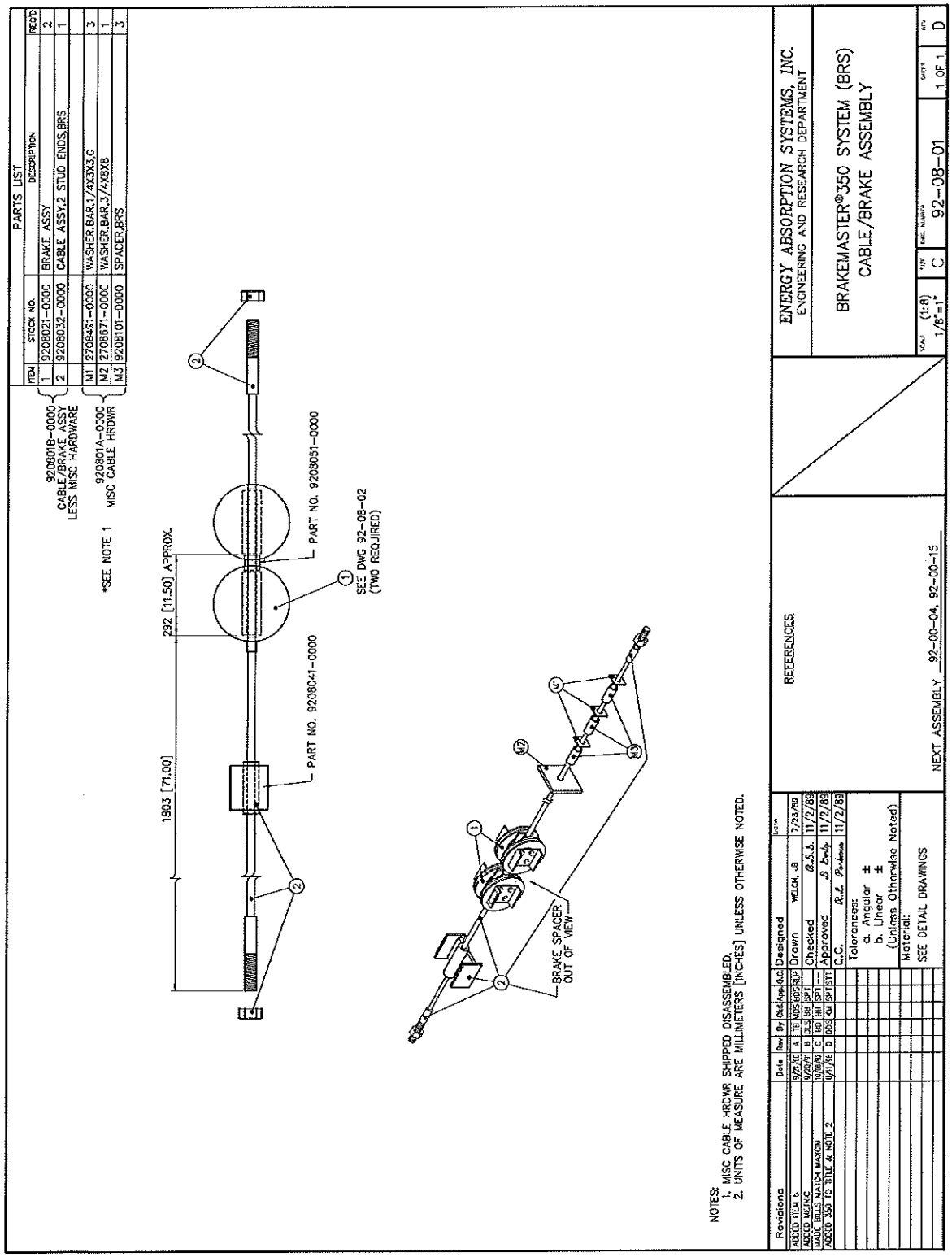

DWG 605893

Brakemaster® 350 Cable/Brake Assembly

All rights in copyright reserved

DWG 612001

PARTS LIST			
ITEM	STOCK NO.	DESCRIPTION	REQ'D
1	013026C	PANEL,FENDER,BRS	1
2	614716B	STRAP,LAMINATED	1
3	003380C	BOLT,HX,5/8X1 1/2,G5,G	8
4	003340C	NUT,HX,5/8,C,RAIL	8

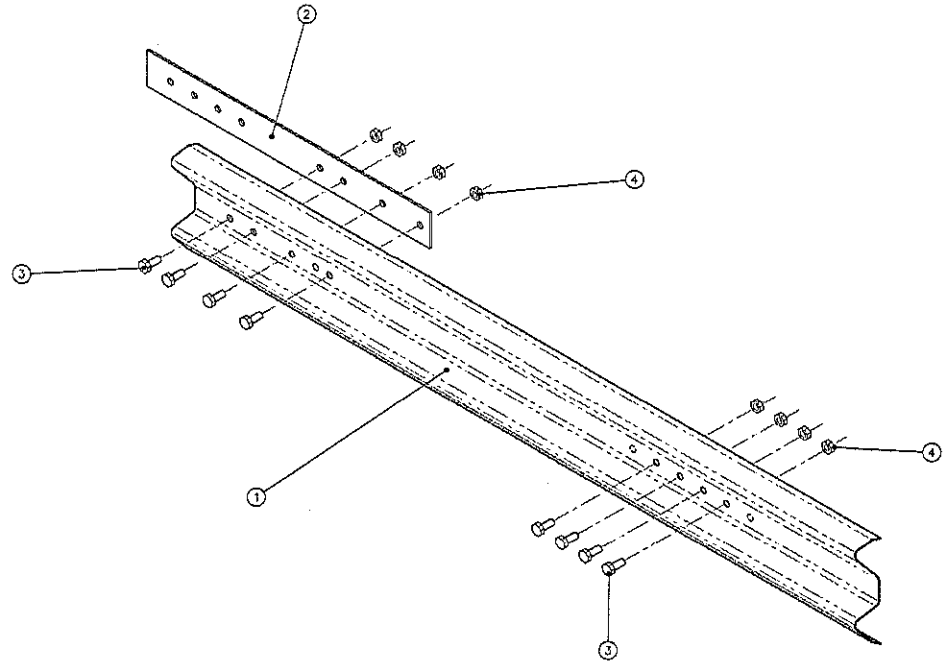

NOTE:
1. SHIPPED DISASSEMBLED.

ASSEMBLY NO. 612001B

Revisions	Date	Rev.	By	Ckd.	App.	Q.C.
ADDED 350 TO TITLE	6/11/98	A	DDS	KM	SPT	STT
ECO 2969; PART NO. WAS 9212010-0000	9/9/10	/	DDS	/	/	/

Designed		Date
Drawn	WELCH, JD	7/19/89
Checked	B. ATEVENA	11/02/89
Approved	J. BERTZ	11/01/89
Q.C.	R.L. PORTEOUS	11/01/89

Tolerances:
a. Angular ±
b. Linear ±
(Unless Otherwise Noted)

Material:
SEE DETAIL DRAWINGS

REFERENCES

NEXT ASSEMBLY _____

ENERGY ABSORPTION SYSTEMS, INC.
ENGINEERING AND RESEARCH DEPARTMENT

BRAKEMASTER®350 SYSTEM (BRS)
PANEL/STRAP ASSEMBLY

SCALE	SIZE	DWG. NUMBER	SHEET	REV
(1:8) 1/8" = 1"	C	612001	1 OF 1	A

Brakemaster® 350 System Panel/Strap Assembly

Revision E September 2012
All rights in copyright reserved

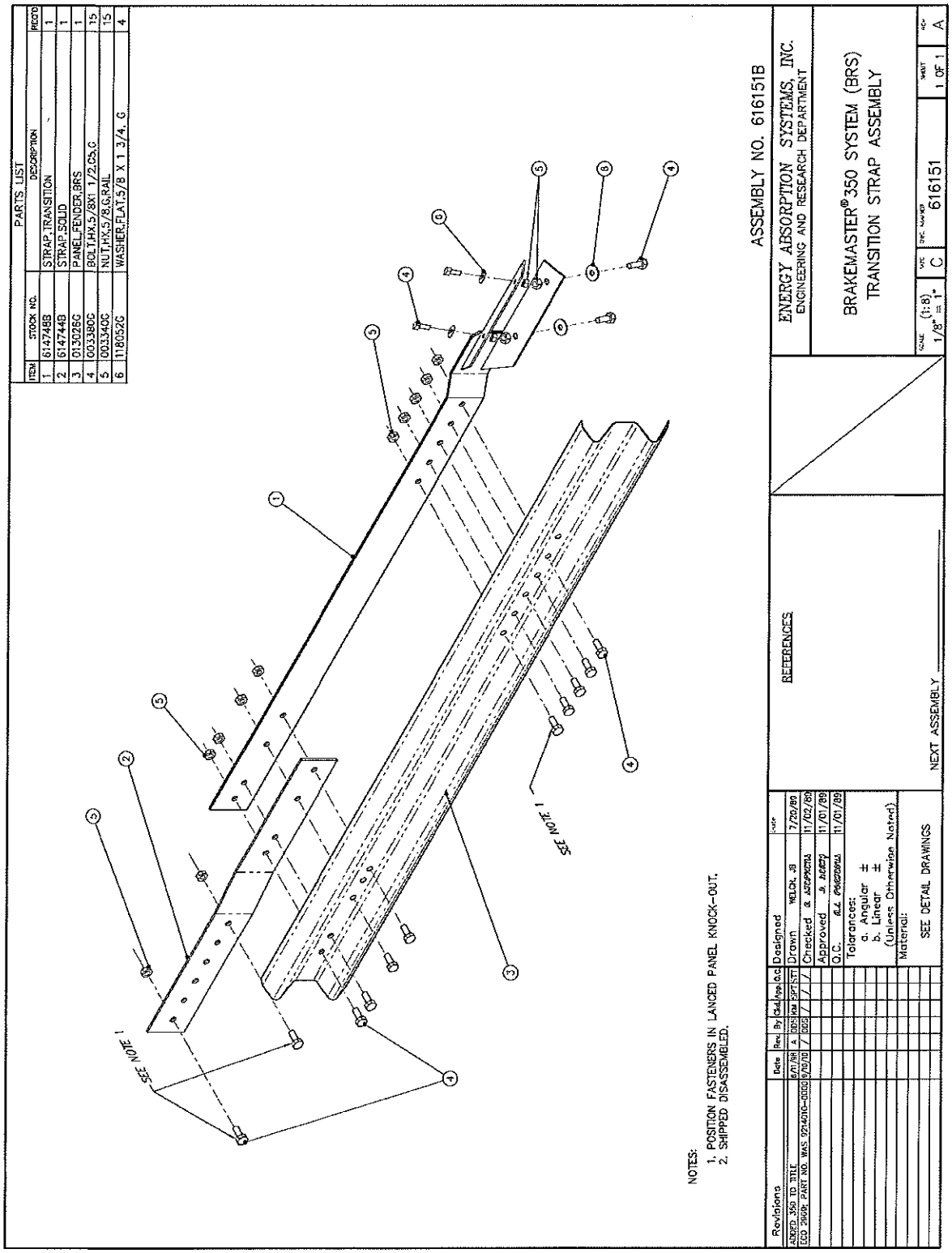

DWG 616151

Brakemaster® 350 Transition Strap Assembly

All rights in copyright reserved

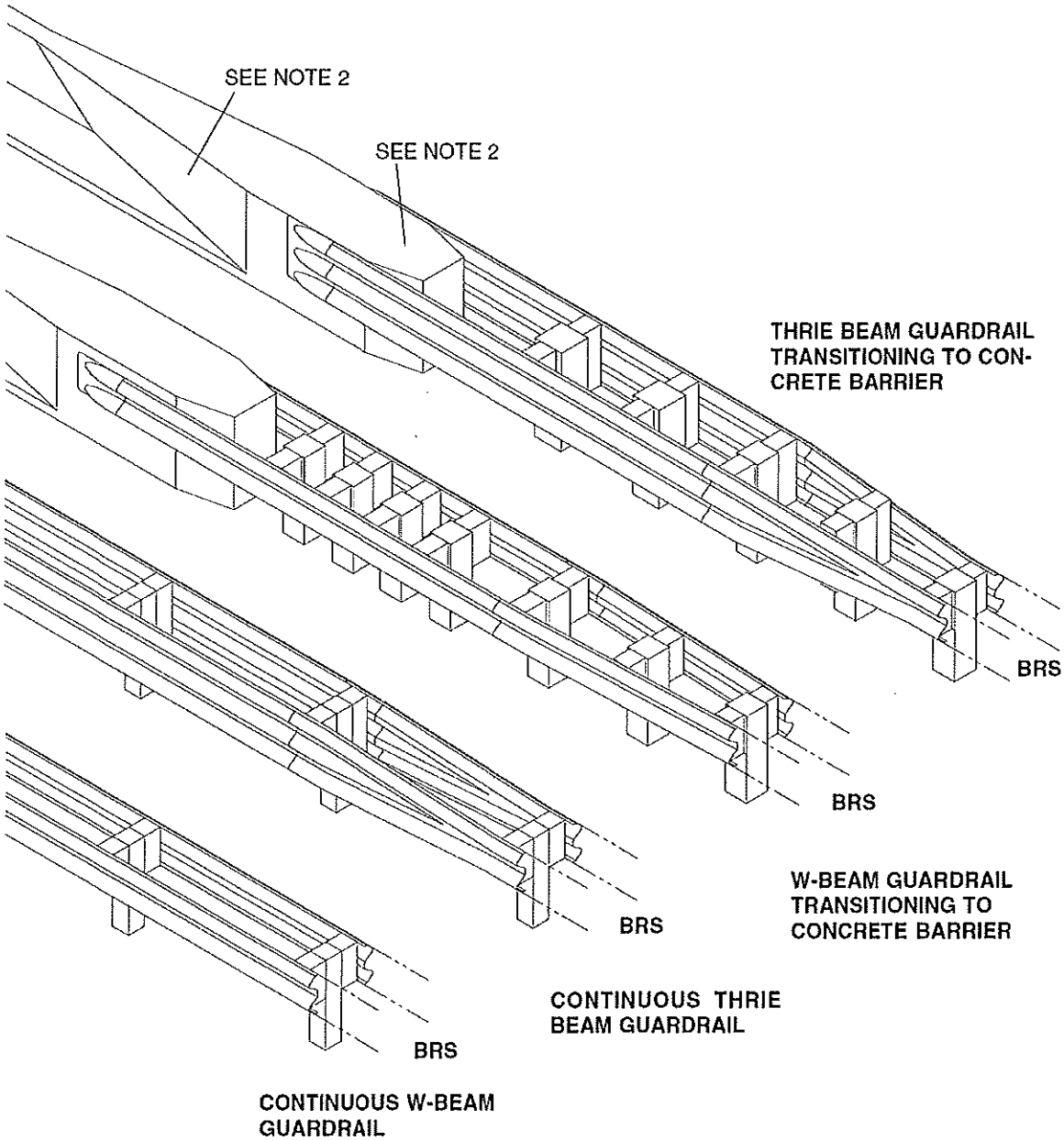

Note:

1. Where necessary, the customer shall supply a transition from the rear of the system to the object being shielded.
2. Customer to make provision for direction of traffic, on structures attached to the Brakemaster system.
3. See Pages 22 through 27 for details.

All rights in copyright reserved

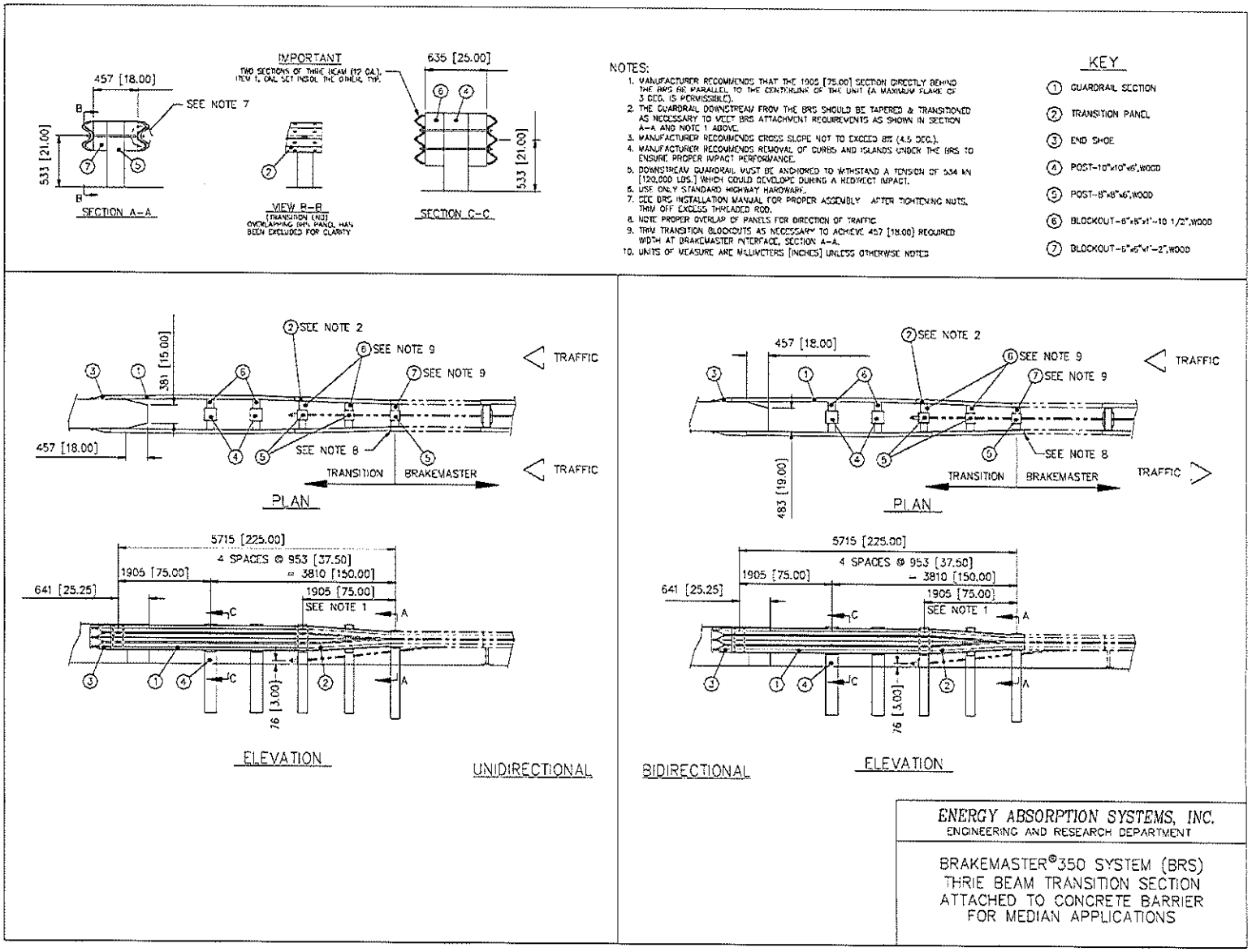

Brakemaster® 350 Thrie Beam Transition Section w/Concrete Barrier for Median Uses

All rights in copyright reserved

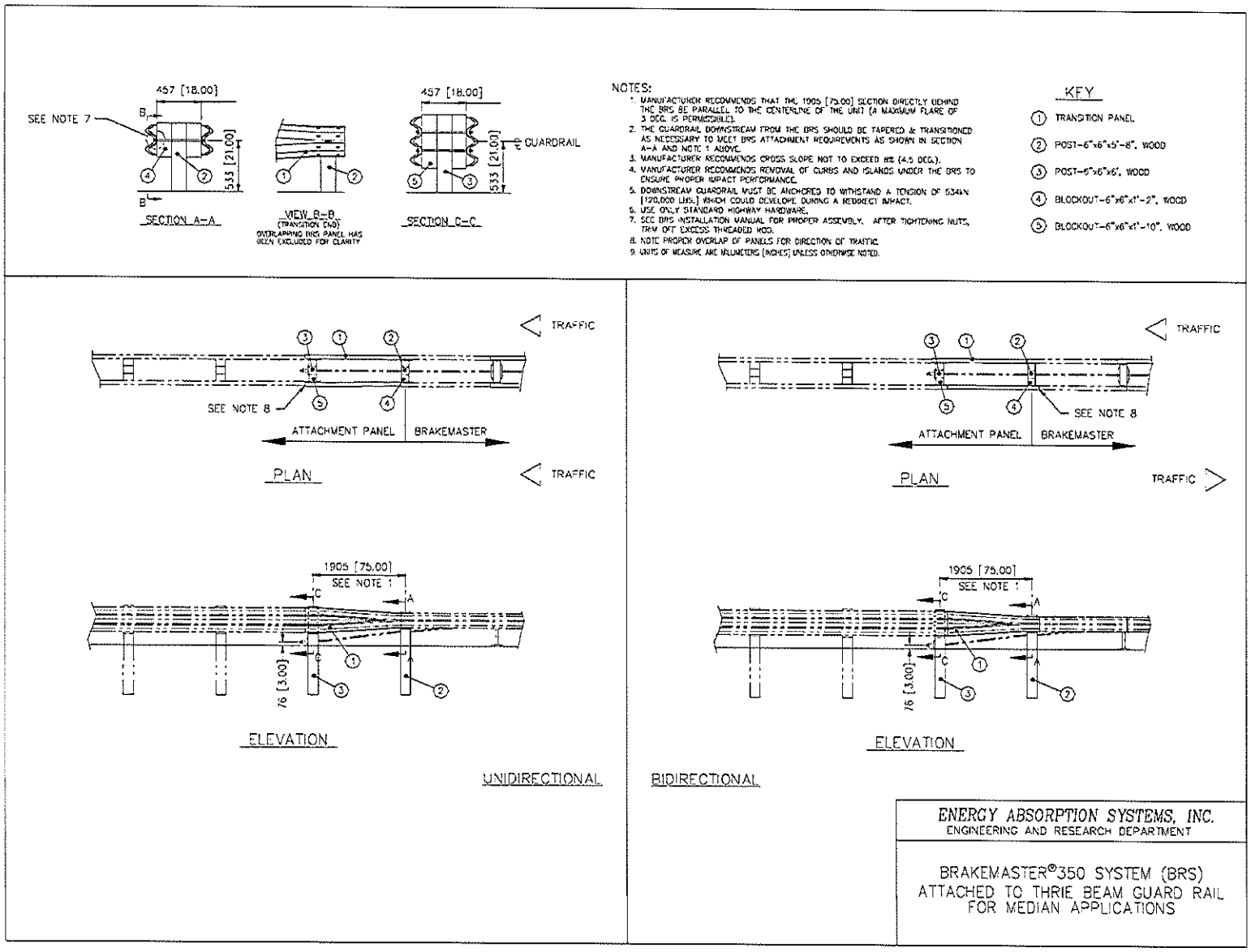

Brakemaster® 350 Attached to Thrie Beam Guard Rail for Median Applications

All rights in copyright reserved

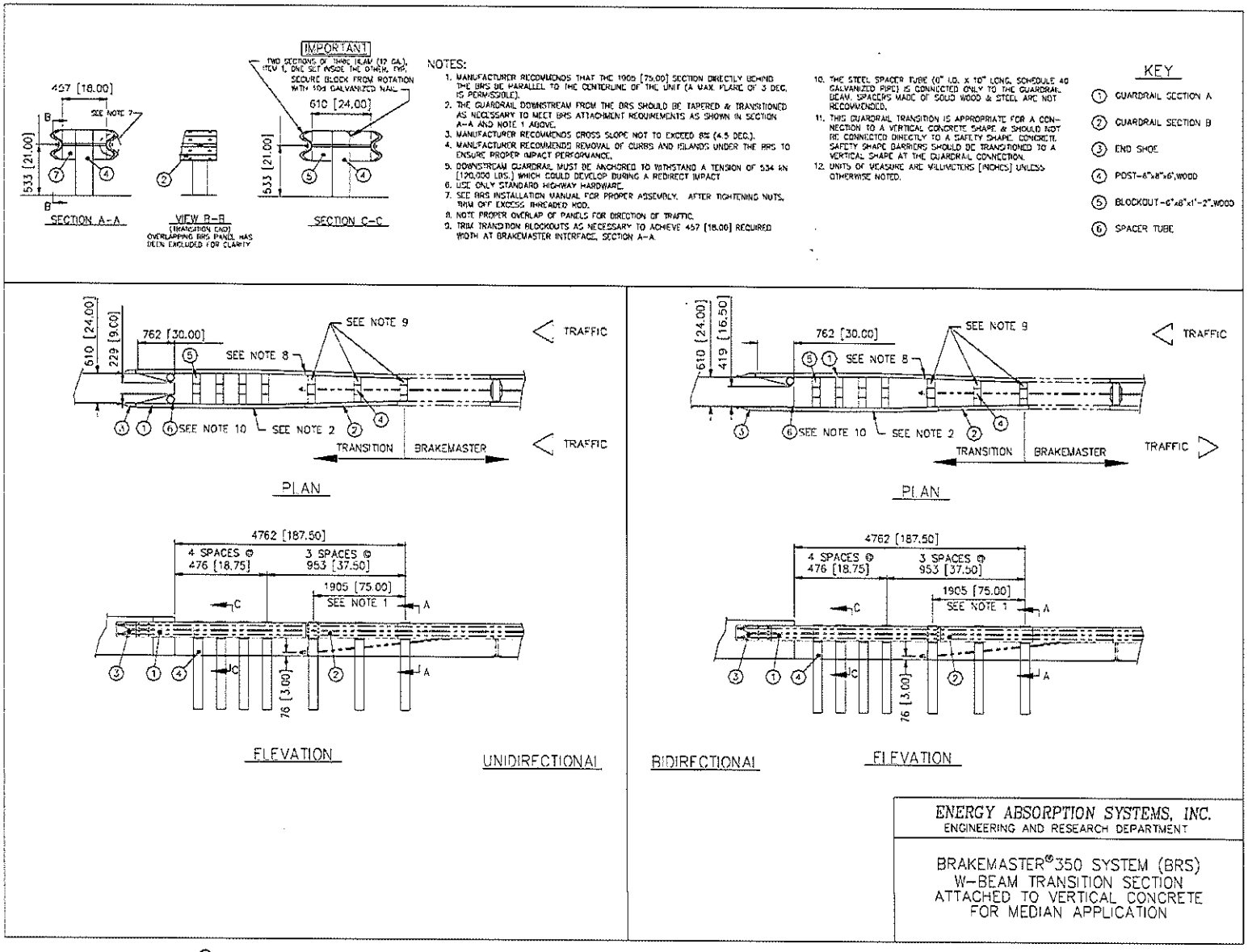

Brakemaster® 350 W-Beam Transition Section w/Vertical Concrete for Median Apps

All rights in copyright reserved

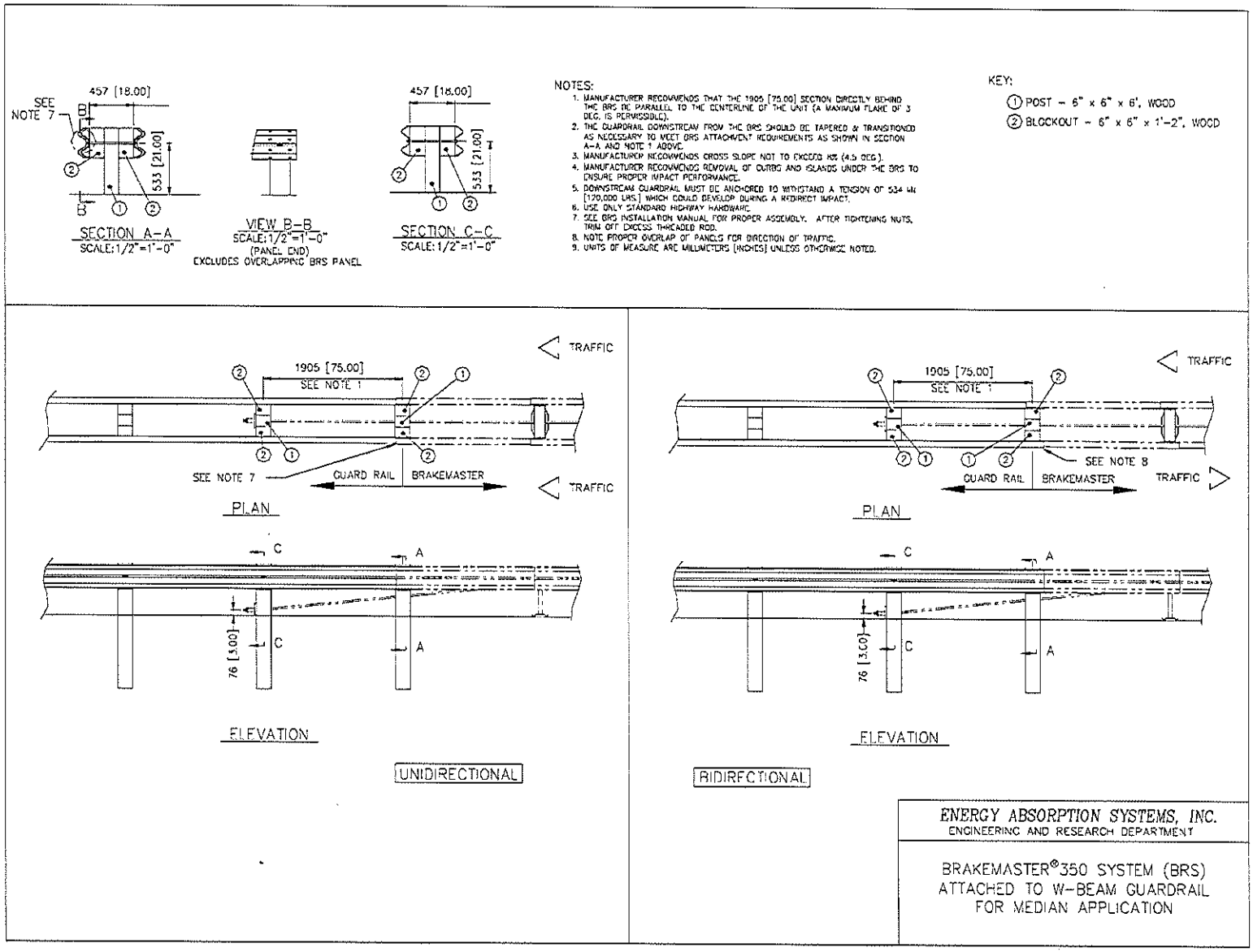

Brakemaster® 350 Attached to W-Beam Guardrail for Median Application

All rights in copyright reserved

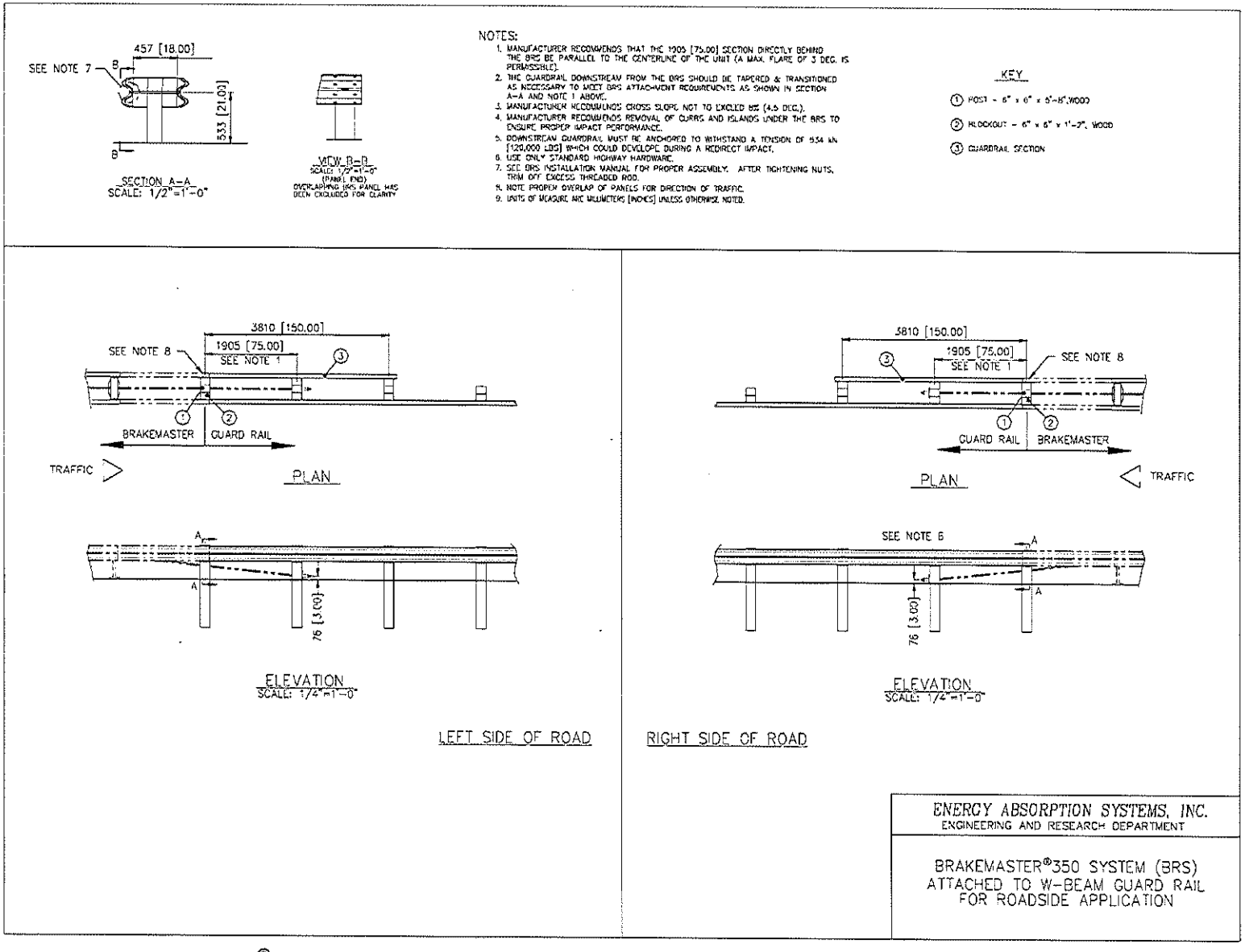

Brakemaster® 350 Attached to W-Beam Guardrail for Roadside Application

All rights in copyright reserved

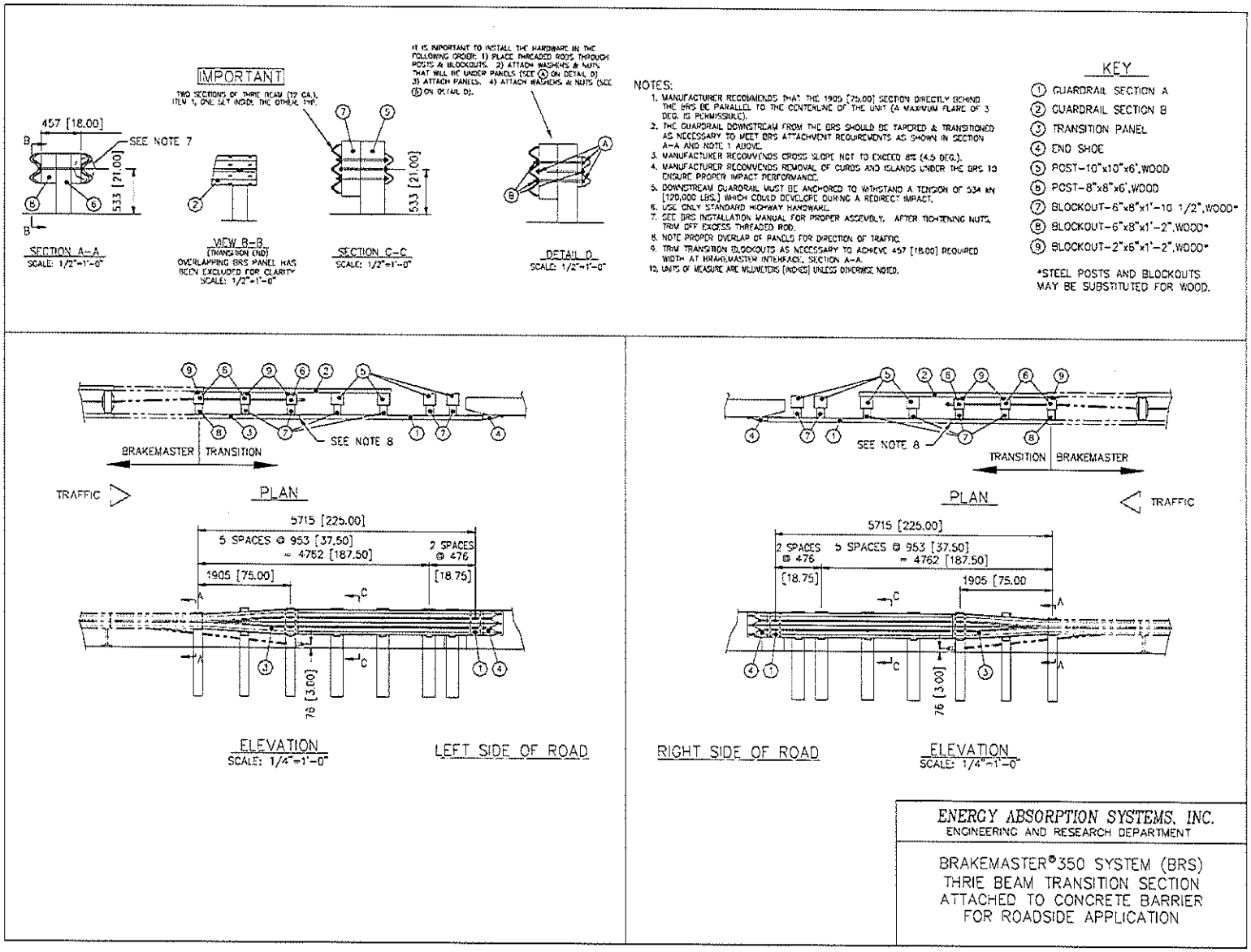

Brakemaster® 350 Thrie Beam Transition Section w/Concrete Barrier for Roadside Uses

All rights in copyright reserved

TRINITY
HIGHWAY PRODUCTS
ENERGY ABSORPTION SYSTEMS

2525 Stemmons Freeway
Dallas, Texas 75207
888-323-6374 (USA only)
214-589-8140 (Outside USA)
www.energyabsorption.com
www.highwayguardrail.com

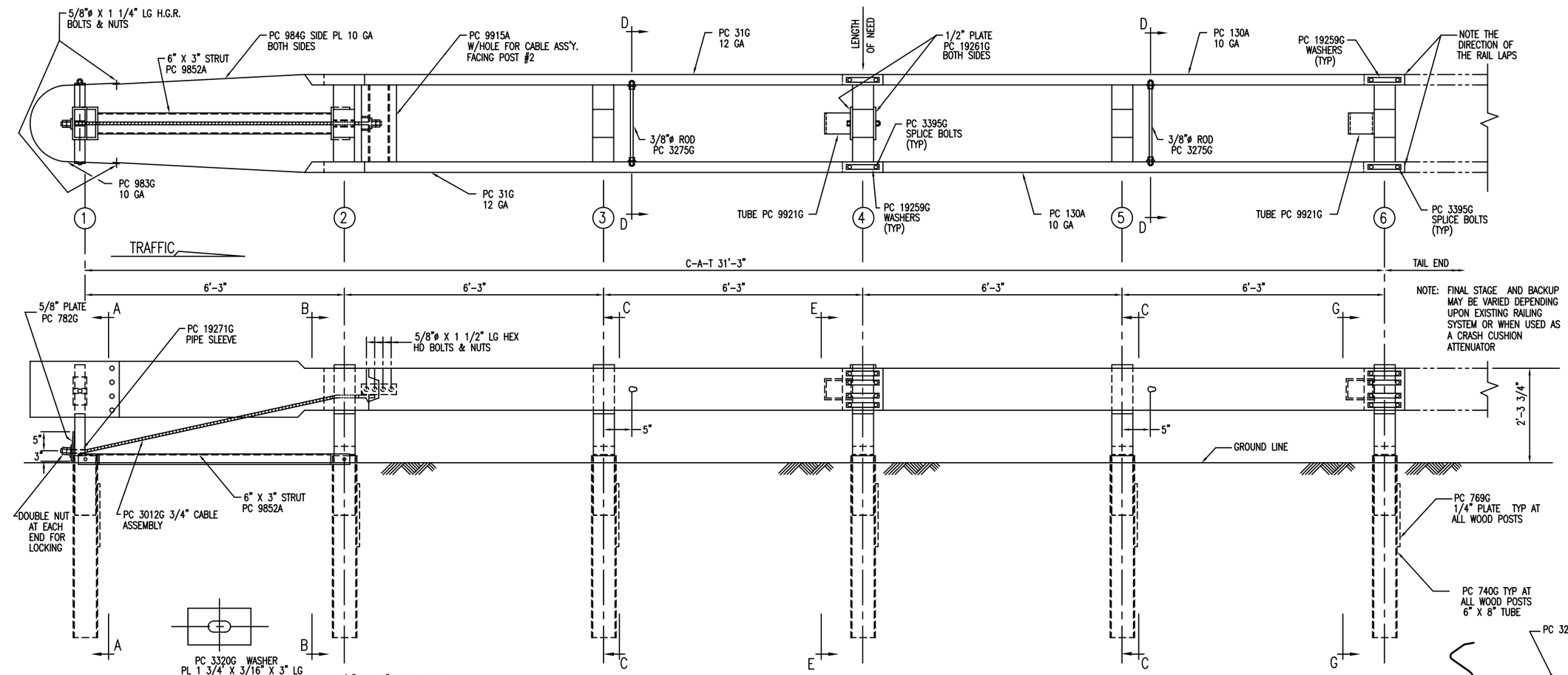

NOTE:
PC 3395G SPLICE BOLTS ARE USED TO ALLOW TELESCOPING ACTION.

C-A-T BILL OF MATERIAL

PRODUCT CODE	QTY	DESCRIPTION
31G	2	12/12'6/0 CAT (GUARDRAIL)
130A	2	10/12'6/5'10:6'8/SP CAT (GUARDRAIL)
705G	1	2" x 5 1/2" PIPE
740G	6	4'6 TUBE SLEEVE
769G	6	1/4 x 18 x 24 SOIL PLATE
782G	1	5/8" x 8" x 8" BEARING PLATE
983G	1	10/NOSE PLATE/CAT/ROLLED
984G	2	10/SIDE PLATE CAT
3012G	1	CABLE 3/4 x 8'0/DBL SWG
3074B	5	WD 3'6 POST #2, 3, 4, 5, 6 CAT
3075B	1	WD 3'6 POST #1 CAT
3100B	2	WD BLOCK 1'2 #1 CAT
3101B	10	WD BLOCK 1'2 #2-6 CAT
3255G	4	3/8" FLAT WASHER
3263G	4	3/8"ø x 2" LAG SCREW
3275G	2	3/8"ø x 24 1/2" RESTRAINT ROD
3300G	20	5/8" FLAT WASHER
3320G	4	3/16" x 1 3/4" x 3" RECT WASHER
3340G	85	5/8" G.R. NUT
3360G	16	5/8"ø x 1 1/4" G.R. BOLT
3380G	8	5/8"ø x 1 1/2" HEX BOLT
3395G	32	5/8"ø x 1 3/4" HEX BOLT CAT
3478G	13	5/8"ø x 7 1/2" HEX BOLT
3497G	6	5/8"ø x 9 1/2" HEX BOLT
3650G	2	5/8"ø x 25" G.R. BOLT
3900G	2	1" FLAT WASHER
3910G	4	1" HEX NUT
4252G	8	3/8" HEX NUT
4258G	4	3/8" LOCK WASHER
4640G	8	5/8"ø x 24" HEX BOLT
9852A	1	CHANNEL STRUT x 6'-6"
9915A	1	SPACER CHANNEL CAT
9916A	1	10/BENT PLATE SLEEVE
9921G	2	6" SLEEVE 6 x 8
19259G	32	3/16" x 2" x 10" PLATE WASHER
19261G	2	1/2 x 3 x 7 POST PLATE
19271G	1	1" x 2 1/2" PIPE SLEEVE CAT

REV.	CHK'D	BY	DATE	REMARKS
6		BT	8-9-00	CHANGED SYSTEM HEIGHT, WAS 2'-3"
5		LH	6-22-00	REPLACED PC 766 WITH PC 769, CHANGED TITLE BLOCK
4		BT	4-10-97	ROTATED BLOCK PC 9921 90° AT POST 4 & 6
3		BT	3-10-97	DELETED PC 3072, 3073, 4470, CHG QTY 3074 & 3478
2		BT	8-12-96	SECTIONS A-A & B-B, CORRECTED PIPE SLEEVE PC No
1		BT	5-1-96	REVISED PC No 31G & 130A

C-A-T

CRASH-CUSHION ATTENUATING TERMINAL PLAN, ELEVATION & SECTIONS FOR USE AS A LONGITUDINAL MEDIAN BARRIER TERMINAL OR CRASH CUSHION ATTENUATOR

TRINITY INDUSTRIES, INC.
HIGHWAY SAFETY PRODUCTS
2525 STEMMONS FREEWAY, DALLAS, TX 75207

DRAWN	BT
CHECKED	EN
SCALE	N.T.S.
DATE	7-15-94
ENG. FILE #	SS245-01E
SHT.No.	E1 OF 1
DRAWING NO.	SS-245
REV.	6

This drawing and the information shown thereon is the sole property of TRINITY INDUSTRIES, INC. Neither the drawing nor such information is to be used for any purpose other than that for which it was specifically furnished by TRINITY INDUSTRIES, INC., nor is any reproduction authorized without written permission.

Dist	COUNTY	ROUTE	POST MILES TOTAL PROJECT	SHEET No.	TOTAL SHEETS

REGISTERED CIVIL ENGINEER DATE

PLANS APPROVAL DATE

REGISTERED PROFESSIONAL ENGINEER No. Exp. CIVIL STATE OF CALIFORNIA

THE STATE OF CALIFORNIA OR ITS OFFICERS OR AGENTS SHALL NOT BE RESPONSIBLE FOR THE ACCURACY OR COMPLETENESS OF SCANNED COPIES OF THIS PLAN SHEET.

NOTE:
1. USE 15'-7½" LENGTH RAIL.

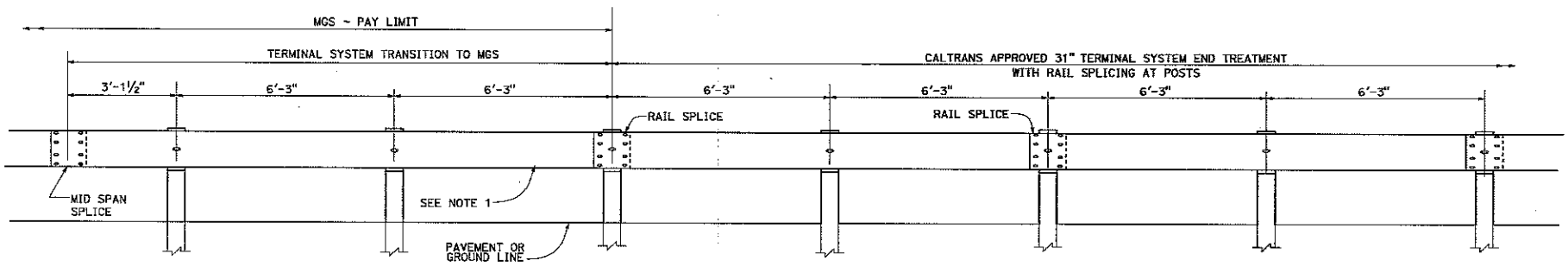

TRANSITION DETAIL FOR 31" TERMINAL SYSTEM END TREATMENT WITH RAIL SPLICING AT POSTS TO MIDWEST GUARDRAIL SYSTEM

REVISED BY | DATE REVISED

CALCULATED-DESIGNED BY | CHECKED BY

FUNCTIONAL SUPERVISOR

STATE OF CALIFORNIA - DEPARTMENT OF TRANSPORTATION

Caltrans

LAST REVISION | DATE PLOTTED => 28-FEB-2014
00-00-00 | TIME PLOTTED => 12:35

BORDER LAST REVISED 7/2/2010 | USERNAME => s114640 | DGN FILE => mgs transition details.dgn | RELATIVE BORDER SCALE IS IN INCHES 0 1 2 3 | UNIT 0000 | PROJECT NUMBER & PHASE 00000000001