Dist	COUNTY	ROUTE	POST MILES TOTAL PROJECT	SHEET No.	TOTAL SHEETS
05	SLO	1	73.7/74.0	1	108

ACSTP-19A5(004)E

STATE OF CALIFORNIA
DEPARTMENT OF TRANSPORTATION

PROJECT PLANS FOR CONSTRUCTION ON
STATE HIGHWAY

IN SAN LUIS OBISPO COUNTY
ABOUT 19 MILES NORTH OF SAN SIMEON
FROM 0.7 MILE TO 1.0 MILE
NORTH OF RAGGED POINT VIADUCT

TO BE SUPPLEMENTED BY STANDARD PLANS DATED 2010

INDEX OF PLANS

SHEET No.	DESCRIPTION
1	TITLE AND LOCATION MAP
2-4	TYPICAL CROSS SECTIONS
5	LAYOUT
6	PROFILES AND SUPERELEVATION DIAGRAMS
7-18	DRAINAGE PLANS, PROFILES, DETAILS AND QUANTITIES
19-20	UTILITY PLANS
21	CONSTRUCTION AREA SIGNS
22-26	STAGE CONSTRUCTION, TRAFFIC HANDLING PLANS AND QUANTITIES
27-28	PAVEMENT DELINEATION, SIGN PLAN AND QUANTITIES
29	SUMMARY OF QUANTITIES
30-32	EROSION CONTROL LEGEND AND QUANTITIES
33-46	ELECTRICAL PLANS
47-79	REVISED STANDARD PLANS
STRUCTURE PLANS	
80-108	ELEPHANT TRUNK RETAINING WALL Br No. 49E0022

THE STANDARD PLANS LIST APPLICABLE TO THIS CONTRACT IS INCLUDED IN THE NOTICE TO BIDDERS AND SPECIAL PROVISIONS BOOK.

LOCATION MAP

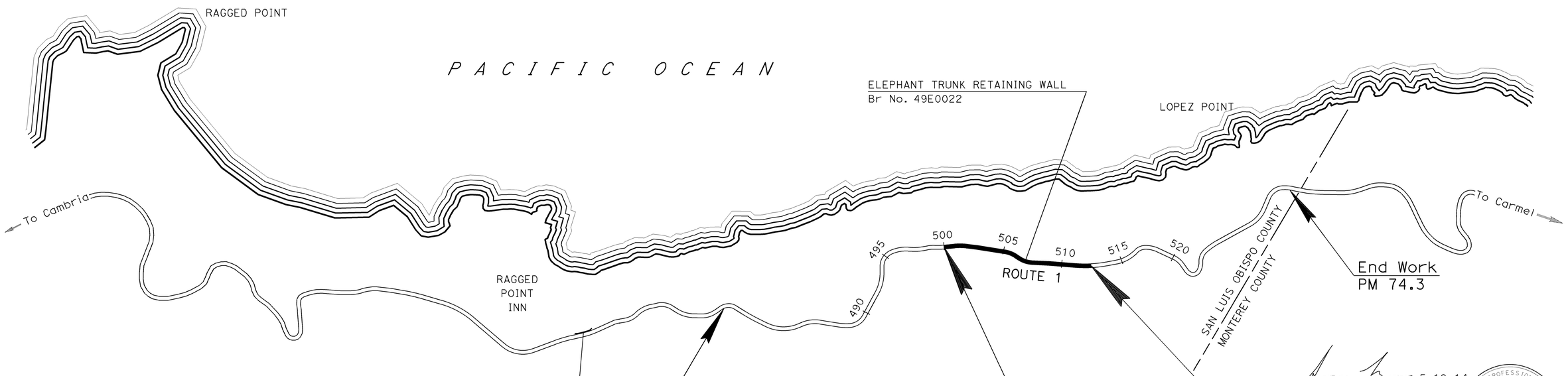

NO SCALE

THE CONTRACTOR SHALL POSSESS THE CLASS (OR CLASSES) OF LICENSE AS SPECIFIED IN THE "NOTICE TO BIDDERS."

PROJECT MANAGER: LISA LOWERSON
DESIGN ENGINEER: STEVEN M. WYATT

5-19-14
PROJECT ENGINEER REGISTERED CIVIL ENGINEER — DATE

May 19, 2014
PLANS APPROVAL DATE

REGISTERED PROFESSIONAL ENGINEER — S. LOZON No. 43136 Exp. 3-31-16 CIVIL — STATE OF CALIFORNIA

THE STATE OF CALIFORNIA OR ITS OFFICERS OR AGENTS SHALL NOT BE RESPONSIBLE FOR THE ACCURACY OR COMPLETENESS OF SCANNED COPIES OF THIS PLAN SHEET.

CONTRACT No.	05-1A7004
PROJECT ID	0512000009

LAST REVISION 05-19-14
DATE PLOTTED => 20-AUG-2014
TIME PLOTTED => 12:05

Dist	COUNTY	ROUTE	POST MILES TOTAL PROJECT	SHEET No.	TOTAL SHEETS
05	SLO	1	73.7/74.0	2	108

REGISTERED CIVIL ENGINEER 5-19-14 DATE

5-19-14
PLANS APPROVAL DATE

REGISTERED PROFESSIONAL ENGINEER S. LOZON No. 43136 Exp. 3/31/16 CIVIL STATE OF CALIFORNIA

THE STATE OF CALIFORNIA OR ITS OFFICERS OR AGENTS SHALL NOT BE RESPONSIBLE FOR THE ACCURACY OR COMPLETENESS OF SCANNED COPIES OF THIS PLAN SHEET.

NOTES:

1. DIMENSIONS OF THE PAVEMENT STRUCTURES (STRUCTURAL SECTIONS) ARE SUBJECT TO TOLERANCES SPECIFIED IN THE STANDARD SPECIFICATIONS.
2. SUPERELEVATIONS ARE SHOWN ON THE SUPERELEVATION DIAGRAM.
3. SEE STRUCTURAL PLANS FOR RETAINING WALL DETAILS.
4. FOR LOCATION OF MGS AND LIMIT OF HMA DIKE, SEE LAYOUT SHEET L-1.
5. UTILITIES ARE NOT SHOWN.
6. SEE X-2 FOR LIMITS OF GEOSYNTHETIC PAVEMENT INTERLAYER.

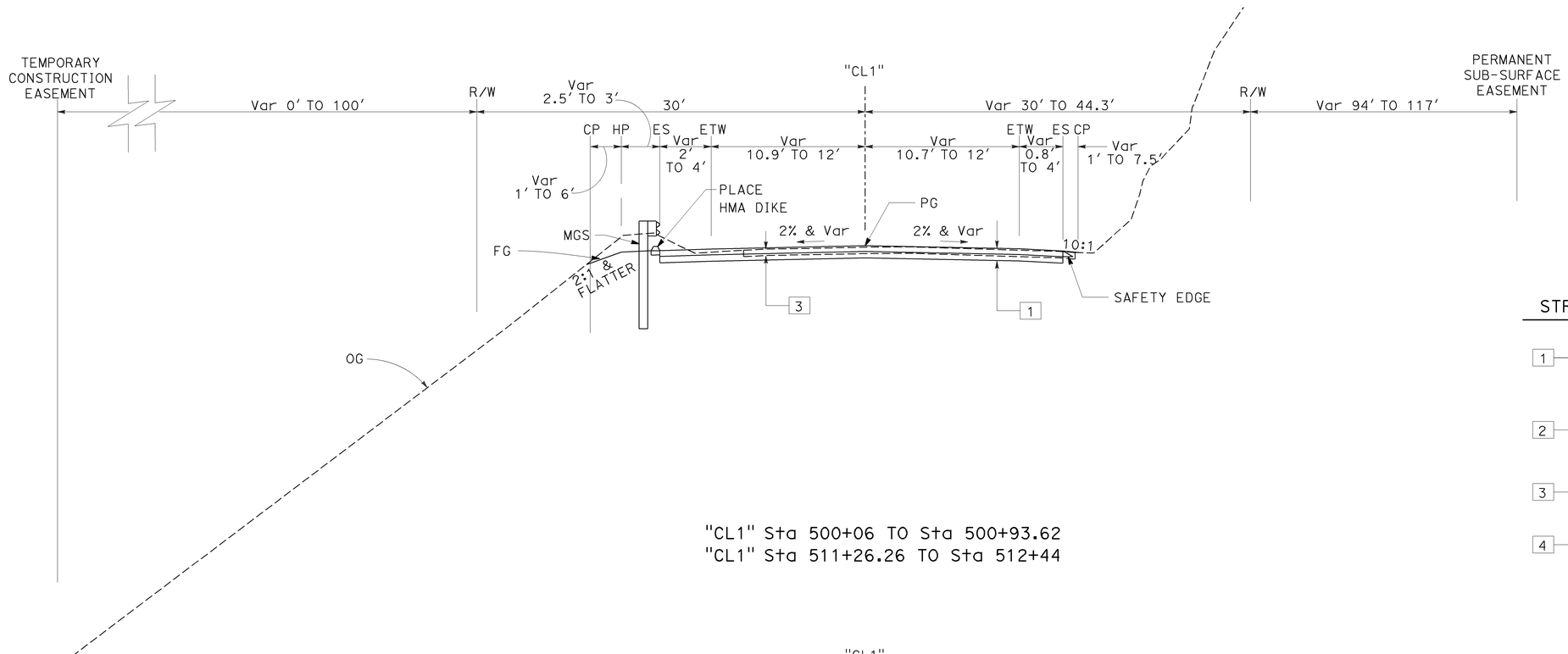

"CL1" Sta 500+06 TO Sta 500+93.62
"CL1" Sta 511+26.26 TO Sta 512+44

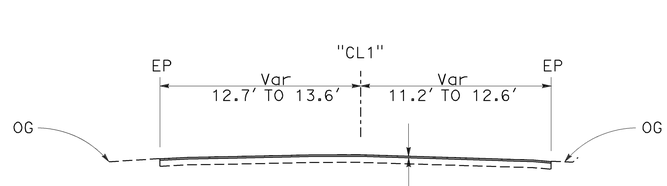

"CL1" Sta 499+96 TO Sta 500+06
"CL1" Sta 512+44 TO Sta 512+54

PAVEMENT CLIMATE REGION

CENTRAL COAST

ROUTE 1 DESIGN DESIGNATION

ADT (2011)	2113
DHV	509
D	71
%Trucks	1.3
TI (20 Yrs)	8

STRUCTURAL SECTIONS

1
- 0.45' HMA (TYPE A)
- 0.50' CI 2 AB

2
- 0.25' HMA (TYPE A)
- GEOSYNTHETIC PAVEMENT INTERLAYER
- 0.17' HMA (TYPE A)
- 2.00' BARRIER SLAB

3
- Exist AC
- Var 0.50' to 1.10'

4
- 0.10' COLD PLANE AC PAVEMENT
- 0.10' HMA (TYPE A)

ROUTE 1

TYPICAL CROSS SECTIONS

NO SCALE

X-1

STATE OF CALIFORNIA - DEPARTMENT OF TRANSPORTATION
Caltrans®
DESIGN

FUNCTIONAL SUPERVISOR: STEVEN M. WYATT
CALCULATED-DESIGNED BY: S. LOZON
CHECKED BY: M. O'NEAL
REVISED BY
DATE REVISED

LAST REVISION 05-19-14
DATE PLOTTED => 26-AUG-2014
TIME PLOTTED => 11:19

Dist	COUNTY	ROUTE	POST MILES TOTAL PROJECT	SHEET No.	TOTAL SHEETS
05	SLO	1	73.7/74.0	3	108

REGISTERED CIVIL ENGINEER 5-19-14 DATE

5-19-14
PLANS APPROVAL DATE

REGISTERED PROFESSIONAL ENGINEER
S. LOZON
No. 43136
Exp. 3/31/16
CIVIL
STATE OF CALIFORNIA

THE STATE OF CALIFORNIA OR ITS OFFICERS OR AGENTS SHALL NOT BE RESPONSIBLE FOR THE ACCURACY OR COMPLETENESS OF SCANNED COPIES OF THIS PLAN SHEET.

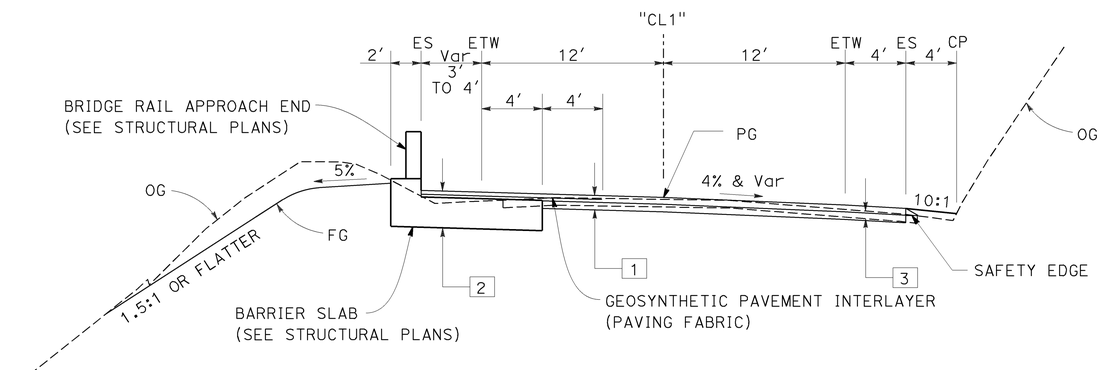

"CL1" Sta 500+93.62 TO Sta 501+00
"CL1" Sta 511+19.65 TO Sta 511+26.26

ROUTE 1

TYPICAL CROSS SECTIONS

NO SCALE

X-2

STATE OF CALIFORNIA - DEPARTMENT OF TRANSPORTATION
Caltrans
DESIGN

FUNCTIONAL SUPERVISOR: STEVEN M. WYATT

CALCULATED-DESIGNED BY: S. LOZON
CHECKED BY: M. O'NEAL

REVISED BY
DATE REVISED

LAST REVISION 05-19-14
DATE PLOTTED => 05-JUN-2014
TIME PLOTTED => 13:18

Dist	COUNTY	ROUTE	POST MILES TOTAL PROJECT	SHEET No.	TOTAL SHEETS
05	SLO	1	73.7/74.0	4	108

REGISTERED CIVIL ENGINEER 5-19-14 DATE

5-19-14
PLANS APPROVAL DATE

REGISTERED PROFESSIONAL ENGINEER S. LOZON No. 43136 Exp. 3/31/16 CIVIL STATE OF CALIFORNIA

THE STATE OF CALIFORNIA OR ITS OFFICERS OR AGENTS SHALL NOT BE RESPONSIBLE FOR THE ACCURACY OR COMPLETENESS OF SCANNED COPIES OF THIS PLAN SHEET.

LEGEND:

ROADWAY EXCAVATION (SELECTED MATERIAL TOPSOIL)

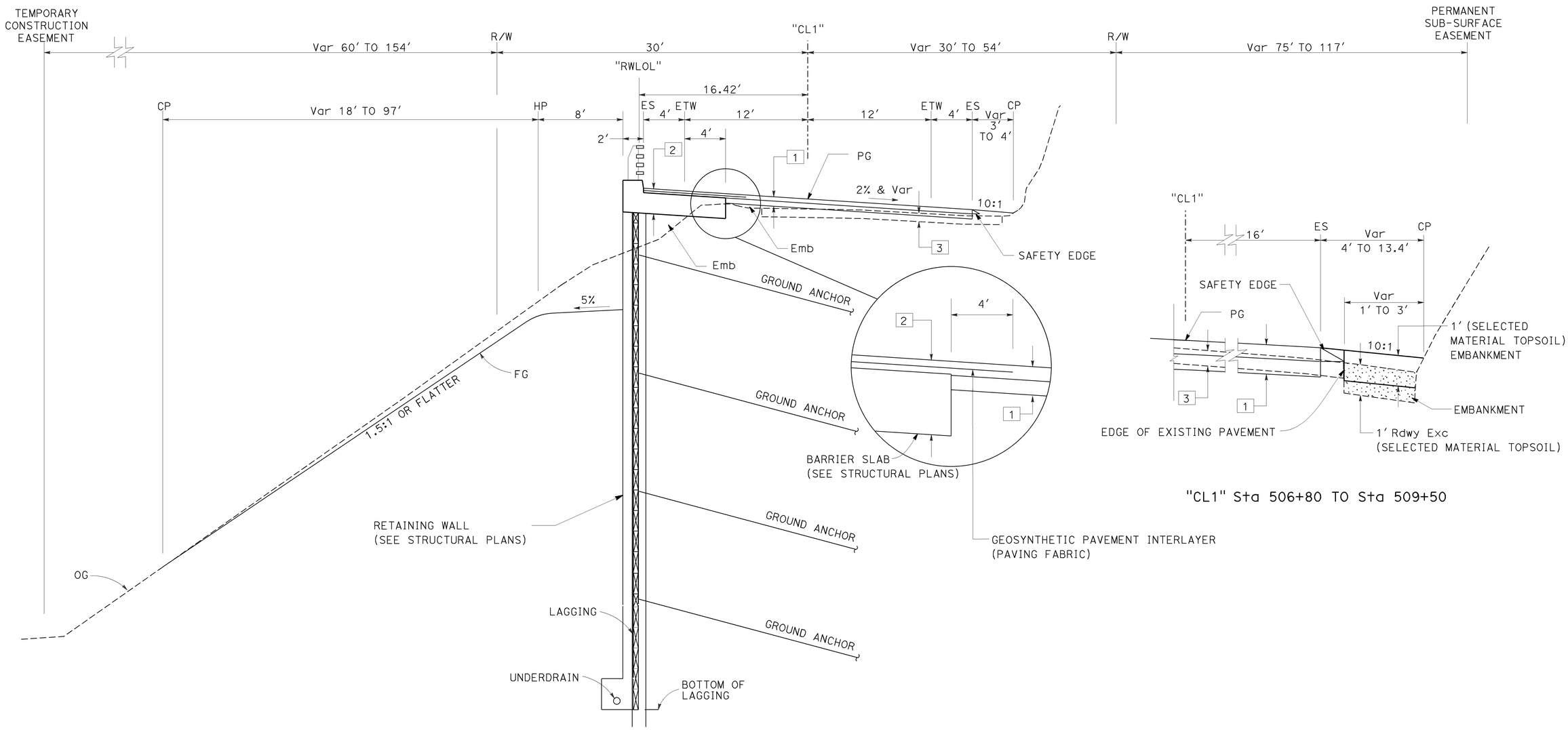

ROUTE 1

TYPICAL CROSS SECTIONS

NO SCALE

X-3

STATE OF CALIFORNIA - DEPARTMENT OF TRANSPORTATION
Caltrans
DESIGN

FUNCTIONAL SUPERVISOR: STEVEN M. WYATT
CALCULATED-DESIGNED BY: S. LOZON
CHECKED BY: M. O'NEAL
REVISED BY
DATE REVISED

LAST REVISION 05-19-14 | DATE PLOTTED => 05-JUN-2014 | TIME PLOTTED => 13:18

Dist	COUNTY	ROUTE	POST MILES TOTAL PROJECT	SHEET No.	TOTAL SHEETS
05	SLO	1	73.7/74.0	5	108

REGISTERED CIVIL ENGINEER 5-19-14 DATE

5-19-14
PLANS APPROVAL DATE

REGISTERED PROFESSIONAL ENGINEER S. LOZON No. 43136 Exp. 3/31/16 CIVIL STATE OF CALIFORNIA

THE STATE OF CALIFORNIA OR ITS OFFICERS OR AGENTS SHALL NOT BE RESPONSIBLE FOR THE ACCURACY OR COMPLETENESS OF SCANNED COPIES OF THIS PLAN SHEET.

NOTE:

1 FOR ACCURATE RIGHT OF WAY DATA, CONTACT RIGHT OF WAY ENGINEERING AT THE DISTRICT OFFICE.

2 MGS LAYOUT TO BE TYPE 12A FOR APPROACH OR TYPE 12AA FOR DEPARTURE.

LEGEND:

COLD PLANE AC PAVEMENT

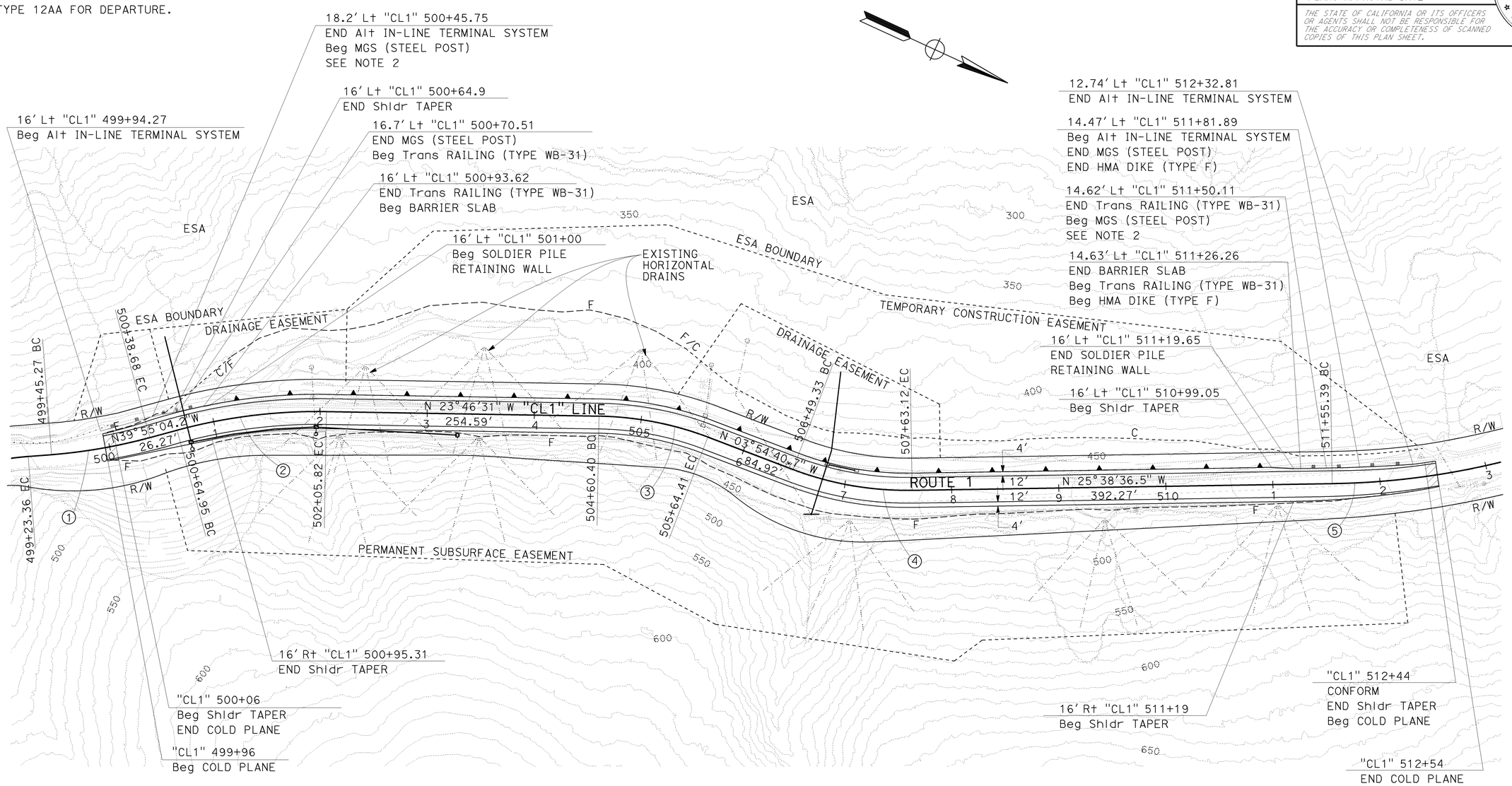

CURVE DATA

No. ⊕	R	Δ	T	L
1	500'	10°42'17"	46.84'	93.42'
2	500'	16°8'33"	70.90'	140.87'
3	300'	19°51'50"	52.53'	104.01'
4	300'	21°43'56"	57.59'	113.79'
5	715'	15°15'57"	95.82'	190.50'

SCALE: 1" = 50'

LAYOUT L-1

STATE OF CALIFORNIA - DEPARTMENT OF TRANSPORTATION
Caltrans DESIGN

FUNCTIONAL SUPERVISOR: STEVEN M. WYATT
CALCULATED-DESIGNED BY: S. LOZON
CHECKED BY: M. O'NEAL
REVISED BY
DATE REVISED

LAST REVISION 05-19-14
DATE PLOTTED => 26-AUG-2014
TIME PLOTTED => 12:49

Dist	COUNTY	ROUTE	POST MILES TOTAL PROJECT	SHEET No.	TOTAL SHEETS
05	SLO	1	73.7/74.0	6	108

REGISTERED CIVIL ENGINEER 5-19-14 DATE

5-19-14
PLANS APPROVAL DATE

REGISTERED PROFESSIONAL ENGINEER S. LOZON No. 43136 Exp. 3/31/16 CIVIL STATE OF CALIFORNIA

THE STATE OF CALIFORNIA OR ITS OFFICERS OR AGENTS SHALL NOT BE RESPONSIBLE FOR THE ACCURACY OR COMPLETENESS OF SCANNED COPIES OF THIS PLAN SHEET.

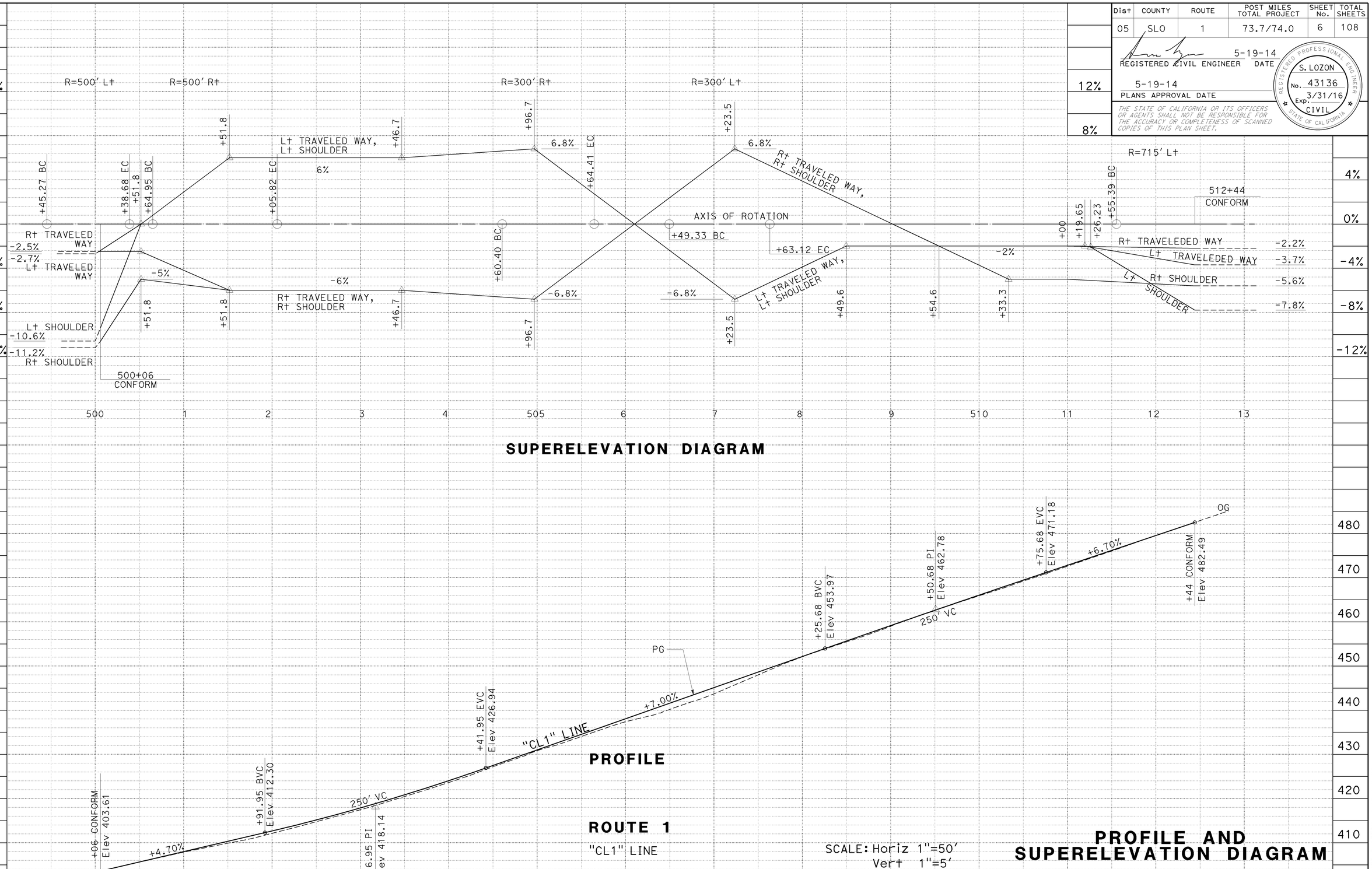

CY		TOTAL
Exc		4332
Emb		4332

STATE OF CALIFORNIA - DEPARTMENT OF TRANSPORTATION
Caltrans DESIGN

FUNCTIONAL SUPERVISOR: STEVEN M. WYATT

CALCULATED-DESIGNED BY: S. LOZON
CHECKED BY: M. O'NEAL

REVISED BY | DATE REVISED

LAST REVISION 05-19-14 | DATE PLOTTED => 20-AUG-2014 | TIME PLOTTED => 12:05

Dist	COUNTY	ROUTE	POST MILES TOTAL PROJECT	SHEET No.	TOTAL SHEETS
05	SLO	1	73.7/74.0	7	108

REGISTERED CIVIL ENGINEER 5-19-14 DATE

5-19-14
PLANS APPROVAL DATE

REGISTERED PROFESSIONAL ENGINEER S. LOZON No. 43136 Exp. 3/31/16 CIVIL STATE OF CALIFORNIA

THE STATE OF CALIFORNIA OR ITS OFFICERS OR AGENTS SHALL NOT BE RESPONSIBLE FOR THE ACCURACY OR COMPLETENESS OF SCANNED COPIES OF THIS PLAN SHEET.

NOTES:

1. FINAL DOWNDRAIN ALIGNMENT TO BE DETERMINED BY THE ENGINEER.
2. FINAL DOWNDRAIN OUTLET TO BE DETERMINED BY THE ENGINEER.

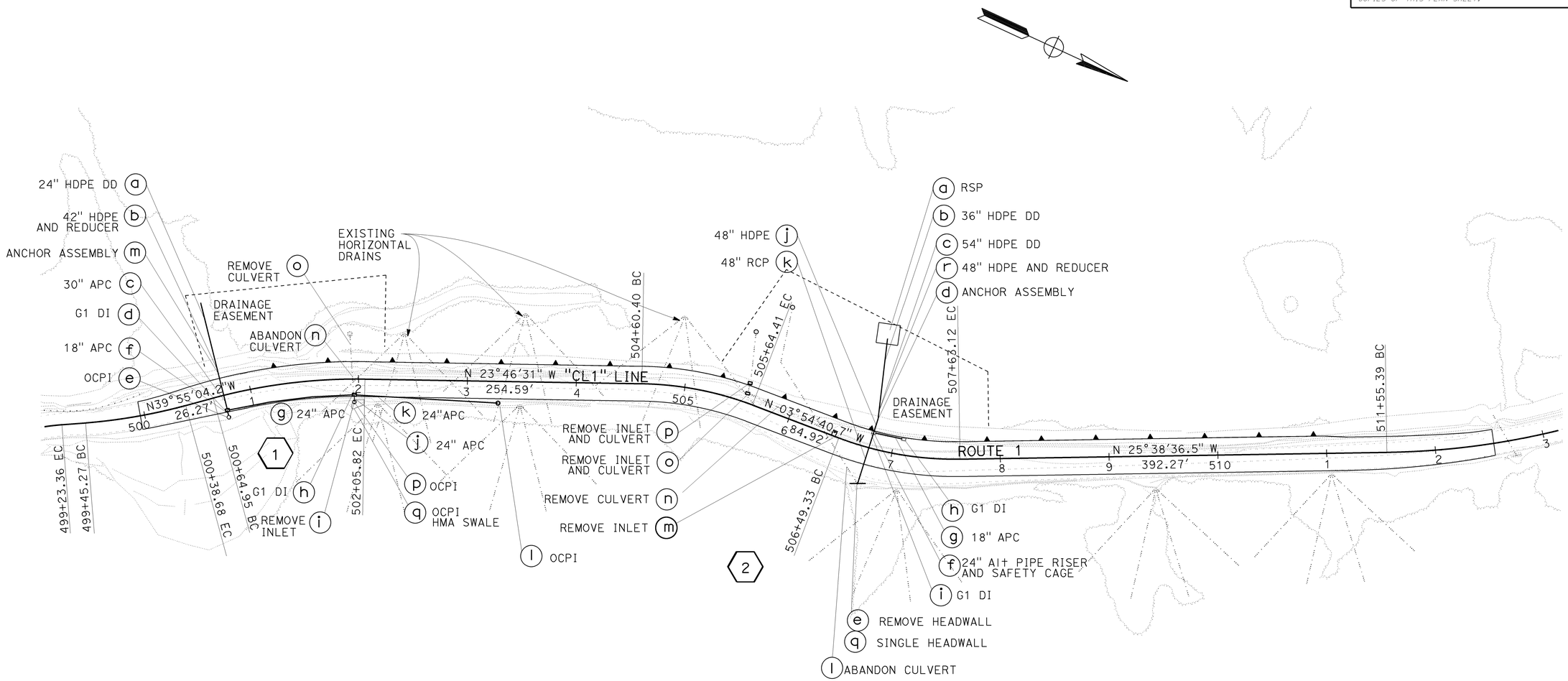

APPROVED FOR DRAINAGE WORK ONLY

DRAINAGE PLAN (ROADWAY)

SCALE: 1" = 50'

D-1

STATE OF CALIFORNIA - DEPARTMENT OF TRANSPORTATION
Caltrans
DESIGN

FUNCTIONAL SUPERVISOR: STEVEN M. WYATT
CALCULATED-DESIGNED BY: S. LOZON
CHECKED BY: M. O'NEAL
REVISED BY
DATE REVISED

LAST REVISION 05-19-14
DATE PLOTTED => 05-JUN-2014
TIME PLOTTED => 13:18

Dist	COUNTY	ROUTE	POST MILES TOTAL PROJECT	SHEET No.	TOTAL SHEETS
05	SLO	1	73.7/74.0	8	108

REGISTERED CIVIL ENGINEER 5-19-14 DATE

5-19-14
PLANS APPROVAL DATE

REGISTERED PROFESSIONAL ENGINEER S. LOZON No. 43136 Exp. 3/31/16 CIVIL STATE OF CALIFORNIA

THE STATE OF CALIFORNIA OR ITS OFFICERS OR AGENTS SHALL NOT BE RESPONSIBLE FOR THE ACCURACY OR COMPLETENESS OF SCANNED COPIES OF THIS PLAN SHEET.

NOTES:

1. FINAL DOWNDRAIN ALIGNMENT TO BE DETERMINED BY THE ENGINEER.
2. FINAL DOWNDRAIN OUTLET TO BE DETERMINED BY THE ENGINEER.

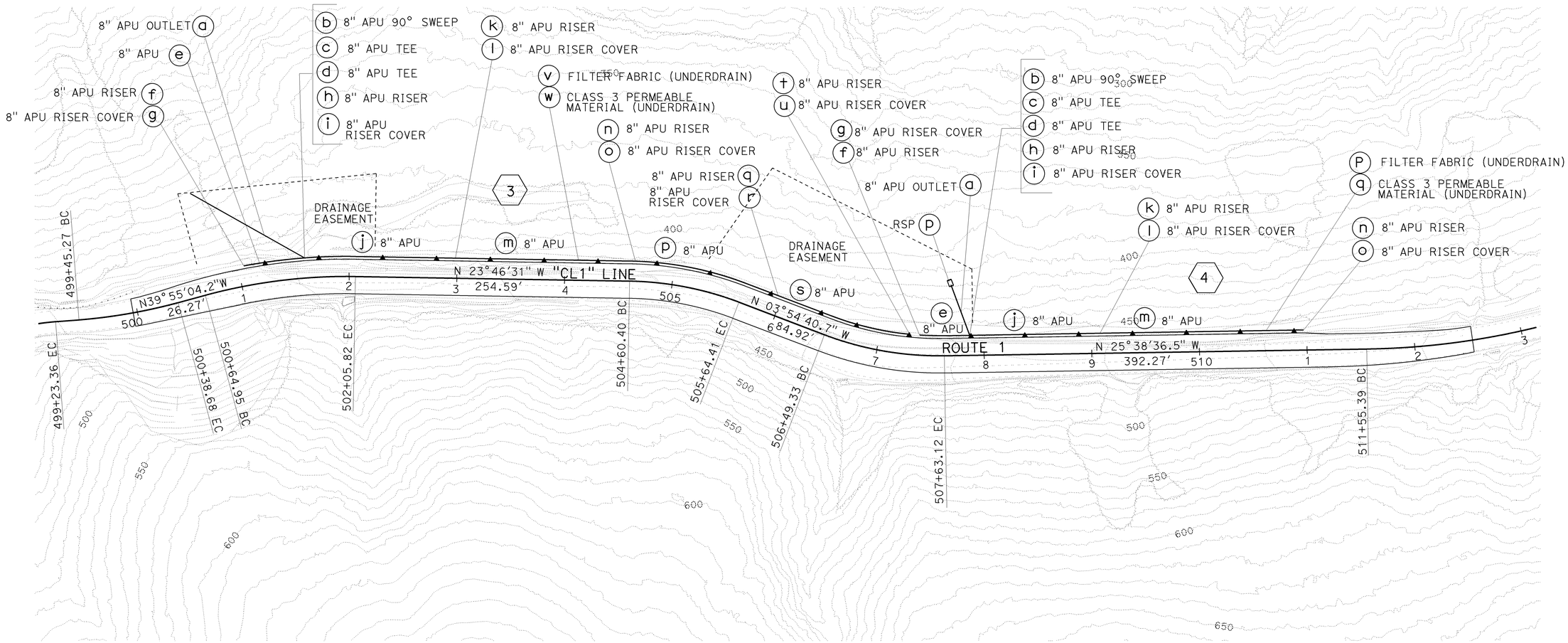

APPROVED FOR DRAINAGE WORK ONLY

DRAINAGE PLAN (RETAINING WALL)

SCALE: 1" = 50'

D-2

STATE OF CALIFORNIA - DEPARTMENT OF TRANSPORTATION
Caltrans
DESIGN

FUNCTIONAL SUPERVISOR: STEVEN M. WYATT
CALCULATED-DESIGNED BY: S. LOZON
CHECKED BY: M. O'NEAL
REVISED BY
DATE REVISED

LAST REVISION 05-19-14
DATE PLOTTED => 05-JUN-2014
TIME PLOTTED => 13:18

Dist	COUNTY	ROUTE	POST MILES TOTAL PROJECT	SHEET No.	TOTAL SHEETS
05	SLO	1	73.7/74.0	9	108

REGISTERED CIVIL ENGINEER 5-19-14 DATE

5-19-14
PLANS APPROVAL DATE

REGISTERED PROFESSIONAL ENGINEER S. LOZON No. 43136 Exp. 3/31/16 CIVIL STATE OF CALIFORNIA

THE STATE OF CALIFORNIA OR ITS OFFICERS OR AGENTS SHALL NOT BE RESPONSIBLE FOR THE ACCURACY OR COMPLETENESS OF SCANNED COPIES OF THIS PLAN SHEET.

NOTES:

1. ALL STATIONS, OFFSETS, AND CORRESPONDING SHOWN LEADER LINES ARE TO THE CENTER OF BOX (COB) UNLESS OTHERWISE SHOWN.
2. ALL DRAINAGE STRUCTURES ARE RADIAL TO THE REFERENCED ALIGNMENT UNLESS OTHERWISE SHOWN.

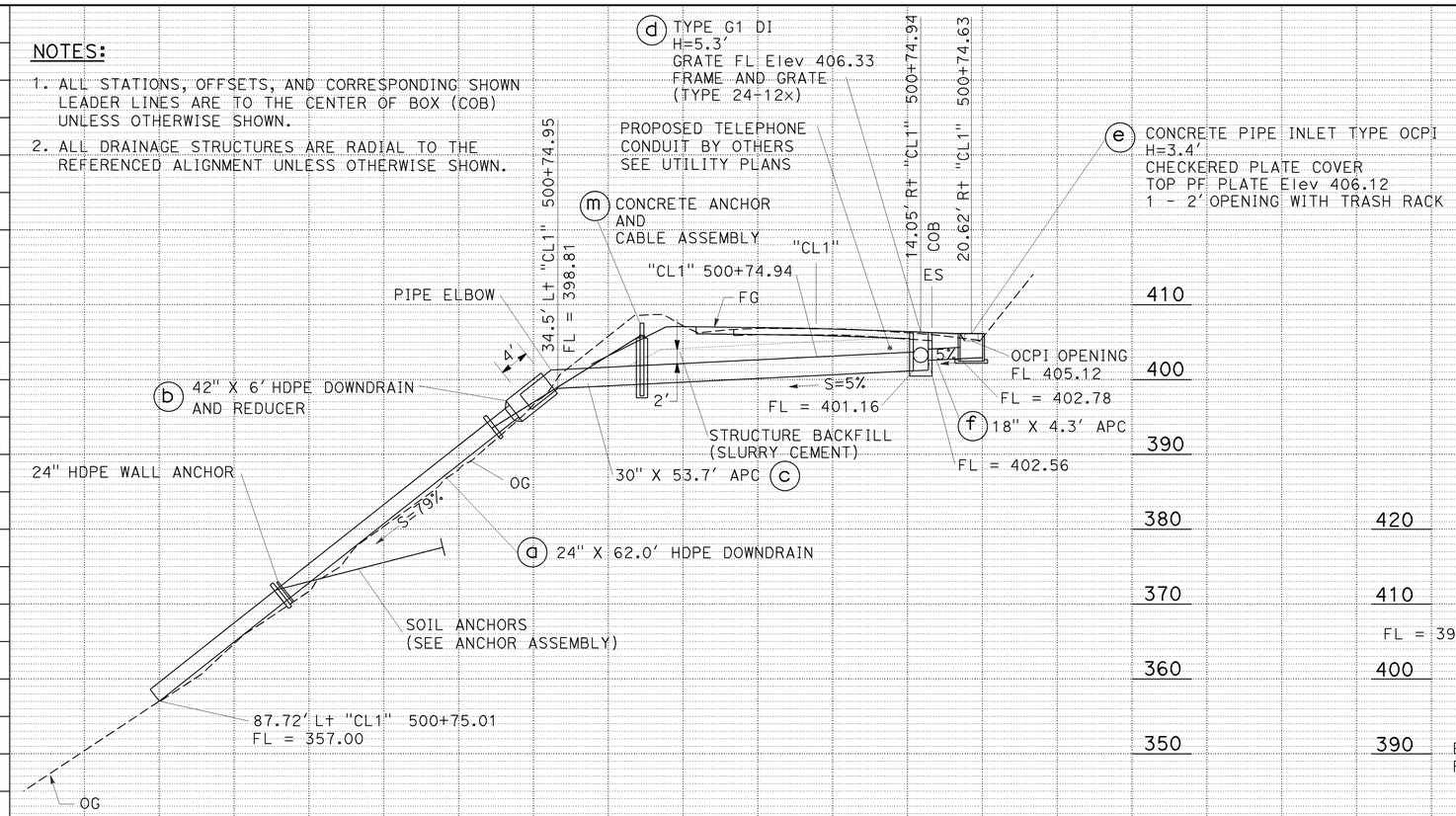

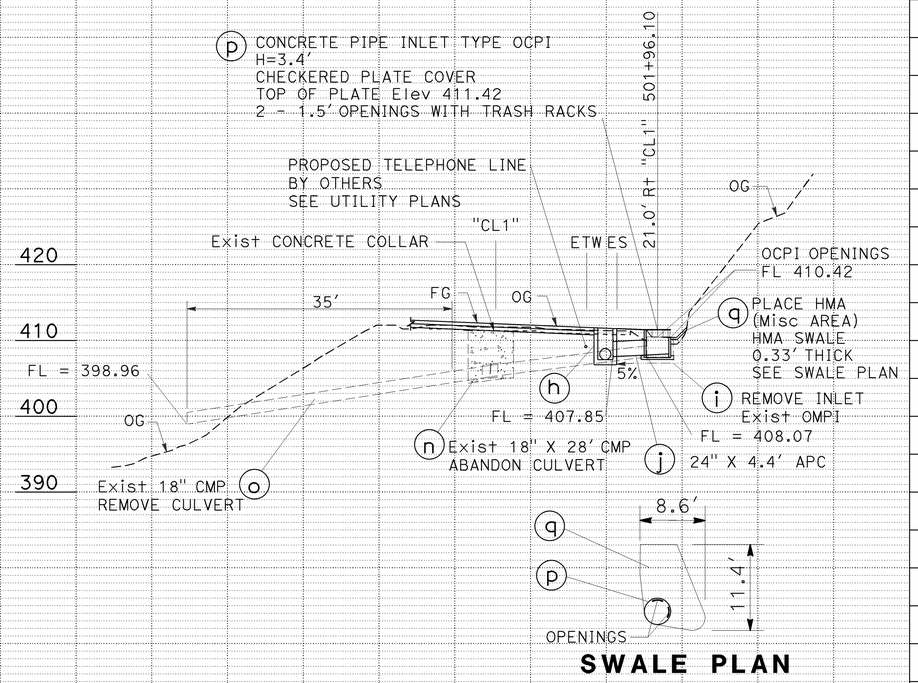

SWALE PLAN

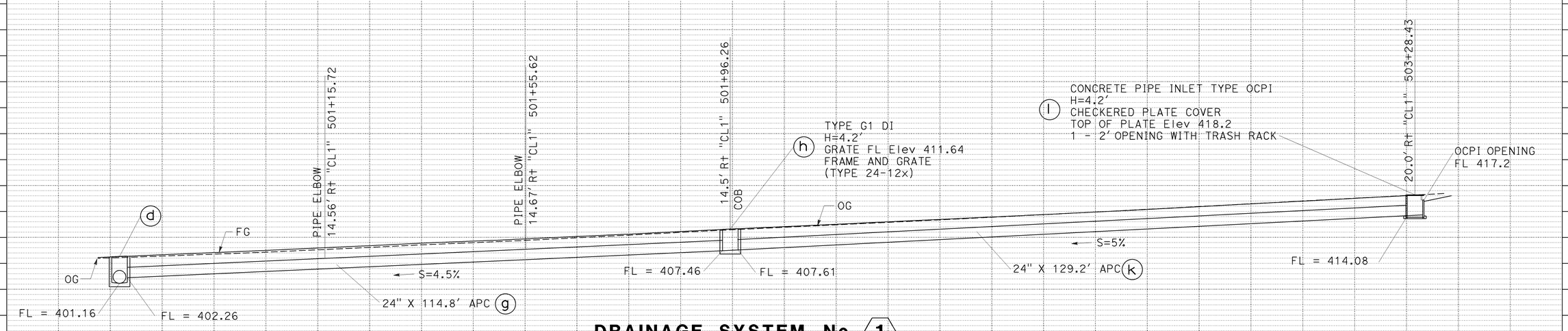

DRAINAGE SYSTEM No. 1
"CL1" 500+74.94

APPROVED FOR DRAINAGE WORK ONLY

DRAINAGE PROFILES

SCALE: Horiz 1" = 10'
Vert 1" = 10'

DP-1

REVISED BY | DATE REVISED
S. LOZON | M. O'NEAL
CALCULATED-DESIGNED BY | CHECKED BY
FUNCTIONAL SUPERVISOR: STEVEN M. WYATT
STATE OF CALIFORNIA - DEPARTMENT OF TRANSPORTATION
Caltrans
DESIGN

LAST REVISION 05-19-14 | DATE PLOTTED => 05-JUN-2014 | TIME PLOTTED => 13:18

Dist	COUNTY	ROUTE	POST MILES TOTAL PROJECT	SHEET No.	TOTAL SHEETS
05	SLO	1	73.7/74.0	10	108

REGISTERED CIVIL ENGINEER 5-19-14 DATE

5-19-14
PLANS APPROVAL DATE

REGISTERED PROFESSIONAL ENGINEER S. LOZON No. 43136 Exp. 3/31/16 CIVIL STATE OF CALIFORNIA

THE STATE OF CALIFORNIA OR ITS OFFICERS OR AGENTS SHALL NOT BE RESPONSIBLE FOR THE ACCURACY OR COMPLETENESS OF SCANNED COPIES OF THIS PLAN SHEET.

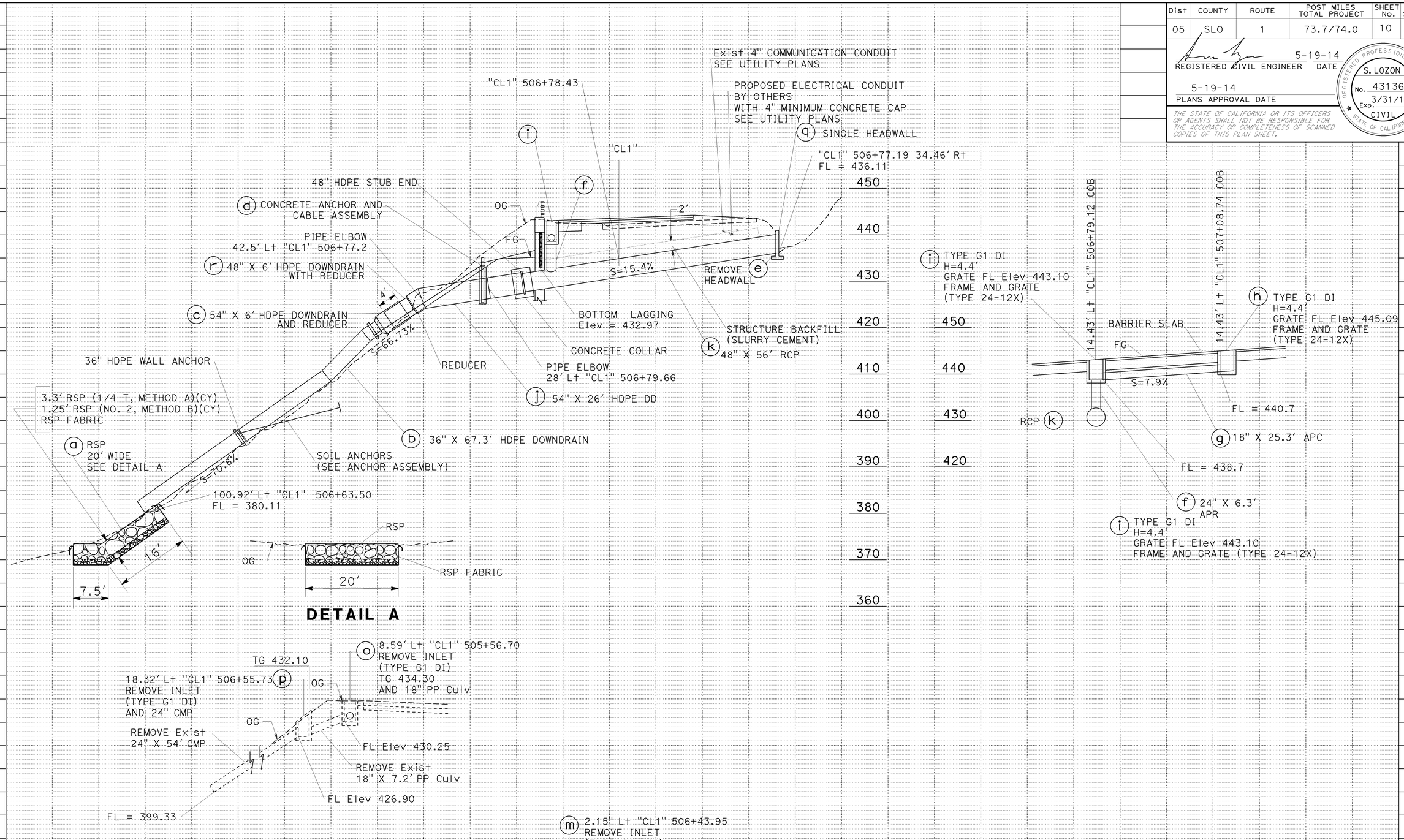

DRAINAGE SYSTEM No. 2

"CL1" 506+78.43

APPROVED FOR DRAINAGE WORK ONLY

DRAINAGE PROFILES

SCALE: Horiz 1" = 10'
Vert 1" = 10'

DP-2

STATE OF CALIFORNIA - DEPARTMENT OF TRANSPORTATION
Caltrans DESIGN
FUNCTIONAL SUPERVISOR: STEVEN M. WYATT
CALCULATED-DESIGNED BY: S. LOZON
CHECKED BY: M. O'NEAL
REVISED BY
DATE REVISED

LAST REVISION 05-19-14 DATE PLOTTED => 05-JUN-2014 TIME PLOTTED => 13:18

Dist	COUNTY	ROUTE	POST MILES TOTAL PROJECT	SHEET No.	TOTAL SHEETS
05	SLO	1	73.7/74.0	11	108

REGISTERED CIVIL ENGINEER DATE 5-19-14

PLANS APPROVAL DATE 5-19-14

REGISTERED PROFESSIONAL ENGINEER No. Exp. CIVIL STATE OF CALIFORNIA

THE STATE OF CALIFORNIA OR ITS OFFICERS OR AGENTS SHALL NOT BE RESPONSIBLE FOR THE ACCURACY OR COMPLETENESS OF SCANNED COPIES OF THIS PLAN SHEET.

420

NOTES:

1. LOCATIONS AND ELEVATIONS AS SHOWN OR AS DIRECTED BY ENGINEER.
2. FOR UNDERDRAIN DETAILS NOT SHOWN SEE STANDARD PLANS D102.
3. TOP OF CLASS III PERMEABLE MATERIAL IS 3' BELOW FG BENCH (SEE DD-1).

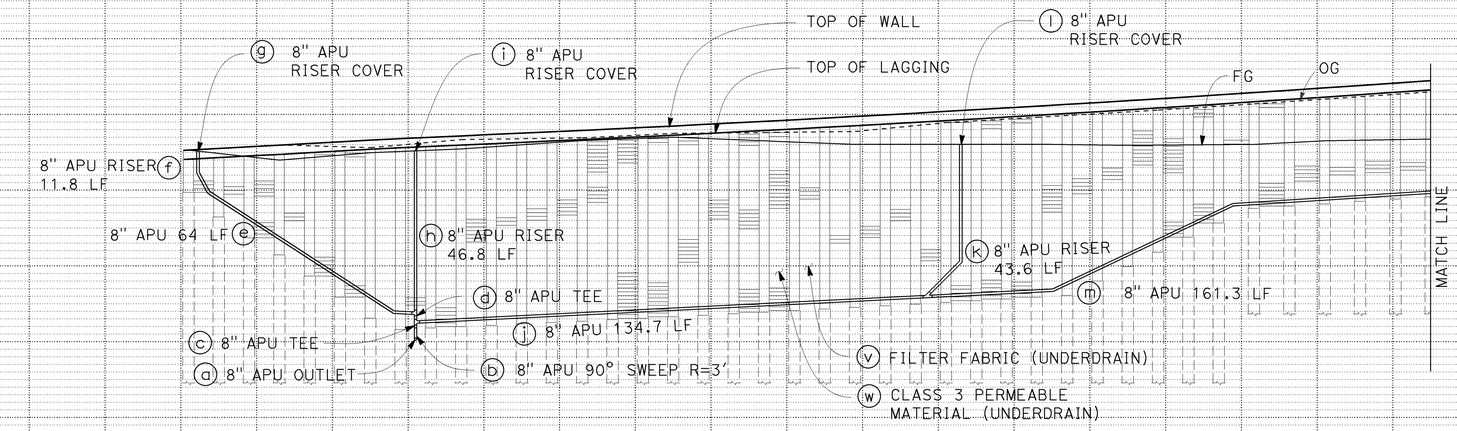

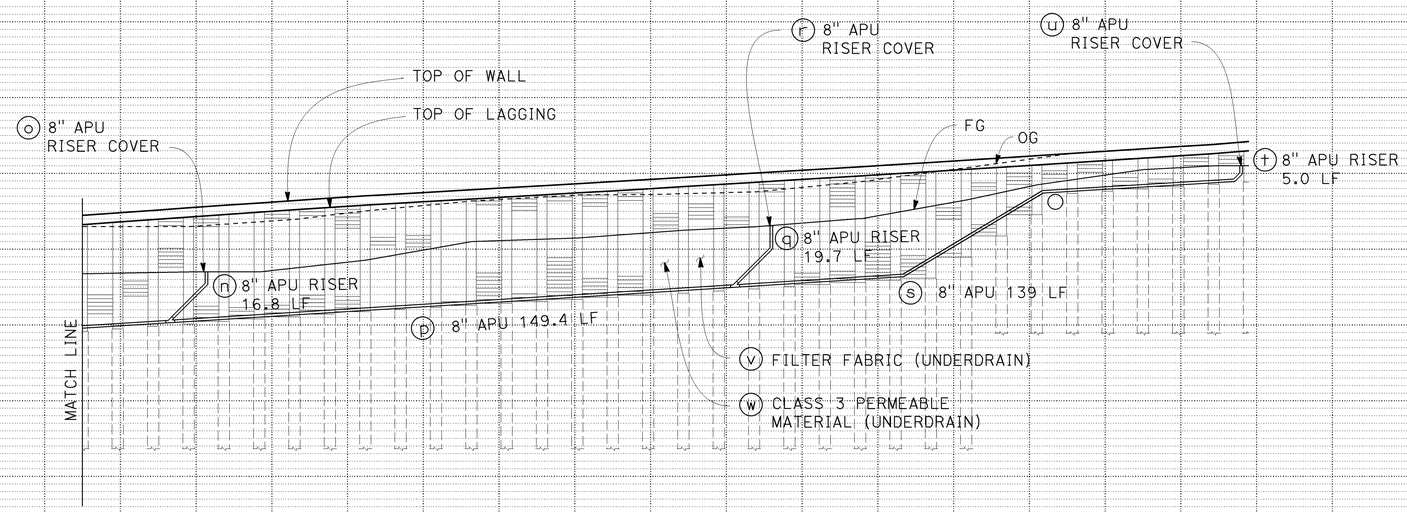

DRAINAGE SYSTEM No. 3

"CL1" Sta 501+04.6 TO Sta 507.31.1

DRAINAGE PROFILE

SCALE: 1" = 20'

DP-3

REVISED BY | DATE REVISED

S. LOZON | M. O'NEAL

CALCULATED-DESIGNED BY | CHECKED BY

FUNCTIONAL SUPERVISOR: STEVEN M. WYATT

STATE OF CALIFORNIA - DEPARTMENT OF TRANSPORTATION

Caltrans

DESIGN

LAST REVISION 05-19-14 | DATE PLOTTED => 05-JUN-2014 | TIME PLOTTED => 13:18

Dist	COUNTY	ROUTE	POST MILES TOTAL PROJECT	SHEET No.	TOTAL SHEETS
05	SLO	1	73.7/74.0	12	108

REGISTERED CIVIL ENGINEER 5-19-14 DATE

5-19-14
PLANS APPROVAL DATE

REGISTERED PROFESSIONAL ENGINEER S. LOZON No. 43136 Exp. 3/31/16 CIVIL STATE OF CALIFORNIA

THE STATE OF CALIFORNIA OR ITS OFFICERS OR AGENTS SHALL NOT BE RESPONSIBLE FOR THE ACCURACY OR COMPLETENESS OF SCANNED COPIES OF THIS PLAN SHEET.

NOTES:

1. LOCATIONS AND ELEVATIONS AS SHOWN OR AS DIRECTED BY THE ENGINEER.
2. FOR UNDERDRAIN DETAILS NOT SHOWN SEE STANDARD PLANS D102.
3. SEE STRUCTURE PLANS FOR RETAINING WALL DETAILS.

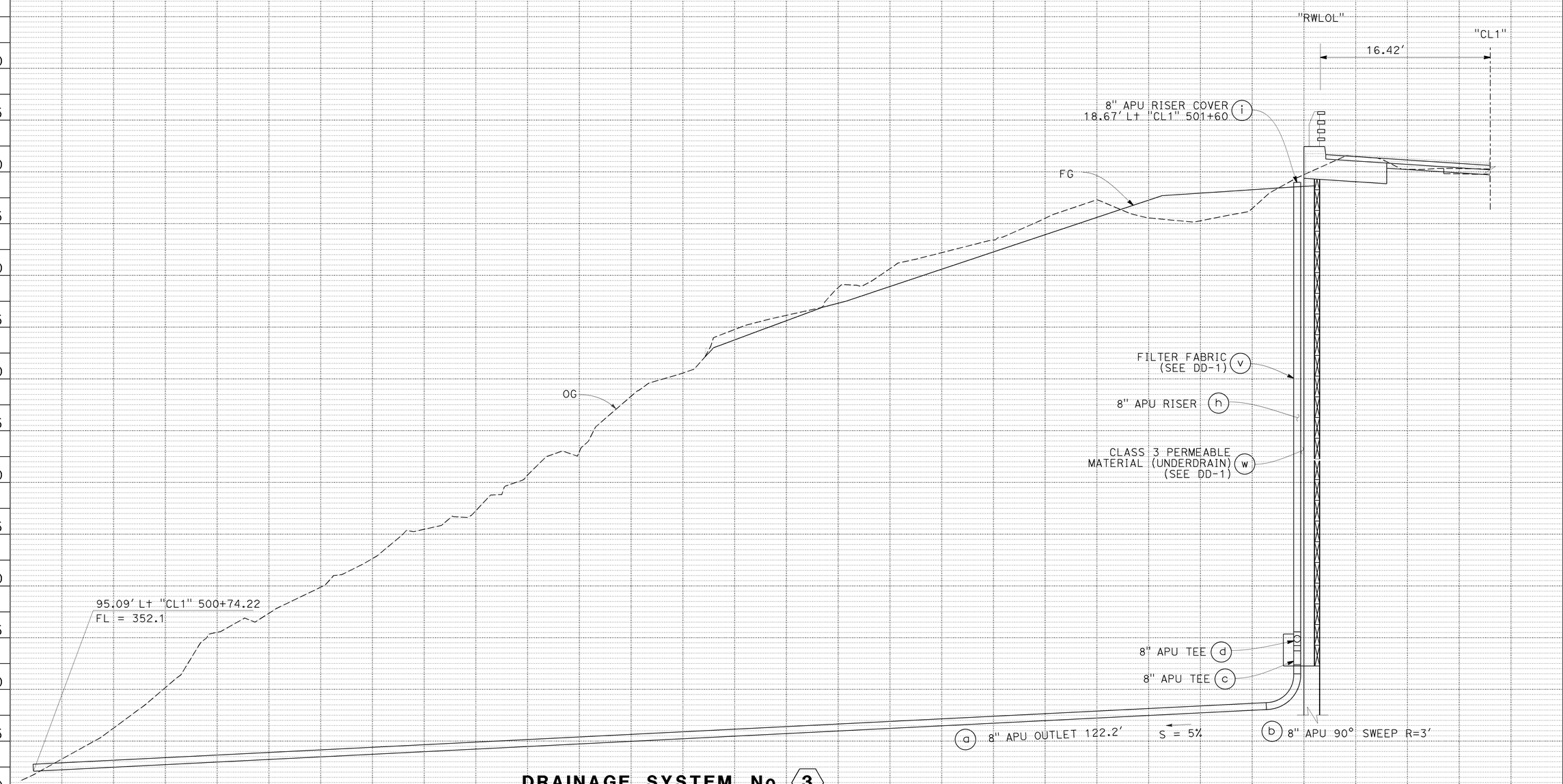

DRAINAGE SYSTEM No. 3

"CL1" Sta 501+60

SCALE: Horiz 1"=5'
Vert 1"=5'

DRAINAGE PROFILES

DP-4

REVISED BY | DATE REVISED
S. LOZON | M. O'NEAL
CALCULATED-DESIGNED BY | CHECKED BY
FUNCTIONAL SUPERVISOR: STEVEN M. WYATT

STATE OF CALIFORNIA - DEPARTMENT OF TRANSPORTATION
Caltrans
DESIGN

LAST REVISION 05-19-14 | DATE PLOTTED => 05-JUN-2014 | TIME PLOTTED => 13:18

Dist	COUNTY	ROUTE	POST MILES TOTAL PROJECT	SHEET No.	TOTAL SHEETS
05	SLO	1	73.7/74.0	13	108

REGISTERED CIVIL ENGINEER 5-19-14 DATE

5-19-14
PLANS APPROVAL DATE

REGISTERED PROFESSIONAL ENGINEER S. LOZON No. 43136 Exp. 3/31/16 CIVIL STATE OF CALIFORNIA

THE STATE OF CALIFORNIA OR ITS OFFICERS OR AGENTS SHALL NOT BE RESPONSIBLE FOR THE ACCURACY OR COMPLETENESS OF SCANNED COPIES OF THIS PLAN SHEET.

NOTES:

1. LOCATIONS AND ELEVATIONS AS SHOWN OR AS DIRECTED BY ENGINEER.
2. FOR UNDERDRAIN DETAILS NOT SHOWN SEE STANDARD PLANS D102.
3. TOP OF CLASS III PERMEABLE MATERIAL IS 3' BELOW FG BENCH (SEE DD-1).

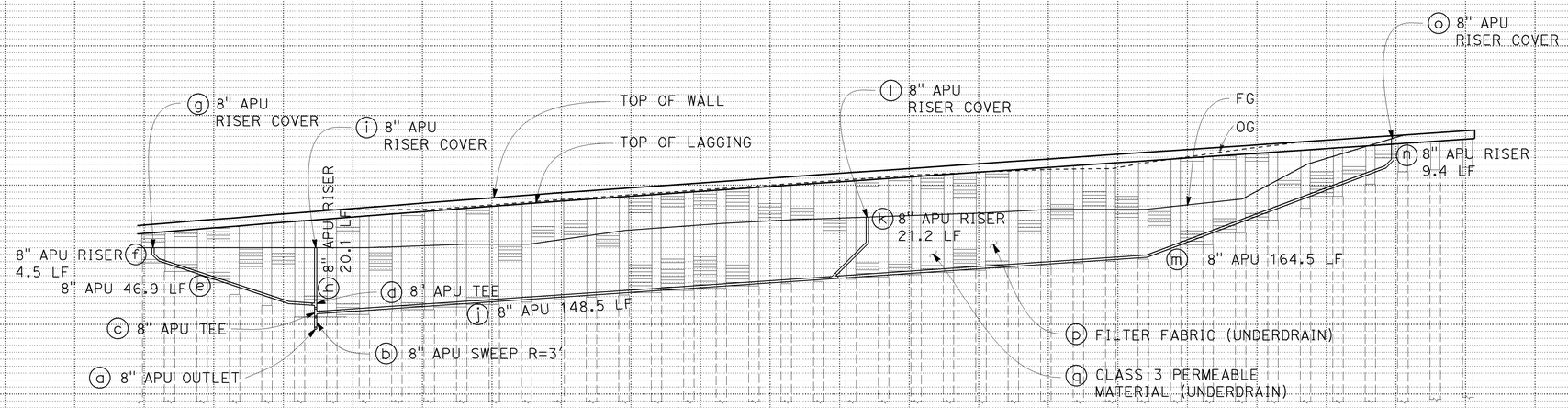

DRAINAGE SYSTEM No. 4

"CL1" 507+36.2 TO 510+97

DRAINAGE PROFILE

SCALE: 1" = 20'

DP-5

STATE OF CALIFORNIA - DEPARTMENT OF TRANSPORTATION
Caltrans
DESIGN

FUNCTIONAL SUPERVISOR: STEVEN M. WYATT
CALCULATED-DESIGNED BY: S. LOZON
CHECKED BY: M. O'NEAL
REVISED BY
DATE REVISED

LAST REVISION 05-19-14
DATE PLOTTED => 05-JUN-2014
TIME PLOTTED => 13:18

Dist	COUNTY	ROUTE	POST MILES TOTAL PROJECT	SHEET No.	TOTAL SHEETS
05	SLO	1	73.7/74.0	14	108

REGISTERED CIVIL ENGINEER 5-19-14 DATE

5-19-14
PLANS APPROVAL DATE

REGISTERED PROFESSIONAL ENGINEER S. LOZON No. 43136 Exp. 3/31/16 CIVIL STATE OF CALIFORNIA

THE STATE OF CALIFORNIA OR ITS OFFICERS OR AGENTS SHALL NOT BE RESPONSIBLE FOR THE ACCURACY OR COMPLETENESS OF SCANNED COPIES OF THIS PLAN SHEET.

NOTES:

1. LOCATIONS AND ELEVATIONS AS SHOWN OR AS DIRECTED BY THE ENGINEER.
2. FOR UNDERDRAIN DETAILS NOT SHOWN SEE STANDARD PLANS D102.
3. SEE STRUCTURE PLANS FOR RETAINING WALL DETAILS.

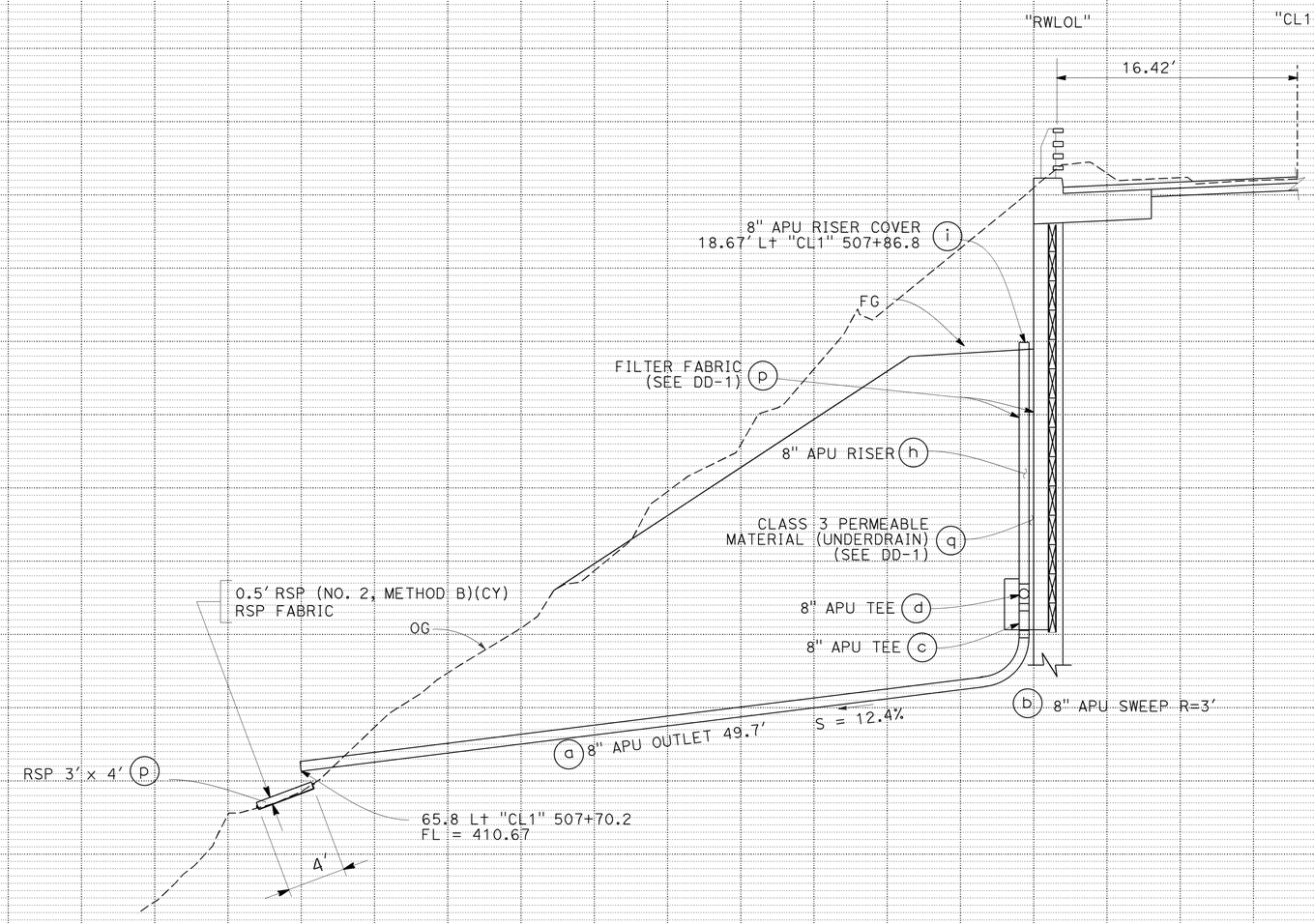

DRAINAGE SYSTEM No. 4

"CL1" Sta 507+86.8

DRAINAGE PROFILES

SCALE: Horiz 1"=5'
Vert 1"=5'

DP-6

STATE OF CALIFORNIA - DEPARTMENT OF TRANSPORTATION
Caltrans® DESIGN

FUNCTIONAL SUPERVISOR: STEVEN M. WYATT
CALCULATED-DESIGNED BY: S. LOZON
CHECKED BY: M. O'NEAL
REVISED BY
DATE REVISED

LAST REVISION 05-19-14
DATE PLOTTED => 05-JUN-2014
TIME PLOTTED => 13:18

Dist	COUNTY	ROUTE	POST MILES TOTAL PROJECT	SHEET No.	TOTAL SHEETS
05	SLO	1	73.7/74.0	15	108

REGISTERED CIVIL ENGINEER 5-19-14 DATE

5-19-14
PLANS APPROVAL DATE

REGISTERED PROFESSIONAL ENGINEER S. LOZON No. 43136 Exp. 3/31/16 CIVIL STATE OF CALIFORNIA

THE STATE OF CALIFORNIA OR ITS OFFICERS OR AGENTS SHALL NOT BE RESPONSIBLE FOR THE ACCURACY OR COMPLETENESS OF SCANNED COPIES OF THIS PLAN SHEET.

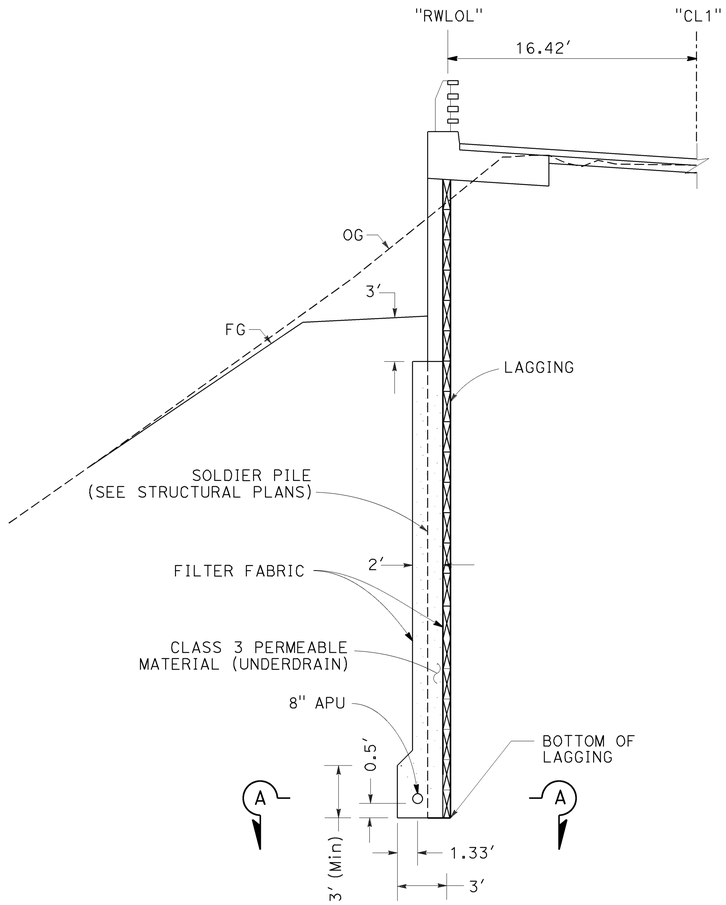

DRAINAGE SYSTEMS No. 3 4
TYPICAL UNDERDRAIN DETAIL

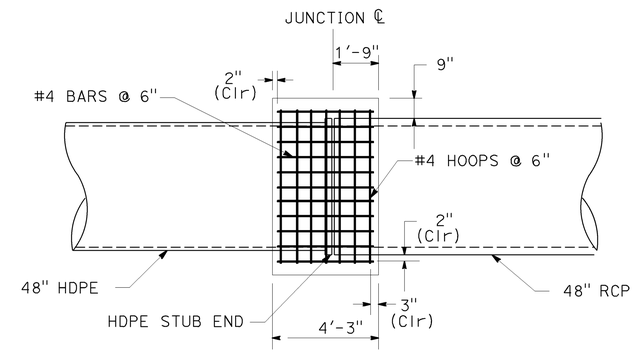

DRAINAGE SYSTEM No. 2 j k
CONC COLLAR

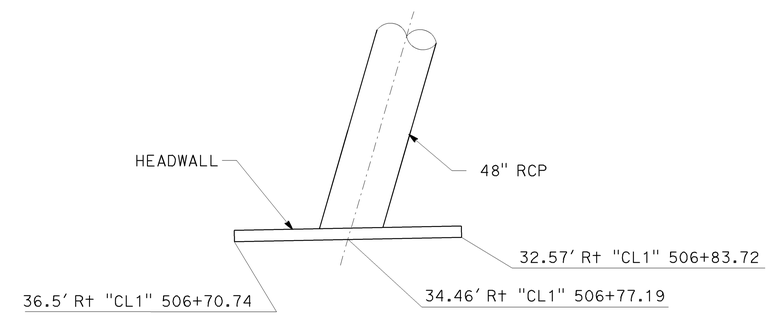

DRAINAGE SYSTEM No. 2 q
SINGLE HEADWALL

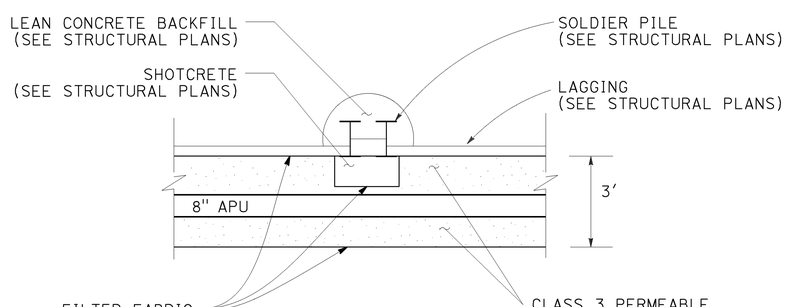

SECTION A-A

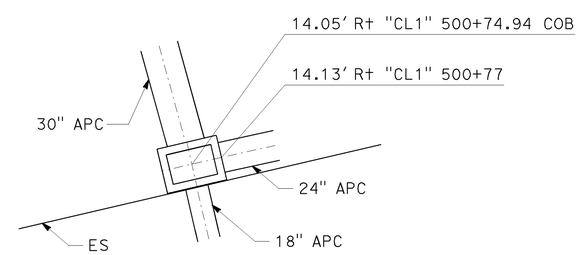

DRAINAGE SYSTEM No. 1 d
TYPE G1 DI

DRAINAGE DETAILS

NO SCALE

DD-1

STATE OF CALIFORNIA - DEPARTMENT OF TRANSPORTATION
Caltrans®
DESIGN

FUNCTIONAL SUPERVISOR: STEVEN M. WYATT
CALCULATED-DESIGNED BY: S. LOZON
CHECKED BY: M. O'NEAL
REVISED BY
DATE REVISED

LAST REVISION 05-19-14
DATE PLOTTED => 05-JUN-2014
TIME PLOTTED => 13:18

Dist	COUNTY	ROUTE	POST MILES TOTAL PROJECT	SHEET No.	TOTAL SHEETS
05	SLO	1	73.7/74.0	16	108

REGISTERED CIVIL ENGINEER 5-19-14 DATE

5-19-14
PLANS APPROVAL DATE

REGISTERED PROFESSIONAL ENGINEER S. LOZON No. 43136 Exp. 3/31/16 CIVIL STATE OF CALIFORNIA

THE STATE OF CALIFORNIA OR ITS OFFICERS OR AGENTS SHALL NOT BE RESPONSIBLE FOR THE ACCURACY OR COMPLETENESS OF SCANNED COPIES OF THIS PLAN SHEET.

NOTES:

1. FOR DETAILS OF RESTRAINER, REFER TO MANUFACTURER'S SPECIFICATIONS AND INSTALLATION INSTRUCTIONS.
2. FOR ADDITIONAL DETAILS OF SOIL ANCHOR, REFER TO MANUFACTURER'S SPECIFICATIONS AND INSTALLATION INSTRUCTIONS.
3. PLASTIC PIPE USED FOR DOWNDRAIN SHALL BE FROM ONE MANUFACTURER FOR EACH DRAINAGE SYSTEM.
4. REFER TO STANDARD PLAN D87C FOR DETAILS CONCERNING STEEL ANCHOR PIPE, CABLE AND CABLE CLIPS.
5. CENTER EYEBOLT IN ANCHOR PIPE PARALLEL TO CABLE.
6. CONCRETE CONTAINING NOT LESS THAN 420 POUNDS OF CEMENTITIOUS MATERIAL.
7. ATTACH 2 CABLES TO EACH RESTRAINER.
8. SOIL ANCHOR MUST BE PROOF TESTED TO REQUIRED CAPACITY.

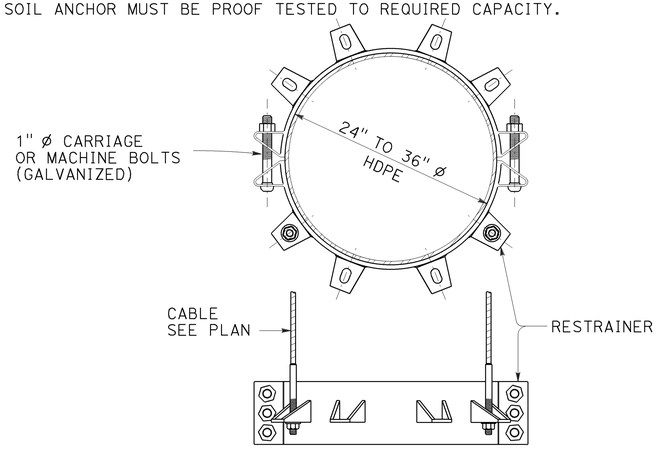

RESTRAINER

DETAIL B

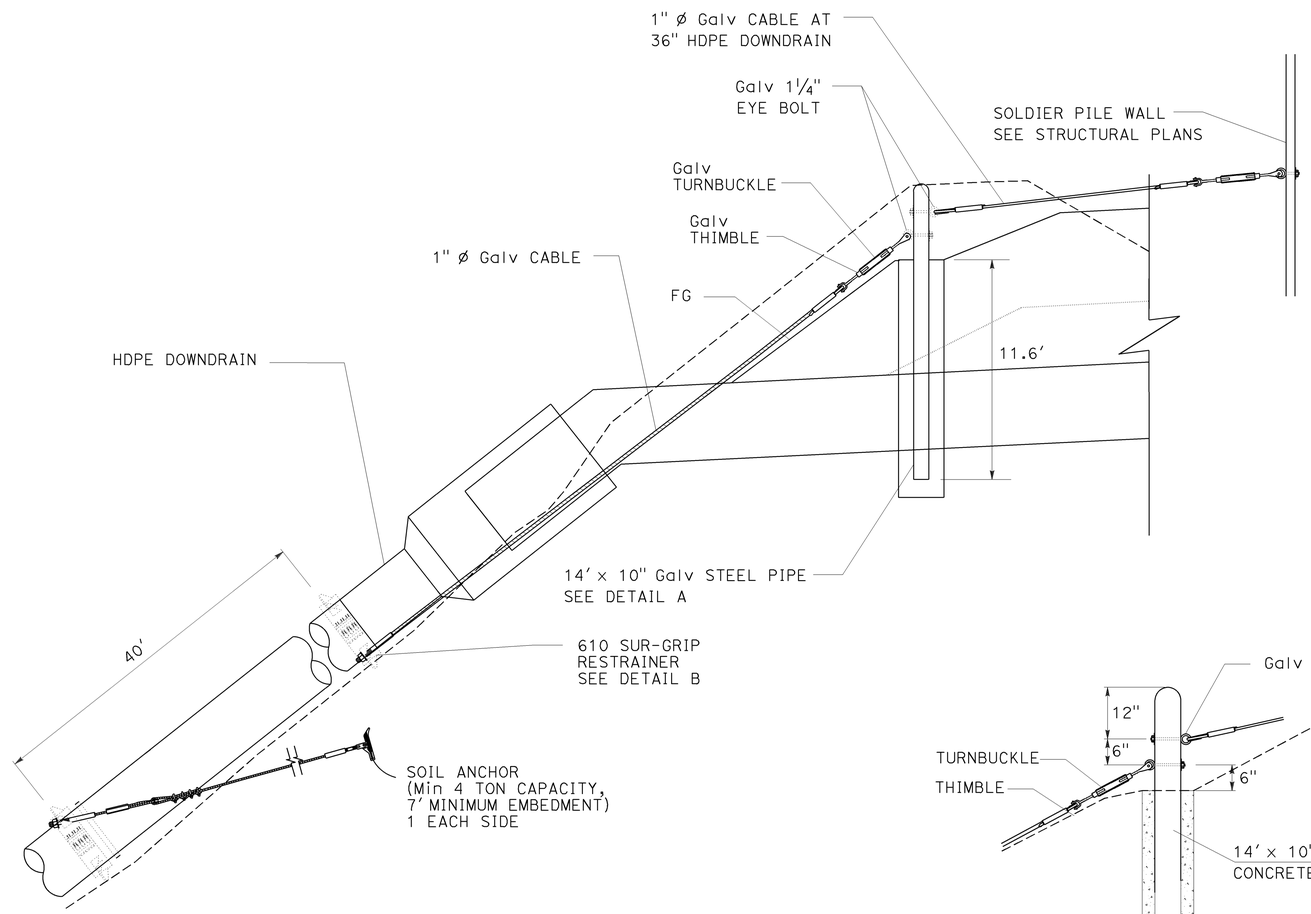

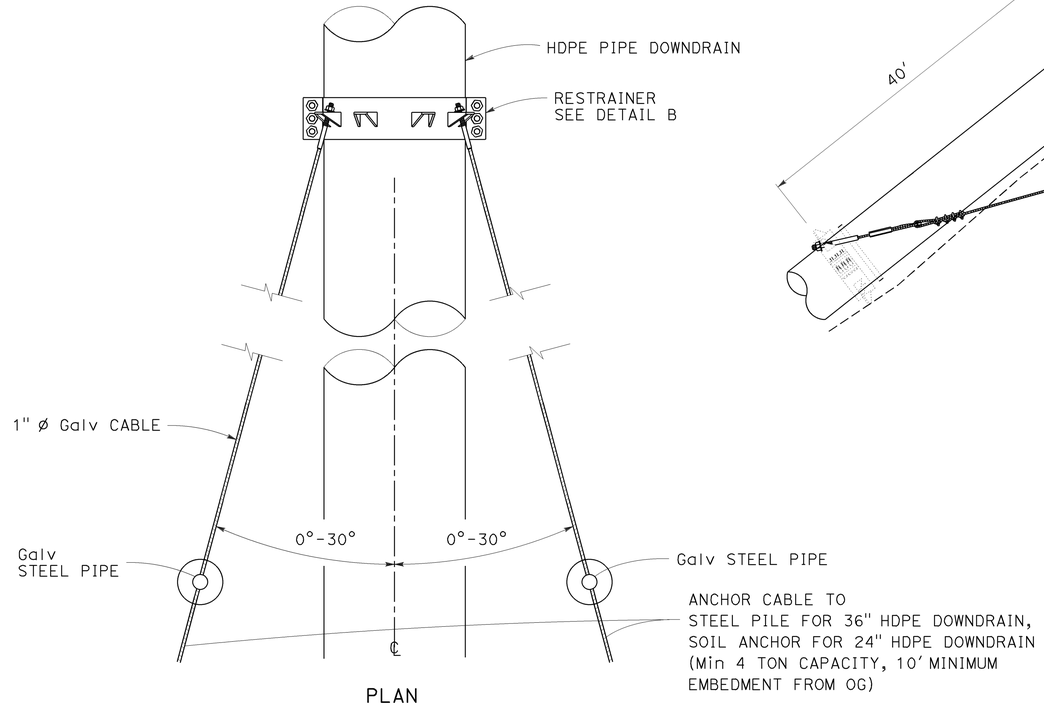

PLAN

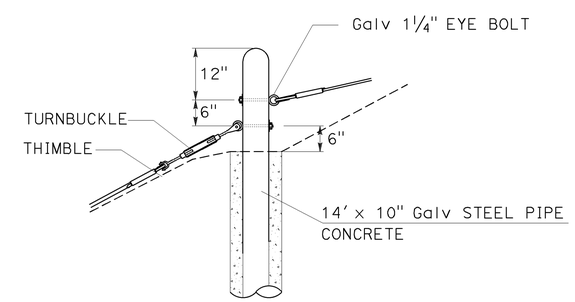

DETAIL A

DRAINAGE SYSTEM No. 1 m 2 d

ANCHOR ASSEMBLY

DRAINAGE DETAILS

NO SCALE

DD-2

STATE OF CALIFORNIA - DEPARTMENT OF TRANSPORTATION
Caltrans® DESIGN
FUNCTIONAL SUPERVISOR: STEVEN M. WYATT
CALCULATED-DESIGNED BY: S. LOZON
CHECKED BY: M. O'NEAL
REVISED BY
DATE REVISED

LAST REVISION 05-19-14
DATE PLOTTED => 05-JUN-2014
TIME PLOTTED => 13:19

Dist	COUNTY	ROUTE	POST MILES TOTAL PROJECT	SHEET No.	TOTAL SHEETS
05	SLO	1	73.7/74.0	17	108

REGISTERED CIVIL ENGINEER 5-19-14 DATE

5-19-14
PLANS APPROVAL DATE

REGISTERED PROFESSIONAL ENGINEER S. LOZON No. 43136 Exp. 3/31/16 CIVIL STATE OF CALIFORNIA

THE STATE OF CALIFORNIA OR ITS OFFICERS OR AGENTS SHALL NOT BE RESPONSIBLE FOR THE ACCURACY OR COMPLETENESS OF SCANNED COPIES OF THIS PLAN SHEET.

ALTERNATIVE PIPE CULVERT/RISER

DESIGNATION	SIZE (INCHES)	HDPE(AASHTO M252 OR M294) TYPE S	RCP	JOINTS
18" APC	18	YES	YES	POSITIVE, WATERTIGHT
24" APC	24	YES	YES	POSITIVE, WATERTIGHT
30" APC	30	YES	YES	POSITIVE, WATERTIGHT
24" APR	24	YES	YES	POSITIVE, WATERTIGHT

DRAINAGE QUANTITIES (ROADWAY)

DRAINAGE PLAN SHEET No.	DRAINAGE SYSTEM No.	DRAINAGE UNIT	REMOVE INLET (EA)	REMOVE CULVERT (LF)	REMOVE HEADWALL (EA)	ABANDON CULVERT (LF)	SAND BACKFILL (CY)	(N) STRUCTURE BACKFILL (SLURRY CEMENT) (CY)	MINOR CONCRETE (MINOR STRUCTURE) (CY)	36" PRECAST CONCRETE PIPE INLET (LF)	PLACE HOT MIX ASPHALT (MISC AREA) (SQYD)	18" ALTERNATIVE PIPE CULVERT (LF)	24" ALTERNATIVE PIPE CULVERT (LF)	30" ALTERNATIVE PIPE CULVERT (LF)	24" ALTERNATIVE PIPE RISER (LF)	48" REINFORCED CONCRETE PIPE (LF)	24" HDPE (DR 32.5) DOWNDRAIN (LF)	36" HDPE (DR 32.5) DOWNDRAIN (LF)	42" HDPE (DR 32.5) DOWNDRAIN (LF)	48" HDPE (DR 32.5) DOWNDRAIN (LF)	54" HDPE (DR 32.5) DOWNDRAIN (LF)	(N) REDUCER (EA)	CONCRETE ANCHOR AND CABLE ASSEMBLY (EA)	(N) PIPE ELBOW (EA)	ROCK SLOPE PROTECTION (1/4 T, METHOD A) (CY)	ROCK SLOPE PROTECTION (NO 2, METHOD B) (CY)	ROCK SLOPE PROTECTION FABRIC (CLASS 8) (SQYD)	MISCELLANEOUS IRON AND STEEL (LB)	(N) HEIGHT OF INLET (LF)	(N) 1/4" CHECKERED PLATE COVER (EA)	(N) TYPE 24-12X GRATE (EA)	DESCRIPTION	STATION	DRAINAGE UNIT	DRAINAGE SYSTEM No.
D-1	1	a															62															HDPE PIPE DR 32.5		a	1
		b																	6			1										HDPE PIPE AND REDUCER DR 32.5		b	
		c						54						52.3										1								30" APC		c	
		d							1.4																			239	5.3		1	G1 DI	"CL1" 500+74.94	d	
		e								3.4																		112	3.4	1		OCPI	"CL1" 500+74.63	e	
		f										4.3																				18" APC		f	
		g											114.8											2								24" APC		g	
		h							1.3																			239	4.2		1	G1 DI	"CL1" 501+96.26	h	
		i	1																													REMOVE EXISTING OMP INLET	"CL1" 501+96.10	i	
		j											4.4																			24" APC		j	
		k											129.2																			24" APC		k	
		l								4.2																		112	4.2	1		OCPI	"CL1" 503+28.43	l	
		m																					1									CABLE ANCHOR ASSEMBLY		m	
		n				28	3																									ABANDON 18" CMP Culv / SAND Bkf		n	
		o		35																												REMOVE 18" CMP CULVERT		o	
		p								3.4																		112	3.4	1		OCPI	"CL1" 501+96.10	p	
		q									7																					0.33' THICK HMA SWALE		q	
D-1	2	a																							53.2	21.4	97					RSP		a	2
		b																67.3						2								HDPE PIPE DR 32.5		b	
		c																			6	1										HDPE PIPE AND REDUCER DR 32.5		c	
		d																					1									CABLE ANCHOR ASSEMBLY		d	
		e			1																											REMOVE HEADWALL	"CL1" 506+77.48	e	
		f													6.3																	24" Alt PIPE RISER		f	
		g						5				25.3																				18" APC		g	
		h							1.3																			239	4.4		1	G1 DI	"CL1" 507+08.74	h	
		i							1.3																			239	4.4		1	G1 DI	"CL1" 506+79.12	i	
		j																			26			2								HDPE PIPE DR 32.5		j	
		k						140								56																48" RCP		k	
		l				197	55																									ABANDON 36" CMP Culv / SAND Bkf		l	
		m	1																													REMOVE GDO DI		m	
		n		84.8																												REMOVE 18" PP CULVERT		n	
		o	1	8.2																												REMOVE INLET AND 18" PP CULVERT		o	
		p	1	54																												REMOVE INLET AND 24" CMP CULVERT		p	
		q							2.8																							PIPE SINGLE HEADWALL	"CL1" 506+77.19	q	
		r										6		1																		HDPE PIPE AND REDUCER DR 32.5		r	
TOTAL			4	182	1	225	58		8.1	11	7	29.6	248.4	52.3	6.3	56	62	67.3	6	6	32		2		53.2	21.4	97	1292							

(N) - NOT A SEPARATE PAY ITEM, FOR INFORMATION ONLY

DRAINAGE QUANTITIES

DQ-1

STATE OF CALIFORNIA - DEPARTMENT OF TRANSPORTATION
Caltrans DESIGN

FUNCTIONAL SUPERVISOR: STEVEN M. WYATT
CALCULATED-DESIGNED BY: S. LOZON
CHECKED BY: M. O'NEAL
REVISED BY
DATE REVISED

LAST REVISION 05-19-14
DATE PLOTTED => 05-JUN-2014
TIME PLOTTED => 13:19

Dist	COUNTY	ROUTE	POST MILES TOTAL PROJECT	SHEET No.	TOTAL SHEETS
05	SLO	1	73.7/74.0	18	108

REGISTERED CIVIL ENGINEER 5-19-14 DATE

5-19-14
PLANS APPROVAL DATE

REGISTERED PROFESSIONAL ENGINEER S. LOZON No. 43136 Exp. 3/31/16 CIVIL STATE OF CALIFORNIA

THE STATE OF CALIFORNIA OR ITS OFFICERS OR AGENTS SHALL NOT BE RESPONSIBLE FOR THE ACCURACY OR COMPLETENESS OF SCANNED COPIES OF THIS PLAN SHEET.

DRAINAGE QUANTITIES (RETAINING WALL)

DRAINAGE PLAN SHEET No.	DRAINAGE SYSTEM No.	DRAINAGE UNIT	(N) FILTER FABRIC (UNDERDRAIN) SQYD	(N) CLASS 3 PERMEABLE MATERIAL (UNDERDRAIN) CY	8" ALTERNATIVE PIPE UNDERDRAIN LF	(N) 8" RISER COVER EA	(N) 8" ALTERNATIVE PIPE UNDERDRAIN TEE EA	(N) 8" ALTERNATIVE PIPE UNDERDRAIN SWEEP R=3' EA	ROCK SLOPE PROTECTION (NO 2, METHOD B) CY	ROCK SLOPE PROTECTION FABRIC SQYD	DESCRIPTION	STATION	DRAINAGE UNIT	DRAINAGE SYSTEM No.
D-2	3	a			122.2						8" APU OUTLET		a	3
		b						1			8" APU 90° SWEEP		b	
		c					1				8" APU TEE		c	
		d					1				8" APU TEE		d	
		e			64						8" APU		e	
		f			11.8						8" APU RISER	"CL1" 501+04.6	f	
		g				1					8" RISER COVER		g	
		h			46.8						8" APU RISER	"CL1" 501+60	h	
		i				1					8" RISER COVER		i	
		j			134.7						8" APU		j	
		k			43.6						8" APU RISER	"CL1" 503+02.4	k	
		l				1					8" RISER COVER		l	
		m			161.3						8" APU		m	
		n			16.8						8" APU RISER	"CL1" 504+59.7	n	
		o				1					8" RISER COVER		o	
		p			149.4						8" APU		p	
		q			19.7						8" APU RISER	"CL1" 506+03.2	q	
		r				1					8" RISER COVER		r	
		s			139						8" APU		s	
		t			5						8" APU RISER	"CL1" 507+31.1	t	
		u				1					8" RISER COVER		u	
		v	4650								FILTER FABRIC (UNDERDRAIN)		v	
		w		1147							CI 3 PERMEABLE MATERIAL		w	
D-2	4	a			49.7				1	3	8" APU OUTLET		a	4
		b						1			8" APU 90° SWEEP		b	
		c					1				8" APU TEE		c	
		d					1				8" APU TEE		d	
		e			46.9						8" APU		e	
		f			4.5						8" APU RISER	"CL1" 507+36.2	f	
		g				1					8" RISER COVER		g	
		h			20.1						8" APU RISER	"CL1" 507+86.8	h	
		i				1					8" RISER COVER		i	
		j			148.5						8" APU		j	
		k			21.2						8" APU RISER	"CL1" 509+45.5	k	
		l				1					8" RISER COVER		l	
		m			164.5						8" APU		m	
		n			9.4						8" APU RISER	"CL1" 510+97	n	
		o				1					8" RISER COVER		o	
		p	1840								FILTER FABRIC (UNDERDRAIN)		p	
		q		404							CI 3 PERMEABLE MATERIAL		q	
TOTAL					1380				1	3				

(N) - NOT A SEPARATE PAY ITEM, FOR INFORMATION ONLY

ALTERNATIVE PIPE UNDERDRAIN

ALLOWABLE PIPE MATERIAL								
DESIGNATION	DIPS SIZE (INCHES)	HDPE AASHTO M252 OR M294		HDPE PE3408		SLOT PATTERN		JOINT PERFORMANCE
		TYPE D	TYPE S	DR26 (65 PSI)	DR 32.5 (50 PSI)	AASHTO CLASS II	AASHTO CLASS I	
8" APU	8	YES	YES	YES	YES	YES	YES	SOIL TIGHT
8" APU (RISER)	8	YES	YES	YES	YES	NO	NO	SOIL TIGHT
8" APU (OUTLET)	8	YES	YES	YES	YES	NO	NO	SOIL TIGHT

ROCK SLOPE PROTECTION

	ROCK SLOPE PROTECTION (1/4 T, METHOD A) (CY)	ROCK SLOPE PROTECTION (NO 2, METHOD B) (CY)	ROCK SLOPE PROTECTION FABRIC (CLASS 8)
	CY	CY	SQYD
FROM DQ-1 (ROADWAY)	53.2	21.4	97
FROM DQ-2 (RETAINING WALL)		1	3
TOTAL	53.2	22.4	100

DRAINAGE QUANTITIES
DQ-2

STATE OF CALIFORNIA - DEPARTMENT OF TRANSPORTATION
Caltrans
DESIGN
FUNCTIONAL SUPERVISOR: STEVEN M. WYATT
CALCULATED-DESIGNED BY: S. LOZON
CHECKED BY: M. O'NEAL
REVISED BY
DATE REVISED

LAST REVISION 05-19-14
DATE PLOTTED => 05-JUN-2014
TIME PLOTTED => 13:19

Dist	COUNTY	ROUTE	POST MILES TOTAL PROJECT	SHEET No.	TOTAL SHEETS
05	SLO	1	73.7/74.0	19	108

REGISTERED CIVIL ENGINEER 5-19-14 DATE

5-19-14
PLANS APPROVAL DATE

REGISTERED PROFESSIONAL ENGINEER S. LOZON No. 43136 Exp. 3/31/16 CIVIL STATE OF CALIFORNIA

THE STATE OF CALIFORNIA OR ITS OFFICERS OR AGENTS SHALL NOT BE RESPONSIBLE FOR THE ACCURACY OR COMPLETENESS OF SCANNED COPIES OF THIS PLAN SHEET.

NOTES:

1. FOR ACCURATE RIGHT OF WAY DATA, CONTACT RIGHT OF WAY ENGINEERING AT THE DISTRICT OFFICE.
2. LOCATIONS OF UTILITIES ARE APPROXIMATE.
3. ELEVATIONS SHOWN REFER TO THE TOP OF PIPE OR CONDUIT, UNLESS OTHERWISE STATED.
4. UTILITY OWNERS ON THIS PROJECT OR AS SHOWN:

   ELECTRICAL - PACIFIC GAS & ELECTRIC (PG&E)
   TELEPHONE - AT&T

LEGEND

—— - t —— —— - t ——	Exist TELEPHONE (UNDERGROUND) - AT&T
—— - T —— —— - T ——	PROPOSED TELEPHONE (UNDERGROUND) - AT&T
—— - e —— —— (oh) ——	Exist ELECTRICAL (OVERHEAD) - PG&E
—— - E —— —— - E ——	PROPOSED ELECTRICAL (UNDERGROUND) - PG&E

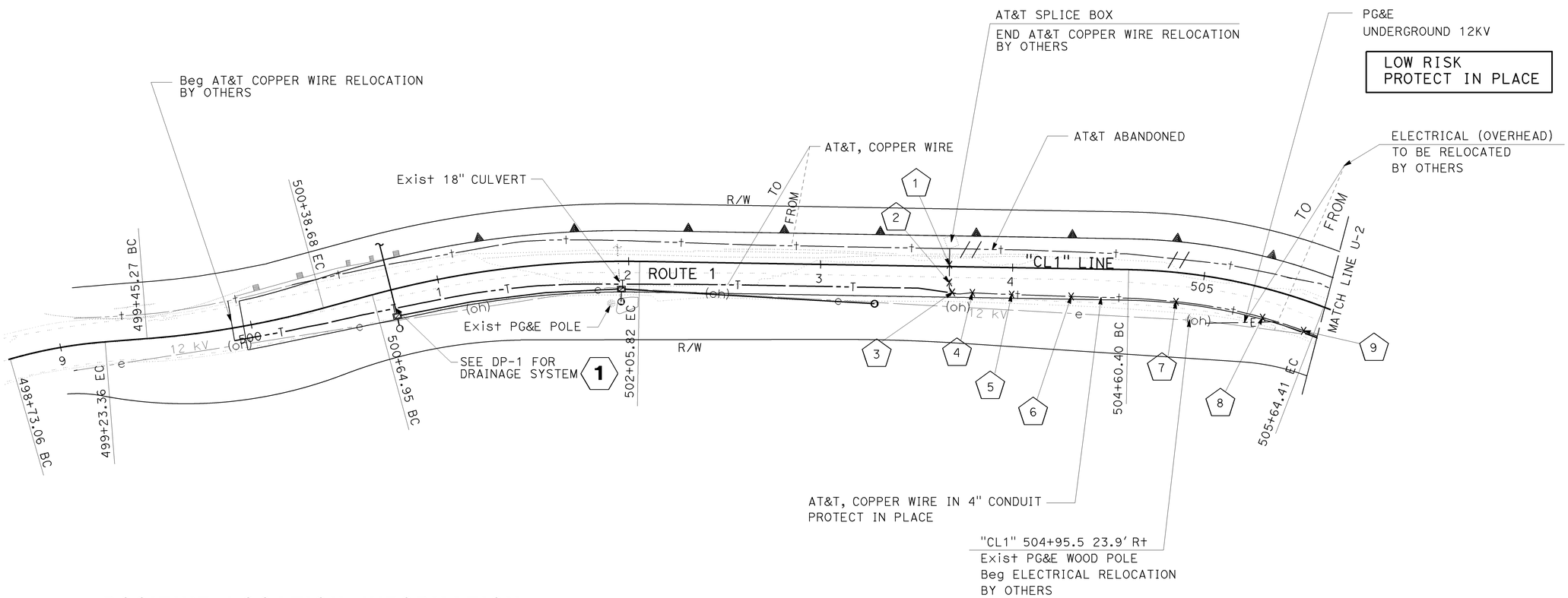

POSITIVE LOCATION INFORMATION

X	LOCATION		DEPTH	ELEVATION	METHOD
1	Lt 0.93	"CL1" 503+67.06	1.83	419.80	ELECTRONIC DETECTION
2	Rt 8.25	"CL1" 503+67.12	2.17	419.07	ELECTRONIC DETECTION
3	Rt 13.41	"CL1" 503+68.79	2.00	419.08	ELECTRONIC DETECTION
4	Rt 13.53	"CL1" 503+79.25	2.42	419.33	ELECTRONIC DETECTION
5	Rt 14.08	"CL1" 503+99.68	2.50	420.56	ELECTRONIC DETECTION
6	Rt 14.55	"CL1" 504+30.72	2.67	422.47	ELECTRONIC DETECTION
7	Rt 15.26	"CL1" 503+86.71	2.50	426.50	ELECTRONIC DETECTION
8	Rt 15.06	"CL1" 505+35.07	2.67	429.40	ELECTRONIC DETECTION
9	Rt 15.21	"CL1" 505+59.02	2.67	431.06	ELECTRONIC DETECTION

APPROVED FOR UTILITY WORK ONLY

UTILITY PLAN

SCALE: 1" = 30' **U-1**

REVISED BY | DATE REVISED
S. LOZON | M. O'NEAL
CALCULATED-DESIGNED BY | CHECKED BY
FUNCTIONAL SUPERVISOR
STEVEN M. WYATT

STATE OF CALIFORNIA - DEPARTMENT OF TRANSPORTATION
Caltrans
DESIGN

LAST REVISION 05-19-14 | DATE PLOTTED => 05-JUN-2014 | TIME PLOTTED => 13:19

Dist	COUNTY	ROUTE	POST MILES TOTAL PROJECT	SHEET No.	TOTAL SHEETS
05	SLO	1	73.7/74.0	20	108

REGISTERED CIVIL ENGINEER 5-19-14 DATE

5-19-14
PLANS APPROVAL DATE

REGISTERED PROFESSIONAL ENGINEER S. LOZON No. 43136 Exp. 3/31/16 CIVIL STATE OF CALIFORNIA

THE STATE OF CALIFORNIA OR ITS OFFICERS OR AGENTS SHALL NOT BE RESPONSIBLE FOR THE ACCURACY OR COMPLETENESS OF SCANNED COPIES OF THIS PLAN SHEET.

NOTE:

FOR ACCURATE RIGHT OF WAY DATA, CONTACT RIGHT OF WAY ENGINEERING AT THE DISTRICT OFFICE.

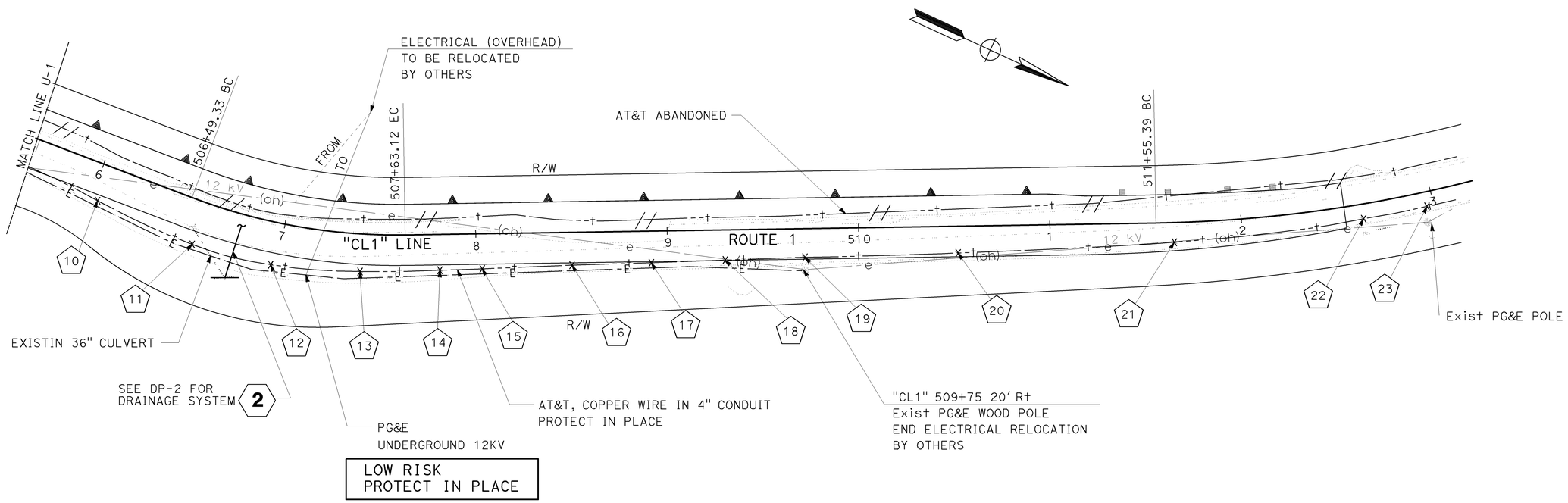

POSITIVE LOCATION INFORMATION

X	LOCATION	DEPTH	ELEVATION	METHOD
10	Rt 19.11 "CL1" 506+03.80	2.75	434.47	POTHOLING
11	Rt 23.01 "CL1" 506+57.54	2.58	439.15	ELECTRONIC DETECTION
12	Rt 22.23 "CL1" 506+96.93	2.08	442.85	POTHOLING
13	Rt 19.66 "CL1" 507+40.64	2.42	445.54	ELECTRONIC DETECTION
14	Rt 18.75 "CL1" 507+80.89	2.33	448.35	ELECTRONIC DETECTION
15	Rt 18.40 "CL1" 508+03.07	2.42	449.75	ELECTRONIC DETECTION
16	Rt 17.20 "CL1" 508+49.97	2.42	452.85	ELECTRONIC DETECTION

POSITIVE LOCATION INFORMATION

X	LOCATION	DEPTH	ELEVATION	METHOD
17	Rt 16.62 "CL1" 508+91.44	2.50	455.77	ELECTRONIC DETECTION
18	Rt 15.80 "CL1" 509+30.10	2.33	458.68	ELECTRONIC DETECTION
19	Rt 15.02 "CL1" 509+71.76	2.58	461.03	ELECTRONIC DETECTION
20	Rt 14.02 "CL1" 510+51.84	2.50	466.26	ELECTRONIC DETECTION
21	Rt 10.29 "CL1" 511+64.72	2.17	474.85	ELECTRONIC DETECTION
22	Rt 7.75 "CL1" 512+63.17	2.00	481.68	ELECTRONIC DETECTION
23	Rt 7.63 "CL1" 512+96.58	2.33	483.58	ELECTRONIC DETECTION

APPROVED FOR UTILITY WORK ONLY

SCALE: 1" = 30'

UTILITY PLAN
U-2

REVISED BY | DATE REVISED
S. LOZON | M. O'NEAL
CALCULATED-DESIGNED BY | CHECKED BY
FUNCTIONAL SUPERVISOR
STEVEN M. WYATT

STATE OF CALIFORNIA - DEPARTMENT OF TRANSPORTATION
DESIGN
Caltrans

LAST REVISION 05-19-14 | DATE PLOTTED => 05-JUN-2014 | TIME PLOTTED => 13:19

Dist	COUNTY	ROUTE	POST MILES TOTAL PROJECT	SHEET No.	TOTAL SHEETS
05	SLO	1	73.7/74.0	21	108

REGISTERED CIVIL ENGINEER 5-19-14 DATE

5-19-14
PLANS APPROVAL DATE

REGISTERED PROFESSIONAL ENGINEER S. LOZON No. 43136 Exp. 3/31/16 CIVIL STATE OF CALIFORNIA

THE STATE OF CALIFORNIA OR ITS OFFICERS OR AGENTS SHALL NOT BE RESPONSIBLE FOR THE ACCURACY OR COMPLETENESS OF SCANNED COPIES OF THIS PLAN SHEET.

NOTES:

1. FOR ADDITIONAL CONSTRUCTION AREA SIGNS SEE STAGE CONSTRUCTION PLANS
2. LOCATION OF CONSTRUCTION AREA SIGNS ARE APPROXIMATE, EXACT LOCATION TO BE DETERMINED BY THE ENGINEER

STATIONARY MOUNTED CONSTRUCTION AREA SIGNS

SIGN No. (X)	SIGN CODE		PANEL SIZE	SIGN MESSAGE	NUMBER OF POSTS AND SIZE	NUMBER OF SIGNS
	FEDERAL	CALIFORNIA				
A	W20-1		36" x 36"	ROAD WORK AHEAD	1 - 4" x 6"	2
B	G20-2		36" x 18"	END ROAD WORK	1 - 4" x 4"	2
C	W5-1		36" x 36"	ROAD NARROWS	1 - 4" x 6"	2

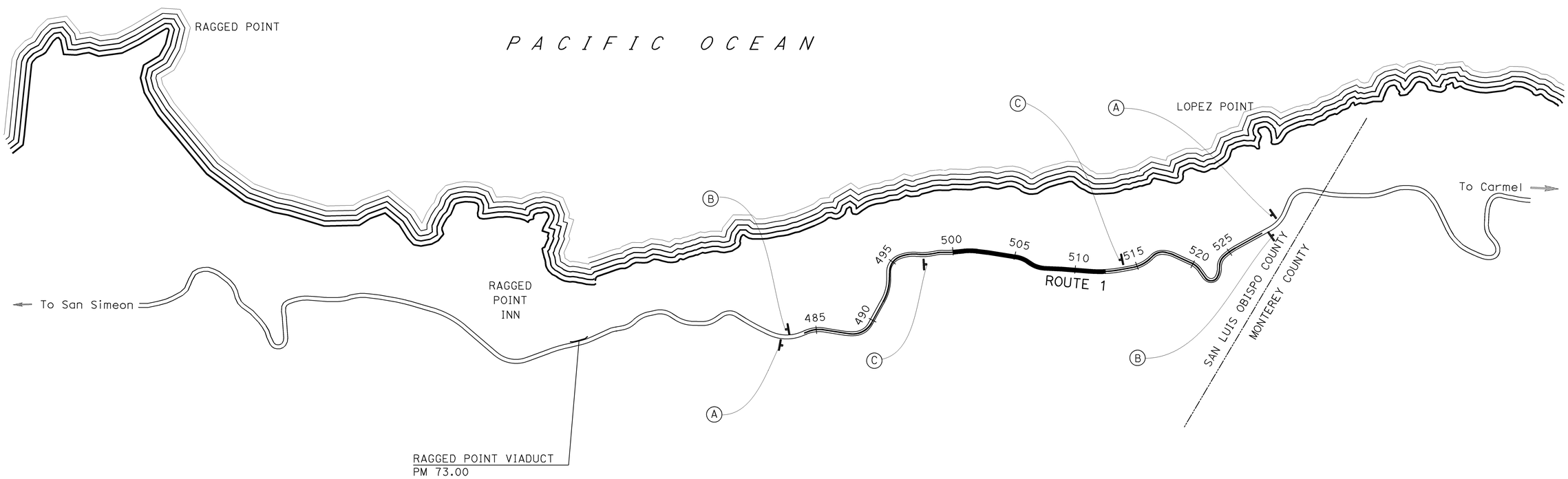

CONSTRUCTION AREA SIGNS

CS-1

APPROVED FOR CONSTRUCTION AREA SIGN WORK ONLY

STATE OF CALIFORNIA - DEPARTMENT OF TRANSPORTATION
Caltrans® DESIGN

FUNCTIONAL SUPERVISOR: STEVEN M. WYATT
CALCULATED-DESIGNED BY: S. LOZON
CHECKED BY: M. O'NEAL
REVISED BY
DATE REVISED

LAST REVISION 05-19-14
DATE PLOTTED => 05-JUN-2014
TIME PLOTTED => 13:19

Dist	COUNTY	ROUTE	POST MILES TOTAL PROJECT	SHEET No.	TOTAL SHEETS
05	SLO	1	73.7/74.0	22	108

REGISTERED CIVIL ENGINEER 5-19-14 DATE

5-19-14
PLANS APPROVAL DATE

REGISTERED PROFESSIONAL ENGINEER S. LOZON No. 43136 Exp. 3/31/16 CIVIL STATE OF CALIFORNIA

THE STATE OF CALIFORNIA OR ITS OFFICERS OR AGENTS SHALL NOT BE RESPONSIBLE FOR THE ACCURACY OR COMPLETENESS OF SCANNED COPIES OF THIS PLAN SHEET.

NOTES:

1. SEE ELECTRICAL PLAN FOR TEMPORARY SIGNAL SYSTEM.
2. SIGN LOCATIONS SHOWN ARE APPROXIMATE. EXACT LOCATIONS TO BE DETERMINED BY THE ENGINEER.
3. STAGE 1 TRAFFIC HANDLING SIGNS TO REMAIN IN PLACE FOR STAGE 2 AND STAGE 3.
4. SEE ELECTRICAL PLANS FOR FLASHING BACON.

STAGE 1 CONSTRUCTION (OR AS DIRECTED BY ENGINEER)

PLACE Temp SIGNAL SYSTEM
CULVERT CONSTRUCTION

LEGEND:

- CONSTRUCT THIS STAGE
- DIRECTION OF TRAVEL
- TEMPORARY PAVEMENT MARKING (TAPE) - LIMIT LINE (1' WHITE)
- TEMPORARY ALTERNATIVE CRASH CUSHION
- TEMPORARY RAILING (TYPE K)
- CHANNELIZER (SURFACE MOUNTED)
- PORTABLE DELINEATOR (DOUBLE BASE)
- FLASHING BEACON (PORTABLE)
- (22) PAVEMENT DELINEATION DETAIL NUMBER EXISTING STRIPE TO BE REMOVED
- FLASHING BEACON AS SHOWN ON ELECTRICAL PLANS

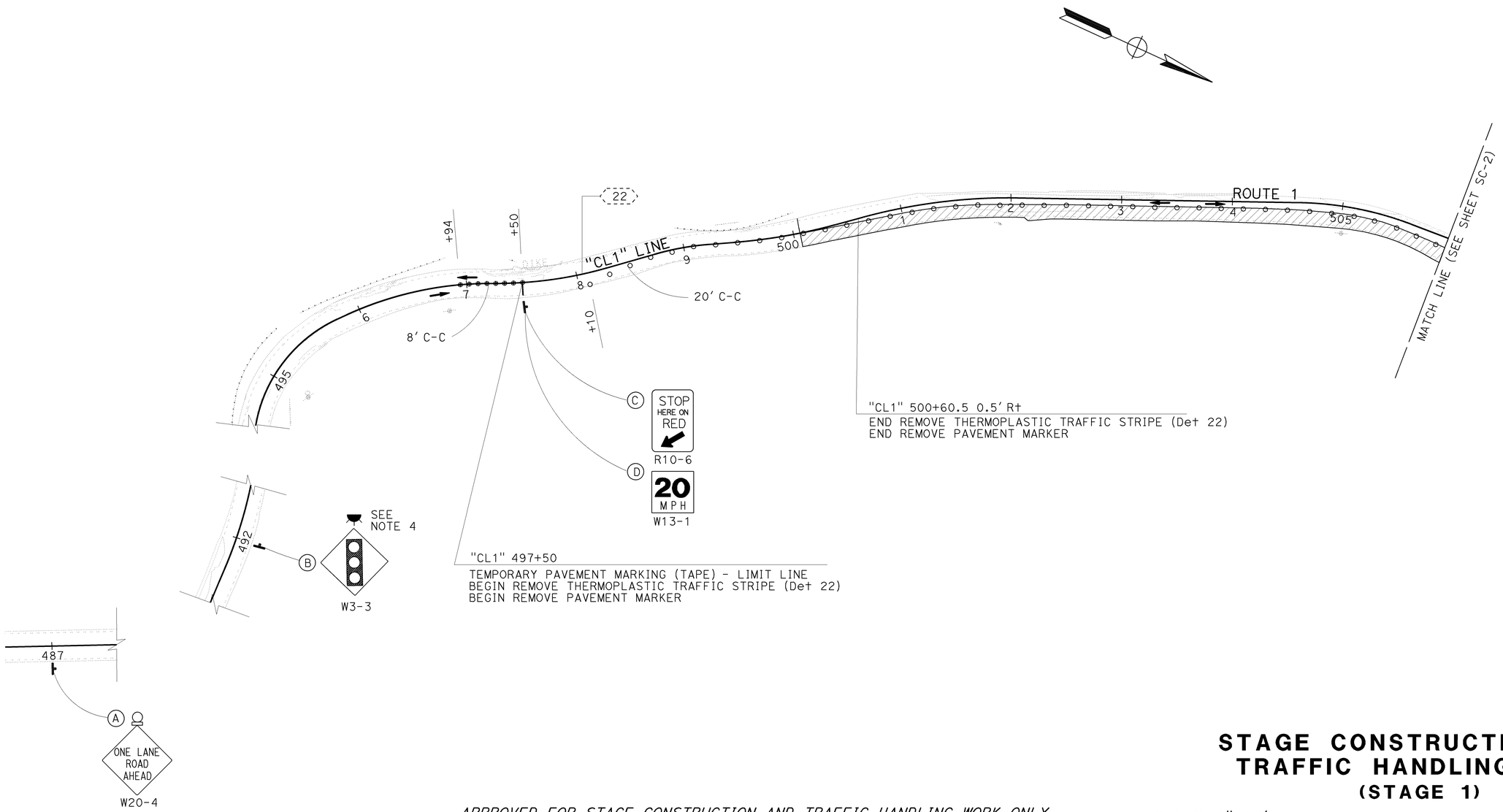

APPROVED FOR STAGE CONSTRUCTION AND TRAFFIC HANDLING WORK ONLY

STAGE CONSTRUCTION AND TRAFFIC HANDLING PLAN (STAGE 1)

SCALE: 1"=50'

SC-1

STATE OF CALIFORNIA - DEPARTMENT OF TRANSPORTATION
DESIGN
FUNCTIONAL SUPERVISOR: STEVEN M. WYATT
CALCULATED-DESIGNED BY: S. LOZON
CHECKED BY: M. O'NEAL
REVISED BY
DATE REVISED

LAST REVISION 05-19-14
DATE PLOTTED => 05-JUN-2014
TIME PLOTTED => 13:19

Dist	COUNTY	ROUTE	POST MILES TOTAL PROJECT	SHEET No.	TOTAL SHEETS
05	SLO	1	73.7/74.0	23	108

REGISTERED CIVIL ENGINEER 5-19-14 DATE

5-19-14
PLANS APPROVAL DATE

REGISTERED PROFESSIONAL ENGINEER
S. LOZON
No. 43136
Exp. 3/31/16
CIVIL
STATE OF CALIFORNIA

THE STATE OF CALIFORNIA OR ITS OFFICERS OR AGENTS SHALL NOT BE RESPONSIBLE FOR THE ACCURACY OR COMPLETENESS OF SCANNED COPIES OF THIS PLAN SHEET.

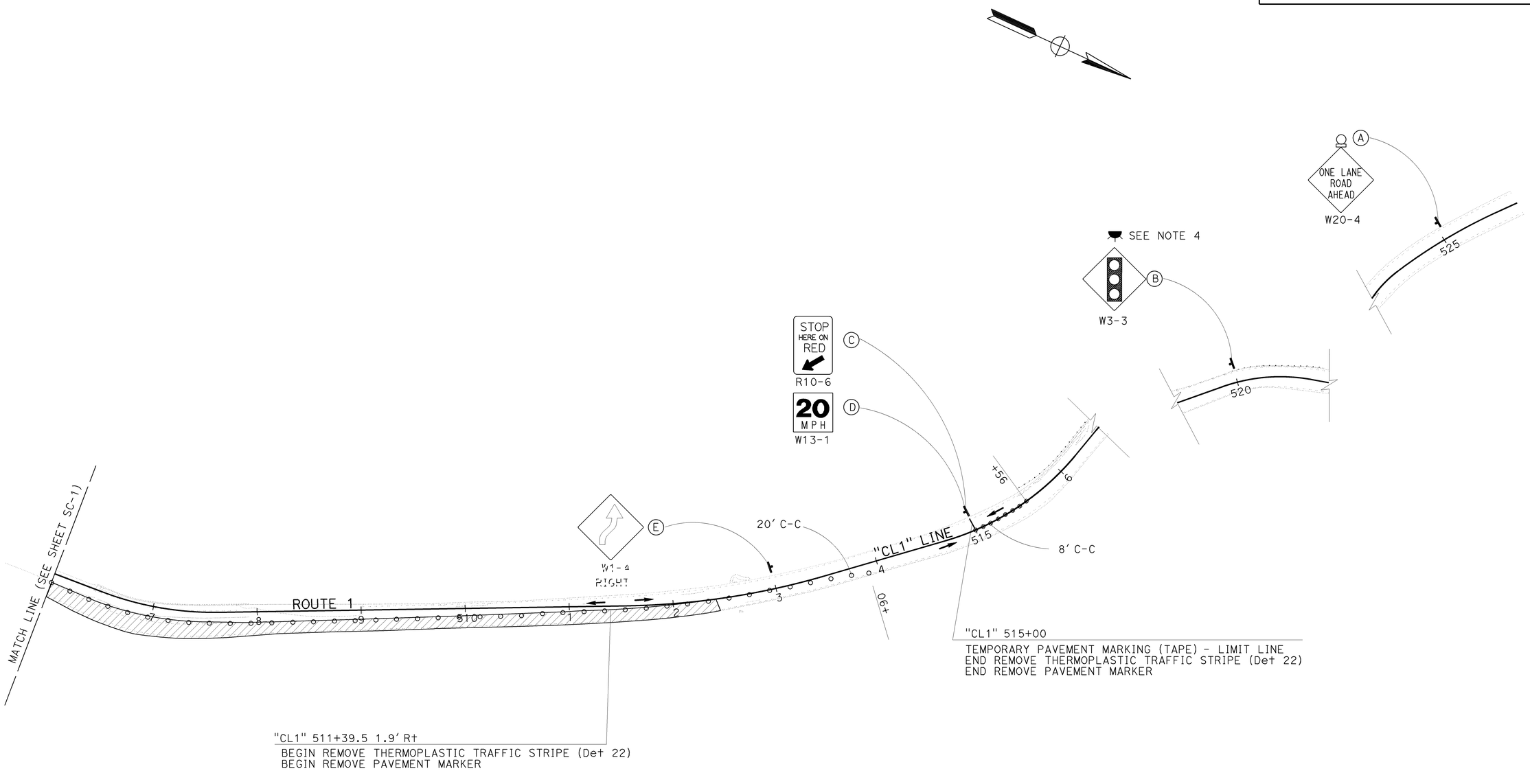

STAGE CONSTRUCTION AND TRAFFIC HANDLING PLAN
(STAGE 1)

APPROVED FOR STAGE CONSTRUCTION AND TRAFFIC HANDLING WORK ONLY

SCALE: 1"=50'

SC-2

STATE OF CALIFORNIA - DEPARTMENT OF TRANSPORTATION
Caltrans
DESIGN

FUNCTIONAL SUPERVISOR: STEVEN M. WYATT
CALCULATED-DESIGNED BY: S. LOZON
CHECKED BY: M. O'NEAL
REVISED BY
DATE REVISED

LAST REVISION 05-19-14
DATE PLOTTED => 05-JUN-2014
TIME PLOTTED => 13:19

Dist	COUNTY	ROUTE	POST MILES TOTAL PROJECT	SHEET No.	TOTAL SHEETS
05	SLO	1	73.7/74.0	24	108

REGISTERED CIVIL ENGINEER 5-19-14 DATE

5-19-14
PLANS APPROVAL DATE

REGISTERED PROFESSIONAL ENGINEER S. LOZON No. 43136 Exp. 3/31/16 CIVIL STATE OF CALIFORNIA

THE STATE OF CALIFORNIA OR ITS OFFICERS OR AGENTS SHALL NOT BE RESPONSIBLE FOR THE ACCURACY OR COMPLETENESS OF SCANNED COPIES OF THIS PLAN SHEET.

NOTE:

STAGE 1 CONSTRUCTION AREA SIGNS, LIMIT LINES AND TEMPORARY SIGNAL SYSTEM TO REMAIN IN PLACE FOR STAGE 2 AND 3.

STAGE 2 CONSTRUCTION (OR AS DIRECTED BY ENGINEER)

PLACE TEMPORARY RAILING (TYPE K)
CONSTRUCT WALL
CONSTRUCT CULVERT
CONSTRUCT DOWNDRAIN
CONSTRUCT SOUTHBOUND ROADBED

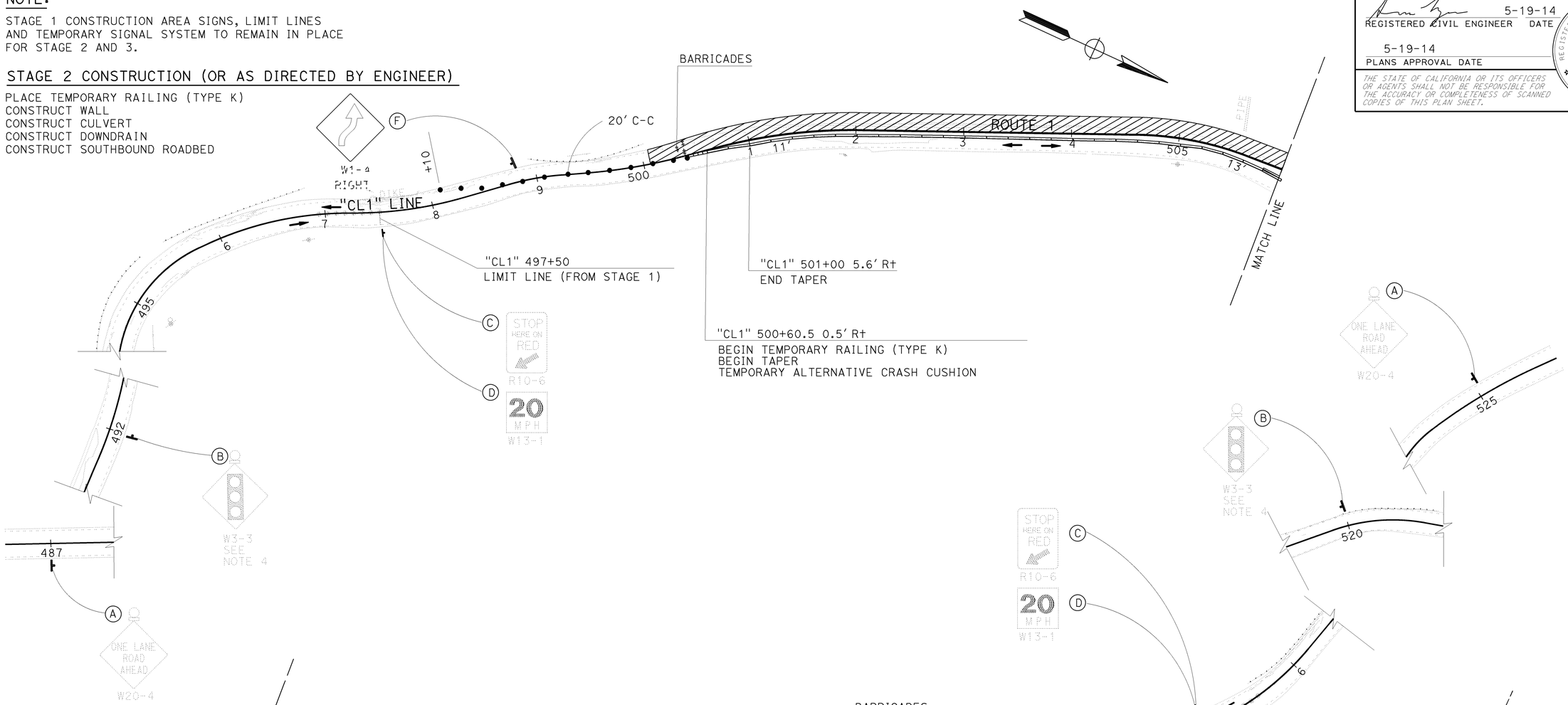

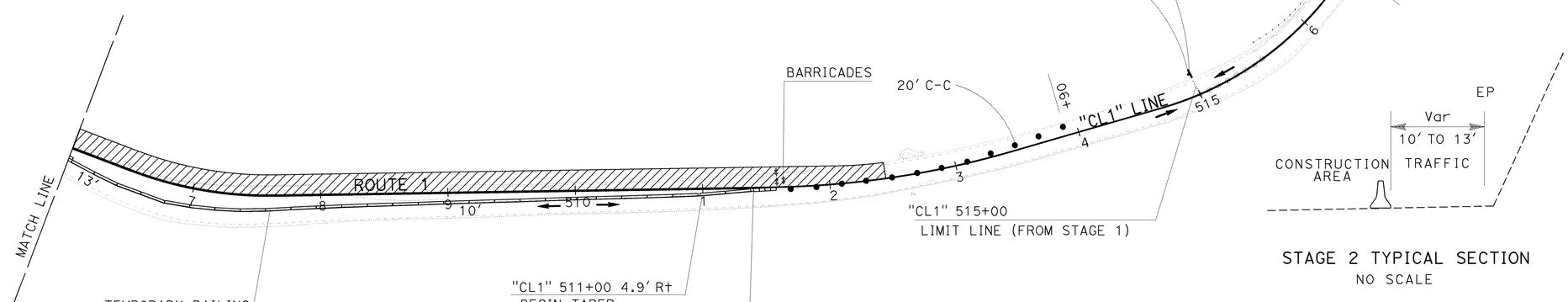

STAGE 2 TYPICAL SECTION
NO SCALE

STAGE CONSTRUCTION AND TRAFFIC HANDLING PLAN
(STAGE 2)

APPROVED FOR STAGE CONSTRUCTION AND TRAFFIC HANDLING WORK ONLY

SCALE: 1"=50'

SC-3

STATE OF CALIFORNIA - DEPARTMENT OF TRANSPORTATION
DESIGN
FUNCTIONAL SUPERVISOR: STEVEN M. WYATT
CALCULATED-DESIGNED BY: S. LOZON
CHECKED BY: M. O'NEAL
REVISED BY
DATE REVISED

LAST REVISION 05-19-14 | DATE PLOTTED => 05-JUN-2014 | TIME PLOTTED => 13:19

Dist	COUNTY	ROUTE	POST MILES TOTAL PROJECT	SHEET No.	TOTAL SHEETS
05	SLO	1	73.7/74.0	25	108

REGISTERED CIVIL ENGINEER 5-19-14 DATE

5-19-14
PLANS APPROVAL DATE

REGISTERED PROFESSIONAL ENGINEER S. LOZON No. 43136 Exp. 3/31/16 CIVIL STATE OF CALIFORNIA

THE STATE OF CALIFORNIA OR ITS OFFICERS OR AGENTS SHALL NOT BE RESPONSIBLE FOR THE ACCURACY OR COMPLETENESS OF SCANNED COPIES OF THIS PLAN SHEET.

STAGE 3 CONSTRUCTION (OR AS DIRECTED BY ENGINEER)

CONSTRUCT NORTHBOUND ROADBED
CONSTRUCT CULVERT

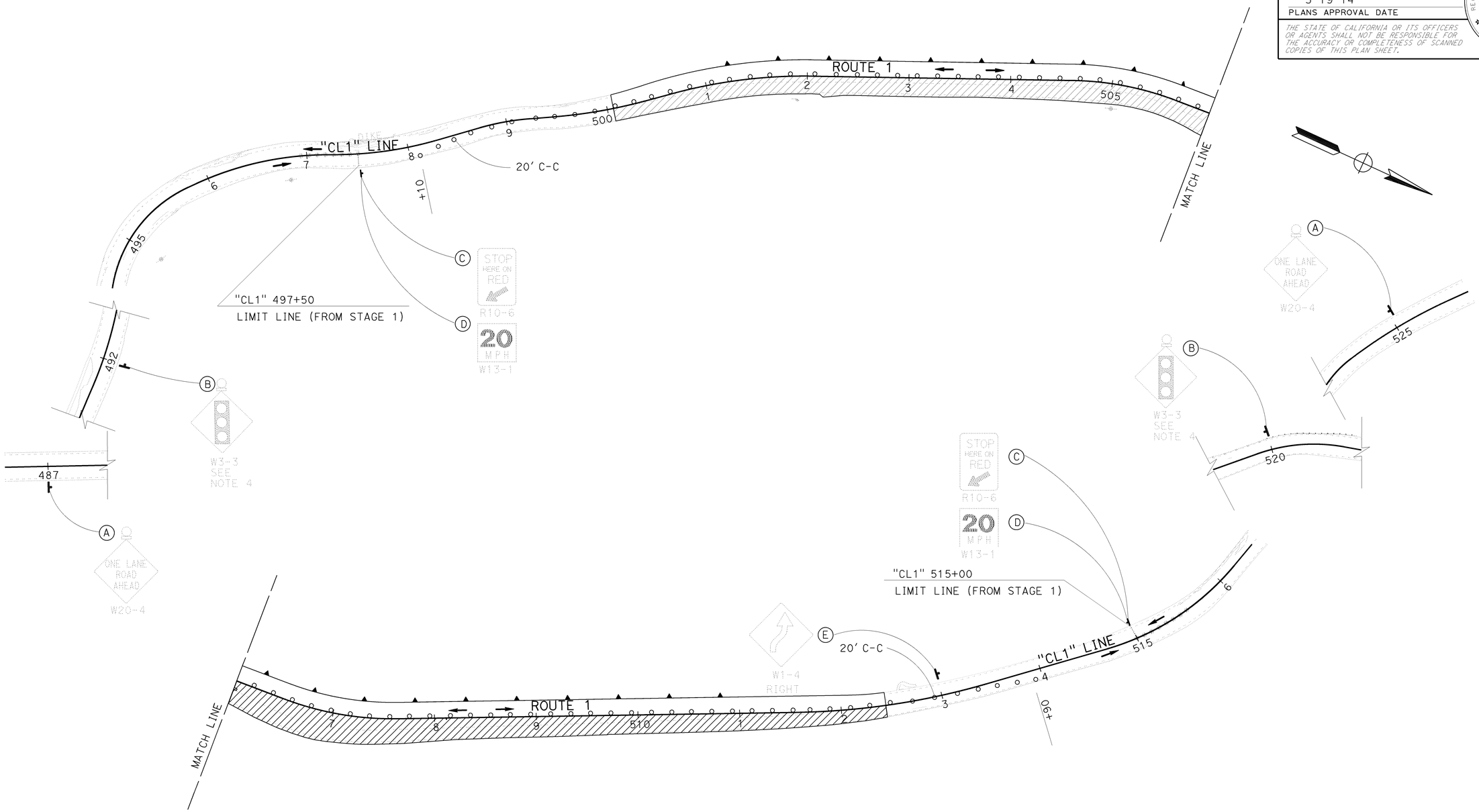

APPROVED FOR STAGE CONSTRUCTION AND TRAFFIC HANDLING WORK ONLY

SCALE: 1"=50'

STAGE CONSTRUCTION AND TRAFFIC HANDLING PLAN
(STAGE 3)

SC-4

STATE OF CALIFORNIA - DEPARTMENT OF TRANSPORTATION
Caltrans
DESIGN
FUNCTIONAL SUPERVISOR: STEVEN M. WYATT
CALCULATED-DESIGNED BY: S. LOZON
CHECKED BY: M. O'NEAL
REVISED BY
DATE REVISED

LAST REVISION 05-19-14
DATE PLOTTED => 05-JUN-2014
TIME PLOTTED => 13:19

Dist	COUNTY	ROUTE	POST MILES TOTAL PROJECT	SHEET No.	TOTAL SHEETS
05	SLO	1	73.7/74.0	26	108

REGISTERED CIVIL ENGINEER 5-19-14 DATE

5-19-14
PLANS APPROVAL DATE

REGISTERED PROFESSIONAL ENGINEER S. LOZON No. 43136 Exp. 3/31/16 CIVIL STATE OF CALIFORNIA

THE STATE OF CALIFORNIA OR ITS OFFICERS OR AGENTS SHALL NOT BE RESPONSIBLE FOR THE ACCURACY OR COMPLETENESS OF SCANNED COPIES OF THIS PLAN SHEET.

TEMPORARY PAVEMENT DELINEATION

STAGE	LOCATION	TEMPORARY PAVEMENT MARKING (TAPE)
		LIMIT LINE
		SQFT
1	"CL1" 497+50	12
1	"CL1" 515+00	12
TOTAL		24

REMOVE PAVEMENT DELINEATION

STAGE	LOCATION	REMOVE PAVEMENT MARKER	REMOVE THERMOPLASTIC TRAFFIC STRIPE
		TYPE D	DETAIL 22
		EA	LF
1	"CL1" 497+50 TO 500+60.5	28	620
1	"CL1" 511+39.5 TO 515+00	32	720
TOTAL		60	1340

TRAFFIC HANDLING DEVICES

STAGE	LOCATION	FLASHING BEACON (PORTABLE)	CHANNELIZER (SURFACE MOUNTED)	PORTABLE DELINEATOR	TEMPORARY ALTERNATIVE CRASH CUSHION	TYPE III BARRICADE	TEMPORARY RAILING (TYPE K)
		EA	EA	EA	EA	EA	LF
1	"CL1" 487+00	1					
	"CL1" 496+94 TO 497+50		8				
	"CL1" 498+10 TO 513+90			80			
	"CL1" 515+00 TO 515+56		8				
	"CL1" 525+00	1					
2	"CL1" 498+10 TO 500+70		14				
	"CL1" 500+60.5				1	3	
	"CL1" 500+60.5 TO 511+39.5						1080
	"CL1" 511+39.5				1	3	
	"CL1" 511+30 TO 513+90		14				
3	"CL1" 498+10 TO 513+90			80			
TOTAL		2	44	160	2	6	1080

STATIONARY MOUNTED CONSTRUCTION AREA SIGNS TRAFFIC HANDLING

SIGN No. (X)	SIGN CODE		PANEL SIZE	SIGN MESSAGE	NUMBER OF POSTS AND SIZE	NUMBER OF SIGNS	REMARKS
	FEDERAL	CALIFORNIA					
A	W20-4		36" x 36"	ONE LANE ROAD AHEAD	1 - 4" x 6"	2	WITH FLASHING BEACON
B	W3-3		36" x 36"			2	MOUNT ON TEMPORARY SIGNAL POLE
C	R10-6		24" x 36"	STOP HERE ON RED	1 - 4" x 6"	2	
D	W13-1		24" x 24"	20 MPH		2	MOUNT ON R10-6 SIGN POST
E	W1-4		36" x 36"		1 - 4" x 6"	1	COVER DURING STAGE 2
F	W1-4		36" x 36"		1 - 4" x 6"	1	COVER DURING STAGE 3

STAGE CONSTRUCTION QUANTITIES

SCQ-1

STATE OF CALIFORNIA - DEPARTMENT OF TRANSPORTATION
Caltrans DESIGN
FUNCTIONAL SUPERVISOR: STEVEN M. WYATT
CALCULATED-DESIGNED BY: S. LOZON
CHECKED BY: M. O'NEAL
REVISED BY
DATE REVISED

LAST REVISION 05-19-14 | DATE PLOTTED => 05-JUN-2014 | TIME PLOTTED => 13:19

Dist	COUNTY	ROUTE	POST MILES TOTAL PROJECT	SHEET No.	TOTAL SHEETS
05	SLO	1	73.7/74.0	27	108

REGISTERED CIVIL ENGINEER 5-19-14 DATE

5-19-14
PLANS APPROVAL DATE

REGISTERED PROFESSIONAL ENGINEER S. LOZON No. 43136 Exp. 3/31/16 CIVIL STATE OF CALIFORNIA

THE STATE OF CALIFORNIA OR ITS OFFICERS OR AGENTS SHALL NOT BE RESPONSIBLE FOR THE ACCURACY OR COMPLETENESS OF SCANNED COPIES OF THIS PLAN SHEET.

LEGEND:

- ## — PAVEMENT DELINEATION DETAIL NUMBER
- LIMIT OF STRIPING DETAIL
- GDE — GUARD RAILING DELINEATOR (TYPE E) @ 20' SPACING C-C
- L1 — OBJECT MARKER (TYPE L1)

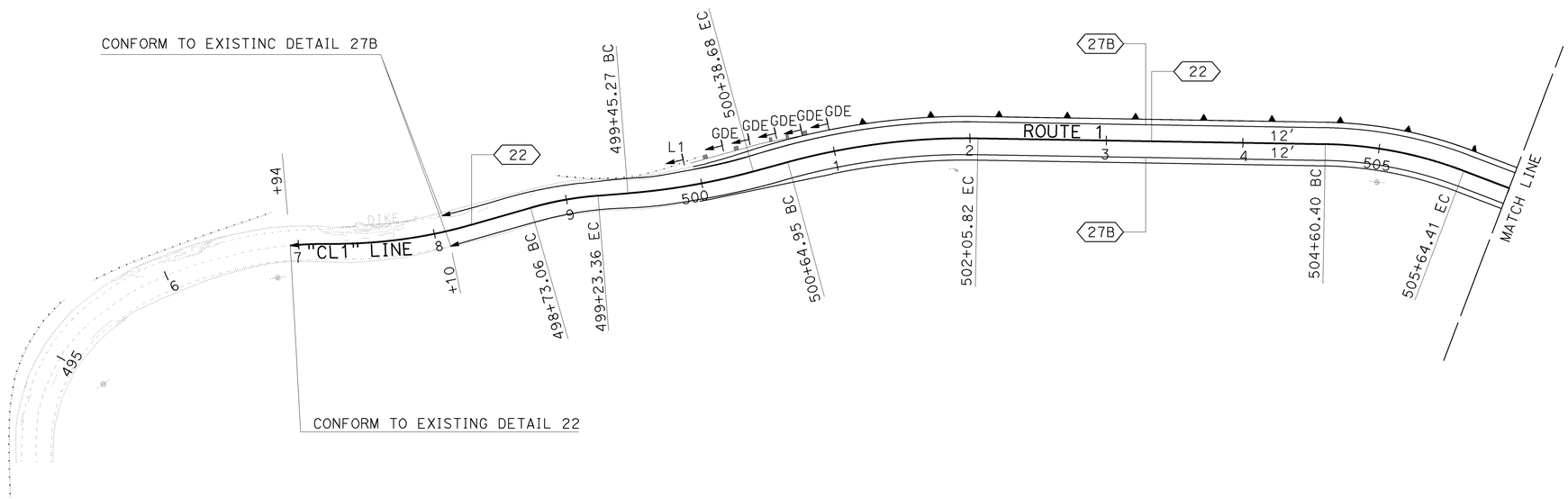

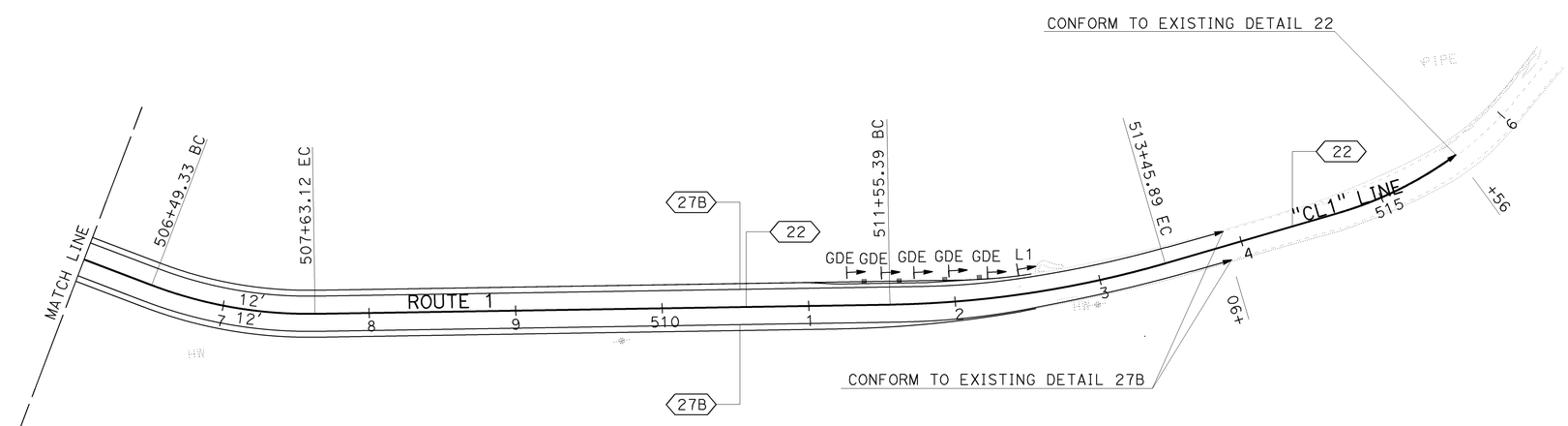

PAVEMENT DELINEATION PLAN

APPROVED FOR PAVEMENT DELINEATION WORK ONLY

SCALE: 1"=50'

PD-1

REVISED BY	DATE REVISED

CALCULATED-DESIGNED BY	CHECKED BY
S. LOZON	M. O'NEAL

FUNCTIONAL SUPERVISOR: STEVEN M. WYATT

STATE OF CALIFORNIA - DEPARTMENT OF TRANSPORTATION
Caltrans
DESIGN

LAST REVISION 05-19-14 | DATE PLOTTED => 20-AUG-2014 | TIME PLOTTED => 12:05

Dist	COUNTY	ROUTE	POST MILES TOTAL PROJECT	SHEET No.	TOTAL SHEETS
05	SLO	1	73.7/74.0	28	108

REGISTERED CIVIL ENGINEER 5-19-14 DATE

5-19-14
PLANS APPROVAL DATE

REGISTERED PROFESSIONAL ENGINEER S. LOZON No. 43136 Exp. 3/31/16 CIVIL STATE OF CALIFORNIA

THE STATE OF CALIFORNIA OR ITS OFFICERS OR AGENTS SHALL NOT BE RESPONSIBLE FOR THE ACCURACY OR COMPLETENESS OF SCANNED COPIES OF THIS PLAN SHEET.

DELINEATORS

STATION LIMITS	GUARD RAILING DELINEATOR	OBJECT MARKER (TYPE L-1)
	TYPE E	
	EA	EA
"CL1" 499+90		1
"CL1" 499+94.27 TO 501+00	5	
"CL1" 511+18.34 TO 512+32.81	5	
"CL1" 512+38		1
TOTAL	10	2

PAVEMENT DELINEATION ITEMS

STATION LIMITS	DETAIL No.	4" THERMOPLASTIC TRAFFIC STRIPE		PAVEMENT MARKER (RETROREFLECTIVE)
		WHITE	YELLOW	TYPE D
		LF	LF	EA
"CL1" 496+94 TO 515+56	22		3,724	158
"CL1" 498+10 TO 513+90 L†	27B	1,590		
"CL1" 498+10 TO 513+90 R†	27B	1,590		
SUBTOTAL		3,180	3,724	
TOTAL		6,904		158

PAVEMENT DELINEATION QUANTITIES
PDQ-1

REVISED BY | DATE REVISED
S. LOZON | M. O'NEAL
CALCULATED-DESIGNED BY | CHECKED BY
FUNCTIONAL SUPERVISOR
STEVEN M. WYATT
STATE OF CALIFORNIA - DEPARTMENT OF TRANSPORTATION
Caltrans
DESIGN

LAST REVISION 05-19-14 | DATE PLOTTED => 05-JUN-2014 | TIME PLOTTED => 13:19

Dist	COUNTY	ROUTE	POST MILES TOTAL PROJECT	SHEET No.	TOTAL SHEETS
05	SLO	1	73.7/74.0	29	108

REGISTERED CIVIL ENGINEER 5-19-14 DATE

5-19-14
PLANS APPROVAL DATE

REGISTERED PROFESSIONAL ENGINEER S. LOZON No. 43136 Exp. 3/31/16 CIVIL STATE OF CALIFORNIA

THE STATE OF CALIFORNIA OR ITS OFFICERS OR AGENTS SHALL NOT BE RESPONSIBLE FOR THE ACCURACY OR COMPLETENESS OF SCANNED COPIES OF THIS PLAN SHEET.

NOTE:

EXACT LOCATION OF TEMPORARY BMPS WILL BE DETERMINED BY THE ENGINEER.

PAVEMENT STRUCTURE

LOCATION	COLD PLANE ASPHALT CONCRETE PAVEMENT	CLASS 2 AGGREGATE BASE (CY)	HOT MIX ASPHALT (TYPE A)	TACK COAT	GEOSYNTHETIC PAVEMENT INTERLAYER (PAVING FABRIC)
	SQYD	CY	TON	TON	SQYD
"CL1"499+96 TO 500+06	29		2.0		
"CL1" 500+06 TO 512+44		581	1,322.5	2.4	
"CL1" 500+93.62 TO 511+26.26					1,400
"CL1" 512+44 TO 512+54	27		1.8		
Misc AREA			1.6		
SAFETY EDGE			16.3		
DIKE			0.8		
TOTAL	56	581	1,345	2.4	1,400

EARTHWORK

LOCATION	ROADWAY EXCAVATION	ROADWAY EMBANKMENT (N)	REMARKS
	CY	CY	
"CL1" 500+06 TO 512+44	4,310	4,310	
"CL1" 506+80 TO 509+50	22	22	SELECTED MATERIAL TOPSOIL
TOTAL	4,332	4,332	

(N) NOT A SEPARATE PAY ITEM, FOR INFORMATION ONLY.

MIDWEST GUARDRAIL SYSTEM

LOCATION	ALTERNATIVE IN-LINE TERMINAL SYSTEM	TRANSITION RAILING (TYPE WB-31)	MIDWEST GUARDRAIL (STEEL POST)
	EA	EA	LF
"CL1" 499+94.27 TO 500+45.75	1		
"CL1" 500+45.75 TO 500+70.51			25
"CL1" 500+70.51 TO 500+93.62		1	
"CL1" 511+26.26 TO 511+50.11		1	
"CL1" 511+50.11 TO 511+81.89			31.3
"CL1" 511+81.98 TO 512+32.81	1		
TOTAL	2	2	56.3

TEMPORARY WATER POLLUTION CONTROL

TEMPORARY CONSTRUCTION ENTRANCE	TEMPORARY FIBER ROLL	TEMPORARY SOIL BINDER	TEMPORARY GRAVEL BAG BERM	TEMPORARY DRAINAGE INLET PROTECTION
TYPE 2	TYPE 2			
EA	LF	SQYD	LF	EA
2	3,500	6,200	1,500	6

SAFETY EDGE

LOCATION	DIRECTION	CASE	(N) TOTAL THICKNESS OF SAFETY EDGE	(N) LENGTH SAFETY EDGE	HOT MIX ASPHALT (TYPE A)
			FT	FT	TON
"CL1" 500+06 TO 512+44	NB	M	0.45	1,238	16.3
SUB TOTAL					16.3*

* QUANTITY INCLUDED IN PAVEMENT STRUCTURE QUANTITY SUMMARY

PLACE HOT MIX ASPHALT DIKE

LOCATION	TYPE F	HOT MIX ASPHALT (TYPE A)
	FT	TON
"CL1" 511+26.26 TO 511+81.89	55.1	0.8
TOTAL	55.1	0.8*

* QUANTITY INCLUDED IN PAVEMENT STRUCTURE QUANTITY SUMMARY

SUMMARY OF QUANTITIES
Q-1

REVISED BY | DATE REVISED
S. LOZON | M. O'NEAL
CALCULATED-DESIGNED BY | CHECKED BY
FUNCTIONAL SUPERVISOR: STEVEN M. WYATT
STATE OF CALIFORNIA - DEPARTMENT OF TRANSPORTATION
DESIGN
Caltrans

LAST REVISION 05-19-14 | DATE PLOTTED => 26-AUG-2014 | TIME PLOTTED => 11:19

Dist	COUNTY	ROUTE	POST MILES TOTAL PROJECT	SHEET No.	TOTAL SHEETS
05	SLO	1	73.7/74.0	30	108

LICENSED LANDSCAPE ARCHITECT

5-19-14
PLANS APPROVAL DATE

LICENSED LANDSCAPE ARCHITECT
Bryan D. Parker No. 5006
Signature
12-31-15
Renewal Date
5-19-14
Date
STATE OF CALIFORNIA

THE STATE OF CALIFORNIA OR ITS OFFICERS OR AGENTS SHALL NOT BE RESPONSIBLE FOR THE ACCURACY OR COMPLETENESS OF SCANNED COPIES OF THIS PLAN SHEET.

NOTES:

1. FOR ACCURATE RIGHT OF WAY DATA, CONTACT RIGHT OF WAY ENGINEERING AT THE DISTRICT OFFICE.
2. VALVE BOX DOES NOT REQUIRE PLACEMENT OF WOVEN WIRE MESH OR CRUSHED ROCK. SIDE OPENINGS MAY BE USED.

LEGEND

DRIP IRRIGATION TUBING - MUST BE 3/4"

ROADSIDE CLEARING, HIGHWAY PLANTING AND PLANT ESTABLISHMENT WORK LIMITS

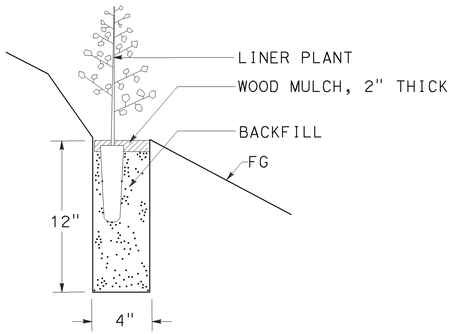

SECTION

PLANT (GROUP M)

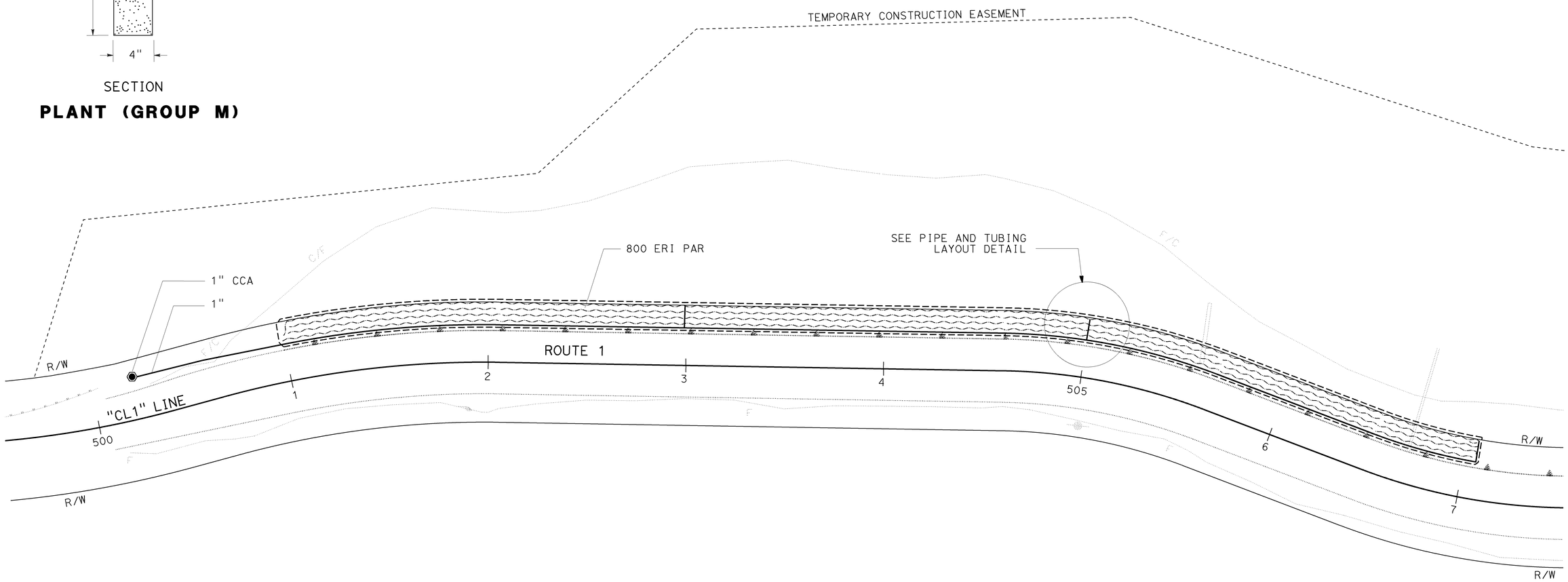

APPROVED FOR IRRIGATION AND PLANTING WORK ONLY

IRRIGATION AND PLANTING PLAN AND DETAIL

NO SCALE

IPP-1

STATE OF CALIFORNIA - DEPARTMENT OF TRANSPORTATION
Caltrans® LANDSCAPE ARCHITECTURE

SENIOR LANDSCAPE ARCHITECT: DENNIS REEVES
CALCULATED-DESIGNED BY: BRYAN PARKER
CHECKED BY: JO JACKSON
REVISED BY
DATE REVISED

LAST REVISION 05-19-14
DATE PLOTTED => 05-JUN-2014
TIME PLOTTED => 13:19

Dist	COUNTY	ROUTE	POST MILES TOTAL PROJECT	SHEET No.	TOTAL SHEETS
05	SLO	1	73.7/74.0	31	108

LICENSED LANDSCAPE ARCHITECT

5-19-14
PLANS APPROVAL DATE

LICENSED LANDSCAPE ARCHITECT — Bryan S. Parker No. 5008 — Signature — 12-31-15 Renewal Date — 5-19-14 Date — STATE OF CALIFORNIA

THE STATE OF CALIFORNIA OR ITS OFFICERS OR AGENTS SHALL NOT BE RESPONSIBLE FOR THE ACCURACY OR COMPLETENESS OF SCANNED COPIES OF THIS PLAN SHEET.

NOTE:
Underlined portions of botanical name indicate abbreviations used on Planting Plans.

PLANT LIST AND PLANTING SPECIFICATIONS

PLANT GROUP	PLANT No.	SYMBOL	BOTANICAL NAME	COMMON NAME	SIZE	QUANTITY EACH	HOLE SIZE (INCH) Dia	HOLE SIZE (INCH) DEPTH	BASIN TYPE	IRON SULFATE	SOIL AMEND ①	COMMERCIAL FERTILIZER ① PLANTING	COMMERCIAL FERTILIZER ① PLT ESTB	WOOD CHIP MULCH ①	STAKING	PLANTING LIMITS MINIMUM DISTANCE (Ft) FROM TRVD WAY	PVMT	FENCE	WALL	PAVED DITCH	EARTH DITCH	ON CENTER (Ft)	REMARKS
M	1		ERIOGONUM PARVIFOLIUM	SEACLIFF BUCKWHEAT	LINER	800	⑥	⑥	-	-	0.05 CF	1 Pkt	-	0.02 CF	-	-	-	-	⑥	-	-	⑥	SHRUB

APPLICABLE WHEN CIRCLED:

① - Quantities shown are "per plant" unless shown as SQFT or SQYD application rates.
2 - Sufficient to receive root protector.
3 - Does not apply to mulch areas.
4 - As shown on plans.
5 - Root protector required.
⑥ - See detail.

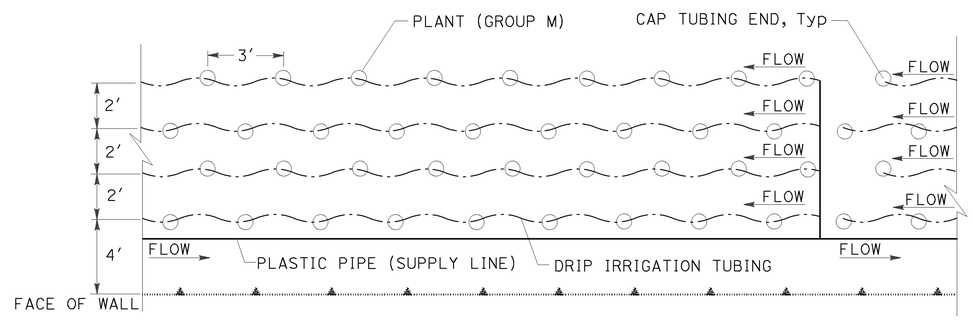

PLAN

PLANT AND PLASTIC PIPE AND TUBING LAYOUT

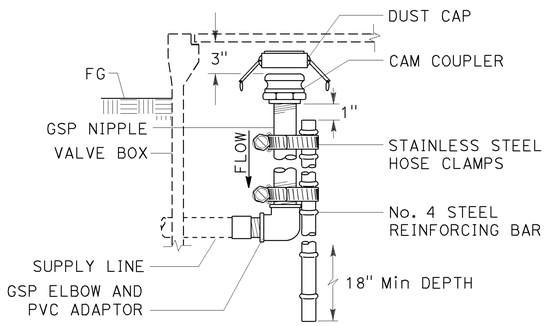

SECTION

CAM COUPLER ASSEMBLY

SPRINKLER SCHEDULE

SYMBOL	ITEM DESCRIPTION	SPRINKLER TYPE	SPRAY PATTERN	OPERATING PRESSURE (PSI)	PRESSURE COMPENSATING	PLUS/MINUS 5% ① DISCHARGE GALLONS PER MINUTE (GPM)	DISCHARGE GALLONS PER HOUR (GPH)	RADIUS (Ft)	WIDTH x LENGTH (Ft)	MATERIAL	INLET CONNECTION (NPT INCH)	POSITIVE-LOCKING ADJ ARC STOP	BACKSPLASH PREVENTER	DIFFUSER PIN	DISTANCE CONTROL FLAP	ADJ DISCHARGE	RISER TYPE	RISER MATERIAL PLASTIC	RISER MATERIAL GALVANIZED	RISER SIZE (IPS INCH)	RISER HEIGHT (INCH)	RISER FLOW SHUTOFF DEVICE	SWING JOINT (TYPE)	RISER SUPPORT	SPRINKLER PROTECTOR (TYPE)	REMARKS
	DIT	EMITTER	-	15	X	-	0.5	-	-	PL	-	-	-	-	-	-	-	-	-	-	-	-	-	-	-	②③④

APPLICABLE WHEN CIRCLED BELOW: DIT= drip irrigation tubing X IN BOX DENOTES REQUIREMENT

① - If a pressure compensating device is specified, the discharge shown reflects its use.
② - Locate emitter on the uphill side of plant.
③ - One emitter per plant.
④ - Preinstalled inline emitters, external barbed emitters, or a combination of both may be used.

IRRIGATION QUANTITIES

SHEET	3/4" DRIP IRRIGATION TUBING	CAM COUPLER ASSEMBLY	1" PLASTIC PIPE (SCHEDULE 40) (SUPPLY LINE)
	LF	EA	LF
IP-1	2,480	1	695

PLANTING QUANTITIES

SHEET	SOIL AMENDMENT	PACKET FERTLIZER	PLANT (GROUP M)	WOOD MULCH
	CY	EA	EA	CY
LD-1	2	800	800	1

LANDSCAPE DETAILS

LD-1

REVISED BY | DATE REVISED
BRYAN PARKER | JO JACKSON
CALCULATED-DESIGNED BY | CHECKED BY
SENIOR LANDSCAPE ARCHITECT | DENNIS J REEVES
STATE OF CALIFORNIA - DEPARTMENT OF TRANSPORTATION
Caltrans LANDSCAPE ARCHITECTURE

LAST REVISION 05-19-14 | DATE PLOTTED => 05-JUN-2014 | TIME PLOTTED => 13:19

Dist	COUNTY	ROUTE	POST MILES TOTAL PROJECT	SHEET No.	TOTAL SHEETS
05	SLO	1	73.7/74.0	32	108

LICENSED LANDSCAPE ARCHITECT

5-19-14
PLANS APPROVAL DATE

LICENSED LANDSCAPE ARCHITECT
Bryan W. Parker No. 5858
Signature
12-31-15
Renewal Date
5-19-14
Date
STATE OF CALIFORNIA

THE STATE OF CALIFORNIA OR ITS OFFICERS OR AGENTS SHALL NOT BE RESPONSIBLE FOR THE ACCURACY OR COMPLETENESS OF SCANNED COPIES OF THIS PLAN SHEET.

EROSION CONTROL

SEQUENCE	ITEM	MATERIAL		APPLICATION RATE	REMARKS
		DESCRIPTION	TYPE		
STEP 1	COMPOST SOCK				TYPE1 STAKING
STEP 2	COMPOST	COMPOST	MEDIUM	130 CY/ACRE	
		SEED	MIX	40 LB/ACRE	
STEP 3	HYDROMULCH	FIBER	WOOD	1,500 LB/ACRE	
		TACKIFIER	PSYLLIUM	125 LB/ACRE	

SEED MIX

SEED	BOTANICAL NAME (COMMON NAME)	PERCENT GERMINATION (MINIMUM)	POUNDS PURE LIVE SEED PER ACRE (SLOPE MEASUREMENT)
MIX	BROMUS MARITIMUS (MARITIME BROME)	70	10
	ERIOPHYLLUM STAECHADIFOLIUM (LIZARDTAIL)	35	5
	ARTEMISIA CALIFORNICA (CALIFORNIA SAGE)	35	5
	FESTUCA MICROSTACHYS (SMALL FESCUE)	65	20

EROSION CONTROL QUANTITIES

SHEET	LOCATION			COMPOST	HYDROMULCH	COMPOST SOCK	REMARKS
	STATION	L†	R†	SQFT	SQFT	LF	
NOT SHOWN ON PLANS	"CL1" 501+00 TO 512+00	X		48,538	48,538	1,500	BENCH AND SLOPE BELOW WALL

EROSION CONTROL LEGEND AND QUANTITIES

ECL-1

REVISED BY	DATE REVISED

CALCULATED-DESIGNED BY	CHECKED BY
BRYAN PARKER	JO JACKSON

SENIOR LANDSCAPE ARCHITECT
DENNIS REEVES

STATE OF CALIFORNIA - DEPARTMENT OF TRANSPORTATION
Caltrans® LANDSCAPE ARCHITECTURE

LAST REVISION 05-19-14
DATE PLOTTED => 05-JUN-2014
TIME PLOTTED => 13:19

Dist	COUNTY	ROUTE	POST MILES TOTAL PROJECT	SHEET No.	TOTAL SHEETS
05	SLO	1	73/74.6	33	108

REGISTERED ELECTRICAL ENGINEER

5-19-14

PLANS APPROVAL DATE

REGISTERED PROFESSIONAL ENGINEER XAVIER I. ALFARO No. E17488 Exp. 6-30-15 ELECTRICAL STATE OF CALIFORNIA

THE STATE OF CALIFORNIA OR ITS OFFICERS OR AGENTS SHALL NOT BE RESPONSIBLE FOR THE ACCURACY OR COMPLETENESS OF SCANNED COPIES OF THIS PLAN SHEET.

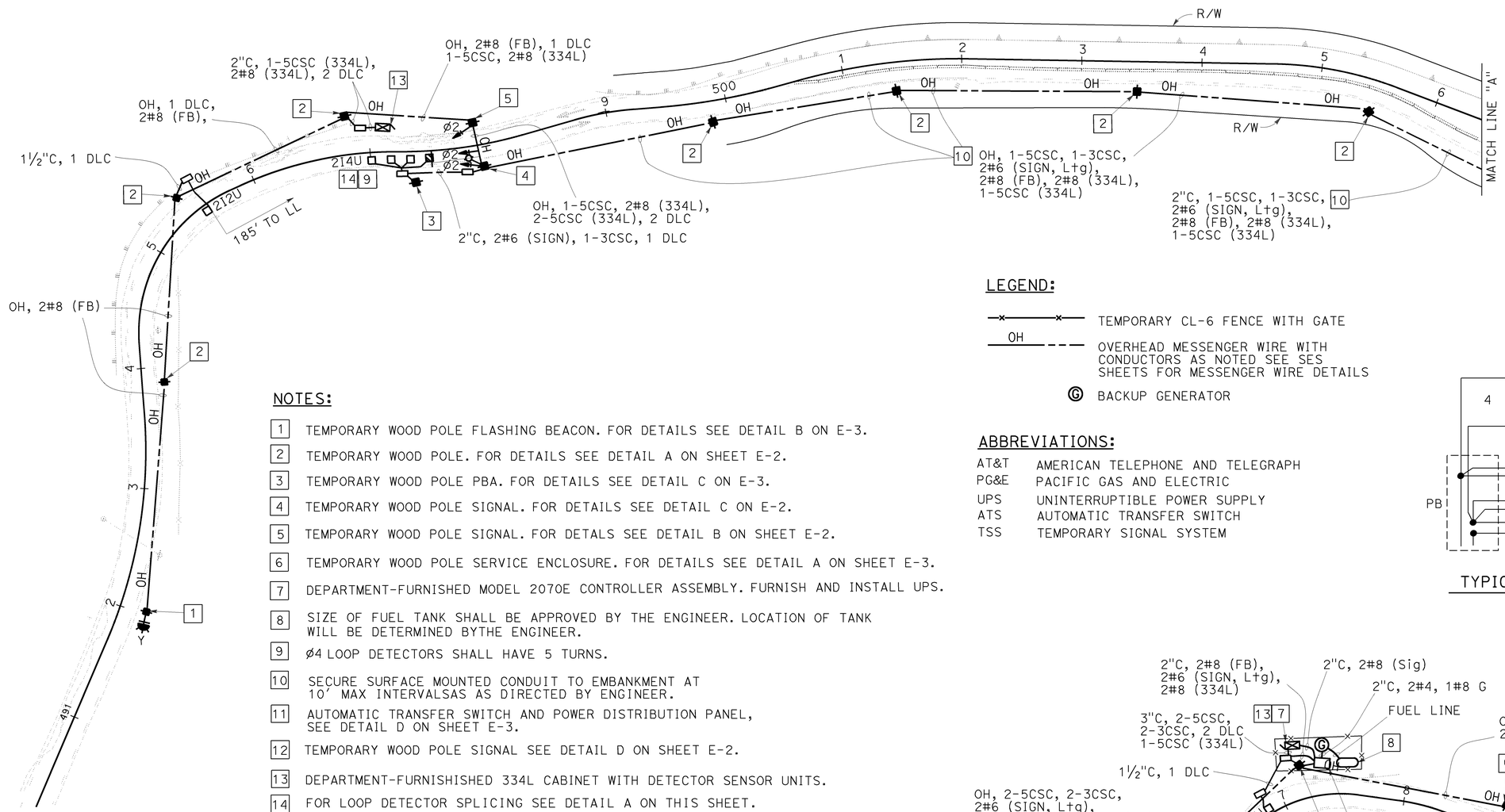

LEGEND:

TEMPORARY CL-6 FENCE WITH GATE

OH — OVERHEAD MESSENGER WIRE WITH CONDUCTORS AS NOTED SEE SES SHEETS FOR MESSENGER WIRE DETAILS

Ⓖ BACKUP GENERATOR

ABBREVIATIONS:

AT&T	AMERICAN TELEPHONE AND TELEGRAPH
PG&E	PACIFIC GAS AND ELECTRIC
UPS	UNINTERRUPTIBLE POWER SUPPLY
ATS	AUTOMATIC TRANSFER SWITCH
TSS	TEMPORARY SIGNAL SYSTEM

NOTES:

1. TEMPORARY WOOD POLE FLASHING BEACON. FOR DETAILS SEE DETAIL B ON E-3.
2. TEMPORARY WOOD POLE. FOR DETAILS SEE DETAIL A ON SHEET E-2.
3. TEMPORARY WOOD POLE PBA. FOR DETAILS SEE DETAIL C ON E-3.
4. TEMPORARY WOOD POLE SIGNAL. FOR DETAILS SEE DETAIL C ON E-2.
5. TEMPORARY WOOD POLE SIGNAL. FOR DETALS SEE DETAIL B ON SHEET E-2.
6. TEMPORARY WOOD POLE SERVICE ENCLOSURE. FOR DETAILS SEE DETAIL A ON SHEET E-3.
7. DEPARTMENT-FURNISHED MODEL 2070E CONTROLLER ASSEMBLY. FURNISH AND INSTALL UPS.
8. SIZE OF FUEL TANK SHALL BE APPROVED BY THE ENGINEER. LOCATION OF TANK WILL BE DETERMINED BYTHE ENGINEER.
9. ø4 LOOP DETECTORS SHALL HAVE 5 TURNS.
10. SECURE SURFACE MOUNTED CONDUIT TO EMBANKMENT AT 10' MAX INTERVALSAS AS DIRECTED BY ENGINEER.
11. AUTOMATIC TRANSFER SWITCH AND POWER DISTRIBUTION PANEL, SEE DETAIL D ON SHEET E-3.
12. TEMPORARY WOOD POLE SIGNAL SEE DETAIL D ON SHEET E-2.
13. DEPARTMENT-FURNISHISHED 334L CABINET WITH DETECTOR SENSOR UNITS.
14. FOR LOOP DETECTOR SPLICING SEE DETAIL A ON THIS SHEET.
15. FOR ACCURATE RIGHT OF WAY DATA, CONTACT RIGHT OF WAY ENGINEERING AT THE DISTRICT OFFICE.
16. MAINTAIN A MAXIMUM OF 200' SPACING BETWEEN ALL WOOD POLES USED FOR HANGING CONDUCTORS.
17. ALL PULL BOXES SHALL BE No. 3½ UNLESS OTHERWISE NOTED.

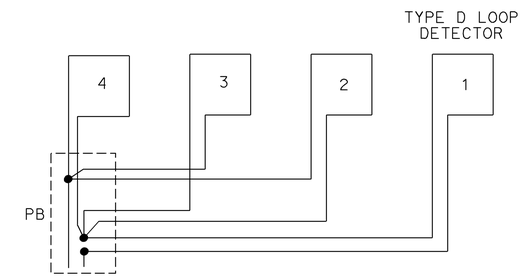

TYPICAL LOOP DETECTOR SPLICING

DETAIL A

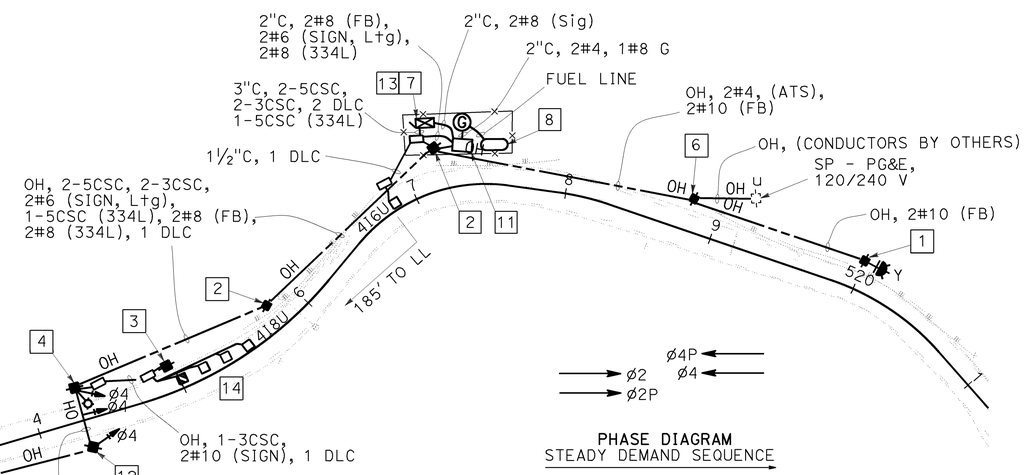

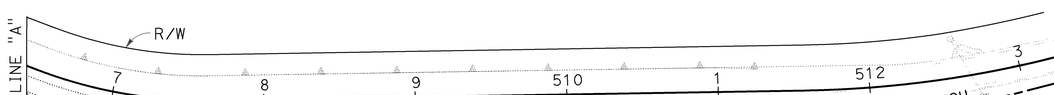

2"C, 1-5CSC, 1-3CSC, 10
2#6 (SIGN, Ltg),
2#8 (FB), 2#8 (334L),
1-5CSC (334L)

10 OH, 1-5CSC, 1-3CSC,
2#6 (SIGN, Ltg),
2#8 (FB), 2#8 (334L),
1-5CSC (334L)

APPROVED FOR ELECTRICAL WORK ONLY

TEMPORARY SIGNAL SYSTEM

SCALE: 1"=50'

E-1

STATE OF CALIFORNIA - DEPARTMENT OF TRANSPORTATION

Caltrans® **ELECTRICAL DESIGN**

FUNCTIONAL SUPERVISOR: ALI BAKHDOUD

CALCULATED-DESIGNED BY: XAVIER ALFARO

CHECKED BY: DANIEL VO

REVISED BY / DATE REVISED

LAST REVISION 05-19-14 | DATE PLOTTED => 05-JUN-2014 | TIME PLOTTED => 13:19

Dist	COUNTY	ROUTE	POST MILES TOTAL PROJECT	SHEET No.	TOTAL SHEETS
05	SLO	1	73/74.6	34	108

Xavier Alfaro
REGISTERED ELECTRICAL ENGINEER

5-19-14
PLANS APPROVAL DATE

REGISTERED PROFESSIONAL ENGINEER XAVIER I. ALFARO No. E17488 Exp. 6-30-15 ELECTRICAL STATE OF CALIFORNIA

THE STATE OF CALIFORNIA OR ITS OFFICERS OR AGENTS SHALL NOT BE RESPONSIBLE FOR THE ACCURACY OR COMPLETENESS OF SCANNED COPIES OF THIS PLAN SHEET.

NOTE:

SEE SES SHEETS FOR DETAILS NOT SHOWN

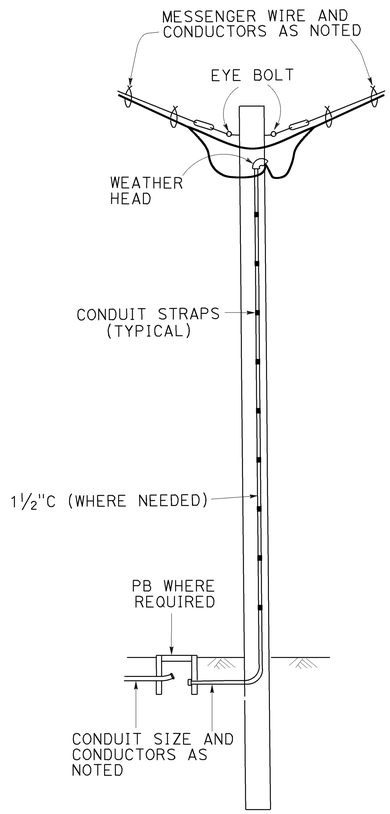

DETAIL A
TEMPORARY WOOD POLE

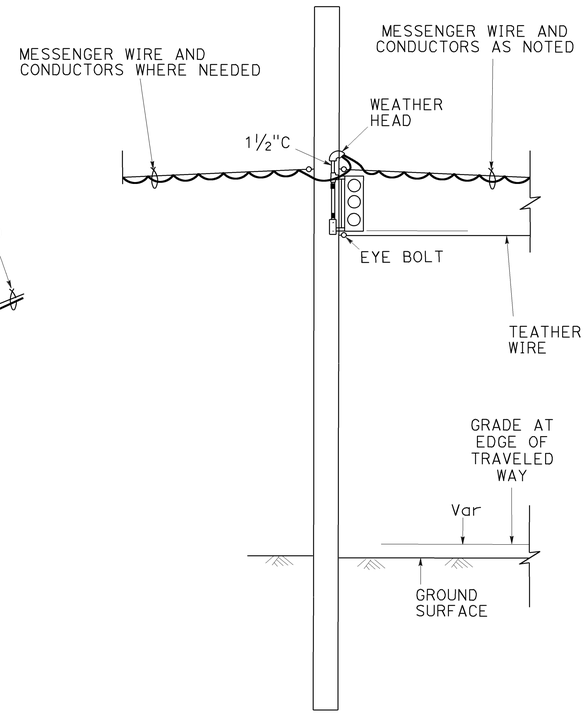

DETAIL B
SIGNAL TEMPORARY WOOD POLE

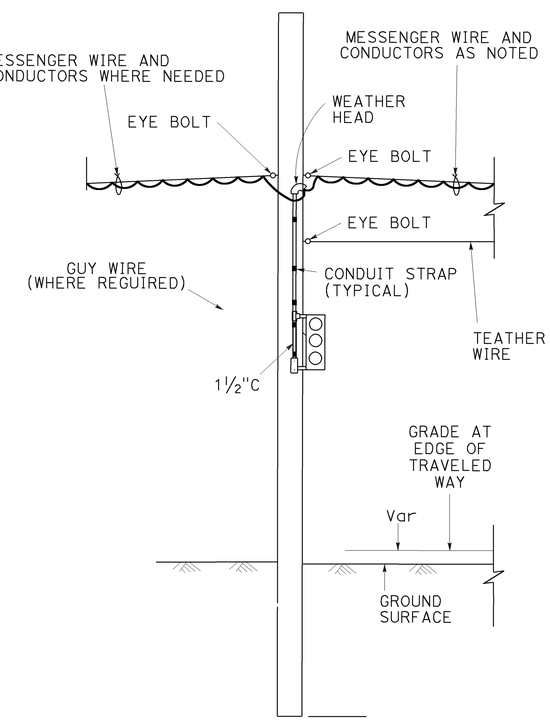

DETAIL D
SIGNAL TEMPORARY WOOD POLE

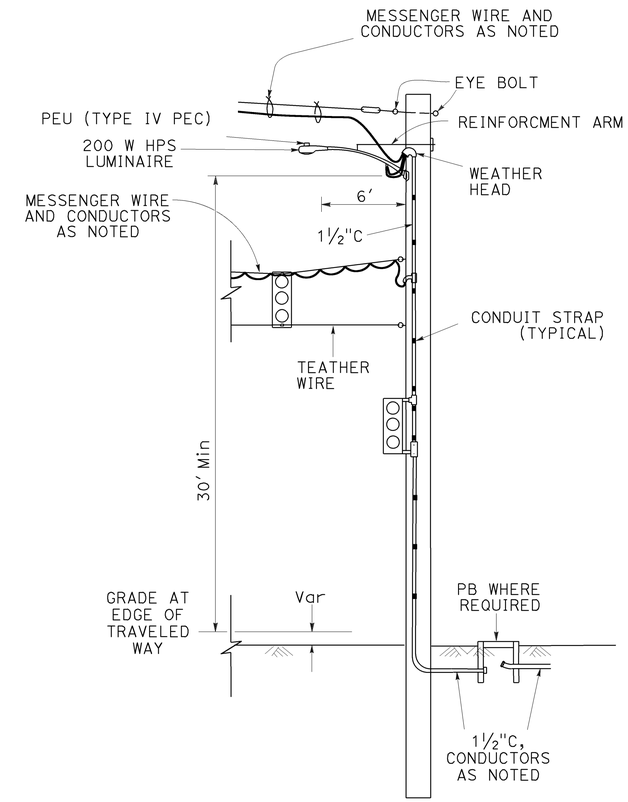

DETAIL C
SIGNAL AND LIGHTING TEMPORARY WOOD POLE

APPROVED FOR ELECTRICAL WORK ONLY

NO SCALE

TEMPORARY SIGNAL SYSTEM
E-2

REVISED BY	DATE REVISED
XAVIER ALFARO	DANIEL VO
CALCULATED-DESIGNED BY	CHECKED BY
FUNCTIONAL SUPERVISOR	ALI BAKHDOUD

STATE OF CALIFORNIA - DEPARTMENT OF TRANSPORTATION
Caltrans® ELECTRICAL DESIGN

LAST REVISION 05-19-14 | DATE PLOTTED => 05-JUN-2014 | TIME PLOTTED => 13:19

Dist	COUNTY	ROUTE	POST MILES TOTAL PROJECT	SHEET No.	TOTAL SHEETS
05	SLO	1	73/74.6	35	108

Xavier Alfaro
REGISTERED ELECTRICAL ENGINEER

5-19-14
PLANS APPROVAL DATE

REGISTERED PROFESSIONAL ENGINEER XAVIER I. ALFARO No. E17488 Exp. 6-30-15 ELECTRICAL STATE OF CALIFORNIA

THE STATE OF CALIFORNIA OR ITS OFFICERS OR AGENTS SHALL NOT BE RESPONSIBLE FOR THE ACCURACY OR COMPLETENESS OF SCANNED COPIES OF THIS PLAN SHEET.

NOTE:
SEE SES SHEETS FOR DETAILS NOT SHOWN

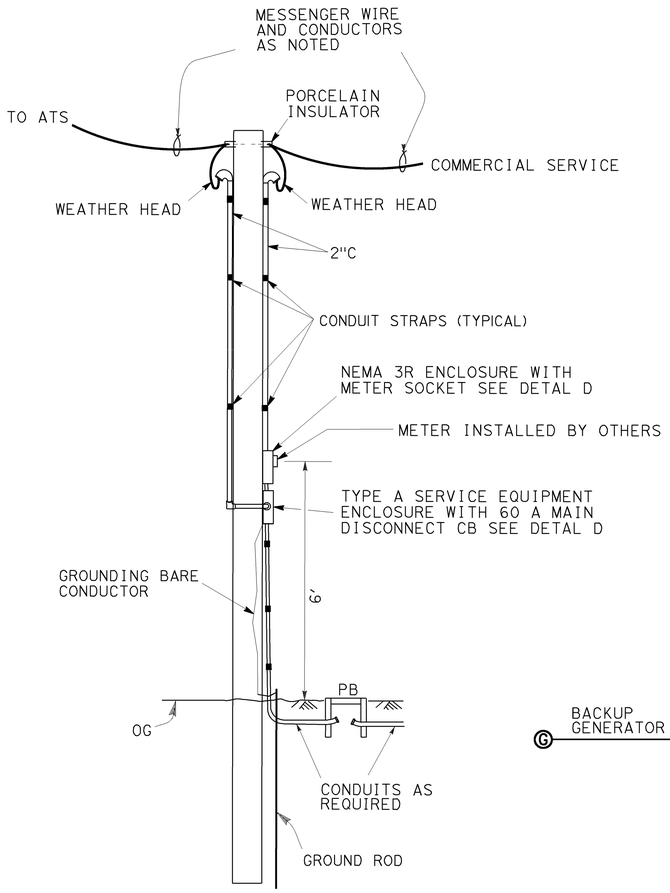

DETAIL A
TEMPORARY WOOD POLE SERVICE ENCLOSURE

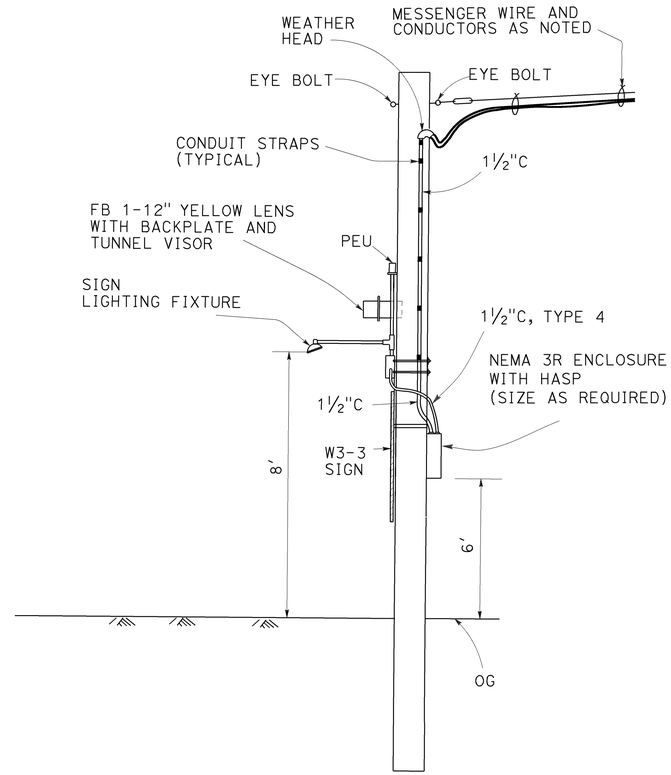

DETAIL B
FLASHING BEACON TEMPORARY WOOD POLE

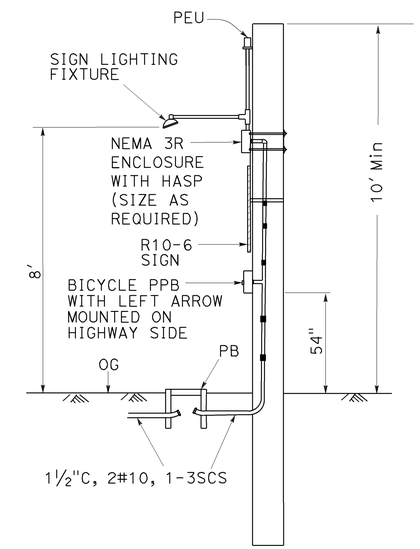

DETAIL C
TEMPORARY WOOD POLE

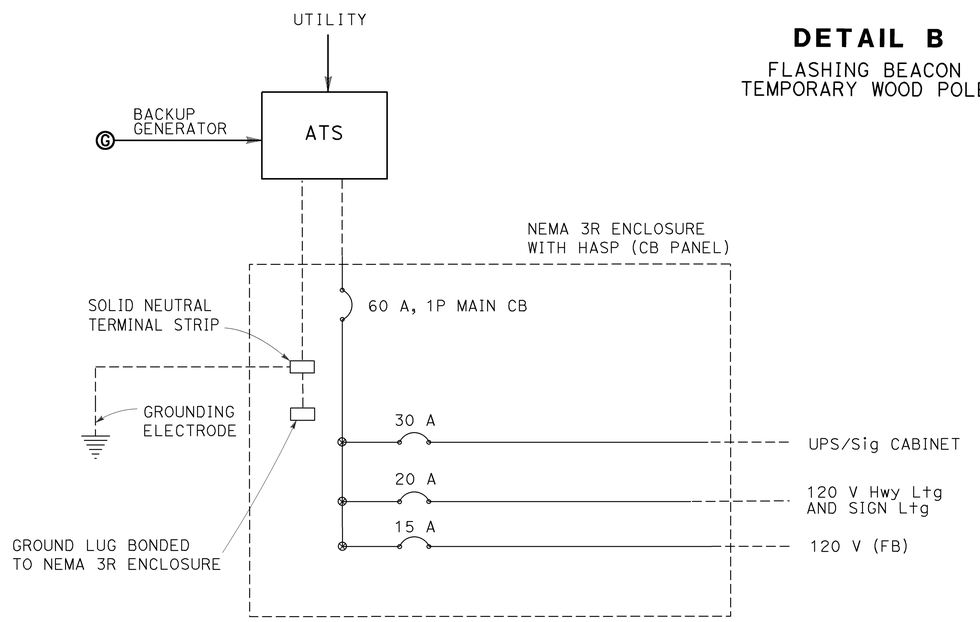

DETAIL D
SERVICE ENCLOSURE WIRE DIAGRAM

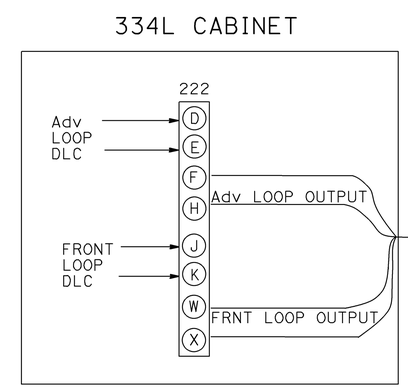

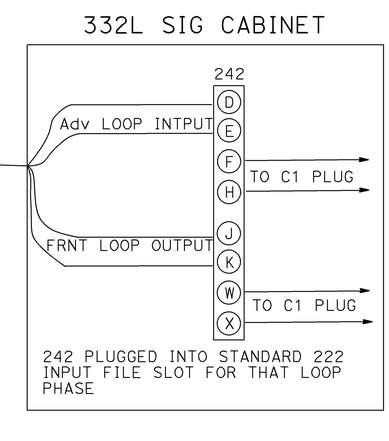

DETAIL E

APPROVED FOR ELECTRICAL WORK ONLY

TEMPORARY SIGNAL SYSTEM
E-3

NO SCALE

STATE OF CALIFORNIA - DEPARTMENT OF TRANSPORTATION
Caltrans® ELECTRICAL DESIGN

FUNCTIONAL SUPERVISOR: ALI BAKHDOUD
CALCULATED-DESIGNED BY: XAVIER ALFARO
CHECKED BY: DANIEL VO
REVISED BY
DATE REVISED

LAST REVISION 05-19-14
DATE PLOTTED => 05-JUN-2014
TIME PLOTTED => 13:19

Dist	COUNTY	ROUTE	POST MILES TOTAL PROJECT	SHEET No.	TOTAL SHEETS
05	SLO	1	73/74.6	36	108

REGISTERED ELECTRICAL ENGINEER DATE

5-19-14
PLANS APPROVAL DATE

REGISTERED PROFESSIONAL ENGINEER XAVIER I. ALFARO No. E17488 Exp. 6-30-15 ELECTRICAL STATE OF CALIFORNIA

THE STATE OF CALIFORNIA OR ITS OFFICERS OR AGENTS SHALL NOT BE RESPONSIBLE FOR THE ACCURACY OR COMPLETENESS OF SCANNED COPIES OF THIS PLAN SHEET.

NOTE:
ITEMS SHOWN IN TABLE ARE NOT A SEPARATE PAY ITEM, FOR INFORMATION USE ONLY.

TEMPORARY SIGNAL SYSTEM

SHEET No.	2"C, TYPE 3	3"C, TYPE 3	No. #10 CONDUCTORS	No. #8 CONDUCTORS	No. #6 CONDUCTORS	No. #4 CONDUCTORS	MESSENGER WIRE	5CSC	3CSC	DLC	#8 (G)
	LF										
E-1	300	50	6000	6000	4000	500	200	5000	3000	2500	3000

TEMPORARY SIGNAL SYSTEM

SHEET No.	ATS	No. 3½ PB	No. #5 PB	TYPE A LOOP DETECTOR	TYPE D LOOP DETECTOR	120 VOLT GENERATOR	TEMPORARY WOOD POLE SERVICE ENCLOSURE	TEMPORARY WOOD POLE Sig	TEMPORARY WOOD POLE FB	TEMPORARY WOOD POLE PBA	TEMPORARY WOOD POLE
	EA										
E-1	1	5	1	8	2	1	1	4	2	2	10

ELECTRICAL QUANTITY
E-4

STATE OF CALIFORNIA - DEPARTMENT OF TRANSPORTATION
Caltrans® ELECTRICAL DESIGN

FUNCTIONAL SUPERVISOR: ALI BAKHDOUD
CALCULATED-DESIGNED BY: XAVIER ALFARO
CHECKED BY: DANIEL VO
REVISED BY
DATE REVISED

LAST REVISION 05-19-14
DATE PLOTTED => 05-JUN-2014
TIME PLOTTED => 13:19

DIST	COUNTY	ROUTE	POST MILES TOTAL PROJECT	SHEET No.	TOTAL SHEETS
05	SLO	1	73.7/74.0	37	108

REGISTERED CIVIL ENGINEER 8-9-13 DATE

5-19-14
PLANS APPROVAL DATE

REGISTERED PROFESSIONAL ENGINEER VICTOR O. LOPEZ No. C61373 Exp. 6/30/15 CIVIL STATE OF CALIFORNIA

The State of California or its officers or agents shall not be responsible for the accuracy or completeness of electronic copies of this plan sheet.

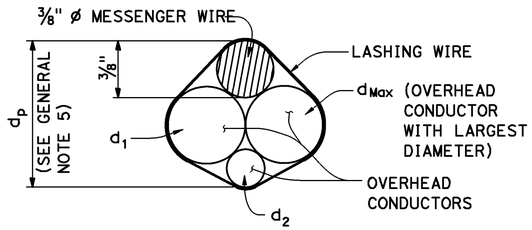

$d_p = 3/8" + d_{Max} + 0.30 * (d_1 + d_2 + ... d_n)$

PROJECTED DEPTH OF OVERHEAD BUNDLE, (d_p)

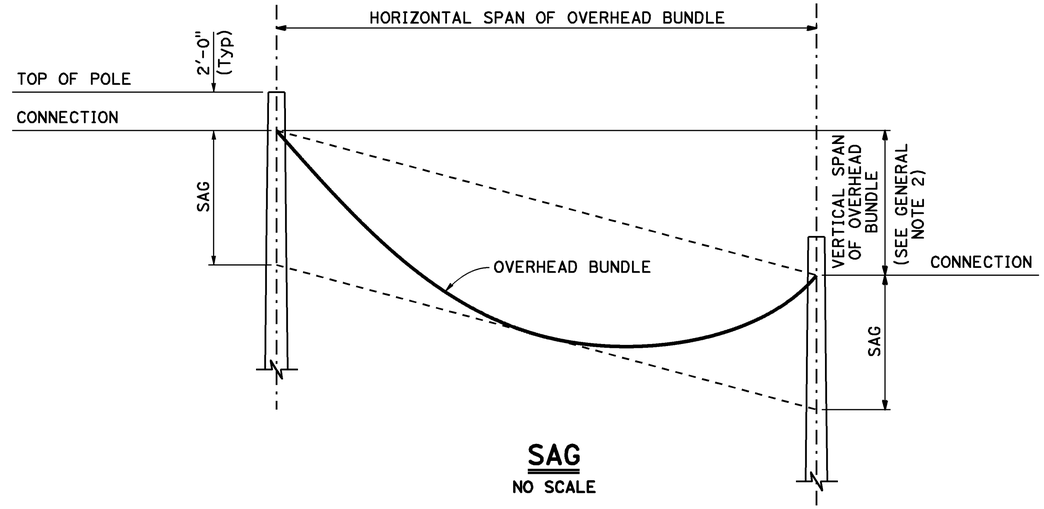

SAG

NO SCALE

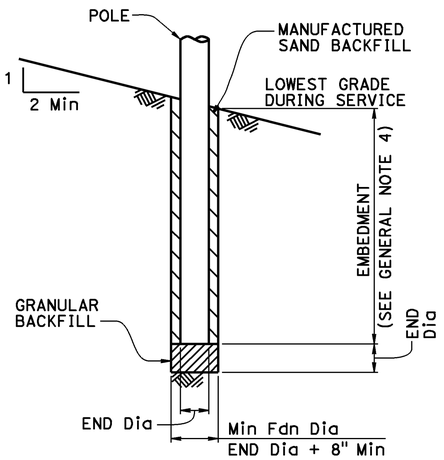

POLE FOUNDATION

Design: AASHTO Standard Specifications for Structural Supports for Highway Signs, Luminaires and Traffic Signals, Fifth Edition (LTS-5).

GROUP LOAD COMBINATIONS:

I Dead Load
II Dead Load + Wind Load
III Dead Load + 0.5 (Wind Load) + Ice Load
IV Fatigue: Not used

LOADING:

Wind Loading: 100 mph (3-second gust)
Wind Recurrence Interval: 10 years
Combined height, exposure, and elevated terrain factor = 1.05 (Exposure C, structure is not located on or over the top half of a ridge, hill, or escarpment)

Ice Loading: 3.0 psf on surfaces, 0.60 in radial thickness of ice at a unit weight of 60 pcf on overhead bundles

BASIC DESIGN VALUES:

Timber Poles: Fb = 1850 psi
Fv = 110 psi
Fcp = 230 psi
Fc = 950 psi
E = 1500 x 10^3 psi

DESIGN WIRE BREAKING STRENGTHS:

ASTM A475, Utilities Grade, 7 strand modified by termination efficiency factor of 0.8

FOUNDATION DESIGN NOTES:

1. Pole embedment depth design is based on Broms' approximate procedure as described in Article 13.6 of AASHTO LTS-5.

2. Embedment depth is calculated based on following soil parameters,
Cohesive Soil:
Shear strength of soil c = 1500 psf.
Cohesionless Soil:
ø = 30 deg, γ = 120 pcf.
Soil assumed to be unsaturated.

3. An overload factor of 2.0 and an undercapacity factor of 0.7 were used for safety factor of 2.86.

4. Allowable vertical bearing pressure at the end bearing of poles is 3000 psf at 6 feet or more embedment.

GENERAL NOTES:

1. The messenger wire and any combination of overhead conductors must not exceed either a self weight of 3.0 lb/ft or the maximun d_p.

2. The maximum vertical span is 10% of the horizontal span.

3. For poles with adjacent unbalanced horizontal spans, the shortest horizontal span must be at least 50% of the largest horizontal span.

4. Add 2'-0" for slopes above 1V:4H.

5. For a pole supporting multiple spans, calculate d_p for each span and use the largest value.

6. Do not exceed the attachments shown.

DIAMETERS AND SELF WEIGHT OF OVERHEAD CONDUCTORS

CONDUCTOR OR CABLE TYPE	DIAMETER d (in)	WEIGHT w (plf)
3 CONDUCTOR SIGNAL CABLE (3CSC)	0.400	0.0980
5 CONDUCTOR SIGNAL CABLE (5CSC)	0.500	0.1560
9 CONDUCTOR SIGNAL CABLE (9CSC)	0.650	0.2760
12 CONDUCTOR SIGNAL CABLE (12CSC)	0.800	0.3970
28 CONDUCTOR SIGNAL CABLE (28CSC)	0.900	0.6490
1-#14	0.166	0.0235
1-#12	0.185	0.0330
1-#10	0.210	0.0476
1-#8	0.271	0.0774
1-#6	0.310	0.1130
1-#4	0.359	0.1690
1-#3	0.388	0.2080
1-#2	0.420	0.2560
1-#1	0.498	0.3340
6-CONDUCTOR SIGNAL INTERCONNECT CABLE (SIC)	0.350	0.0860
12-CONDUCTOR SIGNAL INTERCONNECT CABLE (SIC)	0.500	0.1440
DETECTOR LEAD-IN CABLE (DLC)	0.310	0.0440
12 to 48-STRAND FIBER OPTIC CABLE (48FOC)	0.424	0.0600
72-STRAND FIBER OPTIC CABLE (72FOC)	0.484	0.0770
96-STRAND FIBER OPTIC CABLE (96FOC)	0.535	0.1050
144-STRAND FIBER OPTIC CABLE (144FOC)	0.670	0.1890
3/8" ø MESSENGER WIRE	0.375	0.2730

NO SCALE

BRANCH CHIEF DAVID NEUMANN

	BY	CHECKED
DESIGN	VICTOR LOPEZ	JOEL MAGANA
DETAILS	BOB EDWARDS	JOEL MAGANA
QUANTITIES	X	X

STATE OF CALIFORNIA DEPARTMENT OF TRANSPORTATION

DIVISION OF ENGINEERING SERVICES STRUCTURE DESIGN SPECIAL DESIGN BRANCH

BRIDGE NO. POST MILE

TEMPORARY WOOD POLES GENERAL NOTES

SES-1

STRUCTURES DESIGN SPECIAL DESIGN SHEET (ENGLISH) (REV. 09-01-10)

ORIGINAL SCALE IN INCHES FOR REDUCED PLANS 0 1 2 3

UNIT: 3619
PROJECT NUMBER & PHASE: 0512000009
CONTRACT NO.: 05-1A7001

DISREGARD PRINTS BEARING EARLIER REVISION DATES

REVISION DATES

SHEET 1 OF 10

FILE => 0512000009uh001.dgn

USERNAME => s123239 DATE PLOTTED => 05-JUN-2014 TIME PLOTTED => 13:42

DIST	COUNTY	ROUTE	POST MILES TOTAL PROJECT	SHEET No.	TOTAL SHEETS
05	SLO	1	73.7/74.0	38	108

REGISTERED CIVIL ENGINEER 8-9-13 DATE

5-19-14
PLANS APPROVAL DATE

REGISTERED PROFESSIONAL ENGINEER VICTOR O. LOPEZ No. C61373 Exp. 6/30/15 CIVIL STATE OF CALIFORNIA

The State of California or its officers or agents shall not be responsible for the accuracy or completeness of electronic copies of this plan sheet.

LEGEND

- Wood Pole No Attachments
- A Wood Pole with Attachments
- —OH— Overhead Bundle

POLE SELECTION TABLE

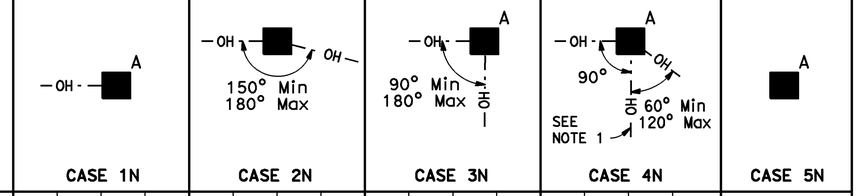

			CASE 1N				CASE 2N				CASE 3N				CASE 4N				CASE 5N
		MAXIMUM d_p	1"	1.5"	2.0"	2.5"	1"	1.5"	2.0"	2.5"	1.0"	1.5"	2.0"	2.5"	1"	1.5"	2.0"	2.5"	N/A
OVERHEAD BUNDLE HORIZONTAL SPAN (Max)	50'	MINIMUM POLE CLASS	H-1	H-2	H-2	H-2	4	3	2	1	H-2	H-2	H-3	H-3	H-4	H-4	H-4	H-5	CLASS 1 E = 10'
		POLE EMBEDMENT (E)	11'				10'				11'				12'				
	100'	MINIMUM POLE CLASS	H-2	H-3	H-4	H-5	1	H-1	H-2	H-3	H-4	H-5	H-5	H-6	H-5	H-5	H-6		
		POLE EMBEDMENT (E)	12'				11'				12'				12'				
	150'	MINIMUM POLE CLASS	H-4	H-5	H-6		H-1	H-2	H-3	H-5	H-6				H-6				
		POLE EMBEDMENT (E)	12'				12'				12'				12'				
	200'	MINIMUM POLE CLASS	H-5	H-6			H-2	H-3	H-5										
		POLE EMBEDMENT (E)	12'				12'												

1. CCTV camera assembly or vehicle detection system
2. Overhead bundle consisting of a 3/8" ø messenger wire and overhead conductors and lashing wire.
3. Luminaire with mast arm
4. Pedestrian pushbutton
5. Signal face with 3 indications or single sheet sign panel (10 SQFT Max)
6. Riser with weather head as required
7. Pull box as required
8. Grounding as required
9. Single section flashing beacon or single sheet sign panel (4 SQFT Max)
10. Single sheet sign panel (4' x 4' Max) or signal face with 3 indications
11. Flashing beacon control assembly
12. NEMA 3R enclosure, 26"(W) x 56"(H) x 12"(D) Max dimensions. Max weight including batteries, 450 lbs
13. 25' SQFT Max total photovoltaic panels mounted as shown as required
14. 2-section 12" flashing beacon

NOTES:

1. In addition to other restrictions on maximum horizontal span, this horizontal span must not exceed 100'.
2. Cases 1N, 3N and 4N may substitute the attachments shown in Case 5N if the photovoltaic panel is not included.

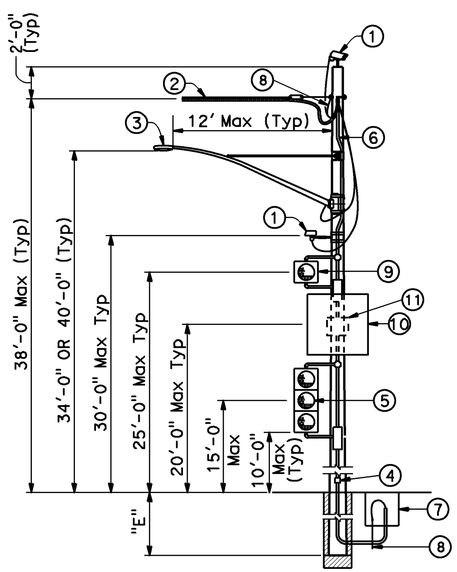

CASE 1N
POLE AT DEAD END WITH ATTACHMENTS
SEE NOTE 2

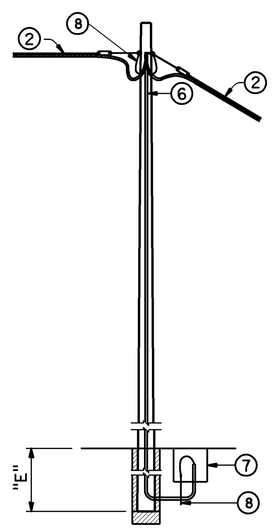

CASE 2N
POLE AT TANGENT WITHOUT ATTACHMENTS

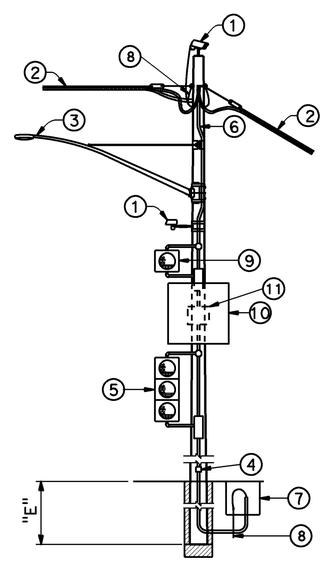

CASE 3N
POLE AT TANGENT OR CORNER WITH ATTACHMENTS
SEE NOTE 2

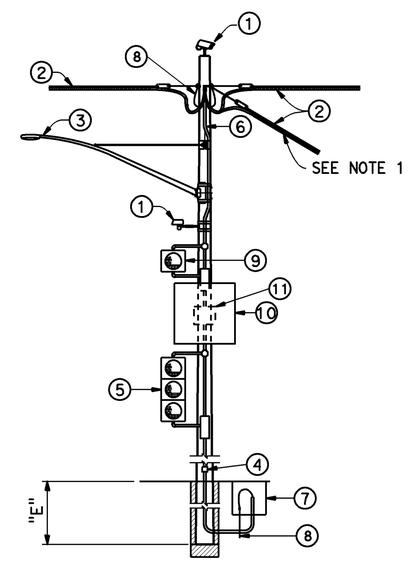

CASE 4N
POLE AT JUNCTION WITH ATTACHMENTS
SEE NOTE 2

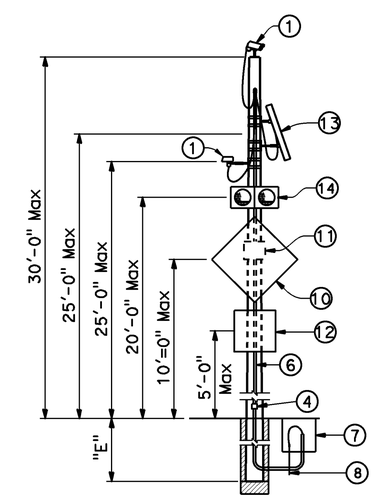

CASE 5N
POLE WITHOUT OVERHEAD BUNDLE WITH ATTACHMENTS

NO SCALE

BRANCH CHIEF: DAVID NEUMANN	DESIGN: BY VICTOR LOPEZ	CHECKED JOEL MAGANA	STATE OF CALIFORNIA DEPARTMENT OF TRANSPORTATION	DIVISION OF ENGINEERING SERVICES STRUCTURE DESIGN SPECIAL DESIGN BRANCH	BRIDGE NO. / POST MILE
	DETAILS: BY BOB EDWARDS	CHECKED JOEL MAGANA			
	QUANTITIES: BY X	CHECKED X			

TEMPORARY WOOD POLES
NON-GUYED - NO SIGNALS ON SPANS

SES-2

STRUCTURES DESIGN SPECIAL DESIGN SHEET (ENGLISH) (REV. 09-01-10)

ORIGINAL SCALE IN INCHES FOR REDUCED PLANS 0 1 2 3

UNIT: 3619
PROJECT NUMBER & PHASE: 0512000009
CONTRACT NO.: 05-1A7001

DISREGARD PRINTS BEARING EARLIER REVISION DATES

REVISION DATES

SHEET 2 OF 10

FILE => 0512000009uh002.dgn

USERNAME => s123239 DATE PLOTTED => 05-JUN-2014 TIME PLOTTED => 13:42

DIST	COUNTY	ROUTE	POST MILES TOTAL PROJECT	SHEET No.	TOTAL SHEETS
05	SLO	1	73.7/74.0	39	108

REGISTERED CIVIL ENGINEER 8-9-13 DATE

5-19-14
PLANS APPROVAL DATE

REGISTERED PROFESSIONAL ENGINEER VICTOR O. LOPEZ No. C61373 Exp. 6/30/15 CIVIL STATE OF CALIFORNIA

The State of California or its officers or agents shall not be responsible for the accuracy or completeness of electronic copies of this plan sheet.

LEGEND

- A — Wood Pole with Attachments
- —OH— Overhead Bundle
- Guy Anchor

POLE SELECTION TABLE

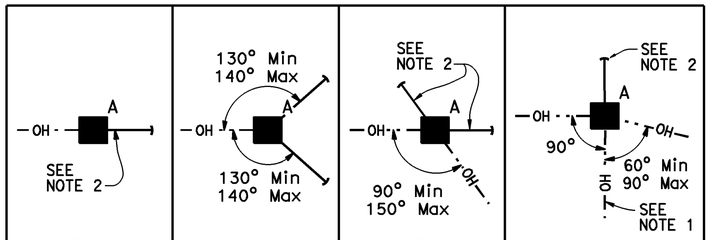

OVERHEAD BUNDLE HORIZONTAL SPAN (Max)		MAXIMUM d_p	1"	1.5"	2.0"	2.5"	1"	1.5"	2.0"	2.5"	1"	1.5"	2.0"	2.5"	1"	1.5"	2.0"	2.5"
	50′	MINIMUM POLE CLASS	H-1	H-1	H-2	H-2	1	1	1	1	1	1	1	H-1	H-2	H-2	H-3	H-3
		POLE EMBEDMENT (E)	10′				9′				9′				11′			
	100′	MINIMUM POLE CLASS	H-2	H-2	H-3	H-4	1	H-1	H-1	H-1	1	H-1	H-2	H-2	H-3	H-3	H-4	H-4
		POLE EMBEDMENT (E)	11′				9′				9′				12′			
	150′	MINIMUM POLE CLASS	H-3	H-3	H-4	H-5	H-1	H-1	H-2	H-2	H-2	H-3	H-3	H-3	H-4	H-5	H-5	H-6
		POLE EMBEDMENT (E)	11′				9′				9′				12′			
	200′	MINIMUM POLE CLASS	H-4	H-4	H-5	H-6	H-1	H-2	H-3	H-3	H-3	H-3	H-4	H-4	H-5	H-6		
		POLE EMBEDMENT (E)	11′				9′				9′				12′			

1. CCTV camera assembly or vehicle detection system
2. Overhead bundle consisting of a ⅜" ø messenger wire and overhead conductors and lashing wire.
3. Luminaire with mast arm
4. Pedestrian pushbutton
5. Signal face with 3 indications or single sheet sign panel (10 SQFT Max)
6. Riser with weather head as required
7. Pull box as required
8. Grounding as required
9. Single section flashing beacon or single sheet sign panel (4 SQFT Max)
10. Single sheet sign panel (4′ x 4′ Max) or signal face with 3 indications
11. Flashing beacon control assembly
12. ½" ø guy wire with white guy marker and strain insulator (for anchorage see "TEMPORARY WOOD POLES-DETAILS No. 2" sheet)

NOTES:

1. In addition to other restrictions on maximum horizontal span, this horizontal span must not exceed 100′.
2. Guy wire in line with opposing span ± 5°.

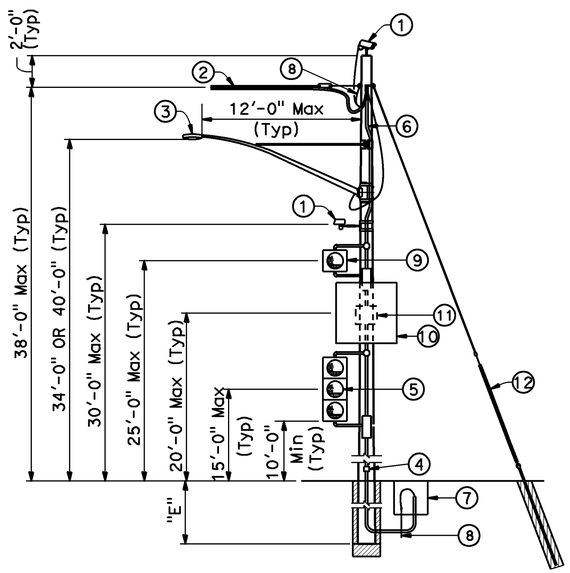

CASE 1G
POLE AT DEAD END WITH ATTACHMENTS

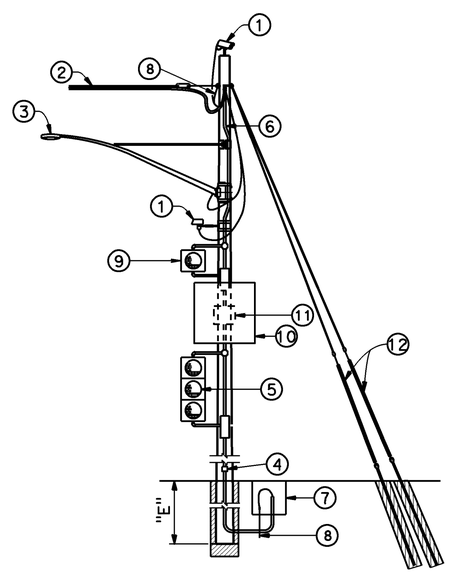

CASE 2G
POLE AT DEAD END WITH ATTACHMENTS

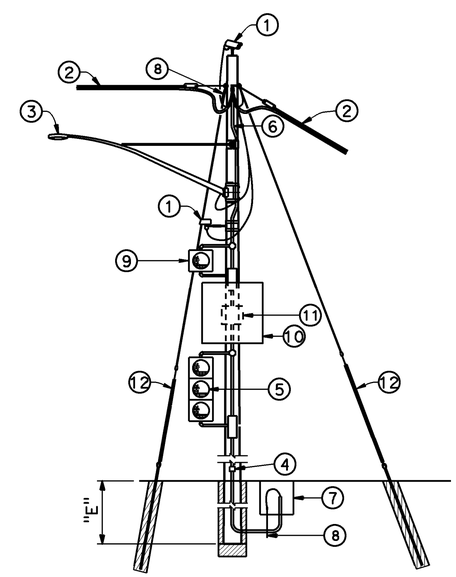

CASE 3G
POLE AT CORNER WITH ATTACHMENTS

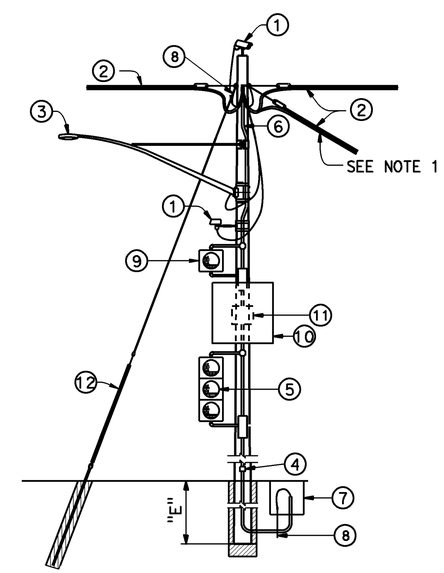

CASE 4G
POLE AT JUNCTION WITH ATTACHMENTS

NO SCALE

BRANCH CHIEF	DAVID NEUMANN		
DESIGN	BY VICTOR LOPEZ	CHECKED JOEL MAGANA	
DETAILS	BY BOB EDWARDS	CHECKED JOEL MAGANA	
QUANTITIES	BY X	CHECKED X	

STATE OF CALIFORNIA
DEPARTMENT OF TRANSPORTATION

DIVISION OF ENGINEERING SERVICES
STRUCTURE DESIGN
SPECIAL DESIGN BRANCH

BRIDGE NO.
POST MILE

TEMPORARY WOOD POLES
GUYED - NO SIGNALS ON SPANS

SES-3

STRUCTURES DESIGN SPECIAL DESIGN SHEET (ENGLISH) (REV. 09-01-10)

ORIGINAL SCALE IN INCHES FOR REDUCED PLANS 0 1 2 3

UNIT: 3619
PROJECT NUMBER & PHASE: 0512000009
CONTRACT NO.: 05-1A7001

DISREGARD PRINTS BEARING EARLIER REVISION DATES

REVISION DATES

SHEET 3 OF 10

FILE => 0512000009uh003.dgn

USERNAME => s123239 DATE PLOTTED => 05-JUN-2014 TIME PLOTTED => 13:42

DIST	COUNTY	ROUTE	POST MILES TOTAL PROJECT	SHEET No.	TOTAL SHEETS
05	SLO	1	73.7/74.0	40	108

REGISTERED CIVIL ENGINEER — DATE 8-9-13

5-19-14
PLANS APPROVAL DATE

REGISTERED PROFESSIONAL ENGINEER VICTOR O. LOPEZ No. C61373 Exp. 6/30/15 CIVIL STATE OF CALIFORNIA

The State of California or its officers or agents shall not be responsible for the accuracy or completeness of electronic copies of this plan sheet.

LEGEND

- A — Wood Pole with Attachments
- —TS— Overhead Bundle with Signal Faces (See Note 2)
- —OH— Overhead Bundle
- Guy Anchor

POLE SELECTION TABLE

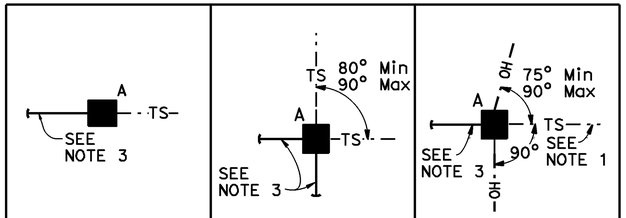

			CASE 1GT			CASE 2GT			CASE 3GT		
		MAXIMUM dp	1"	1.5"	2.0"	1"	1.5"	2.0"	1"	1.5"	2.0"
OVERHEAD BUNDLE HORIZONTAL SPAN Max	50'	MINIMUM POLE CLASS	H-2	H-3	H-3	H-2	H-2	H-2	H-3	H-4	H-4
		POLE EMBEDMENT (E)	10'			10'			11'		
	100'	MINIMUM POLE CLASS	H-3	H-3	H-4	H-2	H-3	H-3	H-4	H-4	H-5
		POLE EMBEDMENT (E)	11'			10'			11'		
	150'	MINIMUM POLE CLASS	H-3	H-4	H-4	H-2	H-3	H-4	H-4	H-5	H-5
		POLE EMBEDMENT (E)	11'			10'			11'		

NOTES:

1. In addition to other restrictions on maximum horizontal span, this horizontal span must not exceed 100'.
2. Maximum of 2 SIGNAL FACES per span within the hatched regions indicated by "LOCATION OF SIGNAL FACES".
3. Guy wire in line with opposing span ± 5°.

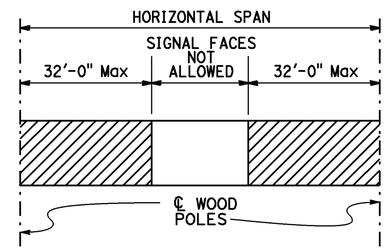

LOCATION OF SIGNAL FACES

1. CCTV camera assembly or vehicle detection system
2. Overhead bundle consisting of 3/8" ø messenger wire and overhead conductors and lashing wire
3. Luminaire with mast arm
4. Pedestrian pushbutton
5. Signal face with 3 indications or single sheet sign panel (10 SQFT Max)
6. Riser with weather head as required
7. Pull box as required
8. Grounding as required
9. 3/8" ø tether wire
10. 1/2" ø guy wire with white guy marker and strain insulator. For anchorage see "TEMPORARY WOOD POLES-DETAILS No. 2" sheet
11. Pedestrian signal head

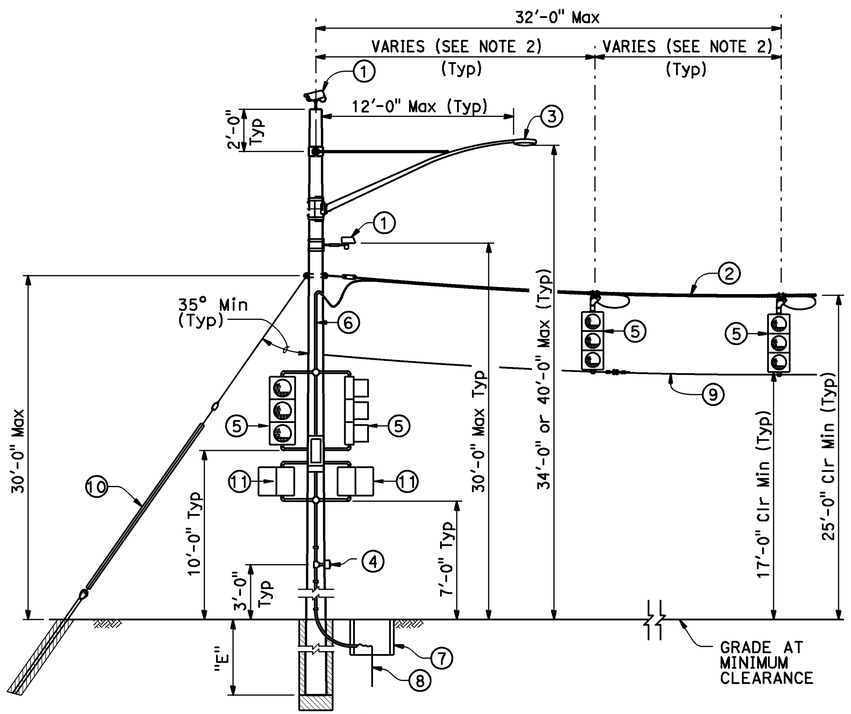

CASE 1GT
POLE AT DEAD END WITH ATTACHMENTS

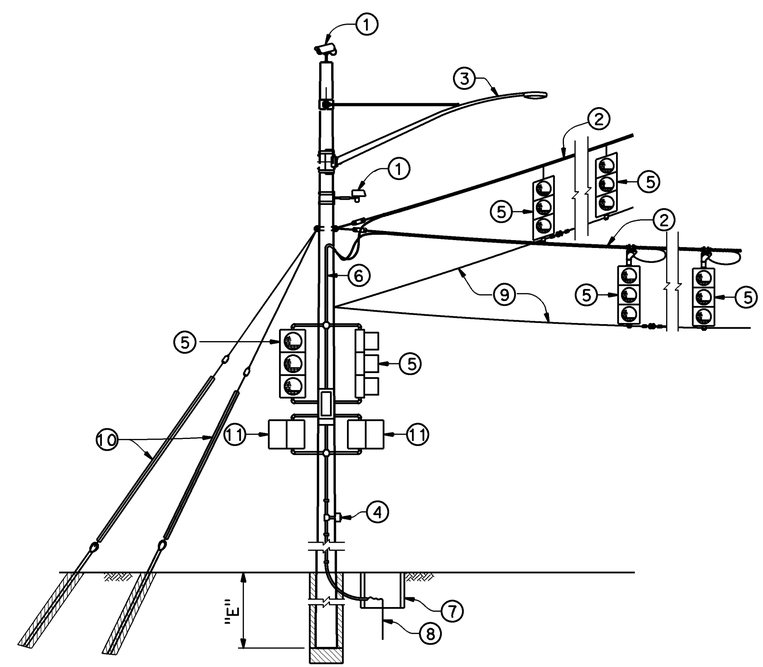

CASE 2GT
POLE AT CORNER WITH ATTACHMENTS

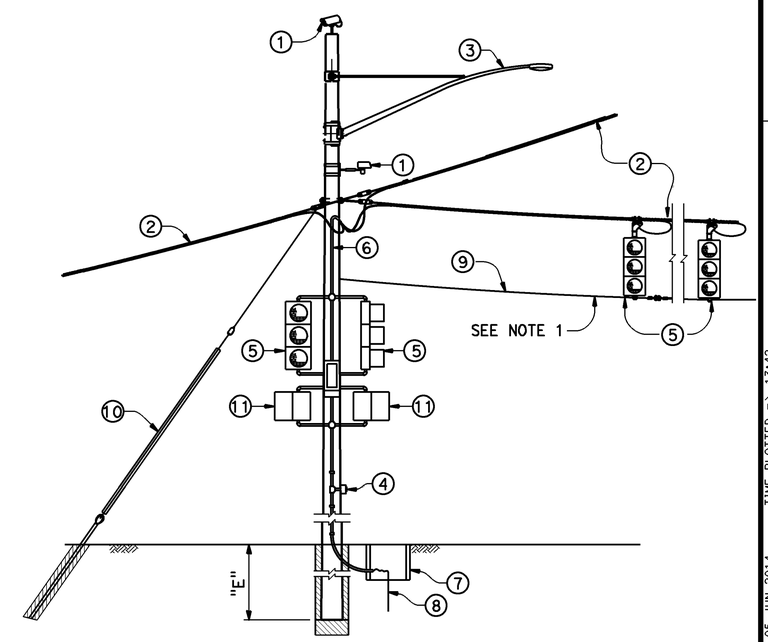

CASE 3GT
POLE AT JUNCTION WITH ATTACHMENTS

NO SCALE

BRANCH CHIEF	DAVID NEUMANN	DESIGN	BY VICTOR LOPEZ	CHECKED JOEL MAGANA
		DETAILS	BY BOB EDWARDS	CHECKED JOEL MAGANA
		QUANTITIES	BY X	CHECKED X

STATE OF CALIFORNIA DEPARTMENT OF TRANSPORTATION

DIVISION OF ENGINEERING SERVICES STRUCTURE DESIGN SPECIAL DESIGN BRANCH

BRIDGE NO. / POST MILE

TEMPORARY WOOD POLES GUYED-WITH SIGNAL FACES ON SPANS

SES-4

STRUCTURES DESIGN SPECIAL DESIGN SHEET (ENGLISH) (REV. 09-01-10)

ORIGINAL SCALE IN INCHES FOR REDUCED PLANS 0 1 2 3

UNIT: 3619
PROJECT NUMBER & PHASE: 0512000009
CONTRACT NO.: 05-1A7001

DISREGARD PRINTS BEARING EARLIER REVISION DATES

REVISION DATES

SHEET 4 OF 10

FILE => 0512000009uh004.dgn

USERNAME => s123239 DATE PLOTTED => 05-JUN-2014 TIME PLOTTED => 13:42

DIST	COUNTY	ROUTE	POST MILES TOTAL PROJECT	SHEET No.	TOTAL SHEETS
05	SLO	1	73.7/74.0	41	108

REGISTERED CIVIL ENGINEER 8-9-13 DATE

5-19-14
PLANS APPROVAL DATE

REGISTERED PROFESSIONAL ENGINEER VICTOR O. LOPEZ No. C61373 Exp. 6/30/15 CIVIL STATE OF CALIFORNIA

The State of California or its officers or agents shall not be responsible for the accuracy or completeness of electronic copies of this plan sheet.

LEGEND

A — Wood Pole with Attachments

—·TS—· — Overhead Bundle with Signal Faces (See Note 1)

POLE SELECTION TABLE

			CASE 1NT		
OVERHEAD BUNDLE HORIZONTAL SPAN (Max)	75'	MAXIMUM dp	1"	1.5"	2.0"
		MINIMUM POLE CLASS	H-5	H-6	H-6
		POLE EMBEDMENT (E)	13'		

1. CCTV camera assembly or vehicle detection system
2. Overhead bundle consisting of a 3/8" ø messenger wire and overhead conductors and lashing wire
3. Luminaire with mast arm
4. Pedestrian pushbutton
5. Signal face with 3 indications or single sheet sign panel (10 SQFT Max)
6. Riser with weather head as required
7. Pull box as required
8. Grounding as required
9. 3/8" ø tether wire
10. Pedestrian signal head

NOTES:

1. Maximum of 2 SIGNAL FACES per span within the hatched regions indicated by "LOCATION OF SIGNAL FACES".

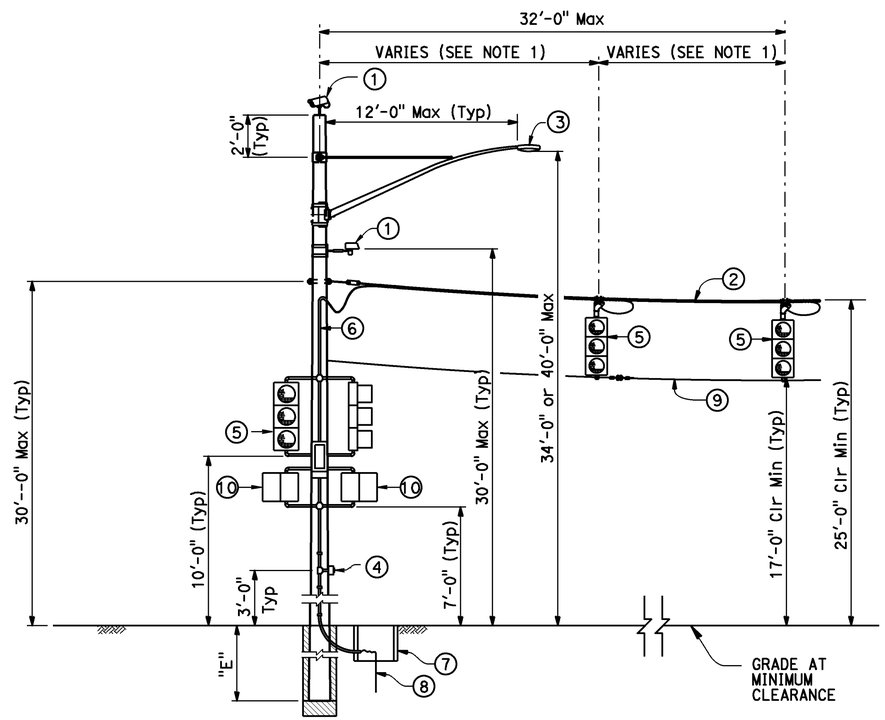

CASE 1NT

POLE AT DEAD END WITH ATTACHMENTS

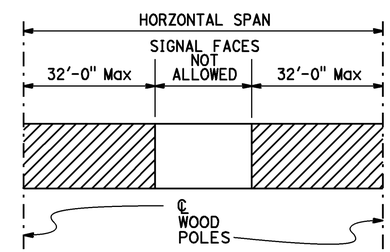

LOCATION OF SIGNAL FACES

NO SCALE

BRANCH CHIEF DAVID NEUMANN	DESIGN	BY VICTOR LOPEZ	CHECKED JOEL MAGANA
	DETAILS	BY BOB EDWARDS	CHECKED JOEL MAGANA
	QUANTITIES	BY X	CHECKED X

STATE OF CALIFORNIA DEPARTMENT OF TRANSPORTATION

DIVISION OF ENGINEERING SERVICES STRUCTURE DESIGN SPECIAL DESIGN BRANCH

BRIDGE NO. / POST MILE

TEMPORARY WOOD POLES NON-GUYED-WITH SIGNAL FACES ON SPAN

SES-5

STRUCTURES DESIGN SPECIAL DESIGN SHEET (ENGLISH) (REV. 09-01-10)

ORIGINAL SCALE IN INCHES FOR REDUCED PLANS 0 1 2 3

UNIT: 3619
PROJECT NUMBER & PHASE: 0512000009
CONTRACT NO.: 05-1A7001

DISREGARD PRINTS BEARING EARLIER REVISION DATES

REVISION DATES

SHEET 5 OF 10

FILE => 0512000009uh005.dgn

USERNAME => s123239 DATE PLOTTED => 05-JUN-2014 TIME PLOTTED => 13:42

DIST	COUNTY	ROUTE	POST MILES TOTAL PROJECT	SHEET No.	TOTAL SHEETS
05	SLO	1	73.7/74.0	42	108

REGISTERED CIVIL ENGINEER 8-9-13 DATE

5-19-14
PLANS APPROVAL DATE

REGISTERED PROFESSIONAL ENGINEER VICTOR O. LOPEZ No. C61373 Exp. 6/30/15 CIVIL STATE OF CALIFORNIA

The State of California or its officers or agents shall not be responsible for the accuracy or completeness of electronic copies of this plan sheet.

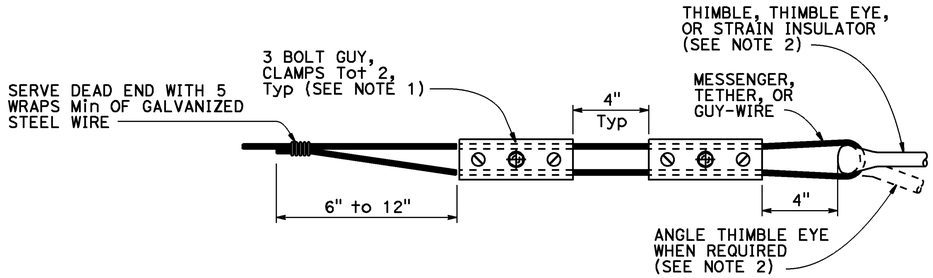

ALTERNATIVE TERMINATION OF MESSENGER WIRES USING GUY CLAMPS

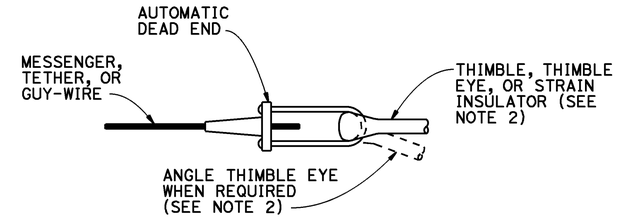

TERMINATION OF WIRES USING AUTOMATIC DEAD END

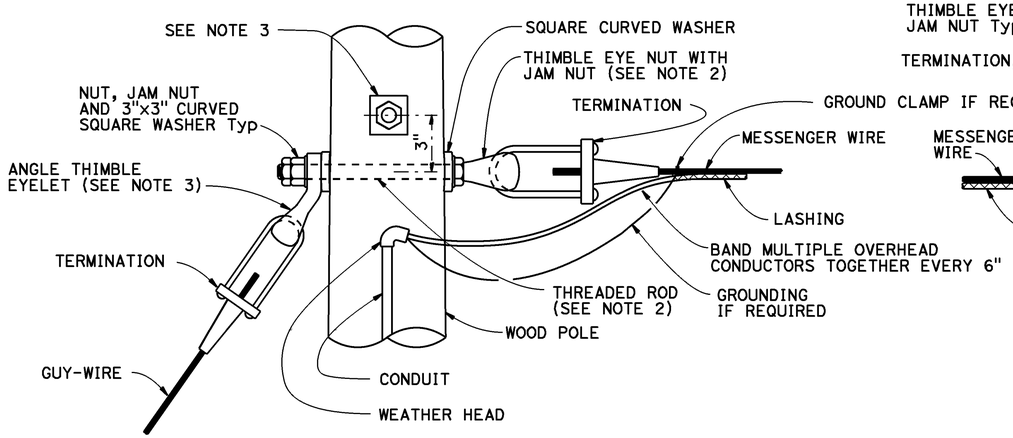

POLE AT DEAD END WITH GUY-WIRE CONNECTION

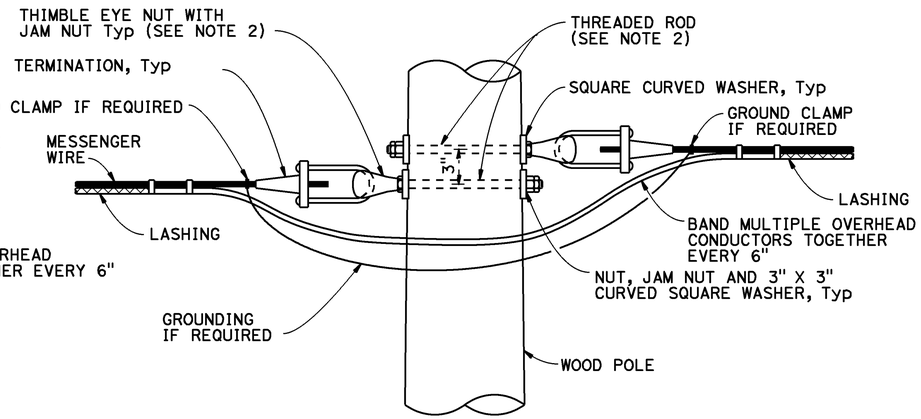

POLE AT TANGENT OR CORNER CONNECTION

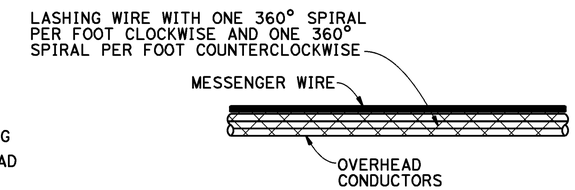

DOUBLE LASHING DETAIL

USE IF d_p IS GREATER THAN 1½"

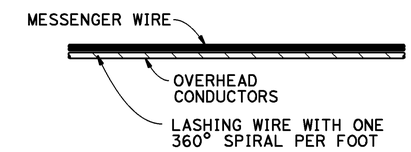

TYPICAL LASHING DETAIL

USE IF d_p IS 1½" OR LESS

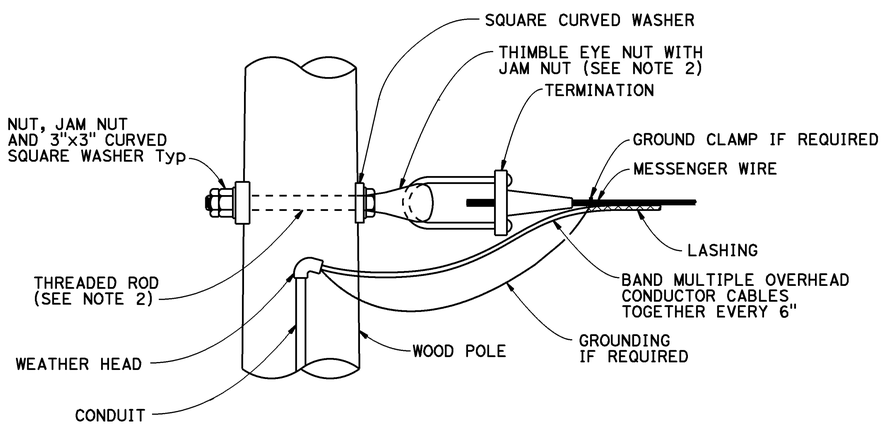

POLE AT DEAD END CONNECTION

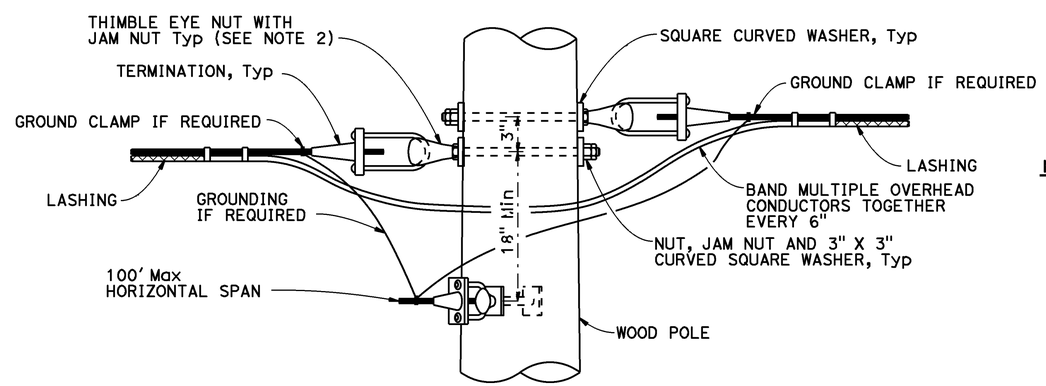

POLE AT JUNCTION CONNECTION

NOTES:

1. For guy wires use 3 clamps.
2. Use ⅝" ø except ¾" ø at guyed wires
3. Install additional angle thimble eyelet at poles with two guy wires.

NO SCALE

BRANCH CHIEF DAVID NEUMANN	DESIGN	BY VICTOR LOPEZ	CHECKED JOEL MAGANA
	DETAILS	BY BOB EDWARDS	CHECKED JOEL MAGANA
	QUANTITIES	BY X	CHECKED X

STATE OF CALIFORNIA DEPARTMENT OF TRANSPORTATION

DIVISION OF ENGINEERING SERVICES STRUCTURE DESIGN SPECIAL DESIGN BRANCH

BRIDGE NO. / POST MILE

TEMPORARY WOOD POLES
DETAILS No. 1

SES-6

STRUCTURES DESIGN SPECIAL DESIGN SHEET (ENGLISH) (REV. 09-01-10)

ORIGINAL SCALE IN INCHES FOR REDUCED PLANS 0 1 2 3

UNIT: 3619
PROJECT NUMBER & PHASE: 0512000009
CONTRACT NO.: 05-1A7001

DISREGARD PRINTS BEARING EARLIER REVISION DATES

REVISION DATES

SHEET 6 OF 10

FILE => 0512000009uh006.dgn

USERNAME => s123239 DATE PLOTTED => 05-JUN-2014 TIME PLOTTED => 13:42

DIST	COUNTY	ROUTE	POST MILES TOTAL PROJECT	SHEET No.	TOTAL SHEETS
05	SLO	1	73.7/74.0	43	108

REGISTERED CIVIL ENGINEER 8-9-13 DATE

5-19-14
PLANS APPROVAL DATE

REGISTERED PROFESSIONAL ENGINEER VICTOR O. LOPEZ No. C61373 Exp. 6/30/15 CIVIL STATE OF CALIFORNIA

The State of California or its officers or agents shall not be responsible for the accuracy or completeness of electronic copies of this plan sheet.

NOTES:

1. Minimum allowable tension capacity "Qa" = 8,900 lbs.
2. Minimum installation torque "T" = 1780 lbs-ft.
3. Helical anchor detail may be used in place of expanded steel anchors.

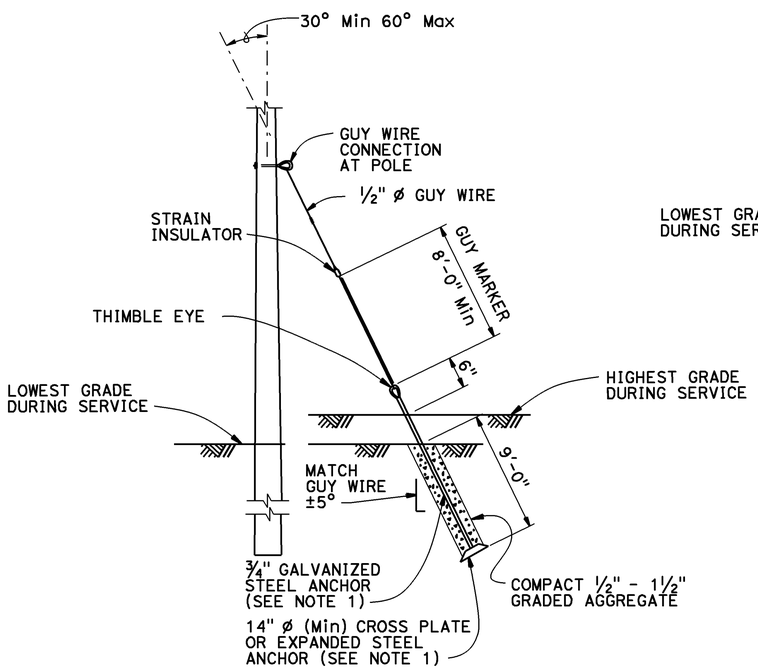

EXPANDED STEEL ANCHOR DETAIL

SEE NOTE 3

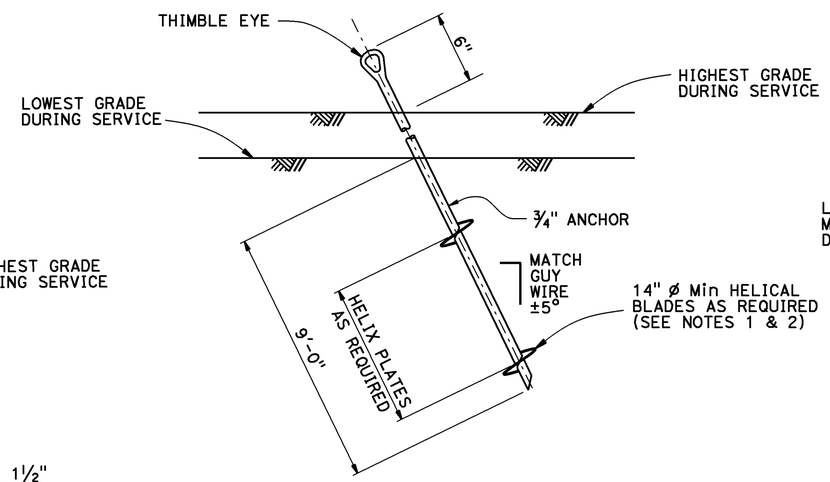

HELICAL ANCHOR DETAIL

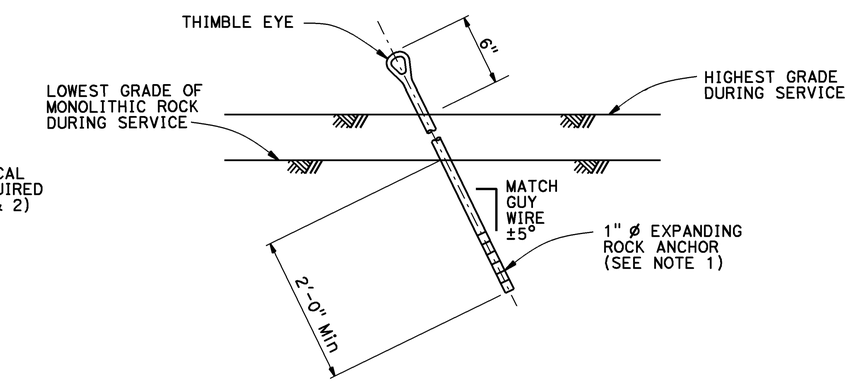

EXPANDING ROCK ANCHOR DETAIL

NO SCALE

BRANCH CHIEF DAVID NEUMANN	DESIGN	BY VICTOR LOPEZ	CHECKED JOEL MAGANA	STATE OF CALIFORNIA DEPARTMENT OF TRANSPORTATION	DIVISION OF ENGINEERING SERVICES STRUCTURE DESIGN SPECIAL DESIGN BRANCH
	DETAILS	BY BOB EDWARDS	CHECKED JOEL MAGANA		
	QUANTITIES	BY X	CHECKED X		

BRIDGE NO.
POST MILE

TEMPORARY WOOD POLES
DETAILS No. 2

SES-7

STRUCTURES DESIGN SPECIAL DESIGN SHEET (ENGLISH) (REV. 09-01-10)

ORIGINAL SCALE IN INCHES FOR REDUCED PLANS 0 1 2 3

UNIT: 3619
PROJECT NUMBER & PHASE: 0512000009
CONTRACT NO.: 05-1A7001

DISREGARD PRINTS BEARING EARLIER REVISION DATES

REVISION DATES

SHEET 7 OF 10

FILE => 0512000009uh007.dgn

USERNAME => s123239 DATE PLOTTED => 05-JUN-2014 TIME PLOTTED => 13:42

DIST	COUNTY	ROUTE	POST MILES TOTAL PROJECT	SHEET No.	TOTAL SHEETS
05	SLO	1	73.7/74.0	44	108

REGISTERED CIVIL ENGINEER 8-9-13 DATE

5-19-14
PLANS APPROVAL DATE

REGISTERED PROFESSIONAL ENGINEER VICTOR O. LOPEZ No. C61373 Exp. 6/30/15 CIVIL STATE OF CALIFORNIA

The State of California or its officers or agents shall not be responsible for the accuracy or completeness of electronic copies of this plan sheet.

NOTES:

1. Luminaire mast arms must be in compliance with Standard Plan ES-6D with noted modifications.
2. Verify pole dimensions at tie-rod attachment height. Fabricate 8" flat bar with "L" Dimension to maintain an open gap between flanges in finished installation.
3. Not all screw heads and bolt heads are shown for clarity.
4. Mast arm not shown for clarity.

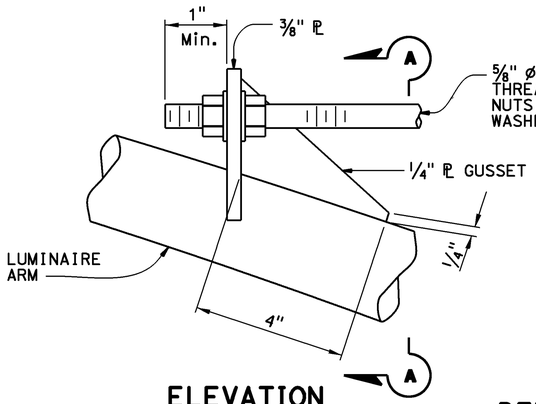

ELEVATION

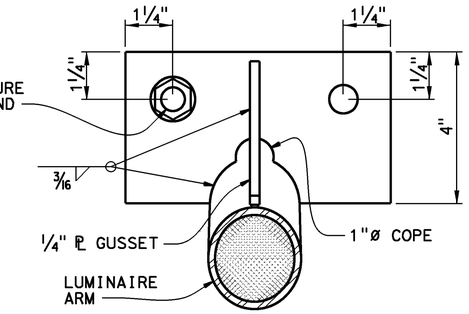

SECTION A-A

DETAIL A
TIE-ROD AT LUMINAIRE ARM

NO SCALE

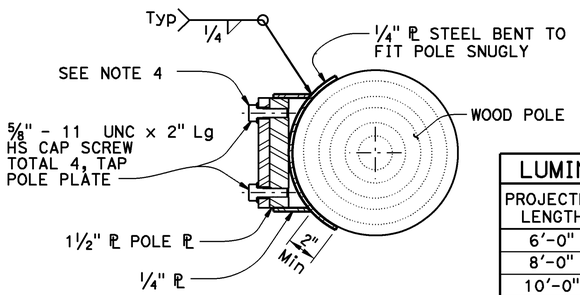

SECTION E-E

LUMINAIRE MAST ARM DATA			
PROJECTED LENGTH	N RISE	Min OD AT POLE	NOMINAL THICKNESS
6'-0"	2'-0"±	3 1/4"	0.1196"
8'-0"	2'-6"±	3 1/2"	
10'-0"	3'-3"±	3 7/8"	
12'-0"	4'-3"±		

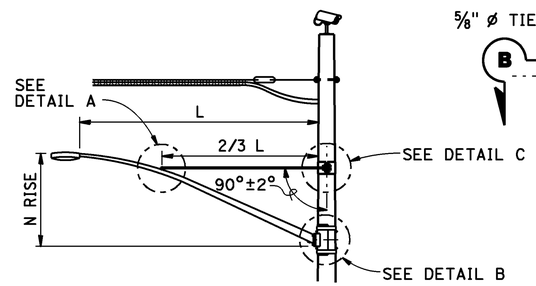

LUMINAIRE MAST ARM

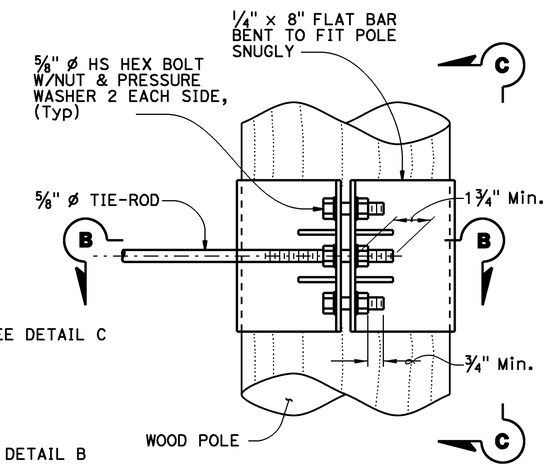

ELEVATION

NOTE:
Not all screw and bolt heads shown for clarity.

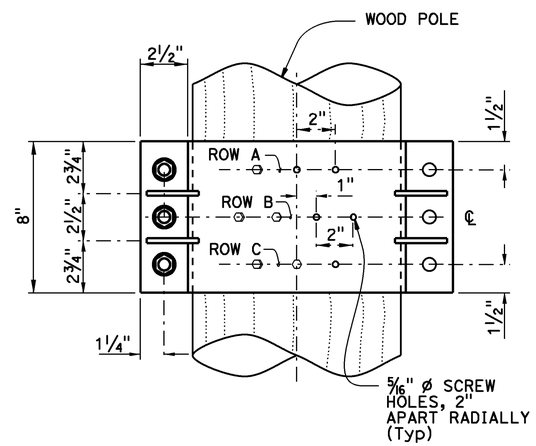

VIEW C-C

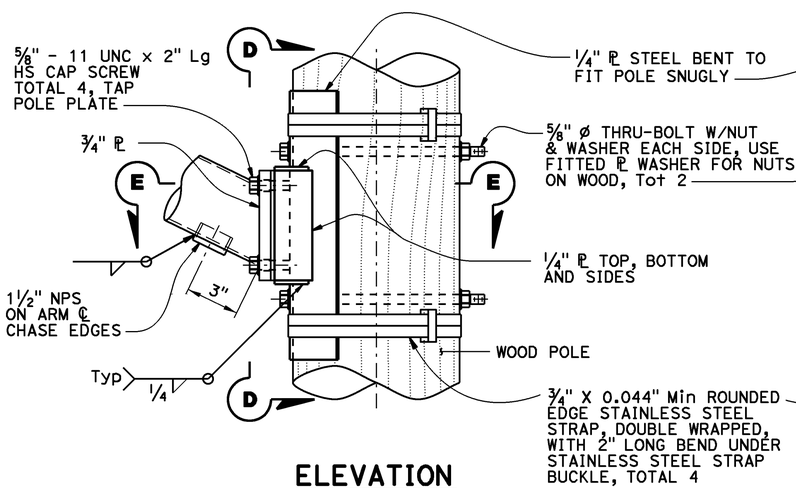

ELEVATION

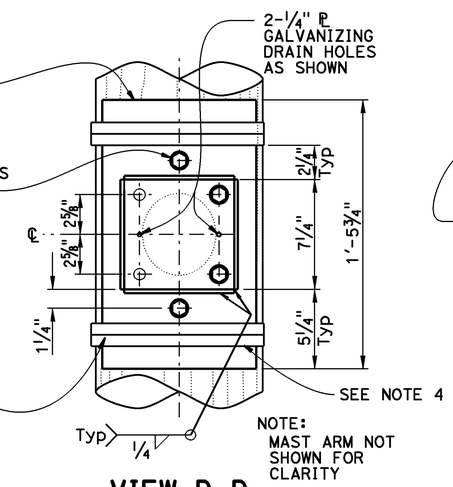

VIEW D-D

DETAIL B
ARM CONNECTION DETAILS

NO SCALE

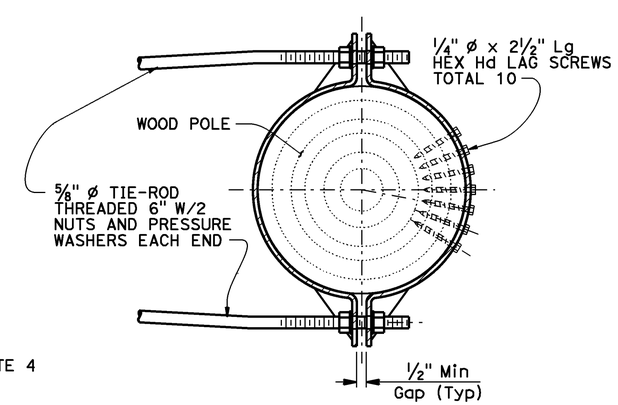

SECTION B-B

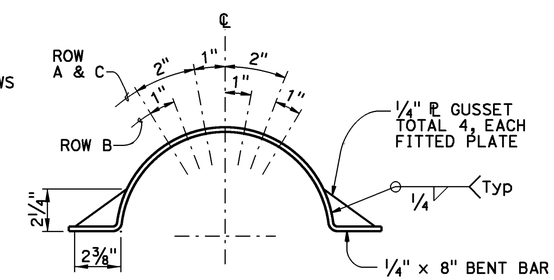

LAG SCREW AND GUSSET PLATE LAYOUT

DETAIL C
TIE-ROD AT POLE

NO SCALE

BRANCH CHIEF DAVID NEUMANN	DESIGN	BY VICTOR LOPEZ	CHECKED JOEL MAGANA	STATE OF CALIFORNIA DEPARTMENT OF TRANSPORTATION	DIVISION OF ENGINEERING SERVICES STRUCTURE DESIGN SPECIAL DESIGN BRANCH
	DETAILS	BY BOB EDWARDS	CHECKED JOEL MAGANA		BRIDGE NO. / POST MILE
	QUANTITIES	BY X	CHECKED X		

TEMPORARY WOOD POLES
DETAILS No. 3

SES-8

STRUCTURES DESIGN SPECIAL DESIGN SHEET (ENGLISH) (REV. 09-01-10)

ORIGINAL SCALE IN INCHES FOR REDUCED PLANS 0 1 2 3

UNIT: 3619
PROJECT NUMBER & PHASE: 0512000009
CONTRACT NO.: 05-1A7001

DISREGARD PRINTS BEARING EARLIER REVISION DATES

REVISION DATES

SHEET 8 OF 10

FILE => 0512000009uh008.dgn

USERNAME => s123239 DATE PLOTTED => 05-JUN-2014 TIME PLOTTED => 13:42

DIST	COUNTY	ROUTE	POST MILES TOTAL PROJECT	SHEET No.	TOTAL SHEETS
05	SLO	1	73.7/74.0	45	108

REGISTERED CIVIL ENGINEER 8-9-13 DATE

5-19-14
PLANS APPROVAL DATE

REGISTERED PROFESSIONAL ENGINEER VICTOR O. LOPEZ No. C61373 Exp. 6/30/15 CIVIL STATE OF CALIFORNIA

The State of California or its officers or agents shall not be responsible for the accuracy or completeness of electronic copies of this plan sheet.

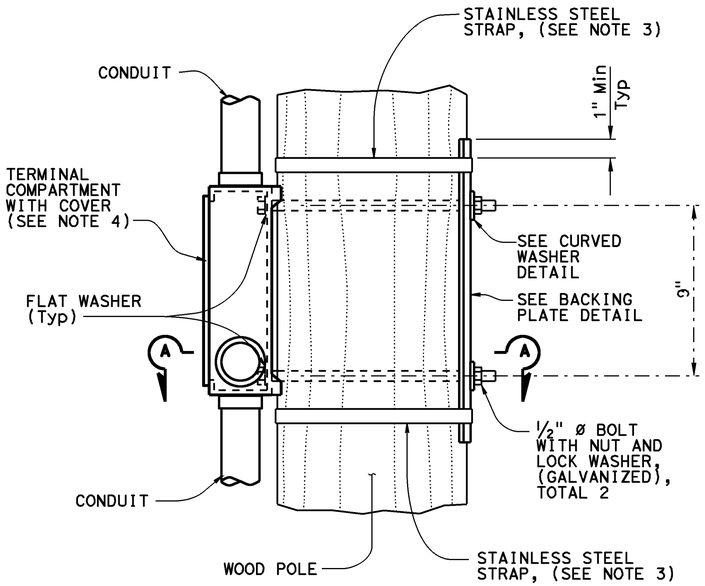

ELEVATION

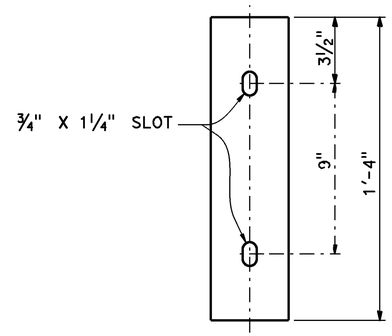

ELEVATION

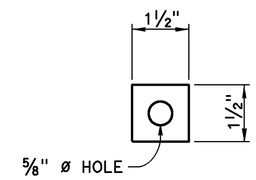

ELEVATION

PLAN

BACKING PLATE DETAIL

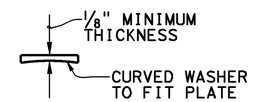

PLAN

CURVED WASHER DETAIL

NOTES:

1. Verify pole dimensions at terminal compartment for fabrication of backing plate and curved washer.
2. Backing plate to be galvanized after fabrication.
3. 3/4" x 0.044" minimum, rounded edge stainless steel straps, double wrapped with 2" long bend under stainless steel strap buckle.
4. For details not shown see Standard Plan ES-4D.

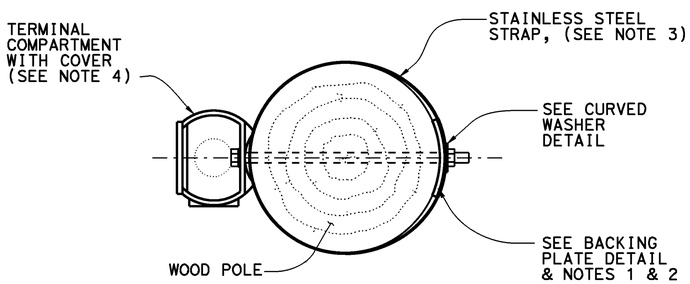

SECTION A-A

SIDE MOUNTING TERMINAL COMPARTMENT

NO SCALE

BRANCH CHIEF DAVID NEUMANN

	BY	CHECKED
DESIGN	VICTOR LOPEZ	JOEL MAGANA
DETAILS	BOB EDWARDS	JOEL MAGANA
QUANTITIES	X	X

STATE OF CALIFORNIA DEPARTMENT OF TRANSPORTATION

DIVISION OF ENGINEERING SERVICES STRUCTURE DESIGN SPECIAL DESIGN BRANCH

BRIDGE NO. POST MILE

TEMPORARY WOOD POLES DETAILS No. 4

SES-9

STRUCTURES DESIGN SPECIAL DESIGN SHEET (ENGLISH) (REV. 09-01-10)

ORIGINAL SCALE IN INCHES FOR REDUCED PLANS 0 1 2 3

UNIT: 3619
PROJECT NUMBER & PHASE: 0512000009
CONTRACT NO.: 05-1A7001

DISREGARD PRINTS BEARING EARLIER REVISION DATES

REVISION DATES

SHEET 9 OF 10

FILE => 0512000009uh009.dgn

USERNAME => s123239 DATE PLOTTED => 05-JUN-2014 TIME PLOTTED => 13:42

DIST	COUNTY	ROUTE	POST MILES TOTAL PROJECT	SHEET No.	TOTAL SHEETS
05	SLO	1	73.7/74.0	46	108

REGISTERED CIVIL ENGINEER 8-9-13 DATE

5-19-14
PLANS APPROVAL DATE

REGISTERED PROFESSIONAL ENGINEER VICTOR O. LOPEZ No. C61373 Exp. 6/30/15 CIVIL STATE OF CALIFORNIA

The State of California or its officers or agents shall not be responsible for the accuracy or completeness of electronic copies of this plan sheet.

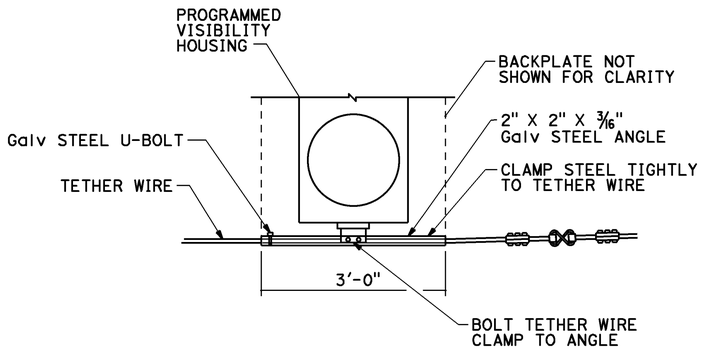

TETHER WIRE ATTACHMENT FOR PROGRAMMED VISIBILITY SIGNAL FACE

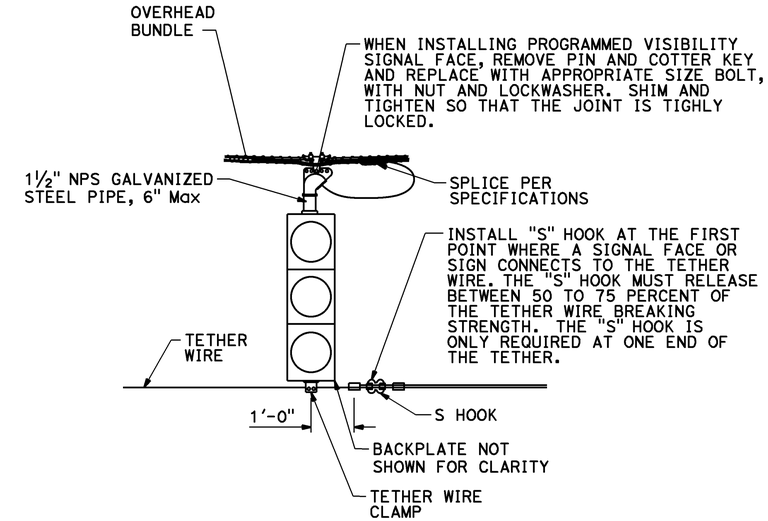

SIGNAL FACE SUPPORT

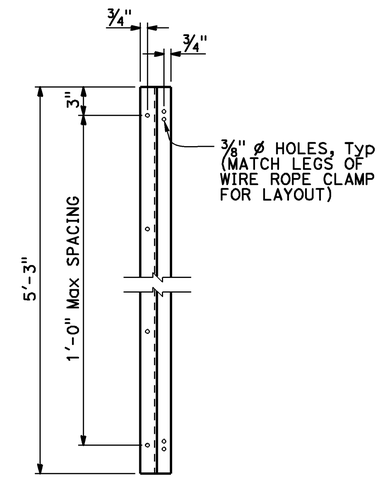

Z-BAR ELEVATION

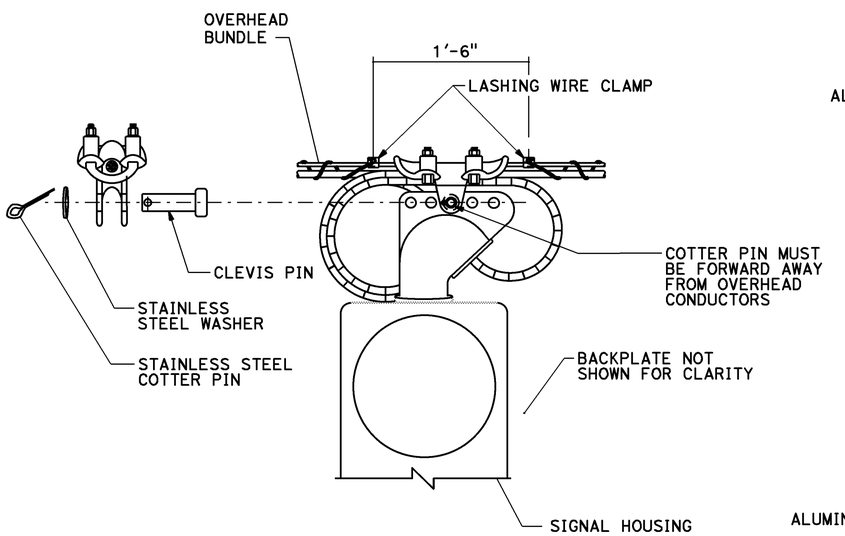

MESSENGER WIRE CLAMP COTTER PIN DETAIL

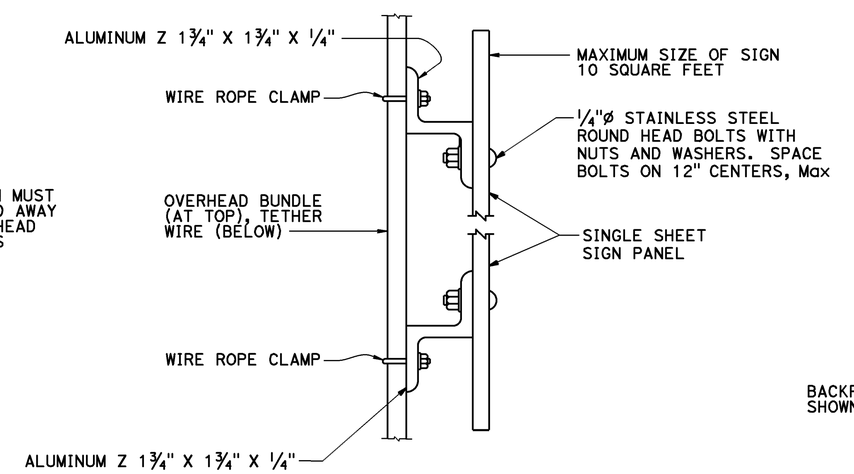

THE OVERLAPPED CONNECTION OF ADJUSTABLE HANGERS MUST USE A MINIMUM OF 2 BOLTS WITH A MINIMUM SPACING BETWEEN BOLTS OF 2"

SIGN MOUNTING DETAIL

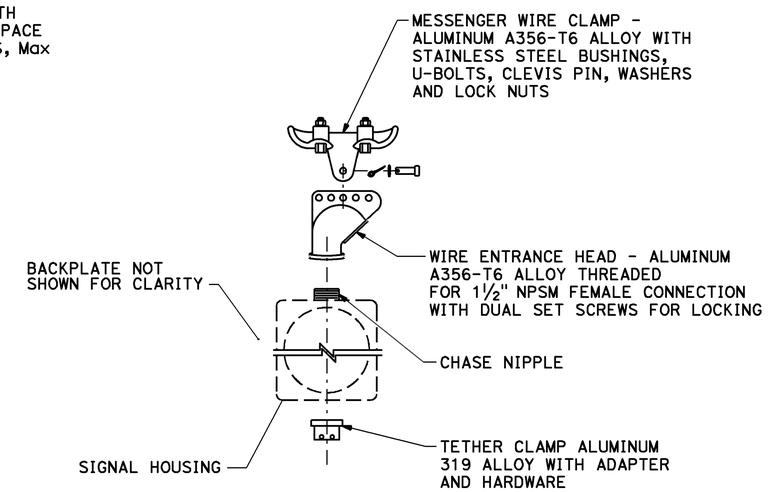

SIGNAL FACE SUPPORT EXPLODED VIEW

NO SCALE

BRANCH CHIEF DAVID NEUMANN	DESIGN	BY VICTOR LOPEZ	CHECKED JOEL MAGANA
	DETAILS	BY BOB EDWARDS	CHECKED JOEL MAGANA
	QUANTITIES	BY X	CHECKED X

STATE OF CALIFORNIA
DEPARTMENT OF TRANSPORTATION

DIVISION OF ENGINEERING SERVICES
STRUCTURE DESIGN
SPECIAL DESIGN BRANCH

BRIDGE NO.
POST MILE

TEMPORARY WOOD POLES
DETAILS No. 5

SES-10

STRUCTURES DESIGN SPECIAL DESIGN SHEET (ENGLISH) (REV. 09-01-10)

ORIGINAL SCALE IN INCHES FOR REDUCED PLANS 0 1 2 3

UNIT: 3619
PROJECT NUMBER & PHASE: 0512000009
CONTRACT NO.: 05-1A7001

DISREGARD PRINTS BEARING EARLIER REVISION DATES

REVISION DATES

SHEET 10 OF 10

FILE => 0512000009uh010.dgn

USERNAME => s123239 DATE PLOTTED => 05-JUN-2014 TIME PLOTTED => 13:42

M

Maint	MAINTENANCE
Max	MAXIMUM
MB	METAL BEAM
MBB	METAL BEAM BARRIER
MBGR	METAL BEAM GUARD RAILING
Med	MEDIAN
MGS	MIDWEST GUARDRAIL SYSTEM
MH	MANHOLE
Min	MINIMUM
Misc	MISCELLANEOUS
Misc I & S	MISCELLANEOUS IRON AND STEEL
Mkr	MARKER
Mod	MODIFIED,
	MODIFY
Mon	MONUMENT
MP	METAL PLATE
MPGR	METAL PLATE GUARD RAILING
MR	MOVEMENT RATING
MSE	MECHANICALLY STABILIZED EMBANKMENT
Mt	MOUNTAIN, MOUNT
Mtl	MATERIAL
MVP	MAINTENANCE VEHICLE PULLOUT

N

N	NORTH
NB	NORTHBOUND
No.	NUMBER (MUST HAVE PERIOD)
Nos.	NUMBERS (MUST HAVE PERIOD)
NPS	NOMINAL PIPE SIZE
NS	NEAR SIDE
NSP	NEW STANDARD PLAN
NTS	NOT TO SCALE

O

Oblr	OBLITERATE
OC	OVERCROSSING
OD	OUTSIDE DIAMETER
OF	OUTSIDE FACE
OG	ORIGINAL GROUND
OGAC	OPEN GRADED ASPHALT CONCRETE
OGFC	OPEN GRADED FRICTION COURSE
OH	OVERHEAD
OHWM	ORDINARY HIGH WATER MARK
O-O	OUT TO OUT
Opp	OPPOSITE
OSD	OVERSIDE DRAIN

P

P	PAGE
PAP	PERFORATED ALUMINUM PIPE
PB	PULL BOX
PC	POINT OF CURVATURE,
	PRECAST
PCC	POINT OF COMPOUND CURVE,
	PORTLAND CEMENT CONCRETE
PCMS	PORTABLE CHANGEABLE MESSAGE SIGN
PCP	PERFORATED CONCRETE PIPE,
	PRESTRESSED CONCRETE PIPE
PCVC	POINT OF COMPOUND VERTICAL CURVE
PEC	PERMIT TO ENTER AND CONSTRUCT
Ped	PEDESTRIAN
Ped OC	PEDESTRIAN OVERCROSSING
Ped UC	PEDESTRIAN UNDERCROSSING
Perm Mtl	PERMEABLE MATERIAL

P continued

PG	PROFILE GRADE
PI	POINT OF INTERSECTION
PJP	PARTIAL JOINT PENETRATION
Pkwy	PARKWAY
ℙ,PL	PLATE
P/L	PROPERTY LINE
PM	POST MILE,
	TIME FROM NOON TO MIDNIGHT
PN	PAVING NOTCH
POC	POINT OF HORIZONTAL CURVE
POT	POINT OF TANGENT
POVC	POINT OF VERTICAL CURVE
PP	PIPE PILE,
	PLASTIC PIPE,
	POWER POLE
PPL	PREFORMED PERMEABLE LINER
PPP	PERFORATED PLASTIC PIPE
PRC	POINT OF REVERSE CURVE
PRF	PAVEMENT REINFORCING FABRIC
PRVC	POINT OF REVERSE VERTICAL CURVE
PS&E	PLANS, SPECIFICATIONS AND ESTIMATES
PS, P/S	PRESTRESSED
PSP	PERFORATED STEEL PIPE
PT	POINT OF TANGENCY
PVC	POLYVINYL CHLORIDE
Pvmt	PAVEMENT

Q

Qty	QUANTITY

R

R	RADIUS
R & D	REMOVE AND DISPOSE
R & S	REMOVE AND SALVAGE
R/C	RATE OF CHANGE
RCA	REINFORCED CONCRETE ARCH
RCB	REINFORCED CONCRETE BOX
RCP	REINFORCED CONCRETE PIPE
RCPA	REINFORCED CONCRETE PIPE ARCH
Rd	ROAD
Reinf	REINFORCED,
	REINFORCEMENT,
	REINFORCING
Rel	RELOCATE
Repl	REPLACEMENT
Ret	RETAINING
Rev	REVISED, REVISION
Rdwy	ROADWAY
RHMA	RUBBERIZED HOT MIX ASPHALT
Riv	RIVER
RM	ROAD-MIXED
RP	RADIUS POINT,
	REFERENCE POINT
RR	RAILROAD
RSP	ROCK SLOPE PROTECTION,
	REVISED STANDARD PLAN
Rt	RIGHT
Rte	ROUTE
RW	REDWOOD,
	RETAINING WALL
R/W	RIGHT OF WAY
Rwy	RAILWAY

S

S	SOUTH,
	SUPPLEMENT
SAE	STRUCTURE APPROACH EMBANKMENT
Salv	SALVAGE
SAPP	STRUCTURAL ALUMINUM PLATE PIPE
SB	SOUTHBOUND
SC	SAND CUSHION
SCSP	SLOTTED CORRUGATED STEEL PIPE
SD	STORM DRAIN
Sec	SECOND,
	SECTION
Sep	SEPARATION
SG	SUBGRADE
Shld	SHOULDER
Sht	SHEET
Sim	SIMILAR
℄	STATION LINE
SM	SELECTED MATERIAL
Spec	SPECIAL,
	SPECIFICATIONS
SPP	SLOTTED PLASTIC PIPE
SS	SLOPE STAKE
SSBM	STRAP AND SADDLE BRACKET METHOD
SSD	STRUCTURAL SECTION DRAIN
SSPA	STRUCTURAL STEEL PLATE ARCH
SSPP	STRUCTURAL STEEL PLATE PIPE
SSPPA	STRUCTURAL STEEL PLATE PIPE ARCH
SSRP	STEEL SPIRAL RIB PIPE
St	STREET
Sta	STATION
STBB	SINGLE THRIE BEAM BARRIER
Std	STANDARD
Str	STRUCTURE
Surf	SURFACING
SW	SIDEWALK,
	SOUND WALL
Swr	SEWER
Sym	SYMMETRICAL
S4S	SURFACE 4 SIDES

T

T	SEMI-TANGENT
Tan	TANGENT
TBB	THRIE BEAM BARRIER
Tbr	TIMBER
TC	TOP OF CURB
TCB	TRAFFIC CONTROL BOX
TCE	TEMPORARY CONSTRUCTION EASEMENT
Tel	TELEPHONE
Temp	TEMPORARY
TG	TOP OF GRADE
Tot	TOTAL
TP	TELEPHONE POLE
TPB	TREATED PERMEABLE BASE
TPM	TREATED PERMEABLE MATERIAL
Trans	TRANSITION

T continued

TS	TRANSVERSE,
	TRAFFIC SIGNAL,
	TUBULAR STEEL
Typ	TYPICAL

U

UC	UNDERCROSSING
UD	UNDERDRAIN
UG	UNDERGROUND
UON	UNLESS OTHERWISE NOTED
UP	UNDERPASS

V

V	VALVE,
	DESIGN SPEED
Var	VARIABLE,
	VARIES
VC	VERTICAL CURVE
VCP	VITRIFIED CLAY PIPE
Vert	VERTICAL
Via	VIADUCT
Vol	VOLUME

W

W	WEST,
	WIDTH
WB	WESTBOUND
WH	WEEP HOLE
WM	WIRE MESH
WS	WATER SURFACE
WSP	WELDED STEEL PIPE
Wt	WEIGHT
WV	WATER VALVE
WW	WINGWALL
WWLOL	WINGWALL LAYOUT LINE

X

X Sec	CROSS SECTION
Xing	CROSSING

Y

Yr	YEAR
Yrs	YEARS

Dist	COUNTY	ROUTE	POST MILES TOTAL PROJECT	SHEET No.	TOTAL SHEETS
05	SLO	1	73.7/74.0	47	108

Grace M. Tsushima
REGISTERED CIVIL ENGINEER

July 19, 2013
PLANS APPROVAL DATE

REGISTERED PROFESSIONAL ENGINEER
Grace M. Tsushima
No. C49814
Exp. 9-30-14
CIVIL
STATE OF CALIFORNIA

THE STATE OF CALIFORNIA OR ITS OFFICERS OR AGENTS SHALL NOT BE RESPONSIBLE FOR THE ACCURACY OR COMPLETENESS OF SCANNED COPIES OF THIS PLAN SHEET.

TO ACCOMPANY PLANS DATED 5-19-14

UNIT OF MEASUREMENT SYMBOLS:

Some of the symbols used in the project plan quantity tables and in the Bid Item List are:

TABLE A

SYMBOL USED	DEFINITIONS
ACRE	ACRE
CF	CUBIC FOOT
CY	CUBIC YARD
EA	EACH
GAL	GALLON
LB	POUND
LF	LINEAR FOOT
SQFT	SQUARE FOOT
SQYD	SQUARE YARD
STA	100 FEET
TAB	TABLET
TON	2,000 POUNDS

Some of the symbols used in the plans other than in the project plan quantity tables are:

TABLE B

SYMBOL USED	DEFINITIONS
ksi	KIPS PER SQUARE INCH
ksf	KIPS PER SQUARE FOOT
psi	POUNDS PER SQUARE INCH
psf	POUNDS PER SQUARE FOOT
lb/ft^3, pcf	POUNDS PER CUBIC FOOT
tsf	TONS PER SQUARE FOOT
mph, MPH *	MILES PER HOUR
ø	NOMINAL DIAMETER
oz	OUNCE
lb	POUND
kip	1,000 POUNDS
cal	CALORIE
ft	FOOT OR FEET
gal	GALLON

* For use on a sign panel only

STATE OF CALIFORNIA
DEPARTMENT OF TRANSPORTATION

ABBREVIATIONS (SHEET 2 OF 2)

NO SCALE

RSP A10B DATED JULY 19, 2013 SUPERSEDES STANDARD PLAN A10B DATED MAY 20, 2011 - PAGE 2 OF THE STANDARD PLANS BOOK DATED 2010.

REVISED STANDARD PLAN RSP A10B

2010 REVISED STANDARD PLAN RSP A10B

6-7-13

Dist	COUNTY	ROUTE	POST MILES TOTAL PROJECT	SHEET No.	TOTAL SHEETS
05	SLO	1	73.7/74.0	48	108

REGISTERED CIVIL ENGINEER

July 20, 2012
PLANS APPROVAL DATE

REGISTERED PROFESSIONAL ENGINEER
Roberta L. McLaughlin
No. C40375
Exp. 3-31-13
CIVIL
STATE OF CALIFORNIA

THE STATE OF CALIFORNIA OR ITS OFFICERS OR AGENTS SHALL NOT BE RESPONSIBLE FOR THE ACCURACY OR COMPLETENESS OF SCANNED COPIES OF THIS PLAN SHEET.

TO ACCOMPANY PLANS DATED 5-19-14

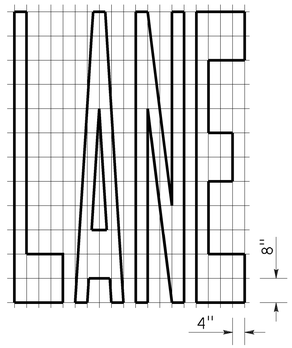

A=24 ft^2

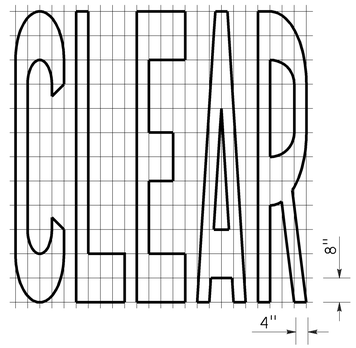

A=27 ft^2

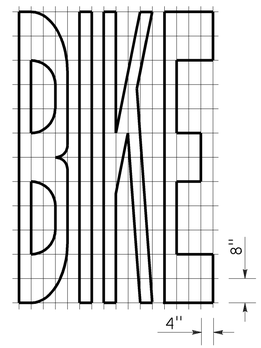

A=21 ft^2

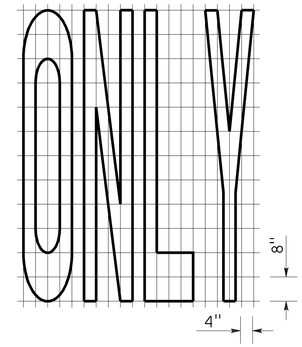

A=22 ft^2

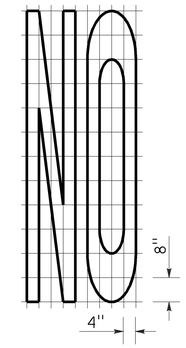

A=14 ft^2

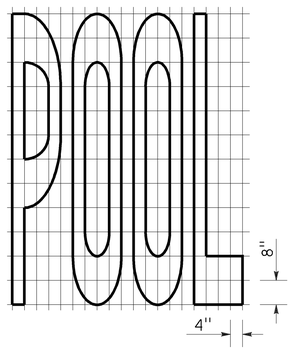

A=23 ft^2

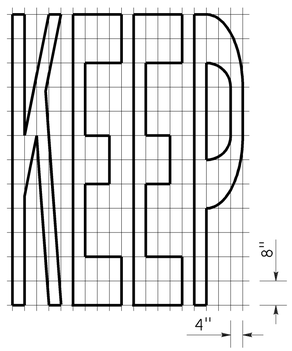

A=24 ft^2

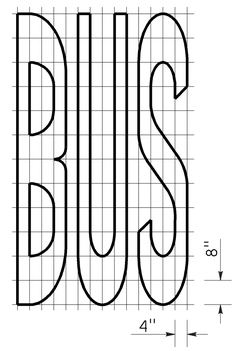

A=20 ft^2

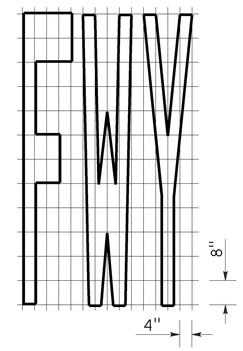

A=16 ft^2

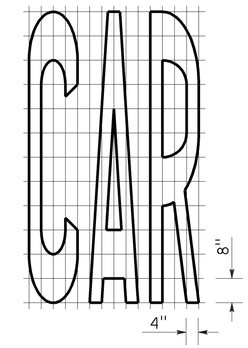

A=17 ft^2

WORD MARKINGS			
ITEM	ft^2	ITEM	ft^2
LANE	24	NO	14
POOL	23	BIKE	21
CAR	17	BUS	20
CLEAR	27	ONLY	22
KEEP	24	FWY	16

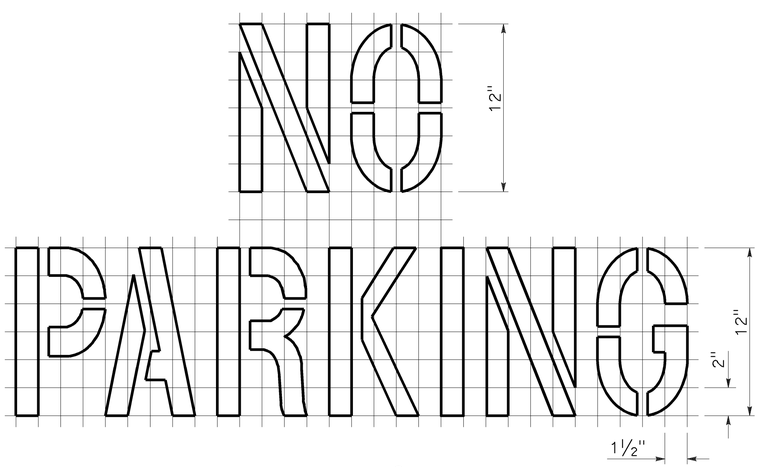

A=2 ft^2
See Notes 6 and 7

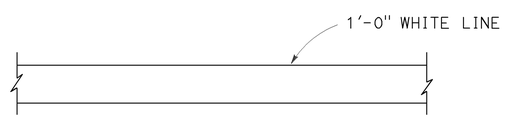

LIMIT LINE (STOP LINE)

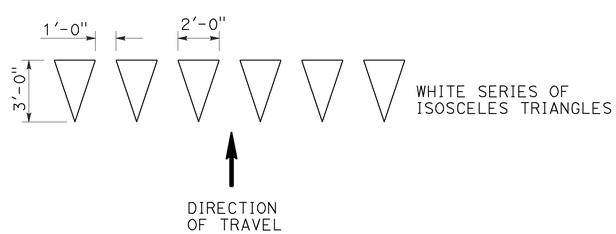

YIELD LINE

NOTES:

1. If a message consists of more than one word, it should read "UP", i.e., the first word should be nearest the driver.
2. The space between words should be at least four times the height of the characters for low speed roads, but not more than ten times the height of the characters. The space may be reduced appropriately where there is limited space because of local conditions.
3. Minor variations in dimensions may be accepted by the Engineer.
4. Portions of a letter, number or symbol may be separated by connecting segments not to exceed 2" in width.
5. The words "NO PARKING" pavement marking is to be used for parking facilities. For typical locations of markings, see Standard Plans A90A and A90B.
6. The words "NO PARKING", shall be painted in white letters no less than 1'-0" high on a contrasting background and located so that it is visible to traffic enforcement officials.

STATE OF CALIFORNIA
DEPARTMENT OF TRANSPORTATION

PAVEMENT MARKINGS WORDS, LIMIT AND YIELD LINES

NO SCALE

RSP A24E DATED JULY 20, 2012 SUPERSEDES STANDARD PLAN A24E
DATED MAY 20, 2011 - PAGE 17 OF THE STANDARD PLANS BOOK DATED 2010.

REVISED STANDARD PLAN RSP A24E

2010 REVISED STANDARD PLAN RSP A24E

6-12-12

Dist	COUNTY	ROUTE	POST MILES TOTAL PROJECT	SHEET No.	TOTAL SHEETS
05	SLO	1	73.7/74.0	49	108

Randell D. Hiatt
REGISTERED CIVIL ENGINEER

July 19, 2013
PLANS APPROVAL DATE

REGISTERED PROFESSIONAL ENGINEER
Randell D. Hiatt
No. C50200
Exp. 6-30-15
CIVIL
STATE OF CALIFORNIA

THE STATE OF CALIFORNIA OR ITS OFFICERS OR AGENTS SHALL NOT BE RESPONSIBLE FOR THE ACCURACY OR COMPLETENESS OF SCANNED COPIES OF THIS PLAN SHEET.

TO ACCOMPANY PLANS DATED 5-19-14

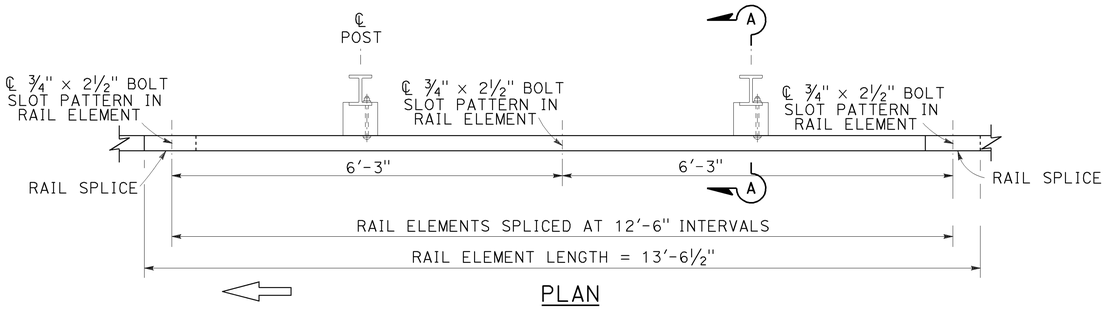

PLAN

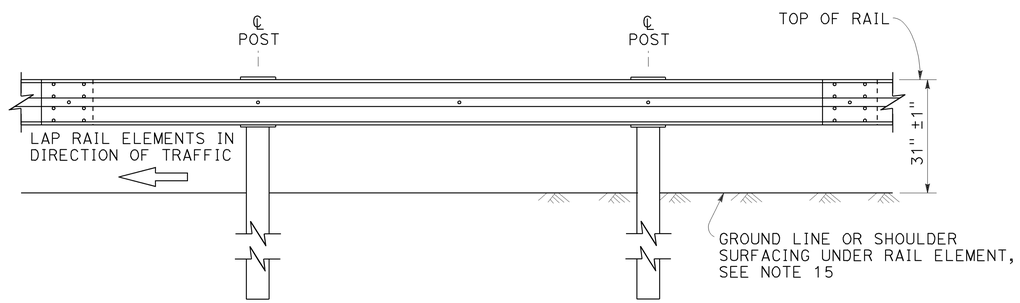

ELEVATION

MIDWEST GUARDRAIL SYSTEM WITH STEEL POSTS AND NOTCHED WOOD OR NOTCHED RECYCLED PLASTIC BLOCKS

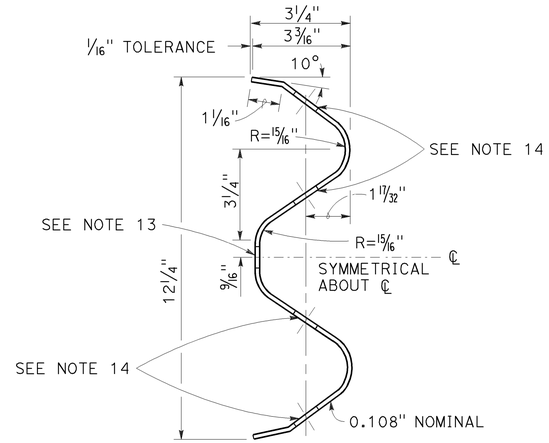

SECTION THRU RAIL ELEMENT

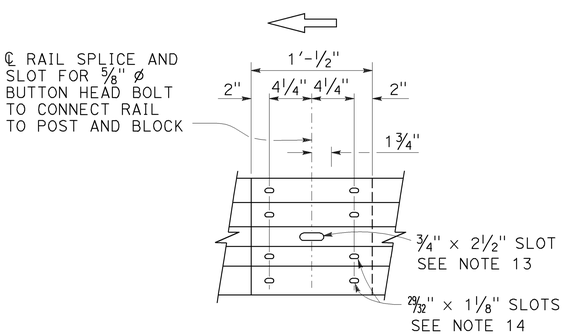

ELEVATION

RAIL ELEMENT SPLICE DETAIL

a) Connect the over lapped end of the rail elements with 5/8" ø × 1 3/8" button head oval shoulder splice bolts inserted into the 29/32" × 1 1/8" slots and bolted together with 5/8" ø recessed hex nuts. Recess of hex nut points toward rail element. A total of 8 bolts and nuts are to be used at each rail splice connection.

b) The ends of the rail elements are to be overlapped in the direction of traffic (see details).

c) Where end cap is to be attached to the end of a rail element, a total of 4 of the above described splice bolts and nuts are to be used.

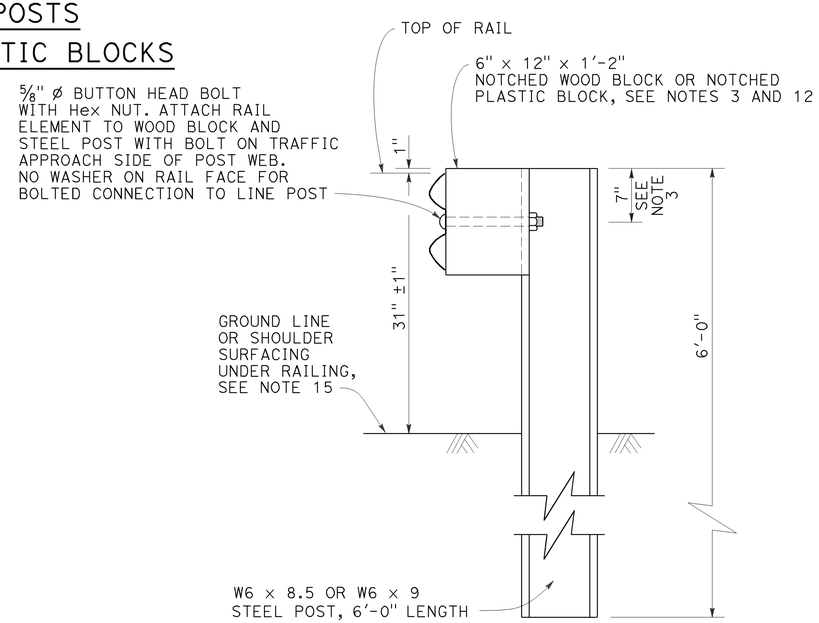

SECTION A-A

TYPICAL STEEL LINE POST INSTALLATION

See Note 4

NOTES:

1. For details of wood post installations, see Revised Standard Plan RSP A77L1.
2. For details of standard hardware used to construct MGS, see Revised Standard Plan RSP A77M1.
3. For details of steel posts and notched wood blocks used to construct MGS, see Revised Standard Plan RSP A77N2.
4. For additional installation details, see Revised Standard Plan RSP A77N3.
5. MGS post spacing to be 6'-3" center to center, except as otherwise noted.
6. For MGS typical layouts, see the A77P, A77Q and A77R Series of Standard Plans.
7. If railing is connected to terminal system end treatment, use 31" height terminal system end treatment.
8. For MGS end anchor details, see Revised Standard Plans RSP A77S1 and RSP A77T2.
9. For details of MGS transition to bridge railing, see Revised Standard Plan RSP A77U4.
10. For additional details of MGS connection to bridge railings, see Revised Standard Plans RSP A77U1, RSP A77U2 and RSP A77V1.
11. For dike positioning and MGS delineation details, see Revised Standard Plan RSP A77N4.
12. Notched face of block faces steel post.
13. Slotted hole for bolted connection of rail element to block and post. See "Section Thru Rail Element".
14. Slotted holes for splice bolts to overlap ends of rail element. See "Section Thru Rail Element".
15. Install posts in soil.

STATE OF CALIFORNIA
DEPARTMENT OF TRANSPORTATION

MIDWEST GUARDRAIL SYSTEM STANDARD RAILING SECTION (STEEL POST WITH NOTCHED WOOD OR NOTCHED RECYCLED PLASTIC BLOCK)

NO SCALE

RSP A77L2 DATED JULY 19, 2013 SUPPLEMENTS THE STANDARD PLANS BOOK DATED 2010.

REVISED STANDARD PLAN RSP A77L2

2010 REVISED STANDARD PLAN RSP A77L2

7-3-13

Dist	COUNTY	ROUTE	POST MILES TOTAL PROJECT	SHEET No.	TOTAL SHEETS
05	SLO	1	73.7/74.0	50	108

Randell D. Hiatt
REGISTERED CIVIL ENGINEER

July 19, 2013
PLANS APPROVAL DATE

REGISTERED PROFESSIONAL ENGINEER
Randell D. Hiatt
No. C50200
Exp. 6-30-15
CIVIL
STATE OF CALIFORNIA

THE STATE OF CALIFORNIA OR ITS OFFICERS OR AGENTS SHALL NOT BE RESPONSIBLE FOR THE ACCURACY OR COMPLETENESS OF SCANNED COPIES OF THIS PLAN SHEET.

TO ACCOMPANY PLANS DATED 5-19-14

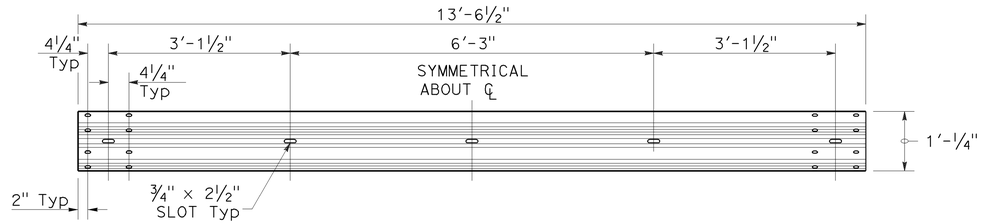

TYPICAL RAIL ELEMENT

NOTE:

1. Slotted holes for splice bolts to overlap ends of rail element.

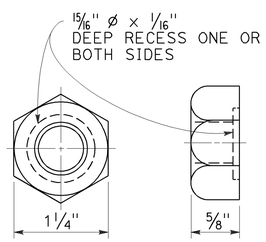

⅝" ø RECESS NUT

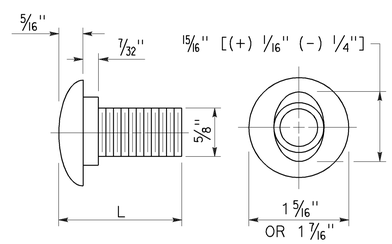

⅝" ø BUTTON HEAD BOLT

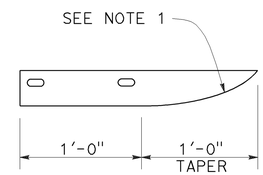

PLAN

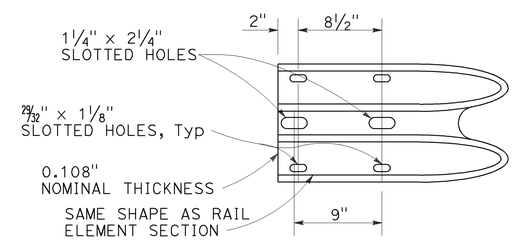

ELEVATION

END CAP
(TYPE A)

BUTTON HEAD BOLT

L	THREAD LENGTH
1⅜"	FULL THREAD LENGTH
2"	FULL THREAD LENGTH
10"	4" Min THREAD LENGTH
18"	4" Min THREAD LENGTH
20"	4" Min THREAD LENGTH
22"	4" Min THREAD LENGTH
26"	4" Min THREAD LENGTH
36"	4" Min THREAD LENGTH
** 2¾"	2" Min THREAD LENGTH
** 19"	4" Min THREAD LENGTH

** For nested rail applications.

STATE OF CALIFORNIA
DEPARTMENT OF TRANSPORTATION

MIDWEST GUARDRAIL SYSTEM STANDARD HARDWARE

NO SCALE

RSP A77M1 DATED JULY 19, 2013 SUPPLEMENTS THE STANDARD PLANS BOOK DATED 2010.

REVISED STANDARD PLAN RSP A77M1

2010 REVISED STANDARD PLAN RSP A77M1

Dist	COUNTY	ROUTE	POST MILES TOTAL PROJECT	SHEET No.	TOTAL SHEETS
05	SLO	1	73.7/74.0	51	108

Randell D. Hiatt
REGISTERED CIVIL ENGINEER

November 15, 2013
PLANS APPROVAL DATE

REGISTERED PROFESSIONAL ENGINEER
Randell D. Hiatt
No. C50200
Exp. 6-30-15
CIVIL
STATE OF CALIFORNIA

THE STATE OF CALIFORNIA OR ITS OFFICERS OR AGENTS SHALL NOT BE RESPONSIBLE FOR THE ACCURACY OR COMPLETENESS OF SCANNED COPIES OF THIS PLAN SHEET.

TO ACCOMPANY PLANS DATED 5-19-14

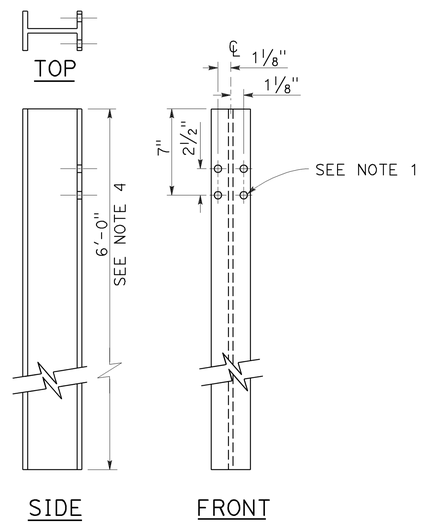

W6 x 9 OR W6 x 8.5
STEEL POST
See Note 4

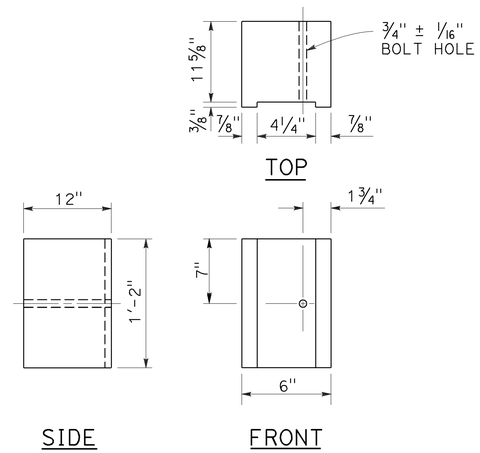

6" x 12"
NOTCHED WOOD BLOCK
See Notes 2 and 3

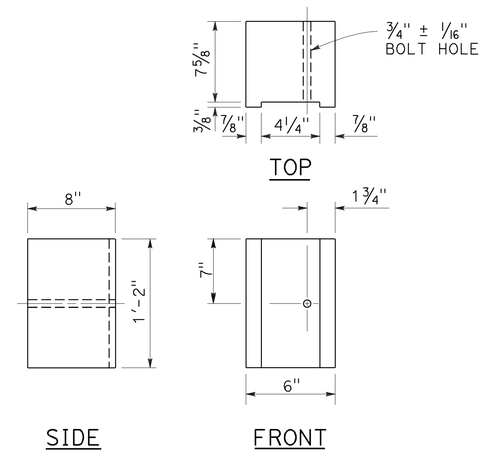

6" x 8"
NOTCHED WOOD BLOCK
Only for use with metal beam guard railing. See Note 5

NOTES:

1. All holes in steel post shall be 13/16" Dia maximum.
2. Dimensions shown for wood block are nominal.
3. Notched face of block faces steel post.
4. 6'-0" length posts to be used for typical roadway installation. See Revised Standard Plan RSP A77N3.
5. See Revised Standard Plan RSP A77L3 for use of 6" x 8" and 8" x 8" notched wood blocks.
6. This post and 8" x 12" block combination to be used for line post sections of MGS on narrow roadways and where strengthened line post sections of MGS are warranted to shield fixed objects.

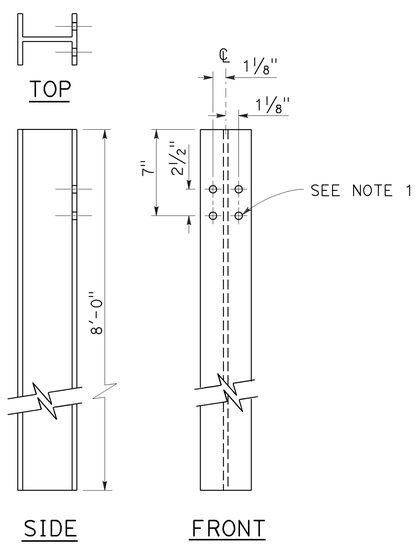

W6 x 15
STEEL POST
See Note 6

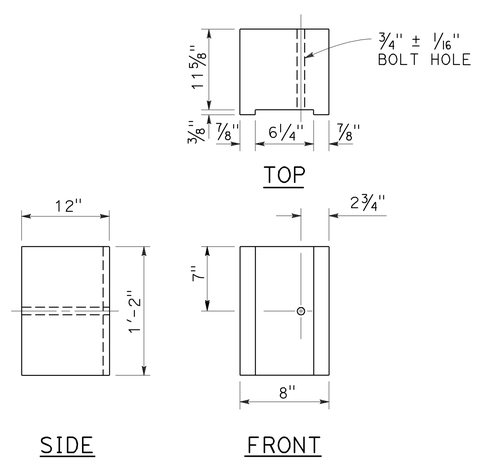

8" x 12"
NOTCHED WOOD BLOCK
See Notes 2 and 3

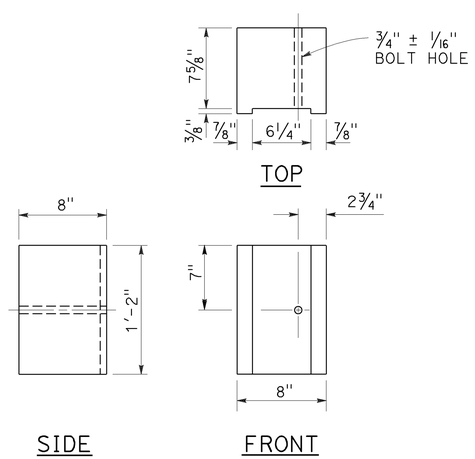

8" x 8"
NOTCHED WOOD BLOCK
Only for use with metal beam guard railing. See Note 5

STATE OF CALIFORNIA
DEPARTMENT OF TRANSPORTATION

MIDWEST GUARDRAIL SYSTEM STEEL POST AND NOTCHED WOOD BLOCK DETAILS

NO SCALE

RSP A77N2 DATED NOVEMBER 15, 2013 SUPERSEDES RSP A77N2
DATED JULY 19, 2013 THAT SUPPLEMENTS THE STANDARD PLANS BOOK DATED 2010.

REVISED STANDARD PLAN RSP A77N2

2010 REVISED STANDARD PLAN RSP A77N2

10-29-13

Dist	COUNTY	ROUTE	POST MILES TOTAL PROJECT	SHEET No.	TOTAL SHEETS
05	SLO	1	73.7/74.0	52	108

Randell D. Hiatt
REGISTERED CIVIL ENGINEER

November 15, 2013
PLANS APPROVAL DATE

REGISTERED PROFESSIONAL ENGINEER
Randell D. Hiatt
No. C50200
Exp. 6-30-15
CIVIL
STATE OF CALIFORNIA

THE STATE OF CALIFORNIA OR ITS OFFICERS OR AGENTS SHALL NOT BE RESPONSIBLE FOR THE ACCURACY OR COMPLETENESS OF SCANNED COPIES OF THIS PLAN SHEET.

TO ACCOMPANY PLANS DATED 5-19-14

2010 REVISED STANDARD PLAN RSP A77N3

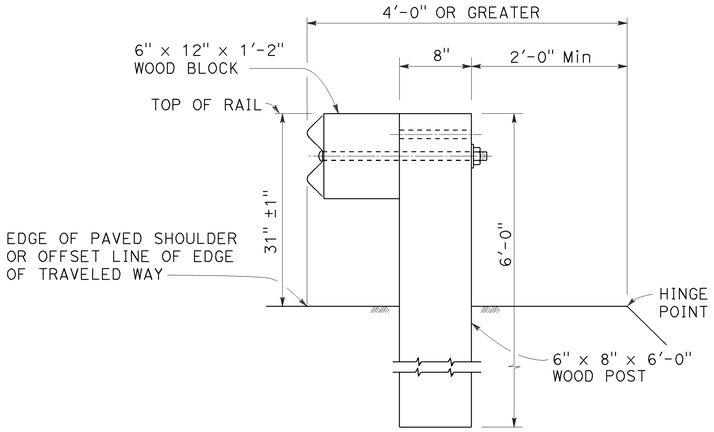

DETAIL A

TYPICAL ROADWAY INSTALLATION

See Note 1

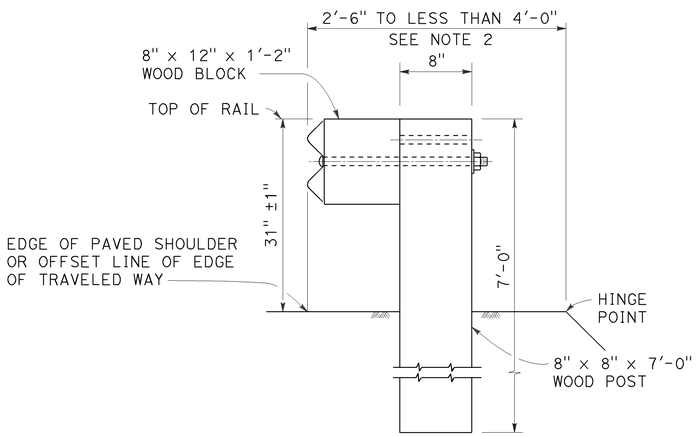

DETAIL B

NARROW ROADWAY INSTALLATION

See Note 1

POST EMBEDMENT

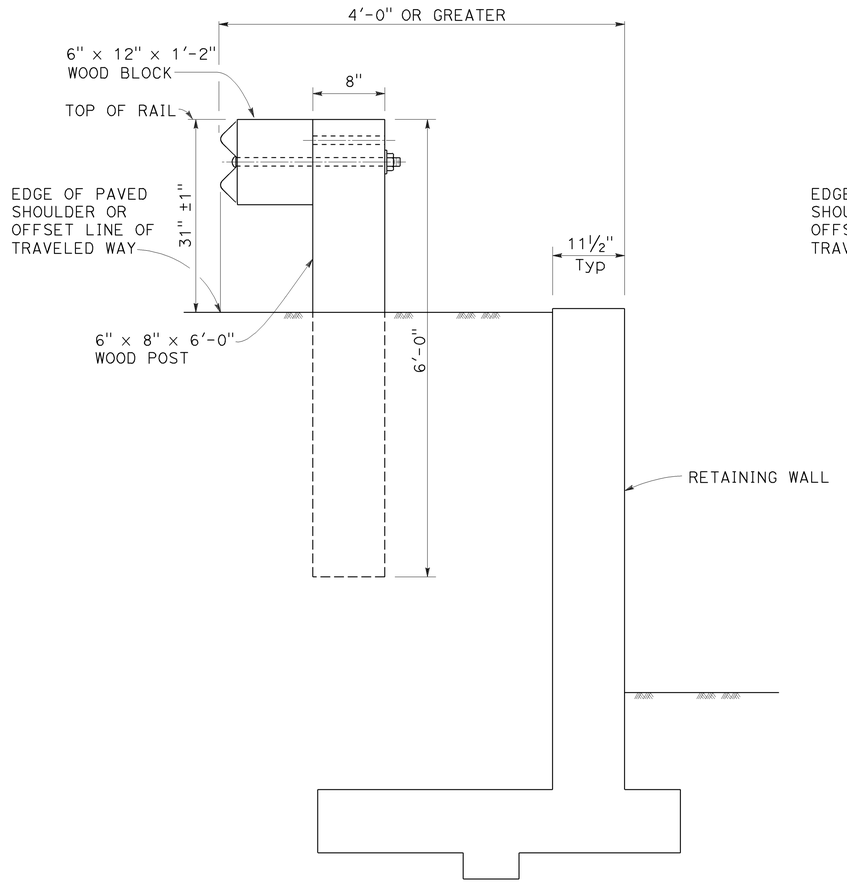

DETAIL C

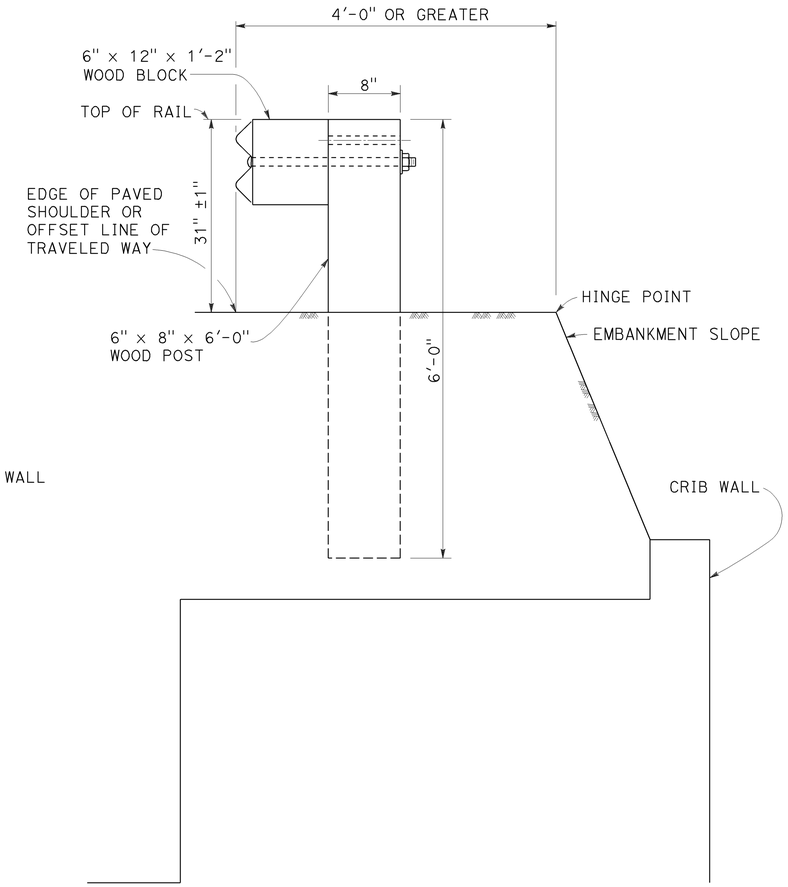

DETAIL D

INSTALLATION AT EARTH RETAINING WALLS

NOTES:

1. These installation details also applicable to steel line post installations. For Detail A, C, and D, where steel line post installations are constructed, W6 x 8.5 or W6 x 9 steel post, 6'-0" in length, with 6" x 12" x 1'-2" notched wood blocks or notched recycled plastic blocks are to be used in place of the size of wood post and wood block shown. For Detail B, where steel line post installations are constructed, W6 x 15 steel post, 8'-0" in length, with 8" x 12" x 1'-2" notched wood blocks or notched recycled plastic blocks are to be used in place of the size of wood post and wood block shown. For additional installation details, see Revised Standard Plan RSP A77L1 and RSP A77L2.
2. Where the distance between the face of the rail and the hinge point is less than 2'-6", see the Project Plans for special details.
3. For dike positioning with MGS installations, see Revised Standard Plan RSP A77N4.

STATE OF CALIFORNIA
DEPARTMENT OF TRANSPORTATION

MIDWEST GUARDRAIL SYSTEM TYPICAL LINE POST EMBEDMENT AND HINGE POINT OFFSET DETAILS

NO SCALE

RSP A77N3 DATED NOVEMBER 15, 2013 SUPERSEDES RSP A77N3
DATED JULY 19, 2013 THAT SUPPLEMENTS THE STANDARD PLANS BOOK DATED 2010.

REVISED STANDARD PLAN RSP A77N3

10-29-13

Dist	COUNTY	ROUTE	POST MILES TOTAL PROJECT	SHEET No.	TOTAL SHEETS
05	SLO	1	73.7/74.0	53	108

Randell D. Hiatt
REGISTERED CIVIL ENGINEER

July 19, 2013
PLANS APPROVAL DATE

REGISTERED PROFESSIONAL ENGINEER
Randell D. Hiatt
No. C50200
Exp. 6-30-15
CIVIL
STATE OF CALIFORNIA

THE STATE OF CALIFORNIA OR ITS OFFICERS OR AGENTS SHALL NOT BE RESPONSIBLE FOR THE ACCURACY OR COMPLETENESS OF SCANNED COPIES OF THIS PLAN SHEET.

TO ACCOMPANY PLANS DATED 5-19-14

NOTES:

1. When necessary to place dike more than 7" in front of face of MGS, only Type C dike may be used. For dike details, see Revised Standard Plan RSP A87B.
2. For standard railing post embedment, see Revised Standard Plan RSP A77N3.
3. MGS delineation to be used where shown on the Project Plans.
4. When dike or curb is placed under MGS, the maximum height of the dike or curb shall be 6". Mountable dike should not be used. For dike and curb details, see Revised Standard Plans RSP A87A and RSP A87B.
5. For details of typical distance between the face of rail and hinge point, see Revised Standard Plan RSP A77N3.
6. For steel line posts, use 1/4 - 20 self-tapping screws in 0.22" diameter holes or 1/4" bolts in 9/32" diameter holes.

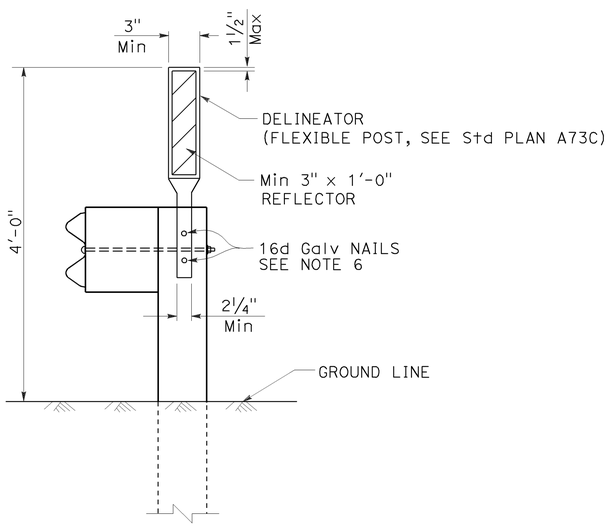

MGS DELINEATION

See Note 3

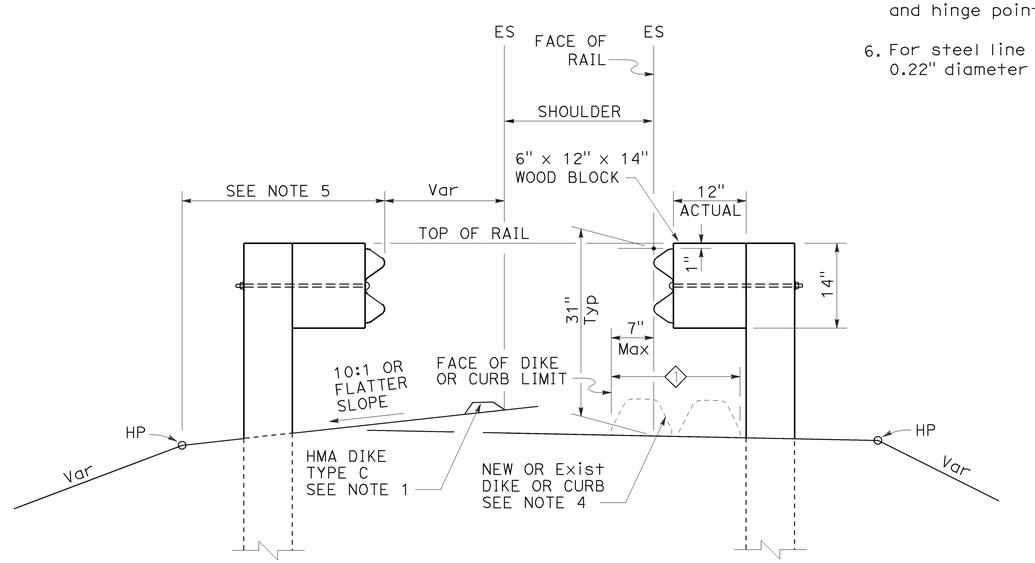

DIKE POSITIONING

See Note 1

1 PERMISSIBLE DIKE OR CURB PLACEMENT AREA

STATE OF CALIFORNIA
DEPARTMENT OF TRANSPORTATION

MIDWEST GUARDRAIL SYSTEM TYPICAL RAILING DELINEATION AND DIKE POSITIONING DETAILS

NO SCALE

RSP A77N4 DATED JULY 19, 2013 SUPPLEMENTS THE STANDARD PLANS BOOK DATED 2010.

REVISED STANDARD PLAN RSP A77N4

2010 REVISED STANDARD PLAN RSP A77N4

7-10-13

Dist	COUNTY	ROUTE	POST MILES TOTAL PROJECT	SHEET No.	TOTAL SHEETS
05	SLO	1	73.7/74.0	54	108

Randell D. Hiatt
REGISTERED CIVIL ENGINEER

July 19, 2013
PLANS APPROVAL DATE

REGISTERED PROFESSIONAL ENGINEER
Randell D. Hiatt
No. C50200
Exp. 6-30-15
CIVIL
STATE OF CALIFORNIA

THE STATE OF CALIFORNIA OR ITS OFFICERS OR AGENTS SHALL NOT BE RESPONSIBLE FOR THE ACCURACY OR COMPLETENESS OF SCANNED COPIES OF THIS PLAN SHEET.

TO ACCOMPANY PLANS DATED 5-19-14

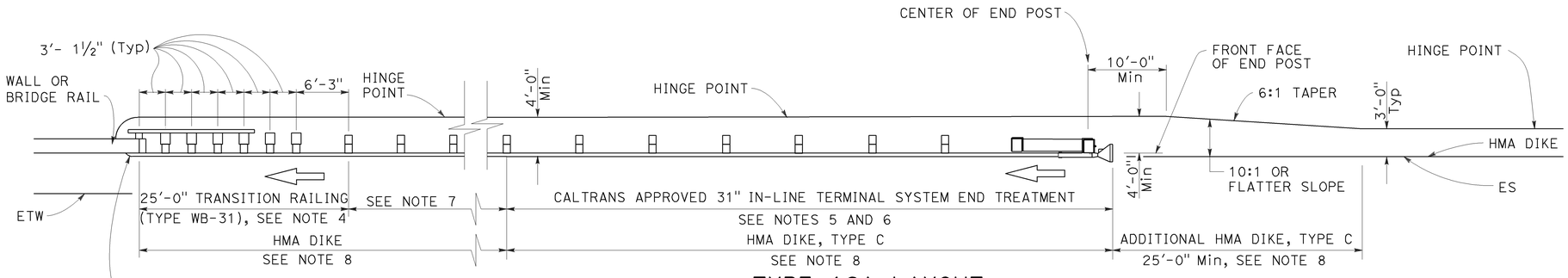

TYPE 12A LAYOUT

(MGS installation at structure approach with
31" In-line end treatment at traffic approach end of railing)
See Notes 9

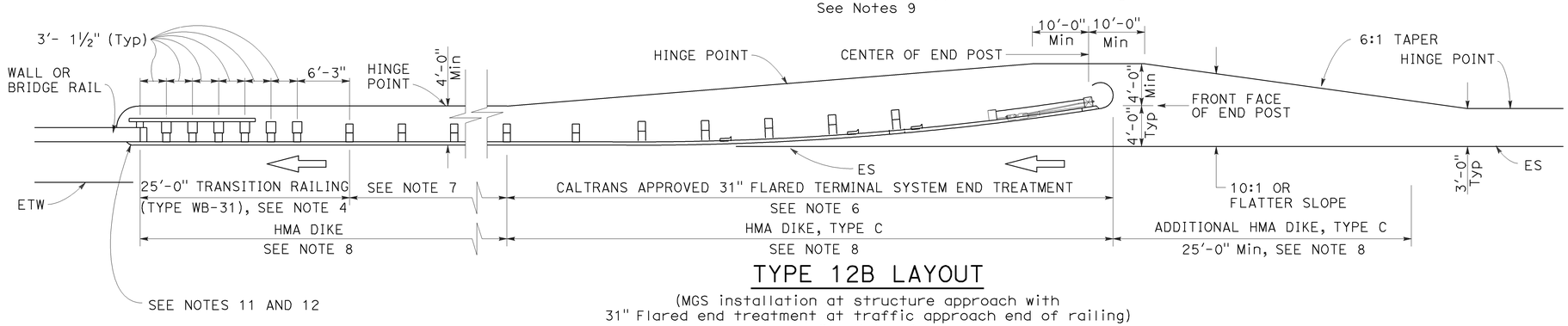

TYPE 12B LAYOUT

(MGS installation at structure approach with
31" Flared end treatment at traffic approach end of railing)
See Notes 9

NOTES:

1. Line post, blocks and hardware to be used are shown on Revised Standard Plans RSP A77L1, RSP A77L2, RSP A77M1, RSP A77N1 and RSP A77N2.
2. MGS post spacing to be 6'-3" center to center, except as otherwise noted.
3. Except as noted, line posts are 6" x 8" x 6'-0" wood with 6" x 12" x 1'-2" wood blocks. W6 x 8.5 or W6 x 9 steel posts, 6'-0" in length, with 6" x 12" x 1'-2" notched wood blocks or plastic blocks may be used for 6" x 8" x 6'-0" wood posts with 6" x 12" x 1'-2" wood blocks where applicable and when specified.
4. For Transition Railing (Type WB-31) details for Types 12A and 12B Layouts, see Revised Standard Plan RSP A77U4.
5. 31" in-line terminal system end treatments are used where site conditions will not accommodate a 31" flared end treatment.
6. The type 31" of terminal system end treatment to be used will be shown on the Project Plans.
7. Dependent on site conditions (embankment height, side slopes, or other fixed objects), it may be advisable to construct additional guard railing (a length equal to multiples of 12'-6" with 6'-3" post spacing) between the transition railing and end treatment. A 12.5 degree angle of departure can be drawn on the Project Plans from the edge of traveled way through the outer most point of the fixed object to determine the additional length of railing needed.
8. Where placement of dike is required with guard railing installations, see Revised Standard Plan RSP A77N4 for dike positioning details.
9. Type 12A or Type 12B Layouts are typically used:
   a. To the right of approaching traffic, at the end of a structure, on two-lane conventional highway where the roadbed width across the structure is less than 40 feet.
   b. To the left of approaching traffic, at the end of a structure, on two-lane conventional highway where the roadbed width across the structure is less than 40 feet.
   c. To the right of approaching traffic at the end of each structure on multilane freeways or expressways with separate adjacent or parallel bridges.
   d. To the right of approaching traffic at the end of the structure on multilane freeways or expressways with decked median on the bridge.
10. See Revised Standard Plan RSP A77Q3 for typical layout used left of approaching traffic at the ends of each structure on multilane freeways or expressways with separate adjacent or parallel bridges.
11. For additional details of typical connections to bridge rail, see Connection Detail AA on Revised Standard Plans RSP A77U1 and RSP A77U2 and Connection Detail FF on Revised Standard Plans RSP A77V1 and RSP A77V2.
12. For additional details of a typical connection to walls or abutments, see Revised Standard Plan RSP A77U3.

STATE OF CALIFORNIA
DEPARTMENT OF TRANSPORTATION

MIDWEST GUARDRAIL SYSTEM TYPICAL LAYOUTS FOR STRUCTURE APPROACH

NO SCALE

RSP A77Q1 DATED JULY 19, 2013 SUPPLEMENTS THE STANDARD PLANS BOOK DATED 2010.

REVISED STANDARD PLAN RSP A77Q1

2010 REVISED STANDARD PLAN RSP A77Q1

Dist	COUNTY	ROUTE	POST MILES TOTAL PROJECT	SHEET No.	TOTAL SHEETS
05	SLO	1	73.7/74.0	55	108

Randell D. Hiatt
REGISTERED CIVIL ENGINEER

July 19, 2013
PLANS APPROVAL DATE

REGISTERED PROFESSIONAL ENGINEER
Randell D. Hiatt
No. C50200
Exp. 6-30-15
CIVIL
STATE OF CALIFORNIA

THE STATE OF CALIFORNIA OR ITS OFFICERS OR AGENTS SHALL NOT BE RESPONSIBLE FOR THE ACCURACY OR COMPLETENESS OF SCANNED COPIES OF THIS PLAN SHEET.

TO ACCOMPANY PLANS DATED 5-19-14

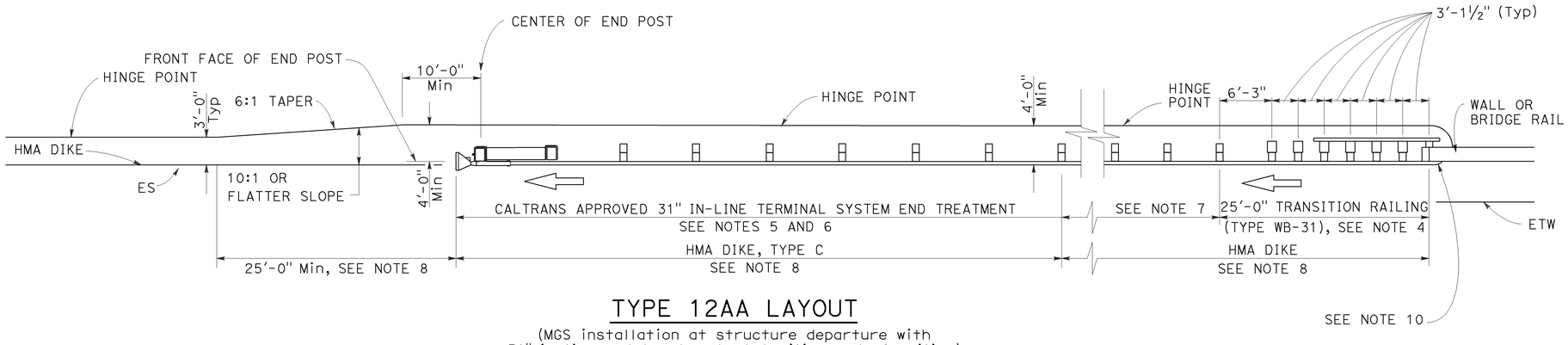

TYPE 12AA LAYOUT

(MGS installation at structure departure with
31" in-line end treatment at trailing end of railing)
See Notes 8 and 9

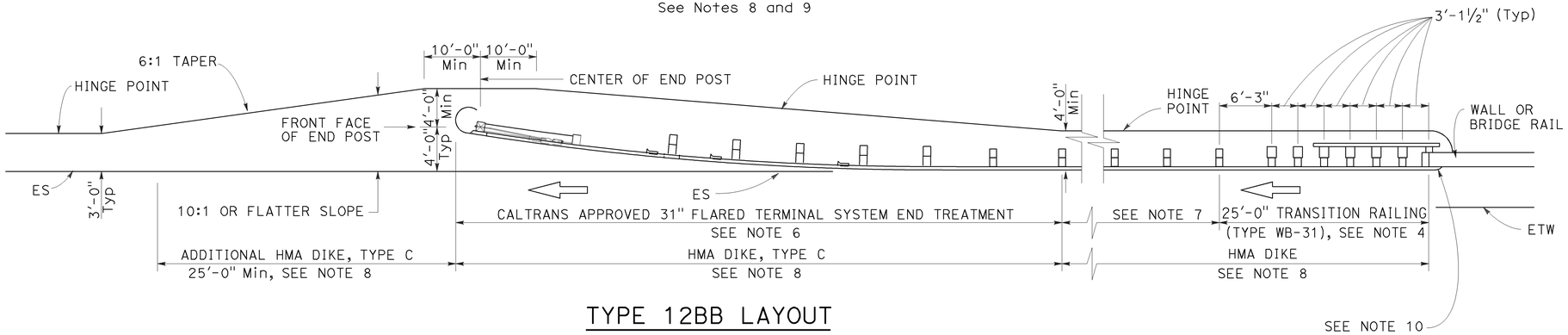

TYPE 12BB LAYOUT

(MGS installation at structure departure with
31" flared end treatment at trailing end of railing)
See Notes 8 and 9

NOTES:

1. Line post, blocks and hardware to be used are shown on Revised Standard Plans RSP A77L1, RSP A77L2, RSP A77M1, RSP A77N1 and RSP A77N2.
2. MGS post spacing to be 6'-3" center to center, except as otherwise noted.
3. Except as noted, line posts are 6" x 8" x 6'-0" wood with 6" x 12" x 1'-2" wood blocks. W6 x 8.5 or W6 x 9 steel posts, 6'-0" in length, with 6" x 12" x 1-2" notched wood blocks or notched recycled plastic blocks may be used for 6" x 8" x 6'-0" wood posts with 6" x 12" x 1'-2" wood blocks where applicable and when specified.
4. For Transition Railing (Type WB-31) details for Types 12AA and 12BB Layouts, see Revised Standard Plan RSP A77U4.
5. 31" in-line terminal system treatments are used where site conditions will not accommodate a 31" flared end treatment.
6. The type of 31" terminal system to be used will be shown on the Project Plans.
7. Dependent on site conditions (embankment height, side slopes, other fixed objects), it may be advisable to construct additional MGS (a length equal to multiples of 12'-6" with 6'-3" post spacing) between the transition railing and 31" end treatments.
8. Where placement of dike is required with MGS installations, see Revised Standard Plan RSP A77N4 for dike positioning details.
9. Type 12AA or Type 12BB Layouts are typically used to the right of traffic departing a structure on two-way conventional highways where the roadbed width across the structure is less than 40 feet.
10. For additional details of typical connections to bridge rail, see Connection Detail CC on Revised Standard Plan RSP A77U2 and Connection Detail HH on Revised Standard Plan RSP A77V2.

STATE OF CALIFORNIA
DEPARTMENT OF TRANSPORTATION

MIDWEST GUARDRAIL SYSTEM TYPICAL LAYOUTS FOR STRUCTURE DEPARTURE

NO SCALE

RSP A77Q4 DATED JULY 19, 2013 SUPPLEMENTS THE STANDARD PLANS BOOK DATED 2010.

REVISED STANDARD PLAN RSP A77Q4

2010 REVISED STANDARD PLAN RSP A77Q4

6-19-13

Dist	COUNTY	ROUTE	POST MILES TOTAL PROJECT	SHEET No.	TOTAL SHEETS
05	SLO	1	73.7/74.0	56	108

Randell D. Hiatt
REGISTERED CIVIL ENGINEER

July 19, 2013
PLANS APPROVAL DATE

REGISTERED PROFESSIONAL ENGINEER
Randell D. Hiatt
No. C50200
Exp. 6-30-15
CIVIL
STATE OF CALIFORNIA

THE STATE OF CALIFORNIA OR ITS OFFICERS OR AGENTS SHALL NOT BE RESPONSIBLE FOR THE ACCURACY OR COMPLETENESS OF SCANNED COPIES OF THIS PLAN SHEET.

TO ACCOMPANY PLANS DATED 5-19-14

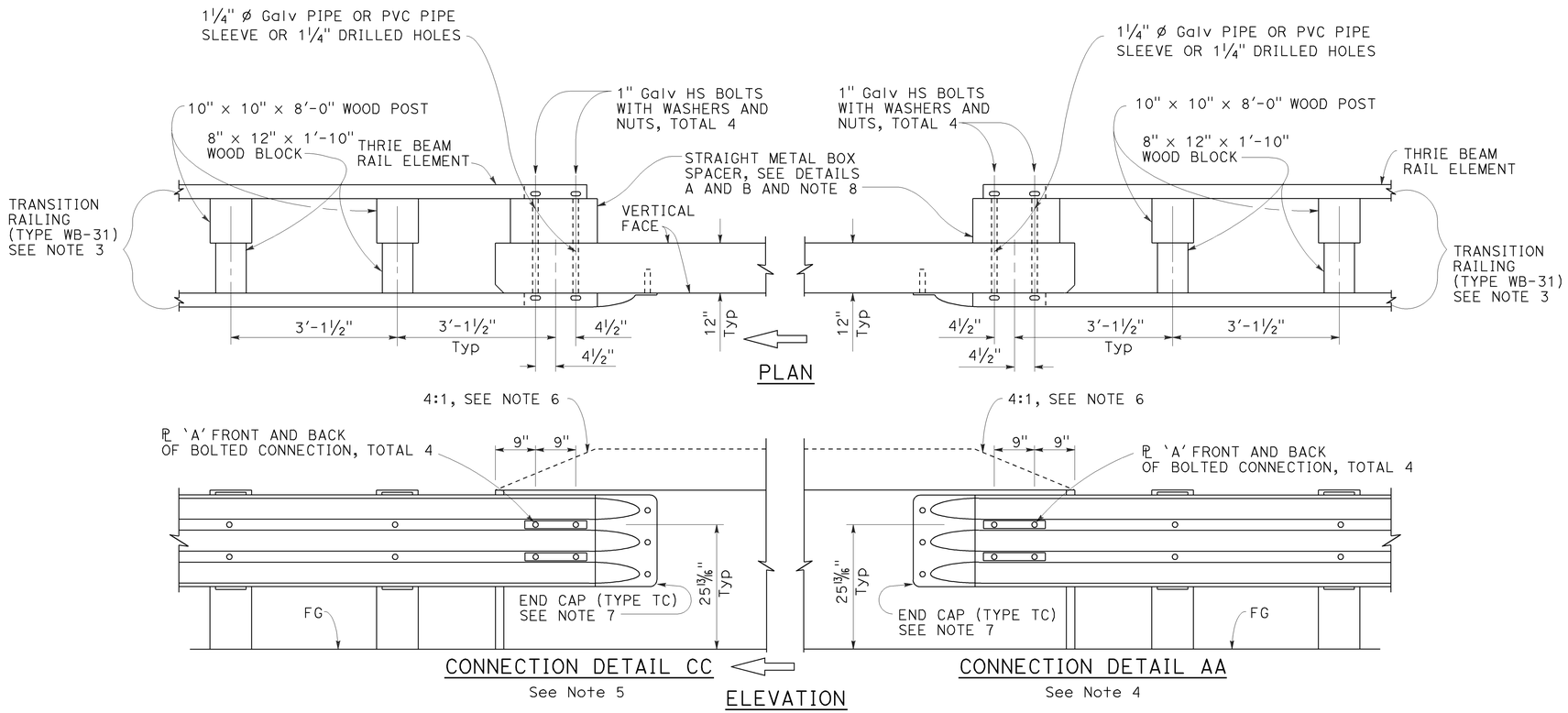

MIDWEST GUARDRAIL SYSTEM CONNECTION TO BRIDGE RAILING WITHOUT SIDEWALK

NOTES:

1. See Revised Standard Plan RSP A77U1 for additional connection details to bridges without sidewalks.
2. Additional details of posts, blocks and hardware are shown on Revised Standard Plans RSP A77M1, RSP A77N1 and RSP A77N2.
3. For additional details of Transition Railing (Type WB-31), see Revised Standard Plan RSP A77U4. Transition Railing (Type WB-31) transitions the 12 gauge MGS railing section to a heavier gage nested thrie beam railing section which is connected to the concrete bridge railing.
4. For typical use of Connection Detail AA, see Layout Types 12A and 12B on Revised Standard Plan RSP A77Q1, Layout Types 12C and 12D on Revised Standard Plan RSP A77Q2, and Layout Type 12E on Revised Standard Plan RSP A77Q3.
5. For typical use of Connection Detail CC, see Layout Types 12AA and 12BB on Revised Standard Plan RSP A77Q4 and Layout Type 12CC on Revised Standard Plan RSP A77Q5.
6. Where the height of the bridge railing exceeds the height of the thrie beam railing by more than 1" at Connection Detail AA and connection Detail CC, taper the top of the end of the bridge railing at 4:1 to match the top elevation of the thrie beam railing.
7. For details of End Cap (Type TC), see Revised Standard Plan RSP A77U4.
8. See Revised Standard Plan RSP A77U4 for additional details regarding depth dimension for straight metal box spacer.

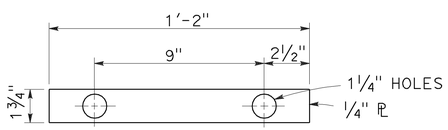

PLATE 'A'

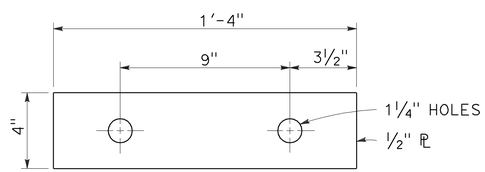

PLATE 'B'
(For backside of connection BB)

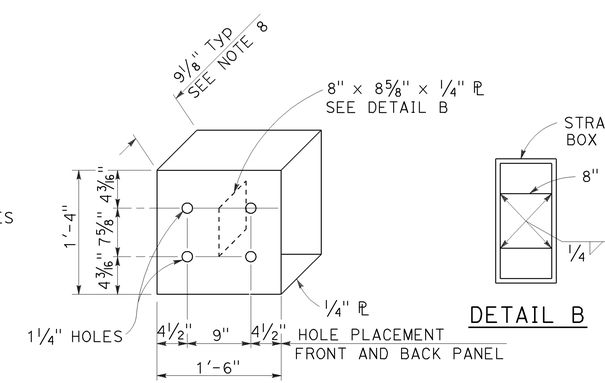

DETAIL A

STRAIGHT METAL BOX SPACER

STATE OF CALIFORNIA
DEPARTMENT OF TRANSPORTATION

MIDWEST GUARDRAIL SYSTEM CONNECTIONS TO BRIDGE RAILINGS WITHOUT SIDEWALKS DETAILS No. 2

NO SCALE

RSP A77U2 DATED JULY 19, 2013 SUPPLEMENTS THE STANDARD PLANS BOOK DATED 2010.

REVISED STANDARD PLAN RSP A77U2

2010 REVISED STANDARD PLAN RSP A77U2

6-20-13

Dist	COUNTY	ROUTE	POST MILES TOTAL PROJECT	SHEET No.	TOTAL SHEETS
05	SLO	1	73.7/74.0	57	108

Randell D. Hiatt
REGISTERED CIVIL ENGINEER

November 15, 2013
PLANS APPROVAL DATE

REGISTERED PROFESSIONAL ENGINEER
Randell D. Hiatt
No. C50200
Exp. 6-30-15
CIVIL
STATE OF CALIFORNIA

THE STATE OF CALIFORNIA OR ITS OFFICERS OR AGENTS SHALL NOT BE RESPONSIBLE FOR THE ACCURACY OR COMPLETENESS OF SCANNED COPIES OF THIS PLAN SHEET.

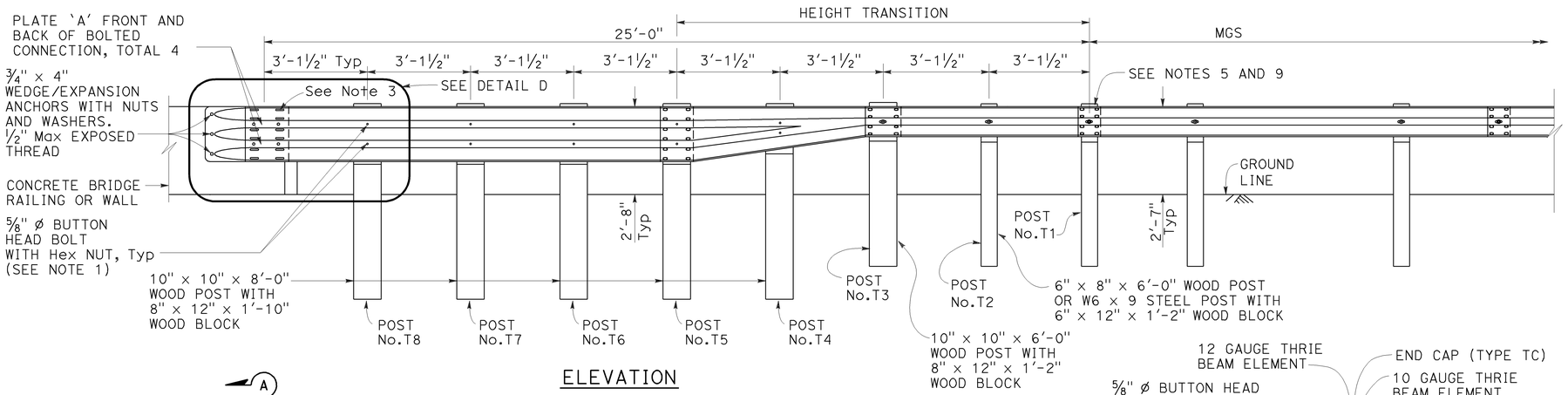

ELEVATION

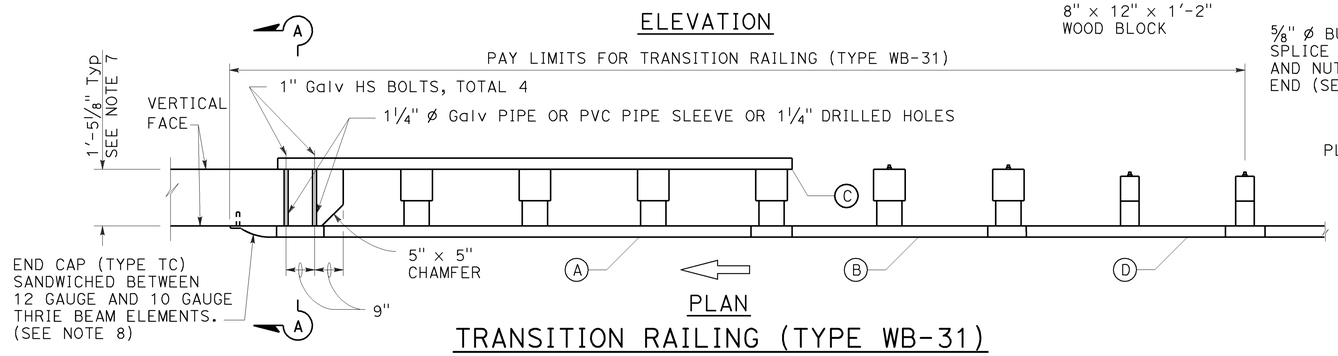

PLAN

TRANSITION RAILING (TYPE WB-31)

(No Blockout Attachment)

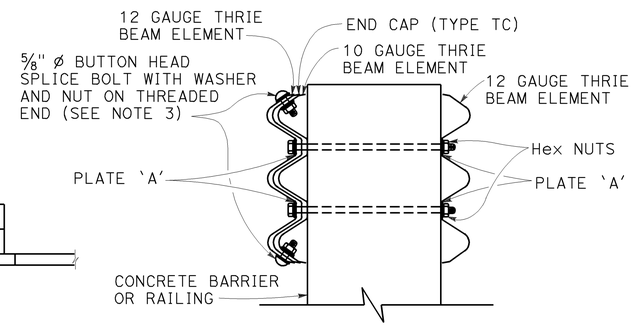

SECTION A-A

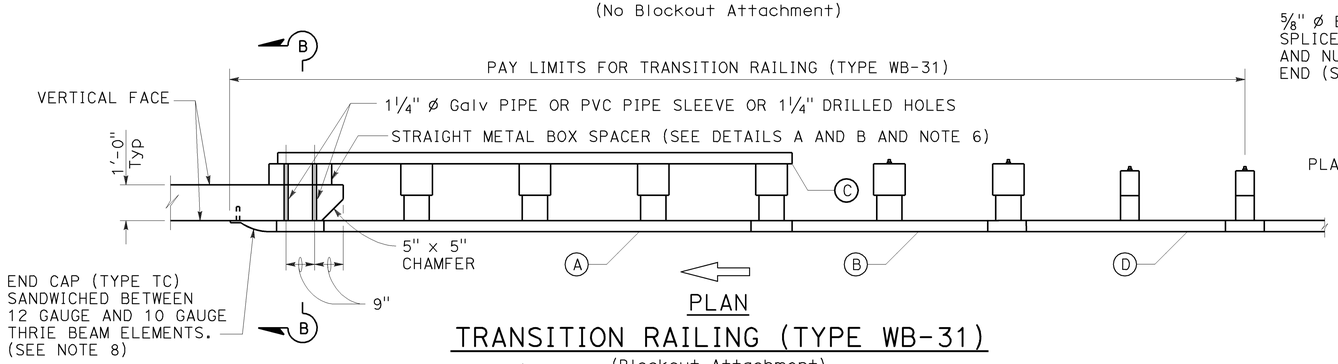

PLAN

TRANSITION RAILING (TYPE WB-31)

(Blockout Attachment)

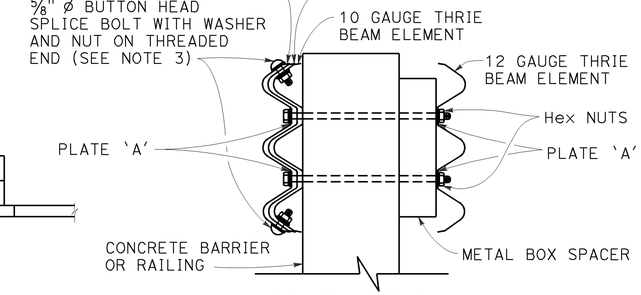

SECTION B-B

LEGEND:

- (A) NESTED THRIE BEAM ELEMENTS (ONE 12 GAUGE ELEMENT NESTED OVER ONE 10 GAUGE ELEMENT).
- (B) ONE ASYMMETRICAL 10 GAUGE "W" BEAM TO THRIE BEAM ELEMENT.
- (C) ONE 12 GAUGE THRIE BEAM ELEMENT.
- (D) ONE 10 GAUGE "W" BEAM RAIL ELEMENT (7'-3 1/2"LENGTH)

10 GAUGE = 0.138" THICK
12 GAUGE = 0.108" THICK

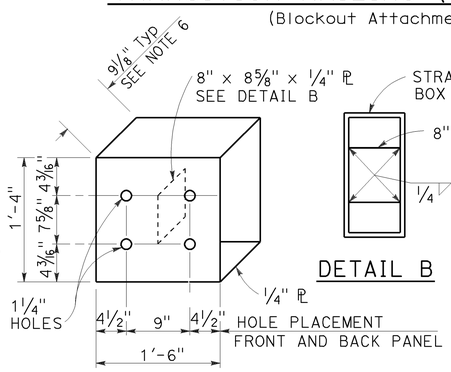

DETAIL A

STRAIGHT METAL BOX SPACER

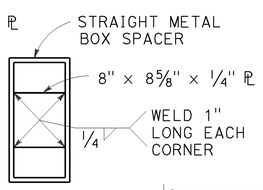

DETAIL B

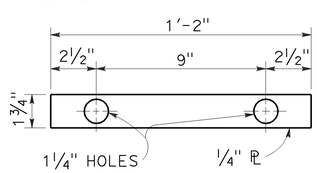

DETAIL C

PLATE 'A'

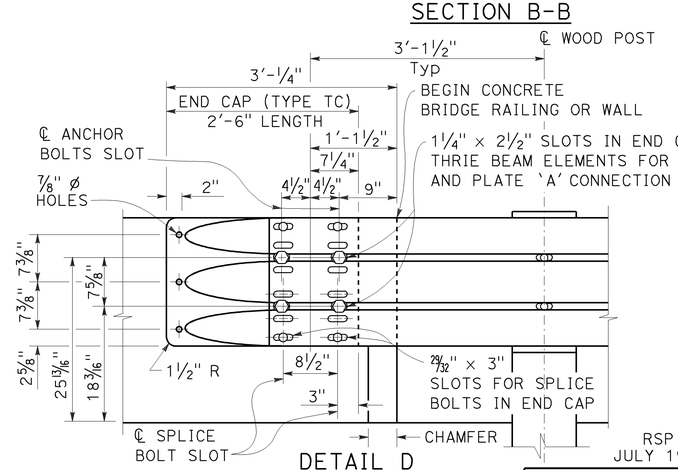

DETAIL D

NOTES:

TO ACCOMPANY PLANS DATED 5-19-14

1. Use 5/8" ø Button head bolts and hex nuts for connections to posts. No washer on rail face for bolted connections to post.
2. The nested rail elements, end cap, and 'W' beam to thrie beam element may be spliced together prior to bolting the elements to the wood post and concrete barrier or railing.
3. Exterior splice bolt holes for rail element splices at Post No. T5 and the connection to the concrete barrier or railing shall be the standard 29/32" x 1 1/8" slot size. Interior splice bolt holes at these locations may be increased up to 1 1/4" ø. Only the top 4 and the bottom 4 splice bolts with washers and nuts are required for rail splices at Post No. T5 and the connection to the concrete barrier or railing.
4. The top elevation of Posts No. T2 through No. T7 shall not project more than 1" above the top elevation of the rail element.
5. Typically, the railing connected to Transition Railing (Type WB-31) will be either standard railing section of MGS with height transition ratio of 150:1 or a Caltrans approved 31" end treatment attached to Post No. T1.
6. The depth of the metal box spacer varies from the 9 1/8" to 1 1/2" and is dependent on the width of the concrete railing or wall. The combined dimension for the depth of the metal box spacer plus the width of railing or wall is typically 21 1/8". Where the space between the backside of the concrete railing or wall and the rear thrie beam element is less than 1 1/2", metal plates similar to Plate 'A' are to be used as spacers.
7. Where the width of the concrete railing or wall is greater than 17 1/8", wood blocks are to be used to fill the space created between the backside of Posts No. T5 through No. T8 and the rear thrie beam element. These wood blocks shall be 8" in width and 1'-2" in length. The dimension between the front thrie beam element and the rear thrie beam element is to match the width of the concrete railing or wall.
8. End cap may be installed over 12 gauge and 10 gauge thrie beam elements where transition railing is installed on the departure end of bridge railing.
9. Conform standard railing section height to 31" at Post No. T1 using height transition ratio of 150:1.

STATE OF CALIFORNIA
DEPARTMENT OF TRANSPORTATION

MIDWEST GUARDRAIL SYSTEM TRANSITION RAILING (TYPE WB-31)

NO SCALE

RSP A77U4 DATED NOVEMBER 15, 2013 SUPERSEDES RSP A77U4 DATED JULY 19, 2013 THAT SUPPLEMENTS THE STANDARD PLANS BOOK DATED 2010.

REVISED STANDARD PLAN RSP A77U4

2010 REVISED STANDARD PLAN RSP A77U4

10-4-13

Dist	COUNTY	ROUTE	POST MILES TOTAL PROJECT	SHEET No.	TOTAL SHEETS
05	SLO	1	73.7/74.0	58	108

REGISTERED CIVIL ENGINEER

October 19, 2012
PLANS APPROVAL DATE

REGISTERED PROFESSIONAL ENGINEER Glenn DeCou No. C34547 Exp. 9-30-13 CIVIL STATE OF CALIFORNIA

THE STATE OF CALIFORNIA OR ITS OFFICERS OR AGENTS SHALL NOT BE RESPONSIBLE FOR THE ACCURACY OR COMPLETENESS OF SCANNED COPIES OF THIS PLAN SHEET.

TO ACCOMPANY PLANS DATED 5-19-14

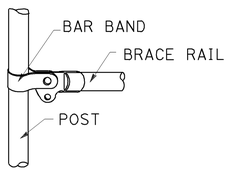

BRACE RAIL

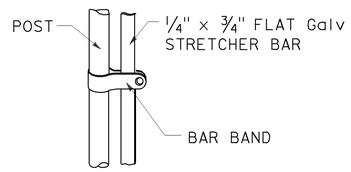

STRETCHER BAR

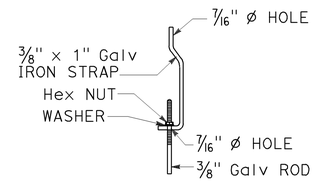

TRUSS TIGHTENER

NOTES:

1. All material for abutment connection to be galvanized.
2. The chain link fabric shall be replaced by barbed wire strands at 12" maximum centers between the double posts.
3. When the width of the culvert makes it necessary to anchor a post to the top of the culvert, a cast iron shoe or other device approved by the Engineer shall be used.
4. Fencing over stream and around headwall may also use Barbed Wire or Wire Mesh fencing with either wood post or steel post installation.
5. See Standard Plan A85 for Chain Link fence dimensions. See Standard Plan A86 for Barbed Wire and Wire Mesh fence dimensions and for wood post and steel post installation.

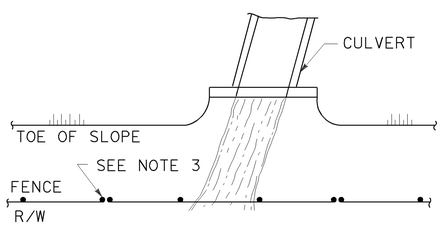

PLAN

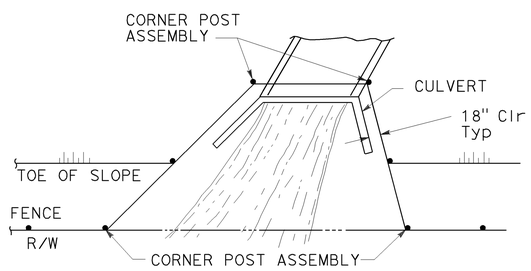

PLAN

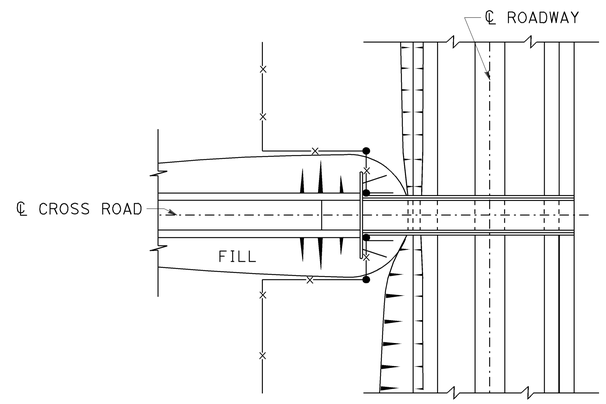

PLAN OF ROADWAY - OVERCROSSING

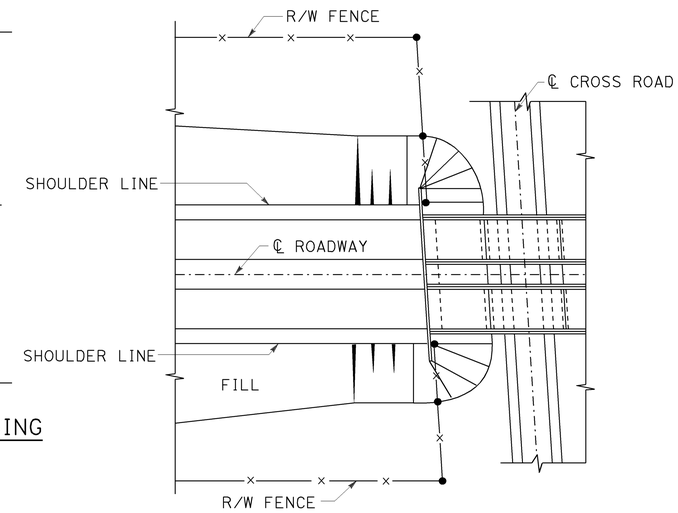

PLAN OF ROADWAY - UNDERCROSSING

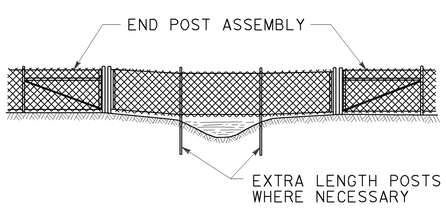

ELEVATION

INSTALLATION OVER STREAM

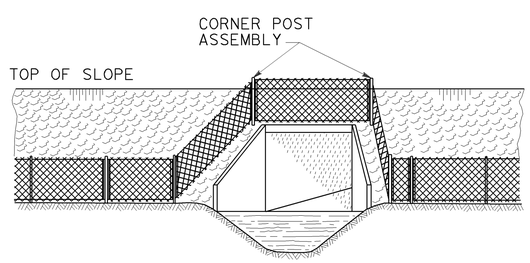

ELEVATION

INSTALLATION AROUND HEADWALL

See Note 4

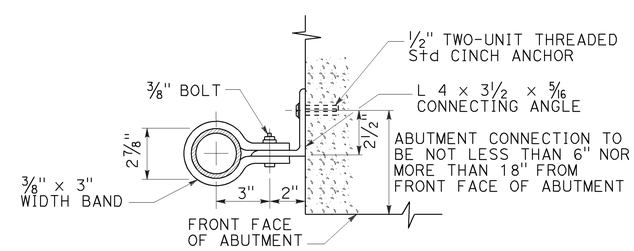

ABUTMENT CONNECTION

TYPICAL INSTALLATION AT BRIDGES

STATE OF CALIFORNIA
DEPARTMENT OF TRANSPORTATION

CHAIN LINK FENCE DETAILS

NO SCALE

RSP A85B DATED OCTOBER 19, 2012 SUPERSEDES STANDARD PLAN A85B DATED MAY 20, 2011 - PAGE 114 OF THE STANDARD PLANS BOOK DATED 2010.

REVISED STANDARD PLAN RSP A85B

2010 REVISED STANDARD PLAN RSP A85B

7-19-12

DIST	COUNTY	ROUTE	POST MILES TOTAL PROJECT	SHEET No.	TOTAL SHEETS
05	SLO	1	73.7/74.0	59	108

REGISTERED CIVIL ENGINEER

November 15, 2013
PLANS APPROVAL DATE

REGISTERED PROFESSIONAL ENGINEER Cornelis M. Hakim No. C55610 Exp. 12-31-14 CIVIL STATE OF CALIFORNIA

THE STATE OF CALIFORNIA OR ITS OFFICERS OR AGENTS SHALL NOT BE RESPONSIBLE FOR THE ACCURACY OR COMPLETENESS OF SCANNED COPIES OF THIS PLAN SHEET.

TO ACCOMPANY PLANS DATED 5-19-14

2010 REVISED STANDARD PLAN RSP P74

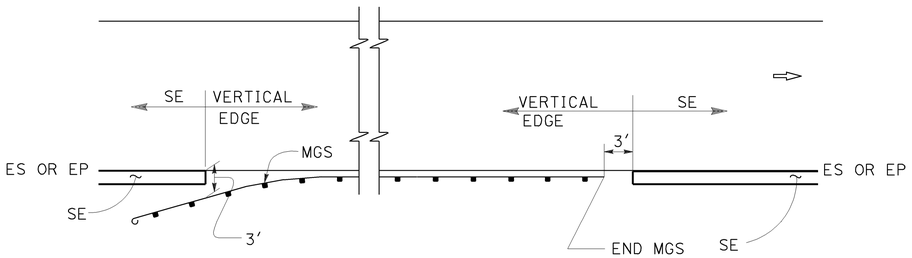

MGS

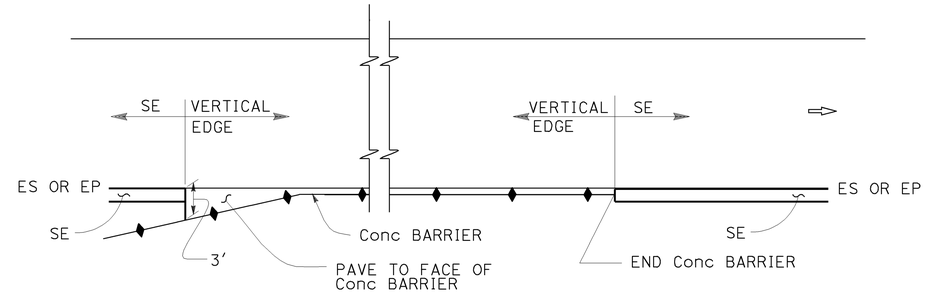

CONCRETE BARRIER

ABBREVIATIONS:

SE SAFETY EDGE

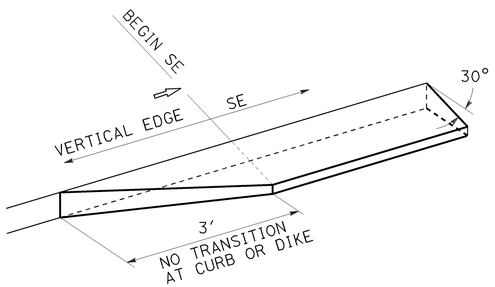

TRANSITION DETAIL FOR CONCRETE ONLY

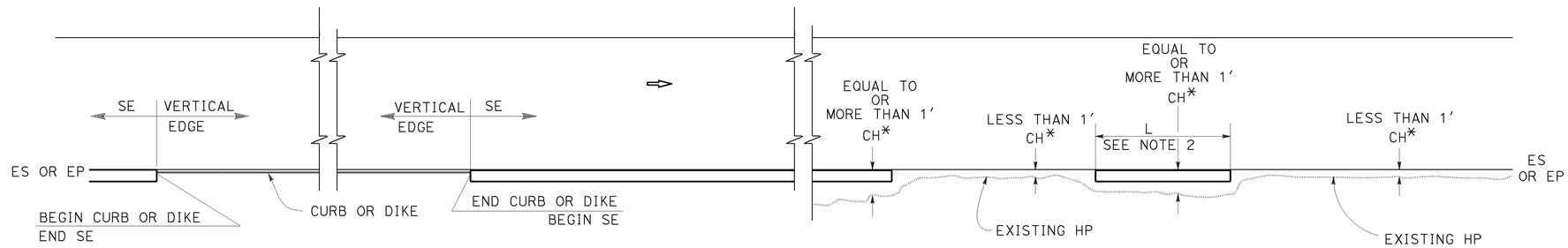

CURB OR DIKE

NARROW SIDE SLOPE

* CH = Distance from ES or EP to existing HP.

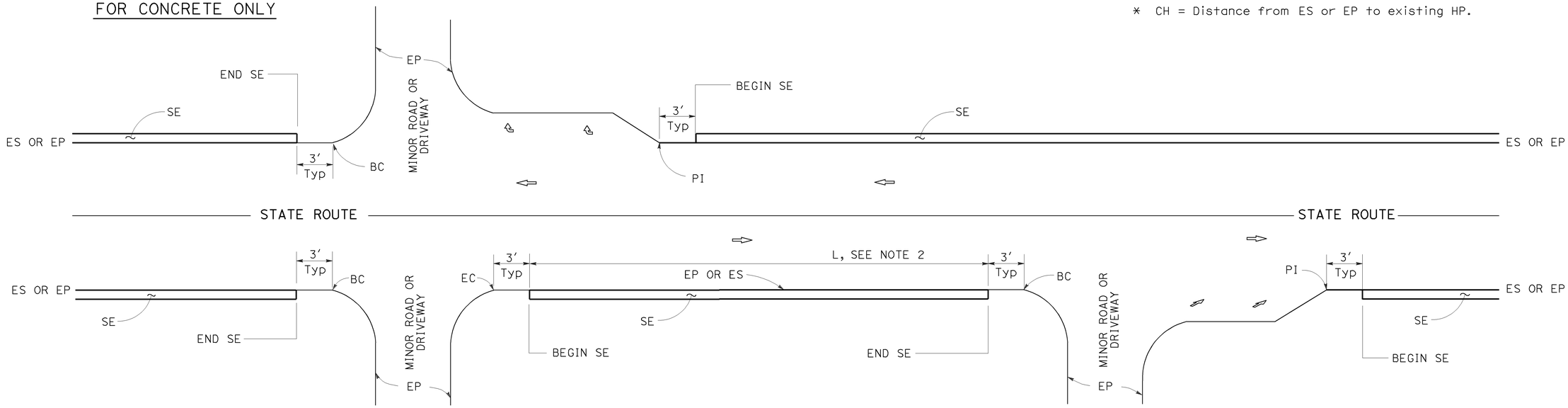

INTERSECTION

MINOR ROADWAY OR DRIVEWAY

DRIVEWAY AND INTERSECTION

STATE OF CALIFORNIA
DEPARTMENT OF TRANSPORTATION

PAVEMENT EDGE TREATMENTS

NO SCALE

RSP P74 DATED NOVEMBER 15, 2013 SUPERSEDES RSP P74 DATED JANUARY 20, 2012 THAT SUPPLEMENTS THE STANDARD PLANS BOOK DATED 2010.

NOTES:

1. For details not shown, see Revised Standard Plans RSP P75 and RSP P76.
2. Safety edge is optional when L is less than 30′.

REVISED STANDARD PLAN RSP P74

10-11-13

DIST	COUNTY	ROUTE	POST MILES TOTAL PROJECT	SHEET No.	TOTAL SHEETS
05	SLO	1	73.7/74.0	60	108

REGISTERED CIVIL ENGINEER

November 15, 2013
PLANS APPROVAL DATE

REGISTERED PROFESSIONAL ENGINEER
Cornelis M. Hakim
No. C55610
Exp. 12-31-14
CIVIL
STATE OF CALIFORNIA

THE STATE OF CALIFORNIA OR ITS OFFICERS OR AGENTS SHALL NOT BE RESPONSIBLE FOR THE ACCURACY OR COMPLETENESS OF SCANNED COPIES OF THIS PLAN SHEET.

TO ACCOMPANY PLANS DATED 5-19-14

LEGEND:

- HMA PAVEMENT
- HMA OR CONCRETE PAVEMENT
- CONCRETE PAVEMENT

ABBREVIATIONS:

SE SAFETY EDGE
TT TOTAL THICKNESS OF SE
HW HINGE WIDTH, DISTANCE FROM ES OR EP TO HP

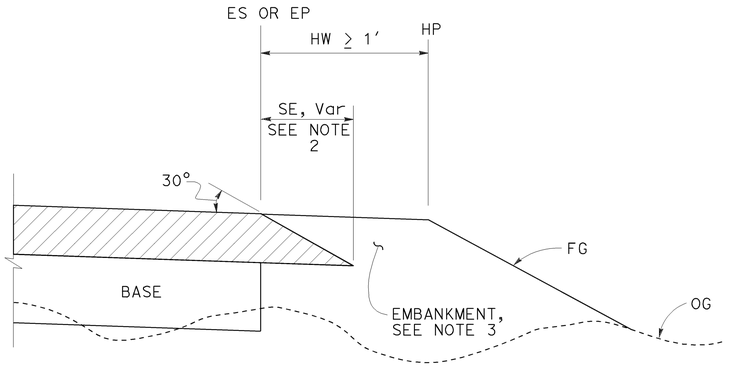

CASE K
Safety Edge - Fill Section, HW ≥ 1′

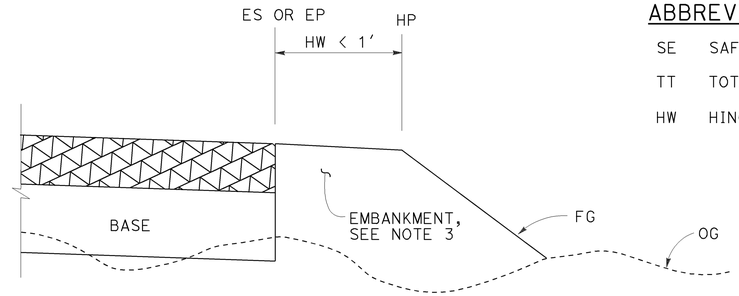

CASE L
Vertical Edge - Fill Section, HW < 1′

FILL SECTION

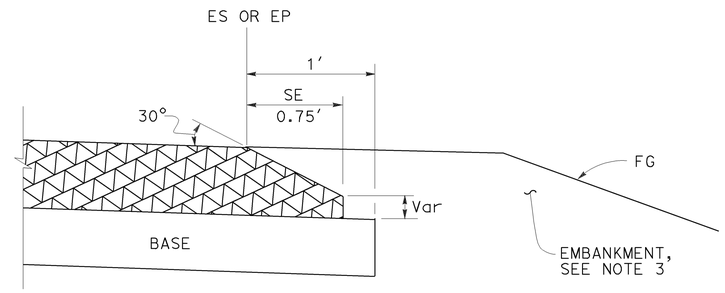

DETAIL "B"
For HMA pavement thickness more than 0.43′ or concrete pavement

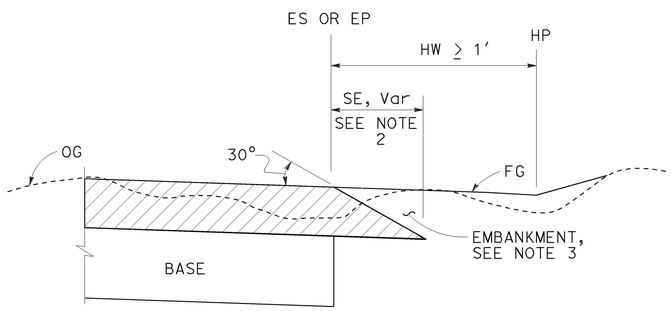

CASE M
Safety Edge - Cut Section, HW ≥ 1′

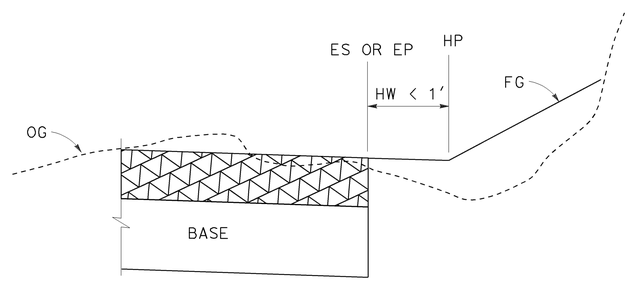

CASE N
Vertical Edge - Cut Section, HW < 1′

CUT SECTION

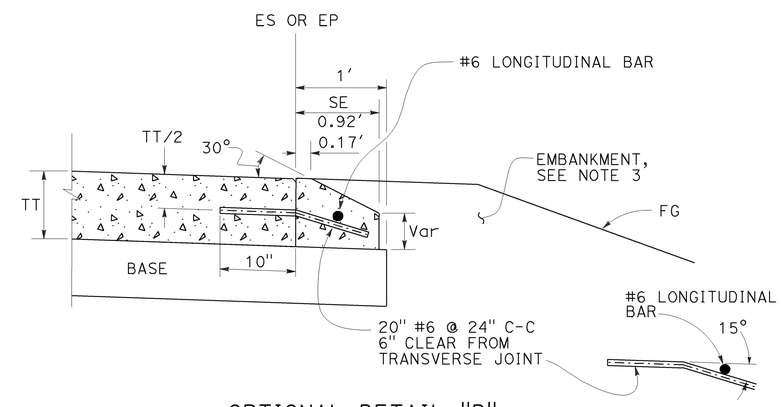

OPTIONAL DETAIL "B"
For concrete pavement
See Note 4

NOTES:

1. For limits of safety edge and vertical edge treatments, see Revised Standard Plan RSP P74
2. Details shown for HMA pavement thickness less than 0.43′. See Detail "B" for HMA pavement thickness more than 0.43′ or concrete pavement.
3. For locations and limits of embankment see project plans.
4. Safety edge transverse joint must match pavement transverse joint. End of #6 longitudinal bar must be 2" ±½" clear from transverse joint.
5. Safety edge is not needed in the area of MGS, barrier, right turn lane and acceleration lane. See Revised Standard Plan RSP P74.

STATE OF CALIFORNIA
DEPARTMENT OF TRANSPORTATION

PAVEMENT EDGE TREATMENTS-NEW CONSTRUCTION

NO SCALE

RSP P76 DATED NOVEMBER 15, 2013 SUPERSEDES RSP P76 DATED JANUARY 20, 2012 THAT SUPPLEMENTS THE STANDARD PLANS BOOK DATED 2010.

REVISED STANDARD PLAN RSP P76

2010 REVISED STANDARD PLAN RSP P76

10-4-13

TO ACCOMPANY PLANS DATED 5-19-14

Dist	COUNTY	ROUTE	POST MILES TOTAL PROJECT	SHEET No.	TOTAL SHEETS
05	SLO	1	73.7/74.0	61	108

REGISTERED CIVIL ENGINEER

October 19, 2012
PLANS APPROVAL DATE

REGISTERED PROFESSIONAL ENGINEER Glenn DeCou No. C34547 Exp. 9-30-13 CIVIL STATE OF CALIFORNIA

THE STATE OF CALIFORNIA OR ITS OFFICERS OR AGENTS SHALL NOT BE RESPONSIBLE FOR THE ACCURACY OR COMPLETENESS OF SCANNED COPIES OF THIS PLAN SHEET.

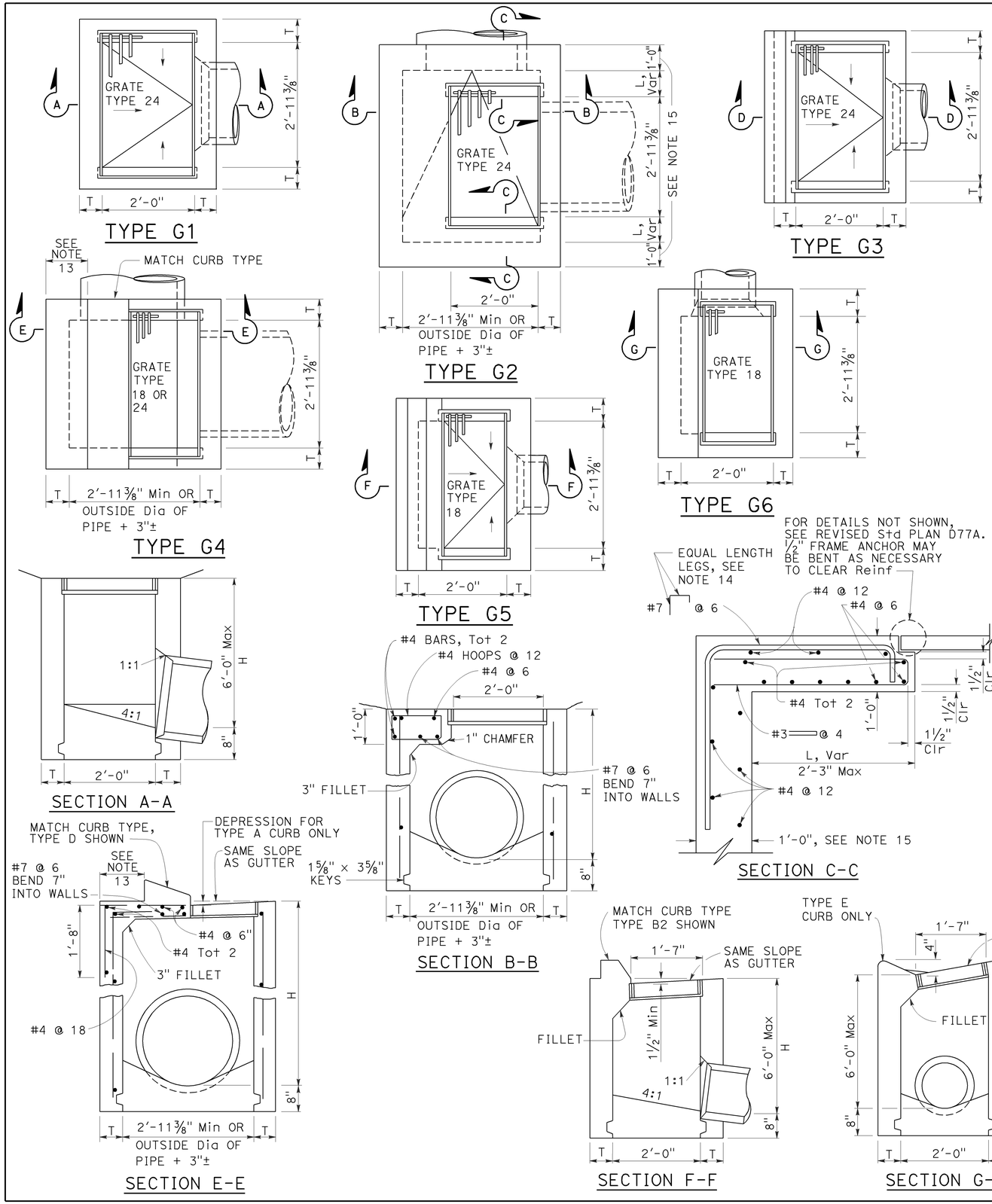

NOTES:

1. "H" is the difference in elevation between the outlet pipe flow line and the normal gutter grade line undepressed.
2. For "T" wall thickness, see Table A below.
3. Wall reinforcing not required when "H" is 8'-0" or less and the unsupported width or length is 7'-0" or less. Walls exceeding these limits shall be reinforced with #4 bars @ 1'-6" ± centers placed 1½" clear to inside of box unless otherwise shown.
4. Inlet bottom reinforcing not required. See Standard Plan D74C for alternative reinforced bottom and alternative half round bottom.
5. Steps-None required where "H" is less than 2'-6". Where "H" is 2'-6" or more, install steps with lowest rung 1'-0" above the floor and highest rung not more than 6" below top of inlet. The distance between steps shall not exceed 1'-0" and shall be uniform throughout the length of the wall. Place steps in the wall without an opening. Steps inserts may be substituted for the bar steps. Step inserts shall comply with State Industrial Safety requirements. See Standard Plan D74C for step details.
6. Details shown apply to both metal and concrete pipe.
7. Pipe(s) can be placed in any wall.
8. Curb section shall match adjacent curb.
9. Basin floors shall have wood trowel finish and a minimum slope of 12:3 from all directions toward outlet pipe.
10. Set inlet so that grate bars are parallel to direction of principal surface flow.
11. See Revised Standard Plans D77A and D77B for grate and frame details and weights of miscellaneous iron and steel.
12. See Standard Plan D78A for gutter depression details.
13. This dimenison will vary with different grates, curbs types, box width and wall thickness.
14. Bar may be rotated as necessary to clear opening. Where "L" is 6" or less, bar may be omitted.
15. Where "L" is 6" or less, wall thickness shall be as shown in Table A.
16. Cast-in-place inlets to be formed around all pipes/stubs intersecting the inlet, and concrete poured in one continuous operation. Precast inlets shall have mortared connections conforming to details for Type GCP Inlet shown on Standard Plan D75B. See Standard Specifications for mortar composition.

TABLE A

CONCRETE QUANTITIES				
TYPE	H=3'-0" TO 8'-0" (T=6")		H=8'-1" TO 20'-0" (T=8")	
	H=3'-0" (CY)	ADDITIONAL PCC PER FOOT (CY)	H=8'-1" (CY)	ADDITIONAL PCC PER FOOT (CY)
G-1	0.95	0.220	See Note A	SEE NOTE A
G-2*	1.31	0.255	3.50	0.357
G-3	1.03	0.220	See Note A	SEE NOTE A
G-4* (TYPE 24)	1.27	0.255	3.48	0.357
G-4* (TYPE 18)	1.30	0.255	3.50	0.357
G-5	1.02	0.220	SEE NOTE A	SEE NOTE A
G-6	1.04	0.220	SEE NOTE A	SEE NOTE A

TABLE BASED ON 8" FLOOR SLAB. NO DEDUCTIONS ARE TO BE MADE TO THESE QUANTITIES BECAUSE OF PIPE OPENINGS, DIFFERENT FLOOR ALTERNATIVES OR DIFFERENT CURB TYPES. * QUANTITIES FOR TYPE G-2 AND G-4 INLETS BASED ON THE MINIMUM INTERIOR DIMENSIONS.

NOTE A:

Maximum allowable height 6'-0".

STATE OF CALIFORNIA
DEPARTMENT OF TRANSPORTATION

DRAINAGE INLETS

NO SCALE

RSP D73 DATED OCTOBER 19, 2012 SUPERSEDES STANDARD PLAN D73 DATED MAY 20, 2011 - PAGE 156 OF THE STANDARD PLANS BOOK DATED 2010.

REVISED STANDARD PLAN RSP D73

2010 REVISED STANDARD PLAN RSP D73

7-19-12

Dist	COUNTY	ROUTE	POST MILES TOTAL PROJECT	SHEET No.	TOTAL SHEETS
05	SLO	1	73.7/74.0	62	108

Raymond Don Tsztoo
REGISTERED CIVIL ENGINEER

April 19, 2013
PLANS APPROVAL DATE

REGISTERED PROFESSIONAL ENGINEER Raymond Don Tsztoo No. C37332 Exp. 6-30-14 CIVIL STATE OF CALIFORNIA

THE STATE OF CALIFORNIA OR ITS OFFICERS OR AGENTS SHALL NOT BE RESPONSIBLE FOR THE ACCURACY OR COMPLETENESS OF SCANNED COPIES OF THIS PLAN SHEET.

TO ACCOMPANY PLANS DATED 5-19-14

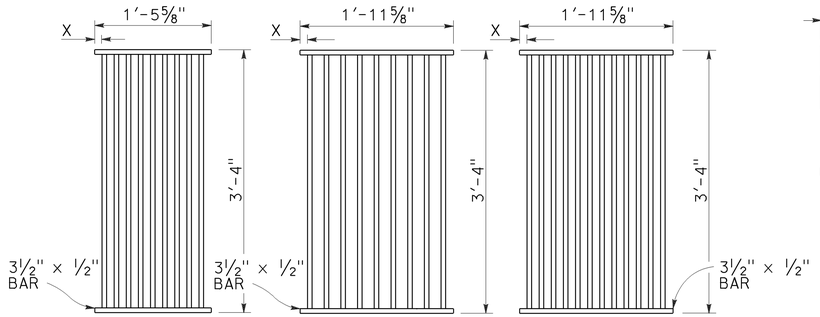

TYPE 18-9

1⅜" Clear spacing. Use within the roadbed on highways where bicycles and pedestrians are excluded.

TYPE 24-9

2" Clear spacing. Use in locations off the roadbed on all types of highways.

TYPE 24-12

1⅜" Clear spacing. Use within the roadbed on highways where bicycles and pedestrians are excluded.

RECTANGULAR GRATE DETAILS

(See table below)

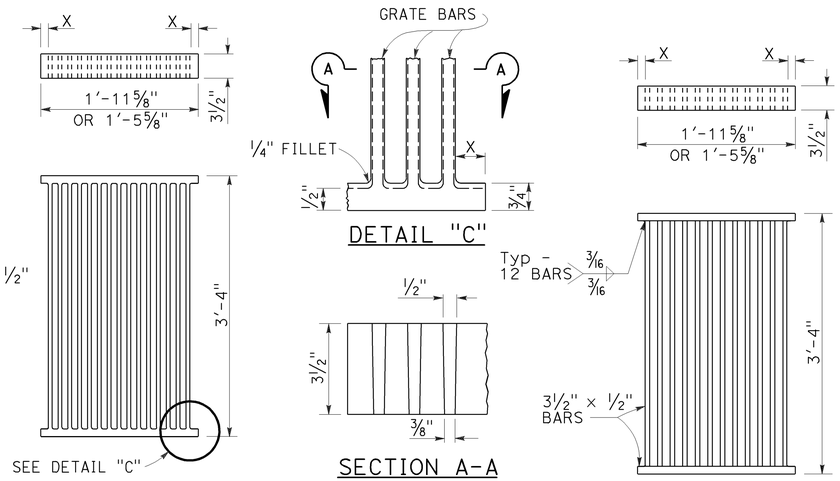

ALTERNATIVE CAST DUCTILE IRON GRATE OR CAST CARBON STEEL GRATE

ALTERNATIVE WELDED GRATE

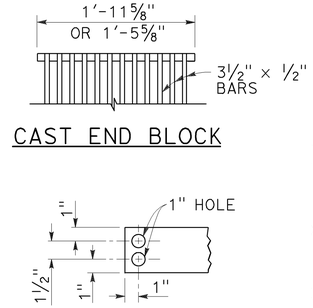

CAST END BLOCK

END OF BAR

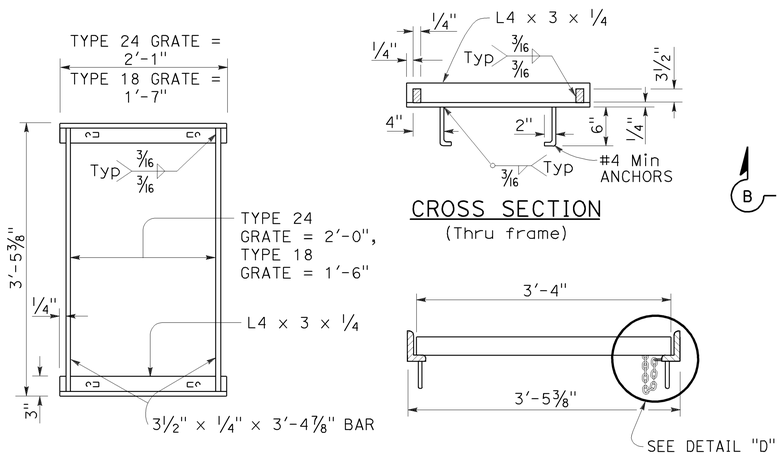

TYPICAL FRAME

CROSS SECTION
(Thru frame)

LONGITUDINAL SECTION
(Thru frame and grate)

RECTANGULAR FRAME DETAILS

(For all rectangular grates)

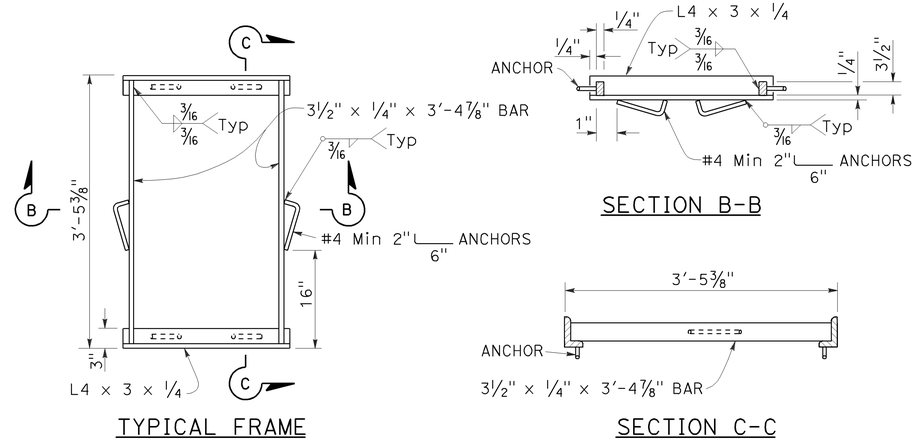

TYPICAL FRAME

SECTION B-B

SECTION C-C

ALTERNATIVE ANCHOR FOR RECTANGULAR FRAME

(For details not shown, See Rectangular Frame Details)

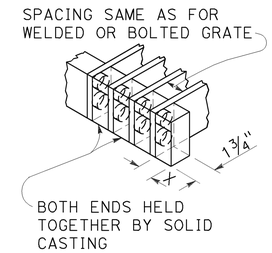

ALTERNATIVE CAST DUCTILE IRON OR CAST CARBON STEEL END BLOCK GRATE

NOTES:

1. Grate type numbers refer to approximate width of grate in inches and number of bars, respectively.
2. Contractor has the option of using cast ductile iron, cast carbon steel, welded, bolted, or cast end block grate.
3. Rounded top of bars optional on all grates.
4. Pipe inlets with a grate shall be placed so that bars parallel direction of principle surface flow.
5. Complete joint penetration butt welds may be substituted for the fillet welds on all anchors.
6. Standard square, hexagon, round or equivalent headed anchors may be substituted for the right angle hooks on the anchors shown on this plan.
7. Grate and frame weights are based on welded grates (weights of face angles, steps, protection bars, etc. are not included).
8. Connect chain to grate and frame only at locations shown on the plans. When chain is required, do not use cast ductile iron grates.

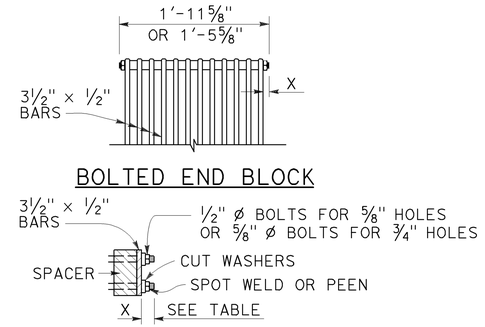

ALTERNATIVE BOLTED GRATE

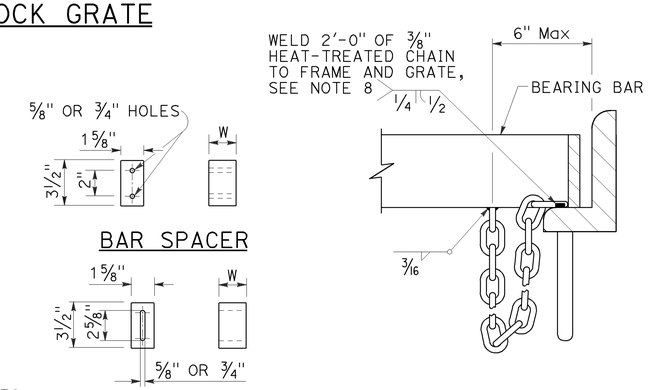

GRATE BAR SPACING TABLE

TYPE	No. OF BARS	CLEAR BAR SPACING	X
18-9	9	1⅜"	1 1/16"
24-9	9	2"	1 9/16"
24-12	12	1⅜"	1¼"

INLET TYPE	COVER TYPE	WEIGHT LB
OS	PLATE	174
OL-7	PLATE	170
OL-10	PLATE	170
OL-14	PLATE	170
OL-21	PLATE	170
OCP	PLATE	112
OCPI	PLATE	112
OCPI	REDWOOD	42
OMP	PLATE	177
OMPI	PLATE	177

INLET TYPE	GRATE TYPE	No. OF GRATES	WEIGHT LB
GDO	24-12	2	634
GOL-7	24-12	1	326
GOL-10	24-12	1	326
GO,G1,G2,G3,G4 (TYPE 24)	24-9	1	263
	24-12	1	326
G4 (TYPE 18),G5,G6	18-9	1	249
GT1	18-9	2	498
GT2	18-9	2	498
GT3	24-12	2	652
GT4	24-12	2	652
TRASH RACK			22
GRATE CHAIN			3

BASIS FOR Misc IRON & STEEL FINAL PAY WEIGHTS FOR DRAINAGE INLETS

(See Note 7)

STATE OF CALIFORNIA
DEPARTMENT OF TRANSPORTATION

GRATE DETAILS No. 1

NO SCALE

RSP D77A DATED APRIL 19, 2013 SUPERSEDES RSP D77A DATED JULY 20, 2012 AND STANDARD PLAN D77A DATED MAY 20, 2011 - PAGE 164 OF THE STANDARD PLANS BOOK DATED 2010.

REVISED STANDARD PLAN RSP D77A

2010 REVISED STANDARD PLAN RSP D77A

4-4-13

Dist	COUNTY	ROUTE	POST MILES TOTAL PROJECT	SHEET No.	TOTAL SHEETS
05	SLO	1	73.7/74.0	63	108

Raymond Don Tsztoo
REGISTERED CIVIL ENGINEER

April 19, 2013
PLANS APPROVAL DATE

REGISTERED PROFESSIONAL ENGINEER
Raymond Don Tsztoo
No. C37332
Exp. 6-30-14
CIVIL
STATE OF CALIFORNIA

THE STATE OF CALIFORNIA OR ITS OFFICERS OR AGENTS SHALL NOT BE RESPONSIBLE FOR THE ACCURACY OR COMPLETENESS OF SCANNED COPIES OF THIS PLAN SHEET.

TO ACCOMPANY PLANS DATED 5-19-14

2010 REVISED STANDARD PLAN RSP D77B

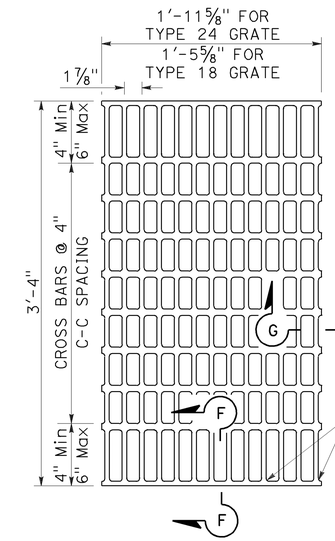

NOTES:

Bearing bars to be 3½" × ¼" bars on 1⅞" centers.

⅜"± ø Cross bars may be fillet welded, resistance welded or electroforged to bearing bars.

Weight of Type 24 grate = 141 LBS.

Weight of Type 18 grate = 107 LBS. (Type 24 grate shown).

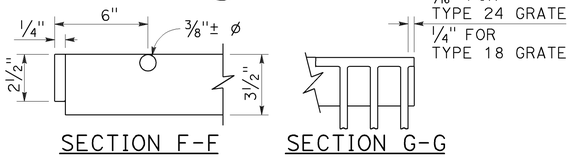

SECTION F-F SECTION G-G

TYPE 18-10 AND 24-13 GRATE

(Welded Steel)

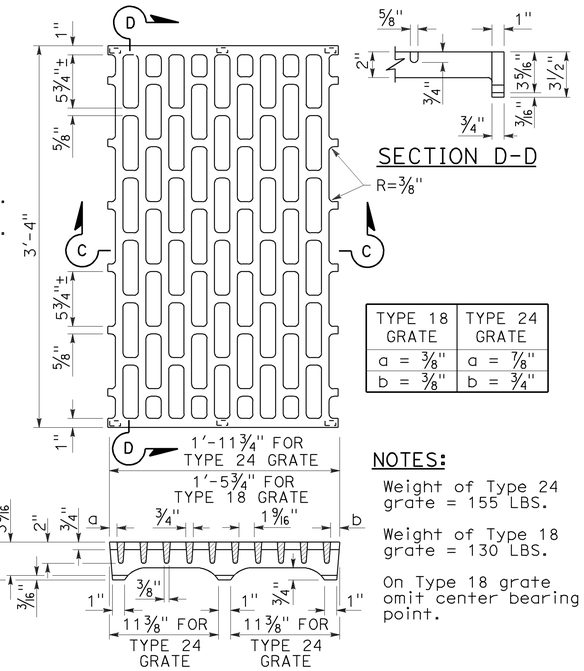

SECTION D-D

TYPE 18 GRATE	TYPE 24 GRATE
a = ⅜"	a = ⅞"
b = ⅜"	b = ¾"

NOTES:

Weight of Type 24 grate = 155 LBS.

Weight of Type 18 grate = 130 LBS.

On Type 18 grate omit center bearing point.

SECTION C-C

TYPE 18-8C AND 24-10C GRATE

(Cast ductile iron)

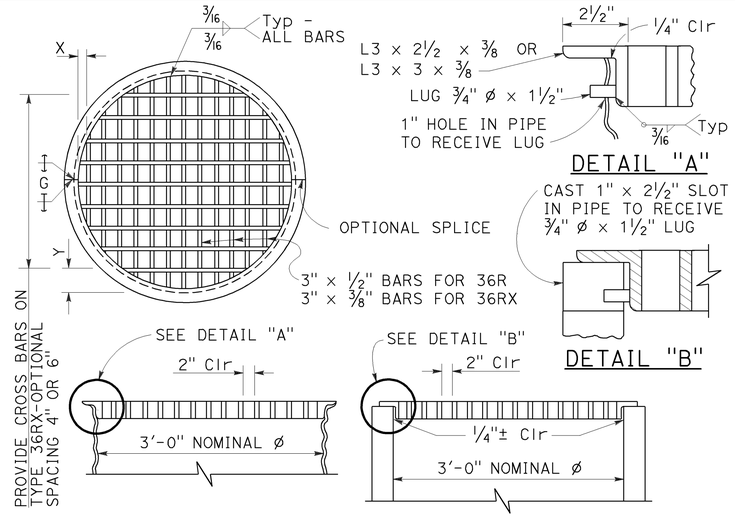

TYPE 36R AND 36RX GRATE DETAILS

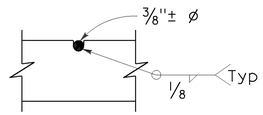

⅜"± ø Cross bars may be fillet welded, resistance welded or electroforged to bearing bars.

CROSS BAR DETAIL TYPE 36RX GRATE (WELDED STEEL)

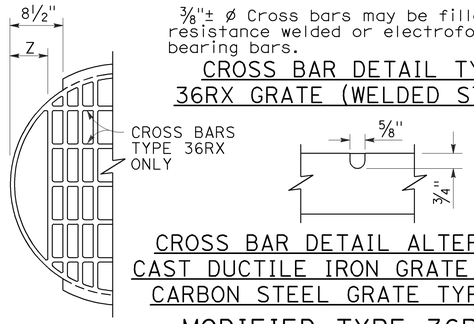

CROSS BAR DETAIL ALTERNATIVE CAST DUCTILE IRON GRATE OR CAST CARBON STEEL GRATE TYPE 36RX

MODIFIED TYPE 36R AND 36RX GRATE FOR ODI INLET

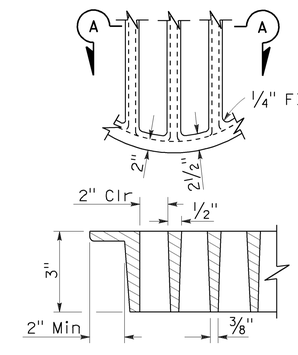

SECTION A-A

ALTERNATIVE CAST DUCTILE IRON GRATE OR CAST CARBON STEEL GRATE TYPE 36R AND 36RX

BASIS FOR Misc IRON AND STEEL FINAL PAY WEIGHTS FOR DRAINAGE INLETS

INLET TYPE	GRATE TYPE	No. OF GRATES	WEIGHT LB
GDO (SEE NOTE 4)	24-10C	2	391
	24-10S	2	456
	24-12X	2	473
	24-13	2	374
GO,GOL,G1,G2, G3,G4 (TYPE 24)	24-10C	1	202
	24-10S	1	229
	24-12X	1	239
	24-13	1	188
G4 (TYPE 18) G5,G6	18-8S	1	187
	18-9X	1	187
	18-10	1	149
GT1,GT2	18-8S	2	374
	18-9X	2	374
	18-10	2	298
GT3,GT4	24-10C	2	404
	24-10S	2	458
	24-12X	2	478
	24-13	2	376
ODI	36RX (Mod)	1	196
GMP,GCP,GCPI	36RX	1	215
ODI	36R (Mod)	1	220
GMP,GCP,GCPI	36R	1	236
TRASH RACK			22
GRATE CHAIN			3

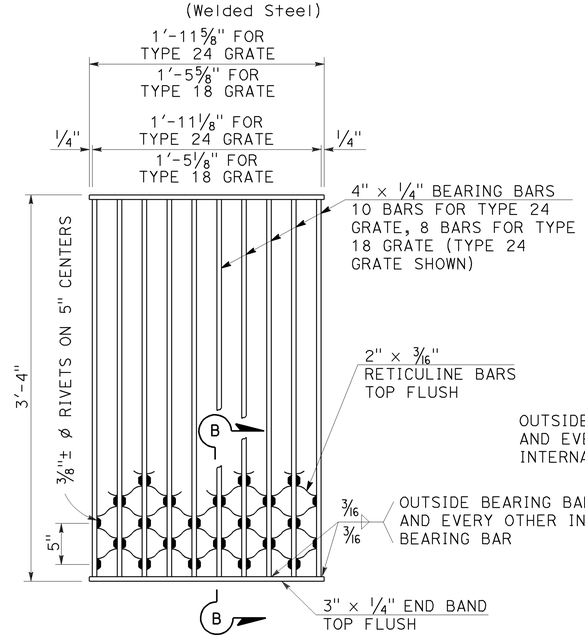

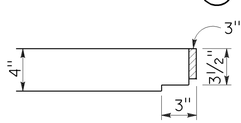

SECTION B-B

NOTES:

Weight of Type 24 grate = 182 LBS.
Weight of Type 18 grate = 145 LBS.

TYPE 18-8S AND 24-10S GRATE

(Welded Steel) Reticuline type

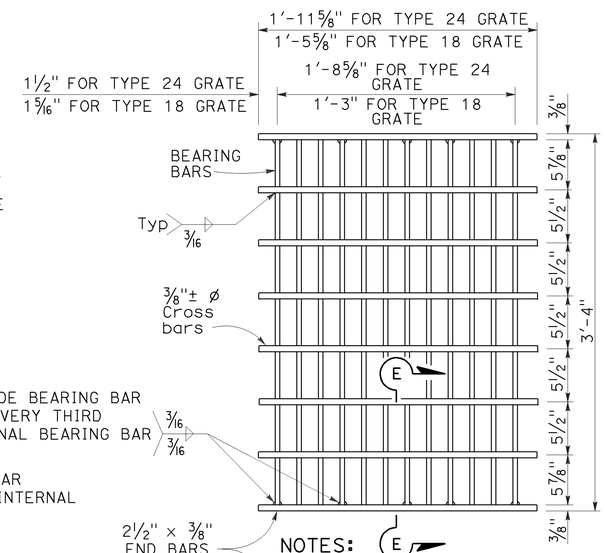

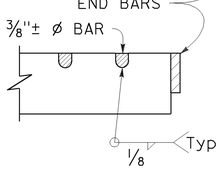

SECTION E-E

NOTES:

Bearing bars to be 3½" × ⅜" bars on 1⅞" centers.

12 Bars for Type 24 grate - 9 bars for Type 18 grates. (Type 24 grate shown).

Weight of Type 24 grate = 192 LBS.

Weight of Type 18 grate = 145 LBS.

⅜"± ø Cross bars may be fillet welded, resistance welded or electroforged to bearing bars.

TYPE 18-9X AND 24-12X GRATE

(Welded Steel)

NOTES:

1. When alternative grates are allowed - Final pay based on alternative with the lesser weight.
2. Use frame shown on Standard Plan D74A, D74B or RSP D77A as appropriate.
3. When Type 24-10S, 24-12X or 24-13 grates are used with GDO Inlets, a ¼" × 3½" × 3'-4⅞" steel bar shall be welded across the center of inlet frame to separate the individual grates.
4. See Revised Standard Plan RSP D77A for connecting chain to welded grate and frame. When chain is required, do not use cast ductile iron grate.

GRATE BAR SPACING TABLE

TYPE	No. OF BARS	CLEAR BAR SPACING	X	Y 4" SPACING	Y 6" SPACING	Z
36R	13	2"	2⅛"	-	-	-
36RX (STEEL)	15	2"	9/16"	3¾"	5¾"	-
36RX (CAST)	13	2"	2⅛"	3¾"	5¾"	-
36R Mod	12	2"	2⅛"	-	-	5"
36RX Mod (STEEL)	13	2"	9/16"	3¾"	5¾"	5 11/16"
36RX Mod (CAST)	12	2"	2⅛"	3¾"	5¾"	5"

STATE OF CALIFORNIA
DEPARTMENT OF TRANSPORTATION

GRATE DETAILS No. 2

NO SCALE

RSP D77B DATED APRIL 19, 2013 SUPERSEDES RSP D77B DATED JULY 20, 2012 AND STANDARD PLAN D77B DATED MAY 20, 2011 - PAGE 165 OF THE STANDARD PLANS BOOK DATED 2010.

REVISED STANDARD PLAN RSP D77B

4-4-13

Dist	COUNTY	ROUTE	POST MILES TOTAL PROJECT	SHEET No.	TOTAL SHEETS
05	SLO	1	73.7/74.0	64	108

LICENSED LANDSCAPE ARCHITECT

July 19, 2013
PLANS APPROVAL DATE

THE STATE OF CALIFORNIA OR ITS OFFICERS OR AGENTS SHALL NOT BE RESPONSIBLE FOR THE ACCURACY OR COMPLETENESS OF SCANNED COPIES OF THIS PLAN SHEET.

LICENSED LANDSCAPE ARCHITECT — Gregory A. Balzer — 2516 — 02-28-15 Renewal Date — 7-19-13 Date — STATE OF CALIFORNIA

TO ACCOMPANY PLANS DATED 5-19-14

A

AB	AGGREGATE BASE
ABS	ACRYLONITRILE-BUTADIENE-STYRENE
AC	ASPHALT CONCRETE
ACC	ARMOR-CLAD CONDUCTORS
Adj	ADJACENT/ADJUSTABLE
AIC	AUXILIARY IRRIGATION CONTROLLER
Alt	ALTERNATIVE
AMEND	AMENDMENT
ARV	AIR RELEASE VALVE
AUTO	AUTOMATIC
AUX	AUXILIARY
AVB	ATMOSPHERIC VACUUM BREAKER

B

B&B	BALLED AND BURLAPPED
B/B	BRASS/BRONZE
B/B/PL	BRASS/BRONZE/PLASTIC
B/PL	BRASS/PLASTIC
BFM	BONDED FIBER MATRIX
Bit Ctd	BITUMINOUS COATED
BP	BOOSTER PUMP
BPA	BACKFLOW PREVENTER ASSEMBLY
BPE	BACKFLOW PREVENTER ENCLOSURE
BV	BALL VALVE

C

C	CONDUIT
CAP	CORRUGATED ALUMINUM PIPE
CARV	COMBINATION AIR RELEASE VALVE
CB	COUPLING BAND
CCA	CAM COUPLER ASSEMBLY
CEC	CONTROLLER ENCLOSURE CABINET
CHDPE	CORRUGATED HIGH DENSITY POLYETHYLENE
CL	CHAIN LINK
CNC	CONTROL AND NEUTRAL CONDUCTORS
Conc	CONCRETE
CP	COPPER PIPE
CS	COMPOST SOCK
CSP	CORRUGATED STEEL PIPE
CST	CENTER STRIP
CV	CHECK VALVE

D

Dia	DIAMETER
DIP	DUCTILE IRON PIPE
DIT	DRIP IRRIGATION TUBING
DG	DECOMPOSED GRANITE
DN	DIAMETER NOMINAL
DVA	DRIP VALVE ASSEMBLY

E

EC	EROSION CONTROL
ECTC	EROSION CONTROL TECHNOLOGY COUNCIL
Elect	ELECTRIC/ELECTRICAL
Elev	ELEVATION
ELL	ELBOW
ENCL	ENCLOSURE
EP	EDGE OF PAVEMENT
ES	EDGE OF SHOULDER
EST	END STRIP
ESTB	ESTABLISHMENT
ETW	EDGE OF TRAVELED WAY

F

F	FULL CIRCLE
F/P	FULL/PART CIRCLE
FCV	FLOW CONTROL VALVE
FERT	FERTILIZER
FG	FINISHED GRADE
FH	FLEXIBLE HOSE
FIPT	FEMALE IRON PIPE THREAD
FIS	FERTILIZER INJECTOR SYSTEM
FL	FLOW LINE
FR	FIBER ROLL
FS	FLOW SENSOR
FSC	FLOW SENSOR CABLE
FV	FLUSH VALVE

G

Galv	GALVANIZED
GARV	GARDEN VALVE
GARVA	GARDEN VALVE ASSEMBLY
GM	GRAVEL MULCH
GPH	GALLONS PER HOUR
GPM	GALLONS PER MINUTE
GSP	GALVANIZED STEEL PIPE
GV	GATE VALVE

H

H	HALF CIRCLE
HDPE	HIGH DENSITY POLYETHYLENE
HP	HORSEPOWER/HINGE POINT
HPL	HIGH PRESSURE LINE
Hwy	HIGHWAY

I

IC	IRRIGATION CONTROLLER
ICC	IRRIGATION CONTROLLER(S) IN CONTROLLER ENCLOSURE CABINET
ID	INSIDE DIAMETER
IFS	IRRIGATION FILTRATION SYSTEM
IPS	IRON PIPE SIZE
IPT	IRON PIPE THREAD
Irr	IRRIGATION

L

L	LENGTH

M

Max	MAXIMUM
MBGR	METAL BEAM GUARD RAILING
MCV	MANUAL CONTROL VALVE
MIC	MASTER IRRIGATION CONTROLLER
Min	MINIMUM
MIPT	MALE IRON PIPE THREAD
Misc	MISCELLANEOUS
Mtl	MATERIAL
MVP	MAINTENANCE VEHICLE PULLOUT

N

NCN	NO COMMON NAME
NL	NOZZLE LINE
No.	NUMBER
NPT	NATIONAL PIPE THREAD

O

O/C	ON CENTER
OD	OUTSIDE DIAMETER
OL	OVERLAP

P

P	PART CIRCLE
PB	PULL BOX
PCC	PORTLAND CEMENT CONCRETE
PE	POLYETHYLENE
Pkt	PACKET
PL	PLASTIC
PLS	PURE LIVE SEED
PLT	PLANT/PLANTING
PLT ESTB	PLANT ESTABLISHMENT
PM	POST MILE
PR	PRESSURE RATED
PRLV	PRESSURE RELIEF VALVE
PRV	PRESSURE REGULATING VALVE
PVC	POLYVINYL CHLORIDE
Pvmt	PAVEMENT

Q

Q	QUARTER CIRCLE
QCV	QUICK COUPLING VALVE

R

R	RADIUS
RCP	REINFORCED CONCRETE PIPE
RCV	REMOTE CONTROL VALVE
RCVM	REMOTE CONTROL VALVE (MASTER)
RCVMF	REMOTE CONTROL VALVE (MASTER) W/FLOW SENSOR
RCVP	REMOTE CONTROL VALVE W/PRESSURE REGULATOR
RCW	RECYCLED WATER
RECP	ROLLED EROSION CONTROL PRODUCT
REQ	REQUIRED
RICS	REMOTE IRRIGATION CONTROL SYSTEM
R/W	RIGHT OF WAY

S

S	SLIP
SCH	SCHEDULE
SF	STATE-FURNISHED
Shld	SHOULDER
Sq	SQUARE
SST	SIDE STRIP
Sta	STATION
Std	STANDARD
SW	SIDEWALK/SOUND WALL

T

T	THIRD CIRCLE/THREAD
TLS	TRUCK LOADING STANDPIPE
TQ	THREE QUARTER CIRCLE
TRM	TURF REINFORCEMENT MAT
TT	TWO-THIRDS CIRCLE
TWSA	TREE WELL SPRINKLER ASSEMBLY
Typ	TYPICAL

U

UG	UNDERGROUND

W

W	WIDTH
W/	WITH
WM	WATER METER
WS	WYE STRAINER
WSA	WYE STRAINER ASSEMBLY
WSP	WELDED STEEL PIPE
WWM	WELDED WIRE MESH

NOTE:

For additional abbreviations, see Standard Plans A10A and A10B.

STATE OF CALIFORNIA
DEPARTMENT OF TRANSPORTATION

LANDSCAPE AND EROSION CONTROL ABBREVIATIONS

NO SCALE

RSP H1 DATED JULY 19, 2013 SUPERSEDES STANDARD PLAN H1 DATED MAY 20, 2011 - PAGE 218 OF THE STANDARD PLANS BOOK DATED 2010.

REVISED STANDARD PLAN RSP H1

2010 REVISED STANDARD PLAN RSP H1

6-28-13

Dist	COUNTY	ROUTE	POST MILES TOTAL PROJECT	SHEET No.	TOTAL SHEETS
05	SLO	1	73.7/74.0	65	108

LICENSED LANDSCAPE ARCHITECT

November 15, 2013
PLANS APPROVAL DATE

LICENSED LANDSCAPE ARCHITECT — Gregory A. Balzer — 2516 — 02-28-15 Renewal Date — 11-15-13 Date — STATE OF CALIFORNIA

THE STATE OF CALIFORNIA OR ITS OFFICERS OR AGENTS SHALL NOT BE RESPONSIBLE FOR THE ACCURACY OR COMPLETENESS OF SCANNED COPIES OF THIS PLAN SHEET.

TO ACCOMPANY PLANS DATED 5-19-14

EXISTING	NEW	ITEM DESCRIPTION
		WATER METER (WM)
		BACKFLOW PREVENTER ASSEMBLY (BPA)
		BACKFLOW PREVENTER ENCLOSURE (BPE)
		BOOSTER PUMP (BP)
		TRUCK LOADING STANDPIPE (TLS)
	FS	FLOW SENSOR (FS)
		MASTER IRRIGATION CONTROLLER (MIC)
		AUXILIARY IRRIGATION CONTROLLER (AIC)
		IRRIGATION CONTROLLER (IC) IRRIGATION CONTROLLER (IC) (BATTERY) IRRIGATION CONTROLLER (IC) (SOLAR) IRRIGATION CONTROLLER (IC) (TWO WIRE)
		IRRIGATION CONTROLLER(S) IN CONTROLLER ENCLOSURE CABINET (ICC)
acc	ACC	ARMOR-CLAD CONDUCTORS (ACC)
cnc	CNC	CONTROL AND NEUTRAL CONDUCTORS (CNC)
		IRRIGATION CONDUIT
		EXTEND IRRIGATION CONDUIT
dip	DIP	DUCTILE IRON PIPE (SUPPLY LINE) (MAIN) (DIP)
		GALVANIZED STEEL PIPE (SUPPLY LINE) (MAIN) (GSP)
		GALVANIZED STEEL PIPE (SUPPLY LINE) (LATERAL) (GSP)
		PLASTIC PIPE (SUPPLY LINE) (MAIN)
		PLASTIC PIPE (SUPPLY LINE) (LATERAL)
cp	CP	COPPER PIPE (SUPPLY LINE)
dit	DIT	DRIP IRRIGATION TUBING
		REMOTE CONTROL VALVE (RCV) REMOTE CONTROL VALVE (MASTER) (RCVM) REMOTE CONTROL VALVE (MASTER) W/FLOW METER (RCVMF)
P	P	REMOTE CONTROL VALVE W/PRESSURE REGULATOR (RCVP)
		EXISTING MANUAL CONTROL VALVE (MCV)
	V	DRIP VALVE ASSEMBLY (DVA)
	Y	WYE STRAINER ASSEMBLY (WSA)

EXISTING	NEW	ITEM DESCRIPTION
		GATE VALVE (GV)
		BALL VALVE (BV)
		QUICK COUPLING VALVE (QCV)
		CAM COUPLER ASSEMBLY (CCA)
		GARDEN VALVE ASSEMBLY (GARVA)
		PRESSURE REGULATING VALVE (PRV)
		PRESSURE RELIEF VALVE (PRLV)
		FLOW CONTROL VALVE (FCV)
		COMBINATION AIR RELEASE VALVE (CARV)
		CHECK VALVE (CV)
		FLUSH VALVE (FV)
		EXISTING NOZZLE LINE W/TURNING UNION
		EXISTING IRRIGATION SYSTEM
		EXISTING IRRIGATION SYSTEM TO BE REMOVED
		CHAIN LINK GATE
		QUICK COUPLING VALVE W/SPRINKLER PROTECTOR
3	3	SPRINKLER W/SPRINKLER PROTECTOR
	C	CONNECT TO EXISTING SYSTEM
		CAP
		CAP EXISTING
	\\\FR\\\	FIBER ROLL
	\\\CS\\\	COMPOST SOCK

- RCV SIZE
- IRRIGATION CONTROLLER
- CONTROLLER STATION
- VALVE IN PARALLEL (IF APPLICABLE)
- GPM
- QUANTITY OF SPRINKLERS (WHEN SHOWN)

* 2½"-A-2b-40-60

VALVE CODE

* VALVE CODES FOR EXISTING VALVES ARE SHOWN IN A DASHED ENCLOSURE.

STATE OF CALIFORNIA
DEPARTMENT OF TRANSPORTATION

LANDSCAPE AND EROSION CONTROL SYMBOLS

NO SCALE

RSP H2 DATED NOVEMBER 15, 2013 SUPERSEDES RSP H2 DATED JULY 19, 2013 AND STANDARD PLAN H2 DATED MAY 20, 2011 - PAGE 219 OF THE STANDARD PLANS BOOK DATED 2010.

REVISED STANDARD PLAN RSP H2

2010 REVISED STANDARD PLAN RSP H2

10-9-13

Dist	COUNTY	ROUTE	POST MILES TOTAL PROJECT	SHEET No.	TOTAL SHEETS
05	SLO	1	73.7/74.0	66	108

LICENSED LANDSCAPE ARCHITECT

July 19, 2013
PLANS APPROVAL DATE

THE STATE OF CALIFORNIA OR ITS OFFICERS OR AGENTS SHALL NOT BE RESPONSIBLE FOR THE ACCURACY OR COMPLETENESS OF SCANNED COPIES OF THIS PLAN SHEET.

LICENSED LANDSCAPE ARCHITECT — Gregory A. Balzer — 2516 — Expiration Date 2-28-15 — Renewal Date 7-19-13 — Date — STATE OF CALIFORNIA

TO ACCOMPANY PLANS DATED 5-19-14

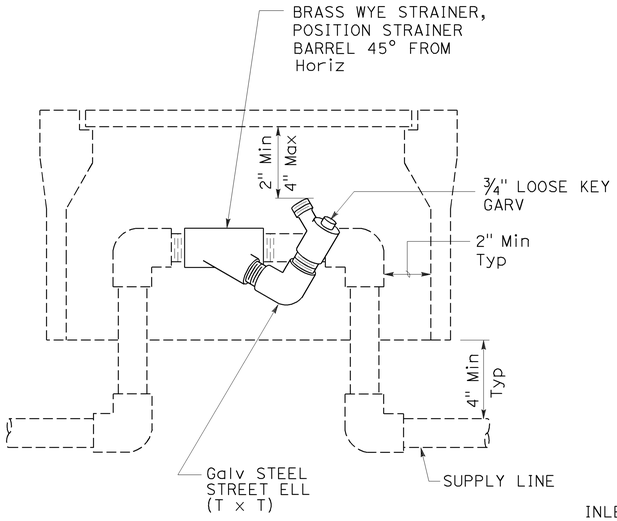

ELEVATION
WYE STRAINER ASSEMBLY

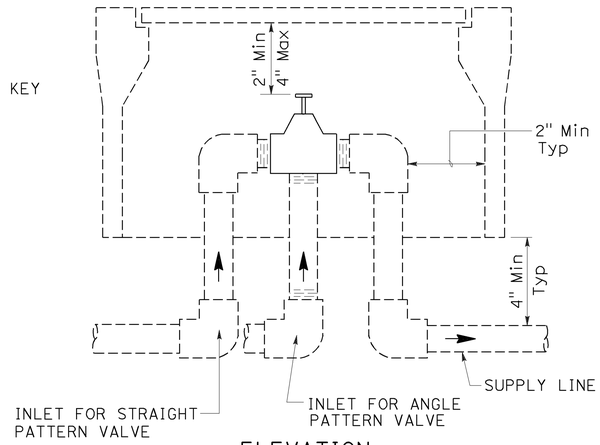

ELEVATION
VALVE

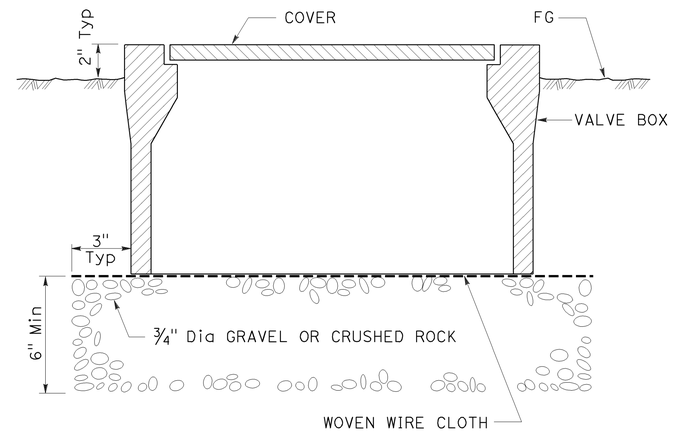

SECTION
VALVE BOX

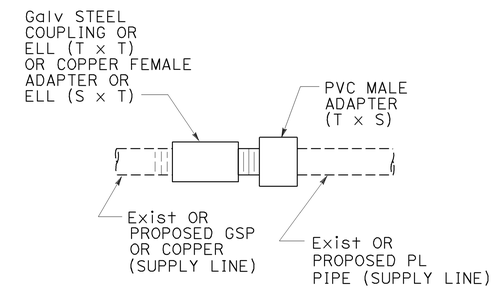

GALVANIZED OR COPPER PIPE CONNECTION TO PLASTIC PIPE

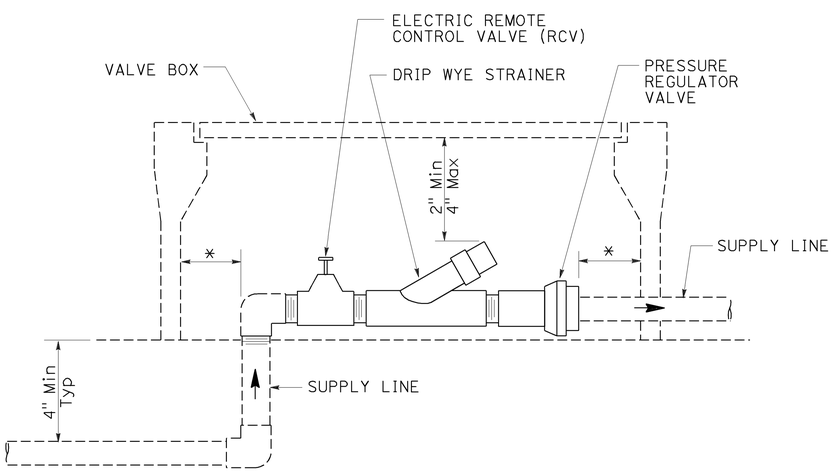

ELEVATION
DRIP VALVE ASSEMBLY

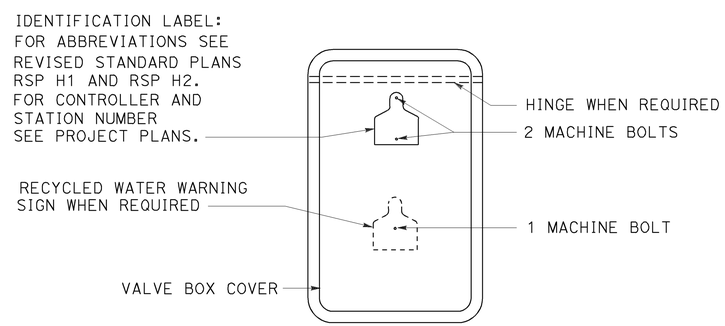

PLAN

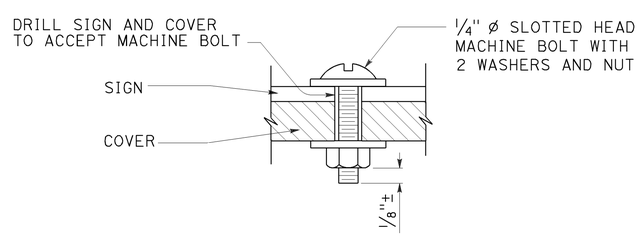

SECTION
VALVE BOX IDENTIFICATION

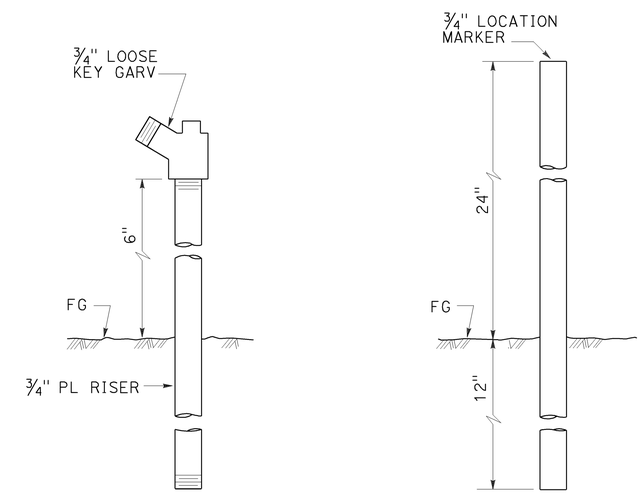

ELEVATION
GARDEN VALVE ASSEMBLY

ELEVATION
LOCATION MARKER

GARDEN VALVE ASSEMBLY

STATE OF CALIFORNIA
DEPARTMENT OF TRANSPORTATION

LANDSCAPE DETAILS

NO SCALE

RSP H7 DATED JULY 19, 2013 SUPERSEDES STANDARD PLAN H7 DATED MAY 20, 2011 - PAGE 224 OF THE STANDARD PLANS BOOK DATED 2010.

REVISED STANDARD PLAN RSP H7

2010 REVISED STANDARD PLAN RSP H7

6-20-13

Dist	COUNTY	ROUTE	POST MILES TOTAL PROJECT	SHEET No.	TOTAL SHEETS
05	SLO	1	73.7/74.0	67	108

REGISTERED CIVIL ENGINEER

July 19, 2013
PLANS APPROVAL DATE

REGISTERED PROFESSIONAL ENGINEER
Gurinderpal Bhullar
No. C48815
Exp. 9-30-14
CIVIL
STATE OF CALIFORNIA

THE STATE OF CALIFORNIA OR ITS OFFICERS OR AGENTS SHALL NOT BE RESPONSIBLE FOR THE ACCURACY OR COMPLETENESS OF SCANNED COPIES OF THIS PLAN SHEET.

TO ACCOMPANY PLANS DATED 5-19-14

TABLE 1

TAPER LENGTH CRITERIA AND CHANNELIZING DEVICE SPACING

SPEED (S)	MINIMUM TAPER LENGTH * FOR WIDTH OF OFFSET 12 FEET (W)				MAXIMUM CHANNELIZING DEVICE SPACING		
					X	Y	Z **
	TANGENT 2L	MERGING L	SHIFTING L/2	SHOULDER L/3	TAPER	TANGENT	CONFLICT
mph	ft	ft	ft	ft	ft	ft	ft
20	160	80	40	27	20	40	10
25	250	125	63	42	25	50	12
30	360	180	90	60	30	60	15
35	490	245	123	82	35	70	17
40	640	320	160	107	40	80	20
45	1080	540	270	180	45	90	22
50	1200	600	300	200	50	100	25
55	1320	660	330	220	55	110	27
60	1440	720	360	240	60	120	30
65	1560	780	390	260	65	130	32
70	1680	840	420	280	70	140	35

* - For other offsets, use the following merging taper length formula for L:
For speed of 40 mph or less, $L = WS^2/60$
For speed of 45 mph or more, $L = WS$

Where: L = Taper length in feet
W = Width of offset in feet
S = Posted speed limit, off-peak 85th-percentile speed prior to work starting, or the anticipated operating speed in mph

** - Use for taper and tangent sections where there are no pavement markings or where there is a conflict between existing pavement markings and channelizers (CA).

TABLE 2

LONGITUDINAL BUFFER SPACE AND FLAGGER STATION SPACING

SPEED *	Min D **	DOWNGRADE Min D ***		
		-3%	-6%	-9%
mph	ft	ft	ft	ft
20	115	116	120	126
25	155	158	165	173
30	200	205	215	227
35	250	257	271	287
40	305	315	333	354
45	360	378	400	427
50	425	446	474	507
55	495	520	553	593
60	570	598	638	686
65	645	682	728	785
70	730	771	825	891

* - Speed is posted speed limit, off-peak 85th-percentile speed prior to work starting, or the anticipated operating speed in mph

** - Longitudinal buffer space or flagger station spacing

*** - Use on sustained downgrade steeper than -3 percent and longer than 1 mile.

TABLE 3

ADVANCE WARNING SIGN SPACING

ROAD TYPE	DISTANCE BETWEEN SIGNS *		
	A	B	C
	ft	ft	ft
URBAN - 25 mph OR LESS	100	100	100
URBAN - MORE THAN 25 mph TO 40 mph	250	250	250
URBAN - MORE THAN 40 mph	350	350	350
RURAL	500	500	500
EXPRESSWAY / FREEWAY	1000	1500	2640

* - The distances are approximate, are intended for guidance purposes only, and should be applied with engineering judgment. These distances should be adjusted by the Engineer for field conditions, if necessary, by increasing or decreasing the recommmended distances.

STATE OF CALIFORNIA
DEPARTMENT OF TRANSPORTATION

TRAFFIC CONTROL SYSTEM TABLES FOR LANE AND RAMP CLOSURES

NO SCALE

RSP T9 DATED JULY 19, 2013 SUPERSEDES RSP T9 DATED APRIL 19, 2013 THAT SUPPLEMENTS THE STANDARD PLANS BOOK DATED 2010.

REVISED STANDARD PLAN RSP T9

2010 REVISED STANDARD PLAN RSP T9

Dist	COUNTY	ROUTE	POST MILES TOTAL PROJECT	SHEET No.	TOTAL SHEETS
05	SLO	1	73.7/74.0	68	108

REGISTERED CIVIL ENGINEER

April 19, 2013
PLANS APPROVAL DATE

REGISTERED PROFESSIONAL ENGINEER Gurinderpal Bhullar No. C48815 Exp. 9-30-14 CIVIL STATE OF CALIFORNIA

THE STATE OF CALIFORNIA OR ITS OFFICERS OR AGENTS SHALL NOT BE RESPONSIBLE FOR THE ACCURACY OR COMPLETENESS OF SCANNED COPIES OF THIS PLAN SHEET.

TO ACCOMPANY PLANS DATED 5-19-14

NOTES:

See Revised Standard Plan RSP T9 for tables.

Use cone spacing X for taper segment, Y for tangent segment or Z for conflict situations, as approriate, per Table 1, unless X, Y, or Z cone spacing is shown on this sheet.

Unless otherwise specified in the special provisions, all temporary warning signs shall have black legend on fluorescent orange background.

California codes are designated by (CA). Otherwise, Federal (MUTCD) codes are shown.

TYPICAL LANE CLOSURE WITH REVERSIBLE CONTROL

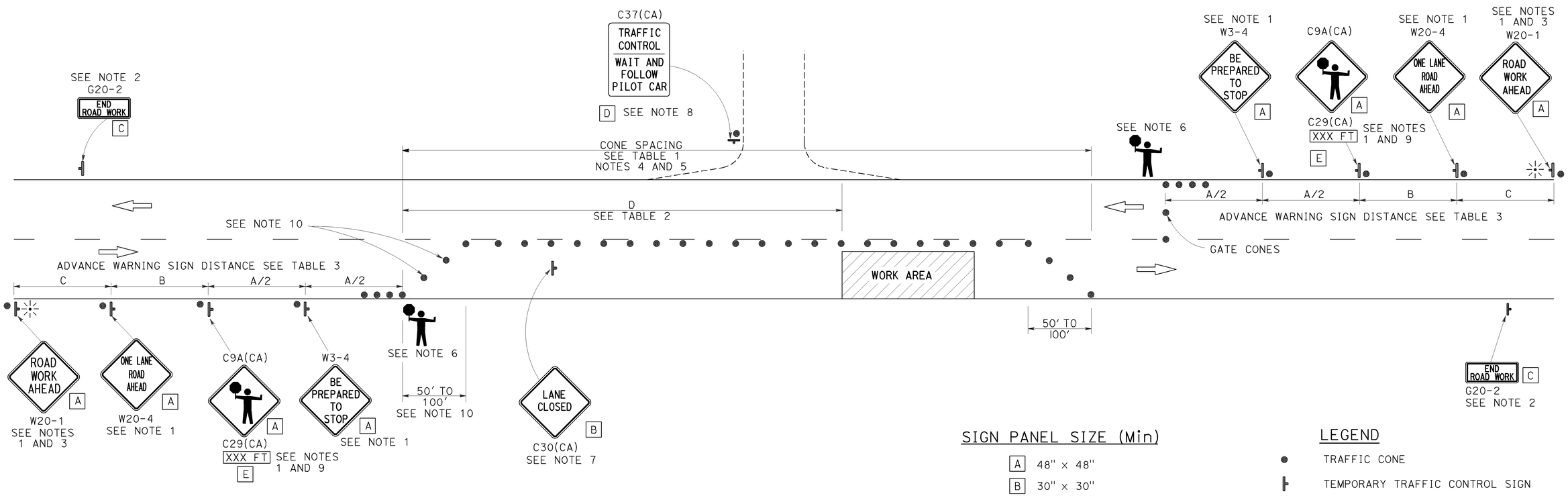

SIGN PANEL SIZE (Min)

A	48" × 48"
B	30" × 30"
C	36" × 18"
D	36" × 42"
E	20" × 7"

LEGEND

- TRAFFIC CONE
- TEMPORARY TRAFFIC CONTROL SIGN
- PORTABLE FLASHING BEACON
- FLAGGER

NOTES:

1. Each advance warning sign in each direction of travel shall be equipped with at least two flags for daytime closure. Each flag shall be at least 16" x 16" in size and shall be orange or fluorescent red-orange in color. Flashing beacons shall be placed at the locations indicated for lane closure during hours of darkness.
2. A G20-2 "END ROAD WORK" sign, as appropriate, shall be placed at the end of the lane control unless the end of work area is obvious, or ends within a larger project's limits.
3. If the W20-1 sign would follow within 2000' of a stationary W20-1 or G20-1 "ROAD WORK NEXT _____ MILES", use a W20-4 sign for the first advance warning sign.
4. All cones used for lane closures during the hours of darkness shall be fitted with retroreflective bands (or sleeves) as specified in the specifications.
5. Portable delineators, placed at one-half the spacing indicated for traffic cones, may be used instead of cones for daytime closures only.
6. Additional advance flaggers may be required. Flagger should stand in a conspicuous place, be visible to approaching traffic as well as approaching vehicles after the first vehicle has stopped. During the hours of darkness, the flagging-station and flagger shall be illuminated and clearly visible to approaching traffic. The illumination footprint of the lighting on the ground shall be at least 20' in diameter. Place a minimum of four cones at 50' intervals in advance of flagger station as shown.
7. Place C30(CA) "LANE CLOSED" sign at 500' to 1000' intervals throughout extended work areas. They are optional if the work area is visible from the flagger station.
8. When a pilot car is used, place a C37(CA) "TRAFFIC CONTROL-WAIT AND FOLLOW PILOT CAR" sign with black legend on white background at all intersections, driveways and alleys without a flagger within traffic control area. Signs shall be clean and visible at all times. Where traffic can not be effectively self-regulated, at least one flagger shall be used at each intersection within traffic control area.
9. An optional C29(CA) sign may be placed below the C9A(CA) sign.
10. Either traffic cones or barricades shall be placed on the taper. Barricades shall be Type I, II, or III.

STATE OF CALIFORNIA
DEPARTMENT OF TRANSPORTATION

TRAFFIC CONTROL SYSTEM FOR LANE CLOSURE ON TWO LANE CONVENTIONAL HIGHWAYS

NO SCALE

RSP T13 DATED APRIL 19, 2013 SUPERSEDES STANDARD PLAN T13 DATED MAY 20, 2011 - PAGE 241 OF THE STANDARD PLANS BOOK DATED 2010.

REVISED STANDARD PLAN RSP T13

2010 REVISED STANDARD PLAN RSP T13

4-2-13

Dist	COUNTY	ROUTE	POST MILES TOTAL PROJECT	SHEET No.	TOTAL SHEETS
05	SLO	1	73.7/74.0	69	108

REGISTERED CIVIL ENGINEER

April 19, 2013
PLANS APPROVAL DATE

REGISTERED PROFESSIONAL ENGINEER Gurinderpal Bhullar No. C48815 Exp. 9-30-14 CIVIL STATE OF CALIFORNIA

THE STATE OF CALIFORNIA OR ITS OFFICERS OR AGENTS SHALL NOT BE RESPONSIBLE FOR THE ACCURACY OR COMPLETENESS OF SCANNED COPIES OF THIS PLAN SHEET.

TO ACCOMPANY PLANS DATED 5-19-14

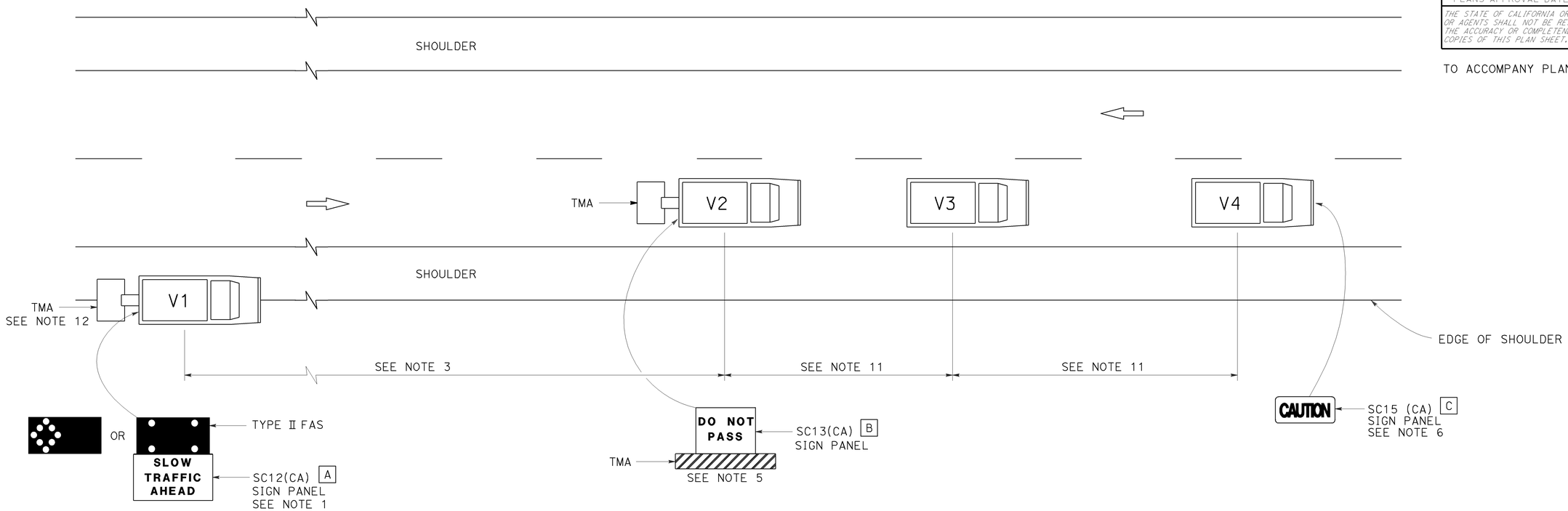

LEGEND

V1	SIGN VEHICLE
V2	SHADOW VEHICLE
V3	WORK/APPLICATION VEHICLE
V4	SIGN VEHICLE
TMA	TRUCK-MOUNTED ATTENUATOR
	FLASHING ARROW SIGN (FAS) IN FLASHING CAUTION MODE
	FLASHING ARROW SIGN (FAS) IN ALTERNATING DIAMOND CAUTION

SIGN PANEL SIZE (Min)

A	72" x 42"
B	54" x 42"
C	54" x 24"

NOTES:

1. Either a changeable message sign or a SC12(CA) "SLOW TRAFFIC AHEAD" sign shall be mounted on the rear of sign vehicle V1. The changeable message sign shall be sequenced to show the "CAUTION" message first, follow by the "SLOW TRAFFIC AHEAD" message. A Type II flashing arrow sign may be used with the SC12(CA) sign panel.
2. Sign vehicle V1 should be positioned where highly visible when shoulders are not available.
3. If traffic queues develop, sign vehicle V1 should be positioned upstream from the end of queue.
4. Vehicle-mounted sign panels shall have Type III or above retroreflective sheeting, black on white, or black on fluorescent orange, with 6" minimum series D letters per Caltrans sign specifications.
5. Shadow vehicle shall be equipped with a truck-mounted attenuator. The sign panel shown shall be mounted on the rear of shadow vehicle V2. The message "LANE CLOSED" may be used in place of the "DO NOT PASS" message.
6. The sign panel shown shall be mounted on the front of sign vehicle V4, facing opposing traffic.
7. All vehicles shall be equipped with flashing or rotating amber lights.
8. Sign vehicle V4 will not be required when the work and vehicles V2 and V3 are 2′ or more from the centerline of the highway during the work or application operations.
9. All vehicles used for lane closures shall be equipped with two-way radios and the vehicle operators shall maintain communication during the work or application operation.
10. This plan shall not be used where workers would be on foot in the work area. Use a stationary type lane closure (Revised Standard Plan T13) for this condition.
11. Minimize spacing between vehicles V2 and V3 and vehicles V3 and V4 to deter road users from driving in between them.
12. If sign vehicle V1 encroaches into the traffic lane due to insufficient shoulder width, sign vehicle V1 shall be equipped with a truck-mounted attenuator. Sign vehicle V1 shall stay as close to the edge of shoulder as practicable.

STATE OF CALIFORNIA
DEPARTMENT OF TRANSPORTATION

TRAFFIC CONTROL SYSTEM FOR MOVING LANE CLOSURE ON TWO LANE HIGHWAYS

NO SCALE

RSP T17 DATED APRIL 19, 2013 SUPERSEDES STANDARD PLAN T17
DATED MAY 20, 2011 - PAGE 245 OF THE STANDARD PLANS BOOK DATED 2010.

REVISED STANDARD PLAN RSP T17

2010 REVISED STANDARD PLAN RSP T17

12-18-12

Dist	COUNTY	ROUTE	POST MILES TOTAL PROJECT	SHEET No.	TOTAL SHEETS
05	SLO	1	73.7/74.0	70	108

Theresa Gabriel
REGISTERED ELECTRICAL ENGINEER

July 19, 2013
PLANS APPROVAL DATE

REGISTERED PROFESSIONAL ENGINEER Theresa Aziz Gabriel No. E15129 Exp. 6-30-14 ELECTRICAL STATE OF CALIFORNIA

THE STATE OF CALIFORNIA OR ITS OFFICERS OR AGENTS SHALL NOT BE RESPONSIBLE FOR THE ACCURACY OR COMPLETENESS OF SCANNED COPIES OF THIS PLAN SHEET.

TO ACCOMPANY PLANS DATED 5-19-14

2010 REVISED STANDARD PLAN RSP ES-1A

LEGEND:

AB	ABANDON. IF APPLIED TO CONDUIT, REMOVE CONDUCTORS
BC	INSTALL PULL BOX IN EXISTING CONDUIT RUN
BP	PEDESTRIAN BARRICADE, TYPE AS INDICATED ON PLAN
CB	INSTALL CONDUIT INTO EXISTING PULL BOX
CC	CONNECT NEW AND EXISTING CONDUIT. REMOVE EXISTING CONDUCTORS AND INSTALL CONDUCTORS AS INDICATED
CF	CONDUIT TO REMAIN FOR FUTURE USE. REMOVE CONDUCTORS. INSTALL PULL TAPE
DH	DETECTOR HANDHOLE
FA	FOUNDATION TO BE ABANDONED
IS	INSTALL SIGN ON SIGNAL MAST ARM
NS	NO SLIP BASE ON STANDARD
PEC	PHOTOELECTRIC CONTROL
PEU	PHOTOELECTRIC UNIT
RC	EQUIPMENT OR MATERIAL TO BE REMOVED AND BECOME THE PROPERTY OF THE CONTRACTOR
RE	REMOVE ELECTROLIER, FUSES AND BALLAST. TAPE ENDS OF CONDUCTORS
RL	RELOCATE EQUIPMENT
RR	REMOVE AND REUSE EQUIPMENT
RS	REMOVE AND SALVAGE EQUIPMENT
SC	SPLICE NEW TO EXISTING CONDUCTORS
SD	SERVICE DISCONNECT
TSP	TELEPHONE SERVICE POINT

ABBREVIATIONS

APS	ACCESSIBLE PEDESTRIAN SIGNAL
BBS	BATTERY BACKUP SYSTEM
BC	BOLT CIRCLE
BPB	BICYCLE PUSH BUTTON
C	CONDUIT
CB	CIRCUIT BREAKER
CCTV	CLOSED CIRCUIT TELEVISION
Ckt	CIRCUIT
CMS	CHANGEABLE MESSAGE SIGN
Ctid	CALTRANS IDENTIFICATION
Comm	COMMUNICATION
DLC	LOOP DETECTOR LEAD-IN CABLE
EMS	EXTINGUISHABLE MESSAGE SIGN
EVUC	EMERGENCY VEHICLE UNIT CABLE
EVUD	EMERGENCY VEHICLE UNIT DETECTOR
FB	FLASHING BEACON
FBCA	FLASHING BEACON CONTROL ASSEMBLY
FBS	FLASHING BEACON WITH SLIP BASE
FO	FIBER OPTIC
G	EQUIPMENT GROUNDING CONDUCTOR
GB	GROUND BUS
GFCI	GROUND FAULT CIRCUIT INTERRUPTER
HAR	HIGHWAY ADVISORY RADIO
Hex	HEXAGONAL
HPS	HIGH PRESSURE SODIUM
IISNS	INTERNALLY ILLUMINATED STREET NAME SIGN
ISL	INDUCTION SIGN LIGHTING
LED	LIGHT EMITTING DIODE
LMA	LUMINAIRE MAST ARM
LPS	LOW PRESSURE SODIUM
Ltg	LIGHTING
Lum	LUMINAIRE
M	METERED
MAT	MAST ARM MOUNTING TOP ATTACHMENT
MAS	MAST ARM MOUNTING SIDE ATTACHMENT
M/M	MULTIPLE TO MULTIPLE TRANSFORMER
Mtg	MOUNTING
MV	MERCURY VAPOR LIGHTING FIXTURE
MVDS	MICROWAVE VEHICLE DETECTION SYSTEM
N	NEUTRAL (GROUNDED CONDUCTOR)
NB	NEUTRAL BUS
NC	NORMALLY CLOSE
NO	NORMALLY OPEN
P	CIRCUIT BREAKER'S POLE
PB	PULL BOX
PBA	PUSH BUTTON ASSEMBLY
PEC	PHOTOELECTRIC CONTROL
Ped	PEDESTRIAN
PEU	PHOTOELECTRIC UNIT
PT	CONDUIT WITH PULL TAPE
RE	RELOCATED EQUIPMENT
RM	RAMP METERING
RWIS	ROADSIDE WEATHER INFORMATION SYSTEM
SB	SLIP BASE
SIC	SIGNAL INTERCONNECT CABLE
Sig	SIGNAL
SMA	SIGNAL MAST ARM
SNS	STREET NAME SIGN
SP	SERVICE POINT
TDC	TELEPHONE DEMARCATION CABINET
TMS	TRAFFIC MONITORING STATION
TOS	TRAFFIC OPERATIONS SYSTEM
Veh	VEHICLE
VIVDS	VIDEO IMAGE VEHICLE DETECTION SYSTEM
WIM	WEIGH-IN-MOTION
Xfmr	TRANSFORMER

SOFFIT AND WALL MOUNTED LUMINAIRES

PENDANT, 70 W HPS UNLESS OTHERWISE SPECIFIED

FLUSH, 70 W HPS UNLESS OTHERWISE SPECIFIED

WALL SURFACE, 70 W HPS UNLESS OTHERWISE SPECIFIED

EXISTING SOFFIT OR WALL LUMINAIRE TO REMAIN UNMODIFIED

EXISTING SOFFIT OR WALL LUMINAIRE TO BE MODIFIED AS SPECIFIED

NOTE:

Arrow indicates "street side" of luminaire.

COMMONLY USED SYMBOLS FOR UNITED STATES CUSTOMARY UNITS OF MEASUREMENT:

SYMBOL USED	DEFINITIONS
Ω	OHMS
min	MINUTE
s	SECOND
bps	BITS PER SECOND
Bps	BYTES PER SECOND
A	AMPERE
V	VOLT
V(dc)	VOLT (DIRECT CURRENT)
V(ac)	VOLT (ALTERNATING CURRENT)
FC	FOOT - CANDLE
W	WATTS
VA	VOLT-AMPERE
M	MEGA
k	KILO
m	MILLI
μ	MICRO
P	PICO
Hz	HERTZ

MISCELLANEOUS ELECTROLIERS

NEW	EXISTING	
		LUMINAIRE ON WOOD POLE
		NON-STANDARD ELECTROLIER (SEE PROJECT NOTES OR PROJECT PLANS)
		CITY ELECTROLIER
		ELECTROLIER FOUNDATION (FUTURE INSTALLATION)

NOTES:

1. HPS luminaires shall be 310 W HPS when installed on Type 21, 21D, 30, 31 and 32 Standards, unless otherwise specified. HPS luminaires shall be 200 W when installed on other type standards or poles, unless otherwise specified.
2. LED luminaires shall be 235 W when installed on Type 21, 21D, 30, 31 and 32 Standards, unless otherwise specified. LED luminaires shall be 165 W when installed on other type standards or poles, unless otherwise specified.
3. Luminaires shall be the cutoff type, ANSI Type III medium cutoff lighting distribution, unless otherwise specified.

STANDARD ELECTROLIER

NEW	EXISTING	STANDARD TYPE
		15
		15D
		15 STRUCTURE
		15D STRUCTURE
		21
		21D
		21 STRUCTURE
		21D STRUCTURE
		30
		31
		32

STATE OF CALIFORNIA
DEPARTMENT OF TRANSPORTATION

ELECTRICAL SYSTEMS (LEGEND AND ABBREVIATIONS)

NO SCALE

RSP ES-1A DATED JULY 19, 2013 SUPERSEDES STANDARD PLAN ES-1A DATED MAY 20, 2011 - PAGE 425 OF THE STANDARD PLANS BOOK DATED 2010.

REVISED STANDARD PLAN RSP ES-1A

Dist	COUNTY	ROUTE	POST MILES TOTAL PROJECT	SHEET No.	TOTAL SHEETS
05	SLO	1	73.7/74.0	71	108

Theresa Gabriel
REGISTERED ELECTRICAL ENGINEER

July 19, 2013
PLANS APPROVAL DATE

REGISTERED PROFESSIONAL ENGINEER
Theresa Aziz Gabriel
No. E15129
Exp. 6-30-14
ELECTRICAL
STATE OF CALIFORNIA

THE STATE OF CALIFORNIA OR ITS OFFICERS OR AGENTS SHALL NOT BE RESPONSIBLE FOR THE ACCURACY OR COMPLETENESS OF SCANNED COPIES OF THIS PLAN SHEET.

TO ACCOMPANY PLANS DATED 5-19-14

CONDUIT

NEW	EXISTING	
		LIGHTING CONDUIT, UNLESS OTHERWISE INDICATED OR NOTED
		TRAFFIC SIGNAL CONDUIT
C	c	COMMUNICATION CONDUIT
T	t	TELEPHONE CONDUIT
F	f	FIRE ALARM CONDUIT
FO	fo	FIBER OPTIC CONDUIT
		CONDUIT TERMINATION
R	r	CONDUIT RISER ATTACHED TO THE STRUCTURE OR SERVICE POLE

SERVICE EQUIPMENT

NEW	EXISTING	
OH	oh	OVERHEAD LINES
U	U	WOOD POLE, "U" INDICATES UTILITY OWNED
		POLE GUY WITH ANCHOR
		UTILITY TRANSFORMER - GROUND MOUNTED
III	III	SERVICE EQUIPMENT ENCLOSURE TYPE. DOOR INDICATES FRONT OF ENCLOSURE
T	t	TELEPHONE DEMARCATION CABINET

POLE-MOUNTED SERVICE DESIGNATION

TYPE H SERVICE, 28'-10" — TYPE OF INSTALLATION AND POLE HEIGHT ABOVE GRADE

FLASHING BEACON

NEW	EXISTING	
R	R	FLASHING BEACON (ONE VEHICLE SIGNAL HEAD WITH BACKPLATE AND VISOR) "R" INDICATES RED INDICATION, "Y" INDICATES YELLOW INDICATION
Y Y	Y Y	FLASHING BEACON WITH TYPE 15-FBS STANDARD AND A SIGN.
R R	R R	FLASHING BEACON WITH TYPES 9, 9A OR 9B SIGN UNLESS OTHERWISE SPECIFIED OR INDICATED

SIGNAL EQUIPMENT

NEW	EXISTING	
C	C	PEDESTRIAN SIGNAL HEAD "C" INDICATES COUNTDOWN PEDESTRIAN HEAD
		PUSH BUTTON ASSEMBLY POST
		PEDESTRIAN BARRICADE
		VEHICLE SIGNAL HEAD (WITH BACKPLATE AND 3-SECTIONS: RED, YELLOW AND GREEN)
		VEHICLE SIGNAL HEAD WITH ANGLE VISOR
PV	PV	MODIFICATIONS OF BASIC SYMBOL: "L" INDICATES ALL NON-ARROW SECTIONS LOUVERED "LG" INDICATES LOUVERED GREEN SECTION ONLY "PV" INDICATES ALL 12" SECTIONS PROGRAMMED VISIBILITY "8" INDICATES ALL 8" SECTIONS (ONLY WHEN SPECIFIED)
		VEHICLE SIGNAL HEAD CONSISTING OF RED, YELLOW AND GREEN LEFT ARROW SECTIONS
		VEHICLE SIGNAL HEAD CONSISTING OF RED AND YELLOW SECTIONS WITH AN UP GREEN ARROW SECTION
		VEHICLE SIGNAL HEAD (5 SECTION) CONSISTING OF RED, YELLOW AND GREEN SECTIONS WITH YELLOW AND GREEN RIGHT ARROW SECTIONS
		TYPE 15TS STANDARD WITH VEHICLE SIGNAL HEAD AND LUMINAIRE
		TYPE 21TS STANDARD WITH VEHICLE SIGNAL HEAD AND LUMINAIRE
		STANDARD WITH LUMINAIRE AND SIGNAL MAST ARMS AND ATTACHED VEHICLE SIGNAL HEADS
		TYPE 1 STANDARD WITH ATTACHED VEHICLE SIGNAL HEADS
		STANDARD WITH A SIGNAL MAST ARM, ATTACHED VEHICLE SIGNAL HEADS AND INTERNALLY ILLUMINATED STREET NAME SIGN
		CONTROLLER ASSEMBLY. DOOR INDICATES FRONT OF CABINET

SIGNAL EQUIPMENT Cont

NEW	EXISTING	
		GUARD POST
		TYPE 1 STANDARD WITH RAMP METERING SIGN
		OPTICAL DETECTOR FOR THE EMERGENCY VEHICLE DETECTION SYSTEM

NOTES:

1. All signal sections shall be 12" unless shown otherwise.
2. Signal heads shall be provided with backplates unless shown otherwise.

ILLUMINATED OVERHEAD SIGN

NEW	EXISTING	
		SINGLE POST, SINGLE ILLUMINATED SIGN, BALANCED BUTTERFLY
		SINGLE POST, DOUBLE ILLUMINATED SIGN, BALANCED BUTTERFLY
		SINGLE POST, SINGLE ILLUMINATED SIGN, FULL CANTILEVER
		DOUBLE POST, SINGLE ILLUMINATED SIGN
		SINGLE ILLUMINATED SIGN MOUNTED ON STRUCTURE
		DOUBLE POST, SINGLE ILLUMINATED SIGN WITH ELECTROLIER

STATE OF CALIFORNIA
DEPARTMENT OF TRANSPORTATION

ELECTRICAL SYSTEMS (LEGEND AND ABBREVIATIONS)

NO SCALE

RSP ES-1B DATED JULY 19, 2013 SUPERSEDES STANDARD PLAN ES-1B DATED MAY 20, 2011 - PAGE 426 OF THE STANDARD PLANS BOOK DATED 2010.

REVISED STANDARD PLAN RSP ES-1B

2010 REVISED STANDARD PLAN RSP ES-1B

7-15-13

Dist	COUNTY	ROUTE	POST MILES TOTAL PROJECT	SHEET No.	TOTAL SHEETS
05	SLO	1	73.7/74.0	72	108

Theresa Gabriel
REGISTERED ELECTRICAL ENGINEER

July 19, 2013
PLANS APPROVAL DATE

REGISTERED PROFESSIONAL ENGINEER
Theresa Aziz Gabriel
No. E15129
Exp. 6-30-14
ELECTRICAL
STATE OF CALIFORNIA

THE STATE OF CALIFORNIA OR ITS OFFICERS OR AGENTS SHALL NOT BE RESPONSIBLE FOR THE ACCURACY OR COMPLETENESS OF SCANNED COPIES OF THIS PLAN SHEET.

TO ACCOMPANY PLANS DATED 5-19-14

EQUIPMENT IDENTIFICATION

ILLUMINATED SIGN IDENTIFICATION NUMBER:

SIGN No. 12345
10 ISL SCI 1.0

- SIGN NUMBER - PLACE ON POST OR STRUCTURE
- TRANSFORMER RATING (kVA)
- LIGHTING CONTROL TYPE
- NUMBER AND TYPE OF FIXTURES

DO NOT PLACE ON STANDARD OR STRUCTURE

ELECTROLIER OR EQUIPMENT IDENTIFICATION NUMBER:

12345 - 15'-0"

- MAST ARM LENGTH, IF SHOWN. DO NOT PLACE ON STANDARD OR STRUCTURE
- EQUIPMENT NUMBER - PLACE ON STANDARD OR STRUCTURE. EXISTING EQUIPMENT NUMBERS ARE SHOWN IN PARENTHESIS

CONDUIT AND CONDUCTOR IDENTIFICATION:

1½"C, 2#10, 15#14, 2 DLC, 12P#18

- PAIR
- NUMBER AND SIZE OF CONDUCTORS AND CABLES
- SIZE OF CONDUIT IN INCHES

ø1, ø2, ø2P, etc.	TRAFFIC PHASE IDENTIFICATION FOR SIGNAL FACES, DETECTORS AND PHASE DIAGRAMS
1 2 3	LEGEND NUMBERS
A B C	EQUIPMENT, SIGNAL POLES, INSTALLATION OR ITEMS
1 2 3	CONDUIT RUN NUMBERS

SIGNAL AND LIGHTING STANDARD (TYPICAL DESIGNATION):

19A - 3 - 100

- WIND VELOCITY = 100 mph
- CASE 3 ARM LOADING
- STANDARD TYPE
- STANDARD PLAN SHEET NUMBER
- DETAIL, NUMBER, SECTION, TYPE OR ELEVATION

MISCELLANEOUS EQUIPMENT

NEW	EXISTING	
CMS	cms	CHANGEABLE MESSAGE SIGN
		CLOSED CIRCUIT TELEVISION CAMERA
		HIGHWAY ADVISORY RADIO POLE AND ANTENNA
EMS	ems	EXTINGUISHABLE MESSAGE SIGN
M V	m v	DETECTION DEVICE M = MICROWAVE SENSOR V = VIDEO IMAGE SENSOR

WIRING DIAGRAM LEGEND

----	EXTERNAL CONDUCTOR
	CONDUCTOR OR BUS
	TIE POINT
	CONTACTOR COIL
	CONTACTOR, NO CONTACT
	TERMINAL BLOCKS
	CONTACTOR, NC CONTACT
	ENCLOSURE BOND
	GROUNDING ELECTRODE
	CIRCUIT BREAKER
	RECEPTACLE

PULL BOXES

NEW	EXISTING	
		PULL BOX, No. 5 UNLESS OTHERWISE INDICATED OR NOTED
3	9A(21)	PULL BOX, ADDITIONAL DESIGNATIONS OR DESCRIPTIONS

3 No. 3½ PULL BOX
5 No. 5 PULL BOX
6 No. 6 PULL BOX
7 No. 7 (CEILING PULL BOX)
8 No. 8 (PENDANT SOFFIT PULL BOX)
9 No. 9 PULL BOX
9A No. 9A PULL BOX

(C) COMMUNICATIONS PULL BOX
(E) PULL BOX WITH EXTENSION
(S) SPRINKLER CONTROL PULL BOX
(21) ANCHOR BOLTS AND CONDUIT FOR FUTURE INSTALLATION OF TYPE 21 STANDARD
(T) TRAFFIC PULL BOX

VEHICLE DETECTORS

5 J 9 U

- VEHICLE DETECTOR DESIGNATION
- U = UPPER
  L = LOWER
- SLOT NUMBER IN INPUT FILE
- INPUT FILE (I OR J)
- PHASE

NEW	EXISTING	
		TYPE A DETECTOR LOOP. OUTLINE OF SAWCUT SHOWN
		TYPE B DETECTOR LOOP. OUTLINE OF SAWCUT SHOWN
		TYPE C DETECTOR LOOP. OUTLINE OF SAWCUT SHOWN
		TYPE D DETECTOR LOOP. OUTLINE OF SAWCUT SHOWN
		TYPE E DETECTOR LOOP. OUTLINE OF SAWCUT SHOWN
		TYPE Q DETECTOR LOOP. OUTLINE OF SAWCUT SHOWN
		MAGNETIC DETECTOR
DH	dh	DETECTOR HANDHOLE
		MICROWAVE OR VIDEO DETECTION ZONE

STATE OF CALIFORNIA
DEPARTMENT OF TRANSPORTATION

ELECTRICAL SYSTEMS (LEGEND AND ABBREVIATIONS)

NO SCALE

RSP ES-1C DATED JULY 19, 2013 SUPERSEDES STANDARD PLAN ES-1C DATED MAY 20, 2011 - PAGE 427 OF THE STANDARD PLANS BOOK DATED 2010.

REVISED STANDARD PLAN RSP ES-1C

2010 REVISED STANDARD PLAN RSP ES-1C

7-11-13

Dist	COUNTY	ROUTE	POST MILES TOTAL PROJECT	SHEET No.	TOTAL SHEETS
05	SLO	1	73.7/74.0	73	108

Theresa Gabriel
REGISTERED ELECTRICAL ENGINEER

July 19, 2013
PLANS APPROVAL DATE

REGISTERED PROFESSIONAL ENGINEER
Theresa Aziz Gabriel
No. E15129
Exp. 6-30-14
ELECTRICAL
STATE OF CALIFORNIA

THE STATE OF CALIFORNIA OR ITS OFFICERS OR AGENTS SHALL NOT BE RESPONSIBLE FOR THE ACCURACY OR COMPLETENESS OF SCANNED COPIES OF THIS PLAN SHEET.

TO ACCOMPANY PLANS DATED 5-19-14

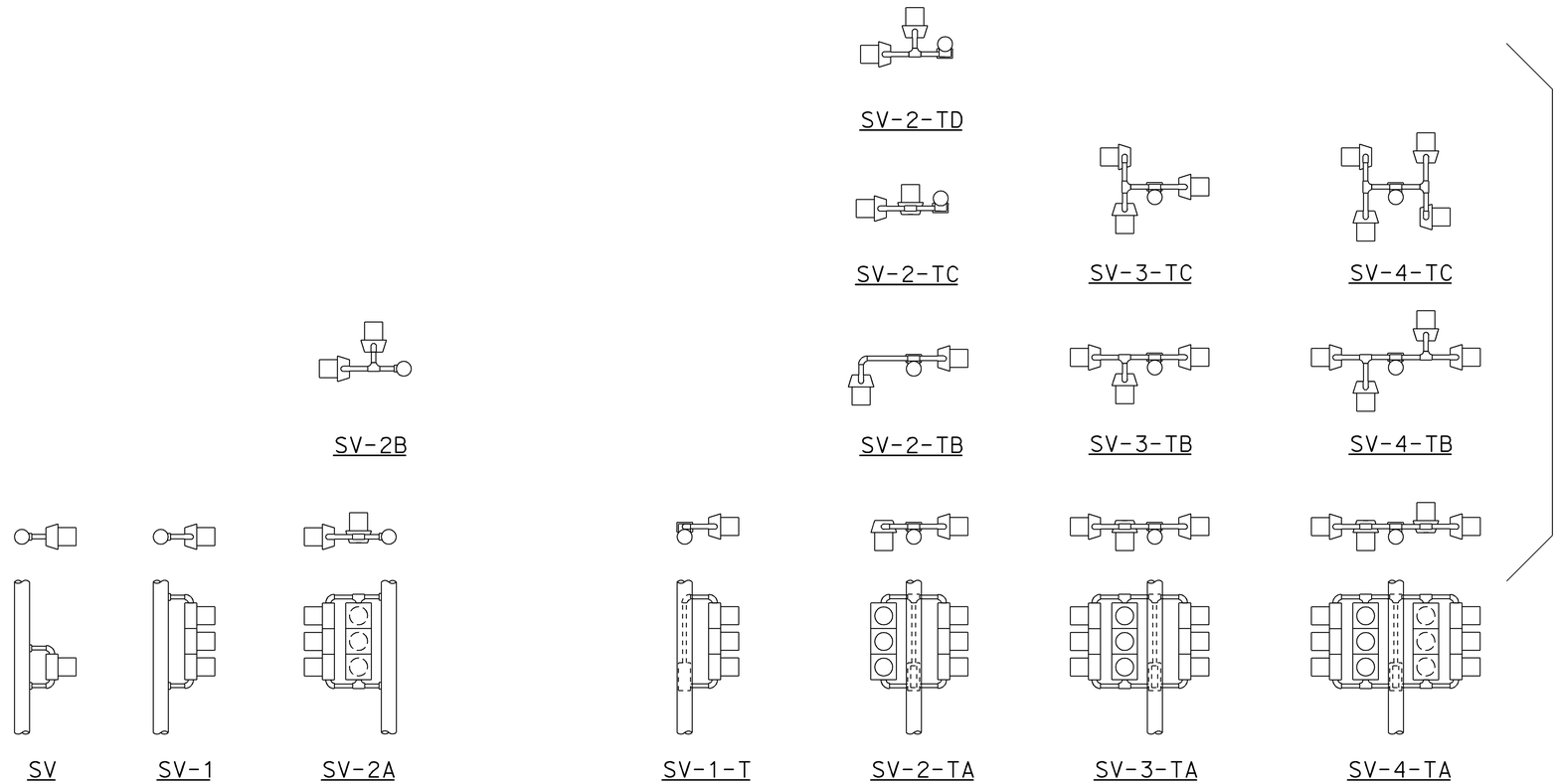

SIDE MOUNTINGS

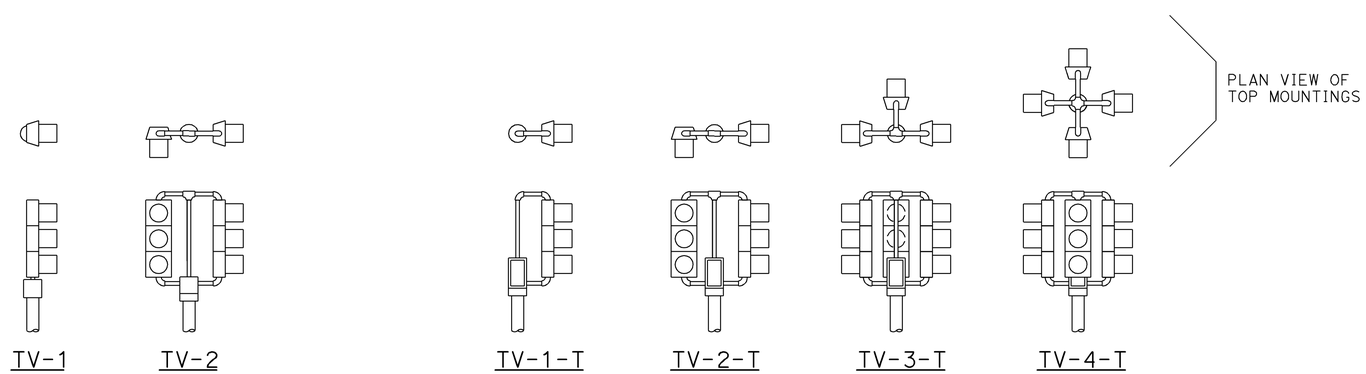

TOP MOUNTINGS

ABBREVIATIONS:

SV	SIDE MOUNTED VEHICLE SIGNALS
T	TERMINAL COMPARTMENT
TV	TOP MOUNTED VEHICLE SIGNALS
1, 2, 3, 4	NUMBER OF SIGNAL FACES (3 - SECTION, UNLESS OTHERWISE INDICATED)
A, B, C, D	CONFIGURATION OF SIGNALS

NOTES:

1. Mountings shall be oriented to provide maximum horizontal clearance to adjacent roadway.
2. Bracket arms shall be long enough to permit proper alignment of signals and backplate installation.
3. See Standard Plans ES-4D and ES-4E for attachment fitting details.

STATE OF CALIFORNIA
DEPARTMENT OF TRANSPORTATION

ELECTRICAL SYSTEMS (VEHICULAR SIGNAL HEADS AND MOUNTINGS)

NO SCALE

RSP ES-4A DATED JULY 19, 2013 SUPERSEDES STANDARD PLAN ES-4A DATED MAY 20, 2011 - PAGE 443 OF THE STANDARD PLANS BOOK DATED 2010.

REVISED STANDARD PLAN RSP ES-4A

2010 REVISED STANDARD PLAN RSP ES-4A

7-9-13

Dist	COUNTY	ROUTE	POST MILES TOTAL PROJECT	SHEET No.	TOTAL SHEETS
05	SLO	1	73.7/74.0	74	108

Theresa Gabriel
REGISTERED ELECTRICAL ENGINEER

July 19, 2013
PLANS APPROVAL DATE

REGISTERED PROFESSIONAL ENGINEER
Theresa Aziz Gabriel
No. E15129
Exp. 6-30-14
ELECTRICAL
STATE OF CALIFORNIA

THE STATE OF CALIFORNIA OR ITS OFFICERS OR AGENTS SHALL NOT BE RESPONSIBLE FOR THE ACCURACY OR COMPLETENESS OF SCANNED COPIES OF THIS PLAN SHEET.

TO ACCOMPANY PLANS DATED 5-19-14

VISORS

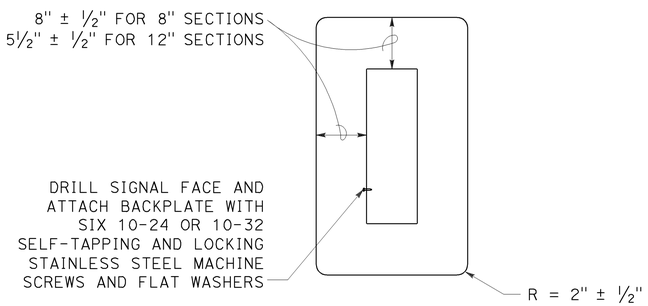

8" AND 12" SECTIONS

BACKPLATE

1/16" minimum thickness
3001-14 aluminum or plastic
when specified

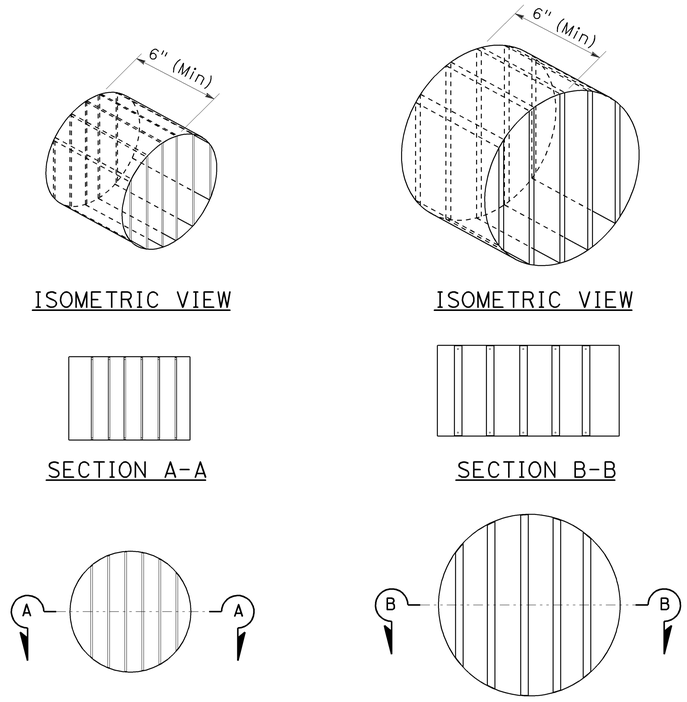

8" DIAMETER FRONT VIEW

12" DIAMETER FRONT VIEW

DIRECTIONAL LOUVER

Directional louvers shall be oriented as directed by the Engineer and secured in place with one plated brass machine screw and nut.

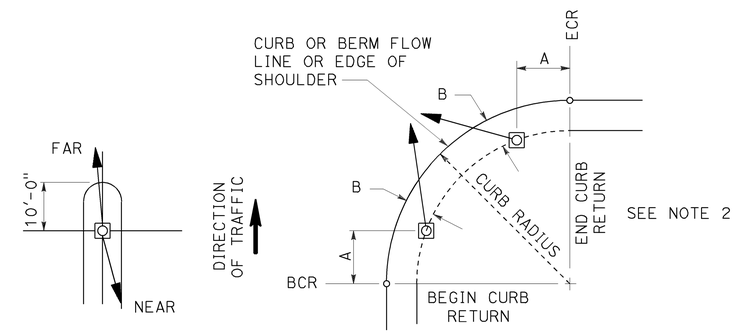

NOTES:

1. Typical signal pole placement unless dimensioned on plans.
2. For A and B dimensions, see Pole Schedule, or as directed by the Engineer.

SIGNAL STANDARD PLACEMENT DIMENSIONS AND EQUIPMENT LOCATIONS

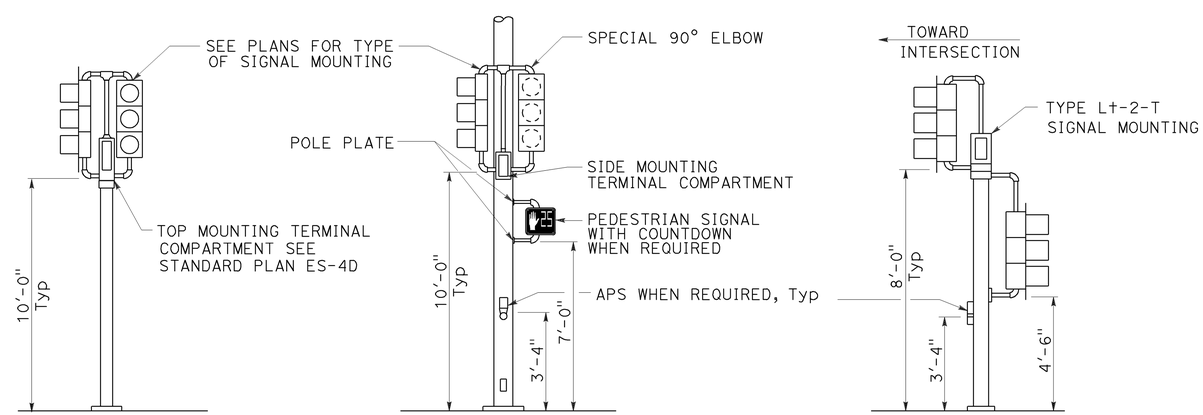

TOP MOUNTED SIGNALS (TV)

Type 1-A, 1-B, 1-C and 1-D standard as indicated on the plans

SIDE MOUNTED SIGNALS (SV AND SP)

Normally used on standards with luminaire or signal mast arm

LEFT TURN LANE SIGNAL

Type 1-A, 1-B, 1-C and 1-D standard as indicated on plans

TYPICAL SIGNAL INSTALLATIONS

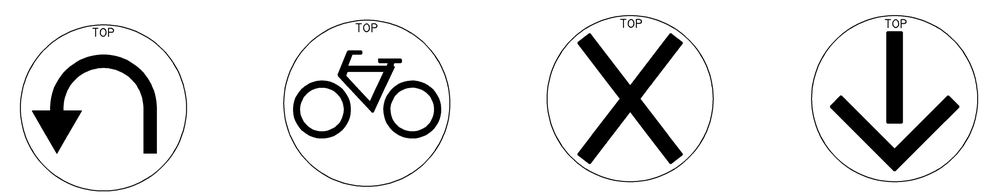

U-TURN

BICYCLE

LANE CONTROL

LANE CONTROL

SIGNAL FACES

STATE OF CALIFORNIA
DEPARTMENT OF TRANSPORTATION

ELECTRICAL SYSTEMS (VEHICULAR SIGNAL HEADS AND MOUNTINGS)

NO SCALE

RSP ES-4C DATED JULY 19, 2013 SUPERSEDES STANDARD PLAN ES-04C DATED MAY 20, 2011 - PAGE 445 OF THE STANDARD PLANS BOOK DATED 2010.

REVISED STANDARD PLAN RSP ES-4C

2010 REVISED STANDARD PLAN RSP ES-4C

7-10-13

Dist	COUNTY	ROUTE	POST MILES TOTAL PROJECT	SHEET No.	TOTAL SHEETS
05	SLO	1	73.7/74.0	75	108

Theresa Gabriel
REGISTERED ELECTRICAL ENGINEER

July 19, 2013
PLANS APPROVAL DATE

REGISTERED PROFESSIONAL ENGINEER
Theresa Aziz Gabriel
No. E15129
Exp. 6-30-14
ELECTRICAL
STATE OF CALIFORNIA

THE STATE OF CALIFORNIA OR ITS OFFICERS OR AGENTS SHALL NOT BE RESPONSIBLE FOR THE ACCURACY OR COMPLETENESS OF SCANNED COPIES OF THIS PLAN SHEET.

TO ACCOMPANY PLANS DATED 5-19-14

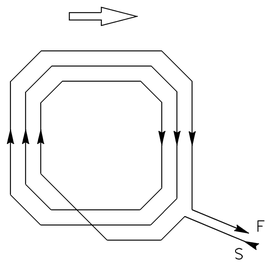

WINDING DETAIL

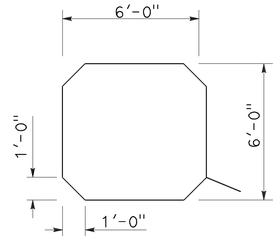

SAWCUT DETAIL

TYPE A LOOP DETECTOR CONFIGURATION

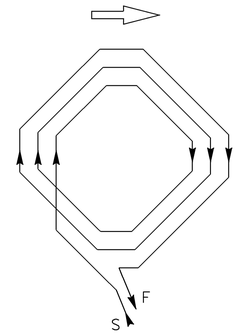

WINDING DETAIL

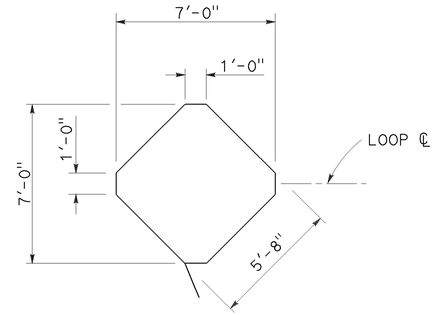

SAWCUT DETAIL

TYPE B LOOP DETECTOR CONFIGURATION

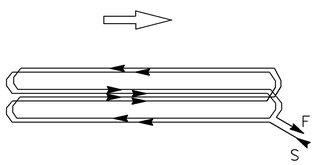

WINDING DETAIL

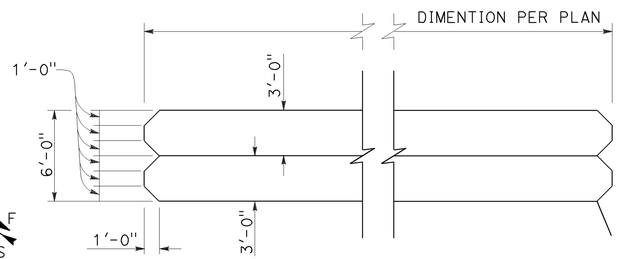

SAWCUT DETAIL

TYPE C LOOP DETECTOR CONFIGURATION

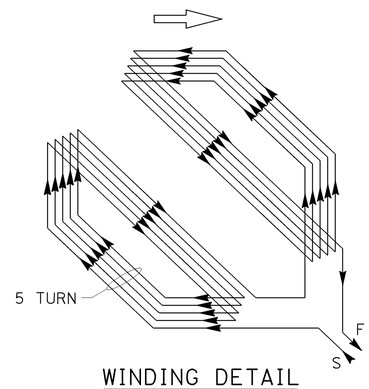

WINDING DETAIL

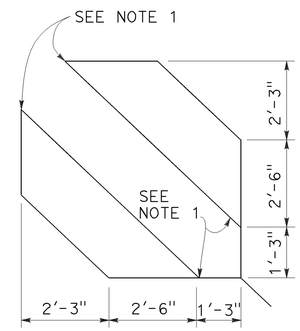

SAWCUT DETAIL

TYPE D LOOP DETECTOR CONFIGURATION

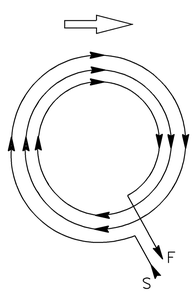

WINDING DETAIL

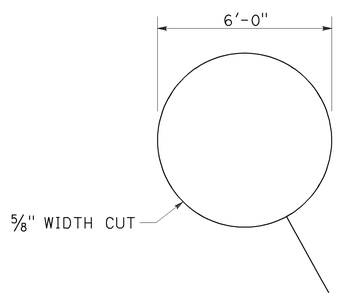

SAWCUT DETAIL

TYPE E LOOP DETECTOR CONFIGURATION

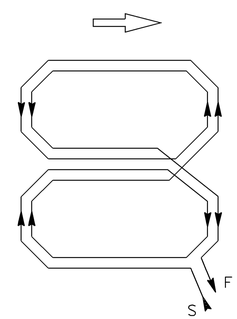

WINDING DETAIL

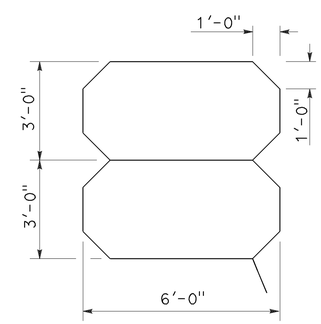

SAWCUT DETAIL

TYPE Q LOOP DETECTOR CONFIGURATION

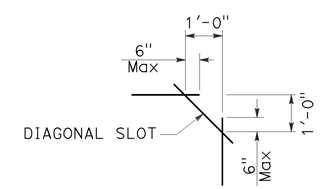

PLAN VIEW OF DIAGONAL SLOT AT CORNERS

NOTES:

1. Round corners of acute angle sawcuts to prevent damage to conductors.
2. Typical distance separating loops from edge to edge is 10' for Type A, B, D and E installation in single lane.

STATE OF CALIFORNIA
DEPARTMENT OF TRANSPORTATION

ELECTRICAL SYSTEMS (DETECTORS)

NO SCALE

RSP ES-5B DATED JULY 19, 2013 SUPERSEDES STANDARD PLAN ES-5B DATED MAY 20, 2011 - PAGE 449 OF THE STANDARD PLANS BOOK DATED 2010.

REVISED STANDARD PLAN RSP ES-5B

2010 REVISED STANDARD PLAN RSP ES-5B

7-9-13

Dist	COUNTY	ROUTE	POST MILES TOTAL PROJECT	SHEET No.	TOTAL SHEETS
05	SLO	1	73.7/74.0	76	108

Theresa Gabriel
REGISTERED ELECTRICAL ENGINEER

July 19, 2013
PLANS APPROVAL DATE

REGISTERED PROFESSIONAL ENGINEER
Theresa Aziz Gabriel
No. E15129
Exp. 6-30-14
ELECTRICAL
STATE OF CALIFORNIA

THE STATE OF CALIFORNIA OR ITS OFFICERS OR AGENTS SHALL NOT BE RESPONSIBLE FOR THE ACCURACY OR COMPLETENESS OF SCANNED COPIES OF THIS PLAN SHEET.

TO ACCOMPANY PLANS DATED 5-19-14

2010 REVISED STANDARD PLAN RSP ES-5C

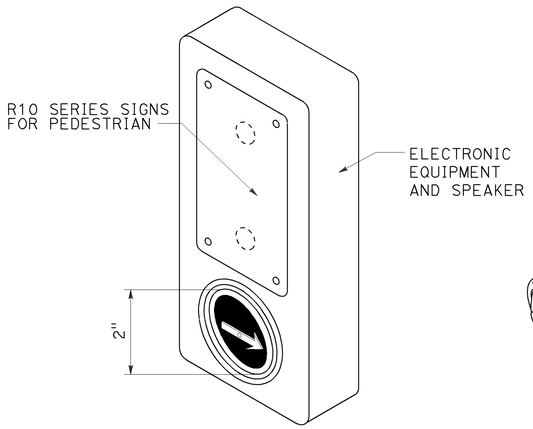

ACCESSIBLE PEDESTRIAN SIGNAL

DETAIL A
(See note 1 to 4)

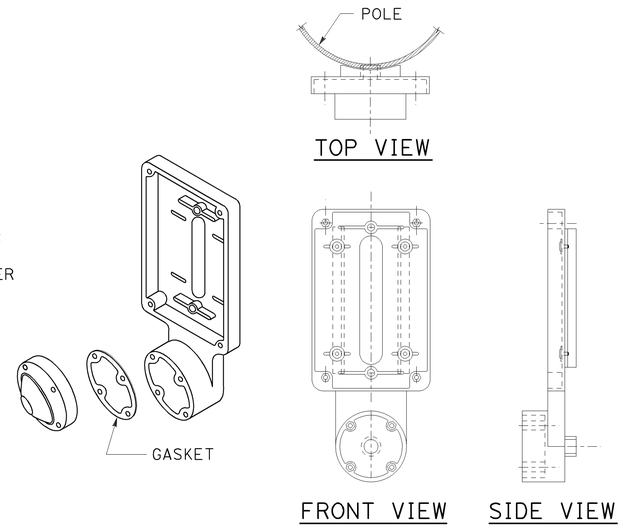

TYPE B PUSH BUTTON ASSEMBLY

DETAIL B
(See note 1 to 4)

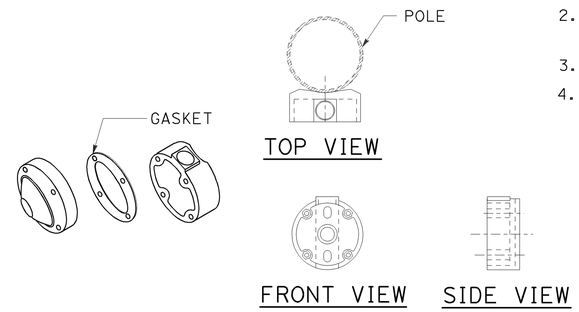

TYPE C PUSH BUTTON ASSEMBLY

DETAIL C
(See note 1 to 4)

NOTES:

1. Back casting shape to fit curvature of pole.
2. Provide cover fitting for top of post, when PBA is mounted on push button assembly post.
3. Install push button on crosswalk side of standard.
4. Use R10 series regulatory signs and plaques for pedestrian and bicycle facilities.

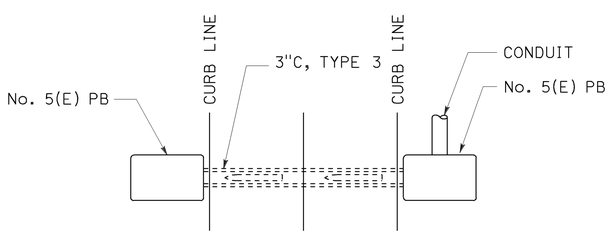

PLAN

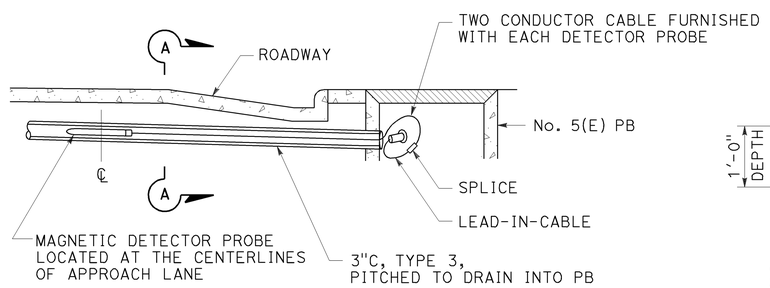

ELEVATION

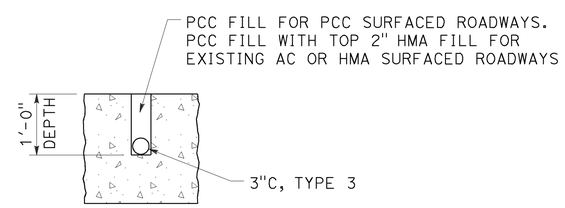

SECTION A-A

MAGNETIC VEHICLE DETECTOR

INSTALLATION DETAILS

DETAIL D

STATE OF CALIFORNIA
DEPARTMENT OF TRANSPORTATION

ELECTRICAL SYSTEMS (ACCESSIBLE PEDESTRIAN SIGNAL, PUSH BUTTON ASSEMBLIES AND MAGNETIC VEHICLE DETECTOR)

NO SCALE

RSP ES-5C DATED JULY 19, 2013 SUPERSEDES STANDARD PLAN ES-5C
DATED MAY 20, 2011 - PAGE 450 OF THE STANDARD PLANS BOOK DATED 2010.

REVISED STANDARD PLAN RSP ES-5C

Dist	COUNTY	ROUTE	POST MILES TOTAL PROJECT	SHEET No.	TOTAL SHEETS
05	SLO	1	73.7/74.0	77	108

Theresa Gabriel
REGISTERED ELECTRICAL ENGINEER

July 19, 2013
PLANS APPROVAL DATE

REGISTERED PROFESSIONAL ENGINEER Theresa Aziz Gabriel No. E15129 Exp. 6-30-14 ELECTRICAL STATE OF CALIFORNIA

THE STATE OF CALIFORNIA OR ITS OFFICERS OR AGENTS SHALL NOT BE RESPONSIBLE FOR THE ACCURACY OR COMPLETENESS OF SCANNED COPIES OF THIS PLAN SHEET.

TO ACCOMPANY PLANS DATED 5-19-14

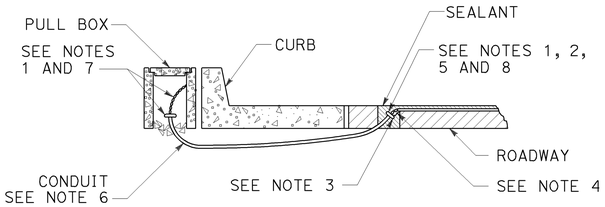

TYPE A
CURB TERMINATION DETAIL

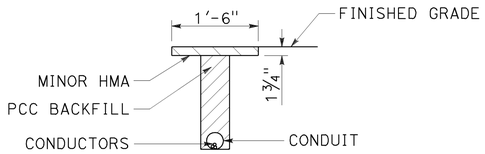

"T" TRENCH
DETAIL T

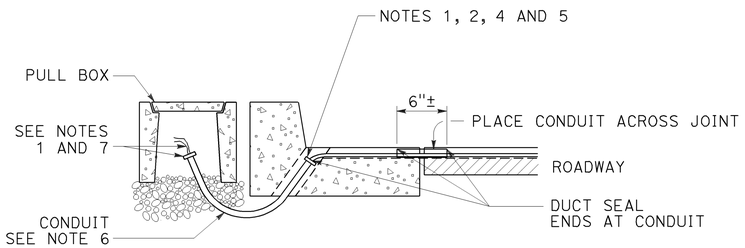

CROSS SECTION

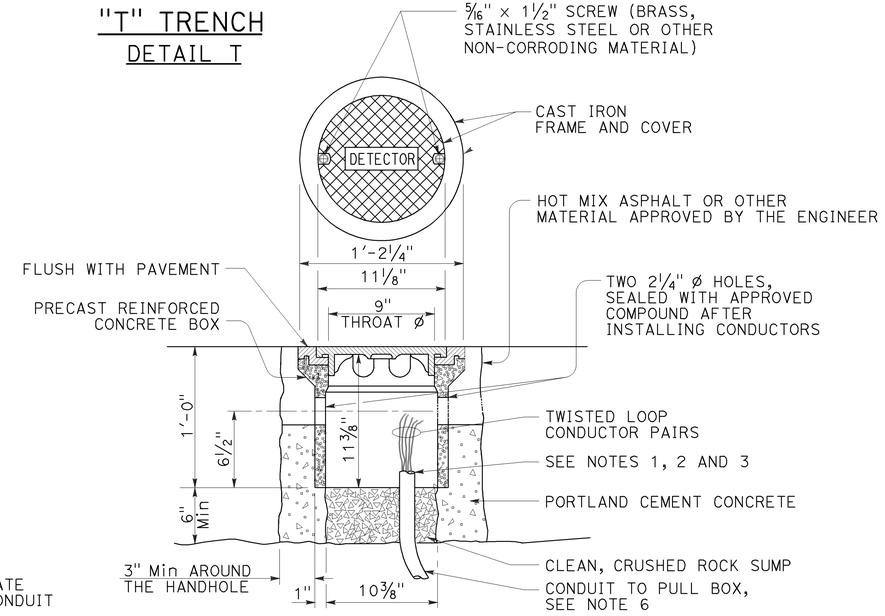

DETECTOR HANDHOLE DETAIL

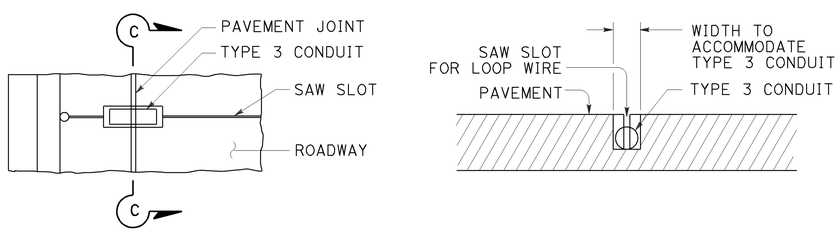

PLAN VIEW

SECTION C-C

TYPE B
CURB TERMINATION DETAIL

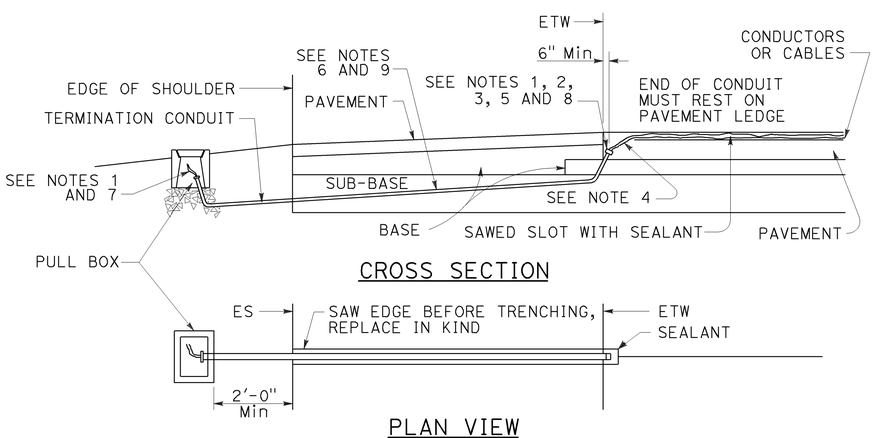

CROSS SECTION

PLAN VIEW

SHOULDER TERMINATION DETAILS

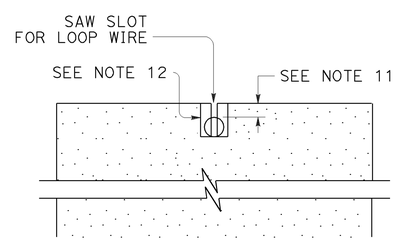

SECTION A-A

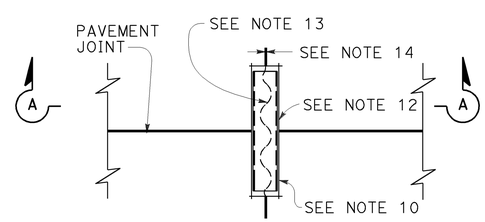

PLAN VIEW

TYPICAL LOOP LEAD-IN DETAIL
AT PAVEMENT JOINT

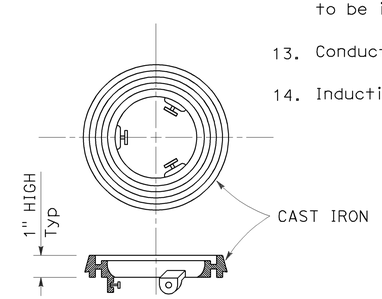

LOCKING GRADE RING

NOTES:

1. Bushing shall be used at end of conduit.
2. Tape detector conductors or cables 3" each side of bushings.
3. Install duct seal compound to each end of termination conduit before installing sealant.
4. Round all sharp edges where detector conductors or cables have to pass.
5. End of conduit shall be 3⅛" below roadway surface.
6. Conduit size / Loop conductors
   - 1"C minimum — 1 to 2 pairs
   - 1½"C minimum — 3 to 4 pairs
   - 2"C minimum — 5 or more pairs
7. Splice detector conductors or cables to detector lead-in-cable.
8. Location of detector handhole when shown on plans.
9. When the shoulder and traveled way are paved with the same material and there is no joint between them, the conduit shall extend only 2'-0" into the shoulder pavement.
10. ¾"C, Type 3 conduit 6" long minimum, plug both ends with duct compound to keep out sealant.
11. ½" Minimum between top of conduit and pavement surface.
12. Sawcut shall not exceed 1" in width and ⅛" longer than conduit to be installed.
13. Conductors with ½" minimum slack inside conduit.
14. Inductive loop detector saw slot.

STATE OF CALIFORNIA
DEPARTMENT OF TRANSPORTATION

ELECTRICAL SYSTEMS (CURB TERMINATION AND HANDHOLE)

NO SCALE

RSP ES-5D DATED JULY 19, 2013 SUPERSEDES STANDARD PLAN ES-5D DATED MAY 20, 2011 - PAGE 451 OF THE STANDARD PLANS BOOK DATED 2010.

REVISED STANDARD PLAN RSP ES-5D

2010 REVISED STANDARD PLAN RSP ES-5D

7-9-13

DIST	COUNTY	ROUTE	POST MILES TOTAL PROJECT	SHEET NO.	TOTAL SHEETS
05	SLO	1	73.7/74.0	78	108

Theresa Gabriel
REGISTERED ELECTRICAL ENGINEER

July 19, 2013
PLANS APPROVAL DATE

REGISTERED PROFESSIONAL ENGINEER Theresa Aziz Gabriel No. E15129 Exp. 6-30-14 ELECTRICAL STATE OF CALIFORNIA

THE STATE OF CALIFORNIA OR ITS OFFICERS OR AGENTS SHALL NOT BE RESPONSIBLE FOR THE ACCURACY OR COMPLETENESS OF SCANNED COPIES OF THIS PLAN SHEET.

TO ACCOMPANY PLANS DATED 5-19-14

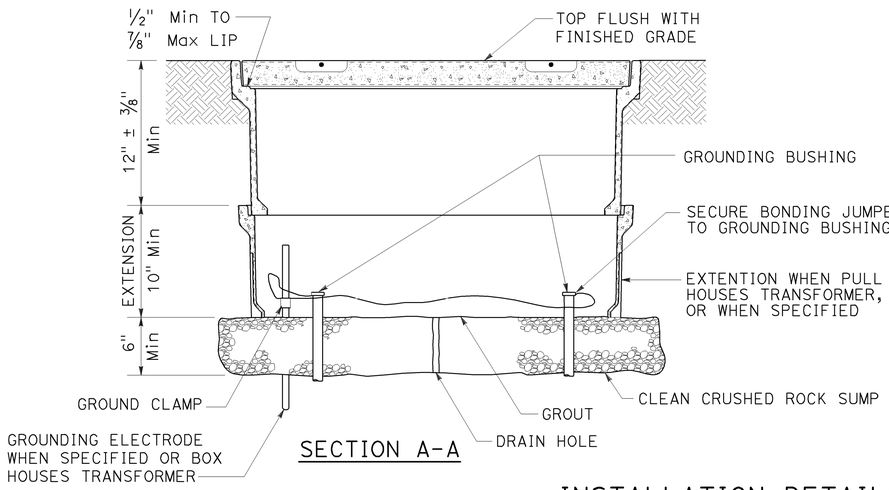

SECTION A-A

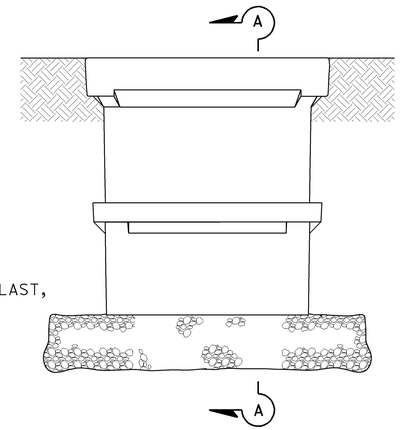

SIDE VIEW

INSTALLATION DETAILS

DETAIL A

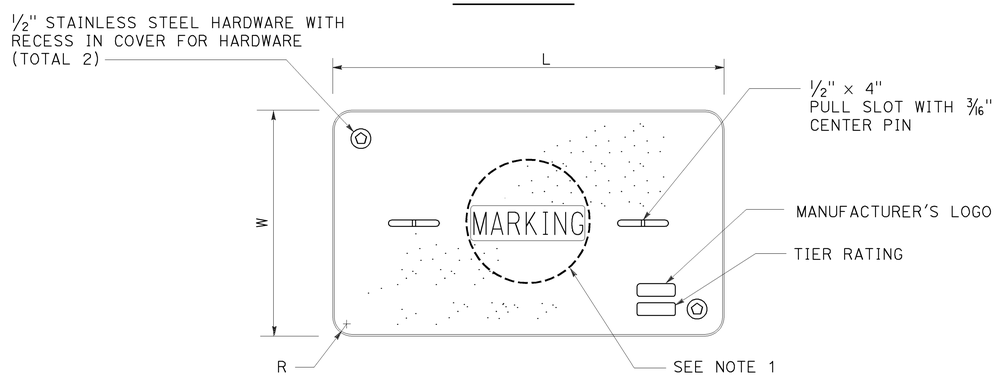

COVER TOP VIEW

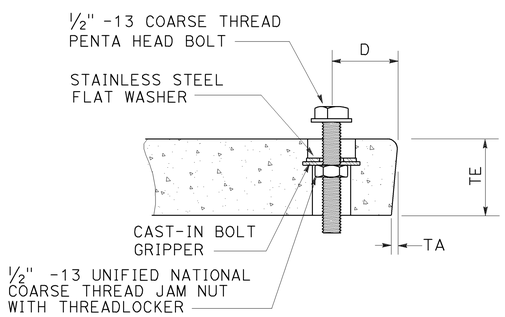

TYPICAL COVER CAPTIVE BOLT

OR SIMILAR

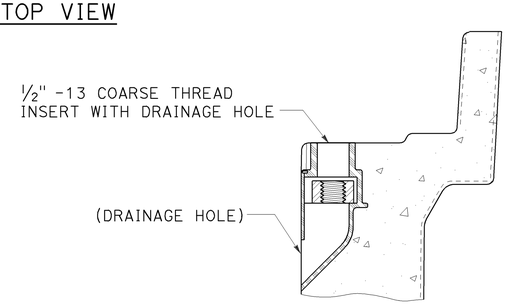

TYPICAL THREADED INSERT

OR SIMILAR

DIMENSION TABLE										
PULL BOX	PULL BOX			COVER						
	MINIMUM DEPTH BOX	MINIMUM DEPTH EXTENSION	MAXIMUM WEIGHT	L	W	R	TE	TA	D	MAXIMUM WEIGHT
No. 3½	12"	N/A	40 lb	1′ - 3⅜"	10⅛"	1⅜"	2"	⅛"	1¾"	30 lb
No. 5	12"	10"	55 lb	1′ - 11¼"	1′ - 1¾"	1⅜"	2"	⅛"	1¾"	60 lb
No. 6	12"	10"	70 lb	2′ - 6½"	1′ - 5½"	1⅜"	2"	⅛"	2"	85 lb

NOTES:

1. Pull box covers shall be marked as follows: "SERVICE" Service circuits between service point and service disconnect; "SPRINKLER-CONTROL" sprinkler control circuits, 50 V or less; "CALTRANS" on all pull boxes, except pull boxes marked "SPRINKLER-CONTROL"; and "TELEPHONE" Telephone service;

   A) No. 3½ pull box.

      1) "SIGNAL" - Traffic signal circuits with or without lighting or sign lighting circuits.

      2) "LIGHTING" - Lighting or sign lighting circuits where voltage is under 600 V.

   B) No. 5, 6, 9 or 9A pull box.

      1) "TRAFFIC SIGNAL" - Traffic signal circuits with or without lighting or sign lighting circuits.
      2) "LIGHTING" - Lighting or sign lighting circuits where voltage is under 600 V.
      3) "LIGHTING-HIGH VOLTAGE" - Lighting or sign lighting circuits where voltage is above 600 V.
      4) "IRRIGATION" - Circuits to irrigation controller 120 V or more.
      5) "RAMP METER" - Ramp meter circuits.
      6) "COUNT STATION" - Count or speed monitor circuits.
      7) "COMMUNICATIONS" - Communication circuits.
      8) "TOS COMMUNICATIONS" - TOS communication line.
      9) "TOS POWER" - TOS power.
      10) "TDC POWER" - Telephone demarcation cabinet power.
      11) "CCTV" - Closed circuit television circuits.
      12) "TMS" - Traffic monitoring station circuits.
      13) "CMS" - Changeable message sign circuits.
      14) "HAR" - Highway advisory radio circuits.
      15) "BOOSTER PUMP" - Booster pump circuit.

2. The nominal dimensions of the opening in which the cover sets shall be the same as the cover dimensions except the length and width dimensions shall be ⅛" greater.

3. Covers and boxes shall be interchangeable with California standard male and female gages. When interchanged with a standard male or female gage, the top surfaces shall be flush within ⅛". Top outside radius of covers and pull boxes shall have a ⅛" radius.

4. Pull box extension may be another pull box as long as the bottom edge of the pull box can fit into the cover opening.

5. All dimensions for the cover for non-traffic pull box are nominal values.

STATE OF CALIFORNIA
DEPARTMENT OF TRANSPORTATION

ELECTRICAL SYSTEMS (NON-TRAFFIC PULL BOX)

NO SCALE

RSP ES-8A DATED JULY 19, 2013 SUPERSEDES RSP ES-8A DATED JANUARY 20, 2012 THAT SUPPLEMENTS THE STANDARD PLANS BOOK DATED 2010.

REVISED STANDARD PLAN RSP ES-8A

2010 REVISED STANDARD PLAN RSP ES-8A

7-15-13

Dist	COUNTY	ROUTE	POST MILES TOTAL PROJECT	SHEET No.	TOTAL SHEETS
05	SLO	1	73.7/74.0	79	108

Theresa Gabriel
REGISTERED ELECTRICAL ENGINEER

July 19, 2013
PLANS APPROVAL DATE

REGISTERED PROFESSIONAL ENGINEER
Theresa Aziz Gabriel
No. E15129
Exp. 6-30-14
ELECTRICAL
STATE OF CALIFORNIA

THE STATE OF CALIFORNIA OR ITS OFFICERS OR AGENTS SHALL NOT BE RESPONSIBLE FOR THE ACCURACY OR COMPLETENESS OF SCANNED COPIES OF THIS PLAN SHEET.

TO ACCOMPANY PLANS DATED 5-19-14

ISOFOOTCANDLE CURVE - MINIMUM

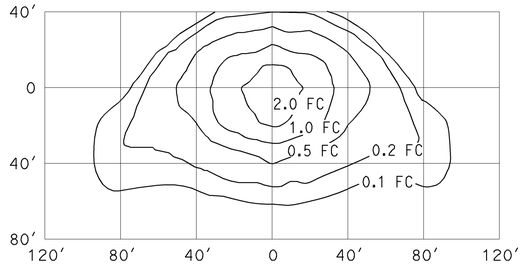

TYPE III MEDIUM CUTOFF

Cutoff Luminaire
34′ Mounting Height
Lamp operated at 22,000 lm
200-W high pressure sodium lamp
ANSI Designation S66

ISOFOOTCANDLE CURVE - MINIMUM

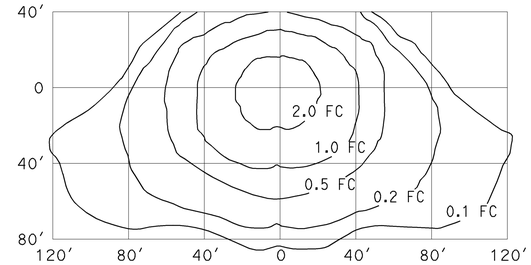

TYPE III MEDIUM CUTOFF

Cutoff Luminaire
40′ Mounting Height
Lamp operated at 37,000 lm
310-W high pressure sodium lamp
ANSI Designation S67

ISOFOOTCANDLE CURVE - MINIMUM

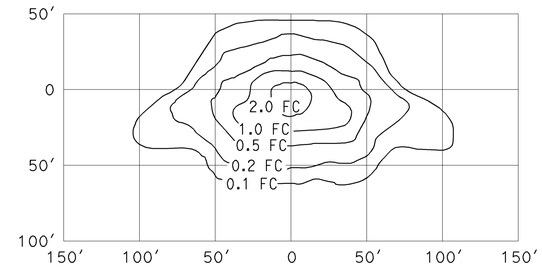

TYPE III MEDIUM CUTOFF

Cutoff Luminaire
30′ Mounting Height
Lamp operated at 16,000 lm
150-W high pressure sodium lamp
ANSI Designation S55

ISOFOOTCANDLE CURVE - MINIMUM

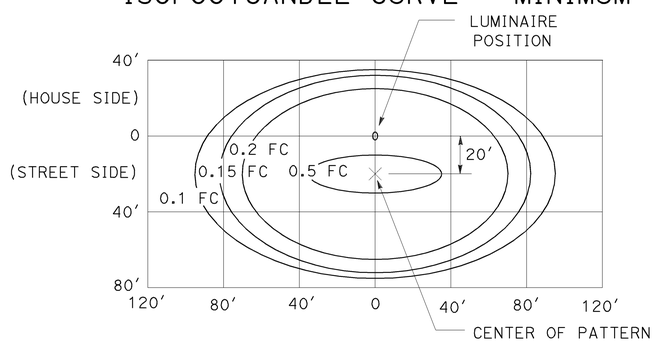

LED LUMINAIRE ROADWAY 1

165-W at 34′ Mounting Height

ISOFOOTCANDLE CURVE - MINIMUM

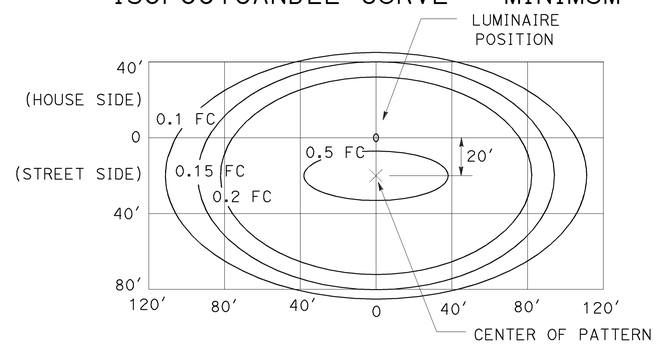

LED LUMINAIRE ROADWAY 2

235-W at 40′ Mounting Height

ISOFOOTCANDLE CURVE - MINIMUM

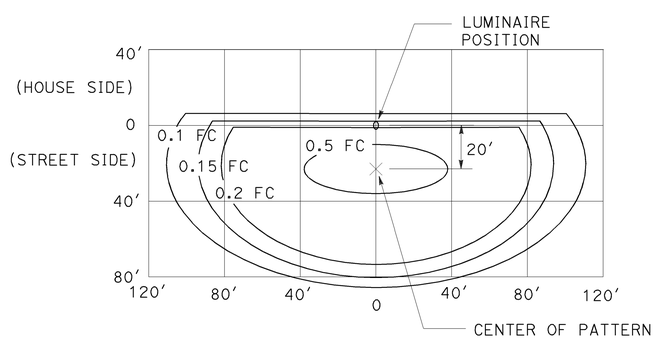

LED LUMINAIRE ROADWAY 3

235-W at 40′ Mounting Height
with back side control

ISOFOOTCANDLE CURVE - MINIMUM

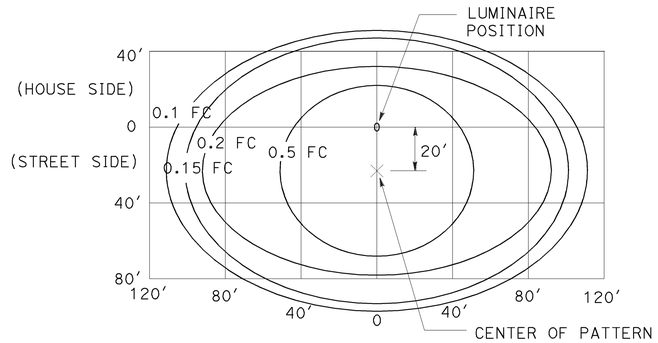

LED LUMINAIRE ROADWAY 4

300-W at 40′ Mounting Height

ISOFOOTCANDLE CURVE - MINIMUM

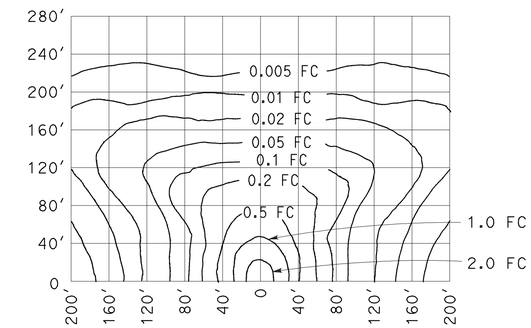

LOW PRESSURE SODIUM LUMINAIRE

40′ Mounting Height
Lamp operated at 33,000 lm
180-W low pressure sodium lamp

STATE OF CALIFORNIA
DEPARTMENT OF TRANSPORTATION

ELECTRICAL SYSTEMS (ISOFOOTCANDLE DIAGRAMS)

NO SCALE

RSP ES-10A DATED JULY 19, 2013 SUPERSEDES RSP ES-10A DATED JULY 20, 2012 THAT SUPPLEMENTS THE STANDARD PLANS BOOK DATED 2010.

REVISED STANDARD PLAN RSP ES-10A

2010 REVISED STANDARD PLAN RSP ES-10A

7-9-13

DIST	COUNTY	ROUTE	POST MILES TOTAL PROJECT	SHEET No.	TOTAL SHEETS
05	SLO	1	73.7/74.0	80	108

REGISTERED CIVIL ENGINEER 10-17-13 DATE

5-19-14
PLANS APPROVAL DATE

REGISTERED PROFESSIONAL ENGINEER M.J. Cullen No. C40620 Exp. 03-31-2015 CIVIL STATE OF CALIFORNIA

The State of California or its officers or agents shall not be responsible for the accuracy or completeness of scanned copies of this plan sheet.

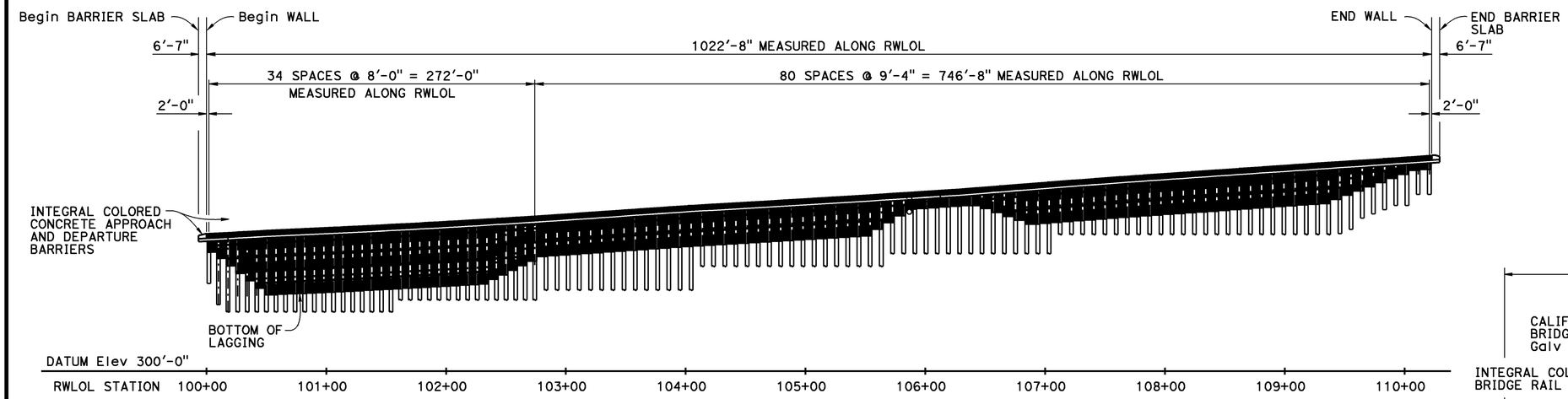

DEVELOPED MIRROR ELEVATION

1" = 60'

RWLOL CURVE DATA			
R	Δ	T	L
516.42	16°08'33"	73.23	145.49
316.42	19°51'50"	55.40	109.70
283.58	21°43'56"	53.43	107.56

QUANTITIES

STRUCTURE EXCAVATION (SOLDIER PILE WALL)	2,627	CY
STRUCTURE BACKFILL (SOLDIER PILE WALL)	212	CY
CONCRETE BACKFILL (SOLDIER PILE WALL)	1,125	CY
LEAN CONCRETE BACKFILL	896	CY
GROUND ANCHOR (SUBHORIZONTAL)	259	EA
STEEL SOLDIER PILE (W14X53)	15,416	LF
36" DRILLED HOLE	7,750	LF
STRUCTURAL CONCRETE, BARRIER SLAB	799	CY
BAR REINFORCING STEEL (EPOXY COATED)	35,477	LB
INTEGRAL COLORED STRUCTURAL SHOTCRETE	339	CY
DECK SEAL	8181	SQFT
TIMBER LAGGING	146	MFBM
CLEAN AND PAINT STEEL SOLDIER PILING	LUMP	SUM
CALIFORNIA ST-70 BRIDGE RAIL	1,036	LF

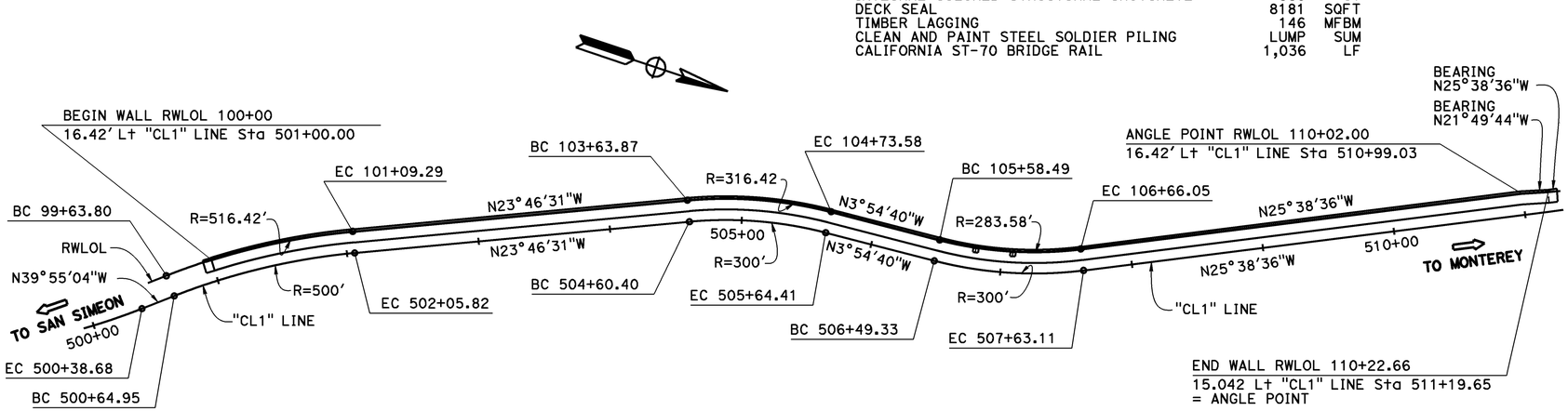

PLAN

1" = 60'

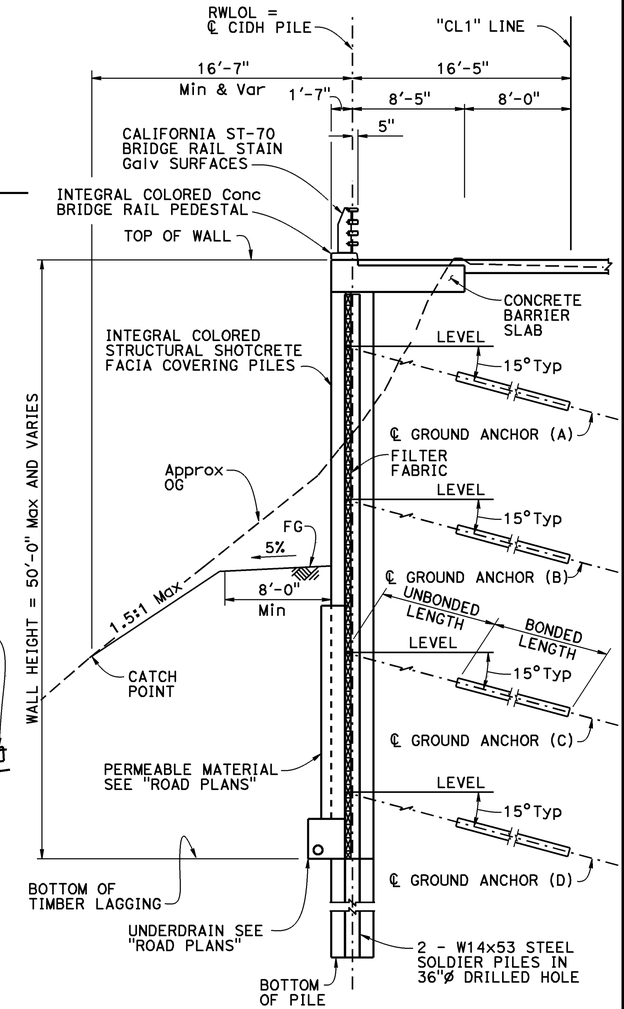

TYPICAL SECTION

3/16" = 1'-0"

DESIGN ENGINEER	DESIGN	BY M. Cullen	CHECKED H. Perez	LOAD & RESISTANCE FACTOR DESIGN	LIVE LOADING: HL93 W/"LOW-BOY"; PERMIT DESIGN VEHICLE		
	DETAILS	BY J. Yang	CHECKED H. Perez	LAYOUT	BY M. Cullen	CHECKED H. Perez	
	QUANTITIES	BY R. Melko	CHECKED R. Washington	SPECIFICATIONS	BY D. Klein	PLANS AND SPECS COMPARED D. Klein	

ORIGINAL SCALE IN INCHES FOR REDUCED PLANS 0 1 2 3

STATE OF CALIFORNIA DEPARTMENT OF TRANSPORTATION

DIVISION OF ENGINEERING SERVICES STRUCTURE DESIGN DESIGN BRANCH 6

BRIDGE NO. 49E0022
POST MILE 73.7/74

ELEPHANT TRUNK RETAINING WALL
GENERAL PLAN

UNIT: 3591
PROJECT NUMBER & PHASE: 0512000009
CONTRACT NO.: 05-1A7001

DISREGARD PRINTS BEARING EARLIER REVISION DATES

REVISION DATES 03-12-13 06-05-13

SHEET 1 OF 29

STRUCTURES DESIGN GENERAL PLAN SHEET (ENGLISH) (REV.09-01-10)

FILE => aa-gp.dgn

USERNAME => s123239 DATE PLOTTED => 05-JUN-2014 TIME PLOTTED => 13:45

DIST	COUNTY	ROUTE	POST MILES TOTAL PROJECT	SHEET No.	TOTAL SHEETS
05	SLO	1	73.7/74.0	81	108

REGISTERED CIVIL ENGINEER 10-17-13 DATE

5-19-14
PLANS APPROVAL DATE

REGISTERED PROFESSIONAL ENGINEER M.J. Cullen No. C40620 Exp. 03-31-2015 CIVIL STATE OF CALIFORNIA

The State of California or its officers or agents shall not be responsible for the accuracy or completeness of scanned copies of this plan sheet.

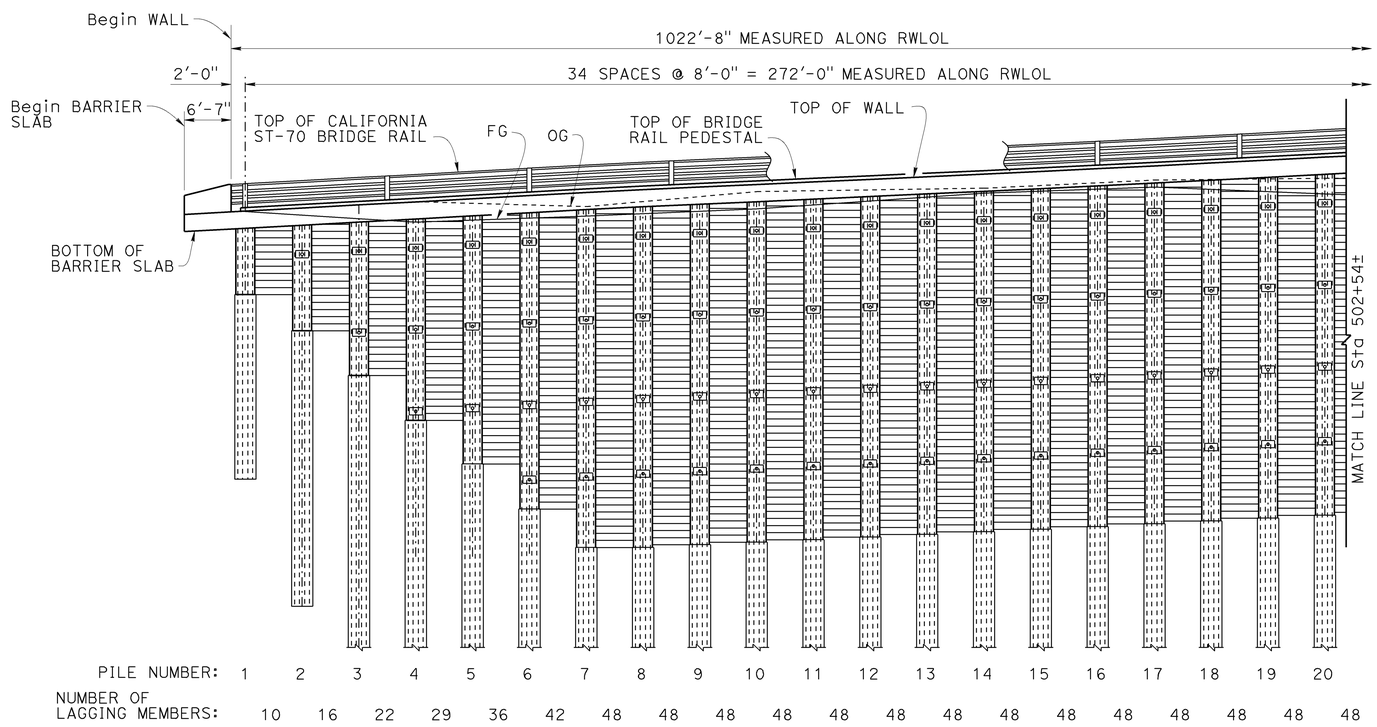

DEVELOPED MIRROR ELEVATION

3/32" = 1'-0"

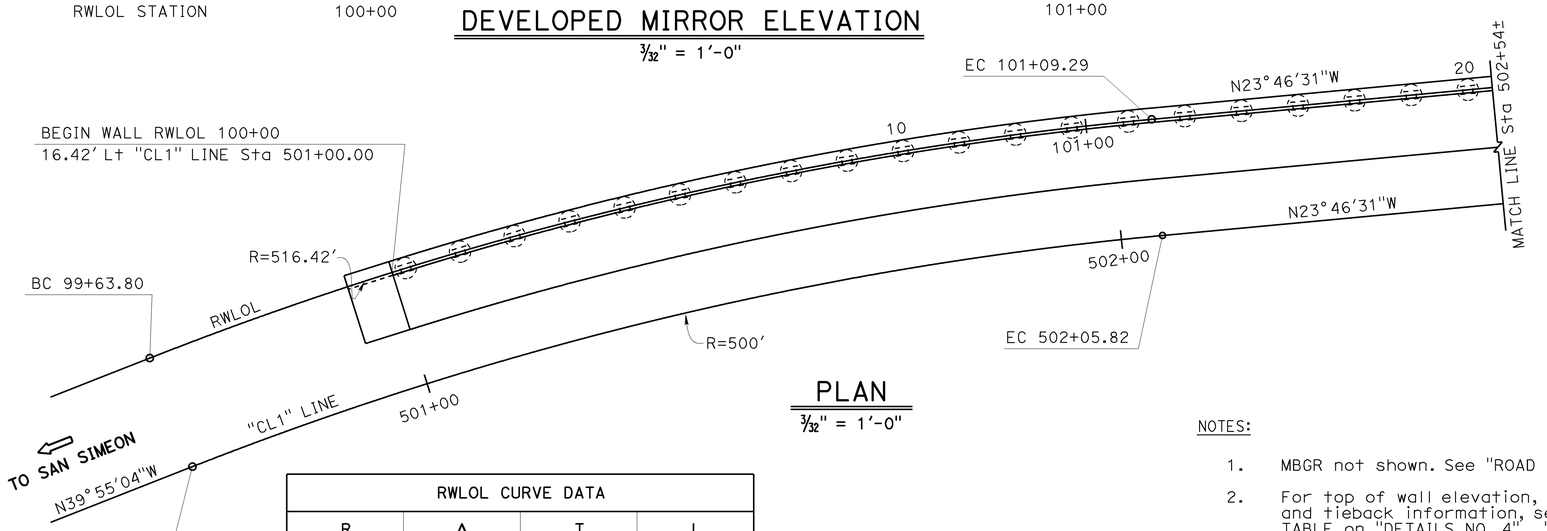

PLAN

3/32" = 1'-0"

RWLOL CURVE DATA			
R	Δ	T	L
516.42	16°08'35"	73.23	145.49

NOTES:

1. MBGR not shown. See "ROAD PLANS"
2. For top of wall elevation, bottom of pile elevation and tieback information, see PILE & TIEBACK DATA TABLE on "DETAILS NO. 4", "DETAILS NO. 5", and "DETAILS NO. 6" sheets.
3. Radius of vertical curves for FG profile = 250'-0"

INDEX TO PLANS

SHEET No.	TITLE
1	GENERAL PLAN
2	STRUCTURE PLAN No. 1
3	STRUCTURE PLAN No. 2
4	STRUCTURE PLAN No. 3
5	STRUCTURE PLAN No. 4
6	FOUNDATION PLAN NO. 1
7	FOUNDATION PLAN NO. 2
8	TYPICAL SECTION
9	DETAILS NO. 1
10	DETAILS NO. 2
11	DETAILS NO. 3
12	DETAILS NO. 4
13	DETAILS NO. 5
14	DETAILS NO. 6
15	SOLDIER PILE WALL WITH GROUND ANCHORS
16	SOLDIER PILE WALL LAGGING DETAILS
17	CALIFORNIA ST-70 BRIDGE RAIL DETAILS NO. 1
18	CALIFORNIA ST-70 BRIDGE RAIL DETAILS NO. 2
19	CALIFORNIA ST-70 BRIDGE RAIL DETAILS NO. 3
20	CALIFORNIA ST-70 BRIDGE RAIL DETAILS NO. 4
21	LOG OF TEST BORING 1 of 9
22	LOG OF TEST BORING 2 of 9
23	LOG OF TEST BORING 3 of 9
24	LOG OF TEST BORING 4 of 9
25	LOG OF TEST BORING 5 of 9
26	LOG OF TEST BORING 6 of 9
27	LOG OF TEST BORING 7 of 9
28	LOG OF TEST BORING 8 of 9
29	LOG OF TEST BORING 9 of 9

STANDARD PLANS 2010

A10A	ABBREVIATIONS (SHEET 1 OF 2)
RSP A10B	ABBREVIATIONS (SHEET 1 OF 2)
A78F1	DOUBLE THRIE BEAM BARRIER CONNECTIONS TO BRIDGE RAILINGS WITHOUT SIDEWALKS
A78F2	SINGLE THRIE BEAM BARRIER CONNECTIONS TO BRIDGE RAILINGS WITHOUT SIDEWALKS

STANDARD PLAN SHEET No.

DETAIL No.

	BY	CHECKED
DESIGN	M. Cullen	H. Perez
DETAILS	J. Yang	H. Perez
QUANTITIES	R. Melko	R. Washington

STATE OF CALIFORNIA DEPARTMENT OF TRANSPORTATION

DIVISION OF ENGINEERING SERVICES STRUCTURE DESIGN DESIGN BRANCH 6

BRIDGE NO. 49E0022 POST MILE 73.7/74

ELEPHANT TRUNK RETAINING WALL STRUCTURE PLAN No. 1

STRUCTURES DESIGN DETAIL SHEET (ENGLISH) (REV. 09-01-10)

ORIGINAL SCALE IN INCHES FOR REDUCED PLANS 0 1 2 3

UNIT: 3591
PROJECT NUMBER & PHASE: 0512000009 CONTRACT NO.: 05-1A7001

DISREGARD PRINTS BEARING EARLIER REVISION DATES

REVISION DATES 03-25-13 SHEET 2 OF 29

FILE => bb-structure01.dgn

USERNAME => s123239 DATE PLOTTED => 05-JUN-2014 TIME PLOTTED => 13:45

DIST	COUNTY	ROUTE	POST MILES TOTAL PROJECT	SHEET No.	TOTAL SHEETS
05	SLO	1	73.7/74.0	82	108

REGISTERED CIVIL ENGINEER 10-17-13 DATE

5-19-14
PLANS APPROVAL DATE

REGISTERED PROFESSIONAL ENGINEER M.J. Cullen No. C40620 Exp. 03-31-2015 CIVIL STATE OF CALIFORNIA

The State of California or its officers or agents shall not be responsible for the accuracy or completeness of scanned copies of this plan sheet.

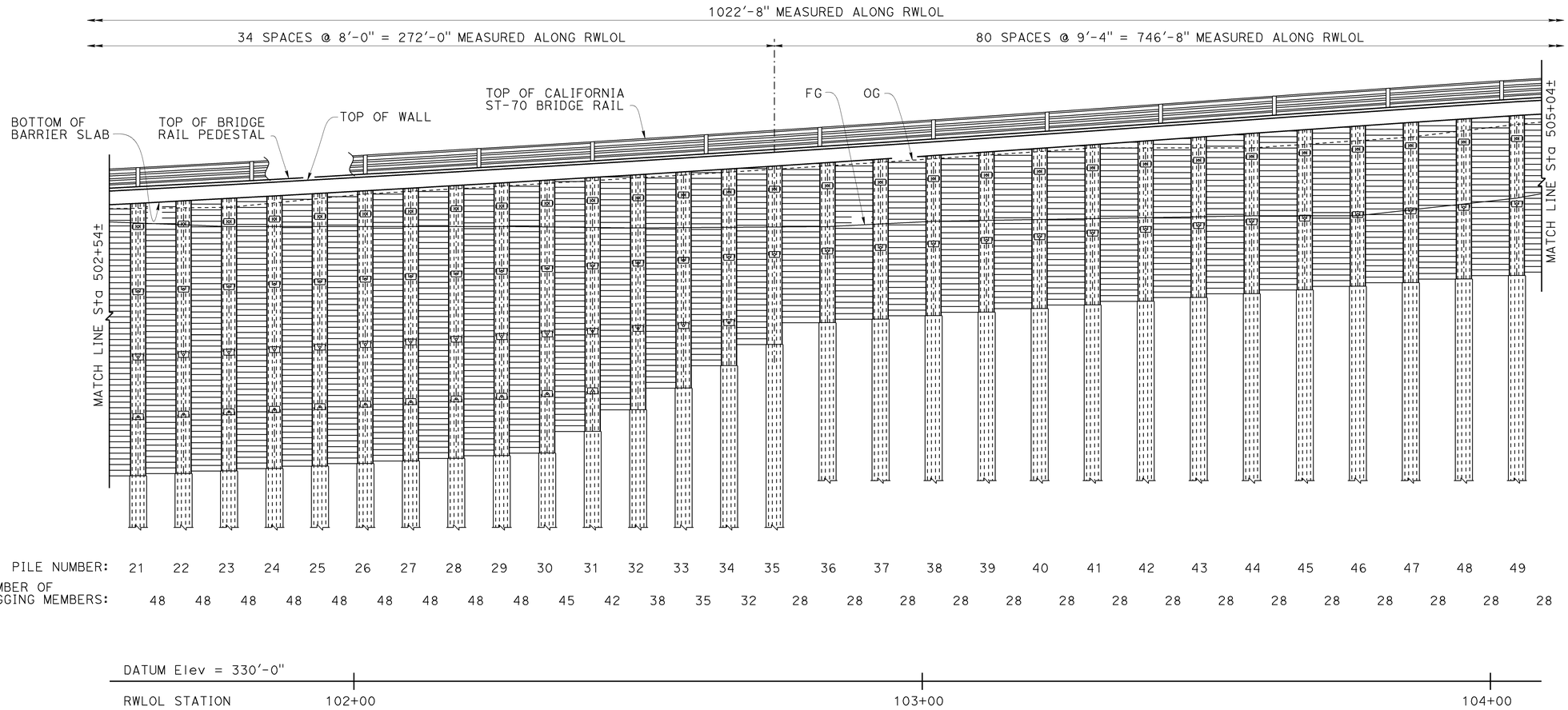

DEVELOPED MIRROR ELEVATION

3/32" = 1'-0"

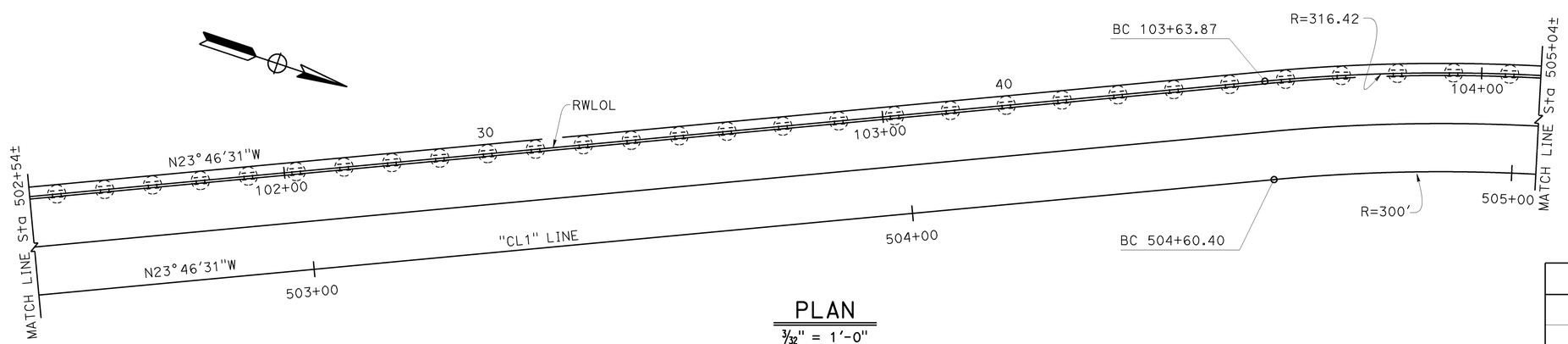

PLAN

3/32" = 1'-0"

NOTES:

1. For top of wall elevation, bottom of pile elevation and tieback information, see PILE & TIEBACK DATA TABLE on "DETAILS NO. 4," "DETAILS NO. 5," and "DETAILS NO. 6" sheets.
2. Radius of vertical curves for FG profile = 250'-0'

RWLOL CURVE DATA			
R	Δ	T	L
316.42	19°51'50"	55.40	109.70

	BY	CHECKED
DESIGN	M. Cullen	H. Perez
DETAILS	J. Yang	H. Perez
QUANTITIES	R. Melko	R. Washington

STATE OF CALIFORNIA
DEPARTMENT OF TRANSPORTATION

DIVISION OF ENGINEERING SERVICES
STRUCTURE DESIGN
DESIGN BRANCH 6

BRIDGE NO. 49E0022
POST MILE 73.7/74

ELEPHANT TRUNK RETAINING WALL
STRUCTURE PLAN No. 2

STRUCTURES DESIGN DETAIL SHEET (ENGLISH) (REV. 09-01-10)

ORIGINAL SCALE IN INCHES FOR REDUCED PLANS 0 1 2 3

UNIT: 3591
PROJECT NUMBER & PHASE: 0512000009
CONTRACT NO.: 05-1A7001

DISREGARD PRINTS BEARING EARLIER REVISION DATES

REVISION DATES 03-25-13

SHEET 3 OF 29

FILE => bb-structure02.dgn

USERNAME => s123239 DATE PLOTTED => 05-JUN-2014 TIME PLOTTED => 13:45

DIST	COUNTY	ROUTE	POST MILES TOTAL PROJECT	SHEET No.	TOTAL SHEETS
05	SLO	1	73.7/74.0	83	108

REGISTERED CIVIL ENGINEER 10-17-13 DATE

5-19-14
PLANS APPROVAL DATE

REGISTERED PROFESSIONAL ENGINEER M.J. Cullen No. C40620 Exp. 03-31-2015 CIVIL STATE OF CALIFORNIA

The State of California or its officers or agents shall not be responsible for the accuracy or completeness of scanned copies of this plan sheet.

NOTES:

1. For top of wall elevation, bottom of pile elevation and tieback information, see PILE & TIEBACK DATA TABLE on "DETAILS NO. 4," "DETAILS NO. 5," and "DETAILS NO. 6" sheets.
2. Radius of vertical curves for FG profile = 250'-0'

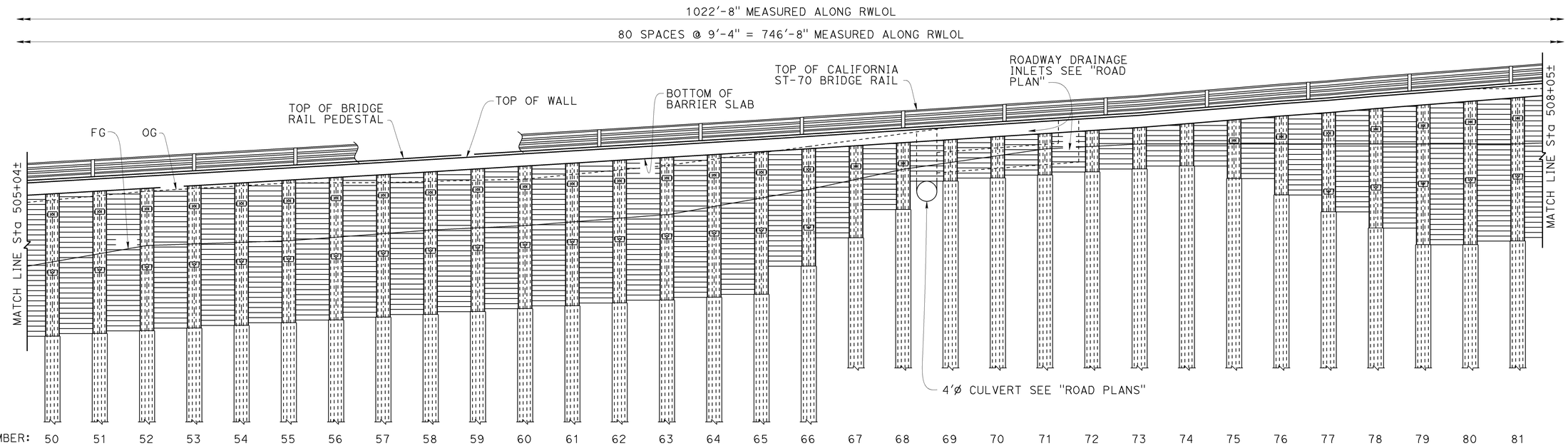

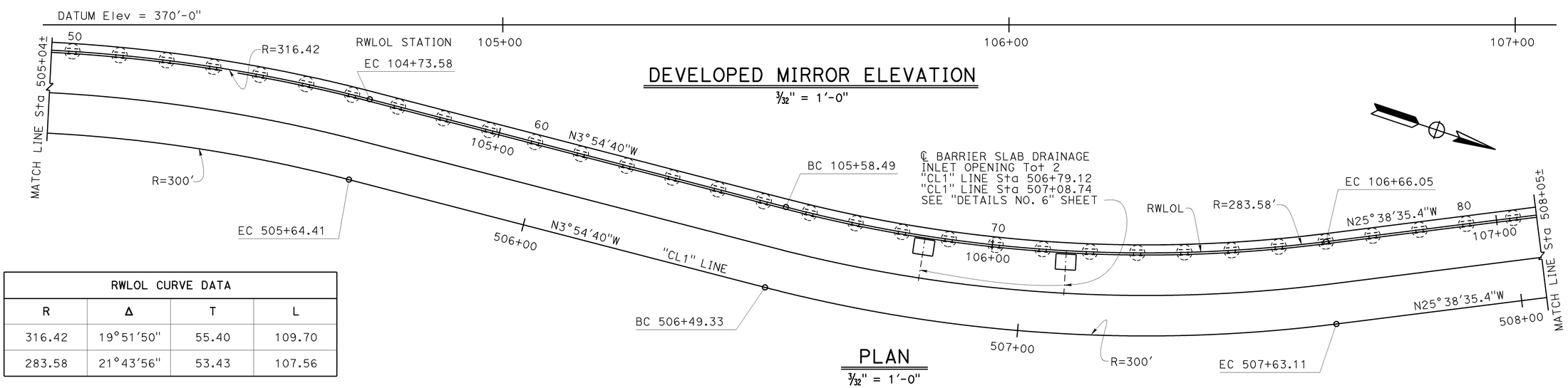

DEVELOPED MIRROR ELEVATION

3/32" = 1'-0"

PLAN

3/32" = 1'-0"

RWLOL CURVE DATA			
R	Δ	T	L
316.42	19°51'50"	55.40	109.70
283.58	21°43'56"	53.43	107.56

DESIGN	BY M. Cullen	CHECKED H. Perez	
DETAILS	BY J. Yang	CHECKED H. Perez	
QUANTITIES	BY R. Melko	CHECKED R. Washington	

STATE OF CALIFORNIA
DEPARTMENT OF TRANSPORTATION

DIVISION OF ENGINEERING SERVICES
STRUCTURE DESIGN
DESIGN BRANCH 6

BRIDGE NO. 49E0022
POST MILE 73.7/74

ELEPHANT TRUNK RETAINING WALL
STRUCTURE PLAN No. 3

STRUCTURES DESIGN DETAIL SHEET (ENGLISH) (REV. 09-01-10)

ORIGINAL SCALE IN INCHES FOR REDUCED PLANS 0 1 2 3

UNIT: 3591
PROJECT NUMBER & PHASE: 0512000009
CONTRACT NO.: 05-1A7001

DISREGARD PRINTS BEARING EARLIER REVISION DATES

REVISION DATES 03-28-13 06-06-13

SHEET 4 OF 29

FILE => bb-structure03.dgn

USERNAME => s123239 DATE PLOTTED => 05-JUN-2014 TIME PLOTTED => 13:45

DIST	COUNTY	ROUTE	POST MILES TOTAL PROJECT	SHEET No.	TOTAL SHEETS
05	SLO	1	73.7/74.0	84	108

REGISTERED CIVIL ENGINEER 10-17-13 DATE

5-19-14
PLANS APPROVAL DATE

REGISTERED PROFESSIONAL ENGINEER M.J. Cullen No. C40620 Exp. 03-31-2015 CIVIL STATE OF CALIFORNIA

The State of California or its officers or agents shall not be responsible for the accuracy or completeness of scanned copies of this plan sheet.

NOTES:

1. For top of wall elevation, bottom of pile elevation and tieback information, see PILE & TIEBACK DATA TABLE on "DETAILS NO. 4," "DETAILS NO. 5," and "DETAILS NO. 6" sheets.
2. Radius of vertical curves for FG profile = 250'-0'

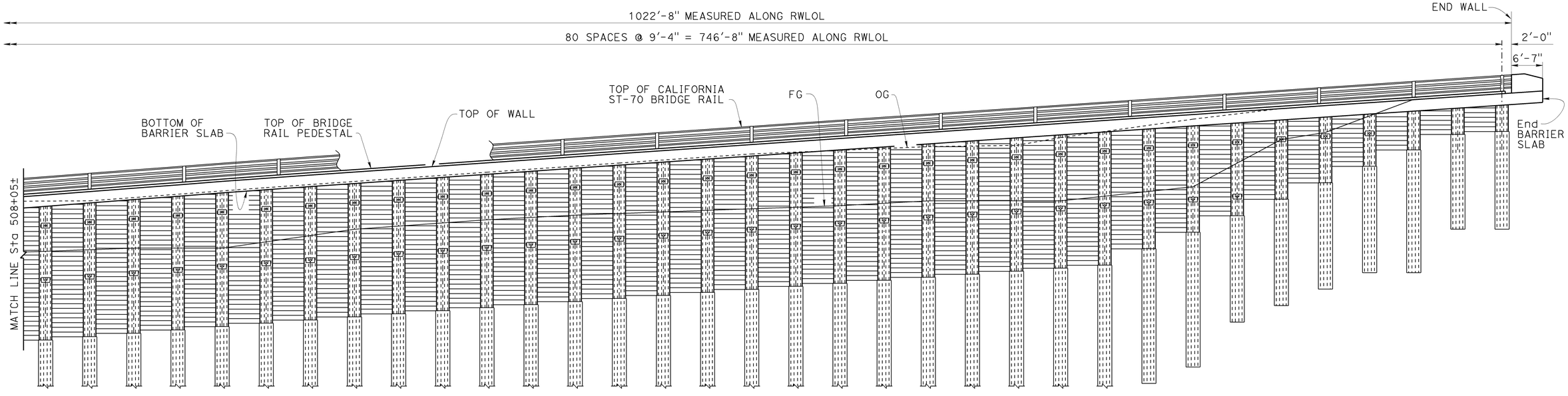

DEVELOPED MIRROR ELEVATION

3/32" = 1'-0"

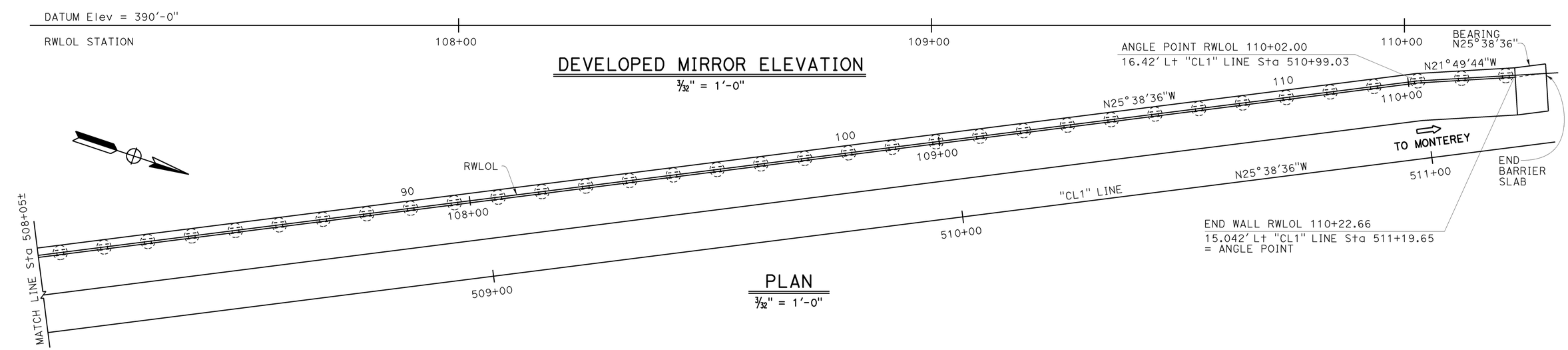

PLAN

3/32" = 1'-0"

DESIGN	BY M. Cullen	CHECKED H. Perez	
DETAILS	BY J. Yang	CHECKED H. Perez	
QUANTITIES	BY R. Melko	CHECKED R. Washington	

STATE OF CALIFORNIA
DEPARTMENT OF TRANSPORTATION

DIVISION OF ENGINEERING SERVICES
STRUCTURE DESIGN
DESIGN BRANCH 6

BRIDGE NO. 49E0022
POST MILE 73.7/74

ELEPHANT TRUNK RETAINING WALL
STRUCTURE PLAN No. 4

STRUCTURES DESIGN DETAIL SHEET (ENGLISH) (REV. 09-01-10)

ORIGINAL SCALE IN INCHES FOR REDUCED PLANS 0 1 2 3

UNIT: 3591
PROJECT NUMBER & PHASE: 0512000009
CONTRACT NO.: 05-1A7001

DISREGARD PRINTS BEARING EARLIER REVISION DATES

REVISION DATES 03-26-13 06-06-13

SHEET 5 OF 29

FILE => bb-structure04.dgn

USERNAME => s123239 DATE PLOTTED => 05-JUN-2014 TIME PLOTTED => 13:45

DIST	COUNTY	ROUTE	POST MILES TOTAL PROJECT	SHEET No.	TOTAL SHEETS
05	SLO	1	73.7/74.0	85	108

REGISTERED CIVIL ENGINEER 10-17-13 DATE

5-19-14
PLANS APPROVAL DATE

REGISTERED PROFESSIONAL ENGINEER M.J. Cullen No. C40620 Exp. 03-31-2015 CIVIL STATE OF CALIFORNIA

The State of California or its officers or agents shall not be responsible for the accuracy or completeness of electronic copies of this plan sheet.

CURVE DATA

No.	R	Δ	T	L
Ⓐ	500.00	16°08'33"	70.90	140.87
Ⓑ	300.00	19°51'50"	52.53	104.01
Ⓒ	300.00	21°43'56"	57.59	113.79
Ⓓ	715.00	15°15'56"	95.82	190.50
Ⓔ	516.42	16°08'33"	73.23	145.49
Ⓕ	316.42	19°51'50"	55.40	109.70
Ⓖ	283.58	21°43'56"	53.43	107.56

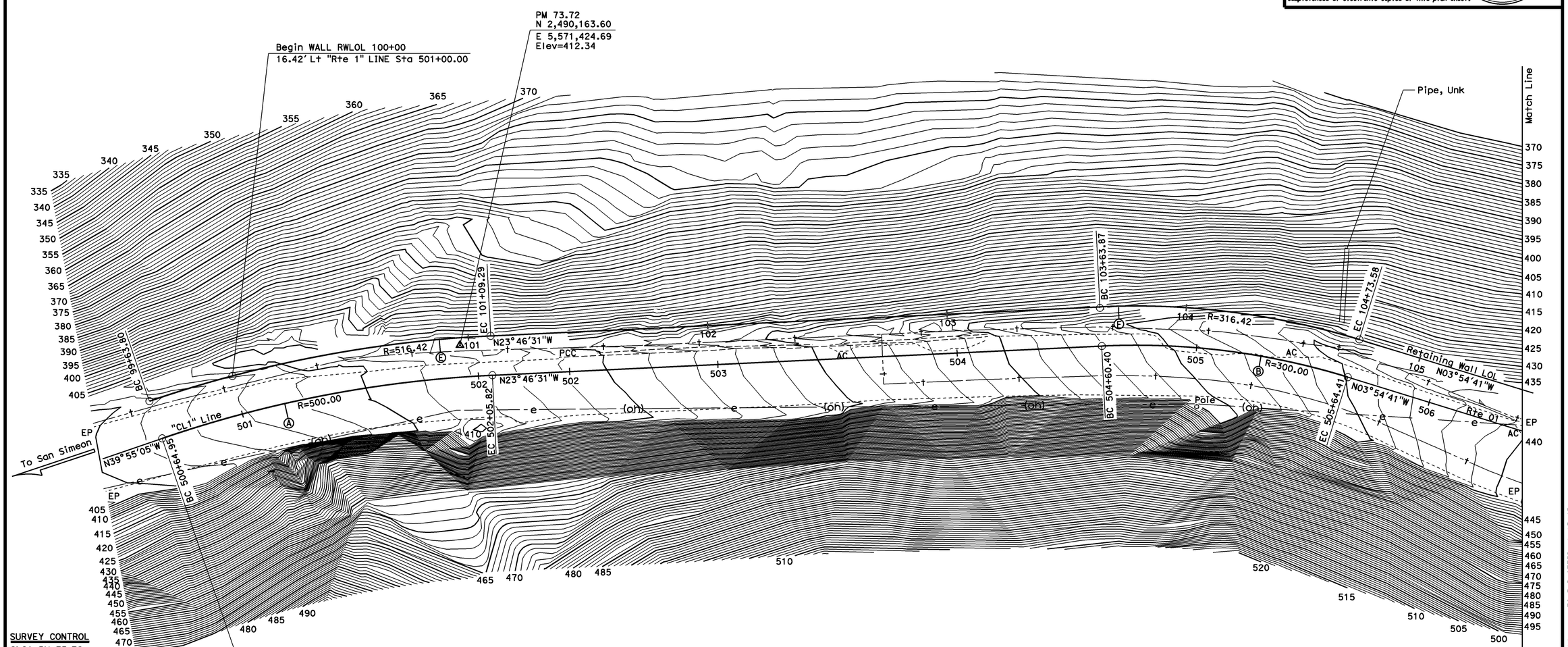

SURVEY CONTROL

SL01 PM-73.72
Fnd 1" IP w/Caltrans control pp & nail
13.30' Lt. "CL" Line, Rte 01
Sta. 501+93.22
N 2,490,163.60
E 5,571,424.69
Elev=412.34

SL01 PM-73.92 (Sheet #2)
Fnd 1" IP w/Caltrans control pp & nail
19.14' Lt. "CL" Line, Rte 01
Sta. 512+41.30
N 2,491,126.66
E 5,571,041.82
Elev=482.84

Note:
Elec Line, Tele Line, Per Dist. Utility Map

PRELIMINARY INVESTIGATION SECTION

SCALE 1"=20'	VERT.DATUM NAVD88	PHOTOGRAMMETRY AS OF: X					
	HORZ.DATUM NAD83 (92)	SURVEYED	BY X	CHECKED	BY C. Fassett 2/2013		
ALIGNMENT TIES Dist. Traverse Sheet		DRAFTED	BY Sharon Zheng 2/2013	CHECKED	BY Sang Sou 2/2013		

DESIGN	BY M. Cullen	CHECKED H. Perez
DETAILS	BY J. Yang	CHECKED H. Perez
QUANTITIES	BY R. Melko	CHECKED R. Washington

STATE OF CALIFORNIA
DEPARTMENT OF TRANSPORTATION

DIVISION OF ENGINEERING SERVICES
STRUCTURE DESIGN
DESIGN BRANCH 06

BRIDGE NO. 49E0022
POST MILE 73.7/74

ELEPHANT TRUNK RETAINING WALL
FOUNDATION PLAN NO. 1

STRUCTURES FOUNDATION PLAN SHEET (ENGLISH) (REV. 09-01-10)

ORIGINAL SCALE IN INCHES FOR REDUCED PLANS 0 1 2 3

UNIT: 3646
PROJECT NUMBER & PHASE: 0512000009
CONTRACT NO.: 05-1A7001

DISREGARD PRINTS BEARING EARLIER REVISION DATES

REVISION DATES 2/15/13 6-06-13

SHEET 6 OF 29

FILE => cc-49-re-wall-e-fp101-pm73.5.dgn

USERNAME => s123239 DATE PLOTTED => 05-JUN-2014 TIME PLOTTED => 13:45

DIST	COUNTY	ROUTE	POST MILES TOTAL PROJECT	SHEET No.	TOTAL SHEETS
05	SLO	1	73.7/74.0	86	108

M.J. Cullen 10-17-13
REGISTERED CIVIL ENGINEER DATE

5-19-14
PLANS APPROVAL DATE

REGISTERED PROFESSIONAL ENGINEER M.J. Cullen No. C40620 Exp. 03-31-2015 CIVIL STATE OF CALIFORNIA

The State of California or its officers or agents shall not be responsible for the accuracy or completeness of electronic copies of this plan sheet.

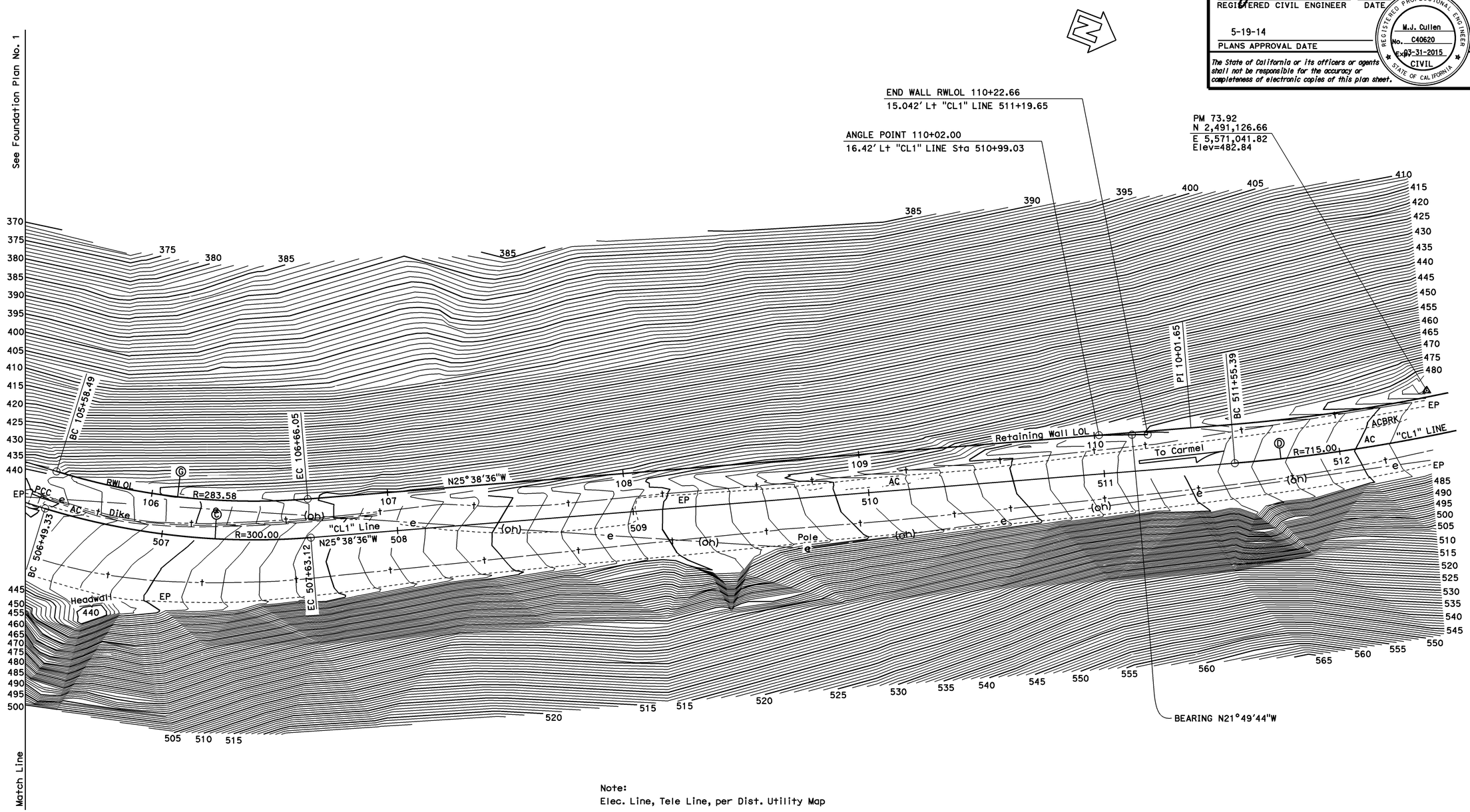

Note:
Elec. Line, Tele Line, per Dist. Utility Map

PRELIMINARY INVESTIGATION SECTION							
SCALE 1"=20'	VERT.DATUM NAVD88	PHOTOGRAMMETRY AS OF: X					
	HORZ.DATUM NAD83 (92)	SURVEYED	BY X	CHECKED	BY C. Fassett	2/2013	
ALIGNMENT TIES Dist. Traverse Sheet		DRAFTED	BY Sharon Zheng	2/2013	CHECKED	BY Sang Sou	2/2013

DESIGN	BY M. Cullen	CHECKED H. Perez
DETAILS	BY J. Yang	CHECKED H. Perez
QUANTITIES	BY R. Welko	CHECKED R. Washington

STATE OF CALIFORNIA
DEPARTMENT OF TRANSPORTATION

DIVISION OF ENGINEERING SERVICES
STRUCTURE DESIGN
DESIGN BRANCH 06

BRIDGE NO. 49E0022
POST MILE 73.7/74

ELEPHANT TRUNK RETAINING WALL
FOUNDATION PLAN NO. 2

STRUCTURES FOUNDATION PLAN SHEET (ENGLISH) (REV. 09-01-10)

ORIGINAL SCALE IN INCHES FOR REDUCED PLANS 0 1 2 3

UNIT: 3591
PROJECT NUMBER & PHASE: 0512000009
CONTRACT NO.: 05-1A7001

DISREGARD PRINTS BEARING EARLIER REVISION DATES

REVISION DATES 02/15/13 06-6-13

SHEET 7 OF 29

FILE => cc-49-re-wall-e-fp102-pm73.5.dgn

USERNAME => s123239 DATE PLOTTED => 05-JUN-2014 TIME PLOTTED => 13:45

DIST	COUNTY	ROUTE	POST MILES TOTAL PROJECT	SHEET No.	TOTAL SHEETS
05	SLO	1	73.7/74.0	87	108

REGISTERED CIVIL ENGINEER — DATE 10-17-13

5-19-14
PLANS APPROVAL DATE

REGISTERED PROFESSIONAL ENGINEER — M.J. Cullen — No. C40620 — Exp. 03-31-2015 — CIVIL — STATE OF CALIFORNIA

The State of California or its officers or agents shall not be responsible for the accuracy or completeness of scanned copies of this plan sheet.

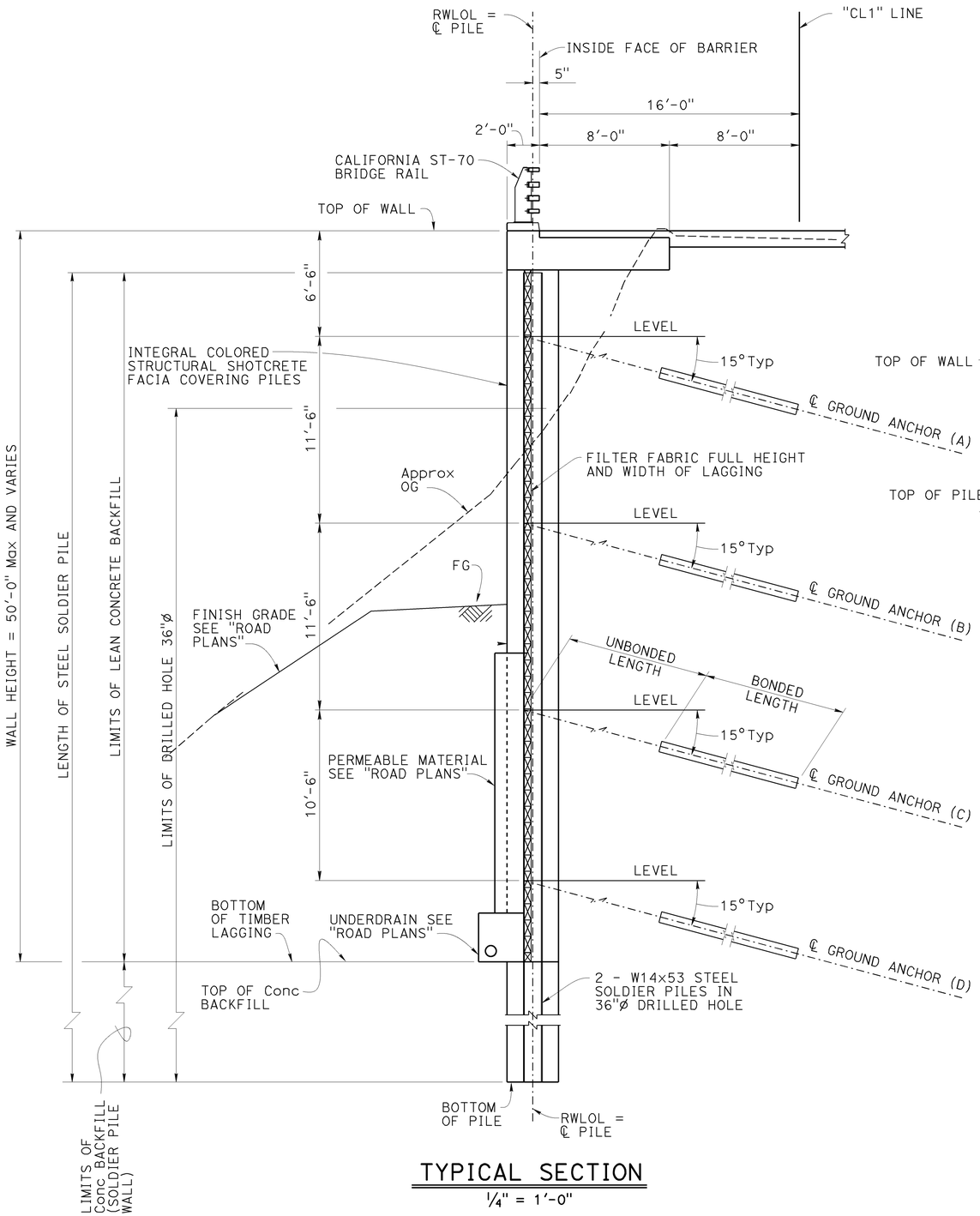

TYPICAL SECTION

1/4" = 1'-0"

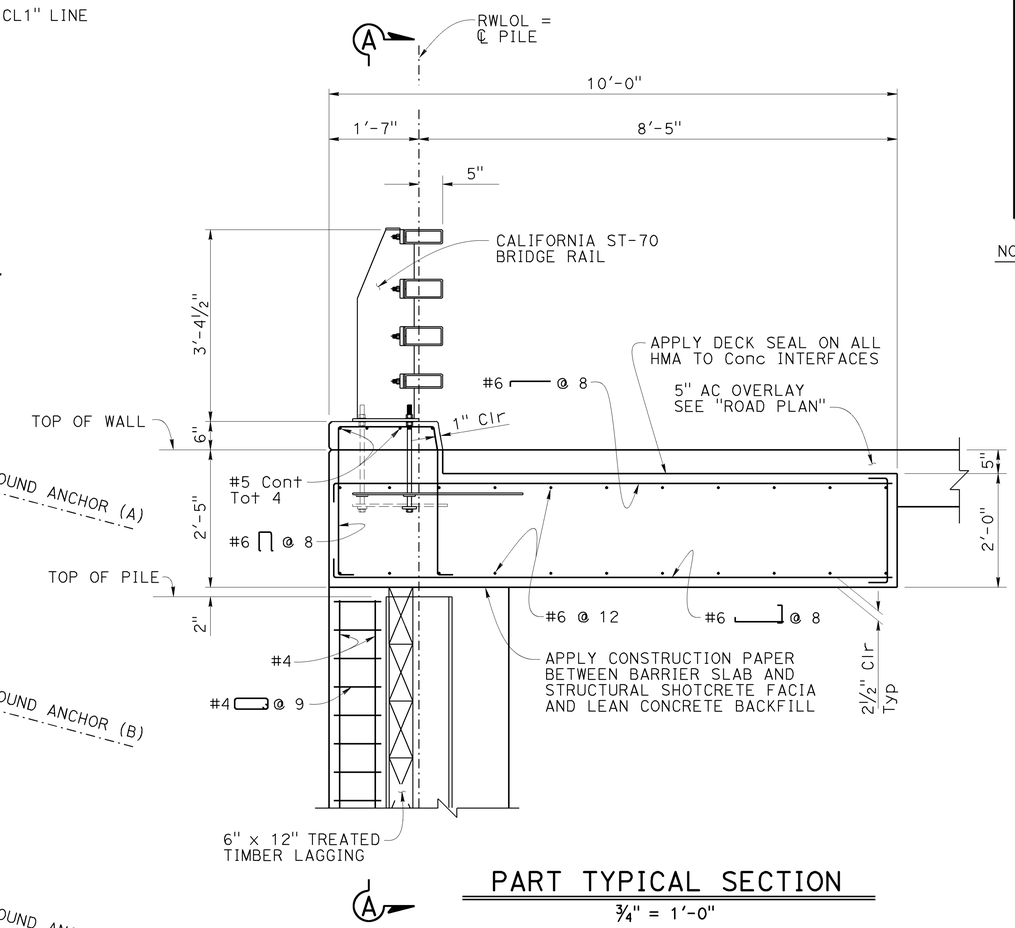

PART TYPICAL SECTION

3/4" = 1'-0"

NOTES:

1. For bridge rail details not shown, see "CALIFORNIA ST-70 BRIDGE RAIL" sheet
2. No expansion joints in concrete barrier or barrier slab.
3. All bar reinforcing steel must be prefabricated epoxy-coated.
4. Barrier and barrier slab shall not be constructed until all ground anchors (A) and ground anchors (B) are installed and stressed.
5. For top of wall elevation, bottom of pile elevation, bottom of timber lagging elevation, and ground anchor information, see PILE & GROUND ANCHOR DATA TABLE on "DETAILS NO. 4," "DETAILS NO. 5," and "DETAILS NO. 6" sheets.

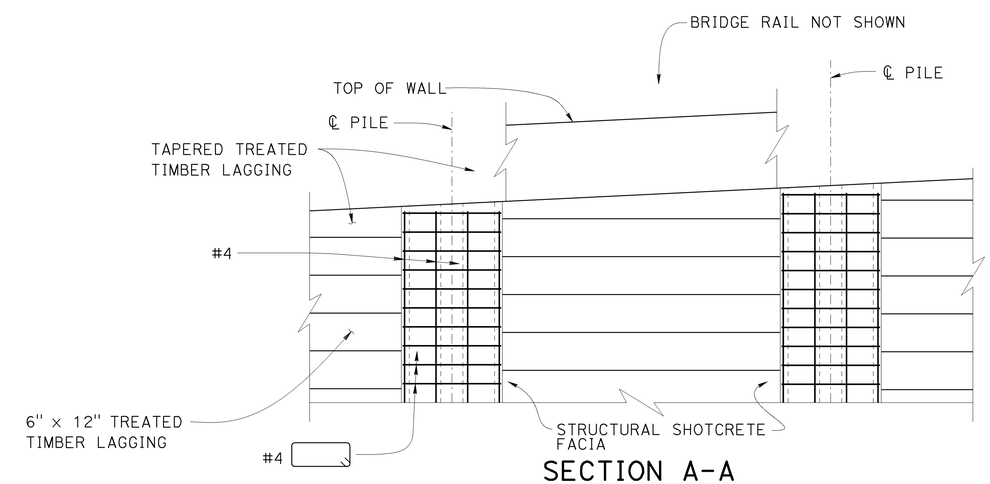

SECTION A-A

1/2" = 1'-0"

DESIGN	BY M. Cullen	CHECKED H. Perez	
DETAILS	BY J. Yang	CHECKED H. Perez	
QUANTITIES	BY R. Melko	CHECKED R. Washington	

STATE OF CALIFORNIA
DEPARTMENT OF TRANSPORTATION

DIVISION OF ENGINEERING SERVICES
STRUCTURE DESIGN
DESIGN BRANCH 6

BRIDGE NO. 49E0022
POST MILE 73.7/74

ELEPHANT TRUNK RETAINING WALL
TYPICAL SECTION

STRUCTURES DESIGN DETAIL SHEET (ENGLISH) (REV. 09-01-10)

ORIGINAL SCALE IN INCHES FOR REDUCED PLANS 0 1 2 3

UNIT: 3591
PROJECT NUMBER & PHASE: 0512000009
CONTRACT NO.: 05-1A7001

DISREGARD PRINTS BEARING EARLIER REVISION DATES

REVISION DATES: 03-25-13 06-06-13

SHEET 8 OF 29

FILE => dd-typical-section.dgn

USERNAME => s123239 DATE PLOTTED => 05-JUN-2014 TIME PLOTTED => 13:45

DIST	COUNTY	ROUTE	POST MILES TOTAL PROJECT	SHEET No.	TOTAL SHEETS
05	SLO	1	73.7/74.0	88	108

REGISTERED CIVIL ENGINEER 10-17-13 DATE

5-19-14
PLANS APPROVAL DATE

REGISTERED PROFESSIONAL ENGINEER M.J. Cullen No. C40620 Exp. 03-31-2015 CIVIL STATE OF CALIFORNIA

The State of California or its officers or agents shall not be responsible for the accuracy or completeness of scanned copies of this plan sheet.

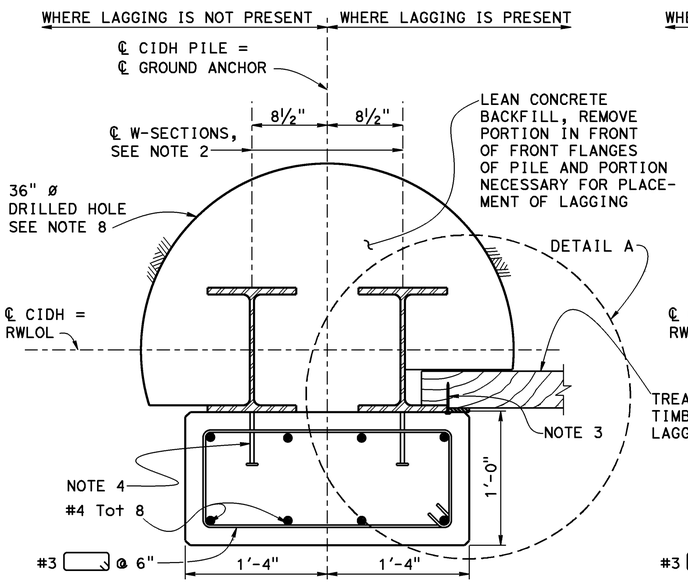

PILE SECTION BETWEEN GROUND ANCHOR

No Scale

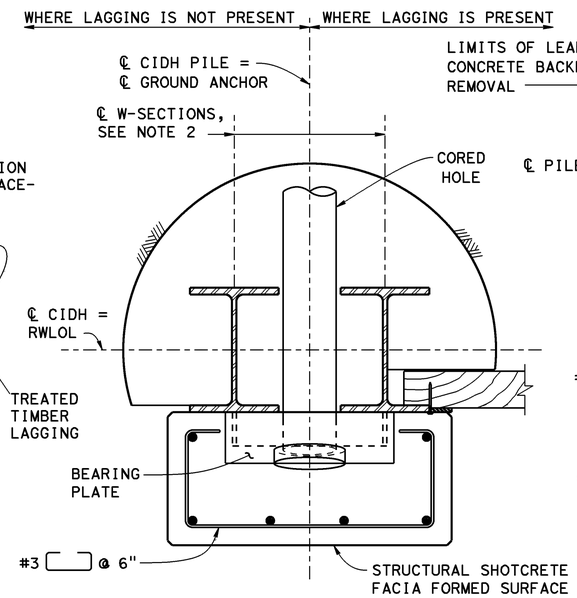

PILE SECTION AT GROUND ANCHOR

No Scale

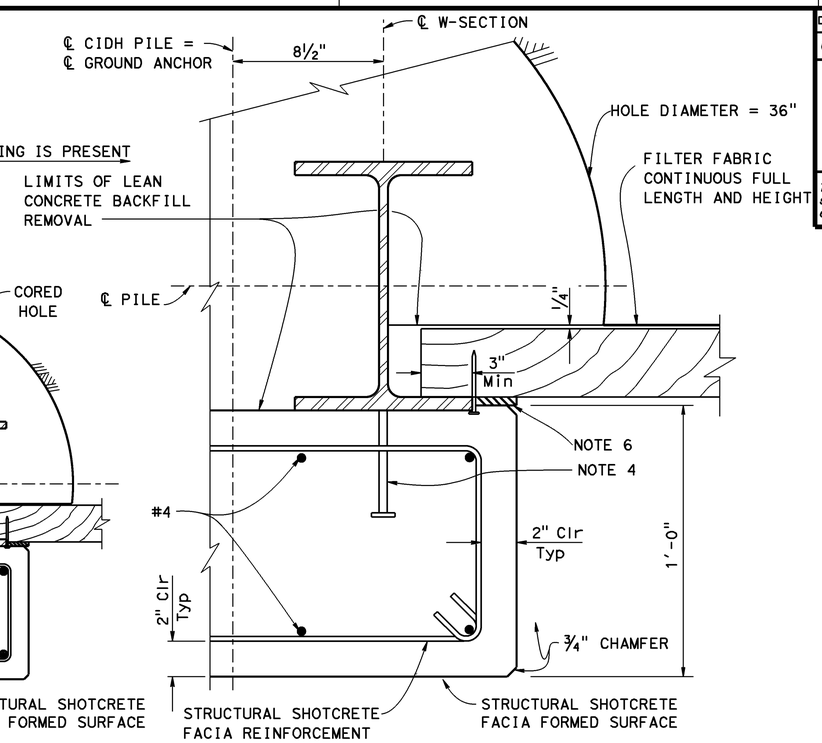

DETAIL A

No Scale

NOTES:

1. Detail symmetrical about ℄ piles = ℄ ground anchor.
2. Provide sufficient number of steel stay plates between W-sections to maintain relative alignment during construction.
3. ¼" Dia 5" galvanized spikes, Typ.
4. Concrete anchor stud, ⅝"ø x 6" @ 12" vertical spacing. All studs are to be welded to W-section with full penetration weld.
5. ⅜" x 6" high density polyethylene (HDPE) shim between lagging members secured with ¼" Dia galv commercial wire nails, Typ. Width of shim to match width of timber lagging.
6. ½" x 6" x full length premolded expansion joint filler, Typ.
7. All bar reinforcing steel must be prefabricated epoxy-coated.
8. Formed surface above drilled hole.

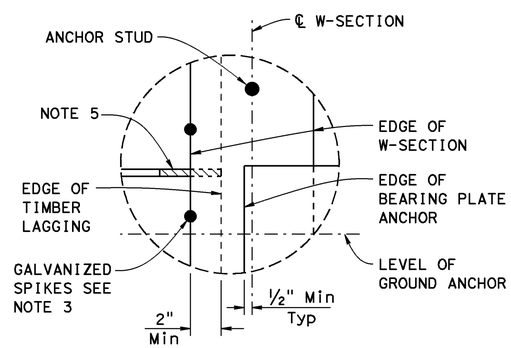

DETAIL "B"

NO SCALE

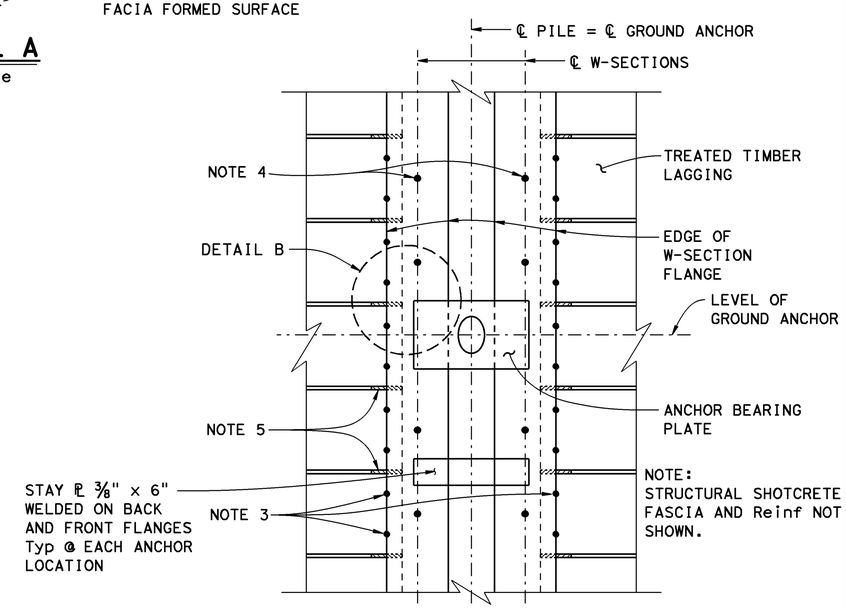

PART ELEVATION OF SOLDIER PILE

NO SCALE

	BY	CHECKED
DESIGN	M. Cullen	H. Perez
DETAILS	J. Yang	H. Perez
QUANTITIES	R. Melko	R. Washington

STATE OF CALIFORNIA
DEPARTMENT OF TRANSPORTATION

DIVISION OF ENGINEERING SERVICES
STRUCTURE DESIGN
DESIGN BRANCH 6

BRIDGE NO. 49E0022
POST MILE 73.7/74

ELEPHANT TRUNK RETAINING WALL
DETAILS NO. 1

STRUCTURES DESIGN DETAIL SHEET (ENGLISH) (REV. 09-01-10)

ORIGINAL SCALE IN INCHES FOR REDUCED PLANS 0 1 2 3

UNIT: 3591
PROJECT NUMBER & PHASE: 0512000009
CONTRACT NO.: 05-1A7001

DISREGARD PRINTS BEARING EARLIER REVISION DATES

REVISION DATES 03-26-13 06-06-13

SHEET 9 OF 29

FILE => ii-details01.dgn

USERNAME => s123239 DATE PLOTTED => 05-JUN-2014 TIME PLOTTED => 13:45

DIST	COUNTY	ROUTE	POST MILES TOTAL PROJECT	SHEET No.	TOTAL SHEETS
05	SLO	1	73.7/74.0	89	108

REGISTERED CIVIL ENGINEER 10-17-13 DATE

5-19-14
PLANS APPROVAL DATE

REGISTERED PROFESSIONAL ENGINEER M.J. Cullen No. C40620 Exp. 03-31-2015 CIVIL STATE OF CALIFORNIA

The State of California or its officers or agents shall not be responsible for the accuracy or completeness of scanned copies of this plan sheet.

NOTES:

Ⓐ Level of initial grouting for drilled hole 6" in diameter or smaller

Ⓑ Level of secondary grouting

Ⓒ Level of initial grouting inside corrugated sheathing

Ⓓ Bonded length shall be determined by the contractor

Ⓔ For unbonded length, see "Details No. 4," "Details No. 5," and "Details No. 6" sheet

Ⓕ For inclination, see "Tyical Section" sheet

Ⓖ Face of Wall Excavation

NOTES:

1. Steel tube (Min thickness = ¼") welded to bearing plate.

2 Steel tube welded to bearing plate. Inside diameter of steel tube (Min thickness = ¼") to be 1" greater than outside diameter of smooth sheathing.

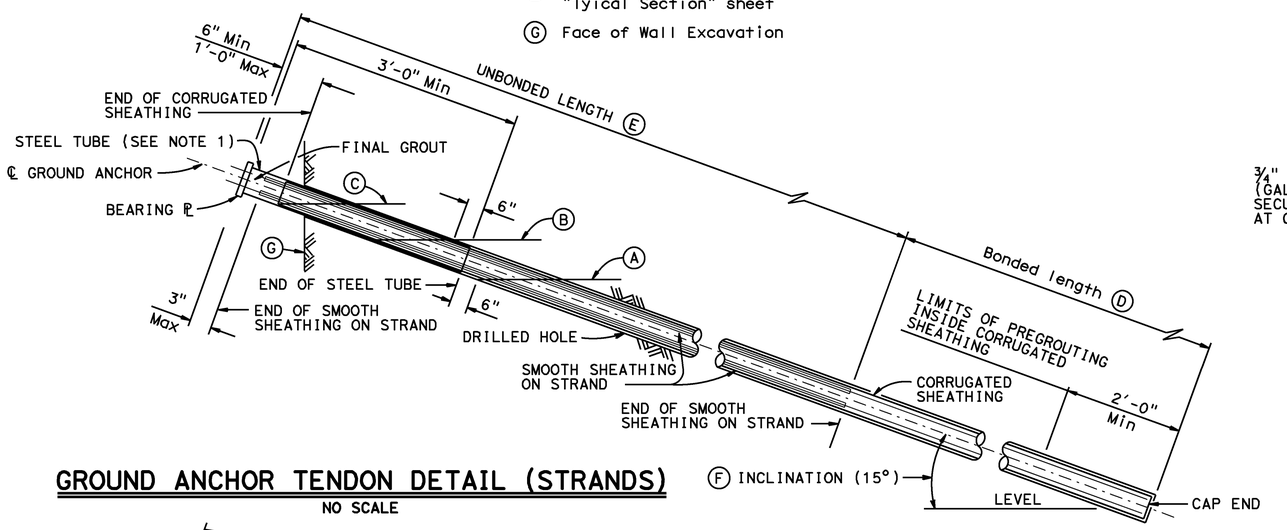

GROUND ANCHOR TENDON DETAIL (STRANDS)

NO SCALE

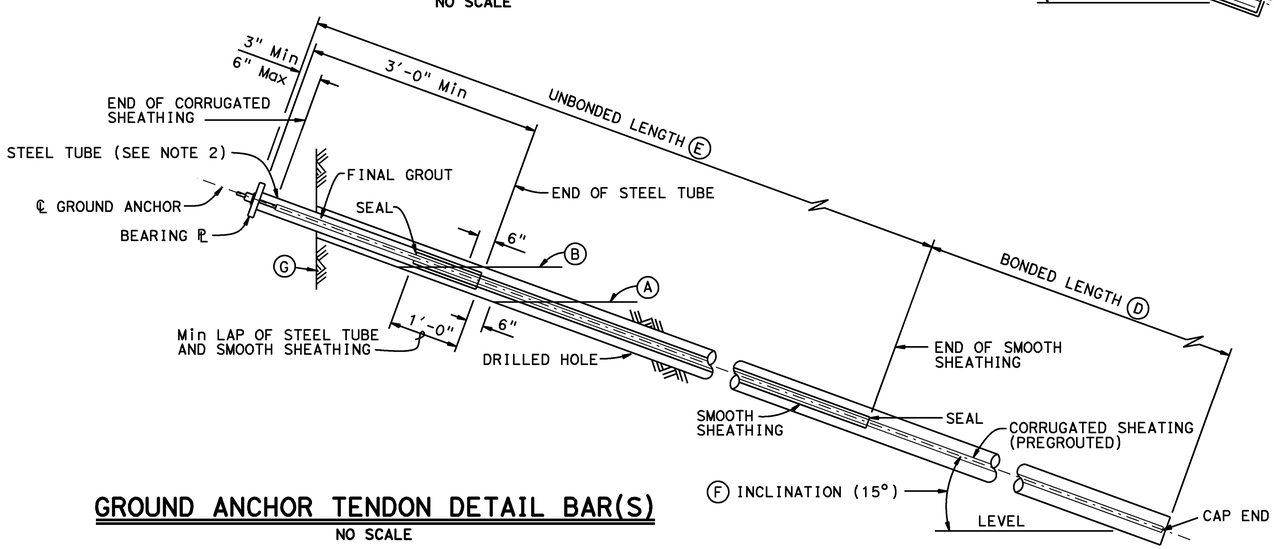

GROUND ANCHOR TENDON DETAIL BAR(S)

NO SCALE

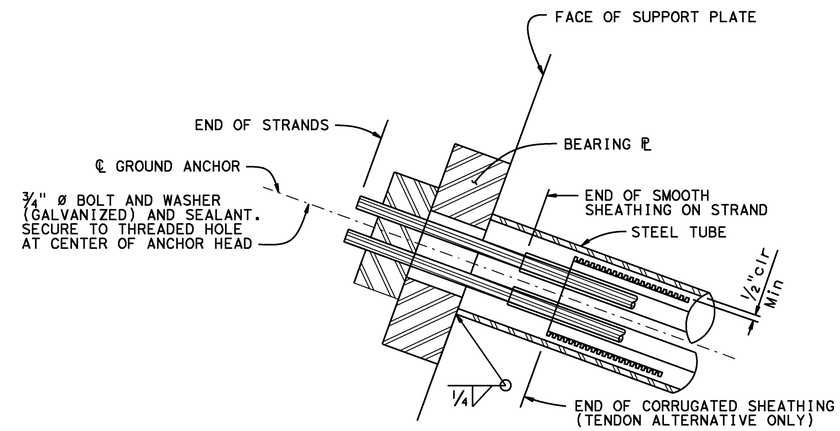

ALTERNATIVE X

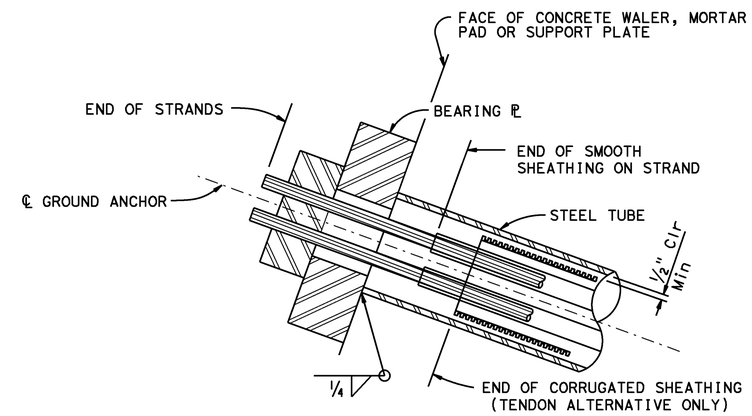

ALTERNATIVE Y

ANCHORAGE DETAILS

NO SCALE

NOTE: For details not shown, see "Typical Section" sheet

	BY	CHECKED
DESIGN	M. Cullen	H. Perez
DETAILS	J. Yang	H. Perez
QUANTITIES	R. Melko	R. Washington

STATE OF CALIFORNIA DEPARTMENT OF TRANSPORTATION

DIVISION OF ENGINEERING SERVICES STRUCTURE DESIGN DESIGN BRANCH 6

BRIDGE NO. 49E0022 POST MILE 73.7/74

ELEPHANT TRUNK RETAINING WALL DETAILS NO. 2

STRUCTURES DESIGN DETAIL SHEET (ENGLISH) (REV. 09-01-10)

ORIGINAL SCALE IN INCHES FOR REDUCED PLANS 0 1 2 3

UNIT: 3591
PROJECT NUMBER & PHASE: 0512000009 CONTRACT NO.: 05-1A7001

DISREGARD PRINTS BEARING EARLIER REVISION DATES → 03-25-13

SHEET 10 OF 29

FILE => ii-details02.dgn

USERNAME => s123239 DATE PLOTTED => 05-JUN-2014 TIME PLOTTED => 13:45

DIST	COUNTY	ROUTE	POST MILES TOTAL PROJECT	SHEET No.	TOTAL SHEETS
05	SLO	1	73.7/74.0	90	108

REGISTERED CIVIL ENGINEER 10-17-13 DATE

5-19-14
PLANS APPROVAL DATE

REGISTERED PROFESSIONAL ENGINEER M.J. Cullen No. C40620 Exp. 03-31-2015 CIVIL STATE OF CALIFORNIA

The State of California or its officers or agents shall not be responsible for the accuracy or completeness of scanned copies of this plan sheet.

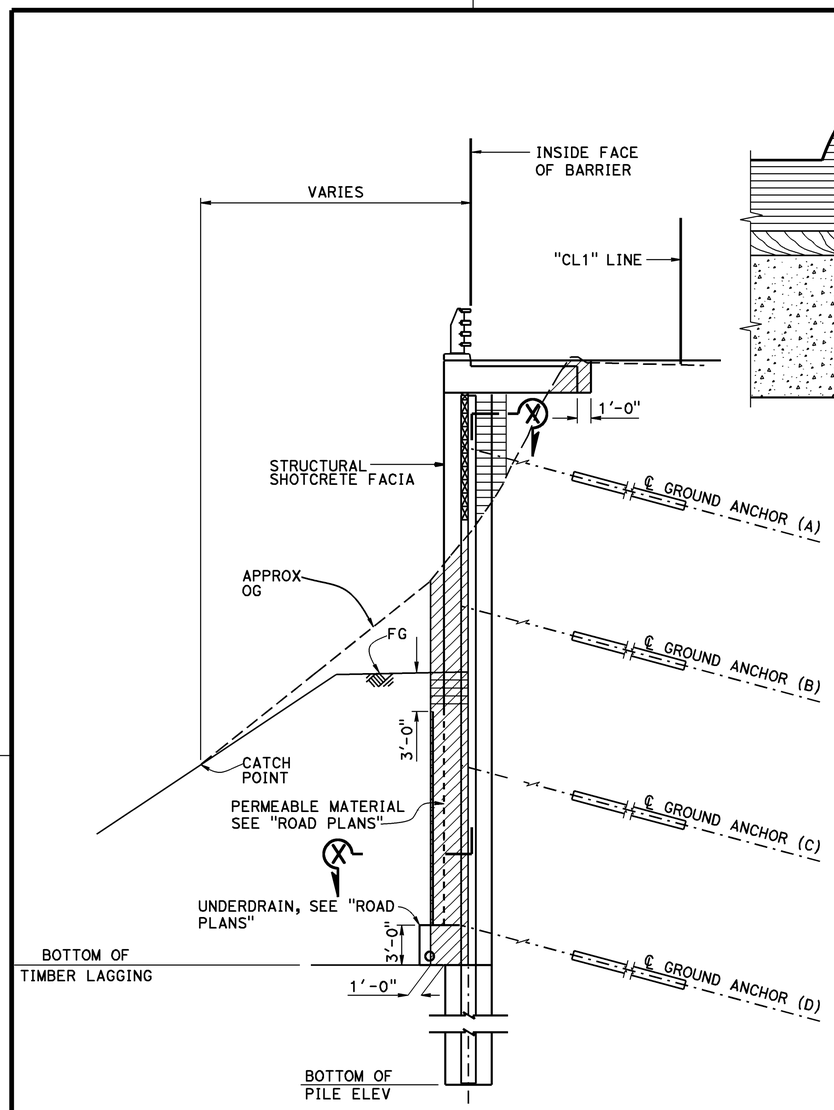

LIMITS OF PAYMENT FOR EXCAVATION AND BACKFILL

NO SCALE

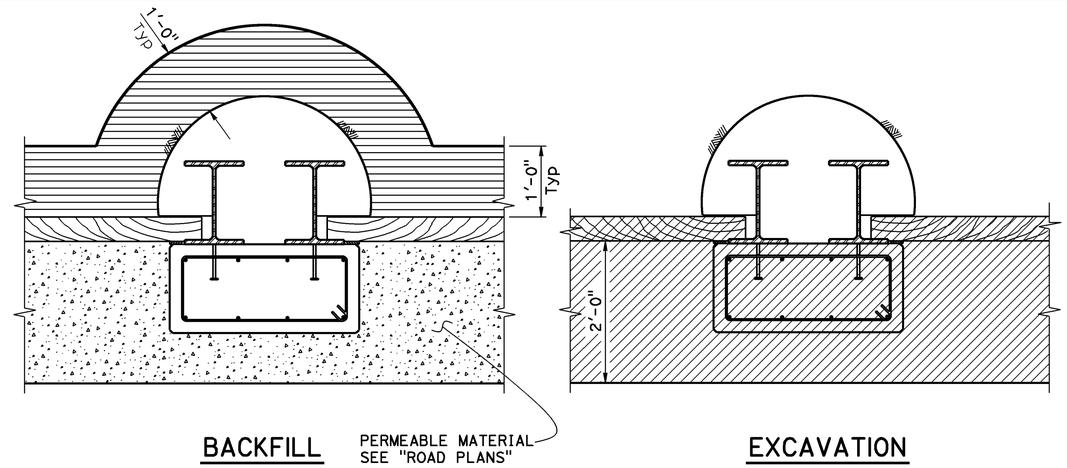

SECTION X-X

NO SCALE

LEGEND

- STRUCTURE BACKFILL (SOLDIER PILE WALL)
- STRUCTURE EXCAVATION (SOLDIER PILE WALL)

NOTES

1. Ground anchor shall be constructed starting with ground anchor (A). At soldier piles where OG at RWLOL is more than 3' below ground anchor (A), the Contractor shall construct ground anchor (B) before ground anchor (A). After installing ground anchor (B), the Contractor shall backfill and install ground anchor (A) before excavating for ground anchors (C) and (D).
2. Structure Backfill and lagging shall be placed to at least 5'-0" above the ground anchor prior to construction of the ground anchor.
3. Excavation shall not extend more than 3'-0" below a ground anchor until it is completly constructed and stressed.
4. For Limits & Layout of Permeable Material and 8" APUD, see "Road Plans".
5. For limits of payments for roadway excavation, see "Road Plans".

	BY	CHECKED
DESIGN	M. Cullen	H. Perez
DETAILS	J. Yang	H. Perez
QUANTITIES	R. Melko	R. Washington

STATE OF CALIFORNIA DEPARTMENT OF TRANSPORTATION

DIVISION OF ENGINEERING SERVICES STRUCTURE DESIGN DESIGN BRANCH 6

BRIDGE NO. 49E0022
POST MILE 73.7/74

ELEPHANT TRUNK RETAINING WALL
DETAILS NO. 3

STRUCTURES DESIGN DETAIL SHEET (ENGLISH) (REV. 09-01-10)

ORIGINAL SCALE IN INCHES FOR REDUCED PLANS 0 1 2 3

UNIT: 3591
PROJECT NUMBER & PHASE: 0512000009
CONTRACT NO.: 05-1A7001

DISREGARD PRINTS BEARING EARLIER REVISION DATES

REVISION DATES 03-26-13 06-06-13

SHEET 11 OF 29

FILE => ii-details03.dgn

USERNAME => s123239 DATE PLOTTED => 05-JUN-2014 TIME PLOTTED => 13:45

DIST	COUNTY	ROUTE	POST MILES TOTAL PROJECT	SHEET No.	TOTAL SHEETS
05	SLO	1	73.7/74.0	91	108

REGISTERED CIVIL ENGINEER 10-17-13 DATE

5-19-14
PLANS APPROVAL DATE

REGISTERED PROFESSIONAL ENGINEER M.J. Cullen No. C40620 Exp. 03-31-2015 CIVIL STATE OF CALIFORNIA

The State of California or its officers or agents shall not be responsible for the accuracy or completeness of scanned copies of this plan sheet.

PILE & GROUND ANCHOR DATA TABLE

RWLOL STATION	PILE NUMBER	TOP OF WALL Elev	BOTTOM OF PILE Elev	BOTTOM OF LAGGING Elev (NOTE 1)	FINISH GRADE ELEVATION	GROUND ANCHOR A		GROUND ANCHOR B		GROUND ANCHOR C		GROUND ANCHOR D	
						FDL	UNBONDED LENGTH	FDL	UNBONDED LENGTH	FDL	UNBONDED LENGTH	FDL	UNBONDED LENGTH
FEET		FEET	FEET	FEET	FEET	KIPS	FEET	KIPS	FEET	KIPS	FEET	KIPS	FEET
100+02.00	1	408.59	304.50	396.82	408.50	N/A	N/A	N/A	N/A	N/A	N/A	N/A	N/A
100+10.00	2	409.03	305.00	391.72	408.00	125	32	N/A	N/A	N/A	N/A	N/A	N/A
100+18.00	3	409.46	305.60	385.43	407.50	120	33	120	28	N/A	N/A	N/A	N/A
100+26.00	4	409.90	305.90	379.11	407.00	150	34	150	29	150	25	N/A	N/A
100+34.00	5	410.34	306.34	372.99	407.33	150	34	150	29	150	25	N/A	N/A
100+42.00	6	410.78	306.78	366.62	407.67	175	40	175	36	175	32	175	28
100+50.00	7	411.22	307.22	361.22	408.00	175	40	175	36	175	32	175	28
100+58.00	8	411.61	307.61	361.61	408.33	175	40	175	36	175	32	175	28
100+66.00	9	411.97	307.97	361.97	408.67	175	40	175	36	175	32	175	28
100+74.00	10	412.34	308.34	362.34	409.00	175	40	175	36	175	32	175	28
100+82.00	11	412.70	308.70	362.70	409.33	175	40	175	36	175	32	175	28
100+90.00	12	413.06	309.06	363.06	409.67	175	40	175	36	175	32	175	28
100+98.00	13	413.42	309.42	363.42	410.00	175	40	175	36	175	32	175	28
101+06.00	14	413.79	309.79	363.79	410.13	175	40	175	36	175	32	175	28
101+14.00	15	414.17	310.17	364.17	410.26	175	40	175	36	175	32	175	28
101+22.00	16	414.56	310.56	364.56	410.38	175	40	175	36	175	32	175	28
101+30.00	17	414.96	310.96	364.96	410.51	175	40	175	36	175	32	175	28
101+38.00	18	415.36	311.36	365.36	410.64	175	40	175	36	175	32	175	28
101+46.00	19	415.77	311.77	365.77	410.77	175	40	175	36	175	32	175	28
101+54.00	20	416.18	312.18	366.18	410.90	175	40	175	36	175	32	175	28
101+62.00	21	416.61	312.61	366.61	411.03	175	40	175	36	175	32	175	28
101+70.00	22	417.03	313.03	367.03	411.15	175	40	175	36	175	32	175	28
101+78.00	23	417.47	313.47	367.47	411.28	175	40	175	36	175	32	175	28
101+86.00	24	417.91	313.91	367.91	411.41	175	40	175	36	175	32	175	28
101+94.00	25	418.35	314.35	368.35	411.54	175	40	175	36	175	32	175	28
102+02.00	26	418.80	314.80	368.80	411.67	175	40	175	36	175	32	175	28
102+10.00	27	419.26	315.26	369.26	411.79	175	40	175	36	175	32	175	28
102+18.00	28	419.72	315.72	369.72	411.92	175	40	175	36	175	32	175	28
102+26.00	29	420.19	316.19	370.19	412.05	175	40	175	36	175	32	175	28
102+34.00	30	420.67	320.00	374.00	412.18	175	40	175	36	175	32	175	28
102+42.00	31	421.15	323.81	377.81	412.31	175	40	175	36	175	32	175	28
102+50.00	32	421.64	339.64	381.64	412.44	150	34	150	29	150	25	N/A	N/A
102+58.00	33	422.14	343.47	385.47	412.56	150	34	150	29	150	25	N/A	N/A
102+66.00	34	422.65	347.32	389.32	412.69	150	34	150	29	150	25	N/A	N/A
102+74.00	35	423.16	361.16	393.16	412.82	140	33	140	28	N/A	N/A	N/A	N/A
102+83.33	36	423.77	361.77	393.77	412.95	140	33	140	28	N/A	N/A	N/A	N/A
102+92.67	37	424.38	362.38	394.38	413.08	140	33	140	28	N/A	N/A	N/A	N/A
103+02.00	38	425.01	363.01	395.01	413.21	140	33	140	28	N/A	N/A	N/A	N/A
103+11.33	39	425.64	363.64	395.64	413.33	140	33	140	28	N/A	N/A	N/A	N/A
103+20.67	40	426.28	364.28	396.28	413.46	140	33	140	28	N/A	N/A	N/A	N/A
103+30.00	41	426.92	364.92	396.92	413.59	140	33	140	28	N/A	N/A	N/A	N/A
103+39.33	42	427.58	365.58	397.58	413.72	140	33	140	28	N/A	N/A	N/A	N/A
103+48.67	43	428.24	366.24	398.24	413.85	140	33	140	28	N/A	N/A	N/A	N/A
103+58.00	44	428.91	366.91	398.91	413.97	140	33	140	28	N/A	N/A	N/A	N/A
103+67.33	45	429.56	367.56	399.56	414.10	140	33	140	28	N/A	N/A	N/A	N/A
103+76.67	46	430.19	368.19	400.19	414.23	140	33	140	28	N/A	N/A	N/A	N/A
103+86.00	47	430.83	368.83	400.83	414.36	140	33	140	28	N/A	N/A	N/A	N/A
103+95.33	48	431.46	369.46	401.46	414.49	140	33	140	28	N/A	N/A	N/A	N/A

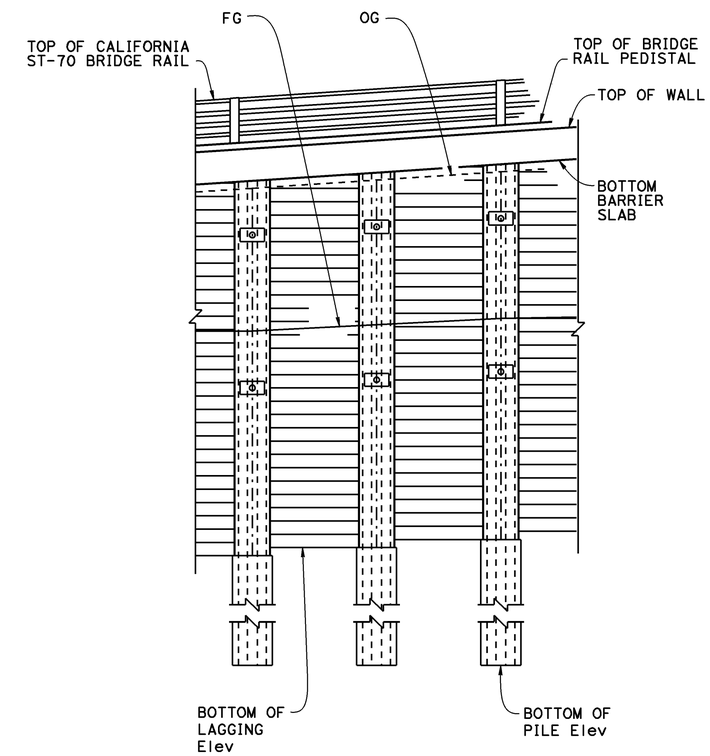

PART MIRROR ELEVATION

3/16" = 1'-0"

NOTES:

1. The bottom of lagging elevation denoted refers to the elevation in the lagging bay immediately to the right of the respective pile number.

	BY	CHECKED
DESIGN	M. Cullen	H. Perez
DETAILS	J. Yang	H. Perez
QUANTITIES	R. Melko	R. Washington

STATE OF CALIFORNIA DEPARTMENT OF TRANSPORTATION

DIVISION OF ENGINEERING SERVICES STRUCTURE DESIGN DESIGN BRANCH 6

BRIDGE NO. 49E0022
POST MILE 73.7/74

ELEPHANT TRUNK RETAINING WALL
DETAILS NO. 4

STRUCTURES DESIGN DETAIL SHEET (ENGLISH) (REV. 09-01-10)

ORIGINAL SCALE IN INCHES FOR REDUCED PLANS 0 1 2 3

UNIT: 3591
PROJECT NUMBER & PHASE: 0512000009
CONTRACT NO.: 05-1A7001

DISREGARD PRINTS BEARING EARLIER REVISION DATES

REVISION DATES 03-26-13 06-06-13

SHEET 12 OF 29

FILE => ii-details04.dgn

USERNAME => s123239 DATE PLOTTED => 05-JUN-2014 TIME PLOTTED => 13:45

DIST	COUNTY	ROUTE	POST MILES TOTAL PROJECT	SHEET No.	TOTAL SHEETS
05	SLO	1	73.7/74.0	92	108

REGISTERED CIVIL ENGINEER 10-17-13 DATE

5-19-14
PLANS APPROVAL DATE

REGISTERED PROFESSIONAL ENGINEER M.J. Cullen No. C40620 Exp. 03-31-2015 CIVIL STATE OF CALIFORNIA

The State of California or its officers or agents shall not be responsible for the accuracy or completeness of scanned copies of this plan sheet.

PILE & GROUND ANCHOR DATA TABLE

RWLOL STATION	PILE NUMBER	TOP OF WALL Elev	BOTTOM OF PILE Elev	BOTTOM OF LAGGING Elev (NOTE 1)	FINISH GRADE ELEVATION	GROUND ANCHOR A		GROUND ANCHOR B		GROUND ANCHOR C		GROUND ANCHOR D	
						FDL	UNBONDED LENGTH	FDL	UNBONDED LENGTH	FDL	UNBONDED LENGTH	FDL	UNBONDED LENGTH
FEET		FEET	FEET	FEET	FEET	KIPS	FEET	KIPS	FEET	KIPS	FEET	KIPS	FEET
104+04.67	49	432.06	370.06	402.06	414.62	140	33	140	28	N/A	N/A	N/A	N/A
104+14.00	50	432.60	370.60	402.60	414.74	140	33	140	28	N/A	N/A	N/A	N/A
104+23.33	51	433.13	371.13	403.13	414.87	140	33	140	28	N/A	N/A	N/A	N/A
104+32.67	52	433.67	371.67	403.67	415.00	140	33	140	28	N/A	N/A	N/A	N/A
104+42.00	53	434.21	372.21	404.21	416.00	140	33	140	28	N/A	N/A	N/A	N/A
104+51.33	54	434.74	372.74	404.74	417.00	140	33	140	28	N/A	N/A	N/A	N/A
104+60.67	55	435.28	373.28	405.28	418.00	140	33	140	28	N/A	N/A	N/A	N/A
104+70.00	56	435.82	373.82	405.82	419.00	140	33	140	28	N/A	N/A	N/A	N/A
104+79.33	57	436.37	374.37	406.37	420.00	140	33	140	28	N/A	N/A	N/A	N/A
104+88.67	58	436.93	374.93	406.93	421.00	140	33	140	28	N/A	N/A	N/A	N/A
104+98.00	59	437.50	375.50	407.50	422.00	140	33	140	28	N/A	N/A	N/A	N/A
105+07.33	60	438.07	376.07	408.07	423.00	140	33	140	28	N/A	N/A	N/A	N/A
105+16.67	61	438.63	376.63	408.63	424.00	140	33	140	28	N/A	N/A	N/A	N/A
105+26.00	62	439.20	377.20	409.20	425.00	140	33	140	28	N/A	N/A	N/A	N/A
105+35.33	63	439.76	377.76	409.76	426.67	140	33	140	28	N/A	N/A	N/A	N/A
105+44.67	64	440.33	378.33	410.33	428.33	140	33	140	28	N/A	N/A	N/A	N/A
105+54.00	65	440.89	383.89	415.89	430.00	140	33	140	28	N/A	N/A	N/A	N/A
105+63.33	66	441.48	389.48	421.48	431.67	125	33	N/A	28	N/A	N/A	N/A	N/A
105+72.67	67	442.07	401.07	427.07	433.33	125	32	N/A	N/A	N/A	N/A	N/A	N/A
105+82.00	68	442.67	406.67	432.67	435.00	125	32	N/A	N/A	N/A	N/A	N/A	N/A
105+91.33	69	443.27	407.27	433.27	435.67	N/A	N/A	N/A	N/A	N/A	N/A	N/A	N/A
106+00.67	70	443.87	407.87	433.87	436.33	N/A	N/A	N/A	N/A	N/A	N/A	N/A	N/A
106+10.00	71	444.47	408.47	434.47	437.00	N/A	N/A	N/A	N/A	N/A	N/A	N/A	N/A
106+19.33	72	445.07	409.07	435.07	437.67	N/A	N/A	N/A	N/A	N/A	N/A	N/A	N/A
106+28.67	73	445.66	409.66	435.66	438.33	N/A	N/A	N/A	N/A	N/A	N/A	N/A	N/A
106+38.00	74	446.42	410.42	436.42	439.00	N/A	N/A	N/A	N/A	N/A	N/A	N/A	N/A
106+47.33	75	447.18	407.18	433.18	439.14	125	32	N/A	N/A	N/A	N/A	N/A	N/A
106+56.67	76	447.94	403.94	429.94	439.29	125	32	N/A	N/A	N/A	N/A	N/A	N/A
106+66.00	77	448.69	394.69	426.69	439.43	140	33	140	28	N/A	N/A	N/A	N/A
106+75.33	78	449.41	391.41	423.41	439.57	140	33	140	28	N/A	N/A	N/A	N/A
106+84.67	79	450.13	388.13	420.13	439.71	140	33	140	28	N/A	N/A	N/A	N/A
106+94.00	80	450.84	388.84	420.84	439.86	140	33	140	28	N/A	N/A	N/A	N/A
107+03.33	81	451.56	389.56	421.56	440.00	140	33	140	28	N/A	N/A	N/A	N/A
107+12.67	82	452.27	390.27	422.27	440.45	140	33	140	28	N/A	N/A	N/A	N/A
107+22.00	83	452.99	390.99	422.99	440.91	140	33	140	28	N/A	N/A	N/A	N/A
107+31.33	84	453.70	391.70	423.70	441.36	140	33	140	28	N/A	N/A	N/A	N/A
107+40.67	85	454.42	392.42	424.42	441.82	140	33	140	28	N/A	N/A	N/A	N/A
107+50.00	86	455.13	393.13	425.13	442.27	140	33	140	28	N/A	N/A	N/A	N/A
107+59.33	87	455.80	393.80	425.80	442.73	140	33	140	28	N/A	N/A	N/A	N/A
107+68.67	88	456.46	394.46	426.46	443.18	140	33	140	28	N/A	N/A	N/A	N/A
107+78.00	89	457.11	395.11	427.11	443.64	140	33	140	28	N/A	N/A	N/A	N/A
107+87.33	90	457.76	395.76	427.76	444.09	140	33	140	28	N/A	N/A	N/A	N/A
107+96.67	91	458.41	396.41	428.41	444.55	140	33	140	28	N/A	N/A	N/A	N/A
108+06.00	92	459.06	397.06	429.06	445.00	140	33	140	28	N/A	N/A	N/A	N/A
108+15.33	93	459.70	397.70	429.70	445.38	140	33	140	28	N/A	N/A	N/A	N/A
108+24.67	94	460.35	398.35	430.35	445.77	140	33	140	28	N/A	N/A	N/A	N/A
108+34.00	95	461.00	399.00	431.00	446.15	140	33	140	28	N/A	N/A	N/A	N/A
108+43.33	96	461.64	399.64	431.64	446.54	140	33	140	28	N/A	N/A	N/A	N/A

Notes:

1. The Bottom of Lagging Elevation denoted refers to the elevation in the lagging bay immediately to the right of the respective Pile Number.

	BY	CHECKED
DESIGN	M. Cullen	H. Perez
DETAILS	J. Yang	H. Perez
QUANTITIES	R. Melko	R. Washington

STATE OF CALIFORNIA DEPARTMENT OF TRANSPORTATION

DIVISION OF ENGINEERING SERVICES STRUCTURE DESIGN DESIGN BRANCH 6

BRIDGE NO. 49E0022 POST MILE 73.7/74

ELEPHANT TRUNK RETAINING WALL DETAILS NO. 5

STRUCTURES DESIGN DETAIL SHEET (ENGLISH) (REV. 09-01-10)

ORIGINAL SCALE IN INCHES FOR REDUCED PLANS 0 1 2 3

UNIT: 3591
PROJECT NUMBER & PHASE: 0512000009 CONTRACT NO.: 05-1A7001

DISREGARD PRINTS BEARING EARLIER REVISION DATES

REVISION DATES 03-26-13 06-06-13

SHEET 13 OF 29

FILE => ii-details05.dgn

USERNAME => s132339 DATE PLOTTED => 05-JUN-2014 TIME PLOTTED => 13:45

DIST	COUNTY	ROUTE	POST MILES TOTAL PROJECT	SHEET No.	TOTAL SHEETS
05	SLO	1	73.7/74.0	93	108

REGISTERED CIVIL ENGINEER 10-17-13 DATE

5-19-14
PLANS APPROVAL DATE

REGISTERED PROFESSIONAL ENGINEER M.J. Cullen No. C40620 Exp. 03-31-2015 CIVIL STATE OF CALIFORNIA

The State of California or its officers or agents shall not be responsible for the accuracy or completeness of scanned copies of this plan sheet.

PILE & GROUND ANCHOR DATA TABLE

RWLOL STATION	PILE NUMBER	TOP OF WALL Elev	BOTTOM OF PILE Elev	BOTTOM OF LAGGING Elev (NOTE 1)	FINISH GRADE ELEVATION	GROUND ANCHOR A		GROUND ANCHOR B		GROUND ANCHOR C		GROUND ANCHOR D	
						FDL	UNBONDED LENGTH	FDL	UNBONDED LENGTH	FDL	UNBONDED LENGTH	FDL	UNBONDED LENGTH
FEET		FEET	FEET	FEET	FEET	KIPS	FEET	KIPS	FEET	KIPS	FEET	KIPS	FEET
108+52.67	97	462.28	400.28	432.28	446.92	140	33	140	28	N/A	N/A	N/A	N/A
108+62.00	98	462.92	400.92	432.92	447.31	140	33	140	28	N/A	N/A	N/A	N/A
108+71.33	99	463.57	401.57	433.57	447.69	140	33	140	28	N/A	N/A	N/A	N/A
108+80.67	100	464.21	402.21	434.21	448.08	140	33	140	28	N/A	N/A	N/A	N/A
108+90.00	101	464.84	402.84	434.84	448.46	140	33	140	28	N/A	N/A	N/A	N/A
108+99.33	102	465.48	403.48	435.48	448.85	140	33	140	28	N/A	N/A	N/A	N/A
109+08.67	103	466.12	404.12	436.12	449.23	140	33	140	28	N/A	N/A	N/A	N/A
109+18.00	104	466.75	404.75	436.75	449.62	140	33	140	28	N/A	N/A	N/A	N/A
109+27.33	105	467.39	405.39	437.39	450.00	140	33	140	28	N/A	N/A	N/A	N/A
109+36.67	106	468.02	408.88	440.88	451.67	140	33	140	28	N/A	N/A	N/A	N/A
109+46.00	107	468.65	412.36	444.36	453.33	140	33	140	28	N/A	N/A	N/A	N/A
109+55.33	108	469.28	415.85	447.85	455.00	140	33	140	28	N/A	N/A	N/A	N/A
109+64.67	109	469.91	425.34	451.34	458.50	145	32	N/A	N/A	N/A	N/A	N/A	N/A
109+74.00	110	470.54	428.82	454.82	462.00	145	32	N/A	N/A	N/A	N/A	N/A	N/A
109+83.33	111	471.17	432.31	458.31	465.50	145	32	N/A	N/A	N/A	N/A	N/A	N/A
109+92.67	112	471.79	435.79	461.79	469.00	145	32	N/A	N/A	N/A	N/A	N/A	N/A
110+02.00	113	472.42	439.06	465.06	472.50	N/A	N/A	N/A	N/A	N/A	N/A	N/A	N/A
110+11.33	114	473.06	445.00	465.68	473.00	N/A	N/A	N/A	N/A	N/A	N/A	N/A	N/A
110+20.67	115	473.68	445.00		473.70	N/A	N/A	N/A	N/A	N/A	N/A	N/A	N/A

Notes:

1. The Bottom of Lagging Elevation denoted refers to the elevation in the lagging bay immediately up-station of the respective Pile Number.
2. Indicates supplemental reinforcement. For barrier slab reinforcement, see "TYPICAL SECTION" sheet.
3. Required around DI opening: Centerline DI opening shall be located 5'-0" from ℄ barrier post. Barrier post spacing on adjacent posts may vary.

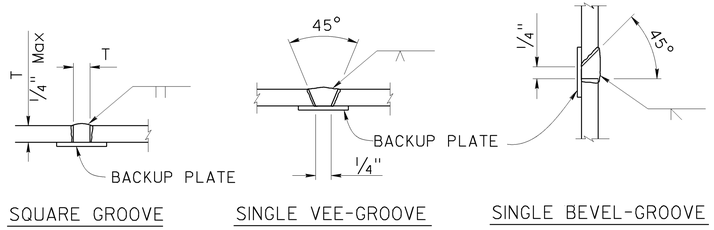

PILE WELDING DETAIL-BUTT JOINTS

NO SCALE

Notes:

a. Single vee-groove and square groove permitted for all positions

b. Single bevel-groove permitted for horizonal joints only

c. For purposes of non-destructive testing, pile shall be considered a main tension member from top of pile to 5 feet below bottom of lagging. The remaining embedded portion of the pile shall be considered a main compression member.

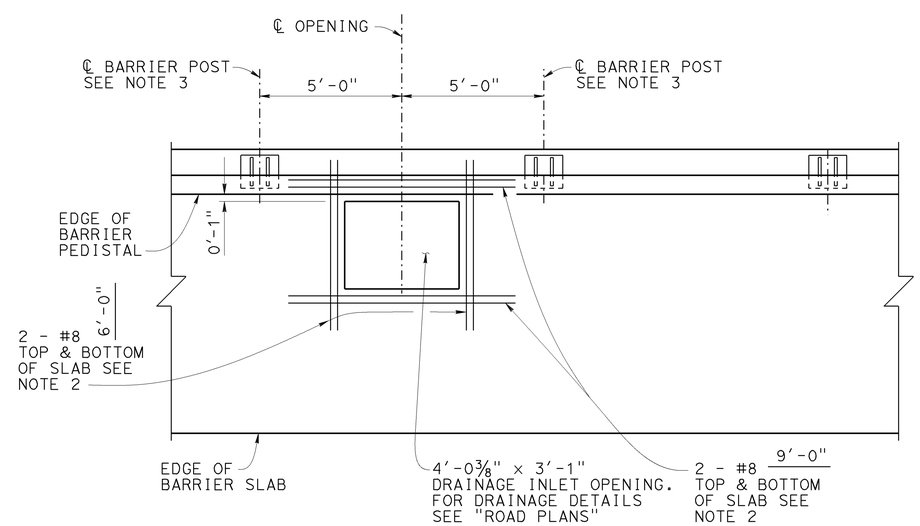

BARRIER SLAB DRANAGE INLET OPENING

PLAN

3/8" = 1'-0"

DESIGN	BY M. Cullen	CHECKED H. Perez	
DETAILS	BY J. Yang	CHECKED H. Perez	
QUANTITIES	BY R. Melko	CHECKED R. Washington	

STATE OF CALIFORNIA
DEPARTMENT OF TRANSPORTATION

DIVISION OF ENGINEERING SERVICES
STRUCTURE DESIGN
DESIGN BRANCH 6

BRIDGE NO. 49E0022
POST MILE 73.7/74

ELEPHANT TRUNK RETAINING WALL
DETAILS NO. 6

STRUCTURES DESIGN DETAIL SHEET (ENGLISH) (REV. 09-01-10)

ORIGINAL SCALE IN INCHES FOR REDUCED PLANS 0 1 2 3

UNIT: 3591
PROJECT NUMBER & PHASE: 0512000009
CONTRACT NO.: 05-1A7001

DISREGARD PRINTS BEARING EARLIER REVISION DATES

REVISION DATES 03-26-13 06-06-13

SHEET 14 OF 29

FILE => ii-details06.dgn

USERNAME => s123239 DATE PLOTTED => 21-JUL-2014 TIME PLOTTED => 09:23

DIST	COUNTY	ROUTE	POST MILES TOTAL PROJECT	SHEET No.	TOTAL SHEETS
05	SLO	1	73.7/74.0	94	108

REGISTERED CIVIL ENGINEER 10-17-13 DATE

5-19-14
PLANS APPROVAL DATE

REGISTERED PROFESSIONAL ENGINEER M.J. Cullen No. C40620 Exp. 03-31-2015 CIVIL STATE OF CALIFORNIA

The State of California or its officers or agents shall not be responsible for the accuracy or completeness of electronic copies of this plan sheet.

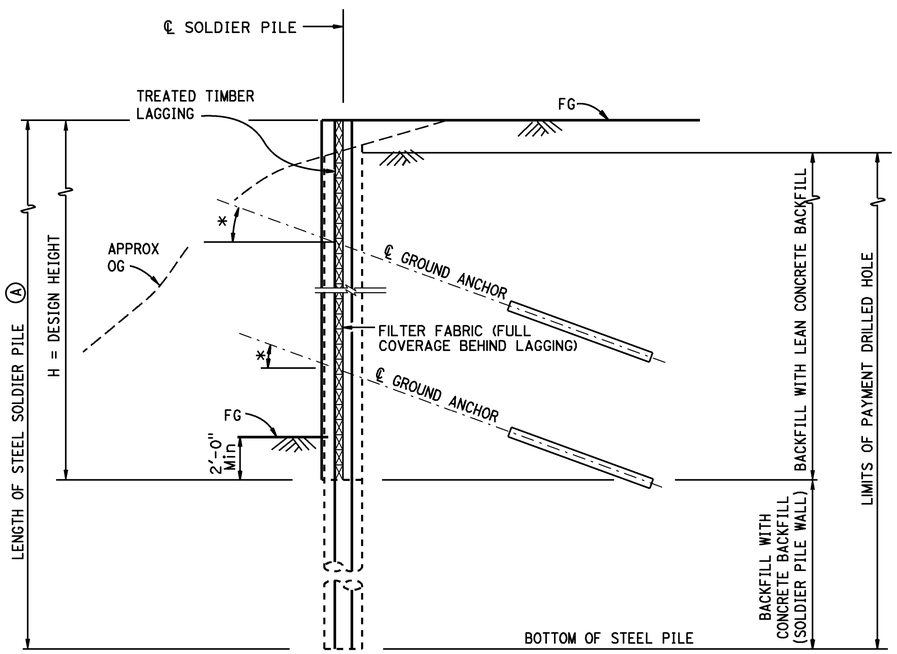

* To be determined by Design Engineer

TYPICAL SECTION

NO SCALE

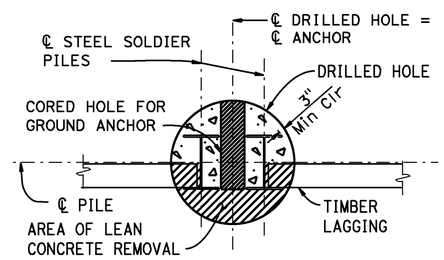

SECTION A-A

NO SCALE

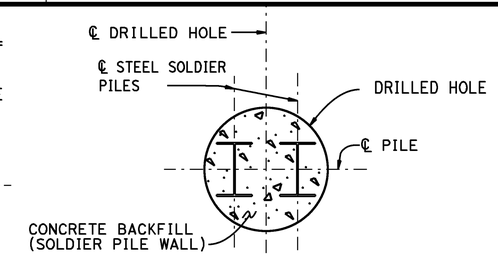

SECTION B-B

NO SCALE

GENERAL NOTES

DESIGN: AASHTO LRFD Bridge Design Specifications, 4th Edition with California Amendments.

LIVE LOAD: 240 psf equivalent to 2 feet soil weight

SOIL PARAMETERS: (For determination of Design Lateral Earth Pressures)
Backfill soil weight = 125 lb/ft^3
Friction Angle = 26°
Active Pressure coefficent, Ka = 0.39
Bedrock Unit Weight = 130 lb/ft^3
Slope Angle = 0°

STEEL SOLDIER PILES: ASTM A572/A, ASTM 572M Grade 50 Min, or ASTM A36/A36M

STRUCTURAL SHOTCRETE: f'c = 4000 psi
fy = 60 ksi

STRUCTURAL CONCRETE: f'c = 4000psi
fy = 60 ksi

STRUCTURAL TIMBER: Treated Douglas Fir, Grade No.1 or better. Timber to be full sawn.

GROUND ANCHOR ACRONYMS:
FDL = Factored Design Load on ground anchor (kips)
FTL = Factored Test Load (kips)
LL = Lock-off Load (kips)
FDL = see Pile & Ground & Tieback Data Table
FTL = 1.5 FDL
LL = FDL

PRESTRESSING STEEL (GROUND ANCHORS):
fpu = Minimum ultimate tensile strength of ground anchor steel (ksi)
As (Min) = Minimum cross sectional area of steel in ground anchor. (square inch)
Strand Tendons Steel = ASTM designation: A416 (HS Strands)
(270 ksi Low Relaxation Steel)

$$As\ (Min) = \frac{1.0\ FTL}{0.75\ fpu}$$

Bars Steel= ASTM designation: A722 Type II (150 ksi)

$$As\ (Min) = \frac{1.0\ FTL}{0.80\ fpu}$$

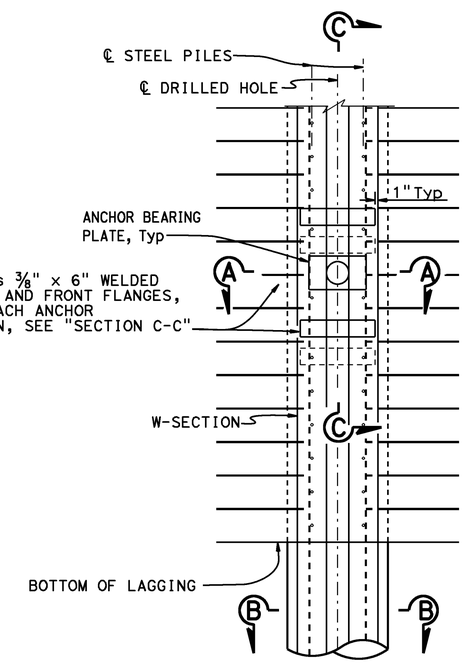

PART ELEVATION

NO SCALE

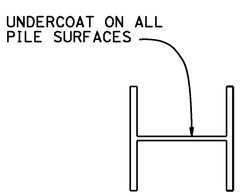

LIMITS OF CLEAN & PAINT STEEL SOLDIER PILE

NO SCALE

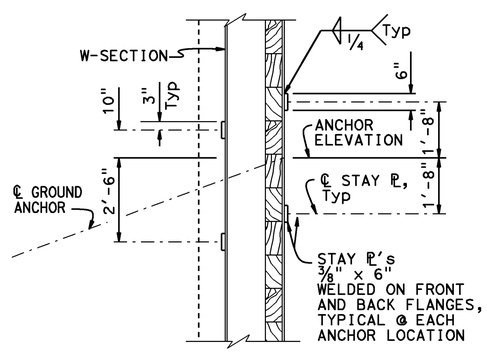

SECTION C-C STAY PLATE DETAILS

NO SCALE

NOTES:

1. For details not shown, see "PROJECT PLANS"

STANDARD DRAWING
FILE NO. xs12-070
APPROVAL DATE January 2012

DS OSD 2147A (ENGLISH STANDARD DRAWING "XS" BORDER REV. (02-02-11)

ORIGINAL SCALE IN INCHES FOR REDUCED PLANS 0 1 2 3

STATE OF CALIFORNIA DEPARTMENT OF TRANSPORTATION

DIVISION OF ENGINEERING SERVICES

BRIDGE NO. 49E0022
POST MILE 73.7/74

ELEPHANT TRUNK RETAINING WALL
SOLDIER PILE WALL WITH GROUND ANCHORS

UNIT: 3591
PROJECT NUMBER & PHASE: 0512000009
CONTRACT NO.: 05-1A7001

DISREGARD PRINTS BEARING EARLIER REVISION DATES

REVISION DATES 06-06-13

SHEET 15 OF 29

FILE => xs12-070[1].dgn

USERNAME => s123239 DATE PLOTTED => 05-JUN-2014 TIME PLOTTED => 13:45

DIST	COUNTY	ROUTE	POST MILES TOTAL PROJECT	SHEET No.	TOTAL SHEETS
05	SLO	1	73.7/74.0	95	108

REGISTERED CIVIL ENGINEER 10-17-13 DATE

5-19-14
PLANS APPROVAL DATE

REGISTERED PROFESSIONAL ENGINEER M.J. Cullen No. C40620 Exp. 03-31-2015 CIVIL STATE OF CALIFORNIA

The State of California or its officers or agents shall not be responsible for the accuracy or completeness of electronic copies of this plan sheet.

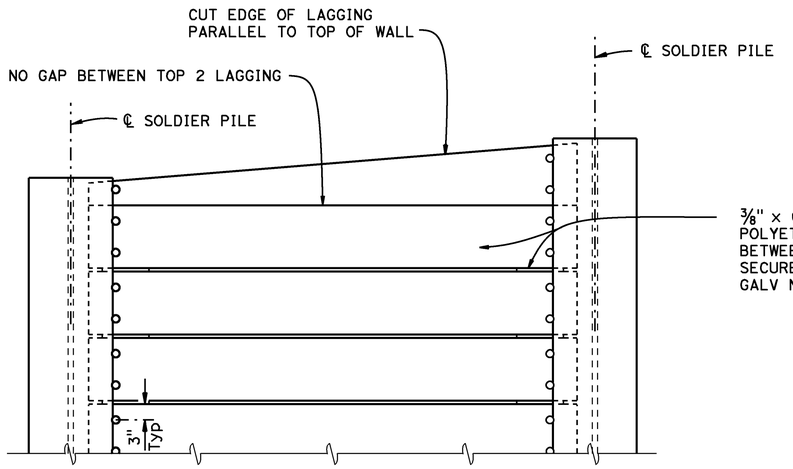

PART ELEVATION

LAGGING DETAILS (ALTERNATIVE 1)

NO SCALE

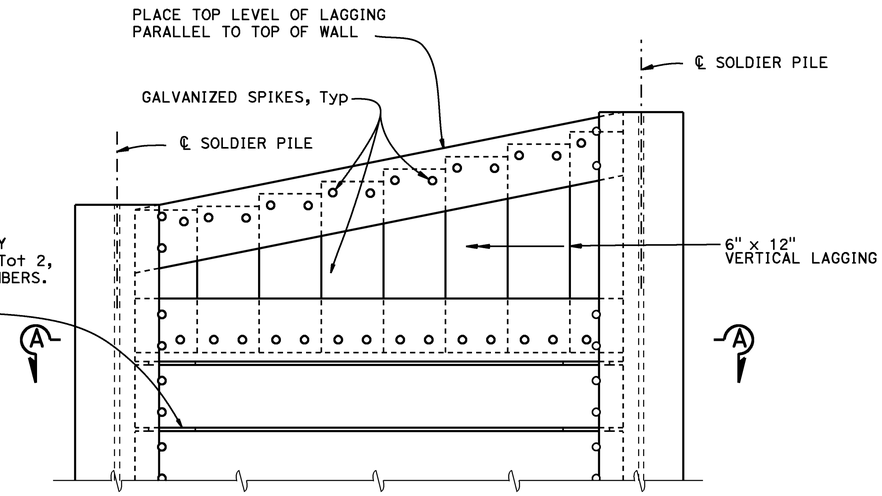

PART ELEVATION

LAGGING DETAILS (ALTERNATIVE 2)

NO SCALE

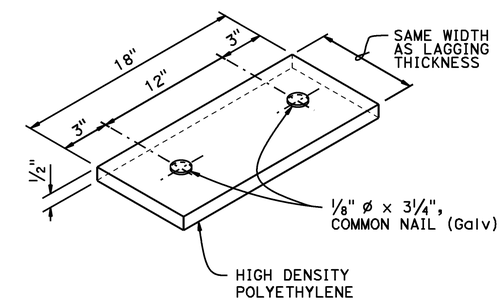

SHIM DETAIL

NO SCALE

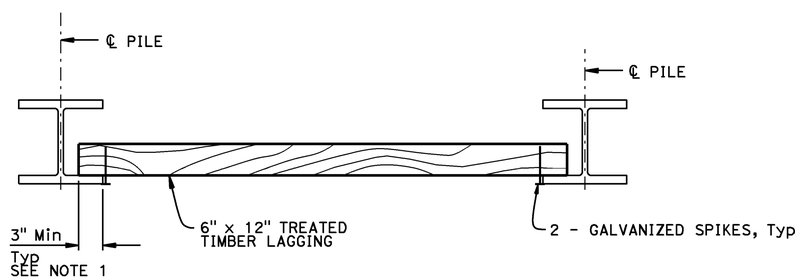

PART PLAN

NO SCALE

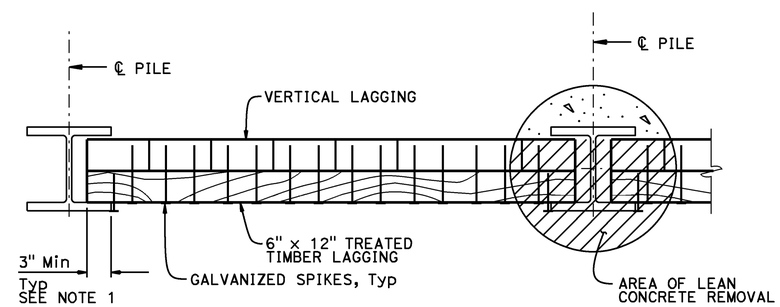

SECTION A-A

NO SCALE

NOTES:

1. If 3" bearing cannot be obtained, lagging corners may be clipped to fit. Under no circumstance shall bearing be less than 2"
2. Use 1/4"Ø x 5" galvanized spikes
3. Spikes shall not be bent

STANDARD DRAWING		STATE OF CALIFORNIA DEPARTMENT OF TRANSPORTATION	DIVISION OF ENGINEERING SERVICES	BRIDGE NO. 49E0022	ELEPHANT TRUNK RETAINING WALL
FILE NO. xs12-080	APPROVAL DATE January 2012			POST MILE 73.7/74	SOLDIER PILE WALL LAGGING DETAILS

DS OSD 2147A (ENGLISH STANDARD DRAWING "XS" BORDER REV. (02-02-11)

ORIGINAL SCALE IN INCHES FOR REDUCED PLANS 0 1 2 3

UNIT: 3591
PROJECT NUMBER & PHASE: 0512000009
CONTRACT NO.: 05-1A7001

DISREGARD PRINTS BEARING EARLIER REVISION DATES 06-06-13

REVISION DATES | SHEET 16 | OF 29

FILE => xs12-080[1].dgn

USERNAME => s123239 DATE PLOTTED => 05-JUN-2014 TIME PLOTTED => 13:45

DIST	COUNTY	ROUTE	POST MILES TOTAL PROJECT	SHEET No.	TOTAL SHEETS
05	SLO	1	73.7/74.0	96	108

REGISTERED CIVIL ENGINEER 10-17-13 DATE

5-19-14
PLANS APPROVAL DATE

REGISTERED PROFESSIONAL ENGINEER M.J. Cullen No. C40620 Exp. 03-31-2015 CIVIL STATE OF CALIFORNIA

The State of California or its officers or agents shall not be responsible for the accuracy or completeness of electronic copies of this plan sheet.

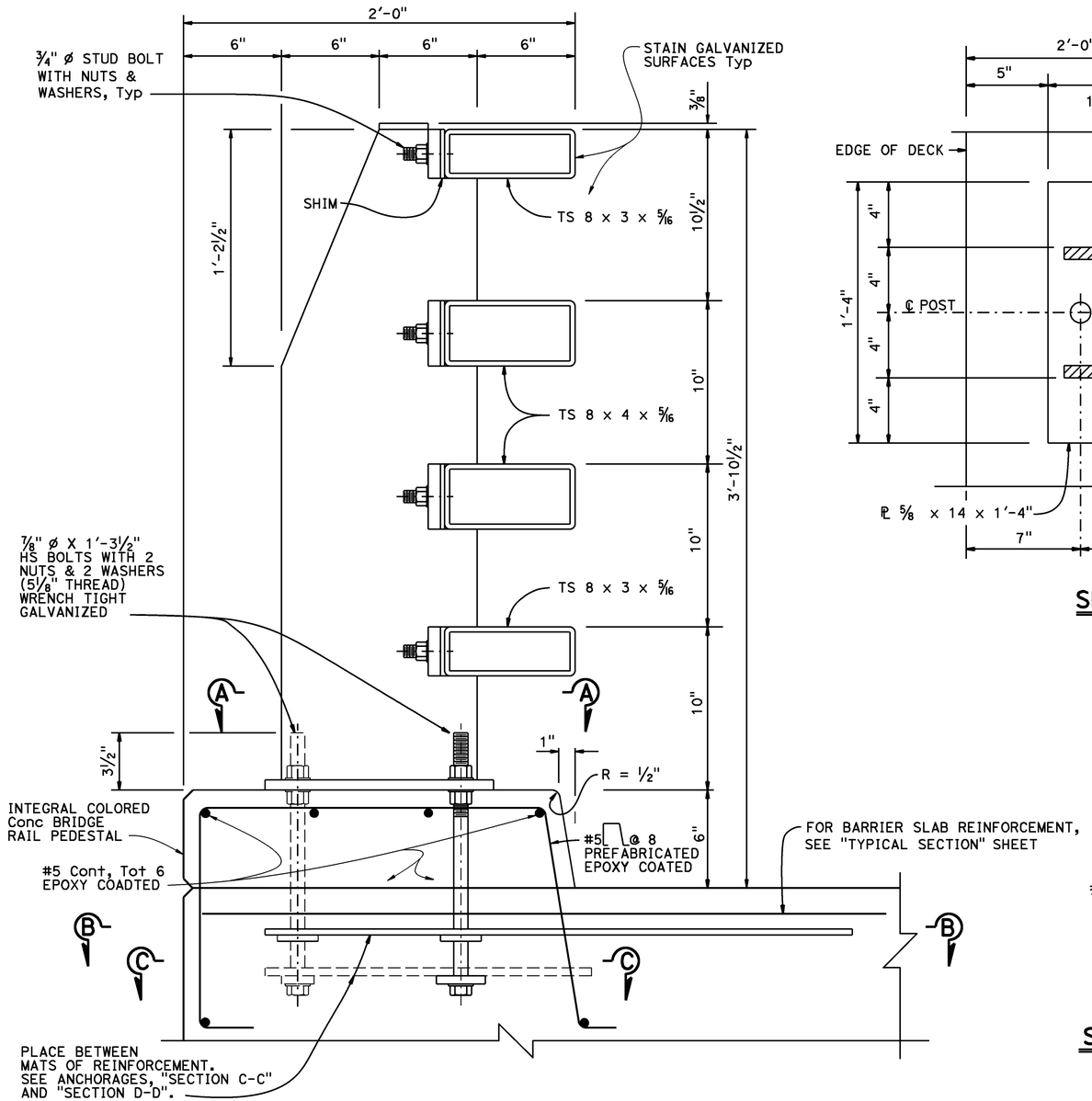

TYPICAL RAIL SYSTEM

3" = 1'-0"

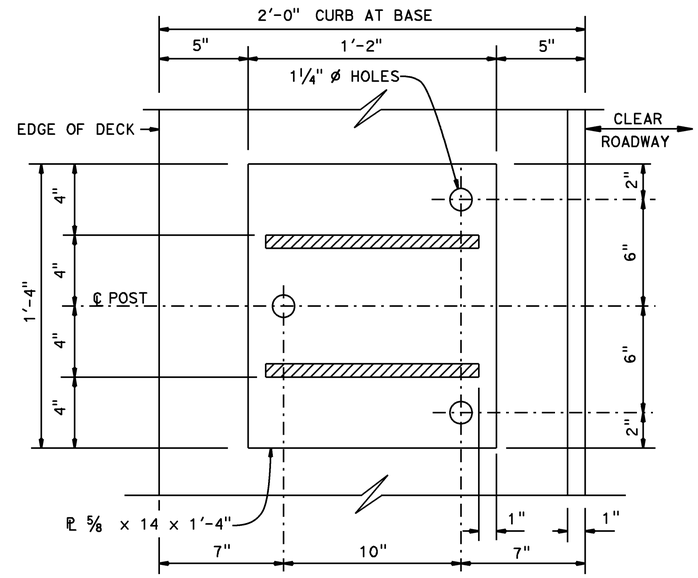

SECTION A-A

3' = 1'-0"

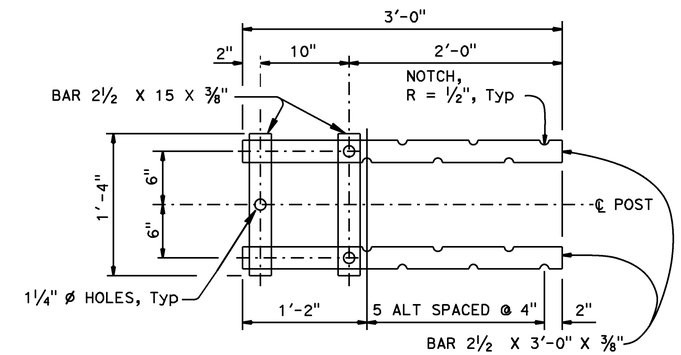

TOP ANCHORAGE

SECTION B-B

1 1/2" = 1'-0"

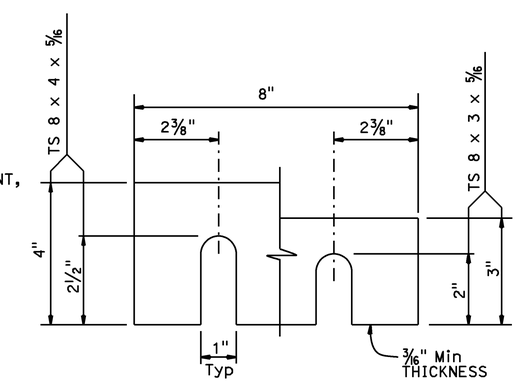

SHIMS REQUIRED FOR ALL RAILS

6" = 1'-0"

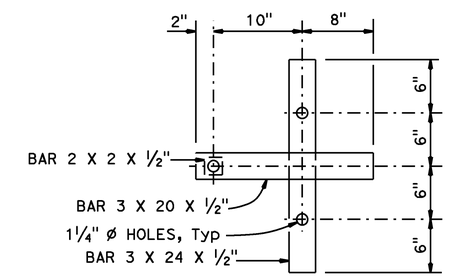

LOWER ANCHORAGE

SECTION C-C

1 1/2" = 1'-0"

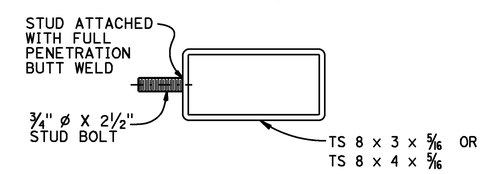

SECTION AT POST

3" = 1'-0"

STANDARD DRAWING

FILE NO. xs16-130-1 APPROVAL DATE July 2011

STATE OF CALIFORNIA DEPARTMENT OF TRANSPORTATION

DIVISION OF ENGINEERING SERVICES

BRIDGE NO. 49E0022

POST MILE 73.7/74

ELEPHANT TRUNK RETAINING WALL

CALIFORNIA ST-70 BRIDGE RAIL

DETAILS NO. 1

DS OSD 2147A (ENGLISH STANDARD DRAWING "XS" BORDER REV. (02-02-11)

ORIGINAL SCALE IN INCHES FOR REDUCED PLANS 0 1 2 3

UNIT: 3591
PROJECT NUMBER & PHASE: 0512000009
CONTRACT NO.: 05-1A7001

DISREGARD PRINTS BEARING EARLIER REVISION DATES

REVISION DATES 06-06-13

SHEET 17 OF 29

FILE => xs16-130-1[1].dgn

USERNAME => s123239 DATE PLOTTED => 05-JUN-2014 TIME PLOTTED => 13:45

DIST	COUNTY	ROUTE	POST MILES TOTAL PROJECT	SHEET No.	TOTAL SHEETS
05	SLO	1	73.7/74.0	97	108

M.J. Cullen 10-17-13
REGISTERED CIVIL ENGINEER DATE

5-19-14
PLANS APPROVAL DATE

REGISTERED PROFESSIONAL ENGINEER M.J. Cullen No. C40620 Exp. 03-31-2015 CIVIL STATE OF CALIFORNIA

The State of California or its officers or agents shall not be responsible for the accuracy or completeness of electronic copies of this plan sheet.

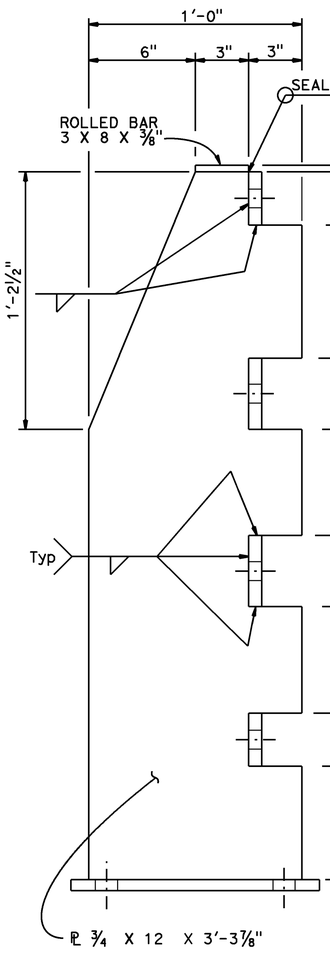

SECTION D-D

3" = 1'-0"

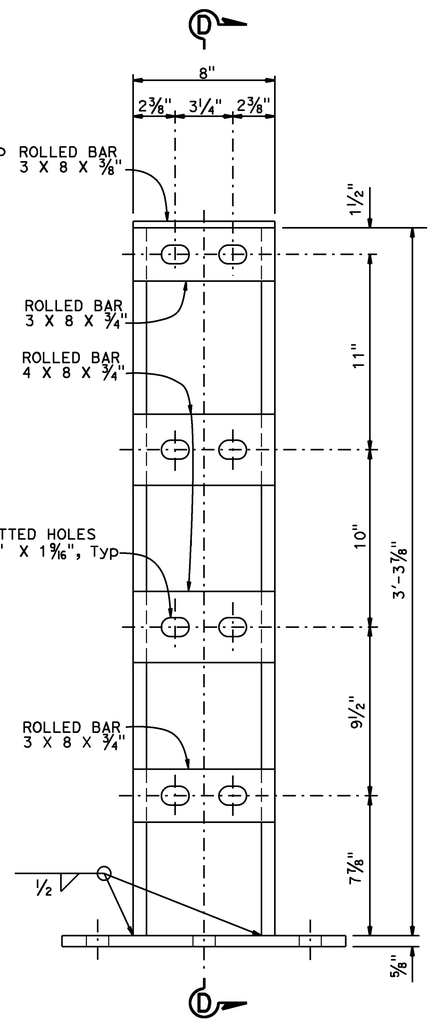

ELEVATION

3" = 1'-0"

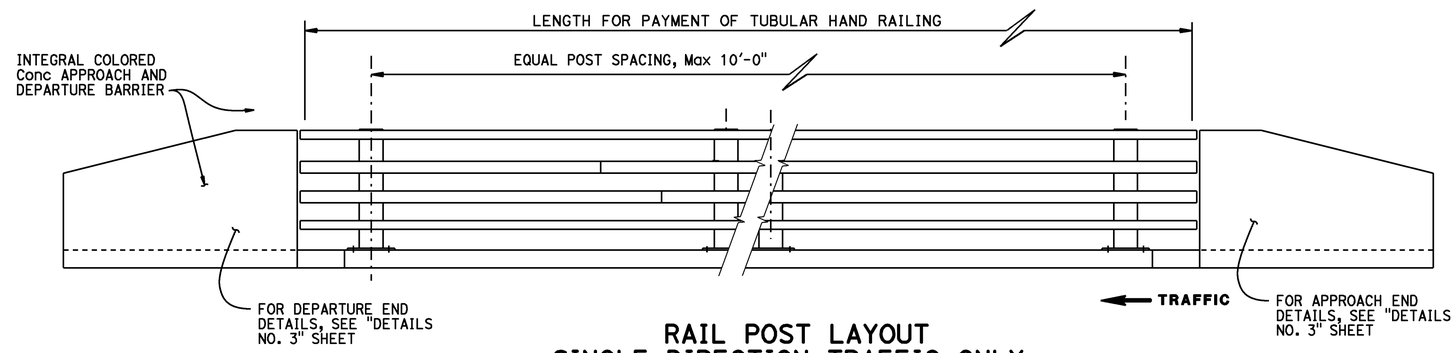

RAIL POST LAYOUT SINGLE DIRECTION TRAFFIC ONLY

1/2" = 1'-0"

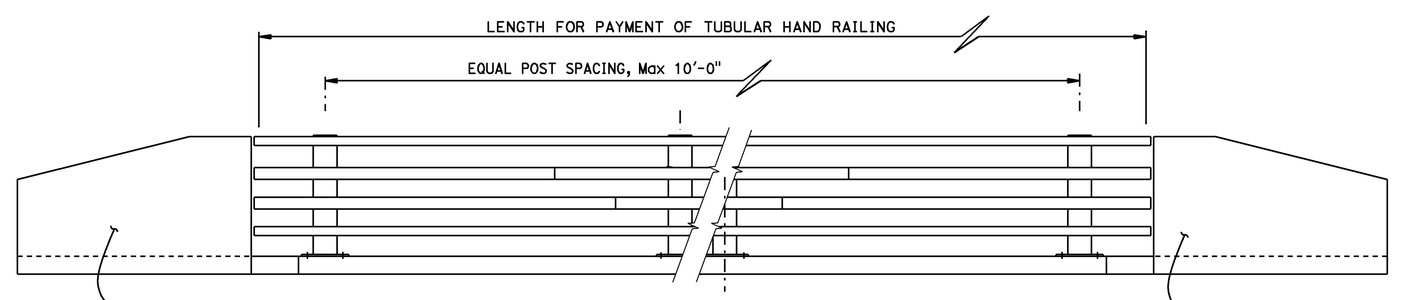

RAIL POST LAYOUT W/O MEDIA RAIL TWO WAY TRAFFIC ON BRIDGE

1/2" = 1'-0"

STANDARD DRAWING

FILE NO. xs16-130-2 APPROVAL DATE July 2011

STATE OF CALIFORNIA DEPARTMENT OF TRANSPORTATION

DIVISION OF ENGINEERING SERVICES

BRIDGE NO. 49E0022 POST MILE 73.7/74

ELEPHANT TRUNK RETAINING WALL
CALIFORNIA ST-70 BRIDGE RAIL
DETAILS NO. 2

DS OSD 2147A (ENGLISH STANDARD DRAWING "XS" BORDER REV. (02-02-11)

ORIGINAL SCALE IN INCHES FOR REDUCED PLANS 0 1 2 3

UNIT: 3591
PROJECT NUMBER & PHASE: 0512000009 CONTRACT NO.: 05-1A7001

DISREGARD PRINTS BEARING EARLIER REVISION DATES

REVISION DATES 06-06-13

SHEET 18 OF 29

FILE => xs16-130-2[1].dgn

USERNAME => s123239 DATE PLOTTED => 05-JUN-2014 TIME PLOTTED => 13:45

DIST	COUNTY	ROUTE	POST MILES TOTAL PROJECT	SHEET No.	TOTAL SHEETS
05	SLO	1	73.7/74.0	98	108

REGISTERED CIVIL ENGINEER 10-17-13 DATE

5-19-14
PLANS APPROVAL DATE

REGISTERED PROFESSIONAL ENGINEER M.J. Cullen No. C40620 Exp. 03-31-2015 CIVIL STATE OF CALIFORNIA

The State of California or its officers or agents shall not be responsible for the accuracy or completeness of electronic copies of this plan sheet.

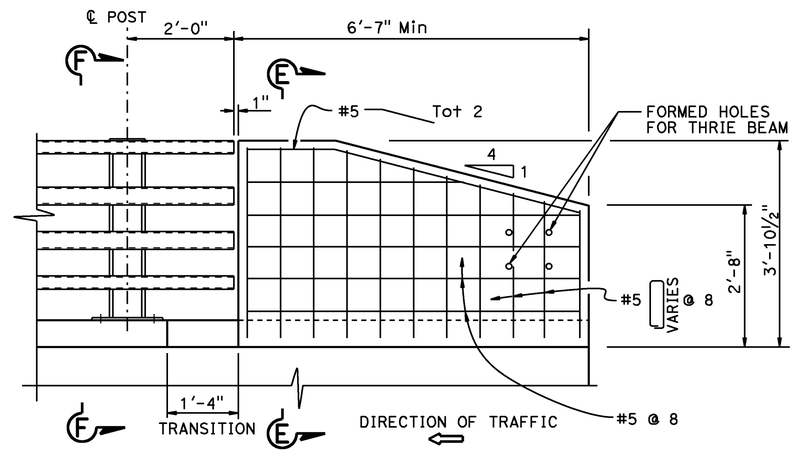

ELEVATION
¾" = 1'-0"

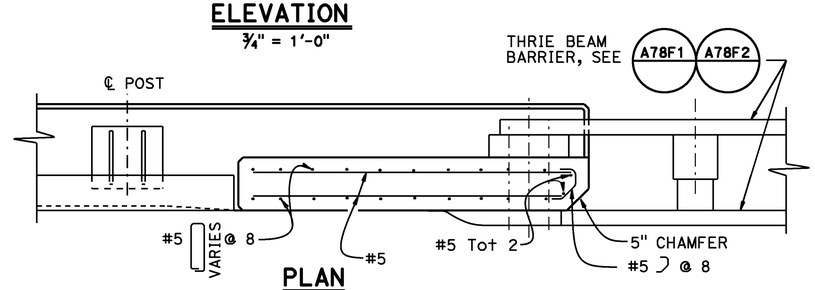

PLAN
¾" = 1'-0"

NOTES:

1. Venting and pick-up holes in rails and sleeves shall be shown on the shop drawings
2. Anchor bolts may be tack welded (shop or field) to anchorage
3. Tubing shall be bent or fabricated to fit horizontal curve when curve is less than 900'-0" in radius
4. Each rail length shall be continuous over a minimum of two posts
5. The fabricator shall check that the tubular sleeves splices conform to the dimensions indicated to assure proper clearance
6. Except for expansion splices, not more than one splice shall be permitted per same side of post

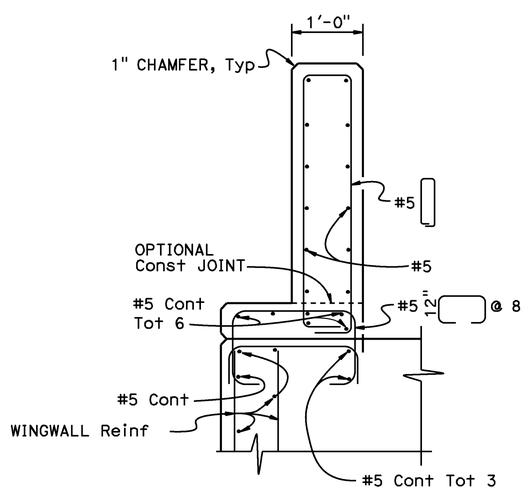

SECTION E-E
1" = 1'-0"

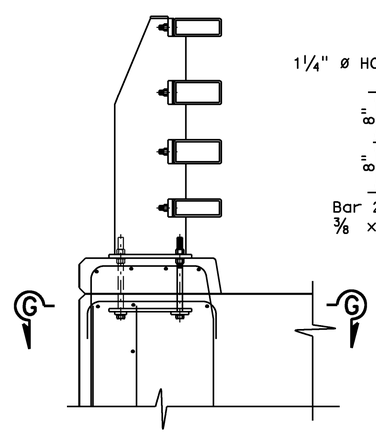

SECTION F-F
1" = 1'-0"

NOTE:
For details not shown, see "SECTION E-E"

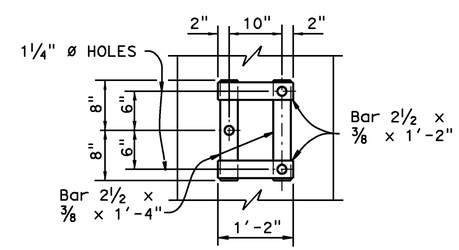

VIEW G-G
NO SCALE

STANDARD DRAWING
FILE NO. xs16-130-3
APPROVAL DATE July 2011

STATE OF CALIFORNIA
DEPARTMENT OF TRANSPORTATION

DIVISION OF ENGINEERING SERVICES

BRIDGE NO. 49E0022
POST MILE 73.7/74

ELEPHANT TRUNK RETAINING WALL
CALIFORNIA ST-70 BRIDGE RAIL
DETAILS NO. 3

DS OSD 2147A (ENGLISH STANDARD DRAWING "XS" BORDER REV. (02-02-11)

ORIGINAL SCALE IN INCHES FOR REDUCED PLANS 0 1 2 3

UNIT: 3591
PROJECT NUMBER & PHASE: 0512000009
CONTRACT NO.: 05-1A7001

DISREGARD PRINTS BEARING EARLIER REVISION DATES
REVISION DATES 06-06-13

SHEET 19 OF 29

FILE => xs16-130-3[1].dgn

USERNAME => s123239 DATE PLOTTED => 05-JUN-2014 TIME PLOTTED => 13:45

DIST	COUNTY	ROUTE	POST MILES TOTAL PROJECT	SHEET No.	TOTAL SHEETS
05	SLO	1	73.7/74.0	99	108

REGISTERED CIVIL ENGINEER 10-17-13 DATE

5-19-14
PLANS APPROVAL DATE

REGISTERED PROFESSIONAL ENGINEER M.J. Cullen No. C40620 Exp. 03-31-2015 CIVIL STATE OF CALIFORNIA

The State of California or its officers or agents shall not be responsible for the accuracy or completeness of electronic copies of this plan sheet.

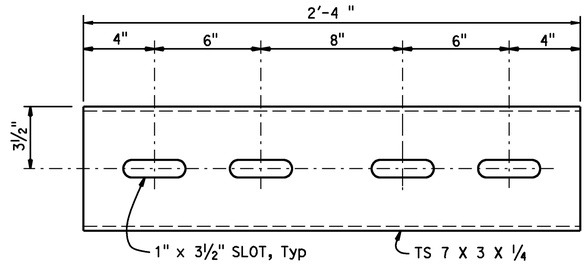

STANDARD SLEEVE DETAIL

3" = 1'-0"
(FOR TS 8 X 4 X 5/16 RAIL)

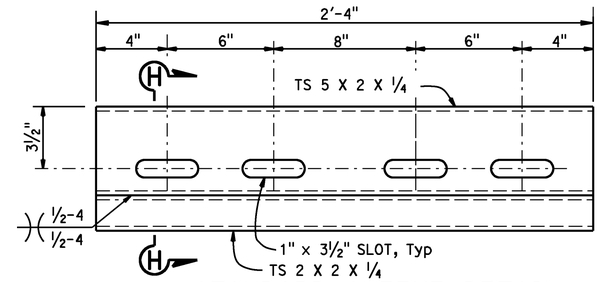

STANDARD SLEEVE DETAIL

3" = 1'-0"
(FOR TS 8 X 3 X 5/16 RAIL)

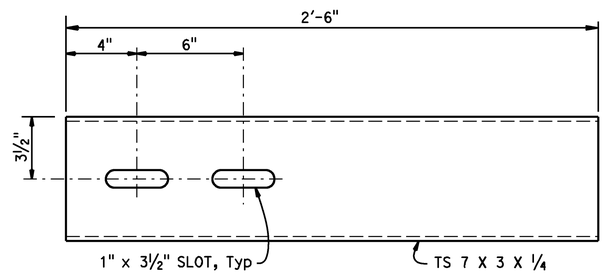

EXPANSION SLEEVE DETAIL

3" = 1'-0"
(FOR TS 8 X 4 X 5/16 RAIL)

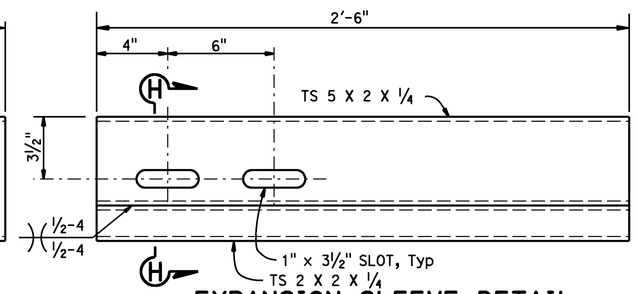

EXPANSION SLEEVE DETAIL

3" = 1'-0"
(FOR TS 8 X 3 X 5/16 RAIL)

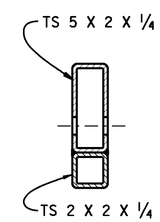

SECTION H-H

3" = 1'-0"

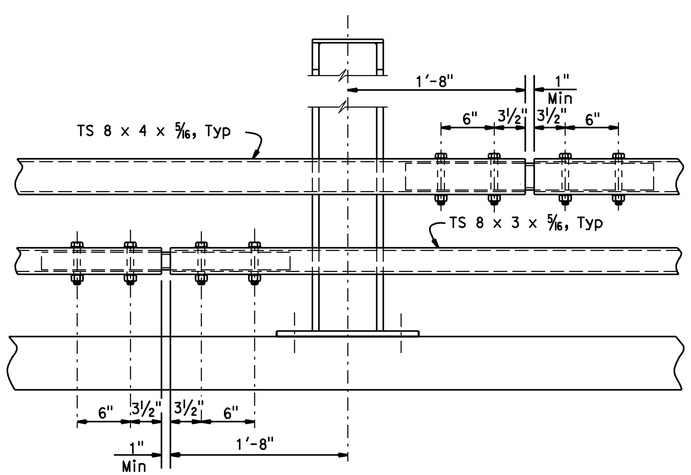

STANDARD SPLICE

1½"= 1'-0"

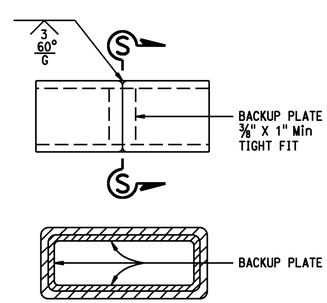

SECTION S-S

ALTERNATE TUBE WELDED SPLICE

3" = 1'-0"

NOTES:
HS bolts with washers, wrench tightened
Use ¾" ø X 5¼ (TS 8 X 4 X 5/16)
Use ¾" ø X 4¼ (TS 8 X 3 X 5/16)

2 rails are not shown for clarity

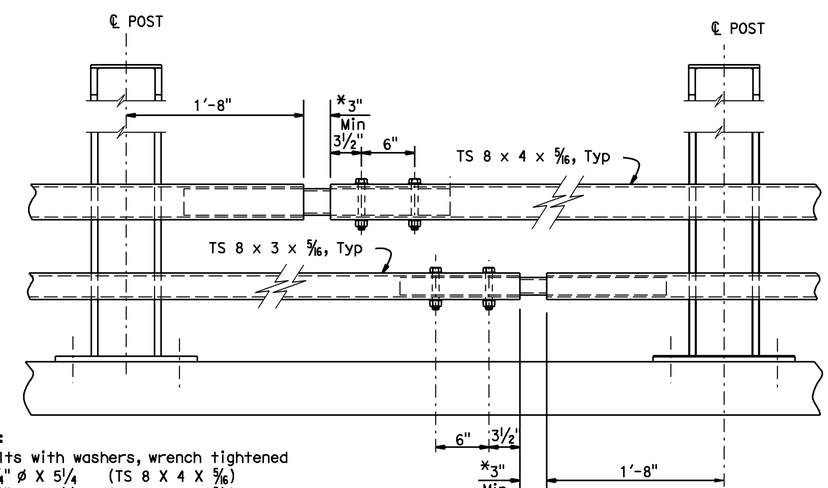

EXPANSION SPLICE

1½"= 1'-0"
* MATCH DECK OR WALL JOINT

STANDARD DRAWING
FILE NO. xs16-130-4
APPROVAL DATE July 2011

STATE OF CALIFORNIA
DEPARTMENT OF TRANSPORTATION

DIVISION OF ENGINEERING SERVICES

BRIDGE NO. X
POST MILE X

ELEPHANT TRUNK RETAINING WALL
CALIFORNIA ST-70 BRIDGE RAIL
DETAILS NO. 4

DS OSD 2147A (ENGLISH STANDARD DRAWING "XS" BORDER REV. (02-02-11)

ORIGINAL SCALE IN INCHES FOR REDUCED PLANS 0 1 2 3

UNIT: 3591
PROJECT NUMBER & PHASE: 0512000009
CONTRACT NO.: 05-1a7001

DISREGARD PRINTS BEARING EARLIER REVISION DATES → 06-06-13

REVISION DATES | SHEET 20 | OF 29

FILE => xs16-130-4[1].dgn

USERNAME => s123239 DATE PLOTTED => 05-JUN-2014 TIME PLOTTED => 13:45

DIST	COUNTY	ROUTE	POST MILES TOTAL PROJECT	SHEET No	TOTAL SHEETS
05	SLO	1	73.7/74.0	100	108

REGISTERED CIVIL ENGINEER 2-20-13

5-19-14
PLANS APPROVAL DATE

REGISTERED PROFESSIONAL ENGINEER David T-M Liao No. C59838 Exp. 12-31-13 CIVIL STATE OF CALIFORNIA

The State of California or its officers or agents shall not be responsible for the accuracy or completeness of electronic copies of this plan sheet.

This LOTB sheet was prepared in accordance with the Caltrans Soil & Rock Logging, Classification, & Presentation Manual (2010 Edition).
See 2010 Standard Plans A10F and A10G for Soil Legend, and A10H for Rock Legend.

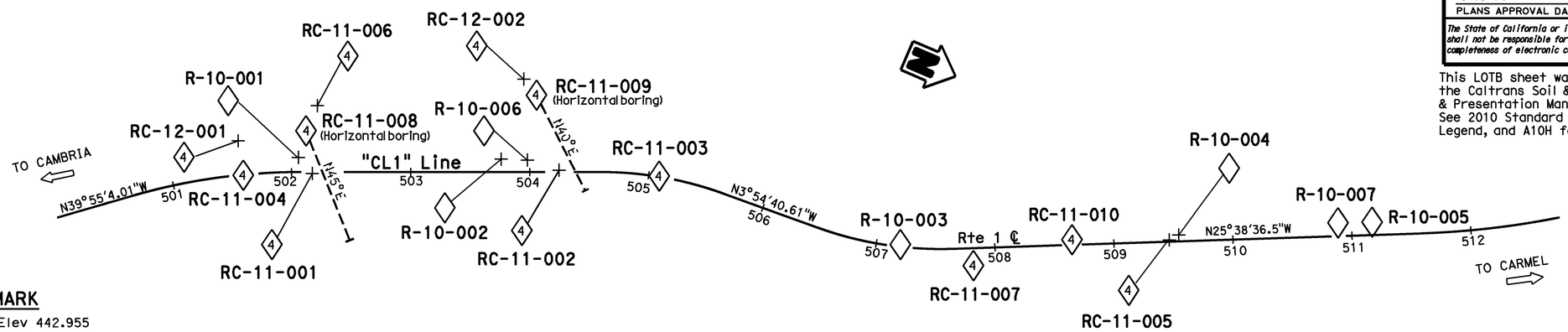

BENCH MARK

BM 73.82 Elev 442.955
N 2490629.057
E 5571279.747
NAVD88

PLAN
1" = 50'

Note:

Borings R-10-001, R-10-002, R-10-003, R-10-004, R-10-005, R-10-006, and R-10-007 were drilled by a contractor in 2010 for piezometer and slope inclinometer installation. These borings were not logged by a geoprofessional.

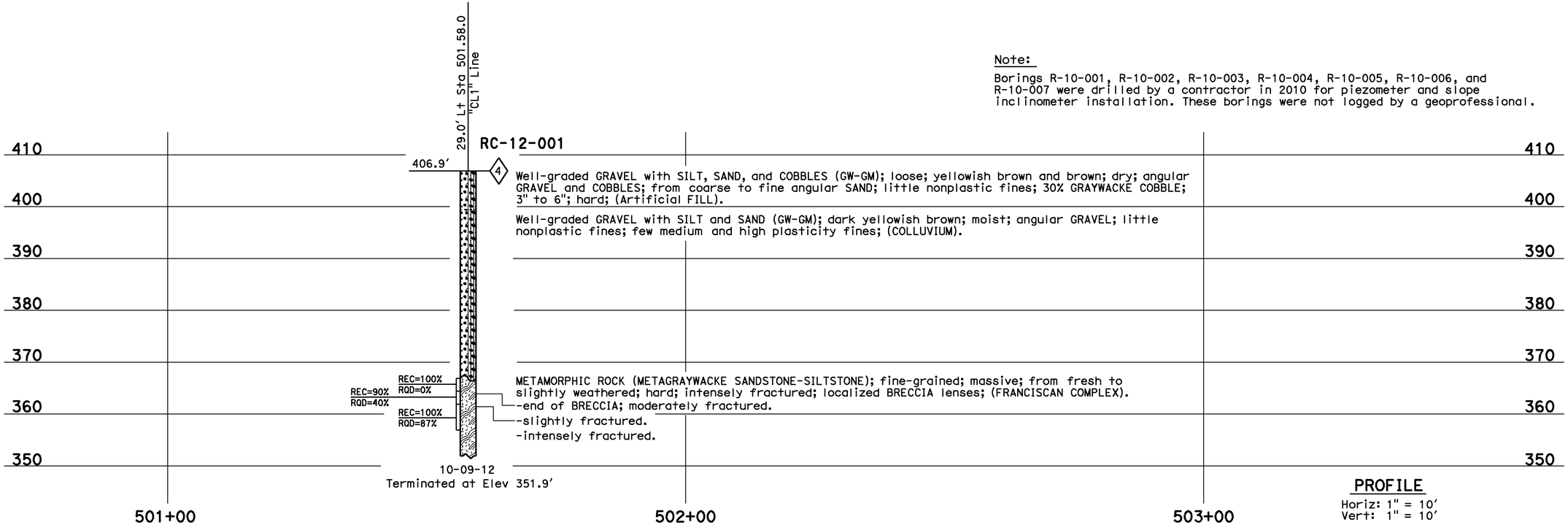

PROFILE
Horiz: 1" = 10'
Vert: 1" = 10'

ENGINEERING SERVICES	MATERIALS AND GEOTECHNICAL SERVICES	STATE OF CALIFORNIA DEPARTMENT OF TRANSPORTATION	DIVISION OF ENGINEERING SERVICES STRUCTURE DESIGN DESIGN BRANCH 6	BRIDGE NO. 49E0022 POST MILE 73.7-73.9	ELEPHANT TRUNK SLIDE RW
FUNCTIONAL SUPERVISOR NAME: M. DeSalvatore	DRAWN BY: I.G-Remmen, F. Nguyen CHECKED BY: C. Manansala	FIELD INVESTIGATION BY: M. Jurasius			LOG OF TEST BORINGS 1 OF 9

OGS CIVIL LOG OF TEST BORINGS SHEET

ORIGINAL SCALE IN INCHES FOR REDUCED PLANS 0 1 2 3

UNIT: 3591
PROJECT NUMBER & PHASE: 05120000091 CONTRACT NO.: 05-1A7001

DISREGARD PRINTS BEARING EARLIER REVISION DATES → REVISION DATES 12-28-12 01-31-13 01-15-13

SHEET 21 OF 29

FILE => yy-lotb-1of9.dgn

USERNAME => s123239 DATE PLOTTED => 05-JUN-2014 TIME PLOTTED => 13:46

DIST	COUNTY	ROUTE	POST MILES TOTAL PROJECT	SHEET No	TOTAL SHEETS
05	SLO	1	73.7/74.0	101	108

REGISTERED CIVIL ENGINEER 2-20-13

5-19-14
PLANS APPROVAL DATE

REGISTERED PROFESSIONAL ENGINEER David T-M Liao No. C59838 Exp. 12-31-13 CIVIL STATE OF CALIFORNIA

The State of California or its officers or agents shall not be responsible for the accuracy or completeness of electronic copies of this plan sheet.

This LOTB sheet was prepared in accordance with the Caltrans Soil & Rock Logging, Classification, & Presentation Manual (2010 Edition).
See 2010 Standard Plans A10F and A10G for Soil Legend, and A10H for Rock Legend.

FOR PLAN VIEW, SEE
"LOG OF TEST BORINGS 1 OF 9"

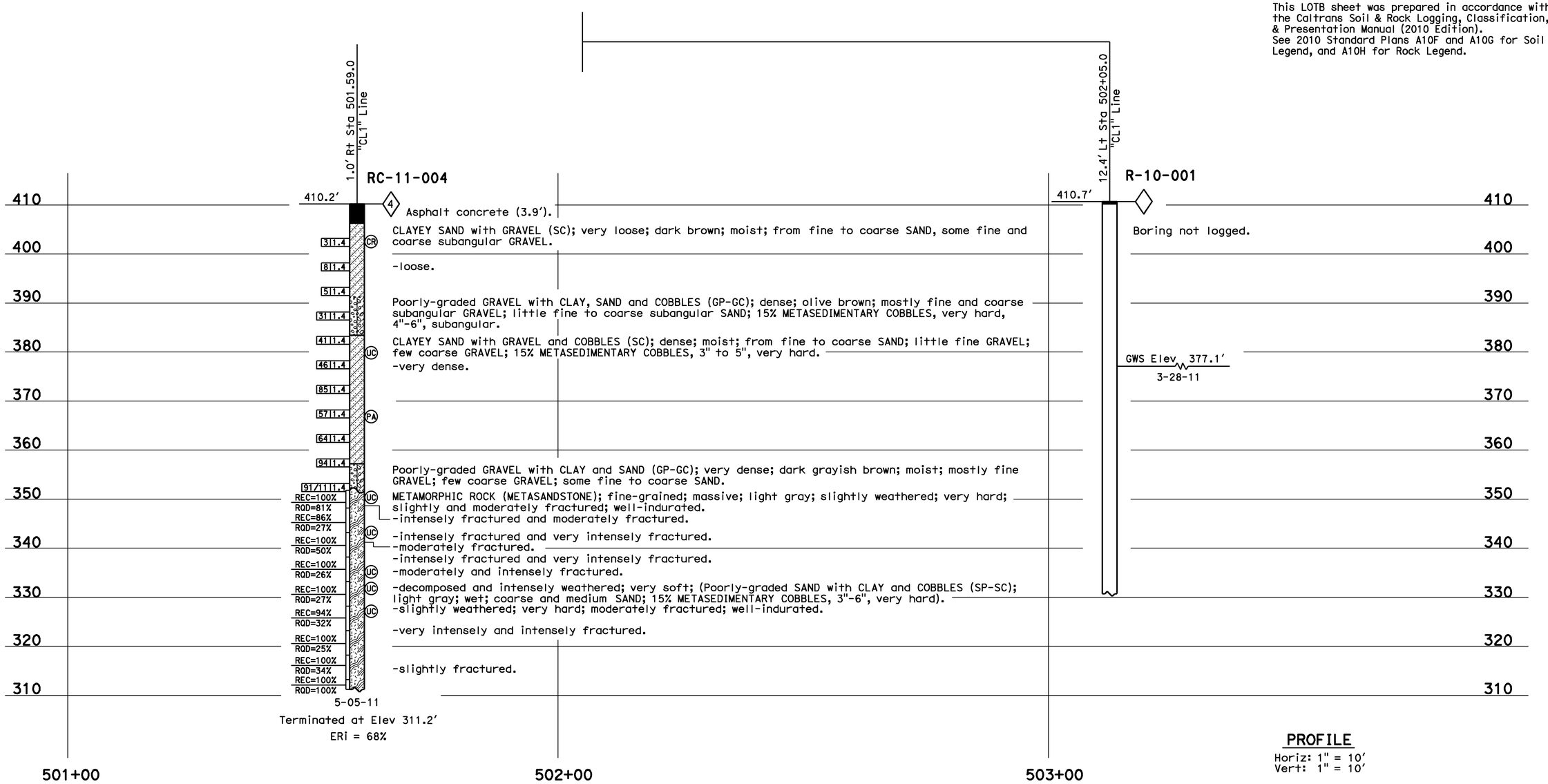

PROFILE
Horiz: 1" = 10'
Vert: 1" = 10'

ENGINEERING SERVICES	MATERIALS AND GEOTECHNICAL SERVICES	STATE OF CALIFORNIA DEPARTMENT OF TRANSPORTATION	DIVISION OF ENGINEERING SERVICES STRUCTURE DESIGN DESIGN BRANCH 6	BRIDGE NO. 49E0022 POST MILE 73.7-73.9	ELEPHANT TRUNK SLIDE RW
FUNCTIONAL SUPERVISOR NAME: M. DeSalvatore	DRAWN BY: I.G-Remmen, F. Nguyen CHECKED BY: C. Manansala	FIELD INVESTIGATION BY: J. Klamecki			LOG OF TEST BORINGS 2 OF 9

OGS CIVIL LOG OF TEST BORINGS SHEET

ORIGINAL SCALE IN INCHES FOR REDUCED PLANS 0 1 2 3

UNIT: 3591
PROJECT NUMBER & PHASE: 05120000091 CONTRACT NO.: 05-1A7001

DISREGARD PRINTS BEARING EARLIER REVISION DATES → REVISION DATES 12-18-12 01-14-13 01-15-13 SHEET 22 OF 29

FILE => yy-lotb-2of9.dgn

USERNAME => s123239 DATE PLOTTED => 05-JUN-2014 TIME PLOTTED => 13:46

DIST	COUNTY	ROUTE	POST MILES TOTAL PROJECT	SHEET No	TOTAL SHEETS
05	SLO	1	73.7/74.0	102	108

REGISTERED CIVIL ENGINEER 2-20-13

5-19-14
PLANS APPROVAL DATE

REGISTERED PROFESSIONAL ENGINEER David T-M Liao No. C59838 Exp. 12-31-13 CIVIL STATE OF CALIFORNIA

The State of California or its officers or agents shall not be responsible for the accuracy or completeness of electronic copies of this plan sheet.

This LOTB sheet was prepared in accordance with the Caltrans Soil & Rock Logging, Classification, & Presentation Manual (2010 Edition).

See 2010 Standard Plans A10F and A10G for Soil Legend, and A10H for Rock Legend.

FOR PLAN VIEW, SEE
"LOG OF TEST BORINGS 1 OF 9"

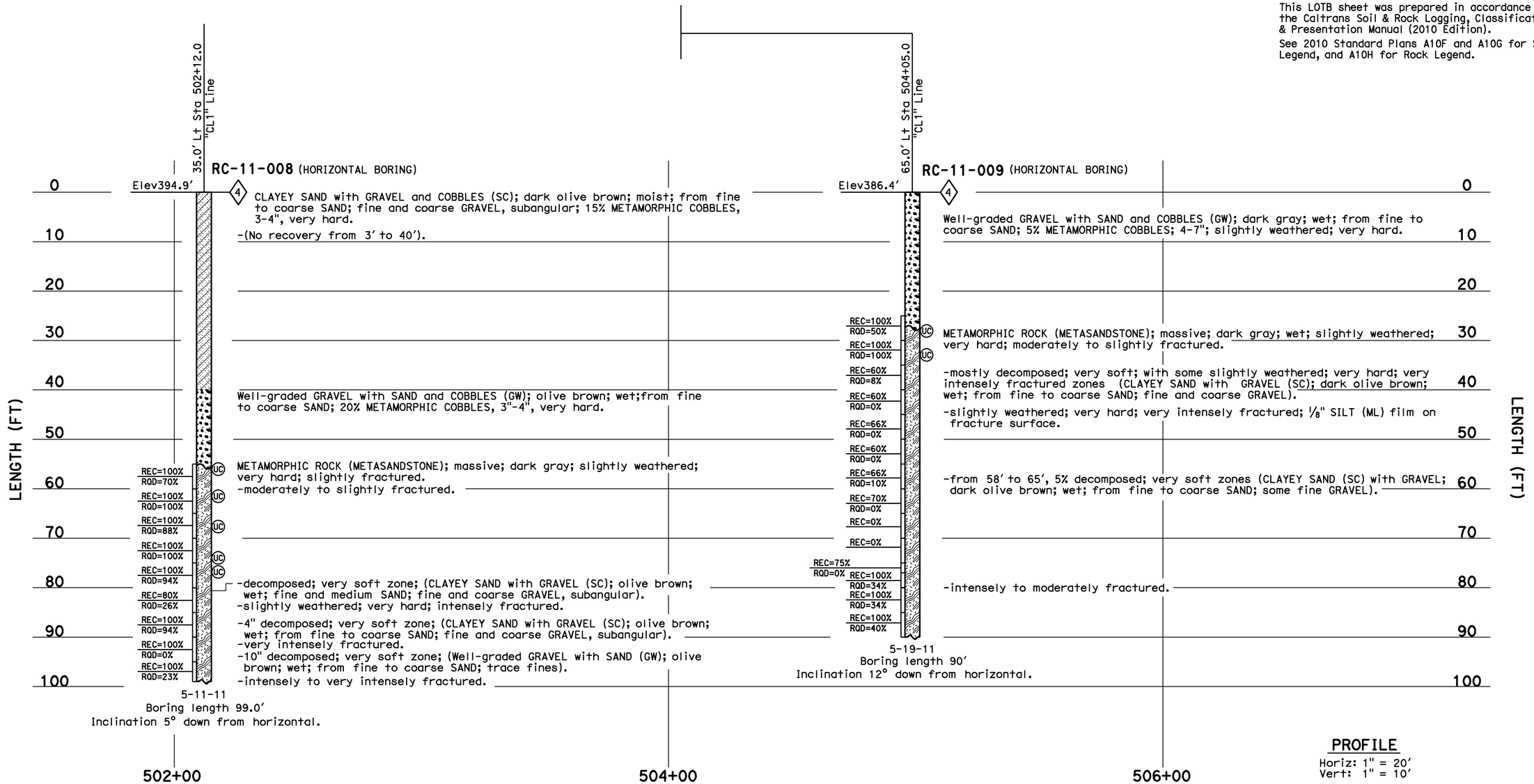

PROFILE
Horiz: 1" = 20'
Vert: 1" = 10'

ENGINEERING SERVICES	MATERIALS AND GEOTECHNICAL SERVICES	STATE OF CALIFORNIA DEPARTMENT OF TRANSPORTATION	DIVISION OF ENGINEERING SERVICES STRUCTURE DESIGN DESIGN BRANCH 6	BRIDGE NO. 49E0022 POST MILE 73.7-73.9	ELEPHANT TRUNK SLIDE RW
FUNCTIONAL SUPERVISOR NAME: M. DeSalvatore	DRAWN BY: I.G-Remmen, F. Nguyen CHECKED BY: C. Manansala	FIELD INVESTIGATION BY: T-M Liao			LOG OF TEST BORINGS 3 OF 9

OGS CIVIL LOG OF TEST BORINGS SHEET

ORIGINAL SCALE IN INCHES FOR REDUCED PLANS 0 1 2 3

UNIT: 3591
PROJECT NUMBER & PHASE: 05120000091 CONTRACT NO.: 05-1A7001

DISREGARD PRINTS BEARING EARLIER REVISION DATES 12-18-12 01-11-13 01-15-13

SHEET 23 OF 29

FILE => yy-lotb-3of9.dgn

USERNAME => s123239 DATE PLOTTED => 05-JUN-2014 TIME PLOTTED => 13:46

DIST	COUNTY	ROUTE	POST MILES TOTAL PROJECT	SHEET No	TOTAL SHEETS
05	SLO	1	73.7/74.0	103	108

REGISTERED CIVIL ENGINEER 2-20-13

5-19-14
PLANS APPROVAL DATE

REGISTERED PROFESSIONAL ENGINEER David T-M Liao No. C59838 Exp. 12-31-13 CIVIL STATE OF CALIFORNIA

The State of California or its officers or agents shall not be responsible for the accuracy or completeness of electronic copies of this plan sheet.

This LOTB sheet was prepared in accordance with the Caltrans Soil & Rock Logging, Classification, & Presentation Manual (2010 Edition).
See 2010 Standard Plans A10F and A10G for Soil Legend, and A10H for Rock Legend.

FOR PLAN VIEW, SEE
"LOG OF TEST BORINGS 1 OF 9"

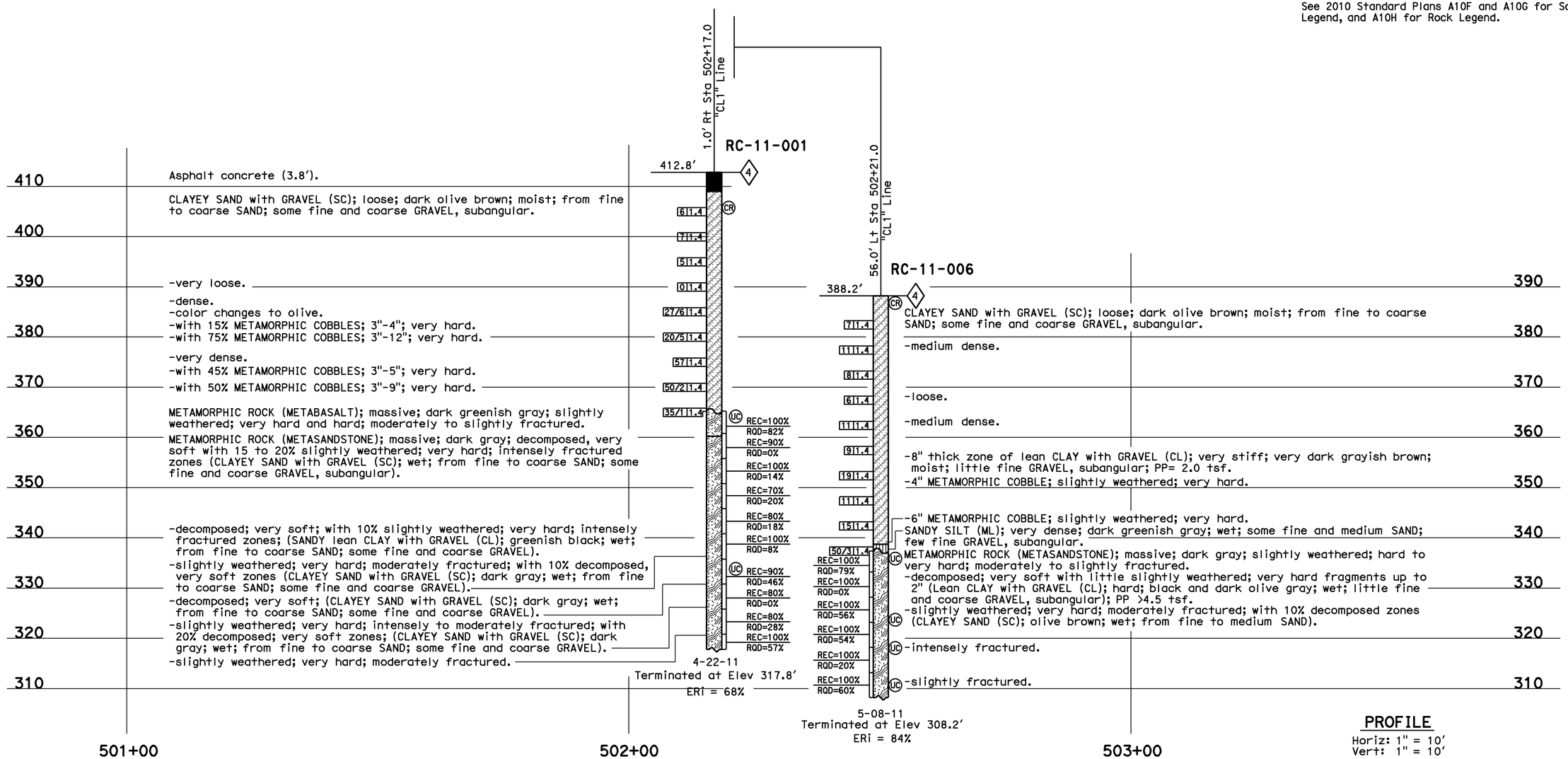

PROFILE
Horiz: 1" = 10'
Vert: 1" = 10'

ENGINEERING SERVICES	MATERIALS AND GEOTECHNICAL SERVICES	STATE OF CALIFORNIA DEPARTMENT OF TRANSPORTATION	DIVISION OF ENGINEERING SERVICES STRUCTURE DESIGN DESIGN BRANCH 6	BRIDGE NO. 49E0022 POST MILE 73.7-73.9	ELEPHANT TRUNK SLIDE RW
FUNCTIONAL SUPERVISOR NAME: M. DeSalvatore	DRAWN BY: I.G-Remmen, F. Nguyen CHECKED BY: C. Manansala	FIELD INVESTIGATION BY: T-M Liao			LOG OF TEST BORINGS 4 OF 9

OGS CIVIL LOG OF TEST BORINGS SHEET

ORIGINAL SCALE IN INCHES FOR REDUCED PLANS 0 1 2 3

UNIT: 3591
PROJECT NUMBER & PHASE: 05120000091 CONTRACT NO.: 05-1A7001

DISREGARD PRINTS BEARING EARLIER REVISION DATES → REVISION DATES 12-18-12 01-14-13 01-15-13 SHEET 24 OF 29

FILE => yy-lotb-4of9.dgn

USERNAME => s123239 DATE PLOTTED => 05-JUN-2014 TIME PLOTTED => 13:46

DIST	COUNTY	ROUTE	POST MILES TOTAL PROJECT	SHEET No	TOTAL SHEETS
05	SLO	1	73.7/74.0	104	108

REGISTERED CIVIL ENGINEER 2-20-13

5-19-14
PLANS APPROVAL DATE

REGISTERED PROFESSIONAL ENGINEER David T-M Liao No. C59838 Exp. 12-31-13 CIVIL STATE OF CALIFORNIA

The State of California or its officers or agents shall not be responsible for the accuracy or completeness of electronic copies of this plan sheet.

This LOTB sheet was prepared in accordance with the Caltrans Soil & Rock Logging, Classification, & Presentation Manual (2010 Edition).
See 2010 Standard Plans A10F and A10G for Soil Legend, and A10H for Rock Legend.

FOR PLAN VIEW, SEE
"LOG OF TEST BORINGS 1 OF 9"

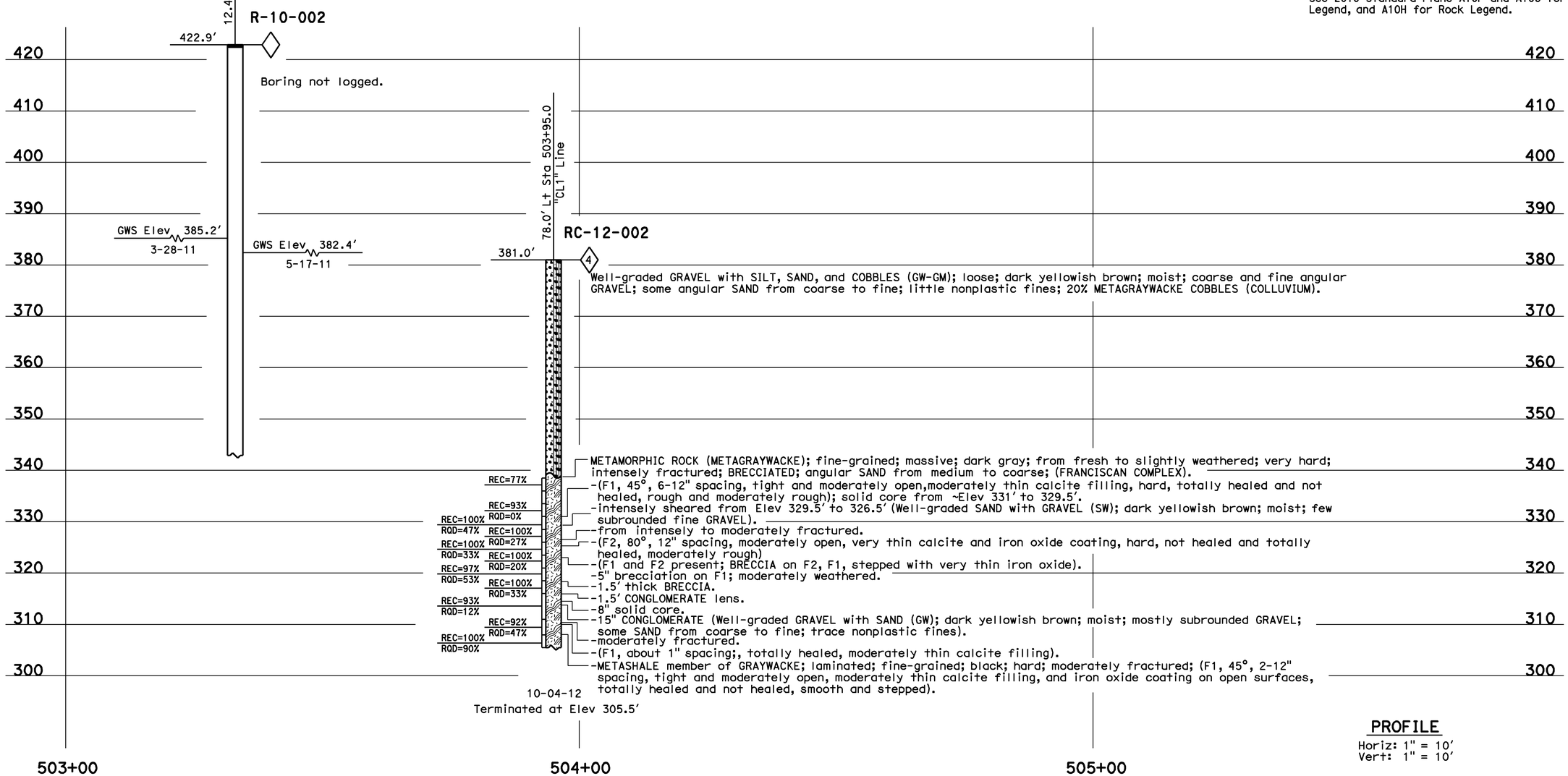

PROFILE
Horiz: 1" = 10'
Vert: 1" = 10'

ENGINEERING SERVICES	MATERIALS AND GEOTECHNICAL SERVICES	STATE OF CALIFORNIA DEPARTMENT OF TRANSPORTATION	DIVISION OF ENGINEERING SERVICES STRUCTURE DESIGN DESIGN BRANCH 6	BRIDGE NO. 49E0022 POST MILE 73.7-73.9	ELEPHANT TRUNK SLIDE RW LOG OF TEST BORINGS 5 OF 9
FUNCTIONAL SUPERVISOR NAME: M. DeSalvatore	DRAWN BY: I.G-Remmen, F. Nguyen CHECKED BY: C. Manansala	FIELD INVESTIGATION BY: M. Jurasius			

OGS CIVIL LOG OF TEST BORINGS SHEET

ORIGINAL SCALE IN INCHES FOR REDUCED PLANS 0 1 2 3

UNIT: 3591
PROJECT NUMBER & PHASE: 05120000091 CONTRACT NO.: 05-1A7001

DISREGARD PRINTS BEARING EARLIER REVISION DATES

REVISION DATES 12-28-12 01-11-13 SHEET 25 OF 29

FILE => yy-lotb-5of9.dgn

USERNAME => s123239 DATE PLOTTED => 05-JUN-2014 TIME PLOTTED => 13:46

DIST	COUNTY	ROUTE	POST MILES TOTAL PROJECT	SHEET No	TOTAL SHEETS
05	SLO	1	73.7/74.0	105	108

REGISTERED CIVIL ENGINEER 2-20-13

5-19-14
PLANS APPROVAL DATE

REGISTERED PROFESSIONAL ENGINEER David T-M Liao No. C59838 Exp. 12-31-13 CIVIL STATE OF CALIFORNIA

The State of California or its officers or agents shall not be responsible for the accuracy or completeness of electronic copies of this plan sheet.

This LOTB sheet was prepared in accordance with the Caltrans Soil & Rock Logging, Classification, & Presentation Manual (2010 Edition).
See 2010 Standard Plans A10F and A10G for Soil Legend, and A10H for Rock Legend.

FOR PLAN VIEW, SEE
"LOG OF TEST BORINGS 1 OF 9"

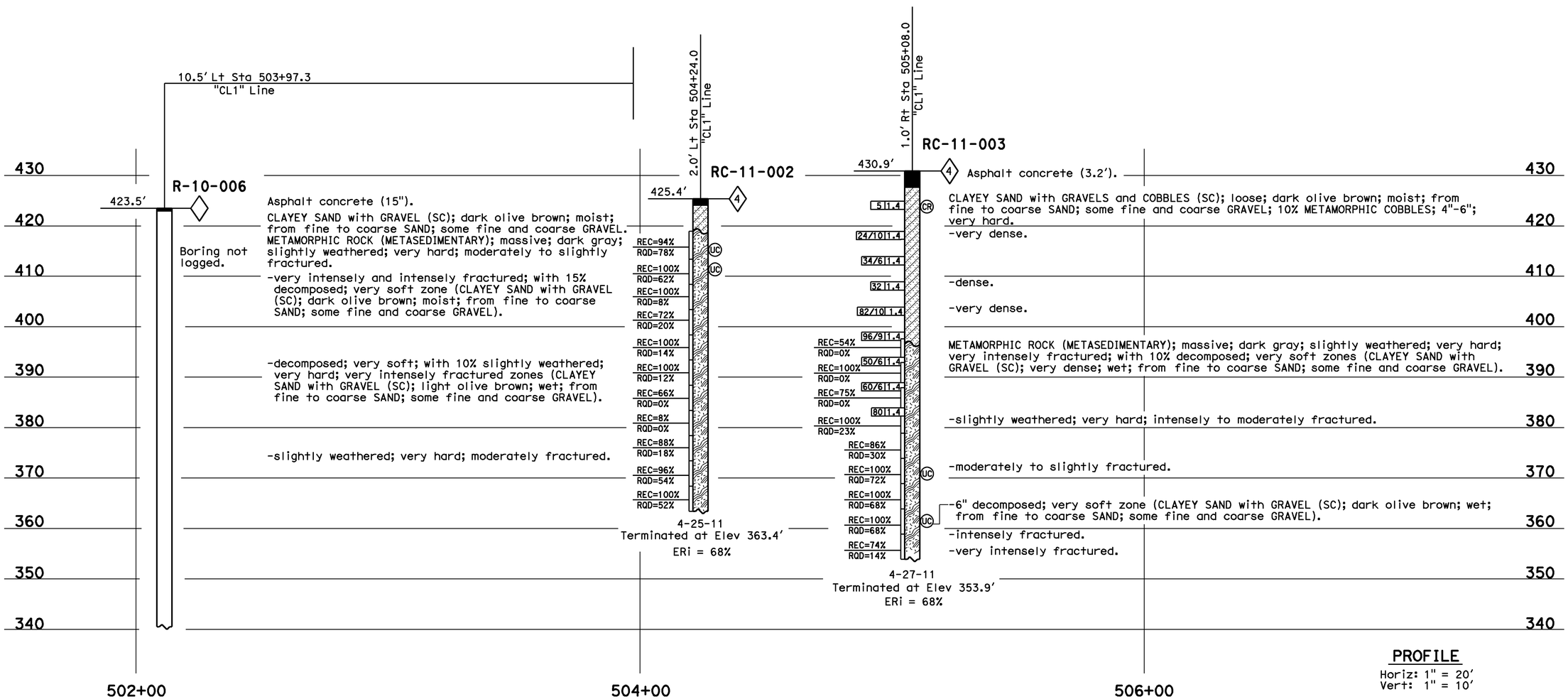

PROFILE
Horiz: 1" = 20'
Vert: 1" = 10'

ENGINEERING SERVICES	MATERIALS AND GEOTECHNICAL SERVICES	STATE OF CALIFORNIA DEPARTMENT OF TRANSPORTATION	DIVISION OF ENGINEERING SERVICES STRUCTURE DESIGN DESIGN BRANCH 6	BRIDGE NO. 49E0022 POST MILE 73.7-73.9	ELEPHANT TRUNK SLIDE RW LOG OF TEST BORINGS 6 OF 9
FUNCTIONAL SUPERVISOR NAME: M. DeSalvatore	DRAWN BY: I.G-Remmen, F. Nguyen CHECKED BY: C. Manansala	FIELD INVESTIGATION BY: T-M Liao			

OGS CIVIL LOG OF TEST BORINGS SHEET

ORIGINAL SCALE IN INCHES FOR REDUCED PLANS 0 1 2 3

UNIT: 3591
PROJECT NUMBER & PHASE: 05120000091 CONTRACT NO.: 05-1A7001

DISREGARD PRINTS BEARING EARLIER REVISION DATES → REVISION DATES 12-12-12 01-14-13 01-15-13 SHEET 26 OF 29

FILE => yy-lotb-6of9.dgn

USERNAME => s123239 DATE PLOTTED => 05-JUN-2014 TIME PLOTTED => 13:46

DIST	COUNTY	ROUTE	POST MILES TOTAL PROJECT	SHEET No	TOTAL SHEETS
05	SLO	1	73.7/74.0	106	108

REGISTERED CIVIL ENGINEER 2-20-13

5-19-14
PLANS APPROVAL DATE

REGISTERED PROFESSIONAL ENGINEER David T-M Liao No. C59838 Exp. 12-31-13 CIVIL STATE OF CALIFORNIA

The State of California or its officers or agents shall not be responsible for the accuracy or completeness of electronic copies of this plan sheet.

This LOTB sheet was prepared in accordance with the Caltrans Soil & Rock Logging, Classification, & Presentation Manual (2010 Edition).
See 2010 Standard Plans A10F and A10G for Soil Legend, and A10H for Rock Legend.

FOR PLAN VIEW, SEE
"LOG OF TEST BORINGS 1 OF 9"

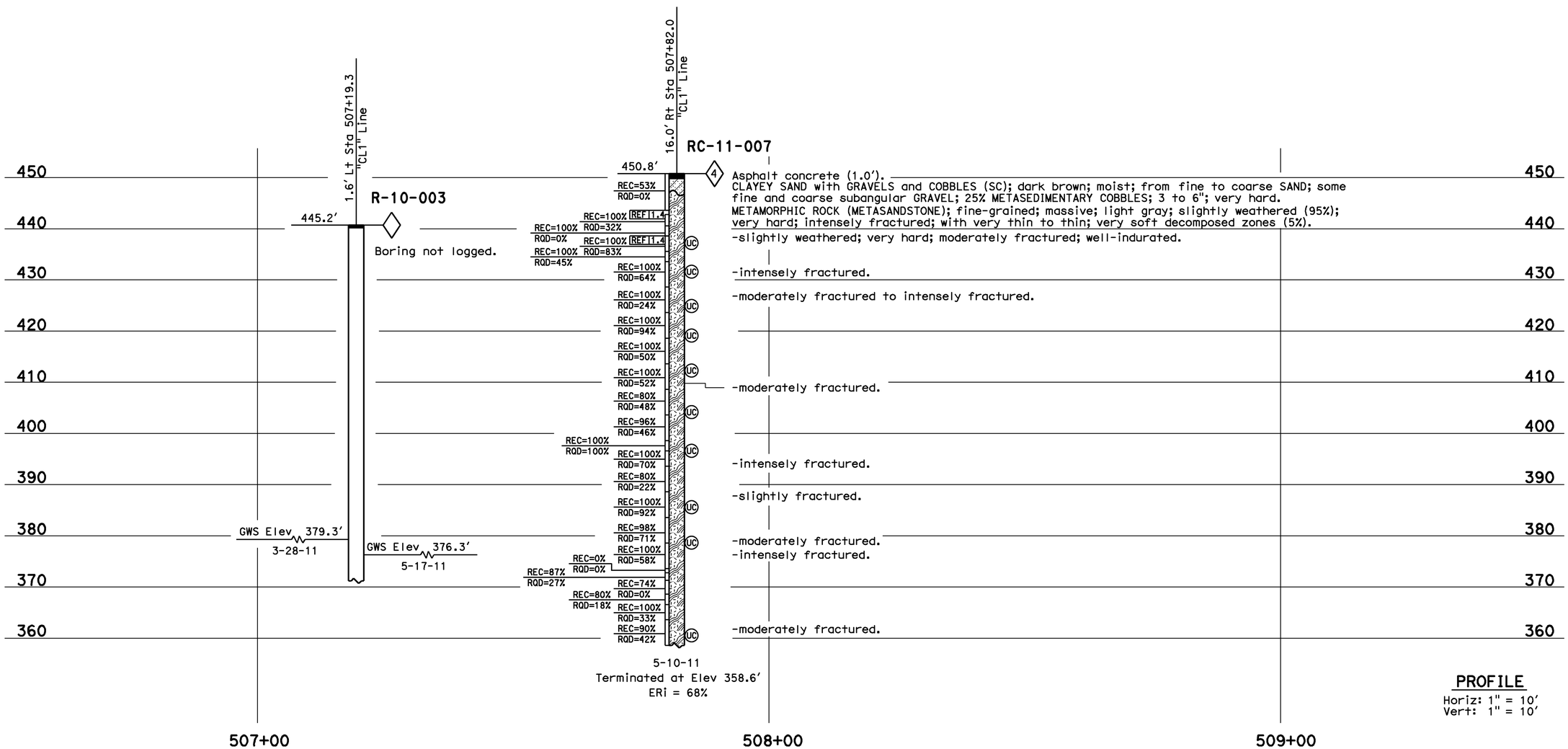

ENGINEERING SERVICES	MATERIALS AND GEOTECHNICAL SERVICES	STATE OF CALIFORNIA DEPARTMENT OF TRANSPORTATION	DIVISION OF ENGINEERING SERVICES STRUCTURE DESIGN DESIGN BRANCH 6	BRIDGE NO. 49E0022 POST MILE 73.7-73.9	ELEPHANT TRUNK SLIDE RW
FUNCTIONAL SUPERVISOR NAME: M. DeSalvatore	DRAWN BY: I.G-Remmen, F. Nguyen CHECKED BY: C. Manansala	FIELD INVESTIGATION BY: J. Klamecki			LOG OF TEST BORINGS 7 OF 9

OGS CIVIL LOG OF TEST BORINGS SHEET

ORIGINAL SCALE IN INCHES FOR REDUCED PLANS 0 1 2 3

UNIT: 3591
PROJECT NUMBER & PHASE: 05120000091 CONTRACT NO.: 05-1A7001

DISREGARD PRINTS BEARING EARLIER REVISION DATES → REVISION DATES 12-24-12 01-31-13 01-15-13

SHEET 27 OF 29

FILE => yy-lotb-7of9.dgn

USERNAME => s123239 DATE PLOTTED => 05-JUN-2014 TIME PLOTTED => 13:46

DIST	COUNTY	ROUTE	POST MILES TOTAL PROJECT	SHEET No	TOTAL SHEETS
05	SLO	1	73.7/74.0	107	108

REGISTERED CIVIL ENGINEER 2-20-13

5-19-14
PLANS APPROVAL DATE

REGISTERED PROFESSIONAL ENGINEER David T-M Liao No. C59838 Exp. 12-31-13 CIVIL STATE OF CALIFORNIA

The State of California or its officers or agents shall not be responsible for the accuracy or completeness of electronic copies of this plan sheet.

This LOTB sheet was prepared in accordance with the Caltrans Soil & Rock Logging, Classification, & Presentation Manual (2010 Edition).
See 2010 Standard Plans A10F and A10G for Soil Legend, and A10H for Rock Legend.

FOR PLAN VIEW, SEE
"LOG OF TEST BORINGS 1 OF 9"

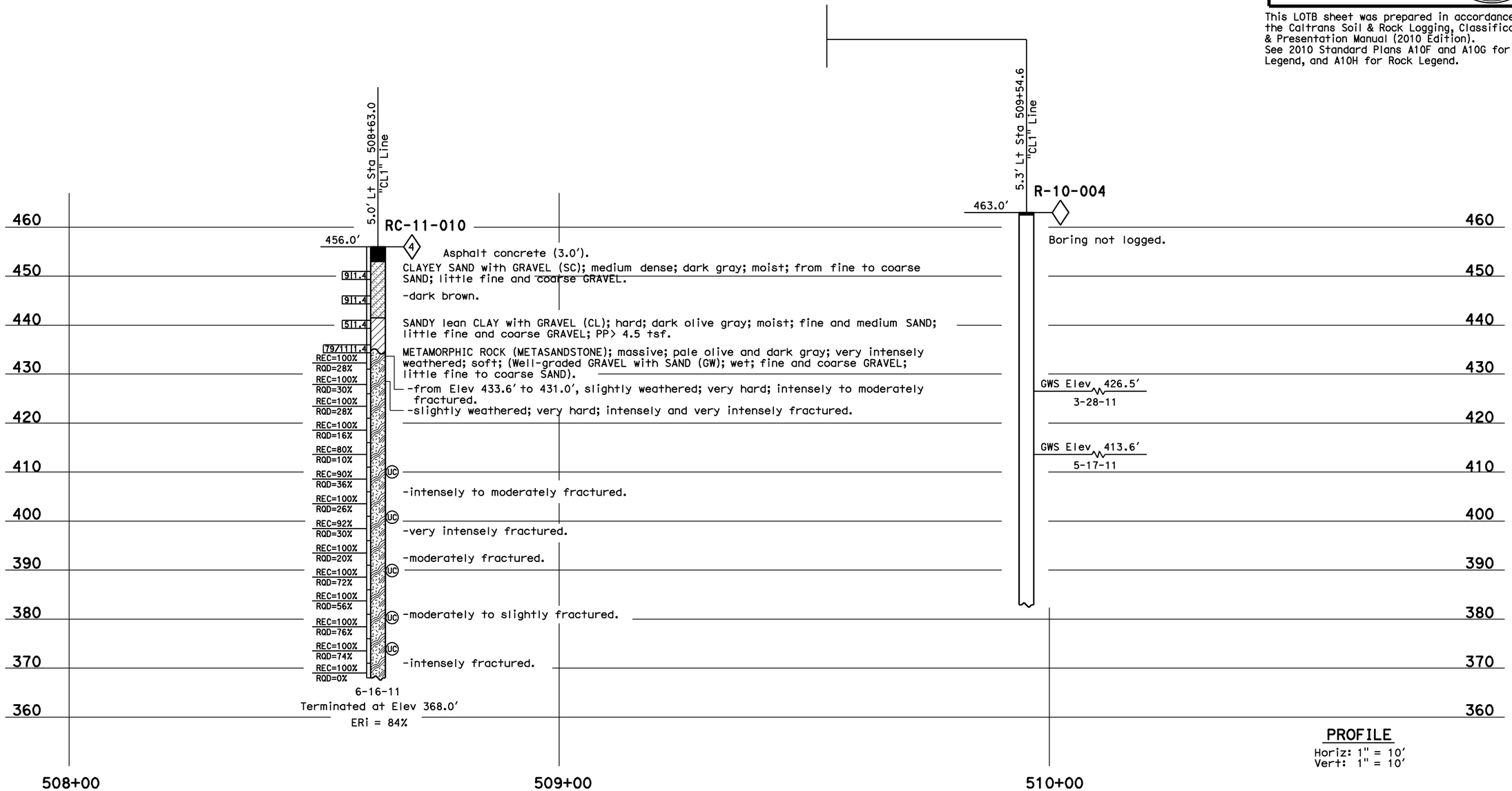

PROFILE
Horiz: 1" = 10'
Vert: 1" = 10'

ENGINEERING SERVICES	MATERIALS AND GEOTECHNICAL SERVICES	STATE OF CALIFORNIA DEPARTMENT OF TRANSPORTATION	DIVISION OF ENGINEERING SERVICES STRUCTURE DESIGN DESIGN BRANCH 6	BRIDGE NO. 49E0022 POST MILE 73.7-73.9	ELEPHANT TRUNK SLIDE RW
FUNCTIONAL SUPERVISOR NAME: M. DeSalvatore	DRAWN BY: I.G-Remmen, F. Nguyen CHECKED BY: C. Manansala	FIELD INVESTIGATION BY: T-M Liao			LOG OF TEST BORINGS 8 OF 9

OGS CIVIL LOG OF TEST BORINGS SHEET

ORIGINAL SCALE IN INCHES FOR REDUCED PLANS 0 1 2 3

UNIT: 3591
PROJECT NUMBER & PHASE: 05120000091 CONTRACT NO.: 05-1A7001

DISREGARD PRINTS BEARING EARLIER REVISION DATES → 12-18-12 01-14-13 01-15-13

REVISION DATES | SHEET 28 | OF 29

FILE => yy-lotb-8of9.dgn

USERNAME => s123239 DATE PLOTTED => 05-JUN-2014 TIME PLOTTED => 13:46

DIST	COUNTY	ROUTE	POST MILES TOTAL PROJECT	SHEET No	TOTAL SHEETS
05	SLO	1	73.7/74.0	108	108

REGISTERED CIVIL ENGINEER 2-20-13

5-19-14
PLANS APPROVAL DATE

REGISTERED PROFESSIONAL ENGINEER David T-M Liao No. C59838 Exp. 12-31-13 CIVIL STATE OF CALIFORNIA

The State of California or its officers or agents shall not be responsible for the accuracy or completeness of electronic copies of this plan sheet.

This LOTB sheet was prepared in accordance with the Caltrans Soil & Rock Logging, Classification, & Presentation Manual (2010 Edition).
See 2010 Standard Plans A10F and A10G for Soil Legend, and A10H for Rock Legend.

FOR PLAN VIEW, SEE
"LOG OF TEST BORINGS 1 OF 9"

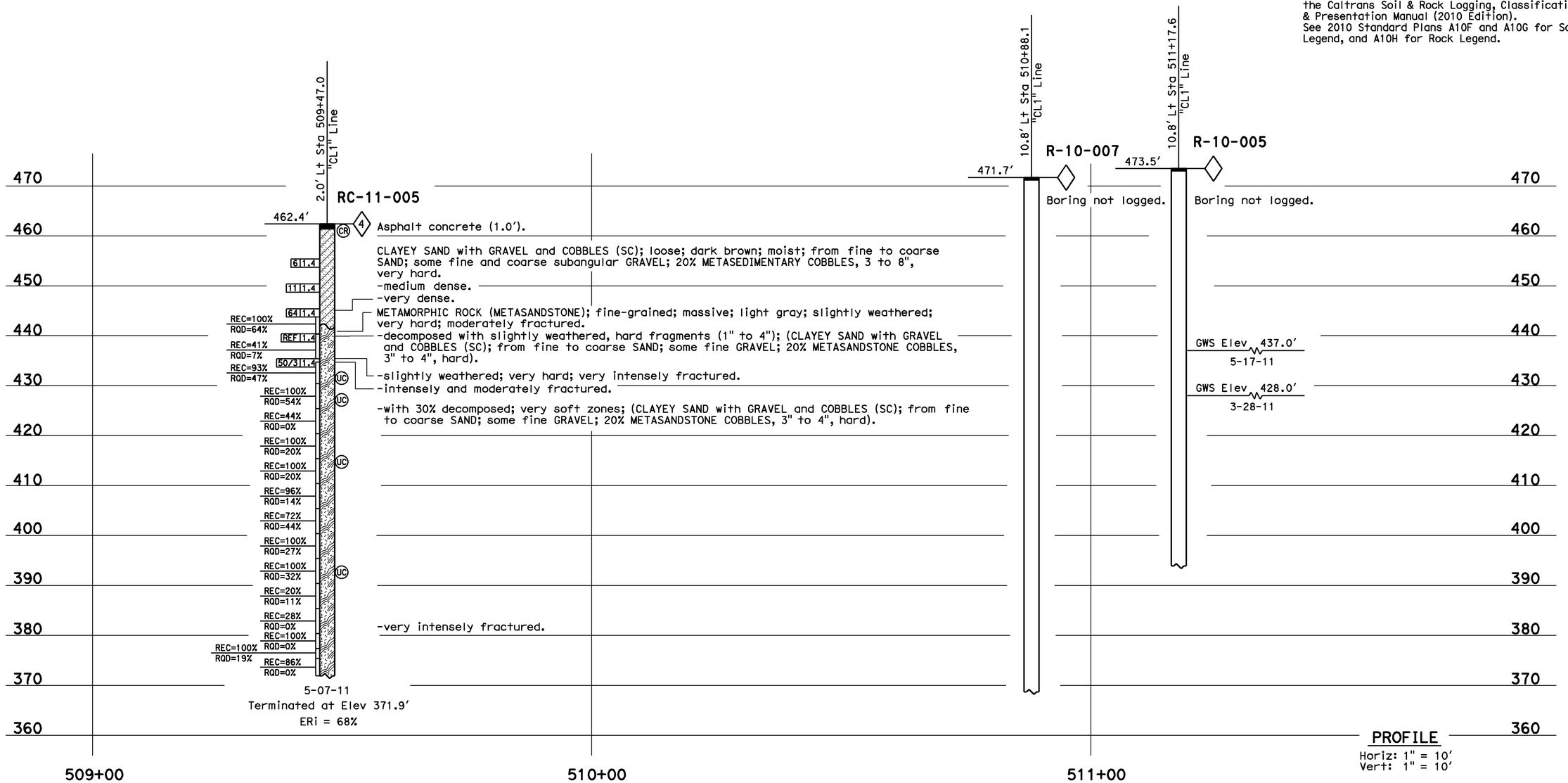

ENGINEERING SERVICES	MATERIALS AND GEOTECHNICAL SERVICES	STATE OF CALIFORNIA DEPARTMENT OF TRANSPORTATION	DIVISION OF ENGINEERING SERVICES STRUCTURE DESIGN DESIGN BRANCH 6	BRIDGE NO. 49E0022 POST MILE 73.7-73.9	ELEPHANT TRUNK SLIDE RW
FUNCTIONAL SUPERVISOR NAME: M. DeSalvatore	DRAWN BY: I.G-Remmen, F. Nguyen CHECKED BY: C. Manansala	FIELD INVESTIGATION BY: J. Klamecki			LOG OF TEST BORINGS 9 OF 9

OGS CIVIL LOG OF TEST BORINGS SHEET

ORIGINAL SCALE IN INCHES FOR REDUCED PLANS 0 1 2 3

UNIT: 3591
PROJECT NUMBER & PHASE: 05120000091
CONTRACT NO.: 05-1A7001

DISREGARD PRINTS BEARING EARLIER REVISION DATES → REVISION DATES 12-28-12 01-31-13 01-15-13

SHEET 29 OF 29

FILE => yy-lotb-9of9.dgn

USERNAME => s123239 DATE PLOTTED => 05-JUN-2014 TIME PLOTTED => 13:46