Dist	COUNTY	ROUTE	POST MILES TOTAL PROJECT	SHEET No.	TOTAL SHEETS
05	SB	101	21.0/27.1	6	130

Mark S. Leichtfuss 11-24-14
REGISTERED CIVIL ENGINEER DATE

11-24-14
PLANS APPROVAL DATE

REGISTERED PROFESSIONAL ENGINEER MARK S. LEICHTFUSS No. 69124 Exp. 6-30-16 CIVIL STATE OF CALIFORNIA

THE STATE OF CALIFORNIA OR ITS OFFICERS OR AGENTS SHALL NOT BE RESPONSIBLE FOR THE ACCURACY OR COMPLETENESS OF SCANNED COPIES OF THIS PLAN SHEET.

NOTE:

FOR ACCURATE RIGHT OF WAY DATA, CONTACT RIGHT OF WAY ENGINEERING AT THE DISTRICT OFFICE.

LEGEND:

MAINLINE: 0.26' COLD PLANE AC Pvmt AND 0.20' RHMA-G

RAMPS: 0.20' COLD PLANE AC Pvmt AND 0.20' RHMA-G

3

RHMA-G CONFORM TAPER (SEE SHEET C-1 FOR DETAILS

REMOVE AND CONSTRUCT CURB RAMPS

CURB RAMP NUMBER (X)

PATTERSON Ave OC AND Rte 217

PM 21.15

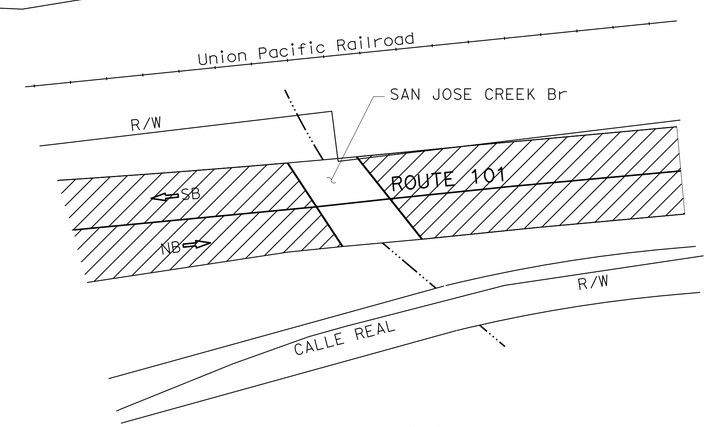

SAN JOSE CREEK Br

PM 21.62

3 **REPLACED PER ADDENDUM No. 3 MARCH 19, 2015**

CONSTRUCTION DETAILS

NO SCALE

C-2

STATE OF CALIFORNIA - DEPARTMENT OF TRANSPORTATION
DESIGN
Caltrans

FUNCTIONAL SUPERVISOR: RON KRAEMER
CALCULATED-DESIGNED BY: AMJED HETTINI
CHECKED BY: MARK S. LEICHTFUSS
REVISED BY
DATE REVISED

LAST REVISION 11-24-14
DATE PLOTTED => 18-MAR-2015
TIME PLOTTED => 10:57

Dist	COUNTY	ROUTE	POST MILES TOTAL PROJECT	SHEET No.	TOTAL SHEETS
05	SB	101	21.0/27.1	23	130

REGISTERED CIVIL ENGINEER 11-24-14 DATE

11-24-14
PLANS APPROVAL DATE

REGISTERED PROFESSIONAL ENGINEER MARK S. LEICHTFUSS No. 69124 Exp. 6-30-16 CIVIL STATE OF CALIFORNIA

THE STATE OF CALIFORNIA OR ITS OFFICERS OR AGENTS SHALL NOT BE RESPONSIBLE FOR THE ACCURACY OR COMPLETENESS OF SCANNED COPIES OF THIS PLAN SHEET.

LEGEND:

RUMBLE STRIP

FAILED AREA

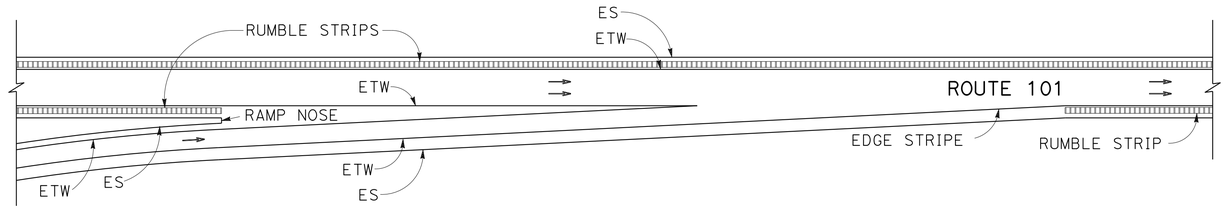

TYPICAL RUMBLE STRIP PLACEMENT AT ON RAMP

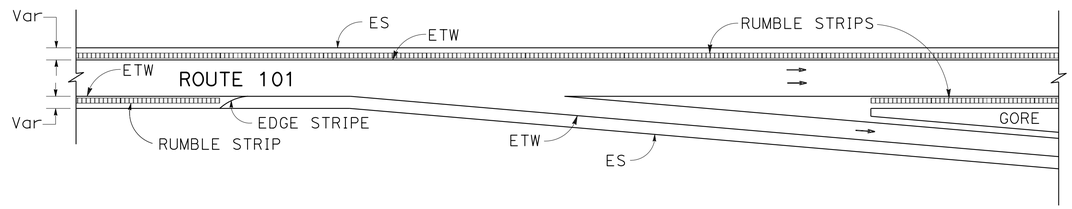

TYPICAL RUMBLE STRIP PLACEMENT AT OFF RAMP

NOTE: FOR ADDITIONAL RUMBLE STRIP DETAILS SEE Std PLANS, A40B.

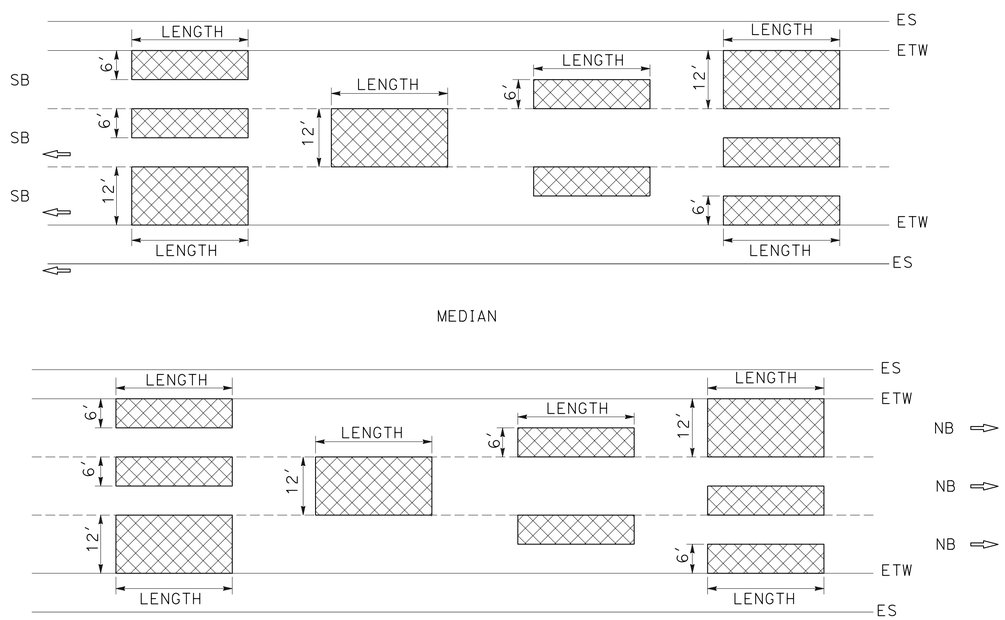

REPAIR FAILED AREAS DETAIL

NOTE: FOR LOCATIONS SEE SHEETS Q-9 THROUGH Q-11.

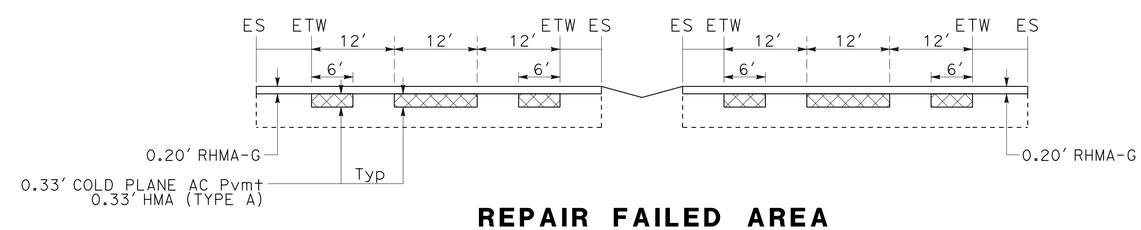

REPAIR FAILED AREA

TYPICAL SECTION
PM 23.0 TO PM 27.1

3

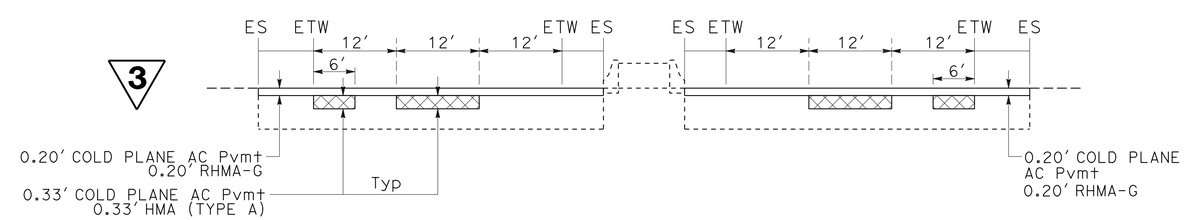

REPAIR FAILED AREA

TYPICAL SECTION
PM 21.0 TO PM 22.4

3 **REPLACED PER ADDENDUM No. 3 MARCH 19, 2015**

CONSTRUCTION DETAILS

NO SCALE

C-19

STATE OF CALIFORNIA - DEPARTMENT OF TRANSPORTATION
Caltrans
DESIGN
FUNCTIONAL SUPERVISOR: RON KRAEMER
CALCULATED-DESIGNED BY: MARK S. LEICHTFUSS
CHECKED BY: AMJED HETTINI
REVISED BY
DATE REVISED

LAST REVISION 11-24-14
DATE PLOTTED => 18-MAR-2015
TIME PLOTTED => 10:57

Dist	COUNTY	ROUTE	POST MILES TOTAL PROJECT	SHEET No.	TOTAL SHEETS
05	SB	101	21.0/27.1	37	130

Mark S. Leichtfuss 11-24-14
REGISTERED CIVIL ENGINEER DATE

11-24-14
PLANS APPROVAL DATE

REGISTERED PROFESSIONAL ENGINEER MARK S. LEICHTFUSS No. 69124 Exp. 6-30-16 CIVIL STATE OF CALIFORNIA

THE STATE OF CALIFORNIA OR ITS OFFICERS OR AGENTS SHALL NOT BE RESPONSIBLE FOR THE ACCURACY OR COMPLETENESS OF SCANNED COPIES OF THIS PLAN SHEET.

3

PAVEMENT STRUCTURE

3

LOCATION	POSTMILE SOUTHBOUND	IMPORTED BORROW (CY)	COLD PLANE AC PAVEMENT 0.06'	0.20'	0.26'	0.33'	TACK COAT	HOT MIX ASPHALT (TYPE A)	RUBBERIZED HOT MIX ASPHALT (GAP GRADED)
		CY	SQYD				TON	TON	TON
"MAINLINE"	21.00 TO 22.30	154.5			46,497.1		9.68		6,277.2
"MAINLINE"	23.00 TO 23.02				422.2				
"MAINLINE"	22.98 TO 25.15		30,272.0						
"MAINLINE"	23.00 TO 27.25	323.8					23.10		14,970.9
LOS CARNEROS Rd OC "MAINLINE"	23.72				1,790.2				
GLEN ANNIE Rd OC "MAINLINE"	24.76				1,900.0				
CATHEDRAL OAKS OC "MAINLINE"	26.78				1,722.7				
PATTERSON Ave ON RAMP	20.99 TO 21.15	21.9		3,067.7	~~3,067.7~~		0.64		414.1
PATTERSON Ave OFF RAMP	21.17 TO 21.50	58.7		4,312.3	~~4,312.3~~		0.90		582.2
Rte 217/PATTERSON Ave OFF RAMP	21.17 TO 21.38			2,653.1	~~2,653.1~~		0.55		358.2
Rte 217/Rte 101 SB ON RAMP	21.29 TO 21.38			2,281.7	~~2,281.7~~		0.48		308.0
FAIRVIEW Ave ON RAMP	22.41 TO 22.52	39.5		2,417.5	~~2,417.5~~		0.50		326.4
LOS CARNEROS Rd ON RAMP	22.55 TO 23.71	51.7		553.9	~~553.9~~		0.76		491.7
LOS CARNEROS Rd OFF RAMP	23.73 TO 23.96	32.7		531.2	~~531.2~~		0.66		430.5
GLEN ANNIE Rd ON RAMP	24.62 TO 24.77	47.8		686.1	~~686.1~~		0.86		556.1
GLEN ANNIE Rd OFF RAMP	24.79 TO 27.99	30.0		540.7	~~540.7~~		0.69		447.2
CATHEDRAL OAKS ON RAMP	26.69 TO 26.79	18.6		526.3	~~526.3~~		0.43		279.6
CATHEDRAL OAKS OFF RAMP	26.80 TO 27.11	29.8		540.9	~~540.9~~		1.20		778.7
"MAINLINE"	27.23 TO 27.25				422.2				
					52,754.4				
	SB SUBTOTAL		30,272.0	18,111.4	~~70,865.8~~				
	SB TOTAL	809.0	101,137.8				40.45		26,220.8

LOCATION	POSTMILE NORTHBOUND	IMPORTED BORROW (CY)	COLD PLANE AC PAVEMENT 0.06'	0.20'	0.26'	0.33'	TACK COAT	HOT MIX ASPHALT (TYPE A)	RUBBERIZED HOT MIX ASPHALT (GAP GRADED)
		CY	SQYD				TON	TON	TON
"MAINLINE"	21.00 TO 22.30	110.2			50,672.2		10.55		6,840.7
"MAINLINE"	23.00 TO 25.02				422.2				
"MAINLINE"	22.98 TO 25.05		28,864.0						
"MAINLINE"	23.00 TO 27.17	236.6					21.16		13,709.7
LOS CARNEROS Rd OC "MAINLINE"	23.72				1,790.2				
GLEN ANNIE Rd OC "MAINLINE"	24.76				1,900.0				
CATHEDRAL OAKS OC "MAINLINE"	26.78				1,722.7				
PATTERSON Ave OFF RAMP	21.08 TO 21.15	23.6		2,227.7	~~2,227.7~~		0.46		300.7
PATTERSON Ave ON RAMP	21.17 TO 21.46	25.3		4,899.9	~~4,899.9~~		1.02		661.5
PATTERSON Ave ON RAMP/Rte 217W	21.17 TO 21.38	0.31		1,607.2	~~1,607.2~~		0.34		217.0
Rte 101/Rte 217W	21.23 TO 21.38	26.1		4,942.3	~~4,942.3~~		1.03		667.2
FAIRVIEW Ave OFF RAMP	22.30 TO 22.42	54.8		2,492.8	~~2,492.8~~		0.52		336.5
FAIRVIEW Ave ON RAMP	22.43 TO 22.45	23.2		1,224.6	~~1,224.6~~		0.26		165.3
LOS CARNEROS Rd OFF RAMP	22.52 TO 23.71	44.8		460.6	~~460.6~~		0.75		487.7
LOS CARNEROS Rd ON RAMP	23.72 TO 23.71	32.8		547.0	~~547.0~~		0.68		439.3
GLEN ANNIE Rd OFF RAMP	24.30 TO 24.79	66.6		2,059.0	~~2,059.0~~		1.87		1,209.3
GLEN ANNIE Rd ON RAMP	24.75 TO 24.79	10.9		3,161.3	~~3,161.3~~		0.66		426.8
CATHEDRAL OAKS OFF RAMP	26.41 TO 26.46	26.5		319.6	~~319.6~~		0.18		117.8
CATHEDRAL OAKS ON RAMP	26.92 TO 27.05	64.9		683.4	~~683.4~~		0.42		272.4
"MAINLINE"	27.15 TO 27.17				570.0				
					57,077.3				
	NB SUBTOTAL		28,864.0	24,625.4	~~81,702.7~~				
	NB TOTAL	746.6	110,566.7				39.90		25,851.9
	SB TOTAL	809.0	101,137.8				40.45		26,220.8
	HMA DIKE						1.08	1,031.42	
	HMA Misc AREAS						0.02	178.01	
	SAFTY EDGE						1.98		988.29
	REPAIR FAILED AREAS		9,880.0				4.86	2,223.90	
	SW & CURB RAMPS						0.01	74.87	
	CALL BOX						0.01	17.82	
	GRAND TOTAL	1,555.6	221,584.5				88.31	3,526.02	53,060.99

3 **REPLACED PER ADDENDUM No. 3 MARCH 19, 2015**

SUMMARY OF QUANTITIES
Q-1

REVISED BY | DATE REVISED
AMJED HETTINI | MARK S. LEICHTFUSS
CALCULATED-DESIGNED BY | CHECKED BY
FUNCTIONAL SUPERVISOR: RON KRAEMER
STATE OF CALIFORNIA - DEPARTMENT OF TRANSPORTATION
Caltrans® DESIGN

LAST REVISION 11-24-14 | DATE PLOTTED => 18-MAR-2015 TIME PLOTTED => 10:57