Dist	COUNTY	ROUTE	POST MILES TOTAL PROJECT	SHEET No.	TOTAL SHEETS
05	SBt	156	R10.0/R18.4	1	89

STATE OF CALIFORNIA

DEPARTMENT OF TRANSPORTATION

ACNHP-P156(020)E

PROJECT PLANS FOR CONSTRUCTION ON

STATE HIGHWAY

IN SAN BENITO COUNTY
NEAR HOLLISTER FROM 0.5 MILE WEST OF
HUDNER OVERHEAD TO SANTA CLARA COUNTY LINE

TO BE SUPPLEMENTED BY STANDARD PLANS DATED 2010

INDEX OF PLANS

SHEET No.	DESCRIPTION
1	TITLE
2	TYPICAL SECTIONS
3-16	CONSTRUCTION DETAILS
17	CONSTRUCTION AREA SIGNS
18	TRAFFIC HANDLING DETAILS AND QUANTITIES
19-23	PAVEMENT DELINEATION QUANTITIES
24-25	SIGN QUANTITIES
26-29	SUMMARY OF QUANTITIES
30-38	ELECTRICAL PLANS
39-89	REVISED STANDARD PLANS

THE STANDARD PLANS LIST APPLICABLE TO CONTRACT IS INCLUDED IN THE NOTICE TO BIDDERS AND SPECIAL PROVISIONS BOOK.

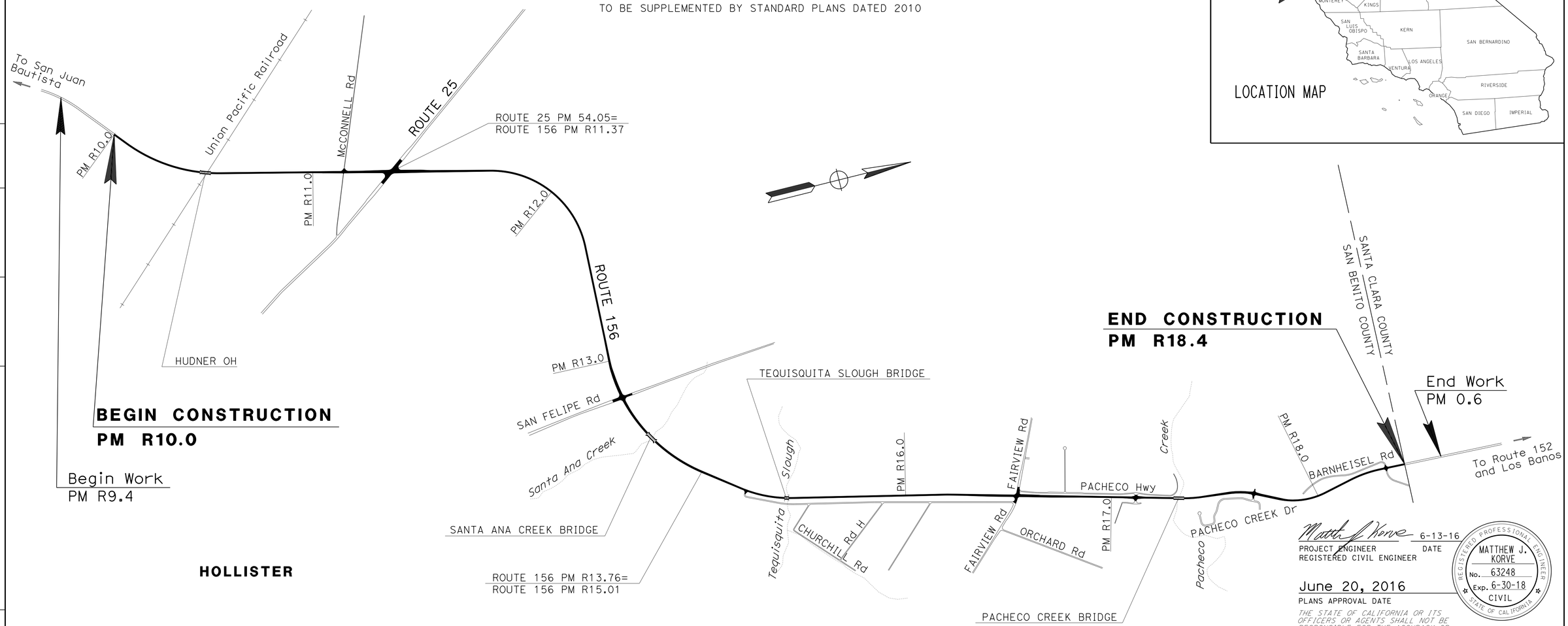

LOCATION MAP

Caltrans

Matthew J. Korve 6-13-16
PROJECT ENGINEER DATE
REGISTERED CIVIL ENGINEER

June 20, 2016
PLANS APPROVAL DATE

REGISTERED PROFESSIONAL ENGINEER
MATTHEW J. KORVE
No. 63248
Exp. 6-30-18
CIVIL
STATE OF CALIFORNIA

THE STATE OF CALIFORNIA OR ITS OFFICERS OR AGENTS SHALL NOT BE RESPONSIBLE FOR THE ACCURACY OR COMPLETENESS OF SCANNED COPIES OF THIS PLAN SHEET.

AECOM
2020 L STREET, SUITE 400
SACRAMENTO, CA 95811

CALTRANS DISTRICT 5
2015 EAST SHIELDS AVENUE, SUITE 100
FRESNO, CA 93726

CONTRACT No.	05-1C8404
PROJECT ID	0512000239

THE CONTRACTOR SHALL POSSESS THE CLASS (OR CLASSES) OF LICENSE AS SPECIFIED IN THE "NOTICE TO BIDDERS."

NO SCALE

APPROVED AS TO IMPACT ON STATE FACILITIES AND CONFORMANCE WITH APPLICABLE STATE STANDARDS AND PRACTICES AND THAT TECHNICAL OVERSIGHT WAS PERFORMED.

CONSULTANT DESIGN MANAGER	CALTRANS DESIGN OVERSIGHT APPROVAL	REGISTRATION No.	LICENSE Exp DATE	DATE SIGNED
MATTHEW J. KORVE	STEVEN McDONALD	C57457	12-31-17	

LAST REVISION 06-03-16 | DATE PLOTTED => 16-AUG-2016 TIME PLOTTED => 09:11

Dist	COUNTY	ROUTE	POST MILES TOTAL PROJECT	SHEET No.	TOTAL SHEETS
05	SBt	156	R10.0/R18.4	2	89

REGISTERED CIVIL ENGINEER — 6-13-16 DATE

6-20-16
PLANS APPROVAL DATE

REGISTERED PROFESSIONAL ENGINEER MATTHEW J. KORVE No. 63248 Exp. 6-30-18 CIVIL STATE OF CALIFORNIA

THE STATE OF CALIFORNIA OR ITS OFFICERS OR AGENTS SHALL NOT BE RESPONSIBLE FOR THE ACCURACY OR COMPLETENESS OF SCANNED COPIES OF THIS PLAN SHEET.

AECOM
2020 L STREET
SUITE 400
SACRAMENTO, CA 95811

NOTES:

1. DIMENSIONS OF THE PAVEMENT STRUCTURES (STRUCTURAL SECTIONS) ARE SUBJECT TO TOLERANCES SPECIFIED IN THE STANDARD SPECIFICATIONS.
2. PLACE TAPERED EDGE OUTSIDE THE LIMITS OF DIKES, MIDWEST GUARDRAIL SYSTEM, CONCRETE BARRIERS, AND INTERSECTIONS, PER REVISED STANDARD PLAN RSP P74-P75.
3. EXACT LOCATIONS AND TYPE OF HMA DIKE, MIDWEST GUARDRAIL SYSTEM, VEGETATION CONTROL, SHOULDER BACKING, RUMBLE STRIP AND REMOVAL OF EXISTING FEATURES, SEE CONSTRUCTION DETAILS AND SUMMARY OF QUANTITIES SHEETS.
4. FOR ACCURATE RIGHT OF WAY DATA, CONTACT RIGHT OF WAY ENGINEERING AT DISTRICT OFFICE.
5. CONFORM FINISHED GRADE TO EXISTING DRAINAGE INLETS, OVERSIDE DRAINS, AND OTHER FEATURES AS SHOWN OR AS DIRECTED BY THE ENGINEER.
6. FOR REPAIR FAILED AREA DETAIL AND LOCATIONS, SEE CONSTRUCTION DETAILS SHEET C-5 AND SUMMARY OF QUANTITIES SHEET Q-4.

ABBREVIATION:

TE TAPERED EDGE

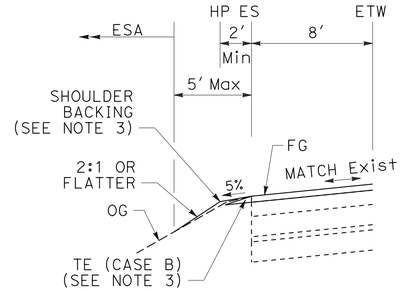

EMBANKMENT WITH TAPERED EDGE
(RIGHT SIDE SIMILAR)

DESIGN DESIGNATION

ROUTE 156

ADT (2016)	11,823	D	63%
ADT (2036)	16,749	T	14%
DHV	2,044	V	55 mph
		TI_{20}	12.0

PAVEMENT CLIMATE REGION:

CENTRAL COAST

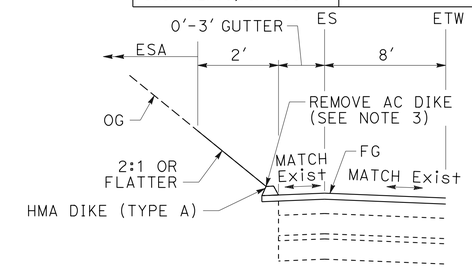

CUT WITH HMA DIKE
(RIGHT SIDE SIMILAR)

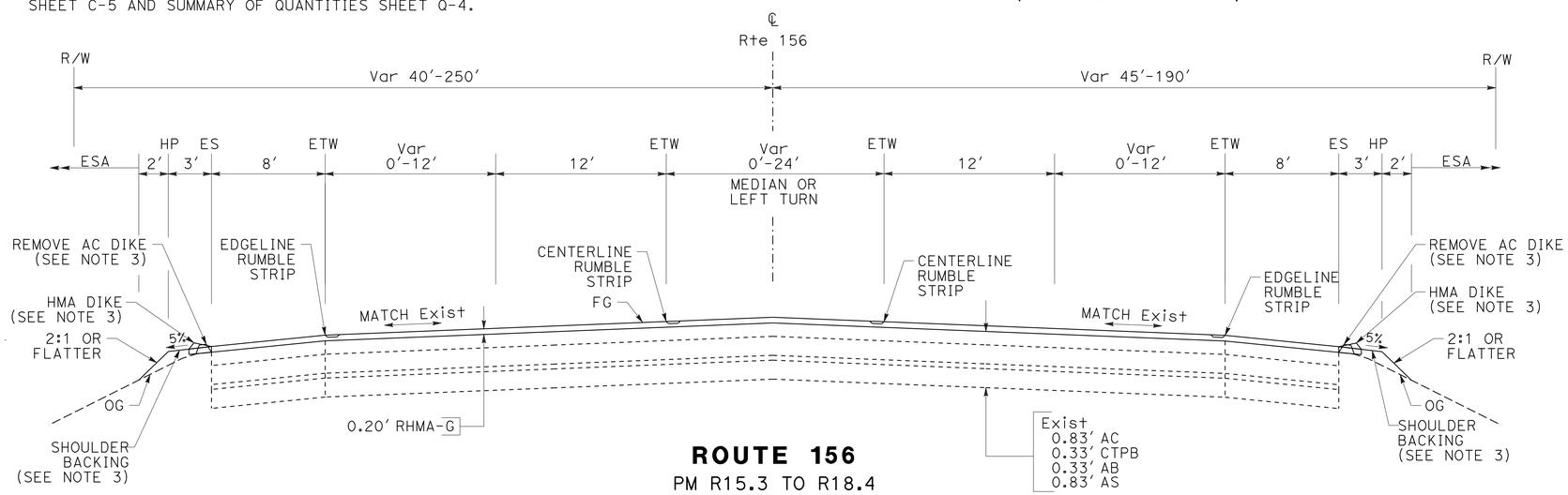

ROUTE 156
PM R15.3 TO R18.4

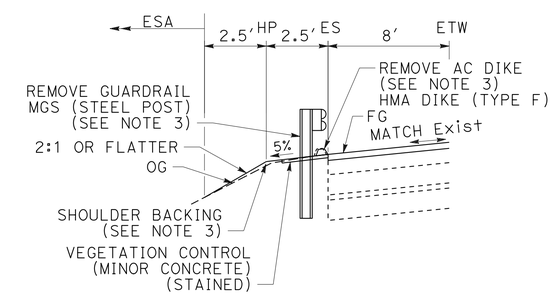

MGS NARROW ROADWAY INSTALLATION
(RIGHT SIDE SIMILAR)

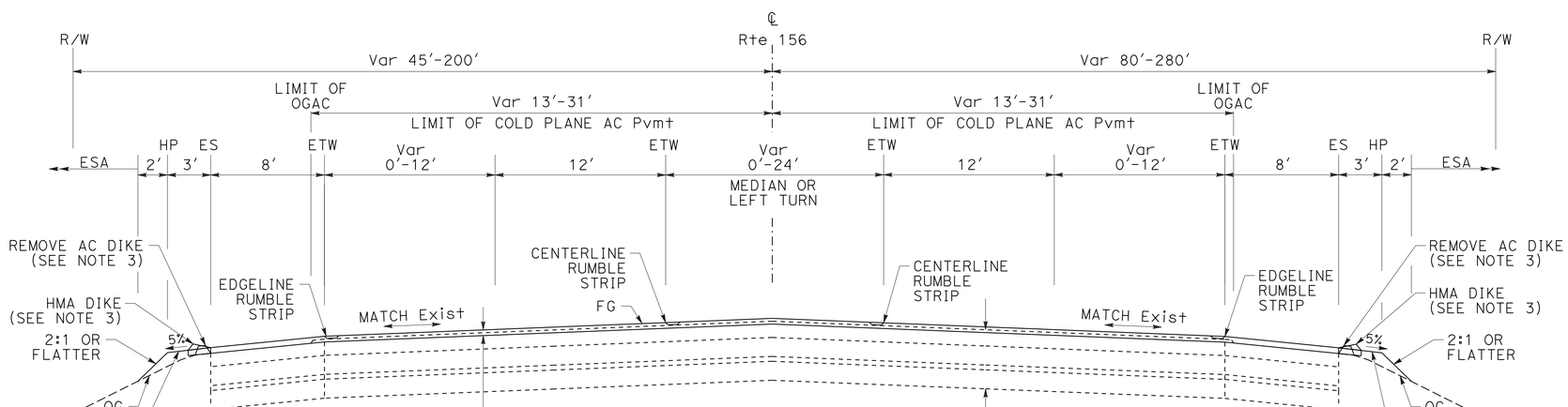

ROUTE 156
PM R15.0 TO R15.3
PM R10.0 TO R13.8

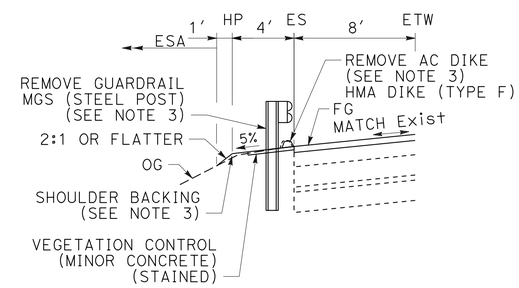

MGS TYPICAL ROADWAY INSTALLATION
(RIGHT SIDE SIMILAR)

THE LOCATIONS OF WORK ARE FLEXIBLE AND MAY BE ADJUSTED TO MITIGATE ANY CONFLICTS WITH EXISTING UTILITY FACILITIES. UTILITIES ARE NOT SHOWN ON THESE PLANS

TYPICAL CROSS SECTIONS

NO SCALE

X-1

STATE OF CALIFORNIA - DEPARTMENT OF TRANSPORTATION
Caltrans®
CONSULTANT FUNCTIONAL SUPERVISOR: MATTHEW J. KORVE
CALCULATED-DESIGNED BY: WAI KEI WONG
CHECKED BY: CLARA PONCE
REVISED BY
DATE REVISED

LAST REVISION 06-03-16
DATE PLOTTED => 10-AUG-2016
TIME PLOTTED => 17:02

Dist	COUNTY	ROUTE	POST MILES TOTAL PROJECT	SHEET No.	TOTAL SHEETS
05	SBt	156	R10.0/R18.4	3	89

REGISTERED CIVIL ENGINEER 6-13-16 DATE

6-20-16
PLANS APPROVAL DATE

REGISTERED PROFESSIONAL ENGINEER MATTHEW J. KORVE No. 63248 Exp. 6-30-18 CIVIL STATE OF CALIFORNIA

THE STATE OF CALIFORNIA OR ITS OFFICERS OR AGENTS SHALL NOT BE RESPONSIBLE FOR THE ACCURACY OR COMPLETENESS OF SCANNED COPIES OF THIS PLAN SHEET.

AECOM
2020 L STREET
SUITE 400
SACRAMENTO, CA 95811

NOTES:

1. FOR DETAILS NOT SHOWN, SEE REVISED STANDARD PLANS.
2. EXISTING OVERSIDE DRAIN OR EXISTING PIPE DOWNDRAIN TO REMAIN. LIMITS TO BE DETERMINED BY THE ENGINEER.

ABBREVIATIONS:

BOW	BACK OF WALK
LIP	LIP OF GUTTER

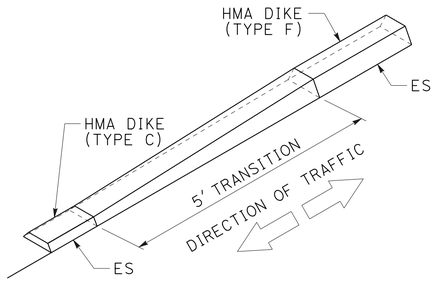

HMA DIKE (TYPE F) TO HMA DIKE (TYPE C)

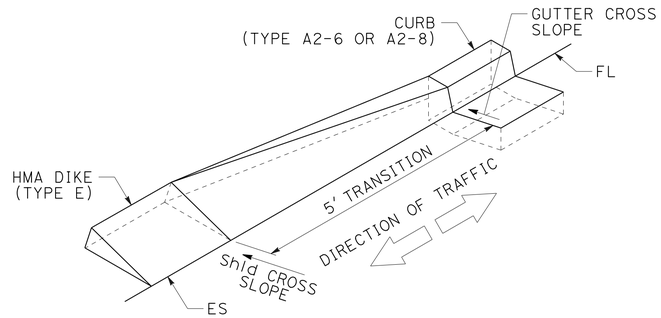

CURB TO HMA DIKE (TYPE E)

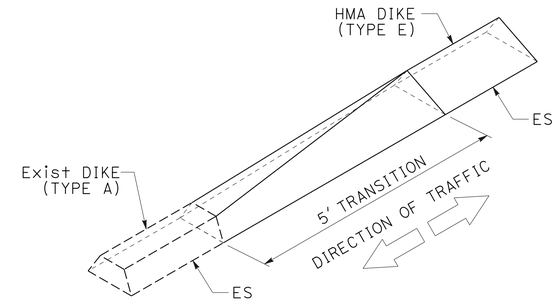

HMA DIKE (TYPE E) TO Exist DIKE (TYPE A)

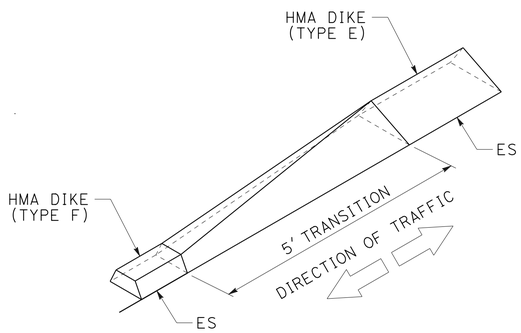

HMA DIKE (TYPE E) TO HMA DIKE (TYPE F)

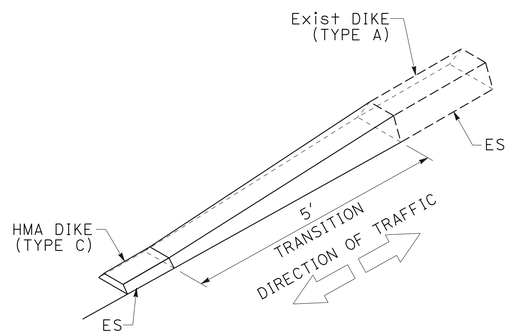

Exist DIKE (TYPE A) TO HMA DIKE (TYPE C)

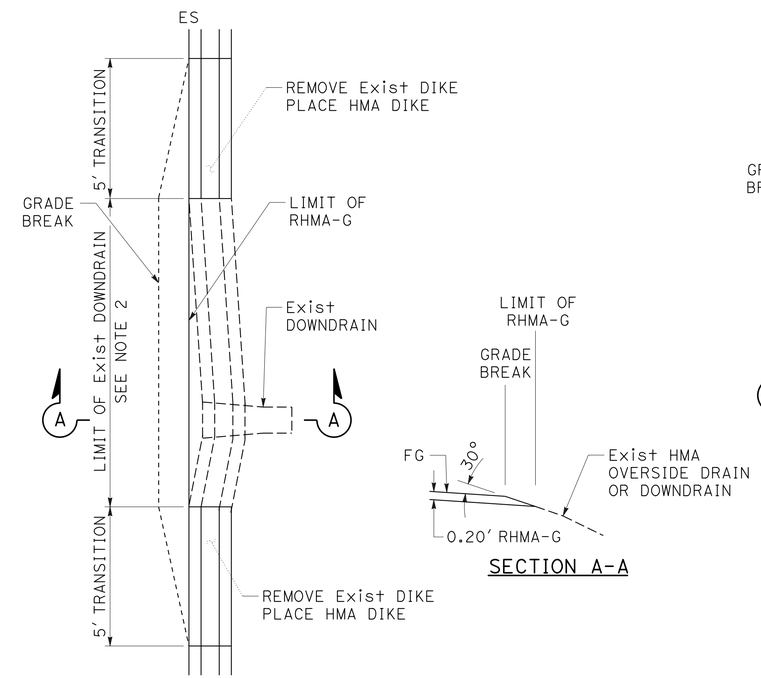

DIKE REMOVAL AND PLACEMENT AT EXISTING PIPE DOWNDRAIN

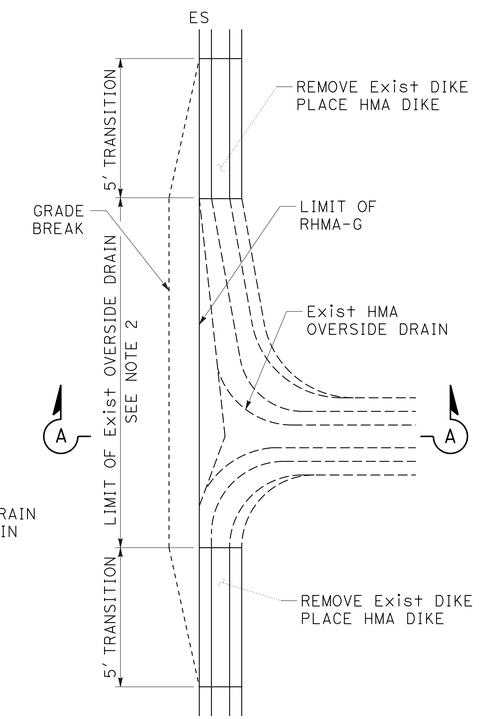

DIKE REMOVAL AND PLACEMENT AT EXISTING HMA OVERSIDE DRAIN

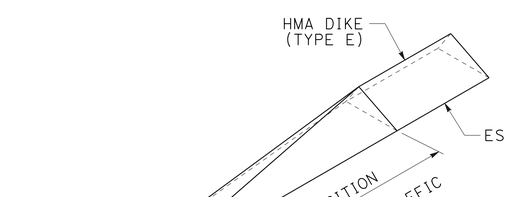

HMA DIKE (TYPE E) TO HMA DIKE (TYPE C)

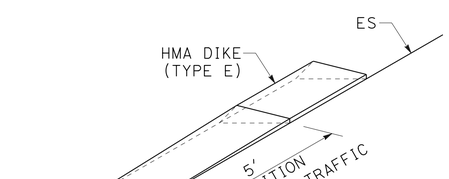

HMA DIKE (TYPE E) TERMINUS

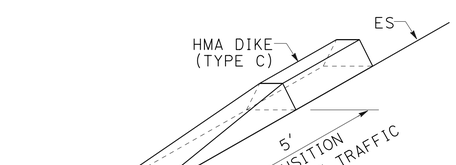

HMA DIKE (TYPE C) TERMINUS

THE LOCATIONS OF WORK ARE FLEXIBLE AND MAY BE ADJUSTED TO MITIGATE ANY CONFLICTS WITH EXISTING UTILITY FACILITIES. UTILITIES ARE NOT SHOWN ON THESE PLANS

CONSTRUCTION DETAILS

NO SCALE

C-1

STATE OF CALIFORNIA - DEPARTMENT OF TRANSPORTATION
Caltrans

CONSULTANT FUNCTIONAL SUPERVISOR: MATTHEW J. KORVE
CALCULATED-DESIGNED BY: CLARA PONCE
CHECKED BY: WAI KEI WONG
REVISED BY
DATE REVISED

LAST REVISION 06-03-16 | DATE PLOTTED => 10-AUG-2016 | TIME PLOTTED => 17:03

Dist	COUNTY	ROUTE	POST MILES TOTAL PROJECT	SHEET No.	TOTAL SHEETS
05	SBt	156	R10.0/R18.4	4	89

REGISTERED CIVIL ENGINEER 6-13-16 DATE

6-20-16
PLANS APPROVAL DATE

REGISTERED PROFESSIONAL ENGINEER MATTHEW J. KORVE No. 63248 Exp. 6-30-18 CIVIL STATE OF CALIFORNIA

THE STATE OF CALIFORNIA OR ITS OFFICERS OR AGENTS SHALL NOT BE RESPONSIBLE FOR THE ACCURACY OR COMPLETENESS OF SCANNED COPIES OF THIS PLAN SHEET.

AECOM
2020 L STREET
SUITE 400
SACRAMENTO, CA 95811

NOTES:

1. COLD PLANE ASPHALT CONCRETE PAVEMENT 0.10′ AT ROUTE 25 AND SAN FELIPE ROAD TO LIMITS OF Exist OPEN GRADED ASPHALT CONCRETE PER TYPICAL CROSS SECTIONS.
2. SEE TYPICAL CROSS SECTIONS FOR COLD PLANE ASPHALT CONCRETE PAVEMENT LIMITS.
3. ALL PAVING AREAS TO BE FLUSH AT COMPLETION OF WORK.

LEGEND (APPLY TO THIS Sht ONLY)

- COLD PLANE AC Pvmt 0.10′ 0.20′ RHMA-G (SEE NOTES 1 AND 2)
- COLD PLANE AC Pvmt 0.30′ 0.40′ HMA (TYPE A) (SEE NOTES 1 AND 2)
- COLD PLANE AC Pvmt 0.20′ Max 0.20′ RHMA-G
- COLD PLANE AC Pvmt 0.10′ 0.20′ HMA (TYPE A) (SEE NOTES 1 AND 2)
- 0.20′ HMA (TYPE A)
- 0.20′ RHMA-G
- COLD PLANE AC Pvmt 0.20′ 0.40′ HMA (TYPE A)

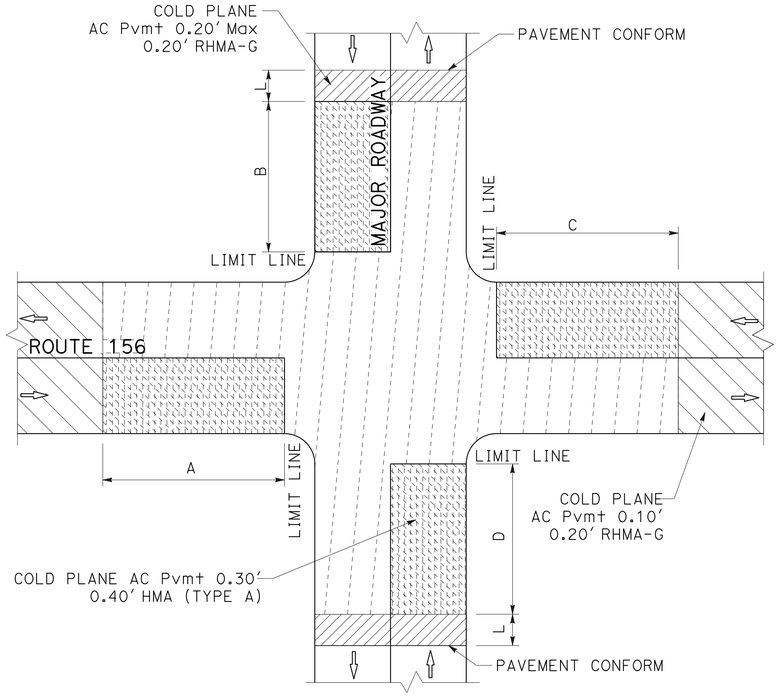

MAJOR ROADWAY	A	B	C	D
ROUTE 25	450′	250′	450′	250′
SAN FELIPE Rd	450′	100′	450′	250′

ROUTE 25 AND SAN FELIPE ROAD

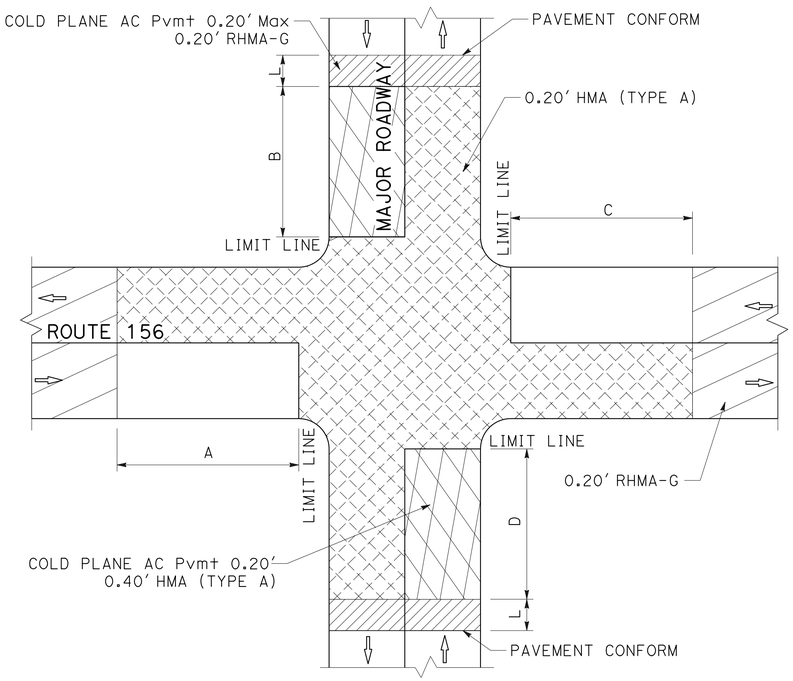

MAJOR ROADWAY	A	B	C	D
FAIRVIEW Rd	450′	70′	450′	100′

FAIRVIEW ROAD

MAJOR ROADWAY INTERSECTION PAVING DETAIL

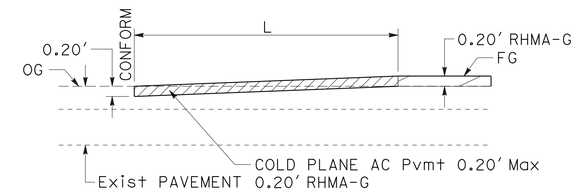

L= 100′ AT RAMPS, MAJOR ROADWAYS, CONCRETE AGRICULTURE CROSSINGS, AND BRIDGES WITHOUT Exist AC OVERLAY.
L= 50′ AT MINOR ROADWAYS AND PAVED DRIVEWAYS.

TYPICAL PAVEMENT CONFORM

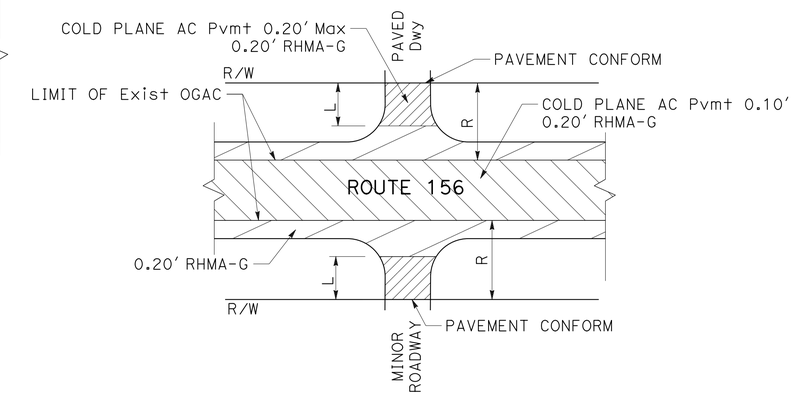

DRIVEWAY AND MINOR ROADWAY LOCATIONS (PM)	DIRECTION	DISTANCE FROM ETW TO R/W (R)
		FT
11.70	WB	110
15.25	EB	120
17.15	WB	75
17.15	EB	120
17.74	WB	95
17.74	EB	118

TYPICAL PAVING LIMITS AT MINOR ROADWAY INTERSECTIONS

THE LOCATIONS OF WORK ARE FLEXIBLE AND MAY BE ADJUSTED TO MITIGATE ANY CONFLICTS WITH EXISTING UTILITY FACILITIES. UTILITIES ARE NOT SHOWN ON THESE PLANS

CONSTRUCTION DETAILS

NO SCALE

C-2

REVISED BY | DATE REVISED
CLARA PONCE | WAI KEI WONG
CALCULATED-DESIGNED BY | CHECKED BY
CONSULTANT FUNCTIONAL SUPERVISOR | MATTHEW J. KORVE
STATE OF CALIFORNIA - DEPARTMENT OF TRANSPORTATION
Caltrans

LAST REVISION 06-03-16 | DATE PLOTTED => 10-AUG-2016 | TIME PLOTTED => 16:38

Dist	COUNTY	ROUTE	POST MILES TOTAL PROJECT	SHEET No.	TOTAL SHEETS
05	SBt	156	R10.0/R18.4	5	89

REGISTERED CIVIL ENGINEER 6-13-16 DATE

6-20-16
PLANS APPROVAL DATE

REGISTERED PROFESSIONAL ENGINEER MATTHEW J. KORVE No. 63248 Exp. 6-30-18 CIVIL STATE OF CALIFORNIA

THE STATE OF CALIFORNIA OR ITS OFFICERS OR AGENTS SHALL NOT BE RESPONSIBLE FOR THE ACCURACY OR COMPLETENESS OF SCANNED COPIES OF THIS PLAN SHEET.

AECOM
2020 L STREET
SUITE 400
SACRAMENTO, CA 95811

NOTES:

1. FOR RUMBLE STRIP DETAILS SEE SHEET C-3.
2. REPLACE AERIAL PATROL MARKINGS WHERE REMOVED, COORDINATE PLACEMENT WITH CALIFORNIA HIGHWAY PATROL AS DIRECTED BY THE ENGINEER.

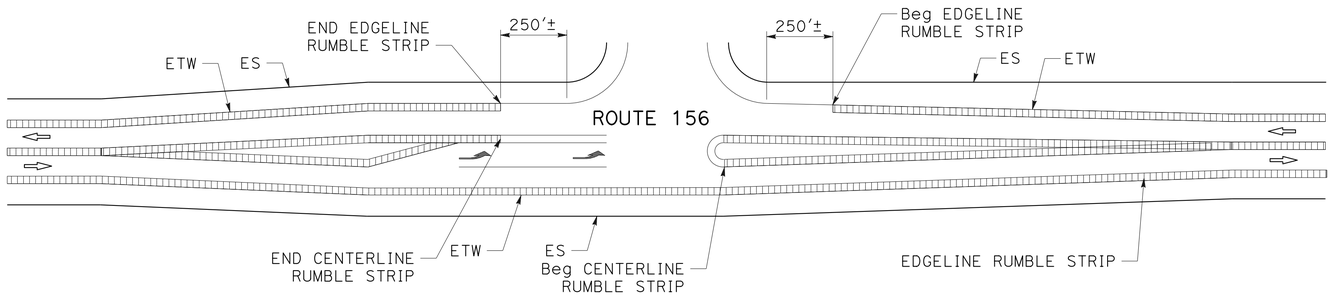

TYPICAL RUMBLE STRIP AT INTERSECTION WITH LEFT TURN CHANNELIZATION

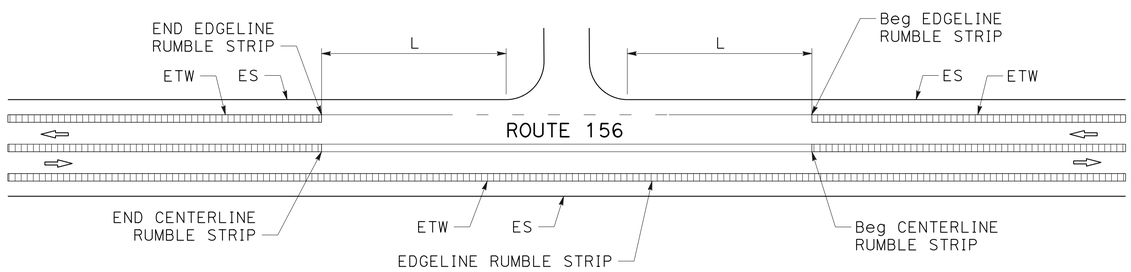

TYPICAL RUMBLE STRIP AT "T" INTERSECTION

LENGTH	LOCATION
L=50'	ACCESS ROAD
L=250'	MINOR/MAJOR ROAD

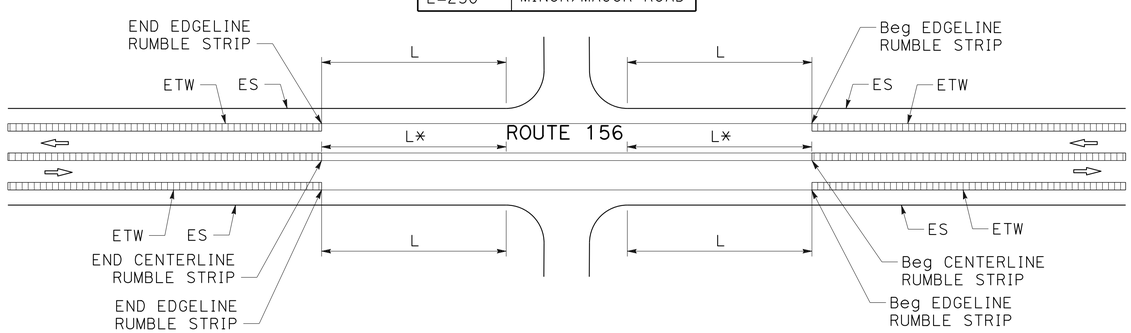

* = AT LOCATIONS WHERE L ON ONE SIDE OF ROUTE 156 WOULD BE DIFFERENT FROM THAT ON THE OTHER SIDE, USE THE LONGER OF THE TWO IN THE MEDIAN.

TYPICAL RUMBLE STRIP AT 4-WAY INTERSECTION

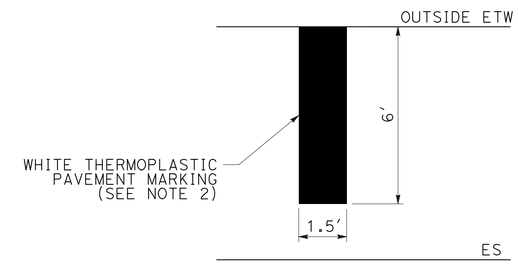

PLAN

AERIAL PATROL MARKING

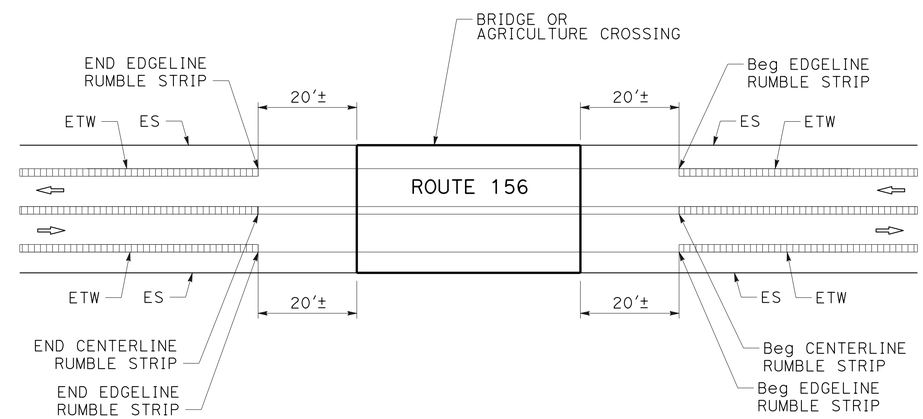

TYPICAL RUMBLE STRIP AT BRIDGE APPROACHES OR AGRICULTURE CROSSINGS

THE LOCATIONS OF WORK ARE FLEXIBLE AND MAY BE ADJUSTED TO MITIGATE ANY CONFLICTS WITH EXISTING UTILITY FACILITIES. UTILITIES ARE NOT SHOWN ON THESE PLANS

CONSTRUCTION DETAILS

NO SCALE

C-3

STATE OF CALIFORNIA - DEPARTMENT OF TRANSPORTATION
Caltrans
CONSULTANT FUNCTIONAL SUPERVISOR: MATTHEW J. KORVE
CALCULATED-DESIGNED BY: WAI KEI WONG
CHECKED BY: CLARA PONCE
REVISED BY
DATE REVISED

LAST REVISION 06-03-16
DATE PLOTTED => 10-AUG-2016
TIME PLOTTED => 16:38

Dist	COUNTY	ROUTE	POST MILES TOTAL PROJECT	SHEET No.	TOTAL SHEETS
05	SBt	156	R10.0/R18.4	6	89

REGISTERED CIVIL ENGINEER 6-13-16 DATE

6-20-16
PLANS APPROVAL DATE

REGISTERED PROFESSIONAL ENGINEER MATTHEW J. KORVE No. 63248 Exp. 6-30-18 CIVIL STATE OF CALIFORNIA

THE STATE OF CALIFORNIA OR ITS OFFICERS OR AGENTS SHALL NOT BE RESPONSIBLE FOR THE ACCURACY OR COMPLETENESS OF SCANNED COPIES OF THIS PLAN SHEET.

AECOM
2020 L STREET
SUITE 400
SACRAMENTO, CA 95811

LEGEND (APPLY TO THIS Sht ONLY)

COLD PLANE AC Pvmt 0.10′
0.20′ RHMA-G

0.20′ RHMA-G

COLD PLANE AC Pvmt 0.50′
0.50′ HMA (TYPE A)

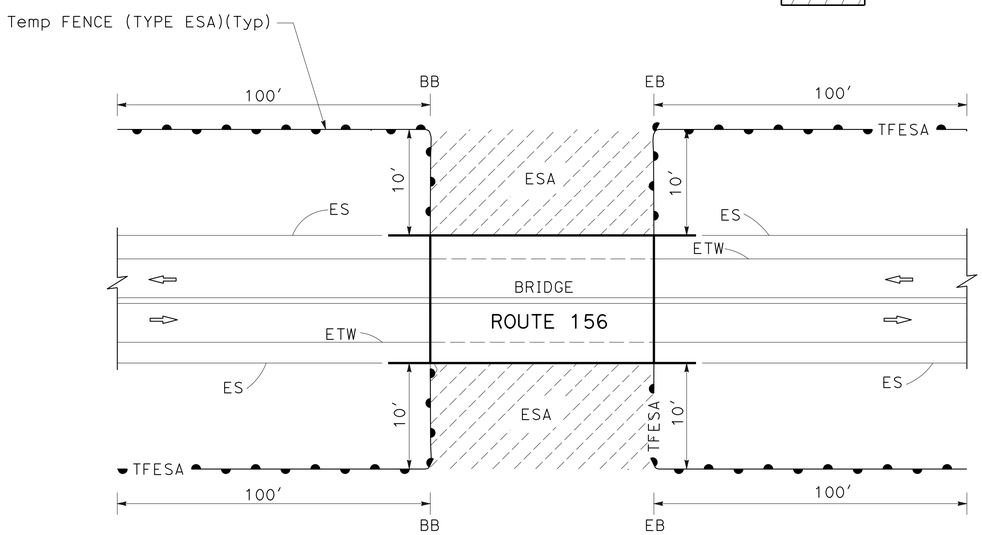

ESA AT BRIDGE LOCATIONS

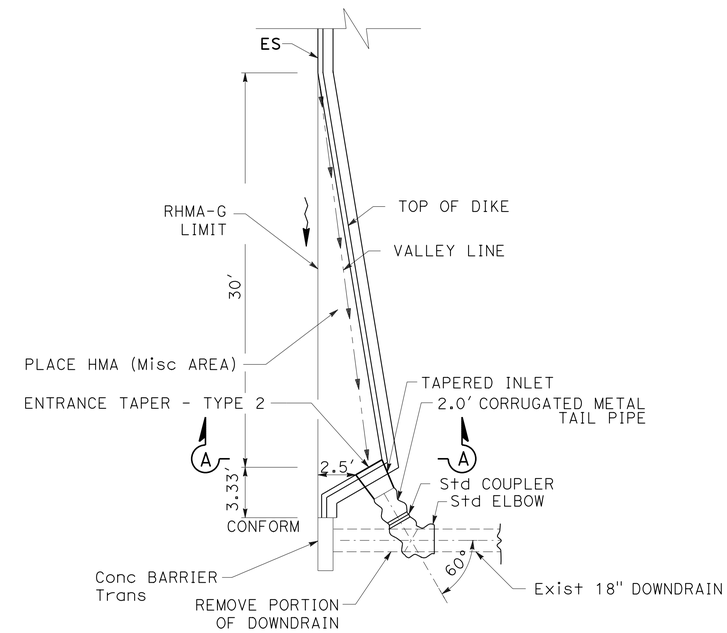

PLAN

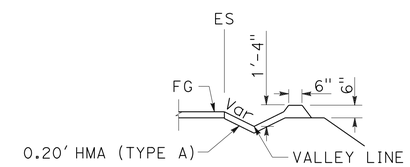

SECTION A-A

CMP DOWNDRAIN

LOCATION No. 2 (PM 10.30, WB)

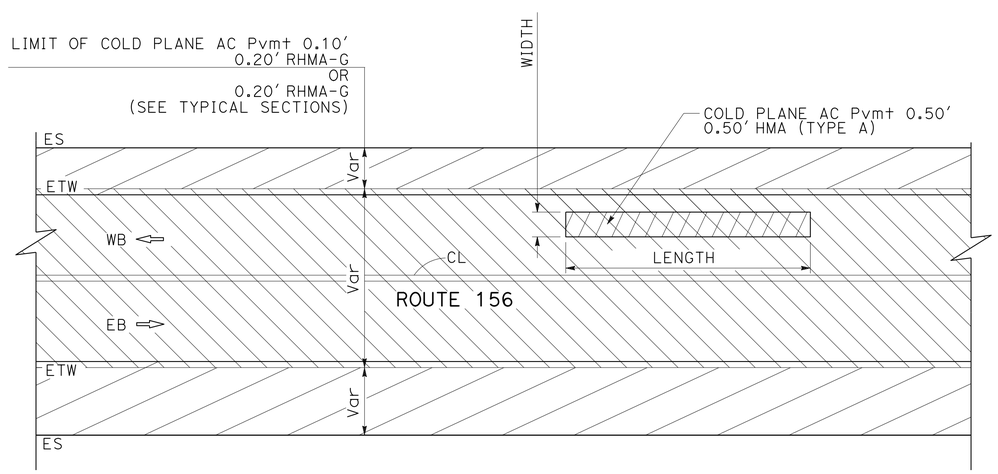

PLAN

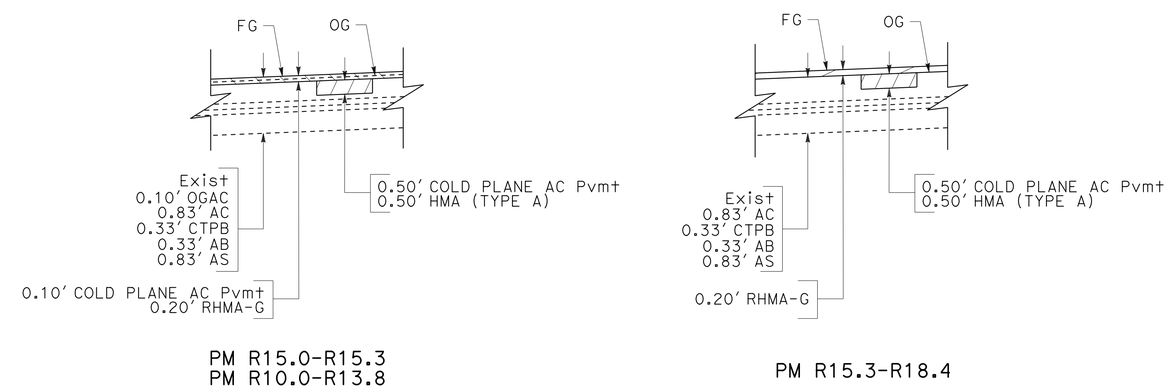

TYPICAL SECTIONS

TYPICAL REPAIR FAILED AREA DETAIL

THE LOCATIONS OF WORK ARE FLEXIBLE AND MAY BE ADJUSTED TO MITIGATE ANY CONFLICTS WITH EXISTING UTILITY FACILITIES. UTILITIES ARE NOT SHOWN ON THESE PLANS

CONSTRUCTION DETAILS

NO SCALE

C-4

STATE OF CALIFORNIA - DEPARTMENT OF TRANSPORTATION
Caltrans®

CONSULTANT FUNCTIONAL SUPERVISOR: MATTHEW J. KORVE
CALCULATED-DESIGNED BY: WAI KEI WONG
CHECKED BY: CLARA PONCE
REVISED BY
DATE REVISED

LAST REVISION 06-03-16
DATE PLOTTED => 10-AUG-2016
TIME PLOTTED => 16:38

Dist	COUNTY	ROUTE	POST MILES TOTAL PROJECT	SHEET No.	TOTAL SHEETS
05	SB†	156	R10.0/R18.4	7	89

REGISTERED CIVIL ENGINEER 6-13-16 DATE

6-20-16
PLANS APPROVAL DATE

REGISTERED PROFESSIONAL ENGINEER MATTHEW J. KORVE No. 63248 Exp. 6-30-18 CIVIL STATE OF CALIFORNIA

THE STATE OF CALIFORNIA OR ITS OFFICERS OR AGENTS SHALL NOT BE RESPONSIBLE FOR THE ACCURACY OR COMPLETENESS OF SCANNED COPIES OF THIS PLAN SHEET.

AECOM
2020 L STREET
SUITE 400
SACRAMENTO, CA 95811

NOTES:

1. FOR ADDITIONAL DETAILS NOT SHOWN ON THIS PLAN, REFER TO REVISED STANDARD PLAN RSP A77L1 AND RSP A77L2.
2. CONTROLLED RELEASING TERMINAL (CRT) POST TO BE WOOD ONLY.

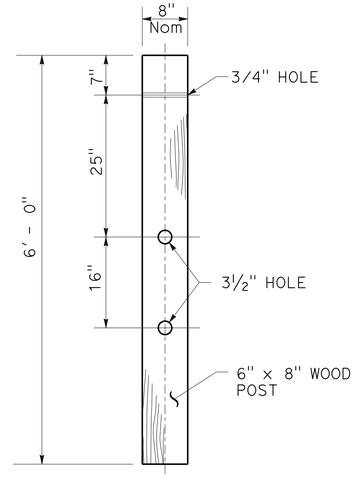

CONTROLLED RELEASING TERMINAL (CRT) POST

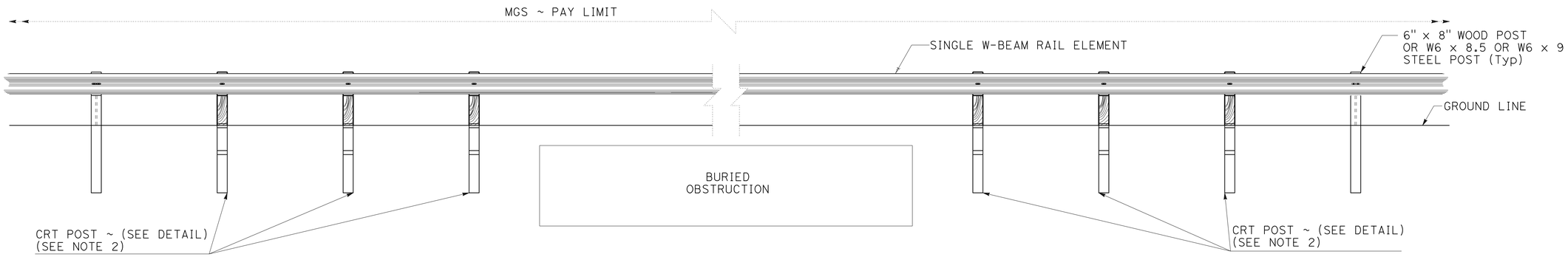

ELEVATION

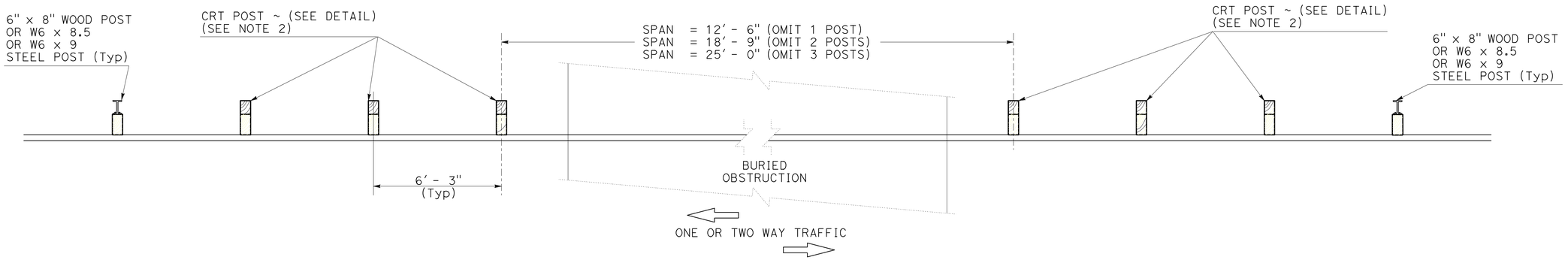

PLAN

MIDWEST GUARDRAIL SYSTEM BURIED OBSTRUCTION SPANNING DETAIL

THE LOCATIONS OF WORK ARE FLEXIBLE AND MAY BE ADJUSTED TO MITIGATE ANY CONFLICTS WITH EXISTING UTILITY FACILITIES. UTILITIES ARE NOT SHOWN ON THESE PLANS

CONSTRUCTION DETAILS

NO SCALE

C-5

STATE OF CALIFORNIA - DEPARTMENT OF TRANSPORTATION
Caltrans

CONSULTANT FUNCTIONAL SUPERVISOR: MATTHEW J. KORVE
CALCULATED-DESIGNED BY: WAI KEI WONG
CHECKED BY: CLARA PONCE
REVISED BY
DATE REVISED

LAST REVISION: 06-03-16
DATE PLOTTED => 10-AUG-2016
TIME PLOTTED => 16:38

Dist	COUNTY	ROUTE	POST MILES TOTAL PROJECT	SHEET No.	TOTAL SHEETS
05	SBt	156	R10.0/R18.4	8	89

REGISTERED CIVIL ENGINEER 6-13-16 DATE

6-20-16
PLANS APPROVAL DATE

REGISTERED PROFESSIONAL ENGINEER MATTHEW J. KORVE No. 63248 Exp. 6-30-18 CIVIL STATE OF CALIFORNIA

THE STATE OF CALIFORNIA OR ITS OFFICERS OR AGENTS SHALL NOT BE RESPONSIBLE FOR THE ACCURACY OR COMPLETENESS OF SCANNED COPIES OF THIS PLAN SHEET.

AECOM
2020 L STREET
SUITE 400
SACRAMENTO, CA 95811

LEGEND (APPLY TO THIS Sht ONLY)

(#) MGS LOCATION

MGS

LOCATIONS OF MIDWEST GUARDRAIL SYSTEM

Loc	PM	DIRECTION	Loc	PM	DIRECTION
1	R10.30-R10.47	EB	10	R15.41-R15.42	WB
2	R10.30-R10.47	WB	11	R15.44-R15.45	EB
3	R10.51-R10.85	EB	12	R15.44-R15.45	WB
4	R10.51-R10.85	WB	13	R17.26-R17.28	EB
5	R13.43-R13.44	EB	14	R17.26-R17.28	WB
6	R13.43-R13.44	WB	15	R17.33-R17.35	EB
7	R13.47-R13.48	EB	16	R17.33-R17.35	WB
8	R13.47-R13.48	WB	17	R17.67-R17.75	WB
9	R15.41-R15.42	EB			

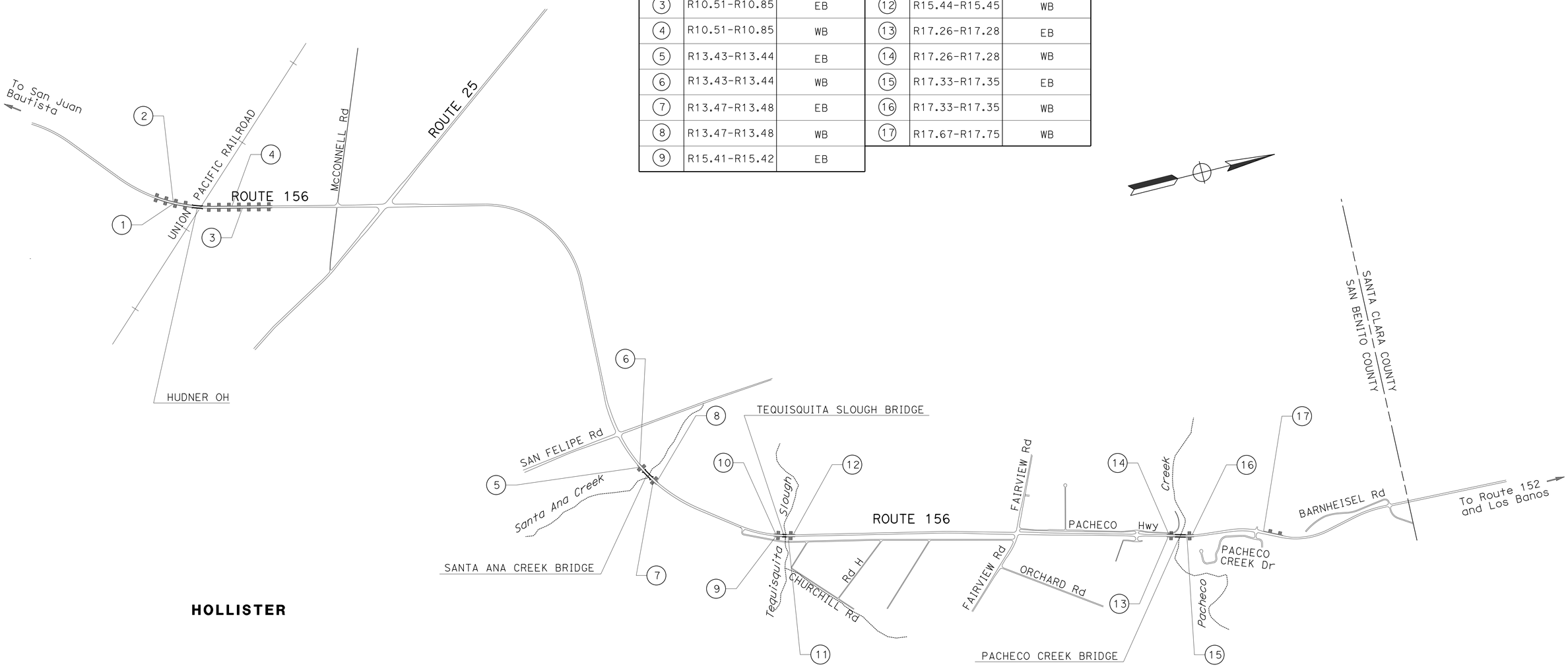

LOCATIONS OF MIDWEST GUARDRAIL SYSTEM

APPROVED FOR CONSTRUCTION AREA SIGN WORK ONLY.

CONSTRUCTION DETAILS

NO SCALE

C-6

STATE OF CALIFORNIA - DEPARTMENT OF TRANSPORTATION

Caltrans

CONSULTANT FUNCTIONAL SUPERVISOR: MATTHEW J. KORVE

CALCULATED-DESIGNED BY: MATTHEW J. KORVE

CHECKED BY: CLARA PONCE

REVISED BY

DATE REVISED

LAST REVISION 06-03-16

DATE PLOTTED => 10-AUG-2016
TIME PLOTTED => 17:15

Dist	COUNTY	ROUTE	POST MILES TOTAL PROJECT	SHEET No.	TOTAL SHEETS
05	SBt	156	R10.0/R18.4	9	89

REGISTERED CIVIL ENGINEER 6-13-16 DATE

6-20-16
PLANS APPROVAL DATE

REGISTERED PROFESSIONAL ENGINEER MATTHEW J. KORVE No. 63248 Exp. 6-30-18 CIVIL STATE OF CALIFORNIA

THE STATE OF CALIFORNIA OR ITS OFFICERS OR AGENTS SHALL NOT BE RESPONSIBLE FOR THE ACCURACY OR COMPLETENESS OF SCANNED COPIES OF THIS PLAN SHEET.

AECOM
2020 L STREET
SUITE 400
SACRAMENTO, CA 95811

NOTES:

1. FOR DETAILS NOT SHOWN, SEE REVISED STANDARD PLANS.
2. THE CONTRACTOR MUST VERIFY ALL CONTROLLING FIELD DIMENSIONS BEFORE ORDERING OR FABRICATING ANY MATERIAL.
3. DETAIL FOR TRAILING END OF Exist CONCRETE BARRIER SIMILAR.

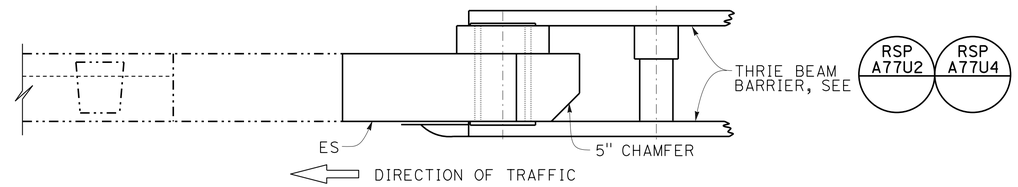

PLAN

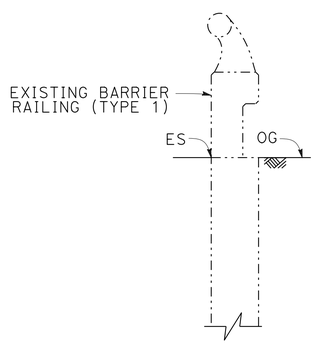

SECTION A-A

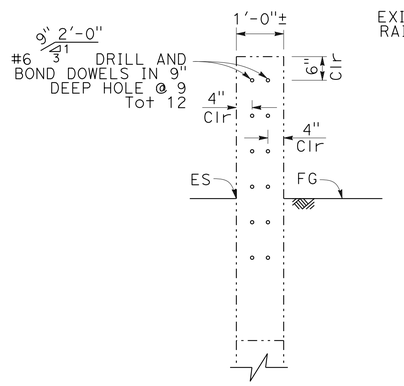

SECTION B-B

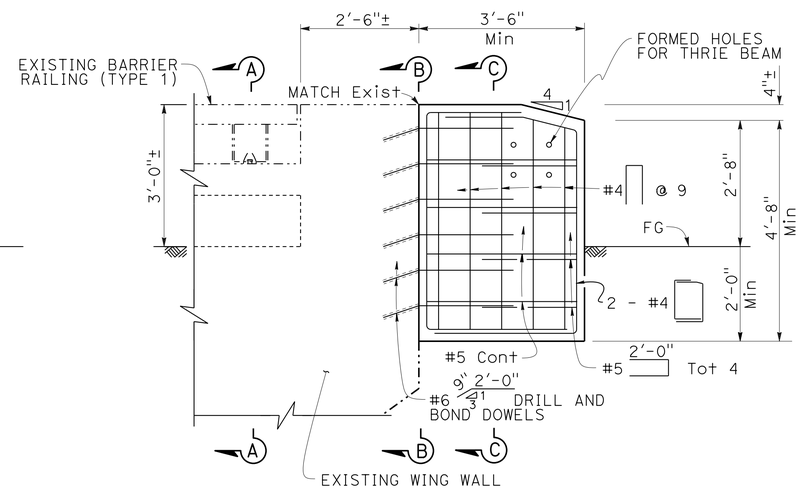

ELEVATION

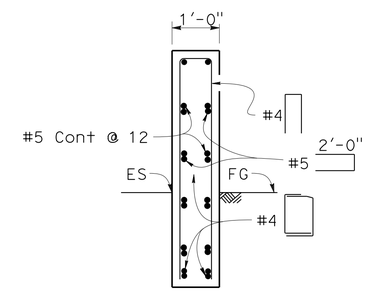

NOTES:

DRILL AND BOND DOWELS NOT SHOWN
THRIE BEAM NOT SHOWN

SECTION C-C

CONCRETE BARRIER (TRANSITION) (CASE 1)

TRANSITION RAILING (TYPE WB-31) TO Exist BARRIER RAILING (TYPE 1)

LOCATION No. 9 (PM 15.41, EB)
LOCATION No. 10 (PM 15.41, WB)
LOCATION No. 11 (PM 15.44, EB)
LOCATION No. 12 (PM 15.44, WB)
LOCATION No. 13 (PM 17.28, EB)
LOCATION No. 14 (PM 17.28, WB)
LOCATION No. 15 (PM 17.33, EB)
LOCATION No. 16 (PM 17.33, WB)

THE LOCATIONS OF WORK ARE FLEXIBLE AND MAY BE ADJUSTED TO MITIGATE ANY CONFLICTS WITH EXISTING UTILITY FACILITIES. UTILITIES ARE NOT SHOWN ON THESE PLANS

CONSTRUCTION DETAILS

NO SCALE

C-7

STATE OF CALIFORNIA - DEPARTMENT OF TRANSPORTATION
Caltrans
CONSULTANT FUNCTIONAL SUPERVISOR: MATTHEW J. KORVE
CALCULATED-DESIGNED BY: WAI KEI WONG
CHECKED BY: CLARA PONCE
REVISED BY
DATE REVISED

LAST REVISION 06-03-16 | DATE PLOTTED => 10-AUG-2016 | TIME PLOTTED => 17:15

Dist	COUNTY	ROUTE	POST MILES TOTAL PROJECT	SHEET No.	TOTAL SHEETS
05	SBt	156	R10.0/R18.4	10	89

REGISTERED CIVIL ENGINEER 6-13-16 DATE

6-20-16
PLANS APPROVAL DATE

REGISTERED PROFESSIONAL ENGINEER MATTHEW J. KORVE No. 63248 Exp. 6-30-18 CIVIL STATE OF CALIFORNIA

THE STATE OF CALIFORNIA OR ITS OFFICERS OR AGENTS SHALL NOT BE RESPONSIBLE FOR THE ACCURACY OR COMPLETENESS OF SCANNED COPIES OF THIS PLAN SHEET.

AECOM
2020 L STREET
SUITE 400
SACRAMENTO, CA 95811

NOTES:

1. FOR DETAILS NOT SHOWN, SEE REVISED STANDARD PLANS.
2. THE CONTRACTOR MUST VERIFY ALL CONTROLLING FIELD DIMENSIONS BEFORE ORDERING OR FABRICATING ANY MATERIAL.
3. DETAIL FOR TRAILING END OF Exist CONCRETE BARRIER SIMILAR

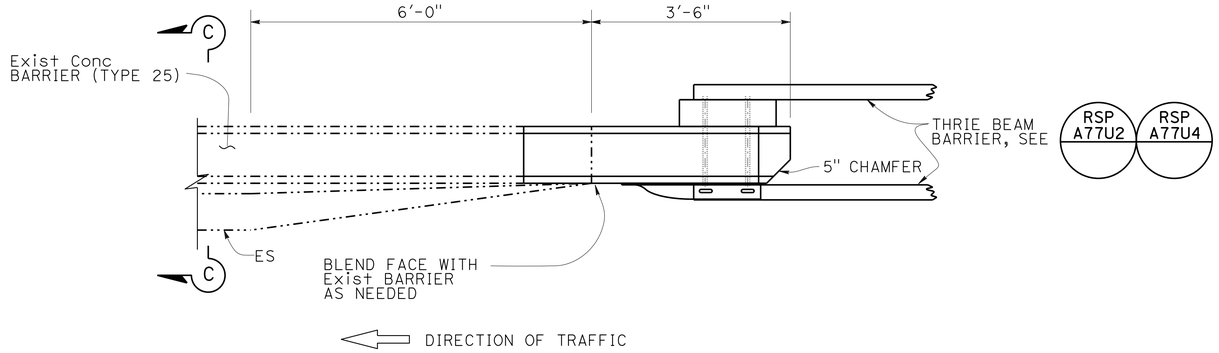

PLAN

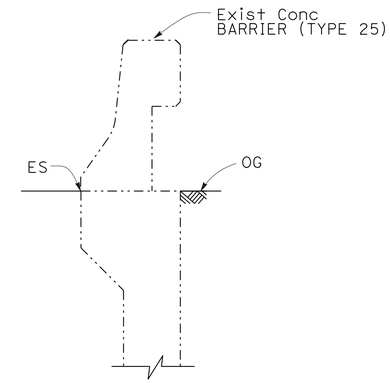

SECTION C-C

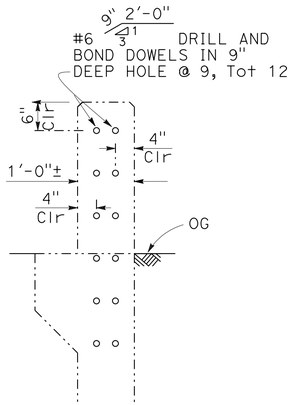

SECTION A-A

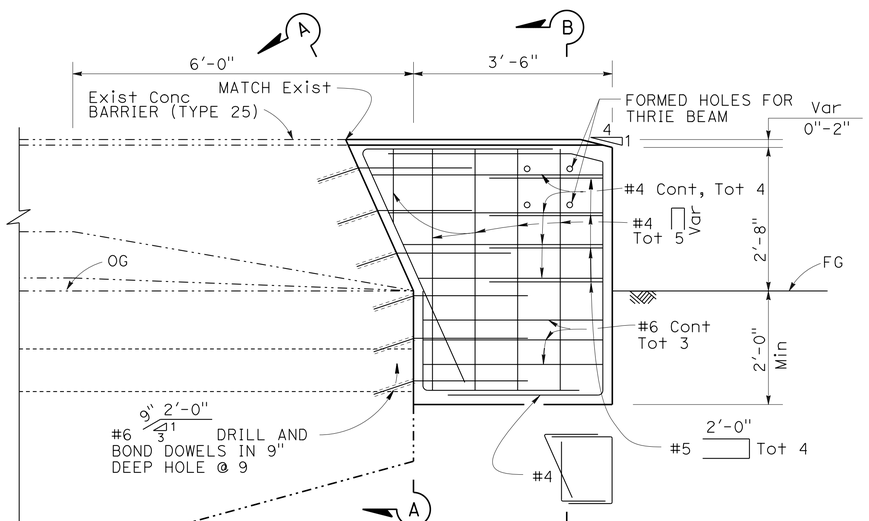

ELEVATION

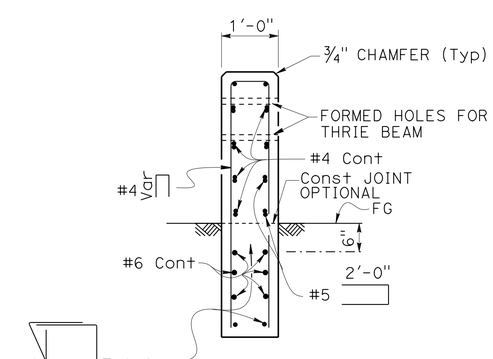

NOTE:
THRIE BEAM NOT SHOWN

SECTION B-B

CONCRETE BARRIER (TRANSITION) (CASE 2)

TRANSITION RAILING (TYPE WB-31) TO Exist CONCRETE BARRIER (TYPE 25)

LOCATION No. 1 (PM 10.47, EB)
LOCATION No. 2 (PM 10.47, WB)
LOCATION No. 3 (PM 10.51, EB)
LOCATION No. 4 (PM 10.51, WB)
LOCATION No. 5 (PM 13.44, EB)
LOCATION No. 6 (PM 13.44, WB)
LOCATION No. 7 (PM 13.47, EB)
LOCATION No. 8 (PM 13.47, WB)

THE LOCATIONS OF WORK ARE FLEXIBLE AND MAY BE ADJUSTED TO MITIGATE ANY CONFLICTS WITH EXISTING UTILITY FACILITIES. UTILITIES ARE NOT SHOWN ON THESE PLANS

CONSTRUCTION DETAILS

NO SCALE

C-8

REVISED BY | DATE REVISED
WAI KEI WONG | CLARA PONCE
CALCULATED-DESIGNED BY | CHECKED BY
CONSULTANT FUNCTIONAL SUPERVISOR | MATTHEW J. KORVE
STATE OF CALIFORNIA - DEPARTMENT OF TRANSPORTATION
Caltrans

LAST REVISION 06-03-16 | DATE PLOTTED => 10-AUG-2016 | TIME PLOTTED => 16:38

Dist	COUNTY	ROUTE	POST MILES TOTAL PROJECT	SHEET No.	TOTAL SHEETS
05	SBt	156	R10.0/R18.4	11	89

REGISTERED CIVIL ENGINEER 6-13-16 DATE

6-20-16
PLANS APPROVAL DATE

REGISTERED PROFESSIONAL ENGINEER MATTHEW J. KORVE No. 63248 Exp. 6-30-18 CIVIL STATE OF CALIFORNIA

THE STATE OF CALIFORNIA OR ITS OFFICERS OR AGENTS SHALL NOT BE RESPONSIBLE FOR THE ACCURACY OR COMPLETENESS OF SCANNED COPIES OF THIS PLAN SHEET.

AECOM
2020 L STREET
SUITE 400
SACRAMENTO, CA 95811

NOTES:

1. FOR DETAILS NOT SHOWN, SEE REVISED STANDARD PLANS AND CONSTRUCTION DETAILS.

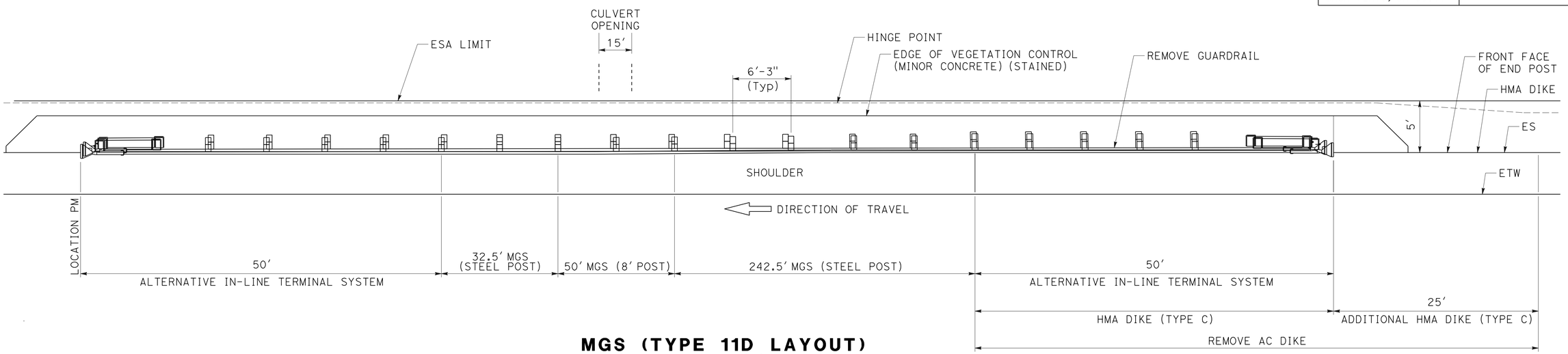

MGS (TYPE 11D LAYOUT) WITH VEGETATION CONTROL DETAIL

LOCATION No. 17 (PM 17.67, WB)

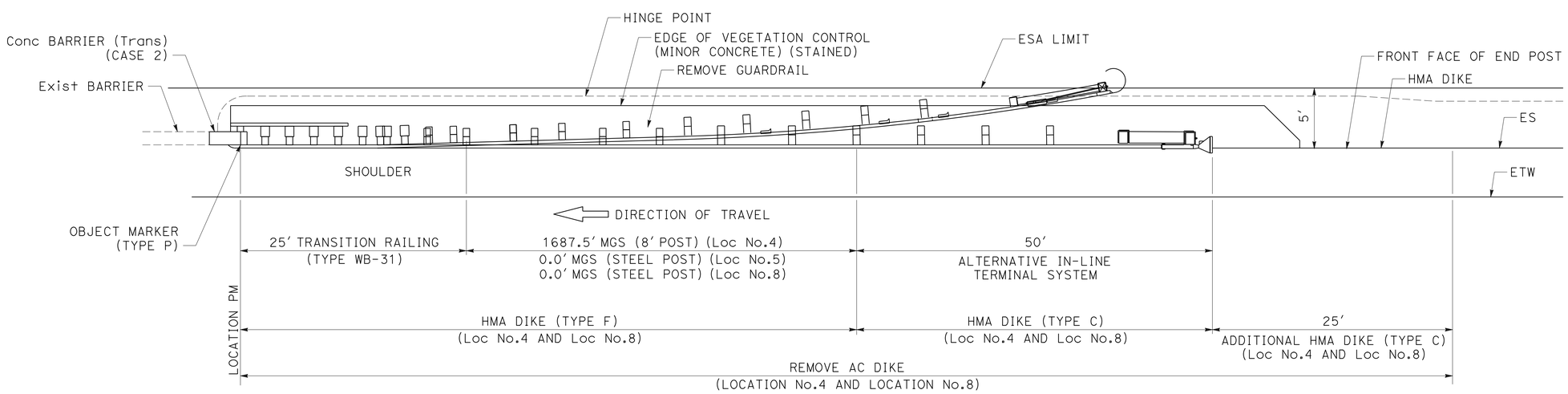

MGS (TYPE 12A LAYOUT) WITH VEGETATION CONTROL DETAIL

LOCATION No. 4 (PM 10.51, WB)
LOCATION No. 5 (PM 13.44, EB)
LOCATION No. 8 (PM 13.47, WB)

THE LOCATIONS OF WORK ARE FLEXIBLE AND MAY BE ADJUSTED TO MITIGATE ANY CONFLICTS WITH EXISTING UTILITY FACILITIES. UTILITIES ARE NOT SHOWN ON THESE PLANS

CONSTRUCTION DETAILS

NO SCALE

C-9

REVISED BY | DATE REVISED
CLARA PONCE | WAI KEI WONG
CALCULATED-DESIGNED BY | CHECKED BY
CONSULTANT FUNCTIONAL SUPERVISOR | MATTHEW J. KORVE
STATE OF CALIFORNIA - DEPARTMENT OF TRANSPORTATION
Caltrans

LAST REVISION 06-03-16 | DATE PLOTTED => 10-AUG-2016 | TIME PLOTTED => 16:38

Dist	COUNTY	ROUTE	POST MILES TOTAL PROJECT	SHEET No.	TOTAL SHEETS
05	SBt	156	R10.0/R18.4	12	89

REGISTERED CIVIL ENGINEER 6-13-16 DATE

6-20-16
PLANS APPROVAL DATE

REGISTERED PROFESSIONAL ENGINEER MATTHEW J. KORVE No. 63248 Exp. 6-30-18 CIVIL STATE OF CALIFORNIA

THE STATE OF CALIFORNIA OR ITS OFFICERS OR AGENTS SHALL NOT BE RESPONSIBLE FOR THE ACCURACY OR COMPLETENESS OF SCANNED COPIES OF THIS PLAN SHEET.

AECOM
2020 L STREET
SUITE 400
SACRAMENTO, CA 95811

NOTES:

1. FOR DETAILS NOT SHOWN, SEE REVISED STANDARD PLANS AND CONSTRUCTION DETAILS.

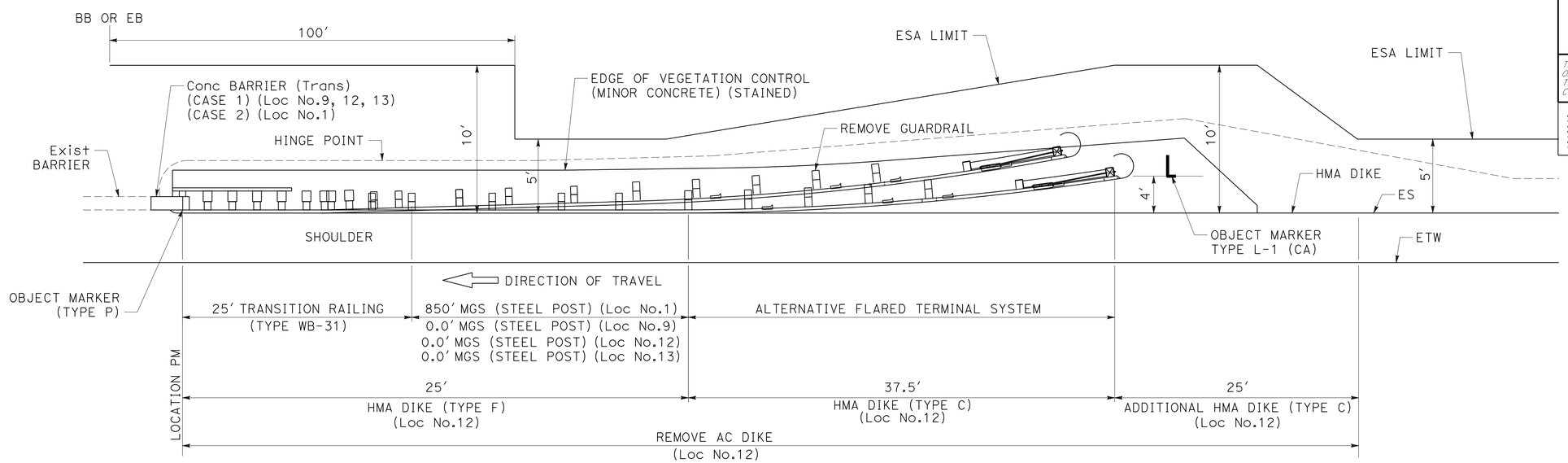

MGS (TYPE 12B LAYOUT) WITH VEGETATION CONTROL DETAIL

LOCATION No. 1 (PM 10.47, EB)
LOCATION No. 9 (PM 15.41, EB)
LOCATION No. 12 (PM 15.44, WB)
LOCATION No. 13 (PM 17.28, EB)

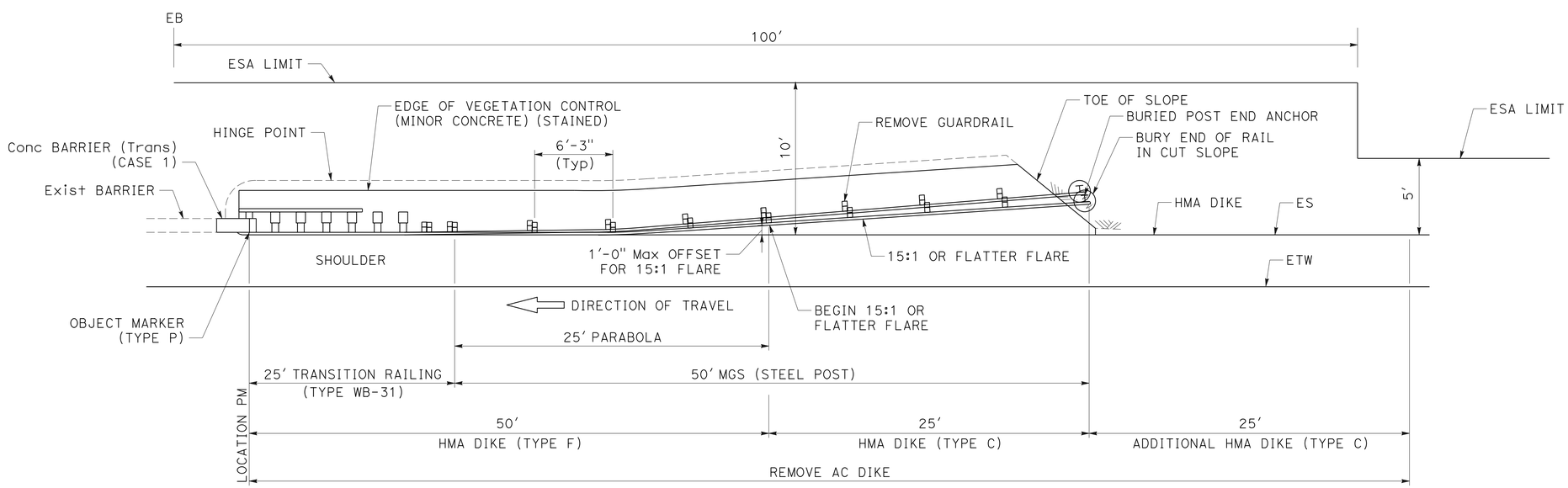

MGS (TYPE 12C LAYOUT) WITH VEGETATION CONTROL DETAIL

LOCATION No. 16 (PM 17.33, WB)

THE LOCATIONS OF WORK ARE FLEXIBLE AND MAY BE ADJUSTED TO MITIGATE ANY CONFLICTS WITH EXISTING UTILITY FACILITIES. UTILITIES ARE NOT SHOWN ON THESE PLANS

CONSTRUCTION DETAILS

NO SCALE

C-10

REVISED BY | DATE REVISED
CLARA PONCE | WAI KEI WONG
CALCULATED-DESIGNED BY | CHECKED BY
CONSULTANT FUNCTIONAL SUPERVISOR
MATTHEW J. KORVE
STATE OF CALIFORNIA - DEPARTMENT OF TRANSPORTATION
Caltrans

LAST REVISION 06-03-16 | DATE PLOTTED => 10-AUG-2016 | TIME PLOTTED => 16:38

Dist	COUNTY	ROUTE	POST MILES TOTAL PROJECT	SHEET No.	TOTAL SHEETS
05	SB†	156	R10.0/R18.4	13	89

REGISTERED CIVIL ENGINEER 6-13-16 DATE

6-20-16
PLANS APPROVAL DATE

REGISTERED PROFESSIONAL ENGINEER MATTHEW J. KORVE No. 63248 Exp. 6-30-18 CIVIL STATE OF CALIFORNIA

THE STATE OF CALIFORNIA OR ITS OFFICERS OR AGENTS SHALL NOT BE RESPONSIBLE FOR THE ACCURACY OR COMPLETENESS OF SCANNED COPIES OF THIS PLAN SHEET.

AECOM
2020 L STREET
SUITE 400
SACRAMENTO, CA 95811

NOTES:

1. FOR DETAILS NOT SHOWN, SEE REVISED STANDARD PLANS AND CONSTRUCTION DETAILS.

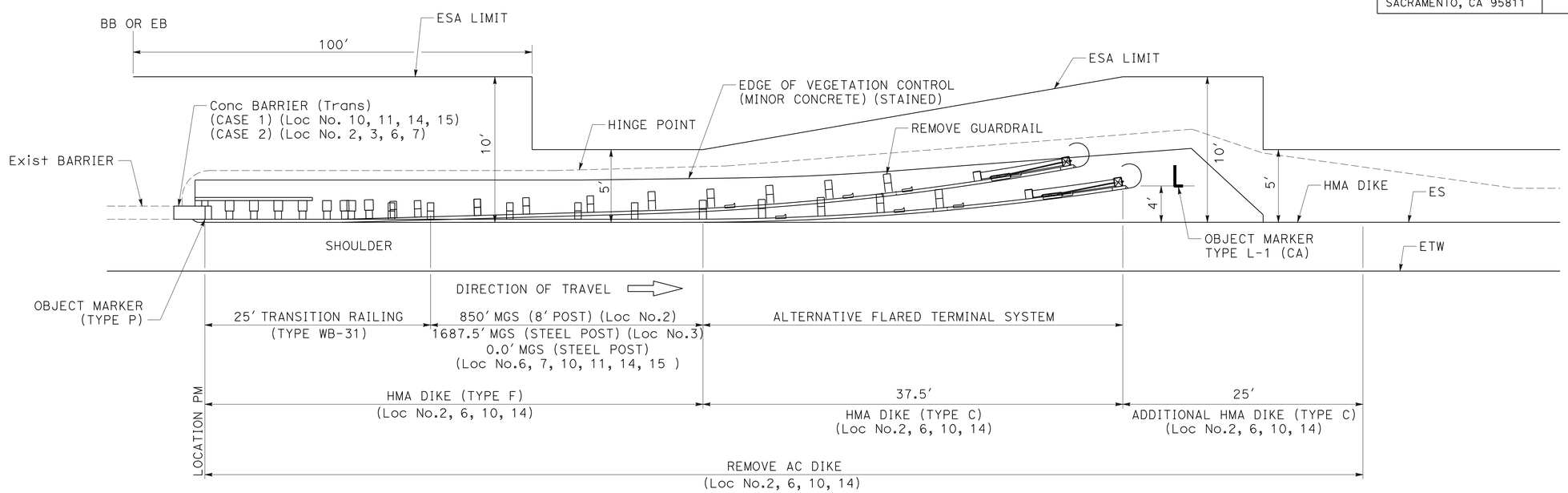

MGS (TYPE 12BB LAYOUT) WITH VEGETATION CONTROL DETAIL

LOCATION No. 2 (PM 10.47, WB)
LOCATION No. 3 (PM 10.51, EB)
LOCATION No. 6 (PM 13.44, WB)
LOCATION No. 7 (PM 13.47, EB)
LOCATION No. 10 (PM 15.41, WB)
LOCATION No. 11 (PM 15.44, EB)
LOCATION No. 14 (PM 17.28, WB)
LOCATION No. 15 (PM 17.33, EB)

THE LOCATIONS OF WORK ARE FLEXIBLE AND MAY BE ADJUSTED TO MITIGATE ANY CONFLICTS WITH EXISTING UTILITY FACILITIES. UTILITIES ARE NOT SHOWN ON THESE PLANS

CONSTRUCTION DETAILS

NO SCALE

C-11

REVISED BY | DATE REVISED
CLARA PONCE | WAI KEI WONG
CALCULATED-DESIGNED BY | CHECKED BY
CONSULTANT FUNCTIONAL SUPERVISOR
MATTHEW J. KORVE
STATE OF CALIFORNIA - DEPARTMENT OF TRANSPORTATION
Caltrans

LAST REVISION 06-03-16 | DATE PLOTTED => 10-AUG-2016 | TIME PLOTTED => 16:38

Dist	COUNTY	ROUTE	POST MILES TOTAL PROJECT	SHEET No.	TOTAL SHEETS
05	SBt	156	R10.0/R18.4	14	89

REGISTERED CIVIL ENGINEER 6-13-16 DATE

6-20-16
PLANS APPROVAL DATE

REGISTERED PROFESSIONAL ENGINEER MATTHEW J. KORVE No. 63248 Exp. 6-30-18 CIVIL STATE OF CALIFORNIA

THE STATE OF CALIFORNIA OR ITS OFFICERS OR AGENTS SHALL NOT BE RESPONSIBLE FOR THE ACCURACY OR COMPLETENESS OF SCANNED COPIES OF THIS PLAN SHEET.

AECOM
2020 L STREET
SUITE 400
SACRAMENTO, CA 95811

NOTES:

1. FOR ACCURATE RIGHT OF WAY DATA, CONTACT RIGHT OF WAY ENGINEERING AT THE DISTRICT OFFICE.
2. EXACT LOCATION OF PAVEMENT MARKINGS TO BE DETERMINED BY ENGINEER.
3. ALL ELEVATIONS ARE IN FEET UNLESS OTHERWISE NOTED.
4. SEE SHEET C-1 FOR CURB/DIKE TRANSITION DETAILS.

LEGEND (APPLY TO THIS Sht ONLY)

- CW — 12" WHITE THERMOPLASTIC PAVEMENT MARKING - CROSSWALK
- (X) — CURVE NUMBER
- REMOVE AC Pvmt 0.5' HMA (TYPE A)
- 0.33' MINOR CONCRETE (CURB, GUTTER, SIDEWALK AND DRIVEWAY)

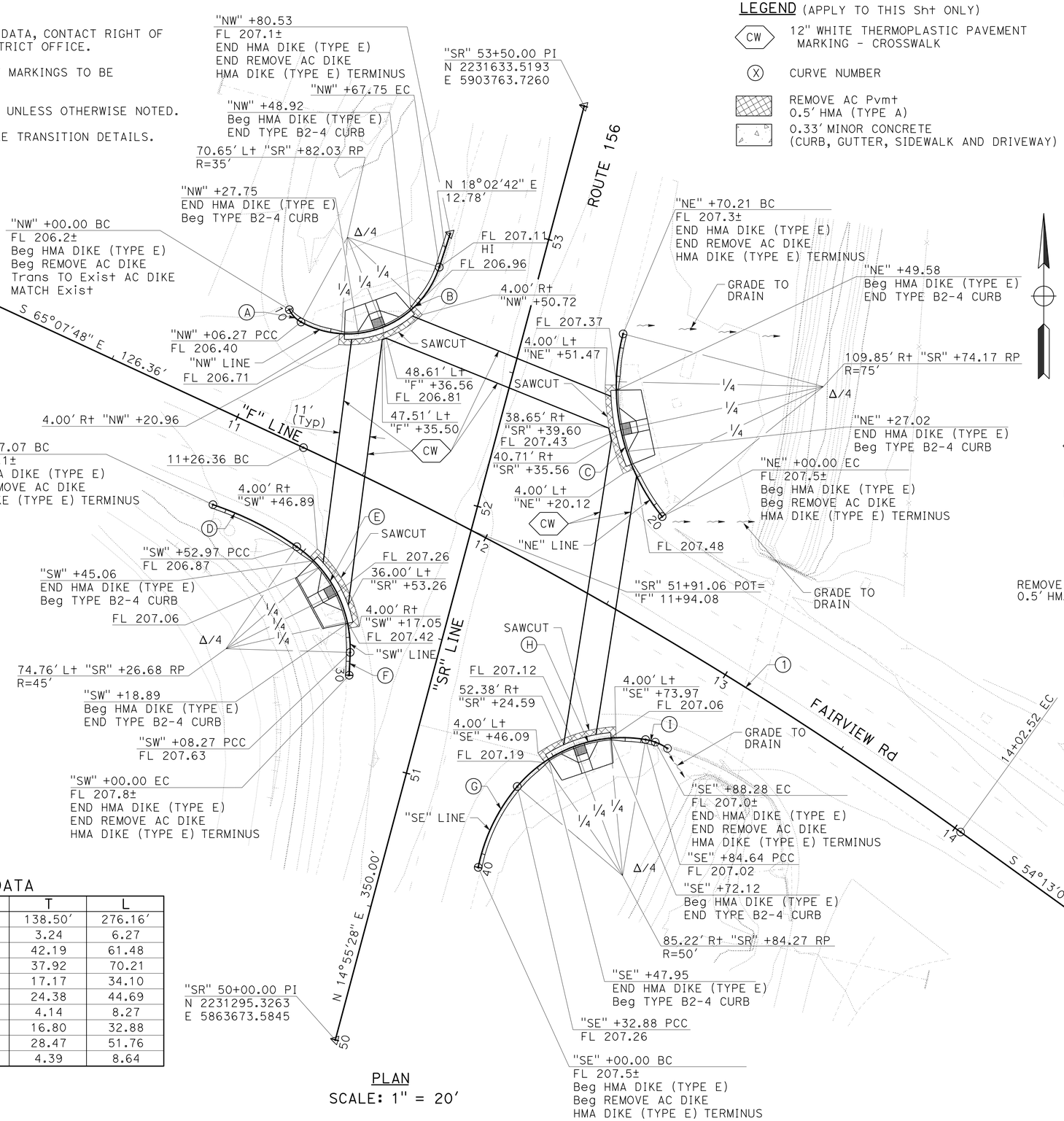

PLAN
SCALE: 1" = 20'

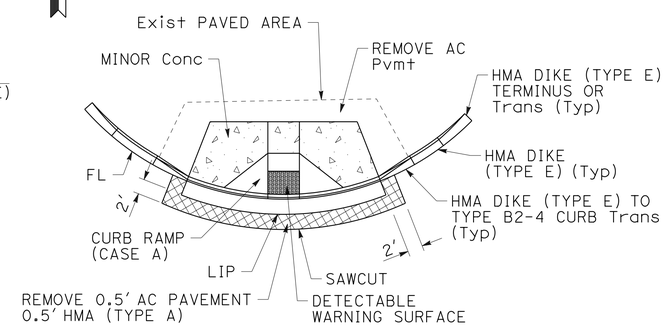

TYPICAL CURB RETURN DETAIL
NO SCALE

CURVE DATA

No.	R	Δ	T	L
1	1450.00'	10°54'44"	138.50'	276.16'
A	10.00	35°56'54"	3.24	6.27
B	35.00	100°38'29"	42.19	61.48
C	75.00	53°38'12"	37.92	70.21
D	120.00	16°16'56"	17.17	34.10
E	45.00	56°54'16"	24.38	44.69
F	320.00	1°28'54"	4.14	8.27
G	65.00	28°58'56"	16.80	32.88
H	50.00	59°18'44"	28.47	51.76
I	20.00	24°45'26"	4.39	8.64

CONSTRUCTION DETAILS

SCALE AS SHOWN

C-12

STATE OF CALIFORNIA - DEPARTMENT OF TRANSPORTATION
Caltrans

CONSULTANT FUNCTIONAL SUPERVISOR: MATTHEW J. KORVE
CALCULATED-DESIGNED BY: WAI KEI WONG
CHECKED BY: CLARA PONCE
REVISED BY
DATE REVISED

LAST REVISION 06-03-16
DATE PLOTTED => 10-AUG-2016
TIME PLOTTED => 17:19

Dist	COUNTY	ROUTE	POST MILES TOTAL PROJECT	SHEET No.	TOTAL SHEETS
05	SBt	156	R10.0/R18.4	15	89

REGISTERED CIVIL ENGINEER 6-13-16 DATE

6-20-16
PLANS APPROVAL DATE

REGISTERED PROFESSIONAL ENGINEER MATTHEW J. KORVE No. 63248 Exp. 6-30-18 CIVIL STATE OF CALIFORNIA

THE STATE OF CALIFORNIA OR ITS OFFICERS OR AGENTS SHALL NOT BE RESPONSIBLE FOR THE ACCURACY OR COMPLETENESS OF SCANNED COPIES OF THIS PLAN SHEET.

AECOM
2020 L STREET
SUITE 400
SACRAMENTO, CA 95811

NOTES:

1. FOR ACCURATE RIGHT OF WAY DATA, CONTACT RIGHT OF WAY ENGINEERING AT THE DISTRICT OFFICE.
2. FOR ADDITIONAL CURB RETURN DETAILS, SEE REVISED STANDARD PLANS.
3. ADJUST PULL BOXES WITH EDGES FLUSH WITH GRADE.
4. FOR PUSH BUTTON, CABINETS, AND SIGNAL POLE LOCATIONS, SEE ELECTRICAL PLAN.
5. SEE SHEET C-13 FOR HMA DIKE LOCATION.

LEGEND (APPLY TO THIS Sht ONLY)

REMOVE AC Pvmt
0.5′ HMA (TYPE A)

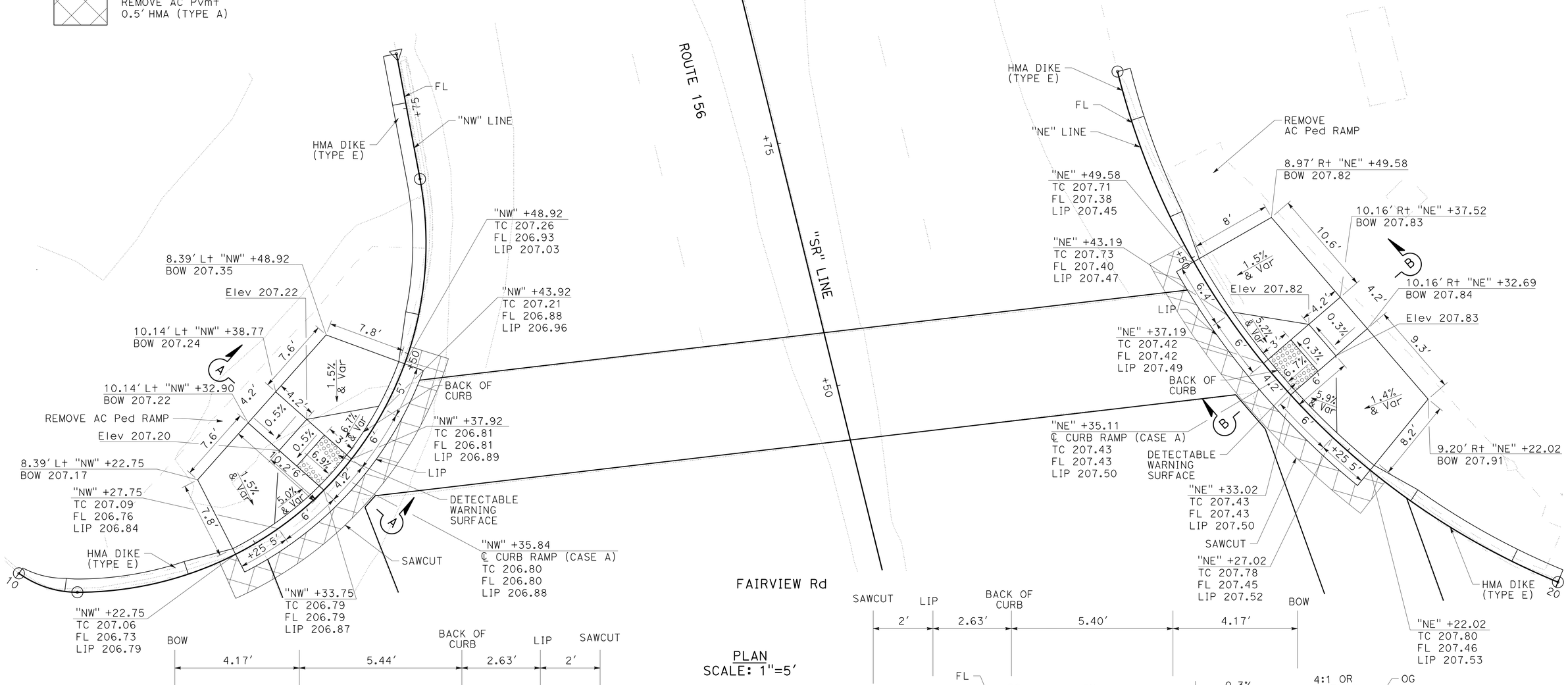

CONSTRUCTION DETAILS

SCALE AS SHOWN

C-13

STATE OF CALIFORNIA - DEPARTMENT OF TRANSPORTATION

Caltrans

CONSULTANT FUNCTIONAL SUPERVISOR: MATTHEW J. KORVE

CALCULATED-DESIGNED BY: WAI KEI WONG

CHECKED BY: CLARA PONCE

REVISED BY

DATE REVISED

LAST REVISION: 06-03-16

DATE PLOTTED => 10-AUG-2016
TIME PLOTTED => 16:53

Dist	COUNTY	ROUTE	POST MILES TOTAL PROJECT	SHEET No.	TOTAL SHEETS
05	SBt	156	R10.0/R18.4	16	89

REGISTERED CIVIL ENGINEER 6-13-16 DATE

6-20-16
PLANS APPROVAL DATE

REGISTERED PROFESSIONAL ENGINEER MATTHEW J. KORVE No. 63248 Exp. 6-30-18 CIVIL STATE OF CALIFORNIA

THE STATE OF CALIFORNIA OR ITS OFFICERS OR AGENTS SHALL NOT BE RESPONSIBLE FOR THE ACCURACY OR COMPLETENESS OF SCANNED COPIES OF THIS PLAN SHEET.

AECOM
2020 L STREET
SUITE 400
SACRAMENTO, CA 95811

NOTES:

1. FOR ACCURATE RIGHT OF WAY DATA, CONTACT RIGHT OF WAY ENGINEERING AT THE DISTRICT OFFICE.
2. FOR ADDITIONAL CURB RETURN DETAILS, SEE REVISED STANDARD PLANS.
3. ADJUST PULL BOXES WITH EDGES FLUSH WITH GRADE.
4. FOR PUSH BUTTON, CABINETS, AND SIGNAL POLE LOCATIONS, SEE ELECTRICAL PLAN.
5. SEE SHEET C-13 FOR HMA DIKE LOCATIONS.

LEGEND (APPLY TO THIS Sht ONLY)

REMOVE AC Pvmt
0.5' HMA (TYPE A)

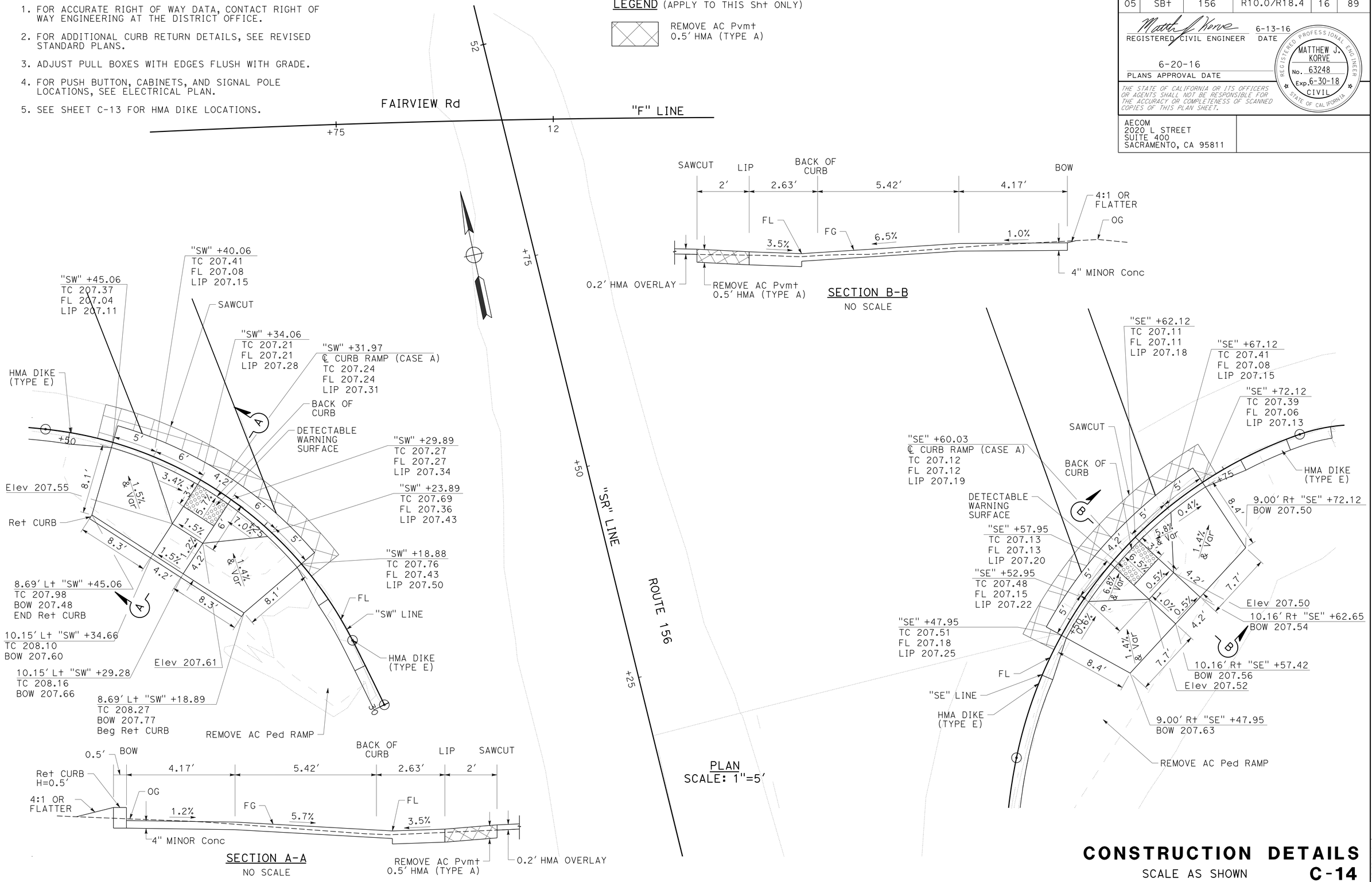

CONSTRUCTION DETAILS

SCALE AS SHOWN

C-14

STATE OF CALIFORNIA - DEPARTMENT OF TRANSPORTATION

Caltrans

CONSULTANT FUNCTIONAL SUPERVISOR: MATTHEW J. KORVE

CALCULATED-DESIGNED BY: WAI KEI WONG

CHECKED BY: CLARA PONCE

REVISED BY | DATE REVISED

LAST REVISION 06-03-16 | DATE PLOTTED => 10-AUG-2016 | TIME PLOTTED => 16:53

Dist	COUNTY	ROUTE	POST MILES TOTAL PROJECT	SHEET No.	TOTAL SHEETS
05	SBt	156	R10.0/R18.4	17	89

REGISTERED CIVIL ENGINEER — DATE 6-13-16

6-20-16
PLANS APPROVAL DATE

REGISTERED PROFESSIONAL ENGINEER — MATTHEW J. KORVE — No. 63248 — Exp. 6-30-18 — CIVIL — STATE OF CALIFORNIA

THE STATE OF CALIFORNIA OR ITS OFFICERS OR AGENTS SHALL NOT BE RESPONSIBLE FOR THE ACCURACY OR COMPLETENESS OF SCANNED COPIES OF THIS PLAN SHEET.

AECOM
2020 L STREET
SUITE 400
SACRAMENTO, CA 95811

NOTES:

1. SIGN LOCATIONS SHOWN ARE APPROXIMATE. EXACT LOCATIONS ARE TO BE DETERMINED BY THE ENGINEER.
2. ALL WORK SHALL BE DONE IN ACCORDANCE WITH CALTRANS 2010 STANDARD PLANS AND 2010 SPECIFICATIONS, THE CALIFORNIA MUTCD, SIGN SPECIFICATIONS AND THE SPECIAL PROVISIONS.
3. PLACE CONSTRUCTION PROJECT FUNDING IDENTIFICATION SIGN.
4. FOR ADDITIONAL CONSTRUCTION AREA SIGNS, SEE TRAFFIC HANDLING SHEETS.
5. COVER ALL CALL BOXES WITHIN PROJECT LIMITS DURING CONSTRUCTION.

STATIONARY MOUNTED CONSTRUCTION AREA SIGNS

SIGN No.	SIGN CODE	SIGN MESSAGE	PANEL SIZE	No. OF POST AND SIZE	No. OF SIGNS
A	W20-1	ROAD WORK AHEAD	48" x 48"	2 - 4" x 6"	4
B	W20-1	ROAD WORK AHEAD	36" x 36"	1 - 4" x 6"	11
C	G20-2	END ROAD WORK	48" x 24"	2 - 4" x 6"	4
D	G20-2	END ROAD WORK	36" x 18"	1 - 4" x 4"	11
E	C40A(CA)	TRAFFIC FINES DOUBLED IN WORK ZONES	48" x 48"	2 - 4" x 6"	4

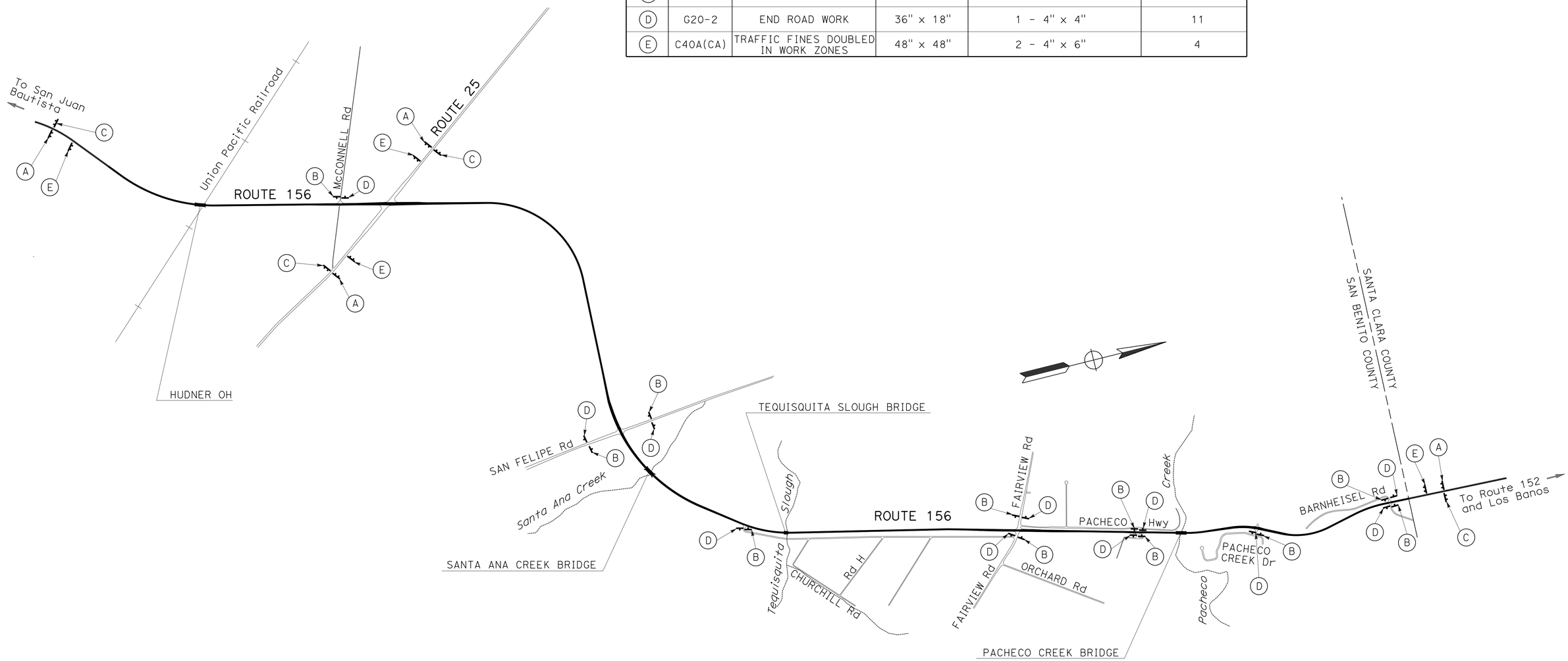

CONSTRUCTION AREA SIGNS

APPROVED FOR CONSTRUCTION AREA SIGN WORK ONLY.

NO SCALE

CS-1

STATE OF CALIFORNIA - DEPARTMENT OF TRANSPORTATION
Caltrans®
CONSULTANT FUNCTIONAL SUPERVISOR: MATTHEW J. KORVE
CALCULATED-DESIGNED BY: MATTHEW J. KORVE
CHECKED BY: CLARA PONCE
REVISED BY
DATE REVISED

LAST REVISION 06-03-16 | DATE PLOTTED => 10-AUG-2016 | TIME PLOTTED => 16:38

Dist	COUNTY	ROUTE	POST MILES TOTAL PROJECT	SHEET No.	TOTAL SHEETS
05	SBt	156	R10.0/R18.4	18	89

REGISTERED CIVIL ENGINEER 6-13-16 DATE

6-20-16
PLANS APPROVAL DATE

REGISTERED PROFESSIONAL ENGINEER MATTHEW J. KORVE No. 63248 Exp. 6-30-18 CIVIL STATE OF CALIFORNIA

THE STATE OF CALIFORNIA OR ITS OFFICERS OR AGENTS SHALL NOT BE RESPONSIBLE FOR THE ACCURACY OR COMPLETENESS OF SCANNED COPIES OF THIS PLAN SHEET.

AECOM
2020 L STREET
SUITE 400
SACRAMENTO, CA 95811

NOTES:

1. ALTHOUGH BOTH DIRECTIONS SHOWN, WORK AREA ALLOWED ONLY ON ONE SIDE OF STRUCTURE AT A TIME.
2. ACTUAL SIGN LOCATIONS TO BE DETERMINED BY THE ENGINEER TO FIT SITE CONDITIONS.

LEGEND

- CHANNELIZER (SURFACE MOUNTED)
- TEMPORARY TRAFFIC CONTROL SIGN

SIGN PANEL SIZE (Min)

- A 48" x 48"
- B 24" x 30"

TEMPORARY TRAFFIC CONTROL DEVICES

LOCATION	CHANNELIZER (SURFACE MOUNTED)	TEMPORARY RAILING (TYPE K)	TEMPORARY ALTERNATIVE CRASH CUSHION
	EA	LF	EA
HUDNER OH	10	880	2
SANTA ANA CREEK BRIDGE	10	840	2
TESQUISQUITA SLOUGH BRIDGE	10	640	2
PACHECO CREEK BRIDGE	10	960	2
TOTAL	40	3320	8

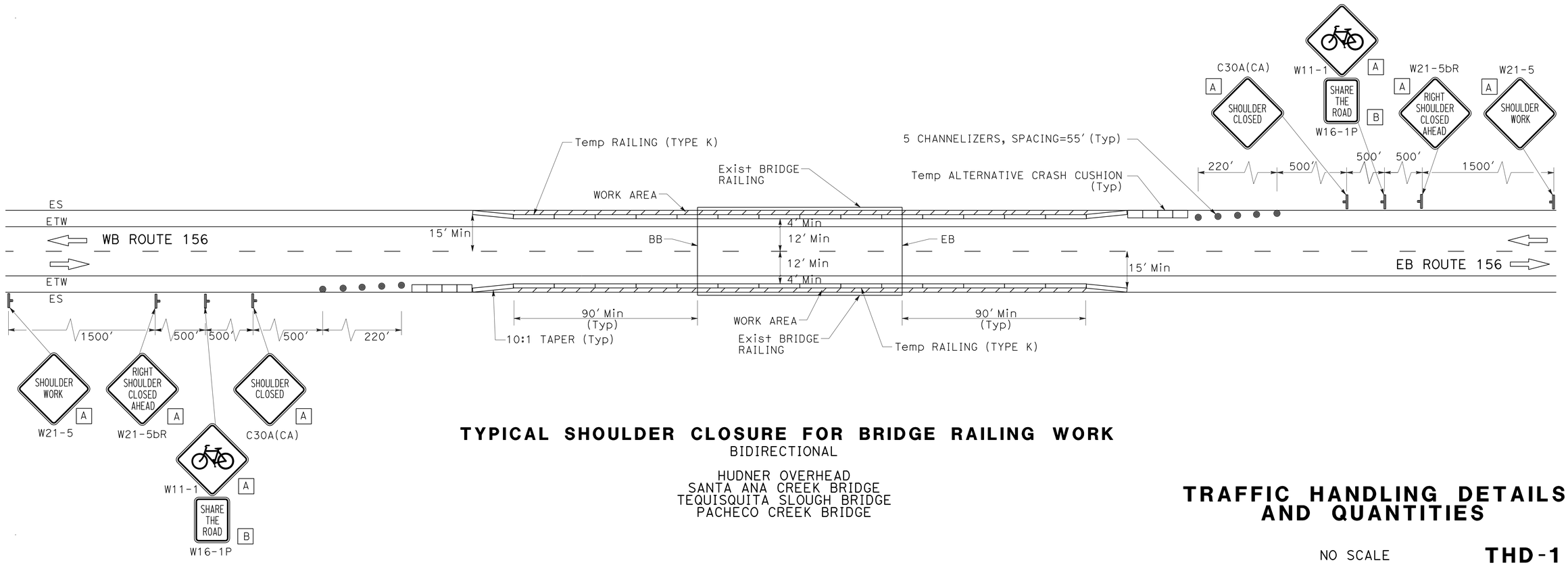

TYPICAL SHOULDER CLOSURE FOR BRIDGE RAILING WORK

BIDIRECTIONAL

HUDNER OVERHEAD
SANTA ANA CREEK BRIDGE
TEQUISQUITA SLOUGH BRIDGE
PACHECO CREEK BRIDGE

TRAFFIC HANDLING DETAILS AND QUANTITIES

NO SCALE

THD-1

STATE OF CALIFORNIA - DEPARTMENT OF TRANSPORTATION
Caltrans

CONSULTANT FUNCTIONAL SUPERVISOR: MATTHEW J. KORVE
CALCULATED-DESIGNED BY: MATTHEW J. KORVE
CHECKED BY: CLARA PONCE
REVISED BY
DATE REVISED

LAST REVISION 06-03-16
DATE PLOTTED => 10-AUG-2016
TIME PLOTTED => 16:38

Dist	COUNTY	ROUTE	POST MILES TOTAL PROJECT	SHEET No.	TOTAL SHEETS
05	SBt	156	R10.0/R18.4	19	89

REGISTERED CIVIL ENGINEER 6-13-16 DATE

6-20-16
PLANS APPROVAL DATE

REGISTERED PROFESSIONAL ENGINEER MATTHEW J. KORVE No. 63248 Exp. 6-30-18 CIVIL STATE OF CALIFORNIA

THE STATE OF CALIFORNIA OR ITS OFFICERS OR AGENTS SHALL NOT BE RESPONSIBLE FOR THE ACCURACY OR COMPLETENESS OF SCANNED COPIES OF THIS PLAN SHEET.

AECOM
2020 L STREET
SUITE 400
SACRAMENTO, CA 95811

REMOVE THERMOPLASTIC TRAFFIC STRIPE AND PAVEMENT MARKER

LOCATION	DETAIL No.	LENGTH (N)	REMOVE THERMOPLASTIC TRAFFIC STRIPE	REMOVE PAVEMENT MARKER
		LF	LF	EA
PM R15.30 TO R16.50	27B	12,672	12,672	
PM R15.30 TO R16.50	27B	12,672	12,672	
PM R15.44 TO R15.55	19	625	781	44
PM R15.55 TO R16.12	6	3,065	766	65
PM R16.12 TO R16.19	19	400	500	29
PM R16.19 TO R16.41	29M	1,157	4,628	1,476
PM R16.41 TO R16.50	23M	465	930	364
PM R16.42 TO R16.50	38	450	900	20
PM R16.53 TO R16.62	23M	500	1,000	382
PM R16.53 TO R16.62	38	480	960	21
PM R16.53 TO R16.62	38	480	960	21
PM R16.53 TO R17.06	27B	2,806	2,806	
PM R16.53 TO R17.06	27B	2,812	2,812	
PM R16.62 TO R16.82	29M	1,085	4,340	1,386
PM R16.82 TO R16.88	23M	317	634	256
PM R16.88 TO R17.08	19	1,033	1,291	68
PM R17.09 TO R17.17	23M	400	800	310
PM R17.11 TO R17.63	27B	2,435	2,435	
PM R17.11 TO R18.40	27B	6,543	6,543	
PM R17.17 TO R17.38	19	1,135	1,419	74
PM R17.38 TO R17.42	23M	200	400	166
PM R17.42 TO R17.56	29M	758	3,032	966
PM R17.56 TO R17.64	23M	450	900	346
PM R17.67 TO R18.40	27B	6,477	6,477	
PM R17.56 TO R17.64	38	435	870	20
PM R17.65 TO R17.74	38	470	940	21
PM R17.65 TO R17.75	23M	485	970	382
PM R17.75 TO R17.89	29M	743	2,972	936
PM R17.89 TO R18.4	23M	3,067	6,134	2,308
FAIRVIEW ROAD	23M	200	400	166
FAIRVIEW ROAD	23M	170	340	148
FAIRVIEW ROAD	27B	210	210	
FAIRVIEW ROAD	27B	215	215	
FAIRVIEW ROAD	27B	186	186	
FAIRVIEW ROAD	27B	82	82	
FAIRVIEW ROAD	38	200	400	10
FAIRVIEW ROAD	38	200	400	10
FAIRVIEW ROAD	38	170	340	9
FAIRVIEW ROAD	38	170	340	9
PACHECO Hwy	22	50	100	8
PACHECO Hwy	22	50	100	8
PACHECO CREEK DRIVE	22	50	100	8
BARNHEISEL ROAD	22	50	100	8
BARNHEISEL ROAD	22	50	100	8
TOTAL			85,958	10,053

PAVEMENT DELINEATION QUANTITIES

PDQ-1

STATE OF CALIFORNIA - DEPARTMENT OF TRANSPORTATION
Caltrans
CONSULTANT FUNCTIONAL SUPERVISOR: MATTHEW J. KORVE
CALCULATED-DESIGNED BY: WAI KEI WONG
CHECKED BY: CLARA PONCE
REVISED BY
DATE REVISED

LAST REVISION 06-03-16
DATE PLOTTED => 10-AUG-2016
TIME PLOTTED => 16:38

Dist	COUNTY	ROUTE	POST MILES TOTAL PROJECT	SHEET No.	TOTAL SHEETS
05	SBt	156	R10.0/R18.4	20	89

REGISTERED CIVIL ENGINEER 6-13-16 DATE

6-20-16
PLANS APPROVAL DATE

REGISTERED PROFESSIONAL ENGINEER MATTHEW J. KORVE No. 63248 Exp. 6-30-18 CIVIL STATE OF CALIFORNIA

THE STATE OF CALIFORNIA OR ITS OFFICERS OR AGENTS SHALL NOT BE RESPONSIBLE FOR THE ACCURACY OR COMPLETENESS OF SCANNED COPIES OF THIS PLAN SHEET.

AECOM
2020 L STREET
SUITE 400
SACRAMENTO, CA 95811

REMOVE THERMOPLASTIC PAVEMENT MARKING

LOCATION	DESCRIPTION	SQFT
PM R16.32, EB	"SIGNAL"	32
PM R16.33, EB	"AHEAD"	31
PM R16.42, EB	TYPE III (L) ARROW	42
PM R16.46, EB	TYPE III (L) ARROW	42
PM R16.50, EB	TYPE III (L) ARROW	42
PM R16.50, EB	LIMIT LINE	48
FAIRVIEW ROAD	CROSS WALK	213
FAIRVIEW ROAD	TYPE III (L) ARROW	42
FAIRVIEW ROAD	TYPE III (R) ARROW	42
FAIRVIEW ROAD	CROSS WALK	188
FAIRVIEW ROAD	TYPE III (R) ARROW	42
FAIRVIEW ROAD	TYPE III (L) ARROW	42
PM R16.52	CROSS WALK	98
PM R16.53, WB	TYPE III (L) ARROW	42
PM R16.53, WB	TYPE III (R) ARROW	42
PM R16.58, WB	TYPE III (R) ARROW	42
PM R16.58, WB	TYPE III (L) ARROW	42
PM R16.62, WB	TYPE III (R) ARROW	42
PM R16.62, WB	TYPE III (L) ARROW	42
PM R16.71, WB	"AHEAD"	31
PM R16.73, WB	"SIGNAL"	32
PM R17.57, EB	TYPE III (L) ARROW	42
PM R17.64, EB	TYPE III (L) ARROW	42
PM R17.66, WB	TYPE III (L) ARROW	42
PM R17.74, WB	TYPE III (L) ARROW	42
ROAD Q	LIMIT LINE	45
ROAD Q	STOP	22
PACHECO Hwy	LIMIT LINE	39
PACHECO Hwy	STOP	22
PACHECO Hwy	LIMIT LINE	41
PACHECO Hwy	STOP	27
PACHECO CREEK Dr	LIMIT LINE	44
PACHECO CREEK Dr	STOP	22
PACHECO CREEK Dr	12" STRIPE (WHITE)	50
PACHECO CREEK Dr	TYPE VII (L) ARROW	27
PACHECO CREEK Dr	TYPE IV (R) ARROW	15
BARNHEISEL Rd	LIMIT LINE	46
BARNHEISEL Rd	STOP	22
BARNHEISEL Rd	LIMIT LINE	44
BARNHEISEL Rd	STOP	22
TOTAL		1,875

REMOVE DELINEATOR

LOCATION	REMOVE DELINEATOR
	EA
PM 10.0 TO 18.4	110
TOTAL	110

THERMOPLASTIC CROSSWALK AND PAVEMENT MARKING (ENHANCED WET NIGHT VISIBILITY)

DESCRIPTION	EA	LENGTH	SQFT PER MARKER	WIDTH	SQFT
TYPE II ARROW	8		45		360
TYPE III ARROW	18		42		756
TYPE IV ARROW	24		15		360
TYPE VI ARROW	7		42		294
TYPE VII ARROW	1		27		27
SIGNAL	6		32		192
AHEAD	6		31		186
STOP	9		22		198
12" DIAGONALS (WHITE)		310		1	310
LL		650		1	650
CW		640		1	640
TOTAL					3,973

DELINEATORS AND OBJECT MARKERS

LOCATION	DELINEATOR (CLASS 1)	OBJECT MARKER	
	TYPE F	TYPE L-1	TYPE P
	EA	EA	EA
PM 10.0 TO 18.4	220	12	16
TOTAL	220	28	

PAVEMENT DELINEATION QUANTITIES

PDQ-2

STATE OF CALIFORNIA - DEPARTMENT OF TRANSPORTATION
Caltrans®

CONSULTANT FUNCTIONAL SUPERVISOR: MATTHEW J. KORVE
CALCULATED-DESIGNED BY: WAI KEI WONG
CHECKED BY: CLARA PONCE
REVISED BY
DATE REVISED

LAST REVISION 06-03-16
DATE PLOTTED => 10-AUG-2016
TIME PLOTTED => 16:38

Dist	COUNTY	ROUTE	POST MILES TOTAL PROJECT	SHEET No.	TOTAL SHEETS
05	SBt	156	R10.0/R18.4	21	89

REGISTERED CIVIL ENGINEER 6-13-16 DATE

6-20-16
PLANS APPROVAL DATE

REGISTERED PROFESSIONAL ENGINEER MATTHEW J. KORVE No. 63248 Exp. 6-30-18 CIVIL STATE OF CALIFORNIA

THE STATE OF CALIFORNIA OR ITS OFFICERS OR AGENTS SHALL NOT BE RESPONSIBLE FOR THE ACCURACY OR COMPLETENESS OF SCANNED COPIES OF THIS PLAN SHEET.

AECOM
2020 L STREET
SUITE 400
SACRAMENTO, CA 95811

THERMOPLASTIC TRAFFIC STRIPE AND PAVEMENT MARKERS

LOCATION	DETAIL No.	LENGTH	4" THERMO PLASTIC TRAFFIC STRIPE (ENHANCED WET NIGHT VISIBILITY)		4" THERMO PLASTIC TRAFFIC STRIPE (ENHANCED WET NIGHT VISIBILITY) (BROKEN 17-7)	4" THERMO PLASTIC TRAFFIC STRIPE (ENHANCED WET NIGHT VISIBILITY) (BROKEN 36-12)	8" THERMO PLASTIC TRAFFIC STRIPE (ENHANCED WET NIGHT VISIBILITY)	PAVEMENT MARKER (RETROREFLECTIVE)			DESCRIPTION/ COMMENTS
			WHITE	YELLOW				TYPE D	TYPE G	TYPE H	
		LF	LF	LF	LF	LF	LF	EA	EA	EA	
PM 10.0 TO 10.03	6	150				150		5			
PM 10.0 TO 11.15	27B	6072	6,072								
PM 10.0 TO 11.35	27B	7128	7,128								
PM 10.03 TO 10.18	19	785		785		785		19		34	
PM 10.18 TO 10.51	22	1745		3,490				147			
PM 10.51 TO 10.66	19	750		750		750		18		33	
PM 10.66 TO 10.75	6	500				500		12			
PM 10.75 TO 10.85	19	550		550		550		14		24	
PM 10.85 TO 11.06	29	1070		4,280				92			
PM 11.06 TO 11.15	22	470		940				42			
PM 11.06 TO 11.15	38	470					470		21		
PM 11.17 TO 11.26	29	475		1,900				42			
PM 11.17 TO 11.38	27B	1109	1,109								
PM 11.26 TO 11.38	22	615		1,230				54			
PM 11.27 TO 11.38	38	575					575		25		
PM 11.27 TO 11.38	9	575			575				13		
PM 11.33 TO 11.38	9	275			275				7		
ROUTE 25	22	350		700				32			
ROUTE 25	22	350		700				32			
ROUTE 25	27B	327	327								
ROUTE 25	27B	424	424								
ROUTE 25	27B	477	477								
ROUTE 25	27B	360	360								
ROUTE 25	38	350					350		16		
ROUTE 25	38	350					350		16		
ROUTE 25	9	350			350				9		
ROUTE 25	9	350			350				9		
ROUTE 25	9	350			350				9		
PM 11.40 TO 11.45	9	270			270				7		
PM 11.40 TO 11.51	22	565		1,130				50			
PM 11.40 TO 11.51	38	560					560		25		
PM 11.40 TO 11.51	9	550			550				13		
PM 11.40 TO 13.16	27B	9293	9,293								
SHEET TOTAL			25,190	16,455	2,720	2,735	2,305	559	170	91	

PAVEMENT DELINEATION QUANTITIES

PDQ-3

REVISED BY | DATE REVISED
WAI KEI WONG | CLARA PONCE
CALCULATED-DESIGNED BY | CHECKED BY
CONSULTANT FUNCTIONAL SUPERVISOR
MATTHEW J. KORVE
STATE OF CALIFORNIA - DEPARTMENT OF TRANSPORTATION
Caltrans

LAST REVISION 06-03-16 | DATE PLOTTED => 10-AUG-2016 | TIME PLOTTED => 16:38

Dist	COUNTY	ROUTE	POST MILES TOTAL PROJECT	SHEET No.	TOTAL SHEETS
05	SBt	156	R10.0/R18.4	22	89

REGISTERED CIVIL ENGINEER 6-13-16 DATE

6-20-16
PLANS APPROVAL DATE

REGISTERED PROFESSIONAL ENGINEER MATTHEW J. KORVE No. 63248 Exp. 6-30-18 CIVIL STATE OF CALIFORNIA

THE STATE OF CALIFORNIA OR ITS OFFICERS OR AGENTS SHALL NOT BE RESPONSIBLE FOR THE ACCURACY OR COMPLETENESS OF SCANNED COPIES OF THIS PLAN SHEET.

AECOM
2020 L STREET
SUITE 400
SACRAMENTO, CA 95811

THERMOPLASTIC TRAFFIC STRIPE AND PAVEMENT MARKERS (Cont)

LOCATION	DETAIL No.	LENGTH	4" THERMO PLASTIC TRAFFIC STRIPE (ENHANCED WET NIGHT VISIBILITY)		4" THERMO PLASTIC TRAFFIC STRIPE (ENHANCED WET NIGHT VISIBILITY) (BROKEN 17-7)	4" THERMO PLASTIC TRAFFIC STRIPE (ENHANCED WET NIGHT VISIBILITY) (BROKEN 36-12)	8" THERMO PLASTIC TRAFFIC STRIPE (ENHANCED WET NIGHT VISIBILITY)	PAVEMENT MARKER (RETROREFLECTIVE)			DESCRIPTION/ COMMENTS
			WHITE	YELLOW				TYPE D	TYPE G	TYPE H	
		LF	LF	LF	LF	LF	LF	EA	EA	EA	
PM 11.40 TO 13.17	27B	9345	9,345								
PM 11.51 TO 11.71	29	1043		4,172				90			
PM 11.71 TO 12.90	22	6552		13,104				548			
PM 12.90 TO 13.17	29	1453		5,812				124			
PM 13.07 TO 13.17	38	540					540		24		
SAN FELIPE ROAD	22	350		700				31			
SAN FELIPE ROAD	22	200		400				18			
SAN FELIPE ROAD	27B	389	389								
SAN FELIPE ROAD	27B	400	400								
SAN FELIPE ROAD	27B	247	247								
SAN FELIPE ROAD	27B	265	265								
SAN FELIPE ROAD	38	200					200		10		
SAN FELIPE ROAD	38	350					350		16		
SAN FELIPE ROAD	38	350					350		16		
SAN FELIPE ROAD	9	350			350				9		
PM 13.20 TO 13.25	38	277					277		13		
PM 13.20 TO 13.26	22	292		584				26			
PM 13.20 TO 13.33	38	690					690		30		
PM 13.20 TO 13.76	27B	2798	2,798								
PM 13.20 TO 13.76	27B	2798	2,798								
PM 13.26 TO 13.55	29	1548		6,192				132			
PM 13.55 TO 13.65	19	525		525		525		13		23	
PM 13.65 TO 13.76	6	400				400		11			
PM 15.01 TO 15.11	6	568				568		14			
PM 15.01 TO 15.20	27B	1056	1,056								
PM 15.01 TO 16.50	27B	7920	7,920								
PM 15.11 TO 15.44	22	1700		3,400				144			
PM 15.24 TO 16.50	27B	6653	6,653								
PM 15.44 TO 15.55	19	625		625		625		16		28	
PM 15.55 TO 16.12	6	3065				3,065		65			
PM 16.12 TO 16.19	19	400		400		400		11		18	
PM 16.19 TO 16.41	29	1157		4,628				100			
PM 16.41 TO 16.50	22	465		930				40			
PM 16.42 TO 16.50	38	450					450		20		
SHEET TOTAL			31,871	41,472	350	5,583	2,857	1,383	138	69	

PAVEMENT DELINEATION QUANTITIES

PDQ-4

STATE OF CALIFORNIA - DEPARTMENT OF TRANSPORTATION
Caltrans

CONSULTANT FUNCTIONAL SUPERVISOR: MATTHEW J. KORVE
CALCULATED-DESIGNED BY: WAI KEI WONG
CHECKED BY: CLARA PONCE
REVISED BY
DATE REVISED

LAST REVISION 06-03-16
DATE PLOTTED => 10-AUG-2016
TIME PLOTTED => 16:38

Dist	COUNTY	ROUTE	POST MILES TOTAL PROJECT	SHEET No.	TOTAL SHEETS
05	SBt	156	R10.0/R18.4	23	89

REGISTERED CIVIL ENGINEER 6-13-16 DATE

6-20-16
PLANS APPROVAL DATE

REGISTERED PROFESSIONAL ENGINEER MATTHEW J. KORVE No. 63248 Exp. 6-30-18 CIVIL STATE OF CALIFORNIA

THE STATE OF CALIFORNIA OR ITS OFFICERS OR AGENTS SHALL NOT BE RESPONSIBLE FOR THE ACCURACY OR COMPLETENESS OF SCANNED COPIES OF THIS PLAN SHEET.

AECOM
2020 L STREET
SUITE 400
SACRAMENTO, CA 95811

THERMOPLASTIC TRAFFIC STRIPE AND PAVEMENT MARKERS (Cont)

LOCATION	DETAIL No.	LENGTH	4" THERMO PLASTIC TRAFFIC STRIPE (ENHANCED WET NIGHT VISIBILITY)		4" THERMO PLASTIC TRAFFIC STRIPE (ENHANCED WET NIGHT VISIBILITY) (BROKEN 17-7)	4" THERMO PLASTIC TRAFFIC STRIPE (ENHANCED WET NIGHT VISIBILITY) (BROKEN 36-12)	8" THERMO PLASTIC TRAFFIC STRIPE (ENHANCED WET NIGHT VISIBILITY)	PAVEMENT MARKER (RETROREFLECTIVE)			DESCRIPTION/ COMMENTS
			WHITE	YELLOW				TYPE D	TYPE G	TYPE H	
		LF	LF	LF	LF	LF	LF	EA	EA	EA	
FAIRVIEW ROAD	22	200		400				18			
FAIRVIEW ROAD	22	170		340				16			
FAIRVIEW ROAD	27B	200	200								
FAIRVIEW ROAD	27B	30	30								
FAIRVIEW ROAD	27B	170	170								
FAIRVIEW ROAD	27B	80	80								
FAIRVIEW ROAD	38	200					200		10		
FAIRVIEW ROAD	38	200					200		10		
FAIRVIEW ROAD	38	170					170		9		
FAIRVIEW ROAD	38	170					170		9		
PM 16.53 TO 16.62	22	500		1,000				44			
PM 16.53 TO 16.62	38	480					480		21		
PM 16.53 TO 16.62	38	480					480		21		
PM 16.53 TO 17.06	27B	2798	2,798								
PM 16.53 TO 17.06	27B	2798	2,798								
PM 16.62 TO 16.82	29	1052		4,208				90			
PM 16.82 TO 16.88	22	317		634				28			
PM 16.88 TO 17.08	19	1033		1,033		1,033		24		45	
PACHECO HIGHWAY	22	50		100				8			
PACHECO HIGHWAY	22	50		100				8			
PM 17.09 TO 17.17	22	400		800				36			
PM 17.11 TO 17.63	27B	2745	2,745								
PM 17.11 TO 18.28	27B	6178	6,178								
PM 17.17 TO 17.38	19	1135		1,135		1,135		26		49	
PM 17.38 TO 17.42	22	200		400				18			
PM 17.42 TO 17.56	29	758		3,032				66			
PM 17.56 TO 17.64	22	450		900				40			
PM 17.56 TO 17.64	38	435					435		20		
PACHECO CREEK Dr	22	50		100				8			
PM 17.65 TO 17.74	38	470					470		21		
PM 17.65 TO 17.75	22	485		970				42			
PM 17.67 TO 18.28	27B	3221	3,221								
PM 17.75 TO 17.89	29	743		2,972				64			
PM 17.89 TO 18.4	22	3067		6,134				258			
BARNHEISEL ROAD	22	50		100				8			
BARNHEISEL ROAD	22	50		100				8			
PM 18.34 TO 18.40	27B	317	317								
PM 18.34 TO 18.40	27B	317	317								
SHEET TOTAL			18,854	24,458	0	2,168	2,605	810	121	94	
TOTAL			158,300		3,070	10,486	7,767	3,435			

PAVEMENT DELINEATION QUANTITIES

PDQ-5

STATE OF CALIFORNIA - DEPARTMENT OF TRANSPORTATION
Caltrans

CONSULTANT FUNCTIONAL SUPERVISOR: MATTHEW J. KORVE
CALCULATED-DESIGNED BY: WAI KEI WONG
CHECKED BY: CLARA PONCE
REVISED BY
DATE REVISED

LAST REVISION 06-03-16
DATE PLOTTED => 10-AUG-2016
TIME PLOTTED => 16:38

Dist	COUNTY	ROUTE	POST MILES TOTAL PROJECT	SHEET No.	TOTAL SHEETS
05	SBt	156	R10.0/R18.4	24	89

REGISTERED CIVIL ENGINEER 6-13-16 DATE

6-20-16
PLANS APPROVAL DATE

REGISTERED PROFESSIONAL ENGINEER MATTHEW J. KORVE No. 63248 Exp. 6-30-18 CIVIL STATE OF CALIFORNIA

THE STATE OF CALIFORNIA OR ITS OFFICERS OR AGENTS SHALL NOT BE RESPONSIBLE FOR THE ACCURACY OR COMPLETENESS OF SCANNED COPIES OF THIS PLAN SHEET.

AECOM
2020 L STREET
SUITE 400
SACRAMENTO, CA 95811

NOTES:

1. ALL SIGN CODES SHOWN ARE FEDERAL SIGN CODES UNLESS OTHERWISE DESIGNATED AS A CALIFORNIA SIGN CODE, (CA).
2. EXACT LOCATION AND POSITION OF ROADSIDE SIGN TO BE DETERMINED BY THE ENGINEER.
3. ALL EXISTING SIGNS NOT SHOWN FOR REMOVAL SHALL REMAIN IN PLACE.

SIGN PANEL QUANTITIES

SIGN CODE	MESSAGE	PANEL SIZE (L x D)	PANEL AREA	NUMBER OF SIGNS	BACKGROUND		LEGEND		FURNISH SINGLE SHEET ALUMINUM SIGN	FURNISH SINGLE SHEET ALUMINUM SIGN FOR RETROREFLECTIVE SHEETING (TYPE XI)		RETROREFLECTIVE SHEETING (TYPE XI)
									UNFRAMED	UNFRAMED		
FEDERAL					SHEETING COLOR	RETRO-REFLECTIVE ASTM TYPE	SHEETING COLOR	RETRO-REFLECTIVE ASTM TYPE	0.063"	0.063"	0.080"	
			SQFT	EA					SQFT	SQFT	SQFT	SQFT
R1-1	STOP	30" x 30"	6.25	8	RED	XI	WHITE	XI		50.00		50.00
R2-1	SPEED LIMIT	24" x 30"	5.00	1	WHITE	IX	BLACK	PLAIN	5.00			
R4-1	DO NOT PASS	24" x 30"	5.00	1	WHITE	IX	BLACK	PLAIN	5.00			
W1-7	TWO DIRECTION LARGE ARROW	48" x 24"	8.00	1	YELLOW	XI	BLACK	PLAIN			8.00	8.00
W2-1	INTERSECTION WARNING	30" x 30"	6.25	2	YELLOW	XI	BLACK	PLAIN		12.50		12.50
W2-2	SIDE STREET	30" x 30"	6.25	2	YELLOW	XI	BLACK	PLAIN		12.50		12.50
W3-3	SIGNAL AHEAD	30" x 30"	6.25	7	YELLOW	XI	RED/GREEN/BLACK	PLAIN/XI		43.75		43.75
W4-2	LANE ENDS	36" x 36"	9.00	1	YELLOW	XI	BLACK	PLAIN		9.00		9.00
W11-5	FARM VEHICLE	30" x 30"	6.25	2	YELLOW	XI	BLACK	PLAIN		12.50		12.50
W14-1	DEAD END	36" x 36"	9.00	1	YELLOW	XI	BLACK	PLAIN		9.00		9.00
W16-7P	DOWNWARD DIAGONAL ARROW (PLAQUE)	24" x 12"	2.00	2	YELLOW	XI	BLACK	PLAIN		4.00		4.00
TOTAL									10.00	153.25	8.00	161.25

REVISED BY | DATE REVISED

WAI KEI WONG | CLARA PONCE

CALCULATED-DESIGNED BY | CHECKED BY

CONSULTANT FUNCTIONAL SUPERVISOR: MATTHEW J. KORVE

STATE OF CALIFORNIA - DEPARTMENT OF TRANSPORTATION

Caltrans

SIGN QUANTITIES

SQ-1

LAST REVISION 06-03-16 | DATE PLOTTED => 10-AUG-2016 | TIME PLOTTED => 16:38

Dist	COUNTY	ROUTE	POST MILES TOTAL PROJECT	SHEET No.	TOTAL SHEETS
05	SBt	156	R10.0/R18.4	25	89

REGISTERED CIVIL ENGINEER 6-13-16 DATE

6-20-16
PLANS APPROVAL DATE

REGISTERED PROFESSIONAL ENGINEER MATTHEW J. KORVE No. 63248 Exp. 6-30-18 CIVIL STATE OF CALIFORNIA

THE STATE OF CALIFORNIA OR ITS OFFICERS OR AGENTS SHALL NOT BE RESPONSIBLE FOR THE ACCURACY OR COMPLETENESS OF SCANNED COPIES OF THIS PLAN SHEET.

AECOM
2020 L STREET
SUITE 400
SACRAMENTO, CA 95811

ROADSIDE SIGN QUANTITIES

SIGN NUMBER	POST MILE	DIRECTION/ ROAD	SIGN CODE FEDERAL	SIGN PANEL SIZE (L x D)	REMOVE ROADSIDE SIGN PANEL EA	INSTALL ROADSIDE SIGN PANEL ON Exist POST EA	REMARKS
S1-1		McCONNELL Rd	R1-1	30" x 30"	1	1	
S1-2	11.18	EB	W3-3	30" x 30"	1	1	W3-3 WITH BEACON
S1-3	11.35	WB	W4-2	36" x 36"	1	1	
			R4-1	24" x 30"	1	1	
S1-4	11.60	WB	W3-3	30" x 30"	1	1	W3-3 WITH BEACON
S1-5	12.39	EB	W11-5	30" x 30"	1	1	W11-5 WITH OLD W80, REPLACE WITH W16-7p
			W80		1		
			W16-7p	24" x 12"		1	
S1-6	12.60	WB	W11-5	30" x 30"	1	1	W11-5 WITH OLD W80, REPLACE WITH W16-7p
			W80		1		
			W16-7p	24" x 12"		1	
S1-9	12.97	EB	W3-3	30" x 30"	1	1	
S1-10	13.41	WB	W3-3	30" x 30"	1	1	W3-3 WITH WARNING BEACON
S1-11	15.13	EB	W2-2	30" x 30"	1	1	
S1-12	15.22	WB	W1-7	48" x 24"	1	1	
S1-13	15.23	ROAD Q	R1-1	30" x 30"	1	1	
S1-14	15.34	WB	W2-2	30" x 30"	1	1	
S1-15	16.31	EB	W3-3	30" x 30"	1	1	W3-3 WITH WARNING BEACON
S1-16	16.72	EB	W3-3	30" x 30"	1	1	W3-3 WITH WARNING BEACON
S1-17	16.72	WB	W3-3	30" x 30"	1	1	W3-3 WITH WARNING BEACON
S1-18	16.98	EB	W2-2	30" x 30"	1		REPLACE W2-2 WITH W2-1
			W2-1	30" x 30"		1	
S1-19	17.08	WB	R1-1	30" x 30"	1	1	
S1-20	17.08	EB	W14-1	36" x 36"	1	1	
S1-21	17.08		R1-1	30" x 30"	1	1	
S1-22	17.09		R1-1	30" x 30"	1	1	
S1-23	17.18	WB	W2-1	30" x 30"	1	1	
S1-24	17.65	PACHECO CREEK Dr	R1-1	30" x 30"	1	1	
S1-25	18.30	BARBHEISEL Rd	R1-1	30" x 30"	1	1	
S1-26	18.32	BARBHEISEL Rd	R1-1	30" x 30"	1	1	
S1-27	18.38	WB	R2-1	24" x 30"	1	1	55 MPH
TOTAL					28	28	

REVISED BY | DATE REVISED
WAI KEI WONG | CLARA PONCE
CALCULATED-DESIGNED BY | CHECKED BY
CONSULTANT FUNCTIONAL SUPERVISOR | MATTHEW J. KORVE
STATE OF CALIFORNIA - DEPARTMENT OF TRANSPORTATION
Caltrans

SIGN QUANTITIES

SQ-2

LAST REVISION 06-03-16 | DATE PLOTTED => 10-AUG-2016 | TIME PLOTTED => 16:38

Dist	COUNTY	ROUTE	POST MILES TOTAL PROJECT	SHEET No.	TOTAL SHEETS
05	SB†	156	R10.0/R18.4	26	89

REGISTERED CIVIL ENGINEER 6-13-16 DATE

6-20-16
PLANS APPROVAL DATE

REGISTERED PROFESSIONAL ENGINEER MATTHEW J. KORVE No. 63248 Exp. 6-30-18 CIVIL STATE OF CALIFORNIA

THE STATE OF CALIFORNIA OR ITS OFFICERS OR AGENTS SHALL NOT BE RESPONSIBLE FOR THE ACCURACY OR COMPLETENESS OF SCANNED COPIES OF THIS PLAN SHEET.

AECOM
2020 L STREET
SUITE 400
SACRAMENTO, CA 95811

COLD PLANE ASPHALT CONCRETE PAVEMENT

LOCATION	DEPTH	COLD PLANE ASPHALT CONCRETE PAVEMENT
	FT	SQYD
PM R10.0 TO R13.76 AND PM R15.01 TO R18.40	0.00-0.20	92,976.5
REPAIR FAILED AREAS	0.50	5,346.9
TOTAL		98,323.4

MINOR CONCRETE

LOCATION	MINOR CONCRETE (CURB, GUTTER, SIDEWALK, AND DRIVEWAY)	MINOR CONCRETE (CURB RAMP)	DETECTABLE WARNING SURFACE
	CY	CY	SQFT
FAIRVIEW ROAD NW CORNER	3.0	0.9	12.7
FAIRVIEW ROAD NE CORNER	3.5	0.9	12.6
FAIRVIEW ROAD SW CORNER	3.5	0.9	12.6
FAIRVIEW ROAD SE CORNER	3.0	0.8	12.6
TOTAL	13.0	3.5	50.5

CONCRETE BARRIER (TRANSITION)

LOCATION No.	CONCRETE BARRIER (TRANSITION)	
	CASE 1	CASE 2
	LF	
1		3.5
2		3.5
3		3.5
4		3.5
5		3.5
6		3.5
7		3.5
8		3.5
9	3.5	
10	3.5	
11	3.5	
12	3.5	
13	6.25	
14	6.25	
15	3.5	
16	3.5	
TOTAL	61.5	

PLACE HMA (MISCELLANEOUS AREA)

LOCATION	PLACE HMA (MISCELLANEOUS AREA)
	SQYD
PIPE DOWNDRAIN	5.9
TOTAL	5.9

GUARDRAIL QUANTITIES

Loc No.	PM	DIRECTION	LAYOUT TYPE	REMOVE GUARDRAIL	MGS (STEEL POST)	MGS (8' POST)	BURIED POST END ANCHOR (N)	ALTERNATIVE FLARED TERMINAL SYSTEM	ALTERNATIVE IN-LINE TERMINAL SYSTEM	TRANSITION RAILING (TYPE WB-31)	END CAP (TYPE TC) (N)	VEGETATION CONTROL (MINOR CONCRETE)	CONCRETE STAINING (OXIDIZING)	TREATED WOOD WASTE
				LF	LF	LF	EA	EA	EA	EA	EA	SQYD	SQYD	LB
1	R10.47	EB	12B	912.5	850.0			1		1	1	427	427	10,091
2	R10.47	WB	12BB	912.5		850.0		1		1	1	286	286	10,091
3	R10.51	EB	12BB	1,750.0	1,687.5			1		1	1	799	799	19,288
4	R10.51	WB	12A	1,750.0		1,687.5			1	1	1	519	519	19,288
5	R13.44	EB	12A	62.5					1	1	1	51	51	756
6	R13.44	WB	12BB	62.5				1		1	1	49	49	756
7	R13.47	EB	12BB	62.5				1		1	1	49	49	756
8	R13.47	WB	12A	62.5					1	1	1	51	51	756
9	R15.41	EB	12B	62.5				1		1	1	49	49	756
10	R15.41	WB	12BB	62.5				1		1	1	49	49	756
11	R15.44	EB	12BB	62.5				1		1	1	49	49	756
12	R15.44	WB	12B	62.5				1		1	1	49	49	756
13	R17.28	EB	12B	62.5				1		1	1	49	49	756
14	R17.28	WB	12BB	62.5				1		1	1	49	49	756
15	R17.33	EB	12BB	62.5				1		1	1	49	49	756
16	R17.33	WB	12C	75.0	50.0		1			1	1	34	34	893
17	R17.67	WB	11D	425.0	275.0	50.0			2			215	215	
TOTAL				6,512.5	2,862.5	2,587.5		12	5	16		2,823	2,823	67,967

(N) NOT A SEPARATE PAY ITEM, FOR INFORMATION ONLY

SUMMARY OF QUANTITIES

Q-1

STATE OF CALIFORNIA - DEPARTMENT OF TRANSPORTATION
Caltrans®

CONSULTANT FUNCTIONAL SUPERVISOR: MATTHEW J. KORVE
CALCULATED-DESIGNED BY: WAI KEI WONG
CHECKED BY: CLARA PONCE
REVISED BY
DATE REVISED

LAST REVISION 06-03-16
DATE PLOTTED => 10-AUG-2016
TIME PLOTTED => 16:38

Dist	COUNTY	ROUTE	POST MILES TOTAL PROJECT	SHEET No.	TOTAL SHEETS
05	SBt	156	R10.0/R18.4	27	89

REGISTERED CIVIL ENGINEER 6-13-16 DATE

6-20-16
PLANS APPROVAL DATE

REGISTERED PROFESSIONAL ENGINEER MATTHEW J. KORVE No. 63248 Exp. 6-30-18 CIVIL STATE OF CALIFORNIA

THE STATE OF CALIFORNIA OR ITS OFFICERS OR AGENTS SHALL NOT BE RESPONSIBLE FOR THE ACCURACY OR COMPLETENESS OF SCANNED COPIES OF THIS PLAN SHEET.

AECOM
2020 L STREET
SUITE 400
SACRAMENTO, CA 95811

EDGELINE RUMBLE STRIP

LOCATION	DESCRIPTION	6" RUMBLE STRIP (AC PAVEMENT)
		STA
PM R10.0 TO R10.47	EB, RIGHT ETW	26.6
PM R10.0 TO R10.47	WB, RIGHT ETW	26.6
PM R10.51 TO R11.13	EB, RIGHT ETW	32.3
PM R10.51 TO R11.13	WB, RIGHT ETW	32.3
PM R11.18 TO R11.32	EB, RIGHT ETW	7.4
PM R11.18 TO R11.32	WB, RIGHT ETW	7.4
PM R11.48 TO R12.48	EB, RIGHT ETW	55.4
PM R11.48 TO R12.48	WB, RIGHT ETW	55.7
PM R12.51 TO R13.13	EB, RIGHT ETW	32.6
PM R12.51 TO R13.13	WB, RIGHT ETW	32.5
PM R13.25 TO R13.44	EB, RIGHT ETW	8.0
PM R13.25 TO R13.44	WB, RIGHT ETW	7.9
PM R13.47 TO R13.76(=R15.01)	EB, RIGHT ETW	14.7
R15.01(=R13.76) TO R15.17	EB, RIGHT ETW	8.5
PM R13.47 TO R13.76(=R15.01)	WB, RIGHT ETW	14.6
R15.01(=R13.76) TO R15.42	WB, RIGHT ETW	21.6
PM R15.29 TO R15.42	EB, RIGHT ETW	6.6
PM R15.44 TO R16.46	EB, RIGHT ETW	54.5
PM R15.44 TO R16.46	WB, RIGHT ETW	54.5
PM R16.58 TO R17.02	EB, RIGHT ETW	23.5
PM R16.58 TO R17.02	WB, RIGHT ETW	23.5
PM R17.15 TO R17.28	EB, RIGHT ETW	6.2
PM R17.15 TO R17.28	WB, RIGHT ETW	6.2
PM R17.33 TO R17.60	EB, RIGHT ETW	14.4
PM R17.33 TO R17.60	WB, RIGHT ETW	14.4
PM R17.72 TO R18.25	EB, RIGHT ETW	28.7
PM R17.72 TO R18.25	WB, RIGHT ETW	28.6
PM R18.31 TO R18.40	EB, RIGHT ETW	4.9
PM R18.31 TO R18.40	WB, RIGHT ETW	4.9
TOTAL		655.0

CORRUGATED METAL PIPE DOWNDRAIN

LOCATION	18" CORRUGATED STEEL PIPE DOWNDRAIN (.079" THICK)	18" TAPERED INLET
	LF	EA
PM R10.3 WB	7	1
TOTAL	7	1

CENTERLINE RUMBLE STRIP

LOCATION	DESCRIPTION	12" RUMBLE STRIP (AC PAVEMENT)
		STA
PM R10.0 TO R10.47	ROUTE 156, CL	26.6
PM R10.51 TO R10.85	ROUTE 156, CL	18.0
PM R10.85 TO R11.06	EB, LEFT ETW	10.7
PM R10.85 TO R11.06	WB, LEFT ETW	10.7
PM R11.06 TO R11.13	ROUTE 156, CL	3.6
PM R11.17 TO R11.26	EB, LEFT ETW	4.7
PM R11.17 TO R11.26	WB, LEFT ETW	4.7
PM R11.26 TO R11.32	ROUTE 156, CL	3.3
PM R11.48 TO R11.51	ROUTE 156, CL	1.6
PM R11.51 TO R11.71	EB, LEFT ETW	10.5
PM R11.51 TO R11.71	WB, LEFT ETW	10.5
PM R11.71 TO R12.48	ROUTE 156, CL	43.5
PM R12.51 TO R12.90	ROUTE 156, CL	20.5
PM R13.90 TO R13.13	EB, LEFT ETW	12.0
PM R13.90 TO R13.13	WB, LEFT ETW	12.0
PM R13.25 TO R13.26	ROUTE 156, CL	0.4
PM R13.26 TO R13.44	EB, LEFT ETW	7.6
PM R13.26 TO R13.44	WB, LEFT ETW	7.6
PM R13.47 TO R13.55	EB, LEFT ETW	5.3
PM R13.47 TO R13.55	WB, LEFT ETW	5.3
PM R13.55 TO R13.76 (=R15.01)	ROUTE 156, CL	9.4
PM R15.01(=R13.76) TO R15.17	ROUTE 156, CL	8.5
PM R15.29 TO R15.42	ROUTE 156, CL	6.6
PM R15.44 TO R16.19	ROUTE 156, CL	40.8
PM R16.19 TO R16.41	EB, LEFT ETW	111.5
PM R16.19 TO R16.41	WB, LEFT ETW	11.5
PM R16.41 TO R16.46	ROUTE 156, CL	2.3
PM R16.58 TO R16.62	ROUTE 156, CL	2.5
PM R16.62 TO R16.82	EB, LEFT ETW	10.5
PM R16.62 TO R16.82	WB, LEFT ETW	10.5
PM R16.82 TO R17.02	ROUTE 156, CL	10.5
PM R17.15 TO R17.28	ROUTE 156, CL	6.2
PM R17.33 TO R17.60	ROUTE 156, CL	14.4
PM R17.72 TO R18.25	ROUTE 156, CL	28.7
PM R18.31 TO R18.40	ROUTE 156, CL	4.8
TOTAL		497.8

TAPERED EDGE

LOCATION	DIRECTION	TAPERED EDGE (N)	RHMA (GAP GRADED)(*)
		LF	TON
PM R10.0 TO R10.09	EB	487	1.3
PM R10.85 TO R11.15	EB	1591	4.1
PM R11.17 TO R11.34	EB	918	2.4
PM R11.41 TO R11.45	EB	210	0.5
PM R11.53 TO R11.70	EB	930	2.4
PM R11.86 TO R12.52	WB	3535	9.2
PM R12.46 TO R12.49	EB	141	0.4
PM R12.50 TO R13.16	EB	3500	9.1
PM R13.21 TO R13.39	EB	960	2.5
PM R13.45 TO R15.20	EB	2534	6.6
PM R15.24 TO R15.40	EB	848	2.2
PM R15.44 TO R16.49	EB	5571	14.5
PM R15.44 TO R16.49	WB	5563	14.4
PM R16.53 TO R16.64	EB	567	1.5
PM R16.53 TO R17.06	WB	2775	7.2
PM R16.67 TO R17.07	EB	2119	5.5
PM R17.10 TO R17.25	EB	817	2.1
PM R17.10 TO R17.25	WB	792	2.1
PM R17.46 TO R17.64	EB	898	2.3
PM R17.51 TO R17.63	WB	641	1.7
PM R17.67 TO R18.30	EB	3370	8.7
PM R17.87 TO R18.30	WB	2228	5.8
PM R18.33 TO R18.40	EB	634	1.6
PM R18.40 TO R18.33	WB	615	1.6
TOTAL			109.7

(*) QUANTITIY INCLUDED IN ROADWAY QUANTITIES TABLE

SUMMARY OF QUANTITIES

Q-2

STATE OF CALIFORNIA - DEPARTMENT OF TRANSPORTATION
Caltrans
CONSULTANT FUNCTIONAL SUPERVISOR: MATTHEW J. KORVE
CALCULATED-DESIGNED BY: WAI KEI WONG
CHECKED BY: CLARA PONCE
REVISED BY
DATE REVISED

LAST REVISION 06-03-16
DATE PLOTTED => 16-AUG-2016
TIME PLOTTED => 09:14

Dist	COUNTY	ROUTE	POST MILES TOTAL PROJECT	SHEET No.	TOTAL SHEETS
05	SB†	156	R10.0/R18.4	28	89

REGISTERED CIVIL ENGINEER 6-13-16 DATE

6-20-16
PLANS APPROVAL DATE

REGISTERED PROFESSIONAL ENGINEER MATTHEW J. KORVE No. 63248 Exp. 6-30-18 CIVIL STATE OF CALIFORNIA

THE STATE OF CALIFORNIA OR ITS OFFICERS OR AGENTS SHALL NOT BE RESPONSIBLE FOR THE ACCURACY OR COMPLETENESS OF SCANNED COPIES OF THIS PLAN SHEET.

AECOM
2020 L STREET
SUITE 400
SACRAMENTO, CA 95811

HMA DIKE

LOCATION	DIRECTION	PLACE HMA DIKE (TYPE A)	PLACE HMA DIKE (TYPE C)	PLACE HMA DIKE (TYPE E)	PLACE HMA DIKE (TYPE F)	HMA (TYPEA) (*)
		LF	LF	LF	LF	TON
PM 10.0 TO 10.47	WB	1,588	62.5		875.0	55.7
PM 10.05 TO 10.30	EB	1,271				34.8
PM 10.51 TO 11.15	WB		75.0	1,566	1,712.5	64.8
PM 11.17 TO 11.39	WB			1,066		28.1
PM 11.45 TO 11.53	EB			405		10.7
PM 11.45 TO 11.86	WB	753		1,410		57.8
PM 11.70 TO 12.46	EB	688		3,547		112.3
PM 12.47 TO 13.17	WB			3,683		97.0
PM 13.21 TO 13.44	WB		62.5	992	25.0	27.1
PM 13.47 TO 13.76	WB		75.0	1,415	25.0	38.3
PM 15.01 TO 15.42	WB		62.5	2,069	25.0	55.4
PM 15.44 TO 15.45	WB		62.5		25.0	0.9
PM 17.28 to 17.30	WB		62.5		25.0	0.9
PM 17.33 TO 17.51	WB	978	50.0		50.0	27.9
PM 17.37 TO 17.49	EB	630				17.3
PM 17.74 TO 17.87	WB		75.0	637		17.4
FAIRVIEW ROAD (NW)				55		1.5
FAIRVIEW ROAD (NE)				43		1.2
FAIRVIEW ROAD (SW)				61		1.7
FAIRVIEW ROAD (SE)				101		2.7
TOTAL		5,908	587.5	17,050	2,762.5	653.5

(*) QUANTITIY INCLUDED IN ROADWAY QUANTITIES TABLE

ROADWAY QUANTITIES

LOCATION	RUBBERIZED HOT MIX ASPHALT (GAP GRADED)	HMA (TYPE A)	SHOULDER BACKING	TACK COAT
	TON	TON	TON	TON
PM R10.0 TO R13.76 AND PM R15.01 TO R18.40	23,463.7	6,057.0	5,426	85
HMA DIKE		653.5		
REPAIR FAILED AREAS		1,826.4		
TAPERED EDGE	109.7			
TOTAL	23,573.4	8,536.9	5,426	85

REMOVE ASPHALT CONCRETE PAVEMENT

LOCATION	REMOVE AC PAVMENT
	SQFT
FAIRVIEW ROAD (NW CORNER)	524
FAIRVIEW ROAD (NE CORNER)	542
FAIRVIEW ROAD (SW CORNER)	452
FAIRVIEW ROAD (SE CORNER)	522
TOTAL	2,040

REMOVE AC DIKE

LOCATION	DIRECTION	REMOVE AC DIKE
		LF
PM 10.0 TO 10.30	WB	2,516
PM 10.05 TO 10.30	EB	1,271
PM 10.51 TO 11.15	WB	3,340
PM 11.17 TO 11.39	WB	1,066
PM 11.45 TO 11.53	EB	405
PM 11.45 TO 11.86	WB	2,163
PM 11.70 TO 12.46	EB	4,235
PM 12.47 TO 13.17	WB	3,683
PM 13.21 TO 13.44	WB	992
PM 13.47 TO 13.76	WB	1,477
PM 15.01 TO 15.42	WB	2,156
PM 15.44 TO 15.45	WB	80
PM 17.28 to 17.30	WB	25
PM 17.33 TO 17.51	WB	1,041
PM 17.37 TO 17.49	EB	630
PM 17.74 TO 17.87	WB	697
FAIRVIEW ROAD (NW)		64
FAIRVIEW ROAD (NE)		47
FAIRVIEW ROAD (SW)		72
FAIRVIEW ROAD (SE)		79
TOTAL		26,039

TEMPORARY FENCE (TYPE ESA)

LOCATION	TEMPORARY FENCE (TYPE ESA)
	LF
HUDNER OH	440
SANTA ANA CREEK BRIDGE	440
TEQUISQUITA SLOUGH BRIDGE	440
PACHECO CREEK BRIDGE	440
TOTAL	1,760

SUMMARY OF QUANTITIES

Q-3

STATE OF CALIFORNIA - DEPARTMENT OF TRANSPORTATION
Caltrans
CONSULTANT FUNCTIONAL SUPERVISOR: MATTHEW J. KORVE
CALCULATED-DESIGNED BY: WAI KEI WONG
CHECKED BY: CLARA PONCE
REVISED BY
DATE REVISED

LAST REVISION 06-03-16
DATE PLOTTED => 10-AUG-2016
TIME PLOTTED => 16:39

Dist	COUNTY	ROUTE	POST MILES TOTAL PROJECT	SHEET No.	TOTAL SHEETS
05	SBt	156	R10.0/R18.4	29	89

REGISTERED CIVIL ENGINEER 6-13-16 DATE

6-20-16
PLANS APPROVAL DATE

REGISTERED PROFESSIONAL ENGINEER MATTHEW J. KORVE No. 63248 Exp. 6-30-18 CIVIL STATE OF CALIFORNIA

THE STATE OF CALIFORNIA OR ITS OFFICERS OR AGENTS SHALL NOT BE RESPONSIBLE FOR THE ACCURACY OR COMPLETENESS OF SCANNED COPIES OF THIS PLAN SHEET.

AECOM
2020 L STREET
SUITE 400
SACRAMENTO, CA 95811

EASTBOUND ROUTE 156
REPAIR FAILED AREA LOCATIONS

DESCRIPTION	PM	LENGTH	WIDTH	HMA (TYPE A) (*)	COLD PLANE AC Pvmt 0.50'(**)
	EB	LF	FT	TON	SQYD
4'x450' GUTTER	10.1	450	4	68.3	200.0
4'x50' Rt WHEEL TRACK	10.4	50	4	7.6	22.3
4'x600' Rt WHEEL TRACK	10.4	600	4	91.1	266.7
4'x75' Lt WHEEL TRACK	10.7	75	4	11.4	33.4
2 LOCATIONS 4'x65' Rt WHEEL TRACK	11.4	130	4	19.8	57.8
4'x75' GUTTER	11.7	75	4	11.4	33.4
4'x75' Rt WHEEL TRACK	11.9	75	4	11.4	33.4
4'x75' Lt WHEEL TRACK	12.0	75	4	11.4	33.4
4'x75' Rt WHEEL TRACK	12.0	75	4	11.4	33.4
4'x600' Rt WHEEL TRACK	12.4	600	4	91.1	266.7
12'x500' LANE	13.0	500	12	227.7	666.7
4'x50' Rt WHEEL TRACK	13.3	50	4	7.6	22.3
4'x150' Lt WHEEL TRACK	13.4	150	4	22.8	66.7
2 LOCATIONS 4'x50' Lt WHEEL TRACK	16.8	100	4	15.2	44.5
4'x50' Rt WHEEL TRACK	16.8	50	4	7.6	22.3
2 LOCATIONS 4'x60' Rt & Lt WHEEL	16.9	120	4	18.3	53.4
4'x300' Lt WHEEL TRACK	17.00	300	4	45.6	133.4
4'x1300' Rt EDGE LINE	17.0-17.25	1300	4	197.3	577.8
4'x400' Rt EDGE LINE	17.2	400	4	60.7	177.8
4'x200' Rt EDGE LINE	17.4	200	4	30.4	88.9
4'x50' Lt WHEEL PATH	17.5	50	4	7.6	22.3
4'x400' Rt EDGE LINE	17.50	400	4	60.7	177.8
4'x50' Rt WHEEL PATH	17.5	50	4	7.6	22.3
4'x150' Rt EDGE LINE	17.52	150	4	22.8	66.7
2 LOCATIONS 4'x30' Lt WHEEL PATH	17.6	60	4	9.2	26.7
4'x200' Rt EDGE LINE	17.6	200	4	30.4	88.9
4'x30' Rt WHEEL PATH	17.60	30	4	4.6	13.4
4'x400' Rt EDGE LINE	18.00	400	4	60.7	177.8
4'x150' Lt WHEEL PATH	18.10	150	4	22.8	66.7
4'x150' Lt WHEEL PATH	18.20	150	4	22.8	66.7
4'x300' Lt WHEEL PATH	18.3	300	4	45.6	133.4
4'x100' Lt WHEEL PATH	18.3	100	4	15.2	44.5
SUBTOTAL				1,278.1	3,741.5

(*) = QUANTITY INCLUDED IN ROADWAY QUANTITITES TABLE
(**)= QUANTITY INCLUDED IN COLD PLANE ASPHALT CONCRETE PAVEMENT TABLE

WESTBOUND ROUTE 156
REPAIR FAILED AREA LOCATIONS

DESCRIPTION	PM	LENGTH	WIDTH	HMA (TYPE A) (*)	COLD PLANE AC Pvmt 0.50'(**)
	WB	LF	FT	TON	SQYD
4'x175' Rt Shld	10.10	175	4	26.6	77.8
3 LOCATIONS 4'x50' Lt WHEEL TRACK	10.10	150	4	22.8	66.7
8 LOCATIONS 4'x50' MIXED Rt & Lt	10.6-10.47	400	4	60.7	177.8
4'x700' Rt WHEEL TRACK	10.70	700	4	106.3	311.2
4'x100' Rt WHEEL TRACK	11.20	100	4	15.2	44.5
4'x75' Rt WHEEL TRACK	11.70	75	4	11.4	33.4
2 LOCATIONS 4'x40' Shld	11.70	80	4	12.2	35.6
4'x75' Rt WHEEL TRACK	11.70	75	4	11.4	33.4
4'x50' Rt WHEEL TRACK	12.25	50	4	7.6	22.3
4'x50' Rt WHEEL TRACK	12.30	50	4	7.6	22.3
4'x100' Rt WHEEL TRACK	12.40	100	4	15.2	44.5
4'x50' Rt WHEEL TRACK	12.43	50	4	7.6	22.3
4'x105' Rt WHEEL TRACK	12.55	105	4	16.0	46.7
4'x50' Rt WHEEL TRACK	13.12	50	4	7.6	22.3
4'x1200' Rt WHEEL TRACK	13.25	1200	4	182.1	533.4
4'x50' BRIDGE DEPARTURE	13.50	50	12	22.8	66.7
4'x100' Rt WHEEL TRACK	16.90	100	4	15.2	44.5
SUBTOTAL				548.3	1,605.4
TOTAL				1,826.4	5,346.9

(*) = QUANTITY INCLUDED IN ROADWAY QUANTITITES TABLE
(**)= QUANTITY INCLUDED IN COLD PLANE ASPHALT CONCRETE PAVEMENT TABLE

SUMMARY OF QUANTITIES

Q-4

STATE OF CALIFORNIA - DEPARTMENT OF TRANSPORTATION
Caltrans

CONSULTANT FUNCTIONAL SUPERVISOR: MATTHEW J. KORVE
CALCULATED-DESIGNED BY: WAI KEI WONG
CHECKED BY: CLARA PONCE
REVISED BY
DATE REVISED

LAST REVISION 06-03-16 | DATE PLOTTED => 10-AUG-2016 | TIME PLOTTED => 16:39

Dist	COUNTY	ROUTE	POST MILES TOTAL PROJECT	SHEET No.	TOTAL SHEETS
05	SBt	156	R10.0/R18.4	30	89

REGISTERED CIVIL ENGINEER 6/13/16 DATE

6-20-16
PLANS APPROVAL DATE

REGISTERED PROFESSIONAL ENGINEER
KIN Y. CHAN
No. 55391
Exp. 12/31/16
CIVIL
STATE OF CALIFORNIA

THE STATE OF CALIFORNIA OR ITS OFFICERS OR AGENTS SHALL NOT BE RESPONSIBLE FOR THE ACCURACY OR COMPLETENESS OF SCANNED COPIES OF THIS PLAN SHEET.

Y&C TRANSPORTATION
CONSULTANTS, INC.
3250 RAMOS CIRCLE
SACRAMENTO, CA 95827

LEGEND:

1. AB Exist DETECTOR LOOPS. FURNISH AND INSTALL DETECTOR LOOPS AS SHOWN.
2. RS Exist PBA. FURNISH AND INSTALL APS.
3. RS Exist PSF. FURNISH AND INSTALL PSF AND APS CABLE.
4. Exist CONTROLLER ASSSEMBLY WITH MODEL 332 CABINET.
5. Exist 2"C, 3#2 (SERVICE).
6. Exist 1½"C, 2#8 (FB), 8 DLC.
7. Exist 2"C, 2#6 (SIGNAL), 2#8 (FB), 2#10 (L+g), 2#10 (CCTV).
8. 1½"C, 2#14, 1 APS CABLE.
9. RC Exist PB. INSTALL NEW No. 6 PB.
10. SEE DETAIL A ON SHEET E-2 FOR LOOP DETECTOR PLACEMENT AND DESIGNATION.
11. RS Exist HPS Lum. FURNISH AND INSTALL Rdwy 1 LED Lum.
12. SC Exist SPARE DLC FOR ADVANCED LOOPS (LEFT-TURN LANE) TO NEW TYPE D LOOP DETECTOR WIRES.
13. Exist 1½"C, 1 DLC.
14. Exist 1½"C, 2#8 (FB), 3 DLC, 3 DLC (SPARE).
15. Exist 1½"C, 2#8 (FB), 1 DLC.
16. SEE DETAIL B ON SHEET E-4 FOR LOOP DETECTOR PLACEMENT.
17. Exist 1½"C, 2#8 (FB), 5 DLC, 2 DLC (SPARE).
18. Exist 1½"C, 2#8 (FB), 4 DLC, 2 DLC (SPARE).
19. Exist 1½"C, 2#8 (FB), 2 DLC, 1 DLC (SPARE).
20. Exist 1½"C, 2#8 (FB).
21. Exist 1½"C, 2#8 (FB), 7 DLC, 2 DLC (SPARE).
22. Exist 1½"C, 2#8 (FB), 6 DLC, 2 DLC (SPARE).
23. Exist 1½"C, 2#8 (FB), 4 DLC, 1 DLC (SPARE).
24. Exist 1½"C, 2#8 (FB), 2 DLC.
25. Exist 1½"C, 3 DLC, 2 DLC (SPARE).
26. Exist 1½"C, 2 DLC, 1 DLC (SPARE).
27. Exist CONDUIT AND CONDUCTORS. ADD 1 APS CABLE.
28. Exist CONDUIT AND CONDUCTORS. ADD 2 APS CABLES.

SYMBOLS:

(X) Exist STANDARD

1 Exist CONDUIT RUN

ABBREVIATIONS:

PG&E - PACIFIC GAS AND ELECTRIC COMPANY

LEGEND, SYMBOLS AND ABBREVIATIONS

E-1

REVISED BY | DATE REVISED
MENG YANG | DAN YAU
CALCULATED-DESIGNED BY | CHECKED BY
CONSULTANT FUNCTIONAL SUPERVISOR
MATTHEW J KORVE
STATE OF CALIFORNIA - DEPARTMENT OF TRANSPORTATION
Caltrans

LAST REVISION 06-03-16 | DATE PLOTTED => 10-AUG-2016 | TIME PLOTTED => 16:39

Dist	COUNTY	ROUTE	POST MILES TOTAL PROJECT	SHEET No.	TOTAL SHEETS
05	SBt	156	R10.0/R18.4	31	89

REGISTERED CIVIL ENGINEER — DATE 6/13/16

6-20-16
PLANS APPROVAL DATE

REGISTERED PROFESSIONAL ENGINEER — KIN Y. CHAN — No. 55391 — Exp. 12/31/16 — CIVIL — STATE OF CALIFORNIA

THE STATE OF CALIFORNIA OR ITS OFFICERS OR AGENTS SHALL NOT BE RESPONSIBLE FOR THE ACCURACY OR COMPLETENESS OF SCANNED COPIES OF THIS PLAN SHEET.

Y&C TRANSPORTATION
CONSULTANTS, INC.
3250 RAMOS CIRCLE
SACRAMENTO, CA 95827

NOTE:

FOR ACCURATE RIGHT OF WAY DATA, CONTACT
RIGHT OF WAY ENGINEERING AT THE DISTRICT OFFICE.

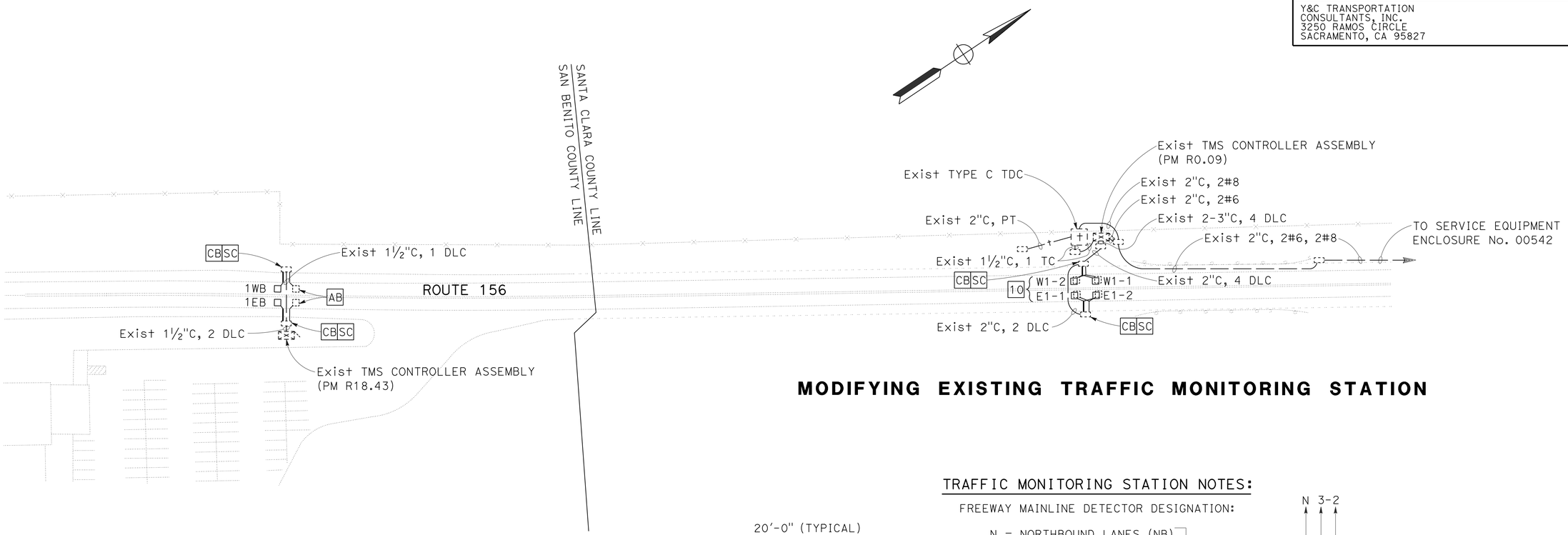

MODIFYING EXISTING TRAFFIC MONITORING STATION

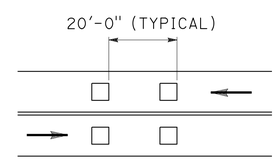

TRAFFIC MONITORING STATION NOTES:

FREEWAY MAINLINE DETECTOR DESIGNATION:

- N = NORTHBOUND LANES (NB)
- S = SOUTHBOUND LANES (SB)
- E = EASTBOUND LANES (EB)
- W = WESTBOUND LANES (WB)

NUMBER OF LANES FROM LEFT WITH RESPECT TO DIRECTION OF TRAFFIC:

- 1 = FIRST LANE FROM LEFT
- 2 = SECOND LANE FROM LEFT
- 3 = THIRD LANE FROM LEFT
- 4 = FOURTH LANE FROM LEFT

NUMBER OF DETECTOR IN THE SAME LANE:

- 1 = ENTERING DETECTOR
- 2 = LEAVING DETECTOR

N 3-2

DETAIL A

LOOP DETECTOR PLACEMENT AND DESIGNATION

MODIFYING EXISTING ELECTRICAL SYSTEM

SCALE: 1" = 50'

APPROVED FOR ELECTRICAL WORK ONLY

E-2

REVISED BY	DATE REVISED
MENG YANG	DAN YAU

CALCULATED-DESIGNED BY	CHECKED BY

CONSULTANT FUNCTIONAL SUPERVISOR: MATTHEW J KORVE

STATE OF CALIFORNIA - DEPARTMENT OF TRANSPORTATION — Caltrans

LAST REVISION 06-03-16 — DATE PLOTTED => 10-AUG-2016 — TIME PLOTTED => 16:39

Dist	COUNTY	ROUTE	POST MILES TOTAL PROJECT	SHEET No.	TOTAL SHEETS
05	SBt	156	R10.0/R18.4	32	89

REGISTERED CIVIL ENGINEER — DATE 6/13/16

6-20-16
PLANS APPROVAL DATE

REGISTERED PROFESSIONAL ENGINEER — KIN Y. CHAN No. 55391 Exp. 12/31/16 CIVIL — STATE OF CALIFORNIA

THE STATE OF CALIFORNIA OR ITS OFFICERS OR AGENTS SHALL NOT BE RESPONSIBLE FOR THE ACCURACY OR COMPLETENESS OF SCANNED COPIES OF THIS PLAN SHEET.

Y&C TRANSPORTATION CONSULTANTS, INC.
3250 RAMOS CIRCLE
SACRAMENTO, CA 95827

NOTE:

FOR ACCURATE RIGHT OF WAY DATA, CONTACT RIGHT OF WAY ENGINEERING AT THE DISTRICT OFFICE.

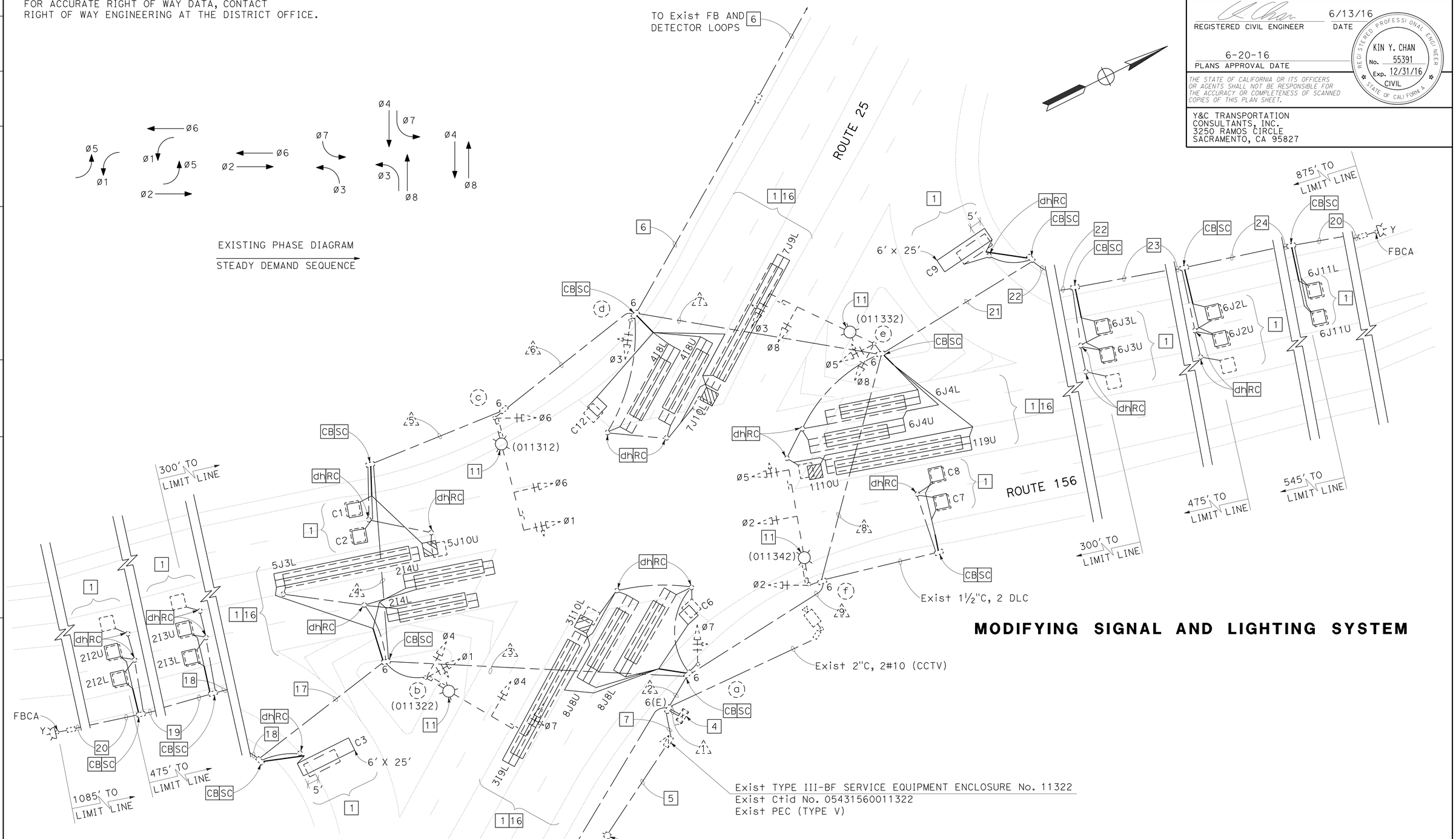

MODIFYING SIGNAL AND LIGHTING SYSTEM

APPROVED FOR ELECTRICAL WORK ONLY

MODIFYING EXISTING ELECTRICAL SYSTEM

SCALE: 1" = 20'

E-3

STATE OF CALIFORNIA - DEPARTMENT OF TRANSPORTATION — Caltrans®

CONSULTANT FUNCTIONAL SUPERVISOR: MATTHEW J KORVE

CALCULATED-DESIGNED BY: MENG YANG — CHECKED BY: DAN YAU

REVISED BY — DATE REVISED

LAST REVISION 06-03-16 — DATE PLOTTED => 10-AUG-2016 — TIME PLOTTED => 16:39

Dist	COUNTY	ROUTE	POST MILES TOTAL PROJECT	SHEET No.	TOTAL SHEETS
05	SBt	156	R10.0/R18.4	33	89

REGISTERED CIVIL ENGINEER — DATE 6/13/16

PLANS APPROVAL DATE 6-20-16

REGISTERED PROFESSIONAL ENGINEER — KIN Y. CHAN — No. 55391 — Exp. 12/31/16 — CIVIL — STATE OF CALIFORNIA

THE STATE OF CALIFORNIA OR ITS OFFICERS OR AGENTS SHALL NOT BE RESPONSIBLE FOR THE ACCURACY OR COMPLETENESS OF SCANNED COPIES OF THIS PLAN SHEET.

Y&C TRANSPORTATION CONSULTANTS, INC.
3250 RAMOS CIRCLE
SACRAMENTO, CA 95827

CONDUCTOR AND CONDUIT SCHEDULE

CONDUCTOR SCHEDULE	No. OF CONDUCTORS CONDUIT RUN NUMBER 1	2	3	4	5	6	7	8	9
No. 14 CONDUCTORS									
Ø1	3	3	3	3	3				
Ø2	3	3							3
Ø3	6	6	3	3	3	3		3	3
Ø4	3	3	3						
Ø5	3	3						3	3
Ø6	3	3	3	3	3				
Ø7	3	3	3						
Ø8	3	3						3	3
SPARES	6	6	3	3	3	3		3	3
TOTAL No. 14	33	33	18	12	12	6		12	15
No. 10 CONDUCTORS									
LIGHTING		2	2	2	2			2	2
SIGNAL NEUTRAL	2	2	1	1	1	1		1	1
TOTAL No. 10	2	4	3	3	3	1		3	3
No. 8 CONDUCTORS									
FLASHING BEACON		2	2	2	2				
No. 6 CONDUCTORS									
SERVICE TO CONTROLLER	2								
DETECTOR CABLES (DLC)									
COUNT (C)	12	10	6	5	3	3		1	3
Ø1 DET.	4	4						4	4
Ø2 DET.	6	6	6						
Ø3 DET.	4	2							
Ø4 DET.	6	6	6	6	6	6			
Ø5 DET.	4	4	4	1					
Ø6 DET.	6	6						6	6
Ø7 DET.	4	4	4	4	4	4			
Ø8 DET.	6	2							
TOTAL DETECTOR CABLES	52	44	26	16	13	13		11	13
PULL ROPE							1		
CONDUIT SIZE (INCHES)	2-3½	2-3½	3½	3	3	2½	3	3	3
% FILL	24	21	25	22	19	23		15	18

POLE AND EQUIPMENT SCHEDULE

No.	STANDARD TYPE	SMA (FEET)	LMA (FEET)	Veh Sig Mtg MAST ARM	POLE	LED Lum	SPECIAL REQUIREMENTS
a	1-A				TV-1-T		
b	29-5-70	50	15	MAT MAS	SV-2-TA	Rdwy 1	11
c	29-5-70	50	15	MAT MAS	SV-1-T	Rdwy 1	11
d	1-A				TV-1-T		
e	29-5-70	50	15	MAT MAS	SV-2-TA	Rdwy 1	11
f	29-5-70	50	15	MAT MAS	SV-1-T	Rdwy 1	11

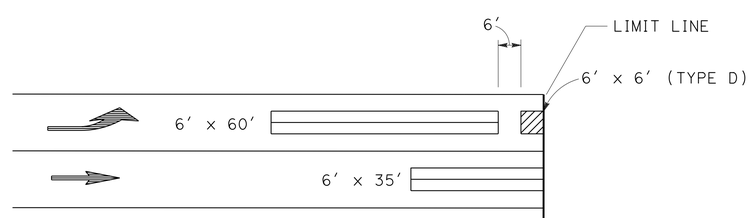

DETAIL B
LOOP DETECTOR PLACEMENT

MODIFYING EXISTING ELECTRICAL SYSTEM

NO SCALE

E-4

STATE OF CALIFORNIA - DEPARTMENT OF TRANSPORTATION
Caltrans®

CONSULTANT FUNCTIONAL SUPERVISOR: MATTHEW J KORVE
CALCULATED-DESIGNED BY: MENG YANG
CHECKED BY: DAN YAU
REVISED BY
DATE REVISED

LAST REVISION 06-03-16
DATE PLOTTED => 10-AUG-2016
TIME PLOTTED => 16:39

Dist	COUNTY	ROUTE	POST MILES TOTAL PROJECT	SHEET No.	TOTAL SHEETS
05	SBt	156	R10.0/R18.4	34	89

REGISTERED CIVIL ENGINEER — DATE 6/13/16

PLANS APPROVAL DATE 6-20-16

REGISTERED PROFESSIONAL ENGINEER — KIN Y. CHAN No. 55391 Exp. 12/31/16 CIVIL — STATE OF CALIFORNIA

THE STATE OF CALIFORNIA OR ITS OFFICERS OR AGENTS SHALL NOT BE RESPONSIBLE FOR THE ACCURACY OR COMPLETENESS OF SCANNED COPIES OF THIS PLAN SHEET.

Y&C TRANSPORTATION CONSULTANTS, INC.
3250 RAMOS CIRCLE
SACRAMENTO, CA 95827

NOTE:

FOR ACCURATE RIGHT OF WAY DATA, CONTACT RIGHT OF WAY ENGINEERING AT THE DISTRICT OFFICE.

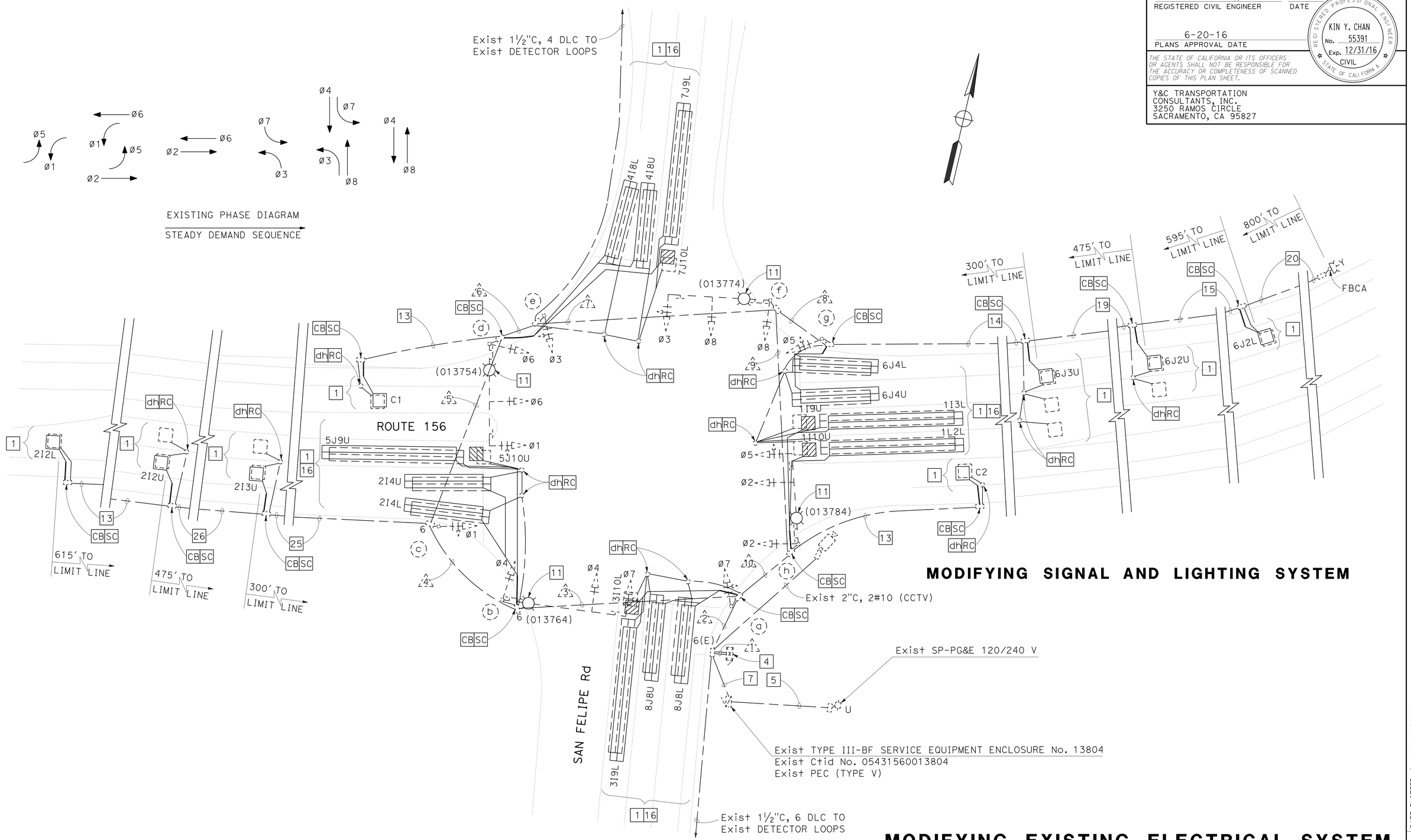

MODIFYING SIGNAL AND LIGHTING SYSTEM

MODIFYING EXISTING ELECTRICAL SYSTEM

SCALE: 1" = 20'

APPROVED FOR ELECTRICAL WORK ONLY

E-5

STATE OF CALIFORNIA - DEPARTMENT OF TRANSPORTATION — Caltrans

CONSULTANT FUNCTIONAL SUPERVISOR: MATTHEW J KORVE

CALCULATED-DESIGNED BY: MENG YANG — CHECKED BY: DAN YAU

REVISED BY — DATE REVISED

LAST REVISION 06-03-16 — DATE PLOTTED => 10-AUG-2016 — TIME PLOTTED => 16:39

Dist	COUNTY	ROUTE	POST MILES TOTAL PROJECT	SHEET No.	TOTAL SHEETS
05	SBt	156	R10.0/R18.4	35	89

REGISTERED CIVIL ENGINEER 6/13/16 DATE

6-20-16
PLANS APPROVAL DATE

REGISTERED PROFESSIONAL ENGINEER
KIN Y. CHAN
No. 55391
Exp. 12/31/16
CIVIL
STATE OF CALIFORNIA

THE STATE OF CALIFORNIA OR ITS OFFICERS OR AGENTS SHALL NOT BE RESPONSIBLE FOR THE ACCURACY OR COMPLETENESS OF SCANNED COPIES OF THIS PLAN SHEET.

Y&C TRANSPORTATION
CONSULTANTS, INC.
3250 RAMOS CIRCLE
SACRAMENTO, CA 95827

CONDUCTOR AND CONDUIT SCHEDULE

CONDUCTOR SCHEDULE	No. OF CONDUCTORS CONDUIT RUN NUMBER 1	2	3	4	5	6	7	8	9	10
No. 14 CONDUCTORS										
Ø1	3	3	3	3	3					
Ø2	3	3								3
Ø3	6	6	3	3	3	3		3	3	3
Ø4	3	3	3							
Ø5	3	3						3	3	3
Ø6	3	3	3	3	3					
Ø7	3	3	3							
Ø8	3	3							3	3
SPARES	6	6	3	3	3	3		3	3	3
TOTAL No. 14	33	33	18	12	12	6		6	12	15
No. 10 CONDUCTORS										
LIGHTING		2	2	2	2				2	2
SIGNAL NEUTRAL	2	2	1	1	1	1		1	1	1
TOTAL No. 10	2	4	3	3	3	1		1	3	3
No. 8 CONDUCTORS										
FLASHING BEACON		2						2	2	2
No. 6 CONDUCTORS										
SERVICE TO CONTROLLER	2									
DETECTOR CABLES (DLC)										
COUNT (C)	2	2	1	1	1					1
Ø1 DET.	7	7						3	3	7
Ø2 DET.	4	4	4	2						
Ø3 DET.	4	2								
Ø4 DET.	4	4	4	4	4	2				
Ø5 DET.	4	4	4	2						
Ø6 DET.	4	4						4	4	4
Ø7 DET.	4	4	4	4	4	2				
Ø8 DET.	6	2								
TOTAL DETECTOR CABLES	39	33	17	13	9	4		7	7	12
PULL ROPE							1			
CONDUIT SIZE (INCHES)	2-3½	2-3	3	3	3	2	3	2½	3	3
% FILL	19	23	23	17	14	13		11	13	19

POLE AND EQUIPMENT SCHEDULE

No.	STANDARD TYPE	SMA (FEET)	LMA (FEET)	Veh Sig Mtg MAST ARM	POLE	LED Lum	SPECIAL REMARKS
a	1-A				TV-1-T		
b	29-5-70	55	15	MAT MAS	SV-1-T	Rdwy 1	11
c	1-A				TV-1-T		
d	26-4-70	45	15	MAT MAS	SV-1-T	Rdwy 1	11
e	1-A				TV-1-T		
f	26-4-70	45	15	MAT MAS	SV-1-T	Rdwy 1	11
g	1-A				TV-1-T		
h	26-4-161	40	15	MAT MAS	SV-1-T	Rdwy 1	11

MODIFYING EXISTING ELECTRICAL SYSTEM

NO SCALE

E-6

REVISED BY | DATE REVISED
MENG YANG | DAN YAU
CALCULATED-DESIGNED BY | CHECKED BY
CONSULTANT FUNCTIONAL SUPERVISOR
MATTHEW J KORVE
STATE OF CALIFORNIA - DEPARTMENT OF TRANSPORTATION
Caltrans

LAST REVISION 06-03-16 | DATE PLOTTED => 10-AUG-2016 | TIME PLOTTED => 16:39

Dist	COUNTY	ROUTE	POST MILES TOTAL PROJECT	SHEET No.	TOTAL SHEETS
05	SBt	156	R10.0/R18.4	36	89

REGISTERED CIVIL ENGINEER — DATE 6/13/16

PLANS APPROVAL DATE 6-20-16

REGISTERED PROFESSIONAL ENGINEER — KIN Y. CHAN No. 55391 Exp. 12/31/16 CIVIL — STATE OF CALIFORNIA

THE STATE OF CALIFORNIA OR ITS OFFICERS OR AGENTS SHALL NOT BE RESPONSIBLE FOR THE ACCURACY OR COMPLETENESS OF SCANNED COPIES OF THIS PLAN SHEET.

Y&C TRANSPORTATION CONSULTANTS, INC.
3250 RAMOS CIRCLE
SACRAMENTO, CA 95827

NOTE:

FOR ACCURATE RIGHT OF WAY DATA, CONTACT RIGHT OF WAY ENGINEERING AT THE DISTRICT OFFICE.

EXISTING PHASE DIAGRAM

STEADY DEMAND SEQUENCE

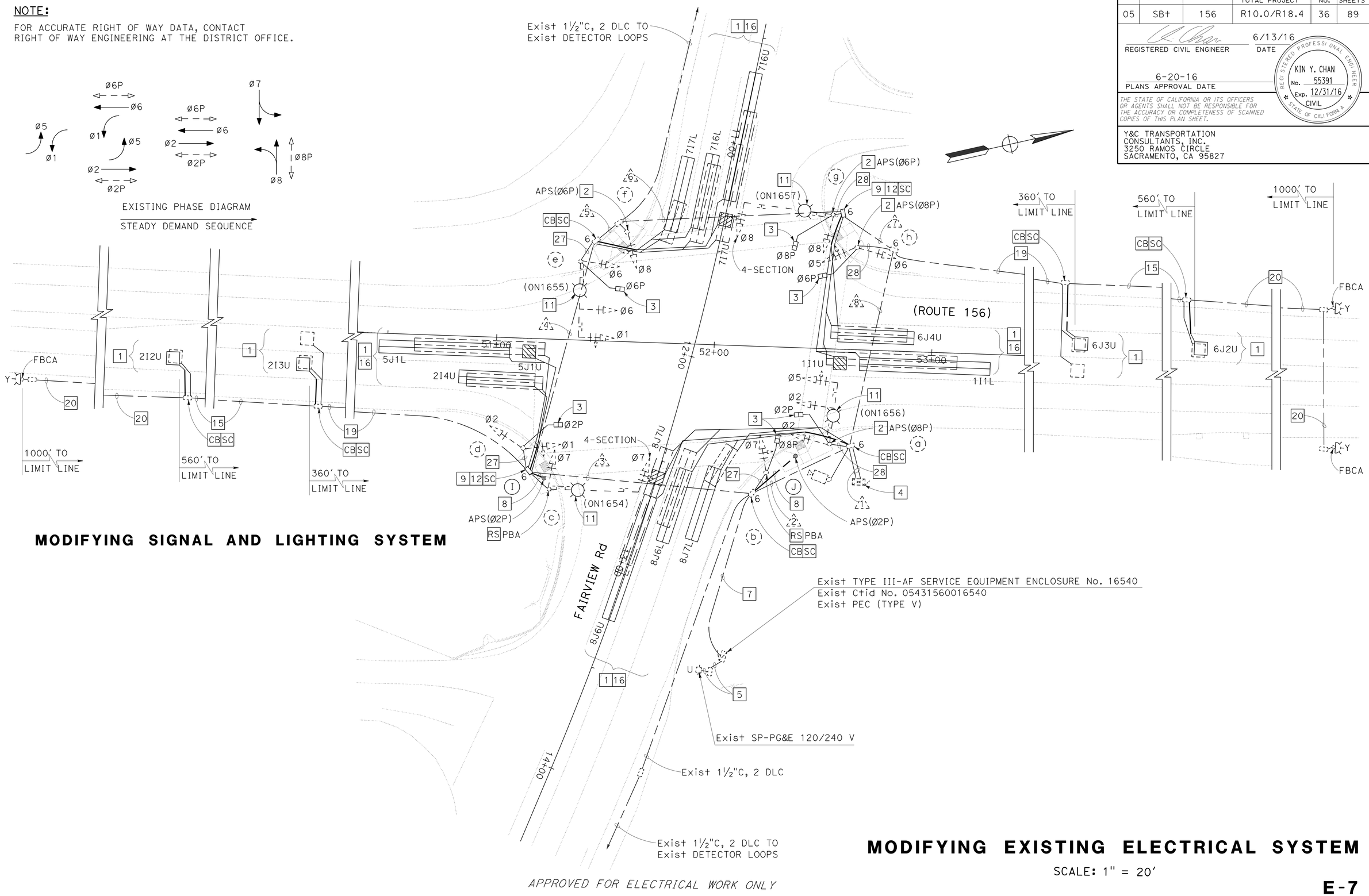

MODIFYING SIGNAL AND LIGHTING SYSTEM

MODIFYING EXISTING ELECTRICAL SYSTEM

SCALE: 1" = 20'

APPROVED FOR ELECTRICAL WORK ONLY

E-7

REVISED BY	DATE REVISED

MENG YANG — DAN YAU — CALCULATED-DESIGNED BY — CHECKED BY

CONSULTANT FUNCTIONAL SUPERVISOR: MATTHEW J KORVE

STATE OF CALIFORNIA - DEPARTMENT OF TRANSPORTATION — Caltrans

LAST REVISION 06-03-16 — DATE PLOTTED => 10-AUG-2016 — TIME PLOTTED => 16:39

Dist	COUNTY	ROUTE	POST MILES TOTAL PROJECT	SHEET No.	TOTAL SHEETS
05	SBt	156	R10.0/R18.4	37	89

REGISTERED CIVIL ENGINEER 6/13/16 DATE

6-20-16
PLANS APPROVAL DATE

REGISTERED PROFESSIONAL ENGINEER KIN Y. CHAN No. 55391 Exp. 12/31/16 CIVIL STATE OF CALIFORNIA

THE STATE OF CALIFORNIA OR ITS OFFICERS OR AGENTS SHALL NOT BE RESPONSIBLE FOR THE ACCURACY OR COMPLETENESS OF SCANNED COPIES OF THIS PLAN SHEET.

Y&C TRANSPORTATION
CONSULTANTS, INC.
3250 RAMOS CIRCLE
SACRAMENTO, CA 95827

CONDUCTOR AND CONDUIT SCHEDULE

CONDUCTOR SCHEDULE	No. OF CONDUCTORS CONDUIT RUN NUMBER 1	2	3	4	5	6	7	8
No. 14 CONDUCTORS								
Ø1	3	3	3	3				
Ø2	3	3	3					
Ø5	3							3
Ø6	6	3	3	3				3
Ø7	3	3	3					
Ø8	6	3	3	3	3		3	3
Ø2P	2	2	2					
Ø6P	4	2	2	2				2
Ø8P	4	2					2	2
APS(Ø2P)	1	1	1					
APS(Ø6P)	2	1	1	1	1		1	1
APS(Ø8P)	1							1
APS COMMON	2	1	1	1	1		1	1
SPARES	6	3	3	3	3		3	3
TOTAL No. 14	46	27	24	16	8		10	19
No. 10 CONDUCTORS								
LIGHTING	2	2	2	2			2	2
CCTV		2						
SIGNAL NEUTRAL	2	1	1	1	1		1	1
TOTAL No. 10	4	5	3	3	1		3	3
No. 8 CONDUCTORS								
FLASHING BEACON		2	2					2
No. 6 CONDUCTORS								
SERVICE TO CONTROLLER	2	2						
DETECTOR CABLES (DLC)								
Ø1 DET.	1/1+						1/1+	1/1+
Ø2 DET.	3	3	3					
Ø5 DET.	1/1+	1/1+	1/1+					
Ø6 DET.	3						1	3
Ø7 DET.	5/1+	5/1+	5/1+	5/1+	2			
Ø8 DET.	5/1+	2						
TOTAL DETECTOR CABLES	22	13	11	6	2		3	5
APS CABLES		2+			1+		2+	
PULL ROPE						1		
CONDUIT SIZE (INCHES)	2-3	3	3	3	2	3	3	3
% FILL	20	26	20	12	18		8	13

+ = ADD NEW CONDUCTORS/CABLES IN Exist CONDUIT AS SHOWN

POLE AND EQUIPMENT SCHEDULE

No.	STANDARD TYPE	SMA (FEET)	LMA (FEET)	Veh Sig Mtg MAST ARM	POLE	Ped Sig Mtg	APS ø	ARROW	LED Lum	SPECIAL REQUIREMENTS
a	24-4-129	35	15	MAT MAS	SV-1-T	SP-1-T	8P	←	Rdwy 1	2 3 11
b	1-A				TV-1-T	SP-1-T				RS Exist PBA. 3
c	24-4-129	35	15	MAS-4B	SV-1-T				Rdwy 1	RS Exist PBA. 11
d	1-A				TV-2-T	SP-1-T				3
e	26-4-129	40	15	MAT MAS	SV-1-T	SP-1-T			Rdwy 1	3 11
f	1-A				TV-1-T		6P	→		2
g	26-4-129	40	15	MAS-4B	SV-1-T	SP-1-T	6P	←	Rdwy 1	2 3 11
h	1-A				TV-2-T	SP-1-T	8P	→		2 3
I	PBA POST						2P	←		
J	PBA POST						2P	→		

MODIFYING EXISTING ELECTRICAL SYSTEM

NO SCALE

E-8

STATE OF CALIFORNIA - DEPARTMENT OF TRANSPORTATION
Caltrans

CONSULTANT FUNCTIONAL SUPERVISOR: MATTHEW J KORVE
CALCULATED-DESIGNED BY: MENG YANG
CHECKED BY: DAN YAU
REVISED BY
DATE REVISED

LAST REVISION 06-03-16 | DATE PLOTTED => 10-AUG-2016 | TIME PLOTTED => 16:39

Dist	COUNTY	ROUTE	POST MILES TOTAL PROJECT	SHEET No.	TOTAL SHEETS
05	SBt	156	R10.0/R18.4	38	89

REGISTERED CIVIL ENGINEER 6/13/16 DATE

6-20-16
PLANS APPROVAL DATE

REGISTERED PROFESSIONAL ENGINEER
KIN Y. CHAN
No. 55391
Exp. 12/31/16
CIVIL
STATE OF CALIFORNIA

THE STATE OF CALIFORNIA OR ITS OFFICERS OR AGENTS SHALL NOT BE RESPONSIBLE FOR THE ACCURACY OR COMPLETENESS OF SCANNED COPIES OF THIS PLAN SHEET.

Y&C TRANSPORTATION
CONSULTANTS, INC.
3250 RAMOS CIRCLE
SACRAMENTO, CA 95827

NOTE:

THE QUANTITIES SHOWN IN TABLES ARE NOT A SEPARATE PAY ITEM, FOR INFORMATION ONLY. FOR COMPLETE ELECTRICAL WORK, SEE ELECTRICAL SHEETS.

MODIFYING EXISTING ELECTRICAL SYSTEM

SHEET No.	TYPE A LOOP DETECTOR	TYPE D LOOP DETECTOR	TYPE A LOOP DETECTOR (6 'x 25')	TYPE C LOOP DETECTOR (6' x 35')	TYPE C LOOP DETECTOR (6 'x 60')	PBA POST WITH FOUNDATION	APS	COUNTDOWN PSF	PB	LED Lum Rdwy 1	2" CONDUIT	DLC	APS CABLE
	EA										FT		
E-2	6	0	0	0	0	0	0	0	0	0	40	0	0
E-3	16	4	2	8	4	0	0	4	0	4	85	0	0
E-5	8	5	0	8	5	0	0	4	0	4	75	0	0
E-7	4	4	0	6	4	2	6	4	2	4	100	300	30

ELECTRICAL QUANTITIES

NO SCALE

E-9

REVISED BY | DATE REVISED
MENG YANG | DAN YAU
CALCULATED-DESIGNED BY | CHECKED BY
CONSULTANT FUNCTIONAL SUPERVISOR
MATTHEW J KORVE
STATE OF CALIFORNIA - DEPARTMENT OF TRANSPORTATION
Caltrans

LAST REVISION 06-03-16 | DATE PLOTTED => 10-AUG-2016 | TIME PLOTTED => 16:39

M

Maint	MAINTENANCE
Max	MAXIMUM
MB	METAL BEAM
MBB	METAL BEAM BARRIER
MBGR	METAL BEAM GUARD RAILING
Med	MEDIAN
MGS	MIDWEST GUARDRAIL SYSTEM
MH	MANHOLE
Min	MINIMUM
Misc	MISCELLANEOUS
Misc I & S	MISCELLANEOUS IRON AND STEEL
Mkr	MARKER
Mod	MODIFIED,
	MODIFY
Mon	MONUMENT
MP	METAL PLATE
MPGR	METAL PLATE GUARD RAILING
MR	MOVEMENT RATING
MSE	MECHANICALLY STABILIZED EMBANKMENT
Mt	MOUNTAIN, MOUNT
Mtl	MATERIAL
MVP	MAINTENANCE VEHICLE PULLOUT

N

N	NORTH
NB	NORTHBOUND
No.	NUMBER (MUST HAVE PERIOD)
Nos.	NUMBERS (MUST HAVE PERIOD)
NPS	NOMINAL PIPE SIZE
NS	NEAR SIDE
NSP	NEW STANDARD PLAN
NTS	NOT TO SCALE

O

Oblr	OBLITERATE
OC	OVERCROSSING
OD	OUTSIDE DIAMETER
OF	OUTSIDE FACE
OG	ORIGINAL GROUND
OGAC	OPEN GRADED ASPHALT CONCRETE
OGFC	OPEN GRADED FRICTION COURSE
OH	OVERHEAD
OHWM	ORDINARY HIGH WATER MARK
O-O	OUT TO OUT
Opp	OPPOSITE
OSD	OVERSIDE DRAIN

P

P	PAGE
PAP	PERFORATED ALUMINUM PIPE
PB	PULL BOX
PC	POINT OF CURVATURE,
	PRECAST
PCC	POINT OF COMPOUND CURVE,
	PORTLAND CEMENT CONCRETE
PCMS	PORTABLE CHANGEABLE MESSAGE SIGN
PCP	PERFORATED CONCRETE PIPE,
	PRESTRESSED CONCRETE PIPE
PCVC	POINT OF COMPOUND VERTICAL CURVE
PEC	PERMIT TO ENTER AND CONSTRUCT
Ped	PEDESTRIAN
Ped OC	PEDESTRIAN OVERCROSSING
Ped UC	PEDESTRIAN UNDERCROSSING
Perm Mtl	PERMEABLE MATERIAL

P continued

PG	PROFILE GRADE
PI	POINT OF INTERSECTION
PJP	PARTIAL JOINT PENETRATION
Pkwy	PARKWAY
₱,PL	PLATE
P/L	PROPERTY LINE
PM	POST MILE,
	TIME FROM NOON TO MIDNIGHT
PN	PAVING NOTCH
POC	POINT OF HORIZONTAL CURVE
POT	POINT OF TANGENT
POVC	POINT OF VERTICAL CURVE
PP	PIPE PILE,
	PLASTIC PIPE,
	POWER POLE
PPL	PREFORMED PERMEABLE LINER
PPP	PERFORATED PLASTIC PIPE
PRC	POINT OF REVERSE CURVE
PRF	PAVEMENT REINFORCING FABRIC
PRVC	POINT OF REVERSE VERTICAL CURVE
PS&E	PLANS, SPECIFICATIONS AND ESTIMATES
PS, P/S	PRESTRESSED
PSP	PERFORATED STEEL PIPE
PT	POINT OF TANGENCY
PVC	POLYVINYL CHLORIDE
Pvmt	PAVEMENT

Q

Qty	QUANTITY

R

R	RADIUS
R & D	REMOVE AND DISPOSE
R & S	REMOVE AND SALVAGE
R/C	RATE OF CHANGE
RCA	REINFORCED CONCRETE ARCH
RCB	REINFORCED CONCRETE BOX
RCP	REINFORCED CONCRETE PIPE
RCPA	REINFORCED CONCRETE PIPE ARCH
Rd	ROAD
Reinf	REINFORCED,
	REINFORCEMENT,
	REINFORCING
Rel	RELOCATE
Repl	REPLACEMENT
Ret	RETAINING
Rev	REVISED, REVISION
Rdwy	ROADWAY
RHMA	RUBBERIZED HOT MIX ASPHALT
Riv	RIVER
RM	ROAD-MIXED
RP	RADIUS POINT,
	REFERENCE POINT
RR	RAILROAD
RSP	ROCK SLOPE PROTECTION,
	REVISED STANDARD PLAN
Rt	RIGHT
Rte	ROUTE
RW	REDWOOD,
	RETAINING WALL
R/W	RIGHT OF WAY
Rwy	RAILWAY

S

S	SOUTH,
	SUPPLEMENT
SAE	STRUCTURE APPROACH EMBANKMENT
Salv	SALVAGE
SAPP	STRUCTURAL ALUMINUM PLATE PIPE
SB	SOUTHBOUND
SC	SAND CUSHION
SCSP	SLOTTED CORRUGATED STEEL PIPE
SD	STORM DRAIN
Sec	SECOND,
	SECTION
Sep	SEPARATION
SG	SUBGRADE
Shld	SHOULDER
Sht	SHEET
Sim	SIMILAR
₤	STATION LINE
SM	SELECTED MATERIAL
Spec	SPECIAL,
	SPECIFICATIONS
SPP	SLOTTED PLASTIC PIPE
SS	SLOPE STAKE
SSBM	STRAP AND SADDLE BRACKET METHOD
SSD	STRUCTURAL SECTION DRAIN
SSPA	STRUCTURAL STEEL PLATE ARCH
SSPP	STRUCTURAL STEEL PLATE PIPE
SSPPA	STRUCTURAL STEEL PLATE PIPE ARCH
SSRP	STEEL SPIRAL RIB PIPE
St	STREET
Sta	STATION
STBB	SINGLE THRIE BEAM BARRIER
Std	STANDARD
Str	STRUCTURE
Surf	SURFACING
SW	SIDEWALK,
	SOUND WALL
Swr	SEWER
Sym	SYMMETRICAL
S4S	SURFACE 4 SIDES

T

T	SEMI-TANGENT
Tan	TANGENT
TBB	THRIE BEAM BARRIER
Tbr	TIMBER
TC	TOP OF CURB
TCB	TRAFFIC CONTROL BOX
TCE	TEMPORARY CONSTRUCTION EASEMENT
Tel	TELEPHONE
Temp	TEMPORARY
TG	TOP OF GRADE
Tot	TOTAL
TP	TELEPHONE POLE
TPB	TREATED PERMEABLE BASE
TPM	TREATED PERMEABLE MATERIAL
Trans	TRANSITION

T continued

TS	TRANSVERSE,
	TRAFFIC SIGNAL,
	TUBULAR STEEL
Typ	TYPICAL

U

UC	UNDERCROSSING
UD	UNDERDRAIN
UG	UNDERGROUND
UON	UNLESS OTHERWISE NOTED
UP	UNDERPASS

V

V	VALVE,
	DESIGN SPEED
Var	VARIABLE,
	VARIES
VC	VERTICAL CURVE
VCP	VITRIFIED CLAY PIPE
Vert	VERTICAL
Via	VIADUCT
Vol	VOLUME

W

W	WEST,
	WIDTH
WB	WESTBOUND
WH	WEEP HOLE
WM	WIRE MESH
WS	WATER SURFACE
WSP	WELDED STEEL PIPE
Wt	WEIGHT
WV	WATER VALVE
WW	WINGWALL
WWLOL	WINGWALL LAYOUT LINE

X

X Sec	CROSS SECTION
Xing	CROSSING

Y

Yr	YEAR
Yrs	YEARS

Dist	COUNTY	ROUTE	POST MILES TOTAL PROJECT	SHEET No.	TOTAL SHEETS
05	SBt	156	R10.0/R18.4	39	89

Grace M. Tsushima
REGISTERED CIVIL ENGINEER

July 19, 2013
PLANS APPROVAL DATE

REGISTERED PROFESSIONAL ENGINEER Grace M. Tsushima No. C49814 Exp. 9-30-14 CIVIL STATE OF CALIFORNIA

THE STATE OF CALIFORNIA OR ITS OFFICERS OR AGENTS SHALL NOT BE RESPONSIBLE FOR THE ACCURACY OR COMPLETENESS OF SCANNED COPIES OF THIS PLAN SHEET.

TO ACCOMPANY PLANS DATED 6-20-16

UNIT OF MEASUREMENT SYMBOLS:

Some of the symbols used in the project plan quantity tables and in the Bid Item List are:

TABLE A

SYMBOL USED	DEFINITIONS
ACRE	ACRE
CF	CUBIC FOOT
CY	CUBIC YARD
EA	EACH
GAL	GALLON
LB	POUND
LF	LINEAR FOOT
SQFT	SQUARE FOOT
SQYD	SQUARE YARD
STA	100 FEET
TAB	TABLET
TON	2,000 POUNDS

Some of the symbols used in the plans other than in the project plan quantity tables are:

TABLE B

SYMBOL USED	DEFINITIONS
ksi	KIPS PER SQUARE INCH
ksf	KIPS PER SQUARE FOOT
psi	POUNDS PER SQUARE INCH
psf	POUNDS PER SQUARE FOOT
lb/ft^3, pcf	POUNDS PER CUBIC FOOT
tsf	TONS PER SQUARE FOOT
mph, MPH *	MILES PER HOUR
ø	NOMINAL DIAMETER
oz	OUNCE
lb	POUND
kip	1,000 POUNDS
cal	CALORIE
ft	FOOT OR FEET
gal	GALLON

* For use on a sign panel only

STATE OF CALIFORNIA
DEPARTMENT OF TRANSPORTATION

ABBREVIATIONS (SHEET 2 OF 2)

NO SCALE

RSP A10B DATED JULY 19, 2013 SUPERSEDES STANDARD PLAN A10B DATED MAY 20, 2011 - PAGE 2 OF THE STANDARD PLANS BOOK DATED 2010.

REVISED STANDARD PLAN RSP A10B

2010 REVISED STANDARD PLAN RSP A10B

6-7-13

Dist	COUNTY	ROUTE	POST MILES TOTAL PROJECT	SHEET No.	TOTAL SHEETS
05	SBt	156	R10.0/R18.4	40	89

REGISTERED CIVIL ENGINEER

July 19, 2013
PLANS APPROVAL DATE

REGISTERED PROFESSIONAL ENGINEER Roberta L. McLaughlin No. C40375 Exp. 3-31-15 CIVIL STATE OF CALIFORNIA

THE STATE OF CALIFORNIA OR ITS OFFICERS OR AGENTS SHALL NOT BE RESPONSIBLE FOR THE ACCURACY OR COMPLETENESS OF SCANNED COPIES OF THIS PLAN SHEET.

TO ACCOMPANY PLANS DATED 6-20-16

EXIT RAMP NEUTRAL AREA (GORE) TREATMENT

DETAIL 36

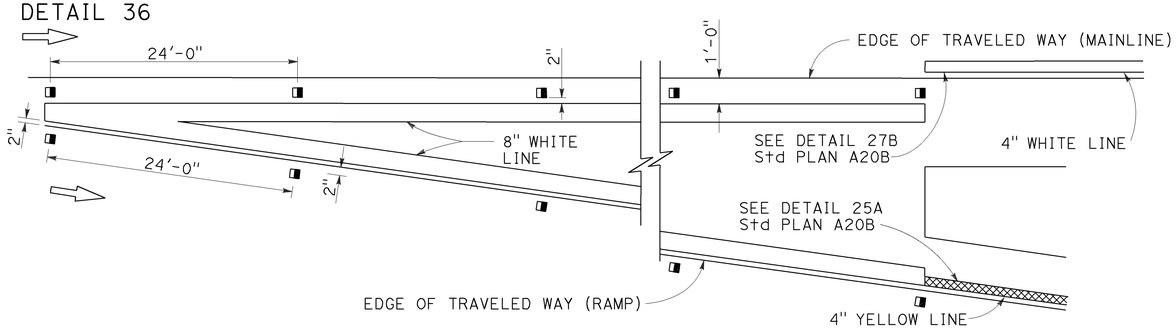

ENTRANCE RAMP NEUTRAL AREA (MERGE) TREATMENT

DETAIL 36A

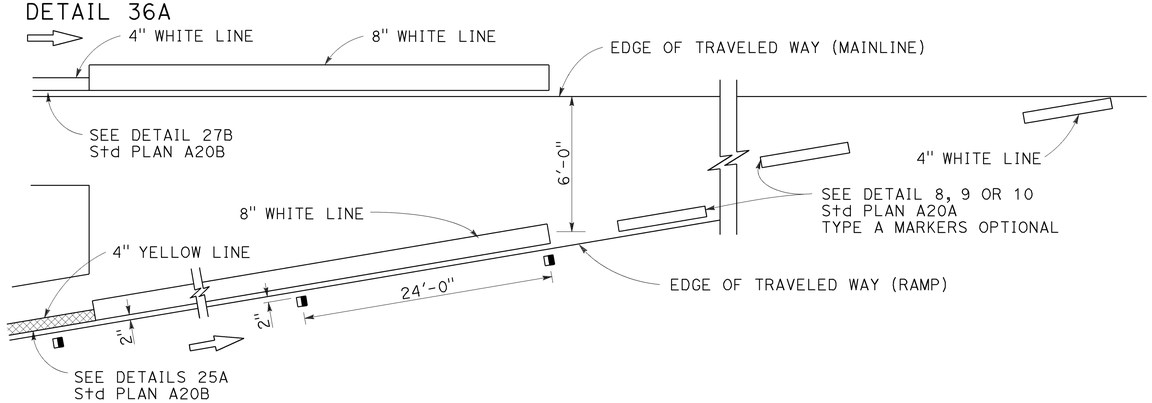

ENTRANCE RAMP NEUTRAL AREA (ACCELERATION LANE) TREATMENT

DETAIL 36B

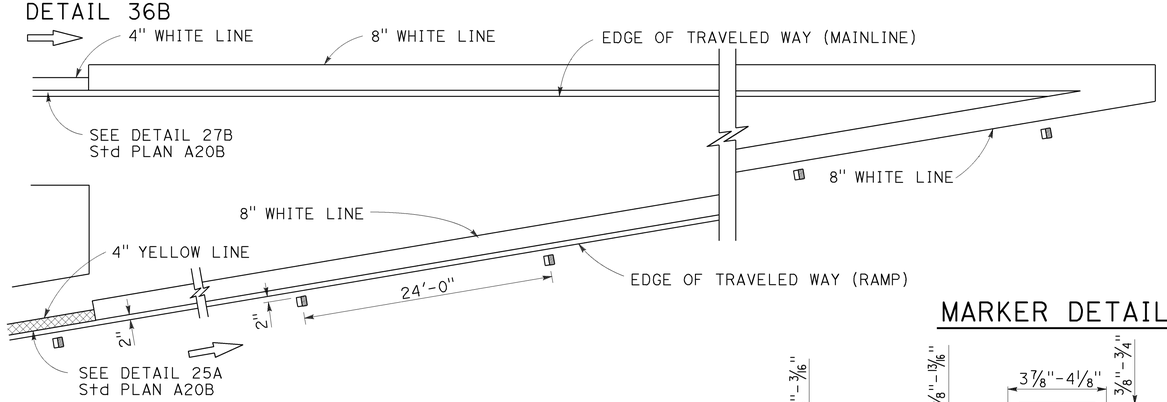

LANE DROP AT EXIT RAMPS

DETAIL 37

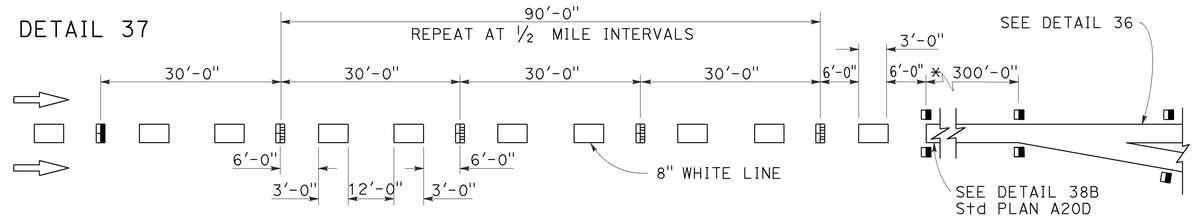

DETAIL 37A

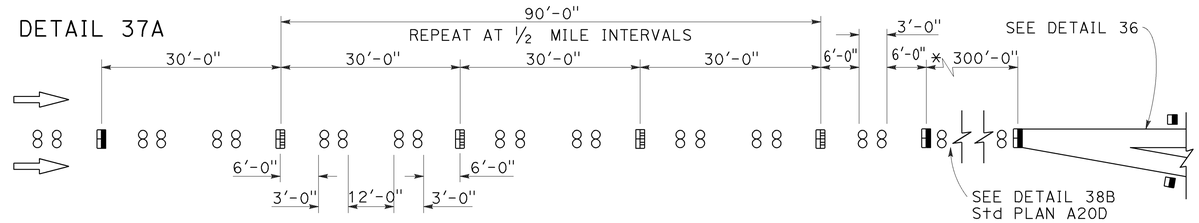

* The solid channelizing line shown may be omitted on short auxiliary lanes where weaving length is critical.

LANE DROP AT INTERSECTIONS

DETAIL 37B

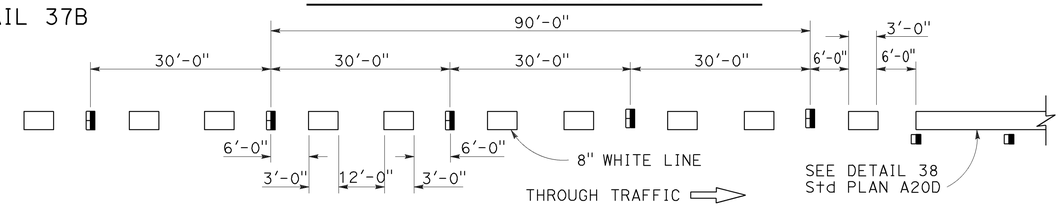

DETAIL 37C

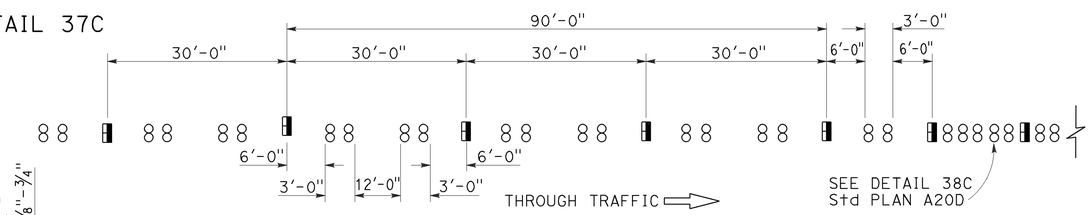

MARKER DETAILS

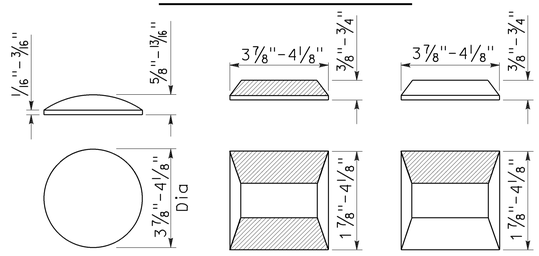

RETROREFLECTIVE FACE

LEGEND:

MARKERS

- ○ TYPE A WHITE NON-REFLECTIVE
- ⊟ TYPE C RED-CLEAR RETROREFLECTIVE
- ◨ TYPE G ONE-WAY CLEAR RETROREFLECTIVE

STATE OF CALIFORNIA
DEPARTMENT OF TRANSPORTATION

PAVEMENT MARKERS AND TRAFFIC LINE TYPICAL DETAILS

NO SCALE

RSP A20C DATED JULY 19, 2013 SUPERSEDES STANDARD PLAN A20C DATED MAY 20, 2011 - PAGE 11 OF THE STANDARD PLANS BOOK DATED 2010.

REVISED STANDARD PLAN RSP A20C

2010 REVISED STANDARD PLAN RSP A20C

4-29-13

Dist	COUNTY	ROUTE	POST MILES TOTAL PROJECT	SHEET No.	TOTAL SHEETS
05	SBt	156	R10.0/R18.4	41	89

REGISTERED CIVIL ENGINEER

April 20, 2012
PLANS APPROVAL DATE

REGISTERED PROFESSIONAL ENGINEER
Roberta L. McLaughlin
No. C40375
Exp. 3-31-13
CIVIL
STATE OF CALIFORNIA

THE STATE OF CALIFORNIA OR ITS OFFICERS OR AGENTS SHALL NOT BE RESPONSIBLE FOR THE ACCURACY OR COMPLETENESS OF SCANNED COPIES OF THIS PLAN SHEET.

TO ACCOMPANY PLANS DATED 6-20-16

2010 REVISED STANDARD PLAN RSP A24A

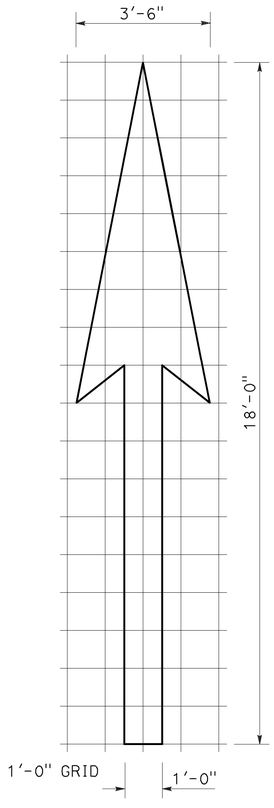

A=25 ft^2

TYPE I 18'-0" ARROW

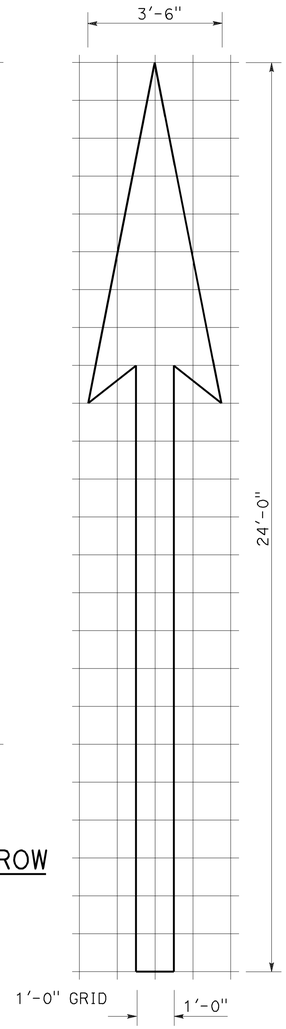

A=31 ft^2

TYPE I 24'-0" ARROW

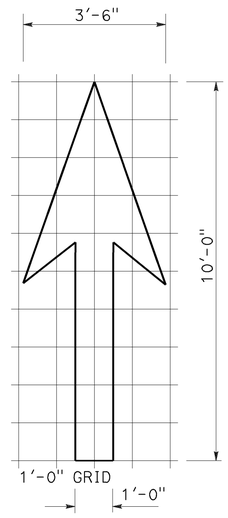

A=14 ft^2

TYPE I 10'-0" ARROW

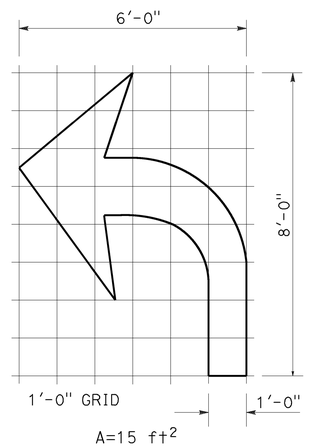

A=15 ft^2

TYPE IV (L) ARROW

(For Type IV (R) arrow, use mirror image)

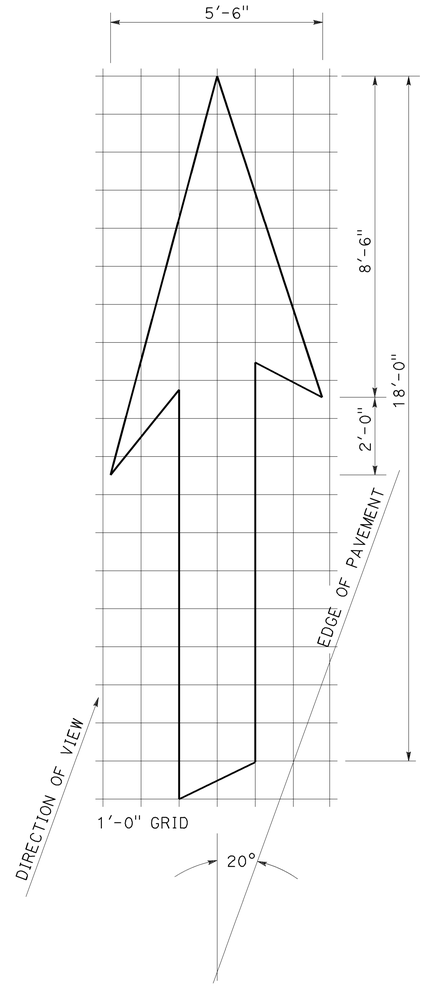

A=42 ft^2

TYPE VI ARROW

Right lane drop arrow
(For left lane, use mirror image)

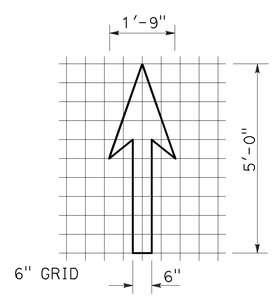

A=3.5 ft^2

BIKE LANE ARROW

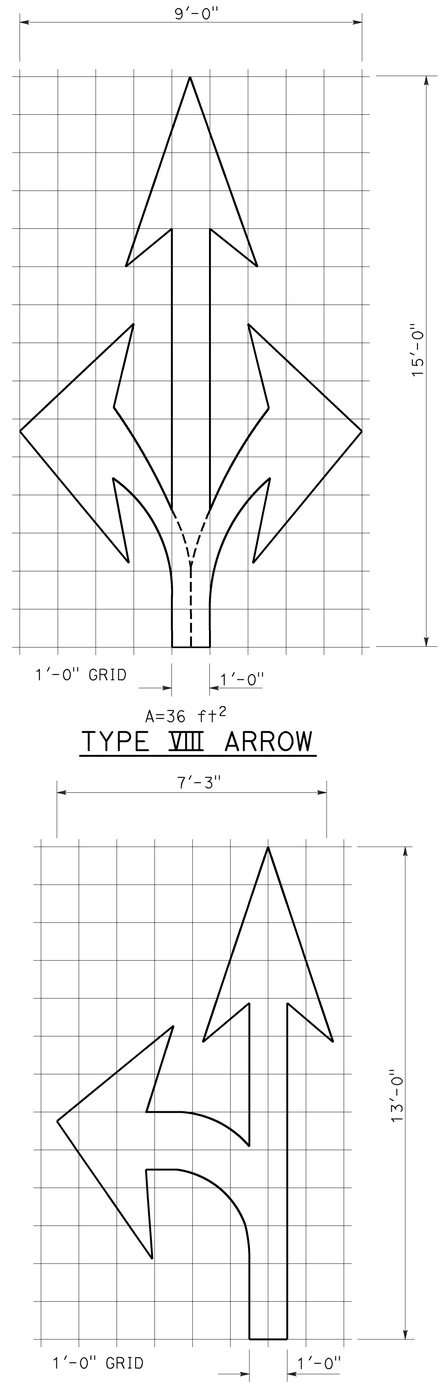

A=36 ft^2

TYPE VIII ARROW

A=27 ft^2

TYPE VII (L) ARROW

(For Type VII (R) arrow, use mirror image)

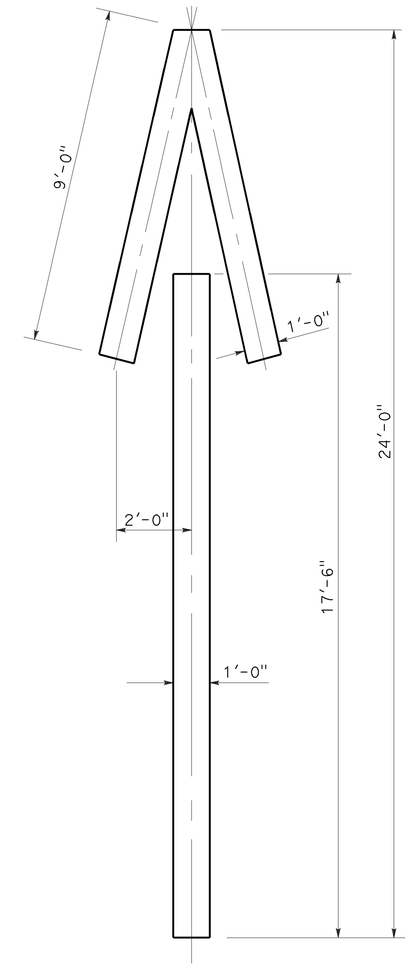

A=33 ft^2

TYPE V ARROW

NOTE:
Minor variations in dimensions may be accepted by the Engineer.

STATE OF CALIFORNIA
DEPARTMENT OF TRANSPORTATION

PAVEMENT MARKINGS ARROWS

NO SCALE

RSP A24A DATED APRIL 20, 2012 SUPERSEDES STANDARD PLAN A24A DATED MAY 20, 2011 - PAGE 13 OF THE STANDARD PLANS BOOK DATED 2010.

REVISED STANDARD PLAN RSP A24A

3-14-12

Dist	COUNTY	ROUTE	POST MILES TOTAL PROJECT	SHEET No.	TOTAL SHEETS
05	SBt	156	R10.0/R18.4	42	89

REGISTERED CIVIL ENGINEER

July 20, 2012
PLANS APPROVAL DATE

REGISTERED PROFESSIONAL ENGINEER
Roberta L. McLaughlin
No. C40375
Exp. 3-31-13
CIVIL
STATE OF CALIFORNIA

THE STATE OF CALIFORNIA OR ITS OFFICERS OR AGENTS SHALL NOT BE RESPONSIBLE FOR THE ACCURACY OR COMPLETENESS OF SCANNED COPIES OF THIS PLAN SHEET.

TO ACCOMPANY PLANS DATED 6-20-16

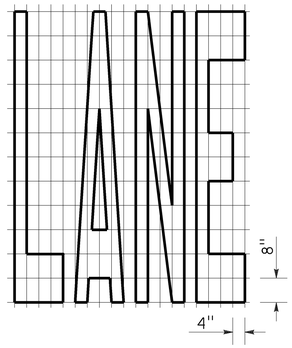

A=24 ft^2

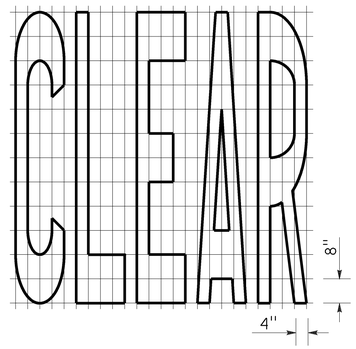

A=27 ft^2

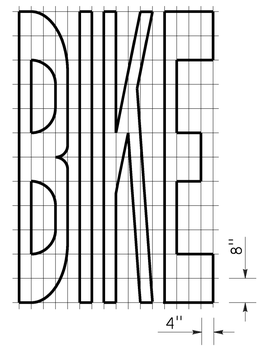

A=21 ft^2

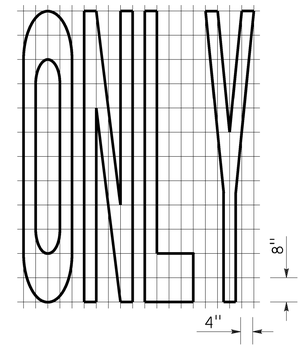

A=22 ft^2

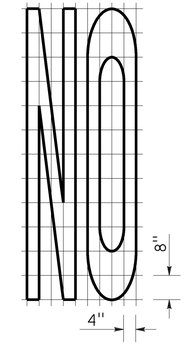

A=14 ft^2

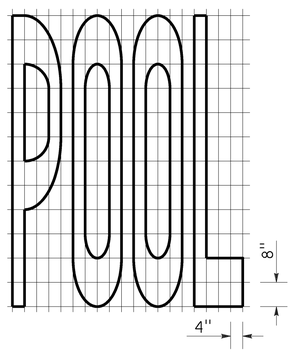

A=23 ft^2

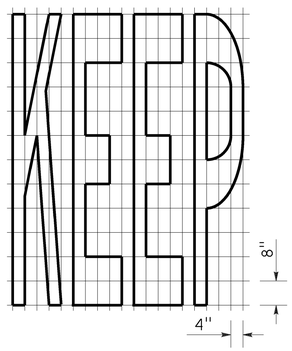

A=24 ft^2

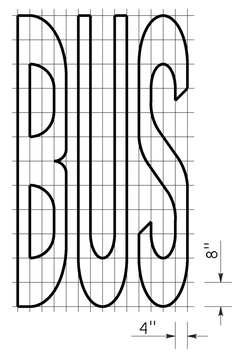

A=20 ft^2

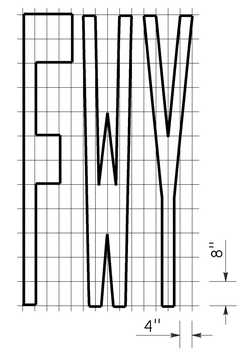

A=16 ft^2

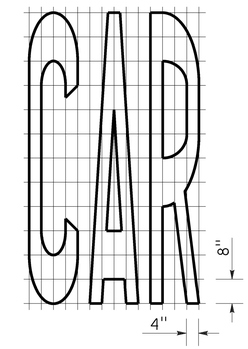

A=17 ft^2

WORD MARKINGS			
ITEM	ft^2	ITEM	ft^2
LANE	24	NO	14
POOL	23	BIKE	21
CAR	17	BUS	20
CLEAR	27	ONLY	22
KEEP	24	FWY	16

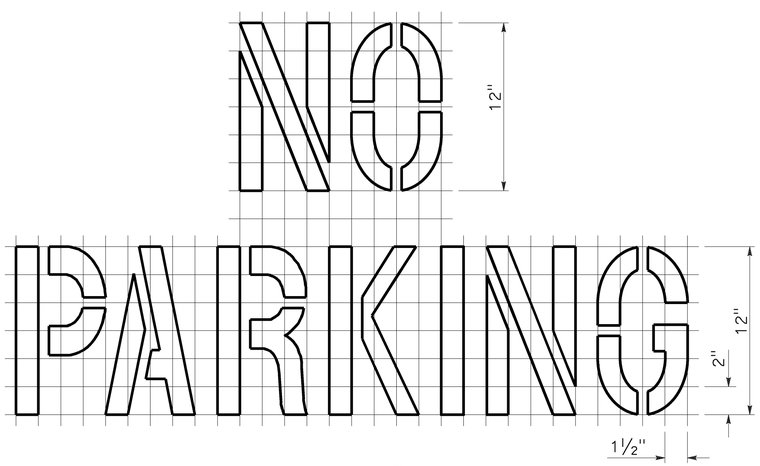

A=2 ft^2
See Notes 6 and 7

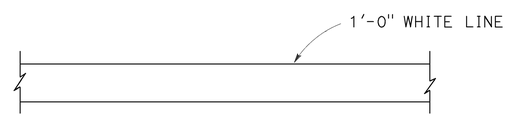

LIMIT LINE (STOP LINE)

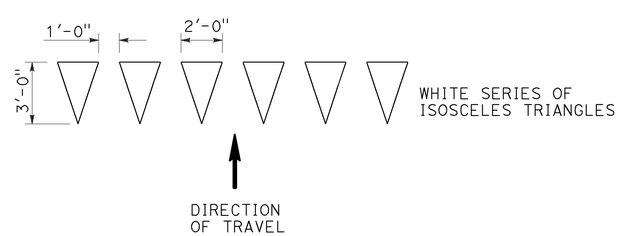

YIELD LINE

NOTES:

1. If a message consists of more than one word, it should read "UP", i.e., the first word should be nearest the driver.
2. The space between words should be at least four times the height of the characters for low speed roads, but not more than ten times the height of the characters. The space may be reduced appropriately where there is limited space because of local conditions.
3. Minor variations in dimensions may be accepted by the Engineer.
4. Portions of a letter, number or symbol may be separated by connecting segments not to exceed 2" in width.
5. The words "NO PARKING" pavement marking is to be used for parking facilities. For typical locations of markings, see Standard Plans A90A and A90B.
6. The words "NO PARKING", shall be painted in white letters no less than 1'-0" high on a contrasting background and located so that it is visible to traffic enforcement officials.

STATE OF CALIFORNIA
DEPARTMENT OF TRANSPORTATION

PAVEMENT MARKINGS WORDS, LIMIT AND YIELD LINES

NO SCALE

RSP A24E DATED JULY 20, 2012 SUPERSEDES STANDARD PLAN A24E
DATED MAY 20, 2011 - PAGE 17 OF THE STANDARD PLANS BOOK DATED 2010.

REVISED STANDARD PLAN RSP A24E

2010 REVISED STANDARD PLAN RSP A24E

6-12-12

Dist	COUNTY	ROUTE	POST MILES TOTAL PROJECT	SHEET No.	TOTAL SHEETS
05	SBt	156	R10.0/R18.4	43	89

Atifa Ferouz
REGISTERED CIVIL ENGINEER

July 15, 2016
PLANS APPROVAL DATE

REGISTERED PROFESSIONAL ENGINEER
Atifa Ferouz
No. C80402
Exp. 3-31-17
CIVIL
STATE OF CALIFORNIA

THE STATE OF CALIFORNIA OR ITS OFFICERS OR AGENTS SHALL NOT BE RESPONSIBLE FOR THE ACCURACY OR COMPLETENESS OF SCANNED COPIES OF THIS PLAN SHEET.

TO ACCOMPANY PLANS DATED 6-20-16

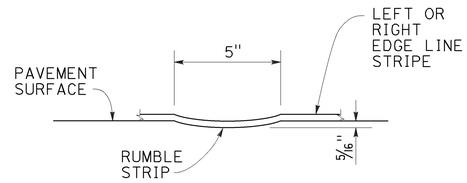

SECTION C-C

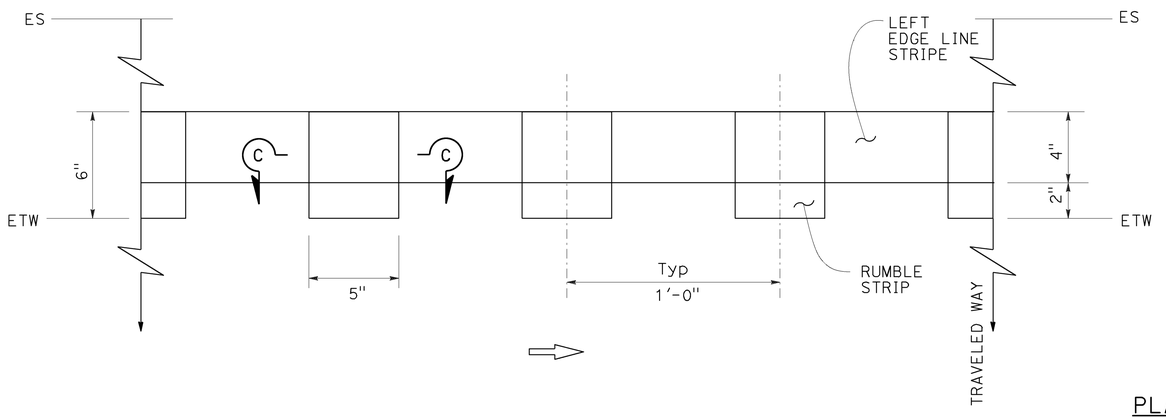

PLAN

EDGE LINE RUMBLE STRIP PLACEMENT
LEFT OF DIRECTION OF TRAVEL

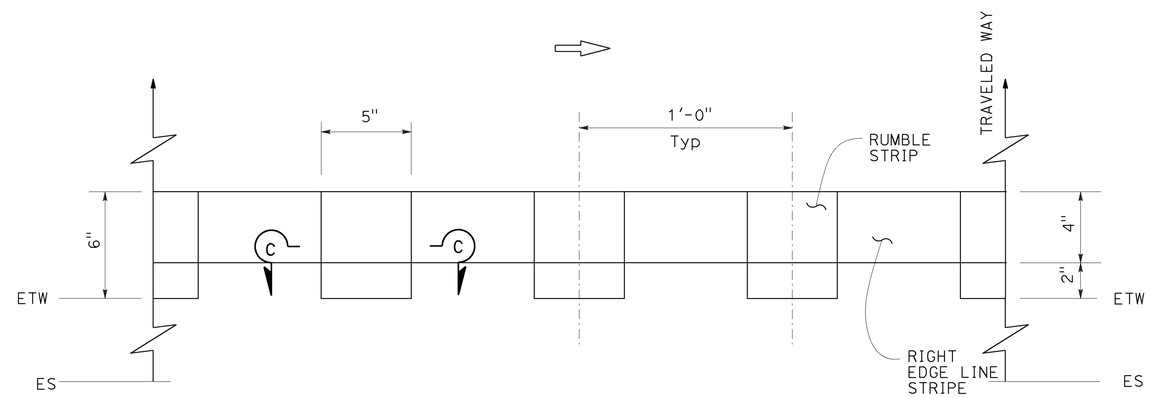

EDGE LINE RUMBLE STRIP PLACEMENT
RIGHT OF DIRECTION OF TRAVEL

TYPICAL EDGE LINE RUMBLE STRIP PLACEMENT

STATE OF CALIFORNIA
DEPARTMENT OF TRANSPORTATION

EDGE LINE RUMBLE STRIP DETAILS GROUND-IN INDENTATIONS

NO SCALE

RSP A40C DATED JULY 15, 2016 SUPPLEMENTS THE STANDARD PLANS BOOK DATED 2010.

REVISED STANDARD PLAN RSP A40C

2010 REVISED STANDARD PLAN RSP A40C

5-23-16

Dist	COUNTY	ROUTE	POST MILES TOTAL PROJECT	SHEET No.	TOTAL SHEETS
05	SBt	156	R10.0/R18.4	44	89

Atifa Ferouz
REGISTERED CIVIL ENGINEER

July 15, 2016
PLANS APPROVAL DATE

REGISTERED PROFESSIONAL ENGINEER
Atifa Ferouz
No. C80402
Exp. 3-31-17
CIVIL
STATE OF CALIFORNIA

THE STATE OF CALIFORNIA OR ITS OFFICERS OR AGENTS SHALL NOT BE RESPONSIBLE FOR THE ACCURACY OR COMPLETENESS OF SCANNED COPIES OF THIS PLAN SHEET.

TO ACCOMPANY PLANS DATED 6-20-16

NOTE:

Detail 21 and Detail 5 traffic stripes shown, see project plans for traffic stripe details.

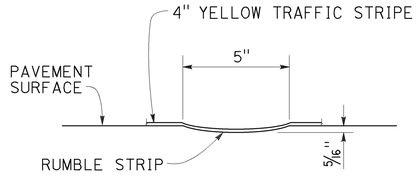

SECTION A-A

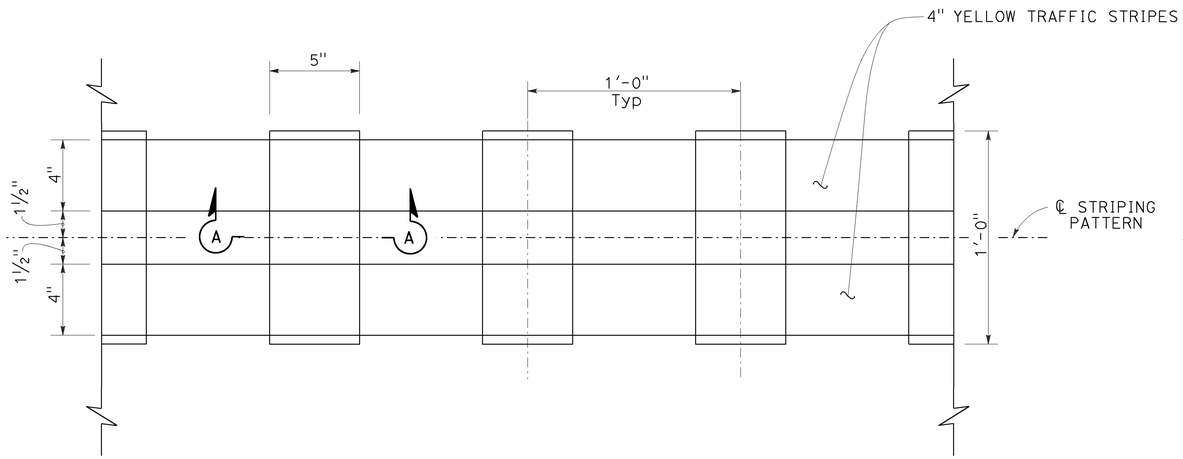

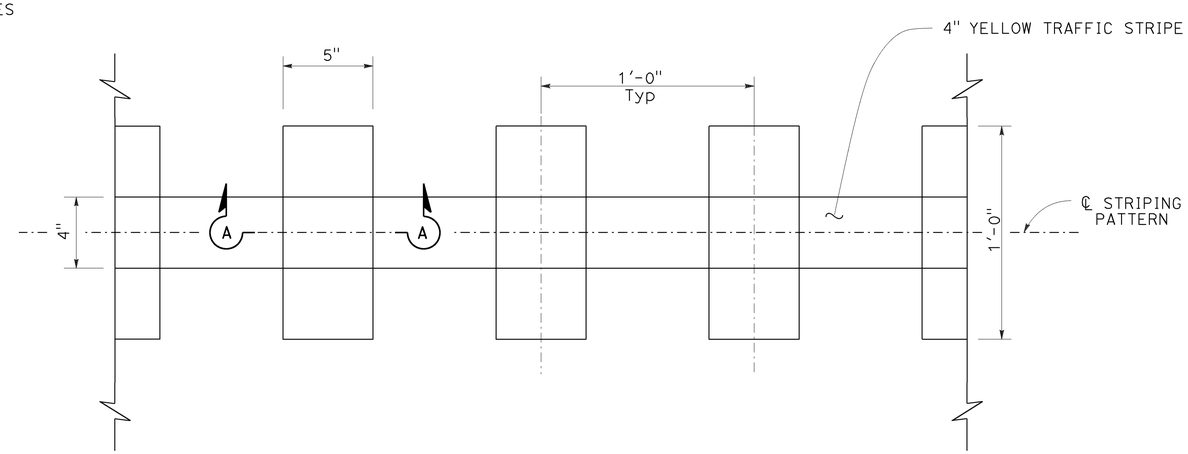

PLAN

RUMBLE STRIP PLACEMENT IN NO PASSING ZONE

RUMBLE STRIP PLACEMENT IN PASSING ZONE

TYPICAL CENTERLINE RUMBLE STRIP PLACEMENT

STATE OF CALIFORNIA
DEPARTMENT OF TRANSPORTATION

CENTERLINE RUMBLE STRIP DETAILS GROUND-IN INDENTATIONS

NO SCALE

RSP A40D DATED JULY 15, 2016 SUPPLEMENTS THE STANDARD PLANS BOOK DATED 2010.

REVISED STANDARD PLAN RSP A40D

2010 REVISED STANDARD PLAN RSP A40D

5-23-16

Dist	COUNTY	ROUTE	POST MILES TOTAL PROJECT	SHEET No.	TOTAL SHEETS
05	SB†	156	R10.0/R18.4	45	89

Atifa Ferouz
REGISTERED CIVIL ENGINEER

July 15, 2016
PLANS APPROVAL DATE

REGISTERED PROFESSIONAL ENGINEER
Atifa Ferouz
No. C80402
Exp. 3-31-17
CIVIL
STATE OF CALIFORNIA

THE STATE OF CALIFORNIA OR ITS OFFICERS OR AGENTS SHALL NOT BE RESPONSIBLE FOR THE ACCURACY OR COMPLETENESS OF SCANNED COPIES OF THIS PLAN SHEET.

TO ACCOMPANY PLANS DATED 6-20-16

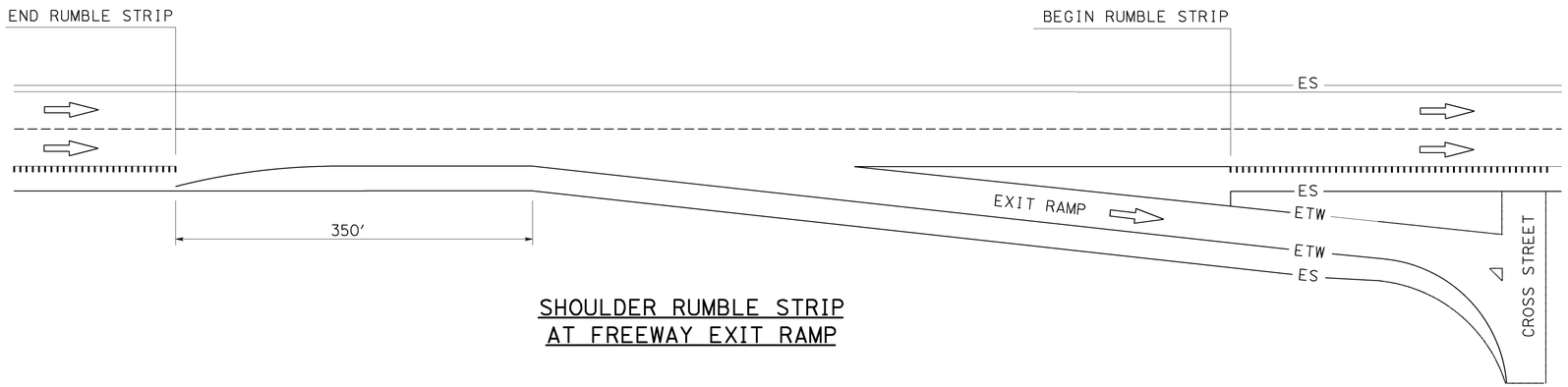

SHOULDER RUMBLE STRIP
AT FREEWAY EXIT RAMP

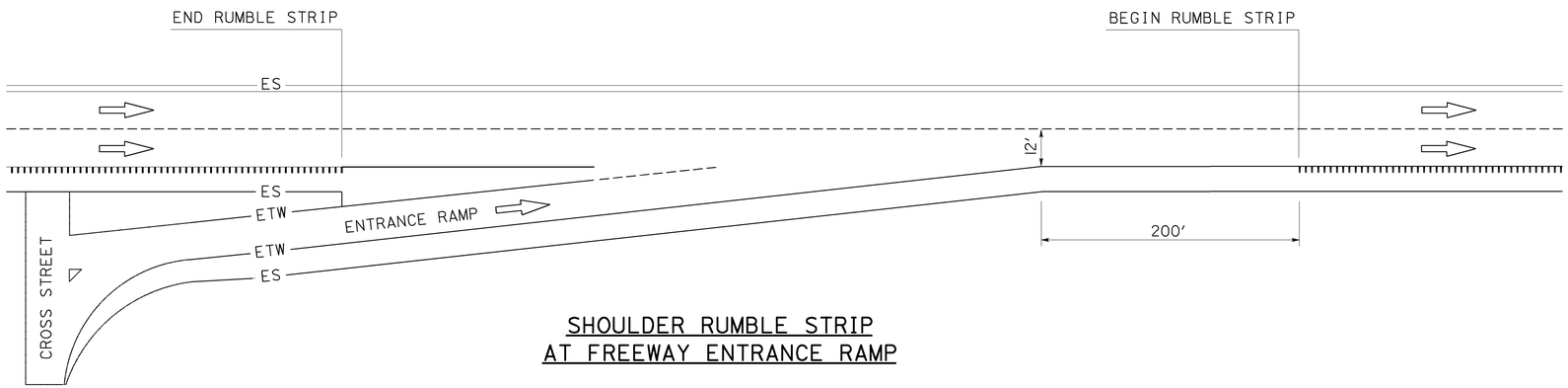

SHOULDER RUMBLE STRIP
AT FREEWAY ENTRANCE RAMP

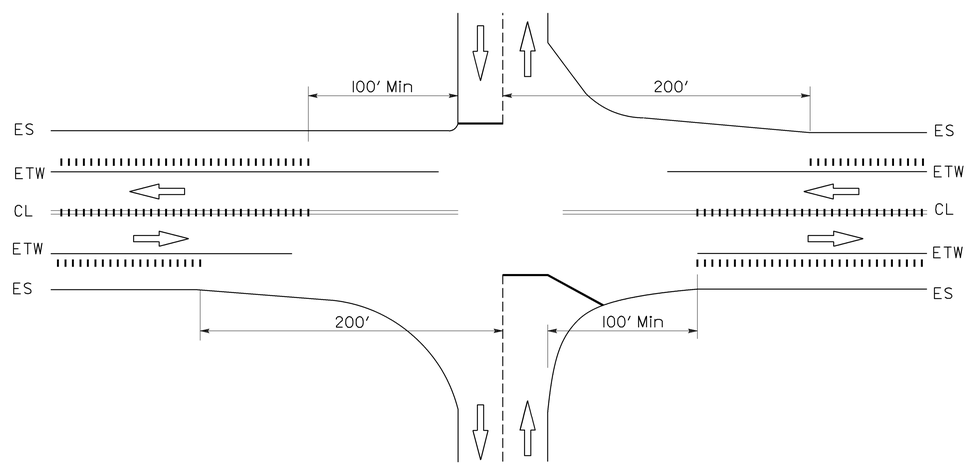

CENTERLINE AND SHOULDER RUMBLE STRIP
AT GRADE INTERSECTION

LEGEND

RUMBLE STRIP (GROUND-IN)

STATE OF CALIFORNIA
DEPARTMENT OF TRANSPORTATION

RUMBLE STRIP PLACEMENT AT FREEWAY EXIT RAMPS, FREEWAY ENTRANCE RAMPS, AND INTERSECTIONS

NO SCALE

RSP A40E DATED JULY 15, 2016 SUPPLEMENTS THE STANDARD PLANS BOOK DATED 2010.

REVISED STANDARD PLAN RSP A40E

2010 REVISED STANDARD PLAN RSP A40E

5-23-16

Dist	COUNTY	ROUTE	POST MILES TOTAL PROJECT	SHEET No.	TOTAL SHEETS
05	SBt	156	R10.0/R18.4	46	89

Atifa Ferouz
REGISTERED CIVIL ENGINEER

July 15, 2016
PLANS APPROVAL DATE

REGISTERED PROFESSIONAL ENGINEER
Atifa Ferouz
No. C80402
Exp. 3-31-17
CIVIL
STATE OF CALIFORNIA

THE STATE OF CALIFORNIA OR ITS OFFICERS OR AGENTS SHALL NOT BE RESPONSIBLE FOR THE ACCURACY OR COMPLETENESS OF SCANNED COPIES OF THIS PLAN SHEET.

TO ACCOMPANY PLANS DATED 6-20-16

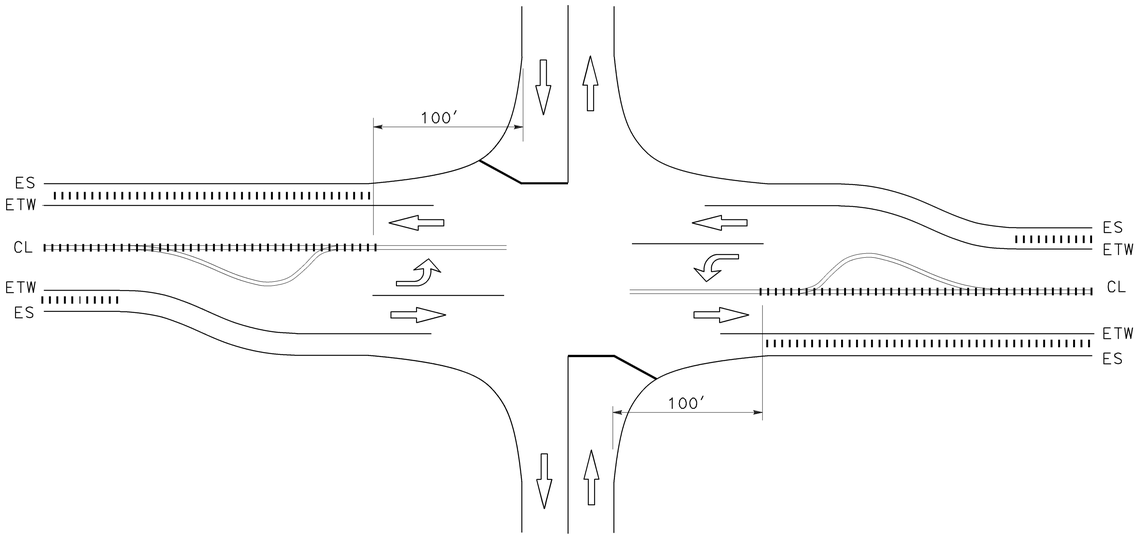

CENTERLINE AND SHOULDER RUMBLE STRIPS
AT INTERSECTION WITH LEFT TURN POCKETS

LEGEND

RUMBLE STRIPS (GROUND-IN)

RAILROAD TRACKS

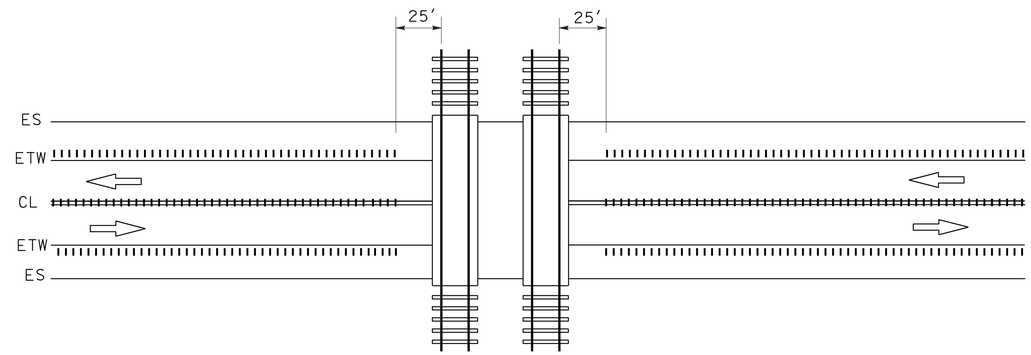

CENTERLINE AND SHOULDER RUMBLE STRIPS
AT RAILROAD CROSSING

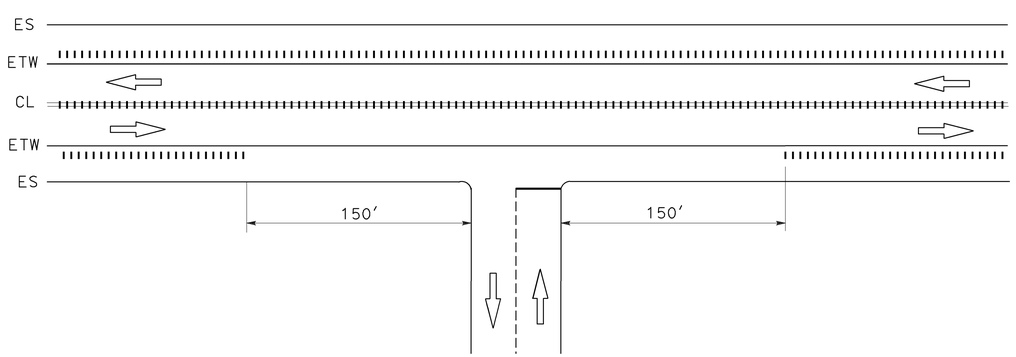

CENTERLINE AND SHOULDER RUMBLE STRIPS
AT DRIVEWAY/PRIVATE ROAD APPROACH

STATE OF CALIFORNIA
DEPARTMENT OF TRANSPORTATION

RUMBLE STRIP PLACEMENT AT INTERSECTIONS WITH LEFT TURN POCKETS, RAILROAD CROSSINGS, PRIVATE ROADS, AND MAJOR DRIVEWAYS

NO SCALE

RSP A40F DATED JULY 15, 2016 SUPPLEMENTS THE STANDARD PLANS BOOK DATED 2010.

REVISED STANDARD PLAN RSP A40F

2010 REVISED STANDARD PLAN RSP A40F

5-23-16

Dist	COUNTY	ROUTE	POST MILES TOTAL PROJECT	SHEET No.	TOTAL SHEETS
05	SBt	156	R10.0/R18.4	47	89

Randell D. Hiatt
REGISTERED CIVIL ENGINEER

July 19, 2013
PLANS APPROVAL DATE

REGISTERED PROFESSIONAL ENGINEER
Randell D. Hiatt
No. C50200
Exp. 6-30-15
CIVIL
STATE OF CALIFORNIA

THE STATE OF CALIFORNIA OR ITS OFFICERS OR AGENTS SHALL NOT BE RESPONSIBLE FOR THE ACCURACY OR COMPLETENESS OF SCANNED COPIES OF THIS PLAN SHEET.

TO ACCOMPANY PLANS DATED 6-20-16

2010 REVISED STANDARD PLAN RSP A77L1

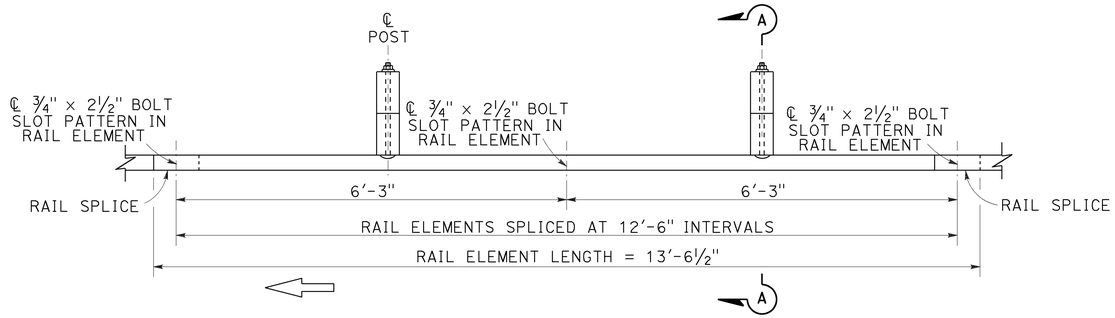

PLAN

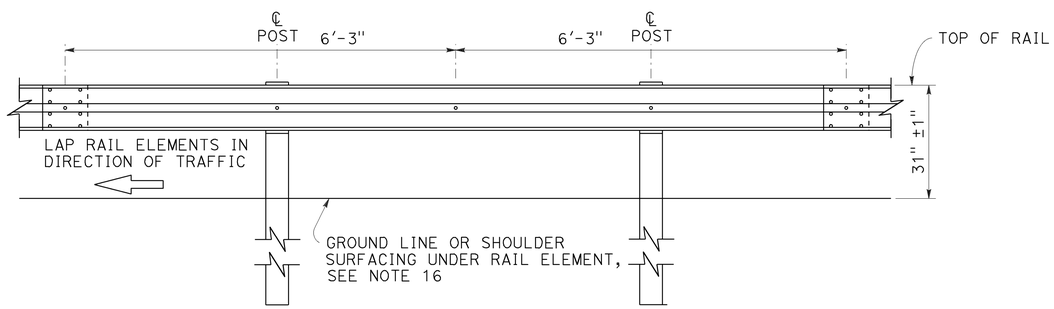

ELEVATION

MIDWEST GUARDRAIL SYSTEM WITH WOOD POST AND BLOCKS

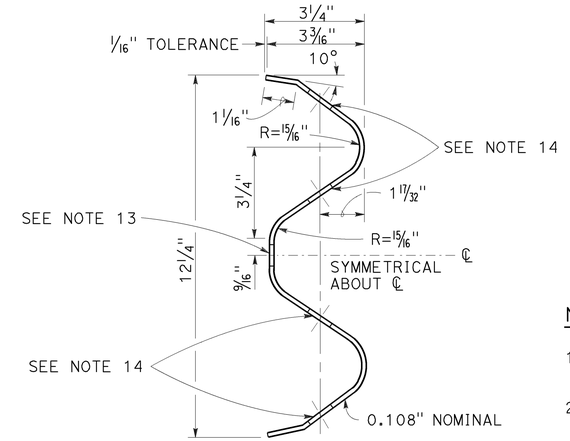

SECTION THRU RAIL ELEMENT

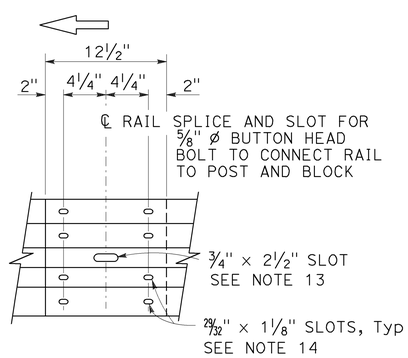

ELEVATION

RAIL ELEMENT SPLICE DETAIL

a) Connect the over lapped end of the rail elements with 5/8" Ø × 1 3/8" button head oval shoulder splice bolts inserted into the 29/32" × 1 1/8" slots and bolted together with 5/8" Ø recessed hex nuts. Recess of hex nut points toward rail element. A total of 8 bolts and nuts are to be used at each rail splice connection.

b) The ends of the rail elements are to be overlapped in the direction of traffic (see details).

c) Where end cap is to be attached to the end of a rail element, a total of 4 of the above described splice bolts and nuts are to be used.

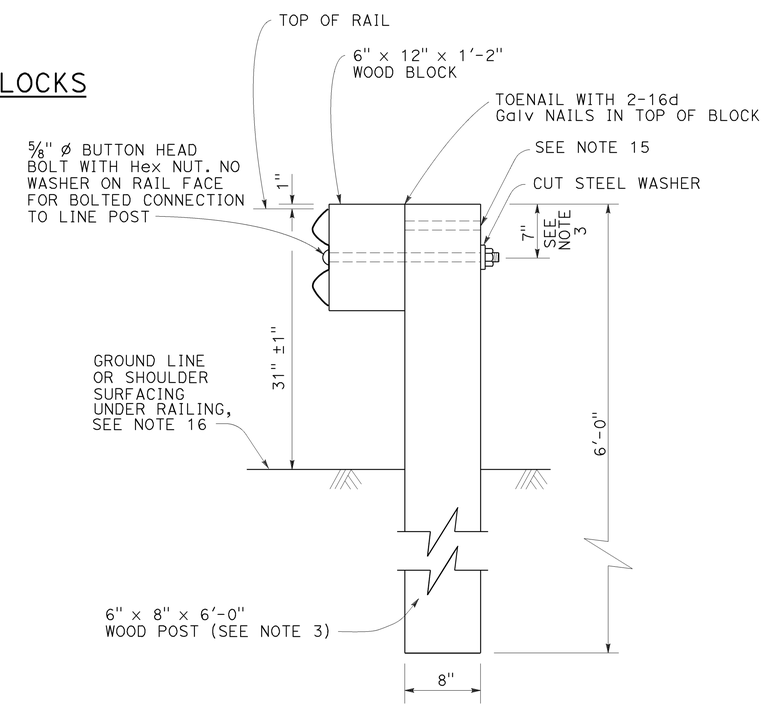

SECTION A-A

TYPICAL WOOD LINE POST INSTALLATION

See Note 4

NOTES:

1. For details of steel post installations, see Revised Standard Plan RSP A77L2.
2. For details of standard hardware used to construct MGS, see Revised Standard Plan RSP A77M1.
3. For details of wood posts and wood blocks used to construct MGS, see Revised Standard Plan RSP A77N1.
4. For additional installation details, see Revised Standard Plan RSP A77N3.
5. MGS post spacing to be 6'-3" center to center, except as otherwise noted.
6. For MGS typical layouts, see the A77P, A77Q and A77R Series of Standard Plans.
7. If railing is connected to terminal system end treatment, use 31" height terminal system end treatment.
8. For MGS end anchor details, see Revised Standard Plans RSP A77S1 and RSP A77T2.
9. For details of MGS transition to bridge railing, see Revised Standard Plan RSP A77U4.
10. For additional details of MSG connection to bridge railing, see Revised Standard Plans RSP A77U1, RSP A77U2 and RSP A77V1.
11. For MGS connection details to abutments and walls, see Revised Standard Plan RSP A77U3.
12. For typical MGS delineation and dike positioning details, see Revised Standard Plan RSP A77N4.
13. Slotted hole for bolted connection of rail element to block and post. See "Section Thru Rail Element".
14. Slotted holes for splice bolts to overlap ends of rail element. See "Section Thru Rail Element".
15. Additional hole in uppermost portion of line post is for potential future adjustments of railing height. See Revised Standard Plan RSP A77N1.
16. Install posts in soil.

STATE OF CALIFORNIA
DEPARTMENT OF TRANSPORTATION

MIDWEST GUARDRAIL SYSTEM STANDARD RAILING SECTION (WOOD POST WITH WOOD BLOCK)

NO SCALE

RSP A77L1 DATED JULY 19, 2013 SUPPLEMENTS STANDARD PLANS BOOK DATED 2010.

REVISED STANDARD PLAN RSP A77L1

Dist	COUNTY	ROUTE	POST MILES TOTAL PROJECT	SHEET No.	TOTAL SHEETS
05	SBt	156	R10.0/R18.4	48	89

Randell D. Hiatt
REGISTERED CIVIL ENGINEER

July 19, 2013
PLANS APPROVAL DATE

REGISTERED PROFESSIONAL ENGINEER
Randell D. Hiatt
No. C50200
Exp. 6-30-15
CIVIL
STATE OF CALIFORNIA

THE STATE OF CALIFORNIA OR ITS OFFICERS OR AGENTS SHALL NOT BE RESPONSIBLE FOR THE ACCURACY OR COMPLETENESS OF SCANNED COPIES OF THIS PLAN SHEET.

TO ACCOMPANY PLANS DATED 6-20-16

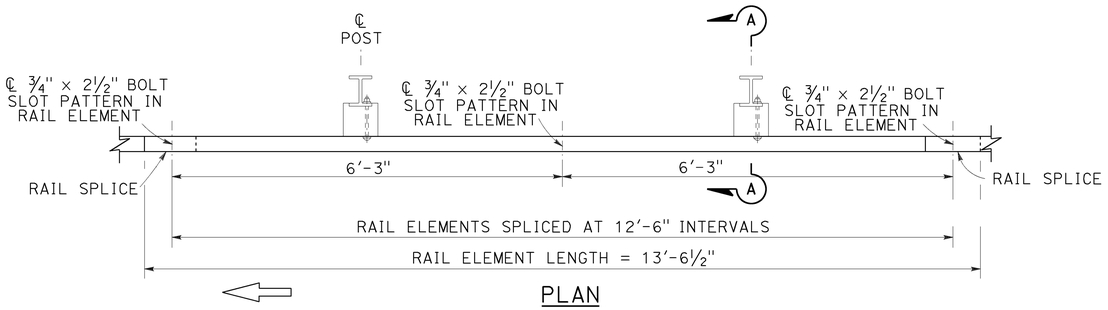

PLAN

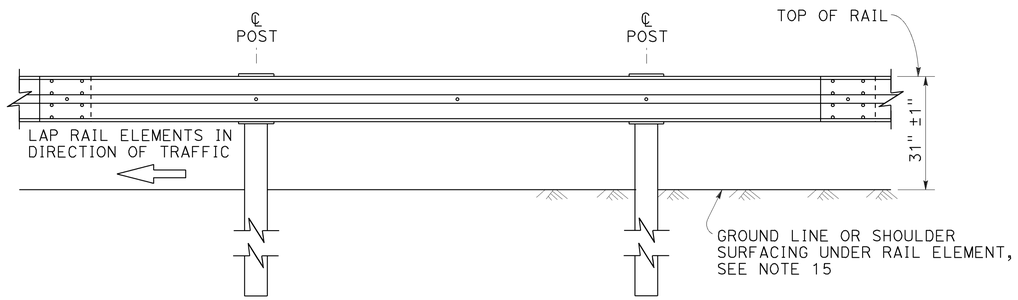

ELEVATION

MIDWEST GUARDRAIL SYSTEM WITH STEEL POSTS AND NOTCHED WOOD OR NOTCHED RECYCLED PLASTIC BLOCKS

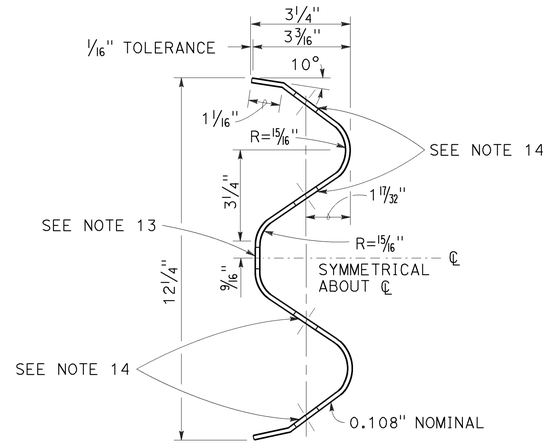

SECTION THRU RAIL ELEMENT

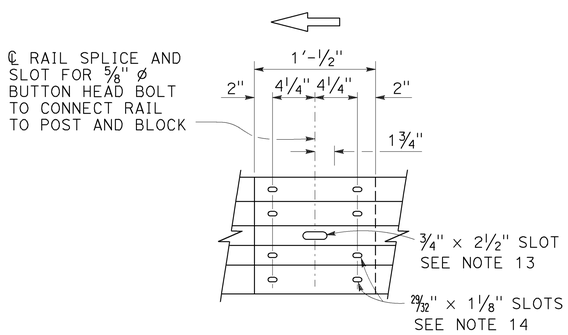

ELEVATION

RAIL ELEMENT SPLICE DETAIL

a) Connect the over lapped end of the rail elements with ⅝" ø × 1⅜" button head oval shoulder splice bolts inserted into the 29⁄32" × 1⅛" slots and bolted together with ⅝" ø recessed hex nuts. Recess of hex nut points toward rail element. A total of 8 bolts and nuts are to be used at each rail splice connection.

b) The ends of the rail elements are to be overlapped in the direction of traffic (see details).

c) Where end cap is to be attached to the end of a rail element, a total of 4 of the above described splice bolts and nuts are to be used.

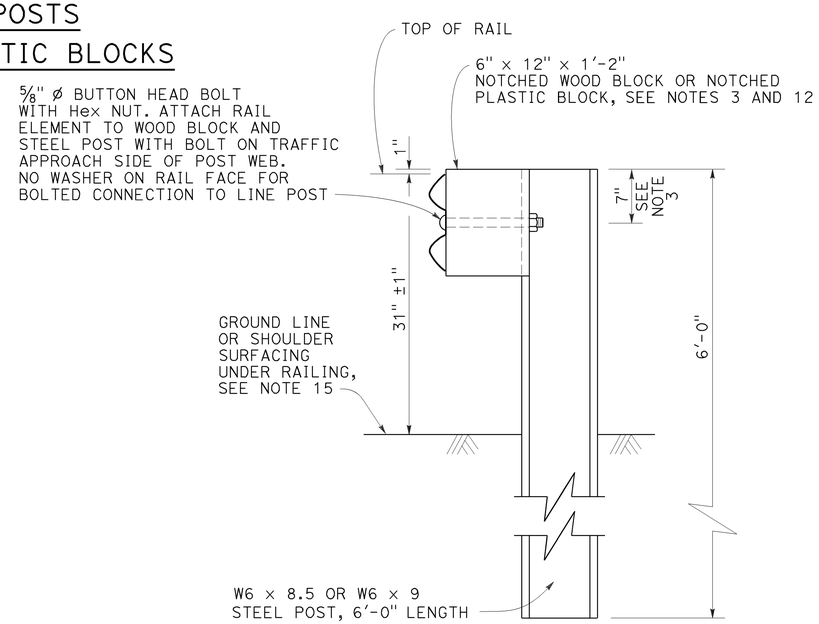

SECTION A-A

TYPICAL STEEL LINE POST INSTALLATION

See Note 4

NOTES:

1. For details of wood post installations, see Revised Standard Plan RSP A77L1.
2. For details of standard hardware used to construct MGS, see Revised Standard Plan RSP A77M1.
3. For details of steel posts and notched wood blocks used to construct MGS, see Revised Standard Plan RSP A77N2.
4. For additional installation details, see Revised Standard Plan RSP A77N3.
5. MGS post spacing to be 6'-3" center to center, except as otherwise noted.
6. For MGS typical layouts, see the A77P, A77Q and A77R Series of Standard Plans.
7. If railing is connected to terminal system end treatment, use 31" height terminal system end treatment.
8. For MGS end anchor details, see Revised Standard Plans RSP A77S1 and RSP A77T2.
9. For details of MGS transition to bridge railing, see Revised Standard Plan RSP A77U4.
10. For additional details of MGS connection to bridge railings, see Revised Standard Plans RSP A77U1, RSP A77U2 and RSP A77V1.
11. For dike positioning and MGS delineation details, see Revised Standard Plan RSP A77N4.
12. Notched face of block faces steel post.
13. Slotted hole for bolted connection of rail element to block and post. See "Section Thru Rail Element".
14. Slotted holes for splice bolts to overlap ends of rail element. See "Section Thru Rail Element".
15. Install posts in soil.

STATE OF CALIFORNIA
DEPARTMENT OF TRANSPORTATION

MIDWEST GUARDRAIL SYSTEM STANDARD RAILING SECTION (STEEL POST WITH NOTCHED WOOD OR NOTCHED RECYCLED PLASTIC BLOCK)

NO SCALE

RSP A77L2 DATED JULY 19, 2013 SUPPLEMENTS THE STANDARD PLANS BOOK DATED 2010.

REVISED STANDARD PLAN RSP A77L2

2010 REVISED STANDARD PLAN RSP A77L2

7-3-13

Dist	COUNTY	ROUTE	POST MILES TOTAL PROJECT	SHEET No.	TOTAL SHEETS
05	SBt	156	R10.0/R18.4	49	89

Randell D. Hiatt
REGISTERED CIVIL ENGINEER

July 19, 2013
PLANS APPROVAL DATE

REGISTERED PROFESSIONAL ENGINEER
Randell D. Hiatt
No. C50200
Exp. 6-30-15
CIVIL
STATE OF CALIFORNIA

THE STATE OF CALIFORNIA OR ITS OFFICERS OR AGENTS SHALL NOT BE RESPONSIBLE FOR THE ACCURACY OR COMPLETENESS OF SCANNED COPIES OF THIS PLAN SHEET.

TO ACCOMPANY PLANS DATED 6-20-16

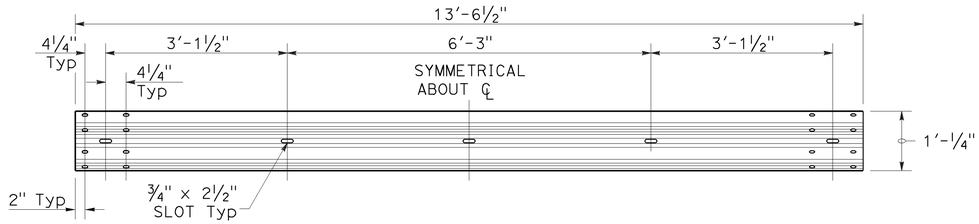

TYPICAL RAIL ELEMENT

NOTE:

1. Slotted holes for splice bolts to overlap ends of rail element.

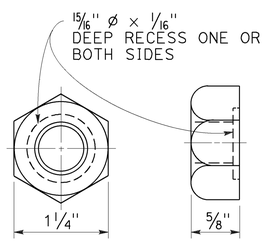

⅝" ø RECESS NUT

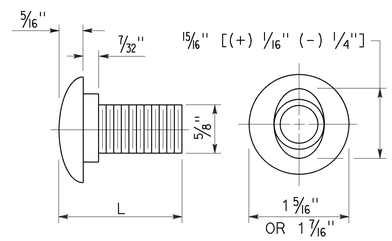

⅝" ø BUTTON HEAD BOLT

BUTTON HEAD BOLT

L	THREAD LENGTH
1⅜"	FULL THREAD LENGTH
2"	FULL THREAD LENGTH
10"	4" Min THREAD LENGTH
18"	4" Min THREAD LENGTH
20"	4" Min THREAD LENGTH
22"	4" Min THREAD LENGTH
26"	4" Min THREAD LENGTH
36"	4" Min THREAD LENGTH
** 2¾"	2" Min THREAD LENGTH
** 19"	4" Min THREAD LENGTH

** For nested rail applications.

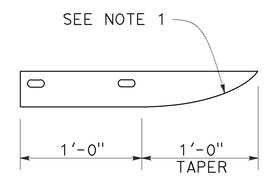

PLAN

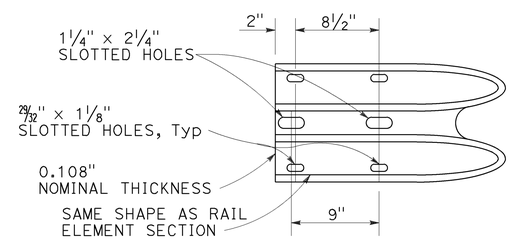

ELEVATION

END CAP
(TYPE A)

STATE OF CALIFORNIA
DEPARTMENT OF TRANSPORTATION

MIDWEST GUARDRAIL SYSTEM STANDARD HARDWARE

NO SCALE

RSP A77M1 DATED JULY 19, 2013 SUPPLEMENTS THE STANDARD PLANS BOOK DATED 2010.

REVISED STANDARD PLAN RSP A77M1

2010 REVISED STANDARD PLAN RSP A77M1

7-3-13

Dist	COUNTY	ROUTE	POST MILES TOTAL PROJECT	SHEET No.	TOTAL SHEETS
05	SBt	156	R10.0/R18.4	50	89

Randell D. Hiatt
REGISTERED CIVIL ENGINEER

July 19, 2013
PLANS APPROVAL DATE

REGISTERED PROFESSIONAL ENGINEER
Randell D. Hiatt
No. C50200
Exp. 6-30-15
CIVIL
STATE OF CALIFORNIA

THE STATE OF CALIFORNIA OR ITS OFFICERS OR AGENTS SHALL NOT BE RESPONSIBLE FOR THE ACCURACY OR COMPLETENESS OF SCANNED COPIES OF THIS PLAN SHEET.

TO ACCOMPANY PLANS DATED 6-20-16

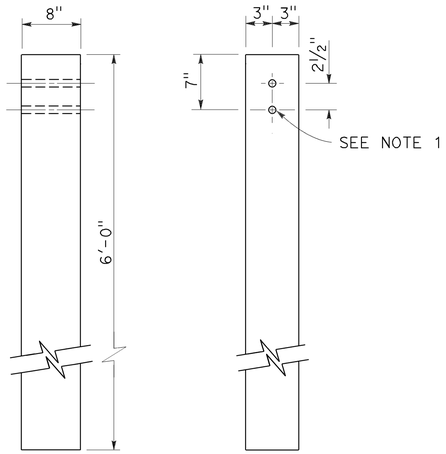

SIDE FRONT

6" x 8" WOOD POST
See Note 3

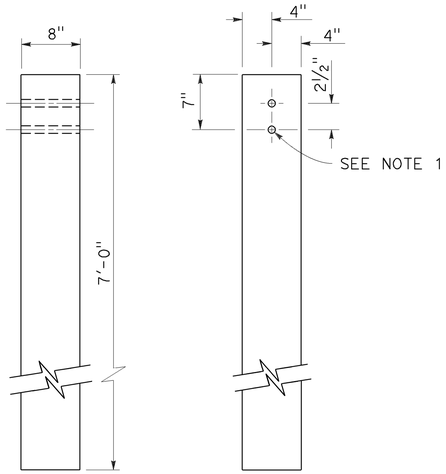

SIDE FRONT

8" x 8" WOOD POST
See Note 4

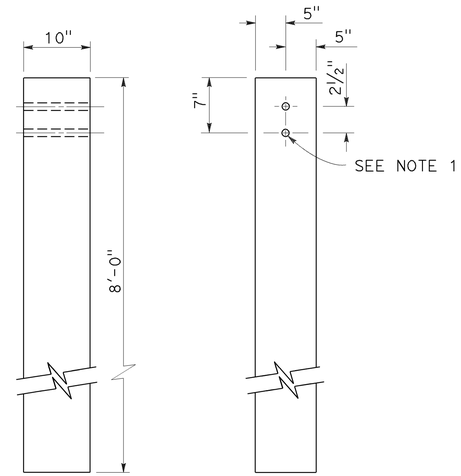

SIDE FRONT

10" x 10" WOOD POST
See Note 5

NOTES:

1. All holes in wood posts and blocks shall be 3/4" Dia ± 1/16".
2. Dimensions shown for wood post are nominal.
3. This post and block combination used for standard line post sections of MGS.
4. This post and 8" x 12" block combination used for line post sections of MGS on narrow roadways.
5. This post and 8" x 12" block combination is typically used where strengthened line post sections of MGS are warranted to shield fixed objects.
6. See Revised Standard Plan RSP A77L3 for use of 6" x 8" and 8" x 8" wood blocks.

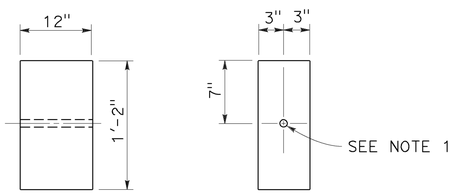

SIDE FRONT

6" x 12" WOOD BLOCK
See Note 3

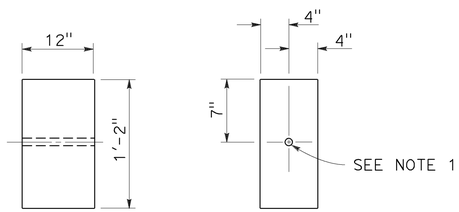

SIDE FRONT

8" x 12" WOOD BLOCK

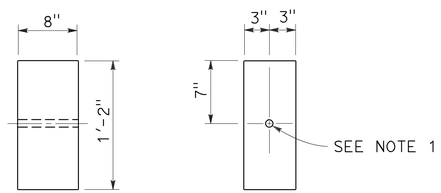

SIDE FRONT

6" x 8" WOOD BLOCK
Only for use with metal beam guard rail see Note 6

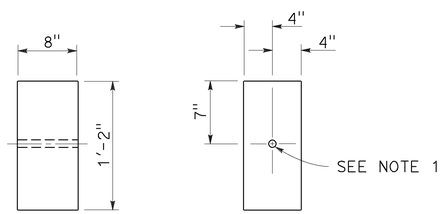

SIDE FRONT

8" x 8" WOOD BLOCK
Only for use with metal beam guard rail see Note 6

STATE OF CALIFORNIA
DEPARTMENT OF TRANSPORTATION

MIDWEST GUARDRAIL SYSTEM WOOD POST AND WOOD BLOCK DETAILS

NO SCALE

RSP A77N1 DATED JULY 19, 2013 SUPPLEMENTS THE STANDARD PLANS BOOK DATED 2010.

REVISED STANDARD PLAN RSP A77N1

2010 REVISED STANDARD PLAN RSP A77N1

7-3-13

Dist	COUNTY	ROUTE	POST MILES TOTAL PROJECT	SHEET No.	TOTAL SHEETS
05	SBt	156	R10.0/R18.4	51	89

Randell D. Hiatt
REGISTERED CIVIL ENGINEER

November 15, 2013
PLANS APPROVAL DATE

REGISTERED PROFESSIONAL ENGINEER
Randell D. Hiatt
No. C50200
Exp. 6-30-15
CIVIL
STATE OF CALIFORNIA

THE STATE OF CALIFORNIA OR ITS OFFICERS OR AGENTS SHALL NOT BE RESPONSIBLE FOR THE ACCURACY OR COMPLETENESS OF SCANNED COPIES OF THIS PLAN SHEET.

TO ACCOMPANY PLANS DATED 6-20-16

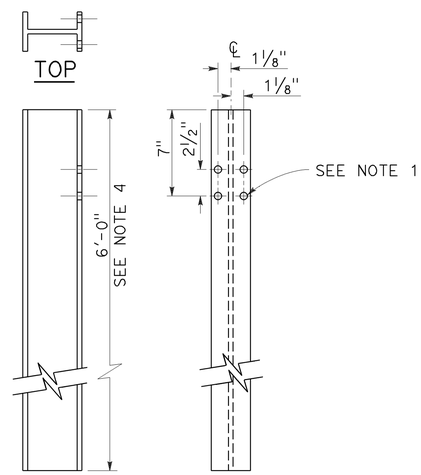

W6 x 9 OR W6 x 8.5
STEEL POST
See Note 4

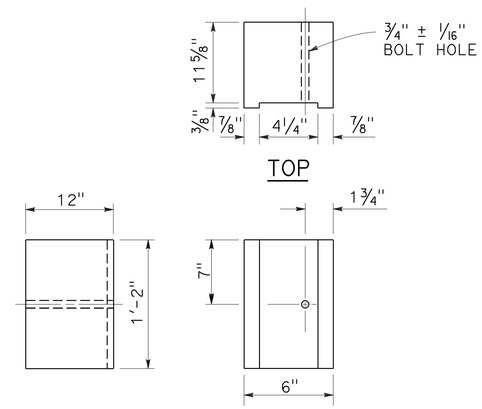

6" x 12"
NOTCHED WOOD BLOCK
See Notes 2 and 3

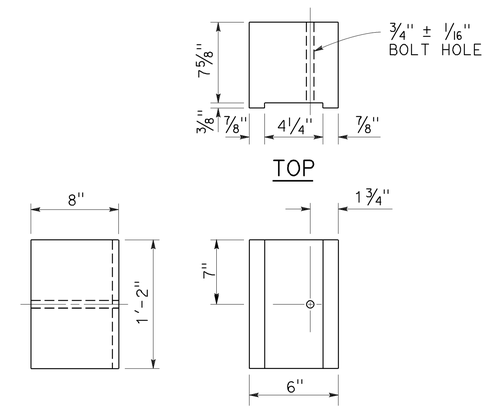

6" x 8"
NOTCHED WOOD BLOCK
Only for use with metal beam guard railing. See Note 5

NOTES:

1. All holes in steel post shall be 13/16" Dia maximum.
2. Dimensions shown for wood block are nominal.
3. Notched face of block faces steel post.
4. 6'-0" length posts to be used for typical roadway installation. See Revised Standard Plan RSP A77N3.
5. See Revised Standard Plan RSP A77L3 for use of 6" x 8" and 8" x 8" notched wood blocks.
6. This post and 8" x 12" block combination to be used for line post sections of MGS on narrow roadways and where strengthened line post sections of MGS are warranted to shield fixed objects.

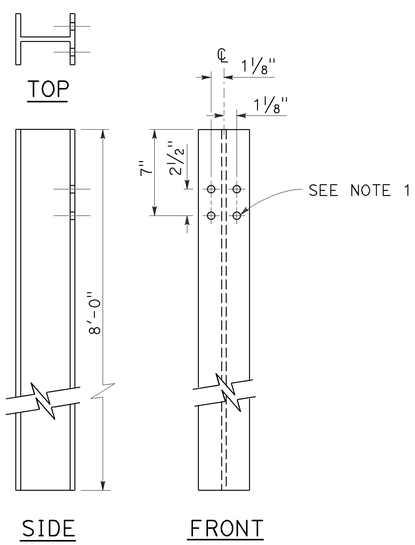

W6 x 15
STEEL POST
See Note 6

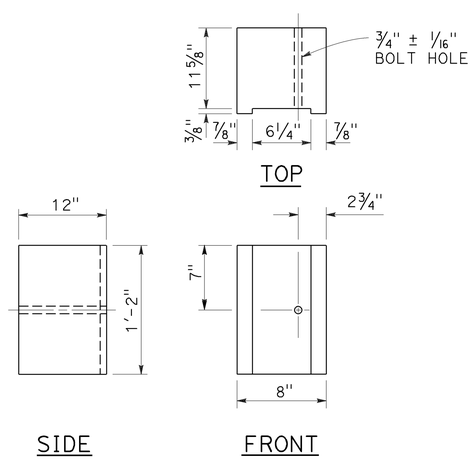

8" x 12"
NOTCHED WOOD BLOCK
See Notes 2 and 3

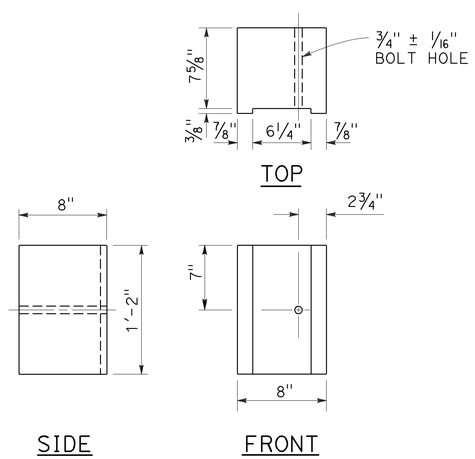

8" x 8"
NOTCHED WOOD BLOCK
Only for use with metal beam guard railing. See Note 5

STATE OF CALIFORNIA
DEPARTMENT OF TRANSPORTATION

MIDWEST GUARDRAIL SYSTEM STEEL POST AND NOTCHED WOOD BLOCK DETAILS

NO SCALE

RSP A77N2 DATED NOVEMBER 15, 2013 SUPERSEDES RSP A77N2
DATED JULY 19, 2013 THAT SUPPLEMENTS THE STANDARD PLANS BOOK DATED 2010.

REVISED STANDARD PLAN RSP A77N2

2010 REVISED STANDARD PLAN RSP A77N2

10-29-13

Dist	COUNTY	ROUTE	POST MILES TOTAL PROJECT	SHEET No.	TOTAL SHEETS
05	SB†	156	R10.0/R18.4	52	89

Randell D. Hiatt
REGISTERED CIVIL ENGINEER

November 15, 2013
PLANS APPROVAL DATE

REGISTERED PROFESSIONAL ENGINEER
Randell D. Hiatt
No. C50200
Exp. 6-30-15
CIVIL
STATE OF CALIFORNIA

THE STATE OF CALIFORNIA OR ITS OFFICERS OR AGENTS SHALL NOT BE RESPONSIBLE FOR THE ACCURACY OR COMPLETENESS OF SCANNED COPIES OF THIS PLAN SHEET.

TO ACCOMPANY PLANS DATED 6-20-16

2010 REVISED STANDARD PLAN RSP A77N3

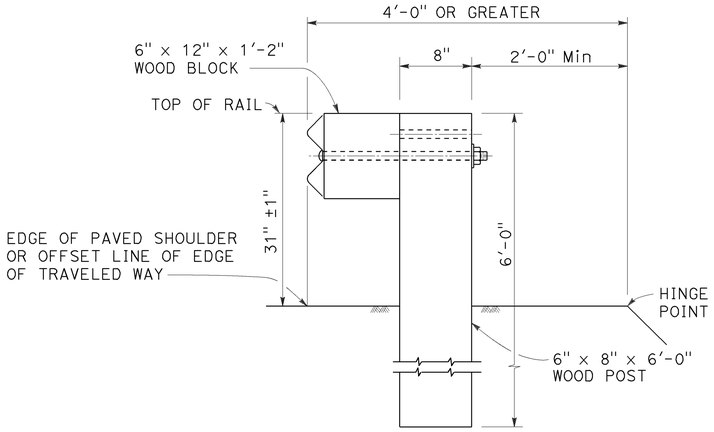

DETAIL A

TYPICAL ROADWAY INSTALLATION

See Note 1

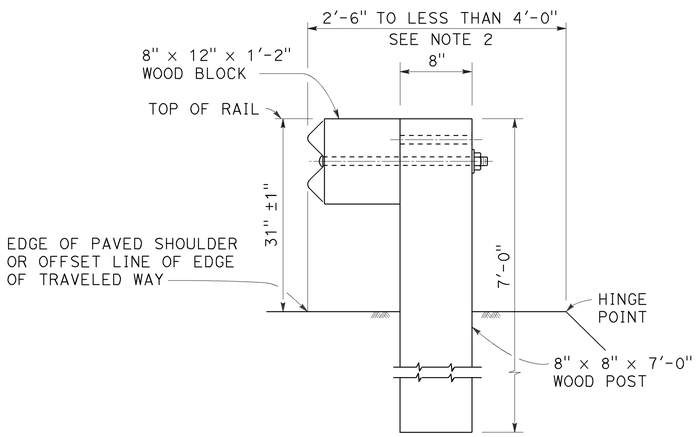

DETAIL B

NARROW ROADWAY INSTALLATION

See Note 1

POST EMBEDMENT

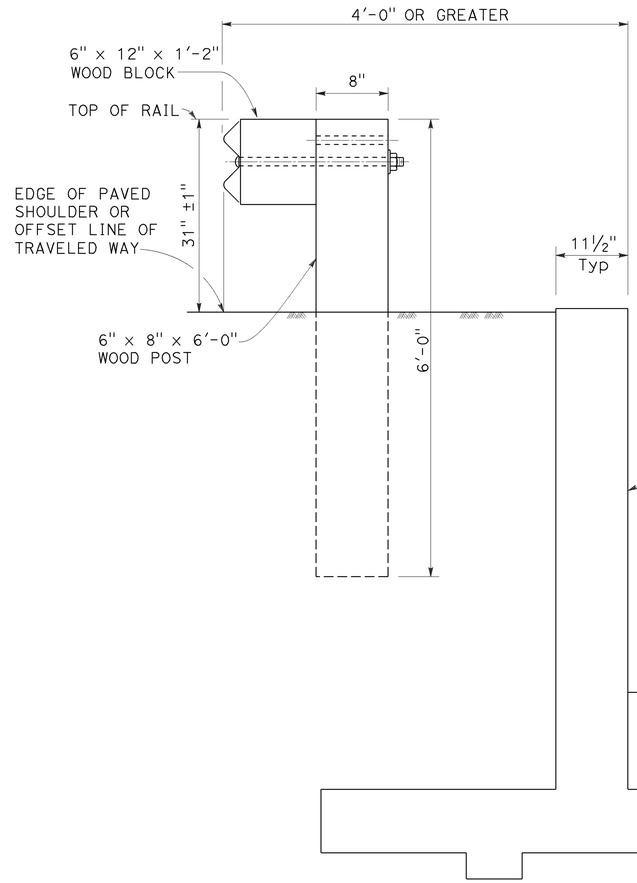

DETAIL C

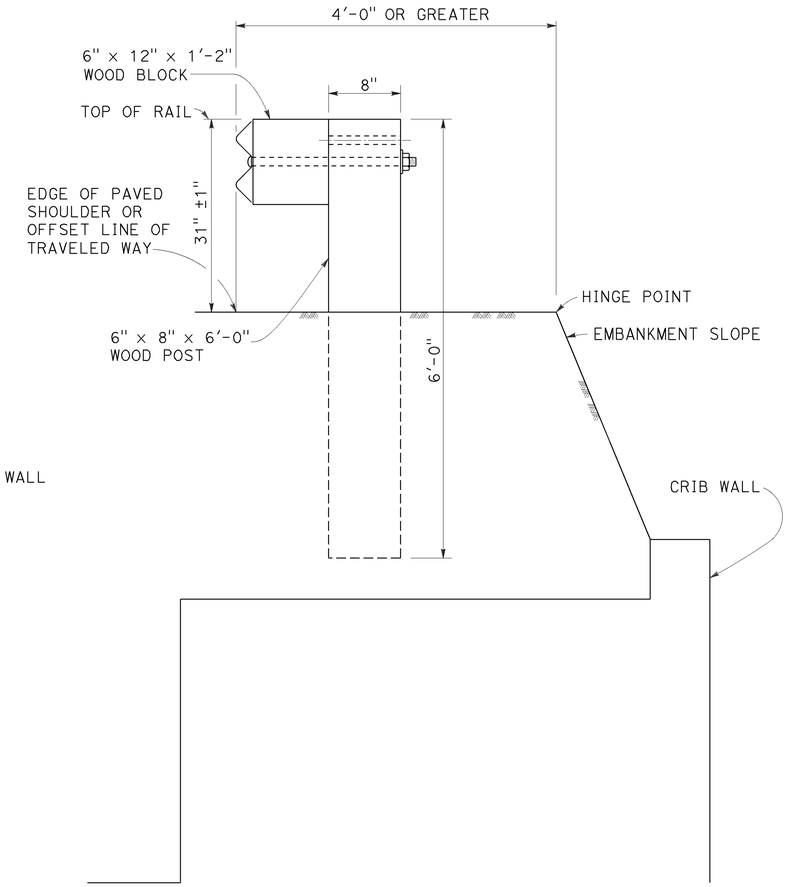

DETAIL D

INSTALLATION AT EARTH RETAINING WALLS

NOTES:

1. These installation details also applicable to steel line post installations. For Detail A, C, and D, where steel line post installations are constructed, W6 x 8.5 or W6 x 9 steel post, 6'-0" in length, with 6" x 12" x 1'-2" notched wood blocks or notched recycled plastic blocks are to be used in place of the size of wood post and wood block shown. For Detail B, where steel line post installations are constructed, W6 x 15 steel post, 8'-0" in length, with 8" x 12" x 1'-2" notched wood blocks or notched recycled plastic blocks are to be used in place of the size of wood post and wood block shown. For additional installation details, see Revised Standard Plan RSP A77L1 and RSP A77L2.
2. Where the distance between the face of the rail and the hinge point is less than 2'-6", see the Project Plans for special details.
3. For dike positioning with MGS installations, see Revised Standard Plan RSP A77N4.

STATE OF CALIFORNIA
DEPARTMENT OF TRANSPORTATION

MIDWEST GUARDRAIL SYSTEM TYPICAL LINE POST EMBEDMENT AND HINGE POINT OFFSET DETAILS

NO SCALE

RSP A77N3 DATED NOVEMBER 15, 2013 SUPERSEDES RSP A77N3
DATED JULY 19, 2013 THAT SUPPLEMENTS THE STANDARD PLANS BOOK DATED 2010.

REVISED STANDARD PLAN RSP A77N3

10-29-13

Dist	COUNTY	ROUTE	POST MILES TOTAL PROJECT	SHEET No.	TOTAL SHEETS
05	SBt	156	R10.0/R18.4	53	89

Randell D. Hiatt
REGISTERED CIVIL ENGINEER

July 19, 2013
PLANS APPROVAL DATE

REGISTERED PROFESSIONAL ENGINEER
Randell D. Hiatt
No. C50200
Exp. 6-30-15
CIVIL
STATE OF CALIFORNIA

THE STATE OF CALIFORNIA OR ITS OFFICERS OR AGENTS SHALL NOT BE RESPONSIBLE FOR THE ACCURACY OR COMPLETENESS OF SCANNED COPIES OF THIS PLAN SHEET.

TO ACCOMPANY PLANS DATED 6-20-16

NOTES:

1. When necessary to place dike more than 7" in front of face of MGS, only Type C dike may be used. For dike details, see Revised Standard Plan RSP A87B.
2. For standard railing post embedment, see Revised Standard Plan RSP A77N3.
3. MGS delineation to be used where shown on the Project Plans.
4. When dike or curb is placed under MGS, the maximum height of the dike or curb shall be 6". Mountable dike should not be used. For dike and curb details, see Revised Standard Plans RSP A87A and RSP A87B.
5. For details of typical distance between the face of rail and hinge point, see Revised Standard Plan RSP A77N3.
6. For steel line posts, use 1/4 - 20 self-tapping screws in 0.22" diameter holes or 1/4" bolts in 9/32" diameter holes.

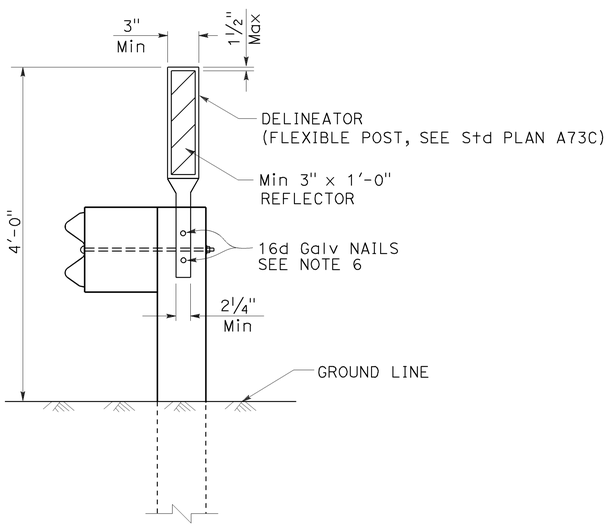

MGS DELINEATION

See Note 3

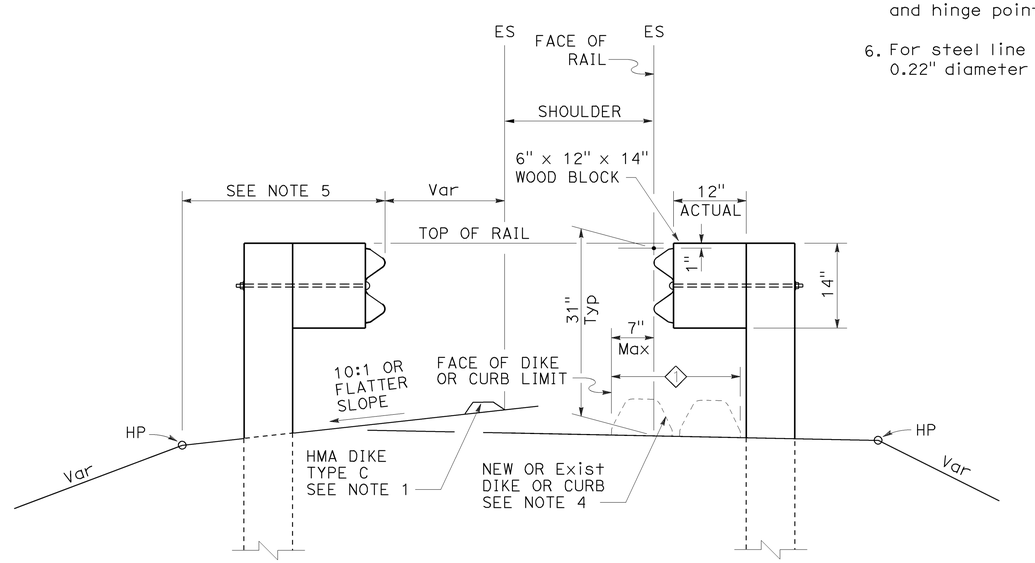

DIKE POSITIONING

See Note 1

1 PERMISSIBLE DIKE OR CURB PLACEMENT AREA

STATE OF CALIFORNIA
DEPARTMENT OF TRANSPORTATION

MIDWEST GUARDRAIL SYSTEM TYPICAL RAILING DELINEATION AND DIKE POSITIONING DETAILS

NO SCALE

RSP A77N4 DATED JULY 19, 2013 SUPPLEMENTS THE STANDARD PLANS BOOK DATED 2010.

REVISED STANDARD PLAN RSP A77N4

2010 REVISED STANDARD PLAN RSP A77N4

7-10-13

Dist	COUNTY	ROUTE	POST MILES TOTAL PROJECT	SHEET No.	TOTAL SHEETS
05	SBt	156	R10.0/R18.4	54	89

Randell D. Hiatt
REGISTERED CIVIL ENGINEER

July 19, 2013
PLANS APPROVAL DATE

REGISTERED PROFESSIONAL ENGINEER
Randell D. Hiatt
No. C50200
Exp. 6-30-15
CIVIL
STATE OF CALIFORNIA

THE STATE OF CALIFORNIA OR ITS OFFICERS OR AGENTS SHALL NOT BE RESPONSIBLE FOR THE ACCURACY OR COMPLETENESS OF SCANNED COPIES OF THIS PLAN SHEET.

TO ACCOMPANY PLANS DATED 6-20-16

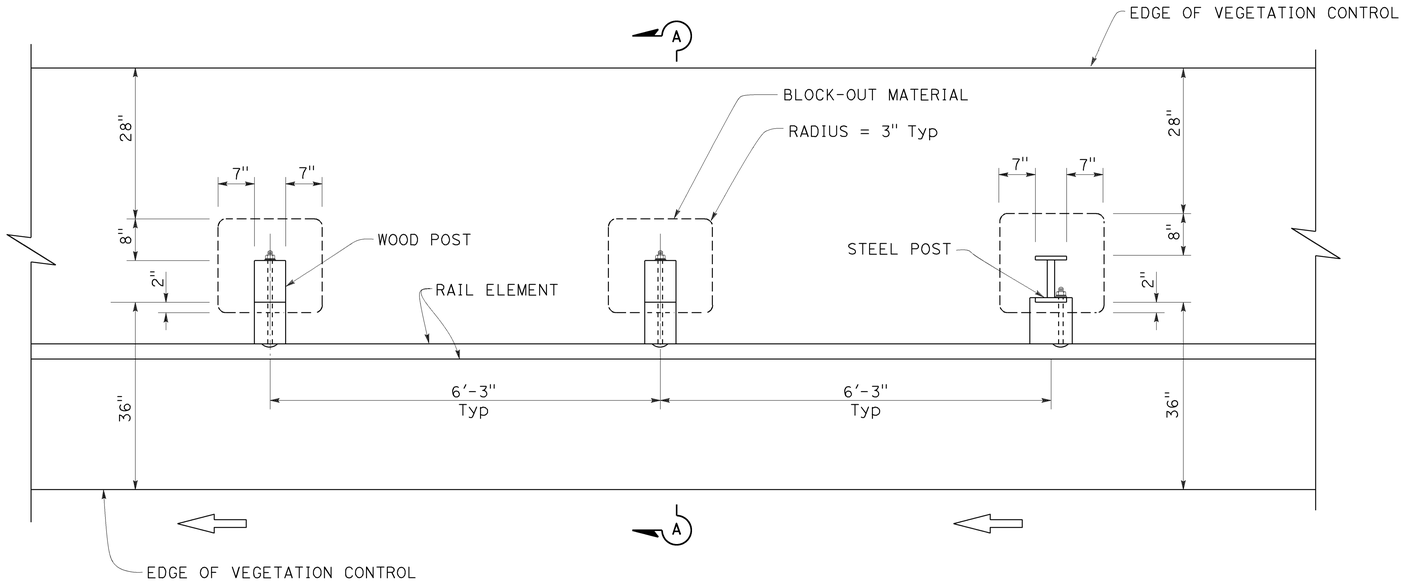

PLAN

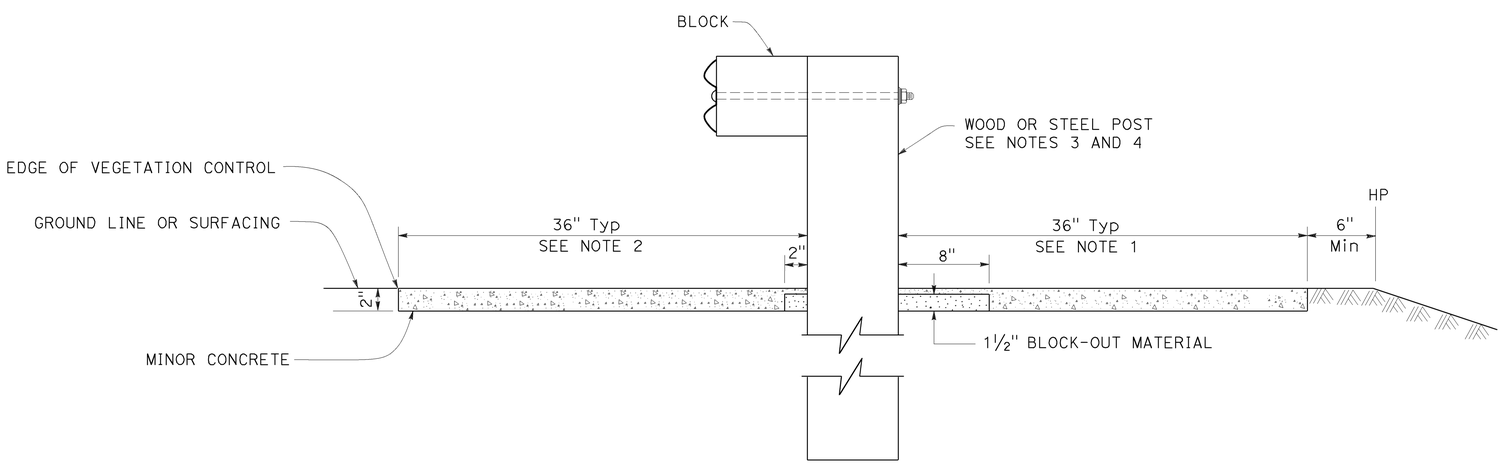

SECTION A-A

NOTES:

1. Where the distance between back of post and hinge point is less than 42", construct vegetation control to 6" from hinge point while maintaining the 8" block-out at back of post. If the 8" block-out at back of post can not be maintained, construct vegetation control flush with the back edge of post.
2. Where dike is constructed under railing, construct vegetation control to back edge of dike. Where paved shoulder is constructed within 36" in front of the post, construct vegetation control to the edge of paved shoulder.
3. For wood post sizes, see Revised Standard Plan RSP A77N1.
4. For steel post sizes, see Revised Standard Plan RSP A77N2.
5. For details not shown, see Revised Standard Plans RSP A77L1 and RSP A77L2.

STATE OF CALIFORNIA
DEPARTMENT OF TRANSPORTATION

MIDWEST GUARDRAIL SYSTEM TYPICAL VEGETATION CONTROL STANDARD RAILING SECTION

NO SCALE

RSP A77N5 DATED JULY 19, 2013 SUPPLEMENTS THE STANDARD PLANS BOOK DATED 2010.

REVISED STANDARD PLAN RSP A77N5

2010 REVISED STANDARD PLAN RSP A77N5

7-3-13

Dist	COUNTY	ROUTE	POST MILES TOTAL PROJECT	SHEET No.	TOTAL SHEETS
05	SBt	156	R10.0/R18.4	55	89

Randell D. Hiatt
REGISTERED CIVIL ENGINEER

July 19, 2013
PLANS APPROVAL DATE

REGISTERED PROFESSIONAL ENGINEER
Randell D. Hiatt
No. C50200
Exp. 6-30-15
CIVIL
STATE OF CALIFORNIA

THE STATE OF CALIFORNIA OR ITS OFFICERS OR AGENTS SHALL NOT BE RESPONSIBLE FOR THE ACCURACY OR COMPLETENESS OF SCANNED COPIES OF THIS PLAN SHEET.

TO ACCOMPANY PLANS DATED 6-20-16

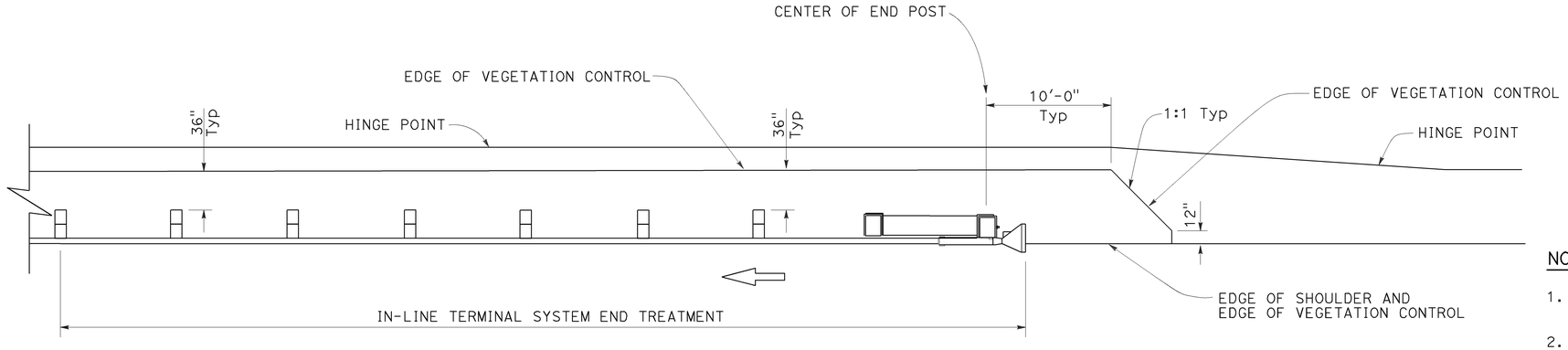

PLAN

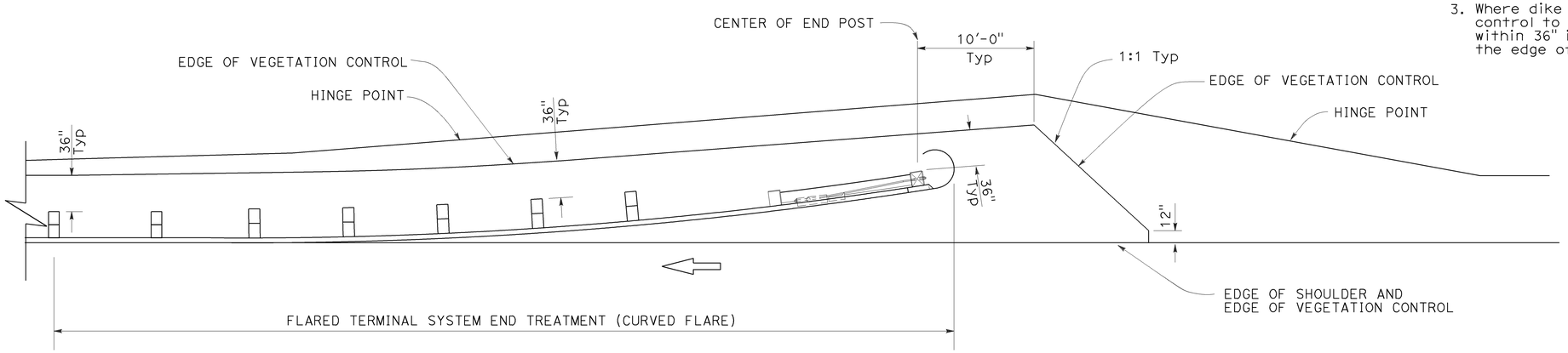

PLAN

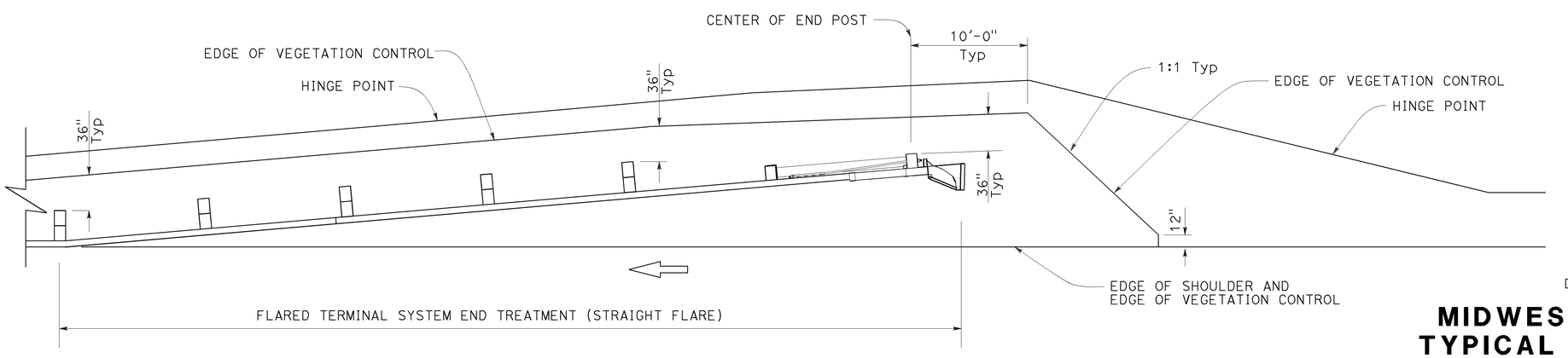

PLAN

NOTES:

1. See Revised Standard Plan RSP A77N5 for additional vegetation control details.
2. Where the distance between back of post and hinge point is less than 42", construct vegetation control to 6" from hinge point while maintaining the 8" block-out at back of post. If the 8" block-out at back of post can not be maintained, construct vegetation control flush with the back edge of post.
3. Where dike is constructed under railing, construct vegetation control to back edge of dike. Where paved shoulder is constructed within 36" in front of the post, construct vegetation control to the edge of paved shoulder.

STATE OF CALIFORNIA
DEPARTMENT OF TRANSPORTATION

MIDWEST GUARDRAIL SYSTEM TYPICAL VEGETATION CONTROL FOR TERMINAL SYSTEM END TREATMENTS

NO SCALE

RSP A77N6 DATED JULY 19, 2013 SUPPLEMENTS THE STANDARD PLANS BOOK DATED 2010.

REVISED STANDARD PLAN RSP A77N6

2010 REVISED STANDARD PLAN RSP A77N6

6-12-13

Dist	COUNTY	ROUTE	POST MILES TOTAL PROJECT	SHEET No.	TOTAL SHEETS
05	SBt	156	R10.0/R18.4	56	89

Randell D. Hiatt
REGISTERED CIVIL ENGINEER

July 19, 2013
PLANS APPROVAL DATE

REGISTERED PROFESSIONAL ENGINEER
Randell D. Hiatt
No. C50200
Exp. 6-30-15
CIVIL
STATE OF CALIFORNIA

THE STATE OF CALIFORNIA OR ITS OFFICERS OR AGENTS SHALL NOT BE RESPONSIBLE FOR THE ACCURACY OR COMPLETENESS OF SCANNED COPIES OF THIS PLAN SHEET.

TO ACCOMPANY PLANS DATED 6-20-16

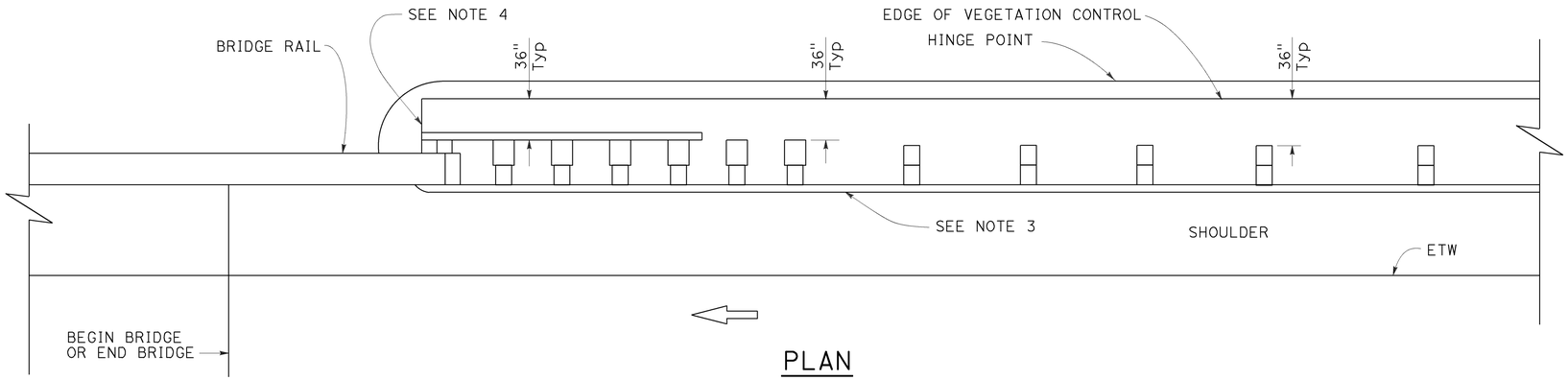

PLAN

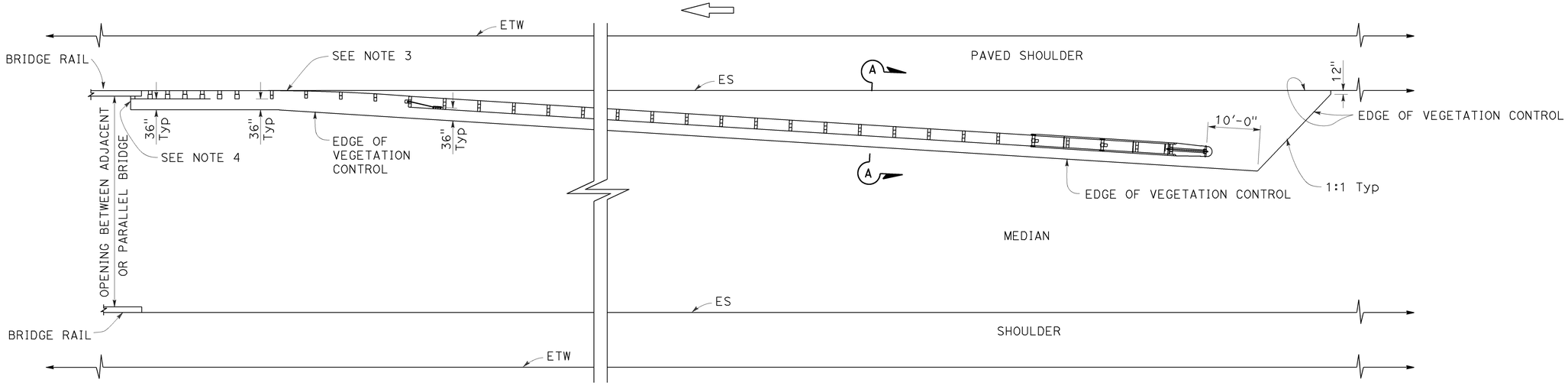

PLAN

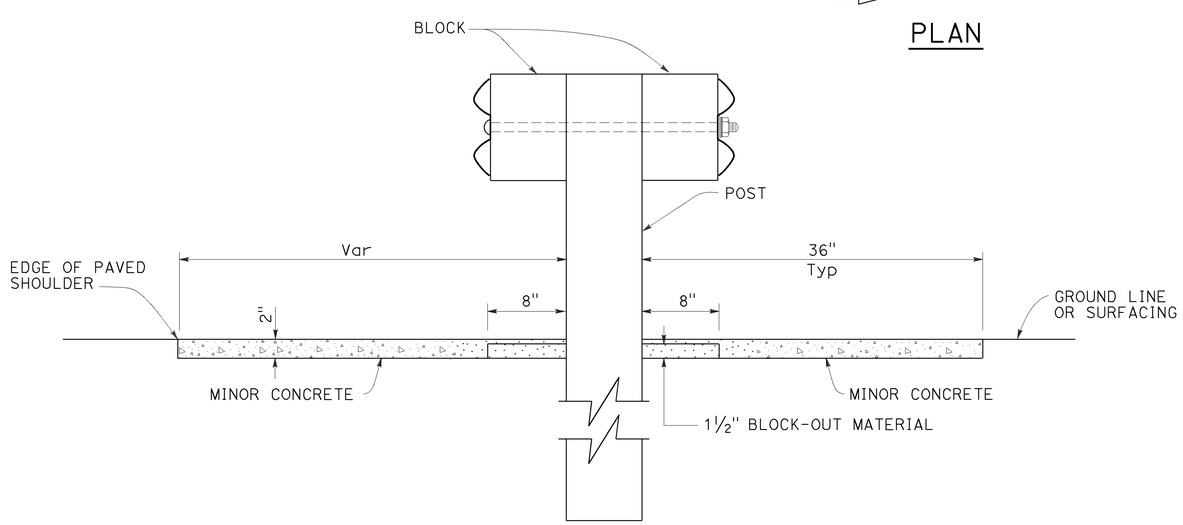

SECTION A-A

NOTES:

1. See Revised Standard Plan RSP A77N5 for additional vegetation control details.
2. Where the distance between back of post and hinge point is less than 42", construct vegetation control to 6" from hinge point while maintaining the 8" block-out at back of post. If the 8" block-out at back of post can not be maintained, construct vegetation control flush with the back edge of post.
3. Where dike is constructed under railing, construct vegetation control to back edge of dike. Where paved shoulder is constructed within 36" in front of the post, construct vegetation control to the edge of paved shoulder.
4. End vegetation control at end of backside rail element.

STATE OF CALIFORNIA
DEPARTMENT OF TRANSPORTATION

MIDWEST GUARDRAIL SYSTEM TYPICAL VEGETATION CONTROL AT STRUCTURE APPROACH

NO SCALE

RSP A77N7 DATED JULY 19, 2013 SUPPLEMENTS THE STANDARD PLANS BOOK DATED 2010.

REVISED STANDARD PLAN RSP A77N7

2010 REVISED STANDARD PLAN RSP A77N7

6-12-13

Dist	COUNTY	ROUTE	POST MILES TOTAL PROJECT	SHEET No.	TOTAL SHEETS
05	SBt	156	R10.0/R18.4	57	89

Randell D. Hiatt
REGISTERED CIVIL ENGINEER

July 19, 2013
PLANS APPROVAL DATE

REGISTERED PROFESSIONAL ENGINEER
Randell D. Hiatt
No. C50200
Exp. 6-30-15
CIVIL
STATE OF CALIFORNIA

THE STATE OF CALIFORNIA OR ITS OFFICERS OR AGENTS SHALL NOT BE RESPONSIBLE FOR THE ACCURACY OR COMPLETENESS OF SCANNED COPIES OF THIS PLAN SHEET.

TO ACCOMPANY PLANS DATED 6-20-16

NOTES:

1. See Revised Standard Plan RSP A77N5 for additional vegetation control details.
2. Where the distance between back of post and hinge point is less than 42", construct vegetation control to 6" from hinge point while maintaining the 8" block-out at back of post. If the 8" block-out at back of post can not be maintained, construct vegetation control flush with the back edge of post.
3. Where dike is constructed under railing, construct vegetation control to back edge of dike. Where paved shoulder is constructed within 36" in front of the post, construct vegetation control to the edge of paved shoulder.

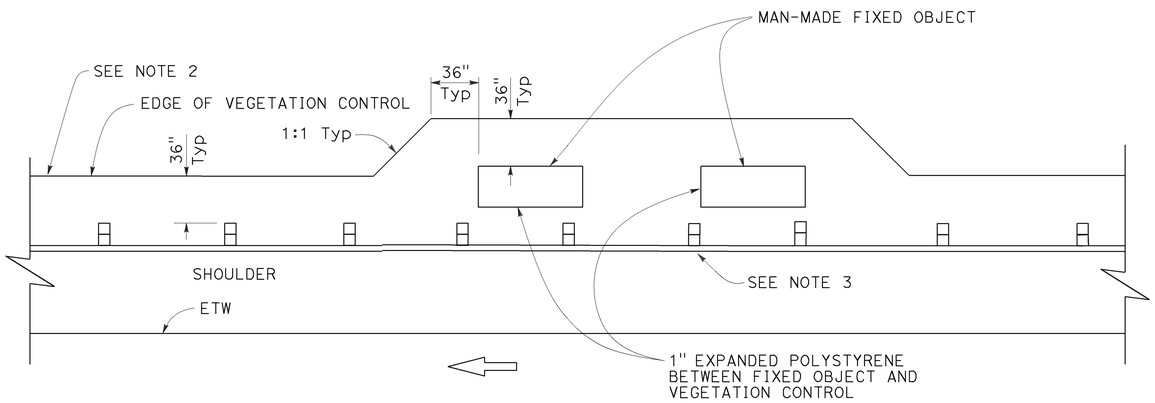

PLAN

Fixed object(s) on shoulder

STATE OF CALIFORNIA
DEPARTMENT OF TRANSPORTATION

MIDWEST GUARDRAIL SYSTEM TYPICAL VEGETATION CONTROL AT FIXED OBJECT

NO SCALE

RSP A77N8 DATED JULY 19, 2013 SUPPLEMENTS THE STANDARD PLANS BOOK DATED 2010.

REVISED STANDARD PLAN RSP A77N8

2010 REVISED STANDARD PLAN RSP A77N8

Dist	COUNTY	ROUTE	POST MILES TOTAL PROJECT	SHEET No.	TOTAL SHEETS
05	SBt	156	R10.0/R18.4	58	89

Randell D. Hiatt
REGISTERED CIVIL ENGINEER

July 19, 2013
PLANS APPROVAL DATE

REGISTERED PROFESSIONAL ENGINEER
Randell D. Hiatt
No. C50200
Exp. 6-30-15
CIVIL
STATE OF CALIFORNIA

THE STATE OF CALIFORNIA OR ITS OFFICERS OR AGENTS SHALL NOT BE RESPONSIBLE FOR THE ACCURACY OR COMPLETENESS OF SCANNED COPIES OF THIS PLAN SHEET.

TO ACCOMPANY PLANS DATED 6-20-16

2010 REVISED STANDARD PLAN RSP A77N10

NOTES:

1. See Revised Standard Plan RSP A77N5 for additional vegetation control details.
2. Where dike is constructed under railing, construct vegetation control to back edge of dike. Where paved shoulder is constructed within 36" in front of the post, construct vegetation control to the edge of paved shoulder.

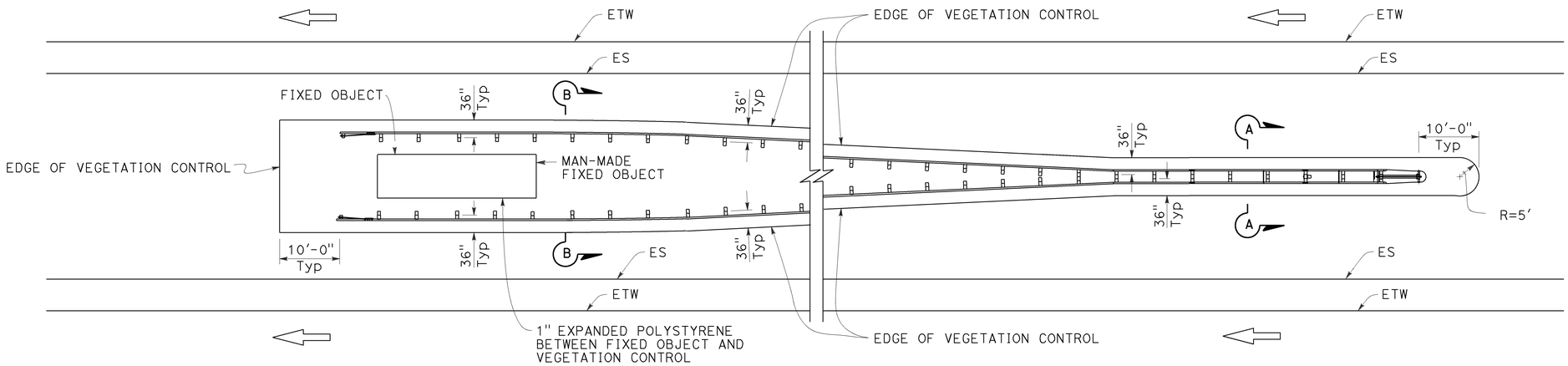

PLAN

Fixed object(s) between separate roadbeds
(One-Way Traffic)

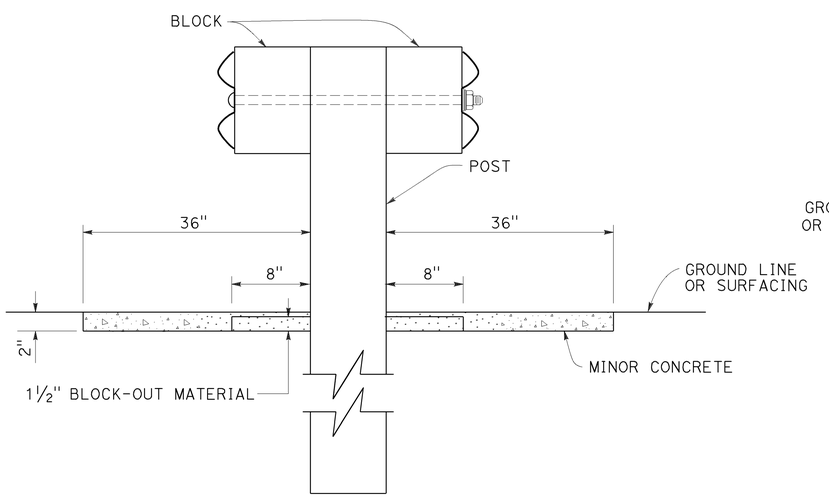

SECTION A-A

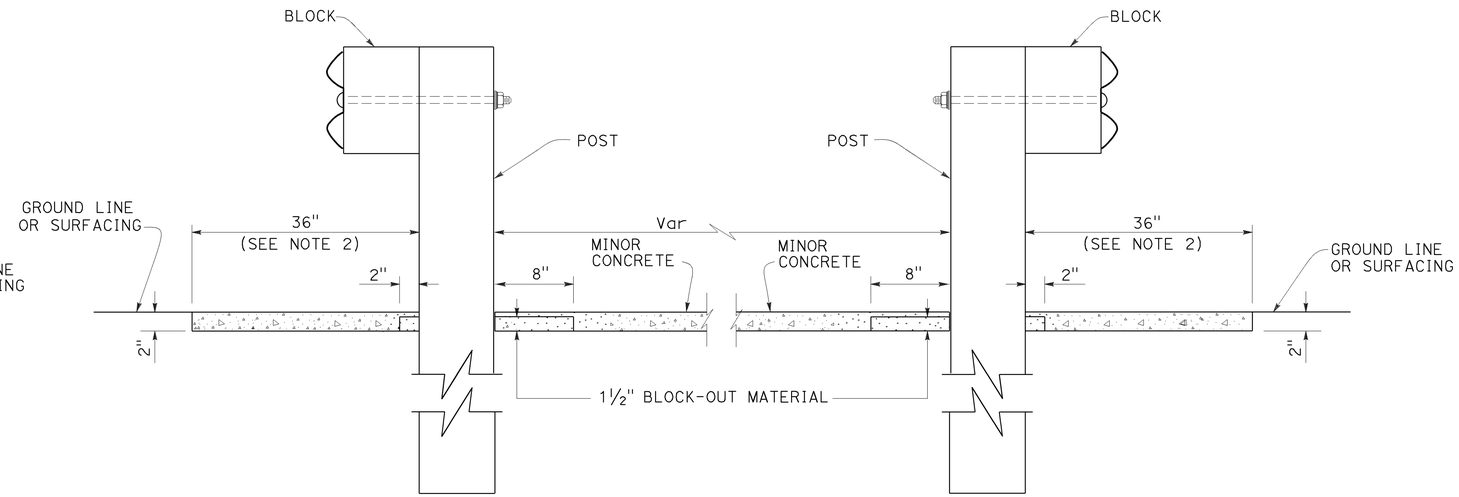

SECTION B-B

STATE OF CALIFORNIA
DEPARTMENT OF TRANSPORTATION

MIDWEST GUARDRAIL SYSTEM TYPICAL VEGETATION CONTROL AT FIXED OBJECT

NO SCALE

RSP A77N10 DATED JULY 19, 2013 SUPPLEMENTS THE STANDARD PLANS BOOK DATED 2010.

REVISED STANDARD PLAN RSP A77N10

6-12-13

Dist	COUNTY	ROUTE	POST MILES TOTAL PROJECT	SHEET No.	TOTAL SHEETS
05	SB†	156	R10.0/R18.4	59	89

Randell D. Hiatt
REGISTERED CIVIL ENGINEER

July 19, 2013
PLANS APPROVAL DATE

REGISTERED PROFESSIONAL ENGINEER
Randell D. Hiatt
No. C50200
Exp. 6-30-15
CIVIL
STATE OF CALIFORNIA

THE STATE OF CALIFORNIA OR ITS OFFICERS OR AGENTS SHALL NOT BE RESPONSIBLE FOR THE ACCURACY OR COMPLETENESS OF SCANNED COPIES OF THIS PLAN SHEET.

TO ACCOMPANY PLANS DATED 6-20-16

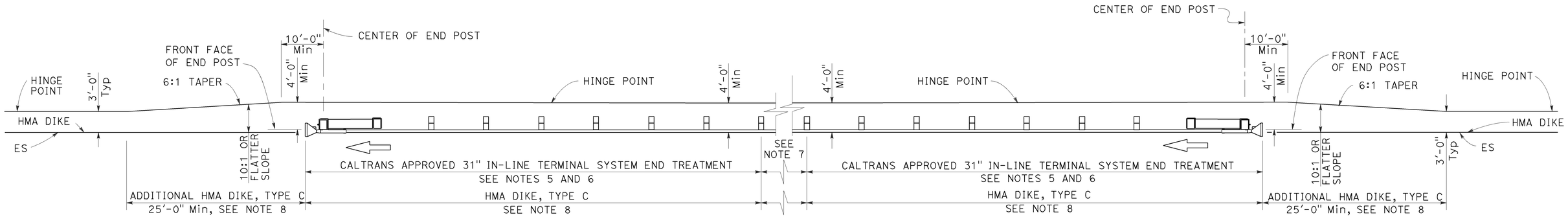

TYPE 11D LAYOUT

(Embankment MGS installation with
31" in-line end treatment at each end of railing)
See Note 4

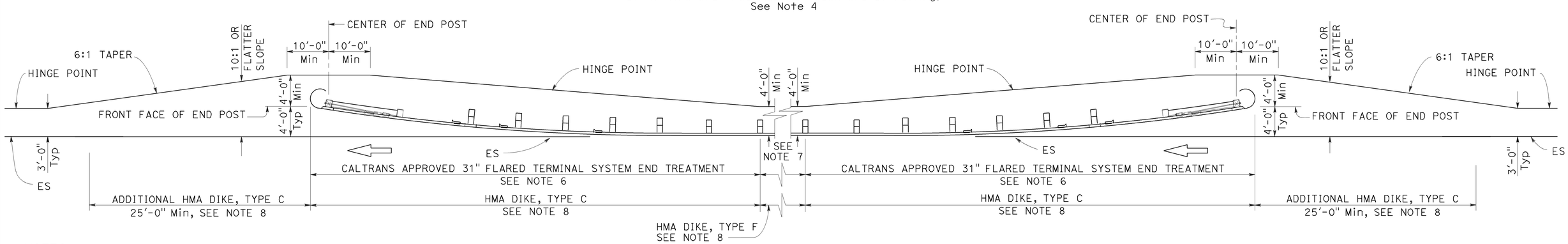

TYPE 11E LAYOUT

(Embankment MGS installation with
31" flared end treatment at each end of railing)
See Note 4

NOTES:

1. Line post, blocks and hardware to be used are shown on Revised Standard Plans RSP A77L1, RSP A77L2, RSP A77M1, RSP A77N1 and RSP A77N2.
2. MGS post spacing to be 6'-3" center to center, except as otherwise noted.
3. Except as noted, line posts are 6" x 8" x 6'-0" wood with 6" x 12" x 1'-2" wood blocks. W6 x 8.5 or W6 x 9 steel posts, 6'-0" in length, with 6" x 12" x 1'-2" notched wood blocks or plastic blocks may be used for 6" x 8" x 6'-0" wood post with 6" x 12" x 1'-2" wood blocks where applicable and when specified.
4. Layout Types 11D through 11L, shown on the A77P Series of Standard Plans, are typically used where MGS is recommended to shield embankment slopes and a crashworthy 31" end treatment is required for both directions of traffic.
5. 31" in-line terminal system end treatments are used where site conditions will not accommodate a flared end treatment.
6. The type of 31" terminal system end treatment to be used will be shown on the Project Plans.
7. Dependent on site conditions (embankment height and side slope), construction of additional MGS (length equal to multiples of 12'-6" with 6'-3" post spacing) may be advisable.
8. Where placement of dike is required with MGS installations, see Revised Standard Plan RSP A77N4 for dike positioning details.

STATE OF CALIFORNIA
DEPARTMENT OF TRANSPORTATION

MIDWEST GUARDRAIL SYSTEM TYPICAL LAYOUTS FOR EMBANKMENTS

NO SCALE

RSP A77P2 DATED JULY 19, 2013 SUPPLEMENTS THE STANDARD PLANS BOOK DATED 2010.

REVISED STANDARD PLAN RSP A77P2

2010 REVISED STANDARD PLAN RSP A77P2

6-19-13

Dist	COUNTY	ROUTE	POST MILES TOTAL PROJECT	SHEET No.	TOTAL SHEETS
05	SB†	156	R10.0/R18.4	60	89

Randell D. Hiatt
REGISTERED CIVIL ENGINEER

August 14, 2015
PLANS APPROVAL DATE

REGISTERED PROFESSIONAL ENGINEER
Randell D. Hiatt
No. C50200
Exp. 6-30-17
CIVIL
STATE OF CALIFORNIA

THE STATE OF CALIFORNIA OR ITS OFFICERS OR AGENTS SHALL NOT BE RESPONSIBLE FOR THE ACCURACY OR COMPLETENESS OF SCANNED COPIES OF THIS PLAN SHEET.

TO ACCOMPANY PLANS DATED 6-20-16

2010 REVISED STANDARD PLAN RSP A77Q1

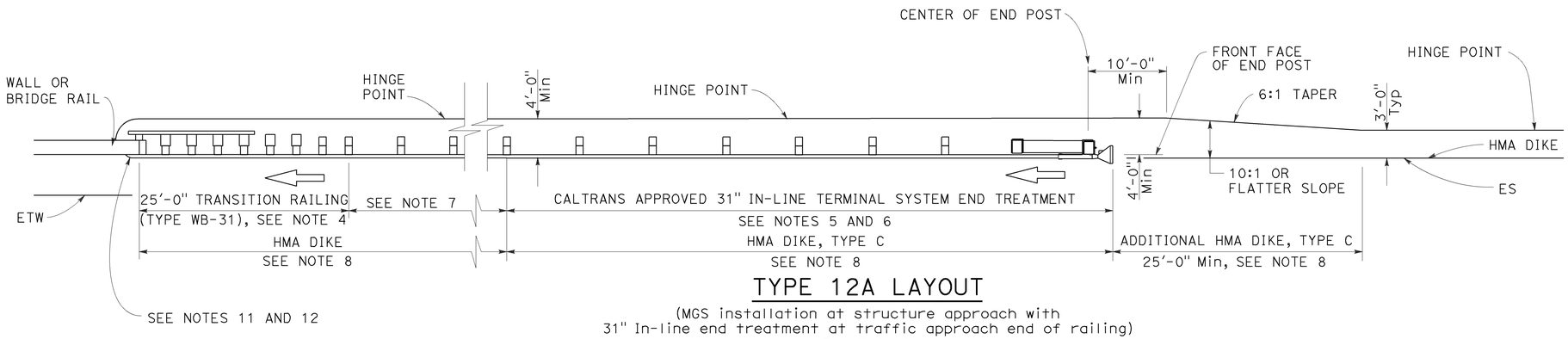

TYPE 12A LAYOUT

(MGS installation at structure approach with
31" In-line end treatment at traffic approach end of railing)
See Note 9

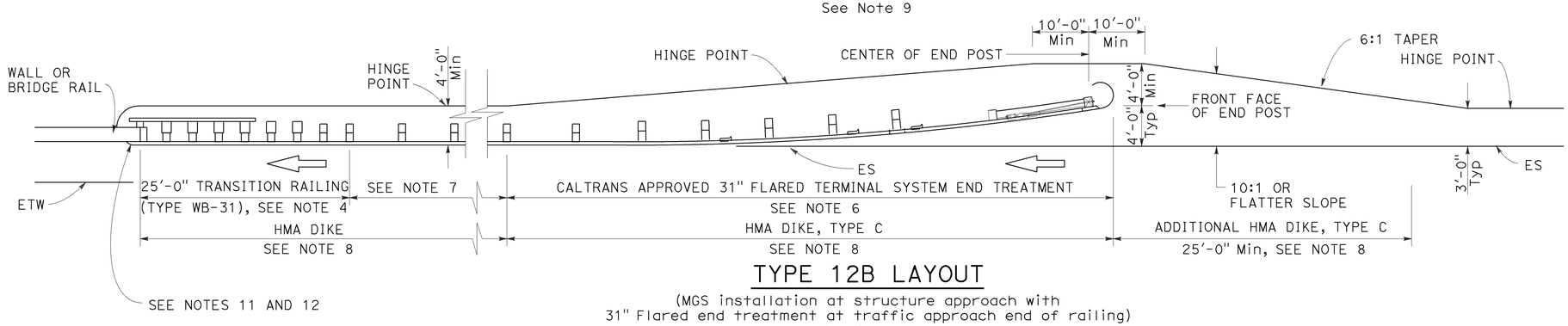

TYPE 12B LAYOUT

(MGS installation at structure approach with
31" Flared end treatment at traffic approach end of railing)
See Note 9

NOTES:

1. Line post, blocks and hardware to be used are shown on Revised Standard Plans RSP A77L1, RSP A77L2, RSP A77M1, RSP A77N1 and RSP A77N2.
2. MGS post spacing to be 6'-3" center to center, except as otherwise noted.
3. Except as noted, line posts are 6" x 8" x 6'-0" wood with 6" x 12" x 1'-2" wood blocks. W6 x 8.5 or W6 x 9 steel posts, 6'-0" in length, with 6" x 12" x 1'-2" notched wood blocks or plastic blocks may be used for 6" x 8" x 6'-0" wood posts with 6" x 12" x 1'-2" wood blocks where applicable and when specified.
4. For Transition Railing (Type WB-31) details for Types 12A and 12B Layouts, see Revised Standard Plan RSP A77U4.
5. 31" in-line terminal system end treatments are used where site conditions will not accommodate a 31" flared end treatment.
6. The type of 31" terminal system end treatment to be used will be shown on the Project Plans.
7. Dependent on site conditions (embankment height, side slopes, or other fixed objects), it may be advisable to construct additional guard railing (a length equal to multiples of 12'-6" with 6'-3" post spacing) between the transition railing and end treatment. A 12.5 degree angle of departure can be drawn on the Project Plans from the edge of traveled way through the outer most point of the fixed object to determine the additional length of railing needed.
8. Where placement of dike is required with guard railing installations, see Revised Standard Plan RSP A77N4 for dike positioning details.
9. Type 12A or Type 12B Layouts are typically used:
   a. To the right of approaching traffic, at the end of a structure, on two-lane conventional highway where the roadbed width across the structure is less than 40 feet.
   b. To the left of approaching traffic, at the end of a structure, on two-lane conventional highway where the roadbed width across the structure is less than 40 feet.
   c. To the right of approaching traffic at the end of each structure on multilane freeways or expressways with separate adjacent or parallel bridges.
   d. To the right of approaching traffic at the end of the structure on multilane freeways or expressways with decked median on the bridge.
10. See Revised Standard Plan RSP A77Q3 for typical layout used left of approaching traffic at the ends of each structure on multilane freeways or expressways with separate adjacent or parallel bridges.
11. For additional details of typical connections to bridge rail, see Connection Detail AA on Revised Standard Plans RSP A77U1 and RSP A77U2 and Connection Detail FF on Revised Standard Plans RSP A77V1 and RSP A77V2.
12. For additional details of a typical connection to walls or abutments, see Revised Standard Plan RSP A77U3.

STATE OF CALIFORNIA
DEPARTMENT OF TRANSPORTATION

MIDWEST GUARDRAIL SYSTEM TYPICAL LAYOUTS FOR STRUCTURE APPROACH

NO SCALE

RSP A77Q1 DATED AUGUST 14, 2015 SUPERSEDES RSP A77Q1 DATED JULY 19, 2013 THAT SUPPLEMENTS THE STANDARD PLANS BOOK DATED 2010.

REVISED STANDARD PLAN RSP A77Q1

8-12-15

Dist	COUNTY	ROUTE	POST MILES TOTAL PROJECT	SHEET No.	TOTAL SHEETS
05	SBt	156	R10.0/R18.4	61	89

Randell D. Hiatt
REGISTERED CIVIL ENGINEER

August 14, 2015
PLANS APPROVAL DATE

REGISTERED PROFESSIONAL ENGINEER
Randell D. Hiatt
No. C50200
Exp. 6-30-17
CIVIL
STATE OF CALIFORNIA

THE STATE OF CALIFORNIA OR ITS OFFICERS OR AGENTS SHALL NOT BE RESPONSIBLE FOR THE ACCURACY OR COMPLETENESS OF SCANNED COPIES OF THIS PLAN SHEET.

TO ACCOMPANY PLANS DATED 6-20-16

2010 REVISED STANDARD PLAN RSP A77Q2

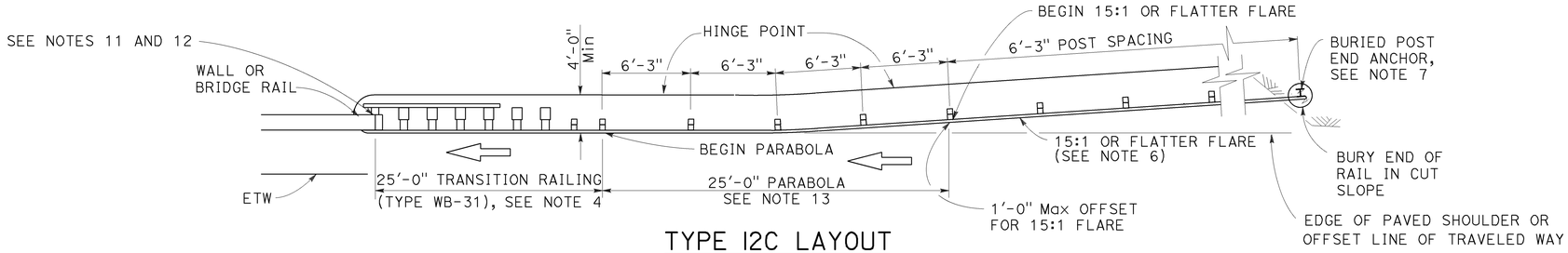

TYPE 12C LAYOUT

(MGS installation at structure approach with a Buried end anchor treatment at traffic approach end of railing)
See Notes 8 and 9

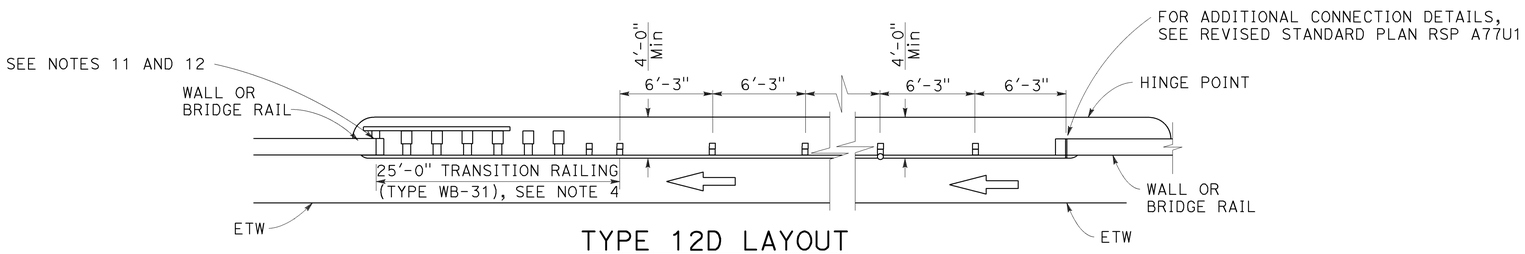

TYPE 12D LAYOUT

(Continuous MGS installation between structures)
See Notes 5 and 9

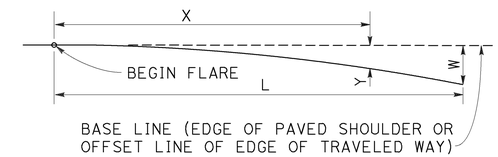

$$Y = \frac{WX^2}{L^2}$$

Y = OFFSET FROM BASE LINE
W = MAXIMUM OFFSET
X = DISTANCE ALONG BASE LINE
L = LENGTH OF FLARE

PARABOLIC FLARE OFFSETS

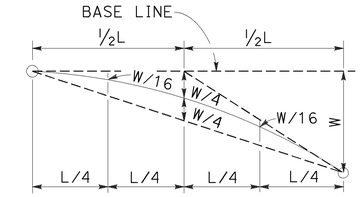

TYPICAL PARABOLIC LAYOUT

NOTES:

1. Line post, blocks and hardware to be used are shown on Revised Standard Plans RSP A77L1, RSP A77L2, RSP A77M1, RSP A77N1 and RSP A77N2.
2. MGS post spacing to be 6'-3" center to center, except as otherwise noted.
3. Except as noted, line posts are 6" x 8" x 6'-0" m wood with 6" x 12" x 1'-2" wood blocks. W6 x 8.5 or W6 x 9 steel posts, 6'-0" in length, with 6" x 12" x 1'-2" notched wood blocks or plastic blocks may be used for 6" x 8" x 6'-0" wood posts with 6" x 12" x 1'-2" wood blocks where applicable and when specified.
4. For Transition Railing (Type WB-31) details for Types 12C and 12D Layouts, see Revised Standard Plan RSP A77U4.
5. Type 12D layout is typically used where continous MGS is recommended between structures.
6. The 15:1 or flatter flare for Type 12C Layout is based on the edge of the paved shoulder or offset line of edge of the traveled way. The length of MGS with the 15:1 or flatter flare is based on site conditions and should be a length equal to multiples of 12'-6".
7. For details of the buried post end anchor used with Type 12C Layout, see Revised Standard Plan RSP A77T2.
8. Where placement of dike is required with MGS installations, see Revised Standard Plan RSP A77N4 for dike positioning details.
9. Type 12C Layout is typically used:
   a. To the right of approaching traffic, at the end of the structure, on two-lane conventional highway where the roadbed width across the structure is less than 40 feet.
   b. To the left of approaching traffic, at each of a structure, on two-lane conventional highway where the roadbed width across the structure is less than 40 feet.
   c. To the right of approaching traffic at the end of each structure on multilane freeways or expressways with separate adjacent or parallel bridges.
   d. To the right of approaching traffic at the end of the structure on multilane freeways or expressways with decked median on the bridge.
10. See Revised Standard Plan RSP A77Q3 for typical layout used left of approaching traffic at the ends of each structure on multilane freeways or expressways with separate adjacent or parallel bridges.
11. For additional details of typical connections to bridge rail, see Connection Detail AA on Revised Standard Plans RSP A77U1 and RSP A77U2 and Connection Detail FF on Revised Standard Plans RSP A77V1 and RSP A77V2.
12. For additional details of a typical connection to walls or abutments, see Revised Standard Plan RSP A77U3.
13. For typical flare offsets for 25'-0" length parabola with maximum offset of 1'-0", see Revised Standard Plan RSP A77P1.

STATE OF CALIFORNIA
DEPARTMENT OF TRANSPORTATION

MIDWEST GUARDRAIL SYSTEM TYPICAL LAYOUTS FOR STRUCTURE APPROACH AND BETWEEN STRUCTURES

NO SCALE

RSP A77Q2 DATED AUGUST 14, 2015 SUPERSEDES RSP A77Q2 DATED JULY 19, 2013 THAT SUPPLEMENTS THE STANDARD PLANS BOOK DATED 2010.

REVISED STANDARD PLAN RSP A77Q2

8-12-15

Dist	COUNTY	ROUTE	POST MILES TOTAL PROJECT	SHEET No.	TOTAL SHEETS
05	SBt	156	R10.0/R18.4	62	89

Randell D. Hiatt
REGISTERED CIVIL ENGINEER

August 14, 2015
PLANS APPROVAL DATE

REGISTERED PROFESSIONAL ENGINEER
Randell D. Hiatt
No. C50200
Exp. 6-30-17
CIVIL
STATE OF CALIFORNIA

THE STATE OF CALIFORNIA OR ITS OFFICERS OR AGENTS SHALL NOT BE RESPONSIBLE FOR THE ACCURACY OR COMPLETENESS OF SCANNED COPIES OF THIS PLAN SHEET.

TO ACCOMPANY PLANS DATED 6-20-16

2010 REVISED STANDARD PLAN RSP A77Q4

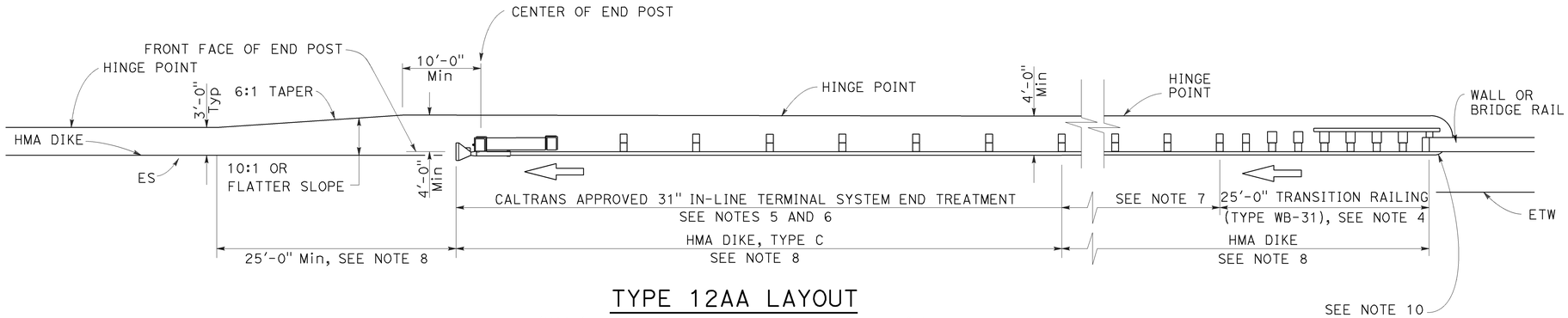

TYPE 12AA LAYOUT

(MGS installation at structure departure with
31" in-line end treatment at trailing end of railing)
See Notes 8 and 9

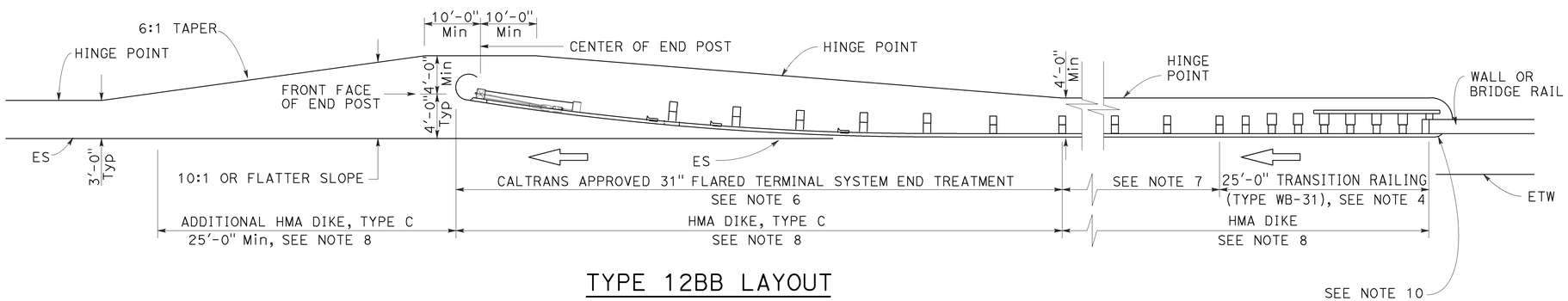

TYPE 12BB LAYOUT

(MGS installation at structure departure with
31" flared end treatment at trailing end of railing)
See Notes 8 and 9

NOTES:

1. Line post, blocks and hardware to be used are shown on Revised Standard Plans RSP A77L1, RSP A77L2, RSP A77M1, RSP A77N1 and RSP A77N2.
2. MGS post spacing to be 6'-3" center to center, except as otherwise noted.
3. Except as noted, line posts are 6" x 8" x 6'-0" wood with 6" x 12" x 1'-2" wood blocks. W6 x 8.5 or W6 x 9 steel posts, 6'-0" in length, with 6" x 12" x 1-2" notched wood blocks or notched recycled plastic blocks may be used for 6" x 8" x 6'-0" wood posts with 6" x 12" x 1'-2" wood blocks where applicable and when specified.
4. For Transition Railing (Type WB-31) details for Types 12AA and 12BB Layouts, see Revised Standard Plan RSP A77U4.
5. 31" in-line terminal system treatments are used where site conditions will not accommodate a 31" flared end treatment.
6. The type of 31" terminal system to be used will be shown on the Project Plans.
7. Dependent on site conditions (embankment height, side slopes, other fixed objects), it may be advisable to construct additional MGS (a length equal to multiples of 12'-6" with 6'-3" post spacing) between the transition railing and 31" end treatments.
8. Where placement of dike is required with MGS installations, see Revised Standard Plan RSP A77N4 for dike positioning details.
9. Type 12AA or Type 12BB Layouts are typically used to the right of traffic departing a structure on two-way conventional highways where the roadbed width across the structure is less than 40 feet.
10. For additional details of typical connections to bridge rail, see Connection Detail CC on Revised Standard Plan RSP A77U2 and Connection Detail HH on Revised Standard Plan RSP A77V2.

STATE OF CALIFORNIA
DEPARTMENT OF TRANSPORTATION

MIDWEST GUARDRAIL SYSTEM TYPICAL LAYOUTS FOR STRUCTURE DEPARTURE

NO SCALE

RSP A77Q4 DATED AUGUST 14, 2015 SUPERSEDES RSP A77Q4 DATED JULY 19, 2013 THAT SUPPLEMENTS THE STANDARD PLANS BOOK DATED 2010.

REVISED STANDARD PLAN RSP A77Q4

8-12-15

Dist	COUNTY	ROUTE	POST MILES TOTAL PROJECT	SHEET No.	TOTAL SHEETS
05	SBt	156	R10.0/R18.4	63	89

Randell D. Hiatt
REGISTERED CIVIL ENGINEER

November 15, 2013
PLANS APPROVAL DATE

REGISTERED PROFESSIONAL ENGINEER
Randell D. Hiatt
No. C50200
Exp. 6-30-15
CIVIL
STATE OF CALIFORNIA

THE STATE OF CALIFORNIA OR ITS OFFICERS OR AGENTS SHALL NOT BE RESPONSIBLE FOR THE ACCURACY OR COMPLETENESS OF SCANNED COPIES OF THIS PLAN SHEET.

TO ACCOMPANY PLANS DATED 6-20-16

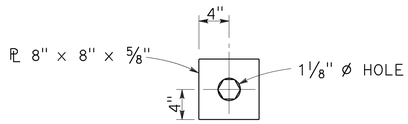

DETAIL "A"
CABLE CONNECTION
END PLATE

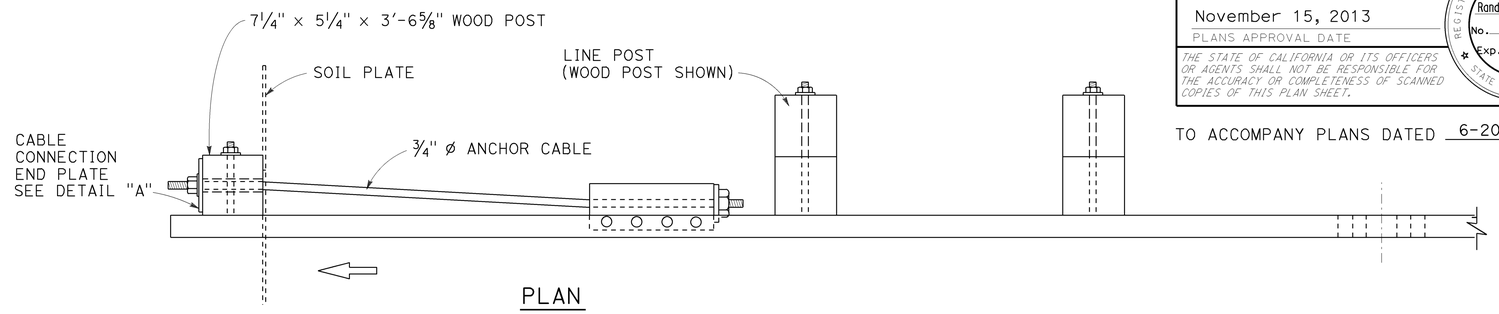

PLAN

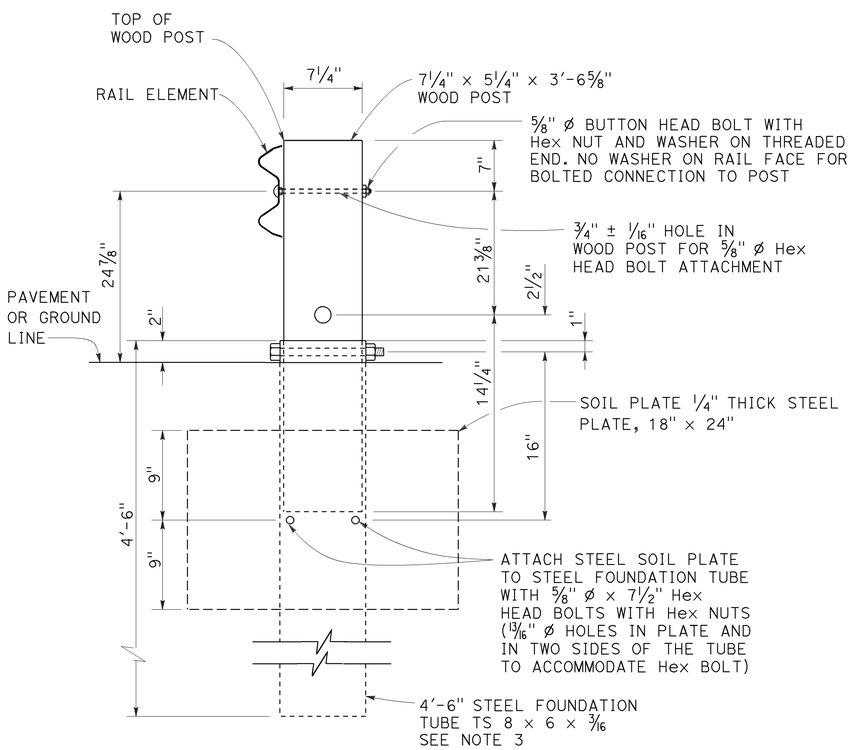

SECTION A-A

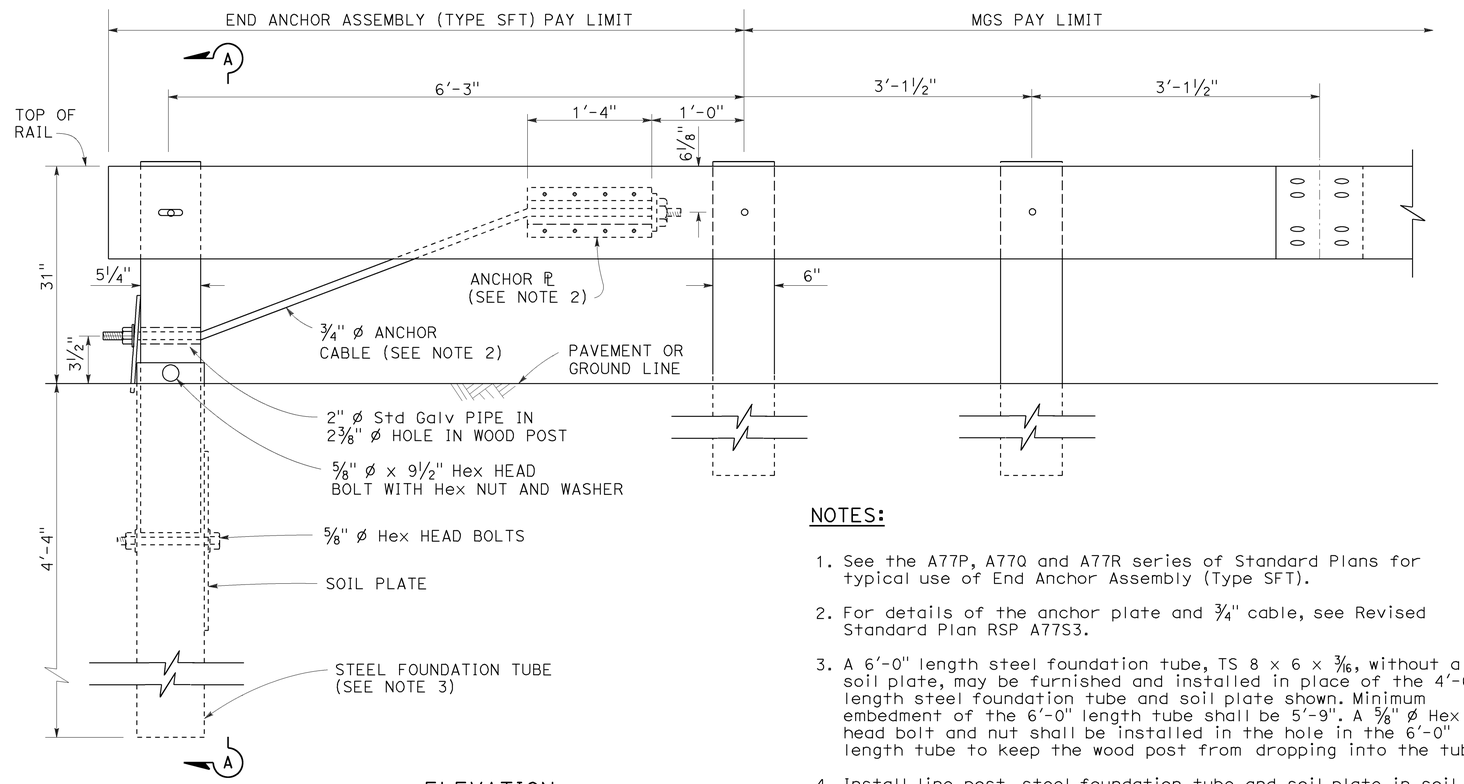

ELEVATION

END ANCHOR
ASSEMBLY (TYPE SFT)
See Note 1

NOTES:

1. See the A77P, A77Q and A77R series of Standard Plans for typical use of End Anchor Assembly (Type SFT).
2. For details of the anchor plate and 3/4" cable, see Revised Standard Plan RSP A77S3.
3. A 6'-0" length steel foundation tube, TS 8 x 6 x 3/16, without a soil plate, may be furnished and installed in place of the 4'-6" length steel foundation tube and soil plate shown. Minimum embedment of the 6'-0" length tube shall be 5'-9". A 5/8" ø Hex head bolt and nut shall be installed in the hole in the 6'-0" length tube to keep the wood post from dropping into the tube.
4. Install line post, steel foundation tube and soil plate in soil.

STATE OF CALIFORNIA
DEPARTMENT OF TRANSPORTATION

MIDWEST GUARDRAIL SYSTEM END ANCHOR ASSEMBLY (TYPE SFT)

NO SCALE

RSP A77S1 DATED NOVEMBER 15, 2013 SUPERSEDES RSP A77S1
DATED JULY 19, 2013 THAT SUPPLEMENTS THE STANDARD PLANS BOOK DATED 2010.

REVISED STANDARD PLAN RSP A77S1

2010 REVISED STANDARD PLAN RSP A77S1

10-4-13

Dist	COUNTY	ROUTE	POST MILES TOTAL PROJECT	SHEET No.	TOTAL SHEETS
05	SBt	156	R10.0/R18.4	64	89

Randell D. Hiatt
REGISTERED CIVIL ENGINEER

November 15, 2013
PLANS APPROVAL DATE

REGISTERED PROFESSIONAL ENGINEER
Randell D. Hiatt
No. C50200
Exp. 6-30-15
CIVIL
STATE OF CALIFORNIA

THE STATE OF CALIFORNIA OR ITS OFFICERS OR AGENTS SHALL NOT BE RESPONSIBLE FOR THE ACCURACY OR COMPLETENESS OF SCANNED COPIES OF THIS PLAN SHEET.

TO ACCOMPANY PLANS DATED 6-20-16

NOTE:

See Revised Standard Plans RSP A77S1, RSP A77S2 and RSP A77T1 for typical use of anchor cable and anchor plate.

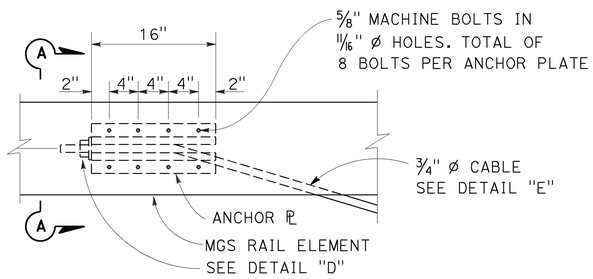

ANCHOR PLATE DETAIL

(MGS shown, TBB similar)

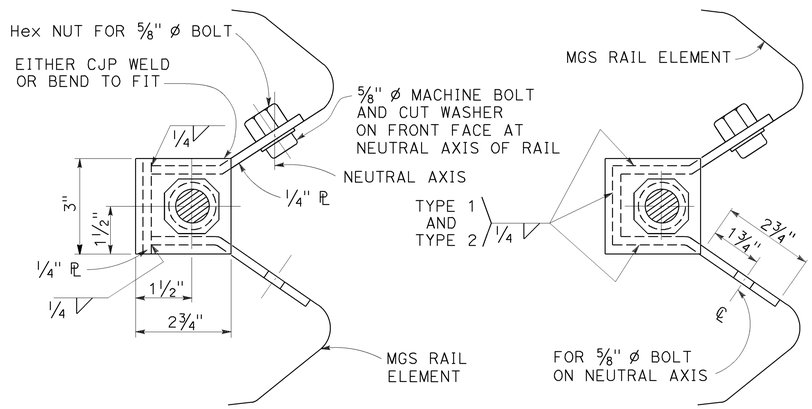

NOTE:

Dimensioning applies to both types.

SECTION A-A
(ALTERNATIVE TYPE 1)

SECTION A-A
(ALTERNATIVE TYPE 2)

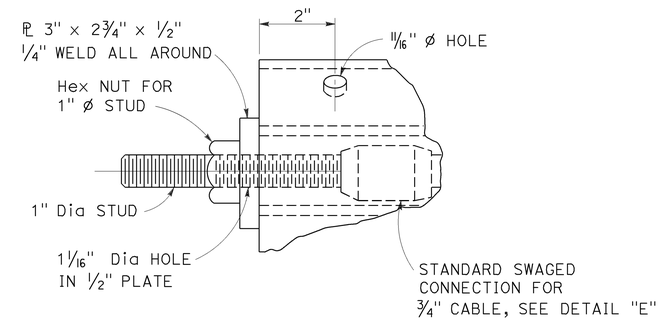

DETAIL "D"

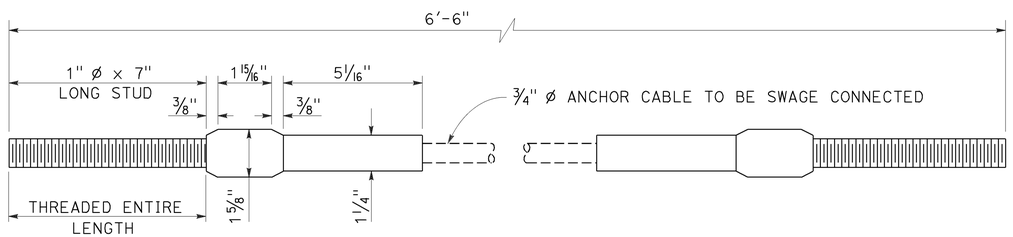

ANCHOR CABLE WITH SWAGED FITTING AND STUD

DETAIL "E"

STATE OF CALIFORNIA
DEPARTMENT OF TRANSPORTATION

METAL RAILING ANCHOR CABLE AND ANCHOR PLATE DETAILS

NO SCALE

RSP A77S3 DATED NOVEMBER 15, 2013 SUPERSEDES RSP A77S3 DATED JULY 19, 2013 THAT SUPPLEMENTS THE STANDARD PLANS BOOK DATED 2010.

REVISED STANDARD PLAN RSP A77S3

2010 REVISED STANDARD PLAN RSP A77S3

10-4-13

Dist	COUNTY	ROUTE	POST MILES TOTAL PROJECT	SHEET No.	TOTAL SHEETS
05	SBt	156	R10.0/R18.4	65	89

Randell D. Hiatt
REGISTERED CIVIL ENGINEER

November 15, 2013
PLANS APPROVAL DATE

REGISTERED PROFESSIONAL ENGINEER
Randell D. Hiatt
No. C50200
Exp. 6-30-15
CIVIL
STATE OF CALIFORNIA

THE STATE OF CALIFORNIA OR ITS OFFICERS OR AGENTS SHALL NOT BE RESPONSIBLE FOR THE ACCURACY OR COMPLETENESS OF SCANNED COPIES OF THIS PLAN SHEET.

TO ACCOMPANY PLANS DATED 6-20-16

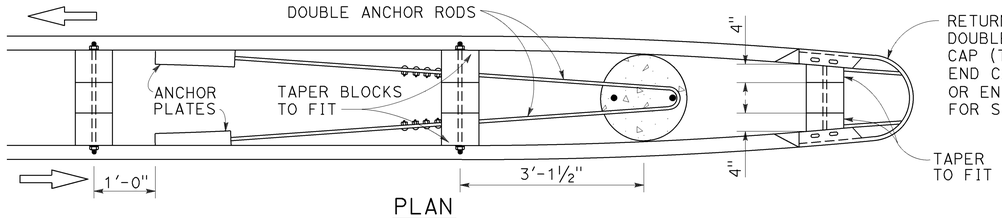

PLAN
See Note 4

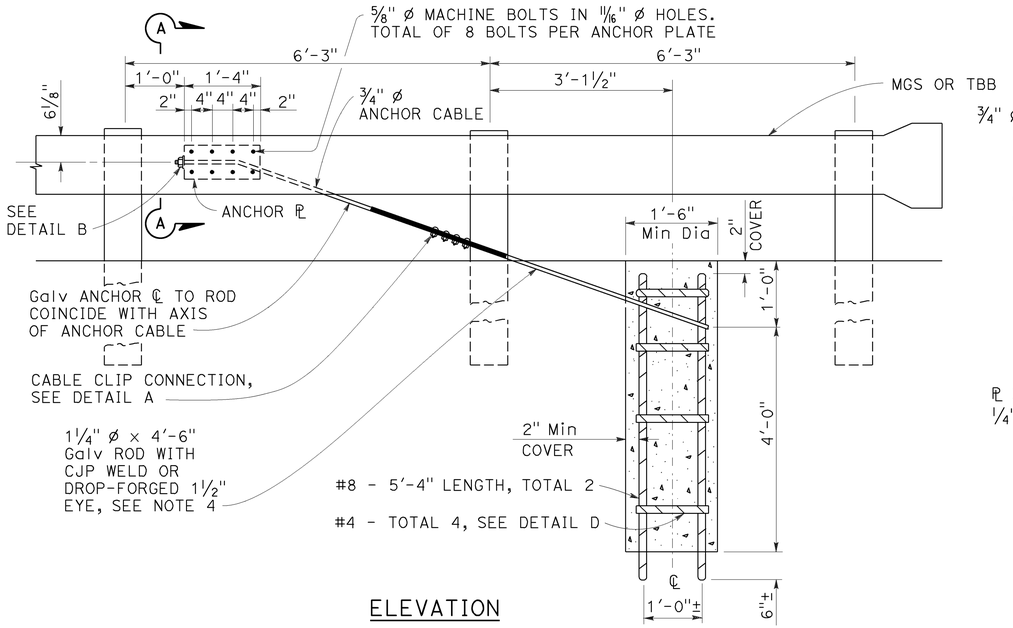

ELEVATION
END ANCHOR ASSEMBLY
(TYPE CA)
(Wood post, MGS shown, details similar for Thrie Beam Barrier.)

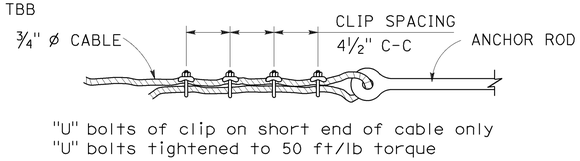

DETAIL A
CABLE CLIP CONNECTION

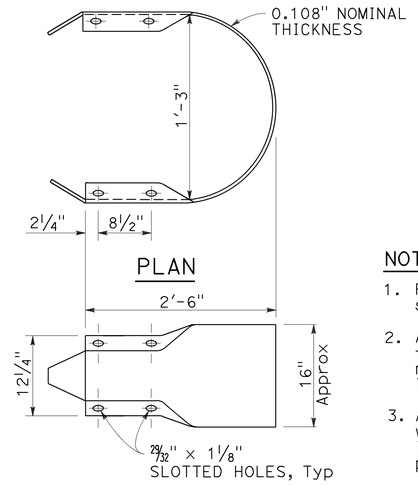

ELEVATION
RETURN CAP
(TYPE A)

NOTES:

1. For typical use of this type of end anchor, see Revised Standard Plan RSP A78E2.
2. Anchor cable to be parallel to railing for straight runs of rail. Anchor cable may have angle point at anchor plate if railing is curved.
3. Anchor rod hooks to be in contact with anchor reinforcement when concrete is placed. Wire ties may be used to position anchor rods.
4. Single sided railing installations require only one anchor plate, anchor rod and anchor cable. Single sided railing will not have a rail element or blockouts on backside of line posts as shown in the plan view.

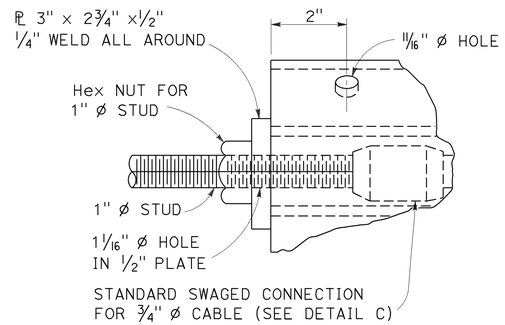

DETAIL B

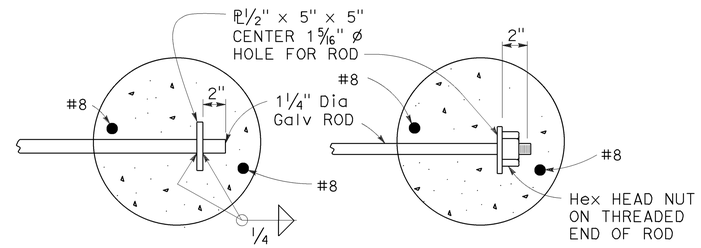

OPTIONAL ENDS ON SINGLE ANCHOR ROD
(Not to be used for double anchors)

NOTE:
Use two 1¼" ø Galv rods with hook and eye for double MGS anchor.

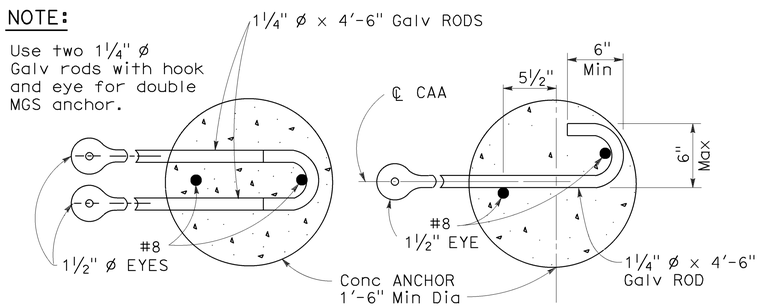

DOUBLE ANCHOR SINGLE ANCHOR
ANCHOR RODS

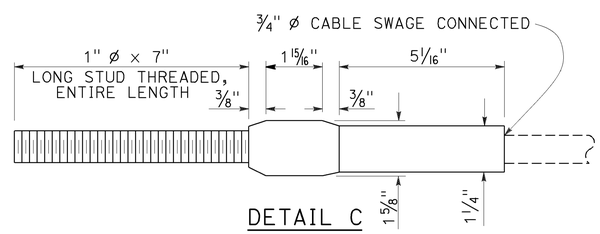

DETAIL C

ANCHOR CABLE WITH
SWAGED FITTING AND STUD

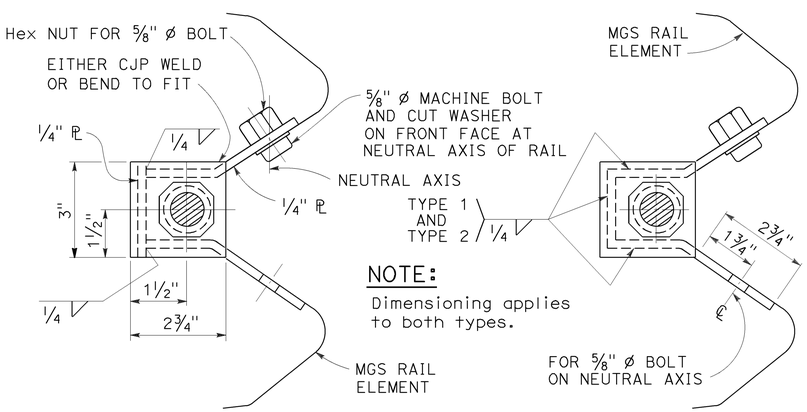

SECTION A-A
(Alternative Type 1)

SECTION A-A
(Alternative Type 2)

ANCHOR PLATE DETAILS

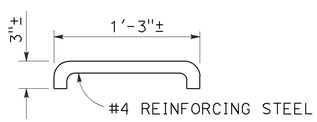

DETAIL D

STATE OF CALIFORNIA
DEPARTMENT OF TRANSPORTATION

METAL RAILING END ANCHOR ASSEMBLY (TYPE CA)

NO SCALE

RSP A77T1 DATED NOVEMBER 15, 2013 SUPERSEDES RSP A77T1 DATED JULY 19, 2013 THAT SUPPLEMENTS THE STANDARD PLANS BOOK DATED 2010.

REVISED STANDARD PLAN RSP A77T1

2010 REVISED STANDARD PLAN RSP A77T1

10-22-13

Dist	COUNTY	ROUTE	POST MILES TOTAL PROJECT	SHEET No.	TOTAL SHEETS
05	SBt	156	R10.0/R18.4	66	89

Randell D. Hiatt
REGISTERED CIVIL ENGINEER

November 15, 2013
PLANS APPROVAL DATE

REGISTERED PROFESSIONAL ENGINEER
Randell D. Hiatt
No. C50200
Exp. 6-30-15
CIVIL
STATE OF CALIFORNIA

THE STATE OF CALIFORNIA OR ITS OFFICERS OR AGENTS SHALL NOT BE RESPONSIBLE FOR THE ACCURACY OR COMPLETENESS OF SCANNED COPIES OF THIS PLAN SHEET.

TO ACCOMPANY PLANS DATED 6-20-16

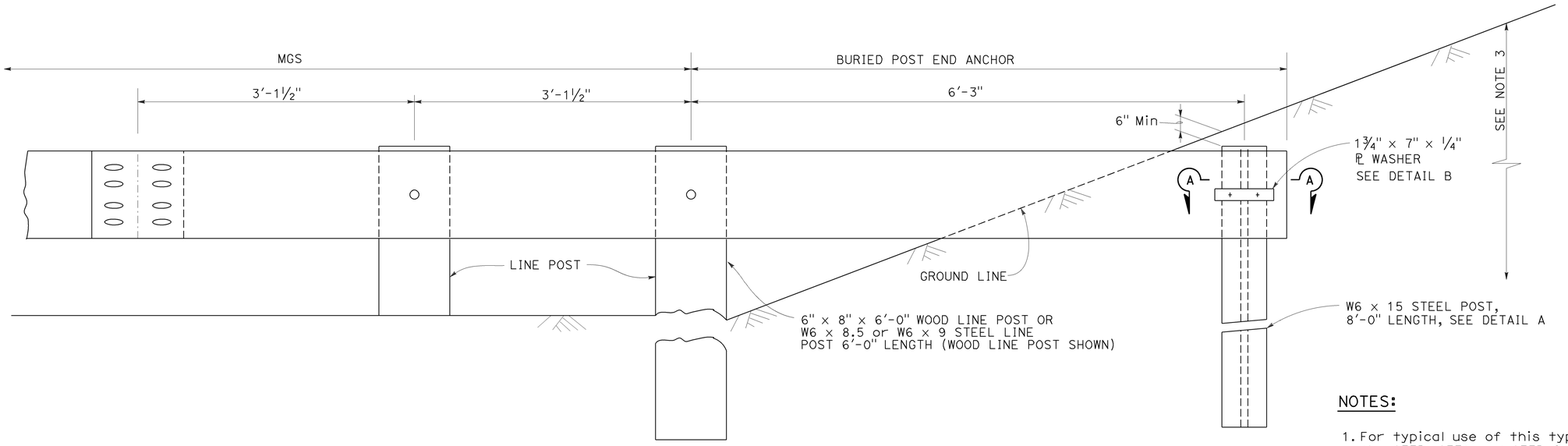

BURIED POST END ANCHOR

See Note 3

NOTES:

1. For typical use of this type of end anchor with MGS see the A77P, A77Q and A77R Series of the Standard Plans.
2. Holes excavation in the slope to construct the buried post end anchor shall be backfilled with selected earth, placed in layers approximately 1'-0" thick. Each layer shall be moistened and thoroughly compacted.
3. The buried post end anchor shall only be constructed at those locations where the slope perpendicular to the roadway is non-traversable.

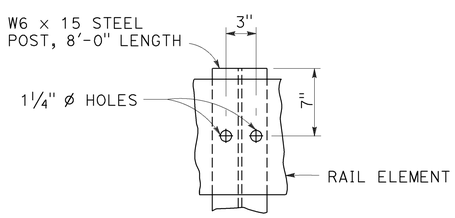

DETAIL A

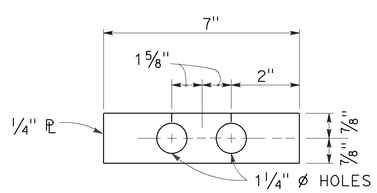

DETAIL B

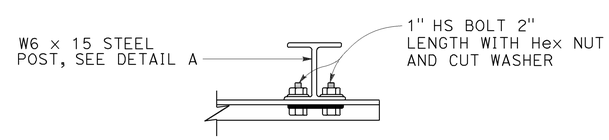

SECTION A-A

STATE OF CALIFORNIA
DEPARTMENT OF TRANSPORTATION

MIDWEST GUARDRAIL SYSTEM BURIED POST END ANCHOR

NO SCALE

RSP A77T2 DATED NOVEMBER 15, 2013 SUPERSEDES RSP A77T2
DATED JULY 19, 2013 THAT SUPPLEMENTS THE STANDARD PLANS BOOK DATED 2010.

REVISED STANDARD PLAN RSP A77T2

2010 REVISED STANDARD PLAN RSP A77T2

10-4-13

Dist	COUNTY	ROUTE	POST MILES TOTAL PROJECT	SHEET No.	TOTAL SHEETS
05	SBt	156	R10.0/R18.4	67	89

Randell D. Hiatt
REGISTERED CIVIL ENGINEER

July 19, 2013
PLANS APPROVAL DATE

REGISTERED PROFESSIONAL ENGINEER
Randell D. Hiatt
No. C50200
Exp. 6-30-15
CIVIL
STATE OF CALIFORNIA

THE STATE OF CALIFORNIA OR ITS OFFICERS OR AGENTS SHALL NOT BE RESPONSIBLE FOR THE ACCURACY OR COMPLETENESS OF SCANNED COPIES OF THIS PLAN SHEET.

TO ACCOMPANY PLANS DATED 6-20-16

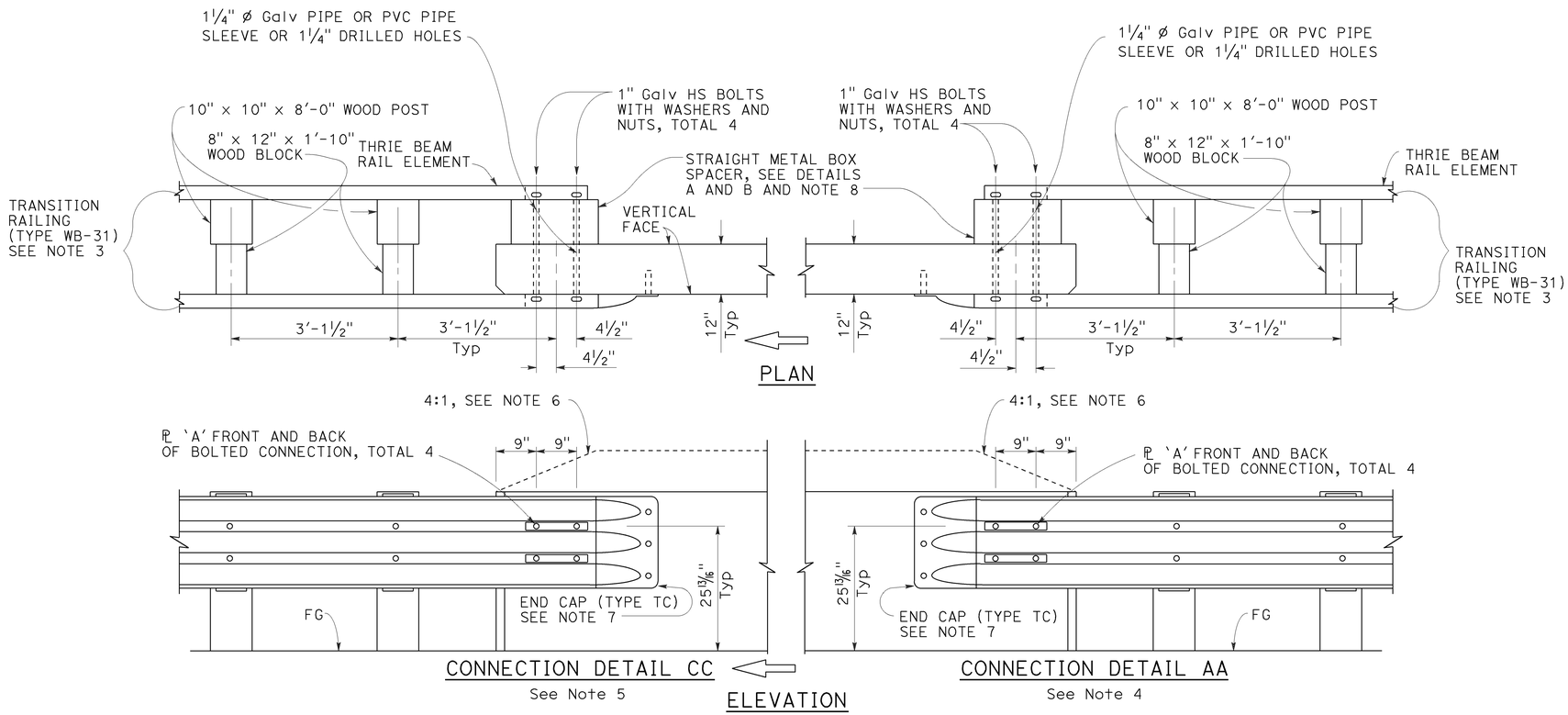

MIDWEST GUARDRAIL SYSTEM CONNECTION TO BRIDGE RAILING WITHOUT SIDEWALK

NOTES:

1. See Revised Standard Plan RSP A77U1 for additional connection details to bridges without sidewalks.
2. Additional details of posts, blocks and hardware are shown on Revised Standard Plans RSP A77M1, RSP A77N1 and RSP A77N2.
3. For additional details of Transition Railing (Type WB-31), see Revised Standard Plan RSP A77U4. Transition Railing (Type WB-31) transitions the 12 gauge MGS railing section to a heavier gage nested thrie beam railing section which is connected to the concrete bridge railing.
4. For typical use of Connection Detail AA, see Layout Types 12A and 12B on Revised Standard Plan RSP A77Q1, Layout Types 12C and 12D on Revised Standard Plan RSP A77Q2, and Layout Type 12E on Revised Standard Plan RSP A77Q3.
5. For typical use of Connection Detail CC, see Layout Types 12AA and 12BB on Revised Standard Plan RSP A77Q4 and Layout Type 12CC on Revised Standard Plan RSP A77Q5.
6. Where the height of the bridge railing exceeds the height of the thrie beam railing by more than 1" at Connection Detail AA and connection Detail CC, taper the top of the end of the bridge railing at 4:1 to match the top elevation of the thrie beam railing.
7. For details of End Cap (Type TC), see Revised Standard Plan RSP A77U4.
8. See Revised Standard Plan RSP A77U4 for additional details regarding depth dimension for straight metal box spacer.

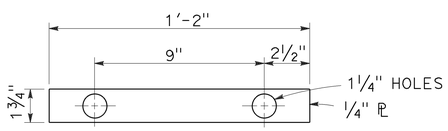

PLATE 'A'

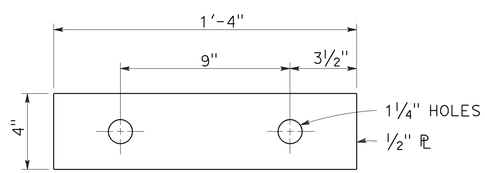

PLATE 'B'
(For backside of connection BB)

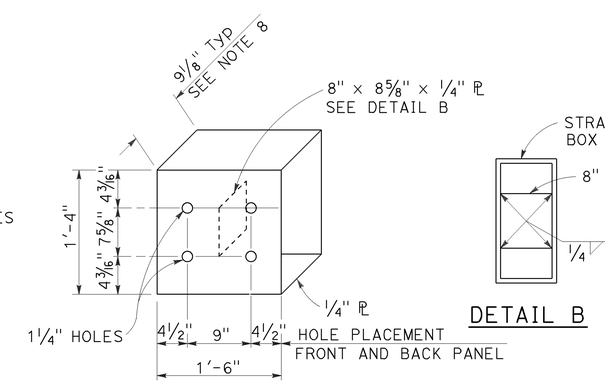

DETAIL A

STRAIGHT METAL BOX SPACER

STATE OF CALIFORNIA
DEPARTMENT OF TRANSPORTATION

MIDWEST GUARDRAIL SYSTEM CONNECTIONS TO BRIDGE RAILINGS WITHOUT SIDEWALKS DETAILS No. 2

NO SCALE

RSP A77U2 DATED JULY 19, 2013 SUPPLEMENTS THE STANDARD PLANS BOOK DATED 2010.

REVISED STANDARD PLAN RSP A77U2

2010 REVISED STANDARD PLAN RSP A77U2

Dist	COUNTY	ROUTE	POST MILES TOTAL PROJECT	SHEET No.	TOTAL SHEETS
05	SBt	156	R10.0/R18.4	68	89

Randell D. Hiatt
REGISTERED CIVIL ENGINEER

January 23, 2015
PLANS APPROVAL DATE

REGISTERED PROFESSIONAL ENGINEER
Randell D. Hiatt
No. C50200
Exp. 6-30-15
CIVIL
STATE OF CALIFORNIA

THE STATE OF CALIFORNIA OR ITS OFFICERS OR AGENTS SHALL NOT BE RESPONSIBLE FOR THE ACCURACY OR COMPLETENESS OF SCANNED COPIES OF THIS PLAN SHEET.

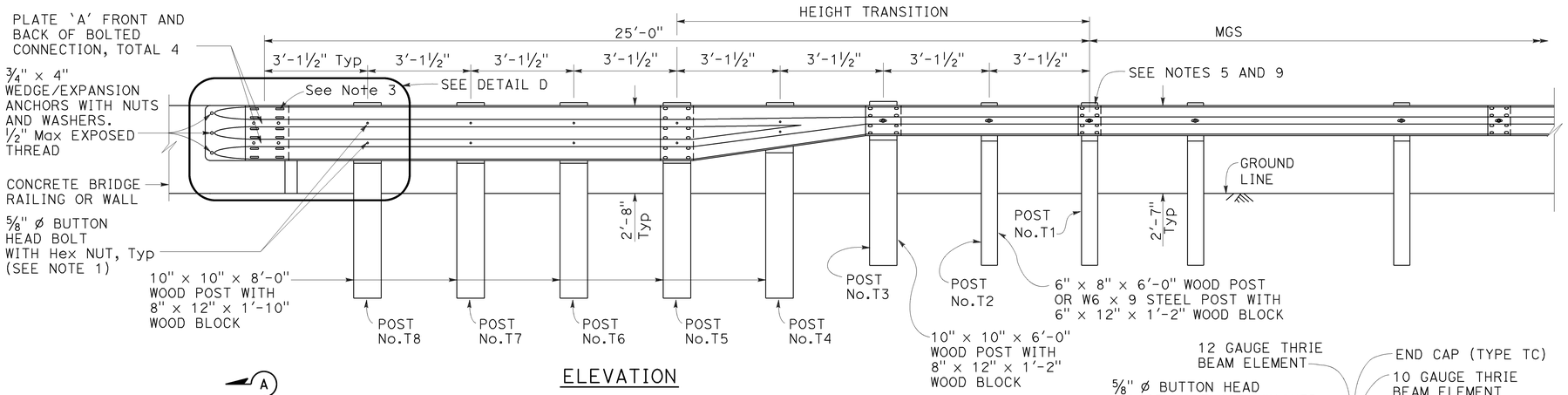

ELEVATION

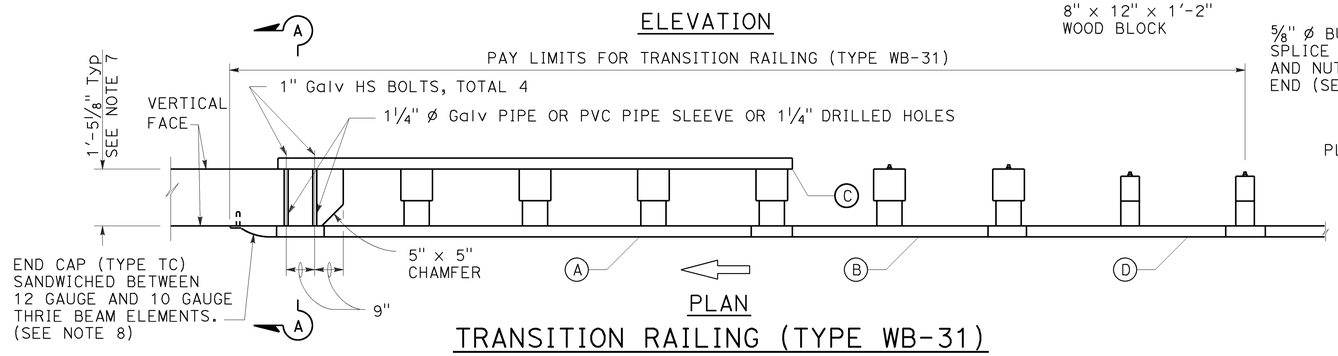

PLAN

TRANSITION RAILING (TYPE WB-31)

(No Blockout Attachment)

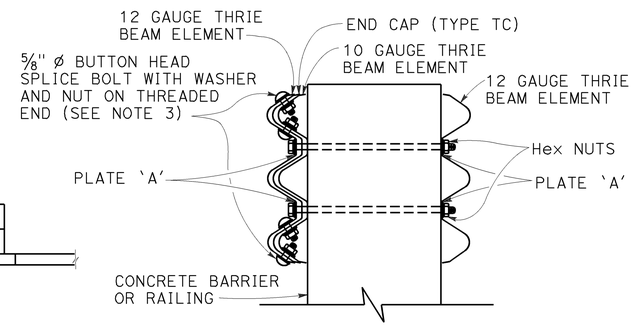

SECTION A-A

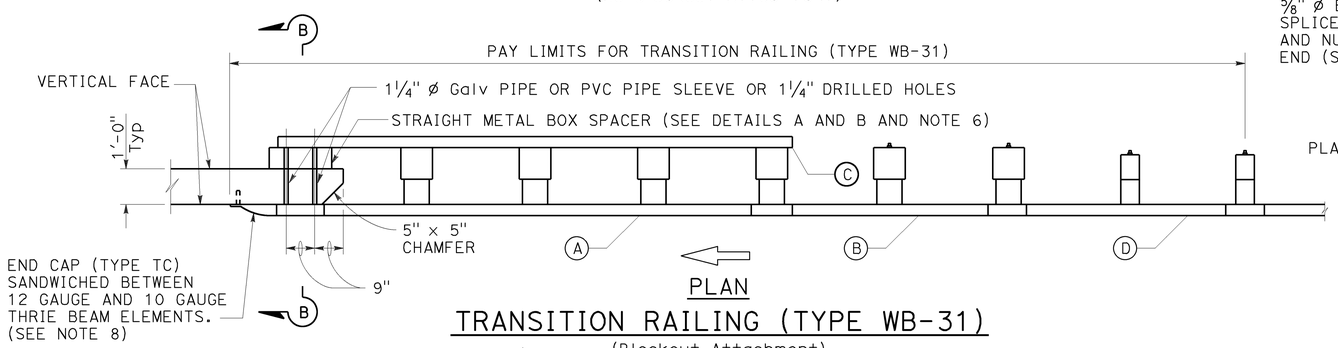

PLAN

TRANSITION RAILING (TYPE WB-31)

(Blockout Attachment)

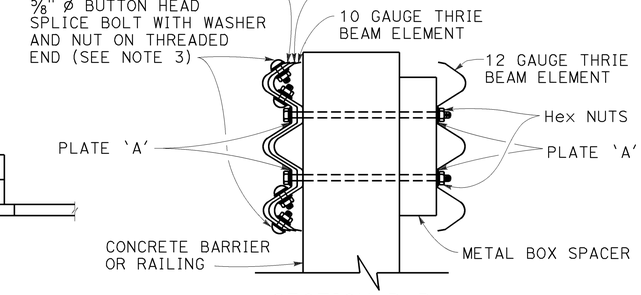

SECTION B-B

NOTES:

TO ACCOMPANY PLANS DATED 6-20-16

1. Use 5/8" ø Button head bolts and hex nuts for connections to posts. No washer on rail face for bolted connections to post.
2. The nested rail elements, end cap, and 'W' beam to thrie beam element may be spliced together prior to bolting the elements to the wood post and concrete barrier or railing.
3. Exterior splice bolt holes for rail element splices at Post No. T5 and the connection to the concrete barrier or railing shall be the standard 29/32" x 1 1/8" slot size. Interior splice bolt holes at these locations may be increased up to 1 1/4" ø. Only the top 4 and the bottom 4 splice bolts with washers and nuts are required for rail splices at Post No. T5 and the connection to the concrete barrier or railing.
4. The top elevation of Posts No. T2 through No. T7 shall not project more than 1" above the top elevation of the rail element.
5. Typically, the railing connected to Transition Railing (Type WB-31) will be either standard railing section of MGS with height transition ratio of 150:1 or a Caltrans approved 31" end treatment attached to Post No. T1.
6. The depth of the metal box spacer varies from the 9 1/8" to 1 1/2" and is dependent on the width of the concrete railing or wall. The combined dimension for the depth of the metal box spacer plus the width of railing or wall is typically 21 1/8". Where the space between the backside of the concrete railing or wall and the rear thrie beam element is less than 1 1/2", metal plates similar to Plate 'A' are to be used as spacers.
7. Where the width of the concrete railing or wall is greater than 17 1/8", wood blocks are to be used to fill the space created between the backside of Posts No. T5 through No. T8 and the rear thrie beam element. These wood blocks shall be 8" in width and 1'-2" in length. The dimension between the front thrie beam element and the rear thrie beam element is to match the width of the concrete railing or wall.
8. End cap may be installed over 12 gauge and 10 gauge thrie beam elements where transition railing is installed on the departure end of bridge railing.
9. Conform standard railing section height to 31" at Post No. T1 using height transition ratio of 150:1.

LEGEND:

(A) NESTED THRIE BEAM ELEMENTS (ONE 12 GAUGE ELEMENT NESTED OVER ONE 10 GAUGE ELEMENT).

(B) ONE ASYMMETRICAL 10 GAUGE "W" BEAM TO THRIE BEAM ELEMENT.

(C) ONE 12 GAUGE THRIE BEAM ELEMENT.

(D) ONE 10 GAUGE "W" BEAM RAIL ELEMENT (7'-3 1/2"LENGTH)

10 GAUGE = 0.138" THICK
12 GAUGE = 0.108" THICK

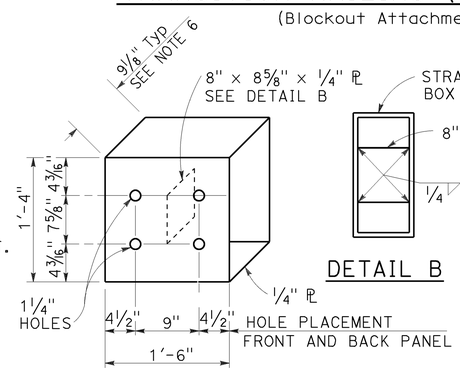

DETAIL A

STRAIGHT METAL BOX SPACER

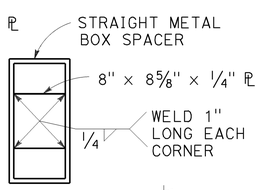

DETAIL B

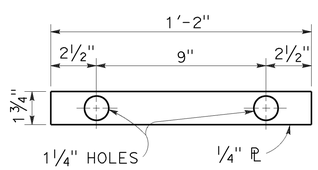

DETAIL C

PLATE 'A'

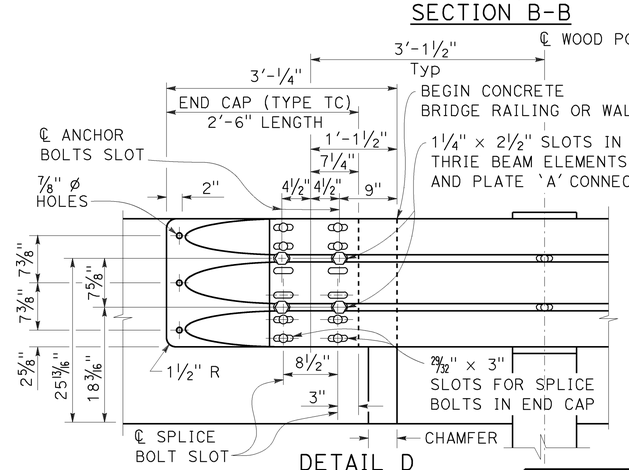

DETAIL D

STATE OF CALIFORNIA
DEPARTMENT OF TRANSPORTATION

MIDWEST GUARDRAIL SYSTEM TRANSITION RAILING (TYPE WB-31)

NO SCALE

RSP A77U4 DATED JANUARY 23, 2015 SUPERSEDES RSP A77U4 DATED NOVEMBER 15, 2013 AND RSP A77U4 DATED JULY 19, 2013 THAT SUPPLEMENTS THE STANDARD PLANS BOOK DATED 2010.

REVISED STANDARD PLAN RSP A77U4

2010 REVISED STANDARD PLAN RSP A77U4

1-8-15

Dist	COUNTY	ROUTE	POST MILES TOTAL PROJECT	SHEET No.	TOTAL SHEETS
05	SBt	156	R10.0/R18.4	69	89

REGISTERED CIVIL ENGINEER

July 19, 2013
PLANS APPROVAL DATE

REGISTERED PROFESSIONAL ENGINEER
Michael Janzen
No. 44788
Exp. 03-31-14
CIVIL
STATE OF CALIFORNIA

THE STATE OF CALIFORNIA OR ITS OFFICERS OR AGENTS SHALL NOT BE RESPONSIBLE FOR THE ACCURACY OR COMPLETENESS OF SCANNED COPIES OF THIS PLAN SHEET.

TO ACCOMPANY PLANS DATED 6-20-16

2010 REVISED STANDARD PLAN RSP A87A

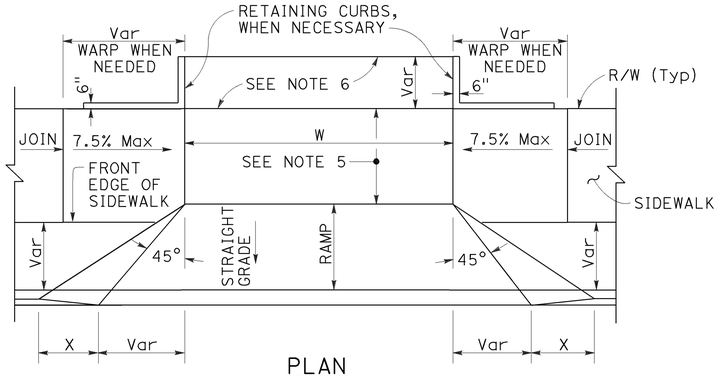

PLAN

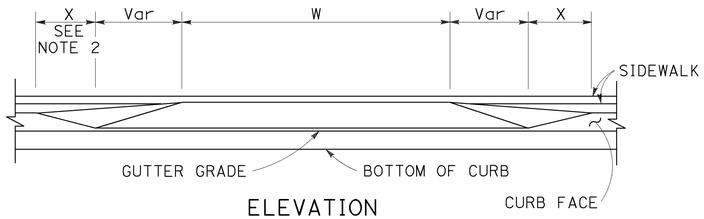

ELEVATION

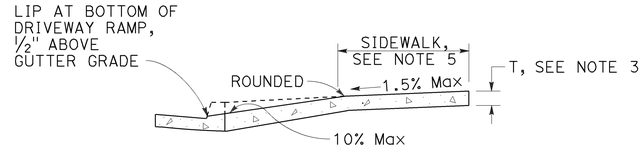

CASE A

Typical driveway, sidewalk not depressed

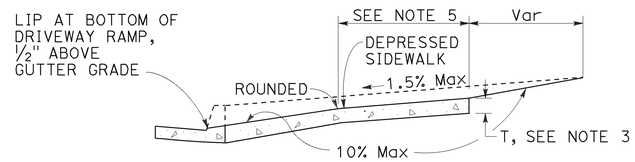

CASE B

Driveway with depressed sidewalk

SECTIONS

DRIVEWAYS

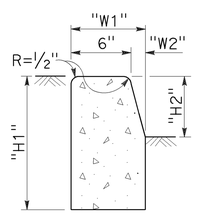

TYPE A1 CURBS

See Table A

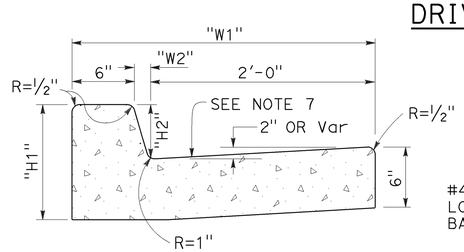

TYPE A2 CURBS

See Table A

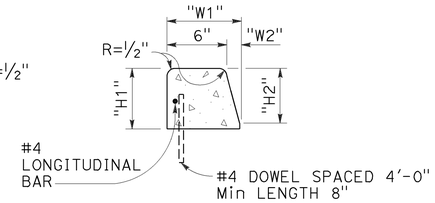

TYPE A3 CURBS

Superimposed on existing pavement
See Table A

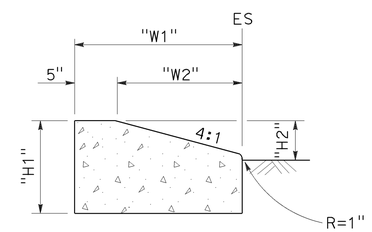

TYPE D CURBS

See Table A

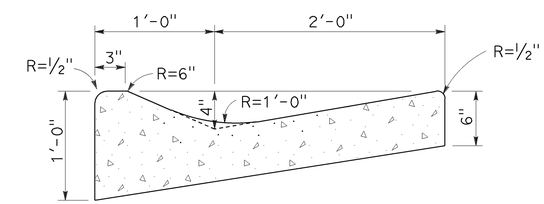

TYPE E CURB

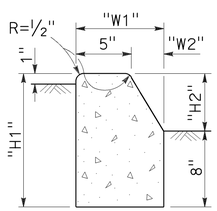

TYPE B1 CURBS

See Table A

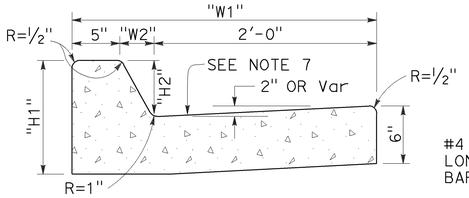

TYPE B2 CURBS

See Table A

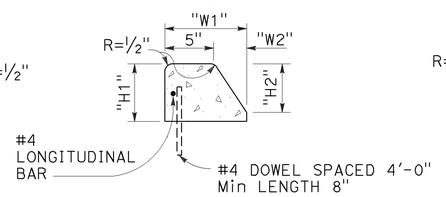

TYPE B3 CURBS

Superimposed on existing pavement
See Table A

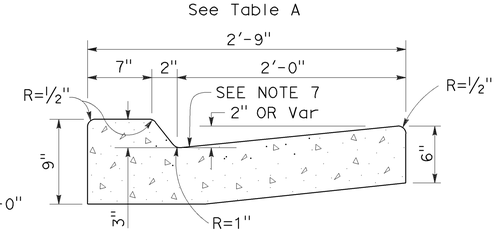

TYPE B4 CURBS

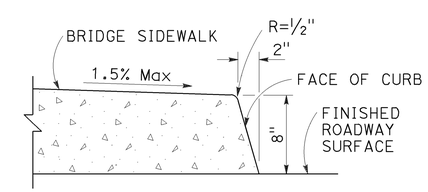

TYPE H CURB

On Bridges

CURBS

TABLE A

CURB TYPE	DIMENSIONS			
	"H1"	"H2"	"W1"	"W2"
A1-6	1'-2"	6"	7½"	1½"
A1-8	1'-4"	8"	8"	2"
A2-6	1'-0"	6"	2'-7½"	1½"
A2-8	1'-2"	8"	2'-8"	2"
A3-6	6"	5"	7¼"	1¼"
A3-8	8"	7"	7¾"	1¾"
B1-4	1'-0"	4"	7½"	2½"
B1-6	1'-2"	6"	9"	4"
B2-4	10"	4"	2'-7½"	2½"
B2-6	1'-0"	6"	2'-9"	4"
B3-4	4"	3"	7"	2"
B3-6	6"	5"	8½"	3½"
D-4	10"	4"	1'-6"	1'-1"
D-6	1'-0"	6"	2'-2"	1'-9"

CURB QUANTITIES

TYPE	CUBIC YARDS PER LINEAR FOOT
A1-6	0.02585
A1-8	0.03084
A2-6	0.05903
A2-8	0.06379
A3-6	0.01036
A3-8	0.01435
B1-4	0.02185
B1-6	0.02930
B2-4	0.05515
B2-6	0.06171
B3-4	0.00641
B3-6	0.01074
B4	0.05709
D-4	0.04083
D-6	0.06804
E	0.06661

NOTES:

1. Case A driveway section typically applies.
2. X=3'-0" except for curb heights over 10" where 4:1 slopes shall be used on curb slope.
3. Sidewalk and ramp thickness "T" at driveway shall be 4" for residental and 6" for commercial.
4. Difference in slope of the driveway ramp and the slope of a line between the gutter and a point on the roadway 5'-0" from gutter line shall not exceed 15%. Reduce driveway ramp slope, not gutter slope, where required.
5. Minimum width of clear passageway for sidewalk shall be 4'-2".
6. Retaining curbs and acquisition of construction easement may be necessary for narrow sidewalks or curb heights in excess of 6".
7. Across the pedestrian route at curb ramp locations, the gutter pan slope shall not exceed 1" of depth for each 2'-0" of width.

STATE OF CALIFORNIA
DEPARTMENT OF TRANSPORTATION

CURBS AND DRIVEWAYS

NO SCALE

RSP A87A DATED JULY 19, 2013 SUPERSEDES STANDARD PLAN A87A
DATED MAY 20, 2011 - PAGE 119 OF THE STANDARD PLANS BOOK DATED 2010.

REVISED STANDARD PLAN RSP A87A

7-8-13

Dist	COUNTY	ROUTE	POST MILES TOTAL PROJECT	SHEET No.	TOTAL SHEETS
05	SBt	156	R10.0/R18.4	70	89

REGISTERED CIVIL ENGINEER

January 15, 2016
PLANS APPROVAL DATE

REGISTERED PROFESSIONAL ENGINEER
Michael Janzen
No. 44788
Exp. 3-31-16
CIVIL
STATE OF CALIFORNIA

THE STATE OF CALIFORNIA OR ITS OFFICERS OR AGENTS SHALL NOT BE RESPONSIBLE FOR THE ACCURACY OR COMPLETENESS OF SCANNED COPIES OF THIS PLAN SHEET.

TO ACCOMPANY PLANS DATED 6-20-16

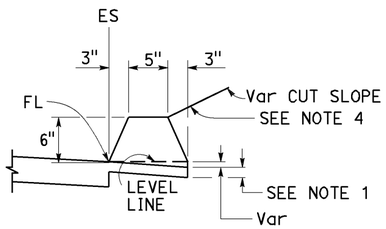

TYPE A
See Notes 3 and 5

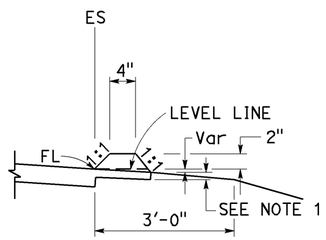

TYPE C

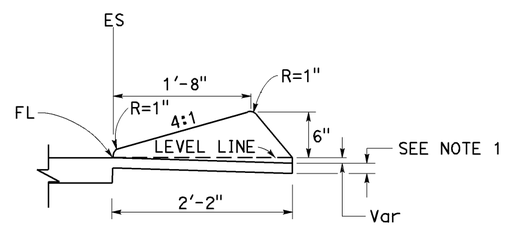

TYPE D

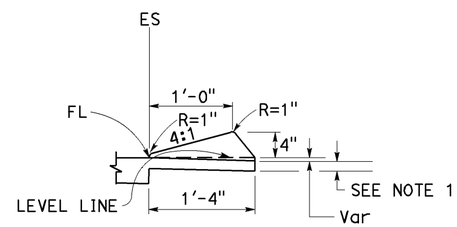

TYPE E

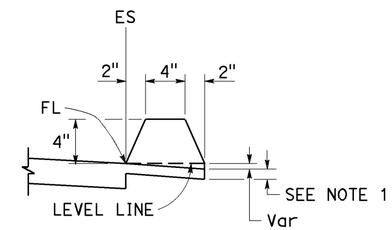

TYPE F
See Note 5

DIKES

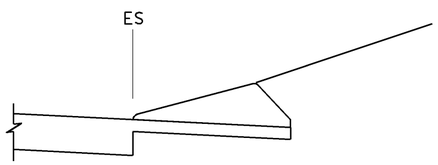

CASE C-1
Cut Slope

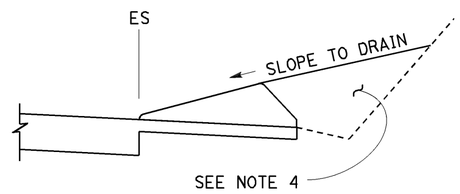

CASE C-2
Cut Slope

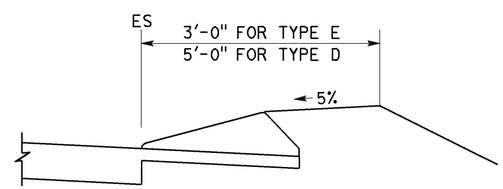

CASE F

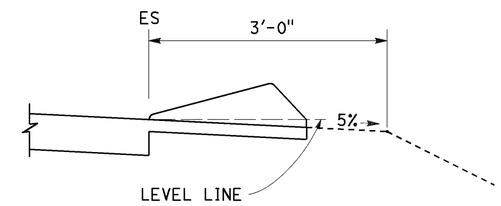

CASE R
See Note 2

TYPE D AND E BACKFILL DETAILS

NOTES:

1. For HMA shoulders only, extend top layer of HMA placed on the shoulder under dike with no joint at the ES. For projects with OGFC shoulders, do not extend OGFC under dike. See project plans for modified dike detail.
2. Case R applies to retrofit only projects where restrictive conditions do not provide enough width for Case F backfill.
3. Type A dike only to be used where restrictive slope conditions do not provide enough width to use Type D or Type E dike.
4. Fill and compact with excavated material to top of dike.
5. Use Type A or F dike, where dike is required with guardrail installations. See Revised Standard Plan RSP A77N4 for dike positioning details. See Revised Standard Plan RSP A77N3 for hinge point offsets with guardrail.

DIKE QUANTITIES

TYPE	CUBIC YARDS PER LINEAR FOOT
A	0.0135
C	0.0038
D	0.0293
E	0.0130
F	0.0066

Quantities based on 5% cross slope.

STATE OF CALIFORNIA
DEPARTMENT OF TRANSPORTATION

HOT MIX ASPHALT DIKES

NO SCALE

RSP A87B DATED JANUARY 15, 2016 SUPERSEDES RSP A87B DATED JULY 19, 2013 AND STANDARD PLAN A87B DATED MAY 20, 2011 - PAGE 120 OF THE STANDARD PLANS BOOK DATED 2010.

REVISED STANDARD PLAN RSP A87B

2010 REVISED STANDARD PLAN RSP A87B

11-17-15

Dist	COUNTY	ROUTE	POST MILES TOTAL PROJECT	SHEET No.	TOTAL SHEETS
05	SBt	156	R10.0/R18.4	71	89

REGISTERED CIVIL ENGINEER

July 15, 2016
PLANS APPROVAL DATE

REGISTERED PROFESSIONAL ENGINEER Hector David Cordova No. C41957 Exp. 3-31-18 CIVIL STATE OF CALIFORNIA

THE STATE OF CALIFORNIA OR ITS OFFICERS OR AGENTS SHALL NOT BE RESPONSIBLE FOR THE ACCURACY OR COMPLETENESS OF SCANNED COPIES OF THIS PLAN SHEET.

TO ACCOMPANY PLANS DATED 6-20-16

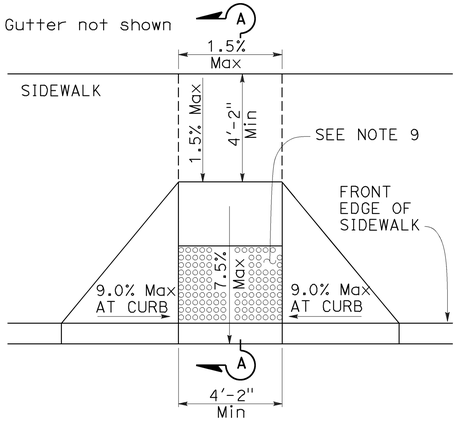

CASE A

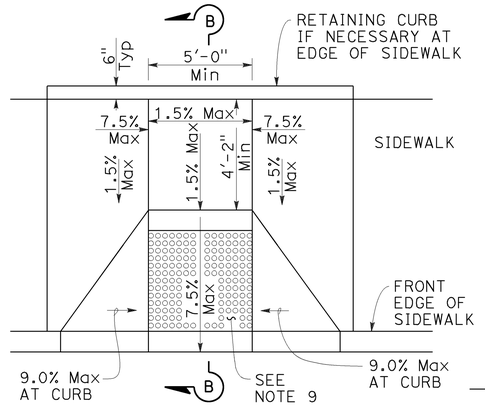

CASE B

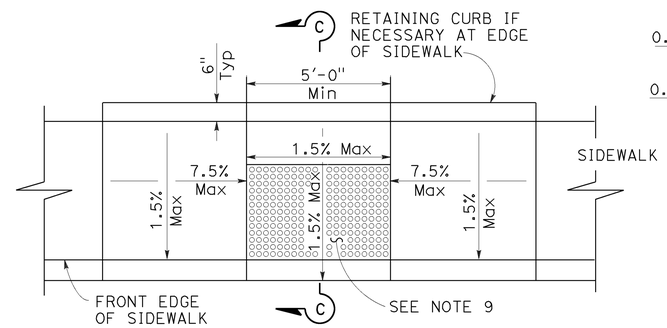

CASE C

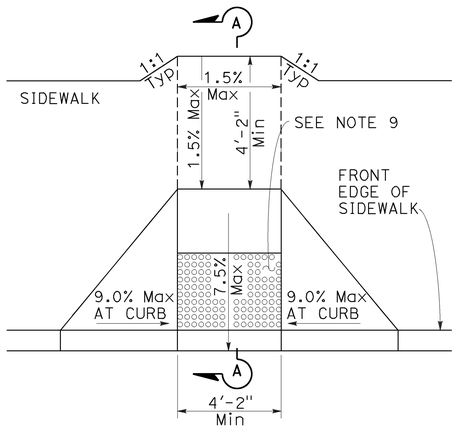

CASE D

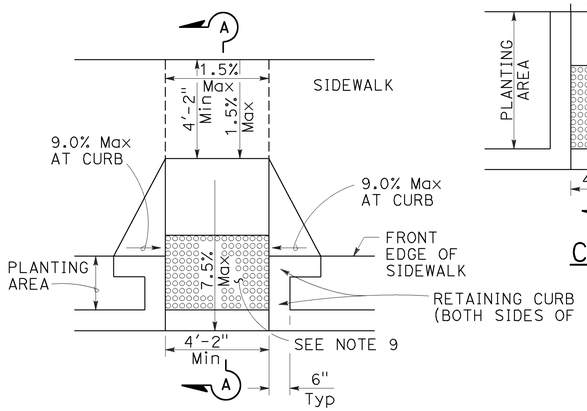

CASE E

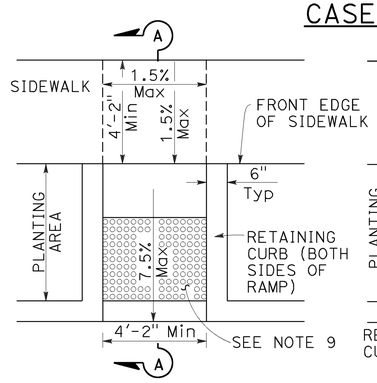

CASE F

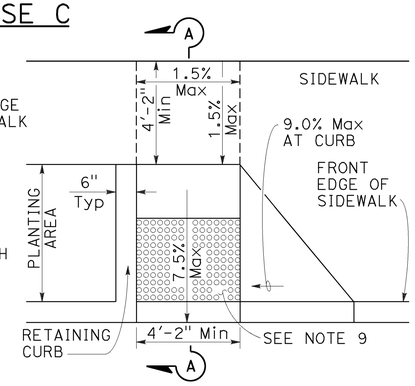

CASE G

See Note 4

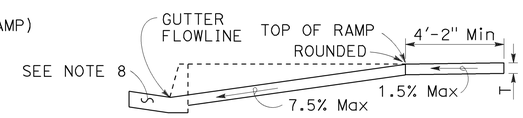

SECTION A-A

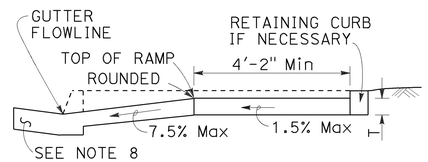

SECTION B-B

Depress entire sidewalk as required

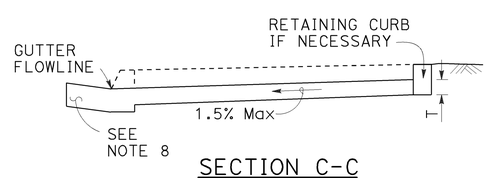

SECTION C-C

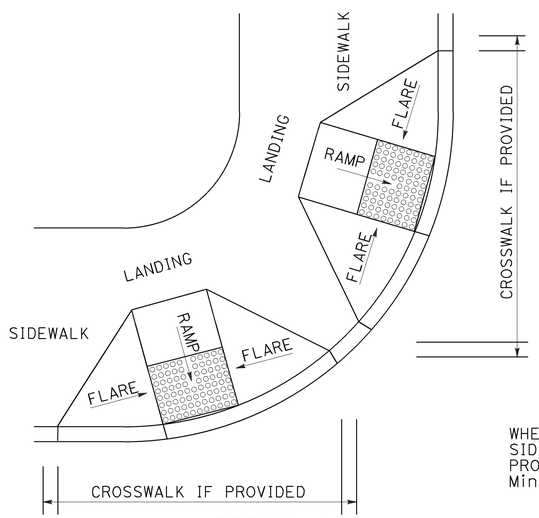

DETAIL A

TYPICAL TWO-RAMP CORNER INSTALLATION

See Note 1

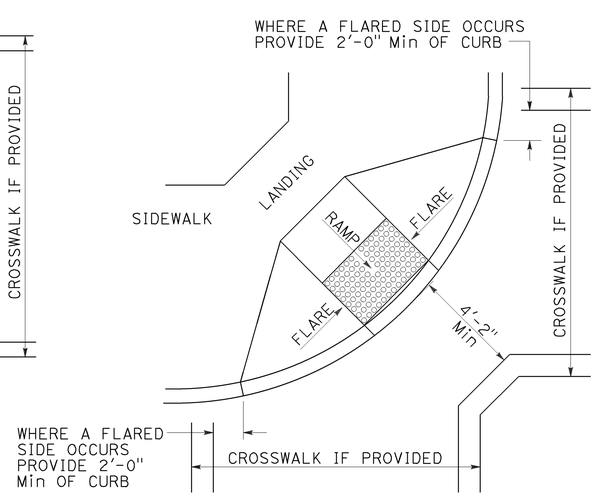

DETAIL B

TYPICAL ONE-RAMP CORNER INSTALLATION

See Notes 1 and 3

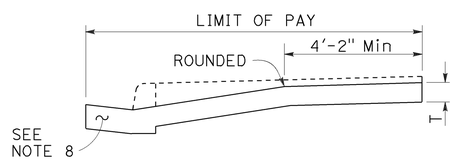

RETROFIT PAY LIMITS

Existing curb and sidewalk

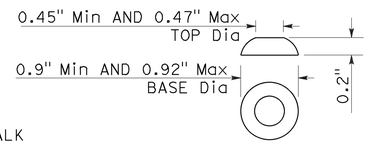

RAISED TRUNCATED DOME

NOTES:

1. As site conditions dictate, Case A through Case G curb ramps may be used for corner installations similar to those shown in Detail A and Detail B. The case of curb ramps used in Detail A do not have to be the same. Case A through Case G curb ramps also may be used at mid block locations, as site conditions dictate.
2. If distance from curb to back of sidewalk is too short to accommodate ramp and 4'-2" platform (landing) as shown in Case A, the sidewalk may be depressed longitudinally as in Case B, or C or may be widened as in Case D.
3. When ramp is located in center of curb return, crosswalk configuration must be similar to that shown for Detail B.
4. As site conditions dictate, the retaining curb side and the flared side of the Case G ramp shall be constructed in reversed position.
5. If located on a curve, the sides of the ramp need not be parallel, but the minimum width of the ramp shall be 4'-2".
6. Side slope of ramp flares vary uniformly from a maximum of 9.0% at curb to conform with longitudinal sidewalk slope adjacent to top of the ramp, except in Case C and Case F.
7. The adjacent surfaces at transitions at curb ramps to walks, gutters, and streets shall be at the same level.
8. Counter slopes of adjoining gutters and road surfaces immediately adjacent to and within 24 inches of the curb ramp shall not be steeper than 1:20 (5.0%). Gutter pan slope shall not exceed 1" of depth for each 2'-0" of width.
9. Curb ramps shall have a detectable warning surface that extends the full width and 3'-0" depth of the ramp. A 4'-0" wide detectable warning surface may be used on a 4'-2" wide curb ramp. Detectable Warning Surfaces shall conform to the requirements in the Standard Specifications.
10. Sidewalk and ramp thickness, "T", shall be 3½" minimum.
11. Utility pull boxes, manholes, vaults and all other utility facilities within the boundaries of the curb ramp will be relocated or adjusted to grade by the owner prior to, or in conjunction with, curb ramp construction.
12. Detectable warning surface may have to be cut to allow removal of utility covers while maintaining full detectable warning width and depth.

RAISED TRUNCATED DOME PATTERN (IN-LINE)

DETECTABLE WARNING SURFACE

See Note 9

STATE OF CALIFORNIA
DEPARTMENT OF TRANSPORTATION

CURB RAMP DETAILS

NO SCALE

RSP A88A DATED JULY 15, 2016 SUPERSEDES RSP A88A DATED JULY 3, 2015, RSP A88A DATED MARCH 21, 2014 AND RSP A88A DATED JULY 19, 2013 AND STANDARD PLAN A88A DATED MAY 20, 2011 - PAGE 121 OF THE STANDARD PLANS BOOK DATED 2010.

REVISED STANDARD PLAN RSP A88A

2010 REVISED STANDARD PLAN RSP A88A

3-30-16

Dist	COUNTY	ROUTE	POST MILES TOTAL PROJECT	SHEET No.	TOTAL SHEETS
05	SBt	156	R10.0/R18.4	72	89

Srikanth Balasubramanian
REGISTERED CIVIL ENGINEER

October 30, 2015
PLANS APPROVAL DATE

REGISTERED PROFESSIONAL ENGINEER Srikanth N. Balasubramanian No. C56426 Exp. 6-30-17 CIVIL STATE OF CALIFORNIA

THE STATE OF CALIFORNIA OR ITS OFFICERS OR AGENTS SHALL NOT BE RESPONSIBLE FOR THE ACCURACY OR COMPLETENESS OF SCANNED COPIES OF THIS PLAN SHEET.

TO ACCOMPANY PLANS DATED 6-20-16

ABBREVIATIONS:

TE TAPERED EDGE

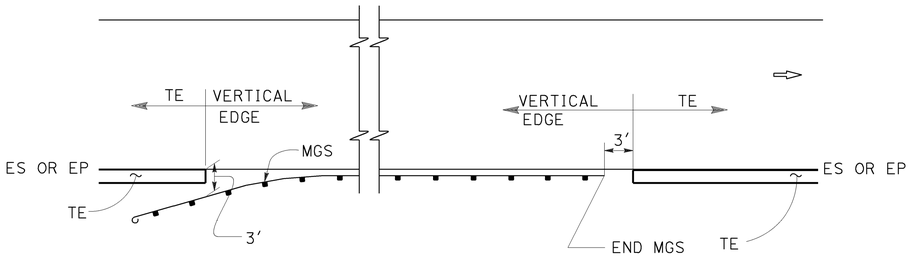

MGS

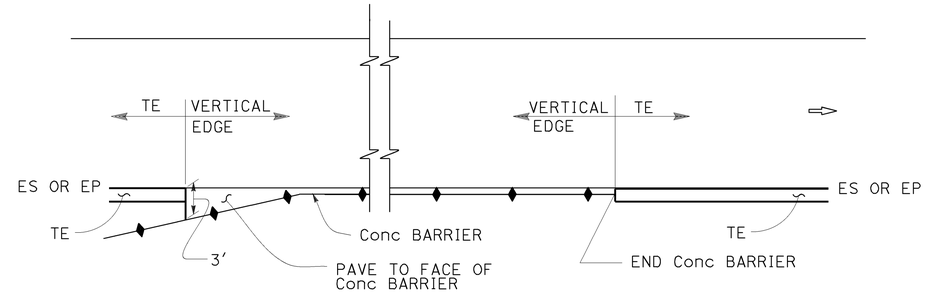

CONCRETE BARRIER

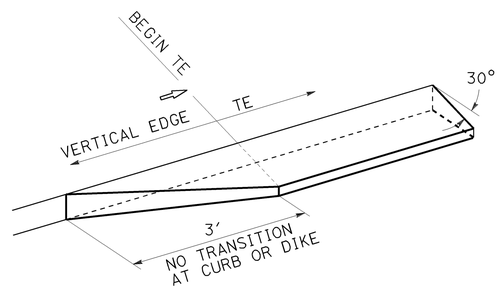

TRANSITION DETAIL FOR CONCRETE ONLY

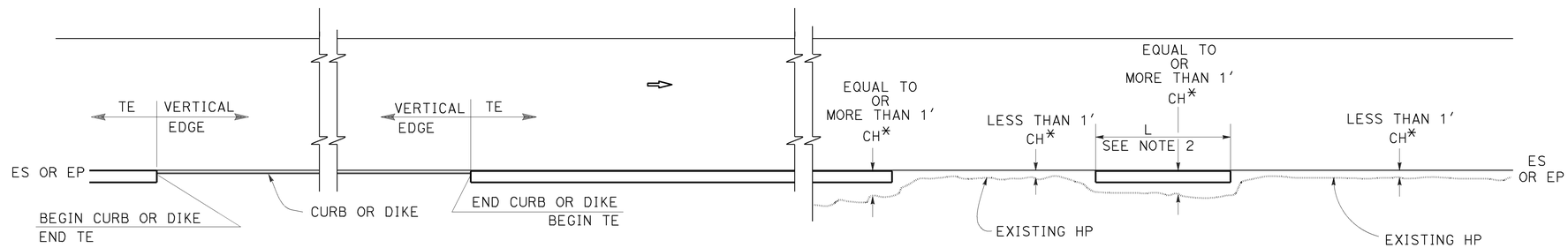

CURB OR DIKE

NARROW SIDE SLOPE

* CH = Distance from ES or EP to existing HP.

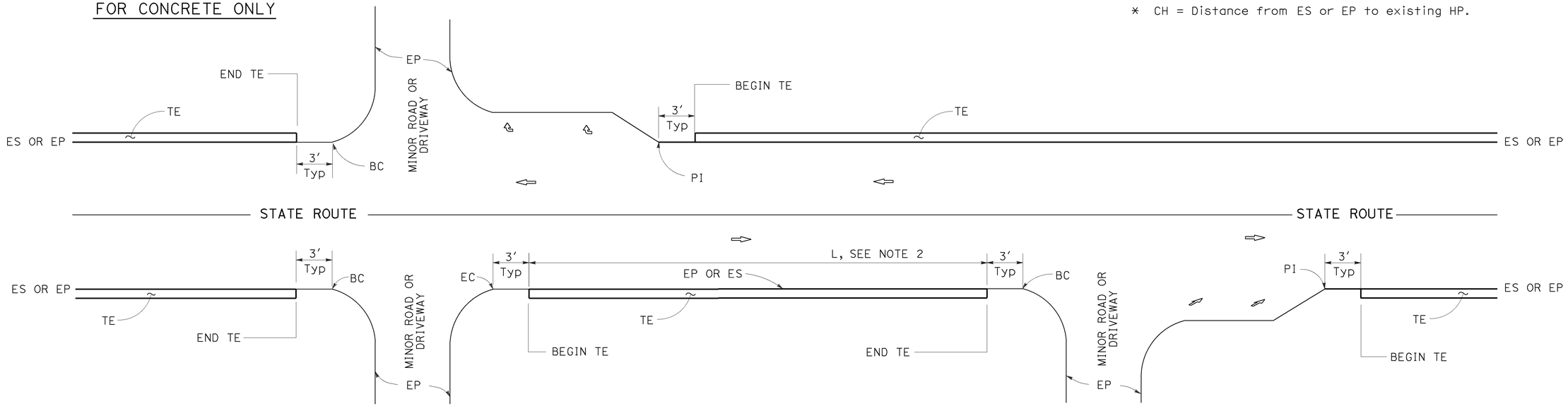

INTERTECTION

DRIVEWAY AND INTERSECTION

MINOR ROADWAY OR DRIVEWAY

STATE OF CALIFORNIA
DEPARTMENT OF TRANSPORTATION

PAVEMENT EDGE TREATMENTS

NO SCALE

NOTES:

1. For details not shown, see Revised Standard Plans RSP P75 and RSP P76.
2. Tapered edge is optional when L is less than 30′.

RSP P74 DATED OCTOBER 30, 2015 SUPERSEDES RSP P74 DATED NOVEMBER 15, 2013 AND RSP P74 DATED JANUARY 20, 2012 THAT SUPPLEMENTS THE STANDARD PLANS BOOK DATED 2010.

REVISED STANDARD PLAN RSP P74

2010 REVISED STANDARD PLAN RSP P74

10-13-15

Dist	COUNTY	ROUTE	POST MILES TOTAL PROJECT	SHEET No.	TOTAL SHEETS
05	SBt	156	R10.0/R18.4	73	89

REGISTERED CIVIL ENGINEER

October 30, 2015
PLANS APPROVAL DATE

REGISTERED PROFESSIONAL ENGINEER Srikanth N. Balasubramanian No. C56426 Exp. 6-30-17 CIVIL STATE OF CALIFORNIA

THE STATE OF CALIFORNIA OR ITS OFFICERS OR AGENTS SHALL NOT BE RESPONSIBLE FOR THE ACCURACY OR COMPLETENESS OF SCANNED COPIES OF THIS PLAN SHEET.

TO ACCOMPANY PLANS DATED 6-20-16

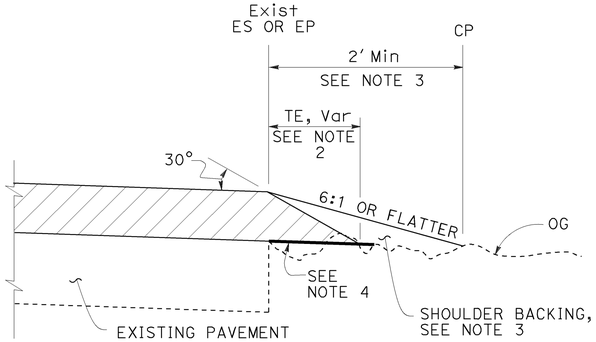

CASE A
Tapered Edge

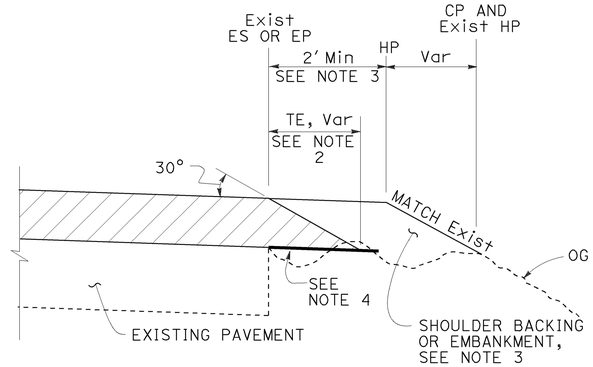

CASE B
Tapered Edge

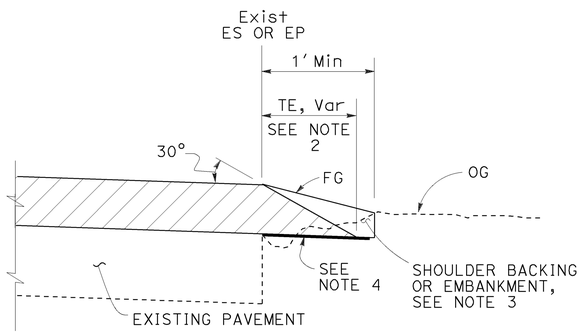

CASE C
Tapered Edge

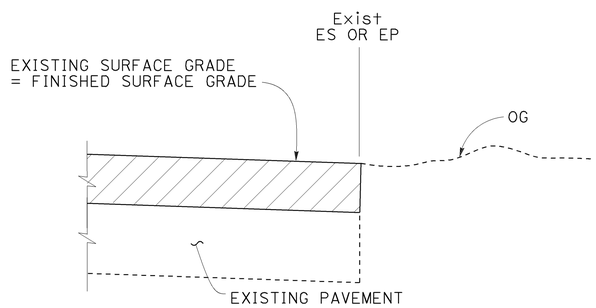

CASE D
Vertical Edge

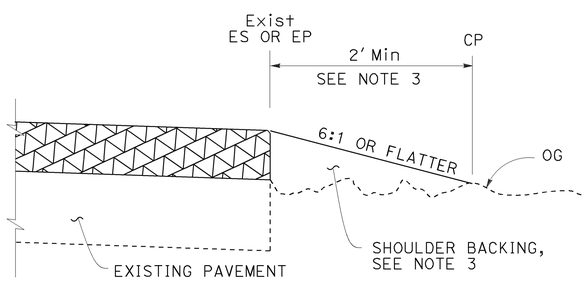

CASE E
Vertical Edge

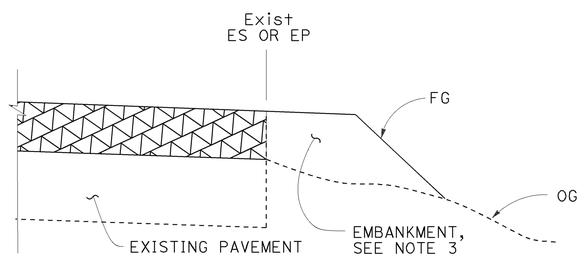

CASE F
Vertical Edge
* See Table A and Revised Std Plan RSP P74

LEGEND:

- HMA OVERLAY
- HMA OR CONCRETE OVERLAY
- CONCRETE OVERLAY

ABBREVIATIONS:

TE TAPERED EDGE
TT TOTAL THICKNESS OF TE

TABLE A
EDGE TREATMENT FOR VARIOUS OVERLAY THICKNESS AND CONDITIONS

	OVERLAY THICKNESS	
FIELD CONDITION	LESS THAN 0.15'	0.15' OR MORE
Exist SLOPE 6:1 OR FLATTER	CASE E	CASE A
Exist SLOPE 3:1 TO 6:1	CASE E	CASE B
Exist SLOPE STEEPER THAN 3:1	CASE F	CASE F
CUT SECTION (REPLACE, COLD PLANE, MILL PAVEMENT)	CASE D	CASE C

ADDITIONAL HMA OR CONCRETE QUANTITIES FOR TE/SIDE/MILE

TYPICAL CROSS SECTION	TT	TOTAL ADDITIONAL MATERIAL FOR TE/SIDE/MILE		
		HMA (TON)	CONCRETE (CY)*	CONCRETE (CY)**
TT	0.15'	7.7	NA	NA
	0.20'	13.7	NA	NA
	0.30'	30.9	NA	NA
	0.40'	54.9	NA	NA
	0.45'	69.4	NA	NA
TT 0.43'	0.50'	84.2	NA	NA
	0.60'	113.9	NA	NA
	0.70'	143.6	70.9	94.2
	0.80'	173.3	85.6	112.2
	0.90'	203.0	100.3	130.2
	1.00'	232.7	114.9	148.2
	1.10'	262.4	129.6	166.2
	1.20'	292.1	144.3	184.2

* For Detail "A"
** For Optional Detail "A"

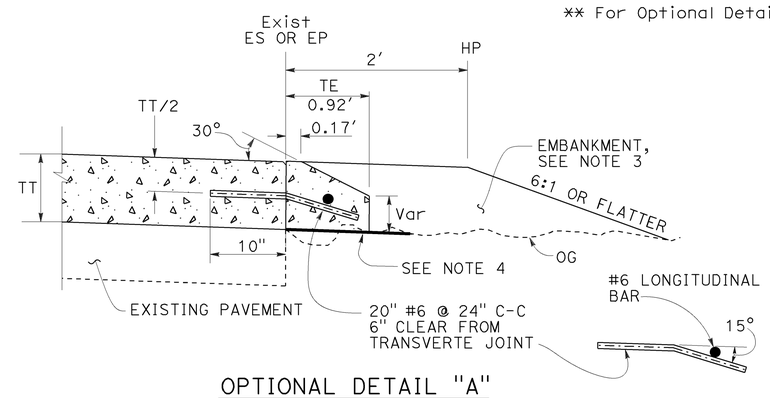

OPTIONAL DETAIL "A"
For concrete overlay
See Note 5

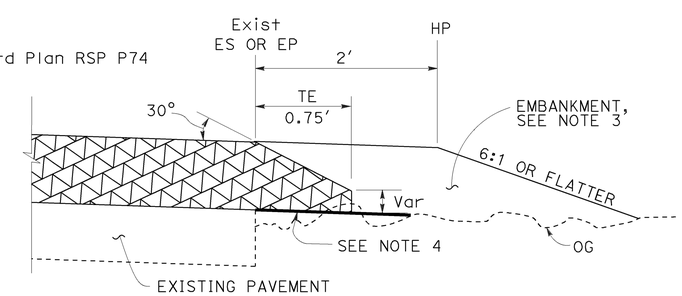

DETAIL "A"
For HMA overlay thickness more than 0.43' or concrete overlay

NOTES:

1. For limits of tapered edge and vertical edge treatments, see Revised Standard Plan RSP P74.
2. Details shown for HMA overlay thickness less than 0.43'. See Detail "A" for HMA overlay thickness more than 0.43' or concrete overlay.
3. For locations and limits of shoulder backing or embankment see project plans.
4. Grade existing ground to place tapered edge. 1' minimum width
5. Tapered edge transverse joint must match overlay transverse joint. End of #6 longitudinal bar must be 2" ±½" clear from transverse joint.
6. Tapered edge is not needed in the area of MGS, barrier, right turn lane and acceleration lane. See Revised Standard Plan RSP P74.

STATE OF CALIFORNIA
DEPARTMENT OF TRANSPORTATION

PAVEMENT EDGE TREATMENTS-OVERLAYS

NO SCALE

RSP P75 DATED OCTOBER 30, 2015 SUPERSEDES RSP P75 DATED NOVEMBER 15, 2013 AND RSP P75 DATED JANUARY 20, 2012 THAT SUPPLEMENTS THE STANDARD PLANS BOOK DATED 2010.

REVISED STANDARD PLAN RSP P75

2010 REVISED STANDARD PLAN RSP P75

7-2-15

Dist	COUNTY	ROUTE	POST MILES TOTAL PROJECT	SHEET No.	TOTAL SHEETS
05	SBt	156	R10.0/R18.4	74	89

REGISTERED CIVIL ENGINEER

July 19, 2013
PLANS APPROVAL DATE

REGISTERED PROFESSIONAL ENGINEER
Gurinderpal Bhullar
No. C48815
Exp. 9-30-14
CIVIL
STATE OF CALIFORNIA

THE STATE OF CALIFORNIA OR ITS OFFICERS OR AGENTS SHALL NOT BE RESPONSIBLE FOR THE ACCURACY OR COMPLETENESS OF SCANNED COPIES OF THIS PLAN SHEET.

TO ACCOMPANY PLANS DATED 6-20-16

2010 REVISED STANDARD PLAN RSP T9

TABLE 1

TAPER LENGTH CRITERIA AND CHANNELIZING DEVICE SPACING

SPEED (S)	MINIMUM TAPER LENGTH * FOR WIDTH OF OFFSET 12 FEET (W)				MAXIMUM CHANNELIZING DEVICE SPACING		
					X	Y	Z **
	TANGENT 2L	MERGING L	SHIFTING L/2	SHOULDER L/3	TAPER	TANGENT	CONFLICT
mph	ft	ft	ft	ft	ft	ft	ft
20	160	80	40	27	20	40	10
25	250	125	63	42	25	50	12
30	360	180	90	60	30	60	15
35	490	245	123	82	35	70	17
40	640	320	160	107	40	80	20
45	1080	540	270	180	45	90	22
50	1200	600	300	200	50	100	25
55	1320	660	330	220	55	110	27
60	1440	720	360	240	60	120	30
65	1560	780	390	260	65	130	32
70	1680	840	420	280	70	140	35

* - For other offsets, use the following merging taper length formula for L:
For speed of 40 mph or less, $L = WS^2/60$
For speed of 45 mph or more, $L = WS$

Where: L = Taper length in feet
W = Width of offset in feet
S = Posted speed limit, off-peak 85th-percentile speed prior to work starting, or the anticipated operating speed in mph

** - Use for taper and tangent sections where there are no pavement markings or where there is a conflict between existing pavement markings and channelizers (CA).

TABLE 2

LONGITUDINAL BUFFER SPACE AND FLAGGER STATION SPACING

SPEED *	Min D **	DOWNGRADE Min D ***		
		-3%	-6%	-9%
mph	ft	ft	ft	ft
20	115	116	120	126
25	155	158	165	173
30	200	205	215	227
35	250	257	271	287
40	305	315	333	354
45	360	378	400	427
50	425	446	474	507
55	495	520	553	593
60	570	598	638	686
65	645	682	728	785
70	730	771	825	891

* - Speed is posted speed limit, off-peak 85th-percentile speed prior to work starting, or the anticipated operating speed in mph

** - Longitudinal buffer space or flagger station spacing

*** - Use on sustained downgrade steeper than -3 percent and longer than 1 mile.

TABLE 3

ADVANCE WARNING SIGN SPACING

ROAD TYPE	DISTANCE BETWEEN SIGNS *		
	A	B	C
	ft	ft	ft
URBAN - 25 mph OR LESS	100	100	100
URBAN - MORE THAN 25 mph TO 40 mph	250	250	250
URBAN - MORE THAN 40 mph	350	350	350
RURAL	500	500	500
EXPRESSWAY / FREEWAY	1000	1500	2640

* - The distances are approximate, are intended for guidance purposes only, and should be applied with engineering judgment. These distances should be adjusted by the Engineer for field conditions, if necessary, by increasing or decreasing the recommmended distances.

STATE OF CALIFORNIA
DEPARTMENT OF TRANSPORTATION

TRAFFIC CONTROL SYSTEM TABLES FOR LANE AND RAMP CLOSURES

NO SCALE

RSP T9 DATED JULY 19, 2013 SUPERSEDES RSP T9 DATED APRIL 19, 2013 THAT SUPPLEMENTS THE STANDARD PLANS BOOK DATED 2010.

REVISED STANDARD PLAN RSP T9

TO ACCOMPANY PLANS DATED 6-20-16

Dist	COUNTY	ROUTE	POST MILES TOTAL PROJECT	SHEET No.	TOTAL SHEETS
05	SBt	156	R10.0/R18.4	75	89

REGISTERED CIVIL ENGINEER

April 19, 2013
PLANS APPROVAL DATE

REGISTERED PROFESSIONAL ENGINEER Gurinderpal Bhullar No. C48815 Exp. 9-30-14 CIVIL STATE OF CALIFORNIA

THE STATE OF CALIFORNIA OR ITS OFFICERS OR AGENTS SHALL NOT BE RESPONSIBLE FOR THE ACCURACY OR COMPLETENESS OF SCANNED COPIES OF THIS PLAN SHEET.

NOTES:

See Revised Standard Plan RSP T9 for tables.

Use cone spacing X for taper segment, Y for tangent segment or Z for conflict situations, as approriate, per Table 1, unless X, Y, or Z cone spacing is shown on this sheet.

Unless otherwise specified in the special provisions, all temporary warning signs shall have black legend on fluorescent orange background.

California codes are designated by (CA). Otherwise, Federal (MUTCD) codes are shown.

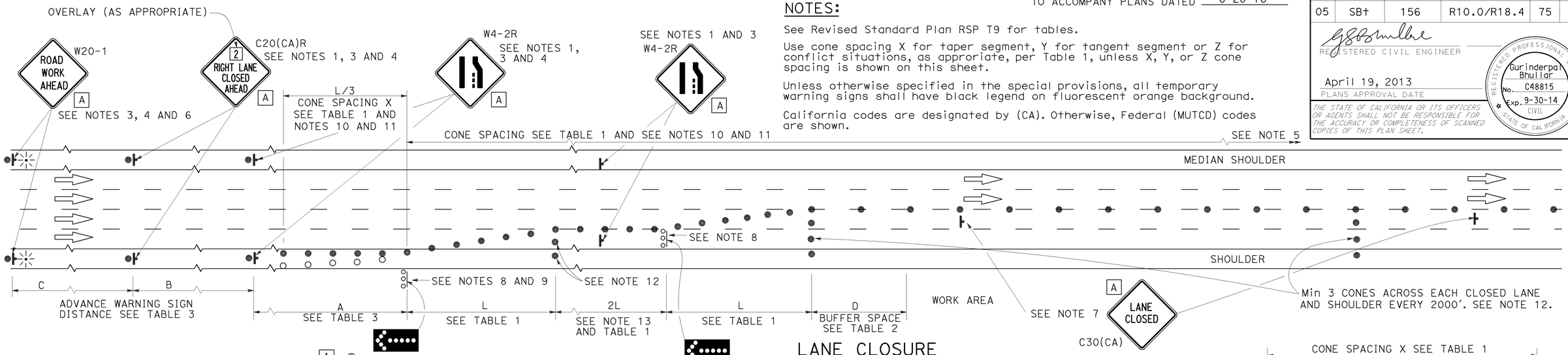

LANE CLOSURE

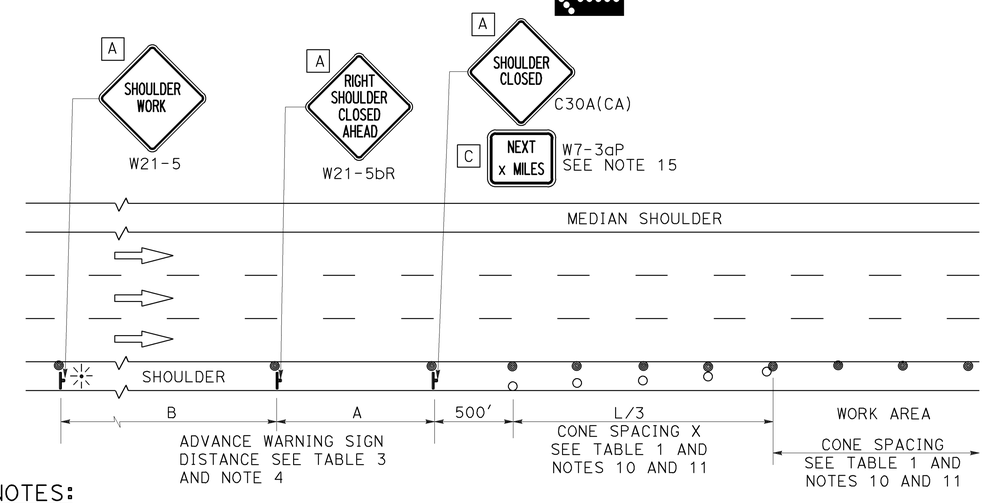

SHOULDER CLOSURE

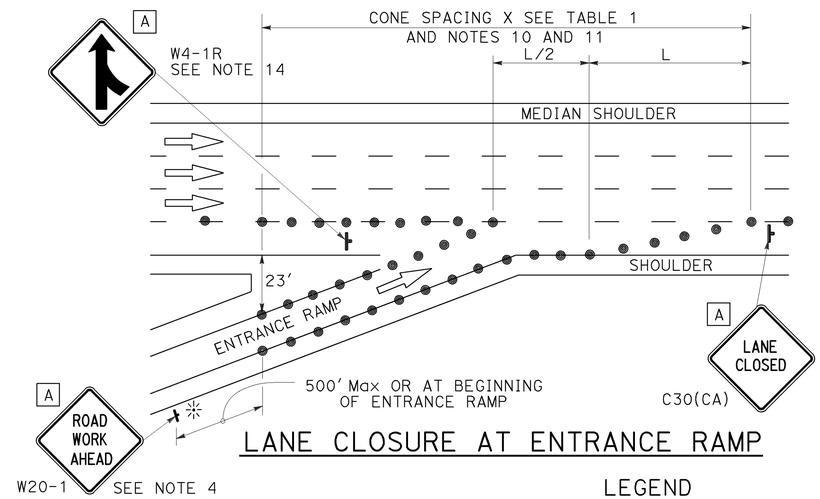

LANE CLOSURE AT ENTRANCE RAMP

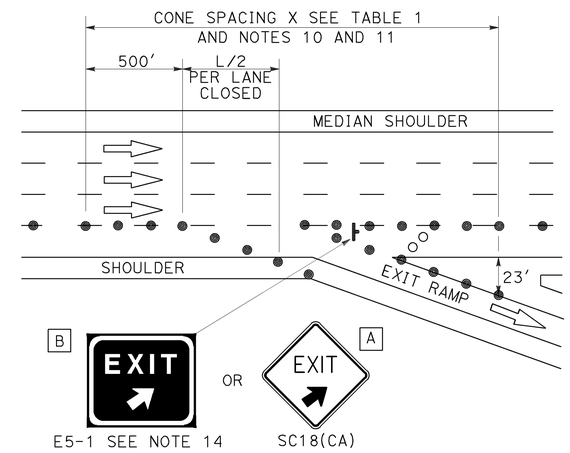

LANE CLOSURE AT EXIT RAMP

NOTES:

1. Median lane closures shall conform to the details as shown except that C20(CA)L and W4-2L signs shall be used.
2. At least one person shall be assigned to provide full time maintenance of traffic control devices for lane closures.
3. Duplicate sign installations are not required:
   a) On opposite shoulder if at least one-half of the available lanes remain open to traffic.
   b) In the median if the width of the median shoulder is less than 8' and the outside lanes are to be closed.
4. Each advance warning sign on each side of the roadway shall be equipped with at least two flags for daytime closure. Each flag shall be at least 16" x 16" in size and shall be orange or fluorescent red-orange in color. Flashing beacons shall be placed at the locations indicated for lane closure during hours of darkness.
5. A G20-2 "END ROAD WORK" sign, with minimum size of 48" x 24" as appropriate, shall be placed at the end of the lane closure unless the end of work area is obvious or ends within a larger project's limits.
6. If the W20-1 sign would follow within 2000' of a stationary W20-1 or G20-1 "ROAD WORK NEXT _____ MILES", use a C20(CA) sign for the first advance warning sign.
7. Place a C30(CA) sign every 2000' throughout length of lane closure.
8. One flashing arrow sign for each lane closed. The flashing arrow signs shall be Type I.
9. A minimum 1500' of sight distance shall be provided where possible for vehicles approaching the first flashing arrow sign. Lane closures shall not begin at top of crest vertical curve or on a horizontal curve.
10. All cones used for lane closures during the hours of darkness shall be fitted with retroreflective bands (or sleeves) as specified in the specifications.
11. Portable delineators, placed at one-half the spacing indicated for traffic cones may be used instead of cones for daytime closures only.
12. Unless otherwise specified in the special provisions, a minimum of 3 cones shall be placed transversely across each closed lane and shoulder at each location where a taper across a traffic lane ends and every 2000' as shown on the "Lane Closure" detail. Two Type II barricades may be used instead of the 3 cones. The transverse alignment of the cones or barricades on the closed shoulder may be shifted from the transverse alignment to provide access to the work.
13. Unless otherwise specified in the special provisions, the 2L tangent shown along lane lines shall be used between the L tapers required for each closed traffic lane.
14. Unless otherwise specified in the special provisions, the E5-1 or SC18(CA) and W4-1 signs shall be used as shown.
15. A W7-3aP "NEXT____ MILES" plaque must be used if theshoulder closure extends beyond the distance that can be perceived by road users.

LEGEND

- TRAFFIC CONE
- TRAFFIC CONE (OPTIONAL TAPER)
- TEMPORARY TRAFFIC CONTROL SIGN
- FLASHING ARROW SIGN (FAS)
- FAS SUPPORT OR TRAILER
- PORTABLE FLASHING BEACON

SIGN PANEL SIZE (Min)

A	48" x 48"
B	72" x 60"
C	36" x 30"

STATE OF CALIFORNIA
DEPARTMENT OF TRANSPORTATION

TRAFFIC CONTROL SYSTEM FOR LANE CLOSURE ON FREEWAYS AND EXPRESSWAYS

NO SCALE

RSP T10 DATED APRIL 19, 2013 SUPERSEDES STANDARD PLAN T10 DATED MAY 20, 2011 - PAGE 237 OF THE STANDARD PLANS BOOK DATED 2010.

REVISED STANDARD PLAN RSP T10

2010 REVISED STANDARD PLAN RSP T10

12-18-12

Dist	COUNTY	ROUTE	POST MILES TOTAL PROJECT	SHEET No.	TOTAL SHEETS
05	SBt	156	R10.0/R18.4	76	89

Devinder Singh
REGISTERED CIVIL ENGINEER

October 30, 2015
PLANS APPROVAL DATE

REGISTERED PROFESSIONAL ENGINEER
Devinder Singh
No. C50470
Exp. 6-30-17
CIVIL
STATE OF CALIFORNIA

THE STATE OF CALIFORNIA OR ITS OFFICERS OR AGENTS SHALL NOT BE RESPONSIBLE FOR THE ACCURACY OR COMPLETENESS OF SCANNED COPIES OF THIS PLAN SHEET.

TO ACCOMPANY PLANS DATED 6-20-16

2010 REVISED STANDARD PLAN RSP T13

NOTES:

See Revised Standard Plan RSP T9 for tables.

Use cone spacing X for taper segment, Y for tangent segment or Z for conflict situations, as approriate, per Table 1, unless X, Y, or Z cone spacing is shown on this sheet.

Unless otherwise specified in the special provisions, all temporary warning signs shall have black legend on fluorescent orange background.

California codes are designated by (CA). Otherwise, Federal (MUTCD) codes are shown.

TYPICAL LANE CLOSURE WITH REVERSIBLE CONTROL

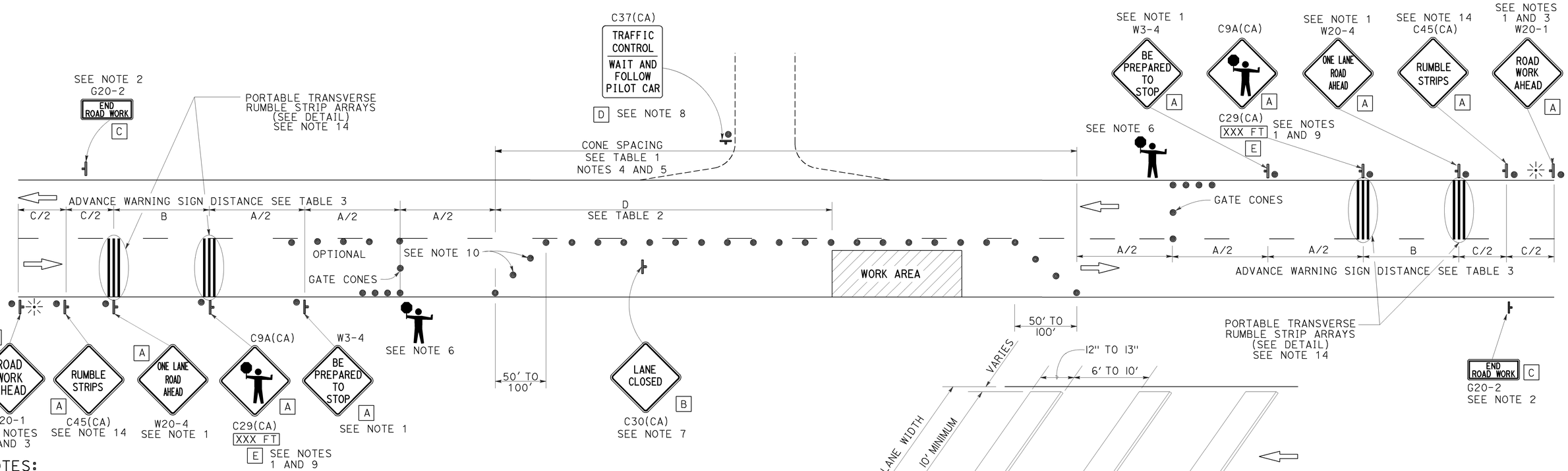

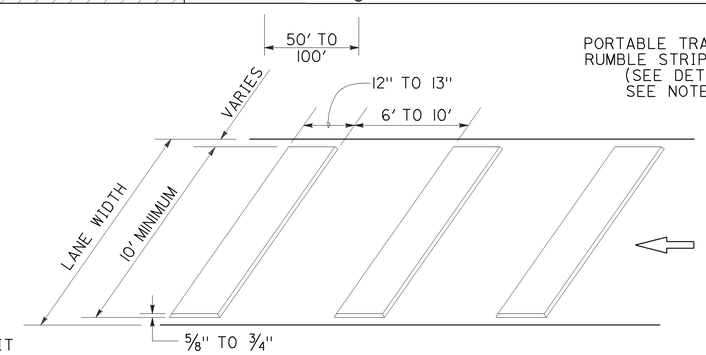

PORTABLE TRANSVERSE RUMBLE STRIP ARRAY DETAIL

NOTES:

1. Each advance warning sign in each direction of travel shall be equipped with at least two flags for daytime closure. Each flag shall be at least 16" x 16" in size and shall be orange or fluorescent red-orange in color. Flashing beacons shall be placed at the locations indicated for lane closure during hours of darkness.
2. A G20-2 "END ROAD WORK" sign, as appropriate, shall be placed at the end of the lane control unless the end of work area is obvious, or ends within a larger project's limits.
3. If the W20-1 sign would follow within 2000' of a stationary W20-1 or G20-1 "ROAD WORK NEXT _____ MILES", use a W20-4 sign for the first advance warning sign.
4. All cones used for lane closures during the hours of darkness shall be fitted with retroreflective bands (or sleeves) as specified in the specifications.
5. Portable delineators, placed at one-half the spacing indicated for traffic cones, may be used instead of cones for daytime closures only.
6. Additional advance flaggers may be required. Flagger should stand in a conspicuous place, be visible to approaching traffic as well as approaching vehicles after the first vehicle has stopped. During the hours of darkness, the flagging-station and flagger shall be illuminated and clearly visible to approaching traffic. The illumination footprint of the lighting on the ground shall be at least 20' in diameter. Place a minimum of four cones at 50' intervals in advance of flagger station as shown.
7. Place C30(CA) "LANE CLOSED" sign at 500' to 1000' intervals throughout extended work areas. They are optional if the work area is visible from the flagger station.
8. When a pilot car is used, place a C37(CA) "TRAFFIC CONTROL-WAIT AND FOLLOW PILOT CAR" sign with black legend on white background at all intersections, driveways and alleys without a flagger within traffic control area. Signs shall be clean and visible at all times. Where traffic can not be effectively self-regulated, at least one flagger shall be used at each intersection within traffic control area.
9. An optional C29(CA) sign may be placed below the C9A(CA) sign.
10. Either traffic cones or barricades shall be placed on the taper. Barricades shall be Type I, II, or III.
11. The color of the portable transverse rumble strips shall be black or orange. Use 2 arrays, each array shall consist of 3 rumble strips.
12. Portable transverse rumble strips shall not be placed on sharp horizontal or vertical curves nor shall they be placed through pedestrian crossings.
13. If the portable transverse rumble strips become out of alignment (skewed) by more than 6 inches, measured from one end to the other, they shall be readjusted to bring the placement back to the original location.
14. Portable transverse rumble strips are not required if any one of the following conditions is satisfied:
    A. Work duration occupies a location for four hours or less
    B. Posted speed limit is below 45 MPH
    C. Work is of emergency nature
    D. Work zone is in snow or icy weather conditions

SIGN PANEL SIZE (Min)

A	48" x 48"
B	30" x 30"
C	36" x 18"
D	36" x 42"
E	20" x 7"

LEGEND

- TRAFFIC CONE
- TEMPORARY TRAFFIC CONTROL SIGN
- PORTABLE FLASHING BEACON
- FLAGGER

STATE OF CALIFORNIA
DEPARTMENT OF TRANSPORTATION

TRAFFIC CONTROL SYSTEM FOR LANE CLOSURE ON TWO LANE CONVENTIONAL HIGHWAYS

NO SCALE

RSP T13 DATED OCTOBER 30, 2015 SUPERSEDES RSP T13 DATED OCTOBER 17, 2014, RSP T13 DATED JULY 18, 2014 AND RSP T13 DATED APRIL 19, 2013 AND STANDARD PLAN T13 DATED MAY 20, 2011 - PAGE 241 OF THE STANDARD PLANS BOOK DATED 2010.

REVISED STANDARD PLAN RSP T13

10-13-15

Dist	COUNTY	ROUTE	POST MILES TOTAL PROJECT	SHEET No.	TOTAL SHEETS
05	SBt	156	R10.0/R18.4	77	89

REGISTERED CIVIL ENGINEER

April 19, 2013
PLANS APPROVAL DATE

REGISTERED PROFESSIONAL ENGINEER Gurinderpal Bhullar No. C48815 Exp. 9-30-14 CIVIL STATE OF CALIFORNIA

THE STATE OF CALIFORNIA OR ITS OFFICERS OR AGENTS SHALL NOT BE RESPONSIBLE FOR THE ACCURACY OR COMPLETENESS OF SCANNED COPIES OF THIS PLAN SHEET.

TO ACCOMPANY PLANS DATED 6-20-16

2010 REVISED STANDARD PLAN RSP T17

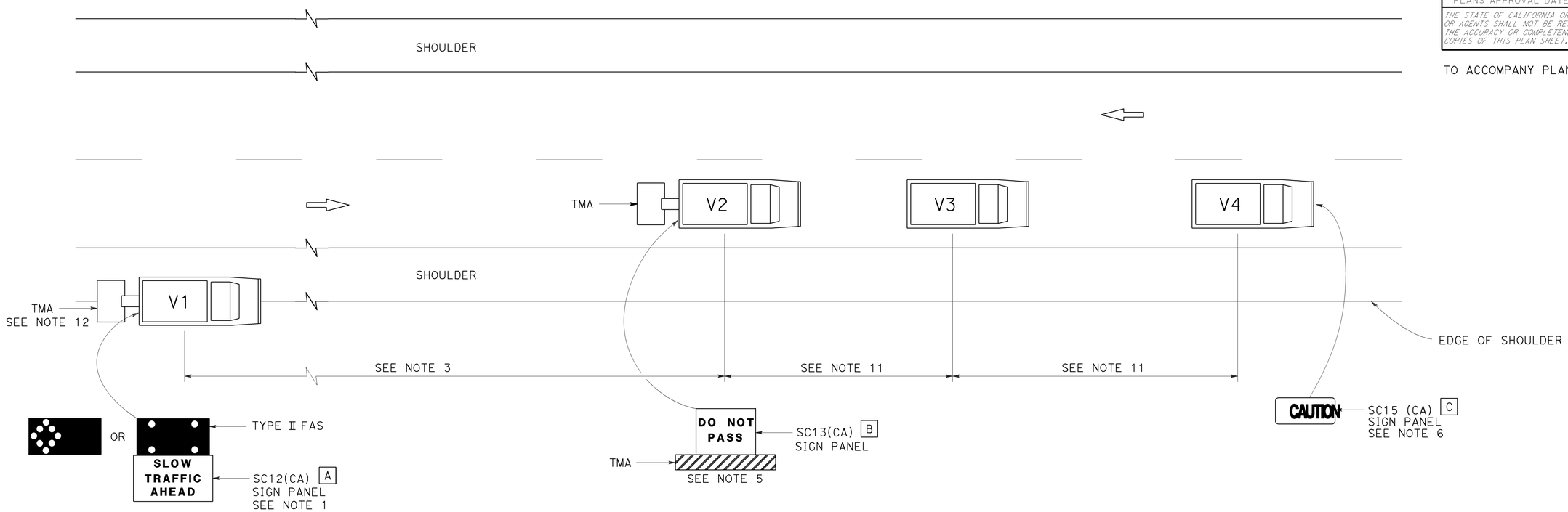

LEGEND

V1	SIGN VEHICLE
V2	SHADOW VEHICLE
V3	WORK/APPLICATION VEHICLE
V4	SIGN VEHICLE
TMA	TRUCK-MOUNTED ATTENUATOR
	FLASHING ARROW SIGN (FAS) IN FLASHING CAUTION MODE
	FLASHING ARROW SIGN (FAS) IN ALTERNATING DIAMOND CAUTION

SIGN PANEL SIZE (Min)

A	72" x 42"
B	54" x 42"
C	54" x 24"

NOTES:

1. Either a changeable message sign or a SC12(CA) "SLOW TRAFFIC AHEAD" sign shall be mounted on the rear of sign vehicle V1. The changeable message sign shall be sequenced to show the "CAUTION" message first, follow by the "SLOW TRAFFIC AHEAD" message. A Type II flashing arrow sign may be used with the SC12(CA) sign panel.
2. Sign vehicle V1 should be positioned where highly visible when shoulders are not available.
3. If traffic queues develop, sign vehicle V1 should be positioned upstream from the end of queue.
4. Vehicle-mounted sign panels shall have Type III or above retroreflective sheeting, black on white, or black on fluorescent orange, with 6" minimum series D letters per Caltrans sign specifications.
5. Shadow vehicle shall be equipped with a truck-mounted attenuator. The sign panel shown shall be mounted on the rear of shadow vehicle V2. The message "LANE CLOSED" may be used in place of the "DO NOT PASS" message.
6. The sign panel shown shall be mounted on the front of sign vehicle V4, facing opposing traffic.
7. All vehicles shall be equipped with flashing or rotating amber lights.
8. Sign vehicle V4 will not be required when the work and vehicles V2 and V3 are 2′ or more from the centerline of the highway during the work or application operations.
9. All vehicles used for lane closures shall be equipped with two-way radios and the vehicle operators shall maintain communication during the work or application operation.
10. This plan shall not be used where workers would be on foot in the work area. Use a stationary type lane closure (Revised Standard Plan T13) for this condition.
11. Minimize spacing between vehicles V2 and V3 and vehicles V3 and V4 to deter road users from driving in between them.
12. If sign vehicle V1 encroaches into the traffic lane due to insufficient shoulder width, sign vehicle V1 shall be equipped with a truck-mounted attenuator. Sign vehicle V1 shall stay as close to the edge of shoulder as practicable.

STATE OF CALIFORNIA
DEPARTMENT OF TRANSPORTATION

TRAFFIC CONTROL SYSTEM FOR MOVING LANE CLOSURE ON TWO LANE HIGHWAYS

NO SCALE

RSP T17 DATED APRIL 19, 2013 SUPERSEDES STANDARD PLAN T17
DATED MAY 20, 2011 - PAGE 245 OF THE STANDARD PLANS BOOK DATED 2010.

REVISED STANDARD PLAN RSP T17

12-18-12

Dist	COUNTY	ROUTE	POST MILES TOTAL PROJECT	SHEET No.	TOTAL SHEETS
05	SBt	156	R10.0/R18.4	78	89

Theresa Gabriel
REGISTERED ELECTRICAL ENGINEER

October 30, 2015
PLANS APPROVAL DATE

REGISTERED PROFESSIONAL ENGINEER Theresa Aziz Gabriel No. E15129 Exp. 6-30-16 ELECTRICAL STATE OF CALIFORNIA

THE STATE OF CALIFORNIA OR ITS OFFICERS OR AGENTS SHALL NOT BE RESPONSIBLE FOR THE ACCURACY OR COMPLETENESS OF SCANNED COPIES OF THIS PLAN SHEET.

TO ACCOMPANY PLANS DATED 6-20-16

LEGEND:

AB	ABANDON. IF APPLIED TO CONDUIT, REMOVE CONDUCTORS
BC	INSTALL PULL BOX IN EXISTING CONDUIT RUN
BP	PEDESTRIAN BARRICADE, TYPE AS INDICATED ON PLAN
CB	INSTALL CONDUIT INTO EXISTING PULL BOX
CC	CONNECT NEW AND EXISTING CONDUIT. REMOVE EXISTING CONDUCTORS AND INSTALL CONDUCTORS AS INDICATED
CF	CONDUIT TO REMAIN FOR FUTURE USE. REMOVE CONDUCTORS. INSTALL PULL TAPE
DH	DETECTOR HANDHOLE
FA	FOUNDATION TO BE ABANDONED
IS	INSTALL SIGN ON SIGNAL MAST ARM
NS	NO SLIP BASE ON STANDARD
PEC	PHOTOELECTRIC CONTROL
PEU	PHOTOELECTRIC UNIT
RC	EQUIPMENT OR MATERIAL TO BE REMOVED AND BECOME THE PROPERTY OF THE CONTRACTOR
RE	REMOVE ELECTROLIER, FUSES AND BALLAST. TAPE ENDS OF CONDUCTORS
RL	RELOCATE EQUIPMENT
RR	REMOVE AND REUSE EQUIPMENT
RS	REMOVE AND SALVAGE EQUIPMENT
SC	SPLICE NEW TO EXISTING CONDUCTORS
SD	SERVICE DISCONNECT
TSP	TELEPHONE SERVICE POINT

ABBREVIATIONS

AC+	UNDERGROUNDED CONDUCTOR
APS	ACCESSIBLE PEDESTRIAN SIGNAL
Batt	BATTERY
BBS	BATTERY BACKUP SYSTEM
BC	BOLT CIRCLE
Blk	BLACK
BP	BYPASS
BPB	BICYCLE PUSH BUTTON
C	CONDUIT
CB	CIRCUIT BREAKER
CCTV	CLOSED CIRCUIT TELEVISION
Ckt	CIRCUIT
CMS	CHANGEABLE MESSAGE SIGN
Ctid	CALTRANS IDENTIFICATION
Comm	COMMUNICATION
Cntl	CONTROL
DF	DEPARTMENT-FURNISHED
DLC	LOOP DETECTOR LEAD-IN CABLE
EMS	EXTINGUISHABLE MESSAGE SIGN
EVUC	EMERGENCY VEHICLE UNIT CABLE
EVUD	EMERGENCY VEHICLE UNIT DETECTOR
FB	FLASHING BEACON
FBCA	FLASHING BEACON CONTROL ASSEMBLY
FBS	FLASHING BEACON WITH SLIP BASE
FO	FIBER OPTIC
G	EQUIPMENT GROUNDING CONDUCTOR
GB	GROUND BUS
GFCI	GROUND FAULT CIRCUIT INTERRUPTER
Grn	GREEN
HAR	HIGHWAY ADVISORY RADIO
Hex	HEXAGONAL
HPS	HIGH PRESSURE SODIUM
IISNS	INTERNALLY ILLUMINATED STREET NAME SIGN
ISL	INDUCTION SIGN LIGHTING
LED	LIGHT EMITTING DIODE
LMA	LUMINAIRE MAST ARM
LPS	LOW PRESSURE SODIUM
Ltg	LIGHTING
Lum	LUMINAIRE
M	METERED
MAT	MAST ARM MOUNTING TOP ATTACHMENT
MAS	MAST ARM MOUNTING SIDE ATTACHMENT
MBPS	MANUAL BYPASS SWITCH
M/M	MULTIPLE TO MULTIPLE TRANSFORMER
Mtg	MOUNTING
MV	MERCURY VAPOR LIGHTING FIXTURE
MVDS	MICROWAVE VEHICLE DETECTION SYSTEM
N	NEUTRAL (GROUNDED CONDUCTOR)
NB	NEUTRAL BUS
NC	NORMALLY CLOSE
NO	NORMALLY OPEN
P	CIRCUIT BREAKER'S POLE
PB	PULL BOX
PBA	PUSH BUTTON ASSEMBLY
PEC	PHOTOELECTRIC CONTROL
Ped	PEDESTRIAN
PEU	PHOTOELECTRIC UNIT
PT	CONDUIT WITH PULL TAPE
PTR	POWER TRANSFER RELAY
RE	RELOCATED EQUIPMENT
RM	RAMP METERING
RWIS	ROADSIDE WEATHER INFORMATION SYSTEM
SB	SLIP BASE
SIC	SIGNAL INTERCONNECT CABLE
Sig	SIGNAL
SMA	SIGNAL MAST ARM
SNS	STREET NAME SIGN
SP	SERVICE POINT
TB	TERMINAL BOARD
TDC	TELEPHONE DEMARCATION CABINET
Temp	TEMPERATURE
TMS	TRAFFIC MONITORING STATION
TOS	TRAFFIC OPERATIONS SYSTEM
UPS	UNINTERRUPTABLE POWER SUPPLY
UPSC	UNINTERRUPTABLE POWER SUPPLY CONTROLLER
Veh	VEHICLE
VIVDS	VIDEO IMAGE VEHICLE DETECTION SYSTEM
Wht	WHITE
WIM	WEIGH-IN-MOTION
Xfmr	TRANSFORMER

SOFFIT AND WALL-MOUNTED LUMINAIRES

PENDANT SOFFIT LUMINAIRE, 70 W HPS UNLESS OTHERWISE SPECIFIED

FLUSH-MOUNTED SOFFIT LUMINAIRE, 70 W HPS UNLESS OTHERWISE SPECIFIED

WALL-MOUNTED LUMINAIRE, 70 W HPS UNLESS OTHERWISE SPECIFIED

EXISTING SOFFIT OR WALL-MOUNTED LUMINAIRE TO REMAIN UNMODIFIED

EXISTING SOFFIT OR WALL-MOUNTED LUMINAIRE TO BE MODIFIED AS SPECIFIED

NOTE:
Arrow indicates "street side" of luminaire.

COMMONLY USED SYMBOLS FOR UNITED STATES CUSTOMARY UNITS OF MEASUREMENT:

SYMBOL	DEFINITIONS
Ω	OHMS
min	MINUTE
s	SECOND
bps	BITS PER SECOND
Bps	BYTES PER SECOND
A	AMPERE
V	VOLT
V(dc)	VOLT (DIRECT CURRENT)
V(ac)	VOLT (ALTERNATING CURRENT)
FC	FOOT - CANDLE
W	WATTS
VA	VOLT-AMPERE
M	MEGA
k	KILO
m	MILLI
μ	MICRO
P	PICO
Hz	HERTZ

MISCELLANEOUS ELECTROLIERS

NEW	EXISTING	
		LUMINAIRE ON WOOD POLE
		NON-STANDARD ELECTROLIER (SEE PROJECT LEGEND)
		CITY ELECTROLIER
		ELECTROLIER FOUNDATION (FUTURE INSTALLATION)

NOTES:

1. LED luminaires shall be 235 W when installed on Type 21, 21D, 30, 31 and 32 Standards, unless otherwise specified. LED luminaires shall be 165 W when installed on other type standards or poles, unless otherwise specified.
2. Luminaires shall be the cutoff type, ANSI Type III medium cutoff lighting distribution, unless otherwise specified.

STANDARD ELECTROLIER

NEW	EXISTING	STANDARD TYPE
		15
		15D
		15 STRUCTURE
		15D STRUCTURE
		21
		21D
		21 STRUCTURE
		21D STRUCTURE
		30
		31
		32

STATE OF CALIFORNIA
DEPARTMENT OF TRANSPORTATION

ELECTRICAL SYSTEMS (LEGEND AND ABBREVIATIONS)

NO SCALE

RSP ES-1A DATED OCTOBER 30, 2015 SUPERSEDES RSP ES-1A DATED JULY 19, 2013 AND STANDARD PLAN ES-1A DATED MAY 20, 2011 - PAGE 425 OF THE STANDARD PLANS BOOK DATED 2010.

REVISED STANDARD PLAN RSP ES-1A

2010 REVISED STANDARD PLAN RSP ES-1A

9-29-15

Dist	COUNTY	ROUTE	POST MILES TOTAL PROJECT	SHEET No.	TOTAL SHEETS
05	SBt	156	R10.0/R18.4	79	89

Theresa Gabriel
REGISTERED ELECTRICAL ENGINEER

October 30, 2015
PLANS APPROVAL DATE

REGISTERED PROFESSIONAL ENGINEER Theresa Aziz Gabriel No. E15129 Exp. 6-30-16 ELECTRICAL STATE OF CALIFORNIA

THE STATE OF CALIFORNIA OR ITS OFFICERS OR AGENTS SHALL NOT BE RESPONSIBLE FOR THE ACCURACY OR COMPLETENESS OF SCANNED COPIES OF THIS PLAN SHEET.

TO ACCOMPANY PLANS DATED 6-20-16

CONDUIT

NEW	EXISTING	
		LIGHTING CONDUIT, UNLESS OTHERWISE INDICATED OR NOTED
		TRAFFIC SIGNAL CONDUIT
C	c	COMMUNICATION CONDUIT
T	t	TELEPHONE CONDUIT
F	f	FIRE ALARM CONDUIT
FO	fo	FIBER OPTIC CONDUIT
		CONDUIT TERMINATION
R	r	CONDUIT RISER ATTACHED TO THE STRUCTURE OR SERVICE POLE

SERVICE EQUIPMENT

NEW	EXISTING	
OH	oh	OVERHEAD LINES
U	U	WOOD POLE, "U" INDICATES UTILITY OWNED
		POLE GUY WITH ANCHOR
		UTILITY TRANSFORMER - GROUND MOUNTED
III	III	SERVICE EQUIPMENT ENCLOSURE TYPE. DOOR INDICATES FRONT OF ENCLOSURE
T	t	TELEPHONE DEMARCATION CABINET

POLE-MOUNTED SERVICE DESIGNATION

TYPE H SERVICE, 28'-10" — TYPE OF INSTALLATION AND POLE HEIGHT ABOVE GRADE

FLASHING BEACON

NEW	EXISTING	
R	R	FLASHING BEACON (ONE VEHICLE SIGNAL HEAD WITH BACKPLATE AND VISOR) "R" INDICATES RED INDICATION, "Y" INDICATES YELLOW INDICATION
Y Y	Y Y	FLASHING BEACON WITH TYPE 15-FBS STANDARD AND A SIGN.
R R	R R	FLASHING BEACON WITH TYPES 9, 9A OR 9B SIGN UNLESS OTHERWISE SPECIFIED OR INDICATED

SIGNAL EQUIPMENT

NEW	EXISTING	
		PEDESTRIAN SIGNAL HEAD
		PUSH BUTTON ASSEMBLY POST
		PEDESTRIAN BARRICADE
		VEHICLE SIGNAL HEAD (WITH BACKPLATE AND 3-SECTIONS: RED, YELLOW AND GREEN)
		VEHICLE SIGNAL HEAD WITH ANGLE VISOR
PV	PV	MODIFICATIONS OF BASIC SYMBOL: "L" INDICATES ALL NON-ARROW SECTIONS LOUVERED "LG" INDICATES LOUVERED GREEN SECTION ONLY "PV" INDICATES ALL 12" SECTIONS PROGRAMMED VISIBILITY "8" INDICATES ALL 8" SECTIONS (ONLY WHEN SPECIFIED)
		VEHICLE SIGNAL HEAD CONSISTING OF RED, YELLOW AND GREEN LEFT ARROW SECTIONS
		VEHICLE SIGNAL HEAD CONSISTING OF RED AND YELLOW SECTIONS WITH AN UP GREEN ARROW SECTION
		VEHICLE SIGNAL HEAD (5 SECTION) CONSISTING OF RED, YELLOW AND GREEN SECTIONS WITH YELLOW AND GREEN RIGHT ARROW SECTIONS
		TYPE 15TS STANDARD WITH VEHICLE SIGNAL HEAD AND LUMINAIRE
		TYPE 21TS STANDARD WITH VEHICLE SIGNAL HEAD AND LUMINAIRE
		STANDARD WITH LUMINAIRE AND SIGNAL MAST ARMS AND ATTACHED VEHICLE SIGNAL HEADS
		TYPE 1 STANDARD WITH ATTACHED VEHICLE SIGNAL HEADS
		STANDARD WITH A SIGNAL MAST ARM, ATTACHED VEHICLE SIGNAL HEADS AND INTERNALLY ILLUMINATED STREET NAME SIGN
		CONTROLLER ASSEMBLY. DOOR INDICATES FRONT OF CABINET

SIGNAL EQUIPMENT Cont

NEW	EXISTING	
		GUARD POST
		TYPE 1 STANDARD WITH RAMP METERING SIGN
		OPTICAL DETECTOR FOR THE EMERGENCY VEHICLE DETECTION

NOTES:

1. All signal sections shall be 12" unless shown otherwise.
2. Signal heads shall be provided with backplates unless shown otherwise.

ILLUMINATED OVERHEAD SIGN

NEW	EXISTING	
		SINGLE POST, SINGLE ILLUMINATED SIGN, BALANCED BUTTERFLY
		SINGLE POST, DOUBLE ILLUMINATED SIGN, BALANCED BUTTERFLY
		SINGLE POST, SINGLE ILLUMINATED SIGN, FULL CANTILEVER
		DOUBLE POST, SINGLE ILLUMINATED SIGN
		SINGLE ILLUMINATED SIGN MOUNTED ON STRUCTURE
		DOUBLE POST, SINGLE ILLUMINATED SIGN WITH ELECTROLIER

STATE OF CALIFORNIA
DEPARTMENT OF TRANSPORTATION

ELECTRICAL SYSTEMS (LEGEND AND ABBREVIATIONS)

NO SCALE

RSP ES-1B DATED OCTOBER 30, 2015 SUPERSEDES RSP ES-1B DATED JULY 19, 2013 AND STANDARD PLAN ES-1B DATED MAY 20, 2011 - PAGE 426 OF THE STANDARD PLANS BOOK DATED 2010.

REVISED STANDARD PLAN RSP ES-1B

2010 REVISED STANDARD PLAN RSP ES-1B

8-19-15

Dist	COUNTY	ROUTE	POST MILES TOTAL PROJECT	SHEET No.	TOTAL SHEETS
05	SBt	156	R10.0/R18.4	80	89

Theresa Gabriel
REGISTERED ELECTRICAL ENGINEER

April 15, 2016
PLANS APPROVAL DATE

REGISTERED PROFESSIONAL ENGINEER
Theresa Aziz Gabriel
No. E15129
Exp. 6-30-16
ELECTRICAL
STATE OF CALIFORNIA

THE STATE OF CALIFORNIA OR ITS OFFICERS OR AGENTS SHALL NOT BE RESPONSIBLE FOR THE ACCURACY OR COMPLETENESS OF SCANNED COPIES OF THIS PLAN SHEET.

TO ACCOMPANY PLANS DATED 6-20-16

EQUIPMENT IDENTIFICATION

ILLUMINATED SIGN IDENTIFICATION:

SIGN No. 12345
10 ISL SCI 1.0

- SIGN EQUIPMENT IDENTIFICATION CHARACTERS - PLACE ON POST OR STRUCTURE
- TRANSFORMER RATING (kVA)
- LIGHTING CONTROL TYPE
- NUMBER AND TYPE OF FIXTURES

} DO NOT PLACE ON STANDARD OR STRUCTURE

ELECTROLIER OR EQUIPMENT IDENTIFICATION:

L2745 - 15'-0"

- MAST ARM LENGTH, IF SHOWN. DO NOT PLACE ON STANDARD OR STRUCTURE
- EQUIPMENT IDENTIFICATION CHARACTERS - PLACE ON STANDARD OR STRUCTURE. EXISTING EQUIPMENT IDENTIFICATION CHARACTERS ARE SHOWN IN PARENTHESIS

CONDUIT AND CONDUCTOR IDENTIFICATION:

1½"C, 2#10, 15#14, 2 DLC, 12P#18 (PAIR)

- NUMBER AND SIZE OF CONDUCTORS AND CABLES
- SIZE OF CONDUIT IN INCHES

ø1, ø2, ø2P, etc.	TRAFFIC PHASE IDENTIFICATION FOR SIGNALS, DETECTORS AND PHASE DIAGRAMS
1 2 3	LEGEND NUMBERS
A B C	EQUIPMENT, SIGNAL POLES, INSTALLATION OR ITEMS
1 2 3	CONDUIT RUN NUMBERS

SIGNAL AND LIGHTING STANDARD (TYPICAL DESIGNATION):

19A - 3 - 100

- WIND VELOCITY = 100 mph
- CASE 3 ARM LOADING
- STANDARD TYPE
- STANDARD PLAN SHEET NUMBER
- DETAIL, NUMBER, SECTION, TYPE OR ELEVATION

MISCELLANEOUS EQUIPMENT

NEW	EXISTING	
CMS	cms	CHANGEABLE MESSAGE SIGN
		CLOSED CIRCUIT TELEVISION CAMERA
		HIGHWAY ADVISORY RADIO POLE AND ANTENNA
EMS	ems	LED EXTINGUISHABLE MESSAGE SIGN
M V	m v	DETECTION DEVICE M = MICROWAVE SENSOR V = VIDEO IMAGE SENSOR

WIRING DIAGRAM LEGEND

- EXTERNAL CONDUCTOR
- CONDUCTOR OR BUS
- TIE POINT
- CONTACTOR COIL
- CONTACTOR, NO CONTACT
- TERMINAL BLOCKS
- CONTACTOR, NC CONTACT
- ENCLOSURE BOND
- GROUNDING ELECTRODE
- CIRCUIT BREAKER
- RECEPTACLE

PULL BOXES

NEW	EXISTING	
		PULL BOX, No. 5 UNLESS OTHERWISE INDICATED OR NOTED
3	9A(21)	PULL BOX, ADDITIONAL DESIGNATIONS OR DESCRIPTIONS

3 No. 3½ PULL BOX
5 No. 5 PULL BOX
6 No. 6 PULL BOX
7 No. 7 PULL BOX (CEILING)
8 No. 8 PULL BOX
9 No. 9 PULL BOX (STRUCTURE)
9A No. 9A PULL BOX (STRUCTURE)

(C) COMMUNICATIONS PULL BOX
(E) PULL BOX WITH EXTENSION
(S) SPRINKLER CONTROL PULL BOX
(21) ANCHOR BOLTS AND CONDUIT FOR FUTURE INSTALLATION OF TYPE 21 STANDARD
(T) TRAFFIC PULL BOX

VEHICLE DETECTORS

5 J 9 U

- VEHICLE DETECTOR DESIGNATION
- U = UPPER
  L = LOWER
- SLOT NUMBER IN INPUT FILE
- INPUT FILE (I OR J)
- PHASE

NEW	EXISTING	
		TYPE A LOOP DETECTOR. OUTLINE OF SAW CUT SHOWN
		TYPE B LOOP DETECTOR. OUTLINE OF SAW CUT SHOWN
		TYPE C LOOP DETECTOR. OUTLINE OF SAW CUT SHOWN
		TYPE D LOOP DETECTOR. OUTLINE OF SAW CUT SHOWN
		TYPE E LOOP DETECTOR. OUTLINE OF SAW CUT SHOWN
		TYPE Q LOOP DETECTOR. OUTLINE OF SAW CUT SHOWN
DH	dh	DETECTOR HANDHOLE
		MICROWAVE OR VIDEO DETECTION ZONE

STATE OF CALIFORNIA
DEPARTMENT OF TRANSPORTATION

ELECTRICAL SYSTEMS (LEGEND AND ABBREVIATIONS)

NO SCALE

RSP ES-1C DATED APRIL 15, 2016 SUPERSEDES RSP ES-1C DATED OCTOBER 30, 2015 AND RSP ES-1C DATED JULY 19, 2013 AND STANDARD PLAN ES-1C DATED MAY 20, 2011 - PAGE 427 OF THE STANDARD PLANS BOOK DATED 2010.

REVISED STANDARD PLAN RSP ES-1C

2010 REVISED STANDARD PLAN RSP ES-1C

1-22-16

Dist	COUNTY	ROUTE	POST MILES TOTAL PROJECT	SHEET No.	TOTAL SHEETS
05	SBt	156	R10.0/R18.4	81	89

Theresa Gabriel
REGISTERED ELECTRICAL ENGINEER

April 15, 2016
PLANS APPROVAL DATE

REGISTERED PROFESSIONAL ENGINEER
Theresa Aziz Gabriel
No. E15129
Exp. 6-30-16
ELECTRICAL
STATE OF CALIFORNIA

THE STATE OF CALIFORNIA OR ITS OFFICERS OR AGENTS SHALL NOT BE RESPONSIBLE FOR THE ACCURACY OR COMPLETENESS OF SCANNED COPIES OF THIS PLAN SHEET.

TO ACCOMPANY PLANS DATED 6-20-16

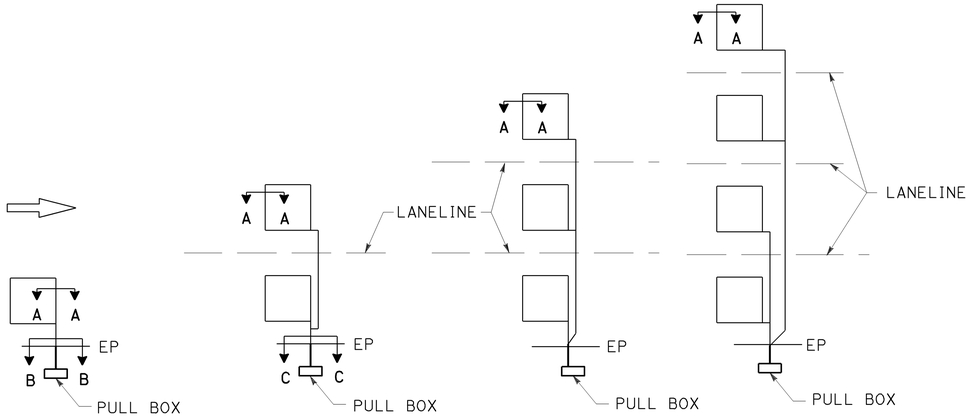

SAW CUT DETAILS

Type A loop detector configurations illustrated

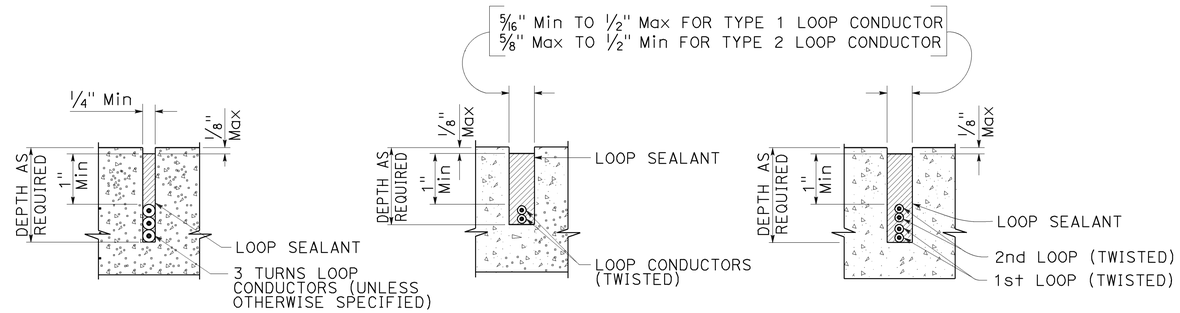

SECTION A-A SECTION B-B SECTION C-C

SLOT DETAILS - TYPE 1 AND TYPE 2 LOOP CONDUCTOR

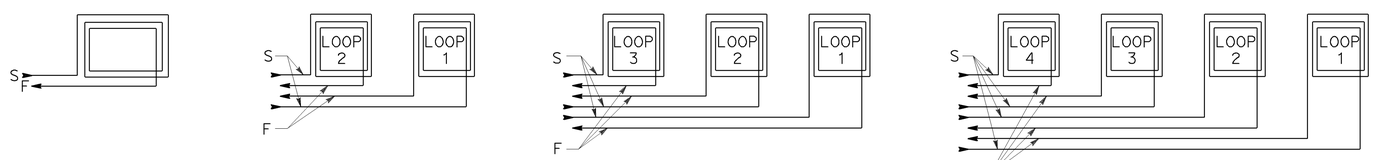

WINDING DETAILS

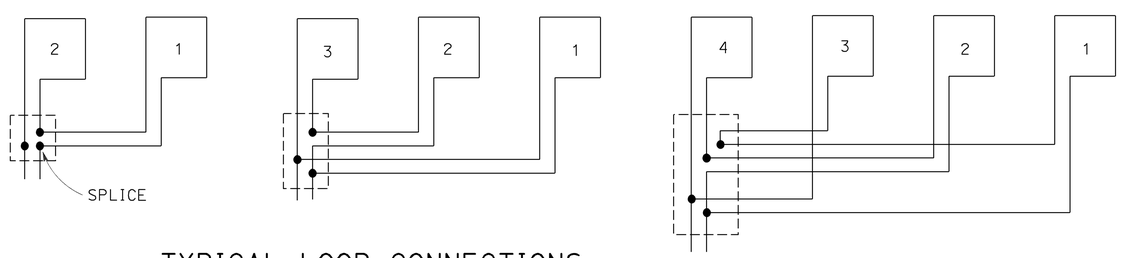

TYPICAL LOOP CONNECTIONS

Dashed lines represent the pull box

ABBREVIATIONS:

S - START
F - FINISH

STATE OF CALIFORNIA
DEPARTMENT OF TRANSPORTATION

ELECTRICAL SYSTEMS (LOOP DETECTORS)

NO SCALE

RSP ES-5A DATED APRIL 15, 2016 SUPERSEDES RSP ES-5A DATED OCTOBER 30, 2015 AND STANDARD PLAN ES-5A DATED MAY 20, 2011 - PAGE 448 OF THE STANDARD PLANS BOOK DATED 2010.

REVISED STANDARD PLAN RSP ES-5A

2010 REVISED STANDARD PLAN RSP ES-5A

1-12-16

Dist	COUNTY	ROUTE	POST MILES TOTAL PROJECT	SHEET No.	TOTAL SHEETS
05	SBt	156	R10.0/R18.4	82	89

Theresa Gabriel
REGISTERED ELECTRICAL ENGINEER

April 15, 2016
PLANS APPROVAL DATE

REGISTERED PROFESSIONAL ENGINEER
Theresa Aziz Gabriel
No. E15129
Exp. 6-30-16
ELECTRICAL
STATE OF CALIFORNIA

THE STATE OF CALIFORNIA OR ITS OFFICERS OR AGENTS SHALL NOT BE RESPONSIBLE FOR THE ACCURACY OR COMPLETENESS OF SCANNED COPIES OF THIS PLAN SHEET.

TO ACCOMPANY PLANS DATED 6-20-16

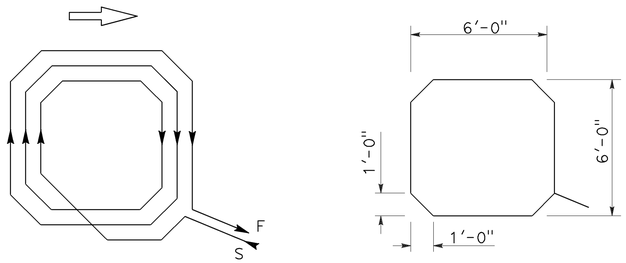

WINDING DETAIL SAW CUT DETAIL

TYPE A LOOP DETECTOR CONFIGURATION

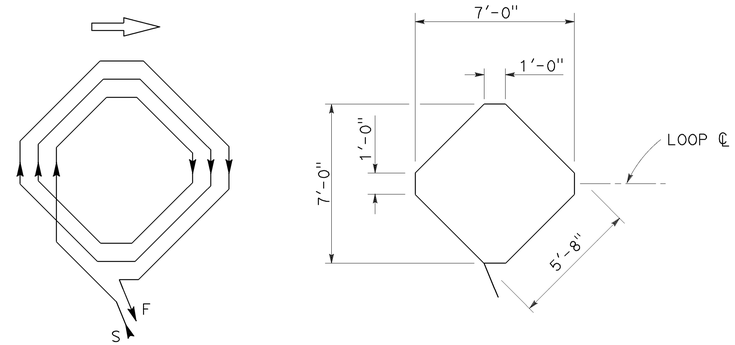

WINDING DETAIL SAW CUT DETAIL

TYPE B LOOP DETECTOR CONFIGURATION

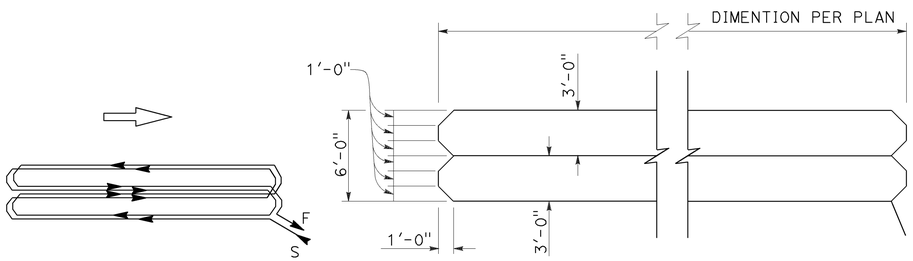

WINDING DETAIL SAW CUT DETAIL

TYPE C LOOP DETECTOR CONFIGURATION

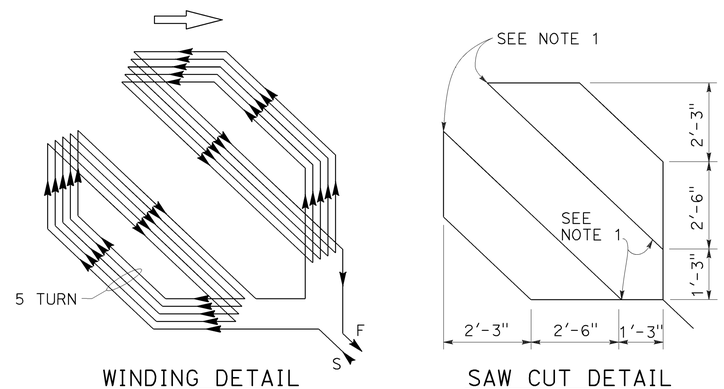

WINDING DETAIL SAW CUT DETAIL

TYPE D LOOP DETECTOR CONFIGURATION

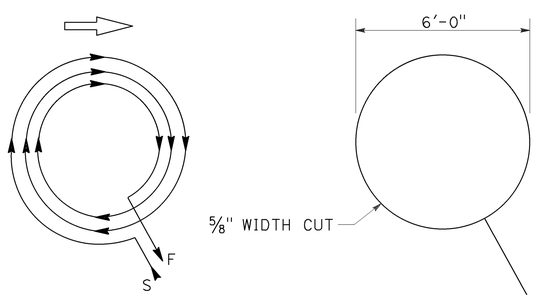

WINDING DETAIL SAW CUT DETAIL

TYPE E LOOP DETECTOR CONFIGURATION

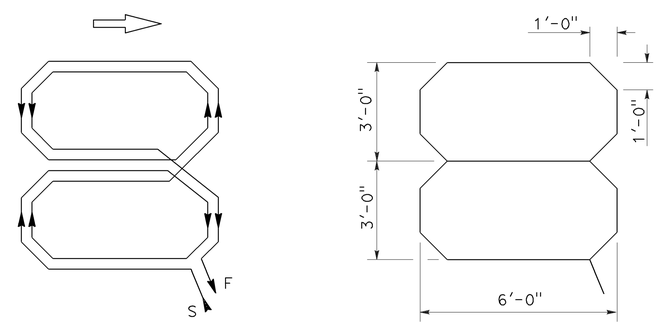

WINDING DETAIL SAW CUT DETAIL

TYPE Q LOOP DETECTOR CONFIGURATION

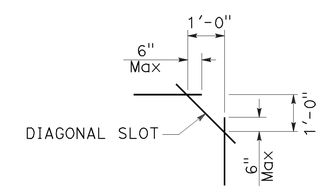

PLAN VIEW OF DIAGONAL SLOT AT CORNERS

NOTES:

1. Round corners of acute angle saw cuts to prevent damage to conductors.
2. Typical distance separating loops from edge to edge is 10' for Type A, B, D and E installation in single lane.
3. Use Type D loops for limit line detection and bicycle lanes.

STATE OF CALIFORNIA
DEPARTMENT OF TRANSPORTATION

ELECTRICAL SYSTEMS (DETECTORS)

NO SCALE

RSP ES-5B DATED APRIL 15, 2016 SUPERSEDES RSP ES-5B DATED OCTOBER 30, 2015 AND RSP ES-5B DATED JULY 19, 2013 AND STANDARD PLAN ES-5B DATED MAY 20, 2011 - PAGE 449 OF THE STANDARD PLANS BOOK DATED 2010.

REVISED STANDARD PLAN RSP ES-5B

2010 REVISED STANDARD PLAN RSP ES-5B

Dist	COUNTY	ROUTE	POST MILES TOTAL PROJECT	SHEET No.	TOTAL SHEETS
05	SBt	156	R10.0/R18.4	83	89

Theresa Gabriel
REGISTERED ELECTRICAL ENGINEER

October 30, 2015
PLANS APPROVAL DATE

REGISTERED PROFESSIONAL ENGINEER
Theresa Aziz Gabriel
No. E15129
Exp. 6-30-16
ELECTRICAL
STATE OF CALIFORNIA

THE STATE OF CALIFORNIA OR ITS OFFICERS OR AGENTS SHALL NOT BE RESPONSIBLE FOR THE ACCURACY OR COMPLETENESS OF SCANNED COPIES OF THIS PLAN SHEET.

TO ACCOMPANY PLANS DATED 6-20-16

NOTES:

1. Back casting shape to fit curvature of pole.
2. Provide cover fitting for top of post, when PBA is mounted on push button assembly post.
3. Install push button on crosswalk side of standard.
4. Use R10 series regulatory signs and plaques for pedestrian and bicycle facilities.

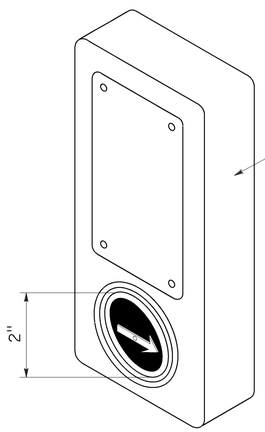

ACCESSIBLE PEDESTRIAN SIGNAL

DETAIL A

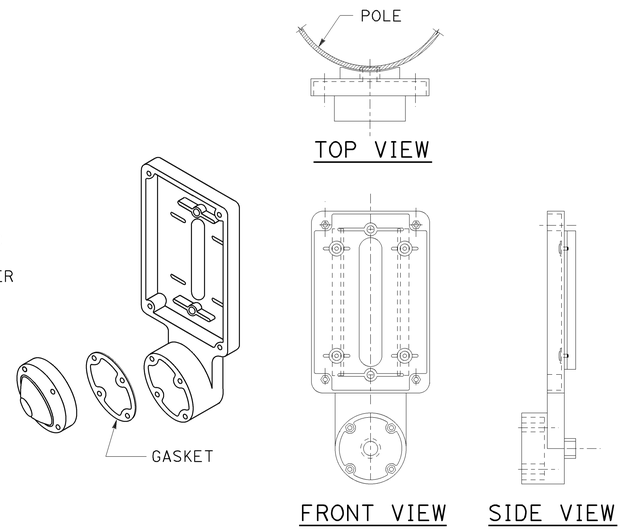

TYPE B PUSH BUTTON ASSEMBLY

DETAIL B

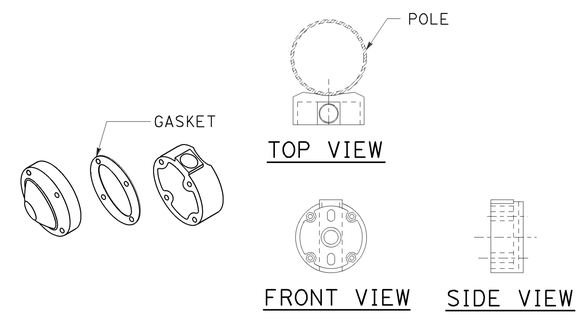

TYPE C PUSH BUTTON ASSEMBLY

DETAIL C

STATE OF CALIFORNIA
DEPARTMENT OF TRANSPORTATION

ELECTRICAL SYSTEMS (ACCESSIBLE PEDESTRIAN SIGNAL AND PUSH BUTTON ASSEMBLIES)

NO SCALE

RSP ES-5C DATED OCTOBER 30, 2015 SUPERSEDES RSP ES-5C DATED JULY 19, 2013 AND STANDARD PLAN ES-5C DATED MAY 20, 2011 - PAGE 450 OF THE STANDARD PLANS BOOK DATED 2010.

REVISED STANDARD PLAN RSP ES-5C

2010 REVISED STANDARD PLAN RSP ES-5C

8-24-15

Dist	COUNTY	ROUTE	POST MILES TOTAL PROJECT	SHEET No.	TOTAL SHEETS
05	SBt	156	R10.0/R18.4	84	89

Theresa Gabriel
REGISTERED ELECTRICAL ENGINEER

October 30, 2015
PLANS APPROVAL DATE

REGISTERED PROFESSIONAL ENGINEER Theresa Aziz Gabriel No. E15129 Exp. 6-30-16 ELECTRICAL STATE OF CALIFORNIA

THE STATE OF CALIFORNIA OR ITS OFFICERS OR AGENTS SHALL NOT BE RESPONSIBLE FOR THE ACCURACY OR COMPLETENESS OF SCANNED COPIES OF THIS PLAN SHEET.

TO ACCOMPANY PLANS DATED 6-20-16

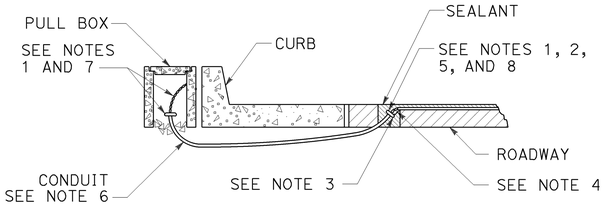

TYPE A
CURB TERMINATION DETAIL

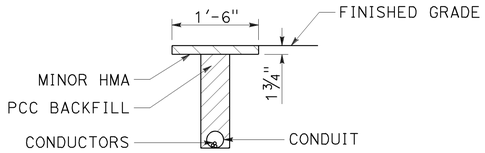

"T" TRENCH
DETAIL T

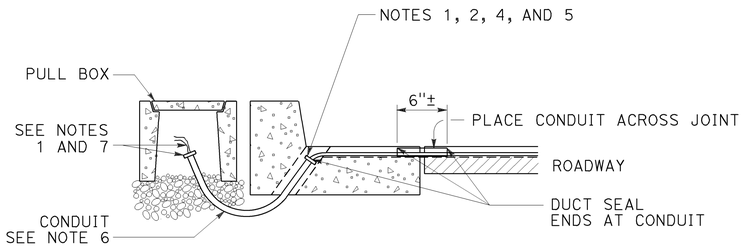

CROSS SECTION

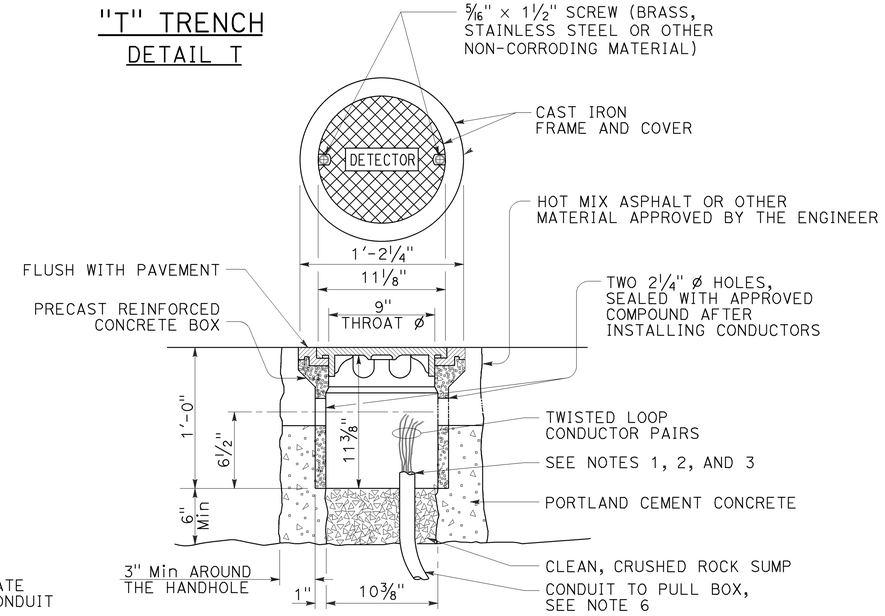

DETECTOR HANDHOLE DETAIL

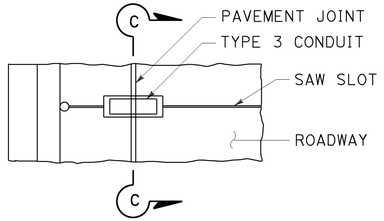

PLAN VIEW

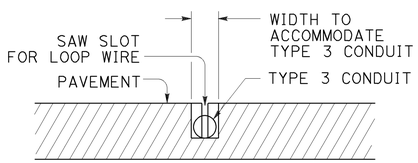

SECTION C-C

TYPE B
CURB TERMINATION DETAIL

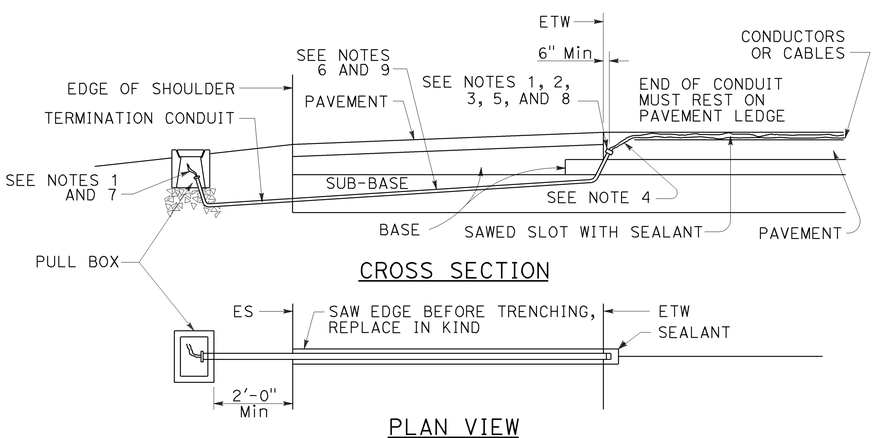

CROSS SECTION

PLAN VIEW

SHOULDER TERMINATION DETAILS

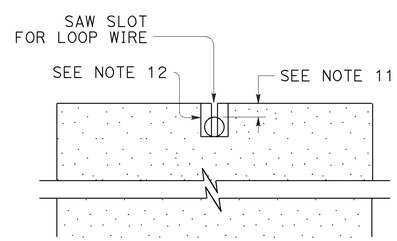

SECTION A-A

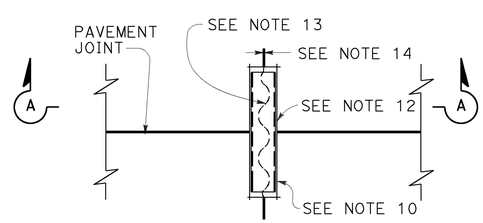

PLAN VIEW

TYPICAL LOOP LEAD-IN DETAIL AT PAVEMENT JOINT

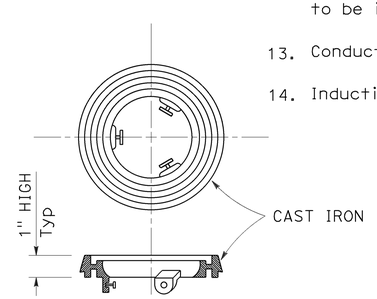

LOCKING GRADE RING

NOTES:

1. Bushing shall be used at end of conduit.
2. Tape detector conductors or cables 3" each side of bushings.
3. Install duct seal compound to each end of termination conduit before installing sealant.
4. Round all sharp edges where detector conductors or cables have to pass.
5. End of conduit shall be 3⅛" below roadway surface.
6.

Conduit size	Loop conductors
1"C minimum	1 to 2 pairs
1½"C minimum	3 to 4 pairs
2"C minimum	5 or more pairs

7. Splice detector conductors or cables to detector lead-in-cable.
8. Location of detector handhole when shown on plans.
9. When the shoulder and traveled way are paved with the same material and there is no joint between them, the conduit shall extend only 2'-0" into the shoulder pavement.
10. ¾"C, Type 3 conduit 6" long minimum, plug both ends with duct compound to keep out sealant.
11. ½" Minimum between top of conduit and pavement surface.
12. Sawcut shall not exceed 1" in width and ⅛" longer than conduit to be installed.
13. Conductors with ½" minimum slack inside conduit.
14. Inductive loop detector saw slot.

STATE OF CALIFORNIA
DEPARTMENT OF TRANSPORTATION

ELECTRICAL SYSTEMS (CURB AND SHOULDER TERMINATION, TRENCH, AND HANDHOLE DETAILS)

NO SCALE

RSP ES-5D DATED OCTOBER 30, 2015 SUPERSEDES RSP ES-5D DATED JULY 19, 2013 AND STANDARD PLAN ES-5D DATED MAY 20, 2011 - PAGE 451 OF THE STANDARD PLANS BOOK DATED 2010.

REVISED STANDARD PLAN RSP ES-5D

2010 REVISED STANDARD PLAN RSP ES-5D

8-19-15

Dist	COUNTY	ROUTE	POST MILES TOTAL PROJECT	SHEET No.	TOTAL SHEETS
05	SBt	156	R10.0/R18.4	85	89

REGISTERED CIVIL ENGINEER

July 15, 2016
PLANS APPROVAL DATE

REGISTERED PROFESSIONAL ENGINEER
Stanley P. Johnson
No. C57793
Exp. 3-31-18
CIVIL
STATE OF CALIFORNIA

THE STATE OF CALIFORNIA OR ITS OFFICERS OR AGENTS SHALL NOT BE RESPONSIBLE FOR THE ACCURACY OR COMPLETENESS OF SCANNED COPIES OF THIS PLAN SHEET.

TO ACCOMPANY PLANS DATED 6-20-16

2010 REVISED STANDARD PLAN RSP ES-7A

NOTES:

1. For additional notes, details and data for Type 15TS and Type 21TS Standards, see Revised Standard Plan RSP ES-6A.
2. Handhole shall be located on the downstream side of traffic.

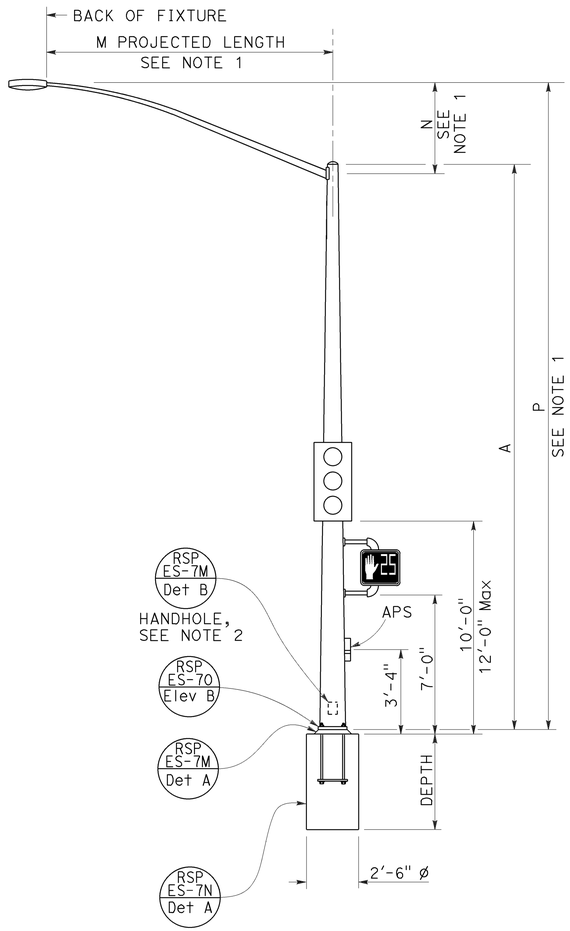

TYPE 15TS AND 21TS STANDARD

ELEVATION A

(See Note 1)

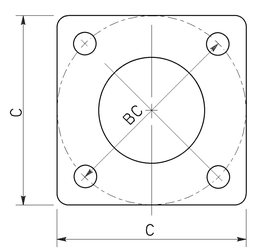

BASE PLATE

TYPE 15TS AND 21TS

DETAIL A

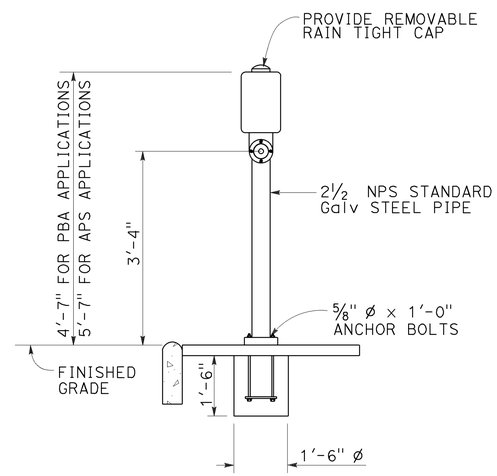

ELEVATION

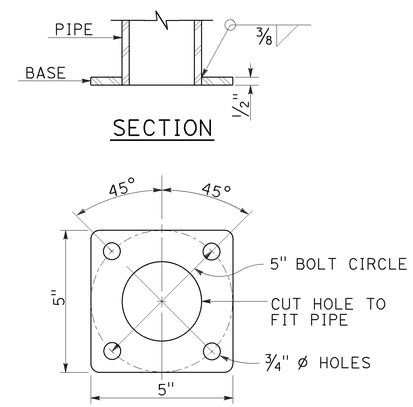

BASE PLATE

PBA POST

PUSH BUTTON ASSEMBLY POST

DETAIL B

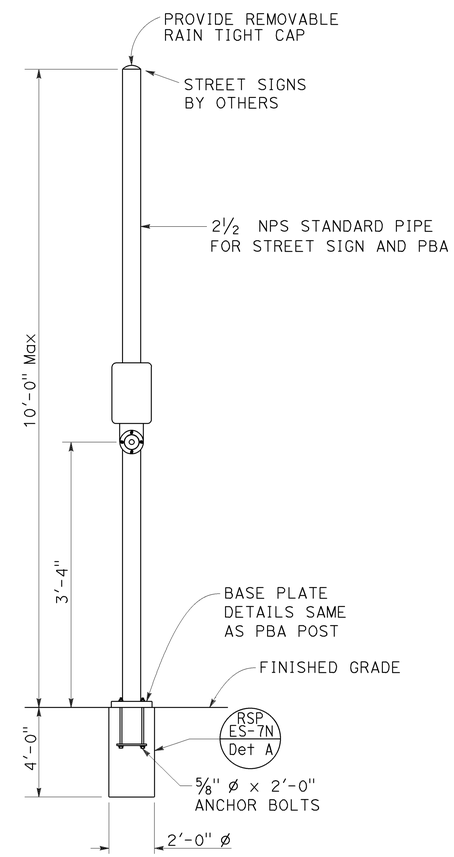

COMBINED STREET SIGN
PUSH BUTTON ASSEMBLY POST

DETAIL C

POLE TYPE	POLE DATA				BASE PLATE DATA				CIDH
	A HEIGHT	Min OD BASE	Min OD TOP	WALL THICKNESS	C	BC = BOLT CIRCLE	THICKNESS	ANCHOR BOLT SIZE	DEPTH
15TS	30'-0"	8"	3 11/16"	0.1793"	1'-1½"	1'-0"	2"	1½" ø x 42"	7'-6"
21TS	35'-0"	9⅜"	3 9/16"		1'-3"	1'-2"			8'-6"

STATE OF CALIFORNIA
DEPARTMENT OF TRANSPORTATION

ELECTRICAL SYSTEMS (SIGNAL AND LIGHTING STANDARD, TYPE TS, AND PUSH BUTTON ASSEMBLY POST)

NO SCALE

RSP ES-7A DATED JULY 15, 2016 SUPERSEDES RSP ES-7A
DATED OCTOBER 30, 2015 AND RSP ES-7A DATED JULY 19, 2013 AND
STANDARD PLAN ES-7A DATED MAY 20, 2011 - PAGE 462 OF THE STANDARD PLANS BOOK DATED 2010.

REVISED STANDARD PLAN RSP ES-7A

DIST	COUNTY	ROUTE	POST MILES TOTAL PROJECT	SHEET NO.	TOTAL SHEETS
05	SBt	156	R10.0/R18.4	86	89

Theresa Gabriel
REGISTERED ELECTRICAL ENGINEER

April 15, 2016
PLANS APPROVAL DATE

REGISTERED PROFESSIONAL ENGINEER
Theresa Aziz Gabriel
No. E15129
Exp. 6-30-16
ELECTRICAL
STATE OF CALIFORNIA

THE STATE OF CALIFORNIA OR ITS OFFICERS OR AGENTS SHALL NOT BE RESPONSIBLE FOR THE ACCURACY OR COMPLETENESS OF SCANNED COPIES OF THIS PLAN SHEET.

TO ACCOMPANY PLANS DATED 6-20-16

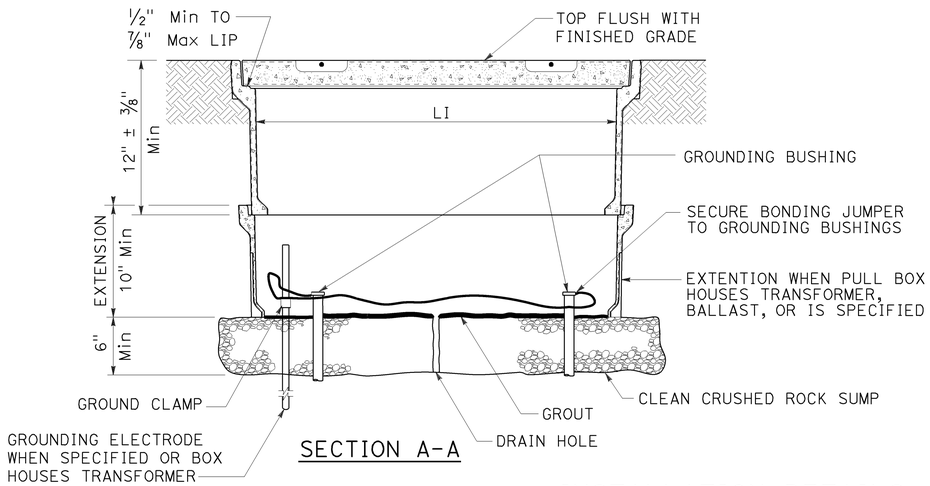

SECTION A-A

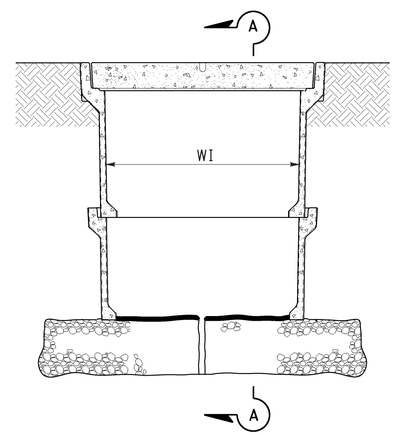

SIDE VIEW

INSTALLATION DETAILS

DETAIL A

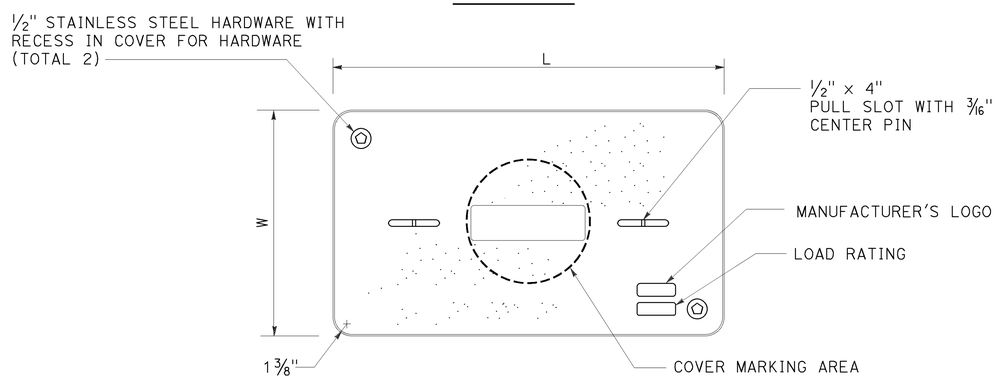

COVER TOP VIEW

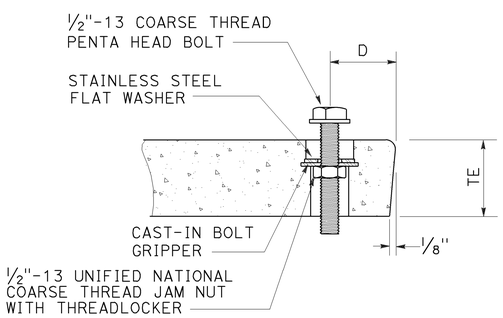

TYPICAL COVER CAPTIVE BOLT

OR SIMILAR

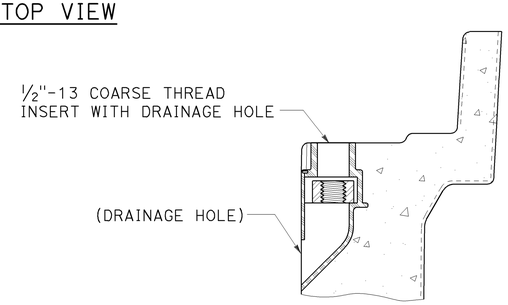

TYPICAL THREADED INSERT

OR SIMILAR

NOTES:

1. The nominal dimensions of the opening in which the cover sets shall be the same as the cover dimensions except the length and width dimensions shall be 1/8" greater.
2. Covers and boxes shall be interchangeable with California standard male and female gages. When interchanged with a standard male or female gage, the top surfaces shall be flush within 1/8". Top outside radius of covers and pull boxes shall have a 1/8" radius.
3. Dimensions for the cover for non-traffic pull box are nominal values.

DIMENSION TABLE

PULL BOX	PULL BOX					COVER				
	MINIMUM DEPTH BOX	MINIMUM DEPTH EXTENSION	MINIMUM WEIGHT	LI Min	WI Min	TE	D	L	W	MINIMUM WEIGHT
No. 3 1/2	12"	N/A	40 lb	1' - 3"	9"	1 3/4"	1 3/4"	1'-3 1/4" - 1'-3 3/8"	10" - 10 1/8"	30 lb
No. 5	12"	10"	55 lb	1' - 8"	11"	2"	1 3/4"	1'-11 1/4"	1'-1 3/4"	60 lb
No. 6	12"	10"	70 lb	2' - 4 1/4"	1' - 3 1/4"	2"	2"	2'-6 1/2"	1'-5 1/2"	85 lb

STATE OF CALIFORNIA
DEPARTMENT OF TRANSPORTATION

ELECTRICAL SYSTEMS (NON-TRAFFIC PULL BOX)

NO SCALE

RSP ES-8A DATED APRIL 15, 2016 SUPERSEDES RSP ES-8A DATED OCTOBER 30, 2015 AND RSP ES-8A DATED JULY 19, 2013 AND RSP ES-8A DATED JANUARY 20, 2012 THAT SUPPLEMENTS THE STANDARD PLANS BOOK DATED 2010.

REVISED STANDARD PLAN RSP ES-8A

2010 REVISED STANDARD PLAN RSP ES-8A

1-22-16

Dist	COUNTY	ROUTE	POST MILES TOTAL PROJECT	SHEET No.	TOTAL SHEETS
05	SBt	156	R10.0/R18.4	87	89

Theresa Gabriel
REGISTERED ELECTRICAL ENGINEER

October 30, 2015
PLANS APPROVAL DATE

REGISTERED PROFESSIONAL ENGINEER
Theresa Aziz Gabriel
No. E15129
Exp. 6-30-16
ELECTRICAL
STATE OF CALIFORNIA

THE STATE OF CALIFORNIA OR ITS OFFICERS OR AGENTS SHALL NOT BE RESPONSIBLE FOR THE ACCURACY OR COMPLETENESS OF SCANNED COPIES OF THIS PLAN SHEET.

TO ACCOMPANY PLANS DATED 6-20-16

NOTE:

Curves represent the minimum footcandle (FC).

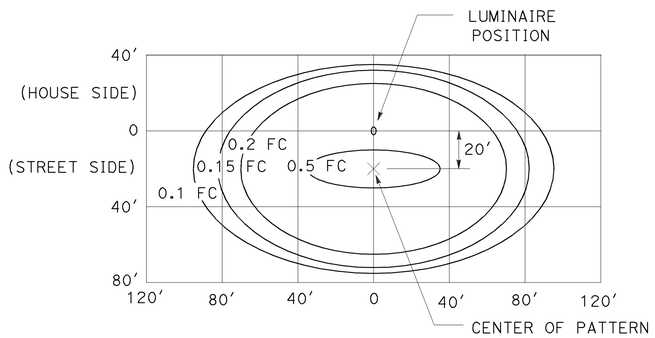

LED LUMINAIRE 165 W
34′ Mounting Height

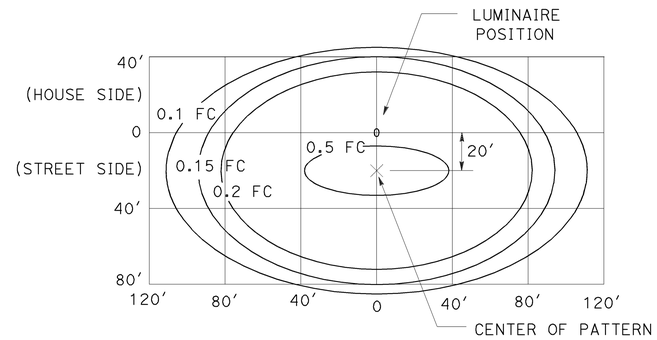

LED LUMINAIRE 235 W
40′ Mounting Height

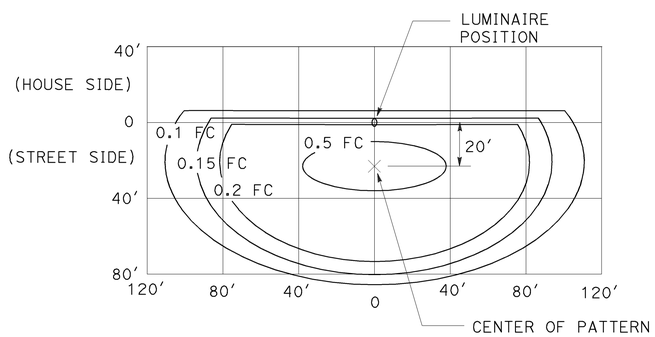

LED LUMINAIRE 235 W
40′ Mounting Height
with back side control

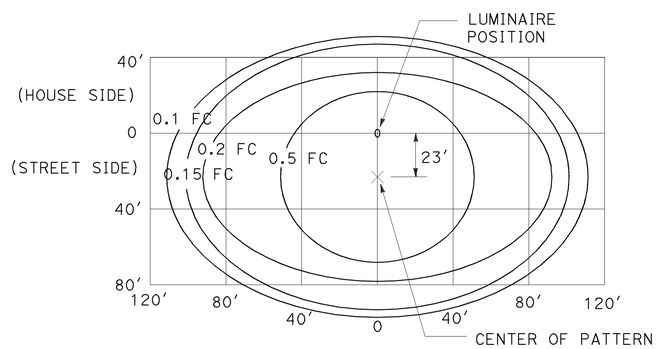

LED LUMINAIRE 300 W
40′ Mounting Height

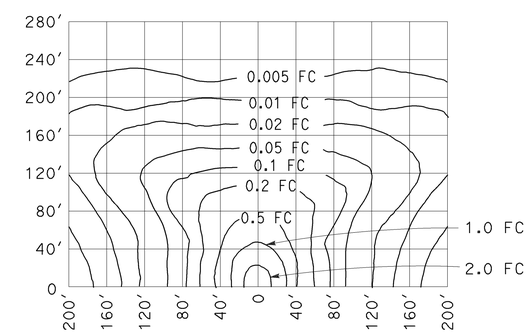

LOW-PRESSURE SODIUM LUMINAIRE 180 W
40′ Mounting Height
Lamp operated at 33,000 lm

STATE OF CALIFORNIA
DEPARTMENT OF TRANSPORTATION

ELECTRICAL SYSTEMS (ISOFOOTCANDLE CURVES)

NO SCALE

RSP ES-10A DATED OCTOBER 30, 2015 SUPERSEDES RSP ES-10A DATED JULY 19, 2013 THAT SUPPLEMENTS THE STANDARD PLANS BOOK DATED 2010.

REVISED STANDARD PLAN RSP ES-10A

2010 REVISED STANDARD PLAN RSP ES-10A

9-29-15

Dist	COUNTY	ROUTE	POST MILES TOTAL PROJECT	SHEET No.	TOTAL SHEETS
05	SBt	156	R10.0/R18.4	88	89

Theresa Gabriel
REGISTERED ELECTRICAL ENGINEER

April 15, 2016
PLANS APPROVAL DATE

REGISTERED PROFESSIONAL ENGINEER Theresa Aziz Gabriel No. E15129 Exp. 6-30-16 ELECTRICAL STATE OF CALIFORNIA

THE STATE OF CALIFORNIA OR ITS OFFICERS OR AGENTS SHALL NOT BE RESPONSIBLE FOR THE ACCURACY OR COMPLETENESS OF SCANNED COPIES OF THIS PLAN SHEET.

TO ACCOMPANY PLANS DATED 6-20-16

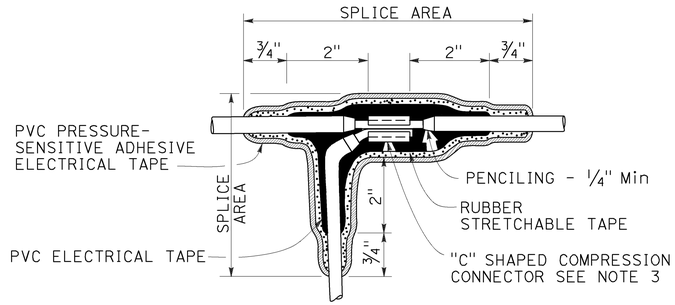

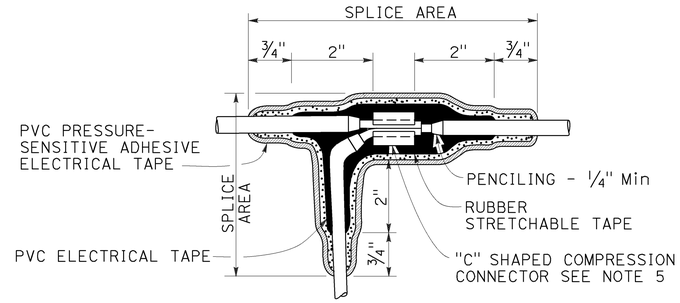

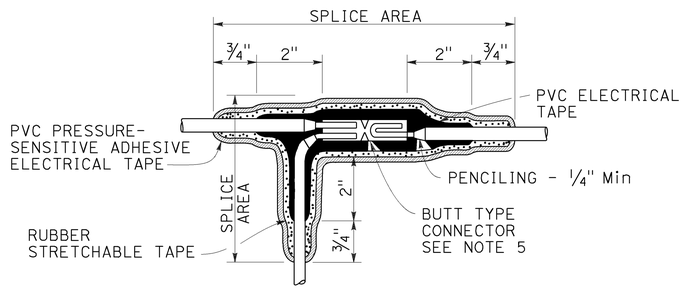

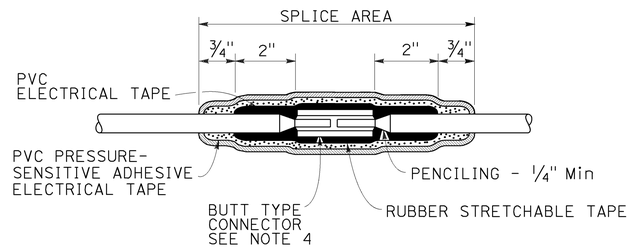

TYPICAL SPLICE INSULATION METHOD B

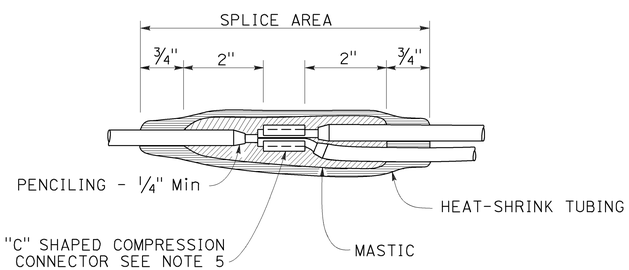

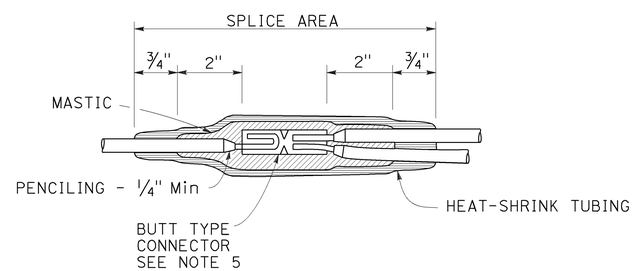

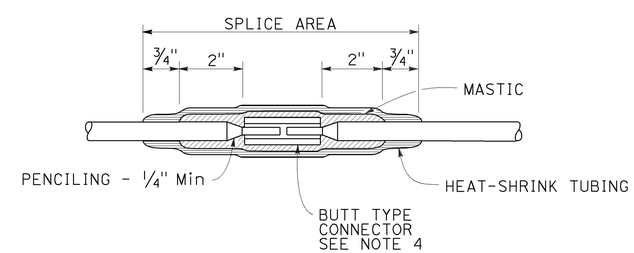

TYPICAL SPLICE INSULATION HEAT-SHRINK TUBING

NOTES:

1. Dimensions are minimum.
2. Rubber tapes shall be rolled after application.
3. Between 1 free-end and 1 through conductor.
4. Between 2 free-end conductors.
5. Between 3 free-end conductors.

STATE OF CALIFORNIA
DEPARTMENT OF TRANSPORTATION

ELECTRICAL SYSTEMS (SPLICE INSULATION METHODS DETAILS)

NO SCALE

RSP ES-13A DATED APRIL 15, 2016 SUPERSEDES RSP ES-13A DATED OCTOBER 30, 2015 AND STANDARD PLAN ES-13A DATED MAY 20, 2011 - PAGE 491 OF THE STANDARD PLANS BOOK DATED 2010.

REVISED STANDARD PLAN RSP ES-13A

2010 REVISED STANDARD PLAN RSP ES-13A

1-22-16

Dist	COUNTY	ROUTE	POST MILES TOTAL PROJECT	SHEET No.	TOTAL SHEETS
05	SBt	156	R10.0/R18.4	89	89

Theresa Gabriel
REGISTERED ELECTRICAL ENGINEER

April 15, 2016
PLANS APPROVAL DATE

REGISTERED PROFESSIONAL ENGINEER
Theresa Aziz Gabriel
No. E15129
Exp. 6-30-16
ELECTRICAL
STATE OF CALIFORNIA

THE STATE OF CALIFORNIA OR ITS OFFICERS OR AGENTS SHALL NOT BE RESPONSIBLE FOR THE ACCURACY OR COMPLETENESS OF SCANNED COPIES OF THIS PLAN SHEET.

TO ACCOMPANY PLANS DATED 6-20-16

CIRCUIT VOLTAGE	FUSE VOLTAGE RATING	FUSE CURRENT RATING						
		HPS LAMP BALLAST		LOW PRESSURE SODIUM BALLAST	INDUCTION SIGN LIGHTING	SINGLE PHASE (TWO WIRE) TRANSFORMERS (PRIMARY SIDE)		
		70 W	100 W	180 W	85 W	1 kVA	2 kVA	3 kVA
120 V	250 V	5 A	5 A	5 A	5 A	10 A	20 A	30 A
240 V	250 V	5 A	5 A	5 A	5 A	6 A	10 A	20 A
480 V	500-600 V	5 A	5 A	3 A	1 A (SEE NOTE 2)	3 A	6 A	10 A

NOTES:

1. Primary lines of multiple ballasts shall be provided with fused connectors. Fuse ratings shall be as noted above.
2. See Revised Standard Plan RSP ES-15D, Type SC3 control.

FUSE RATINGS FOR FUSED CONNECTORS

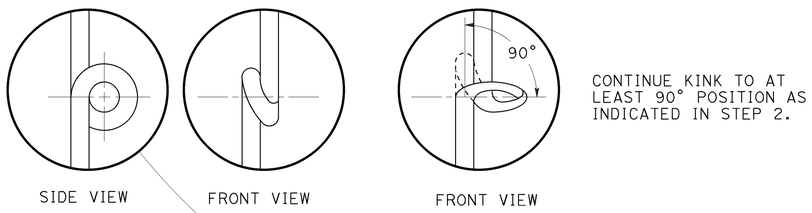

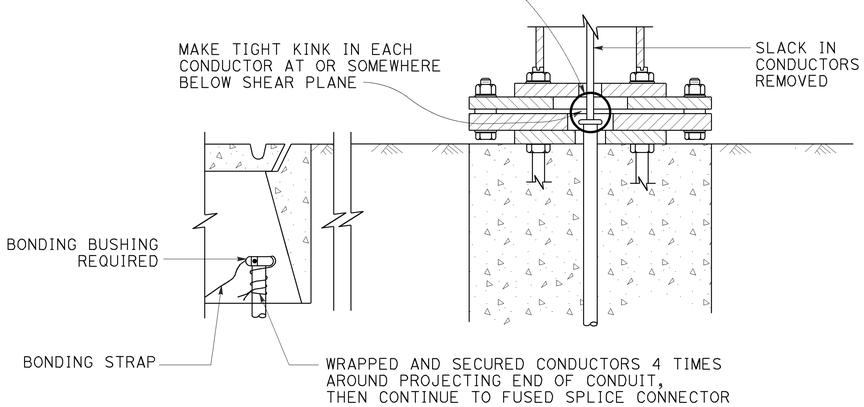

KINKING DETAIL FOR SLIP BASE STANDARDS

DETAIL A

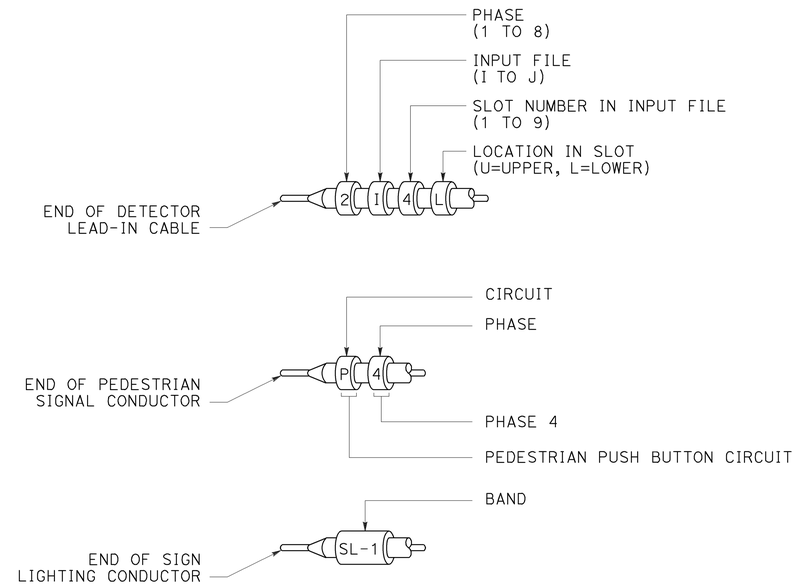

TYPICAL BANDING DETAILS

DETAIL B

STATE OF CALIFORNIA
DEPARTMENT OF TRANSPORTATION

ELECTRICAL SYSTEMS (FUSE RATING, KINKING AND BANDING DETAIL)

NO SCALE

RSP ES-13B DATED APRIL 15, 2016 SUPERSEDES STANDARD PLAN ES-13B DATED MAY 20, 2011 - PAGE 492 OF THE STANDARD PLANS BOOK DATED 2010.

REVISED STANDARD PLAN RSP ES-13B

2010 REVISED STANDARD PLAN RSP ES-13B

1-12-16