Dist	COUNTY	ROUTE	POST MILES TOTAL PROJECT	SHEET No.	TOTAL SHEETS
05	SBt	156	0.0/3.0	1	113

STATE OF CALIFORNIA
DEPARTMENT OF TRANSPORTATION

ACNHP-P156(021)E

PROJECT PLANS FOR CONSTRUCTION ON
STATE HIGHWAY

IN SAN BENITO COUNTY
IN AND NEAR SAN JUAN BAUTISTA FROM
ROUTE 156/101 SEPARATION TO THE ALAMEDA

TO BE SUPPLEMENTED BY STANDARD PLANS DATED 2010

INDEX OF PLANS

SHEET No.	DESCRIPTION
1	TITLE
2-4	TYPICAL SECTIONS
5-23	CONSTRUCTION DETAILS
24	CONSTRUCTION AREA SIGNS
25-27	MOTORIST INFORMATION PLAN
28	TRAFFIC HANDLING DETAILS
29	TRAFFIC HANDLING QUANTITIES
30-33	PAVEMENT DELINEATION QUANTITIES
34-38	SIGN QUANTITIES
39-42	SUMMARY OF QUANTITIES
43-47	ELECTRICAL PLANS
48-104	REVISED STANDARD PLANS

STRUCTURE PLANS

105-113 WASHINGTON St UC Br No. 43-0030 R/L

THE STANDARD PLANS LIST APPLICABLE TO CONTRACT IS INCLUDED IN THE NOTICE TO BIDDERS AND SPECIAL PROVISIONS BOOK.

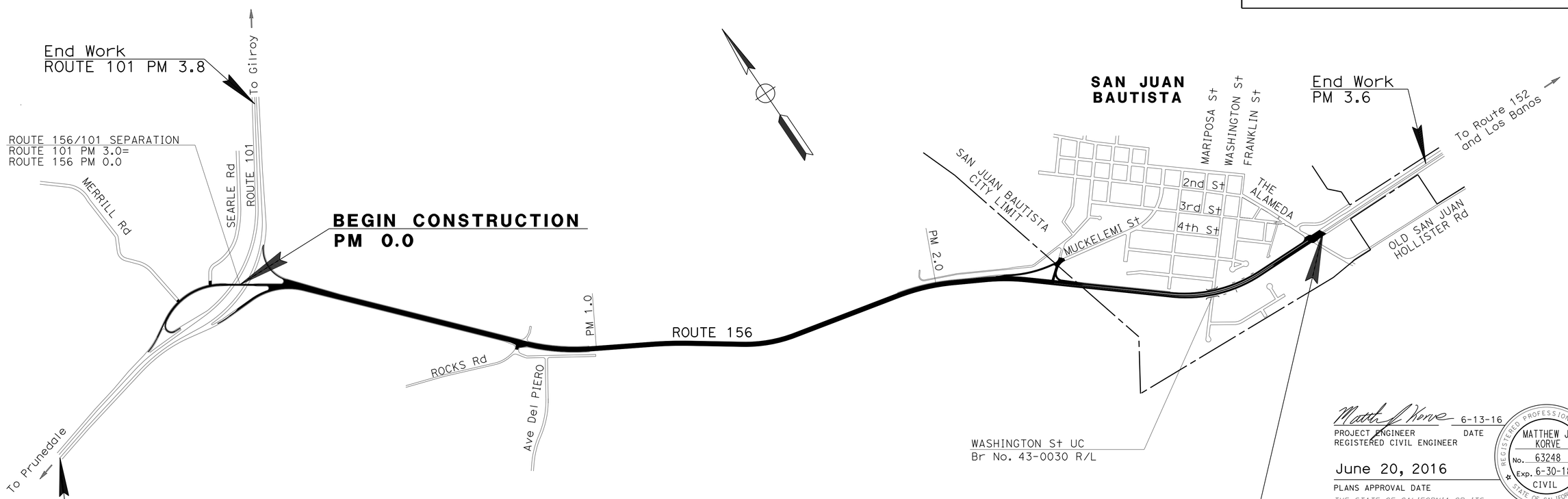

NO SCALE

THE CONTRACTOR SHALL POSSESS THE CLASS (OR CLASSES) OF LICENSE AS SPECIFIED IN THE "NOTICE TO BIDDERS."

APPROVED AS TO IMPACT ON STATE FACILITIES AND CONFORMANCE WITH APPLICABLE STATE STANDARDS AND PRACTICES AND THAT TECHNICAL OVERSIGHT WAS PERFORMED.

CONSULTANT DESIGN MANAGER: MATTHEW J. KORVE
REGISTRATION No. C57457 — LICENSE Exp DATE 12-31-17
CALTRANS DESIGN OVERSIGHT APPROVAL: STEVEN McDONALD — DATE SIGNED

Matthew J. Korve 6-13-16
PROJECT ENGINEER REGISTERED CIVIL ENGINEER — DATE

REGISTERED PROFESSIONAL ENGINEER
MATTHEW J. KORVE
No. 63248
Exp. 6-30-18
CIVIL
STATE OF CALIFORNIA

June 20, 2016
PLANS APPROVAL DATE

THE STATE OF CALIFORNIA OR ITS OFFICERS OR AGENTS SHALL NOT BE RESPONSIBLE FOR THE ACCURACY OR COMPLETENESS OF SCANNED COPIES OF THIS PLAN SHEET.

AECOM
2020 L STREET, SUITE 400
SACRAMENTO, CA 95811

CALTRANS DISTRICT 5
2015 EAST SHIELDS AVENUE, SUITE 100
FRESNO, CA 93726

CONTRACT No.	05-1C8704
PROJECT ID	0513000005

LAST REVISION 06-06-16 — DATE PLOTTED => 10-AUG-2016 TIME PLOTTED => 1421

Dist	COUNTY	ROUTE	POST MILES TOTAL PROJECT	SHEET No.	TOTAL SHEETS
05	SBt	156	0.0/3.0	2	113

REGISTERED CIVIL ENGINEER 6-13-16 DATE

6-20-16
PLANS APPROVAL DATE

REGISTERED PROFESSIONAL ENGINEER MATTHEW J. KORVE No. 63248 Exp. 6-30-18 CIVIL STATE OF CALIFORNIA

THE STATE OF CALIFORNIA OR ITS OFFICERS OR AGENTS SHALL NOT BE RESPONSIBLE FOR THE ACCURACY OR COMPLETENESS OF SCANNED COPIES OF THIS PLAN SHEET.

AECOM
2020 L STREET
SUITE 400
SACRAMENTO, CA 95811

NOTES:

1. DIMENSIONS OF THE PAVEMENT STRUCTURES (STRUCTURAL SECTIONS) ARE SUBJECT TO TOLERANCES SPECIFIED IN THE STANDARD SPECIFICATIONS.
2. PLACE TAPERED EDGE OUTSIDE THE LIMITS OF DIKES, MIDWEST GUARDRAIL SYSTEM, CONCRETE BARRIERS, AND INTERSECTIONS, PER REVISED STANDARD PLAN RSP P74-P75.
3. EXACT LOCATIONS AND TYPE OF HMA DIKE, MIDWEST GUARDRAIL SYSTEM, VEGETATION CONTROL, SHOULDER BACKING, RUMBLE STRIP AND REMOVAL OF EXISTING FEATURES, SEE CONSTRUCTION DETAILS AND SUMMARY OF QUANTITIES SHEETS.
4. FOR ACCURATE RIGHT OF WAY DATA, CONTACT RIGHT OF WAY ENGINEERING AT THE DISTRICT OFFICE.
5. CONFORM FINISHED GRADE TO EXISTING DRAINAGE INLETS, OVERSIDE DRAINS, AND OTHER FEATURES AS SHOWN OR AS DIRECTED BY THE ENGINEER.
6. FOR REPAIR FAILED AREA DETAIL AND LOCATIONS, SEE CONSTRUCTION DETAILS SHEET C-5 AND SUMMARY OF QUANTITIES SHEET Q-4.

ABBREVIATION:

TE TAPERED EDGE

DESIGN DESIGNATION

ROUTE 156

ADT (2016)	22,308	D	51%
ADT (2036)	27,946	T	14%
DHV	2,605	V	65 mph
		TI_{20}	13.0

PAVEMENT CLIMATE REGION:

CENTRAL COAST

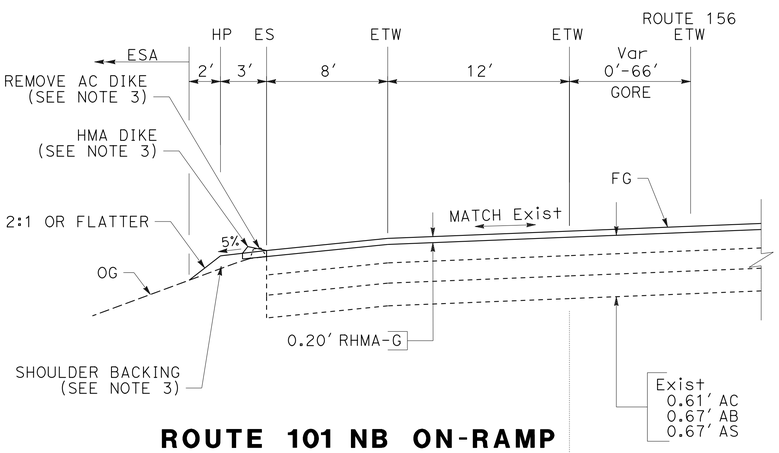

ROUTE 101 NB ON-RAMP

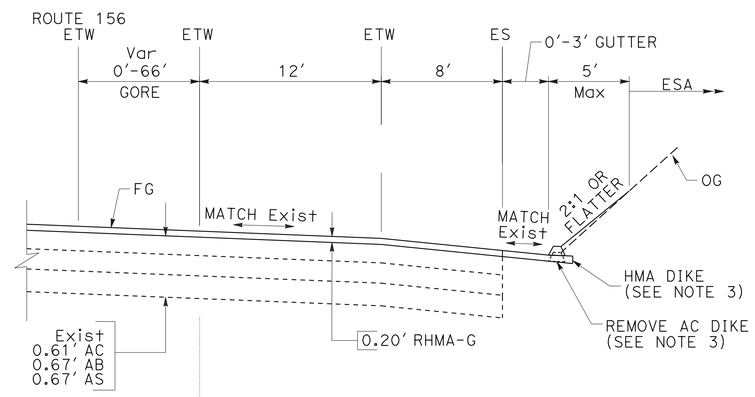

ROUTE 101 NB OFF-RAMP

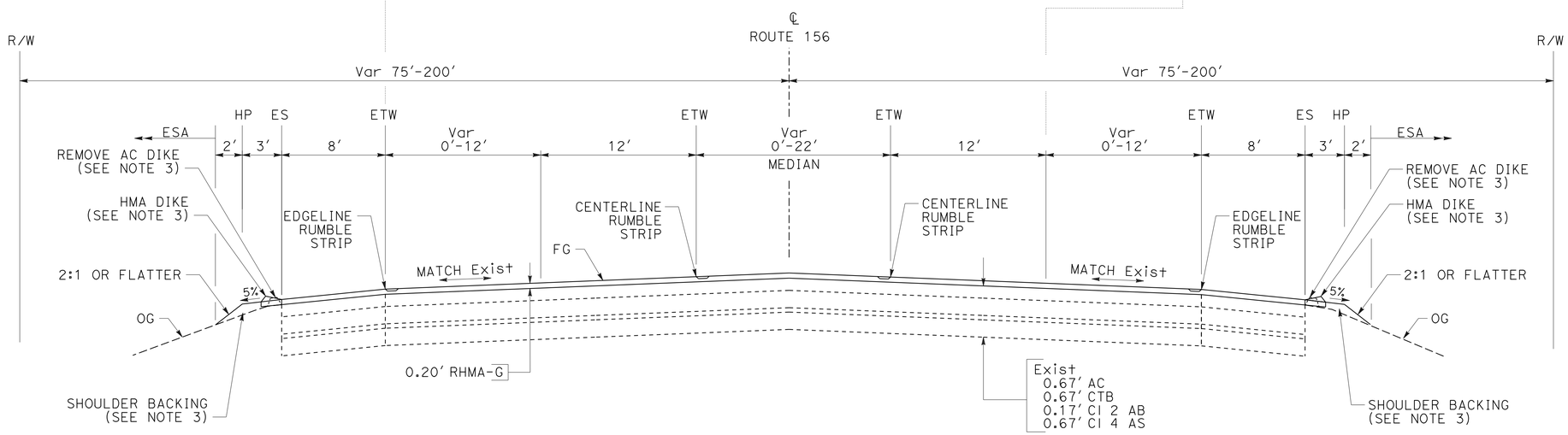

ROUTE 156

PM 0.0-0.3

THE LOCATIONS OF WORK ARE FLEXIBLE AND MAY BE ADJUSTED TO MITIGATE ANY CONFLICTS WITH EXISTING UTILITY FACILITIES. UTILITIES ARE NOT SHOWN ON THESE PLANS

TYPICAL CROSS SECTIONS

NO SCALE

X-1

STATE OF CALIFORNIA - DEPARTMENT OF TRANSPORTATION
Caltrans

CONSULTANT FUNCTIONAL SUPERVISOR: MATTHEW J. KORVE
CALCULATED-DESIGNED BY: WAI KEI WONG
CHECKED BY: CLARA PONCE
REVISED BY
DATE REVISED

LAST REVISION 06-06-16
DATE PLOTTED => 10-AUG-2016
TIME PLOTTED => 14:21

Dist	COUNTY	ROUTE	POST MILES TOTAL PROJECT	SHEET No.	TOTAL SHEETS
05	SBt	156	0.0/3.0	3	113

REGISTERED CIVIL ENGINEER — DATE 6-13-16

6-20-16
PLANS APPROVAL DATE

REGISTERED PROFESSIONAL ENGINEER — MATTHEW J. KORVE — No. 63248 — Exp. 6-30-18 — CIVIL — STATE OF CALIFORNIA

THE STATE OF CALIFORNIA OR ITS OFFICERS OR AGENTS SHALL NOT BE RESPONSIBLE FOR THE ACCURACY OR COMPLETENESS OF SCANNED COPIES OF THIS PLAN SHEET.

AECOM
2020 L STREET
SUITE 400
SACRAMENTO, CA 95811

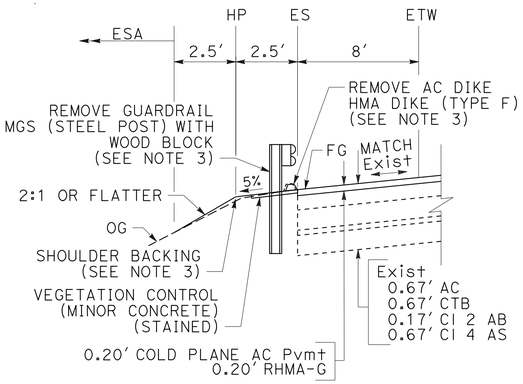

MGS NARROW ROADWAY INSTALLATION
(RIGHT SIDE SIMILAR)

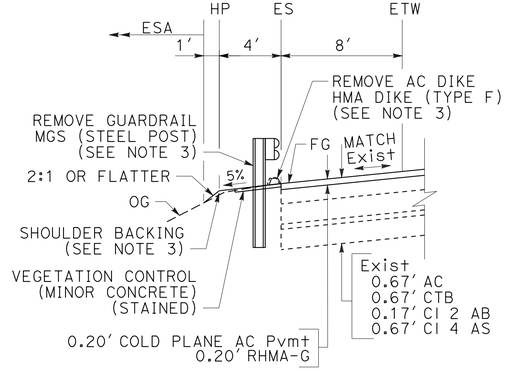

MGS TYPICAL ROADWAY INSTALLATION
(RIGHT SIDE SIMILAR)

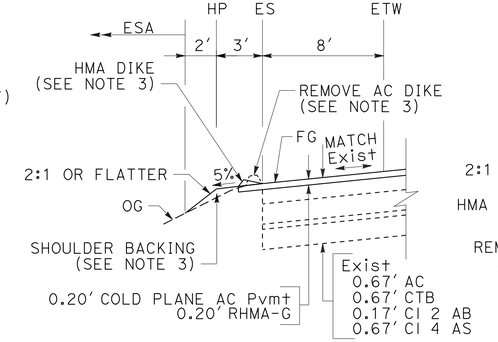

EMBANKMENT WITH HMA DIKE
(RIGHT SIDE SIMILAR)

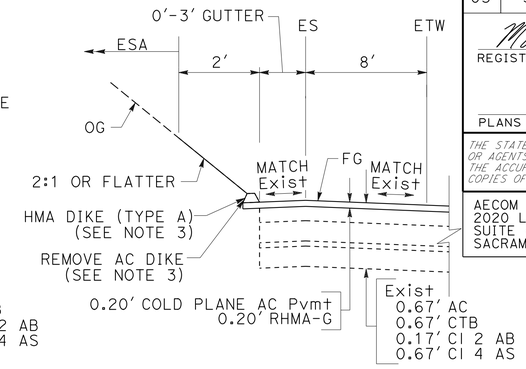

CUT WITH HMA DIKE
(RIGHT SIDE SIMILAR)

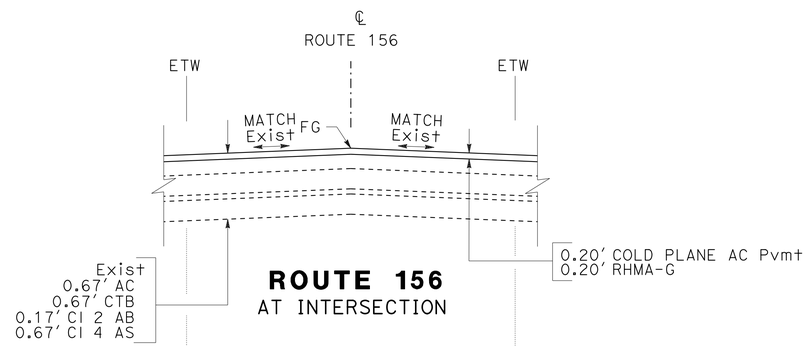

ROUTE 156
AT INTERSECTION

*Exist SURVEY MONUMENT
PM
0.43
0.60
1.70

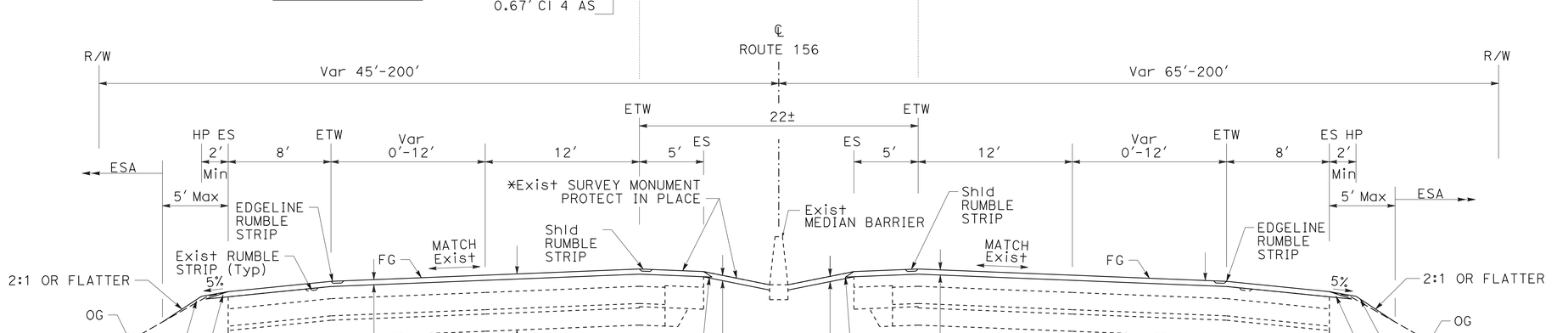

ROUTE 156
PM 0.3-3.0

THE LOCATIONS OF WORK ARE FLEXIBLE AND MAY BE ADJUSTED TO MITIGATE ANY CONFLICTS WITH EXISTING UTILITY FACILITIES. UTILITIES ARE NOT SHOWN ON THESE PLANS

TYPICAL CROSS SECTIONS
NO SCALE

X-2

STATE OF CALIFORNIA - DEPARTMENT OF TRANSPORTATION
Caltrans®

CONSULTANT FUNCTIONAL SUPERVISOR: MATTHEW J. KORVE
CALCULATED-DESIGNED BY: WAI KEI WONG
CHECKED BY: CLARA PONCE
REVISED BY
DATE REVISED

LAST REVISION 06-06-16
DATE PLOTTED => 10-AUG-2016
TIME PLOTTED => 14:21

Dist	COUNTY	ROUTE	POST MILES TOTAL PROJECT	SHEET No.	TOTAL SHEETS
05	SBt	156	0.0/3.0	4	113

REGISTERED CIVIL ENGINEER 6-13-16 DATE

6-20-16
PLANS APPROVAL DATE

REGISTERED PROFESSIONAL ENGINEER MATTHEW J. KORVE No. 63248 Exp. 6-30-18 CIVIL STATE OF CALIFORNIA

THE STATE OF CALIFORNIA OR ITS OFFICERS OR AGENTS SHALL NOT BE RESPONSIBLE FOR THE ACCURACY OR COMPLETENESS OF SCANNED COPIES OF THIS PLAN SHEET.

AECOM
2020 L STREET
SUITE 400
SACRAMENTO, CA 95811

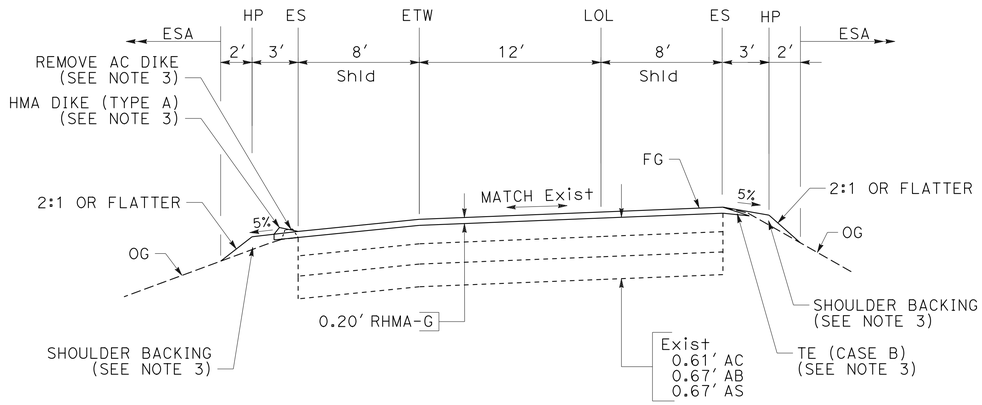

ROUTE 101 NB ON-RAMP

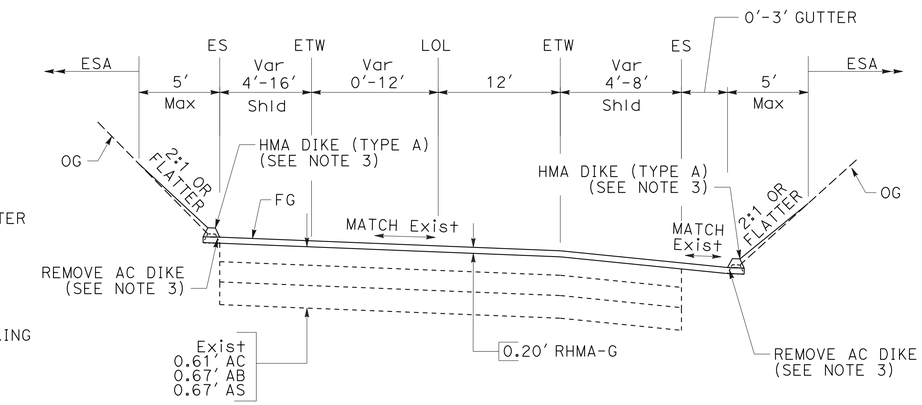

ROUTE 101 NB OFF-RAMP

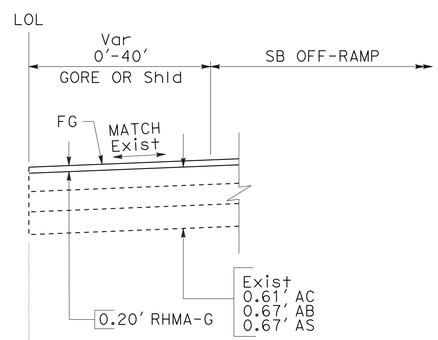

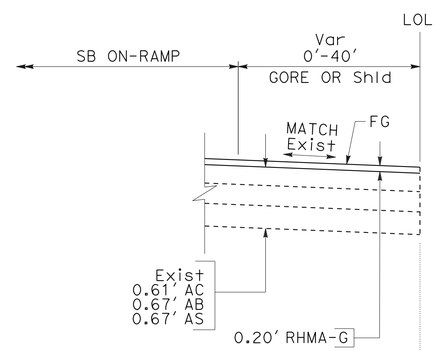

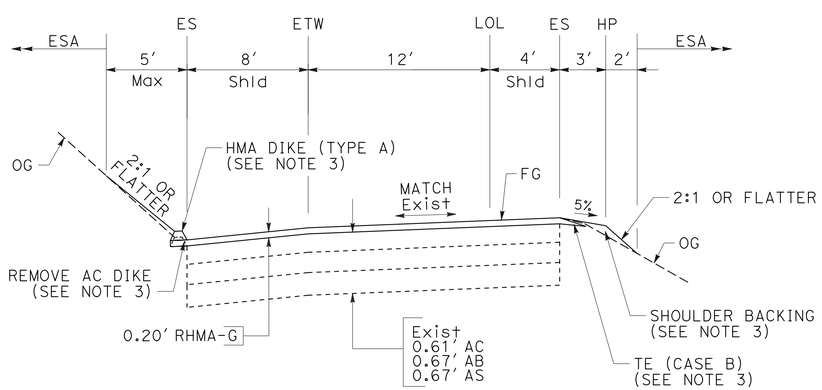

ROUTE 101 SB ON-RAMP

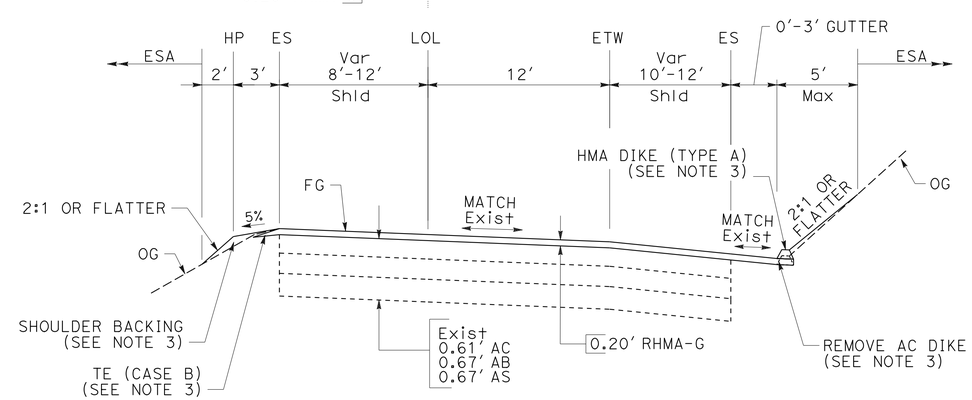

ROUTE 101 SB OFF-RAMP

TYPICAL CROSS SECTIONS

NO SCALE

X-3

THE LOCATIONS OF WORK ARE FLEXIBLE AND MAY BE ADJUSTED TO MITIGATE ANY CONFLICTS WITH EXISTING UTILITY FACILITIES. UTILITIES ARE NOT SHOWN ON THESE PLANS

STATE OF CALIFORNIA - DEPARTMENT OF TRANSPORTATION
Caltrans

CONSULTANT FUNCTIONAL SUPERVISOR: MATTHEW J. KORVE
CALCULATED-DESIGNED BY: WAI KEI WONG
CHECKED BY: CLARA PONCE
REVISED BY
DATE REVISED

LAST REVISION 06-06-16
DATE PLOTTED => 10-AUG-2016
TIME PLOTTED => 14:21

Dist	COUNTY	ROUTE	POST MILES TOTAL PROJECT	SHEET No.	TOTAL SHEETS
05	SBt	156	0.0/3.0	5	113

REGISTERED CIVIL ENGINEER 6-13-16 DATE

6-20-16
PLANS APPROVAL DATE

REGISTERED PROFESSIONAL ENGINEER MATTHEW J. KORVE No. 63248 Exp. 6-30-18 CIVIL STATE OF CALIFORNIA

THE STATE OF CALIFORNIA OR ITS OFFICERS OR AGENTS SHALL NOT BE RESPONSIBLE FOR THE ACCURACY OR COMPLETENESS OF SCANNED COPIES OF THIS PLAN SHEET.

AECOM
2020 L STREET
SUITE 400
SACRAMENTO, CA 95811

NOTES:

1. FOR DETAILS NOT SHOWN, SEE REVISED STANDARD PLANS.
2. EXISTING OVERSIDE DRAIN OR EXISTING PIPE DOWNDRAIN TO REMAIN. LIMITS TO BE DETERMINED BY THE ENGINEER.

ABBREVIATIONS:

HI	HIGH POINT
BOW	BACK OF WALK

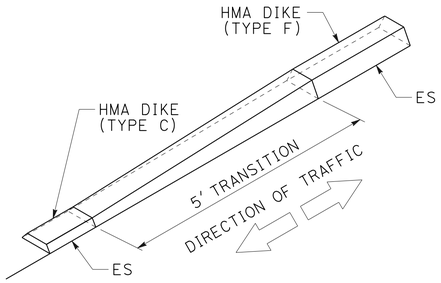

HMA DIKE (TYPE F) TO HMA DIKE (TYPE C)

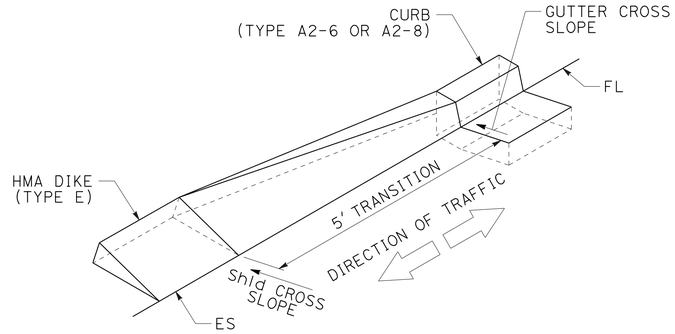

CURB TO HMA DIKE (TYPE E)

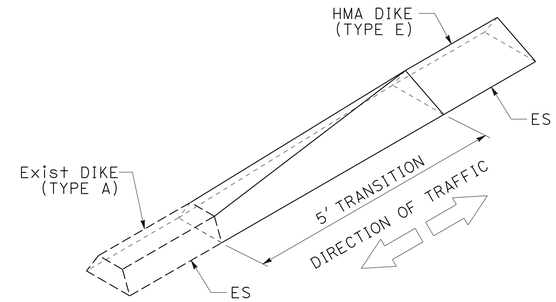

HMA DIKE (TYPE E) TO Exist DIKE (TYPE A)

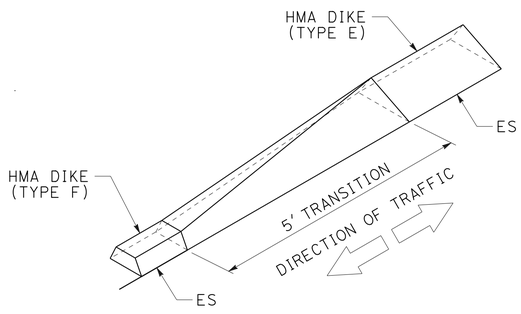

HMA DIKE (TYPE E) TO HMA DIKE (TYPE F)

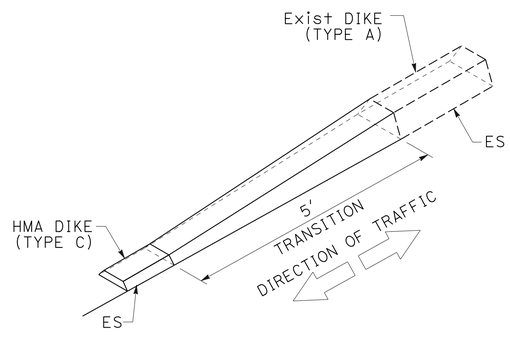

Exist DIKE (TYPE A) TO HMA DIKE (TYPE C)

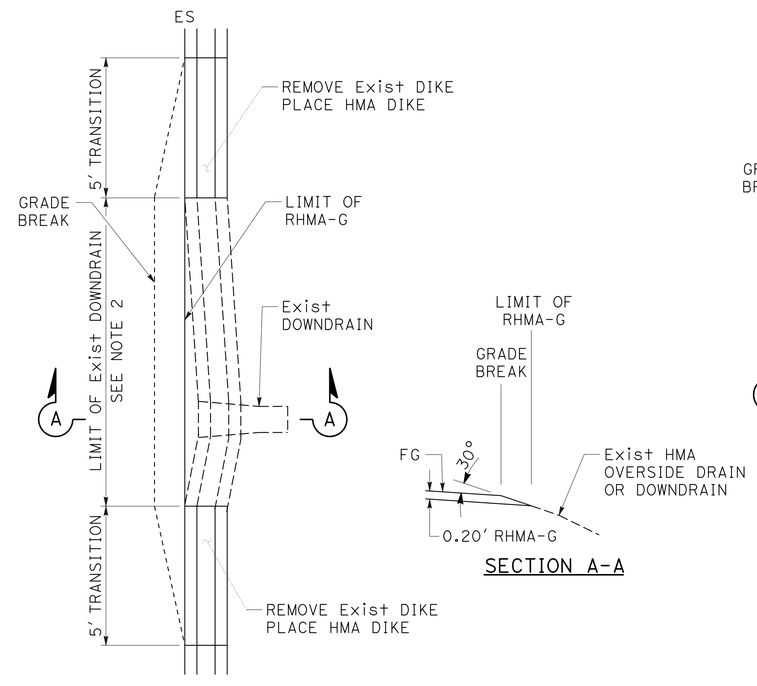

DIKE REMOVAL AND PLACEMENT AT EXISTING PIPE DOWNDRAIN

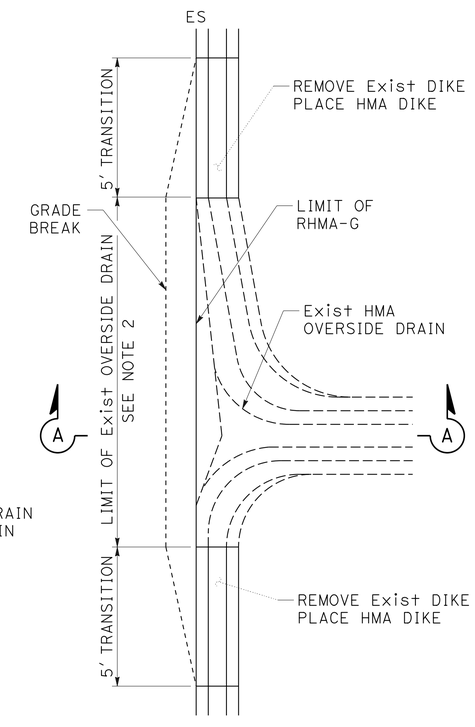

DIKE REMOVAL AND PLACEMENT AT EXISTING HMA OVERSIDE DRAIN

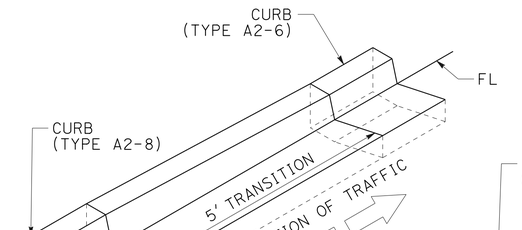

A2-6 TO A2-8 CURB

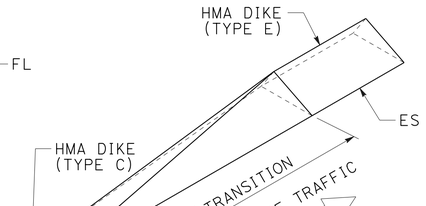

HMA DIKE (TYPE E) TO HMA DIKE (TYPE C)

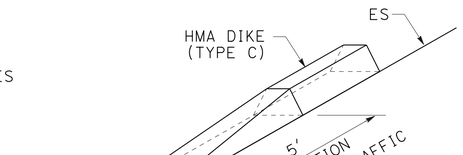

HMA DIKE (TYPE C) TERMINUS

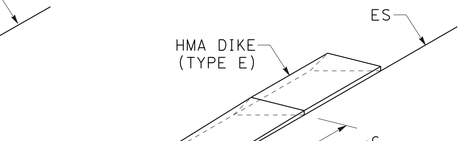

HMA DIKE (TYPE E) TERMINUS

THE LOCATIONS OF WORK ARE FLEXIBLE AND MAY BE ADJUSTED TO MITIGATE ANY CONFLICTS WITH EXISTING UTILITY FACILITIES. UTILITIES ARE NOT SHOWN ON THESE PLANS

CONSTRUCTION DETAILS

NO SCALE

C-1

STATE OF CALIFORNIA - DEPARTMENT OF TRANSPORTATION
Caltrans

CONSULTANT FUNCTIONAL SUPERVISOR: MATTHEW J. KORVE
CALCULATED-DESIGNED BY: WAI KEI WONG
CHECKED BY: CLARA PONCE
REVISED BY
DATE REVISED

LAST REVISION
DATE PLOTTED => 10-AUG-2016
TIME PLOTTED => 14:21

Dist	COUNTY	ROUTE	POST MILES TOTAL PROJECT	SHEET No.	TOTAL SHEETS
05	SBt	156	0.0/3.0	6	113

REGISTERED CIVIL ENGINEER 6-13-16 DATE

6-20-16
PLANS APPROVAL DATE

REGISTERED PROFESSIONAL ENGINEER MATTHEW J. KORVE No. 63248 Exp. 6-30-18 CIVIL STATE OF CALIFORNIA

THE STATE OF CALIFORNIA OR ITS OFFICERS OR AGENTS SHALL NOT BE RESPONSIBLE FOR THE ACCURACY OR COMPLETENESS OF SCANNED COPIES OF THIS PLAN SHEET.

AECOM
2020 L STREET
SUITE 400
SACRAMENTO, CA 95811

NOTES:

1. SEE TYPICAL CROSS SECTIONS FOR COLD PLANE ASPHALT CONCRETE PAVEMENT LIMITS.
2. FOR ACCURATE RIGHT OF WAY DATA, CONTACT RIGHT OF WAY ENGINEERING AT THE DISTRICT OFFICE.

LEGEND (APPLY TO THIS Sht ONLY)

- COLD PLANE AC Pvmt 0.10′ 0.10′ RHMA-G
- COLD PLANE AC Pvmt 0.20′ Max 0.20′ RHMA-G
- COLD PLANE AC Pvmt 0.20′ 0.20′ RHMA-G (SEE NOTE)
- 0.20′ RHMA-G
- COLD PLANE AC Pvmt 0.20′ 0.20′ HMA-A

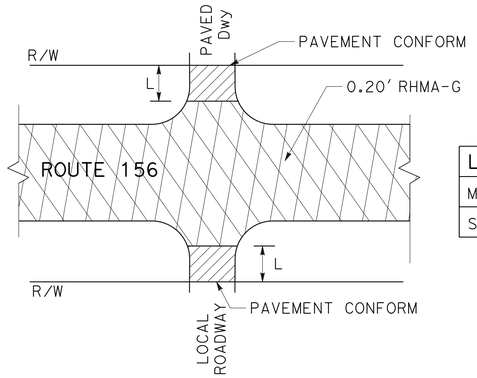

LOCAL ROADWAY	L
MERRILL Rd	50′
SEARLE Rd	100′

TYPICAL PAVING LIMITS AT INTERSECTIONS WITHIN OVERLAY SECTION

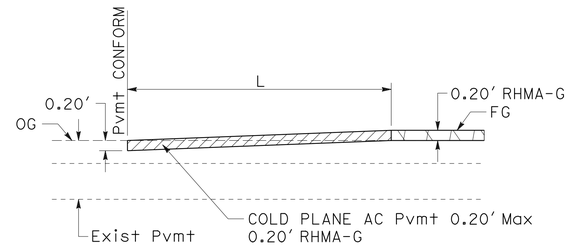

L= 100′ AT ROUTE 101 RAMPS, ROUTE 156/101 SEPARATION, AND SEARLE Rd.
L= 50′ AT MERRILL Rd.

TYPICAL PAVEMENT CONFORM

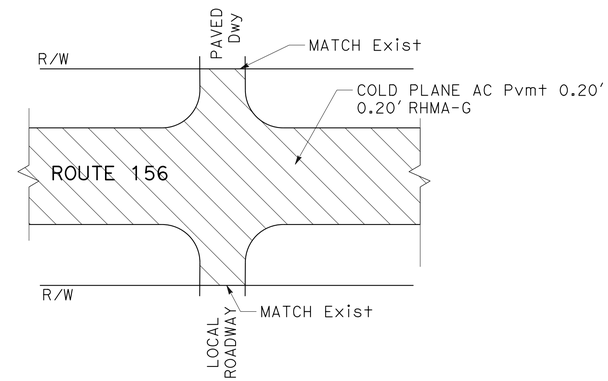

TYPICAL PAVING LIMITS AT INTERSECTIONS WITHIN PLANING SECTION

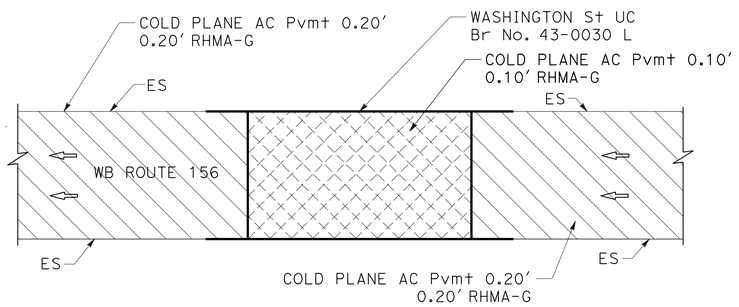

WB WASHINGTON St UC PAVING DETAIL

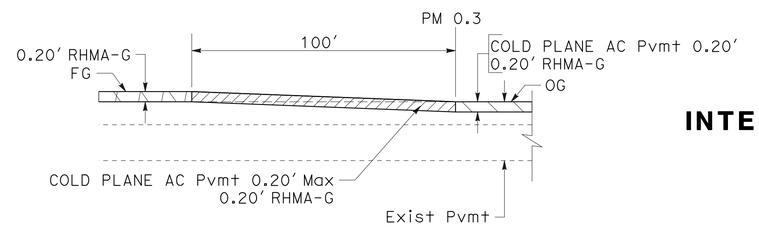

PAVING TRANSITION

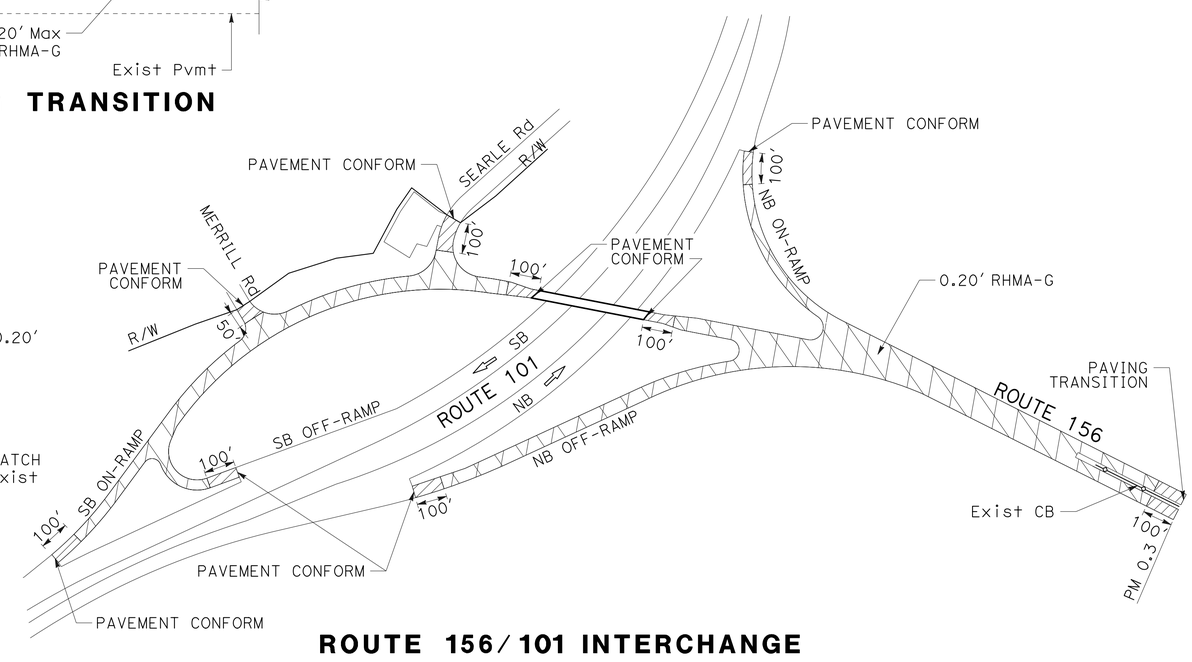

ROUTE 156/101 INTERCHANGE PAVING DETAIL

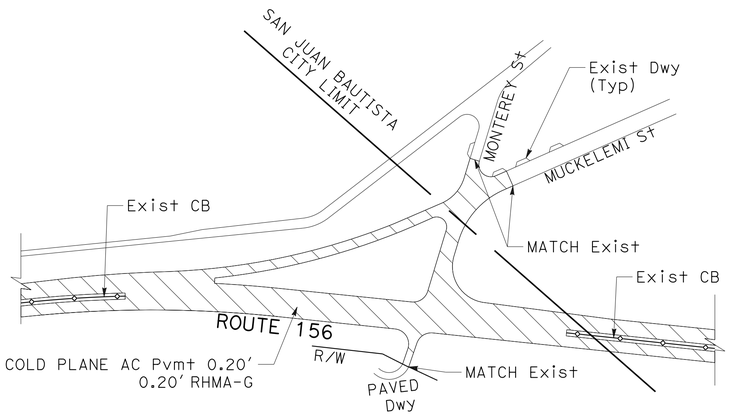

MUCKELEMI St AND MONTEREY St PAVING DETAIL

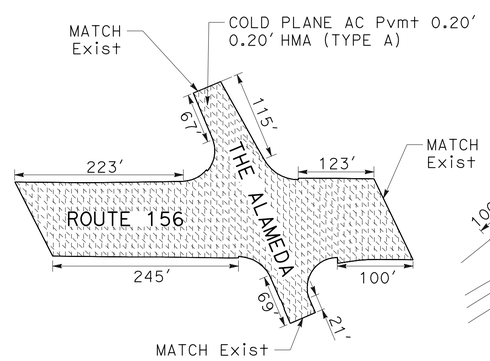

THE ALAMEDA INTERSECTION PAVING DETAIL

THE LOCATIONS OF WORK ARE FLEXIBLE AND MAY BE ADJUSTED TO MITIGATE ANY CONFLICTS WITH EXISTING UTILITY FACILITIES. UTILITIES ARE NOT SHOWN ON THESE PLANS

CONSTRUCTION DETAILS

NO SCALE

C-2

STATE OF CALIFORNIA - DEPARTMENT OF TRANSPORTATION
Caltrans
CONSULTANT FUNCTIONAL SUPERVISOR: MATTHEW J. KORVE
CALCULATED-DESIGNED BY: MATTHEW J. KORVE
CHECKED BY: CLARA PONCE
REVISED BY
DATE REVISED

LAST REVISION 06-06-16
DATE PLOTTED => 10-AUG-2016
TIME PLOTTED => 14:21

Dist	COUNTY	ROUTE	POST MILES TOTAL PROJECT	SHEET No.	TOTAL SHEETS
05	SBt	156	0.0/3.0	7	113

REGISTERED CIVIL ENGINEER 6-13-16 DATE

6-20-16
PLANS APPROVAL DATE

REGISTERED PROFESSIONAL ENGINEER MATTHEW J. KORVE No. 63248 Exp. 6-30-18 CIVIL STATE OF CALIFORNIA

THE STATE OF CALIFORNIA OR ITS OFFICERS OR AGENTS SHALL NOT BE RESPONSIBLE FOR THE ACCURACY OR COMPLETENESS OF SCANNED COPIES OF THIS PLAN SHEET.

AECOM
2020 L STREET
SUITE 400
SACRAMENTO, CA 95811

NOTES:

1. OMIT DETAIL AT INTERSECTIONS, BRIDGES, AND IN FRONT OF PAVED DRIVEWAYS PER SHEET C-4.
2. DO NOT PLACE RUMBLE STRIPS WHERE THE OUTSIDE SHOULDER WIDTH IS LESS THAN 5'.

LEGEND (APPLY TO THIS Sht ONLY)

COLD PLANE AC Pvmt 0.20' Max
0.20' RHMA-G

0.20' RHMA-G

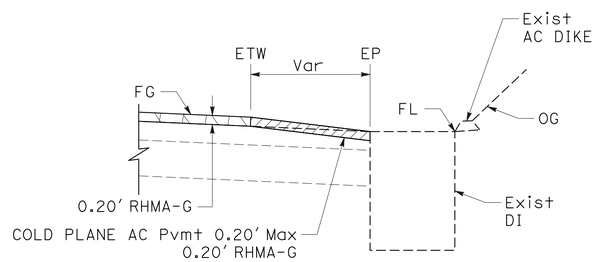

TYPICAL PAVEMENT CONFORM AT Exist INLET
AT LOCATIONS WHERE INLET IS NOT ADJUSTED

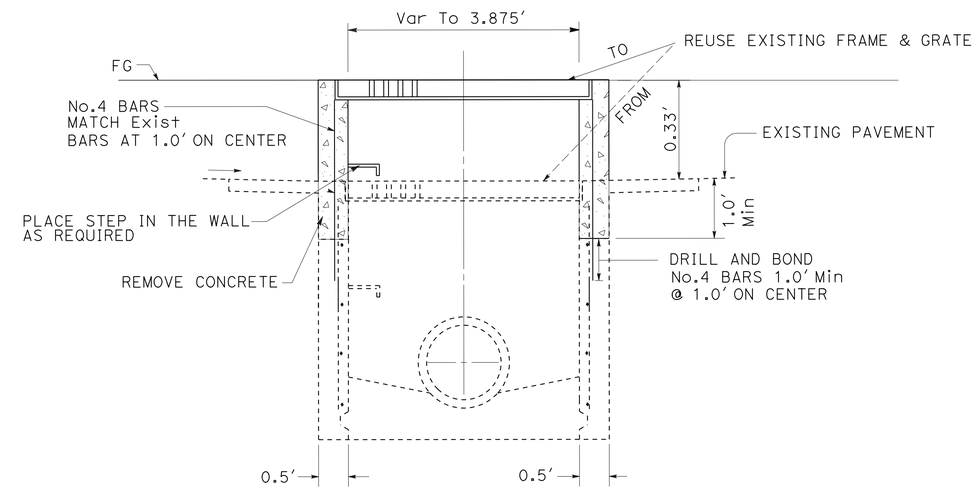

ADJUST INLET
SOUTHERNMOST INLETS ON ROUTE 101 NB OFF-RAMP AND SB ON-RAMP

THE LOCATIONS OF WORK ARE FLEXIBLE AND MAY BE ADJUSTED TO MITIGATE ANY CONFLICTS WITH EXISTING UTILITY FACILITIES. UTILITIES ARE NOT SHOWN ON THESE PLANS

CONSTRUCTION DETAILS

NO SCALE

C-3

STATE OF CALIFORNIA - DEPARTMENT OF TRANSPORTATION
Caltrans

CONSULTANT FUNCTIONAL SUPERVISOR: MATTHEW J. KORVE
CALCULATED-DESIGNED BY: WAI KEI WONG
CHECKED BY: CLARA PONCE
REVISED BY
DATE REVISED

LAST REVISION 06-06-16
DATE PLOTTED => 10-AUG-2016
TIME PLOTTED => 14:21

Dist	COUNTY	ROUTE	POST MILES TOTAL PROJECT	SHEET No.	TOTAL SHEETS
05	SBt	156	0.0/3.0	8	113

REGISTERED CIVIL ENGINEER 6-13-16 DATE

6-20-16
PLANS APPROVAL DATE

REGISTERED PROFESSIONAL ENGINEER MATTHEW J. KORVE No. 63248 Exp. 6-30-18 CIVIL STATE OF CALIFORNIA

THE STATE OF CALIFORNIA OR ITS OFFICERS OR AGENTS SHALL NOT BE RESPONSIBLE FOR THE ACCURACY OR COMPLETENESS OF SCANNED COPIES OF THIS PLAN SHEET.

AECOM
2020 L STREET
SUITE 400
SACRAMENTO, CA 95811

NOTE:

FOR EDGELINE AND CENTERLINE RUMBLE STRIP DETAILS, SEE SHEET C-3.

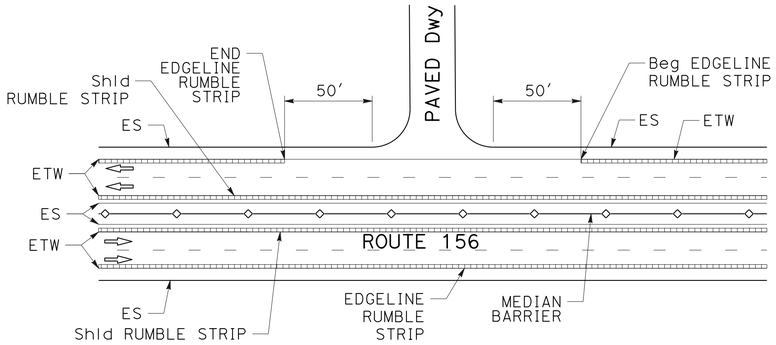

TYPICAL RUMBLE STRIP AT PAVED DRIVEWAY

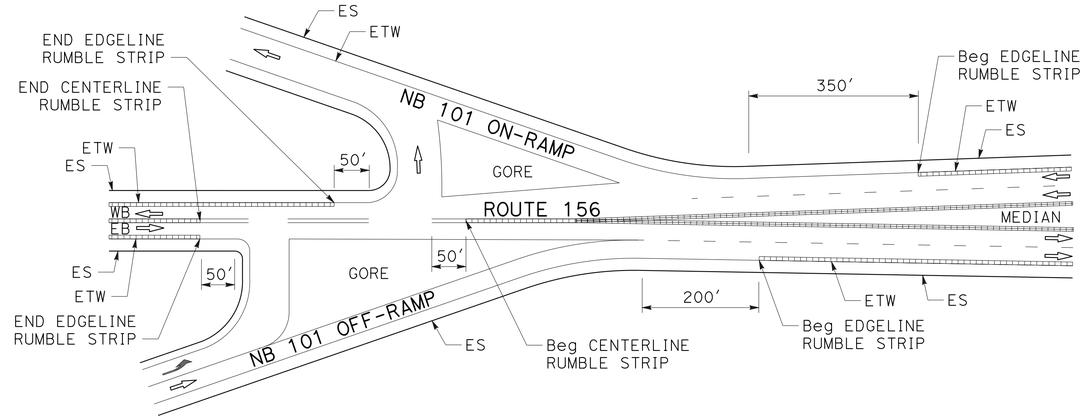

RUMBLE STRIP AT NB ROUTE 101 RAMPS

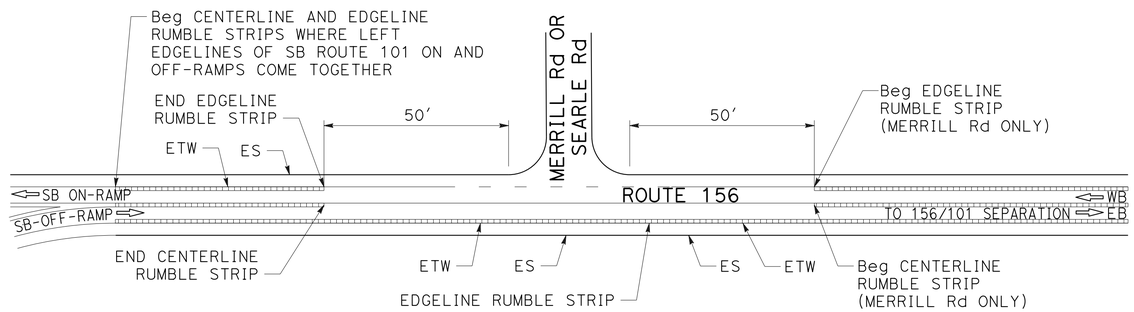

TYPICAL RUMBLE STRIP AT "T" INTERSECTION

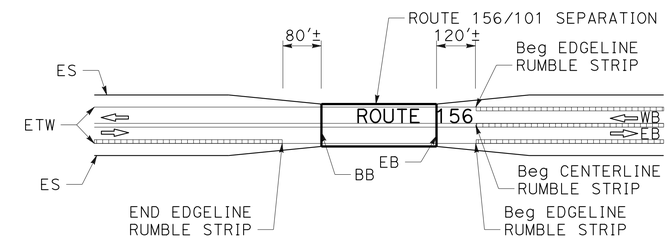

RUMBLE STRIP AT ROUTE 156/101 SEPARATION

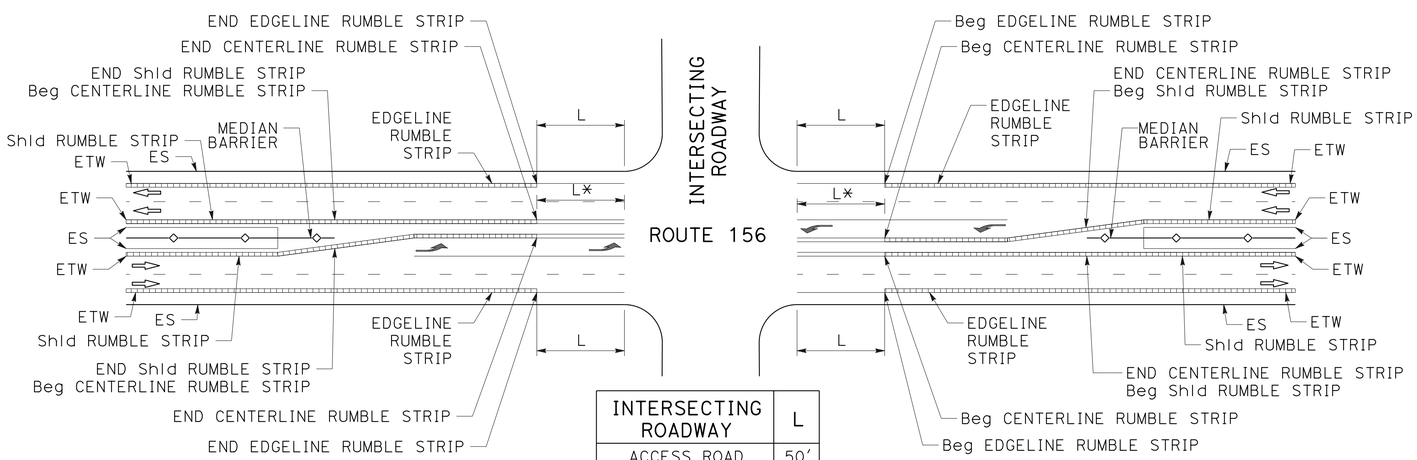

INTERSECTING ROADWAY	L
ACCESS ROAD	50′
ROCKS Rd	250′
MONTEREY St	250′
THE ALAMEDA	250′

* = AT LOCATIONS WHERE L ON ONE SIDE OF ROUTE 156 WOULD BE DIFFERENT FROM THAT ON THE OTHER SIDE, USE THE LONGER OF THE TWO IN THE MEDIAN.

TYPICAL RUMBLE STRIP AT 4-WAY INTERSECTION

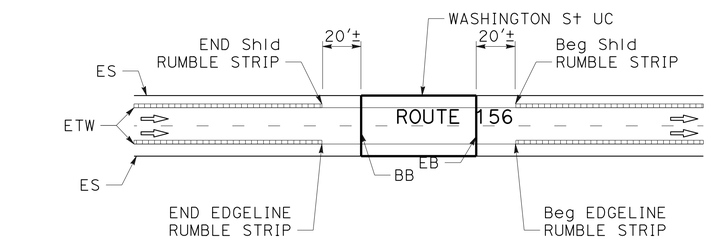

RUMBLE STRIP AT WASHINGTON St UNDERCROSSING

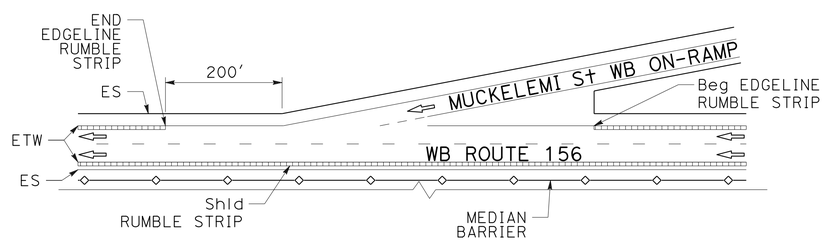

RUMBLE STRIP AT MUCKELEMI St ON-RAMP

THE LOCATIONS OF WORK ARE FLEXIBLE AND MAY BE ADJUSTED TO MITIGATE ANY CONFLICTS WITH EXISTING UTILITY FACILITIES. UTILITIES ARE NOT SHOWN ON THESE PLANS

CONSTRUCTION DETAILS

NO SCALE

C-4

REVISED BY | DATE REVISED
MATTHEW J. KORVE | CLARA PONCE
CALCULATED-DESIGNED BY | CHECKED BY
CONSULTANT FUNCTIONAL SUPERVISOR
MATTHEW J. KORVE

STATE OF CALIFORNIA - DEPARTMENT OF TRANSPORTATION
Caltrans

LAST REVISION 06-06-16 | DATE PLOTTED => 10-AUG-2016 | TIME PLOTTED => 14:21

Dist	COUNTY	ROUTE	POST MILES TOTAL PROJECT	SHEET No.	TOTAL SHEETS
05	SBt	156	0.0/3.0	9	113

REGISTERED CIVIL ENGINEER 6-13-16 DATE

6-20-16
PLANS APPROVAL DATE

REGISTERED PROFESSIONAL ENGINEER MATTHEW J. KORVE No. 63248 Exp. 6-30-18 CIVIL STATE OF CALIFORNIA

THE STATE OF CALIFORNIA OR ITS OFFICERS OR AGENTS SHALL NOT BE RESPONSIBLE FOR THE ACCURACY OR COMPLETENESS OF SCANNED COPIES OF THIS PLAN SHEET.

AECOM
2020 L STREET
SUITE 400
SACRAMENTO, CA 95811

NOTES:

1. COLD PLANE AC Pvmt 0.20′ ACROSS ROAD WIDTH PER TYPICAL SECTIONS PRIOR TO CONSTRUCTING REPAIR FAILED AREA. PAVE 0.20′ RHMA-G ACROSS ROAD WIDTH PER TYPICAL SECTIONS AFTER CONSTRUCTING REPAIR FAILED AREA.
2. REPLACE AERIAL PATROL MARKINGS WHERE REMOVED, COORDINATE PLACEMENT WITH CALIFORNIA HIGHWAY PATROL AS DIRECTED BY THE ENGINEER.

LEGEND (APPLY TO THIS Sht ONLY)

- COLD PLANE AC Pvmt 0.50′ 0.50′ HMA (TYPE A) (SEE NOTE 1)
- COLD PLANE AC Pvmt 0.20′ 0.20′ RHMA-G (SEE NOTE 1)
- COLD PLANE AC Pvmt 0.20′ 0.20′ HMA-A
- 0.20′ RHMA-G

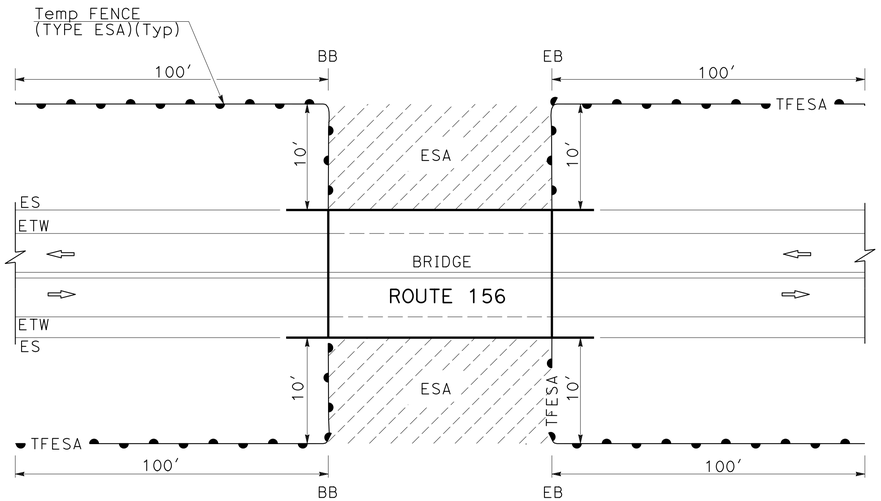

ESA AT BRIDGE LOCATIONS

BI-DIRECTIONAL SHOWN, UNI-DIRECTIONAL SIMILAR

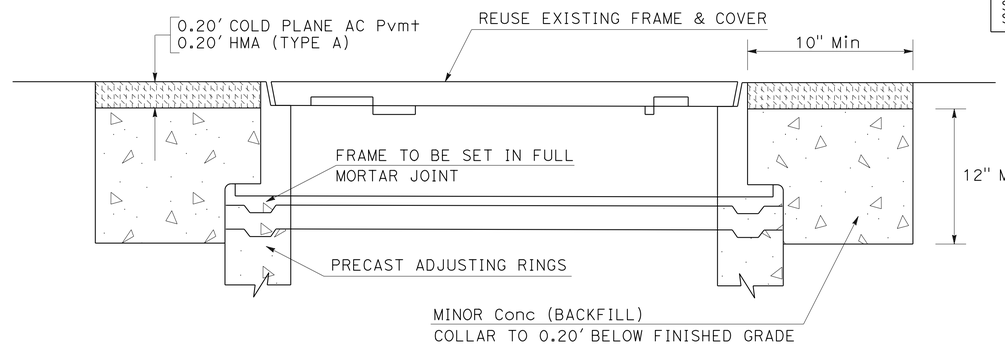

ADJUST FRAME AND COVER TO GRADE

MUCKELEMI St (PM 2.30)
THE ALAMEDA (PM 3.00)

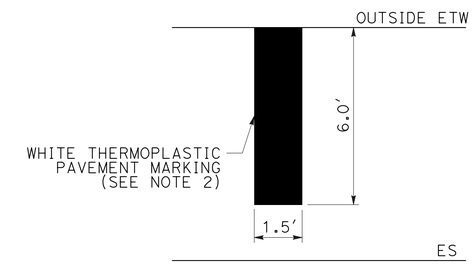

PLAN

AERIAL PATROL MARKING

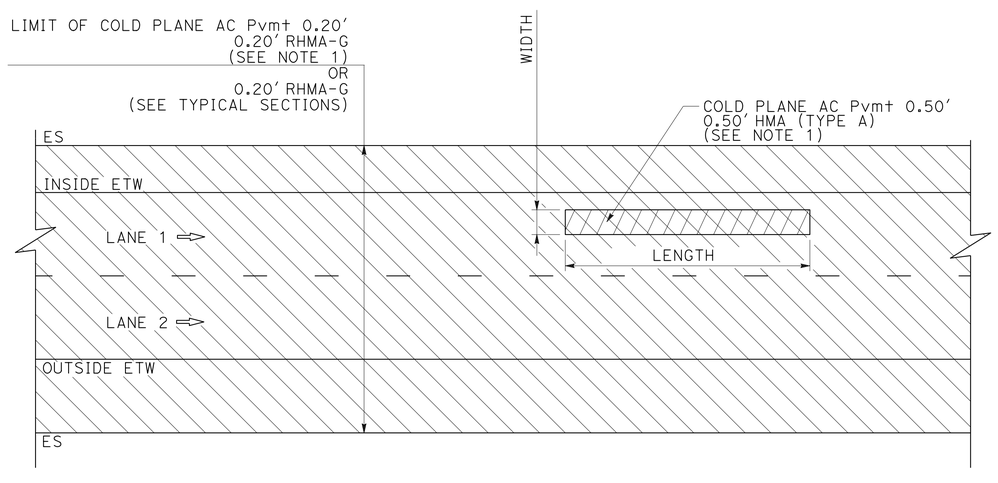

PLAN

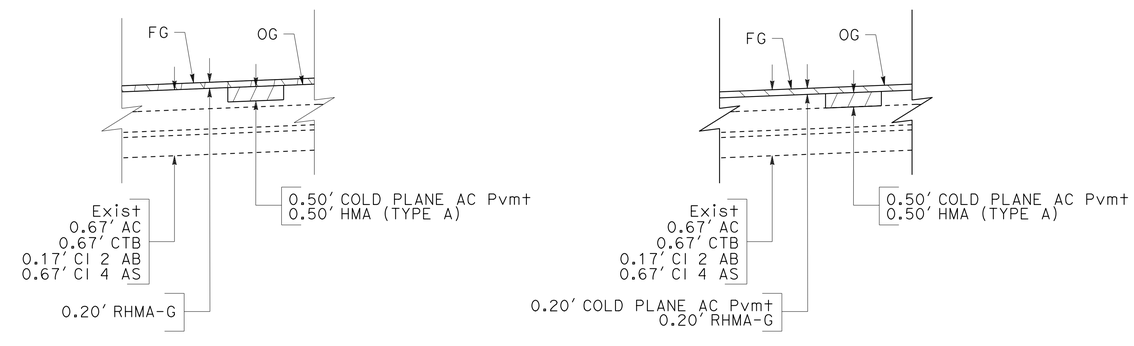

PM 0.0-0.3 PM 0.3-3.0

TYPICAL SECTIONS

TYPICAL REPAIR FAILED AREA DETAIL

THE LOCATIONS OF WORK ARE FLEXIBLE AND MAY BE ADJUSTED TO MITIGATE ANY CONFLICTS WITH EXISTING UTILITY FACILITIES. UTILITIES ARE NOT SHOWN ON THESE PLANS

CONSTRUCTION DETAILS

NO SCALE

C-5

STATE OF CALIFORNIA - DEPARTMENT OF TRANSPORTATION
Caltrans®
CONSULTANT FUNCTIONAL SUPERVISOR MATTHEW J. KORVE
CALCULATED-DESIGNED BY WAI KEI WONG
CHECKED BY CLARA PONCE
REVISED BY
DATE REVISED

LAST REVISION 06-06-16
DATE PLOTTED => 10-AUG-2016
TIME PLOTTED => 14:21

Dist	COUNTY	ROUTE	POST MILES TOTAL PROJECT	SHEET No.	TOTAL SHEETS
05	SBt	156	0.0/3.0	10	113

REGISTERED CIVIL ENGINEER 6-13-16 DATE

6-20-16
PLANS APPROVAL DATE

REGISTERED PROFESSIONAL ENGINEER MATTHEW J. KORVE No. 63248 Exp. 6-30-18 CIVIL STATE OF CALIFORNIA

THE STATE OF CALIFORNIA OR ITS OFFICERS OR AGENTS SHALL NOT BE RESPONSIBLE FOR THE ACCURACY OR COMPLETENESS OF SCANNED COPIES OF THIS PLAN SHEET.

AECOM
2020 L STREET
SUITE 400
SACRAMENTO, CA 95811

NOTES:

1. FOR ADDITIONAL DETAILS NOT SHOWN ON THIS PLAN, REFER TO REVISED STANDARD PLAN RSP A77L1 AND RSP A77L2.
2. CONTROLLED RELEASING TERMINAL (CRT) POST TO BE WOOD ONLY.

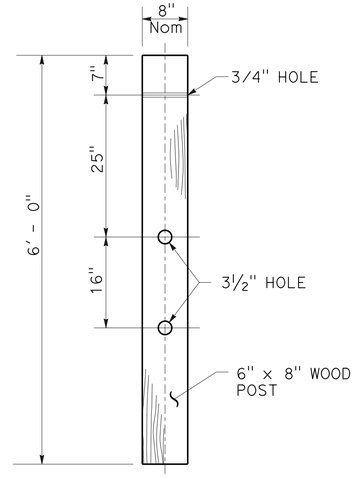

CONTROLLED RELEASING TERMINAL (CRT) POST

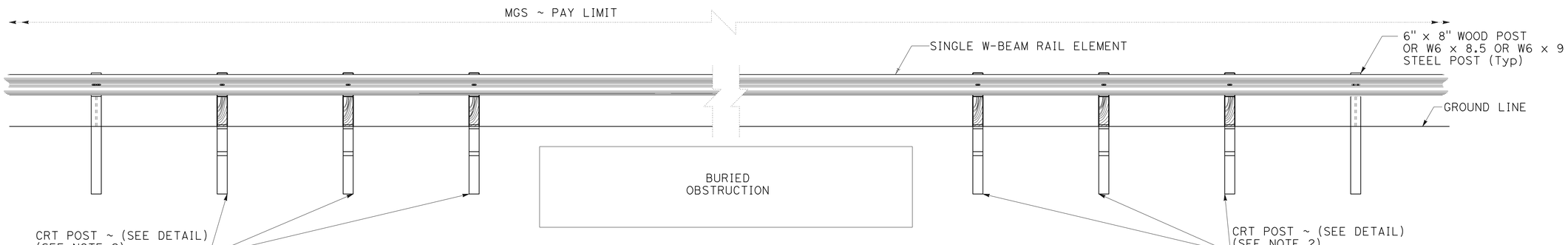

ELEVATION

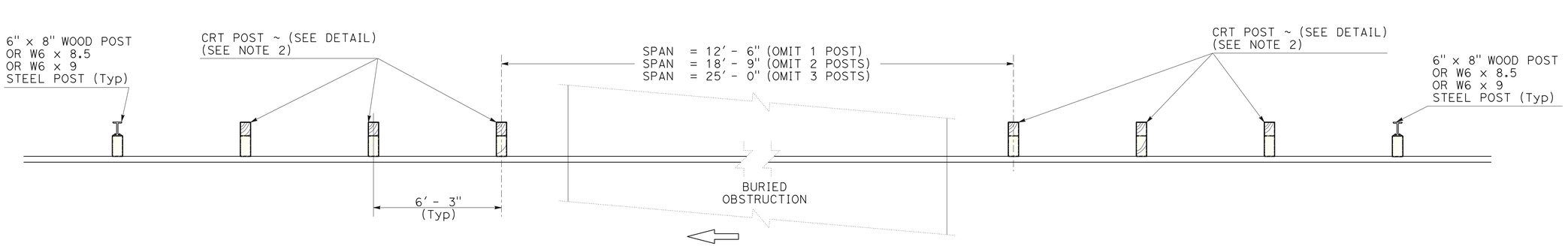

PLAN

MIDWEST GUARDRAIL SYSTEM BURIED OBSTRUCTION SPANNING DETAIL

THE LOCATIONS OF WORK ARE FLEXIBLE AND MAY BE ADJUSTED TO MITIGATE ANY CONFLICTS WITH EXISTING UTILITY FACILITIES. UTILITIES ARE NOT SHOWN ON THESE PLANS

CONSTRUCTION DETAILS

NO SCALE

C-6

STATE OF CALIFORNIA - DEPARTMENT OF TRANSPORTATION
Caltrans

CONSULTANT FUNCTIONAL SUPERVISOR: MATTHEW J. KORVE
CALCULATED-DESIGNED BY: WAI KEI WONG
CHECKED BY: CLARA PONCE
REVISED BY
DATE REVISED

LAST REVISION 06-06-16 DATE PLOTTED => 10-AUG-2016 TIME PLOTTED => 14:21

Dist	COUNTY	ROUTE	POST MILES TOTAL PROJECT	SHEET No.	TOTAL SHEETS
05	SBt	156	0.0/3.0	11	113

REGISTERED CIVIL ENGINEER 6-13-16 DATE

6-20-16
PLANS APPROVAL DATE

REGISTERED PROFESSIONAL ENGINEER MATTHEW J. KORVE No. 63248 Exp. 6-30-18 CIVIL STATE OF CALIFORNIA

THE STATE OF CALIFORNIA OR ITS OFFICERS OR AGENTS SHALL NOT BE RESPONSIBLE FOR THE ACCURACY OR COMPLETENESS OF SCANNED COPIES OF THIS PLAN SHEET.

AECOM
2020 L STREET
SUITE 400
SACRAMENTO, CA 95811

LOCATIONS OF MIDWEST GUARDRAIL SYSTEM

Loc	PM	DIRECTION	Loc	PM	DIRECTION
1	ROUTE 101 ON-RAMP	SB	11	1.97-2.01	EB
2	ROUTE 101 OFF-RAMP	SB	12	2.02-2.14	WB
3	ROUTE 101 ON-RAMP	SB	13	2.13-2.17	EB
4	0.00-0.02	EB	14	2.62-2.70	EB
5	0.00-0.02	WB	15	2.68-2.7	EB
6	0.23-0.25	WB	16	2.71-2.73	WB
7	0.40-0.45	EB	17	2.69-2.70	WB
8	0.43-0.47	WB	18	2.72-2.83	EB
9	1.29-1.33	EB	19	2.72-2.94	WB
10	1.33-1.37	WB			

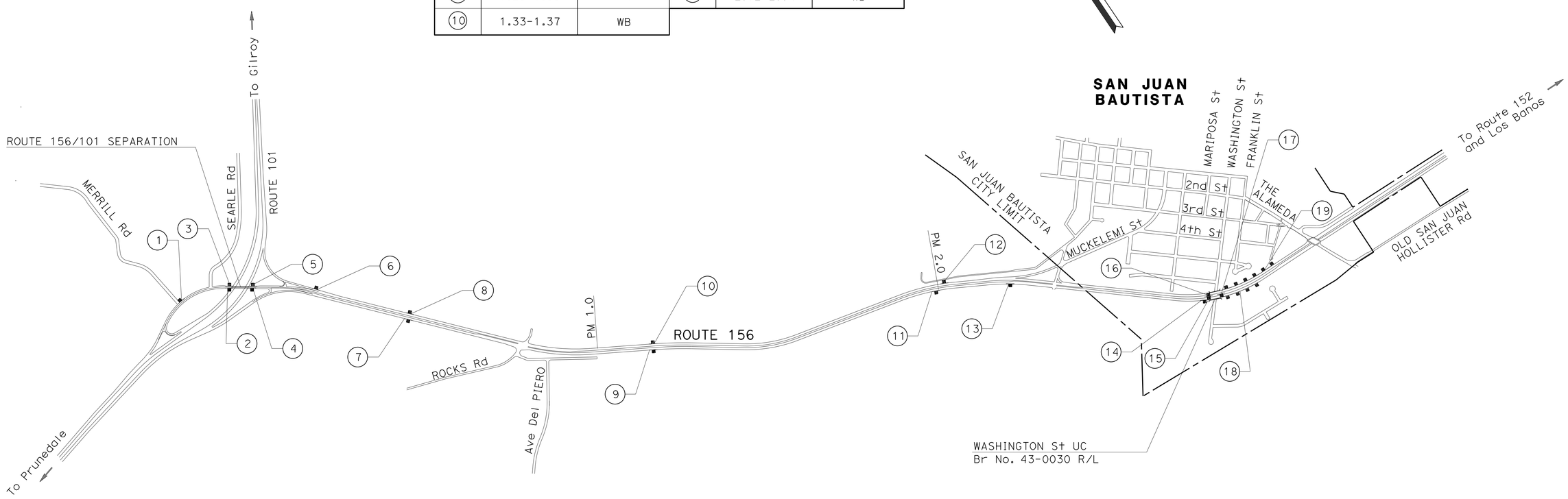

LOCATIONS OF MIDWEST GUARDRAIL SYSTEM

EXISTING UTILITY FACILITIES ARE NOT SHOWN ON THESE PLANS

CONSTRUCTION DETAILS

NO SCALE

C-7

STATE OF CALIFORNIA - DEPARTMENT OF TRANSPORTATION
Caltrans

CONSULTANT FUNCTIONAL SUPERVISOR: MATTHEW J. KORVE
CALCULATED-DESIGNED BY: CLARA PONCE
CHECKED BY: CINDY JIMENEZ
REVISED BY
DATE REVISED

LAST REVISION 06-06-16
DATE PLOTTED => 10-AUG-2016
TIME PLOTTED => 14:21

Dist	COUNTY	ROUTE	POST MILES TOTAL PROJECT	SHEET No.	TOTAL SHEETS
05	SBt	156	0.0/3.0	12	113

REGISTERED CIVIL ENGINEER 6-13-16 DATE

6-20-16
PLANS APPROVAL DATE

REGISTERED PROFESSIONAL ENGINEER MATTHEW J. KORVE No. 63248 Exp. 6-30-18 CIVIL STATE OF CALIFORNIA

THE STATE OF CALIFORNIA OR ITS OFFICERS OR AGENTS SHALL NOT BE RESPONSIBLE FOR THE ACCURACY OR COMPLETENESS OF SCANNED COPIES OF THIS PLAN SHEET.

AECOM
2020 L STREET
SUITE 400
SACRAMENTO, CA 95811

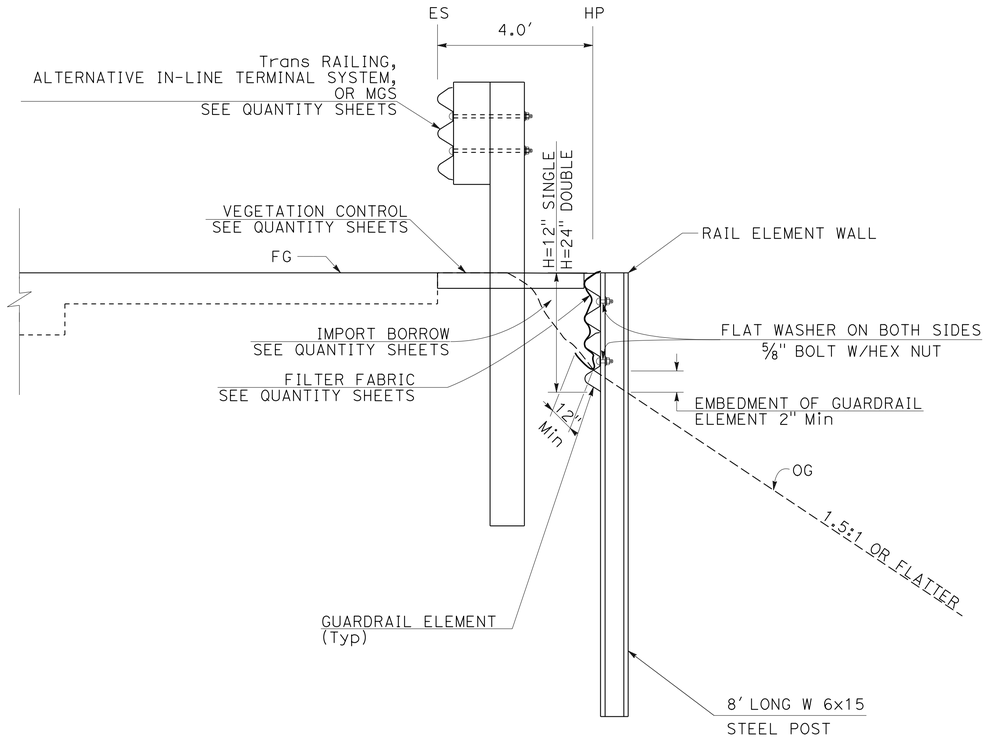

SECTION A-A

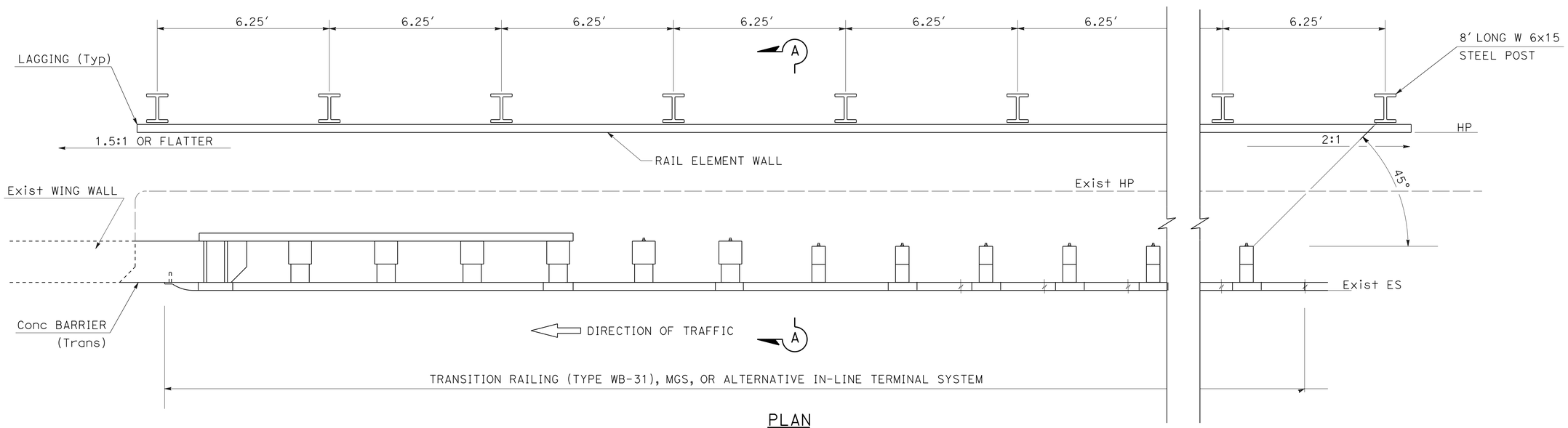

PLAN

RAIL ELEMENT WALL

LOCATION No. 1 (ROUTE 101 SB ON-RAMP)
LOCATION No. 6 (PM 0.23, WB)
LOCATION No. 19 (PM 2.72, WB)

THE LOCATIONS OF WORK ARE FLEXIBLE AND MAY BE ADJUSTED TO MITIGATE ANY CONFLICTS WITH EXISTING UTILITY FACILITIES. UTILITIES ARE NOT SHOWN ON THESE PLANS

CONSTRUCTION DETAILS

NO SCALE

C-8

REVISED BY | DATE REVISED
CLARA PONCE | WAI KEI WONG
CALCULATED-DESIGNED BY | CHECKED BY
CONSULTANT FUNCTIONAL SUPERVISOR
MATTHEW J. KORVE
STATE OF CALIFORNIA - DEPARTMENT OF TRANSPORTATION
Caltrans

LAST REVISION 06-06-16 | DATE PLOTTED => 10-AUG-2016 TIME PLOTTED => 14:21

Dist	COUNTY	ROUTE	POST MILES TOTAL PROJECT	SHEET No.	TOTAL SHEETS
05	SBt	156	0.0/3.0	13	113

REGISTERED CIVIL ENGINEER 6-13-16 DATE

6-20-16
PLANS APPROVAL DATE

REGISTERED PROFESSIONAL ENGINEER MATTHEW J. KORVE No. 63248 Exp. 6-30-18 CIVIL STATE OF CALIFORNIA

THE STATE OF CALIFORNIA OR ITS OFFICERS OR AGENTS SHALL NOT BE RESPONSIBLE FOR THE ACCURACY OR COMPLETENESS OF SCANNED COPIES OF THIS PLAN SHEET.

AECOM
2020 L STREET
SUITE 400
SACRAMENTO, CA 95811

NOTES:

1. FOR DETAILS NOT SHOWN, SEE REVISED STANDARD PLANS.
2. THE CONTRACTOR MUST VERIFY ALL CONTROLLING FIELD DIMENSIONS BEFORE ORDERING OR FABRICATING ANY MATERIAL.
3. DETAIL FOR TRAILING END OF Exist CONCRETE BARRIER SIMILAR

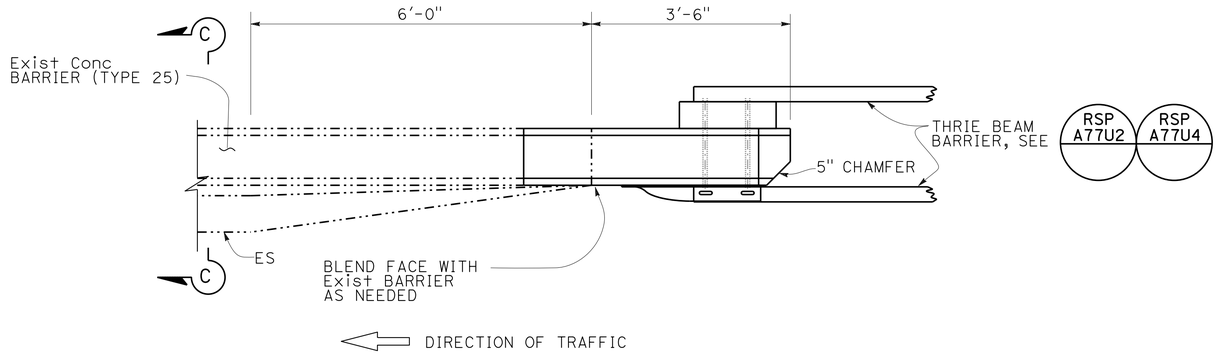

PLAN

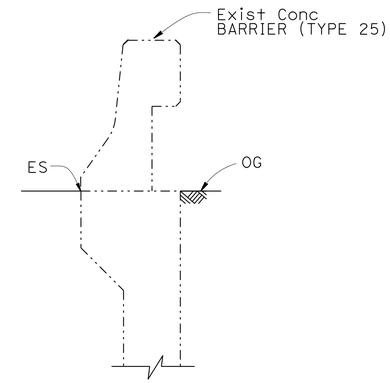

SECTION C-C

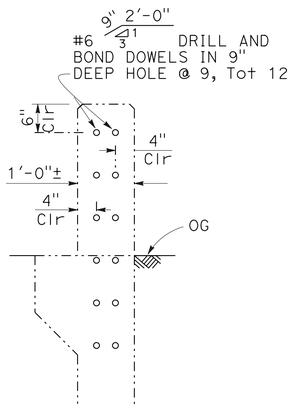

SECTION A-A

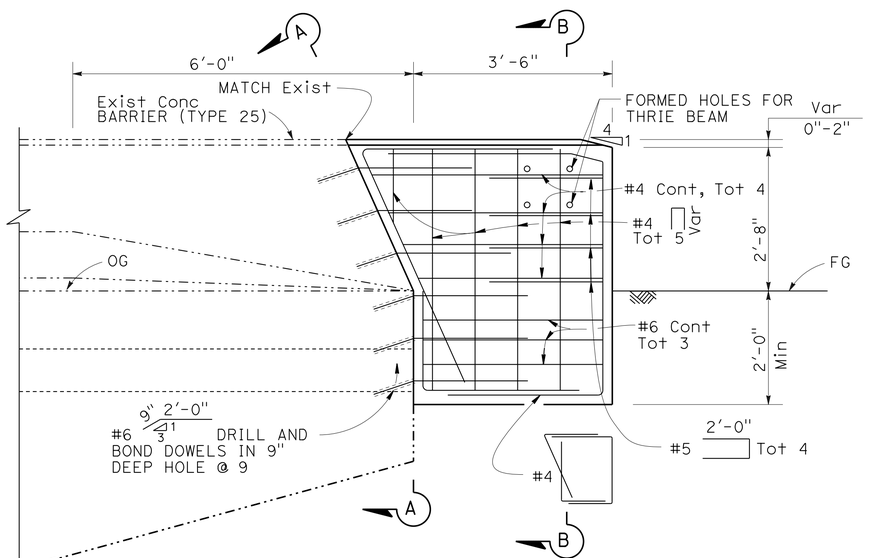

ELEVATION

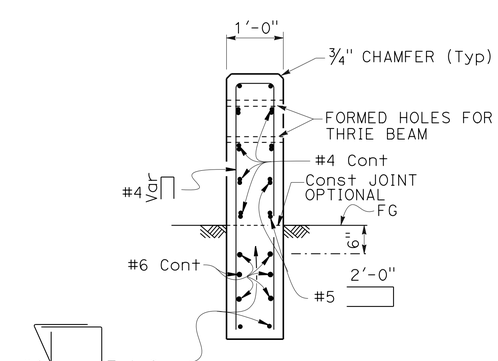

NOTE:
THRIE BEAM NOT SHOWN

SECTION B-B

CONCRETE BARRIER (TRANSITION)

TRANSITION RAILING (TYPE WB-31) TO Exist CONCRETE BARRIER (TYPE 25)
LOCATION No. 2 (ROUTE 101 SB OFF-RAMP)
LOCATION No. 3 (ROUTE 101 SB ON-RAMP)
LOCATION No. 4 (PM 0.03, EB)
LOCATION No. 5 (PM 0.00, WB)
LOCATION No. 14 (PM 2.70, EB)
LOCATION No. 18 (PM 2.72, EB)

THE LOCATIONS OF WORK ARE FLEXIBLE AND MAY BE ADJUSTED TO MITIGATE ANY CONFLICTS WITH EXISTING UTILITY FACILITIES. UTILITIES ARE NOT SHOWN ON THESE PLANS

CONSTRUCTION DETAILS

NO SCALE

C-9

STATE OF CALIFORNIA - DEPARTMENT OF TRANSPORTATION
Caltrans

CONSULTANT FUNCTIONAL SUPERVISOR: MATTHEW J. KORVE
CALCULATED-DESIGNED BY: WAI KEI WONG
CHECKED BY: CLARA PONCE
REVISED BY
DATE REVISED

LAST REVISION 06-06-16
DATE PLOTTED => 10-AUG-2016
TIME PLOTTED => 14:21

Dist	COUNTY	ROUTE	POST MILES TOTAL PROJECT	SHEET No.	TOTAL SHEETS
05	SBt	156	0.0/3.0	14	113

REGISTERED CIVIL ENGINEER 6-13-16 DATE

6-20-16
PLANS APPROVAL DATE

REGISTERED PROFESSIONAL ENGINEER MATTHEW J. KORVE No. 63248 Exp. 6-30-18 CIVIL STATE OF CALIFORNIA

THE STATE OF CALIFORNIA OR ITS OFFICERS OR AGENTS SHALL NOT BE RESPONSIBLE FOR THE ACCURACY OR COMPLETENESS OF SCANNED COPIES OF THIS PLAN SHEET.

AECOM
2020 L STREET
SUITE 400
SACRAMENTO, CA 95811

NOTES:

1. FOR DETAILS NOT SHOWN, SEE REVISED STANDARD PLANS AND CONSTRUCTION DETAILS.
2. FOR ADDITIONAL RAIL ELEMENT WALL DETAILS SEE CONSTRUCTION DETAILS.

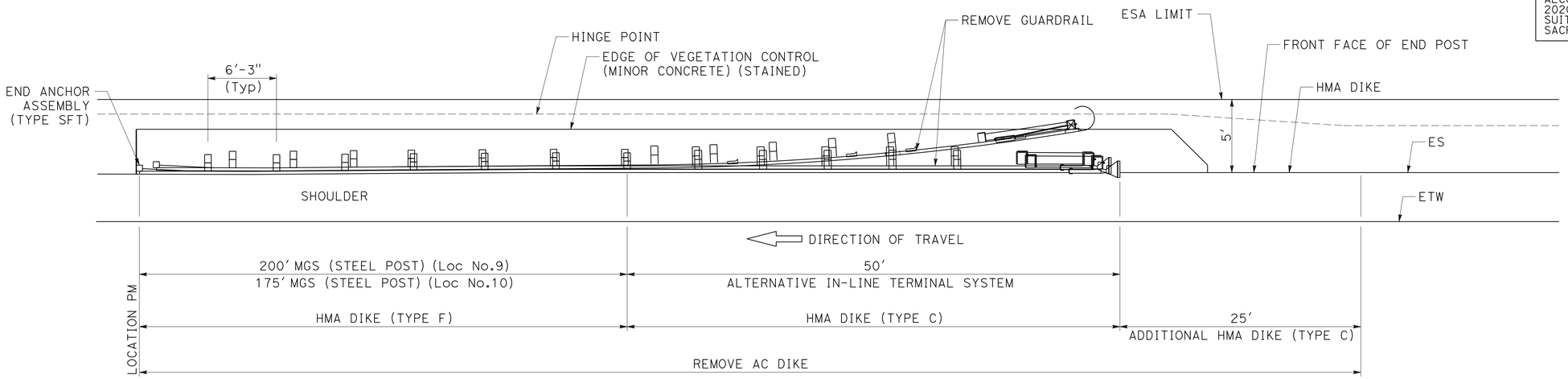

MGS (TYPE 11A LAYOUT) WITH VEGETATION CONTROL DETAIL

LOCATION No. 9 (PM 1.33, EB)
LOCATION No. 10 (PM 1.33, WB)

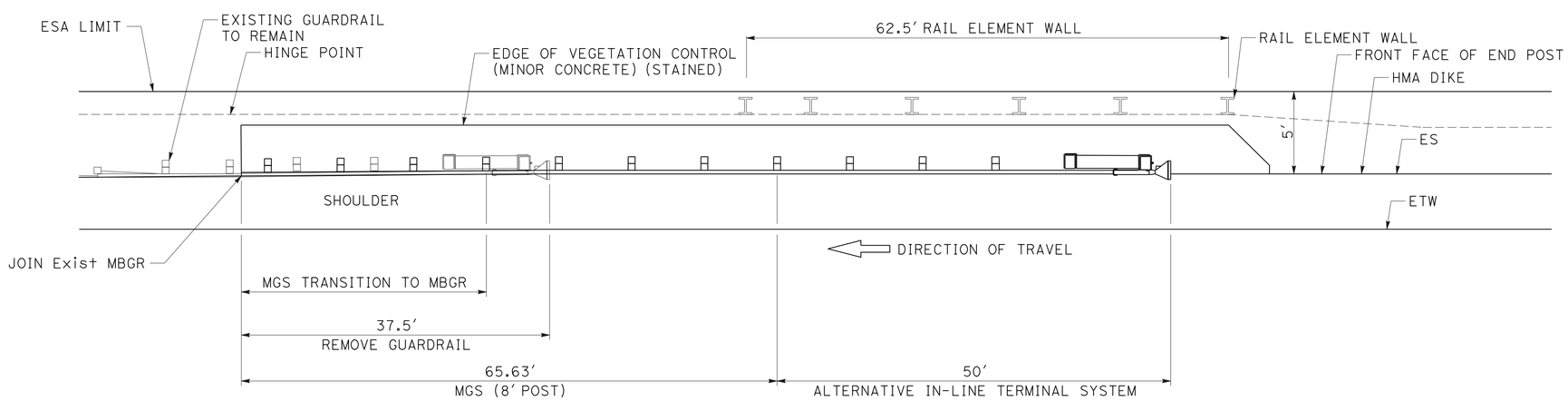

MGS (TYPE 11A Mod LAYOUT) WITH VEGETATION CONTROL DETAIL

LOCATION No. 1 (ROUTE 101 SB ON-RAMP)

THE LOCATIONS OF WORK ARE FLEXIBLE AND MAY BE ADJUSTED TO MITIGATE ANY CONFLICTS WITH EXISTING UTILITY FACILITIES. UTILITIES ARE NOT SHOWN ON THESE PLANS

CONSTRUCTION DETAILS

NO SCALE

C-10

REVISED BY | DATE REVISED
CLARA PONCE | WAI KEI WONG
CALCULATED-DESIGNED BY | CHECKED BY
CONSULTANT FUNCTIONAL SUPERVISOR
MATTHEW J. KORVE
STATE OF CALIFORNIA - DEPARTMENT OF TRANSPORTATION
Caltrans

LAST REVISION 06-06-16 | DATE PLOTTED => 10-AUG-2016 | TIME PLOTTED => 14:21

Dist	COUNTY	ROUTE	POST MILES TOTAL PROJECT	SHEET No.	TOTAL SHEETS
05	SBt	156	0.0/3.0	15	113

REGISTERED CIVIL ENGINEER 6-13-16 DATE

6-20-16
PLANS APPROVAL DATE

REGISTERED PROFESSIONAL ENGINEER MATTHEW J. KORVE No. 63248 Exp. 6-30-18 CIVIL STATE OF CALIFORNIA

THE STATE OF CALIFORNIA OR ITS OFFICERS OR AGENTS SHALL NOT BE RESPONSIBLE FOR THE ACCURACY OR COMPLETENESS OF SCANNED COPIES OF THIS PLAN SHEET.

AECOM
2020 L STREET
SUITE 400
SACRAMENTO, CA 95811

NOTES:

1. FOR DETAILS NOT SHOWN, SEE REVISED STANDARD PLANS AND CONSTRUCTION DETAILS.

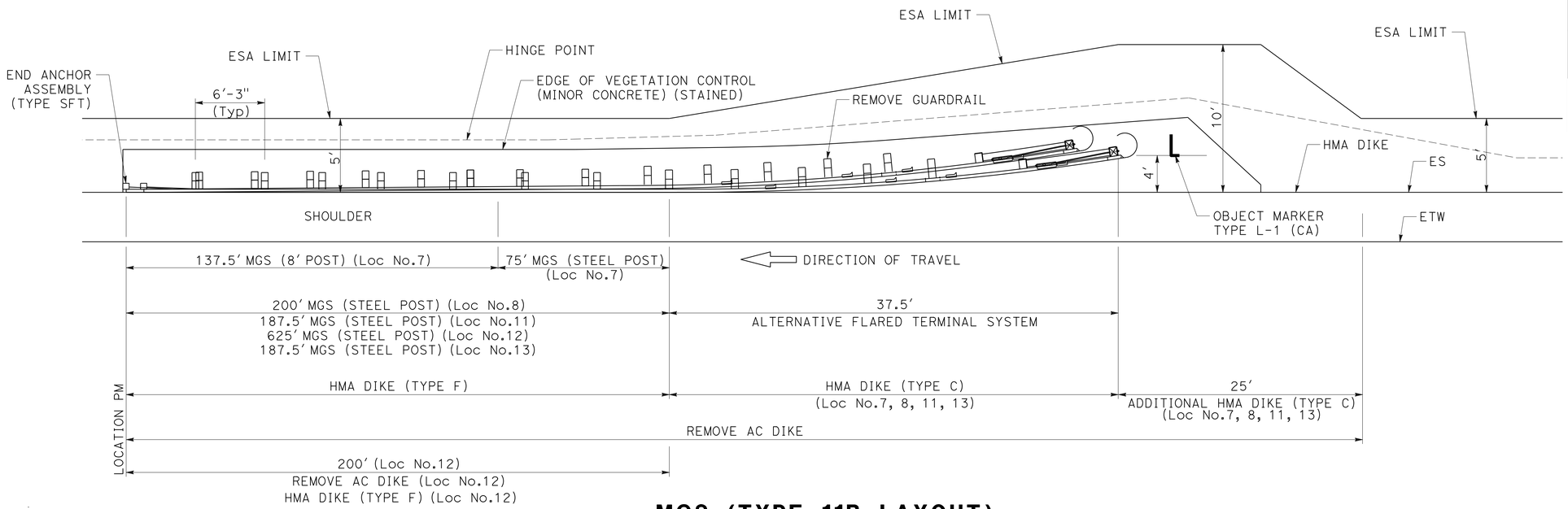

MGS (TYPE 11B LAYOUT) WITH VEGETATION CONTROL DETAIL

LOCATION No. 7 (PM 0.45, EB)
LOCATION No. 8 (PM 0.43, WB)
LOCATION No. 11 (PM 2.01, EB)
LOCATION No. 12 (PM 2.02, WB)
LOCATION No. 13 (PM 2.17, EB)

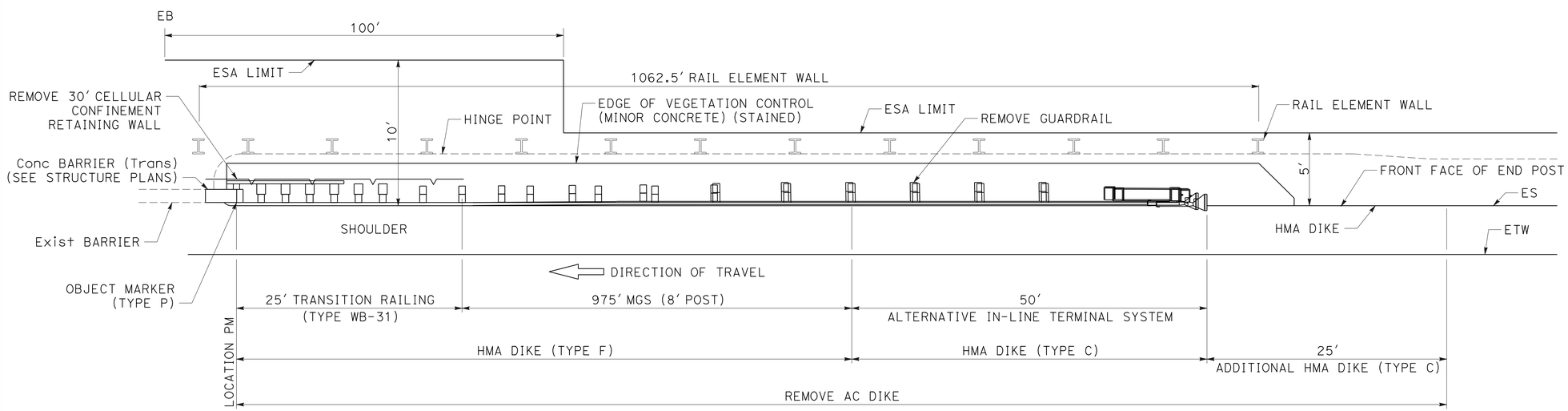

MGS (TYPE 12A LAYOUT) WITH VEGETATION CONTROL DETAIL

LOCATION No. 19 (PM 2.72, WB)

THE LOCATIONS OF WORK ARE FLEXIBLE AND MAY BE ADJUSTED TO MITIGATE ANY CONFLICTS WITH EXISTING UTILITY FACILITIES. UTILITIES ARE NOT SHOWN ON THESE PLANS

CONSTRUCTION DETAILS

NO SCALE

C-11

STATE OF CALIFORNIA - DEPARTMENT OF TRANSPORTATION
Caltrans
CONSULTANT FUNCTIONAL SUPERVISOR: MATTHEW J. KORVE
CALCULATED-DESIGNED BY: WAI KEI WONG
CHECKED BY: CLARA PONCE
REVISED BY
DATE REVISED

LAST REVISION 06-06-16
DATE PLOTTED => 10-AUG-2016
TIME PLOTTED => 14:22

Dist	COUNTY	ROUTE	POST MILES TOTAL PROJECT	SHEET No.	TOTAL SHEETS
05	SBt	156	0.0/3.0	16	113

REGISTERED CIVIL ENGINEER 6-13-16 DATE

6-20-16
PLANS APPROVAL DATE

REGISTERED PROFESSIONAL ENGINEER MATTHEW J. KORVE No. 63248 Exp. 6-30-18 CIVIL STATE OF CALIFORNIA

THE STATE OF CALIFORNIA OR ITS OFFICERS OR AGENTS SHALL NOT BE RESPONSIBLE FOR THE ACCURACY OR COMPLETENESS OF SCANNED COPIES OF THIS PLAN SHEET.

AECOM
2020 L STREET
SUITE 400
SACRAMENTO, CA 95811

NOTES:

1. FOR DETAILS NOT SHOWN, SEE REVISED STANDARD PLANS AND CONSTRUCTION DETAILS.

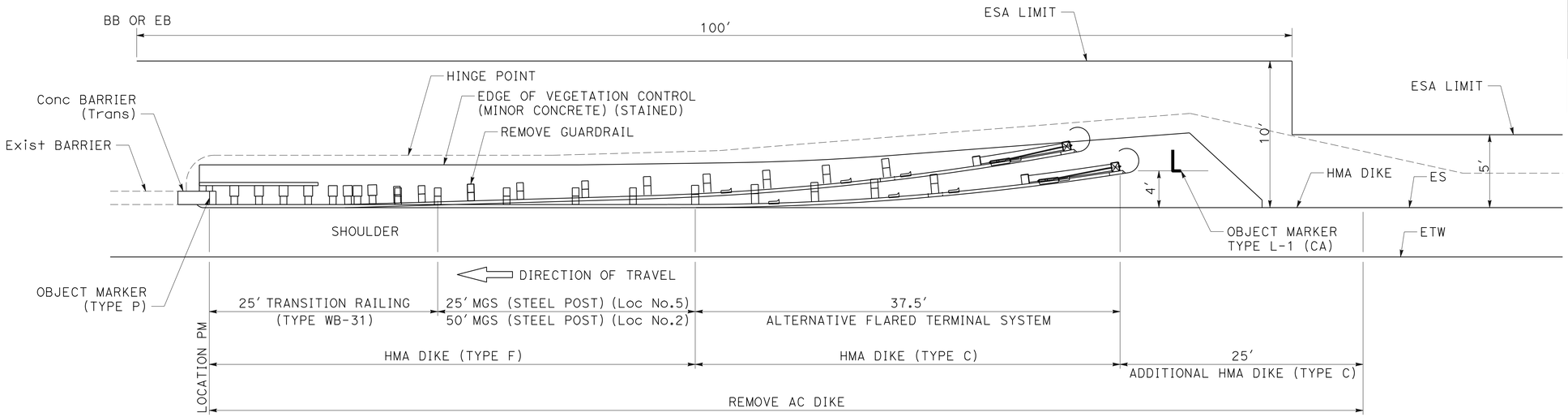

MGS (TYPE 12B LAYOUT) WITH VEGETATION CONTROL DETAIL

LOCATION No. 2 (ROUTE 101 SB OFF-RAMP)
LOCATION No. 5 (PM 0.00, WB)

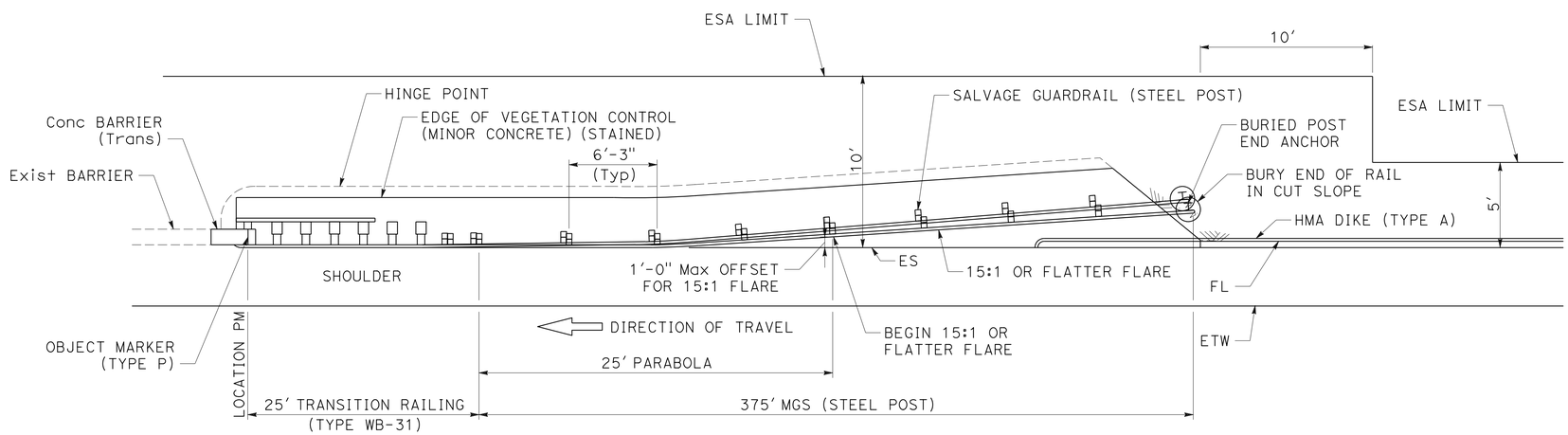

MGS (TYPE 12C LAYOUT) WITH VEGETATION CONTROL DETAIL

LOCATION No. 14 (PM 2.70, EB)

THE LOCATIONS OF WORK ARE FLEXIBLE AND MAY BE ADJUSTED TO MITIGATE ANY CONFLICTS WITH EXISTING UTILITY FACILITIES. UTILITIES ARE NOT SHOWN ON THESE PLANS

CONSTRUCTION DETAILS

NO SCALE

C-12

STATE OF CALIFORNIA - DEPARTMENT OF TRANSPORTATION
Caltrans

CONSULTANT FUNCTIONAL SUPERVISOR: MATTHEW J. KORVE
CALCULATED-DESIGNED BY: WAI KEI WONG
CHECKED BY: CLARA PONCE
REVISED BY
DATE REVISED

LAST REVISION 06-06-16
DATE PLOTTED => 10-AUG-2016
TIME PLOTTED => 14:22

Dist	COUNTY	ROUTE	POST MILES TOTAL PROJECT	SHEET No.	TOTAL SHEETS
05	SBt	156	0.0/3.0	17	113

REGISTERED CIVIL ENGINEER 6-13-16 DATE

6-20-16
PLANS APPROVAL DATE

REGISTERED PROFESSIONAL ENGINEER MATTHEW J. KORVE No. 63248 Exp. 6-30-18 CIVIL STATE OF CALIFORNIA

THE STATE OF CALIFORNIA OR ITS OFFICERS OR AGENTS SHALL NOT BE RESPONSIBLE FOR THE ACCURACY OR COMPLETENESS OF SCANNED COPIES OF THIS PLAN SHEET.

AECOM
2020 L STREET
SUITE 400
SACRAMENTO, CA 95811

NOTES:

1. FOR DETAILS NOT SHOWN, SEE REVISED STANDARD PLANS AND CONSTRUCTION DETAILS.

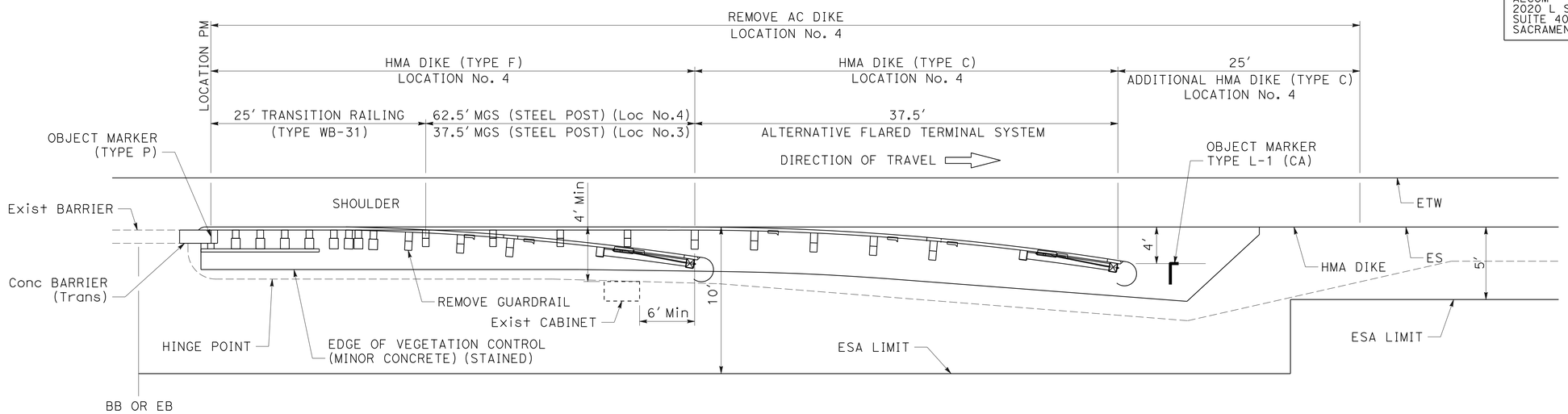

MGS (TYPE 12BB LAYOUT) WITH VEGETATION CONTROL DETAIL

LOCATION No. 3 (ROUTE 101 SB ON-RAMP)
LOCATION No. 4 (PM 0.03, EB)

THE LOCATIONS OF WORK ARE FLEXIBLE AND MAY BE ADJUSTED TO MITIGATE ANY CONFLICTS WITH EXISTING UTILITY FACILITIES. UTILITIES ARE NOT SHOWN ON THESE PLANS

CONSTRUCTION DETAILS

NO SCALE

C-13

REVISED BY | DATE REVISED
CLARA PONCE | WAI KEI WONG
CALCULATED-DESIGNED BY | CHECKED BY
CONSULTANT FUNCTIONAL SUPERVISOR
MATTHEW J. KORVE
STATE OF CALIFORNIA - DEPARTMENT OF TRANSPORTATION
Caltrans

LAST REVISION 06-06-16
DATE PLOTTED => 10-AUG-2016
TIME PLOTTED => 14:22

Dist	COUNTY	ROUTE	POST MILES TOTAL PROJECT	SHEET No.	TOTAL SHEETS
05	SBt	156	0.0/3.0	18	113

REGISTERED CIVIL ENGINEER 6-13-16 DATE

6-20-16
PLANS APPROVAL DATE

REGISTERED PROFESSIONAL ENGINEER MATTHEW J. KORVE No. 63248 Exp. 6-30-18 CIVIL STATE OF CALIFORNIA

THE STATE OF CALIFORNIA OR ITS OFFICERS OR AGENTS SHALL NOT BE RESPONSIBLE FOR THE ACCURACY OR COMPLETENESS OF SCANNED COPIES OF THIS PLAN SHEET.

AECOM
2020 L STREET
SUITE 400
SACRAMENTO, CA 95811

NOTES:

1. FOR DETAILS NOT SHOWN, SEE REVISED STANDARD PLANS AND CONSTRUCTION DETAILS.

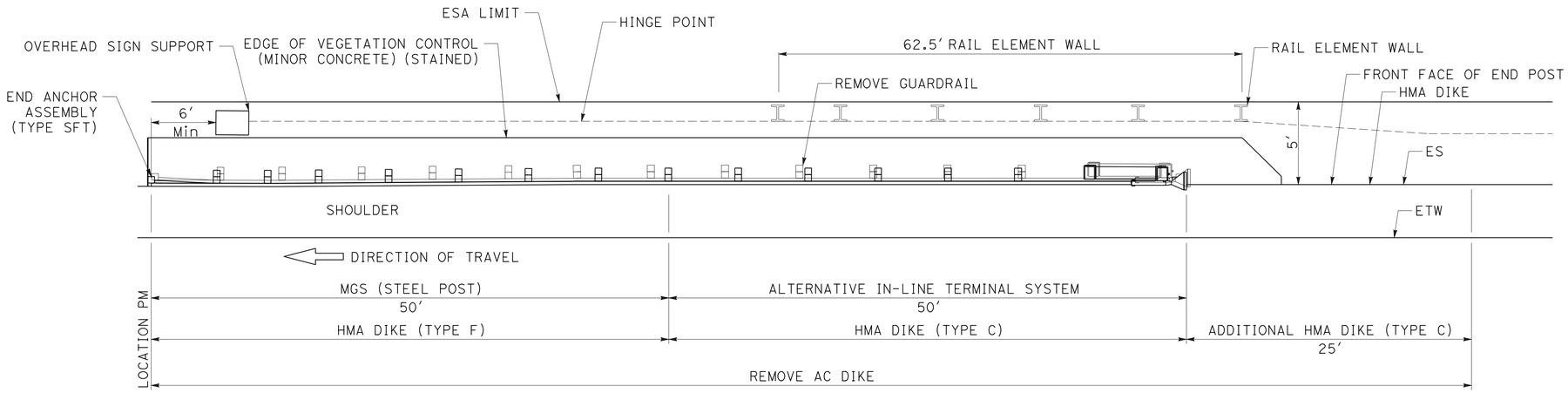

MGS (TYPE 16A LAYOUT) WITH VEGETATION CONTROL DETAIL

LOCATION No. 6 (PM 0.23, WB)

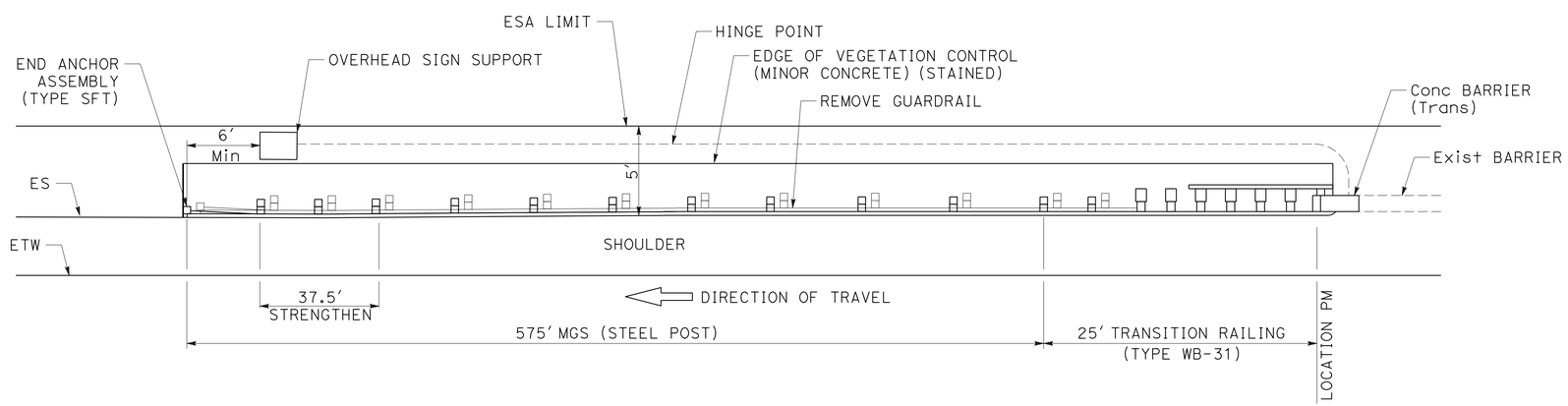

MGS (TYPE 16A Mod LAYOUT) WITH VEGETATION CONTROL DETAIL

LOCATION No. 18 (PM 2.72, EB)

THE LOCATIONS OF WORK ARE FLEXIBLE AND MAY BE ADJUSTED TO MITIGATE ANY CONFLICTS WITH EXISTING UTILITY FACILITIES. UTILITIES ARE NOT SHOWN ON THESE PLANS

CONSTRUCTION DETAILS

NO SCALE

C-14

REVISED BY | DATE REVISED
CLARA PONCE | WAI KEI WONG
CALCULATED-DESIGNED BY | CHECKED BY
CONSULTANT FUNCTIONAL SUPERVISOR
MATTHEW J. KORVE
STATE OF CALIFORNIA - DEPARTMENT OF TRANSPORTATION
Caltrans

LAST REVISION 06-06-16 | DATE PLOTTED => 10-AUG-2016 | TIME PLOTTED => 14:22

Dist	COUNTY	ROUTE	POST MILES TOTAL PROJECT	SHEET No.	TOTAL SHEETS
05	SBt	156	0.0/3.0	19	113

REGISTERED CIVIL ENGINEER — DATE 6-13-16

6-20-16
PLANS APPROVAL DATE

REGISTERED PROFESSIONAL ENGINEER — MATTHEW J. KORVE — No. 63248 — Exp. 6-30-18 — CIVIL — STATE OF CALIFORNIA

THE STATE OF CALIFORNIA OR ITS OFFICERS OR AGENTS SHALL NOT BE RESPONSIBLE FOR THE ACCURACY OR COMPLETENESS OF SCANNED COPIES OF THIS PLAN SHEET.

AECOM
2020 L STREET
SUITE 400
SACRAMENTO, CA 95811

NOTES:
1. FOR ACCURATE RIGHT OF WAY DATA, CONTACT RIGHT OF WAY ENGINEERING AT THE DISTRICT OFFICE.
2. EXACT LOCATION OF PAVEMENT MARKINGS TO BE DETERMINED BY ENGINEER.
3. ALL ELEVATIONS ARE IN FEET UNLESS OTHERWISE NOTED
4. SEE SHEET C-5 FOR ADJUST FRAME AND COVER TO GRADE DETAIL

LEGEND (APPLY TO THIS Sht ONLY)

- (CW) 12' WHITE THERMOPLASTIC PAVEMENT MARKING - CROSSWALK
- (X) CURVE NUMBER
- REMOVE AC Pvmt 0.5' HMA (TYPE A)

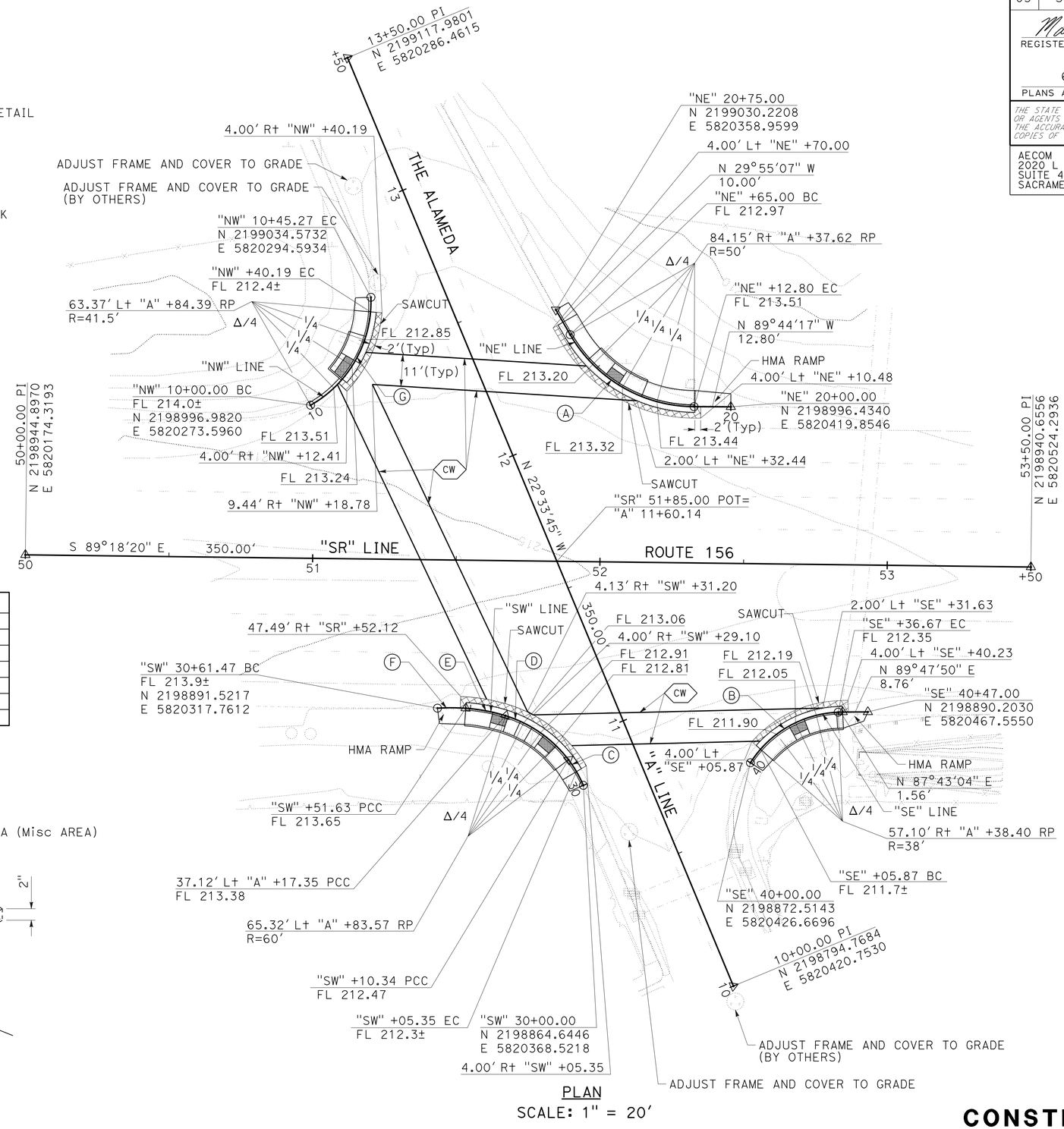

PLAN
SCALE: 1" = 20'

CURVE DATA

No. (X)	R	Δ	T	L
A	50.00	59°49'10"	28.76	52.20
B	38.00	55°17'41"	19.91	36.67
C	40.89	14°29'40"	5.20	10.34
D	44.00	35°22'18"	14.03	27.16
E	60.00	13°29'17"	7.10	14.12
F	80.00	7°2'34"	4.92	9.83
G	41.50	62°29'59"	25.18	45.27

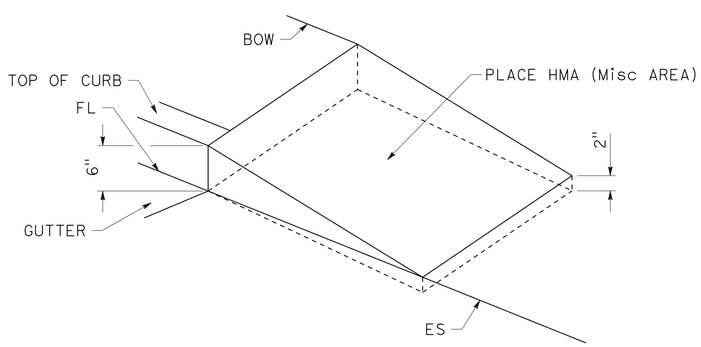

TYPICAL HMA RAMP
NO SCALE

CONSTRUCTION DETAILS

SCALE AS SHOWN

C-15

STATE OF CALIFORNIA - DEPARTMENT OF TRANSPORTATION

Caltrans

CONSULTANT FUNCTIONAL SUPERVISOR: MATTHEW J. KORVE

CALCULATED-DESIGNED BY: WAI KEI WONG

CHECKED BY: CLARA PONCE

REVISED BY / DATE REVISED

LAST REVISION 06-06-16

DATE PLOTTED => 10-AUG-2016
TIME PLOTTED => 14:22

Dist	COUNTY	ROUTE	POST MILES TOTAL PROJECT	SHEET No.	TOTAL SHEETS
05	SBt	156	0.0/3.0	20	113

REGISTERED CIVIL ENGINEER 6-13-16 DATE

6-20-16
PLANS APPROVAL DATE

REGISTERED PROFESSIONAL ENGINEER MATTHEW J. KORVE No. 63248 Exp. 6-30-18 CIVIL STATE OF CALIFORNIA

THE STATE OF CALIFORNIA OR ITS OFFICERS OR AGENTS SHALL NOT BE RESPONSIBLE FOR THE ACCURACY OR COMPLETENESS OF SCANNED COPIES OF THIS PLAN SHEET.

AECOM
2020 L STREET
SUITE 400
SACRAMENTO, CA 95811

NOTES:

1. FOR ACCURATE RIGHT OF WAY DATA, CONTACT RIGHT OF WAY ENGINEERING AT THE DISTRICT OFFICE.
2. FOR ADDITIONAL CURB RETURN DETAILS, SEE CONSTRUCTION DETAILS.
3. FOR LOCATION OF PUSH BUTTONS, SEE ELECTRICAL PLAN.

LEGEND (APPLY TO THIS Sht ONLY)

REMOVE AC Pvmt
0.5' HMA (TYPE A)

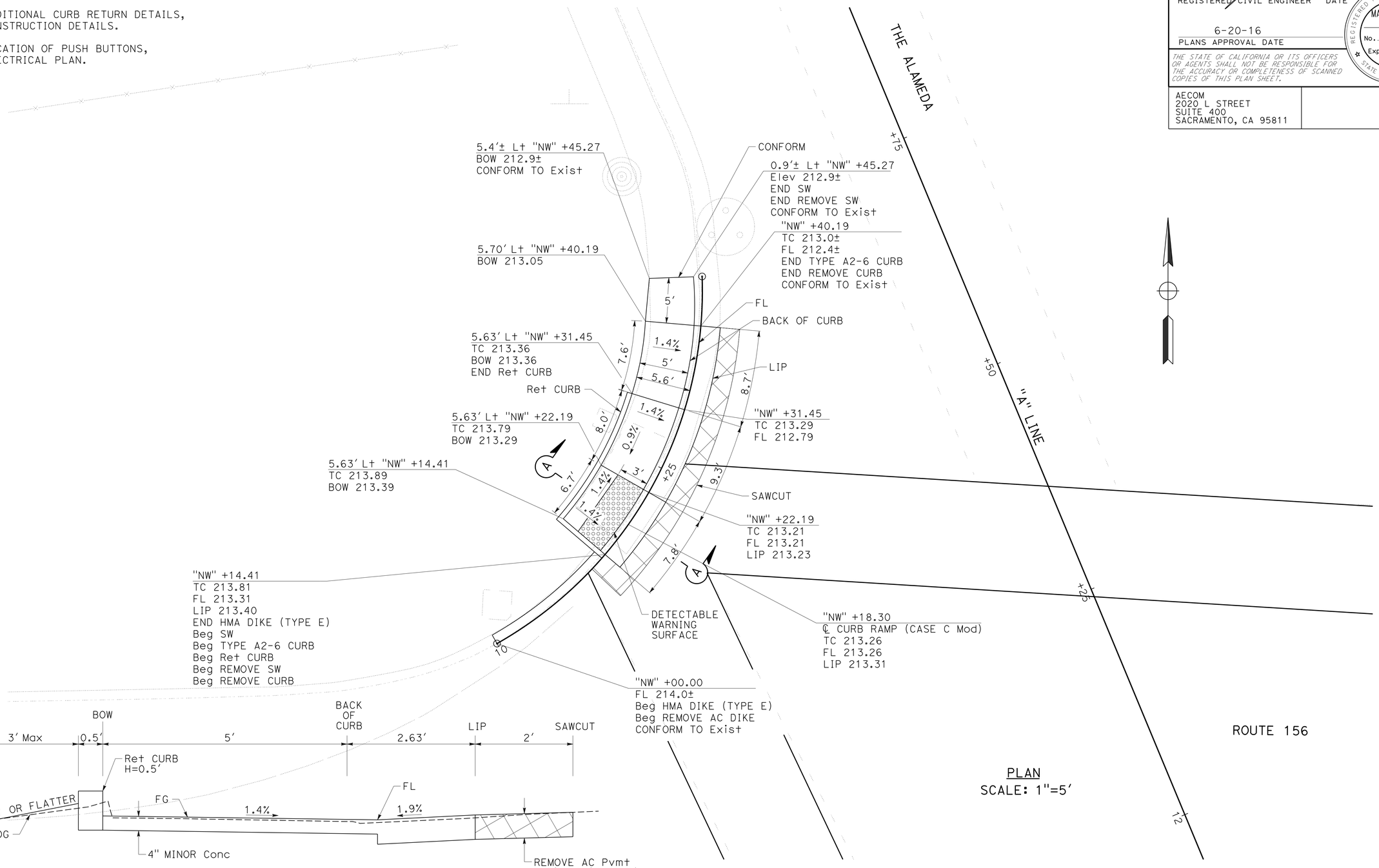

PLAN
SCALE: 1"=5'

SECTION A-A
NO SCALE

CONSTRUCTION DETAILS

SCALE AS SHOWN

C-16

STATE OF CALIFORNIA - DEPARTMENT OF TRANSPORTATION
Caltrans

CONSULTANT FUNCTIONAL SUPERVISOR: MATTHEW J. KORVE
CALCULATED-DESIGNED BY: WAI KEI WONG
CHECKED BY: CLARA PONCE
REVISED BY
DATE REVISED

LAST REVISION 06-06-16
DATE PLOTTED => 10-AUG-2016
TIME PLOTTED => 14:22

Dist	COUNTY	ROUTE	POST MILES TOTAL PROJECT	SHEET No.	TOTAL SHEETS
05	SBt	156	0.0/3.0	21	113

REGISTERED CIVIL ENGINEER 6-13-16 DATE

6-20-16
PLANS APPROVAL DATE

REGISTERED PROFESSIONAL ENGINEER MATTHEW J. KORVE No. 63248 Exp. 6-30-18 CIVIL STATE OF CALIFORNIA

THE STATE OF CALIFORNIA OR ITS OFFICERS OR AGENTS SHALL NOT BE RESPONSIBLE FOR THE ACCURACY OR COMPLETENESS OF SCANNED COPIES OF THIS PLAN SHEET.

AECOM
2020 L STREET
SUITE 400
SACRAMENTO, CA 95811

NOTES:

1. FOR ACCURATE RIGHT OF WAY DATA, CONTACT RIGHT OF WAY ENGINEERING AT THE DISTRICT OFFICE.
2. FOR ADDITIONAL CURB RETURN DETAILS, SEE CONSTRUCTION DETAILS.
3. FOR LOCATION OF PUSH BUTTONS, SEE ELECTRICAL PLAN.

LEGEND (APPLY TO THIS Sht ONLY)

- REMOVE AC Pvmt 0.5′ HMA (TYPE A)
- PLACE HMA (Misc AREA) (SEE DETAIL ON SHEET C-15)

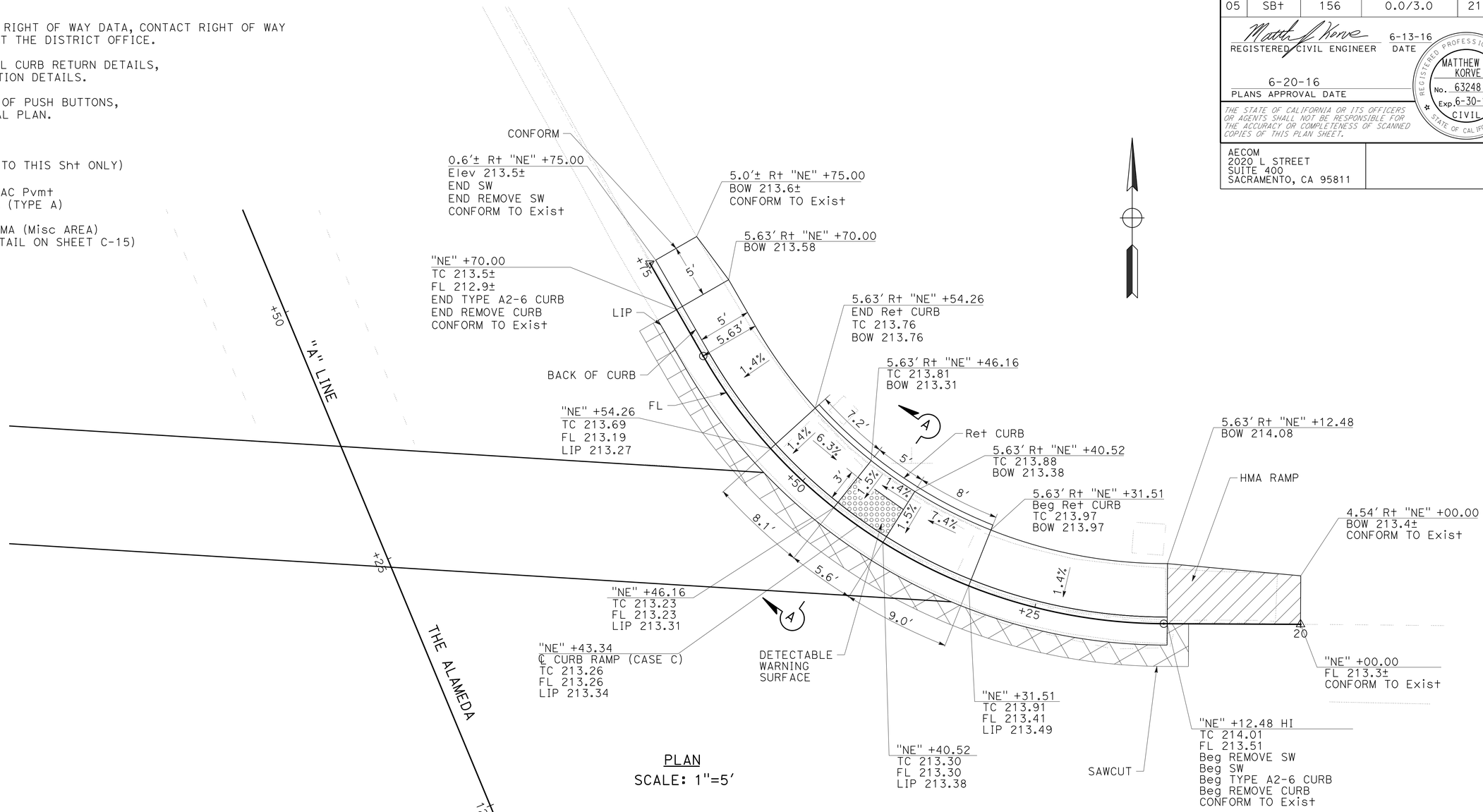

PLAN
SCALE: 1"=5′

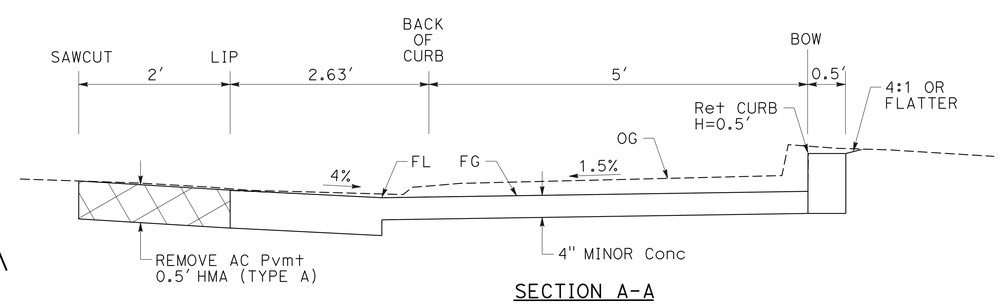

SECTION A-A
NO SCALE

CONSTRUCTION DETAILS
SCALE AS SHOWN **C-17**

STATE OF CALIFORNIA - DEPARTMENT OF TRANSPORTATION
Caltrans
CONSULTANT FUNCTIONAL SUPERVISOR: MATTHEW J. KORVE
CALCULATED-DESIGNED BY: WAI KEI WONG
CHECKED BY: CLARA PONCE
REVISED BY
DATE REVISED

LAST REVISION 06-06-16
DATE PLOTTED => 10-AUG-2016
TIME PLOTTED => 14:22

Dist	COUNTY	ROUTE	POST MILES TOTAL PROJECT	SHEET No.	TOTAL SHEETS
05	SBt	156	0.0/3.0	22	113

REGISTERED CIVIL ENGINEER 6-13-16 DATE

6-20-16
PLANS APPROVAL DATE

REGISTERED PROFESSIONAL ENGINEER MATTHEW J. KORVE No. 63248 Exp. 6-30-18 CIVIL STATE OF CALIFORNIA

THE STATE OF CALIFORNIA OR ITS OFFICERS OR AGENTS SHALL NOT BE RESPONSIBLE FOR THE ACCURACY OR COMPLETENESS OF SCANNED COPIES OF THIS PLAN SHEET.

AECOM
2020 L STREET
SUITE 400
SACRAMENTO, CA 95811

NOTES:

1. FOR ACCURATE RIGHT OF WAY DATA, CONTACT RIGHT OF WAY ENGINEERING AT THE DISTRICT OFFICE.
2. FOR ADDITIONAL CURB RETURN DETAILS, SEE CONSTRUCTION DETAILS.
3. FOR LOCATION OF PUSH BUTTONS, SEE ELECTRICAL PLAN.

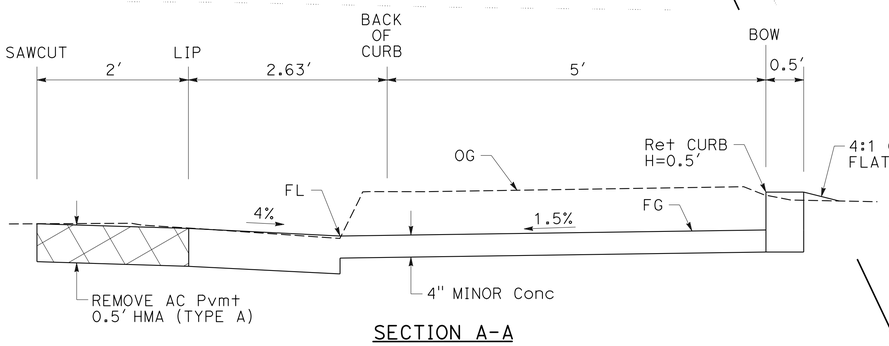

SECTION A-A
NO SCALE

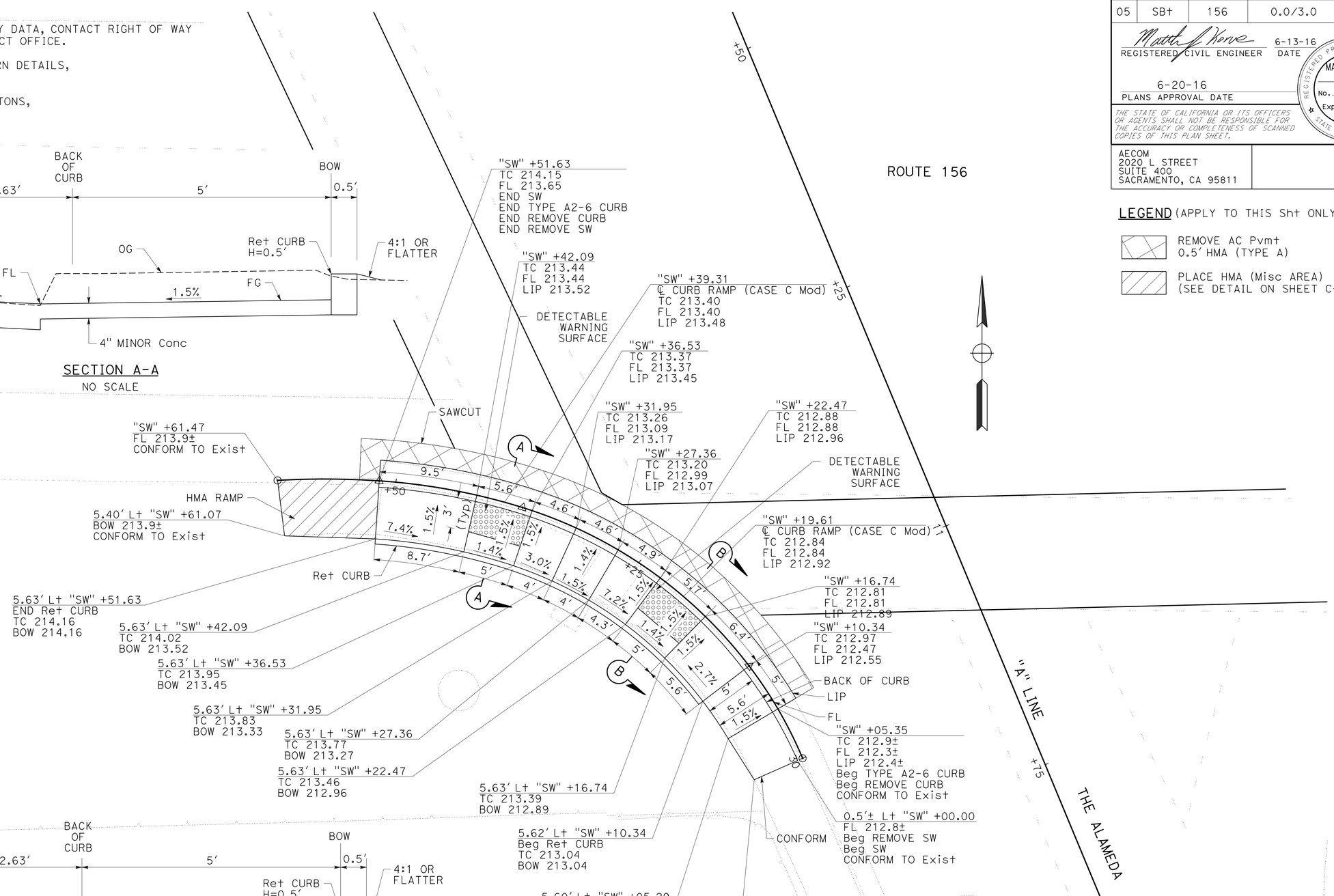

PLAN
SCALE: 1"=5′

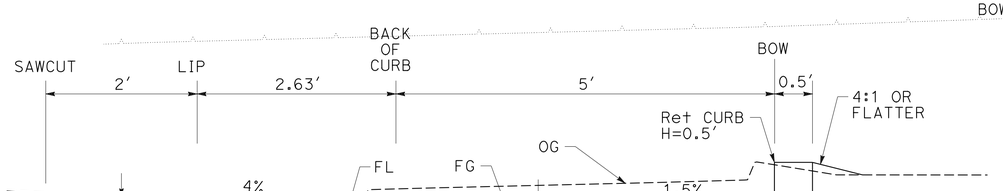

SECTION B-B
NO SCALE

LEGEND (APPLY TO THIS Sht ONLY)

- REMOVE AC Pvmt 0.5′ HMA (TYPE A)
- PLACE HMA (Misc AREA) (SEE DETAIL ON SHEET C-15)

CONSTRUCTION DETAILS

SCALE AS SHOWN

C-18

STATE OF CALIFORNIA - DEPARTMENT OF TRANSPORTATION
Caltrans

CONSULTANT FUNCTIONAL SUPERVISOR: MATTHEW J. KORVE
CALCULATED-DESIGNED BY: WAI KEI WONG
CHECKED BY: CLARA PONCE
REVISED BY
DATE REVISED

LAST REVISION 06-06-16
DATE PLOTTED => 10-AUG-2016
TIME PLOTTED => 14:22

Dist	COUNTY	ROUTE	POST MILES TOTAL PROJECT	SHEET No.	TOTAL SHEETS
05	SBt	156	0.0/3.0	23	113

REGISTERED CIVIL ENGINEER 6-13-16 DATE

6-20-16
PLANS APPROVAL DATE

REGISTERED PROFESSIONAL ENGINEER MATTHEW J. KORVE No. 63248 Exp. 6-30-18 CIVIL STATE OF CALIFORNIA

THE STATE OF CALIFORNIA OR ITS OFFICERS OR AGENTS SHALL NOT BE RESPONSIBLE FOR THE ACCURACY OR COMPLETENESS OF SCANNED COPIES OF THIS PLAN SHEET.

AECOM
2020 L STREET
SUITE 400
SACRAMENTO, CA 95811

NOTES:

1. FOR ACCURATE RIGHT OF WAY DATA, CONTACT RIGHT OF WAY ENGINEERING AT THE DISTRICT OFFICE.
2. FOR ADDITIONAL CURB RETURN DETAILS, SEE CONSTRUCTION DETAILS.
3. FOR LOCATION OF PUSH BUTTONS, SEE ELECTRICAL PLAN.

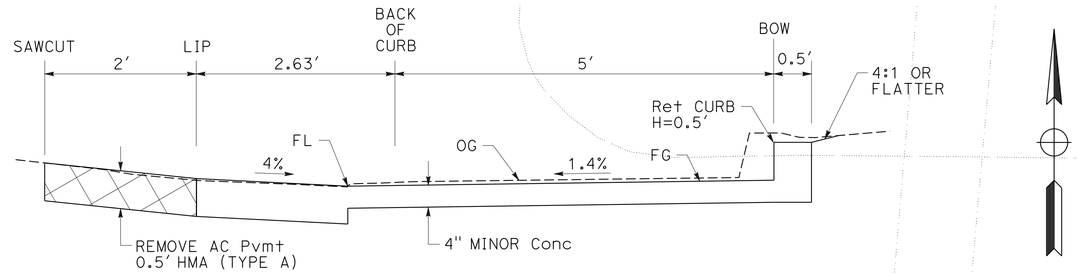

SECTION A-A
NO SCALE

LEGEND (APPLY TO THIS Sht ONLY)

REMOVE AC Pvmt 0.5′ HMA (TYPE A)

PLACE HMA (Misc AREA) (SEE DETAIL ON SHEET C-15)

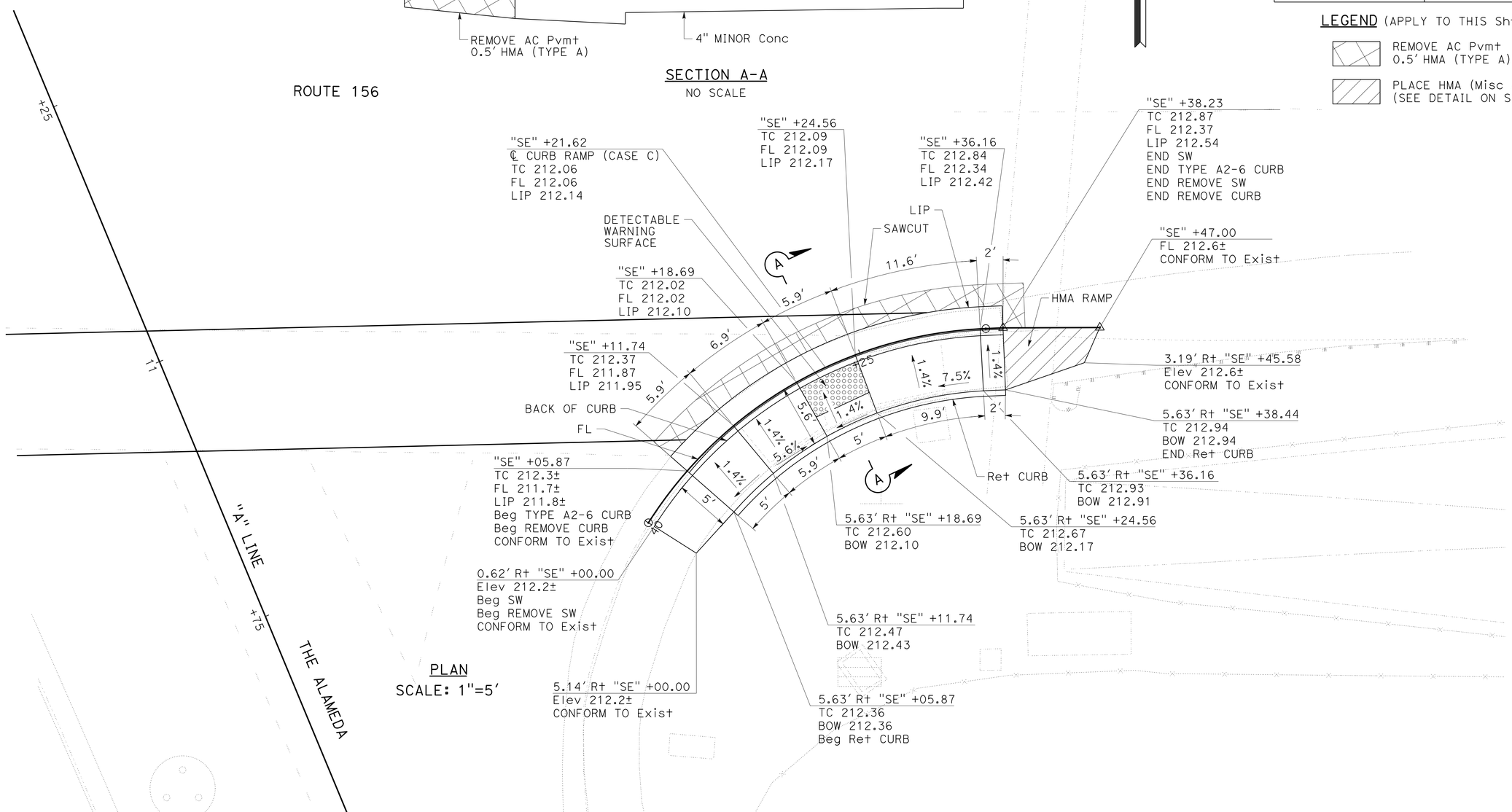

PLAN
SCALE: 1"=5′

CONSTRUCTION DETAILS

SCALE AS SHOWN

C-19

STATE OF CALIFORNIA - DEPARTMENT OF TRANSPORTATION

Caltrans

CONSULTANT FUNCTIONAL SUPERVISOR: MATTHEW J. KORVE

CALCULATED-DESIGNED BY: WAI KEI WONG

CHECKED BY: CLARA PONCE

REVISED BY

DATE REVISED

LAST REVISION 06-06-16

DATE PLOTTED => 10-AUG-2016
TIME PLOTTED => 14:22

Dist	COUNTY	ROUTE	POST MILES TOTAL PROJECT	SHEET No.	TOTAL SHEETS
05	SBt	156	0.0/3.0	24	113

REGISTERED CIVIL ENGINEER 6-13-16 DATE

6-20-16
PLANS APPROVAL DATE

REGISTERED PROFESSIONAL ENGINEER MATTHEW J. KORVE No. 63248 Exp. 6-30-18 CIVIL STATE OF CALIFORNIA

THE STATE OF CALIFORNIA OR ITS OFFICERS OR AGENTS SHALL NOT BE RESPONSIBLE FOR THE ACCURACY OR COMPLETENESS OF SCANNED COPIES OF THIS PLAN SHEET.

AECOM
2020 L STREET
SUITE 400
SACRAMENTO, CA 95811

NOTES:

1. SIGN LOCATIONS SHOWN ARE APPROXIMATE. EXACT LOCATIONS ARE TO BE DETERMINED BY THE ENGINEER.
2. ALL WORK SHALL BE DONE IN ACCORDANCE WITH CALTRANS 2010 STANDARD PLANS AND 2010 SPECIFICATIONS, THE CALIFORNIA MUTCD, SIGN SPECIFICATIONS AND THE SPECIAL PROVISIONS.
3. PLACE CONSTRUCTION PROJECT FUNDING IDENTIFICATION SIGN.
4. FOR ADDITIONAL CONSTRUCTION AREA SIGNS, SEE TRAFFIC HANDLING SHEETS.
5. COVER ALL CALL BOXES WITHIN PROJECT LIMITS DURING CONSTRUCTION.

STATIONARY MOUNTED CONSTRUCTION AREA SIGNS

SIGN No.	SIGN CODE	SIGN MESSAGE	PANEL SIZE	No. OF POST AND SIZE	No. OF SIGNS
A	W20-1	ROAD WORK AHEAD	48" x 48"	2 - 4" x 6"	3
B	W20-1	ROAD WORK AHEAD	36" x 36"	1 - 4" x 6"	5
C	G20-2	END ROAD WORK	48" x 24"	2 - 4" x 6"	3
D	G20-2	END ROAD WORK	36" x 18"	1 - 4" x 4"	5
E	C40A(CA)	TRAFFIC FINES DOUBLED IN WORK ZONES	48" x 48"	2 - 4" x 6"	3

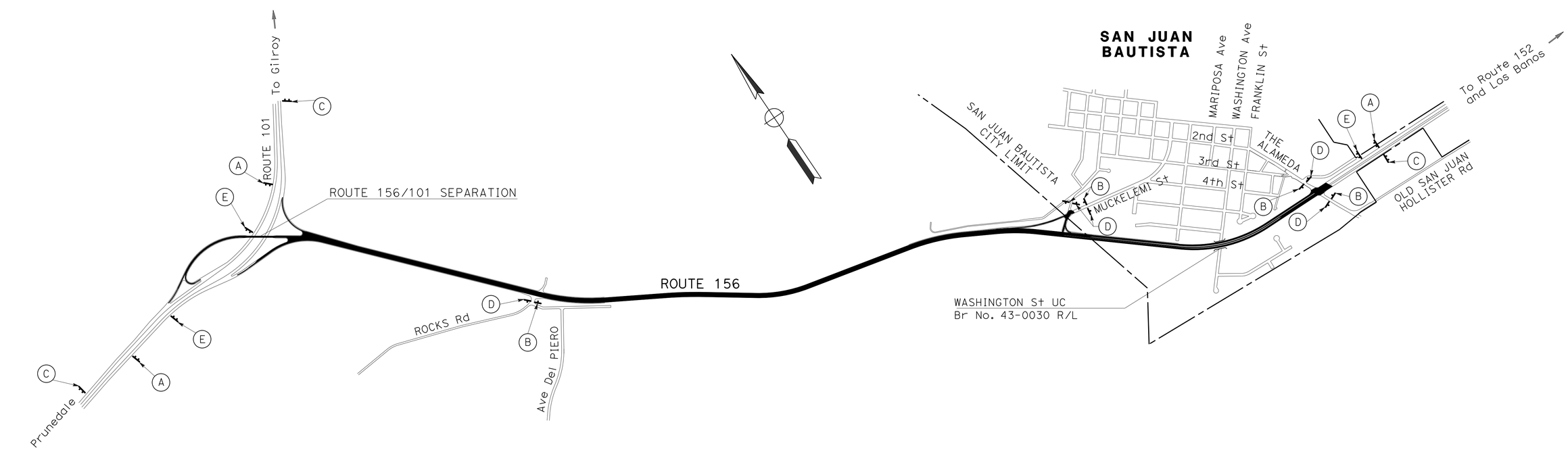

CONSTRUCTION AREA SIGNS

APPROVED FOR CONSTRUCTION AREA SIGN WORK ONLY

NO SCALE

CS-1

STATE OF CALIFORNIA - DEPARTMENT OF TRANSPORTATION
Caltrans

CONSULTANT FUNCTIONAL SUPERVISOR: MATTHEW J. KORVE
CALCULATED-DESIGNED BY: MATTHEW J. KORVE
CHECKED BY: CLARA PONCE
REVISED BY
DATE REVISED

LAST REVISION 06-06-16
DATE PLOTTED => 10-AUG-2016
TIME PLOTTED => 14:22

Dist	COUNTY	ROUTE	POST MILES TOTAL PROJECT	SHEET No.	TOTAL SHEETS
05	SBt	156	0.0/3.0	25	113

REGISTERED CIVIL ENGINEER 6-13-16 DATE

6-20-16
PLANS APPROVAL DATE

REGISTERED PROFESSIONAL ENGINEER MATTHEW J. KORVE No. 63248 Exp. 6-30-18 CIVIL STATE OF CALIFORNIA

THE STATE OF CALIFORNIA OR ITS OFFICERS OR AGENTS SHALL NOT BE RESPONSIBLE FOR THE ACCURACY OR COMPLETENESS OF SCANNED COPIES OF THIS PLAN SHEET.

AECOM
2020 L STREET
SUITE 400
SACRAMENTO, CA 95811

NOTES:

1. SIGN LOCATIONS SHOWN ARE APPROXIMATE. EXACT LOCATIONS ARE TO BE DETERMINED BY THE ENGINEER.
2. ALL WORK SHALL BE DONE IN ACCORDANCE WITH CALTRANS 2010 STANDARD PLANS AND 2010 SPECIFICATIONS, THE CALIFORNIA MUTCD, SIGN SPECIFICATIONS AND THE SPECIAL PROVISIONS.
3. FOR RAMP CLOSURE TRAFFIC HANDLING LAYOUT SEE REVISED Std Pln T14.
4. FOR ADDITIONAL CONSTRUCTION AREA SIGNS, SEE TRAFFIC HANDLING SHEETS.

LEGEND

- PORTABLE CHANGEABLE MESSAGE SIGN
- Exist BIKE ROUTE
- BIKE DETOUR

STATIONARY MOUNTED CONSTRUCTION AREA SIGNS

SIGN No.	SIGN CODE	SIGN MESSAGE	PANEL SIZE	No. OF POST AND SIZE	No. OF SIGNS
A	C19(CA) Alt	RAMP CLOSED AHEAD	48" x 48"	2 - 4" x 6"	4
B	C2(CA) C38(CA)	RAMP CLOSED USE NEXT EXIT	48" x 30" 48" x 36"	ON BARRICADE	4
C	SC3(CA)	⇧ DETOUR	36" x 12"	1 - 4" x 6"	3
D	M4-8 M6-2(⇗)	DETOUR UP Rt ARROW	30" x 15" 21" x 15"	1 - 4" x 6"	4
E	M4-10	DETOUR ARROW (Lt OR Rt SEE PLAN)	48" x 18"	1 - 4" x 6"	4
F	M4-8a	END DETOUR	24" x 18"	1 - 4" x 4"	2

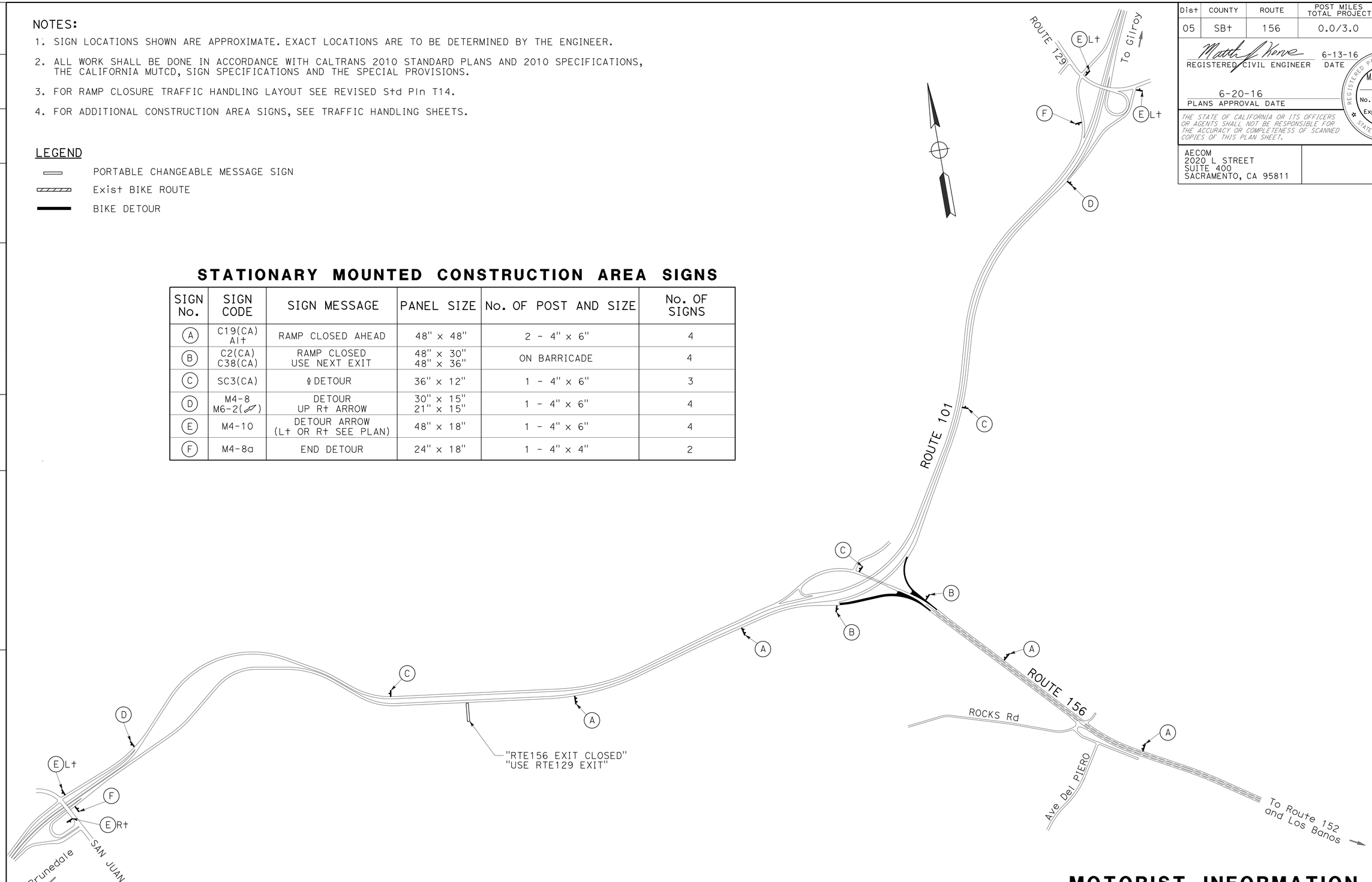

APPROVED FOR MOTORIST INFORMATION WORK ONLY

MOTORIST INFORMATION PLAN
(DETOUR PLAN FOR NORTHBOUND RAMPS CLOSURE)

NO SCALE

MI-1

STATE OF CALIFORNIA - DEPARTMENT OF TRANSPORTATION
Caltrans

CONSULTANT FUNCTIONAL SUPERVISOR: MATTHEW J. KORVE
CALCULATED-DESIGNED BY: MATTHEW J. KORVE
CHECKED BY: CLARA PONCE
REVISED BY
DATE REVISED

LAST REVISION 06-06-16
DATE PLOTTED => 10-AUG-2016
TIME PLOTTED => 14:22

Dist	COUNTY	ROUTE	POST MILES TOTAL PROJECT	SHEET No.	TOTAL SHEETS
05	SBt	156	0.0/3.0	26	113

REGISTERED CIVIL ENGINEER 6-13-16 DATE

6-20-16
PLANS APPROVAL DATE

REGISTERED PROFESSIONAL ENGINEER MATTHEW J. KORVE No. 63248 Exp. 6-30-18 CIVIL STATE OF CALIFORNIA

THE STATE OF CALIFORNIA OR ITS OFFICERS OR AGENTS SHALL NOT BE RESPONSIBLE FOR THE ACCURACY OR COMPLETENESS OF SCANNED COPIES OF THIS PLAN SHEET.

AECOM
2020 L STREET
SUITE 400
SACRAMENTO, CA 95811

NOTES:

1. SIGN LOCATIONS SHOWN ARE APPROXIMATE. EXACT LOCATIONS ARE TO BE DETERMINED BY THE ENGINEER.
2. ALL WORK SHALL BE DONE IN ACCORDANCE WITH CALTRANS 2010 STANDARD PLANS AND 2010 SPECIFICATIONS, THE CALIFORNIA MUTCD, SIGN SPECIFICATIONS AND THE SPECIAL PROVISIONS.
3. FOR RAMP AND LANE CLOSURE TRAFFIC HANDLING LAYOUT SEE REVISED Std Pln T10 AND T14.
4. FOR ADDITIONAL CONSTRUCTION AREA SIGNS, SEE TRAFFIC HANDLING SHEETS.

STATIONARY MOUNTED CONSTRUCTION AREA SIGNS

SIGN No.	SIGN CODE	SIGN MESSAGE	PANEL SIZE	No. OF POST AND SIZE	No. OF SIGNS
A	C19(CA) Alt	RAMP CLOSED AHEAD	48" x 48"	2 - 4" x 6"	2
B	C2(CA) C38(CA)	RAMP CLOSED USE NEXT EXIT	48" x 30" 48" x 36"	ON BARRICADE	4
C	SC3(CA)	⇧ DETOUR	36" x 12"	1 - 4" x 6"	3
D	M4-8 M6-2(⇗)	DETOUR UP Rt ARROW	30" x 15" 21" x 15"	1 - 4" x 6"	4
E	M4-10	DETOUR ARROW (Lt OR Rt SEE PLAN)	48" x 18"	1 - 4" x 6"	4
F	M4-8a	END DETOUR	24" x 18"	1 - 4" x 4"	2
G	C30(CA)	LANE CLOSED	30" x 15"	1 - 4" x 6"	2
H	R3-2	NO Lt TURN	24" x 18"	1 - 4" x 4"	2
I	C20(CA)L	LEFT LANE CLOSED AHEAD	48" x 48"	1 - 4" x 6"	2
J	W4-2L	Lt LANE REDUCTION	48" x 48"	1 - 4" x 4"	2
K	C2(CA)	ROAD CLOSED	36" x 24"	1 - 4" x 6"	2
L	C19(CA)	ROAD CLOSED AHEAD	36" x 36"	1 - 4" x 4"	3

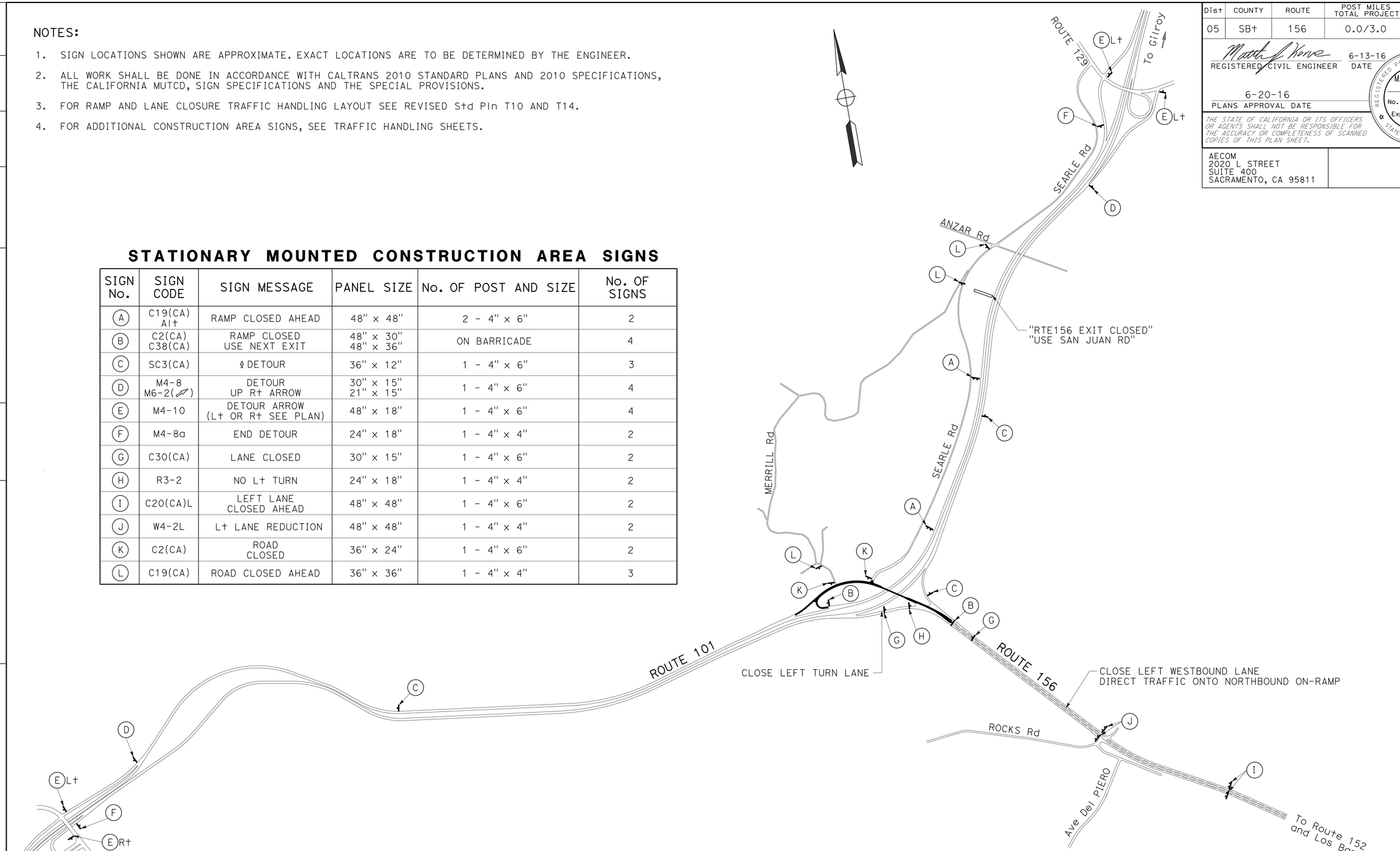

APPROVED FOR MOTORIST INFORMATION WORK ONLY.

MOTORIST INFORMATION PLAN
(DETOUR PLAN FOR SOUTHBOUND RAMPS AND SEPARATION CLOSURE)

NO SCALE

MI-2

STATE OF CALIFORNIA - DEPARTMENT OF TRANSPORTATION
Caltrans

CONSULTANT FUNCTIONAL SUPERVISOR: MATTHEW J. KORVE
CALCULATED-DESIGNED BY: MATTHEW J. KORVE
CHECKED BY: CLARA PONCE
REVISED BY
DATE REVISED

LAST REVISION 06-06-16 | DATE PLOTTED => 10-AUG-2016 | TIME PLOTTED => 14:22

Dist	COUNTY	ROUTE	POST MILES TOTAL PROJECT	SHEET No.	TOTAL SHEETS
05	SBt	156	0.0/3.0	27	113

REGISTERED CIVIL ENGINEER 6-13-16 DATE

6-20-16
PLANS APPROVAL DATE

REGISTERED PROFESSIONAL ENGINEER MATTHEW J. KORVE No. 63248 Exp. 6-30-18 CIVIL STATE OF CALIFORNIA

THE STATE OF CALIFORNIA OR ITS OFFICERS OR AGENTS SHALL NOT BE RESPONSIBLE FOR THE ACCURACY OR COMPLETENESS OF SCANNED COPIES OF THIS PLAN SHEET.

AECOM
2020 L STREET
SUITE 400
SACRAMENTO, CA 95811

NOTES:

1. SIGN LOCATIONS SHOWN ARE APPROXIMATE. EXACT LOCATIONS ARE TO BE DETERMINED BY THE ENGINEER.
2. ALL WORK SHALL BE DONE IN ACCORDANCE WITH CALTRANS 2010 STANDARD PLANS AND 2010 SPECIFICATIONS, THE CALIFORNIA MUTCD, SIGN SPECIFICATIONS AND THE SPECIAL PROVISIONS.

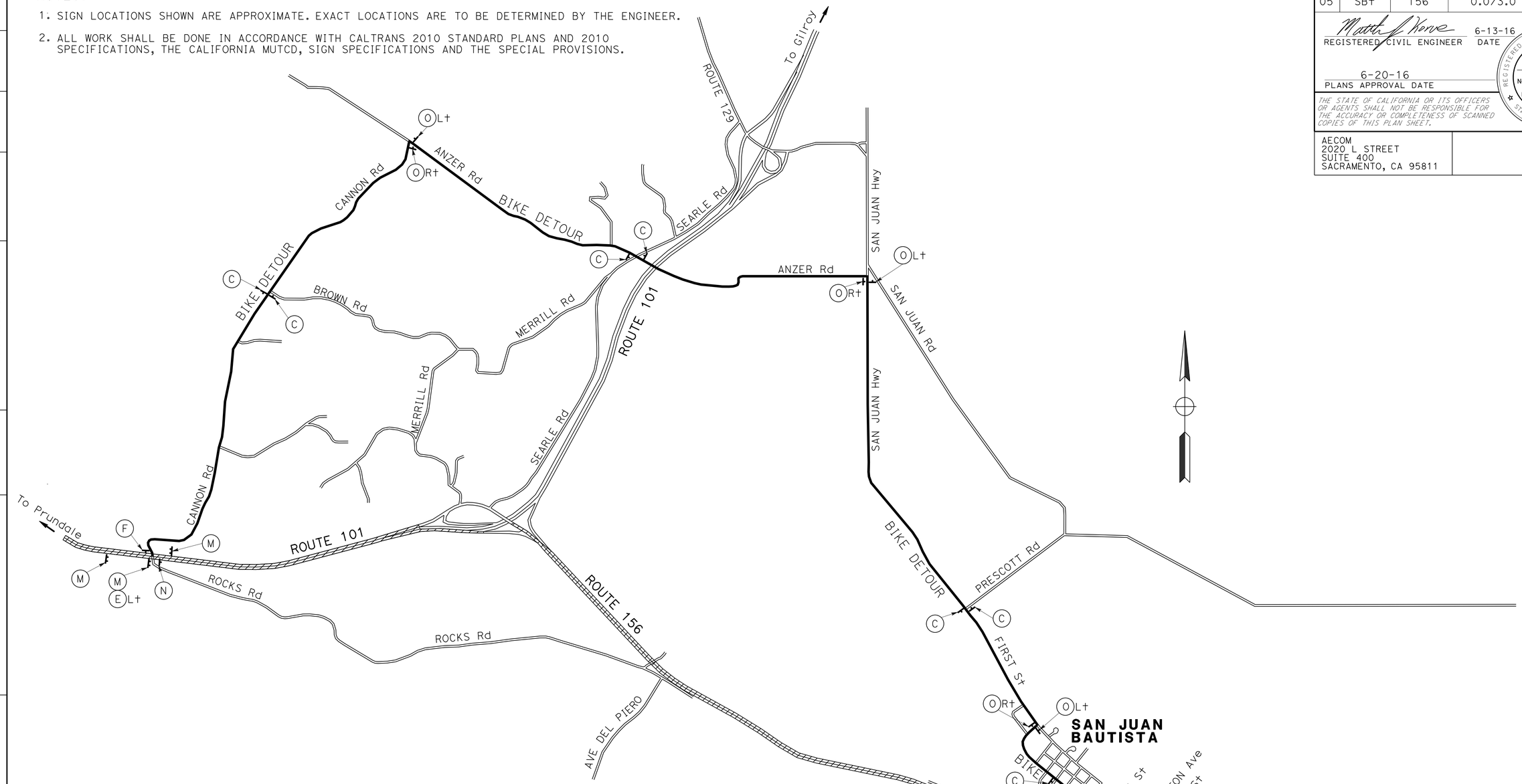

STATIONARY MOUNTED CONSTRUCTION AREA SIGNS

SIGN No.	SIGN CODE	SIGN MESSAGE	PANEL SIZE	No. OF POST AND SIZE	No. OF SIGN (EA)
C	SC3(CA)	⇧ DETOUR	36" x 12"	1 - 4" x 6"	8
E	M4-10	DETOUR ARROW (Lt OR Rt SEE PLAN)	48" x 18"	1 - 4" x 6"	2
F	M4-8a	END DETOUR	24" x 18"	1 - 4" x 4"	2
M	W11-1	BIKE WARNING	48" x 48"	2 - 4" x 6"	4
N	R5-6	NO BICYCLES	36" x 36"	1 - 4" x 6"	2
O	M4-9c	BIKE DETOUR W/ ARROW (Lt OR Rt SEE PLAN)	30" x 24"	1 - 4" x 6"	6

APPROVED FOR MOTORIST INFORMATION WORK ONLY

MOTORIST INFORMATION PLAN
(BICYCLE DETOUR PLAN)

NO SCALE

MI-3

REVISED BY | DATE REVISED
MATTHEW J. KORVE | WAI KEI WONG
CALCULATED-DESIGNED BY | CHECKED BY
CONSULTANT FUNCTIONAL SUPERVISOR
MATTHEW J. KORVE
STATE OF CALIFORNIA - DEPARTMENT OF TRANSPORTATION
Caltrans

LAST REVISION 06-06-16 | DATE PLOTTED => 10-AUG-2016 | TIME PLOTTED => 14:22

Dist	COUNTY	ROUTE	POST MILES TOTAL PROJECT	SHEET No.	TOTAL SHEETS
05	SBt	156	0.0/3.0	28	113

REGISTERED CIVIL ENGINEER 6-13-16 DATE

6-20-16
PLANS APPROVAL DATE

REGISTERED PROFESSIONAL ENGINEER MATTHEW J. KORVE No. 63248 Exp. 6-30-18 CIVIL STATE OF CALIFORNIA

THE STATE OF CALIFORNIA OR ITS OFFICERS OR AGENTS SHALL NOT BE RESPONSIBLE FOR THE ACCURACY OR COMPLETENESS OF SCANNED COPIES OF THIS PLAN SHEET.

AECOM
2020 L STREET
SUITE 400
SACRAMENTO, CA 95811

NOTES:

1. ALTHOUGH BOTH DIRECTIONS SHOWN, WORK AREA ALLOWED ONLY ON ONE SIDE OF STRUCTURE AT A TIME.
2. ACTUAL SIGN LOCATIONS TO BE DETERMINED BY THE ENGINEER TO FIT SITE CONDITIONS.

LEGEND

- CHANNELIZER (SURFACE MOUNTED)
- TEMPORARY TRAFFIC CONTROL SIGN

SIGN PANEL SIZE (Min)

- A 48" x 48"
- B 24" x 30"

DIRECTION	L
WB ROUTE 156	40′
EB ROUTE 156	130′

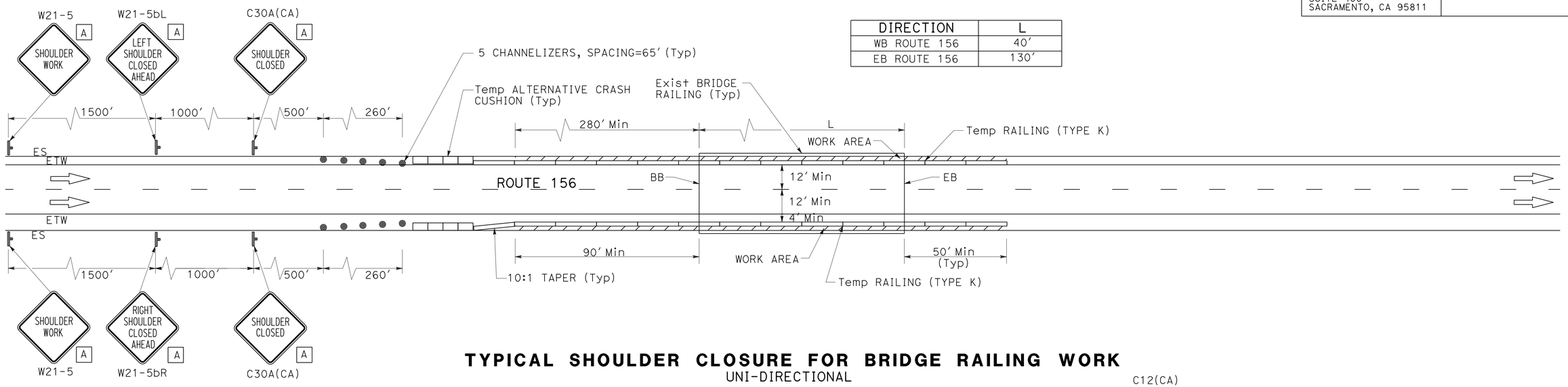

TYPICAL SHOULDER CLOSURE FOR BRIDGE RAILING WORK

UNI-DIRECTIONAL

WB ROUTE 156/WASHINGTON AVENUE UNDERCROSSING
EB ROUTE 156/WASHINGTON AVENUE UNDERCROSSING

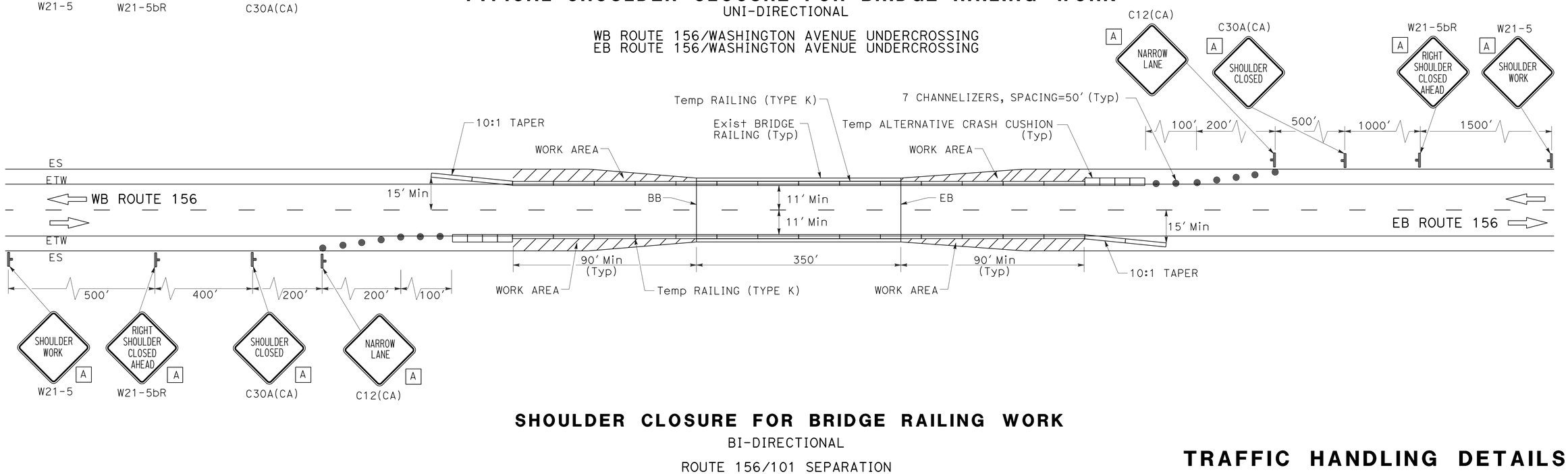

SHOULDER CLOSURE FOR BRIDGE RAILING WORK

BI-DIRECTIONAL

ROUTE 156/101 SEPARATION

TRAFFIC HANDLING DETAILS

NO SCALE

THD-1

REVISED BY | DATE REVISED
MATTHEW J. KORVE | CLARA PONCE
CALCULATED-DESIGNED BY | CHECKED BY
CONSULTANT FUNCTIONAL SUPERVISOR
MATTHEW J. KORVE
STATE OF CALIFORNIA - DEPARTMENT OF TRANSPORTATION
Caltrans

LAST REVISION 06-06-16 | DATE PLOTTED => 10-AUG-2016 | TIME PLOTTED => 14:22

Dist	COUNTY	ROUTE	POST MILES TOTAL PROJECT	SHEET No.	TOTAL SHEETS
05	SBt	156	0.0/3.0	29	113

REGISTERED CIVIL ENGINEER 6-13-16 DATE

6-20-16
PLANS APPROVAL DATE

REGISTERED PROFESSIONAL ENGINEER MATTHEW J. KORVE No. 63248 Exp. 6-30-18 CIVIL STATE OF CALIFORNIA

THE STATE OF CALIFORNIA OR ITS OFFICERS OR AGENTS SHALL NOT BE RESPONSIBLE FOR THE ACCURACY OR COMPLETENESS OF SCANNED COPIES OF THIS PLAN SHEET.

AECOM
2020 L STREET
SUITE 400
SACRAMENTO, CA 95811

TEMPORARY TRAFFIC CONTROL DEVICES

LOCATION	CHANNELIZER (SURFACE MOUNTED)	TEMPORARY RAILING (TYPE K)	TEMPORARY ALTERNATIVE CRASH CUSHION
	EA	LF	EA
EB WASHINGTON Blvd UC	10	780	2
WB WASHINGTON Blvd UC	10	600	2
ROUTE 156/101 SEPARATION	14	1,160	2
TOTAL	34	2,540	6

TRAFFIC HANDLING QUANTITIES

THQ-1

REVISED BY
DATE REVISED

WAI KEI WONG
CLARA PONCE

CALCULATED-DESIGNED BY
CHECKED BY

CONSULTANT FUNCTIONAL SUPERVISOR
MATTHEW J. KORVE

STATE OF CALIFORNIA - DEPARTMENT OF TRANSPORTATION
Caltrans

LAST REVISION 06-06-16
DATE PLOTTED => 10-AUG-2016
TIME PLOTTED => 14:22

Dist	COUNTY	ROUTE	POST MILES TOTAL PROJECT	SHEET No.	TOTAL SHEETS
05	SBt	156	0.0/3.0	30	113

REGISTERED CIVIL ENGINEER 6-13-16 DATE

6-20-16
PLANS APPROVAL DATE

REGISTERED PROFESSIONAL ENGINEER MATTHEW J. KORVE No. 63248 Exp. 6-30-18 CIVIL STATE OF CALIFORNIA

THE STATE OF CALIFORNIA OR ITS OFFICERS OR AGENTS SHALL NOT BE RESPONSIBLE FOR THE ACCURACY OR COMPLETENESS OF SCANNED COPIES OF THIS PLAN SHEET.

AECOM
2020 L STREET
SUITE 400
SACRAMENTO, CA 95811

REMOVE THERMOPLASTIC TRAFFIC STRIPE AND PAVEMENT MARKERS

LOCATION	DETAIL No.	LENGTH (N)	REMOVE THERMOPLASTIC TRAFFIC STRIPE		REMOVE PAVEMENT MARKER
			WHITE	YELLOW	
		LF	LF	LF	EA
PM 0.17 TO 0.3	12	701	176		16
PM 0.17 TO 0.3	12	704	176		16
PM 0.0 TO 0.05	22	252		504	24
PM 0.05 TO 0.09	22	171		342	18
SB 101 RAMP	22	1,445		2,890	124
PM 0.20 TO 0.3	25	558		558	50
PM 0.20 TO 0.3	25	556		556	50
PM 0.09 TO 0.20	29	539		2,156	48
SB 101 RAMP	29	130		520	14
SEARLE ROAD	38	35	70		3
NB 101 OFF-RAMP	38	334	668		15
NB 101 OFF-RAMP	38	1,130	2,260		49
NB 101 OFF-RAMP	38	84	168		5
NB 101 ON-RAMP	38	467	934		21
NB 101 ON-RAMP	38	75	150		5
NB 101 ON-RAMP	38	504	1,008		22
SB 101 OFF-RAMP	25A	299		299	14
SB 101 ON-RAMP	25A	397		397	18
NB 101 OFF-RAMP	25A	1,078		1,078	46
NB 101 ON-RAMP	25A	636		636	28
PM 0.0 TO 0.05	27B	257	257		
PM 0.0 TO 0.09	27B	454	454		
PM 0.18 TO 0.3	27B	608	608		
SEARLE ROAD	27B	45	45		
SB 101 OFF-RAMP	27B	2,101	2,101		
SB 101 ON-RAMP	27B	1,642	1,642		
NB 101 OFF-RAMP	27B	2,690	2,690		
NB 101 ON-RAMP	27B	1,724	1,724		
SB 101 ON-RAMP	27C	151	30		
		SUBTOTAL	15,161	9,936	586
		TOTAL	25,097		586

REMOVE THERMOPLASTIC PAVEMENT MARKING

LOCATION	DESCRIPTION	SQFT
SB 101 OFF-RAMP	TYPE V ARROW	33
SB 101 OFF-RAMP	TYPE V ARROW	33
SB 101 OFF-RAMP	TYPE V ARROW	33
SB 101 OFF-RAMP	TYPE V ARROW	33
SB 101 OFF-RAMP	TYPE V ARROW	33
SB 101 ON-RAMP	"STOP"	22
SB 101 ON-RAMP	LIMIT LINE	32
SEARLE ROAD	"STOP"	22
SEARLE ROAD	LIMIT LINE	51
SEARLE ROAD	DIAGONAL STRIPPING	65
PM 0.08 EB	TYPE V ARROW	33
PM 0.08 WB	TYPE V ARROW	33
PM 0.15 WB	TYPE VI ARROW	42
PM 0.17 WB	TYPE VI ARROW	42
PM 0.19 WB	TYPE VI ARROW	42
NB 101 OFF-RAMP	TYPE III (L) ARROW	42
NB 101 OFF-RAMP	TYPE III (L) ARROW	42
NB 101 OFF-RAMP	TYPE III (L) ARROW	42
NB 101 OFF-RAMP	TYPE V ARROW	33
NB 101 OFF-RAMP	TYPE III (L) ARROW	42
NB 101 OFF-RAMP	TYPE V ARROW	33
NB 101 OFF-RAMP	"STOP"	22
NB 101 OFF-RAMP	LIMIT LINE	35
NB 101 ON-RAMP	TYPE V ARROW	33
NB 101 ON-RAMP	"STOP"	22
NB 101 ON-RAMP	LIMIT LINE	21
TOTAL		916

PAVEMENT DELINEATION QUANTITIES

PDQ-1

REVISED BY | DATE REVISED
WAI KEI WONG | CLARA PONCE
CALCULATED-DESIGNED BY | CHECKED BY
CONSULTANT FUNCTIONAL SUPERVISOR
MATTHEW J. KORVE
STATE OF CALIFORNIA - DEPARTMENT OF TRANSPORTATION
Caltrans

LAST REVISION 06-06-16 | DATE PLOTTED => 10-AUG-2016 | TIME PLOTTED => 14:22

Dist	COUNTY	ROUTE	POST MILES TOTAL PROJECT	SHEET No.	TOTAL SHEETS
05	SBt	156	0.0/3.0	31	113

REGISTERED CIVIL ENGINEER 6-13-16 DATE

6-20-16
PLANS APPROVAL DATE

REGISTERED PROFESSIONAL ENGINEER MATTHEW J. KORVE No. 63248 Exp. 6-30-18 CIVIL STATE OF CALIFORNIA

THE STATE OF CALIFORNIA OR ITS OFFICERS OR AGENTS SHALL NOT BE RESPONSIBLE FOR THE ACCURACY OR COMPLETENESS OF SCANNED COPIES OF THIS PLAN SHEET.

AECOM
2020 L STREET
SUITE 400
SACRAMENTO, CA 95811

THERMOPLASTIC TRAFFIC STRIPE AND PAVEMENT MARKERS

LOCATION	DETAIL No.	LENGTH (N)	4" THERMOPLASTIC TRAFFIC STRIPE (ENHANCED WET NIGHT VISIBILITY)		4" THERMOPLASTIC TRAFFIC STRIPE (ENHANCED WET NIGHT VISIBILITY) (BROKEN 17-7)	4" THERMOPLASTIC TRAFFIC STRIPE (ENHANCED WET NIGHT VISIBILITY) (BROKEN 36-12)	8" THERMOPLASTIC TRAFFIC STRIPE (ENHANCED WET NIGHT VISIBILITY)	PAVEMENT MARKER (RETROREFLECTIVE)		
			WHITE	YELLOW				TYPE D	TYPE G	TYPE H
		LF	LF	LF	LF	LF	LF	EA	EA	EA
SB 101 OFF-RAMP	22	1,485		2,970				126		
SB 101 OFF-RAMP	25A	299		299						14
SB 101 OFF-RAMP	27B	2,100	2,100							
SB 101 OFF-RAMP	38	282					282		13	
SB 101 ON-RAMP	25A	397		397						18
SB 101 ON-RAMP	27B	1,687	1,687							
SB 101 ON-RAMP	29	130		520				14		
SB 101 ON-RAMP	38	35					35		3	
NB 101 OFF-RAMP	25A	1,078		1,078						46
NB 101 OFF-RAMP	27B	2,690	2,690							
NB 101 OFF-RAMP	38	1,548					1,548		66	
NB 101 ON-RAMP	25A	636		636						28
NB 101 ON-RAMP	27B	1,724	1,724							
NB 101 ON-RAMP	38	579					579		26	
PM 0.0 TO 0.05	22	252		504				24		
PM 0.0 TO 0.05	27B	257	257							
PM 0.0 TO 0.09	27B	454	454							
PM 0.05 TO 0.09	22	171		342				18		
PM 0.05 TO 0.17	27B	608	608							
PM 0.09 TO 0.18	38	467					467		21	
PM 0.09 TO 0.20	29	539		2,156				48		
PM 0.17 TO 0.76	12	3,425				3,425			73	
PM 0.17 TO 0.76	12	3,062				3,062			65	
PM 0.17 TO 0.75	27B	2,986	2,986							
PM 0.18 TO 2.13	27B	10,340	10,340							
PM 0.20 TO 0.63	25	2,193		2,193						47
PM 0.20 TO 0.63	25	2,192		2,192						47
PM 0.63 TO 0.66	29	132		528				14		
PM 0.66 TO 0.76	22	591		1,182				52		
SHEET TOTAL			22,846	14,997	0	6,487	2,911	296	267	200

PAVEMENT DELINEATION QUANTITIES

PDQ-2

STATE OF CALIFORNIA - DEPARTMENT OF TRANSPORTATION
Caltrans
CONSULTANT FUNCTIONAL SUPERVISOR: MATTHEW J. KORVE
CALCULATED-DESIGNED BY: WAI KEI WONG
CHECKED BY: CLARA PONCE
REVISED BY
DATE REVISED

LAST REVISION 06-06-16
DATE PLOTTED => 10-AUG-2016
TIME PLOTTED => 14:22

NOTES:

1. ALL SIGN CODES SHOWN ARE FEDERAL SIGN CODES UNLESS OTHERWISE DESIGNATED AS A CALIFORNIA SIGN CODE, (CA).
2. EXACT LOCATION AND POSITION OF ROADSIDE SIGN TO BE DETERMINED BY THE ENGINEER.
3. ALL EXISTING SIGNS NOT SHOWN FOR REMOVAL SHALL REMAIL IN PLACE.

THERMOPLASTIC TRAFFIC STRIPE AND PAVEMENT MARKERS (Cont)

LOCATION	DETAIL No.	LENGTH (N)	4" THERMOPLASTIC TRAFFIC STRIPE (ENHANCED WET NIGHT VISIBILITY)		4" THERMOPLASTIC TRAFFIC STRIPE (ENHANCED WET NIGHT VISIBILITY) (BROKEN 17-7)	4" THERMOPLASTIC TRAFFIC STRIPE (ENHANCED WET NIGHT VISIBILITY) (BROKEN 36-12)	8" THERMOPLASTIC TRAFFIC STRIPE (ENHANCED WET NIGHT VISIBILITY)	PAVEMENT MARKER (RETROREFLECTIVE)		
			WHITE	YELLOW				TYPE D	TYPE G	TYPE H
		LF	LF	LF	LF	LF	LF	EA	EA	EA
PM 0.66 TO 0.76	38	568					568		25	
PM 0.70 TO 0.76	38	308					308		14	
PM 0.71 TO 0.76	38	250					250		12	
PM 0.78 TO 2.26	12	7,762				7,762			163	
PM 0.78 TO 2.26	12	7,771				7,771			163	
PM 0.78 TO 0.92	29	731		2,924				64		
PM 0.78 TO 3.01	27B	11,816	11,816							
PM 0.78 TO 0.90	38	604					604		27	
PM 0.92 TO 2.13	25	6,314		6,314						133
PM 0.92 TO 2.13	25	6,321		6,321						133
PM 2.13 TO 2.26	29	720		2,880				62		
PM 2.15 TO 2.18	38	148					148		8	
PM 2.15 TO 2.26	38	559					559		25	
PM 2.17 TO 2.24	27B	325	325							
PM 2.28 TO 3.01	12	3,862				3,862			82	
PM 2.28 TO 3.01	12	3,936				3,936			83	
PM 2.28 TO 2.36	29	452		1,808				40		
PM 2.28 TO 2.33	38	584					584		26	
PM 2.35 TO 3.0	27B	3,398	3,398							
PM 2.36 TO 2.96	25	3,165		3,165						67
PM 2.36 TO 2.96	25	3,199		3,199						68
PM 2.91 TO 3.01	38	535					535		24	
PM 2.96 TO 3.01	29	258		1,032				24		
MUCKELEMI St	8	65			65					
MUCKELEMI St	22	228		456				22		
MUCKELEMI St	25A	521		521						23
MUCKELEMI St	27B	706	706							
MUCKELEMI St	38	143					143		7	
THE ALAMEDA	22	150		300				16		
THE ALAMEDA	22	150		300				16		
THE ALAMEDA	38	100					100		6	
THE ALAMEDA	38	50					50		4	
SHEET TOTAL			16,245	29,220	65	23,331	3,849	244	669	424
TOTAL			83,308		65	29,818	6,760	2,100		

Dist	COUNTY	ROUTE	POST MILES TOTAL PROJECT	SHEET No.	TOTAL SHEETS
05	SBt	156	0.0/3.0	32	113

REGISTERED CIVIL ENGINEER 6-13-16 DATE

6-20-16
PLANS APPROVAL DATE

REGISTERED PROFESSIONAL ENGINEER MATTHEW J. KORVE No. 63248 Exp. 6-30-18 CIVIL STATE OF CALIFORNIA

THE STATE OF CALIFORNIA OR ITS OFFICERS OR AGENTS SHALL NOT BE RESPONSIBLE FOR THE ACCURACY OR COMPLETENESS OF SCANNED COPIES OF THIS PLAN SHEET.

AECOM
2020 L STREET
SUITE 400
SACRAMENTO, CA 95811

REVISED BY | DATE REVISED
WAI KEI WONG | CLARA PONCE
CALCULATED-DESIGNED BY | CHECKED BY
CONSULTANT FUNCTIONAL SUPERVISOR
MATTHEW J. KORVE

STATE OF CALIFORNIA - DEPARTMENT OF TRANSPORTATION
Caltrans

PAVEMENT DELINEATION QUANTITIES
PDQ-3

LAST REVISION 06-06-16 | DATE PLOTTED => 10-AUG-2016 | TIME PLOTTED => 14:22

Dist	COUNTY	ROUTE	POST MILES TOTAL PROJECT	SHEET No.	TOTAL SHEETS
05	SBt	156	0.0/3.0	33	113

REGISTERED CIVIL ENGINEER 6-13-16 DATE

6-20-16
PLANS APPROVAL DATE

REGISTERED PROFESSIONAL ENGINEER MATTHEW J. KORVE No. 63248 Exp. 6-30-18 CIVIL STATE OF CALIFORNIA

THE STATE OF CALIFORNIA OR ITS OFFICERS OR AGENTS SHALL NOT BE RESPONSIBLE FOR THE ACCURACY OR COMPLETENESS OF SCANNED COPIES OF THIS PLAN SHEET.

AECOM
2020 L STREET
SUITE 400
SACRAMENTO, CA 95811

OBJECT MARKERS

LOCATION	OBJECT MARKER	
	TYPE L-1	TYPE P
	EA	EA
PM 0.0 TO 3.0	9	8
TOTAL	17	

REMOVE DELINEATOR

LOCATION	REMOVE DELINEATOR
	EA
ROUTE 156/101 INTERCHANGE	56
PM 0.0 TO 3.0	64
TOTAL	120

DELINEATORS

LOCATION	DELINEATOR (CLASS 1)	
	TYPE F	TYPE G
	EA	EA
SB ON-RAMP TO 156/101 SEPARATION	15	4
SB OFF-RAMP TO 156/101 SEPARATION	23	10
NB ON-RAMP	20	14
NB OFF-RAMP	20	9
MUCKELEMI St ON-RAMP	6	5
MONTEREY St OFF-RAMP	7	0
PM 0.0 TO 3.0	112	0
SUBTOTAL	203	42
TOTAL	245	

THERMOPLASTIC CROSSWALK AND PAVEMENT MARKING (ENHANCED WET NIGHT VISIBILITY)

DESCRIPTION	EA	LENGTH (LF)	SQFT PER MARKING	WIDTH (FT)	SQFT
TYPE III ARROW	23		42		966
TYPE IV ARROW	3		15		45
TYPE V ARROW	26		33		858
TYPE VI ARROW	6		42		252
TYPE VII ARROW	1		27		27
SIGNAL	2		32		64
AHEAD	2		31		62
STOP	8		22		176
12" DIAGONALS (YELLOW)		213		1	213
12" DIAGONALS (WHITE)		65		1	65
LIMIT LINE		249		1	249
CROSSWALK		590		1	590
TOTAL					3,567

PAVEMENT DELINEATION QUANTITIES

PDQ-4

REVISED BY | DATE REVISED
WAI KEI WONG | CLARA PONCE
CALCULATED-DESIGNED BY | CHECKED BY
CONSULTANT FUNCTIONAL SUPERVISOR | MATTHEW J. KORVE
STATE OF CALIFORNIA - DEPARTMENT OF TRANSPORTATION
Caltrans

LAST REVISION 06-06-16 | DATE PLOTTED => 10-AUG-2016 | TIME PLOTTED => 14:22

Dist	COUNTY	ROUTE	POST MILES TOTAL PROJECT	SHEET No.	TOTAL SHEETS
05	SBt	156	0.0/3.0	34	113

REGISTERED CIVIL ENGINEER 6-13-16 DATE

6-20-16
PLANS APPROVAL DATE

REGISTERED PROFESSIONAL ENGINEER MATTHEW J. KORVE No. 63248 Exp. 6-30-18 CIVIL STATE OF CALIFORNIA

THE STATE OF CALIFORNIA OR ITS OFFICERS OR AGENTS SHALL NOT BE RESPONSIBLE FOR THE ACCURACY OR COMPLETENESS OF SCANNED COPIES OF THIS PLAN SHEET.

AECOM
2020 L STREET
SUITE 400
SACRAMENTO, CA 95811

NOTES:

1. ALL SIGN CODES SHOWN ARE FEDERAL SIGN CODES UNLESS OTHERWISE DESIGNATED AS A CALIFORNIA SIGN CODE, (CA).
2. EXACT LOCATION AND POSITION OF ROADSIDE SIGN TO BE DETERMINED BY THE ENGINEER.
3. ALL EXISTING SIGNS NOT SHOWN FOR REMOVAL SHALL REMAIN IN PLACE.

SIGN PANEL QUANTITIES

SIGN CODE		DESCRIPTION	PANEL SIZE (L x D)	PANEL AREA	NUMBER OF SIGNS	BACKGROUND		LEGEND		FURNISH SINGLE SHEET ALUMINUM SIGN		FURNISH SINGLE SHEET ALUMINUM SIGN FOR RETROREFLECTIVE SHEETING (TYPE XI)		RETROREFLECTIVE SHEETING (TYPE XI)
										UNFRAMED		UNFRAMED		
FEDERAL	CALIFORNIA					SHEETING COLOR	RETRO-REFLECTIVE ASTM TYPE	SHEETING COLOR	RETRO-REFLECTIVE ASTM TYPE	0.063"	0.080"	0.063"	0.080"	
				SQFT	EA					SQFT	SQFT	SQFT	SQFT	SQFT
R1-1		STOP	36" x 36"	9.00	8	RED	VIII	WHITE	VIII	72.00				
R2-1		SPEED LIMIT	36" x 48'	12.00	3	WHITE	VIII	BLACK	PLAIN	36.00				
R2-4P		MINIMUM SPEED LIMIT	36" x 48"	12.00	1	WHITE	VIII	BLACK	PLAIN	12.00				
R3-1		NO RIGHT TURN	36" x 36"	9.00	1	WHITE	VIII	BLACK/RED	PLAIN	9.00				
R3-2		NO LEFT TURN	36" x 36"	9.00	2	WHITE	VIII	BLACK/RED	PLAIN	18.00				
R3-5		LEFT TURN ONLY	30" x 36"	7.50	1	WHITE	VIII	BLACK	PLAIN	7.50				
R4-1		DO NOT PASS	36" x 48"	12.00	3	WHITE	VIII	BLACK	PLAIN	36.00				
R4-3		SLOWER TRAFFIC KEEP RIGHT	36" x 48"	12.00	3	WHITE	VIII	BLACK	PLAIN	36.00				
R4-7		KEEP RIGHT	48" x 60"	20.00	1	WHITE	VIII	BLACK	PLAIN		20.00			
R4-8		KEEP LEFT	36" x 48"	12.00	1	WHITE	VIII	BLACK	PLAIN	12.00				
R5-1		DO NOT ENTER	48" x 48"	16.00	5	WHITE/RED	VIII	WHITE	VIII		80.00			
R5-1A		DO NOT ENTER	42" X 30"	8.75	5	RED	VIII	WHITE	VIII		43.75			
R5-2		NO TRUCKS	30" x 30"	6.25	3	WHITE	VIII	BLACK/RED	PLAIN	18.75				
R5-10A		NO PEDESTRIANS, BICYCLES	30" x 36"	7.50	1	WHITE	VIII	BLACK	PLAIN	7.50				
R5-10C		NO PEDESTRIANS	24" x 12"	2.00	1	WHITE	VIII	BLACK	PLAIN	2.00				
R6-1		ONE WAY	54" x 18"	6.75	8	BLACK/WHITE	VIII	BLACK	PLAIN		54.00			
	R2-4 (CA)	SPEED ZONE AHEAD	36" x 45"	11.25	1	WHITE	VIII	BLACK	PLAIN	11.25				
	R6-3(CA)	TRUCKS, 3 AXELS OR MORE RIGHT 2 LANES ONLY	48" x 60"	20.00	2	WHITE	VIII	BLACK	PLAIN		40.00			
	R6-4(CA)	ALL VEHICLES WHEN TOWING 55 MAXIMUM	48" x 60"	20.00	2	WHITE	VIII	BLACK	PLAIN		40.00			
	R20D-1 (CA)	TRUCK EXCLUSION PLAQUE	36" x 12"	3.00	2	WHITE	VIII	BLACK/RED	PLAIN	6.00				
	R47 (CA)	$1000 FINE FOR LITTERING	52" x 36"	13.00	1	WHITE	VIII	BLACK	PLAIN		13.00			
	R48	SPEED ENFORCED BY RADAR	36" x 48"	12.00	1	WHITE	VIII	BLACK	PLAIN	12.00				
	R49	NO PED CROSSING, USE CROSSWALK	42" x 18"	5.25	2	WHITE	VIII	BLACK	PLAIN	10.50				
									SHEET TOTAL	306.50	290.75	0	0	0

REVISED BY | DATE REVISED
WAI KEI WONG | CLARA PONCE
CALCULATED-DESIGNED BY | CHECKED BY
CONSULTANT FUNCTIONAL SUPERVISOR
MATTHEW J. KORVE

STATE OF CALIFORNIA - DEPARTMENT OF TRANSPORTATION
Caltrans

SIGN QUANTITIES

SQ-1

LAST REVISION 06-06-16 | DATE PLOTTED => 10-AUG-2016 | TIME PLOTTED => 14:22

Dist	COUNTY	ROUTE	POST MILES TOTAL PROJECT	SHEET No.	TOTAL SHEETS
05	SBt	156	0.0/3.0	35	113

REGISTERED CIVIL ENGINEER 6-13-16 DATE

6-20-16
PLANS APPROVAL DATE

REGISTERED PROFESSIONAL ENGINEER MATTHEW J. KORVE No. 63248 Exp. 6-30-18 CIVIL STATE OF CALIFORNIA

THE STATE OF CALIFORNIA OR ITS OFFICERS OR AGENTS SHALL NOT BE RESPONSIBLE FOR THE ACCURACY OR COMPLETENESS OF SCANNED COPIES OF THIS PLAN SHEET.

AECOM
2020 L STREET
SUITE 400
SACRAMENTO, CA 95811

SIGN PANEL QUANTITIES (Cont)

SIGN CODE		DESCRIPTION	PANEL SIZE (L x D)	PANEL AREA	NUMBER OF SIGNS	BACKGROUND		LEGEND		FURNISH SINGLE SHEET ALUMINUM SIGN		FURNISH SINGLE SHEET ALUMINUM SIGN FOR RETROREFLECTIVE SHEETING (TYPE XI)		RETROREFLECTIVE SHEETING (TYPE XI)
										UNFRAMED		UNFRAMED		
FEDERAL	CALIFORNIA					SHEETING COLOR	RETRO-REFLECTIVE ASTM TYPE	SHEETING COLOR	RETRO-REFLECTIVE ASTM TYPE	0.063"	0.080"	0.063"	0.080"	
				SQFT	EA					SQFT	SQFT	SQFT	SQFT	SQFT
W1-1 R		RIGHT TURN	36" x 36"	9.00	1	YELLOW	XI	BLACK	PLAIN			9.00		9.00
W1-6		ONE-DIRECTION LARGE ARROW	60" x 30"	12.50	1	YELLOW	XI	BLACK	PLAIN				12.50	12.50
W2-2		SIDE ROAD	36" x 36"	9.00	1	YELLOW	XI	BLACK	PLAIN			9.00	9.00	18.00
W3-3		SIGNAL AHEAD	48" x 48"	16.00	3	YELLOW	XI	BLACK/RED/GREEN	PLAIN/XI				48.00	48.00
W4-1		MERGE	48" x 48"	16.00	1	YELLOW	XI	BLACK	PLAIN				16.00	16.00
W4-2		LANE ENDS	48" x 48"	16.00	3	YELLOW	XI	BLACK	PLAIN				48.00	48.00
W4-3		ADDED LANE	36" x 36"	9.00	2	YELLOW	XI	BLACK	PLAIN				18.00	18.00
W6-1		DIVIDED HIGHWAY	48" x 48"	16.00	1	YELLOW	XI	BLACK	PLAIN				16.00	16.00
W6-2		DIVIDED HIGHWAY ENDS	48" x 48"	16.00	1	YELLOW	XI	BLACK	PLAIN				16.00	16.00
W6-3		TWO-WAY TRAFFIC	48" x 48"	16.00	1	YELLOW	XI	BLACK	PLAIN				16.00	16.00
W9-2		LANE ENDS MERGE RIGHT	36" x 36"	9.00	1	YELLOW	XI	BLACK	PLAIN			9.00		9.00
W13-1P		ADVISORY SPEED PLAQUE	30" x 30"	6.25	1	YELLOW	XI	BLACK	PLAIN			6.25		6.25
W13-3		ADVISORY EXIT OR RAMP SPEED	36" x 48"	12.00	1	YELLOW	XI	BLACK	PLAIN			12.00		12.00
OM1-3		OBJECT MARKER	18" x 18"	2.25	5	YELLOW	XI	-	-			11.25		11.25
									SHEET TOTAL	0	0	56.50	199.50	256.00
									TOTAL	306.50	290.75	56.50	199.50	256.00

SIGN QUANTITIES

SQ-2

STATE OF CALIFORNIA - DEPARTMENT OF TRANSPORTATION
Caltrans

CONSULTANT FUNCTIONAL SUPERVISOR: MATTHEW J. KORVE
CALCULATED-DESIGNED BY: WAI KEI WONG
CHECKED BY: CLARA PONCE
REVISED BY
DATE REVISED

LAST REVISION 06-06-16
DATE PLOTTED => 10-AUG-2016
TIME PLOTTED => 14:22

Dist	COUNTY	ROUTE	POST MILES TOTAL PROJECT	SHEET No.	TOTAL SHEETS
05	SBt	156	0.0/3.0	36	113

REGISTERED CIVIL ENGINEER 6-13-16 DATE

6-20-16
PLANS APPROVAL DATE

REGISTERED PROFESSIONAL ENGINEER MATTHEW J. KORVE No. 63248 Exp. 6-30-18 CIVIL STATE OF CALIFORNIA

THE STATE OF CALIFORNIA OR ITS OFFICERS OR AGENTS SHALL NOT BE RESPONSIBLE FOR THE ACCURACY OR COMPLETENESS OF SCANNED COPIES OF THIS PLAN SHEET.

AECOM
2020 L STREET
SUITE 400
SACRAMENTO, CA 95811

ROADSIDE SIGN

SIGN NUMBER	POST MILE	DIRECTION/ ROAD	SIGN CODE FEDERAL	SIGN CODE CALIFORNIA	SIGN PANEL SIZE (L x D)	REMOVE ROADSIDE SIGN PANEL EA	INSTALL ROADSIDE SIGN PANEL ON Exist POST EA	REMARKS
S1		SB 101 OFF-RAMP	W1-1 R		36" x 36"	1	1	
			W13-1p		30" x 30"	1	1	20 MPH
			OM1-3		18" x 18"	1	1	
S2		SB 101 OFF-RAMP	R5-1		48" x 48"	1	1	
			R5-1A		42" x 30"	1	1	
S3		SB 101 OFF-RAMP	R5-10C		24" x 12"	1	1	
S4		SB 101 OFF-RAMP	R4-7		48" x 60"	1	1	
			OM1-3		18" x 18"	1	1	
S5		SB 101 OFF-RAMP	R5-1		48" x 48"	1	1	
			R5-1A		42" x 30"	1	1	
S6		SB 101 OFF-RAMP	OM1-3		18" x 18"	1	1	
S7		SB 101 ON-RAMP	R1-1		36" x 36"	1	1	
S8		SB 101 OFF-RAMP	W1-6		60" x 30"	1	1	
			OM1-3		18" x 18"	1	1	
S9		SEARLE Rd	R3-5		30" x 36"	1	1	
S10		SEARLE Rd	R1-1		36" x 36"	1	1	
S11		NB 101 OFF-RAMP	R5-1		48" x 48"	1	1	
			R5-1A		42" x 30"	1	1	
S12		NB 101 OFF-RAMP	R5-1		48" x 48"	1	1	
			R5-1A		42" x 30"	1	1	
S13		NB 101 OFF-RAMP	R6-1		54" x 18"	1	1	
S14		NB 101 ON-RAMP	W13-3		36" x 48"	1	1	
S15		NB 101 ON-RAMP	R3-2		36" x 36"	1	1	
S16		NB 101 ON-RAMP	R1-1		36" x 36"	1	1	
S17		NB 101 ON-RAMP	R6-1		54" x 18"	1	1	
S18		NB 101 ON-RAMP	R5-10A		30" x 36"	1	1	
S19		NB 101 ON-RAMP	W4-1		48" x 48"	1	1	
					SUBTOTAL	27	27	

SIGN QUANTITIES

SQ-3

STATE OF CALIFORNIA - DEPARTMENT OF TRANSPORTATION
Caltrans

CONSULTANT FUNCTIONAL SUPERVISOR: MATTHEW J. KORVE
CALCULATED-DESIGNED BY: WAI KEI WONG
CHECKED BY: CLARA PONCE
REVISED BY
DATE REVISED

LAST REVISION 06-06-16
DATE PLOTTED => 10-AUG-2016
TIME PLOTTED => 14:22

Dist	COUNTY	ROUTE	POST MILES TOTAL PROJECT	SHEET No.	TOTAL SHEETS
05	SBt	156	0.0/3.0	37	113

REGISTERED CIVIL ENGINEER 6-13-16 DATE

6-20-16
PLANS APPROVAL DATE

REGISTERED PROFESSIONAL ENGINEER MATTHEW J. KORVE No. 63248 Exp. 6-30-18 CIVIL STATE OF CALIFORNIA

THE STATE OF CALIFORNIA OR ITS OFFICERS OR AGENTS SHALL NOT BE RESPONSIBLE FOR THE ACCURACY OR COMPLETENESS OF SCANNED COPIES OF THIS PLAN SHEET.

AECOM
2020 L STREET
SUITE 400
SACRAMENTO, CA 95811

ROADSIDE SIGN (Cont)

SIGN NUMBER	POST MILE	DIRECTION/ ROAD	SIGN CODE FEDERAL	SIGN CODE CALIFORNIA	SIGN PANEL SIZE (L x D)	REMOVE ROADSIDE SIGN PANEL EA	INSTALL ROADSIDE SIGN PANEL ON Exist POST EA	REMARKS
S20	0.01	EB	W6-1		48" x 48"	1	1	
S21	0.03	EB	R3-1		36" x 36"	1	1	R3-1 WITH TWO R6-1 BACK TO BACK
			R6-1		54" x 18"	2	2	
S22	0.03	WB	W2-2		36" x 36"	1	1	
S24	0.06	WB	R3-2		36" x 36"	1	1	
S25		ROUTE 101 NB OFF-RAMP	R1-1		36" x 36"	1	1	R1-1 WITH TWO R6-1 BACK TO BACK
			R6-1		54" x 18"	2	2	
S26	0.09	EB	W4-3		48" x 48"	1	1	
S27	0.1	WB	W6-3		48" x 48"	1	1	
S28	0.19	WB	W4-2		48" x 48"	1	1	W4-2 WITH R4-1
			R4-1		36" X 48"	1	1	
S29	0.19	EB	R4-8		36" X 48"	1	1	R4-8 WITH OM1-3
			OM1-3		18" x 18"	1	1	
S30	0.20	EB	W4-2		48" x 48"	1	1	W4-2 WITH R4-1
			R4-1		36" x 48"	1	1	
S31	0.24	EB	R4-3		36" x 48"	1	1	
S32	0.25	WB	R4-3		36" x 48"	1	1	
S33	0.39	WB	W6-2		48" x 48"	1	1	
S34	0.39	EB		R48	24" x 30"	1	1	
S35	0.47	EB	R2-1		36" x 48"	1	1	65 MPH
S36	0.55	EB		R6-3 (CA)	48" x 60"	1	1	
S37	0.64	CL	W9-2		36" x 36"	1		W9-2 REPLACE WITH W4-2
			W4-2		48" x 48"		1	
S38	0.76	EB	R6-1		54" x 18"	1	1	
S39		ROCKS St	R1-1		36" x 36"	1	1	
S40	0.79	WB	R6-1		54" x 18"	1	1	
					SUBTOTAL	27	27	

SIGN QUANTITIES

SQ-4

STATE OF CALIFORNIA - DEPARTMENT OF TRANSPORTATION
Caltrans

CONSULTANT FUNCTIONAL SUPERVISOR: MATTHEW J. KORVE
CALCULATED-DESIGNED BY: WAI KEI WONG
CHECKED BY: CLARA PONCE
REVISED BY
DATE REVISED

LAST REVISION 06-06-16
DATE PLOTTED => 10-AUG-2016
TIME PLOTTED => 14:22

Dist	COUNTY	ROUTE	POST MILES TOTAL PROJECT	SHEET No.	TOTAL SHEETS
05	SBt	156	0.0/3.0	38	113

REGISTERED CIVIL ENGINEER 6-13-16 DATE

6-20-16
PLANS APPROVAL DATE

REGISTERED PROFESSIONAL ENGINEER MATTHEW J. KORVE No. 63248 Exp. 6-30-18 CIVIL STATE OF CALIFORNIA

THE STATE OF CALIFORNIA OR ITS OFFICERS OR AGENTS SHALL NOT BE RESPONSIBLE FOR THE ACCURACY OR COMPLETENESS OF SCANNED COPIES OF THIS PLAN SHEET.

AECOM
2020 L STREET
SUITE 400
SACRAMENTO, CA 95811

ROADSIDE SIGN (Cont)

SIGN NUMBER	POST MILE	DIRECTION/ ROAD	SIGN CODE FEDERAL	SIGN CODE CALIFORNIA	SIGN PANEL SIZE (L x D)	REMOVE ROADSIDE SIGN PANEL EA	INSTALL ROADSIDE SIGN PANEL ON Exist POST EA	REMARKS
S41	1.00	EB		R6-4(CA)	48" x 60"	1	1	
S42	1.08	EB		R47(CA)	52" x 36"	1	1	
S43	1.68	WB		R6-4(CA)	48" x 60"	1	1	
S44	1.81	WB		R6-3(CA)	48" x 60"	1	1	
S45	1.82	EB		R2-4(CA)	36" x 45	1	1	
S46	1.89	EB	R5-2		30" x 30"	1	1	R5-2 WITH "NO TRUCKS OVER 3 TONS NEXT 2 EXITS"
S47	2.01	EB	R2-1		36" x 48"	1	1	SPEED LIMIT 55 MPH
S48	2.01	WB	R2-4p		36" x 48"	1	1	MAX SPEED 65
S49	2.09	WB	R4-3		36" x 48"	1	1	
S50	2.19	WB	R4-1		36" x 48"	1	1	
S51	2.26	EB	R6-1		54" x 18"	1	1	
S52		MONTEREY St	R1-1		36" x 36"	1	1	
S53		MONTEREY St	R6-1		54" x 18"	1	1	
S54		MONTEREY St	R5-1		48" x 48"	1	1	
S55			R5-1A		42" x 30"	1	1	
S56		MONTEREY St	R5-2		30" x 30"	1	1	
S57				R20D-1(CA)	36" x 12"	1	1	
S58		MONTEREY St	R1-1		36" x 36"	1	1	
S59		MONTEREY St	R1-1		36" x 36"	1	1	
S60	2.67		W3-3		48" x 48"	1	1	
S61	2.67	EB	W3-3		48" x 48"	1	1	
S62	2.83	EB	W3-3		48" x 48"	1	1	W3-3 ON MASK ARM
S63	3.04	EB		R49	42" x 18"	1	1	
S64	3.05	EB	W4-3		36" x 36"	1	1	
S65		ALAMEDA		R49	42" x 18"	1	1	
					SUBTOTAL	25	25	
					TOTAL	79	79	

SIGN QUANTITIES

SQ-5

STATE OF CALIFORNIA - DEPARTMENT OF TRANSPORTATION
Caltrans

CONSULTANT FUNCTIONAL SUPERVISOR: MATTHEW J. KORVE
CALCULATED-DESIGNED BY: WAI KEI WONG
CHECKED BY: CLARA PONCE
REVISED BY
DATE REVISED

LAST REVISION 06-06-16
DATE PLOTTED => 10-AUG-2016
TIME PLOTTED => 14:22

Dist	COUNTY	ROUTE	POST MILES TOTAL PROJECT	SHEET No.	TOTAL SHEETS
05	SBt	156	0.0/3.0	39	113

REGISTERED CIVIL ENGINEER 6-13-16 DATE

6-20-16
PLANS APPROVAL DATE

REGISTERED PROFESSIONAL ENGINEER MATTHEW J. KORVE No. 63248 Exp. 6-30-18 CIVIL STATE OF CALIFORNIA

THE STATE OF CALIFORNIA OR ITS OFFICERS OR AGENTS SHALL NOT BE RESPONSIBLE FOR THE ACCURACY OR COMPLETENESS OF SCANNED COPIES OF THIS PLAN SHEET.

AECOM
2020 L STREET
SUITE 400
SACRAMENTO, CA 95811

MINOR CONCRETE QUANTITIES

LOCATION	MINOR CONCRETE (CURB, GUTTER, SIDEWALK, AND DRIVEWAY)	MINOR CONCRETE (CURB RAMP)	DETECTABLE WARNING SURFACE
	CY	CY	SQFT
THE ALAMEDA NW CORNER	2.6	1.0	22.9
THE ALAMEDA SW CORNER	4.0	2.1	42.9
THE ALAMEDA NE CORNER	6.0	1.3	16.4
THE ALAMEDA SE CORNER	2.8	1.7	17.0
TOTAL	16.0	6.1	99.2

COLD PLANE ASPHALT CONCRETE PAVEMENT

LOCATION	DEPTH	COLD PLANE ASPHALT CONCRETE PAVEMENT
	FT	SQYD
SB ROUTE 101 ON-RAMP	0.20	296.0
SB ROUTE 101 OFF-RAMP	0.20	416.0
NB ROUTE 101 OFF-RAMP	0.20	409.0
MERRILL ROAD	0.20	177.0
SEARLE ROAD	0.20	615.0
ROUTE 156/101 SEPARATION	0.20	340.0
ROUTE 156/101 SEPARATION	0.20	353.0
NB ROUTE 101 ON-RAMP	0.20	280.0
PM 0.3 TO 1.0	0.20	33,606.0
PM 1.0 TO 2.0	0.20	43,113.0
PM 2.0 TO 2.7	0.20	39,588.0
PM 2.72 TO ALAMEDA	0.20	18,470.0
WB WASHINGTON Blvd UC	0.10	240.0
REPAIR FAILED AREAS	0.50	6,809.3
TOTAL		144,712.3

PLACE HOT MIX ASPHALT (MISCELLANEOUS AREA)

LOCATION	PLACE HMA (MISCELLANEOUS AREA)
	SQYD
THE ALAMEDA NW CORNER	7.2
THE ALAMEDA SW CORNER	17.7
THE ALAMEDA NE CORNER	21.6
THE ALAMEDA SE CORNER	12.5
TOTAL	59.0

GUARDRAIL QUANTITIES

Loc No.	PM	DIRECTION	LAYOUT TYPE	REMOVE GUARDRAIL	MGS (STEEL POST)	MGS (8' POST)	BURIED POST END ANCHOR (N)	ALTERNATIVE FLARED TERMINAL SYSTEM	ALTERNATIVE IN-LINE TERMINAL SYSTEM	TRANSITION RAILING (TYPE WB-31)	END ANCHOR ASSEMBLY (TYPE SFT)	MGS TRANSITION TO MBGR (N)	VEGETATION CONTROL (MINOR CONCRETE)	CONCRETE STAINING (OXIDIZING)	RAIL ELEMENT WALL	IMPORTED BORROW	FILTER FABRIC (N)	TREATED WOOD WASTE
				LF	LF	LF	EA	EA	EA	EA	EA	EA	SQYD	SQYD	LF	CY	SQYD	LB
1	ROUTE 101 ON-RAMP	SB	11A Mod	37.5		65.7			1			1	57	57	62.5	2.9	11	481
2	ROUTE 101 OFF-RAMP	SB	12B	75.0	50.0			1		1			71	71				893
3	ROUTE 101 ON-RAMP	SB	12BB	75.0	37.5			1		1			66	66				893
4	0.00	EB	12BB	87.5	62.5			1		1			77	77				1,030
5	0.00	WB	12B	87.5	25.0			1		1			60	60				1,030
6	0.23	WB	16A	100.0	50.0				1		1		61	61	62.5	2.9	11	1,167
7	0.40	EB	11B	250.0	75.0	137.5		1			1		110	110				2,815
8	0.43	WB	11B	237.5	200.0			1			1		127	127				2,677
9	1.29	EB	11A	225.0	200.0				1		1		128	128				2,540
10	1.33	WB	11A	225.0	175.0				1		1		117	117				2,540
11	1.97	EB	11B	225.0	187.5			1			1		121	121				2,540
12	2.02	WB	11B	662.5	625.0			1			1		316	316				7,345
13	2.13	EB	11B	225.0	187.5			1			1		121	121				2,540
14	2.62	EB	12C	400.0	375.0		1			1			178	178				
15	2.68	EB		87.5	INTENTIONALLY LEFT BLANK													1,030
16	2.69	WB		100.0														1,167
17	2.71	WB		50.0														618
18	2.72	EB	16A Mod	600.0	575.0					1	1		267	267				
19	2.72	WB	12A	1,050.0		975.0			1	1			321	321	1,062.5	49.2	178	
TOTAL				4,800.0	2,825.0	1,178.2		9	5	7	9		2,198	2,198	1,187.5	55.0		31,306

(N) NOT A SEPARATE PAY ITEM, FOR INFORMATION ONLY

SUMMARY OF QUANTITIES

Q-1

REVISED BY | DATE REVISED
WAI KEI WONG | CLARA PONCE
CALCULATED-DESIGNED BY | CHECKED BY
CONSULTANT FUNCTIONAL SUPERVISOR
MATTHEW J. KORVE
STATE OF CALIFORNIA - DEPARTMENT OF TRANSPORTATION
Caltrans

LAST REVISION 06-06-16 | DATE PLOTTED => 10-AUG-2016 TIME PLOTTED => 14:22

Dist	COUNTY	ROUTE	POST MILES TOTAL PROJECT	SHEET No.	TOTAL SHEETS
05	SBt	156	0.0/3.0	40	113

REGISTERED CIVIL ENGINEER 6-13-16 DATE

6-20-16
PLANS APPROVAL DATE

REGISTERED PROFESSIONAL ENGINEER MATTHEW J. KORVE No. 63248 Exp. 6-30-18 CIVIL STATE OF CALIFORNIA

THE STATE OF CALIFORNIA OR ITS OFFICERS OR AGENTS SHALL NOT BE RESPONSIBLE FOR THE ACCURACY OR COMPLETENESS OF SCANNED COPIES OF THIS PLAN SHEET.

AECOM
2020 L STREET
SUITE 400
SACRAMENTO, CA 95811

REMOVE ASPHALT CONCRETE DIKE

LOCATION	DIRECTION	REMOVE AC DIKE
		LF
PM 0.0 TO 0.05	EB	260
PM 0.17 TO 0.76	EB	3,115
PM 0.18 TO 0.42	WB	1,267
PM 0.43 TO 0.77	WB	1,795
PM 0.78 TO 1.66	WB	4,646
PM 0.98 TO 1.34	EB	1,901
PM 1.54 TO 2.26	EB	3,802
PM 1.99 TO 2.06	WB	390
MUCKELEMI STREET	WB	445
MUCKELEMI STREET	WB	140
PM 2.20 TO MONTEREY STREET	WB	397
PM 2.27 TO 2.62	EB	1,848
MONTEREY STREET TO PM 2.70	WB	2,633
PM 2.72 TO 3.01	WB	1,531
PM 2.89 TO 2.99	EB	542
SB ROUTE 101 OFF-RAMP	SB	1,276
SB ROUTE 101 ON-RAMP	SB	830
NB ROUTE 101 OFF-RAMP	NB	405
NB ROUTE 101 OFF-RAMP	NB	1,148
NB ROUTE 101 ON-RAMP	NB	1,007
TOTAL		29,378

TEMPORARY FENCE (TYPE ESA)

LOCATION	TEMPORARY FENCE (TYPE ESA)
	LF
ROUTE 156/101 SEPARATION	440
WASHINGTON St UC Lt	220
WASHINGTON St UC Rt	220
TOTAL	880

REMOVE CONCRETE (CURB, GUTTER, AND SIDEWALK)

LOCATION	REMOVE CONCRETE (CURB, GUTTER, AND SIDEWALK)
	CY
THE ALAMEDA NW CORNER	2.6
THE ALAMEDA SW CORNER	4.5
THE ALAMEDA NE CORNER	5.5
THE ALAMEDA SE CORNER	3.3
TOTAL	15.9

REMOVE ASPHALT CONCRETE PAVEMENT

LOCATION	REMOVE AC PAVMENT
	SQFT
THE ALAMEDA NW CORNER	64
THE ALAMEDA SW CORNER	159
THE ALAMEDA NE CORNER	194
THE ALAMEDA SE CORNER	112
TOTAL	529

ADJUST FRAME AND COVER TO GRADE

LOCATION	ADJUST FRAME AND COVER TO GRADE
	EA
THE ALAMEDA NORTH LEG	1
THE ALAMEDA SOUTH LEG	1
MUCKELEMI St	1
TOTAL	3

TAPERED EDGE

LOCATION	DIRECTION	TAPERED EDGE (N)	RHMA (GAP GRADED)(*)
		LF	TON
SB ROUTE 101 OFF-RAMP	SB	514	1.3
SB ROUTE 101 ON-RAMP	SB	693	1.8
NB ROUTE 101 OFF-RAMP	NB	232	0.6
NB ROUTE 101 ON-RAMP	NB	461	1.2
PM 0.03 TO 0.09	WB	326	0.8
PM 0.80 TO 0.98	EB	1,001	2.6
PM 1.34 TO 1.54	EB	1,040	2.7
PM 1.66 TO 1.99	WB	1,716	4.5
MUCKELEMI St	WB	681	1.8
MONTEREY St	WB	113	0.3
PM 2.83 TO 2.89	EB	317	0.8
PM 2.99 TO 3.01	EB	128	0.3
TOTAL			18.7

(N) NOT A PAY ITEM, FOR INFORMATION ONLY
(*) QUANTITY INCLUDED IN ROADWAY QUANTITIES TABLE.

CENTERLINE RUMBLE STRIP

LOCATION	DESCRIPTION	12" RUMBLE STRIP (AC PAVEMENT)
		STA
SB RAMPS TO MERRILL ROAD	ROUTE 156 CL	2.0
MERRILL ROAD TO SEARLE ROAD	ROUTE 156 CL	3.2
PM 0.0 TO 0.03	ROUTE 156 CL	0.9
PM 0.10 TO 0.15	ROUTE 156 CL	2.8
PM 0.15 TO 0.19	EB, LEFT ETW	2.0
PM 0.15 TO 0.19	WB, LEFT ETW	2.0
PM 0.64 TO 0.72	EB, LEFT ETW	3.9
PM 0.64 TO 0.72	WB, LEFT ETW	3.9
PM 0.83 TO 0.92	EB, LEFT ETW	4.6
PM 0.83 TO 0.92	WB, LEFT ETW	4.6
PM 2.14 TO 2.22	EB, LEFT ETW	4.0
PM 2.14 TO 2.22	WB, LEFT ETW	4.0
PM 2.31 TO 2.36	EB, LEFT ETW	2.2
PM 2.31 TO 2.36	WB, LEFT ETW	2.3
TOTAL		42.4

EDGELINE RUMBLE STRIP

LOCATION	DESCRIPTION	6" RUMBLE STRIP (AC PAVEMENT)
		STA
SB RAMPS TO ROUTE156/101 SEPARATION	EB, RIGHT ETW	10.2
SB RAMPS TO MERRILL ROAD	WB, RIGHT ETW	2.0
MERRILL ROAD TO SEARLE ROAD	WB, RIGHT ETW	3.2
PM 0.0 TO 0.03	EB, RIGHT ETW	0.9
PM 0.0 TO 0.07	WB, RIGHT ETW	2.9
PM 0.22 TO 0.72	EB, RIGHT ETW	26.1
PM 0.29 TO 0.72	WB, RIGHT ETW	22.6
PM 0.83 TO 2.26	EB, RIGHT ETW	74.7
PM 0.83 TO 2.10	WB, RIGHT ETW	66.6
PM 2.18 TO 2.22	WB, RIGHT ETW	2.3
PM 2.29 TO 2.69	EB, RIGHT ETW	21.5
PM 2.31 TO 2.69	WB, RIGHT ETW	20.1
PM 2.72 TO 2.96	EB, RIGHT ETW	12.6
PM 2.72 TO 2.96	WB, RIGHT ETW	12.1
TOTAL		277.8

SHOULDER RUMBLE STRIP

LOCATION	DESCRIPTION	12" RUMBLE STRIP (AC PAVEMENT)
		STA
PM 0.19 TO 0.64	EB, LEFT ETW	22.9
PM 0.19 TO 0.64	WB, LEFT ETW	22.9
PM 0.92 TO 2.14	EB, LEFT ETW	64.1
PM 0.92 TO 2.14	WB, LEFT ETW	64.1
PM 2.36 TO 2.69	EB, LEFT ETW	17.8
PM 2.36 TO 2.69	WB, LEFT ETW	17.8
PM 2.72 TO 2.96	EB, LEFT ETW	12.5
PM 2.72 TO 2.96	WB, LEFT ETW	12.3
TOTAL		234.4

SUMMARY OF QUANTITIES

Q-2

STATE OF CALIFORNIA - DEPARTMENT OF TRANSPORTATION
Caltrans
CONSULTANT FUNCTIONAL SUPERVISOR MATTHEW J. KORVE
CALCULATED-DESIGNED BY WAI KEI WONG
CHECKED BY CLARA PONCE
REVISED BY
DATE REVISED

LAST REVISION 06-06-16
DATE PLOTTED => 15-AUG-2016
TIME PLOTTED => 11:10

Dist	COUNTY	ROUTE	POST MILES TOTAL PROJECT	SHEET No.	TOTAL SHEETS
05	SBt	156	0.0/3.0	41	113

REGISTERED CIVIL ENGINEER 6-13-16 DATE

6-20-16
PLANS APPROVAL DATE

REGISTERED PROFESSIONAL ENGINEER MATTHEW J. KORVE No. 63248 Exp. 6-30-18 CIVIL STATE OF CALIFORNIA

THE STATE OF CALIFORNIA OR ITS OFFICERS OR AGENTS SHALL NOT BE RESPONSIBLE FOR THE ACCURACY OR COMPLETENESS OF SCANNED COPIES OF THIS PLAN SHEET.

AECOM
2020 L STREET
SUITE 400
SACRAMENTO, CA 95811

ROADWAY QUANTITIES

LOCATION	RUBBERIZED HOT MIX ASPHALT (GAP GRADED)	HMA (TYPE A)	SHOULDER BACKING	TACK COAT
	TON	TON	TON	TON
PM 0.0 TO 3.0 AND ROUTE 101 RAMPS	22,054.2		3,469	85
ALAMEDA INTERSECTION		918		
HMA DIKE		741.5		
REPAIR FAILED AREAS		2,414.2		
TAPERED EDGE	18.7			
TOTAL	22,072.9	4,073.7	3,469	85

ADJUST INLET

LOCATION	ADJUST INLET
	EA
NB ROUTE 101 OFF-RAMP	1
SB ROUTE 101 ON-RAMP	1
TOTAL	2

CONCRETE BARRIER (TRANSITION)

LOCATION No.	LOCATION PM	DIRECTION	LENGTH
			LF
2	ROUTE 101 OFF-RAMP	SB	3.5
3	ROUTE 101 ON-RAMP	SB	3.5
4	0.00	EB	3.5
5	0.00	WB	3.5
14	2.62	EB	3.5
15(*)	2.68	EB	
16(*)	2.69	WB	
17(*)	2.71	WB	
18	2.72	EB	3.5
19(*)	2.72	WB	
TOTAL			21.0

(*) FOR QUANTITIES, SEE STRUCTURE PLANS

PLACE HOT MIX ASPHALT DIKE

LOCATION	DIRECTION	PLACE HMA DIKE (TYPE A)	(TYPE C)	(TYPE E)	(TYPE F)	HMA (TYPE A)(*)
		LF	LF	LF	LF	TON
SB ROUTE 101 ON-RAMP	SB	830				22.7
SB ROUTE 101 OFF-RAMP	SB	500		780		34.3
NB ROUTE 101 ON-RAMP	NB			1,010		26.6
NB ROUTE 101 OFF-RAMP	NB	940		400		36.3
ROUTE 156 PM 0 - ROCKS Rd	EB	1,200		2,090		88.0
ROUTE 156 ROCKS Rd - MONTEREY St	EB	670		4,390		134.0
ROUTE 156 MONTEREY St - WASHINGTON UC	EB	1,880				51.4
ROUTE 156 WASHINGTON UC - ALAMEDA	EB			540		14.3
ROUTE 156 PM 0 - ROCKS Rd	WB	1,690		1,110		75.6
ROUTE 156 ROCKS Rd - MONTEREY St	WB	1,190		3,900		135.3
ROUTE 156 MONTEREY St - WASHINGTON UC	WB	2,530		100		71.9
ROUTE 156 WASHINGTON UC - ALAMEDA	WB			340		9.0
LOCATION No. 2	SB		63		75	1.6
LOCATION No. 3	SB		63			0.5
LOCATION No. 4	EB		63		88	1.7
LOCATION No. 5	WB		63		50	1.2
LOCATION No. 6	WB		75		50	1.3
LOCATION No. 7	EB		63		213	3.4
LOCATION No. 8	WB		63		200	3.2
LOCATION No. 9	EB		75		200	3.3
LOCATION No. 10	WB		75		175	3.0
LOCATION No. 11	EB		63		188	3.1
LOCATION No. 12	WB				200	2.7
LOCATION No. 13	EB		63		188	3.1
LOCATION No. 19	WB		75		1,000	14.0
TOTAL		11,430	800	14,660	2,625	741.5

(*) QUANTITY INCLUDED IN ROADWAY QUANTITIES TABLE

SUMMARY OF QUANTITIES

Q-3

REVISED BY | DATE REVISED
WAI KEI WONG | CLARA PONCE
CALCULATED-DESIGNED BY | CHECKED BY
CONSULTANT FUNCTIONAL SUPERVISOR: MATTHEW J. KORVE
STATE OF CALIFORNIA - DEPARTMENT OF TRANSPORTATION
Caltrans

LAST REVISION 06-06-16 | DATE PLOTTED => 10-AUG-2016 | TIME PLOTTED => 14:22

Dist	COUNTY	ROUTE	POST MILES TOTAL PROJECT	SHEET No.	TOTAL SHEETS
05	SB†	156	0.0/3.0	42	113

REGISTERED CIVIL ENGINEER 6-13-16 DATE

6-20-16
PLANS APPROVAL DATE

REGISTERED PROFESSIONAL ENGINEER MATTHEW J. KORVE No. 63248 Exp. 6-30-18 CIVIL STATE OF CALIFORNIA

THE STATE OF CALIFORNIA OR ITS OFFICERS OR AGENTS SHALL NOT BE RESPONSIBLE FOR THE ACCURACY OR COMPLETENESS OF SCANNED COPIES OF THIS PLAN SHEET.

AECOM
2020 L STREET
SUITE 400
SACRAMENTO, CA 95811

ROUTE 156 WESTBOUND REPAIR FAILED AREA LOCATIONS

DESCRIPTION	PM	LENGTH LANE 1	LENGTH LANE 2	WIDTH	HMA (TYPE A) (*)	COLD PLANE AC Pvm† 0.50′ (**)
	WB	LF	LF	FT	TON	SQYD
4′x25′ LEFT WHEEL PATH	2.60		25	4	4.0	11.2
2 LOCATIONS 4x25 LEFT WHEEL PATH	2.7-2.8		25	4	4.0	11.2
4′x300′ LEFT WHEEL PATH	2.45	300		4	47.3	133.4
4′x150′ LEFT WHEEL PATH	2.38	150		4	23.7	66.7
4′x25′	2.30	25		4	4.0	11.2
4′x400′	2.30	400		4	63.0	177.8
4′x150′	2.25	150		4	23.7	66.7
4′x600′ LEFT AND CENTER OF LANE	2.00	600		4	94.5	266.7
4′x600′	1.7-1.8	600	600	4	189.0	533.4
4′x200′ LEFT WHEEL PATH	1.30		200	4	31.5	88.9
4′x200′ LEFT SPOT LOCATION	1.30	100		4	15.8	44.5
4′x125′ RIGHT WHEEL PATH	1.25		125	4	19.7	55.6
4′x600′ RIGHT WHEEL PATH	1.60		600	4	94.5	266.7
4′x400′ RIGHT EDGE LINE	1.45		400	4	63.0	177.8
10′x150′	1.17	150		10	59.1	166.7
4′x150′ RIGHT EDGE LINE	0.96		150	4	23.7	66.7
4′x150′ RIGHT EDGE LINE	0.90		150	4	23.7	66.7
4′x100′ LEFT WHEEL PATH	0.90	100		4	15.8	44.5
4′x25′	0.80		25	4	4.0	11.2
4′x100′ LEFT WHEEL PATH	0.75	100		4	15.8	44.5
8′x150′ CENTER	0.40	150		8	47.3	133.4
10′x250′	0.35		250	10	98.5	277.8
2 LOCATIONS 4′x75′	0.30	150		4	23.7	66.7
4′x50′ RIGHT EDGE LANE	0.24		50	4	7.9	22.3
7 LOCATIONS 4′x75′ ACROSS THIS AREA	0.17-0.2	525		4	82.7	233.4
2 LOCATIONS 4′x25′ NB ON-RAMP RIGHT WHEEL PATH	0.10		50	4	7.9	22.3
BRIDGE APPROACH	0.00	50		12	23.7	66.7
BRIDGE DEPARTURE	0.00	50		12	23.7	66.7
BEYOND THE BRIDGE	N/A	100		4	15.8	44.5
SB ON-RAMP BETWEEN 23′ POINTS	N/A	400		12	189.0	533.4
SUBTOTAL					1340.0	3779.3

(*) = QUANTITY INCLUDED IN ROADWAY QUANTITIES TABLE
(**) = QUANTITY INCLUDED IN COLD PLANE AC PAVEMENT TABLE

ROUTE 156 EASTBOUND REPAIR FAILED AREA LOCATIONS

DESCRIPTION	PM	LENGTH LANE 1	LENGTH LANE 2	WIDTH	HMA (TYPE A) (*)	COLD PLANE AC Pvm† 0.50′ (**)
	EB	LF	LF	FT	TON	SQYD
12′x125′ LEFT WHEEL PATH	2.9		125	12	59.1	166.7
4′x500′ LEFT WHEEL PATH	2.75	500		4	78.8	222.3
12′ CONTINUOUS	2.7-2.4		1580	12	746.6	2106.7
2 LOCATIONS 4′x50′	2.1		100	4	15.8	44.5
2 LOCATIONS 4′x25′	2.0	50		4	7.9	22.3
4′x100′	1.8	100		4	15.8	44.5
4′x50′ LEFT WHEEL PATH	1.65	50		4	7.9	22.3
2 LOCATIONS 4′x50′	1.3	100		4	15.8	44.5
4′x25′ LEFT WHEEL PATH	1.25	25		4	4.0	11.2
4′x50′ CENTER WHEEL PATH	1.2		50	4	7.9	22.3
4′x50′ LEFT WHEEL PATH	1.1		50	4	7.9	22.3
4′x25′ CENTER	0.85	25		4	4.0	11.2
4′x25′ CENTER	0.80	25		4	4.0	11.2
4 LOCATIONS 4′x75′	0.15-0.25	300		4	47.3	133.4
4′x25′ R† WHEEL PATH (OFF BRIDGE)	0.02	25		4	4.0	11.2
BRIDGE DEPARTURE	0.0	50		12	23.7	66.7
BRIDGE APPROACH	0.0	50		12	23.7	66.7
SUBTOTAL					1074.2	3030.0
TOTAL					2414.2	6809.3

(*) = QUANTITY INCLUDED IN ROADWAY QUANTITIES TABLE
(**) = QUANTITY INCLUDED IN COLD PLANE AC PAVEMENT TABLE

SUMMARY OF QUANTITIES

Q-4

STATE OF CALIFORNIA - DEPARTMENT OF TRANSPORTATION
Caltrans
CONSULTANT FUNCTIONAL SUPERVISOR: MATTHEW J. KORVE
CALCULATED-DESIGNED BY: WAI KEI WONG
CHECKED BY: CLARA PONCE
REVISED BY
DATE REVISED

LAST REVISION 06-06-16 | DATE PLOTTED => 10-AUG-2016 | TIME PLOTTED => 14:22

Dist	COUNTY	ROUTE	POST MILES TOTAL PROJECT	SHEET No.	TOTAL SHEETS
05	SBt	156	0.0/3.0	43	113

REGISTERED CIVIL ENGINEER 6/13/16 DATE

6-20-16
PLANS APPROVAL DATE

REGISTERED PROFESSIONAL ENGINEER
KIN Y. CHAN
No. 55391
Exp. 12/31/16
CIVIL
STATE OF CALIFORNIA

THE STATE OF CALIFORNIA OR ITS OFFICERS OR AGENTS SHALL NOT BE RESPONSIBLE FOR THE ACCURACY OR COMPLETENESS OF SCANNED COPIES OF THIS PLAN SHEET.

Y&C TRANSPORTATION
CONSULTANTS, INC.
3250 RAMOS CIRCLE
SACRAMENTO, CA 95827

LEGEND:

1. AB Exist DETECTOR LOOPS. FURNISH AND INSTALL DETECTOR LOOPS AS SHOWN.
2. Exist CONDUIT AND CONDUCTORS. ADD 2 APS CABLE.
3. Exist CONTROLLER ASSEMBLY WITH MODEL 332 CABINET.
4. Exist 1½"C, 2#8 (FB), 2 DLC, 2 DLC (SPARE).
5. Exist CONDUIT AND CONDUCTORS. ADD 1 APS CABLE.
6. 1½"C, 2#14, 1 APS CABLE.
7. RS Exist HPS Lum. FURNISH AND INSTALL Rdwy 1 LED Lum.
8. Exist 1½"C, 2#8 (FB).
9. SC Exist SPARE DLC FOR ADVANCED LOOP (LEFT-TURN LANE) TO NEW TYPE D LOOP DETECTOR WIRES.
10. Exist 1½"C, 2#8 (FB), 4 DLC, 4 DLC (SPARE).
11. Exist 2"C, 3#2 (SERVICE).
12. Exist 2"C, 2#6 (SIGNAL), 4#8 (FB), 2#10 (Ltg), 2#10 (CCTV).
13. Exist 1½"C, 2#8 (FB), 4 DLC, 2 DLC (SPARE).
14. Exist 1½"C, 2#8 (FB), 2 DLC, 1 DLC (SPARE).
15. SEE DETAIL C ON SHEET E-4 FOR LOOP DETECTOR PLACEMENT.

SYMBOLS:

(X) Exist STANDARD

Exist CONDUIT RUN

ABBREVIATIONS:

PG&E - PACIFIC GAS AND ELECTRIC COMPANY

LEGEND, SYMBOLS AND ABBREVIATIONS

E-1

STATE OF CALIFORNIA - DEPARTMENT OF TRANSPORTATION
Caltrans®

CONSULTANT FUNCTIONAL SUPERVISOR: MATTHEW J. KORVE

CALCULATED-DESIGNED BY: MENG YANG
CHECKED BY: DAN YAU

REVISED BY
DATE REVISED

LAST REVISION 06-06-16
DATE PLOTTED => 10-AUG-2016
TIME PLOTTED => 14:22

Dist	COUNTY	ROUTE	POST MILES TOTAL PROJECT	SHEET No.	TOTAL SHEETS
05	SBt	156	0.0/3.0	44	113

REGISTERED CIVIL ENGINEER — DATE 6/13/16

PLANS APPROVAL DATE 6-20-16

REGISTERED PROFESSIONAL ENGINEER — KIN Y. CHAN No. 55391 Exp. 12/31/16 CIVIL — STATE OF CALIFORNIA

THE STATE OF CALIFORNIA OR ITS OFFICERS OR AGENTS SHALL NOT BE RESPONSIBLE FOR THE ACCURACY OR COMPLETENESS OF SCANNED COPIES OF THIS PLAN SHEET.

Y&C TRANSPORTATION CONSULTANTS, INC.
3250 RAMOS CIRCLE
SACRAMENTO, CA 95827

NOTE:

FOR ACCURATE RIGHT OF WAY DATA, CONTACT RIGHT OF WAY ENGINEERING AT THE DISTRICT OFFICE.

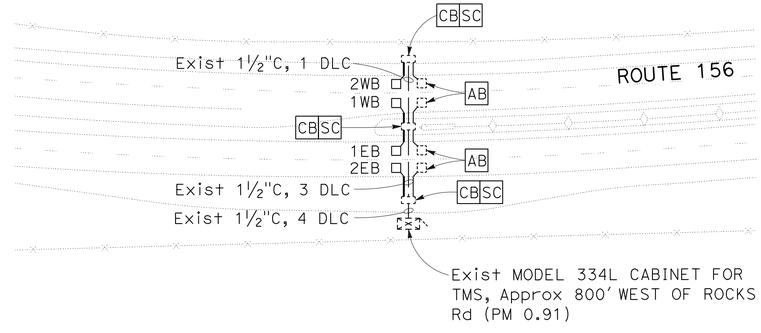

MODIFYING TRAFFIC MONITORING STATION

MODIFYING EXISTING ELECTRICAL SYSTEM

SCALE: 1" = 50'

APPROVED FOR ELECTRICAL WORK ONLY

E-2

STATE OF CALIFORNIA - DEPARTMENT OF TRANSPORTATION — Caltrans

CONSULTANT FUNCTIONAL SUPERVISOR: MATTHEW J. KORVE

CALCULATED-DESIGNED BY: MENG YANG

CHECKED BY: DAN YAU

REVISED BY / DATE REVISED

LAST REVISION 06-06-16 | DATE PLOTTED => 10-AUG-2016 | TIME PLOTTED => 14:22

Dist	COUNTY	ROUTE	POST MILES TOTAL PROJECT	SHEET No.	TOTAL SHEETS
05	SBt	156	0.0/3.0	45	113

REGISTERED CIVIL ENGINEER — DATE 6/13/16

PLANS APPROVAL DATE 6-20-16

REGISTERED PROFESSIONAL ENGINEER — KIN Y. CHAN No. 55391 Exp. 12/31/16 CIVIL — STATE OF CALIFORNIA

THE STATE OF CALIFORNIA OR ITS OFFICERS OR AGENTS SHALL NOT BE RESPONSIBLE FOR THE ACCURACY OR COMPLETENESS OF SCANNED COPIES OF THIS PLAN SHEET.

Y&C TRANSPORTATION CONSULTANTS, INC.
3250 RAMOS CIRCLE
SACRAMENTO, CA 95827

NOTE:

FOR ACCURATE RIGHT OF WAY DATA, CONTACT RIGHT OF WAY ENGINEERING AT THE DISTRICT OFFICE.

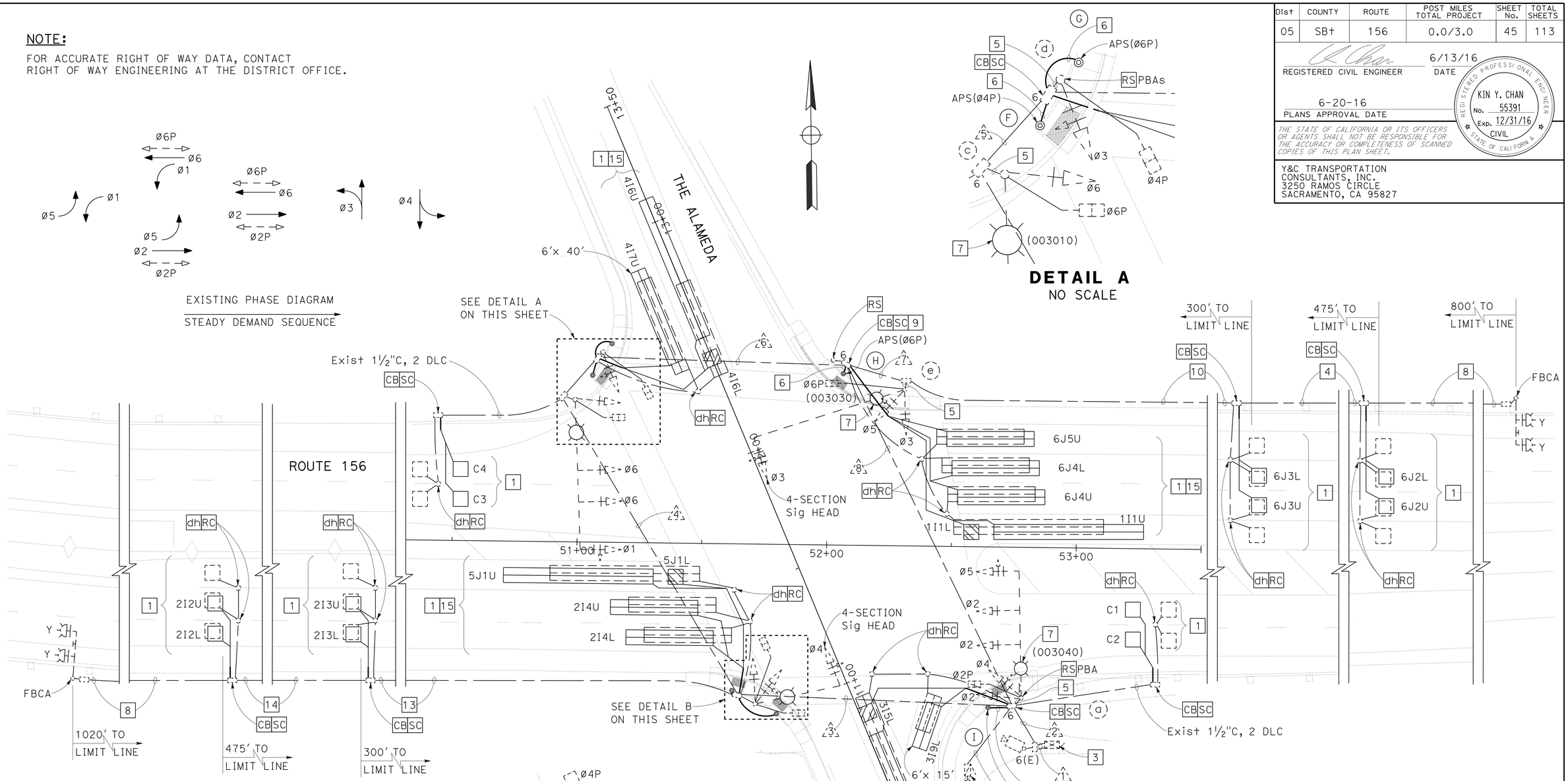

MODIFYING SIGNAL AND LIGHTING SYSTEM

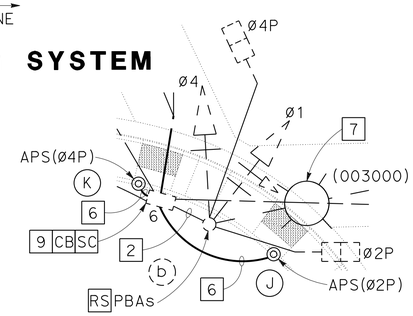

MODIFYING EXISTING ELECTRICAL SYSTEM

SCALE: 1" = 20'

APPROVED FOR ELECTRICAL WORK ONLY

E-3

STATE OF CALIFORNIA - DEPARTMENT OF TRANSPORTATION — Caltrans®

CONSULTANT FUNCTIONAL SUPERVISOR: MATTHEW J. KORVE

CALCULATED-DESIGNED BY: MENG YANG — CHECKED BY: DAN YAU

REVISED BY — DATE REVISED

LAST REVISION — DATE PLOTTED => 10-AUG-2016 — TIME PLOTTED => 14:22 — 06-06-16

Dist	COUNTY	ROUTE	POST MILES TOTAL PROJECT	SHEET No.	TOTAL SHEETS
05	SBt	156	0.0/3.0	46	113

REGISTERED CIVIL ENGINEER — DATE 6/13/16

6-20-16
PLANS APPROVAL DATE

REGISTERED PROFESSIONAL ENGINEER — KIN Y. CHAN — No. 55391 — Exp. 12/31/16 — CIVIL — STATE OF CALIFORNIA

THE STATE OF CALIFORNIA OR ITS OFFICERS OR AGENTS SHALL NOT BE RESPONSIBLE FOR THE ACCURACY OR COMPLETENESS OF SCANNED COPIES OF THIS PLAN SHEET.

Y&C TRANSPORTATION
CONSULTANTS, INC.
3250 RAMOS CIRCLE
SACRAMENTO, CA 95827

CONDUCTOR AND CONDUIT SCHEDULE

CONDUCTOR SCHEDULE	No. OF CONDUCTORS CONDUIT RUN NUMBER 1	2	3	4	5	6	7	8
No. 14 CONDUCTORS								
Ø1	6	6	3		3	3		3
Ø2	3	3						
Ø3	3	3	3			3	3	3
Ø4	6	6						
Ø5	6	6					3	3
Ø6	3	3			3	3		3
Ø2P	4	4	2					
Ø4P	4	4	2			2		2
Ø6P	2	2			2	2	2	2
APS(Ø2P)	2	2	1					
APS(Ø4P)	2	2	1			1		1
APS(Ø6P)	1	1				1		1
APS COMMON	2	2	1			1		1
SPARES	6	6	3		3	3	3	3
TOTAL No. 14	50	50	16		11	19	11	22
No. 10 CONDUCTORS								
LIGHTING	2	2	2		2	2	2	2
CCTV		2						
SIGNAL NEUTRAL	2	2	1		1	1	1	1
TOTAL No. 10	4	6	3		3	3	3	3
No. 8 CONDUCTORS								
FLASHING BEACON			2				2	2
No. 6 CONDUCTORS								
SERVICE TO CONTROLLER	2							
DETECTOR CABLES (DLC)								
COUNT (C)	4	4			2	2		2
Ø1 DET.	2	2					2	2
Ø2 DET.	6	6	6					
Ø3 DET.	2 1+	2 1+						
Ø4 DET.	2 1+	2 1+				2 1+		2 1+
Ø5 DET.	2	2	2					
Ø6 DET.	7	7					7	7
SPARES	4	4	1				3	3
TOTAL DETECTOR CABLES	31	31	9		2	5	12	17
APS CABLES					1+		1+	
CONDUIT SIZE (INCHES)	2-3	3	3	3	1½	2	2	3
% FILL	25	47	16		15	25	40	26

+ = ADD NEW CONDUCTORS/CABLES IN Exist CONDUIT AS SHOWN

POLE AND EQUIPMENT SCHEDULE

No.	STANDARD TYPE	SMA (FEET)	LMA (FEET)	Veh Sig Mtg MAST ARM	Veh Sig Mtg POLE	Ped Sig Mtg	APS ø	APS ARROW	LED Lum	SPECIAL REQUIREMENTS
a	29-5-70	50	15	MAT MAS MAS	SV-2-TB	SP-1-T			Rdwy 1	RS Exist PBA. 7
b	24-3-70	35	15	MAT	SV-2-TB	SP-2-T	2 4	← →	Rdwy 1	2 7
c	29-5-70	55	15	MAT MAS MAS	SV-1-T	SP-1-T			Rdwy 1	7
d	1-A				TV-1-T	SP-1-T				RS Exist PBAs.
e	29-5-70	50	15	MAT	SV-2-TB	SP-1-T			Rdwy 1	7
F	PBA POST						4	←		
G	PBA POST						6	→		
H	PBA POST						6	←		
I	PBA POST						2	→		
J	PBA POST						2	←		
K	PBA POST						4	→		

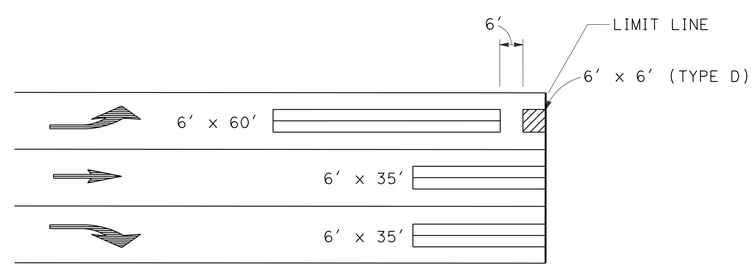

DETAIL C
LOOP DETECTOR PLACEMENT

MODIFYING EXISTING ELECTRICAL SYSTEM

NO SCALE

E-4

STATE OF CALIFORNIA - DEPARTMENT OF TRANSPORTATION
Caltrans
CONSULTANT FUNCTIONAL SUPERVISOR: MATTHEW J. KORVE
CALCULATED-DESIGNED BY: MENG YANG
CHECKED BY: DAN YAU
REVISED BY
DATE REVISED

LAST REVISION 06-06-16 | DATE PLOTTED => 10-AUG-2016 | TIME PLOTTED => 14:22

Dist	COUNTY	ROUTE	POST MILES TOTAL PROJECT	SHEET No.	TOTAL SHEETS
05	SBt	156	0.0/3.0	47	113

REGISTERED CIVIL ENGINEER 6/13/16 DATE

6-20-16
PLANS APPROVAL DATE

REGISTERED PROFESSIONAL ENGINEER
KIN Y. CHAN
No. 55391
Exp. 12/31/16
CIVIL
STATE OF CALIFORNIA

THE STATE OF CALIFORNIA OR ITS OFFICERS OR AGENTS SHALL NOT BE RESPONSIBLE FOR THE ACCURACY OR COMPLETENESS OF SCANNED COPIES OF THIS PLAN SHEET.

Y&C TRANSPORTATION
CONSULTANTS, INC.
3250 RAMOS CIRCLE
SACRAMENTO, CA 95827

NOTE:

THE QUANTITIES SHOWN IN TABLES ARE NOT A SEPARATE PAY ITEM, FOR INFORMATION ONLY. FOR COMPLETE ELECTRICAL WORK, SEE ELECTRICAL SHEETS.

MODIFYING EXISTING ELECTRICAL SYSTEM

SHEET No.	TYPE A LOOP DETECTOR	TYPE D LOOP DETECTOR	TYPE C LOOP DETECTOR (6 'x 15')	TYPE C LOOP DETECTOR (6' x 35')	TYPE C LOOP DETECTOR (6 'x 40')	TYPE C LOOP DETECTOR (6 'x 60')	PBA POST WITH FOUNDATION	APS	LED Lum Rdwy 1	2"C, TYPE 3	DLC	APS CABLE
	EA									FT		
E-2	4	0	0	0	0	0	0	0	0	40	0	0
E-3	12	4	1	5	1	4	6	6	4	470	300	55

ELECTRICAL QUANTITIES

NO SCALE

E-5

STATE OF CALIFORNIA - DEPARTMENT OF TRANSPORTATION
Caltrans

CONSULTANT FUNCTIONAL SUPERVISOR: MATTHEW J. KORVE

CALCULATED-DESIGNED BY: MENG YANG
CHECKED BY: DAN YAU

REVISED BY
DATE REVISED

LAST REVISION 06-06-16
DATE PLOTTED => 10-AUG-2016
TIME PLOTTED => 14:22

M

Maint	MAINTENANCE
Max	MAXIMUM
MB	METAL BEAM
MBB	METAL BEAM BARRIER
MBGR	METAL BEAM GUARD RAILING
Med	MEDIAN
MGS	MIDWEST GUARDRAIL SYSTEM
MH	MANHOLE
Min	MINIMUM
Misc	MISCELLANEOUS
Misc I & S	MISCELLANEOUS IRON AND STEEL
Mkr	MARKER
Mod	MODIFIED,
	MODIFY
Mon	MONUMENT
MP	METAL PLATE
MPGR	METAL PLATE GUARD RAILING
MR	MOVEMENT RATING
MSE	MECHANICALLY STABILIZED EMBANKMENT
Mt	MOUNTAIN, MOUNT
Mtl	MATERIAL
MVP	MAINTENANCE VEHICLE PULLOUT

N

N	NORTH
NB	NORTHBOUND
No.	NUMBER (MUST HAVE PERIOD)
Nos.	NUMBERS (MUST HAVE PERIOD)
NPS	NOMINAL PIPE SIZE
NS	NEAR SIDE
NSP	NEW STANDARD PLAN
NTS	NOT TO SCALE

O

Oblr	OBLITERATE
OC	OVERCROSSING
OD	OUTSIDE DIAMETER
OF	OUTSIDE FACE
OG	ORIGINAL GROUND
OGAC	OPEN GRADED ASPHALT CONCRETE
OGFC	OPEN GRADED FRICTION COURSE
OH	OVERHEAD
OHWM	ORDINARY HIGH WATER MARK
O-O	OUT TO OUT
Opp	OPPOSITE
OSD	OVERSIDE DRAIN

P

P	PAGE
PAP	PERFORATED ALUMINUM PIPE
PB	PULL BOX
PC	POINT OF CURVATURE,
	PRECAST
PCC	POINT OF COMPOUND CURVE,
	PORTLAND CEMENT CONCRETE
PCMS	PORTABLE CHANGEABLE MESSAGE SIGN
PCP	PERFORATED CONCRETE PIPE,
	PRESTRESSED CONCRETE PIPE
PCVC	POINT OF COMPOUND VERTICAL CURVE
PEC	PERMIT TO ENTER AND CONSTRUCT
Ped	PEDESTRIAN
Ped OC	PEDESTRIAN OVERCROSSING
Ped UC	PEDESTRIAN UNDERCROSSING
Perm Mtl	PERMEABLE MATERIAL

P continued

PG	PROFILE GRADE
PI	POINT OF INTERSECTION
PJP	PARTIAL JOINT PENETRATION
Pkwy	PARKWAY
₱,PL	PLATE
P/L	PROPERTY LINE
PM	POST MILE,
	TIME FROM NOON TO MIDNIGHT
PN	PAVING NOTCH
POC	POINT OF HORIZONTAL CURVE
POT	POINT OF TANGENT
POVC	POINT OF VERTICAL CURVE
PP	PIPE PILE,
	PLASTIC PIPE,
	POWER POLE
PPL	PREFORMED PERMEABLE LINER
PPP	PERFORATED PLASTIC PIPE
PRC	POINT OF REVERSE CURVE
PRF	PAVEMENT REINFORCING FABRIC
PRVC	POINT OF REVERSE VERTICAL CURVE
PS&E	PLANS, SPECIFICATIONS AND ESTIMATES
PS, P/S	PRESTRESSED
PSP	PERFORATED STEEL PIPE
PT	POINT OF TANGENCY
PVC	POLYVINYL CHLORIDE
Pvmt	PAVEMENT

Q

Qty	QUANTITY

R

R	RADIUS
R & D	REMOVE AND DISPOSE
R & S	REMOVE AND SALVAGE
R/C	RATE OF CHANGE
RCA	REINFORCED CONCRETE ARCH
RCB	REINFORCED CONCRETE BOX
RCP	REINFORCED CONCRETE PIPE
RCPA	REINFORCED CONCRETE PIPE ARCH
Rd	ROAD
Reinf	REINFORCED,
	REINFORCEMENT,
	REINFORCING
Rel	RELOCATE
Repl	REPLACEMENT
Ret	RETAINING
Rev	REVISED, REVISION
Rdwy	ROADWAY
RHMA	RUBBERIZED HOT MIX ASPHALT
Riv	RIVER
RM	ROAD-MIXED
RP	RADIUS POINT,
	REFERENCE POINT
RR	RAILROAD
RSP	ROCK SLOPE PROTECTION,
	REVISED STANDARD PLAN
Rt	RIGHT
Rte	ROUTE
RW	REDWOOD,
	RETAINING WALL
R/W	RIGHT OF WAY
Rwy	RAILWAY

S

S	SOUTH,
	SUPPLEMENT
SAE	STRUCTURE APPROACH EMBANKMENT
Salv	SALVAGE
SAPP	STRUCTURAL ALUMINUM PLATE PIPE
SB	SOUTHBOUND
SC	SAND CUSHION
SCSP	SLOTTED CORRUGATED STEEL PIPE
SD	STORM DRAIN
Sec	SECOND,
	SECTION
Sep	SEPARATION
SG	SUBGRADE
Shld	SHOULDER
Sht	SHEET
Sim	SIMILAR
₤	STATION LINE
SM	SELECTED MATERIAL
Spec	SPECIAL,
	SPECIFICATIONS
SPP	SLOTTED PLASTIC PIPE
SS	SLOPE STAKE
SSBM	STRAP AND SADDLE BRACKET METHOD
SSD	STRUCTURAL SECTION DRAIN
SSPA	STRUCTURAL STEEL PLATE ARCH
SSPP	STRUCTURAL STEEL PLATE PIPE
SSPPA	STRUCTURAL STEEL PLATE PIPE ARCH
SSRP	STEEL SPIRAL RIB PIPE
St	STREET
Sta	STATION
STBB	SINGLE THRIE BEAM BARRIER
Std	STANDARD
Str	STRUCTURE
Surf	SURFACING
SW	SIDEWALK,
	SOUND WALL
Swr	SEWER
Sym	SYMMETRICAL
S4S	SURFACE 4 SIDES

T

T	SEMI-TANGENT
Tan	TANGENT
TBB	THRIE BEAM BARRIER
Tbr	TIMBER
TC	TOP OF CURB
TCB	TRAFFIC CONTROL BOX
TCE	TEMPORARY CONSTRUCTION EASEMENT
Tel	TELEPHONE
Temp	TEMPORARY
TG	TOP OF GRADE
Tot	TOTAL
TP	TELEPHONE POLE
TPB	TREATED PERMEABLE BASE
TPM	TREATED PERMEABLE MATERIAL
Trans	TRANSITION

T continued

TS	TRANSVERSE,
	TRAFFIC SIGNAL,
	TUBULAR STEEL
Typ	TYPICAL

U

UC	UNDERCROSSING
UD	UNDERDRAIN
UG	UNDERGROUND
UON	UNLESS OTHERWISE NOTED
UP	UNDERPASS

V

V	VALVE,
	DESIGN SPEED
Var	VARIABLE,
	VARIES
VC	VERTICAL CURVE
VCP	VITRIFIED CLAY PIPE
Vert	VERTICAL
Via	VIADUCT
Vol	VOLUME

W

W	WEST,
	WIDTH
WB	WESTBOUND
WH	WEEP HOLE
WM	WIRE MESH
WS	WATER SURFACE
WSP	WELDED STEEL PIPE
Wt	WEIGHT
WV	WATER VALVE
WW	WINGWALL
WWLOL	WINGWALL LAYOUT LINE

X

X Sec	CROSS SECTION
Xing	CROSSING

Y

Yr	YEAR
Yrs	YEARS

Dist	COUNTY	ROUTE	POST MILES TOTAL PROJECT	SHEET No.	TOTAL SHEETS
05	SBt	156	0.0/3.0	48	113

Grace M. Tsushima
REGISTERED CIVIL ENGINEER

July 19, 2013
PLANS APPROVAL DATE

REGISTERED PROFESSIONAL ENGINEER
Grace M. Tsushima
No. C49814
Exp. 9-30-14
CIVIL
STATE OF CALIFORNIA

THE STATE OF CALIFORNIA OR ITS OFFICERS OR AGENTS SHALL NOT BE RESPONSIBLE FOR THE ACCURACY OR COMPLETENESS OF SCANNED COPIES OF THIS PLAN SHEET.

TO ACCOMPANY PLANS DATED 6-20-16

UNIT OF MEASUREMENT SYMBOLS:

Some of the symbols used in the project plan quantity tables and in the Bid Item List are:

TABLE A

SYMBOL USED	DEFINITIONS
ACRE	ACRE
CF	CUBIC FOOT
CY	CUBIC YARD
EA	EACH
GAL	GALLON
LB	POUND
LF	LINEAR FOOT
SQFT	SQUARE FOOT
SQYD	SQUARE YARD
STA	100 FEET
TAB	TABLET
TON	2,000 POUNDS

Some of the symbols used in the plans other than in the project plan quantity tables are:

TABLE B

SYMBOL USED	DEFINITIONS
ksi	KIPS PER SQUARE INCH
ksf	KIPS PER SQUARE FOOT
psi	POUNDS PER SQUARE INCH
psf	POUNDS PER SQUARE FOOT
lb/ft^3, pcf	POUNDS PER CUBIC FOOT
tsf	TONS PER SQUARE FOOT
mph, MPH *	MILES PER HOUR
ø	NOMINAL DIAMETER
oz	OUNCE
lb	POUND
kip	1,000 POUNDS
cal	CALORIE
ft	FOOT OR FEET
gal	GALLON

* For use on a sign panel only

STATE OF CALIFORNIA
DEPARTMENT OF TRANSPORTATION

ABBREVIATIONS (SHEET 2 OF 2)

NO SCALE

RSP A10B DATED JULY 19, 2013 SUPERSEDES STANDARD PLAN A10B DATED MAY 20, 2011 - PAGE 2 OF THE STANDARD PLANS BOOK DATED 2010.

REVISED STANDARD PLAN RSP A10B

2010 REVISED STANDARD PLAN RSP A10B

6-7-13

Dist	COUNTY	ROUTE	POST MILES TOTAL PROJECT	SHEET No.	TOTAL SHEETS
05	SBt	156	0.0/3.0	49	113

REGISTERED CIVIL ENGINEER

July 19, 2013
PLANS APPROVAL DATE

REGISTERED PROFESSIONAL ENGINEER Roberta L. McLaughlin No. C40375 Exp. 3-31-15 CIVIL STATE OF CALIFORNIA

THE STATE OF CALIFORNIA OR ITS OFFICERS OR AGENTS SHALL NOT BE RESPONSIBLE FOR THE ACCURACY OR COMPLETENESS OF SCANNED COPIES OF THIS PLAN SHEET.

TO ACCOMPANY PLANS DATED 6-20-16

EXIT RAMP NEUTRAL AREA (GORE) TREATMENT

DETAIL 36

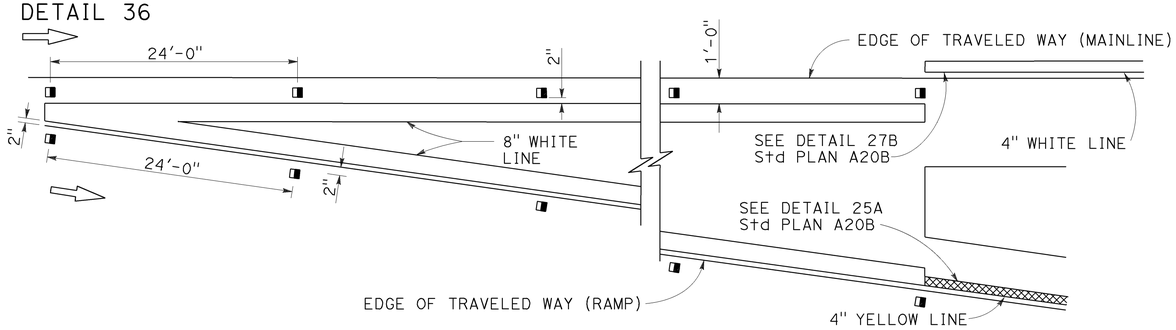

ENTRANCE RAMP NEUTRAL AREA (MERGE) TREATMENT

DETAIL 36A

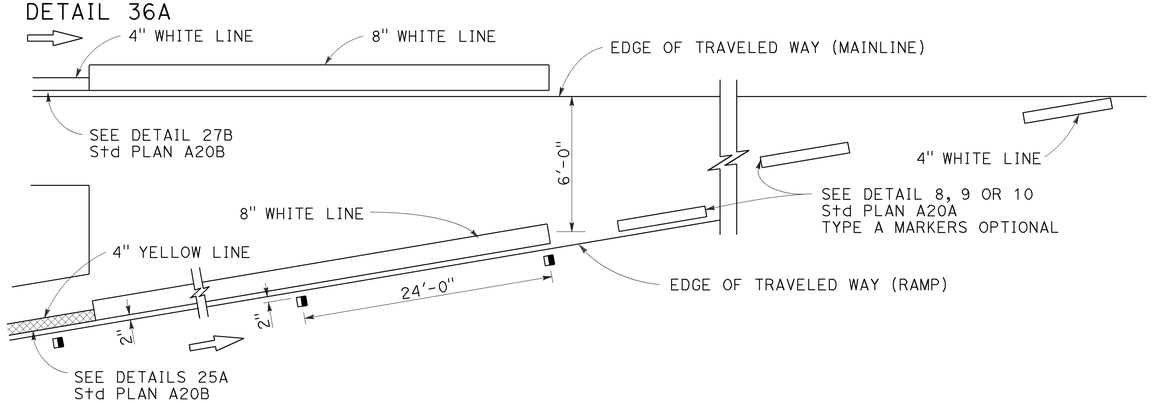

ENTRANCE RAMP NEUTRAL AREA (ACCELERATION LANE) TREATMENT

DETAIL 36B

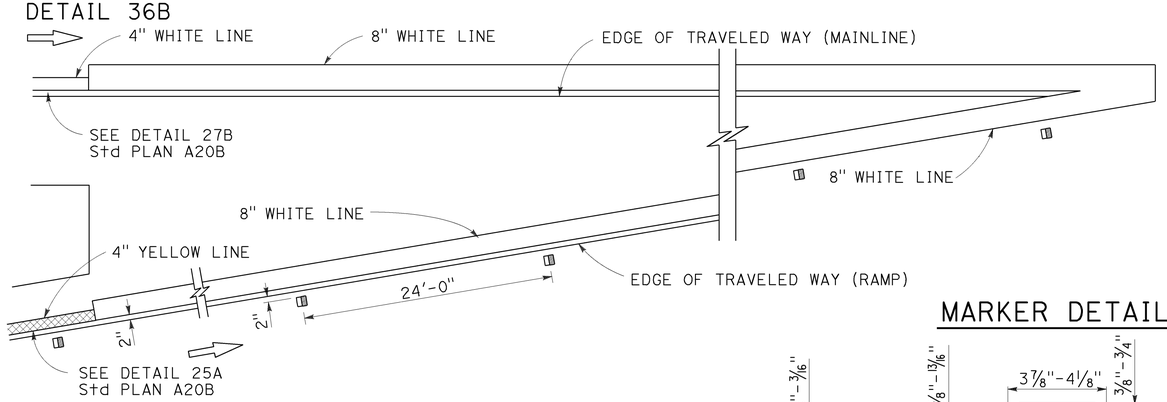

LANE DROP AT EXIT RAMPS

DETAIL 37

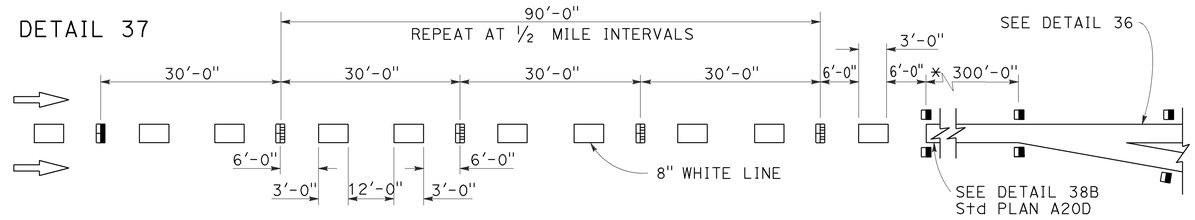

DETAIL 37A

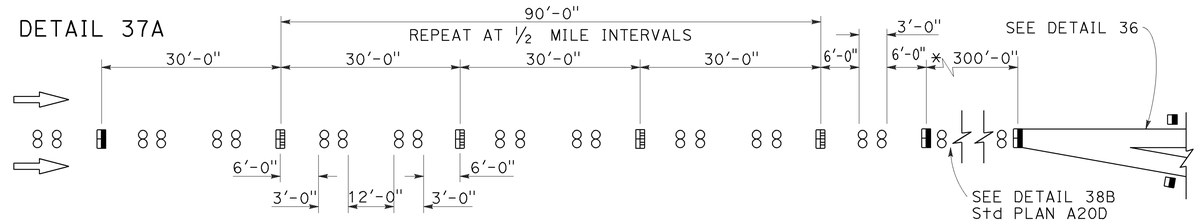

* The solid channelizing line shown may be omitted on short auxiliary lanes where weaving length is critical.

LANE DROP AT INTERSECTIONS

DETAIL 37B

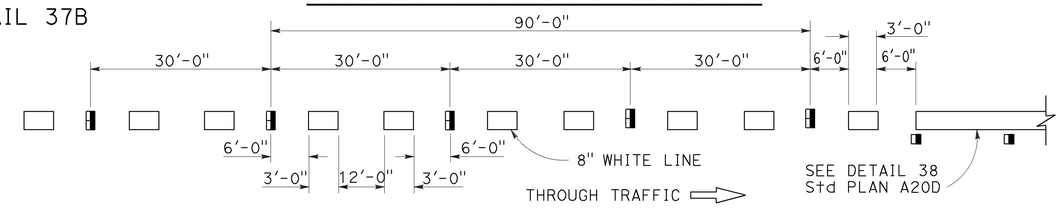

DETAIL 37C

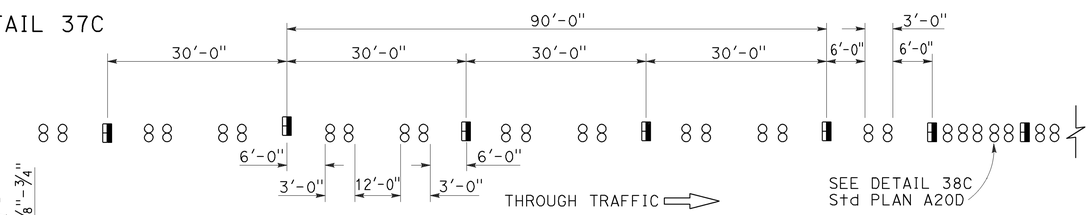

MARKER DETAILS

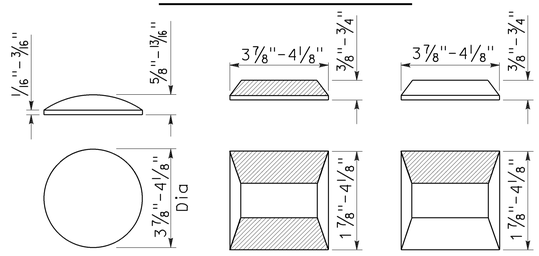

RETROREFLECTIVE FACE

LEGEND:

MARKERS

- ○ TYPE A WHITE NON-REFLECTIVE
- ⊟ TYPE C RED-CLEAR RETROREFLECTIVE
- ◨ TYPE G ONE-WAY CLEAR RETROREFLECTIVE

STATE OF CALIFORNIA
DEPARTMENT OF TRANSPORTATION

PAVEMENT MARKERS AND TRAFFIC LINE TYPICAL DETAILS

NO SCALE

RSP A20C DATED JULY 19, 2013 SUPERSEDES STANDARD PLAN A20C DATED MAY 20, 2011 - PAGE 11 OF THE STANDARD PLANS BOOK DATED 2010.

REVISED STANDARD PLAN RSP A20C

2010 REVISED STANDARD PLAN RSP A20C

4-29-13

Dist	COUNTY	ROUTE	POST MILES TOTAL PROJECT	SHEET No.	TOTAL SHEETS
05	SBt	156	0.0/3.0	50	113

REGISTERED CIVIL ENGINEER

April 20, 2012
PLANS APPROVAL DATE

REGISTERED PROFESSIONAL ENGINEER
Roberta L. McLaughlin
No. C40375
Exp. 3-31-13
CIVIL
STATE OF CALIFORNIA

THE STATE OF CALIFORNIA OR ITS OFFICERS OR AGENTS SHALL NOT BE RESPONSIBLE FOR THE ACCURACY OR COMPLETENESS OF SCANNED COPIES OF THIS PLAN SHEET.

TO ACCOMPANY PLANS DATED 6-20-16

2010 REVISED STANDARD PLAN RSP A24A

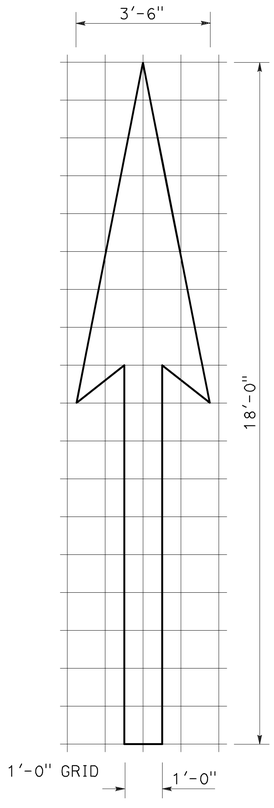

A=25 ft^2

TYPE I 18'-0" ARROW

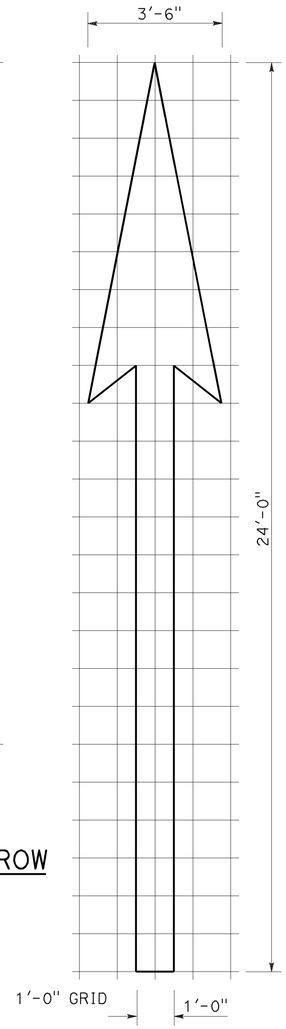

A=31 ft^2

TYPE I 24'-0" ARROW

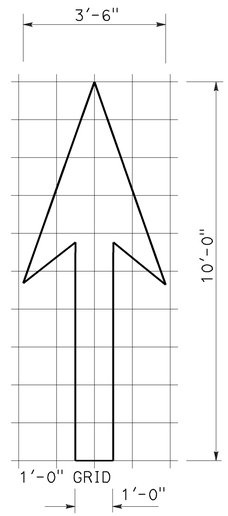

A=14 ft^2

TYPE I 10'-0" ARROW

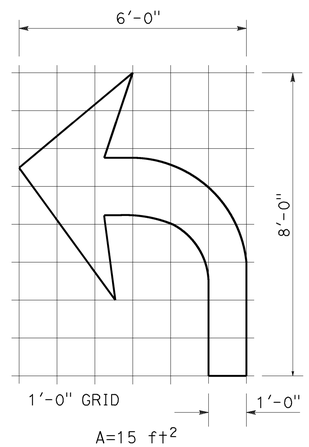

A=15 ft^2

TYPE IV (L) ARROW

(For Type IV (R) arrow, use mirror image)

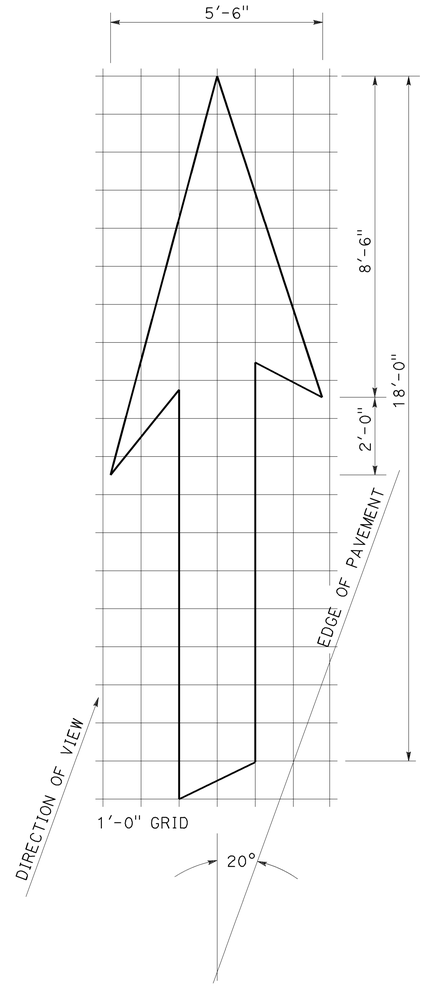

A=42 ft^2

TYPE VI ARROW

Right lane drop arrow
(For left lane, use mirror image)

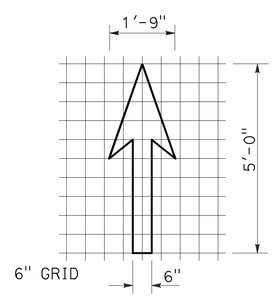

A=3.5 ft^2

BIKE LANE ARROW

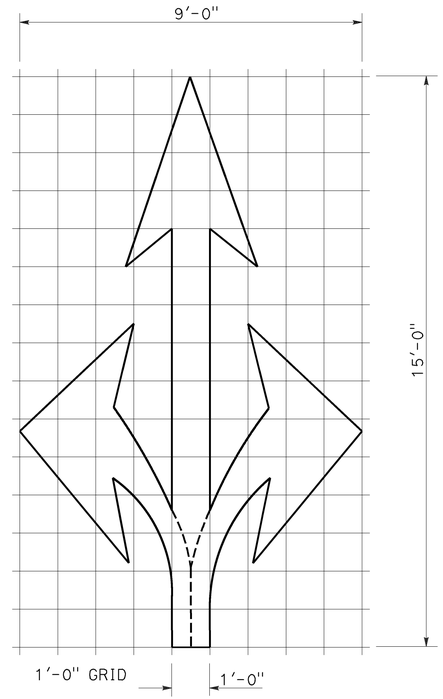

A=36 ft^2

TYPE VIII ARROW

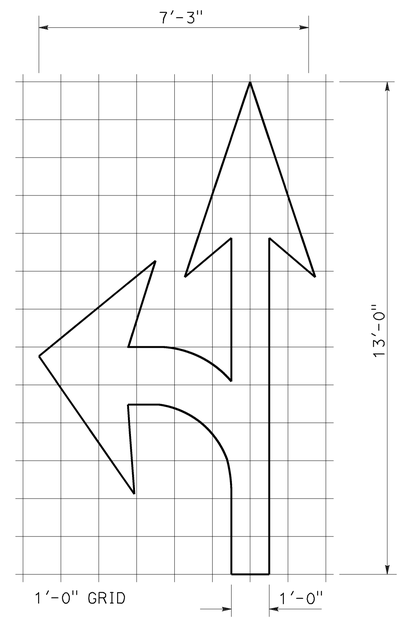

A=27 ft^2

TYPE VII (L) ARROW

(For Type VII (R) arrow, use mirror image)

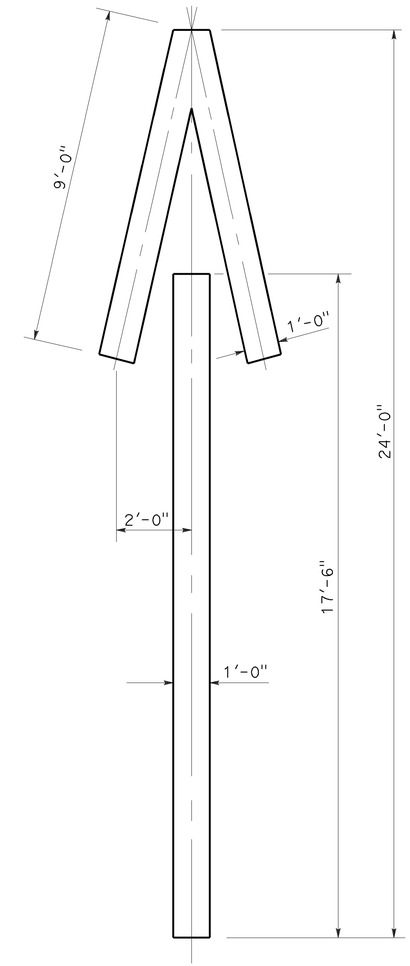

A=33 ft^2

TYPE V ARROW

NOTE:
Minor variations in dimensions may be accepted by the Engineer.

STATE OF CALIFORNIA
DEPARTMENT OF TRANSPORTATION

PAVEMENT MARKINGS ARROWS

NO SCALE

RSP A24A DATED APRIL 20, 2012 SUPERSEDES STANDARD PLAN A24A DATED MAY 20, 2011 - PAGE 13 OF THE STANDARD PLANS BOOK DATED 2010.

REVISED STANDARD PLAN RSP A24A

3-14-12

Dist	COUNTY	ROUTE	POST MILES TOTAL PROJECT	SHEET No.	TOTAL SHEETS
05	SBt	156	0.0/3.0	51	113

REGISTERED CIVIL ENGINEER

July 20, 2012
PLANS APPROVAL DATE

REGISTERED PROFESSIONAL ENGINEER
Roberta L. McLaughlin
No. C40375
Exp. 3-31-13
CIVIL
STATE OF CALIFORNIA

THE STATE OF CALIFORNIA OR ITS OFFICERS OR AGENTS SHALL NOT BE RESPONSIBLE FOR THE ACCURACY OR COMPLETENESS OF SCANNED COPIES OF THIS PLAN SHEET.

TO ACCOMPANY PLANS DATED 6-20-16

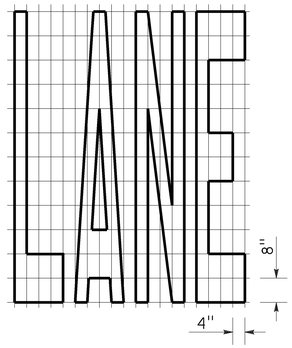

A=24 ft²

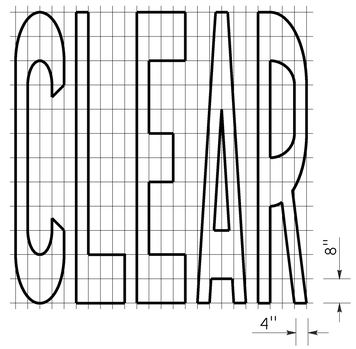

A=27 ft²

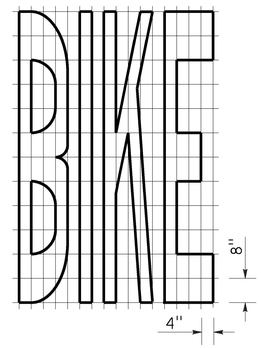

A=21 ft²

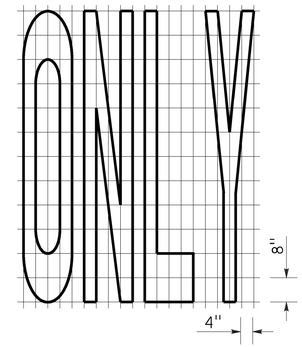

A=22 ft²

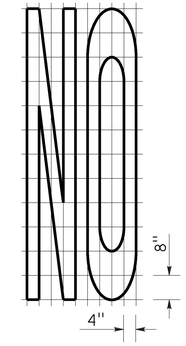

A=14 ft²

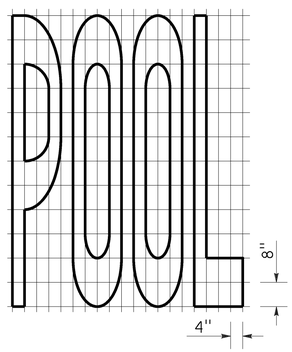

A=23 ft²

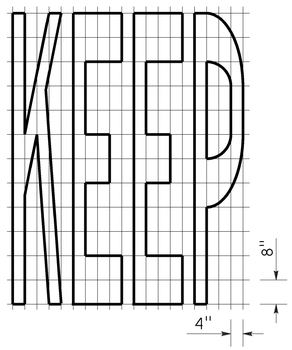

A=24 ft²

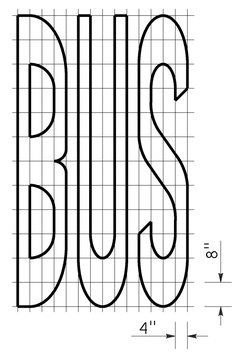

A=20 ft²

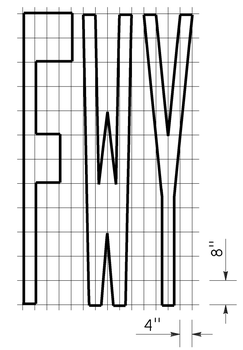

A=16 ft²

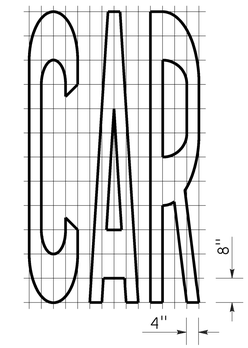

A=17 ft²

WORD MARKINGS			
ITEM	ft²	ITEM	ft²
LANE	24	NO	14
POOL	23	BIKE	21
CAR	17	BUS	20
CLEAR	27	ONLY	22
KEEP	24	FWY	16

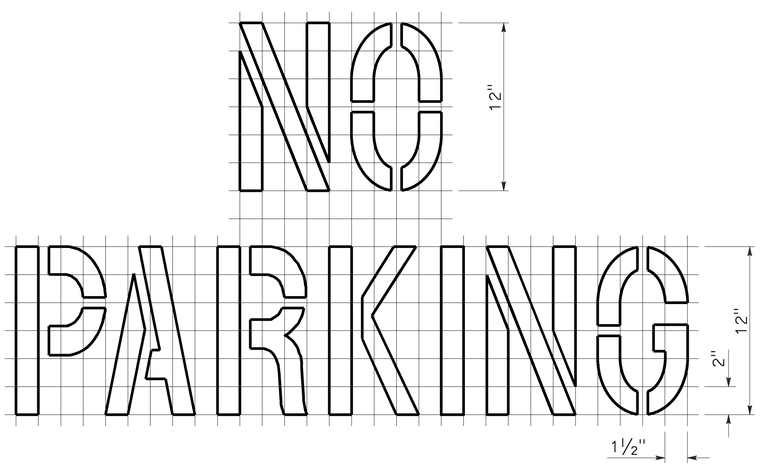

A=2 ft²
See Notes 6 and 7

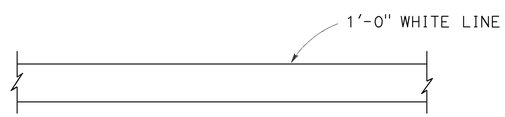

LIMIT LINE (STOP LINE)

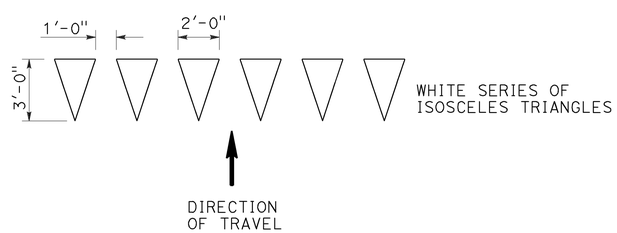

YIELD LINE

NOTES:

1. If a message consists of more than one word, it should read "UP", i.e., the first word should be nearest the driver.
2. The space between words should be at least four times the height of the characters for low speed roads, but not more than ten times the height of the characters. The space may be reduced appropriately where there is limited space because of local conditions.
3. Minor variations in dimensions may be accepted by the Engineer.
4. Portions of a letter, number or symbol may be separated by connecting segments not to exceed 2" in width.
5. The words "NO PARKING" pavement marking is to be used for parking facilities. For typical locations of markings, see Standard Plans A90A and A90B.
6. The words "NO PARKING", shall be painted in white letters no less than 1'-0" high on a contrasting background and located so that it is visible to traffic enforcement officials.

STATE OF CALIFORNIA
DEPARTMENT OF TRANSPORTATION

PAVEMENT MARKINGS WORDS, LIMIT AND YIELD LINES

NO SCALE

RSP A24E DATED JULY 20, 2012 SUPERSEDES STANDARD PLAN A24E
DATED MAY 20, 2011 - PAGE 17 OF THE STANDARD PLANS BOOK DATED 2010.

REVISED STANDARD PLAN RSP A24E

2010 REVISED STANDARD PLAN RSP A24E

6-12-12

Dist	COUNTY	ROUTE	POST MILES TOTAL PROJECT	SHEET No.	TOTAL SHEETS
05	SBt	156	0.0/3.0	52	113

Atifa Ferouz
REGISTERED CIVIL ENGINEER

July 15, 2016
PLANS APPROVAL DATE

REGISTERED PROFESSIONAL ENGINEER
Atifa Ferouz
No. C80402
Exp. 3-31-17
CIVIL
STATE OF CALIFORNIA

THE STATE OF CALIFORNIA OR ITS OFFICERS OR AGENTS SHALL NOT BE RESPONSIBLE FOR THE ACCURACY OR COMPLETENESS OF SCANNED COPIES OF THIS PLAN SHEET.

TO ACCOMPANY PLANS DATED 6-20-16

2010 REVISED STANDARD PLAN RSP A40C

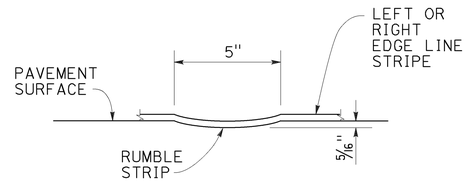

SECTION C-C

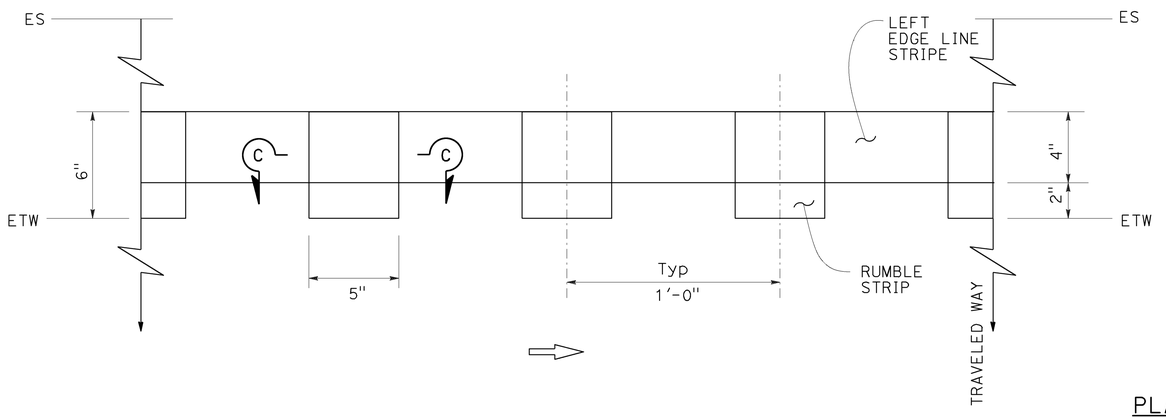

PLAN

EDGE LINE RUMBLE STRIP PLACEMENT
LEFT OF DIRECTION OF TRAVEL

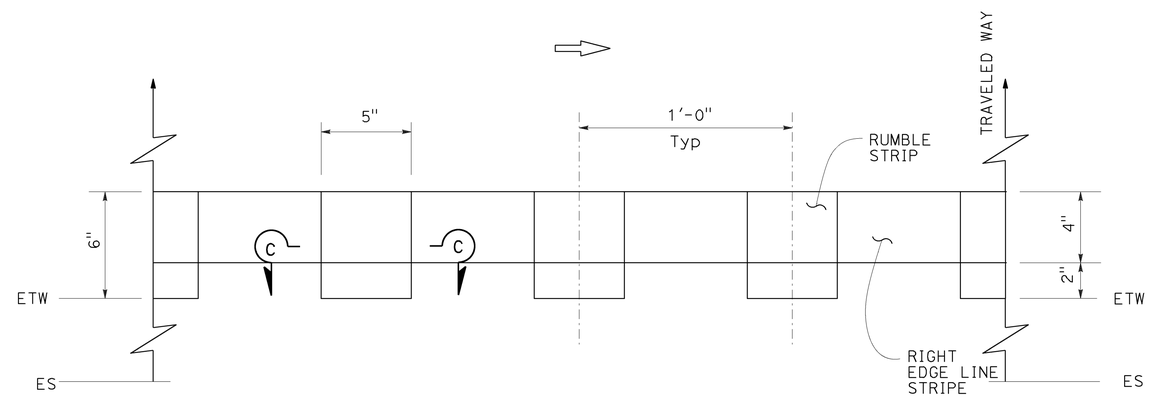

EDGE LINE RUMBLE STRIP PLACEMENT
RIGHT OF DIRECTION OF TRAVEL

TYPICAL EDGE LINE RUMBLE STRIP PLACEMENT

STATE OF CALIFORNIA
DEPARTMENT OF TRANSPORTATION

EDGE LINE RUMBLE STRIP DETAILS GROUND-IN INDENTATIONS

NO SCALE

RSP A40C DATED JULY 15, 2016 SUPPLEMENTS THE STANDARD PLANS BOOK DATED 2010.

REVISED STANDARD PLAN RSP A40C

5-23-16

Dist	COUNTY	ROUTE	POST MILES TOTAL PROJECT	SHEET No.	TOTAL SHEETS
05	SBt	156	0.0/3.0	53	113

Atifa Ferouz
REGISTERED CIVIL ENGINEER

July 15, 2016
PLANS APPROVAL DATE

REGISTERED PROFESSIONAL ENGINEER
Atifa Ferouz
No. C80402
Exp. 3-31-17
CIVIL
STATE OF CALIFORNIA

THE STATE OF CALIFORNIA OR ITS OFFICERS OR AGENTS SHALL NOT BE RESPONSIBLE FOR THE ACCURACY OR COMPLETENESS OF SCANNED COPIES OF THIS PLAN SHEET.

TO ACCOMPANY PLANS DATED 6-20-16

NOTE:

Detail 21 and Detail 5 traffic stripes shown, see project plans for traffic stripe details.

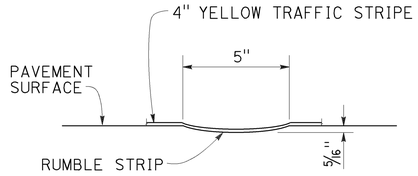

SECTION A-A

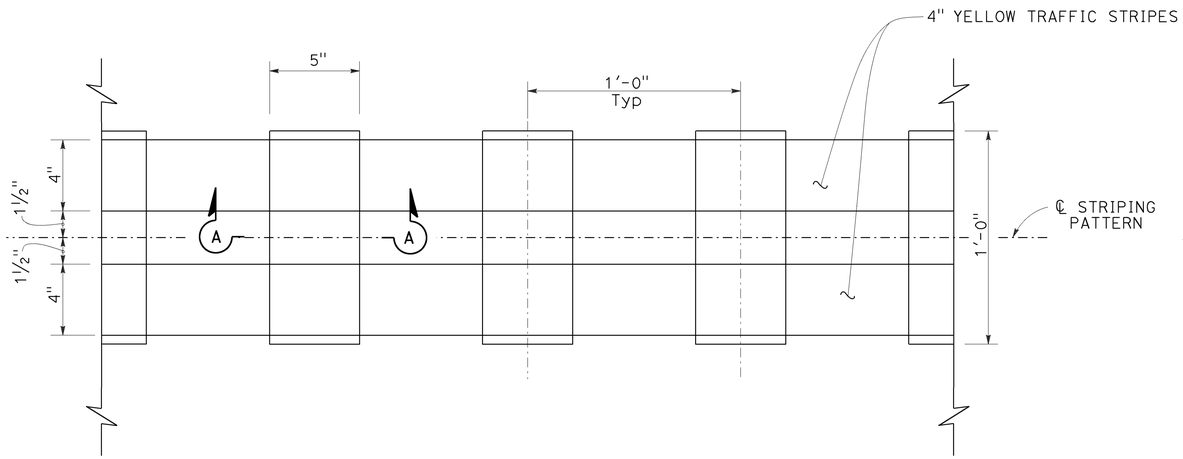

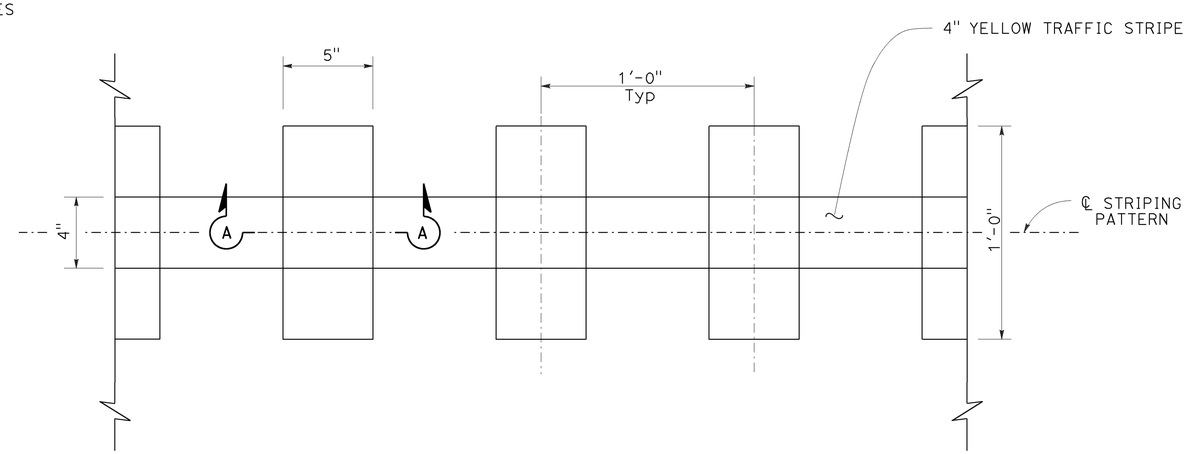

PLAN

RUMBLE STRIP PLACEMENT IN NO PASSING ZONE

RUMBLE STRIP PLACEMENT IN PASSING ZONE

TYPICAL CENTERLINE RUMBLE STRIP PLACEMENT

STATE OF CALIFORNIA
DEPARTMENT OF TRANSPORTATION

CENTERLINE RUMBLE STRIP DETAILS GROUND-IN INDENTATIONS

NO SCALE

RSP A40D DATED JULY 15, 2016 SUPPLEMENTS THE STANDARD PLANS BOOK DATED 2010.

REVISED STANDARD PLAN RSP A40D

2010 REVISED STANDARD PLAN RSP A40D

5-23-16

Dist	COUNTY	ROUTE	POST MILES TOTAL PROJECT	SHEET No.	TOTAL SHEETS
05	SB†	156	0.0/3.0	54	113

Atifa Ferouz
REGISTERED CIVIL ENGINEER

July 15, 2016
PLANS APPROVAL DATE

REGISTERED PROFESSIONAL ENGINEER
Atifa Ferouz
No. C80402
Exp. 3-31-17
CIVIL
STATE OF CALIFORNIA

THE STATE OF CALIFORNIA OR ITS OFFICERS OR AGENTS SHALL NOT BE RESPONSIBLE FOR THE ACCURACY OR COMPLETENESS OF SCANNED COPIES OF THIS PLAN SHEET.

TO ACCOMPANY PLANS DATED 6-20-16

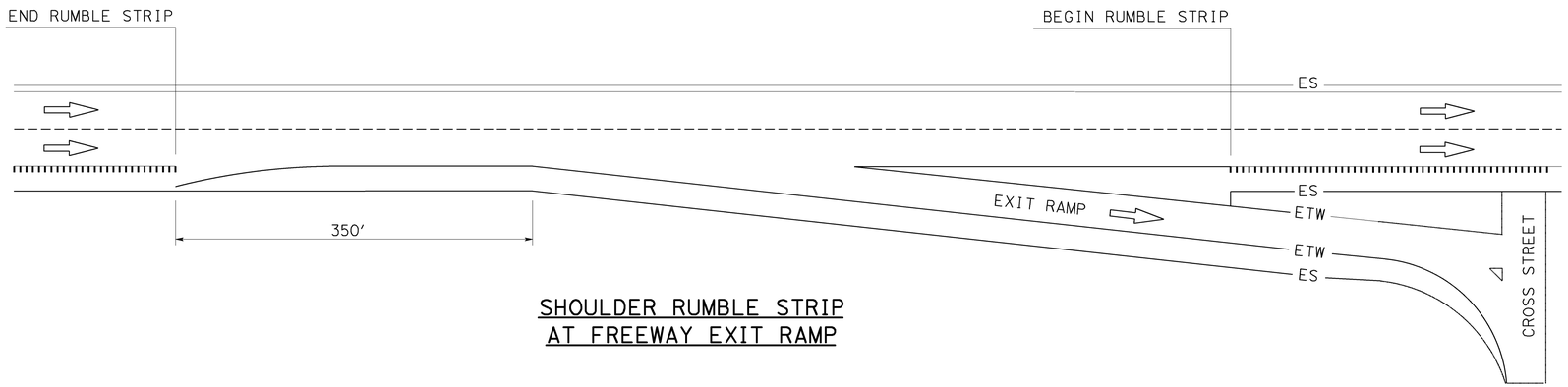

SHOULDER RUMBLE STRIP
AT FREEWAY EXIT RAMP

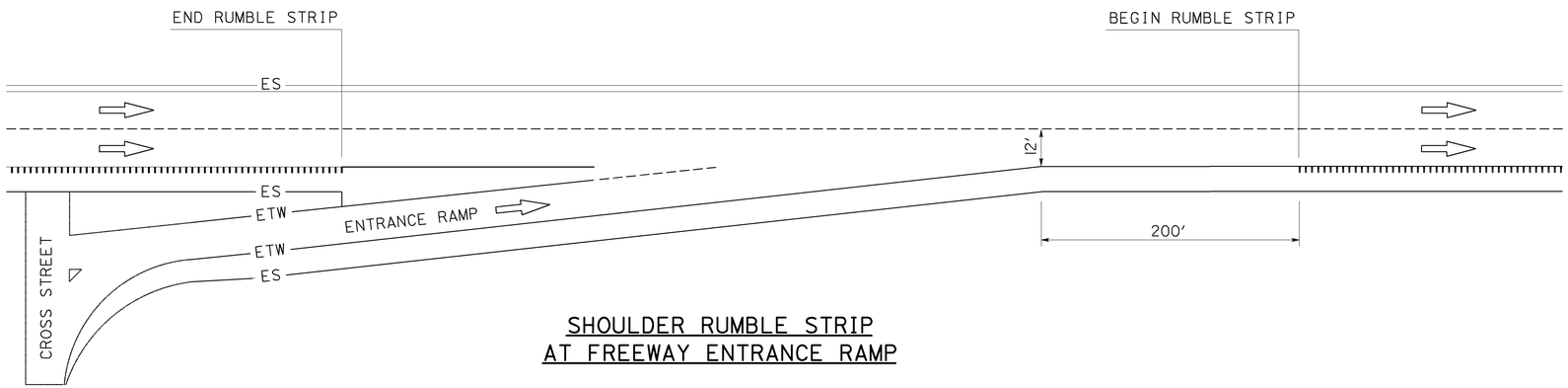

SHOULDER RUMBLE STRIP
AT FREEWAY ENTRANCE RAMP

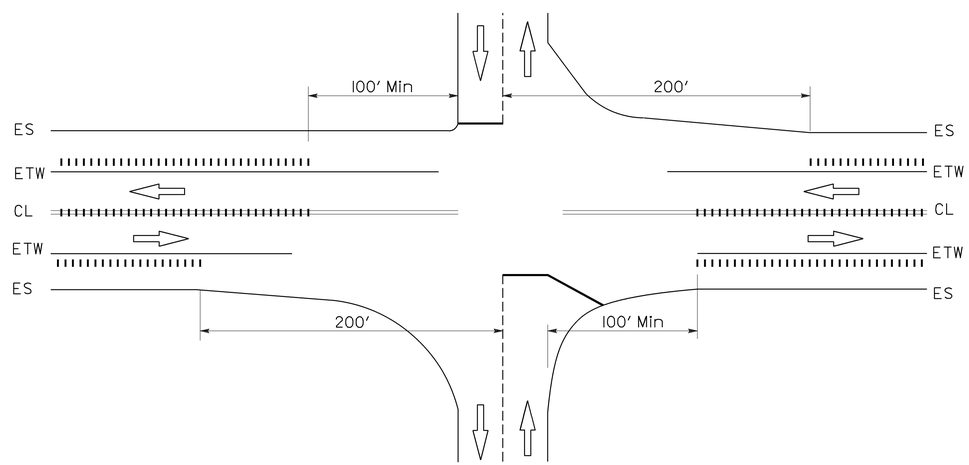

CENTERLINE AND SHOULDER RUMBLE STRIP
AT GRADE INTERSECTION

LEGEND

RUMBLE STRIP (GROUND-IN)

STATE OF CALIFORNIA
DEPARTMENT OF TRANSPORTATION

RUMBLE STRIP PLACEMENT AT FREEWAY EXIT RAMPS, FREEWAY ENTRANCE RAMPS, AND INTERSECTIONS

NO SCALE

RSP A40E DATED JULY 15, 2016 SUPPLEMENTS THE STANDARD PLANS BOOK DATED 2010.

REVISED STANDARD PLAN RSP A40E

2010 REVISED STANDARD PLAN RSP A40E

5-23-16

Dist	COUNTY	ROUTE	POST MILES TOTAL PROJECT	SHEET No.	TOTAL SHEETS
05	SBt	156	0.0/3.0	55	113

Atifa Ferouz
REGISTERED CIVIL ENGINEER

July 15, 2016
PLANS APPROVAL DATE

REGISTERED PROFESSIONAL ENGINEER
Atifa Ferouz
No. C80402
Exp. 3-31-17
CIVIL
STATE OF CALIFORNIA

THE STATE OF CALIFORNIA OR ITS OFFICERS OR AGENTS SHALL NOT BE RESPONSIBLE FOR THE ACCURACY OR COMPLETENESS OF SCANNED COPIES OF THIS PLAN SHEET.

TO ACCOMPANY PLANS DATED 6-20-16

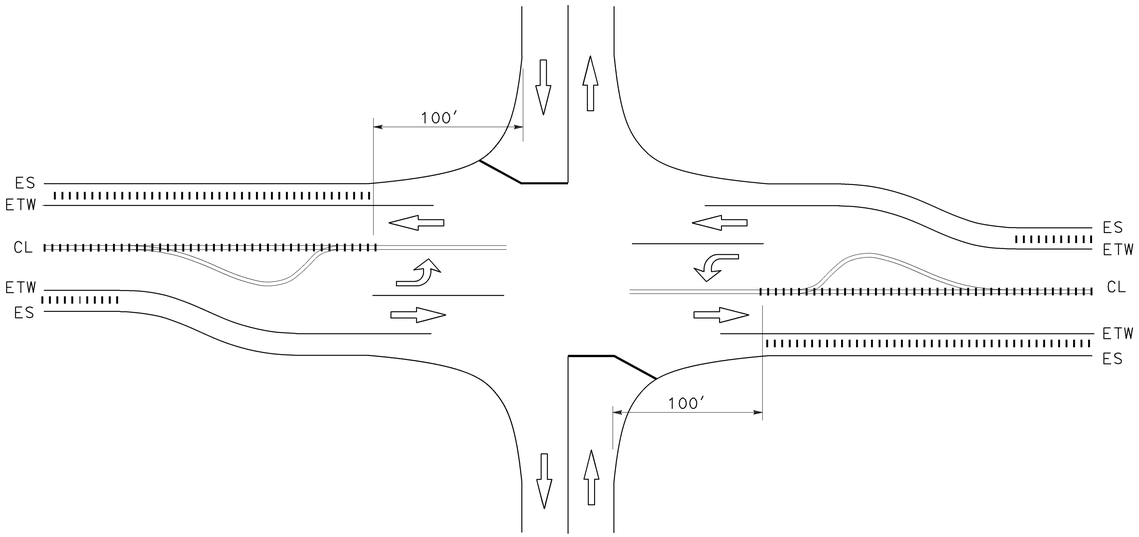

CENTERLINE AND SHOULDER RUMBLE STRIPS
AT INTERSECTION WITH LEFT TURN POCKETS

LEGEND

RUMBLE STRIPS (GROUND-IN)

RAILROAD TRACKS

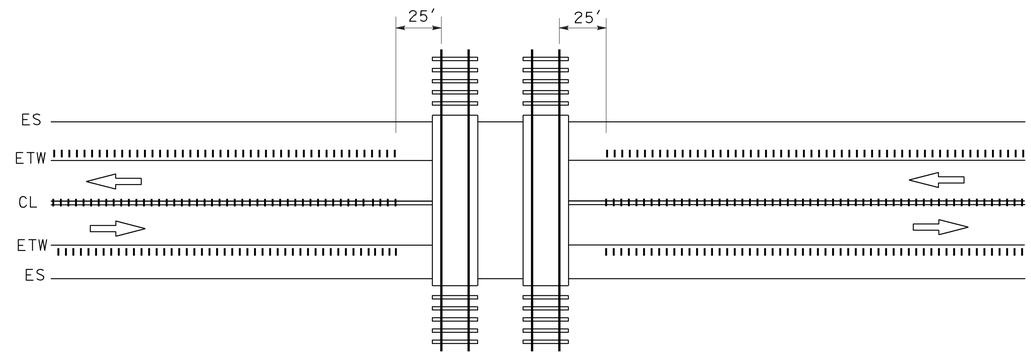

CENTERLINE AND SHOULDER RUMBLE STRIPS
AT RAILROAD CROSSING

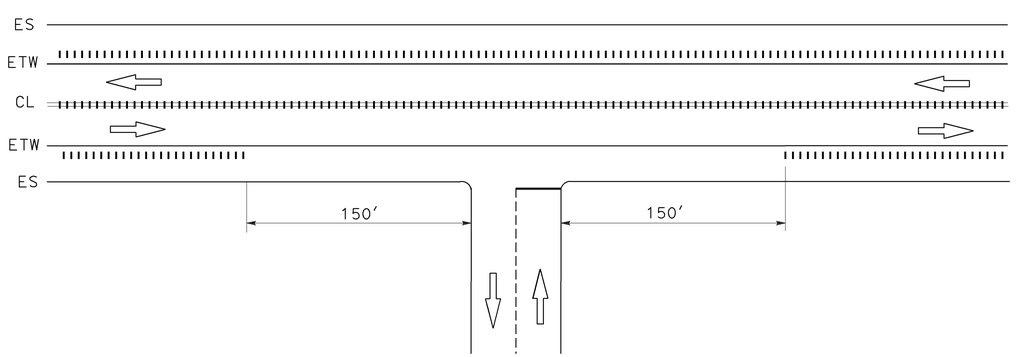

CENTERLINE AND SHOULDER RUMBLE STRIPS
AT DRIVEWAY/PRIVATE ROAD APPROACH

STATE OF CALIFORNIA
DEPARTMENT OF TRANSPORTATION

RUMBLE STRIP PLACEMENT AT INTERSECTIONS WITH LEFT TURN POCKETS, RAILROAD CROSSINGS, PRIVATE ROADS, AND MAJOR DRIVEWAYS

NO SCALE

RSP A40F DATED JULY 15, 2016 SUPPLEMENTS THE STANDARD PLANS BOOK DATED 2010.

REVISED STANDARD PLAN RSP A40F

2010 REVISED STANDARD PLAN RSP A40F

5-23-16

Dist	COUNTY	ROUTE	POST MILES TOTAL PROJECT	SHEET No.	TOTAL SHEETS
05	SBt	156	0.0/3.0	56	113

Randell D. Hiatt
REGISTERED CIVIL ENGINEER

July 19, 2013
PLANS APPROVAL DATE

REGISTERED PROFESSIONAL ENGINEER
Randell D. Hiatt
No. C50200
Exp. 6-30-15
CIVIL
STATE OF CALIFORNIA

THE STATE OF CALIFORNIA OR ITS OFFICERS OR AGENTS SHALL NOT BE RESPONSIBLE FOR THE ACCURACY OR COMPLETENESS OF SCANNED COPIES OF THIS PLAN SHEET.

TO ACCOMPANY PLANS DATED 6-20-16

2010 REVISED STANDARD PLAN RSP A77L1

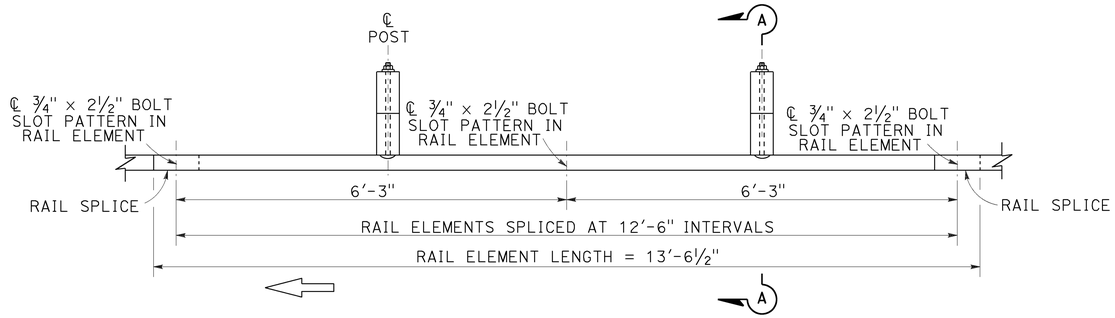

PLAN

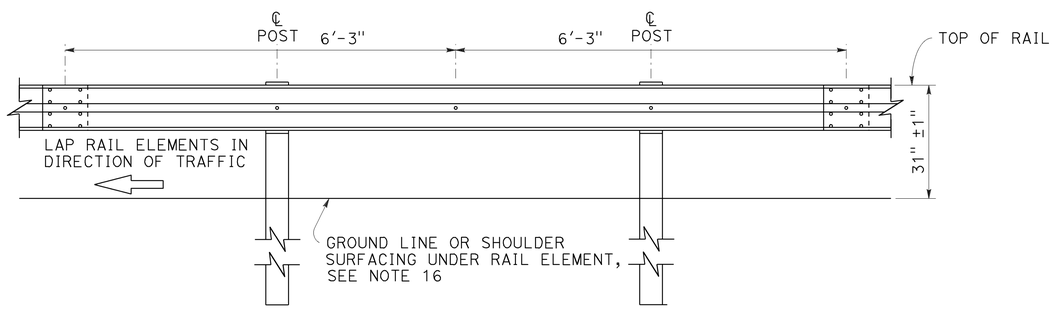

ELEVATION

MIDWEST GUARDRAIL SYSTEM WITH WOOD POST AND BLOCKS

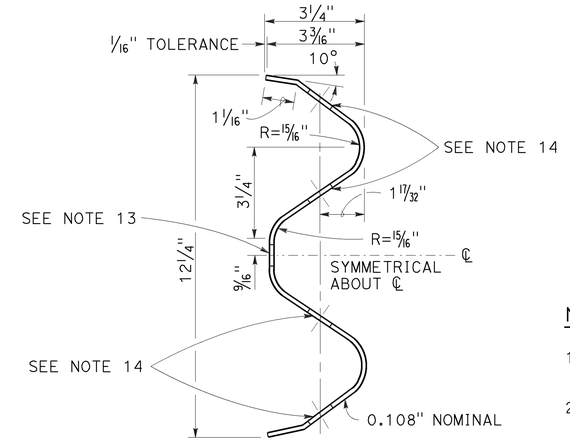

SECTION THRU RAIL ELEMENT

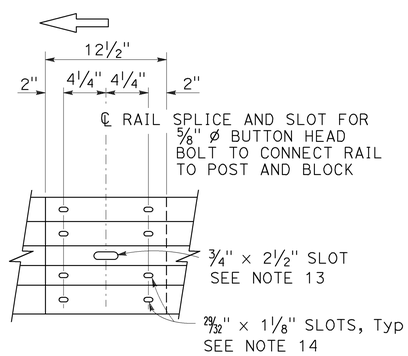

ELEVATION

RAIL ELEMENT SPLICE DETAIL

a) Connect the over lapped end of the rail elements with ⅝" ø × 1⅜" button head oval shoulder splice bolts inserted into the 29/32" × 1⅛" slots and bolted together with ⅝" ø recessed hex nuts. Recess of hex nut points toward rail element. A total of 8 bolts and nuts are to be used at each rail splice connection.

b) The ends of the rail elements are to be overlapped in the direction of traffic (see details).

c) Where end cap is to be attached to the end of a rail element, a total of 4 of the above described splice bolts and nuts are to be used.

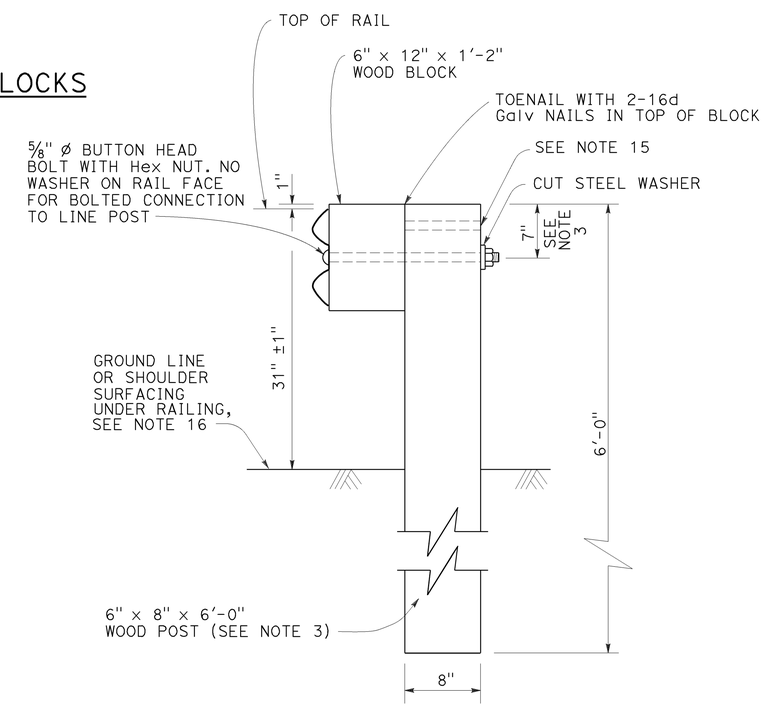

SECTION A-A

TYPICAL WOOD LINE POST INSTALLATION

See Note 4

NOTES:

1. For details of steel post installations, see Revised Standard Plan RSP A77L2.
2. For details of standard hardware used to construct MGS, see Revised Standard Plan RSP A77M1.
3. For details of wood posts and wood blocks used to construct MGS, see Revised Standard Plan RSP A77N1.
4. For additional installation details, see Revised Standard Plan RSP A77N3.
5. MGS post spacing to be 6'-3" center to center, except as otherwise noted.
6. For MGS typical layouts, see the A77P, A77Q and A77R Series of Standard Plans.
7. If railing is connected to terminal system end treatment, use 31" height terminal system end treatment.
8. For MGS end anchor details, see Revised Standard Plans RSP A77S1 and RSP A77T2.
9. For details of MGS transition to bridge railing, see Revised Standard Plan RSP A77U4.
10. For additional details of MSG connection to bridge railing, see Revised Standard Plans RSP A77U1, RSP A77U2 and RSP A77V1.
11. For MGS connection details to abutments and walls, see Revised Standard Plan RSP A77U3.
12. For typical MGS delineation and dike positioning details, see Revised Standard Plan RSP A77N4.
13. Slotted hole for bolted connection of rail element to block and post. See "Section Thru Rail Element".
14. Slotted holes for splice bolts to overlap ends of rail element. See "Section Thru Rail Element".
15. Additional hole in uppermost portion of line post is for potential future adjustments of railing height. See Revised Standard Plan RSP A77N1.
16. Install posts in soil.

STATE OF CALIFORNIA
DEPARTMENT OF TRANSPORTATION

MIDWEST GUARDRAIL SYSTEM STANDARD RAILING SECTION (WOOD POST WITH WOOD BLOCK)

NO SCALE

RSP A77L1 DATED JULY 19, 2013 SUPPLEMENTS STANDARD PLANS BOOK DATED 2010.

REVISED STANDARD PLAN RSP A77L1

Dist	COUNTY	ROUTE	POST MILES TOTAL PROJECT	SHEET No.	TOTAL SHEETS
05	SBt	156	0.0/3.0	57	113

Randell D. Hiatt
REGISTERED CIVIL ENGINEER

July 19, 2013
PLANS APPROVAL DATE

REGISTERED PROFESSIONAL ENGINEER
Randell D. Hiatt
No. C50200
Exp. 6-30-15
CIVIL
STATE OF CALIFORNIA

THE STATE OF CALIFORNIA OR ITS OFFICERS OR AGENTS SHALL NOT BE RESPONSIBLE FOR THE ACCURACY OR COMPLETENESS OF SCANNED COPIES OF THIS PLAN SHEET.

TO ACCOMPANY PLANS DATED 6-20-16

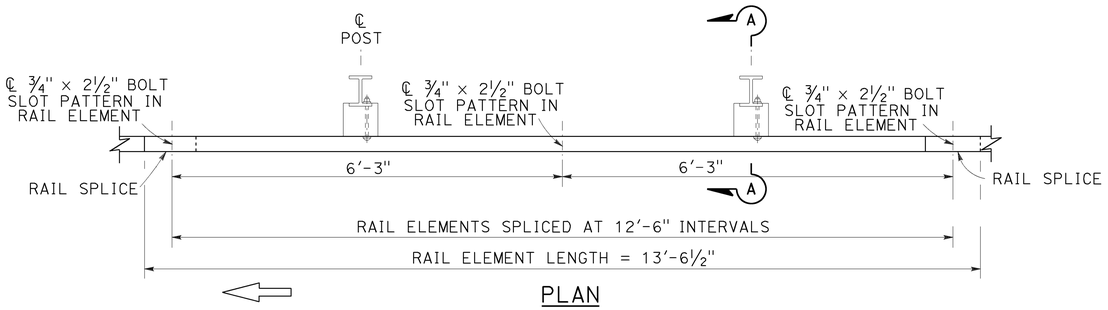

PLAN

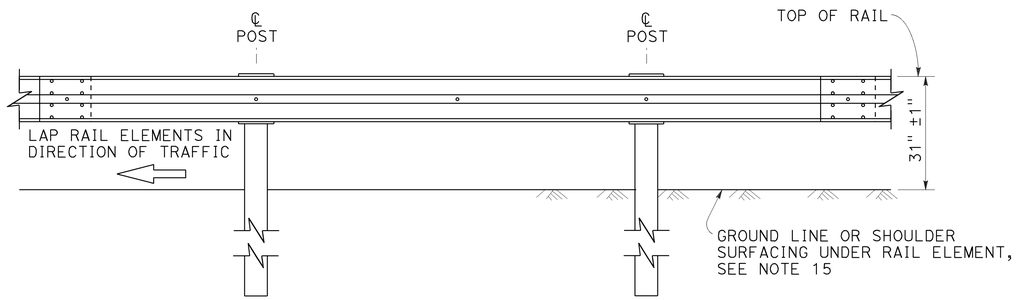

ELEVATION

MIDWEST GUARDRAIL SYSTEM WITH STEEL POSTS AND NOTCHED WOOD OR NOTCHED RECYCLED PLASTIC BLOCKS

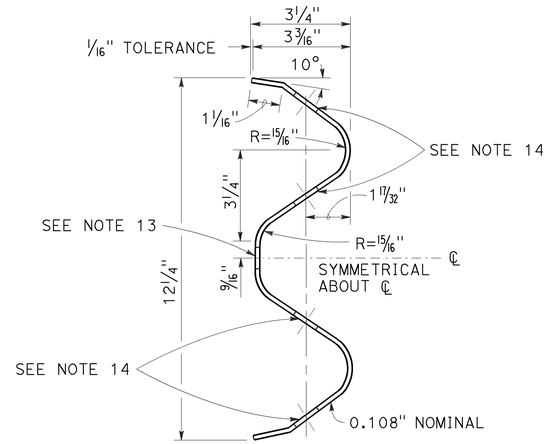

SECTION THRU RAIL ELEMENT

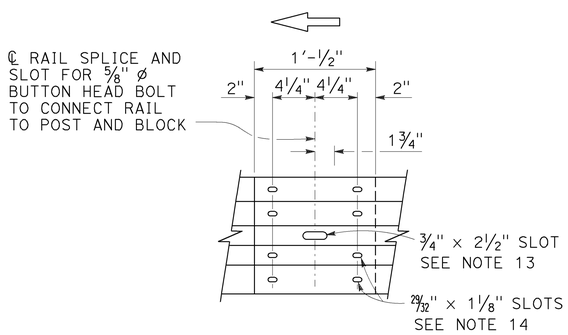

ELEVATION

RAIL ELEMENT SPLICE DETAIL

a) Connect the over lapped end of the rail elements with ⅝" ø × 1⅜" button head oval shoulder splice bolts inserted into the 29⁄32" × 1⅛" slots and bolted together with ⅝" ø recessed hex nuts. Recess of hex nut points toward rail element. A total of 8 bolts and nuts are to be used at each rail splice connection.

b) The ends of the rail elements are to be overlapped in the direction of traffic (see details).

c) Where end cap is to be attached to the end of a rail element, a total of 4 of the above described splice bolts and nuts are to be used.

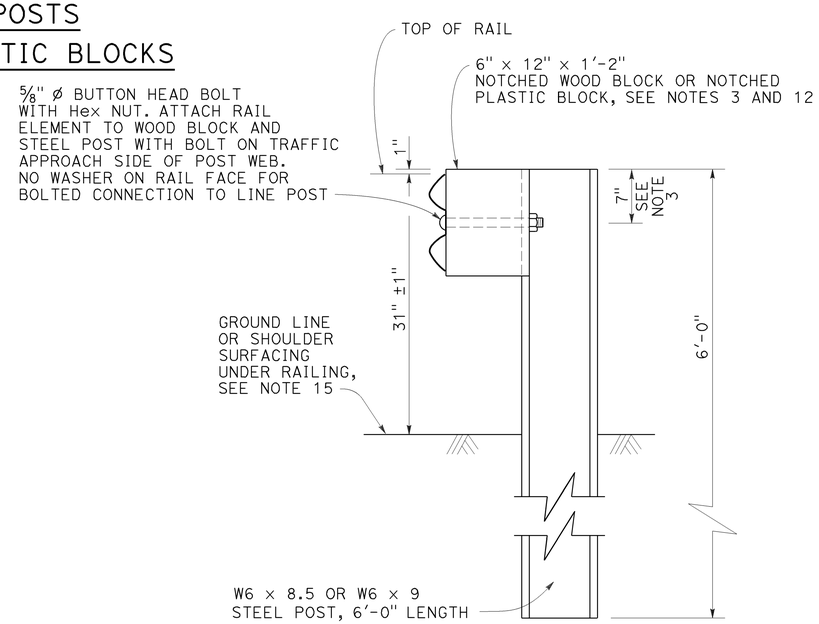

SECTION A-A

TYPICAL STEEL LINE POST INSTALLATION

See Note 4

NOTES:

1. For details of wood post installations, see Revised Standard Plan RSP A77L1.
2. For details of standard hardware used to construct MGS, see Revised Standard Plan RSP A77M1.
3. For details of steel posts and notched wood blocks used to construct MGS, see Revised Standard Plan RSP A77N2.
4. For additional installation details, see Revised Standard Plan RSP A77N3.
5. MGS post spacing to be 6'-3" center to center, except as otherwise noted.
6. For MGS typical layouts, see the A77P, A77Q and A77R Series of Standard Plans.
7. If railing is connected to terminal system end treatment, use 31" height terminal system end treatment.
8. For MGS end anchor details, see Revised Standard Plans RSP A77S1 and RSP A77T2.
9. For details of MGS transition to bridge railing, see Revised Standard Plan RSP A77U4.
10. For additional details of MGS connection to bridge railings, see Revised Standard Plans RSP A77U1, RSP A77U2 and RSP A77V1.
11. For dike positioning and MGS delineation details, see Revised Standard Plan RSP A77N4.
12. Notched face of block faces steel post.
13. Slotted hole for bolted connection of rail element to block and post. See "Section Thru Rail Element".
14. Slotted holes for splice bolts to overlap ends of rail element. See "Section Thru Rail Element".
15. Install posts in soil.

STATE OF CALIFORNIA
DEPARTMENT OF TRANSPORTATION

MIDWEST GUARDRAIL SYSTEM STANDARD RAILING SECTION (STEEL POST WITH NOTCHED WOOD OR NOTCHED RECYCLED PLASTIC BLOCK)

NO SCALE

RSP A77L2 DATED JULY 19, 2013 SUPPLEMENTS THE STANDARD PLANS BOOK DATED 2010.

REVISED STANDARD PLAN RSP A77L2

2010 REVISED STANDARD PLAN RSP A77L2

7-3-13

Dist	COUNTY	ROUTE	POST MILES TOTAL PROJECT	SHEET No.	TOTAL SHEETS
05	SBt	156	0.0/3.0	58	113

Randell D. Hiatt
REGISTERED CIVIL ENGINEER

July 19, 2013
PLANS APPROVAL DATE

REGISTERED PROFESSIONAL ENGINEER
Randell D. Hiatt
No. C50200
Exp. 6-30-15
CIVIL
STATE OF CALIFORNIA

THE STATE OF CALIFORNIA OR ITS OFFICERS OR AGENTS SHALL NOT BE RESPONSIBLE FOR THE ACCURACY OR COMPLETENESS OF SCANNED COPIES OF THIS PLAN SHEET.

TO ACCOMPANY PLANS DATED 6-20-16

2010 REVISED STANDARD PLAN RSP A77M1

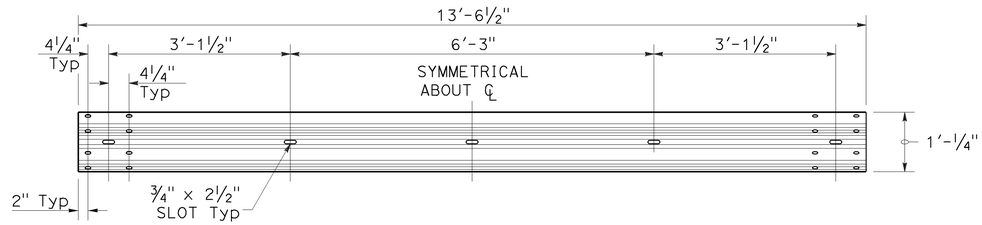

TYPICAL RAIL ELEMENT

NOTE:

1. Slotted holes for splice bolts to overlap ends of rail element.

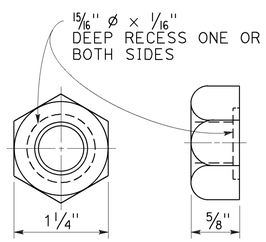

⅝" ø RECESS NUT

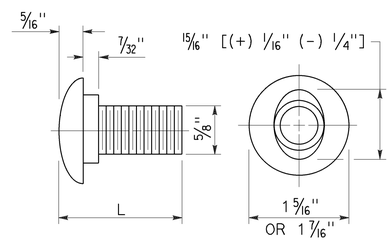

⅝" ø BUTTON HEAD BOLT

BUTTON HEAD BOLT

L	THREAD LENGTH
1⅜"	FULL THREAD LENGTH
2"	FULL THREAD LENGTH
10"	4" Min THREAD LENGTH
18"	4" Min THREAD LENGTH
20"	4" Min THREAD LENGTH
22"	4" Min THREAD LENGTH
26"	4" Min THREAD LENGTH
36"	4" Min THREAD LENGTH
** 2¾"	2" Min THREAD LENGTH
** 19"	4" Min THREAD LENGTH

** For nested rail applications.

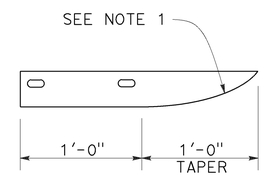

PLAN

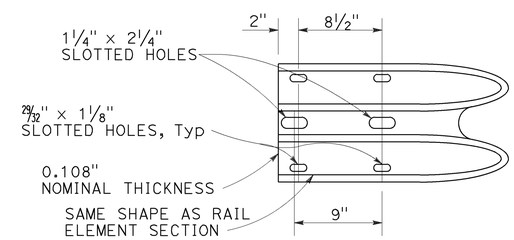

ELEVATION

END CAP (TYPE A)

STATE OF CALIFORNIA
DEPARTMENT OF TRANSPORTATION

MIDWEST GUARDRAIL SYSTEM STANDARD HARDWARE

NO SCALE

RSP A77M1 DATED JULY 19, 2013 SUPPLEMENTS THE STANDARD PLANS BOOK DATED 2010.

REVISED STANDARD PLAN RSP A77M1

7-3-13

Dist	COUNTY	ROUTE	POST MILES TOTAL PROJECT	SHEET No.	TOTAL SHEETS
05	SBt	156	0.0/3.0	59	113

Randell D. Hiatt
REGISTERED CIVIL ENGINEER

July 19, 2013
PLANS APPROVAL DATE

REGISTERED PROFESSIONAL ENGINEER
Randell D. Hiatt
No. C50200
Exp. 6-30-15
CIVIL
STATE OF CALIFORNIA

THE STATE OF CALIFORNIA OR ITS OFFICERS OR AGENTS SHALL NOT BE RESPONSIBLE FOR THE ACCURACY OR COMPLETENESS OF SCANNED COPIES OF THIS PLAN SHEET.

TO ACCOMPANY PLANS DATED 6-20-16

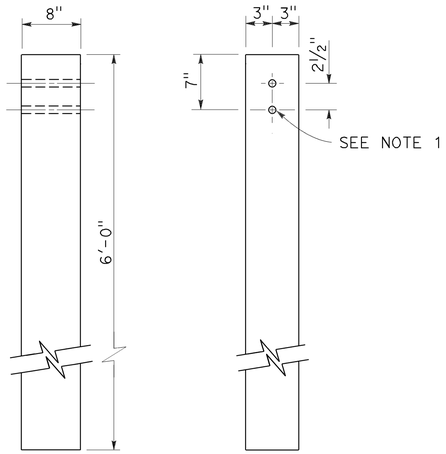

SIDE FRONT

6" x 8" WOOD POST
See Note 3

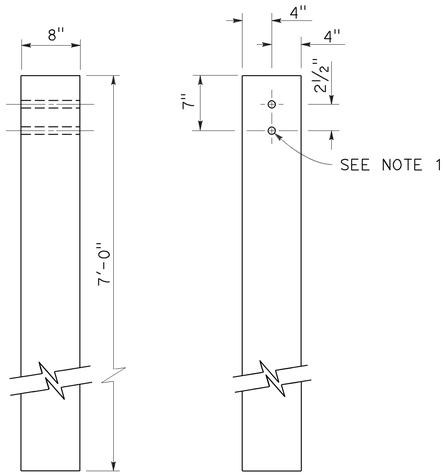

SIDE FRONT

8" x 8" WOOD POST
See Note 4

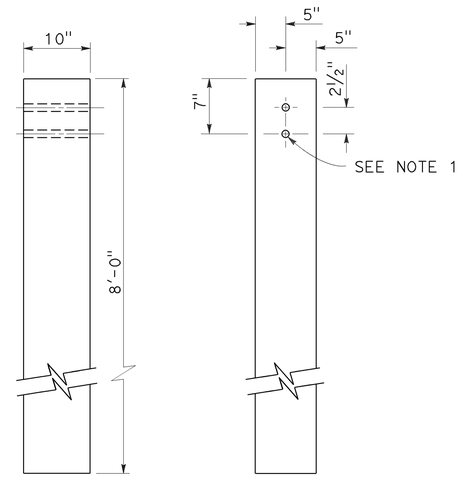

SIDE FRONT

10" x 10" WOOD POST
See Note 5

NOTES:

1. All holes in wood posts and blocks shall be 3/4" Dia ± 1/16".
2. Dimensions shown for wood post are nominal.
3. This post and block combination used for standard line post sections of MGS.
4. This post and 8" x 12" block combination used for line post sections of MGS on narrow roadways.
5. This post and 8" x 12" block combination is typically used where strengthened line post sections of MGS are warranted to shield fixed objects.
6. See Revised Standard Plan RSP A77L3 for use of 6" x 8" and 8" x 8" wood blocks.

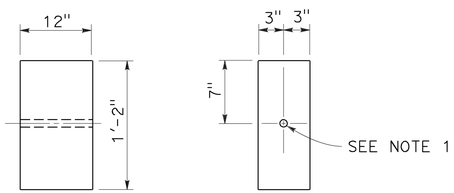

SIDE FRONT

6" x 12" WOOD BLOCK
See Note 3

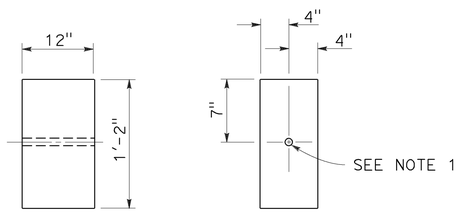

SIDE FRONT

8" x 12" WOOD BLOCK

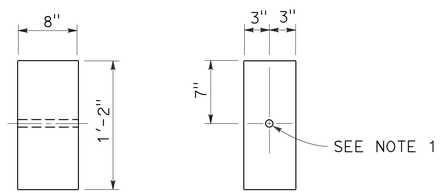

SIDE FRONT

6" x 8" WOOD BLOCK
Only for use with metal beam guard rail see Note 6

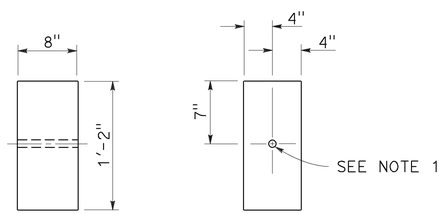

SIDE FRONT

8" x 8" WOOD BLOCK
Only for use with metal beam guard rail see Note 6

STATE OF CALIFORNIA
DEPARTMENT OF TRANSPORTATION

MIDWEST GUARDRAIL SYSTEM WOOD POST AND WOOD BLOCK DETAILS

NO SCALE

RSP A77N1 DATED JULY 19, 2013 SUPPLEMENTS THE STANDARD PLANS BOOK DATED 2010.

REVISED STANDARD PLAN RSP A77N1

2010 REVISED STANDARD PLAN RSP A77N1

7-3-13

Dist	COUNTY	ROUTE	POST MILES TOTAL PROJECT	SHEET No.	TOTAL SHEETS
05	SBt	156	0.0/3.0	60	113

Randell D. Hiatt
REGISTERED CIVIL ENGINEER

November 15, 2013
PLANS APPROVAL DATE

REGISTERED PROFESSIONAL ENGINEER
Randell D. Hiatt
No. C50200
Exp. 6-30-15
CIVIL
STATE OF CALIFORNIA

THE STATE OF CALIFORNIA OR ITS OFFICERS OR AGENTS SHALL NOT BE RESPONSIBLE FOR THE ACCURACY OR COMPLETENESS OF SCANNED COPIES OF THIS PLAN SHEET.

TO ACCOMPANY PLANS DATED 6-20-16

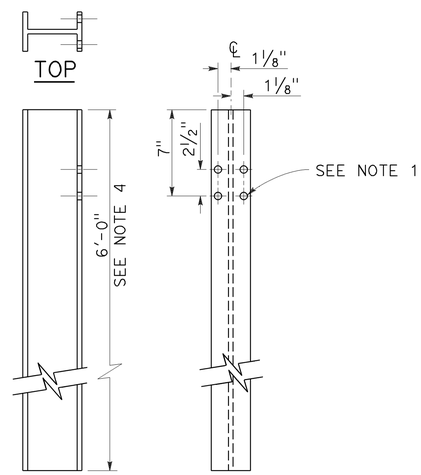

W6 x 9 OR W6 x 8.5
STEEL POST
See Note 4

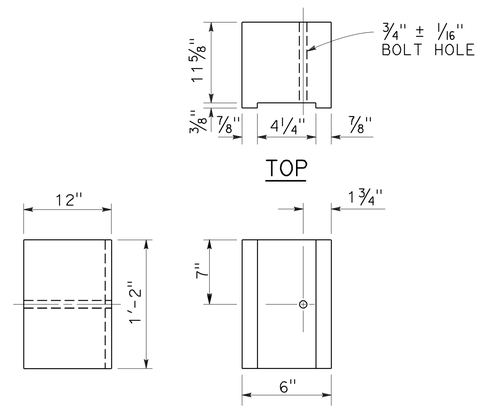

6" x 12"
NOTCHED WOOD BLOCK
See Notes 2 and 3

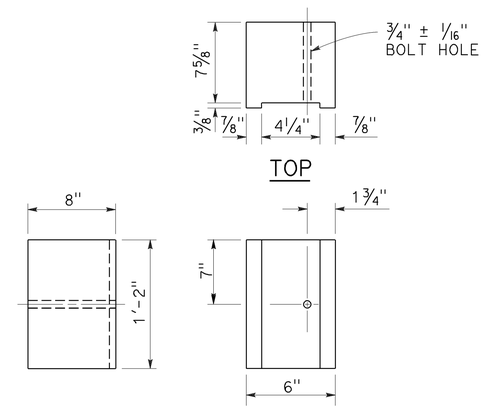

6" x 8"
NOTCHED WOOD BLOCK
Only for use with metal beam guard railing. See Note 5

NOTES:

1. All holes in steel post shall be 13/16" Dia maximum.
2. Dimensions shown for wood block are nominal.
3. Notched face of block faces steel post.
4. 6'-0" length posts to be used for typical roadway installation. See Revised Standard Plan RSP A77N3.
5. See Revised Standard Plan RSP A77L3 for use of 6" x 8" and 8" x 8" notched wood blocks.
6. This post and 8" x 12" block combination to be used for line post sections of MGS on narrow roadways and where strengthened line post sections of MGS are warranted to shield fixed objects.

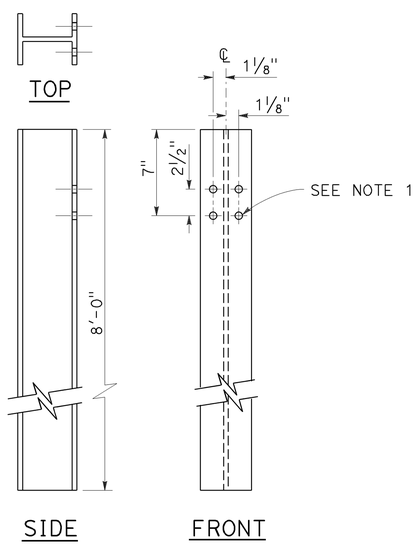

W6 x 15
STEEL POST
See Note 6

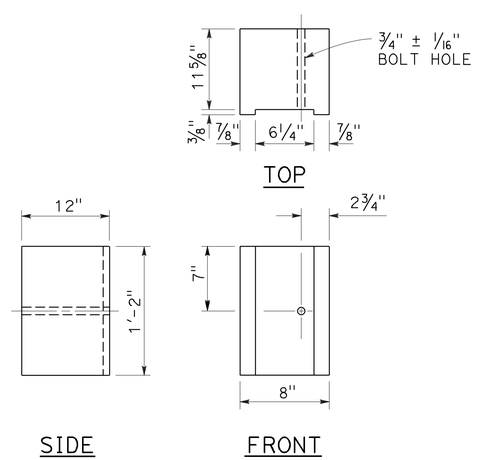

8" x 12"
NOTCHED WOOD BLOCK
See Notes 2 and 3

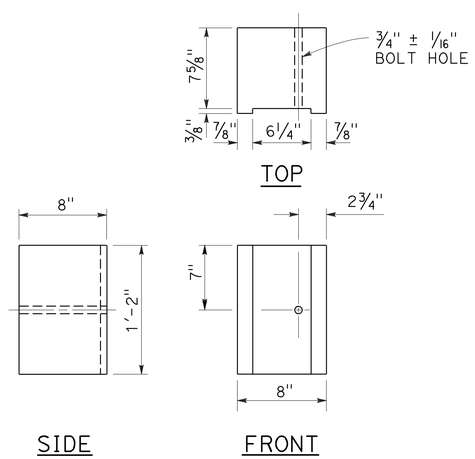

8" x 8"
NOTCHED WOOD BLOCK
Only for use with metal beam guard railing. See Note 5

STATE OF CALIFORNIA
DEPARTMENT OF TRANSPORTATION

MIDWEST GUARDRAIL SYSTEM STEEL POST AND NOTCHED WOOD BLOCK DETAILS

NO SCALE

RSP A77N2 DATED NOVEMBER 15, 2013 SUPERSEDES RSP A77N2
DATED JULY 19, 2013 THAT SUPPLEMENTS THE STANDARD PLANS BOOK DATED 2010.

REVISED STANDARD PLAN RSP A77N2

2010 REVISED STANDARD PLAN RSP A77N2

10-29-13

Dist	COUNTY	ROUTE	POST MILES TOTAL PROJECT	SHEET No.	TOTAL SHEETS
05	SB†	156	0.0/3.0	61	113

Randell D. Hiatt
REGISTERED CIVIL ENGINEER

November 15, 2013
PLANS APPROVAL DATE

REGISTERED PROFESSIONAL ENGINEER
Randell D. Hiatt
No. C50200
Exp. 6-30-15
CIVIL
STATE OF CALIFORNIA

THE STATE OF CALIFORNIA OR ITS OFFICERS OR AGENTS SHALL NOT BE RESPONSIBLE FOR THE ACCURACY OR COMPLETENESS OF SCANNED COPIES OF THIS PLAN SHEET.

TO ACCOMPANY PLANS DATED 6-20-16

2010 REVISED STANDARD PLAN RSP A77N3

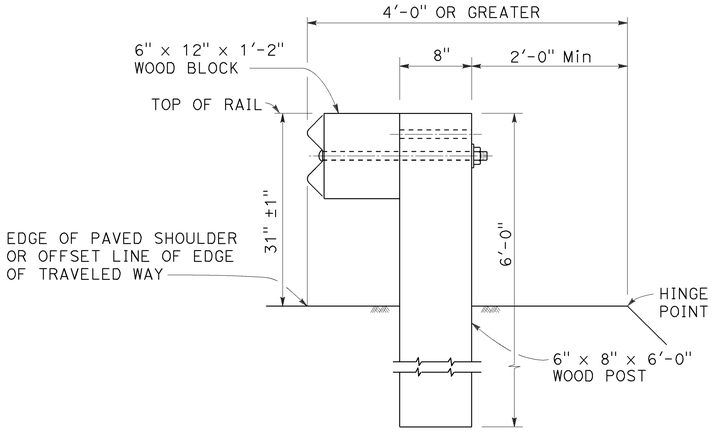

DETAIL A

TYPICAL ROADWAY INSTALLATION

See Note 1

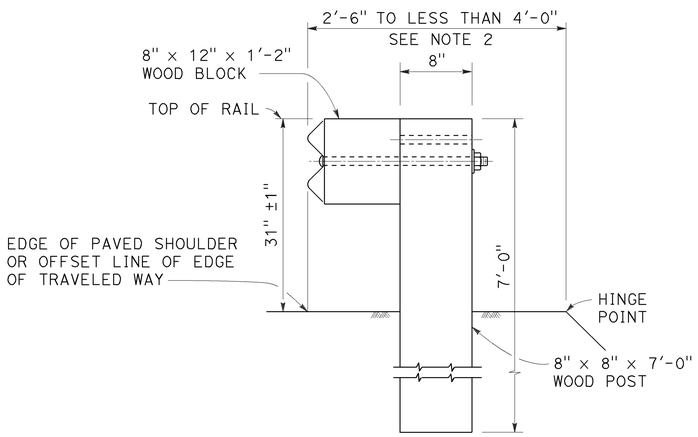

DETAIL B

NARROW ROADWAY INSTALLATION

See Note 1

POST EMBEDMENT

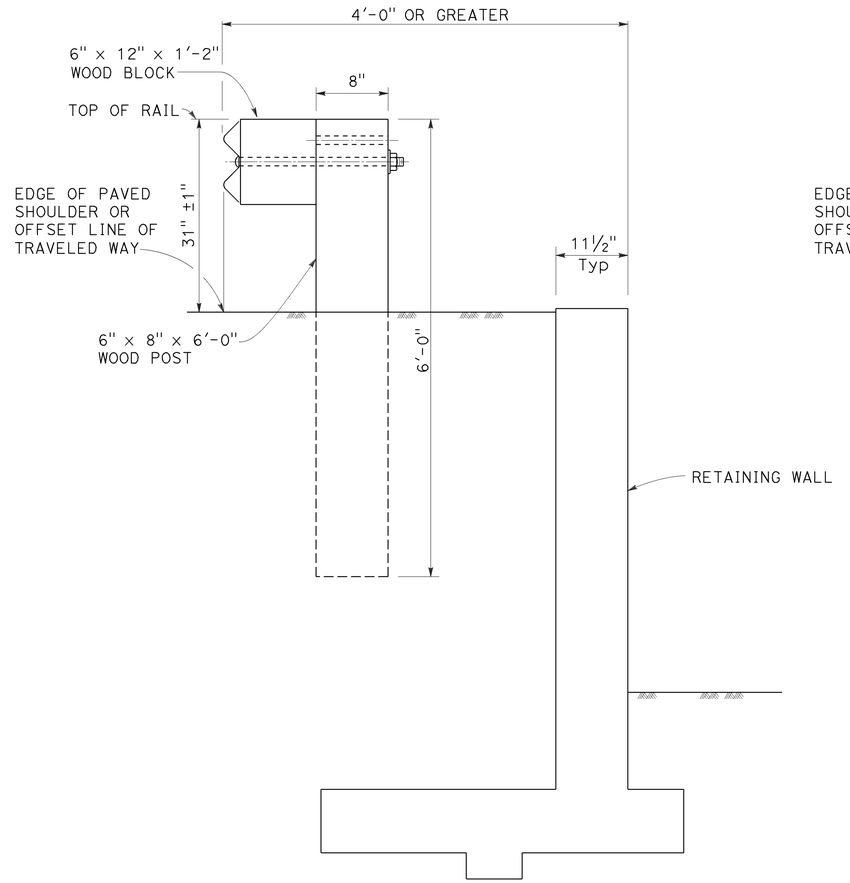

DETAIL C

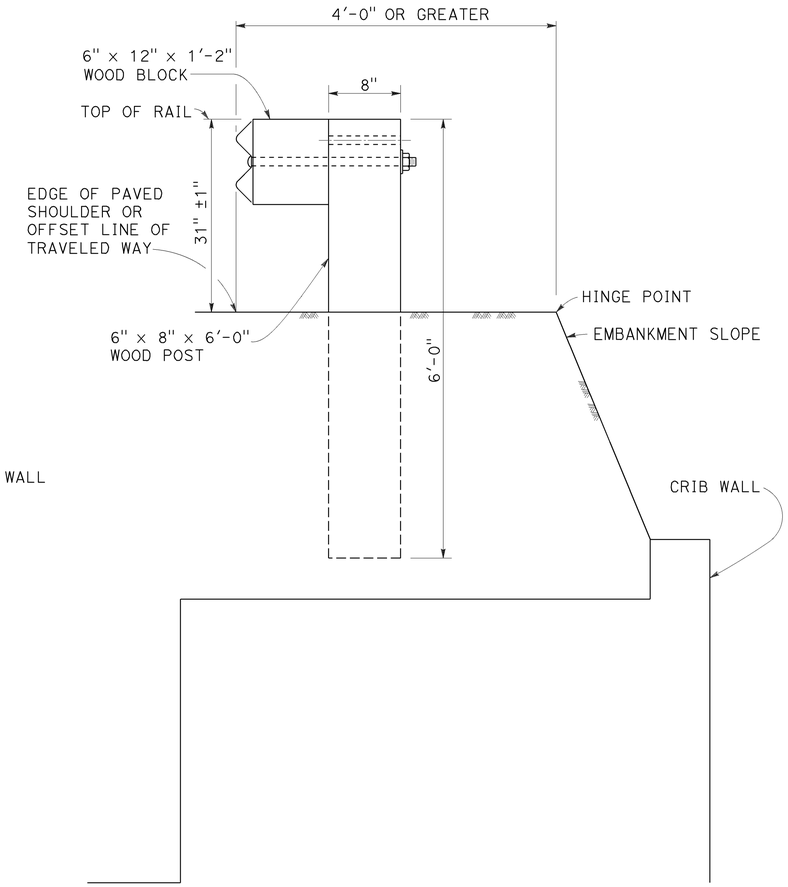

DETAIL D

INSTALLATION AT EARTH RETAINING WALLS

NOTES:

1. These installation details also applicable to steel line post installations. For Detail A, C, and D, where steel line post installations are constructed, W6 x 8.5 or W6 x 9 steel post, 6'-0" in length, with 6" x 12" x 1'-2" notched wood blocks or notched recycled plastic blocks are to be used in place of the size of wood post and wood block shown. For Detail B, where steel line post installations are constructed, W6 x 15 steel post, 8'-0" in length, with 8" x 12" x 1'-2" notched wood blocks or notched recycled plastic blocks are to be used in place of the size of wood post and wood block shown. For additional installation details, see Revised Standard Plan RSP A77L1 and RSP A77L2.
2. Where the distance between the face of the rail and the hinge point is less than 2'-6", see the Project Plans for special details.
3. For dike positioning with MGS installations, see Revised Standard Plan RSP A77N4.

STATE OF CALIFORNIA
DEPARTMENT OF TRANSPORTATION

MIDWEST GUARDRAIL SYSTEM TYPICAL LINE POST EMBEDMENT AND HINGE POINT OFFSET DETAILS

NO SCALE

RSP A77N3 DATED NOVEMBER 15, 2013 SUPERSEDES RSP A77N3 DATED JULY 19, 2013 THAT SUPPLEMENTS THE STANDARD PLANS BOOK DATED 2010.

REVISED STANDARD PLAN RSP A77N3

10-29-13

Dist	COUNTY	ROUTE	POST MILES TOTAL PROJECT	SHEET No.	TOTAL SHEETS
05	SBt	156	0.0/3.0	62	113

Randell D. Hiatt
REGISTERED CIVIL ENGINEER

July 19, 2013
PLANS APPROVAL DATE

REGISTERED PROFESSIONAL ENGINEER
Randell D. Hiatt
No. C50200
Exp. 6-30-15
CIVIL
STATE OF CALIFORNIA

THE STATE OF CALIFORNIA OR ITS OFFICERS OR AGENTS SHALL NOT BE RESPONSIBLE FOR THE ACCURACY OR COMPLETENESS OF SCANNED COPIES OF THIS PLAN SHEET.

TO ACCOMPANY PLANS DATED 6-20-16

NOTES:

1. When necessary to place dike more than 7" in front of face of MGS, only Type C dike may be used. For dike details, see Revised Standard Plan RSP A87B.
2. For standard railing post embedment, see Revised Standard Plan RSP A77N3.
3. MGS delineation to be used where shown on the Project Plans.
4. When dike or curb is placed under MGS, the maximum height of the dike or curb shall be 6". Mountable dike should not be used. For dike and curb details, see Revised Standard Plans RSP A87A and RSP A87B.
5. For details of typical distance between the face of rail and hinge point, see Revised Standard Plan RSP A77N3.
6. For steel line posts, use 1/4 - 20 self-tapping screws in 0.22" diameter holes or 1/4" bolts in 9/32" diameter holes.

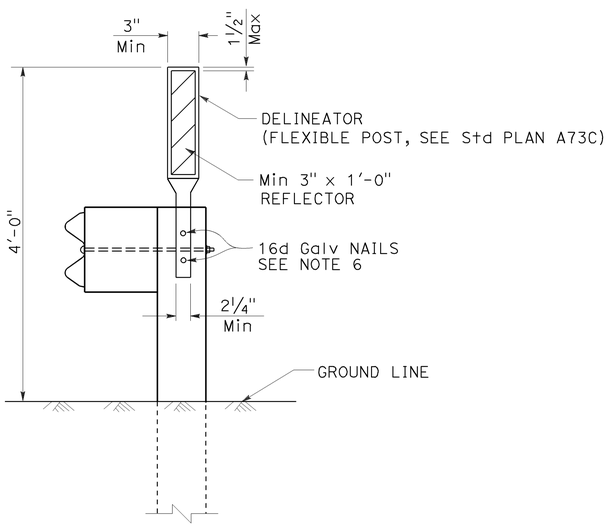

MGS DELINEATION

See Note 3

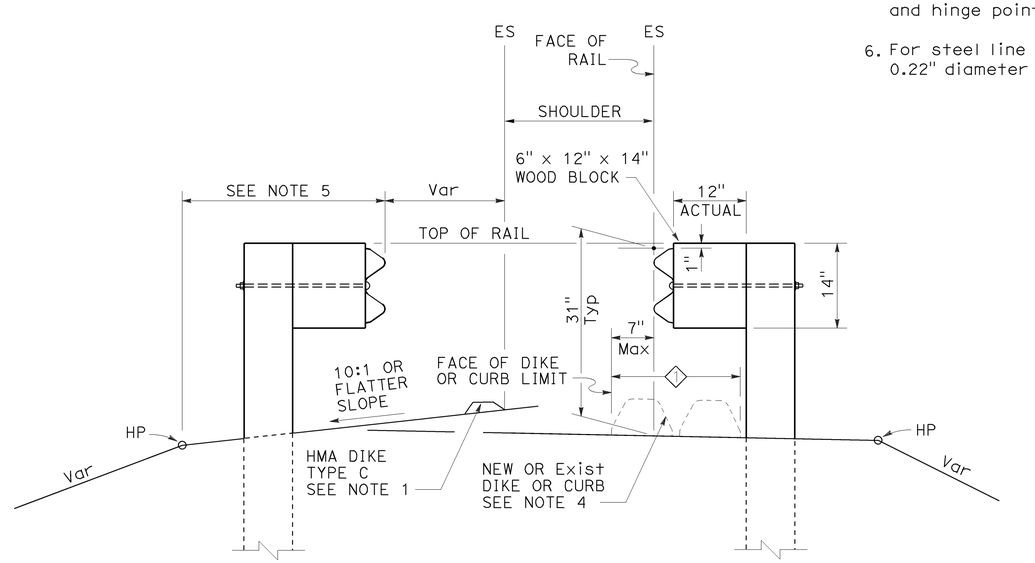

DIKE POSITIONING

See Note 1

1 PERMISSIBLE DIKE OR CURB PLACEMENT AREA

STATE OF CALIFORNIA
DEPARTMENT OF TRANSPORTATION

MIDWEST GUARDRAIL SYSTEM TYPICAL RAILING DELINEATION AND DIKE POSITIONING DETAILS

NO SCALE

RSP A77N4 DATED JULY 19, 2013 SUPPLEMENTS THE STANDARD PLANS BOOK DATED 2010.

REVISED STANDARD PLAN RSP A77N4

2010 REVISED STANDARD PLAN RSP A77N4

7-10-13

Dist	COUNTY	ROUTE	POST MILES TOTAL PROJECT	SHEET No.	TOTAL SHEETS
05	SBt	156	0.0/3.0	63	113

Randell D. Hiatt
REGISTERED CIVIL ENGINEER

July 19, 2013
PLANS APPROVAL DATE

REGISTERED PROFESSIONAL ENGINEER
Randell D. Hiatt
No. C50200
Exp. 6-30-15
CIVIL
STATE OF CALIFORNIA

THE STATE OF CALIFORNIA OR ITS OFFICERS OR AGENTS SHALL NOT BE RESPONSIBLE FOR THE ACCURACY OR COMPLETENESS OF SCANNED COPIES OF THIS PLAN SHEET.

TO ACCOMPANY PLANS DATED 6-20-16

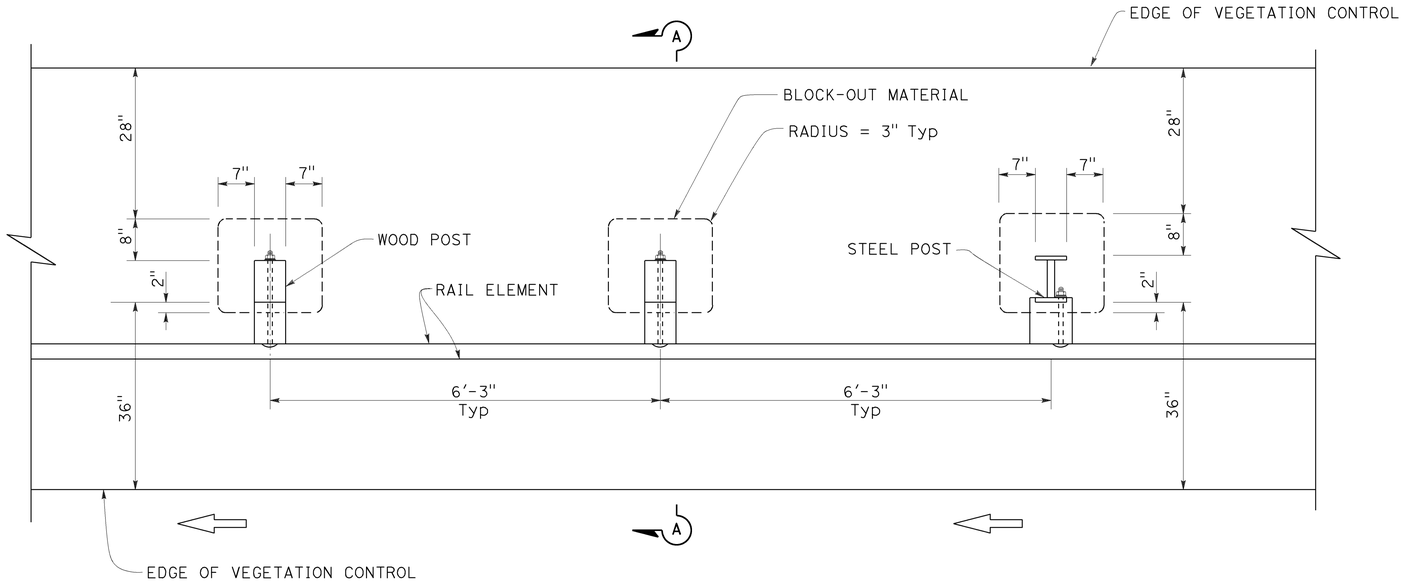

PLAN

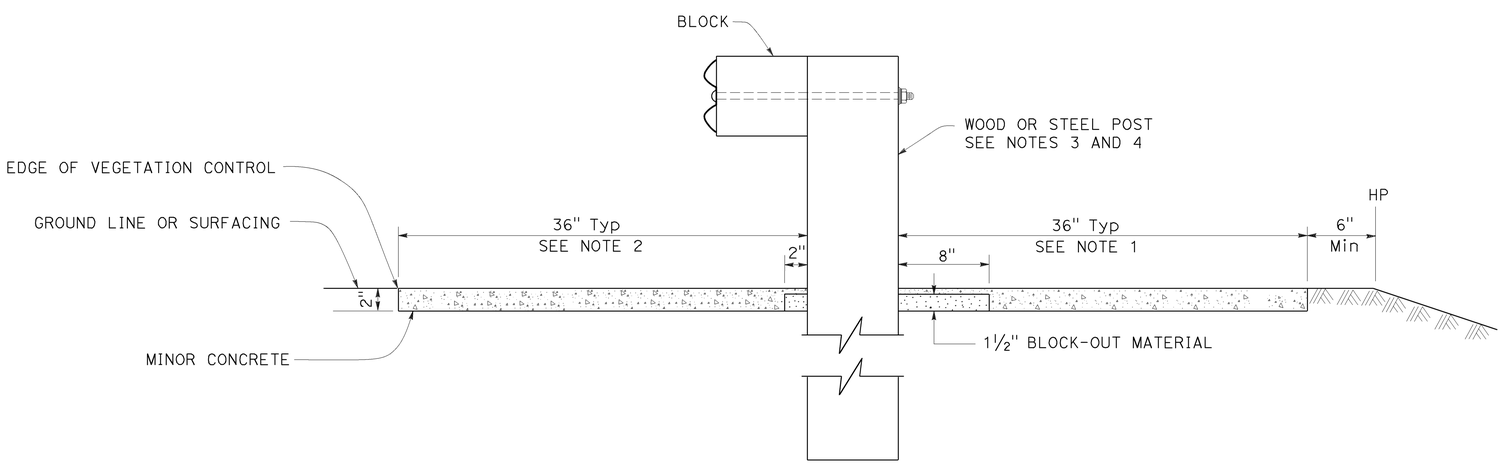

SECTION A-A

NOTES:

1. Where the distance between back of post and hinge point is less than 42", construct vegetation control to 6" from hinge point while maintaining the 8" block-out at back of post. If the 8" block-out at back of post can not be maintained, construct vegetation control flush with the back edge of post.
2. Where dike is constructed under railing, construct vegetation control to back edge of dike. Where paved shoulder is constructed within 36" in front of the post, construct vegetation control to the edge of paved shoulder.
3. For wood post sizes, see Revised Standard Plan RSP A77N1.
4. For steel post sizes, see Revised Standard Plan RSP A77N2.
5. For details not shown, see Revised Standard Plans RSP A77L1 and RSP A77L2.

STATE OF CALIFORNIA
DEPARTMENT OF TRANSPORTATION

MIDWEST GUARDRAIL SYSTEM TYPICAL VEGETATION CONTROL STANDARD RAILING SECTION

NO SCALE

RSP A77N5 DATED JULY 19, 2013 SUPPLEMENTS THE STANDARD PLANS BOOK DATED 2010.

REVISED STANDARD PLAN RSP A77N5

2010 REVISED STANDARD PLAN RSP A77N5

7-3-13

Dist	COUNTY	ROUTE	POST MILES TOTAL PROJECT	SHEET No.	TOTAL SHEETS
05	SBt	156	0.0/3.0	64	113

Randell D. Hiatt
REGISTERED CIVIL ENGINEER

July 19, 2013
PLANS APPROVAL DATE

REGISTERED PROFESSIONAL ENGINEER
Randell D. Hiatt
No. C50200
Exp. 6-30-15
CIVIL
STATE OF CALIFORNIA

THE STATE OF CALIFORNIA OR ITS OFFICERS OR AGENTS SHALL NOT BE RESPONSIBLE FOR THE ACCURACY OR COMPLETENESS OF SCANNED COPIES OF THIS PLAN SHEET.

TO ACCOMPANY PLANS DATED 6-20-16

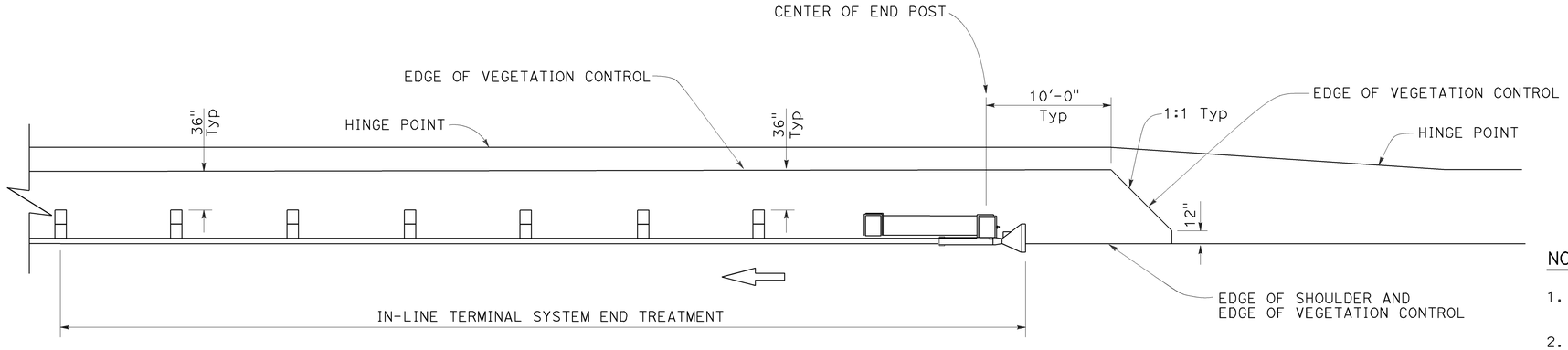

PLAN

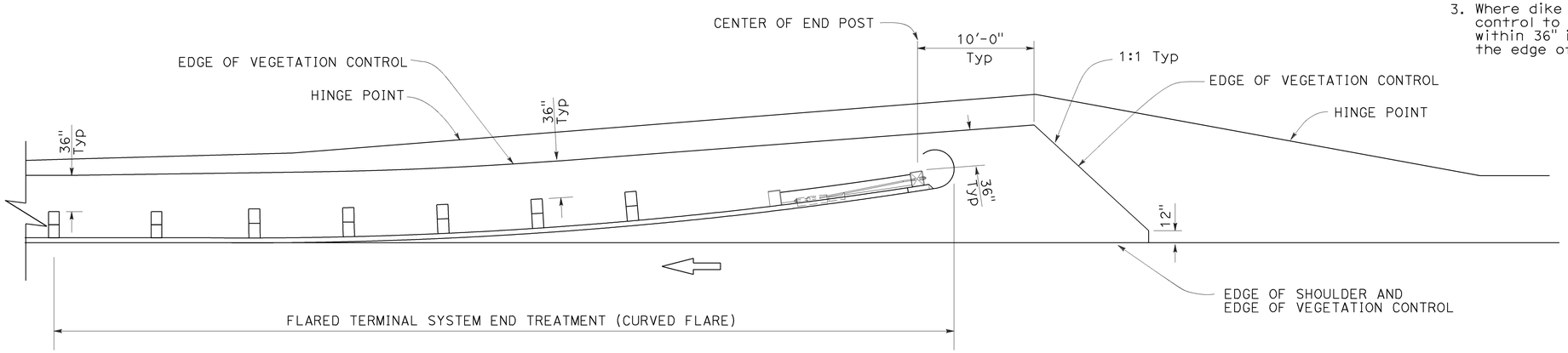

PLAN

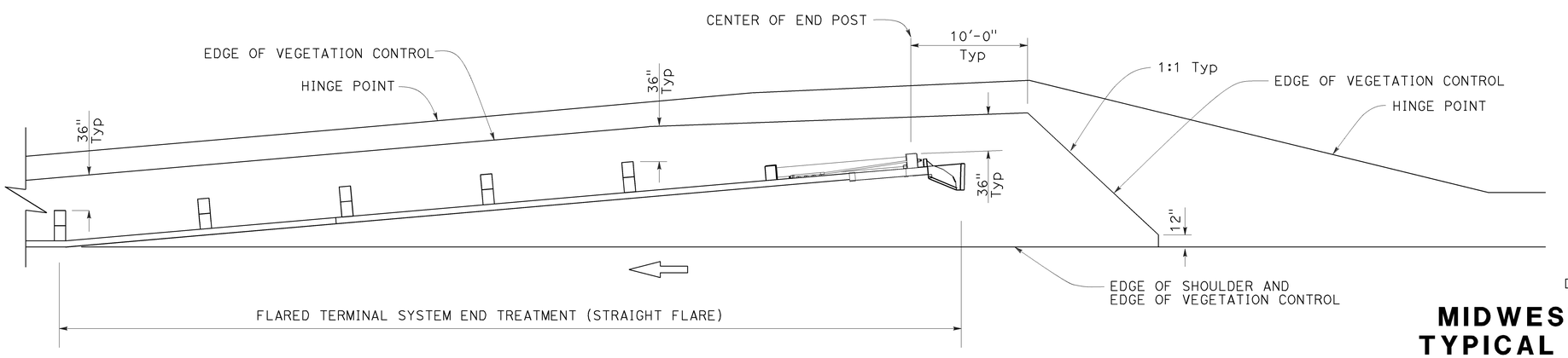

PLAN

NOTES:

1. See Revised Standard Plan RSP A77N5 for additional vegetation control details.
2. Where the distance between back of post and hinge point is less than 42", construct vegetation control to 6" from hinge point while maintaining the 8" block-out at back of post. If the 8" block-out at back of post can not be maintained, construct vegetation control flush with the back edge of post.
3. Where dike is constructed under railing, construct vegetation control to back edge of dike. Where paved shoulder is constructed within 36" in front of the post, construct vegetation control to the edge of paved shoulder.

STATE OF CALIFORNIA
DEPARTMENT OF TRANSPORTATION

MIDWEST GUARDRAIL SYSTEM TYPICAL VEGETATION CONTROL FOR TERMINAL SYSTEM END TREATMENTS

NO SCALE

RSP A77N6 DATED JULY 19, 2013 SUPPLEMENTS THE STANDARD PLANS BOOK DATED 2010.

REVISED STANDARD PLAN RSP A77N6

2010 REVISED STANDARD PLAN RSP A77N6

6-12-13

Dist	COUNTY	ROUTE	POST MILES TOTAL PROJECT	SHEET No.	TOTAL SHEETS
05	SBt	156	0.0/3.0	65	113

Randell D. Hiatt
REGISTERED CIVIL ENGINEER

July 19, 2013
PLANS APPROVAL DATE

REGISTERED PROFESSIONAL ENGINEER
Randell D. Hiatt
No. C50200
Exp. 6-30-15
CIVIL
STATE OF CALIFORNIA

THE STATE OF CALIFORNIA OR ITS OFFICERS OR AGENTS SHALL NOT BE RESPONSIBLE FOR THE ACCURACY OR COMPLETENESS OF SCANNED COPIES OF THIS PLAN SHEET.

TO ACCOMPANY PLANS DATED 6-20-16

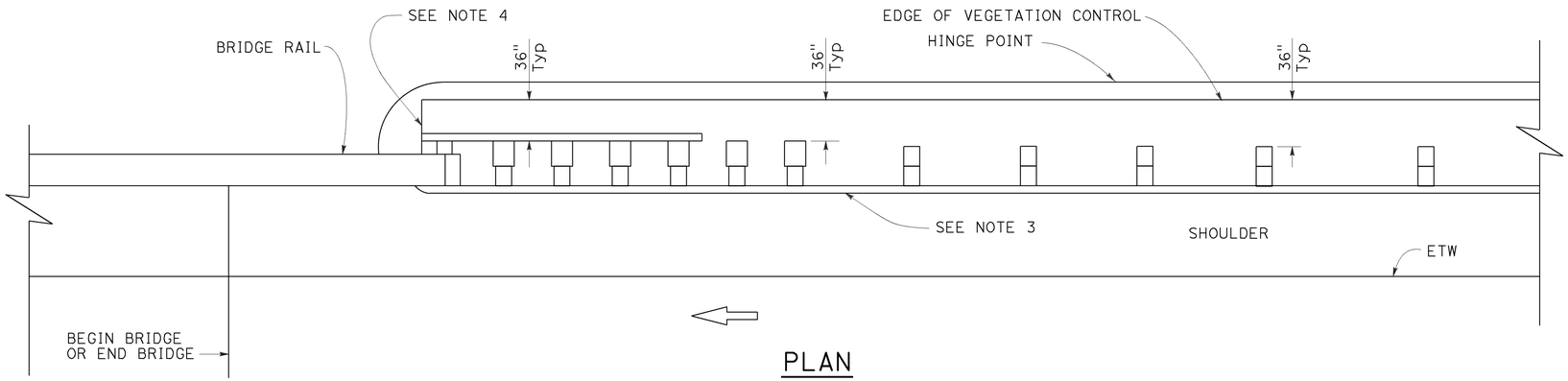

PLAN

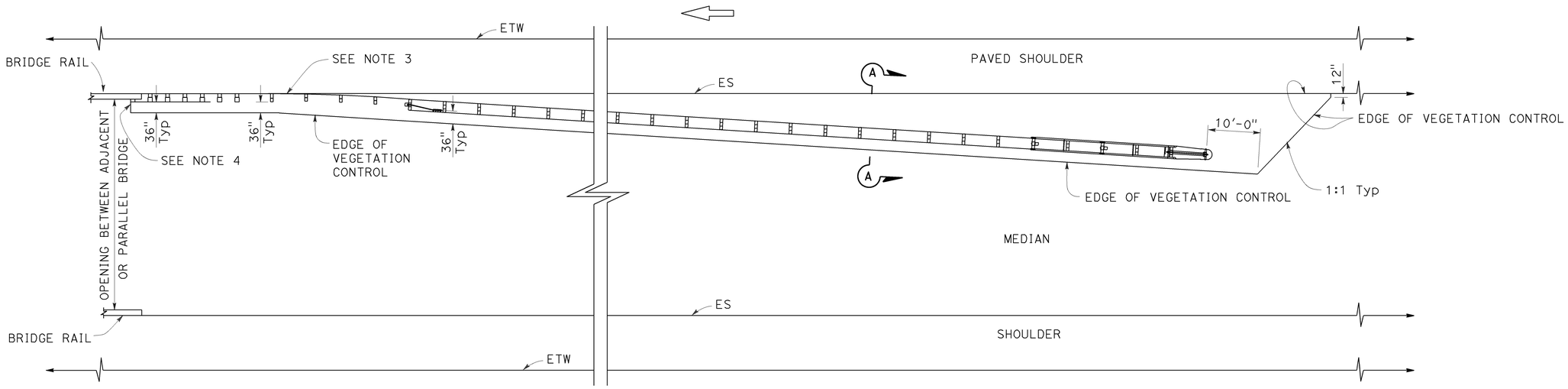

PLAN

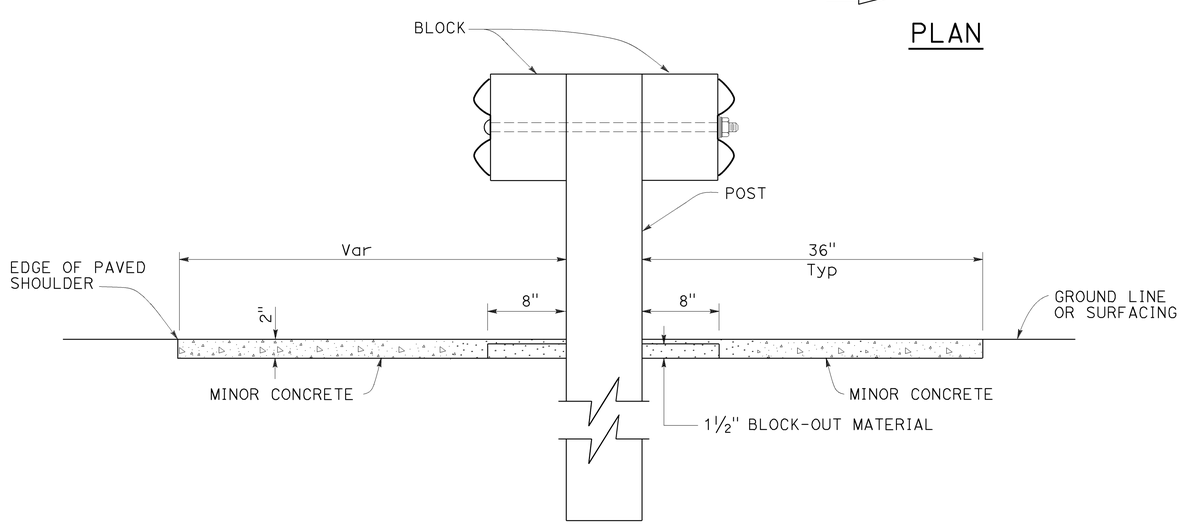

SECTION A-A

NOTES:

1. See Revised Standard Plan RSP A77N5 for additional vegetation control details.
2. Where the distance between back of post and hinge point is less than 42", construct vegetation control to 6" from hinge point while maintaining the 8" block-out at back of post. If the 8" block-out at back of post can not be maintained, construct vegetation control flush with the back edge of post.
3. Where dike is constructed under railing, construct vegetation control to back edge of dike. Where paved shoulder is constructed within 36" in front of the post, construct vegetation control to the edge of paved shoulder.
4. End vegetation control at end of backside rail element.

STATE OF CALIFORNIA
DEPARTMENT OF TRANSPORTATION

MIDWEST GUARDRAIL SYSTEM TYPICAL VEGETATION CONTROL AT STRUCTURE APPROACH

NO SCALE

RSP A77N7 DATED JULY 19, 2013 SUPPLEMENTS THE STANDARD PLANS BOOK DATED 2010.

REVISED STANDARD PLAN RSP A77N7

2010 REVISED STANDARD PLAN RSP A77N7

6-12-13

Dist	COUNTY	ROUTE	POST MILES TOTAL PROJECT	SHEET No.	TOTAL SHEETS
05	SB†	156	0.0/3.0	66	113

Randell D. Hiatt
REGISTERED CIVIL ENGINEER

July 19, 2013
PLANS APPROVAL DATE

REGISTERED PROFESSIONAL ENGINEER
Randell D. Hiatt
No. C50200
Exp. 6-30-15
CIVIL
STATE OF CALIFORNIA

THE STATE OF CALIFORNIA OR ITS OFFICERS OR AGENTS SHALL NOT BE RESPONSIBLE FOR THE ACCURACY OR COMPLETENESS OF SCANNED COPIES OF THIS PLAN SHEET.

TO ACCOMPANY PLANS DATED 6-20-16

2010 REVISED STANDARD PLAN RSP A77N10

NOTES:

1. See Revised Standard Plan RSP A77N5 for additional vegetation control details.
2. Where dike is constructed under railing, construct vegetation control to back edge of dike. Where paved shoulder is constructed within 36" in front of the post, construct vegetation control to the edge of paved shoulder.

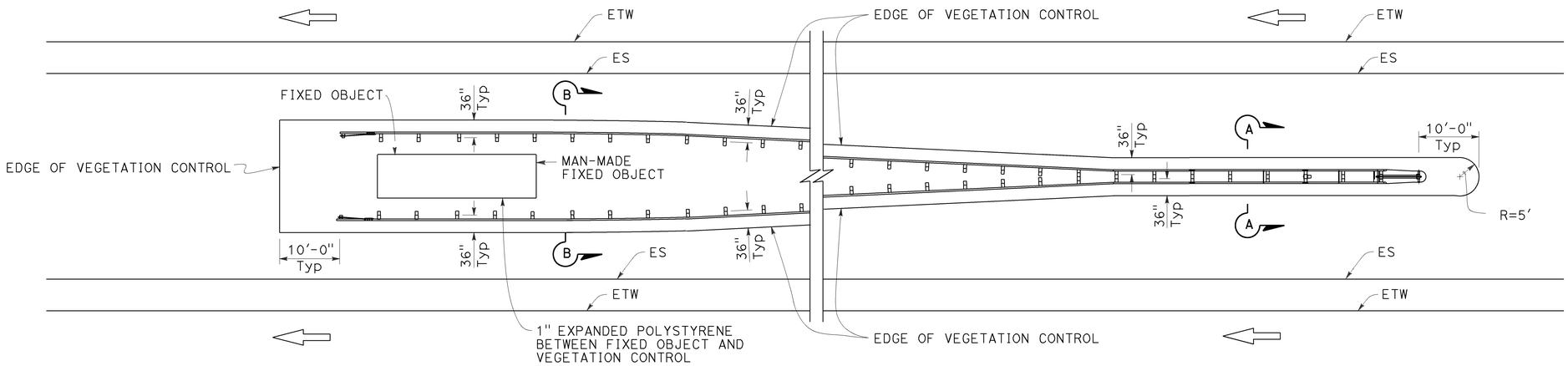

PLAN

Fixed object(s) between separate roadbeds
(One-Way Traffic)

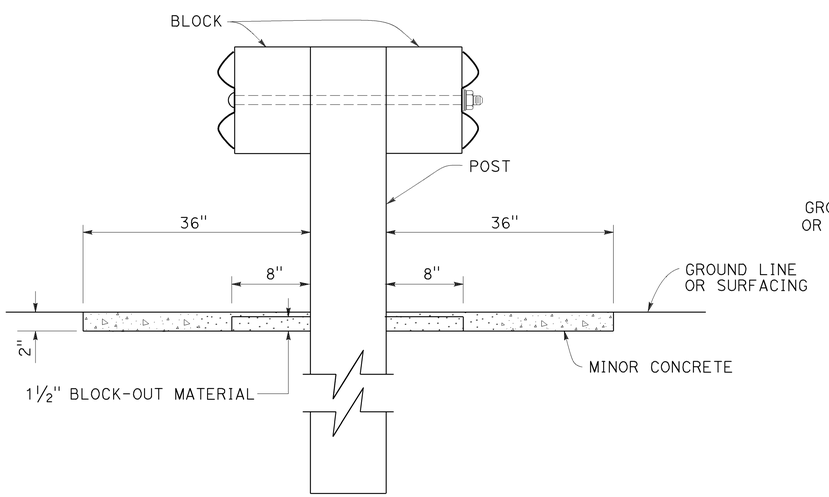

SECTION A-A

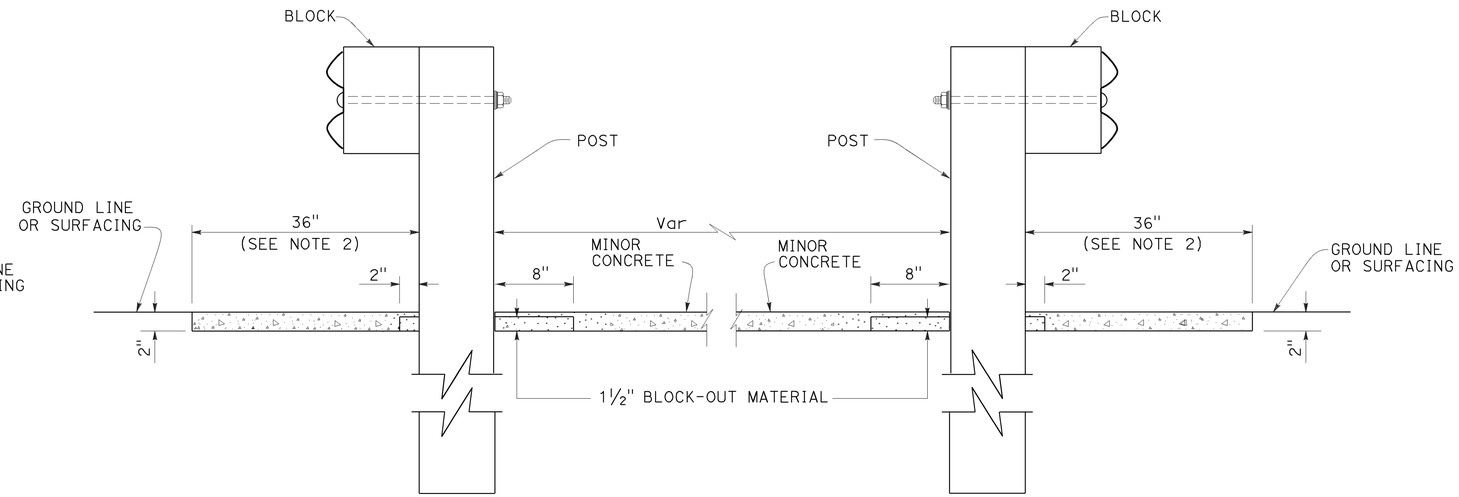

SECTION B-B

STATE OF CALIFORNIA
DEPARTMENT OF TRANSPORTATION

MIDWEST GUARDRAIL SYSTEM TYPICAL VEGETATION CONTROL AT FIXED OBJECT

NO SCALE

RSP A77N10 DATED JULY 19, 2013 SUPPLEMENTS THE STANDARD PLANS BOOK DATED 2010.

REVISED STANDARD PLAN RSP A77N10

6-12-13

Dist	COUNTY	ROUTE	POST MILES TOTAL PROJECT	SHEET No.	TOTAL SHEETS
05	SBt	156	0.0/3.0	67	113

Randell D. Hiatt
REGISTERED CIVIL ENGINEER

November 15, 2013
PLANS APPROVAL DATE

REGISTERED PROFESSIONAL ENGINEER
Randell D. Hiatt
No. C50200
Exp. 6-30-15
CIVIL
STATE OF CALIFORNIA

THE STATE OF CALIFORNIA OR ITS OFFICERS OR AGENTS SHALL NOT BE RESPONSIBLE FOR THE ACCURACY OR COMPLETENESS OF SCANNED COPIES OF THIS PLAN SHEET.

TO ACCOMPANY PLANS DATED 6-20-16

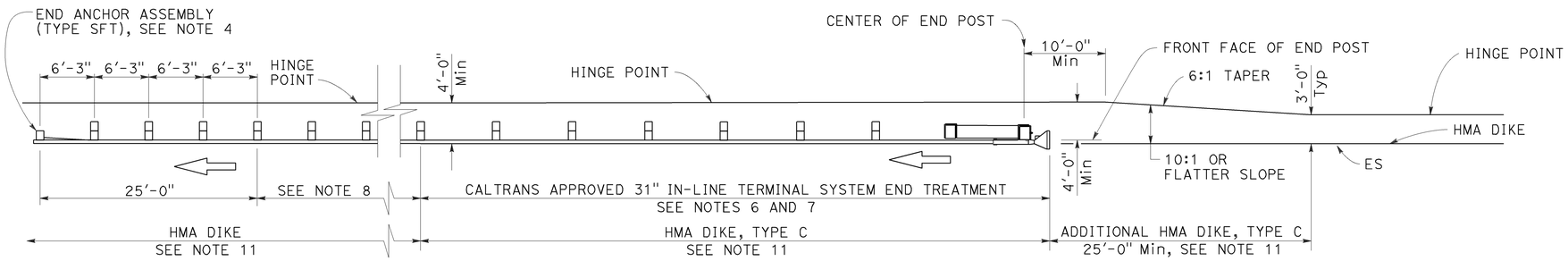

TYPE 11A LAYOUT

(Embankment MGS installation with 31" in-line end treatment at traffic approach end of railing) see Note 5

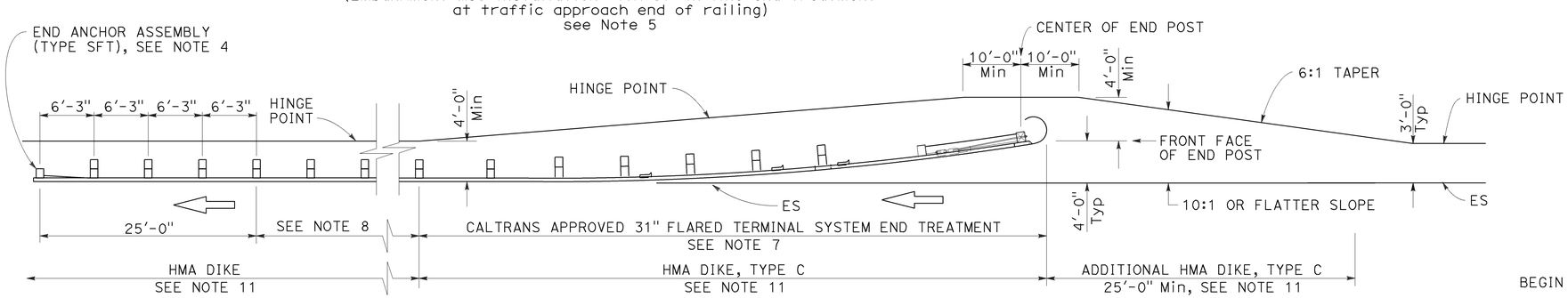

TYPE 11B LAYOUT

(Embankment MGS installation with 31" flared end treatment at traffic approach end of railing) see Note 5

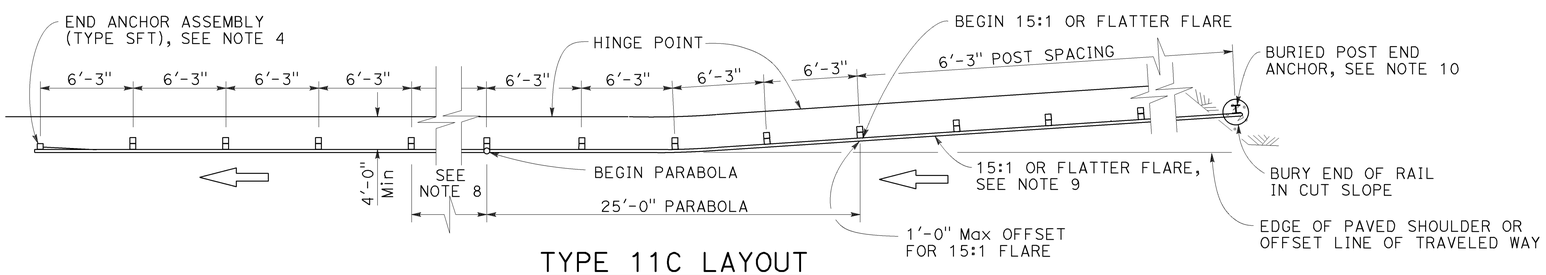

TYPE 11C LAYOUT

(Embankment MGS installation with buried end anchor treatment at traffic approach end of railing) see Notes 5 and 11

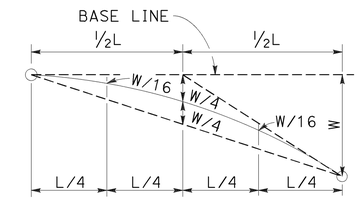

TYPICAL PARABOLIC LAYOUT

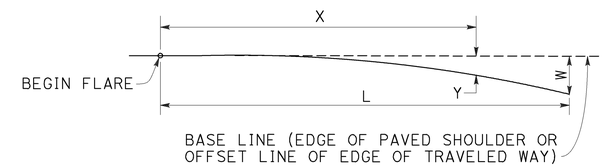

$$Y = \frac{WX^2}{L^2}$$

Y = OFFSET FROM BASE LINE
W = MAXIMUM OFFSET
X = DISTANCE ALONG BASE LINE
L = LENGTH OF FLARE

PARABOLIC FLARE OFFSETS

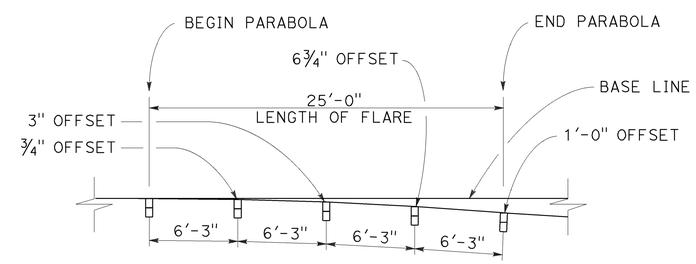

TYPICAL FLARE OFFSETS FOR 1 FOOT Max END OFFSET

NOTES:

1. Line post, blocks and hardware to be used are shown on Revised Standard Plans RSP A77L1, RSP A77L2, RSP A77M1, RSP A77N1 and RSP A77N2.
2. MGS post spacing to be 6'-3" center to center, except as otherwise noted.
3. Except as noted, line posts are 6" x 8" x 6'-0" wood with 6" x 12" x 1'-2" wood blocks. W6 x 8.5 or W6 x 9 steel posts, 6'-0" in length, with 6" x 12" x 1'-2" notched wood blocks or recycled plastic blocks may be used for 6" x 8" x 6'-0" wood post with 6" x 12" x 1'-2" wood blocks where applicable and when specified.
4. For End Anchor Assembly (Type SFT) details, see Revised Standard Plan RSP A77S1.
5. Layout Types 11A, 11B or 11C are typically used where MGS is recommended to shield embankment slopes and a crashworthy end treatment is required for only one direction of traffic.
6. 31" in-line terminal system end treatments are used where site conditions will not accommodate a flared end treatment.
7. The type of 31" terminal system end treatment to be used will be shown on the Project Plans.
8. Dependent on site conditions (embankment height and side slope), construction of additional MGS (length equal to multiples of 12'-6" with 6'-3" post spacing) may be advisable.
9. The 15:1 or flatter flare used with buried end anchors is based on the edge of the paved shoulder or offset line of edge of the traveled way. The length of MGS within the 15:1 or flatter flare is based on site conditions and should be a length equal to multiples of 12'-6".
10. For details of the buried post end anchor used with Type 11C Layout, see Revised Standard Plan RSP A77T2.
11. Where placement of dike is required with MGS installations, see Revised Standard Plan RSP A77N4 for dike positioning details.

STATE OF CALIFORNIA
DEPARTMENT OF TRANSPORTATION

MIDWEST GUARDRAIL SYSTEM TYPICAL LAYOUTS FOR EMBANKMENTS

NO SCALE

RSP A77P1 DATED NOVEMBER 15, 2013 SUPERSEDES RSP A77P1 DATED JULY 19, 2013 THAT SUPPLEMENTS THE STANDARD PLANS BOOK DATED 2010.

REVISED STANDARD PLAN RSP A77P1

2010 REVISED STANDARD PLAN RSP A77P1

10-4-13

Dist	COUNTY	ROUTE	POST MILES TOTAL PROJECT	SHEET No.	TOTAL SHEETS
05	SBt	156	0.0/3.0	68	113

Randell D. Hiatt
REGISTERED CIVIL ENGINEER

August 14, 2015
PLANS APPROVAL DATE

REGISTERED PROFESSIONAL ENGINEER
Randell D. Hiatt
No. C50200
Exp. 6-30-17
CIVIL
STATE OF CALIFORNIA

THE STATE OF CALIFORNIA OR ITS OFFICERS OR AGENTS SHALL NOT BE RESPONSIBLE FOR THE ACCURACY OR COMPLETENESS OF SCANNED COPIES OF THIS PLAN SHEET.

TO ACCOMPANY PLANS DATED 6-20-16

2010 REVISED STANDARD PLAN RSP A77Q1

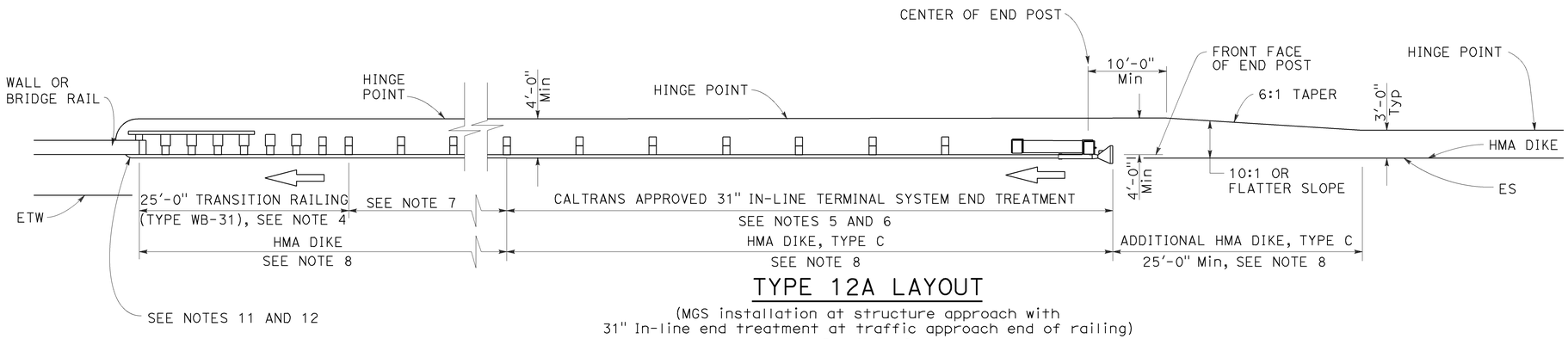

TYPE 12A LAYOUT

(MGS installation at structure approach with
31" In-line end treatment at traffic approach end of railing)
See Note 9

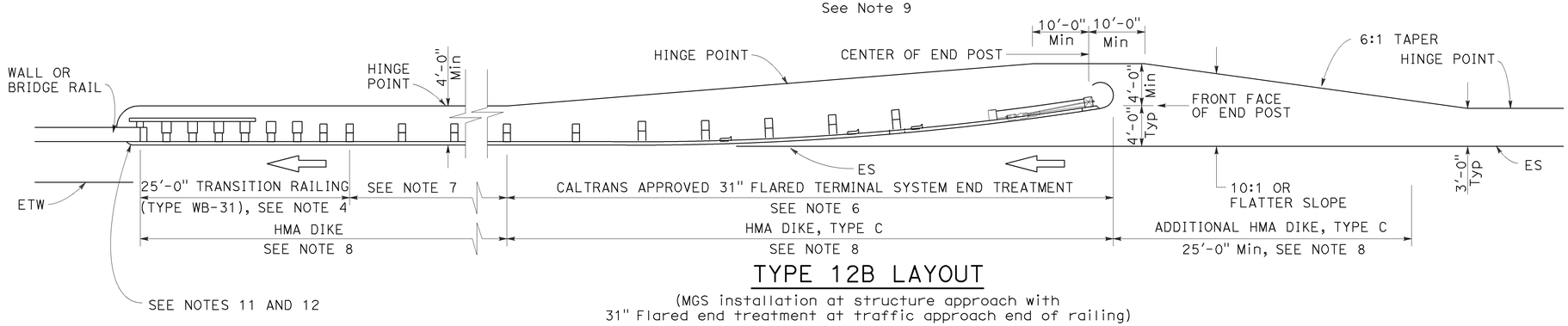

TYPE 12B LAYOUT

(MGS installation at structure approach with
31" Flared end treatment at traffic approach end of railing)
See Note 9

NOTES:

1. Line post, blocks and hardware to be used are shown on Revised Standard Plans RSP A77L1, RSP A77L2, RSP A77M1, RSP A77N1 and RSP A77N2.
2. MGS post spacing to be 6'-3" center to center, except as otherwise noted.
3. Except as noted, line posts are 6" x 8" x 6'-0" wood with 6" x 12" x 1'-2" wood blocks. W6 x 8.5 or W6 x 9 steel posts, 6'-0" in length, with 6" x 12" x 1'-2" notched wood blocks or plastic blocks may be used for 6" x 8" x 6'-0" wood posts with 6" x 12" x 1'-2" wood blocks where applicable and when specified.
4. For Transition Railing (Type WB-31) details for Types 12A and 12B Layouts, see Revised Standard Plan RSP A77U4.
5. 31" in-line terminal system end treatments are used where site conditions will not accommodate a 31" flared end treatment.
6. The type of 31" terminal system end treatment to be used will be shown on the Project Plans.
7. Dependent on site conditions (embankment height, side slopes, or other fixed objects), it may be advisable to construct additional guard railing (a length equal to multiples of 12'-6" with 6'-3" post spacing) between the transition railing and end treatment. A 12.5 degree angle of departure can be drawn on the Project Plans from the edge of traveled way through the outer most point of the fixed object to determine the additional length of railing needed.
8. Where placement of dike is required with guard railing installations, see Revised Standard Plan RSP A77N4 for dike positioning details.
9. Type 12A or Type 12B Layouts are typically used:
   a. To the right of approaching traffic, at the end of a structure, on two-lane conventional highway where the roadbed width across the structure is less than 40 feet.
   b. To the left of approaching traffic, at the end of a structure, on two-lane conventional highway where the roadbed width across the structure is less than 40 feet.
   c. To the right of approaching traffic at the end of each structure on multilane freeways or expressways with separate adjacent or parallel bridges.
   d. To the right of approaching traffic at the end of the structure on multilane freeways or expressways with decked median on the bridge.
10. See Revised Standard Plan RSP A77Q3 for typical layout used left of approaching traffic at the ends of each structure on multilane freeways or expressways with separate adjacent or parallel bridges.
11. For additional details of typical connections to bridge rail, see Connection Detail AA on Revised Standard Plans RSP A77U1 and RSP A77U2 and Connection Detail FF on Revised Standard Plans RSP A77V1 and RSP A77V2.
12. For additional details of a typical connection to walls or abutments, see Revised Standard Plan RSP A77U3.

STATE OF CALIFORNIA
DEPARTMENT OF TRANSPORTATION

MIDWEST GUARDRAIL SYSTEM TYPICAL LAYOUTS FOR STRUCTURE APPROACH

NO SCALE

RSP A77Q1 DATED AUGUST 14, 2015 SUPERSEDES RSP A77Q1 DATED JULY 19, 2013 THAT SUPPLEMENTS THE STANDARD PLANS BOOK DATED 2010.

REVISED STANDARD PLAN RSP A77Q1

8-12-15

Dist	COUNTY	ROUTE	POST MILES TOTAL PROJECT	SHEET No.	TOTAL SHEETS
05	SBt	156	0.0/3.0	69	113

Randell D. Hiatt
REGISTERED CIVIL ENGINEER

August 14, 2015
PLANS APPROVAL DATE

REGISTERED PROFESSIONAL ENGINEER
Randell D. Hiatt
No. C50200
Exp. 6-30-17
CIVIL
STATE OF CALIFORNIA

THE STATE OF CALIFORNIA OR ITS OFFICERS OR AGENTS SHALL NOT BE RESPONSIBLE FOR THE ACCURACY OR COMPLETENESS OF SCANNED COPIES OF THIS PLAN SHEET.

TO ACCOMPANY PLANS DATED 6-20-16

2010 REVISED STANDARD PLAN RSP A77Q2

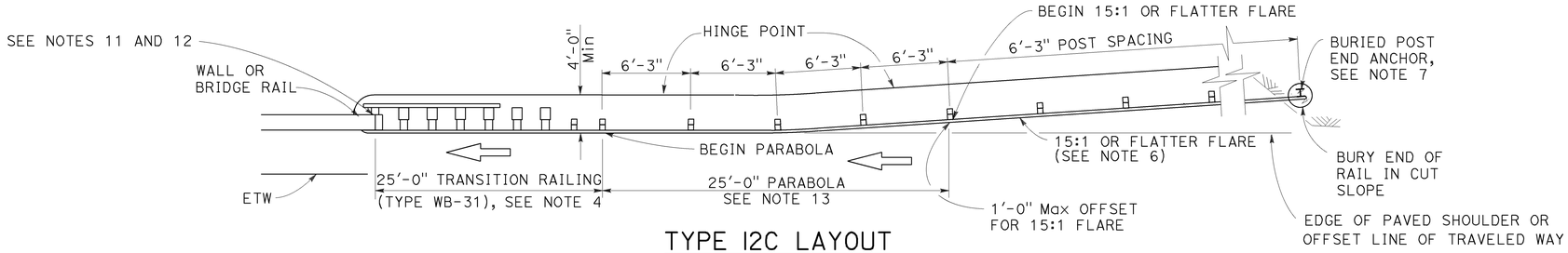

TYPE 12C LAYOUT

(MGS installation at structure approach with a Buried end anchor treatment at traffic approach end of railing)
See Notes 8 and 9

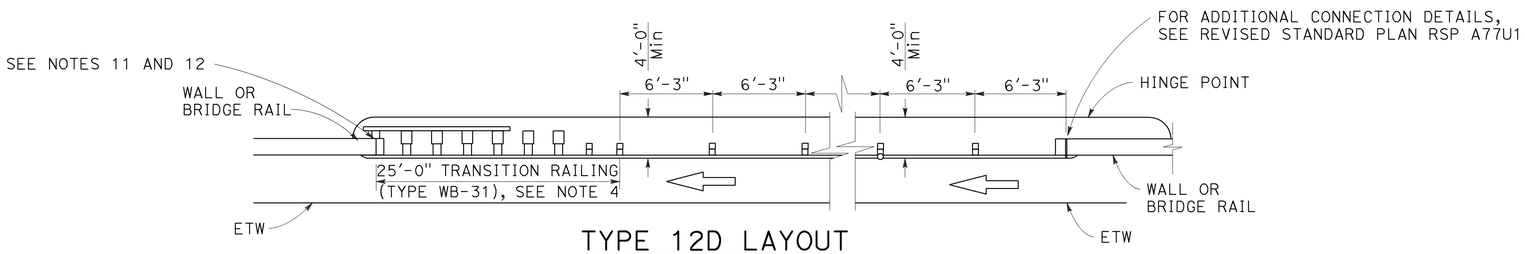

TYPE 12D LAYOUT

(Continuous MGS installation between structures)
See Notes 5 and 9

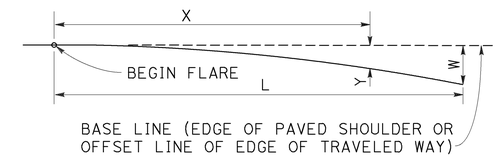

BASE LINE (EDGE OF PAVED SHOULDER OR OFFSET LINE OF EDGE OF TRAVELED WAY)

$$Y = \frac{WX^2}{L^2}$$

Y = OFFSET FROM BASE LINE
W = MAXIMUM OFFSET
X = DISTANCE ALONG BASE LINE
L = LENGTH OF FLARE

PARABOLIC FLARE OFFSETS

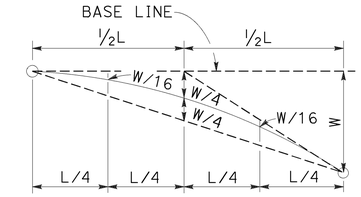

TYPICAL PARABOLIC LAYOUT

NOTES:

1. Line post, blocks and hardware to be used are shown on Revised Standard Plans RSP A77L1, RSP A77L2, RSP A77M1, RSP A77N1 and RSP A77N2.
2. MGS post spacing to be 6'-3" center to center, except as otherwise noted.
3. Except as noted, line posts are 6" x 8" x 6'-0" m wood with 6" x 12" x 1'-2" wood blocks. W6 x 8.5 or W6 x 9 steel posts, 6'-0" in length, with 6" x 12" x 1'-2" notched wood blocks or plastic blocks may be used for 6" x 8" x 6'-0" wood posts with 6" x 12" x 1'-2" wood blocks where applicable and when specified.
4. For Transition Railing (Type WB-31) details for Types 12C and 12D Layouts, see Revised Standard Plan RSP A77U4.
5. Type 12D layout is typically used where continous MGS is recommended between structures.
6. The 15:1 or flatter flare for Type 12C Layout is based on the edge of the paved shoulder or offset line of edge of the traveled way. The length of MGS with the 15:1 or flatter flare is based on site conditions and should be a length equal to multiples of 12'-6".
7. For details of the buried post end anchor used with Type 12C Layout, see Revised Standard Plan RSP A77T2.
8. Where placement of dike is required with MGS installations, see Revised Standard Plan RSP A77N4 for dike positioning details.
9. Type 12C Layout is typically used:
   a. To the right of approaching traffic, at the end of the structure, on two-lane conventional highway where the roadbed width across the structure is less than 40 feet.
   b. To the left of approaching traffic, at each of a structure, on two-lane conventional highway where the roadbed width across the structure is less than 40 feet.
   c. To the right of approaching traffic at the end of each structure on multilane freeways or expressways with separate adjacent or parallel bridges.
   d. To the right of approaching traffic at the end of the structure on multilane freeways or expressways with decked median on the bridge.
10. See Revised Standard Plan RSP A77Q3 for typical layout used left of approaching traffic at the ends of each structure on multilane freeways or expressways with separate adjacent or parallel bridges.
11. For additional details of typical connections to bridge rail, see Connection Detail AA on Revised Standard Plans RSP A77U1 and RSP A77U2 and Connection Detail FF on Revised Standard Plans RSP A77V1 and RSP A77V2.
12. For additional details of a typical connection to walls or abutments, see Revised Standard Plan RSP A77U3.
13. For typical flare offsets for 25'-0" length parabola with maximum offset of 1'-0", see Revised Standard Plan RSP A77P1.

STATE OF CALIFORNIA
DEPARTMENT OF TRANSPORTATION

MIDWEST GUARDRAIL SYSTEM TYPICAL LAYOUTS FOR STRUCTURE APPROACH AND BETWEEN STRUCTURES

NO SCALE

RSP A77Q2 DATED AUGUST 14, 2015 SUPERSEDES RSP A77Q2 DATED JULY 19, 2013 THAT SUPPLEMENTS THE STANDARD PLANS BOOK DATED 2010.

REVISED STANDARD PLAN RSP A77Q2

Dist	COUNTY	ROUTE	POST MILES TOTAL PROJECT	SHEET No.	TOTAL SHEETS
05	SBt	156	0.0/3.0	70	113

Randell D. Hiatt
REGISTERED CIVIL ENGINEER

August 14, 2015
PLANS APPROVAL DATE

REGISTERED PROFESSIONAL ENGINEER
Randell D. Hiatt
No. C50200
Exp. 6-30-17
CIVIL
STATE OF CALIFORNIA

THE STATE OF CALIFORNIA OR ITS OFFICERS OR AGENTS SHALL NOT BE RESPONSIBLE FOR THE ACCURACY OR COMPLETENESS OF SCANNED COPIES OF THIS PLAN SHEET.

TO ACCOMPANY PLANS DATED 6-20-16

2010 REVISED STANDARD PLAN RSP A77Q4

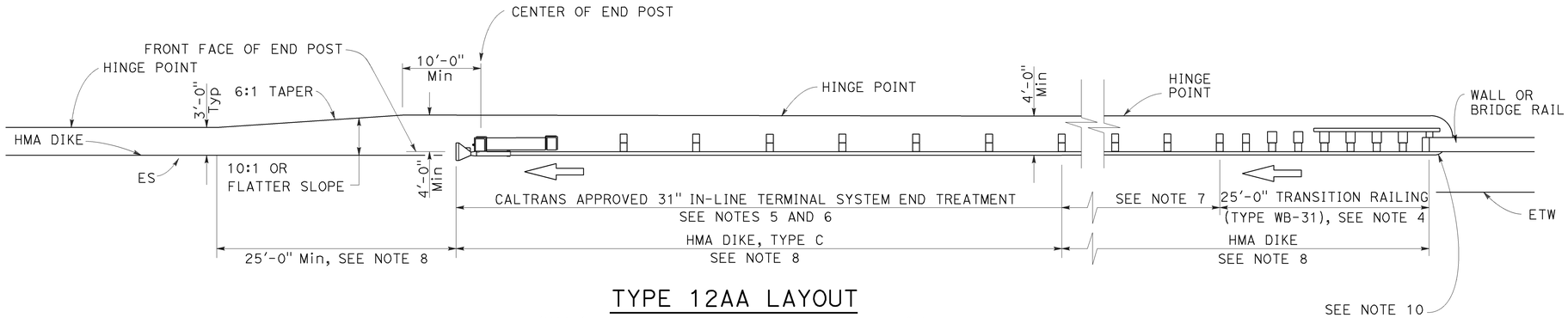

TYPE 12AA LAYOUT

(MGS installation at structure departure with
31" in-line end treatment at trailing end of railing)
See Notes 8 and 9

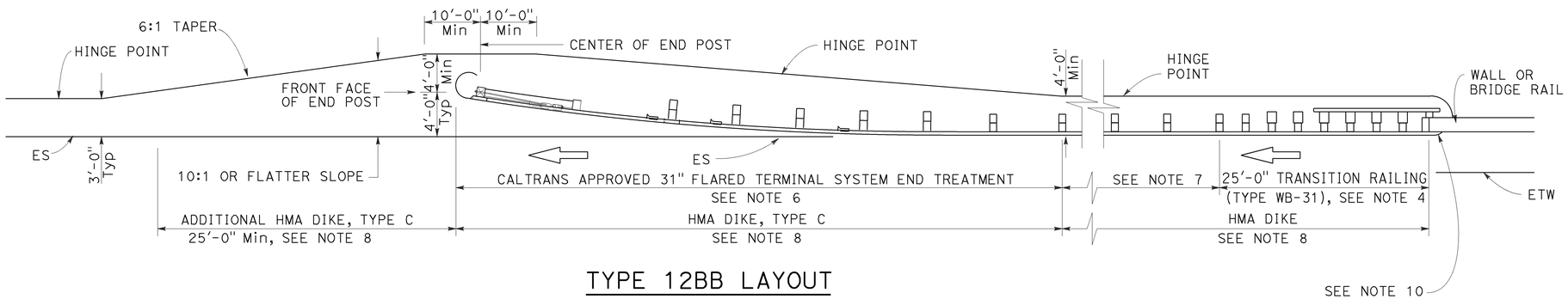

TYPE 12BB LAYOUT

(MGS installation at structure departure with
31" flared end treatment at trailing end of railing)
See Notes 8 and 9

NOTES:

1. Line post, blocks and hardware to be used are shown on Revised Standard Plans RSP A77L1, RSP A77L2, RSP A77M1, RSP A77N1 and RSP A77N2.
2. MGS post spacing to be 6'-3" center to center, except as otherwise noted.
3. Except as noted, line posts are 6" x 8" x 6'-0" wood with 6" x 12" x 1'-2" wood blocks. W6 x 8.5 or W6 x 9 steel posts, 6'-0" in length, with 6" x 12" x 1-2" notched wood blocks or notched recycled plastic blocks may be used for 6" x 8" x 6'-0" wood posts with 6" x 12" x 1'-2" wood blocks where applicable and when specified.
4. For Transition Railing (Type WB-31) details for Types 12AA and 12BB Layouts, see Revised Standard Plan RSP A77U4.
5. 31" in-line terminal system treatments are used where site conditions will not accommodate a 31" flared end treatment.
6. The type of 31" terminal system to be used will be shown on the Project Plans.
7. Dependent on site conditions (embankment height, side slopes, other fixed objects), it may be advisable to construct additional MGS (a length equal to multiples of 12'-6" with 6'-3" post spacing) between the transition railing and 31" end treatments.
8. Where placement of dike is required with MGS installations, see Revised Standard Plan RSP A77N4 for dike positioning details.
9. Type 12AA or Type 12BB Layouts are typically used to the right of traffic departing a structure on two-way conventional highways where the roadbed width across the structure is less than 40 feet.
10. For additional details of typical connections to bridge rail, see Connection Detail CC on Revised Standard Plan RSP A77U2 and Connection Detail HH on Revised Standard Plan RSP A77V2.

STATE OF CALIFORNIA
DEPARTMENT OF TRANSPORTATION

MIDWEST GUARDRAIL SYSTEM TYPICAL LAYOUTS FOR STRUCTURE DEPARTURE

NO SCALE

RSP A77Q4 DATED AUGUST 14, 2015 SUPERSEDES RSP A77Q4 DATED JULY 19, 2013 THAT SUPPLEMENTS THE STANDARD PLANS BOOK DATED 2010.

REVISED STANDARD PLAN RSP A77Q4

8-12-15

Dist	COUNTY	ROUTE	POST MILES TOTAL PROJECT	SHEET No.	TOTAL SHEETS
05	SBt	156	0.0/3.0	71	113

Randell D. Hiatt
REGISTERED CIVIL ENGINEER

July 19, 2013
PLANS APPROVAL DATE

REGISTERED PROFESSIONAL ENGINEER
Randell D. Hiatt
No. C50200
Exp. 6-30-15
CIVIL
STATE OF CALIFORNIA

THE STATE OF CALIFORNIA OR ITS OFFICERS OR AGENTS SHALL NOT BE RESPONSIBLE FOR THE ACCURACY OR COMPLETENESS OF SCANNED COPIES OF THIS PLAN SHEET.

TO ACCOMPANY PLANS DATED 6-20-16

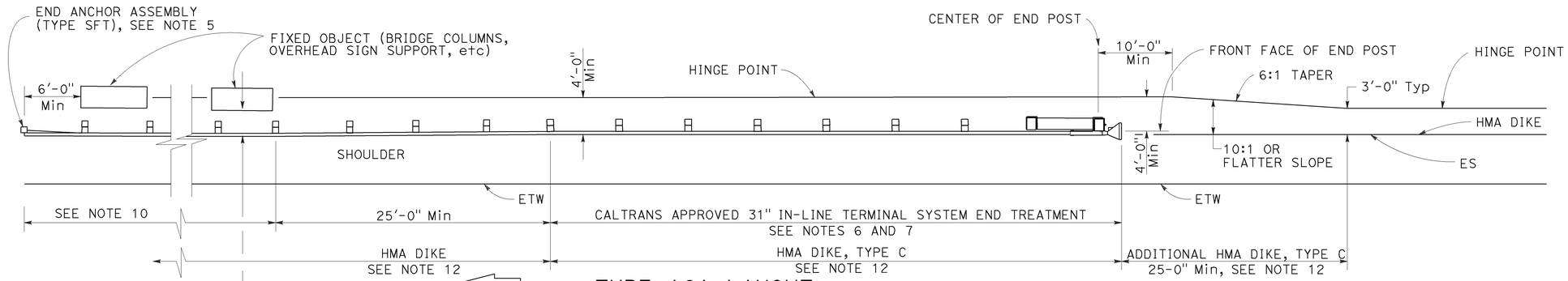

TYPE 16A LAYOUT

(MGS installation at roadside fixed object or objects with 31" in-line end treatment at traffic approach end of railing)
See Notes 11 and 12

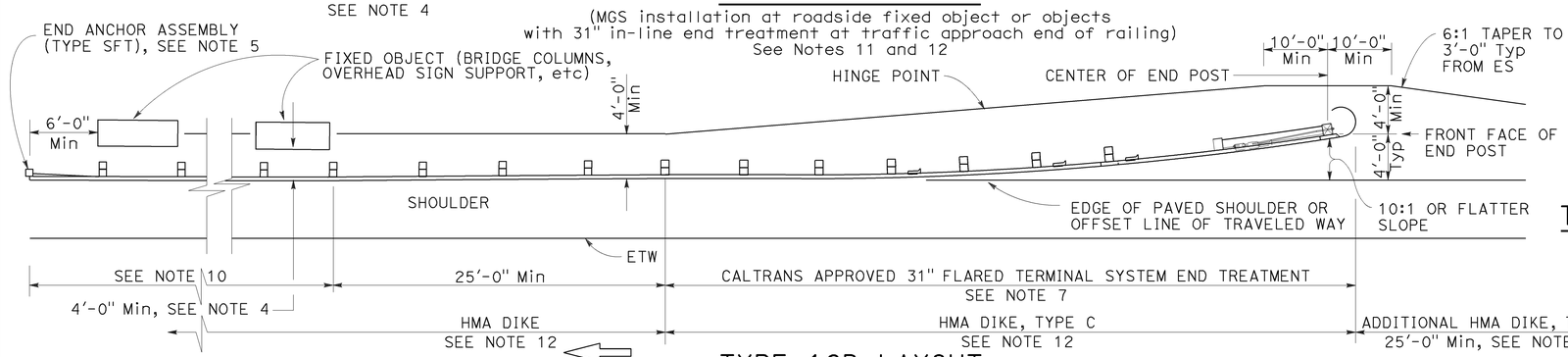

TYPE 16B LAYOUT

(MGS installation at roadside fixed object or objects with 31' flared end treatment at traffic approach end of railing)
See Notes 11 and 12

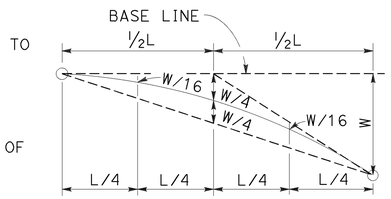

TYPIC AL PARABOLIC LAYOUT

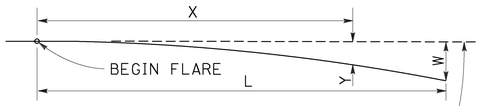

BASE LINE (EDGE OF PAVED SHOULDER OR OFFSET LINE OF EDGE OF TRAVELED WAY)

$$Y = \frac{WX^2}{L^2}$$

Y = OFFSET FROM BASE LINE
W = MAXIMUM OFFSET
X = DISTANCE ALONG BASE LINE
L = LENGTH OF FLARE

PARABOLIC FLARE OFFSETS

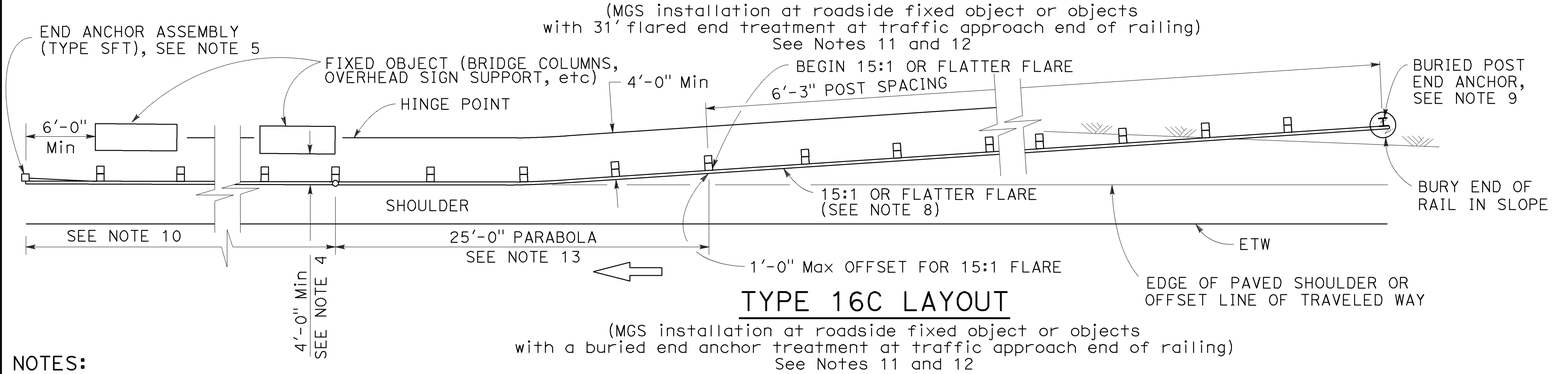

TYPE 16C LAYOUT

(MGS installation at roadside fixed object or objects with a buried end anchor treatment at traffic approach end of railing)
See Notes 11 and 12

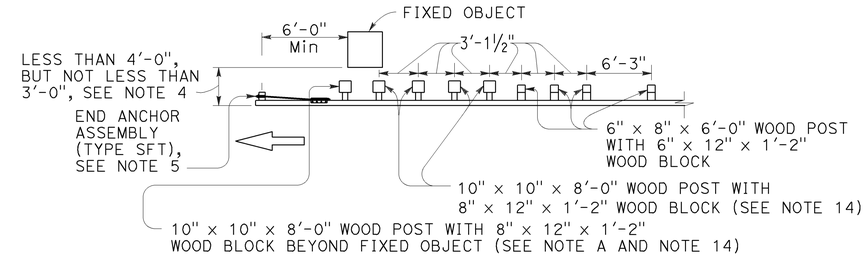

NOTE A: For a series of fixed objects (bridge columns, overhead sign supports, etc.) additional 10" x 10" x 8'-0" wood post with 8" x 12" x 1'-2" wood blocks at 3'-1½" center to center spacing are to be used between fixed objects.

STRENGTHENED MIDWEST GUARDRAIL SYSTEM SECTIONS FOR FIXED OBJECT

Use strengthened MGS sections with Types 16A, 16B or 16C layouts where minimum clearance between the face of the railing and fixed object(s) is less than 4'-0", but not less than 3'-0". See Note 4

NOTES:

1. Line post, blocks and hardware to be used are shown on Revised Standard Plans RSP A77L1, RSP A77L2, RSP A77M1, RSP A77N1 and RSP A77N2.
2. MGS post spacing to be 6'-3" center to center, except as otherwise noted.
3. Except as noted, line posts are 6" x 8" x 6'-0" wood with 6" x 12" x 1'-2" wood blocks. W6 x 8.5 or W6 x 9 steel posts, 6'-0" in length, with 6" x 12" x 1'-2" notched wood blocks or notched recycled plastic blocks may be used for 6" x 8" x 6'-0" wood line posts with 6" x 12" x 1'-2" wood blocks where applicable and when specified.
4. A 4'-0" minimum clearance is required between the face of the railing and the face of a fixed object located directly behind MGS sections with post spacing of 6'-3". Construct MGS as shown in the detail "Strengthened Midwest Guardrail System Sections for Fixed Object" on this plan, where the clearance between the face of the railing and the face of a fixed object is less than 4'-0", but not less than 3'-0". Where the clearance is less than 3'-0", a concrete wall or barrier should be constructed to shield the fixed object(s).
5. For End Anchor Assembly (Type SFT) details, see Revised Standard Plan RSP A77S1.
6. 31" in-line terminal system end treatments are used where site conditions will not accommodate a 31" flared end treatment.
7. The type of 31" terminal system to be used will be shown on the Project Plans.
8. The 15:1 or flatter flare used with Type 16C Layout is based on the edge of the paved shoulder or offset line of edge of the traveled way. The length of MGS within the 15:1 or flatter flare is based on site conditions and should be a length equal to multiples of 12'-6".
9. For details of the Buried Post End Anchor used with Type 16C Layout, see Revised Standard Plan RSP A77T2.
10. As site conditions dictate, construct additional MGS to shield fixed object(s). Additional MGS length equal to multiples of 12'-6". Post spacing at 6'-3" except as specified in Note 4.
11. Layout Types 16A, 16B or 16C are typically used where MGS is recommended to shield roadside fixed object(s) and a crashworthy 31" end treatment is required for only one direction of traffic.
12. Where placement of dike is required with MGS, see Revised Standard Plan RSP A77N4 for dike positioning details.
13. For typical flare offsets for 25'-0" length parabola with maximum offset of 1'-0", see Revised Standard Plan RSP A77P1.
14. W6 x 15 steel post, 8'-0" in length, with 8" x 12" x 1'-2" notched wood block or notched recycled plastic blocks may be used in place of the 10" x 10" x 8'-0" wood post with 8" x 12" x 1'-2" wood block shown in the detail "Strengthened Midwest Guardrail System Sections for Fixed Object".

STATE OF CALIFORNIA
DEPARTMENT OF TRANSPORTATION

MIDWEST GUARDRAIL SYSTEM TYPICAL LAYOUTS FOR ROADSIDE FIXED OBJECTS

NO SCALE

RSP A77R3 DATED JULY 19, 2013 SUPPLEMENTS THE STANDARD PLANS BOOK DATED 2010.

REVISED STANDARD PLAN RSP A77R3

2010 REVISED STANDARD PLAN RSP A77R3

6-20-13

Dist	COUNTY	ROUTE	POST MILES TOTAL PROJECT	SHEET No.	TOTAL SHEETS
05	SBt	156	0.0/3.0	72	113

Randell D. Hiatt
REGISTERED CIVIL ENGINEER

November 15, 2013
PLANS APPROVAL DATE

REGISTERED PROFESSIONAL ENGINEER
Randell D. Hiatt
No. C50200
Exp. 6-30-15
CIVIL
STATE OF CALIFORNIA

THE STATE OF CALIFORNIA OR ITS OFFICERS OR AGENTS SHALL NOT BE RESPONSIBLE FOR THE ACCURACY OR COMPLETENESS OF SCANNED COPIES OF THIS PLAN SHEET.

TO ACCOMPANY PLANS DATED 6-20-16

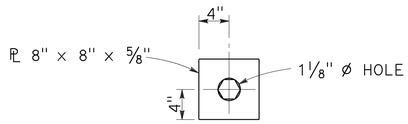

DETAIL "A"
CABLE CONNECTION
END PLATE

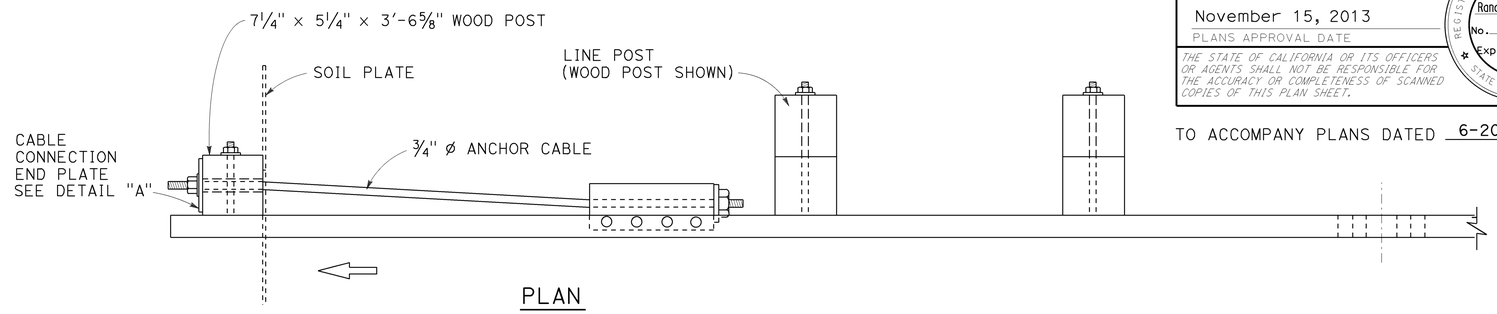

PLAN

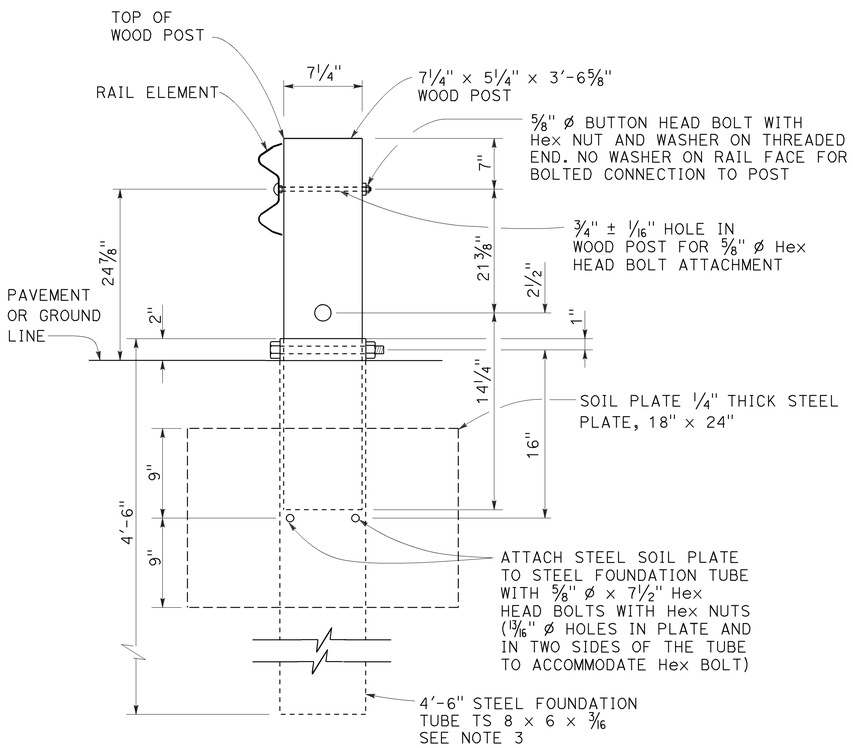

SECTION A-A

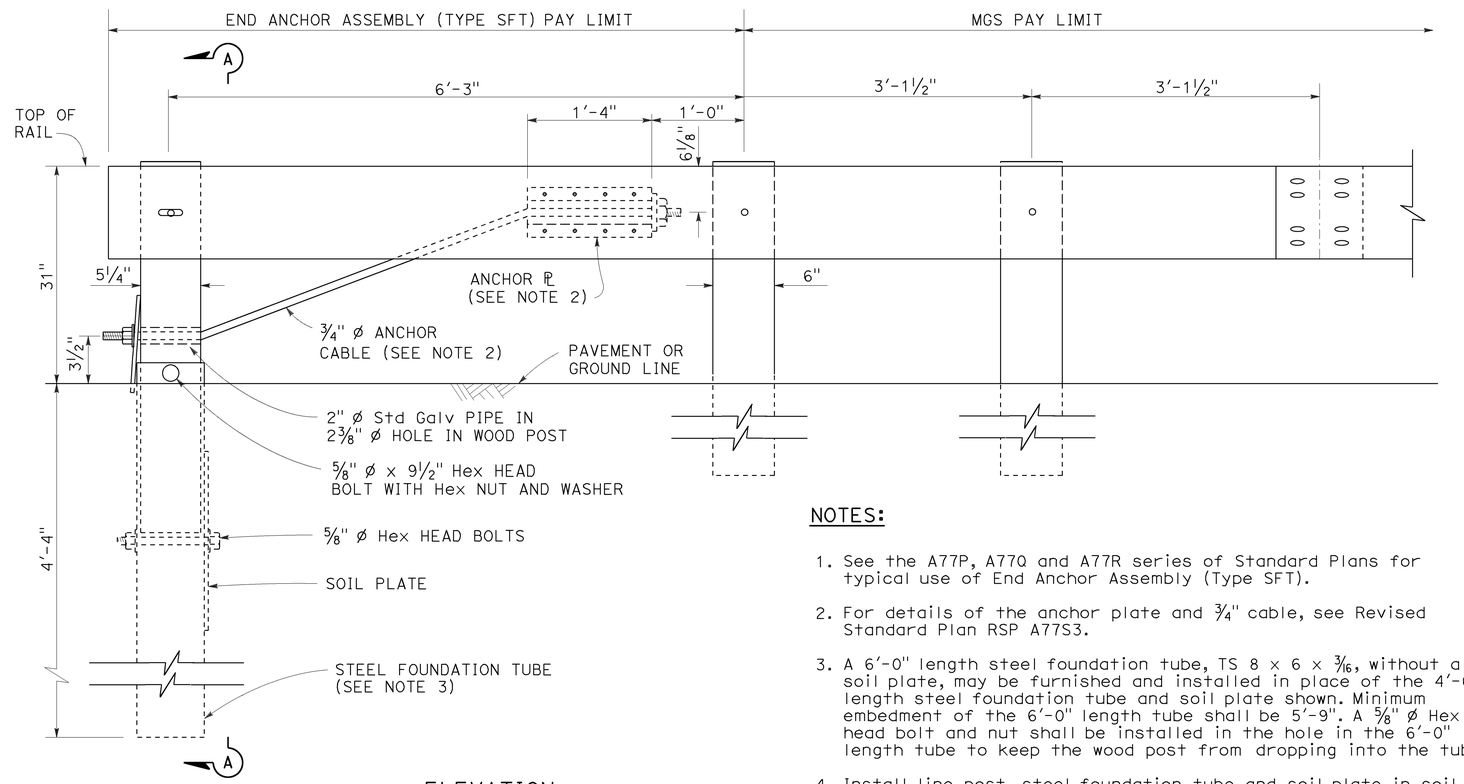

ELEVATION

END ANCHOR
ASSEMBLY (TYPE SFT)
See Note 1

NOTES:

1. See the A77P, A77Q and A77R series of Standard Plans for typical use of End Anchor Assembly (Type SFT).
2. For details of the anchor plate and 3/4" cable, see Revised Standard Plan RSP A77S3.
3. A 6'-0" length steel foundation tube, TS 8 x 6 x 3/16, without a soil plate, may be furnished and installed in place of the 4'-6" length steel foundation tube and soil plate shown. Minimum embedment of the 6'-0" length tube shall be 5'-9". A 5/8" ø Hex head bolt and nut shall be installed in the hole in the 6'-0" length tube to keep the wood post from dropping into the tube.
4. Install line post, steel foundation tube and soil plate in soil.

STATE OF CALIFORNIA
DEPARTMENT OF TRANSPORTATION

MIDWEST GUARDRAIL SYSTEM END ANCHOR ASSEMBLY (TYPE SFT)

NO SCALE

RSP A77S1 DATED NOVEMBER 15, 2013 SUPERSEDES RSP A77S1
DATED JULY 19, 2013 THAT SUPPLEMENTS THE STANDARD PLANS BOOK DATED 2010.

REVISED STANDARD PLAN RSP A77S1

2010 REVISED STANDARD PLAN RSP A77S1

10-4-13

Dist	COUNTY	ROUTE	POST MILES TOTAL PROJECT	SHEET No.	TOTAL SHEETS
05	SBt	156	0.0/3.0	73	113

Randell D. Hiatt
REGISTERED CIVIL ENGINEER

November 15, 2013
PLANS APPROVAL DATE

REGISTERED PROFESSIONAL ENGINEER
Randell D. Hiatt
No. C50200
Exp. 6-30-15
CIVIL
STATE OF CALIFORNIA

THE STATE OF CALIFORNIA OR ITS OFFICERS OR AGENTS SHALL NOT BE RESPONSIBLE FOR THE ACCURACY OR COMPLETENESS OF SCANNED COPIES OF THIS PLAN SHEET.

TO ACCOMPANY PLANS DATED 6-20-16

NOTE:

See Revised Standard Plans RSP A77S1, RSP A77S2 and RSP A77T1 for typical use of anchor cable and anchor plate.

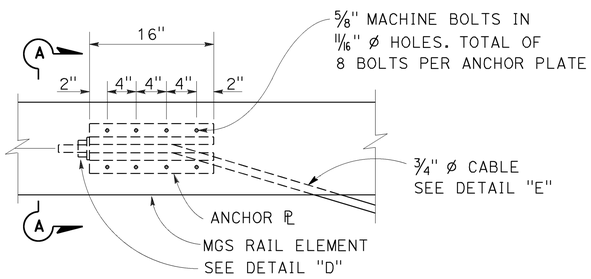

ANCHOR PLATE DETAIL

(MGS shown, TBB similar)

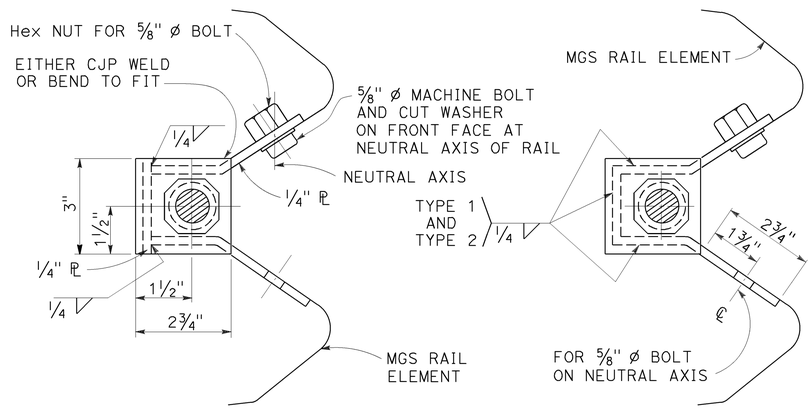

NOTE:

Dimensioning applies to both types.

SECTION A-A
(ALTERNATIVE TYPE 1)

SECTION A-A
(ALTERNATIVE TYPE 2)

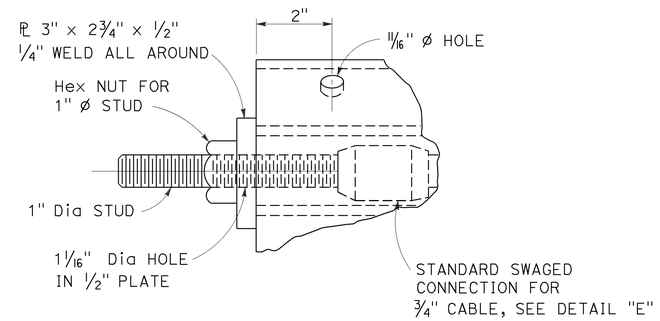

DETAIL "D"

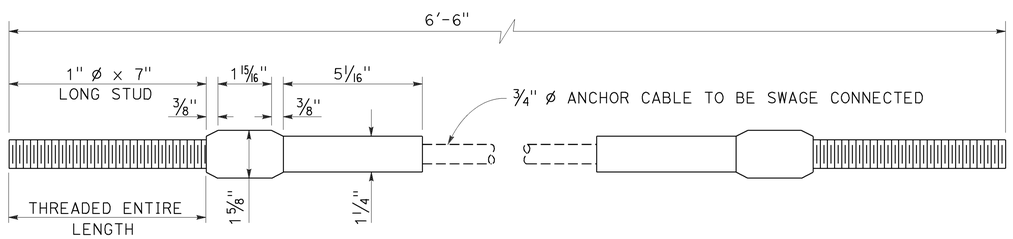

ANCHOR CABLE WITH SWAGED FITTING AND STUD

DETAIL "E"

STATE OF CALIFORNIA
DEPARTMENT OF TRANSPORTATION

METAL RAILING ANCHOR CABLE AND ANCHOR PLATE DETAILS

NO SCALE

RSP A77S3 DATED NOVEMBER 15, 2013 SUPERSEDES RSP A77S3 DATED JULY 19, 2013 THAT SUPPLEMENTS THE STANDARD PLANS BOOK DATED 2010.

REVISED STANDARD PLAN RSP A77S3

2010 REVISED STANDARD PLAN RSP A77S3

10-4-13

Dist	COUNTY	ROUTE	POST MILES TOTAL PROJECT	SHEET No.	TOTAL SHEETS
05	SBt	156	0.0/3.0	74	113

Randell D. Hiatt
REGISTERED CIVIL ENGINEER

November 15, 2013
PLANS APPROVAL DATE

REGISTERED PROFESSIONAL ENGINEER
Randell D. Hiatt
No. C50200
Exp. 6-30-15
CIVIL
STATE OF CALIFORNIA

THE STATE OF CALIFORNIA OR ITS OFFICERS OR AGENTS SHALL NOT BE RESPONSIBLE FOR THE ACCURACY OR COMPLETENESS OF SCANNED COPIES OF THIS PLAN SHEET.

TO ACCOMPANY PLANS DATED 6-20-16

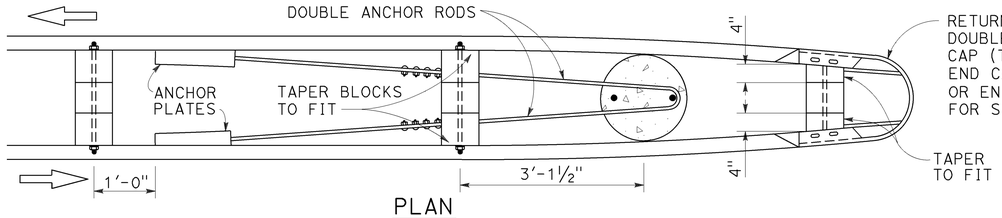

PLAN
See Note 4

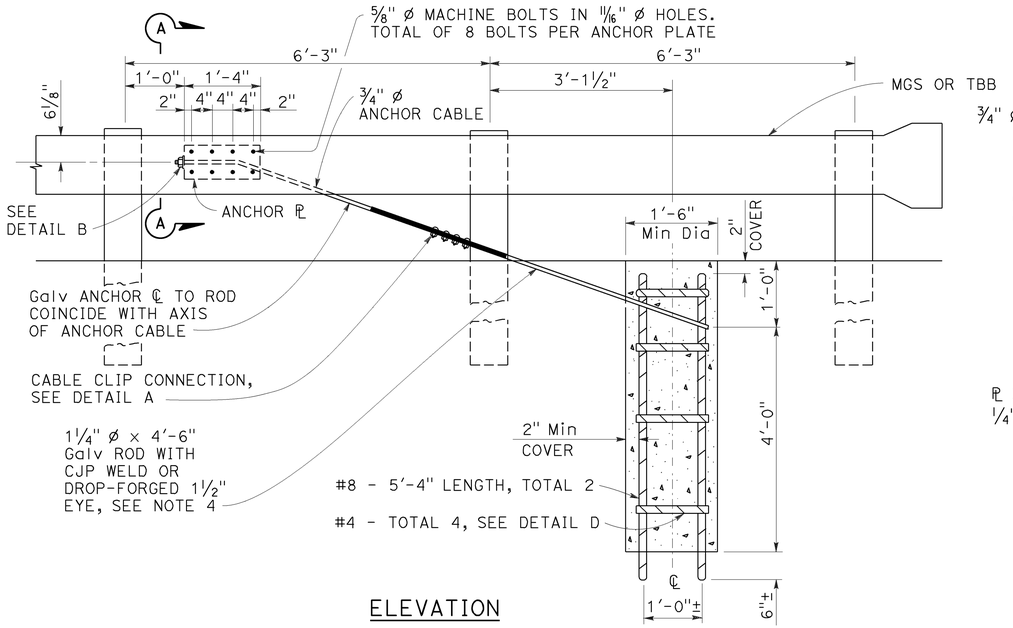

ELEVATION
END ANCHOR ASSEMBLY
(TYPE CA)
(Wood post, MGS shown, details similar for Thrie Beam Barrier.)

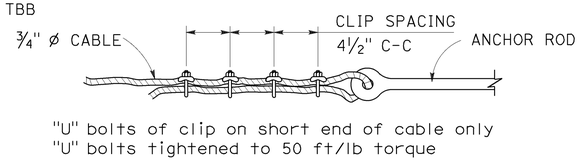

DETAIL A
CABLE CLIP CONNECTION

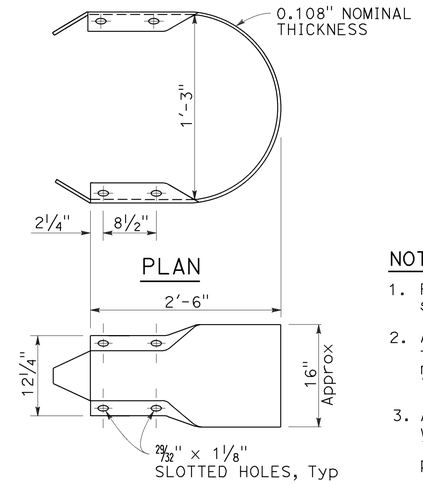

PLAN
ELEVATION
RETURN CAP
(TYPE A)

NOTES:

1. For typical use of this type of end anchor, see Revised Standard Plan RSP A78E2.
2. Anchor cable to be parallel to railing for straight runs of rail. Anchor cable may have angle point at anchor plate if railing is curved.
3. Anchor rod hooks to be in contact with anchor reinforcement when concrete is placed. Wire ties may be used to position anchor rods.
4. Single sided railing installations require only one anchor plate, anchor rod and anchor cable. Single sided railing will not have a rail element or blockouts on backside of line posts as shown in the plan view.

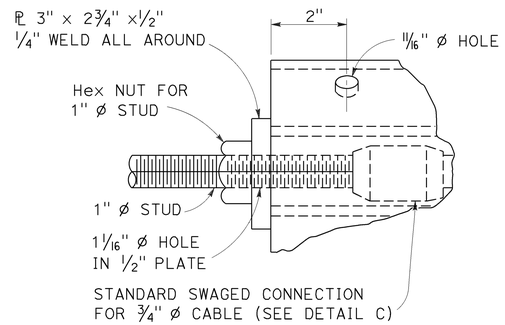

DETAIL B

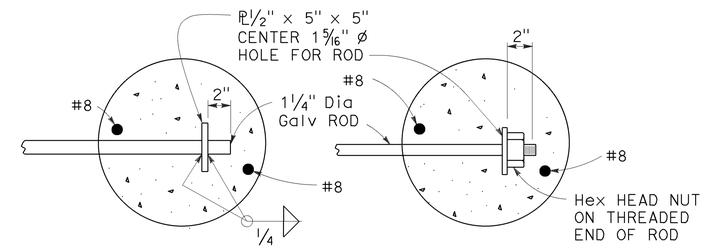

OPTIONAL ENDS ON SINGLE ANCHOR ROD
(Not to be used for double anchors)

NOTE:
Use two 1¼" ø Galv rods with hook and eye for double MGS anchor.

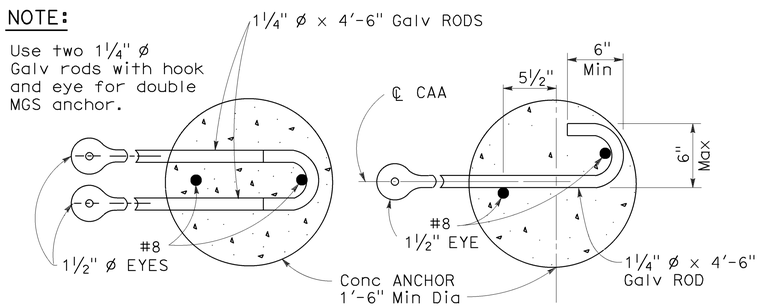

DOUBLE ANCHOR
SINGLE ANCHOR
ANCHOR RODS

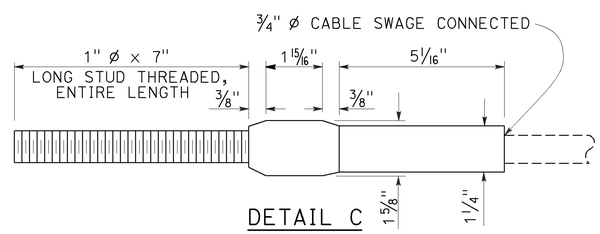

DETAIL C
ANCHOR CABLE WITH
SWAGED FITTING AND STUD

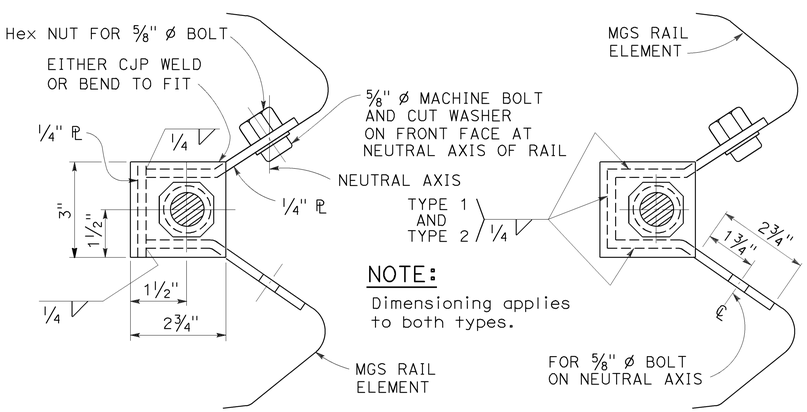

SECTION A-A
(Alternative Type 1)

SECTION A-A
(Alternative Type 2)

ANCHOR PLATE DETAILS

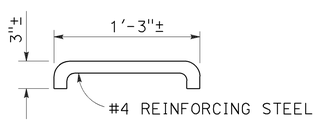

DETAIL D

STATE OF CALIFORNIA
DEPARTMENT OF TRANSPORTATION

METAL RAILING END ANCHOR ASSEMBLY (TYPE CA)

NO SCALE

RSP A77T1 DATED NOVEMBER 15, 2013 SUPERSEDES RSP A77T1 DATED JULY 19, 2013 THAT SUPPLEMENTS THE STANDARD PLANS BOOK DATED 2010.

REVISED STANDARD PLAN RSP A77T1

2010 REVISED STANDARD PLAN RSP A77T1

10-22-13

Dist	COUNTY	ROUTE	POST MILES TOTAL PROJECT	SHEET No.	TOTAL SHEETS
05	SBt	156	0.0/3.0	75	113

Randell D. Hiatt
REGISTERED CIVIL ENGINEER

November 15, 2013
PLANS APPROVAL DATE

REGISTERED PROFESSIONAL ENGINEER
Randell D. Hiatt
No. C50200
Exp. 6-30-15
CIVIL
STATE OF CALIFORNIA

THE STATE OF CALIFORNIA OR ITS OFFICERS OR AGENTS SHALL NOT BE RESPONSIBLE FOR THE ACCURACY OR COMPLETENESS OF SCANNED COPIES OF THIS PLAN SHEET.

TO ACCOMPANY PLANS DATED 6-20-16

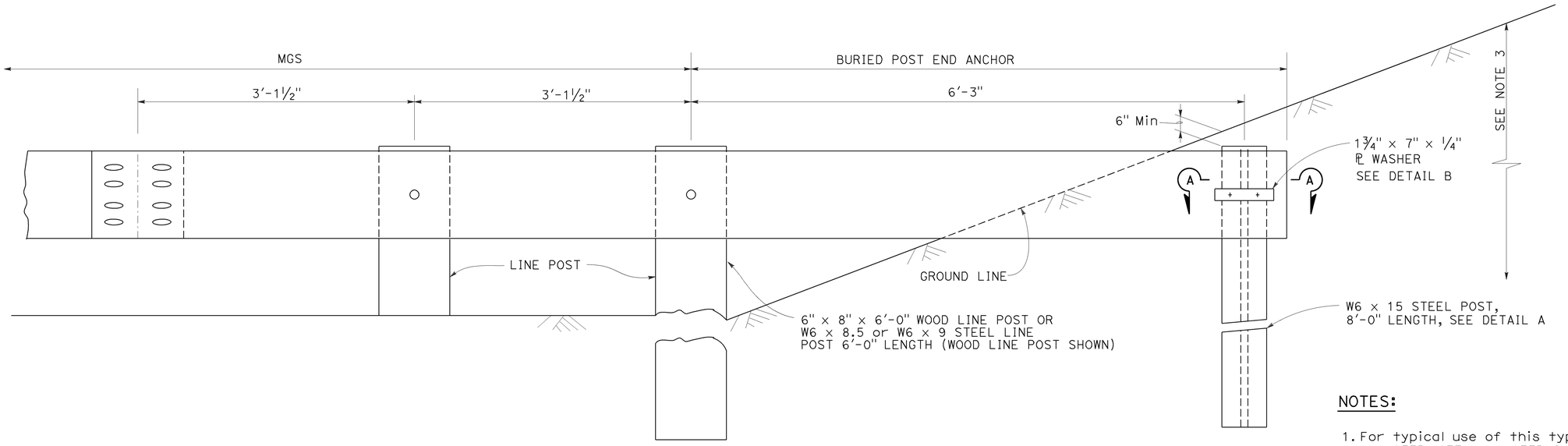

BURIED POST END ANCHOR

See Note 3

NOTES:

1. For typical use of this type of end anchor with MGS see the A77P, A77Q and A77R Series of the Standard Plans.
2. Holes excavation in the slope to construct the buried post end anchor shall be backfilled with selected earth, placed in layers approximately 1'-0" thick. Each layer shall be moistened and thoroughly compacted.
3. The buried post end anchor shall only be constructed at those locations where the slope perpendicular to the roadway is non-traversable.

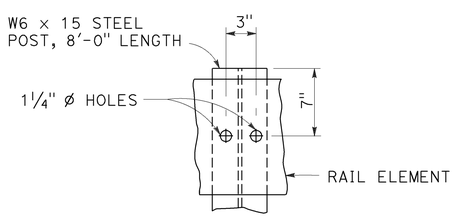

DETAIL A

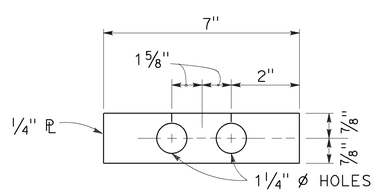

DETAIL B

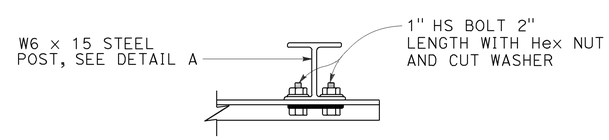

SECTION A-A

STATE OF CALIFORNIA
DEPARTMENT OF TRANSPORTATION

MIDWEST GUARDRAIL SYSTEM BURIED POST END ANCHOR

NO SCALE

RSP A77T2 DATED NOVEMBER 15, 2013 SUPERSEDES RSP A77T2
DATED JULY 19, 2013 THAT SUPPLEMENTS THE STANDARD PLANS BOOK DATED 2010.

REVISED STANDARD PLAN RSP A77T2

2010 REVISED STANDARD PLAN RSP A77T2

10-4-13

Dist	COUNTY	ROUTE	POST MILES TOTAL PROJECT	SHEET No.	TOTAL SHEETS
05	SBt	156	0.0/3.0	76	113

Randell D. Hiatt
REGISTERED CIVIL ENGINEER

July 19, 2013
PLANS APPROVAL DATE

REGISTERED PROFESSIONAL ENGINEER
Randell D. Hiatt
No. C50200
Exp. 6-30-15
CIVIL
STATE OF CALIFORNIA

THE STATE OF CALIFORNIA OR ITS OFFICERS OR AGENTS SHALL NOT BE RESPONSIBLE FOR THE ACCURACY OR COMPLETENESS OF SCANNED COPIES OF THIS PLAN SHEET.

TO ACCOMPANY PLANS DATED 6-20-16

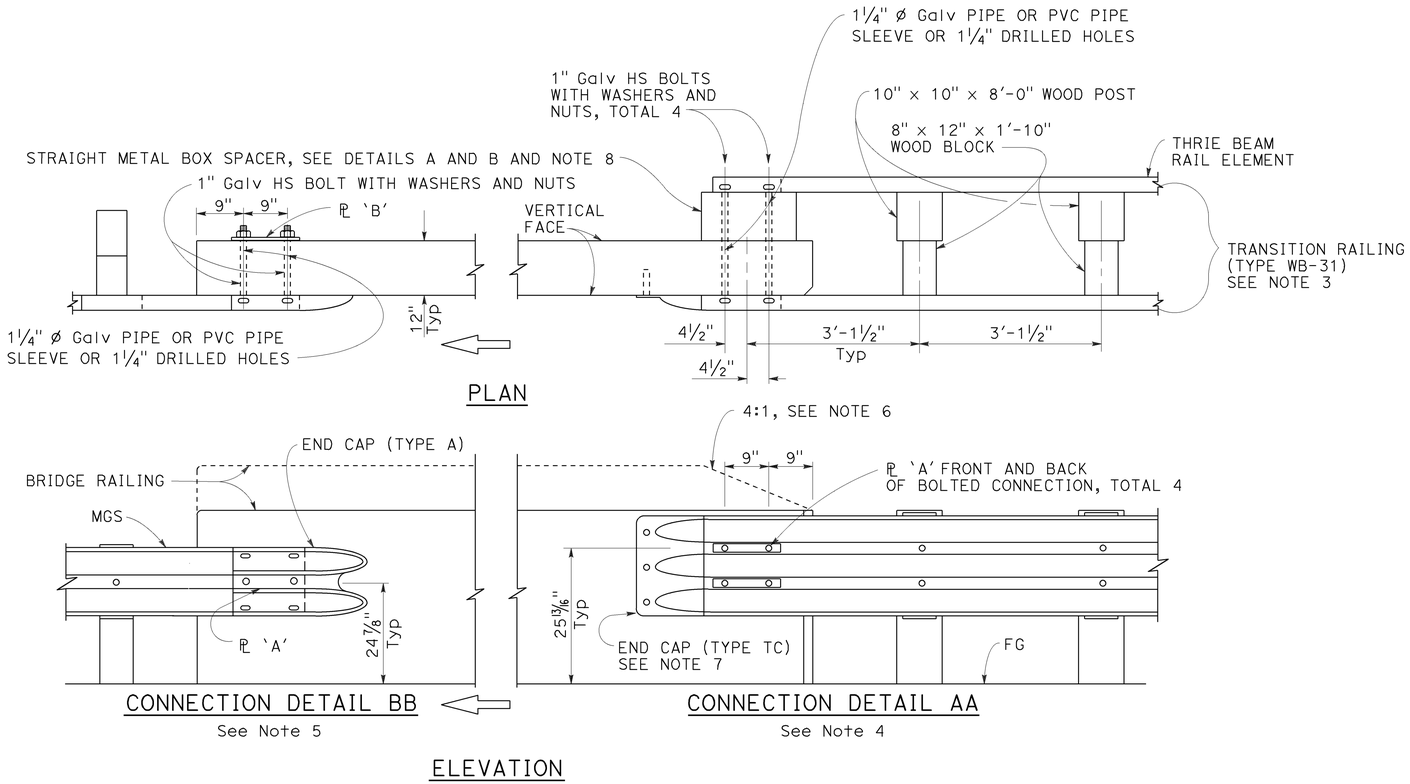

MIDWEST GUARDRAIL SYSTEM CONNECTION TO BRIDGE RAILING WITHOUT SIDEWALK

NOTES:

1. See Revised Standard Plan RSP A77U2 for additional connection details to bridges without sidewalks.
2. Additional details of posts, blocks and hardware are shown on Revised Standard Plans RSP A77M1, RSP A77N1 and RSP A77N2.
3. For additional details of Transition Railing (Type WB-31), see Revised Standard Plan RSP A77U4. Transition Railing (Type WB-31) transitions the 12 gauge MGS railing section to a heavier gage nested thrie beam railing section which is connected to the concrete bridge railing.
4. For typical use of Connection Detail AA, see Layout Types 12A and 12B on Revised Standard Plan RSP A77Q1, Layout Types 12C and 12D on Revised Standard Plan RSP A77Q2, and Layout Type 12E on Revised Standard Plan RSP A77Q3.
5. For typical use of Connection Detail BB, see Layout Type 12D (structure departure railing connection) on Revised Standard Plan RSP A77Q2 and Layout Type 12DD on Revised Standard Plan RSP A77Q5.
6. Where the height of the bridge railing exceeds the height of the thrie beam railing by more than 1" at Connection Detail AA, taper the top of the end of the bridge railing at 4:1 to match the top elevation of the thrie beam rail.
7. For details of End Cap (Type TC), see Revised Standard Plan RSP A77U4.
8. See Revised Standard Plan RSP A77U4 for additional details regarding depth dimension for straight metal box spacer.

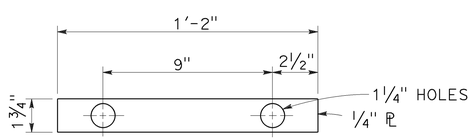

PLATE 'A'

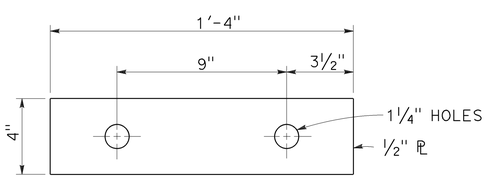

PLATE 'B'
(For backside of connection BB)

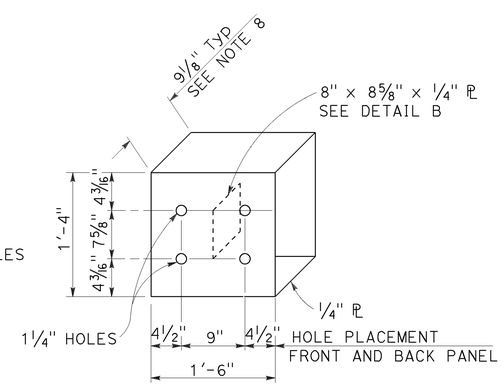

DETAIL A

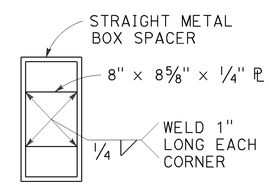

DETAIL B

STRAIGHT METAL BOX SPACER

STATE OF CALIFORNIA
DEPARTMENT OF TRANSPORTATION

MIDWEST GUARDRAIL SYSTEM CONNECTIONS TO BRIDGE RAILINGS WITHOUT SIDEWALKS DETAILS No. 1

NO SCALE

RSP A77U1 DATED JULY 19, 2013 SUPPLEMENTS THE STANDARD PLANS BOOK DATED 2010.

REVISED STANDARD PLAN RSP A77U1

2010 REVISED STANDARD PLAN RSP A77U1

7-8-13

Dist	COUNTY	ROUTE	POST MILES TOTAL PROJECT	SHEET No.	TOTAL SHEETS
05	SB†	156	0.0/3.0	77	113

Randell D. Hiatt
REGISTERED CIVIL ENGINEER

July 19, 2013
PLANS APPROVAL DATE

REGISTERED PROFESSIONAL ENGINEER
Randell D. Hiatt
No. C50200
Exp. 6-30-15
CIVIL
STATE OF CALIFORNIA

THE STATE OF CALIFORNIA OR ITS OFFICERS OR AGENTS SHALL NOT BE RESPONSIBLE FOR THE ACCURACY OR COMPLETENESS OF SCANNED COPIES OF THIS PLAN SHEET.

TO ACCOMPANY PLANS DATED 6-20-16

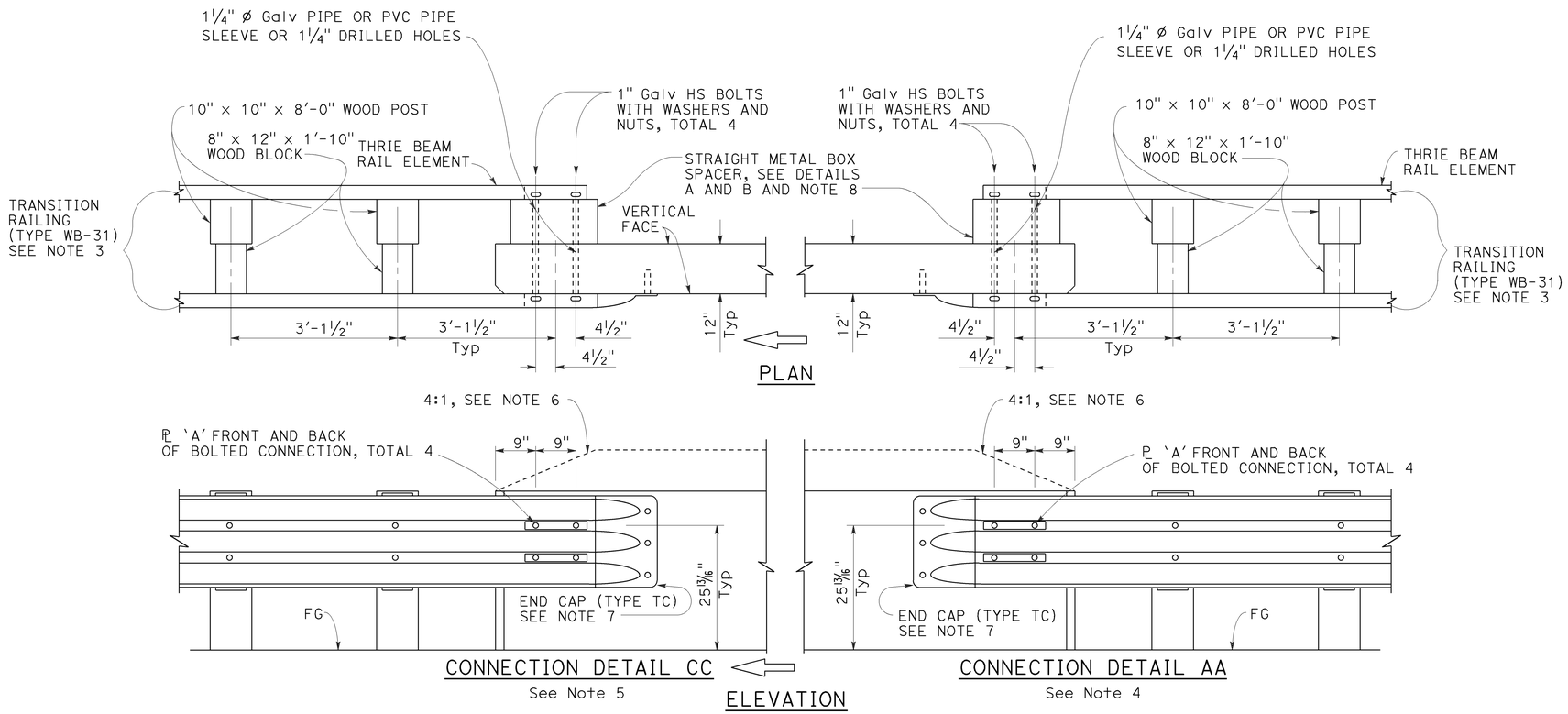

MIDWEST GUARDRAIL SYSTEM CONNECTION TO BRIDGE RAILING WITHOUT SIDEWALK

NOTES:

1. See Revised Standard Plan RSP A77U1 for additional connection details to bridges without sidewalks.
2. Additional details of posts, blocks and hardware are shown on Revised Standard Plans RSP A77M1, RSP A77N1 and RSP A77N2.
3. For additional details of Transition Railing (Type WB-31), see Revised Standard Plan RSP A77U4. Transition Railing (Type WB-31) transitions the 12 gauge MGS railing section to a heavier gage nested thrie beam railing section which is connected to the concrete bridge railing.
4. For typical use of Connection Detail AA, see Layout Types 12A and 12B on Revised Standard Plan RSP A77Q1, Layout Types 12C and 12D on Revised Standard Plan RSP A77Q2, and Layout Type 12E on Revised Standard Plan RSP A77Q3.
5. For typical use of Connection Detail CC, see Layout Types 12AA and 12BB on Revised Standard Plan RSP A77Q4 and Layout Type 12CC on Revised Standard Plan RSP A77Q5.
6. Where the height of the bridge railing exceeds the height of the thrie beam railing by more than 1" at Connection Detail AA and connection Detail CC, taper the top of the end of the bridge railing at 4:1 to match the top elevation of the thrie beam railing.
7. For details of End Cap (Type TC), see Revised Standard Plan RSP A77U4.
8. See Revised Standard Plan RSP A77U4 for additional details regarding depth dimension for straight metal box spacer.

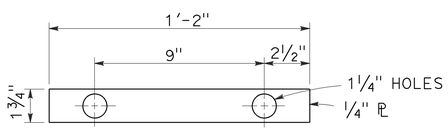

PLATE 'A'

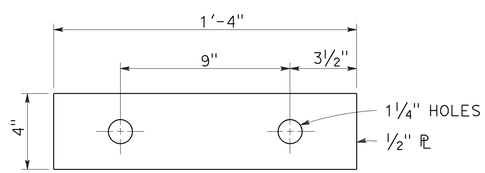

PLATE 'B'
(For backside of connection BB)

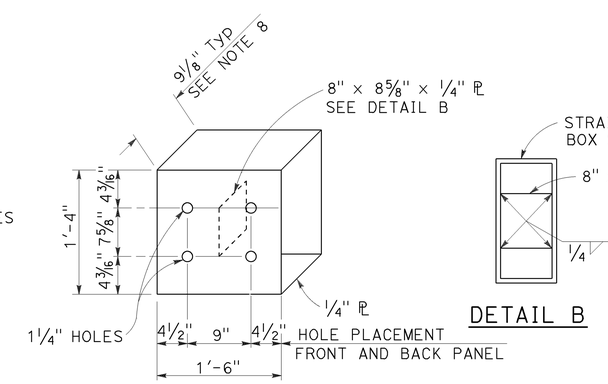

STATE OF CALIFORNIA
DEPARTMENT OF TRANSPORTATION

MIDWEST GUARDRAIL SYSTEM CONNECTIONS TO BRIDGE RAILINGS WITHOUT SIDEWALKS DETAILS No. 2

NO SCALE

RSP A77U2 DATED JULY 19, 2013 SUPPLEMENTS THE STANDARD PLANS BOOK DATED 2010.

REVISED STANDARD PLAN RSP A77U2

2010 REVISED STANDARD PLAN RSP A77U2

6-20-13

Dist	COUNTY	ROUTE	POST MILES TOTAL PROJECT	SHEET No.	TOTAL SHEETS
05	SBt	156	0.0/3.0	78	113

Randell D. Hiatt
REGISTERED CIVIL ENGINEER

January 23, 2015
PLANS APPROVAL DATE

REGISTERED PROFESSIONAL ENGINEER
Randell D. Hiatt
No. C50200
Exp. 6-30-15
CIVIL
STATE OF CALIFORNIA

THE STATE OF CALIFORNIA OR ITS OFFICERS OR AGENTS SHALL NOT BE RESPONSIBLE FOR THE ACCURACY OR COMPLETENESS OF SCANNED COPIES OF THIS PLAN SHEET.

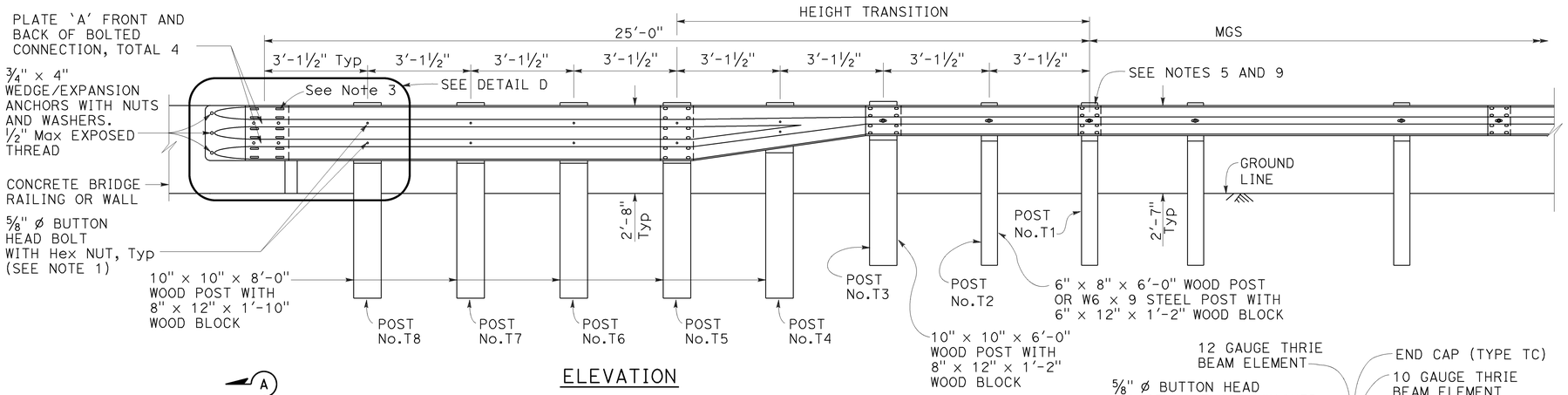

ELEVATION

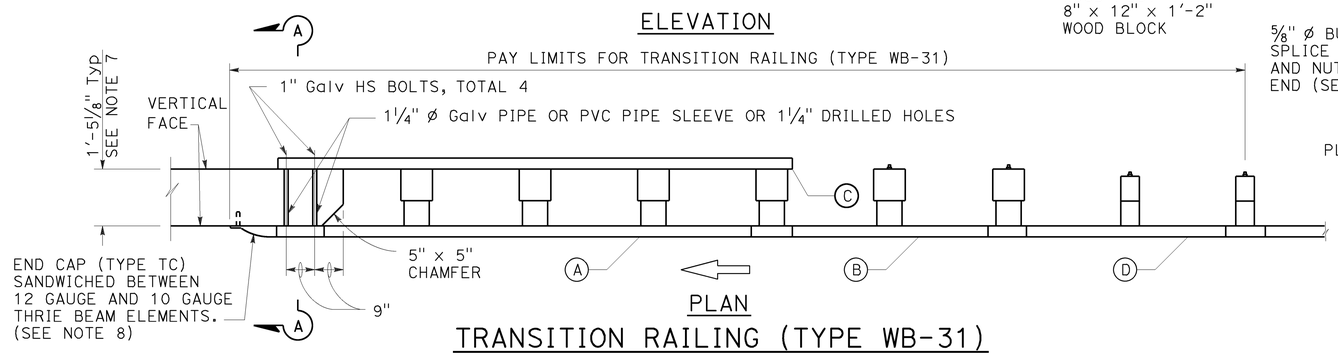

PLAN

TRANSITION RAILING (TYPE WB-31)

(No Blockout Attachment)

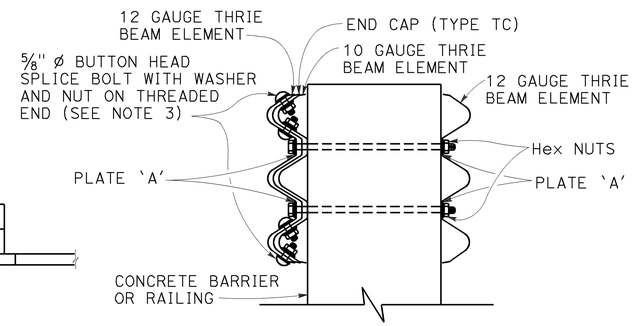

SECTION A-A

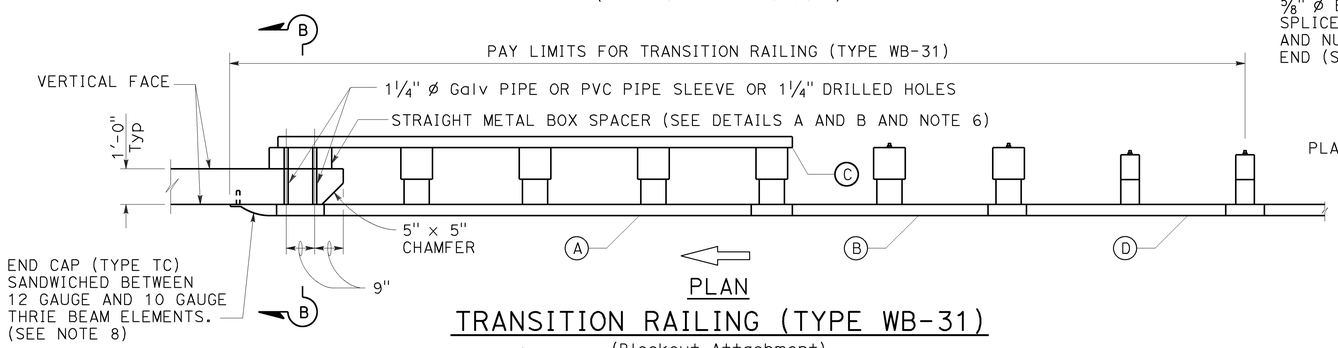

PLAN

TRANSITION RAILING (TYPE WB-31)

(Blockout Attachment)

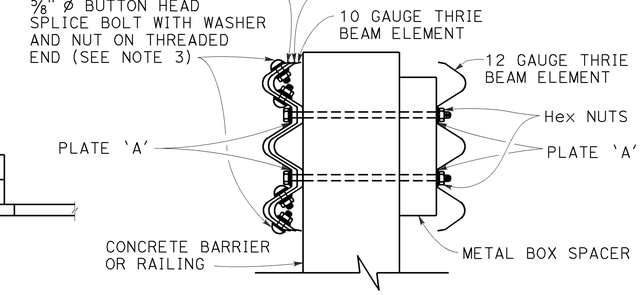

SECTION B-B

NOTES:

TO ACCOMPANY PLANS DATED 6-20-16

1. Use 5/8" ø Button head bolts and hex nuts for connections to posts. No washer on rail face for bolted connections to post.
2. The nested rail elements, end cap, and 'W' beam to thrie beam element may be spliced together prior to bolting the elements to the wood post and concrete barrier or railing.
3. Exterior splice bolt holes for rail element splices at Post No. T5 and the connection to the concrete barrier or railing shall be the standard 29/32" x 1 1/8" slot size. Interior splice bolt holes at these locations may be increased up to 1 1/4" ø. Only the top 4 and the bottom 4 splice bolts with washers and nuts are required for rail splices at Post No. T5 and the connection to the concrete barrier or railing.
4. The top elevation of Posts No. T2 through No. T7 shall not project more than 1" above the top elevation of the rail element.
5. Typically, the railing connected to Transition Railing (Type WB-31) will be either standard railing section of MGS with height transition ratio of 150:1 or a Caltrans approved 31" end treatment attached to Post No. T1.
6. The depth of the metal box spacer varies from the 9 1/8" to 1 1/2" and is dependent on the width of the concrete railing or wall. The combined dimension for the depth of the metal box spacer plus the width of railing or wall is typically 21 1/8". Where the space between the backside of the concrete railing or wall and the rear thrie beam element is less than 1 1/2", metal plates similar to Plate 'A' are to be used as spacers.
7. Where the width of the concrete railing or wall is greater than 17 1/8", wood blocks are to be used to fill the space created between the backside of Posts No. T5 through No. T8 and the rear thrie beam element. These wood blocks shall be 8" in width and 1'-2" in length. The dimension between the front thrie beam element and the rear thrie beam element is to match the width of the concrete railing or wall.
8. End cap may be installed over 12 gauge and 10 gauge thrie beam elements where transition railing is installed on the departure end of bridge railing.
9. Conform standard railing section height to 31" at Post No. T1 using height transition ratio of 150:1.

LEGEND:

(A) NESTED THRIE BEAM ELEMENTS (ONE 12 GAUGE ELEMENT NESTED OVER ONE 10 GAUGE ELEMENT).

(B) ONE ASYMMETRICAL 10 GAUGE "W" BEAM TO THRIE BEAM ELEMENT.

(C) ONE 12 GAUGE THRIE BEAM ELEMENT.

(D) ONE 10 GAUGE "W" BEAM RAIL ELEMENT (7'-3 1/2" LENGTH)

10 GAUGE = 0.138" THICK
12 GAUGE = 0.108" THICK

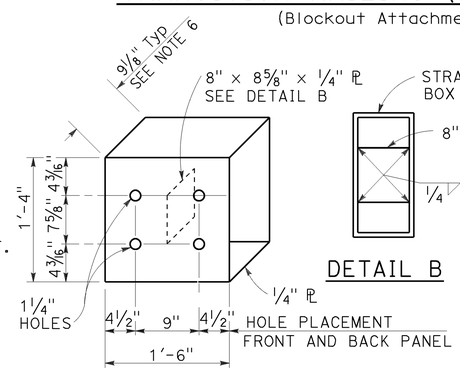

DETAIL A

STRAIGHT METAL BOX SPACER

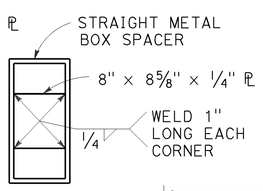

DETAIL B

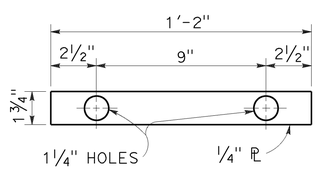

DETAIL C

PLATE 'A'

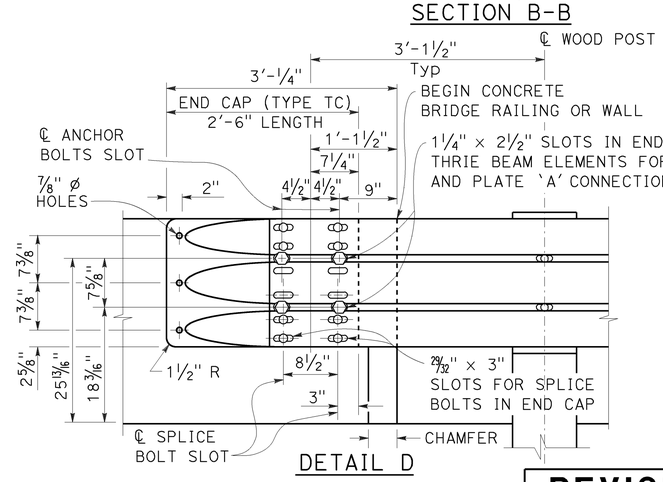

DETAIL D

STATE OF CALIFORNIA
DEPARTMENT OF TRANSPORTATION

MIDWEST GUARDRAIL SYSTEM TRANSITION RAILING (TYPE WB-31)

NO SCALE

RSP A77U4 DATED JANUARY 23, 2015 SUPERSEDES RSP A77U4 DATED NOVEMBER 15, 2013 AND RSP A77U4 DATED JULY 19, 2013 THAT SUPPLEMENTS THE STANDARD PLANS BOOK DATED 2010.

REVISED STANDARD PLAN RSP A77U4

2010 REVISED STANDARD PLAN RSP A77U4

1-8-15

Dist	COUNTY	ROUTE	POST MILES TOTAL PROJECT	SHEET No.	TOTAL SHEETS
05	SBt	156	0.0/3.0	79	113

Randell D. Hiatt
REGISTERED CIVIL ENGINEER

July 19, 2013
PLANS APPROVAL DATE

REGISTERED PROFESSIONAL ENGINEER
Randell D. Hiatt
No. C50200
Exp. 6-30-15
CIVIL
STATE OF CALIFORNIA

THE STATE OF CALIFORNIA OR ITS OFFICERS OR AGENTS SHALL NOT BE RESPONSIBLE FOR THE ACCURACY OR COMPLETENESS OF SCANNED COPIES OF THIS PLAN SHEET.

TO ACCOMPANY PLANS DATED 6-20-16

NOTES:

1. Refer to Revised Standard Plans RSP A77L1 and RSP A77L2 for component details for MGS not shown on this plan.
2. All posts for any standard barrier run shall be of the same type: Wood or Steel.
3. Install posts in soil.

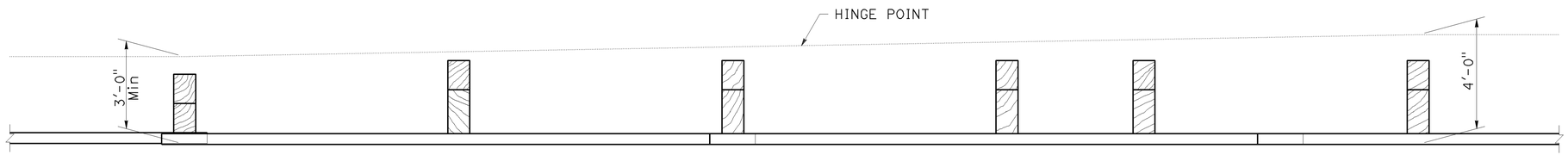

PLAN

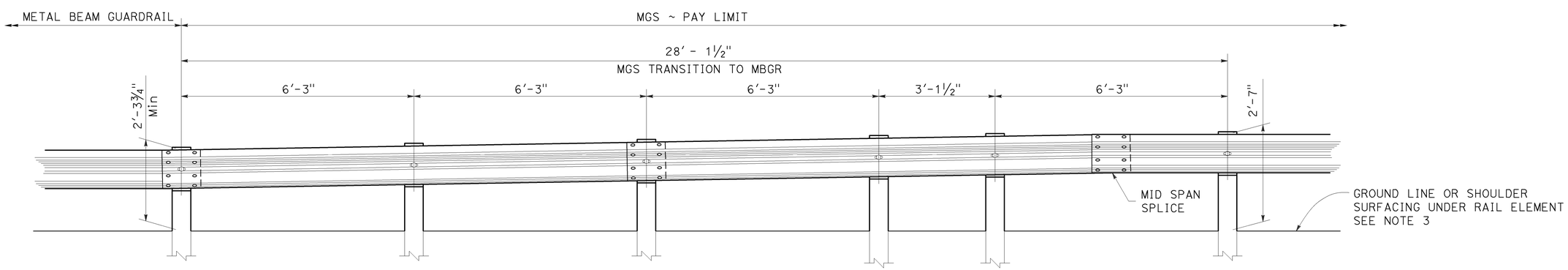

ELEVATION

STATE OF CALIFORNIA
DEPARTMENT OF TRANSPORTATION

MIDWEST GUARDRAIL SYSTEM TRANSITION TO METAL BEAM GUARDRAIL

NO SCALE

RSP A77U5 DATED JULY 19, 2013 SUPPLEMENTS THE STANDARD PLANS BOOK DATED 2010.

REVISED STANDARD PLAN RSP A77U5

2010 REVISED STANDARD PLAN RSP A77U5

Dist	COUNTY	ROUTE	POST MILES TOTAL PROJECT	SHEET No.	TOTAL SHEETS
05	SBt	156	0.0/3.0	80	113

REGISTERED CIVIL ENGINEER

July 19, 2013
PLANS APPROVAL DATE

REGISTERED PROFESSIONAL ENGINEER
Michael Janzen
No. 44788
Exp. 03-31-14
CIVIL
STATE OF CALIFORNIA

THE STATE OF CALIFORNIA OR ITS OFFICERS OR AGENTS SHALL NOT BE RESPONSIBLE FOR THE ACCURACY OR COMPLETENESS OF SCANNED COPIES OF THIS PLAN SHEET.

TO ACCOMPANY PLANS DATED 6-20-16

2010 REVISED STANDARD PLAN RSP A87A

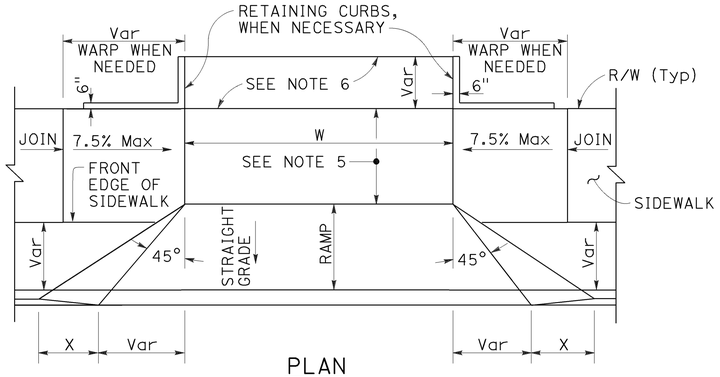

PLAN

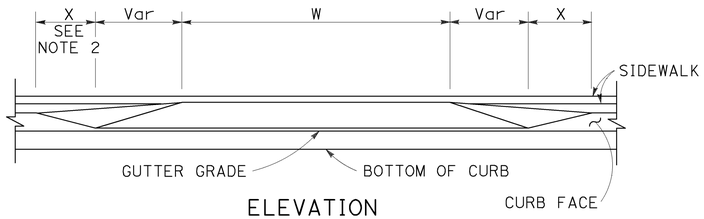

ELEVATION

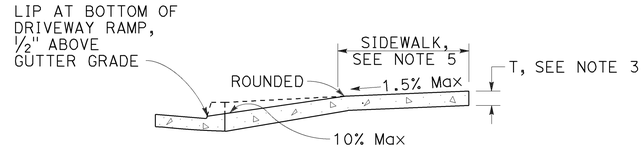

CASE A

Typical driveway, sidewalk not depressed

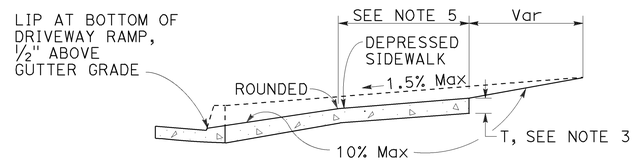

CASE B

Driveway with depressed sidewalk

SECTIONS

DRIVEWAYS

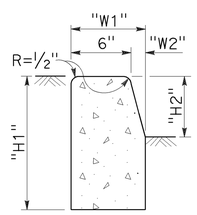

TYPE A1 CURBS

See Table A

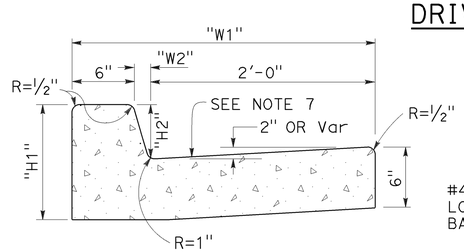

TYPE A2 CURBS

See Table A

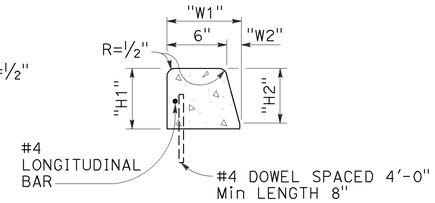

TYPE A3 CURBS

Superimposed on existing pavement
See Table A

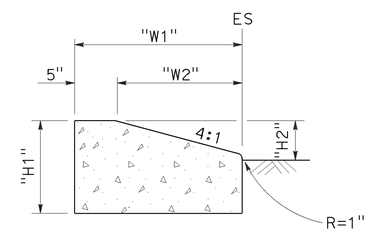

TYPE D CURBS

See Table A

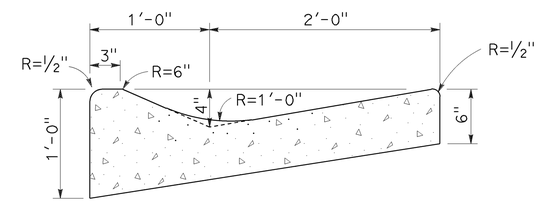

TYPE E CURB

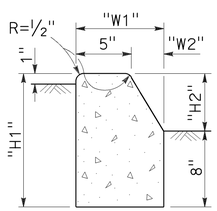

TYPE B1 CURBS

See Table A

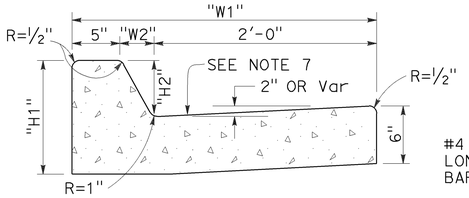

TYPE B2 CURBS

See Table A

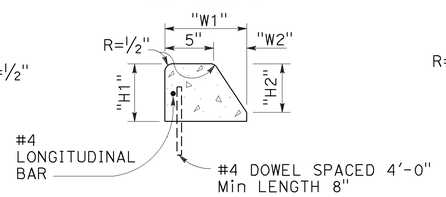

TYPE B3 CURBS

Superimposed on existing pavement
See Table A

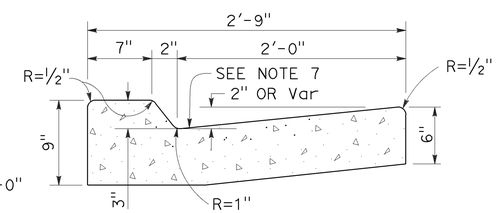

TYPE B4 CURBS

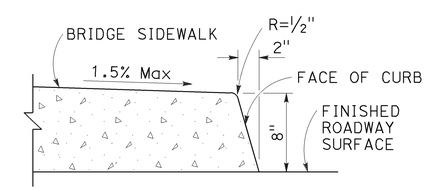

TYPE H CURB

On Bridges

CURBS

TABLE A

CURB TYPE	DIMENSIONS			
	"H1"	"H2"	"W1"	"W2"
A1-6	1'-2"	6"	7½"	1½"
A1-8	1'-4"	8"	8"	2"
A2-6	1'-0"	6"	2'-7½"	1½"
A2-8	1'-2"	8"	2'-8"	2"
A3-6	6"	5"	7¼"	1¼"
A3-8	8"	7"	7¾"	1¾"
B1-4	1'-0"	4"	7½"	2½"
B1-6	1'-2"	6"	9"	4"
B2-4	10"	4"	2'-7½"	2½"
B2-6	1'-0"	6"	2'-9"	4"
B3-4	4"	3"	7"	2"
B3-6	6"	5"	8½"	3½"
D-4	10"	4"	1'-6"	1'-1"
D-6	1'-0"	6"	2'-2"	1'-9"

CURB QUANTITIES

TYPE	CUBIC YARDS PER LINEAR FOOT
A1-6	0.02585
A1-8	0.03084
A2-6	0.05903
A2-8	0.06379
A3-6	0.01036
A3-8	0.01435
B1-4	0.02185
B1-6	0.02930
B2-4	0.05515
B2-6	0.06171
B3-4	0.00641
B3-6	0.01074
B4	0.05709
D-4	0.04083
D-6	0.06804
E	0.06661

NOTES:

1. Case A driveway section typically applies.
2. X=3'-0" except for curb heights over 10" where 4:1 slopes shall be used on curb slope.
3. Sidewalk and ramp thickness "T" at driveway shall be 4" for residental and 6" for commercial.
4. Difference in slope of the driveway ramp and the slope of a line between the gutter and a point on the roadway 5'-0" from gutter line shall not exceed 15%. Reduce driveway ramp slope, not gutter slope, where required.
5. Minimum width of clear passageway for sidewalk shall be 4'-2".
6. Retaining curbs and acquisition of construction easement may be necessary for narrow sidewalks or curb heights in excess of 6".
7. Across the pedestrian route at curb ramp locations, the gutter pan slope shall not exceed 1" of depth for each 2'-0" of width.

STATE OF CALIFORNIA
DEPARTMENT OF TRANSPORTATION

CURBS AND DRIVEWAYS

NO SCALE

RSP A87A DATED JULY 19, 2013 SUPERSEDES STANDARD PLAN A87A
DATED MAY 20, 2011 - PAGE 119 OF THE STANDARD PLANS BOOK DATED 2010.

REVISED STANDARD PLAN RSP A87A

7-8-13

Dist	COUNTY	ROUTE	POST MILES TOTAL PROJECT	SHEET No.	TOTAL SHEETS
05	SBt	156	0.0/3.0	81	113

REGISTERED CIVIL ENGINEER

January 15, 2016
PLANS APPROVAL DATE

REGISTERED PROFESSIONAL ENGINEER
Michael Janzen
No. 44788
Exp. 3-31-16
CIVIL
STATE OF CALIFORNIA

THE STATE OF CALIFORNIA OR ITS OFFICERS OR AGENTS SHALL NOT BE RESPONSIBLE FOR THE ACCURACY OR COMPLETENESS OF SCANNED COPIES OF THIS PLAN SHEET.

TO ACCOMPANY PLANS DATED 6-20-16

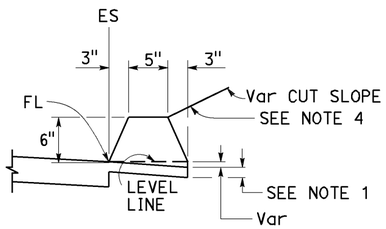

TYPE A
See Notes 3 and 5

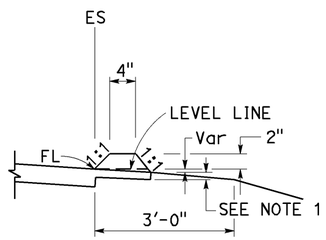

TYPE C

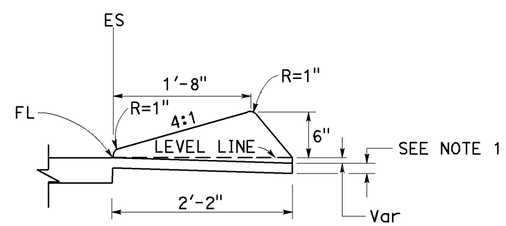

TYPE D

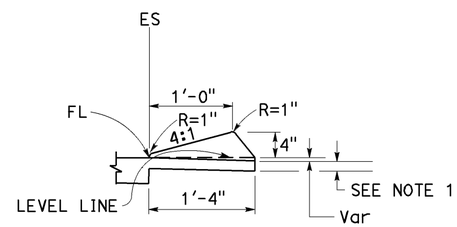

TYPE E

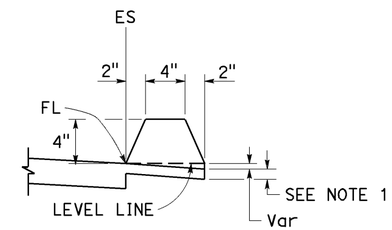

TYPE F
See Note 5

DIKES

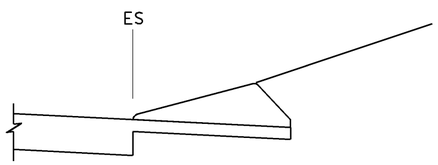

CASE C-1
Cut Slope

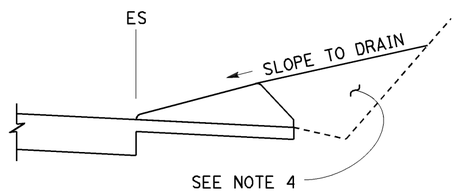

CASE C-2
Cut Slope

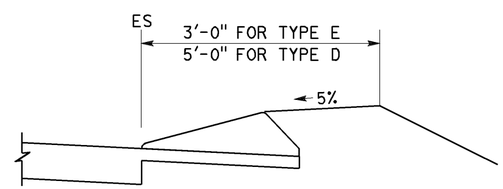

CASE F

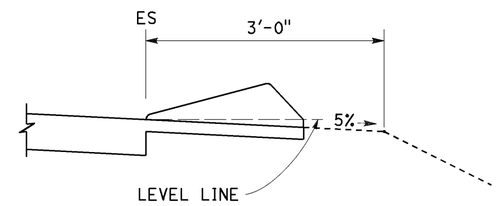

CASE R
See Note 2

TYPE D AND E BACKFILL DETAILS

NOTES:

1. For HMA shoulders only, extend top layer of HMA placed on the shoulder under dike with no joint at the ES. For projects with OGFC shoulders, do not extend OGFC under dike. See project plans for modified dike detail.
2. Case R applies to retrofit only projects where restrictive conditions do not provide enough width for Case F backfill.
3. Type A dike only to be used where restrictive slope conditions do not provide enough width to use Type D or Type E dike.
4. Fill and compact with excavated material to top of dike.
5. Use Type A or F dike, where dike is required with guardrail installations. See Revised Standard Plan RSP A77N4 for dike positioning details. See Revised Standard Plan RSP A77N3 for hinge point offsets with guardrail.

DIKE QUANTITIES

TYPE	CUBIC YARDS PER LINEAR FOOT
A	0.0135
C	0.0038
D	0.0293
E	0.0130
F	0.0066

Quantities based on 5% cross slope.

STATE OF CALIFORNIA
DEPARTMENT OF TRANSPORTATION

HOT MIX ASPHALT DIKES

NO SCALE

RSP A87B DATED JANUARY 15, 2016 SUPERSEDES RSP A87B DATED JULY 19, 2013 AND STANDARD PLAN A87B DATED MAY 20, 2011 - PAGE 120 OF THE STANDARD PLANS BOOK DATED 2010.

REVISED STANDARD PLAN RSP A87B

2010 REVISED STANDARD PLAN RSP A87B

11-17-15

Dist	COUNTY	ROUTE	POST MILES TOTAL PROJECT	SHEET No.	TOTAL SHEETS
05	SBt	156	0.0/3.0	82	113

REGISTERED CIVIL ENGINEER

July 15, 2016
PLANS APPROVAL DATE

Hector David Cordova No. C41957 Exp. 3-31-18 CIVIL — REGISTERED PROFESSIONAL ENGINEER — STATE OF CALIFORNIA

THE STATE OF CALIFORNIA OR ITS OFFICERS OR AGENTS SHALL NOT BE RESPONSIBLE FOR THE ACCURACY OR COMPLETENESS OF SCANNED COPIES OF THIS PLAN SHEET.

TO ACCOMPANY PLANS DATED 6-20-16

2010 REVISED STANDARD PLAN RSP A88A

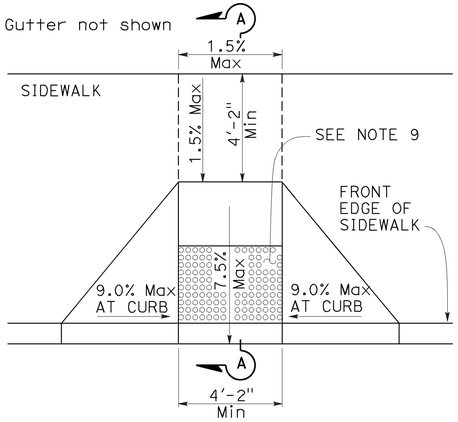

CASE A

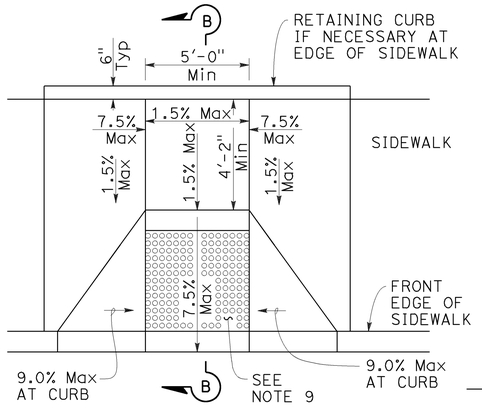

CASE B

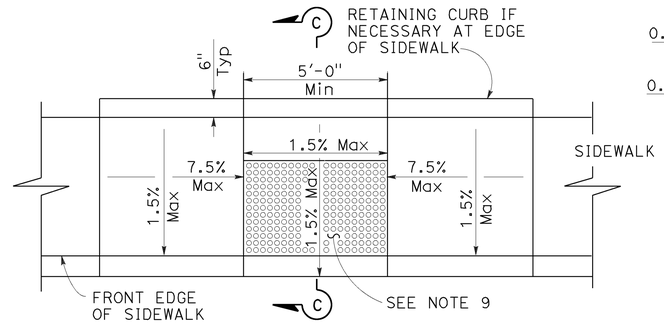

CASE C

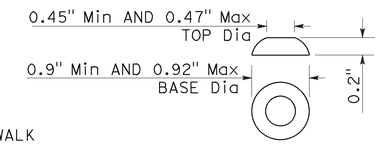

RAISED TRUNCATED DOME

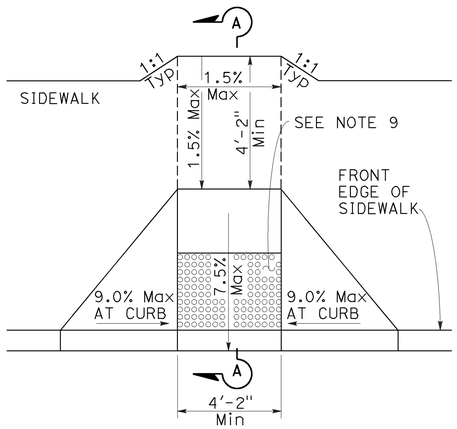

CASE D

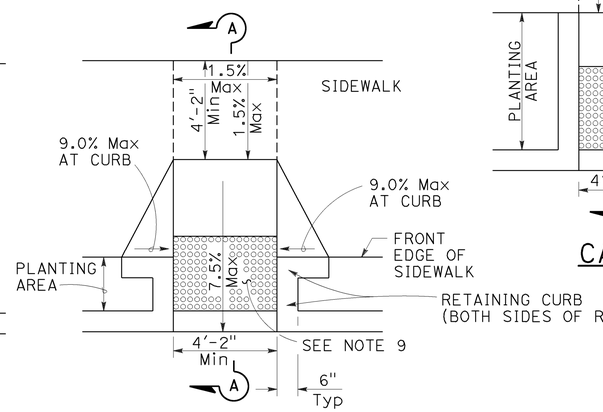

CASE E

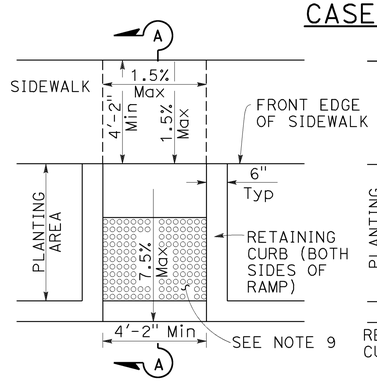

CASE F

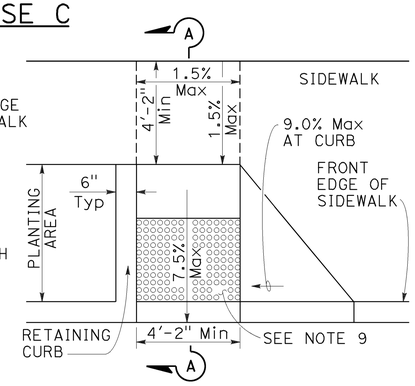

CASE G
See Note 4

SECTION A-A

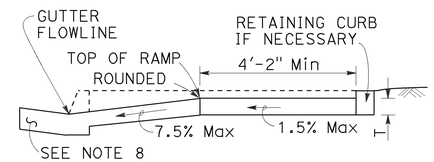

SECTION B-B
Depress entire sidewalk as required

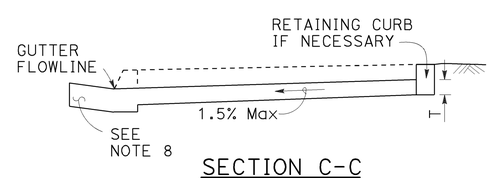

SECTION C-C

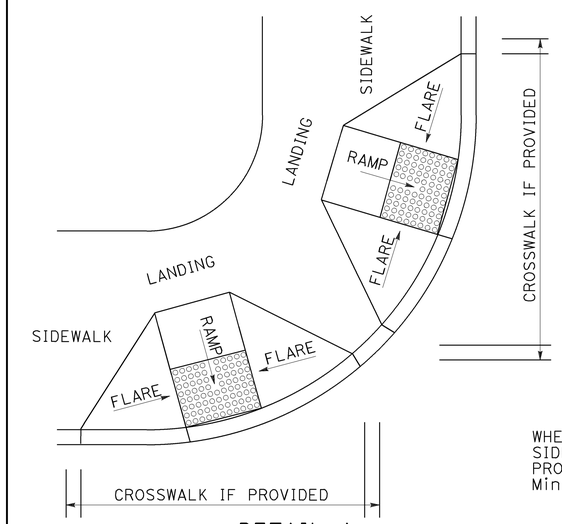

DETAIL A

TYPICAL TWO-RAMP CORNER INSTALLATION

See Note 1

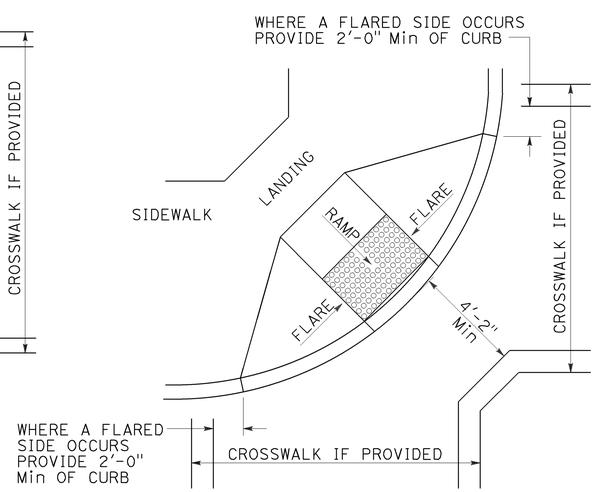

DETAIL B

TYPICAL ONE-RAMP CORNER INSTALLATION

See Notes 1 and 3

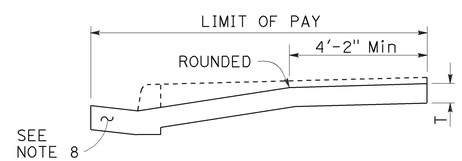

RETROFIT PAY LIMITS

Existing curb and sidewalk

NOTES:

1. As site conditions dictate, Case A through Case G curb ramps may be used for corner installations similar to those shown in Detail A and Detail B. The case of curb ramps used in Detail A do not have to be the same. Case A through Case G curb ramps also may be used at mid block locations, as site conditions dictate.
2. If distance from curb to back of sidewalk is too short to accommodate ramp and 4'-2" platform (landing) as shown in Case A, the sidewalk may be depressed longitudinally as in Case B, or C or may be widened as in Case D.
3. When ramp is located in center of curb return, crosswalk configuration must be similar to that shown for Detail B.
4. As site conditions dictate, the retaining curb side and the flared side of the Case G ramp shall be constructed in reversed position.
5. If located on a curve, the sides of the ramp need not be parallel, but the minimum width of the ramp shall be 4'-2".
6. Side slope of ramp flares vary uniformly from a maximum of 9.0% at curb to conform with longitudinal sidewalk slope adjacent to top of the ramp, except in Case C and Case F.
7. The adjacent surfaces at transitions at curb ramps to walks, gutters, and streets shall be at the same level.
8. Counter slopes of adjoining gutters and road surfaces immediately adjacent to and within 24 inches of the curb ramp shall not be steeper than 1:20 (5.0%). Gutter pan slope shall not exceed 1" of depth for each 2'-0" of width.
9. Curb ramps shall have a detectable warning surface that extends the full width and 3'-0" depth of the ramp. A 4'-0" wide detectable warning surface may be used on a 4'-2" wide curb ramp. Detectable Warning Surfaces shall conform to the requirements in the Standard Specifications.
10. Sidewalk and ramp thickness, "T", shall be 3½" minimum.
11. Utility pull boxes, manholes, vaults and all other utility facilities within the boundaries of the curb ramp will be relocated or adjusted to grade by the owner prior to, or in conjunction with, curb ramp construction.
12. Detectable warning surface may have to be cut to allow removal of utility covers while maintaining full detectable warning width and depth.

RAISED TRUNCATED DOME PATTERN (IN-LINE)

DETECTABLE WARNING SURFACE

See Note 9

STATE OF CALIFORNIA
DEPARTMENT OF TRANSPORTATION

CURB RAMP DETAILS

NO SCALE

RSP A88A DATED JULY 15, 2016 SUPERSEDES RSP A88A DATED JULY 3, 2015, RSP A88A DATED MARCH 21, 2014 AND RSP A88A DATED JULY 19, 2013 AND STANDARD PLAN A88A DATED MAY 20, 2011 - PAGE 121 OF THE STANDARD PLANS BOOK DATED 2010.

REVISED STANDARD PLAN RSP A88A

3-30-16

Dist	COUNTY	ROUTE	POST MILES TOTAL PROJECT	SHEET No.	TOTAL SHEETS
05	SBt	156	0.0/3.0	83	113

Srikanth Balasubramanian
REGISTERED CIVIL ENGINEER

October 30, 2015
PLANS APPROVAL DATE

REGISTERED PROFESSIONAL ENGINEER
Srikanth N. Balasubramanian
No. C56426
Exp. 6-30-17
CIVIL
STATE OF CALIFORNIA

THE STATE OF CALIFORNIA OR ITS OFFICERS OR AGENTS SHALL NOT BE RESPONSIBLE FOR THE ACCURACY OR COMPLETENESS OF SCANNED COPIES OF THIS PLAN SHEET.

TO ACCOMPANY PLANS DATED 6-20-16

ABBREVIATIONS:

TE TAPERED EDGE

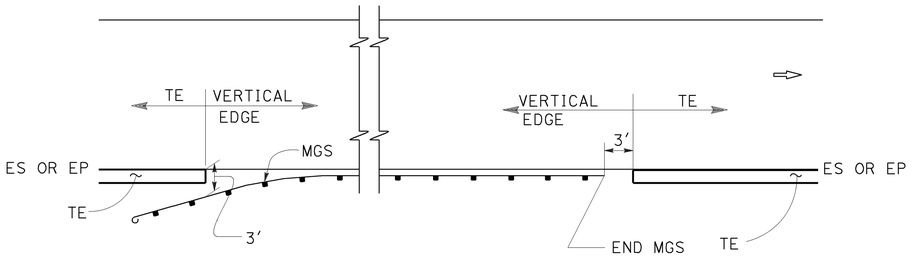

MGS

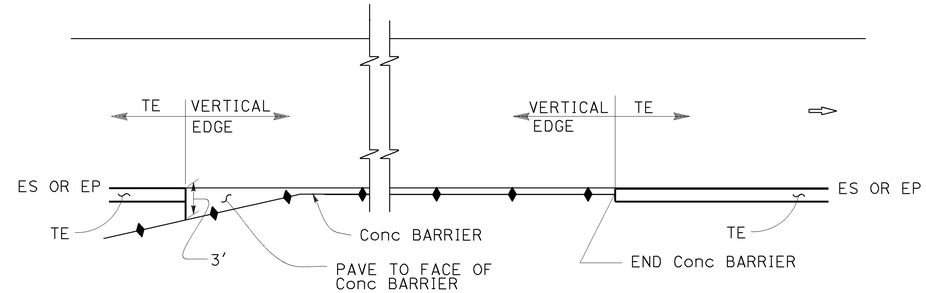

CONCRETE BARRIER

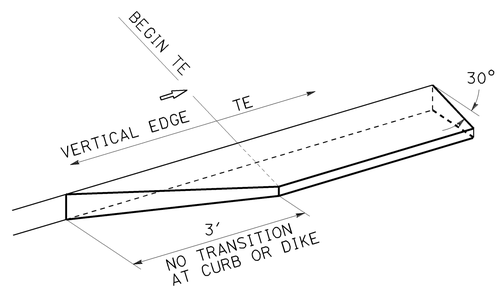

TRANSITION DETAIL FOR CONCRETE ONLY

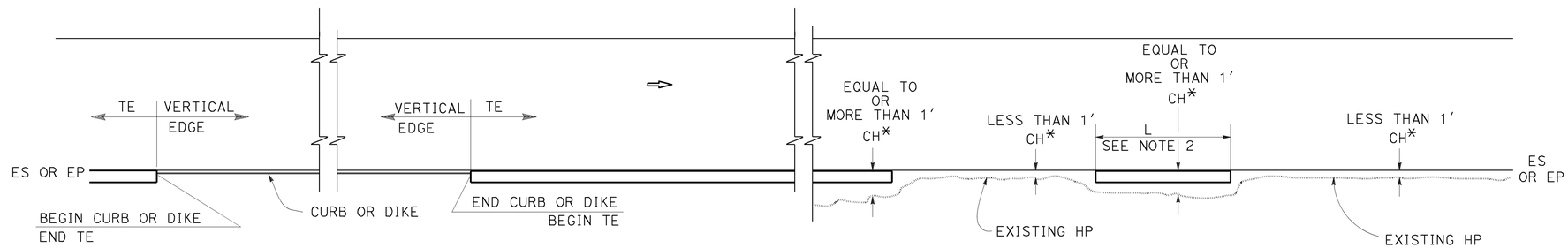

CURB OR DIKE

NARROW SIDE SLOPE

* CH = Distance from ES or EP to existing HP.

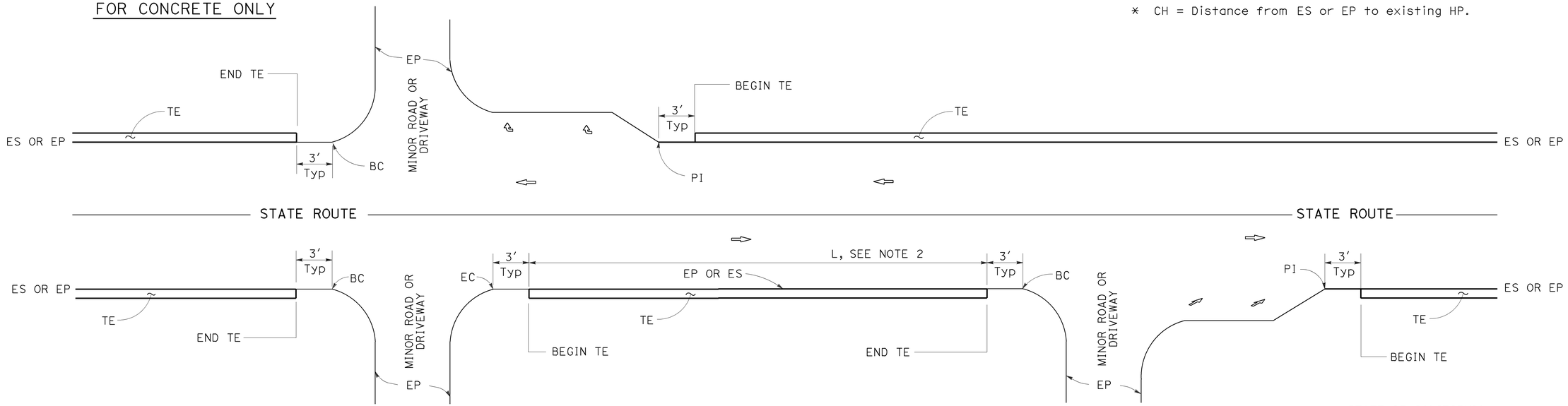

INTERTECTION

DRIVEWAY AND INTERSECTION

MINOR ROADWAY OR DRIVEWAY

STATE OF CALIFORNIA
DEPARTMENT OF TRANSPORTATION

PAVEMENT EDGE TREATMENTS

NO SCALE

NOTES:

1. For details not shown, see Revised Standard Plans RSP P75 and RSP P76.
2. Tapered edge is optional when L is less than 30′.

RSP P74 DATED OCTOBER 30, 2015 SUPERSEDES RSP P74 DATED NOVEMBER 15, 2013 AND RSP P74 DATED JANUARY 20, 2012 THAT SUPPLEMENTS THE STANDARD PLANS BOOK DATED 2010.

REVISED STANDARD PLAN RSP P74

2010 REVISED STANDARD PLAN RSP P74

10-13-15

Dist	COUNTY	ROUTE	POST MILES TOTAL PROJECT	SHEET No.	TOTAL SHEETS
05	SBt	156	0.0/3.0	84	113

REGISTERED CIVIL ENGINEER

October 30, 2015
PLANS APPROVAL DATE

REGISTERED PROFESSIONAL ENGINEER Srikanth N. Balasubramanian No. C56426 Exp. 6-30-17 CIVIL STATE OF CALIFORNIA

THE STATE OF CALIFORNIA OR ITS OFFICERS OR AGENTS SHALL NOT BE RESPONSIBLE FOR THE ACCURACY OR COMPLETENESS OF SCANNED COPIES OF THIS PLAN SHEET.

TO ACCOMPANY PLANS DATED 6-20-16

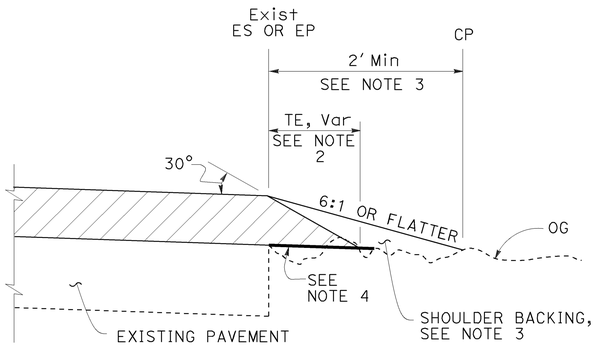

CASE A
Tapered Edge

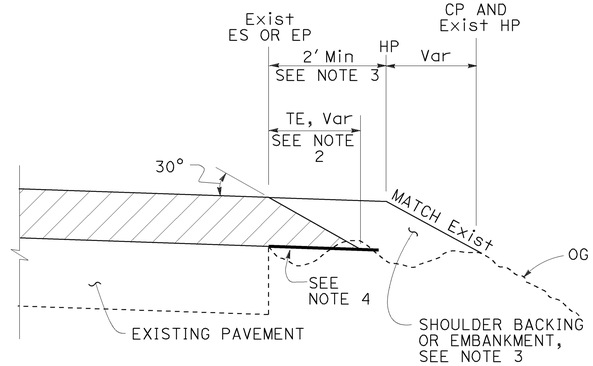

CASE B
Tapered Edge

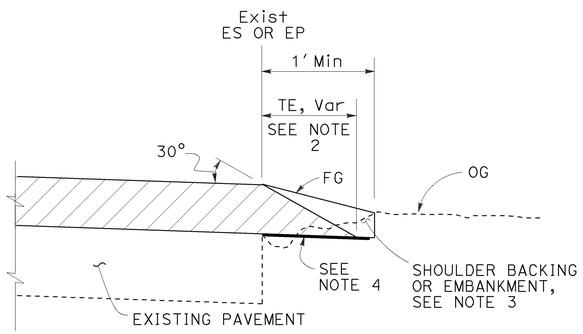

CASE C
Tapered Edge

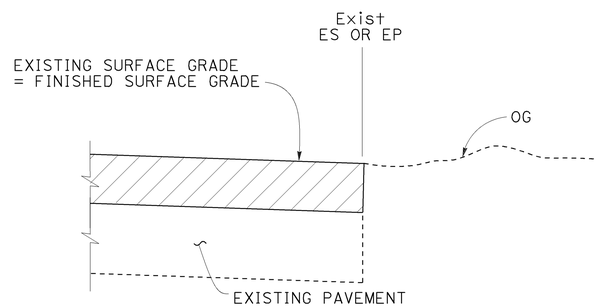

CASE D
Vertical Edge

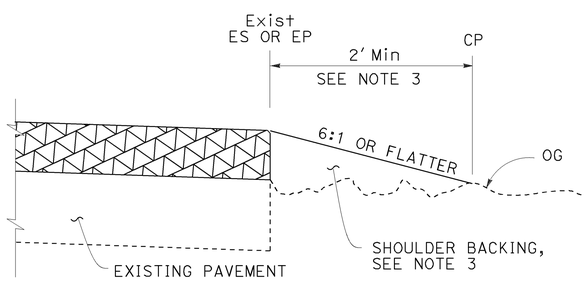

CASE E
Vertical Edge

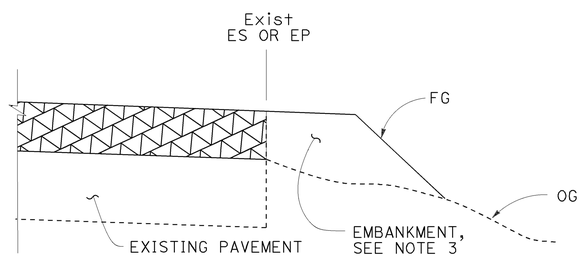

CASE F
Vertical Edge
* See Table A and Revised Std Plan RSP P74

LEGEND:

- HMA OVERLAY
- HMA OR CONCRETE OVERLAY
- CONCRETE OVERLAY

ABBREVIATIONS:

TE TAPERED EDGE
TT TOTAL THICKNESS OF TE

TABLE A
EDGE TREATMENT FOR VARIOUS OVERLAY THICKNESS AND CONDITIONS

	OVERLAY THICKNESS	
FIELD CONDITION	LESS THAN 0.15'	0.15' OR MORE
Exist SLOPE 6:1 OR FLATTER	CASE E	CASE A
Exist SLOPE 3:1 TO 6:1	CASE E	CASE B
Exist SLOPE STEEPER THAN 3:1	CASE F	CASE F
CUT SECTION (REPLACE, COLD PLANE, MILL PAVEMENT)	CASE D	CASE C

ADDITIONAL HMA OR CONCRETE QUANTITIES FOR TE/SIDE/MILE

TYPICAL CROSS SECTION	TT	TOTAL ADDITIONAL MATERIAL FOR TE/SIDE/MILE		
		HMA (TON)	CONCRETE (CY)*	CONCRETE (CY)**
TT	0.15'	7.7	NA	NA
	0.20'	13.7	NA	NA
	0.30'	30.9	NA	NA
	0.40'	54.9	NA	NA
	0.45'	69.4	NA	NA
TT 0.43'	0.50'	84.2	NA	NA
	0.60'	113.9	NA	NA
	0.70'	143.6	70.9	94.2
	0.80'	173.3	85.6	112.2
	0.90'	203.0	100.3	130.2
	1.00'	232.7	114.9	148.2
	1.10'	262.4	129.6	166.2
	1.20'	292.1	144.3	184.2

* For Detail "A"
** For Optional Detail "A"

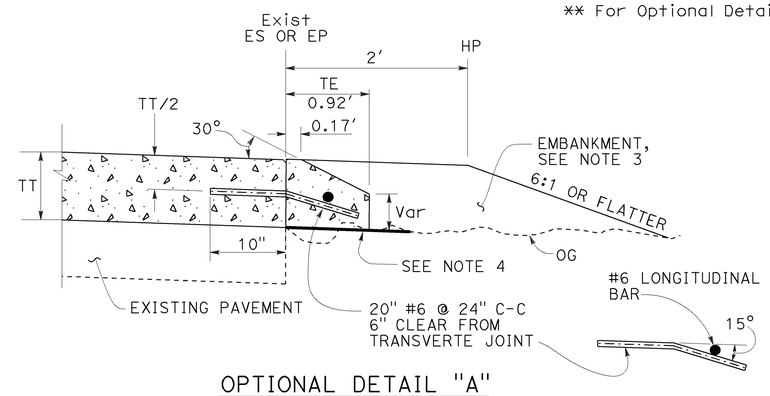

OPTIONAL DETAIL "A"
For concrete overlay
See Note 5

NOTES:

1. For limits of tapered edge and vertical edge treatments, see Revised Standard Plan RSP P74.
2. Details shown for HMA overlay thickness less than 0.43'. See Detail "A" for HMA overlay thickness more than 0.43' or concrete overlay.
3. For locations and limits of shoulder backing or embankment see project plans.
4. Grade existing ground to place tapered edge. 1' minimum width
5. Tapered edge transverse joint must match overlay transverse joint. End of #6 longitudinal bar must be 2" ±½" clear from transverse joint.
6. Tapered edge is not needed in the area of MGS, barrier, right turn lane and acceleration lane. See Revised Standard Plan RSP P74.

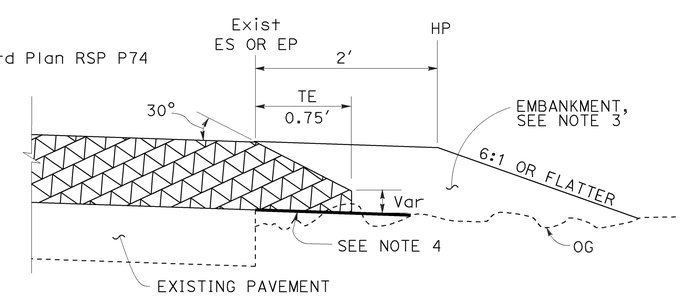

DETAIL "A"
For HMA overlay thickness more than 0.43' or concrete overlay

STATE OF CALIFORNIA
DEPARTMENT OF TRANSPORTATION

PAVEMENT EDGE TREATMENTS-OVERLAYS

NO SCALE

RSP P75 DATED OCTOBER 30, 2015 SUPERSEDES RSP P75 DATED NOVEMBER 15, 2013 AND RSP P75 DATED JANUARY 20, 2012 THAT SUPPLEMENTS THE STANDARD PLANS BOOK DATED 2010.

REVISED STANDARD PLAN RSP P75

2010 REVISED STANDARD PLAN RSP P75

7-2-15

Dist	COUNTY	ROUTE	POST MILES TOTAL PROJECT	SHEET No.	TOTAL SHEETS
05	SBt	156	0.0/3.0	85	113

Raymond Don Tsztoo
REGISTERED CIVIL ENGINEER

April 19, 2013
PLANS APPROVAL DATE

REGISTERED PROFESSIONAL ENGINEER Raymond Don Tsztoo No. C37332 Exp. 6-30-14 CIVIL STATE OF CALIFORNIA

THE STATE OF CALIFORNIA OR ITS OFFICERS OR AGENTS SHALL NOT BE RESPONSIBLE FOR THE ACCURACY OR COMPLETENESS OF SCANNED COPIES OF THIS PLAN SHEET.

TO ACCOMPANY PLANS DATED 6-20-16

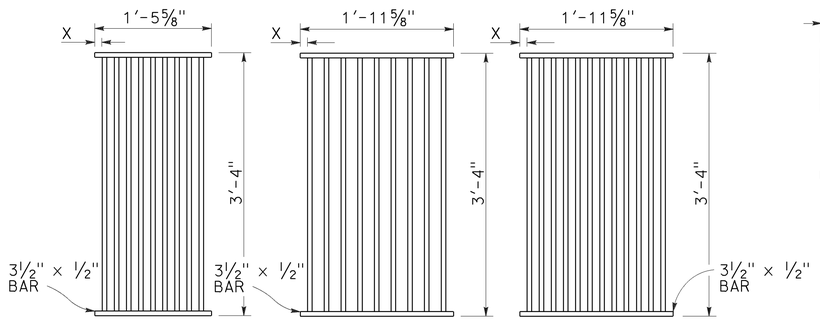

TYPE 18-9
1⅜" Clear spacing. Use within the roadbed on highways where bicycles and pedestrians are excluded.

TYPE 24-9
2" Clear spacing. Use in locations off the roadbed on all types of highways.

TYPE 24-12
1⅜" Clear spacing. Use within the roadbed on highways where bicycles and pedestrians are excluded.

RECTANGULAR GRATE DETAILS
(See table below)

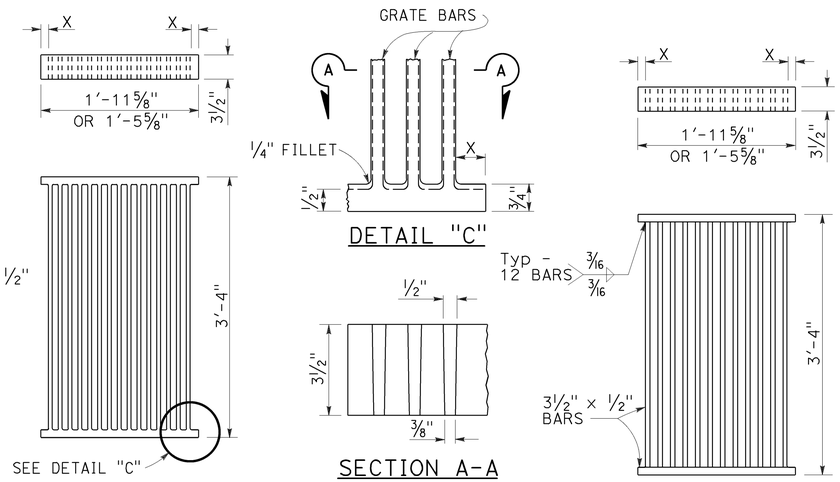

ALTERNATIVE CAST DUCTILE IRON GRATE OR CAST CARBON STEEL GRATE

ALTERNATIVE WELDED GRATE

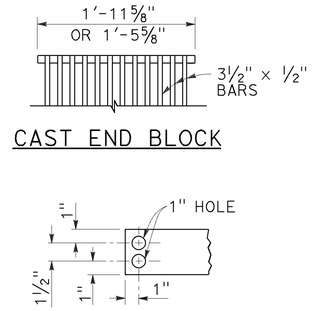

CAST END BLOCK

END OF BAR

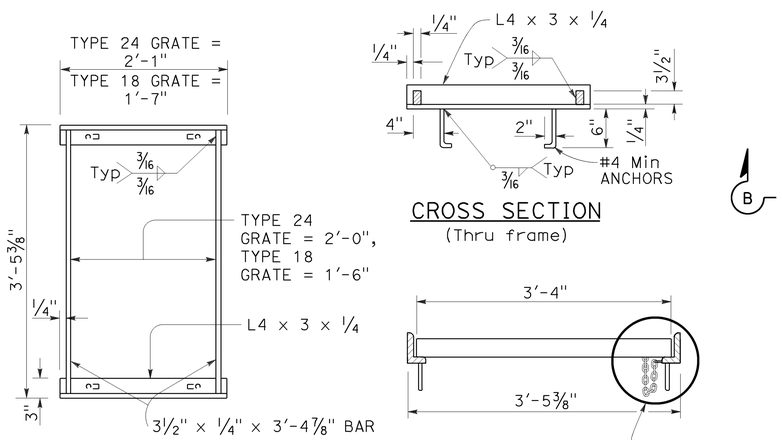

TYPICAL FRAME

CROSS SECTION
(Thru frame)

LONGITUDINAL SECTION
(Thru frame and grate)

RECTANGULAR FRAME DETAILS
(For all rectangular grates)

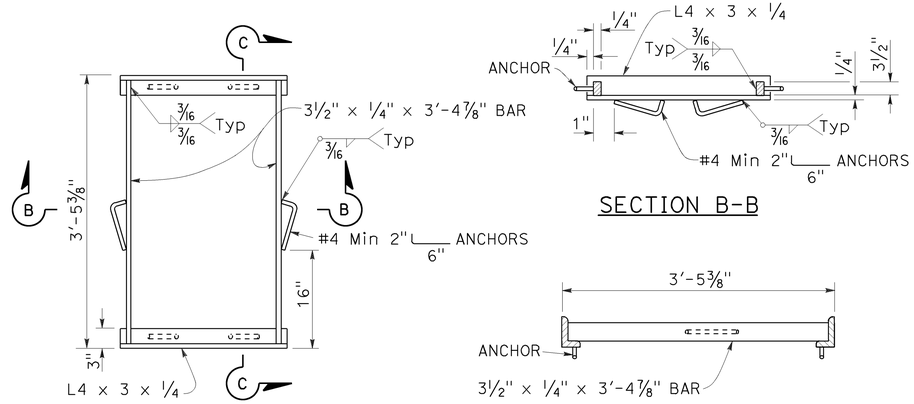

TYPICAL FRAME

SECTION B-B

SECTION C-C

ALTERNATIVE ANCHOR FOR RECTANGULAR FRAME
(For details not shown, See Rectangular Frame Details)

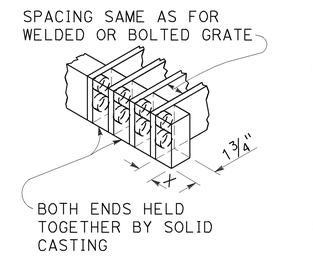

ALTERNATIVE CAST DUCTILE IRON OR CAST CARBON STEEL END BLOCK GRATE

NOTES:

1. Grate type numbers refer to approximate width of grate in inches and number of bars, respectively.
2. Contractor has the option of using cast ductile iron, cast carbon steel, welded, bolted, or cast end block grate.
3. Rounded top of bars optional on all grates.
4. Pipe inlets with a grate shall be placed so that bars parallel direction of principle surface flow.
5. Complete joint penetration butt welds may be substituted for the fillet welds on all anchors.
6. Standard square, hexagon, round or equivalent headed anchors may be substituted for the right angle hooks on the anchors shown on this plan.
7. Grate and frame weights are based on welded grates (weights of face angles, steps, protection bars, etc. are not included).
8. Connect chain to grate and frame only at locations shown on the plans. When chain is required, do not use cast ductile iron grates.

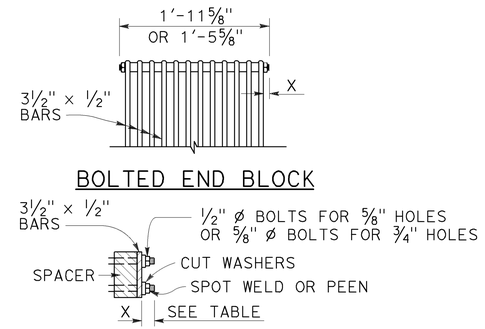

ALTERNATIVE BOLTED GRATE

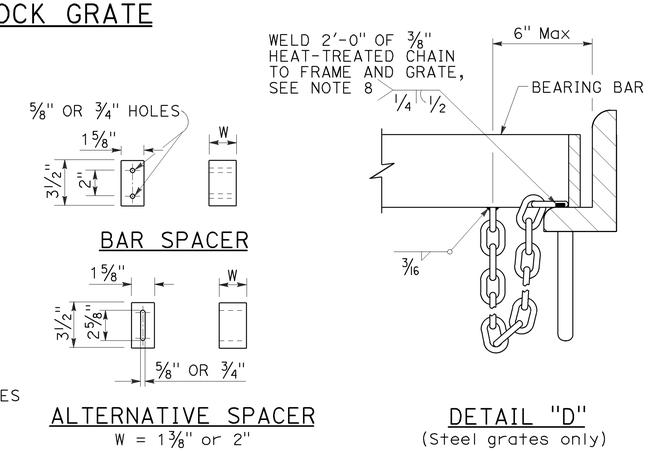

GRATE BAR SPACING TABLE

TYPE	No. OF BARS	CLEAR BAR SPACING	X
18-9	9	1⅜"	1 1/16"
24-9	9	2"	1 9/16"
24-12	12	1⅜"	1¼"

INLET TYPE	COVER TYPE	WEIGHT LB
OS	PLATE	174
OL-7	PLATE	170
OL-10	PLATE	170
OL-14	PLATE	170
OL-21	PLATE	170
OCP	PLATE	112
OCPI	PLATE	112
OCPI	REDWOOD	42
OMP	PLATE	177
OMPI	PLATE	177

INLET TYPE	GRATE TYPE	No. OF GRATES	WEIGHT LB
GDO	24-12	2	634
GOL-7	24-12	1	326
GOL-10	24-12	1	326
GO,G1,G2,G3,G4 (TYPE 24)	24-9	1	263
	24-12	1	326
G4 (TYPE 18),G5,G6	18-9	1	249
GT1	18-9	2	498
GT2	18-9	2	498
GT3	24-12	2	652
GT4	24-12	2	652
TRASH RACK			22
GRATE CHAIN			3

BASIS FOR Misc IRON & STEEL FINAL PAY WEIGHTS FOR DRAINAGE INLETS
(See Note 7)

STATE OF CALIFORNIA
DEPARTMENT OF TRANSPORTATION

GRATE DETAILS No. 1

NO SCALE

RSP D77A DATED APRIL 19, 2013 SUPERSEDES RSP D77A DATED JULY 20, 2012 AND STANDARD PLAN D77A DATED MAY 20, 2011 - PAGE 164 OF THE STANDARD PLANS BOOK DATED 2010.

REVISED STANDARD PLAN RSP D77A

2010 REVISED STANDARD PLAN RSP D77A

4-4-13

Dist	COUNTY	ROUTE	POST MILES TOTAL PROJECT	SHEET No.	TOTAL SHEETS
05	SBt	156	0.0/3.0	86	113

REGISTERED CIVIL ENGINEER

April 19, 2013
PLANS APPROVAL DATE

Raymond Don Tsztoo No. C37332 Exp. 6-30-14 CIVIL — REGISTERED PROFESSIONAL ENGINEER — STATE OF CALIFORNIA

THE STATE OF CALIFORNIA OR ITS OFFICERS OR AGENTS SHALL NOT BE RESPONSIBLE FOR THE ACCURACY OR COMPLETENESS OF SCANNED COPIES OF THIS PLAN SHEET.

TO ACCOMPANY PLANS DATED 6-20-16

2010 REVISED STANDARD PLAN RSP D77B

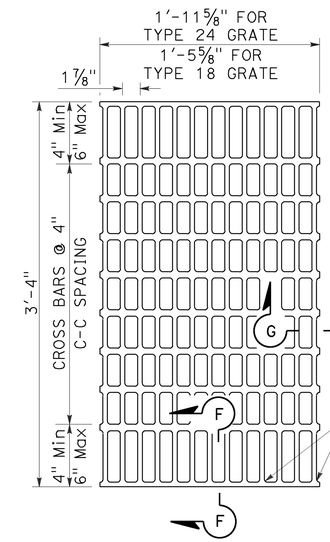

NOTES:

Bearing bars to be 3½" × ¼" bars on 1⅞" centers.

⅜"± ø Cross bars may be fillet welded, resistance welded or electroforged to bearing bars.

Weight of Type 24 grate = 141 LBS.

Weight of Type 18 grate = 107 LBS. (Type 24 grate shown).

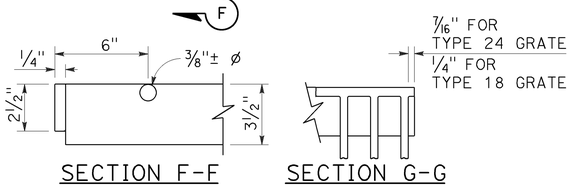

SECTION F-F SECTION G-G

TYPE 18-10 AND 24-13 GRATE

(Welded Steel)

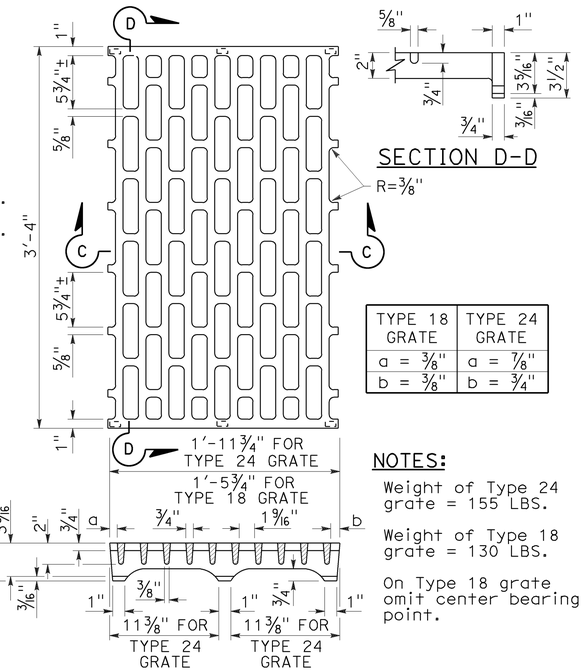

SECTION D-D

NOTES:

Weight of Type 24 grate = 155 LBS.

Weight of Type 18 grate = 130 LBS.

On Type 18 grate omit center bearing point.

TYPE 18 GRATE	TYPE 24 GRATE
a = ⅜"	a = ⅞"
b = ⅜"	b = ¾"

SECTION C-C

TYPE 18-8C AND 24-10C GRATE

(Cast ductile iron)

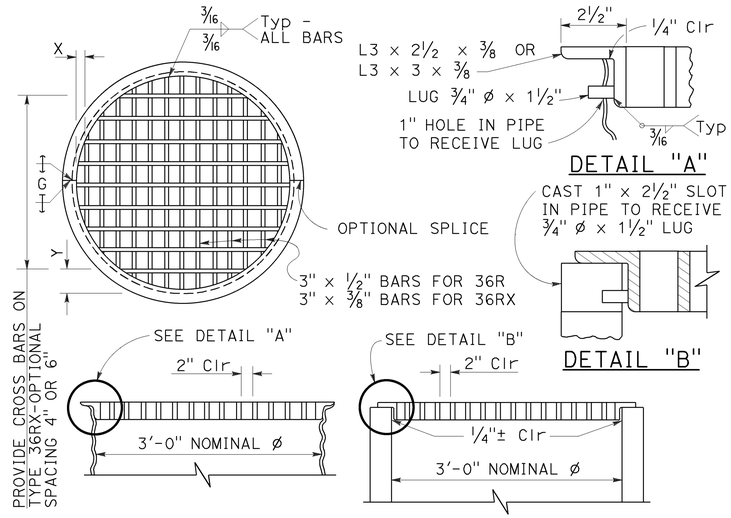

TYPE 36R AND 36RX GRATE DETAILS

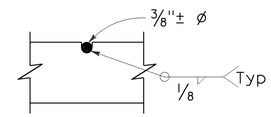

⅜"± ø Cross bars may be fillet welded, resistance welded or electroforged to bearing bars.

CROSS BAR DETAIL TYPE 36RX GRATE (WELDED STEEL)

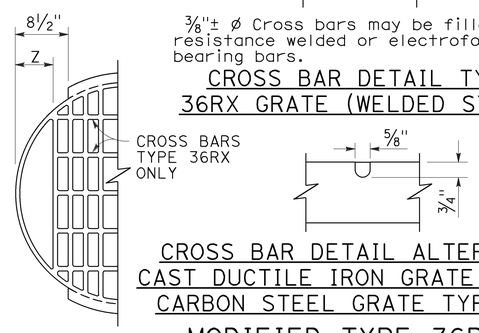

CROSS BAR DETAIL ALTERNATIVE CAST DUCTILE IRON GRATE OR CAST CARBON STEEL GRATE TYPE 36RX

MODIFIED TYPE 36R AND 36RX GRATE FOR ODI INLET

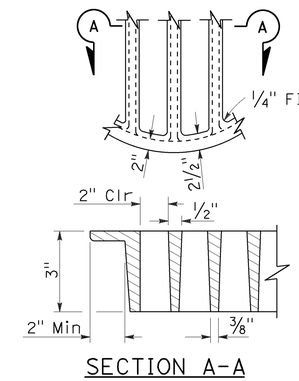

SECTION A-A

ALTERNATIVE CAST DUCTILE IRON GRATE OR CAST CARBON STEEL GRATE TYPE 36R AND 36RX

BASIS FOR Misc IRON AND STEEL FINAL PAY WEIGHTS FOR DRAINAGE INLETS

INLET TYPE	GRATE TYPE	No. OF GRATES	WEIGHT LB
GDO (SEE NOTE 4)	24-10C	2	391
	24-10S	2	456
	24-12X	2	473
	24-13	2	374
GO,GOL,G1,G2, G3,G4 (TYPE 24)	24-10C	1	202
	24-10S	1	229
	24-12X	1	239
	24-13	1	188
G4 (TYPE 18) G5,G6	18-8S	1	187
	18-9X	1	187
	18-10	1	149
GT1,GT2	18-8S	2	374
	18-9X	2	374
	18-10	2	298
GT3,GT4	24-10C	2	404
	24-10S	2	458
	24-12X	2	478
	24-13	2	376
ODI	36RX (Mod)	1	196
GMP,GCP,GCPI	36RX	1	215
ODI	36R (Mod)	1	220
GMP,GCP,GCPI	36R	1	236
TRASH RACK			22
GRATE CHAIN			3

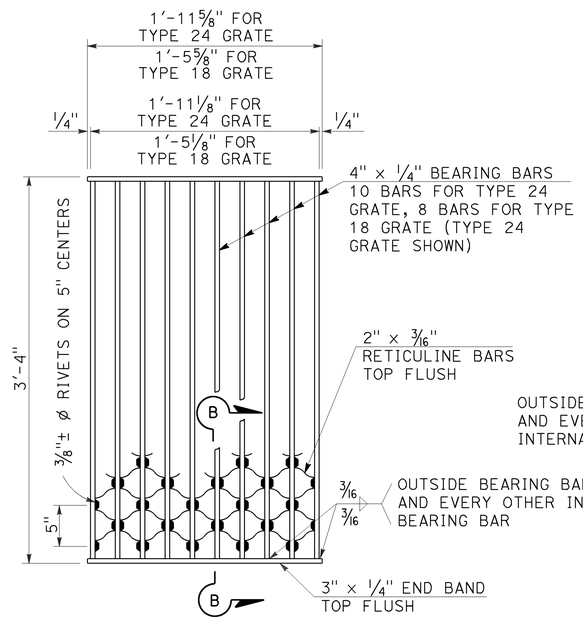

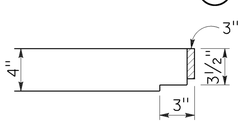

NOTES:

Weight of Type 24 grate = 182 LBS.
Weight of Type 18 grate = 145 LBS.

SECTION B-B

TYPE 18-8S AND 24-10S GRATE

(Welded Steel) Reticuline type

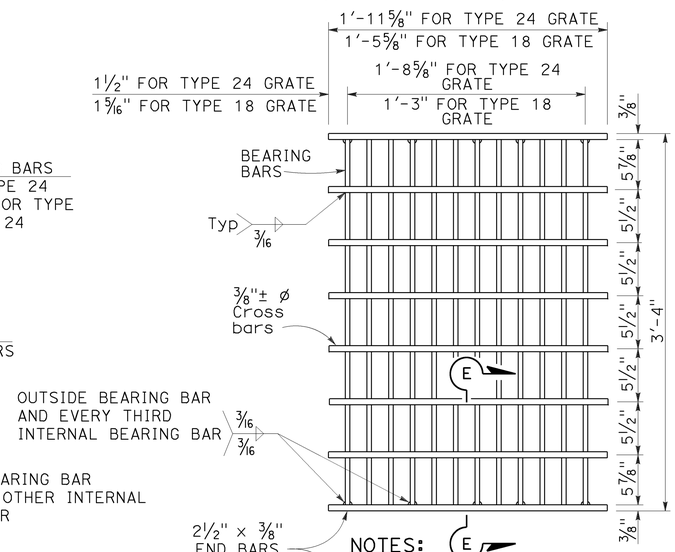

SECTION E-E

NOTES:

Bearing bars to be 3½" × ⅜" bars on 1⅞" centers.

12 Bars for Type 24 grate - 9 bars for Type 18 grates. (Type 24 grate shown).

Weight of Type 24 grate = 192 LBS.

Weight of Type 18 grate = 145 LBS.

⅜"± ø Cross bars may be fillet welded, resistance welded or electroforged to bearing bars.

TYPE 18-9X AND 24-12X GRATE

(Welded Steel)

NOTES:

1. When alternative grates are allowed - Final pay based on alternative with the lesser weight.
2. Use frame shown on Standard Plan D74A, D74B or RSP D77A as appropriate.
3. When Type 24-10S, 24-12X or 24-13 grates are used with GDO Inlets, a ¼" × 3½" × 3'-4⅞" steel bar shall be welded across the center of inlet frame to separate the individual grates.
4. See Revised Standard Plan RSP D77A for connecting chain to welded grate and frame. When chain is required, do not use cast ductile iron grate.

GRATE BAR SPACING TABLE

TYPE	No. OF BARS	CLEAR BAR SPACING	X	Y 4" SPACING	Y 6" SPACING	Z
36R	13	2"	2⅛"	-	-	-
36RX (STEEL)	15	2"	9/16"	3¾"	5¾"	-
36RX (CAST)	13	2"	2⅛"	3¾"	5¾"	-
36R Mod	12	2"	2⅛"	-	-	5"
36RX Mod (STEEL)	13	2"	9/16"	3¾"	5¾"	5 11/16"
36RX Mod (CAST)	12	2"	2⅛"	3¾"	5¾"	5"

STATE OF CALIFORNIA
DEPARTMENT OF TRANSPORTATION

GRATE DETAILS No. 2

NO SCALE

RSP D77B DATED APRIL 19, 2013 SUPERSEDES RSP D77B DATED JULY 20, 2012 AND STANDARD PLAN D77B DATED MAY 20, 2011 - PAGE 165 OF THE STANDARD PLANS BOOK DATED 2010.

REVISED STANDARD PLAN RSP D77B

4-4-13

Dist	COUNTY	ROUTE	POST MILES TOTAL PROJECT	SHEET No.	TOTAL SHEETS
05	SBt	156	0.0/3.0	87	113

REGISTERED CIVIL ENGINEER

July 19, 2013
PLANS APPROVAL DATE

REGISTERED PROFESSIONAL ENGINEER
Gurinderpal Bhullar
No. C48815
Exp. 9-30-14
CIVIL
STATE OF CALIFORNIA

THE STATE OF CALIFORNIA OR ITS OFFICERS OR AGENTS SHALL NOT BE RESPONSIBLE FOR THE ACCURACY OR COMPLETENESS OF SCANNED COPIES OF THIS PLAN SHEET.

TO ACCOMPANY PLANS DATED 6-20-16

2010 REVISED STANDARD PLAN RSP T9

TABLE 1

TAPER LENGTH CRITERIA AND CHANNELIZING DEVICE SPACING

SPEED (S)	MINIMUM TAPER LENGTH * FOR WIDTH OF OFFSET 12 FEET (W)				MAXIMUM CHANNELIZING DEVICE SPACING		
					X	Y	Z **
	TANGENT 2L	MERGING L	SHIFTING L/2	SHOULDER L/3	TAPER	TANGENT	CONFLICT
mph	ft	ft	ft	ft	ft	ft	ft
20	160	80	40	27	20	40	10
25	250	125	63	42	25	50	12
30	360	180	90	60	30	60	15
35	490	245	123	82	35	70	17
40	640	320	160	107	40	80	20
45	1080	540	270	180	45	90	22
50	1200	600	300	200	50	100	25
55	1320	660	330	220	55	110	27
60	1440	720	360	240	60	120	30
65	1560	780	390	260	65	130	32
70	1680	840	420	280	70	140	35

* - For other offsets, use the following merging taper length formula for L:
For speed of 40 mph or less, $L = WS^2/60$
For speed of 45 mph or more, $L = WS$

Where: L = Taper length in feet
W = Width of offset in feet
S = Posted speed limit, off-peak 85th-percentile speed prior to work starting, or the anticipated operating speed in mph

** - Use for taper and tangent sections where there are no pavement markings or where there is a conflict between existing pavement markings and channelizers (CA).

TABLE 2

LONGITUDINAL BUFFER SPACE AND FLAGGER STATION SPACING

SPEED *	Min D **	DOWNGRADE Min D ***		
		-3%	-6%	-9%
mph	ft	ft	ft	ft
20	115	116	120	126
25	155	158	165	173
30	200	205	215	227
35	250	257	271	287
40	305	315	333	354
45	360	378	400	427
50	425	446	474	507
55	495	520	553	593
60	570	598	638	686
65	645	682	728	785
70	730	771	825	891

* - Speed is posted speed limit, off-peak 85th-percentile speed prior to work starting, or the anticipated operating speed in mph

** - Longitudinal buffer space or flagger station spacing

*** - Use on sustained downgrade steeper than -3 percent and longer than 1 mile.

TABLE 3

ADVANCE WARNING SIGN SPACING

ROAD TYPE	DISTANCE BETWEEN SIGNS *		
	A	B	C
	ft	ft	ft
URBAN - 25 mph OR LESS	100	100	100
URBAN - MORE THAN 25 mph TO 40 mph	250	250	250
URBAN - MORE THAN 40 mph	350	350	350
RURAL	500	500	500
EXPRESSWAY / FREEWAY	1000	1500	2640

* - The distances are approximate, are intended for guidance purposes only, and should be applied with engineering judgment. These distances should be adjusted by the Engineer for field conditions, if necessary, by increasing or decreasing the recommmended distances.

STATE OF CALIFORNIA
DEPARTMENT OF TRANSPORTATION

TRAFFIC CONTROL SYSTEM TABLES FOR LANE AND RAMP CLOSURES

NO SCALE

RSP T9 DATED JULY 19, 2013 SUPERSEDES RSP T9 DATED APRIL 19, 2013 THAT SUPPLEMENTS THE STANDARD PLANS BOOK DATED 2010.

REVISED STANDARD PLAN RSP T9

TO ACCOMPANY PLANS DATED 6-20-16

Dist	COUNTY	ROUTE	POST MILES TOTAL PROJECT	SHEET No.	TOTAL SHEETS
05	SBt	156	0.0/3.0	88	113

REGISTERED CIVIL ENGINEER

April 19, 2013
PLANS APPROVAL DATE

REGISTERED PROFESSIONAL ENGINEER Gurinderpal Bhullar No. C48815 Exp. 9-30-14 CIVIL STATE OF CALIFORNIA

THE STATE OF CALIFORNIA OR ITS OFFICERS OR AGENTS SHALL NOT BE RESPONSIBLE FOR THE ACCURACY OR COMPLETENESS OF SCANNED COPIES OF THIS PLAN SHEET.

NOTES:

See Revised Standard Plan RSP T9 for tables.

Use cone spacing X for taper segment, Y for tangent segment or Z for conflict situations, as approriate, per Table 1, unless X, Y, or Z cone spacing is shown on this sheet.

Unless otherwise specified in the special provisions, all temporary warning signs shall have black legend on fluorescent orange background.

California codes are designated by (CA). Otherwise, Federal (MUTCD) codes are shown.

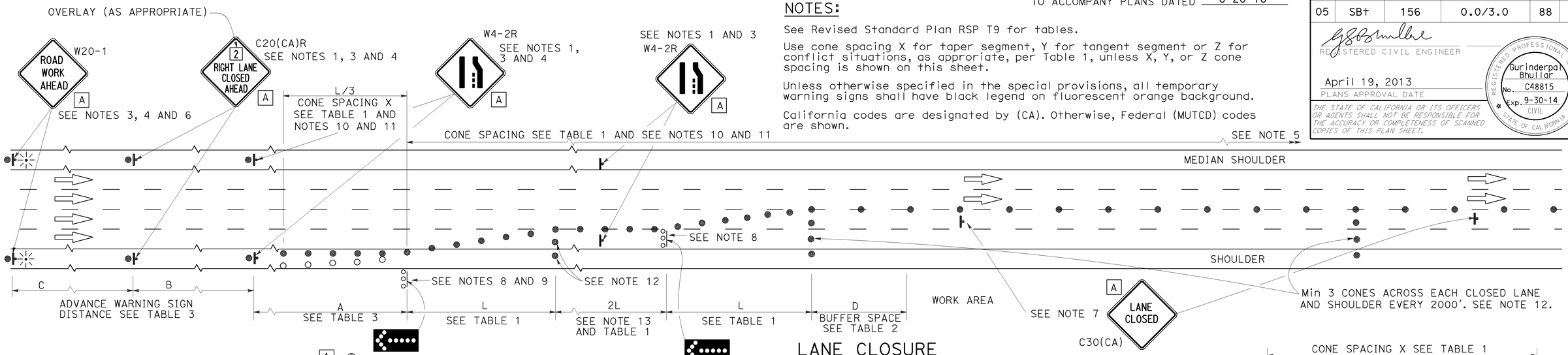

LANE CLOSURE

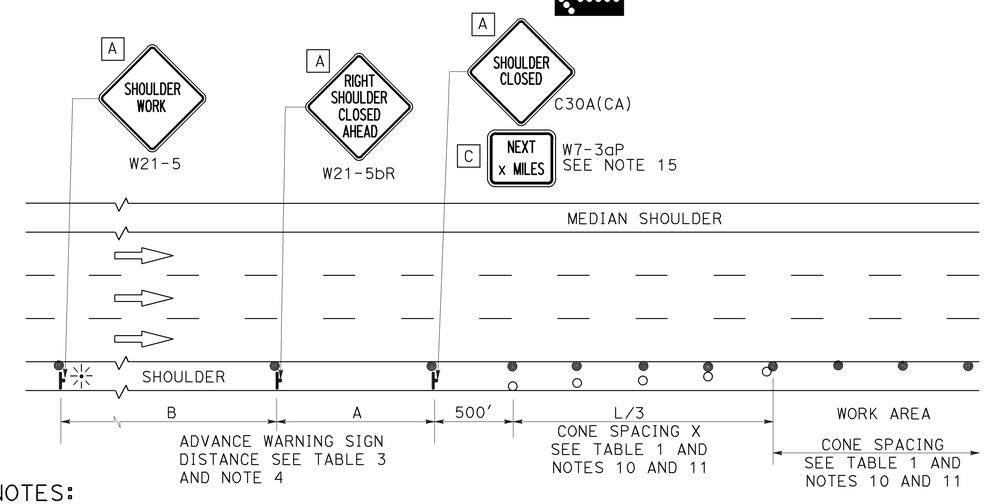

SHOULDER CLOSURE

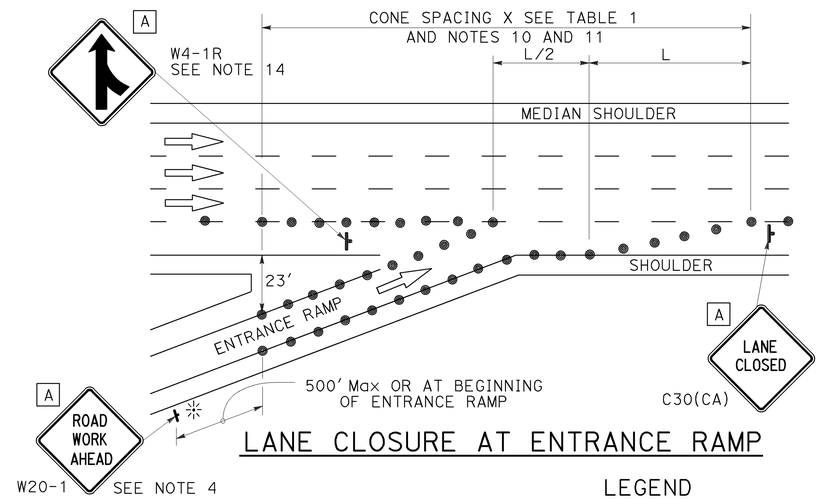

LANE CLOSURE AT ENTRANCE RAMP

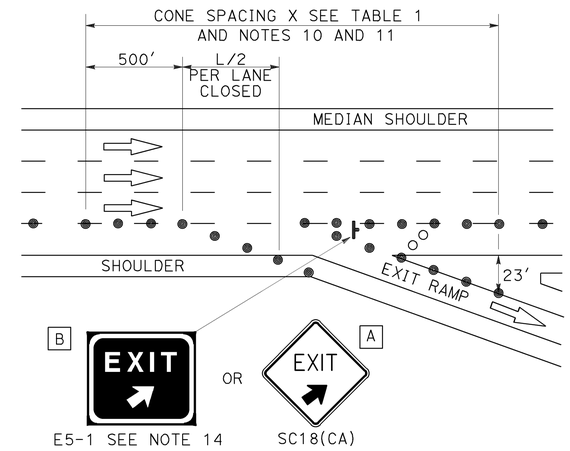

LANE CLOSURE AT EXIT RAMP

NOTES:

1. Median lane closures shall conform to the details as shown except that C20(CA)L and W4-2L signs shall be used.
2. At least one person shall be assigned to provide full time maintenance of traffic control devices for lane closures.
3. Duplicate sign installations are not required:
   a) On opposite shoulder if at least one-half of the available lanes remain open to traffic.
   b) In the median if the width of the median shoulder is less than 8' and the outside lanes are to be closed.
4. Each advance warning sign on each side of the roadway shall be equipped with at least two flags for daytime closure. Each flag shall be at least 16" x 16" in size and shall be orange or fluorescent red-orange in color. Flashing beacons shall be placed at the locations indicated for lane closure during hours of darkness.
5. A G20-2 "END ROAD WORK" sign, with minimum size of 48" x 24" as appropriate, shall be placed at the end of the lane closure unless the end of work area is obvious or ends within a larger project's limits.
6. If the W20-1 sign would follow within 2000' of a stationary W20-1 or G20-1 "ROAD WORK NEXT _____ MILES", use a C20(CA) sign for the first advance warning sign.
7. Place a C30(CA) sign every 2000' throughout length of lane closure.
8. One flashing arrow sign for each lane closed. The flashing arrow signs shall be Type I.
9. A minimum 1500' of sight distance shall be provided where possible for vehicles approaching the first flashing arrow sign. Lane closures shall not begin at top of crest vertical curve or on a horizontal curve.
10. All cones used for lane closures during the hours of darkness shall be fitted with retroreflective bands (or sleeves) as specified in the specifications.
11. Portable delineators, placed at one-half the spacing indicated for traffic cones may be used instead of cones for daytime closures only.
12. Unless otherwise specified in the special provisions, a minimum of 3 cones shall be placed transversely across each closed lane and shoulder at each location where a taper across a traffic lane ends and every 2000' as shown on the "Lane Closure" detail. Two Type II barricades may be used instead of the 3 cones. The transverse alignment of the cones or barricades on the closed shoulder may be shifted from the transverse alignment to provide access to the work.
13. Unless otherwise specified in the special provisions, the 2L tangent shown along lane lines shall be used between the L tapers required for each closed traffic lane.
14. Unless otherwise specified in the special provisions, the E5-1 or SC18(CA) and W4-1 signs shall be used as shown.
15. A W7-3aP "NEXT____ MILES" plaque must be used if theshoulder closure extends beyond the distance that can be perceived by road users.

LEGEND

- TRAFFIC CONE
- TRAFFIC CONE (OPTIONAL TAPER)
- TEMPORARY TRAFFIC CONTROL SIGN
- FLASHING ARROW SIGN (FAS)
- FAS SUPPORT OR TRAILER
- PORTABLE FLASHING BEACON

SIGN PANEL SIZE (Min)

A	48" x 48"
B	72" x 60"
C	36" x 30"

STATE OF CALIFORNIA
DEPARTMENT OF TRANSPORTATION

TRAFFIC CONTROL SYSTEM FOR LANE CLOSURE ON FREEWAYS AND EXPRESSWAYS

NO SCALE

RSP T10 DATED APRIL 19, 2013 SUPERSEDES STANDARD PLAN T10 DATED MAY 20, 2011 - PAGE 237 OF THE STANDARD PLANS BOOK DATED 2010.

REVISED STANDARD PLAN RSP T10

2010 REVISED STANDARD PLAN RSP T10

12-18-12

TO ACCOMPANY PLANS DATED 6-20-16

Dist	COUNTY	ROUTE	POST MILES TOTAL PROJECT	SHEET No.	TOTAL SHEETS
05	SBt	156	0.0/3.0	89	113

REGISTERED CIVIL ENGINEER

April 19, 2013
PLANS APPROVAL DATE

REGISTERED PROFESSIONAL ENGINEER Gurinderpal Bhullar No. C48815 Exp. 9-30-14 CIVIL STATE OF CALIFORNIA

THE STATE OF CALIFORNIA OR ITS OFFICERS OR AGENTS SHALL NOT BE RESPONSIBLE FOR THE ACCURACY OR COMPLETENESS OF SCANNED COPIES OF THIS PLAN SHEET.

NOTES: See Revised Standard Plan RSP T9 for tables.

Use cone spacing X for taper segment, Y for tangent segment or Z for conflict situations, as approriate, per Table 1, unless X, Y, or Z cone spacing is shown on this sheet.

Unless otherwise specified in the special provisions, all temporary warning signs shall have black legend on fluorescent orange background.

California codes are designated by (CA). Otherwise, Federal (MUTCD) codes are shown.

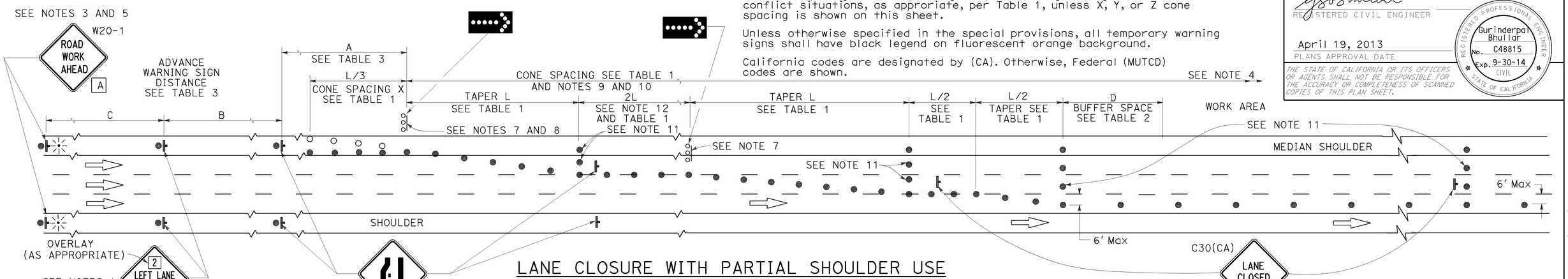

LANE CLOSURE WITH PARTIAL SHOULDER USE

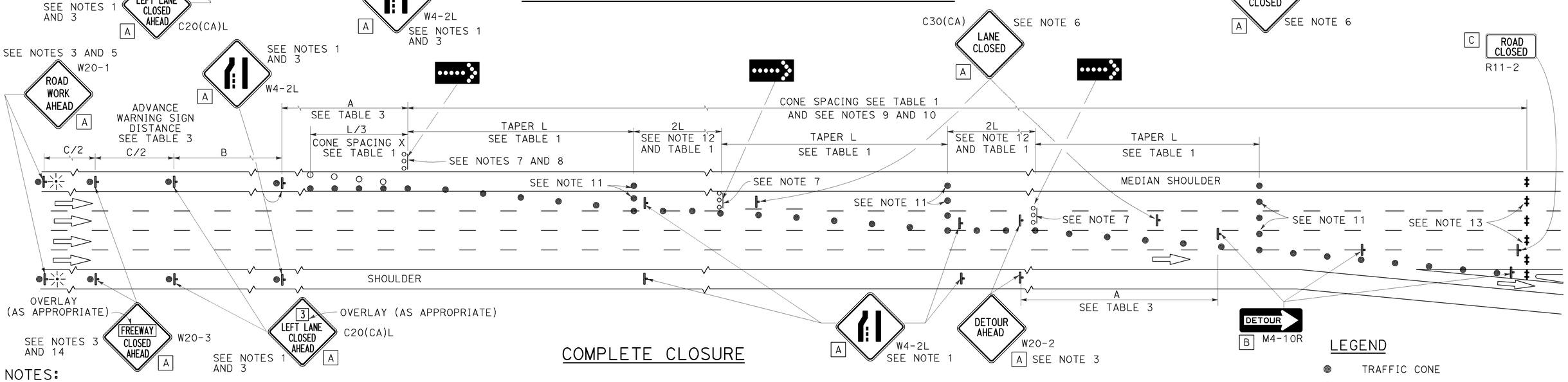

COMPLETE CLOSURE

NOTES:

1. Lane closures on the right side using partial median shoulder as a traffic lane shall conform to the details as shown except that C20(CA)R and W4-2R signs shall be used.
2. At least one person shall be assigned to provide full time maintenance of traffic control devices for lane closures.
3. Each advance warning sign on each side of the roadway shall be equipped with at least two flags for daytime closure. Each flag shall be at least 16" X 16" in size and shall be orange or fluorescent red-orange in color. Flashing beacons shall be placed at the locations indicated for lane closure during hours of darkness.
4. A G20-2 "END ROAD WORK" sign, with minimum size of 48" x 24" as appropriate, shall be placed at the end of the lane closure unless the end of work area is obvious or ends within a larger project's limits.
5. If the W20-1 sign would follow within 2000' of a stationary W20-1 or G20-1 "ROAD WORK NEXT ___ MILES", use a C20(CA) sign for the first advance warning sign.
6. Place a C30(CA) sign every 2000' throughout length of lane closure.
7. One flashing arrow sign for each lane closed. The flashing arrow signs shall be Type I.
8. A minimum 1500' of sight distance shall be provided where possible for vehicles approaching the first flashing arrow sign. Lane closures shall not begin at the top of crest vertical curve or on a horizontal curve.
9. All cones used for lane closures during the hours of darkness shall be fitted with retroreflective bands (or sleeves) as specified in the specifications.
10. Portable delineators, placed at one-half the spacing indicated for traffic cones, may be used instead of cones for daytime closures only.
11. Unless otherwise specified in the special provisions, a minimum of 3 cones shall be placed transversely across each closed lane and shoulder at each location where a taper across a traffic lane ends and every 2000' as shown on the "Lane Closure With Partial Shoulder Use" detail. Two Type II barricades may be used instead of the 3 cones. The transverse alignment of the cones or barricades on the closed shoulder may be shifted from the transverse alignment to provide access to the work.
12. Unless otherwise specified in the special provisions, the 2L tangent shown along lane lines shall be used between the L tapers required for each closed traffic lane.
13. A minimum of Two Type II or III barricades shall be placed across each closed lane and shoulder at the location shown and every 2000' within the complete closure area. Within the complete closure area, the transverse alignment of the barricades on the closed shoulder may be shifted from the transverse alignment to provide access to the work.
14. When specified in the special provisions, a W20-2 "DETOUR AHEAD" sign is to be used in place of the W20-3 "FREEWAY CLOSED AHEAD" sign.

SIGN PANEL SIZE (Min)

A	48" x 48"
B	48" x 18"
C	48" x 30"

LEGEND

- TRAFFIC CONE
- TRAFFIC CONE (OPTIONAL TAPER)
- TEMPORARY TRAFFIC CONTROL SIGN
- FLASHING ARROW SIGN (FAS)
- FAS SUPPORT OR TRAILER
- PORTABLE FLASHING BEACON

STATE OF CALIFORNIA
DEPARTMENT OF TRANSPORTATION

TRAFFIC CONTROL SYSTEM FOR LANE CLOSURES ON FREEWAYS AND EXPRESSWAYS

NO SCALE

RSP T10A DATED APRIL 19, 2013 SUPERSEDES STANDARD PLAN T10A DATED MAY 20, 2011 - PAGE 238 OF THE STANDARD PLANS BOOK DATED 2010.

REVISED STANDARD PLAN RSP T10A

2010 REVISED STANDARD PLAN RSP T10A

12-18-12

Dist	COUNTY	ROUTE	POST MILES TOTAL PROJECT	SHEET No.	TOTAL SHEETS
05	SBt	156	0.0/3.0	90	113

Devinder Singh
REGISTERED CIVIL ENGINEER

October 30, 2015
PLANS APPROVAL DATE

REGISTERED PROFESSIONAL ENGINEER
Devinder Singh
No. C50470
Exp. 6-30-17
CIVIL
STATE OF CALIFORNIA

THE STATE OF CALIFORNIA OR ITS OFFICERS OR AGENTS SHALL NOT BE RESPONSIBLE FOR THE ACCURACY OR COMPLETENESS OF SCANNED COPIES OF THIS PLAN SHEET.

TO ACCOMPANY PLANS DATED 6-20-16

2010 REVISED STANDARD PLAN RSP T13

NOTES:

See Revised Standard Plan RSP T9 for tables.

Use cone spacing X for taper segment, Y for tangent segment or Z for conflict situations, as approriate, per Table 1, unless X, Y, or Z cone spacing is shown on this sheet.

Unless otherwise specified in the special provisions, all temporary warning signs shall have black legend on fluorescent orange background.

California codes are designated by (CA). Otherwise, Federal (MUTCD) codes are shown.

TYPICAL LANE CLOSURE WITH REVERSIBLE CONTROL

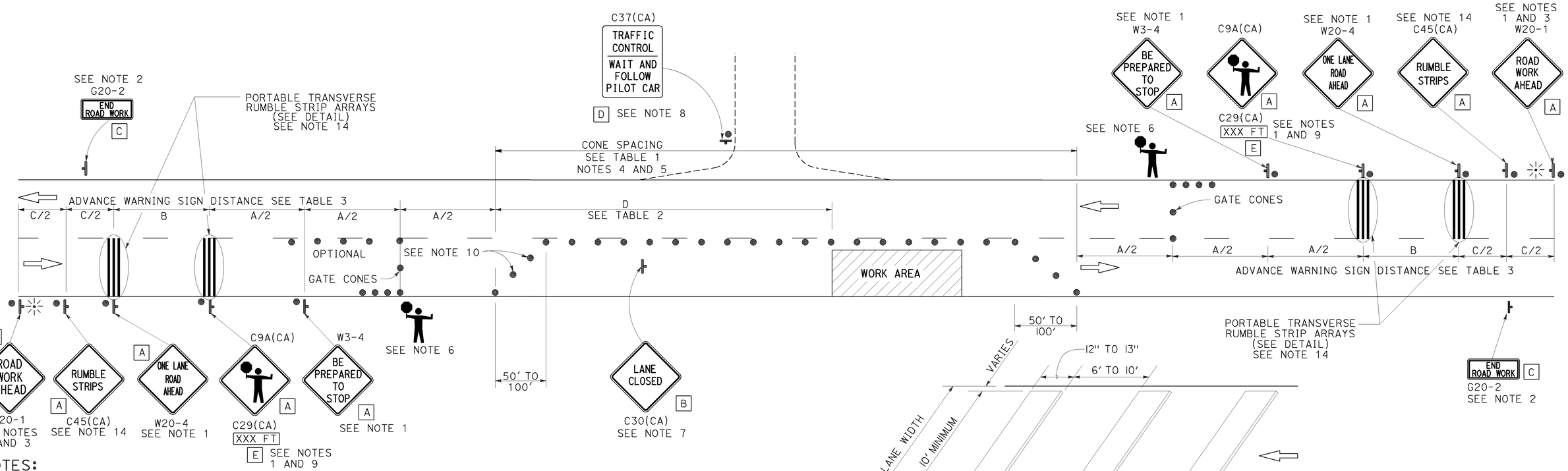

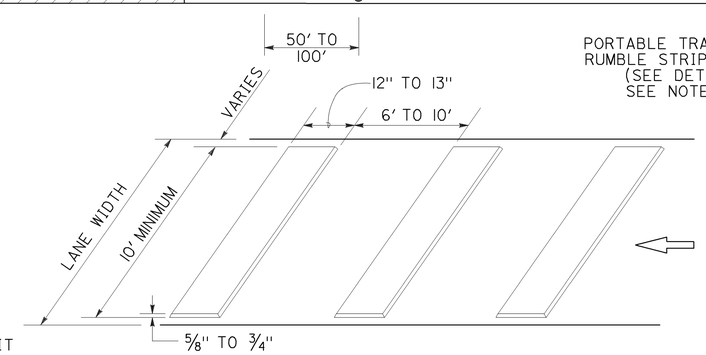

PORTABLE TRANSVERSE RUMBLE STRIP ARRAY DETAIL

NOTES:

1. Each advance warning sign in each direction of travel shall be equipped with at least two flags for daytime closure. Each flag shall be at least 16" x 16" in size and shall be orange or fluorescent red-orange in color. Flashing beacons shall be placed at the locations indicated for lane closure during hours of darkness.
2. A G20-2 "END ROAD WORK" sign, as appropriate, shall be placed at the end of the lane control unless the end of work area is obvious, or ends within a larger project's limits.
3. If the W20-1 sign would follow within 2000' of a stationary W20-1 or G20-1 "ROAD WORK NEXT _____ MILES", use a W20-4 sign for the first advance warning sign.
4. All cones used for lane closures during the hours of darkness shall be fitted with retroreflective bands (or sleeves) as specified in the specifications.
5. Portable delineators, placed at one-half the spacing indicated for traffic cones, may be used instead of cones for daytime closures only.
6. Additional advance flaggers may be required. Flagger should stand in a conspicuous place, be visible to approaching traffic as well as approaching vehicles after the first vehicle has stopped. During the hours of darkness, the flagging-station and flagger shall be illuminated and clearly visible to approaching traffic. The illumination footprint of the lighting on the ground shall be at least 20' in diameter. Place a minimum of four cones at 50' intervals in advance of flagger station as shown.
7. Place C30(CA) "LANE CLOSED" sign at 500' to 1000' intervals throughout extended work areas. They are optional if the work area is visible from the flagger station.
8. When a pilot car is used, place a C37(CA) "TRAFFIC CONTROL-WAIT AND FOLLOW PILOT CAR" sign with black legend on white background at all intersections, driveways and alleys without a flagger within traffic control area. Signs shall be clean and visible at all times. Where traffic can not be effectively self-regulated, at least one flagger shall be used at each intersection within traffic control area.
9. An optional C29(CA) sign may be placed below the C9A(CA) sign.
10. Either traffic cones or barricades shall be placed on the taper. Barricades shall be Type I, II, or III.
11. The color of the portable transverse rumble strips shall be black or orange. Use 2 arrays, each array shall consist of 3 rumble strips.
12. Portable transverse rumble strips shall not be placed on sharp horizontal or vertical curves nor shall they be placed through pedestrian crossings.
13. If the portable transverse rumble strips become out of alignment (skewed) by more than 6 inches, measured from one end to the other, they shall be readjusted to bring the placement back to the original location.
14. Portable transverse rumble strips are not required if any one of the following conditions is satisfied:
    A. Work duration occupies a location for four hours or less
    B. Posted speed limit is below 45 MPH
    C. Work is of emergency nature
    D. Work zone is in snow or icy weather conditions

SIGN PANEL SIZE (Min)

A	48" x 48"
B	30" x 30"
C	36" x 18"
D	36" x 42"
E	20" x 7"

LEGEND

- TRAFFIC CONE
- TEMPORARY TRAFFIC CONTROL SIGN
- PORTABLE FLASHING BEACON
- FLAGGER

STATE OF CALIFORNIA
DEPARTMENT OF TRANSPORTATION

TRAFFIC CONTROL SYSTEM FOR LANE CLOSURE ON TWO LANE CONVENTIONAL HIGHWAYS

NO SCALE

RSP T13 DATED OCTOBER 30, 2015 SUPERSEDES RSP T13 DATED OCTOBER 17, 2014, RSP T13 DATED JULY 18, 2014 AND RSP T13 DATED APRIL 19, 2013 AND STANDARD PLAN T13 DATED MAY 20, 2011 - PAGE 241 OF THE STANDARD PLANS BOOK DATED 2010.

REVISED STANDARD PLAN RSP T13

10-13-15

Dist	COUNTY	ROUTE	POST MILES TOTAL PROJECT	SHEET No.	TOTAL SHEETS
05	SBt	156	0.0/3.0	91	113

REGISTERED CIVIL ENGINEER

April 19, 2013
PLANS APPROVAL DATE

REGISTERED PROFESSIONAL ENGINEER Gurinderpal Bhullar No. C48815 Exp. 9-30-14 CIVIL STATE OF CALIFORNIA

THE STATE OF CALIFORNIA OR ITS OFFICERS OR AGENTS SHALL NOT BE RESPONSIBLE FOR THE ACCURACY OR COMPLETENESS OF SCANNED COPIES OF THIS PLAN SHEET.

TO ACCOMPANY PLANS DATED 6-20-16

TYPICAL RAMP CLOSURES

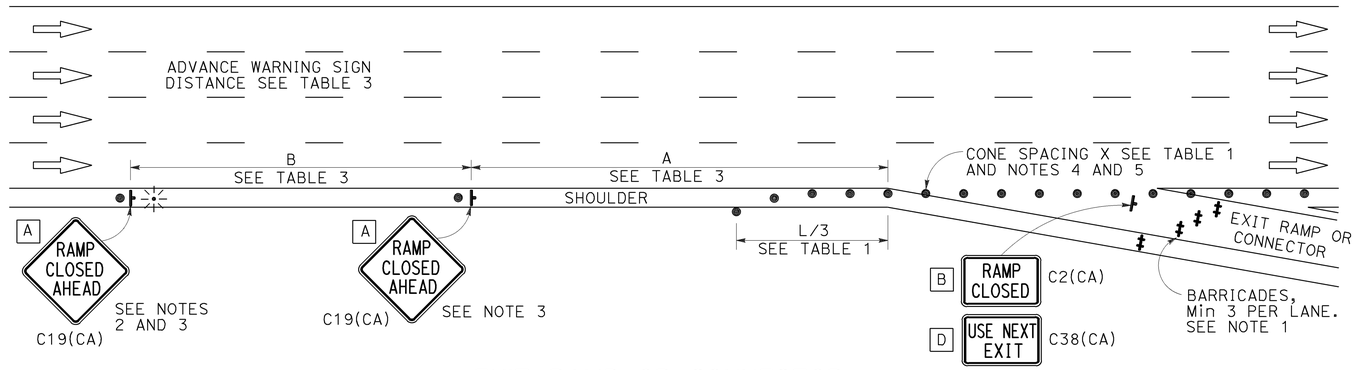

EXIT RAMP OR CONNECTOR

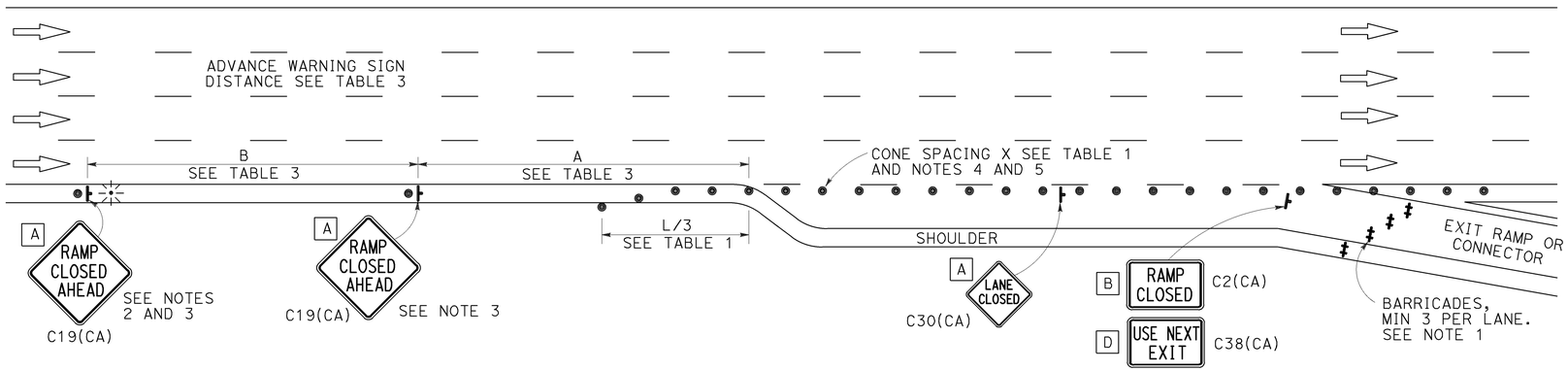

EXIT RAMP OR CONNECTOR WITH ADDITIONAL LANE

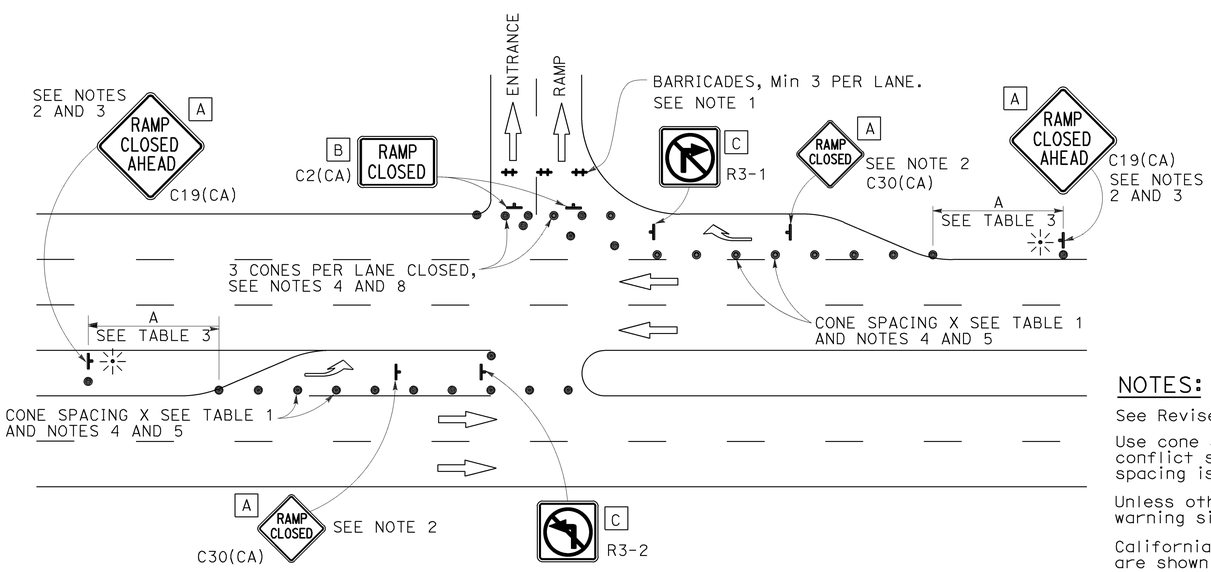

ENTRANCE RAMP WITH TURNING POCKETS

SIGN PANEL SIZE (Min)

- A 48" × 48"
- B 48" × 30"
- C 36" × 36"
- D 48" × 36"

LEGEND

- TRAFFIC CONE
- TEMPORARY TRAFFIC CONTROL SIGN
- BARRICADES
- PORTABLE FLASHING BEACON

NOTES:

1. Barricades shall be Type I, II, or III for closures lasting one week or less and Type III for closures lasting longer than one week.
2. In addition to placing the C19(CA) "RAMP CLOSED AHEAD" and C30(CA) "RAMP CLOSED" signs, black on orange overlay plates with the word "CLOSED" may be mounted, as directed by the Engineer, on all guide signs that refer to the closed ramp. The letter size on the overlay shall be the same as the guide sign.
3. Each advance C19(CA) "RAMP CLOSED AHEAD" sign shall be equipped with at least two flags for daytime closure. Each flag shall be at least 16" × 16" in size and shall be orange or fluorescent red-orange in color. A flashing beacon shall be placed on top of the first C19(CA) sign during hours of darkness.
4. All cones used for ramp closures during the hours of darkness shall be fitted with retroreflective bands (or sleeves) as specified in the specifications.
5. Portable delineators, placed at one-half the spacing indicated for traffic cones, may be used instead of cones for daytime ramp closures only.
6. At least one person shall be assigned to provide full time maintenance of traffic control devices, unless otherwise directed by the Engineer.
7. The existing "EXIT" signs shall be covered during ramp closures.
8. A minimum of 3 cones shall be placed transversely across each closed lane and shoulder.

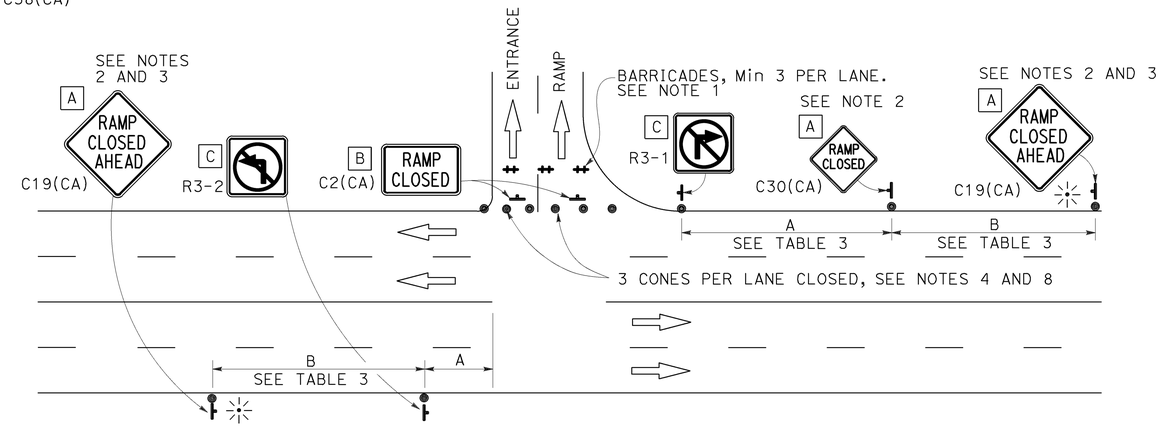

ENTRANCE RAMP WITHOUT TURNING POCKETS

NOTES:

See Revised Standard Plan RSP T9 for tables.

Use cone spacing X for taper segment, Y for tangent segment or Z for conflict situations, as approriate, per Table 1, unless X, Y, or Z cone spacing is shown on this sheet.

Unless otherwise specified in the special provisions, all temporary warning signs shall have black legend on fluorescent orange background.

California codes are designated by (CA). Otherwise, Federal (MUTCD) codes are shown.

STATE OF CALIFORNIA
DEPARTMENT OF TRANSPORTATION

TRAFFIC CONTROL SYSTEM FOR RAMP CLOSURE

NO SCALE

RSP T14 DATED APRIL 19, 2013 SUPERSEDES STANDARD PLAN T14
DATED MAY 20, 2011 - PAGE 242 OF THE STANDARD PLANS BOOK DATED 2010.

REVISED STANDARD PLAN RSP T14

2010 REVISED STANDARD PLAN RSP T14

12-18-12

Dist	COUNTY	ROUTE	POST MILES TOTAL PROJECT	SHEET No.	TOTAL SHEETS
05	SBt	156	0.0/3.0	92	113

REGISTERED CIVIL ENGINEER

April 19, 2013
PLANS APPROVAL DATE

REGISTERED PROFESSIONAL ENGINEER Gurinderpal Bhullar No. C48815 Exp. 9-30-14 CIVIL STATE OF CALIFORNIA

THE STATE OF CALIFORNIA OR ITS OFFICERS OR AGENTS SHALL NOT BE RESPONSIBLE FOR THE ACCURACY OR COMPLETENESS OF SCANNED COPIES OF THIS PLAN SHEET.

TO ACCOMPANY PLANS DATED 6-20-16

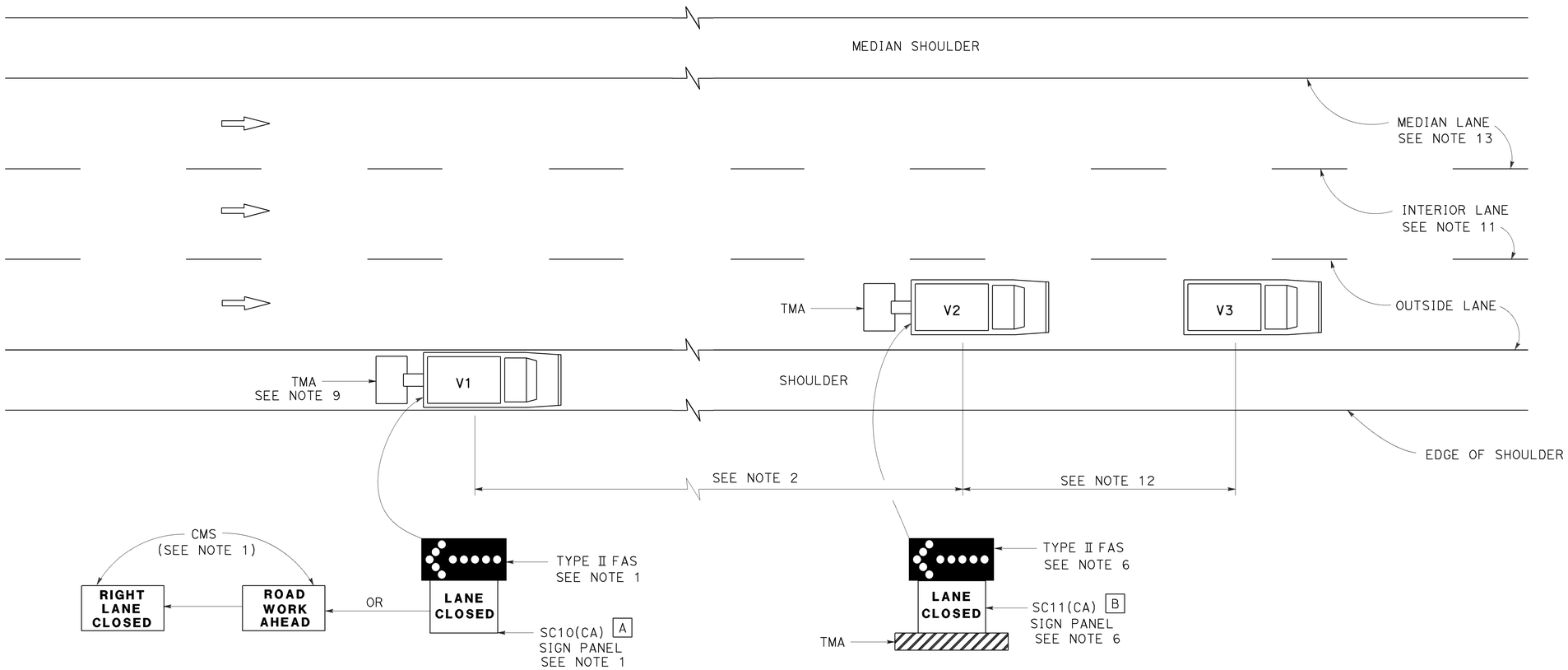

MOVING LANE CLOSURE ON MEDIAN LANE OR OUTSIDE LANE OF MULTILANE HIGHWAYS

SIGN PANEL SIZE (Min)

A 66" x 36"

B 54" x 42"

LEGEND

V1	SIGN VEHICLE
V2	SHADOW VEHICLE
V3	WORK/APPLICATION VEHICLE
	FLASHING ARROW SIGN (FAS)
CMS	CHANGEABLE MESSAGE SIGN
TMA	TRUCK-MOUNTED ATTENUATOR

NOTES:

1. Either a changeable message sign or a SC10(CA) sign panel and a Type II flashing arrow sign shall be mounted on the rear of sign vehicle V1. The changeable message sign shall be sequenced to show the "ROAD WORK AHEAD" message first, followed by the "RIGHT LANE CLOSED" message. For median lane closure, the flashing arrow symbol shall be reversed with the arrowhead on the right and the changeable message sign shall show "LEFT LANE CLOSED".
2. If traffic queues develop, sign vehicle V1 should be positioned upstream from the end of queue. Sign vehicle V1 shall be positioned where highly visible when shoulders are not available.
3. A minimum sight distance of 1500′ should be provided in advance of sign vehicle V1.
4. Sign vehicle V1 should remain at the beginning of horizontal or vertical curves until the other vehicles (V2 and V3) are far enough beyond the curve to resume the minimum sight distance of 1500′.
5. Vehicle-mounted sign panels shall have Type III or above retroreflective sheeting, black on white, or black on fluorescent orange, with 6" minimum series D letters per Caltrans sign specifications.
6. Shadow vehicle V2 shall be equipped with a truck-mounted attenuator. The sign panel shown and a Type II flashing arrow sign shall be mounted on the rear of shadow vehicle V2. For median lane closure the flashing arrow sign symbol shall be displayed with the arrowhead on the right.
7. All vehicles used for lane closures shall be equipped with two-way radios, and the vehicle operators shall maintain communication during the work or application operation.
8. All vehicles shall be equipped with flashing or rotating amber lights.
9. If sign vehicle V1 encroaches into the traffic lane due to insufficient shoulder width, sign vehicle V1 shall be equipped with a truck-mounted attenuator. Sign vehicle V1 shall stay as close to the edge of shoulder as practicable.
10. Where workers would be on foot in the work area, a stationary type lane closure (Revised Standard Plan T10, T11, etc., as applicable) shall be used instead of this plan.
11. For moving lane closure on interior lane of multilane highways, use Revised Standard Plan T16.
12. The spacing between work vehicle(s) and the shadow vehicles, and between each shadow vehicle should be minimized to deter road users from driving in between.
13. When the work/application vehicle V3 occupies the median lane, sign vehicle V1 should drive in the median shoulder and indicate left lane closed ahead.

STATE OF CALIFORNIA
DEPARTMENT OF TRANSPORTATION

TRAFFIC CONTROL SYSTEM FOR MOVING LANE CLOSURE ON MULTILANE HIGHWAYS

NO SCALE

RSP T15 DATED APRIL 19, 2013 SUPERSEDES STANDARD PLAN T15
DATED MAY 20, 2011 - PAGE 243 OF THE STANDARD PLANS BOOK DATED 2010.

REVISED STANDARD PLAN RSP T15

2010 REVISED STANDARD PLAN RSP T15

12-18-12

Dist	COUNTY	ROUTE	POST MILES TOTAL PROJECT	SHEET No.	TOTAL SHEETS
05	SBt	156	0.0/3.0	93	113

REGISTERED CIVIL ENGINEER

July 15, 2016
PLANS APPROVAL DATE

REGISTERED PROFESSIONAL ENGINEER Tillat Satter No. C42892 Exp. 3-31-18 CIVIL STATE OF CALIFORNIA

THE STATE OF CALIFORNIA OR ITS OFFICERS OR AGENTS SHALL NOT BE RESPONSIBLE FOR THE ACCURACY OR COMPLETENESS OF SCANNED COPIES OF THIS PLAN SHEET.

TO ACCOMPANY PLANS DATED 6-20-16

2010 REVISED STANDARD PLAN RSP B11-55

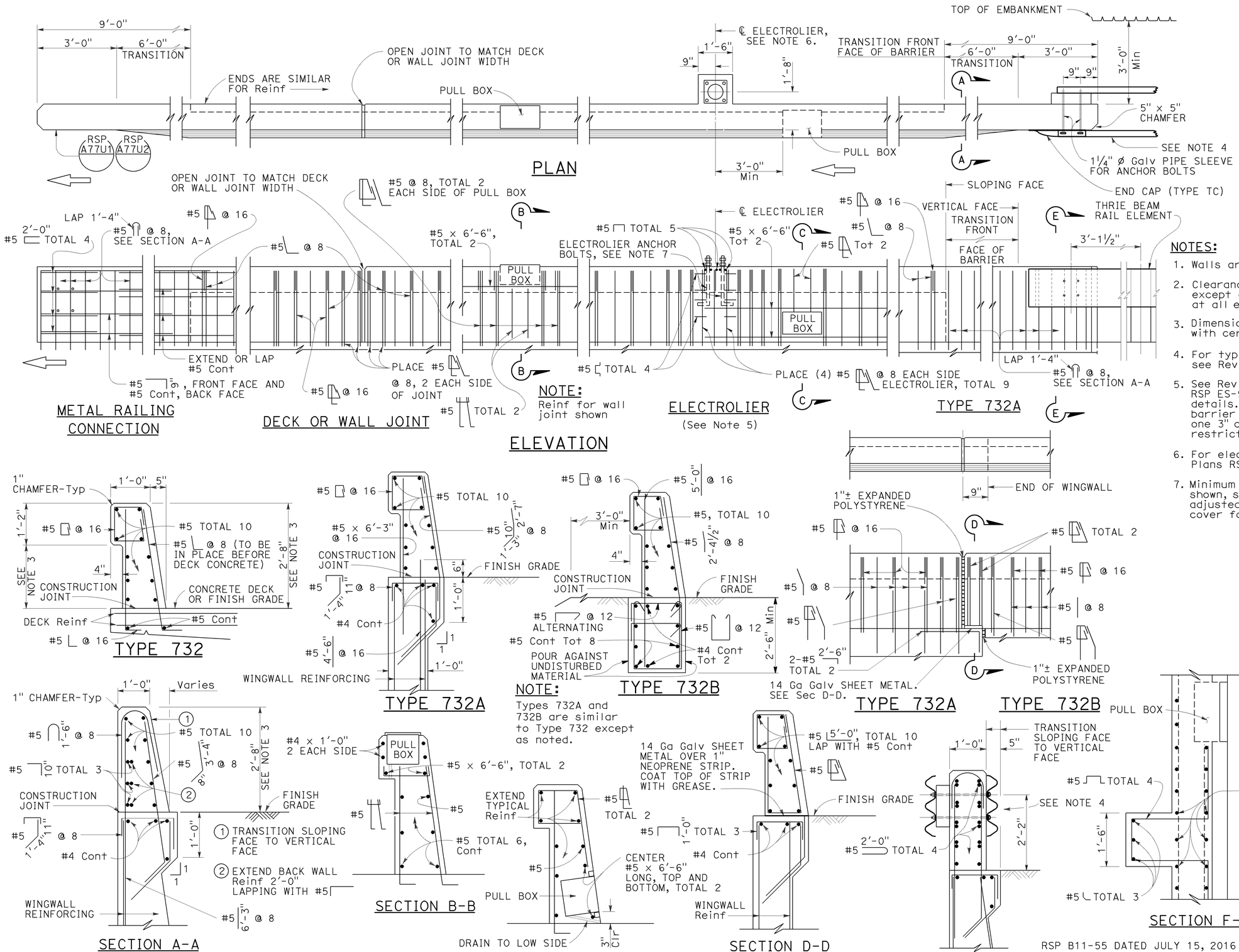

NOTES:

1. Walls are to be backfilled before barrier is placed.
2. Clearance to reinforcing steel in barrier to be 1", except as noted. Longitudinal reinforcement to stop at all expansion joints.
3. Dimensions may vary with roadway cross slope and with certain thickness of surfacing. See Project Plans.
4. For typical metal railing connection details not shown, see Revised Standard Plans RSP A77U1 and RSP A77U2.
5. See Revised Standard Plans RSP ES-9A, RSP ES-9B, RSP ES-9C, RSP ES-9D and RSP ES-9E for electrical details. The maximum number of conduits in the barrier is limited to two 2" conduits along with one 3" conduit. When a 3" conduit is used, it is restricted to the base of the barrier.
6. For electrolier mounting details, See Revised Standard Plans RSP ES-6A and RSP ES-6B.
7. Minimum concrete edge distance, to the reinforcing shown, shall be maintained. Edge distance may be adjusted to accommodate increase in concrete cover for architectual treatment.

Details shown for barrier anchorage to Type 732A. Anchorage for barrier Types 732 and 732A are similar to their respective details.

STATE OF CALIFORNIA
DEPARTMENT OF TRANSPORTATION

CONCRETE BARRIER TYPE 732

NO SCALE

RSP B11-55 DATED JULY 15, 2016 SUPERSEDES RSP B11-55 DATED NOVEMBER 15, 2013 AND RSP B11-55 DATED JULY 19, 2013 AND STANDARD PLAN B11-55 DATED MAY 20, 2011 - PAGE 297 OF THE STANDARD PLANS BOOK DATED 2010.

REVISED STANDARD PLAN RSP B11-55

6-29-16

Dist	COUNTY	ROUTE	POST MILES TOTAL PROJECT	SHEET No.	TOTAL SHEETS
05	SBt	156	0.0/3.0	94	113

Theresa Gabriel
REGISTERED ELECTRICAL ENGINEER

October 30, 2015
PLANS APPROVAL DATE

REGISTERED PROFESSIONAL ENGINEER
Theresa Aziz Gabriel
No. E15129
Exp. 6-30-16
ELECTRICAL
STATE OF CALIFORNIA

THE STATE OF CALIFORNIA OR ITS OFFICERS OR AGENTS SHALL NOT BE RESPONSIBLE FOR THE ACCURACY OR COMPLETENESS OF SCANNED COPIES OF THIS PLAN SHEET.

TO ACCOMPANY PLANS DATED 6-20-16

LEGEND:

- AB — ABANDON. IF APPLIED TO CONDUIT, REMOVE CONDUCTORS
- BC — INSTALL PULL BOX IN EXISTING CONDUIT RUN
- BP — PEDESTRIAN BARRICADE, TYPE AS INDICATED ON PLAN
- CB — INSTALL CONDUIT INTO EXISTING PULL BOX
- CC — CONNECT NEW AND EXISTING CONDUIT. REMOVE EXISTING CONDUCTORS AND INSTALL CONDUCTORS AS INDICATED
- CF — CONDUIT TO REMAIN FOR FUTURE USE. REMOVE CONDUCTORS. INSTALL PULL TAPE
- DH — DETECTOR HANDHOLE
- FA — FOUNDATION TO BE ABANDONED
- IS — INSTALL SIGN ON SIGNAL MAST ARM
- NS — NO SLIP BASE ON STANDARD
- PEC — PHOTOELECTRIC CONTROL
- PEU — PHOTOELECTRIC UNIT
- RC — EQUIPMENT OR MATERIAL TO BE REMOVED AND BECOME THE PROPERTY OF THE CONTRACTOR
- RE — REMOVE ELECTROLIER, FUSES AND BALLAST. TAPE ENDS OF CONDUCTORS
- RL — RELOCATE EQUIPMENT
- RR — REMOVE AND REUSE EQUIPMENT
- RS — REMOVE AND SALVAGE EQUIPMENT
- SC — SPLICE NEW TO EXISTING CONDUCTORS
- SD — SERVICE DISCONNECT
- TSP — TELEPHONE SERVICE POINT

ABBREVIATIONS

AC+	UNDERGROUNDED CONDUCTOR
APS	ACCESSIBLE PEDESTRIAN SIGNAL
Batt	BATTERY
BBS	BATTERY BACKUP SYSTEM
BC	BOLT CIRCLE
Blk	BLACK
BP	BYPASS
BPB	BICYCLE PUSH BUTTON
C	CONDUIT
CB	CIRCUIT BREAKER
CCTV	CLOSED CIRCUIT TELEVISION
Ckt	CIRCUIT
CMS	CHANGEABLE MESSAGE SIGN
Ctid	CALTRANS IDENTIFICATION
Comm	COMMUNICATION
Cntl	CONTROL
DF	DEPARTMENT-FURNISHED
DLC	LOOP DETECTOR LEAD-IN CABLE
EMS	EXTINGUISHABLE MESSAGE SIGN
EVUC	EMERGENCY VEHICLE UNIT CABLE
EVUD	EMERGENCY VEHICLE UNIT DETECTOR
FB	FLASHING BEACON
FBCA	FLASHING BEACON CONTROL ASSEMBLY
FBS	FLASHING BEACON WITH SLIP BASE
FO	FIBER OPTIC
G	EQUIPMENT GROUNDING CONDUCTOR
GB	GROUND BUS
GFCI	GROUND FAULT CIRCUIT INTERRUPTER
Grn	GREEN
HAR	HIGHWAY ADVISORY RADIO
Hex	HEXAGONAL
HPS	HIGH PRESSURE SODIUM
IISNS	INTERNALLY ILLUMINATED STREET NAME SIGN
ISL	INDUCTION SIGN LIGHTING
LED	LIGHT EMITTING DIODE
LMA	LUMINAIRE MAST ARM
LPS	LOW PRESSURE SODIUM
Ltg	LIGHTING
Lum	LUMINAIRE
M	METERED
MAT	MAST ARM MOUNTING TOP ATTACHMENT
MAS	MAST ARM MOUNTING SIDE ATTACHMENT
MBPS	MANUAL BYPASS SWITCH
M/M	MULTIPLE TO MULTIPLE TRANSFORMER
Mtg	MOUNTING
MV	MERCURY VAPOR LIGHTING FIXTURE
MVDS	MICROWAVE VEHICLE DETECTION SYSTEM
N	NEUTRAL (GROUNDED CONDUCTOR)
NB	NEUTRAL BUS
NC	NORMALLY CLOSE
NO	NORMALLY OPEN
P	CIRCUIT BREAKER'S POLE
PB	PULL BOX
PBA	PUSH BUTTON ASSEMBLY
PEC	PHOTOELECTRIC CONTROL
Ped	PEDESTRIAN
PEU	PHOTOELECTRIC UNIT
PT	CONDUIT WITH PULL TAPE
PTR	POWER TRANSFER RELAY
RE	RELOCATED EQUIPMENT
RM	RAMP METERING
RWIS	ROADSIDE WEATHER INFORMATION SYSTEM
SB	SLIP BASE
SIC	SIGNAL INTERCONNECT CABLE
Sig	SIGNAL
SMA	SIGNAL MAST ARM
SNS	STREET NAME SIGN
SP	SERVICE POINT
TB	TERMINAL BOARD
TDC	TELEPHONE DEMARCATION CABINET
Temp	TEMPERATURE
TMS	TRAFFIC MONITORING STATION
TOS	TRAFFIC OPERATIONS SYSTEM
UPS	UNINTERRUPTABLE POWER SUPPLY
UPSC	UNINTERRUPTABLE POWER SUPPLY CONTROLLER
Veh	VEHICLE
VIVDS	VIDEO IMAGE VEHICLE DETECTION SYSTEM
Wht	WHITE
WIM	WEIGH-IN-MOTION
Xfmr	TRANSFORMER

SOFFIT AND WALL-MOUNTED LUMINAIRES

- PENDANT SOFFIT LUMINAIRE, 70 W HPS UNLESS OTHERWISE SPECIFIED
- FLUSH-MOUNTED SOFFIT LUMINAIRE, 70 W HPS UNLESS OTHERWISE SPECIFIED
- WALL-MOUNTED LUMINAIRE, 70 W HPS UNLESS OTHERWISE SPECIFIED
- EXISTING SOFFIT OR WALL-MOUNTED LUMINAIRE TO REMAIN UNMODIFIED
- EXISTING SOFFIT OR WALL-MOUNTED LUMINAIRE TO BE MODIFIED AS SPECIFIED

NOTE:
Arrow indicates "street side" of luminaire.

COMMONLY USED SYMBOLS FOR UNITED STATES CUSTOMARY UNITS OF MEASUREMENT:

SYMBOL	DEFINITIONS
Ω	OHMS
min	MINUTE
s	SECOND
bps	BITS PER SECOND
Bps	BYTES PER SECOND
A	AMPERE
V	VOLT
$V_{(dc)}$	VOLT (DIRECT CURRENT)
$V_{(ac)}$	VOLT (ALTERNATING CURRENT)
FC	FOOT - CANDLE
W	WATTS
VA	VOLT-AMPERE
M	MEGA
k	KILO
m	MILLI
μ	MICRO
P	PICO
Hz	HERTZ

MISCELLANEOUS ELECTROLIERS

NEW	EXISTING	
		LUMINAIRE ON WOOD POLE
		NON-STANDARD ELECTROLIER (SEE PROJECT LEGEND)
		CITY ELECTROLIER
		ELECTROLIER FOUNDATION (FUTURE INSTALLATION)

NOTES:

1. LED luminaires shall be 235 W when installed on Type 21, 21D, 30, 31 and 32 Standards, unless otherwise specified. LED luminaires shall be 165 W when installed on other type standards or poles, unless otherwise specified.
2. Luminaires shall be the cutoff type, ANSI Type III medium cutoff lighting distribution, unless otherwise specified.

STANDARD ELECTROLIER

NEW	EXISTING	STANDARD TYPE
		15
		15D
		15 STRUCTURE
		15D STRUCTURE
		21
		21D
		21 STRUCTURE
		21D STRUCTURE
		30
		31
		32

STATE OF CALIFORNIA
DEPARTMENT OF TRANSPORTATION

ELECTRICAL SYSTEMS (LEGEND AND ABBREVIATIONS)

NO SCALE

RSP ES-1A DATED OCTOBER 30, 2015 SUPERSEDES RSP ES-1A DATED JULY 19, 2013 AND STANDARD PLAN ES-1A DATED MAY 20, 2011 - PAGE 425 OF THE STANDARD PLANS BOOK DATED 2010.

REVISED STANDARD PLAN RSP ES-1A

2010 REVISED STANDARD PLAN RSP ES-1A

9-29-15

Dist	COUNTY	ROUTE	POST MILES TOTAL PROJECT	SHEET No.	TOTAL SHEETS
05	SBt	156	0.0/3.0	95	113

Theresa Gabriel
REGISTERED ELECTRICAL ENGINEER

October 30, 2015
PLANS APPROVAL DATE

REGISTERED PROFESSIONAL ENGINEER Theresa Aziz Gabriel No. E15129 Exp. 6-30-16 ELECTRICAL STATE OF CALIFORNIA

THE STATE OF CALIFORNIA OR ITS OFFICERS OR AGENTS SHALL NOT BE RESPONSIBLE FOR THE ACCURACY OR COMPLETENESS OF SCANNED COPIES OF THIS PLAN SHEET.

TO ACCOMPANY PLANS DATED 6-20-16

CONDUIT

NEW	EXISTING	
		LIGHTING CONDUIT, UNLESS OTHERWISE INDICATED OR NOTED
		TRAFFIC SIGNAL CONDUIT
C	c	COMMUNICATION CONDUIT
T	t	TELEPHONE CONDUIT
F	f	FIRE ALARM CONDUIT
FO	fo	FIBER OPTIC CONDUIT
		CONDUIT TERMINATION
R	r	CONDUIT RISER ATTACHED TO THE STRUCTURE OR SERVICE POLE

SERVICE EQUIPMENT

NEW	EXISTING	
OH	oh	OVERHEAD LINES
U	U	WOOD POLE, "U" INDICATES UTILITY OWNED
		POLE GUY WITH ANCHOR
		UTILITY TRANSFORMER - GROUND MOUNTED
III	III	SERVICE EQUIPMENT ENCLOSURE TYPE. DOOR INDICATES FRONT OF ENCLOSURE
T	t	TELEPHONE DEMARCATION CABINET

POLE-MOUNTED SERVICE DESIGNATION

TYPE H SERVICE, 28'-10" — TYPE OF INSTALLATION AND POLE HEIGHT ABOVE GRADE

FLASHING BEACON

NEW	EXISTING	
R	R	FLASHING BEACON (ONE VEHICLE SIGNAL HEAD WITH BACKPLATE AND VISOR) "R" INDICATES RED INDICATION, "Y" INDICATES YELLOW INDICATION
Y Y	Y Y	FLASHING BEACON WITH TYPE 15-FBS STANDARD AND A SIGN.
R R	R R	FLASHING BEACON WITH TYPES 9, 9A OR 9B SIGN UNLESS OTHERWISE SPECIFIED OR INDICATED

SIGNAL EQUIPMENT

NEW	EXISTING	
		PEDESTRIAN SIGNAL HEAD
		PUSH BUTTON ASSEMBLY POST
		PEDESTRIAN BARRICADE
		VEHICLE SIGNAL HEAD (WITH BACKPLATE AND 3-SECTIONS: RED, YELLOW AND GREEN)
		VEHICLE SIGNAL HEAD WITH ANGLE VISOR
PV	PV	MODIFICATIONS OF BASIC SYMBOL: "L" INDICATES ALL NON-ARROW SECTIONS LOUVERED "LG" INDICATES LOUVERED GREEN SECTION ONLY "PV" INDICATES ALL 12" SECTIONS PROGRAMMED VISIBILITY "8" INDICATES ALL 8" SECTIONS (ONLY WHEN SPECIFIED)
		VEHICLE SIGNAL HEAD CONSISTING OF RED, YELLOW AND GREEN LEFT ARROW SECTIONS
		VEHICLE SIGNAL HEAD CONSISTING OF RED AND YELLOW SECTIONS WITH AN UP GREEN ARROW SECTION
		VEHICLE SIGNAL HEAD (5 SECTION) CONSISTING OF RED, YELLOW AND GREEN SECTIONS WITH YELLOW AND GREEN RIGHT ARROW SECTIONS
		TYPE 15TS STANDARD WITH VEHICLE SIGNAL HEAD AND LUMINAIRE
		TYPE 21TS STANDARD WITH VEHICLE SIGNAL HEAD AND LUMINAIRE
		STANDARD WITH LUMINAIRE AND SIGNAL MAST ARMS AND ATTACHED VEHICLE SIGNAL HEADS
		TYPE 1 STANDARD WITH ATTACHED VEHICLE SIGNAL HEADS
		STANDARD WITH A SIGNAL MAST ARM, ATTACHED VEHICLE SIGNAL HEADS AND INTERNALLY ILLUMINATED STREET NAME SIGN
		CONTROLLER ASSEMBLY. DOOR INDICATES FRONT OF CABINET

SIGNAL EQUIPMENT Cont

NEW	EXISTING	
		GUARD POST
		TYPE 1 STANDARD WITH RAMP METERING SIGN
		OPTICAL DETECTOR FOR THE EMERGENCY VEHICLE DETECTION

NOTES:

1. All signal sections shall be 12" unless shown otherwise.
2. Signal heads shall be provided with backplates unless shown otherwise.

ILLUMINATED OVERHEAD SIGN

NEW	EXISTING	
		SINGLE POST, SINGLE ILLUMINATED SIGN, BALANCED BUTTERFLY
		SINGLE POST, DOUBLE ILLUMINATED SIGN, BALANCED BUTTERFLY
		SINGLE POST, SINGLE ILLUMINATED SIGN, FULL CANTILEVER
		DOUBLE POST, SINGLE ILLUMINATED SIGN
		SINGLE ILLUMINATED SIGN MOUNTED ON STRUCTURE
		DOUBLE POST, SINGLE ILLUMINATED SIGN WITH ELECTROLIER

STATE OF CALIFORNIA
DEPARTMENT OF TRANSPORTATION

ELECTRICAL SYSTEMS (LEGEND AND ABBREVIATIONS)

NO SCALE

RSP ES-1B DATED OCTOBER 30, 2015 SUPERSEDES RSP ES-1B DATED JULY 19, 2013 AND STANDARD PLAN ES-1B DATED MAY 20, 2011 - PAGE 426 OF THE STANDARD PLANS BOOK DATED 2010.

REVISED STANDARD PLAN RSP ES-1B

2010 REVISED STANDARD PLAN RSP ES-1B

8-19-15

Dist	COUNTY	ROUTE	POST MILES TOTAL PROJECT	SHEET No.	TOTAL SHEETS
05	SBt	156	0.0/3.0	96	113

Theresa Gabriel
REGISTERED ELECTRICAL ENGINEER

April 15, 2016
PLANS APPROVAL DATE

REGISTERED PROFESSIONAL ENGINEER
Theresa Aziz Gabriel
No. E15129
Exp. 6-30-16
ELECTRICAL
STATE OF CALIFORNIA

THE STATE OF CALIFORNIA OR ITS OFFICERS OR AGENTS SHALL NOT BE RESPONSIBLE FOR THE ACCURACY OR COMPLETENESS OF SCANNED COPIES OF THIS PLAN SHEET.

TO ACCOMPANY PLANS DATED 6-20-16

EQUIPMENT IDENTIFICATION

ILLUMINATED SIGN IDENTIFICATION:

SIGN No. 12345
10 ISL SCI 1.0

- SIGN EQUIPMENT IDENTIFICATION CHARACTERS - PLACE ON POST OR STRUCTURE
- TRANSFORMER RATING (kVA)
- LIGHTING CONTROL TYPE
- NUMBER AND TYPE OF FIXTURES

} DO NOT PLACE ON STANDARD OR STRUCTURE

ELECTROLIER OR EQUIPMENT IDENTIFICATION:

L2745 - 15'-0"

- MAST ARM LENGTH, IF SHOWN. DO NOT PLACE ON STANDARD OR STRUCTURE
- EQUIPMENT IDENTIFICATION CHARACTERS - PLACE ON STANDARD OR STRUCTURE. EXISTING EQUIPMENT IDENTIFICATION CHARACTERS ARE SHOWN IN PARENTHESIS

CONDUIT AND CONDUCTOR IDENTIFICATION:

1½"C, 2#10, 15#14, 2 DLC, 12P#18 (PAIR)

- NUMBER AND SIZE OF CONDUCTORS AND CABLES
- SIZE OF CONDUIT IN INCHES

ø1, ø2, ø2P, etc.	TRAFFIC PHASE IDENTIFICATION FOR SIGNALS, DETECTORS AND PHASE DIAGRAMS
1 2 3	LEGEND NUMBERS
A B C	EQUIPMENT, SIGNAL POLES, INSTALLATION OR ITEMS
1 2 3	CONDUIT RUN NUMBERS

SIGNAL AND LIGHTING STANDARD (TYPICAL DESIGNATION):

19A - 3 - 100

- WIND VELOCITY = 100 mph
- CASE 3 ARM LOADING
- STANDARD TYPE
- STANDARD PLAN SHEET NUMBER
- DETAIL, NUMBER, SECTION, TYPE OR ELEVATION

MISCELLANEOUS EQUIPMENT

NEW	EXISTING	
CMS	cms	CHANGEABLE MESSAGE SIGN
		CLOSED CIRCUIT TELEVISION CAMERA
		HIGHWAY ADVISORY RADIO POLE AND ANTENNA
EMS	ems	LED EXTINGUISHABLE MESSAGE SIGN
M V	m v	DETECTION DEVICE M = MICROWAVE SENSOR V = VIDEO IMAGE SENSOR

WIRING DIAGRAM LEGEND

- EXTERNAL CONDUCTOR
- CONDUCTOR OR BUS
- TIE POINT
- CONTACTOR COIL
- CONTACTOR, NO CONTACT
- TERMINAL BLOCKS
- CONTACTOR, NC CONTACT
- ENCLOSURE BOND
- GROUNDING ELECTRODE
- CIRCUIT BREAKER
- RECEPTACLE

PULL BOXES

NEW	EXISTING	
		PULL BOX, No. 5 UNLESS OTHERWISE INDICATED OR NOTED
3	9A(21)	PULL BOX, ADDITIONAL DESIGNATIONS OR DESCRIPTIONS

3 No. 3½ PULL BOX
5 No. 5 PULL BOX
6 No. 6 PULL BOX
7 No. 7 PULL BOX (CEILING)
8 No. 8 PULL BOX
9 No. 9 PULL BOX (STRUCTURE)
9A No. 9A PULL BOX (STRUCTURE)

(C) COMMUNICATIONS PULL BOX
(E) PULL BOX WITH EXTENSION
(S) SPRINKLER CONTROL PULL BOX
(21) ANCHOR BOLTS AND CONDUIT FOR FUTURE INSTALLATION OF TYPE 21 STANDARD
(T) TRAFFIC PULL BOX

VEHICLE DETECTORS

5 J 9 U

- VEHICLE DETECTOR DESIGNATION
- U = UPPER
  L = LOWER
- SLOT NUMBER IN INPUT FILE
- INPUT FILE (I OR J)
- PHASE

NEW	EXISTING	
		TYPE A LOOP DETECTOR. OUTLINE OF SAW CUT SHOWN
		TYPE B LOOP DETECTOR. OUTLINE OF SAW CUT SHOWN
		TYPE C LOOP DETECTOR. OUTLINE OF SAW CUT SHOWN
		TYPE D LOOP DETECTOR. OUTLINE OF SAW CUT SHOWN
		TYPE E LOOP DETECTOR. OUTLINE OF SAW CUT SHOWN
		TYPE Q LOOP DETECTOR. OUTLINE OF SAW CUT SHOWN
DH	dh	DETECTOR HANDHOLE
		MICROWAVE OR VIDEO DETECTION ZONE

STATE OF CALIFORNIA
DEPARTMENT OF TRANSPORTATION

ELECTRICAL SYSTEMS (LEGEND AND ABBREVIATIONS)

NO SCALE

RSP ES-1C DATED APRIL 15, 2016 SUPERSEDES RSP ES-1C DATED OCTOBER 30, 2015 AND RSP ES-1C DATED JULY 19, 2013 AND STANDARD PLAN ES-1C DATED MAY 20, 2011 - PAGE 427 OF THE STANDARD PLANS BOOK DATED 2010.

REVISED STANDARD PLAN RSP ES-1C

2010 REVISED STANDARD PLAN RSP ES-1C

1-22-16

Dist	COUNTY	ROUTE	POST MILES TOTAL PROJECT	SHEET No.	TOTAL SHEETS
05	SBt	156	0.0/3.0	97	113

Theresa Gabriel
REGISTERED ELECTRICAL ENGINEER

April 15, 2016
PLANS APPROVAL DATE

REGISTERED PROFESSIONAL ENGINEER
Theresa Aziz Gabriel
No. E15129
Exp. 6-30-16
ELECTRICAL
STATE OF CALIFORNIA

THE STATE OF CALIFORNIA OR ITS OFFICERS OR AGENTS SHALL NOT BE RESPONSIBLE FOR THE ACCURACY OR COMPLETENESS OF SCANNED COPIES OF THIS PLAN SHEET.

TO ACCOMPANY PLANS DATED 6-20-16

2010 REVISED STANDARD PLAN RSP ES-5A

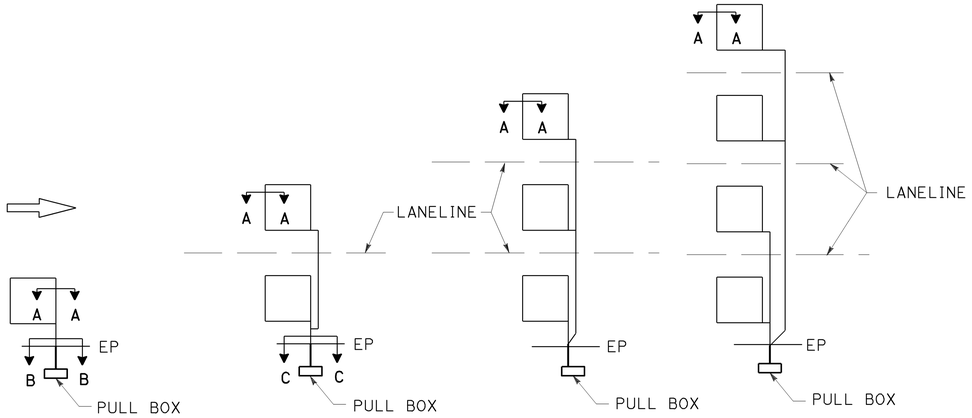

SAW CUT DETAILS

Type A loop detector configurations illustrated

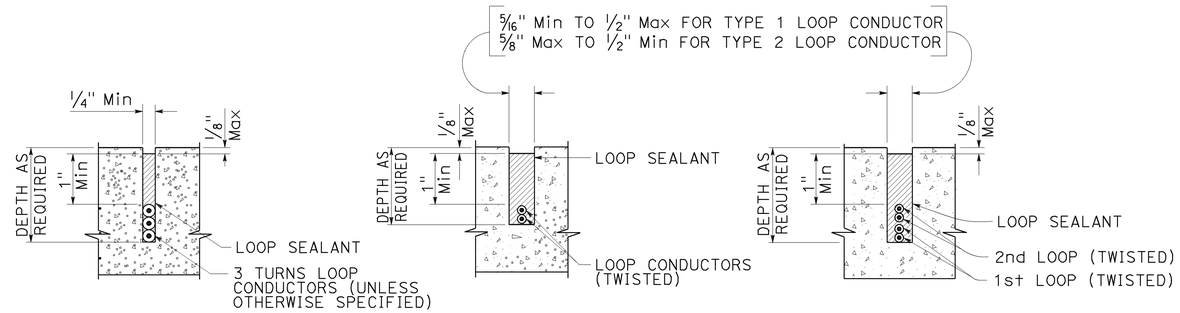

SECTION A-A SECTION B-B SECTION C-C

SLOT DETAILS - TYPE 1 AND TYPE 2 LOOP CONDUCTOR

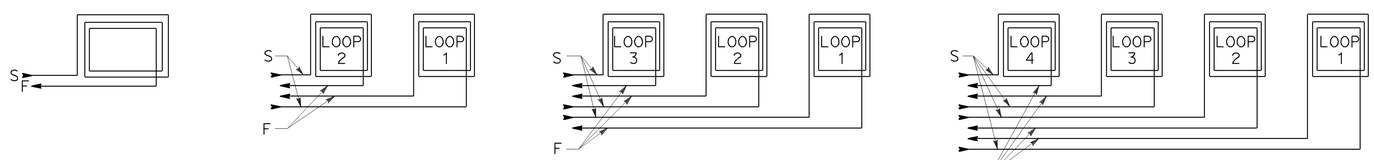

WINDING DETAILS

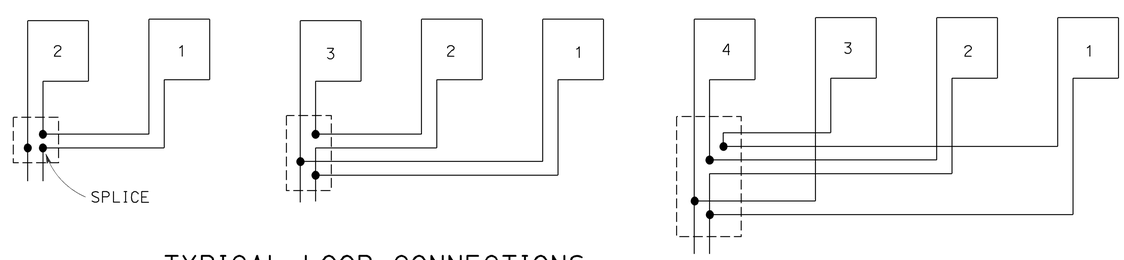

TYPICAL LOOP CONNECTIONS

Dashed lines represent the pull box

ABBREVIATIONS:

S - START
F - FINISH

STATE OF CALIFORNIA
DEPARTMENT OF TRANSPORTATION

ELECTRICAL SYSTEMS (LOOP DETECTORS)

NO SCALE

RSP ES-5A DATED APRIL 15, 2016 SUPERSEDES RSP ES-5A DATED OCTOBER 30, 2015 AND STANDARD PLAN ES-5A DATED MAY 20, 2011 - PAGE 448 OF THE STANDARD PLANS BOOK DATED 2010.

REVISED STANDARD PLAN RSP ES-5A

Dist	COUNTY	ROUTE	POST MILES TOTAL PROJECT	SHEET No.	TOTAL SHEETS
05	SBt	156	0.0/3.0	98	113

Theresa Gabriel
REGISTERED ELECTRICAL ENGINEER

April 15, 2016
PLANS APPROVAL DATE

REGISTERED PROFESSIONAL ENGINEER
Theresa Aziz Gabriel
No. E15129
Exp. 6-30-16
ELECTRICAL
STATE OF CALIFORNIA

THE STATE OF CALIFORNIA OR ITS OFFICERS OR AGENTS SHALL NOT BE RESPONSIBLE FOR THE ACCURACY OR COMPLETENESS OF SCANNED COPIES OF THIS PLAN SHEET.

TO ACCOMPANY PLANS DATED 6-20-16

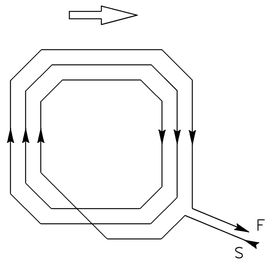

WINDING DETAIL

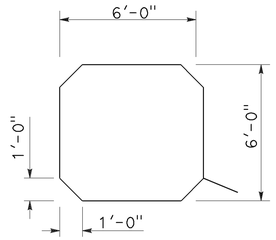

SAW CUT DETAIL

TYPE A LOOP DETECTOR CONFIGURATION

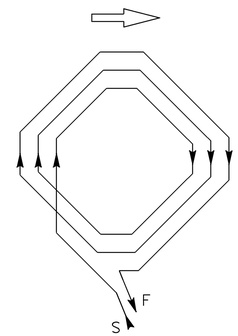

WINDING DETAIL

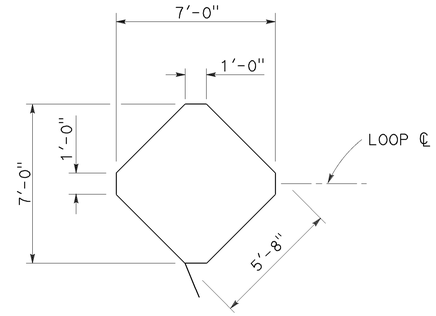

SAW CUT DETAIL

TYPE B LOOP DETECTOR CONFIGURATION

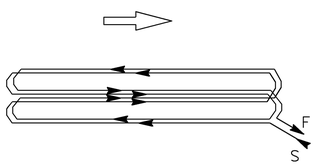

WINDING DETAIL

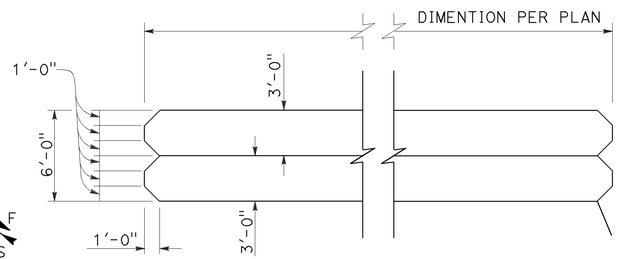

SAW CUT DETAIL

TYPE C LOOP DETECTOR CONFIGURATION

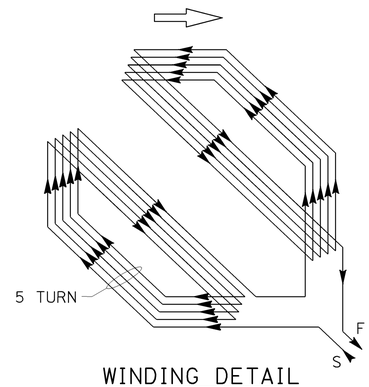

WINDING DETAIL

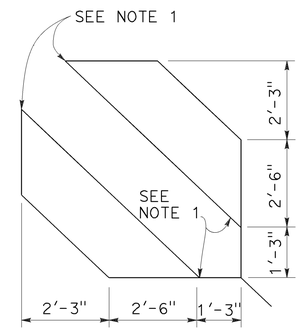

SAW CUT DETAIL

TYPE D LOOP DETECTOR CONFIGURATION

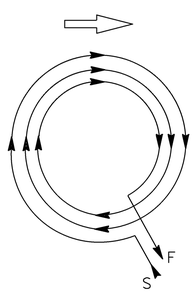

WINDING DETAIL

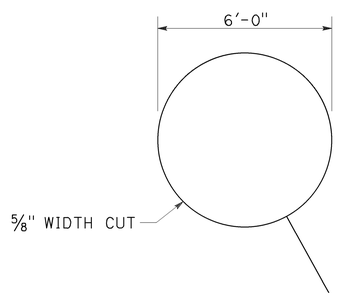

SAW CUT DETAIL

TYPE E LOOP DETECTOR CONFIGURATION

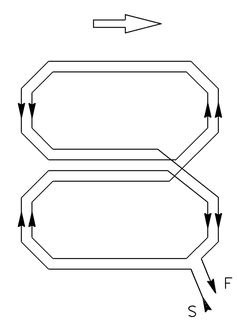

WINDING DETAIL

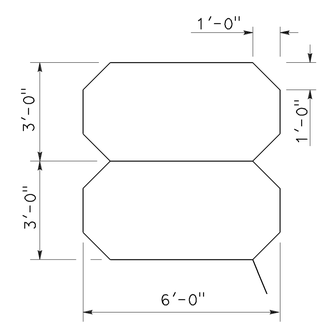

SAW CUT DETAIL

TYPE Q LOOP DETECTOR CONFIGURATION

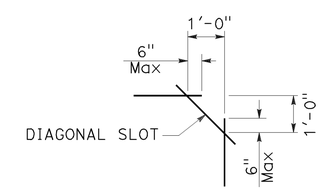

PLAN VIEW OF DIAGONAL SLOT AT CORNERS

NOTES:

1. Round corners of acute angle saw cuts to prevent damage to conductors.
2. Typical distance separating loops from edge to edge is 10' for Type A, B, D and E installation in single lane.
3. Use Type D loops for limit line detection and bicycle lanes.

STATE OF CALIFORNIA
DEPARTMENT OF TRANSPORTATION

ELECTRICAL SYSTEMS (DETECTORS)

NO SCALE

RSP ES-5B DATED APRIL 15, 2016 SUPERSEDES RSP ES-5B DATED OCTOBER 30, 2015 AND RSP ES-5B DATED JULY 19, 2013 AND STANDARD PLAN ES-5B DATED MAY 20, 2011 - PAGE 449 OF THE STANDARD PLANS BOOK DATED 2010.

REVISED STANDARD PLAN RSP ES-5B

2010 REVISED STANDARD PLAN RSP ES-5B

Dist	COUNTY	ROUTE	POST MILES TOTAL PROJECT	SHEET No.	TOTAL SHEETS
05	SBt	156	0.0/3.0	99	113

Theresa Gabriel
REGISTERED ELECTRICAL ENGINEER

October 30, 2015
PLANS APPROVAL DATE

REGISTERED PROFESSIONAL ENGINEER
Theresa Aziz Gabriel
No. E15129
Exp. 6-30-16
ELECTRICAL
STATE OF CALIFORNIA

THE STATE OF CALIFORNIA OR ITS OFFICERS OR AGENTS SHALL NOT BE RESPONSIBLE FOR THE ACCURACY OR COMPLETENESS OF SCANNED COPIES OF THIS PLAN SHEET.

TO ACCOMPANY PLANS DATED 6-20-16

NOTES:

1. Back casting shape to fit curvature of pole.
2. Provide cover fitting for top of post, when PBA is mounted on push button assembly post.
3. Install push button on crosswalk side of standard.
4. Use R10 series regulatory signs and plaques for pedestrian and bicycle facilities.

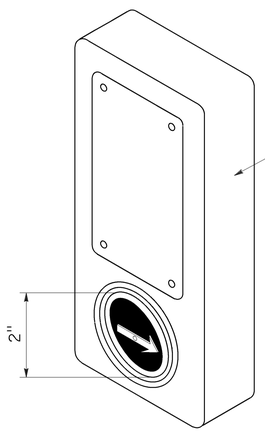

ACCESSIBLE PEDESTRIAN SIGNAL

DETAIL A

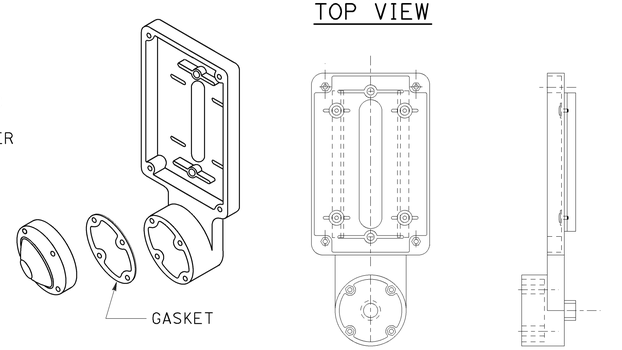

TYPE B PUSH BUTTON ASSEMBLY

DETAIL B

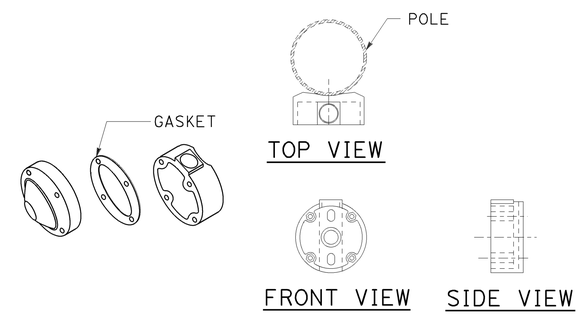

TYPE C PUSH BUTTON ASSEMBLY

DETAIL C

STATE OF CALIFORNIA
DEPARTMENT OF TRANSPORTATION

ELECTRICAL SYSTEMS (ACCESSIBLE PEDESTRIAN SIGNAL AND PUSH BUTTON ASSEMBLIES)

NO SCALE

RSP ES-5C DATED OCTOBER 30, 2015 SUPERSEDES RSP ES-5C DATED JULY 19, 2013 AND STANDARD PLAN ES-5C DATED MAY 20, 2011 - PAGE 450 OF THE STANDARD PLANS BOOK DATED 2010.

REVISED STANDARD PLAN RSP ES-5C

2010 REVISED STANDARD PLAN RSP ES-5C

8-24-15

Dist	COUNTY	ROUTE	POST MILES TOTAL PROJECT	SHEET No.	TOTAL SHEETS
05	SBt	156	0.0/3.0	100	113

Theresa Gabriel
REGISTERED ELECTRICAL ENGINEER

October 30, 2015
PLANS APPROVAL DATE

REGISTERED PROFESSIONAL ENGINEER Theresa Aziz Gabriel No. E15129 Exp. 6-30-16 ELECTRICAL STATE OF CALIFORNIA

THE STATE OF CALIFORNIA OR ITS OFFICERS OR AGENTS SHALL NOT BE RESPONSIBLE FOR THE ACCURACY OR COMPLETENESS OF SCANNED COPIES OF THIS PLAN SHEET.

TO ACCOMPANY PLANS DATED 6-20-16

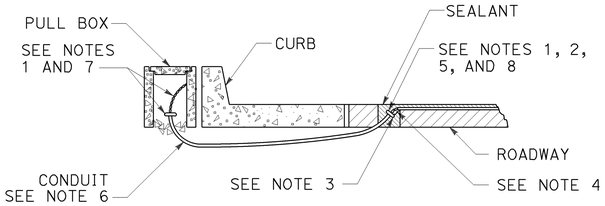

TYPE A
CURB TERMINATION DETAIL

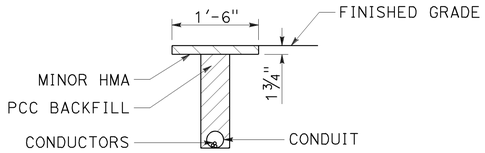

"T" TRENCH
DETAIL T

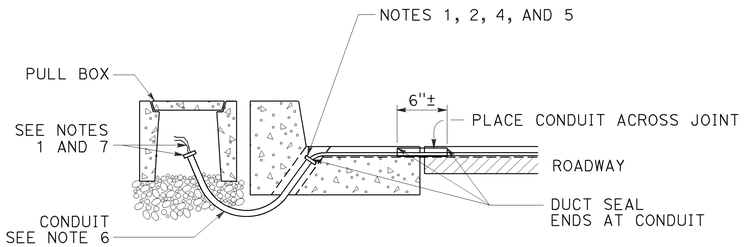

CROSS SECTION

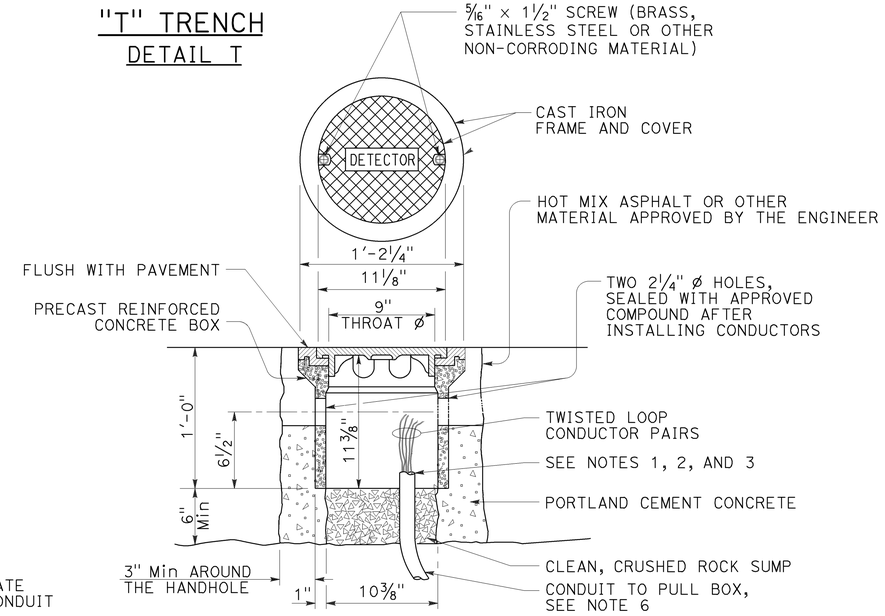

DETECTOR HANDHOLE DETAIL

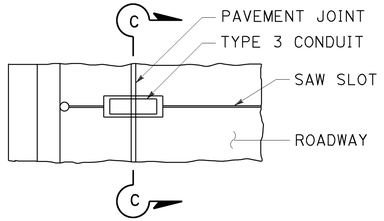

PLAN VIEW

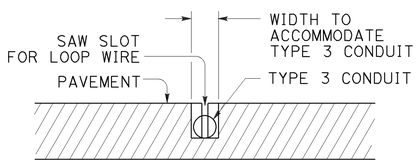

SECTION C-C

TYPE B
CURB TERMINATION DETAIL

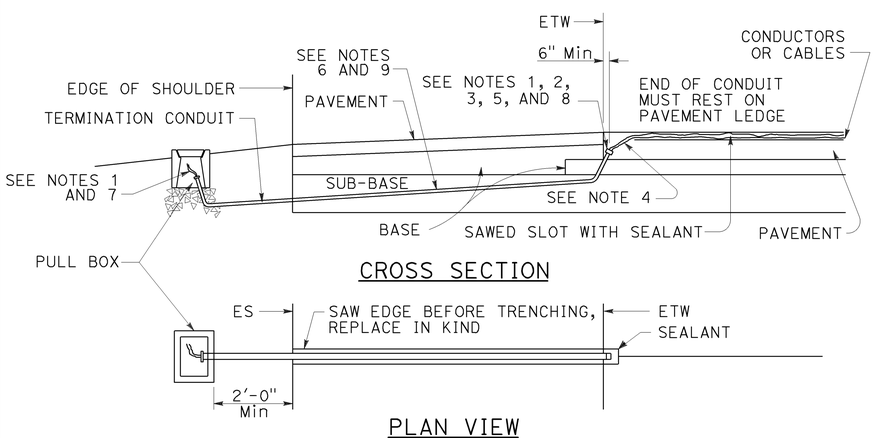

CROSS SECTION

PLAN VIEW

SHOULDER TERMINATION DETAILS

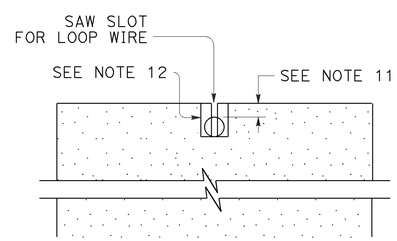

SECTION A-A

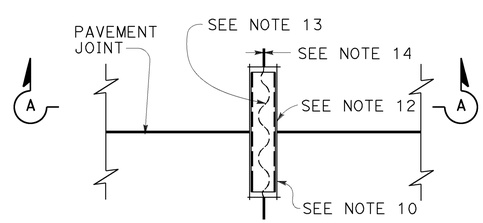

PLAN VIEW

TYPICAL LOOP LEAD-IN DETAIL AT PAVEMENT JOINT

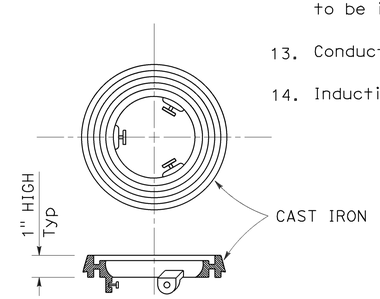

LOCKING GRADE RING

NOTES:

1. Bushing shall be used at end of conduit.
2. Tape detector conductors or cables 3" each side of bushings.
3. Install duct seal compound to each end of termination conduit before installing sealant.
4. Round all sharp edges where detector conductors or cables have to pass.
5. End of conduit shall be 3⅛" below roadway surface.
6.

Conduit size	Loop conductors
1"C minimum	1 to 2 pairs
1½"C minimum	3 to 4 pairs
2"C minimum	5 or more pairs

7. Splice detector conductors or cables to detector lead-in-cable.
8. Location of detector handhole when shown on plans.
9. When the shoulder and traveled way are paved with the same material and there is no joint between them, the conduit shall extend only 2'-0" into the shoulder pavement.
10. ¾"C, Type 3 conduit 6" long minimum, plug both ends with duct compound to keep out sealant.
11. ½" Minimum between top of conduit and pavement surface.
12. Sawcut shall not exceed 1" in width and ⅛" longer than conduit to be installed.
13. Conductors with ½" minimum slack inside conduit.
14. Inductive loop detector saw slot.

STATE OF CALIFORNIA
DEPARTMENT OF TRANSPORTATION

ELECTRICAL SYSTEMS (CURB AND SHOULDER TERMINATION, TRENCH, AND HANDHOLE DETAILS)

NO SCALE

RSP ES-5D DATED OCTOBER 30, 2015 SUPERSEDES RSP ES-5D DATED JULY 19, 2013 AND STANDARD PLAN ES-5D DATED MAY 20, 2011 - PAGE 451 OF THE STANDARD PLANS BOOK DATED 2010.

REVISED STANDARD PLAN RSP ES-5D

2010 REVISED STANDARD PLAN RSP ES-5D

8-19-15

Dist	COUNTY	ROUTE	POST MILES TOTAL PROJECT	SHEET No.	TOTAL SHEETS
05	SBt	156	0.0/3.0	101	113

REGISTERED CIVIL ENGINEER

July 15, 2016
PLANS APPROVAL DATE

REGISTERED PROFESSIONAL ENGINEER
Stanley P. Johnson
No. C57793
Exp. 3-31-18
CIVIL
STATE OF CALIFORNIA

THE STATE OF CALIFORNIA OR ITS OFFICERS OR AGENTS SHALL NOT BE RESPONSIBLE FOR THE ACCURACY OR COMPLETENESS OF SCANNED COPIES OF THIS PLAN SHEET.

TO ACCOMPANY PLANS DATED 6-20-16

2010 REVISED STANDARD PLAN RSP ES-7A

NOTES:

1. For additional notes, details and data for Type 15TS and Type 21TS Standards, see Revised Standard Plan RSP ES-6A.
2. Handhole shall be located on the downstream side of traffic.

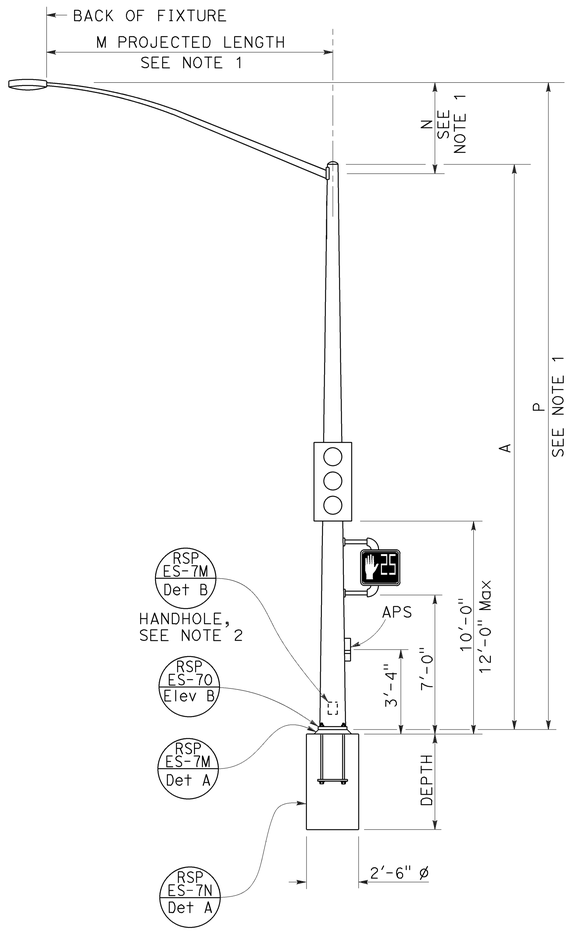

TYPE 15TS AND 21TS STANDARD

ELEVATION A

(See Note 1)

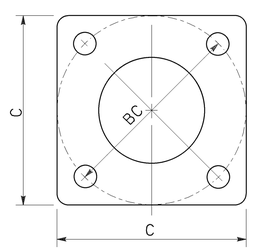

BASE PLATE

TYPE 15TS AND 21TS

DETAIL A

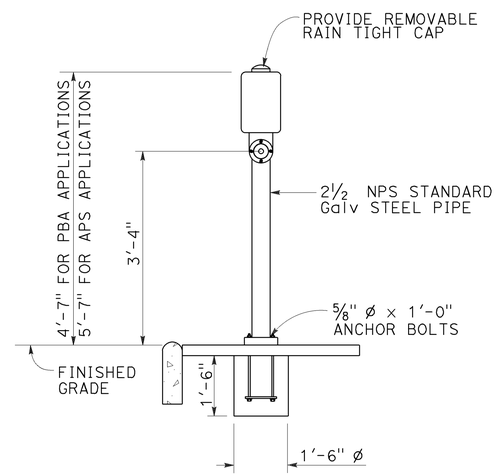

ELEVATION

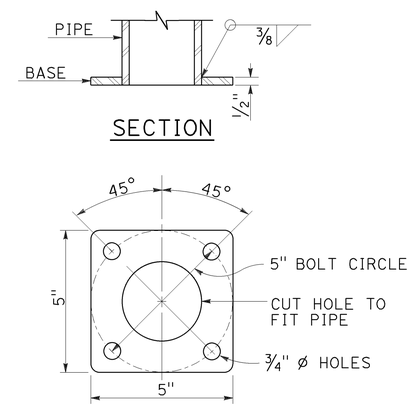

BASE PLATE

PBA POST

PUSH BUTTON ASSEMBLY POST

DETAIL B

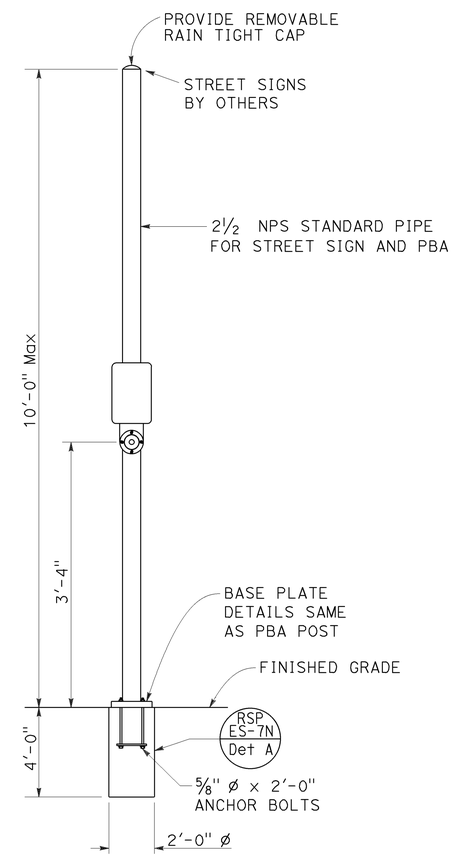

COMBINED STREET SIGN

PUSH BUTTON ASSEMBLY POST

DETAIL C

POLE TYPE	POLE DATA				BASE PLATE DATA				CIDH
	A HEIGHT	Min OD BASE	Min OD TOP	WALL THICKNESS	C	BC = BOLT CIRCLE	THICKNESS	ANCHOR BOLT SIZE	DEPTH
15TS	30'-0"	8"	3 11/16"	0.1793"	1'-1½"	1'-0"	2"	1½" ø x 42"	7'-6"
21TS	35'-0"	9⅜"	3 9/16"		1'-3"	1'-2"			8'-6"

STATE OF CALIFORNIA
DEPARTMENT OF TRANSPORTATION

ELECTRICAL SYSTEMS (SIGNAL AND LIGHTING STANDARD, TYPE TS, AND PUSH BUTTON ASSEMBLY POST)

NO SCALE

RSP ES-7A DATED JULY 15, 2016 SUPERSEDES RSP ES-7A DATED OCTOBER 30, 2015 AND RSP ES-7A DATED JULY 19, 2013 AND STANDARD PLAN ES-7A DATED MAY 20, 2011 - PAGE 462 OF THE STANDARD PLANS BOOK DATED 2010.

REVISED STANDARD PLAN RSP ES-7A

Dist	COUNTY	ROUTE	POST MILES TOTAL PROJECT	SHEET No.	TOTAL SHEETS
05	SBt	156	0.0/3.0	102	113

Theresa Gabriel
REGISTERED ELECTRICAL ENGINEER

October 30, 2015
PLANS APPROVAL DATE

REGISTERED PROFESSIONAL ENGINEER
Theresa Aziz Gabriel
No. E15129
Exp. 6-30-16
ELECTRICAL
STATE OF CALIFORNIA

THE STATE OF CALIFORNIA OR ITS OFFICERS OR AGENTS SHALL NOT BE RESPONSIBLE FOR THE ACCURACY OR COMPLETENESS OF SCANNED COPIES OF THIS PLAN SHEET.

TO ACCOMPANY PLANS DATED 6-20-16

NOTE:

Curves represent the minimum footcandle (FC).

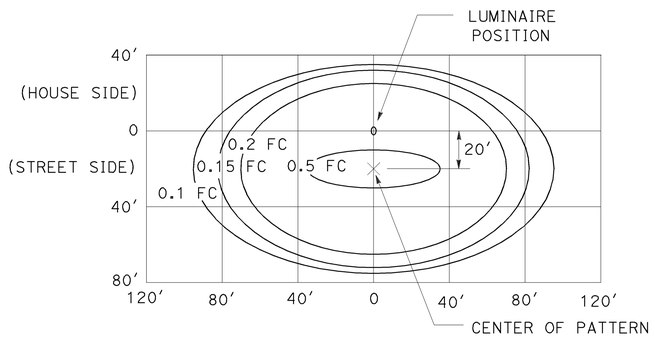

LED LUMINAIRE 165 W
34′ Mounting Height

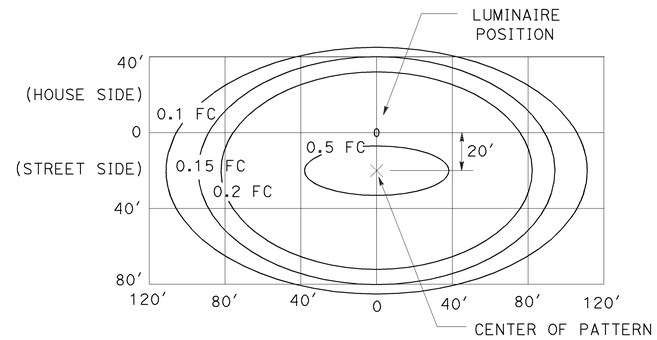

LED LUMINAIRE 235 W
40′ Mounting Height

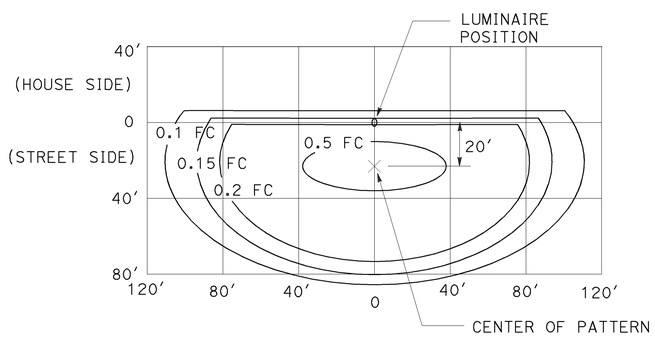

LED LUMINAIRE 235 W
40′ Mounting Height
with back side control

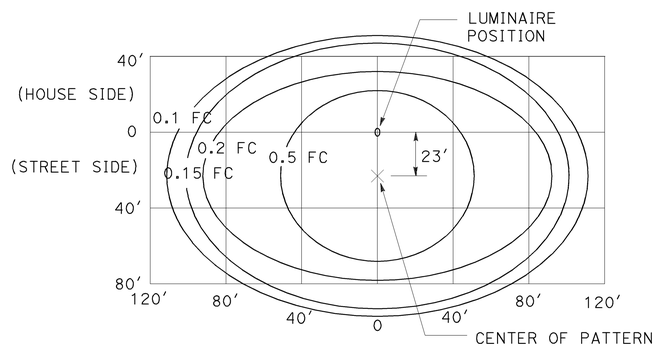

LED LUMINAIRE 300 W
40′ Mounting Height

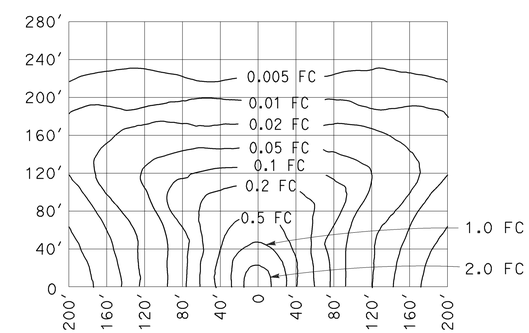

LOW-PRESSURE SODIUM LUMINAIRE 180 W
40′ Mounting Height
Lamp operated at 33,000 lm

STATE OF CALIFORNIA
DEPARTMENT OF TRANSPORTATION

ELECTRICAL SYSTEMS (ISOFOOTCANDLE CURVES)

NO SCALE

RSP ES-10A DATED OCTOBER 30, 2015 SUPERSEDES RSP ES-10A DATED JULY 19, 2013 THAT SUPPLEMENTS THE STANDARD PLANS BOOK DATED 2010.

REVISED STANDARD PLAN RSP ES-10A

2010 REVISED STANDARD PLAN RSP ES-10A

9-29-15

Dist	COUNTY	ROUTE	POST MILES TOTAL PROJECT	SHEET No.	TOTAL SHEETS
05	SBt	156	0.0/3.0	103	113

Theresa Gabriel
REGISTERED ELECTRICAL ENGINEER

April 15, 2016
PLANS APPROVAL DATE

REGISTERED PROFESSIONAL ENGINEER
Theresa Aziz Gabriel
No. E15129
Exp. 6-30-16
ELECTRICAL
STATE OF CALIFORNIA

THE STATE OF CALIFORNIA OR ITS OFFICERS OR AGENTS SHALL NOT BE RESPONSIBLE FOR THE ACCURACY OR COMPLETENESS OF SCANNED COPIES OF THIS PLAN SHEET.

TO ACCOMPANY PLANS DATED 6-20-16

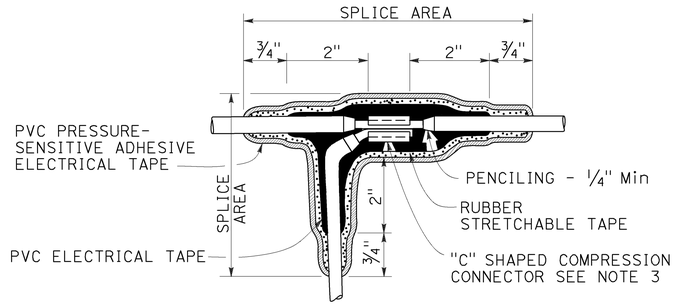

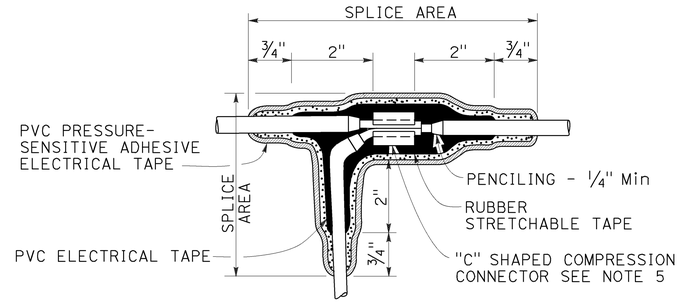

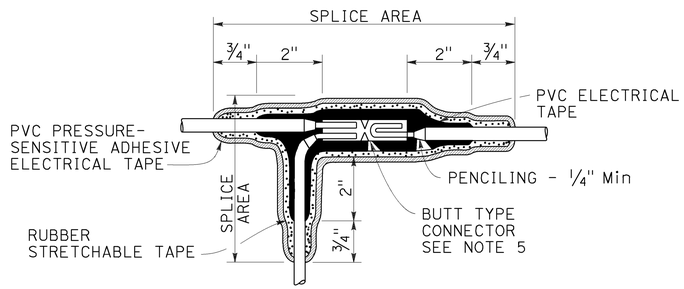

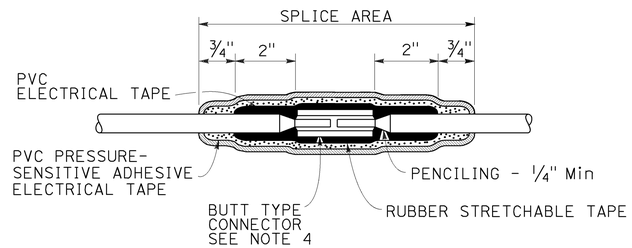

TYPICAL SPLICE INSULATION METHOD B

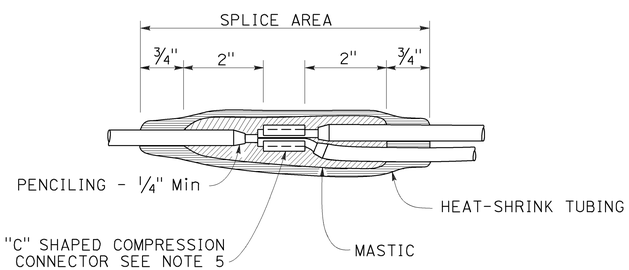

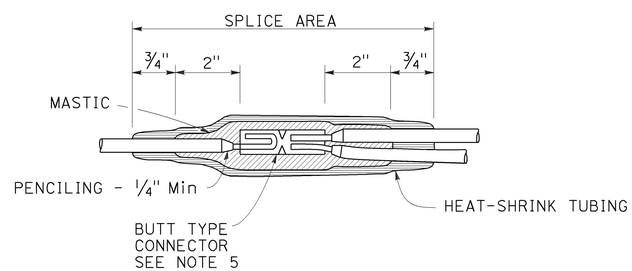

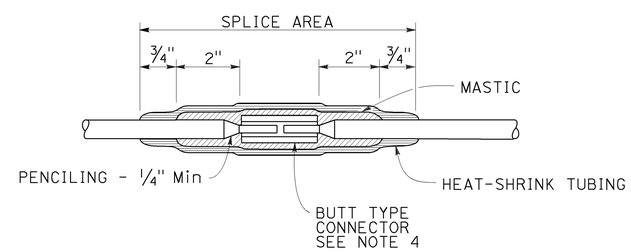

TYPICAL SPLICE INSULATION HEAT-SHRINK TUBING

NOTES:

1. Dimensions are minimum.
2. Rubber tapes shall be rolled after application.
3. Between 1 free-end and 1 through conductor.
4. Between 2 free-end conductors.
5. Between 3 free-end conductors.

STATE OF CALIFORNIA
DEPARTMENT OF TRANSPORTATION

ELECTRICAL SYSTEMS (SPLICE INSULATION METHODS DETAILS)

NO SCALE

RSP ES-13A DATED APRIL 15, 2016 SUPERSEDES RSP ES-13A DATED OCTOBER 30, 2015 AND STANDARD PLAN ES-13A DATED MAY 20, 2011 - PAGE 491 OF THE STANDARD PLANS BOOK DATED 2010.

REVISED STANDARD PLAN RSP ES-13A

2010 REVISED STANDARD PLAN RSP ES-13A

1-22-16

Dist	COUNTY	ROUTE	POST MILES TOTAL PROJECT	SHEET No.	TOTAL SHEETS
05	SBt	156	0.0/3.0	104	113

Theresa Gabriel
REGISTERED ELECTRICAL ENGINEER

April 15, 2016
PLANS APPROVAL DATE

REGISTERED PROFESSIONAL ENGINEER
Theresa Aziz Gabriel
No. E15129
Exp. 6-30-16
ELECTRICAL
STATE OF CALIFORNIA

THE STATE OF CALIFORNIA OR ITS OFFICERS OR AGENTS SHALL NOT BE RESPONSIBLE FOR THE ACCURACY OR COMPLETENESS OF SCANNED COPIES OF THIS PLAN SHEET.

TO ACCOMPANY PLANS DATED 6-20-16

CIRCUIT VOLTAGE	FUSE VOLTAGE RATING	FUSE CURRENT RATING						
		HPS LAMP BALLAST		LOW PRESSURE SODIUM BALLAST	INDUCTION SIGN LIGHTING	SINGLE PHASE (TWO WIRE) TRANSFORMERS (PRIMARY SIDE)		
		70 W	100 W	180 W	85 W	1 kVA	2 kVA	3 kVA
120 V	250 V	5 A	5 A	5 A	5 A	10 A	20 A	30 A
240 V	250 V	5 A	5 A	5 A	5 A	6 A	10 A	20 A
480 V	500-600 V	5 A	5 A	3 A	1 A (SEE NOTE 2)	3 A	6 A	10 A

NOTES:

1. Primary lines of multiple ballasts shall be provided with fused connectors. Fuse ratings shall be as noted above.
2. See Revised Standard Plan RSP ES-15D, Type SC3 control.

FUSE RATINGS FOR FUSED CONNECTORS

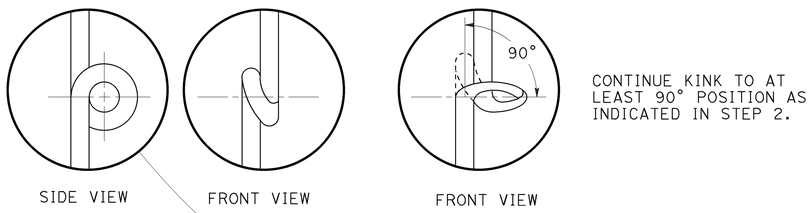

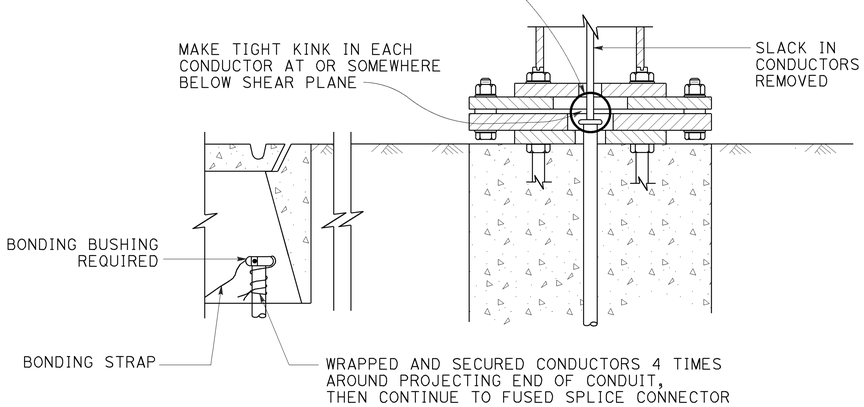

KINKING DETAIL FOR SLIP BASE STANDARDS

DETAIL A

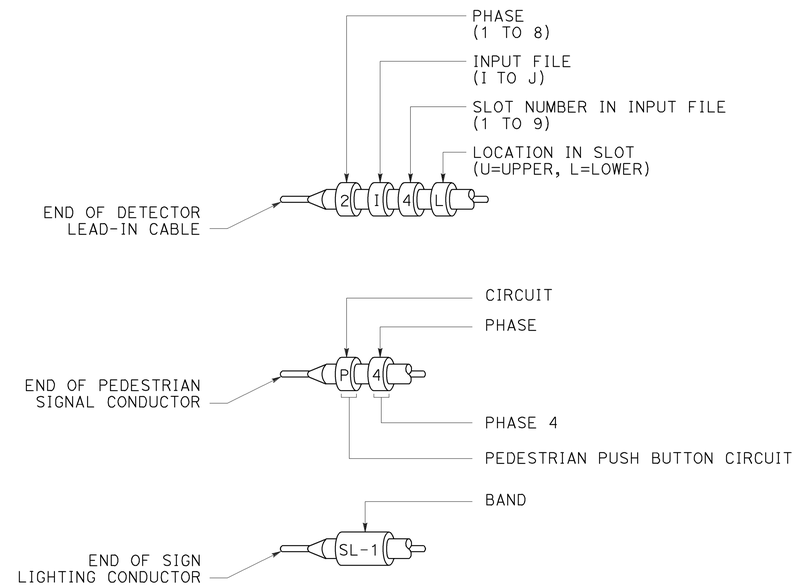

TYPICAL BANDING DETAILS

DETAIL B

STATE OF CALIFORNIA
DEPARTMENT OF TRANSPORTATION

ELECTRICAL SYSTEMS (FUSE RATING, KINKING AND BANDING DETAIL)

NO SCALE

RSP ES-13B DATED APRIL 15, 2016 SUPERSEDES STANDARD PLAN ES-13B DATED MAY 20, 2011 - PAGE 492 OF THE STANDARD PLANS BOOK DATED 2010.

REVISED STANDARD PLAN RSP ES-13B

2010 REVISED STANDARD PLAN RSP ES-13B

1-12-16

DIST	COUNTY	ROUTE	POST MILES TOTAL PROJECT	SHEET No.	TOTAL SHEETS
05	SBt	156	0.0/3.0	105	113

REGISTERED CIVIL ENGINEER 6/7/16 DATE

6-20-16
PLANS APPROVAL DATE

REGISTERED PROFESSIONAL ENGINEER TAMARA S. MARCHENKO No. C76837 Exp. 12/31/16 CIVIL STATE OF CALIFORNIA

The State of California or its officers or agents shall not be responsible for the accuracy or completeness of scanned copies of this plan sheet.

LOCATION OF CONCRETE BARRIER Rte 156, SBt

(WASHINGTON ST UC)

LOCATION No.	DIRECTION	POST MILE	MAINLINE OR RAMP	LEFT OR RIGHT SHOULDER MEDIAN	BARRIER TYPE (NEW)	DESCRIPTION	CONNECTION END FOR TRAFFIC	QUANTITIES LF	QUANTITIES TYPE
17	WB	2.75	MAIN	LEFT	TYPE 732B (Mod)	WB, BEFORE Br. UC No. 43-0030L	APPROACH	160	732B (Mod)
15	EB	2.67	MAIN	MEDIAN	TYPE 732B (Mod)	EB, BEFORE Br. UC No. 43-0030R	APPROACH	180	732B (Mod)
16	WB	2.70	MAIN	LEFT	TYPE 732B (Mod)	WB, AFTER Br. UC No. 43-0030L	DEPARTURE	39	732B (Mod)
19	WB	2.72	MAIN	RIGHT	TRANSITION	WB, BEFORE Br. UC No. 43-0030L	APPROACH	4	CONCRETE BARRIER (TRANSITION)

GENERAL NOTES:

1. See "ROADWAY PLANS" for Barrier Layout alignment.
2. Finish grade to slope away from the barrier to prevent ponding.
3. The concrete barriers and transition to align with the existing alignment curvature as necessary.
4. See "ROADWAY PLANS" for MGBR removal.

QUANTITIES

REMOVE CONCRETE BARRIER	82 LF
CONCRETE BARRIER TYPE 732B (Modified)	379 LF
CONCRETE BARRIER TRANSITION	4 LF

INDEX TO PLANS

SHEET No.	TITLE
1.	GENERAL PLAN
2.	LOCATION 17, TRANSITION 17a, REMOVAL
3.	LOCATION 17, TRANSITION 17a
4.	TRANSITIONS 17b & 16a
5.	LOCATION 16, TRANSITION 16b
6.	LOCATION 15, TRANSITION 15a, REMOVAL
7.	LOCATION 15, TRANSITION 15a
8.	LOCATION 15, TRANSITION 15b
9.	LOCATION 19

GENERAL DESIGN DATA

DESIGN:
AASHTO LRFD Bridge Design Specifications, 6th Edition with California Amendments

IMPACT LOAD:
Vehicular collision force
F_t = 54 kips on barrier

REINFORCED CONCRETE:
fy = 60 ksi
f'c = 3.6 ksi
n = 8

STANDARD PLANS DATED 2010

A10A	ABBREVIATIONS (SHEET 1 OF 2)
RSP A10B	ABBREVIATIONS (SHEET 2 OF 2)
B0-3	BRIDGE DETAILS
RSP B11-55	CONCRETE BARRIER TYPE 732
RSP A77U1	MIDWEST GUARDRAIL SYSTEM CONNECTIONS TO BRIDGE RAILINGS WITHOUT SIDEWALKS DETAIL No. 1
RSP A77U2	MIDWEST GUARDRAIL SYSTEM CONNECTIONS TO BRIDGE RAILINGS WITHOUT SIDEWALKS DETAIL No. 2
RSP A77U4	MIDWEST GUARDRAIL SYSTEM TRANSITION RAILING (TYPE WB-31)

LEGEND:

EXISTING STRUCTURAL
NEW CONSTRUCTION
XXXXXXX EXISTING MGBR TO REMOVE

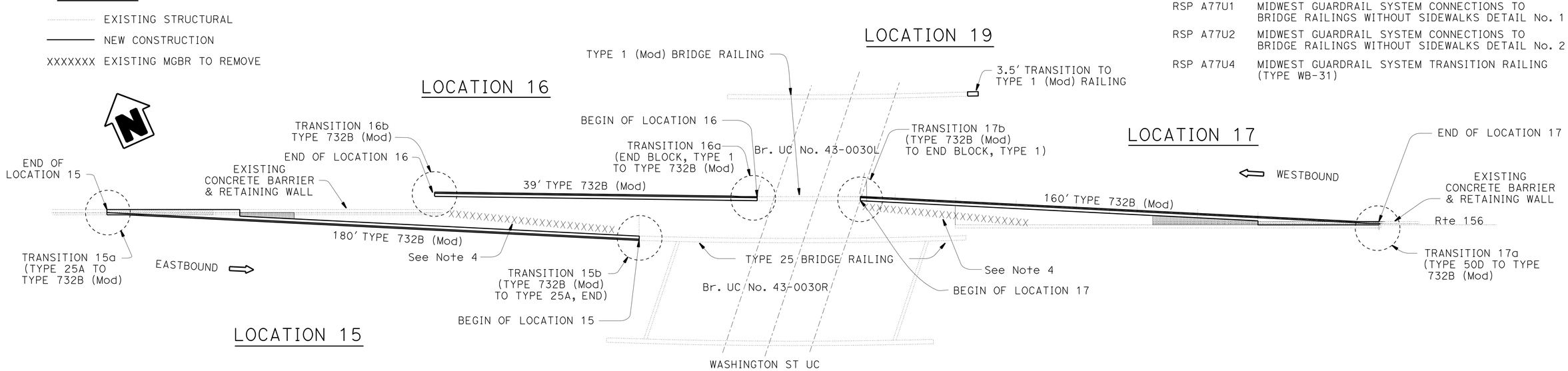

NOTE:
THE CONTRACTOR MUST VERIFY ALL CONTROLLING FIELD DIMENSIONS BEFORE ORDERING OR FABRICATING ANY MATERIAL.

CONCRETE BARRIER LAYOUT

NO SCALE

DESIGN	BY TAMARA MARCHENKO	CHECKED VICTOR LOPEZ	LOAD & RESISTANCE FACTOR DESIGN	LIVE LOADING: HL93 W/"LOW-BOY"; PERMIT DESIGN VEHICLE	
DETAILS	BY HUNG NGUYEN	CHECKED VICTOR LOPEZ	LAYOUT	BY HUNG NGUYEN	CHECKED TAMARA MARCHENKO
QUANTITIES	BY TAMARA MARCHENKO	CHECKED VICTOR LOPEZ	SPECIFICATIONS	BY JARVIS MAHE/SHARON HANSEN	PLANS AND SPECS COMPARED SHARON HANSEN

DAVID NEUMANN
DESIGN ENGINEER

STATE OF CALIFORNIA
DEPARTMENT OF TRANSPORTATION

DIVISION OF ENGINEERING SERVICES
DESIGN AND TECHNICAL SERVICES
SPECIAL DESIGN BRANCH B

BRIDGE NO. 43-0030L/R
POST MILE 2.7

CONCRETE BARRIER
GENERAL PLAN

ORIGINAL SCALE IN INCHES FOR REDUCED PLANS 0 1 2 3

UNIT: 3619
PROJECT NUMBER & PHASE: 0513000005
CONTRACT NO.: 05-1C8701

DISREGARD PRINTS BEARING EARLIER REVISION DATES

REVISION DATES 11-24-15 4-15-16

SHEET 1 OF 9

USERNAME => s119704 DATE PLOTTED => 10-AUG-2016 TIME PLOTTED => 14:29

STRUCTURES DESIGN GENERAL PLAN SHEET (ENGLISH) (REV.09-01-10)

FILE => 05-1c8701-1.dgn

DIST	COUNTY	ROUTE	POST MILES TOTAL PROJECT	SHEET No	TOTAL SHEETS
05	SBt	156	0.0/3.0	106	113

REGISTERED CIVIL ENGINEER 6/7/16 DATE

6-20-16
PLANS APPROVAL DATE

REGISTERED PROFESSIONAL ENGINEER TAMARA S. MARCHENKO No. C76837 Exp.12/31/16 CIVIL STATE OF CALIFORNIA

The State of California or its officers or agents shall not be responsible for the accuracy or completeness of electronic copies of this plan sheet.

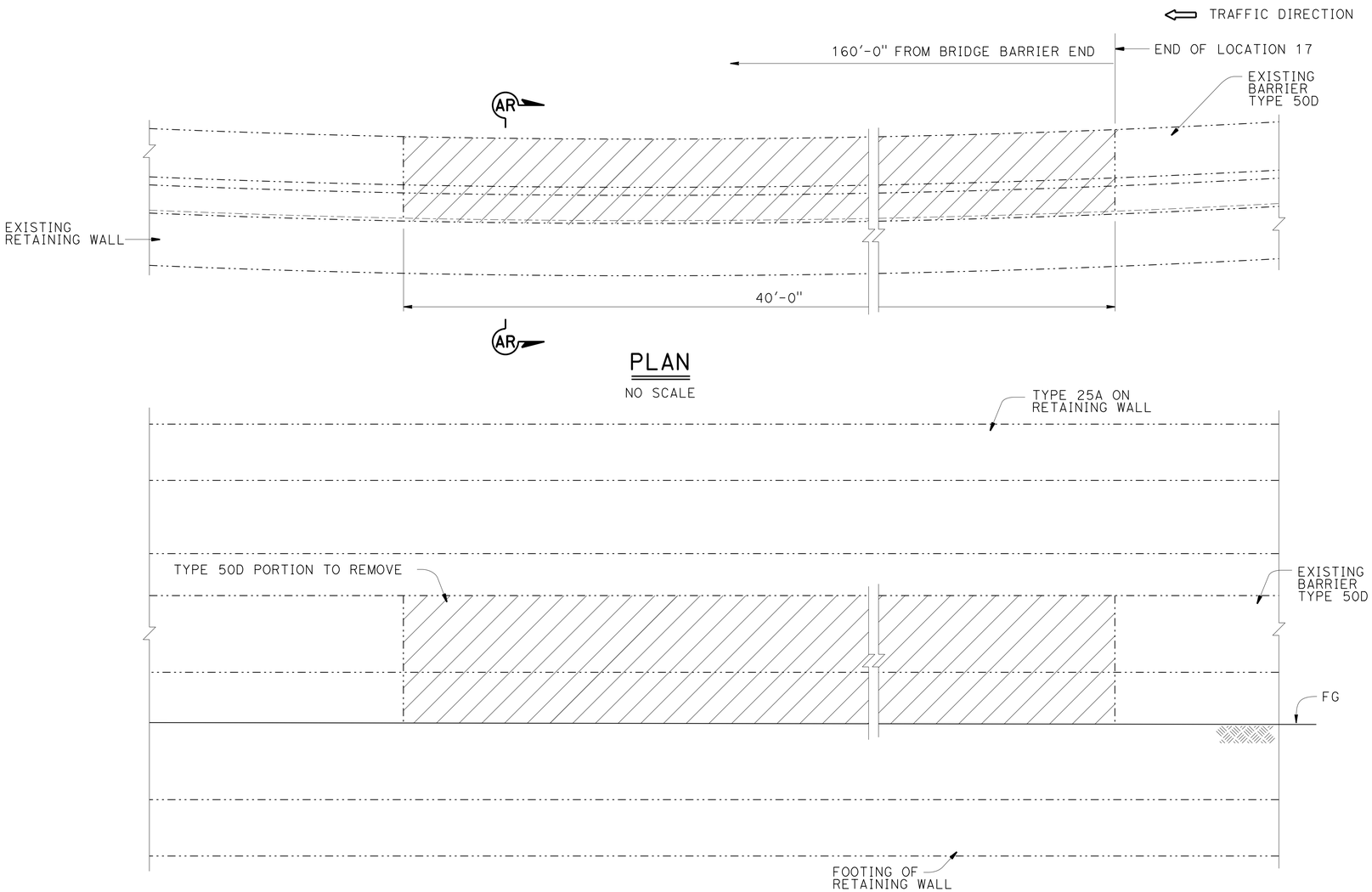

PLAN
NO SCALE

ELEVATION
NO SCALE

NOTES: For SHEETS 2 and 3

1. Align concrete barrier transition with existing barriers curvature as necessary. See "ROADWAY PLANS".
2. Existing barrier heights vary. Where existing barrier height is more than 2'-8", transition barrier height to 2'-8" @ 4:1 slope.
3. Concrete cover for reinforcing steel in barrier to be 1" except as noted. Longitudinal reinforcement to stop at all expansion joints.
4. Minimum concrete edge distance for drill and bond dowels must be 4", except as noted. Maintain 4" Clr Min around each dowel.
5. Lap splice existing horizontal reinforcement with new #5 bars. Horizontal reinforcement from SECTION AR-AR must continue through transition sections.
6. Protect existing electrical and drainage system.
7. Apply bond breaker for the retaining wall or existing barrier surfaces in contact with new concrete.
8. Contractor to verify existing retaining wall footing and maintain at least 12" vertical distance from it. Minimize open trench time frame. Prevent drainage system damage.

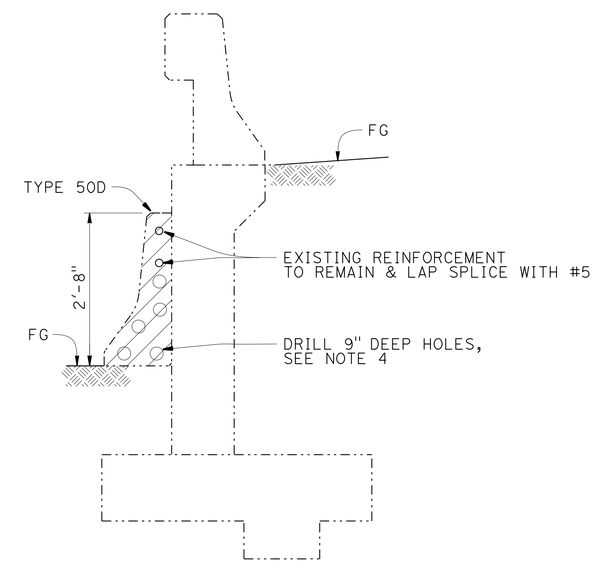

SECTION AR-AR
3/4"=1'-0"

LEGEND:

- EXISTING STRUCTURE
- NEW CONSTRUCTION
- REMOVE CONCRETE BARRIER, REINFORCEMENT TO REMAIN

NOTE:
THE CONTRACTOR MUST VERIFY ALL CONTROLLING FIELD DIMENSIONS BEFORE ORDERING OR FABRICATING ANY MATERIAL.

BRANCH CHIEF ***DAVID NEUMANN***

	BY	CHECKED
DESIGN	TAMARA MARCHENKO	VICTOR LOPEZ
DETAILS	HUNG NGUYEN	VICTOR LOPEZ
QUANTITIES	TAMARA MARCHENKO	VICTOR LOPEZ

STATE OF **CALIFORNIA** DEPARTMENT OF TRANSPORTATION

DIVISION OF ENGINEERING SERVICES DESIGN AND TECHNICAL SERVICES SPECIAL DESIGNS BRANCH **B**

BRIDGE NO. 43-0030L/R
POST MILE 2.75

CONCRETE BARRIER TYPE 732B (Mod)
LOCATION 17, TRANSITION 17a, REMOVAL

(ENGLISH) SPECIAL DESIGNS BRANCH BORDER SHEET (REV. 4-1-14)

ORIGINAL SCALE IN INCHES FOR REDUCED PLANS 0 1 2 3

UNIT: 3619
PROJECT NUMBER & PHASE: 0513000005
CONTRACT NO.: 05-1C8701

DISREGARD PRINTS BEARING EARLIER REVISION DATES
REVISION DATES 11-25-15 4-15-16

SHEET 2 OF 9

FILE => /2015sd/05-1C8701

USERNAME => s119704 DATE PLOTTED => 10-AUG-2016 TIME PLOTTED => 14:29

DIST	COUNTY	ROUTE	POST MILES TOTAL PROJECT	SHEET No	TOTAL SHEETS
05	SBt	156	0.0/3.0	107	113

REGISTERED CIVIL ENGINEER 6/7/16 DATE

6-20-16
PLANS APPROVAL DATE

REGISTERED PROFESSIONAL ENGINEER TAMARA S. MARCHENKO No. C76837 Exp.12/31/16 CIVIL STATE OF CALIFORNIA

The State of California or its officers or agents shall not be responsible for the accuracy or completeness of electronic copies of this plan sheet.

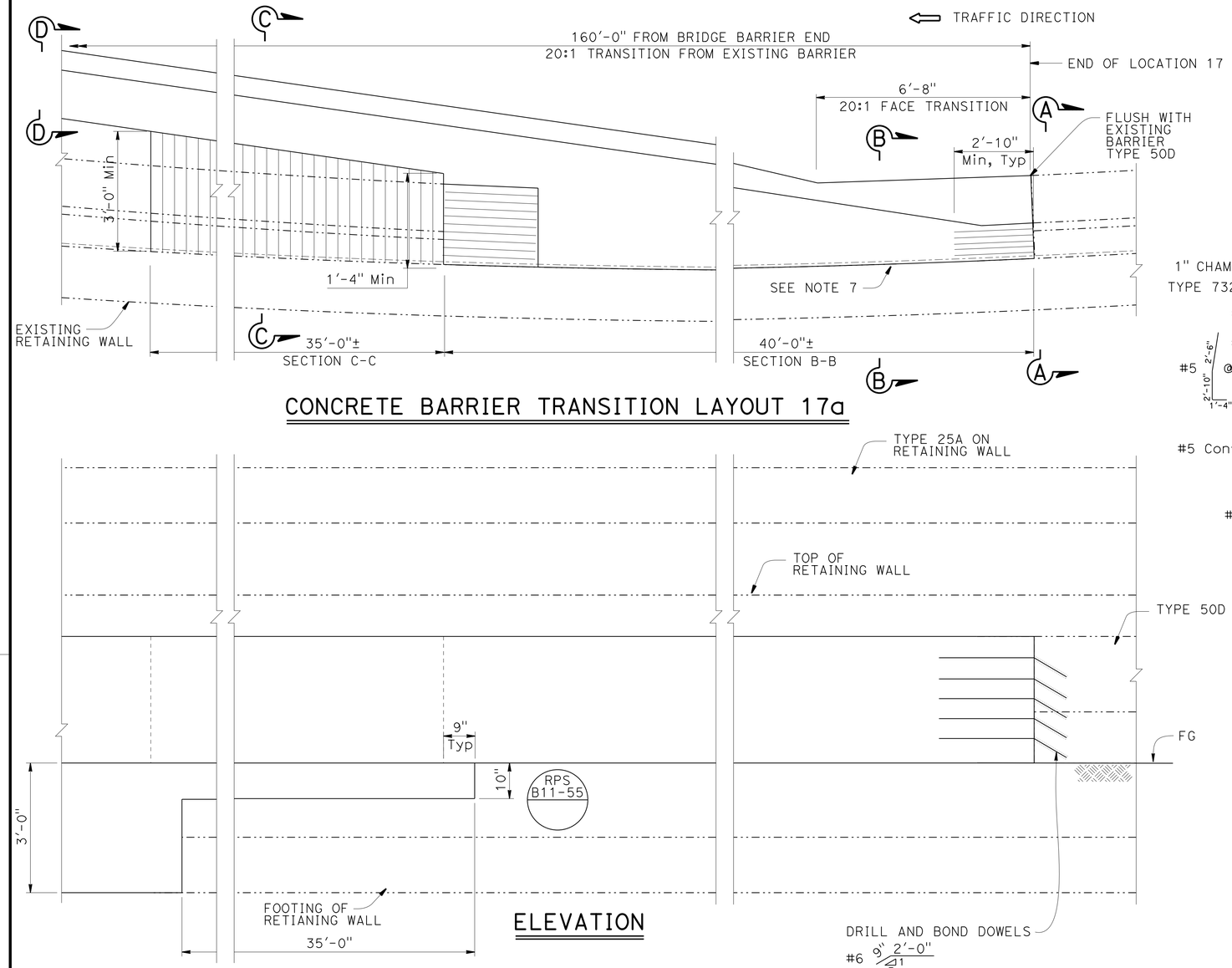

CONCRETE BARRIER TRANSITION LAYOUT 17a

ELEVATION

NOTE: See SHEET 2 for Notes

LEGEND:

- EXISTING STRUCTURE
- NEW CONSTRUCTION
- CONCRETE FILL (MINOR CONCRETE) (SECTION C-C ONLY)
- NEW CONCRETE WITH EXISTING REINFORCEMENT INTACT
- ○ EXISTING REINFORCEMENT
- ● NEW REINFORCEMENT
- ◉ DRILL AND BOND DOWEL

STANDARD PLAN SHEET No.

DETAIL No.

NOTE:
THE CONTRACTOR MUST VERIFY ALL CONTROLLING FIELD DIMENSIONS BEFORE ORDERING OR FABRICATING ANY MATERIAL.

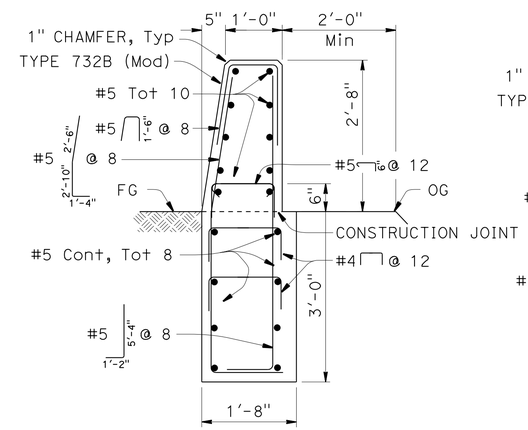

SECTION D-D

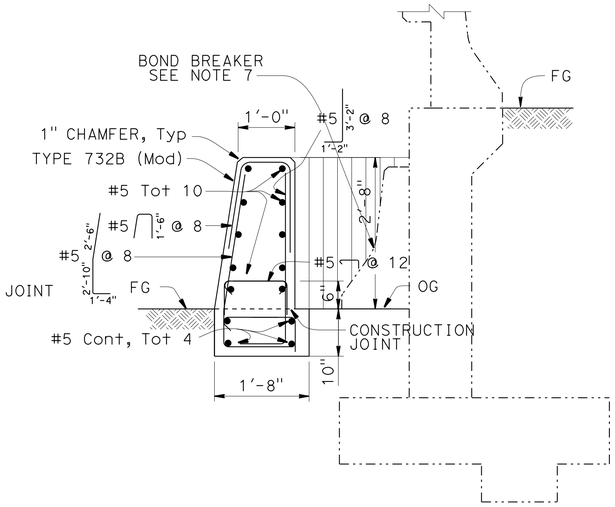

SECTION C-C

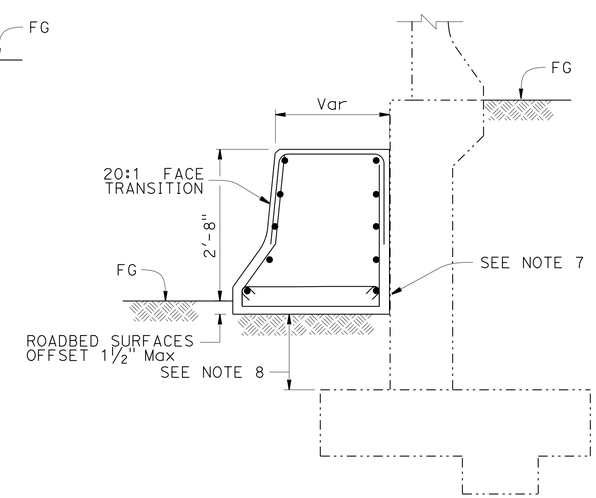

SECTION B-B

SEE SECTION C-C FOR REINFORCEMENT ADJUST FOR TRANSITION

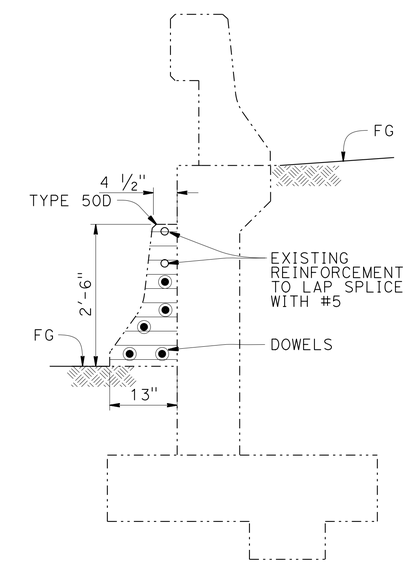

SECTION A-A

DIMENSIONS ARE FOR REFERENCE ONLY

NO SCALE

BRANCH CHIEF **DAVID NEUMANN**

	BY	CHECKED
DESIGN	TAMARA MARCHENKO	VICTOR LOPEZ
DETAILS	HUNG NGUYEN	VICTOR LOPEZ
QUANTITIES	TAMARA MARCHENKO	VICTOR LOPEZ

STATE OF CALIFORNIA
DEPARTMENT OF TRANSPORTATION

DIVISION OF ENGINEERING SERVICES
DESIGN AND TECHNICAL SERVICES
SPECIAL DESIGNS BRANCH
B

BRIDGE NO. 43-0030L/R
POST MILE 2.75

CONCRETE BARRIER TYPE 732B (Mod)
LOCATION 17, TRANSITION 17a

(ENGLISH) SPECIAL DESIGNS BRANCH BORDER SHEET (REV. 4-1-14)

ORIGINAL SCALE IN INCHES FOR REDUCED PLANS 0 1 2 3

UNIT: 3619
PROJECT NUMBER & PHASE: 0513000005
CONTRACT NO.: 05-1C8701

DISREGARD PRINTS BEARING EARLIER REVISION DATES
REVISION DATES 11-25-15 4-15-16

SHEET 3 OF 9

FILE => /2015sd/05-1C8701

USERNAME => s119704 DATE PLOTTED => 10-AUG-2016 TIME PLOTTED => 14:29

DIST	COUNTY	ROUTE	POST MILES TOTAL PROJECT	SHEET No	TOTAL SHEETS
05	SBt	156	0.0/3.0	108	113

REGISTERED CIVIL ENGINEER 6/7/16 DATE

6-20-16
PLANS APPROVAL DATE

REGISTERED PROFESSIONAL ENGINEER TAMARA S. MARCHENKO No. C76837 Exp.12/31/16 CIVIL STATE OF CALIFORNIA

The State of California or its officers or agents shall not be responsible for the accuracy or completeness of electronic copies of this plan sheet.

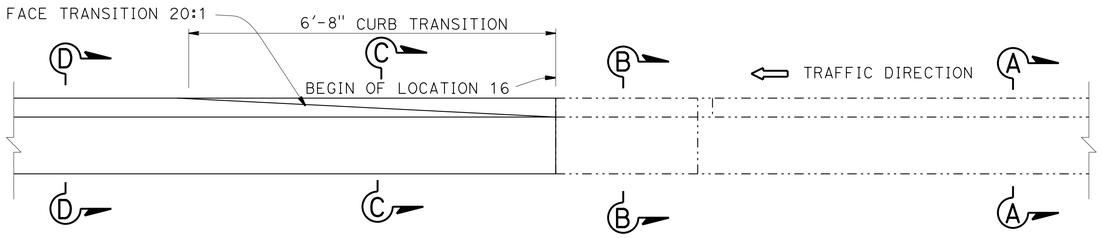

TRANSITION 16a PLAN

¾"=1'-0"

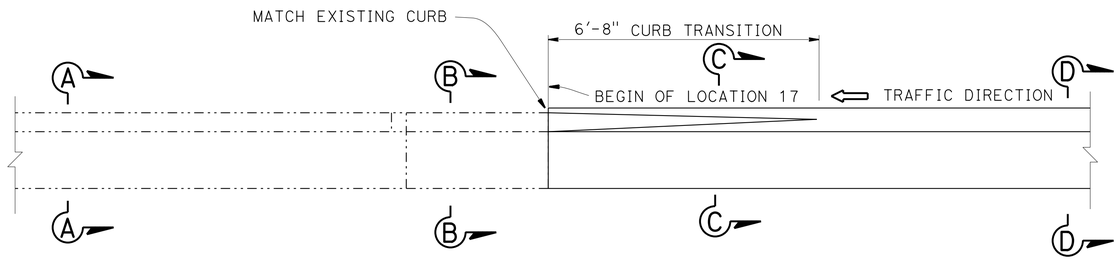

TRANSITION 17b PLAN

¾"=1'-0"

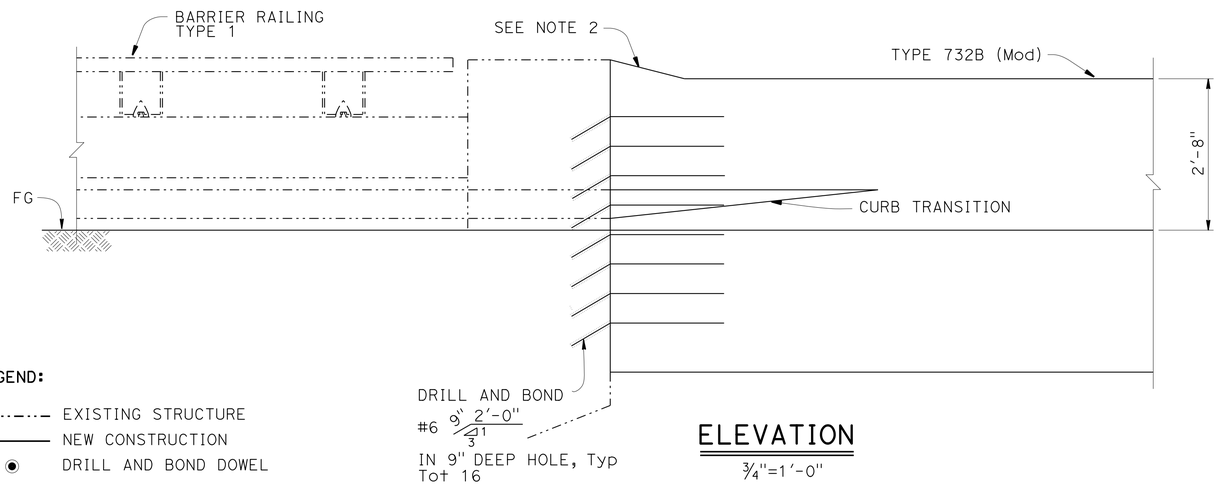

ELEVATION

¾"=1'-0"

LOCATION 17, TRANSITION 17b

See Note 6

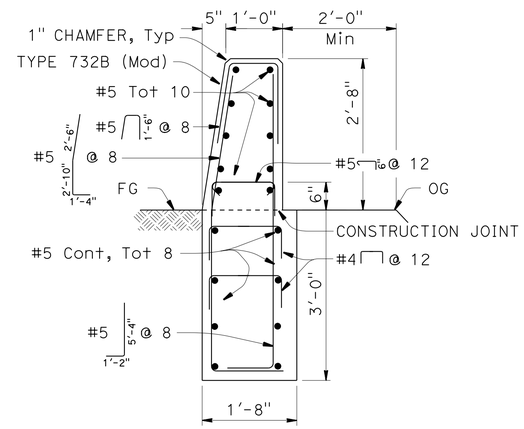

SECTION D-D

¾"=1'-0"

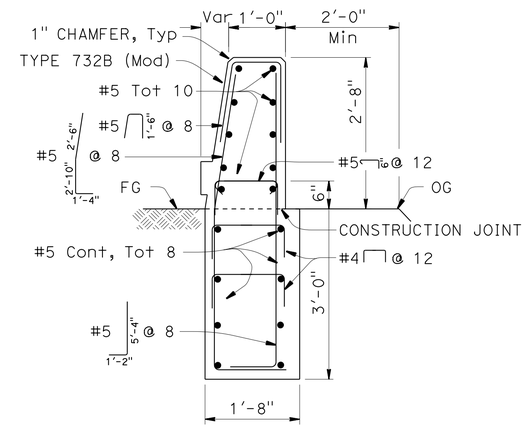

SECTION C-C

¾"=1'-0"

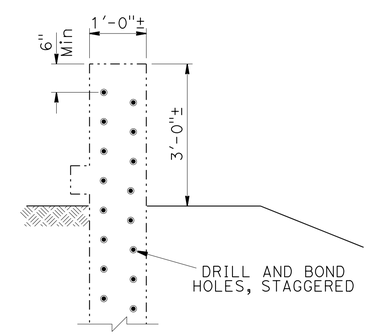

SECTION B-B

¾"=1'-0"

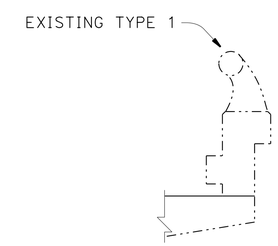

SECTION A-A

¾"=1'-0"

LEGEND:

- EXISTING STRUCTURE
- NEW CONSTRUCTION
- DRILL AND BOND DOWEL

NOTES:

1. Align concrete barrier transition with barriers curvature as necessary. See "ROADWAY PLANS".
2. Existing barrier heights vary. Where existing barrier height is more than 2'-8", transition barrier height to 2'-8" @ 4:1 slope.
3. Concrete cover to reinforcing steel in barrier to be 1", except as noted. Longitudinal reinforcement to stop at all expansion joints.
4. Minimum concrete edge distance for drill and bond dowels must be 4", except as noted. Maintain 4" clr min around each dowel.
5. Protect existing electrical and drainage system.
6. Location 16, transition 16a is symmetrical to the transition 17b.

NOTE:
THE CONTRACTOR MUST VERIFY ALL CONTROLLING FIELD DIMENSIONS BEFORE ORDERING OR FABRICATING ANY MATERIAL.

BRANCH CHIEF **DAVID NEUMANN**

	BY	CHECKED
DESIGN	TAMARA MARCHENKO	VICTOR LOPEZ
DETAILS	HUNG NGUYEN	VICTOR LOPEZ
QUANTITIES	TAMARA MARCHENKO	VICTOR LOPEZ

STATE OF CALIFORNIA
DEPARTMENT OF TRANSPORTATION

DIVISION OF ENGINEERING SERVICES
DESIGN AND TECHNICAL SERVICES
SPECIAL DESIGNS BRANCH

B

BRIDGE NO. 43-0030L/R
POST MILE 2.75,2.70

CONCRETE BARRIER TYPE 732B (Mod)
TRANSITIONS 17b & 16a

(ENGLISH) SPECIAL DESIGNS BRANCH BORDER SHEET (REV. 4-1-14)

ORIGINAL SCALE IN INCHES FOR REDUCED PLANS 0 1 2 3

UNIT: 3619
PROJECT NUMBER & PHASE: 0513000005
CONTRACT NO.: 05-1C8701

DISREGARD PRINTS BEARING EARLIER REVISION DATES
REVISION DATES 12-2-15 4-15-16

SHEET 4 OF 9

FILE => /2015sd/05-1C8701

USERNAME => s119704 DATE PLOTTED => 10-AUG-2016 TIME PLOTTED => 14:29

DIST	COUNTY	ROUTE	POST MILES TOTAL PROJECT	SHEET No	TOTAL SHEETS
05	SBt	156	0.0/3.0	109	113

REGISTERED CIVIL ENGINEER — DATE 6/7/16

6-20-16
PLANS APPROVAL DATE

REGISTERED PROFESSIONAL ENGINEER — TAMARA S. MARCHENKO — No. C76837 — Exp. 12/31/16 — CIVIL — STATE OF CALIFORNIA

The State of California or its officers or agents shall not be responsible for the accuracy or completeness of electronic copies of this plan sheet.

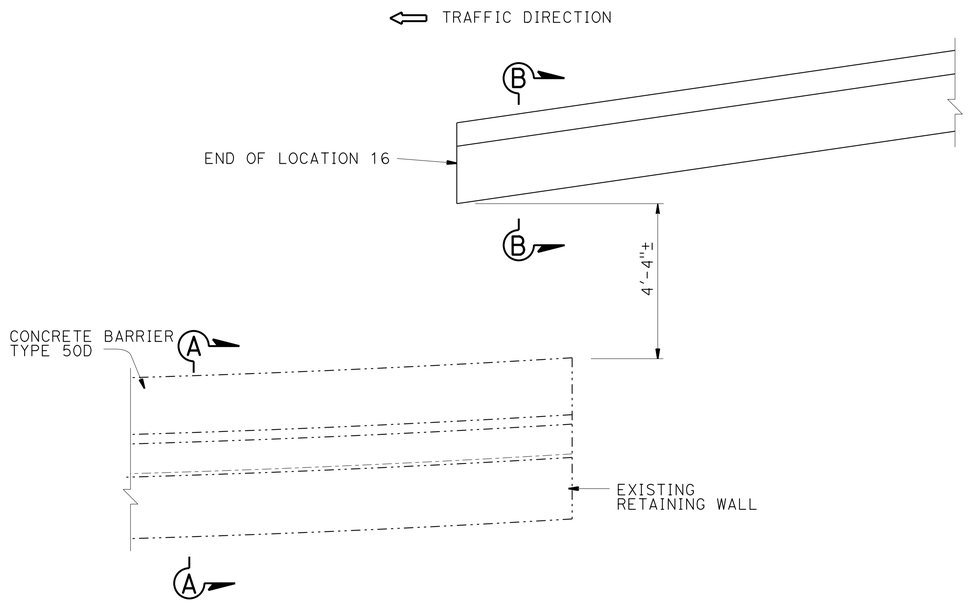

PLAN 16b

NO SCALE

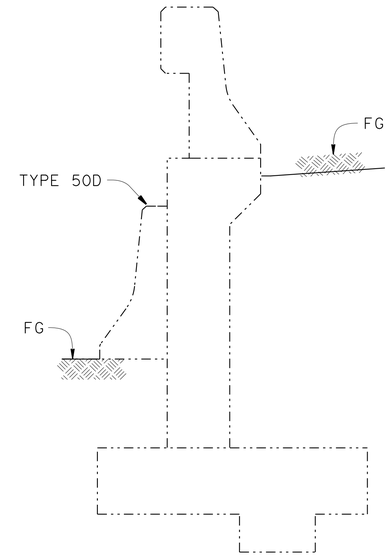

SECTION A-A

¾"=1'-0"

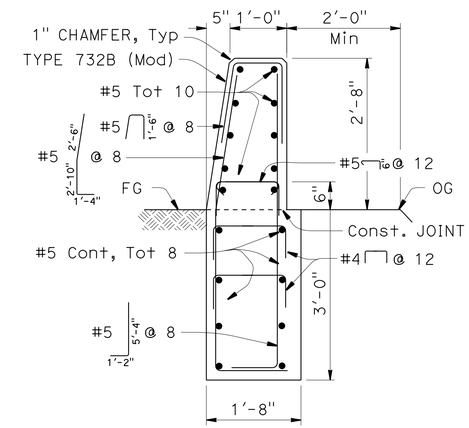

SECTION B-B

¾"=1'-0"

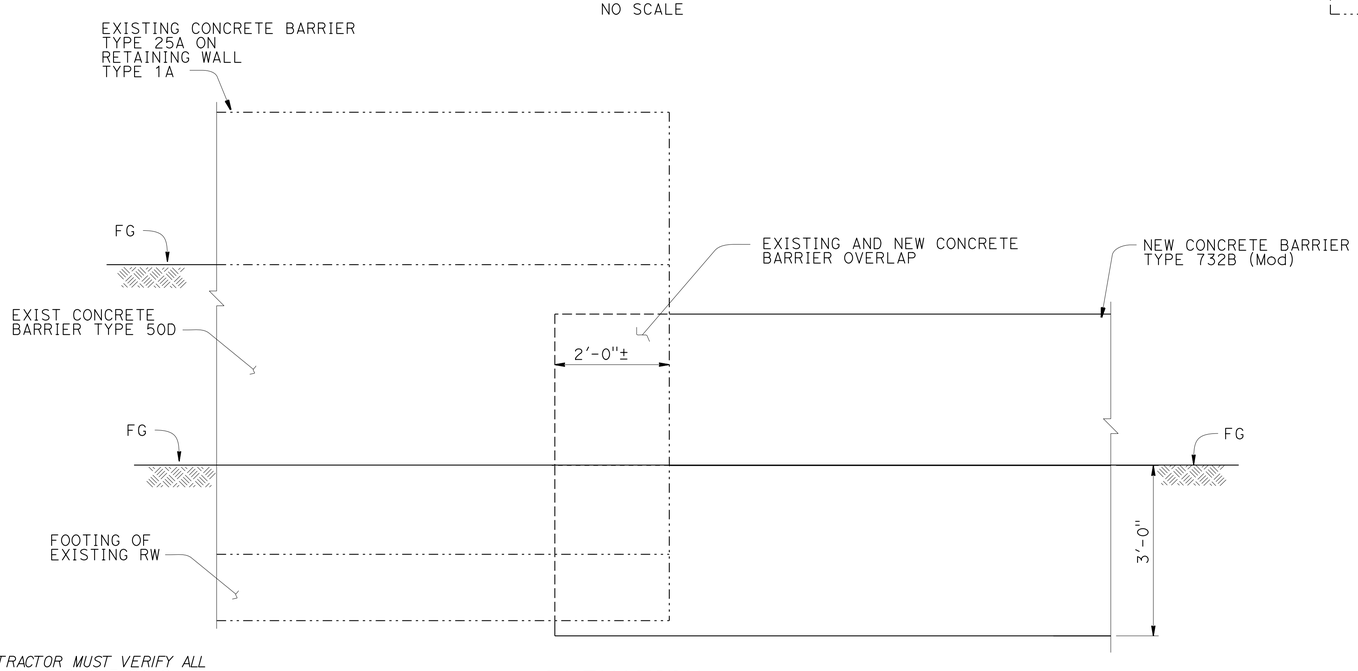

ELEVATION

NO SCALE

NOTE:
THE CONTRACTOR MUST VERIFY ALL CONTROLLING FIELD DIMENSIONS BEFORE ORDERING OR FABRICATING ANY MATERIAL.

NOTES:

1. Align concrete barrier transition with barriers curvature as necessary. See "ROADWAY PLANS".
2. Existing barrier heights vary. Where existing barrier height is more than 2'-8", transition barrier height to 2'-8" @ 4:1 slope.
3. Concrete cover to reinforcing steel in barrier to be 1", except as noted.
4. Protect existing electrical and drainage system.
5. Contractor must maintain at least 12" Min clearance from the Retaining wall footing. Minimize open trench time frame. Prevent drainage system damage.

LEGEND:

-·-·-·- EXISTING STRUCTURE
——— NEW CONSTRUCTION

BRANCH CHIEF *DAVID NEUMANN*

	BY	CHECKED
DESIGN	TAMARA MARCHENKO	VICTOR LOPEZ
DETAILS	HUNG NGUYEN	VICTOR LOPEZ
QUANTITIES	TAMARA MARCHENKO	VICTOR LOPEZ

STATE OF CALIFORNIA
DEPARTMENT OF TRANSPORTATION

DIVISION OF ENGINEERING SERVICES
DESIGN AND TECHNICAL SERVICES
SPECIAL DESIGNS BRANCH
B

BRIDGE NO. 43-0030L/R
POST MILE 2.70

CONCRETE BARRIER TYPE 732B (Mod)
LOCATION 16, TRANSITION 16b

(ENGLISH) SPECIAL DESIGNS BRANCH BORDER SHEET (REV. 4-1-14)

ORIGINAL SCALE IN INCHES FOR REDUCED PLANS 0 1 2 3

UNIT: 3619
PROJECT NUMBER & PHASE: 0513000005
CONTRACT NO.: 05-1C8701

DISREGARD PRINTS BEARING EARLIER REVISION DATES
REVISION DATES 12-7-15 4-15-16

SHEET 5 OF 9

FILE => /2015sd/05-1C8701

USERNAME => s119704 DATE PLOTTED => 10-AUG-2016 TIME PLOTTED => 14:29

DIST	COUNTY	ROUTE	POST MILES TOTAL PROJECT	SHEET No	TOTAL SHEETS
05	SBt	156	0.0/3.0	110	113

REGISTERED CIVIL ENGINEER 6/7/16 DATE

6-20-16
PLANS APPROVAL DATE

REGISTERED PROFESSIONAL ENGINEER TAMARA S. MARCHENKO No. C76837 Exp.12/31/16 CIVIL STATE OF CALIFORNIA

The State of California or its officers or agents shall not be responsible for the accuracy or completeness of electronic copies of this plan sheet.

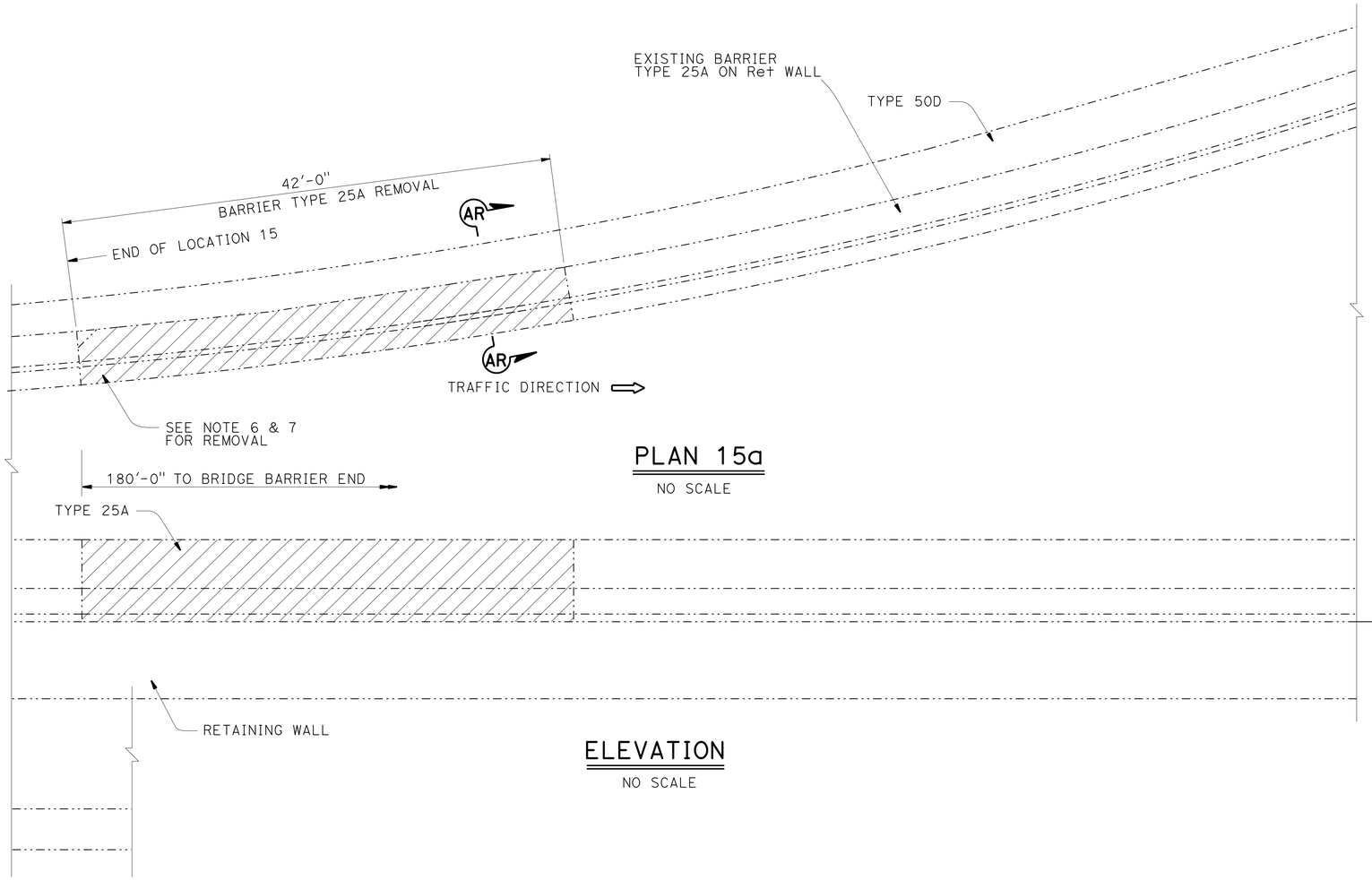

PLAN 15a

NO SCALE

ELEVATION

NO SCALE

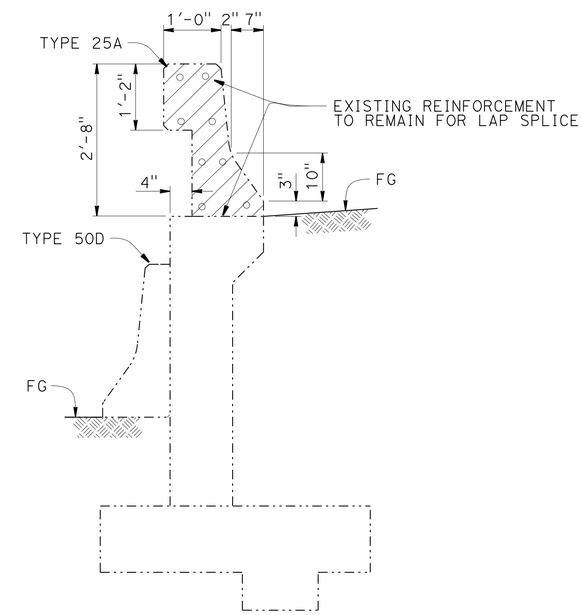

SECTION AR-AR

3/4"=1'-0"

DIMENSIONS ARE FOR REFERENCE ONLY

NOTES: For SHEETS 6 and 7

1. Align concrete barrier transition with barriers curvature as necessary. See "ROADWAY PLANS".
2. Existing barrier heights vary. Where existing barrier height is more than 2'-8", transition barrier height to 2'-8" @ 4:1 slope.
3. Concrete cover to reinforcing steel in barrier to be 1", except as noted, longitudinal reinforcement to stop at all expansion joints.
4. Minimum concrete edge distance for drill and bond dowels must be 4", except as noted. Maintain 4" clear Min around each dowel.
5. Lap splice existing horizontal reinforcement with new #5 bars, horizontal reinforcement from section A-A must continue through transition sections.
6. Protect existing electrical and drainage system.
7. Use alternative #6 dowels (Typ) if the existing anchorage reinforcement damaged or removed.
8. Contractor must maintain at least 12" clearance from the existing retaining wall footing. Minimize open trench time frame. Prevent drainage system damage.

LEGEND:

- EXISTING STRUCTURE
- NEW CONSTRUCTION
- REMOVE CONCRETE BARRIER REINFORCEMENT TO REMAIN
- ○ EXISTING REINFORCEMENT

NOTE:
THE CONTRACTOR MUST VERIFY ALL CONTROLLING FIELD DIMENSIONS BEFORE ORDERING OR FABRICATING ANY MATERIAL.

BRANCH CHIEF *DAVID NEUMANN*

	BY	CHECKED
DESIGN	TAMARA MARCHENKO	VICTOR LOPEZ
DETAILS	HUNG NGUYEN	VICTOR LOPEZ
QUANTITIES	TAMARA MARCHENKO	VICTOR LOPEZ

STATE OF CALIFORNIA
DEPARTMENT OF TRANSPORTATION

DIVISION OF ENGINEERING SERVICES
DESIGN AND TECHNICAL SERVICES
SPECIAL DESIGNS BRANCH
B

BRIDGE NO. 43-0030L/R
POST MILE 2.67

CONCRETE BARRIER TYPE 732B (Mod)
LOCATION 15, TRANSITION 15a, REMOVAL

(ENGLISH) SPECIAL DESIGNS BRANCH BORDER SHEET (REV. 4-1-14)

ORIGINAL SCALE IN INCHES FOR REDUCED PLANS 0 1 2 3

UNIT: 3619
PROJECT NUMBER & PHASE: 0513000005
CONTRACT NO.: 05-1C8701

DISREGARD PRINTS BEARING EARLIER REVISION DATES

REVISION DATES: 12-8-15 4-15-16

SHEET 6 OF 9

FILE => /2015sd/05-1C8701

USERNAME => s119704 DATE PLOTTED => 10-AUG-2016 TIME PLOTTED => 14:29

DIST	COUNTY	ROUTE	POST MILES TOTAL PROJECT	SHEET No	TOTAL SHEETS
05	SBt	156	0.0/3.0	111	113

REGISTERED CIVIL ENGINEER 6/7/16 DATE

6-20-16
PLANS APPROVAL DATE

REGISTERED PROFESSIONAL ENGINEER TAMARA S. MARCHENKO No. C76837 Exp.12/31/16 CIVIL STATE OF CALIFORNIA

The State of California or its officers or agents shall not be responsible for the accuracy or completeness of electronic copies of this plan sheet.

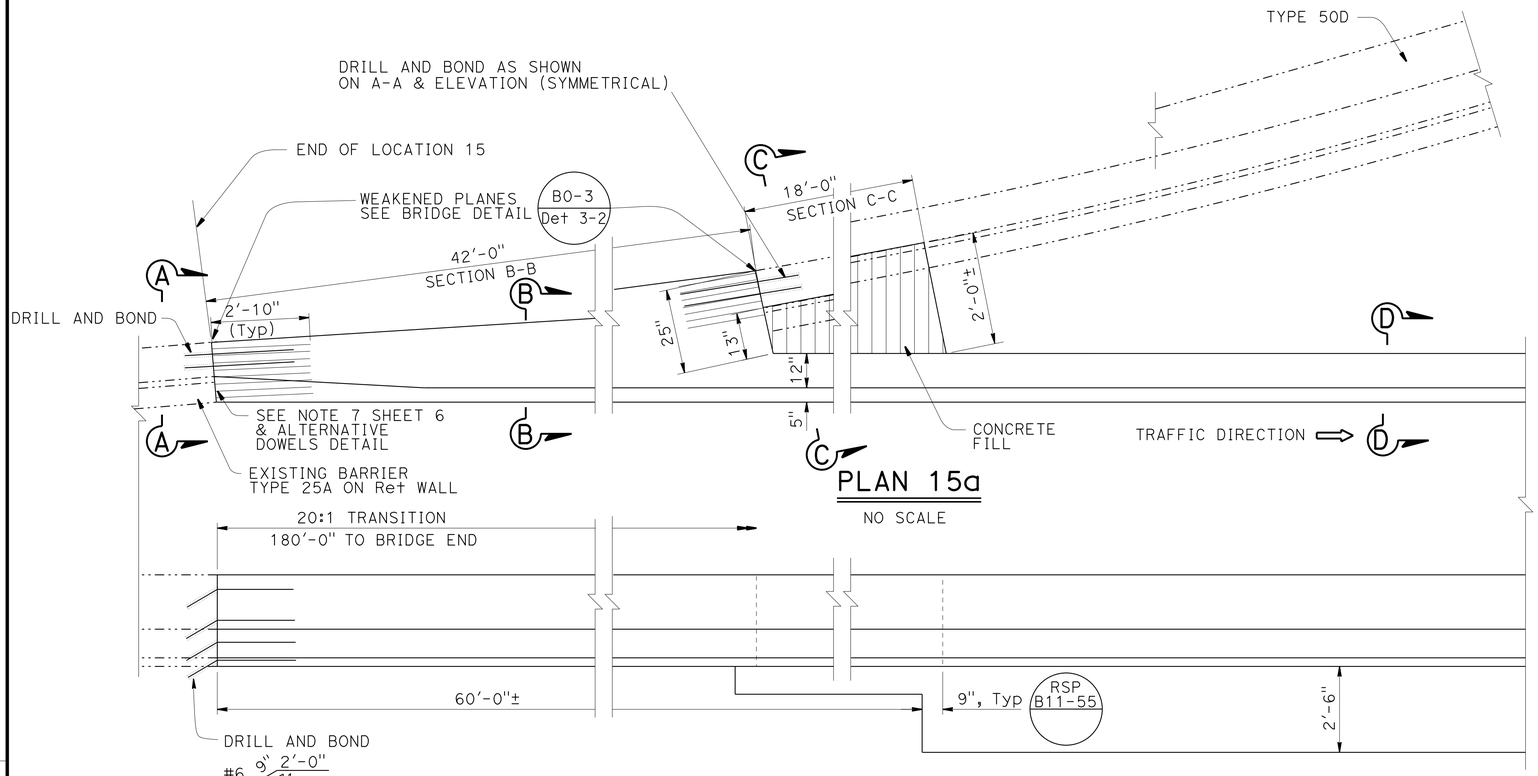

PLAN 15a
NO SCALE

ELEVATION
NO SCALE

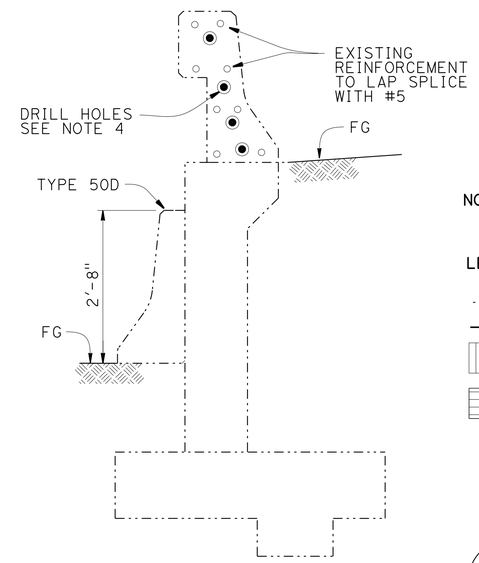

SECTION A-A
3/4"=1'-0"

NOTE: See SHEET 6 for Notes

LEGEND:

- EXISTING STRUCTURE
- NEW CONSTRUCTION
- CONCRETE FILL (MINOR CONCRETE)
- NEW CONCRETE WITH EXISTING REINFORCEMENT INTACT
- EXISTING REINFORCEMENT
- NEW REINFORCEMENT
- DRILL AND BOND DOWEL

STANDARD PLAN SHEET No.
DETAIL No.

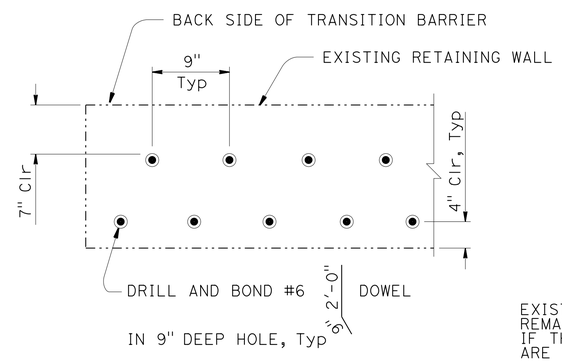

ALTERNATIVE DOWELS DETAIL PLAN
NO SCALE

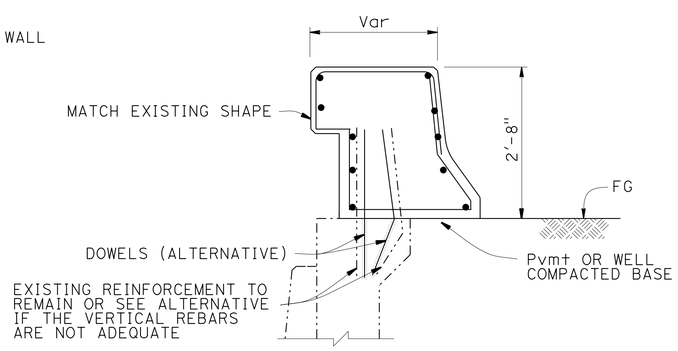

SECTION B-B
3/4"=1'-0"

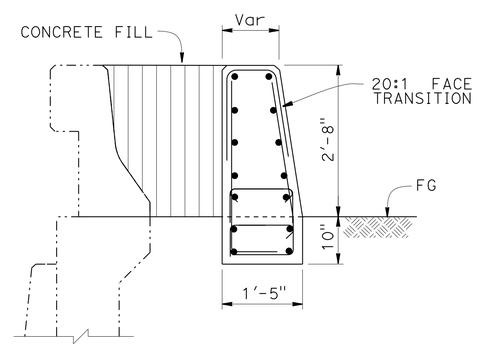

SEE SECTION D-D FOR REINFORCEMENT

SECTION C-C
3/4"=1'-0"

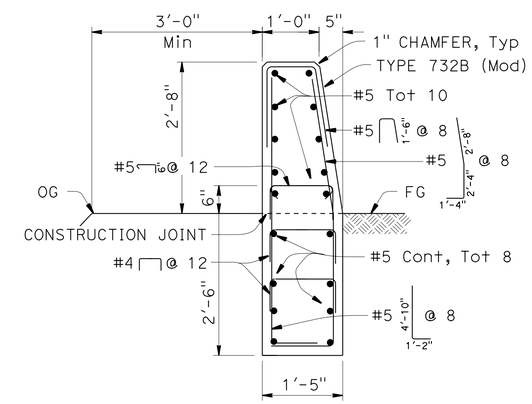

SECTION D-D (Typ)
3/4"=1'-0"

NOTE:
THE CONTRACTOR MUST VERIFY ALL CONTROLLING FIELD DIMENSIONS BEFORE ORDERING OR FABRICATING ANY MATERIAL.

BRANCH CHIEF	DAVID NEUMANN		
DESIGN	BY TAMARA MARCHENKO	CHECKED VICTOR LOPEZ	
DETAILS	BY HUNG NGUYEN	CHECKED VICTOR LOPEZ	
QUANTITIES	BY TAMARA MARCHENKO	CHECKED VICTOR LOPEZ	

STATE OF CALIFORNIA
DEPARTMENT OF TRANSPORTATION

DIVISION OF ENGINEERING SERVICES
DESIGN AND TECHNICAL SERVICES
SPECIAL DESIGNS BRANCH
B

BRIDGE NO. 43-0030L/R
POST MILE 2.67

CONCRETE BARRIER TYPE 732B (Mod)
LOCATION 15, TRANSITION 15a

(ENGLISH) SPECIAL DESIGNS BRANCH BORDER SHEET (REV. 4-1-14)

ORIGINAL SCALE IN INCHES FOR REDUCED PLANS 0 1 2 3

UNIT: 3619
PROJECT NUMBER & PHASE: 0513000005
CONTRACT NO.: 05-1C8701

DISREGARD PRINTS BEARING EARLIER REVISION DATES
REVISION DATES 12-8-15 4-15-16

SHEET 7 OF 9

FILE => /2015sd/05-1C8701

USERNAME => s119704 DATE PLOTTED => 10-AUG-2016 TIME PLOTTED => 14:29

DIST	COUNTY	ROUTE	POST MILES TOTAL PROJECT	SHEET No	TOTAL SHEETS
05	SBt	156	0.0/3.0	112	113

REGISTERED CIVIL ENGINEER 6/7/16 DATE

6-20-16
PLANS APPROVAL DATE

REGISTERED PROFESSIONAL ENGINEER TAMARA S. MARCHENKO No. C76837 Exp.12/31/16 CIVIL STATE OF CALIFORNIA

The State of California or its officers or agents shall not be responsible for the accuracy or completeness of electronic copies of this plan sheet.

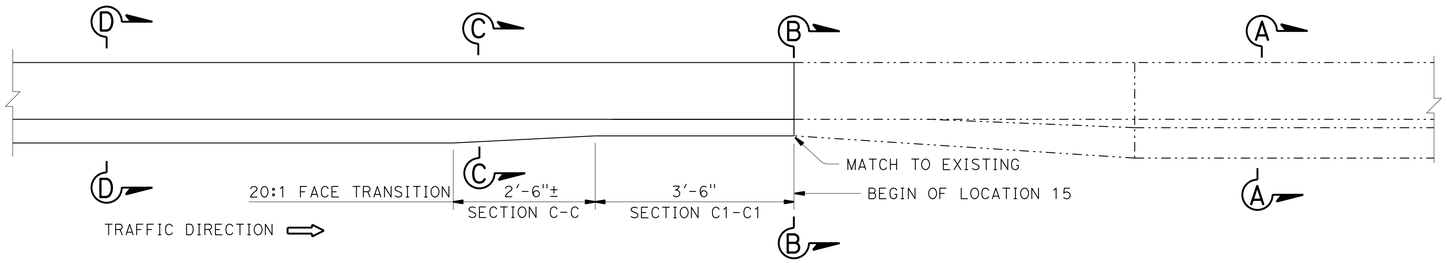

PLAN 15b

NO SCALE

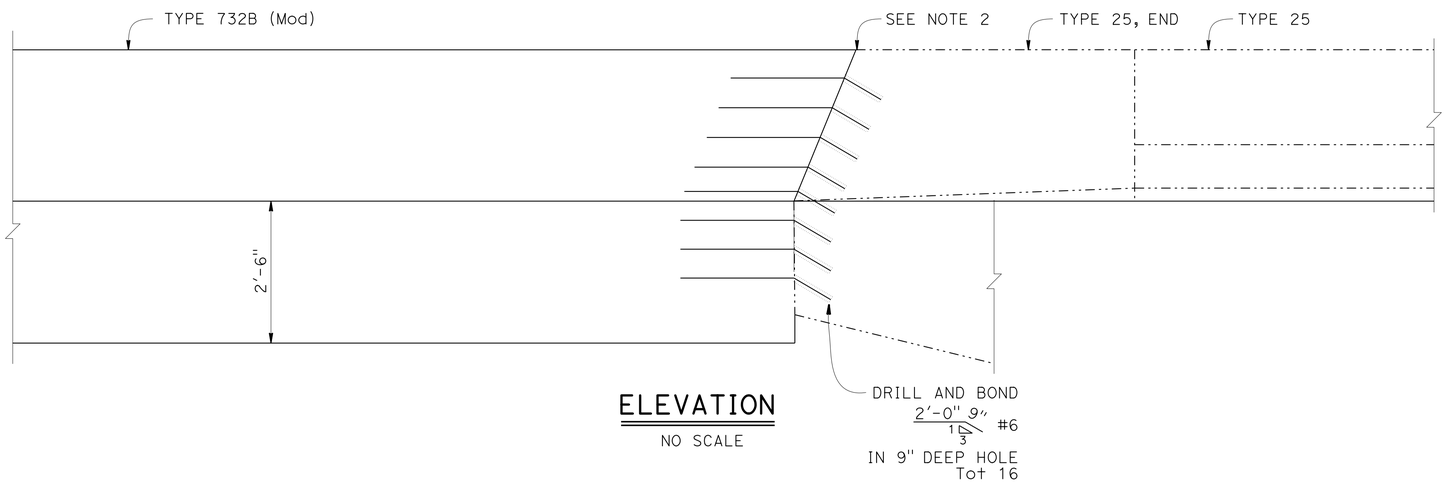

ELEVATION

NO SCALE

NOTES:

1. Align concrete barrier transition with barriers curvature as necessary. See "ROADWAY PLANS".
2. Existing barrier heights vary. Where existing barrier height is more than 2'-8", transition barrier height to 2'-8" @ 4:1 slope.
3. Concrete cover to reinforcing steel in barrier to be 1", except as noted, longitudinal reinforcement to stop at all expansion joints.
4. Minimum concrete edge distance for drill and bond dowels must be 4", except as noted. Maintain 4" clear Min around each dowel.

LEGEND:

- EXISTING STRUCTURE
- NEW CONSTRUCTION
- CONCRETE REMOVAL, REINFORCEMENT TO REMAIN
- NEW CONCRETE WITH EXISTING REINFORCEMENT INTACT
- ○ EXISTING REINFORCEMENT
- ● NEW REINFORCEMENT
- ◉ DRILL AND BOND DOWEL

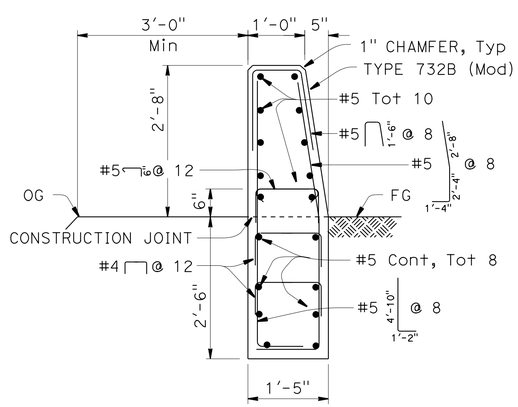

SECTION D-D (Typ)

3/4"=1'-0"

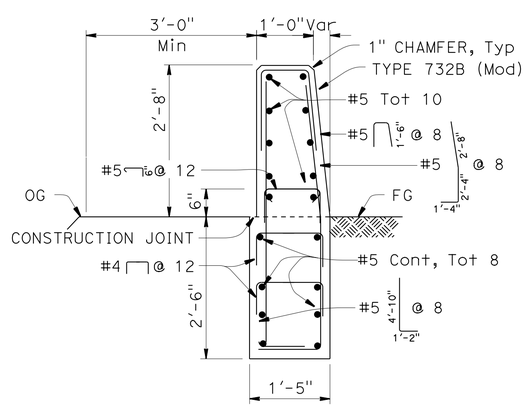

SECTION C-C

3/4"=1'-0"

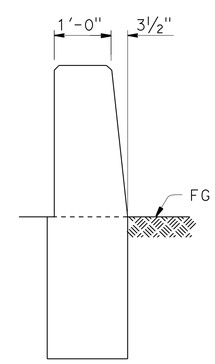

SECTION C1-C1

3/4"=1'-0"

SEE SECTION C-C FOR DIMENSIONS AND REINFORCEMENT

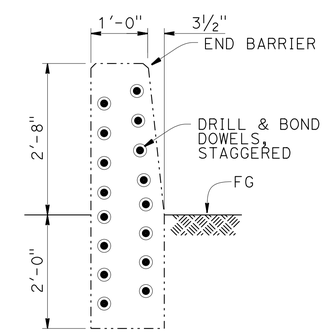

SECTION B-B

3/4"=1'-0"

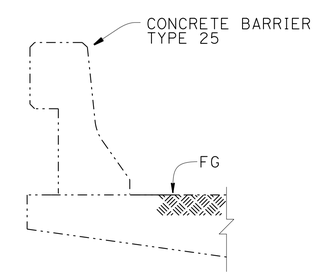

SECTION A-A

3/4"=1'-0"

DIMENSIONS ARE FOR REFERENCE ONLY

NOTE:
THE CONTRACTOR MUST VERIFY ALL CONTROLLING FIELD DIMENSIONS BEFORE ORDERING OR FABRICATING ANY MATERIAL.

BRANCH CHIEF	DAVID NEUMANN		
DESIGN	BY TAMARA MARCHENKO	CHECKED VICTOR LOPEZ	
DETAILS	BY HUNG NGUYEN	CHECKED VICTOR LOPEZ	
QUANTITIES	BY TAMARA MARCHENKO	CHECKED VICTOR LOPEZ	

STATE OF CALIFORNIA
DEPARTMENT OF TRANSPORTATION

DIVISION OF ENGINEERING SERVICES
DESIGN AND TECHNICAL SERVICES
SPECIAL DESIGNS BRANCH
B

BRIDGE NO. 43-0030L/R
POST MILE 2.67

CONCRETE BARRIER TYPE 732B (Mod)
LOCATION 15, TRANSITION 15b

(ENGLISH) SPECIAL DESIGNS BRANCH BORDER SHEET (REV. 4-1-14)

ORIGINAL SCALE IN INCHES FOR REDUCED PLANS 0 1 2 3

UNIT: 3619
PROJECT NUMBER & PHASE: 0513000005
CONTRACT NO.: 05-1C8701

DISREGARD PRINTS BEARING EARLIER REVISION DATES

REVISION DATES 12-9-15 4-15-16

SHEET 8 OF 9

FILE => /2015sd/05-1C8701

USERNAME => s119704 DATE PLOTTED => 10-AUG-2016 TIME PLOTTED => 14:29

DIST	COUNTY	ROUTE	POST MILES TOTAL PROJECT	SHEET No	TOTAL SHEETS
05	SBt	156	0.0/3.0	113	113

REGISTERED CIVIL ENGINEER 6/7/16 DATE

6-20-16
PLANS APPROVAL DATE

REGISTERED PROFESSIONAL ENGINEER TAMARA S. MARCHENKO No. C76837 Exp.12/31/16 CIVIL STATE OF CALIFORNIA

The State of California or its officers or agents shall not be responsible for the accuracy or completeness of electronic copies of this plan sheet.

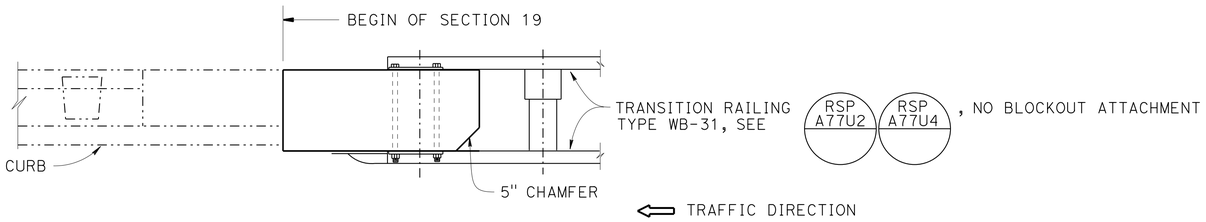

PLAN 19

3/4" = 1'-0"

NOTES:

1. Align concrete barrier transition with barriers curvature as necessary. See "ROADWAY PLANS".
2. Existing barrier heights vary. where existing barrier height is more than 2'-8", transition barrier height to 2'-8" @ 4:1 slope.
3. Concrete cover to reinforcing steel in barrier to be 1", except as noted.
4. Minimum concrete edge distance for drill and bond dowels must be 4", except as noted.
5. Protect existing features.

LEGEND:

EXISTING STRUCTURE

NEW CONSTRUCTION

STANDARD PLAN SHEET No.

DETAIL No.

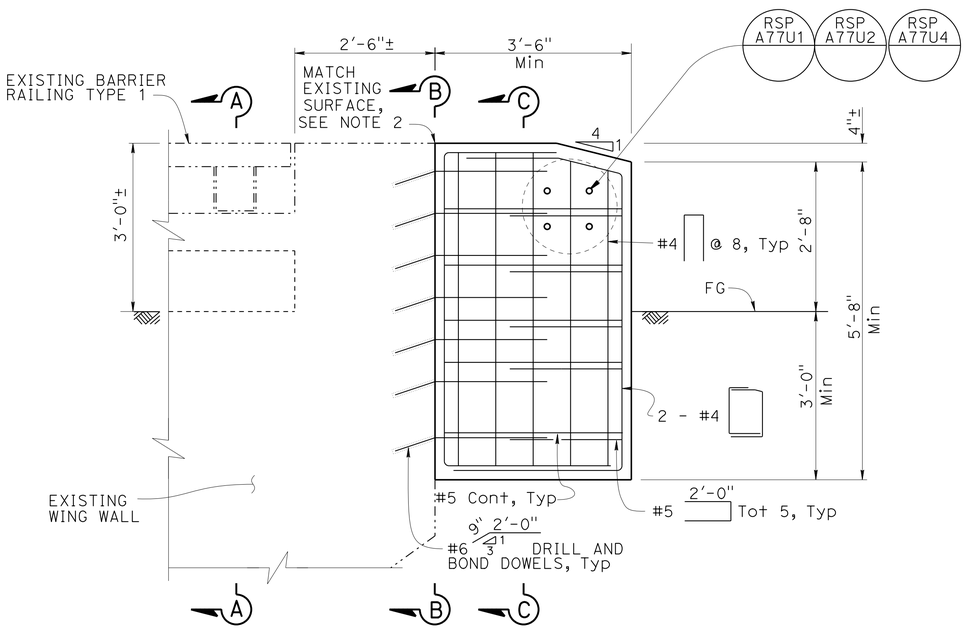

ELEVATION

3/4" = 1'-0"

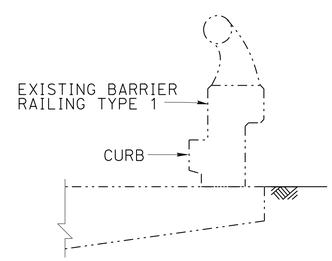

SECTION A-A

3/4" = 1'-0"

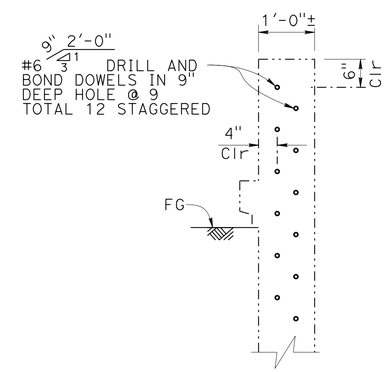

SECTION B-B

3/4" = 1'-0"

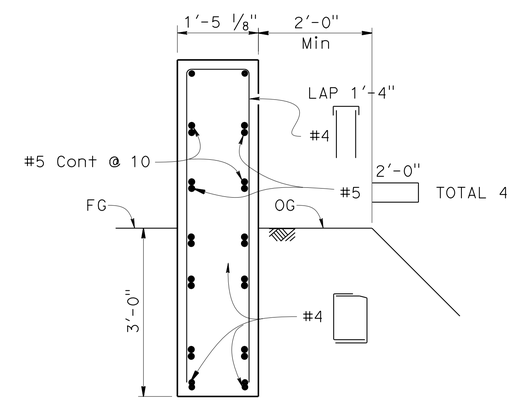

NOTE:
Drill and bond dowels not shown

SECTION C-C

3/4" = 1'-0"

NOTE:
THE CONTRACTOR MUST VERIFY ALL CONTROLLING FIELD DIMENSIONS BEFORE ORDERING OR FABRICATING ANY MATERIAL.

BRANCH CHIEF *DAVID NEUMANN*

	BY	CHECKED
DESIGN	TAMARA MARCHENKO	VICTOR LOPEZ
DETAILS	HUNG NGUYEN	VICTOR LOPEZ
QUANTITIES	TAMARA MARCHENKO	VICTOR LOPEZ

STATE OF CALIFORNIA
DEPARTMENT OF TRANSPORTATION

DIVISION OF ENGINEERING SERVICES
DESIGN AND TECHNICAL SERVICES
SPECIAL DESIGNS BRANCH B

BRIDGE NO. 43-0030L/R
POST MILE 2.72

CONCRETE BARRIER TRANSITION
LOCATION 19

(ENGLISH) SPECIAL DESIGNS BRANCH BORDER SHEET (REV. 4-1-14)

ORIGINAL SCALE IN INCHES FOR REDUCED PLANS 0 1 2 3

UNIT: 3619
PROJECT NUMBER & PHASE: 0513000005
CONTRACT NO.: 05-1C8701

DISREGARD PRINTS BEARING EARLIER REVISION DATES

REVISION DATES 12-14-15 4-15-16

SHEET 9 OF 9

FILE => /2015sd/05-1C8701

USERNAME => s119704 DATE PLOTTED => 10-AUG-2016 TIME PLOTTED => 14:29