Dist	COUNTY	ROUTE	POST MILES TOTAL PROJECT	SHEET No.	TOTAL SHEETS
05	SLO	41	19.7/R42.2	1	37

STATE OF CALIFORNIA

DEPARTMENT OF TRANSPORTATION

ACSTP-P041(130)E

PROJECT PLANS FOR CONSTRUCTION ON

STATE HIGHWAY

IN SAN LUIS OBISPO COUNTY
NEAR ATASCADERO
FROM 0.3 MILE WEST OF HOMESTEAD ROAD
TO ROUTE 46

TO BE SUPPLEMENTED BY STANDARD PLANS DATED 2015

INDEX OF PLANS

SHEET No.	DESCRIPTION
1	TITLE AND LOCATION MAP
2	TYPICAL CROSS SECTIONS
3-11	CONSTRUCTION DETAILS
12-14	DRAINAGE DETAILS AND QUANTITIES
15	UTILITY PLANS
16	CONSTRUCTION AREA SIGNS
17-18	TRAFFIC HANDLING PLANS AND QUANTITIES
19	PAVEMENT DELINEATION QUANTITIES
20-23	SUMMARY OF QUANTITIES
24	EROSION CONTROL QUANTITIES
25-37	REVISED STANDARD PLANS

THE STANDARD PLANS LIST AVAILABLE TO THIS CONTRACT IS INCLUDED IN THE NOTICE TO BIDDERS AND SPECIAL PROVISIONS BOOK

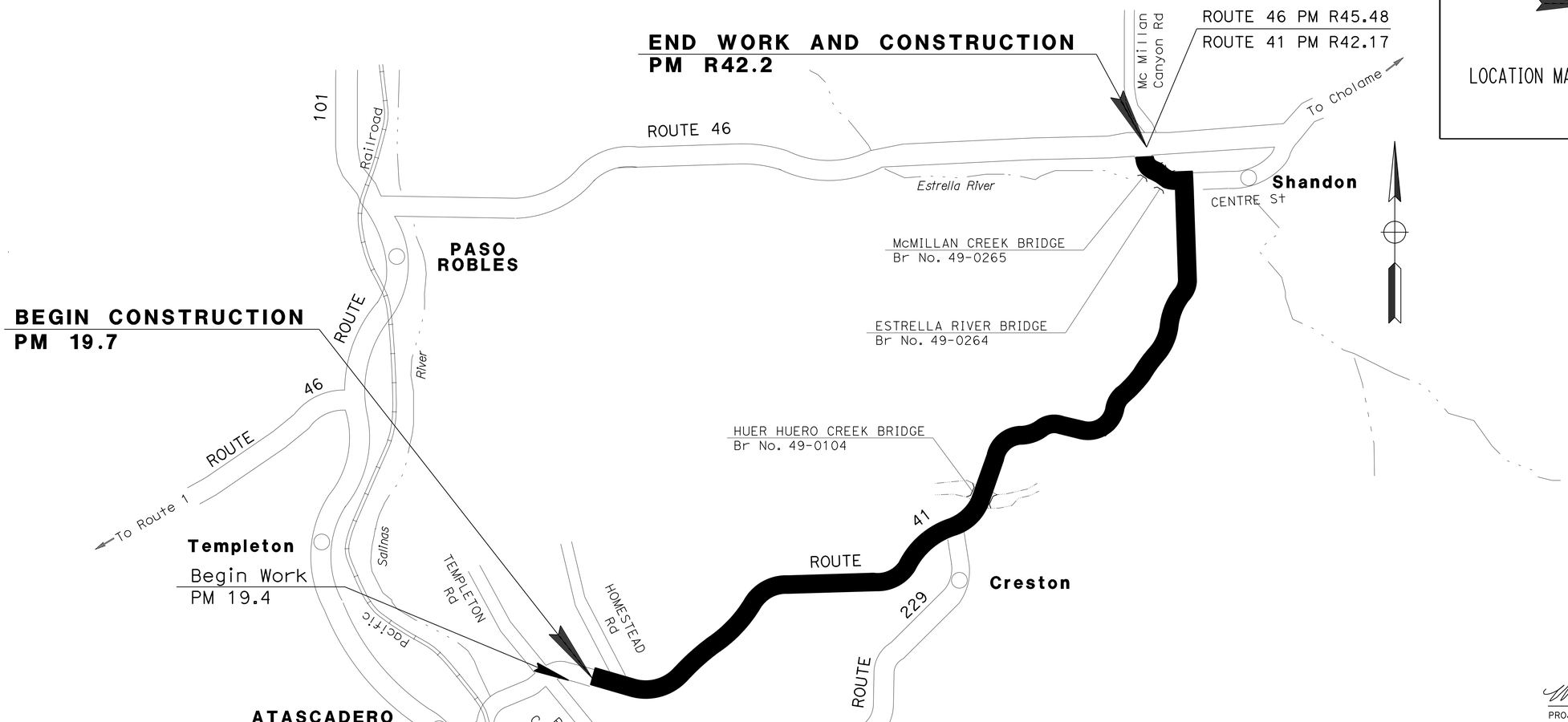

NO SCALE

LOCATION MAP

THE CONTRACTOR SHALL POSSESS THE CLASS (OR CLASSES) OF LICENSE AS SPECIFIED IN THE "NOTICE TO BIDDERS."

6-13-16
PROJECT ENGINEER DATE
REGISTERED CIVIL ENGINEER

June 13, 2016
PLANS APPROVAL DATE

REGISTERED PROFESSIONAL ENGINEER MICHAEL JAMES DAY No. 66870 Exp. 9/30/16 CIVIL STATE OF CALIFORNIA

THE STATE OF CALIFORNIA OR ITS OFFICERS OR AGENTS SHALL NOT BE RESPONSIBLE FOR THE ACCURACY OR COMPLETENESS OF SCANNED COPIES OF THIS PLAN SHEET.

CONTRACT No.	05-1G1504
PROJECT ID	0514000113

PROJECT MANAGER: ROCHELLE VIERRA
DESIGN MANAGER: SCOTT SHAVER

LAST REVISION 07-27-16
DATE PLOTTED => 03-AUG-2016
TIME PLOTTED => 16:51

Dist	COUNTY	ROUTE	POST MILES TOTAL PROJECT	SHEET No.	TOTAL SHEETS
05	SLO	41	19.7/R42.2	2	37

REGISTERED CIVIL ENGINEER 6-13-16 DATE

6-13-16
PLANS APPROVAL DATE

REGISTERED PROFESSIONAL ENGINEER MICHAEL JAMES DAY No. 66870 Exp. 9/30/16 CIVIL STATE OF CALIFORNIA

THE STATE OF CALIFORNIA OR ITS OFFICERS OR AGENTS SHALL NOT BE RESPONSIBLE FOR THE ACCURACY OR COMPLETENESS OF SCANNED COPIES OF THIS PLAN SHEET.

NOTES:

1. DIMENSIONS OF THE PAVEMENT STRUCTURES (STRUCTURAL SECTIONS) ARE SUBJECT TO TOLERENCES SPECIFIED IN THE STANDARD SPECIFICATIONS.
2. FOR LOCATION AND TYPE OF HMA DIKE, GR AND SHOULDER BACKING SEE Q-SHEETS.
3. FOR ACCURATE RIGHT OF WAY DATA CONTACT RIGHT OF WAY ENGINEERING AT THE DISTRICT OFFICE.
4. FOR CENTERLINE RUMBLE STRIP LIMITS SEE Q-3.
5. TAPERED EDGE NOT INCLUDED AT INTERSECTIONS, BRIDGES AND DIKES.
6. COLD IN-PLACE RECYCLING FROM PM R41.2 TO R42.2 WILL BE 0.17'.

ABBREVIATION:

RHMA-G - RUBBERIZED HOT MIX ASPHALT (GAP GRADED)

PAVEMENT CLIMATE REGION:

INLAND VALLEY

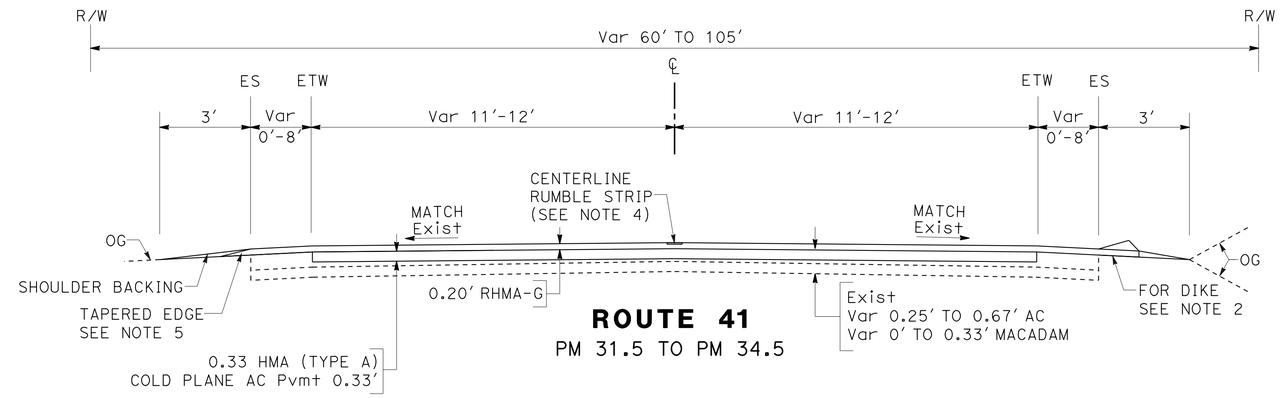

ROUTE 41
PM 31.5 TO PM 34.5

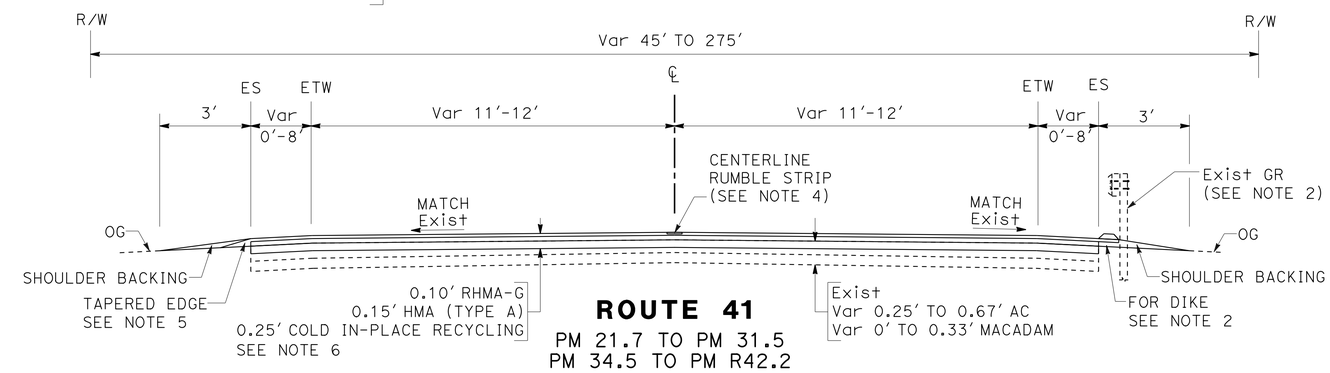

ROUTE 41
PM 21.7 TO PM 31.5
PM 34.5 TO PM R42.2

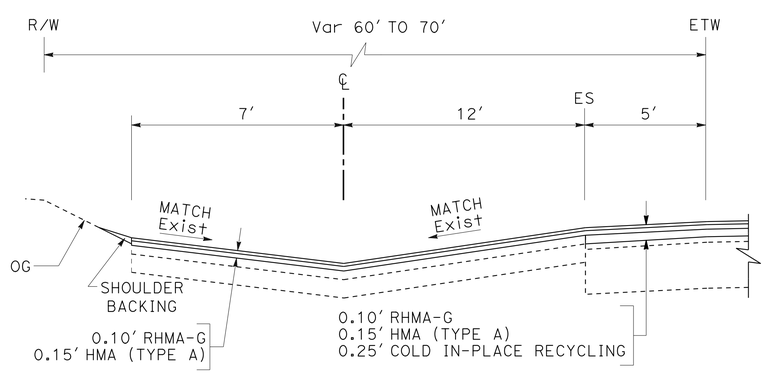

ASPHALT CONCRETE SWALE
PM 30.41 TO PM 30.61

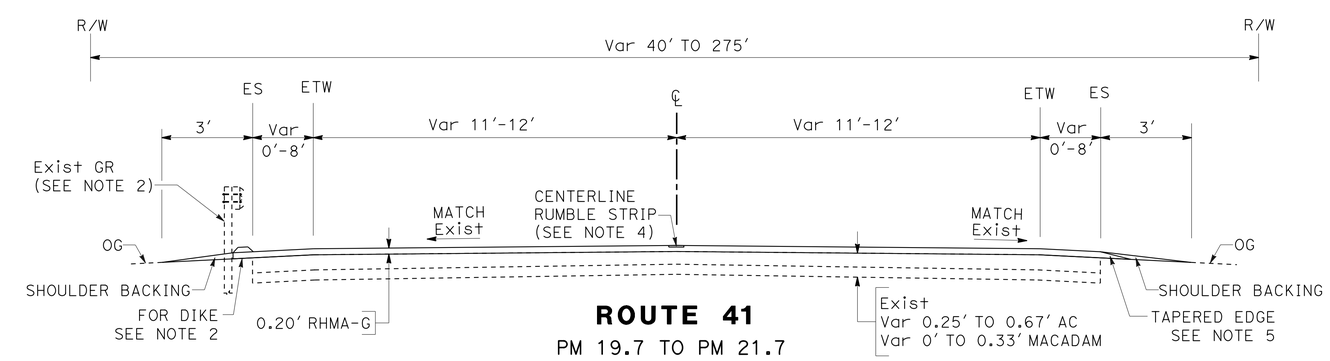

ROUTE 41
PM 19.7 TO PM 21.7

THE LOCATIONS OF WORK ARE FLEXIBLE AND MAY BE ADJUSTED TO MITIGATE ANY CONFLICTS WITH EXISTING UTILITY FACILITIES. UTILITY INFORMATION SHOWN ON THESE PLANS IS INCOMPLETE.

TYPICAL CROSS SECTIONS

NO SCALE

X-1

STATE OF CALIFORNIA - DEPARTMENT OF TRANSPORTATION
Caltrans®
06-DESIGN
FUNCTIONAL SUPERVISOR: SCOTT SHAVER
CALCULATED-DESIGNED BY: MAGDI MARZOUK
CHECKED BY: MICHAEL DAY
REVISED BY
DATE REVISED

LAST REVISION 07-27-16
DATE PLOTTED => 03-AUG-2016
TIME PLOTTED => 16:51

Dist	COUNTY	ROUTE	POST MILES TOTAL PROJECT	SHEET No.	TOTAL SHEETS
05	SLO	41	19.7/R42.2	3	37

REGISTERED CIVIL ENGINEER 6-13-16 DATE

6-13-16
PLANS APPROVAL DATE

REGISTERED PROFESSIONAL ENGINEER MICHAEL JAMES DAY No. 66870 Exp. 9/30/16 CIVIL STATE OF CALIFORNIA

THE STATE OF CALIFORNIA OR ITS OFFICERS OR AGENTS SHALL NOT BE RESPONSIBLE FOR THE ACCURACY OR COMPLETENESS OF SCANNED COPIES OF THIS PLAN SHEET.

NOTES:

1. FOR DRIVEWAY LOCATIONS SEE DRIVEWAY TABLE ON QUANTITY SHEETS.
2. DRIVEWAY GEOMETRY VARIES BY LOCATION.

LEGEND

- COLD PLANE AC Pvmt
- PLACE HMA (Misc AREA)
- ESA
- 0.15' HMA TYPE A (OVERSIDE DRAIN)

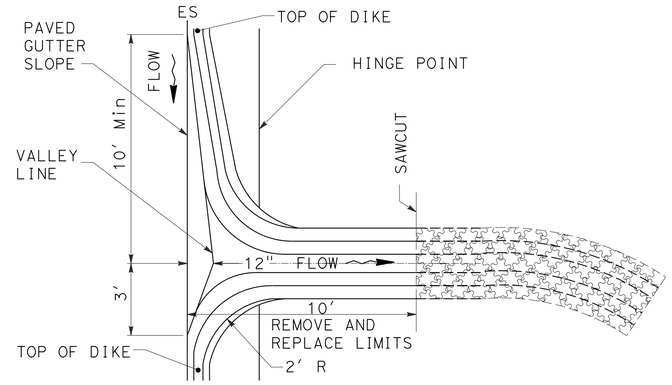

TYPICAL REMOVE AND REPLACE HMA OVERSIDE DRAIN

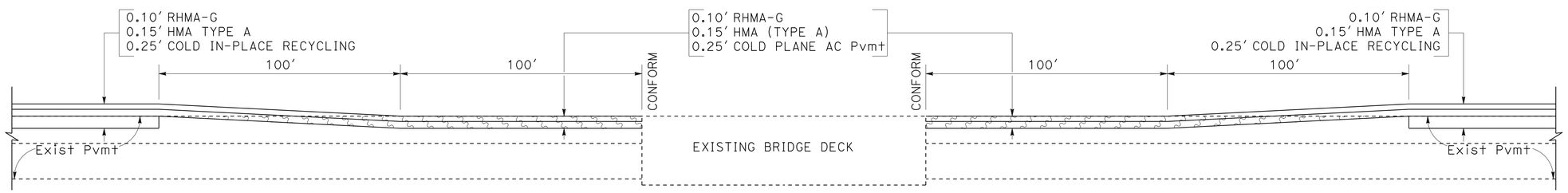

TYPICAL HMA CONFORM TAPER AT BRIDGE DECKS

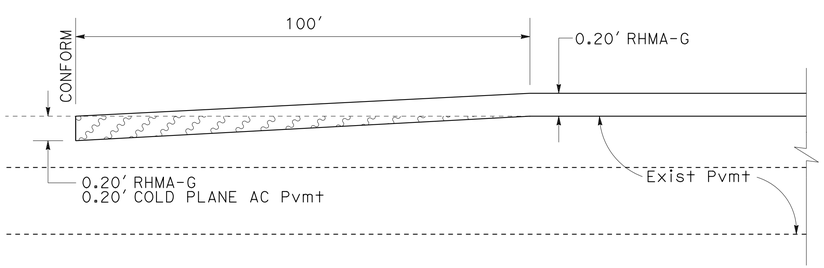

RHMA CONFORM TAPER

PM 19.7

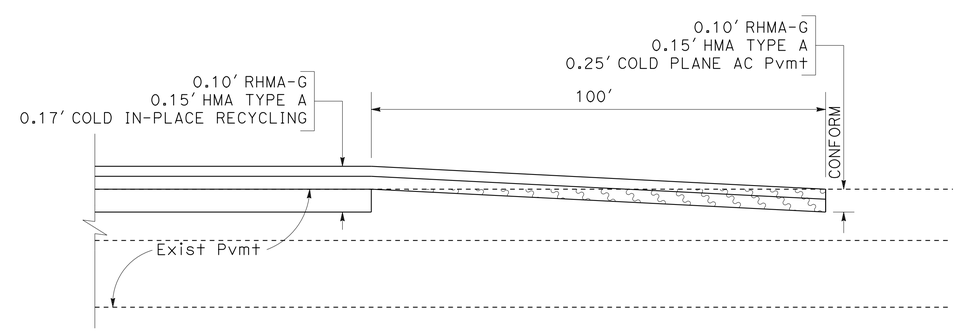

RHMA CONFORM TAPER

PM R42.2

THE LOCATIONS OF WORK ARE FLEXIBLE AND MAY BE ADJUSTED TO MITIGATE ANY CONFLICTS WITH EXISTING UTILITY FACILITIES. UTILITY INFORMATION SHOWN ON THESE PLANS IS INCOMPLETE.

CONSTRUCTION DETAILS

NO SCALE

C-1

STATE OF CALIFORNIA - DEPARTMENT OF TRANSPORTATION
Caltrans
06-DESIGN

FUNCTIONAL SUPERVISOR: SCOTT SHAVER
CALCULATED-DESIGNED BY: MAGDI MARZOUK
CHECKED BY: MICHAEL DAY
REVISED BY / DATE REVISED

LAST REVISION 07-27-16
DATE PLOTTED => 03-AUG-2016
TIME PLOTTED => 16:51

Dist	COUNTY	ROUTE	POST MILES TOTAL PROJECT	SHEET No.	TOTAL SHEETS
05	SLO	41	19.7/R42.2	4	37

REGISTERED CIVIL ENGINEER 6-13-16 DATE

6-13-16
PLANS APPROVAL DATE

REGISTERED PROFESSIONAL ENGINEER MICHAEL JAMES DAY No. 66870 Exp. 9/30/14 CIVIL STATE OF CALIFORNIA

THE STATE OF CALIFORNIA OR ITS OFFICERS OR AGENTS SHALL NOT BE RESPONSIBLE FOR THE ACCURACY OR COMPLETENESS OF SCANNED COPIES OF THIS PLAN SHEET.

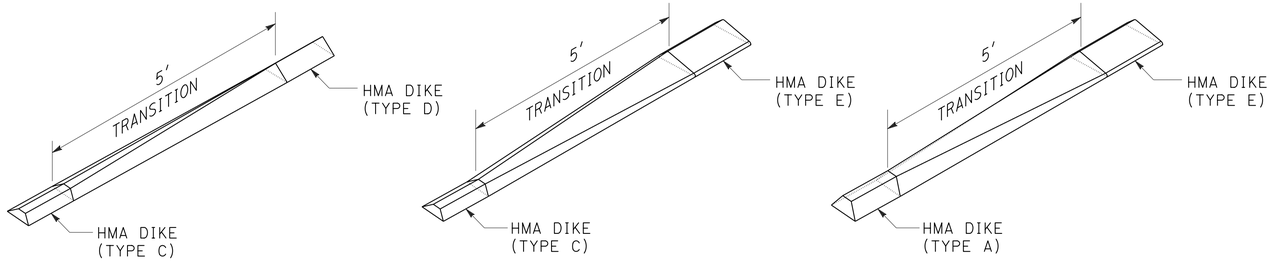

HMA DIKE TRANSITIONS

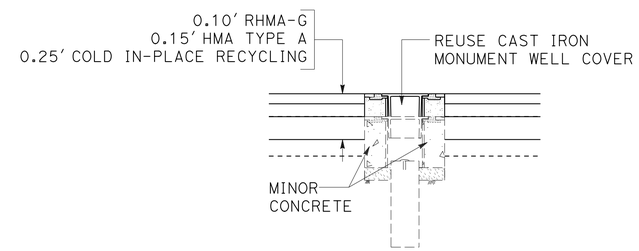

Exist WELL SURVEY MONUMENT
NOT TO BE DISTURBED

ADJUST MONUMENT COVER

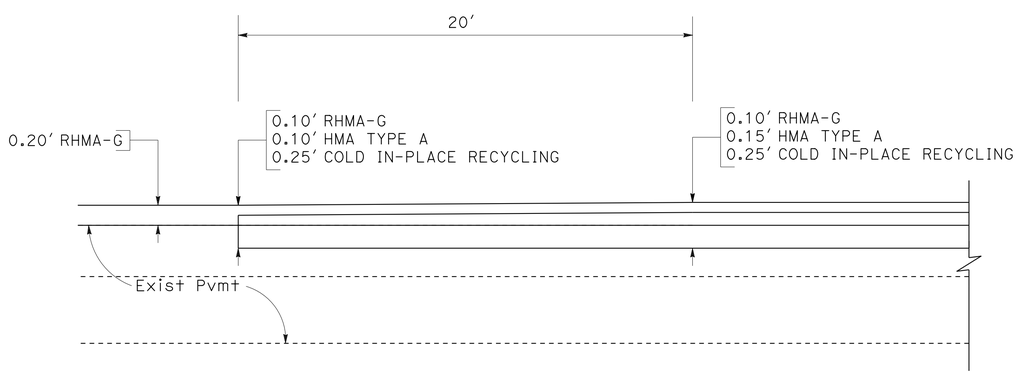

STRUCTURAL SECTION TRANSITION DETAIL

PM 21.7 AND PM 34.5

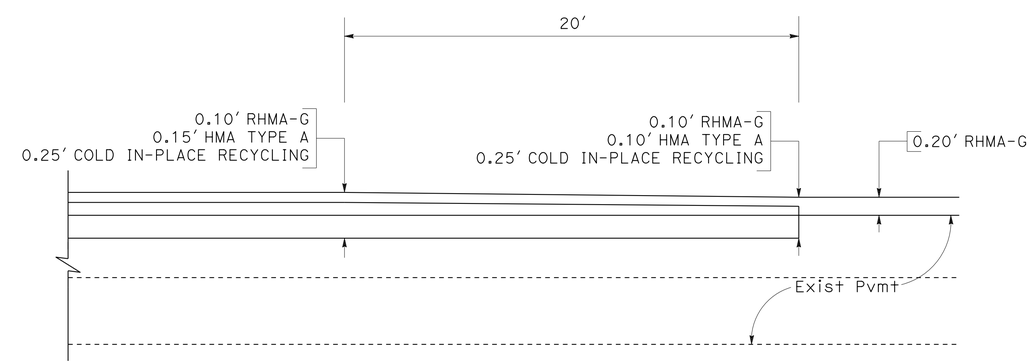

STRUCTURAL SECTION TRANSITION DETAIL

PM 31.5

THE LOCATIONS OF WORK ARE FLEXIBLE AND MAY BE ADJUSTED TO MITIGATE ANY CONFLICTS WITH EXISTING UTILITY FACILITIES. UTILITY INFORMATION SHOWN ON THESE PLANS IS INCOMPLETE.

CONSTRUCTION DETAILS

NO SCALE

C-2

STATE OF CALIFORNIA - DEPARTMENT OF TRANSPORTATION
Caltrans
06-DESIGN

FUNCTIONAL SUPERVISOR: SCOTT SHAVER
CALCULATED-DESIGNED BY: MAGDI MARZOUK
CHECKED BY: MICHAEL DAY
REVISED BY
DATE REVISED

LAST REVISION 07-27-16
DATE PLOTTED => 03-AUG-2016
TIME PLOTTED => 16:51

Dist	COUNTY	ROUTE	POST MILES TOTAL PROJECT	SHEET No.	TOTAL SHEETS
05	SLO	41	19.7/R42.2	5	37

REGISTERED CIVIL ENGINEER 6-13-16 DATE

6-13-16
PLANS APPROVAL DATE

REGISTERED PROFESSIONAL ENGINEER MICHAEL JAMES DAY No. 66870 Exp. 9/30/16 CIVIL STATE OF CALIFORNIA

THE STATE OF CALIFORNIA OR ITS OFFICERS OR AGENTS SHALL NOT BE RESPONSIBLE FOR THE ACCURACY OR COMPLETENESS OF SCANNED COPIES OF THIS PLAN SHEET.

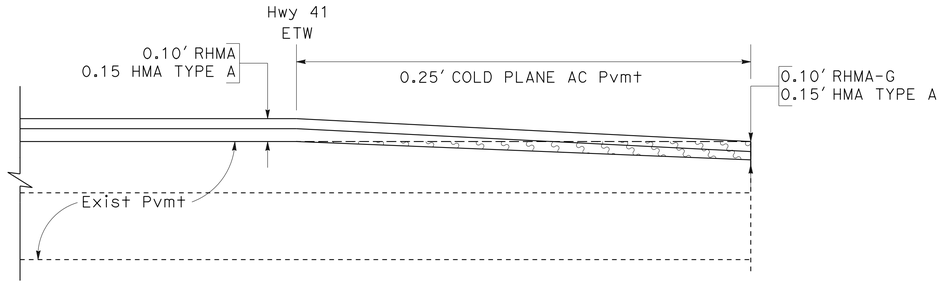

SECTION B-B
PM 21.7 TO 31.5 AND PM 34.5 TO R42.2

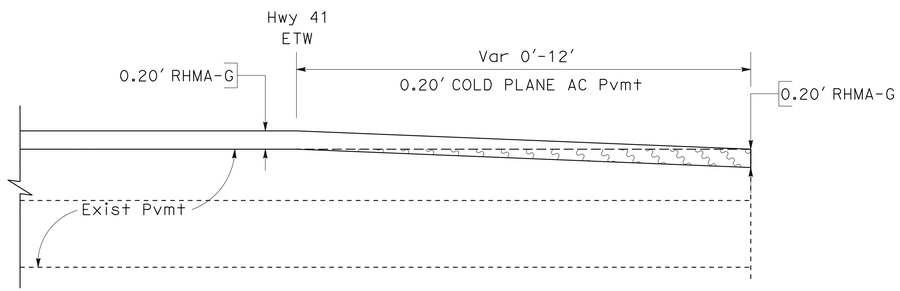

SECTION B-B
PM 19.7 TO 21.7 AND PM 31.5 TO 34.5

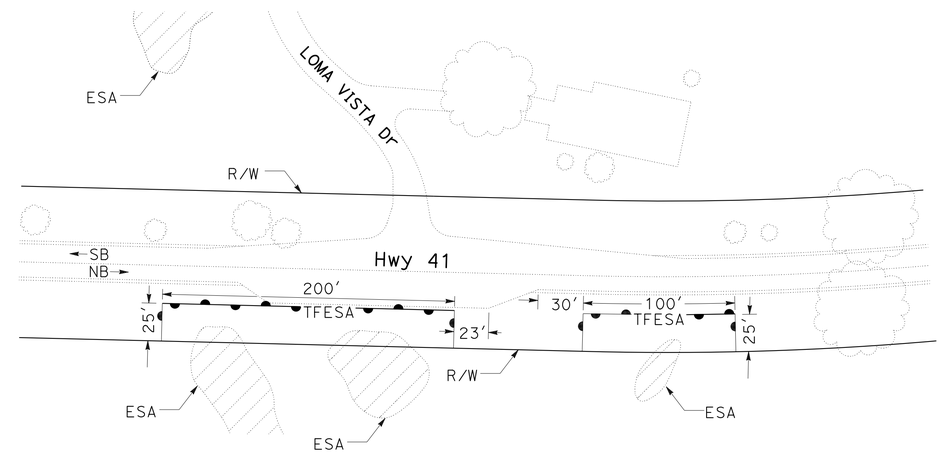

ESA LIMITS
PM 28.6

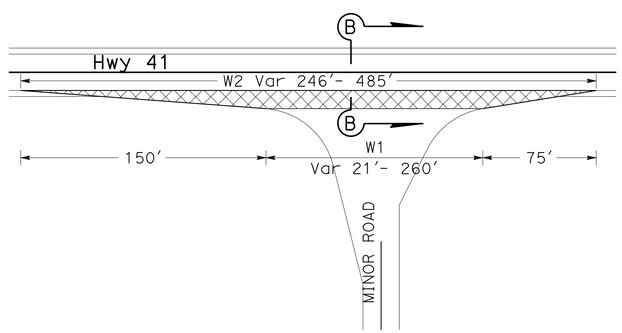

TYPICAL HMA MINOR ROADS INTERSECTIONS

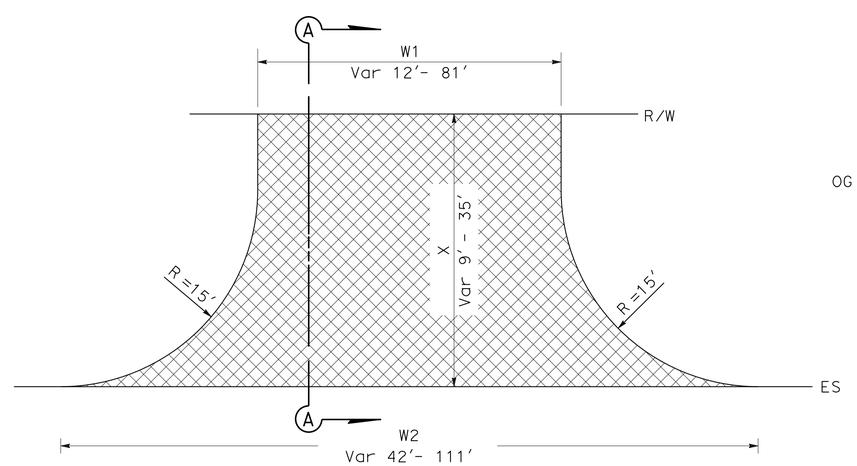

TYPICAL HMA DRIVEWAY

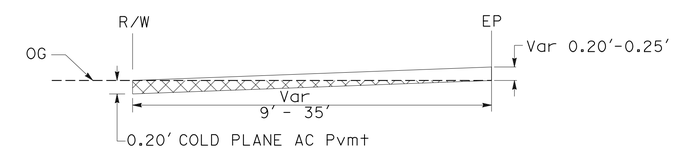

SECTION A-A

THE LOCATIONS OF WORK ARE FLEXIBLE AND MAY BE ADJUSTED TO MITIGATE ANY CONFLICTS WITH EXISTING UTILITY FACILITIES. UTILITY INFORMATION SHOWN ON THESE PLANS IS INCOMPLETE.

CONSTRUCTION DETAILS

NO SCALE

C-3

REVISED BY | DATE REVISED
MAGDI MARZOUK | MICHAEL DAY
CALCULATED-DESIGNED BY | CHECKED BY
FUNCTIONAL SUPERVISOR | SCOTT SHAVER
STATE OF CALIFORNIA - DEPARTMENT OF TRANSPORTATION
Caltrans
06-DESIGN

LAST REVISION 06-08-16 | DATE PLOTTED => 03-AUG-2016 | TIME PLOTTED => 16:51

Dist	COUNTY	ROUTE	POST MILES TOTAL PROJECT	SHEET No.	TOTAL SHEETS
05	SLO	41	19.7/R42.2	6	37

REGISTERED CIVIL ENGINEER 6-13-16 DATE

6-13-16
PLANS APPROVAL DATE

REGISTERED PROFESSIONAL ENGINEER MICHAEL JAMES DAY No. 66870 Exp. 9/30/16 CIVIL STATE OF CALIFORNIA

THE STATE OF CALIFORNIA OR ITS OFFICERS OR AGENTS SHALL NOT BE RESPONSIBLE FOR THE ACCURACY OR COMPLETENESS OF SCANNED COPIES OF THIS PLAN SHEET.

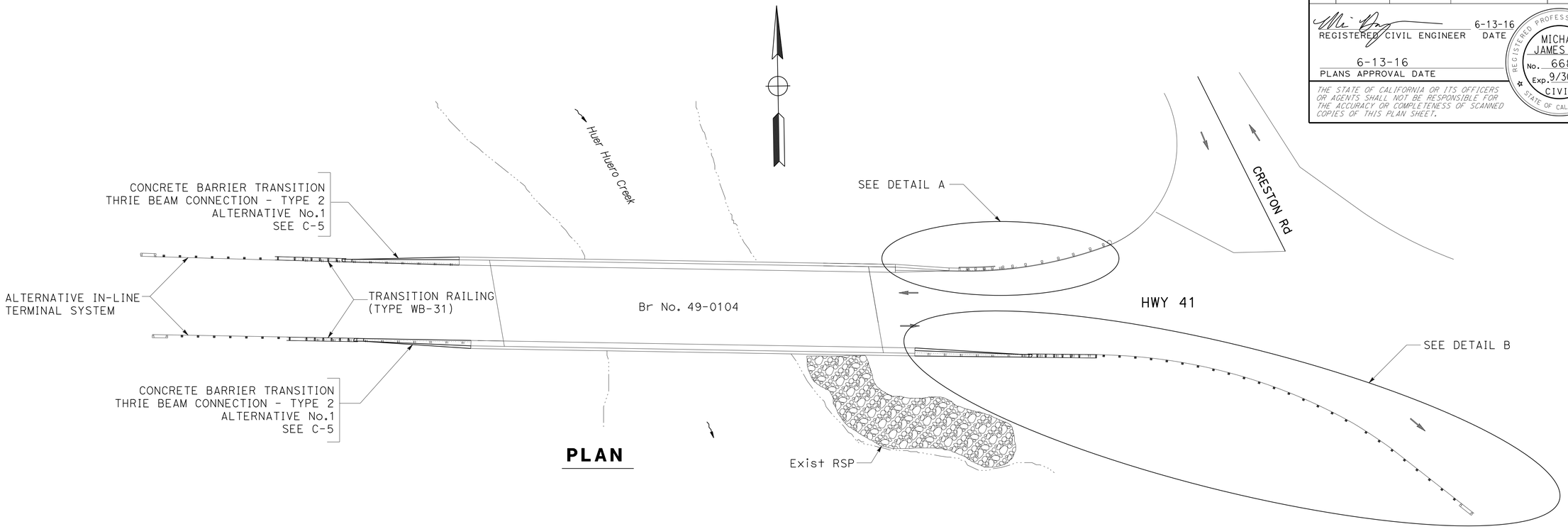

PLAN

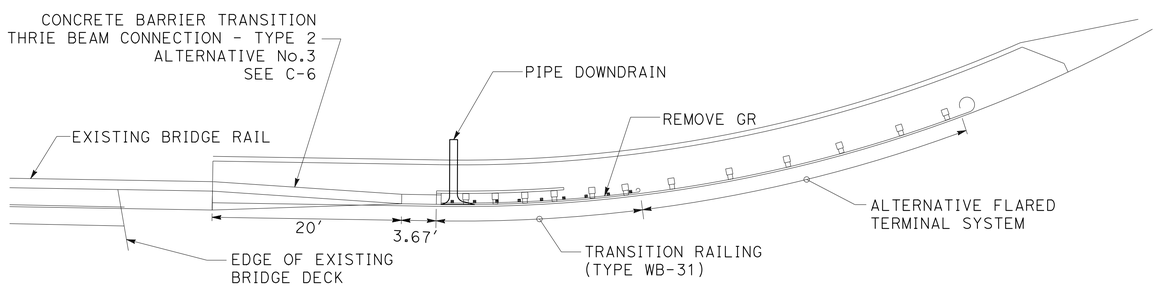

DETAIL A

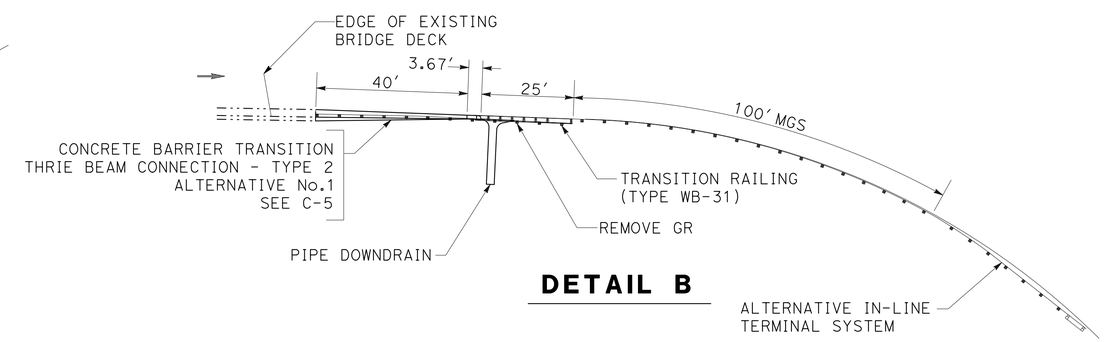

DETAIL B

MODIFIED TRANSITION RAILING (TYPE WB)
HUER HUERO CREEK BRIDGE

PM 28.05

MIDWEST GUARDRAIL SYSTEM EXTENDED AT INTERSECTION
HUER HUERO CREEK BRIDGE

PM 28.05

THE LOCATIONS OF WORK ARE FLEXIBLE AND MAY BE ADJUSTED TO MITIGATE ANY CONFLICTS WITH EXISTING UTILITY FACILITIES. UTILITY INFORMATION SHOWN ON THESE PLANS IS INCOMPLETE.

APPROVED FOR MGS WORK ONLY

CONSTRUCTION DETAILS

NO SCALE

C-4

REVISED BY | DATE REVISED
MAGDI MARZOUK | MICHAEL DAY
CALCULATED-DESIGNED BY | CHECKED BY
FUNCTIONAL SUPERVISOR: SCOTT SHAVER

STATE OF CALIFORNIA - DEPARTMENT OF TRANSPORTATION
Caltrans
06-DESIGN

LAST REVISION 06-08-16 | DATE PLOTTED => 03-AUG-2016 | TIME PLOTTED => 16:51

Dist	COUNTY	ROUTE	POST MILES TOTAL PROJECT	SHEET No.	TOTAL SHEETS
05	SLO	41	19.7/R42.2	7	37

REGISTERED CIVIL ENGINEER 6-13-16 DATE

6-13-16
PLANS APPROVAL DATE

REGISTERED PROFESSIONAL ENGINEER MICHAEL JAMES DAY No. 66870 Exp. 9/30/16 CIVIL STATE OF CALIFORNIA

THE STATE OF CALIFORNIA OR ITS OFFICERS OR AGENTS SHALL NOT BE RESPONSIBLE FOR THE ACCURACY OR COMPLETENESS OF SCANNED COPIES OF THIS PLAN SHEET.

NOTE:
THE CONTRACTOR MUST VERIFY ALL CONTROLLING FIELD DIMENSIONS BEFORE ORDERING OR FABRICATING ANY MATERIAL.

LEGEND:

··-··- Indicates Existing Structure

——— Indicates New Structure

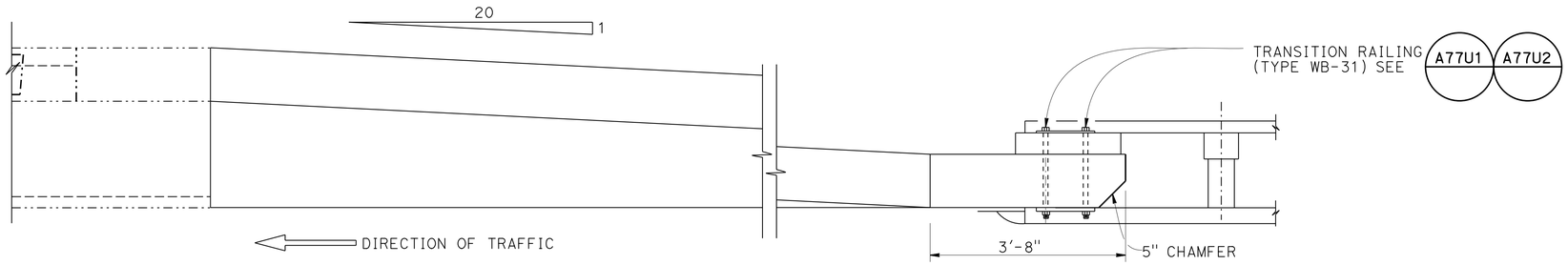

PLAN - ALTERNATIVE No. 1

NO SCALE

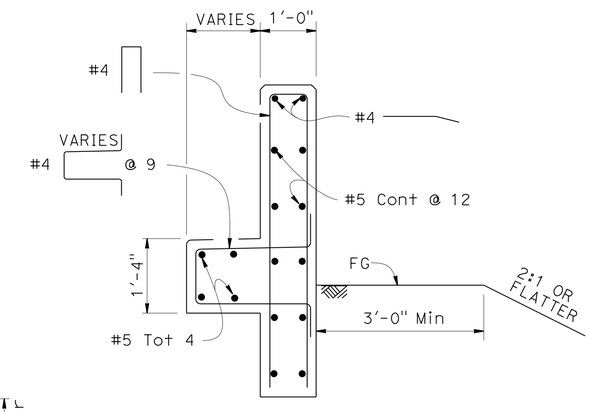

SECTION D-D

SCALE: 3/4" = 1'-0"

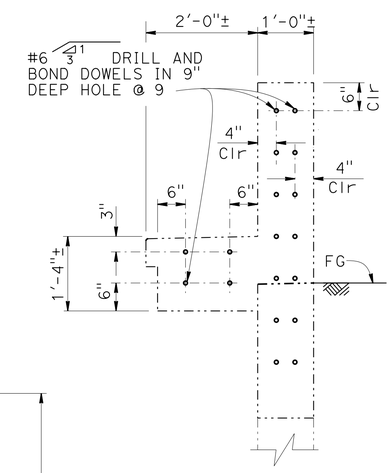

SECTION C-C

SCALE: 3/4" = 1'-0"

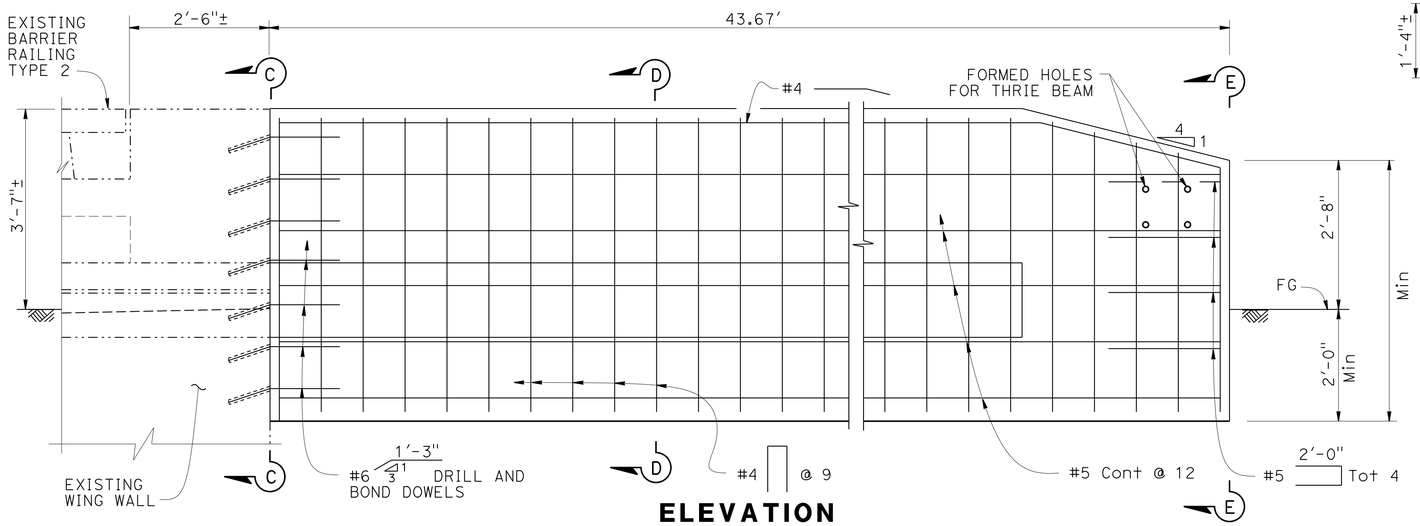

ELEVATION

SCALE: 3/4" = 1'-0"

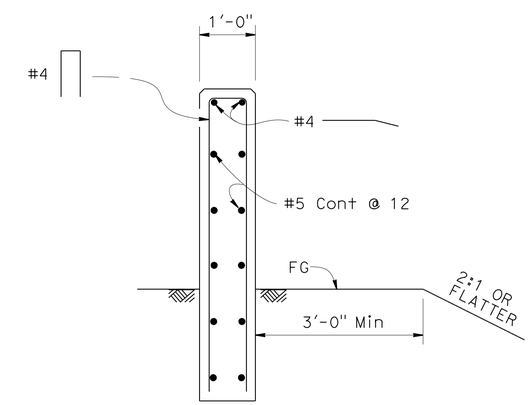

SECTION E-E

SCALE: 3/4" = 1'-0"

HUER HUERO CREEK CONCRETE BARRIER TRANSITION
THRIE BEAM CONNECTION - TYPE 2

THE LOCATIONS OF WORK ARE FLEXIBLE AND MAY BE ADJUSTED TO MITIGATE ANY CONFLICTS WITH EXISTING UTILITY FACILITIES. UTILITY INFORMATION SHOWN ON THESE PLANS IS INCOMPLETE.

CONSTRUCTION DETAILS

SCALE AS SHOWN

C-5

STATE OF CALIFORNIA - DEPARTMENT OF TRANSPORTATION
06-DESIGN
Caltrans®

FUNCTIONAL SUPERVISOR: SCOTT SHAVER
CALCULATED-DESIGNED BY: MAGDI MARZOUK
CHECKED BY: MICHAEL DAY
REVISED BY / DATE REVISED

LAST REVISION 06-08-16
DATE PLOTTED => 03-AUG-2016
TIME PLOTTED => 16:51

Dist	COUNTY	ROUTE	POST MILES TOTAL PROJECT	SHEET No.	TOTAL SHEETS
05	SLO	41	19.7/R42.2	8	37

REGISTERED CIVIL ENGINEER 6-13-16 DATE

6-13-16
PLANS APPROVAL DATE

REGISTERED PROFESSIONAL ENGINEER MICHAEL JAMES DAY No. 66870 Exp. 9/30/16 CIVIL STATE OF CALIFORNIA

THE STATE OF CALIFORNIA OR ITS OFFICERS OR AGENTS SHALL NOT BE RESPONSIBLE FOR THE ACCURACY OR COMPLETENESS OF SCANNED COPIES OF THIS PLAN SHEET.

NOTE:
THE CONTRACTOR MUST VERIFY ALL CONTROLLING FIELD DIMENSIONS BEFORE ORDERING OR FABRICATING ANY MATERIAL.

LEGEND:
- Indicates Existing Structure
- Indicates New Structure

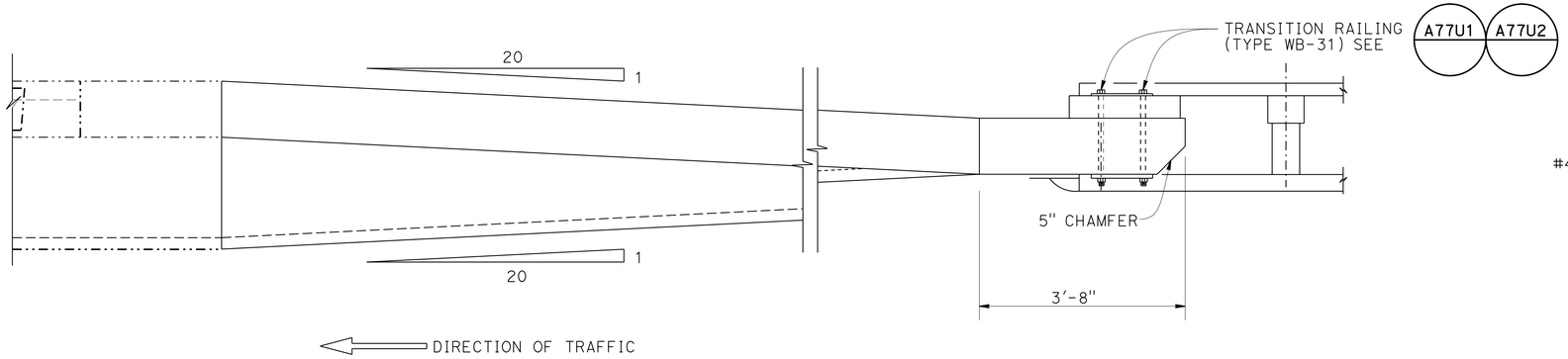

PLAN - ALTERNATIVE No. 3

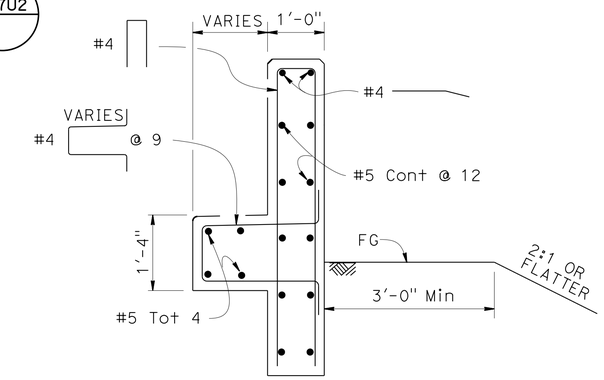

SECTION B-B
SCALE: 3/4" = 1'-0"

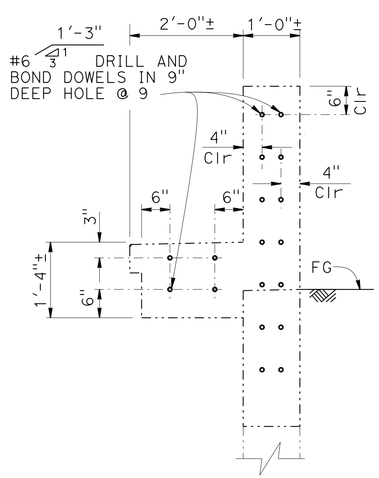

SECTION A-A
3/4" = 1'-0"

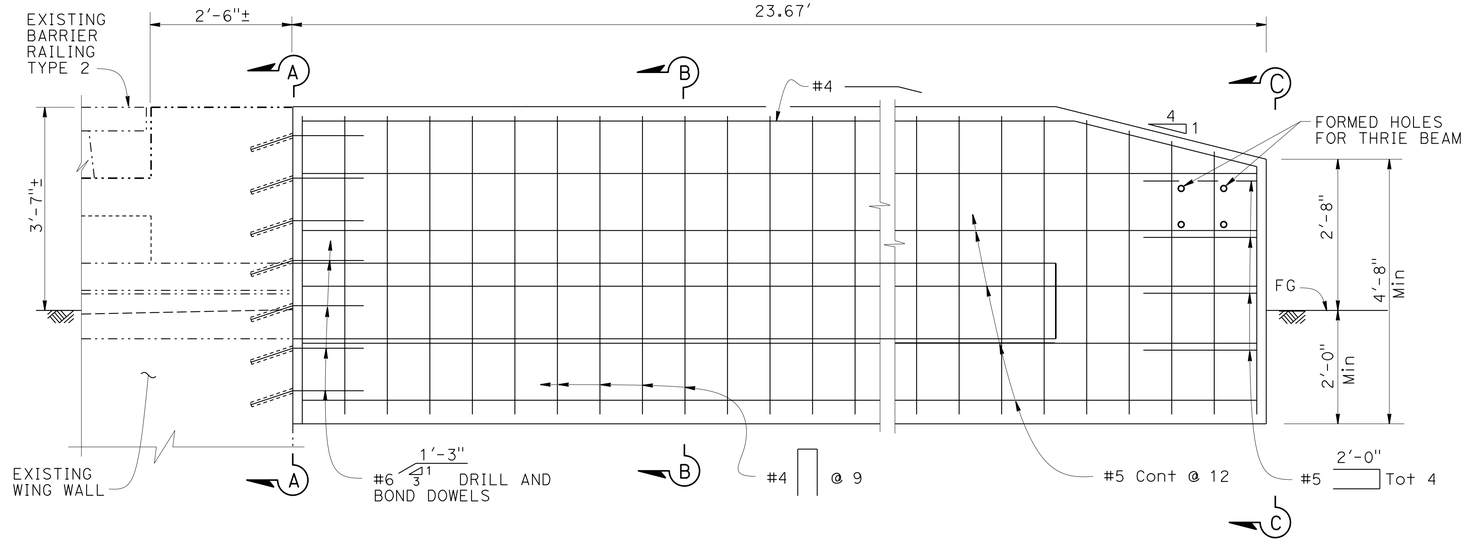

ELEVATION
SCALE: 3/4" = 1'-0"

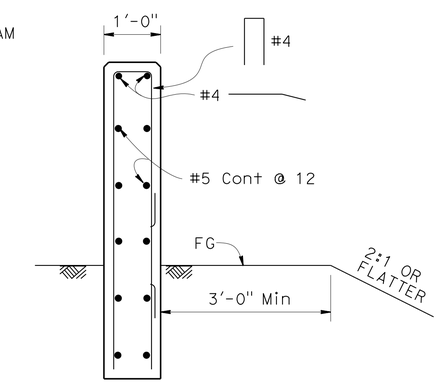

SECTION C-C
SCALE: 3/4" = 1'-0"

HUER HUERO CREEK CONCRETE BARRIER TRANSITION THRIE BEAM CONNECTION - TYPE 2

THE LOCATIONS OF WORK ARE FLEXIBLE AND MAY BE ADJUSTED TO MITIGATE ANY CONFLICTS WITH EXISTING UTILITY FACILITIES. UTILITY INFORMATION SHOWN ON THESE PLANS IS INCOMPLETE.

CONSTRUCTION DETAILS

NO SCALE

C-6

REVISED BY | DATE REVISED
MAGDI MARZOUK | MICHAEL DAY
CALCULATED-DESIGNED BY | CHECKED BY
FUNCTIONAL SUPERVISOR: SCOTT SHAVER
STATE OF CALIFORNIA - DEPARTMENT OF TRANSPORTATION
06-DESIGN
Caltrans

LAST REVISION 06-08-16 | DATE PLOTTED => 03-AUG-2016 | TIME PLOTTED => 16:51

Dist	COUNTY	ROUTE	POST MILES TOTAL PROJECT	SHEET No.	TOTAL SHEETS
05	SLO	41	19.7/R42.2	9	37

REGISTERED CIVIL ENGINEER 6-13-16 DATE

6-13-16
PLANS APPROVAL DATE

REGISTERED PROFESSIONAL ENGINEER MICHAEL JAMES DAY No. 66870 Exp. 9/30/16 CIVIL STATE OF CALIFORNIA

THE STATE OF CALIFORNIA OR ITS OFFICERS OR AGENTS SHALL NOT BE RESPONSIBLE FOR THE ACCURACY OR COMPLETENESS OF SCANNED COPIES OF THIS PLAN SHEET.

NOTES:

1. FOR ADDITIONAL DETAILS NOT SHOWN ON THIS PLAN REFER TO A77L1 AND A77L2.
2. CRT POST TO BE WOOD ONLY.

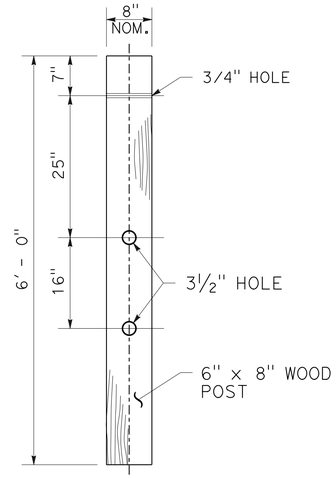

CONTROLLED RELEASING TERMINAL (CRT) POST DETAIL

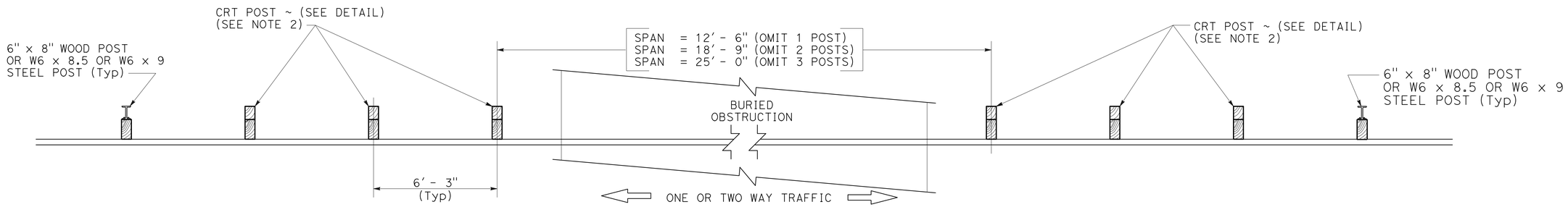

PLAN

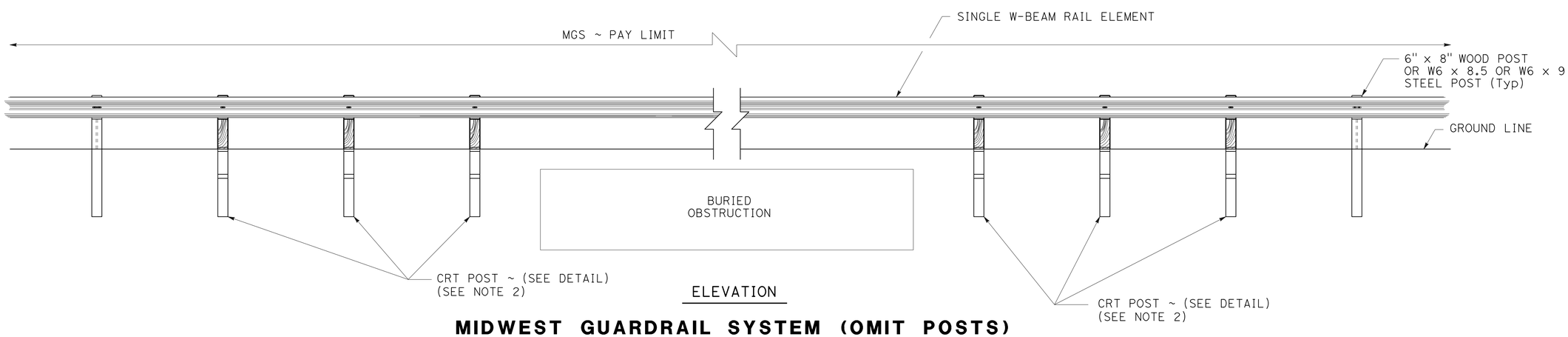

ELEVATION

MIDWEST GUARDRAIL SYSTEM (OMIT POSTS)

WEST BRANCH HUER HUERO CREEK

THE LOCATIONS OF WORK ARE FLEXIBLE AND MAY BE ADJUSTED TO MITIGATE ANY CONFLICTS WITH EXISTING UTILITY FACILITIES. UTILITY INFORMATION SHOWN ON THESE PLANS IS INCOMPLETE.

CONSTRUCTION DETAILS

NO SCALE

C-7

STATE OF CALIFORNIA - DEPARTMENT OF TRANSPORTATION
06-DESIGN
Caltrans

FUNCTIONAL SUPERVISOR: SCOTT SHAVER
CALCULATED-DESIGNED BY: MAGDI MARZOUK
CHECKED BY: MICHAEL DAY
REVISED BY
DATE REVISED

LAST REVISION 06-08-16
DATE PLOTTED => 03-AUG-2016
TIME PLOTTED => 16:51

Dist	COUNTY	ROUTE	POST MILES TOTAL PROJECT	SHEET No.	TOTAL SHEETS
05	SLO	41	19.7/R42.2	10	37

REGISTERED CIVIL ENGINEER 6-13-16 DATE

6-13-16
PLANS APPROVAL DATE

REGISTERED PROFESSIONAL ENGINEER MICHAEL JAMES DAY No. 66870 Exp 9/30/16 CIVIL STATE OF CALIFORNIA

THE STATE OF CALIFORNIA OR ITS OFFICERS OR AGENTS SHALL NOT BE RESPONSIBLE FOR THE ACCURACY OR COMPLETENESS OF SCANNED COPIES OF THIS PLAN SHEET.

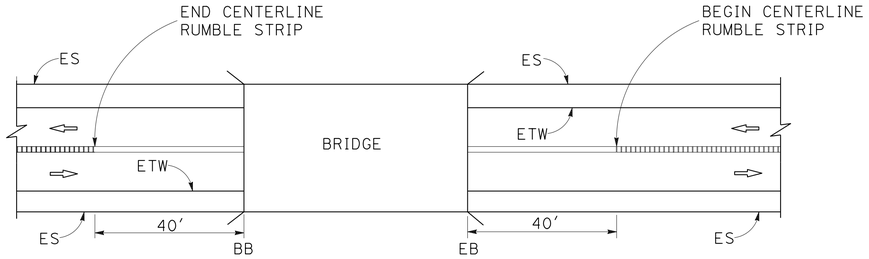

TYPICAL RUMBLE STRIP AT BRIDGES

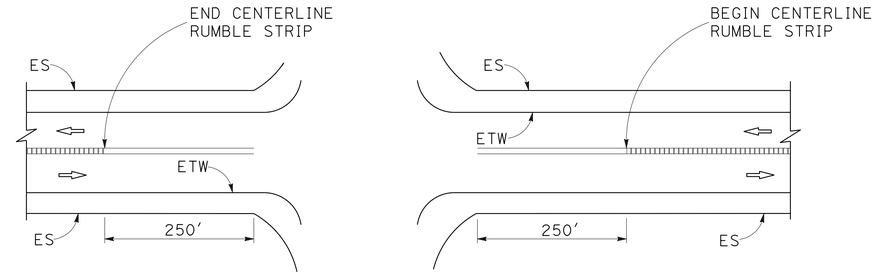

TYPICAL RUMBLE STRIP AT INTERSECTION

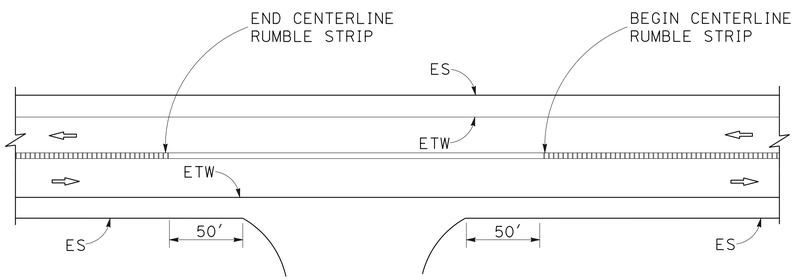

TYPICAL RUMBLE STRIP AT PRIVATE Dwy/ FARM ACCESS ROAD

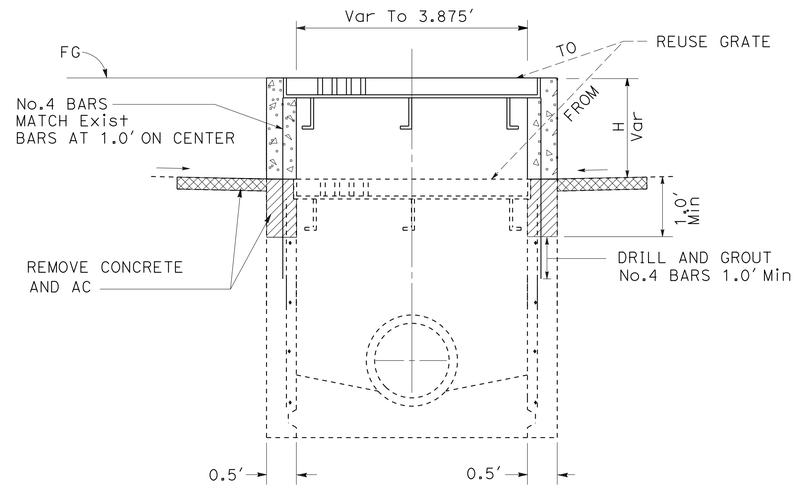

ADJUST INLET

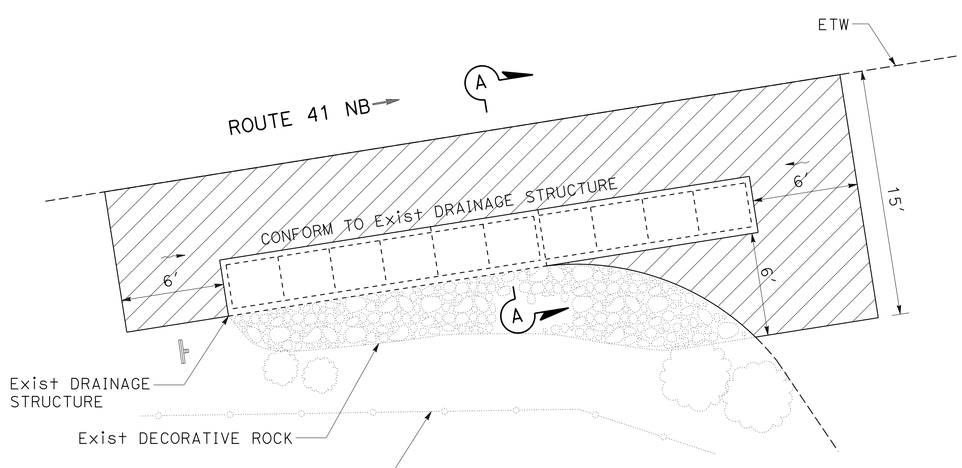

PLAN

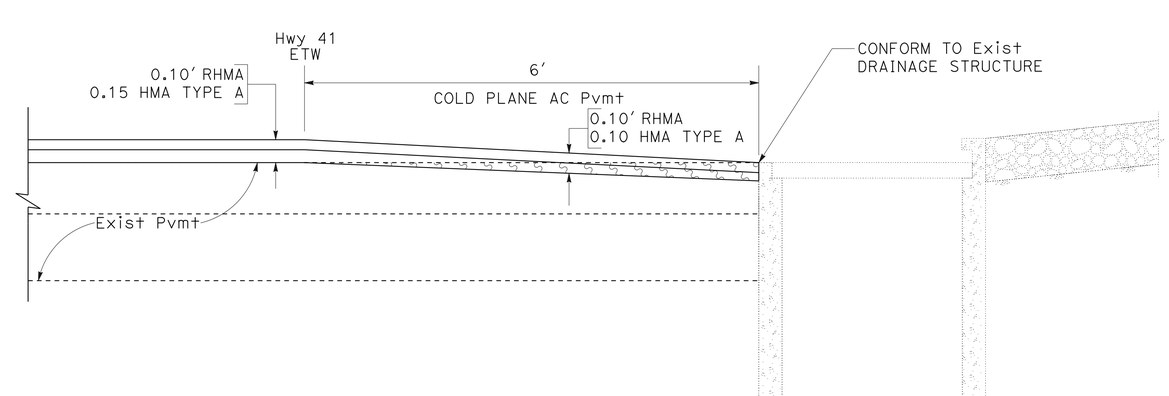

SECTION A-A

CONFORM TO EXISTING INLET

PM 30.0 DRIVEWAY

THE LOCATIONS OF WORK ARE FLEXIBLE AND MAY BE ADJUSTED TO MITIGATE ANY CONFLICTS WITH EXISTING UTILITY FACILITIES. UTILITY INFORMATION SHOWN ON THESE PLANS IS INCOMPLETE.

CONSTRUCTION DETAILS

NO SCALE

C-8

STATE OF CALIFORNIA - DEPARTMENT OF TRANSPORTATION
Caltrans
06-DESIGN

FUNCTIONAL SUPERVISOR: SCOTT SHAVER
CALCULATED-DESIGNED BY: MAGDI MARZOUK
CHECKED BY: MICHAEL DAY
REVISED BY
DATE REVISED

LAST REVISION 06-08-16
DATE PLOTTED => 03-AUG-2016
TIME PLOTTED => 16:51

Dist	COUNTY	ROUTE	POST MILES TOTAL PROJECT	SHEET No.	TOTAL SHEETS
05	SLO	41	19.7/R42.2	11	37

REGISTERED CIVIL ENGINEER 6-13-16 DATE

6-13-16
PLANS APPROVAL DATE

REGISTERED PROFESSIONAL ENGINEER MICHAEL JAMES DAY No. 66870 Exp. 9/30/16 CIVIL STATE OF CALIFORNIA

THE STATE OF CALIFORNIA OR ITS OFFICERS OR AGENTS SHALL NOT BE RESPONSIBLE FOR THE ACCURACY OR COMPLETENESS OF SCANNED COPIES OF THIS PLAN SHEET.

NOTE:
1. USE 15'-7½" LENGTH RAIL.

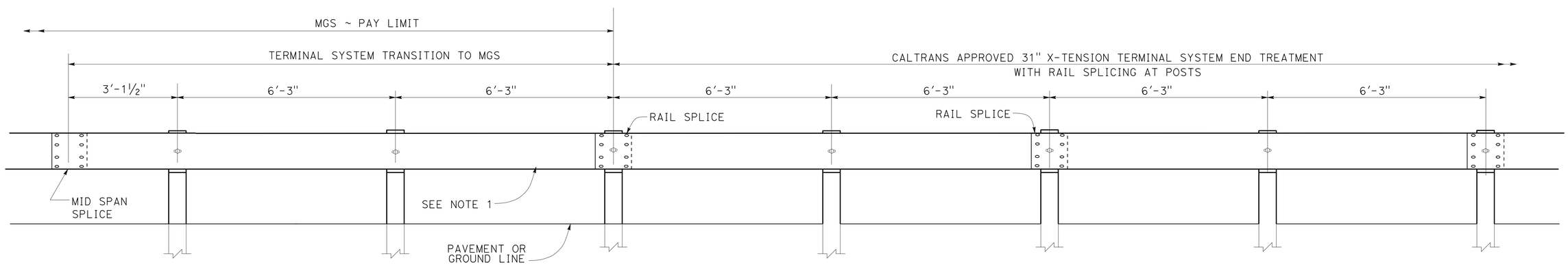

TRANSITION DETAIL FOR 31" X-TENSION TERMINAL SYSTEM END TREATMENT WITH RAIL SPLICING AT POSTS TO MIDWEST GUARDRAIL SYSTEM

THE LOCATIONS OF WORK ARE FLEXIBLE AND MAY BE ADJUSTED TO MITIGATE ANY CONFLICTS WITH EXISTING UTILITY FACILITIES. UTILITY INFORMATION SHOWN ON THESE PLANS IS INCOMPLETE.

CONSTRUCTION DETAILS

SCALE AS SHOWN

C-9

REVISED BY | DATE REVISED
MAGDI MARZOUK | MICHAEL DAY
CALCULATED-DESIGNED BY | CHECKED BY
FUNCTIONAL SUPERVISOR: SCOTT SHAVER
STATE OF CALIFORNIA - DEPARTMENT OF TRANSPORTATION
Caltrans
06-DESIGN

LAST REVISION 06-10-16 | DATE PLOTTED => 03-AUG-2016 | TIME PLOTTED => 16:51

Dist	COUNTY	ROUTE	POST MILES TOTAL PROJECT	SHEET No.	TOTAL SHEETS
05	SLO	41	19.7/R42.2	12	37

REGISTERED CIVIL ENGINEER 6-13-16 DATE

6-13-16
PLANS APPROVAL DATE

REGISTERED PROFESSIONAL ENGINEER MICHAEL JAMES DAY No. 66870 Exp. 9/30/16 CIVIL STATE OF CALIFORNIA

THE STATE OF CALIFORNIA OR ITS OFFICERS OR AGENTS SHALL NOT BE RESPONSIBLE FOR THE ACCURACY OR COMPLETENESS OF SCANNED COPIES OF THIS PLAN SHEET.

LEGEND

0.50′ PLACE HMA (Misc AREA)

REMOVE AC (ROADWAY EXCAVATION)
PLACE HMA (Misc AREA) 0.50′

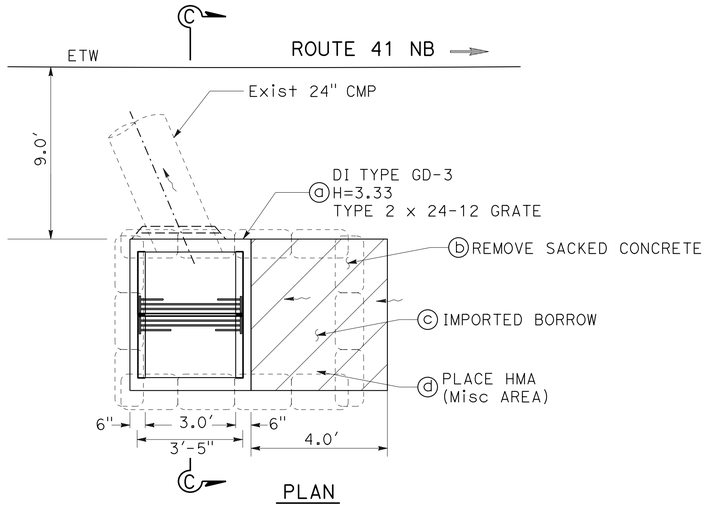

PLAN

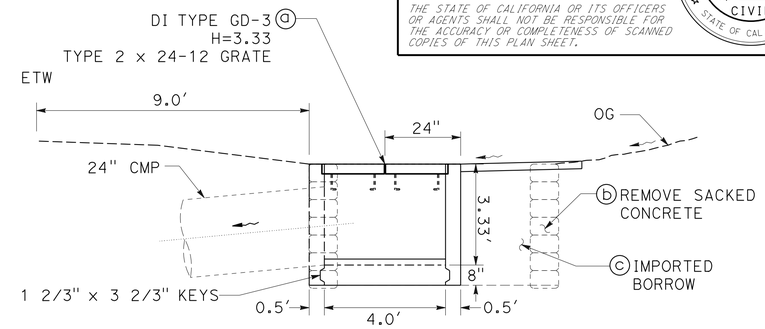

SECTION C-C

DRAINAGE SYSTEM No. 3

TYPE GD-3
PM 21.08

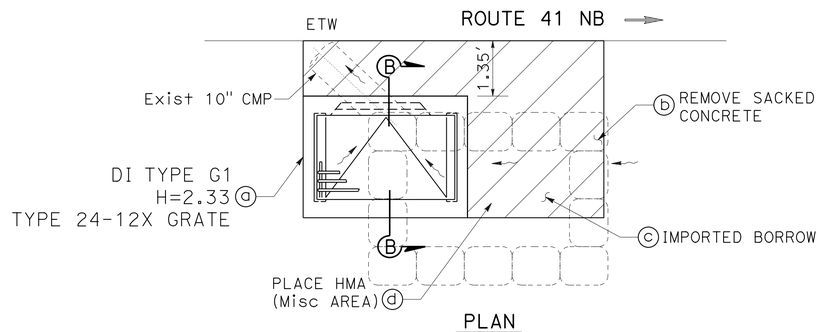

PLAN

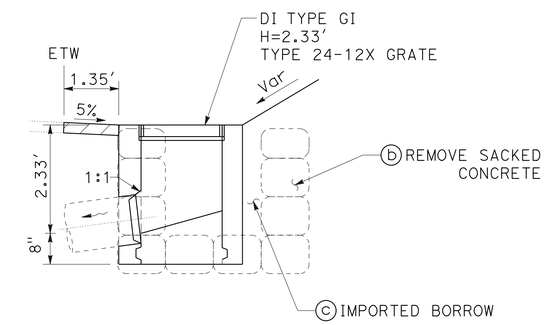

SECTION B-B

DRAINAGE SYSTEM No. 2

TYPE G1
PM 20.96

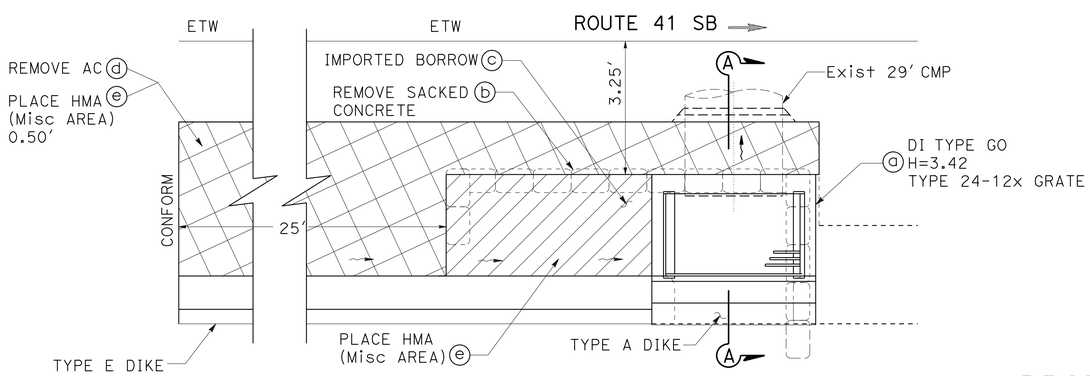

PLAN

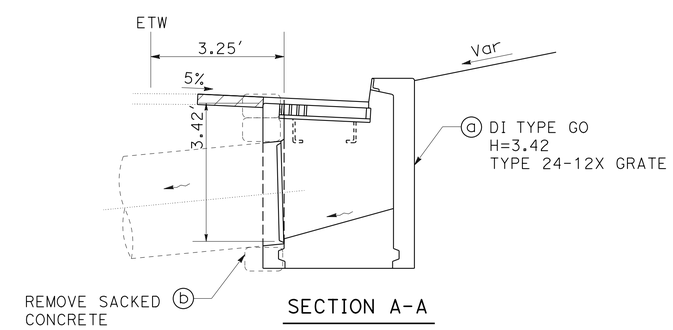

SECTION A-A

DRAINAGE SYSTEM No. 1

TYPE GO
PM 20.47

THE LOCATIONS OF WORK ARE FLEXIBLE AND MAY BE ADJUSTED TO MITIGATE ANY CONFLICTS WITH EXISTING UTILITY FACILITIES. UTILITY INFORMATION SHOWN ON THESE PLANS IS INCOMPLETE.

APPROVED FOR DRAINAGE WORK ONLY

DRAINAGE DETAILS

NO SCALE

DD-1

STATE OF CALIFORNIA - DEPARTMENT OF TRANSPORTATION
Caltrans®
06-DESIGN

FUNCTIONAL SUPERVISOR: SCOTT SHAVER
CALCULATED-DESIGNED BY: MAGDI MARZOUK
CHECKED BY: MICHAEL DAY
REVISED BY
DATE REVISED

LAST REVISION 06-10-16
DATE PLOTTED => 03-AUG-2016
TIME PLOTTED => 16:51

Dist	COUNTY	ROUTE	POST MILES TOTAL PROJECT	SHEET No.	TOTAL SHEETS
05	SLO	41	19.7/R42.2	13	37

REGISTERED CIVIL ENGINEER 6-13-16 DATE

6-13-16
PLANS APPROVAL DATE

REGISTERED PROFESSIONAL ENGINEER MICHAEL JAMES DAY No. 66870 Exp. 9/30/16 CIVIL STATE OF CALIFORNIA

THE STATE OF CALIFORNIA OR ITS OFFICERS OR AGENTS SHALL NOT BE RESPONSIBLE FOR THE ACCURACY OR COMPLETENESS OF SCANNED COPIES OF THIS PLAN SHEET.

LEGEND

- REMOVE ± 3′ FROM 30" CMP
- REMOVE AC (ROADWAY EXCAVATION) PLACE HMA (0.25′ THICK)
- REMOVE AC (ROADWAY EXCAVATION)

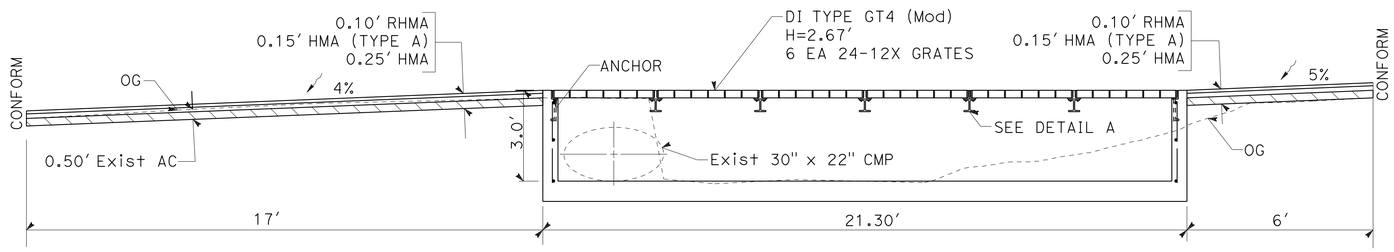

SECTION A-A

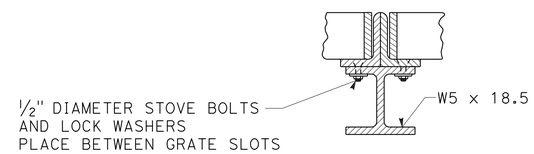

DETAIL A

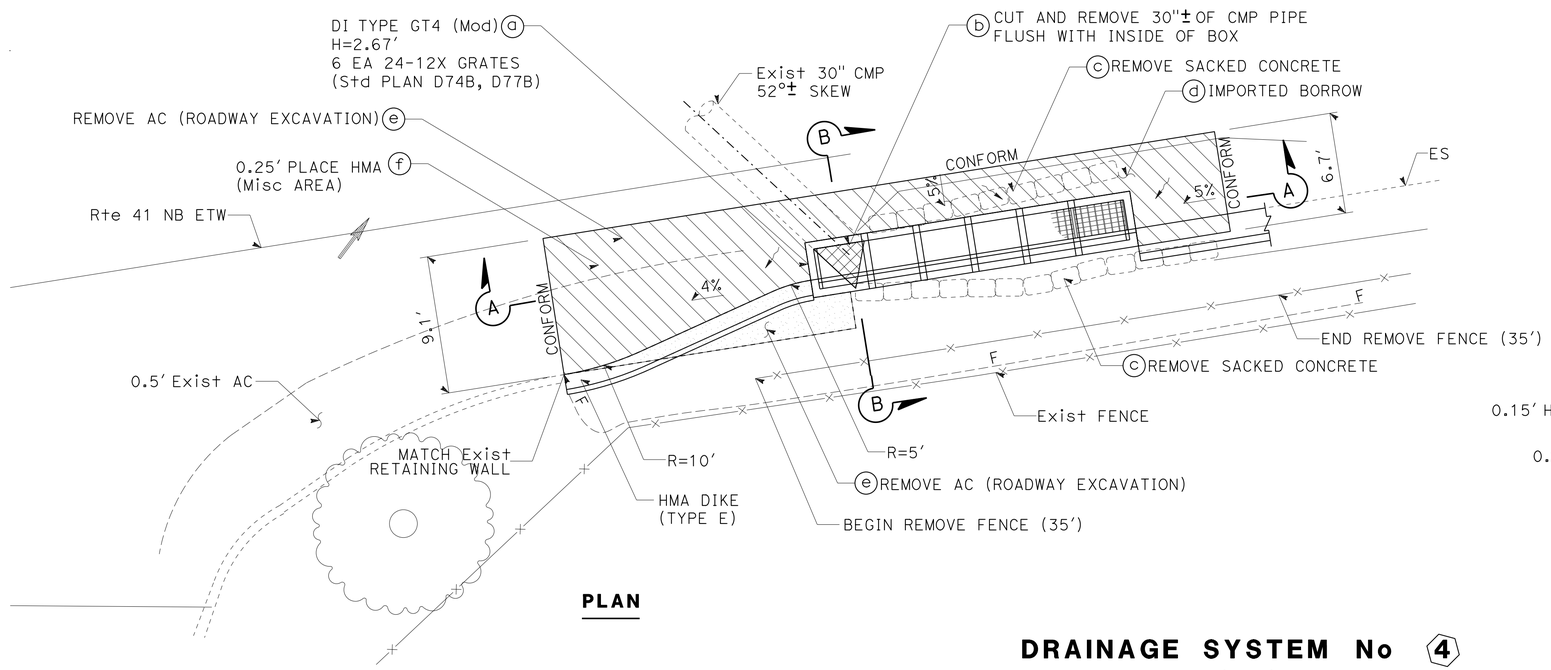

PLAN

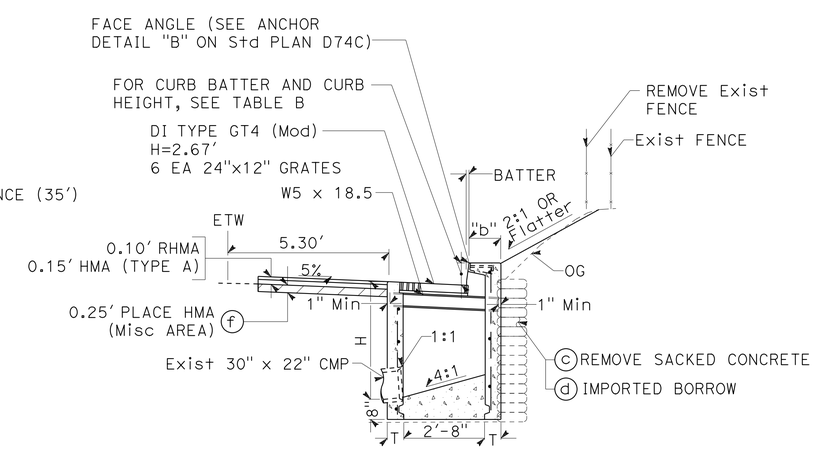

SECTION B-B

DRAINAGE SYSTEM No 4

TYPE GT4 (Mod)
PM 30.00
SEE D74A FOR DETAILS NOT SHOWN

THE LOCATIONS OF WORK ARE FLEXIBLE AND MAY BE ADJUSTED TO MITIGATE ANY CONFLICTS WITH EXISTING UTILITY FACILITIES. UTILITY INFORMATION SHOWN ON THESE PLANS IS INCOMPLETE.

APPROVED FOR DRAINAGE WORK ONLY

DRAINAGE DETAILS

NO SCALE

DD-2

REVISED BY | DATE REVISED
MAGDI MARZOUK | MICHAEL DAY
CALCULATED-DESIGNED BY | CHECKED BY
FUNCTIONAL SUPERVISOR: SCOTT SHAVER

STATE OF CALIFORNIA - DEPARTMENT OF TRANSPORTATION
06-DESIGN
Caltrans

LAST REVISION 06-10-16 | DATE PLOTTED => 03-AUG-2016 | TIME PLOTTED => 16:51

Dist	COUNTY	ROUTE	POST MILES TOTAL PROJECT	SHEET No.	TOTAL SHEETS
05	SLO	41	19.7/R42.2	14	37

REGISTERED CIVIL ENGINEER 6-13-16 DATE

6-13-16
PLANS APPROVAL DATE

REGISTERED PROFESSIONAL ENGINEER MICHAEL JAMES DAY No. 66870 Exp. 9/30/16 CIVIL STATE OF CALIFORNIA

THE STATE OF CALIFORNIA OR ITS OFFICERS OR AGENTS SHALL NOT BE RESPONSIBLE FOR THE ACCURACY OR COMPLETENESS OF SCANNED COPIES OF THIS PLAN SHEET.

ABBREVIATIONS:

LNMI - LANE MILES
DIR - DIRECTION

DRAINAGE QUANTITIES

DRAINAGE SHEET No.	DRAINAGE SYSTEM No. ⬡	DRAINAGE UNIT ○	REMOVE CULVERT LF	REMOVE SACKED CONCRETE CY	ROADWAY EXCAVATION CY	IMPORTED BORROW CY *	PLACE HMA (Misc AREA) SQYD *	MINOR CONCRETE (MINOR STRUCTURE) CY	(N) DESIGN H LF	Misc IRON AND STEEL LB	DESCRIPTION	PM	DRAINAGE SYSTEM No. ⬡	DRAINAGE UNIT ○
DD-1	1	a						1.34	3.42	239	DI TYPE GO - TYPE 24-12X GRATE	20.47	1	a
		b		1.76							REMOVE SACKED CONCRETE			b
		c				6.47					IMPORTED BORROW			c
		d			3.28						REMOVE AC			d
		e					25.79				PLACE HMA (Misc AREA)			e
DD-1	2	a						0.95	2.33	239	DI TYPE G-1 - TYPE 24-12X GRATE	20.96	2	a
		b		1.31							REMOVE SACKED CONCRETE			b
		c				1.63					IMPORTED BORROW			c
		d					2.46				PLACE HMA (Misc AREA)			d
DD-1	3	a						1.73	3.33	478	DI TYPE GD-3 - TYPE 2 X 24-12 GRATE	21.08	3	a
		b		3.00							REMOVE SACKED CONCRETE			b
		c				2.95					IMPORTED BORROW			c
		d					2.87				PLACE HMA (Misc AREA)			d
DD-2	4	a						4.69	3.00	1434	DI TYPE GT4 MODIFIED 6 EA - 24-12X GRATES	30.00	4	a
		b	2.5								CUT EXISTING 30" CMP TO FIT DI TYPE GO			b
		c		2.51							REMOVE SACKED CONCRETE			c
		d				37.69					IMPORTED BORROW			d
		e			5.12						REMOVE AC			e
			2.5	8.58	8.40	48.74	31.12	8.71		2390	TOTAL			

* QUANTITY INCLUDED IN ROADWAY QUANTITIES TABLE
(N) NOT A SEPARATE PAY ITEM, FOR INFORMATION ONLY

DRAINAGE QUANTITIES

DQ-1

STATE OF CALIFORNIA - DEPARTMENT OF TRANSPORTATION
Caltrans
06-DESIGN

FUNCTIONAL SUPERVISOR: SCOTT SHAVER
CALCULATED-DESIGNED BY: WAFAA SIQUEIROS
CHECKED BY: MICHAEL DAY
REVISED BY
DATE REVISED

LAST REVISION 06-10-16 | DATE PLOTTED => 03-AUG-2016 | TIME PLOTTED => 16:51

Dist	COUNTY	ROUTE	POST MILES TOTAL PROJECT	SHEET No.	TOTAL SHEETS
05	SLO	41	19.7/R42.2	15	37

REGISTERED CIVIL ENGINEER 6-13-16 DATE

6-13-16
PLANS APPROVAL DATE

REGISTERED PROFESSIONAL ENGINEER MICHAEL JAMES DAY No. 66870 Exp. 9/30/16 CIVIL STATE OF CALIFORNIA

THE STATE OF CALIFORNIA OR ITS OFFICERS OR AGENTS SHALL NOT BE RESPONSIBLE FOR THE ACCURACY OR COMPLETENESS OF SCANNED COPIES OF THIS PLAN SHEET.

POTHOLING INFORMATION

X	UTILITY OWNER	DESCRIPTION	PM	OFFSET	DEPTH	REMARKS
1	SOUTHERN CA GAS	10" HP GAS	20.81		DID NOT LOCATE	EXCAVATED IN EXCESS OF 15' AND WAS NOT FOUND
2	SOUTHERN CA GAS	CATHODIC PROTECTION CABLE	20.79	1'5" FROM ETW.	3'4"	15' FROM BEGINING OF EXIST MBGR
3	SOUTHERN CA GAS	CATHODIC PROTECTION CABLE	20.75	2'0" FROM ETW.	3'4"	188' FROM BEGINING OF EXIST MBGR

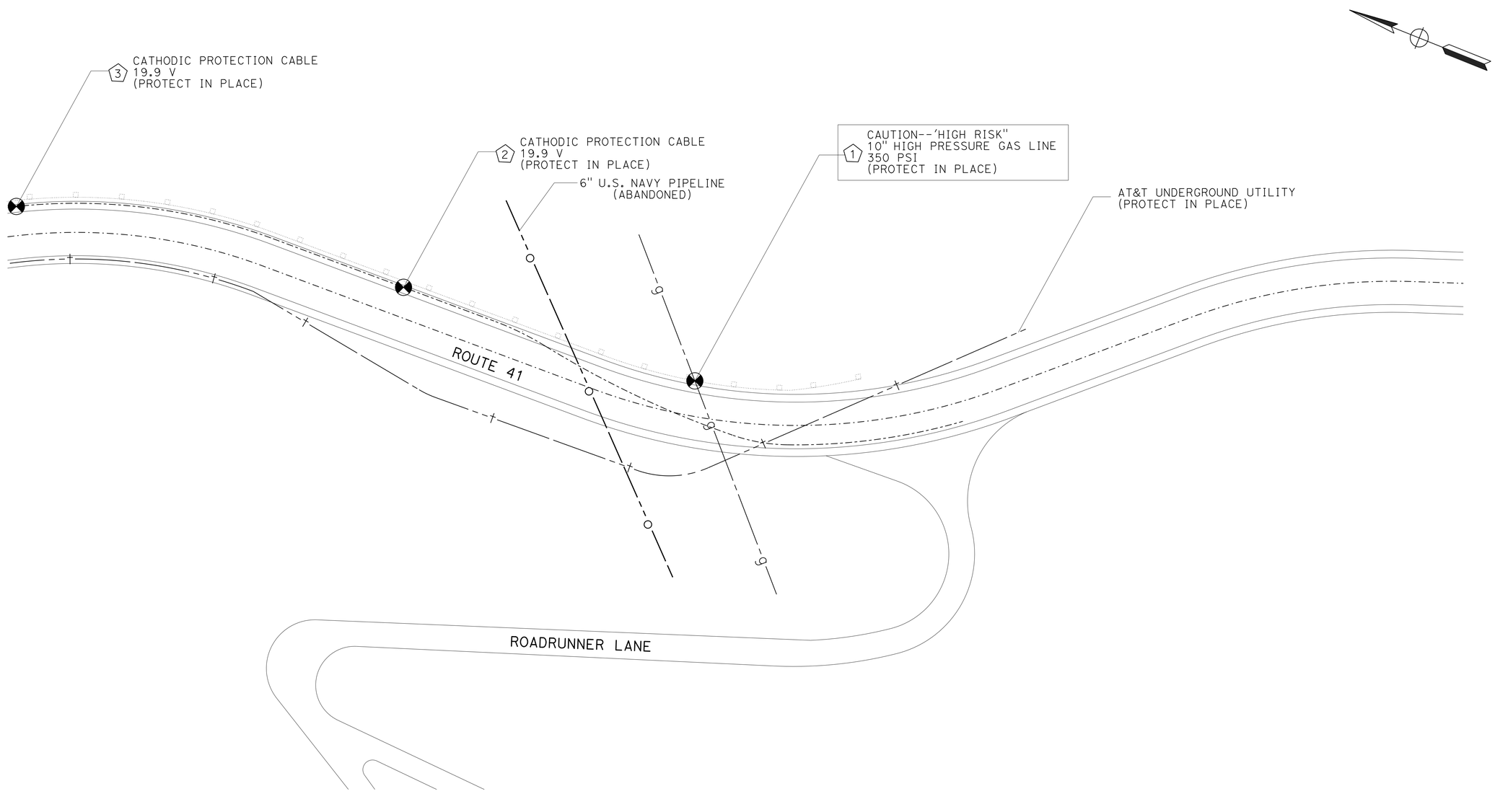

THE LOCATIONS OF WORK ARE FLEXIBLE AND MAY BE ADJUSTED TO MITIGATE ANY CONFLICTS WITH EXISTING UTILITY FACILITIES. UTILITY INFORMATION SHOWN ON THESE PLANS IS INCOMPLETE.

THIS PLAN TO BE USED FOR UTILITY INFORMATION ONLY

NO SCALE

UTILITY PLANS

U-1

STATE OF CALIFORNIA - DEPARTMENT OF TRANSPORTATION
Caltrans
06-DESIGN

FUNCTIONAL SUPERVISOR: SCOTT SHAVER
CALCULATED-DESIGNED BY: MAGDI MARZOUK
CHECKED BY: MICHAEL DAY
REVISED BY
DATE REVISED

LAST REVISION 06-13-16 | DATE PLOTTED => 03-AUG-2016 TIME PLOTTED => 16:51

Dist	COUNTY	ROUTE	POST MILES TOTAL PROJECT	SHEET No.	TOTAL SHEETS
05	SLO	41	19.7/R42.2	16	37

REGISTERED CIVIL ENGINEER 05-20-16 DATE

6-13-16
PLANS APPROVAL DATE

REGISTERED PROFESSIONAL ENGINEER FAWZI YAGHMOUR No. 54750 Exp. 12-31-17 CIVIL STATE OF CALIFORNIA

THE STATE OF CALIFORNIA OR ITS OFFICERS OR AGENTS SHALL NOT BE RESPONSIBLE FOR THE ACCURACY OR COMPLETENESS OF SCANNED COPIES OF THIS PLAN SHEET.

STATIONARY MOUNTED CONSTRUCTION AREA SIGNS

SIGN No.	SIGN CODE FEDERAL	SIGN CODE CALIFORNIA	PANEL SIZE	SIGN MESSAGE	No. OF POSTS POST SIZE	No. OF SIGNS
A	W20-1		48" x 48"	ROAD WORK AHEAD	2-4" x 6"	2
B	W20-1		36" x 36"	ROAD WORK AHEAD	1-4" x 6"	2
C	G20-2		36" x 18"	END ROAD WORK	1-4" x 4"	2
D		C40	108"x 42"	TRAFFIC FINES DOUBLED IN CONSTRUCTION ZONES	2-6" x 6"	2

LEGEND:

(X) SIGN NUMBER

ONE POST

TWO POST

NOTES:

1. LOCATION OF CONSTRUCTION SIGNS ARE APPROXIMATE EXACT LOCATIONS TO BE DETERMINED BY THE ENGINEER.
2. FOR SIGN "C40" (TRAFFIC FINES DOUBLED IN CONSTRUCTION ZONES), ALL LETTERS SHALL BE BLACK ON WHITE BACKGROUND.

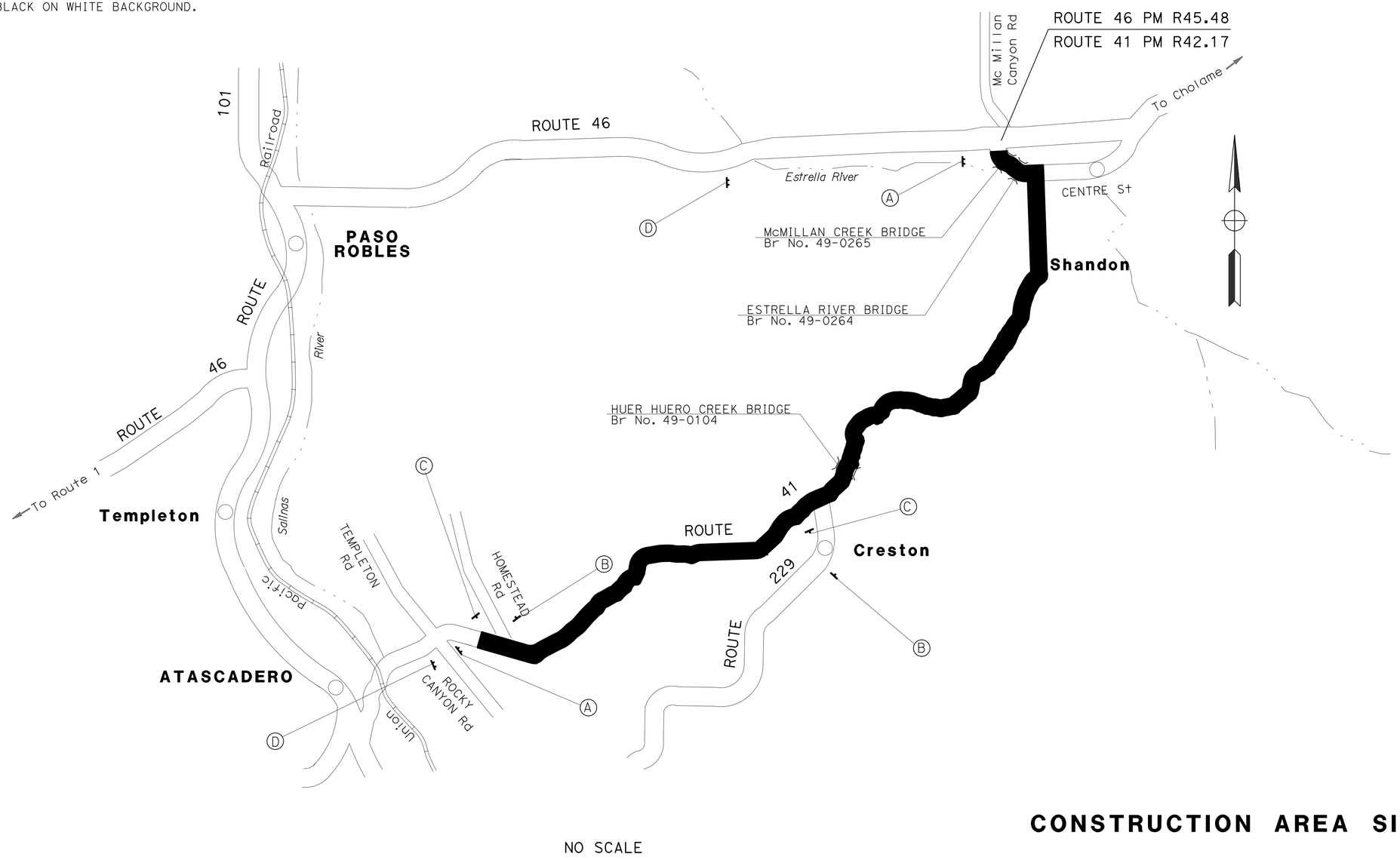

NO SCALE

CONSTRUCTION AREA SIGNS

CS-1

APPROVED FOR CONSTRUCTION AREA SIGN WORK ONLY

NO SCALE

STATE OF CALIFORNIA - DEPARTMENT OF TRANSPORTATION
Caltrans® TRAFFIC DESIGN

FUNCTIONAL SUPERVISOR: MOHAMMED QATAMI
CALCULATED-DESIGNED BY: FAWZI YAGHMOUR
CHECKED BY: GURMIT GILL
REVISED BY / DATE REVISED

LAST REVISION 06-01-16
DATE PLOTTED => 03-AUG-2016
TIME PLOTTED => 16:51

Dist	COUNTY	ROUTE	POST MILES TOTAL PROJECT	SHEET No.	TOTAL SHEETS
05	SLO	41	19.7/R42.2	17	37

REGISTERED CIVIL ENGINEER DATE 05-20-16

PLANS APPROVAL DATE 6-13-16

REGISTERED PROFESSIONAL ENGINEER FAWZI YAGHMOUR No. C-54750 Exp. 12/31/17 CIVIL STATE OF CALIFORNIA

THE STATE OF CALIFORNIA OR ITS OFFICERS OR AGENTS SHALL NOT BE RESPONSIBLE FOR THE ACCURACY OR COMPLETENESS OF SCANNED COPIES OF THIS PLAN SHEET.

LEGEND

WORK AREA

Temp RAILING (TYPE K)

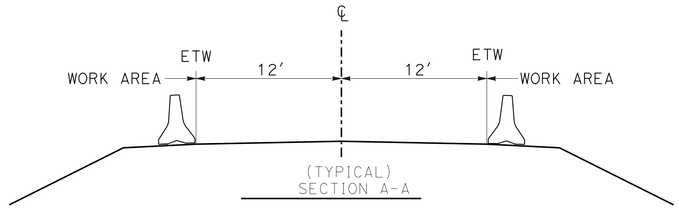

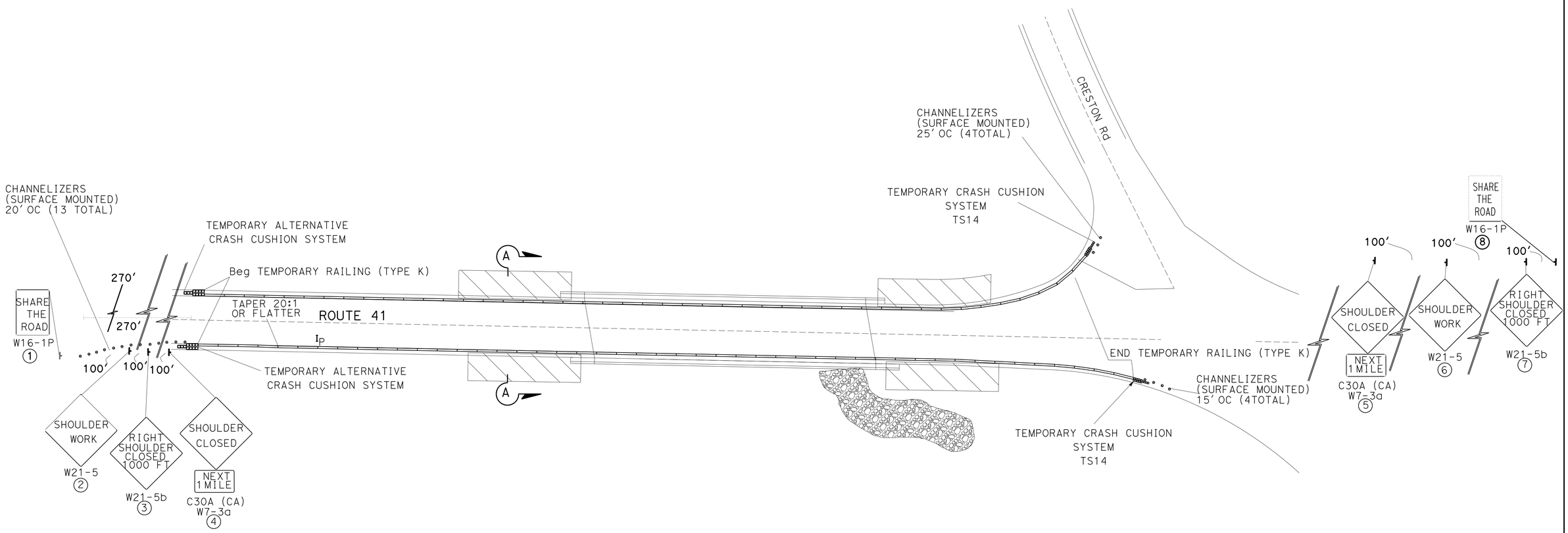

APPROVED FOR TRAFFIC HANDLING WORK ONLY

TRAFFIC HANDLING PLAN

NO SCALE

TH-1

STATE OF CALIFORNIA - DEPARTMENT OF TRANSPORTATION

Caltrans® **TRAFFIC DESIGN**

FUNCTIONAL SUPERVISOR: MOHAMMED QATAMI

CALCULATED-DESIGNED BY: FAWZI YAGHMOUR

CHECKED BY: ANTHONY DEANDA

REVISED BY

DATE REVISED

LAST REVISION 06-02-16

DATE PLOTTED => 03-AUG-2016

TIME PLOTTED => 16:52

Dist	COUNTY	ROUTE	POST MILES TOTAL PROJECT	SHEET No.	TOTAL SHEETS
05	SLO	41	19.7/R42.2	18	37

05-20-16
REGISTERED CIVIL ENGINEER DATE

6-13-16
PLANS APPROVAL DATE

REGISTERED PROFESSIONAL ENGINEER
FAWZI YAGHMOUR
No. C-54750
Exp. 12/31/17
CIVIL
STATE OF CALIFORNIA

THE STATE OF CALIFORNIA OR ITS OFFICERS OR AGENTS SHALL NOT BE RESPONSIBLE FOR THE ACCURACY OR COMPLETENESS OF SCANNED COPIES OF THIS PLAN SHEET.

CONSTRUCTION AREA SIGNS (STATIONARY MOUNTED)

SHEET No.	SIGN No. (X)	SIGN CODE FEDERAL	SIGN CODE CALIFORNIA	PANEL SIZE	SIGN MESSAGE	NUMBER OF POSTS AND SIZE	NUMBER OF SIGNS
TH-1	1	W16-1b		18" x 24"	SHARE THE ROAD	1 - 4" x 4"	1
	2	W21-5		30" x 30"	SHOULDER WORK	1 - 4" x 4"	1
	3	W21-5b		36" x 36"	RIGHT SHOULDER CLOSED 1000'	1 - "4 x 6"	1
	4		C30A (CA)	30" x 30"	SHOULDER CLOSED	1 - 4" x 6"	1
		W7-3a		24" x 18"	NEXT 1 MILE		
	5		C30A (CA)	30"x 30"	SHOULDER CLOSED	1 - 4" x 6"	1
				24" x 18"	NEXT 1 MILE		
	6	W21-5		30" x 30"	SHOULDER WORK	1 - 4" x 4"	1
	7	W21-5b		36" x 36"	RIGHT SHOULDER CLOSED 1000'	1 - 4" x 6"	1
		W16-1b		18" x 24"	SHARE THE ROAD	1 - 4" x 4"	1

CRASH CUSHION

SHEET	TEMPORARY CRASH CUSHION MODULE	TEMPORARY ALTERNATIVE CRASH CUSHION SYSTEM
	TYPE TS14	
	EA	EA
TH-1	28	2
TOTAL	28	2

TEMPORARY RAILING (TYPE K)

LOCATION	LF
TH-1 NB	1100
TH-1SB	1100
TOTAL	2200

CHANNELIZER (SURFACE MOUNTED)

LOCATION	EA
TH-1 NB	4
TH-1SB	16
TOTAL	20

TRAFFIC HANDLING QUANTITIES
THQ-1

REVISED BY | DATE REVISED
FAWZI YAGHMOUR | ANTHONY DEANDA
CALCULATED-DESIGNED BY | CHECKED BY
FUNCTIONAL SUPERVISOR: MOHAMMED QATAMI
STATE OF CALIFORNIA - DEPARTMENT OF TRANSPORTATION
Caltrans
TRAFFIC DESIGN

LAST REVISION 06-02-16 | DATE PLOTTED => 03-AUG-2016 | TIME PLOTTED => 16:52

Dist	COUNTY	ROUTE	POST MILES TOTAL PROJECT	SHEET No.	TOTAL SHEETS
05	SLO	41	19.7/R42.2	19	37

REGISTERED CIVIL ENGINEER DATE 05-20-16

PLANS APPROVAL DATE 6-13-16

REGISTERED PROFESSIONAL ENGINEER FAWZI YAGHMOUR No. C-54750 Exp. 12/31/17 CIVIL STATE OF CALIFORNIA

THE STATE OF CALIFORNIA OR ITS OFFICERS OR AGENTS SHALL NOT BE RESPONSIBLE FOR THE ACCURACY OR COMPLETENESS OF SCANNED COPIES OF THIS PLAN SHEET.

PAVEMENT DELINEATION QUANTITIES

LOCATION MAINLINE	DETAIL No.	PAVEMENT MARKER (RETROREFLECTIVE)		THERMOPLASTIC TRAFFIC STRIPE			REMOVE THERMOPLASTIC TRAFFIC STRIPE	REMOVE YELLOW THERMOPLASTIC TRAFFIC STRIPE (HAZARDOUS WASTE)	REMOVE PAVEMENT MARKER	REMOVE THERMOPLASTIC PAVEMENT MARKING			THERMOPLASTIC PAVEMENT MARKING		
		TYPE D	TYPE H	4" WHITE SOLID	4" YELLOW SOLID	4" YELLOW BROKEN 36-12				STOP	AHEAD	LIMIT LINE	STOP	AHEAD	LIMIT LINE
		EA				LF			EA	SQFT			SQFT		
NB/SB 19.7/42.2	27B			237,600			237,600								
	22	7,730			185,476			185,476	7,730						
	19	538	1,075		25,789	25,789		16,117	1,613						
	6	180				8,592		2,148	180						
41-21.982										22		24	22		24
41-27.97										22		50	22		50
41-28.121										22		50	22		50
41-28.919										22		30	22		30
41-132.316										22		22	22		22
41-39.342										22		24	22		24
41-40.343										22		12	22		12
41-41.00										22	31	24	22	31	24
41-41.101										22		30	22		30
41-41.899										22		24	22		24
41-41.99										22		24	22		24
SUBTOTAL		8,448	1,075	237,600	211,265	34,381	237,600	203,741	9,523	242	31	314	242	31	314
TOTAL PDQ-1		9,523		448,865		34,381	237,600	203,741	9,523	587.0			587.0		

PAVEMENT DELINEATION QUANTITIES

PDQ-1

STATE OF CALIFORNIA - DEPARTMENT OF TRANSPORTATION

Caltrans® TRAFFIC DESIGN

FUNCTIONAL SUPERVISOR: MOHAMMED QATAMI

CALCULATED-DESIGNED BY: FAWZI YAGHMOUR

CHECKED BY: DAVID BLACK

REVISED BY

DATE REVISED

LAST REVISION 06-02-16

DATE PLOTTED => 18-AUG-2016

TIME PLOTTED => 12:55

Dist	COUNTY	ROUTE	POST MILES TOTAL PROJECT	SHEET No.	TOTAL SHEETS
05	SLO	41	19.7/R42.2	20	37

REGISTERED CIVIL ENGINEER 6-13-16 DATE

6-13-16
PLANS APPROVAL DATE

REGISTERED PROFESSIONAL ENGINEER MICHAEL JAMES DAY No. 66870 Exp. 9/30/16 CIVIL STATE OF CALIFORNIA

THE STATE OF CALIFORNIA OR ITS OFFICERS OR AGENTS SHALL NOT BE RESPONSIBLE FOR THE ACCURACY OR COMPLETENESS OF SCANNED COPIES OF THIS PLAN SHEET.

ASPHALT CONCRETE OVERSIDE DRAINS

POSTMILE	Dir	REMOVE OVERSIDE DRAIN	*PLACE HMA (Misc AREA)	*HMA (TYPE A)
		EA	SQYD	TON
24.55	NB	1	3.67	0.6
26.90	NB	1	3.67	0.6
26.91	NB	1	3.67	0.6
27.50	NB	1	3.67	0.6
28.25	NB	1	3.67	0.6
28.33	NB	1	3.67	0.6
28.49	NB	1	3.67	0.6
28.76	NB	1	3.67	0.6
28.82	NB	1	3.67	0.6
35.82	NB	1	3.67	0.6
36.03	NB	1	3.67	0.6
36.07	NB	1	3.67	0.6
28.84	SB	1	3.67	0.6
28.79	SB	1	3.67	0.6
28.72	SB	1	3.67	0.6
28.34	SB	1	3.67	0.6
28.30	SB	1	3.67	0.6
28.26	SB	1	3.67	0.6
28.20	SB	1	3.67	0.6
27.43	SB	1	3.67	0.6
27.11	SB	1	3.67	0.6
27.10	SB	1	3.67	0.6
TOTAL		22	80.8	13.2

* QUANTITY INCLUDED IN ROADWAY QUANTITIES TABLE

FLUME DOWNDRAINS

POST MILE	DIRECTION	(N) REMOVE ASPHALT CONCRETE	* PLACE HMA (Misc AREA)	* HMA (TYPE A)	FLUME DOWNDRAIN	TAPERED INLET	FLUME ANCHOR ASSEMBLY	** REMOVE DOWNDRAIN
		SQFT	SQYD	TON	LF	EA	EA	EA
33.47	NB	50	1.67	0.93	11	1	1	1
33.57	NB	50	1.67	0.93	5	1	1	1
33.71	NB	50	1.67	0.93	10	1	1	1
33.76	NB	50	1.67	0.93	10	1	1	1
33.94	NB	50	1.67	0.93	8	1	1	1
34.04	NB	50	1.67	0.93	11	1	1	1
34.30	NB	50	1.67	0.93	8	1	1	1
34.51	NB	50	1.67	0.93	6	1	1	1
34.59	NB	50	1.67	0.93	10	1	1	1
35.00	NB	50	1.67	0.93	10	1	1	1
36.15	NB	50	1.67	0.93	15	1	1	1
20.99	SB	50	1.67	0.93	20	1	1	1
TOTAL		600	20	11.2	124	12	12	12

* QUANTITY INCLUDED IN ROADWAY QUANTITIES TABLE
** QUANTITY INCLUDED IN PIPE DOWNDRAIN TABLE
(N) NOT A SEPERATE PAY ITEM, FOR INFORMATION ONLY

ADJUST INLET

PM	Dir	TYPE	SHOULDER	EA
20.83	NB	G6	R†	1
20.86	NB	G6	R†	1
20.89	NB	G6	R†	1
28.43	SB	GCP	R†	1
30.00	SB	DBL GT3	R†	1
			TOTAL	5

PIPE DOWNDRAINS

POST MILE	DIRECTION	(N) REMOVE ASPHALT CONCRETE	*PLACE HMA (Misc AREA)	*HMA (TYPE A)	(N) DOWNDRAIN JOINT	12" ENTRANCE TAPER	12" ANCHOR ASSEMBLY	12" CORRUGATED STEEL PIPE DOWNDRAIN	REMOVE DOWNDRAIN
		SQFT	SQYD	TON	EA	EA	EA	LF	EA
20.38	NB	50	1.67	0.93	1	1	1	12	1
28.08	NB	50	1.67	0.93	2	1	2	40	1
28.55	NB	50	1.67	0.93	1	1	1	19	1
33.43	NB	50	1.67	0.93	1	1	1	13	1
33.54	NB	50	1.67	0.93	1	1	1	11	1
33.65	NB	50	1.67	0.93	1	1	1	12	1
34.70	NB	50	1.67	0.93	2	1	2	22	1
35.08	NB	50	1.67	0.93	1	1	1	9	1
40.50	SB	50	1.67	0.93	1	1	1	10	1
32.74	SB	50	1.67	0.93	1	1	1	15	1
32.63	SB	50	1.67	0.93	1	1	1	20	1
32.54	SB	50	1.67	0.93	1	1	1	20	1
32.35	SB	50	1.67	0.93	2	1	2	30	1
31.73	SB	50	1.67	0.93	1	1	1	18	1
28.65	SB	50	1.67	0.93	1	1	1	20	1
28.60	SB	50	1.67	0.93	1	1	1	16	1
28.52	SB	50	1.67	0.93	1	1	1	16	1
28.08	SB	50	1.67	0.93	1	1	1	20	1
21.56	SB	50	1.67	0.93	1	1	1	20	1
21.40	SB	50	1.67	0.93	1	1	1	12	1
21.21	SB	50	1.67	0.93	1	1	1	10	1
21.14	SB	50	1.67	0.93	1	1	1	12	1
20.80	SB	50	1.67	0.93	2	1	2	30	1
SUBTOTAL FROM FLUME DOWNDRAINS									12
TOTAL		1,150	384.1	21.39	27	23	27	411	35

* QUANTITY INCLUDED IN ROADWAY QUANTITIES TABLE
(N) NOT A SEPERATE PAY ITEM, FOR INFORMATION ONLY

ROADWAY QUANTITIES

LOCATION/POST MILE	COLD IN-PLACE RECYCLING: COLD IN-PLACE RECYCLE	EMULSIFIED RECYCLING AGENT	CEMENT	SAND COVER	ASPHALTIC EMULSION	SHOULDER BACKING	COLD PLANE AC PAVEMENT: 0.20'	0.25'	0.33'	IMPORTED BORROW	HOT MIX ASPHALT (TYPE A)	RUBBERIZED HOT MIX ASPHALT (GAP GRADED)	PLACE HMA (MISCELLANEOUS AREA)	TACK COAT
	SQYD	TON	TON	TON	TON	TON	SQYD	SQYD	SQYD	CY	TON	TON	SQYD	TON
PM 19.7 TO 21.7						383						3,696		11.5
PM 21.7 TO 31.5	169,030	715	167	338	29	1,876					16,300.0	9,056		80.5
PM 31.5 TO 34.5						574			42,240		9,504.0	5,544		46.1
PM 34.5 TO R42.2	132,810	561	131	266	22	1,474					12,807.0	7,115		63.2
HMA DIKES (TYPE C, D & E)											1,425.0			
ASPHALT CONCRETE OVERSIDE DRAINS											13.2		80.8	
PIPE DOWNDRAIN											21.4		384.1	
FLUME DOWNDRAIN											11.2		20.0	
GR LOCATIONS										211.11				
DRAINAGE SYSTEMS 1-4										48.74	9.6		31.2	
DRIVEWAYS							1,465.9	2,747.4			278.2	319.5		2.3
MINOR ROAD INTERSECTIONS							642.0	6,102.3			617.9	415.5		3.7
CONFORM TAPERS							311.0	4,044.0			409.5	262.5		2.4
TAPERED EDGE												614.4		3.3
SUB TOTAL							2,418.9	12,893.7	42,240					
TOTAL	301,840	1,276	298	604	51	4,307	57,552.6			259.85	41,397.0	27,022.9	516.1	213.0

SUMMARY OF QUANTITIES

Q-1

STATE OF CALIFORNIA - DEPARTMENT OF TRANSPORTATION
06-DESIGN
Caltrans

FUNCTIONAL SUPERVISOR: SCOTT SHAVER
CALCULATED-DESIGNED BY: MAGDI MARZOUK
CHECKED BY: MICHAEL DAY
REVISED BY
DATE REVISED

LAST REVISION 08-03-16
DATE PLOTTED => 03-AUG-2016
TIME PLOTTED => 16:52

Dist	COUNTY	ROUTE	POST MILES TOTAL PROJECT	SHEET No.	TOTAL SHEETS
05	SLO	41	19.7/R42.2	21	37

REGISTERED CIVIL ENGINEER 6-13-16 DATE

6-13-16
PLANS APPROVAL DATE

REGISTERED PROFESSIONAL ENGINEER MICHAEL JAMES DAY No. 66870 Exp. 9/30/16 CIVIL STATE OF CALIFORNIA

THE STATE OF CALIFORNIA OR ITS OFFICERS OR AGENTS SHALL NOT BE RESPONSIBLE FOR THE ACCURACY OR COMPLETENESS OF SCANNED COPIES OF THIS PLAN SHEET.

HOT MIX ASPHALT DIKE

POST MILE NB	PLACE HOT MIX ASPHALT DIKE TYPE E LF	TYPE D LF	TYPE C LF	* HMA (TYPE A) TON
19.70 TO 19.88	941			24.77
19.89 TO 19.92	117			3.08
19.92 TO 20.04	601			15.82
20.30 TO 20.51	1,130			29.75
20.52 TO 20.57	314			8.27
20.58 TO 20.78	1,027			27.04
20.82 TO 20.99	430			11.32
21.08 TO 21.36	1530			40.28
24.47 TO 24.61	740			19.48
27.01 TO 27.07	346			9.11
27.98 TO 28.04			380	10.00
28.07 TO 28.11			210	5.53
28.12 TO 28.42	1,625			42.78
28.43 TO 28.55	615			16.19
28.72 TO 28.90	930			24.48
28.91 TO 28.99	475			12.50
30.00 TO 30.59		3,104		184.17
30.59 to 30.78		958		56.84
30.78 TO 30.90		607		36.01
30.91 TO 30.93		116		6.88
31.79 TO 31.90		610		36.19
32.20 TO 32.24		210		12.46
33.31 TO 33.47		882		52.33
33.52 TO 33.54		125		7.42
35.84 TO 35.91		400		23.73
36.02 TO 36.14		636		37.74
SUBTOTAL 1	10,821	7,648	590	743.18

POST MILE SB	PLACE HOT MIX ASPHALT DIKE TYPE E LF	TYPE D LF	TYPE C LF	* HMA (TYPE A) TON
32.68 TO 32.54		738		43.79
32.35 TO 32.34		92		5.46
31.73 TO 31.44		1,546		91.73
30.98 TO 30.94		185		10.98
30.94 TO 30.70		1273		75.53
30.69 TO 30.61		448		26.58
30.60 TO 30.54		350		20.77
30.53 TO 30.53		40		2.37
30.30 TO 30.06		1,292		76.66
30.05 TO 29.99		140		8.31
29.06 TO 28.93	681			17.93
28.92 TO 28.71	1,150			30.27
28.70 TO 28.56	830			21.85
28.55 TO 28.46	570			15.01
28.45 TO 28.13	1,750			46.07
28.11 TO 28.08			130	3.42
28.04 TO 27.97			400	10.53
27.56 TO 27.50	307			8.08
27.47 TO 27.37	581			15.29
27.25 TO 27.15	510			13.43
27.14 TO 27.07	430			11.32
26.78 TO 26.72	320			8.42
21.59 TO 21.56	178			4.69
21.50 TO 21.40	516			13.58
21.28 TO 21.21			370	4.92
21.21 TO 21.14	370			12.77
21.01 TO 20.99	157			4.13
20.87 TO 20.79			440	11.58
20.74 TO 20.65	500			13.16
20.64 TO 20.61	200			5.27
20.60 TO 20.49	605			15.93
20.48 TO 20.47	50			1.32
20.46 TO 20.39	375			9.87
20.39 TO 20.28	582			15.32
20.27 TO 20.18	477			12.56
20.18 TO 20.07	586			15.43
SUBTOTAL	11,725	6,104	1,340	681.14
SUBTOTAL 1	10,821	7,648	590	743.18
TOTAL	22,546	13,752	1,930	1,425

* QUANTITY INCLUDED IN ROADWAY QUANTITIES TABLE.

REMOVE ASPHALT CONCRETE DIKE

POST MILE NB	NB Rt Shld LF	POST MILE SB	SB Rt Shld LF
19.70 TO 19.88	941	32.68 TO 32.54	738
19.89 TO 19.92	117	32.35 TO 32.34	92
19.92 TO 20.04	601	31.73 TO 31.44	1,546
20.30 TO 20.51	1,130	30.98 TO 30.94	185
20.52 TO 20.57	314	30.94 TO 30.70	1,273
20.58 TO 20.78	1,027	30.69 TO 30.61	448
20.82 TO 20.99	430	30.60 TO 30.54	350
21.08 TO 21.36	1,530	30.53 TO 30.53	40
24.47 TO 24.61	740	30.30 TO 30.06	1,292
27.01 TO 27.07	346	30.05 TO 29.99	140
27.98 TO 28.04	380	29.06 TO 28.93	681
28.07 TO 28.11	210	28.92 TO 28.71	1,150
28.12 TO 28.42	1,625	28.70 TO 28.56	830
28.43 TO 28.55	615	28.55 TO 28.46	570
28.72 TO 28.90	930	28.45 TO 28.13	1,750
28.91 TO 28.99	475	28.11 TO 28.08	130
30.00 TO 30.59	3,104	28.04 TO 27.97	400
30.59 to 30.78	958	27.56 TO 27.50	307
30.78 TO 30.90	607	27.47 TO 27.37	581
30.91 TO 30.93	116	27.25 TO 27.15	510
31.79 TO 31.90	610	27.14 TO 27.07	430
32.20 TO 32.24	210	26.78 TO 26.72	320
33.31 TO 33.47	882	21.59 TO 21.56	178
33.52 TO 33.54	125	21.50 TO 21.40	516
35.84 TO 35.91	400	21.28 TO 21.25	187
36.02 TO 36.14	636	21.23 TO 21.14	485
		21.01 TO 20.99	157
NB SUBTOTAL	19,059	20.87 TO 20.79	440
		20.74 TO 20.65	500
		20.64 TO 20.61	200
		20.60 TO 20.49	605
		20.48 TO 20.47	50
		20.46 TO 20.39	375
		20.39 TO 20.28	582
		20.27 TO 20.18	477
		20.18 TO 20.07	586
		SB SUBTOTAL	19,101
		NB SUBTOTAL	19,059
		TOTAL	38,160

SUMMARY OF QUANTITIES

Q-2

STATE OF CALIFORNIA - DEPARTMENT OF TRANSPORTATION
Caltrans
06-DESIGN

FUNCTIONAL SUPERVISOR: SCOTT SHAVER
CALCULATED-DESIGNED BY: MAGDI MARZOUK
CHECKED BY: MICHAEL DAY
REVISED BY
DATE REVISED

LAST REVISION 06-10-16 | DATE PLOTTED => 03-AUG-2016 | TIME PLOTTED => 16:52

Dist	COUNTY	ROUTE	POST MILES TOTAL PROJECT	SHEET No.	TOTAL SHEETS
05	SLO	41	19.7/R42.2	22	37

REGISTERED CIVIL ENGINEER 6-13-16 DATE

6-13-16
PLANS APPROVAL DATE

REGISTERED PROFESSIONAL ENGINEER MICHAEL JAMES DAY No. 66870 Exp. 9/30/16 CIVIL STATE OF CALIFORNIA

THE STATE OF CALIFORNIA OR ITS OFFICERS OR AGENTS SHALL NOT BE RESPONSIBLE FOR THE ACCURACY OR COMPLETENESS OF SCANNED COPIES OF THIS PLAN SHEET.

ABBREVIATIONS:

LNMI - LANE MILES
DIR - DIRECTION

*TAPERED EDGE (N)

POSTMILE	** HMA (TYPE A)
	TON
19.7/R42.2	614

* NOT INCLUDED AT INTERSECTIONS, BRIDGES AND DIKE LOCATIONS

** QUANTITY INCLUDED IN ROADWAY QUANTITIES TABLE

12" RUMBLE STRIP (ASPHALT CONCRETE PAVEMENT)

LOCATION	CENTERLINE
	STA
19.7 TO R42.2	1,009
TOTAL	1,009

REMOVE FENCE

POSTMILE	LF
30.0	35

TEMPORARY FIBER ROLLS

LOCATION	LF
PM 28.6	400
TOTAL	400

TEMPORARY FENCE (TYPE ESA)

LOCATION	LF
PM 28.6	400
TOTAL	400

MIDWEST GUARDRAIL SYSTEM

LOCATION	POST MILE	DIRECTION	REMOVE GUARDRAIL	CONCRETE BARRIER TRANSITION	MIDWEST GUARDRAIL SYSTEM (STEEL POST)	MIDWEST GUARDRAIL SYSTEM (8' STEEL POST)	VEGETATION CONTROL (MINOR CONCRETE)	TRANSITION RAILING (TYPE WB-31)	ALTERNATIVE IN-LINE TERMINAL SYSTEM END TREATMENT	ALTERNATIVE FLARED TERMINAL SYSTEM	TREATED WOOD WASTE	IMPORTED BORROW	* END CAP (TYPE A) (N)
			LF	LF	LF	LF	SQYD	EA	EA	EA	LB	CY	EA
EMBANKMENT	20.75	SB	525.0		437.5		282.0		1	1	1,967	11.11	
WEST BRANCH HUER HUERO CREEK BRIDGE No. 49-0222	27.70	NB	125.0			87.5	118.0		2		2,564	22.22	
		SB	125.0			50.0	93.0		2		2,564	22.22	
HUER HUERO CREEK BRIDGE No. 49-0104	28.19	NB APPROACH	62.5	43.67			38.0	1	1		1,964	13.89	1
		NB DEPARTURE	62.5	43.67		100.0	73.0	1	1		1,678	36.11	1
		SB APPROACH	62.5	23.67			43.0	1		1	1,756	13.89	1
		SB DEPARTURE	62.5	43.67			38.0	1	1		2,192	13.89	1
COOPER RANCH	30.07	SB	100.0		12.5		69.0		1	1	1,967		
ESTRELLA RIVER BRIDGE No. 49-0264 (REPLACE FLARED END TREATMENTS ONLY)	R41.70	NB APPROACH	50.0			12.5	40.0			1	1,222	11.11	
		SB APPROACH	50.0			12.5	40.0			1	1,222	11.11	
		SB DEPARTURE	50.0			12.5	40.0			1	1,222	11.11	
McMILLAN CREEK BRIDGE No. 49-0265 (REPLACE FLARED END TREATMENTS ONLY)	R42.00	NB APPROACH	50.0			12.5	40.0			1	1,222	11.11	
		NB DEPARTURE	50.0			12.5	40.0			1	1,222	11.11	
		SB APPROACH				12.5	40.0			1	1,222	11.11	
		SB DEPARTURE	50.0			12.5	40.0			1	1,222	11.11	
TOTAL			1475.0	154.7	450.0	325.0	1034.0	4	9	10	25,206	211.11	4

* QUANTITY INCLUDED IN ROADWAY QUANTITIES TABLE

(N) NOT A SEPARATE PAY ITEM. FOR INFORMATION ONLY

SURVEY MONUMENTS

POSTMILE	SURVEY MONUMENT (TYPE D)	ADJUST MONUMENT COVER
	EA	EA
28.95	1	
30.28	1	
30.281	1	
30.50	1	
39.40	1	
40.40	1	
41.16		1
41.64		1
41.82		1
41.85		1
41.98		1
42.08		1
TOTAL	6	6

SUMMARY OF QUANTITIES

Q-3

STATE OF CALIFORNIA - DEPARTMENT OF TRANSPORTATION
Caltrans®
06-DESIGN
FUNCTIONAL SUPERVISOR: SCOTT SHAVER
CALCULATED-DESIGNED BY: MAGDI MARZOUK
CHECKED BY: MICHAEL DAY
REVISED BY
DATE REVISED

LAST REVISION 06-10-16
DATE PLOTTED => 03-AUG-2016
TIME PLOTTED => 16:52

Dist	COUNTY	ROUTE	POST MILES TOTAL PROJECT	SHEET No.	TOTAL SHEETS
05	SLO	41	19.7/R42.2	23	37

REGISTERED CIVIL ENGINEER 6-13-16 DATE

6-13-16
PLANS APPROVAL DATE

REGISTERED PROFESSIONAL ENGINEER MICHAEL JAMES DAY No. 66870 Exp. 9/30/16 CIVIL STATE OF CALIFORNIA

THE STATE OF CALIFORNIA OR ITS OFFICERS OR AGENTS SHALL NOT BE RESPONSIBLE FOR THE ACCURACY OR COMPLETENESS OF SCANNED COPIES OF THIS PLAN SHEET.

DRIVEWAYS

POSTMILE	DIRECTION	DIMENSIONS W1 LF	W2 LF	X LF	COLD PLANE AC PAVEMENT 0.20' * SQYD	0.25' SQYD	HOT MIX ASPHALT (TYPE A) * TON	RUBBERIZED HOT MIX ASPHALT (GAP GRADED) * TON	POSTMILE	DIRECTION	DIMENSIONS W1 LF	W2 LF	X LF	COLD PLANE AC PAVEMENT 0.20' * SQYD	0.25' SQYD	HOT MIX ASPHALT (TYPE A) * TON	RUBBERIZED HOT MIX ASPHALT (GAP GRADED) * TON
19.87	NB	75	105	11	103.7			11.66	41.50	SB	85	85	35.5		347.3	35.16	19.53
19.92	NB	22	52	11	38.9			4.38	41.51	SB	30	30	30		112.0	11.34	6.30
20.38	NB	16	46	15	38.7			4.35	41.40	SB	18	40	20		52.0	5.27	2.93
20.49	NB	17	47	15	40.3			4.54	40.40	SB	24	40	9		36.0	3.65	2.03
20.52	NB	23	53	15	50.3			5.66	39.40	SB	20	40	15		45.3	4.59	2.55
20.58	NB	20	50	15	45.3			5.10	30.96	SB	12	23	20		38.7	3.92	2.18
21.00	NB	44	74	15	85.3			9.60	30.72	SB	12	44	22		41.3	4.19	2.33
21.65	NB	13	43	26	49.6			5.58	30.09	SB	16	70	20		47.6	4.82	2.68
21.81	NB	25	55	19		64.8	6.56	3.64	29.80	SB	20	53	20		56.4	5.72	3.18
21.90	NB	23	53	19		60.6	6.13	3.41	29.48	SB	15	65	30		62.0	6.28	3.49
22.05	NB	14	44	22		46.2	4.68	2.60	27.56	SB	25		24		78.7	7.97	4.43
22.30	NB	15	45	20		45.3	4.59	2.55	27.46	SB	25		30		95.3	9.65	5.36
22.32	NB	34	64	20		87.6	8.87	4.93	27.11	SB	25		21		70.3	7.12	3.96
22.34	NB	22	52	20		60.9	6.17	3.43	26.28	SB	24		20		65.3	6.62	3.68
22.80	NB	20	50	12		38.7	3.92	2.18	25.03	SB	27		27		93.0	9.42	5.23
23.20	NB	14	44	23		47.8	4.84	2.69	22.47	SB	12		20		38.7	3.92	2.18
23.53	NB	25	55	25		81.4	8.25	4.58	22.19	SB	12		28		49.3	5.00	2.78
26.49	NB	20	50	22		60.9	6.17	3.43	22.13	SB	12		20		38.7	3.92	2.18
26.77	NB	36	66	18		84.0	8.51	4.73	21.98	SB	12		22		41.3	4.19	2.33
26.88	NB	13	43	26		49.6	5.02	2.79	22.92	SB	24		20		65.3	6.62	3.68
26.98	NB	23	53	19		60.6	6.13	3.41	21.82	SB	16		24		54.7	5.54	3.08
26.99	NB	15	45	20		45.3	4.59	2.55	21.40	SB	81	81	30	282.0			31.73
29.11	NB	20	50	18		52.0	5.27	2.93	20.65	SB	12		24	44.0			4.95
29.36	NB	18	48	23		58.0	5.87	3.26	20.61	SB	25			45.3			5.10
29.96	NB	80	110	12		118.7	12.02	6.68	20.49	SB	12		18	36.0			4.05
30.59	NB	15	45	20		45.3	4.59	2.55	20.48	SB	19		15	43.7			4.91
31.26	NB	22	52	19		58.4	5.92	3.29	20.40	SB	20		13	40.9			4.60
31.28	NB	19	49	19		52.1	5.28	2.93	20.29	SB	25		18	62.0			6.98
32.80	NB	20	50	20	56.4			6.35	19.86	SB	23		14	47.8			5.38
33.23	NB	23	53	12	42.7			4.80	19.87	SB	17		14	38.4			4.33
33.29	NB	30	60	10	45.3			5.10	SUB-TOTAL 2					640.1	1,529.2	154.91	158.12
33.54	NB	13	43	20	40.9			4.60	SUB-TOTAL 1					825.8	1,218.2	123.38	161.47
33.67	NB	26	56	12	46.7			5.25	TOTAL					1465.9	2747.4	278.29	319.59
33.88	NB	25	55	15	53.7			6.04									
34.04	NB	23	53	12	42.7			4.80									
34.19	NB	25	55	12	45.3			5.10									
SUB-TOTAL 1					825.8	1,218.2	123.38	161.47									

* QUANTITY INCLUDED IN ROADWAY QUANTITIES TABLE

MINOR ROADS INTERSECTIONS

ROAD NAME	POSTMILE	DIRECTION	DIMENSIONS W1 LF	W2 LF	X LF	COLD PLANE AC PAVEMENT 0.20' * SQYD	0.25' SQYD	HOT MIX ASPHALT (TYPE A) * TON	RUBBERIZED HOT MIX ASPHALT (GAP GRADED) * TON
ROAD RUNNER LANE	20.81	NB	55	280	12	231.3			26.03
KINGSBURY ROAD	22.58	NB	50	275	12		224.7	22.75	12.64
VISTA DEL PASO WAY	26.51	NB	65	290	12		244.7	24.77	13.76
STRAW RIDGE ROAD	27.15	NB	45	270	12		218.0	22.07	12.26
IRONGATE ROAD	27.48	NB	62	287	12		240.7	24.37	13.54
WEBSTER ROAD	27.97	NB	105	330	12		298.0	30.17	16.76
LA PANZA ROAD	28.10	NB	135	360	12		338.0	34.22	19.01
LITTLE FARM ROAD	28.90	NB	165	390	12		378.0	38.27	21.26
YOSEMITE PLACE	32.31	NB	27	252	12	194.0			21.83
CLARK ROADD	39.36	NB	48	273	12		222.0	22.48	12.49
STARKEY ROAD	40.46	NB	40	265	12		211.3	21.40	11.89
SHANDON ROAD	42.03	SB	21	60	35		239.7	24.27	13.48
CRESTON VALLEY ROAD	30.56	SB	41	57	12		212.7	21.53	11.96
CAMP 8 ROAD	30.35	SB	110	175	12		304.7	30.85	17.14
PARISH GAP ROAD	29.16	SB	35	260	12		204.7	20.72	11.51
LOMA LINDA ROAD	29.08	SB	40	265	12		211.3	21.40	11.89
RANCHO LA LOMA LINDA ROAD	28.96	SB	260	485	12		504.7	51.10	28.39
LOMA REAL ROAD	28.73	SB	22	247	42		260.7	26.39	14.66
LOMA VERDE DRIVE	28.58	SB	21	246	40		251.3	25.45	14.14
CRESTON ROAD	28.14	SB	125	350	12		324.7	32.87	18.26
WEBSTER CROSSING ROAD	27.97	SB	60	285	12		238.0	24.10	13.39
CRIPPLE CREEK ROAD	26.18	SB	115	340	12		311.3	31.52	17.51
POCO ROAD	22.72	SB	90	315	12		278.0	28.15	15.64
TAMARA LANE	22.23	SB	27	252	12		194.0	19.64	10.91
VIA VISTA WAY	21.75	SB	25	250	12		191.3	19.37	10.76
HOMESTEAD ROAD	20.07	SB	44	269	12	216.7			24.38
TOTAL						642.0	6,102.5	617.86	415.49

* QUANTITY INCLUDED IN ROADWAY QUANTITIES TABLE

SUMMARY OF QUANTITIES

Q-4

MAGDI MARZOUK | REVISED BY
MICHAEL DAY | DATE REVISED
CALCULATED-DESIGNED BY
CHECKED BY
FUNCTIONAL SUPERVISOR
SCOTT SHAVER
STATE OF CALIFORNIA - DEPARTMENT OF TRANSPORTATION
Caltrans
06-DESIGN

LAST REVISION 06-10-16 | DATE PLOTTED => 03-AUG-2016 | TIME PLOTTED => 16:52

Dist	COUNTY	ROUTE	POST MILES TOTAL PROJECT	SHEET No.	TOTAL SHEETS
05	SLO	41	19.7/R42.2	24	37

LICENSED LANDSCAPE ARCHITECT

6-13-16
PLANS APPROVAL DATE

LICENSED LANDSCAPE ARCHITECT JO JACKSON No. 3175 Expiration Date 06-30-2018 Renewal Date 06-13-16 Date STATE OF CALIFORNIA

THE STATE OF CALIFORNIA OR ITS OFFICERS OR AGENTS SHALL NOT BE RESPONSIBLE FOR THE ACCURACY OR COMPLETENESS OF SCANNED COPIES OF THIS PLAN SHEET.

EROSION CONTROL

ITEM	MATERIAL		APPLICATION RATE
	DESCRIPTION	TYPE	
HYDROSEED	SEED	MIX	30 LB/ACRE
	FIBER	WOOD	1,500 LB/ACRE
	TACKIFIER	PSYLLIUM	125 LB/ACRE

EROSION CONTROL QUANTITIES

SHEET	LOCATION	STATION	L†	R†	HYDROSEED SQFT
NOT SHOWN ON PLANS	EMBANKMENT	20.75 TO 20.85	X		725
	WEST BRANCH HUER HUERO CREEK	27.69 TO 27.71		X	1,450
			X		1,450
	HUER HUERO CREEK BRIDGE No. 49-104	28.04 TO 28.05		X	906
		28.08 TO 28.09		X	2,357
		28.04 TO 28.05	X		906
		28.08 TO 28.09	X		906
	ESTRELLA RIVER BRIDGE No. 49-0264 (REPLACE FLARED END TREATMENTS ONLY)	41.70 TO 41.71		X	725
		41.70 TO 41.71	X		725
		41.80 TO 41.81	X		725
	McMILLAN CREEK BRIDGE No. 49-0265 (REPLACE FLARED END TREATMENTS ONLY)	41.99 TO 42.00		X	725
		42.10 TO 42.20		X	725
		41.99 TO 42.00	X		725
		42.10 TO 42.20	X		725
	DRAINAGE SYSTEM 4	30.00		X	300
		TOTAL			14,075

SEED MIX

BOTANICAL NAME (COMMON NAME)	PERCENT GERMINATION (MINIMUM)	PURE LIVE SEED POUNDS PER ACRE (SLOPE MEASUREMENT)
ACHILLEA MILLEFOLIUM (COMMON YARROW)	42	1.0
BROMUS CARINATUS 'CUCAMONGA' (CUCAMONGA BROME)	45	8.0
ESCHSCHOLZIA CALIFORNICA (CALIFORNIA POPPY)	40	2.0
LAYIA PLATYGLOSSA (TIDY TIPS)	41	1.0
LOTUS PURSHIANUS (SPANISH LOTUS)	37	2.0
LUPINUS DENSIFLORUS (NO COMMON NAME)	42	4.0
NASSELLA PULCHRA (PURPLE NEEDLEGRASS)	37	6.0
VULPIA MICROSTACHYS (SMALL FESCUE)	40	6.0

EROSION CONTROL LEGEND AND QUANTITIES

ECL-1

REVISED BY | DATE REVISED
JO JACKSON | JOSEPH ARNOLD
CALCULATED-DESIGNED BY | CHECKED BY
SENIOR LANDSCAPE ARCHITECT | DENNIS REEVES

STATE OF CALIFORNIA - DEPARTMENT OF TRANSPORTATION
Caltrans® LANDSCAPE ARCHITECTURE

LAST REVISION 05-05-16 | DATE PLOTTED => 03-AUG-2016 TIME PLOTTED => 16:52

Dist	COUNTY	ROUTE	POST MILES TOTAL PROJECT	SHEET No.	TOTAL SHEETS
05	SLO	41	19.7/R42.2	25	37

Atifa Ferouz
REGISTERED CIVIL ENGINEER

July 15, 2016
PLANS APPROVAL DATE

REGISTERED PROFESSIONAL ENGINEER
Atifa Ferouz
No. C80402
Exp. 3-31-17
CIVIL
STATE OF CALIFORNIA

THE STATE OF CALIFORNIA OR ITS OFFICERS OR AGENTS SHALL NOT BE RESPONSIBLE FOR THE ACCURACY OR COMPLETENESS OF SCANNED COPIES OF THIS PLAN SHEET.

TO ACCOMPANY PLANS DATED 6-13-16

NOTE:

Detail 21 and Detail 5 traffic stripes shown, see project plans for traffic stripe details.

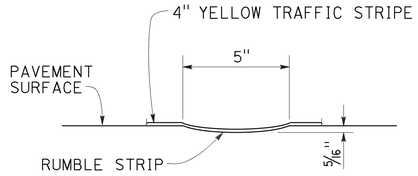

SECTION A-A

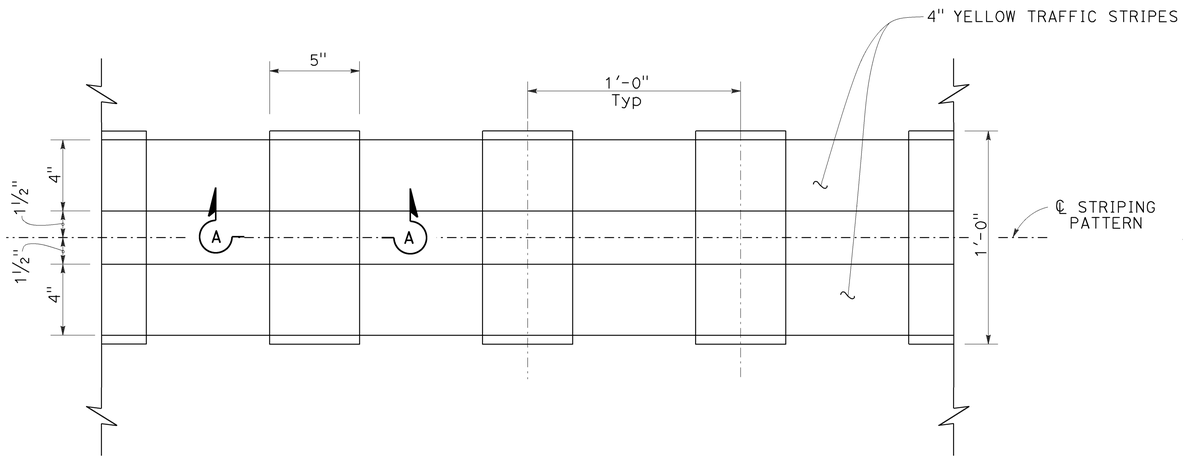

PLAN

RUMBLE STRIP PLACEMENT IN NO PASSING ZONE

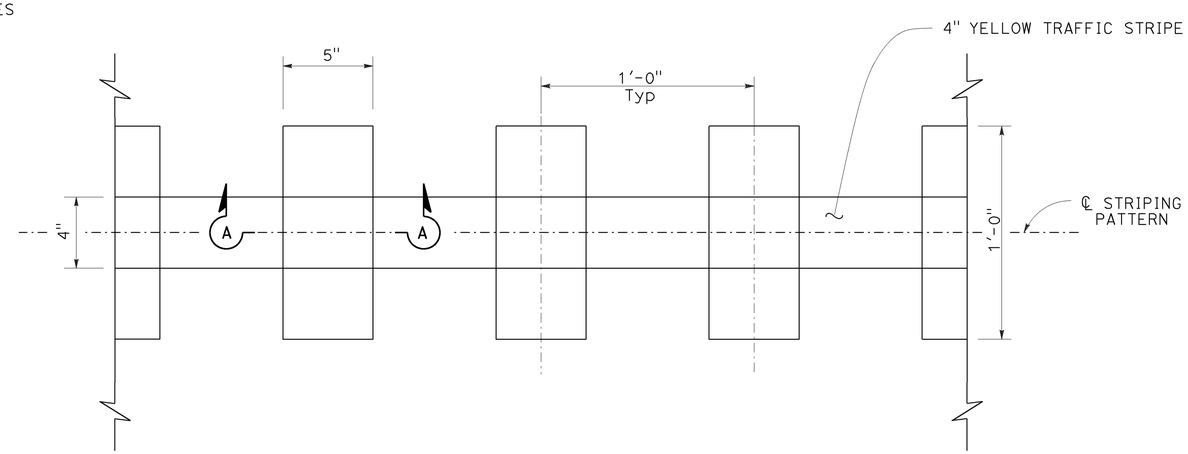

RUMBLE STRIP PLACEMENT IN PASSING ZONE

STATE OF CALIFORNIA
DEPARTMENT OF TRANSPORTATION

CENTERLINE RUMBLE STRIP DETAILS GROUND-IN INDENTATIONS

NO SCALE

TYPICAL CENTERLINE RUMBLE STRIP PLACEMENT

RSP A40D DATED JULY 15, 2016 SUPPLEMENTS THE STANDARD PLANS BOOK DATED 2015.

REVISED STANDARD PLAN RSP A40D

2015 REVISED STANDARD PLAN RSP A40D

5-23-16

Dist	COUNTY	ROUTE	POST MILES TOTAL PROJECT	SHEET No.	TOTAL SHEETS
05	SLO	41	19.7/R42.2	26	37

REGISTERED CIVIL ENGINEER

January 15, 2016
PLANS APPROVAL DATE

REGISTERED PROFESSIONAL ENGINEER
Michael Janzen
No. 44788
Exp. 3-31-16
CIVIL
STATE OF CALIFORNIA

THE STATE OF CALIFORNIA OR ITS OFFICERS OR AGENTS SHALL NOT BE RESPONSIBLE FOR THE ACCURACY OR COMPLETENESS OF SCANNED COPIES OF THIS PLAN SHEET.

TO ACCOMPANY PLANS DATED 6-13-16

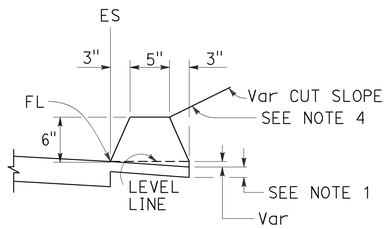

TYPE A
See Notes 3 and 5

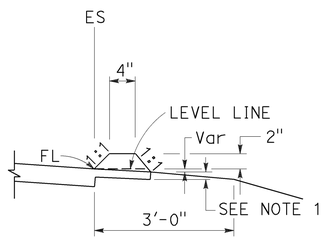

TYPE C

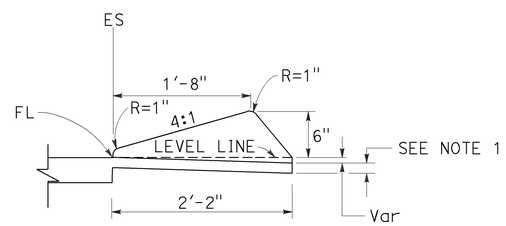

TYPE D

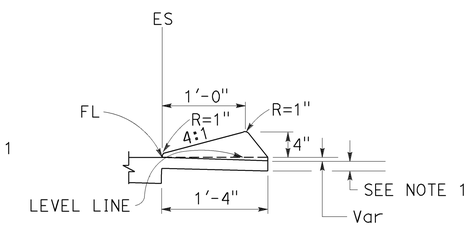

TYPE E

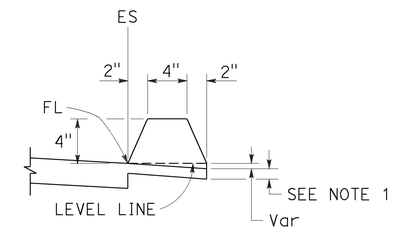

TYPE F
See Note 5

DIKES

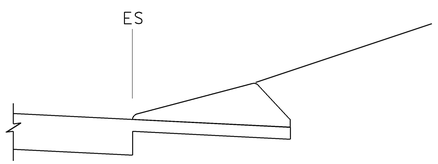

CASE C-1
Cut Slope

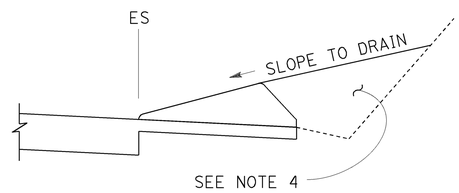

CASE C-2
Cut Slope

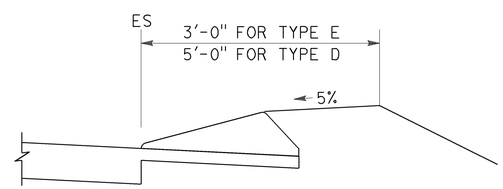

CASE F

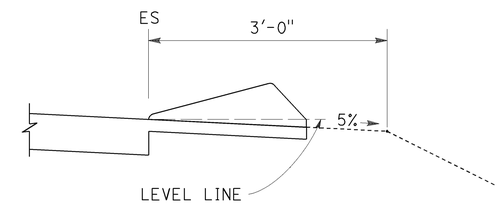

CASE R
See Note 2

TYPE D AND E BACKFILL DETAILS

NOTES:

1. For HMA shoulders only, extend top layer of HMA placed on the shoulder under dike with no joint at the ES. For projects with OGFC shoulders, do not extend OGFC under dike. See project plans for modified dike detail.
2. Case R applies to retrofit only projects where restrictive conditions do not provide enough width for Case F backfill.
3. Type A dike only to be used where restrictive slope conditions do not provide enough width to use Type D or Type E dike.
4. Fill and compact with excavated material to top of dike.
5. Use Type A or F dike, where dike is required with guardrail installations. See Standard Plan A77N4 for dike positioning details. See Standard Plan A77N3 for hinge point offsets with guardrail.

DIKE QUANTITIES

TYPE	CUBIC YARDS PER LINEAR FOOT
A	0.0135
C	0.0038
D	0.0293
E	0.0130
F	0.0066

Quantities based on 5% cross slope.

STATE OF CALIFORNIA
DEPARTMENT OF TRANSPORTATION

HOT MIX ASPHALT DIKES

NO SCALE

RSP A87B DATED JANUARY 15, 2016 SUPERSEDES STANDARD PLAN A87B DATED OCTOBER 30, 2015 - PAGE 126 OF THE STANDARD PLANS BOOK DATED 2015.

REVISED STANDARD PLAN RSP A87B

2015 REVISED STANDARD PLAN RSP A87B

11-17-15

Dist	COUNTY	ROUTE	POST MILES TOTAL PROJECT	SHEET No.	TOTAL SHEETS
05	SLO	41	19.7/R42.2	27	37

REGISTERED CIVIL ENGINEER

July 15, 2016
PLANS APPROVAL DATE

REGISTERED PROFESSIONAL ENGINEER Carl M. Duan No. C59976 Exp. 6-30-18 CIVIL STATE OF CALIFORNIA

THE STATE OF CALIFORNIA OR ITS OFFICERS OR AGENTS SHALL NOT BE RESPONSIBLE FOR THE ACCURACY OR COMPLETENESS OF SCANNED COPIES OF THIS PLAN SHEET.

TO ACCOMPANY PLANS DATED 6-13-16

NOTE:

1. For notes and Table 2, See Revised Standard Plan RSP D72C.

TABLE 1		
	T_1	Vert BARS
L_1 AND L_2 < 2'-10"	9"	#4 @ 12
L_1 OR L_2 > 2'-10"	12"	#5 @ 12

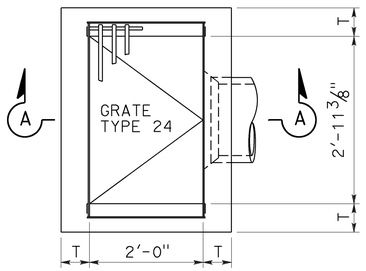

PLAN
TYPE G1

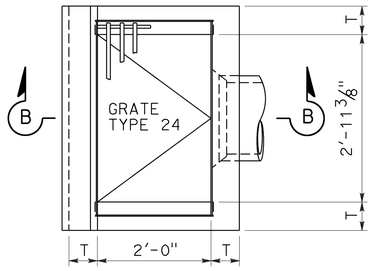

PLAN
TYPE G3

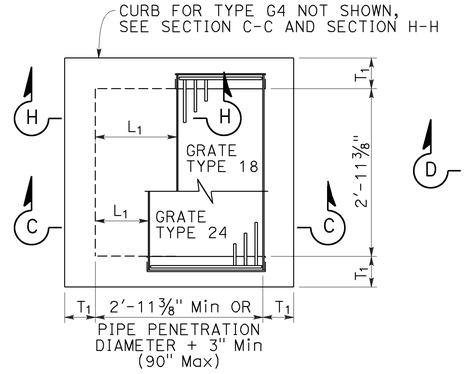

PLAN
STANDARD
TYPE G2 OR G4

FOR "L1", "L2" AND "T1" VALUES, SEE "TABLE 1"

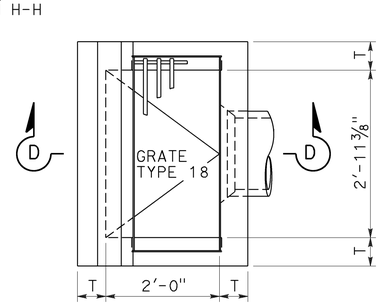

PLAN
TYPE G5

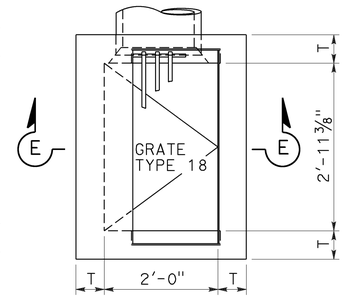

PLAN
TYPE G6

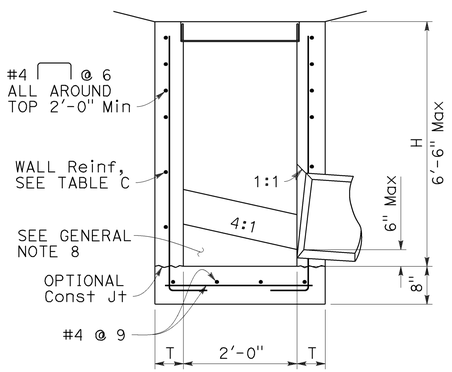

SECTION A-A

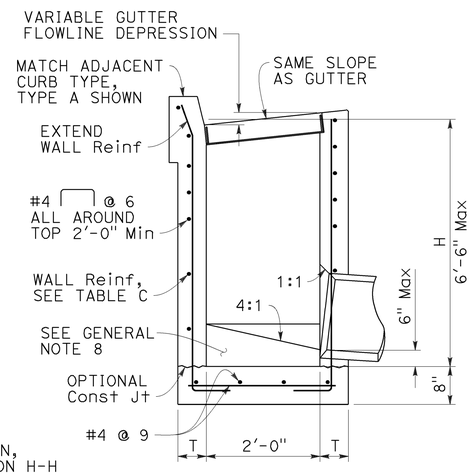

SECTION B-B

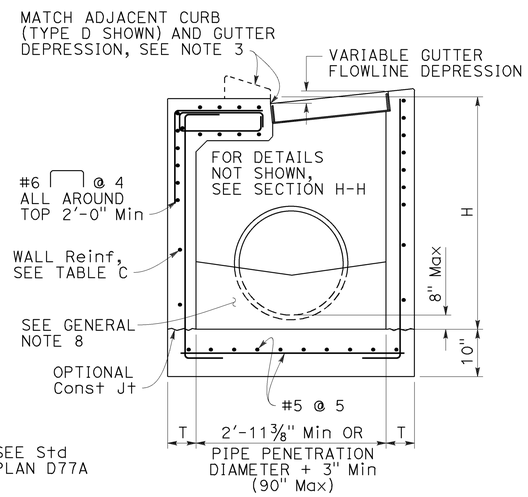

SECTION C-C

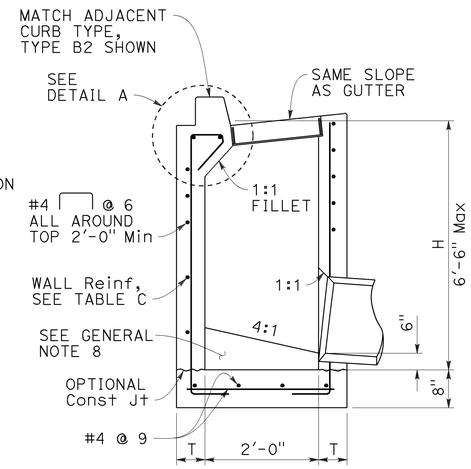

SECTION D-D

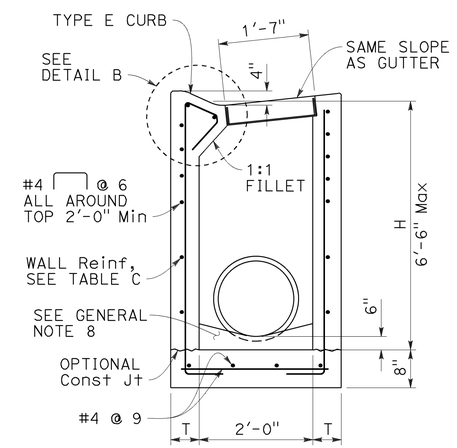

SECTION E-E

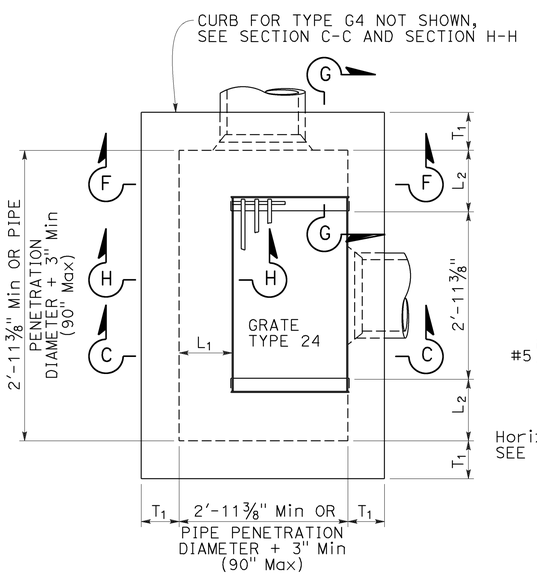

PLAN
EXPANDED
TYPE G2 OR G4

(INTEGRAL TOP ALTERNATIVE)
FOR "L" AND "T" VALUES, SEE TABLE 1

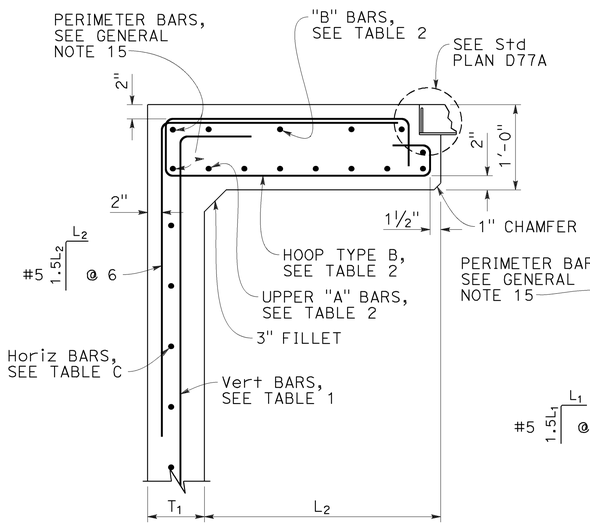

SECTION G-G

FOR "L1", "L2" AND "T1" VALUES, SEE "TABLE 1"

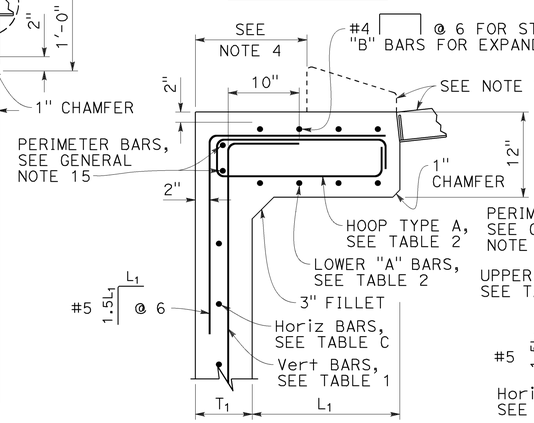

SECTION H-H

FOR "L1", "L2" AND "T1" VALUES, SEE "TABLE 1"

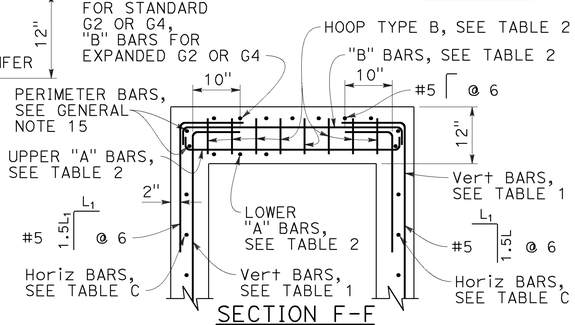

SECTION F-F

FOR "L1", "L2" AND "T1" VALUES, SEE "TABLE 1"

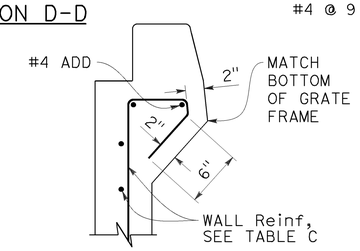

DETAIL A

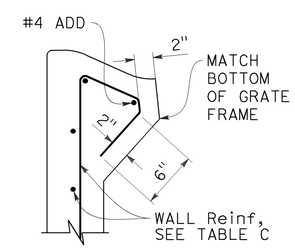

DETAIL B

STATE OF CALIFORNIA
DEPARTMENT OF TRANSPORTATION

CIP DRAINAGE INLETS TYPES G1, G2, G3, G4, G5 AND G6

NO SCALE

RSP D72A DATED JULY 15, 2016 SUPPLEMENTS THE STANDARD PLANS BOOK DATED 2015.

REVISED STANDARD PLAN RSP D72B

2015 REVISED STANDARD PLAN RSP D72B

6-20-16

Dist	COUNTY	ROUTE	POST MILES TOTAL PROJECT	SHEET No.	TOTAL SHEETS
05	SLO	41	19.7/R42.2	28	37

REGISTERED CIVIL ENGINEER

July 15, 2016
PLANS APPROVAL DATE

REGISTERED PROFESSIONAL ENGINEER
Carl M. Duan
No. C59976
Exp. 6-30-18
CIVIL
STATE OF CALIFORNIA

THE STATE OF CALIFORNIA OR ITS OFFICERS OR AGENTS SHALL NOT BE RESPONSIBLE FOR THE ACCURACY OR COMPLETENESS OF SCANNED COPIES OF THIS PLAN SHEET.

TO ACCOMPANY PLANS DATED 6-13-16

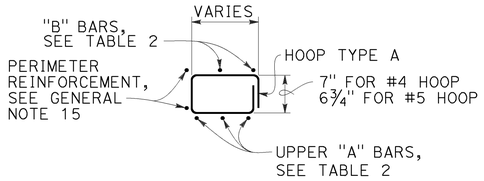

HOOP TYPE A

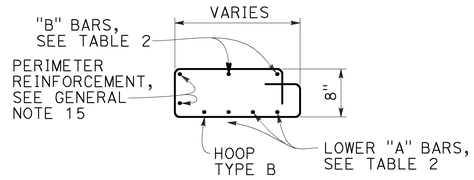

HOOP TYPE B

NOTES:

1. See Revised Standard Plan RSP D72F for General Notes and additional details. See Revised Standard Plan RSP D72G for tables and quantities.
2. Type G4 inlet can use Grate Type 18 or 24. Type G2 inlet uses Grate Type 24.
3. Type G4 inlet details are similar to Type G2 inlet details, except for the addition of a curb and sloped grate to match the adjacent curb and gutter depression.
4. Dimension will vary with different grates, curb types, box width and wall thickness.

TABLE 2 - TOP SLAB REINFORCEMENT

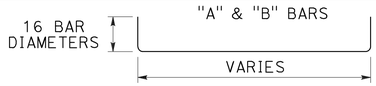

	W/ CURB	W/O CURB
"A" BARS	#4 @ 5 (2 BARS Min)	#5 @ 5 (3 BARS Min)
"B" BARS	#4 @ 10 (2 BARS Min)	#4 @ 12 (2 BARS Min)
HOOPS ("A" & "B")	#4 @ 5	#5 @ 5

ROTATE "A" AND "B" BARS SO HOOKED ENDS WILL MAINTAIN 2" CLEAR COVERAGE.

STATE OF CALIFORNIA
DEPARTMENT OF TRANSPORTATION

CIP DRAINAGE INLETS TYPES G1, G2, G3, G4, G5 AND G6

NO SCALE

RSP D72C DATED JULY 15, 2016 SUPPLEMENTS THE STANDARD PLANS BOOK DATED 2015.

REVISED STANDARD PLAN RSP D72C

2015 REVISED STANDARD PLAN RSP D72C

6-20-16

Dist	COUNTY	ROUTE	POST MILES TOTAL PROJECT	SHEET No.	TOTAL SHEETS
05	SLO	41	19.7/R42.2	29	37

REGISTERED CIVIL ENGINEER

July 15, 2016
PLANS APPROVAL DATE

REGISTERED PROFESSIONAL ENGINEER
Carl M. Duan
No. C59976
Exp. 6-30-18
CIVIL
STATE OF CALIFORNIA

THE STATE OF CALIFORNIA OR ITS OFFICERS OR AGENTS SHALL NOT BE RESPONSIBLE FOR THE ACCURACY OR COMPLETENESS OF SCANNED COPIES OF THIS PLAN SHEET.

TO ACCOMPANY PLANS DATED 6-13-16

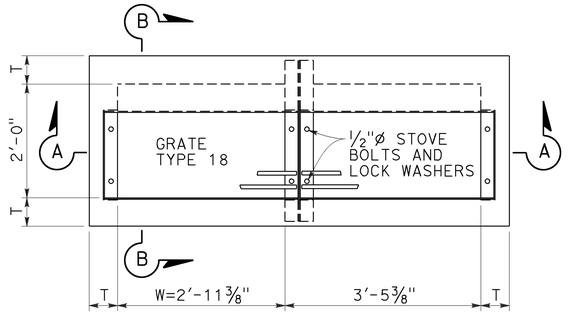

PLAN
TYPE GT1

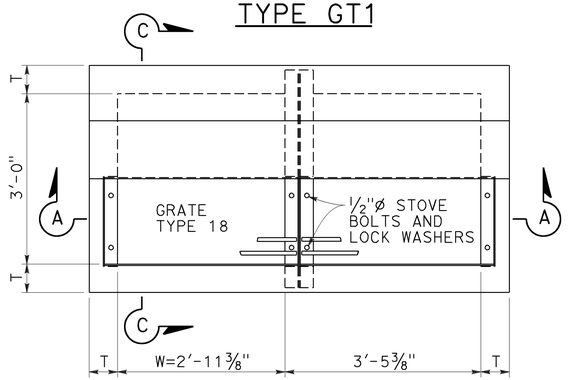

PLAN
TYPE GT2

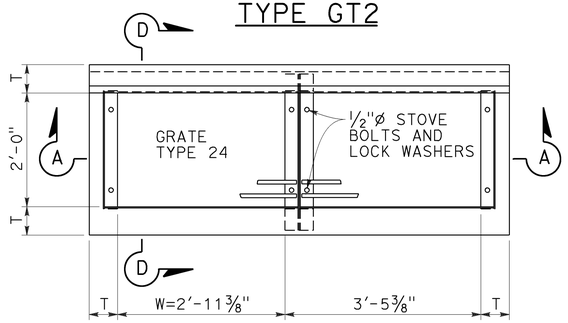

PLAN
TYPE GT3

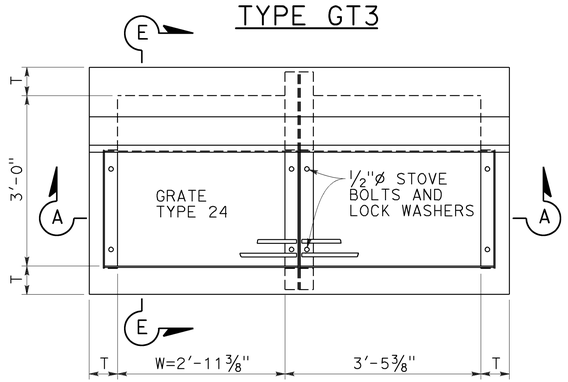

PLAN
TYPE GT4

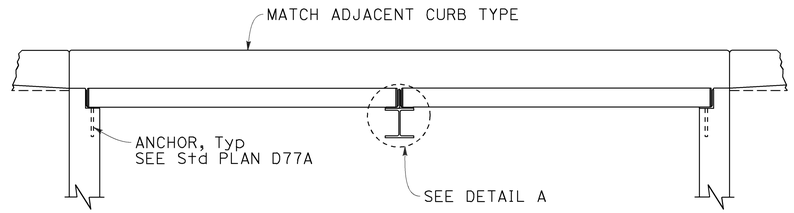

SECTION A-A

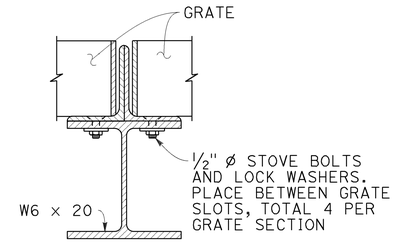

DETAIL A

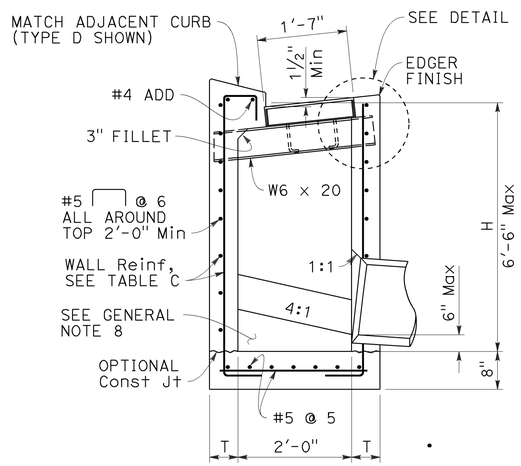

SECTION B-B

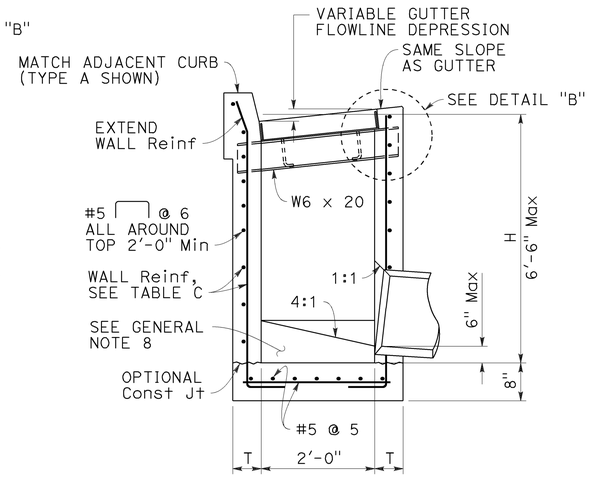

SECTION D-D

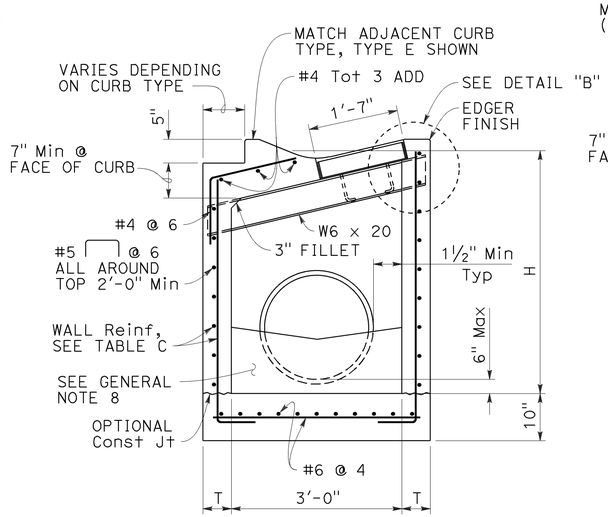

SECTION C-C

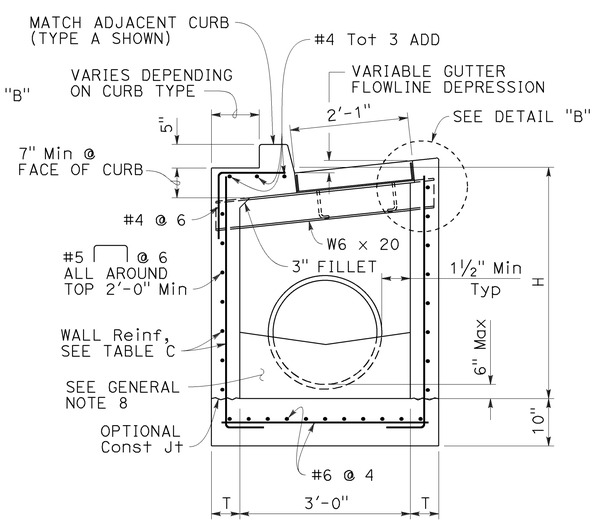

SECTION E-E

NOTES:

1. See Revised Standard Plan RSP D72F for General Notes and additional details. See Revised Standard Plan RSP D72G for tables, wall thickness "T" and quantities.
2. W=2'-11 3/8" for one grate. Add 3'-5 3/8" for additional grates in tandem.
3. Complete joint penetration butt welds may be substituted for the fillet welds on all anchors.
4. Standard square, hexagon, round or equivalent headed anchors may be substituted for the right angle hooks on the anchors shown on this plan.

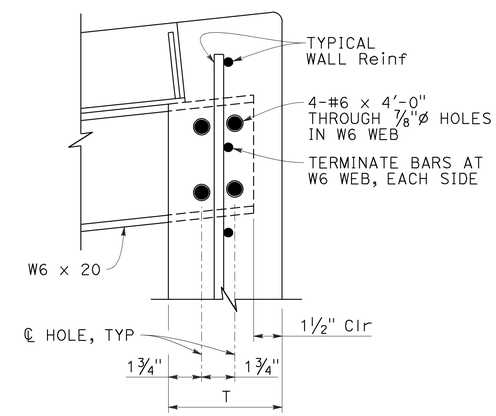

DETAIL "B"
(SIMILAR OPPOSITE END OF W6)

STATE OF CALIFORNIA
DEPARTMENT OF TRANSPORTATION

CIP DRAINAGE INLETS TYPES GT1, GT2, GT3 AND GT4

NO SCALE

RSP D72D DATED JULY 15, 2016 SUPPLEMENTS THE STANDARD PLANS BOOK DATED 2015.

REVISED STANDARD PLAN RSP D72D

2015 REVISED STANDARD PLAN RSP D72D

6-20-16

Dist	COUNTY	ROUTE	POST MILES TOTAL PROJECT	SHEET No.	TOTAL SHEETS
05	SLO	41	19.7/R42.2	30	37

REGISTERED CIVIL ENGINEER

July 15, 2016
PLANS APPROVAL DATE

REGISTERED PROFESSIONAL ENGINEER
Carl M. Duan
No. C59976
Exp. 6-30-18
CIVIL
STATE OF CALIFORNIA

THE STATE OF CALIFORNIA OR ITS OFFICERS OR AGENTS SHALL NOT BE RESPONSIBLE FOR THE ACCURACY OR COMPLETENESS OF SCANNED COPIES OF THIS PLAN SHEET.

TO ACCOMPANY PLANS DATED 6-13-16

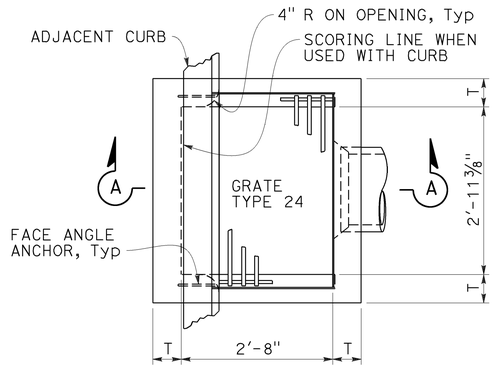

PLAN
TYPE GO

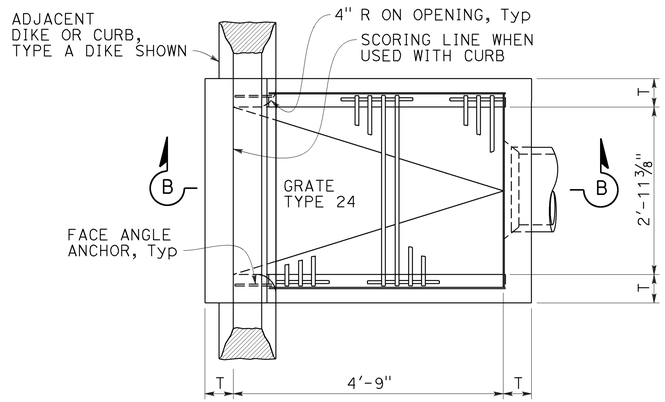

PLAN
TYPE GDO

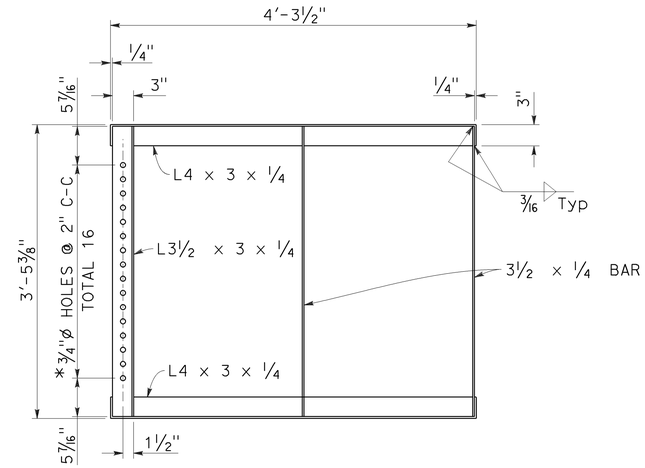

GRATE FRAME FOR TYPE GDO INLET
* HOLES REQUIRED ONLY WITH TRASH RACK

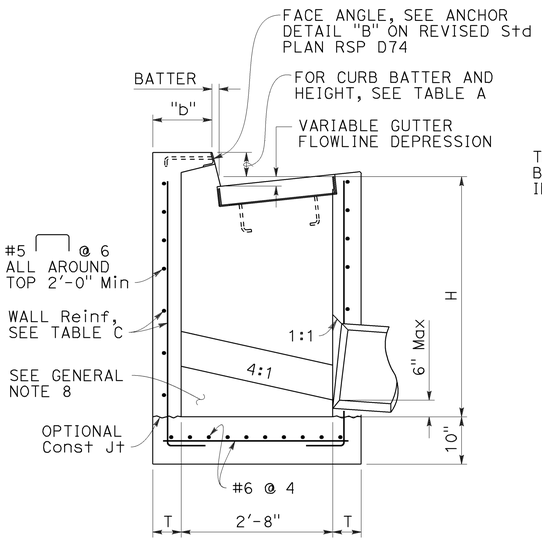

SECTION A-A

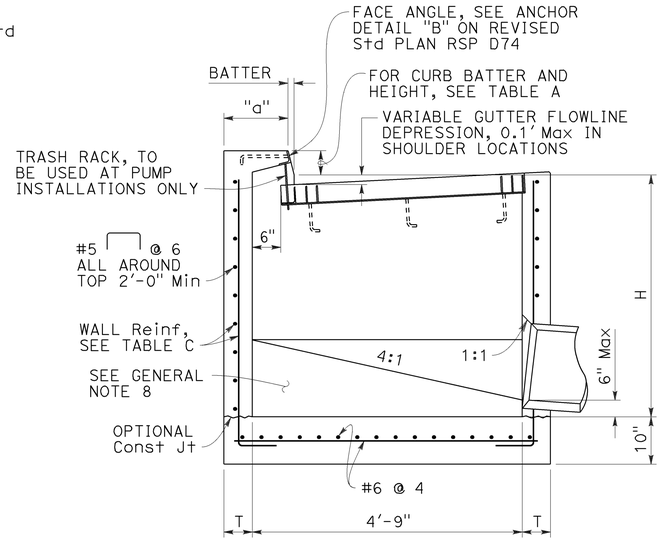

SECTION B-B

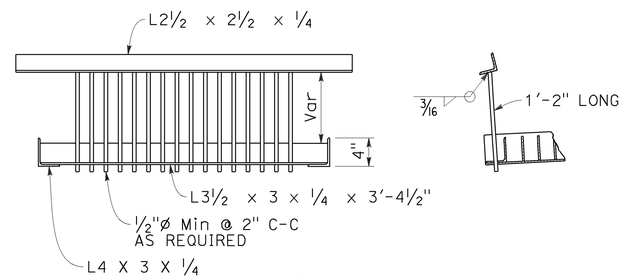

TRASH RACK
(FOR USE WITH PUMP INSTALLATION)

TABLE A				
CURB TYPE	NORMAL CURB HEIGHT	CURB BATTER	"a" DIMENSION	"b" DIMENSION
A1-6	6"	1 1/2"	T+7 1/2"	T+6 1/2"
A1-8	8"	2"	T+7"	T+6"
B1-6	6"	4"	T+5"	T+4"
TYPE A DIKE	6"	3"	T+6"	T+5"

Height of curb opening will vary with the type of curb and the depth of the local depression.

NOTES:

1. See Revised Standard Plan RSP D72F for General Notes and additional details. See Revised Standard Plan RSP D72G for tables, wall thickness "T" and quantities.
2. Where shown on the project plans, place a 3/4"ø plain round protection bar horizontally across the length of the opening and bend back 4" into the inlet wall on each side.
3. Complete joint penetration butt welds may be substituted for the fillet welds on all anchors.
4. Standard square, hexagon, round or equivalent headed anchors may be substituted for the right angle hooks on the anchors shown on this plan.

STATE OF CALIFORNIA
DEPARTMENT OF TRANSPORTATION

CIP DRAINAGE INLETS TYPES GO AND GDO

NO SCALE

RSP D72E DATED JULY 15, 2016 SUPPLEMENTS THE STANDARD PLANS BOOK DATED 2015.

REVISED STANDARD PLAN RSP D72E

2015 REVISED STANDARD PLAN RSP D72E

6-20-16

Dist	COUNTY	ROUTE	POST MILES TOTAL PROJECT	SHEET No.	TOTAL SHEETS
05	SLO	41	19.7/R42.2	31	37

REGISTERED CIVIL ENGINEER

July 15, 2016
PLANS APPROVAL DATE

REGISTERED PROFESSIONAL ENGINEER
Carl M. Duan
No. C59976
Exp. 6-30-18
CIVIL
STATE OF CALIFORNIA

THE STATE OF CALIFORNIA OR ITS OFFICERS OR AGENTS SHALL NOT BE RESPONSIBLE FOR THE ACCURACY OR COMPLETENESS OF SCANNED COPIES OF THIS PLAN SHEET.

TO ACCOMPANY PLANS DATED 6-13-16

TABLE A - CONCRETE QUANTITIES

TYPE	H=3'-0" TO 8'-0"		H=8'-1" TO 20'-0"	
	H=3'-0" (CY)	ADDITIONAL CONCRETE PER FOOT (CY)	H=8'-1" (CY)	ADDITIONAL CONCRETE PER FOOT (CY)
G1	0.95	0.220	SEE NOTE 2	SEE NOTE 2
G2*	2.00	0.411	5.11	0.525
G3	1.03	0.220	SEE NOTE 2	SEE NOTE 2
G4 (TYPE 18)*	2.02	0.411	5.14	0.525
G4 (TYPE 24)*	1.99	0.411	5.10	0.525
G5	1.02	0.220	SEE NOTE 2	SEE NOTE 2
G6	1.04	0.220	SEE NOTE 2	SEE NOTE 2
OS	1.53	0.278	5.08	0.504
OL7	2.06	0.278	6.17	0.566
OL10	2.85	0.278	6.85	0.566
OL14	3.81	0.278	7.78	0.566
OL21	5.71	0.278	9.62	0.566
GOL7	2.48	0.313	6.89	0.630
GOL10	3.41	0.313	7.85	0.630
GT1	1.72	0.248	SEE NOTE 2	SEE NOTE 2
GT2	2.93	0.530	7.73	0.762
GT3	1.74	0.348	SEE NOTE 2	SEE NOTE 2
GT4	2.83	0.530	7.62	0.762
GO	1.26	0.245	4.90	0.506
GDO	1.74	0.322	6.33	0.647

* Quantities are based on the minimum interior dimensions.

TABLE B - REINFORCEMENT QUANTITIES

TYPE	H=3'-0" TO 8'-0"		H=8'-1" TO 20'-0"	
	H=3'-0" (LB)	ADDITIONAL REINFORCEMENT PER FOOT (LB)	H=8'-1" (LB)	ADDITIONAL REINFORCEMENT PER FOOT (LB)
G1	118	22.20	SEE NOTE 2	SEE NOTE 2
G2*	729	86.48	1794	171.79
G3	118	22.20	SEE NOTE 2	SEE NOTE 2
G4 (TYPE 18)*	647	86.48	1675	171.79
G4 (TYPE 24)*	647	86.48	1675	171.79
G5	118	22.20	SEE NOTE 2	SEE NOTE 2
G6	118	22.20	SEE NOTE 2	SEE NOTE 2
OS	245	49.88	1057	120.77
OL7	458	50.53	1324	126.75
OL10	729	50.53	1595	126.75
OL14	982	50.53	1849	126.75
OL21	1453	50.53	2320	126.75
GOL7	644	83.57	1969	148.79
GOL10	883	83.57	2208	148.79
GT1	486	96.91	SEE NOTE 2	SEE NOTE 2
GT2	1040	117.08	2543	233.37
GT3	486	96.91	SEE NOTE 2	SEE NOTE 2
GT4	1001	117.08	2556	237.88
GO	308	32.44	1013	96.56
GDO	519	57.09	1654	165.66

* Quantities are based on the minimum interior dimensions.

TABLE D

INLET	CURB USED IN QUANTITIES
G1	-
G2	-
G3	A1-6
G4 (Type 18)	A1-6
G4 (Type 24)	A1-6
G5	B1-4
G6	½E
OS	-
OL7	-
OL10	-
OL14	-
OL21	-
GOL7	-
GOL10	-
GT1	D-6
GT2	E
GT3	A2-8
GT4	A2-8
GO	-
GDO	-

TABLE C - WALL REINFORCEMENT

TYPE	H≤8 (T=6",UON)		8<H≤20 (T=11",UON)	
	HORIZ	VERTICAL	HORIZ	VERTICAL
OS	#4 @ 8	#4 @ 6	#5 @ 6	#6 @ 4.5
OL	#4 @ 6	#4 @ 6	#5 @ 6	#6 @ 4.5
GOL	#5 @ 6	#5 @ 8	#6 @ 5	#6 @ 4.5
G1 (H≤6-6")	#3 @ 6	#3 @ 6	-	-
G2	T=9" #5 @ 5	#5 @ 5	T=11" #6 @ 4	#6 @ 4.5
G3 (H≤6-6")	#3 @ 6	#3 @ 6	-	-
G4	T=9" #5 @ 5	#5 @ 5	T=11" #6 @ 4	#6 @ 4.5
G5 (H≤6-6")	#3 @ 6	#3 @ 6	-	-
G6 (H≤6-6")	#3 @ 6	#3 @ 6	-	-
GT1 (H≤6-6")	#5 @ 6	#5 @ 6	-	-
GT2	T=8" #5 @ 6	#5 @ 6	#6 @ 4	#6 @ 4.5
GT3 (H≤6-6")	#5 @ 6	#5 @ 6	-	-
GT4	T=8" #5 @ 6	#5 @ 6	#6 @ 4	#6 @ 4.5
GO	#4 @ 9	#4 @ 6	#4 @ 6	#6 @ 4.5
GDO	#4 @ 6	#4 @ 6	#5 @ 4	#6 @ 4.5

TABLE E

SOIL PRESSURE BELOW BASE SLAB (ksf)		
TYPE	H=8'-0"	8'-0"< H ≤20'-0"
OS	2.93	5.56
OL*	2.93	5.56
GOL*	2.50	5.06
G1	3.67	-
G2	2.99	5.91
G3	3.67	-
G4	2.99	5.91
G5	3.67	-
G6	3.67	-
GT1	3.66	-
GT2	3.91	6.07
GT3	3.86	-
GT4	3.91	6.07
GO	3.42	6.11
GDO	2.52	6.95

* Main Box

NOTES:

1. No deduction or adjustment was made to the quantities of concrete and reinforcement for pipe openings, floor alternatives or curb type.
2. Maximum allowable height is 6'-6".
3. Quantities are approximate and for design purposes only.
4. Design is based on envelope of level and sloped ground.

STATE OF CALIFORNIA
DEPARTMENT OF TRANSPORTATION

CIP DRAINAGE INLET TABLES

NO SCALE

RSP D72G DATED JULY 15, 2016 SUPPLEMENTS THE STANDARD PLANS BOOK DATED 2015.

REVISED STANDARD PLAN RSP D72G

2015 REVISED STANDARD PLAN RSP D72G

6-20-16

Dist	COUNTY	ROUTE	POST MILES TOTAL PROJECT	SHEET No.	TOTAL SHEETS
05	SLO	41	19.7/R42.2	32	37

REGISTERED CIVIL ENGINEER

July 15, 2016
PLANS APPROVAL DATE

REGISTERED PROFESSIONAL ENGINEER Carl M. Duan No. C59976 Exp. 6-30-18 CIVIL STATE OF CALIFORNIA

THE STATE OF CALIFORNIA OR ITS OFFICERS OR AGENTS SHALL NOT BE RESPONSIBLE FOR THE ACCURACY OR COMPLETENESS OF SCANNED COPIES OF THIS PLAN SHEET.

TO ACCOMPANY PLANS DATED 6-13-16

NOTE:

1. For notes and Table 2, See Revised Standard Plan RSP D73C.

TABLE 1		
	T_1	Vert BARS
L_1 AND L_2 < 2'-10"	8"	#4 @ 12
L_1 OR L_2 > 2'-10"	12"	#5 @ 12

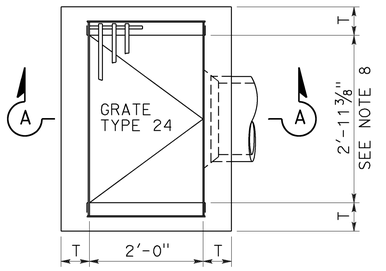

PLAN
TYPE G1

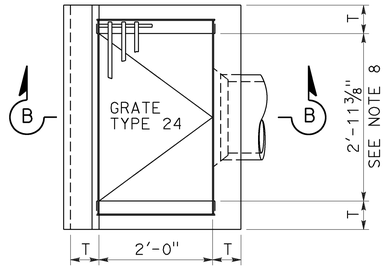

PLAN
TYPE G3

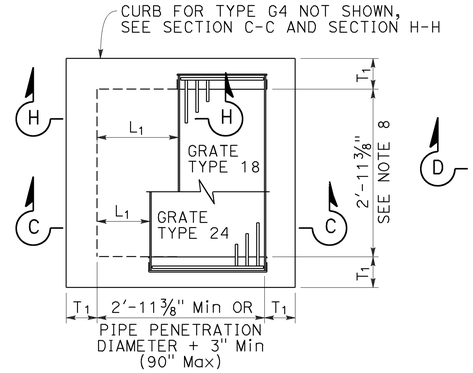

PLAN
STANDARD TYPE G2 OR G4
(INTEGRAL TOP ALTERNATIVE)
FOR "L" AND "T" VALUES, SEE TABLE 1

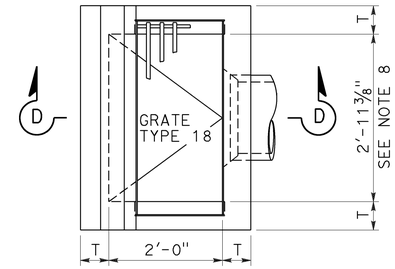

PLAN
TYPE G5

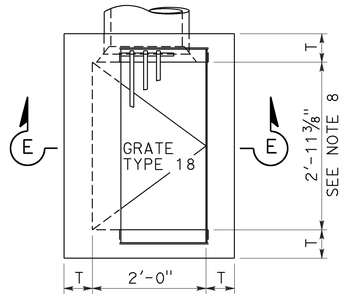

PLAN
TYPE G6

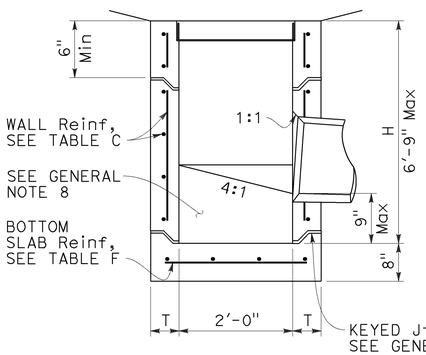

SECTION A-A

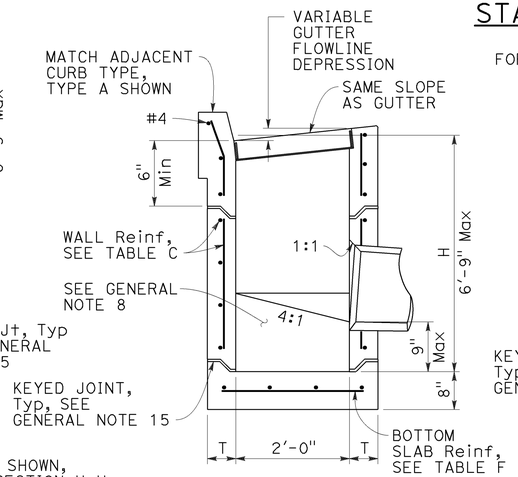

SECTION B-B

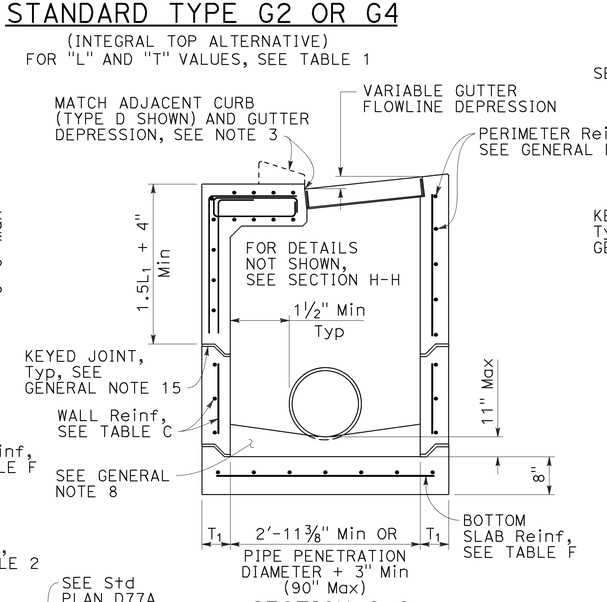

SECTION C-C
FOR "L1", "L2" AND "T1" VALUES, SEE "TABLE 1"

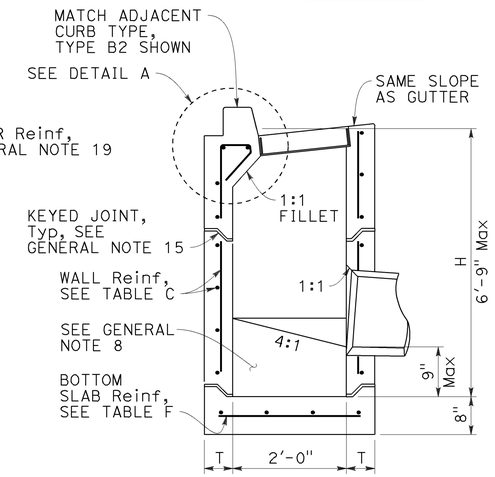

SECTION D-D

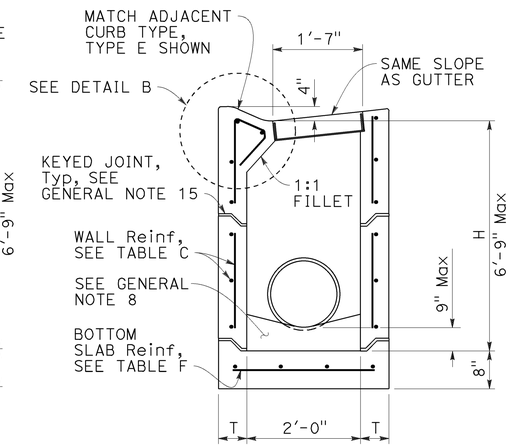

SECTION E-E

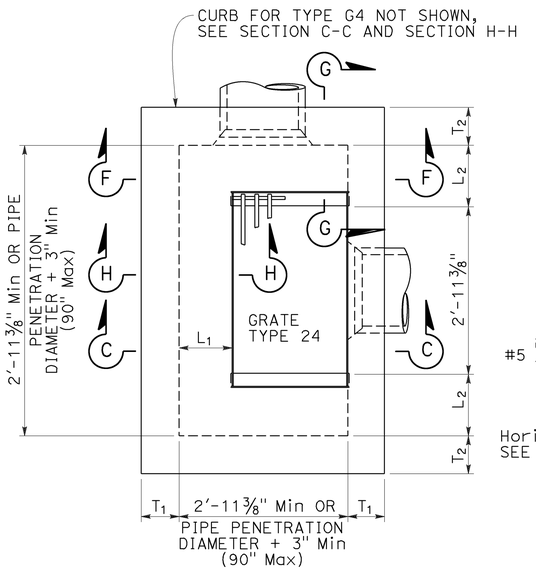

PLAN
EXPANDED
TYPE G2 OR G4
(INTEGRAL TOP ALTERNATIVE)
FOR "L1", "L2" AND "T1" VALUES, SEE "TABLE 1"

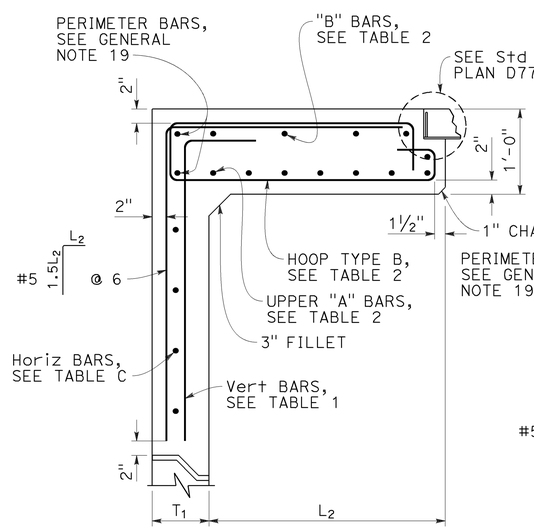

SECTION G-G
FOR "L1", "L2" AND "T1" VALUES, SEE "TABLE 1"

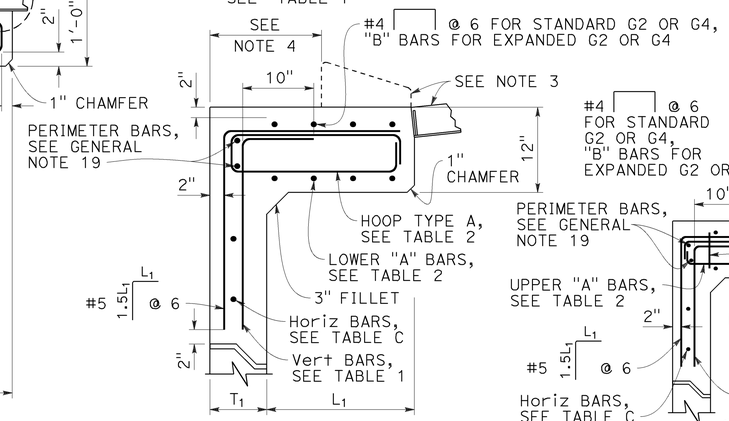

SECTION H-H
FOR "L1", "L2" AND "T1" VALUES, SEE "TABLE 1"

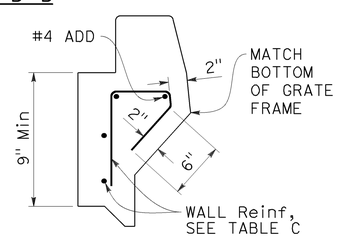

DETAIL A

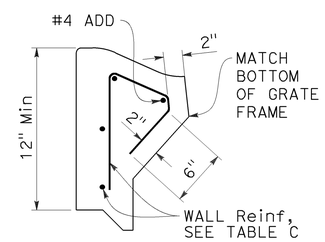

DETAIL B

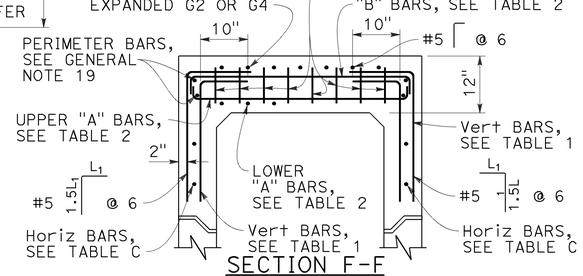

SECTION F-F
FOR "L1", "L2" AND "T1" VALUES, SEE "TABLE 1"

RSP D73B DATED JULY 15, 2016 SUPPLEMENTS THE STANDARD PLANS BOOK DATED 2015.

STATE OF CALIFORNIA
DEPARTMENT OF TRANSPORTATION

PRECAST DRAINAGE INLETS TYPES G1, G2, G3, G4, G5 AND G6

NO SCALE

REVISED STANDARD PLAN RSP D73B

2015 REVISED STANDARD PLAN RSP D73B

6-29-16

Dist	COUNTY	ROUTE	POST MILES TOTAL PROJECT	SHEET No.	TOTAL SHEETS
05	SLO	41	19.7/R42.2	33	37

REGISTERED CIVIL ENGINEER

July 15, 2016
PLANS APPROVAL DATE

REGISTERED PROFESSIONAL ENGINEER Carl M. Duan No. C59976 Exp. 6-30-18 CIVIL STATE OF CALIFORNIA

THE STATE OF CALIFORNIA OR ITS OFFICERS OR AGENTS SHALL NOT BE RESPONSIBLE FOR THE ACCURACY OR COMPLETENESS OF SCANNED COPIES OF THIS PLAN SHEET.

TO ACCOMPANY PLANS DATED 6-13-16

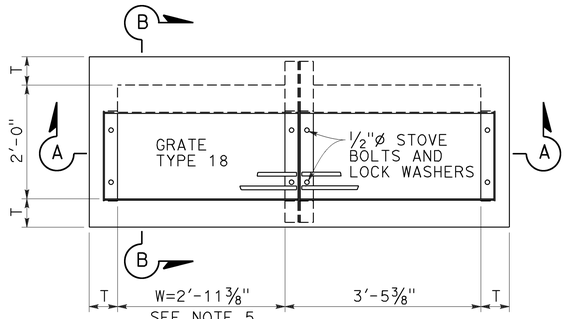

PLAN
TYPE GT1

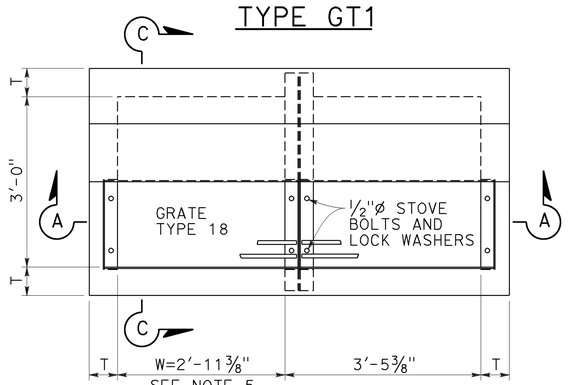

PLAN
TYPE GT2

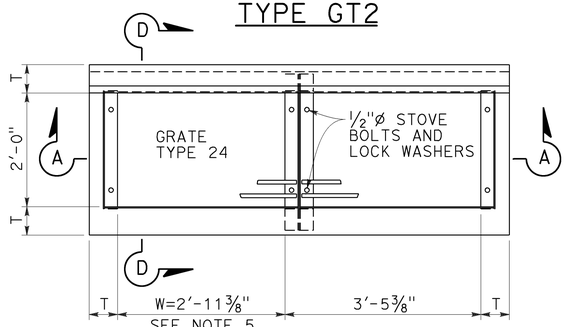

PLAN
TYPE GT3

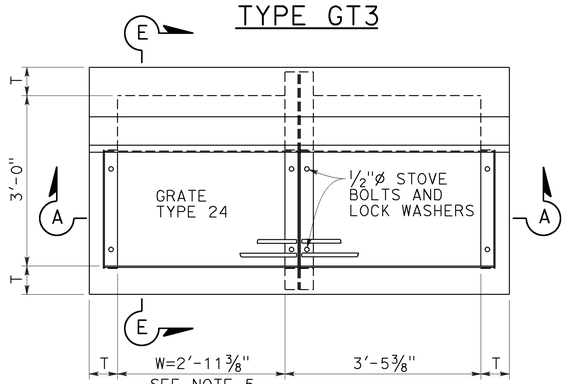

PLAN
TYPE GT4

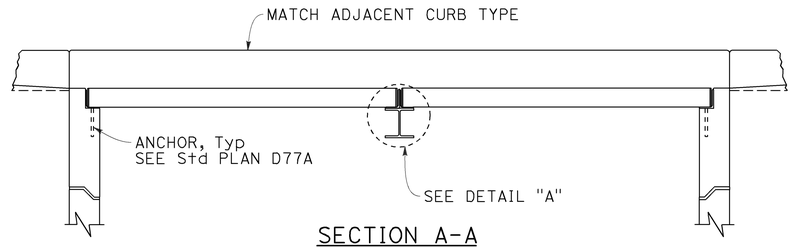

SECTION A-A

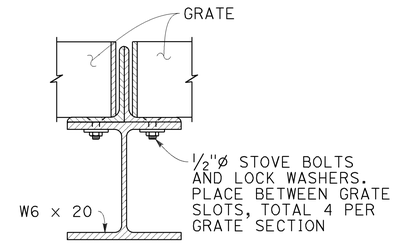

DETAIL "A"

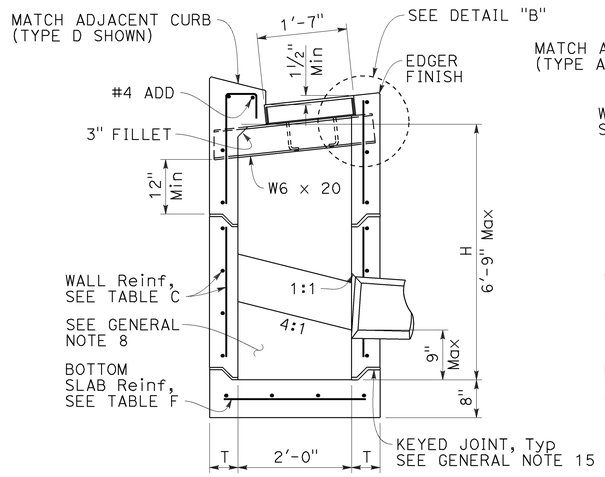

SECTION B-B

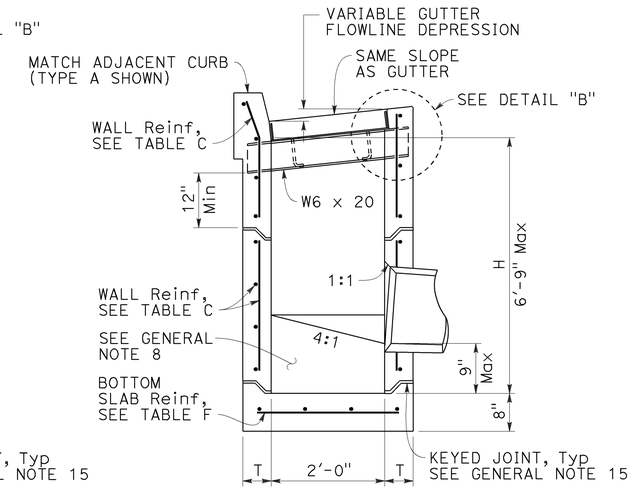

SECTION D-D

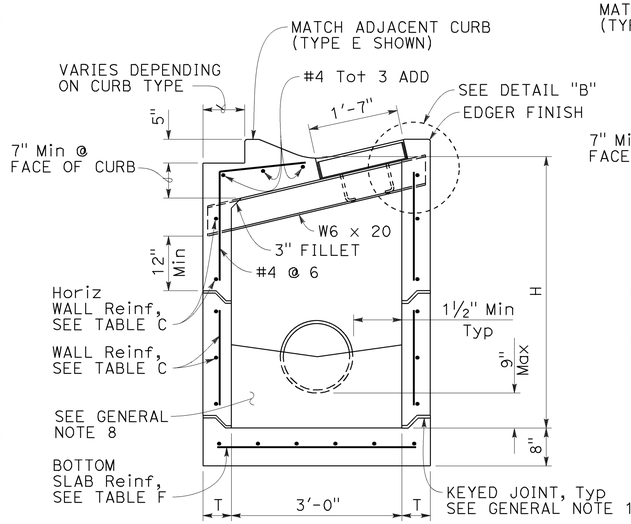

SECTION C-C

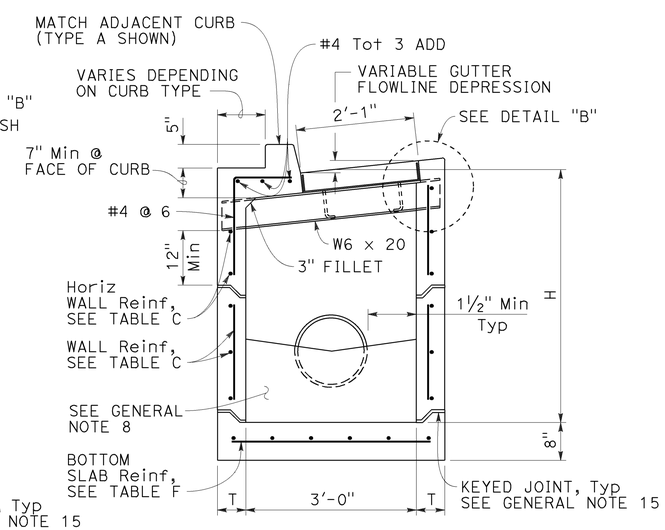

SECTION E-E

NOTES:

1. See Revised Standard Plan RSP D73F for General Notes and additional details. See Revised Standard Plan RSP D73G for tables, wall thickness "T" and quantities.
2. W=2'-11 3/8" for one grate. Add 3'-5 3/8" for additional grates in tandem.
3. Complete joint penetration butt welds may be substituted for the fillet welds on all anchors.
4. Standard square, hexagon, round or equivalent headed anchors may be substituted for the right angle hooks on the anchors shown on this plan.
5. Overall interior length of lower sections may be 6'-6" provided top section conforms to the requirements for frame and grate types on Standard Plan D77A. The wall thickness of top sections may transition from "T" to "T"+5/8" to meet this requirement. Minimum height of thickened wall shall = "T".

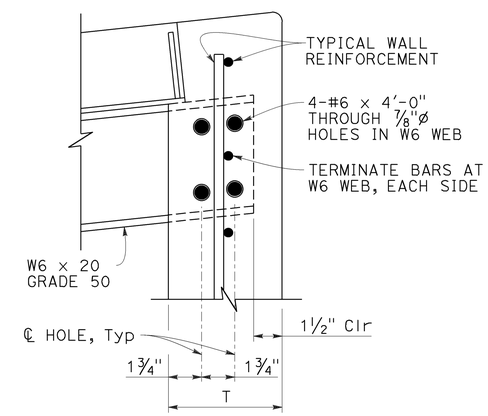

DETAIL "B"
(SIMILAR OPPOSITE END OF W6)

STATE OF CALIFORNIA
DEPARTMENT OF TRANSPORTATION

PRECAST DRAINAGE INLETS TYPES GT1, GT2, GT3 AND GT4

NO SCALE

RSP D73D DATED JULY 15, 2016 SUPPLEMENTS THE STANDARD PLANS BOOK DATED 2015.

REVISED STANDARD PLAN RSP D73D

2015 REVISED STANDARD PLAN RSP D73D

6-28-16

Dist	COUNTY	ROUTE	POST MILES TOTAL PROJECT	SHEET No.	TOTAL SHEETS
05	SLO	41	19.7/R42.2	34	37

REGISTERED CIVIL ENGINEER

July 15, 2016
PLANS APPROVAL DATE

REGISTERED PROFESSIONAL ENGINEER
Carl M. Duan
No. C59976
Exp. 6-30-18
CIVIL
STATE OF CALIFORNIA

THE STATE OF CALIFORNIA OR ITS OFFICERS OR AGENTS SHALL NOT BE RESPONSIBLE FOR THE ACCURACY OR COMPLETENESS OF SCANNED COPIES OF THIS PLAN SHEET.

TO ACCOMPANY PLANS DATED 6-13-16

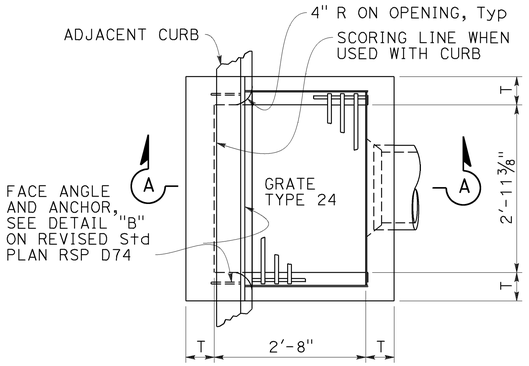

PLAN
TYPE GO

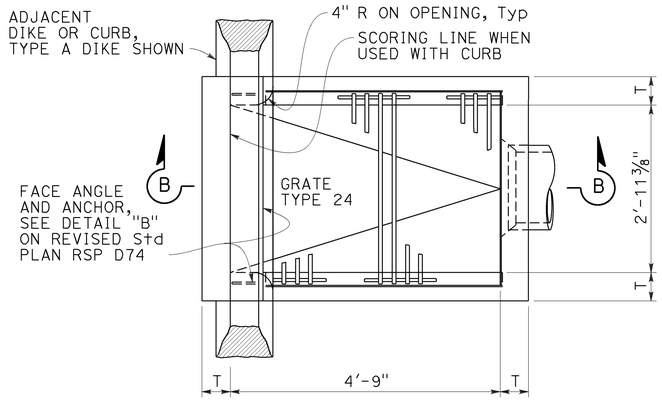

PLAN
TYPE GDO

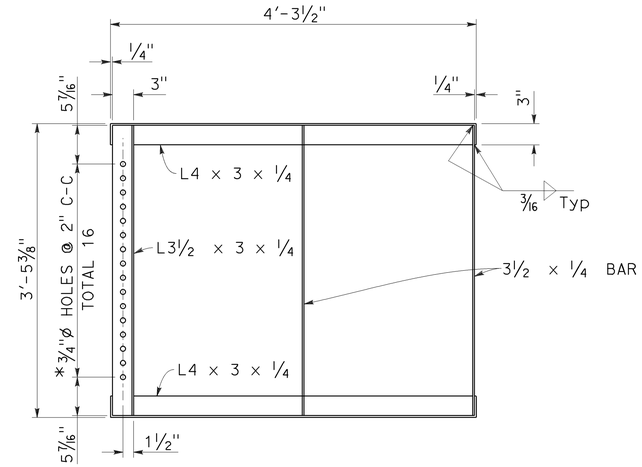

GRATE FRAME FOR TYPE GDO INLET

* HOLES REQUIRED ONLY WITH TRASH RACK

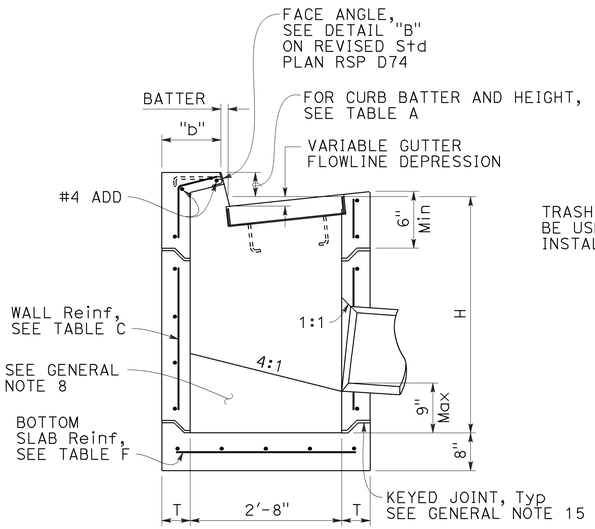

SECTION A-A

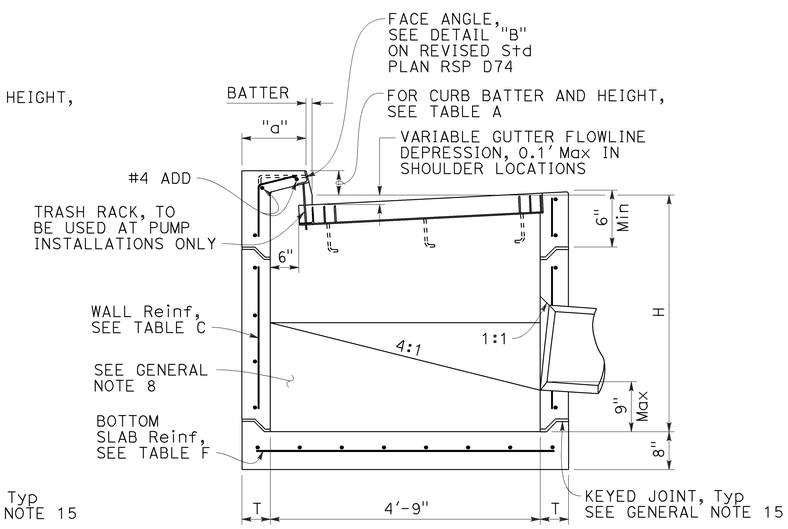

SECTION B-B

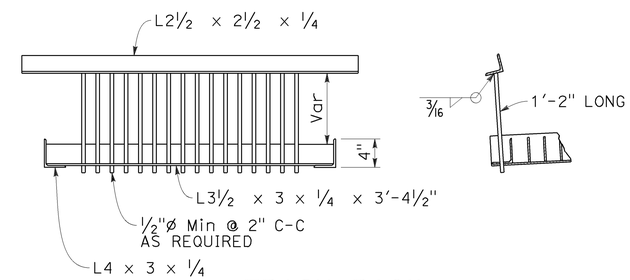

TRASH RACK

FOR USE WITH PUMP INSTALLATION

TABLE A				
CURB TYPE	NORMAL CURB HEIGHT	CURB BATTER	"a" DIMENSION	"b" DIMENSION
A1-6	6"	1 1/2"	T+7 1/2"	T+6 1/2"
A1-8	8"	2"	T+7"	T+6"
B1-6	6"	4"	T+5"	T+4"
TYPE A DIKE	6"	3"	T+6"	T+5"

Height of curb opening will vary with the type of curb and the depth of the local depression.

NOTES:

1. See Revised Standard Plan RSP D73F for General Notes and additional details. See Revised Standard Plan RSP D73G for tables, wall thickness "T" and quantities.
2. Where shown on the project plans, place a 3/4"* plain round protection bar horizontally across the length of the opening and bend back 4" into the inlet wall on each side.
3. Complete joint penetration butt welds may be substituted for the fillet welds on all anchors.
4. Standard square, hexagon, round or equivalent headed anchors may be substituted for the right angle hooks on the anchors shown on this plan.

STATE OF CALIFORNIA
DEPARTMENT OF TRANSPORTATION

PRECAST DRAINAGE INLETS TYPES GO AND GDO

NO SCALE

RSP D73E DATED JULY 15, 2016 SUPPLEMENTS THE STANDARD PLANS BOOK DATED 2015.

REVISED STANDARD PLAN RSP D73E

2015 REVISED STANDARD PLAN RSP D73E

6-20-16

Dist	COUNTY	ROUTE	POST MILES TOTAL PROJECT	SHEET No.	TOTAL SHEETS
05	SLO	41	19.7/R42.2	35	37

REGISTERED CIVIL ENGINEER

July 15, 2016
PLANS APPROVAL DATE

REGISTERED PROFESSIONAL ENGINEER Carl M. Duan No. C59976 Exp. 6-30-18 CIVIL STATE OF CALIFORNIA

THE STATE OF CALIFORNIA OR ITS OFFICERS OR AGENTS SHALL NOT BE RESPONSIBLE FOR THE ACCURACY OR COMPLETENESS OF SCANNED COPIES OF THIS PLAN SHEET.

TO ACCOMPANY PLANS DATED 6-13-16

2015 REVISED STANDARD PLAN RSP D73F

GENERAL NOTES:

1. "H" is measured from top of bottom slab to the normal gutter grade line undepressed at the curb face.
2. For "T" wall thickness and reinforcement, see Table C on Revised Standard Plan RSP D73G.
3. Wall reinforcement must be placed at the center of wall thickness with horizontal bars placed on the exterior face. Bottom slab concrete cover must be 3" clear on the interior side face unless otherwise noted. Top slab concrete cover must be 2" clear on the exterior face unless otherwise noted. Short independent wall sections or height adjustment rings 6" to 24" high must have a minimum of two #4 horizontal bars. Reinforcement spacing is in inches unless otherwise noted.
4. Steps - None required where "H" is less than 2'-6". Where "H" is 2'-6" or more, install steps with lowest rung 1'-0" above the floor and highest rung not more than 6" below bottom of lid. The distance between steps must not exceed 1'-0" and be uniform throughout the length of the wall. Place steps in the wall without an opening. Steps inserts may be substituted for the bar steps. Step inserts must comply with State Industrial Safety Requirements. See Revised Standard Plan RSP D74 for step details.
5. Pipe(s) can be placed in any wall. Adjacent to each side of the opening, place additional reinforcement equivalent to half the interupted main reinforcement. For larger pipes greater than or equal to 42" diameter, also add 4 diagonal bars, 1 bar each side. Bars must be the same size as the larger of the main vertical or horizontal bars. Extend bars one development length past the intersection with the adjacent diagonal bar, or where bars intersect mid thickness of adjacent wall bottom or top of non-continuous wall, bend ends as required into same plane.
6. Set inlet so that grate bars are parallel to direction of principal surface flow.
7. Curb section must match adjacent curb.
8. Except for inlets used as junction boxes, basin floors must have wood trowel finish and a minimum slope of 4:1, unless otherwise noted, from all directions toward outlet pipe by casting grout on top of the bottom slab. Grout must be placed prior to backfill.
9. See Standard Plans D77A and D77B for grate and frame details and weights of miscellaneous iron and steel.
10. See Standard Plans D78A and D78B for gutter depression details.
11. See Standard Plan A87A and Revised Standard Plan RSP A87B for curb and dike details.
12. Details shown apply to metal, concrete and plastic pipe(s).
13. The Contractor may use WWR instead of bar reinforcement. The ratio of bar reinforcement to WWR shall be based on the yield strength ratio.
14. Seal precast inlets connection openings between wall and pipe with non-shrink grout or resilient connectors as specified in the Special Provisions. Precast inlets shall have mortared connections conforming to details for Type GCP Inlet shown on Standard Plan D75B. See Standard Specifications for mortar composition.
15. Where shown, provide precast inlets with separate top sections for final grade adjustment. Provide keyed joints with butyl rubber sealant between the top section and wall, multiple wall sections, and wall and bottom slab. Joint design may vary but must be 1" to 3" in depth. For tongue type joints, tongue down orientation is not allowed. For keyed joints, keyway up, keyway down or tongue up configurations are allowed. Only one key type is allowed for each drainage inlet.
16. Non-shrink grout can be used for upper most joint to facilitate final top grade adjustment.
17. Provide a level and firm sand bedding on which to place precast inlets. Extend sand bedding under all structure backfill.
18. For Integral Base, see Detail "A".
19. Perimeter reinforcement must not be smaller than main bars and #4 and serves as a rigid frame to position and attach the required structural reinforcement and may be tack welded at outer corners when using ASTM A706 weldable bars.
20. Inlet extensions may be cast in place after placement of main box and placement and compaction of backfill. Concrete strength must be 3.6 ksi minimum. All slab and wall thicknesses must be per Revised Standard Plan RSP D72A. All reinforcement shall extend a minimum of 24" from precast main inlet box.

DESIGN NOTES:

1. Design Specifications: AASHTO LRFD Bridge Design Specifications, 6th edition with 2012 Interims and Errata and CA Amendments.
2. Live Load (AASHTO LRFD 3.6.1.2):
   HL-93, consists of design truck or tandem, and design lane load.
   Dynamic Load Allowance, IM = 33%
   Multiple Presence Factor, m = 1.0
   Design lane load was excluded in Top Slab design.
   A wheel load of 8 kips without impact factor was used for top slabs that are above a curb.
3. Earth Load:
   Vertical pressure = 140 pcf
   Lateral pressure:
   = 100 pcf for walls with flat embankment
   = 140 pcf For walls with slope embankment, 1.5:1 Max
4. Downdrag: ϕ = 34° and γ_E = 120 pcf.
5. Buoyancy: γ_W = 62.4 pcf to finished grade.
6. Reinforced Concrete: f'c = 5.0 ksi, fy = 60.0 ksi.
7. Tables are based on the worst case from the level ground and sloped ground.
8. Soil pressures shown are factored per AASHTO LRFD and include self-weight, live load and downdrag.

SPAN "A" OR "B" (IN)	L (IN)
<38	34
38 TO 50	40
51 TO 64	47
65 TO 76	53
77 TO 90	60

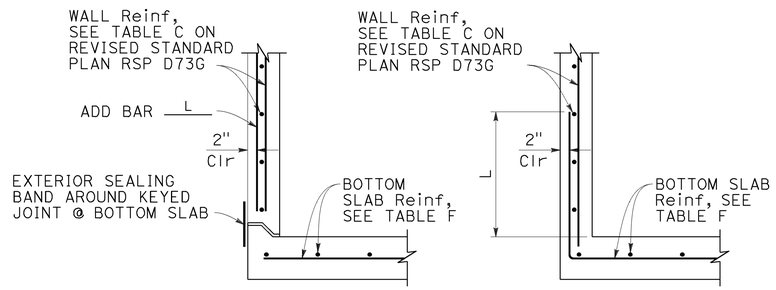

BASE WITH KEYED JOINT — INTEGRAL BASE

DETAIL "A"

FOR INTEGRAL BASE, CLEARANCE BETWEEN PIPE PENETRATION AND BASE SLAB MAY BE AS SHOWN IN CIP ALTERNATIVE STANDARD PLAN SHEET.

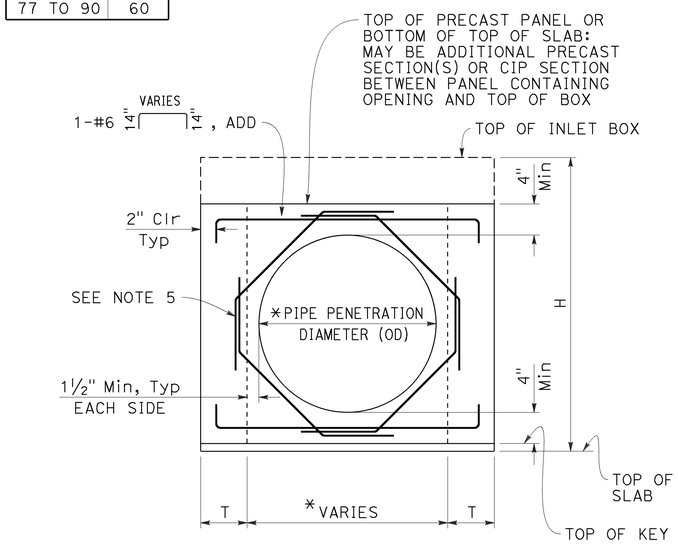

BASE WITH KEYED JOINT

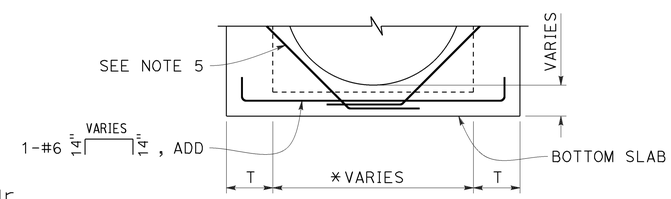

INTEGRAL BASE

FOR DETAILS NOT SHOWN, SEE "BASE WITH KEYED JOINT"

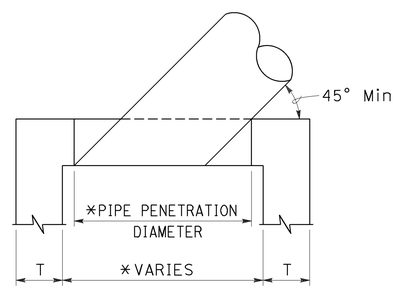

SKEWED PIPE PLAN

* ADJUST PIPE PENETRATION AND BOX WIDTH FOR SKEWED PIPES.

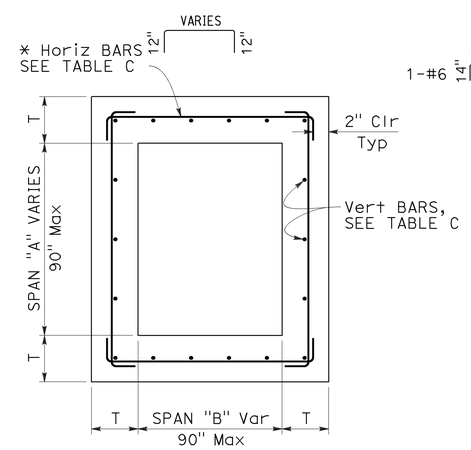

TYPICAL INLET PLAN

* ALTERNATIVE HORIZONTAL BARS

TYPICAL WALL W/ PIPE OPENING

* SEE "SKEWED PIPE PLAN"

STATE OF CALIFORNIA
DEPARTMENT OF TRANSPORTATION

PRECAST DRAINAGE INLET NOTES

NO SCALE

RSP D73F DATED JULY 15, 2016 SUPPLEMENTS THE STANDARD PLANS BOOK DATED 2015.

REVISED STANDARD PLAN RSP D73F

6-20-16

Dist	COUNTY	ROUTE	POST MILES TOTAL PROJECT	SHEET No.	TOTAL SHEETS
05	SLO	41	19.7/R42.2	36	37

REGISTERED CIVIL ENGINEER

July 15, 2016
PLANS APPROVAL DATE

REGISTERED PROFESSIONAL ENGINEER
Carl M. Duan
No. C59976
Exp. 6-30-18
CIVIL
STATE OF CALIFORNIA

THE STATE OF CALIFORNIA OR ITS OFFICERS OR AGENTS SHALL NOT BE RESPONSIBLE FOR THE ACCURACY OR COMPLETENESS OF SCANNED COPIES OF THIS PLAN SHEET.

TO ACCOMPANY PLANS DATED 6-13-16

2015 REVISED STANDARD PLAN RSP D73G

TABLE A - CONCRETE QUANTITIES

TYPE	H=3'-0" TO 8'-0"		H=8'-1" TO 20'-0"	
	H=3'-0" (CY)	ADDITIONAL CONCRETE PER FOOT (CY)	H=8'-1" (CY)	ADDITIONAL CONCRETE PER FOOT (CY)
G1	0.95	0.220	SEE NOTE 2	SEE NOTE 2
G2*	1.25	0.255	2.55	0.255
G3	1.06	0.220	SEE NOTE 2	SEE NOTE 2
G4 (TYPE 18)*	1.41	0.255	2.71	0.255
G4 (TYPE 24)*	1.36	0.255	2.65	0.255
G5	1.09	0.220	SEE NOTE 2	SEE NOTE 2
G6	1.14	0.220	SEE NOTE 2	SEE NOTE 2
OS	1.28	0.278	2.69	0.278
OL7	1.92	0.278	3.33	0.278
OL10	2.43	0.278	3.84	0.278
OL14	3.16	0.278	4.57	0.278
OL21	4.58	0.278	5.99	0.278
GOL7	2.36	0.313	4.04	0.434
GOL10	2.84	0.313	4.53	0.434
GT1	2.30	0.480	SEE NOTE 2	SEE NOTE 2
GT2	2.71	0.530	5.40	0.530
GT3	2.29	0.480	SEE NOTE 2	SEE NOTE 2
GT4	2.69	0.530	5.39	0.530
GO	1.25	0.245	2.37	0.245
GDO	1.64	0.322	3.37	0.446

* Quantities are based on the minimum interior dimensions.

TABLE B - REINFORCEMENT QUANTITIES

TYPE	H=3'-0" TO 8'-0"		H=8'-1" TO 20'-0"	
	H=3'-0" (LB)	ADDITIONAL REINFORCEMENT PER FOOT (LB)	H=8'-1" (LB)	ADDITIONAL REINFORCEMENT PER FOOT (LB)
G1	88.5	21.90	SEE NOTE 2	SEE NOTE 2
G2*	151.5	24.54	277.4	38.64
G3	92.9	21.90	SEE NOTE 2	SEE NOTE 2
G4 (TYPE 18)*	134.4	24.54	260.3	38.64
G4 (TYPE 24)*	125.1	24.54	251.0	38.64
G5	92.5	21.90	SEE NOTE 2	SEE NOTE 2
G6	92.5	21.90	SEE NOTE 2	SEE NOTE 2
OS	145.8	35.57	327.8	49.60
OL7	328.0	35.57	510.0	49.60
OL10	467.5	35.57	649.5	49.60
OL14	667.5	35.57	849.5	49.60
OL21	1056.1	35.57	1238.1	49.60
GOL7	474.7	45.17	706.8	74.02
GOL10	604.9	45.17	836.9	74.02
GT1	349.0	80.48	SEE NOTE 2	SEE NOTE 2
GT2	403.7	86.82	849.1	135.15
GT3	347.0	80.48	SEE NOTE 2	SEE NOTE 2
GT4	403.7	86.82	849.1	135.15
GO	99.8	23.75	221.7	37.46
GDO	208.8	46.22	446.2	75.61

* Quantities are based on the minimum interior dimensions.

TABLE D

INLET	CURB USED IN QUANTITIES
G1	-
G2	-
G3	A1-6
G4 (Type 18)	A1-6
G4 (Type 24)	A1-6
G5	B1-4
G6	½E
OS	-
OL7	-
OL10	-
OL14	-
OL21	-
GOL7	-
GOL10	-
GT1	D-6
GT2	E
GT3	A2-8
GT4	A2-8
GO	-
GDO	-

TABLE C - WALL REINFORCEMENT

TYPE	H ≤8'-0" (T=6", UON)			8'-0"< H ≤20'-0" (T=8", UON)		
	HORIZONTAL	VERTICAL	*ADD	HORIZONTAL	VERTICAL	*ADD
OS	#4@6	#3@8	#3@8	#4@4 (T=6")	#3@8	#3@8
OL	#4@6	#3@8	#3@8	#4@4 (T=6")	#3@8	#3@8
GOL	#4@5	#3@8	#3@8	#5@5	#3@6	#3@6
G1 (H ≤6'-9")	#4@9	#3@8	#3@8	-	-	-
G2 & G4 (a** ≤38")	#4@9	#3@8	#3@8	#4@5 (T=6")	#3@8	#3@8
G2 & G4 (38" < a** ≤50")	#4@6	#3@8	#3@8	#4@4 (T=6")	#3@8	#3@8
G2 & G4 (50" < a** ≤64")	#4@5	#3@8	#3@8	#5@5	#3@6	#3@6
G2 & G4 (64"< a** ≤76")	#5@7 (T=8")	#3@6	#3@6	#5@4	#3@6	#5@6
G2 & G4 (76" < a** ≤90")	#5@5 (T=8")	#3@6	#3@6	#5@3	#3@6	#5@6
G3 (H ≤6'-9")	#4@9	#3@8	#3@8	-	-	-
G5 (H ≤6'-9")	#4@9	#3@8	#3@8	-	-	-
G6 (H ≤6'-9")	#4@9	#3@8	#3@8	-	-	-
GT1 (H ≤6'-9")	#5@5 (T=8")	#3@6	#3@6	-	-	-
GT2	#5@5 (T=8")	#3@6	#3@6	#5@3	#3@6	#5@6
GT3 (H ≤6'-9")	#5@5 (T=8")	#3@6	#3@6	-	-	-
GT4	#5@5 (T=8")	#3@6	#3@6	#5@3	#3@6	#5@6
GO	#4@9	#3@8	#3@8	#4@5 (T=6")	#3@8	#3@8
GDO	#4@5	#3@8	#3@8	#5@5	#3@6	#3@6

* See Detail A on Revised Standard Plan RSP D73F for additional vertical bars at the base.
** a = Larger interior span

TABLE E

SOIL PRESSURE BELOW BASE SLAB (ksf)		
TYPE	H ≤8'-0"	8'-0"< H ≤20'-0"
OS	2.89	5.68
OL*	2.89	5.68
GOL*	2.36	4.93
G1 (H ≤6'-9")	3.51	-
G2 & G4 (a** ≤38")	2.96	5.79
G2 & G4 (38" < a** ≤50")	2.21	4.51
G2 & G4 (50" < a** ≤64")	3.19	4.89
G2 & G4 (64"< a** ≤76")	2.50	4.23
G2 & G4 (76" < a** ≤90")	2.04	3.56
G3 (H ≤6'-9")	3.51	-
G5 (H ≤6'-9")	3.51	-
G6 (H ≤6'-9")	3.51	-
GT1 (H ≤6'-9")	3.41	-
GT2	3.60	6.42
GT3 (H ≤6'-9")	3.41	-
GT4	3.60	6.42
GO	3.37	6.46
GDO	2.48	7.30

* Main Box
** a = Larger interior span

TABLE F

BASE SLAB REINFORCEMENT (T=8", UON)		
TYPE	H ≤8'-0"	8'-0"< H ≤20'-0"
OS	#4@8 (EW)	#4@5 (EW)
OL*	#4@8 (EW)	#4@5 (EW)
GOL*	#4@6 (EW)	#4@4 (EW)
G1 (H ≤6'-9")	#4@10 (EW)	-
G2 & G4 (a** ≤38")	#4@10 (EW)	#4@6 (EW)
G2 & G4 (38" < a** ≤50")	#4@8 (EW)	#4@5 (EW)
G2 & G4 (50" < a** ≤64")	#4@6 (EW)	#4@4 (EW)
G2 & G4 (64"< a** ≤76")	#4@5 (EW)	#4@3 (EW)
G2 & G4 (76" < a** ≤90")	#4@4 (EW)	#5@3 (EW)
G3 (H ≤6'-9")	#4@10 (EW)	-
G5 (H ≤6'-9")	#4@10 (EW)	-
G6 (H ≤6'-9")	#4@10 (EW)	-
GT1 (H ≤6'-9")	#4@4 (EW)	-
GT2	#4@4 (EW)	#5@3 (EW)
GT3 (H ≤6'-9")	#4@4 (EW)	-
GT4	#4@4 (EW)	#5@3 (EW)
GO	#4@10 (EW)	#4@6 (EW)
GDO	#4@6 (EW)	#4@4 (EW)

(EW) Each Way
* Main Box
** a = Larger interior span

NOTES:

1. No deduction or adjustment was made to the quantities of concrete and reinforcement for pipe openings, floor alternatives or curb type.
2. Maximum allowable height is 6'-9".
3. Quantities are approximate and for design purposes only.
4. Design is based on envelope of level and sloped ground.

STATE OF CALIFORNIA
DEPARTMENT OF TRANSPORTATION

PRECAST DRAINAGE INLET TABLES

NO SCALE

RSP D73G DATED JULY 15, 2016 SUPPLEMENTS THE STANDARD PLANS BOOK DATED 2015.

REVISED STANDARD PLAN RSP D73G

6-20-16

Dist	COUNTY	ROUTE	POST MILES TOTAL PROJECT	SHEET No.	TOTAL SHEETS
05	SLO	41	19.7/R42.2	37	37

REGISTERED CIVIL ENGINEER

July 15, 2016
PLANS APPROVAL DATE

REGISTERED PROFESSIONAL ENGINEER
Carl M. Duan
No. C59976
Exp. 6-30-18
CIVIL
STATE OF CALIFORNIA

THE STATE OF CALIFORNIA OR ITS OFFICERS OR AGENTS SHALL NOT BE RESPONSIBLE FOR THE ACCURACY OR COMPLETENESS OF SCANNED COPIES OF THIS PLAN SHEET.

TO ACCOMPANY PLANS DATED 6-13-16

FACE ANGLE DETAIL "A"	
LENGTH OF CURB OPENING	No. OF ANCHORS
3'-6" OR LESS	2
7'-0"	3
10'-0"	4
14'-0"	5
21'-0"	7

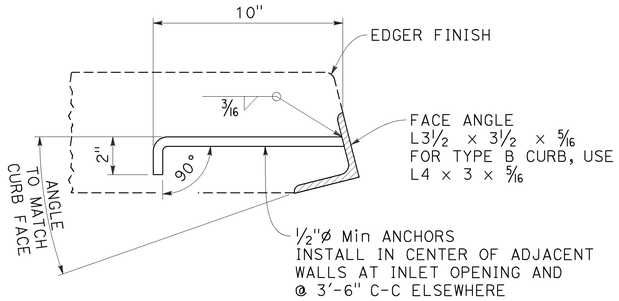

DETAIL "A"

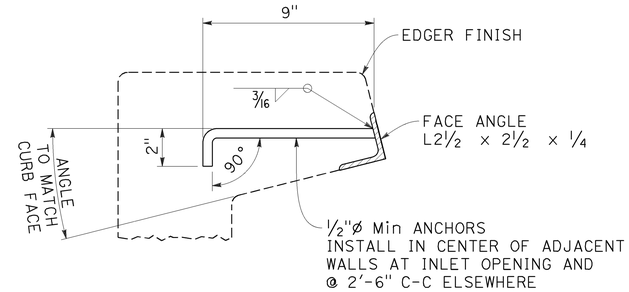

DETAIL "B"

FACE ANGLE AND ANCHOR

NOTE:

1. When shown on the project plans, place a ¾"ø plain round protection bar horizontally across the length of the opening and bend back 4" into the inlet wall on each side.

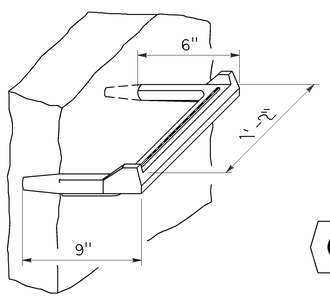

STEP INSERT

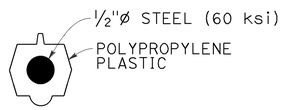

TYPICAL SECTION
(STEP INSERT)

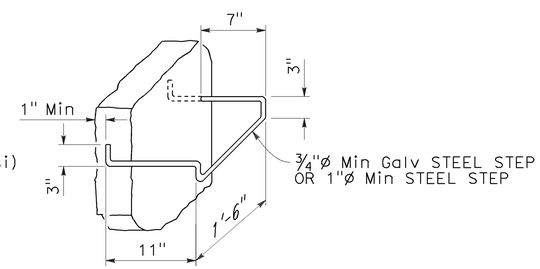

BAR STEP

STEP DETAILS

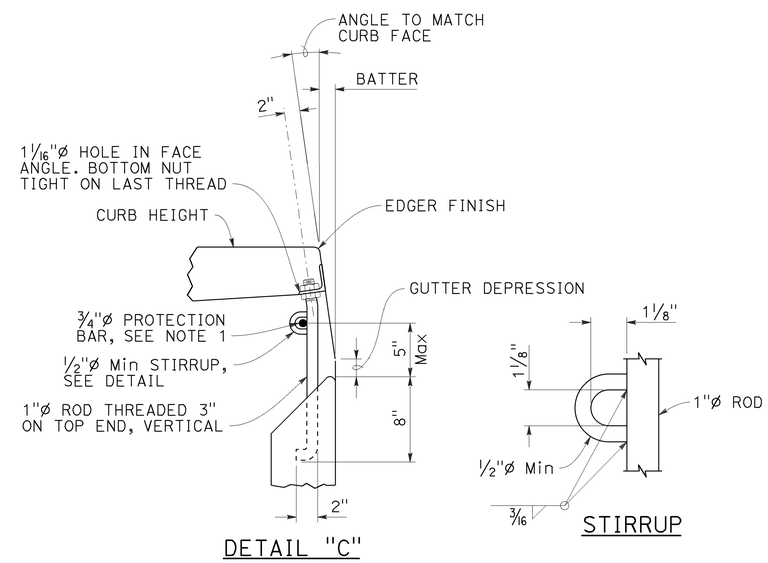

DETAIL "C"

STIRRUP

CURB SUPPORT

CURB SUPPORTS SHALL BE EVENLY SPACED AND MINIMAL IN NUMBER SUCH THAT MAXIMUM SPAN OF UNSUPPORTED CURB IS 7'-0".

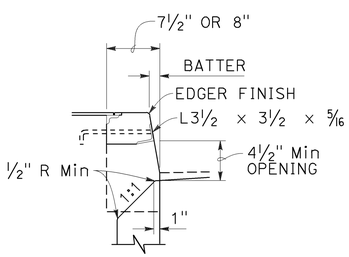

TYPE A CURBS

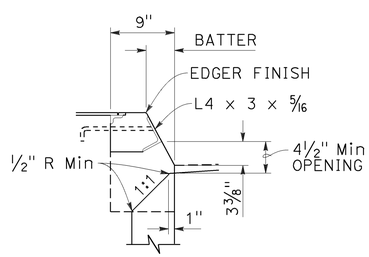

TYPE B CURBS

CURB OPENING DETAILS

STATE OF CALIFORNIA
DEPARTMENT OF TRANSPORTATION

DRAINAGE INLET DETAILS

NO SCALE

RSP D74 DATED JULY 15, 2016 SUPPLEMENTS THE STANDARD PLANS BOOK DATED 2015.

REVISED STANDARD PLAN RSP D74

2015 REVISED STANDARD PLAN RSP D74

6-20-16