Dist	COUNTY	ROUTE	POST MILES TOTAL PROJECT	SHEET No.	TOTAL SHEETS
05	SB	101	2.2/3.3	27	786

REGISTERED CIVIL ENGINEER DATE 12-4-15

12-7-15
PLANS APPROVAL DATE

REGISTERED PROFESSIONAL ENGINEER AMIR SAEDI No. 56083 Exp. 12-31-16 CIVIL STATE OF CALIFORNIA

THE STATE OF CALIFORNIA OR ITS OFFICERS OR AGENTS SHALL NOT BE RESPONSIBLE FOR THE ACCURACY OR COMPLETENESS OF SCANNED COPIES OF THIS PLAN SHEET.

NOTE:

FOR ACCURATE RIGHT OF WAY DATA, CONTACT RIGHT OF WAY ENGINEERING AT THE DISTRICT OFFICE.

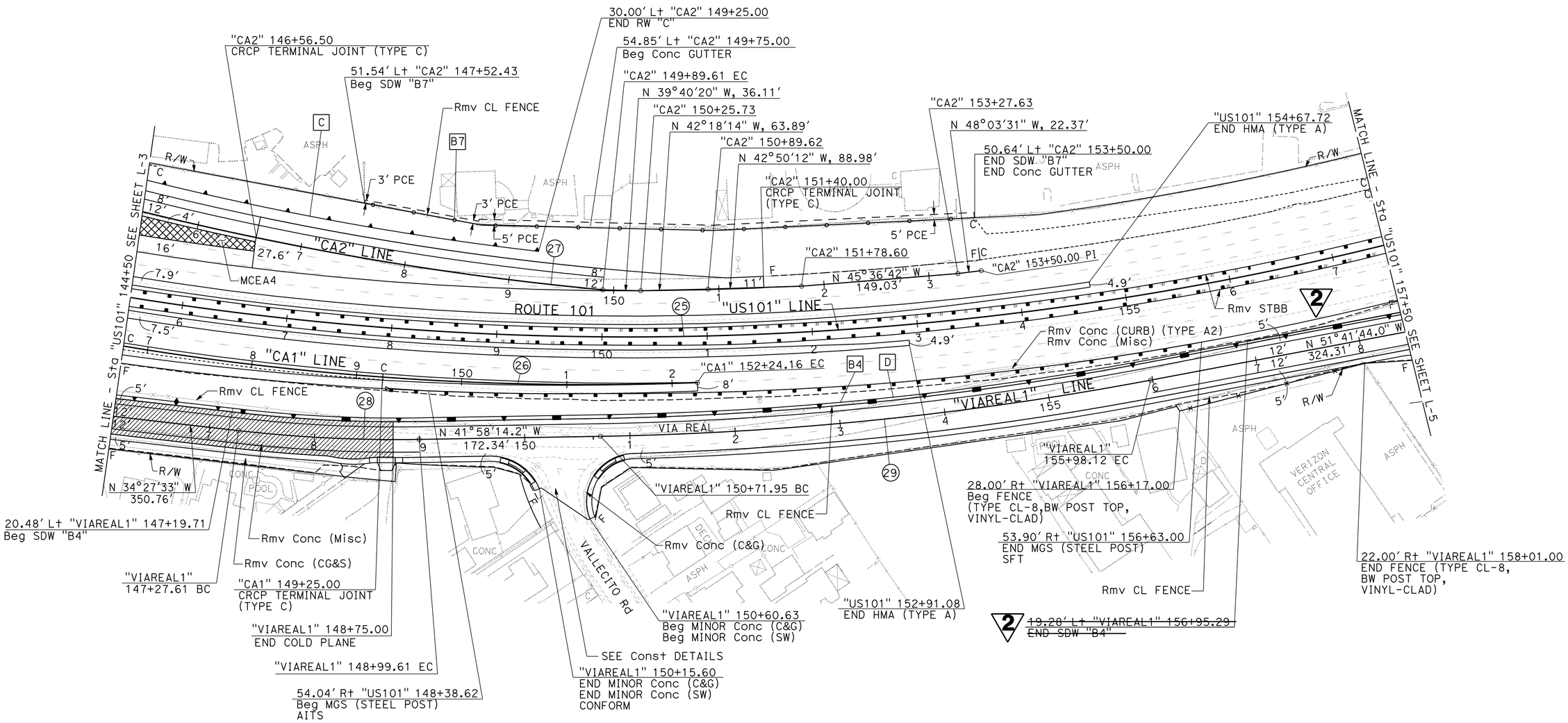

CURVE DATA

No. (X)	R	Δ	T	L
25	3,002'	47°30'53"	1,321.18'	2,489.15'
26	2,697'	13°15'22"	313.34'	623.88'
27	2,952'	08°58'33"	231.66'	462.38'
28	1,312'	07°30'41"	86.12'	172.00'
29	3,100'	09°43'30"	263.72'	526.17'

2 **REPLACED PER ADDENDUM No. 2 DATED APRIL 4, 2016**

LAYOUT

SCALE: 1" = 50' **L-4**

AS	09-17-14		
MT	10-01-14		
REVISED BY	DATE REVISED		
AMIR SAEDI	MILT TOWNE	CALCULATED-DESIGNED BY	CHECKED BY
FUNCTIONAL SUPERVISOR	JAMES R. PERANO		

STATE OF CALIFORNIA - DEPARTMENT OF TRANSPORTATION

Caltrans

DESIGN

LAST REVISION 12-04-15 | DATE PLOTTED => 30-MAR-2016 | TIME PLOTTED => 13:12

Dist	COUNTY	ROUTE	POST MILES TOTAL PROJECT	SHEET No.	TOTAL SHEETS
05	SB	101	2.2/3.3	28	786

REGISTERED CIVIL ENGINEER 12-4-15 DATE

12-7-15
PLANS APPROVAL DATE

REGISTERED PROFESSIONAL ENGINEER AMIR SAEDI No. 56083 Exp. 12-31-16 CIVIL STATE OF CALIFORNIA

THE STATE OF CALIFORNIA OR ITS OFFICERS OR AGENTS SHALL NOT BE RESPONSIBLE FOR THE ACCURACY OR COMPLETENESS OF SCANNED COPIES OF THIS PLAN SHEET.

NOTE:
FOR ACCURATE RIGHT OF WAY DATA, CONTACT RIGHT OF WAY ENGINEERING AT THE DISTRICT OFFICE.

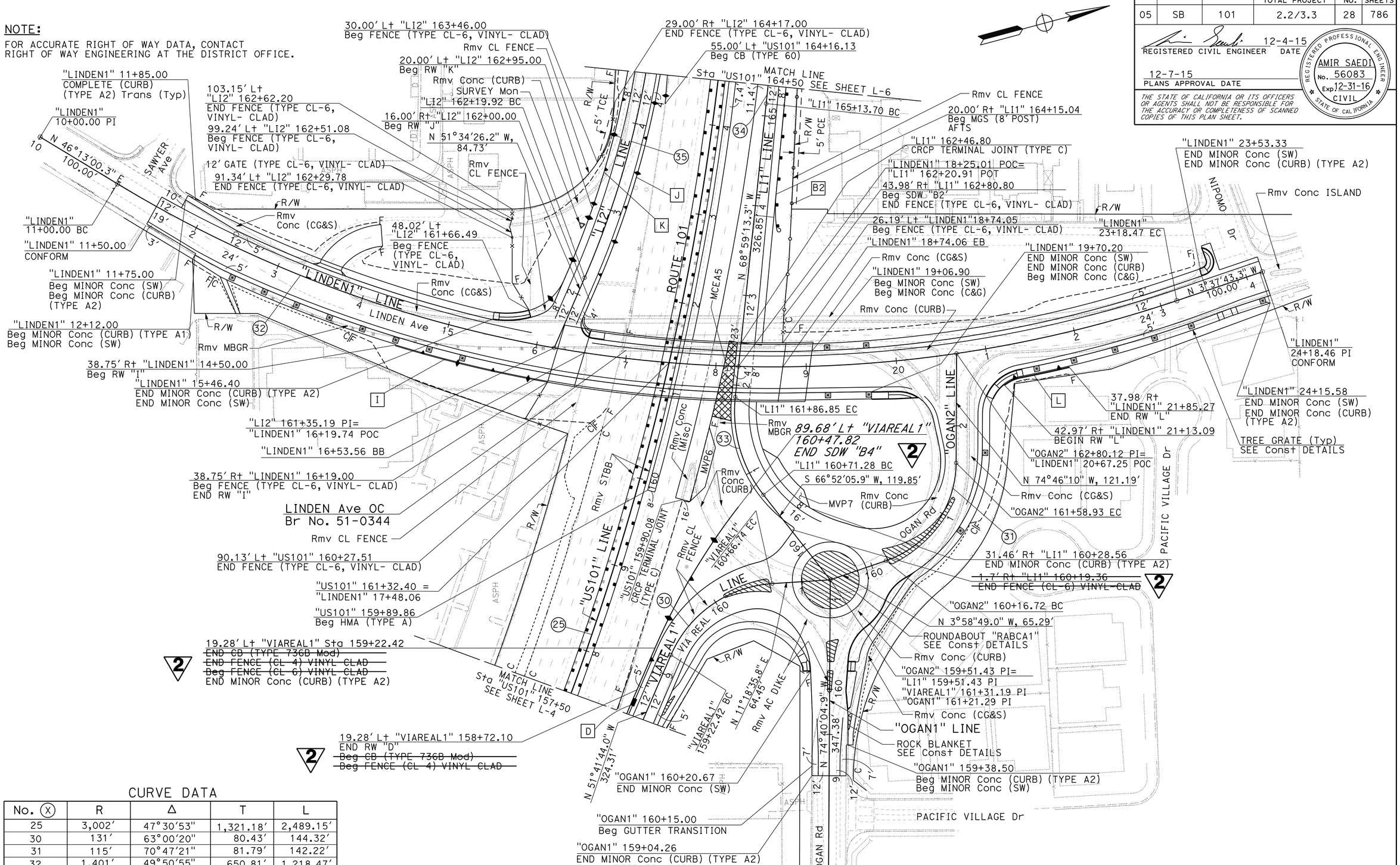

CURVE DATA

No. (X)	R	Δ	T	L
25	3,002′	47°30′53"	1,321.18′	2,489.15′
30	131′	63°00′20"	80.43′	144.32′
31	115′	70°47′21"	81.79′	142.22′
32	1,401′	49°50′55"	650.81′	1,218.47′
33	150′	44°08′40.9"	60.82′	115.57′
34	3,052′	07°45′18.6"	206.84′	413.04′
35	1,000′	16°53′47"	148.53′	294.90′

2 REPLACED PER ADDENDUM No. 2 DATED APRIL 4, 2016

LAYOUT

SCALE: 1" = 50′ **L-5**

REVISED BY	DATE REVISED	CALCULATED-DESIGNED BY	CHECKED BY	FUNCTIONAL SUPERVISOR
AW	11-10-15	AS	CG	AMIR SAEDI	MILT TOWNE	JAMES R. PERANO

STATE OF CALIFORNIA - DEPARTMENT OF TRANSPORTATION
Caltrans DESIGN

LAST REVISION 12-04-15 | DATE PLOTTED => 30-MAR-2016 | TIME PLOTTED => 13:12

Dist	COUNTY	ROUTE	POST MILES TOTAL PROJECT	SHEET No.	TOTAL SHEETS
05	SB	101	2.2/3.3	104	786

REGISTERED CIVIL ENGINEER 12-4-15 DATE

12-7-15
PLANS APPROVAL DATE

REGISTERED PROFESSIONAL ENGINEER AMIR SAEDI No. 56083 Exp. 12-31-16 CIVIL STATE OF CALIFORNIA

THE STATE OF CALIFORNIA OR ITS OFFICERS OR AGENTS SHALL NOT BE RESPONSIBLE FOR THE ACCURACY OR COMPLETENESS OF SCANNED COPIES OF THIS PLAN SHEET.

NOTE:

FOR ACCURATE RIGHT OF WAY DATA, CONTACT RIGHT OF WAY ENGINEERING AT THE DISTRICT OFFICE.

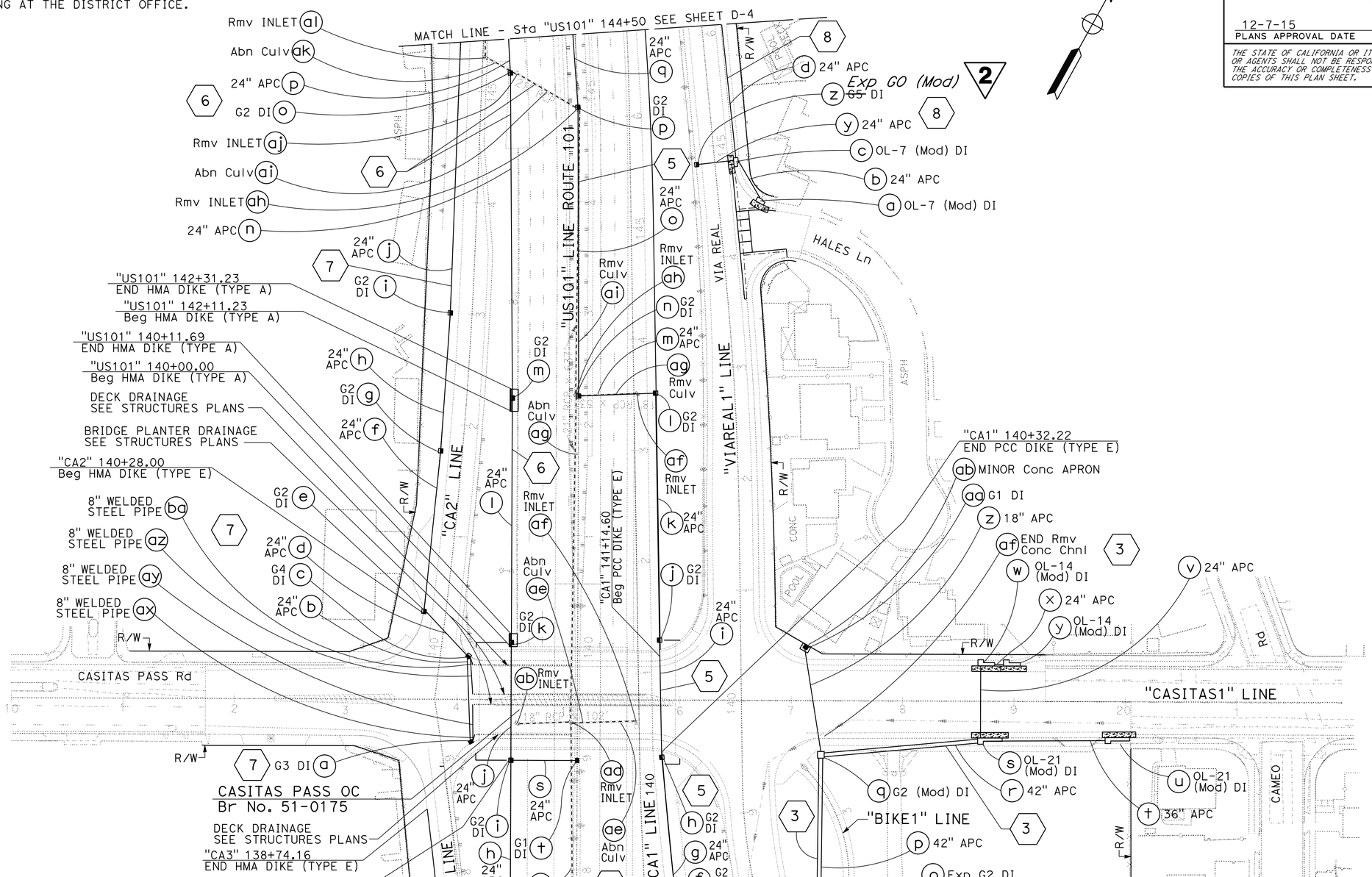

2 REPLACED PER ADDENDUM No. 2 DATED APRIL 4, 2016

APPROVED FOR DRAINAGE WORK ONLY

DRAINAGE PLAN

SCALE: 1" = 50' **D-3**

CALCULATED-DESIGNED BY	JH	10-22-15
CHECKED BY	JH	10-20-15
REVISED BY	MT	10-16-15
DATE REVISED		

FUNCTIONAL SUPERVISOR: JAMES R. PERANO

JACKSON HO — AARON WOLFRAM

STATE OF CALIFORNIA - DEPARTMENT OF TRANSPORTATION — Caltrans — DESIGN

LAST REVISION 12-04-15 | DATE PLOTTED => 30-MAR-2016 | TIME PLOTTED => 13:12

Dist	COUNTY	ROUTE	POST MILES TOTAL PROJECT	SHEET No.	TOTAL SHEETS
05	SB	101	2.2/3.3	105	786

REGISTERED CIVIL ENGINEER 12-4-15 DATE

12-7-15
PLANS APPROVAL DATE

REGISTERED PROFESSIONAL ENGINEER AMIR SAEDI No. 56083 Exp 12-31-16 CIVIL STATE OF CALIFORNIA

THE STATE OF CALIFORNIA OR ITS OFFICERS OR AGENTS SHALL NOT BE RESPONSIBLE FOR THE ACCURACY OR COMPLETENESS OF SCANNED COPIES OF THIS PLAN SHEET.

NOTE:

FOR ACCURATE RIGHT OF WAY DATA, CONTACT RIGHT OF WAY ENGINEERING AT THE DISTRICT OFFICE.

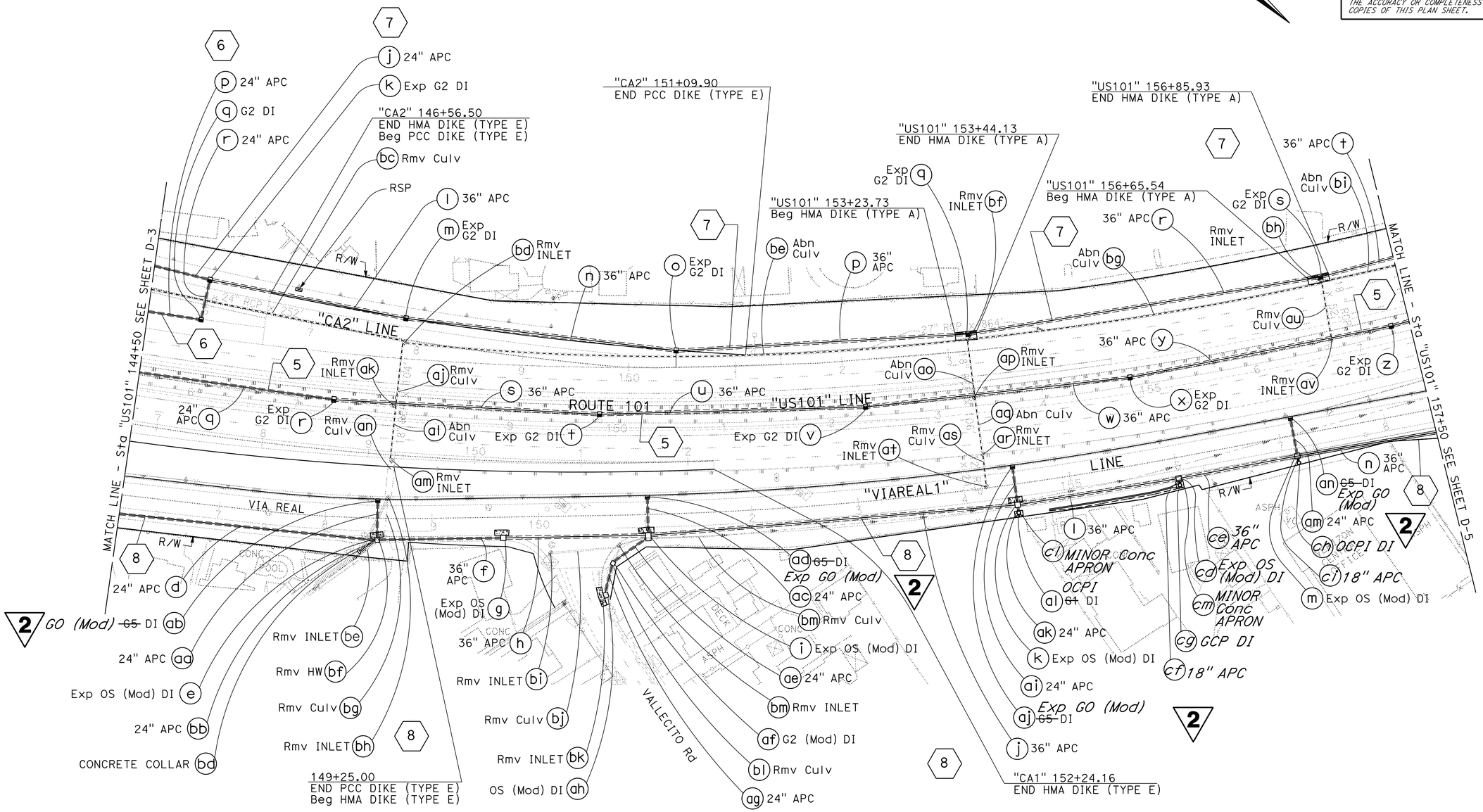

2 REPLACED PER ADDENDUM No. 2 DATED APRIL 4, 2016

APPROVED FOR DRAINAGE WORK ONLY

DRAINAGE PLAN

SCALE: 1" = 50'

D-4

JH	10-20-15		
AW	10-08-15		
JH	09-17-15		
REVISED BY	DATE REVISED		
JACKSON HO	AARON WOLFRAM		
CALCULATED-DESIGNED BY	CHECKED BY		
FUNCTIONAL SUPERVISOR	JAMES R. PERANO		

STATE OF CALIFORNIA - DEPARTMENT OF TRANSPORTATION

Caltrans

DESIGN

LAST REVISION 12-04-15 | DATE PLOTTED => 30-MAR-2016 | TIME PLOTTED => 13:12

Dist	COUNTY	ROUTE	POST MILES TOTAL PROJECT	SHEET No.	TOTAL SHEETS
05	SB	101	2.2/3.3	106	786

REGISTERED CIVIL ENGINEER 12-4-15 DATE

12-7-15
PLANS APPROVAL DATE

REGISTERED PROFESSIONAL ENGINEER AMIR SAEDI No. 56083 Exp. 12-31-16 CIVIL STATE OF CALIFORNIA

THE STATE OF CALIFORNIA OR ITS OFFICERS OR AGENTS SHALL NOT BE RESPONSIBLE FOR THE ACCURACY OR COMPLETENESS OF SCANNED COPIES OF THIS PLAN SHEET.

NOTE:

FOR ACCURATE RIGHT OF WAY DATA, CONTACT RIGHT OF WAY ENGINEERING AT THE DISTRICT OFFICE.

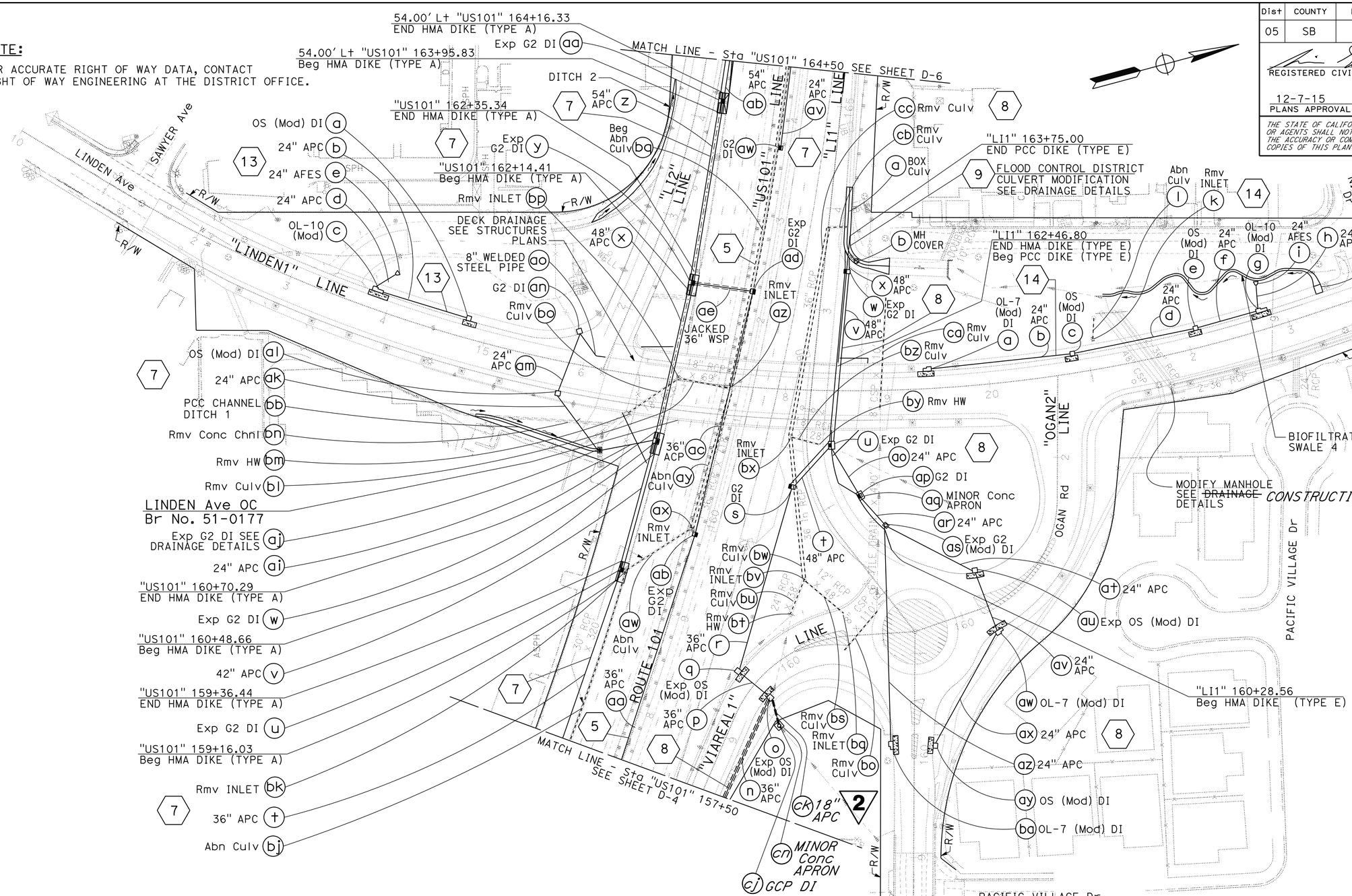

2 **REPLACED PER ADDENDUM No. 2 DATED APRIL 4, 2016**

APPROVED FOR DRAINAGE WORK ONLY

DRAINAGE PLAN

SCALE: 1" = 50'

D-5

CALCULATED-DESIGNED BY	CHECKED BY	REVISED BY	DATE REVISED
JH		JH	02-27-15
JH		JH	09-14-15
JH		JH	10-22-15

FUNCTIONAL SUPERVISOR: JAMES R. PERANO

JACKSON HO — AARON WOLFRAM

STATE OF CALIFORNIA - DEPARTMENT OF TRANSPORTATION — DESIGN

LAST REVISION 12-04-15 | DATE PLOTTED => 30-MAR-2016 | TIME PLOTTED => 13:12

Dist	COUNTY	ROUTE	POST MILES TOTAL PROJECT	SHEET No.	TOTAL SHEETS
05	SB	101	2.2/3.3	111	786

REGISTERED CIVIL ENGINEER DATE 12-4-15

12-7-15
PLANS APPROVAL DATE

REGISTERED PROFESSIONAL ENGINEER AMIR SAEDI No. 56083 Exp. 12-31-16 CIVIL STATE OF CALIFORNIA

THE STATE OF CALIFORNIA OR ITS OFFICERS OR AGENTS SHALL NOT BE RESPONSIBLE FOR THE ACCURACY OR COMPLETENESS OF SCANNED COPIES OF THIS PLAN SHEET.

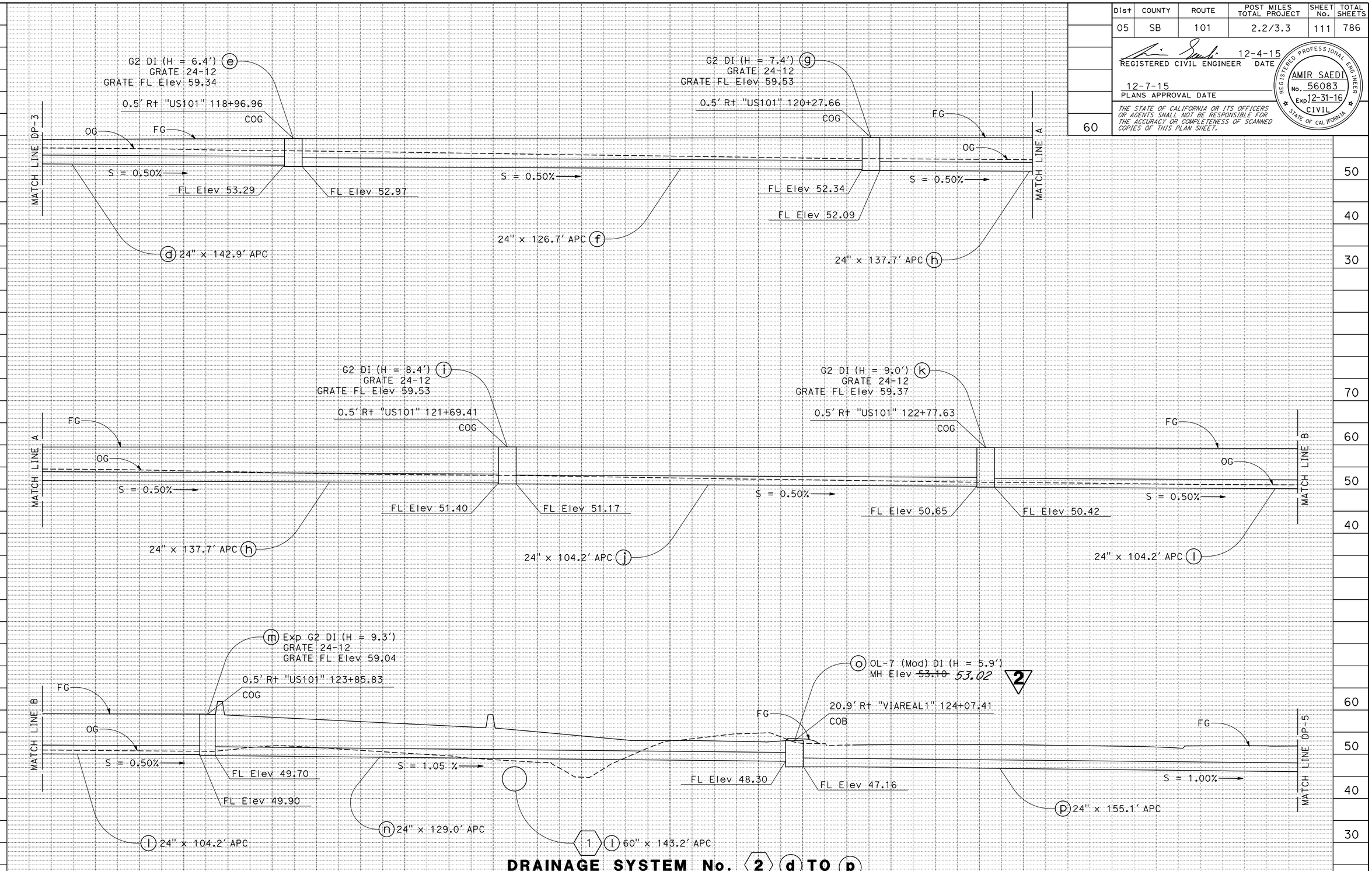

DRAINAGE SYSTEM No. (2) (d) TO (p)

Sta "US101" 118+40.13 TO Sta "VIAREAL1" 124+72.71

2 REPLACED PER ADDENDUM No. 2 DATED APRIL 4, 2016

DRAINAGE PROFILES

SCALE: Horiz 1" = 10'
Vert 1" = 10'

DP-4

REVISED BY	DATE REVISED
JH	10-21-15
JH	07-02-14

CALCULATED-DESIGNED BY: JACKSON HO
CHECKED BY: AARON WOLFRAM
FUNCTIONAL SUPERVISOR: JAMES R. PERANO

STATE OF CALIFORNIA - DEPARTMENT OF TRANSPORTATION
Caltrans DESIGN

LAST REVISION 12-04-15 | DATE PLOTTED => 30-MAR-2016 | TIME PLOTTED => 13:12

Dist	COUNTY	ROUTE	POST MILES TOTAL PROJECT	SHEET No.	TOTAL SHEETS
05	SB	101	2.2/3.3	115	786

REGISTERED CIVIL ENGINEER 12-4-15 DATE

12-7-15
PLANS APPROVAL DATE

REGISTERED PROFESSIONAL ENGINEER AMIR SAEDI No. 56083 Exp. 12-31-16 CIVIL STATE OF CALIFORNIA

THE STATE OF CALIFORNIA OR ITS OFFICERS OR AGENTS SHALL NOT BE RESPONSIBLE FOR THE ACCURACY OR COMPLETENESS OF SCANNED COPIES OF THIS PLAN SHEET.

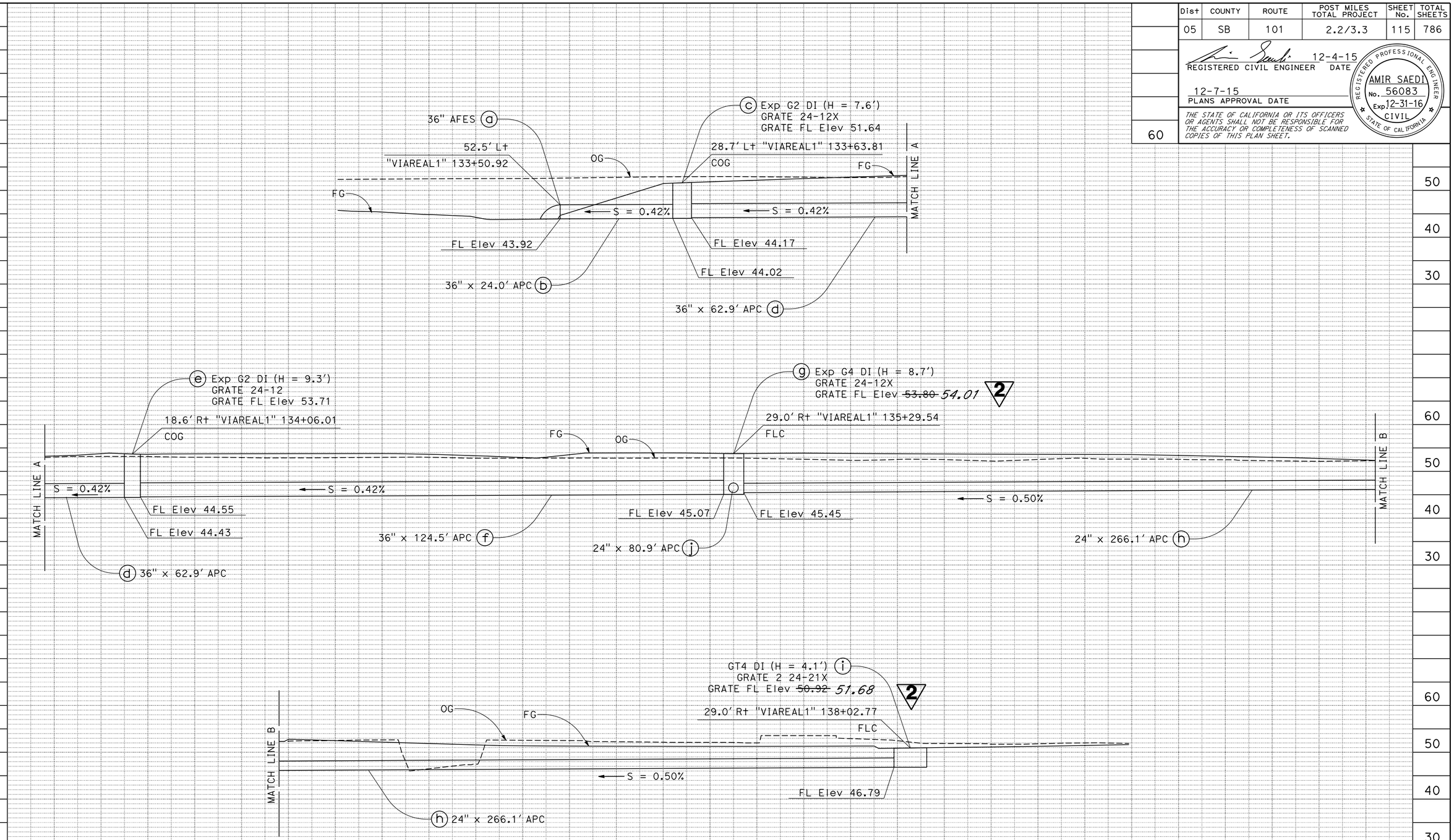

DRAINAGE SYSTEM No. 4 (a) TO (i)

Sta "VIAREAL1" 133+50.92 TO 138+02.77

2 REPLACED PER ADDENDUM No. 2 DATED APRIL 4, 2016

DRAINAGE PROFILES

SCALE: Horiz 1" = 10'
Vert 1" = 10'

DP-8

REVISED BY	DATE REVISED
JH	10-23-15

CALCULATED-DESIGNED BY	CHECKED BY
JACKSON HO	AARON WOLFRAM

FUNCTIONAL SUPERVISOR: JAMES R. PERANO

STATE OF CALIFORNIA - DEPARTMENT OF TRANSPORTATION

Caltrans® DESIGN

LAST REVISION 12-04-15 | DATE PLOTTED => 30-MAR-2016 | TIME PLOTTED => 13:12

Dist	COUNTY	ROUTE	POST MILES TOTAL PROJECT	SHEET No.	TOTAL SHEETS
05	SB	101	2.2/3.3	128	786

REGISTERED CIVIL ENGINEER 12-4-15 DATE

12-7-15
PLANS APPROVAL DATE

REGISTERED PROFESSIONAL ENGINEER AMIR SAEDI No. 56083 Exp. 12-31-16 CIVIL STATE OF CALIFORNIA

THE STATE OF CALIFORNIA OR ITS OFFICERS OR AGENTS SHALL NOT BE RESPONSIBLE FOR THE ACCURACY OR COMPLETENESS OF SCANNED COPIES OF THIS PLAN SHEET.

REVISED BY	DATE REVISED
JH	10-21-15
JH	10-12-15
JH	09-17-15

CALCULATED-DESIGNED BY: JACKSON HO
CHECKED BY: AARON WOLFRAM
FUNCTIONAL SUPERVISOR: JAMES R. PERANO

STATE OF CALIFORNIA - DEPARTMENT OF TRANSPORTATION
Caltrans® DESIGN

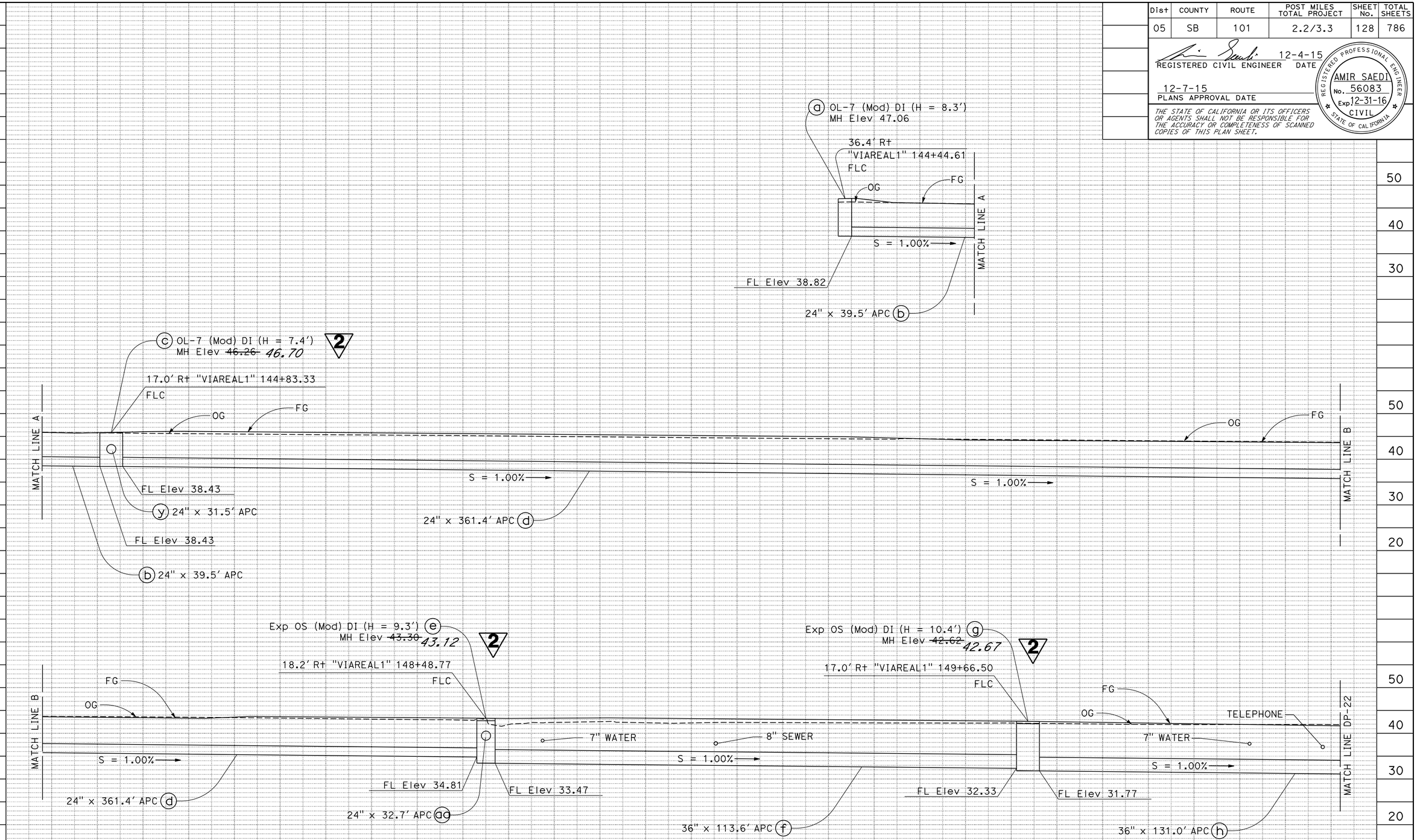

DRAINAGE SYSTEM No. (8) (a) TO (h)

Sta "VIAREAL1" 143+97.67 TO 150+34.83

2 REPLACED PER ADDENDUM No. 2 DATED APRIL 4, 2016

DRAINAGE PROFILES

SCALE: Horiz 1" = 10'
Vert 1" = 10'

DP-21

LAST REVISION 12-04-15 | DATE PLOTTED => 30-MAR-2016 | TIME PLOTTED => 13:12

Dist	COUNTY	ROUTE	POST MILES TOTAL PROJECT	SHEET No.	TOTAL SHEETS
05	SB	101	2.2/3.3	129	786

REGISTERED CIVIL ENGINEER 12-4-15 DATE

12-7-15
PLANS APPROVAL DATE

REGISTERED PROFESSIONAL ENGINEER AMIR SAEDI No. 56083 Exp. 12-31-16 CIVIL STATE OF CALIFORNIA

THE STATE OF CALIFORNIA OR ITS OFFICERS OR AGENTS SHALL NOT BE RESPONSIBLE FOR THE ACCURACY OR COMPLETENESS OF SCANNED COPIES OF THIS PLAN SHEET.

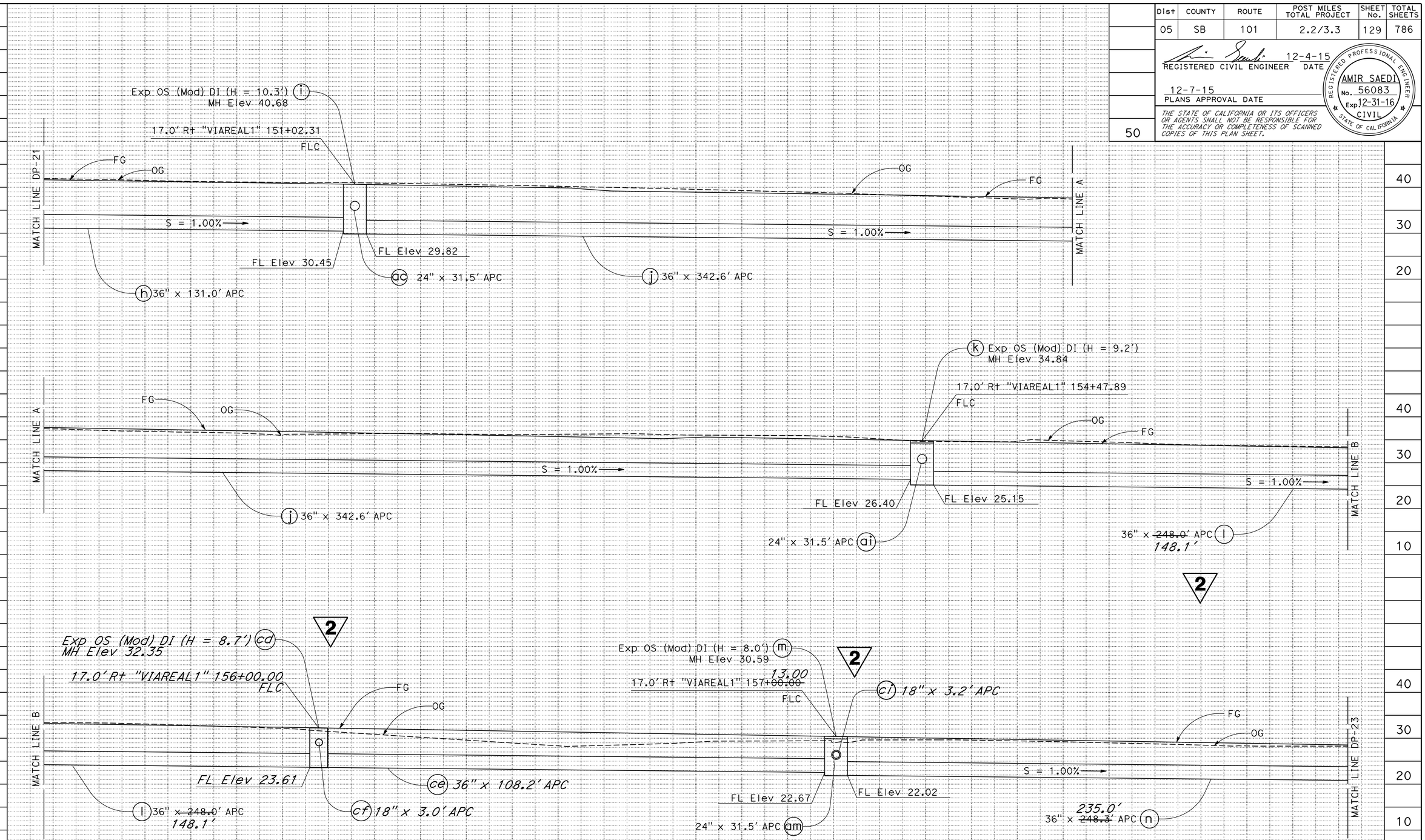

DRAINAGE SYSTEM No. 8 h TO n

Sta "VIAREAL1" 150+34.83 TO 158+23.68

2 REPLACED PER ADDENDUM No. 2 DATED APRIL 4, 2016

DRAINAGE PROFILES

SCALE: Horiz 1" = 10'
Vert 1" = 10'

DP-22

STATE OF CALIFORNIA - DEPARTMENT OF TRANSPORTATION
DESIGN
FUNCTIONAL SUPERVISOR: JAMES R. PERANO
CALCULATED-DESIGNED BY: JACKSON HO
CHECKED BY: AARON WOLFRAM
REVISED BY: JH
DATE REVISED: 06-12-14

LAST REVISION 12-04-15
DATE PLOTTED => 30-MAR-2016
TIME PLOTTED => 13:12

Dist	COUNTY	ROUTE	POST MILES TOTAL PROJECT	SHEET No.	TOTAL SHEETS
05	SB	101	2.2/3.3	130	786

REGISTERED CIVIL ENGINEER 12-4-15 DATE

12-7-15
PLANS APPROVAL DATE

REGISTERED PROFESSIONAL ENGINEER AMIR SAEDI No. 56083 Exp. 12-31-16 CIVIL STATE OF CALIFORNIA

THE STATE OF CALIFORNIA OR ITS OFFICERS OR AGENTS SHALL NOT BE RESPONSIBLE FOR THE ACCURACY OR COMPLETENESS OF SCANNED COPIES OF THIS PLAN SHEET.

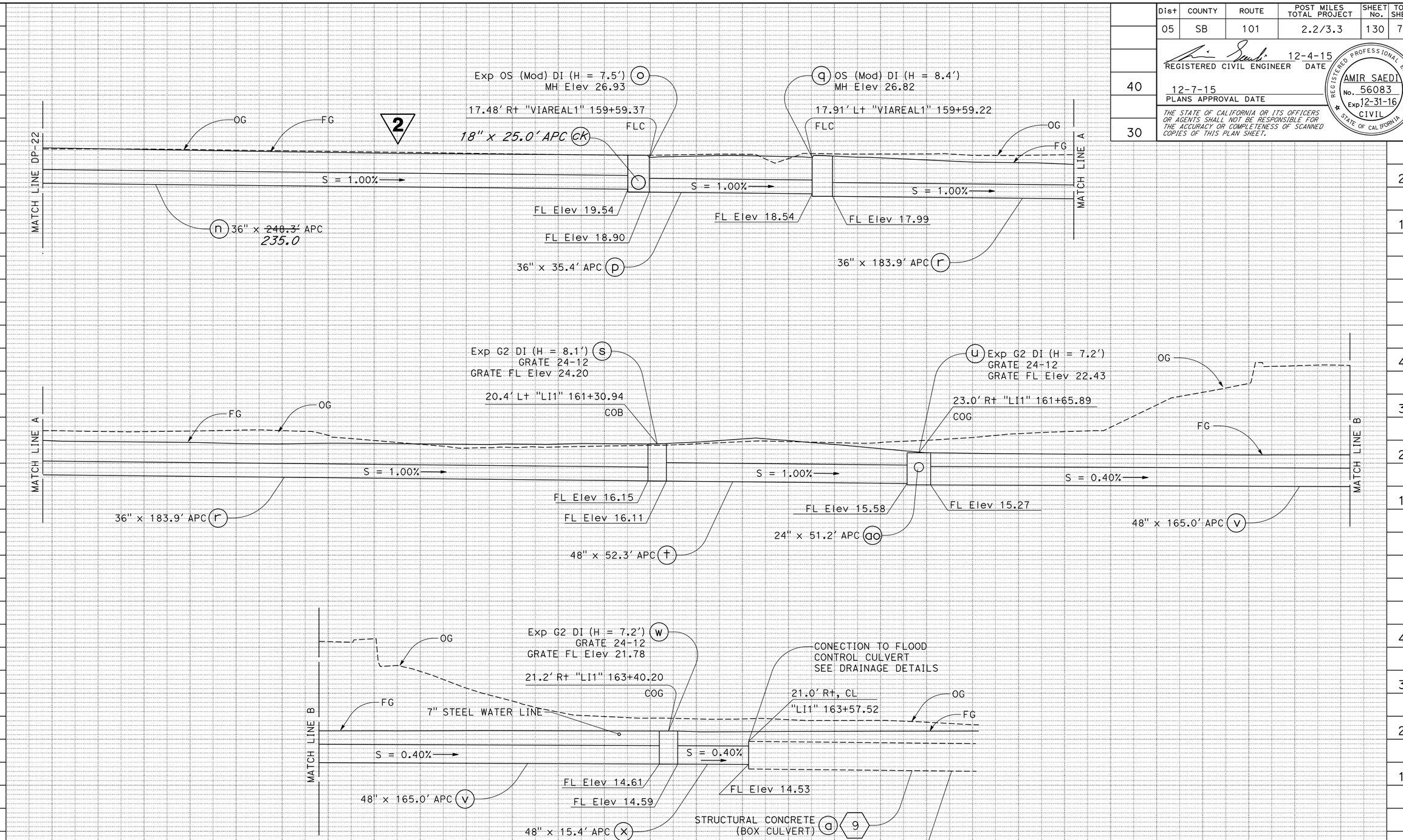

DRAINAGE SYSTEM No. 8 n TO x

Sta "VIAREAL1" 158+23.68 TO Sta "LI1" 163+57.52

2 **REPLACED PER ADDENDUM No. 2 DATED APRIL 4, 2016**

DRAINAGE PROFILES

SCALE: Horiz 1" = 10′
Vert 1" = 10′

DP-23

REVISED BY	DATE REVISED
JH	06-12-14

CALCULATED-DESIGNED BY: JACKSON HO
CHECKED BY: AARON WOLFRAM

FUNCTIONAL SUPERVISOR: JAMES R. PERANO

STATE OF CALIFORNIA - DEPARTMENT OF TRANSPORTATION
Caltrans
DESIGN

LAST REVISION 12-04-15
DATE PLOTTED => 30-MAR-2016
TIME PLOTTED => 13:12

Dist	COUNTY	ROUTE	POST MILES TOTAL PROJECT	SHEET No.	TOTAL SHEETS
05	SB	101	2.2/3.3	131	786

REGISTERED CIVIL ENGINEER 12-4-15 DATE

12-7-15
PLANS APPROVAL DATE

REGISTERED PROFESSIONAL ENGINEER AMIR SAEDI No. 56083 Exp. 12-31-16 CIVIL STATE OF CALIFORNIA

THE STATE OF CALIFORNIA OR ITS OFFICERS OR AGENTS SHALL NOT BE RESPONSIBLE FOR THE ACCURACY OR COMPLETENESS OF SCANNED COPIES OF THIS PLAN SHEET.

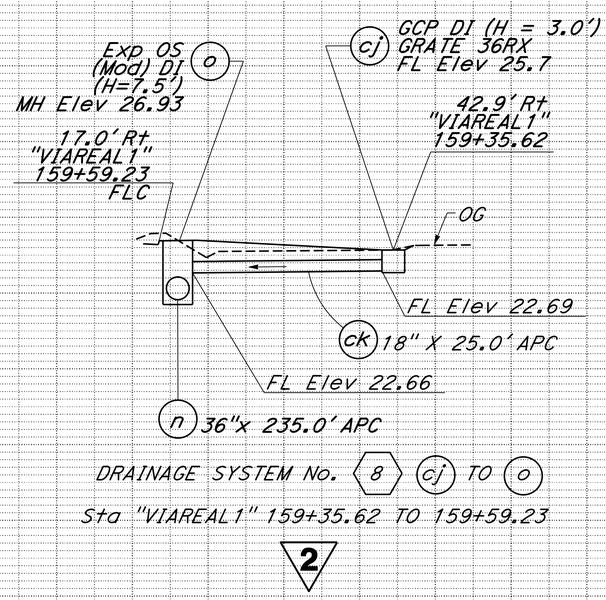

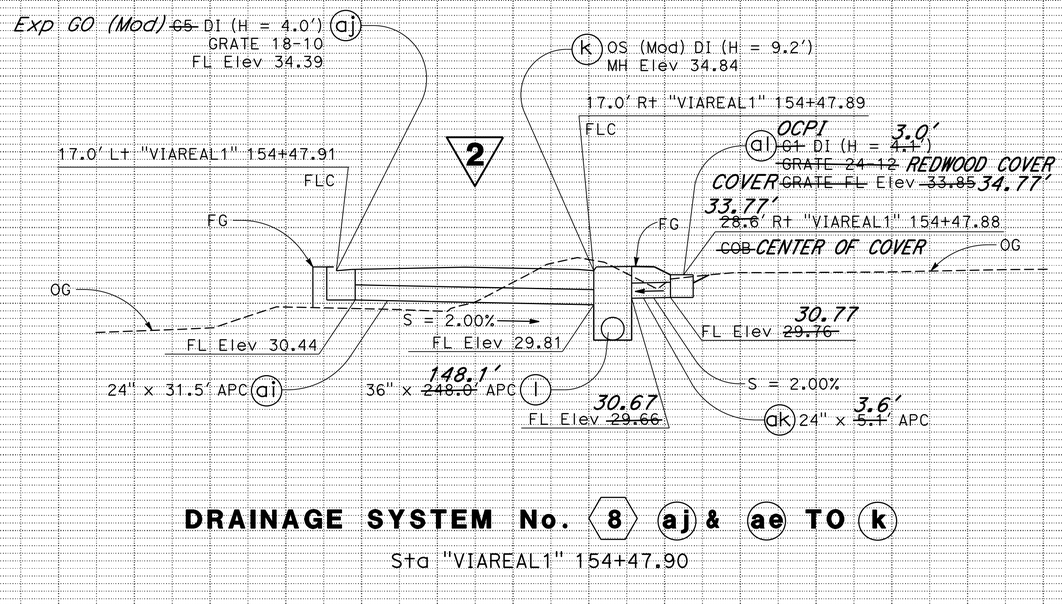

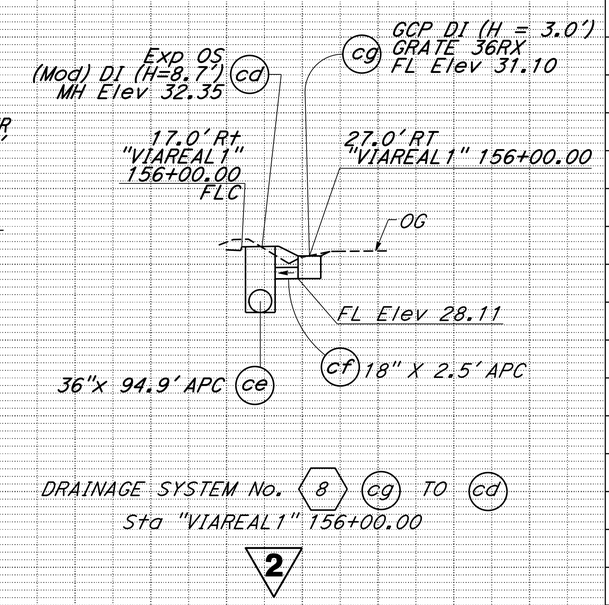

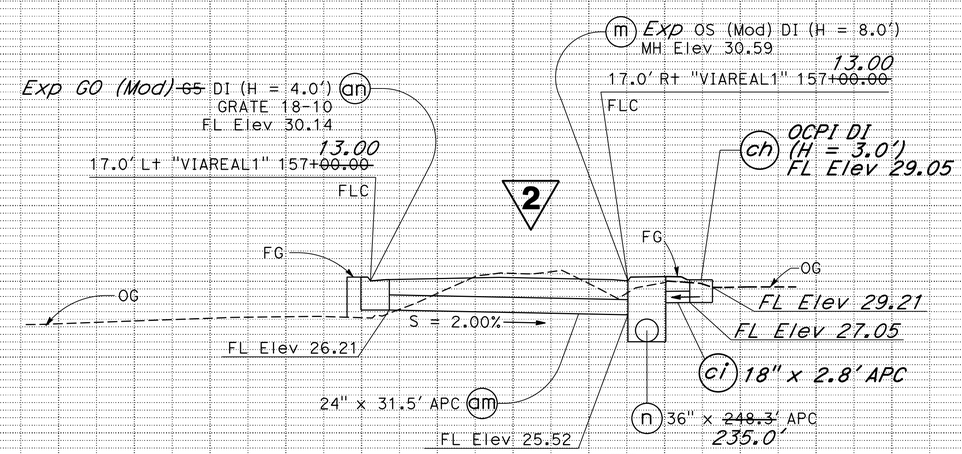

2 REPLACED PER ADDENDUM No. 2 DATED APRIL 4, 2016

DRAINAGE PROFILES

SCALE: Horiz 1" = 10'
Vert 1" = 10'

DP-24

REVISED BY	DATE REVISED
JH	10-09-14

CALCULATED-DESIGNED BY: JACKSON HO
CHECKED BY: AARON WOLFRAM
FUNCTIONAL SUPERVISOR: JAMES R. PERANO

STATE OF CALIFORNIA - DEPARTMENT OF TRANSPORTATION
Caltrans
DESIGN

LAST REVISION 12-04-15
DATE PLOTTED => 30-MAR-2016
TIME PLOTTED => 13:12

Dist	COUNTY	ROUTE	POST MILES TOTAL PROJECT	SHEET No.	TOTAL SHEETS
05	SB	101	2.2/3.3	132	786

REGISTERED CIVIL ENGINEER 12-4-15 DATE

12-7-15
PLANS APPROVAL DATE

REGISTERED PROFESSIONAL ENGINEER AMIR SAEDI No. 56083 Exp. 12-31-16 CIVIL STATE OF CALIFORNIA

THE STATE OF CALIFORNIA OR ITS OFFICERS OR AGENTS SHALL NOT BE RESPONSIBLE FOR THE ACCURACY OR COMPLETENESS OF SCANNED COPIES OF THIS PLAN SHEET.

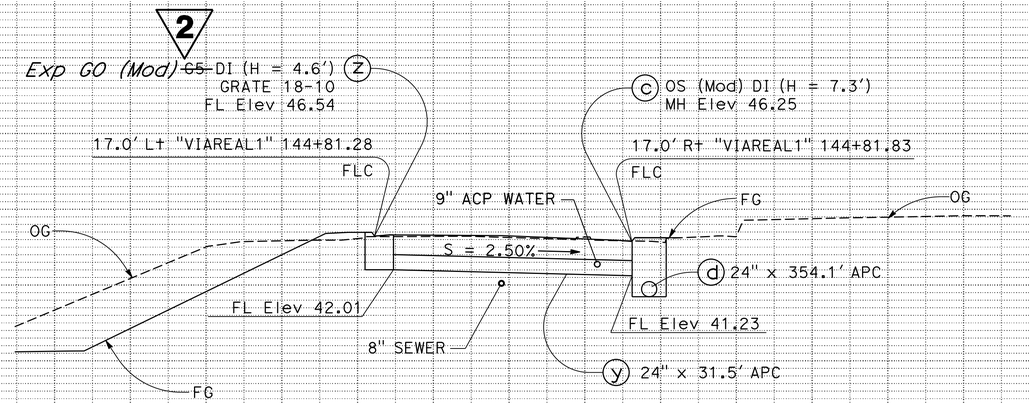

DRAINAGE SYSTEM No. 8 z TO c

Sta "VIAREAL1" 144+81.51

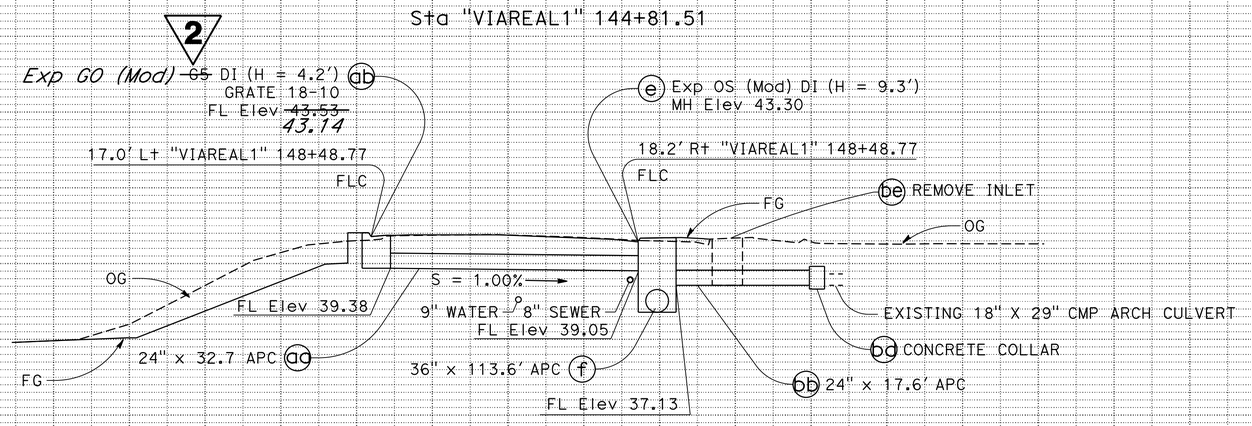

DRAINAGE SYSTEM No. 8 ab TO aa & 8 bd

Sta "VIAREAL1" 148+38.60

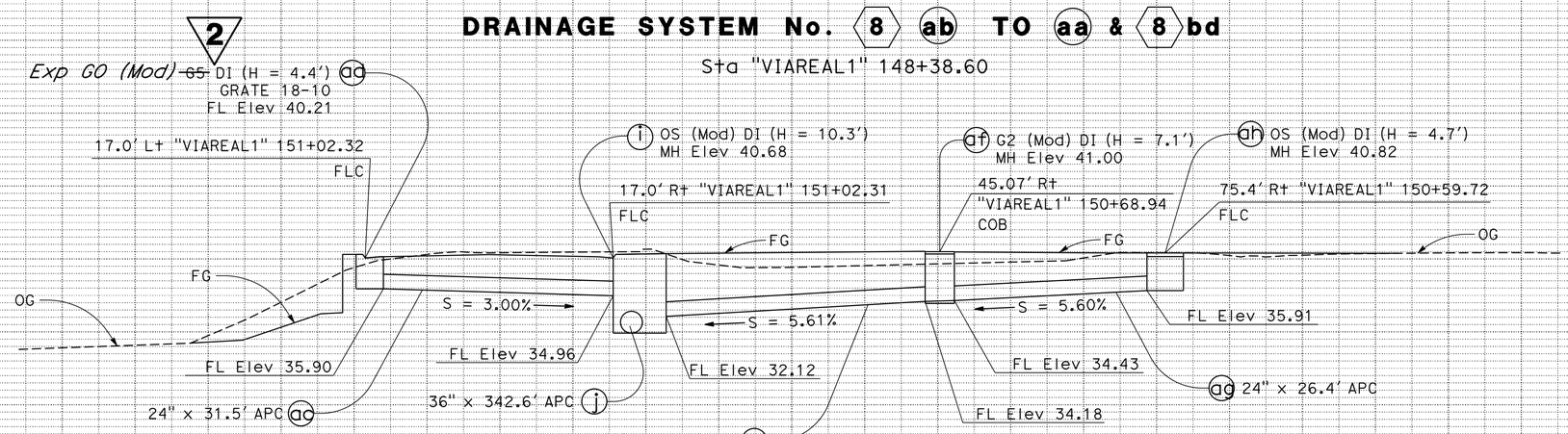

DRAINAGE SYSTEM No. 8 ad & ah TO i

Sta "VIAREAL1" 151+02.34

2 **REPLACED PER ADDENDUM No. 2 DATED APRIL 4, 2016**

DRAINAGE PROFILES

SCALE: Horiz 1" = 10'
Vert 1" = 10'

DP-25

AW	10-08-15	
JH	09-17-15	
JH	10-09-14	
REVISED BY	DATE REVISED	
JACKSON HO	AARON WOLFRAM	
CALCULATED-DESIGNED BY	CHECKED BY	
FUNCTIONAL SUPERVISOR	JAMES R. PERANO	

STATE OF CALIFORNIA - DEPARTMENT OF TRANSPORTATION
Caltrans
DESIGN

LAST REVISION 12-04-15
DATE PLOTTED => 30-MAR-2016
TIME PLOTTED => 13:12

Dist	COUNTY	ROUTE	POST MILES TOTAL PROJECT	SHEET No.	TOTAL SHEETS
05	SB	101	2.2/3.3	134	786

REGISTERED CIVIL ENGINEER 12-4-15 DATE

12-7-15
PLANS APPROVAL DATE

REGISTERED PROFESSIONAL ENGINEER AMIR SAEDI No. 56083 Exp. 12-31-16 CIVIL STATE OF CALIFORNIA

THE STATE OF CALIFORNIA OR ITS OFFICERS OR AGENTS SHALL NOT BE RESPONSIBLE FOR THE ACCURACY OR COMPLETENESS OF SCANNED COPIES OF THIS PLAN SHEET.

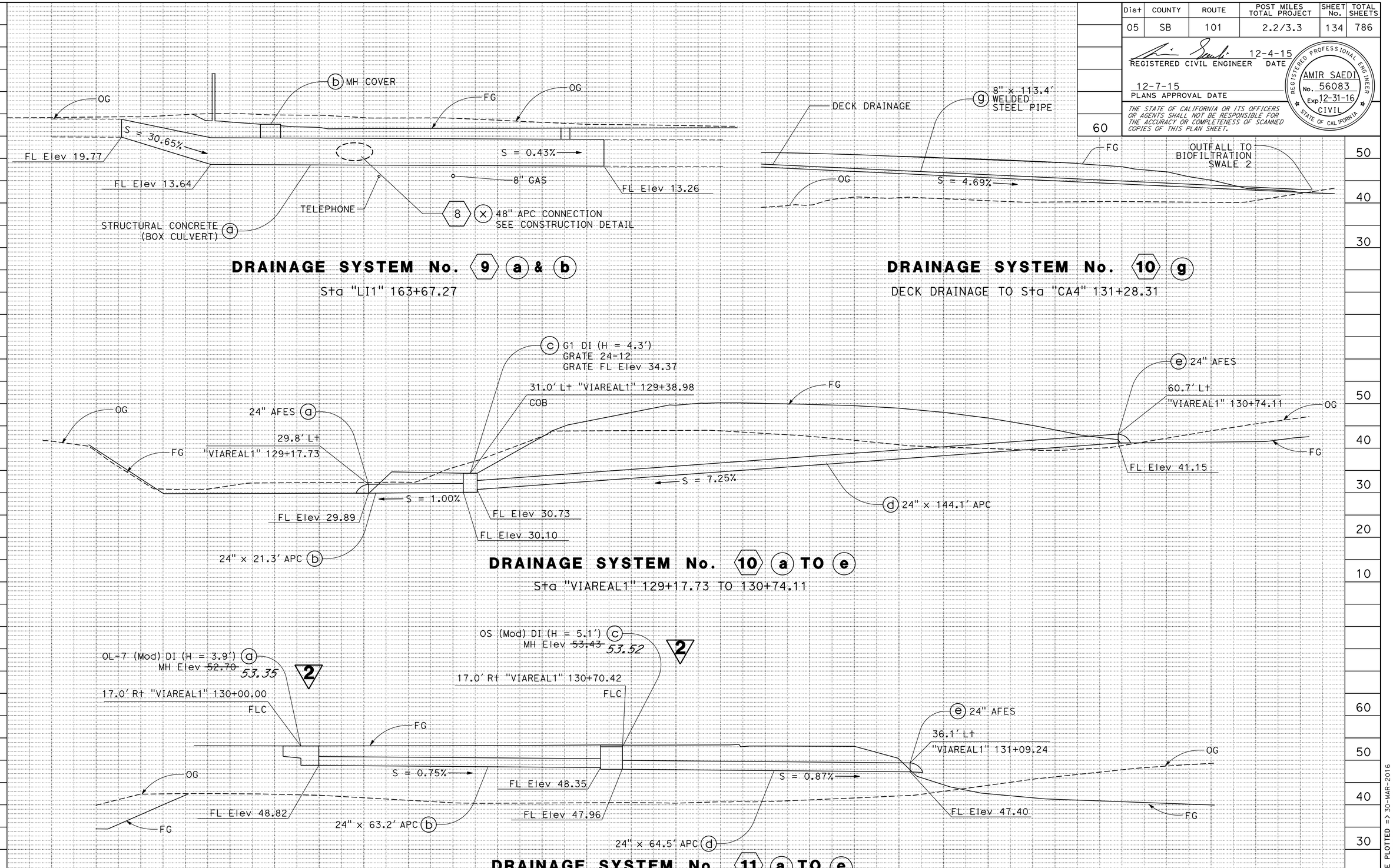

(2) **REPLACED PER ADDENDUM No. 2 DATED APRIL 4, 2016**

DRAINAGE PROFILES

SCALE: Horiz 1" = 10'
Vert 1" = 10'

DP-27

JH	10-23-15	
JH	09-22-15	
JH	07-02-14	
REVISED BY	DATE REVISED	
JACKSON HO	AARON WOLFRAM	
CALCULATED-DESIGNED BY	CHECKED BY	
FUNCTIONAL SUPERVISOR	JAMES R. PERANO	

STATE OF CALIFORNIA - DEPARTMENT OF TRANSPORTATION
Caltrans
DESIGN

LAST REVISION 12-04-15 | DATE PLOTTED => 30-MAR-2016 | TIME PLOTTED => 13:12

Dist	COUNTY	ROUTE	POST MILES TOTAL PROJECT	SHEET No.	TOTAL SHEETS
05	SB	101	2.2/3.3	137	786

REGISTERED CIVIL ENGINEER 12-4-15 DATE

12-7-15
PLANS APPROVAL DATE

REGISTERED PROFESSIONAL ENGINEER AMIR SAEDI No. 56083 Exp. 12-31-16 CIVIL STATE OF CALIFORNIA

THE STATE OF CALIFORNIA OR ITS OFFICERS OR AGENTS SHALL NOT BE RESPONSIBLE FOR THE ACCURACY OR COMPLETENESS OF SCANNED COPIES OF THIS PLAN SHEET.

DRAINAGE DETAILS
INDEX OF PLANS

SHEET No.	DESCRIPTION
DD-1	INLETS IN MEDIAN
DD-2	INLETS ADJACENT TO Conc BARRIER & GUTTER DEPRESSIONS
DD-3	INLET (TYPE G5) & (TYPE G5 Mod) & (TYPE OS Mod)
DD-4	INLET (TYPE G2 Mod) & (TYPE OL Mod)
DD-5	INLET DIMENSIONS
DD-6	HMA APRON
DD-7	HMA APRON
DD-8	MINOR Conc APRON
DD-8a	*MINOR Conc APRON* 2
DD-9	HEADWALL & WINGWALL - DS No. 1 a
DD-10	HEADWALL & WINGWALL - DS No. 7 ax
DD-11	HEADWALL & WINGWALL - DS Nos. 3 a & 1 ac
DD-12	STRUCTURE ORIENTATIONS - DS No. 1
DD-13	STRUCTURE ORIENTATIONS - DS Nos. 1 & 2
DD-14	STRUCTURE ORIENTATIONS - DS Nos. 2 & 3
DD-15	STRUCTURE ORIENTATIONS - DS Nos. 3, 4 & 5
DD-16	STRUCTURE ORIENTATIONS - DS No. 5
DD-17	STRUCTURE ORIENTATIONS - DS Nos. 5 & 6
DD-18	STRUCTURE ORIENTATIONS - DS Nos. 6 & 7
DD-19	STRUCTURE ORIENTATIONS - DS No. 7
DD-20	STRUCTURE ORIENTATIONS - DS Nos. 7 & 8
DD-21	STRUCTURE ORIENTATIONS - DS No. 8
DD-22	STRUCTURE ORIENTATIONS - DS Nos. 8, 10 & 11
DD-23	STRUCTURE ORIENTATIONS - DS Nos. 11, 12, 13, 14 & 15
DD-24	GUTTER DETAIL - SOUND WALL 'B2'
DD-25	RETAINING WALL 'C' GUTTER & MINOR Conc BACKFILL
DD-26	Conc BARRIER (TYPE 60) SCUPPER DETAIL
DD-27	DRAINAGE SYSTEM Conn & Conc COLLAR
DD-28	CURB OUTLET DRAIN (TYPE A) & AC DIKE Trans
DD-29	TRIPLE BOX CULVERT & TRANSITION
DD-30	FLOOD CONTROL DISTRICT CULVERT MODIFICATION
DD-31	LINDEN AVENUE DITCH 1
DD-32	LINDEN AVENUE SOUTHBOUND OFF RAMP DITCH 2
DD-33	LINDEN AVENUE SOUTHBOUND OFF RAMP DITCH 3
DD-33a	*VIA REAL DITCH 4* 2
DD-34	BIOFILTRATION SWALE 1
DD-35	BIOFILTRATION SWALE 2 & 3
DD-36	BIOFILTRATION SWALE 4
DD-37	RSP LAYOUT - CARPINTERIA CREEK
DD-38	RSP POINT DESCRIPTIONS
DD-39	RSP CROSS SECTIONS
DD-40	BRIDGE APPROACH DRAINAGE DETAIL

NOTE (THIS SHEET ONLY):

1. GRATE DEPRESSION FOR INLETS IN UNPAVED AREAS IS 4" AND 1" IN PAVED AREAS, UNLESS NOTED OTHERWISE.

ABBREVIATIONS:

COB - CENTER OF BOX
COG - CENTER OF GRATE
DS - DRAINAGE SYSTEM
FLC - FLOW LINE AT CURB

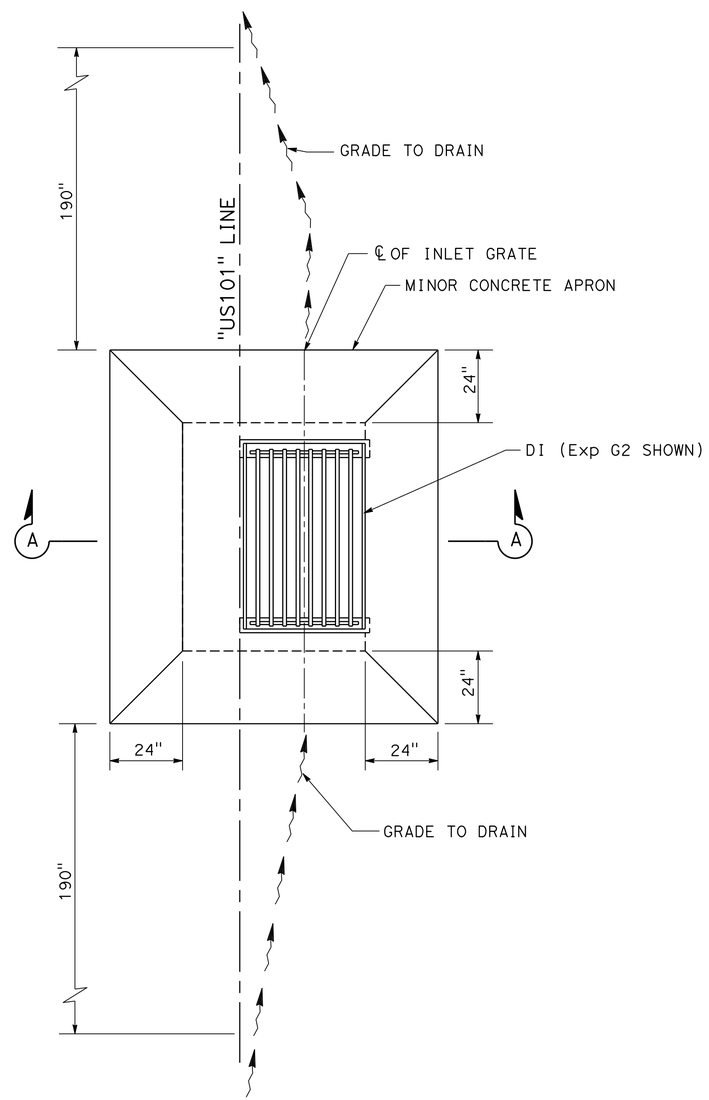

PLAN

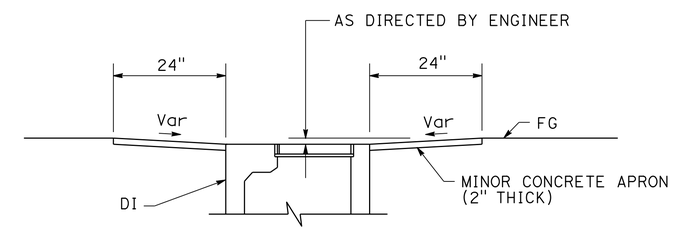

SECTION A-A

LOCATIONS

⬡ DRAINAGE SYSTEM No.	○ DRAINAGE UNIT	DI
5	n	G2
	p	G2
	r	G2
	t	Exp G2
	v	Exp G2
	x	Exp G2
	z	Exp G2
	ab	Exp G2
5	ad	Exp G2
7	aw	G2
7	au	G2
7	as	G2

DRAINAGE INLET IN MEDIAN WITH MINOR CONCRETE APRON

2 **REPLACED PER ADDENDUM No. 2 DATED APRIL 4, 2016**

DRAINAGE DETAILS

NO SCALE **DD-1**

REVISED BY	DATE REVISED
JH	10-22-15
JH	10-21-15
JH	07-16-14

CALCULATED-DESIGNED BY: JACKSON HO
CHECKED BY: AARON WOLFRAM
FUNCTIONAL SUPERVISOR: JAMES R. PERANO

STATE OF CALIFORNIA - DEPARTMENT OF TRANSPORTATION
Caltrans
DESIGN

LAST REVISION 12-04-15
DATE PLOTTED => 30-MAR-2016
TIME PLOTTED => 13:12

Dist	COUNTY	ROUTE	POST MILES TOTAL PROJECT	SHEET No.	TOTAL SHEETS
05	SB	101	2.2/3.3	139	786

REGISTERED CIVIL ENGINEER 12-4-15 DATE

12-7-15
PLANS APPROVAL DATE

REGISTERED PROFESSIONAL ENGINEER AMIR SAEDI No. 56083 Exp. 12-31-16 CIVIL STATE OF CALIFORNIA

THE STATE OF CALIFORNIA OR ITS OFFICERS OR AGENTS SHALL NOT BE RESPONSIBLE FOR THE ACCURACY OR COMPLETENESS OF SCANNED COPIES OF THIS PLAN SHEET.

NOTE (THIS SHEET ONLY):

FOR DETAILS NOT SHOWN, SEE STANDARD PLAN D73 FOR TYPE-G5 DI AND SEE STANDARD PLAN D72 FOR TYPE OS DI

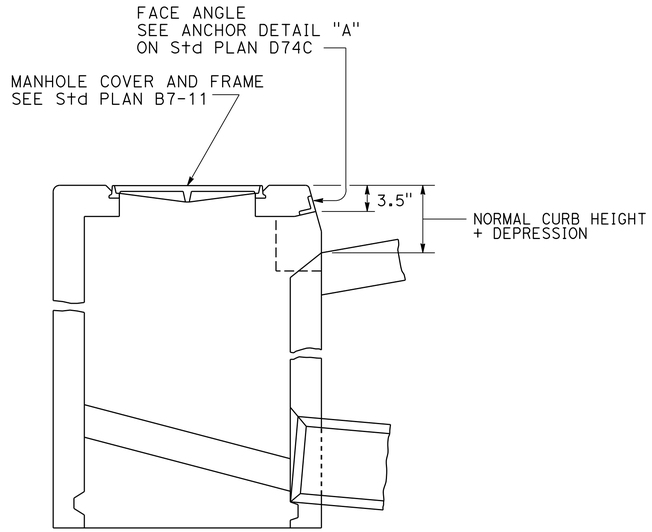

SECTION A-A

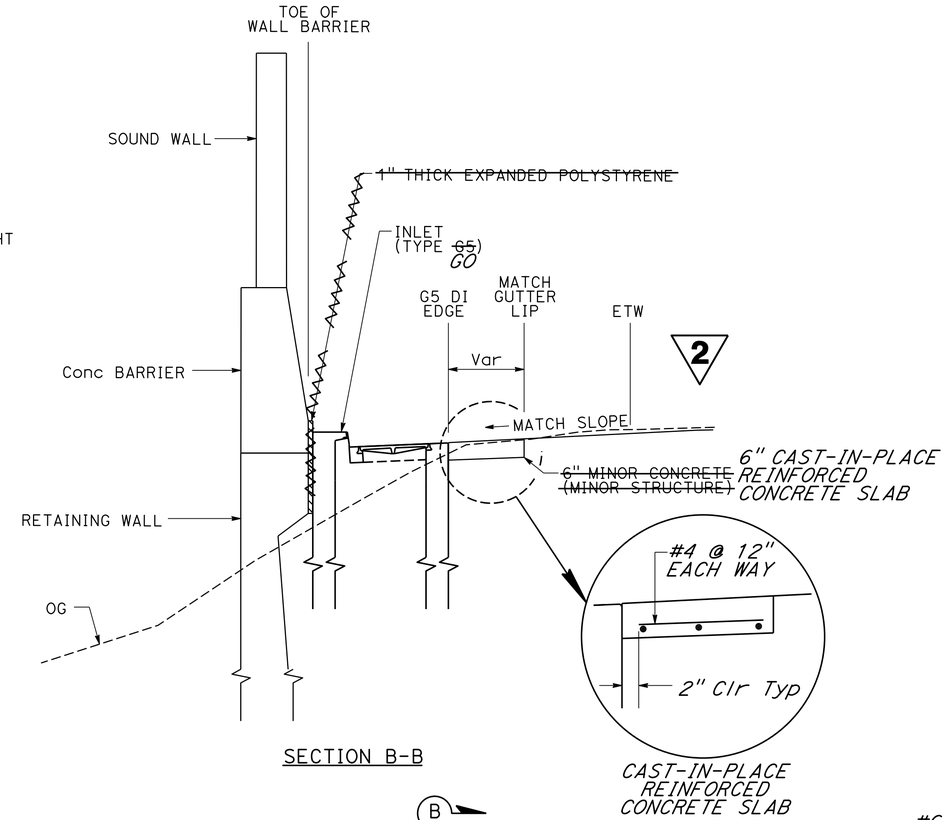

SECTION B-B

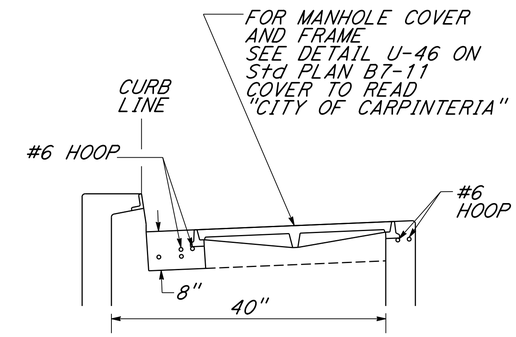

SECTION A-A

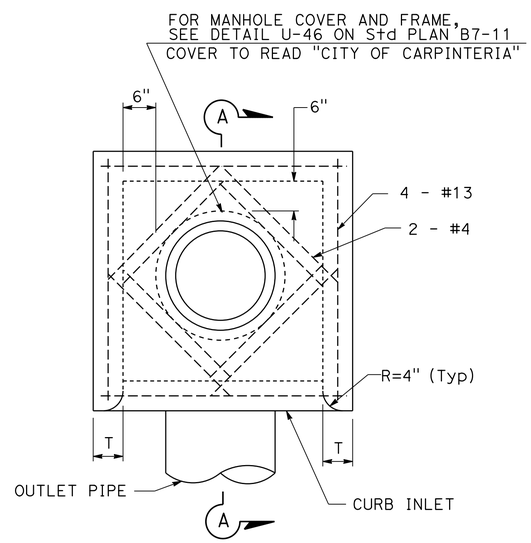

PLAN

PLAN

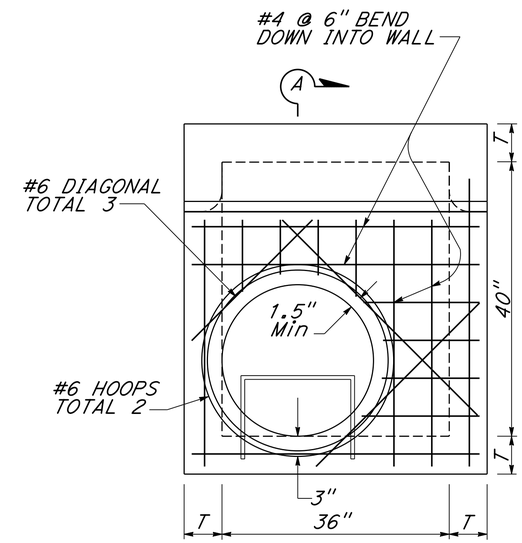

2 PLAN
DRAINAGE INLET
(TYPE Exp GO Mod)

TABLE A

H RANGE	CONCRETE	REINFORCING		
	T (Typ)	SIDES	TOP	BOTTOM
ALL	8"	#4 @ 12" O/C	#4 @ 12" O/C	#4 @ 12" O/C

DRAINAGE INLET (TYPE OS Mod)

DRAINAGE INLET TYPE G5
ADJACENT TO RETAINING WALL

DRAINAGE DETAILS

NO SCALE **DD-3**

2 **REPLACED PER ADDENDUM No. 2 DATED APRIL 4, 2016**

REVISED BY	DATE REVISED
JH	11-16-15
JH	10-22-15
JH	10-08-15

CALCULATED-DESIGNED BY: JACKSON HO
CHECKED BY: AARON WOLFRAM
FUNCTIONAL SUPERVISOR: JAMES R. PERANO

STATE OF CALIFORNIA - DEPARTMENT OF TRANSPORTATION
Caltrans® DESIGN

LAST REVISION 12-04-15
DATE PLOTTED => 30-MAR-2016
TIME PLOTTED => 13:12

Dist	COUNTY	ROUTE	POST MILES TOTAL PROJECT	SHEET No.	TOTAL SHEETS
05	SB	101	2.2/3.3	141	786

REGISTERED CIVIL ENGINEER 12-4-15 DATE

12-7-15
PLANS APPROVAL DATE

REGISTERED PROFESSIONAL ENGINEER AMIR SAEDI No. 56083 Exp. 12-31-16 CIVIL STATE OF CALIFORNIA

THE STATE OF CALIFORNIA OR ITS OFFICERS OR AGENTS SHALL NOT BE RESPONSIBLE FOR THE ACCURACY OR COMPLETENESS OF SCANNED COPIES OF THIS PLAN SHEET.

DRAINAGE SHEET No.	DRAINAGE SYSTEM No. ⬡	DRAINAGE UNIT ○	INLET TYPE	"A" SPAN LF	"B" SPAN LF	"X" SPAN LF	"Y" SPAN LF
D-1	1	c	Exp G2	7.67	4.42		
		e	Exp G2	7.67	4.42		
		g	Exp G2	7.67	4.42		
		i	Exp G2	7.67	4.42		
		k	Exp G2	7.75	4.42		
		m	Exp G2	7.75	4.42		
D-1		o	Exp G2	8.42	4.42		
D-2	1	q	Exp G2 (Mod)	8.00	4.42		
D-1	2	m	Exp G2	4.42	4.50		
D-2	2	q	Exp G2 (Mod)	4.42	4.50		
D-2	3	c	Exp G2 (Mod)	6.74	2.95		
		g	Exp G2 (Mod)	6.08	4.42		
		i	Exp G2	6.33	4.42		
		k	Exp G2	5.92	4.42		
D-2		m	Exp G2	6.17	4.42		
D-3		o	Exp G2	6.08	4.42		
		q	Exp G2 (Mod)	5.92	5.92		
D-3		w	Exp OS (Mod)			4.50	4.00
D-2	3	e	Exp OS (Mod)	6.25	2.95		
D-2	4	c	Exp G2	5.17	4.00		
		e	Exp G2	4.42	6.92		
D-2	4	g	Exp G4	4.50	5.42		
D-4	5	r	Exp G2	5.00	4.00		
		t	Exp G2	5.00	4.00		
		v	Exp G2	5.00	4.00		
		x	Exp G2	5.00	4.00		
D-4		z	Exp G2	5.00	4.00		
D-5		ab	Exp G2	5.00	4.00		
D-5	5	ad	Exp G2	5.00	5.00		

DRAINAGE SHEET No.	DRAINAGE SYSTEM No. ⬡	DRAINAGE UNIT ○	INLET TYPE	"A" SPAN LF	"B" SPAN LF	"X" SPAN LF	"Y" SPAN LF
D-4	7	k	Exp G2	5.00	4.00		
		m	Exp G2	5.00	4.00		
		o	Exp G2	5.00	4.00		
		q	Exp G2	5.00	4.00		
D-4		s	Exp G2	5.00	4.00		
D-5		u	Exp G2	5.50	4.00		
		aj	Exp G2	6.17	5.42		
		w	Exp G2	5.50	4.00		
		y	Exp G2	6.17	5.00		
D-5		aa	Exp G2	6.17	4.00		
D-6		ac	Exp G2	6.17	4.00		
D-6	7	ae	Exp G2	8.00	4.00		
D-4	8	e	Exp OS (Mod)			4.50	4.25
		g	Exp OS (Mod)			4.92	5.25
		i	Exp OS (Mod)			4.92	8.25
		k	Exp OS (Mod)			4.92	5.33
D-4		m	Exp OS (Mod)			4.50	5.00
D-5		o	Exp OS (Mod)			5.00	5.17
		q	Exp OS (Mod)			5.00	5.58
		s	Exp G2	7.15	4.42		
		u	Exp G2	8.33	6.17		
		as	Exp G2 (Mod)	5.42	4.58		
		au	Exp OS (Mod)			4.92	5.17
D-5	8	w	Exp G2	6.17	6.75		
D-1	12	c	Exp OS (Mod)			4.50	3.00
D-6	15	c	Exp G2	4.67	4.00		
D-6	15	e	Exp G2	4.50	4.00		
D-3	*8*	*z*	*Exp GO (Mod)*			*4.00*	*4.67*
D-4	*8*	*ab*	*Exp GO (Mod)*			*4.00*	*4.67*
		ad	*Exp GO (Mod)*			*4.00*	*4.67*
		aj	*Exp GO (Mod)*			*4.00*	*4.67*
		an	*Exp GO (Mod)*			*4.00*	*4.67*
D-4	*8*	*cd*	*Exp OS (Mod)*			*5.00*	*5.00*

2

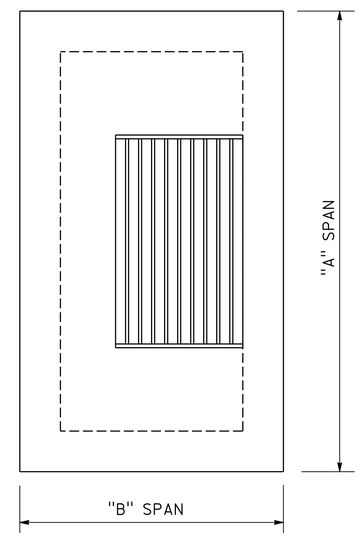

EXPANDED G2, G2 (Mod) OR G4

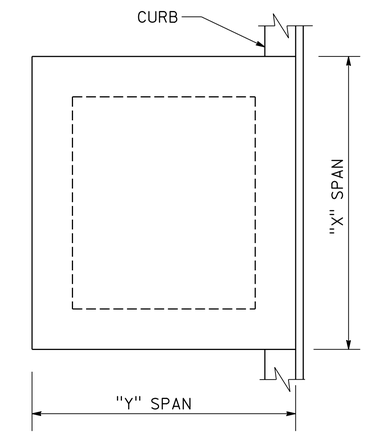

EXPANDED *GO,* OS (Mod)

2

EXPANDED DRAINAGE INLET DIMENSIONS
TYPE Exp G2, Exp G2 (Mod), Exp G4 & OS (Mod)

2 **REPLACED PER ADDENDUM No. 2 DATED APRIL 4, 2016**

DRAINAGE DETAILS

NO SCALE **DD-5**

JH	10-26-15		
JH	10-20-15		
JH	10-08-15		
REVISED BY	DATE REVISED		
JACKSON HO	AARON WOLFRAM		
CALCULATED-DESIGNED BY	CHECKED BY		
FUNCTIONAL SUPERVISOR	JAMES R. PERANO		

STATE OF CALIFORNIA - DEPARTMENT OF TRANSPORTATION
Caltrans® DESIGN

LAST REVISION 12-04-15 | DATE PLOTTED => 30-MAR-2016 | TIME PLOTTED => 13:12

Dist	COUNTY	ROUTE	POST MILES TOTAL PROJECT	SHEET No.	TOTAL SHEETS
05	SB	101	2.2/3.3	144	786

REGISTERED CIVIL ENGINEER 12-4-15 DATE

12-7-15
PLANS APPROVAL DATE

REGISTERED PROFESSIONAL ENGINEER AMIR SAEDI No. 56083 Exp. 12-31-16 CIVIL STATE OF CALIFORNIA

THE STATE OF CALIFORNIA OR ITS OFFICERS OR AGENTS SHALL NOT BE RESPONSIBLE FOR THE ACCURACY OR COMPLETENESS OF SCANNED COPIES OF THIS PLAN SHEET.

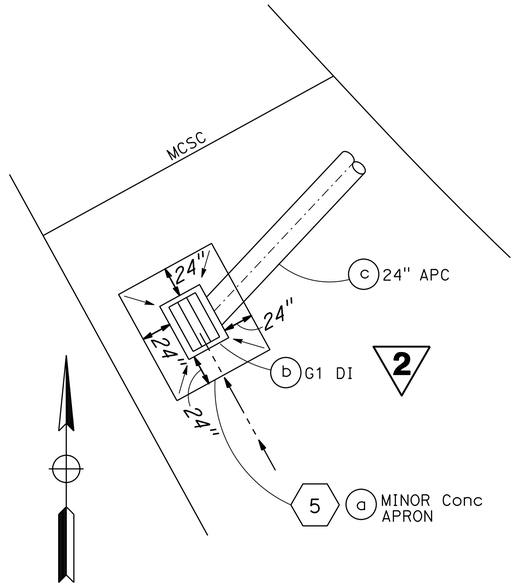

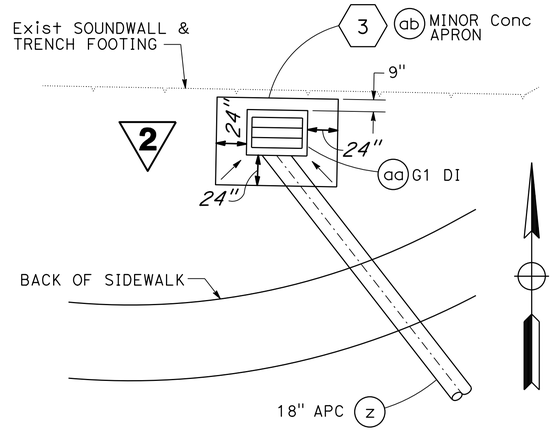

DRAINAGE SYSTEM No. 3 ab

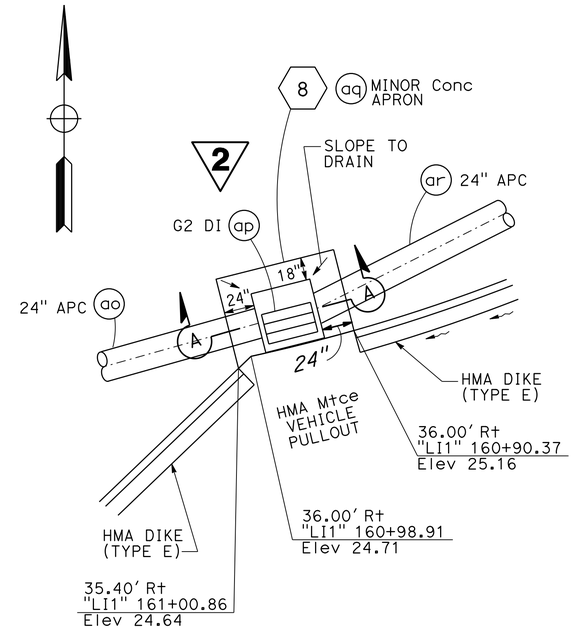

DRAINAGE SYSTEM No. 8 aq

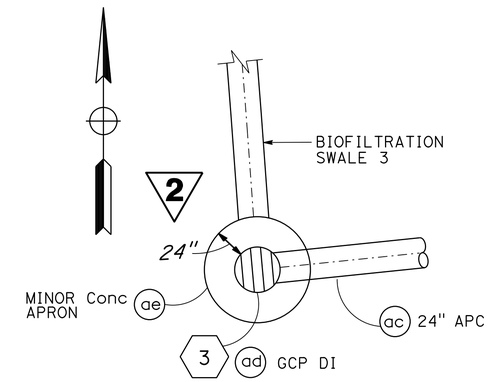

DRAINAGE SYSTEM No. 3 ad

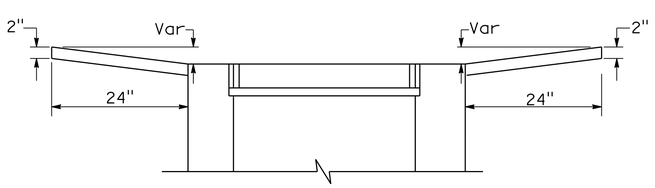

Typ G1 APRON SECTION

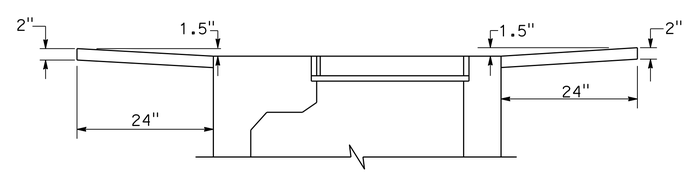

G2 APRON SECTION A-A

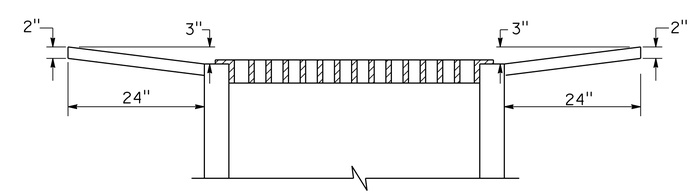

Typ GCP APRON SECTION

MINOR CONCRETE APRON

2 **REPLACED PER ADDENDUM No. 2 DATED APRIL 4, 2016**

DRAINAGE DETAILS

NO SCALE **DD-8**

REVISED BY	JH
DATE REVISED	10-22-15
REVISED BY	JH
DATE REVISED	07-16-14
JACKSON HO	AARON WOLFRAM
CALCULATED-DESIGNED BY	
CHECKED BY	
FUNCTIONAL SUPERVISOR	JAMES R. PERANO

STATE OF CALIFORNIA - DEPARTMENT OF TRANSPORTATION
Caltrans® DESIGN

LAST REVISION 12-04-15 | DATE PLOTTED => 30-MAR-2016 | TIME PLOTTED => 13:12

Dist	COUNTY	ROUTE	POST MILES TOTAL PROJECT	SHEET No.	TOTAL SHEETS
05	SB	101	2.2/3.3	144A	786

REGISTERED CIVIL ENGINEER 12-4-15 DATE

12-7-15
PLANS APPROVAL DATE

REGISTERED PROFESSIONAL ENGINEER AMIR SAEDI No. 56083 Exp. 12-31-16 CIVIL STATE OF CALIFORNIA

THE STATE OF CALIFORNIA OR ITS OFFICERS OR AGENTS SHALL NOT BE RESPONSIBLE FOR THE ACCURACY OR COMPLETENESS OF SCANNED COPIES OF THIS PLAN SHEET.

2

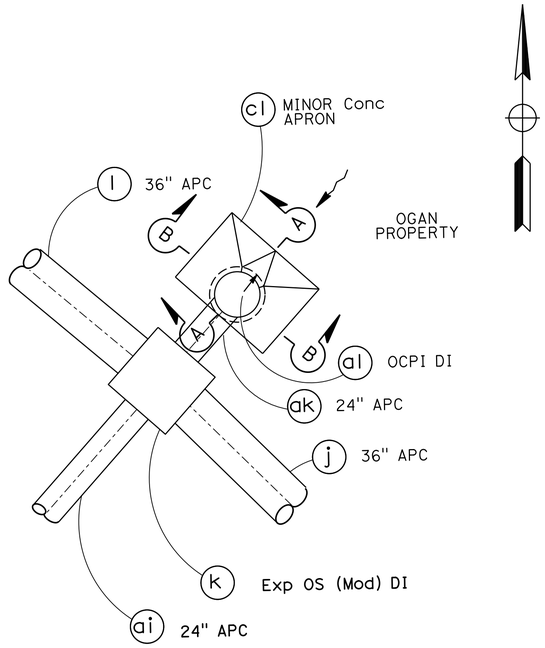

DRAINAGE SYSTEM No. 8 al

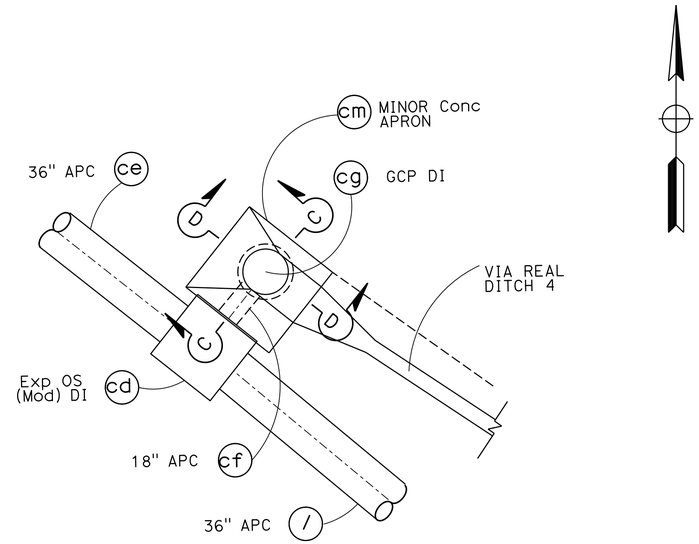

DRAINAGE SYSTEM No. 8 cg

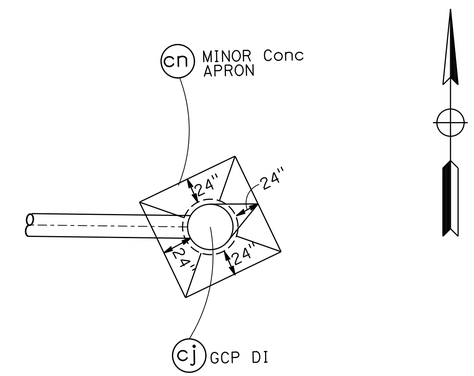

DRAINAGE SYSTEM No. 8 cj

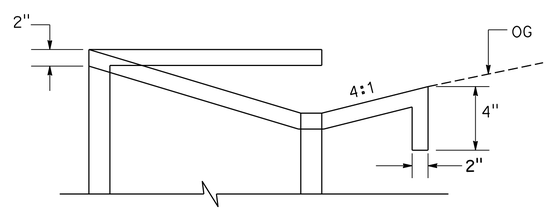

SECTION A-A

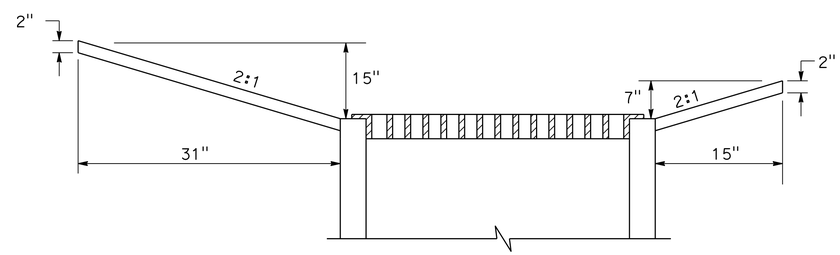

SECTION C-C

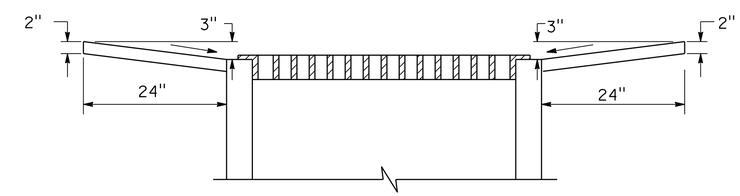

Typ GCP APRON SECTION

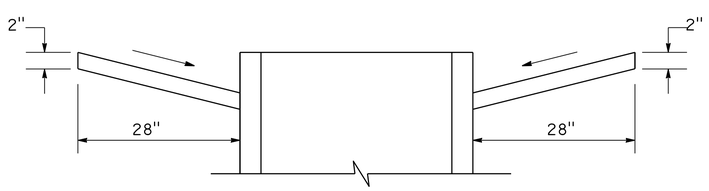

SECTION B-B

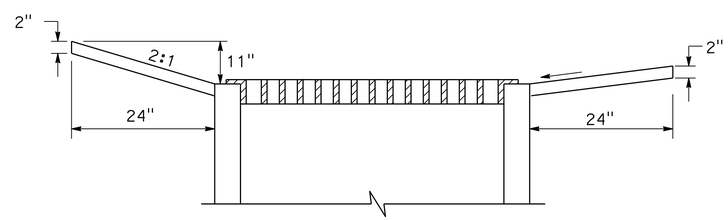

SECTION D-D

MINOR CONCRETE APRON

2 **ADDED PER ADDENDUM No. 2 DATED APRIL 4, 2016**

DRAINAGE DETAILS

NO SCALE **DD-8a**

STATE OF CALIFORNIA - DEPARTMENT OF TRANSPORTATION
Caltrans® DESIGN

FUNCTIONAL SUPERVISOR: JAMES R. PERANO
CALCULATED-DESIGNED BY: JACKSON HO
CHECKED BY: AARON WOLFRAM
REVISED BY / DATE REVISED

LAST REVISION 03-21-16
DATE PLOTTED => 30-MAR-2016
TIME PLOTTED => 13:12

Dist	COUNTY	ROUTE	POST MILES TOTAL PROJECT	SHEET No.	TOTAL SHEETS
05	SB	101	2.2/3.3	156	786

REGISTERED CIVIL ENGINEER 12-4-15 DATE

12-7-15
PLANS APPROVAL DATE

REGISTERED PROFESSIONAL ENGINEER AMIR SAEDI No. 56083 Exp. 12-31-16 CIVIL STATE OF CALIFORNIA

THE STATE OF CALIFORNIA OR ITS OFFICERS OR AGENTS SHALL NOT BE RESPONSIBLE FOR THE ACCURACY OR COMPLETENESS OF SCANNED COPIES OF THIS PLAN SHEET.

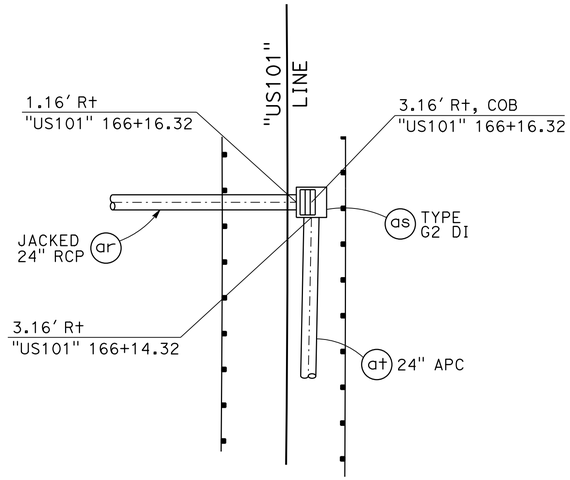

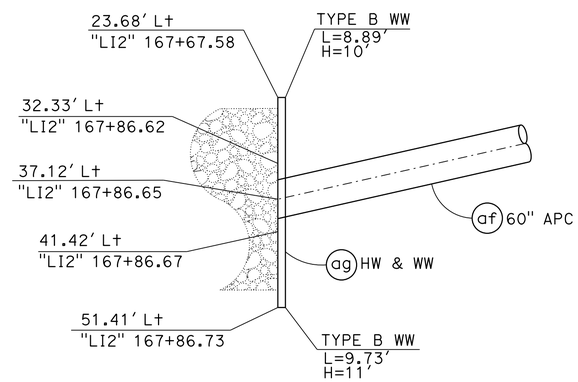

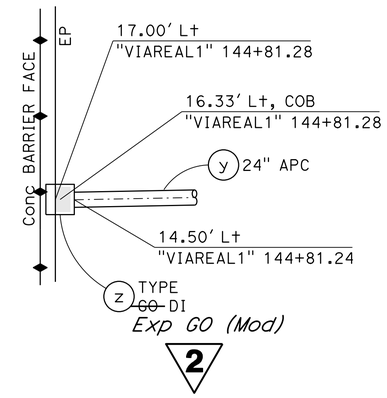

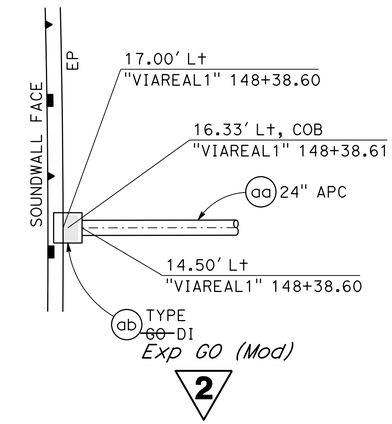

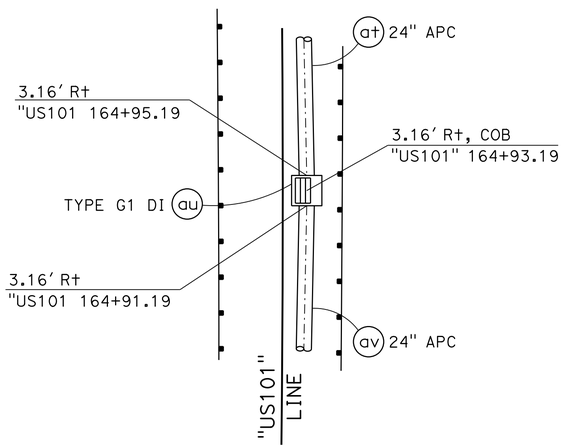

(CONTINUED)
DRAINAGE SYSTEM No. 7

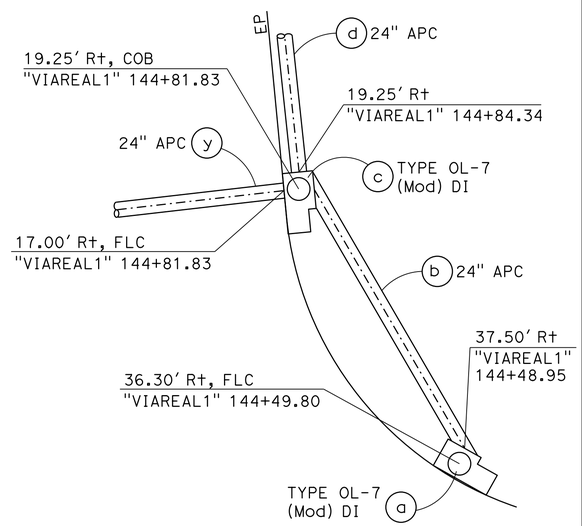

DRAINAGE SYSTEM No. 8

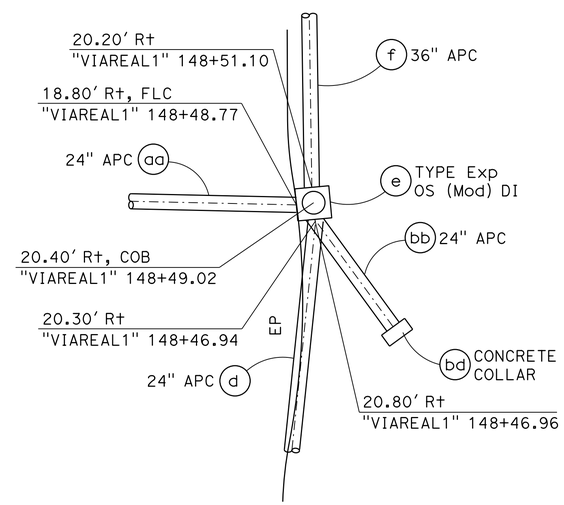

(CONTINUED)
DRAINAGE SYSTEM No. 8

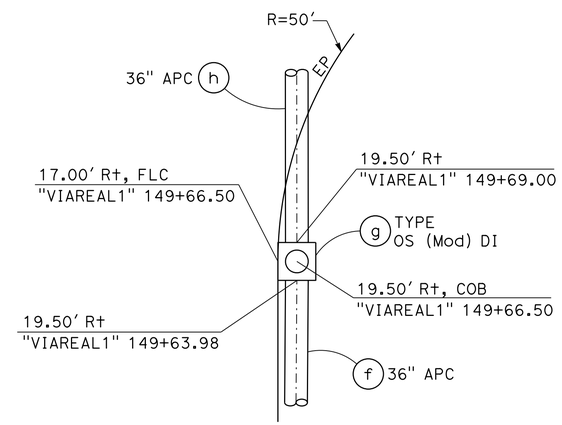

(CONTINUED)
DRAINAGE SYSTEM No. 8

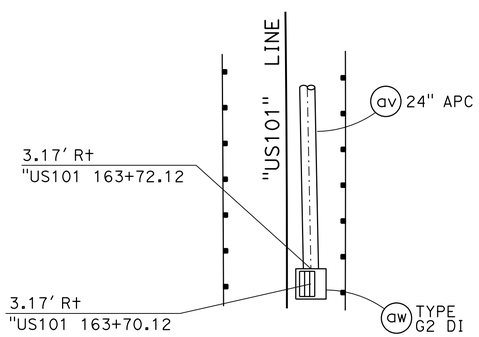

(CONTINUED)
DRAINAGE SYSTEM No. 7

2 REPLACED PER ADDENDUM No. 2 DATED APRIL 4, 2016

STRUCTURE ORIENTATIONS

DRAINAGE DETAILS

NO SCALE **DD-20**

JH	10-21-15	
JH	09-21-15	
JH	10-09-14	
REVISED BY	DATE REVISED	
JACKSON HO	AARON WOLFRAM	
CALCULATED-DESIGNED BY	CHECKED BY	
FUNCTIONAL SUPERVISOR	JAMES R. PERANO	

STATE OF CALIFORNIA - DEPARTMENT OF TRANSPORTATION
Caltrans
DESIGN

LAST REVISION 12-04-15
DATE PLOTTED => 30-MAR-2016
TIME PLOTTED => 13:12

Dist	COUNTY	ROUTE	POST MILES TOTAL PROJECT	SHEET No.	TOTAL SHEETS
05	SB	101	2.2/3.3	157	786

REGISTERED CIVIL ENGINEER 12-4-15 DATE

12-7-15
PLANS APPROVAL DATE

REGISTERED PROFESSIONAL ENGINEER AMIR SAEDI No. 56083 Exp 12-31-16 CIVIL STATE OF CALIFORNIA

THE STATE OF CALIFORNIA OR ITS OFFICERS OR AGENTS SHALL NOT BE RESPONSIBLE FOR THE ACCURACY OR COMPLETENESS OF SCANNED COPIES OF THIS PLAN SHEET.

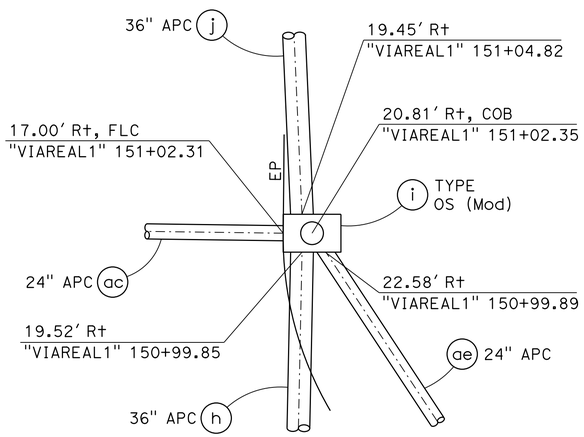

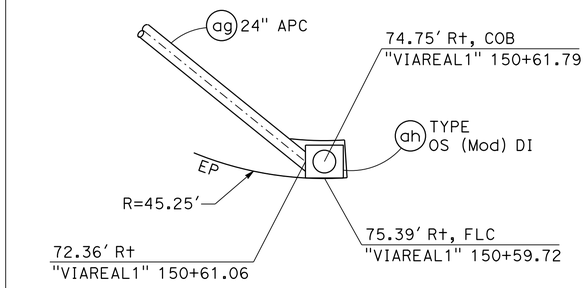

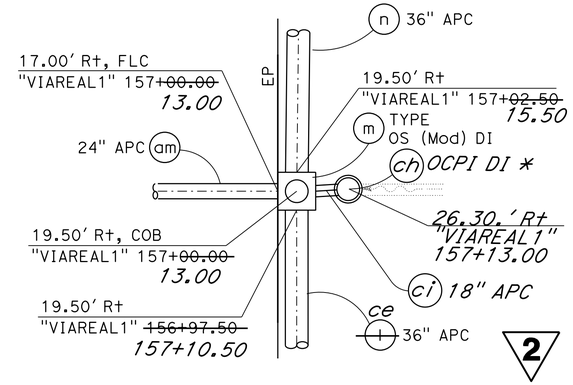

* MODIFY INLET ENTRANCE AS NEEDED TO CONFORM TO EXISTING GUTTER

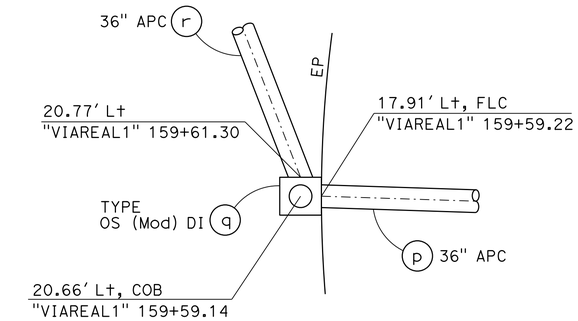

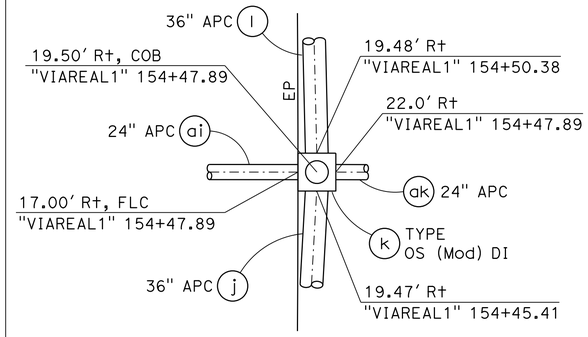

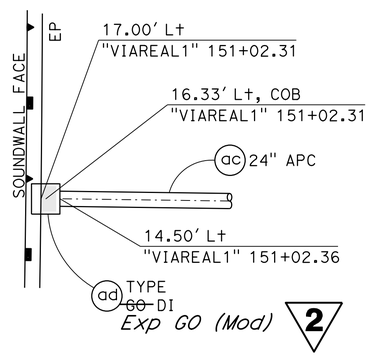

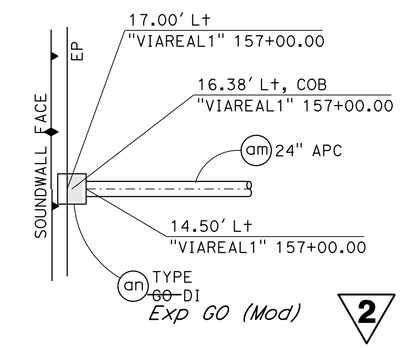

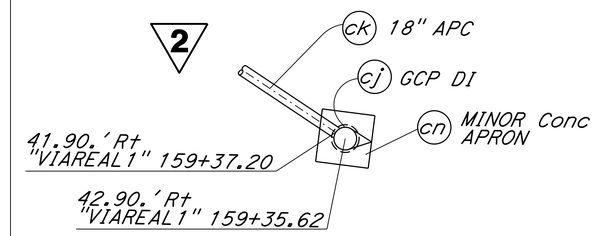

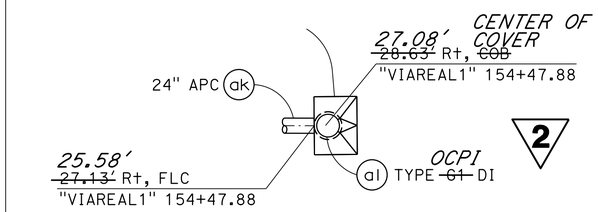

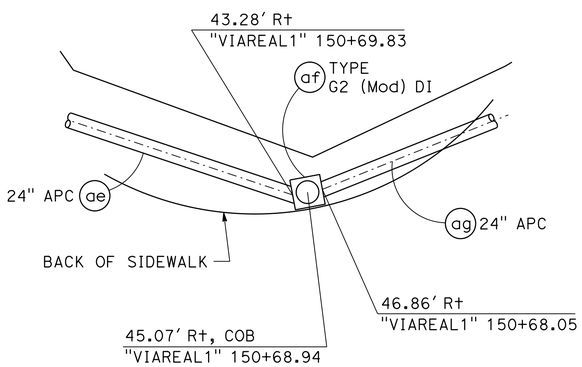

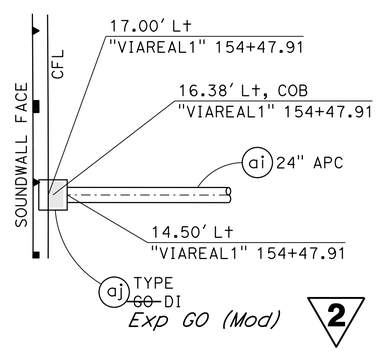

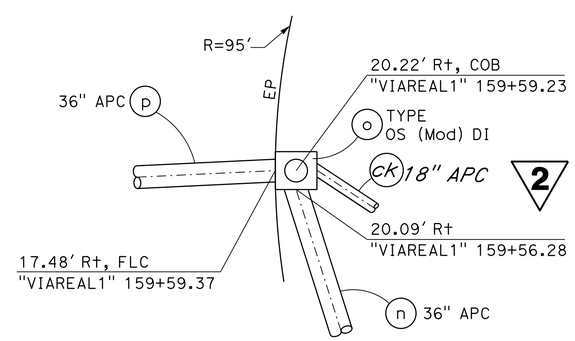

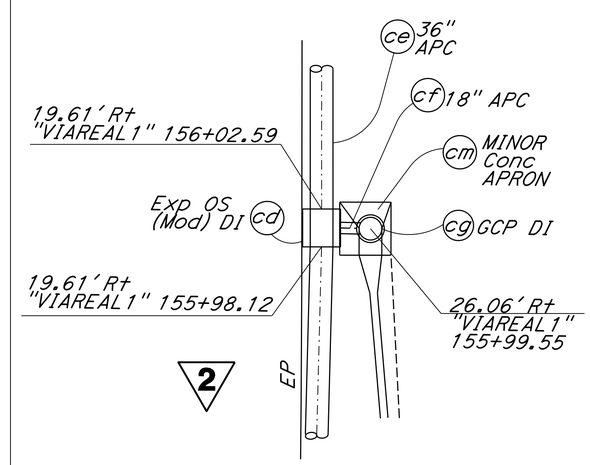

(CONTINUED)
DRAINAGE SYSTEM No. 8

(CONTINUED)
DRAINAGE SYSTEM No. 8

(CONTINUED)
DRAINAGE SYSTEM No. 8

(CONTINUED)
DRAINAGE SYSTEM No. 8

2 **REPLACED PER ADDENDUM No. 2**
DATED APRIL 4, 2016

STRUCTURE ORIENTATIONS

DRAINAGE DETAILS

NO SCALE **DD-21**

JH	10-22-15	
AW	10-08-15	
JH	10-10-14	
REVISED BY	DATE REVISED	
JACKSON HO	AARON WOLFRAM	
CALCULATED-DESIGNED BY	CHECKED BY	
FUNCTIONAL SUPERVISOR	JAMES R. PERANO	

STATE OF CALIFORNIA - DEPARTMENT OF TRANSPORTATION
Caltrans® **DESIGN**

LAST REVISION 12-04-15 | DATE PLOTTED => 30-MAR-2016 | TIME PLOTTED => 13:12

Dist	COUNTY	ROUTE	POST MILES TOTAL PROJECT	SHEET No.	TOTAL SHEETS
05	SB	101	2.2/3.3	169A	786

REGISTERED CIVIL ENGINEER 12-4-15 DATE

12-7-15
PLANS APPROVAL DATE

REGISTERED PROFESSIONAL ENGINEER AMIR SAEDI No. 56083 Exp. 12-31-16 CIVIL STATE OF CALIFORNIA

THE STATE OF CALIFORNIA OR ITS OFFICERS OR AGENTS SHALL NOT BE RESPONSIBLE FOR THE ACCURACY OR COMPLETENESS OF SCANNED COPIES OF THIS PLAN SHEET.

2

NOTES (THIS SHEET ONLY):

A. "VIAREAL1" STATION 157+90.00:
EXISTING PIPES OF ADJACET PROPERTY TO DRAIN INTO DITCH.

B. "VIAREAL1" STATION 155+30.00:
EXISTING DRAINAGE FROM GARAGE TO DRAIN TO DITCH 4

C. FOR ACCURATE RIGHT OF WAY DATA, CONTACT
RIGHT OF WAY ENGINEERING AT THE DISTRICT OFFICE.

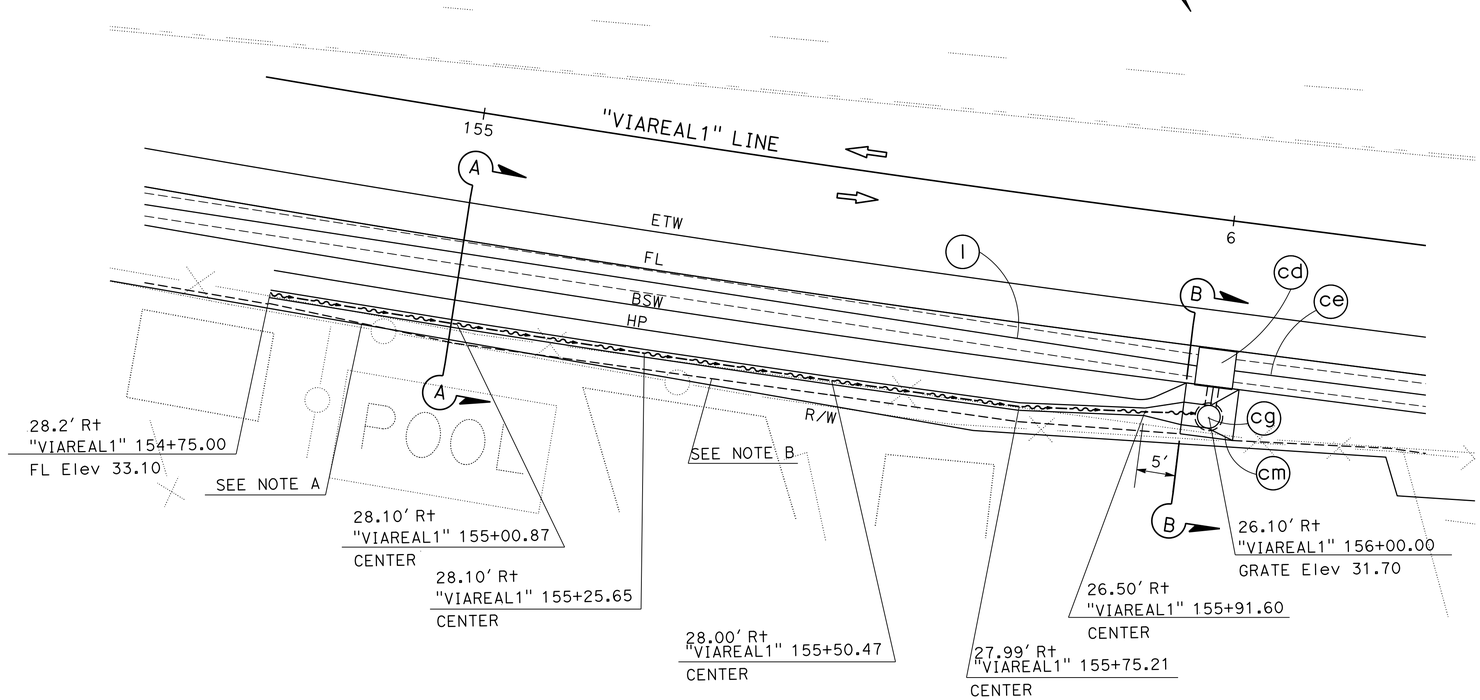

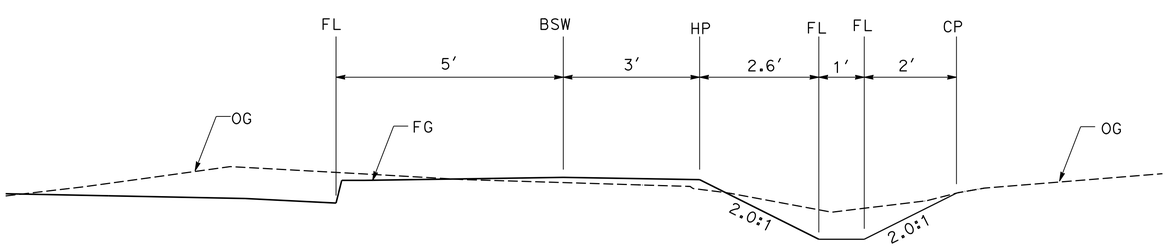

SECTION A-A

VIA REAL
DITCH 4

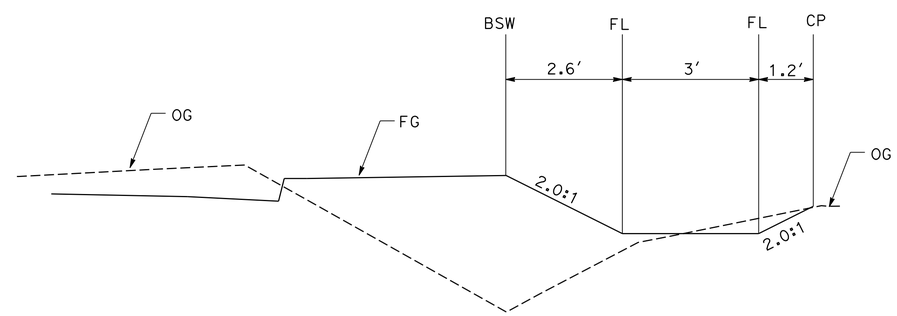

SECTION B-B

2 **ADDED PER ADDENDUM No. 2 DATED APRIL 4, 2016**

DRAINAGE DETAILS

NO SCALE **DD-33a**

STATE OF CALIFORNIA - DEPARTMENT OF TRANSPORTATION
Caltrans® **DESIGN**

FUNCTIONAL SUPERVISOR: JAMES R. PERANO
CALCULATED-DESIGNED BY: JACKSON HO
CHECKED BY: AARON WOLFRAM
REVISED BY
DATE REVISED

LAST REVISION 03-22-16
DATE PLOTTED => 30-MAR-2016
TIME PLOTTED => 13:12

Dist	COUNTY	ROUTE	POST MILES TOTAL PROJECT	SHEET No.	TOTAL SHEETS
05	SB	101	2.2/3.3	177	786

REGISTERED CIVIL ENGINEER 12-4-15 DATE

12-7-15
PLANS APPROVAL DATE

REGISTERED PROFESSIONAL ENGINEER AMIR SAEDI No. 56083 Exp 12-31-16 CIVIL STATE OF CALIFORNIA

THE STATE OF CALIFORNIA OR ITS OFFICERS OR AGENTS SHALL NOT BE RESPONSIBLE FOR THE ACCURACY OR COMPLETENESS OF SCANNED COPIES OF THIS PLAN SHEET.

NOTE:

FOR STRUCTURAL CONCRETE AND ROCK SLOPE PROTECTION QUANTITIES, SEE SHEET DQ-10.

ABBREVIATION:

Exp = EXPANDED

ALTERNATIVE PIPE CULVERTS

ALLOWABLE MATERIAL (EXCEPT DRAINAGE SYSTEM No. 5,6,7)	ALLOWABLE MATERIAL FOR DRAINAGE SYSTEM No. 5,6,7
REINFORCED CONCRETE PIPE	PLASTIC PIPE WITH SMOOTH INTERIOR
PLASTIC PIPE WITH SMOOTH INTERIOR	

2 PIPE JOINT CLASSIFICATION

ALTERNATIVE FLARED END SECTIONS

ALLOWABLE MATERIAL
PRECAST CONCRETE
PREFABRICATED STEEL

DRAINAGE QUANTITIES

DRAINAGE SHEET No.	DRAINAGE SYSTEM No.	DRAINAGE UNIT	ABANDON CULVERT (EA)	REMOVE CULVERT (LF)	REMOVE INLET	REMOVE HEADWALL	REMOVE CONCRETE (CHANNEL)	REMOVE CONCRETE (MISCELLANEOUS) (CY)	MINOR CONCRETE (MINOR STRUCTURE)	(N) 18-10 GRATE	(N) 24-12 GRATE	(N) 24-12X GRATE	(N) 36RX GRATE	(N) ~~STEEL PLATE~~	(N) MANHOLE COVER	ALTERNATIVE PIPE CULVERT 18"	24"	36"	42"	48"	54"	60"	WELDED STEEL PIPE CULVERT (TRENCHLESS INSTALLATION) 24"	36"	8" WELDED STEEL PIPE	36" PRECAST CONCRETE PIPE INLET	24" ALTERNATIVE FLARED END SECTION	36" ALTERNATIVE FLARED END SECTION	Misc IRON & STEEL	(N) HEIGHT OF INLET	(N) HEIGHT OF COVER	DESCRIPTION	STATION	DRAINAGE SYSTEM No.	DRAINAGE UNIT
			EA	LF	EA	EA	CY	CY	CY	EA	EA	EA	EA	~~EA~~	EA	LF	LF	LF	LF	LF	LF	LF	LF	LF	LF	LF	EA	EA	LB	LF	LF				
D-1	1	b																				241.4										60" APC	77.0′ R† "US101" 113+50.00 TO 87.9′ R† "US101" 116+02.65	1	b
		c							8.2		1																		326	9.3	4.2	Exp G2 DI, TYPE 24-12	87.9′ R† "US101" 116+02.65		c
		d																				137.7										60" APC	87.9′ R† "US101" 116+02.65 TO 87.4′ R† "US101" 117+50.18		d
		e							8.5		1																		326	9.7	4.7	Exp G2 DI, TYPE 24-12	87.4′ R† "US101" 117+50.18		e
		f																				184.5										60" APC	87.4′ R† "US101" 117+50.18 TO 86.4′ R† "US101" 119+46.45		f
		g							8.6		1																		326	9.9	4.9	Exp G2 DI, TYPE 24-12	86.4′ R† "US101" 119+46.45		g
		h																				156.2										60" APC	86.4′ R† "US101" 119+46.45 TO 85.7′ R† "US101" 121+13.14		h
		i							8.7		1																		326	10.0	4.9	Exp G2 DI, TYPE 24-12	85.7′ R† "US101" 121+13.14		i
		j																				151.5										60" APC	85.7′ R† "US101" 121+13.14 TO 85.5′ R† "US101" 122+74.94		j
		k							8.2		1																		326	9.3	4.2	Exp G2 DI, TYPE 24-12	85.5′ R† "US101" 122+74.94		k
		l																				143.2										60" APC	85.5′ R† "US101" 122+74.94 TO 58.8′ R† "US101" 124+25.03		l
		m							12.0		1																		326	14.2	9.2	Exp G2 DI, TYPE 24-12	58.8′ R† "US101" 124+25.03		m
		n																				265.6										60" APC	58.8′ R† "US101" 124+25.03 TO 71.1′ R† "US101" 126+97.32		n
		o							14.5		1																		326	16.1	4.4	Exp G2 DI, TYPE 24-12	71.1′ R† "US101" 126+97.32		o
D-1		p																				144.7										60" APC	71.1′ R† "US101" 126+97.32 TO 40.6′ R† "VIAREAL" 128+03.55		p
D-2		q							8.8						1														440	9.7	1.0	Exp G2 (Mod) DI, MH COVER	40.6′ R† "VIAREAL1" 128+03.55		q
D-2		r																				24.1										60" APC	40.6′ R† "VIAREAL1" 128+03.55 TO 37.0′ R† "VIAREAL1" 128+30.02		r
D-1		†															67.6															24" APC	71.1′ R† "US101" 126+97.32 TO "US101" 126+98.06		†
		u							3.6		2																		652	6.7	4.3	GT4 DI, 2 TYPE 24-12	"US101" 126+98.06		u
		v															12.5															24" APC	"US101" 126+78.06 TO "US101" 126+98.06		v
		w							3.5		2																		652	6.3	3.9	GT4 DI, 2 TYPE 24-12	"US101" 126+78.06		w
		x															12.5															24" APC	"US101" 126+58.06 TO "US101" 126+78.06		x
		y							3.3		2																		652	5.9	3.5	GT4 DI, 2 TYPE 24-12	"US101" 126+58.06		y
		z															71.3															24" APC	"US101" 125+79.31 TO "US101" 126+58.06		z
D-1		aa							3.0		2																		652	5.0	3.0	GT4 DI, 2 TYPE 24-12	"US101" 125+79.31		aa
D-2		ab															69.2															24" APC	40.6′ R†,"VIAREAL1" 128+03.55 TO 18.5′ R† "CA4" 128+13.19		ab
D-2		ac							2.2		1																		326	6.3	4.3	G2 DI, TYPE 24-12	18.5′ R† "CA4" 128+13.19		ac
D-1		ad					326.3																									REMOVE CONCRETE CHANNEL	77.0′ R† "US101" 113+50.00 TO 26.3′ R† "CA4" 128+89.41		ad
		ae			1																									5.0		REMOVE INLET	62.9′ R† "US101" 117+22.89		ae
D-1		af	1																												3.0	ABANDON 24" x 164.0′ RCP	101.1′ L† "US101" 117+22.21 TO 62.9′ R† "US101" 117+22.89		af
D-2	1	ag		23.6																											1.0	REMOVE 18" x 23.6′ CMP	"US101" 128+71.39 TO "US101" 128+95.02	1	ag
D-1	2	a							1.3		1																		326	4.4	2.4	G1 DI, TYPE 24-12	0.5′ R† "US101" 116+02.01	2	a
		b															143.9															24" APC	0.5′ R† "US101" 116+02.01 TO 0.5′ R† "US101" 117+50.00		b
		c							1.4		1																		326	5.0	2.5	G1 DI, TYPE 24-12	0.5′ R† "US101" 117+50.00		c
		d															142.9															24" APC	0.5′ R† "US101" 117+50.00 TO 0.5′ R† "US101" 118+96.96		d
		e							2.2		1																		326	6.4	4.0	G2 DI, TYPE 24-12	0.5′ R† "US101" 118+96.96		e
		f															126.7															24" APC	0.5′ R† "US101" 118+96.96 TO 0.5′ R† "US101" 120+27.66		f
		g							2.4		1																		326	7.4	5.2	G2 DI, TYPE 24-12	0.5′ R† "US101" 120+27.66		g
		h															137.7															24" APC	0.5′ R† "US101" 120+27.66 TO 0.5′ R† "US101" 121+69.41		h
		i							3.6		1																		326	8.4	6.1	G2 DI, TYPE 24-12	0.5′ R† "US101" 121+69.41		i
		j															104.2															24" APC	0.5′ R† "US101" 121+69.41 TO 0.5′ R† "US101" 122+77.63		j
D-1	2	k							3.8		1																		326	9.0	6.7	G2 DI, TYPE 24-12	0.5′ R† "US101" 122+77.63	2	k
SHEET TOTAL			1	23.6	1		326.3		107.8		22				1		888.5					1,448.9							7,612			SHEET TOTAL			

(N) - NOT A separate PAY ITEM, FOR INFORMATION ONLY

2 REPLACED PER ADDENDUM No. 2 DATED APRIL 4, 2016

DRAINAGE QUANTITIES
DQ-1

STATE OF CALIFORNIA - DEPARTMENT OF TRANSPORTATION
Caltrans DESIGN

FUNCTIONAL SUPERVISOR: JAMES R. PERANO
CALCULATED-DESIGNED BY: AARON WOLFRAM
CHECKED BY: JACKSON HO
REVISED BY: JH
DATE REVISED: 10-23-15

LAST REVISION 12-04-15
DATE PLOTTED => 30-MAR-2016
TIME PLOTTED => 13:12

Dist	COUNTY	ROUTE	POST MILES TOTAL PROJECT	SHEET No.	TOTAL SHEETS
05	SB	101	2.2/3.3	178	786

REGISTERED CIVIL ENGINEER 12-4-15 DATE

12-7-15
PLANS APPROVAL DATE

REGISTERED PROFESSIONAL ENGINEER AMIR SAEDI No. 56083 Exp. 12-31-16 CIVIL STATE OF CALIFORNIA

THE STATE OF CALIFORNIA OR ITS OFFICERS OR AGENTS SHALL NOT BE RESPONSIBLE FOR THE ACCURACY OR COMPLETENESS OF SCANNED COPIES OF THIS PLAN SHEET.

2 *PIPE JOINT CLASSIFICATION*

DRAINAGE QUANTITIES

DRAINAGE SHEET No.	DRAINAGE SYSTEM No. ⬡	DRAINAGE UNIT ○	ABANDON CULVERT (EA)	REMOVE CULVERT (LF)	REMOVE INLET	REMOVE HEADWALL	REMOVE CONCRETE (CHANNEL)	REMOVE CONCRETE (MISCELLANEOUS) (CY)	MINOR CONCRETE (MINOR STRUCTURE)	(N) 18-10 GRATE	(N) 24-12 GRATE	(N) 24-12X GRATE	(N) 36RX GRATE	(N) ~~STEEL PLATE~~	(N) MANHOLE COVER	ALTERNATIVE PIPE CULVERT 18"	24"	36"	42"	48"	54"	60"	WELDED STEEL PIPE CULVERT (TRENCHLESS INSTALLATION) 24"	36"	8" WELDED STEEL PIPE	36" PRECAST CONCRETE PIPE INLET	24" ALTERNATIVE FLARED END SECTION	36" ALTERNATIVE FLARED END SECTION	Misc IRON & STEEL	(N) HEIGHT OF INLET	(N) HEIGHT OF COVER	DESCRIPTION	STATION	DRAINAGE SYSTEM No. ⬡	DRAINAGE UNIT ○
			EA	LF	EA	EA	CY	CY	CY	EA	EA	EA	EA	~~EA~~	EA	LF	LF	LF	LF	LF	LF	LF	LF	LF	LF	LF	EA	EA	LB	LF	LF				
D-1	2	l															104.2															24" APC	0.5′ R+ "US101" 122+77.63 TO 41.7′ L+ "US101" 123+85.83	2	l
l		m							4.8		1																		326	9.3	7.1	Exp G2 DI, TYPE 24-12	41.7′ L+ "US101" 123+85.83		m
D-1		n															129.0															24" APC	41.7′ L+ "US101" 123+85.83 TO 19.6′ R+ "VIAREAL1" 124+05.71		n
D-2		o							2.7						1														440	5.9	1.8	Exp OL-7 (Mod) DI, MH COVER	20.9′ R+ "VIAREAL1" 124+07.41		o
		p															155.1															24" APC	22.6′ R+ "VIAREA1L" 124+05.79 TO 154.0′ R+ "VIAREAL1" 124+88.87		p
		q							5.3						1														440	10.5	3.2	Exp G2 (Mod) DI, MH COVER	156.0′ R+ "VIAREAL1" 124+88.70		q
		r															144.6															24" APC	156.0′ R+ "VIAREAL1" 124+92.02 TO 159.7′ R+ "VIAREAL1" 126+69.87		r
D-2	2	s																									1					24" AFES	159.7′ R+ "VIAREAL1" 126+69.87	2	s
D-2	3	a							2.9																							HEADWALL AND WINGWALLS	86.2′ R+ "VIAREAL1" 129+44.83	3	a
		b																		112.6												48" APC	92.6′ R+ "VIAREAL1" 129+64.55 TO 122.1′ R+ "VIAREAL1" 130+85.74		b
		c							4.2						1														440	6.1	1.4	Exp G2 (Mod) DI, MH COVER	122.1′ R+ "VIAREAL1" 130+85.74		c
		d *																														5′ X 2′ X 90.0′ RCB	121.8′ R+ "VIAREAL1" 130+88.19 TO 91.0′ R+ "VIAREAL1" 1+68.28		d *
		e							8.9						1														440	13.7	11.5	Exp G2 (Mod) DI, MH COVER	90.5′ R+ "VIAREAL1" 131+69.47		e
		f															200.2															42" APC	90.5′ R+ "VIAREAL1" 131+69.47 TO 68.2′ R+ "VIAREAL1" 133+41.24		f
		g							5.0						1														440	16.5	13.0	Exp G2 (Mod) DI, MH COVER	68.2′ R+ "VIAREAL1" 133+41.24		g
		h																	73.5													42" APC	68.2′ R+ "VIAREAL1" 133+41.24 TO 37.5′ R+ "VIAREAL1" 134+04.31		h
		i							10.7		1																		326	15.3	12.2	Exp G2 DI, TYPE 24-12	37.5′ R+ "VIAREAL1" 134+04.31		i
		j																	124.1													42" APC	37.5′ R+ "VIAREAL1" 134+04.31 TO 40.4′ R+ "VIAREAL1" 135+23.81		j
		k							8.7		1																		326	14.4	11.0	Exp G2 DI, TYPE 24-12	40.4′ R+ "VIAREAL1" 135+23.81		k
		l																	195.1													42" APC	40.4′ R+ "VIAREAL1" 135+23.81 TO 41.2′ R+ "VIAREAL1" 137+16.85		l
		m							7.0		1																		326	10.3	8.3	Exp G2 DI, TYPE 24-12	41.2′ R+ "VIAREAL1" 137+16.85		m
D-2		n																	73.9													42" APC	41.2′ R+ "VIAREAL1" 137+16.85 TO 67.0′ R+ "VIAREAL1" 137+99.41		n
D-3		o							8.0		1																		326	11.3	8.4	Exp G2 DI, TYPE 24-12	67.0′ R+ "VIAREAL1" 137+99.41		o
		p																	128.2													42" APC	48.7′ R+ "CASITAS1" 17+26.74 TO 67.0′ R+ "VIAREAL1" 137+99.41		p
		q							10.6						1														440	11.9	8.6	Exp G2 (Mod) DI, MH COVER	48.7′ R+ "CASITAS1" 17+26.74		q
		r																	138.4													42" APC	48.7′ R+ "CASITAS1" 17+26.74 TO 33.0′ R+ "CASITAS1" 18+78.50		r
		s							7.1						1														440	8.8	5.3	OL-21 (Mod) DI, MH COVER	33.0′ R+ "CASITAS1" 18+78.50		s
		t																109.5														36" APC	33.0′ R+ "CASITAS1" 18+78.50 TO 32.3′ R+ "CASITAS1" 19+92.93		t
		u							9.5						1														440	6.8	4.3	OL-21 (Mod) DI, MH COVER	32.3′ R+ "CASITAS1" 19+92.93		u
		v															64.8															24" APC	31.7′ L+ "CASITAS1" 18+70.00 TO 33.0′ R+ "CASITAS1" 18+78.50		v
		w							4.9						1														440	5.9	4.1	OL-14 (Mod) DI, MH COVER	31.7′ L+ "CASITAS1" 18+70.00		w
		x															8.0															24" APC	33.20′ L+ "CASITAS1" 18+82.50 TO 33.20′ L+ "CASITAS1" 18+90.50		x
		y													1														440	5.3	2.8	OL-14 (Mod) DI, MH COVER	33.20′ L+ "CASITAS1" 18+93.00		y
		z														93.3																18" APC	47.8′ L+ "CASITAS1" 17+12.76 TO 48.7′ R+ "CASITAS1" 17+26.74		z
D-3		aa							1.1		1																		326	7.2	5.4	G1 DI, TYPE 24-12	47.8′ L+ "CASITAS1" 17+12.76		aa
D-2		ac															46.8															24" APC	71.3′ R+ "VIAREAL1" 130+78.72 TO 122.1′ R+ "VIAREAL1" 130+85.74		ac
		ad											1													3.0			215	3.0	1.0	GCP DI, TYPE 36RX	71.3′ R+ "VIAREAL1" 130+78.72		ad
D-2	3	af					66.2																									REMOVE CONCRETE CHANNEL	31.9′ R+ "CASITAS1" 17+29.88 TO 3.1′ R+ "CA4" 131+50.41	3	af
D-2	4	a																										1				36" AFES	52.5′ L+ "VIAREAL1" 133+50.92	4	a
		b																24.0														36" APC	52.5′ L+ "VIAREAL1" 133+50.92 TO 28.7′ L+ "VIAREAL1" 133+63.81		b
		c							3.2			1																	239	7.6	4.5	Exp G2 DI, TYPE 24-12X	28.7′ L+ "VIAREAL1" 133+63.81		c
		d																62.9														36" APC	28.7′ L+ "VIAREAL1" 133+63.81 TO 21.5′ R+ "VIAREAL1" 134+05.59		d
D-2	4	e							7.4		1																		326	9.3	6.2	Exp G2 DI, TYPE 24-12	21.5′ R+ "VIAREAL1" 134+05.59	4	e
SHEET TOTAL							66.2		112.0		7	1	1		10	93.3	852.7	196.4	733.2	112.6						3.0	1	1	7,136			SHEET TOTAL			

(N) - NOT A SEPARATE PAY ITEM, FOR INFORMATION ONLY
* - SEE SHEET DQ-10 FOR QUANTITIES

2 **REPLACED PER ADDENDUM No. 2 DATED APRIL 4, 2016**

DRAINAGE QUANTITIES
DQ-2

JH	11-17-15		
JH	10-13-15		
JH	09-14-15		
REVISED BY	DATE REVISED		
JACKSON HO	AARON WOLFRAM		
CALCULATED-DESIGNED BY	CHECKED BY		
FUNCTIONAL SUPERVISOR	JAMES R. PERANO		
STATE OF CALIFORNIA - DEPARTMENT OF TRANSPORTATION	DESIGN		

LAST REVISION 12-04-15 | DATE PLOTTED => 30-MAR-2016 | TIME PLOTTED => 13:12

Dist	COUNTY	ROUTE	POST MILES TOTAL PROJECT	SHEET No.	TOTAL SHEETS
05	SB	101	2.2/3.3	179	786

REGISTERED CIVIL ENGINEER 12-4-15 DATE

12-7-15
PLANS APPROVAL DATE

REGISTERED PROFESSIONAL ENGINEER AMIR SAEDI No. 56083 Exp 12-31-16 CIVIL STATE OF CALIFORNIA

THE STATE OF CALIFORNIA OR ITS OFFICERS OR AGENTS SHALL NOT BE RESPONSIBLE FOR THE ACCURACY OR COMPLETENESS OF SCANNED COPIES OF THIS PLAN SHEET.

2 *PIPE JOINT CLASSIFICATION*

DRAINAGE QUANTITIES

DRAINAGE SHEET No.	DRAINAGE SYSTEM No. ⬡	DRAINAGE UNIT ○	ABANDON CULVERT (EA)	REMOVE CULVERT (LF)	REMOVE INLET	REMOVE HEADWALL	REMOVE CONCRETE (CHANNEL)	REMOVE CONCRETE (MISCELLANEOUS) (CY)	MINOR CONCRETE (MINOR STRUCTURE)	(N) 18-10 GRATE	(N) 24-12 GRATE	(N) 24-12X GRATE	(N) 36RX GRATE	(N) ~~STEEL PLATE~~	(N) MANHOLE COVER	ALTERNATIVE PIPE CULVERT 18"	24"	36"	42"	48"	54"	60"	WELDED STEEL PIPE CULVERT (TRENCHLESS INSTALLATION) 24"	36"	8" WELDED STEEL PIPE	36" PRECAST CONCRETE PIPE INLET	24" ALTERNATIVE FLARED END SECTION	36" ALTERNATIVE FLARED END SECTION	Misc IRON & STEEL	(N) HEIGHT OF INLET	(N) HEIGHT OF COVER	DESCRIPTION 2	STATION	DRAINAGE SYSTEM No. ⬡	DRAINAGE UNIT ○
			EA	LF	EA	EA	CY	CY	CY	EA	EA	EA	EA	~~EA~~	EA	LF	LF	LF	LF	LF	LF	LF	LF	LF	LF	LF	EA	EA	LB	LF	LF				
D-2	4	f																124.5														36" APC	21.5′ Rt "VIAREAL1" 134+05.59 TO 28.0′ Rt "VIAREAL1" 135+29.54	4	f
		g							5.6			1																	239	8.7	5.7	Exp G4 DI, TYPE 24-12X	28.0′ Rt "VIAREAL1" 135+29.54		g
D-2		h															266.1															24" APC	28.0′ Rt "VIAREAL1" 135+29.54 TO 28.0′ Rt "VIAREAL1" 138+02.77		h
D-3		i							2.6			2																	478	4.1	2.1	GT4 DI ,2 TYPE 24-12X	28.0′ Rt "VIAREAL1" 138+02.77		i
D-2		j															80.9															24" APC	28.0′ Rt "VIAREAL1" 135+29.54 TO 45.3′ Lt "VIAREAL1" 135+70.51		j
D-2	4	k							1.1			1																	239	3.8	2.0	G1 DI, TYPE 24-12X	45.3′ Lt "VIAREAL1" 135+70.51	4	k
D-2	5	b							1.4		1																		326	5.1	3.1	G1 DI, TYPE 24-12	66.0′ Rt "US101" 135+95.34	5	b
		c												P			54.9															24" APC, *"WATERTIGHT"*	66.0′ Rt "US101" 135+95.34 TO 35.8′ Rt "CA1" 137+25.07		c
		d							1.7		1																		326	4.6	2.4	G2 DI, TYPE 24-12	35.8′ Rt "CA1" 137+25.07		d
D-2		e												P			150.5															24" APC, *"WATERTIGHT"*	35.8′ Rt "CA1" 137+25.07 TO 27.0′ Rt "CA1" 138+85.44		e
D-3		f							1.9		1																		326	5.2	3.1	G2 DI, TYPE 24-12	27.0′ Rt "CA1" 138+85.44		f
		g												P			133.8															24" APC, *"WATERTIGHT"*	27.0′ Rt "CA1" 138+85.44 TO 19.4′ Rt "CA1" 140+24.07		g
		h							2.0		1																		326	5.7	3.7	G2 DI, TYPE 24-12	19.4′ Rt "CA1" 140+24.07		h
		i												P			101.2															24" APC, *"WATERTIGHT"*	19.4′ Rt "CA1" 140+24.07 TO 19.0′ Rt "CA1" 141+29.30		i
		j							2.1		1																		326	6.1	4.0	G2 DI, TYPE 24-12	19.0′ Rt "CA1" 141+29.30		j
		k												P			217.8															24" APC, *"WATERTIGHT"*	19.0′ Rt "CA1" 141+29.30 TO 19.0′ Rt "CA1" 143+51.10		k
		l							2.3		1																		326	7.0	5.0	G2 DI, TYPE 24-12	19.0′ Rt "CA1" 143+51.10		l
		m												P			65.2															24" APC, *"WATERTIGHT"*	"US101" 142+25.26 TO 19.0′ Rt "CA1" 143+51.10		m
		n							2.3		1																		326	7.0	4.9	G2 DI, TYPE 24-12	"US101" 142+25.26		n
		o												P			255.2															24" APC, *"WATERTIGHT"*	"US101" 142+25.26 TO "US101" 144+84.52		o
		p							2.2		1																		326	6.4	4.3	G2 DI, TYPE 24-12	"US101" 144+84.52		p
D-3		q												P			245.6															24" APC, *"WATERTIGHT"*	"US101" 144+84.52 TO "US101" 147+34.18		q
D-4		r							2.7		1																		326	6.4	3.4	Exp G2 DI, TYPE 24-12	"US101" 147+34.18		r
		s												P				245.6														36" APC, *"WATERTIGHT"*	"US101" 147+34.18 TO "US101" 149+83.78		s
		t							3.0		1																		326	7.3	4.3	Exp G2 DI, TYPE 24-12	"US101" 149+83.78		t
		u												P				245.6														36" APC, *"WATERTIGHT"*	"US101" 149+83.78 TO "US101" 152+33.39		u
		v							2.8		1																		326	6.6	3.5	Exp G2 DI, TYPE 24-12	"US101" 152+33.39		v
		w												P				245.6														36" APC, *"WATERTIGHT"*	"US101" 152+33.39 TO "US101" 154+83.02		w
		x							2.8		1																		326	6.8	3.7	Exp G2 DI, TYPE 24-12	"US101" 154+83.02		x
		y												P				245.6														36" APC, *"WATERTIGHT"*	"US101" 154+83.02 TO "US101" 157+32.64		y
D-4		z							2.7		1																		326	6.4	3.4	Exp G2 DI, TYPE 24-12	"US101" 157+32.64		z
D-5		aa												P				245.6														36" APC, *"WATERTIGHT"*	"US101" 157+32.64 TO "US101" 159+82.29		aa
		ab							2.7		1																		326	6.5	3.4	Exp G2 DI, TYPE 24-12	"US101" 159+82.29		ab
		ac												P				240.2														36" APC, *"WATERTIGHT"*	"US101" 159+82.29 TO "US101" 162+26.93		ac
		ad							3.5		1																		326	6.7	3.7	Exp G2 DI, TYPE 24-12	"US101" 162+26.93		ad
D-5		ae												P										55.2								36" JACKED WSP, *"WATERTIGHT"*	59.0′ Lt "US101" 162+26.92 TO "US101" 162+26.93		ae
D-3		af			1																									6.0		REMOVE INLET	3.3′ Rt "CA1" 143+50.73		af
		ag		55.5																											4.0	REMOVE 18" x 55.5′ RCP	2.6′ Lt "US101" 132+25.98 TO 3.3′ Rt "CA1" 143+50.73		ag
		ah			1																									5.0		REMOVE INLET	2.6′ Lt "US101" 132+25.98		ah
D-3	5	ai		257.8																											4.0	REMOVE 21" x 257.8′ RCP	2.6′ Lt "US101" 132+25.98 TO "US101" 144+83.82	5	ai
SHEET TOTAL				313.3	2				45.4		15	4					1,571.2	1,592.7						55.2					5,846				SHEET TOTAL		

(N) - NOT A SEPARATE PAY ITEM, FOR INFORMATION ONLY

P - POSITIVE 2

2 **REPLACED PER ADDENDUM No. 2 DATED APRIL 4, 2016**

DRAINAGE QUANTITIES
DQ-3

STATE OF CALIFORNIA - DEPARTMENT OF TRANSPORTATION
Caltrans® **DESIGN**

FUNCTIONAL SUPERVISOR: JAMES R. PERANO
CALCULATED-DESIGNED BY: JACKSON HO
CHECKED BY: AARON WOLFRAM
REVISED BY: JH
DATE REVISED: 11-17-15

LAST REVISION DATE PLOTTED => 30-MAR-2016
TIME PLOTTED => 13:12
12-04-15

Dist	COUNTY	ROUTE	POST MILES TOTAL PROJECT	SHEET No.	TOTAL SHEETS
05	SB	101	2.2/3.3	180	786

REGISTERED CIVIL ENGINEER 12-4-15 DATE

12-7-15
PLANS APPROVAL DATE

REGISTERED PROFESSIONAL ENGINEER AMIR SAEDI No. 56083 Exp 12-31-16 CIVIL STATE OF CALIFORNIA

THE STATE OF CALIFORNIA OR ITS OFFICERS OR AGENTS SHALL NOT BE RESPONSIBLE FOR THE ACCURACY OR COMPLETENESS OF SCANNED COPIES OF THIS PLAN SHEET.

2 *PIPE JOINT CLASSIFICATION*

DRAINAGE QUANTITIES

DRAINAGE SHEET No.	DRAINAGE SYSTEM No. ⬡	DRAINAGE UNIT ○	ABANDON CULVERT (EA)	REMOVE CULVERT (LF)	REMOVE INLET	REMOVE HEADWALL	REMOVE CONCRETE (CHANNEL)	REMOVE CONCRETE (MISCELLANEOUS) (CY)	MINOR CONCRETE (MINOR STRUCTURE)	(N) 18-10 GRATE	(N) 24-12 GRATE	(N) 24-12X GRATE	(N) 36RX GRATE	(N) ~~STEEL PLATE~~	(N) MANHOLE COVER	ALTERNATIVE PIPE CULVERT 18"	24"	36"	42"	48"	54"	60"	WELDED STEEL PIPE CULVERT (TRENCHLESS INSTALLATION) 24"	36"	8" WELDED STEEL PIPE	36" PRECAST CONCRETE PIPE INLET	24" ALTERNATIVE FLARED END SECTION	36" ALTERNATIVE FLARED END SECTION	Misc IRON & STEEL	(N) HEIGHT OF INLET	(N) HEIGHT OF COVER	DESCRIPTION 2	STATION	DRAINAGE SYSTEM No. ⬡	DRAINAGE UNIT ○
			EA	LF	EA	EA	CY	CY	CY	EA	EA	EA	EA	~~EA~~	EA	LF	LF	LF	LF	LF	LF	LF	LF	LF	LF	LF	EA	EA	LB	LF	LF				
D-4	5	aj		59.4																											4.0	REMOVE 18" x 59.4' RCP	3.0' Rt "CA2" 147+88.54 TO "US101" 147+91.04	5	aj
		ak			1																									4.7		REMOVE INLET	"US101" 147+91.04		ak
		al	1																												4.0	ABANDON 18" x 52.2' RCP	"US101" 147+91.04 TO 5.5' Rt "CA1" 149+22.60		al
		am			1																									7.0		REMOVE INLET	5.5' Rt "CA1" 149+22.60		am
		an		32.6																											2.0	REMOVE 32.6' CULVERT	38.0' Rt "CA1" 149+21.57 TO 5.5' Rt "CA1" 149+22.60		an
		ao	1																												4.0	ABANDON 18" x 54.5' RCP	54.6' Lt "US101" 153+35.91		ao
		ap			1																									5.0		REMOVE INLET	"US101" 153+35.88		ap
		aq	1																												5.0	ABANDON 18" x 53.9' RCP	"US101" 153+35.88 TO 53.7' Rt "US101" 153+38.13		aq
		ar			1																									5.9		REMOVE INLET	53.7' Rt "US101" 153+38.13		ar
		as		30.8																											2.8	REMOVE 12" x 30.8' RCP	53.7' Rt "US101" 153+38.13 TO 84.5' Rt "US101" 153+38.41		as
		at			1																									3.5		REMOVE INLET	84.5' Rt "US101" 153+38.41		at
		au		54.7																											4.0	REMOVE 18" x 54.7' RCP	"US101" 156+75.70 TO 55.0' Lt "US101" 156+77.97		au
D-4		av			1																									2.7		REMOVE INLET	"US101" 156+75.70		av
D-5		aw	1																												4.0	ABANDON 30" x 77.2' RCP	55.1' Lt "US101" 159+28.19 TO 3.9' Lt "US101" 159+86.49		aw
		ax			1																									7.0		REMOVE INLET	3.9' Lt "US101" 159+86.49		ax
		ay	1																												3.0	ABANDON 36" x 143.0' RCP	3.9' Lt "US101" 159+86.49 TO 3.1' Lt "US101" 161+29.62		ay
D-5	5	az			1																									5.0		REMOVE INLET	3.1' Lt "US101" 161+29.62	5	az
D-2	6	a							3.8		1																		326	8.8	6.8	G2 DI, TYPE 24-12	19.0' Lt "CA3" 130+51.56	6	a
		b												P		226.4																24" APC, *"WATERTIGHT"*	19.0' Lt "CA3" 130+51.56 TO 19.0' Lt "CA3" 132+83.05		b
		c							2.4		1																		326	7.3	4.8	G2 DI, TYPE 24-12	19.0' Lt "CA3" 132+83.05		c
		d												P		226.3																24" APC, *"WATERTIGHT"*	19.0' Lt "CA3" 130+83.05 TO 19.0' Lt "CA3" 135+13.28		d
		e							2.5		1																		326	7.6	4.9	G2 DI, TYPE 24-12	19.0' Lt "CA3" 135+13.28		e
		f												P		39.5																24" APC, *"WATERTIGHT"*	59.0' Lt "US101" 135+12.61 TO 19.0' Lt "CA3" 135+13.28		f
		g							2.4		1																		326	7.4	4.6	G2 DI, TYPE 24-12	59.0' Lt "US101" 135+12.61		g
D-2		h												P		381.4																24" APC, *"WATERTIGHT"*	59.0' Lt "US101" 135+12.61 TO 59.0' Lt "US101" 138+98.00		h
D-3		i							2.1		1																		326	6.0	3.2	G2 DI, TYPE 24-12	59.0' Lt "US101" 138+98.00		i
		j												P		101.7																24" APC, *"WATERTIGHT"*	59.0' Lt "US101" 138+98.00 TO 59.0' Lt "US101" 140+03.69		j
		k							3.7		1																		326	8.5	6.4	G2 DI, TYPE 24-12	59.0' Lt "US101" 140+03.69		k
		l												P		215.5																24" APC, *"WATERTIGHT"*	59.0' Lt "US101" 140+03.69 TO 59.0' Lt "US101" 142+23.23		l
		m							2.5		1																		326	7.8	5.7	G2 DI, TYPE 24-12	59.0' Lt "US101" 142+23.23		m
		n												P		287.8																24" APC, *"WATERTIGHT"*	59.0' Lt "US101" 142+23.23 TO 59.0' Lt "US101" 145+17.72		n
		o							2.2		1																		326	6.6	4.5	G2 DI, TYPE 24-12	59.0' Lt "US101" 145+17.72		o
D-3		p												P		77.0																24" APC, *"WATERTIGHT"*	59.0' Lt "US101" 145+17.72 TO 59.0' Lt "US101" 146+00.32		p
D-4		q							2.3		1																		326	6.9	4.9	G2 DI, TYPE 24-12	59.0' Lt "US101" 146+00.32		q
D-4		r												P		34.0																24" APC, *"WATERTIGHT"*	19.0' Lt "CA2" 145+97.59 TO 59.0' Lt "US101" 146+00.32		r
D-3		s												P		56.0																24" APC, *"WATERTIGHT"*	59.0' Lt "US101" 138+98.00 TO "US101" 139+00.00		s
D-3		t							1.6		1																		326	6.0		G1 DI, TYPE 24-12	"US101" 139+00.00		t
D-3		u																							26.0							8" WELDED STEEL PIPE	70.5 Lt "US101" 130+22.00 TO 74.6 "US101" 130+47.71		u
D-2		v			1																									3.0	3.0	REMOVE INLET	73.0' Lt "US101" 134+26.42		v
		w	1																											5.0		ABANDON 15" x 73.1' RCP	73.0' Lt "US101" 134+26.42 TO "US101" 134+26.83		w
		x			1																										3.0	REMOVE INLET	"US101" 134+26.83		x
D-2	6	y	1																											4.3		ABANDON 15" x 84.0' RCP	"US101" 134+26.83 TO 84.0' Rt "US101" 134+28.78	6	y
SHEET TOTAL			7	177.5	10				25.5		10					1,645.6									26.0				3,260				SHEET TOTAL		

(N) - NOT A SEPARATE PAY ITEM, FOR INFORMATION ONLY

P - POSITIVE 2

2 **REPLACED PER ADDENDUM No. 2 DATED APRIL 4, 2016**

DRAINAGE QUANTITIES
DQ-4

STATE OF CALIFORNIA - DEPARTMENT OF TRANSPORTATION
DESIGN

FUNCTIONAL SUPERVISOR: JAMES R. PERANO
CALCULATED-DESIGNED BY: AARON WOLFRAM
CHECKED BY: JACKSON HO
REVISED BY: JH
DATE REVISED: 10-23-15

LAST REVISION 12-04-15
DATE PLOTTED => 30-MAR-2016
TIME PLOTTED => 13:12

Dist	COUNTY	ROUTE	POST MILES TOTAL PROJECT	SHEET No.	TOTAL SHEETS
05	SB	101	2.2/3.3	181	786

REGISTERED CIVIL ENGINEER 12-4-15 DATE

12-7-15
PLANS APPROVAL DATE

REGISTERED PROFESSIONAL ENGINEER AMIR SAEDI No. 56083 Exp 12-31-16 CIVIL STATE OF CALIFORNIA

THE STATE OF CALIFORNIA OR ITS OFFICERS OR AGENTS SHALL NOT BE RESPONSIBLE FOR THE ACCURACY OR COMPLETENESS OF SCANNED COPIES OF THIS PLAN SHEET.

2 *PIPE JOINT CLASSIFICATION*

DRAINAGE QUANTITIES

DRAINAGE SHEET No.	DRAINAGE SYSTEM No. ⬡	DRAINAGE UNIT ○	ABANDON CULVERT (EA)	REMOVE CULVERT (LF)	REMOVE INLET	REMOVE HEADWALL	REMOVE CONCRETE (CHANNEL)	REMOVE CONCRETE (MISCELLANEOUS) (CY)	MINOR CONCRETE (MINOR STRUCTURE)	(N) 18-10 GRATE	(N) 24-12 GRATE	(N) 24-12X GRATE	(N) 36RX GRATE	(N) ~~STEEL PLATE~~	(N) MANHOLE COVER	ALTERNATIVE PIPE CULVERT 18"	24"	36"	42"	48"	54"	60"	WELDED STEEL PIPE CULVERT (TRENCHLESS INSTALLATION) 24"	36"	8" WELDED STEEL PIPE	36" PRECAST CONCRETE PIPE INLET	24" ALTERNATIVE FLARED END SECTION	36" ALTERNATIVE FLARED END SECTION	Misc IRON & STEEL	(N) HEIGHT OF INLET	(N) HEIGHT OF COVER	DESCRIPTION 2	STATION	DRAINAGE SYSTEM No. ⬡	DRAINAGE UNIT ○
			EA	LF	EA	EA	CY	CY	CY	EA	EA	EA	EA	~~EA~~	EA	LF	LF	LF	LF	LF	LF	LF	LF	LF	LF	LF	EA	EA	LB	LF	LF				
D-2	6	z			1																											REMOVE INLET	84.0′ R+ "US101" 134+28.78	6	z
D-2		aa	1																												4.0	ABANDON 18" x 505.5′ RCP	"US101" 134+26.83 TO 6.0 L+ "US101" 139+32.26		aa
D-3		ab			1																									5.4		REMOVE INLET	53.8 L+ "US101" 139+31.27		ab
		ac	1																												4.0	ABANDON 18" x 47.9′ RCP	53.8 L+ "US101" 139+31.27 TO 6.0 L+ "US101" 139+32.26		ac
		ad			1																									6.3		REMOVE INLET	6.0 L+ "US101" 139+32.26		ad
		ae	1																												4.0	ABANDON 18" x 58.8′ RCP	6.0 L+ "US101" 139+32.26 TO 52.8 R+ "US101" 139+32.54		ae
		af			1																									4.0		REMOVE INLET	52.8 R+ "US101" 139+32.54		af
		ag	1																												4.0	ABANDON 21" x 293.7′ RCP	2.6 L+ "US101" 132+25.98 TO 6.0 L+ "US101" 139+32.26		ag
		ah			1																									6.2		REMOVE INLET	"US101" 144+83.82		ah
		ai	1																												4.0	ABANDON 21" x 31.2′ RCP	"US101" 144+83.82 TO 53.6 L+ "US101" 145+17.48		ai
		aj			1																									5.5		REMOVE INLET	53.6 L+ "US101" 145+17.48		aj
		ak	1																												4.0	ABANDON 21" x 63.3′ RCP	53.6 L+ "US101" 145+17.48 TO 81.0 L+ "US101" 145+32.65		ak
D-3	6	al			1																									4.0		REMOVE INLET	81.0 L+ "US101" 145+32.65	6	al
D-3	7	a							1.2			1																	239	5.7	1.8	G3 DI, TYPE 24-12X	38.1′ R+ "CASITAS1" 14+12.57	7	a
		b												P			73.9															24" APC, *"WATERTIGHT"*	38.2′ L+ "CASITAS1" 14+09.60 TO 38.1′ R+ "CASITAS1" 14+12.57		b
		c							2.0			1																	239	6.8	3.3	G4 DI, TYPE 24-12X	38.2′ L+ "CASITAS1" 14+09.60		c
		d												P			53.2															24" APC, *"WATERTIGHT"*	38.2′ L+ "CASITAS1" 14+09.60 TO 19.0′ L+ "CA2" 140+29.64		d
		e							2.0		1																		326	5.8	3.4	G2 DI, TYPE 24-12	19.0′ L+ "CA2" 140+29.64		e
		f												P			140.9															24" APC, *"WATERTIGHT"*	19.0′ L+ "CA2" 140+29.64 TO 19.0′ L+ "CA2" 141+75.28		f
		g							2.1		1																		326	6.2	3.7	G2 DI, TYPE 24-12	19.0′ L+ "CA2" 141+75.28		g
		h												P			120.2															24" APC, *"WATERTIGHT"*	19.0′ L+ "CA2" 141+75.28 TO 19.0′ L+ "CA2" 143+00.00		h
		i							1.9		1																		326	5.1	2.0	G2 DI, TYPE 24-12	19.0′ L+ "CA2" 143+00.00		i
D-3		j												P			293.0															24" APC, *"WATERTIGHT"*	19.0′ L+ "CA2" 143+00.00 TO 19.0′ L+ "CA2" 145+97.59		j
D-4		k							2.7		1																		326	6.3	3.0	Exp G2 DI, TYPE 24-12	19.0′ L+ "CA2" 145+97.59		k
		l												P				183.3														36" APC, *"WATERTIGHT"*	19.0′ L+ "CA2" 145+97.59 TO 19.0′ L+ "CA2" 147+86.20		l
		m							2.5		1																		326	5.8	2.7	Exp G2 DI, TYPE 24-12	19.0′ L+ "CA2" 147+86.20		m
		n												P				251.1														36" APC, *"WATERTIGHT"*	19.0′ L+ "CA2" 147+86.20 TO 59.1′ L+ "US101" 150+56.07		n
		o							2.9		1																		326	6.9	3.9	Exp G2 DI, TYPE 24-12	59.1′ L+ "US101" 150+56.07		o
		p												P				270.2														36" APC, *"WATERTIGHT"*	59.1′ L+ "US101" 150+56.07 TO 59.0′ L+ "US101" 153+35.99		p
		q							2.9		1																		326	7.0	3.9	Exp G2 DI, TYPE 24-12	59.0′ L+ "US101" 153+35.99		q
		r												P				330.8														36" APC, *"WATERTIGHT"*	59.0′ L+ "US101" 153+35.99 TO 59.0′ L+ "US101" 156+77.76		r
		s							3.0		1																		326	7.3	3.8	Exp G2 DI, TYPE 24-12	59.0′ L+ "US101" 156+77.76		s
D-4		t												P				241.5														36" APC, *"WATERTIGHT"*	59.0′ L+ "US101" 156+77.76 TO 59.0′ L+ "US101" 159+28.27		t
D-5		u							3.2		1																		326	7.1	4.1	Exp G2 DI, TYPE 24-12	59.0′ L+ "US101" 159+28.27		u
		v												P					126.0													42" APC, *"WATERTIGHT"*	59.0′ L+ "US101" 159+28.27 TO 59.0′ L+ "US101" 160+61.51		v
		w							5.0		1																		326	7.4	2.7	Exp G2 DI, TYPE 24-12	59.0′ L+ "US101" 160+61.51		w
		x												P						157.2												48" APC, *"WATERTIGHT"*	59.0′ L+ "US101" 160+61.51 TO 59.0′ L+ "US101" 162+26.92		x
		y							4.2		1																		326	6.6	2.1	Exp G2 DI, TYPE 24-12	59.0′ L+ "US101" 162+26.92		y
		z												P							176.1											54" APC, *"WATERTIGHT"*	59.0′ L+ "US101" 162+26.92 TO 59.0′ L+ "US101" 164+08.01		z
		aa							3.3		1																		326	6.3	1.8	Exp G2 DI, TYPE 24-12	59.0′ L+ "US101" 164+08.01		aa
D-5		ab												P							87.5											54" APC, *"WATERTIGHT"*	59.0′ L+ "US101" 164+08.01 TO 56.1′ L+ "US101" 165+01.25		ab
D-6		ac							3.4		1																		326	6.5	2.0	Exp G2 DI, TYPE 24-12	56.1′ L+ "US101" 165+01.25		ac
D-5	7	ad												P							108.9											54" APC, *"WATERTIGHT"*	56.1′ L+ "US101" 165+01.25 TO 58.4′ L+ "US101" 166+16.35	7	ad
SHEET TOTAL			6		7				42.3		13	2				681.2	1,276.9	126.0	157.2	372.5									4,716				SHEET TOTAL		

(N) - NOT A SEPARATE PAY ITEM, FOR INFORMATION ONLY

P - POSITIVE 2

2 **REPLACED PER ADDENDUM No. 2 DATED APRIL 4, 2016**

DRAINAGE QUANTITIES
DQ-5

JH	11-17-15	REVISED BY	DATE REVISED
AW	10-07-15		

CALCULATED-DESIGNED BY: JACKSON HO
CHECKED BY: AARON WOLFRAM
FUNCTIONAL SUPERVISOR: JAMES R. PERANO

STATE OF CALIFORNIA - DEPARTMENT OF TRANSPORTATION
Caltrans® DESIGN

LAST REVISION 12-04-15
DATE PLOTTED => 30-MAR-2016
TIME PLOTTED => 13:12

Dist	COUNTY	ROUTE	POST MILES TOTAL PROJECT	SHEET No.	TOTAL SHEETS
05	SB	101	2.2/3.3	182	786

REGISTERED CIVIL ENGINEER 12-4-15 DATE

12-7-15
PLANS APPROVAL DATE

REGISTERED PROFESSIONAL ENGINEER AMIR SAEDI No. 56083 Exp. 12-31-16 CIVIL STATE OF CALIFORNIA

THE STATE OF CALIFORNIA OR ITS OFFICERS OR AGENTS SHALL NOT BE RESPONSIBLE FOR THE ACCURACY OR COMPLETENESS OF SCANNED COPIES OF THIS PLAN SHEET.

REVISED BY	DATE REVISED
JH	10-23-15
JH	09-21-15
JH	10-13-14

JACKSON HO — AARON WOLFRAM — CALCULATED-DESIGNED BY — CHECKED BY — FUNCTIONAL SUPERVISOR — JAMES R. PERANO

STATE OF CALIFORNIA - DEPARTMENT OF TRANSPORTATION — DESIGN — Caltrans

2 PIPE JOINT CLASSIFICATION

DRAINAGE QUANTITIES

DRAINAGE SHEET No.	DRAINAGE SYSTEM No.	DRAINAGE UNIT	ABANDON CULVERT (EA)	REMOVE CULVERT (LF)	REMOVE INLET	REMOVE HEADWALL	REMOVE CONCRETE (CHANNEL)	REMOVE CONCRETE (MISCELLANEOUS) (CY)	MINOR CONCRETE (MINOR STRUCTURE)	(N) 18-10 GRATE	(N) 24-12 GRATE	(N) 24-12X GRATE	(N) 36RX GRATE	(N) ~~STEEL PLATE~~	(N) MANHOLE COVER	ALTERNATIVE PIPE CULVERT 18"	24"	36"	42"	48"	54"	60"	WELDED STEEL PIPE CULVERT (TRENCHLESS INSTALLATION) 24"	36"	8" WELDED STEEL PIPE	36" PRECAST CONCRETE PIPE INLET	24" ALTERNATIVE FLARED END SECTION	36" ALTERNATIVE FLARED END SECTION	Misc IRON & STEEL	(N) HEIGHT OF INLET	(N) HEIGHT OF COVER	DESCRIPTION 2	STATION	DRAINAGE SYSTEM No.	DRAINAGE UNIT
			EA	LF	EA	EA	CY	CY	CY	EA	EA	EA	EA	~~EA~~	EA	LF	LF	LF	LF	LF	LF	LF	LF	LF	LF	LF	EA	EA	LB	LF	LF				
D-5	7	ae							4.3		1																		326	6.4	1.4	Exp G2 DI, TYPE 24-12	58.4' Lt "US101" 166+16.35	7	ae
D-6		af												P								170.5										60" APC, *"WATERTIGHT"*	58.4' Lt "US101" 166+16.35 TO 37.1' Lt "LI2" 167+86.65		af
D-5		ai												P			50.7															24" APC, *"WATERTIGHT"*	78.6' Rt "LINDEN1" 16+29.77 TO 59.0' Lt "US101" 160+61.51		ai
		aj							2.1		1																		326	4.0	1.7	Exp G2 DI, TYPE 24-12	78.6' Rt "LINDEN1" 16+29.77		aj
		ak												P			68.3															24" APC, *"WATERTIGHT"*	29.0' Rt "LINDEN1" 15+81.08 TO 78.6' Rt "LINDEN1" 16+29.77		ak
		al							6.0						1														440	14.1	6.8	OS (Mod) DI, MH COVER	29.0' Rt "LINDEN1" 15+81.08		al
		am												P			60.0															24" APC, *"WATERTIGHT"*	32.3' Lt "LINDEN1" 15+89.84 TO 29.0' Rt "LINDEN1" 15+81.08		am
		an							2.1			1																	239	6.5	3.8	G2 DI, TYPE 24-12X	32.3' Lt "LINDEN1" 15+89.84		an
D-5		ao																							35.9								8" WELDED STEEL PIPE	32.3' Lt "LINDEN1" 15+89.84 TO DECK DRAINAGE		ao
D-6		ap												P			28.6															24" APC, *"WATERTIGHT"*	58.4' Lt "US101" 166+16.35 TO 19.0' Lt "LI2" 166+21.40		ap
		aq							1.2		1																		326	4.3	2.3	G1 DI, TYPE 24-12	19.0' Lt "LI2" 166+21.40		aq
		ar												P									58.1									24" JACKED WSP, *"WATERTIGHT"*	3.2' Rt "US101" 166+16.32 TO 58.4' Lt "US101" 166+16.35		ar
		as							1.7		1																		326	4.7	2.7	G2 DI, TYPE 24-12	3.2' Rt "US101" 166+16.32		as
		at												P			119.3															24" APC, *"WATERTIGHT"*	3.2' Rt "US101" 164+93.19 TO 3.2' Rt "US101" 166+16.32		at
		au							1.6		1																		326	4.1	2.2	G2 DI, TYPE 24-12	3.2' Rt "US101" 164+93.19		au
		av												P			119.2															24" APC, *"WATERTIGHT"*	3.2' Rt "US101" 163+70.12 TO 3.2' Rt "US101" 164+93.19		av
D-6		aw							1.4		1																		326	3.3	1.8	G2 DI, TYPE 24-12	3.2' Rt "US101" 163+70.12		aw
D-3		ax																							5.9								8" WELDED STEEL PIPE	31.5' Rt "CASITAS1" 14+15.95 TO 37.2' Rt "CASITAS1" 14+14.35		ax
		ay																							32.6								8" WELDED STEEL PIPE	4.6' Rt "CASITAS1" 14+14.00 TO 37.2' Rt "CASITAS1" 14+14.35		ay
		az																							33.1								8" WELDED STEEL PIPE	4.7' Lt "CASITAS1" 14+14.00 TO 37.7' Lt "CASITAS1" 14+11.78		az
D-3		ba																							7.1								8" WELDED STEEL PIPE	31.0' Lt "CASITAS1" 14+14.01 TO 37.7' Lt "CASITAS1" 14+11.78		ba
D-5		bb							4.2																								PCC CHANNEL	70.5' Rt "LINDEN1" 15+09.98 TO 78.6' Rt "LINDEN1" 16+29.77		bb
D-4		bc		258.3																											2.0	REMOVE 24" x 258.3' RCP	81.0' Lt "US101" 145+32.65 TO 3.0' Rt "CA2" 147+88.54		bc
		bd			1																									3.3		REMOVE INLET	3.0' Rt "CA2" 147+88.54		bd
		be	1																												2.4	ABANDON 27" x 529.9' RCP	3.0' Rt "CA2" 147+88.54 TO 54.6' Lt "US101" 153+35.91		be
		bf			1																									5.8		REMOVE INLET	54.6' Lt "US101" 153+35.91		bf
		bg	1																												3.0	ABANDON 27" x 335.8' RCP	54.6' Lt "US101" 153+35.91 TO 55.0' Lt "US101" 156+77.97		bg
		bh			1																									5.7		REMOVE INLET	55.0' Lt "US101" 156+77.97		bh
D-4		bi	1																												2.1	ABANDON 30" x 245.7' RCP	55.0' Lt "US101" 156+77.97 TO 55.1' Lt "US101" 159+28.19		bi
D-5		bk			1																									5.0		REMOVE INLET	55.1' Lt "US101" 159+28.19		bk
		bl		50.4																											5.0	REMOVE 18" x 50.4' RCP	53.5' Lt "US101" 161+28.25 TO 3.1' Lt "US101" 161+29.62		bl
		bm				1																										REMOVE HEADWALL	93.0' Lt "US101" 160+82.41		bm
		bn					5.6																									REMOVE CONCRETE CHANNEL	238.1' Lt "US101" 160+41.14 TO 93.0' Lt "US101" 160+82.41		bn
		bo		59.7																											8.0	REMOVE 18" x 59.7' RCP	93.0' Lt "US101" 160+82.41 TO 53.5' Lt "US101" 161+28.25		bo
		bp			1																									4.5		REMOVE INLET	53.5' Lt "US101" 161+28.25		bp
D-5		bq	1																												1.0	ABANDON 36" x 447.2' RCP	3.1' Lt "US101" 161+29.62 TO "US101" 165+76.99		bq
D-6		br			1																									3.4		REMOVE INLET	"US101" 165+76.99		br
		bs	1																												3.0	ABANDON 36" x 125.3' RSP	"US101" 165+76.99 TO 14.1' Lt "LI2" 166+72.27		bs
		bt				1																										REMOVE HEADWALL	14.1' Lt "LI2" 166+72.27		bt
		bu						11.4																								REMOVE SACKRETE CHANNEL	14.1' Lt "LI2" 166+72.27 TO 39.6' Lt "LI2" 167+04.79		bu
D-6	7	bv			1																									3.5		REMOVE INLET	53.8' Lt "US101" 166+27.56	7	bv
SHEET TOTAL			5	368.4	7	2	5.6	11.4	24.6		8				1		446.1				157.2	369.6	170.5	58.1		114.6				2,635			SHEET TOTAL			

(N) - NOT A SEPARATE PAY ITEM, FOR INFORMATION ONLY

P - POSITIVE 2

2 **REPLACED PER ADDENDUM No. 2 DATED APRIL 4, 2016**

DRAINAGE QUANTITIES
DQ-6

LAST REVISION 12-04-15 | DATE PLOTTED => 30-MAR-2016 | TIME PLOTTED => 13:12

Dist	COUNTY	ROUTE	POST MILES TOTAL PROJECT	SHEET No.	TOTAL SHEETS
05	SB	101	2.2/3.3	183	786

REGISTERED CIVIL ENGINEER 12-4-15 DATE

12-7-15
PLANS APPROVAL DATE

REGISTERED PROFESSIONAL ENGINEER AMIR SAEDI No. 56083 Exp. 12-31-16 CIVIL STATE OF CALIFORNIA

THE STATE OF CALIFORNIA OR ITS OFFICERS OR AGENTS SHALL NOT BE RESPONSIBLE FOR THE ACCURACY OR COMPLETENESS OF SCANNED COPIES OF THIS PLAN SHEET.

2 PIPE JOINT CLASSIFICATION

2 REPLACED PER ADDENDUM No. 2 DATED APRIL 4, 2016

DRAINAGE QUANTITIES

DRAINAGE SHEET No.	DRAINAGE SYSTEM No.	DRAINAGE UNIT	ABANDON CULVERT (EA)	REMOVE CULVERT (LF)	REMOVE INLET	REMOVE HEADWALL	REMOVE CONCRETE (CHANNEL)	REMOVE CONCRETE (MISCELLANEOUS) (CY)	MINOR CONCRETE (MINOR STRUCTURE)	(N) 18-10 GRATE	(N) 24-12 GRATE	(N) 24-12X GRATE	(N) 36RX GRATE	(N) ~~STEEL PLATE~~	(N) MANHOLE COVER	ALTERNATIVE PIPE CULVERT 18"	24"	36"	42"	48"	54"	60"	WELDED STEEL PIPE CULVERT (TRENCHLESS INSTALLATION) 24"	36"	8" WELDED STEEL PIPE	36" PRECAST CONCRETE PIPE INLET	24" ALTERNATIVE FLARED END SECTION	36" ALTERNATIVE FLARED END SECTION	Misc IRON & STEEL	(N) HEIGHT OF INLET	(N) HEIGHT OF COVER	DESCRIPTION	STATION	DRAINAGE SYSTEM No.	DRAINAGE UNIT
			EA	LF	EA	EA	CY	CY	CY	EA	EA	EA	EA	~~EA~~	EA	LF	LF	LF	LF	LF	LF	LF	LF	LF	LF	LF	EA	EA	LB	LF	LF				
D-3	8	a							4.4						1														440	8.3	6.3	OL-7 (Mod) DI, MH COVER	36.4′ Rt "VIAREAL1" 144+47.61	8	a
		b															39.5															24" APC	36.4′ Rt "VIAREAL1" 144+44.61 TO 17.0′ Rt "VIAREAL1" 144+83.33		b
		c							3.1						1														440	7.4	5.3	OL-7 (Mod) DI, MH COVER	17.0′ Rt "VIAREAL1" 144+83.33		c
D-3		d															361.4															24" APC	17.0′ Rt "VIAREAL1" 144+84.33 TO 17.0′ Rt "VIAREAL1" 148+48.77		d
D-4		e							5.1						1														440	9.3	2.3	Exp OS (Mod) DI, MH COVER	18.2′ Rt "VIAREAL1" 148+48.77		e
		f																113.6														36" APC	18.2′ Rt "VIAREAL1" 148+48.77 TO 17.0′ Rt "VIAREAL1" 149+66.50		f
		g							7.5						1														440	10.4	7.3	Exp OS (Mod) DI, MH COVER	17.0′ Rt "VIAREAL1" 149+66.50		g
		h																131.0														36" APC	17.0′ Rt "VIAREAL1" 149+66.50 TO 17.0′ Rt "VIAREAL1" 151+02.31		h
		i							11.7						1														440	10.3	3.2	Exp OS (Mod) DI, MH COVER	17.0′ Rt "VIAREAL1" 151+02.31		i
		j																342.6														36" APC	17.0′ Rt "VIAREAL1" 151+02.31 TO 17.0′ Rt "VIAREAL1" 154+47.89		j
		k							6.8						1														440	9.2	2.5	Exp OS (Mod) DI, MH COVER	17.0′ Rt "VIAREAL1" 154+47.89		k
		l																148.1 ~~248.0~~														36" APC	17.0′ Rt "VIAREAL1" 154+47.89 TO 17.0′ Rt "VIAREAL1" 157+00.00		l
		m							5.3						1														440	8.0	2.5	Exp OS (Mod) DI, MH COVER	17.0′ Rt "VIAREAL1" 157+00.00		m
D-4		n																235.0 ~~248.3~~														36" APC	17.0′ Rt "VIAREAL1" 157+00.00 TO ~~18.2′~~ 17.5′ Rt "VIAREAL1" 159+59.37		n
D-5		o							3.8						1														440	7.5	4.4	Exp OS (Mod) DI, MH COVER	17.5′ ~~18.2′~~ Rt "VIAREAL1" 159+59.37		o
		p																35.4														36" APC	18.7′ Lt "VIAREAL1" 159+59.22 TO 17.5′ ~~18.2′~~ Rt "VIAREAL1" 159+59.37		p
		q							6.8						1														440	8.4	4.9	Exp OS (Mod) DI, MH COVER	18.7′ Lt "VIAREAL1" 159+59.22		q
		r																183.9														36" APC	18.7′ Lt "VIAREAL1" 159+59.22 TO 20.4′ Lt "LI1" 161+30.94		r
		s							6.9		1																		326	8.1	4.1	Exp G2 DI, TYPE 24-12	20.4′ Lt "LI1" 161+30.94		s
		t																		52.3												48" APC	20.4′ Lt "LI1" 161+30.94 TO 23.0′ Rt "LI1" 161+65.89		t
		u							7.6		1																		326	7.2	2.3	Exp G2 DI, TYPE 24-12	23.0′ Rt "LI1" 161+65.89		u
		v																		165.0												48" APC	23.0′ Rt "LI1" 161+65.89 TO 21.2′ Rt "LI1" 163+40.20		v
		w							6.1		1																		326	7.2	3.1	Exp G2 DI, TYPE 24-12	21.2′ Rt "LI1" 163+40.20		w
D-5		x																		15.4												48" APC	21.2′ Rt "LI1" 163+40.20 TO 21.0′ Rt "LI1" 163+57.52		x
D-3		y															31.5															24" APC	16.3′ Lt "VIAREAL1" 144+81.28 TO 17.0′ Rt "VIAREAL1" 144+81.83		y
D-3		z							1.6	1																			440 ~~149~~	4.6	2.6	Exp GO (Mod) ~~G5~~ DI, TYPE 18-10	17.0′ Lt "VIAREAL1" 144+81.28		z
D-4		aa															32.7															24" APC	18.2′ Rt "VIAREAL1" 148+48.77 TO 16.3′ Lt "VIAREAL1" 148+48.77		aa
		ab							1.5 ~~1.6~~	1																			440 ~~149~~	4.2	2.4	Exp GO (Mod) ~~G5~~ DI, TYPE 18-10	17.0′ Lt "VIAREAL1" 148+48.77		ab
		ac															31.5															24" APC	17.0′ Rt "VIAREAL1" 151+02.31 TO 16.3′ Lt "VIAREAL1" 151+02.32		ac
		ad							1.6	1																			440 ~~149~~	4.4	2.4	Exp GO (Mod) ~~G5~~ DI, TYPE 18-10	17.0′ Lt "VIAREAL1" 151+02.32		ad
		ae															36.7															24" APC	41.2′ Rt "VIAREAL1" 150+74.19 TO 17.0′ Rt "VIAREAL1" 151+02.31		ae
		af							2.3						1														440	7.1	4.9	G2 (Mod) DI, MH COVER	41.2′ Rt "VIAREAL1" 150+74.19		af
		ag															26.4															24" APC	75.4′ Rt "VIAREAL1" 150+59.72 TO 41.2′ Rt "VIAREAL1" 150+74.19		ag
		ah							1.6						1														440	4.7	3.2	OS (Mod) DI, MH COVER	75.4′ Rt "VIAREAL1" 150+59.72		ah
		ai															31.5															24" APC	17.0′ Rt "VIAREAL1" 154+47.89 TO 16.3′ Lt "VIAREAL1" 154+47.91		ai
		aj							1.5	1																			440 ~~149~~	4.0	2.0	Exp GO (Mod) ~~G5~~ DI, TYPE 18-10	16.6′ Lt "VIAREAL1" 154+47.91		aj
		ak															3.6 ~~3.1~~															24" APC	28.6′ Rt "VIAREAL1" 154+47.88 TO 17.0′ Rt "VIAREAL1" 154+47.89		ak
		al							~~1.2~~		~~1~~															3.5			~~326~~	3.0 ~~4.1~~	2.1	OCPI REDWOOD COVER ~~G1~~ DI, ~~TYPE 24-12~~	28.6′ Rt "VIAREAL1" 154+47.88		al
		am															31.5															24" APC	17.0′ Rt "VIAREAL1" 157+00.00 TO 16.3′ Lt "VIAREAL1" 157+00.00		am
D-4		an							1.5	1																			440 ~~149~~	4.0	2.0	Exp GO (Mod) ~~G5~~ DI, TYPE 18-10	16.3′ Lt "VIAREAL1" 157+00.00		an
D-5		ao															51.2															24" APC	38.1′ Rt "LI1" 160+95.64 TO 23.0′ Rt "LI1" 161+65.89		ao
		ap							2.2		1																		326	6.4	4.0	G2 DI, TYPE 24-12	38.1′ Rt "LI1" 160+95.65		ap
		ar															34.0															24" APC	41.9′ Rt "LI1" 160+50.98 TO 38.1′ Rt "LI1" 160+95.64		ar
D-5	8	as							3.8						1														440	7.8	1.8	Exp G2 (Mod) DI, MH COVER	41.9′ Rt "LI1" 160+50.98	8	as
SHEET TOTAL									~~94.0~~ 92.8	5	~~5~~ 4				12		~~713.0~~ 711.5	~~1,302.8~~ 1,189.6		232.7						3.5			~~7,207~~ 7,904				SHEET TOTAL		

(N) - NOT A SEPARATE PAY ITEM, FOR INFORMATION ONLY

2 2 2

DRAINAGE QUANTITIES
DQ-7

JACKSON HO — AARON WOLFRAM — JAMES R. PERANO — DESIGN

STATE OF CALIFORNIA - DEPARTMENT OF TRANSPORTATION

Caltrans

REVISED BY	DATE REVISED
JH	11-17-15
JH	10-21-15
JH	09-21-15

CALCULATED-DESIGNED BY / CHECKED BY / FUNCTIONAL SUPERVISOR

LAST REVISION 12-04-15 DATE PLOTTED => 30-MAR-2016 TIME PLOTTED => 13:12

Dist	COUNTY	ROUTE	POST MILES TOTAL PROJECT	SHEET No.	TOTAL SHEETS
05	SB	101	2.2/3.3	184	786

REGISTERED CIVIL ENGINEER DATE 12-4-15

PLANS APPROVAL DATE 12-7-15

REGISTERED PROFESSIONAL ENGINEER AMIR SAEDI No. 56083 Exp 12-31-16 CIVIL STATE OF CALIFORNIA

THE STATE OF CALIFORNIA OR ITS OFFICERS OR AGENTS SHALL NOT BE RESPONSIBLE FOR THE ACCURACY OR COMPLETENESS OF SCANNED COPIES OF THIS PLAN SHEET.

2 PIPE JOINT CLASSIFICATION

DRAINAGE QUANTITIES

DRAINAGE SHEET No.	DRAINAGE SYSTEM No. ⬡	DRAINAGE UNIT ○	ABANDON CULVERT (EA)	REMOVE CULVERT (LF)	REMOVE INLET	REMOVE HEADWALL	REMOVE CONCRETE (CHANNEL)	REMOVE CONCRETE (MISCELLANEOUS) (CY)	MINOR CONCRETE (MINOR STRUCTURE)	(N) 18-10 GRATE	(N) 24-12 GRATE	(N) 24-12X GRATE	(N) 36RX GRATE	(N) ~~STEEL PLATE~~	(N) MANHOLE COVER	ALTERNATIVE PIPE CULVERT 18"	24"	36"	42"	48"	54"	60"	WELDED STEEL PIPE CULVERT (TRENCHLESS INSTALLATION) 24"	36"	8" WELDED STEEL PIPE	36" PRECAST CONCRETE PIPE INLET	24" ALTERNATIVE FLARED END SECTION	36" ALTERNATIVE FLARED END SECTION	Misc IRON & STEEL	(N) HEIGHT OF INLET	(N) HEIGHT OF COVER	DESCRIPTION	STATION	DRAINAGE SYSTEM No. ⬡	DRAINAGE UNIT ○
			EA	LF	EA	EA	CY	CY	CY	EA	EA	EA	EA	~~EA~~	EA	LF	LF	LF	LF	LF	LF	LF	LF	LF	LF	LF	EA	EA	LB	LF	LF				
D-5	8	at															93.3															24" APC	34.8′ L+ "OGAN2" 160+30.14 TO 41.9′ R+ "LI1" 160+50.98	8	at
		au							3.2						1														440	6.4	4.2	Exp OS (Mod) DI, MH COVER	34.8′ L+ "OGAN2" 160+30.14		au
		av															60.5															24" APC	18.6′ R+ "OGAN2" 160+25.93 TO 34.8′ L+ "OGAN2" 160+30.14		av
		aw							2.2						1														440	6.2	4.5	OL-7 (Mod) DI, MH COVER	25.5′ R+ "OGAN2" 160+25.93		aw
		ax															122.5															24" APC	18.6′ R+ "OGAN1" 160+09.77 TO 18.6′ R+ "OGAN2" 160+25.93		ax
		ay							1.2						1														440	3.2	1.8	OS (Mod) DI, MH COVER	18.6′ R+ "OGAN1" 160+09.77		ay
		az															202.7															24" APC	20.9′ L+ "OGAN1" 160+15.06 TO 41.9′ R+ "LI1" 160+50.98		az
D-5		ba							2.2						1														440	5.4	3.4	OL-7 (Mod) DI, MH COVER	20.7′ L+ "OGAN1" 160+09.70		ba
D-4		bb															17.6															24" APC	17.0′ R+ "VIAREAL1" 148+48.77 TO 31.4′ R+ "VIAREAL1" 148+33.34		bb
		bd							0.7																							CONCRETE COLLAR	31.4′ R+ "VIAREAL1" 148+33.34		bd
		be			1																											REMOVE INLET	26.3 R+ "VIAREAL1" 148+36.65		be
		bf																														REMOVE HEADWALL	17.1 R+ "VIAREAL1" 148+51.62		bf
		bg		36.3		1																									1.2	REMOVE 16" x 36.3′ RCP	17.1 R+ "VIAREAL1" 148+51.62 TO 18.9 L+ "VIAREAL1" 148+59.14		bg
		bh			1																									5.0		REMOVE INLET	18.9 L+ "VIAREAL1" 148+59.14		bh
		bi			1																									1.7		REMOVE INLET	34.4 R+ "VIAREAL1" 150+10.63		bi
		bj		64.7																											2.0	REMOVE 64.7′ CULVERT	34.4 R+ "VIAREAL1" 150+10.63 TO 28.3 R+ "VIAREAL1" 150+75.00		bj
		bk			1																									1.6		REMOVE INLET	80.1 R+ "VIAREAL1" 150+59.49		bk
		bl		50.6																											2.0	REMOVE 50.6′ CULVERT	80.1 R+ "VIAREAL1" 150+59.49 TO 28.3 R+ "VIAREAL1" 150+75.00		bl
		bm			1																									3.0		REMOVE INLET	28.3 R+ "VIAREAL1" 150+75.00		bm
D-4		bn		78.4																											3.0	REMOVE 78.4′ CULVERT	28.3 R+ "VIAREAL1" 150+75.00 TO 22.7 R+ "VIAREAL1" 151+54.11		bn
D-5		bo		50.0																											1.3	REMOVE 8" x 50.0′ CSP	13.7 R+ "VIAREAL1" 160+60.44 TO 22.4 L+ "VIAREAL1" 160+95.63		bo
		bq			1																									4.2		REMOVE INLET	22.3 L+ "VIAREAL1" 160+64.04		bq
		bs		50.9																											5.0	REMOVE 12" x 50.9′ RCP	53.5 L+ "LI1" 160+57.87 TO 22.3 L+ "VIAREAL1" 160+64.04		bs
		bt				1																										REMOVE HEADWALL	34.5 L+ "VIAREAL1" 160+21.68		bt
		bu		36.3																											3.0	REMOVE 24" x 36.3′ RCP	34.5 L+ "VIAREAL1" 160+21.68 TO 53.5 L+ "LI1" 160+57.87		bu
		bv			1																									3.3		REMOVE INLET	53.5 L+ "LI1" 160+57.87		bv
		bw		139.8																											3.0	REMOVE 36" x 139.8′ RCP	53.5 L+ "LI1" 160+57.87 TO 15.6 L+ "LI1" 161+75.27		bw
		bx			1																									5.0		REMOVE INLET	15.6 L+ "LI1" 161+75.27		bx
		by																														REMOVE HEADWALL	12.5 R+ "LI1" 161+67.17		by
		bz		29.2		1																									2.0	REMOVE 18" x 29.2′ RCP	12.5 R+ "LI1" 161+67.17 TO 15.6 L+ "LI1" 161+75.27		bz
		ca		110.0																											6.0	REMOVE 8" x 110.0′ CSP	19.0 R+ "LINDEN1" 18+91.86 TO 90.7 L+ "LINDEN1" 19+00.56		ca
		cb		17.7																											9.0	REMOVE 36" x 17.7′ RCP	"LI1" 163+81.26 TO 17.5 R+ "LI1" 163+83.63		cb
D-5	8	cc		206.8																											5.2	REMOVE 36" x 206.8′ RCP	18.9 L+ "VIAREAL1" 148+59.14 TO 28.3 R+ "VIAREAL1" 150+75.00	8	cc
D-5	9	b													1														440			MH COVER	30.8′ R+ "LI1" 163+51.40	9	b
D-2	10	a																									1					24" AFES	29.8′ R+ "VIAREAL1" 129+17.73	10	a
		b															21.3															24" APC	29.8′ R+ "VIAREAL1" 129+17.73 TO 31.0′ L+ "VIAREAL1" 129+38.98		b
		c									1																		326	4.3	1.6	G1 DI, TYPE 24-12	31.0′ L+ "VIAREAL1" 129+38.98		c
		d							1.2								144.1															24" APC	31.0′ L+ "VIAREAL1" 129+38.98 TO 60.7′ L+ "VIAREAL1" 130+74.11		d
		e																									1					24" AFES	60.7′ L+ "VIAREAL1" 130+74.11		e
		f					4.7																									REMOVE CONCRETE CHANNEL	18.3′ R+ "CA4" 129+75.13 TO 10.1′ R+ "CA4" 130+19.73		f
D-2	10	g																					113.4									8" WELDED STEEL PIPE	DECK DRAINAGE TO 61.8′ R+ "CA4" 131+28.31	10	g
SHEET TOTAL				870.7	8	3	4.7		10.7		1				5		662.0						113.4				2		2,526			SHEET TOTAL			

(N) - NOT A SEPARATE PAY ITEM, FOR INFORMATION ONLY

2 REPLACED PER ADDENDUM No. 2 DATED APRIL 4, 2016

DRAINAGE QUANTITIES
DQ-8

STATE OF CALIFORNIA - DEPARTMENT OF TRANSPORTATION
DESIGN
Caltrans

JH	11-17-15	JACKSON HO	AARON WOLFRAM
AW	10-07-15		
JH	09-17-15		
REVISED BY	DATE REVISED	CALCULATED-DESIGNED BY	CHECKED BY

FUNCTIONAL SUPERVISOR: JAMES R. PERANO

LAST REVISION 12-04-15 | DATE PLOTTED => 30-MAR-2016 | TIME PLOTTED => 13:12

Dist	COUNTY	ROUTE	POST MILES TOTAL PROJECT	SHEET No.	TOTAL SHEETS
05	SB	101	2.2/3.3	185	786

REGISTERED CIVIL ENGINEER DATE 12-4-15

PLANS APPROVAL DATE 12-7-15

REGISTERED PROFESSIONAL ENGINEER AMIR SAEDI No. 56083 Exp 12-31-16 CIVIL STATE OF CALIFORNIA

THE STATE OF CALIFORNIA OR ITS OFFICERS OR AGENTS SHALL NOT BE RESPONSIBLE FOR THE ACCURACY OR COMPLETENESS OF SCANNED COPIES OF THIS PLAN SHEET.

2 PIPE JOINT CLASSIFICATION

DRAINAGE QUANTITIES

DRAINAGE SHEET No.	DRAINAGE SYSTEM No. ⬡	DRAINAGE UNIT ○	ABANDON CULVERT (EA) EA	REMOVE CULVERT (LF) LF	REMOVE INLET EA	REMOVE HEADWALL EA	REMOVE CONCRETE (CHANNEL) CY	REMOVE CONCRETE (MISCELLANEOUS) (CY) CY	MINOR CONCRETE (MINOR STRUCTURE) CY	(N) 18-10 GRATE EA	(N) 24-12 GRATE EA	(N) 24-12X GRATE EA	(N) 36RX GRATE EA	(N) ~~STEEL PLATE~~ ~~EA~~	(N) MANHOLE COVER EA	ALTERNATIVE PIPE CULVERT 18" LF	24" LF	36" LF	42" LF	48" LF	54" LF	60" LF	WELDED STEEL PIPE CULVERT (TRENCHLESS INSTALLATION) 24" LF	36" LF	8" WELDED STEEL PIPE LF	36" PRECAST CONCRETE PIPE INLET LF	24" ALTERNATIVE FLARED END SECTION EA	36" ALTERNATIVE FLARED END SECTION EA	Misc IRON & STEEL LB	(N) HEIGHT OF INLET LF	(N) HEIGHT OF COVER LF	DESCRIPTION	STATION	DRAINAGE SYSTEM No. ⬡	DRAINAGE UNIT ○
D-2	11	a							2.2						1														440	3.9	2.4	OL-7 (Mod) DI, MH COVER	17.0′ Rt "VIAREAL1" 130+00.00	11	a
		b															63.2															24" APC	17.0′ Rt "VIAREAL1" 130+00.00 TO 17.0′ Rt "VIAREAL1" 130+70.42		b
		c							1.7						1														440	5.1	3.3	OS (Mod) DI, MH COVER	17.0′ Rt "VIAREAL1" 130+70.42		c
		d															64.5															24" APC	17.0′ Rt "VIAREAL1" 130+70.42 TO 36.1′ Lt "VIAREAL1" 131+07.26		d
D-2	11	e																									1					24" AFES	36.1′ Lt "VIAREAL1" 131+07.26	11	e
D-1	12	a							4.0						1														440	4.0	2.5	OL-21 (Mod) DI, MH COVER	20.7′ Rt "VIAREAL1" 122+63.37	12	a
		b															27.3															24" APC	20.7′ Rt "VIAREAL1" 122+63.37 TO 21.8′ Rt "VIAREAL1" 122+96.61		b
		c							1.9						1														440	4.3	3.1	OS (Mod) Exp DI, MH COVER	21.8′ Rt "VIAREAL1" 122+98.85		c
D-1		d															199.9															24" APC	23.3′ Rt "VIAREAL1" 123+98.91 TO 145.1′ Rt "VIAREAL1" 124+54.97		d
D-2		e							1.9						1														440	7.3	3.4	G2 (Mod) DI, MH Cover	146.4′ Rt "VIAREAL1" 124+55.92		e
		f															70.0															24" APC	147.7′ Rt "VIAREAL1" 124+57.41 TO 194.8′ Rt "VIAREAL1" 125+28.07		f
		g											1													6.3			215	6.3	4.3	GCP DI, TYPE 36RX	194.9′ Rt "VIAREAL1" 125+31.01		g
		h															16.6															24" APC	195.2′ Rt "VIAREAL1" 125+34.65 TO 197.3′ Rt "VIAREAL1" 125+61.54		h
D-2		i																									1					24" AFES	197.6′ Rt "VIAREAL1" 125+61.54		i
D-1	12	j																											40			CURB OUTLET DRAIN	20.6′ Rt "VIAREAL1" 122+76.58	12	j
D-5	13	a							1.7						1														440	5.0	3.4	OS (Mod) DI, MH COVER	17.0′ Lt "LINDEN1" 14+79.50	13	a
		b															88.5															24" APC	16.0′ Lt "LINDEN1" 13+85.18 TO 17.0′ Lt "LINDEN1" 14+79.50		b
		c							2.5						1														440	3.5	1.6	OL-10 (Mod) DI, MH COVER	16.0′ Lt "LINDEN1" 13+85.18		c
		d															19.1															24" APC	16.0′ Lt "LINDEN1" 13+85.18 TO 37.9′ Rt "LINDEN1" 14+00.00		d
D-5	13	e																									1					24" AFES	37.9′ Rt "LINDEN1" 14+00.00	13	e
D-5	14	a							2.2						1														440	3.8	2.2	OL-7 (Mod) DI, MH COVER	17.0′ Lt "LINDEN1" 19+39.68	14	a
		b															137.0															24" APC	17.0′ Lt "LINDEN1" 19+39.68 TO 17.0′ Lt "LINDEN1" 20+84.84		b
		c							1.6						1														440	4.7	2.6	OS (Mod) DI, MH COVER	17.0′ Lt "LINDEN1" 20+84.84		c
		d															118.9															24" APC	17.0′ Lt "LINDEN1" 20+84.84 TO 17.0′ Lt "LINDEN1" 22+09.87		d
		e							1.6						1														440	4.6	2.3	OS (Mod) DI, MH COVER	17.0′ Lt "LINDEN1" 22+09.87		e
		f															59.2															24" APC	17.0′ Lt "LINDEN1" 22+09.87 TO 17.0′ Lt "LINDEN1" 22+77.76		f
		g							2.4						1														440	2.9	1.2	OL-10 (Mod) DI, MH COVER	17.0′ Lt "LINDEN1" 22+77.76		g
		h															23.2															24" APC	44.0′ Rt "LINDEN1" 22+83.00 TO 17.0′ Lt "LINDEN1" 22+77.76		h
		i																									1					24" AFES	44.0′ Lt "LINDEN1" 22+83.00		i
		j																											640			CURB OUTLET DRAIN	21.1′ Rt "LINDEN1" 23+37.58		j
		k			1																									5.0		REMOVE INLET	29.7 Lt "LINDEN1" 21+07.23		k
D-5	14	l	1																												1.0	ABANDON 10" x 20.9′ CMP	29.7 Lt "LINDEN1" 21+07.23 TO 50.0 Lt "LINDEN1" 21+12.11	14	l
D-6	15	a																									1					24" AFES	35.3′ Lt "LI2" 168+15.57	15	a
		b															36.8															24" APC	19.8′ Lt "LI2" 167+79.86 TO 35.3′ Lt "LI2" 168+15.57		b
		c							2.4		1																		326	6.0	4.2	Exp G2 DI, TYPE 24-12	19.8′ Lt "LI2" 167+79.86		c
		d															54.0															24" APC	15.8′ Rt "LI2" 167+35.09 TO 19.8′ Lt "LI2" 167+79.86		d
		e							2.4		1																		326	6.2	4.7	Exp G2 DI, TYPE 24-12	15.8′ Rt "LI2" 167+35.09		e
		f			1																									3.5		REMOVE INLET	7.7 Lt "LI2" 167+30.67		f
D-6	15	g		25.8																											3.0	REMOVE 12" x 25.8′ CSP	34.5 Lt "LI2" 167+24.81 TO 7.7 Lt "LI2" 167+30.67	15	g
SHEET TOTAL			1	25.8	2				28.5		2		1		11		978.2									6.3	5		6,387			SHEET TOTAL			

(N) - NOT A SEPARATE PAY ITEM, FOR INFORMATION ONLY

2 REPLACED PER ADDENDUM No. 2 DATED APRIL 4, 2016

DRAINAGE QUANTITIES
DQ-9

JH	11-17-15		
JH	10-21-15		
JH	09-22-15	REVISED BY	DATE REVISED
JACKSON HO	AARON WOLFRAM	CALCULATED-DESIGNED BY	CHECKED BY
FUNCTIONAL SUPERVISOR	JAMES R. PERANO		

STATE OF CALIFORNIA - DEPARTMENT OF TRANSPORTATION
DESIGN
Caltrans

LAST REVISION 12-04-15 | DATE PLOTTED => 30-MAR-2016 | TIME PLOTTED => 13:12

Dist	COUNTY	ROUTE	POST MILES TOTAL PROJECT	SHEET No.	TOTAL SHEETS
05	SB	101	2.2/3.3	185A	786

REGISTERED CIVIL ENGINEER 12-4-15 DATE

12-7-15
PLANS APPROVAL DATE

REGISTERED PROFESSIONAL ENGINEER AMIR SAEDI No. 56083 Exp 12-31-16 CIVIL STATE OF CALIFORNIA

THE STATE OF CALIFORNIA OR ITS OFFICERS OR AGENTS SHALL NOT BE RESPONSIBLE FOR THE ACCURACY OR COMPLETENESS OF SCANNED COPIES OF THIS PLAN SHEET.

2

DRAINAGE QUANTITIES

DRAINAGE SHEET No.	DRAINAGE SYSTEM No. ⬡	DRAINAGE UNIT ○	ABANDON CULVERT (EA) EA	REMOVE CULVERT (LF) LF	REMOVE INLET EA	REMOVE HEADWALL EA	REMOVE CONCRETE (CHANNEL) CY	REMOVE CONCRETE (MISCELLANEOUS) (CY) CY	MINOR CONCRETE (MINOR STRUCTURE) CY	(N) 18-10 GRATE EA	(N) 24-12 GRATE EA	(N) 24-12X GRATE EA	(N) 36RX GRATE EA	(N) PIPE JOINT CLASSIFICATION	(N) MANHOLE COVER EA	ALTERNATIVE PIPE CULVERT 18" LF	24" LF	36" LF	42" LF	48" LF	54" LF	60" LF	WELDED STEEL PIPE CULVERT (TRENCHLESS INSTALLATION) 24" LF	36" LF	8" WELDED STEEL PIPE LF	36" PRECAST CONCRETE PIPE INLET LF	24" ALTERNATIVE FLARED END SECTION EA	36" ALTERNATIVE FLARED END SECTION EA	Misc IRON & STEEL LB	(N) HEIGHT OF INLET LF	(N) HEIGHT OF COVER LF	DESCRIPTION	STATION	DRAINAGE SYSTEM No. ⬡	DRAINAGE UNIT ○
D-4	8	cd																											440	8.7	5.7	Exp OS (Mod) DI, MH COVER	17.0′ R+ "VIAREAL1" 156+00.00	8	cd
		ce												P				108.2														36" APC, WATERTIGHT	17.0′ R+ "VIAREAL1" 156+00.00 TO 17.0′ R+ "VR1" 157+13.00		ce
		cf												P		2.5																18" APC, WATERTIGHT	17.0′ R+ "VIAREAL1" 156+00.00 TO 26.1′ R+ "VIAREAL1" 156+00.00		cf
		cg											1													3.0			215	3.0	1.5	GCP DI, TYPE 36RX	26.1′ R+ "VIAREAL1" 156+00.00		cg
		ch																								3.0				3.0	0.5	OCPI DI, REDWOOD COVER	26.3′ R+ "VIAREAL1" 157+13.00		ch
D-4		ci												P		2.8																18" APC, WATERTIGHT	17.0′ R+ "VIAREAL1" 157+13.00 TO 26.3′ R+ "VIAREAL1"157+13.00		ci
D-5		cj											1													3.0			215	3.0	1.5	GCP DI, TYPE 36RX	42.9′ R+ "VIAREAL1" 159+35.62		cj
D-5	8	ck												P		25.0																18" APC, WATERTIGHT	17.5′ R+ "VIAREAL1" 159+59.37 TO 42.9′ R+ "VIAREAL1"159+35.62	8	ck
SHEET TOTAL																30.3		108.2								9.0			870			SHEET TOTAL			

(N) - NOT A SEPARATE PAY ITEM, FOR INFORMATION ONLY
P - POSITIVE

REDWOOD COVER

DRAINAGE SYSTEM No. ⬡	DRAINAGE UNIT ○	REDWOOD COVER EA
8	al	1
8	ch	1
TOTAL		2

2 ADDED PER ADDENDUM No. 2 DATED APRIL 4, 2016

DRAINAGE QUANTITIES
DQ-9a

REVISED BY | DATE REVISED
JACKSON HO | AARON WOLFRAM
CALCULATED-DESIGNED BY | CHECKED BY
FUNCTIONAL SUPERVISOR: JAMES R. PERANO
STATE OF CALIFORNIA - DEPARTMENT OF TRANSPORTATION
Caltrans DESIGN

LAST REVISION 03-21-16 | DATE PLOTTED => 30-MAR-2016 | TIME PLOTTED => 13:12

Dist	COUNTY	ROUTE	POST MILES TOTAL PROJECT	SHEET No.	TOTAL SHEETS
05	SB	101	2.2/3.3	186	786

REGISTERED CIVIL ENGINEER 12-4-15 DATE

12-7-15
PLANS APPROVAL DATE

REGISTERED PROFESSIONAL ENGINEER AMIR SAEDI No. 56083 Exp. 12-31-16 CIVIL STATE OF CALIFORNIA

THE STATE OF CALIFORNIA OR ITS OFFICERS OR AGENTS SHALL NOT BE RESPONSIBLE FOR THE ACCURACY OR COMPLETENESS OF SCANNED COPIES OF THIS PLAN SHEET.

HEADWALL SUBGRADE

SHEET No.	SUBGRADE ENHANCEMENT GEOTEXTILE, CLASS B3	CLASS 3 PERMEABLE MATERIAL (BLANKET)
	SQYD	CY
DD-10	102.1	
DD-10		40.9
TOTAL	102.1	40.9

STRUCTURAL CONCRETE

DRAINAGE SYSTEM No. ⬡	DRAINAGE UNIT ○	STRUCTURAL CONCRETE, BOX CULVERT	STRUCTURAL CONCRETE, HEADWALL	BAR REINFORCING STEEL	CONCRETE BACKFILL (PIPE TRENCH)
		CY	CY	LB	CY
1	a		19.8	1,552	
1	s		11.8	1,456	
3	a		16.9	1,830	
3	d	33.3		5,220	
7	af				46.4
7	ag		17.9	2,177	
9	a	96.1		10,086	
TOTAL		129.4	66.4	22,321 *	46.4

* FOR BAR REINFORCING STEEL QUANTITIES, SEE SHEET Q-4.

APRONS

DRAINAGE SYSTEM No. ⬡	DRAINAGE UNIT ○	PLACE HOT MIX ASPHALT (MISCELLANEOUS AREA)	HOT MIX ASPHALT (TYPE A)	MINOR CONCRETE (MISCELLANEOUS CONSTRUCTION)
		SQYD	TON	CY
3	ae			0.22
3	ab			0.27
5	a			0.27
6	k	7.71	0.84	
6	m	14.53	1.58	
7	q	15.45	1.68	
7	s	14.87	1.62	
7	u	16.84	1.83	
7	w	18.07	1.96	
7	y	17.45	1.90	
7	aa	18.07	1.96	
7	ac	111.90	12.17	
8	ag			0.18
8	*cl*			*0.36*
8	*cm*			*0.37*
8	*cn*			*0.39*
TOTAL		234.89	25.54 *	~~0.94~~ ** *2.06*

2

FOR DIKE QUANTITIES, SEE SHEET Q-2.

* QUANTITY INCLUDED IN THE PAVEMENT STRUCTURE QUANTITIES, SEE SHEET Q-3.

** QUANTITY INCLUDED IN THE CONCRETE QUANTITIES, SEE SHEET Q-4.

3" PLASTIC PIPE (EDGE DRAIN OUTLET)

UNIT No. ○	LENGTH
	LF
a	27
b	29
c	29
d	26
e	32
f	26
g	30
h	29
i	34
j	18
k	32
l	15
m	55
n	35
o	32
P	62
TOTAL	511 *

* FOR PIPE DETAILS SEE SHEET DD-40

SAND BACKFILL

DRAINAGE SYSTEM No. ⬡	DRAINAGE UNIT ○	SAND BACKFILL
		CY
1	af	19.1
5	al	3.4
5	ao	3.6
5	aq	3.5
5	aw	14.0
5	ay	37.4
6	w	3.3
6	y	3.8
6	aa	33.1
6	ac	3.1
6	ae	3.8
6	ag	26.2
6	ai	2.8
6	ak	5.6
7	be	78.0
7	bg	49.5
7	bi	44.7
7	bq	117.1
7	bo	32.8
14	l	0.4
TOTAL		485.2

GUTTER DEPRESSION, WING GATES AND CONNECTOR PIPE SCREEN

DRAINAGE SYSTEM	UNIT	DESCRIPTION	MINOR CONCRETE (GUTTER DEPRESSION)	(N) CURB OPENING LENGTH	WING GATES (AUTOMATIC RETRACTABLE SYSTEM)	CONNECTOR PIPE SCREEN
			CY	LF	EA	EA
2	o	OL-7 ON GRADE	1.97	7.0	1	
3	s	OL-21 IN GRADE SAG (Mod)	4.05	21.0	1	1
3	w	OL-14 IN GRADE SAG (Mod)	4.08	14.0	1	
3	u	OL-21 ON GRADE	3.71	21.0	1	
3	y	OL-14 ON GRADE	2.84	14.0	1	
8	a	OL-7 IN GRADE	1.97	7.0	1	
8	c	OS ON GRADE	1.65	7.0	1	
8	e	OS ON GRADE	1.46	3.5	1	
8	g	OS ON GRADE	1.64	4.9	1	
8	i	OS ON GRADE	1.79	4.9	1	
8	k	OS ON GRADE	1.60	4.9	1	
8	m	OS ON GRADE	1.60	3.5	1	
8	o	OS IN GRADE SAG (Mod)	2.03	4.0	1	
8	q	OS IN GRADE SAG (Mod)	1.94	4.0	1	1
8	ah	OS IN GRADE SAG (Mod)	2.24	3.5	1	1
8	au	OS IN GRADE SAG (Mod)	2.06	4.9	1	1
8	aw	OS IN GRADE SAG (Mod)	2.10	7.0	1	
8	ay	OS IN GRADE SAG (Mod)	1.97	3.5	1	
8	ba	OL-21 IN GRADE SAG (Mod)	2.96	7.0	1	1
11	a	OL-7 ON GRADE	1.97	7.0	1	
11	c	OS ON GRADE	1.57	3.5	1	1
12	a	OL-21 ON GRADE	1.66	21.0	1	1
12	c	OS ON GRADE	3.58	3.5	1	
13	a	OS ON GRADE	1.66	3.5	1	
13	c	OL-10 ON GRADE	2.47	10.0	1	1
14	a	OL-7 ON GRADE	1.97	7.0	1	
14	c	OS ON GRADE	1.54	3.5	1	
14	e	OS ON GRADE	1.55	3.5	1	
14	g	OL-10 ON GRADE	2.33	10.0	1	1
TOTAL			63.96		29	9

(N) - NOT A SEPARATE PAY ITEM, FOR INFORMATION ONLY

ROCK SLOPE PROTECTION & Rdwy Exc

LOCATION	ROCK SLOPE PROTECTION (FACING, METHOD B) (CY)	ROCK SLOPE PROTECTION (1/4 T, METHOD A) (CY)	ROCK SLOPE PROTECTION (1/4 T, METHOD B) (CY)	ROCK SLOPE PROTECTION FABRIC (CLASS 8)	ROADWAY EXCAVATION
	CY	CY	CY	SQYD	CY
DRAINAGE SYSTEM No. 7 ah	116			45	
RW 'C' - "CA2" Sta 146+79 TO 146+85	1			1	
CARPINTERIA CREEK	2,260	3,250	430	5,500	2,000
"US101" 131+52 TO 139+00 (ECQ-1)				818	
TOTAL	2,377	3,250	430	6,364	2,000 *

* QUANTITY INCLUDED IN THE ROADWAY EXCAVATION QUANTITIES, SEE SHEET Q-3.

2 REPLACED PER ADDENDUM No. 2 DATED APRIL 4, 2016

DRAINAGE QUANTITIES

DQ-10

STATE OF CALIFORNIA - DEPARTMENT OF TRANSPORTATION
Caltrans DESIGN
FUNCTIONAL SUPERVISOR: JAMES R. PERANO
CALCULATED-DESIGNED BY: JACKSON HO
CHECKED BY: AARON WOLFRAM
REVISED BY: JH JH JH AS
DATE REVISED: 10-16-15 10-23-15 12-04-15

LAST REVISION 12-04-15 | DATE PLOTTED => 30-MAR-2016 | TIME PLOTTED => 13:12

Dist	COUNTY	ROUTE	POST MILES TOTAL PROJECT	SHEET No.	TOTAL SHEETS
05	SB	101	2.2/3.3	187	786

REGISTERED CIVIL ENGINEER DATE 12-4-15

PLANS APPROVAL DATE 12-7-15

REGISTERED PROFESSIONAL ENGINEER AMIR SAEDI No. 56083 Exp. 12-31-16 CIVIL STATE OF CALIFORNIA

THE STATE OF CALIFORNIA OR ITS OFFICERS OR AGENTS SHALL NOT BE RESPONSIBLE FOR THE ACCURACY OR COMPLETENESS OF SCANNED COPIES OF THIS PLAN SHEET.

REVISED BY	JH	JH	AW	JH
DATE REVISED	11-17-15	10-21-15	10-07-15	

2 *PIPE JOINT CLASSIFICATION*

DRAINAGE QUANTITIES SUMMARY

SHEET No.	ABANDON CULVERT (EA)	REMOVE CULVERT (LF)	REMOVE INLET	REMOVE HEADWALL	REMOVE CONCRETE (CHANNEL)	REMOVE CONCRETE (MISCELLANEOUS) (CY)	MINOR CONCRETE (MINOR STRUCTURE)	(N) 18-10 GRATE	(N) 24-12 GRATE	(N) 24-12X GRATE	(N) 36RX GRATE	(N) ~~STEEL PLATE~~	(N) MANHOLE COVER	ALTERNATIVE PIPE CULVERT 18"	24"	36"	42"	48"	54"	60"	WELDED STEEL PIPE (0.5" THICK) TRENCHLESS INSTALLATION 24"	36"	8" WELDED STEEL PIPE	36" PRECAST CONCRETE PIPE INLET	24" ALTERNATIVE FLARED END SECTION	36" ALTERNATIVE FLARED END SECTION	Misc IRON & STEEL	DESCRIPTION
	EA	LF	EA	EA	CY	CY	CY	EA	EA	EA	EA	~~EA~~	EA	LF	LF	LF	LF	LF	LF	LF	LF	LF	LF	LF	EA	EA	LB	
DQ-1	1	23.6	1		326.3		107.8		22				1		888.5					1,448.9							7,612	DQ-1 SHEET TOTAL
DQ-2					66.2		112.0		7	1	1		10	93.3	852.7	196.4	733.2	112.6						3.0	1	1	7,136	DQ-2 SHEET TOTAL
DQ-3		313.3	2				45.4		15	4					1,571.2	1,592.7						55.2					5,846	DQ-3 SHEET TOTAL
DQ-4	7	177.5	10				25.5		10						1,645.6								26.0				3,260	DQ-4 SHEET TOTAL
DQ-5	6		7				42.3		11	3					681.2	1,276.9	126.0	157.2	372.5								4,716	DQ-5 SHEET TOTAL
DQ-6	5	368.4	7	2	5.6	11.4	24.6		6				1		446.1					170.5	58.1		114.6				2,635	DQ-6 SHEET TOTAL
DQ-7							92.8 ~~94.0~~	5	4 ~~5~~				12		711.5 ~~713.0~~	1,189.6 ~~1,302.8~~		232.7						3.5			4,904 ~~4,207~~	DQ-7 SHEET TOTAL
DQ-8		870.7	8	3	4.7		10.7		1				5		662.0								113.4		2		2,526	DQ-8 SHEET TOTAL
DQ-9	1	25.8	2				28.5		2		1		11		978.2									6.3	5		6,387	DQ-9 SHEET TOTAL
DQ-9a														30.3		108.2								9.0			870	DQ-9a SHEET TOTAL
SCQ-1	1	409.9					98.9							101.1		409.9												SCQ-1 SHEET TOTAL
TOTAL	21	2,189.2	37	5	402.8	11.4*	~~589.7~~ 588.5							~~194.4~~ 224.7	~~8,438.5~~ 8,437.0	~~4,778.7~~ 4,773.7	859.2	502.5	372.5	1,619.4	58.1	55.2	254.0	~~9.3~~ 21.8	8	1	~~47,325~~ 48,892	TOTAL

(N) - NOT A SEPARATE PAY ITEM, FOR INFORMATION ONLY

* QUANTITY INCLUDED IN REMOVE CONCRETE (MISCELLANEOUS) QUANTITIES, SEE SHEET Q-1.

2 2 2 2

2 **REPLACED PER ADDENDUM No. 2 DATED APRIL 4, 2016**

CALCULATED-DESIGNED BY JACKSON HO
CHECKED BY AARON WOLFRAM
FUNCTIONAL SUPERVISOR JAMES R. PERANO

STATE OF CALIFORNIA - DEPARTMENT OF TRANSPORTATION
Caltrans® DESIGN

LAST REVISION 12-04-15 | DATE PLOTTED => 30-MAR-2016 | TIME PLOTTED => 13:12

DRAINAGE QUANTITIES
DQ-11

Dist	COUNTY	ROUTE	POST MILES TOTAL PROJECT	SHEET No.	TOTAL SHEETS
05	SB	101	2.2/3.3	350	786

REGISTERED CIVIL ENGINEER 12-4-15 DATE

12-7-15
PLANS APPROVAL DATE

REGISTERED PROFESSIONAL ENGINEER AMIR SAEDI No. 56083 Exp. 12-31-16 CIVIL STATE OF CALIFORNIA

THE STATE OF CALIFORNIA OR ITS OFFICERS OR AGENTS SHALL NOT BE RESPONSIBLE FOR THE ACCURACY OR COMPLETENESS OF SCANNED COPIES OF THIS PLAN SHEET.

2 **REPLACED PER ADDENDUM No. 2 DATED APRIL 4, 2016**

BARRIERS

SHEET No.	STATION	SIDE	CONCRETE BARRIER (TYPE 60)	CONCRETE BARRIER (TYPE 60C)	CONCRETE BARRIER (TYPE 60F)	CONCRETE BARRIER (TYPE 80 MODIFIED)	CONCRETE BARRIER (TYPE 736B MODIFIED)	CONCRETE BARRIER (TYPE 732B MODIFIED)	SINGLE THRIE BEAM BARRIER (STEEL POST)	TRANSITION RAILING (TYPE STB)	(N) SPLIT FACE TEXTURE	(N) WOOD BEAM TEXTURE PREPARE AND STAIN	BASE BOND BREAKER
			LF	LF	LF	LF	LF	LF	LF	EA	SQFT		SQYD
L-1	"US101" 116+00.00 TO 122.75.00			675							6,102		150
L-1,L-2	"US101" 122+75.00 TO 128+17.00	R†	542								3,859		120
L-1,L-2	"US101" 123+69.50 TO 128+17.00	R†	444								3,161		
L-2,L-3	"US101" 130+17.00 TO 131+52.00	R†	135								961		30
L-2,L-3	"US101" 131+52.00 TO 138+48.56	L†	697								2,844		155
L-2,L-3	"US101" 131+52.00 TO 138+48.56	R†	697								2,844		155
L-3	"US101" 138+87.83 TO 140+56.54				169					2	2,380		94
L-3	"CA2" 140+32.19 TO 140+67.89	R†						35			223		
L-3	"VIAREAL1" 142+00.00 TO 145+01.04	L†					300				2,136		
L-3 TO L-6	"US101" 140+81.54 TO 166+25.00	L†							2,537				
L-3 TO L-6	"US101" 140+81.54 TO 166+25.00	R†							2,550				
L-5 TO L-6	"US101" 164+00.00 TO 166+84.07	L†	263								1,073		
2 ~~L-5~~	~~VIAREAL1" 158+72.10 TO 159+22.42~~	~~L†~~					~~50~~				~~2,136~~		
L-6	"LI1" 169+00.00 TO 173+25.00	R†	426								1,738		
L-6	"LI2" 165+25.00 TO 168+02.34	L†/R†				339						*339*	26
	STRUCTURE PLANS					1,400						*****	
	TOTAL		3,204	675	169	1,739	~~350~~ *300* 2	35	5,087	2	~~29,457~~ *27,321 (N)* 2 (N)		730

(N) - NOT A SEPARATE PAY ITEM, FOR INFORMATION ONLY.
**** SEE STRUCTURE PLANS FOR TEXTURES ON BARRIERS.*

HOT MIX ASPHALT DIKE

SHEET No.	STATION	SIDE	PLACE HOT MIX ASPHALT DIKE (TYPE A)	PLACE HOT MIX ASPHALT DIKE (TYPE E)	HOT MIX ASPHALT (TYPE A)
			LF	LF	TON
D-1	"VIAREAL1" 122+43.59 TO 123+75.00	L†		131	3.2
D-2	"VIAREAL1" 136+00.00 TO 136+62.00	L†		62	1.6
D-2, D-3	"CA3" 133+81.95 TO 138+74.16	L†		492	12.1
D-2, D-3	"CA5" 133+19.22 TO "CA1" 140+32.22	R†		243	6.0
D-3, D-4	"CA1" 149+25.00 TO 152+24.16	R†		299	7.4
D-3, D-4	"CA2" 140+28 TO 146+56.50	L†		629	16.0
D-3	"US101" 140+00.00 TO 140+11.69	L†	11		0.3
D-3	"US101" 142+11.23 TO 142+31.23	L†	20		0.5
D-4	"US101" 153+23.73 TO 153+44.13	L†	20		0.5
D-4	"US101" 156+65.54 TO 156+85.93	L†	20		0.5
D-5	"US101" 159+16.03 TO 159+36.44	L†	14		0.4
D-5	"US101" 160+48.66 TO 160+70.29	L†	21		0.6
D-5	"US101" 162+14.41 TO 162+35.34	L†	21		0.5
D-5	"US101" 163+95.83 TO 164+16.33	L†	20		0.5
D-5	"LI1" 160+28.56 TO 162+46.80	R†		202	5.1
	TOTAL		147	2,058	55.2*

* QUANTITY INCLUDED IN HOT MIX ASPHALT QUANTITIES, SEE SHEET Q-3.

MIDWEST GUARDRAIL SYSTEM

SHEET No.	LOCATION	SIDE	TRANSITION RAILING (TYPE WB-31)	END ANCHOR ASSEMBLY (TYPE SFT)	ALTERNATIVE IN-LINE TERMINAL SYSTEM	MIDWEST GUARDRAIL SYSTEM (8' POST)	ALTERNATIVE CRASH CUSHION SYSTEM	(N) BURIED POST END ANCHOR	(N) END CAP (TYPE A)	ALTERNATIVE FLARED TERMINAL SYSTEM	VEGETATION CONTROL (MINOR Conc)	(N) LAYOUT TYPE
			EA	EA	EA	LF	EA	EA	EA	EA	SQYD	
L-1	"US101" 123+69.50 END BARRIER	R†					1					
L-1,L-2	"US101" 120+67.58 TO "CA3" 128+18.82	L†		1		762.5			1		296.6	12DD
L-2	"CA3" 130+43.86 TO 133+32.23	L†	1			287.5		1			121.8	12C
L-2	"VIAREAL1" 126+94.37 TO 127+69.38	L†	1		1	75.0					62.4	12A
L-2	"VIAREAL1" 130+16.00	L†	1							1	43.1	12B
L-2,L-3	"CA3" 135+63.58 TO 138+97.62	R†		1		337.5			1		131.3	12DD
L-2,L-3	"VIAREAL1" 136+76.36 TO 139+06.77	L†			1	237.5			1		115.6	
L-3	"CA2" 140+92.79 TO 141+92.40	L†	1		1	100.0					72.0	12A
L-4	"US101" 148+38.62 TO 156+63.00	R†		1	1	737.5					309.9	11A
L-5,L-6	"LI1" 164+15.04 TO 168+75.16	R†	1			462.5				1	223.0	12B
L-6	"LI2" 168+27.51 TO 171+52.75	L†	1		1	325					159.6	12A
L-6	"LI2" 166+87.50	R†					1				24.7	
	TOTAL		6	3	5	3325.0	2			2	1,560.0	

(N) - NOT A SEPARATE PAY ITEM, FOR INFORMATION ONLY.

PCC DIKE

SHEET No.	STATION	SIDE	(N) PORTLAND CEMENT CONCRETE DIKE TYPE A	TYPE C	TYPE E	TYPE F	MINOR CONCRETE (MISCELLANEOUS CONSTRUCTION)
			LF	LF	LF	LF	CY
D-2	"CA3" 130+18.50 TO 131+00.00	L†				81.5	2.1
D-2	"CA3" 132+18.75 TO 133+25.00	L†		106.3			2.0
D-2, D-3	"CA3" 133+25.00 TO 133+81.95	L†			57.0		2.2
D-2, D-3	"US101" 135+51.40 TO 139+00.00	L†			348.6		13.2
D-3	"US101" 139+89.46 TO 140+12.43	L†	27.0				1.1
D-3	"US101" 142+08.49 TO 142+31.03	L†	27.5				1.1
D-2, D-3	"CA1" 137+90.00 TO 140+32.22	R†			236.7		9.0
D-3, D-4	"CA1" 141+14.60 TO 149+25.00	R†			810.4		30.8
D-4	"CA2" 146+56.50 TO 151+09.90	L†			453.4		17.2
D-5	"LI1" 162+46.80 TO 163+75.00	R†			128.2		4.9
		L†					
	TOTAL		54.5	106.3	2034.3	81.5	83.6*

(N) - NOT A SEPARATE PAY ITEM, FOR INFORMATION ONLY.
* QUANTITY INCLUDED IN CONCRETE QUANTITIES, SEE SHEET Q-4.

SUMMARY OF QUANTITIES
Q-2

STATE OF CALIFORNIA - DEPARTMENT OF TRANSPORTATION
Caltrans DESIGN
FUNCTIONAL SUPERVISOR: JAMES R. PERANO
CALCULATED-DESIGNED BY: MOHAMMAD ALIASGARIAN
CHECKED BY: AMIR SAEDI
REVISED BY: AS, JH, MT
DATE REVISED: 12-04-15, 03-02-15, 07-29-14

LAST REVISION 12-04-15 | DATE PLOTTED => 30-MAR-2016 | TIME PLOTTED => 13:12

Dist	COUNTY	ROUTE	POST MILES TOTAL PROJECT	SHEET No.	TOTAL SHEETS
05	SB	101	2.2/3.3	352	786

REGISTERED CIVIL ENGINEER DATE 12-4-15

12-7-15
PLANS APPROVAL DATE

REGISTERED PROFESSIONAL ENGINEER AMIR SAEDI No. 56083 Exp. 12-31-16 CIVIL STATE OF CALIFORNIA

THE STATE OF CALIFORNIA OR ITS OFFICERS OR AGENTS SHALL NOT BE RESPONSIBLE FOR THE ACCURACY OR COMPLETENESS OF SCANNED COPIES OF THIS PLAN SHEET.

MINOR CONCRETE

SHEET No.	LOCATION/STATION	MINOR CONCRETE (MISCELLANEOUS CONSTRUCTION) CY	MINOR CONCRETE (CURB) (CY) CY	(N) MINOR CONCRETE (CURB) TYPE	MINOR CONCRETE (DRIVEWAY) CY	MINOR CONCRETE (SIDEWALK) CY	MINOR CONCRETE (BUS POCKET) CY	MINOR CONCRETE (GUTTER) CY	BAR REINFORCING STEEL LB
L-1,L-2	"MHP1" 10+08.82 to 12+10.43 R+	10.0	2.8	A2-6	8.0				
L-1,L-2	"MHP1" 10+06.86 TO 12+12.82 L+		4.7	A1-6		9.7			
L-1,L-2	"VIAREAL1" 122+43.59 TO 127+96.63 R+		29.7	A2-6		29.8			
L-1	"VIAREAL1" 123+69.40 TO 124+44.80	1.0							
L-2	"VIAREAL1" 130+10.00 TO 131+00.00 R+		5.3	A2-6		5.6			
L-2	"VIAREAL1" 131+00.00 TO 137+33.31 R+		4.7	A1-6		19.6			
L-2	"VIAREAL1" 136+21.00 TO 137+33.00						32.6		
L-2,L-3	"VIAREAL1" 137+33.31 TO 139+41.52 R+		11.7	A2-6					
	"VIAREAL1" 139+25.15 TO "Casitas1" Sta 20+05 R+					17.1			
L-3	"CASITAS1" 11+74 TO 19+28 L+		22.1	A2-6		15.8			
L-3	"CASITAS1" 11+72.00 TO 12+06.00 R+				7.0				
L-3	"CASITAS1" 12+65.00 TO 12+98.00 R+				7.1				
L-3	"CASITAS1" 19+50.00 TO 19+74.00 R+				8.7				
L-3	"CASITAS1" 11+74 TO 20+05 R+		19.9	A2-6		11.3			
L-3 TO L-5	"VIAREAL1" 140+61.52 TO 159+22.42 L+		109.6	A2-6					
L-3	"VIAREAL1" 140+66.50 TO 143+97.30 R+		20.0	A2-6		15.2			
L-3,L-4	"VIAREAL1" 144+38.11 TO 150+13.07 R+		29.8	A2-6		32.5			
L-4	"VIAREAL1" 148+58.00 TO 148+74.00 R+				4.1				
L-4	"CA2" 149+75 51.64' L+ TO "CA2" 153+50 47.43' L+							17.4	
L-4,L-5	"VIAREAL1" 150+62.97 TO "OGAN1"159+04.26 R+		67.4	A2-6		66.1			
L-5	"OGAN1" 159+38.5 TO "LINDEN1" 24+11.58 R+		42.0	A2-6		73.6			
L-5	"LI1" 160+28.44 R+ TO "OGAN2" 162+30.82 L+		15.9	A2-6					
L-5	"LINDEN1" 12+12.00 TO 16+20.11 R+		10.8	A1-6		43.2			
L-5	"LINDEN1" 18+99.60 TO 19+76.01 R+		2.0	A1-6		8.3			
L-5	"LINDEN1" 11+75.00 TO 15+46.51 L+		19.4	A2-6		35.3			
L-5	"LINDEN1" 13+20.00 TO 13+68.00 L+				5.6				
L-5	"LINDEN1" 19+06.99 TO 23+53.33 L+		26.1	A2-6		45.5			
L-3	"CASITAS1" 12+35.00 TO 13+43.00		5.9	B1-6					
L-5	"OGAN 2" 160+16.73 TO 161+21.01 L+, R+ (ISLAND)		5.8	A1-6					
L-5	"VIAREAL1" 160+11.20 TO 160+65.13 L+, R+ (ISLAND)		3.2	A1-6					
L-5	"OGAN1" 159+96.85 TO 160+20.67 L+, R+ (ISLAND)		1.4	A1-6					
L-5	"OGAN1" 160+30.67 TO 160+56.29 L+, R+ (ISLAND)		1.7	A1-6					
L-5	"RABCA1" 10+00 TO 12+63.89 10' L+		5.2	A1-6					
L-5	"RABCA1" 10+00 TO 12+63.89 0' L+		18.0	D-6					
L-6	"LI1" 175+00.00 TO 175+20.52 R+							2.3	
Var	PCC DIKE	83.6							
L-2	"BIKE1" 99+75.00 TO 103+97.58					55.2			
C-38	STAIRCASE								
Var	APRONS (FROM DQ-10)	~~2.1~~ ~~0.9~~							
C-8	PCC CROSS GUTTER							27.7	3,131
DQ-10	DRAINAGE (DQ-10)								22,321
TOTAL		~~95.5~~ 96.7	485.1		40.5	483.9	32.6	47.4	25,452

FOR VEGETATION CONTROL QUANTITIES, SEE SHEET Q-2.
* FOR STAIRCASE QUANTITIES, SEE SHEET Q-6.
(N) - NOT A SEPARATE PAY ITEM, FOR INFORMATION ONLY.

2

PREPARE AND PAINT CONCRETE

SHEET No.	LOCATION	SQFT
L-2	MCEA2 / CASITAS PASS Rd NB OFF RAMP	2,653
TOTAL		2,653

CURB RAMPS

SHEET No.	LOCATION	CURB RAMP IDENTIFICATION CY	MINOR CONCRETE (CURB RAMP) CY	DETECTABLE WARNING SURFACE SQFT
C-2	"CASITAS1"/"CA2" - NW	CR #1	5.4	39.1
C-2	"CASITAS1"/"CA2" - NE	CR #2	3.1	24.5
C-3	"CASITAS1"/"CA3" - SW	CR #3	4.3	43.9
C-3	"CASITAS1"/"CA3" - SE	CR #4	3.2	28.7
C-4	"CASITAS1"/"VIAREAL1" - NW	CR #5	3.9	17.2
C-5	"CASITAS1"/"VIAREAL1" - NE	CR #6 & CR #7	8.4	63.6
C-6	"CASITAS1"/"VIAREAL1" - SW	CR #8	3.7	16.4
C-7	"CASITAS1"/"VIAREAL1" - SE	CR #9 & CR #10	6.0	24.0
C-8	"VIAREAL1"/HALES Ln - SE	CR #11	3.6	41.4
C-8	"VIAREAL1"/HALES Ln - NE	CR #12	3.7	40.0
C-9	"VIAREAL1"/"VALLECITO1" - SE	CR #13	5.6	52.3
C-9	"VIAREAL1"/"VALLECITO1" - NE	CR #14	4.8	39.2
C-10	"OGAN1" - L+	CR #15	3.4	32.4
C-10	"OGAN1" - R+	CR #16	2.8	30.1
C-10	"MHP1"	CR #17	2.1	25.2
C-11	"LINDEN1"/"OGAN2" - SE	CR #18	5.1	89.6
C-12	"LINDEN1"/"OGAN2" - NE	CR #19	9.3	83.0
C-13	"LINDEN1"/"LI2" - NW	CR #20	8.0	104.2
C-13	"LINDEN1"/"LI2" - NE	CR #21	3.5	29.8
C-14	NIPOMO Dr/"LINDEN1" - NW	CR #22	5.4	88.9
C-14	NIPOMO Dr/"LINDEN1" - SW	CR #23	4.2	30.1
C-10	"MHP1" PARKING	CR #24	1.1	12.6
	"OGAN1" ISLAND			39.7
TOTAL			100.5	995.9

MINOR CONCRETE (EXPOSED AGGREGATE CONCRETE)

SHEET No.	LOCATION	MINOR CONCRETE (EXPOSED AGGREGATE CONCRETE) SQFT	(N) WELDED WIRE REINFORCEMENT SQFT	CLASS 1 AGGREGATE SUBBASE CY
L-2	MCEA1 / CASITAS PASS Rd SB ON RAMP	2,653	2,653	206.8
L-2	MCEA2 / CASITAS PASS Rd NB OFF RAMP	848	848	73.3
L-2	MCEA3 / CASITAS PASS Rd NB ON RAMP	922	922	71.7
L-3,L-4	MCEA4 / CASITAS PASS Rd SB OFF RAMP	1,885	1,885	146.6
L-5	MCEA5 / LINDEN Ave NB ON RAMP	1,223	1,223	81.5
L-6	MCEA6 / LINDEN Ave SB OFF RAMP	893	1,470	98.1
TOTAL		8,424		678*

(N) - NOT A SEPARATE PAY ITEM, FOR INFORMATION ONLY.
* QUANTITY INCLUDED IN THE PAVEMENT STRUCTURE QUANTITIES, SEE SHEET Q-3.

2 **REPLACED PER ADDENDUM No. 2 DATED APRIL 4, 2016**

SUMMARY OF QUANTITIES

Q-4

REVISED BY	DATE REVISED
AS	12-04-15
JH	07-31-14

CALCULATED-DESIGNED BY: MOHAMMAD ALIASGARIAN
CHECKED BY: AMIR SAEDI
FUNCTIONAL SUPERVISOR: JAMES R. PERANO

STATE OF CALIFORNIA - DEPARTMENT OF TRANSPORTATION
Caltrans® DESIGN

LAST REVISION 12-04-15 | DATE PLOTTED => 30-MAR-2016 | TIME PLOTTED => 13:12

Dist	COUNTY	ROUTE	POST MILES TOTAL PROJECT	SHEET No.	TOTAL SHEETS
05	SB	101	2.2/3.3	353	786

REGISTERED CIVIL ENGINEER DATE

12-7-15
PLANS APPROVAL DATE

REGISTERED PROFESSIONAL ENGINEER AMIR SAEDI No. 56083 Exp. 12-31-16 CIVIL STATE OF CALIFORNIA

THE STATE OF CALIFORNIA OR ITS OFFICERS OR AGENTS SHALL NOT BE RESPONSIBLE FOR THE ACCURACY OR COMPLETENESS OF SCANNED COPIES OF THIS PLAN SHEET.

TACK COAT

SHEET No.	LOCATION	TON
L-1 TO L-6	ROUTE 101	1.76
L-1 TO L-5	VIA REAL	15.26
L-2	CASITAS NB ON RAMP	0.91
L-2, L-3	CASITAS SB ON RAMP	0.58
L-2, L-3	CASITAS NB OFF RAMP	0.72
L-3	CASITAS PASS Rd	1.75
L-3,L-4	CASITAS SB OFF RAMP	0.78
L-5	LINDEN Ave	1.92
L-5	ROUNDABOUT	0.68
L-5,L-6	LINDEN NB ON RAMP	0.22
L-5,L-6	LINDEN SB OFF RAMP	0.32
TOTAL		24.90

TEMPORARY FENCE (TYPE ESA)

SHEET	LOCATION			LENGTH
	STATION	L†	R†	LF
C-46	"VIAREAL1" 124+75 TO 127+25		X	600
C-46	"VIAREAL1" 125+25 TO 126+25		X	130
C-46	"VIAREAL1" 126+50 TO 131+50		X	640
C-46	"CA3" 128+00 TO 129+90	X		310
C-46	"VIAREAL1" 131+60 TO 137+70		X	850
C-47	"CASITAS1" 17+50 TO 20+00		X	380
C-48	"US101" 154+00 TO 155+25	X		225
C-49	"LINDEN1" 19+50 TO 21+50	X		425
C-50	"LI2" 165+30 TO 165+70		X	50
C-50	"LI2" 166+20 TO 166+80		X	80
C-50	"LI2" 167+25 TO 167+70		X	60
TOTAL				3,750

SURVEY MONUMENTS

SHEET No.	STATION	PM	DESIGNATION	SURVEY MONUMENT (TYPE A)
				EA
L-1	4.25′ R† "US101" 117+76.70	2.23	25-2	1
L-2	"US101" 125+44.40	2.38	25-3	1
L-3	56.60′ R† "CASITAS1" 14+14.00	2.64	H-D	1
L-3	20.90′ L† "CASITAS1" 16+06.70	2.87	25-5	1
L-5	24.70′ L† "LI2" 162+73.50	3.24	25-7	1
TOTAL				5

FENCING

SHEET No.	STATION	TEMPORARY FENCE (TYPE CL-6)	CHAIN LINK FENCE (TYPE CL-4, VINYL-CLAD)	CHAIN LINK FENCE (TYPE CL-6, VINYL-CLAD)	CHAIN LINK FENCE (TYPE CL-8, BW POST TOP, VINYL-CLAD)	12′ CHAIN LINK GATE (TYPE CL-6, VINYL-CLAD)
		LF	LF	LF	LF	EA
L-1	87′ L† "US101" 120+87 TO 92′ L† "US101" 124+47			380		
L-1,L-2	94′ R† "US101" 122+54 TO 83′ R† "US101" 128+17			555		
L-2	97′ L† "US101" 128+43 TO 72′ L† "US101" 128+47			20		1
L-2	75′ L† "US101" 129+87 TO 110′ L† "US101" 139+90			40		
L-2	21′ R† "CA4" 129+90 TO 78′ R† "CA4" 134+59			460		
L-2,L-3	28′ R† "CA5" 133+41 TO 49′ R† "CA1" 140+12			430		
L-3	43′ R† "CASITAS1" 13+18 TO 39′ L† "CA3" 138+97			40		
L-3	43 L† "VIAREAL1" 140+65 TO 19′ L† "VIAREAL1" 145+01		436			
L-4	28′ R† "VIAREAL1" 156+17 TO 22′ R† "VIAREAL1" 158+01				190	
L-4	51′ L† "CA2" 147+50 TO 50′ L† "CA2" 153+50	590				
2 ~~L-5~~	~~20′ L† VIAREAL1" 158+72.10 TO 1.7′ R† "LI1" 160+19.36~~		~~230~~	~~210~~		
L-5	30′ L† "LI2" 163+46 TO 29′ R† "LI2" 164+17	70		70		
L-5	142′ L† "LINDEN1" 15+39 TO 36′ L† "LINDEN1" 15+84			100		
L-5	39′ R† "LINDEN1" 16+19 TO 91′ R† "LINDEN1" 16+49			100		2
L-5	46′ R† "LI1" 162+51 TO 44 R† "LI1" 162+81			30		
L-5	40′ R† "LI1" 162+80 to 38′ R† LI1" 175+77	1,300				
L-5,L-6	100′ L† "US101" 170+39 TO 100′ L† "US101" 175+16	480				
	STRUCTURE PLANS		~~522~~ 353			
TOTAL		2,440	~~1,188~~ 789	~~2,435~~ 2,225 2	190	3

CONTINUOUSLY REINFORCED CONCRETE PAVEMENT JOINTS

STATION	(N) TERMINAL JOINT C	(N) TERMINAL JOINT D	(N) TERMINAL JOINT E	(N) WIDE FLANGE BEAM TERMINAL JOINT	(N) LEAN CONCRETE BASE
	LF	LF	LF	LF	CY
"US101" 116+00.00		121			
"US101" 116+80.00				121	303
"US101" 127+37.00				149	371
"US101" 128+17.00			156		
"US101" 130+17.00			177		
"US101" 130+97.00				135	338
"US101" 139+20.00				110	275
"US101" 140+00.00		115			
"US101" 140+56.56	32				
"US101" 144+48.70	11				
"US101" 159+90.08	9				
"CA3" 133+81.95	24				
"CA1" 137+90.00	37				
"CA2" 143+56.50	24				
"CA2" 151+40.00	11				
"LI1" 162+80.80	24				
"LI1" 174+47.00	9				
"LI2" 167+36.00	20				

(N) - NOT A SEPARATE PAY ITEM, FOR INFORMATION ONLY.

2 **REPLACED PER ADDENDUM No. 2 DATED APRIL 4, 2016**

SUMMARY OF QUANTITIES

Q-5

REVISED BY	DATE REVISED	CG	JH	AS
		04-25-14	07-22-14	12-04-15

CALCULATED-DESIGNED BY: MOHAMMAD ALIASGARIAN
CHECKED BY: AMIR SAEDI
FUNCTIONAL SUPERVISOR: JAMES R. PERANO

STATE OF CALIFORNIA - DEPARTMENT OF TRANSPORTATION
Caltrans® DESIGN

LAST REVISION 12-04-15
DATE PLOTTED => 30-MAR-2016
TIME PLOTTED => 13:13

Dist	COUNTY	ROUTE	POST MILES TOTAL PROJECT	SHEET No.	TOTAL SHEETS
05	SB	101	2.2/3.3	390	786

Xavier Alfaro 11-25-15
REGISTERED ELECTRICAL ENGINEER

12-7-15
PLANS APPROVAL DATE

REGISTERED PROFESSIONAL ENGINEER XAVIER I. ALFARO No. E17488 Exp. 6-30-17 ELECTRICAL STATE OF CALIFORNIA

THE STATE OF CALIFORNIA OR ITS OFFICERS OR AGENTS SHALL NOT BE RESPONSIBLE FOR THE ACCURACY OR COMPLETENESS OF SCANNED COPIES OF THIS PLAN SHEET.

NOTES:

1. FOR ACCURATE RIGHT OF WAY DATA, CONTACT RIGHT OF WAY ENGINEERING AT THE DISTRICT OFFICE.
2. FOR LEGEND AND SCHEDULES SEE SHEET E-18.

DETAIL C

TYPICAL DETAIL FOR TYPE C AND TYPE D LOOP DETECTOR PLACEMENT

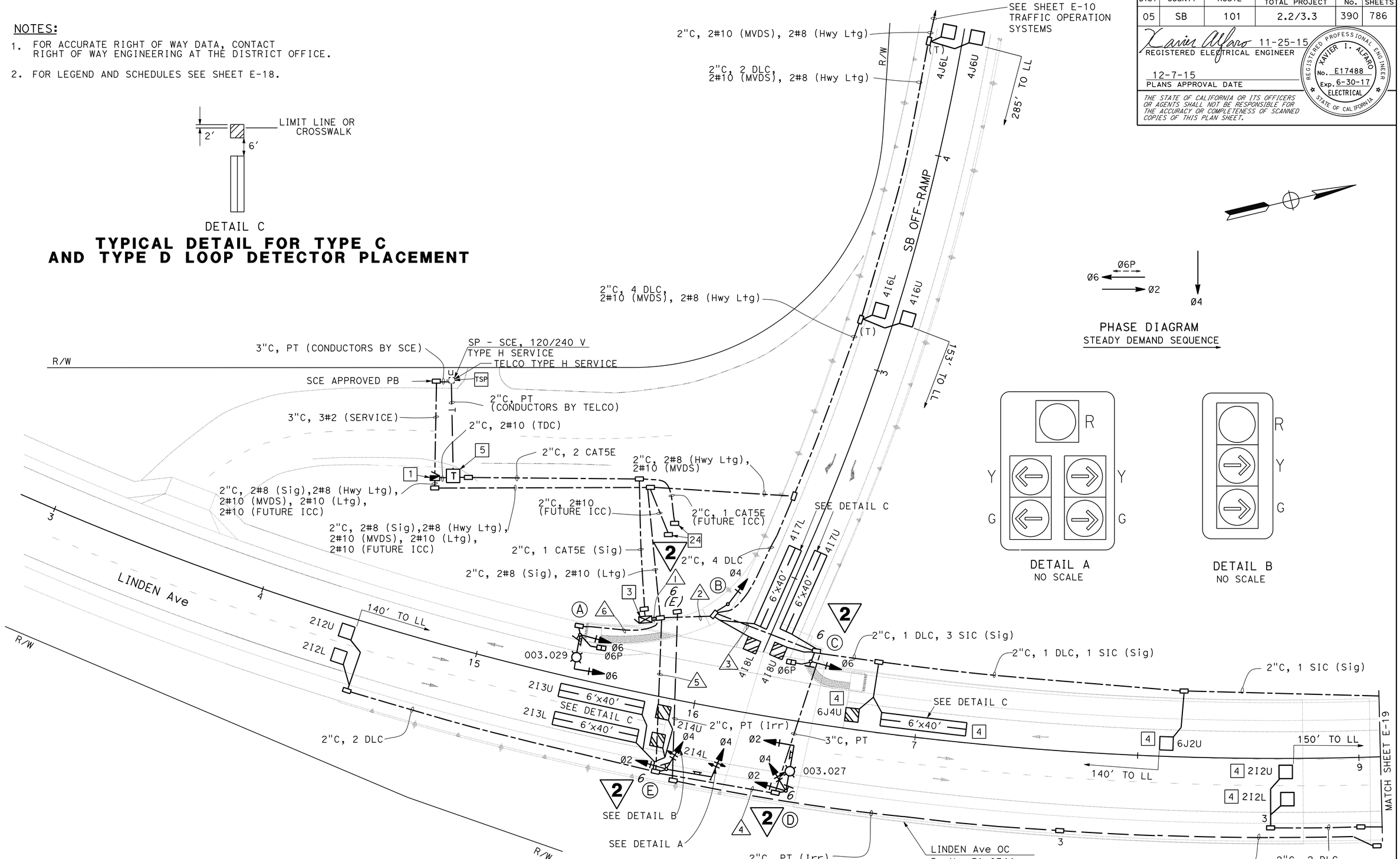

2 REPLACED PER ADDENDUM No. 2 DATED APRIL 4, 2016

APPROVED FOR ELECTRICAL WORK ONLY

SIGNAL AND LIGHTING
(LOCATION 4)
SCALE: 1"=20'

E-17

REVISED BY	DATE REVISED
XIA	11-25-15

XAVIER ALFARO — KARIM ABDOLLAHIAN — CALCULATED-DESIGNED BY — CHECKED BY

FUNCTIONAL SUPERVISOR: ALI BAKHDOUD

STATE OF CALIFORNIA - DEPARTMENT OF TRANSPORTATION — Caltrans — ELECTRICAL DESIGN

LAST REVISION 11-25-15 — DATE PLOTTED => 30-MAR-2016 — TIME PLOTTED => 13:13

Dist	COUNTY	ROUTE	POST MILES TOTAL PROJECT	SHEET No.	TOTAL SHEETS
05	SB	101	2.2/3.3	403	786

Xavier Alfaro 11-25-15
REGISTERED ELECTRICAL ENGINEER

12-7-15
PLANS APPROVAL DATE

REGISTERED PROFESSIONAL ENGINEER XAVIER I. ALFARO No. E17488 Exp. 6-30-17 ELECTRICAL STATE OF CALIFORNIA

THE STATE OF CALIFORNIA OR ITS OFFICERS OR AGENTS SHALL NOT BE RESPONSIBLE FOR THE ACCURACY OR COMPLETENESS OF SCANNED COPIES OF THIS PLAN SHEET.

NOTE:

THE QUANITIES ON THIS SHEET ARE NOT A SEPARATE PAY ITEM, FOR INFORMATION ONLY.
FOR COMPLETE ELECTRICAL WORK, SEE ELECTRICAL PLAN SHEETS.

LIGHTING 2

SHEET No.	SERVICE EQUIPMENT ENCLOSURE TYPE III-BF	SCE APPROVED PB	No. 5 PB	No. 5 (T) PB	TYPE 30 ELECTROLIER AND FOUNDATION	TYPE 30 NS ELECTROLIER AND FOUNDATION	TYPE 21S ELECTROLIER	ISL	2"C TYPE 3	3"C TYPE 3	2"C TYPE 1	No. 10 CONDUCTORS	No. 8 CONDUCTORS	No. 2 CONDUCTORS	No. 8 (G) CONDUCTORS
	EA								LF						
E-4	1	1	~~3~~ 2	0	1	0	~~1~~ 2	1	350	150	200	1,100	0	500	600
E-5	0	0	4	2	3	0	0	0	1,100	150	0	0	2,200	0	1,100
E-6	0	0	5	0	0	3	0	0	700	150	0	0	1,800	0	900

2

LIGHTING

SHEET No.	*No. 6 PB*	*9A PB*
E-4	*1*	*2*

TRAFFIC OPERATION SYSTEMS

SHEET No.	2"C TYPE 3	2"C TYPE 1	No. 10 CONDUCTORS	No. 8 CONDUCTORS	No. 8 (G) CONDUCTORS	COAX CABLE	SIC	CAT5E	CCTV POWER CORD
	LF								
E-8	350	700	1,100	1,000	300	100	100	300	100
E-9	100	200	0	0	0	0	0	30	0

2

TRAFFIC OPERATION SYSTEMS

SHEET No.	VSN	~~VSN~~ VDS TYPE 30 POLE AND FOUNDATION	344 CCTV CABINET	PoE	CCTV CAMERA ASSEMBLY	24 Volt POWER SUPPLY	120 VOLT QUAD OUTLET	802.11 WCB	0.5 A CIRCUIT BREAKER	No. 5 PB	No. 6 PB
	EA										
E-8	2	1	1	1	1	1	1	1	1	7	1
E-9	2	0	0	0	0	0	0	1	0	0	0
E-10	0	1	0	0	0	1	1	0	1	0	0

SIGNAL AND LIGHTING (LOCATION 1)

SHEET No.	2"C, TYPE 3	3"C, TYPE 3	No. 8 CONDUCTORS	12CSC	3CSC	DLC	EVUC	APS CABLE	No. 8 CONDUCTOR (G)	SIC	BBS AND CONTROLLER CABINET FOUNDATION	TYPE 15 STANDRARD AND FOUNDATION
	LF										EA	
E-11	800	500	800	800	400	5,600	400	40	1,200	600	1	1

SIGNAL AND LIGHTING (LOCATION 1)

SHEET No.	TYPE 19-3 Sig STANDARD WITH EQUIPMENT AND FOUNDATION	TYPE 1-A Sig STANDARD WITH EQUIPMENT AND FOUNDATION	TYPE 17-3 Sig STANDARD WITH EQUIPMENT AND FOUNDATION	TYPE 16-3 STANDARD WITHEQUIPMENT AND FOUNDATION	No. 5 PB	No. 6 PB	No. 6 (E) PB	TYPE A LOOP DETECTOR	TYPE C LOOP DETECTOR	TYPE D LOOP DETECTOR	165 W LUMINAIRE
	EA										
E-11	1	3	1	1	11	4	1	9	4	4	2

2 **REPLACED PER ADDENDUM No. 2 DATED APRIL 4, 2016**

ELECTRICAL QUANTITIES
E-30

REVISED BY	DATE REVISED
XIA	11-25-15

XAVIER ALFARO — KARIM ABDOLLAHIAN — CALCULATED-DESIGNED BY — CHECKED BY — FUNCTIONAL SUPERVISOR — ALI BAKHDOUD

STATE OF CALIFORNIA - DEPARTMENT OF TRANSPORTATION
Caltrans® **ELECTRICAL DESIGN**

LAST REVISION 11-25-15 — DATE PLOTTED => 30-MAR-2016 — TIME PLOTTED => 13:13

Dist	COUNTY	ROUTE	POST MILES TOTAL PROJECT	SHEET No.	TOTAL SHEETS
05	SB	101	2.2/3.3	404	786

Xavier Alfaro 11-25-15
REGISTERED ELECTRICAL ENGINEER

12-7-15
PLANS APPROVAL DATE

REGISTERED PROFESSIONAL ENGINEER XAVIER I. ALFARO No. E17488 Exp. 6-30-17 ELECTRICAL STATE OF CALIFORNIA

THE STATE OF CALIFORNIA OR ITS OFFICERS OR AGENTS SHALL NOT BE RESPONSIBLE FOR THE ACCURACY OR COMPLETENESS OF SCANNED COPIES OF THIS PLAN SHEET.

NOTE:

THE QUANITIES ON THIS SHEET ARE NOT A SEPARATE PAY ITEM, FOR INFORMATION ONLY.
FOR COMPLETE ELECTRICAL WORK, SEE ELECTRICAL PLAN SHEETS.

SIGNAL AND LIGHTING (LOCATION 2)

SHEET No.	2"C, TYPE 3	3"C, TYPE 3	2"C, TYPE 1	No. 8 CONDUCTORS	12CSC	3CSC	DLC	EVUC	APS CABLE	No. 8 CONDUCTOR (G)	SIC	TYPE III-BF ELECTRICAL EQUIPMENT ENCLOSURE	TDC	PREFORMED TYPE C LOOP DETECTOR	PREFORMED TYPE A LOOP DETECTOR
	LF											EA			
E-13	800	400	400	500	800	500	6,000	300	150	1,200	400	1	1	2	2

SIGNAL AND LIGHTING (LOCATION 2)

SHEET No.	TYPE 19-3 Sig STANDARD WITH EQUIPMENT AND FOUNDATION	TYPE 1-A Sig STANDARD WITH EQUIPMENT AND FOUNDATION	TYPE 17-3 Sig STANDARD WITH EQUIPMENT AND FOUNDATION	PPB POST	BBS AND CONTROLLER CABINET FOUNDATION	No. 3 PB	No. 5 PB	No. 6 PB	No. 6 (E) PB	TYPE A LOOP DETECTOR	TYPE C LOOP DETECTOR	TYPE D LOOP DETECTOR	165 W LUMINAIRE
	EA												
E-13	2	3	1	1	1	4	*14* ~~11~~	3	1	4	4	5	3

2

SIGNAL AND LIGHTING (LOCATION 3)

SHEET No.	2"C, TYPE 3	3"C, TYPE 3	2"C, TYPE 1	No. 8 CONDUCTORS	12CSC	3CSC	DLC	EVUC	APS CABLE	No. 8 CONDUCTOR (G)	SIC	TYPE III-BF ELECTRICAL EQUIPMENT ENCLOSURE	TDC	PREFORMED TYPE C LOOP DETECTOR	PREFORMED TYPE D LOOP DETECTOR
	LF											EA			
E-15	800	500	300	100	800	500	2,500	400	160	400	300	1	1	2	0

2

SIGNAL AND LIGHTING (LOCATION 3)

SHEET No.	TYPE 19-3 Sig STANDARD WITH EQUIPMENT AND FOUNDATION	TYPE 1-A Sig STANDARD WITH EQUIPMENT AND FOUNDATION	TYPE ~~24-3~~ *24-4* Sig STANDARD WITH EQUIPMENT AND FOUNDATION	PREFORMED TYPE A LOOP DETECTOR	BBS AND CONTROLLER CABINET FOUNDATION	No. 3 PB	No. 5 PB	No. 6 PB	No. 6 (E) PB	TYPE A LOOP DETECTOR	TYPE C LOOP DETECTOR	TYPE D LOOP DETECTOR	165 W LED LUMINAIRE
	EA									LF			
E-15	3	3	1	2	1	2	*10* ~~11~~	*4* ~~3~~	1	6	6	6	4

2

SIGNAL AND LIGHTING (LOCATION 4)

SHEET No.	2"C, TYPE 3	3"C, TYPE 3	2"C, TYPE 1	No. 8 CONDUCTORS	12CSC	3CSC	DLC	EVUC	APS CABLE	No. 8 CONDUCTOR (G)	SIC	TYPE III-BF ELECTRICAL EQUIPMENT ENCLOSURE	TDC	PREFORMED TYPE A LOOP DETECTOR	PREFORMED TYPE C LOOP DETECTOR
	LF											EA			
E-17	1,500	400	550	10,000	500	200	3,800	300	160	1,200	400	1	1	3	1

SIGNAL AND LIGHTING (LOCATION 4)

SHEET No.	TYPE 17-3 Sig STANDARD WITH EQUIPMENT AND FOUNDATION	TYPE 16-3 Sig STANDARD WITH EQUIPMENT AND FOUNDATION	TYPE 1-A Sig STANDARD WITH EQUIPMENT AND FOUNDATION	BBS AND CONTROLLER CABINET FOUNDATION	No. 3 PB	No. 5 PB	No. 6 PB	No. 6 (E) PB	TYPE A LOOP DETECTOR	TYPE C LOOP DETECTOR	TYPE D LOOP DETECTOR	165 W LED LUMINAIRE	PREFORMED TYPE D LOOP DETECTOR	*SCE APPROVED PB*
	EA													
E-17	2	1	2	1	*2* ~~4~~	*17* ~~14~~	3	1	6	4	4	*2* ~~3~~	1	*1*

2 2 2

2 REPLACED PER ADDENDUM No. 2 DATED APRIL 4, 2016

ELECTRICAL QUANTITIES
E-31

XIA 11-24-15 REVISED BY DATE REVISED
XAVIER ALFARO KARIM ABDOLLAHIAN CALCULATED-DESIGNED BY CHECKED BY
ALI BAKHDOUD FUNCTIONAL SUPERVISOR
STATE OF CALIFORNIA - DEPARTMENT OF TRANSPORTATION
Caltrans ELECTRICAL DESIGN

LAST REVISION 11-25-15 DATE PLOTTED => 30-MAR-2016 TIME PLOTTED => 13:13

Dist	COUNTY	ROUTE	POST MILES TOTAL PROJECT	SHEET No.	TOTAL SHEETS
05	SB	101	2.2/3.3	405	786

Xavier Alfaro 11-25-15
REGISTERED ELECTRICAL ENGINEER

12-7-15
PLANS APPROVAL DATE

REGISTERED PROFESSIONAL ENGINEER XAVIER I. ALFARO No. E17488 Exp. 6-30-17 ELECTRICAL STATE OF CALIFORNIA

THE STATE OF CALIFORNIA OR ITS OFFICERS OR AGENTS SHALL NOT BE RESPONSIBLE FOR THE ACCURACY OR COMPLETENESS OF SCANNED COPIES OF THIS PLAN SHEET.

NOTE:

THE QUANITIES ON THIS SHEET ARE NOT A SEPARATE PAY ITEM, FOR INFORMATION ONLY.
FOR COMPLETE ELECTRICAL WORK, SEE ELECTRICAL PLAN SHEETS.

SIGNAL AND LIGHTING (CITY STREET)

SHEET No.	2"C, TYPE 3	3"C, TYPE 3	No. 8 CONDUCTORS	No. 10 CONDUCTORS	12CSC	3CSC	DLC	EVUC	APS CABLE	No. 8 CONDUCTOR (G)
	LF									
E-19	1,000	700	600	1,200	1,200	300	1,200	300	200	600

SIGNAL AND LIGHTING (CITY STREET)

SHEET No.	TYPE 19-4 Sig STANDARD WITH EQUIPMENT AND FOUNDATION	TYPE 1-A Sig STANDARD WITH EQUIPMENT AND FOUNDATION	TYPE 17-3 Sig STANDARD WITH EQUIPMENT AND FOUNDATION	TYPE 18-3 Sig STANDARD WITH EQUIPMENT AND FOUNDATION	BBS AND CONTROLLER CABINET FOUNDATION	165 W LED LUMINAIRE	No. 5 PB	No. 6 PB	No. 6 (E) PB	TYPE A LOOP DETECTOR	TDC	VIVDS	TYPE III-BF SERVICE EQUIPMENT ENCLOSURE
	EA												
E-19	1	2	1	1	1	~~3~~ 2	9	~~2~~ 3	1	2	1	3	1

2 2

LIGHTING (CITY STREET)

SHEET No.	No. 8 CONDUCTORS	No. 10 CONDUCTORS	3"C TYPE 3	2"C TYPE 3	2"C TYPE 1	TYPE III-BF SERVICE EQUIPMENT ENCLOSURE	TYPE 9A PULL BOX	BRIDGE SOFFIT	No. 5 PB	No. 3 PB	DECORATIVE BRIDGE MOUNT ELECTROLIER	DECORATIVE GROUND LEVEL ELECTROLIER AND FOUNDATION	BICYCLE PATH ELECTROLIER AND FOUNDATION
	LF					EA							
E-21	3,000	0	1,400	1,400	200	0	2	4	15	0	0	0	6
E-22	400	2,000	2,500	2,500	400	1	0	0	~~12~~ 11	~~6~~ 7	6	0	1
E-23	0	2,500	1,600	1,200	400	1	0	0	~~6~~ 26	6	6	~~6~~ 5	0

2 2

2 REPLACED PER ADDENDUM No. 2 DATED APRIL 4, 2016

ELECTRICAL QUANTITIES
E-32

XAVIER ALFARO	XIA	CALCULATED-DESIGNED BY	FUNCTIONAL SUPERVISOR
KARIM ABDOLLAHIAN	11-25-15	CHECKED BY	ALI BAKHDOUD
REVISED BY	DATE REVISED		

STATE OF CALIFORNIA - DEPARTMENT OF TRANSPORTATION
Caltrans ELECTRICAL DESIGN

LAST REVISION 11-25-15 | DATE PLOTTED => 30-MAR-2016 | TIME PLOTTED => 13:13

Dist	COUNTY	ROUTE	POST MILES TOTAL PROJECT	SHEET No.	TOTAL SHEETS
05	SB	101	2.2/3.3	524A	786

REGISTERED CIVIL ENGINEER

October 30, 2015
PLANS APPROVAL DATE

REGISTERED PROFESSIONAL ENGINEER Stanley P. Johnson No. C57793 Exp. 3-31-16 CIVIL STATE OF CALIFORNIA

THE STATE OF CALIFORNIA OR ITS OFFICERS OR AGENTS SHALL NOT BE RESPONSIBLE FOR THE ACCURACY OR COMPLETENESS OF SCANNED COPIES OF THIS PLAN SHEET.

TO ACCOMPANY PLANS DATED 12-7-15

NOTE:
Handhole shall be located on the downstream side of traffic.

2

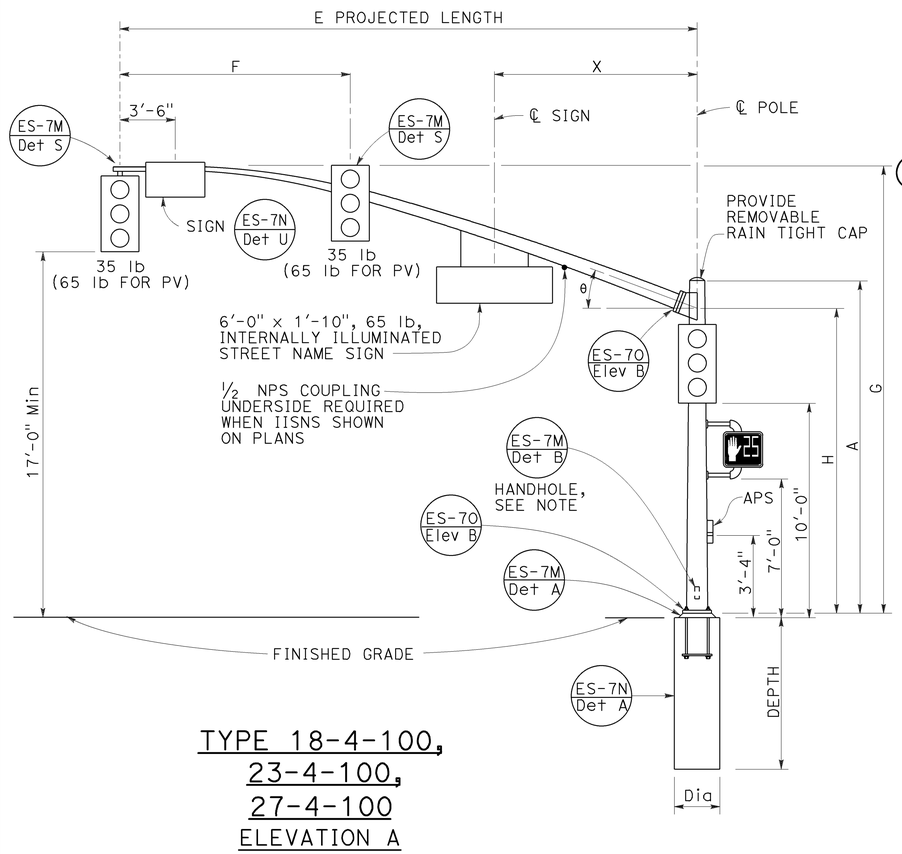

TYPE 18-4-100,
23-4-100,
27-4-100
ELEVATION A

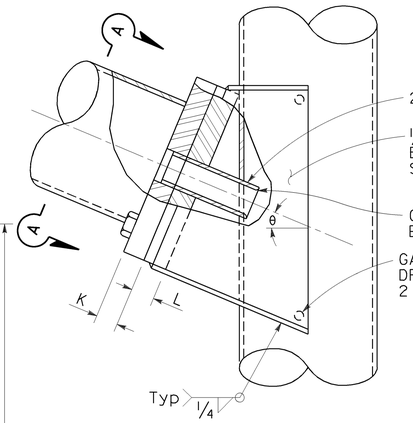

ELEVATION C

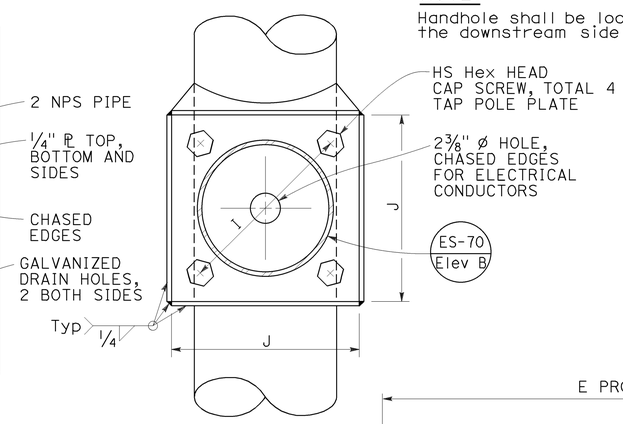

VIEW A-A

SIGNAL MAST ARM CONNECTION
DETAIL A

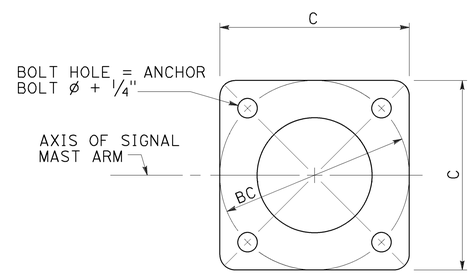

BASE PLATE
DETAIL B

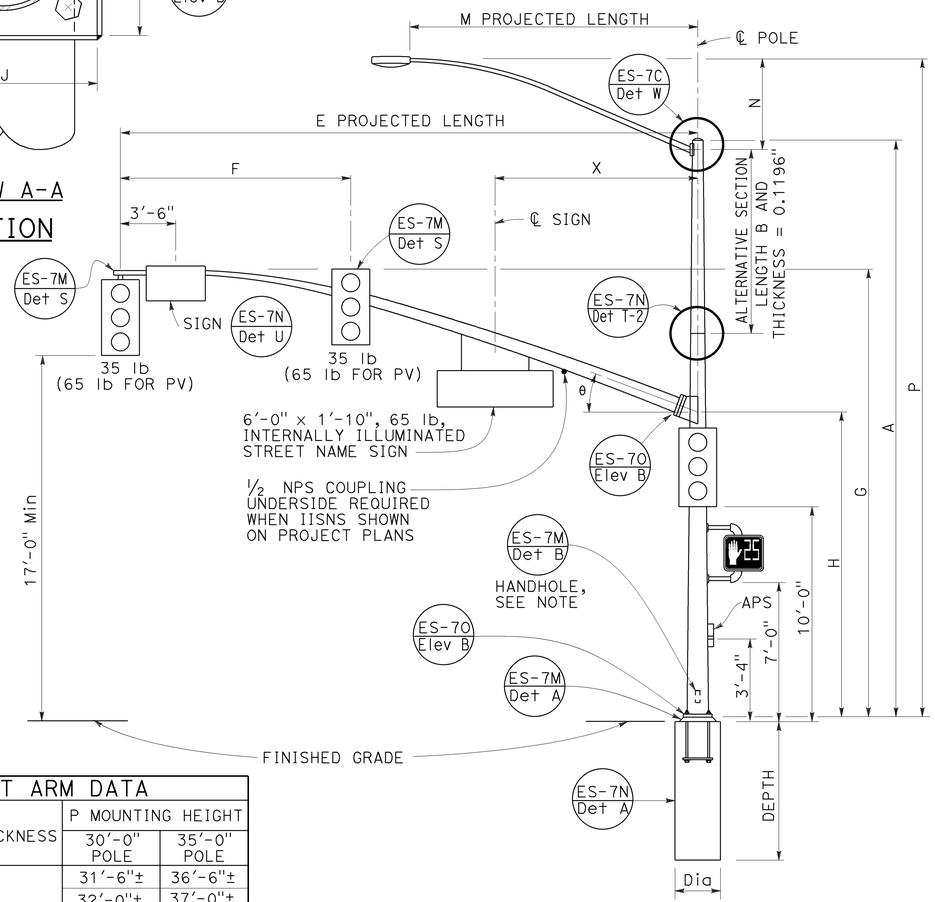

TYPE 19-4-100, 19A-4-100,
24-4-100, 24A-4-100,
26-4-100, 26A-4-100
ELEVATION B

2 ADDED PER ADDENDUM No. 2 DATED APRIL 4, 2016

SIGNAL MAST ARM DATA

E PROJECTED LENGTH	F Min SPACING	G MOUNTING HEIGHT	H	Min OD AT POLE	THICKNESS	I BOLT CIRCLE	HS CAP SCREWS	J PLATE SIZE	K MAST ARM PL THICKNESS	L POLE PL THICKNESS	θ	X Max
25'-0"	10'-0"	22'-8"±	16'-0"	7⅜"	0.2391"	12"	1¼"-7NC-3"	1'-0"	1¼"	1½"	23°	10'-6"
30'-0"	12'-0"	23'-0"±		8"								
35'-0"	14'-0"			8 11/16"		13½"		1'-1½"	1½"	1¾"	21°	
40'-0"	15'-0"			9⅜"							15°	13'-0"
45'-0"		23'-8"±		10¼"								

LUMINAIRE MAST ARM DATA

M PROJECTED LENGTH	N RISE	Min OD AT POLE	THICKNESS	P MOUNTING HEIGHT 30'-0" POLE	P MOUNTING HEIGHT 35'-0" POLE
6'-0"	2'-0"±	3¼"	0.1196"	31'-6"±	36'-6"±
8'-0"	2'-6"±	3½"		32'-0"±	37'-0"±
10'-0"	3'-3"±	3⅞"		32'-9"±	37'-9"±
12'-0"	4'-3"±			33'-9"±	38'-9"±
15'-0"	4'-9"±	4¼"		34'-3"±	39'-3"±

POLE TYPE	LOAD CASE	WIND VELOCITY (mph)	POLE DATA A HEIGHT	Min OD BASE	Min OD TOP	THICKNESS	ALTERNATIVE SECTION B LENGTH	BOTTOM	TOP	BASE PLATE DATA C	BC = BOLT CIRCLE	THICKNESS	ANCHOR BOLT SIZE	LUMINAIRE MAST ARM	SIGNAL MAST ARM	CIDH PILE FOUNDATION Dia	DEPTH	REINFORCED
18-4-100	4	100	17'-0"	12⅛"	9 9/16"	0.3125"	NONE			1'-7"	1'-5½"	3"	2" Ø x 42"	NONE	25'-0", 30'-0"	3'-0"	11'-0"	YES
19-4-100			30'-0"		7 11/16"		10'-0"	9⅛"	7 11/16"					6'-15' 12'-0"				
19A-4-100			35'-0"		6 15/16"		15'-0'		6 15/16"					6'-15' 15'-0"				
23-4-100			17'-0"		9 9/16"		NONE							NONE	35'-0"			
24-4-100			30'-0"		7 11/16"		10'-0"	9⅛"	7 11/16"					6'-15' 12'-0"				
24A-4-100			35'-0"		6 15/16"		15'-0"		6 15/16"					6'-15' 15'-0"				
26-4-100			30'-0"	14"	8 3/16"		10'-0"	9⅝"	8 3/16"	23"	21"		2½" Ø x 42"	6'-15' 12'-0"	40'-0", 45'-0"	3'-6"	12'-0"	
26A-4-100			35'-0"		7 7/16"		15'-0"		7 7/16"					6'-15' 15'-0"				
27-4-100			17'-0"		10 1/16"		NONE							NONE				

INDICATES MAST ARM LENGTH TO BE USED UNLESS OTHERWISE NOTED ON PLANS.

STATE OF CALIFORNIA
DEPARTMENT OF TRANSPORTATION

ELECTRICAL SYSTEMS (SIGNAL AND LIGHTING STANDARD, CASE 4 SIGNAL MAST ARM LOADING, WIND VELOCITY=100 MPH AND SIGNAL MAST ARM LENGTHS 25' TO 45')

NO SCALE

RSP ES-7F DATED OCTOBER 30, 2015 SUPERSEDES RSP ES-7F DATED JULY 19, 2013 AND ES-7F DATED MAY 20, 2011 - PAGE 467 OF THE STANDARD PLANS BOOK DATED 2010.

REVISED STANDARD PLAN RSP ES-7F

2010 REVISED STANDARD PLAN RSP ES-7F

8-24-15

DIST	COUNTY	ROUTE	POST MILES TOTAL PROJECT	SHEET NO.	TOTAL SHEETS
05	SB	101	2.2/3.3	528A	786

Theresa Gabriel
REGISTERED ELECTRICAL ENGINEER

October 30, 2015
PLANS APPROVAL DATE

REGISTERED PROFESSIONAL ENGINEER Theresa Aziz Gabriel No. E15129 Exp. 6-30-16 ELECTRICAL STATE OF CALIFORNIA

THE STATE OF CALIFORNIA OR ITS OFFICERS OR AGENTS SHALL NOT BE RESPONSIBLE FOR THE ACCURACY OR COMPLETENESS OF SCANNED COPIES OF THIS PLAN SHEET.

TO ACCOMPANY PLANS DATED 12-7-15

2 **ADDED PER ADDENDUM No. 2 DATED APRIL 4, 2016**

2

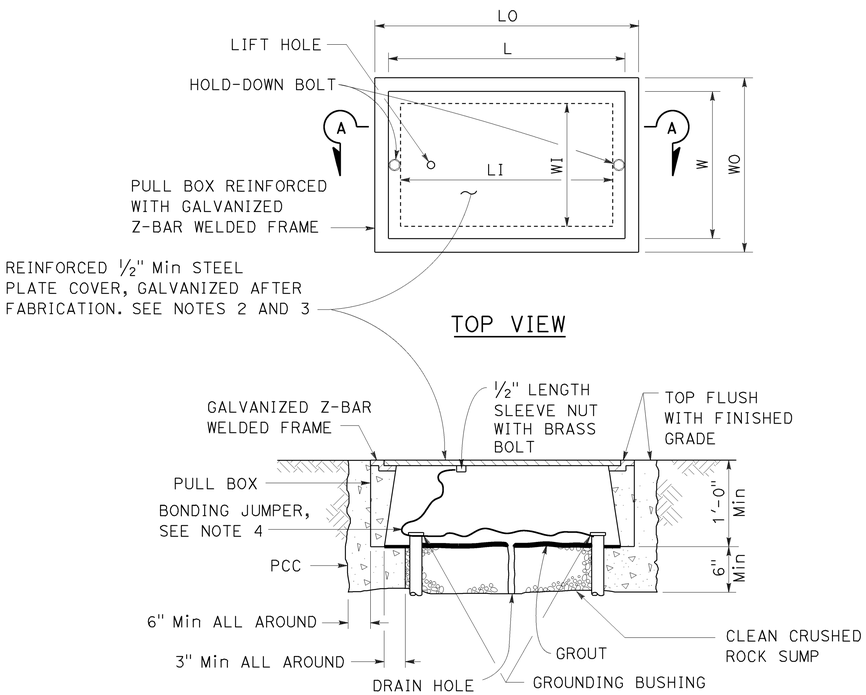

SECTION A-A

No. 3½(T), No. 5(T) AND No. 6(T) TRAFFIC PULL BOX

NOTES:

1. Traffic pull box shall be provided with steel cover and special concrete footing. Steel cover shall have embossed non-skid pattern.
2. Steel reinforcing shall be as regularly used in the standard products of the respective manufacturer.
3. Pull box covers shall be marked as follows: "SERVICE" Service circuits between service point and service disconnect; "SPRINKLER-CONTROL" Sprinkler control circuits, 50 V or less; "CALTRANS" On all pull boxes, except pull boxes marked "SPRINKLER-CONTROL"; and "TELEPHONE" Telephone service.
   - A) No. 3½(T) pull box.
     - 1) "SIGNAL" - Traffic signal circuits with or without lighting or sign lighting circuits.
     - 2) "LIGHTING" - Lighting or sign lighting circuits where voltage is under 600 V.
   - B) No. 5(T) or 6(T) pull box.
     - 1) "TRAFFIC SIGNAL" - Traffic signal circuits with or without lighting or sign lighting circuits.
     - 2) "LIGHTING" - Lighting or sign lighting circuits where voltage is under 600 V.
     - 3) "LIGHTING-HIGH VOLTAGE" - Lighting or sign lighting circuits where voltage is above 600 V.
     - 4) "IRRIGATION" - Circuits to irrigation controller 120 V or more.
     - 5) "RAMP METER" - Ramp meter circuits.
     - 6) "COUNT STATION" - Count or speed monitor circuits.
     - 7) "COMMUNICATION" - Communication circuits.
     - 8) "TOS COMMUNICATIONS" - TOS communications line.
     - 9) "TOS POWER" - TOS power.
     - 10) "TDC POWER" - Telephone demarcation cabinet power.
     - 11) "CCTV" - Closed circuit television circuits.
     - 12) "TMS" - Traffic monitoring station circuits.
     - 13) "CMS" - Changeable message sign circuits.
     - 14) "HAR" - Highway advisory radio circuits.
     - 15) "BOOSTER PUMP" - Booster pump circuit.
4. Bonding jumper for metal covers shall be 3' long, minimum.
5. The nominal dimensions of the opening in which the cover sets shall be the same as the cover dimensions except the length and width dimensions shall be ⅛" greater.
6. Covers and boxes shall be interchangeable with California standard male and female gages. When interchanged with a standard male or female gage, the top surfaces shall be flush within ⅛".

DIMENSION TABLE

PULL BOX	PULL BOX						COVER	
	MINIMUM * THICKNESS	MINIMUM DEPTH BOX AND EXTENSION	LO	LI	WO	WI	L **	W **
No. 3½(T)	1½"	1'-0"	1'-10" - 1'-11"	1'-5" - 1'-6½"	1'-3" - 1'-4"	10" - 1'-0"	1'-8" -1'-8½"	1'-1" - 1'-2"
No. 5(T)	1¾"	1'-0"	2'-5" - 2'-6"	2'-0" - 2'-1"	1'-6" - 1'-7"	1'-1" - 1'-2"	2'-3" - 2'-3½"	1'-4" - 1'-4½"
No. 6(T)	2"	1'-0"	2'-11" - 3'-1"	2'-6" - 2'-7"	1'-10" - 2'-0"	1'-5" - 1'-6"	2'-9" - 2'-9½"	1'-8" - 1'-8½"

* EXCLUDING CONDUIT WEB ** TOP DIMENSION

STATE OF CALIFORNIA
DEPARTMENT OF TRANSPORTATION

ELECTRICAL SYSTEMS (TRAFFIC PULL BOX)

NO SCALE

RSP ES-8B DATED OCTOBER 30, 2015 SUPERSEDES RSP ES-8B DATED JULY 19, 2013 AND RSP ES-8B DATED JANUARY 20, 2012 THAT SUPPLEMENTS THE STANDARD PLANS BOOK DATED 2010.

REVISED STANDARD PLAN RSP ES-8B

2010 REVISED STANDARD PLAN RSP ES-8B

8-25-15

2 REPLACED PER ADDENDUM No. 2
DATED APRIL 4, 2016

DIST	COUNTY	ROUTE	POST MILES TOTAL PROJECT	SHEET No.	TOTAL SHEETS
05	SB	101	2.2/3.3	572	786

REGISTERED CIVIL ENGINEER Rakesh Deo DATE 5-23-14

PLANS APPROVAL DATE 12-7-15

REGISTERED PROFESSIONAL ENGINEER Rakesh Deo No. C73814 Exp. 6/30/17 CIVIL STATE OF CALIFORNIA

The State of California or its officers or agents shall not be responsible for the accuracy or completeness of electronic copies of this plan sheet.

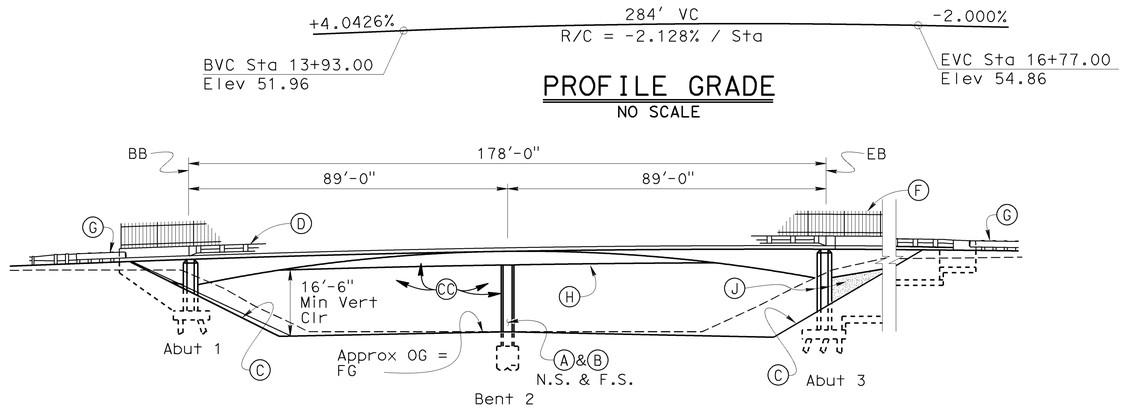

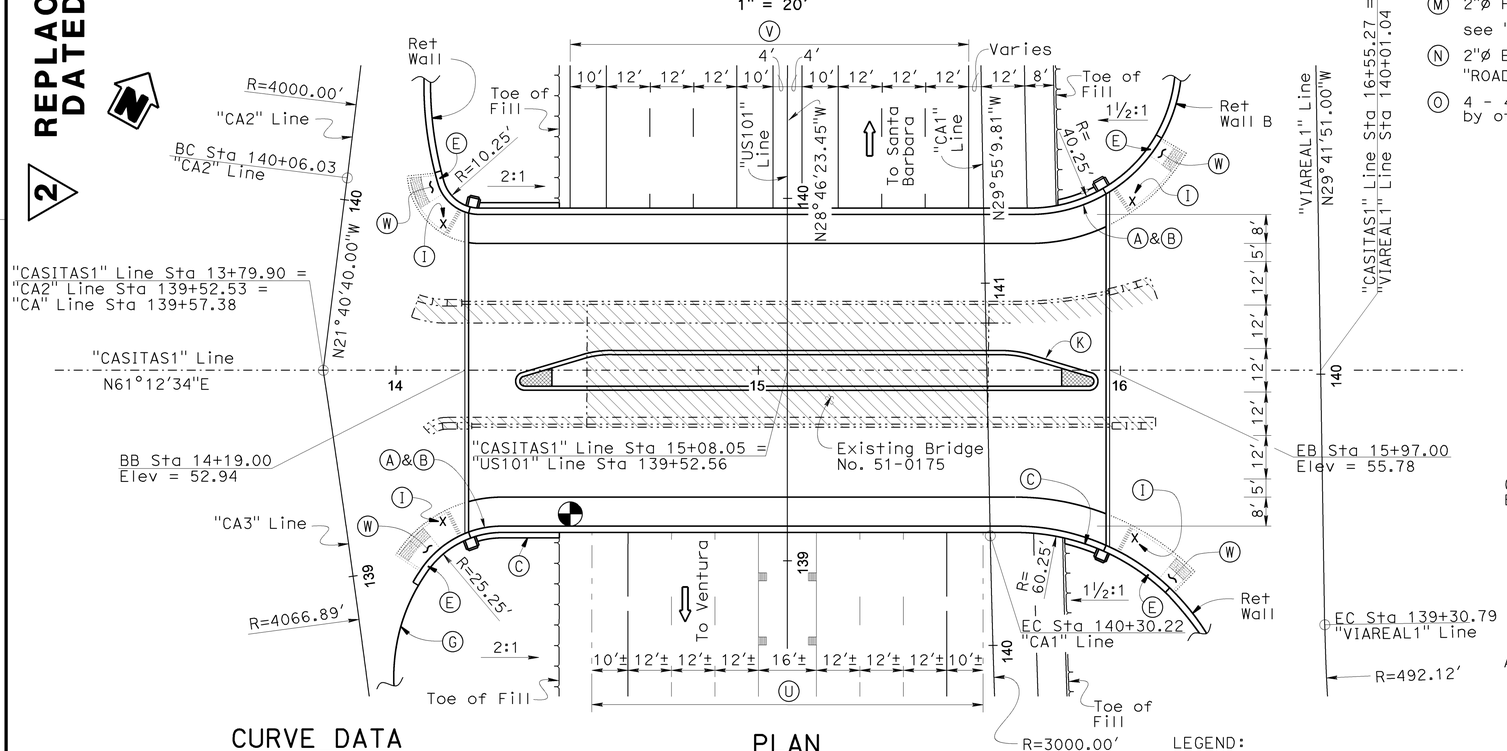

CURVE DATA

"VIAREAL1" Line	"CA1" Line	"CA2" Line	"CA3" Line	"CNOSE4" Line
R = 492.12'	R = 3000.00'	R = 4000.00'	R = 4066.89'	R = 100.01'
Δ = 31°22'56"	Δ = 3°11'29"	Δ = 5°00'42"	Δ = 4°20'39"	Δ = 38°01'06"
T = 138.25'	T = 83.57'	T = 175.06'	T = 154.25'	T = 34.45'
L = 269.55'	L = 167.10'	L = 349.89'	L = 308.35'	L = 66.36'

PLAN
1" = 20'

NOTES:

2

(A) Paint "Casitas Pass Road Overcrossing"
(B) Paint "Br. No. 51-0343"
(C) Slope Paving (In-and-out Block Texture Concrete) , see "SLOPE PAVING-FULL SLOPE" sheet
(D) Concrete Barrier (Type 80SW Modified)
(E) Concrete Barrier (Type 80A Modified)
(F) Picket Fence Railing
(G) MGS, see "ROADWAY PLANS"
(H) For architectural details on exterior girder, see "BRIDGE GEOMETRICS NO. 1" sheet
(I) Traffic signals, see "ROADWAY PLANS"
(J) In-and-out block texture and limits of prepare and stain concrete on abutment face, wingwalls and retaining walls
(K) Bridge planter, see "BRIDGE PLANTER LAYOUT", "BRIDGE PLANTER DETAILS NO. 1, NO. 2, AND NO. 3", AND BRIDGE PLANTER DRAINAGE" sheets.
(L) 2"Ø Electric Conduit (decorative lights), see "ROADWAY PLANS"
(M) 2"Ø Future Electric Conduit (Caltrans), see "ROADWAY PLANS"
(N) 2"Ø Electric Conduit (irrigation), see "ROADWAY PLANS"
(O) 4 - 4" (Tot 8) Verizon Telephone Conduit, by others
(P) 3"Ø water supply line
(Q) Carpinteria Valley water district 8" water line and 12" casing, by others
(R) 2 - 5" SCE power conduit, by others
(S) 4" Cox Cable television conduit, by others
(T) 2"Ø electrical conduit (traffic signal), see "ROADWAY PLANS"
(U) Existing "US101" lane configuration
(V) Furure "US101" lane configuration
(W) Sidewalk and ADA ramp, see "ROADWAY PLANS"
(X) Deck drainage
(Y) Bridge planter drainage
(CC) Integrally colored concrete at abutments, bent and superstructure soffit slab and girders

NOTE: For Quantities, see "DECK CONTOURS" sheet.

LEGEND:

Indicates bridge removal
Indicates existing structure
Indicates location of Min Vert Clr

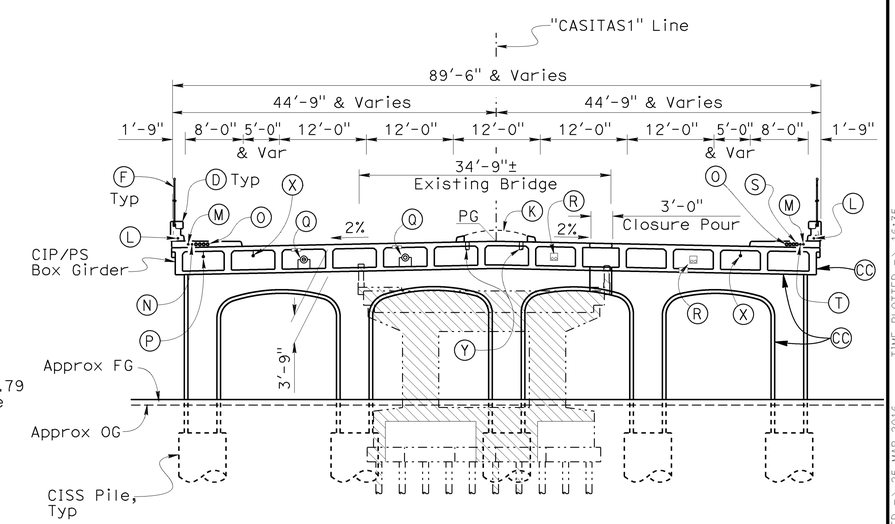

TYPICAL SECTION
1" = 10'

Michael Downs DESIGN ENGINEER	DESIGN	BY Rakesh Deo	CHECKED Ubong Inyang	LOAD & RESISTANCE FACTOR DESIGN	LIVE LOADING: HL93 W/"LOW-BOY"; PERMIT DESIGN VEHICLE
	DETAILS	BY G. Dickerson	CHECKED Ubong Inyang	LAYOUT BY Rakesh Deo	CHECKED Ubong Inyang
	QUANTITIES	BY H. Vu / J. Szaba	CHECKED Mario Guadamuz	SPECIFICATIONS BY Dave Klein	PLANS AND SPECS COMPARED Dave Klein

ORIGINAL SCALE IN INCHES FOR REDUCED PLANS 0 1 2 3

STATE OF CALIFORNIA
DEPARTMENT OF TRANSPORTATION

DIVISION OF ENGINEERING SERVICES
STRUCTURE DESIGN
DESIGN BRANCH 7

UNIT: 3592
PROJECT NUMBER & PHASE: 05000005431
CONTRACT NO.: 05-4482U4

BRIDGE NO. 51-0343
POST MILE 2.64

CASITAS PASS ROAD OVERCROSSING (REPLACE)
GENERAL PLAN NO. 1

DISREGARD PRINTS BEARING EARLIER REVISION DATES

REVISION DATES				SHEET	OF
11-06-12		04-28-14	8-27-15	1	53

STRUCTURES DESIGN GENERAL PLAN SHEET (ENGLISH) (REV.09-01-10)

FILE => 51-0343-a-gp01.dgn

USERNAME => S115755 DATE PLOTTED => 25-MAR-2016 TIME PLOTTED => 16:35

DIST	COUNTY	ROUTE	POST MILES TOTAL PROJECT	SHEET No.	TOTAL SHEETS
05	SB	101	2.2/3.3	573	786

Rakesh Deo 5-23-14
REGISTERED CIVIL ENGINEER DATE

12-7-15
PLANS APPROVAL DATE

REGISTERED PROFESSIONAL ENGINEER Rakesh Deo No. C73814 Exp. 6/30/17 CIVIL STATE OF CALIFORNIA

The State of California or its officers or agents shall not be responsible for the accuracy or completeness of electronic copies of this plan sheet.

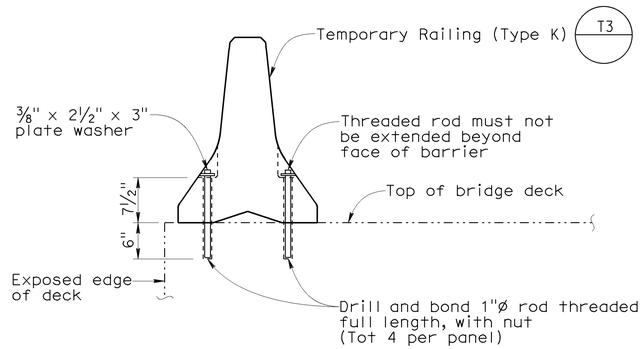

TEMPORARY RAILING (TYPE K) ATTACHMENT DETAIL

No Scale

NOTES:

1. Existing bridge elements within the limits of CISS piles shall be removed fully.

(E) Concrete Barrier (Type 80SW Modified)

(F) Picket Fence Railing

(G) Integral colored concrete sidewalk

(H) Concrete barrier (Type 80SW Modified). To be constructed at end of stage 2 construction

(I) Picket fence railing. To be constructed at end of stage 2 construction

(J) Integral colored concrete sidewalk. To be constructed at end of stage 2 construction

(K) Integral colored concrete curb at bridge planter to be constructed during stage 2 construction.

(L) Temporary pedestrian walkway. To be removed when sidewalk at left edge of deck is open for pedestrians at end of Stage 2 construction

(M) Temporary railing, Type K, see "ROADWAY PLANS"

LEGEND:

·—··— Indicates existing structure

Indicates bridge removal

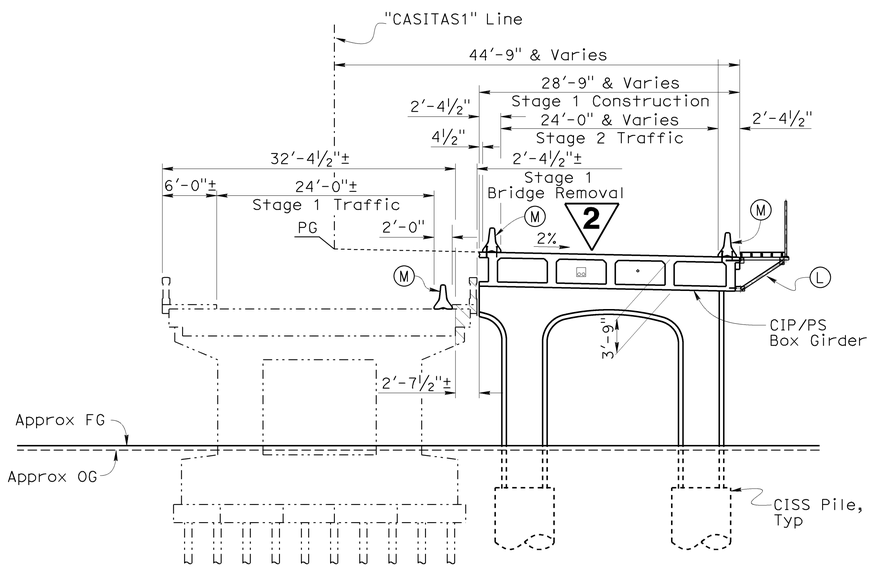

STAGE 1

1/8" = 1'-0"

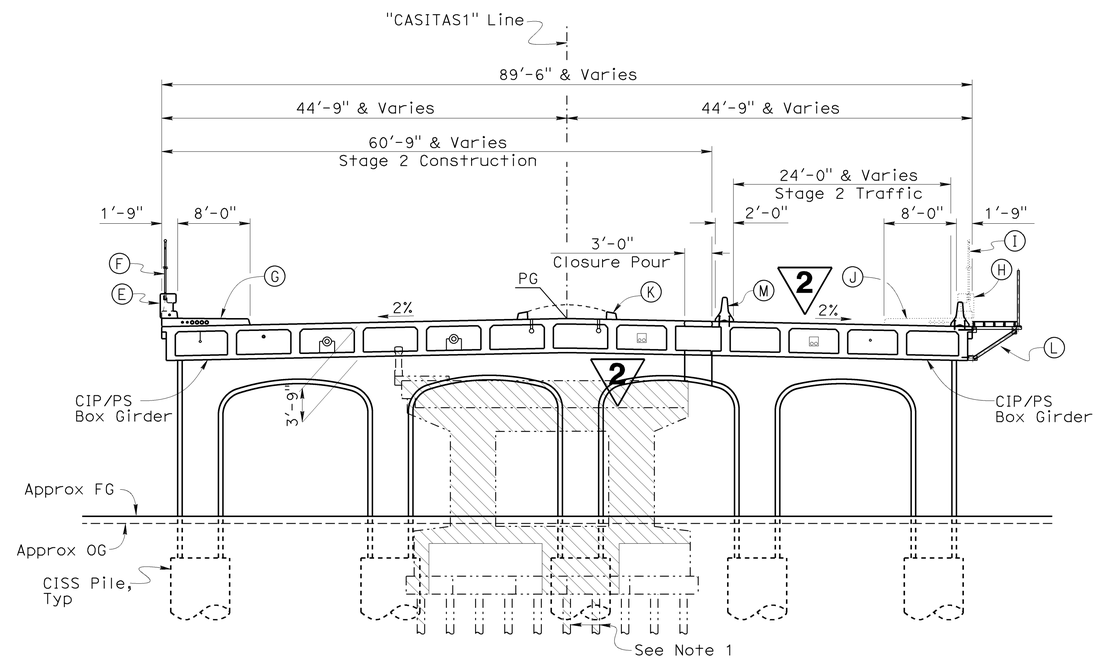

STAGE 2

1/8" = 1'-0"

NOTE:
VERIFY ALL CONTROLLING FIELD DIMENSIONS BEFORE ORDERING OR FABRICATING ANY MATERIAL.

2 **REPLACED PER ADDENDUM No. 2 DATED APRIL 4, 2016**

	BY	CHECKED
DESIGN	Rakesh Deo	Ubong Inyang
DETAILS	G. Dickerson/C. Cancino	Ubong Inyang
QUANTITIES	H. Vu / J. Szabo	Mario Guadamuz

STATE OF CALIFORNIA
DEPARTMENT OF TRANSPORTATION

DIVISION OF ENGINEERING SERVICES
STRUCTURE DESIGN
DESIGN BRANCH 7

BRIDGE NO. 51-0343
POST MILE 2.64

CASITAS PASS ROAD OVERCROSSING (REPLACE)
CONSTRUCTION STAGING PLAN

STRUCTURES DESIGN DETAIL SHEET (ENGLISH) (REV. 09-01-10)

ORIGINAL SCALE IN INCHES FOR REDUCED PLANS 0 1 2 3

UNIT: 3592
PROJECT NUMBER & PHASE: 05000005431
CONTRACT NO.: 05-4482U4

DISREGARD PRINTS BEARING EARLIER REVISION DATES

REVISION DATES 11-05-12 03-12-14 04-14-14

SHEET 2 OF 53

FILE => 51-0343-b-csp.dgn

USERNAME => S115755 DATE PLOTTED => 25-MAR-2016 TIME PLOTTED => 16:35

DIST	COUNTY	ROUTE	POST MILES TOTAL PROJECT	SHEET No.	TOTAL SHEETS
05	SB	101	2.2/3.3	577	786

Rakesh Deo 5-23-14
REGISTERED CIVIL ENGINEER DATE

12-7-15
PLANS APPROVAL DATE

REGISTERED PROFESSIONAL ENGINEER Rakesh Deo No. C73814 Exp. 6/30/17 CIVIL STATE OF CALIFORNIA

The State of California or its officers or agents shall not be responsible for the accuracy or completeness of electronic copies of this plan sheet.

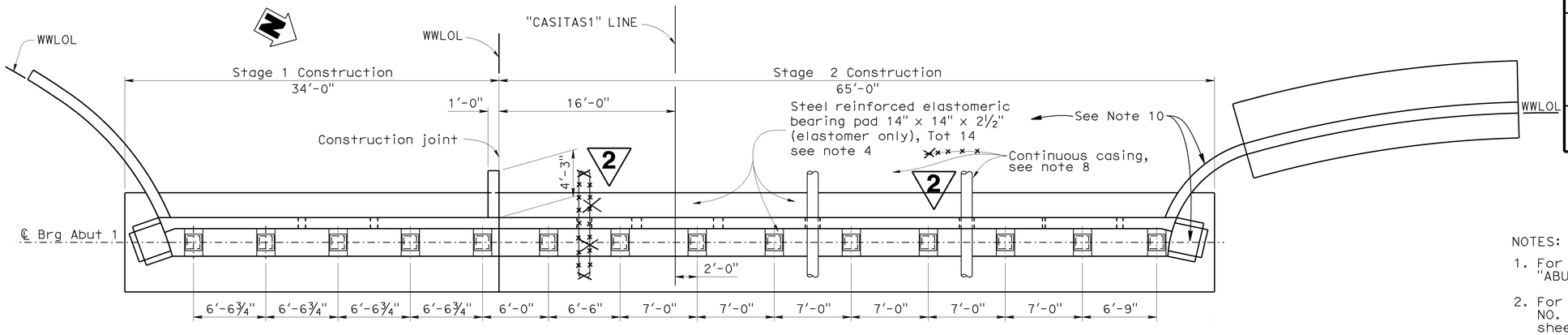

PLAN

3/16" = 1'-0"

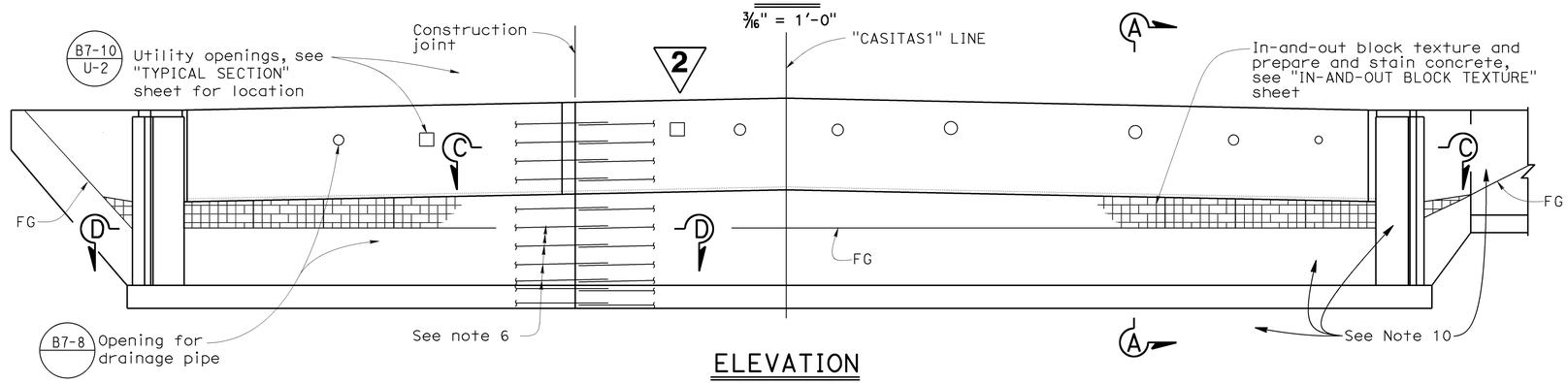

ELEVATION

3/16" = 1'-0"

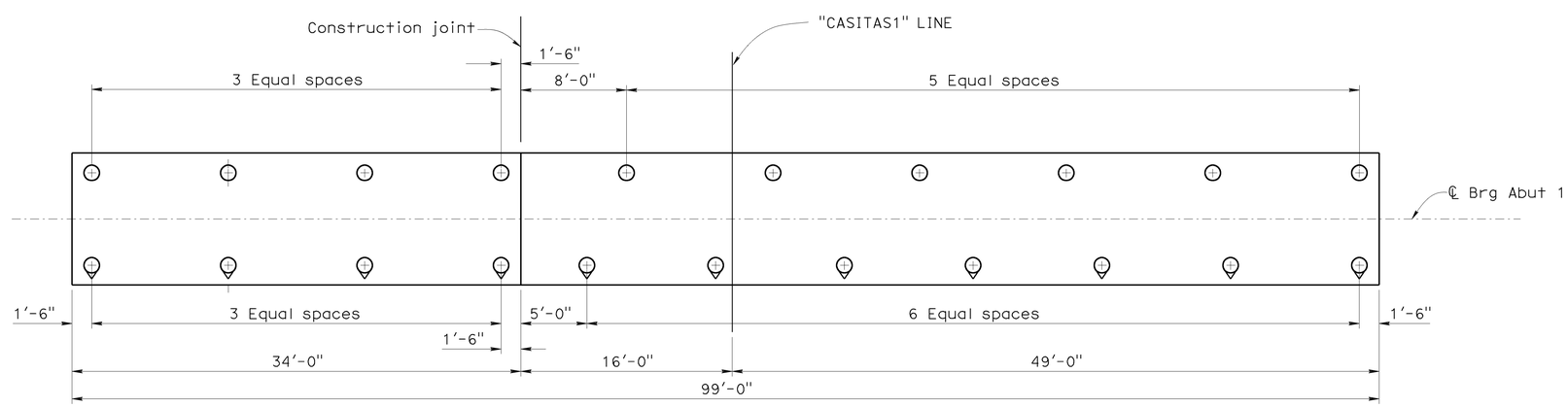

FOOTING PLAN

3/16" = 1'-0"

NOTES:

1. For "SECTION A-A", see "ABUTMENT DETAILS NO. 1" sheet.
2. For wingwall, see "ABUTMENT DETAILS NO. 3" and "ABUTMENT DETAILS NO. 4" sheets.
3. For shear key details, see "ABUTMENT DETAILS NO. 2" sheet.
4. For elastomeric bearing pad details, see "ABUTMENT DETAILS NO. 1" sheet.
5. For "SECTION C-C" and "SECTION D-D", see "ABUTMENT DETAILS NO. 2" sheet.
6. Extend stage 1 Abut Reinf 2'-0" into stage 2 construction.
7. Backwall to be placed after stressing.
8. Continuous casing for water line to be extended 20'-0" beyond the back of the abutment, ~~City of Carpenteria.~~ Carpenteria Valley Water District
9. Prepare and stain in-and-out block texture. Limits of stained concrete shall extend to 1'-0" below FG.
10. Use integrally colored concrete on all abutment elements above the top of footing, excluding the back wall

2

LEGEND:

⊙ Indicates vertical pile

⊙ Indicates 1:3 battered pile

2 **REPLACED PER ADDENDUM No. 2 DATED APRIL 4, 2016**

DESIGN	BY Huan Vu	CHECKED Sujan Talukder	
DETAILS	BY Doug Wooten	CHECKED Sujan Talukder	
QUANTITIES	BY H. Vu / J. Szabo	CHECKED Mario Guadamuz	

STATE OF CALIFORNIA
DEPARTMENT OF TRANSPORTATION

DIVISION OF ENGINEERING SERVICES
STRUCTURE DESIGN
DESIGN BRANCH 7

BRIDGE NO. 51-0343
POST MILE 2.64

CASITAS PASS ROAD OVERCROSSING (REPLACE)

ABUTMENT 1 LAYOUT

STRUCTURES DESIGN DETAIL SHEET (ENGLISH) (REV. 09-01-10)

ORIGINAL SCALE IN INCHES FOR REDUCED PLANS 0 1 2 3

UNIT: 3592
PROJECT NUMBER & PHASE: 05000005431
CONTRACT NO.: 05-4482U4

DISREGARD PRINTS BEARING EARLIER REVISION DATES

REVISION DATES: 1-08-13 04-21-14 8-27-15

SHEET 6 OF 53

FILE => 51-0343-f-a01-1o01.dgn

USERNAME => S115755 DATE PLOTTED => 25-MAR-2016 TIME PLOTTED => 16:35

DIST	COUNTY	ROUTE	POST MILES TOTAL PROJECT	SHEET No.	TOTAL SHEETS
05	SB	101	2.2/3.3	578	786

Rakesh Deo 5-23-14
REGISTERED CIVIL ENGINEER DATE

12-7-15
PLANS APPROVAL DATE

REGISTERED PROFESSIONAL ENGINEER Rakesh Deo No. C73814 Exp. 6/30/17 CIVIL STATE OF CALIFORNIA

The State of California or its officers or agents shall not be responsible for the accuracy or completeness of electronic copies of this plan sheet.

2 REPLACED PER ADDENDUM No. 2 DATED APRIL 4, 2016

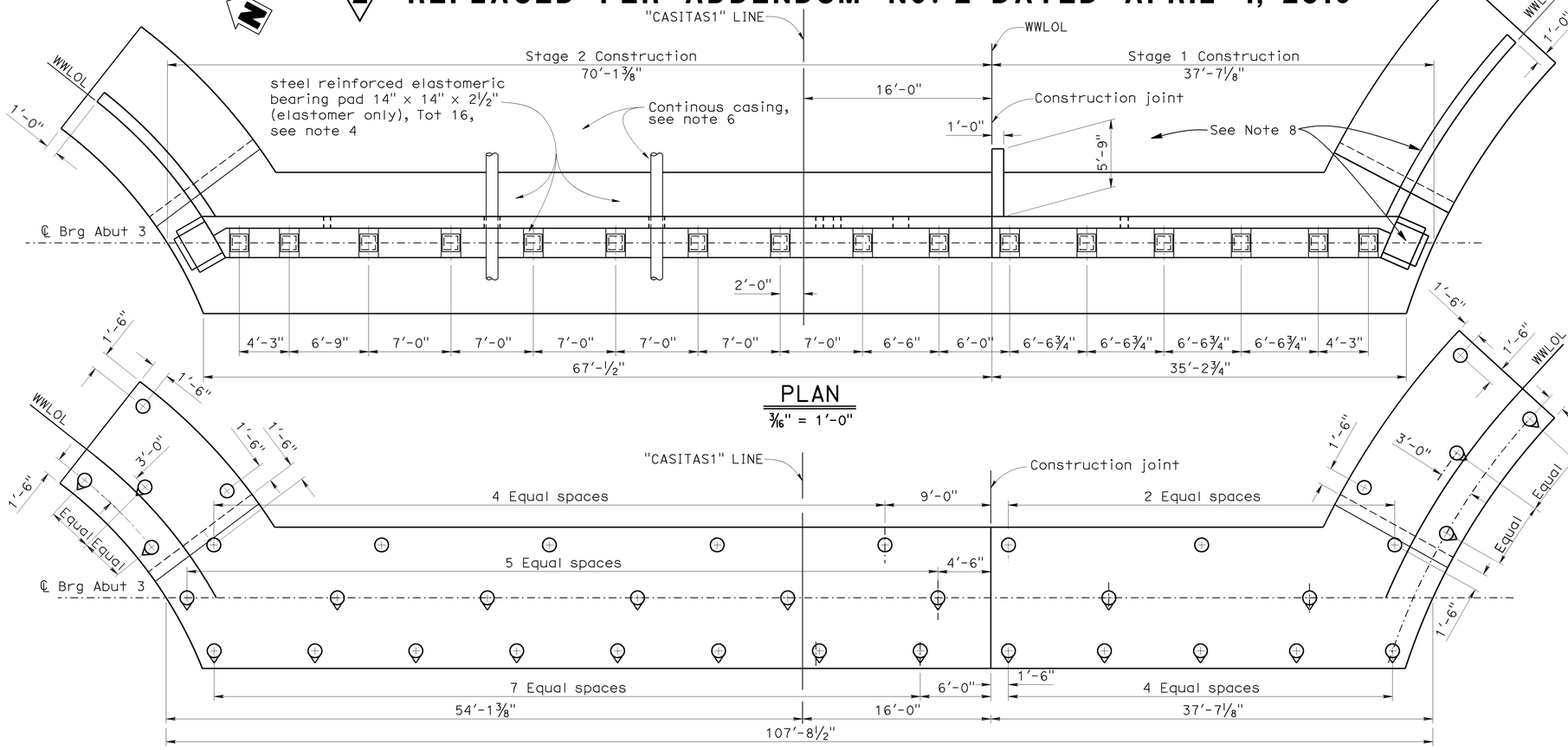

PLAN
3/16" = 1'-0"

FOOTING PLAN
3/16" = 1'-0"

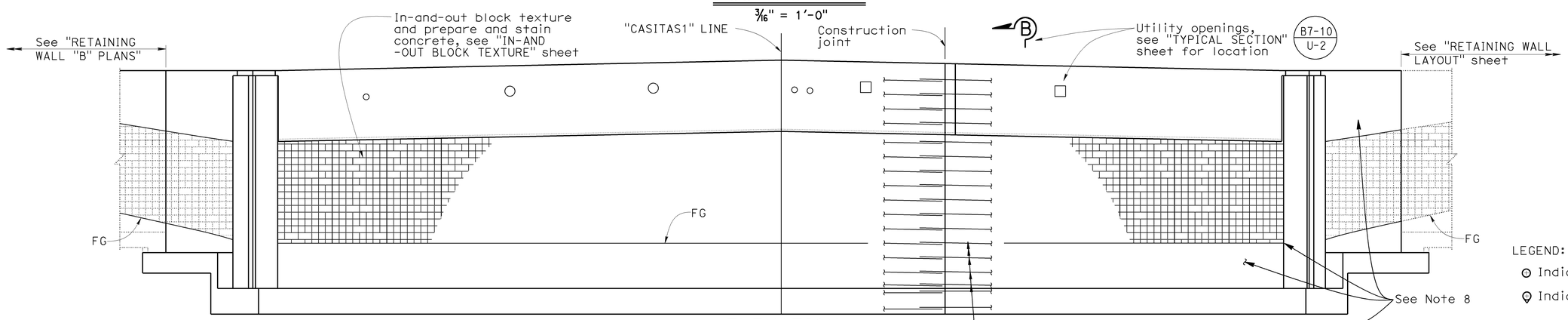

ELEVATION
3/16" = 1'-0"

NOTES:

1. For "SECTION B-B", see "ABUTMENT DETAILS NO. 1" sheet.
2. For wingwalls, see "ABUTMENT DETAILS NO. 3" sheet.
3. For shear key details, see "ABUTMENT DETAILS NO. 2" sheets.
4. For elastomeric bearing pad details, see "ABUTMENT DETAILS NO. 1" sheet.
5. Extend stage 1 reinforcement 2'-0" into stage 2 construction.
6. Continuous casing for water line to be extended 20'-0" beyond the back of the abutment, Carpenteria Valley Water District.
7. Prepare and stain in-and-out block texture. Limits of stained concrete shall extend to 1'-0" below FG.
8. Use integrally colored concrete on all abutment elements above the top of footing, excluding the back wall

LEGEND:

⊙ Indicates vertical pile

Indicates 1:3 battered pile

	BY	CHECKED
DESIGN	Huan Vu	Sujan Talukder
DETAILS	Doug Wooten	Sujan Talukder
QUANTITIES	H. Vu / J. Szabo	Mario Guadamuz

STATE OF CALIFORNIA
DEPARTMENT OF TRANSPORTATION

DIVISION OF ENGINEERING SERVICES
STRUCTURE DESIGN
DESIGN BRANCH 7

BRIDGE NO. 51-0343
POST MILE 2.64

CASITAS PASS ROAD OVERCROSSING (REPLACE)
ABUTMENT 3 LAYOUT

STRUCTURES DESIGN DETAIL SHEET (ENGLISH) (REV. 09-01-10)

ORIGINAL SCALE IN INCHES FOR REDUCED PLANS 0 1 2 3

UNIT: 3592
PROJECT NUMBER & PHASE: 05000005431
CONTRACT NO.: 05-4482U4

DISREGARD PRINTS BEARING EARLIER REVISION DATES

REVISION DATES 12-28-12 04-21-14 8-27-15

SHEET 7 OF 53

FILE => 51-0343-f-a03-1o01.dgn

USERNAME => s115755 DATE PLOTTED => 25-MAR-2016 TIME PLOTTED => 16:35

DIST	COUNTY	ROUTE	POST MILES TOTAL PROJECT	SHEET No.	TOTAL SHEETS
05	SB	101	2.2/3.3	579	786

Rakesh Deo 5-23-14
REGISTERED CIVIL ENGINEER DATE

12-7-15
PLANS APPROVAL DATE

REGISTERED PROFESSIONAL ENGINEER Rakesh Deo No. C73814 Exp. 6/30/17 CIVIL STATE OF CALIFORNIA

The State of California or its officers or agents shall not be responsible for the accuracy or completeness of electronic copies of this plan sheet.

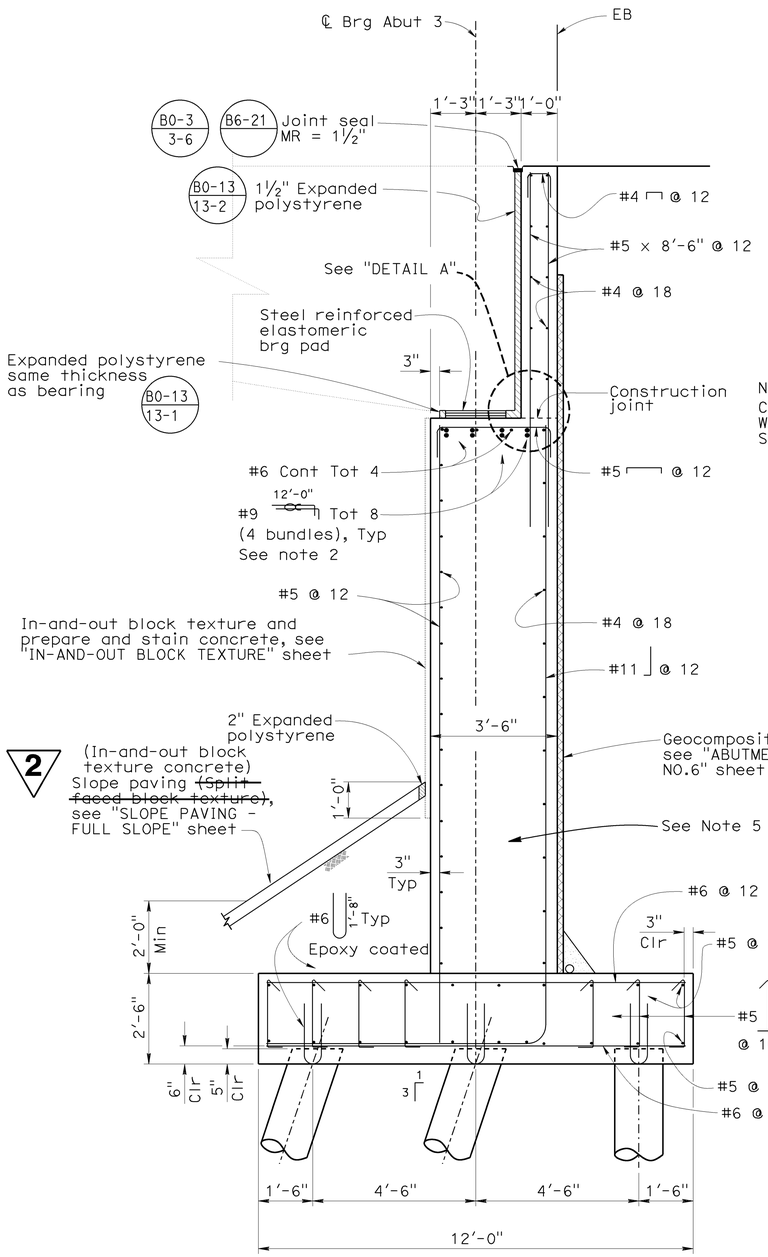

SECTION B-B

ABUTMENT 3
B2-8
½" = 1'-0"

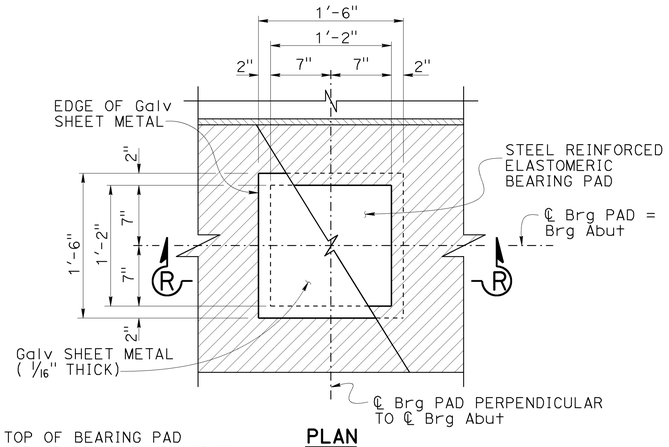

PLAN

NOTE:
COAT TOP OF BEARING PAD WITH GREASE PRIOR TO PLACING SHEET METAL.

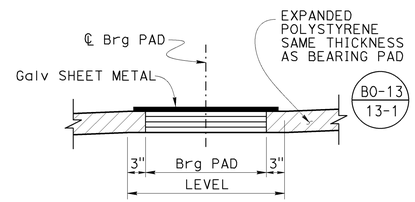

SECTION R-R

BEARING PAD DETAIL

NO SCALE

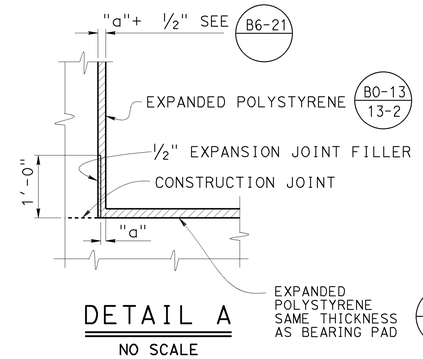

DETAIL A

NO SCALE

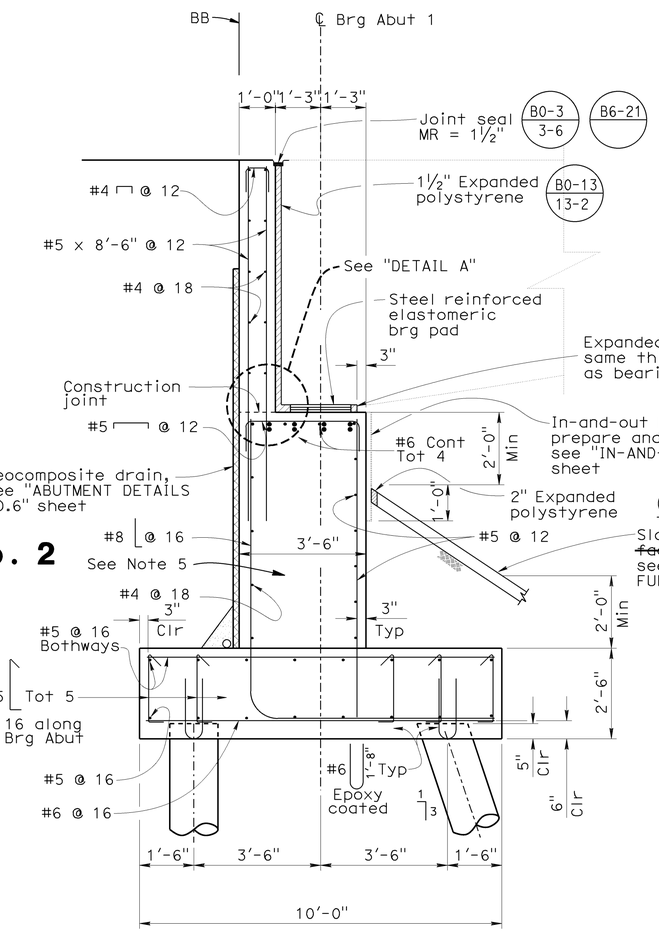

SECTION A-A

ABUTMENT 1
B2-8
½" = 1'-0"

2 REPLACED PER ADDENDUM No. 2 DATED APRIL 4, 2016

NOTES:

1. Backwall to be placed after stressing.
2. For location of reinforcement, see "ABUTMENT DETAILS NO. 2" sheet.
3. For location of "SECTION A-A", see "ABUTMENT 1 LAYOUT" sheet.
4. For location of "SECTION B-B", see "ABUTMENT 3 LAYOUT" sheet.
5. Use integrally colored concrete, see "ABUTMENT 1 LAYOUT" and "ABUTMENT 3 LAYOUT" sheets

	BY	CHECKED
DESIGN	Huan Vu	Sujan Talukder
DETAILS	Doug Wooten	Sujan Talukder
QUANTITIES	H. Vu / J. Szabo	Mario Guadamuz

STATE OF CALIFORNIA
DEPARTMENT OF TRANSPORTATION

DIVISION OF ENGINEERING SERVICES
STRUCTURE DESIGN
DESIGN BRANCH 7

BRIDGE NO. 51-0343
POST MILE 2.64

CASITAS PASS ROAD OVERCROSSING (REPLACE)

ABUTMENT DETAILS NO. 1

STRUCTURES DESIGN DETAIL SHEET (ENGLISH) (REV. 09-01-10)

ORIGINAL SCALE IN INCHES FOR REDUCED PLANS 0 1 2 3

UNIT: 3592
PROJECT NUMBER & PHASE: 05000005431
CONTRACT NO.: 05-4482U4

DISREGARD PRINTS BEARING EARLIER REVISION DATES

REVISION DATES: 1-28-13 04-14-14 04-21-14

SHEET 8 OF 53

FILE => 51-0343-f-abdt01.dgn

USERNAME => S115735 DATE PLOTTED => 25-MAR-2016 TIME PLOTTED => 16:35

DIST	COUNTY	ROUTE	POST MILES TOTAL PROJECT	SHEET No.	TOTAL SHEETS
05	SB	101	2.2/3.3	581	786

REGISTERED CIVIL ENGINEER 5-23-14 DATE

12-7-15
PLANS APPROVAL DATE

REGISTERED PROFESSIONAL ENGINEER Rakesh Deo No. C73814 Exp. 6/30/17 CIVIL STATE OF CALIFORNIA

The State of California or its officers or agents shall not be responsible for the accuracy or completeness of electronic copies of this plan sheet.

2 REPLACED PER ADDENDUM No. 2 DATED APRIL 4, 2016

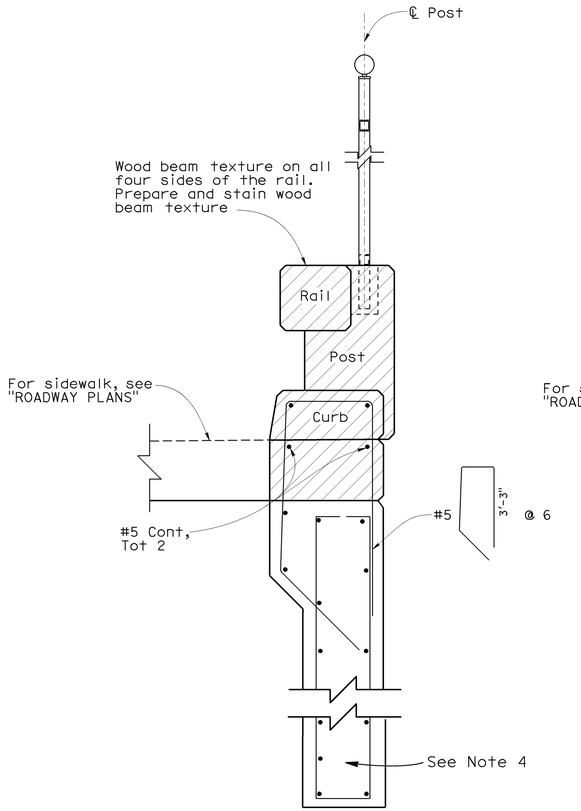

SECTION F-F (B0-1)
1" = 1'-0"

RSP B11-60 (Type 80A Modified)

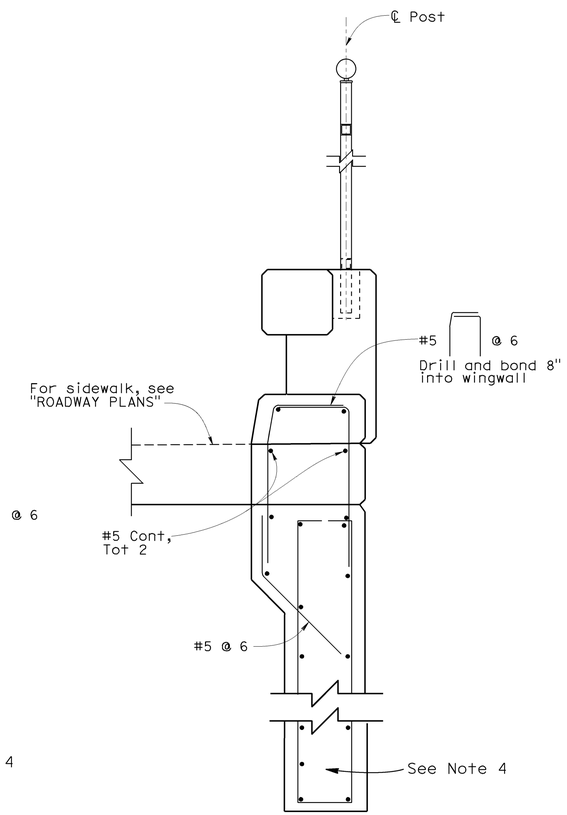

SECTION G-G (B0-1)
1" = 1'-0"
DRILL AND BOND DETAIL

RSP B11-60 (Type 80A Modified)

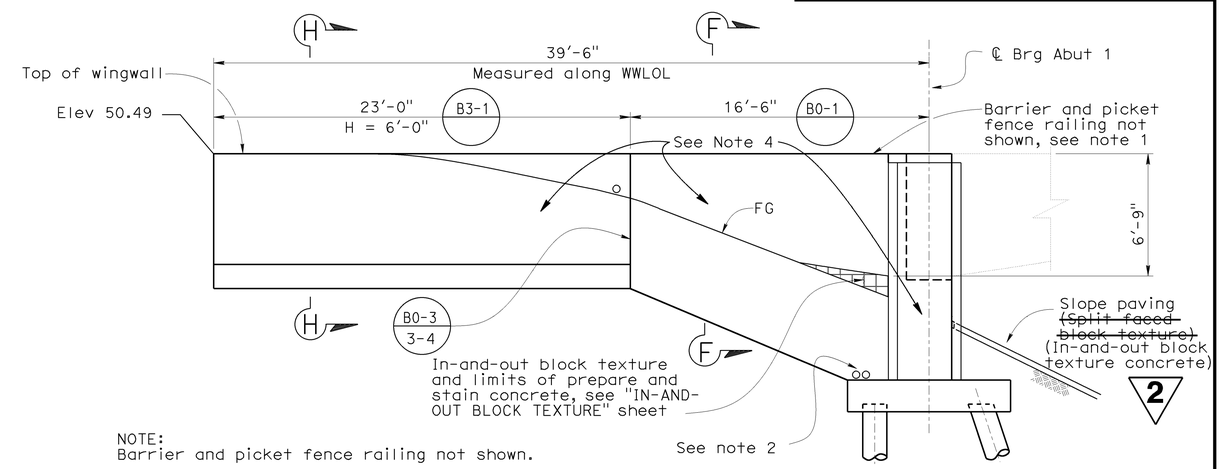

NOTE:
Barrier and picket fence railing not shown.

DEVELOPED MIRRORED ABUTMENT 1 LEFT WINGWALL ELEVATION
1/4" = 1'-0"

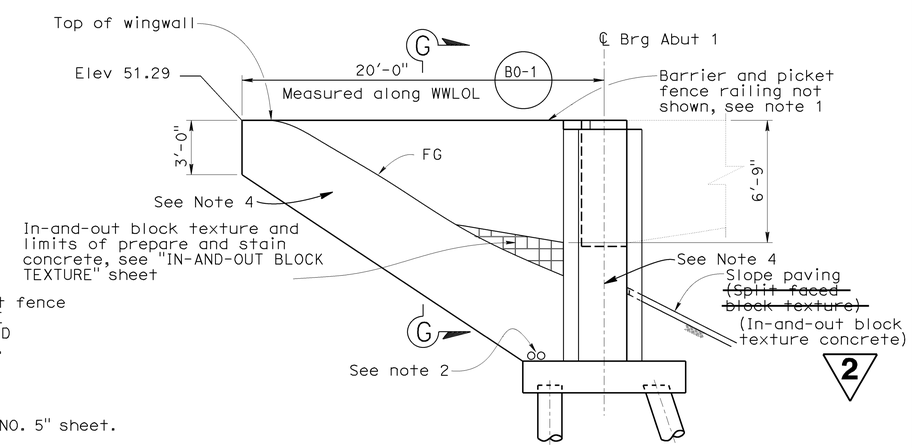

DEVELOPED ABUTMENT 1 RIGHT WINGWALL ELEVATION
1/4" = 1'-0"

NOTES:

1. For limits of concrete barrier and picket fence railing, see "BARRIER MOUNTED PICKET FENCE RAILING LAYOUT NO. 1" and "BARRIER MOUNTED PICKET FENCE RAILING LAYOUT NO. 2" sheets.
2. Outlets to geocomposite drainage, see "ABUTMENT DETAILS NO. 6" sheet.
3. For "SECTION H-H", see "ABUTMENT DETAILS NO. 5" sheet.
4. Use integrally colored concrete, see "ELEVATION" on "ABUTMENT 1 LAYOUT" sheet

LEGEND:

Indicates integrally colored concrete.

	BY	CHECKED
DESIGN	Huan Vu / Rakesh Deo	Sujan Talukder
DETAILS	Doug Wooten	Sujan Talukder
QUANTITIES	H. Vu / J. Szabo	Mario Guadamuz

STATE OF CALIFORNIA
DEPARTMENT OF TRANSPORTATION

DIVISION OF ENGINEERING SERVICES
STRUCTURE DESIGN
DESIGN BRANCH 7

BRIDGE NO. 51-0343
POST MILE 2.64

CASITAS PASS ROAD OVERCROSSING (REPLACE)

ABUTMENT DETAILS NO. 3

STRUCTURES DESIGN DETAIL SHEET (ENGLISH) (REV. 09-01-10)

ORIGINAL SCALE IN INCHES FOR REDUCED PLANS 0 1 2 3

UNIT: 3592
PROJECT NUMBER & PHASE: 05000005431
CONTRACT NO.: 05-4482U4

DISREGARD PRINTS BEARING EARLIER REVISION DATES

REVISION DATES: 1-30-13 04-21-14 08-14-14

SHEET 10 OF 53

FILE => 51-0343-f-abdt03.add

USERNAME => S115755 DATE PLOTTED => 25-MAR-2016 TIME PLOTTED => 16:35

DIST	COUNTY	ROUTE	POST MILES TOTAL PROJECT	SHEET No.	TOTAL SHEETS
05	SB	101	2.2/3.3	583	786

Rakesh Deo 5-23-14
REGISTERED CIVIL ENGINEER DATE

12-7-15
PLANS APPROVAL DATE

REGISTERED PROFESSIONAL ENGINEER Rakesh Deo No. C73814 Exp. 6/30/17 CIVIL STATE OF CALIFORNIA

The State of California or its officers or agents shall not be responsible for the accuracy or completeness of electronic copies of this plan sheet.

2 REPLACED PER ADDENDUM No. 2 DATED APRIL 4, 2016

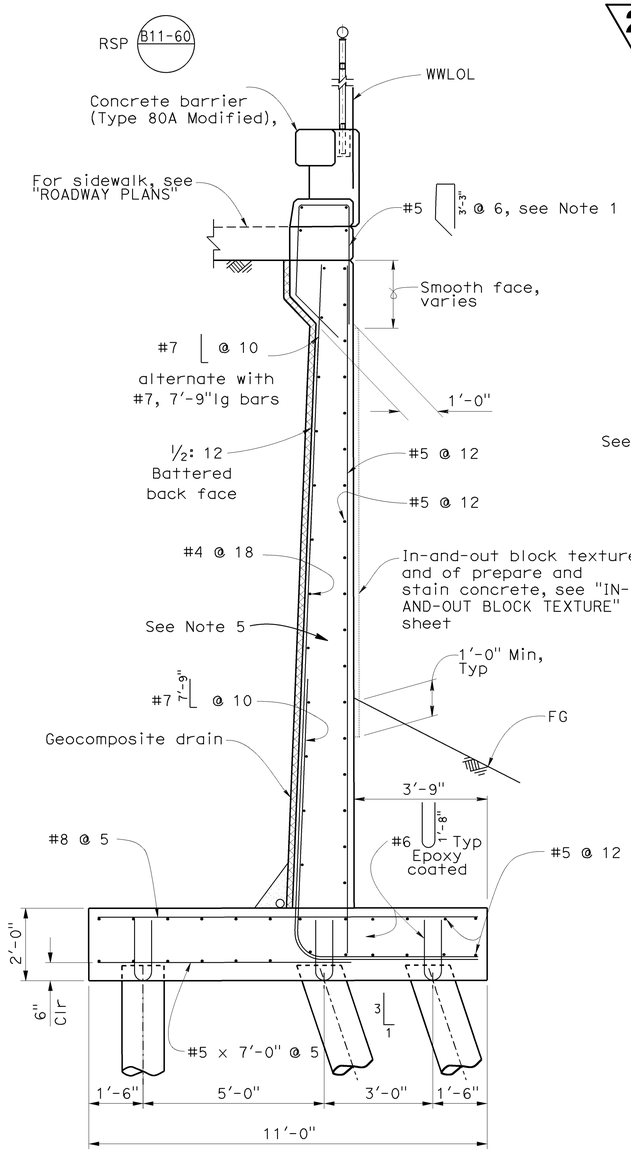

SECTION H-H (B2-5)

No Scale

NOTES:

1. Drill and bond required on Rt WW.
2. For drill and bond detail, see "ABUTMENT DETAILS NO. 3" sheet.

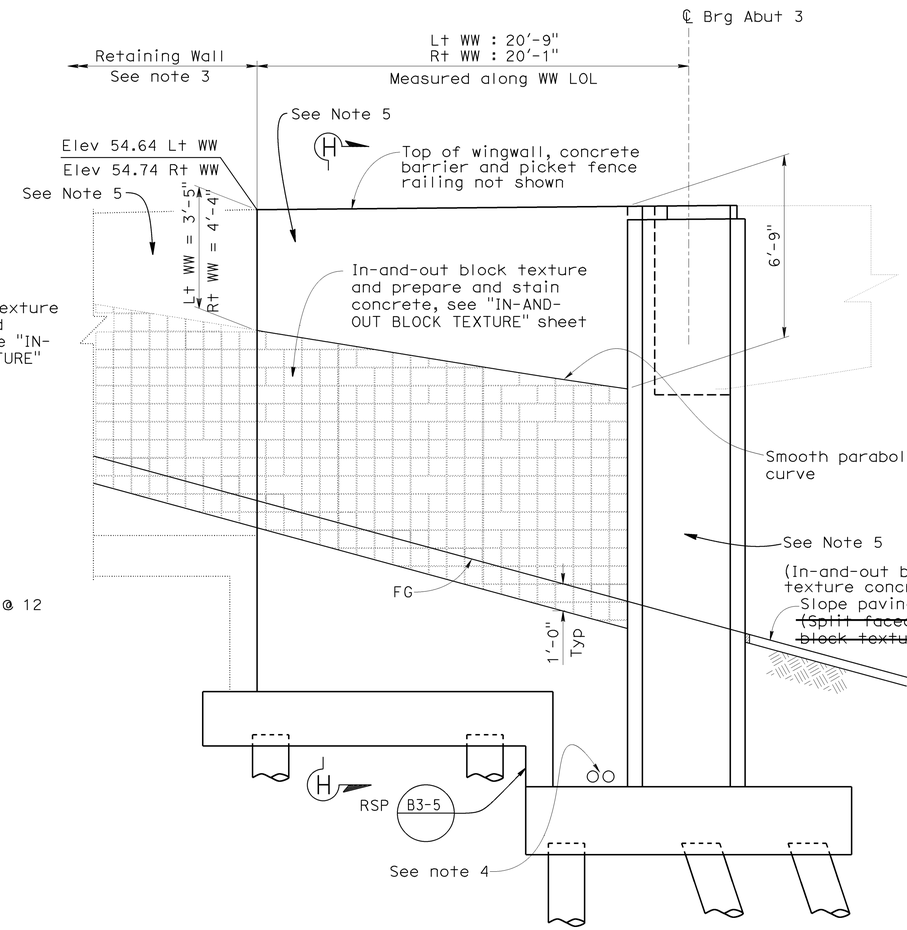

DEVELOPED ABUTMENT 3 WINGWALL

3/8"=1'-0"

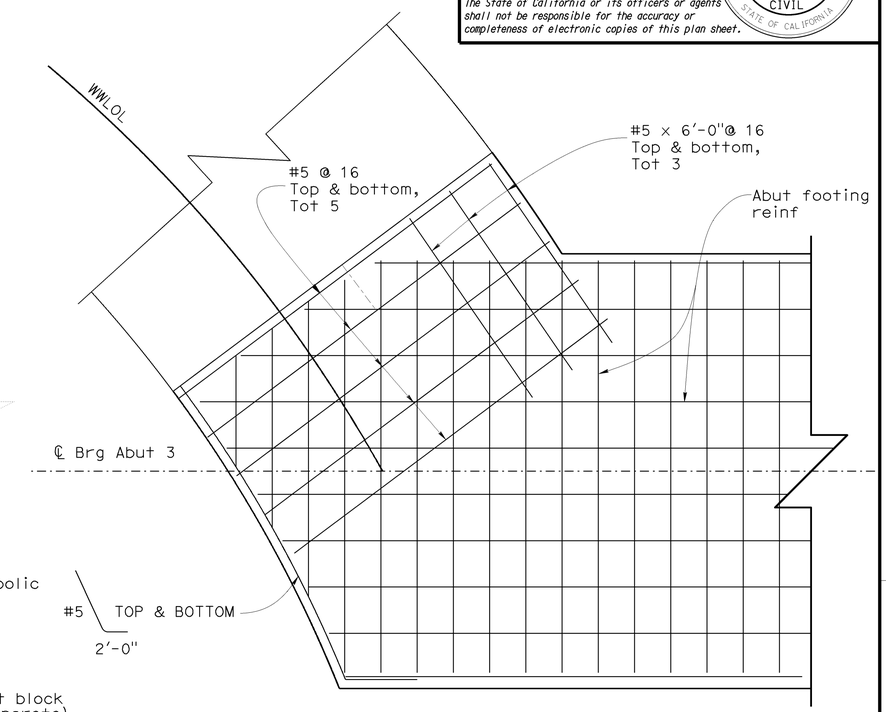

ABUTMENT 3 FOOTING CORNER REINFORCEMENT

LEFT SIDE SHOWN, RIGHT SIDE SIMILAR

½"=1'-0"

NOTES:

1. Abutment 3 left wingwall shown, Abutment 3 right wingwall similar.
2. For limits of concrete barrier and picket fence railing, see "BARRIER MOUNTED PICKET FENCE RAILING LAYOUT NO. 1" and "BARRIER MOUNTED PICKET FENCE RAILING LAYOUT NO. 2" sheets.
3. For retaining wall at Abut 3 Lt, see "RETAINING WALL "B" " plans. For retaining wall at Abut 3 Rt, see "RETAINING WALL LAYOUT" and "RETAINING WALL DETAILS" sheets.
4. Outlets to geocomposite drainage, see"ABUTMENT DETAILS NO. 6" sheet.
5. Use integrally colored concrete, see "ELEVATION" on "ABUTMENT 3 LAYOUT" sheet

	BY	CHECKED
DESIGN	Huan Vu	Sujan Talukder
DETAILS	Doug Wooten	Sujan Talukder
QUANTITIES	H. Vu / J. Szabo	Mario Guadamuz

STATE OF CALIFORNIA DEPARTMENT OF TRANSPORTATION

DIVISION OF ENGINEERING SERVICES STRUCTURE DESIGN DESIGN BRANCH 7

BRIDGE NO. 51-0343
POST MILE 2.64

CASITAS PASS ROAD OVERCROSSING (REPLACE)

ABUTMENT DETAILS NO. 5

STRUCTURES DESIGN DETAIL SHEET (ENGLISH) (REV. 09-01-10)

ORIGINAL SCALE IN INCHES FOR REDUCED PLANS 0 1 2 3

UNIT: 3592
PROJECT NUMBER & PHASE: 05000005431
CONTRACT NO.: 05-4482U4

DISREGARD PRINTS BEARING EARLIER REVISION DATES

REVISION DATES 1-30-13 4-21-14 4-24-14

SHEET 12 OF 53

FILE => 51-0343-f-abdt05.dgn

USERNAME => S115755 DATE PLOTTED => 25-MAR-2016 TIME PLOTTED => 16:35

DIST	COUNTY	ROUTE	POST MILES TOTAL PROJECT	SHEET No.	TOTAL SHEETS
05	SB	101	2.2/3.3	587	786

Rakesh Deo 5-23-14
REGISTERED CIVIL ENGINEER DATE

12-7-15
PLANS APPROVAL DATE

REGISTERED PROFESSIONAL ENGINEER Rakesh Deo No. C73814 Exp. 6/30/17 CIVIL STATE OF CALIFORNIA

The State of California or its officers or agents shall not be responsible for the accuracy or completeness of electronic copies of this plan sheet.

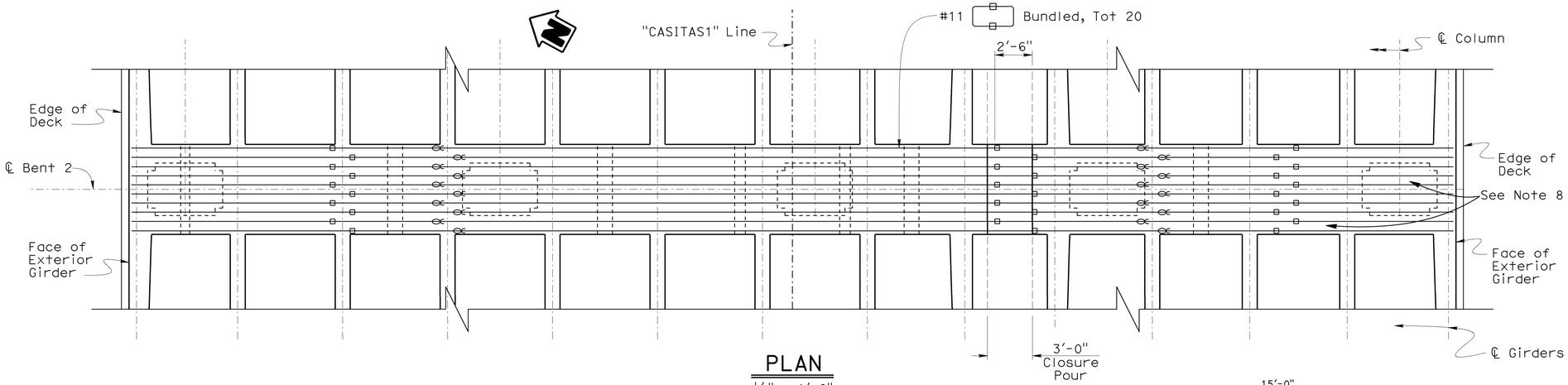

PLAN
1/4" = 1'-0"

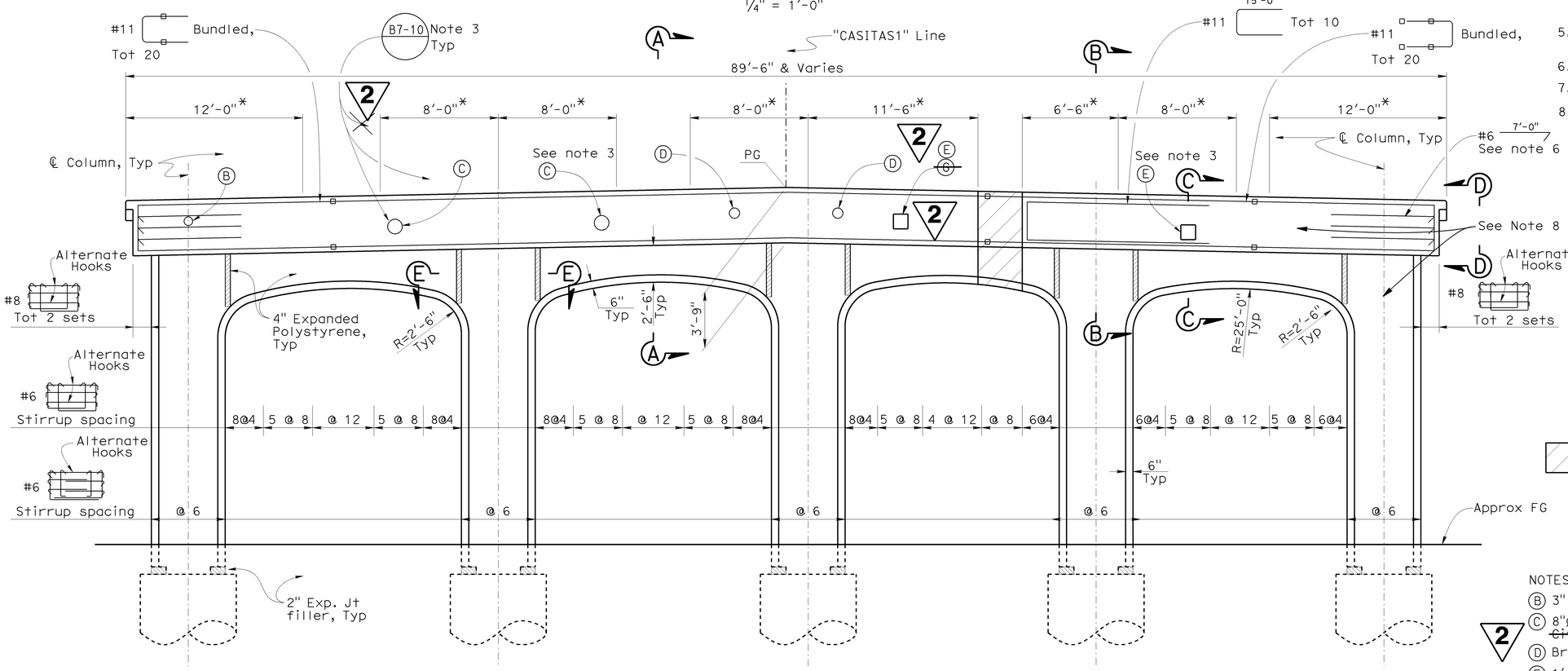

ELEVATION
1/4" = 1'-0" B7-1

NOTES:

1. For "SECTION A-A", "SECTION B-B" and "SECTION C-C", see "BENT DETAILS NO. 1" sheet.
2. For reinforcement not shown, see "BENT DETAILS NO. 1", "BENT DETAILS NO. 2" and "BENT DETAILS NO. 3" sheets.
3. For details, see Section C-C on "BENT DETAILS NO. 1" sheet and Utility Opening in Bent Cap on "BENT DETAILS NO. 3" sheet.
4. Falsework at Bent 2 Stage 2 Construction to be removed after completion of Bent Cap closure pour.
5. For "SECTION E-E" see "BENT DETAILS NO. 3" sheet.
6. Adjust reinf to clear opening.
7. Lap splices prohibited in bent cap reinf.
8. Use integrally colored concrete in all bent elements above the top of CISS piles excluding the deck slab

LEGEND:

* Indicates "NO SPLICE ZONE" for main bent cap reinforcement and service spliced side face reinforcement.

∝ Indicates bundled bars

▫ Indicates service splices to be staggered 2'-6"

Indicates limit of closure pour

NOTES:

Ⓑ 3" Water supply line (bridge)
Ⓒ 8"ø Water line (12"ø casing), ~~City of~~ Carpinteria Valley Water District
Ⓓ Bridge planter drainage pipe
Ⓔ 1'-0" x 1'-0" Opening for power conduit, SCE
~~Ⓖ 10"ø water line (12"ø casing) Carpinteria Valley Water District~~

2 REPLACED PER ADDENDUM No. 2 DATED APRIL 4, 2016

DESIGN	BY Rakesh Deo	CHECKED Ubong Inyang	
DETAILS	BY G. Dickerson/C. Cancino	CHECKED Ubong Inyang	
QUANTITIES	BY H. Vu / J. Szabo	CHECKED Mario Guadamuz	

STATE OF CALIFORNIA
DEPARTMENT OF TRANSPORTATION

DIVISION OF ENGINEERING SERVICES
STRUCTURE DESIGN
DESIGN BRANCH 7

BRIDGE NO. 51-0343
POST MILE 2.64

CASITAS PASS ROAD OVERCROSSING (REPLACE)
BENT LAYOUT

STRUCTURES DESIGN DETAIL SHEET (ENGLISH) (REV. 09-01-10)

ORIGINAL SCALE IN INCHES FOR REDUCED PLANS 0 1 2 3

UNIT: 3592
PROJECT NUMBER & PHASE: 05000005431
CONTRACT NO.: 05-4482U4

DISREGARD PRINTS BEARING EARLIER REVISION DATES

REVISION DATES 1-28-13 03-28-14 8-27-15

SHEET 16 OF 53

FILE => 51-0343-h-b101.add

USERNAME => s115755 DATE PLOTTED => 25-MAR-2016 TIME PLOTTED => 16:35

DIST	COUNTY	ROUTE	POST MILES TOTAL PROJECT	SHEET No.	TOTAL SHEETS
05	SB	101	2.2/3.3	592	786

REGISTERED CIVIL ENGINEER Rakesh Deo DATE 5-23-14

12-7-15
PLANS APPROVAL DATE

REGISTERED PROFESSIONAL ENGINEER Rakesh Deo No. C73814 Exp. 6/30/17 CIVIL STATE OF CALIFORNIA

The State of California or its officers or agents shall not be responsible for the accuracy or completeness of electronic copies of this plan sheet.

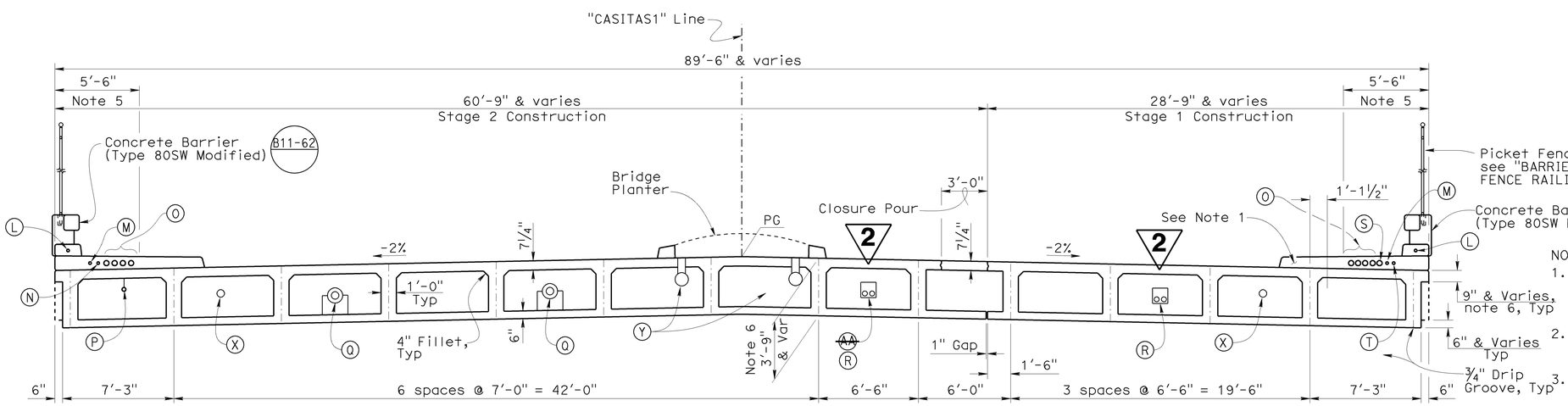

TYPICAL SECTION

¼" = 1'-0"

B7-10 / U-8

NOTES:

1. Sidewalk, barrier and picket fence railing to be placed at end of Stage 2 construction.
2. All utilities must be centered in bay horizontally unless shown otherwise.
3. All utilities or casings, as applicable, in bay must be installed prior to placement of concrete for bridge deck.
4. Loop detectors to be placed in the deck prior to concrete pour, see "ROADWAY PLANS".
5. Locate utility conduits in sidewalk to clear traffic signal posts and foundations. For location of traffic signal posts, see "ROADWAY PLANS".
6. For depth of superstructure and overhang, see "BRIDGE GEOMETRICS" sheet.

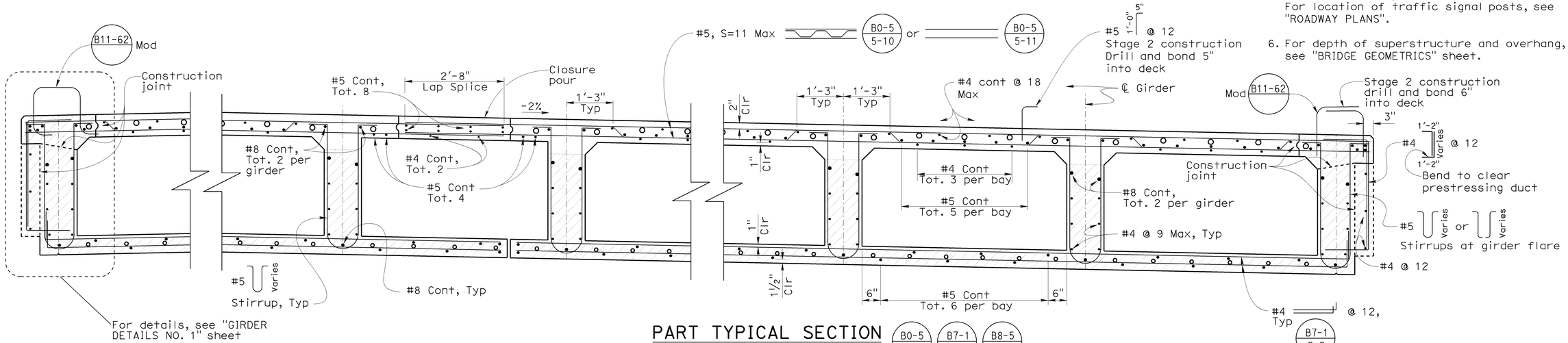

PART TYPICAL SECTION

¾" = 1'-0"

B0-5 B7-1 B8-5

NOTES:

(L) 2"Ø Electric Conduit (Decorative Lights), see "ROADWAY PLANS"
(M) 2"Ø Future Electric Conduit, see "ROADWAY PLANS"
(N) 2"Ø Electric Conduit (Irrigation), see "ROADWAY PLANS"
(O) 4 - 4"Ø (Tot 8) Telephone Conduit, Verizon
(P) 3" Water supply line (bridge)
2 (Q) 8"Ø Water line (12"Ø Casing), ~~City of Carpinteria~~ Carpinteria Valley Water District
2 (R) ~~4~~ 2 - 5"Ø Power Conduit, SCE
(S) 4"Ø Television Conduit, COX Cable
(T) 2"Ø Electric Conduit (Traffic Signal), see "ROADWAY PLANS"
(X) Deck drainage
(Y) Bridge planter drainage
2 ~~(AA) 10"Ø water line (12"Ø casing), Carpinteria Valley Water District~~

LEGEND:

o Indicates additional top slab and bottom slab reinforcement, see "GIRDER REINFORCEMENT NO. 1" and "GIRDER REINFORCEMENT NO. 2" sheets

Indicates integrally colored concrete

2 **REPLACED PER ADDENDUM No. 2 DATED APRIL 4, 2016**

	BY	CHECKED
DESIGN	Rakesh Deo	Ubong Inyang
DETAILS	G. Dickerson/C. Cancino	Ubong Inyang
QUANTITIES	H. Vu / J. Szabo	Mario Guadamuz

STATE OF CALIFORNIA DEPARTMENT OF TRANSPORTATION

DIVISION OF ENGINEERING SERVICES STRUCTURE DESIGN DESIGN BRANCH 7

BRIDGE NO. 51-0343
POST MILE 2.64

CASITAS PASS ROAD OVERCROSSING (REPLACE)

TYPICAL SECTION

STRUCTURES DESIGN DETAIL SHEET (ENGLISH) (REV. 09-01-10)

ORIGINAL SCALE IN INCHES FOR REDUCED PLANS 0 1 2 3

UNIT: 3592
PROJECT NUMBER & PHASE: 05000005431
CONTRACT NO.: 05-4482U4

DISREGARD PRINTS BEARING EARLIER REVISION DATES

REVISION DATES 11-01-12 04-30-14 8-27-15

SHEET 21 OF 53

FILE => 51-0343-j-ts01.dgn

USERNAME => S115755 DATE PLOTTED => 25-MAR-2016 TIME PLOTTED => 16:35

DIST	COUNTY	ROUTE	POST MILES TOTAL PROJECT	SHEET No.	TOTAL SHEETS
05	SB	101	2.2/3.3	593	786

Rakesh Deo 5-23-14
REGISTERED CIVIL ENGINEER DATE

12-7-15
PLANS APPROVAL DATE

REGISTERED PROFESSIONAL ENGINEER Rakesh Deo No. C73814 Exp. 6/30/17 CIVIL STATE OF CALIFORNIA

The State of California or its officers or agents shall not be responsible for the accuracy or completeness of electronic copies of this plan sheet.

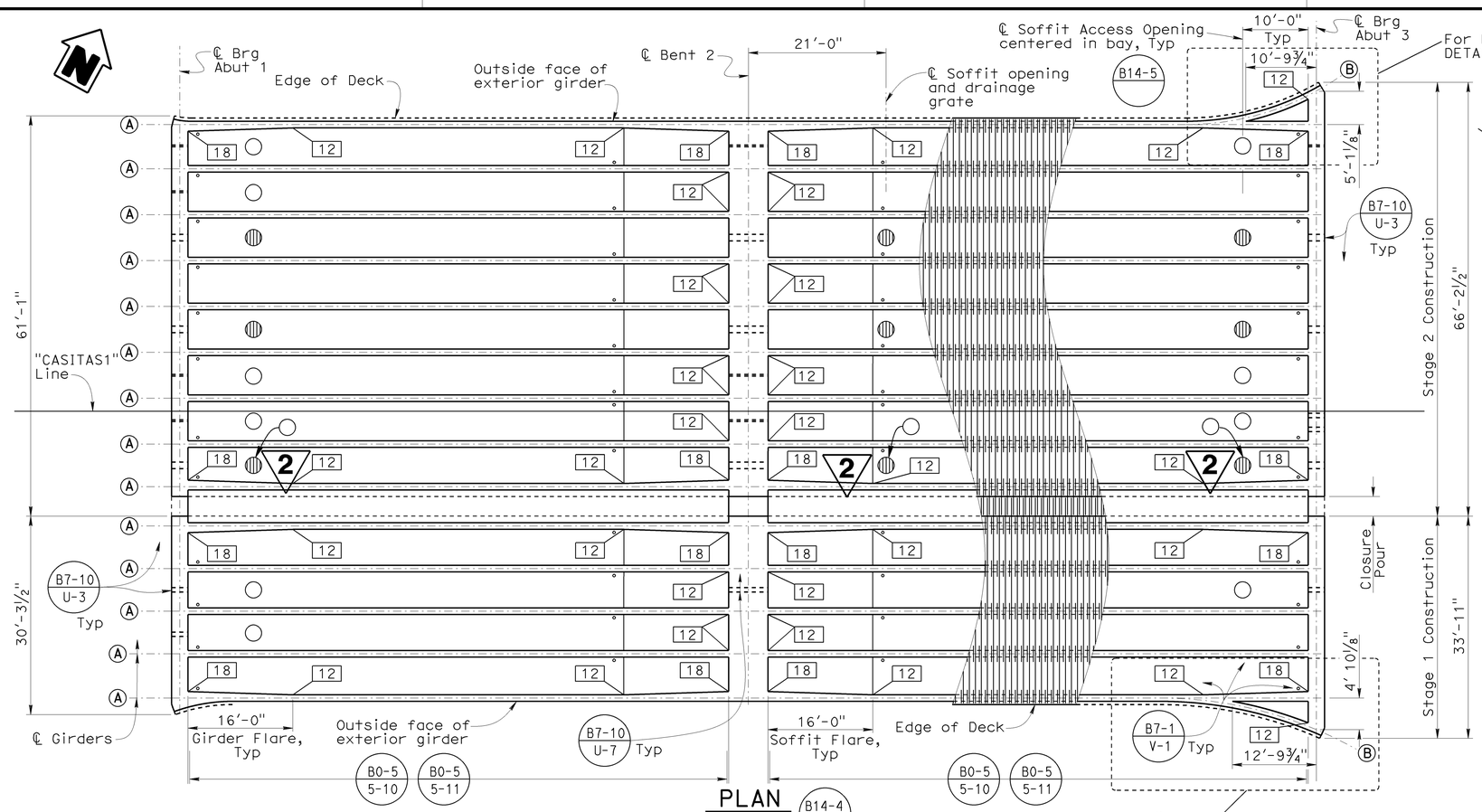

PLAN

1" = 10'

For Details, see "GIRDER DETAILS NO. 1" sheet

LEGEND:

- ⊠ Indicates point of no movement
- Indicates girder stem width in inches
- Indicates soffit access opening
- Indicates soffit opening and drainage grate, see "DECK DRAINAGE DETAILS" sheet

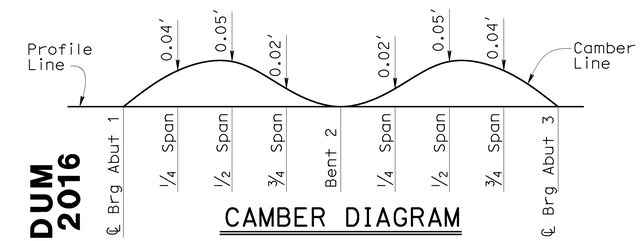

CAMBER DIAGRAM

No Scale

NOTE:
Does not include allowance for falsework settlement

REPLACED PER ADDENDUM No. 2 DATED APRIL 4, 2016

PRESTRESSING NOTES

270 KSI Low Relaxation Strands:

STAGE 1

P_{jack} = 5,000 kips
Total Number of Girders = 5

STAGE 2

P_{jack} = 9,000 kips
Total Number of Girders = 9

Anchor set = ⅜ inch

Friction Curvature Coefficient, μ = 15 X 10^{-2} (1/rad)

Friction Wobble Coefficient, K = 0.0002/ft

The final force ratio (larger divided by smaller) between any two girders must not exceed the ratio of 10 to 9

Concrete: f'_c = 4.0 ksi @ 28 days

f'_{ci} = 3.5 ksi @ time of stressing

Contractor must submit elongation calculations based on initial stress at ⊠ = 0.9162 times jacking stress.

One end stressing must be performed from Abutment 3 only

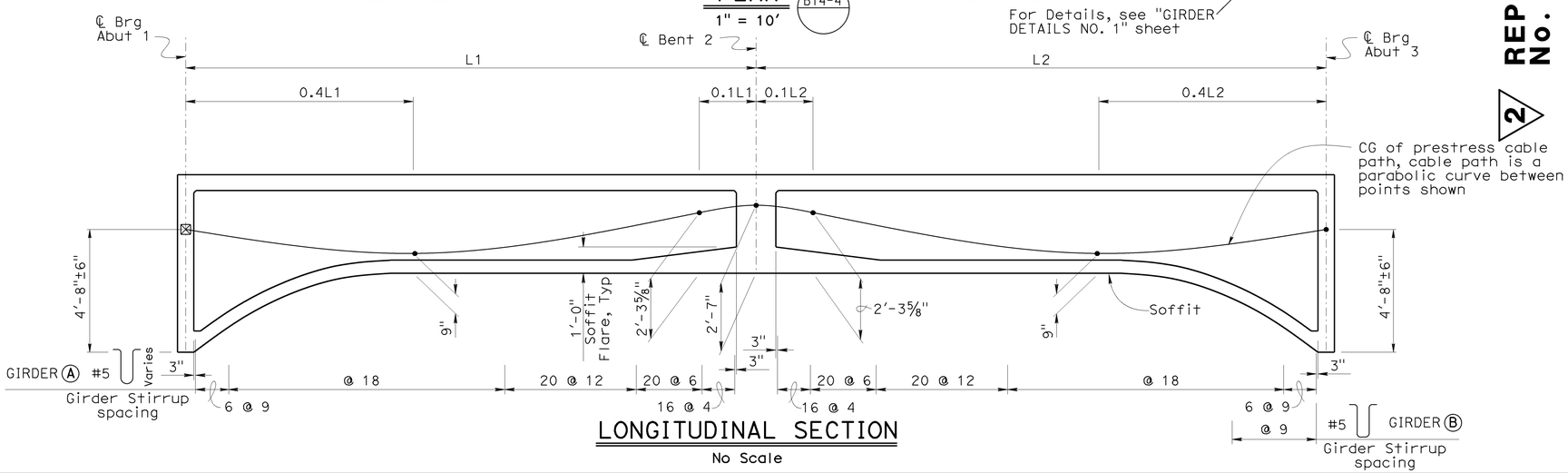

LONGITUDINAL SECTION

No Scale

FALSEWORK RELEASE

ALTERNATIVE 1:
Falsework must be released as soon as permitted by the Specifications. Closure pour must not be placed sooner than 60 days after falsework has been released.

ALTERNATIVE 2:
Falsework must be released less than 28 days after the last concrete has been placed. Closure pour must not be placed sooner than 14 days after the falsework has been released. When falsework release Alternative 2 is used, camber values are 0.75 times those shown.

NOTE:
Falsework at Bent 2 stage 2 construction to be removed after completion of Bent Cap Closure Pour.

	BY	CHECKED
DESIGN	R. Deo / S. Talukder	Ubong Inyang
DETAILS	G. Dickerson/C. Cancino	Ubong Inyang
QUANTITIES	H. Vu / J. Szabo	Mario Guadamuz

STATE OF CALIFORNIA
DEPARTMENT OF TRANSPORTATION

DIVISION OF ENGINEERING SERVICES
STRUCTURE DESIGN
DESIGN BRANCH 7

BRIDGE NO. 51-0343
POST MILE 2.64

CASITAS PASS ROAD OVERCROSSING (REPLACE)

GIRDER LAYOUT

STRUCTURES DESIGN DETAIL SHEET (ENGLISH) (REV. 09-01-10)

ORIGINAL SCALE IN INCHES FOR REDUCED PLANS 0 1 2 3

UNIT: 3592
PROJECT NUMBER & PHASE: 05000005431
CONTRACT NO.: 05-4482U4

DISREGARD PRINTS BEARING EARLIER REVISION DATES

REVISION DATES: 11-15-12 05-29-14 8-27-15

SHEET 22 OF 53

FILE => 51-0343-k-lo01.dgn

USERNAME => s115755 DATE PLOTTED => 25-MAR-2016 TIME PLOTTED => 16:35

DIST	COUNTY	ROUTE	POST MILES TOTAL PROJECT	SHEET No.	TOTAL SHEETS
05	SB	101	2.2/3.3	600	786

Rakesh Deo 5-23-14
REGISTERED CIVIL ENGINEER DATE

12-7-15
PLANS APPROVAL DATE

REGISTERED PROFESSIONAL ENGINEER Rakesh Deo No. C73814 Exp. 6/30/17 CIVIL STATE OF CALIFORNIA

The State of California or its officers or agents shall not be responsible for the accuracy or completeness of electronic copies of this plan sheet.

2 REPLACED PER ADDENDUM No. 2 DATED APRIL 4, 2016

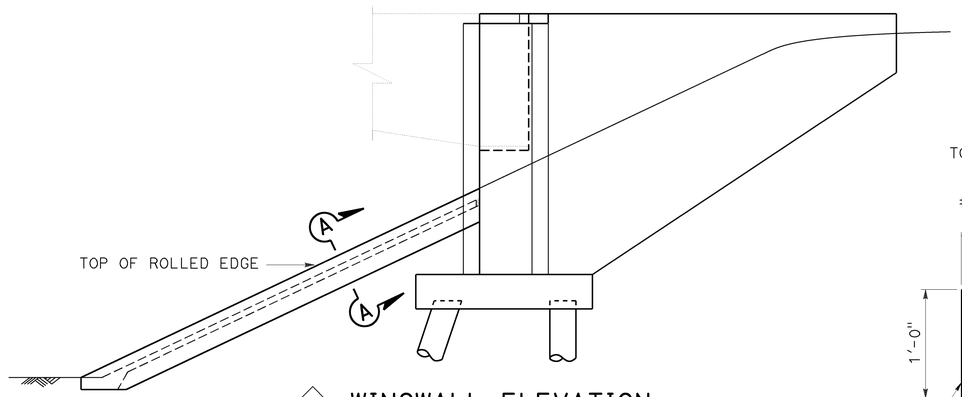

2 WINGWALL ELEVATION

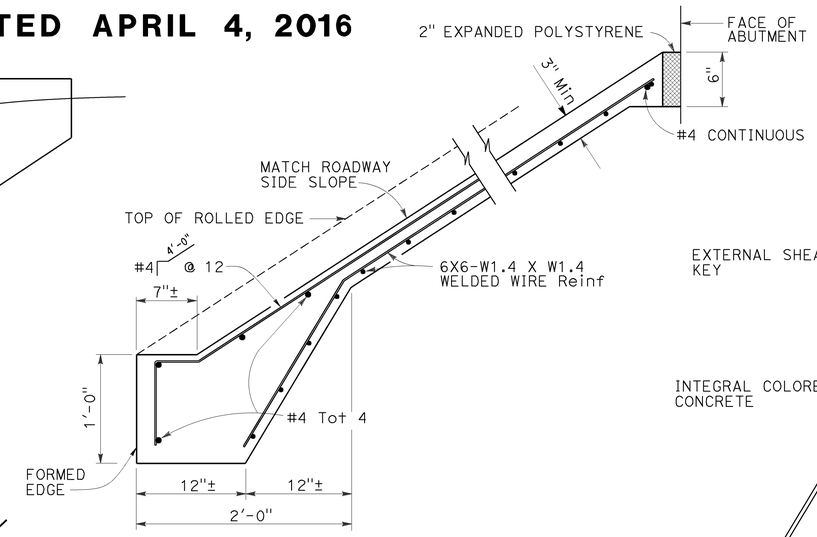

TYPICAL SECTION - CONCRETE PAVING

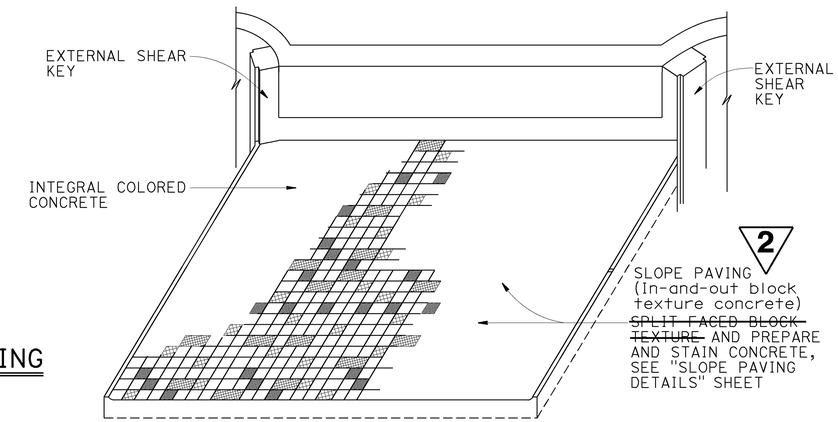

2 PICTORIAL VIEW OF TYPICAL INSTALLATION

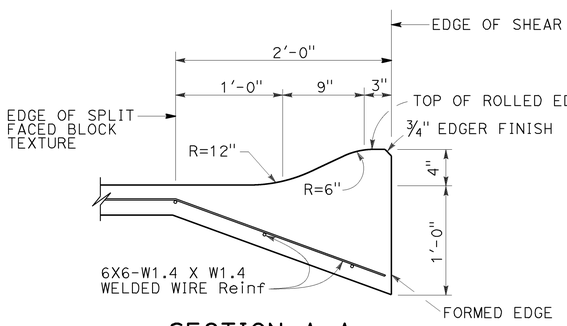

SECTION A-A

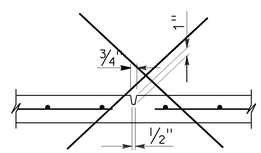

1 PREFORMED GROOVE

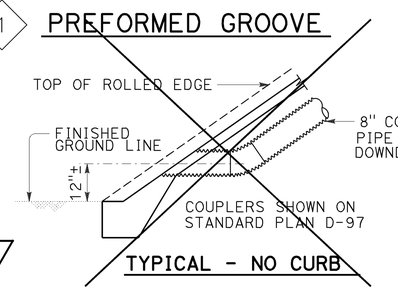

TYPICAL - NO CURB

2

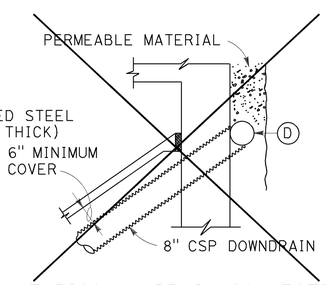

TYPICAL - DRAIN CONNECTION

2

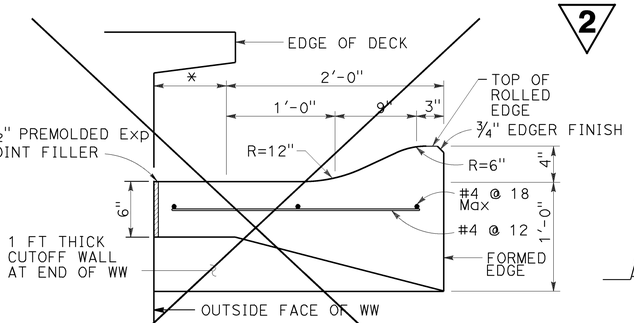

SECTION B-B

1

* THIS DIMENSION BECOMES ZERO WHEN EDGE OF DECK IS AT OUTSIDE FACE OF WW

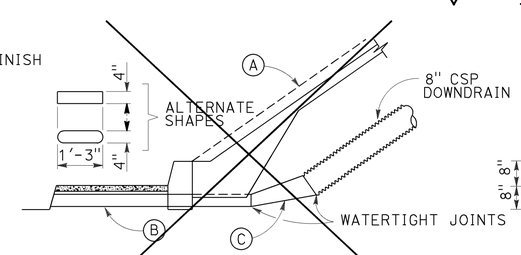

TYPICAL - WITH SIDEWALK

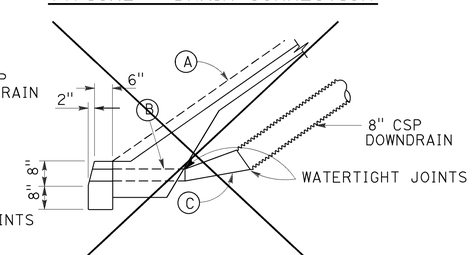

TYPICAL - WITH CURB

DRAINAGE DETAILS 1

NOTE:
Drainage details are only applicable when is indicated on detail sheets.

BO-3 / 3-5

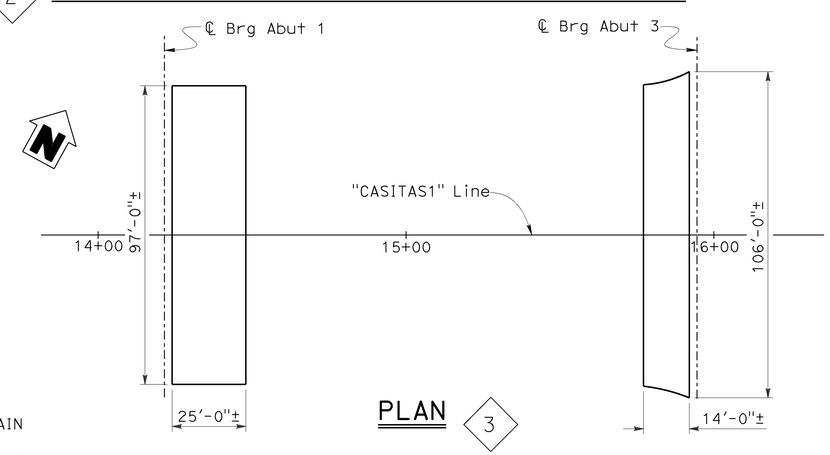

PLAN 3

LIMITS OF SLOPE PAVING & DRAINAGE LAYOUT 1

2

(A) Top of rolled edge
(B) Conduit:
0.064" galv corrugated steel or 0.109" smooth galv steel
(C) Taper: { 0.064" galv corrugated steel or 0.109" smooth galv steel
(D) 8" perforated steel pipe (0.064" thick) underdrain behind abutment. Connect to downdrain as shown on limits of Slope Paving & Drainage layout.

NO SCALE

REVISED STANDARD DRAWING			
FILE NO. xs4-210	APPROVAL DATE July 2011	1 Does not apply 2 Revised details	3 Added new details

STATE OF CALIFORNIA DEPARTMENT OF TRANSPORTATION

DIVISION OF ENGINEERING SERVICES

BRIDGE NO. 51-0343
POST MILE 2.64

CASITAS PASS ROAD OVERCROSSING (REPLACE)

SLOPE PAVING-FULL SLOPE

DS OSD 2147A (ENGLISH STANDARD DRAWING "XS" BORDER REV. (02-02-11)

ORIGINAL SCALE IN INCHES FOR REDUCED PLANS 0 1 2 3

UNIT: 3592
PROJECT NUMBER & PHASE: 05000005431
CONTRACT NO.: 05-4482U4

DISREGARD PRINTS BEARING EARLIER REVISION DATES

REVISION DATES: 04-17-14 04-21-14

SHEET 29 OF 53

FILE => 51-0343-p-pslope.dgn

USERNAME => S115755 DATE PLOTTED => 25-MAR-2016 TIME PLOTTED => 16:35

DIST	COUNTY	ROUTE	POST MILES TOTAL PROJECT	SHEET No.	TOTAL SHEETS
05	SB	101	2.2/3.3	601	786

REGISTERED CIVIL ENGINEER — DATE 5-23-14

12-7-15
PLANS APPROVAL DATE

REGISTERED PROFESSIONAL ENGINEER — Rakesh Deo — No. C73814 — Exp. 6/30/17 — CIVIL — STATE OF CALIFORNIA

The State of California or its officers or agents shall not be responsible for the accuracy or completeness of electronic copies of this plan sheet.

PATTERN LEGEND:

- BLOCK 'A' : 7⅝" x 15⅝" x ¾" depth or 7⅝" x 7⅝" x ¾" depth split face texture.
- BLOCK 'B' : 7⅝" x 7⅝" x ¾" depth split face texture.
- BLOCK 'C' : 7⅝" x 7⅝" x ¾" depth split face texture.

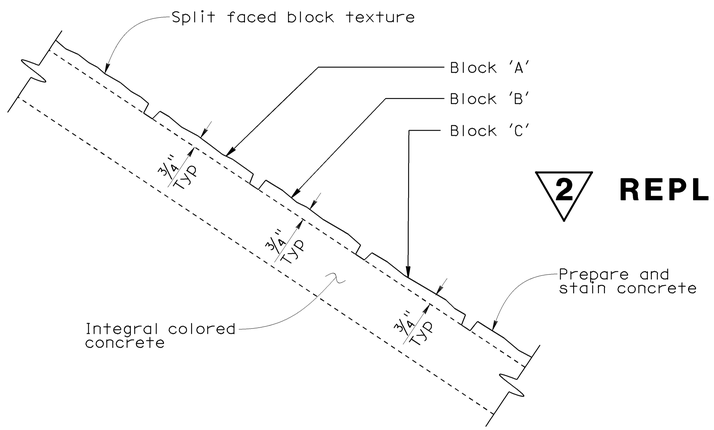

2 **REPLACED PER ADDENDUM No. 2 DATED APRIL 4, 2016**

NOTE:
Alternate panel layouts so there are no identical panels adjacent to each other.

PARTIAL SECTION B-B

No Scale

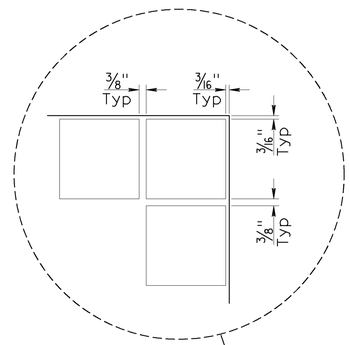

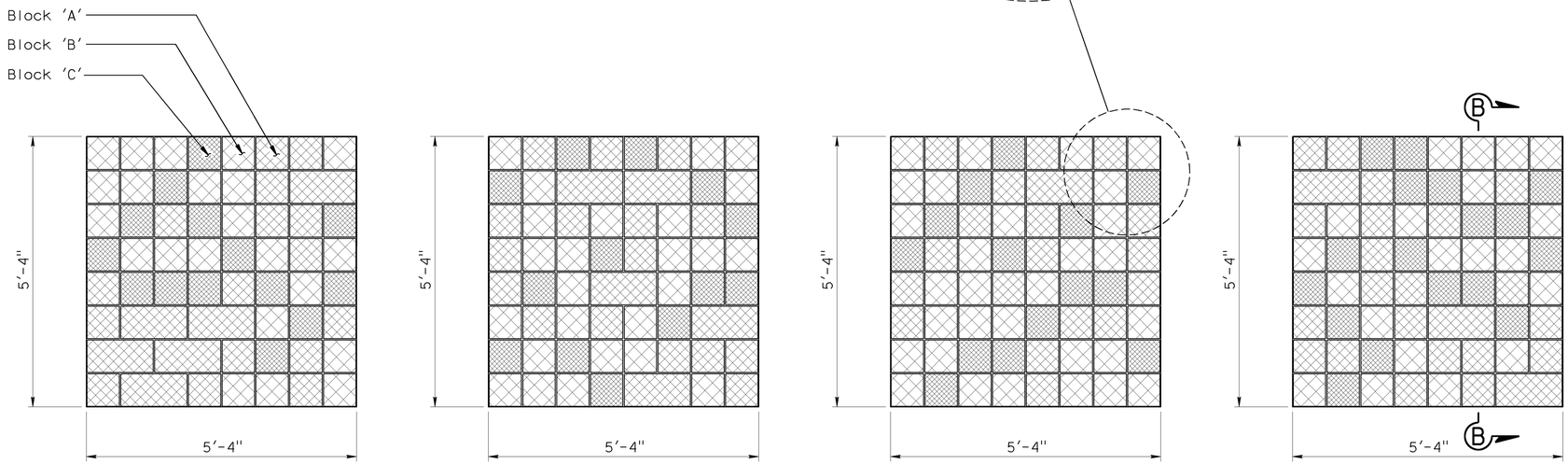

PANEL NO. 1 PANEL NO. 2 PANEL NO. 3 PANEL NO. 4

ELEVATION-PATTERN "SLOPE PAVING (IN-AND-OUT BLOCK TEXTURE CONCRETE)"

2 ~~PATTERN ELEVATION~~

No Scale

DESIGN	BY S. Heath / R. Deo	CHECKED Keith Stillmunkes	
DETAILS	BY Bruno Jenko	CHECKED Keith Stillmunkes	
QUANTITIES	BY H. Vu / J. Szabo	CHECKED Mario Guadamuz	

STATE OF CALIFORNIA
DEPARTMENT OF TRANSPORTATION

DIVISION OF ENGINEERING SERVICES
STRUCTURE DESIGN
DESIGN BRANCH 7

BRIDGE NO. 51-0343
POST MILE 2.64

CASITAS PASS ROAD OVERCROSSING (REPLACE)

SLOPE PAVING DETAILS

STRUCTURES DESIGN DETAIL SHEET (ENGLISH) (REV. 09-01-10)

ORIGINAL SCALE IN INCHES FOR REDUCED PLANS 0 1 2 3

UNIT: 3592
PROJECT NO. & PHASE: 05000005431
CONTRACT NO.: 05-4482U4

DISREGARD PRINTS BEARING EARLIER REVISION DATES → REVISION DATES 03-25-14 04-16-14

SHEET 30 OF 53

FILE => 51-0343-p-spdet01.add

USERNAME => s115755 DATE PLOTTED => 25-MAR-2016 TIME PLOTTED => 16:35

DIST	COUNTY	ROUTE	POST MILES TOTAL PROJECT	SHEET No.	TOTAL SHEETS
05	SB	101	2.2/3.3	625	786

Rakesh Deo 5-23-14
REGISTERED CIVIL ENGINEER DATE

12-7-15
PLANS APPROVAL DATE

REGISTERED PROFESSIONAL ENGINEER Rakesh Deo No. C73814 Exp. 6/30/17 CIVIL STATE OF CALIFORNIA

The State of California or its officers or agents shall not be responsible for the accuracy or completeness of electronic copies of this plan sheet.

NOTE: For Quantities, see "DECK CONTOURS" sheet.

PROFILE GRADE
NO SCALE

2 **REPLACED PER ADDENDUM No. 2 DATED APRIL 4, 2016**

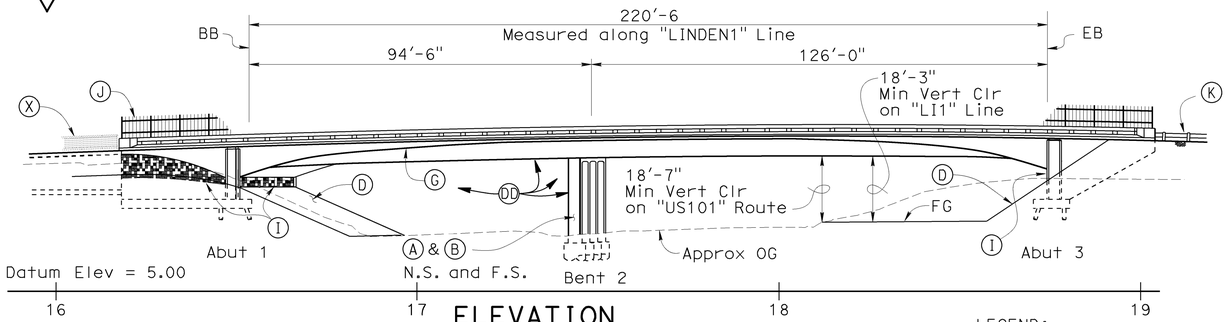

ELEVATION
1" = 20'

LEGEND:
Indicates existing
Indicates bridge removal
Indicates point of minimum vertical clearance

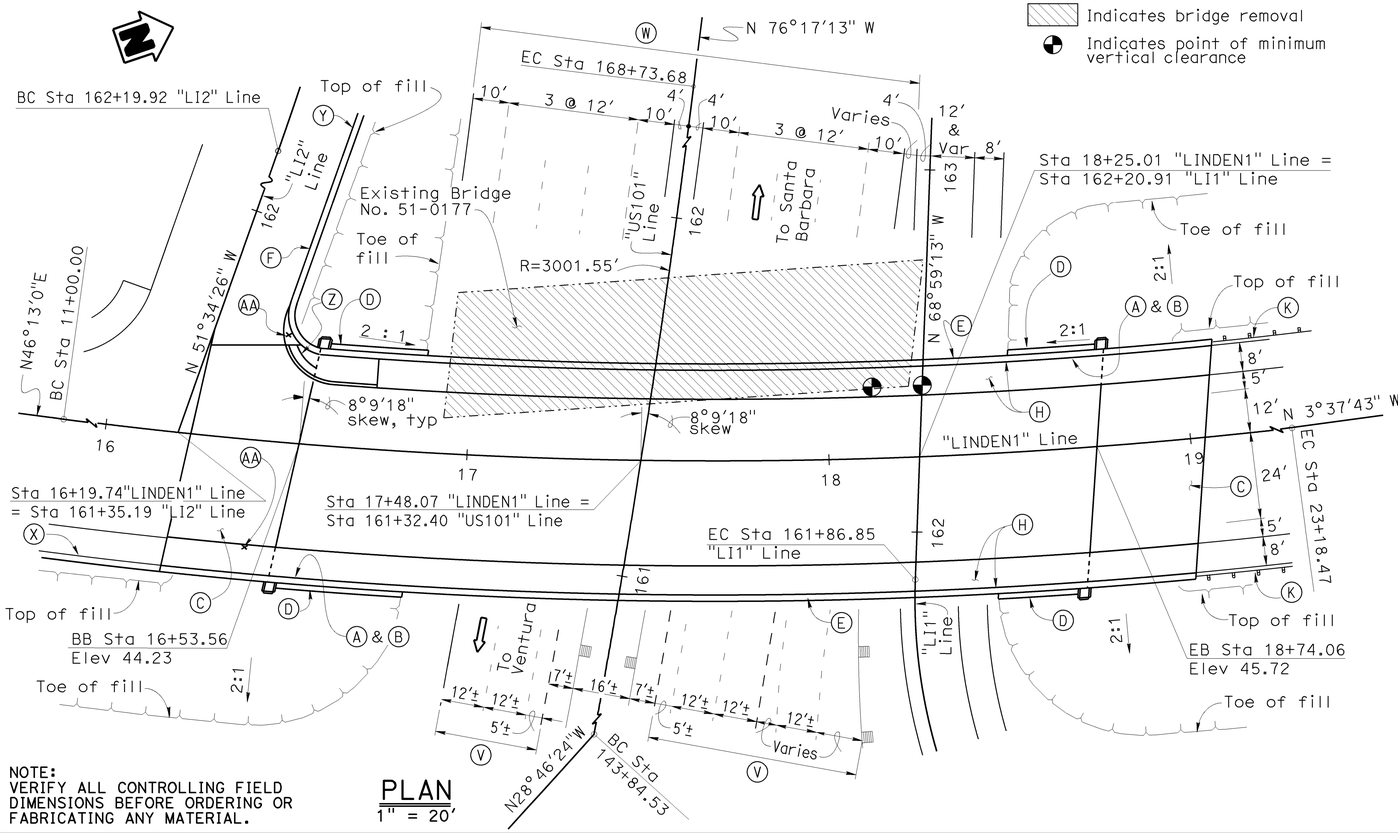

PLAN
1" = 20'

NOTE:
VERIFY ALL CONTROLLING FIELD DIMENSIONS BEFORE ORDERING OR FABRICATING ANY MATERIAL.

CURVE DATA

"LINDEN1" Line
R = 1400.50'
Δ = 49°50'54.91"
T = 650.81'
L = 1218.47'

"US101" Line
R = 3001.55'
Δ = 47°30'52.95"
T = 1321.18'
L = 2489.15'

"LI1" Line
R = 150.00'
Δ = 44°08'39.37"
T = 60.82'
L = 115.57'

"LI2" Line
R = 1000.00'
Δ =16°53'46.56"
T = 148.53'
L = 294.90'

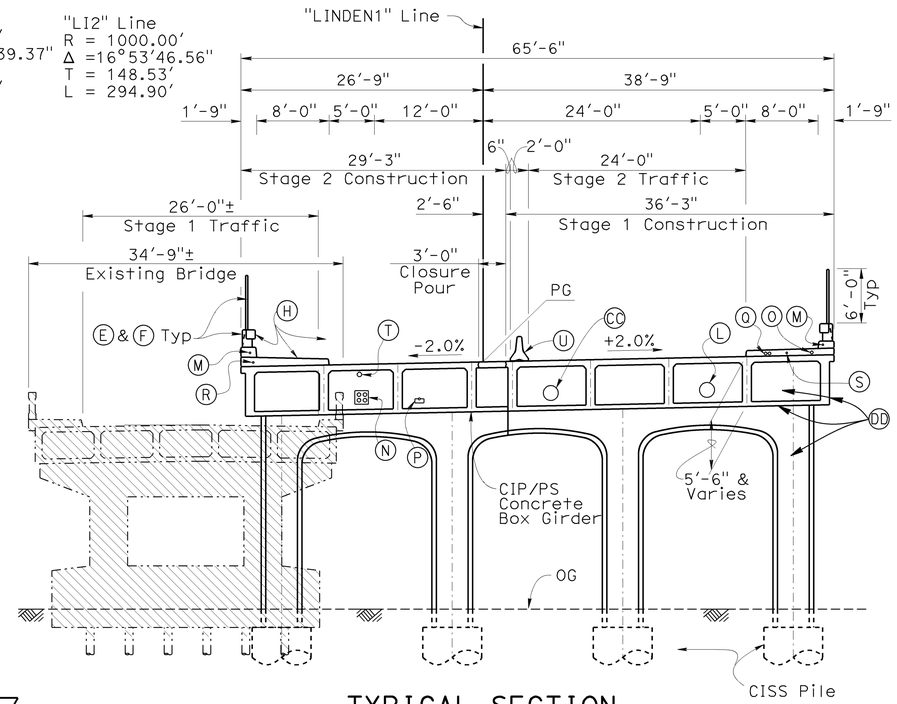

TYPICAL SECTION
1/8" = 1'-0"

2 (D) Slope Paving (In-and-out block texture concrete), see "SLOPE PAVING-FULL SLOPE" sheet

NOTES:

(A) Paint "Linden Avenue Overcrossing"
(B) Paint "Br. No. 51-0344"
(C) Structure Approach Slab Type N(30S)
~~(D) Slope Paving (Split Faced Block Texture)~~
(E) Concrete Barrier (Type 80SW Modified)
(F) Concrete Barrier (Type 80A Modified)
(G) Architectural details on exterior girder
(H) Integrally colored sidewalk and barrier
(I) In-and-out block texture and prepare and stain concrete on abutment face and return walls
(J) Picket Fence Railing
(K) MGS, see "ROADWAY PLANS"
(L) City of Carpinteria 12" water line and 20" casing, by others
(M) 2" ø electric conduit (decorative lights), see "ROADWAY PLANS"
(N) 4 - 5" Southern California Edison power conduits, by others
(O) 4" Cox Cable television conduit, by others
(P) 3" water supply line (Bridge)
(Q) 2 - 4" ø Future Utility opening
(R) 2" ø electrical conduit (Traffic Signal), see "ROADWAY PLANS"
(S) 2" ø electrical conduit (Irrigation), see "ROADWAY PLANS"
(T) Deck drainage, see "DECK DRAINAGE DETAILS" sheet
(U) Temporary Railing Type K, see "ROADWAY PLANS"
(V) Existing "US101" lane configuration
(W) Future "US101" lane configuration
(X) See "RETAINING WALL I" plans
(Y) See "RETAINING WALL J" plans
(Z) Sidewalk and ADA ramp, See "ROADWAY PLANS"
(AA) Traffic signal, see "ROADWAY PLANS"
(CC) 16"ø water line (20"ø casing), Carpinteria Valley Water District
(DD) Integrally colored concrete at abutments, bent and superstructure soffit slab and girders

Michael Downs, DESIGN ENGINEER	DESIGN	BY Keith Stillmunkes	CHECKED Daryoush Tavatli	LOAD & RESISTANCE FACTOR DESIGN	LIVE LOADING: HL93 W/"LOW-BOY"; PERMIT DESIGN VEHICLE	
	DETAILS	BY Y Feng / B Jenko	CHECKED Daryoush Tavatli	LAYOUT	BY Keith Stillmunkes	CHECKED Daryoush Tavatli
	QUANTITIES	BY Wendy Hou	CHECKED Fangfei Chen	SPECIFICATIONS	BY Dave Klein	PLANS AND SPECS COMPARED Dave Klein

ORIGINAL SCALE IN INCHES FOR REDUCED PLANS 0 1 2 3

STATE OF CALIFORNIA
DEPARTMENT OF TRANSPORTATION

DIVISION OF ENGINEERING SERVICES
STRUCTURE DESIGN
DESIGN BRANCH 7

BRIDGE NO. 51-0344
POST MILE 3.06

LINDEN AVENUE OVERCROSSING (REPLACE)
GENERAL PLAN

UNIT: 3592
PROJECT NUMBER & PHASE: 0500000543
CONTRACT NO.: 05-4482U4

DISREGARD PRINTS BEARING EARLIER REVISION DATES

REVISION DATES: 10-17-12 5-23-14 8-27-15

SHEET 1 OF 42

STRUCTURES DESIGN GENERAL PLAN SHEET (ENGLISH) (REV.09-01-10)

FILE => 51-0344-a-gp.add

USERNAME => S115755 DATE PLOTTED => 25-MAR-2016 TIME PLOTTED => 16:35

DIST	COUNTY	ROUTE	POST MILES TOTAL PROJECT	SHEET No.	TOTAL SHEETS
05	SB	101	2.2/3.3	629	786

Rakesh Deo 5-23-14
REGISTERED CIVIL ENGINEER DATE

12-7-15
PLANS APPROVAL DATE

REGISTERED PROFESSIONAL ENGINEER Rakesh Deo No. C73814 Exp. 6/30/17 CIVIL STATE OF CALIFORNIA

The State of California or its officers or agents shall not be responsible for the accuracy or completeness of electronic copies of this plan sheet.

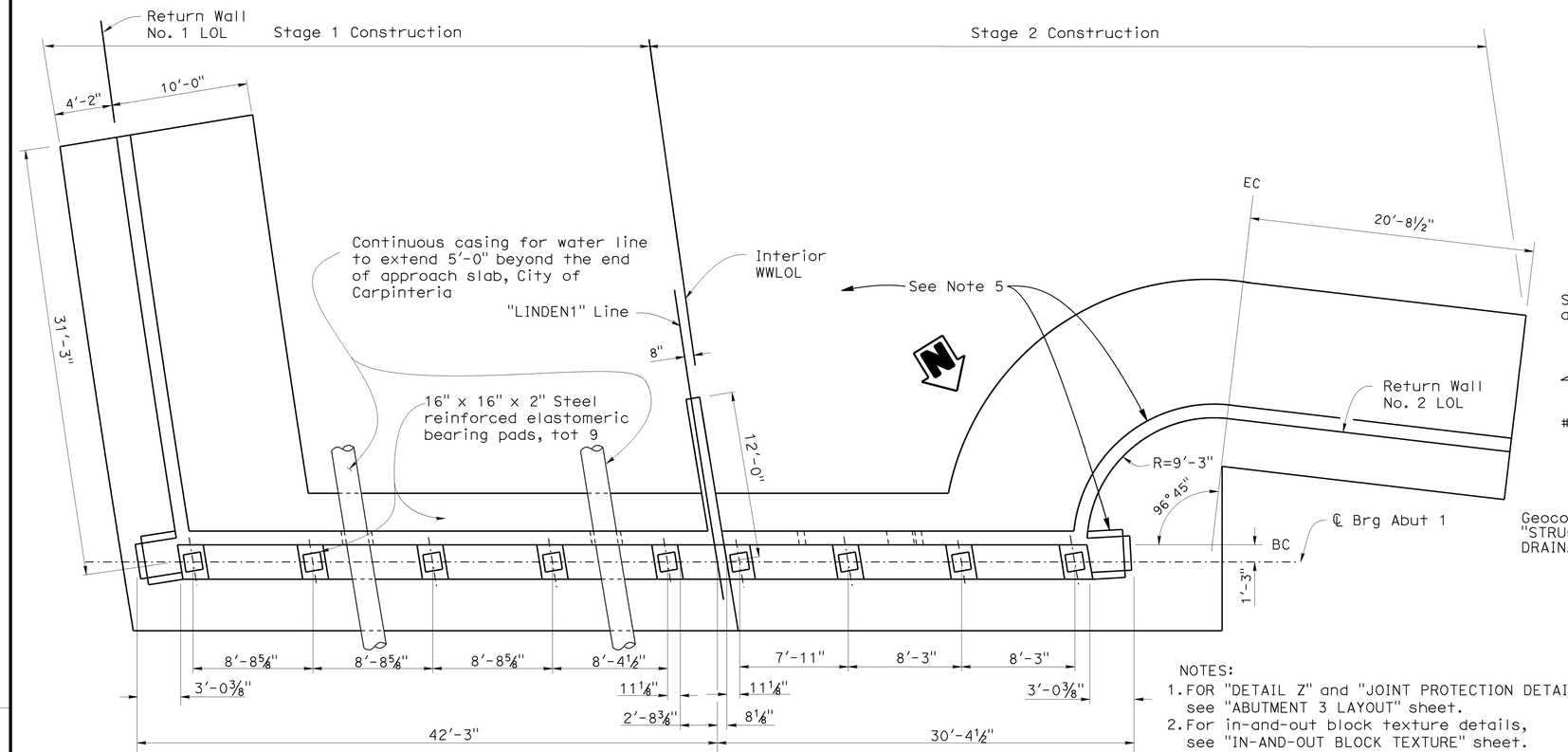

PLAN
1" = 5'

NOTES:
1. FOR "DETAIL Z" and "JOINT PROTECTION DETAIL", see "ABUTMENT 3 LAYOUT" sheet.
2. For in-and-out block texture details, see "IN-AND-OUT BLOCK TEXTURE" sheet.
3. Backwall to be placed after stressing.
4. Extend stage 1 reinforcement 2'-0" into stage 2 construction.
5. Use integrally colored concrete on all abutment elements above the top of footing, excluding the back wall

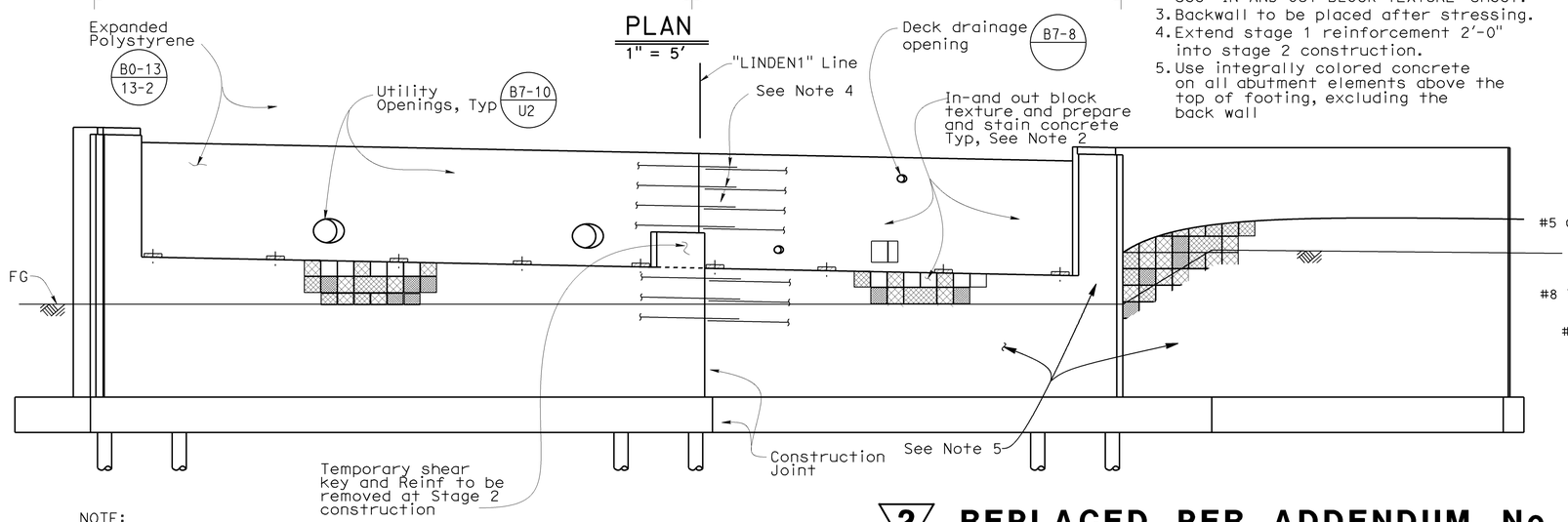

NOTE:
Not all piles shown.

ELEVATION
1" = 5'

2 **REPLACED PER ADDENDUM No. 2 DATED APRIL 4, 2016**

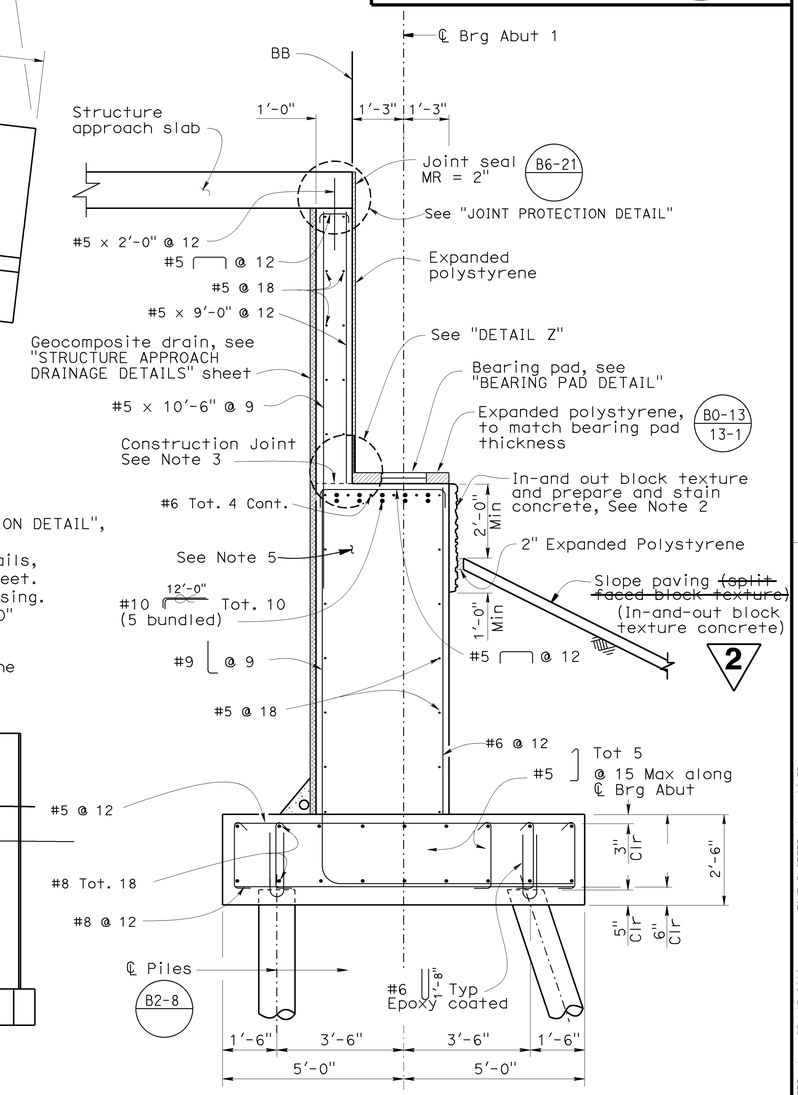

ABUTMENT TYPICAL SECTION
½" = 1'-0'

NOTE: Abutment 1 shown, Abutment 3 similar.

DESIGN	BY Keith Stillmunkes	CHECKED Daryoush Tavatli	
DETAILS	BY Yingjue Feng	CHECKED Daryoush Tavatli	
QUANTITIES	BY Wendy Hou	CHECKED Fangfei Chen	

STATE OF CALIFORNIA
DEPARTMENT OF TRANSPORTATION

DIVISION OF ENGINEERING SERVICES
STRUCTURE DESIGN
DESIGN BRANCH 7

BRIDGE NO. 51-0344
POST MILE 3.06

LINDEN AVENUE OVERCROSSING (REPLACE)
ABUTMENT 1 LAYOUT

STRUCTURES DESIGN DETAIL SHEET (ENGLISH) (REV. 09-01-10)

ORIGINAL SCALE IN INCHES FOR REDUCED PLANS 0 1 2 3

UNIT: 3592
PROJECT NUMBER & PHASE: 05000005431
CONTRACT NO.: 05-4482U4

DISREGARD PRINTS BEARING EARLIER REVISION DATES
REVISION DATES 5-3-13 5-30-14 8-27-15
SHEET 5 OF 42

FILE => 51-0344-f-a011o.add

USERNAME => s115755 DATE PLOTTED => 25-MAR-2016 TIME PLOTTED => 16:35

DIST	COUNTY	ROUTE	POST MILES TOTAL PROJECT	SHEET No.	TOTAL SHEETS
05	SB	101	2.2/3.3	634	786

REGISTERED CIVIL ENGINEER — DATE 5-23-14

12-7-15
PLANS APPROVAL DATE

REGISTERED PROFESSIONAL ENGINEER — Rakesh Deo — No. C73814 — Exp. 6/30/17 — CIVIL — STATE OF CALIFORNIA

The State of California or its officers or agents shall not be responsible for the accuracy or completeness of electronic copies of this plan sheet.

2 REPLACED PER ADDENDUM No. 2 DATED APRIL 4, 2016

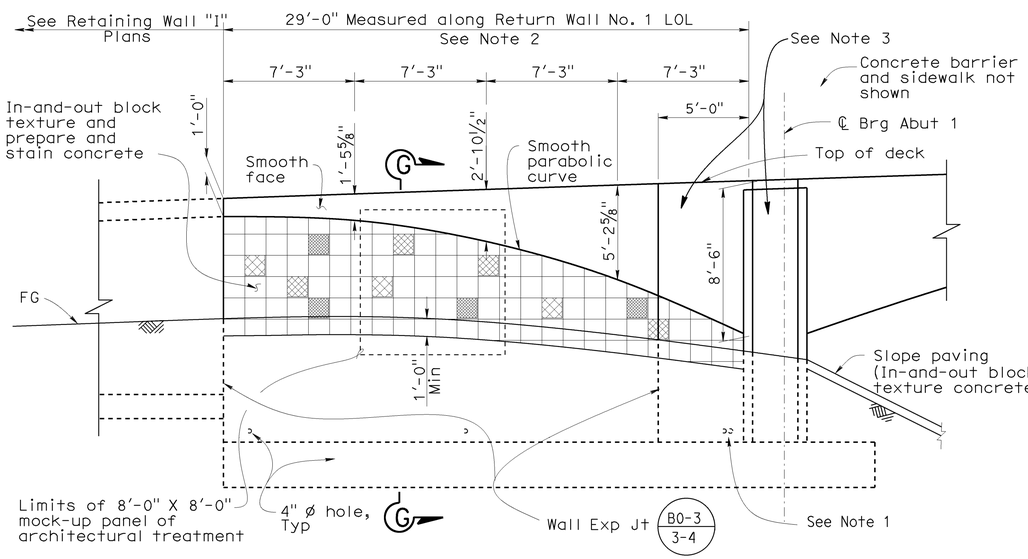

RETURN WALL NO. 1 ELEVATION B0-3

¼" = 1'-0"

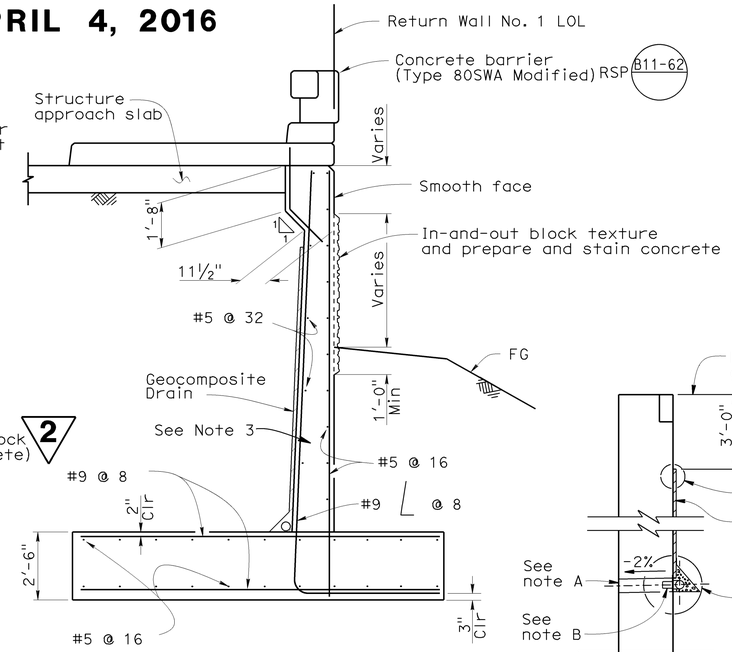

SECTION G-G

⅜" = 1'-0"

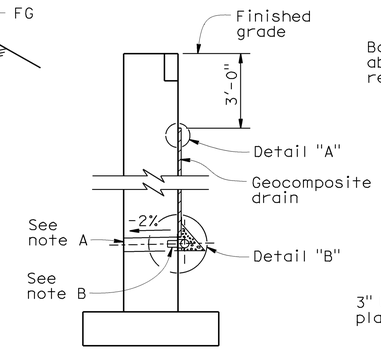

WALL SECTION

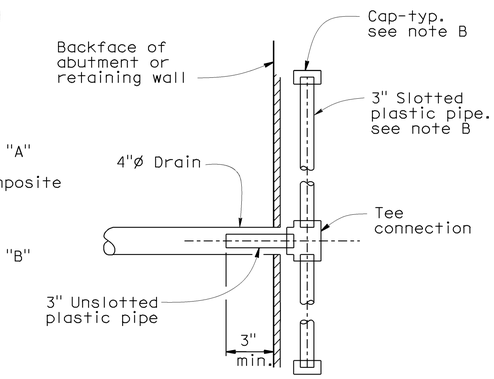

SECTION A-A

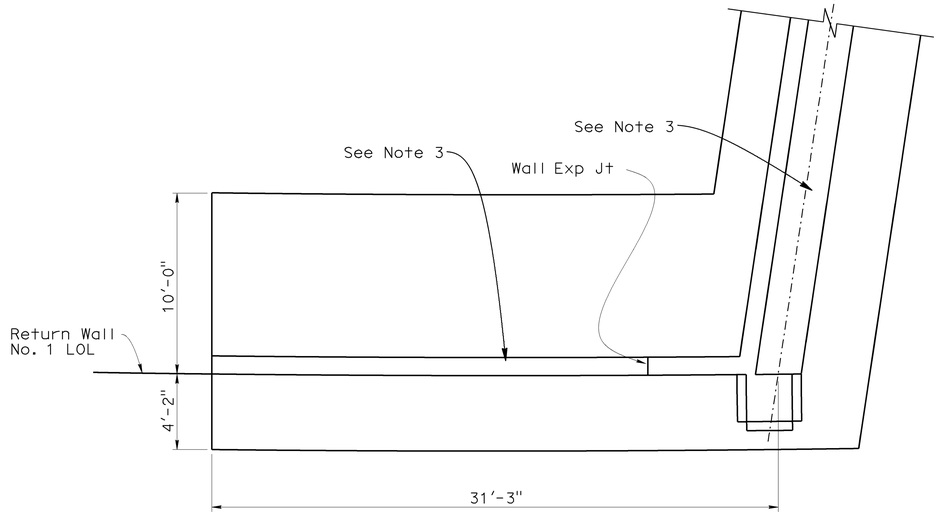

RETURN WALL NO. 1 PLAN

¼" = 1'-0"

NOTES:

1. For drainage details behind abutment, see "APPROACH SLAB DRAINAGE DETAILS" sheet.
2. Prepare and stain In-and-out block texture. Limits of stained concrete must extend to 1'-0" below FG.
3. Use integrally colored concrete, see "ELEVATION" on "ABUTMENT 1 LAYOUT" sheet

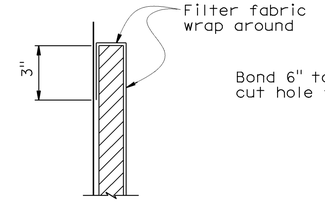

DETAIL "A"

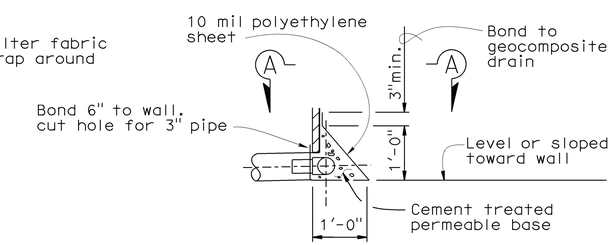

DETAIL "B"

WEEP HOLE AND GEOCOMPOSITE DRAIN

NOTES:

A. 4" ø DRAINS AT INTERMEDIATE SAG POINTS AND AT 25' MAX CENTER TO CENTER. EXPOSED WALL DRAINS MUST BE LOCATED 3" ± ABOVE FINISHED GRADE.

B. GEOCOMPOSITE DRAIN, CEMENT TREATED PERMEABLE BASE, AND 3" ø SLOTTED PLASTIC PIPE CONTINUOUS BEHIND RETAINING WALL OR ABUTMENT. CAP ENDS OF PIPE. PROVIDE "TEE" CONNECTION AT EACH 4" ø DRAIN.

C. CONNECT THE LOW END OF PLASTIC PIPE TO THE MAIN OUTLET PIPE AS APPLICABLE.

	BY	CHECKED
DESIGN	Keith Stillmunkes	Daryoush Tavatli
DETAILS	Yingjue Feng	Daryoush Tavatli
QUANTITIES	Wendy Hou	Fangfei Chen

STATE OF CALIFORNIA
DEPARTMENT OF TRANSPORTATION

DIVISION OF ENGINEERING SERVICES
STRUCTURE DESIGN
DESIGN BRANCH 7

BRIDGE NO. 51-0344
POST MILE 3.06

LINDEN AVENUE OVERCROSSING (REPLACE)
RETURN WALL NO. 1 LAYOUT

STRUCTURES DESIGN DETAIL SHEET (ENGLISH) (REV. 09-01-10)

ORIGINAL SCALE IN INCHES FOR REDUCED PLANS 0 1 2 3

UNIT: 3592
PROJECT NUMBER & PHASE: 05000005431
CONTRACT NO.: 05-4482U4

DISREGARD PRINTS BEARING EARLIER REVISION DATES

REVISION DATES: 12-5-13 | 4/25/14 | 5/1/14

SHEET 10 OF 42

FILE => 51-0344-g-rw1o01.dgn

USERNAME => s115755 DATE PLOTTED => 25-MAR-2016 TIME PLOTTED => 16:35

DIST	COUNTY	ROUTE	POST MILES TOTAL PROJECT	SHEET No.	TOTAL SHEETS
05	SB	101	2.2/3.3	635	786

REGISTERED CIVIL ENGINEER — DATE 5-23-14

12-7-15
PLANS APPROVAL DATE

REGISTERED PROFESSIONAL ENGINEER — Rakesh Deo — No. C73814 — Exp. 6/30/17 — CIVIL — STATE OF CALIFORNIA

The State of California or its officers or agents shall not be responsible for the accuracy or completeness of electronic copies of this plan sheet.

2 REPLACED PER ADDENDUM No. 2 DATED APRIL 4, 2016

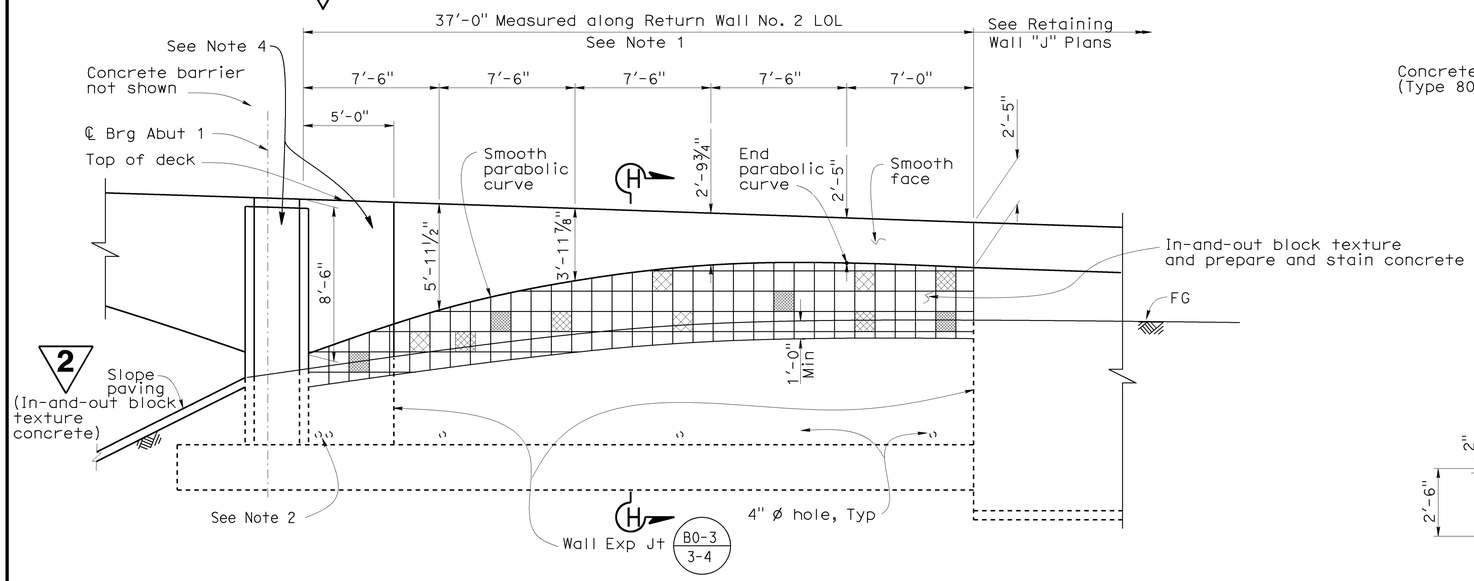

RETURN WALL NO. 2 DEVELOPED ELEVATION B0-3

¼" = 1'-0"

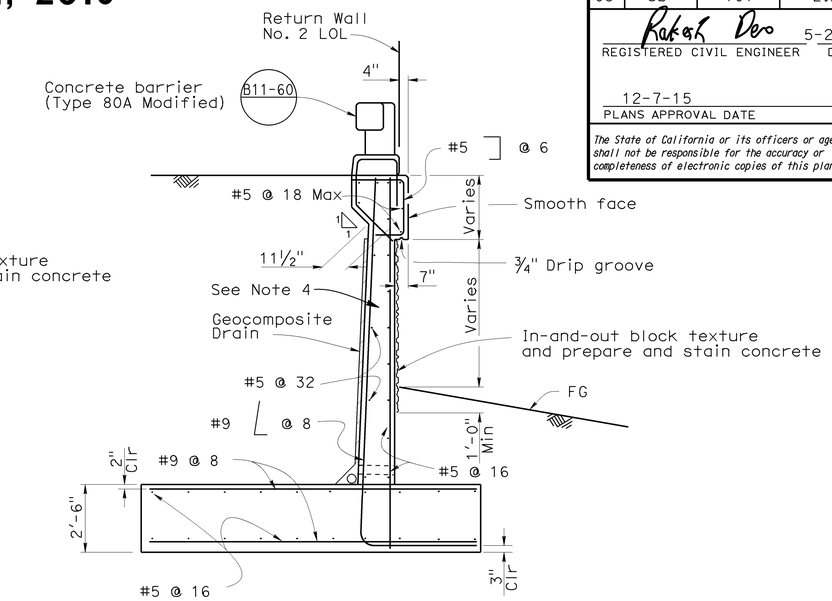

SECTION H-H

⅜" = 1'-0"

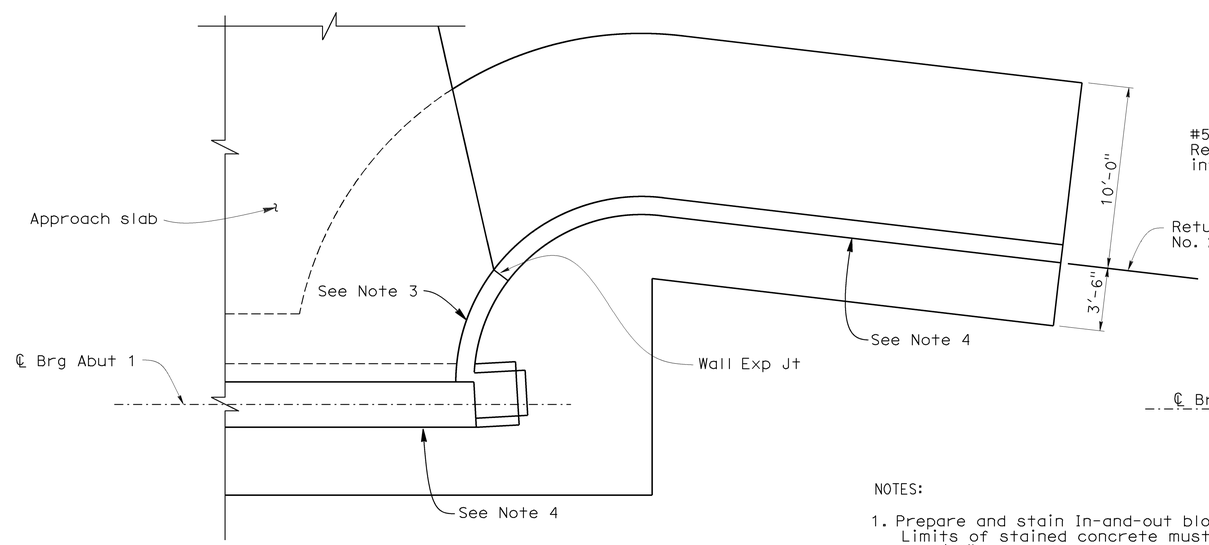

RETURN WALL NO. 2 PLAN

¼" = 1'-0"

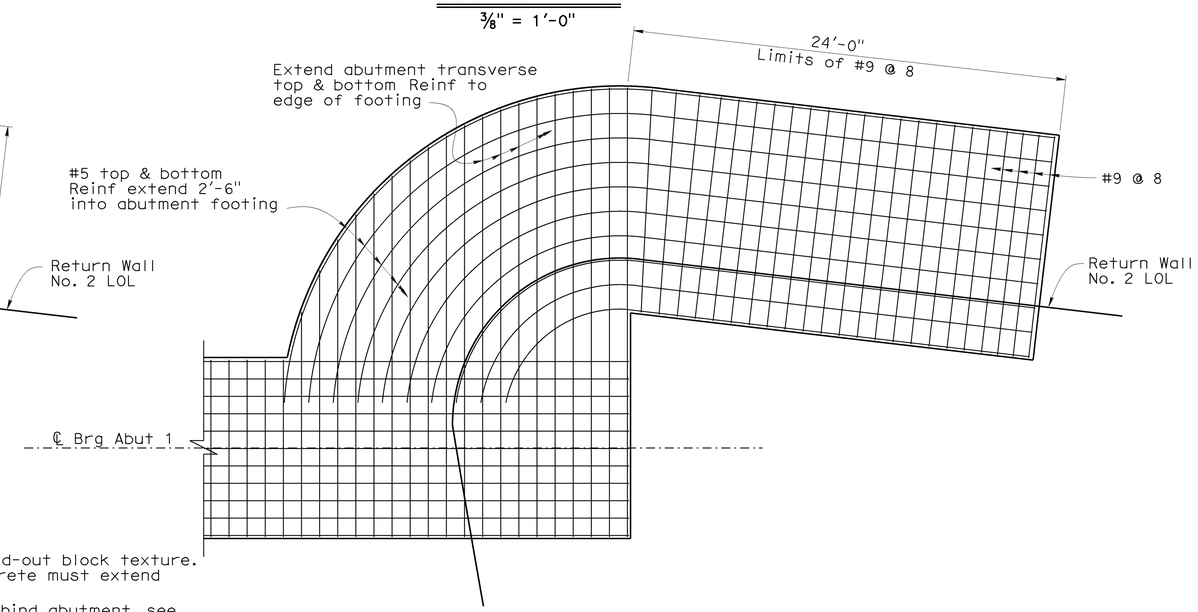

FOOTING CORNER DETAIL

¼" = 1'-0"

NOTES:

1. Prepare and stain In-and-out block texture. Limits of stained concrete must extend to 1'-0" below FG.
2. For drainage details behind abutment, see "APPROACH SLAB DRAINAGE DETAILS" sheet.
3. See "SECTION G-G" on "RETURN WALL NO. 1 LAYOUT" sheet for similar approach slab detail.
4. Use integrally colored concrete, see "ELEVATION" on "ABUTMENT 1 LAYOUT" sheet

	BY	CHECKED
DESIGN	Keith Stillmunkes	Daryoush Tavatli
DETAILS	Yingjue Feng	Daryoush Tavatli
QUANTITIES	Wendy Hou	Fangfei Chen

STATE OF CALIFORNIA
DEPARTMENT OF TRANSPORTATION

DIVISION OF ENGINEERING SERVICES
STRUCTURE DESIGN
DESIGN BRANCH 7

BRIDGE NO. 51-0344
POST MILE 3.06

LINDEN AVENUE OVERCROSSING (REPLACE)
RETURN WALL NO. 2 LAYOUT

STRUCTURES DESIGN DETAIL SHEET (ENGLISH) (REV. 09-01-10)

ORIGINAL SCALE IN INCHES FOR REDUCED PLANS 0 1 2 3

UNIT: 3592
PROJECT NUMBER & PHASE: 05000005431
CONTRACT NO.: 05-4482U4

DISREGARD PRINTS BEARING EARLIER REVISION DATES

REVISION DATES 12-9-13 8-28-15 5/19/16

SHEET 11 OF 42

FILE => 51-0344-g-rw1o02.dgn

USERNAME => s115755 DATE PLOTTED => 25-MAR-2016 TIME PLOTTED => 16:35

DIST	COUNTY	ROUTE	POST MILES TOTAL PROJECT	SHEET No.	TOTAL SHEETS
05	SB	101	2.2/3.3	650	786

Rakesh Deo 5-23-14
REGISTERED CIVIL ENGINEER DATE

12-7-15
PLANS APPROVAL DATE

REGISTERED PROFESSIONAL ENGINEER Rakesh Deo No. C73814 Exp. 6/30/17 CIVIL STATE OF CALIFORNIA

The State of California or its officers or agents shall not be responsible for the accuracy or completeness of electronic copies of this plan sheet.

2 REPLACED PER ADDENDUM No. 2 DATED APRIL 4, 2016

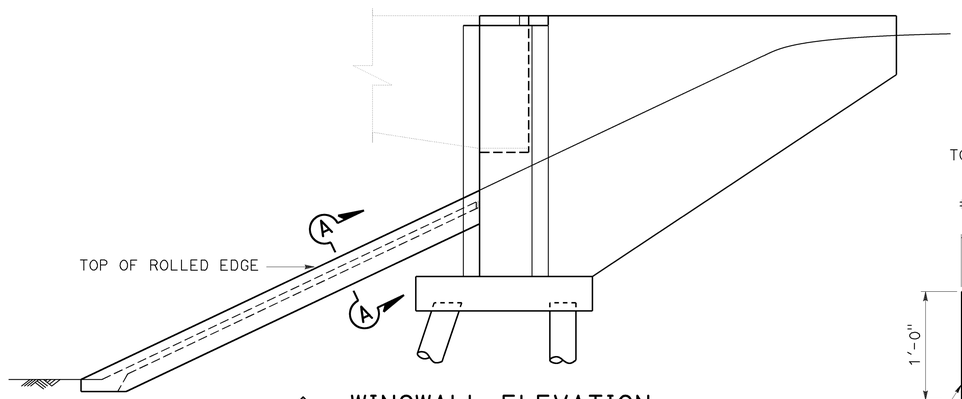

2 WINGWALL ELEVATION

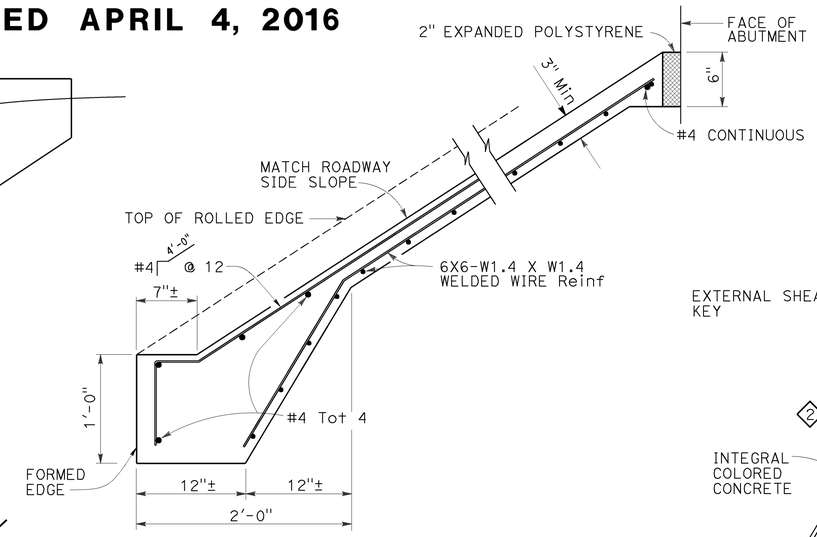

TYPICAL SECTION - CONCRETE PAVING

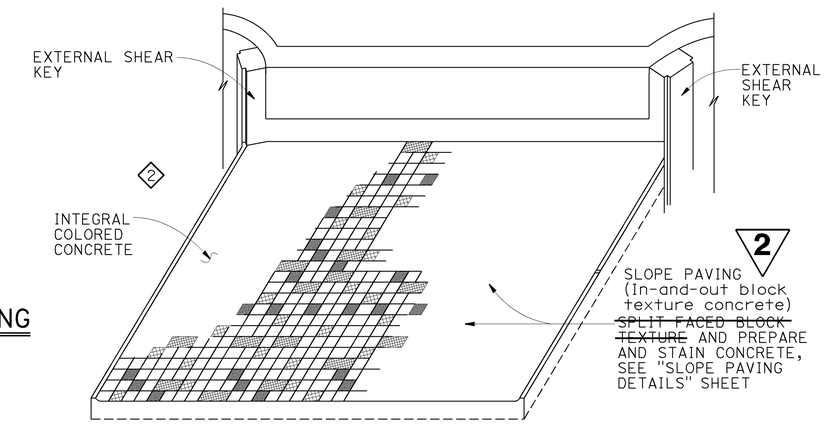

PICTORIAL VIEW OF TYPICAL INSTALLATION

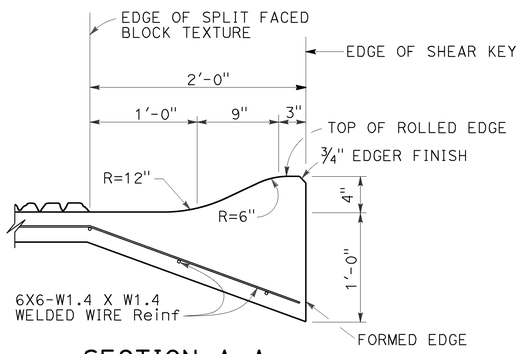

SECTION A-A

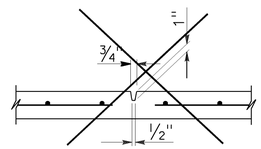

PREFORMED GROOVE

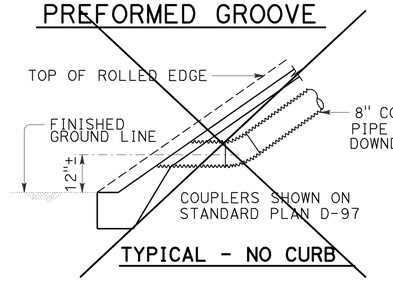

TYPICAL - NO CURB

2

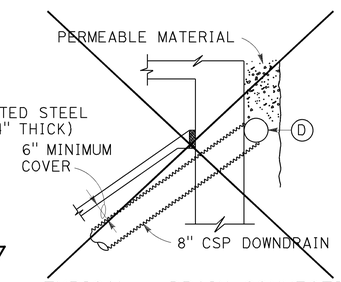

TYPICAL - DRAIN CONNECTION

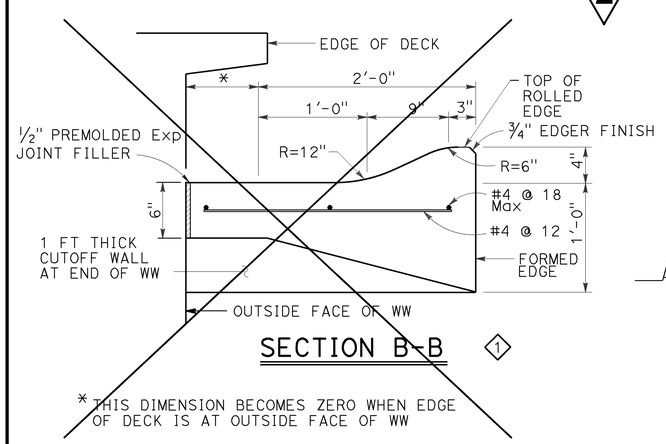

SECTION B-B 1

*THIS DIMENSION BECOMES ZERO WHEN EDGE OF DECK IS AT OUTSIDE FACE OF WW

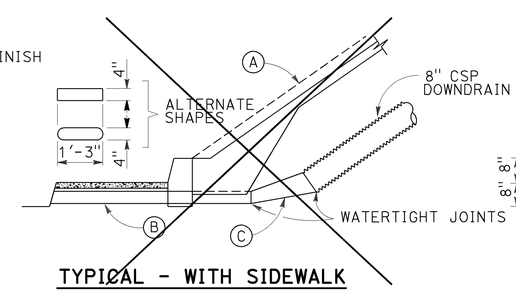

TYPICAL - WITH SIDEWALK

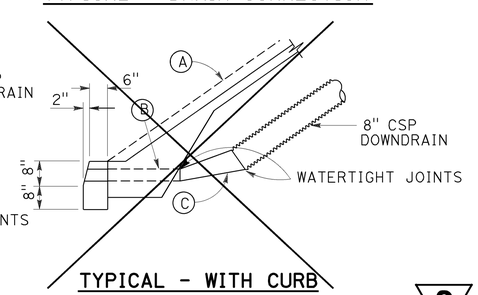

TYPICAL - WITH CURB

1 DRAINAGE DETAILS

NOTE:
Drainage details are only applicable when is indicated on detail sheets.

BO-3
3-5

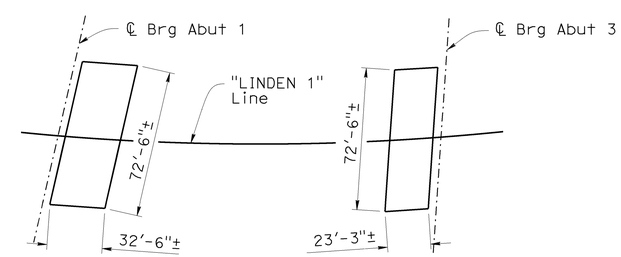

LIMITS OF SLOPE PAVING & DRAINAGE LAYOUT

2

(A) Top of rolled edge 1

(B) Conduit:
0.064" galv corrugated steel or 0.109" smooth galv steel

(C) Taper: { 0.064" galv corrugated steel or 0.109" smooth galv steel

(D) 8" perforated steel pipe (0.064" thick) underdrain behind abutment. Connect to downdrain as shown on limits of Slope Paving & Drainage layout.

NO SCALE

REVISED STANDARD DRAWING

FILE NO. xs4-210

APPROVAL DATE July 2011

1 Detail crossed out for clarity
2 Modified detail

STATE OF CALIFORNIA DEPARTMENT OF TRANSPORTATION

DIVISION OF ENGINEERING SERVICES

BRIDGE NO. 51-0344
POST MILE 3.06

LINDEN AVENUE OVERCROSSING (REPLACE)
SLOPE PAVING-FULL SLOPE

DS OSD 2147A (ENGLISH STANDARD DRAWING "XS" BORDER REV. (02-02-11)

ORIGINAL SCALE IN INCHES FOR REDUCED PLANS 0 1 2 3

UNIT: 3592
PROJECT NUMBER & PHASE: 0500000543, 1
CONTRACT NO.: 05-4482U4

DISREGARD PRINTS BEARING EARLIER REVISION DATES

REVISION DATES 4/29/14 5/2/14

SHEET 26 OF 42

FILE => 51-0344-s-sp.add

USERNAME => S115755 DATE PLOTTED => 25-MAR-2016 TIME PLOTTED => 16:36

DIST	COUNTY	ROUTE	POST MILES TOTAL PROJECT	SHEET No.	TOTAL SHEETS
05	SB	101	2.2/3.3	651	786

Rakesh Deo 5-23-14
REGISTERED CIVIL ENGINEER DATE

12-7-15
PLANS APPROVAL DATE

REGISTERED PROFESSIONAL ENGINEER Rakesh Deo No. C73814 Exp. 6/30/17 CIVIL STATE OF CALIFORNIA

The State of California or its officers or agents shall not be responsible for the accuracy or completeness of electronic copies of this plan sheet.

PATTERN LEGEND:

- BLOCK 'A' : 7⅝" x 15⅝" x ¾" depth or 7⅝" x 7⅝" x ¾" depth split face texture.
- BLOCK 'B' : 7⅝" x 7⅝" x ¾" depth split face texture.
- BLOCK 'C' : 7⅝" x 7⅝" x ¾" depth split face texture.

2 **REPLACED PER ADDENDUM No. 2 DATED APRIL 4, 2016**

NOTE:
Alternate panel layouts so there are no identical panels adjacent to each other.

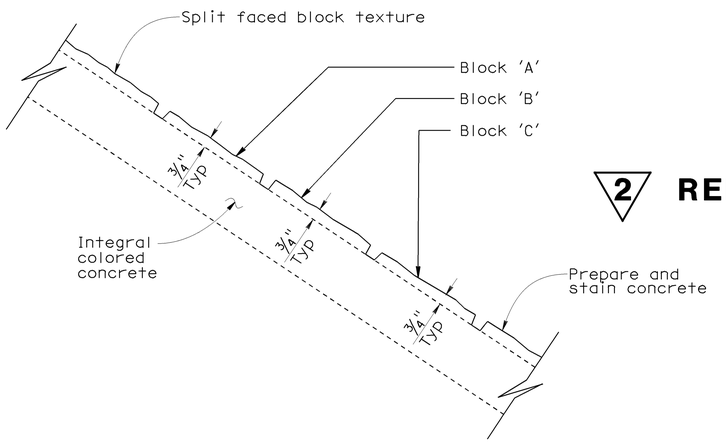

PARTIAL SECTION B-B

No Scale

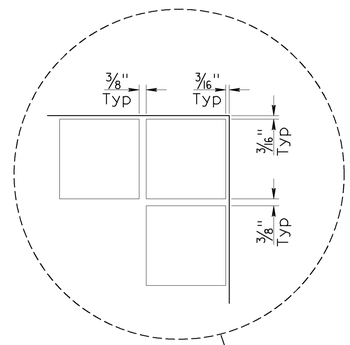

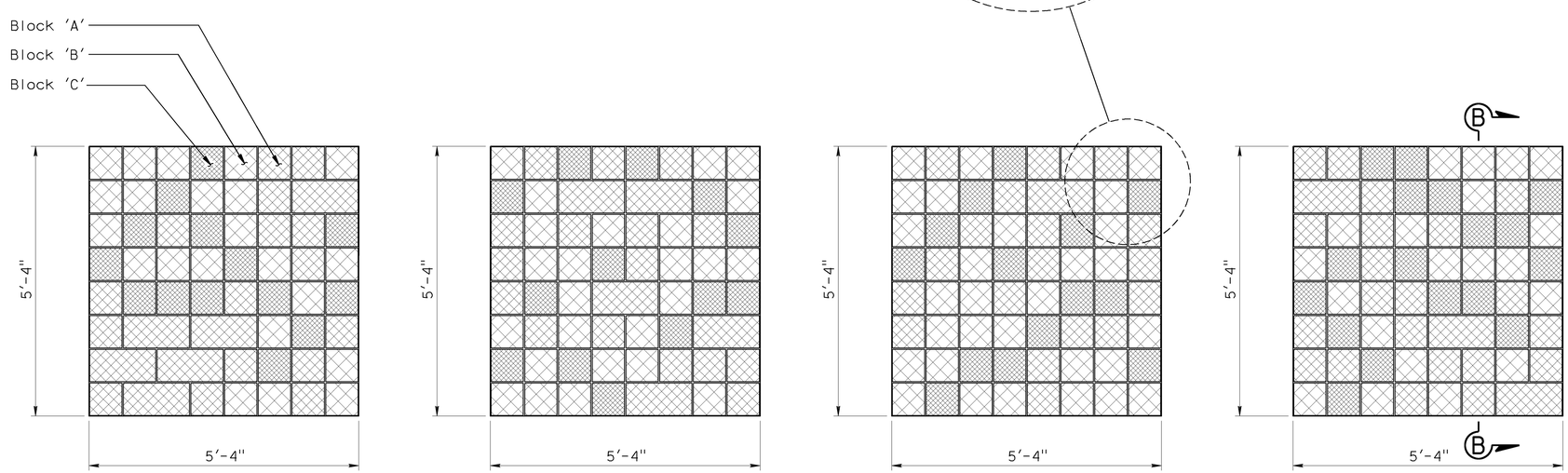

PANEL NO. 1 PANEL NO. 2 PANEL NO. 3 PANEL NO. 4

ELEVATION-PATTERN "SLOPE PAVING (IN-AND-OUT BLOCK TEXTURE CONCRETE)"

2 ~~PATTERN ELEVATION~~

No Scale

DESIGN	BY S. Heath / R. Deo	CHECKED Keith Stillmunkes	
DETAILS	BY Yingjue Feng	CHECKED Keith Stillmunkes	
QUANTITIES	BY H. Vu / J. Szabo	CHECKED Mario Guadamuz	

STATE OF CALIFORNIA
DEPARTMENT OF TRANSPORTATION

DIVISION OF ENGINEERING SERVICES
STRUCTURE DESIGN
DESIGN BRANCH 7

BRIDGE NO. 51-0344
POST MILE 3.06

LINDEN AVENUE OVERCROSSING (REPLACE)
SLOPE PAVING DETAILS

STRUCTURES DESIGN DETAIL SHEET (ENGLISH) (REV. 09-01-10)

ORIGINAL SCALE IN INCHES FOR REDUCED PLANS 0 1 2 3

UNIT: 3592
PROJECT NO. & PHASE: 0500000543 1
CONTRACT NO.: 05-4482U4

DISREGARD PRINTS BEARING EARLIER REVISION DATES

REVISION DATES 4-23-14 4/22/14

SHEET 27 OF 42

FILE => 51-0344-s-spdet01.add

USERNAME => s115755 DATE PLOTTED => 25-MAR-2016 TIME PLOTTED => 16:36

DIST	COUNTY	ROUTE	POST MILES TOTAL PROJECT	SHEET No.	TOTAL SHEETS
05	SB	101	2.2/3.3	705	786

Manoele Kodsuntie 5-23-14
REGISTERED CIVIL ENGINEER DATE

12-7-15
PLANS APPROVAL DATE

REGISTERED PROFESSIONAL ENGINEER M. Kodsuntie No. 56671 Exp. 6/30/2017 CIVIL STATE OF CALIFORNIA

The State of California or its officers or agents shall not be responsible for the accuracy or completeness of scanned copies of this plan sheet.

2

QUANTITIES

STRUCTURE EXCAVATION (TYPE D)	2,415 ~~1,584~~	CY
STRUCTURE EXCAVATION (RETAINING WALL)	2,925	CY
PERMEABLE MATTRESS	422 ~~297~~	CY
STRUCTURE BACKFILL (RETAINING WALL)	4,099 ~~3,558~~	CY
PERVIOUS BACKFILL MATERIAL (RETAINING WALL)	121 ~~120~~	CY
STRUCTURAL CONCRETE, RETAINING WALL	1,412 ~~1,229~~	CY
SPLIT FACE TEXTURE	13,189 ~~12,714~~	SQFT
BAR REINFORCING STEEL (RETAINING WALL)	192,763 ~~163,501~~	LB
SOUND WALL (MASONRY BLOCK)	9,653 ~~6,832~~	SQFT
CHAIN LINK FENCE (TYPE CL-4, VINYL-CLAD)	218 ~~387~~	LF
CONCRETE BARRIER (TYPE 736 MODIFIED)	1,598 ~~1,365~~	LF

2 **REPLACED PER ADDENDUM No. 2 DATED APRIL 4, 2016**

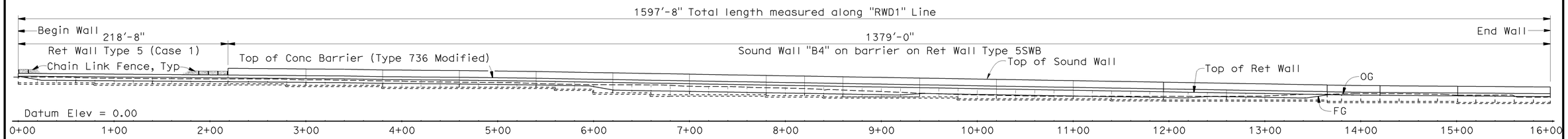

DEVELOPED MIRRORED ELEVATION

1" = 50'

INDEX TO PLANS

SHEET NO.	TITLE
1.	GENERAL PLAN
2.	STRUCTURE PLAN NO. 1
3.	STRUCTURE PLAN NO. 2
4.	STRUCTURE PLAN NO. 3
5.	STRUCTURE PLAN NO. 4
6.	STRUCTURE PLAN NO. 5
7.	STRUCTURE PLAN NO. 6
7A.	STRUCTURE PLAN NO. 6A
8.	FOUNDATION PLAN NO. 1
9.	FOUNDATION PLAN NO. 2
10.	FOUNDATION PLAN NO. 3
11.	RETAINING WALL TYPE 5SWB - DETAILS NO. 1
12.	RETAINING WALL TYPE 5SWB - DETAILS NO. 2
13.	MASONRY BLOCK SOUND WALL BARRIER ON RETAINING WALL DETAILS NO. 1
14.	MASONRY BLOCK SOUND WALL BARRIER ON RETAINING WALL DETAILS NO. 2
15.	WALL DETAILS
16.	ARCHITECTURAL DETAILS
17.	LOG OF TEST BORING 1 OF 2
18.	LOG OF TEST BORING 2 OF 2

STANDARD PLANS 2010

	A10A	ABBREVIATIONS (SHEET 1 OF 2)
RSP	A10B	ABBREVIATIONS (SHEET 2 OF 2)
	A10C	LINES AND SYMBOLS (SHEET 1 OF 3)
	A10D	LINES AND SYMBOLS (SHEET 2 OF 3)
	A10E	LINES AND SYMBOLS (SHEET 3 OF 3)
	A10F	LEGEND - SOIL (SHEET 1 OF 2)
	A10G	LEGEND - SOIL (SHEET 2 OF 2)
	A10H	LEGEND - ROCK
	A85A	CHIN LINK FENCE DETAILS
	B0-3	BRIDGE DETAILS
RSP	B3-4A	RETAINING WALL TYPE 5 (CASE 1)
RSP	B3-5	RETAINING WALL DETAILS NO. 1
	B11-7	CHAIN LINK RAILING
	B15-9	SOUND WALL MASONRY BLOCK MISCELLANEOUS DETAILS

STANDARD PLAN SHEET No.

DETAIL No.

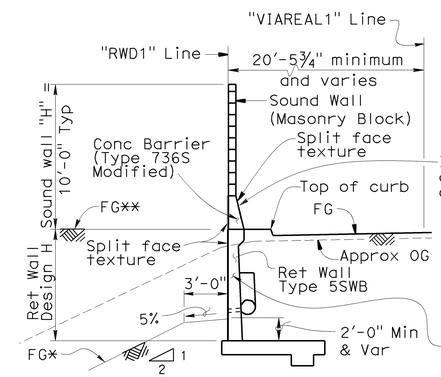

* FG for Sta 2+18.67 to 13+65
** FG for Sta 13+65 to 15+97.67

TYPICAL SECTION

Sta 2+18.67 to 15+97.67

1" = 5'

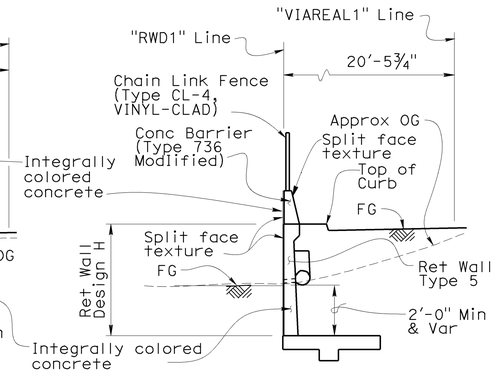

TYPICAL SECTION

Sta 0+00.00 to 2+18.67 & RSP B3-4A

1" = 5'

CURVE DATA

① "VIAREAL1" Line	② "RWD1" Line	③ "VIAREAL1" Line	④ "RWD1" Line	⑤ "VIAREAL1" Line	⑥ "RWD1" Line
R = 1312.00'	R = 1291.52'	R = 3100.00'	R = 3080.00'	R = 131.00'	R = 719.12'
Δ = 7°30'40.81"	Δ = 7°30'40.7"	Δ = 9°43'29.79"	Δ = 9°43'29.7"	Δ = 63°00'20"	Δ = 14°31'43"
T = 86.12'	T = 84.78'	T = 263.72'	T = 262.02'	T = 80.43'	T = 91.67'
L = 172.00'	L = 169.31'	L = 526.17'	L = 522.77'	L = 144.32'	L = 182.35'

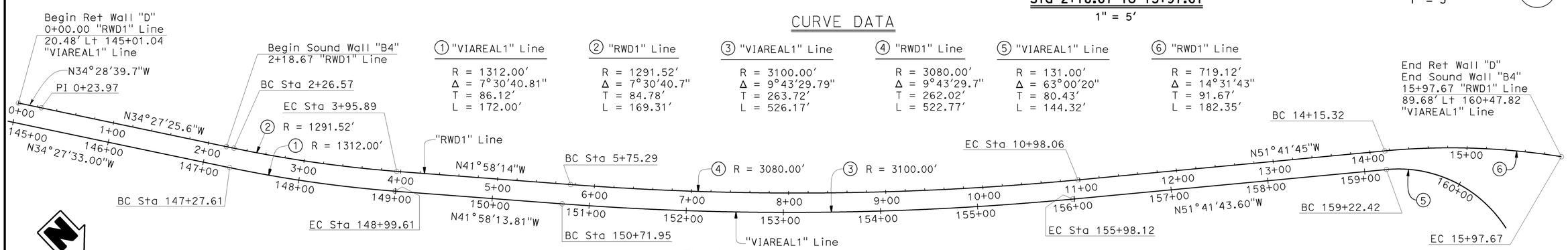

PLAN

1" = 50'

Michael Downs, DESIGN ENGINEER	DESIGN	BY M. Kodsuntie	CHECKED Jun Ki Jung	LOAD & RESISTANCE FACTOR DESIGN		
	DETAILS	BY B.Jenko / B.Huddleston	CHECKED John Yolton	LAYOUT	BY M. Kodsuntie	CHECKED Jun Ki Jung
	QUANTITIES	BY M. Kodsuntie	CHECKED Jun Ki Jung	SPECIFICATIONS	BY Dave Klein	PLANS AND SPECS COMPARED Dave Klein

ORIGINAL SCALE IN INCHES FOR REDUCED PLANS 0 1 2 3

STATE OF CALIFORNIA DEPARTMENT OF TRANSPORTATION

DIVISION OF ENGINEERING SERVICES STRUCTURE DESIGN DESIGN BRANCH 7

BRIDGE NO. 51E0006 POST MILE 2.7

RETAINING WALL "D" & SOUND WALL "B4"
GENERAL PLAN

UNIT: 3592
PROJECT NUMBER & PHASE: 05 0000 0543 1 CONTRACT NO.: 05-4482U4

DISREGARD PRINTS BEARING EARLIER REVISION DATES

REVISION DATES 10-28-13 10-28-15 3-5-14

SHEET 1 OF 18

STRUCTURES DESIGN GENERAL PLAN SHEET (ENGLISH) (REV.09-01-10)

FILE => rwd-a-gp01.add

USERNAME => s115755 DATE PLOTTED => 25-MAR-2016 TIME PLOTTED => 16:36

DIST	COUNTY	ROUTE	POST MILES TOTAL PROJECT	SHEET No.	TOTAL SHEETS
05	SB	101	2.2/3.3	706	786

Manode Kodsuntie 5-23-14
REGISTERED CIVIL ENGINEER DATE

12-7-15
PLANS APPROVAL DATE

REGISTERED PROFESSIONAL ENGINEER M. Kodsuntie No. 56671 Exp. 6/30/2017 CIVIL STATE OF CALIFORNIA

The State of California or its officers or agents shall not be responsible for the accuracy or completeness of scanned copies of this plan sheet.

2 REPLACED PER ADDENDUM No. 2 DATED APRIL 4, 2016

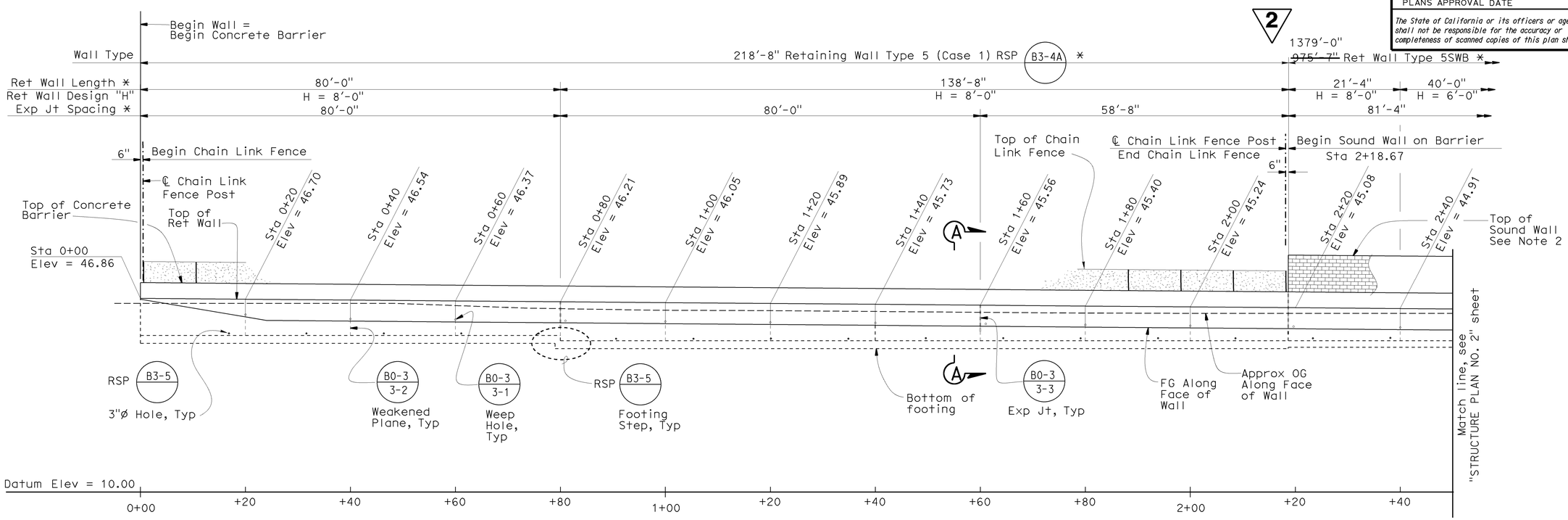

DEVELOPED MIRRORED ELEVATION

1" = 10'

* Measured along "RWD1" Line

NOTE:

1. Transition ground line in front of wall between points shown.
2. For top of sound wall elevations see Table on "STRUCTURE PLAN NO. 6" sheet.

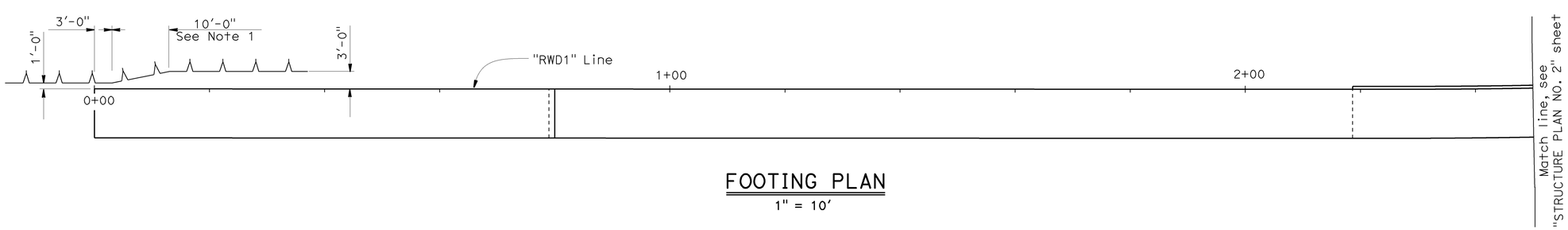

FOOTING PLAN

1" = 10'

DESIGN	BY Manode Kodsuntie	CHECKED Jun Ki Jung	
DETAILS	BY B. Huddleston / J. Zhou	CHECKED Jun Ki Jung	
QUANTITIES	BY Manode Kodsuntie	CHECKED Jun Ki Jung	

STATE OF CALIFORNIA
DEPARTMENT OF TRANSPORTATION

DIVISION OF ENGINEERING SERVICES
STRUCTURE DESIGN
DESIGN BRANCH 7

BRIDGE NO. 51E0006
POST MILE 2.7

RETAINING WALL "D" & SOUND WALL "B4"
STRUCTURE PLAN NO. 1

STRUCTURES DESIGN DETAIL SHEET (ENGLISH) (REV. 09-01-10)

ORIGINAL SCALE IN INCHES FOR REDUCED PLANS 0 1 2 3

UNIT: 3592
PROJECT NUMBER & PHASE: 05000005431
CONTRACT NO.: 05-4482U4

DISREGARD PRINTS BEARING EARLIER REVISION DATES

REVISION DATES 11-1-12 3-13-14 12-24-14

SHEET 2 OF 18

FILE => rwd-b-sp01.dgn

USERNAME => s115755 DATE PLOTTED => 25-MAR-2016 TIME PLOTTED => 16:36

DIST	COUNTY	ROUTE	POST MILES TOTAL PROJECT	SHEET No.	TOTAL SHEETS
05	SB	101	2.2/3.3	707	786

Manode Kodsuntie 5-23-14
REGISTERED CIVIL ENGINEER DATE

12-7-15
PLANS APPROVAL DATE

REGISTERED PROFESSIONAL ENGINEER M. Kodsuntie No. 56671 Exp. 6/30/2017 CIVIL STATE OF CALIFORNIA

The State of California or its officers or agents shall not be responsible for the accuracy or completeness of scanned copies of this plan sheet.

2 **REPLACED PER ADDENDUM No. 2 DATED APRIL 4, 2016**

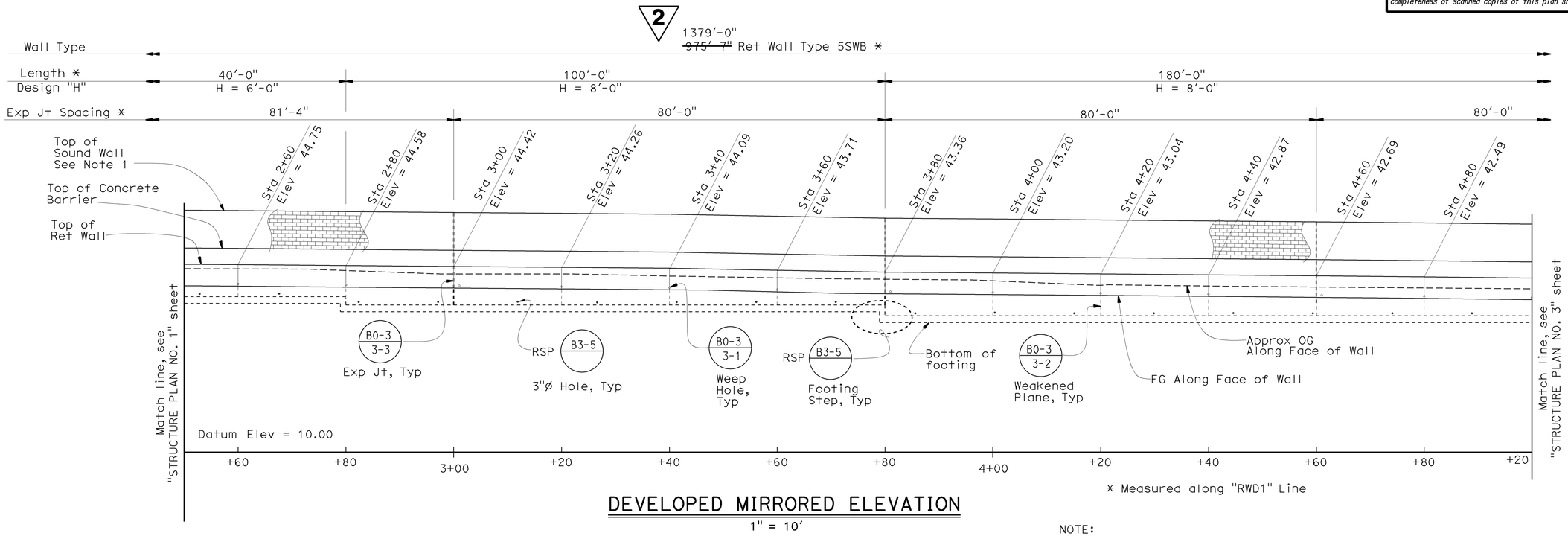

DEVELOPED MIRRORED ELEVATION

1" = 10'

NOTE:

1. For top of sound wall elevations see Table on "STRUCTURE PLAN NO. 6" sheet.

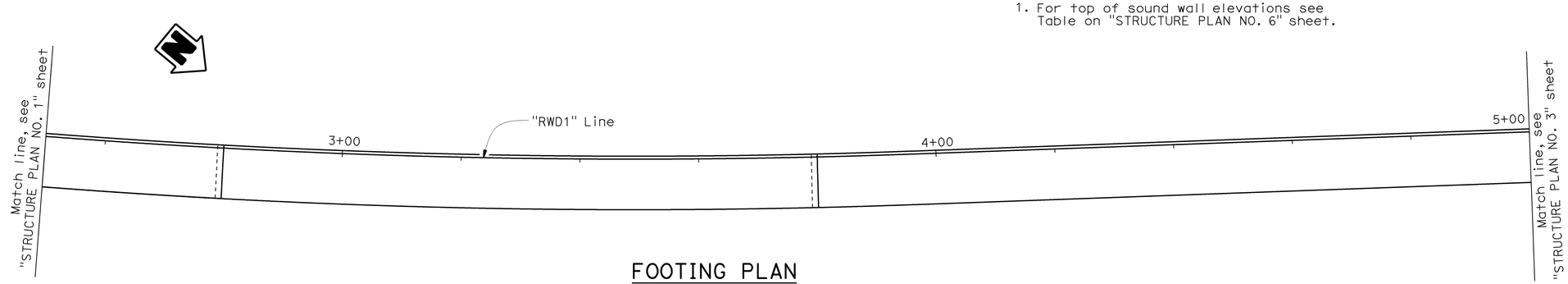

FOOTING PLAN

1" = 10'

DESIGN	BY Manode Kodsuntie	CHECKED Jun Ki Jung	
DETAILS	BY B. Huddleston / J. Zhou	CHECKED Jun Ki Jung	
QUANTITIES	BY Manode Kodsuntie	CHECKED Jun Ki Jung	

STATE OF CALIFORNIA
DEPARTMENT OF TRANSPORTATION

DIVISION OF ENGINEERING SERVICES
STRUCTURE DESIGN
DESIGN BRANCH 7

BRIDGE NO. 51E0006
POST MILE 2.7

RETAINING WALL "D" & SOUND WALL "B4"
STRUCTURE PLAN NO. 2

STRUCTURES DESIGN DETAIL SHEET (ENGLISH) (REV. 09-01-10)

ORIGINAL SCALE IN INCHES FOR REDUCED PLANS 0 1 2 3

UNIT: 3592
PROJECT NUMBER & PHASE: 05000005431
CONTRACT NO.: 05-4482U4

DISREGARD PRINTS BEARING EARLIER REVISION DATES

REVISION DATES: 09-04-13 3-13-14 1-21-14

SHEET 3 OF 18

FILE => rwd-b-sp02.add

USERNAME => s115755 DATE PLOTTED => 25-MAR-2016 TIME PLOTTED => 16:36

DIST	COUNTY	ROUTE	POST MILES TOTAL PROJECT	SHEET No.	TOTAL SHEETS
05	SB	101	2.2/3.3	708	786

Manode Kodsuntie 5-23-14
REGISTERED CIVIL ENGINEER DATE

12-7-15
PLANS APPROVAL DATE

REGISTERED PROFESSIONAL ENGINEER M. Kodsuntie No. 56671 Exp. 6/30/2017 CIVIL STATE OF CALIFORNIA

The State of California or its officers or agents shall not be responsible for the accuracy or completeness of scanned copies of this plan sheet.

2 **REPLACED PER ADDENDUM No. 2 DATED APRIL 4, 2016**

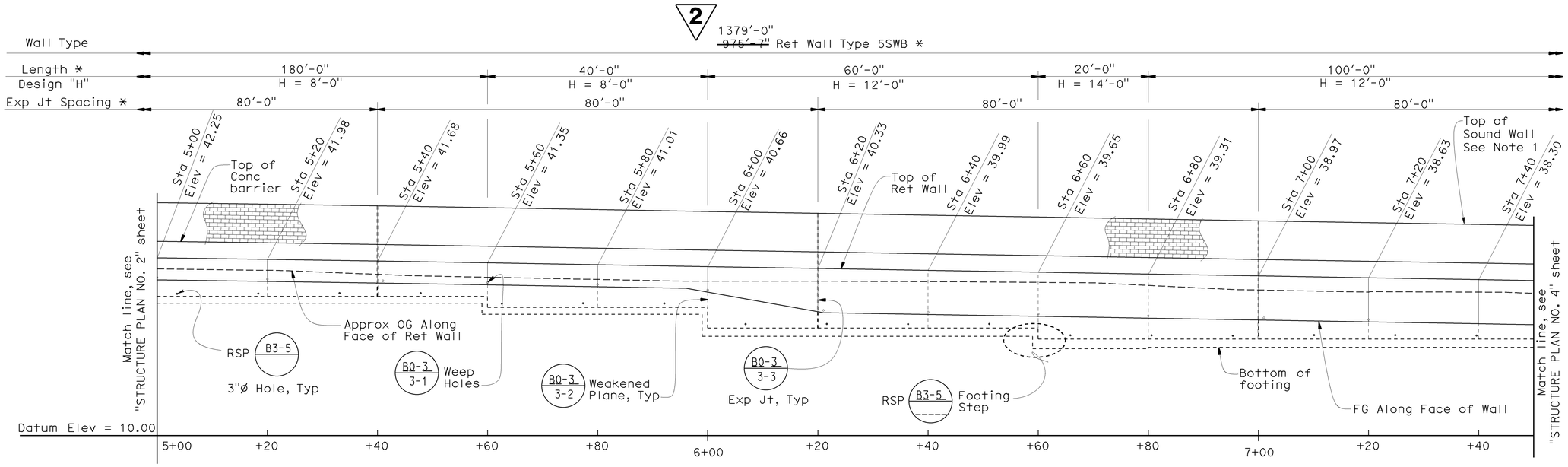

DEVELOPED MIRRORED ELEVATION

1" = 10'

* Measured along "RWD1" Line

NOTE:

1. For top of sound wall elevations see Table on "STRUCTURE PLAN NO. 6" sheet.

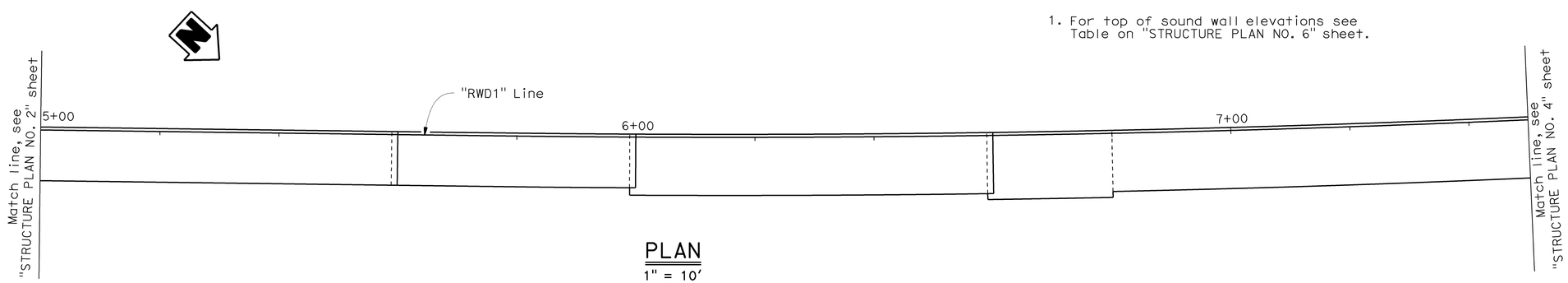

PLAN

1" = 10'

DESIGN	BY Manode Kodsuntie	CHECKED Jun Ki Jung	
DETAILS	BY B.Huddleston / J. Zhou	CHECKED Jun Ki Jung	
QUANTITIES	BY Manode Kodsuntie	CHECKED Jun Ki Jung	

STATE OF CALIFORNIA
DEPARTMENT OF TRANSPORTATION

DIVISION OF ENGINEERING SERVICES
STRUCTURE DESIGN
DESIGN BRANCH 7

BRIDGE NO. 51E0006
POST MILE 2.7

RETAINING WALL "D" & SOUND WALL "B4"
STRUCTURE PLAN NO. 3

STRUCTURES DESIGN DETAIL SHEET (ENGLISH) (REV. 09-01-10)

ORIGINAL SCALE IN INCHES FOR REDUCED PLANS 0 1 2 3

UNIT: 3592
PROJECT NUMBER & PHASE: 05000005431
CONTRACT NO.: 05-4482U4

DISREGARD PRINTS BEARING EARLIER REVISION DATES

REVISION DATES 11-5-12 3-13-14 7-24-14

SHEET 4 OF 18

FILE => rwd-b-sp03.add

USERNAME => s115755 DATE PLOTTED => 25-MAR-2016 TIME PLOTTED => 16:36

DIST	COUNTY	ROUTE	POST MILES TOTAL PROJECT	SHEET No.	TOTAL SHEETS
05	SB	101	2.2/3.3	709	786

Manode Kodsuntie 5-23-14
REGISTERED CIVIL ENGINEER DATE

12-7-15
PLANS APPROVAL DATE

REGISTERED PROFESSIONAL ENGINEER M. Kodsuntie No. 56671 Exp. 6/30/2017 CIVIL STATE OF CALIFORNIA

The State of California or its officers or agents shall not be responsible for the accuracy or completeness of scanned copies of this plan sheet.

2 **REPLACED PER ADDENDUM No. 2 DATED APRIL 4, 2016**

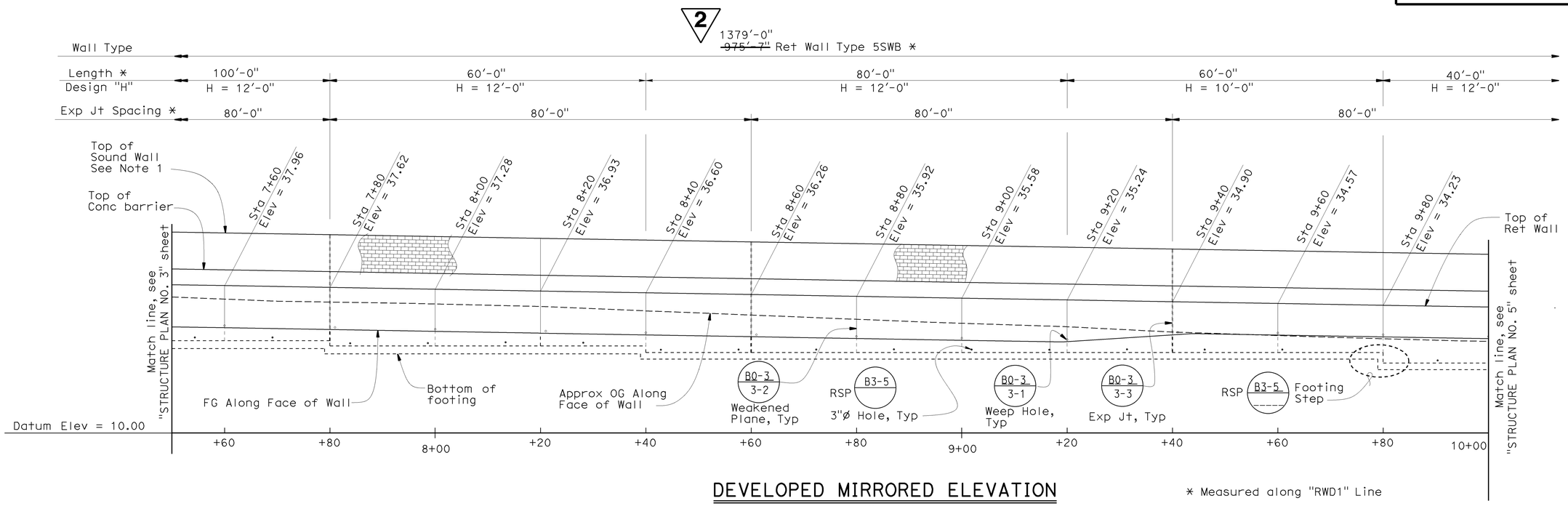

DEVELOPED MIRRORED ELEVATION

1" = 10'

* Measured along "RWD1" Line

NOTE:

1. For top of sound wall elevations see Table on "STRUCTURE PLAN NO. 6" sheet.

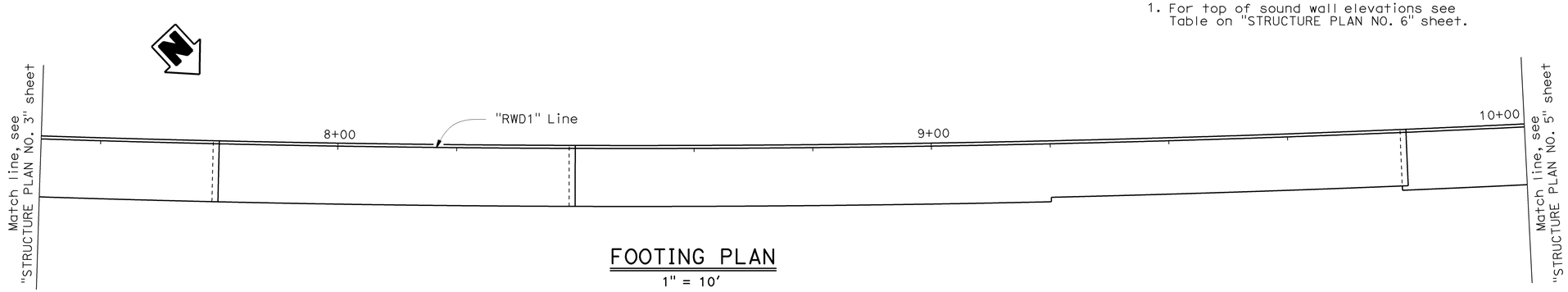

FOOTING PLAN

1" = 10'

DESIGN	BY Manode Kodsuntie	CHECKED Jun Ki Jung	
DETAILS	BY B.Huddleston / J.Zhou	CHECKED Jun Ki Jung	
QUANTITIES	BY Manode Kodsuntie	CHECKED Jun Ki Jung	

STATE OF CALIFORNIA
DEPARTMENT OF TRANSPORTATION

DIVISION OF ENGINEERING SERVICES
STRUCTURE DESIGN
DESIGN BRANCH 7

BRIDGE NO. 51E0006
POST MILE 2.7

RETAINING WALL "D" & SOUND WALL "B4"
STRUCTURE PLAN NO. 4

STRUCTURES DESIGN DETAIL SHEET (ENGLISH) (REV. 09-01-10)

ORIGINAL SCALE IN INCHES FOR REDUCED PLANS 0 1 2 3

UNIT: 3592
PROJECT NUMBER & PHASE: 05000005431
CONTRACT NO.: 05-4482U4

DISREGARD PRINTS BEARING EARLIER REVISION DATES

REVISION DATES: 11-26-12 3-13-14 1-24-14

SHEET 5 OF 18

FILE => rwd-b-sp04.dgn

USERNAME => s115755 DATE PLOTTED => 25-MAR-2016 TIME PLOTTED => 16:36

DIST	COUNTY	ROUTE	POST MILES TOTAL PROJECT	SHEET No.	TOTAL SHEETS
05	SB	101	2.2/3.3	710	786

Manode Kodsuntie 5-23-14
REGISTERED CIVIL ENGINEER DATE

12-7-15
PLANS APPROVAL DATE

REGISTERED PROFESSIONAL ENGINEER M. Kodsuntie No. 56671 Exp. 6/30/2017 CIVIL STATE OF CALIFORNIA

The State of California or its officers or agents shall not be responsible for the accuracy or completeness of scanned copies of this plan sheet.

2 **REPLACED PER ADDENDUM No. 2 DATED APRIL 4, 2016**

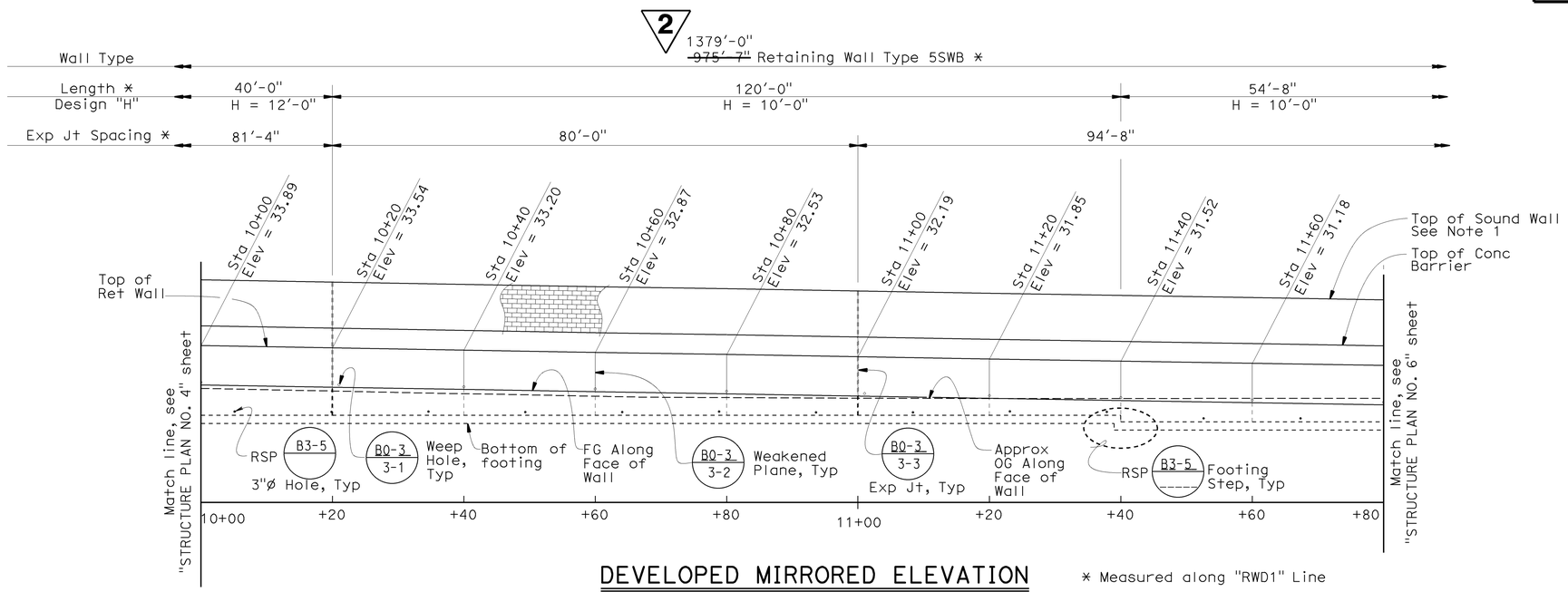

DEVELOPED MIRRORED ELEVATION

1" = 10'

* Measured along "RWD1" Line

NOTE:

1. For top of sound wall elevations see Table on "STRUCTURE PLAN NO. 6" sheet.

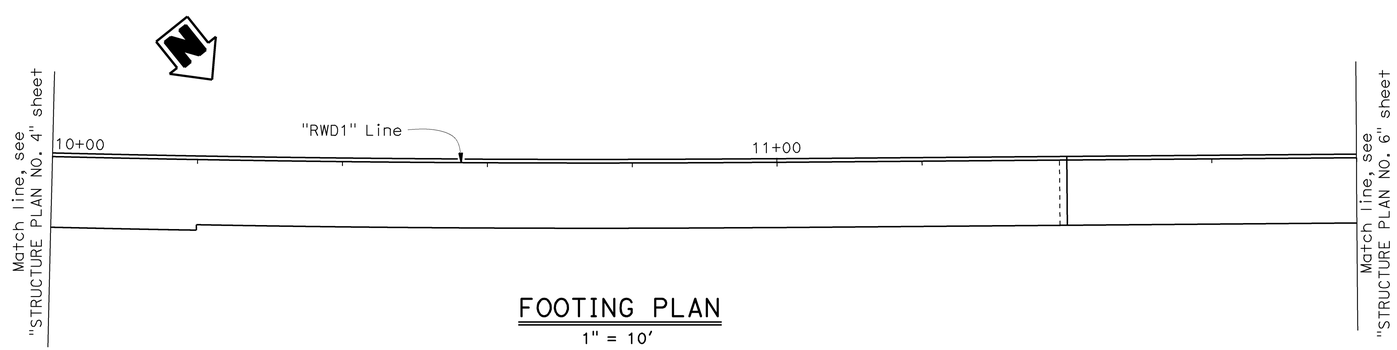

FOOTING PLAN

1" = 10'

DESIGN	BY Manode Kodsuntie	CHECKED Jun Ki Jung	
DETAILS	BY B.Huddleston / J. Zhou	CHECKED Jun Ki Jung	
QUANTITIES	BY Manode Kodsuntie	CHECKED Jun Ki Jung	

STATE OF CALIFORNIA DEPARTMENT OF TRANSPORTATION

DIVISION OF ENGINEERING SERVICES STRUCTURE DESIGN DESIGN BRANCH 7

BRIDGE NO. 51E0006
POST MILE 2.7

RETAINING WALL "D" & SOUND WALL "B4"
STRUCTURE PLAN NO. 5

STRUCTURES DESIGN DETAIL SHEET (ENGLISH) (REV. 09-01-10)

ORIGINAL SCALE IN INCHES FOR REDUCED PLANS 0 1 2 3

UNIT: 3592
PROJECT NUMBER & PHASE: 05000005431
CONTRACT NO.: 05-4482U4

DISREGARD PRINTS BEARING EARLIER REVISION DATES

REVISION DATES 11-26-12 3-13-14 7-24-14

SHEET 6 OF 18

FILE => rwd-b-sp05.dgn

USERNAME => s115755 DATE PLOTTED => 25-MAR-2016 TIME PLOTTED => 16:36

DIST	COUNTY	ROUTE	POST MILES TOTAL PROJECT	SHEET No.	TOTAL SHEETS
05	SB	101	2.2/3.3	711	786

Manode Kodsuntie 5-23-14
REGISTERED CIVIL ENGINEER DATE

12-7-15
PLANS APPROVAL DATE

REGISTERED PROFESSIONAL ENGINEER M. Kodsuntie No. 56671 Exp. 6/30/2017 CIVIL STATE OF CALIFORNIA

The State of California or its officers or agents shall not be responsible for the accuracy or completeness of scanned copies of this plan sheet.

2

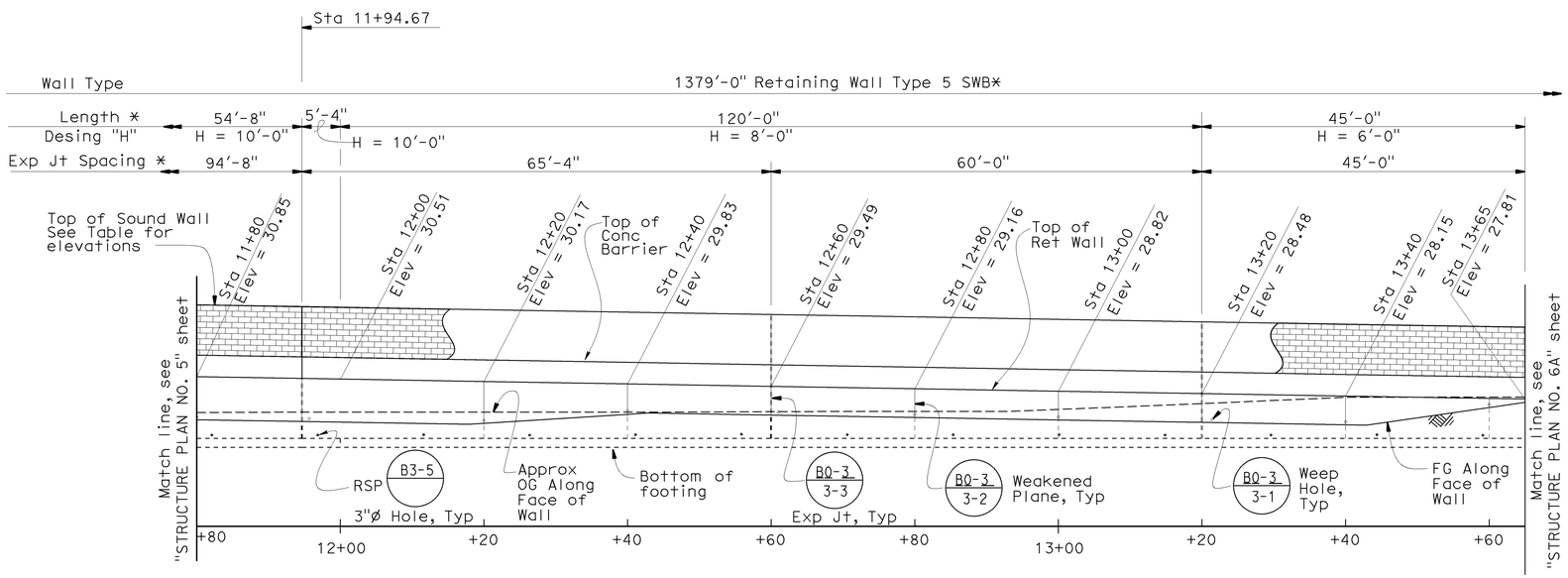

DEVELOPED MIRRORED ELEVATION

1" = 10'

* Measured along "RWD1" Line

NOTE:

1. Transition ground line at front of wall between points shown.

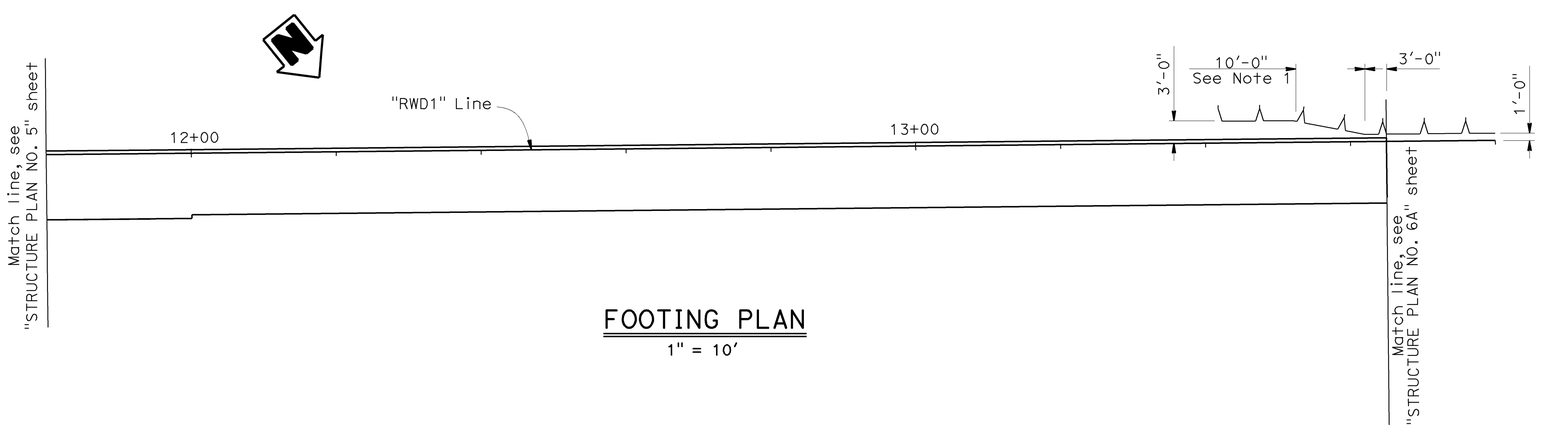

FOOTING PLAN

1" = 10'

TABLE			
"RWD1" Line Station	Top of Sound Wall Elevation	"RWD1" Line Station	Top of Sound Wall Elevation
2+18.67	55.09	9+20.00	45.24
2+20.00	55.08	9+40.00	44.90
2+40.00	54.91	9+60.00	44.57
2+60.00	54.75	9+80.00	44.23
2+80.00	54.58	10+00.00	43.89
3+00.00	54.42	10+20.00	43.54
3+20.00	54.26	10+40.00	43.20
3+40.00	54.09	10+60.00	42.87
3+60.00	53.71	10+80.00	42.53
3+80.00	53.36	11+00.00	42.19
4+00.00	53.20	11+20.00	41.85
4+20.00	53.04	11+40.00	41.52
4+40.00	52.87	11+60.00	41.18
4+60.00	52.69	11+80.00	40.85
4+80.00	52.49	11+94.67	40.60
5+00.00	52.25	12+00.00	40.51
5+20.00	51.98	12+20.00	40.17
5+40.00	51.68	12+40.00	39.83
5+60.00	51.35	12+60.00	39.49
5+80.00	51.01	12+80.00	39.16
6+00.00	50.66	13+00.00	38.82
6+20.00	50.33	13+20.00	38.48
6+40.00	49.99	13+40.00	38.15
6+60.00	49.65	13+65.00	37.81
6+80.00	49.31	13+80.00	37.50
7+00.00	48.97	14+00.00	37.27
7+20.00	48.63	14+20.00	37.05
7+40.00	48.30	14+40.00	36.91
7+60.00	47.96	14+60.00	36.76
7+80.00	47.62	14+80.00	36.62
8+00.00	47.28	15+00.00	36.47
8+20.00	46.93	15+20.00	36.33
8+40.00	46.60	15+40.00	36.19
8+60.00	46.26	15+60.00	36.04
8+80.00	45.92	15+80.00	35.89
9+00.00	45.58	15+97.67	35.71

2 **REPLACED PER ADDENDUM No. 2 DATED APRIL 4, 2016**

DESIGN	BY Manode Kodsuntie	CHECKED Jun Ki Jung	
DETAILS	BY B.Huddleston / J. Zhou	CHECKED Jun Ki Jung	
QUANTITIES	BY Manode Kodsuntie	CHECKED Jun Ki Jung	

STATE OF CALIFORNIA
DEPARTMENT OF TRANSPORTATION

DIVISION OF ENGINEERING SERVICES
STRUCTURE DESIGN
DESIGN BRANCH 7

BRIDGE NO. 5IE0006
POST MILE 2.7

RETAINING WALL "D" & SOUND WALL "B4"
STRUCTURE PLAN NO. 6

STRUCTURES DESIGN DETAIL SHEET (ENGLISH) (REV. 09-01-10)

ORIGINAL SCALE IN INCHES FOR REDUCED PLANS 0 1 2 3

UNIT: 3592
PROJECT NUMBER & PHASE: 05000005431
CONTRACT NO.: 05-4482U4

DISREGARD PRINTS BEARING EARLIER REVISION DATES

REVISION DATES 11-13-12 3-17-14 12-7-14

SHEET 7 OF 18

FILE => rwd-b-sp06.dgn

USERNAME => s115755 DATE PLOTTED => 25-MAR-2016 TIME PLOTTED => 16:36

DIST	COUNTY	ROUTE	POST MILES TOTAL PROJECT	SHEET No.	TOTAL SHEETS
05	SB	101	2.2/3.3	711A	786

Manode Kodsuntie 5-23-14
REGISTERED CIVIL ENGINEER DATE

12-7-15
PLANS APPROVAL DATE

REGISTERED PROFESSIONAL ENGINEER M. Kodsuntie No. 56671 Exp. 6/30/2017 CIVIL STATE OF CALIFORNIA

The State of California or its officers or agents shall not be responsible for the accuracy or completeness of scanned copies of this plan sheet.

2

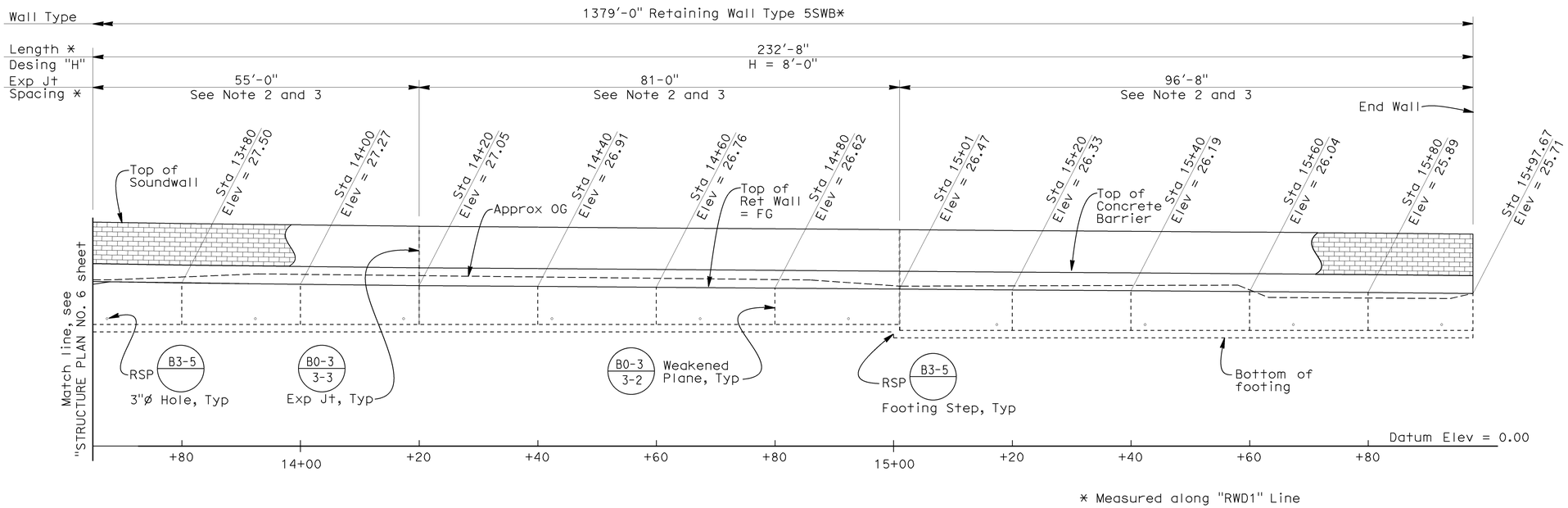

* Measured along "RWD1" Line

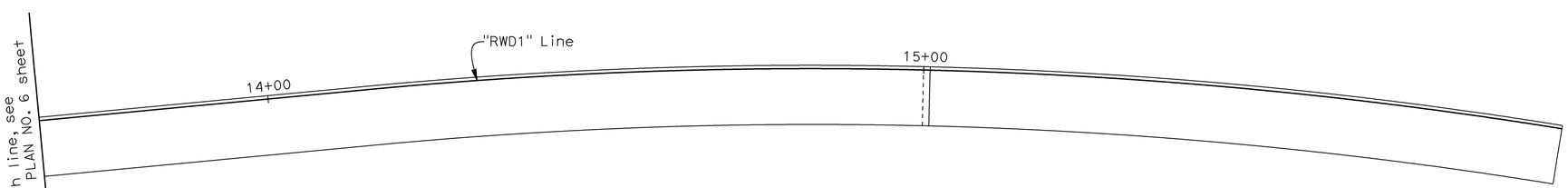

FOOTING PLAN

1" = 10'

NOTES:

1. For top of soundwall elevations, see TABLE on "STRUCTURE PLAN NO. 6" sheet
2. No split face texture applied to stem
3. No pervious backfill drain only for this portion of wall since FG is equal on both sides of stem

2 **ADDED PER ADDENDUM No. 2 DATED APRIL 4, 2016**

	BY	CHECKED
DESIGN	Manode Kodsuntie	Jun Ki Jung
DETAILS	A. Onodera	Jun Ki Jung
QUANTITIES	Manode Kodsuntie	Jun Ki Jung

STATE OF CALIFORNIA
DEPARTMENT OF TRANSPORTATION

DIVISION OF ENGINEERING SERVICES
STRUCTURE DESIGN
DESIGN BRANCH 7

BRIDGE NO. 51E0006
POST MILE 2.7

RETAINING WALL "D" & SOUND WALL "B4"
STRUCTURE PLAN NO. 6A

STRUCTURES DESIGN DETAIL SHEET (ENGLISH) (REV. 09-01-10)

ORIGINAL SCALE IN INCHES FOR REDUCED PLANS 0 1 2 3

UNIT: 3592
PROJECT NUMBER & PHASE: 05000005431
CONTRACT NO.: 05-4482U4

DISREGARD PRINTS BEARING EARLIER REVISION DATES

REVISION DATES: 3-1-16

SHEET 7A OF 18

FILE => rwd-b-sp06a.add

USERNAME => s115755 DATE PLOTTED => 25-MAR-2016 TIME PLOTTED => 16:36

DIST	COUNTY	ROUTE	POST MILES TOTAL PROJECT	SHEET No.	TOTAL SHEETS
05	SB	101	2.2/3.3	714	786

Manode Kodsuntie 5-23-14
REGISTERED CIVIL ENGINEER DATE

12-7-15
PLANS APPROVAL DATE

REGISTERED PROFESSIONAL ENGINEER M. Kodsuntie No. 56671 Exp. 6/30/2017 CIVIL STATE OF CALIFORNIA

The State of California or its officers or agents shall not be responsible for the accuracy or completeness of electronic copies of this plan sheet.

2

2 REPLACED PER ADDENDUM No. 2 DATED APRIL 4, 2016

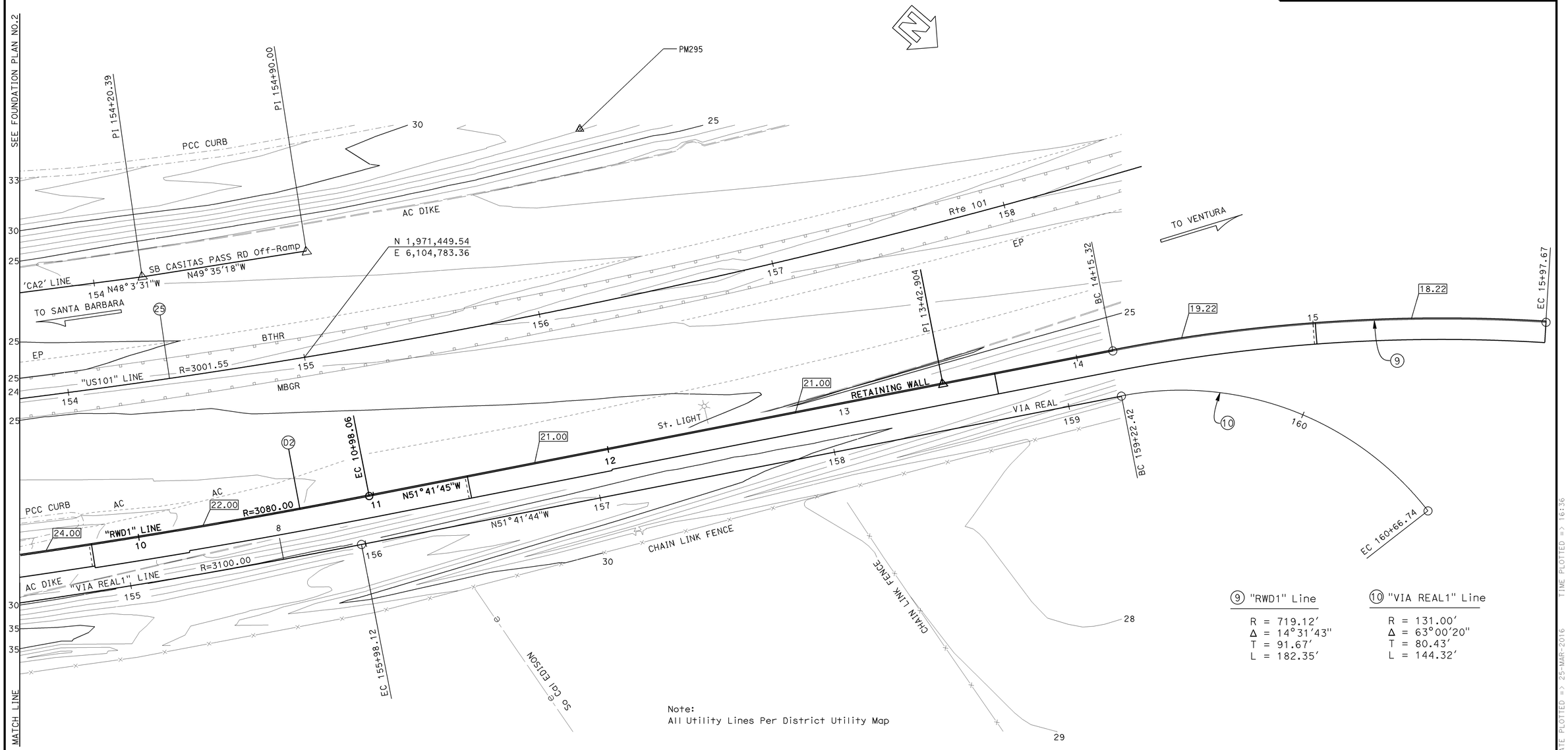

Note:
All Utility Lines Per District Utility Map

9 "RWD1" Line

R = 719.12′
Δ = 14°31′43″
T = 91.67′
L = 182.35′

10 "VIA REAL1" Line

R = 131.00′
Δ = 63°00′20″
T = 80.43′
L = 144.32′

PRELIMINARY INVESTIGATION SECTION							
SCALE 1"=20′	VERT.DATUM NAVD88	PHOTOGRAMMETRY AS OF: X					
	HORZ.DATUM NAD83 (1991.35)	SURVEYED	BY DISTRICT	CHECKED	BY DON IVY 01/2014		
ALIGNMENT TIES Dist. Traverse Sheet		DRAFTED	BY SHARON ZHENG 01/2014	CHECKED	BY LAWRENCE LEW 01/2014		

DESIGN	BY Manode Kodsuntie	CHECKED Jun Jung
DETAILS	BY Yingjue Feng	CHECKED Jun Jung
QUANTITIES	BY Manode Kodsuntie	CHECKED Jun Jung

STATE OF CALIFORNIA
DEPARTMENT OF TRANSPORTATION

DIVISION OF ENGINEERING SERVICES
STRUCTURE DESIGN
DESIGN BRANCH 7

BRIDGE NO. 5IE0006
POST MILE 2.7

RETAINING WALL "D" & SOUND WALL "B4"
FOUNDATION PLAN NO. 3

STRUCTURES FOUNDATION PLAN SHEET (ENGLISH) (REV. 09-01-10)

ORIGINAL SCALE IN INCHES FOR REDUCED PLANS 0 1 2 3

UNIT: 3646
PROJECT NUMBER & PHASE: 05 00000543 1 CONTRACT NO.: 05-4482U4

DISREGARD PRINTS BEARING EARLIER REVISION DATES → REVISION DATES 1/9/2014 1/13/2014 1/22/14

SHEET 10 OF 18

FILE => rwd-e-fp03.add

USERNAME => s115755 DATE PLOTTED => 25-MAR-2016 TIME PLOTTED => 16:36

DIST	COUNTY	ROUTE	POST MILES TOTAL PROJECT	SHEET No.	TOTAL SHEETS
05	SB	101	2.2/3.3	719	786

REGISTERED CIVIL ENGINEER 5-23-14 DATE

12-7-15
PLANS APPROVAL DATE

REGISTERED PROFESSIONAL ENGINEER M. Kodsuntie No. 56671 Exp. 6/30/2017 CIVIL STATE OF CALIFORNIA

The State of California or its officers or agents shall not be responsible for the accuracy or completeness of scanned copies of this plan sheet.

2

NOTE:

1. For location of Section A-A, See "STRUCTURE PLAN NO. 1" sheet.

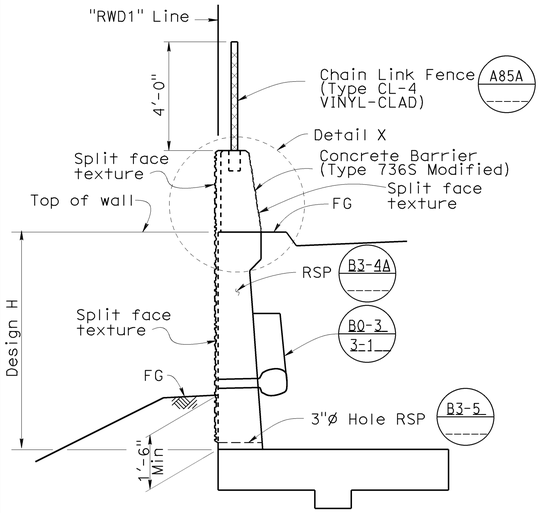

SECTION A-A

3/8" = 1'-0"

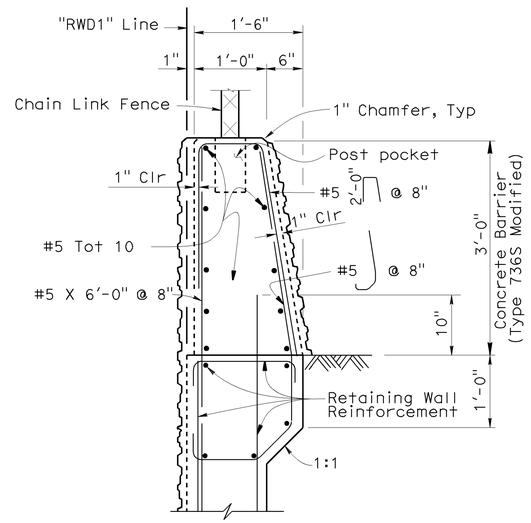

DETAIL X

NO SCALE

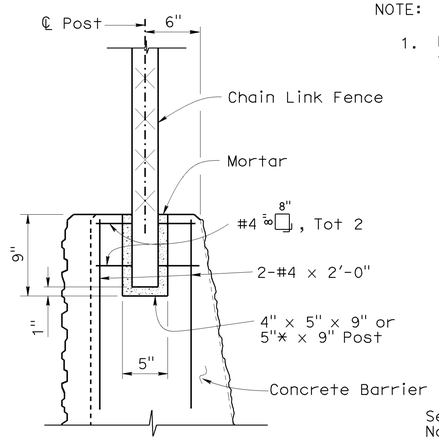

POST POCKET

1½" = 1'-0"

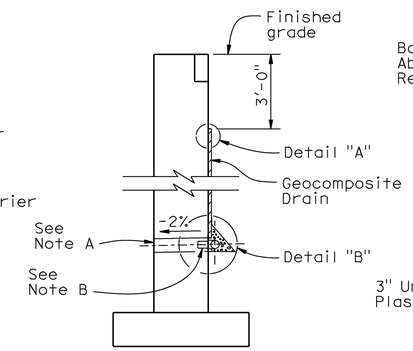

WALL SECTION

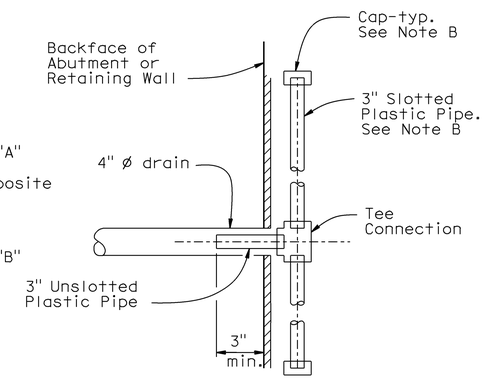

SECTION A-A

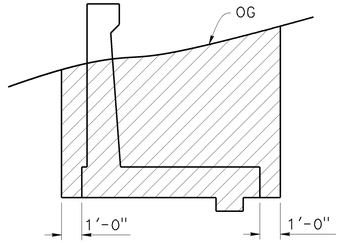

Sta 0+00 to Sta 8+40

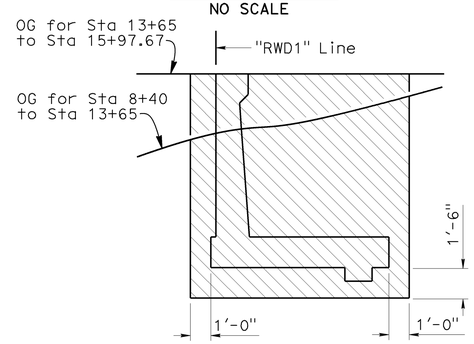

Sta 8+40 to Sta 15+97.67

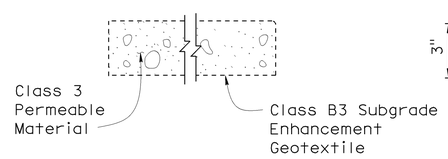

PERMEABLE MATTRESS DETAIL

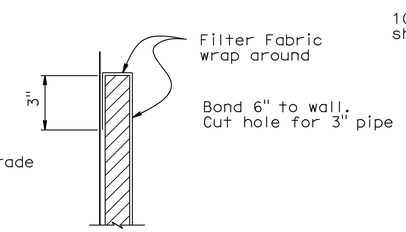

DETAIL "A"

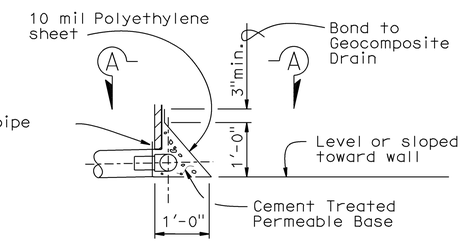

DETAIL "B"

WEEP HOLE AND GEOCOMPOSITE DRAIN

NO SCALE

ALTERNATIVE TO BRIDGE DETAIL BO-3 / 3-1

Notes:

A. 4" ø drains at intermediate sag points and at 25' max center to center (9' c-c for Type 3 and 9'-3" c-c for Type 4 retaining walls).
For walls adjacent to sidewalks or curbs, provide 4" cast iron or asbestos cement pipe under the sidewalk to discharge through curb face.
Exposed wall drains must be located 3"± above finished grade.

B. Geocomposite drain, cement treated permeable base, and 3"ø slotted plastic pipe continuous behind retaining wall or abutment. Cap ends of pipe. Provide "Tee" connection at each 4" ø drain.

C. Connect the low end of plastic pipe to the main outlet pipe as apprlicable.

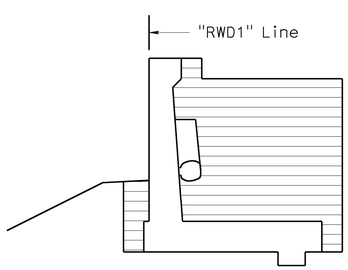

Sta 0+00 to Sta 8+40

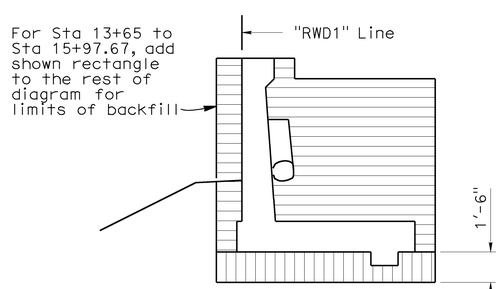

Sta 8+40 to Sta 15+97.67

LEGEND:

- Structure Excavation
- Structure Excavation (Type D)
- Structure Backfill
- permeable Mattress

LIMITS OF STRUCTURE EXCAVATION AND STRUCTURE BACKFILL

NO SCALE

2 **REPLACED PER ADDENDUM No. 2 DATED APRIL 4, 2016**

DESIGN	BY Manode Kodsuntie	CHECKED Jun Ki Jung
DETAILS	BY Yingjue Feng	CHECKED Jun Ki Jung
QUANTITIES	BY Manode Kodsuntie	CHECKED Jun Ki Jung

STATE OF CALIFORNIA DEPARTMENT OF TRANSPORTATION

DIVISION OF ENGINEERING SERVICES STRUCTURE DESIGN DESIGN BRANCH 7

BRIDGE NO. 51E0006
POST MILE 2.7

RETAINING WALL "D" & SOUND WALL "B4"
WALL DETAILS

STRUCTURES DESIGN DETAIL SHEET (ENGLISH) (REV. 09-01-10)

ORIGINAL SCALE IN INCHES FOR REDUCED PLANS 0 1 2 3

UNIT: 3592
PROJECT NUMBER & PHASE: 0500000543-1 CONTRACT NO.: 05-4482U4

DISREGARD PRINTS BEARING EARLIER REVISION DATES

REVISION DATES 10-30-13 10-28-15 3-14-14 SHEET 15 OF 18

FILE => rwd-u-wdet.dgn

USERNAME => s115755 DATE PLOTTED => 25-MAR-2016 TIME PLOTTED => 16:36

DIST	COUNTY	ROUTE	POST MILES TOTAL PROJECT	SHEET No.	TOTAL SHEETS
05	SB	101	2.2/3.3	720	786

REGISTERED CIVIL ENGINEER — DATE 5-23-14

12-7-15
PLANS APPROVAL DATE

REGISTERED PROFESSIONAL ENGINEER — M. Kodsuntie No. 56671 Exp. 6/30/2017 CIVIL — STATE OF CALIFORNIA

The State of California or its officers or agents shall not be responsible for the accuracy or completeness of scanned copies of this plan sheet.

2

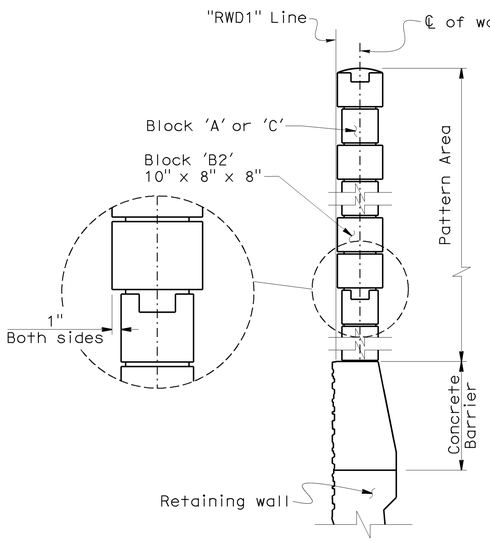

SECTION B-B

No Scale

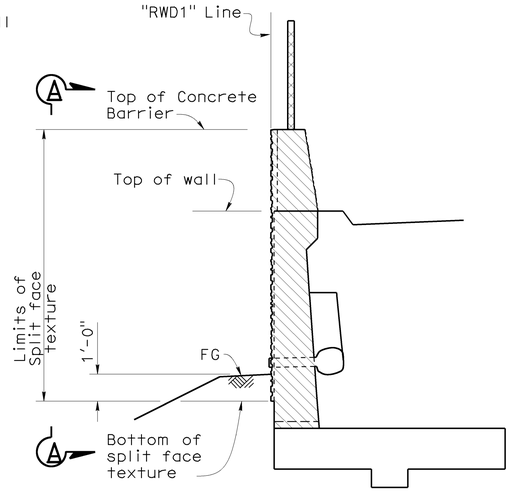

TYPICAL SECTION

3/8" = 1'-0"

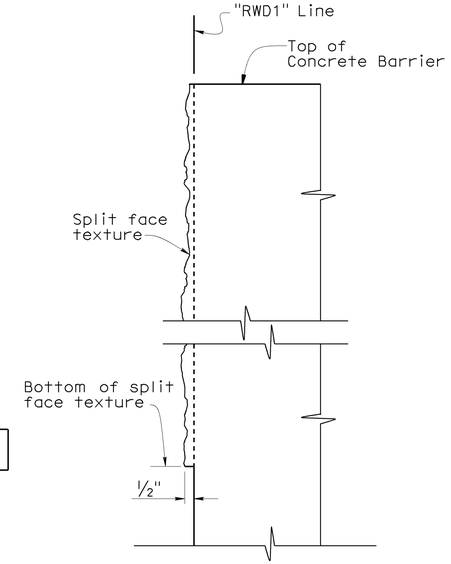

SECTION C-C

2" = 1'-0"

NOTES:

1. Repeat vertical pattern, starting from top of wall, in 8" lift increments. Bottom single lift can be cut to less than 8" to match grade below.
2. Pattern to be repeated on entire front and back face of sound wall.

LEGEND:

Split face texture

Integrally colored concrete

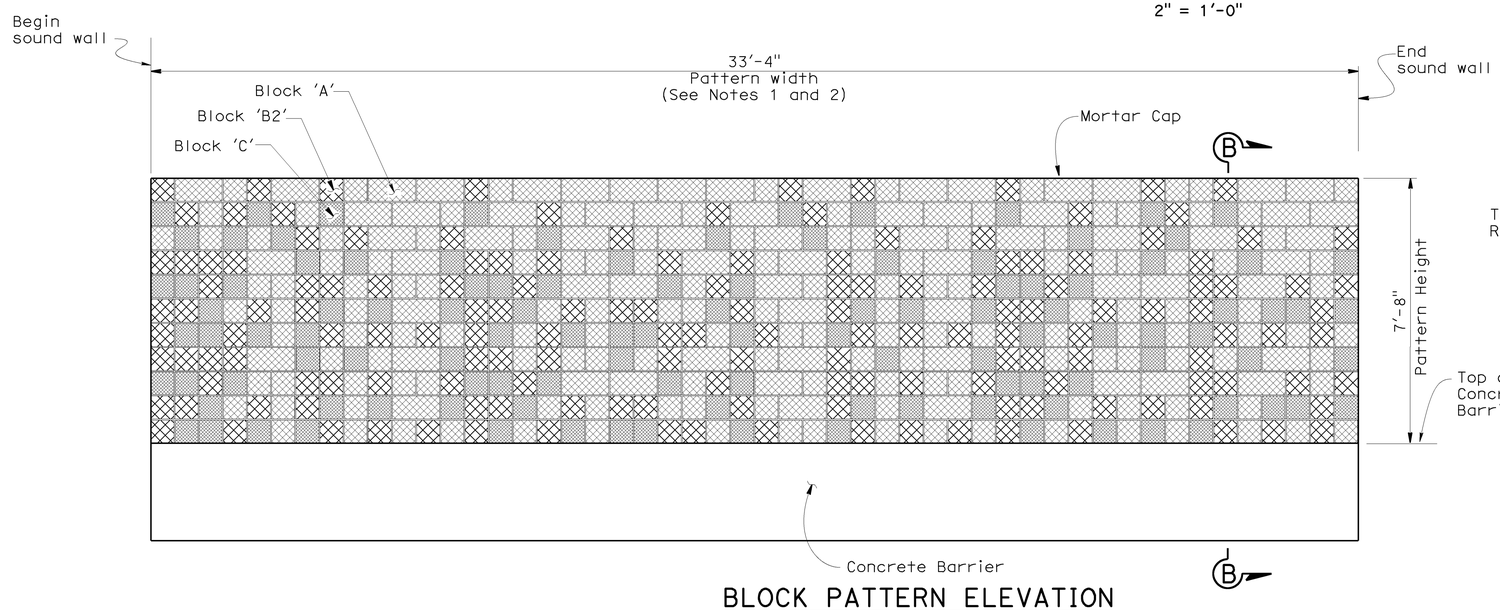

BLOCK PATTERN ELEVATION

No Scale

NOTE:
Concrete Barrier, Chain Link Fence and Sound Wall not shown

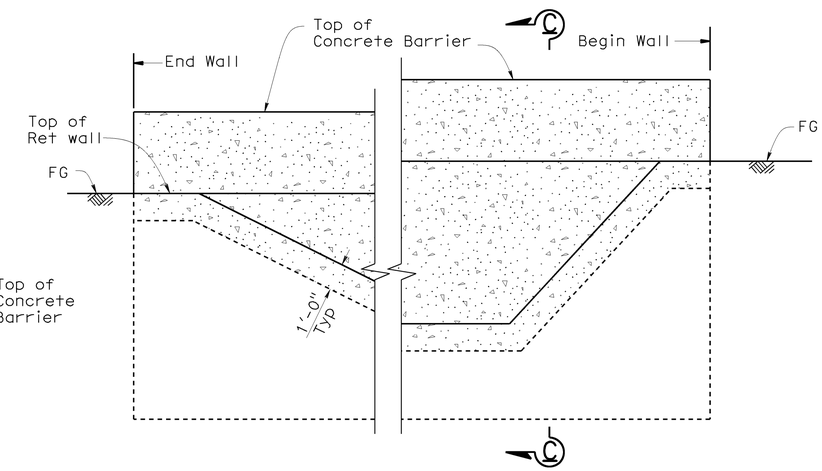

VIEW A-A

3/8" = 1'-0"

MASONRY BLOCK LEGEND:

Block 'A' : 8" x 8" x 16" split face all exposed sides. Use half blocks where necessary.

Block 'B2' : 10" x 8" x 8" split face all exposed sides. Block will project 1" both sides of wall.

Block 'C' : 8" x 8" x 8" split face all exposed sides. Use half blocks where necessary.

2 **REPLACED PER ADDENDUM No. 2 DATED APRIL 4, 2016**

	BY	CHECKED
DESIGN	Manode Kodsuntie	Jun Ki Jung
DETAILS	Yingjue Feng	Jun Ki Jung
QUANTITIES	Manode Kodsuntie	Jun Ki Jung

STATE OF CALIFORNIA
DEPARTMENT OF TRANSPORTATION

DIVISION OF ENGINEERING SERVICES
STRUCTURE DESIGN
DESIGN BRANCH 7

BRIDGE NO. 51E0006
POST MILE 2.7

RETAINING WALL "D" & SOUND WALL "B4"
ARCHITECTURAL DETAILS

STRUCTURES DESIGN DETAIL SHEET (ENGLISH) (REV. 09-01-10)

ORIGINAL SCALE IN INCHES FOR REDUCED PLANS 0 1 2 3

UNIT: 3592
PROJECT NUMBER & PHASE: 0500000543-1
CONTRACT NO.: 05-4482U4

DISREGARD PRINTS BEARING EARLIER REVISION DATES

REVISION DATES: 8-26-13 | 3-12-14 | 10-28-15

SHEET 16 OF 18

FILE => rwd-v-archdet.dgn

USERNAME => s115755 DATE PLOTTED => 25-MAR-2016 TIME PLOTTED => 16:36