INFORMATION HANDOUT

For Contract No. 05-4482U4
At 05-SB-101-2.2/3.3

Identified by
Project ID 0500000543

PERMITS

City of Carpinteria, Coastal Development Permit / Conditional Use Permit

U.S. Fish and Wildlife Service Biological Opinion: Tidewater Goby

National Oceanic and Atmospheric Administration (National Marine Fisheries Service), Biological Opinion: Steelhead Trout

United States Army Corps of Engineers 404 Individual Permit

WATER QUALITY

Central Coast Regional Water Quality Control Board, Water Quality Certification

AGREEMENTS

California Department of Fish and Wildlife, Streambed Alteration Agreement

MATERIALS INFORMATION

Summary of Foundation Recommendation Reports:

- Foundation Report for Carpinteria Creek Bridge dated May 5, 2014
- Final Hydraulic Report for Carpinteria Creek Bridge and Via Real Bridge dated June 14, 2012
- Foundation Report for Via Real Bridge dated May 5, 2014
- Foundation Report for Casitas Pass Road Bridge dated May 5, 2014
- Foundation Report for Linden Avenue Overcrossing dated May 5, 2014
- Retaining Wall B Foundation Report dated January 22, 2014
- Retaining Wall C Foundation Report dated January 28, 2014
- Retaining Wall D and Sound Wall B4 Foundation Report dated January 28, 2014
- Retaining Wall I Foundation Report dated March 28, 2014
- Retaining Wall J Foundation Report dated January 22, 2014
- Retaining Wall K Foundation Report dated January 22, 2014
- Retaining Wall L Foundation Report dated January 22, 2014
- Retaining Wall M Foundation Report dated January 22, 2014
- Sound Wall B2 Foundation Report dated January 22, 2014
- Sound Wall B7 Foundation Report dated January 22, 2014
- Sound Wall B9 Foundation Report dated January 22, 2014

Manufacturer's Instructions

- Wing-Gate (Automatic Retractable Screen)
- Connector Pipe Screen
- LNI Custom Manufacturing Bus Shelter
- LEDTronics LED Acorn Light Bulb
- BEGA Street Lighting Fixtures
- Urban Accessories Kiva Tree Grate

Water Source Information

- Carpinteria Valley Water District

Transition Detail for 31" Terminal System

American Public Works Association (APWA) Standard Plan No. 635 & 636

ADL Concentrations and Data Mapping

CITY of CARPINTERIA CALIFORNIA

November 25, 2015

David Beard, Project Manager
Caltrans
50 Higuera Street
San Luis Obispo, CA 93401

Re: Notification of City Council Action
Linden Avenue – Casitas Pass Road Interchanges and Via Real Extension
Project 09-1522-CUP/CDP

Dear Mr. Beard:

On November 23, 2015, the City Council took action on the following item:

Request by the California Department of Transportation (Caltrans) for approval of development permits to replace the Linden Avenue and Casitas Pass Road US 101 overcrossings, reconfigure the northbound onramps and offramps at Casitas Pass Road, extend the northbound Linden Avenue onramp, rebuild the southbound Linden Avenue offramp, construct four soundwalls along the US 101 corridor, replace the US 101 freeway bridges over Carpinteria Creek and extend Via Real to Casitas Pass Road and Linden Avenue.

The City Council approved the project subject to the Findings and Conditions of Approval as recommended. This decision to approve the project is appealable to the California Coastal Commission. The appeal period is ten working days commencing on the day the Coastal Commission receives this notice.

The project is not subject to the payment of the City's Development Impact Fees as the project does not involve the addition of any new square footage or residential units. The project may however be subject to development impact fees from other agencies including the Carpinteria Unified School District, the Carpinteria-Summerland Fire Protection District, the Carpinteria Sanitary District and the Carpinteria Valley Water District.

Conditions of Approval for the project are attached to this letter for your records. A separate copy of the last page of the Conditions of Approval is also attached. Please sign and return this page to the Community Development Department. Should you have any questions or need further information regarding this action letter or the project, please contact Steve Goggia at (805) 755-4414.

5775 CARPINTERIA AVENUE • CARPINTERIA, CA 93013-2603 (805) 684-5405 • FAX (805) 684-5304
www.carpinteria.ca.us

Sincerely,

Jackie Campbell

Jackie Campbell
Community Development Director

Attachment: City Council Resolution with Attachments

cc: Ed Foster, Carpinteria-Summerland Fire District
Lance Lawhon, Carpinteria Sanitary District
Brian King, Carpinteria Valley Water District
Charlie Ebeling, Carpinteria Public Works
Jacqueline Phelps, California Coastal Commission

RESOLUTION NO. 5632

A RESOLUTION OF THE CITY OF CARPINTERIA CITY COUNCIL APPROVING CONDITIONAL USE PERMIT AND COASTAL DEVELOPMENT PERMIT NO. 09-1522-CUP/CDP TO ALLOW CALTRANS TO CONSTRUCT THE LINDEN AVENUE AND CASITAS PASS ROAD INTERCHANGES AND VIA REAL EXTENSION

WHEREAS, the Carpinteria City Council has considered an application for a Conditional Use Permit and Coastal Development Permit filed by Caltrans on July 28, 2009 to allow for the construction of two freeway interchanges, replacements for the existing Linden Avenue and Casitas Pass Road US 101 overcrossings, including reconfiguration of the northbound on and offramps at Casitas Pass Road, extension of the northbound Linden Avenue onramp and southbound offramp, replacement of the US 101 freeway bridges over Carpinteria Creek, extension of Via Real to Casitas Pass Road and to Linden Avenue, and construction of four soundwalls along US 101 (the Project); and

WHEREAS, the application was deemed complete and accepted by the City as being consistent with the applicable submittal requirements on March 26, 2015; and

WHEREAS, the City of Carpinteria Planning Commission conducted a special public hearing on May 18, 2015 and conceptually approved the Conditional Use Permit and Coastal Development Permit and recommended approval of associated Local Coastal Program Amendments to the City Council; and

WHEREAS, the City Council conducted a public hearing on June 22, 2015 and conceptually approved the Conditional Use Permit and Coastal Development Permit and authorized submittal of associated Local Coastal Program Amendments to the California Coastal Commission; and

WHEREAS, on October 6, 2015 the California Coastal Commission recommended suggested modifications to the Local Coastal Program Amendments submitted by the City under Project 09-1522-LCPA/ORD; and

WHEREAS, the City Council accepted the suggested modifications at a public hearing conducted on October 12, 2015 and conducted a second reading and approved Ordinance No. 703 implementing the LCPA on October 26, 2015; and

WHEREAS, the City Council conducted a public hearing on November 23, 2015 and received evidence in favor of the application for the Conditional Use Permit and Coastal Development Permit; and

WHEREAS, in accordance with the California Environmental Quality Act (CEQA), the Community Development Director has provided public notice of the intent of the City to accept the Final EIR and Addendum prepared for the Project by the California Department of Transportation (Caltrans), the City has reviewed the environmental impacts of the Project in accord with CEQA (Public Resources Code §§ 21000, et seq.) and the regulations promulgated thereunder (14 Cal. Code of Regulations §§ 15000, et seq., the "CEQA Guidelines"), and the City Council has considered the Final EIR and Addendum, together with any comments received during the public review process; and

WHEREAS, the City Council has reviewed the policies of the General Plan/Coastal Plan and the Zoning Code standards that are relevant to the Project.

NOW THEREFORE, THE CITY COUNCIL HEREBY RESOLVES AS FOLLOWS:

1. The Conditional Use Permit and Coastal Development Permit are approved by the City Council, subject to the Findings set forth in Attachment 1, Exhibit A.

2. The Project Engineering Plans and Design Renderings shown in Attachment 1, Exhibit B are approved subject to the conditions set forth in Attachment 1, Exhibit C.

PASSED, APPROVED AND ADOPTED this 23rd day of November 2015, by the following called vote:

AYES: **COUNCILMEMBERS:** STEIN, SHAW, CARTY

NOES: **COUNCILMEMBER(S):** CLARK

ABSENT: **COUNCILMEMBER(S):** NOMURA

Gregg A. Carty, Mayor
City of Carpinteria

ATTEST:

City Clerk, City of Carpinteria

I hereby certify that the foregoing Resolution was duly and regularly introduced and adopted at a regular meeting of the City Council of the City of Carpinteria held the 23rd day of November 2015.

City Clerk, City of Carpinteria

APPROVED AS TO FORM:

Peter N. Brown, on behalf of
Brownstein Hyatt Farber Schreck, LLP
acting as City Attorney of the City of Carpinteria

ATTACHMENT 1

City Council
Resolution No. 5632

Exhibit A - Findings

November 23, 2015

EXHIBIT A: FINDINGS

CITY COUNCIL HEARING
PROJECT 09-1522-CUP/CDP
LINDEN AVENUE AND CASITAS PASS ROAD INTERCHANGES AND VIA REAL IMPROVEMENTS
November 23, 2015

1.0 Administrative Findings

The City Council hereby incorporates by reference as though set forth in full all Community Development Department staff reports and attachments hereto presented to the City Council and all comments made or received either orally or in writing at the public hearings on this project.

1.1 Procedures

Pursuant to the California Coastal Act, the Administrative Regulations of the California Coastal Commission and the City's Local Coastal Program, it has been found that the process for public review of the subject Local Coastal Development Permit has been properly conducted as follows:

a. An application for a Conditional Use Permit and Coastal Development Permit was submitted on July 28, 2009, and deemed complete and accepted by the City as being consistent with the applicable submittal requirements on March 26, 2015. Said application and all related material have been available for public review at City offices since the date of submittal.

   In order to accommodate the project, the City has approved a Local Coastal Program Amendment, Project 09-1522-LCPA/ORD, to create the Transportation Corridor Wetland Overlay and the Whitney Site Agriculture Overlay Districts in the Carpinteria Zoning Code and add text amendments to the Coastal Land Use Plan and modify the Land Use Map for the Whitney Site (APN 001-070-012). The application has been evaluated and found to conform to the applicable zone districts and is consistent with the City's Local Coastal Program Land Use Plan, the Interpretive Guidelines of the Coastal Commission and the California Coastal Act.

b. The project, including the Environmental Impact Report and Addendum, has been reviewed by the City Council at a duly noticed public hearing which included, but is not limited to, mailed notice to all property owners within 300 feet and all occupants within 100 feet of the project right-of-way and publication in the local newspaper, the Coastal View News.

1.2 California Environmental Quality Act

California Environmental Quality Act (CEQA) findings pursuant to CEQA (California Public Resources Code Sections 21081, 21081.6) and State CEQA Guidelines (California Code of Regulations Sections 15091, 15096, 15097, 15162, 15164):

The City Council has reviewed and considered the Caltrans Certified Final EIR/FONSI dated July 2010 and the EIR/FONSI Addendum dated March 26, 2015. The EIR and Addendum were prepared in accordance with the provisions of the State CEQA Guidelines. The Certified EIR/FONSI and Addendum constitute adequate CEQA environmental documentation for the project (09-1522-CUP/CDP).

The location and custodian of file documents which constitute the record of proceedings upon which the project decision is based is the City of Carpinteria Community Development Department, 5775 Carpinteria Avenue, Carpinteria, California. The California Department of Transportation (Caltrans) District 5 is located at 50 Higuera Street, San Luis Obispo, California and is the Lead Agency and custodian of documents for the CEQA environmental document (EIR/FONSI State Clearinghouse Number 2008041158).

A mitigation monitoring and reporting program for the project has been made a condition of project approval and is hereby adopted. Mitigation measures have been made enforceable through incorporation into the project description, conditions of Caltrans project approval, agency agreements, or conditions of Conditional Use Permit/Coastal Development Permit approval.

As described below, the EIR identifies several areas of insignificant impact consistent with Public Resources Code §21100 and State CEQA Guidelines §15128. The EIR also identifies areas where the project's environmental impact is considered potentially significant but mitigable consistent with State CEQA Guidelines §15091(a)(1).

Design features incorporated as part of the project description and mitigation measures applied as conditions of project approval would result in the avoidance or reduction of environmental impacts to insignificant levels. The City Council's approval of the project is conditioned upon the inclusion of these measures.

These findings are supported by substantial evidence in the record, including the Certified Final EIR/FONSI dated July 2010 and the EIR/FONSI Addendum dated March 26, 2015, and associated appendix materials. These impacts and the relevant mitigation measures are discussed below, along with the appropriate findings under State CEQA Guidelines §15091.

A. Land Use, Socioeconomics and Housing: The EIR identified land use effects of the project to be less than significant with respect to loss of open space, housing resources, effects on pedestrian, bicycle and transit facilities, environmental justice effects, growth inducement, and effects on economic growth. Caltrans identified a minimization approach to land use effects, including designing ramp geometrics which meet minimum design standards, and aligning the Via Real extension as close to US 101 as possible. All land use, socioeconomic and housing impacts of the proposal would remain insignificant with no mitigation required.

B. Parks and Recreation: The proposal includes improvement to local bike circulation via the addition of bike lanes in both directions for the Linden Avenue and Casitas Pass Road overcrossings and along Via Real, as well as the reconfiguration of the bike path along Carpinteria Creek to make it all-weather accessible. These bike lane segments would intermittently be inaccessible during project construction. Mitigation includes

advance notice of access restrictions or bike facility closures to affected stakeholders. Vehicle access to Carpinteria Creek would be interrupted at certain times during the construction of the Casitas Pass Road US 101 northbound ramps and Via Real. A project condition of approval requires temporary parking to be provided proximate to the park, with pedestrian access to the park, at times when vehicular access to the park is unavailable during project construction. Potentially significant short-term project impacts to recreation (bike circulation and Carpinteria Creek Park) would be reduced to less than significant levels with implementation of mitigation measures and other requirements applied as conditions of project approval.

C. Farmland: Approximately five acres of land designated agriculture and currently planted with avocado orchard would be converted to transportation use with the placement of project improvements including via real and Casitas Pass Road US 101 northbound ramps. In order to directly offset the loss of five acres of agriculture, the applicant shall provide funding for the Agriculture Preservation Program in the amount of $538,947to the City of Carpinteria to be placed in an escrow account and distributed for the implementation of the Program. The applicant shall also transfer to the City, as a single legal parcel, the remaining portion of the former Whitney property not developed with transportation improvements. A permanent agriculture easement shall be placed on the property at the time of transfer to the City. Potentially significant project impacts to agricultural resources would be reduced to less than significant levels with implementation of mitigation measures and other requirements applied as conditions of project approval.

D. Utilities: The construction of the Linden Avenue and Casitas Pass Road overcrossings, US 101 bridges over Carpinteria Creek and Via Real will require the relocation of existing utilities owned by parties other than Caltrans. Early coordination and communication between Caltrans and the utility provider(s) has occurred to avoid disruption of services or construction delays. Less than significant short-term project impacts upon utility systems would be minimized with implementation of mitigation measures applied as conditions of project.

E. Circulation and Traffic: The project would benefit long-term capacity, circulation, and safety for the Linden Avenue and Casitas Pass Road overcrossings and interchanges and Via Real, as well as enhancing opportunities for alternate transportation modes. Improvements to pedestrian and bicycle facilities would also benefit long-term circulation and traffic. During the multi-year phased project construction process, one lane of travel in each direction would be maintained for the overcrossings. Periodic ramp closures and detours would be instituted at various locations and time periods during construction, resulting in temporary adverse but less than significant traffic impacts. Construction traffic management measures to minimize temporary construction effects have been incorporated in the project description and applied as conditions of approval, including public awareness / driver information measures (website, mailings, speakers bureau, public service announcements in the media, roadway signs, telephone information line), operations strategies (management plan evaluation and adjustment, freeway surveillance, reduced speeds through construction zones, alternate route strategies, temporary traffic management equipment, roadway signs, California Highway Patrol presence and enforcement; tow service for incident response, construction staging, parking and traffic route management), and alternative transportation modes and transportation demand management measures (bus, rail, rideshare subsidies and

marketing, employer based incentives for telecommuting, alternate work hours and alternative travel modes). Less than significant short-term impacts to traffic would be minimized with implementation of mitigation measures applied as conditions of approval.

F. Visual Resources: The project would result in minimal blockage of coastal or mountain views due to replacement of the existing Linden Avenue and Casitas Pass Road overcrossings with wider and slightly higher elevations, and the construction of several soundwalls. The development would result in the loss of existing vegetation around the overcrossings, a potentially significant impact. With replanting proposed as part of the project and reviewed by the ARB, the impact would be reduced to an adverse but less than significant level. With the architectural design for the overcrossings, bridges, retaining walls, railings and lighting standards, as reviewed by the ARB, architectural design would not result in a significant visual impact. Temporary reduction in visual quality of the area would occur during construction and until vegetation matures (estimated three to five years), an adverse but less than significant impact. Impacts on visual and aesthetic resources would therefore be reduced to less than significant with implementation of mitigation measures applied as conditions of approval.

G. Cultural Resources: Archaeological resources are not anticipated to be present in the project Area of Potential Affect (APE). However, if cultural materials are discovered, all earth-moving activity within and around the discovery would be diverted until a qualified archaeologist could assess the nature and significance of the find. Potentially significant impacts to archaeological resources would be reduced to less than significant with implementation of mitigation measures applied as conditions of approval.

H. Hydrology and Water Quality: The project would increase impervious surface, thereby increasing the amount and volume of stormwater runoff and potential downstream erosion. Project drainage design would accommodate increased flow making project-specific and cumulative hydrological impacts less than significant. Long-term water quality effects (project-specific and cumulative) from increased discharge of urban pollutants and sediment to Carpinteria Creek would be reduced to less than significant levels with mitigation measures applied as conditions of approval in the Regional Water Quality Control Board (RWQCB) permitting process, including pollution prevention best management practices (i.e., preservation of existing vegetation, concentrated flow conveyance systems and slope surface protection systems) and treatment control best management practices (i.e., bio-filtration strips and swales). Temporary construction impacts to drainage and water quality would be reduced to less than significant levels with BMPs applied as conditions of project approval, including temporary sediment control, temporary soil stabilization, temporary concentrated flow conveyance systems, scheduling to avoid the rainy season whenever possible, preservation of vegetation, clear water diversion, dewatering operations, wind erosion control, sediment tracking control, solid waste management, materials handling, concrete waste management, vehicle and equipment operations, paving operations, stockpile management, water conservation practices, illegal discharge detection and reporting, storm drain inlet protection and contaminated soil management.

I. Paleontology: The project is underlain by quaternary alluvium which has a very low potential to contain fossil resources. Consequently, impacts on paleontology resources would be less than significant and mitigation is not required or recommended.

J. Hazardous Materials and Waste: The potential exists for contaminated soil to be encountered during excavation for overcrossing and bridge foundations, and with construction of Via Real. The EIR identifies this as a potentially significant impact, and requires that any contaminated soil be transferred to an appropriate disposal site during construction. All procedures governing the handling or disposal of hazardous waste shall be in accordance with the appropriate regulatory agencies. Potential project impacts associated with soil contamination would be mitigated to less than significant levels through measures applied as conditions of approval.

K. Air Quality: No significant long-term air quality impacts (project-specific impacts or project contribution to cumulative impacts) would result from project development, and project circulation improvements would have a slight beneficial effect on long-term air quality via encouragement of reduction in congestion levels on the local roadway network, and encouragement of alternative transportation modes. Temporary construction dust effects would be mitigated to less than significant levels by application of standard Air Pollution Control District measures required as conditions of approval, including daily watering of exposed soils and stockpiles, stabilization of disturbed soil areas, covered truck transport, reduced construction vehicle speeds on unpaved surfaces, dust control monitoring and reporting, and complaint resolution procedures. Temporary construction exhaust emissions effects would also be mitigated to less than significant levels by application of standard Air Pollution Control District and measures including use of heavy-duty diesel-powered equipment with manufacture date not older than 1996, idling of heavy-duty equipment not longer than five minutes at any location, maintenance of construction equipment in tune per manufacturer specifications, incorporation of diesel catalytic converters, diesel oxidation catalysts, and diesel particulate filters and use of CARB approved on-road diesel fuel (when locally available).

L. Noise and Vibration: Predicted noise levels will increase between two and seven decibels as a result of the project. Four soundwalls are included in the project design to mitigate noise impacts. Long-term vibration effects to adjacent land uses due to passing heavy trucks and buses would be less than significant; it is recommended these be minimized with application of measures to provide smooth surfacing and use of lower-noise surfacing materials. Sporadic disruptive construction noise would occur temporarily during construction, an adverse but less than significant effect to adjacent residents with the application of mitigation measures as conditions of approval including use of equipment noise control (newer, quieter equipment with noise abatement measures such as mufflers, engine covers and vibration isolators), administrative measures (schedule construction activities to minimize noise effects during nighttime and weekend hours; locate stationary construction operations to be least disruptive); barriers (use temporary wooden barriers if nighttime construction activities occur); and notification (advance notice of construction schedule and identified contact for complaints resolution). Potential noise impacts of the project would be mitigated to less than significant levels through measures applied as conditions of approval.

M. Wetlands: Project components would encroach into wetland and wetland buffer area, resulting in a potentially significant impact. The EIR requires mitigation for permanent impacts to wetland at a 3:1 ratio (i.e., three acres of wetland restored for every one acre of wetland lost). Because encroachment into wetland would be in conflict with policies of the Carpinteria Local Coastal Land Use Plan and the California Coastal Act, LCP Amendments (LCPA) have been proposed. The LCP Amendments

include a proposed Transportation Corridor Wetland Overlay District with specific development standards dictating mitigation for wetland and wetland buffer impacts (Development Standard #3). As a condition of approval to ensure compliance with TCWO development standards, direct impacts shall be mitigated at a ratio of 4:1 for natural wetland areas, including salt marsh and wetlands associated with creeks. Indirect impacts to riparian habitats shall be mitigated at a ratio of 3:1. Direct impacts to created wetlands (low functioning wetlands associated with highway infrastructure) shall be mitigated at a ratio of 3:1. Indirect impacts to wetlands, such as development in wetland buffer areas, shall be mitigated by enhancing (e.g., invasive species removal, native screening vegetation, planting appropriate native species, water quality improvement, sound reduction) all portions of the remaining (undeveloped) wetland buffer area within 100 feet of the impacted wetland. Temporary direct and indirect impacts to wetlands and riparian habitat shall be mitigated at a ratio of 1:1. Potential project impacts associated with wetland resources would be mitigated to less than significant levels through mitigation measures and other requirements applied as conditions of approval.

N. Biological Resources: Focused botanical and wildlife surveys were conducted for the project on several occasions. Potentially significant impacts on biological resources include temporary impacts and loss of nesting habitat for two to three seasons for migratory birds; eucalyptus trees used by red-tailed hawks for nesting are currently proposed for removal and nests may exist under bridges at the time construction is intended. Temporary impacts to steelhead trout and tidewater goby will occur due to creek diversion activities. Removal of the concrete low-flow bike/pedestrian crossing will benefit both species by removing a barrier to fish passage in Carpinteria Creek. Mitigation measures include exclusion of bird nesting activities under bridges leading up to the proposed construction activity; pre-construction nesting bird surveys adjacent to individual project components; pre-construction survey for western pond turtle and two-striped garter snake, with relocation of any individuals present, prior to construction activities in Carpinteria Creek; construction within Carpinteria Creek only during low flow periods; installation and maintenance of exclusion fencing along the boundary of any ESHA adjacent to a work area; restoration for impacts to ESHA; and biological monitoring provided during construction. Potential project impacts associated with biological resources would be mitigated to less than significant levels through mitigation measures and other requirements applied as conditions of approval.

1.3 Conditional Use Permit

A. The site for the proposed use is adequate in size and shape to accommodate the use.

The Linden Avenue and Casitas Pass Road overcrossings and US 101 bridges over Carpinteria Creek would fit entirely within the existing Caltrans right-of-way for US 101. Via Real would be developed within roadway easements belonging to the City of Carpinteria, except within the former Whitney property. Caltrans has acquired the former Whitney property in order to accommodate development of the Casitas Pass Road US 101 northbound ramps and Via Real; the balance of the parcel not used for roadway purposes will be transferred to the City of Carpinteria with a permanent agriculture conservation easement as part of an agriculture preservation program to offset the direct loss of agriculture from project implementation.

B. The site for the proposed use is served by streets and highways that are properly designed to carry the type and quantity of traffic generated by the subject use.

This project is designed to increase capacity of the Linden Avenue and Casitas Pass Road interchanges, including ramp operations and travel lane capacity for the overcrossings. The additional design capacity is in direct response to existing congestion and poor operating levels, which would be exacerbated in the future by regional traffic volume increases in the absence of the proposed project.

C. The granting of the permit will not materially adversely affect such necessary community services as sewage disposal, fire protection, water supply and police protection.

A copy of the project application and plans were routed to all applicable agencies and special districts for review and comments. All of these agencies have indicated the project would not have adverse effects upon their ability to serve the population of Carpinteria. The project would improve traffic flow and reduce vehicle congestion to reduce emergency response times, providing a benefit to community safety. The project would not generate wastewater needing treatment, and would not generate an increase in demand for fire or police protection services. A negligible amount of water would be required to establish the new landscape plantings.

D. The granting of the permit will not be detrimental to the health, safety and general welfare of the neighborhood.

The Final EIR/FONSI and Addendum analyzed potentially significant impacts associated with the project and identified appropriate mitigation measures to ensure that all impacts were mitigated to a less than significant level. Mitigation measures were identified for the following issue areas: Parks and Recreation, Traffic and Transportation, Visual and Aesthetics, Cultural Resources, Storm Water Quality, Hazardous Materials/ Wastes, Air Quality, Noise and Vibration and Biology. The mitigation measures incorporated into the project via the Final EIR/FONSI and Addendum and the project restrictions imposed via conditions of approval ensure that granting the permit will not be detrimental to the health, safety and welfare of the neighborhoods located immediately adjacent to project components.

E. The proposed use is consistent with the Coastal Plan, General Plans and applicable Specific Plan(s).

As discussed in the General Plan/Coastal Plan policy analysis section of the Staff Report dated November 23, 2015 and herein incorporated by reference, the project would be consistent with the various applicable policies from the Community Design, Circulation, Recreation, Safety, Noise, and Public Facilities and Services Elements. The proposed project would conflict with existing policies in the Land Use and Open Space Conservation Elements, due to encroachment of project components into designated agricultural land and wetland areas. As such, the City has approved Local Coastal Program Amendments in Project 09-1522-LCPA/ORD to create the Transportation Corridor Wetland Overlay and the Whitney Site Agriculture Overlay Districts, such that the project can be found consistent with the City's Local Coastal Program (including the Coastal Land Use Plan), the Interpretive Guidelines of the Coastal Commission and the California Coastal Act.

F. The proposed use will not cause substantial environmental damage or substantially and avoidably injure fish or wildlife or their habitat.

The Final EIR/FONSI identified potentially significant impacts on wetland resources, ESHA and special status wildlife species. The Final EIR/FONSI and Addendum contain mitigation measures to reduce all environmental impacts of the proposal to less than significant levels; pertinent mitigation measures from the EIR/FONSI and Addendum have been incorporated as conditions of approval.

G. *The proposed development will not conflict with recorded easements acquired by the public at large for access through or use of the property within the proposed development or any easements granted to any public agency or required as a condition of approval.*

The proposed project includes the addition of sidewalk and bike lanes in both travel directions for the overcrossings; extension of Via Real to achieve a continuous frontage road along the north side of US 101, including sidewalk and bike lanes; and the reconfiguration of the Carpinteria Creek bike path. The project also includes permanent dedication of approximately four acres of the former Whitney property for ongoing orchard use, community garden and agriculture education purposes. In this regard, the project enhances public access between areas north and south of US 101 and to the remainder of the Whitney property not used for roadway purposes.

H. Any other conditions which are reasonably necessary to protect the public peace, health, safety and general welfare.

Through the environmental review process, a number of mitigation measures have been developed in order to avoid significant impacts to the environment. All mitigation measures identified in the Final EIR/FONSI and Addendum have been included in the conditions of approval.

1.4 Coastal Development Permit Finding

Pursuant to the California Coastal Act, the Administrative Regulations of the California Coastal Commission and the City's Local Coastal Program, it has been found that the permit requested may be issued based on the following finding.

A. The proposed development is in conformity with the City's certified Local Coastal Program.

The Caltrans right-of-way is designated Transportation Corridor (TC) in the General Plan/Coastal Plan and is undesignated with respect to zoning. The portion of the former Whitney property proposed for the Casitas Pass Road US 101 northbound ramps and Via Real extension is designated agriculture (AG); however, a redesignation of this portion of the Whitney property to TC has been approved, along with removal of the agriculture zoning (AG-5) on the portion of the Whitney site that is proposed to accommodate the roadway improvements. The proposed use is consistent with the stipulations outlined for this land use designation as it involves improvements to US 101 interchanges. A Conditional Use Permit and Coastal Development Permit are required for this major transportation facility. The project can meet all of the required findings for approval of the required CUP (discussed above) and CDP. The proposed project is consistent with existing policies in the General Plan/Coastal Plan Land Use and Open

Space Conservation Elements as recently amended through Project 09-1522-LCPA/ORD that created the Transportation Corridor Wetland Overlay District and the Whitney Site Agriculture Overlay District, as discussed in the City Council staff report dated November 23, 2015. The project is also consistent with the Interpretive Guidelines of the Coastal Commission and the California Coastal Act as discussed in the City Council staff report dated November 23, 2015.

ATTACHMENT 1

City Council
Resolution No. 5632

Exhibit B – Project Engineering Plans and Design Renderings

November 23, 2015

LEGEND
Caltrans Right of Way
Proposed Soundwall
Proposed Retaining Wall
Proposed Concrete Median Barrier
Proposed Roadway
Proposed Structure
Contrasting Paving
Proposed Mitigation and Habitat Enhancement Planting Areas
Proposed Landscaped Area (may include mitigation plantings)
Retaining Wall 'D'
Height: 5 - 9 ft
Retaining Wall 'L'
Height: 8 ft
Linden Avenue Bridge
Length: Approx 240 ft
Double Span Bridge
Soundwall B-2 (Nipomo Drive)
Height: 12 ft higher than NB 101 lanes
Soundwall B-4
Height: 12 ft
Retaining Wall 'B'
Height: 2-6 ft
Via Real Bridge
Length: Approx 145 ft
Double span Bridge
Two Lanes of Vehicle travel
Bike lanes on both sides
Carpinteria Creek Bridge
Length: Approx 140 ft
Single Span Bridge
10 ft inside and outside shoulders
Retaining Wall 'M'
Height: 3-9 ft
Soundwall B-9 (Holly Ave)
Height: 10 ft
Retaining Walls 'J', 'K'
'J' Height: 3 - 11 feet
'K' Height: 3 - 13 feet
Soundwall B-7 (Vallecito/Church)
Height: 10 ft
Retaining Wall 'C'
Height 6-8 feet
Casitas Pass Bridge
Length: Approx 260 ft
Double Span Bridge
Bike lanes and sidewalks on both sides
Concrete Median Planter
6ft Face to Face of Barrier (5 ft planter)
Area of Limited Lateral Sight Distance
Median Planting Not Feasible
Single Concrete Median Barrier - offset
Limit of Mainline (Freeway) Improvements
NOT TO SCALE
LINDEN CASITAS
Project Overview
(SBCAG

Linden Avenue Overcrossing - Northbound Perspective

Cassia Pass Road Overcrossing - Northbound US 101 Perspective

Casitas Pass Road - Northbound Traveler Perspective

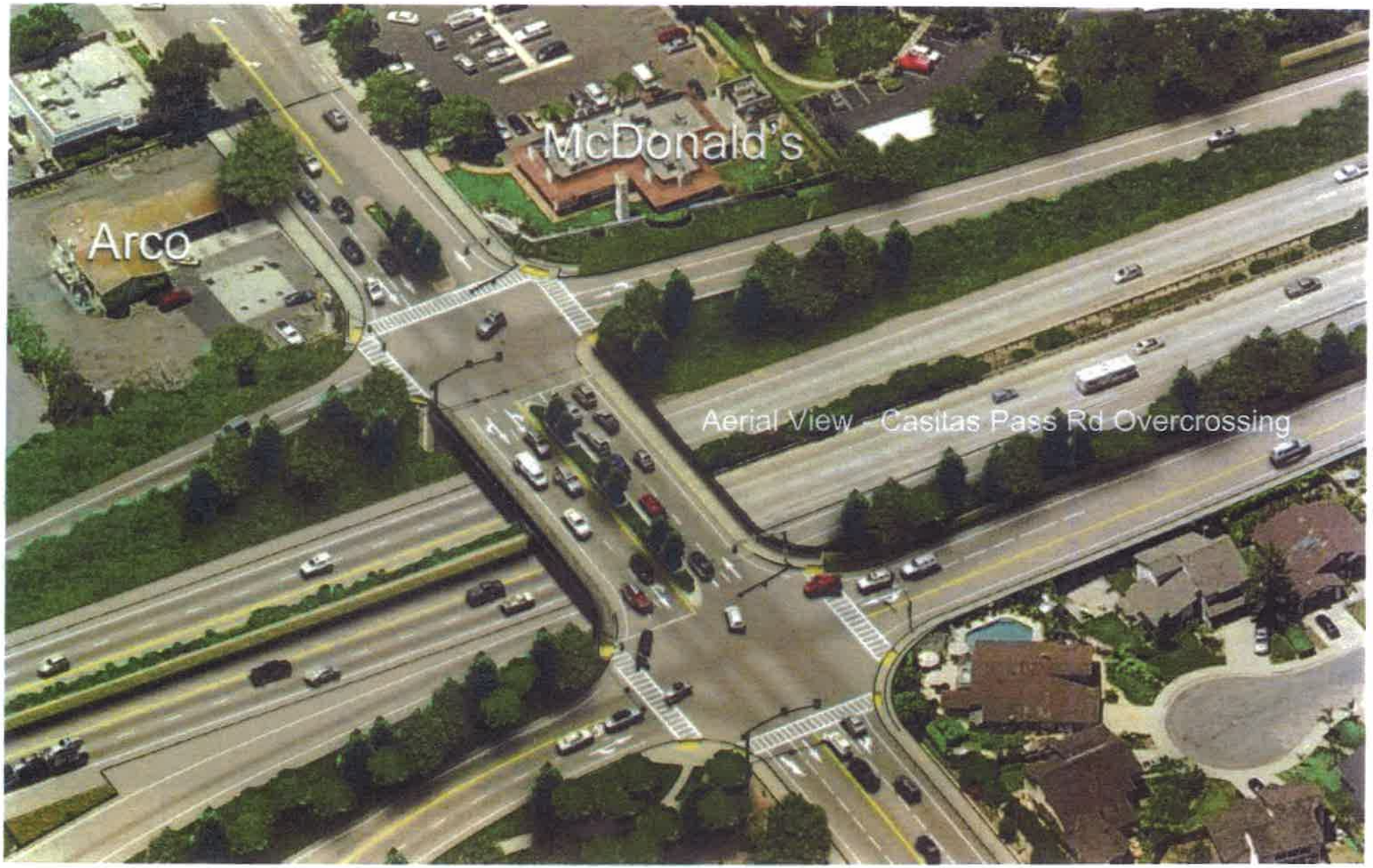

Aerial View - Casitas Pass Rd Overcrossing

Elevation View of Via Rosa Bridge (foreground) and US 101 Bridge (background) over Carpinteria Creek - Looking South

ns Right of Way
sed Soundwall
sed Privacy Wall

Proposed Structure
Contrasting Paving
Proposed Landscaped Area (may include mitigation plantings)

Soundwall B-4 (Via Real)
Height: 10-12 ft (as noted)
Length: Approx 1390 ft.

lipomo Drive)
nan NB 101 lanes
15 -12 ft tall face)
: Approx 1200 ft.

Privacy Wall (
Height: 8 ft
Length: Approx 93

12 ft 10 ft

NIPOMO DR
PACIFIC VILLAGE DR
OGDEN AVE
STAR PINE RD
CAMEO RD
HALES LN
LA BREA LN
SAWYER AVE
HOLLY AVE
LINDEN AVE
EUGENIA PL
CHURCH LN
VALLECITO RD
CASITAS PASS
CARPINTERIA AVE

Soundwall B-9
(Holly Ave)
Height: 10 ft
Length: Approx 475 ft.

Soundwall B-7 (Vallecito/Church)
Height: 10 ft
Length: Approx 600 ft.

INDEN CASITAS
Interchanges Project

Wall Overview

Caltrans

PLANT LIST

BOTANICAL NAME	COMMON NAME
Skyline Trees	
Celtis sinensis	Japan Hackberry
Cupressus macrocarpa	Monterey Cypress
Platanus californica	California Sycamore
Quercus lobata	Valley Oak
Mingling and Specimen Accent	
Acer saccharum	Big Leaf Maple
Alnus rhombifolia	White Alder
Platanus californica	California Sycamore
Populus fremontii	Black Cottonwood
Salix lasiolepis	Arroyo Willow
Street Trees	
Acrocarpus fraxinifolius	Pink Cedar
Brachychiton populneus	Bottle Tree
Ginkgo biloba	Maidenhair Tree
Jacaranda mimosifolia	Jacaranda
Koelreuteria paniculata	Golden Rain Tree
Pyrus calleryana	Cleveland Pear
Pistacia chinensis	Chinese Pistache
Prunus cerasifera	Pink Plum
Sapium sebiferum	Chinese Tallow
Tabebuia ochracea	Golden Bell
Screening Juniper Trees	
Juniperus chinensis	Chinese Juniper
Juniperus virginiana	Eastern Red Cedar
Cupressus sempervirens	Italian Cypress
Cupressus macrocarpa	Monterey Cypress
Cupressus sempervirens 'Tiny Tower'	Tiny Tower Italian Cypress
Cupressus sempervirens 'Glauca'	Blue Italian Cypress
Cupressus sempervirens 'Stricta'	Stricta Italian Cypress
Cupressus sempervirens 'Swane's Blue Rocket'	Swane's Blue Rocket Italian Cypress
Lophostemon confertus 'Varegatus'	Variegated Brisbane Box
Melaleuca f. nesophila	Pink Melaleuca
Screen Better Trees	
Cupressus 'Leyland Cypress'	Leyland Cypress
Quercus agrifolia	Coast Live Oak
Quercus lobata	Valley Oak
Umbellularia californica	California Bay
Flowering Accent Trees	
Arbutus unedo 'Compacta'	Compact Strawberry Tree
Arbutus unedo	Strawberry Tree
Cercis occidentalis	Western Redbud
Cercis canadensis 'Texas White'	White Redbud
Lagerstroemia indica	Crape Myrtle
Prunus cerasifera	Pink Plum
Prunus cerasifera 'Krauter Vesuvius'	Krauter Vesuvius Plum
Pyrus calleryana 'Bradford'	Bradford Pear
Pyrus calleryana 'Aristocrat'	Aristocrat Pear
Pyrus calleryana 'Chanticleer'	Chanticleer Pear
Pyrus calleryana 'Cleveland Select'	Cleveland Select Pear
Pyrus calleryana 'Redspire'	Redspire Pear
Pyrus calleryana 'Trinity'	Trinity Pear
Pyrus calleryana 'Whitehouse'	Whitehouse Pear
Pyrus calleryana 'Winter Gem'	Winter Gem Pear
Pyrus calleryana 'Aristocrat'	Aristocrat Pear
Pyrus calleryana 'Bradford'	Bradford Pear
Pyrus calleryana 'Chanticleer'	Chanticleer Pear
Pyrus calleryana 'Cleveland Select'	Cleveland Select Pear
Pyrus calleryana 'Redspire'	Redspire Pear
Pyrus calleryana 'Trinity'	Trinity Pear
Pyrus calleryana 'Whitehouse'	Whitehouse Pear
Pyrus calleryana 'Winter Gem'	Winter Gem Pear
Palms (not shown)	
Washingtonia robusta	Mexican Fan Palm
Arecastrum romanzoffianum	Queen Palm
Butia capitata	Pindo Palm
Chamaerops humilis	Mediterranean Fan Palm
Washingtonia robusta	Mexican Fan Palm
Washingtonia filifera	California Fan Palm

BOTANICAL NAME	COMMON NAME
Shrubs	
Arctostaphylos 'Howard McMinn'	Howard McMinn Manzanita
Arctostaphylos 'Pacific Mist'	Pacific Mist Manzanita
Ceanothus delilianus	Delil Ceanothus
Ceanothus hybrids	Hybrid Ceanothus
Fremontodendron mexicanum	Mexican Flannelbush
Fremontodendron 'San Gabriel'	California Flannel Bush
Garrya elliptica 'Evie'	Evie Silktassel
Heteromeles arbutifolia	Toyon
Myrica californica	Pacific Wax Myrtle
Rhamnus californica 'Eve Case'	California Coffeeberry
Rhamnus californica 'Mound San Bruno'	Coffeeberry
Rhus integrifolia	Lemonadeberry
Rhus ovata	Sugar Sumac
Rosa californica 'Bibb'	California Wild Rose
Vines	
Ficus repens	Creeping Fig
Parthenocissus tricuspidata	Boston Ivy
Low Shrubs / Groundcovers	
Arctostaphylos 'Emerald Carpet'	Manzanita
Arctostaphylos uva-ursi 'Point Reyes'	Point Reyes Bearberry
Baccharis pilularis 'Twin Peaks'	Twin Peaks Coyote Brush
Ceanothus gloriosus 'Anchor Bay'	Anchor Bay Wild Lilac
Ceanothus gloriosus 'Yankee Point'	Yankee Point Wild Lilac
Delosperma aceras 'Lavender'	Lavender Ice Plant
Hypericum calycinum	Aaron's Beard
Trachelospermum jasminoides	Star Jasmine
Zauschneria latifolia 'Twin Peaks'	Twin Peaks Blue Bear

BOTANICAL NAME	COMMON NAME
Grasses and Grass Like Plants	
Carex tumulicola	Foothill Sedge
Leymus condensatus 'Canyon Prince'	Giant Rye
Muhlenbergia rigens	Deergrass
Pennisetum alopecuroides	Fountain Grass
Pennisetum setaceum	Fountain Grass
Zauschneria latifolia	Hummingbird Trumpet
Zauschneria septentrionalis	Hummingbird Trumpet
Zauschneria cana	Hummingbird Trumpet
Zauschneria californica	California Fuchsia
Zauschneria californica 'Dublin'	Dublin California Fuchsia
Zauschneria californica 'Olbrich'	Olbrich California Fuchsia
Riparian Mitigation/Restoration	
Arctostaphylos glauca	Bigberry Manzanita
Artemisia douglasiana	Mugwort
Baccharis douglasii	Marsh Baccharis
Baccharis pilularis	Coyote Brush
Carex barbarae	Santa Barbara Sedge
Carex densa	Densely Flowered Sedge
Carex praegracilis	Clustered Field Sedge
Carex tumulicola	Foothill Sedge
Elymus glaucus	Blue Wild Rye
Fragaria chiloensis	Beach Strawberry
Frankenia salina	Alkali Heath
Juncus balticus	Baltic Rush
Juncus patens	California Gray Rush
Juncus xiphioides	Iris Leaved Rush
Leymus condensatus	Giant Rye
Leymus triticoides	Creeping Wild Rye
Muhlenbergia rigens	Deergrass
Pennisetum setaceum	Fountain Grass
Pennisetum alopecuroides	Fountain Grass
Pennisetum setaceum 'Rubrum'	Purple Fountain Grass
Rosa californica	California Wild Rose
Rosa pinetorum	Pine Mountain Rose
Rosa gymnocarpa	Wood Rose
Rosa californica	California Wild Rose
Rosa pinetorum	Pine Mountain Rose
Salix exigua	Narrow Leaf Willow
Salix lasiolepis	Arroyo Willow
Scirpus acutus	Tule
Scirpus californicus	Tule
Scirpus cernuus	Low Bulrush
Scirpus maritimus	Alkali Bulrush
Scirpus robustus	Pacific Bulrush
Sisyrinchium bellum	Blue Eyed Grass
Sisyrinchium californicum	Golden Eyed Grass
Sisyrinchium elmoreae	Elmore's Blue Eyed Grass
Sisyrinchium bellum	Blue Eyed Grass
Sisyrinchium californicum	Golden Eyed Grass
Sisyrinchium elmoreae	Elmore's Blue Eyed Grass
Zauschneria latifolia	Hummingbird Trumpet
Zauschneria septentrionalis	Hummingbird Trumpet
Zauschneria cana	Hummingbird Trumpet
Zauschneria californica	California Fuchsia
Zauschneria californica 'Dublin'	Dublin California Fuchsia
Zauschneria californica 'Olbrich'	Olbrich California Fuchsia

LINDENCASTIAS

Interchange Project

Conceptual Landscape Plan

NORTH
NOT TO SCALE

SBCAG

Aerial View of Linden Roundabout
Via Real
Ogan Rd

Aerial View of Via Real and Casitas Ramps

INDEX OF PLANS

NOTE:
THE LISTING OF THE INDEX OF PLANS IS SHOWN ON THE INDEX OF PLANS SHEET.

STATE OF CALIFORNIA
DEPARTMENT OF TRANSPORTATION

PROJECT PLANS FOR CONSTRUCTION ON
STATE HIGHWAY

IN SANTA BARBARA COUNTY
IN CARPINTERIA
FROM 0.2 MILE SOUTH OF CARPINTERIA CREEK BRIDGE
TO 0.3 MILE NORTH OF LINDEN AVENUE OVERCROSSING

TO BE SUPPLEMENTED BY STANDARD PLANS DATED 2010

DIST	COUNTY	ROUTE	POST MILES TOTAL PROJECT	SHEET NO.	TOTAL SHEETS
05	SB	101	2.2/3.3	1	XXX

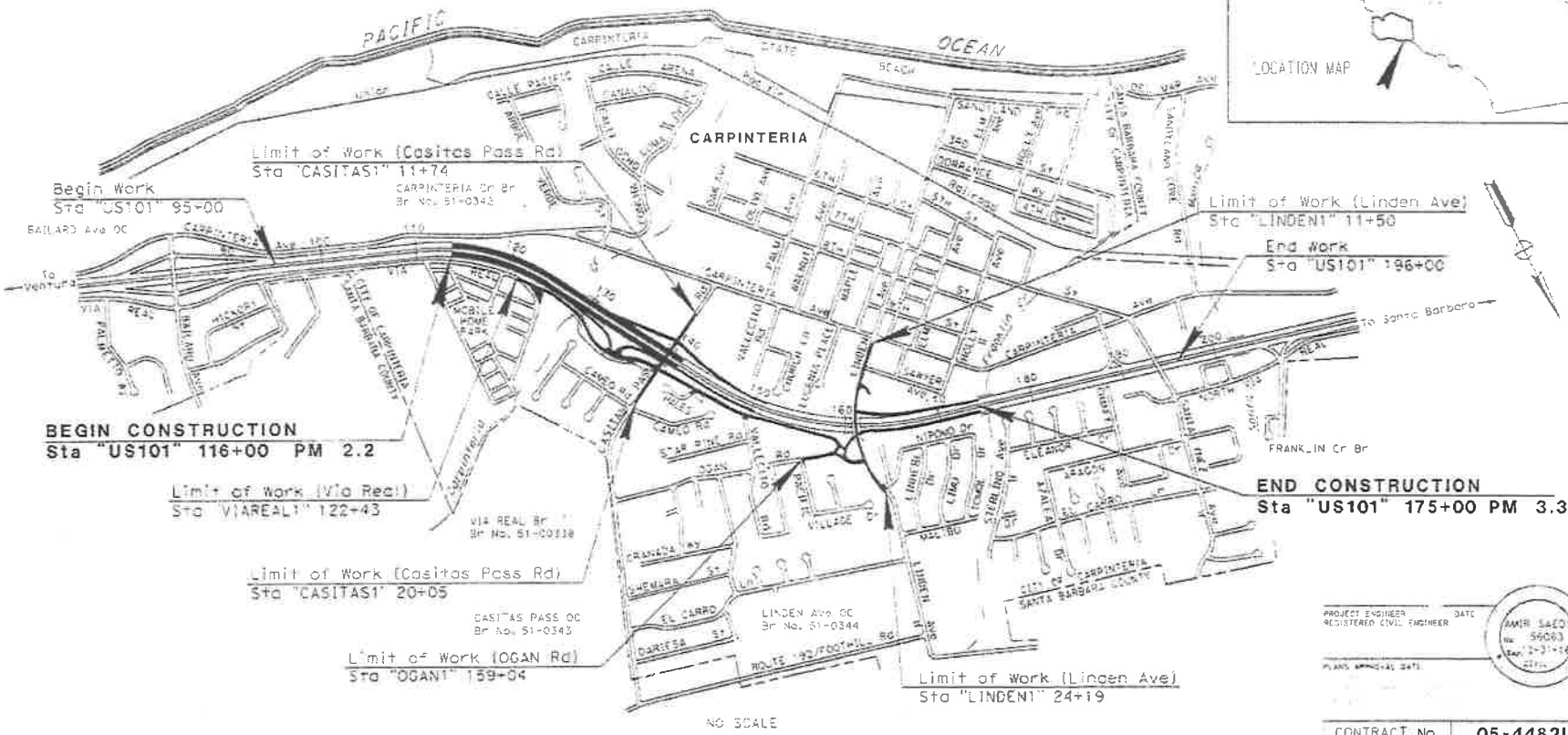

PROJECT ENGINEER REGISTERED CIVIL ENGINEER DATE
PLANS APPROVAL DATE

CONTRACT No.	05-4482U4
PROJECT ID	0500000543

THE CONTRACTOR SHALL POSSESS THE CLASS (OR CLASSES) OF LICENSE AS SPECIFIED IN THE "NOTICE TO BIDDERS."

DAVID BEARD
JAMES R. PEGRAM

USERNAME
DGN FILE

PROJECT NUMBER & PHASE 0500000543

NOTES:

1. FOR ACCURATE RIGHT OF WAY DATA, CONTACT RIGHT OF WAY ENGINEERING AT THE DISTRICT OFFICE.
2. FOR CURB RAMPS, CURB AND GUTTERS, ROUNDABOUT, DRIVEWAY AND INTERSECTION INFORMATION, SEE CONSTRUCTION DETAIL SHEETS.
3. FOR HMA DIKE LOCATIONS SEE DRAINAGE SHEETS.
4. FOR WALL AND WALL WITH BARRIER INFORMATION, SEE STRUCTURES PLANS.
5. FOR CONTOUR GRADING, SEE CONTOUR GRADING SHEETS.
6. PLACE TYPICAL VEGETATION CONTROL WHERE MGS (STEEL POST) IS PLACED.
7. FOR IRRIGATION CROSSOVERS, CONDUITS AND WATER METERS, SEE IRRIGATION SHEETS.
8. FOR CONSTRASTING SURFACE TREATMENT DETAILS, SEE CONSTRUCTION DETAIL SHEETS.
9. FOR MAINTENANCE VEHICLE PULLOUT, SEE CONSTRUCTION DETAIL SHEETS.
10. FOR ALL REMOVAL LIMITS, SEE SUMMARY OF QUANTITIES SHEETS.
11. FOR ESA FENCE LOCATIONS, SEE EROSION CONTROL SHEETS.
12. FOR CLEARING AND GRUBBING DUFF COLLECTION, SEE EROSION CONTROL SHEETS.
13. FOR BRIDGE PLANTER RAISED ISLAND, SEE STRUCTURES PLANS.
14. THIS PROJECT IS BASED ON THE CALIFORNIA COORDINATE SYSTEM OF 1983, NAD83 EPOCH ADJUSTMENT (CCS 83 (1991.35)), ZONE 5, U.S. SURVEY FOOT.

ABBREVIATIONS:

ACCS = ALTERNATIVE CRASH CUSHION SYSTEM
ATTS = ALTERNATIVE FLARED TERMINAL SYSTEM
ILTS = ALTERNATIVE IN-LINE TERMINAL SYSTEM
SFT = END ANCHOR Assy (TYPE SFT)
C&G = CURB & GUTTER
CG&S = CURB, GUTTER & SIDEWALK
CL-4 = CHAIN LINK FENCE (4 FT)
CL-8 = CHAIN LINK FENCE (8 FT)
MCEA = MINOR Conc (EXPOSED AGGREGATE CONCRETE)
PCE = PERMANENT CONSTRUCTION EASEMENT
Rmv = REMOVE
SOW = SOUND WALL
SW = SIDEWALK
TR = TRANSITION RAILING

LEGEND:

RETAINING WALL
SOUND WALL
SOUND WALL & BARRIER ON RET WALL
BARRIER ON RET WALL
X RETAINING WALL IDENTIFICATION
XX SOUND WALL IDENTIFICATION
TREE GRATE
MINOR Conc (EXPOSED AGGREGATE CONCRETE) (SEE Const DETAILS)
RAISED ISLAND (SEE Const DETAILS)
0.20' COLD PLANE AC Pvmt 0.20' HMA (TYPE A)

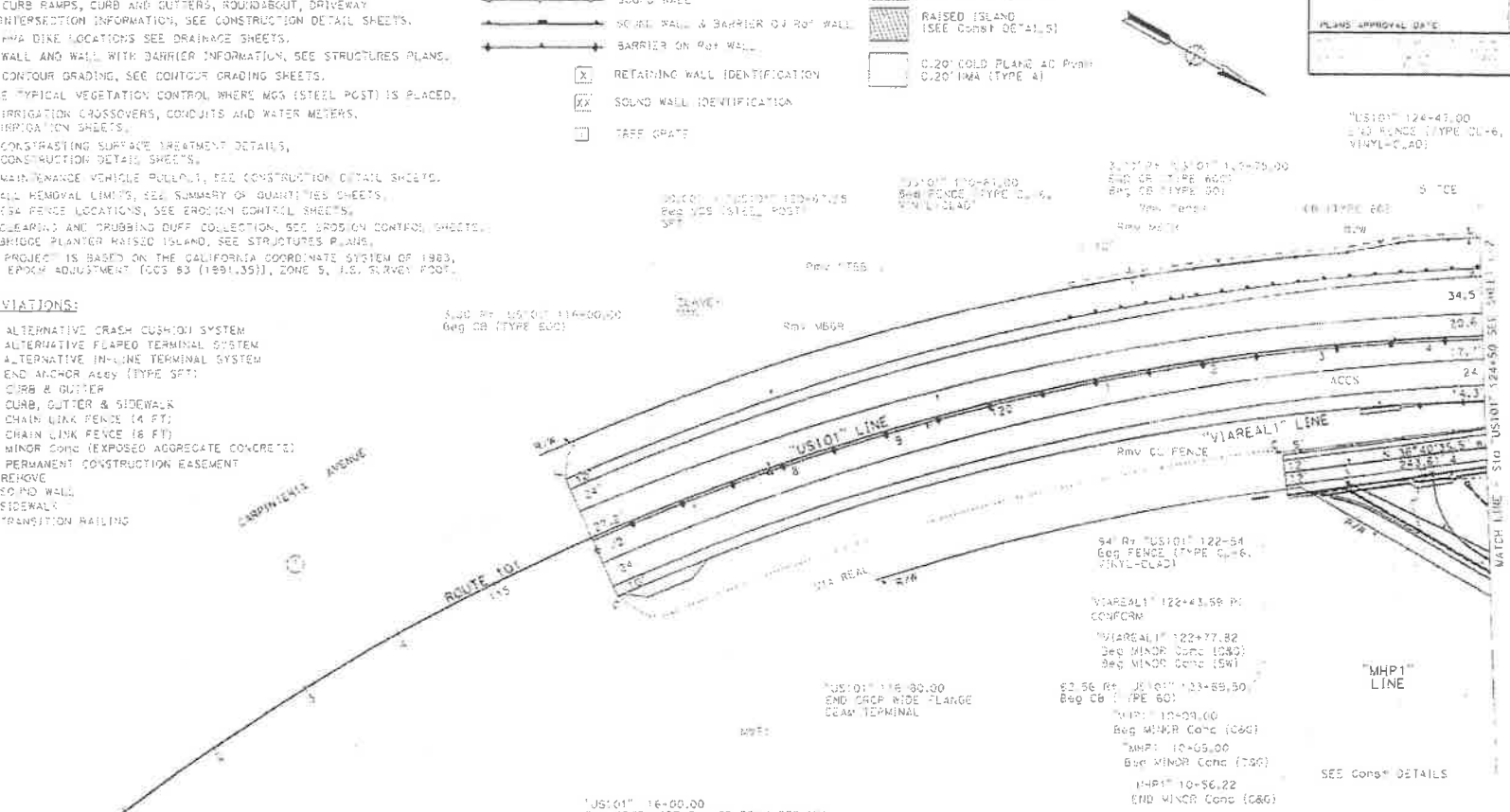

CURVE DATA

No. (X)	R	Δ	T	L
1	3,211'	34°58'07"	75.31'	1,491.38'

LAYOUT

SCALE: 1" = 50' L-1

STATE OF CALIFORNIA - DEPARTMENT OF TRANSPORTATION
Caltrans
DESIGN
JAMES R. DERANG
AMIR SAEDI
MILO LOHNE

REV	DATE
A	10-23-14
B1	04-14-14

DIST	COUNTY	ROUTE	POST MILES TOTAL PROJECT	SHEET TOTAL NO. SHEETS
05	SB	101	0.2/23.3	

REGISTERED CIVIL ENGINEER DATE
PLANS APPROVAL DATE
AMIR SAEDI No. 56083 12-31-16 CIVIL

PROJECT NUMBER & PHASE 0500000431

09-17-14 3:44 PM PLOTTED BY FSC PLOTTED ON

NOTE:

FOR ACCURATE RIGHT OF WAY DATA, CONTACT RIGHT OF WAY ENGINEERING AT THE DISTRICT OFFICE.

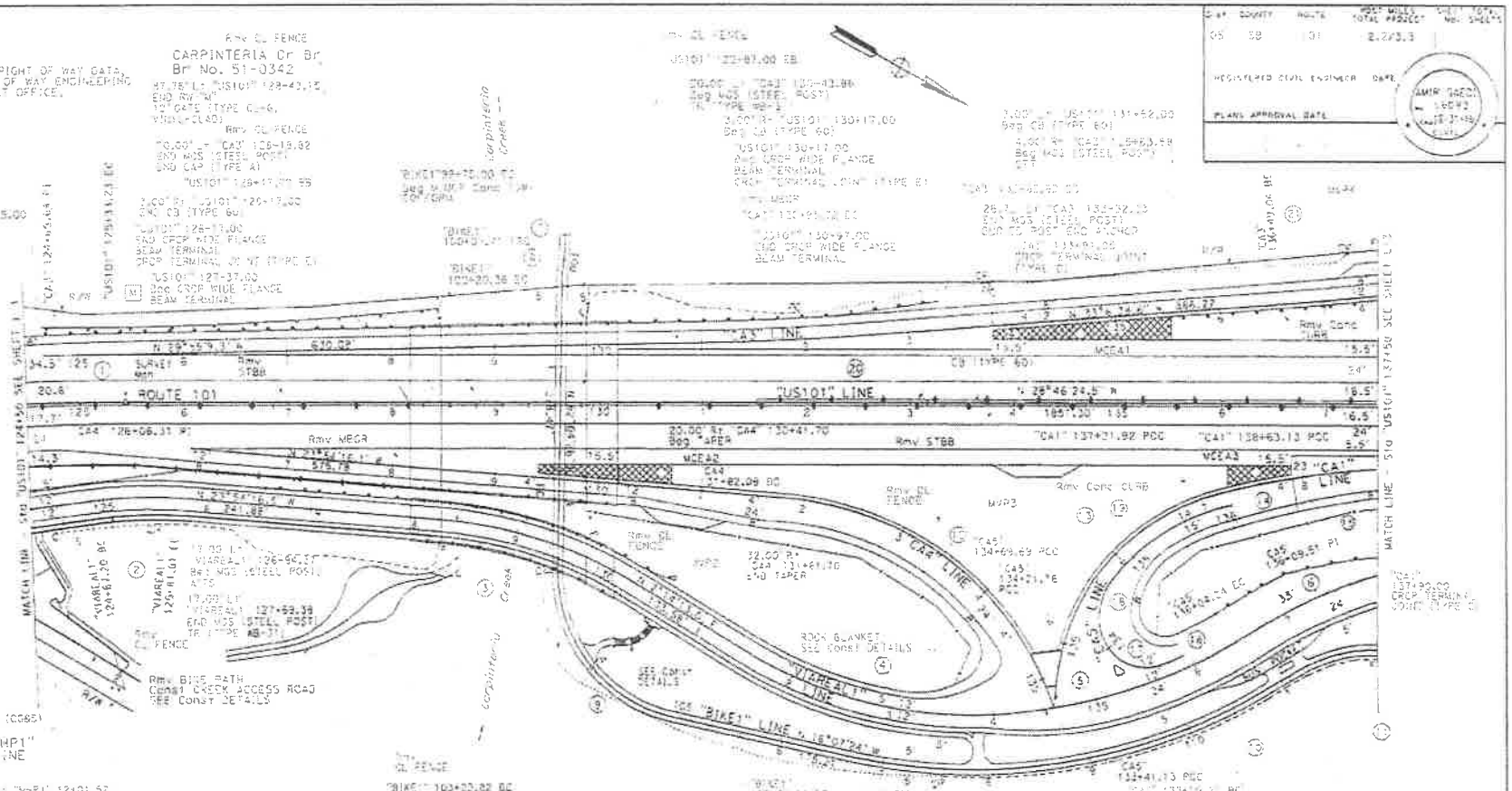

CURVE DATA

No.	R	Δ	T	L	No.	R	Δ	T	L	No.	R	Δ	T	L
[illegible]	2,611'	38°38'37"	775.31'	1,491.38'	[illegible]	140'	07°13'18"	8.48'	17.65'	[illegible]	3,000'	03°11'32"	83.58'	167.11'
[illegible]	425'	12°43'42"	47.40'	94.42'	[illegible]	[illegible]	78°13'50"	112.77'	191.07'	[illegible]	49'	02°35'29"	10.98'	21.97'
[illegible]	425'	25°43'29"	97.37'	191.44'	[illegible]	1,000'	43°05'29"	393.35'	814.40'	[illegible]	[illegible]	102°25'11"	56.59'	80.24'
[illegible]	425'	39°50'56"	154.06'	295.59'	[illegible]	140'	40°35'02"	51.80'	99.22'	[illegible]	42'	18°46'08"	25.33'	47.33'
[illegible]	496'	23°28'14"	103.91'	203.13'	12	500'	66°16'42"	195.66'	347.03'	19	231'	38°21'08"	63.90'	134.56'
[illegible]	492'	31°22'56"	138.25'	269.25'	13	215'	60°08'27"	48.20'	259.51'	20	3,000'	03°11'29"	83.67'	167.10'
[illegible]	540'	11°20'26"	53.90'	107.11'	14	335'	10°10'44"	20.78'	141.21'	21	4,000'	04°20'18"	154.05'	300.38'

LAYOUT

SCALE: 1" = 50' L-2

STATE OF CALIFORNIA - DEPARTMENT OF TRANSPORTATION

DESIGN

JAMES R. FERRANO

Caltrans

UNIT 1242 PROJECT NUMBER & PHASE 05000005H31

NOTE:

FOR ACCURATE RIGHT OF WAY DATA, CONTACT RIGHT OF WAY ENGINEERING AT THE DISTRICT OFFICE.

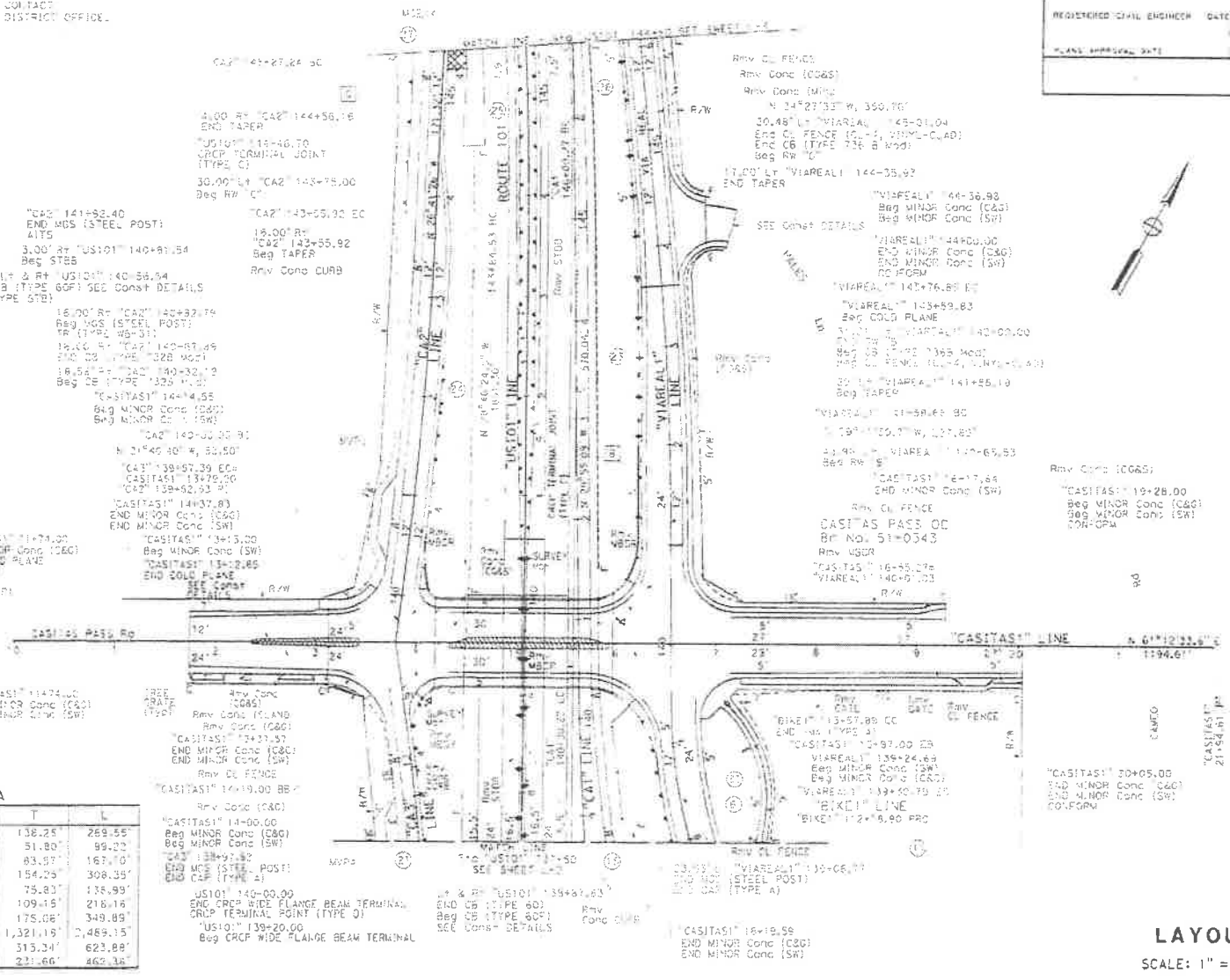

CURVE DATA

No.	R	Δ	T	L
6	492'	31°22'56"	138.25'	269.55'
13	140'	40°36'22"	51.80'	99.22'
15	3,000'	03°11'29"	83.57'	167.10'
21	4,067'	04°20'29"	154.25'	308.35'
22	140'	56°52'54"	75.83'	138.99'
23	2,625'	04°45'43"	109.16'	218.16'
24	4,000'	05°00'42"	175.06'	349.89'
25	2,002'	47°30'53"	1,321.16'	2,489.15'
26	2,697'	13°15'22"	315.34'	623.88'
27	2,952'	08°58'33"	231.66'	462.36'

STATE OF CALIFORNIA - DEPARTMENT OF TRANSPORTATION
Caltrans
DESIGN

JAMES R. PERRIN

MIC TONNE

AMIR SAEDI

BY 04-14-14 KS 06-02-14

REGISTERED CIVIL ENGINEER DATE

PLANS APPROVAL DATE

UNIT 1447 PROJECT NUMBER & PHASE 0500000543

DIST	COUNTY	ROUTE	PREV. MILES TOTAL PROJECT	SHEET NO. TOTAL SHEETS
05	SB	101	2.2/3.3	

REGISTERED CIVIL ENGINEER DATE

PLANS APPROVAL DATE

AMIR SAEDI
56037
(12-31-16)
CIVIL

NOTE:

FOR ACCURATE RIGHT OF WAY DATA, CONTACT RIGHT OF WAY ENGINEERING AT THE DISTRICT OFFICE.

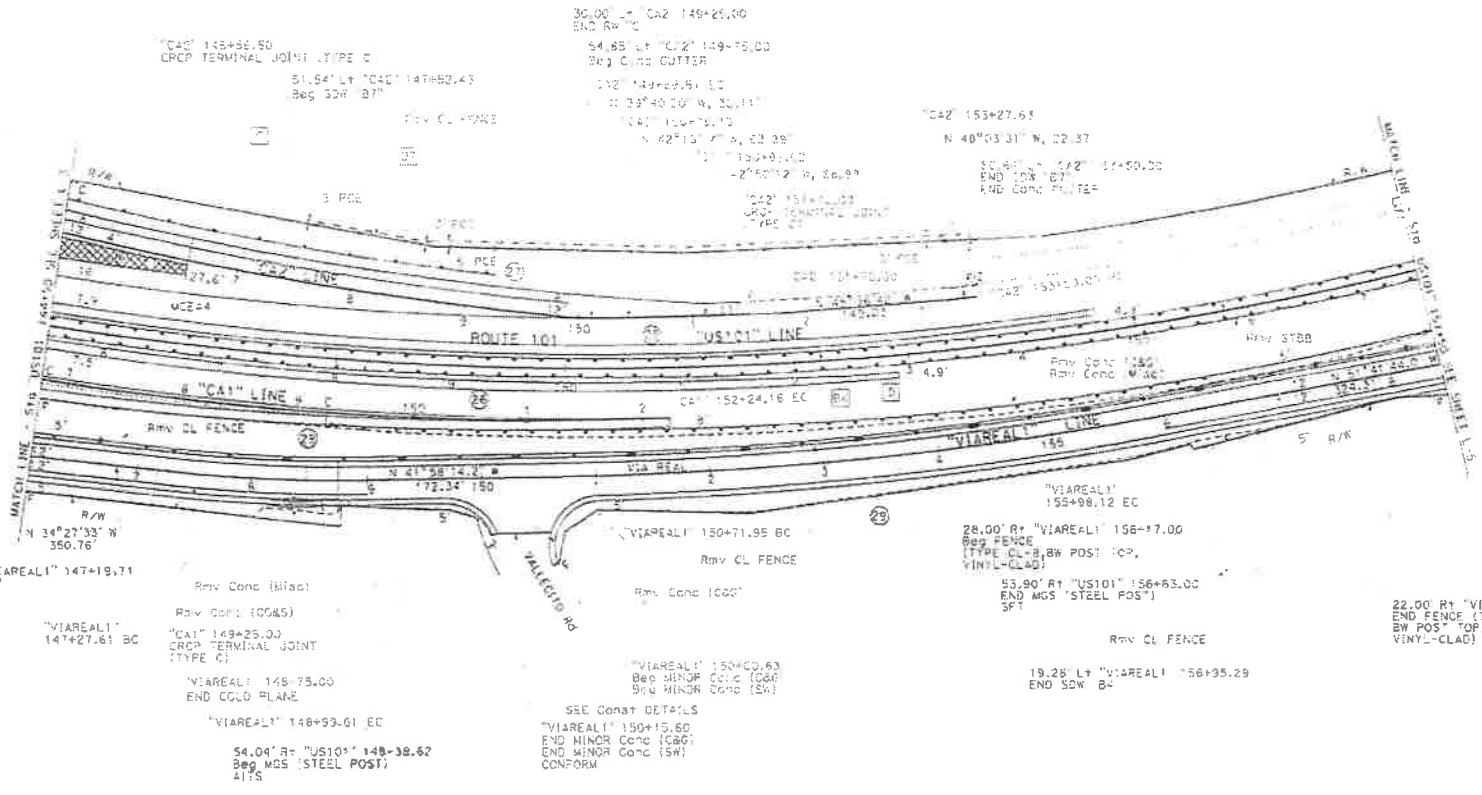

CURVE DATA

No. (X)	R	Δ	T	L
25	3,002'	47°30'53"	1,321.18'	2,489.15'
26	2,697'	13°15'22"	313.34'	623.88'
27	2,952'	08°58'33"	231.66'	462.36'
28	1,312'	07°30'41"	86.12'	172.00'
29	3,100'	09°43'30"	263.72'	526.17'

LAYOUT

SCALE: 1" = 50' L-4

STATE OF CALIFORNIA - DEPARTMENT OF TRANSPORTATION

DESIGN

JAMES R. PEDANO

AMIR SAEDI

MT 10-01-12 AS 09-17-14

PROJECT NUMBER & PHASE 0500000543

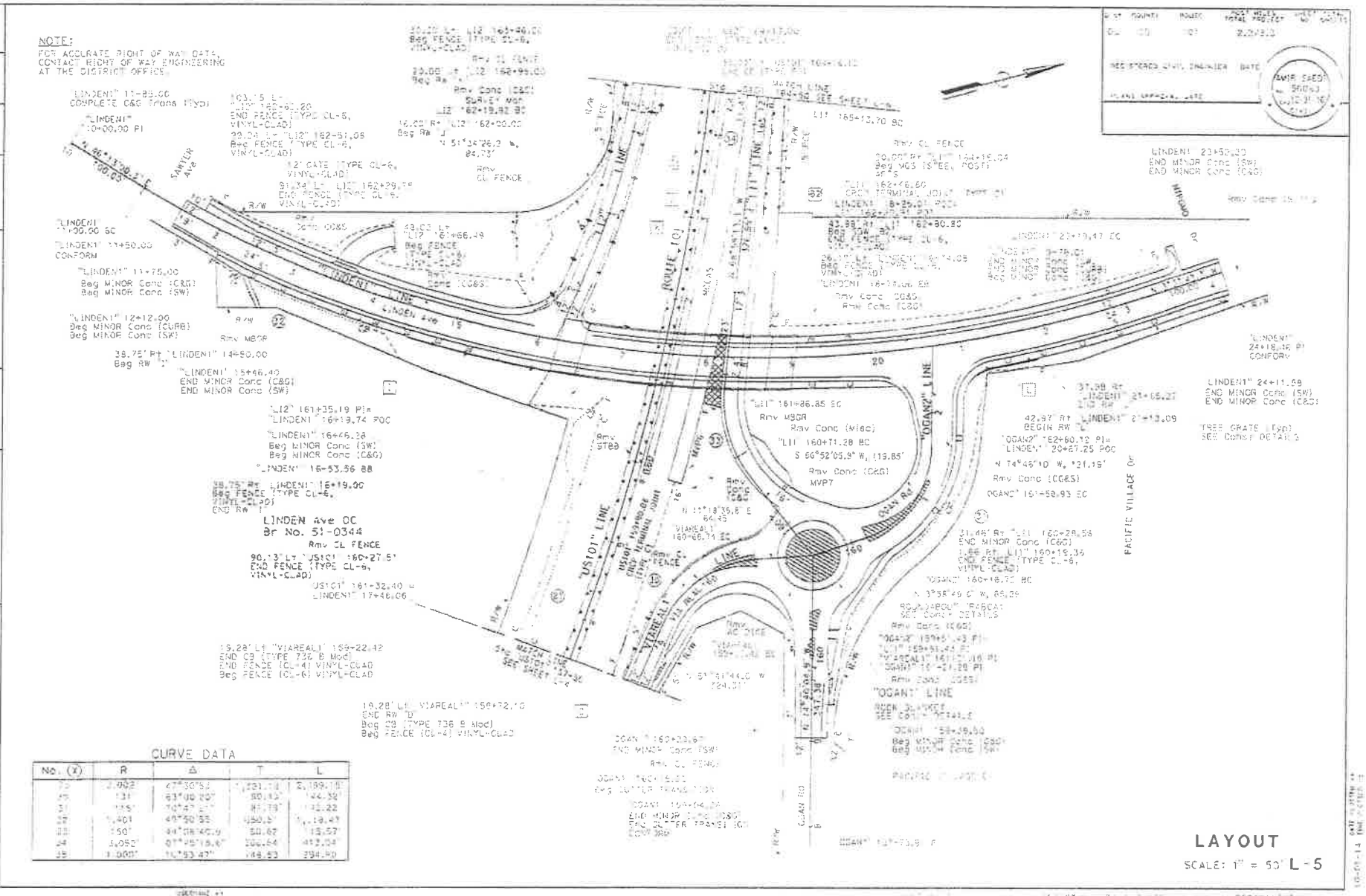

CURVE DATA

No. (X)	R	Δ	T	L
22	2,002'	47°30'52"	1,231.13'	2,189.16'
23	131'	63°00'20"	80.43'	144.32'
31	115'	70°47'21"	83.79'	142.22'
32	1,401'	48°50'55"	650.61'	1,194.47'
33	150'	94°08'40.9"	50.67'	123.57'
34	1,052'	27°25'15.6"	256.64'	473.04'
35	1,000'	16°53'47"	148.53'	294.90'

DIST	COUNTY	ROUTE	POST MILES TOTAL PROJECT	SHEET TOTAL NO. SHEETS
05	SB	101	2.2/3.3	

REGISTERED CIVIL ENGINEER DATE

PLANS APPROVAL DATE

NOTE:
FOR ACCURATE RIGHT OF WAY DATA, CONTACT
RIGHT OF WAY ENGINEERING AT THE DISTRICT OFFICE.

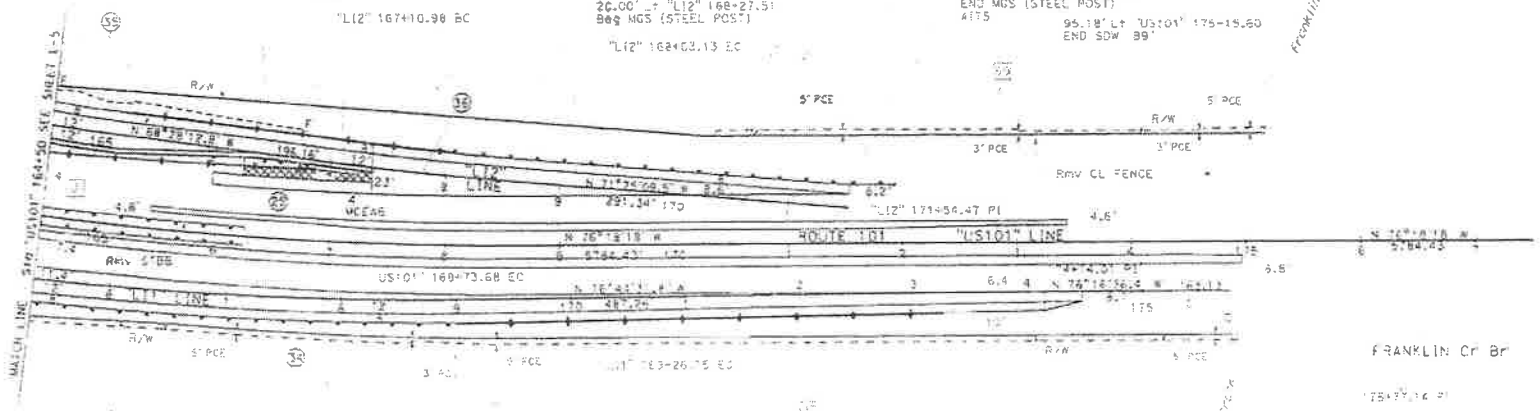

CURVE DATA

No. (X)	R	Δ	T	L
23	3,002	[illegible]	[illegible]	2,689.19'
24	3,052	07°45'18.6"	206.94'	413.04'
35	1,000	16°53'47"	148.53'	294.90'
36	2,956	[illegible]	76.49'	[illegible]

LAYOUT

SCALE: 1" = 50' L-6

STATE OF CALIFORNIA - DEPARTMENT OF TRANSPORTATION
DESIGN
JAMES R. BERNARD
MILT TOWNE
ASHIR SAEDI
CC 08-26-14
AS 09-17-14
BT 10-01-14

USERNAME =>
DGN FILE =>

UNIT 1447 PROJECT NUMBER & PHASE 0500000531

10-01-14 TIME PLOTTED =>

DIST	COUNTY	ROUTE	POST MILES TOTAL PROJECT	SHEET TOTAL NO. SHEETS
05	SB	101	2.2/3.3	

REGISTERED CIVIL ENGINEER DATE

PLANS APPROVAL DATE

AMIR SAEDI No. 58083 12-31-10 CIVIL

NOTES:

1. FOR ACCURATE RIGHT OF WAY DATA, CONTACT RIGHT OF WAY ENGINEERING AT THE DISTRICT OFFICE.
2. UTILITY OWNERSHIP:
   ELECTRICAL - SOUTHERN CALIFORNIA EDISON (SCE)
   FIBER OPTIC - VERIZON
   GAS - SOUTHERN CALIFORNIA GAS (SCG)
   SEWER - CARPINTERIA SANITARY DISTRICT
   TELEPHONE - VERIZON
   TELEVISION CABLE - COX CABLE
   WATER - CARPINTERIA VALLEY WATER DISTRICT

ABBREVIATIONS:

HP - HIGH PRESSURE
PEM - POLYETHYLENE MEDIUM PRESSURE
VCP - VITRIFIED CLAY PIPE

LEGEND:

- MANHOLE ADJUST TO GRADE
- MANHOLE TO BE RELOCATED
- PULL BOX ADJUST TO GRADE
- PULL BOX TO BE RELOCATED
- WATER VALVE ADJUST TO GRADE
- WATER VALVE TO BE RELOCATED
- METER BOX ADJUST TO GRADE
- METER BOX TO BE RELOCATED
- GAS METER ADJUST TO GRADE
- MONITORING WELL ADJUST TO GRADE
- POLE TO BE RELOCATED
- HYDRANT ADJUST TO GRADE
- HOSE BIBBS TO BE RELOCATED BY OTHERS
- UTILITY LOCATION DATA NO.

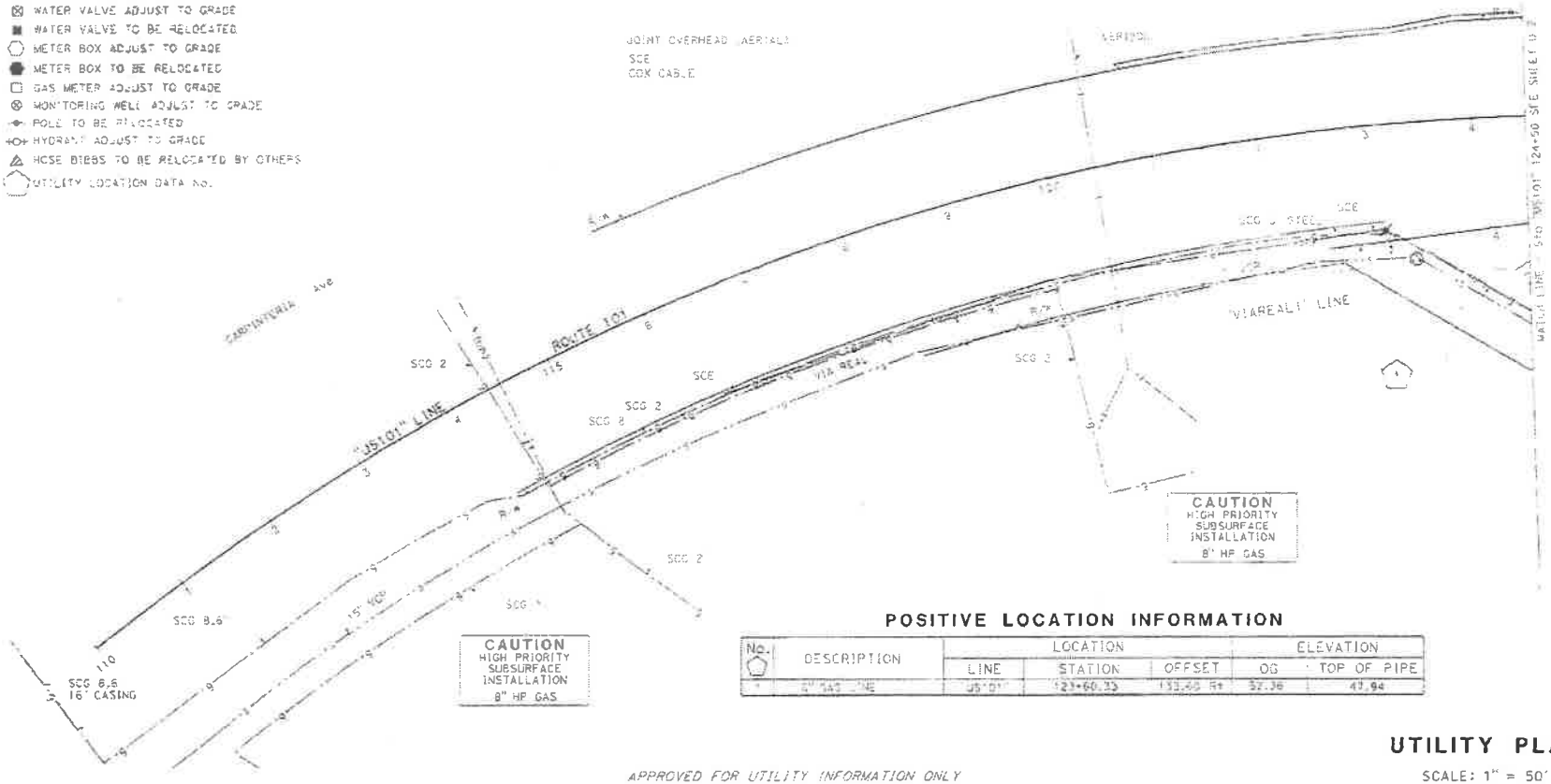

POSITIVE LOCATION INFORMATION

No.	DESCRIPTION	LOCATION			ELEVATION	
		LINE	STATION	OFFSET	OG	TOP OF PIPE
1	8" GAS LINE	J5101	123+60.35	133.40 Rt	32.36	43.94

APPROVED FOR UTILITY INFORMATION ONLY

UTILITY PLAN

SCALE: 1" = 50'

U-1

STATE OF CALIFORNIA - DEPARTMENT OF TRANSPORTATION

Caltrans

DESIGN

JAMES D. PERANO

AMIR SAEDI

MILT TOWNE

08-06-14

DATE PLOTTED 08 06 14 TIME PLOTTED

USERNAME = DGN FILE =

UNIT 1447

PROJECT NUMBER & PHASE 0500003431

NOTE:

FOR ACCURATE RIGHT OF WAY DATA, CONTACT RIGHT OF WAY ENGINEERING AT THE DISTRICT OFFICE.

DIST.	COUNTY	ROUTE	POST MILES TOTAL PROJECT	SHEET TOTAL NO. SHEETS
05	SB	101	2.2/3.3	

REGISTERED CIVIL ENGINEER DATE

PLANS APPROVAL DATE

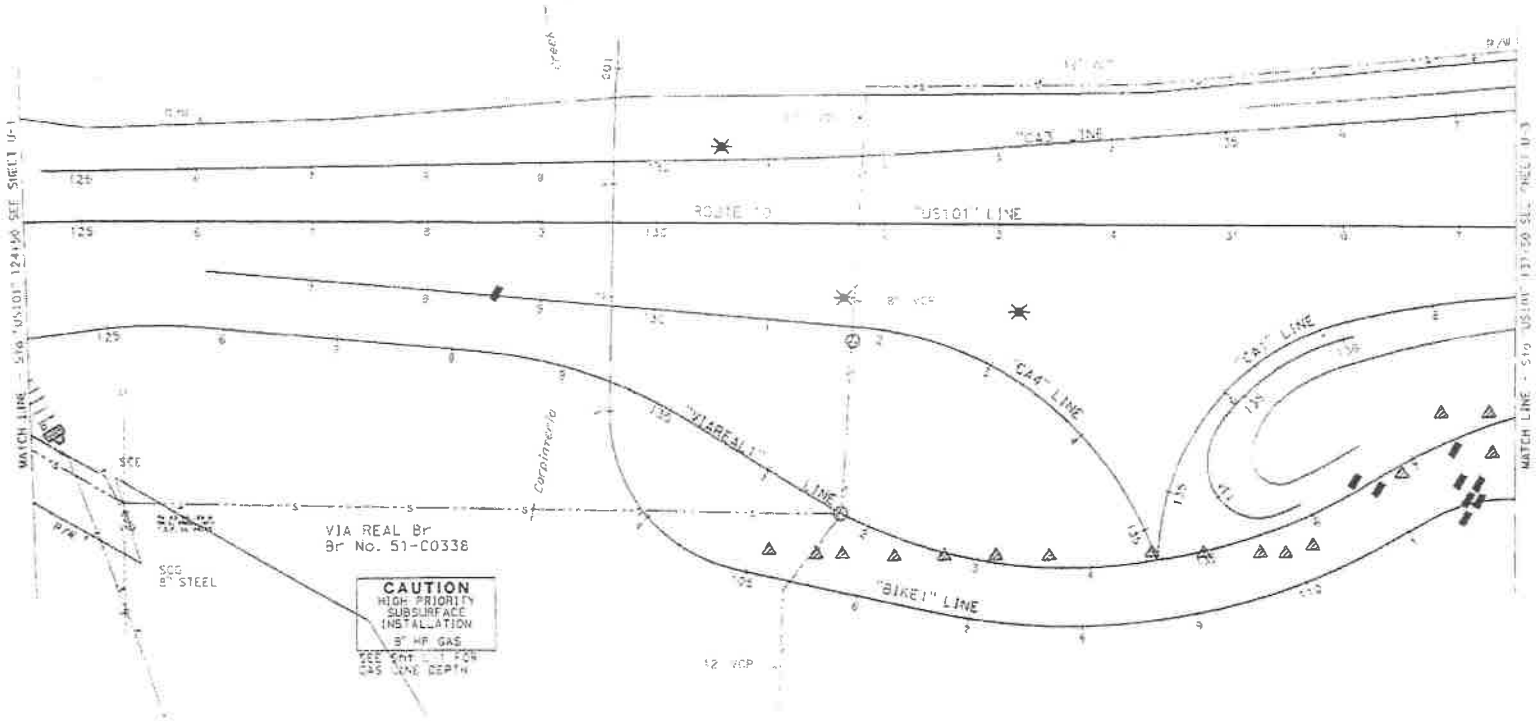

APPROVED FOR UTILITY INFORMATION ONLY

UTILITY PLAN

SCALE: 1" = 50'

U-2

STATE OF CALIFORNIA DEPARTMENT OF TRANSPORTATION

Caltrans

DESIGN

JAMES R. FERRARO

MILT TOWNE

AMIR SAEDI

03-05-14

NOTE:
FOR ACCURATE RIGHT OF WAY DATA, CONTACT
RIGHT OF WAY ENGINEERING AT THE DISTRICT OFFICE.

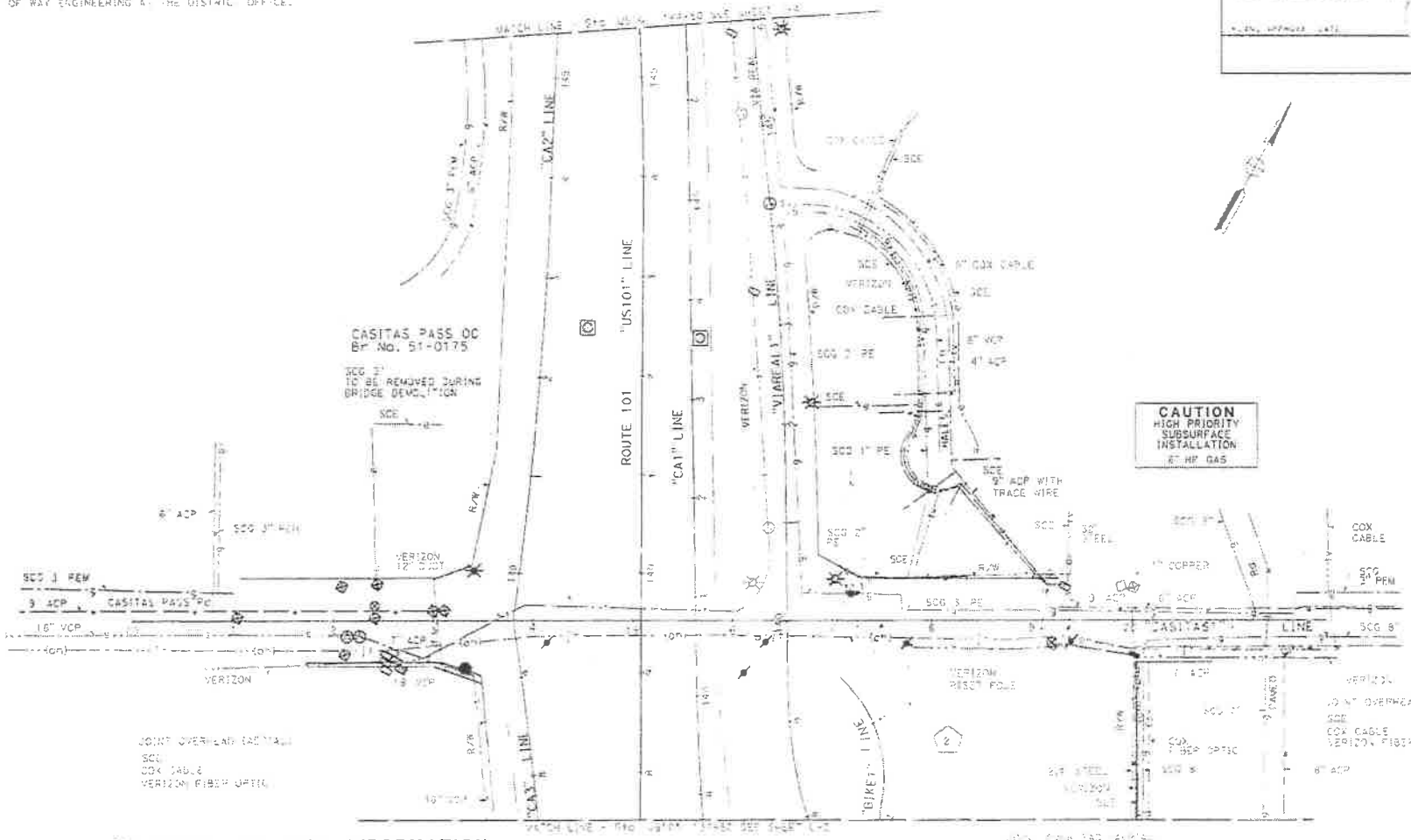

POSITIVE LOCATION INFORMATION

No.	DESCRIPTION	LOCATION			ELEVATION	
		LINE	STATION	OFFSET	OG	TOP OF PIPE
2	4" GAS LINE	US101	123+60.33	206.86 Rt	30.96	47.96

APPROVED FOR UTILITY INFORMATION ONLY

UTILITY PLAN

SCALE: 1" = 50'

U-3

STATE OF CALIFORNIA - DEPARTMENT OF TRANSPORTATION
Caltrans
DESIGN

JAMES D. PERANO

AMIR SAEDI

MILT TOMA

05-15-14

NOTE:

FOR ACCURATE RIGHT OF WAY DATA, CONTACT RIGHT OF WAY ENGINEERING AT THE DISTRICT OFFICE.

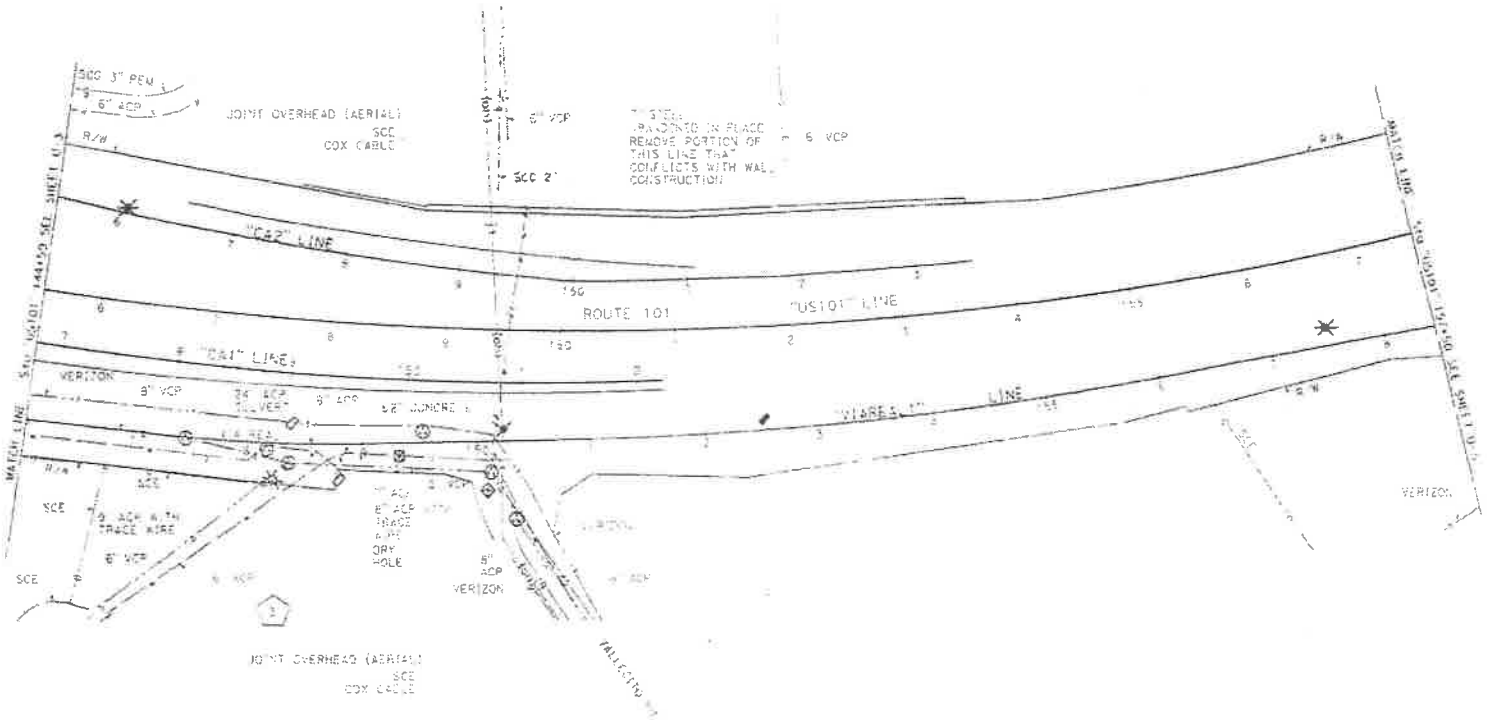

POSITIVE LOCATION INFORMATION

NO.	DESCRIPTION	LOCATION			ELEVATION	
		LINE	STATION	OFFSET	OG	TOP OF PIPE
3	8" WATER LINE	US101	147+89.08	126.15' RT	42.00	38.00

APPROVED FOR UTILITY INFORMATION ONLY

UTILITY PLAN

SCALE: 1" = 50' U-4

STATE OF CALIFORNIA - DEPARTMENT OF TRANSPORTATION
Caltrans
DESIGN

MILT TONING
AMIR SAEDI
JAMES P. PERANO

PROJECT NUMBER & PHASE 0500000543I

NOTES:
FOR ACCURATE RIGHT OF WAY DATA, CONTACT
RIGHT OF WAY ENGINEERING AT THE DISTRICT OFFICE.

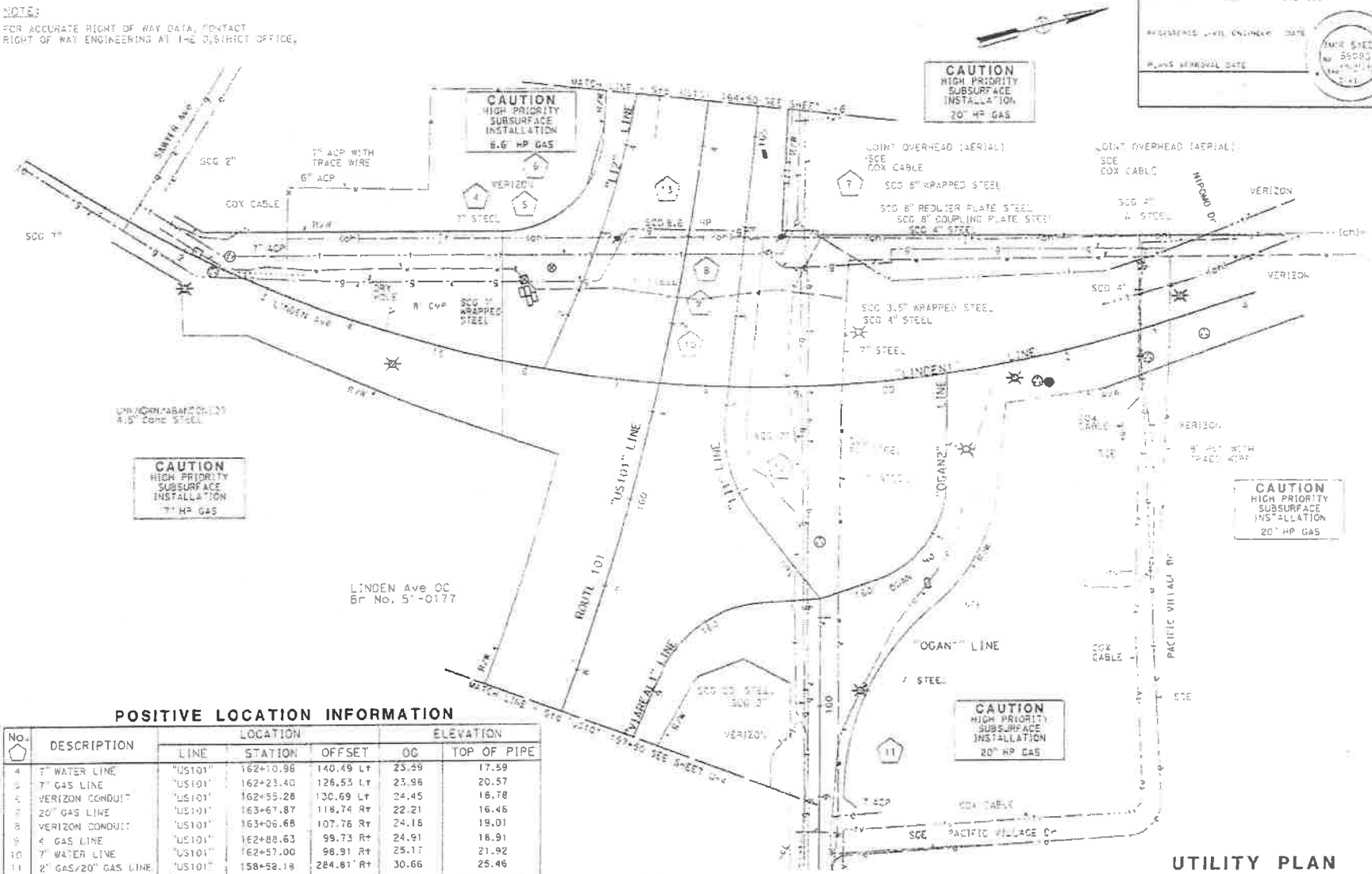

POSITIVE LOCATION INFORMATION

No.	DESCRIPTION	LOCATION			ELEVATION	
		LINE	STATION	OFFSET	OC	TOP OF PIPE
4	7" WATER LINE	"US101"	162+10.96	140.49 Lt	23.59	17.59
5	7" GAS LINE	"US101"	162+23.40	126.53 Lt	23.98	20.57
6	VERIZON CONDUIT	"US101"	162+55.28	130.69 Lt	24.45	18.78
7	20" GAS LINE	"US101"	163+67.87	118.74 Rt	22.21	16.46
8	VERIZON CONDUIT	"US101"	163+06.68	107.76 Rt	24.18	19.01
9	4" GAS LINE	"US101"	162+88.63	99.73 Rt	24.91	16.91
10	7" WATER LINE	"US101"	162+57.00	98.91 Rt	25.17	21.92
11	2" GAS/20" GAS LINE	"US101"	158+58.18	284.81' Rt	30.66	25.46
12	2" GAS/20" GAS LINE	"US101"	160+34.05	192.16' Rt	27.78	27.79/20.76
13	8" GAS LINE	"US101"	162+97.58	61.46' Rt	21.12	TBD

WAITING FOR PH INFO

APPROVED FOR UTILITY INFORMATION ONLY

UTILITY PLAN

SCALE: 1" = 50'

U-5

STATE OF CALIFORNIA - DEPARTMENT OF TRANSPORTATION
Caltrans
DESIGN

JAMES R. DERAND

MILT TORRE
AMIR SAEDI

05-15-14

DIST	COUNTY	ROUTE	TOTAL PROJECT	TOTAL SHEETS
05	SB	101	2.2/3.3	

REGISTERED CIVIL ENGINEER DATE

PLANS APPROVAL DATE

STATE OF CALIFORNIA
No. 56080
REGISTERED CIVIL ENGINEER

UNIT 1447

PROJECT NUMBER & PHASE 0500000543

05 15 14 TIME PLOTTED

DIST	COUNTY	ROUTE	POST MILES TOTAL PROJECT	SHEET TOTAL NO. SHEETS
05	SB	101	2.2/3.3	

REGISTERED CIVIL ENGINEER DATE

PLANS APPROVAL DATE

NOTE:
FOR ACCURATE RIGHT OF WAY DATA, CONTACT RIGHT OF WAY ENGINEERING AT THE DISTRICT OFFICE.

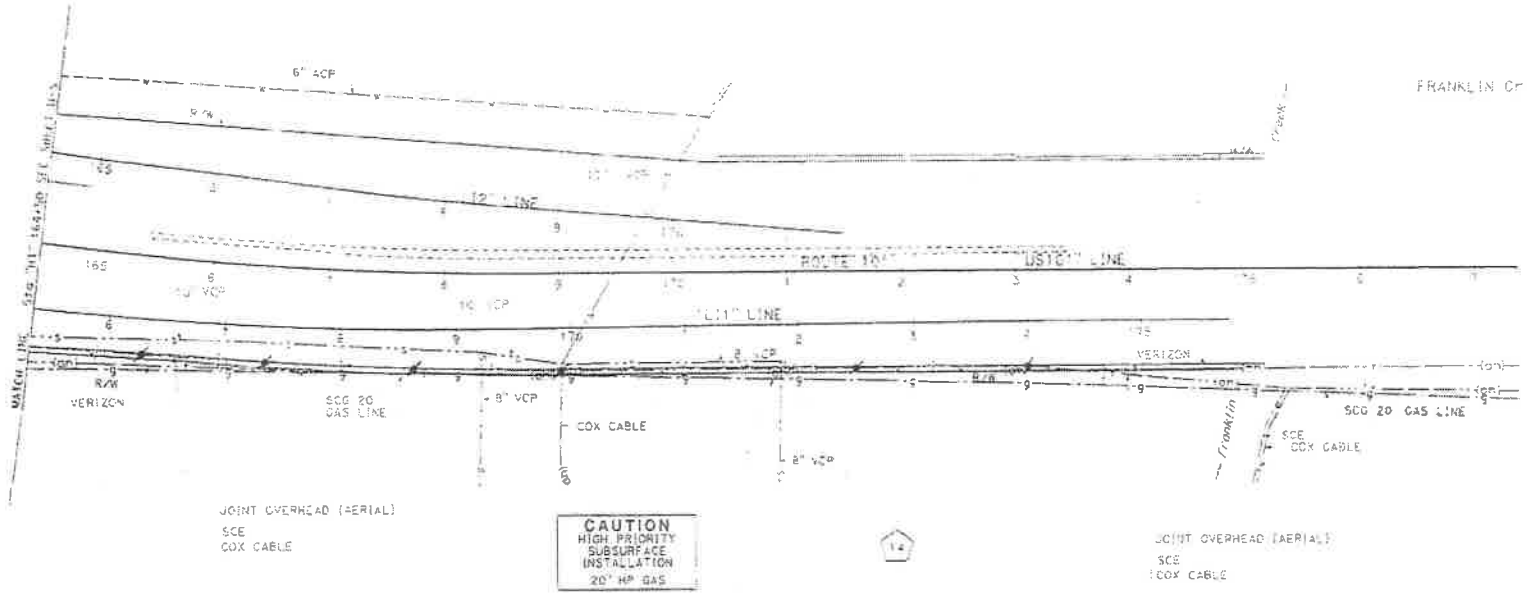

POSITIVE LOCATION INFORMATION

NO.	DESCRIPTION	LOCATION			ELEVATION	
		LINE	STATION	OFFSET	OG	TOP OF PIPE
14	20" GAS LINE	US101"	171+00.00	92.25' Rt	[illegible].35	[illegible].10

APPROVED FOR UTILITY INFORMATION ONLY

UTILITY PLAN

SCALE: 1" = 50' U-6

STATE OF CALIFORNIA DEPARTMENT OF TRANSPORTATION
Caltrans
DESIGN
JAMES R. PERANO
VIET TUONG
AMIR SAEDI
MT 05-15-14

USERNAME =
DGN FILE =

UNIT 1447 PROJECT NUMBER & PHASE 0500000543

05-15-14 LINE PLOTTED =

NOTES:

1. LOCATION OF ROADSIDE SIGNS ARE APPROXIMATE. EXACT LOCATIONS WILL BE DETERMINED IN THE FIELD.
2. SEE STANDARD PLAN T17 FOR LANE CLOSURE CHARTS FOR ADDITIONAL REQUIRED SIGNS.

DIST	COUNTY	ROUTE	TOTAL PROJECT	TOTAL SHEETS	NO. SHEETS
05	SB	101	0.2/3.3		

REGISTERED CIVIL ENGINEER DATE

PLANS APPROVAL DATE

LEGEND:

ROADSIDE SIGN

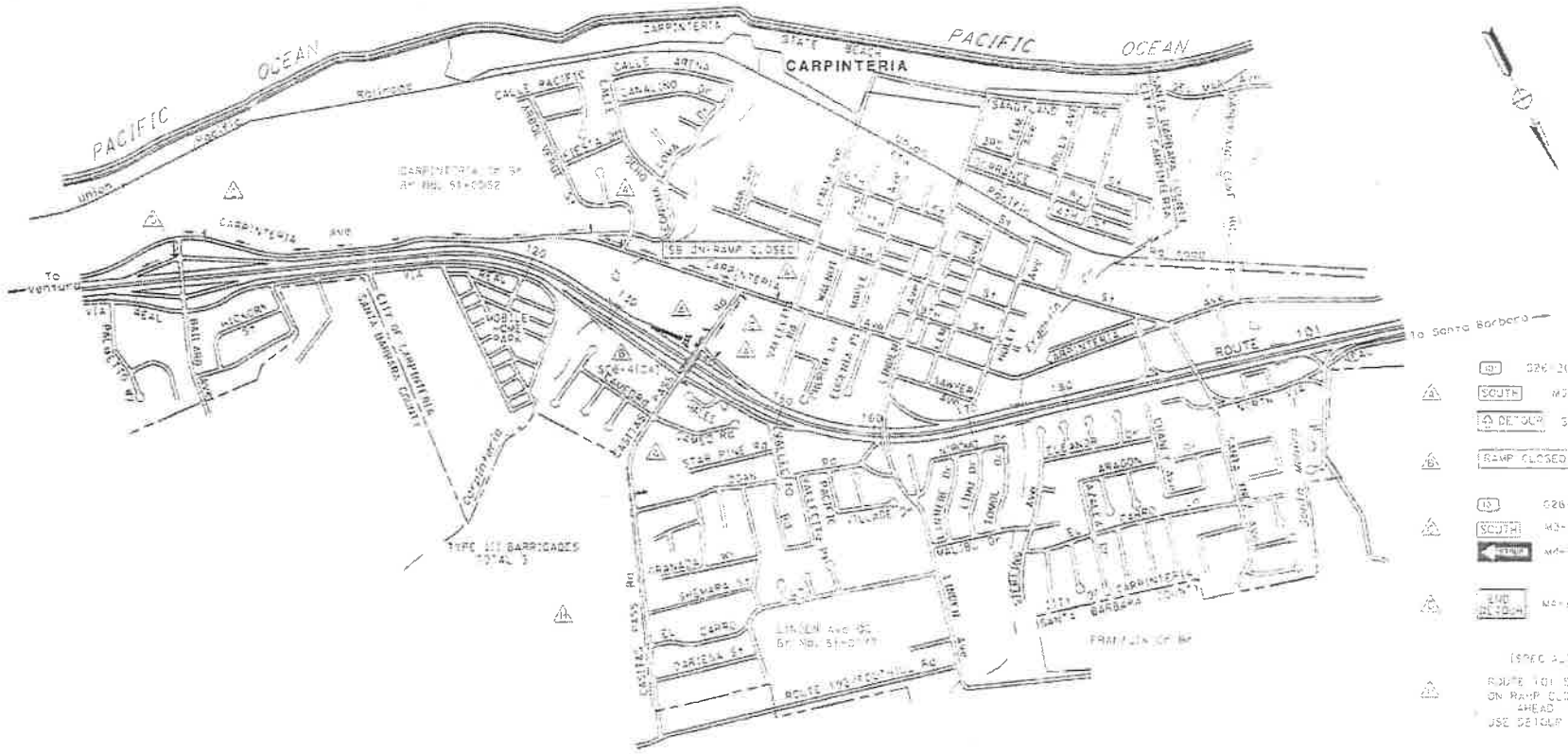

DETOUR PLAN 1: CASITAS PASS ROAD SB ON RAMP CLOSED

FROM CASITAS PASS ROAD TO SB ON RAMP AT BAILARD Ave
TURN LEFT ON CARPINTERIA Ave
TURN LEFT ON BAILARD Ave AND MERGE TO SB ON RAMP 101

MOTORIST INFORMATION PLAN

(SOUTHBOUND CASITAS PASS ON RAMP CLOSED)

MI-1

NO SCALE

APPROVED FOR MOTORIST INFORMATION WORK ONLY

STATE OF CALIFORNIA - DEPARTMENT OF TRANSPORTATION

Caltrans

TRAFFIC DESIGN

FILE NAME

COMPUTER FILE

UNNAMED DATAM

07-28 14

DESIGN

DGN FILE

UNIT NUMBER

PROJECT NUMBER & PHASE

0500000S451

NOTE:

DURING THE NB OFF-RAMP CLOSURE, THE PCMS MESSAGE SHOULD READ:

CASITAS PASS ROAD NB OFF-RAMP CLOSED	USE BALLARD AVE NEXT EXIT
1ST FRAME	2ND FRAME

DETOUR PLAN 1

CASITAS PASS ROAD NB OFF RAMP CLOSED USE BALLARD AVE NB OFF RAMP
TURN LEFT ON BALLARD AVE
TAKE RIGHT ON CARPINTERIA AVE TO ACCESS CASITAS PASS ROAD

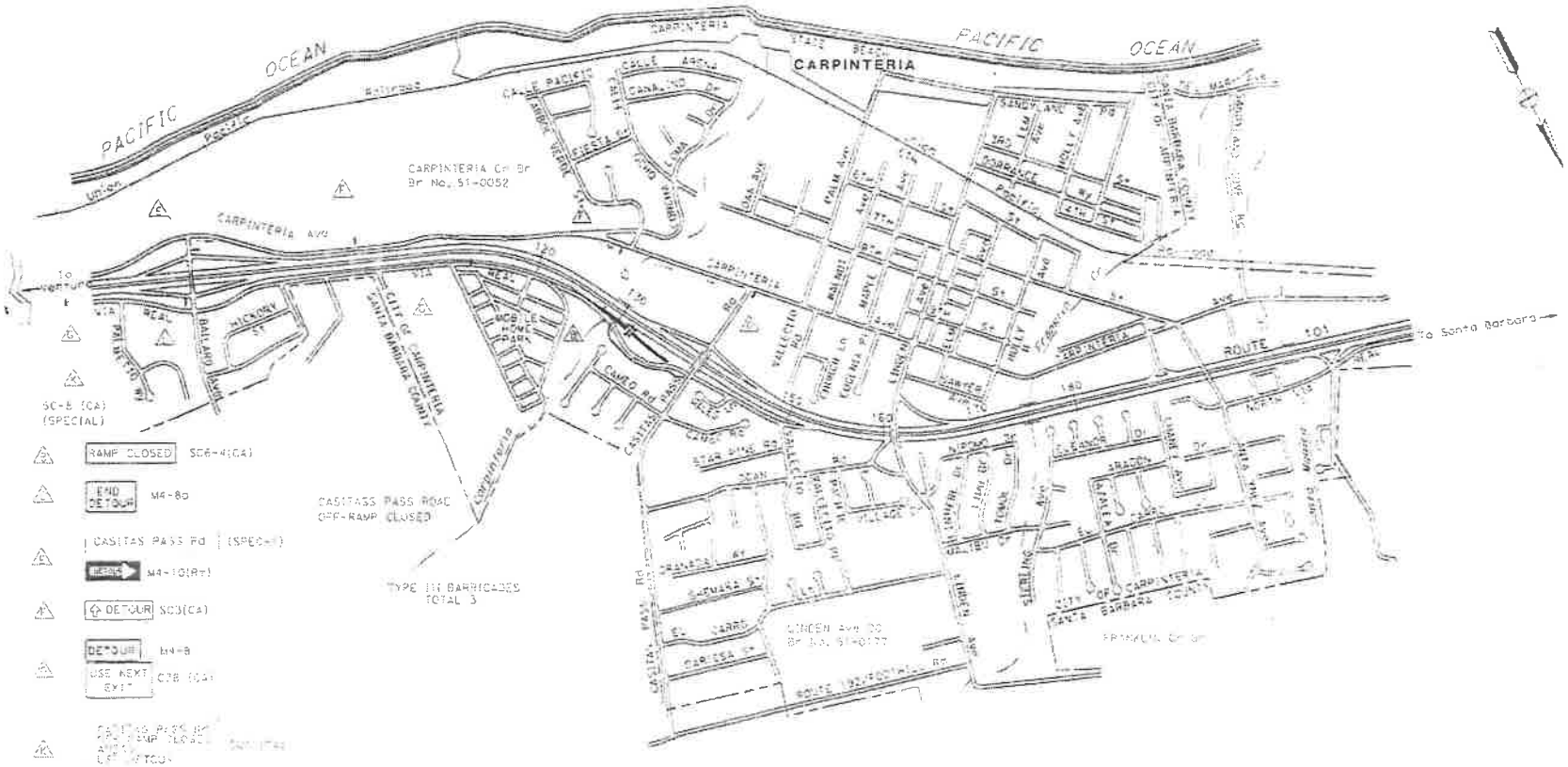

STATE OF CALIFORNIA - DEPARTMENT OF TRANSPORTATION

Caltrans TRAFFIC DESIGN

MOTORIST INFORMATION PLAN

(NORTHBOUND CASITAS PASS ROAD (OFF RAMP CLOSED)

MI-2

NO SCALE

APPROVED FOR MOTORIST INFORMATION WORK ONLY

DETOUR PLAN : LINDEN Ave AND OGAN Rd CLOSED

FROM NE TRAFFIC USE LINDEN Ave TO NORTH:
RIGHT TURN ON ROUTE 192/FOOTHILL Rd
RIGHT TURN ON CASITAS PASS Ave

FROM SW TRAFFIC USE LINDEN Ave TO SOUTH:
TAKE RIGHT TURN ON CARPINTERIA Ave
TAKE RIGHT TURN ON SANTA INEZ Ave
LEFT TURN ON NORTH VIA REAL Ave MERGE NB/SB

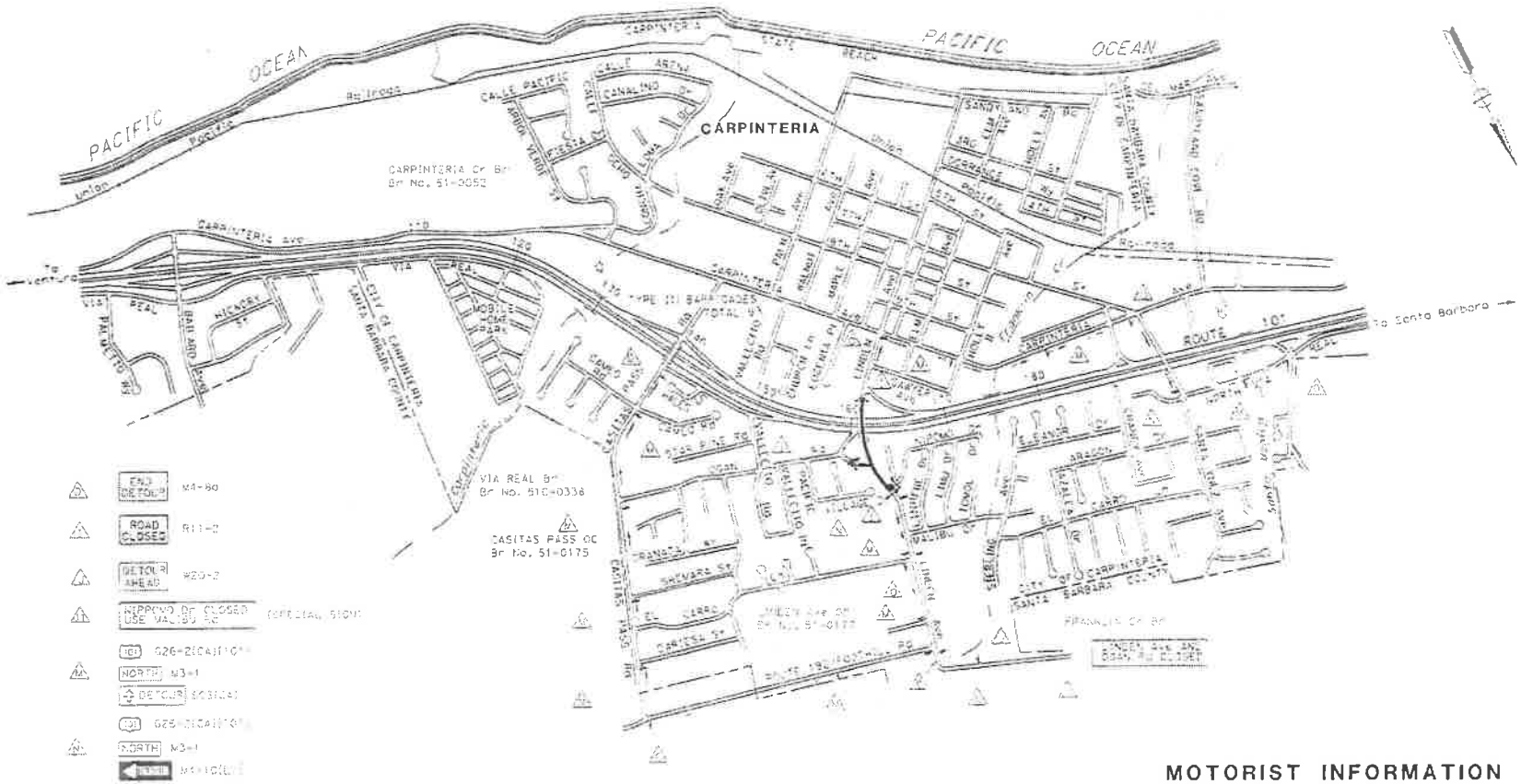

MOTORIST INFORMATION PLAN

(LINDEN Ave Rd AND OGAN Rd CLOSED)

NO SCALE

MI-3

APPROVED FOR MOTORIST INFORMATION WORK ONLY

STATE OF CALIFORNIA - DEPARTMENT OF TRANSPORTATION

Caltrans

TRAFFIC DESIGN

MOHAMED DAFANI

FARZI KALMADOR

SUNDAY LEU

DIST	COUNTY	ROUTE	POST MILE(S) TOTAL PROJECT	SHEET TOTAL No. SHEETS
05	SB	101	2.0/3.3	

REGISTERED CIVIL ENGINEER DATE

PLANS APPROVAL DATE

UNIT 1440

PROJECT NUMBER & PHASE 0500000543

DETOUR PLAN 1 : CASITAS PASS ROAD SB OFF RAMP CLOSED

CASITAS PASS ROAD SB OFF RAMP CLOSED USE LINDEN AVE SB OFF RAMP
TURN RIGHT ON LINDEN AVE
TAKE LEFT ON CARPINTERIA AVE TO ACCESS CASITAS PASS ROAD

DIST	COUNTY	ROUTE	POST MILES TOTAL PROJECT	SHEET TOTAL NO. SHEETS
05	SB	101	2.2/3.3	

REGISTERED CIVIL ENGINEER DATE

PLANS APPROVAL DATE

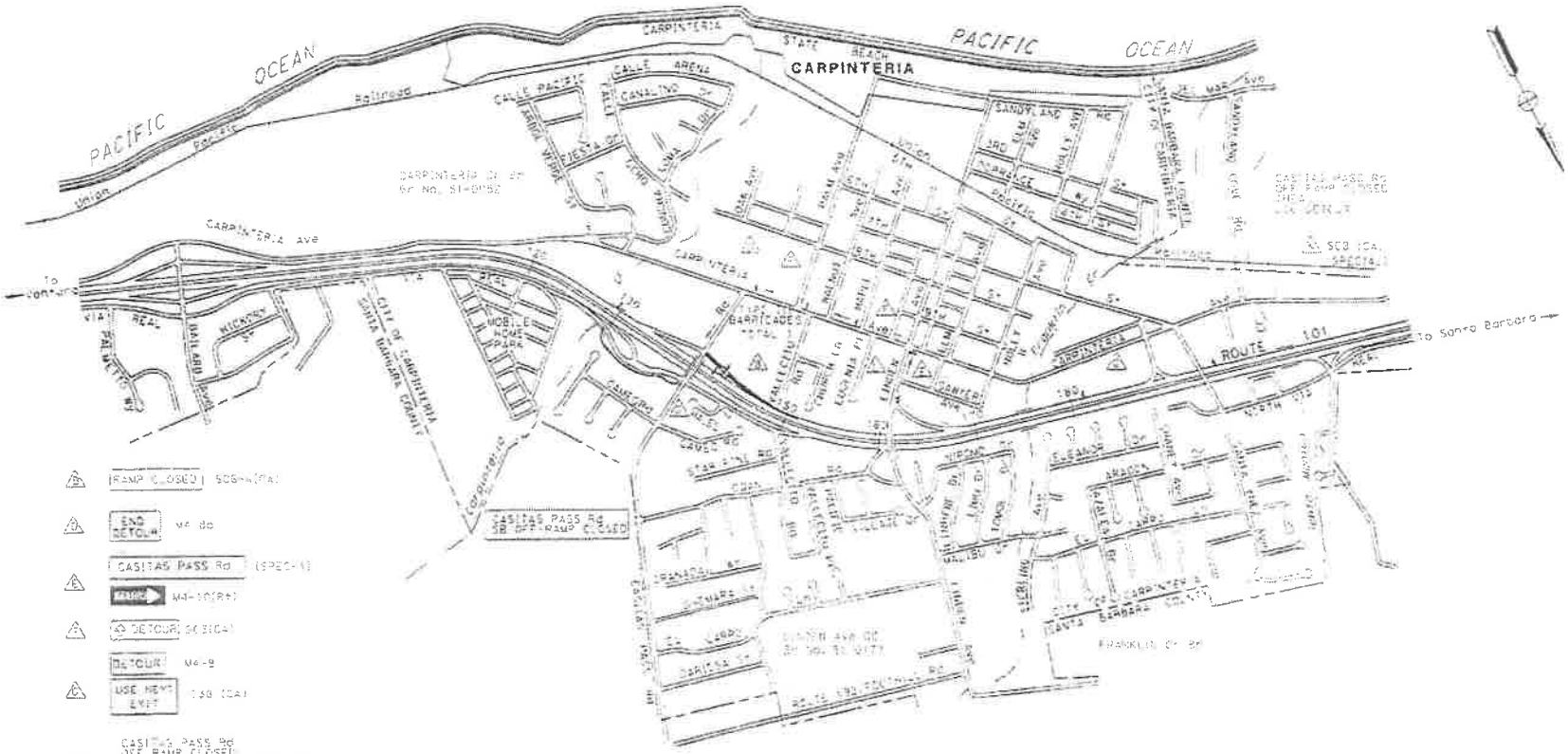

MOTORIST INFORMATION PLAN

(SOUTHBOUND CASITAS PASS ROAD OFF RAMP CLOSED)

MI-4

NO SCALE

APPROVED FOR MOTORIST INFORMATION WORK ONLY

STATE OF CALIFORNIA · DEPARTMENT OF TRANSPORTATION

Caltrans TRAFFIC DESIGN

PAWEL RACHMADOV · GURMIT GILL · MOHAMED GATAMI

UNIT · PROJECT NUMBER & PHASE

10-08-14 [illegible]

DETOUR PLAN: LINDEN Ave SB OFF RAMP CLOSED

LINDEN Ave SB OFF RAMP CLOSED USE
REYNOLDS Ave SB OFF RAMP
TAKE LEFT TURN ON CARPINTERIA Ave TO ACCESS LINDEN Ave.
IF TAKE CASITAS PASS Ave SB OFF RAMP
TURN RIGHT ON CASITAS PASS Ave
TAKE RIGHT TURN ON CARPINTERIA Ave TO ACCESS LINDEN Ave

NOTE:

DURING THE LINDEN Ave SB OFF-RAMP CLOSURE, THE PCMS MESSAGE SHOULD READ:

LINDEN AVE OFF-RAMP CLOSED	USE EXIT REYNOLDS AVE NEXT EXIT
1ST FRAME	2ND FRAME

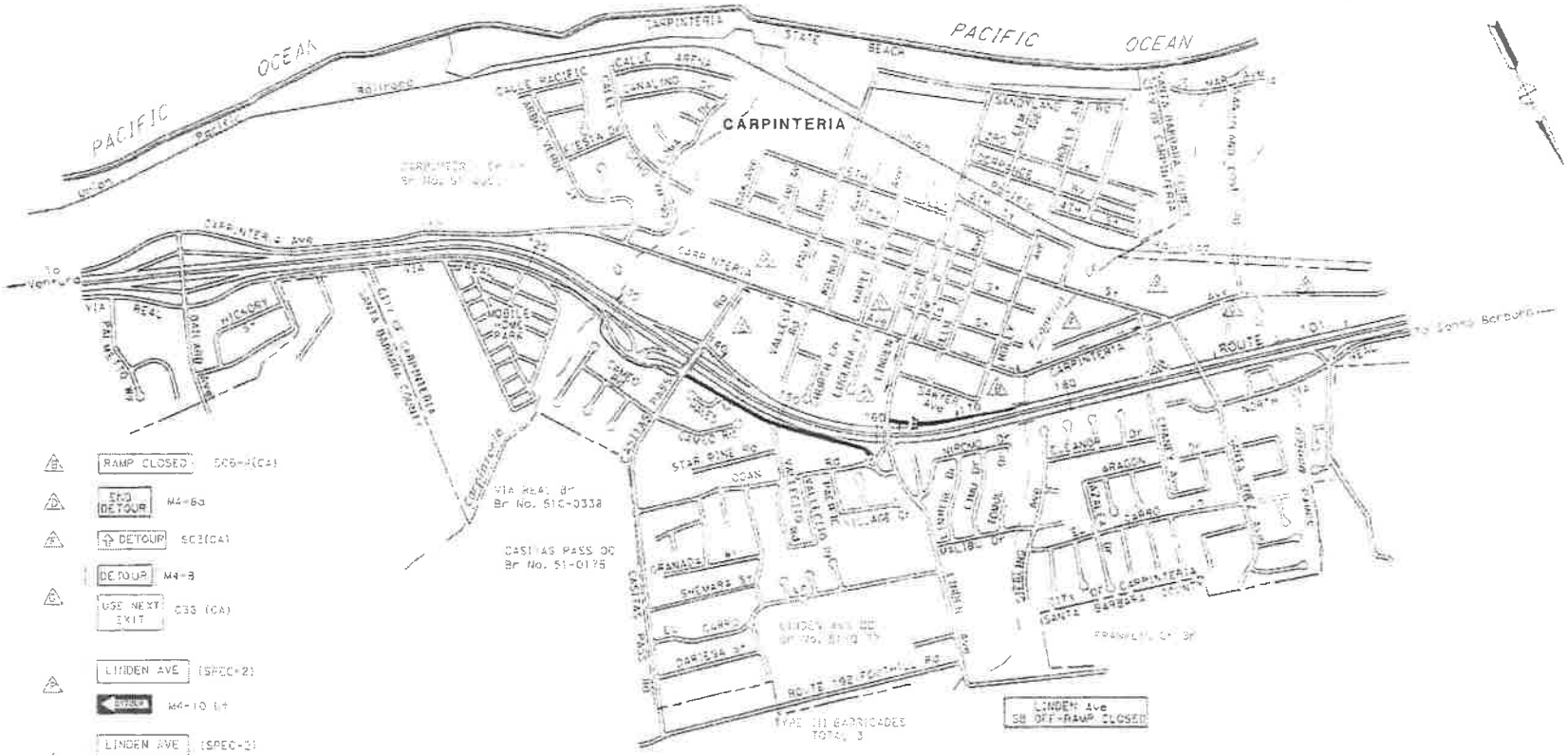

1	RAMP CLOSED	506-A(CA)
2	END DETOUR	M4-6a
3	DETOUR	503(CA)
	DETOUR	M4-8
4	USE NEXT EXIT	533 (CA)
5	LINDEN AVE	(SPEC-2)
		M4-10 L1
6	LINDEN AVE	(SPEC-2)
		M4-10R1
7	LINDEN AVE EXIT RAMP CLOSED AHEAD USE DETOUR	506 (CA) (SPECIAL)

APPROVED FOR MOTORIST INFORMATION WORK ONLY

MOTORIST INFORMATION PLAN

(SOUTHBOUND LINDEN AVENUE OFF RAMP AND VIA REAL CLOSED)

NO SCALE

MI-5

STATE OF CALIFORNIA DEPARTMENT OF TRANSPORTATION
Caltrans TRAFFIC DESIGN
MOHAMMED DAFANI
DESIGN CELL

DETOUR PLAN:

VIA REAL AND OGAN ROAD CLOSED AT NB LINDEN Ave ON RAMP CONNECTOR.
USE S OGAN Rd AND VIA REAL TO ACCESS NB ON RAMP 101 AND OTHER LOCAL ST

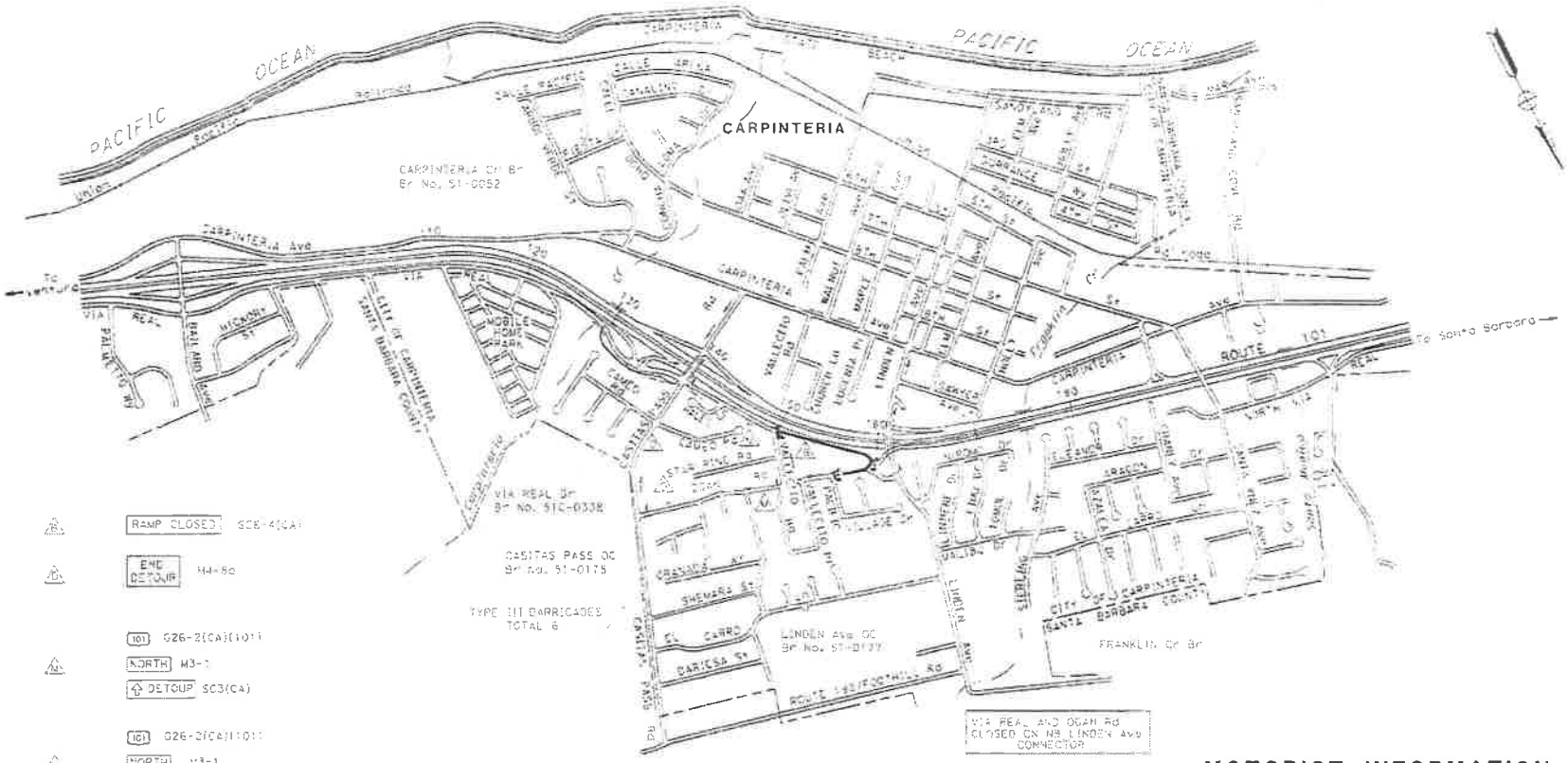

RAMP CLOSED G26-4(CA)

END DETOUR M4-8a

101 G26-2(CA)(101)
NORTH M3-1
DETOUR SC3(CA)

101 G26-2(CA)(101)
NORTH M3-1
DETOUR M4-10(L-1)

101 G26-2(CA)(101)
NORTH M3-1
DETOUR M4-10(R-1)

MOTORIST INFORMATION PLAN

(VIA REAL AND OGAN ROAD CLOSED
ON NORTHBOUND LINDEN Ave CONNECTOR)

NO SCALE

MI-6

APPROVED FOR MOTORTIST INFORMATION WORK ONLY

STATE OF CALIFORNIA - DEPARTMENT OF TRANSPORTATION
Caltrans TRAFFIC DESIGN

PROJECT NUMBER & PHASE 0500000543

NOTES:

1. BIKE FACILITIES ARE CLOSED DURING THE CONSTRUCTION OF NEW BRIDGE, BIKE PATH STRUCTURE AND OTHER RELATED WORK.

2. DURING THE CARPINTERIA CREEK UNDER PATH WORK, THE POMS MESSAGE AT (A) SHOULD READ.....

BIKE ROUTE CLOSED AHEAD	USE BIKE DETOUR AHEAD
1ST FRAME	2ND FRAME

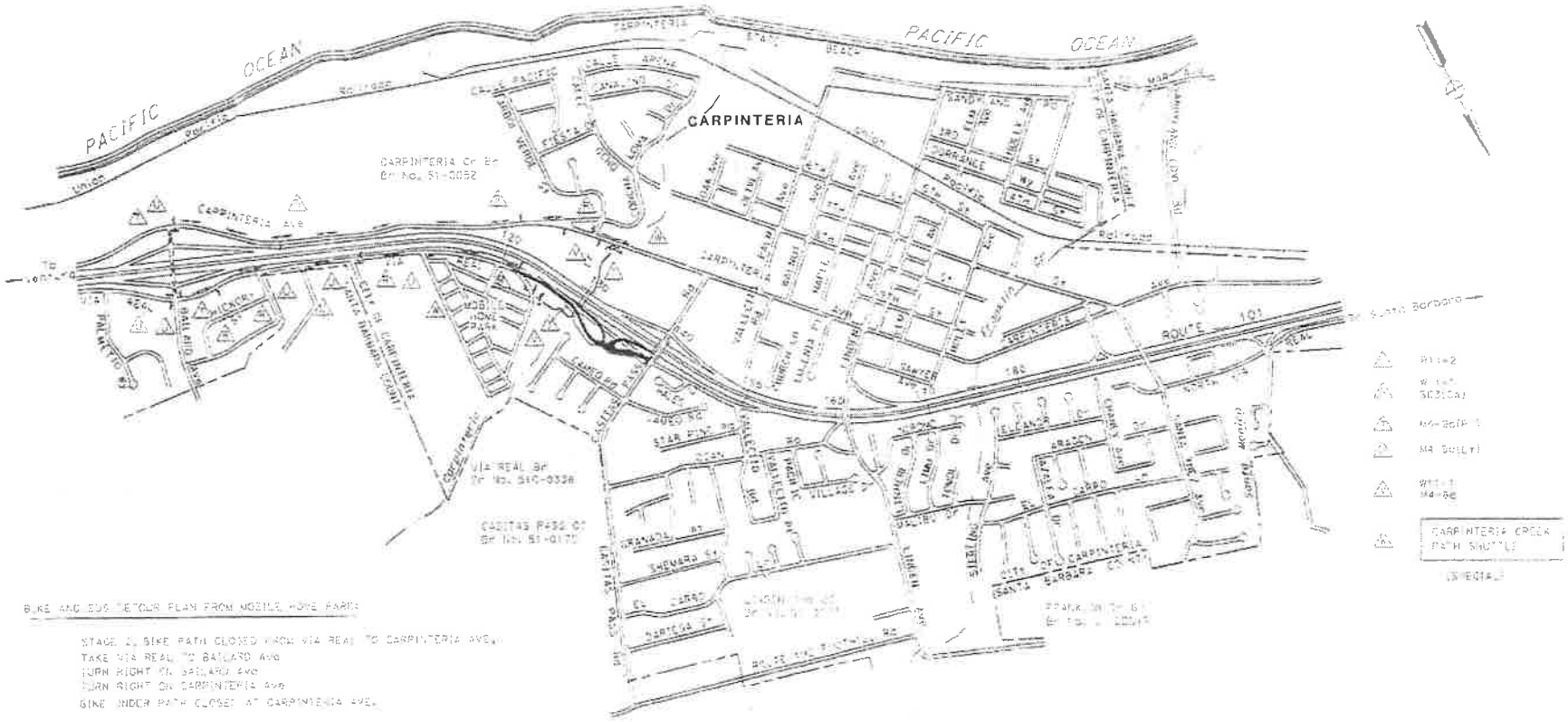

BIKE AND BUS DETOUR PLAN FROM MOBILE HOME PARK

STAGE 2, BIKE PATH CLOSED FROM VIA REAL TO CARPINTERIA AVE.
TAKE VIA REAL TO BAILARD AVE
TURN RIGHT ON BAILARD AVE
TURN RIGHT ON CARPINTERIA AVE
BIKE UNDER PATH CLOSED AT CARPINTERIA AVE.

BIKE AND BUS DETOUR PLAN TO MOBILE HOME PARK

STAGE 2, BIKE PATH CLOSED FROM VIA REAL TO CARPINTERIA AVE.
TAKE CARPINTERIA AVE TO BAILARD AVE
TURN LEFT ON BAILARD AVE
TURN LEFT ON VIA REAL AVE TO MOBILE HOME PARK

MOTORIST INFORMATION PLAN

(BIKE AND BUS
CARPINTERIA CREEK PATH SHUTTLE DETOUR)

MI-7

NO SCALE

APPROVED FOR MOTORIST INFORMATION WORK ONLY

STATE OF CALIFORNIA · DEPARTMENT OF TRANSPORTATION
Caltrans
TRAFFIC DESIGN

FARZI FARMAHOUR
GERMIT GILL
HASSAN MAHAI

USERNAME
DGN FILE
UNIT
PROJECT NUMBER & PHASE

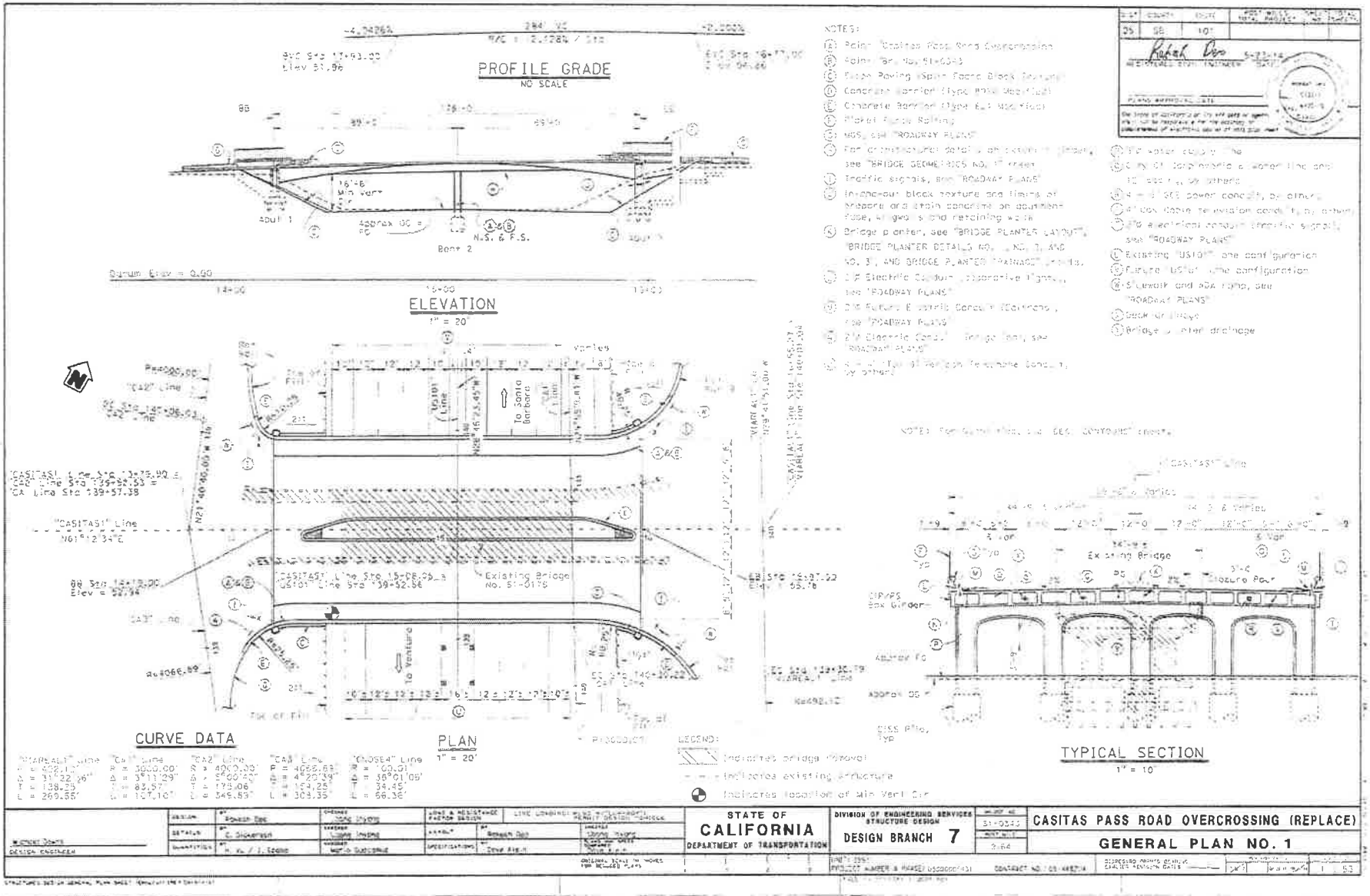

NOTES:

(A) Point "Casitas Pass Road Overcrossing"
(B) Point "Bridge No. 51-0343"
(C) Slope Paving (Split Face Block Texture)
(D) Concrete Barrier (Type 80M Modified)
(E) Concrete Barrier (Type 8L1 Modified)
(F) Metal Beam Railing
(G) MGS, see "ROADWAY PLANS"
(H) For dimensions, details and construction phasing, see "BRIDGE GEOMETRICS NO. 1" sheet
(I) Traffic signals, see "ROADWAY PLANS"
(J) Interconnect block texture and limits of shotcrete and stain concrete on abutment face, wingwalls and retaining walls
(K) Bridge planter, see "BRIDGE PLANTER LAYOUT", "BRIDGE PLANTER DETAILS NO. 1, NO. 2, AND NO. 3", AND BRIDGE PLANTER DRAINAGE" sheets.
(L) 2" Electric Conduit (Interconnect Signals), see "ROADWAY PLANS"
(M) 2" Future Electric Conduit (Lighting), see "ROADWAY PLANS"
(N) 2" Electric Conduit - Bridge Lighting, see "ROADWAY PLANS"
(O) 2" Future Type of Telephone Conduit, by others
(P) Fire water supply line
(Q) 2" Type of telephone conduit, telephone line and TV cable, by others
(R) 4" PVC cable television conduit, by others
(S) 2"Ø electrical conduit (traffic signal), see "ROADWAY PLANS"
(T) Existing "US101" line configuration
(U) Future "US101" line configuration
(V) Sidewalk and ADA ramp, see "ROADWAY PLANS"
(W) Back up lighting
(X) Bridge planter drainage

NOTES: For typical section, see "GEN. CONTOURS" sheet.

CURVE DATA				
"CA(REALT)" Line	"CA1" Line	"CA2" Line	"CA3" Line	"CA(SB4)" Line
R = 908.12'	R = 3000.00'	R = 4000.00'	R = 4065.88'	R = 160.01'
Δ = 31°22'26"	Δ = 3°11'29"	Δ = 5°00'12"	Δ = 4°25'39"	Δ = 39°01'09"
T = 138.25'	T = 83.97'	T = 175.06'	T = 154.25'	T = 34.45'
L = 269.55'	L = 167.10'	L = 349.53'	L = 308.35'	L = 66.36'

DESIGN	BY Robert Dos	CHECKED Tony Lyons	LOAD & RESISTANCE FACTOR DESIGN	LINE LOADING: MS18 (HS20-44)	PERMIT DESIGN CHECK
DETAILS	BY C. Sigmarson	CHECKED Tony Lyons	LAYOUT BY Robert Dos		CHECKED Tony Lyons
QUANTITIES	BY H. Ko / J. Sedno	CHECKED Mario Gutierrez	SPECIFICATIONS BY Dave Aiello		CHECKED Mario Gutierrez

Michael Davis
DESIGN ENGINEER

STATE OF CALIFORNIA
DEPARTMENT OF TRANSPORTATION

DIVISION OF ENGINEERING SERVICES
STRUCTURE DESIGN
DESIGN BRANCH 7

EA 51-0343
PROJECT NO. 2-64

CASITAS PASS ROAD OVERCROSSING (REPLACE)

GENERAL PLAN NO. 1

ORIGINAL SCALE IN INCHES FOR REDUCED PLANS

FILE = 2351
PROJECT NUMBER & PHASE: 0500000431

CONTRACT NO. 05-0K8704

RECEIVED PRIOR TO ENGINEER DEADLINE REVISION DATE

REVISED PRIOR TO ENGINEER DEADLINE REVISION DATE

SHEET 1 OF 53

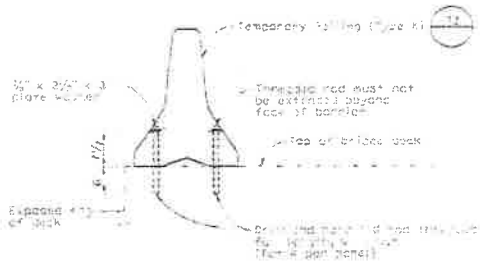

TEMPORARY RAILING (TYPE K) ATTACHMENT DETAIL

No Scale

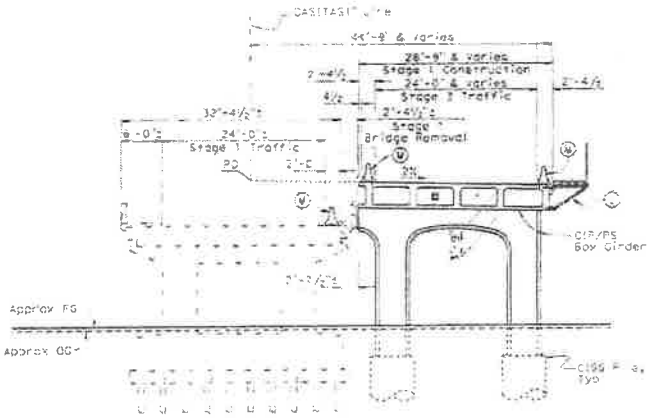

STAGE 1

1/8" = 1'-0"

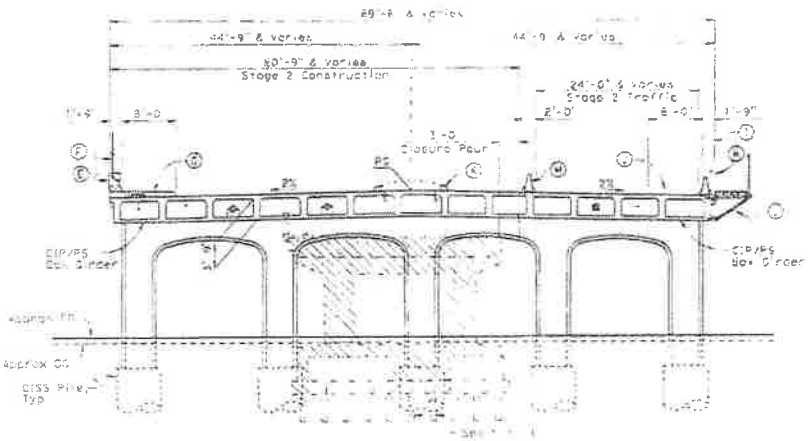

STAGE 2

1/8" = 1'-0"

NOTE:
VERIFY ALL CONTROLLING FIELD DIMENSIONS BEFORE ORDERING OR FABRICATING ANY MATERIAL.

STATE OF CALIFORNIA
DEPARTMENT OF TRANSPORTATION

DIVISION OF ENGINEERING SERVICES
STRUCTURE DESIGN
DESIGN BRANCH 7

CASITAS PASS ROAD OVERCROSSING (REPLACE)

CONSTRUCTION STAGING PLAN

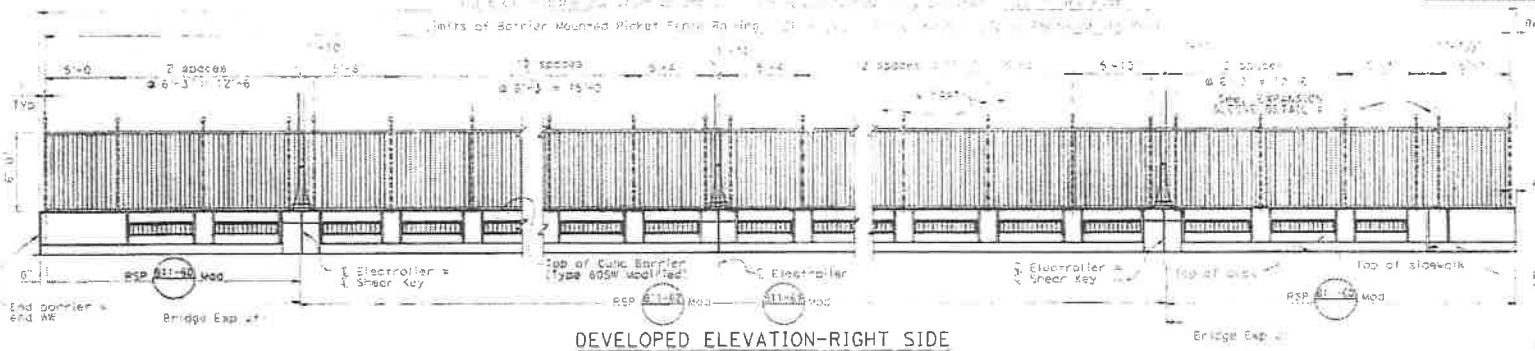

DEVELOPED ELEVATION-RIGHT SIDE

1/4" = 1'-0"

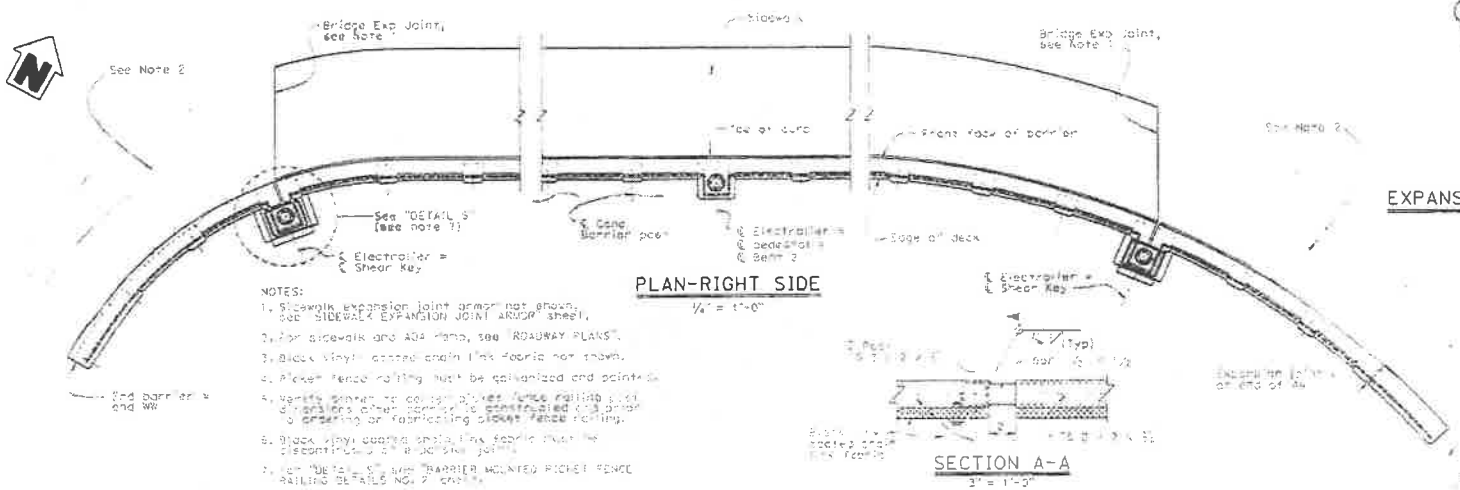

PLAN-RIGHT SIDE

1/4" = 1'-0"

NOTES:

1. Sidewalk expansion joint armor not shown. See "SIDEWALK EXPANSION JOINT ARMOR" sheet.
2. For sidewalk and ADA ramp, see "ROADWAY PLANS".
3. Black vinyl coated chain link fabric not shown.
4. Picket fence railing must be galvanized and painted.
5. Verify dimensions to contact picket fence railing and dimensions other than those controlled shall be verified prior to ordering or fabricating picket fence railing.
6. Black vinyl coated chain link fabric must be discontinuous at expansion joint.
7. For "DETAIL S" see "BARRIER MOUNTED PICKET FENCE RAILING DETAILS NO. 2" sheet.

SECTION A-A

3" = 1'-0"

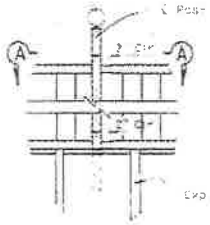

EXPANSION SLEEVE DETAIL A

1" = 1'-0"

NOTE:
Black vinyl coated chain link fabric not shown.

			STATE OF CALIFORNIA DEPARTMENT OF TRANSPORTATION	DIVISION OF ENGINEERING SERVICES STRUCTURE DESIGN DESIGN BRANCH 7	CASITAS PASS ROAD OVERCROSSING (REPLACE)
					BARRIER MOUNTED PICKET FENCE RAILING LAYOUT NO.1

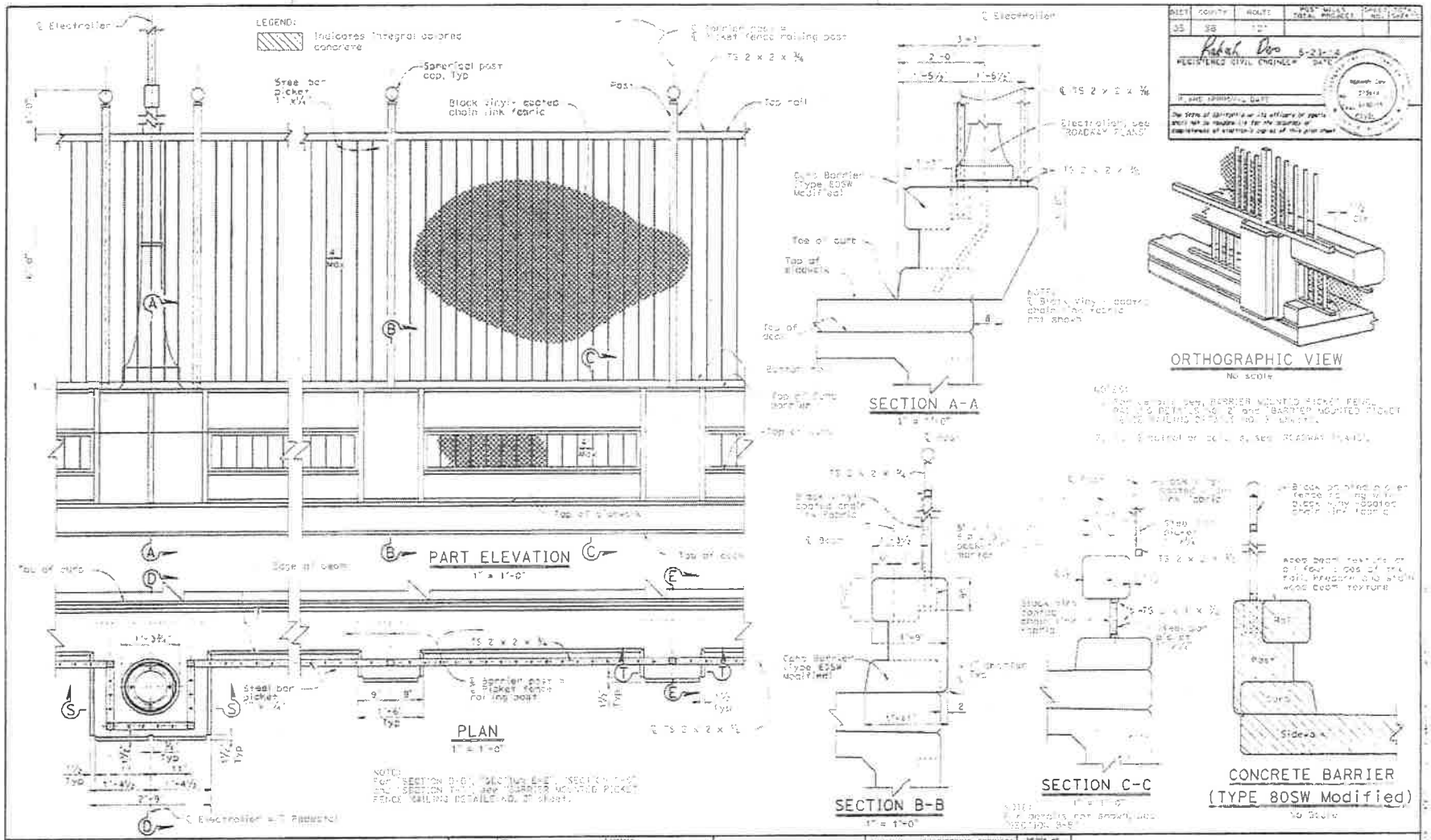
LEGEND:
Indicates integral colored concrete
℄ Electrolier
Spherical post cap, Typ
Steel bar picket
Block vinyl coated chain link fabric
Post
Top rail
℄ Barrier post & picket fence railing post
TS 2 x 2 x ¼
PART ELEVATION
1" = 1'-0"
PLAN
1" = 1'-0"
SECTION A-A
1" = 1'-0"
SECTION B-B
1" = 1'-0"
SECTION C-C
ORTHOGRAPHIC VIEW
No scale
CONCRETE BARRIER
(TYPE 80SW Modified)
No Scale
Electrolier, see "ROADWAY PLAN"
Top of curb
Top of deck
Top of sidewalk
Side of deck
Steel bar picket
Post
Rail
Sidewalk
STATE OF
CALIFORNIA
DEPARTMENT OF TRANSPORTATION
DIVISION OF ENGINEERING SERVICES
STRUCTURE DESIGN
DESIGN BRANCH 7
CASITAS PASS ROAD OVERCROSSING (REPLACE)
BARRIER MOUNTED PICKET FENCE RAILING DETAILS NO. 1

DIST	COUNTY	ROUTE	POST MILES TOTAL PROJECT	SHEET NO. TOTAL SHEETS
05	SB	101		

PROJECT ENGINEER DATE

PLANS APPROVAL DATE

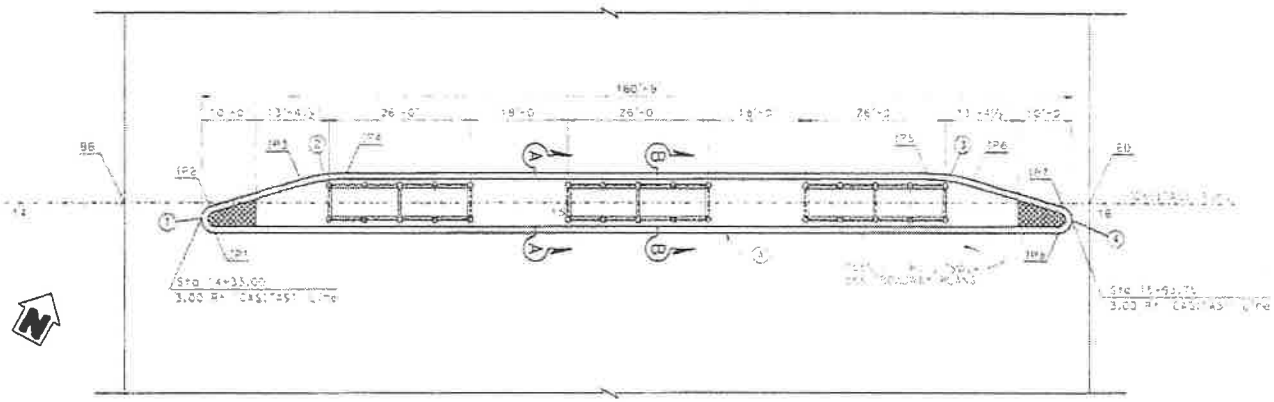

PLAN
1" = 10'

CURVE DATA

No.	R	Δ	T	L
1	20.50'	102°20'50"	23.18'	36.62'
2	20.50'	16°39'25"	4.32'	8.59'
3	29.50'	16°39'25"	4.32'	8.58'
4	[illegible]	102°20'50"	23.18'	36.62'

ISLAND (PLANTER) POINT DESCRIPTIONS

Point	Location or Description
IP1	3.00' Rt Casitas "C" Line, Sta 14+33.00
IP2	3.00' Rt Casitas "C" Line, Sta 14+33.58
IP3	8.65' Lt Casitas "C" Line, Sta 14+44.06
IP4	8.65' Lt Casitas "C" Line, Sta 14+62.50
IP5	8.65' Lt Casitas "C" Line, Sta 15+78.27
IP6	8.65' Lt Casitas "C" Line, Sta 15+92.71
IP7	3.00' Rt Casitas "C" Line, Sta 15+92.19
IP8	3.00' Rt Casitas "C" Line, Sta 15+93.23

Notes:
IP = Island (Planter) Point

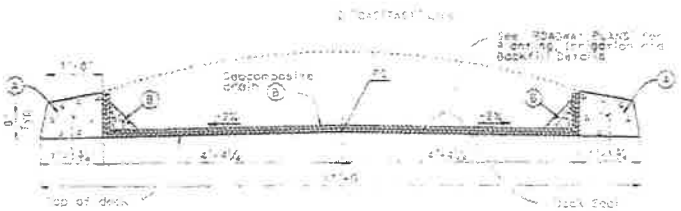

SECTION A-A
1" = 1'-0"

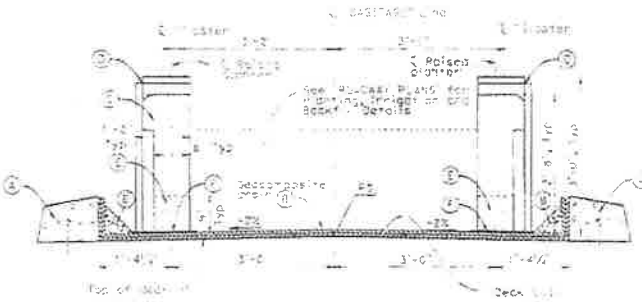

TYPICAL SECTION B-B
1" = 1'-0"

Notes:
For dimensions not shown, see "SECTION A-A".

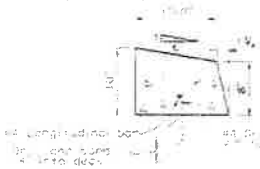

TYPE A3-8 (MOD) CURB
1" = 1'-0"

Notes:
1. Type A3-8 (Mod) curb, integral colored concrete.
2. Drainage details, see "Bridge Surface Drainage" sheet.
3. Planter wall, see "Bridge Planter Details No. 1" & "Bridge Plan and Details No. 2" sheets, integral colored concrete.
4. Planter floor, see "Bridge Plan and Details No. 2" & "Bridge Planter Details No. 1" sheets, integral colored concrete.
5. Planter wall opening, see "Bridge Planter Details No. 1" sheet.
6. ½" Expansion joint filler, see "Bridge Planter Details No. 1" sheet.

DESIGN	[illegible]	CHECKED	[illegible]	
DETAILS	Carla Gerling	CHECKED	[illegible]	
QUANTITIES	[illegible]	CHECKED	[illegible]	

STATE OF CALIFORNIA
DEPARTMENT OF TRANSPORTATION

DIVISION OF ENGINEERING SERVICES
STRUCTURE DESIGN
DESIGN BRANCH 7

BRIDGE NO. 53-0263
POST MILE 2.61

CASITAS PASS ROAD OVERCROSSING (REPLACE)

BRIDGE PLANTER LAYOUT

COUNTY SBD
PROJECT NUMBER & PHASE 0500000147
CONTRACT NO. 05-[illegible]
DESIGNING AGENCY CHANGE
EARLIER REVISION DATE: ——
SHEET 33 OF 53

NOTES:

1. ½" Expansion joint filler to be placed at the bottom of raised planter. Exp. joint filler to be extended 3" beyond limits of raised planter as shown.
2. For "VIEW C-C" and "SECTION D-D" reinforcement, see "BRIDGE PLANTER DETAILS NO. 2" sheet.

LEGEND:

------ Limits of ½" Expansion joint filler

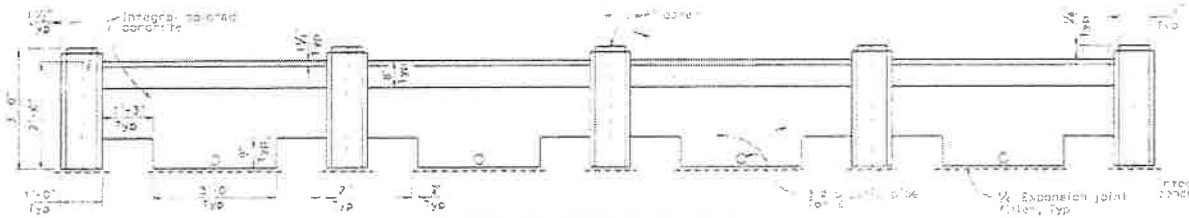

RAISED PLANTER ELEVATION

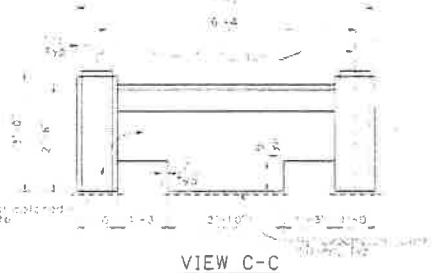

VIEW C-C

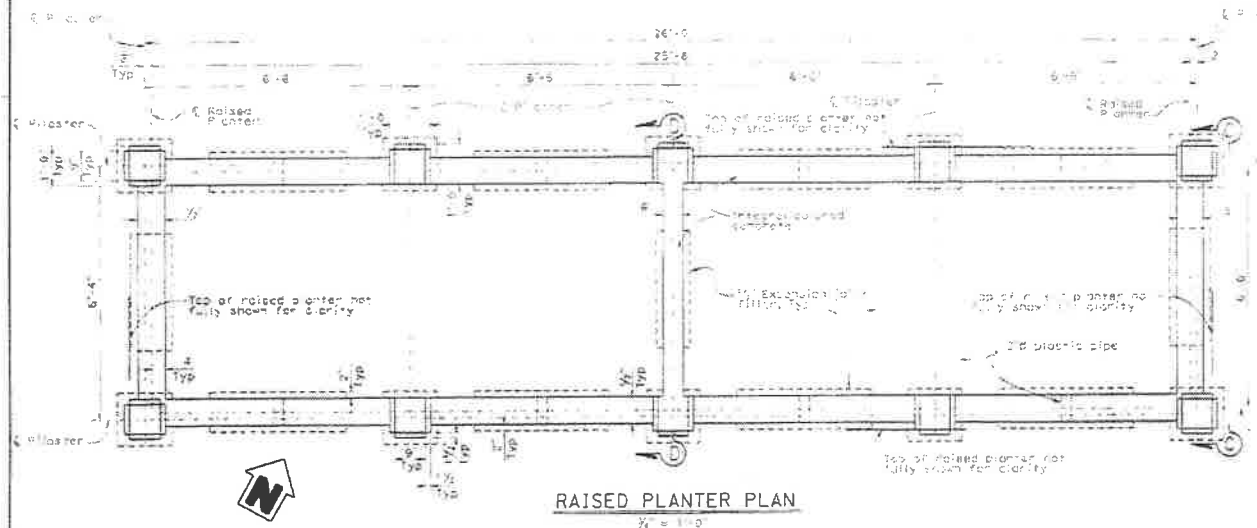

RAISED PLANTER PLAN

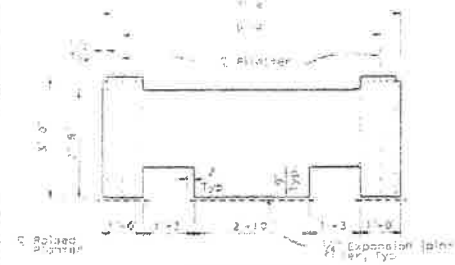

SECTION D-D

NOTE:
Relief not shown.

			STATE OF CALIFORNIA DEPARTMENT OF TRANSPORTATION	DIVISION OF ENGINEERING SERVICES STRUCTURE DESIGN DESIGN BRANCH 7	CASITAS PASS ROAD OVERCROSSING (REPLACE) BRIDGE PLANTER DETAILS NO. 1

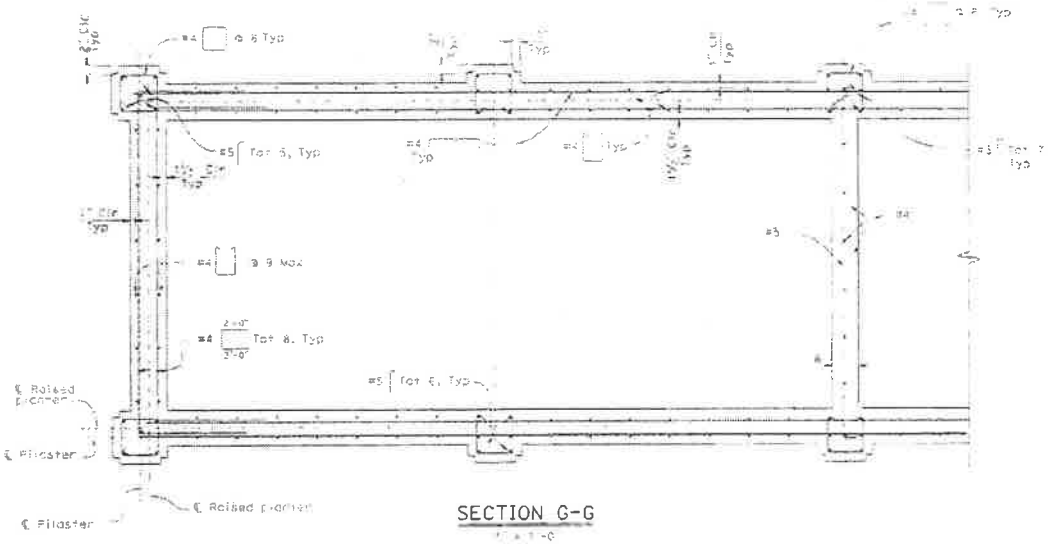

SECTION G-G

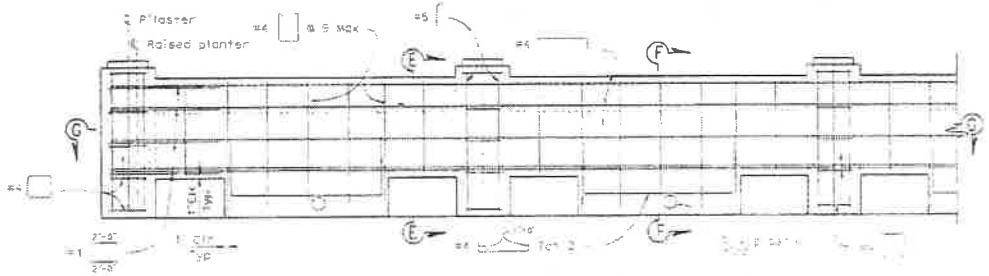

RAISED PLANTER - PART ELEVATION

1" = 1'-0"

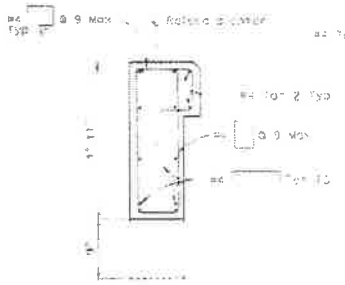

SECTION E-E

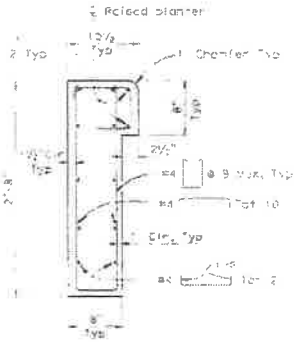

SECTION F-F

1½" = 1'-0"

DESIGN	R. Dao / S. Tsunder		STATE OF CALIFORNIA DEPARTMENT OF TRANSPORTATION	DIVISION OF ENGINEERING SERVICES STRUCTURE DESIGN DESIGN BRANCH 7	CASITAS PASS ROAD OVERCROSSING (REPLACE)
DETAILS	Bruno Jerez				BRIDGE PLANTER DETAILS NO. 2
QUANTITIES					

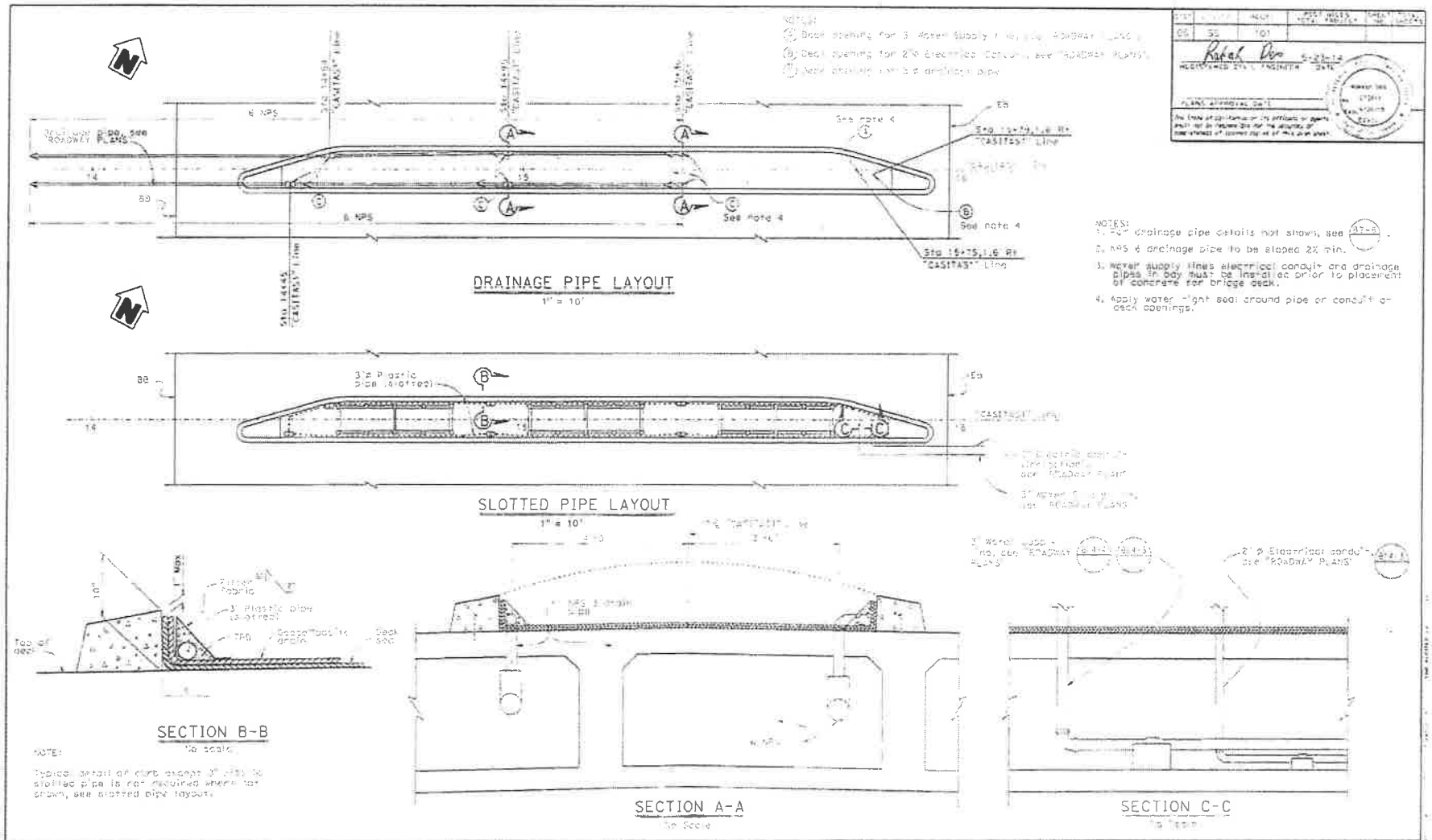

STATE OF CALIFORNIA
DEPARTMENT OF TRANSPORTATION

DIVISION OF ENGINEERING SERVICES
STRUCTURE DESIGN
DESIGN BRANCH 7

CASITAS PASS ROAD OVERCROSSING (REPLACE)

BRIDGE PLANTER DRAINAGE

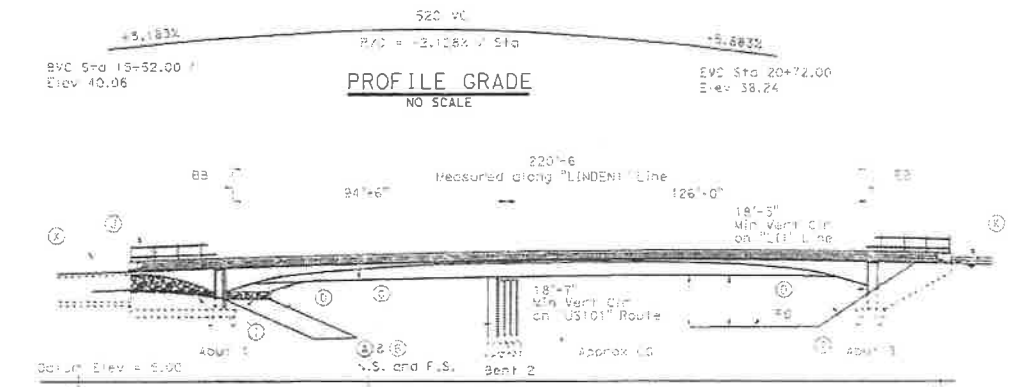

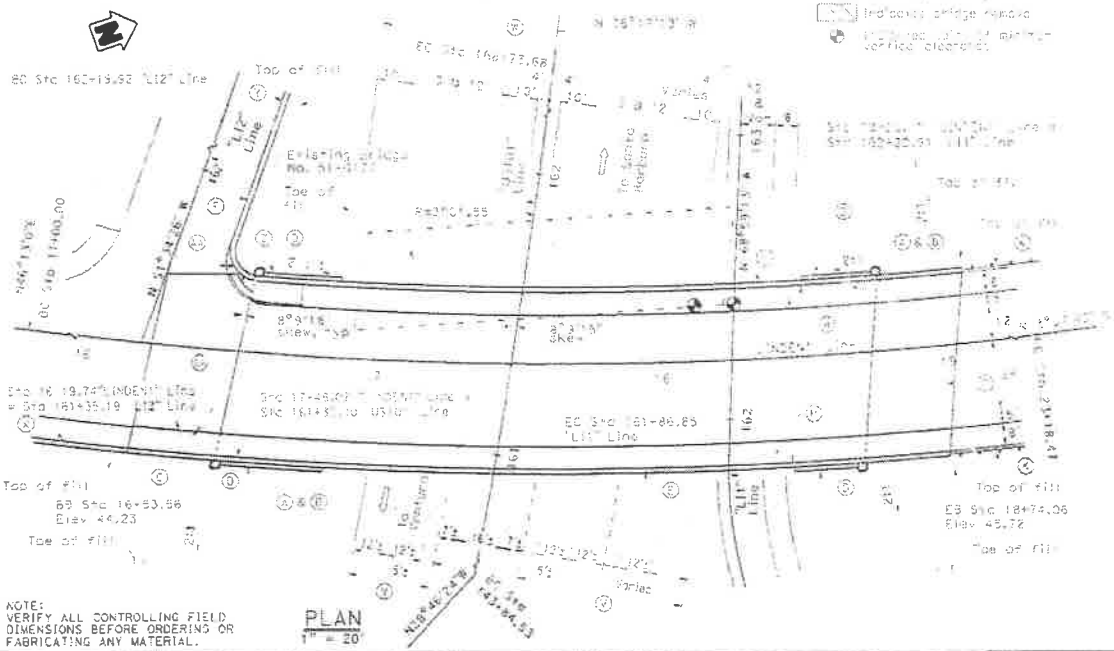

NOTE:
VERIFY ALL CONTROLLING FIELD DIMENSIONS BEFORE ORDERING OR FABRICATING ANY MATERIAL.

NOTE: For Quantities, see "DECK CONTOURS" sheet.

CURVE DATA

"LINDEN" Line	"US101" Line
R = 1400.50'	R = 3001.55
Δ = 49°50'54.91"	Δ = 47°30'52.95
T = 650.31'	T = 1321.18'
L = 1217.47'	L = 2489.15'

"LI1" Line	"LI2" Line
R = 150.00'	R = 1900.00'
Δ = 44°08'39.37"	Δ = 16°53'46.56"
T = 60.82'	T = 146.53'
L = 115.57'	L = 284.90'

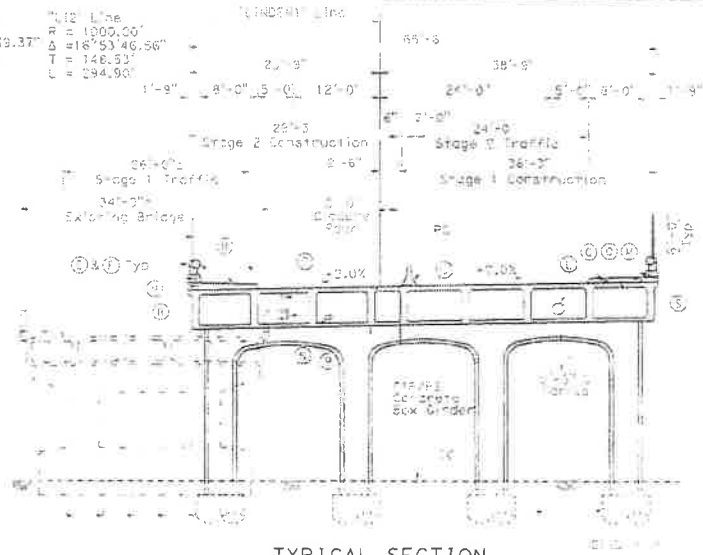

TYPICAL SECTION
1/8" = 1'-0"

NOTES:

1. Paint "Linden Avenue Overcrossing" (R)
2. Paint "Bridge No. 51-0344"
3. Structure Approach Slab "Type N1305"
4. Slope Paving (Split Faced Block texture)
5. Concrete Barrier (Type 80SW Modified)
6. Concrete Barrier (Type 60A Modified)
7. Architectural details on exterior girder (integral), colored sidewalk and barrier (sand-cut block texture and prepare and stain concrete on abutment face and return walls
8. Picket Fence Railing
9. MGS, see "ROADWAY PLANS"
10. City of Carpinteria 12" water line and 20" casing, by others
11. 2" ø electric conduit (decorative lighting), see "ROADWAY PLANS"
12. 4 - 5" Southern California Edison power conduits, by others
13. 4" Cox Cable television conduit, by others
14. 3" water supply line (Bridge)
15. 2 - 4" ø Future utility opening
16. 2" ø electrical conduit (Traffic Signal), see "ROADWAY PLANS"
17. 2" ø electrical conduit (Irrigation), see "ROADWAY PLANS"
18. Deck drainage, see "DECK DRAINAGE DETAILS" sheet
19. Temporary Railing Type K, see "ROADWAY PLANS"
20. Existing "US101" lane configuration
21. Future "US101" lane configuration
22. See "RETAINING WALL 1" plans
23. See "RETAINING WALL 2" plans
24. Sidewalk and ADA ramp, See "ROADWAY PLANS"
25. Traffic signal, see "ROADWAY PLANS"

DIST	COUNTY	ROUTE	POST MILES TOTAL PROJECT	PROJECT TOTAL NO. CONTRACTS
05	SB	101		

Robert Dow 5-23-14
REGISTERED CIVIL ENGINEER DATE

PLANS APPROVAL DATE

The State of California or its officers or agents shall not be responsible for the accuracy or completeness of electronic copies of this plan sheet.

Michael Davis
DESIGN ENGINEER

DESIGN	Keith Stillwaiks	CHECKED Dorrisuan Tanzil	LOAD & RESISTANCE FACTOR DESIGN
DETAILS	2 Fpoz / 2 Jenko	CHECKED Dorrisuan Tanzil	
QUANTITIES	Wendy Hou	CHECKED Fangfang Chen	

STATE OF CALIFORNIA
DEPARTMENT OF TRANSPORTATION

DIVISION OF ENGINEERING SERVICES
STRUCTURE DESIGN
DESIGN BRANCH 7

BRIDGE NO. 51-0344
POST MILE 3.06

LINDEN AVENUE OVERCROSSING (REPLACE)

GENERAL PLAN

UNIT: 2592
PROJECT NUMBER & PHASE: 0500000543
CONTRACT NO.: 05-4285U4
DISREGARD PRINTS BEARING EARLIER REVISION DATE

DIST	COUNTY	ROUTE	POST MILES TOTAL PROJECT	SHEET NO.	TOTAL SHEETS
05	SB	101			

REGISTERED CIVIL ENGINEER — DATE

PLANS APPROVAL DATE

The State of California or its officers or agents shall not be responsible for the accuracy or completeness of electronic copies of this plan sheet.

NOTE: For Quantities, See "DECK CONTOURS" sheet.

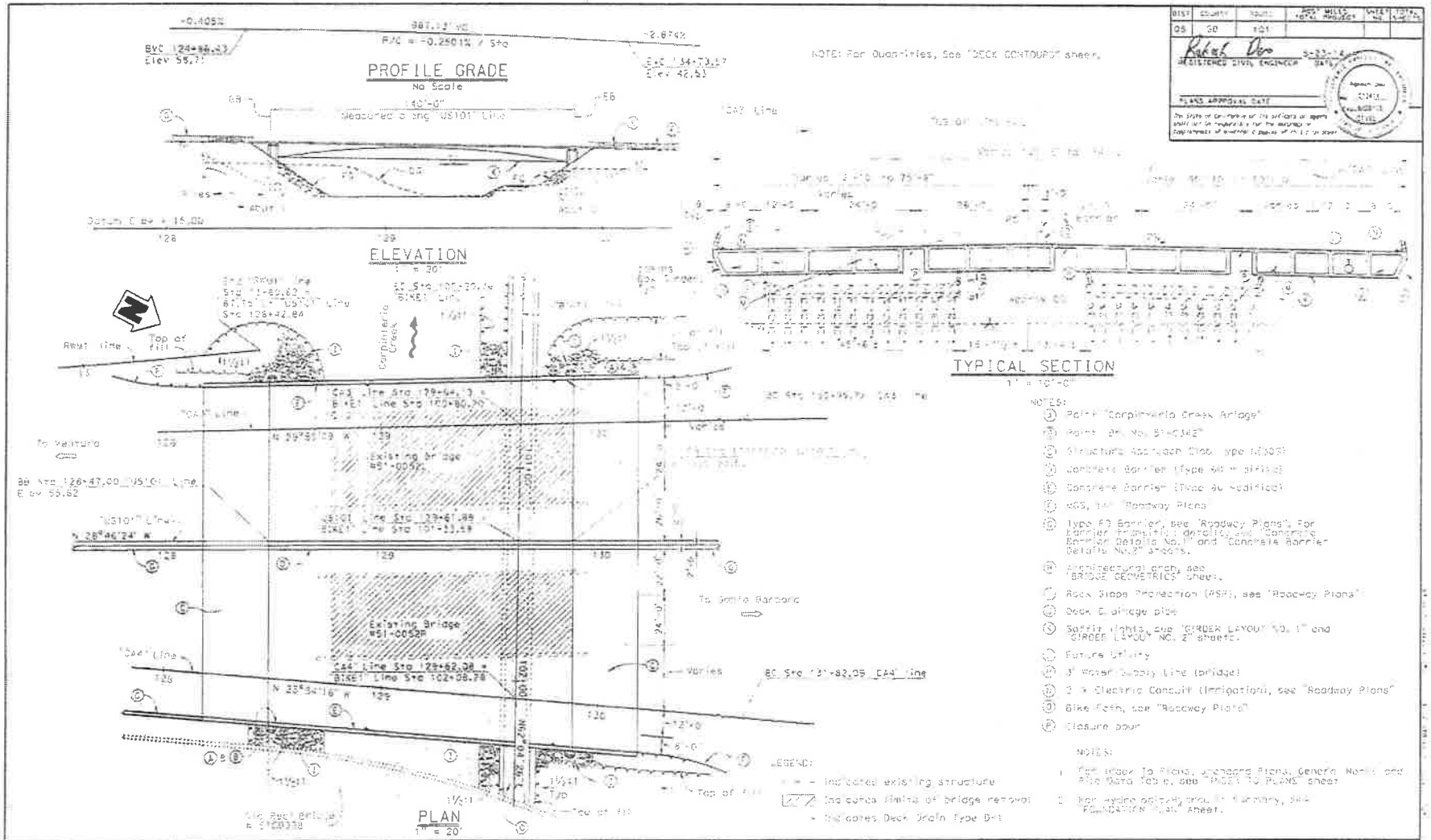

NOTES:

1. Point "Carpinteria Creek Bridge"
2. Point "PM No. 51-0.342"
3. Structure Approach Slab (Type N303)
4. Concrete Barrier (Type 60 - Bridge)
5. Concrete Barrier (Type 60 - Modified)
6. 405, 1:4 "Roadway Plans"
7. Type F3 Barrier, see "Roadway Plans" for Barrier Transition details, and "Concrete Barrier Details No.1" and "Concrete Barrier Details No.2" sheets.
8. Architectural arch, see "BRIDGE GEOMETRICS" sheet.
9. Rock Slope Protection (RSP), see "Roadway Plans"
10. Deck Drainage pipe
11. Soffit lights, see "GIRDER LAYOUT NO. 1" and "GIRDER LAYOUT NO. 2" sheets.
12. Future Utility
13. 3" Water Supply Line (bridge)
14. 3" x Electric Conduit (Irrigation), see "Roadway Plans"
15. Bike Path, see "Roadway Plans"
16. Closure pour

NOTES:

1. For Index To Plans, Standard Plans, General Notes and Pile Data Table, see "INDEX TO PLANS" sheet
2. For Hydraulic Data, see "Summary, Bridge FOUNDATION PLAN" sheet.

DESIGN					
DETAILS					
QUANTITIES					

STATE OF CALIFORNIA
DEPARTMENT OF TRANSPORTATION

DIVISION OF ENGINEERING SERVICES
STRUCTURE DESIGN
DESIGN BRANCH 7

CARPINTERIA CREEK BRIDGE (REPLACE)

GENERAL PLAN

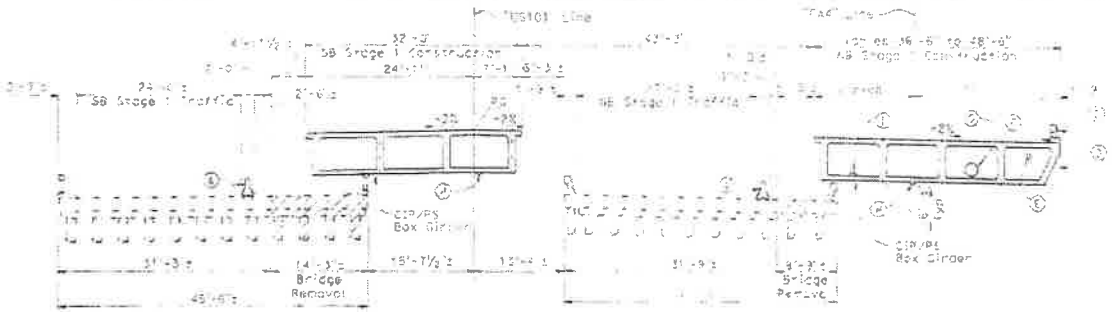

STAGE 1 CONSTRUCTION

1/8" = 1'-0"

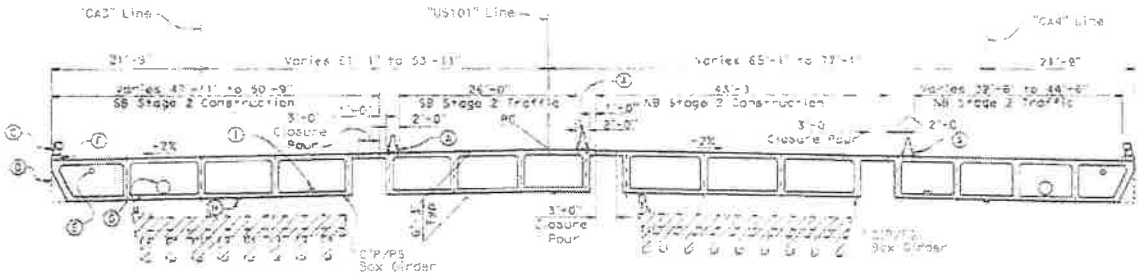

STAGE 2 CONSTRUCTION

1/8" = 1'-0"

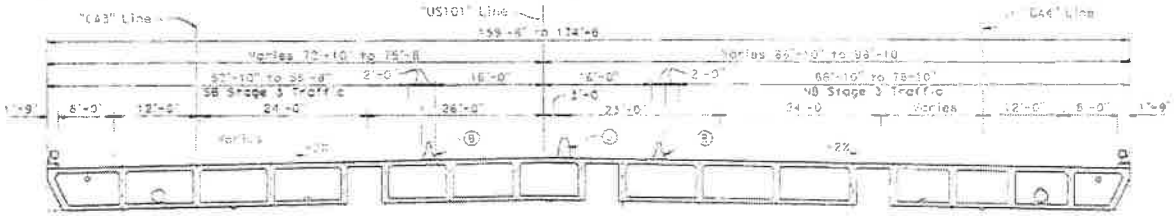

STAGE 3 CONSTRUCTION

1/8" = 1'-0"

NOTE:
VERIFY ALL CONTROLLING FIELD DIMENSIONS BEFORE ORDERING OR FABRICATING ANY MATERIAL.

LEGEND:

- Top of bridge deck
- Indicates limits of bridge removal

NOTES:

(1) Temporary Railing, Type K, see "ROADWAY PLANS"
(2) Concrete Barrier (Type 60 Modified)
(3) Architectural Grid, See "BRIDGE GEOMETRICS" sheet
(4) Deck Drainage pipe
(5) 2" ø Electric Conduit (Irrigation), see "ROADWAY PLANS"
(6) Future Utility
(7) Specific lights, see "GIRDER LAYOUT NO. 1" and "GIRDER LAYOUT NO. 2" sheets.
(8) 3" Water Supply Line (Bridge)
(9) Concrete Barrier (Type 60 Modified)

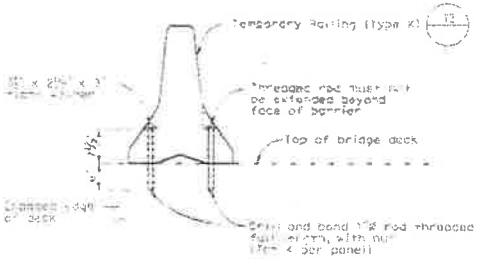

TEMPORARY RAILING (TYPE K) ATTACHMENT DETAIL

No Scale

			STATE OF CALIFORNIA DEPARTMENT OF TRANSPORTATION	DIVISION OF ENGINEERING SERVICES STRUCTURE DESIGN DESIGN BRANCH 7	CARPINTERIA CREEK BRIDGE (REPLACE) STAGE CONSTRUCTION

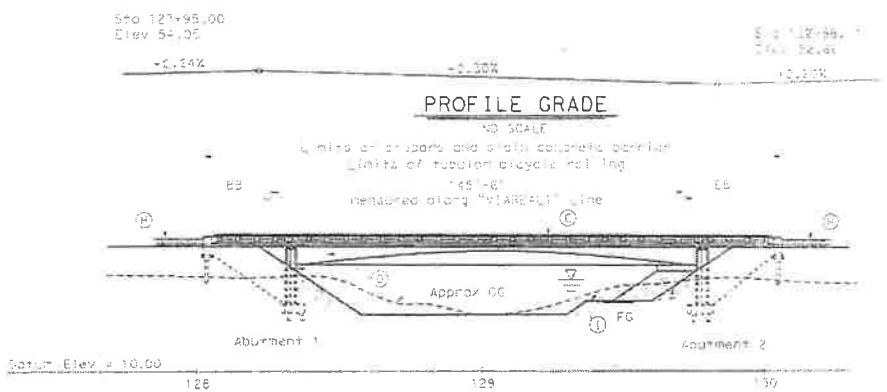

ELEVATION

1" = 20'

NOTES:

1. Prime File Deck Bridge
2. Permit No. 51C0339
3. Structure approach is on tangent
4. Concrete Barrier (Type 80) modified
5. Concrete Barrier (Type 80) modified
6. Tubular Bicycle Railing
7. Rock Slope Protection or (RSP), see "HIGHWAY PLANS"
8. MSE, see "ROADWAY PLANS"
9. Bike Path, see "ROADWAY PLANS"
10. Future utility
11. Two 4"Ø conduits for future utility
12. Architectural grids, see "BRIDGE GEOMETRICS" sheet
13. 2"Ø Electric conduit (irrigation), see "ROADWAY PLANS"
14. 3" Water supply line (bridge)
15. Deck Drainage
16. Soffit light, see "GIRDER LAYOUT" sheet

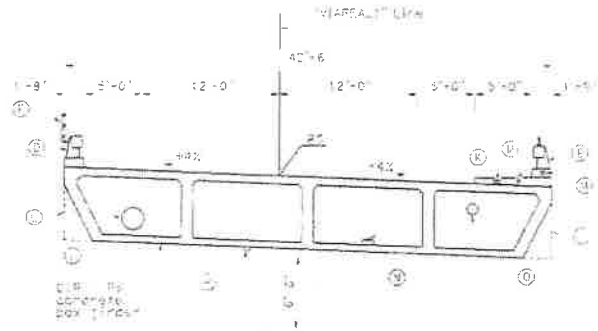

TYPICAL SECTION

1" = 5'

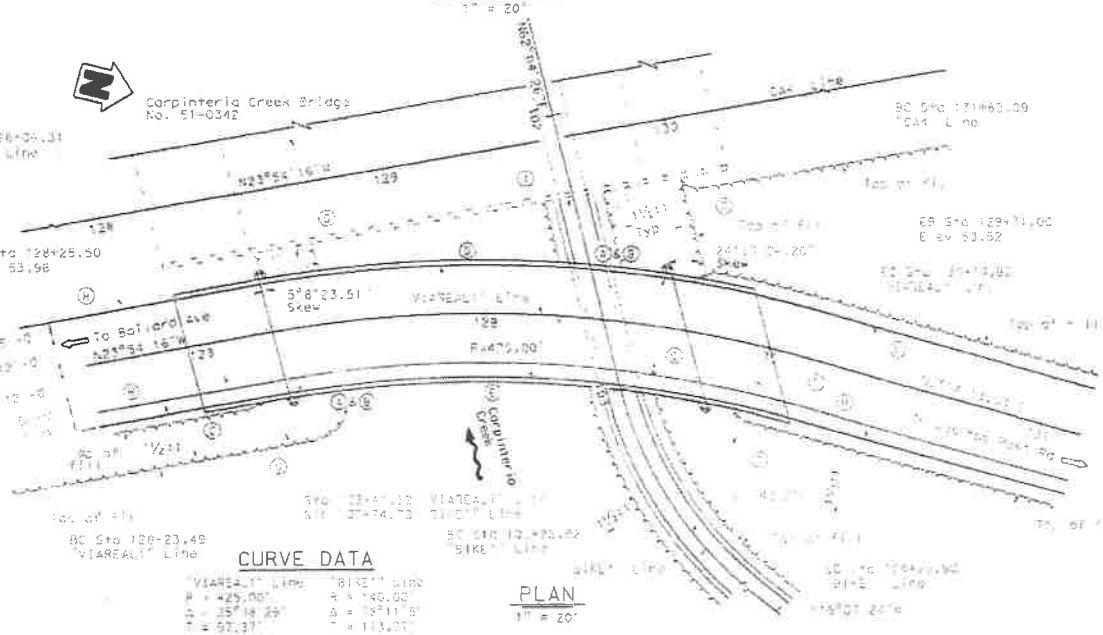

PLAN

1" = 20'

NOTES:

1. For Index To Plans, Standard Plans, General Notes and Pile Data Table, see "INDEX TO PLANS" sheet
2. For Hydrologic/Hydraulic Summary, see "FOUNDATION PLAN" sheet.

CURVE DATA

"VIAREAL" Line	"BIKE" Line
R = 425.00'	R = 140.00'
Δ = 25°18'29"	Δ = 39°11'5"
T = 97.37'	T = 113.20'
L = 191.42'	L = 107.07'

DESIGN	BY D. Deaso / R. Cao	CHECKED Peter Sohr	LOAD & RESISTANCE FACTOR DESIGN	LIVE LOADING HL93 AND SEMI-TRUCK PERMIT DESIGN VEHICLE			
DETAILS	BY Y. Kang / G. Gilchrist	CHECKED Peter Sohr	LAYOUT	BY Edward Denis	CHECKED R. Cao		
QUANTITIES	BY Peter Anderson	CHECKED Yoshio Ohno	SPECIFICATIONS	BY Gene Nieto	CHECKED Roger Rios		

Michael Jenks
DESIGN ENGINEER

DATUM: NGVD 29 (MSL)
FOR BRIDGE PLANS

STATE OF CALIFORNIA
DEPARTMENT OF TRANSPORTATION

DIVISION OF ENGINEERING SERVICES
STRUCTURE DESIGN
DESIGN BRANCH 7

BRIDGE NO. 51C0339
POST MILE 2.44

UNIT: 92
PROJECT NUMBER & PHASE: 0500C0361.11
CONTRACT NO. 05-0A6204

VIA REAL BRIDGE
GENERAL PLAN

HIGHLIGHT PRINTS BEARING EARLIER REVISION DATES

ATTACHMENT 1

City Council
Resolution No. 5632

Exhibit C – Conditions of Approval
Project 09-1522-CUP/CDP

November 23, 2015

EXHIBIT C

CONDITIONS OF APPROVAL

PROJECT 09-1522-CUP/CDP

Linden Avenue and Casitas Pass Road Interchanges and Via Real Extension

November 23, 2015

The Conditions set forth in this permit affect the title and possession of the real property which is the subject of this permit and shall run with the real property or any portion thereof. All the terms, covenants, conditions and restrictions herein imposed shall be binding upon and inure to the benefit of the owner (applicant, developer), his or her heirs, administrators, executors, successors and assigns. Upon any sale, division or lease of real property, all the conditions of this permit shall apply separately to each portion of the real property and the owner (applicant, developer) and/or possessor of any such portion shall succeed to and be bound by the obligations imposed on the owner (applicant, developer) by this permit.

1. **Permitted Development.** The development approved by the City Council on November 23, 2015 is limited to the Linden Avenue and Casitas Pass Road Interchanges and Via Real Extension (Project 09-1522-CUP/CDP), consisting of the improvements shown on the plans and written project description below, and the conditions of approval on file at the City of Carpinteria, subject to further City review and approval as detailed below.

   The Linden Avenue and Casitas Pass Road Interchanges and Via Real Extension consists of replacing both the Linden Avenue and Casitas Pass Road US 101 overcrossings, reconfiguring the northbound on and offramps at Casitas Pass Road, extending the northbound Linden Avenue onramp, rebuilding the southbound Linden Avenue offramp, replacing the US 101 freeway bridges over Carpinteria Creek, constructing four soundwalls along the US 101 corridor and extending Via Real to Casitas Pass Road and to Linden Avenue. The following bulleted summary provides highlights of the major components of the proposal.

   - Replace, widen, lengthen and raise the northbound and southbound US 101 Carpinteria Creek Bridges.
   - Extend Via Real from the cul de sac at San Roque Mobile Home Park over Carpinteria Creek to Linden Avenue, building a new bridge for Via Real over Carpinteria Creek (including one vehicle travel lane in each direction, one Class II bike path in each direction and a five-foot wide sidewalk on the north side).
   - A 535-foot linear section of Carpinteria Creek would be widened to accommodate the US 101 and Via Real bridges over Carpinteria Creek. The width of the channel bottom would be widened from approximately 35 feet to 65 feet. The width between the creek banks would be widened from approximately 110 feet to 140 feet. An estimated 5,000 cubic yards of material would be excavated from the creek channel, including 638 cubic yards of material below the new widened channel. An estimated 4,850 cubic yards of rock slope protection (RSP) would be installed along the restored banks of Carpinteria Creek and in adjacent areas, including approximately 393 cubic yards of RSP below the widened channel.

- Construct a Class I bike lane between Casitas Pass Road and the existing Carpinteria Creek Class I bike lane adjacent to Carpinteria Creek and remove the existing bike path that crosses Carpinteria Creek connecting to the cul de sac terminus of Via Real near Carpinteria Creek Park.
- Reconstruct the US 101 Casitas Pass Road southbound on and offramps. Remove the existing US 101 Casitas Pass Road northbound on and offramps and build new northbound on and offramps to be accessed from the Via Real frontage road extension. Install signals at the intersections of Via Real and the northbound US 101 Casitas Pass Road on and offramps, Casitas Pass Road and Via Real, and Casitas Pass Road and the southbound US 101 on and offramps.
- Replace the Casitas Pass Road US 101 overcrossing with a five-lane bridge structure including bike lanes and sidewalks on both sides. The overcrossing would initially include a planted median in the center lane leaving four lanes for vehicle traffic; the center planted median could be removed to accommodate future traffic volumes, if necessary, to be replaced by a two-way left turn to facilitate northbound and southbound US 101 onramp turning movements.
- Remove the existing US 101 southbound offramp and build a new southbound offramp at Linden Avenue. Remove the existing US 101 northbound Linden onramp and build a new roundabout, including the new northbound onramp as one of the four legs. Reconfigure Ogan Road to form a third connection to the new roundabout, located on its northeastern side. Install signals at the intersections of Linden Avenue and Ogan Road, and Linden Avenue and the southbound US 101 offramp.
- Replace the US 101 Linden Avenue overcrossing with a three-lane bridge structure, including bike lanes and sidewalks on both sides.
- Prior to construction of the new Via Real bridge, relocate the existing aboveground sewer line at Carpinteria Creek 20 feet below the creek bed parallel to Via Real.
- Construct the following soundwalls:
    - Soundwall B-4 along northbound US 101 located between Via Real and US 101, between the existing soundwall and the Verizon property (APN 003-161-001);
    - Soundwall B-7 along southbound US 101, between Church Lane and Vallecito Road;
    - Soundwall B-2 along northbound US 101, between Linden Avenue and Franklin Creek Bridge;
    - Soundwall B-9 along southbound US 101, between Franklin Creek and the end of the existing soundwall along the Linden Avenue southbound offramp.

As a condition of project approval, the following project elements and variations shall be incorporated into proposed plans and the project description and detailed more specifically subject to approval of the Community Development Director in consultation with the Public Works Director as follows:

1.1. ***Nipomo Drive Soundwall (B-2):*** The installation of this soundwall shall be achieved at the earliest practical point in the construction of the project.

1.2. ***Temporary Construction Staging Areas:*** The applicant shall submit to the Public Works Director for approval any areas intended for temporary staging of construction equipment and materials which are proposed to be located outside of the US 101 right-of-way.

1.3. ***Road Surfacing:*** Road surfacing shall be made as smooth as possible and lower-noise generating surfacing materials shall be utilized to minimize long-term noise and vibration effects.

1.4. ***Construction Storm Water Pollution Prevention:*** The following measures shall be implemented during project construction:

1.4.1. Best available erosion and sediment prevention and control measures, both structural and non-structural, such as:

- Stabilize disturbed areas with vegetation, mulch, geotextiles or similar method;
- Trap sediment onsite using fiber rolls, silt fencing, sediment basin or similar method;
- Ensure vehicles onsite are parked on areas free from mud; monitor site entrance for mud tracked offsite; and
- Prevent blowing dust from exposed soils.

1.4.2. Best Management Practices to provide adequate sanitary and waste disposal facilities and prevent contamination of runoff by construction chemicals and materials, such as:

- Control the storage, application and disposal of pesticides, petroleum and other construction and chemical materials;
- Site washout areas to be located more than 50 feet from a storm drain, open ditch or surface water and ensure that runoff flows from such activities do not enter receiving water bodies;
- Provide sanitary facilities for construction workers;
- Provide adequate disposal facilities for solid waste produced during construction and recycle where possible.

2. **Plan Review and Approval by City.** At several steps in the development of the improvement and construction plans, the project shall be subject to further review and approvals from City Departments, the Architectural Review Board (ARB) and other agencies (e.g., Carpinteria-Summerland Fire Protection District). Caltrans shall submit design plans for the Linden Avenue and Casitas Pass Road Interchanges and Via Real Extension on State of California plan format for City approval at the following intervals: 95% completion plans prior to final ARB review and *final plans* prior to commencement of construction. The applicant shall submit project plans in accordance with the City of Carpinteria final Architectural Review Board process. Plans shall address design comments made by the ARB as identified in their meeting minutes of May 16, 2013. The Architectural Review Board shall review the architectural design of all structures, landscaping and proposed project signage for aesthetics, compatibility and community character issues in accordance with General Plan/Coastal Plan policies.

3. **95% Project Plans.** The following plans and information shall be submitted to the City prior to or concurrently with submittal of 95% Completion Project Plans for review and approval by Community Development in consultation with Public Works prior to final review by the Architectural Review Board.

   3.1. ***Storm Water Quality Measures.*** Storm water treatment system details shall be submitted for approval by the Public Works Department. Plans shall identify and describe the proposed storm water treatment devices to be installed for treating runoff from the new overcrossing and bridge structures, freeway ramps and Via Real, including any new drains installed as part of the project. Storm water treatment devices shall consist of vegetated strips, bio-swales or equivalent. Treatment devices shall have the capacity to treat the first one inch of rainfall and shall have pollutant removal rates consistent with Caltrans' approved NPDES permit if placed on Caltrans property, and shall meet the Central Coast Regional Water Quality Control Board Post-Construction Requirements if placed on City or private property. Plans submitted for approval shall include all systems, including vegetated swales, filters, detention ponds, trash racks, interceptors, etc. Plans shall show any proposed connections or upgrades to the City storm drain system on drainage plans, flow conveyance systems (ditches, dikes, berms and swales), energy dissipaters, hard surface for slope protection systems and vegetated systems, and shall preserve existing vegetation where possible. Permanent storm water systems shall comply with post-construction coastal water quality standards contained in the Transportation Corridor Wetland Overlay District (CMC Section 14.45.030.5).

   3.2. ***Drainage Plans.*** Final drainage design and calculations shall be submitted to Public Works for review and approval of all drainage improvements and shall reflect all upgrades to existing infrastructure required by additional flows. Where feasible, construction of any new culverts shall commence at the downstream end and may be completed in phases according to the overall construction schedule. Applicant shall provide Storm Water Pollution Prevention Plan (SWPPP) requirements to bidders for proposed construction prior to accepting bids.

   3.3. ***Agency Cooperative Agreements - Pre-Construction.*** Provide a draft Agency Cooperative Agreement between Caltrans, SBCAG, City of Carpinteria and any other entities carrying forward the project, setting forth pre-construction activities affecting City streets and facilities related to the subject project, including responsibility for environmental permitting, project design, drainage considerations, coordination of City permits for improvements (encroachments) located outside of the US 101 corridor, relocation of existing utilities, provision for any applicable fees, identification of any required project construction staging areas specifically located on City-owned properties and rights-of-way, if any, and other essential elements.

   3.4. ***Right-of-Way Map(s) and Actions.*** Provide copies of Right-of-Way Record Maps showing data applicable to the project area as necessary to verify location of US 101 rights-of-way, City rights-of-way and any affected adjacent properties (in lieu of preliminary title reports). Depict locations of affected City streets adjacent to US 101 travel lanes on all plans (i.e., Layout plans, Drainage plans, Utility plans, etc.).

3.5. ***Recycling Plan.*** Submit to the Public Works Director for approval a waste reduction plan including a completed Construction and Demolition Waste Diversion Plan that demonstrates how at least 65% of the project demolition and construction waste will either be re-used or recycled. Construction and Demolition Waste quantities shall be reported to Public Works on a semi-annual basis during construction.

3.6. ***Traffic Management Plan.*** Provide a detailed Traffic Management Plan for review by Public Works, Community Development, Carpinteria-Summerland Fire Protection District and the Santa Barbara County Sheriff's Office, and obtain approval from the Public Works Director in consultation with the Community Development Director. The plan shall identify:

3.6.1. Construction Phases. Project construction stage exhibits including work descriptions.

3.6.2. Staging and Parking Areas. Equipment staging, materials storage and construction worker parking areas.

3.6.3. Truck Routes. Construction truck routes to minimize noise and traffic effects to residential neighborhoods.

3.6.4. Ramp Closures and Detours. Any proposed closures of US 101 ramps and/or detours, by construction stage.

3.6.5. City Street Closures and Detours. Any proposed closures of City streets and/or detours, by construction stage.

3.6.6. Signs and Traffic Control Measures. Signage and other planned temporary traffic control measures, by construction stage.

3.6.7. Public Awareness. A program for public awareness and outreach to commuters, property owners, businesses, residents and agencies affected by project construction.

3.6.8. Public Relations Committee. Applicant is required to form and support a Public Relations Committee consisting of Caltrans, SBCAG, a public relations consultant, business representatives, residents, transit and public safety agencies and City representatives. The Committee shall meet regularly prior to and during construction. Applicant shall review construction, construction phasing, mitigation measures, public relations efforts and permit conditions of approval with the committee. Applicant shall consider feedback and comments from the committee and the general public throughout project construction and make necessary adjustments in response to problems and/or concerns when possible.

3.6.9. Maintenance of Access. Plans for providing access to businesses, coastal dependent uses and recreational uses during construction.

3.6.10. Motorist Information Measures. Elements such as radio announcements and appropriate signage.

3.6.11. Incident Response Measures. Strategies such as COZEEP and freeway service patrol.

3.6.12. Alternative Transportation and Transportation Demand Management (TDM). Incentives and other measures to increase use of alternative modes of transportation, flexible hours and TDM.

3.6.13. Coordination and Reporting. A program for ongoing reporting and coordination with the City and other affected agencies throughout construction.

3.7. ***Long-Term Impact Mitigation Measures:*** Applicant shall submit the following information describing long-term mitigation measures required in the EIR and Addendum and/or included in the Project Description:

3.7.1. Parks and Recreation. [EIR Mitigation 2.1.1.4]

- Public access to Carpinteria Creek Park shall be provided from the proposed extension of Via Real.
- The Class I bicycle path shall be replaced with an Americans with Disabilities Act (ADA) compliant bicycle path.
- When the Class I bicycle path requires closure, Caltrans shall provide a minimum seven-day public notice of the closure and designated detour routes.

3.7.2. Population Relocation. [EIR Mitigation 2.1.3.1]

- Adequate replacement housing shall be made available to relocate all permanently displaced residents within the community.

3.7.3. Natural Communities [EIR Mitigation 2.3.1]

- Caltrans shall comply with regulatory agencies' recommendations.
- Environmentally Sensitive Area (ESA) fencing shall be installed to limit construction activities and protect biological habitats of concern. Proposed ESA fencing shall be established at all wetlands, riparian areas, oak tree areas and all areas of wildlife habitat in order to avoid, minimize and reduce potential impacts to biological resources. ESA fencing locations shall be determined in the Plans, Specifications and Estimates (PS&E) phase of the project. [Addendum Mitigation]
- All oaks and native trees and shrubs that will remain in the project vicinity shall be delineated on plans and fenced in the field as environmentally sensitive areas.
- To comply with the Migratory Bird Treaty Act, if an active bird nest is found in the work area, a buffer area shall be identified and delineated in the field (e.g., using stakes, flagging or equivalent) until nesting activity has ceased. The buffer established around the active nest shall have a radius of 50 to 100 feet, as determined by the City Biologist.

- Revegetation shall occur in disturbed areas.
- Replacement planting of riparian trees greater than four inches diameter at breast height (dbh) shall be at a 3:1 ratio.
- Removal of a remaining root ball of invasive giant reed (*Arundo donax*) on the north bank of Carpinteria Creek within and adjacent to the property at 1212 Casitas Pass Road shall be included as part of this project.
- Oak replacement plantings shall be at a 10:1 ratio at one gallon size for each oak tree greater than four inches diameter at breast height (dbh) removed during construction. A reduced ratio of 3:1 may be used for 15-gallon size replacement trees.
- Tree and vegetation removal shall be scheduled from September 2 through February 14 to avoid nesting birds, if possible. If vegetation removal must occur during the nesting season (February 15 - September 1), a qualified biologist shall conduct surveys no more than 14 days prior to removal to ensure no nests are present or have been vacated.
- Removal of ornamental/landscape and non-native trees shall require replacement at a ratio of 1:1 using native trees.
- Both riparian trees and oak trees shall have a three-year plant establishment period.

3.7.4. Wetlands and Other Waters

- Applicant shall submit detailed restoration plans which shall achieve mitigation of project impacts on biological habitat areas at the following minimum ratios, in accordance with the development standards contained in the Transportation Corridor Wetland Overlay District (CMC §14.45.030.3). Adverse direct impacts shall be mitigated at a ratio of 4:1 for natural wetland areas, including salt marsh and wetlands associated with creeks. Adverse direct impacts to riparian habitats shall be mitigated at a ratio of 3:1. Adverse direct impacts to created wetlands (low functioning wetlands associated with freeway infrastructure) shall be mitigated at a ratio of 3:1. Indirect impacts to wetlands, such as development in wetland buffer areas, shall be mitigated by enhancing (e.g., invasive species removal, native screening vegetation, planting appropriate native species, water quality improvement, sound reduction) all portions of the remaining (undeveloped) wetland buffer area within 100 feet of the impacted wetland. Temporary direct and indirect impacts to wetlands and riparian habitat shall be mitigated at a ratio of 1:1.
- The project shall incorporate environmentally sensitive area fencing; diversion shall be restricted to June 1 and October 31; cofferdam construction is required. [EIR Mitigation 2.3.2]

- Restoration of 0.059 acre (2,570 square feet) of wetlands and 0.272 acre/11,761 square feet of federal other waters shall be conducted. [EIR Mitigation 2.3.2]

3.7.5. Animal Species [EIR Mitigation 2.3.4]

- Caltrans shall comply with regulatory agencies' recommendations.
- Environmentally Sensitive Area fencing shall be installed prior to beginning construction and depicted in the final design layout plans.
- Bird nests exclusionary methods shall be employed at the US 101 Carpinteria Creek Bridges prior to and during construction.

3.7.6. Steelhead Trout [EIR Mitigation 2.3.5]

- Applicant shall comply with regulatory agencies' recommendations.
- Construction within or adjacent to Carpinteria Creek shall only take place during low flow conditions between June 1 and October 31 to avoid migrating steelhead trout.
- Following water diversion installation, any remaining fish within the area to be dewatered shall be removed using a seine and dip nets. Any steelhead trout encountered during the seining of the dewatered area shall be relocated to a suitable location in Carpinteria Creek.
- Soil exposed as a result of the project shall be revegetated using native hydroseeding or live planting methods.
- Applicant shall grade and contour the slope and surrounding area of the creek bed to widen the channel, per project plans, and restore habitat in and around Carpinteria Creek.
- Applicant shall remove the at-grade concrete bike and pedestrian crossing over Carpinteria Creek to create a free-flowing and natural channel bottom.
- A 3:1 areal replacement ratio shall be employed for all riparian vegetation (other than riparian trees) removed.
- Removal of a remaining root ball of invasive giant reed *(Arundo donax)* on the north bank of Carpinteria Creek within and adjacent to the property at 1212 Casitas Pass Road shall be included as part of this project.
- Applicant shall consult with National Oceanic and Atmospheric Administration Fisheries under Section 7 of the Endangered Species Act and comply with all requirements of the Biological Opinion.
- Fish passage shall be maintained during and after construction.
- Applicant shall obtain a Construction General Permit under the existing Caltrans National Pollution Discharge Elimination System Permit (WQO 2012-0011 DWQ) from the State Water Resources Control Board.

3.7.7. Tidewater Goby [EIR Mitigation 2.3.5]

- Applicant shall comply with regulatory agencies' recommendations.
- The window of work for construction within or adjacent to Carpinteria Creek and Franklin Creek shall be during the low flow period between June 1 and October 31.
- Only qualified personnel authorized under the Biological Opinion shall participate in activities associated with the capture, handling and relocation of tidewater gobies. The names and credentials of personnel who will conduct these activities shall be supplied to the US Fish and Wildlife Service for review and approval at least 30 days prior to the onset of these activities.
- Pump intakes shall be completely screened with wire mesh no larger than three millimeters.
- If present during the de-watering effort, as many tidewater gobies as possible shall be removed prior to draining the site. After barriers are constructed, tidewater gobies shall be captured, transported in buckets and released in the most appropriate habitat immediately adjacent to the de-watered area. If a beach seine is used, it shall be pulled to shore in a deliberate manner with care being taken to avoid rolling the lead line inward. The number of tidewater gobies shall be estimated prior to release. All debris and aquatic and emergent vegetation in the pumped area shall be carefully inspected for tidewater gobies and other vertebrates. As the work site is diverted, remaining pools shall be inspected for tidewater gobies. As many individuals as possible shall be captured using dip nets and other appropriate tools and moved as described above. Handling time for tidewater gobies shall be minimized.
- In work areas that have been dewatered, water above the barrier shall be released or pumped downstream at an appropriate rate to maintain downstream flows during construction. Upon completion of construction activities, the barriers to flow shall be removed in a manner that will allow flow to resume with the least disturbance to the substrate.
- Fish passage shall be maintained during and after construction.
- Environmentally Sensitive Area fencing shall be installed prior to beginning construction and depicted in the final design layout plans.
- Applicant shall restore the contour, slope and surrounding area of the creek bed to pre-construction conditions or better outside of the area of Carpinteria Creek to be widened.
- Applicant shall consult with the U.S. Fish and Wildlife Service under Section 7 of the Endangered Species Act and shall comply with all requirements of the Biological Opinion.

3.7.8. Western Pond Turtle and Two-striped Garter Snake [Addendum Mitigation]

- Applicant shall comply with regulatory agencies' recommendations.
- Prior to construction, a City-approved biologist shall survey the ADI and, if present, capture and relocate any western pond turtles or two-striped garter snakes to suitable habitat downstream of the project area.
- Observations of Species of Special Concern (SSC) or other special status species shall be documented on CNDDB forms and submitted to CDFW upon project completion.
- If these species or other SSC aquatic species are observed during construction, they shall likewise be relocated to suitable downstream habitat by a City-approved biologist.

3.7.9. Invasive Species [EIR Mitigation 2.3.6]

- In compliance with Executive Order 13112 Non-Invasive Species and subsequent guidance from the Federal Highway Administration, landscaping and erosion control shall not use species listed as noxious weeds.
- In areas of particular sensitivity, extra precaution shall be taken if invasive species are found in or adjacent to construction areas. These include the inspection and cleaning of construction equipment and eradication strategies to be implemented should an invasion occur.
- Invasive species shall be removed within the project footprint including sticky snakeroot *(Ageratina adenophora),* sweet fennel *(Foeniculum vulgare)* and bristly ox-tongue (*Helminthotheca echioides).* [Addendum Mitigation]

3.7.10. Visual/Aesthetics [EIR Mitigation 3.3]

- All new lighting in the vicinity of the residential neighborhoods north of US 101 shall be minimized to reduce excess light and glare.
- Sufficient area shall be designated for landscaping.
- Landscaping shall be included at retaining walls, sound walls, roundabouts and medians.
- Aesthetic treatments and design shall be integrated into all new bridge structures.
- Trees or large shrubs shall be planted at the bridge abutments. Street trees shall be included along all new local roads.
- Planting shall be included along Via Real in the vicinity of the Ogan property at APNs 003-161-003 and -011.
- Native vegetation planting shall be included in the vicinity of the Via Real/Carpinteria Creek bridge and the bicycle path.

- The US 101/Carpinteria Creek bridges and the Via Real/Carpinteria Creek bridge shall include open-style bridge rail.
- Any existing median planting removed or damaged shall be replaced in the median, to the greatest extent possible.
- All paving and base material shall be removed, the earth shall be ripped or scarified, and topsoil placed and made ready for planting.
- Yellow barrel-type crash cushion end treatments shall not be permanently installed but may be used during construction.
- Utility Undergrounding. To preserve and enhance views, existing aerial utility lines in conflict with the project shall be removed or relocated underground and/or in bridge structures at the Linden Avenue and Casitas Pass Road overcrossings and at Vallecito road at US 101.

3.7.11. Hazardous Waste. Applicant shall submit hazardous waste/materials investigation reports and evidence of compliance with applicable regulatory requirements for any clean-up and/or disposal of hazardous materials to the California Environmental Protection Agency, Department of Toxic Substances Control (DTSC) for review. This same information shall be submitted to Community Development with comments from DTSC for City review.

3.7.12. Road Surfacing. Applicant shall submit information demonstrating how road surfacing specified for the project will reduce vehicle noise and vibration impacts.

3.7.13. Agriculture Resources.

- Prior to commencement of construction, applicant shall provide funding for the Agriculture Preservation Program in the amount of $538,947 to the City of Carpinteria to be placed in an escrow account and distributed for the implementation of the Program. The applicant shall also transfer to the City, as a single legal parcel, the remaining portion of the former Whitney property not developed with transportation improvements at the time of completion of the Casitas Pass Road Interchanges and Via Real Extension. A permanent agriculture easement shall be placed on the property prior to or at the time of transfer to the City.

- Caltrans shall furnish to the City of Carpinteria the LAFCO application fee for the request to remove two agricultural parcels which are currently included in the City's Sphere of Influence on Via Real (APN 001-080-033 and APN 001-180-026).

3.7.14. Storm water Quality.

- Applicant shall submit plans and information demonstrating compliance with the post-construction coastal water quality standards contained in

Carpinteria Municipal Code Section 14.45.030.5, the Transportation Corridor Wetland Overlay District.

- Revegetation shall occur for disturbed areas along creeks. Work in the creekbed shall be performed during the dry season. Contractor shall comply with Storm Water Pollution Prevention Plan.

3.7.15. Coastal Access and Recreation.

- Applicant shall complete construction of the Rincon Trail as described in the Mitigated Negative Declaration prepared by City for the project and as depicted in the City Planning Commission May 4, 2015 approval of Project 15-1760-CUP/CDP and subject to approval by the County of Santa Barbara and California Public Utilities Commission. This requirement for applicant to complete the trail shall not be contingent on any other factors or conditions such as, but not limited to, applicant's ability to secure funding from outside sources. While construction and completion of the trail remains the applicant's sole responsibility, City, County, SBCAG and Caltrans commit to continuing to work cooperatively to complete construction of the Rincon Trail. If the Rincon Trail cannot be completed along the route described in the Mitigated Negative Declaration dated May 4, 2015, applicant shall provide an alternative route. The trail shall be open to the public prior to completion of the Linden Avenue and Casitas Pass Road Interchanges and Via Real Extension.
- Prior to issuance of a Grading Permit, applicant shall submit to the City for review and approval a construction schedule setting forth key tasks to be completed and deadlines to complete such tasks to ensure the Rincon Trail is completed and open to the public prior to completion of the Linden Avenue and Casitas Pass Road Interchanges and Via Real Extension.

3.7.16. Noise/Soundwalls.

- Soundwalls shall be included in the project varying in height from eight feet to 12 feet. [EIR noise abatement technique 2.2.7]
- Applicant shall submit information demonstrating soundwall construction in the locations indicated in the project description and shown on the project plans, including length, height, surface materials and landscaping.
- Following completion of construction, including installation of the privacy wall between the Cameo Lane residences and agriculture parcel to the south, 24-hour sound level measurements shall be performed in the rear yards of three Cameo Road residences. The verification sound level measurements are intended to confirm the conclusions of noise impact analysis performed for the EIR as well as the assumptions employed for design of the privacy wall.

3.8. ***Mitigation Compliance, Monitoring and Reporting Requirement.*** Applicant shall submit to the Community Development Department a draft monitoring program for the mitigation measures identified in the Certified EIR, approved Project Description and Conditions of Approval for review and comment. A City-approved biologist and mitigation monitors responsible for permit compliance monitoring shall be retained and paid for by the applicant. The mitigation monitoring program shall include, but not be limited to:

3.8.1. Mitigation Measures. A list of the project's mitigation measures.

3.8.2. Implementation of Mitigation. Timing and party responsible for implementation of each mitigation measure.

3.8.3. Mitigation Monitoring. Timing and party responsible for monitoring of each mitigation measure and a list of mitigation monitors to be retained.

3.8.4. Mitigation Reporting. Procedures, timing and responsible party for reporting to the City on project mitigation compliance and monitoring.

3.9. ***Biologist.*** A qualified biologist from the County of Santa Barbara approved consultants list of biologists (or other environmental professionals) shall be designated by the applicant. The biologist shall be responsible for ensuring compliance with the provisions of the Mitigation Monitoring and Reporting Program. The biologist shall have authority over all other environmental monitors provided by the applicant. The applicant shall submit the name, contact information and qualifications of the biologist and obtain approval from the Community Development Director prior to commencement of construction.

3.10. ***Archaeologist and Native American Monitors.*** Applicant shall submit to the Community Development Department the names of archaeologists and Native American monitors for the project who are familiar and experienced with local archaeological conditions.

3.11. ***Dust Control Plan.*** Applicant shall submit a Dust Control Plan that incorporates mitigation measures and includes complaint resolution procedures and a reporting structure, consistent with SBCAPCD requirements, for approval by the City.

4. **Final Plans.** Prior to final approval for project site preparation, earthwork or construction, applicant shall submit final project construction plans and the following, or evidence of completion of the following, for approval by the Community Development Director in consultation with the Public Works Director:

4.1. ***Hazardous Materials Clean-Up/Remediation.*** Applicant shall submit evidence to Community Development verifying completion of required soil and/or groundwater clean-up or remediation in accordance with applicable regulations and approved plans and shall obtain DTSC approval of remediation completion.

4.2. ***Fire District/Sheriff's Office Notification.*** The Fire District and Sheriff's Office shall be contacted prior to ramp or lane closures and/or circulation alterations and restrictions. A final Traffic Management Plan (TMP) with projected dates including

closures and restrictions of ramps and lanes shall be provided to the Fire District and Sheriff's Office for review and approval prior to the commencement of construction.

4.3. ***Agency Cooperative Agreement.*** Prior to commencement of project construction, the applicant shall obtain City approval of an Agency Cooperative Agreement for the project.

4.4. ***Pre-Construction Conference.*** Prior to commencement of construction, a preconstruction conference shall be held by the Resident Engineer to include construction processes and environmental mitigation and monitoring. The conference shall include representatives from Public Works, Fire District, Sheriff's Department, Community Development, Project Engineer, Landscape Architect, Contractor and Subcontractor(s), Biologist, Archaeologist and Mitigation Monitors.

5. **Record Drawings.** Upon completion of construction of the project, the applicant shall submit record drawings, stamped and signed by a registered civil engineer, to the City for review, approval and signature by the City Engineer. The record drawings shall include, but not be limited to, all facilities that will be relinquished to the City including all traffic signal and electrical plans, roadway improvements, drainage structures, soundwalls and the Via Real bridge over Carpinteria Creek.

6. **Construction Mitigation.** The following measures shall be implemented by the applicant during project site preparation, demolition, grading and/or construction processes to mitigate environmental impacts. Mitigation monitoring and reporting shall be implemented in accordance with the City-approved plan.

6.1. ***Temporary Construction Staging Areas:*** Temporary staging of construction equipment and materials outside of the US 101 right-of-way shall be restricted to locations approved by the Public Works Director. Staging areas shall be screened to the maximum extent feasible.

6.2. ***Traffic and Parking.*** The Traffic Management Plan approved by Public Works shall be implemented by the applicant throughout project construction.

6.2.1. Detour routes shall be provided for all full closures. [EIR Construction Impact Mitigation]

6.2.2. The Traffic Management Plan shall include: Public Awareness Campaign - flyers, brochures, press releases, website and advertising as required to inform travelers of the project; a Construction Zone Enhanced Enforcement Plan (COZEEP); additional strategies for motorist information, incident management, construction, demand management and alternate route(s); and temporary facilities such as changeable message signs as listed in the Caltrans Transportation Management Plan Guidelines. [EIR Construction Impact Mitigation]

6.3. ***Recreation Access.*** Vehicular, pedestrian and bicycle access to Carpinteria Creek Park shall be maintained to the maximum extent during construction. For short periods of time when direct vehicle access cannot be maintained, temporary parking

proximate to the park shall be provided along with a pedestrian route from the parking area to the park. When the park will be inaccessible to the public, applicant shall provide notification of closure no less than seven business days prior to such closure. Notification shall be in the form of posted notices at the entrance to the park and at the bike path entrances at Carpinteria Avenue and Via Real. Notices shall be hand-delivered to adjacent mobile home park residents.

6.4. ***Cultural Resources Mitigation.*** Applicant shall implement EIR mitigation measures and standard City monitoring and archaeological resource discovery procedures as identified in the City's archaeological guidelines. The following apply:

6.4.1. Construction Worker Notification. Prior to the start of any vegetation or paving removal, demolition, trenching or grading, contractors and construction personnel shall be alerted to the possibility of uncovering unanticipated subsurface archaeological features or artifacts associated with past human occupation of the project area, and procedures that shall occur in the event of discoveries.

6.4.2. Archaeological and Native American Monitors. Ground disturbance in areas sensitive for subsurface archaeological resources as identified in the EIR shall be monitored by a qualified archaeologist and Native American monitor. Reports on monitoring shall be provided in accordance with the approved Mitigation Monitoring and Reporting Plan.

6.4.3. Discovery Procedures. If cultural resources are encountered, work shall be halted immediately in the vicinity of the find. The Biologist and Native American Heritage Commission shall be notified, a qualified archaeologist shall be consulted to evaluate the find, and mitigation measures shall be undertaken as necessary to avoid significant impacts in accordance with Public Resources Code Section 5097.98. If the discovery potentially consists of human remains, the Santa Barbara County Coroner shall also be contacted. Work in the area may only proceed after authorization is granted by the Biologist.

6.5. ***Water Quality BMPs.***

6.5.1. Temporary measures to protect water quality as required by an approved Storm Water Pollution Prevention Plan (SWPPP) shall include sediment control, soil stabilization, concentrated flow conveyance systems, scheduling of ground disturbance activities with respect to rainy season, preservation of existing vegetation, clear water diversion, dewatering operations, wind erosion control, sediment tracking, solid waste management, materials handling, concrete waste management, vehicle and equipment operations, paving operations, stockpile management, water conservation practices, illegal connection or discharge detection and reporting, storm drain inlet protection and contaminated soil management.

6.5.2. There shall be storm water inspections both by the contractor and Caltrans during construction. The project shall be subject to the Caltrans General

Permit from the Regional Water Quality Control Board. Work in the creek bed shall be performed during the dry season (June 1 - October 31). Contractor shall acquire SWPPP. [EIR Construction Impact Mitigation]

6.6. ***Hazardous Materials.*** Measures shall be implemented in the event of discovery of hazardous materials during project construction to ensure protection of the public, construction workers and environment from hazardous exposure and assessment and remediation of contamination in accordance with regulatory requirements and procedures. Any contaminated soil identified with the proposed project shall be transferred to an appropriate disposal site during construction. All procedures governing the handling or disposal of hazardous waste shall be in accordance with the appropriate regulatory agencies. California regulatory criteria for determining whether excavated soils are to be classified as hazardous waste for disposal purposes based on their metal content are contained in the California Code of Regulations, Title 22, Division 4.5, Chapter 11, Article 3, Section 66261.24. [EIR Construction Impact Mitigation]

6.7. ***Air Quality Mitigation Measures.***

6.7.1. Caltrans' Standard Specifications pertaining to dust control and dust palliative requirements are a required part of all construction contracts and should effectively reduce and control emission impacts during construction. The provisions of Caltrans Standard Specifications for Air Pollution Control require the contractor to comply with the more stringent of local or state rules, regulations and ordinances regarding air quality (Government Code § 11017). The Standard Specifications also regulate dust control. California Health and Safety Code requires the contractor to keep visible dust from blowing offsite. [EIR Construction Impact Mitigation]

6.7.2. A final dust control plan is required to be prepared by Caltrans and approved by Santa Barbara County Air Pollution Control District and shall include standard APCD construction-related control measures that mandate: minimizing disturbed areas; watering of disturbed areas and stockpiles; stabilization and paving of disturbed areas; covering of trucks; and reduction of vehicle speeds on unpaved construction areas. Construction equipment and vehicles shall be maintained in proper tune and low sulfur fuel shall be used in construction equipment.

6.8. ***Noise and Vibration.*** Applicant shall implement mitigation measures identified in the EIR and Addendum as follows:

6.8.1. Construction Hours. Construction hours shall be limited to weekdays between 7:00 a.m. and 7:00 p.m. Nighttime construction shall be permitted Sunday through Friday with adequate prior notice and temporary relocation services provided to nearby residents (within 100 feet of nighttime construction activities). The Community Development Director may allow exceptions to these hours for special circumstances.

6.8.2. Equipment Maintenance and Mufflers. All construction equipment shall be professionally maintained and fitted with standard manufacturers' muffler and silencing devices.

6.8.3. Staging Areas. Staging and equipment areas shall be sited to minimize noise effects to residential uses to the extent feasible.

6.8.4. Noise Barriers. Temporary noise barriers shall be provided around the construction site as necessary to avoid extended disturbance to residents from construction noise.

6.8.5. The noise level from the contractor's operations, between the hours of 7:00 p.m. and 7:00 a.m., shall not exceed a maximum of 86 dBA (Lmax) at a distance of 50 feet.

6.8.6. Neighbor Notification. Within 10 days prior to commencement of each construction stage, applicant shall provide the construction schedule to surrounding neighborhoods impacted by noise and vibration in accordance with locations and in a manner specified in the City-approved Construction Management Plan. Applicant shall post information onsite in a location visible to the public, including the hours of construction and contact person with telephone number.

6.8.7. Vibration. Applicant shall notify residents two weeks prior to pile driving and use vibratory pile driving when available. Rubber-tired vehicles shall be used to the extent possible in areas immediately adjacent to residential neighborhoods. Severe vibration activities shall be restricted to daylight hours as much as possible. Nighttime demolition work shall be limited to the US 101 overcrossings and US 101bridges over Carpinteria Creek. Applicant shall arrange hotel/motel rooms for residents living within 100 feet of the proposed activity when protracted vibrations in excess of the threshold are expected at the residence during hours that the residents normally sleep. [EIR Construction Impact Mitigation]

6.9. ***Fish and Wildlife Mitigation.*** Measures for the protection of fish and wildlife species during project construction as identified in the EIR and Addendum and required by any resource agency permits shall be implemented by the applicant during project construction as follows.

6.9.1. Migratory Birds: In project construction areas, trees and shrubs shall be removed prior to the start of migratory bird nesting season. If vegetation removal must occur during nesting season (February 15 - September 1), a qualified biologist shall conduct surveys no more than 14 days prior to removal to ensure no nests are present or have been vacated. If nests are present, removal shall not occur until after nests have been certified as vacated by a qualified biologist. Exclusionary netting may be used, if necessary, to prevent birds from nesting on structures.

6.9.2. Fish: Approved fish removal and relocation techniques shall be implemented; environmentally sensitive area fencing shall be employed; downstream flows

shall be maintained; worker education programs shall be provided. [EIR Construction Impact Mitigation]

6.10. ***Habitat Protection.*** Measures for the prevention of impacts to habitat area and native plant communities during project construction as identified in the EIR and Addendum and required by any resource agency permits shall be implemented by the applicant during project construction as follows.

6.10.1. Natural Communities: The number of access routes, size of staging areas and total area of activity shall be limited to the minimum necessary. [EIR Construction Impact Mitigation]

6.10.2. Wetlands and Other Waters: Compliance with California Coastal Commission and US Army Corps of Engineers; Environmentally Sensitive Area fencing; silt fencing; diversion restricted to summer months (June 1 - October 31); use of cofferdams; restoration to natural channel bottom; project shall incorporate Best Management Practices and abide by Storm Water Pollution Prevention Plan. [EIR Construction Impact Mitigation]

6.10.3. Animal Species: Environmentally Sensitive Area fencing shall be installed to prevent damage to environmentally sensitive areas (that may provide habitat for special status wildlife species) from construction activities and equipment. [EIR Construction Impact Mitigation]

6.11. ***Pre-construction Surveys.*** [Addendum Mitigation]

6.11.1. To ensure that potential impacts to biological resources are avoided and/or minimized, and due to the long lead-time until construction, pre-construction surveys shall be conducted by a City of Carpinteria approved biologist for the following species: steelhead trout, tidewater goby, western pond turtle and two-striped garter snake. Pre-construction surveys shall also be conducted for the California red-legged frog to allow time to coordinate use of the Programmatic Biological Opinion if California red legged frogs are found. If work is proposed to occur from February 15 to September 1 during the nesting season, surveys for nesting birds shall be conducted by a City approved biologist no more than 14 days prior to initiation of construction.

6.11.2. If any federally listed species are found during the pre-construction surveys, other than steelhead trout and tidewater goby, construction shall cease until Formal Section 7 Consultation between Caltrans/FHWA and USFWS is completed. If California red-legged frog is found during pre-construction surveys, Caltrans shall coordinate with USFWS to use the Programmatic Biological Opinion as Formal Section 7 Consultation.

6.11.3. If any state-listed endangered or threatened species are found during the pre-construction surveys, the project shall cease until consultation between Caltrans and CDFW is completed.

6.12. ***Duties of the Biologist.*** [Addendum Mitigation]

6.12.1. If any special status species are found in the ADI during construction, the City approved biologist shall be present at the construction site until such time as instruction has been given to the Caltrans Resident Engineer, the special-status species has been allowed to move out of the ADI on its own, or the special-status species has been relocated outside of the ADI.

6.12.2. A biologist shall be onsite during construction activities that may impact special status species and/or migratory birds. This includes clearing and grubbing of Carpinteria Creek, the stream diversion/dewatering of Carpinteria Creek and the removal of trees during the nesting season (February 15 to September 1).

6.13. ***Authority of the Biologist.*** The City approved biologist shall have the authority to halt any action that might result in impacts that exceed the anticipated levels of impact determined during agency review (by Caltrans, City, U.S. Army Corps of Engineers, CDFW, California Coastal Commission and/or USFWS). If work is stopped, the appropriate regulatory agencies shall be notified immediately by the Environmental Monitor.

6.14. ***Equipment Maintenance and Staging and Materials Storage Restrictions.*** All refueling and maintenance of equipment and vehicles shall be conducted at least 50 feet from any aquatic habitat, wetland area or any water body. The contractor shall ensure contamination of habitat does not occur during such operations. All workers shall be informed of the importance of preventing spills of fuels and of the appropriate measures to take should a spill occur. Equipment staging and materials storage shall be located outside of stream corridors and associated riparian habitat.

6.15. ***Geology and Soils.*** Recommendations of the geotechnical report shall be followed, including a likely fill delay period and/or a fill surcharge before placement of the bridge piles and the pavement structural section at Linden Avenue and at the Casitas Pass Road/Via Real Interchange. Erosion control or slope stabilization shall be required for slope angles to 1:1.5. The project shall incorporate a revegetation program, including irrigation required on both cut and fill slopes. [EIR Construction Impact Mitigation]

6.16. ***Paleontology.*** Because there still exists the potential to find sensitive paleontological remains in low sensitivity formations, the following statement shall be included in the Resident Engineer's Instructions: If any vertebrate or plant fossils are discovered during construction, it is required that construction be halted in the immediate vicinity (33-foot radius) of the discovery until the District Paleontology Coordinator has the opportunity to review the find. Remediation of any sensitive resources encountered before or during construction may include removal, preparation and curation of any significant finds. [EIR Construction Impact Mitigation]

6.17. ***Solid Waste.*** The project solid waste management plan for demolition and construction waste shall be reviewed and approved by the Public Works Department prior to project construction and shall be implemented throughout construction.

Demolition and/or excess construction materials shall be separated for reuse/recycling or proper disposal (e.g., concrete asphalt) with a minimum 65% diversion rate. During grading and construction, separate bins for recycling of construction materials and brush shall be provided. This requirement shall be printed on grading and construction plans. Applicant shall provide Public Works with receipts for recycled materials. Materials shall be recycled as necessary. During construction, all trash that may attract predators shall be properly contained, removed from the work site and disposed of regularly.

6.18. ***Project Implemented as Approved by City.*** Applicant shall implement the project in accordance with the final plans and provisions approved by the City of Carpinteria as outlined in these conditions of approval. After final design approval, any minor alterations in project components, design or construction processes shall require prior approval by the Community Development Director and any major alterations shall require prior approval by the Planning Commission and/or City Council. Project structures, facilities and landscaping shall be maintained for the life of the project.

6.19. ***Annual Report.*** Annually through completion of project construction, the applicant shall submit a report to the Public Works Department on the progress and status of the project.

7. **Design.** The project shall obtain final design review by the Architectural Review Board (ARB) prior to commencement of construction. Structural improvements of the project, including but not limited to overcrossings, bridges, retaining walls, soundwalls, railings, light standards, sidewalks, etc., and landscaping, shall be constructed and installed in conformance with the final design review.

8. **Graffiti Abatement.** Applicant shall clean up graffiti within 72 hours. If the problem persists, as determined by Community Development, a plan for preventing recurrence shall be submitted to Community Development for review and approval, and shall be implemented as approved. Suggested anti-graffiti measures include the use of vertical landscaping or vines along affected wall surfaces and/or the use of anti-graffiti paint. This condition shall be printed on final construction plans. A graffiti prevention plan shall be submitted upon determination of need by Community Development.

9. **Staging Area Closeout.** Applicant shall clear the project staging areas of all excess construction debris. This requirement shall be noted on final construction plans. Debris clearance shall occur upon project completion and obtain approval from Public Works.

CONDITIONAL USE PERMIT

10. This Conditional Use Permit is not valid until a Grading Permit for the development and/or use has been obtained. Failure to obtain said Grading Permit shall render this Conditional Use Permit null and void. Prior to the approval of the Grading Permit, all of the conditions listed in this Conditional Use Permit that are required to be satisfied prior to approval of a Grading Permit must be satisfied. Upon issuance of the Grading Permit, the Conditional

Use Permit shall be valid. The effective date of this Permit shall be the date of action by the City Council, or if appealed, the date of action by the Coastal Commission.

11. If the Planning Commission or City Council determines at a noticed public hearing that the permittee is not in compliance with any permit condition(s), the Planning Commission or City Council is empowered, in addition to revoking the permit pursuant to said section, to amend, alter, delete or add conditions to this permit.

12. Any use authorized by this Conditional Use Permit shall immediately cease upon expiration or revocation of this Conditional Use Permit. Any Building Permit issued pursuant to this Conditional Use Permit shall expire upon expiration or revocation of the Conditional Use Permit. Conditional Use Permit renewals must be applied for prior to expiration of the Conditional Use Permit.

13. The applicant's acceptance of this permit and/or commencement of construction and/or operations under this permit shall be deemed acceptance of all conditions of this permit by the permittee.

14. Within two years after the effective date of this permit, construction shall commence. Construction cannot commence until a Grading Permit has been issued. Failure to commence the construction pursuant to a valid Grading Permit shall render the Conditional Use Permit null and void.

15. All time limits may be extended by the Planning Commission or City Council for good cause shown, provided a written request, including a statement of reasons for the time limit extension request is filed with Community Development prior to the expiration date.

16. If the applicant requests a time extension for this permit, the permit may be revised to include updated language to standard conditions and/or mitigation measures and additional conditions and/or mitigation measures which reflect changed circumstances or additional identified project impacts. Mitigation fees shall be those in effect at the time of issuance of a Grading Permit.

17. Before commencing any work pertaining to the erection, alteration, enlarging or rebuilding of any structure or improvement, the applicant shall obtain a Grading Permit. The permit is necessary to ensure implementation of the conditions required by the City Council. Before any Permit will be issued by Community Development, the applicant must obtain written clearance from all agencies having conditions; such clearance shall indicate that the applicant has satisfied all pre-construction conditions. A form for such clearance is available from Community Development.

18. Prior to issuance of a Grading Permit, applicant shall notify in writing all property owners and occupants of parcels within 300 feet of the project site of its approval and conditions. Proof of mailing the notices shall be provided to Community Development.

19. If, at any time, the Planning Commission determines that there has been, or may be, a violation of the findings or conditions of this Conditional Use Permit and Coastal Development Permit, or of the Municipal Code regulations, a public hearing may be held before the Planning Commission to review this permit. At said hearing, the Planning Commission may add additional conditions, or recommend enforcement actions, or revoke the permit entirely, as necessary to ensure compliance with the Municipal Code, and to provide for the health, safety, and general welfare of the City. Applicant shall reimburse the City for all costs associated with gaining compliance with the original conditions of approval.

20. City Manager and/or Community Development Director shall be informed of any minor changes to the project scope. Any minor changes may be approved by the City Manager and/or Community Development Director. Any major changes will require the filing of a revision application to be considered by the Planning Commission.

21. All requirements of the City of Carpinteria (including but not limited to public improvements as defined in the City of Carpinteria Municipal Code (CMC), Section 15.16.110) and any other applicable requirements of any law or agency of the State and/or any government entity or District shall be met.

22. The standards defined within the City's adopted model Building Codes (UBC; NEC; UMC; UFC; UPC; UHC) relative to the building and occupancy shall apply to this project.

23. Any and all damage or injury to public property resulting from this development, including without limitation, City streets and storm drain infrastructure, shall be corrected or result in being repaired and restored to its original or better condition.

24. No Grading Permit shall be issued for this project prior to meeting all required terms and conditions listed herein. When not specified herein, all conditions shall be satisfied prior to issuance of a Grading Permit or prior to commencement of construction when allowed by the Community Development Director.

25. To allow time for the utility companies to locate and mark their facilities for the contractor, the applicant shall telephone Underground Service Alert (USA) toll free at 1-800-227-2600 a minimum of 48 hours prior to the start of construction. For best response, provide as much notice as possible, up to 10 working days.

26. Compliance with the Carpinteria Valley Water District letter dated June 12, 2015.

27. All applicable final conditions of approval shall be printed in their entirety on applicable pages of grading/construction plans submitted to Community Development. These shall be graphically illustrated where feasible. The approved set of plans shall be retained at the construction site for review by the Public Works Director during the course of construction.

28. Applicant shall ensure that the project complies with all approved plans and all project conditions including those which must be monitored after the project is built and occupied. To accomplish this, applicant agrees to contact Community Development at least two weeks prior to commencement of construction activities to schedule an onsite pre-construction meeting agency personnel and key construction personnel.

29. *Pre-project Flood Risk Determination* – Applicant shall bear primary responsibility for assisting the City in obtaining a Federal Emergency Management Agency (FEMA) Letter of Map Revision under the National Flood Insurance Program for City of Carpinteria area Flood Insurance Rate Map (FIRM), Panel No. 0683C1420G. The Letter of Map Revision (LOMR) shall address the pre-project flood risk associated with US 101. The pre-project risk condition shall include the previously mapped diversion of the 1% chance per year flood flow to the Franklin Creek watershed caused by the existing US 101 bridges over Carpinteria Creek and the risk that all of the floodwaters will follow Carpinteria Creek to the ocean. The LOMR shall be approved by FEMA prior to commencement of construction. Applicant shall reimburse all costs the City of Carpinteria may incur, including cost for staff time, to obtain the LOMR from FEMA. Applicant shall also assist the City with and pay all City and all property owner costs for the preparation and filing of Flood Determination Letters and Elevation Certificates for all properties that are affected by the resultant change in the pre-project FIRM.

30. *Project Related Flood Risk Determination* - Applicant shall prepare all FEMA required documents and Flood Insurance Rate Map revisions that may be required as result of the proposed project. This shall include, but is not limited to, all costs the City of Carpinteria may incur. If a Conditional Letter of Map Revision (CLOMR) is required, the FEMA-approved CLOMR shall be obtained by the applicant prior to commencement of construction.

31. Prior to issuance of a Grading Permit, the applicant shall provide a signed copy of the Conditions of Approval on a form acceptable to Community Development. Such form may be obtained from the Community Development Department. Written authorization to proceed and consent to conditions of approval by the applicant shall be provided to the City prior to commencement of any demolition or construction activity.

32. Prior to issuance of a Grading Permit, applicant shall pay all applicable CDD permit processing fees in full.

33. The applicant (Caltrans) hereby agrees to defend, indemnify and hold harmless the City, its officers, employees, agents, consultants and independent contractors ("City's Agents") from any claim, action or proceeding ("Claims") against the City and the City's Agents to attack, review, set aside, void or annul, in whole or in part, the City's approval of the Linden Avenue – Casitas Pass Road Interchanges and Via Real Extension (the "Project"), or any condition attached thereto, or any proceedings, acts or determinations taken, done or made prior to the approval that were part of the approval process. Applicant further agrees to indemnify and hold harmless the City and the City's Agents from any award of attorneys'

fees or court costs made in connection with any Claim. Applicant further agrees to pay any and all City costs, permit fees, attorneys' fees, engineering fees, license fees and taxes arising out of or concerning the Project, whether incurred prior to or subsequent to the date of approval and that the City's costs shall be reimbursed prior to this approval becoming valid. These commitments of defense and indemnification are material conditions of the approval of the Project. Nothing contained in this condition shall prevent the City or the City's Agents from independently defending any Claim. If the City or the City's Agents decide to independently defend a Claim, the City and the City's Agents shall bear their own attorneys' fees, expenses and costs of that independent defense.

34. In the event that any Condition of Approval imposing a fee, exaction, dedication or other mitigation measure is challenged by Applicant/Owner/Developer/Permittee in an action filed in a court of law or threatened to be filed therein which action is brought within the time period provided by law, this approval shall be suspended pending dismissal of such action, the expiration of the limitation period applicable to such action, or final resolution of such action. If any Condition of Approval is invalidated by a court of law, the entire project shall be reviewed by the City and substitute Conditions of Approval may be imposed.

35. Written authorization to proceed and consent to conditions of approval by the applicant shall be provided to the City prior to grading permit issuance.

Approved by the City Council on November 23, 2015

I HAVE READ AND UNDERSTOOD, AND I WILL COMPLY

WITH ALL ABOVE STATED CONDITIONS OF THIS PERMIT

_____

Applicant Date

fees or court costs made in connection with any Claim. Applicant further agrees to pay any and all City costs, permit fees, attorneys' fees, engineering fees, license fees and taxes arising out of or concerning the Project, whether incurred prior to or subsequent to the date of approval and that the City's costs shall be reimbursed prior to this approval becoming valid. These commitments of defense and indemnification are material conditions of the approval of the Project. Nothing contained in this condition shall prevent the City or the City's Agents from independently defending any Claim. If the City or the City's Agents decide to independently defend a Claim, the City and the City's Agents shall bear their own attorneys' fees, expenses and costs of that independent defense.

34. In the event that any Condition of Approval imposing a fee, exaction, dedication or other mitigation measure is challenged by Applicant/Owner/Developer/Permittee in an action filed in a court of law or threatened to be filed therein which action is brought within the time period provided by law, this approval shall be suspended pending dismissal of such action, the expiration of the limitation period applicable to such action, or final resolution of such action. If any Condition of Approval is invalidated by a court of law, the entire project shall be reviewed by the City and substitute Conditions of Approval may be imposed.

35. Written authorization to proceed and consent to conditions of approval by the applicant shall be provided to the City prior to grading permit issuance.

Approved by the City Council on November 23, 2015

I HAVE READ AND UNDERSTOOD, AND I WILL COMPLY

WITH ALL ABOVE STATED CONDITIONS OF THIS PERMIT

_____

Applicant Date

United States Department of the Interior

FISH AND WILDLIFE SERVICE
Ventura Fish and Wildlife Office
2493 Portola Road, Suite B
Ventura, California 93003

IN REPLY REFER TO:
81440-2009-F-0468

January 8, 2010

Chuck Cesena
Senior Environmental Planner
California Department of Transportation
50 Higuera Street
San Luis Obispo, California 93401-5415

Subject: Biological Opinion for Linden Avenue and Casitas Pass Road Interchanges Project (EA 05-4482U0), City of Carpinteria, Santa Barbara County, California (8-8-09-F-57)

Dear Mr. Cesena:

This document transmits the U.S. Fish and Wildlife Service's (Service) biological opinion regarding the proposed replacement of the SR 101 Carpinteria Bridge with a single span bridge and creating a new bridge over Carpinteria Creek, and its effects on the federally endangered tidewater goby (*Eucyclogobius newberryi*), in accordance with section 7 of the Endangered Species Act of 1973, as amended (Act) (16 U.S.C. 1531 *et seq.*). The California Department of Transportation (Caltrans) has assumed the Federal Highway Administration's (FHWA) authority and responsibility for compliance with the National Environmental Policy Act and other environmental laws. A memorandum of understanding (MOU) between the FHWA and Caltrans (FHWA/Caltrans 2007) allows Caltrans to serve as the Federal lead agency for formal consultation on the proposed project. Your request for formal consultation was received by our office on August 28, 2009.

This biological opinion was prepared using the biological assessment prepared by Caltrans (2009) that was included with your request for consultation as well as information contained in our files. A complete administrative record for this biological opinion is available at the Ventura Fish and Wildlife Office.

CONSULTATION HISTORY

A meeting between Caltrans staff and Bridget Fahey and Katie Drexhage of the Service took place at the project location on November 21, 2002. As a result of discussions at this meeting, all parties concluded that formal consultation with the Service under the Act for potential adverse effects to tidewater gobies would be required. Based on habitat assessment, we agreed that the project would have no effect on the federally threatened California red-legged frog (*Rana aurora draytonii*) and western snowy plover (*Charadrius alexandrinus nivosus*), and the federally

TAKE PRIDE® IN AMERICA

endangered light-footed clapper rail (*Rallus longirostris levipes*), southwestern willow flycatcher (*Empidonax traillii extimus*), least Bell's vireo (*Vireo bellii pusillus*), salt marsh bird's-beak (*Cordylanthus maritimus maritimus*), and Gambel's watercress (*Rorippa gambellii*). Therefore, these species will not be addressed any further in this document.

BIOLOGICAL OPINION

DESCRIPTION OF THE PROPOSED ACTION

Caltrans, the Santa Barbara County Association of Governments, and the City of Carpinteria propose to make operational improvements to SR 101 between Post Miles (PM) 2.2/3.4, located in the City of Carpinteria, Santa Barbara County, California. These improvements include interchange reconstruction, new bridge construction, sound wall construction, and a frontage road extension.

As described in your request for consultation, the proposed activities include:

1. Replacing, widening, and raising the northbound and southbound SR 101 Carpinteria Creek Bridges;

2. Upgrading the Casitas Pass Road southbound on and off diamond ramps;

3. Extending Via Real from the current cul-de-sac at the San Roque Mobile Home Park over Carpinteria Creek to Vallecito Road;

4. Constructing a new bridge for Via Real over Carpinteria Creek (two lanes with Class II bike lanes and a sidewalk);

5. Removing the existing bike path crossing Carpinteria Creek that connects to Via Real;

6. Adding two new bike paths connecting the north bank of Carpinteria Creek to northbound and southbound Via Real (the extension of Via Real will continue from Vallecito Road to form the second leg of the new roundabout);

7. Removing the existing northbound diamond off-ramp and nonstandard slip on-ramp at Casitas Pass Road;

8. Constructing a new northbound on and off hook ramps to be accessed from the new Via Real frontage road extension between Carpinteria Creek and Casitas Pass Road;

9. Replacing the Casitas Pass Road Separation with a 5-lane structure including bike lanes and sidewalks on both sides;

10. Installing signals at the intersections of Via Real and the northbound Casitas hook ramps, Casitas Pass Road and Via Real, and Casitas Pass Road and the southbound SR 101 on- and off-ramps;

11. Removing the existing northbound Linden Avenue on-ramp and construct a new roundabout, including the new northbound on-ramp as one of the four legs;

12. Replacing the Linden Avenue overcrossing with a 4-lane structure, including bike lanes and sidewalks on both sides;

13. Reconfiguring Ogan Road to form a third connection to the new roundabout, located on its northeastern side, and build a fourth leg connecting the northwest area of the roundabout to Linden Avenue;

14. Installing signals at the intersections of Linden Avenue and Ogan Road and Linden Avenue and the southbound SR 101 off-ramp; and

15. Constructing soundwalls.

Prior to the start of construction, any water within Carpinteria Creek would be diverted. Caltrans would place a temporary cofferdam constructed of sandbags (filled with washed river gravel) and a plastic liner upstream of the proposed project site. Two different water diversions would be needed in Carpinteria Creek. One diversion for work associated with the demolition and construction of the SR 101 Bridges and the other diversion for work associated with the construction of the new Via Real Bridge. The temporary diversion of the creek required for rebuilding the SR 101 Bridge is approximately 300 feet in length and the diversion for the Via Real Bridge is approximately 190 feet in length, with a distance of approximately 80 feet in length between the two. Flow through the project site would be maintained through a flexible pipe culvert of adequate size to facilitate maximum daily flows. The corrugated pipe would terminate in a plastic lined weir on the downstream side of the diversion. Construction activities are expected to last approximately 5 years based on the 5 month work window (June 1 – October 31). Therefore, water diversion in Carpinteria Creek may be needed 5 times (once per year).

The following is an abbreviated list of the protective measures that Caltrans proposes to implement for the tidewater goby. A complete list and description of all protective measures proposed by Caltrans can be found in the biological assessment (Caltrans 2009):

1. Prior to project implementation, the project site will be surveyed for the presence of tidewater gobies. Fish barriers will be installed temporarily and individuals present inside will be captured and relocated, out of harm's way, to adjacent suitable habitat within Carpinteria Creek by a Service approved biologist.

2. The window for work within Carpinteria Creek will be during the low flow period between June 1 and October 31.

3. No construction activities will occur within a wetted stream channel.

4. Prior to construction, water in Carpinteria Creek will be diverted. If pumps are used during water diverting activities, intakes will be completely screened with wire mesh no larger than 0.2 inch to prevent tidewater gobies from entering the pump system.

5. Environmentally Sensitive Area Fencing will be installed throughout the project site to clearly define project limits and protect sensitive areas.

6. No equipment will be fueled or serviced within 66 feet of the riparian or wetland areas.

7. Non-native vegetation will be removed from the project site. Revegetation will use local native species. Riparian vegetation removed will be replaced at a 3:1 ratio.

8. Effects to downstream habitat due to erosion and sedimentation will be avoided through use of best management practices.

9. All project personnel will receive environmental training that will include tidewater goby identification and natural history, protective measures, and reporting.

STATUS OF THE SPECIES

The tidewater goby was listed as endangered on March 7, 1994 (59 FR 5494). On June 24, 1999, the Service proposed to remove the populations occurring north of Orange County, California, from the endangered species list (64 FR 33816). In November 2002, the Service withdrew this proposed delisting rule and retained the tidewater goby listing as endangered throughout its range (67 FR 67803).

The Service originally designated critical habitat for the tidewater goby on November 20, 2000 (65 FR 69693); however, in November 2006, we proposed to revise that designated critical habitat (71 FR 68914). A recovery plan for the tidewater goby was completed on December 12, 2005 (Service 2005).

The information in this species account is summarized from the following sources: Wang (1982), Irwin and Soltz (1984), Lafferty et al. (1999a, 1999b), Swift et al. (1989, 1993, 1997), Worcester (1992), Swenson (1995, 1999), and Swenson and McCray (1996).

The tidewater goby is endemic to California and typically inhabits coastal lagoons, estuaries, and marshes. Tidewater goby habitat is characterized by brackish estuaries, lagoons, and lower stream reaches where the water is fairly still but not stagnant. They tend to be found in the

upstream portions of lagoons. Tidewater gobies can withstand a wide range of habitat conditions and have been documented in waters with salinity levels that range from 0 to 42 parts per thousand (ppt) (preferring relatively low salinities of approximately 12 ppt), temperatures from 46 to 77 degrees Fahrenheit, and depths from approximately 10 inches to 6.5 feet.

The tidewater goby is primarily an annual species in central and southern California, although some variation in life history has been observed. If reproductive output during a single season fails, few (if any) tidewater gobies may survive into the next year. Reproduction typically peaks from late April or May to July and can continue into November or December depending on the seasonal temperature and amount of rainfall. Males begin the breeding ritual by digging burrows (3 to 4 inches deep) in clean, course sand of open areas. Females then deposit eggs into the burrows, averaging 400 eggs per spawning effort. Males remain in the burrows to guard the eggs. They frequently forego feeding which may contribute to the mid-summer mortality observed in some populations. Within 9 to 10 days, larvae emerge and are approximately 0.20 to 0.27 inches in length. They live in vegetated areas in the lagoon until they are 0.60 to 0.70 inches long. When they reach this life stage, they become substrate-oriented, spending the majority of time on the bottom rather than in the water column. Both males and females can breed more than once in a season, with a lifetime reproductive potential of 3 to 12 spawning events. Vegetation is critical for over-wintering tidewater gobies because it provides refuge from high water flows.

Tidewater gobies feed on small invertebrates, including mysids, amphipods, ostracods, snails, aquatic insect larvae, and particularly chironomid midge larvae. Tidewater gobies of less than 0.30 inches probably feed on unicellular phytoplankton or zooplankton similar to many other early stage larval fishes.

Historically, the tidewater goby occurred in at least 126 California coastal lagoons and estuaries from Tillas Slough near the Oregon border south to Agua Hedionda Lagoon in northern San Diego County. The southern extent of its distribution has been reduced by approximately eight miles. The species is currently known to occur in about 98 locations, although the number of sites fluctuates with climatic conditions. Currently, the most stable populations are in lagoons and estuaries of intermediate size (5 to 124 acres) that are relatively unaffected by human activities.

In Santa Barbara County during the fall of 1994, tidewater gobies were reported as common in the Santa Ynez River 4 miles above the lagoon (Swift et al. 1997); however, by January, 1995, they were absent at the upstream sites. Tidewater gobies that are found upstream of the lagoons in summer and fall tend to be juveniles. The highest densities of tidewater gobies are typically present in the fall.

Tidewater gobies enter the marine environment when sandbars are breached during storm events. The species' tolerance of high salinities (up to 60 ppt) for short periods of time enables it to withstand marine environment conditions where salinities are approximately 35 ppt, thereby

allowing the species to re-establish or colonize lagoons and estuaries following flood events. However, genetic studies indicate that individual populations rarely have contact with other populations so natural recolonization may be rare.

Native predators are not known to be important regulators of tidewater goby population size in the lagoons of southern California. Rather, population fluctuations are attributable to environmental conditions. During high flows, streams flood and breach lagoon barriers creating strong tidal conditions. As a result, populations plummet. Populations typically recover quickly in summer, with mean densities of between 54 to 323 fish per square feet recorded. Tidewater goby densities are greatest among emergent and submergent vegetation (Moyle 2002).

The decline of the tidewater goby is attributed primarily to habitat loss or degradation resulting from urban, agricultural, and industrial development in and around coastal wetlands. Tidewater gobies have been extirpated from water bodies that are impaired by degraded water quality (e.g., Mugu Lagoon, Ventura County), but still occur in others (e.g., Santa Clara River, Ventura County). Some extirpations are believed to be related to pollution, upstream water diversions, and the introduction of non-native predatory fish species (most notably, centrarchid sunfish and bass). These threats continue to affect some of the remaining populations of tidewater gobies.

ENVIRONMENTAL BASELINE

The implementing regulations for section 7(a)(2) of the Act define the "action area" as all areas to be affected directly or indirectly by the Federal action and not merely the immediate area involved in the action (50 CFR 402.02). For the purposes of this biological opinion, we consider the action area for the proposed project to include Carpinteria Creek in its entirety from 100 feet upstream of the upper boundary of the project site downstream to the Pacific Ocean. The action area also includes the creek banks and associated uplands within the project site. The action area does not fall within proposed or designated critical habitat for the tidewater goby. This action area encompasses the likely direct and indirect effects of the proposed action.

Tidewater Goby

Tidewater gobies have been documented in Carpinteria Creek from the creek mouth to approximately 0.1 mile downstream of the project site. No surveys were performed for tidewater goby for this project due to their known presence within the creek and the assumption that they would be present in the action area. An assessment of the project area for tidewater goby suitable breeding and spawning habitat within the project area was conducted, and the results were negative; however, this species could potentially move through the project site. Franklin Creek is the closest occurrence of tidewater goby away from Carpinteria Creek. The closest designated critical habitat is the Ventura River to the south in Ventura County, and Mission Creek–Laguna Channel, to the north in Santa Barbara County.

The southern coast of Santa Barbara County contains some of the highest densities of tidewater goby occurrences in the species' range. The action area contains a relatively small portion of the tidewater goby geographic range; however, Carpinteria Creek is important to maintaining continuity in tidewater goby occurrences along this coast and improving the probability of re-population after an extirpation.

The reach of Carpinteria Creek that would be affected by the proposed project includes a perennial, freshwater flow. Riparian vegetation is present along the creek banks and emergent vegetation occurs within the creek. Although flows are typically greatly reduced during the dry season, shallow pools can persist and provide marginal habitat for tidewater gobies in, and adjacent to, the proposed project site. A concrete low flow bike/pedestrian path crosses the creek and then runs parallel to the north bank on top of a retaining wall that runs the width of the existing SR 101 bridges.

EFFECTS OF THE ACTION

The action area would be dewatered prior to construction. As a protective measure, Caltrans would capture and relocate any tidewater gobies to nearby suitable habitat. The capture and handling of tidewater gobies to move them from a work area may adversely affect individual fish; however, the capture of tidewater gobies prior to the primary breeding season will reduce adverse impacts to juveniles that are less likely to survive handling. Some individuals may be killed or injured by the capture efforts. For example, individuals could be crushed in seines by the weighted lead line if it should roll inward while being pulled in to shore. Tidewater gobies held in temporary captivity may also be killed or injured due to stress. Individuals could suffocate if water becomes depleted of oxygen as a result in a rise in temperature or from excessive crowding. To avoid the physiological stress that could occur if tidewater gobies were released into an area that drastically differs in water quality from the capture site, individuals may be excluded from a work area but not transported to another location outside the creek. Fewer tidewater gobies may be killed during efforts to exclude them from a work area than by proceeding without exclusion or by attempting capture and relocation. Finally, because tidewater gobies may be concealed from capture by vegetation or debris, some individuals may remain within work areas and be killed during project activities.

Noise and vibration from work activities likely disturb tidewater gobies to some degree; however, these effects are temporal, lasting only for the duration of the construction activities. If tidewater gobies are driven from the vicinity of the work activities, it is anticipated that they would return upon the completion of construction.

Tidewater gobies may be entrained by pump intakes, if such devices are used to dry out work areas. Screening pump intakes with wire with no greater than 0.2 inch mesh diameter should reduce the potential that tidewater gobies would be caught in the inflow.

Some potential exists for tidewater gobies excluded from a work area to remain in an area that does not contain those elements necessary to sustain the species (e.g., adequate food and suitable substrate type for breeding). For example, if exclusion from a work area results in overcrowding, tidewater gobies may compete to a greater degree for food, breeding substrate, and space. The effects of such types of competition are unknown but because the tidewater goby has an annual life history, it could lead to a portion of the population to undergo a mortality event. Consequently, the potential needs to be carefully considered during the evaluation of any action covered by this biological opinion. Upon completion of work activities, tidewater gobies will likely regain use of the disturbed habitat after restoration actions or natural processes restore appropriate water depths and substrate along.

CUMULATIVE EFFECTS

Cumulative effects include the effects of future State, tribal, local or private actions that are reasonably certain to occur in the action area considered in this biological opinion. Future Federal actions that are unrelated to the proposed action are not considered in this section because they would require separate consultation pursuant to section 7 of the Act. We are not currently aware of any non-federal actions that are reasonably certain to occur in the action area.

CONCLUSION

After reviewing the current status of the tidewater goby, the environmental baseline for the action area, the effects of the proposed action, and the cumulative effects, it is the Service's biological opinion that the Linden Avenue and Casitas Pass Road Interchanges Project, as proposed, is not likely to jeopardize the continued existence of the tidewater goby.

We have reached this conclusion for the following reasons:

1. Caltrans proposed numerous measures to reduce the adverse effects of the proposed work on the tidewater goby;

2. Only a small amount of habitat for tidewater goby would be permanently lost relative to the amount of habitat available for these species within their affected recovery units and throughout their respective ranges; and

3. We anticipate the removal of the at-grade concrete bike/pedestrian path, currently a barrier for tidewater goby movement, will allow for a more natural stream and will improve habitat conditions for the tidewater goby.

INCIDENTAL TAKE STATEMENT

Section 9 of the Act and Federal regulation pursuant to section 4(d) of the Act prohibit the take of endangered and threatened species, respectively, without special exemption. Take is defined

as to harass, harm, pursue, hunt, shoot, wound, kill, trap, capture or collect, or to attempt to engage in any such conduct. Harm is further defined by the Service to include significant habitat modification or degradation that results in death or injury to listed species by significantly impairing essential behavioral patterns, including breeding, feeding, or sheltering. Harass is defined by the Service as intentional or negligent actions that create the likelihood of injury to listed species by annoying it to such an extent as to significantly disrupt normal behavioral patterns which include, but are not limited to, breeding, feeding or sheltering. Incidental take is defined as take that is incidental to, and not the purpose of, the carrying out of an otherwise lawful activity. Under the terms of section 7(b)(4) and section 7(o)(2), taking that is incidental to and not intended as part of the agency action is not considered to be prohibited taking under the Act provided that such taking is in compliance with the terms and conditions of this incidental take statement.

The measures described below are non-discretionary and Caltrans must implement them for the exemption in section 7(o)(2) to apply. Caltrans has a continuing duty to regulate the activity covered by this incidental take statement. If Caltrans fails to adhere to the terms and conditions of the incidental take statement, the protective coverage of section 7(o)(2) may lapse. To monitor the impact of incidental take, Caltrans must report the progress of the action and its impact on the species to the Service as specified in the incidental take statement [50 CFR §402.14(i)(3)].

We cannot predict the exact number of tidewater gobies that could be affected by project activities because of the natural fluctuations in numbers that the tidewater goby exhibits and the difficulty in determining how many individuals are present at any given time. We anticipate that few tidewater gobies will be taken through injury or mortality as a result of project activities; however, all tidewater gobies present in the project area would be subject to take through harassment, injury, or mortality during relocation from the project area. Therefore, if more than two tidewater gobies are found dead or injured within one calendar year, Caltrans must contact our office immediately so we can review the project activities to determine if additional protective measures are needed. Project activities may continue during this review period, provided that all protective measures proposed by Caltrans and the terms and conditions of this biological opinion have been and continue to be implemented.

This biological opinion provides an exemption from the prohibition against the taking of listed species, contained in section 9 of the Act, only for the activities described in the Description of the Proposed Action section of this biological opinion and in the biological assessment (Caltrans 2009).

REASONABLE AND PRUDENT MEASURES

The Service believes the following reasonable and prudent measures are necessary and appropriate to minimize take of the tidewater goby:

1. Caltrans must ensure that the level of incidental take during project implementation is commensurate with the analysis contained in this biological opinion.

2. Biologists must be authorized by the Service before they survey for, capture, and move tidewater gobies from the action area.

3. Caltrans must ensure that all work is confined to defined areas through barriers and education of workers. The education program must include information on all relevant aspects of the measures intended to protect the tidewater goby.

The Service's evaluation of the effects of the proposed action includes consideration of the measures to minimize the adverse effects of the proposed action on the tidewater goby. Any subsequent changes in these measures may constitute a modification of the proposed action and may warrant re-initiation of formal consultation, as specified at 50 CFR 402.16. The above reasonable and prudent measures are intended to supplement the protective measures that were proposed by Caltrans as part of the proposed action.

TERMS AND CONDITIONS

To be exempted from the prohibitions of section 9 of the Act, Caltrans should ensure that the following terms and conditions, which implement the reasonable and prudent measures described above, are implemented:

1. The following term and condition implements reasonable and prudent measure 1:

    a. Because we are unable to anticipate with a great deal of certainty the number of tidewater gobies that may be killed or injured, Caltrans must notify the Service if more than two individuals are killed or injured within one calendar year. We will then review the project activities to determine if additional protective measures are needed. The cause of death or injury must be determined by a Service-approved biologist (see Reasonable and Prudent Measure #2). Project activities may continue during this review period, provided that all the terms and conditions of this biological opinion have been, and continue to be, implemented.

2. The following term and condition implements reasonable and prudent measure 2:

    a. Caltrans must request our approval of any biologists they wish to conduct activities pursuant to this biological opinion. Such requests must be in writing, and be received by the Ventura Fish and Wildlife Office at least 30 days prior to any such activities being conducted. Please be advised that possession of a 10(a)(1)(A) permit for the covered species does not substitute for the implementation of this measure. A section 10(a)(1)(A) recovery permit is limited to any act otherwise prohibited by section 9 of the Act for scientific purposes or to

enhance the propagation or survival of the affected species. Capture and relocation of listed species can only be authorized through the incidental take anticipated by this biological opinion or through the section 10(a)(1)(B) incidental take permitting process. Authorization of Service-approved biologists is valid for this project only.

3. The following term and condition implements reasonable and prudent measure 3:

   a. Prior to any activities related to the proposed project, a qualified biologist will conduct a training session for all construction personnel. At a minimum, the training will include a description of the tidewater goby and its habitat, the species' legal status, project boundaries, and general measures to be implemented to conserve the tidewater goby as they relate to the proposed project.

REPORTING REQUIREMENTS

Caltrans must provide a written report to the Service within 90 days following completion of the proposed project. The report must document the number and size of any tidewater gobies relocated from the action area, the date and time of relocation, and a description of relocation sites. The report must also state the number of tidewater gobies killed or injured, describing the circumstances of the mortalities or injuries if known. The report must contain a brief discussion of any problems encountered in implementing minimization measures, results of biological surveys and sighting records, and any other pertinent information such as the acreage affected and restored or undergoing restoration of each habitat type. We encourage you to submit recommendations regarding modification of or additional measures that would improve or maintain protection of the tidewater goby, while simplifying compliance with the Act.

DISPOSITION OF DEAD OR INJURED SPECIMENS

Upon locating a dead or injured tidewater goby, notification must be made by telephone and in writing to the Ventura Fish and Wildlife Office in Ventura, California, (2493 Portola Road, Suite B, Ventura, California 93003, (805) 644-1766). Telephone contact must be made within 24 hours of the incident, and in writing within 3 working days. The report must include the date, time, location of the carcass, a photograph, cause of death if known, and any other pertinent information.

Care must be taken in handling dead specimens to preserve biological material in the best possible state for later analysis. Should any injured tidewater gobies survive, the Service must be contacted regarding their final disposition. The remains of tidewater gobies must be placed with the Santa Barbara Natural History Museum (Contact: Paul Collins, Santa Barbara Natural History Museum, Vertebrate Zoology Department, 2559 Puesta Del Sol, Santa Barbara, California 93460, 805-682-4711 ext.321).

CONSERVATION RECOMMENDATIONS

Section 7(a)(1) of the Act directs Federal agencies to use their authorities to further the purposes of the Act by carrying out conservation programs for the benefit of endangered and threatened species. Conservation recommendations are discretionary agency activities to minimize or avoid adverse effects of a proposed action on listed species or critical habitat, to help implement recovery plans, or to develop information.

> Caltrans should work with local agencies and governments towards the implementation of recovery actions identified in the tidewater goby recovery plan.

The Service requests notification of the implementation of any conservation recommendations so we may be kept informed of actions that minimize or avoid adverse effects or that benefit listed species and their habitats.

REINITIATION NOTICE

This concludes formal consultation on the Linden Avenue and Casitas Pass Road Interchanges Project, Santa Barbara County, California. As provided in 50 CFR §402.16, reinitiation of formal consultation is required where discretionary Federal agency involvement or control over the action has been retained (or is authorized by law) and if: 1) the amount or extent of incidental take is exceeded; 2) new information reveals effects of the agency action that may affect listed species or critical habitat in a manner or to an extent not considered in this biological opinion; 3) the agency action is subsequently modified in a manner that causes an effect to the listed species or critical habitat not considered in this biological opinion; or 4) a new species is listed or critical habitat is designated that may be affected by the action. In instances where the amount or extent of incidental take is exceeded, any operations causing such take must cease pending reinitiation.

If you have any questions, please contact Robert McMorran of my staff at (805) 644-1766, extension 232.

Sincerely,

Diane K. Noda
acting Field Supervisor

REFERENCES CITED

California Department of Transportation (Caltrans). 2009. Biological assessment for the Linden Avenue and Casitas Pass Road Interchanges Project, Santa Barbara County, California.

Irwin, J.F. and D.L. Soltz. 1984. The natural history of the tidewater goby, *Eucyclogobius newberryi*, in the San Antonio and Schuman Creek system, Santa Barbara County, California. U.S. Fish and Wildlife Service, Sacramento Endangered Species Office Contract No. 11310-0215-2.

Lafferty, K.D., C.C. Swift, and R.F. Ambrose. 1999a. Post flood persistence and recolonization of endangered tidewater goby population. North American Journal of Fisheries Management 19:618-622.

Lafferty, K.D., C.C. Swift, and R.F. Ambrose. 1999b. Extirpation and recolonization in a metapopulation of an endangered fish, the tidewater goby. Conservation Biology 13:1447-1453.

Moyle, P.B. 2002. Inland Fishes of California revised and expanded. University of California Press, Berkeley, California.

Swenson, R.O. 1995. The reproductive behavior and ecology of the tidewater goby, *Eucyclogobius newberryi* (Pisces: Gobiidae). Ph.D. Dissertation, University of California at Berkeley.

Swenson, R.O. 1999. The ecology, behavior, and conservation of the tidewater goby, *Eucyclogobius newberryi*. Environmental Biology of Fishes 55:99-119.

Swenson, R.O. and A.T. McCray. 1996. Feeding ecology of the tidewater goby. Trans. Amer. Fish. Soc. 125:956-970.

Swift, C.C., J.L. Nelson, C. Maslow, and T. Stein. 1989. Biology and distribution of the tidewater goby, *Eucyclogobius newberryi* (Pisces: Gobiidae) of California. Natural History Museum of Los Angeles County, No. 404.

Swift, C.C., T.R. Haglund, M. Ruiz, and R.N. Fisher. 1993. The status and distribution of the freshwater fishes of southern California. Bull. S. Calif. Acad. Sci. 92:101-167.

Swift, C.C., P. Duangsitti, C. Clementa, K. Hasserd, and L. Valle. 1997. Biology and distribution of the tidewater goby, *Eucyclogobius* newberryi, on Vandenberg Air Force Base, Santa Barbara County, California. Final Report, USNBS Cooperative Agreement 1445-007-94-8129. 121 pp.

U.S. Fish and Wildlife Service (Service). 2005. Recovery Plan for the Tidewater Goby (*Eucyclogobius newberryi*). U.S. Fish and Wildlife Service, Portland, Oregon. vi + 199 pp.

Worcester, K.R. 1992. Habitat utilization in a central California coastal lagoon by the tidewater goby (*Eucyclogobius newberryi*). Masters thesis, California Polytechnic State University, San Luis Obispo, California.

Wang, J.C.S. 1982. Early life history and protection of the tidewater goby (*Eucyclogobius newberryi*)(Girard) in the Rodeo Lagoon of the Golden Gate National Recreation Area. Cooperative National Park Research Study Unit, Technical Report 7, Institute of Ecology, University of California, Davis, CPSU/UCD 022/3.

UNITED STATES DEPARTMENT OF COMMERCE
National Oceanic and Atmospheric Administration
NATIONAL MARINE FISHERIES SERVICE
Southwest Region
501 West Ocean Boulevard, Suite 4200
Long Beach, California 90802-4213

2009/04754:MRM

APR 20 2010

Chuck Cesena
State Of California
Department of Transportation
50 Higuera Street
San Luis Obispo, California 93401

Dear Mr. Cesena:

Enclosed with this letter is NOAA's National Marine Fisheries Service's (NMFS) Biological Opinion for the Federal Highway Administration's and California Department of Transportation's (Caltrans) project to modify bridges and roadways in order to improve traffic conditions at the Linden Avenue and Casitas Pass Road interchange where State Route 101 crosses Carpinteria Creek in Santa Barbara County. Under the June 7, 2007, assumption of federal responsibilities, Caltrans is the lead agency for this consultation. This Biological Opinion addresses the effects of the proposed action on the endangered Southern California Distinct Population Segment of steelhead (*Oncorhynchus mykiss*) in accordance with section 7(a)(2) of the Endangered Species Act of 1973, as amended (16 U. S. C. 1531 *et seq.*).

The Biological Opinion concludes that the proposed action is not likely to jeopardize the continued existence of the Federally endangered steelhead or adversely modify critical habitat. NMFS believes the proposed action is likely to result in incidental take of steelhead, and therefore an incidental take statement is attached to the Biological Opinion. The incidental take statement includes reasonable and prudent measures that NMFS believes are necessary and appropriate to minimize and monitor incidental take of steelhead. Please call Matt McGoogan at (562) 980-4026 if you have any questions concerning the Biological Opinion or if you would like additional information.

Sincerely,

for Rodney R. McInnis
Regional Administrator

Enclosure

BIOLOGICAL OPINION

AGENCY: California Department of Transportation

ACTION: The Federal Highway Administration's funding of a project to make modifications to the bridges and roadways associated with the Linden Ave. and Casitas Pass Rd. interchange near where State Route 101 crosses Carpinteria Creek in Santa Barbara County.

CONSULTATION CONDUCTED BY: National Marine Fisheries Service, Southwest Region

DATE ISSUED: APR 20 2010

FILE NUMBER: 151422SWR2009PR00467

I. CONSULTATION HISTORY

On September 1, 2009, NOAA's National Marine Fisheries Service (NMFS) received a written request for formal consultation from the Federal Highway Administration (FHWA) and California Department of Transportation (Caltrans) for a project to modify bridges and roadways in order to improve traffic conditions at the Linden Avenue and Casitas Pass Road interchange where State Route (SR) 101 crosses Carpinteria Creek in Santa Barbara County. Caltrans is taking the role of lead agency for this consultation in accordance with the provisions of the Memorandum of Understanding (MOU) between FHWA, California Division, and Caltrans Assumption of Responsibility for Categorical Exclusions, which became effective June 7, 2007. Because aspects of this project have the potential to cause unavoidable short-term adverse effects on the endangered Southern California (SC) Distinct Population Segment (DPS) of steelhead (*Oncorhynchus mykiss*) in Carpinteria Creek, Caltrans requested formal consultation with NMFS. The consultation package received by NMFS on September 1, 2009, appeared to comport with the requirements for initiating formal consultation as defined in 50 CFR §402.14, and formal consultation was initiated on the same day. Accordingly, NMFS prepared this biological opinion for this bridge and highway construction project.

This biological opinion is based on the best scientific and commercial data available, including descriptions of the project (Caltrans 2009), observations of the creek and instream habitat noted by a NMFS biologist, expected effects of the project on steelhead, and the ecological literature. A complete administrative record for this consultation is maintained on file at NMFS' Southwest Regional Office (501 W. Ocean Blvd., Suite 4200, Long Beach, California 90802).

II. DESCRIPTION OF THE PROPOSED ACTION

The Federal action is FHWA's funding of this interchange improvement project. The project involves modifications to bridges and roadways on SR 101 in Santa Barbara County, located within the City of Carpinteria, from 0.2 miles south of the Carpinteria Creek bridges to 0.4 mile north of Linden Ave. The project is being proposed by FHWA, and Caltrans. The purpose of the project is to reduce traffic congestion and improve circulation along SR 101 and adjacent local streets as well as address operational safety issues within the project limits. The project is expected to take up to 5 years to complete. Project activities and impact minimization and avoidance measures include the following:

- Replace, widen, and raise the northbound and southbound SR 101 Carpinteria Creek Bridges.
- Upgrade the Casitas Pass Road southbound on and off diamond ramps.
- Construct a new bridge for Via Real over Carpinteria Creek.
- Remove the existing bike path crossing Carpinteria Creek at grade and add two new bike paths on northbound and southbound Via Real.
- Remove old ramps and construct new northbound on and off hook ramps at Casitas Pass Road.
- Replace the Casitas Pass Road Separation with a 5-lane structure including bike lanes and sidewalks on both sides.
- Remove existing nonstandard southbound off-ramp at Linden Ave. and construct a new southbound diamond off-ramp.
- Remove existing northbound Linden Ave. on-ramp and construct a new northbound on-ramp with a roundabout.
- Replace Linden Ave. overcrossing with a 4-lane structure, including bike lanes and sidewalks on both sides.
- Reconfigure Ogan Road to connect with the new roundabout.
- Install signal lights on Via Real, Linden Ave., and Ogan Road.
- Install of sound walls.
- No work will be conducted in flowing water.
- Dewater two sections of Carpinteria Creek during instream work associated with bridge demolition and new bridge installation at SR 101 (dewatering about 300 feet of stream)

and installation of the new bridge for Via Real (dewatering about 190 feet of stream). Dewatering activities will include the construction and deconstruction of 2 coffer dam diversions to isolate the work spaces. The distance between these diversions is about 80 feet. Diversions will be installed at the beginning of the instream construction period from June 1 to October 31. The diversion for SR 101 may need to be installed 4 times (once for each of the 4 years that instream construction activities are expected) and 1 time at Via Real (for 1 year of estimated instream construction activities).

- Limit construction activities within or directly adjacent to Carpinteria Creek to periods of low stream flow between June 1st and October 31st.

- Monitor the stream during dewatering by a NMFS approved biologist to relocate any steelhead found in the dewatered reaches to appropriate nearby habitats.

- No equipment will be fueled or serviced within 20 meters of the riparian or wetland areas.

- Revegetate of disturbed areas with locally native species and replacement of any riparian vegetation that is removed at a 3:1 ratio.

- Install of sediment and erosion best management practices.

The action area of the project covers about 1 acre of land along Carpinteria Creek and includes natural communities and land-use types such as riverine, freshwater marsh, riparian forest, riparian scrub, ruderal, landscaped/ornamental, grassland, and existing roads. There are 0.42 acres of permanent riparian impacts and 0.47 acres of temporary riparian impacts expected as a result of this project. The length of stream within the action area is about 700 feet of Carpinteria Creek. This action area is located where Highway 101 crosses Carpinteria Creek immediately south of the Linden and Casitas Pass off-ramps. Steelhead are present in Carpinteria Creek, which is designated as critical habitat for this species.

III. STATUS OF THE LISTED SPECIES

Because this biological opinion considers the potential effect of the proposed action on the Federally endangered SC DPS of steelhead, the status of steelhead and the species' life history and habitat requirements are described as follows.

A. Description of the Species

Steelhead are a short-lived species native to Pacific Coast streams extending from Alaska south to northwestern Mexico (Moyle 1976, NMFS 1997, Good *et al.* 2005). Like other steelhead populations, the SC DPS steelhead spends a portion of their overall life history spawning and rearing in freshwater coastal streams along the southern California coast. The geographic range of this coastal steelhead DPS was determined to extend from the Santa Maria River, near Santa Maria, California, to the U.S.–Mexico border (NMFS 1997, 2005). Adult steelhead spawn in upstream reaches within coastal watersheds, and the progeny rear in freshwater or estuary for a

period of one to three years prior to emigrating to the sea where they reach maturity before returning to natal streams for spawning. The species exhibits a polymorphic life history with some individuals not returning to the ocean before maturing and reproducing, and some individuals giving rise to progeny that resume an anadromous reproductive cycle.

B. Life History and Habitat Requirements

The life history of steelhead generally involves rearing in freshwater for one to three years before migrating to the ocean, usually in the spring and fall, where they may remain for up to four years. The timing of emigration appears to be influenced by photoperiod, streamflow, and temperature. In some drainages, immature steelhead may rear in lagoon or estuary for several weeks prior to entering the ocean. Steelhead grow and reach maturity at age two to four while in the ocean. Adults generally immigrate to natal streams for spawning (but may also enter non-natal streams) during winter; some adults may not enter coastal streams until spring. Adults may migrate several miles, hundreds of miles in some watersheds, to reach their spawning grounds. Although spawning may occur in late winter and early spring, the specific timing of spawning may vary a month or more among streams within a region. Steelhead do not necessarily die after spawning and may return to the ocean, sometimes repeating their spawning migration one or more years. Female steelhead excavate a nest in the streambed and then deposit their eggs. After fertilization by the male, the female covers the nest with a layer of gravel, and the embryos incubate within this gravel pocket. Hatching time varies from about three weeks to two months depending on water temperature. The young fish emerge from the nest two to six weeks after hatching. Additional details regarding steelhead life history can be found in Shapovalov and Taft (1954), Barnhart (1991), and Bjornn and Reiser (1991).

Habitat requirements of steelhead in streams generally depend on the life history stage (Cederholm and Martin 1983, Bjornn and Reiser 1991). Generally, discharge, water temperature, and water chemistry must be appropriate for adult and juvenile migration. Passage of adults to upstream spawning areas should not be impeded because evidence suggests delays in arrival times at spawning areas can reduce fitness and ultimately production of young. Low discharge, high water temperature, physical barriers, low dissolved oxygen, and turbidity (high levels) may delay or halt upstream migration of adults and timing of spawning, and downstream migration of juveniles and subsequent entry into the estuary, lagoon, or ocean. Suitable water depth and velocity, and substrate composition are the primary requirements for spawning, but water temperature and turbidity are also important. Dissolved oxygen concentration, pH, and water temperature are factors affecting survival of incubating embryos. Fine sediment, sand and smaller particles, can fill interstitial spaces between large substrate particle types, thereby reducing waterflow through and dissolved oxygen levels within a nest. Juvenile steelhead require living space (different combinations of water depth and velocity), shelter from predators and harsh environmental conditions, food resources, and suitable water quality and quantity, for growth and survival during summer and winter (Moyle 2002). Young-of-the-year and yearling steelhead generally use riffles, runs and pools (*e.g.*, Roper *et al.* 1994) during much of a given year where these habitats exist. Young-of-the-year and older juveniles may seek cover and cool water in pools during summer (Nielsen *et al.* 1994) particularly as discharge and therefore space declines in summer and fall (Kraft 1972). Juvenile steelhead have specific habitat requirements as indicated by the similarity of microhabitat use despite changes in microhabitat availability.

C. Population Dynamics

The number of steelhead in the SC DPS is small (Busby *et al.* 1996, Good *et al.* 2005). Total run size of adults for the DPS (based on combined estimates for the Santa Ynez, Ventura, and Santa Clara rivers, and Malibu Creek) is estimated at less than 500 adults (NMFS 2005). The small estimated run sizes suggest the Southern California steelhead DPS is not likely to be viable over lengthy temporal scales because the risk of extinction increases with decreasing population size and the extinction factors affecting population dynamics have more effect on small populations as compared to large populations (Pimm *et al.* 1988, McElhany *et al.* 2000).

Although no long-term data set is available that would allow an adequate assessment of population variability, observations of species presence and distribution since 1997 indicate the variability of the SC DPS is high. For instance, since this species was listed in 1997, NMFS has periodically observed steelhead in drainages, with abundance ranging from no fish to numerous fish (A. Spina, NMFS, pers. obs.). These observations corresponded with years in which rainfall was more or less at or above normal for the region, which provided increased attraction flows and migration for adult and juvenile steelhead. Because population abundance depends, in part, on the availability of suitable freshwater habitat, and the frequency and magnitude of annual rainfall (which creates and sustains living space for steelhead) fluctuates greatly in southern California, steelhead abundance is likely to vary substantially over time. Such population variability is expected to increase the risk of species' extinction because risk increases with variation (fluctuation) in population size (Pimm *et al.* 1988).

D. Status and Distribution

Wild steelhead populations in California have decreased from their historic levels (Swift *et al.* 1993, Busby *et al.* 1996, Good *et al.* 2005). Reasons for the decline of steelhead include past and present destruction, modification or curtailment of the species habitat; over-utilization for commercial, recreational and educational purposes; disease and predation; and inadequacy of existing regulatory mechanisms (NMFS 1997, 2005). In many watersheds throughout the Southern California steelhead DPS, steelhead have been cut off from historical spawning and rearing habitats due to the damming of streams for creation of water-storage and diversion facilities (*e.g.*, Twitchell Reservoir within the Santa Maria River watershed, Bradbury Dam within the Santa Ynez River watershed, Matilija Dam within the Ventura River watershed, Rindge Dam within the Malibu Creek watershed). Such facilities have resulted in both physical barriers and hydrological impediments for adults and juveniles migrating to and from prime spawning and rearing habitats. Within stream reaches that are accessible to this species, diversion and storage of surface waters and groundwater pumping have in many watersheds eliminated or dramatically reduced the quality and amount of living space for juvenile steelhead, based on NMFS' observations (A. Spina, NMFS, pers. obs.). Urbanization has contributed to declines in the quality and quantity of suitable habitat for this species. The decline in the abundance of steelhead prompted listing of the Southern California steelhead DPS as endangered on August 18, 1997 (NMFS 1997).

Reviews of the DPS status (Busby *et al.* 1996, Good *et al.* 2005) note that the number of individuals throughout much of the species' historical geographic range has declined and have

concluded (and reaffirmed) the species is at risk of extinction. The historical run size of adults within the Southern California steelhead DPS (based on combined estimates for the Santa Ynez, Ventura, and Santa Clara rivers, and Malibu Creek) was roughly estimated to be at least 32,000 to 46,000. In contrast, recent total run sizes for the same four waterways was estimated at less than 500 adults. While the estimates of historical run sizes have been criticized for lacking adequate support (Good *et al.* 2005), there is recent evidence indicating that the number of streams currently supporting the Southern California steelhead DPS (46 drainages) has been reduced to less than 50 % and may be as low as 37 % of streams that historically supported steelhead (Good *et al.* 2005). The Santa Clara River system is the largest steelhead-bearing watershed within the Southern California steelhead DPS, with a drainage basin over 1,600 square miles. Up to the mid-1940s, this system was estimated to support an annual run of 9,000 adult steelhead (Moore 1980). Furthermore, recent information for some of the larger river systems (such as the Santa Clara River watershed) which are presumed to have been the historical foundation for the DPS, suggest small run sizes. For instance, a few estimates have been obtained from the Vern Freeman diversion on the Santa Clara River, which possesses a fish ladder and trap, allowing individuals to be counted. A range of zero to two upstream migrating adult steelhead have been detected each year during monitoring activities conducted at this facility from 1994 through 2009 (S. Howard, United Conservation District Biologist, February 2010, pers. comm.).

E. Status of Critical Habitat

Critical habitat for the SC steelhead DPS was designated on September 2, 2005, and consists of the stream channels listed in 70 FR 52488, including Carpinteria Creek. Critical habitat has a lateral extent as defined by the bankfull discharge, also known as a 2-year flood event. Estuarine areas of listed streams are also included in the designation, but the riparian zone is not included in the designation. Primary constituent elements (PCE) within these streams essential for the conservation of the DPS are those sites and habitat components that support one or more steelhead life stages. These include freshwater spawning sites and rearing sites with water quantity and quality sufficient to form and maintain physical habitat conditions that support juvenile growth and mobility. PCEs also include natural cover such as shade, submerged and overhanging large wood, logjams, beaver dams, aquatic vegetation, large rocks, boulders, side channels and undercut banks (September 2, 2005, 70 FR 52488). Additional PCEs of critical habitat consist of freshwater migration corridors free of obstruction and excessive predation that have sufficient water quantity and quality, and physical cover within migration corridors that supports steelhead mobility and survival, as well as estuarine areas that also share these attributes. Also listed as PCEs are juvenile and adult steelhead food forage, including aquatic invertebrates and fishes that support steelhead growth and maturation (September 2, 2005, 70 FR 52488).

Critical habitat does not include occupied habitat areas on Indian tribal lands, or on specific lands owned or controlled by the Department of Defense where a natural resources management plan has been prepared. Riverine areas above major dams that are presently inaccessible to steelhead are currently being evaluated in terms of being included in the critical habitat designation, based on their potential benefit for future recovery efforts. The areas that could potentially be included in the critical habitat designation are reaches of the Santa Ynez River upstream of Bradbury

Dam, reaches of Piru Creek above Santa Felicia Dam, and reaches of the Santa Maria River above Twitchell Dam.

Streams designated as critical habitat in the Southern California DPS have the above PCE attributes to varying degrees, depending on the stream location and the impacts associated with the watershed. NMFS' most recent Status Review Update for West Coast Steelhead (Good *et al.* 2005) identified habitat destruction and degradation as serious ongoing risk factors for this DPS. Urban development, flood control, water development, and other anthropogenic factors have adversely affected the proper functioning and condition of some spawning, rearing, and migratory habitats in streams designated as critical habitat. Urbanization has resulted in some permanent impacts to steelhead critical habitat due to stream channelization, increased bank erosion, riparian damage, migration barriers, and pollution (Good *et al.* 2005). Many streams within the DPS have dams and reservoirs that mute flushing stream flows, withhold or reduce water levels suitable for fish passage and rearing, physically block upstream fish passage, and retain valuable sediments for spawning and rearing. In addition, some stream reaches within the DPS' designated critical habitat may be vulnerable to further perturbation resulting from poor land use and management decisions.

In addition, as part of the process to gather and analyze information to finalize this most recent designation of critical habitat several Critical Habitat Analytical Review Teams (CHARTs) were formed. The CHART for the southern California DPS compiled all available information regarding the distribution and habitat use of steelhead within the southern California DPS, worked with a GIS specialist to develop maps depicting the spatial distribution of each DPS overlaid on stream hydrography at a scale of 1:100,000, verified that PCEs occurred in each CALWATER Hydrologic Subarea (HSA) that were occupied by steelhead, verified the existence of management activities that may affect the PCEs, and finally, performed conservation assessments for all occupied watersheds, including riverine reaches and estuarine areas within each DPS. The conservation value of a given HSA represents the relative importance of the HSA to the conservation of the DPS. To assess the conservation value of an HSA, the CHART used their best professional judgment and considered a variety of data sources and employed a generally uniform scoring system based on the quality, quantity, and distribution of physical or biological features associated with spawning, rearing, and migration in each HSA. From this analysis each occupied HSA was given a conservation value of "high", "medium", or "low". Within the freshwater and estuarine range of the southern California DPS, the CHART identified 32 HSAs that were occupied by steelhead (NMFS 2005). Five HSAs were rated low in conservation value, 6 were rated medium, and 21 were rated as high in conservation value. Essential features for spawning, rearing, and migration are contained in approximately 741 miles of occupied stream habitat within these HSAs.

IV. ENVIRONMENTAL BASELINE

This section describes the status of steelhead in the action area and factors affecting steelhead abundance. Each of these is described as follows.

A. Status of Steelhead in the Action Area

Instream habitat in the action area appears suitable for steelhead migration and juvenile rearing. Depending on the stream flow each year and how it affects substrate composition the action area could provide some opportunities for spawning but this location is low in Carpinteria Creek (less than a mile from the ocean) and adults are more likely to spawn higher in the watershed. In some of the larger pools higher in the watershed NMFS has observed as many as 200 juvenile steelhead (M. McGoogan, NMFS biologist, pers. obs.) in a single pool. In 2007 NMFS observed 3 adult steelhead in a pool below a passage impediment about 1.5 miles upstream of the action area (M. McGoogan, NMFS biologist, pers. obs.). The number of steelhead present in the action area is unknown. Though summer stream flows are low (often around 1 cubic feet per second or less), this reach of Carpinteria Creek stays wetted even in the driest of years. Stream habitats are shallower here and not expected to support numbers of steelhead similar to those observed in the upper watershed. NMFS has not observed steelhead at this location but vegetation and algae cover may have precluded detection of any steelhead that were present. Based on knowledge of steelhead in Carpinteria Creek, the size of the action area, and experience with similar proposed actions, NMFS expects that each year 50 or less juvenile steelhead could be present in the action area when the proposed action is implemented.

Carpinteria Creek is designated as a Core 1 population in NMFS' draft recovery plan (NMFS 2009). Core 1 populations are defined as those populations that are considered vital for the recovery of steelhead in certain biogeographic population groups and are therefore considered priority populations for recovery actions.

B. Factors Affecting Steelhead in the Action Area

Because the steelhead population within the action area lies downstream of the City of Carpinteria, and agricultural fields, input of wet and dry season runoff from streets, fields, and parking lots to the creek may at times impair water quality. These impacts may translate into adverse effects on steelhead because, in part, long-term urbanization effects have been associated with lower fish species diversity and abundance (Weaver and Garman 1994). Groundwater pumping to sustain municipal and agricultural water demands may decrease the amount and extent of surface water in the action area, which is not favorable for survival and growth of steelhead.

Barriers to passage within the watershed have prevented adult steelhead from accessing optimal spawning and rearing areas, reducing productivity of steelhead. These barriers are mainly comprised of low-flow or Arizona-style crossings for access to private residence or agriculture plots. In recent years several of these impediments have been successfully modified for fish passage including a large Santa Barbara County owned debris basin. These modifications have improved passage conditions, but there are still a few remaining impediments to be removed for complete unimpeded passage, including another County owned debris basin. These remaining

impediments are located at least 3 miles upstream of the action area. In the action area there is a bike path that crosses Carpinteria Creek at grade and can be an impediment to steelhead passage at certain flows or when the grates get plugged with debris.

V. EFFECTS OF THE PROPOSED ACTION

This section describes potential effects of the proposed action on SC steelhead and critical habitat. To identify the potential effects, NMFS reviewed the ecological literature concerning the effect of habitat changes on steelhead and aquatic habitat, and carefully considered the type, amount and extent of habitat changes that are expected to result from the proposed action. A general knowledge of physical and biological processes, population dynamics, and the life history and habitat requirements of steelhead supplemented the literature review, particularly where there was little or no information concerning effects of an impact on steelhead or the aquatic environment. This Biological opinion does not rely on the regulatory definition of "destruction or adverse modification" of critical habitat at 50 C.F.R. 402.02. Instead, we have relied upon the statutory provisions of the ESA to complete the following analysis with respect to critical habitat.

A. Alteration of Freshwater Rearing Areas

Coffer dams and water diversions will be used to isolate instream work areas and prevent work in flowing water. Installing the temporary sandbag and visqueen dam diversion is expected to cause a temporary loss of aquatic habitat and potentially put steelhead at the diversion site at a greater risk for harm during the dewatering process. The loss would be confined to discrete sections of Carpinteria Creek, and would be temporary because the affected workspace would be re-watered after the proposed action is complete. Due to the timing of this project, diversion of surface water would have the most significant impact on the freshwater rearing areas juvenile steelhead (PCE 2). No adult steelhead is expected to be found in the action area during timing of instream project activities (June 1 to October 31).

With regard to the consequences of altering the freshwater rearing area for steelhead, this species requires suitable living space for growth and survival; living space absent surface water is not suitable. Streamflow diversion could harm individual steelhead by concentrating or stranding them in residual wetted areas that are predisposed to dewatering or desiccation, increased water temperature, decreased dissolved oxygen concentration and predation (Cushman 1985) or by causing them to migrate to adjacent less suitable habitats (Kraft 1972, Campbell and Scott 1984). The likelihood of harm and mortality to steelhead as a result of dewatering will be reduced by having a fish biologist on site to move steelhead to nearby stream habitats outside of the project area during the dewatering process. There is still some risk to steelhead from this handling and dewatering process and this risk will be addressed further in Section B below. Based on observations of the stream, there is expected to be adequate habitat available nearby that would support any steelhead moved from the dewatered work areas.

Steelhead also require free movement for development and survival; precluding movement could harm individual steelhead by forcing fish to migrate to adjacent habitats which are less suitable than the work area (Kraft 1972, Campbell and Scott 1984). Installation of coffer dams and water

diversions could impact movement patterns of juvenile steelhead over-summering in the stream. All coffer dams and diversions will be installed during the lowest flows of the year (between June 1 and October 31) to reduce impacts and avoid main migratory seasons for steelhead. The two coffer dams to be installed on Carpinteria Creek will drain about 500 feet of stream (300 feet at the SR 101 crossing and 190 feet at Via Real crossing) and will be in place from as early as June 1 to October 31 each year of project activities. The SR 101 diversion may be installed 4 times (once for each of the 4 years that instream construction activities are expected) and the Via Real diversion is expected to be installed 1 time (for the 1 year of expected construction). The diversion structure will be composed of coffer dams at the upstream and downstream ends of each worksite with a pipeline to pass water through these isolated areas. Due to the low flows during the time the diversion would be installed, steelhead are expected to already have limited ability to migrate between stream habitats. Therefore, it is not expected that the diversion or pipe will have any noticeable additional effects to steelhead. There also seem to be locations downstream that could provide habitat comparable to that found in the action area where steelhead could be relocated, further reducing the likelihood of noticeable effects to steelhead resulting from loss of service to the dewatered portion of stream.

B. Capture and Relocation of Steelhead

During the dewatering process the applicant proposes to monitor installation of the diversion and construction activities, and capture (by hand, net, and possibly electrofishing) and relocate steelhead that are stranded in the residual wetted area. Based on NMFS observations of steelhead in Carpinteria Creek, no more than 50 juvenile steelhead are expected to be relocated as a result of the project each year (or no more than a total of 200 juvenile steelhead over the 4 years of instream project activities). As many as 3% annually may be killed (about 2 juvenile steelhead per year or 8 over the life of the project) as a result of the proposed action, based on NMFS' experience and knowledge gained on similar projects in Santa Barbara County during the last several years. As indicated in the environmental baseline section, the upper portions of the Carpinteria Creek watershed supports higher numbers of rearing juveniles with as many as 200 individuals observed in some of the larger pools. Any steelhead found in the project reach would be a small fraction of the main population. Therefore, if lethal take of 2 juvenile steelhead is observed each year of the project, NMFS believes the loss would have a negligible effect on the population of steelhead in the Carpinteria Creek watershed.

C. Loss of Aquatic Insects

The benthic (bottom-dwelling) aquatic insect assemblage of most waterways typically comprises numerous species. Food resources are important in supporting rearing functions of critical habitat (PCE 2) for juvenile steelhead. Aquatic insects provide a source of food for stream fish populations, and may represent a substantial portion of food items consumed by juvenile steelhead at various times of a year. The sections of stream to be dewatered for this project are composed of a mix of small pools, runs, and riffles. Some species of insects are found in swift-water habitats such as riffle and runs, whereas other species are found in slow-water habitats such as glides and pools. Riffles are generally accepted as the principal food-producing habitat in streams. Nevertheless, any activity that affects instream habitat could reasonably be expected to affect these food resources.

Individual benthic aquatic insects are expected to be lost when discrete sections of the creek within the action area are temporarily dewatered. Effects to aquatic insects resulting from streamflow diversion will be temporary because construction activities will be relatively short-lived, and rapid (on the order of one to two months) recolonization of disturbed areas by macroinvertebrates is expected (Thomas 1985, Harvey 1986). Furthermore, the effect of insect loss on steelhead is likely to be negligible because food from upstream sources (via macroinvertebrate drift through the culvert) would be available to steelhead immediately downstream of the affected area.

D. Disturbance to Streamside Vegetation

Streamside vegetation provides numerous functional values to stream fish that may benefit migrating, rearing, or spawning steelhead (critical habitat PCEs 1, 2, and 3) (Hall and Lantz 1969, Karr and Schlosser 1978, Lowrance *et al.* 1985, Wesche *et al.* 1987; Gregory *et al.* 1991, Platts 1991, Welsch 1991; Castelle *et al.* 1994; Lowrance *et al.* 1995, Wang *et al.* 1997). Consequently, the trimming and loss of some of the riparian vegetation on and around the vicinity of the bridges at SR 101 and Via Real are of concern. Loss of trees and vegetation in the area may result in some temporary impacts to the primary constituent elements of critical habitat and steelhead due to loss of some shading and cover. However, the loss of trees or vegetation at this site is expected be temporary (2 to 3 years as vegetation grows back) because a habitat mitigation plan will be implemented, which is intended to compensate for these losses. The bridges installed at SR 101 and Via Real will also provide immediate shading of Carpinteria Creek and will compensate for riparian shading lost at that location as a result of the bridge work. The revegetated areas will be monitored and maintained over time to ensure success. The specific length of time required for the area to be restored to pre-project conditions is not known. NMFS expects two or three years will be required to regain the basic instream cover and shading that will be lost, based on observations of similar areas that have been disturbed and subsequently treated with riparian plants. Until the disturbed area is restored to pre-project conditions, there might be less overhead canopy and shade in the immediate project area, but the dense canopy cover upstream and downstream of the project area is expected to maintain stream temperatures and provide cover for steelhead during the interim conditions.

E. Alteration of Water Quality

Water quality is important for maintaining quality of critical habitat for rearing and spawning (PCEs 1 and 2). Installing and then removing the temporary stream diversion, and the rock slope protection are expected to temporarily increase the potential for sedimentation (rapid settling of suspended sediment) and turbidity (suspended particulate matter affecting the amount of light that is scattered or absorbed by a fluid). This is of concern because high turbidity concentrations can cause fish mortality, reduce fish feeding efficiency and decrease food availability (Berg and Northcote 1985, McLeay *et al.* 1987,Gregory and Northcote 1993, Velagic 1995). Prolonged exposure to elevated concentrations of inorganic sediment can caused decreased growth in salmonids (Shaw and Richardson 2001). The magnitude and degree of the potential water-quality alteration is unknown because the specific sedimentation and turbidity rates have not been predicted. The actual sedimentation and turbidity rates would depend in part on the amount of time required to install the diversion and slope protection. Gross increases in sedimentation

and turbidity owing to construction activities are not likely because the applicant proposes to implement and maintain erosion control measures, and construction activities will occur in the dry. Although NMFS expects that turbidity and sedimentation rates will increase, in particular during installation of the temporary diversion, these increases are not expected to be sufficient to diminish the functional value of habitat for steelhead because they are localized, of less magnitude than can occur as part of natural flow events, and should settle quickly and be unnoticeable within 300 feet or less down stream. Further, installation and work activities will be conducted during the dry season when stream flows are lowest, allowing for greater ease in setting up diversion structures and less opportunity for sediment to be carried downstream.

Heavy equipment may accidentally release fluid (including large spills during refueling) that once in the creek is harmful to aquatic life. To further reduce potential inputs of hazardous substances to the stream all equipment and vehicles will be removed from the streambed at the end of each day, all servicing of vehicles will be conducted outside of the stream channel and in designated areas enclosed by spill-containing berms, and a spill contingency plan that covers possible leaks and spills into Carpinteria Creek will be developed and implemented.

G. Post-Project Hydraulic Conditions

Manipulation of the stream channel, bridge structures, and culverts can result in changes to channel morphology and hydraulic conditions. This can be a concern because changing channel morphology or hydraulic conditions could create barriers or impediments to passage at these or other locations. The bridge at Via Real is an open bottom bridge with one center piling and no structures perpendicular to the flow line that could impede steelhead passage. The bridge installation at SR 101 will be a clear span bridge and includes the removal of bridge pilings supporting the current bridge and removal the current bike path that crosses the stream at grade. Removal of these structures is expected to benefit steelhead by providing unimpeded passage for steelhead at this location. Therefore the project is expected to maintain and improve steelhead passage through the project reach.

VI. CUMULATIVE EFFECTS

Cumulative effects include the effects of future State, local or private actions that are reasonably certain to occur in the action area considered in this biological opinion. NMFS is generally familiar with activities occurring in the action area, and at this time is unaware of such actions that would be reasonably certain to occur, beyond the continuing effects of actions described in the Environmental Baseline. Future Federal actions that are unrelated to the proposed action are not considered in this section because they require separate consultation pursuant to section 7 of the ESA. Consequently, NMFS believes no cumulative effect is likely.

VII. CONCLUSION

After reviewing the best scientific and commercial information available, the recent status of steelhead, the environmental baseline for the action area, and expected effects of the proposed action, it is NMFS' Biological Opinion that the proposed action is not likely to jeopardize the continued existence of the Federally endangered SC DPS steelhead. The proposed action is not

expected to reduce the likelihood of survival or recovery of the Carpinteria Creek population because short-term effects are expected to be temporary, confined onsite, and are not expected to result in any detectable changes in the number, reproduction, or distribution of the population of either stream. Further, based on the above analysis, implementation of the proposed action is expected to allow critical habitat to remain functional and retain the current ability for the primary constituent elements to serve the intended conservation role for the species.

VIII. INCIDENTAL TAKE STATEMENT

Take is defined as to harass, harm, pursue, hunt, shoot, wound, kill, trap, capture, collect, or to attempt to engage in any such conduct. Harm is further defined by NMFS to include significant habitat modification or degradation which actually kills or injures fish or wildlife by significantly impairing essential behavioral patterns, including breeding, spawning, rearing, migrating, feeding, or sheltering. Incidental take is defined as take of listed animal species that results from, but is not the purpose of, carrying out an otherwise lawful activity. Under the terms of section 7(b)(4) and section 7(o)(2), taking that is incidental to and not the purpose of the agency action is not considered a prohibited taking provided that such taking is in compliance with the terms and conditions of this incidental take statement.

The measures described below are non-discretionary and must be undertaken by Caltrans for the exemption in section 7(o)(2) to apply. The Caltrans has a continuing duty to regulate the activity covered by this incidental take statement. If Caltrans (1) fails to assume and implement the terms and conditions or (2) fails to adhere to the terms and conditions of this incidental take statement through enforceable terms that are added to the permit or grant document, the protective coverage of section 7(o)(2) may lapse. In order to monitor the impact of incidental take, Caltrans must report the progress of the action and its impact on the species to NMFS as specified in the incidental take statement (50 CFR §402.14(i)(3)).

A. Amount and Extent of Take

NMFS believes the proposed action on Carpinteria Creek in Santa Barbara County, California, will result in the incidental take (capture, injury, and mortality) of steelhead when individual work areas are dewatered, and when juvenile steelhead are captured for relocation outside work areas. NMFS anticipates that annually no more than 50 juvenile steelhead (or 200 juvenile steelhead over the 4 years that instream project activities are expected) will be relocated during project activities and that no more than 2 juvenile steelhead (or 8 juvenile steelhead over 4 years) may be killed. The accompanying Biological Opinion does not anticipate any other form of take incidental to the proposed action.

B. Effect of Take

In the accompanying Biological Opinion, NMFS concludes that the anticipated level of take associated with the proposed action is not likely to jeopardize the continued existence of the federally endangered SC DPS of steelhead.

C. Reasonable and Prudent Measures

NMFS believes Reasonable and Prudent Measures are necessary and appropriate to minimize and monitor incidental take of steelhead. The results of the effect analysis provide the basis for the following Reasonable and Prudent Measures:

1. Avoid working in flowing water.
2. Employ a fishery biologist for the purposes of monitoring the affected area, and for removing and relocating steelhead from the affected area.
3. Report to NOAA Fisheries the progress of the action and its impact on the species.

D. Terms and Conditions

In order to be exempt from take prohibitions of the ESA, Caltrans must comply with the following Terms and Conditions, which implement the Reasonable and Prudent Measures described above and outline required reporting/monitoring conditions. The Terms and Conditions are non-discretionary.

1. The following Terms and Conditions implement Reasonable and Prudent Measure No. 1.
   A. When practical, the applicant shall use existing ingress or egress points, or perform work from the top of the creek banks, for the purposes of avoiding work and heavy equipment in flowing water, and disturbing creekbank, vegetation and instream habitat.
2. The following Terms and Conditions implement Reasonable and Prudent Measure No. 2.
   A. The applicant shall retain a fishery biologist with expertise in the areas of resident or anadromous salmonid biology and ecology, fish-habitat relationships, biological monitoring, and handling, collecting and relocating salmonid species. The biologist will continuously monitor installation and removal of the diversion, the workspace and other stream related construction activities.
   B. The applicant's biologist shall continuously monitor placement and removal of the diversion for removing steelhead that could be adversely affected. The biologist shall capture steelhead in residual wetted areas as a result of streamflow diversion and workspace dewatering, and then relocate steelhead to a suitable instream location immediately downstream of the workspace. The biologist shall note the number of steelhead observed in the affected area, the number of steelhead relocated, and the date and time of the collection and relocation. One or more of the following methods shall be used to capture steelhead: dip net, seine, throw net, minnow trap, or by hand. Electrofishing is also hereby authorized.
   C. The applicant's biologist shall continuously monitor construction activities for the purpose of identifying and reconciling any condition that could adversely affect steelhead or their habitat. The biologist shall be empowered to halt work activity and to recommend measures for avoiding adverse effects to steelhead and their habitat.
   D. The applicant's biologist shall contact NMFS (Matt McGoogan, 562-980-4026) immediately if one or more steelhead are found dead or injured. The purpose of

the contact shall be to review the activities resulting in take and to determine if additional protective measures are required.

3. The following Terms and Conditions implement Reasonable and Prudent Measure No. 3.
   A. The applicant shall provide a written monitoring report to NOAA Fisheries (Matt McGoogan, 501 W. Ocean Blvd., Suite 4200, Long Beach, California, 90802) within 30 working days following completion of the proposed action. The report shall include the number of steelhead killed or injured during the proposed action and biological monitoring; the number and size of steelhead relocated; any effect of the proposed action on steelhead that was not previously considered (reinitiation of consultation would be required, see section IX (2) of the biological opinion); and, photographs taken during, before and after work activity.

IX. REINITIATION OF CONSULTATION

This concludes formal consultation on the actions outlined in the project proposal. As provided in 50 CFR §402.16, reinitiation of formal consultation is required where discretionary federal agency involvement or control over the action has been retained (or is authorized by law) and if: (1) the amount or extent of incidental take is exceeded, (2) new information reveals effects of the action that may affect listed species or critical habitat in a manner or to an extent not previously considered in this opinion, (3) the action is subsequently modified in a manner that causes an effect to the listed species or critical habitat not considered in this opinion, or (4) a new species is listed or critical habitat designated that may be affected by the action. In instances where the amount or extent of incidental take is exceeded, formal consultation shall be reinitiated immediately.

X. LITERATURE CITED

Barnhart, R. B. 1991. Steelhead (*Oncorhynchus mykiss*). Pages 324 –336 in J. Stolz and J. Schnell (eds.) Trout. Stackpole Books, Harrisburg, PA.

Berg, L., and T. G. Northcote. 1985. Changes in territorial, gill-flaring, and feeding behavior in juvenile coho salmon (*Oncorhynchus kisutch*) following short-term pulses of suspended sediment. Canadian Journal of Fisheries and Aquatic Sciences 42:1410–1417.

Bjornn, T. C., and D. W. Reiser. 1991. Habitat requirements of salmonids in streams. Pages 83–138 in W. R. Meehan (ed.) Influences of Forest and Rangeland Management on Salmonid Fishes and their Habitats. American Fisheries Society Special Publication 19.

Busby, P. J., T. C Wainwright, G. J. Bryant, L. J. Lierheimer, R. S. Waples, F. W. Waknitz, and I. V. Lagomarsino. 1996. Status review of west coast steelhead from Washington, Idaho, Oregon, and California. U. S. Department of Commerce, NOAA Technical Memorandum. NMFS-NWFSC-27, 261 pp.

Campbell, R. N. B., and D. Scott. 1984. The determination of minimum discharge for 0+ brown trout (*Salmo trutta* L.) using a velocity response. New Zealand Journal of Marine and Freshwater Research 18:1–11.

Caltrans. 2009. Linden Ave and Casitas Pass Road Interchanges Project Biological Assessment for the Southern California Steelhead. August 2009.

Castelle, A. J., A. W. Johnson, and C. Conolly. 1994. Wetland and stream buffer size requirements-a review. Journal of Environmental Quality 23:878–882.

Cederholm, C. J., and D. J. Martin. 1983. Habitat requirements and life history of wild salmon and trout. Pages 88 to 102 in Proceedings of the Salmon and Trout Conference, March 11–12, Seattle University, Washington.

Cushman, R. M. 1985. Review of ecological effects of rapidly varying flows downstream from hydroelectric facilities. North American Journal of Fisheries Management 5:330–339.

Good, T. P., R. S. Waples, P. Adams. 2005. Updated status of federally listed ESUs of West Coast salmon and steelhead. U. S. Department of Commerce, NOAA Technical Memorandum, NMFS-NWFSC-66.

Gregory, R. S., and T. G. Northcote. 1993. Surface, planktonic, and benthic foraging by juvenile chinook salmon (*Oncorhynchus tshawytcha*) in turbid laboratory conditions. Canadian Journal of Fisheries and Aquatic Sciences 50:233–240.

Hall, J. D., and R. L. Lantz. 1969. Effects of logging on the habitat of coho salmon and cutthroat trout in coastal streams. Pages 355 to 376 in T. G. Northcote (ed.) Symposium on salmon and trout in streams, Institute of Fisheries, University of British Columbia, Vancouver.

Harvey, B. C. 1986. Effects of suction gold dredging on fish and invertebrates in two California streams. North American Journal of Fisheries Management 6:401–409.

Karr, J. R., and I. J. Schlosser. 1978. Water resources and the land-water interface. Science 201:229–234.

Kraft, M. E. 1972. Effects of controlled flow reduction on a trout stream. Journal of the Fisheries Research Board of Canada 29: 1405–1411.

Lowrance, R., and twelve co-authors. 1995. Water quality functions of riparian forest buffer systems in the Chesapeake Bay Watershed. U. S. Environmental Protection Agency, EPA 903-R-95-004.

Lowrance, R., R. Leonard, and J. Sheridan. 1985. Managing riparian ecosystems to control nonpoint pollution. Journal of Soil and Water Conservation 40:87–91.

McElhany, P., M. H. Ruckelshaus, M. J. Ford, T. C. Wainwright, and E. P. Bjorkstedt. 2000. Viable salmonid populations and the recovery of evolutionarily significant units. NOAA Technical Memorandum, NMFS-NWFSC-42.

McLeay, D. J., I. K. Birtwell, G. F. Hartman, G. L. Ennis. 1987. Responses of arctic grayling (*Thymallus arcticus*) to acute and prolonged exposure to Yukon placer mining sediment. Canadian Journal of Fisheries and Aquatic Sciences 44:658-673.

Moore, M. R. 1980. An assessment of the impacts of the proposed improvements to the Vern Freeman diversion on anadromous fishes of the Santa Clara River System, Ventura

County, California. Prepared for the Ventura County Environmental Resources Agency, Ventura.

Moyle, P.B. 2002. Inland Fishes of California, revised and expanded. University of California Press: 271-282.

Moyle, P. B. 1976. Inland fishes of California. University of California Press, Berkeley.

Mundie, J. H. 1991. Overview of effects of Pacific Coast river regulation on salmonids and the opportunities for mitigation. American Fisheries Society Symposium 10: 1–11.

National Marine Fisheries Service. 2009. Southern California Steelhead Recovery Plan. Draft version: July 2009.

National Marine Fisheries Service. 2005. Endangered and threatened species: designated critical habitat for seven evolutionarily significant units of Pacific salmon and steelhead in California. Federal Register 70(170): 52488–52586.

National Marine Fisheries Service. 1997. Endangered and threatened species: listing of several evolutionary significant units (ESUs) of West Coast steelhead. Federal Register 62(159): 43937–43953.

Nielsen, J. L., T. E. Lisle, and V. Ozaki. 1994. Thermally stratified pools and their use by steelhead in northern California streams. Transactions of the American Fisheries Society 123: 613–626

Pimm, S. L., H. L. Jones, and J. Diamond. 1988. On the risk of extinction. American Naturalist 132: 757-785.

Platts, W. S. 1991. Livestock grazing. Pages 389–423 *in* W. R. Meehan (ed.) Influences of Forest and Rangeland Management on Salmonid Fishes and their Habitats. American Fisheries Society Special Publication 19.

Roper, B. B., D. L. Scarnecchia, and T. J. La Marr. 1994. Summer distribution of and habitat use by chinook salmon and steelhead within a major basin of the South Umpqua River, Oregon. Transactions of the American Fisheries Society 123:298–308.

Shapovalov, L., and A. C. Taft. 1954. The life histories of the steelhead rainbow trout *(Salmo gairdneri gairdneri)* and silver salmon (*Oncorhynchus kisutch*) with special reference to Waddell Creek, California, and recommendations regarding their management. State of California, Department of Fish and Game, Fish Bulletin 98.

Swift, C. C., T. R. Haglund, M. Ruiz, and R. N. Fisher. 1993. The status and distribution of the freshwater fishes of Southern California. Bulletin of the Southern California Academy of Sciences 92: 101–167.

Thomas, V. G. 1985. Experimentally determined impacts of a small, suction gold dredge on a Montana stream. North American Journal of Fisheries Management 5:480–488.

Velagic, E. 1995. Turbidity study: a literature review. Prepared for Delta planning branch, California Department of Water Resources by Centers for Water and Wildland Resources, University of California, Davis.

Wang, L., J. Lyons, P. Kanehl, and R. Gratti. 1997. Influences of watershed land use on habitat quality and biotic integrity in Wisconsin streams. Fisheries 6:6–12.

Weaver, L. A., and G. C. Garman. 1994. Urbanization of a watershed and historical changes in a stream fish assemblage. Transactions of the American Fisheries Society 123: 162–172.

Welsch, D. J. 1991. Riparian forest buffers: functions and design for protection and enhancement of water resources. USDA Forest Service, NA-PR-07-91, Radnor, Pennsylvania.

Wesche, T. A., C. M. Goertler, and C. B. Frye. 1987. Contributions of riparian vegetation to trout cover in small streams. North American Journal of Fisheries Management 7:151–153.

DEPARTMENT OF THE ARMY
LOS ANGELES DISTRICT, U.S. ARMY CORPS OF ENGINEERS
VENTURA FIELD OFFICE
2151 ALESSANDRO DRIVE, SUITE 110
VENTURA, CA 93001

October 29, 2015

Larry Bonner
California Department of Transportation
District 5
50 Higuera Street
San Luis Obispo, California 93401

DEPARTMENT OF THE ARMY STANDARD INDIVIDUAL PERMIT

Dear Mr. Bonner:

I am responding to your application for a Department of the Army permit dated July 10, 2015 (Corps File No. SPL-2008-00838-TS). Enclosed is one copy of the permit authorizing you to discharge fill material into waters of the United States (U.S.) in association with the California Department of Transportation District 5 Linden Avenue and Casitas Pass Road Interchanges Project. The proposed work would take place in the city of Carpinteria, Santa Barbara County, California (34.394516° N / -119.509679° W).

If you object to this permit decision, you may request an administrative appeal under Corps regulations at 33 CFR Part 331. Enclosed you will find a Notification of Appeal Process (NAP) fact sheet and Request for Appeal (RFA) form (Enclosures 1 and 2, respectively). If you request to appeal this decision you must submit a completed RFA form to the Corps South Pacific Division Office at the following address:

Mr. Tom Cavanaugh
Administrative Appeal Review Officer
South Pacific Division, U.S. Army Corps of Engineers
1155 Market Street, 14th Floor
San Francisco, CA 94105-2195
Telephone (415) 977-8035; Fax (415) 977-8129
Email: thomas.j.cavanaugh@usace.army.mil

In order for an RFA to be accepted by the Corps, the Corps must determine that it is complete, that it meets the criteria for appeal under 33 CFR Part 331.5, and that it has been received by the South Pacific Division Office within 60 days of the date on the NAP. Should you decide to submit an RFA form, it must be received at the above address by **December 29, 2015**. It is not necessary to submit an RFA form to the Division office if you do not object to the decision in this letter.

Thank you for participating in the Regulatory Program. If you have any questions, please contact Theresa Stevens, Ph.D. at 805-585-2146 or via e-mail at theresa.stevens@usace.army.mil.

Please help me to evaluate and improve the regulatory experience for others by completing the customer survey form at http://corpsmapu.usace.army.mil/cm_apex/f?p=regulatory_survey.

Sincerely,

Aaron O. Allen, Ph.D.
Chief, North Coast Branch

Enclosure(s)

NOTIFICATION OF ADMINISTRATIVE APPEAL OPTIONS AND PROCESS AND REQUEST FOR APPEAL		
Applicant: California Department of Transportation District 5	File Number: SPL-2008-00838-TS	Date: OCTOBER 29, 2015
Attached is:		See Section below
	INITIAL PROFFERED PERMIT	A
x	PROFFERED PERMIT (Standard Permit)	B
	PERMIT DENIAL	C
	APPROVED JURISDICTIONAL DETERMINATION	D
	PRELIMINARY JURISDICTIONAL DETERMINATION	E

SECTION I - The following identifies your rights and options regarding an administrative appeal of the above decision. Additional information may be found at http://www.usace.army.mil/cecw/pages/reg_materials.aspx or Corps regulation at 33 CFR Part 331.

A: INITIAL PROFFERED PERMIT: You may accept or object to the permit.

- ACCEPT: If you received a Standard Permit, you may sign the permit document and return it to the district enginee for final authorization. If you received a Letter of Permission (LOP), you may accept the LOP and your work is authorized. Your signature on the Standard Permit or acceptance of the LOP means that you accept the permit in its entirety, and waive all rights to appeal the permit, including its terms and conditions, and approved jurisdictional determinations associated with the permit.

- OBJECT: If you object to the permit (Standard or LOP) because of certain terms and conditions therein, you may request that the permit be modified accordingly. You must complete Section II of this form and return the form to the district engineer. Your objections must be received by the district engineer within 60 days of the date of this notice, or you will forfeit your right to appeal the permit in the future. Upon receipt of your letter, the district engineer will evaluate your objections and may: (a) modify the permit to address all of your concerns, (b) modify th permit to address some of your objections, or (c) not modify the permit having determined that the permit should be issued as previously written. After evaluating your objections, the district engineer will send you a proffered permi for your reconsideration, as indicated in Section B below.

B: PROFFERED PERMIT: You may accept or appeal the permit

- ACCEPT: If you received a Standard Permit, you may sign the permit document and return it to the district enginee for final authorization. If you received a Letter of Permission (LOP), you may accept the LOP and your work is authorized. Your signature on the Standard Permit or acceptance of the LOP means that you accept the permit in its entirety, and waive all rights to appeal the permit, including its terms and conditions, and approved jurisdictional determinations associated with the permit.

- APPEAL: If you choose to decline the proffered permit (Standard or LOP) because of certain terms and conditions therein, you may appeal the declined permit under the Corps of Engineers Administrative Appeal Process by completing Section II of this form and sending the form to the division engineer. This form must be received by the division engineer within 60 days of the date of this notice.

C: PERMIT DENIAL: You may appeal the denial of a permit under the Corps of Engineers Administrative Appeal Process by completing Section II of this form and sending the form to the division engineer. This form must be receive by the division engineer within 60 days of the date of this notice.

D: APPROVED JURISDICTIONAL DETERMINATION: You may accept or appeal the approved JD or provide new information.

- ACCEPT: You do not need to notify the Corps to accept an approved JD. Failure to notify the Corps within 60 days of the date of this notice, means that you accept the approved JD in its entirety, and waive all rights to appeal the approved JD.

- APPEAL: If you disagree with the approved JD, you may appeal the approved JD under the Corps of Engineers Administrative Appeal Process by completing Section II of this form and sending the form to the division engineer. This form must be received by the division engineer within 60 days of the date of this notice.

E: PRELIMINARY JURISDICTIONAL DETERMINATION: You do not need to respond to the Corps regarding the preliminary JD. The Preliminary JD is not appealable. If you wish, you may request an approved JD (which may be appealed), by contacting the Corps district for further instruction. Also you may provide new information for further consideration by the Corps to reevaluate the JD.

SECTION II - REQUEST FOR APPEAL or OBJECTIONS TO AN INITIAL PROFFERED PERMIT

REASONS FOR APPEAL OR OBJECTIONS: (Describe your reasons for appealing the decision or your objections to an initial proffered permit in clear concise statements. You may attach additional information to this form to clarify where your reasons or objections are addressed in the administrative record.)

ADDITIONAL INFORMATION: The appeal is limited to a review of the administrative record, the Corps memorandum for the record of the appeal conference or meeting, and any supplemental information that the review officer has determined is needed to clarify the administrative record. Neither the appellant nor the Corps may add new information or analyses to the record. However, you may provide additional information to clarify the location of information that is already in the administrative record.

POINT OF CONTACT FOR QUESTIONS OR INFORMATION:

If you have questions regarding this decision and/or the appeal process you may contact:	If you only have questions regarding the appeal process you may also contact:
Theresa Stevens, Ph.D. Senior Project Manager U.S. Army Corps of Engineers Los Angeles District Ventura Field Office 2151 Alessandro Drive, Suite 110 Ventura, CA 93001 Phone: 805-585-2146 Email: theresa.stevens@usace.army.mil	Thomas J. Cavanaugh Administrative Appeal Review Officer, U.S. Army Corps of Engineers South Pacific Division 1455 Market Street, 2052B San Francisco, California 94103-1399 Phone: (415) 503-6574 Fax: (415) 503-6646 Email: thomas.j.cavanaugh@usace.army.mil

RIGHT OF ENTRY: Your signature below grants the right of entry to Corps of Engineers personnel, and any government consultants, to conduct investigations of the project site during the course of the appeal process. You will be provided a 15 day notice of any site investigation, and will have the opportunity to participate in all site investigations.

	Date:	Telephone number:
_____ Signature of appellant or agent.		

Administrative Appeal Process for Approved Jurisdictional Determinations

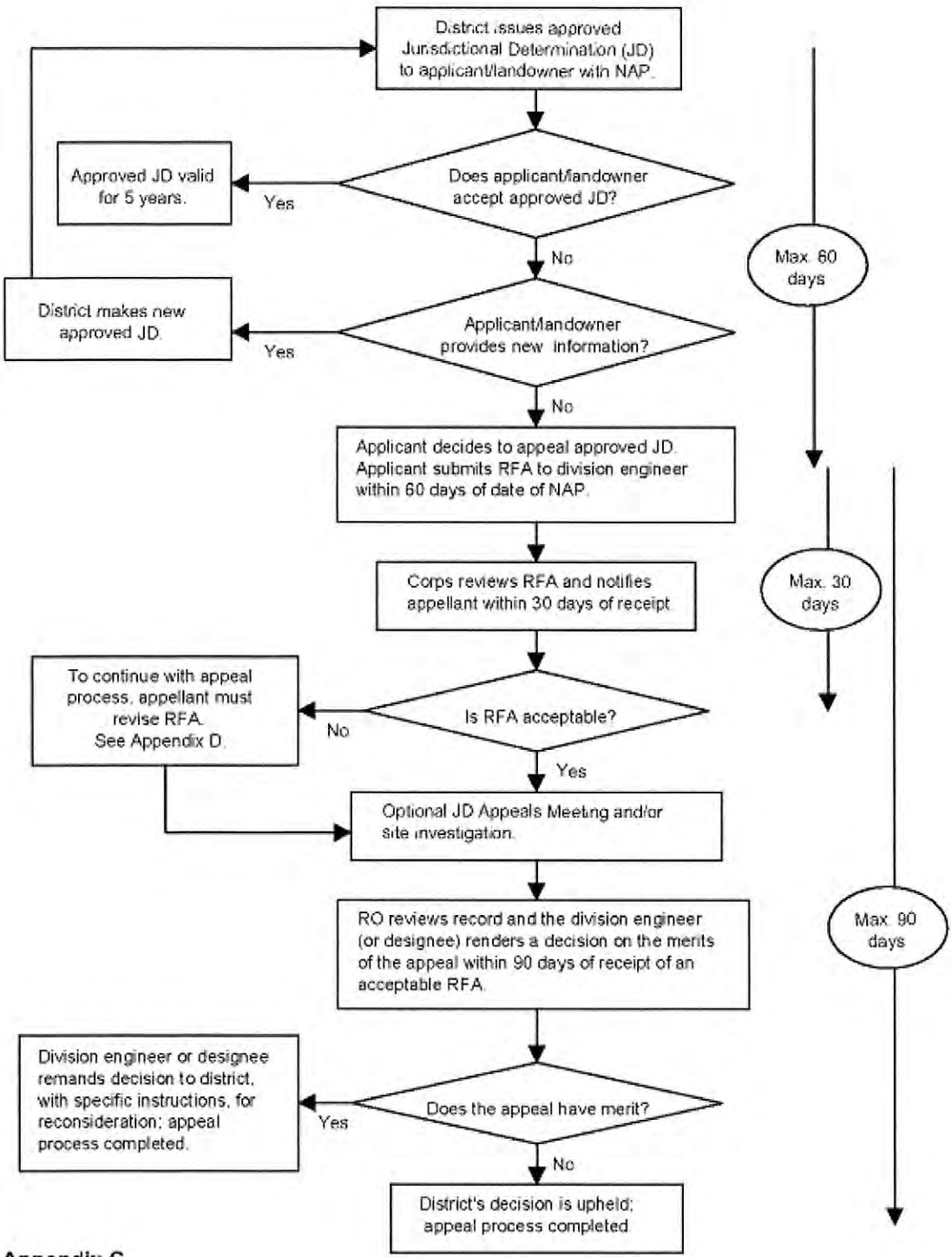

Appendix C

§ 331.5 Criteria.

(a) *Criteria for appeal* —(1) *Submission of RFA.* The appellant must submit a completed RFA (as defined at §331.2) to the appropriate division office in order to appeal an approved JD, a permit denial, or a declined permit. An individual permit that has been signed by the applicant, and subsequently unilaterally modified by the district engineer pursuant to 33 CFR 325.7, may be appealed under this process, provided that the applicant has not started work in waters of the United States authorized by the permit. The RFA must be received by the division engineer within 60 days of the date of the NAP.

(2) *Reasons for appeal.* The reason(s) for requesting an appeal of an approved JD, a permit denial, or a declined permit must be specifically stated in the RFA and must be more than a simple request for appeal because the affected party did not like the approved JD, permit decision, or the permit conditions. Examples of reasons for appeals include, but are not limited to, the following: A procedural error; an incorrect application of law, regulation or officially promulgated policy; omission of material fact; incorrect application of the current regulatory criteria and associated guidance for identifying and delineating wetlands; incorrect application of the Section 404(b)(1) Guidelines (see 40 CFR Part 230); or use of incorrect data. The reasons for appealing a permit denial or a declined permit may include jurisdiction issues, whether or not a previous approved JD was appealed.

(b) *Actions not appealable.* An action or decision is not subject to an administrative appeal under this part if it falls into one or more of the following categories:

(1) An individual permit decision (including a letter of permission or a standard permit with special conditions), where the permit has been accepted and signed by the permittee. By signing the permit, the applicant waives all rights to appeal the terms and conditions of the permit, unless the authorized work has not started in waters of the United States and that issued permit is subsequently modified by the district engineer pursuant to 33 CFR 325.7;

(2) Any site-specific matter that has been the subject of a final decision of the Federal courts;

(3) A final Corps decision that has resulted from additional analysis and evaluation, as directed by a final appeal decision;

(4) A permit denial without prejudice or a declined permit, where the controlling factor cannot be changed by the Corps decision maker (e.g., the requirements of a binding statute, regulation, state Section 401 water quality certification, state coastal zone management disapproval, etc. (See 33 CFR 320.4(j));

(5) A permit denial case where the applicant has subsequently modified the proposed project, because this would constitute an amended application that would require a new public interest review, rather than an appeal of the existing record and decision;

(6) Any request for the appeal of an approved JD, a denied permit, or a declined permit where the RFA has not been received by the division engineer within 60 days of the date of the NAP;

(7) A previously approved JD that has been superceded by another approved JD based on new information or data submitted by the applicant. The new approved JD is an appealable action;

(8) An approved JD associated with an individual permit where the permit has been accepted and signed by the permittee;

(9) A preliminary JD; or

(10) A JD associated with unauthorized activities except as provided in §331.11.

DEPARTMENT OF THE ARMY PERMIT

Permittee: California Department of Transportation, District 5

Project Name: Linden Avenue and Casitas Pass Road Interchanges Project

Permit Number: SPL-2008-00838-TS

Issuing Office: Los Angeles District

Note: The term "you" and its derivatives, as used in this permit, means the Permittee or any future transferee. The term "this office" refers to the appropriate district or division office of the Corps of Engineers having jurisdiction over the permitted activity or the appropriate official acting under the authority of the commanding officer.

You are authorized to perform work in accordance with the terms and conditions specified below.

Project Description:

1. Excavation and discharges of fill associated with the Project would temporarily impact jurisdictional wetlands (0.059 acre) and non-wetland waters (0.136 acre) in Carpinteria Creek. The Project would widen Carpinteria Creek and result in a net gain of 0.46 acre of jurisdictional waters of the United States.
2. Excavation and discharges of fill in the jurisdictional drainage ditch to Franklin Creek would permanently impact 0.023 acre and temporarily impact 0.067 acre of non-wetland waters.
3. The Project impacts would occur pursuant to Section 404 of the Clean Water Act of 1972, and in association with the Linden Avenue and Casitas Pass Road Interchanges Project as shown on the attached drawings.

Specifically, you are authorized to:

- Demolish and reconstruct the northbound and southbound U.S. 101 bridges over Carpinteria Creek. The reconstructed bridges would be wider, longer and higher than the existing bridges.
- Construct a full-span bridge across Carpinteria Creek associated with the proposed extension of the Via Real frontage road from its eastern terminus at the San Roque mobile home park cul-de-sac to Linden Avenue.
- Re-grade and widen an approximately 535-foot-long section of Carpinteria Creek. Caltrans proposes to widen the creek bed below "ordinary high water" (OHW) (33 CFR 328.3(e)) from approximately 35 feet to approximately 65 feet. The top of the creek banks would be widened from approximately 110 feet to approximately 140 feet; cut slopes along the new creek banks would be 1.5:1; the excavated low flow trapezoidal channel would be approximately 1-foot-deep, 5-feet-wide at the bottom,

and 9-feet-wide at the top, with side slopes of 2:1. Approximately 5,021 cubic yards (cy) of earthen material would be excavated from the Carpinteria Creek channel, of which approximately 638 cy would be removed from below the OHW. Approximately 385 linear feet of the newly graded creek banks would be armored above and below the OHW with approximately 4,848 cy of ungrouted rock slope protection (RSP), of which approximately 393 cy would be installed below the OHW of Carpinteria Creek (this RSP would replace existing RSP below the OHW). The west bank would have the existing Class I bike path reconstructed in the new slope, above the OHW. The proposed RSP on the west bank of the creek would be installed above and below the bike path. RSP would only be replaced below the OHW on the east bank of Carpinteria Creek at the downstream end of the Corps action area (see attached exhibits).

- Permanently impact 0.023 acre of an existing man-made earthen roadside drainage ditch to Franklin Creek to accommodate an approximately 250-foot-long drainage culvert, consisting of concrete or high density polyethylene (HDPE) pipe. Approximately 160 linear feet of this ditch along U.S. 101 near the southbound Linden Avenue off-ramp would be permanently filled with earthen material and RSP. A small portion of the filled area would be paved and become part of the southern shoulder of the new southbound Linden Avenue off-ramp. The middle section of the existing ditch (approximately 260 linear feet) would be realigned slightly to the south during construction. The west end of the ditch (approximately 360 linear feet) would be temporarily filled with earthen fill to accommodate construction of a sound wall just south of the ditch. The middle and west end sections of the ditch would be re-contoured, revegetated with a standard native seed mix, and remain an open earthen ditch following construction.
- Aquatic functions and services of impacted on-site and off-site wetlands and non-wetland waters of the United States impacted by the proposed project would be mitigated (rehabilitation) in Carpinteria Creek. Specifically, Caltrans proposes to excavate a sinuous 5-foot-wide (bed width) by 1-foot-deep by 535-foot-long low-flow channel in the bed of Carpinteria Creek prior to planting approximately 0.666 acres of native wetland herbaceous, shrub and tree species in the bed and on the banks of Carpinteria Creek. Brush layering at the upstream and downstream ends of the proposed RSP, and installation of arroyo willow stakes (*Salix* sp.) along the toe of or within the proposed RSP, would reduce scour and flanking of high flows and re-establish riparian canopy, respectively. Caltrans would remove invasive exotic species throughout the project area (including riparian areas and uplands outside waters of the United States) during the 5-year mitigation monitoring period. Caltrans would also revegetate the floodplain (outside jurisdictional waters of the United States) with appropriate native riparian species to compensate for the permanent loss of floodplain vegetation due to the extension of the Via Real frontage road. Due to the hydrology of Carpinteria Creek and the floodplain, Caltrans anticipates successful plant establishment during the 5-year mitigation monitoring period (see Final Habitat Mitigation and Monitoring Plan, June 2015).

Project Location: City of Carpinteria, Santa Barbara County, California (34.394516° N, -119.509679° W).

Permit Conditions:

General Conditions:

1. The time limit for completing the authorized activity ends on **November 1, 2020**. If you find that you need more time to complete the authorized activity, submit your request for a time extension to this office for consideration at least one month before the above date is reached.

2. You must maintain the activity authorized by this permit in good condition and in conformance with the terms and conditions of this permit. You are not relieved of this requirement if you abandon the permitted activity, although you may make a good faith transfer to a third party in compliance with General Condition 4 below. Should you wish to cease to maintain the authorized activity or should you desire to abandon it without a good faith transfer, you must obtain a modification from this permit from this office, which may require restoration of the area.

3. If you discover any previously unknown historic or archeological remains while accomplishing the activity authorized by this permit, you must immediately notify this office of what you have found. We will initiate the Federal and state coordination required to determine if the remains warrant a recovery effort or if the site is eligible for listing in the National Register of Historic Places.

4. If you sell the property associated with this permit, you must obtain the signature of the new owner in the space provided and forward a copy of the permit to this office to validate the transfer of this authorization.

5. If a conditioned water quality certification has been issued for your project, you must comply with the conditions specified in the certification as special conditions to this permit. For your convenience, a copy of the certification is attached if it contains such conditions.

6. You must allow representatives from this office to inspect the authorized activity at any time deemed necessary to ensure that it is being or has been accomplished with the terms and conditions of your permit.

Special Conditions:

1. This permit is contingent upon the issuance of a section 401 Water Quality Certification (WQC) and Coastal Zone Management Act consistency determination (CZM). The Permittee shall abide by the terms and conditions of the WQC and CZM. The Permittee shall submit the WQC and the CZM to the Corps Regulatory Division (preferably via email) within two weeks of receipt from the issuing state agency. The Permittee shall not proceed with construction in waters of the U.S. until receiving an e-mail or other written

notification from the Corps Regulatory Division acknowledging the WQC/CZM has been received, reviewed, and determined to be acceptable. If the Regional Water Quality Control Board fails to act on a valid request for WQC within 60 days after receipt of a complete application, please notify the Corps so we may consider whether a waiver of water quality certification has been obtained. If the California Coastal Commission fails to act on a valid request for concurrence with your CZM within six months after receipt of a complete application, please notify the Corps so we may consider whether to presume a concurrence has been obtained.

2. The Permittee shall notify the Corps Regulatory Division Project Manager of initiation of work in waters of the U.S. at least two weeks prior to the actual start date. Notification must be in writing, and may be made by electronic mail, regular mail or facsimile (805-585-2154).

3. Within 45 calendar days of completion of authorized work in waters of the U.S., the Permittee shall submit to the Corps Regulatory Division a post-project implementation memorandum including the following information:
   A) Date(s) work within waters of the U.S. was initiated and completed;
   B) Summary of compliance status with each special condition of this permit (including any noncompliance that previously occurred or is currently occurring and corrective actions taken or proposed to achieve compliance);
   C) Color photographs (including map of photopoints) taken at the project site before and after construction for those aspects directly associated with permanent impacts to waters of the U.S. such that the extent of authorized fills can be verified;
   D) One copy of "as built" drawings for the entire project. Electronic submittal (Adobe PDF format) is preferred. All sheets must be signed, dated, and to-scale. If submitting paper copies, sheets must be no larger than 11 x 17 inches; and
   E) Signed Certification of Compliance.

4. The Permittee shall clearly mark the limits of the workspace with flagging or similar means to ensure mechanized equipment does not enter preserved waters of the U.S. and riparian wetland/habitat areas. Adverse impacts to waters of the U.S. beyond the Corps-approved construction footprint are not authorized. Such impacts could result in permit suspension and revocation, administrative, civil or criminal penalties, and/or substantial, additional, compensatory mitigation requirements.

5. No staging, stockpiling or materials storage shall occur in waters of the United States.

6. Within 45 calendar days of complete installation of all mitigation, the Permittee shall submit to the Corps Regulatory Division a memorandum including the following information:
   A) Date(s) all mitigation was installed and monitoring was initiated;
   B) Schedule for future mitigation monitoring and reporting pursuant to final, Corps-approved mitigation plan;

C) Color photographs (including map of photopoints) taken at each mitigation site before and after installation such that correct installation per final, Corps-approved mitigation plan can be verified;
D) One copy of "as built" drawings for the entire project, including all mitigation sites. Electronic submittal (Adobe PDF format) is preferred. All sheets must be signed, dated, and to-scale. If submitting paper copies, sheets must be no larger than 11 x 17 inches; and
E) Summary of compliance status with each special condition of this permit (including any noncompliance that previously occurred or is currently occurring and corrective actions taken or proposed to achieve compliance).

7. This Corps permit does not authorize you to take any threatened or endangered species, in particular the tidewater goby (*Eucyclogobius newberryi*), southern steelhead (*Oncorhynchus mykiss*) or California red-legged frog (*Rana draytonii*), or adversely modify any designated critical habitat. In order to legally take a listed species, you must have separate authorization under the Endangered Species Act (ESA) (e.g. ESA Section 10 permit, or a Biological Opinion (BO) under ESA Section 7, with "incidental take" provisions with which you must comply). The BOs issued to Caltrans by the FWS and NMFS contain mandatory terms and conditions to implement the reasonable and prudent measures that are associated with "incidental take" that is also specified in the BO (FWS BO No. 8-8-09-F-57, dated January 8, 2010; NMFS BO No. 2009-04754:MRM, dated April 20, 2010). Your authorization under this Corps permit is conditional upon your compliance with all of the mandatory terms and conditions associated with incidental take of the attached BO, which terms and conditions are incorporated by reference in this permit. Failure to comply with the terms and conditions associated with incidental take of the BO, where a take of the listed species occurs, would constitute an unauthorized take, and it would also constitute non-compliance with your Corps permit. Because Caltrans is the lead federal lead agency, the FWS and NMFS, are the appropriate authorities to determine compliance with the terms and conditions of its BO and with the ESA.

8. Pursuant to 36 C.F.R. section 800.13, in the event of any discoveries during construction of either human remains, archeological deposits, or any other type of historic property, the Permittee shall notify within 24 hours the Corps' Regulatory Division (Theresa Stevens, Ph.D. at 805-585-2146) and the Corps' Archeology Staff (John Killeen at 213-452-3861). The Permittee shall immediately suspend all work in any area(s) where potential cultural resources are discovered. The Permittee shall not resume construction in the area surrounding the potential cultural resources until the Corps Regulatory Division re-authorizes project construction, per 36 C.F.R. section 800.13.

9. The Permittee shall ensure all sites within waters of the U.S. subject to authorized, temporary impacts are restored to pre-project alignments, elevation contours, and conditions, including revegetation with appropriate native plant species after completion of construction in the area, as described in the final, Corps-approved mitigation plan: (Final Habitat Mitigation and Monitoring Plan, June 2015). At a minimum, the acreage of waters of the U.S. and aquatic resource functions of each site shall equal or exceed pre-project acreage of waters of the U.S. and aquatic resource functions by the end of the

monitoring period as specified in the plan. Functions for the above impact areas shall be assessed annually using CRAM, RSRA, or a similar Corps-approved functional/condition assessment method. The Permittee's responsibility to complete the required restoration as set forth in this special condition shall not be considered fulfilled until the Permittee has met or exceeded all final performance standards for each impact area and has obtained written confirmation from the Corps verifying successful restoration **Note**: if not done previously as part of the permit application evaluation process, then prior to initiating construction in sites within waters of the U.S. subject to authorized, temporary impacts, the Permittee shall conduct a functional/condition assessment to establish pre-project (baseline) functions at each impact site.

10. The Permittee shall mitigate for temporary impacts to 0.059 acres of jurisdictional wetlands in Carpinteria Creek and for permanent impacts to 0.023 acres of non-wetland waters in the ditch to Franklin Creek as described in the final, approved mitigation plan: (Final Habitat Mitigation and Monitoring Plan, June 2015). The Permittee shall complete site preparation and planting and initiate monitoring as described in the final, approved mitigation plan within 30 days of completing excavation and/or discharge of fill material in waters of the U.S. According to the final, approved mitigation plan, responsible parties would be as follows: a) Implementation: Caltrans District 5; b) Performance: Caltrans District 5; c) Caltrans District 5. The Permittee retains ultimate legal responsibility for meeting the requirements of the final, approved mitigation plan. Detailed mitigation objectives, performance standards, and monitoring requirements are described in the above final, approved mitigation plan. Any requirements for financial assurances and/or long-term management provisions are also described in the above final, approved mitigation plan. Your responsibility to complete the required compensatory mitigation will not be considered fulfilled until you have demonstrated compensatory mitigation project success and have received written verification of that success from the U.S. Army Corps of Engineers Regulatory Division.

11. MONITORING: The Permittee shall submit monitoring reports for all compensatory mitigation sites as described in the final, approved mitigation plan by October 1 of each year following the construction of mitigation. To assure compensatory mitigation success, you shall monitor the mitigation area(s) for at least five (5) consecutive growing seasons after construction or until the Corps determines the final performance standards are met (monitoring shall be for a minimum of 5 years unless the Corps agrees earlier that success has been reached and maintained for a sufficient time period, or, if success is not demonstrated to the Corps satisfaction after the 5th year of monitoring, additional monitoring may be required by the Corps as determined at that time). The monitoring period shall commence upon completion of the construction of the mitigation site(s). Additionally, you shall demonstrate continued success of the compensatory mitigation site(s), without human intervention, for at least two consecutive years during which interim and/or final performance standards are met. The compensatory mitigation project will not be deemed successful until this criterion has been met.

12. GIS DATA: Within 60 days following permit issuance, the Permittee shall provide to this office GIS data (polygons only) depicting the boundaries of all compensatory mitigation sites, as authorized in the above, final mitigation plan. All GIS data and associated metadata shall be provided on a digital medium (CD or DVD) or via file transfer protocol (FTP), preferably using the Environmental Systems Research Institute (ESRI) shapefile format. GIS data for mitigation sites shall conform to the Mitigation_SPD.xlsx data table, as specified in the Final Map and Drawing Standards for the South Pacific Division Regulatory Program dated August 6, 2012 (http://www.spd.usace.army.mil/Portals/13/docs/regulatory/standards/map.pdf), and shall include a text file of metadata, including datum, projection, and mapper contact information. Within 60 days following completion of compensatory mitigation construction activities, if any deviations have occurred, you shall submit as-built GIS data (polygons only) accompanied by a narrative description listing and explaining each deviation.

13. Caltrans Proposed Minimization Measures would also be implemented during construction to reduce impacts to waters of the United States (see Enclosure 1).

Further Information:

1. Congressional Authorities. You have been authorized to undertake the activity described above pursuant to:

( ) Section 10 of the River and Harbor Act of 1899 (33 U.S.C. 403).

(x) Section 404 of the Clean Water Act (33 U.S.C. 1344).

( ) Section 103 of the Marine Protection, Research and Sanctuaries Act of 1972 (33 U.S.C. 1413).

2. Limits of this authorization.

a. This permit does not obviate the need to obtain other Federal, state, or local authorizations required by law.

b. This permit does not grant any property rights or exclusive privileges.

c. This permit does not authorize any injury to the property or rights of others.

d. This permit does not authorize interference with any existing or proposed Federal project.

3. Limits of Federal Liability. In issuing this permit, the Federal Government does not assume any liability for the following:

a. Damages to the permitted project or uses thereof as a result of other permitted or unpermitted activities or from natural causes.

b. Damages to the permitted project or uses thereof as a result of current or future activities undertaken by or on behalf of the United States in the public interest.

c. Damages to persons, property, or to other permitted or unpermitted activities or structures caused by the activity authorized by this permit.

d. Design or construction deficiencies associated with the permitted work.

e. Damage claims associated with any future modification, suspension, or revocation of this permit.

4. Reliance on Applicant's Data. The determination of this office that issuance of this permit is not contrary to the public interest was made in reliance on the information you provided.

5. Reevaluation of Permit Decision. This office may reevaluate its decision on this permit at any time the circumstances warrant. Circumstances that could require a reevaluation include, but are not limited to, the following:

a. You fail to comply with the terms and conditions of this permit.

b. The information provided by you in support of your permit application proves to have been false, incomplete, or inaccurate (See 4 above).

c. Significant new information surfaces which this office did not consider in reaching the original public interest decision.

Such a reevaluation may result in a determination that it is appropriate to use the suspension, modification, and revocation procedures contained in 33 CFR 325.7 or enforcement procedures such as those contained in 33 CFR 326.4 and 326.5. The referenced enforcement procedures provide for the issuance of an administrative order requiring you to comply with the terms and conditions of your permit and for the initiation of legal action where appropriate. You will be required to pay for any corrective measure ordered by this office, and if you fail to comply with such directive, this office may in certain situations (such as those specified in 33 CFR 209.170) accomplish the corrective measures by contract or otherwise and bill you for the cost.

6. Extensions. General Condition No. 1 establishes a time limit for the completion of the activity authorized by this permit. Unless there are circumstances requiring either a prompt completion of the authorized activity or a reevaluation of the public interest decision, the Corps will normally give you favorable consideration to a request for an extension of this time limit.

Your signature below, as permittee, indicates that you accept and agree to comply with the terms and conditions of this permit.

Larry E. Bu

PERMITTEE

10-28-15

DATE

This permit becomes effective when the Federal official, designated to act for the Secretary of the Army, has signed below.

Aaron O. Allen

AARON O. ALLEN, PH.D.
CHIEF, NORTH COAST BRANCH
REGULATORY DIVISION

October 29, 2015

DATE

When the structures or work authorized by this permit are still in existence at the time the property is transferred, the terms and conditions of this permit will continue to be binding on the new owner(s) of the property. To validate the transfer of this permit and the associated liabilities associated with compliance with its terms and conditions, have the transferee sign and date below.

TRANSFEREE

DATE

INDEX OF PLANS

NOTE:
THE LISTING OF THE INDEX OF PLANS IS SHOWN ON THE INDEX OF PLANS SHEET.

STATE OF CALIFORNIA
DEPARTMENT OF TRANSPORTATION

PROJECT PLANS FOR CONSTRUCTION ON
STATE HIGHWAY

IN SANTA BARBARA COUNTY
IN CARPINTERIA
FROM 0.2 MILE SOUTH OF CARPINTERIA CREEK BRIDGE TO 0.3 MILE NORTH OF LINDEN AVENUE OVERCROSSING

TO BE SUPPLEMENTED BY STANDARD PLANS DATED 2010

Dist	COUNTY	ROUTE	POST MILES TOTAL PROJECT	SHEET No.	TOTAL SHEETS
05	SB	101	2.2/3.3	1	XXX

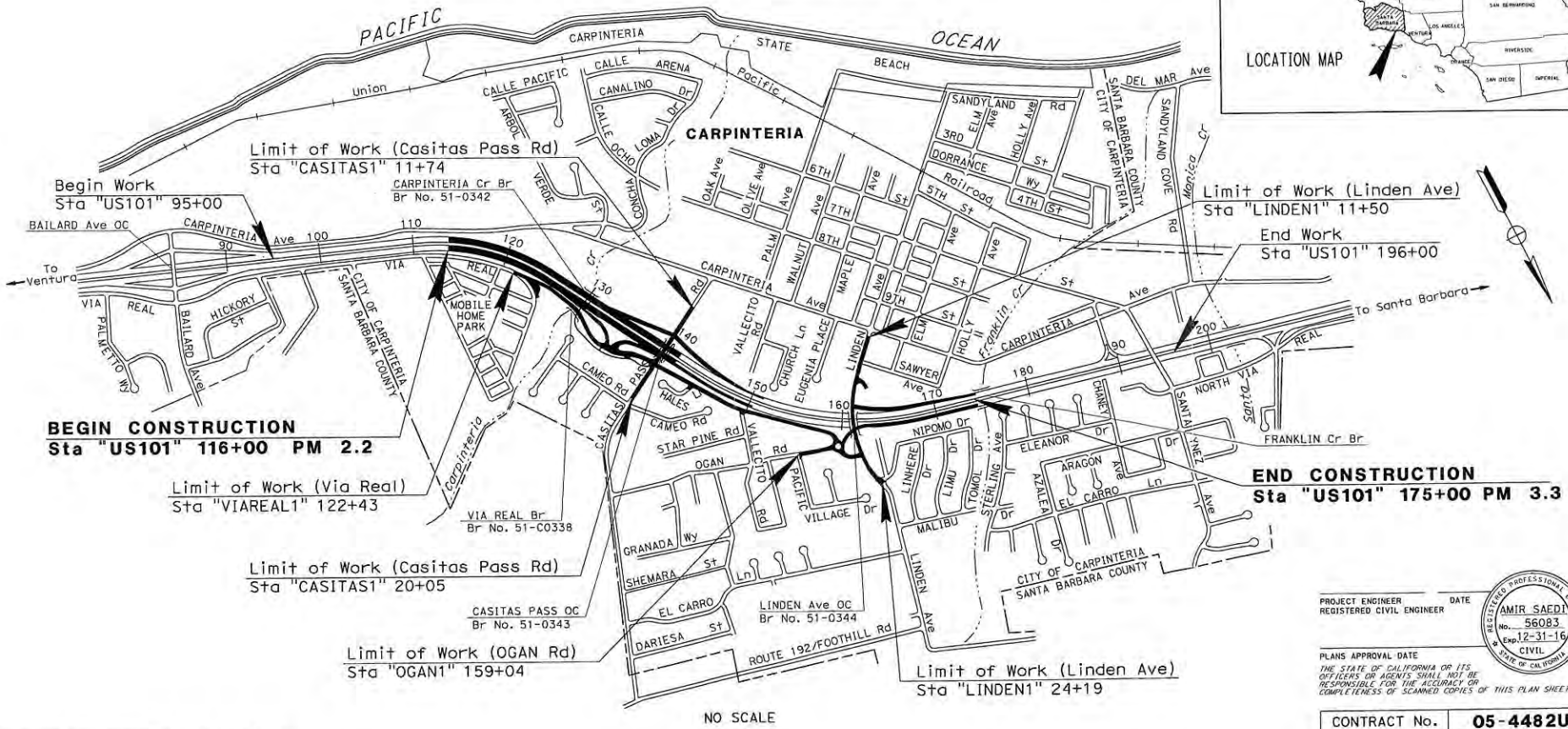

PROJECT ENGINEER DATE
REGISTERED CIVIL ENGINEER

REGISTERED PROFESSIONAL ENGINEER AMIR SAEDI No. 56083 Exp. 12-31-16 CIVIL STATE OF CALIFORNIA

PLANS APPROVAL DATE

THE STATE OF CALIFORNIA OR ITS OFFICERS OR AGENTS SHALL NOT BE RESPONSIBLE FOR THE ACCURACY OR COMPLETENESS OF SCANNED COPIES OF THIS PLAN SHEET.

CONTRACT No.	05-4482U4
PROJECT ID	0500000543

PROJECT MANAGER DAVID BEARD
DESIGN ENGINEER JAMES R. PERANO

THE CONTRACTOR SHALL POSSESS THE CLASS (OR CLASSES) OF LICENSE AS SPECIFIED IN THE "NOTICE TO BIDDERS."

Dist	COUNTY	ROUTE	POST MILES TOTAL PROJECT	SHEET No.	TOTAL SHEETS
05	SB	101	2.2/3.3		

REGISTERED CIVIL ENGINEER DATE

PLANS APPROVAL DATE

THE STATE OF CALIFORNIA OR ITS OFFICERS OR AGENTS SHALL NOT BE RESPONSIBLE FOR THE ACCURACY OR COMPLETENESS OF SCANNED COPIES OF THIS PLAN SHEET.

REGISTERED PROFESSIONAL ENGINEER AMIR SAEDI No. 56083 Exp. 12-31-16 CIVIL STATE OF CALIFORNIA

NOTE:

FOR ACCURATE RIGHT OF WAY DATA, CONTACT RIGHT OF WAY ENGINEERING AT THE DISTRICT OFFICE.

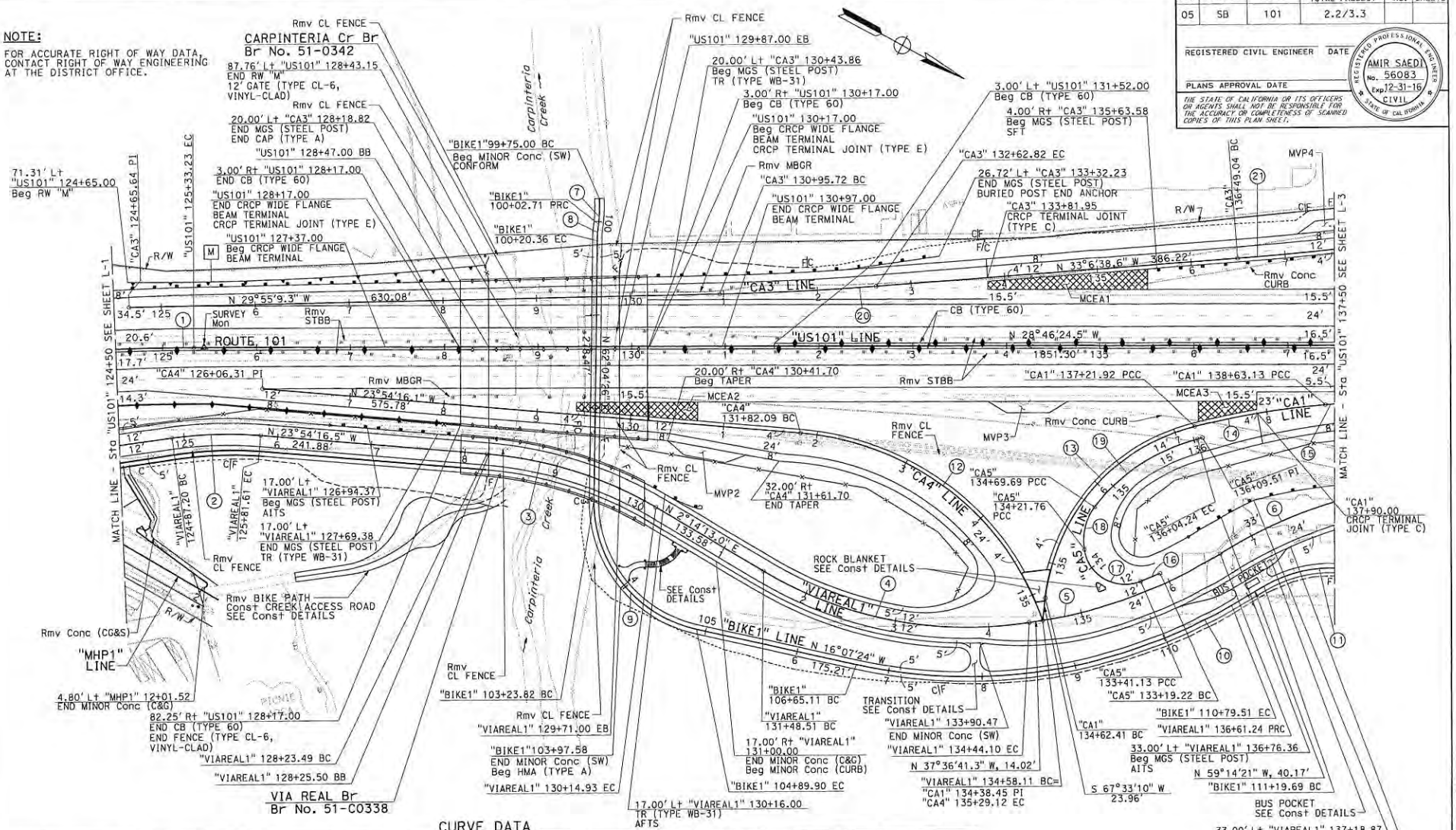

CURVE DATA

No. (X)	R	Δ	T	L	No. (X)	R	Δ	T	L	No. (X)	R	Δ	T	L
1	2,211'	38°38'57"	775.31'	1,491.38'	8	140'	07°13'18"	8.83'	17.65'	15	3,000'	03°11'30"	83.56'	167.11'
2	425'	12°43'42"	47.40'	94.42'	9	140'	78°11'50"	113.77'	191.07'	16	484'	02°35'39"	10.96'	21.91'
3	425'	25°48'29"	97.37'	191.44'	10	551'	43°05'29"	217.55'	414.40'	17	45'	103°25'11"	56.59'	80.64'
4	425'	39°50'58"	154.06'	295.59'	11	140'	40°36'22"	51.80'	99.22'	18	60'	45°46'09"	25.33'	47.93'
5	496'	23°28'14"	103.01'	203.13'	12	300'	66°16'42"	195.86'	347.03'	19	201'	38°21'06"	69.90'	134.54'
6	492'	31°22'56"	138.25'	269.55'	13	215'	69°09'27"	148.20'	259.51'	20	3,000'	03°11'29"	83.57'	167.10'
7	140'	11°20'26"	13.90'	27.71'	14	795'	10°10'44"	70.79'	141.21'	21	4,067'	04°20'39"	154.25'	308.35'

LAYOUT

SCALE: 1" = 50' **L-2**

FUNCTIONAL SUPERVISOR	CALCULATED-DESIGNED BY	CHECKED BY	REVISED BY	DATE REVISED
JAMES R. PERANO	AMIR SAEDI	MILT TOWNE	MT	10-01-14
			AS	06-02-14

STATE OF CALIFORNIA - DEPARTMENT OF TRANSPORTATION

Caltrans

DESIGN

LAST REVISION DATE PLOTTED => 03-JUN-2015
TIME PLOTTED => 15:13

BORDER LAST REVISED 7/2/2010

USERNAME => s118989
DGN FILE => 0500000543ea002.dgn

RELATIVE BORDER SCALE IS IN INCHES 0 1 2 3

UNIT 1447

PROJECT NUMBER & PHASE 05000005431

Dist	COUNTY	ROUTE	POST MILES TOTAL PROJECT	SHEET No.	TOTAL SHEETS
05	SB	101	2.2/3.3		

REGISTERED CIVIL ENGINEER DATE

PLANS APPROVAL DATE

REGISTERED PROFESSIONAL ENGINEER AMIR SAEDI No. 56083 Exp. 12-31-16 CIVIL STATE OF CALIFORNIA

THE STATE OF CALIFORNIA OR ITS OFFICERS OR AGENTS SHALL NOT BE RESPONSIBLE FOR THE ACCURACY OR COMPLETENESS OF SCANNED COPIES OF THIS PLAN SHEET.

NOTE:

FOR ACCURATE RIGHT OF WAY DATA, CONTACT RIGHT OF WAY ENGINEERING AT THE DISTRICT OFFICE.

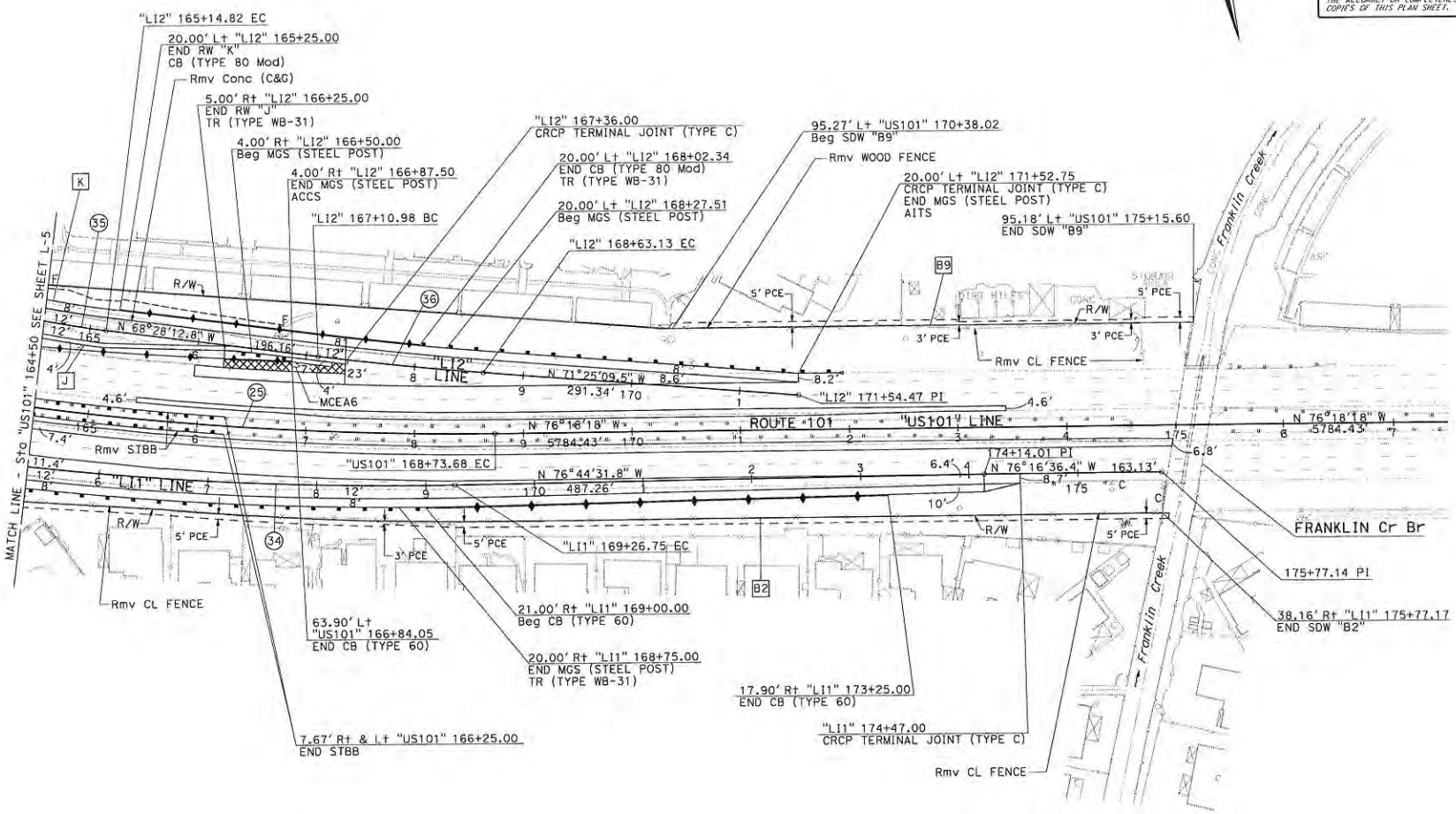

CURVE DATA

No. (X)	R	Δ	T	L
25	3,002'	47°30'53"	1,321.18'	2,489.15'
34	3,052'	07°45'18.6"	206.84'	413.04'
35	1,000'	16°53'47"	148.53'	294.90'
36	2,956'	02°56'56"	76.09'	152.15'

LAYOUT

SCALE: 1" = 50' **L-6**

STATE OF CALIFORNIA - DEPARTMENT OF TRANSPORTATION	FUNCTIONAL SUPERVISOR	CALCULATED-DESIGNED BY	CHECKED BY	REVISED BY	DATE REVISED
DESIGN	JAMES R. PERANO	AMIR SAEDI	MILT TOWNE	CG	08-28-14
				AS	09-17-14
				MT	10-01-14

LAST REVISION 10-01-14 DATE PLOTTED => 03-JUN-2015 TIME PLOTTED => 13:13

Dist	COUNTY	ROUTE	POST MILES TOTAL PROJECT	SHEET No.	TOTAL SHEETS
05	SB	101	2.2/3.3		

REGISTERED CIVIL ENGINEER DATE

PLANS APPROVAL DATE

THE STATE OF CALIFORNIA OR ITS OFFICERS OR AGENTS SHALL NOT BE RESPONSIBLE FOR THE ACCURACY OR COMPLETENESS OF SCANNED COPIES OF THIS PLAN SHEET.

REGISTERED PROFESSIONAL ENGINEER AMIR SAEDI No. 56083 Exp. 12-31-16 CIVIL STATE OF CALIFORNIA

NOTE:

FOR ACCURATE RIGHT OF WAY DATA, CONTACT RIGHT OF WAY ENGINEERING AT THE DISTRICT OFFICE.

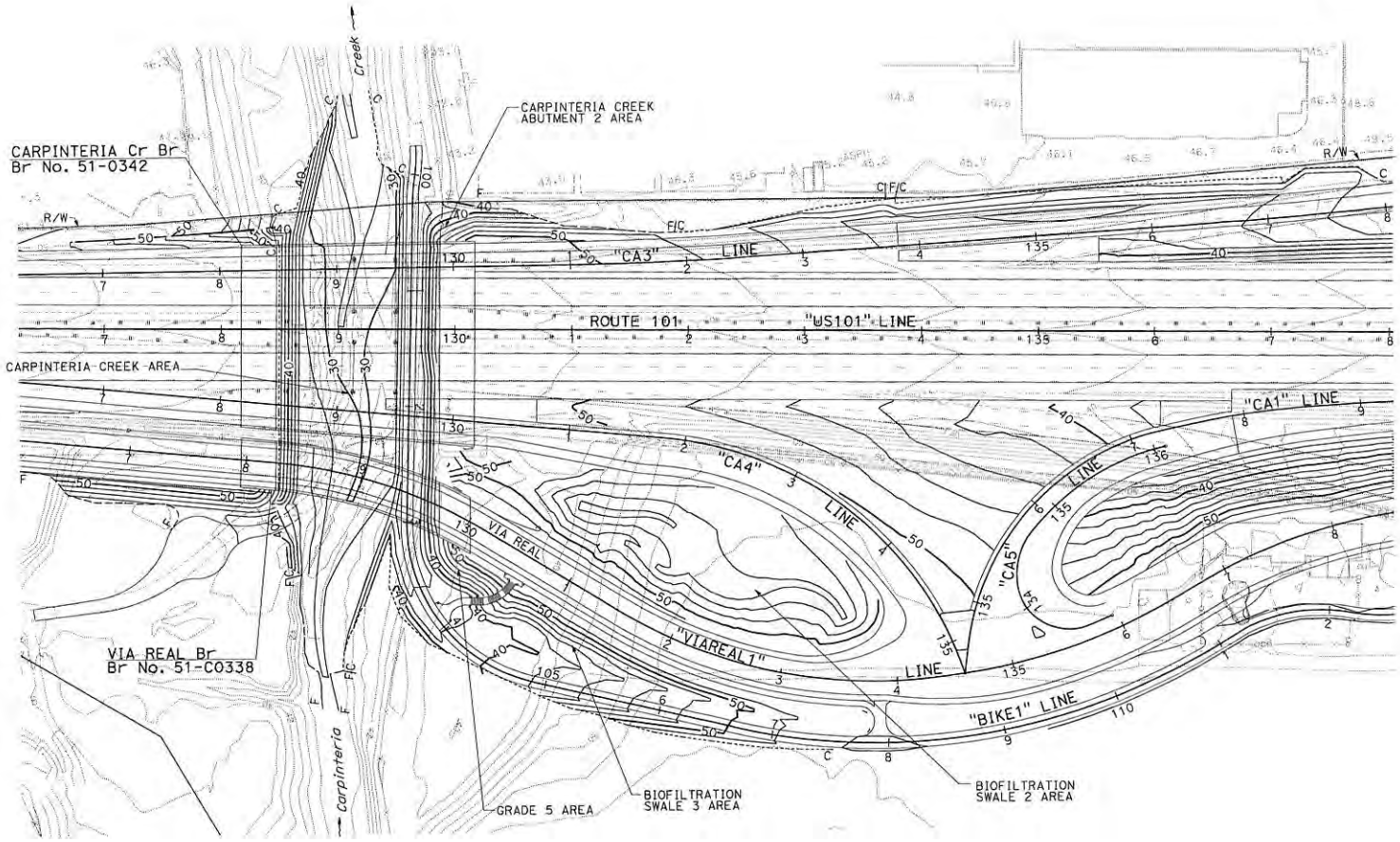

APPROVED FOR CONTOUR GRADING WORK ONLY

CONTOUR GRADING

SCALE: 1"=50'

G-1

REVISED BY	JH
DATE REVISED	08-29-14
CALCULATED-DESIGNED BY	JACKSON HO CHRISTOPHER BAAB
CHECKED BY	AMIR SAEDI
FUNCTIONAL SUPERVISOR	JAMES R. PERANO

STATE OF CALIFORNIA - DEPARTMENT OF TRANSPORTATION

Caltrans

DESIGN

LAST REVISION 08-29-14 | DATE PLOTTED => 03-JUN-2015 | TIME PLOTTED => 13:28

BORDER LAST REVISED 7/2/2010 | USERNAME => s118989 | DGN FILE => 0500000543ha001.dgn | RELATIVE BORDER SCALE IS IN INCHES 0 1 2 3 | UNIT 1447 | PROJECT NUMBER & PHASE 05000005431

Dist	COUNTY	ROUTE	POST MILES TOTAL PROJECT	SHEET No.	TOTAL SHEETS
05	SB	101	2.2/3.3		

REGISTERED CIVIL ENGINEER DATE

PLANS APPROVAL DATE

THE STATE OF CALIFORNIA OR ITS OFFICERS OR AGENTS SHALL NOT BE RESPONSIBLE FOR THE ACCURACY OR COMPLETENESS OF SCANNED COPIES OF THIS PLAN SHEET.

REGISTERED PROFESSIONAL ENGINEER AMIR SAEDI No. 56083 Exp 12-31-16 CIVIL STATE OF CALIFORNIA

NOTE:

FOR ACCURATE RIGHT OF WAY DATA, CONTACT RIGHT OF WAY ENGINEERING AT THE DISTRICT OFFICE.

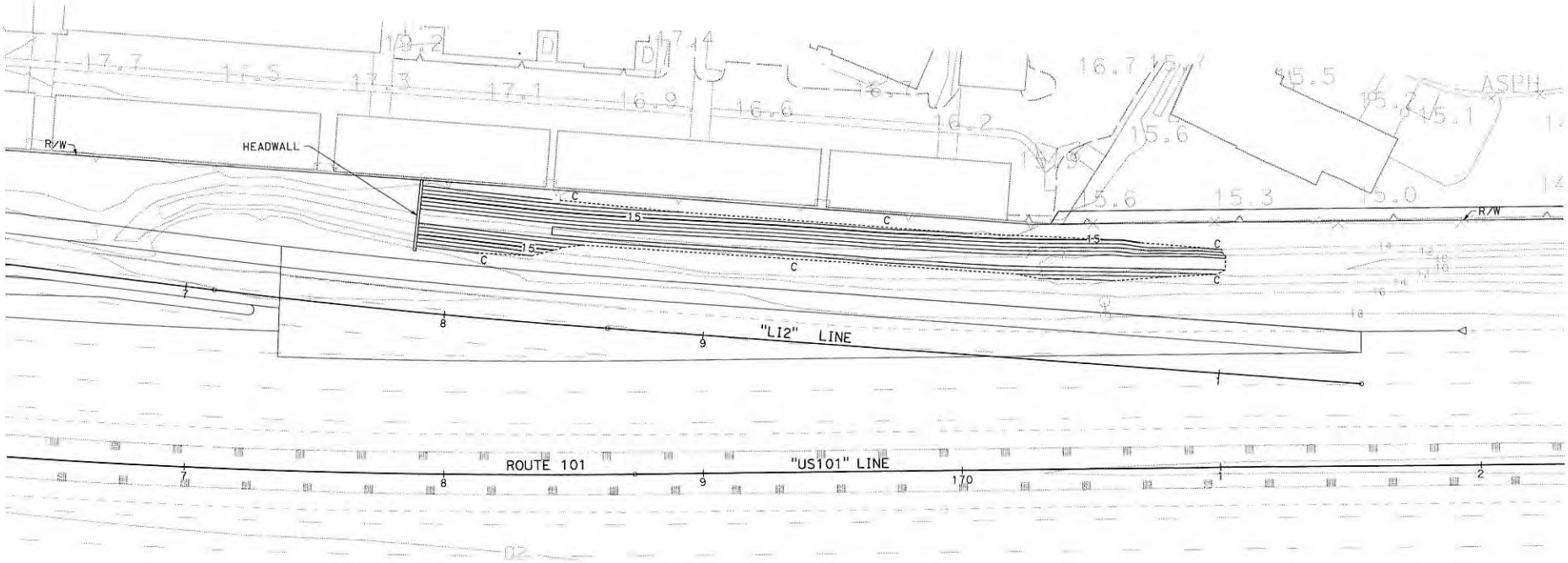

APPROVED FOR CONTOUR GRADING WORK ONLY

CONTOUR GRADING

SCALE: 1"=20'

G-4

STATE OF CALIFORNIA - DEPARTMENT OF TRANSPORTATION	FUNCTIONAL SUPERVISOR	CALCULATED-DESIGNED BY	REVISED BY
Caltrans	JAMES R. PERANO	CHRISTOPHER BAAB	JH
DESIGN		AMIR SAEDI	DATE REVISED 04-25-14
		CHECKED BY	

LAST REVISION 04-29-14 | DATE PLOTTED => 03-JUN-2015 | TIME PLOTTED => 13:28

BORDER LAST REVISED 7/2/2010 | USERNAME => s118989 | DGN FILE => 0500000543hq004.dgn | RELATIVE BORDER SCALE IS IN INCHES 0 1 2 3 | UNIT 1447 | PROJECT NUMBER & PHASE 05000005431

Dist	COUNTY	ROUTE	POST MILES TOTAL PROJECT	SHEET No.	TOTAL SHEETS
05	SB	101	2.2/3.3		

REGISTERED CIVIL ENGINEER DATE

PLANS APPROVAL DATE

THE STATE OF CALIFORNIA OR ITS OFFICERS OR AGENTS SHALL NOT BE RESPONSIBLE FOR THE ACCURACY OR COMPLETENESS OF SCANNED COPIES OF THIS PLAN SHEET.

REGISTERED PROFESSIONAL ENGINEER AMIR SAEDI No. 56083 Exp. 12-31-16 CIVIL STATE OF CALIFORNIA

NOTE:

FOR ACCURATE RIGHT OF WAY DATA, CONTACT RIGHT OF WAY ENGINEERING AT THE DISTRICT OFFICE.

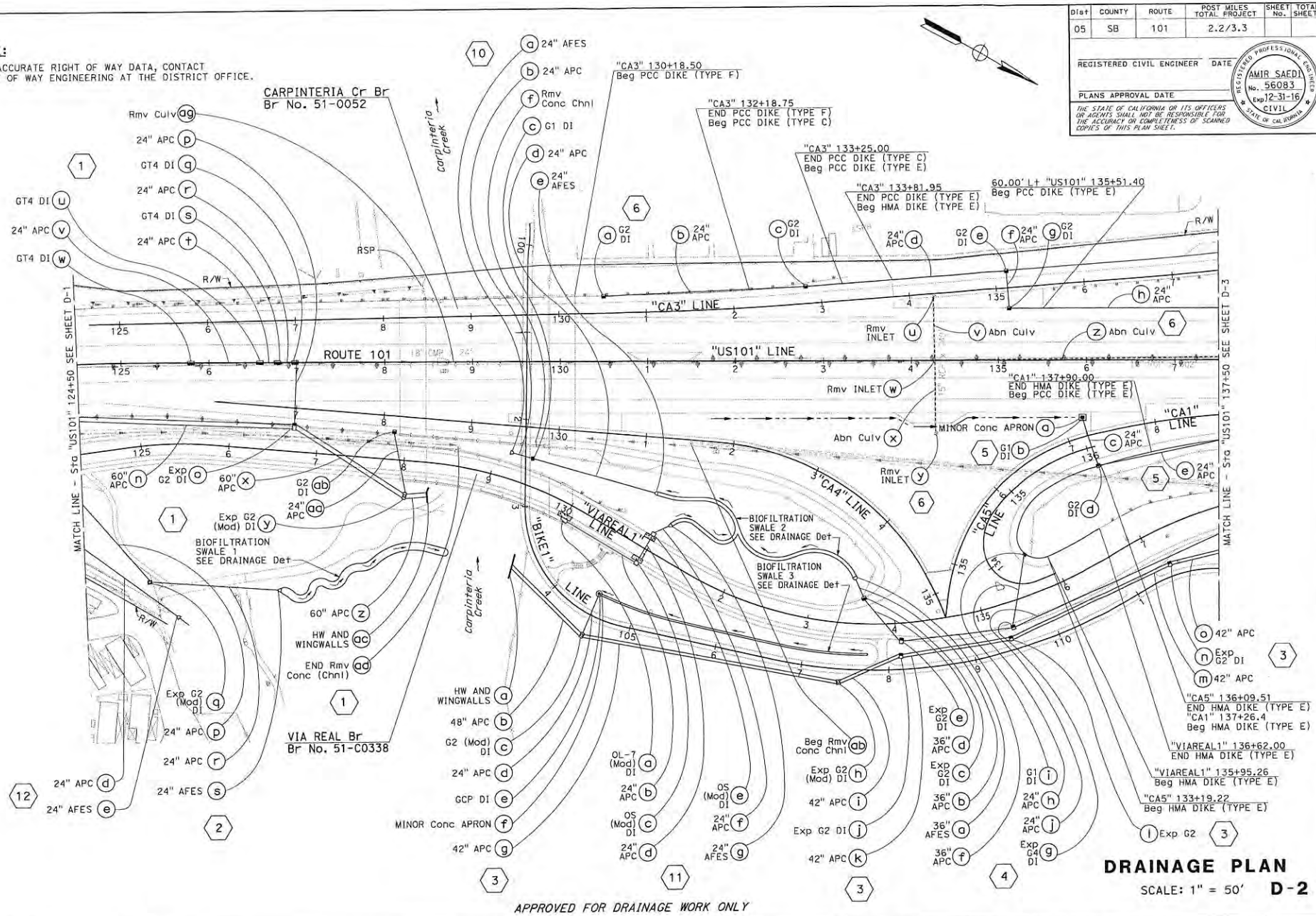

DRAINAGE PLAN

SCALE: 1" = 50'

D-2

APPROVED FOR DRAINAGE WORK ONLY

STATE OF CALIFORNIA - DEPARTMENT OF TRANSPORTATION	FUNCTIONAL SUPERVISOR	CALCULATED-DESIGNED BY	REVISED BY
Caltrans	JAMES R. PERANO	CHRISTOPHER BAAB	JH
DESIGN		JACKSON HO	MT
		CHECKED BY	JH
		DATE REVISED	09-17-14
			10-02-14
			03-02-15

LAST REVISION 03-02-15 DATE PLOTTED => 03-JUN-2015 TIME PLOTTED => 13:29

Dist	COUNTY	ROUTE	POST MILES TOTAL PROJECT	SHEET No.	TOTAL SHEETS
05	SB	101	2.2/3.3		

REGISTERED CIVIL ENGINEER DATE

PLANS APPROVAL DATE

THE STATE OF CALIFORNIA OR ITS OFFICERS OR AGENTS SHALL NOT BE RESPONSIBLE FOR THE ACCURACY OR COMPLETENESS OF SCANNED COPIES OF THIS PLAN SHEET.

REGISTERED PROFESSIONAL ENGINEER AMIR SAEDI No. 56083 Exp. 12-31-16 CIVIL STATE OF CALIFORNIA

NOTE:

FOR ACCURATE RIGHT OF WAY DATA, CONTACT RIGHT OF WAY ENGINEERING AT THE DISTRICT OFFICE.

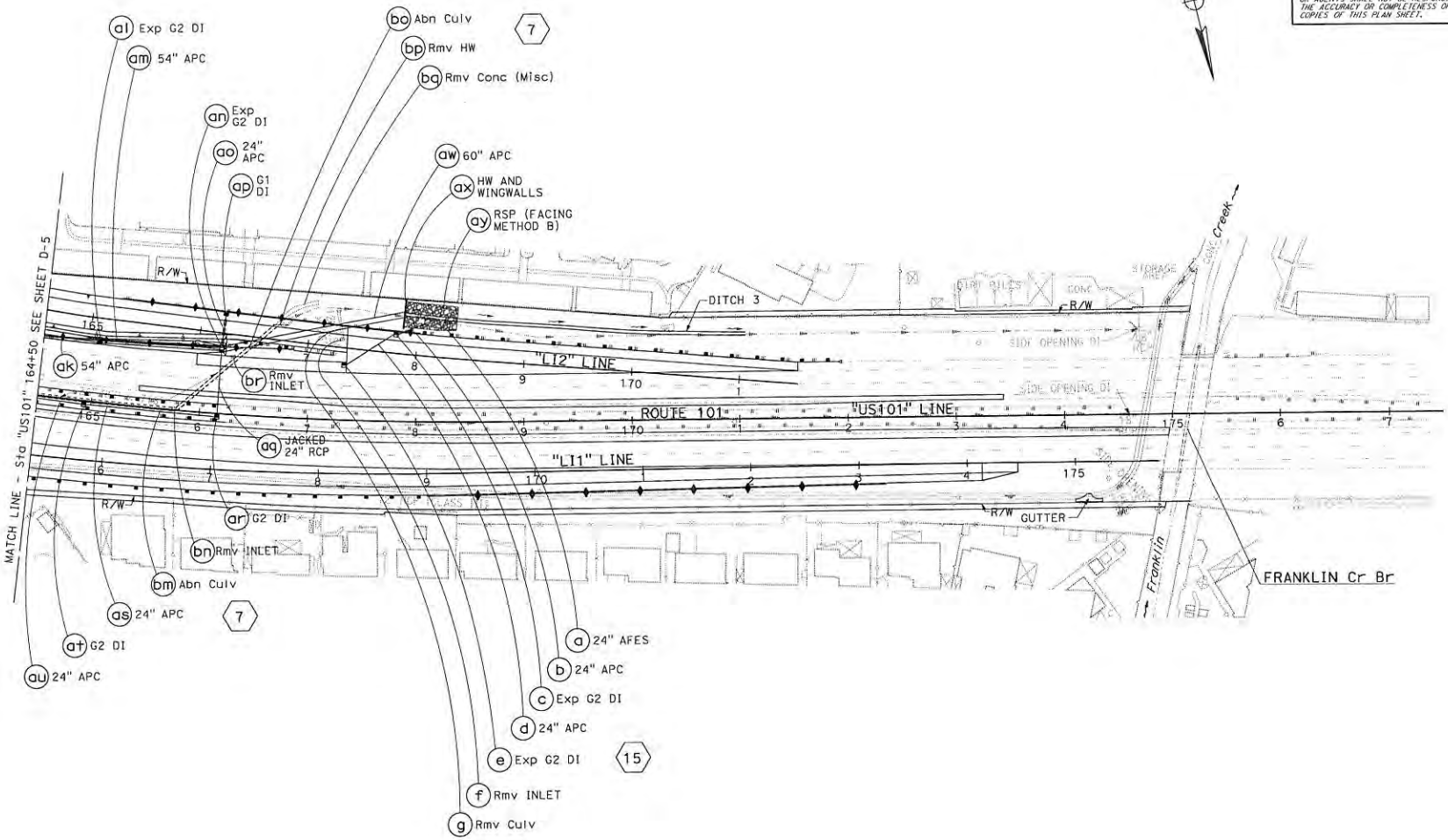

APPROVED FOR DRAINAGE WORK ONLY

DRAINAGE PLAN

SCALE: 1" = 50' **D-6**

JH	07-01-14		
MT	06-26-14		
REVISED BY	DATE REVISED		
CHRISTOPHER BAAB	JACKSON HO		
CALCULATED-DESIGNED BY	CHECKED BY		
FUNCTIONAL SUPERVISOR	JAMES R. PERANO		

STATE OF CALIFORNIA - DEPARTMENT OF TRANSPORTATION

Caltrans

DESIGN

LAST REVISION 07-01-14 DATE PLOTTED => 03-JUN-2015 TIME PLOTTED => 13:29

BORDER LAST REVISED 7/2/2010 | USERNAME => s118989 DGN FILE => 0500000543ia006.dgn | RELATIVE BORDER SCALE IS IN INCHES 0 1 2 3 | UNIT 1447 | PROJECT NUMBER & PHASE 05000005431

Dist	COUNTY	ROUTE	POST MILES TOTAL PROJECT	SHEET No.	TOTAL SHEETS
05	SB	101	2.2/3.3		

REGISTERED CIVIL ENGINEER DATE

PLANS APPROVAL DATE

THE STATE OF CALIFORNIA OR ITS OFFICERS OR AGENTS SHALL NOT BE RESPONSIBLE FOR THE ACCURACY OR COMPLETENESS OF SCANNED COPIES OF THIS PLAN SHEET.

REGISTERED PROFESSIONAL ENGINEER AMIR SAEDI No. 56083 Exp. 12-31-16 CIVIL STATE OF CALIFORNIA

NOTE:

FOR ACCURATE RIGHT OF WAY DATA, CONTACT RIGHT OF WAY ENGINEERING AT THE DISTRICT OFFICE.

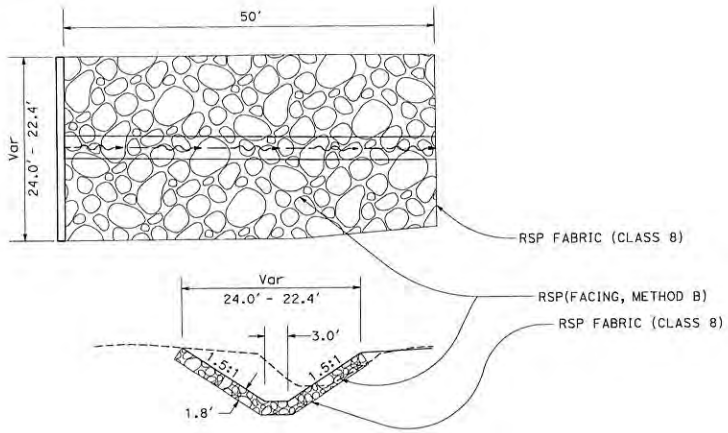

RSP DETAIL

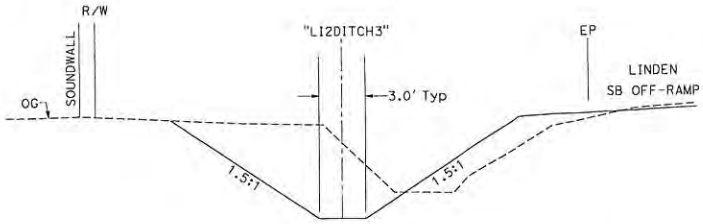

SECTION A-A

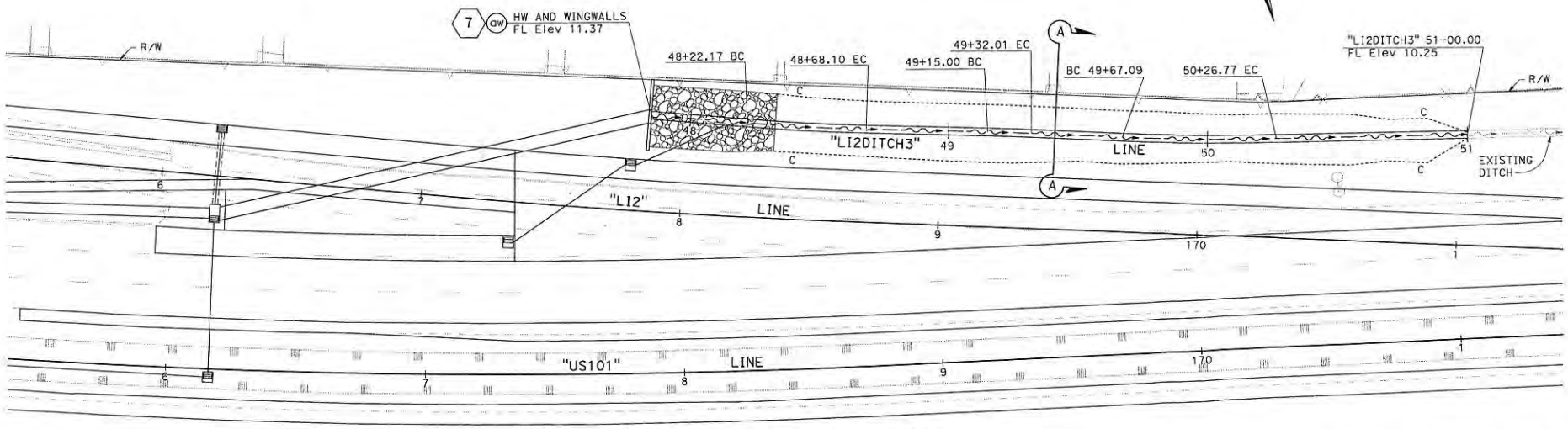

LINDEN Ave SB OFF RAMP
DITCH 3

DRAINAGE DETAILS

SCALE: 1" = 20' **DD-33**

REVISED BY	JH	CHRISTOPHER BAAB	CALCULATED-DESIGNED BY
DATE REVISED	07-18-14	JACKSON HO	CHECKED BY

FUNCTIONAL SUPERVISOR: JAMES R. PERANO

STATE OF CALIFORNIA - DEPARTMENT OF TRANSPORTATION

Caltrans DESIGN

LAST REVISION 07-18-14 | DATE PLOTTED => 03-JUN-2015 | TIME PLOTTED => 13:54

BORDER LAST REVISED 7/2/2010 | USERNAME => s118989 | DGN FILE => 0500000543ic033.dgn | RELATIVE BORDER SCALE IS IN INCHES 0 1 2 3 | UNIT 1447 | PROJECT NUMBER & PHASE 05000005431

Dist	COUNTY	ROUTE	POST MILES TOTAL PROJECT	SHEET No.	TOTAL SHEETS
05	SB	101	2.2/3.3		

REGISTERED CIVIL ENGINEER DATE

PLANS APPROVAL DATE

REGISTERED PROFESSIONAL ENGINEER AMIR SAEDI No. 56083 Exp. 12-31-16 CIVIL STATE OF CALIFORNIA

THE STATE OF CALIFORNIA OR ITS OFFICERS OR AGENTS SHALL NOT BE RESPONSIBLE FOR THE ACCURACY OR COMPLETENESS OF SCANNED COPIES OF THIS PLAN SHEET.

LEGEND (THIS SHEET ONLY):

- RSP
- BRUSH LAYERING
- X — POINT DESCRIPTION No.
- TOE — TOE OF SLOPE

NOTES (THIS SHEET ONLY):

1. FOR POINT DESCRIPTION INFORMATION AND RSP DETAILS, SEE DRAINAGE DETAIL SHEETS DD-38 AND DD-39.
2. FOR BRUSH LAYERING DETAILS, SEE SHEET ECD-1.
3. FOR FINISHED GRADES ALONG VIA REAL AND CARPINTERIA CREEK, SEE CONTOUR GRADING PLANS.

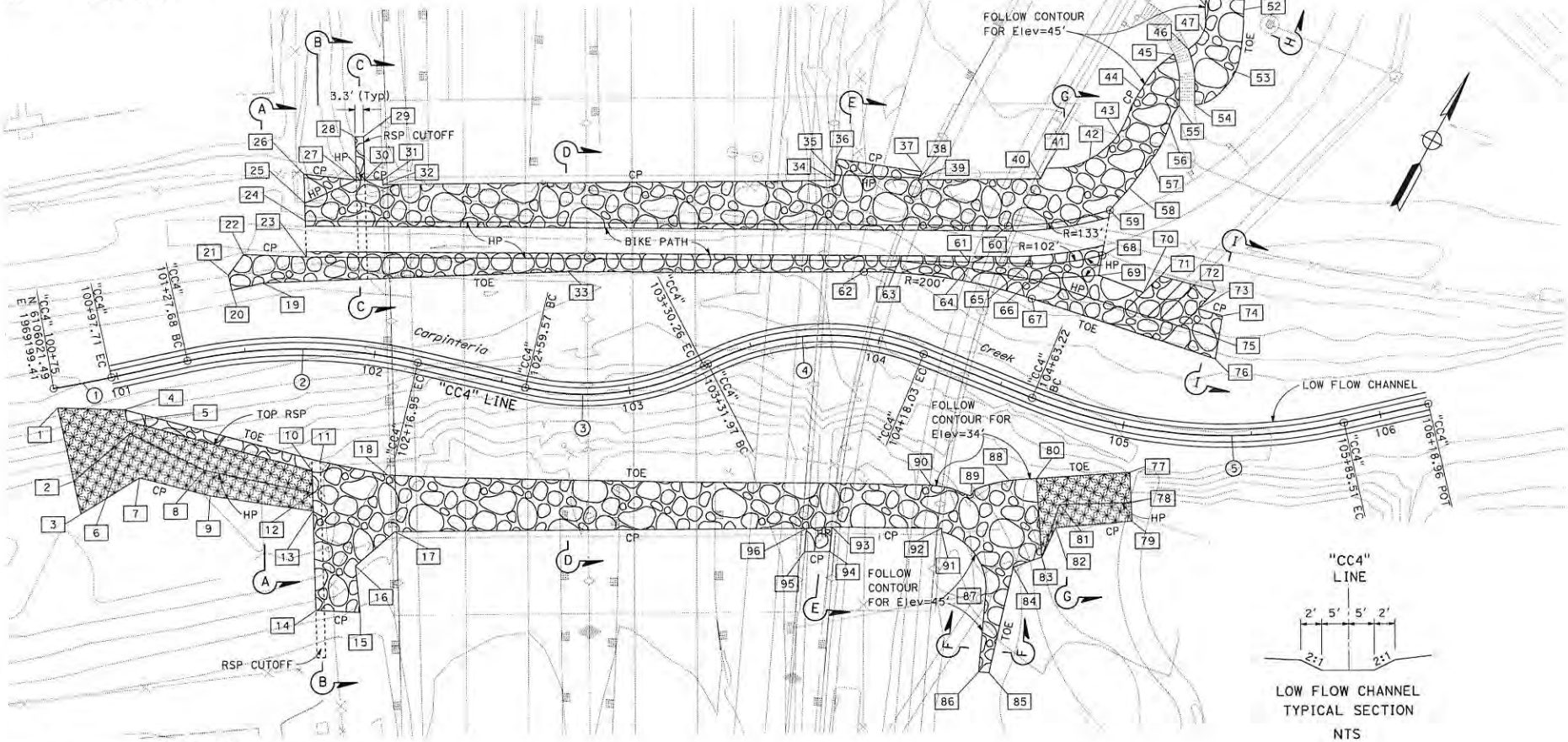

LOW FLOW CHANNEL TYPICAL SECTION

NTS

CURVE DATA

No. (X)	R	Δ	T	L
1	500.00'	02°36'08"	11.36'	22.71'
2	200.00'	25°34'26"	45.39'	89.27'
3	100.00'	40°30'08"	36.89'	70.69'
4	100.00'	49°18'34"	45.90'	86.06'
5	200.00'	35°02'00"	63.12'	122.29'

CARPINTERIA CREEK ROCK SLOPE PROTECTION LAYOUT

DRAINAGE DETAILS

SCALE 1"=20' **DD-37**

STATE OF CALIFORNIA - DEPARTMENT OF TRANSPORTATION

Caltrans DESIGN

FUNCTIONAL SUPERVISOR: JAMES R. PERANO

CALCULATED-DESIGNED BY: WENDELYN E. WICKHAM

CHECKED BY: AMIR SAEDI

REVISED BY / DATE REVISED

LAST REVISION 09-15-14 | DATE PLOTTED => 03-JUN-2015 | TIME PLOTTED => 13:54

BORDER LAST REVISED 7/2/2010 | USERNAME => s118989 | DGN FILE => 0500000543ic037.dgn | RELATIVE BORDER SCALE IS IN INCHES 0 1 2 3 | UNIT 1447 | PROJECT NUMBER & PHASE 05000005431

Dist	COUNTY	ROUTE	POST MILES TOTAL PROJECT	SHEET No.	TOTAL SHEETS
05	SB	101	2.2/3.3		

REGISTERED CIVIL ENGINEER DATE

PLANS APPROVAL DATE

REGISTERED PROFESSIONAL ENGINEER AMIR SAEDI No. 56083 Exp. 12-31-16 CIVIL STATE OF CALIFORNIA

THE STATE OF CALIFORNIA OR ITS OFFICERS OR AGENTS SHALL NOT BE RESPONSIBLE FOR THE ACCURACY OR COMPLETENESS OF SCANNED COPIES OF THIS PLAN SHEET.

NOTES (THIS SHEET ONLY):

1. FOR BRUSH LAYERING DETAILS, SEE SHEET ECD-1.
2. FOR FINISHED GRADES ALONG VIA REAL AND CARPINTERIA CREEK, SEE CONTOUR GRADING PLANS.
3. PLACE RSP FABRIC AT ALL LOCATIONS WHERE RSP IS IN CONTACT WITH SOIL.
4. BACKFILL VOIDS WITH NATIVE MATERIAL.

RSP AND CREEKBED SECTIONS

1 — 3.3' RSP (1#4 T, METHOD A)
1.8' RSP (FACING, METHOD B)
RSP FABRIC (CLASS 8)

2 — 8.3' RSP (1#4 T, METHOD A)
1.8' RSP (FACING, METHOD B)
RSP FABRIC (CLASS 8)

3 — 3.3' RSP (1#4 T, METHOD B)
1.8' RSP (FACING, METHOD B)
RSP FABRIC (CLASS 8)

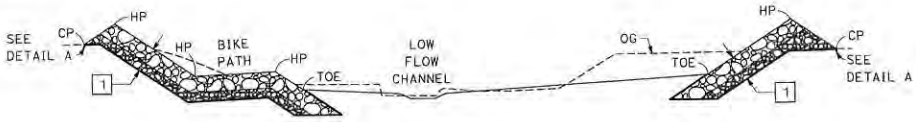

SECTION E-E

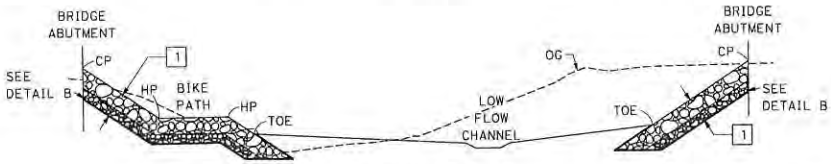

SECTION D-D

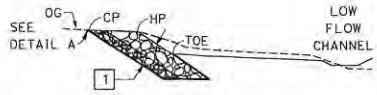

SECTION I-I

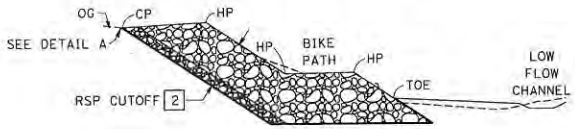

SECTION C-C

DETAIL B

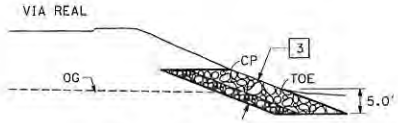

SECTION H-H

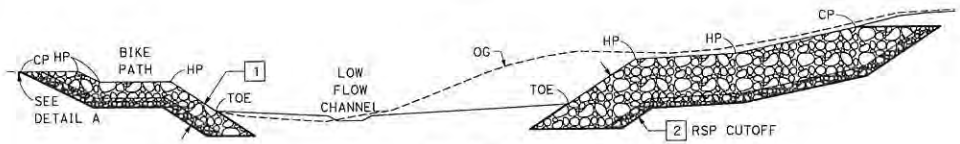

SECTION B-B

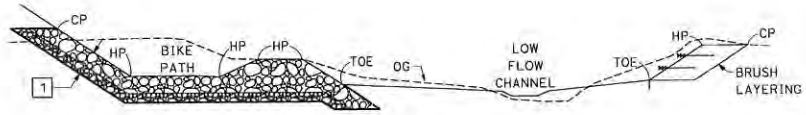

SECTION G-G

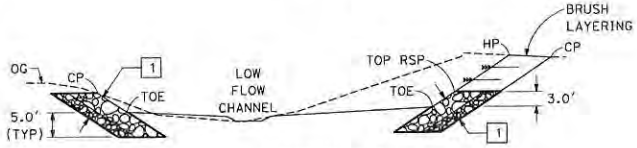

SECTION A-A

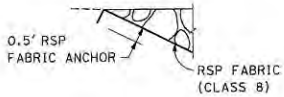

DETAIL A

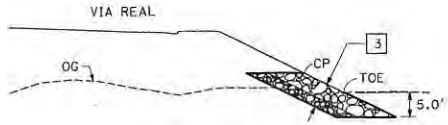

SECTION F-F

ROCK SLOPE PROTECTION CROSS SECTIONS

DRAINAGE DETAILS

NO SCALE

DD-39

STATE OF CALIFORNIA - DEPARTMENT OF TRANSPORTATION

Caltrans DESIGN

FUNCTIONAL SUPERVISOR: JAMES R. PERANO

CALCULATED-DESIGNED BY: WENDELYN E. WICKHAM

CHECKED BY: AMIR SAEDI

REVISED BY | DATE REVISED

LAST REVISION 09-04-14 | DATE PLOTTED => 03-JUN-2015 | TIME PLOTTED => 13:55

BORDER LAST REVISED 7/2/2010 | USERNAME => s118989 | DGN FILE => 0500000543ic039.dgn | RELATIVE BORDER SCALE IS IN INCHES 0 1 2 3 | UNIT 1447 | PROJECT NUMBER & PHASE 05000005431

Dist	COUNTY	ROUTE	POST MILES TOTAL PROJECT	SHEET No.	TOTAL SHEETS
05	SB	101	2.2/3.3		

LICENSED LANDSCAPE ARCHITECT

PLANS APPROVAL DATE

LICENSED LANDSCAPE ARCHITECT David A. Emerson No. 4343 Signature Renewal Date Date STATE OF CALIFORNIA

THE STATE OF CALIFORNIA OR ITS OFFICERS OR AGENTS SHALL NOT BE RESPONSIBLE FOR THE ACCURACY OR COMPLETENESS OF SCANNED COPIES OF THIS PLAN SHEET.

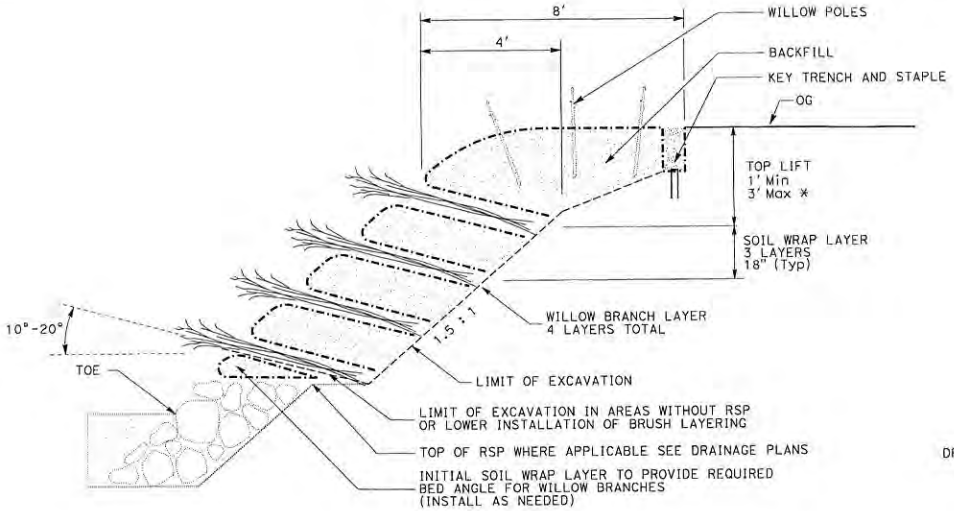

* TOP LIFT TO BE 18" DEEP WHEN BELOW ADDITIONAL INSTALLATIONS OF BRUSH LAYERING

SECTION

BRUSH LAYERING

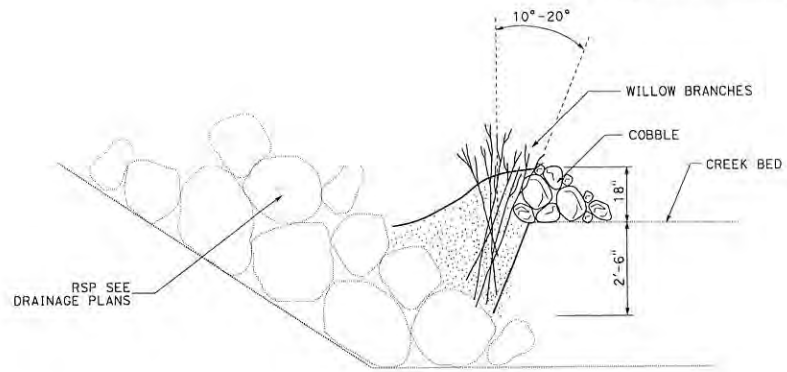

SECTION

LIVE SILTATION

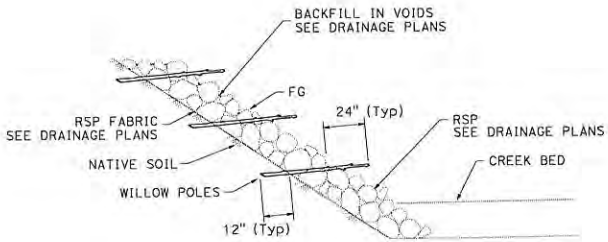

SECTION

WILLOW POLES IN RSP

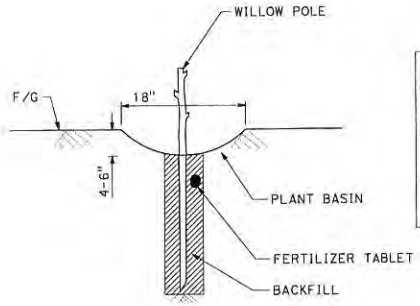

SECTION

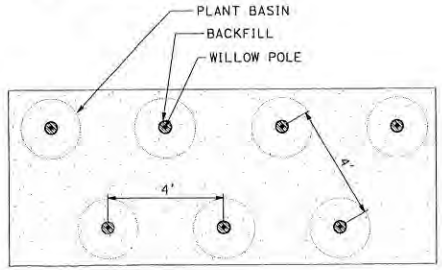

PLAN

WILLOW POLES IN SOIL

EROSION CONTROL DETAILS

NO SCALE

ECD-1

STATE OF CALIFORNIA - DEPARTMENT OF TRANSPORTATION

Caltrans LANDSCAPE ARCHITECTURE

SENIOR LANDSCAPE ARCHITECT: DENNIS REEVES

CALCULATED-DESIGNED BY: DAVID EMERSON

CHECKED BY: JO JACKSON

REVISED BY

DATE REVISED

LAST REVISION 02-18-14

DATE PLOTTED => 26-JUN-2015

TIME PLOTTED => 10:22

BORDER LAST REVISED 7/2/2010

USERNAME => s132009

DGN FILE => 0500000543tf001.dgn

RELATIVE BORDER SCALE IS IN INCHES 0 1 2 3

UNIT 1502

PROJECT NUMBER & PHASE 050000054341

Dist	COUNTY	ROUTE	POST MILES TOTAL PROJECT	SHEET No.	TOTAL SHEETS
05	SB	101	2.2/3.3		

LICENSED LANDSCAPE ARCHITECT

PLANS APPROVAL DATE

LICENSED LANDSCAPE ARCHITECT David A. Emerson No. 4256 Signature Renewal Date Date STATE OF CALIFORNIA

THE STATE OF CALIFORNIA OR ITS OFFICERS OR AGENTS SHALL NOT BE RESPONSIBLE FOR THE ACCURACY OR COMPLETENESS OF SCANNED COPIES OF THIS PLAN SHEET.

EROSION CONTROL TYPE 3 (CHANNEL)

SEQUENCE	ITEM	MATERIAL		APPLICATION RATE
		DESCRIPTION	TYPE	
STEP 1	DRY SEED	SEED	MIX 1	26 LB/ACRE

SEED MIX 1

SEED	BOTANICAL NAME (COMMON NAME)	PERCENT GERMINATION (MINIMUM)	POUNDS PURE LIVE SEED PER ACRE (SLOPE MEASUREMENT)
MIX 1	ANEMOPSIS CALIFORNICA (YERBA MANSA)	50	2
	ARTEMISIA DOUGLASIANA (MUGWORT)	40	3
	CAREX SPISSA (SAN DIEGO SEDGE)	50	2
	CYPERIS ERAGROSTIS (TALL FLATSEDGE)	50	2
	EPILOBIUM CILIATUM (FRINGED WILLHERB)	50	2
	FESTUCA MICROSTACHYS (SMALL FESCUE)	60	4
	JUNCUS ACUTUS (SPINY RUSH)	60	2
	MIMULUS CARDINALIS (SCARLET MONKEY FLOWER)	50	2
	NASTURTIUM OFFICANALE (WATER CRESS)	50	2
	OENOTHERA ELATA HOOKERII (EVENING PRIMROSE)	60	3
	TYPHA LATIFOLIA (COMMON CATTAIL)	60	2

EROSION CONTROL LEGEND
ECL-1

STATE OF CALIFORNIA - DEPARTMENT OF TRANSPORTATION
Caltrans LANDSCAPE ARCHITECTURE

SENIOR LANDSCAPE ARCHITECT: DENNIS REEVES
CALCULATED-DESIGNED BY: DAVID EMERSON
CHECKED BY: JO JACKSON
REVISED BY
DATE REVISED

LAST REVISION 02-18-14
DATE PLOTTED => 30-JUN-2015
TIME PLOTTED => 10:49

Dist	COUNTY	ROUTE	POST MILES TOTAL PROJECT	SHEET No.	TOTAL SHEETS
05	SB	101	2.2/3.3		

LICENSED LANDSCAPE ARCHITECT

PLANS APPROVAL DATE

THE STATE OF CALIFORNIA OR ITS OFFICERS OR AGENTS SHALL NOT BE RESPONSIBLE FOR THE ACCURACY OR COMPLETENESS OF SCANNED COPIES OF THIS PLAN SHEET.

LICENSED LANDSCAPE ARCHITECT — David A. Emerson No. 2526 — Signature — Renewal Date — Date — STATE OF CALIFORNIA

NOTE:

1. FOR ACCURATE RIGHT OF WAY DATA, CONTACT RIGHT OF WAY ENGINEERING AT THE DISTRICT OFFICE.
2. PLAN ACCURATE FOR AREAS WITHIN ORDINARY HIGH WATER MARK. PLANTING SHOWN OUTSIDE FOR CONTEXT ONLY.
3. FULLY AUTOMATIC, TEMPORARY IRRIGATION SYSTEM WILL BE PROVIDED DURING PLANT ESTABLISHMENT PERIOD, AND REMOVED AT END OF THE CONTRACT.

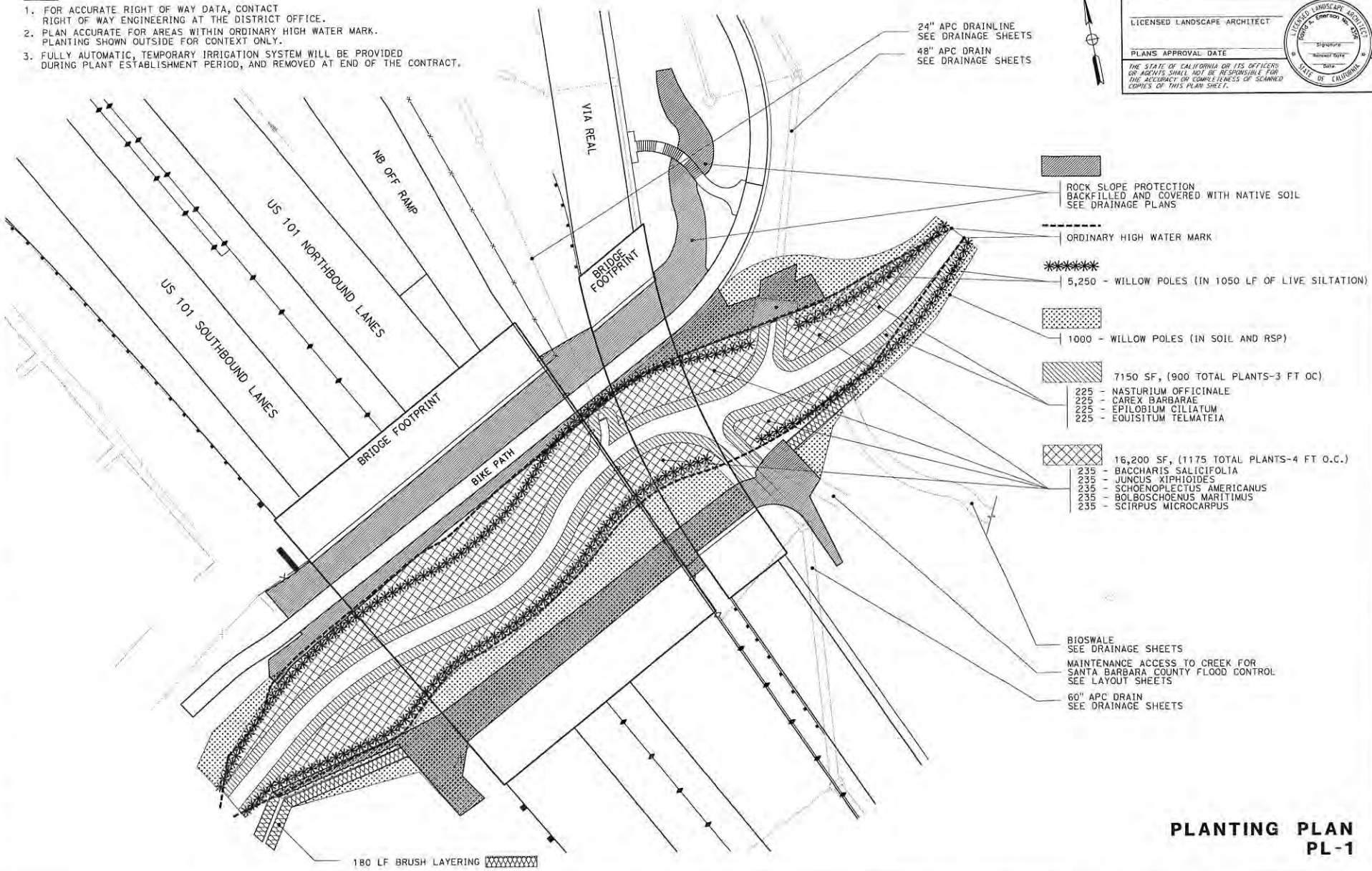

PLANTING PLAN
PL-1

REVISED BY	DATE REVISED

CALCULATED-DESIGNED BY	CHECKED BY
DAVID EMERSON	JO JACKSON

SENIOR LANDSCAPE ARCHITECT: DENNIS REEVES

STATE OF CALIFORNIA - DEPARTMENT OF TRANSPORTATION
Caltrans LANDSCAPE ARCHITECTURE

LAST REVISION 02-18-14 | DATE PLOTTED => 30-JUN-2015 | TIME PLOTTED => 13:05

BORDER LAST REVISED 7/2/2010 | USERNAME => s132009 | DGN FILE => wetland planting future-.dgn | RELATIVE BORDER SCALE IS IN INCHES 0 1 2 3 | UNIT 1502 | PROJECT NUMBER & PHASE 050000054341

November 4, 2015

Mr. Larry Bonner
Caltrans District 5
50 Higuera Street
San Luis Obispo, CA 93401
Email: larry.bonner@dot.ca.gov

VIA ELECTRONIC MAIL

Dear Mr. Bonner:

WATER QUALITY CERTIFICATION NUMBER 34215WQ10 FOR THE LINDEN AVENUE-CASITAS PASS ROAD INTERCHANGES PROJECT, SANTA BARBARA COUNTY

Thank you for the opportunity to review your July 2, 2015 application for water quality certification of the Linden Avenue-Casitas Pass Road Interchanges Project (Project). The application was completed on July 8, 2015. The project, if implemented as described in your application and with the additional mitigation and other conditions required by this Clean Water Action Section 401 Water Quality Certification (Certification), appears to be protective of beneficial uses of State waters. We are issuing the enclosed Certification. Should new information come to our attention that indicates a water quality problem, we may require additional monitoring and reporting, issue Waste Discharge Requirements, or take other action.

Your Certification application and submitted documents indicate that project activities have the potential to affect beneficial uses and water quality. The Central Coast Regional Water Quality Control Board (Central Coast Water Board) issues this Certification to protect water quality and associated beneficial uses from project activities. We need reports to determine compliance with this Certification. All technical and monitoring reports requested in this Certification, or any time after, are required per Section 13267 of the California Water Code.

Failure to submit reports required by this Certification, or failure to submit a report of technical quality acceptable to the Executive Officer, may subject you to enforcement action per Section 13268 of the California Water Code. The Central Coast Water Board will base enforcement actions on the date of certification. Any person affected by this Central Coast Water Board action may petition the State Water Resources Control Board (State Water Board) to review this action in accordance with California Water Code Section 13320; and Title 23, California Code of Regulations, Sections 2050 and 3867-3869. The State Water Board, Office of Chief Counsel, PO Box 100, Sacramento, CA 95812, must receive the petition within 30 days of the date of this Certification. We will provide upon request copies of the law and regulations applicable to filing petitions.

If you have questions please contact **Paula Richter** at (805) 549-3865 or via email at Paula.Richter@waterboards.ca.gov, or Phil Hammer at (805) 549-3882. Please mention the above certification number in all future correspondence pertaining to this project.

Sincerely,

for
Kenneth A. Harris, Jr.
Executive Officer

Enclosure: Action on Request for CWA Section 401 Water Quality Certification

cc: With enclosures

Geoff Hoetker
Caltrans District 5
Email: geoff.hoetker@dot.ca.gov

Crystal Huerta
U.S. Army Corps of Engineers
Email: Crystal.Huerta@usace.army.mil

Theresa Stevens
U.S Army Corps of Engineers
Caltrans Liaison
Email: Theresa.Stevens@usace.army.mil

Ed Pert
California Department of Fish and Wildlife
Email: Ed.Pert@wildlife.ca.gov

Jamie Jackson
California Department of Fish and Wildlife
Caltrans Liaison
Email: Jamie.Jackson@wildlife.ca.gov

401 Program Manager
State Water Resources Control Board
Email: Stateboard401@waterboards.ca.gov

Elizabeth Goldmann
U.S. Environmental Protection Agency
Region 9
Email: Goldmann.elizabeth@epa.gov

Shea Oades
Central Coast Water Board
Email: Shea.Oades@waterboards.ca.gov

Paula Richter
Central Coast Water Board
Email: Paula.Richter@waterboards.ca.gov

R:\RB3\Shared\401\Certifications\Santa Barbara\2015\Linden Ave-Casitas Pass Interchanges\401_Certification_ Linden Ave-Casitas Pass Interchanges_34215WQ10_final

Action on Request for
Clean Water Act Section 401 Water Quality Certification
for Discharge of Dredged and/or Fill Materials

PROJECT: Linden Avenue-Casitas Pass Road Interchanges

APPLICANT: Mr. Larry Bonner
Caltrans District 5
50 Higuera Street
San Luis Obispo, CA 93401

ACTION:
1. ☐ Order for Standard Certification
2. ■ Order for Technically-conditioned Certification
3. ☐ Order for Denial of Certification

STANDARD CONDITIONS:

1. This Certification action is subject to modification or revocation upon administrative or judicial review, including review and amendment per section 13330 of the California Water Code and section 3867 of Title 23 of the California Code of Regulations (23 CCR).

2. This Certification action is not intended to apply to any discharge from any activity involving a hydroelectric facility requiring a Federal Energy Regulatory Commission (FERC) license or an amendment to a FERC license unless the pertinent Certification application was filed per 23 CCR subsection 3855(b) and the application specifically identified that a FERC license or amendment to a FERC license was being sought.

3. The validity of any non-denial Certification action (Actions 1 and 2) is conditioned upon total payment of the fee required under 23 CCR section 3833, unless otherwise stated in writing by the certifying agency.

ADMINISTRATIVE CONDITIONS:

1. This Certification is subject to the acquisition of all local, regional, state, and federal permits and approvals as required by law. Failure to meet any conditions contained herein or any conditions contained in any other permit or approval issued by the State of California or any subdivision thereof may result in the revocation of this Certification and civil or criminal liability.

2. In the event of a violation or threatened violation of this Certification, the violation or threatened violation shall be subject to any remedies, penalties, process or sanctions as provided for under state law. For purposes of Section 401(d) of the Clean Water Act, the applicability of any state law authorizing remedies, penalties, process or sanctions for the violation or threatened violation constitutes a limitation necessary to assure compliance with the water quality standards and other pertinent requirements incorporated into this Certification.

3. In response to a suspected violation of any condition of this Certification, the Central Coast Water Board may require the holder of any permit or license subject to this Certification to furnish, under penalty of perjury, any technical or monitoring reports the Central Coast Water Board deems appropriate, provided that the burden, including costs, of the reports shall have a reasonable relationship to the need for the reports and the benefits obtained from the reports.

4. In response to any violation of the conditions of this Certification, the Central Coast Water Board may add to or modify the conditions of this Certification as appropriate to ensure compliance.

5. The Central Coast Water Board reserves the right to suspend, cancel, or modify and reissue this Certification, after providing notice to the applicant, if the Central Coast Water Board determines that the Project fails to comply with any of the terms or conditions of this Certification.

6. A copy of this Certification, the application, and supporting documentation must be available at the Project site during construction for review by site personnel and agencies. A copy of this Certification must also be provided to the contractor and all subcontractors who will work at the Project site. All personnel performing work on the proposed Project shall be familiar with the content of this Certification and its posted location on the Project site.

7. The Applicant shall grant Central Coast Water Board staff, or an authorized representative, upon presentation of credentials and other documents as may be required by law, permission to enter the Project site at reasonable times, to ensure compliance with the terms and conditions of this Certification and/or to determine the impacts the Project may have on waters of the State.

8. The Applicant must, at all times, fully comply with the application, engineering plans, specifications, and technical reports submitted to support this Certification; all subsequent submittals required as part of this Certification; and the attached Project Information and Conditions. The conditions within this Certification and attachment(s) supersede conflicting provisions within applicant submittals.

9. The Applicant shall notify the Central Coast Water Board within 24 hours of any unauthorized discharge to waters of the U.S. and/or State; measures that were implemented to stop and contain the discharge; measures implemented to clean-up the discharge; the volume and type of materials discharged and recovered; and additional BMPs or other measures that will be implemented to prevent future discharges.

10. This Certification is not transferable to any person except after notice to the Executive Officer of the Central Coast Water Board. The Applicant shall submit this notice in writing at least 30 days in advance of any proposed transfer. The notice must include a written agreement between the existing and new responsible party containing a specific date for the transfer of this Certification's responsibility and coverage between the current responsible party and the new responsible party. This agreement shall include an acknowledgement that the existing responsible party is liable for compliance and violations up to the transfer date and that the new responsible party is liable from the transfer date on.

11. This Certification expires if Project construction does not begin (a) prior to expiration of the associated U.S. Army Corps of Engineers (Corps) authorization or permit for the Project, or

(b) within five years from the date of this Certification. If a Corps authorization or permit was unnecessary for this Project due to coverage under a non-reporting Nationwide Permit (NWP), and Project construction has not begun, this Certification expires when the non-reporting NWP expires. If the Corps issues a one-year grace period for uncompleted projects that began under a NWP that has since expired, this Certification is valid during the grace period for such projects. If this Certification does not expire as described above, it remains in effect until the Applicant complies with all Certification requirements and conditions.

12. The total fee for this project is $17,753. The remaining fee payable to the Central Coast Water Board is $17,153.

CENTRAL COAST WATER BOARD CONTACT PERSON:

Paula Richter
(805) 549-3865
Paula.Richter@waterboards.ca.gov

Please refer to the above certification number when corresponding with the Central Coast Water Board concerning this project.

WATER QUALITY CERTIFICATION:

I hereby issue an order certifying that as long as all the conditions listed in this Certification are met, any discharge from the Linden Avenue-Casitas Pass Road Interchanges Project shall comply with the applicable provisions of sections 301 ("Effluent Limitations"), 302 ("Water Quality Related Effluent Limitations"), 303 ("Water Quality Standards and Implementation Plans"), 306 ("National Standards of Performance"), and 307 ("Toxic and Pretreatment Effluent Standards") of the Clean Water Act. This discharge is also regulated pursuant to State Water Board Water Quality Order No. 2003-0017-DWQ, which requires compliance with all conditions of this Certification.

Except insofar as may be modified by any preceding conditions, all Certification actions are contingent on (a) the discharge being limited and all proposed mitigation being completed in strict compliance with the applicant's project description and the attached Project Information and Conditions, and (b) compliance with all applicable requirements of the Central Coast Water Board's policies and Water Quality Control Plan (Basin Plan).

for _____ November 4, 2015
Kenneth A. Harris, Jr. Date
Executive Officer
Central Coast Water Board

PROJECT INFORMATION AND CONDITIONS

Application Date	Received: July 2, 2015 Completed: July 8, 2015
Applicant	Mr. Larry Bonner Caltrans District 5 50 Higuera Street San Luis Obispo, CA 93401 Email: larry.bonner@dot.ca.gov (805) 549-3337
Applicant Representatives	Geoff Hoetker Caltrans District 5 50 Higuera Street San Luis Obispo, CA 93401 Email: geoff.hoetker@dot.ca.gov (805) 542-4670
Project Name	Linden Avenue-Casitas Pass Road Interchanges
Application Number	34215WQ10
Type of Project	Bridges, Overpasses and Crossings
Project Location	Carpinteria Latitude: 34° 23’ 40.2576” N Longitude: -119° 30’ 34.8444” W
County	Santa Barbara
Receiving Water(s)	Carpinteria and Franklin Creeks 315.34 Carpinteria Hydrologic Unit
Water Body Type	Streambed, wetland, and riparian

Designated Beneficial Uses	<u>Carpinteria Creek</u> Municipal and Domestic Supply (MUN) Agricultural Supply (AGR) Ground Water Recharge (GWR) Water Contact Recreation (REC-1) Non-Contact Recreation (REC-2) Wildlife Habitat (WILD) Cold Fresh Water Habitat (COLD) Warm Fresh Water Habitat (WARM) Migration of Aquatic Organisms (MIGR) Spawning, Reproduction, and/or Early Development (SPWN) Preservation of Biological Habitats of Special Significance (BIOL) Rare, Threatened or Endangered Species (RARE) Estuarine Habitat (EST) Freshwater Replenishment (FRSH) Commercial and Sport Fishing (COMM) <u>Franklin Creek</u> Municipal and Domestic Supply (MUN) Agricultural Supply (AGR) Ground Water Recharge (GWR) Water Contact Recreation (REC-1) Non-Contact Recreation (REC-2) Wildlife Habitat (WILD) Cold Fresh Water Habitat (COLD) Warm Fresh Water Habitat (WARM) Migration of Aquatic Organisms (MIGR) Spawning, Reproduction, and/or Early Development (SPWN) Rare, Threatened or Endangered Species (RARE) Freshwater Replenishment (FRSH) Commercial and Sport Fishing (COMM)
Project Description (purpose/goal)	The purpose of this project is to reduce traffic congestion, improve circulation, and address operational safety issues along Route 101 and adjacent local streets. Central Coast Regional Water Quality Control Board (Central Coast Water Board) staff understands that the project includes the following activities, as more particularly described in the Project Description dated September 22, 2015: 1. Reconstruction of the Linden Avenue and Casitas Pass Road interchanges; 2. Reconfiguration of the on- and off-ramps, replacement of the Route 101 bridges over Carpinteria Creek, widening of Carpinteria Creek, and armoring of the channel with rock slope protection in the vicinity of the Route 101 bridges over Carpinteria Creek; and 3. Extension of the Via Real frontage road from Bailard Avenue through to Casitas Pass Road, addition of a new bridge over Carpinteria Creek at Via Real, and reconstruction of bicycle paths.

U.S. Army Corps of Engineers Permit No.	Individual Permit
Federal Public Notice	N/A
Dept. of Fish and Wildlife Streambed Alteration Agreement	Streambed Alteration Agreement is pending. Final, signed copy shall be forwarded immediately upon execution.
Status of CEQA Compliance	Environmental Impact Report approved on July 20, 2010 and revalidated with a CEQA Addendum/NEPA re-evaluation on March 26, 2015. Lead Agency: Caltrans District 5
Total Certification Fee	$17,753
Area of Disturbance	Approximately 1.903 acres / 2,205 linear feet total <u>Carpinteria Creek</u> Streambed/Other Waters: 0.136 acre / 385 linear feet temporary Wetland: 0.059 acre / 150 linear feet temporary Riparian Area: 0.514 acre / 430 linear feet permanent, 1.104 acres / 460 linear feet temporary, including the removal of approximately 191 native trees (135 arroyo willows, 26 western sycamore, 15 coast live oak, 12 black cottonwood, and 3 white alder) <u>Unnamed tributary drainage to Franklin Creek</u> Streambed/Other Waters: 0.023 acre / 160 linear feet permanent, 0.067 acre / 620 linear feet temporary Riparian Area: 0.183 acre / 620 linear feet temporary (only non-native vegetation shall be impacted)
Dredge Volume	N/A
Excavation Volume	N/A
Fill Volume	Approximately 5,684 total cubic yards <u>Carpinteria Creek</u> Streambed: 393 cubic yards permanent Riparian Area: 4,848 cubic yards permanent <u>Franklin Creek</u> Streambed: 121 cubic yards permanent, 322 cubic yards temporary

Compensatory Mitigation Requirements	1. The project shall include the following compensatory mitigation: <u>Carpinteria Creek</u> a. 0.136 acre / 385 linear feet of temporary streambed impacts shall be mitigated at a 1:1 ratio through the rehabilitation of 0.136 acre of streambed habitat; b. 0.059 acre / 150 linear feet of temporary wetland impacts shall be mitigated at a 1:1 ratio through the rehabilitation of 0.059 acre of wetland habitat; c. 1.104 acres / 460 linear feet of temporary riparian impacts shall be mitigated at a 1:1 ratio through the rehabilitation of 1.104 acres of native riparian habitat; d. 0.514 acre / 430 linear feet of permanent riparian impacts shall be mitigated at a 3:1 ratio through the re-establishment of 1.542 acres of native riparian habitat; and e. The removal of 191 trees (temporary riparian impacts) shall be mitigated at a minimum 3:1 replacement ratio through the planting of a minimum of 573 trees. <u>Franklin Creek</u> a. 0.067 acre / 620 linear feet of temporary streambed impacts shall be mitigated at a 1:1 ratio through the rehabilitation of 0.067 acre of streambed habitat; b. 0.023 acre / 160 linear feet of permanent streambed impacts shall be mitigated at a 3:1 ratio through the re-establishment of 0.272 acre of streambed habitat; and c. 0.183 acre / 620 linear feet of temporary riparian impacts to degraded habitat shall be mitigated at a 1:1 ratio through the rehabilitation of 0.183 acre of native riparian habitat. 2. The Applicant shall implement compensatory mitigation installation, maintenance, and monitoring as described in the Mitigation and Monitoring Plan dated October 2015, the application, and all supporting documents. 3. Caltrans shall coordinate annually with Santa Barbara County Flood Control District to ensure that all mitigation plantings outside of the 35-foot wide flood control maintenance channel within Carpinteria Creek shall be preserved. In-stream wetland vegetation shall be allowed to remain in the channel, mitigation plantings that encroach into the 35-foot wide maintenance and flood control channel may be trimmed back, and any mitigation plantings on the banks shall not be disturbed. Debris and vegetation removal within the mitigation site for maintenance and flood control purposes shall be conducted by hand whenever possible. If heavy equipment use is necessary, this activity shall be monitored by Caltrans to protect mitigation plantings. 4. Offsite compensatory mitigation shall be installed within 12 months of the commencement of project construction. Onsite compensatory mitigation shall be installed within 12 months of completion of project construction.

Project Requirements	<u>Project practices that are required to comply with 401 Water Quality Certification are as follows:</u> 1. All work performed within waters of the State shall be completed in a manner that minimizes impacts to beneficial uses and habitat. Measures shall be employed to minimize land disturbances that will adversely impact the water quality of waters of the State. Disturbance or removal of vegetation shall not exceed the minimum necessary to complete Project implementation. 2. No construction activities shall be conducted below top of creek banks or in other waters of the State during the winter period November 1 – May 31, unless prior written approval has been obtained from Central Coast Water Board staff. Requests to conduct construction activities below top of creek banks or in other waters of the State during the winter period shall be submitted to Central Coast Water Board staff at least 21 days prior to the planned winter period work date. 3. Erosion and sediment control measures shall be on site prior to the start of construction and kept on site at all times so they are immediately available for installation in anticipation of rain events. 4. The Applicant shall implement and maintain an effective combination of erosion and sediment control measures (e.g., revegetation, fiber rolls, erosion control blankets, hydromulching, compost, straw with tackifiers, temporary basins) to prevent erosion and capture sediment. The Applicant shall implement and maintain washout, trackout, dust control, and any other applicable source control BMPs. 5. Erosion and sediment control measures and other construction BMPs shall be implemented and maintained in accordance with all specifications governing their proper design, installation, operation, and maintenance. 6. At any time of the year, the Applicant shall not conduct construction activities below top of creek banks or in other waters of the State on any day for which the National Weather Service has predicted a 25% or more chance of at least 0.1 inch rain in 24 hours. The Applicant shall implement effective erosion control, sediment control, and other protective measures no later than the day prior to the predicted rain event. Construction activities below top of creek banks or in other waters of the State may resume after the rain has ceased, the National Weather Service predicts clear weather for at least 24 hours, and site conditions are dry enough to continue work without discharge of sediment or other pollutants from the project site. 7. Any material stockpiled that is not actively being used during construction shall be covered and surrounded with a linear sediment barrier. 8. The Applicant shall retain a spill plan and appropriate spill control and clean up materials (e.g., oil absorbent pads) onsite in case spills occur. 9. The Applicant shall confine all trash and debris in appropriate enclosed bins and dispose of the trash and debris at an approved site at least weekly.

	10. All construction vehicles and equipment used on site shall be well maintained and checked daily for fuel, oil, and hydraulic fluid leaks or other problems that could result in spills of toxic materials. 11. The Applicant shall designate a staging area for equipment and vehicle fueling and storage at least 100 feet away from waterways, in a location where fluids or accidental discharges cannot flow into waterways. 12. All vehicle fueling and maintenance activity shall occur at least 100 feet away from waterways, and in designated staging areas, unless a requested exception on a case-by-case basis granted by prior written approval has been obtained from Central Coast Water Board staff. 13. Dewatering and stream diversion measures are not authorized based on the application. If the project requires dewatering or diversion, the Applicant shall submit detailed dewatering/ diversion plans for Central Coast Water Board staff approval at least 21 days prior to any dewatering or diversion. Dewatering/diversion plans shall include the area to be dewatered, timing of dewatering, and method of dewatering to be implemented. All temporary dewatering/diversion methods shall be designed to have the minimum necessary impacts to waters of the State to isolate the immediate work area. All dewatering/diversion methods shall be installed such that natural flow is maintained upstream and downstream of the project area. Any temporary dams or diversions shall be installed such that the diversion does not cause sedimentation, siltation, or erosion upstream or downstream of the project area. All dewatering/diversion methods shall be removed immediately upon completion of dewatering/diversion activities. Dewatering or diversion shall not commence until applicant has obtained Central Coast Water Board staff approval of the dewatering/diversion plans. 14. The Applicant shall implement post-construction stormwater BMPs as described in the Linden & Casitas Pass Water Quality Exhibit submitted November 2, 2015. For all areas that flow to Carpinteria Creek, the Applicant shall install stormwater treatment features to infiltrate greater than 100% of the water quality volume for the 85th percentile 24-hour storm event. The Applicant shall also incorporate flow-through pollutant removal BMPs through the installation of bio-strips and bioswales for areas draining to Carpinteria Creek as shown on the Linden & Casitas Pass Water Quality Exhibit submitted November 2, 2015.. For all areas that flow to Franklin Creek, the Applicant shall incorporate flow-through pollutant removal BMPs through the installation of bio-strips and bioswales as shown on the Linden & Casitas Pass Water Quality Exhibit submitted November 2, 2015. All drainage inlets within the City of Carpinteria jurisdiction shall be installed with trash removal BMPs, such as inlet screens and connector pipe screens. 15. All construction-related equipment, materials, and any temporary BMPs no longer needed shall be removed and cleared from the site upon completion of the project. 16. Central Coast Water Board staff shall be notified if mitigations as

	described in the 401 Water Quality Certification application for this project are altered by the imposition of subsequent permit conditions by any local, state or federal regulatory authority. The Applicant shall inform Central Coast Water Board staff of any modifications that interfere with compliance with this Certification.
Monitoring and Reporting Requirements	The Applicant shall conduct the following monitoring: 1. Visually inspect the project site and areas of waters of the State adjacent to project impact areas following completion of project construction and for five subsequent rainy seasons to ensure that the project is not causing excessive erosion, stream instability, or other water quality problems. If the project does cause water quality problems, contact the Central Coast Water Board staff member overseeing the project. You will be responsible for obtaining any additional permits necessary for implementing plans for restoration to prevent further water quality problems. 2. Monitor the compensatory mitigation site for ten years. If success criteria are not achieved within that time, continue annual monitoring and maintenance until success criteria are achieved. Compensatory mitigation monitoring shall include assessment of growth, survival, percent cover, general health and stature, signs of reproduction, progress towards achieving success criteria, and any other measures identified in the application, Mitigation and Monitoring Plan dated October 2015, and any other associated submittals. **The Applicant shall provide the following reporting to RB3_401Reporting@waterboards.ca.gov [Note: Annual fees are based on submittal of reporting items 5-6 below]:** 1. Streambed Alteration Agreement - Submit a signed copy of the Department of Fish and Wildlife's streambed alteration agreement to the Central Coast Water Board immediately upon execution and prior to any discharge to waters of the State. 2. Coastal Development Permit – Submit a final copy of the City of Carpinteria Coastal Development Permit. 3. Memorandum of Understanding with the City of Carpinteria – Submit a signed copy of the Memorandum of Understanding with the City of Carpinteria for transfer of ownership of the mitigation site (should a transfer of ownership occur) upon finalization. 4. Construction Commencement Notification - At least seven days in advance of any ground disturbing or grubbing activities, submit notification to the Central Coast Water Board of the date when project construction will begin. 5. Discharge, Construction, and Mitigation Installation Completion Notification - Within seven days of completing all project discharge, construction, and mitigation installation activities, submit notification to the Central Coast Water Board of project discharge, construction, and mitigation installation completion. 6. Compensatory Mitigation and Monitoring Completion Notification – Within seven days of Applicant verification of achievement of all compensatory mitigation success criteria and completion of all monitoring, submit notification to the Central Coast Water Board of compensatory mitigation success criteria achievement and monitoring completion. Include identification of the date when the

final Annual Project Status Report will be submitted. [Note: Submittal of Compensatory Mitigation and Monitoring Completion Notification does not terminate this Certification or its requirements.]

7. Annual Project Status Report – The Applicant shall submit to the Central Coast Water Board an Annual Project Status Report by May 31 of each year following the issuance of this Certification, regardless of whether project construction has started or not. The Applicant shall submit Annual Project Status Reports for five years after construction completion. The Annual Project Status Reports shall include:
    a. The status of the project: construction not started, construction started, or construction complete.
    b. The date of construction initiation, if applicable.
    c. The date of construction completion, if applicable.
    d. If project construction is complete:
        i. A summary of daily activities, monitoring and inspection observations, and problems incurred and actions taken;
        ii. Status of permanent post-construction stormwater management BMPs, including photo documentation of all BMPs;
        iii. A description of the results of the annual visual inspection of the project site and areas of waters of the State adjacent to project impact areas, including:
            1. Erosion conditions;
            2. Stream stability conditions;
            3. Water quality and beneficial use conditions;
            4. Clearly identified photo-documentation of all areas of permanent and temporary impact, prior to and after project construction; and
            5. Clearly identified representative photo-documentation of other project areas, prior to and after project construction.
    e. If the visual inspection monitoring period is over, but water quality problems persist, the Annual Project Status Report shall identify corrective measures to be undertaken, including extension of the monitoring period until the project is no longer causing excessive erosion, stream instability, or other water quality problems.
    f. The status of the compensatory mitigation installation: mitigation installation not started, mitigation installation started, or mitigation installation complete; the date of mitigation installation initiation, if applicable; and the date of mitigation installation completion, if applicable.
8. Mitigation and Monitoring Reporting.
    a. The applicant shall submit Biennial Mitigation and Monitoring Reports on or before May 31 following mitigation installation completion at Years Two, Four, Six, Eight, and Ten, or until the mitigation has achieved all success criteria. Each Biennial Mitigation and Monitoring Report shall include at a minimum:
        i. Date of initiation of mitigation installation and date mitigation installation was completed;

	ii. Confirmation mitigation was installed according to the requirements of this Certification and as described in the application, the Mitigation and Monitoring Plan dated October 2015, and any other associated submittals; iii. A summary of Caltrans' annual coordination efforts with the Santa Barbara County Flood Control District to ensure that flood control maintenance activities in the vicinity of the mitigation site are compatible with Caltrans' mitigation obligations under this Certification. iv. Analysis of monitoring data collected in the field; v. Quantification of growth, percent cover, survival, general health and stature, signs of reproduction, and documentation of progress toward achieving all mitigation performance criteria; vi. Qualitative and quantitative comparisons of current mitigation conditions with preconstruction conditions and previous mitigation monitoring results; vii. Any remedial or maintenance actions taken or needed; viii. Any additional information specified in the Mitigation and Monitoring Plan dated October 2015, and any other associated submittals; ix. Annual photo-documentation representative of all mitigation areas, taken from vantage points from which Central Coast Water Board staff can identify changes in size and cover of plants. Compare photos of installed mitigation with photos of the mitigation areas prior to installation; and x. A description of mitigation completion status that identifies the amount of mitigation monitoring and maintenance remaining, or certifies that mitigation is complete and all required mitigation monitoring and maintenance has been conducted and all success criteria achieved. If the monitoring period is over, but all success criteria have not been achieved, the Biennial Report shall identify corrective measures to be undertaken, including extension of the monitoring period until the criteria are met.

State of California – Natural Resources Agency
DEPARTMENT OF FISH AND WILDLIFE
South Coast Region
3883 Ruffin Road
San Diego, CA 92123
(858) 467-4201
www.dfg.ca.gov

EDMUND G. BROWN JR., Governor
CHARLTON H. BONHAM, Director

November 16, 2015

Mr. Larry Bonner
California Department of Transportation
50 Higuera Street
San Luis Obispo, California 93401

Subject: Final Lake or Streambed Alteration Agreement
Notification No. 1600-2015-00137-R5
Linden Avenue and Casitas Pass Road Interchange Project

Dear Larry Bonner:

Enclosed is the final Streambed Alteration Agreement (Agreement) for the Linden Avenue and Casitas Pass Road Interchange Project (project). Before the Department of Fish and Game (DFG) may issue an Agreement, it must comply with the California Environmental Quality Act (CEQA). In this case, the Department, acting as a Responsible Agency, filed a notice of determination (NOD) on the same date it signed the Agreement. The NOD was based on information contained in the lead agency prepared for the Project.

Under CEQA, filing a NOD starts a 30-day period within which a party may challenge the filing agency's approval of the project. You may begin your project before the 30-day period expires if you have obtained all necessary local, state, and federal permits or other authorizations. However, if you elect to do so, it will be at your own risk.
If you have any questions regarding this matter, please contact Ms. Jamie Jackson at 805-382-6906 or jamie.jackson@wildlife.ca.gov.
Sincerely,

Betty J Courtney
Environmental Program Manager

for

ec: Jamie Jackson, Staff Environmental Scientist

CALIFORNIA DEPARTMENT OF FISH AND WILDLIFE
SOUTH COAST REGION
3883 Ruffin Road
San Diego, CA 92123

STREAMBED ALTERATION AGREEMENT
NOTIFICATION NO. 1600-2015-0137-R5 – ORIGINAL DRAFT
CARPINTERIA AND FRANKLIN CREEKS

California Department of Transportation
LINDEN AVENUE AND CASITAS PASS ROAD INTERCHANGE PROJECT

This Streambed Alteration Agreement (Agreement) is entered into between the California Department of Fish and Wildlife (CDFW) and California Department of Transportation (Permittee), as represented by Mr. Larry Bonner acting on behalf of Permittee.

RECITALS

WHEREAS, pursuant to Fish and Game Code (FGC) section 1602, Permittee notified CDFW on August 10, 2015, that Permittee intends to complete the Project described herein.

WHEREAS, pursuant to FGC section 1603, CDFW has determined that the Project could substantially adversely affect existing fish or wildlife resources and has included measures in the Agreement necessary to protect those resources.

WHEREAS, Permittee has reviewed the Agreement and accepts its terms and conditions, including the measures to protect fish and wildlife resources.

NOW THEREFORE, Permittee agrees to complete the Project in accordance with the Agreement.

PROJECT LOCATION

(Additional information is available in Exhibit B located in the Notification Package for this Agreement)

The proposed Project site is located just along United States Highway 101 (US-101) between Post Miles (PMs) 2.2/3.3, located in the City of Carpinteria in Santa Barbara County.

PROJECT DESCRIPTION

Bridge Replacements

(Additional information is available in Exhibits B and C located in the Notification Package for this Agreement)

The Permittee proposes at Carpinteria Creek to implement the following Project. Construction at Carpinteria Creek would include the following construction elements: 1) replace, widen, lengthen, and raise the northbound and southbound US-101 Carpinteria Creek Bridges; 2) extend Via Real from the current cul-de-sac at the San Roque Mobile Home Park over Carpinteria Creek to Linden Avenue, building a new bridge for Via Real over Carpinteria Creek (including one lane in each direction, one Class II bike path in each direction, and five-foot wide sidewalks on the north side; 3) move the alignment of Via Real closer to US-101; 4)

regrade and widen an approximately 535 linear-foot section of Carpinteria Creek; 5) widen the width of the bottom of Carpinteria Creek near the ordinary high water marks (OHWMs) from an existing width of approximately 35 feet to a new width of approximately 65 feet; 6) widen the distance between banks from an existing width of approximately 110 feet to a new width of approximately 140 feet; 7) excavate an estimated 5,021 cubic yards (CUYs) of material from the existing Carpinteria Creek channel, including approximately 638 CUYs of material below the new OHWMs of the widened channel; and 8) install an estimated 4,848 CUYs of Rock Slope Protection (RSP) along the restored banks of Carpinteria Creek, and in adjacent areas, including approximately 393 CUYs of RSP below the new OHWMs of the widened channel.

Rock Slope Protection
(Additional information is available in Exhibits B and C located in the Notification Package for this Agreement)

The CDFW recommends self-locking or self- adjusting RSP. Currently, flows are spread out in floodplains on either side of Carpinteria Creek upstream and downstream of the US-101 and Via Real bridges. The Project proposes an opening wider than the main channel to convey flows through the bridges. To implement the following changes at the bridge structures the Project at Carpinteria Creek would include the following construction elements: 1) RSP is needed in areas of the creek that will be regraded to accommodate high flow velocities through this section and require additional bank protection; 2) the bike path and ends of several pipes that outlet to the creek require RSP; and 3) in some areas, RSP previously installed during past Projects along Carpinteria Creek will be replaced with new RSP along the newly widened channel. The amount of previously installed RSP along the channel has not been quantified. The amount of new RSP has been reduced to the minimum amount necessary to adequately address flows.

Bike Path
(Additional information is available in Exhibits B and C located in the Notification Package for this Agreement)

The Permittee proposes to construct a Class I bike lane between Casitas Pass Road and the existing Carpinteria Creek Class I bike lane adjacent to Carpinteria Creek. The Permittee proposes to improve passage for Southern California steelhead trout by remove the existing bike path that crosses Carpinteria Creek connecting to the end of Via Real.

To implement the following Project at Carpinteria Creek would include the following construction elements: 1) reconstruct the Casitas Pass Road southbound on- and off-ramps; 2) remove the existing Casitas Pass Road northbound on- and off-ramps, and build new northbound on- and off-ramps to be accessed from the new Via Real frontage road extension; 3) replace the Casitas Pass Road overcrossing with a five-lane structure including bike lanes and sidewalks on both sides. The overcrossing will include a temporary median in the central lane leaving four lanes of traffic; 4) install signals at the intersections of Via Real and the northbound Casitas Pass Road on- and off-ramps, Casitas Pass Road and Via Real, and Casitas Pass Road and the southbound US-101 on- and off-ramps; 5) remove the existing southbound off-ramp and build a new southbound off-ramp at Linden Avenue; 6) remove the existing northbound on-ramp and build a new roundabout, including the new northbound on-ramp as one of the four legs; 7) replace the Linden Avenue overcrossing with a 3-lane structure, including bike lanes and sidewalks on both sides, on a curved alignment; 8) reconfigure Ogan Road to form a third connection to the new roundabout, located on its

northeastern side; and 9) install signals at the intersections of Linden Avenue and Ogan Road, and Linden Avenue and the southbound US-101 off-ramp.

Soundwalls
(Additional information is available in Exhibits B and C located in the Notification Package for this Agreement)

The Permittee proposes two Projects at Carpinteria and Franklin Creeks. Constructed soundwalls should include passages, fencing, and/or other attributes with the intention to direct wildlife away from the freeway and toward the open undercrossing at the bridge locations. The Permittee has proposed the installation of the described soundwalls which include the following construction elements: 1) soundwall B-4 along northbound US-101 between Via Real and US-101, between the existing soundwall and the Verizon property; 2) soundwall B-7 along southbound US-101, between Church Lane and Vallecito Road; 3) soundwall B-2 along northbound US-101, between Linden Avenue overcrossing and Franklin Creek Bridge; and 4) soundwall B-9 along southbound US-101, between Franklin Creek and the end of the existing soundwall along the Linden Avenue southbound off-ramp (previously shorter wall ending before Franklin Creek.

NOTE: Removal and replacement of an existing underground sanitary sewer line using horizontal directional drilling (HDD) within the existing Project limits parallel to the Via Real extension will be required under separate Notification. This work would include a staging area in the cul-de-sac at the terminus of the existing Via Real, HDD entry and exit pits excavated on either side of Carpinteria Creek (outside of the riparian corridor), a pipe string layout area located north of Carpinteria Creek, approximately 620 linear feet of new sewer line installed under Carpinteria Creek via HDD, three sections of sewer pipeline of various lengths installed via trenching (outside of Carpinteria Creek) to tie-in to the existing sewer line, and installation of two manholes at each of the tie-in locations. This is scheduled to occur before the other Project components and the City of Carpinteria is seeking approval for this activity under a separate permitting process.

PROJECT IMPACTS
(Additional information is available in Exhibits F, J, and K located in the Notification Package for this Agreement)

Existing fish or wildlife resources the Project could substantially adversely affect, based on information received from the Permittee, include: **Amphibians:** California red-legged frog (*Rana draytonii*) *CSC. **Fish:** steelhead trout (southern California distinct population segment) (DPS) (*Oncorhynchus mykiss*) *(CSC), (CH); tidewater goby (*Eucyclogobius newberryi*)*(CSC). **Reptiles:** western pond turtle (*Emys marmorata*) *(CSC), two-striped garter snake (*Thamnophis hammondii*) *(CSC). **Birds:** red-tailed hawk *(Buteo jamaicensis)*. **Mammals:** gray fox (*Urocyon cinereoargenteus*), mule deer (*Odocoileus hemionus*), coyote (*Canis latrans*), striped skunk (*Mephitis mephitis*), brush rabbit (*Sylvilagus bachmani*), bobcat (*Lynx rufus*); **Native Plants:** Gambel's watercress (*Nasturtium gambelii*); marsh sandwort (*Arenaria paludicola*); coast live oak (*Quercus agrifolia*); arroyo willow (*Salix lasiolepis*); alder (*Alnus rhombifolia*); western sycamore (*Plantanus racemosa*); black cottonwood (*Populus trichocarpa*); California blackberry (*Rubus ursinus*); blue elderberry (*Sambucus mexicana*); giant horsetail (*Equisetum telmateia*); common water cress (*Nasturtium officinale*); fringed willowherb (*Epilobium ciliatum*); ditch beard grass (*Polypogon interruptus*); tall flatsedge (*Cyperus eragrostis*); broadleaf cattail (*Typha latifolia*); creek clematis (*Clematis ligusticifolia*); iris leaved rush (*Juncus xiphoides*); umbrella plant (*Cyperus involucratus*); scarlet monkey flower (*Mimulus cardinalis*); and all other aquatic and wildlife resources in the area, including the riparian vegetation which provides habitat for such species in the area.

*Status: State Endangered (SE); State Threatened (ST); California Special Concern species (CSC); California Native Plant Society (CNPS), Critical Habitat (CH), California Native Plant Society Listings: 1B.2 Rare, threatened, or endangered in California.

Table 1- Impacts Analyses to Bed, Bank, and Channel.
(Additional information is available in Exhibits F, J, and K located in the Notification Package for this Agreement)

Resource	Non-wetland Streambed / Other Waters		In-stream Wetlands		Riparian Vegetation (above OHWM)	
	Perm Impact	Temp Impact	Perm Impact	Temp Impact	Perm Impact	Temp Impact
Carpinteria Creek	0 ac / 0 l.f.	0.136 ac / 385 l.f.	0 ac / 0 l.f.	0.059 ac / 150 l.f.	0.514 ac / 430 l.f.	1.104 ac / 460 l.f.
Drainage Ditch-to Franklin Ck - Linden/101 SB off ramp	0.023 ac / 160 l.f.	0.067 ac / 620 l.f.	0 ac / 0 l.f.	0 ac / 0 l.f.	0 ac / 0 l.f.	0 ac / 0 l.f.
Total Impacts (ac / l.f.)	**0.023 ac / 160 l.f.**	**0.203 ac / 1,005 l.f.**	**0 ac / 0 l.f.**	**0.059 ac / 150 l.f.**	**0.514 ac / 430 l.f.**	**1.104 ac / 460 l.f.**
Proposed Replacement Ratio for Impacts (ac))	**3:1**	**1:1**	**3:1**	**1:1**	**3:1**	**1:1**
Total Mitigation Required (ac)	(0.023 ac X 3)+(0.203 ac X 1) = **0.272 ac total**		**0.059 ac total**		(0.514 ac X 3)+(1.104 ac X 1) = **2.646 ac total**	

Table 2- Impacts Analyses to Riparian Habitat.
(Additional information is available in Exhibits F, J, and K located in the Notification Package for this Agreement)

Species	Number of Individuals	Average Diameter at Breast Height (dbh)	DBH Range
arroyo willow (*Salix lasiolepis*)	135	7.75"	4 to 30"
western sycamore (*Platanus racemosa*)	26	9.5"	4 to 34"
coast live oak (*Quercus agrifolia*)	15	15"	4 to 65"
black cottonwood (*Populus trichocarpa*)	12	14.25"	4 to 40"
white alder (*Alnus rhombifolia*)	3	5.33"	4 to 6"
Total	**191 trees[1]**	**10.3"**	**4 to 65"**

[1] Native riparian trees removed will be replaced at a minimum 3:1 replacement ratio (for a minimum of at least 573 trees).

Impacts Analyses

Potential permanent and temporary adverse effects cannot be avoided, and have been minimized to the extent practicable. However, permanent and temporary impacts resulting from the temporary stream diversion/dewatering and construction in Carpinteria Creek are not expected to have permanent adverse effects on steelhead and tidewater goby. The removal of the culverted bike path crossing of Carpinteria Creek just east of the existing US-101 Bridge and other channel improvements (e.g., meandering low-flow channel and replanting of vegetation) are likely to be an overall benefit for steelhead and tidewater goby and the Permittee and CDFW have consulted previously on the positive effects and benefits to wildlife with regard to the removal of the culverted bike path.

The Permittee shall implement the Project as proposed and the work area shall be limited to the streams/channels/culverts/ditches indicated for impacts as part of the Notification and listed in Table 1, page 4; this includes all impacts as described in the original Project

description in the Notification for this Agreement, including staging, storage and access roads necessary to complete the Project as described. If additional impacts beyond those expressly stated herein occur CDFW must be notified and additional mitigation and/or measures to protect resources may be required.

MEASURES TO PROTECT FISH AND WILDLIFE RESOURCES

1. Administrative Measures

Permittee shall meet each administrative requirement described below.

1.1 Documentation at Project Site. Permittee shall make the Agreement, any extensions and amendments to the Agreement, and all related notification materials and California Environmental Quality Act (CEQA) documents, readily available at the Project site at all times and shall be presented to CDFW personnel, or personnel from another state, federal, or local agency upon request.

1.2 Providing Agreement to Persons at Project Site. Permittee shall provide copies of the Agreement and any extensions and amendments to the Agreement to all persons who will be working on the Project at the Project site on behalf of Permittee, including but not limited to contractors, subcontractors, inspectors, and monitors.

1.3 Notification of Conflicting Provisions. Permittee shall notify CDFW if Permittee determines or learns that a provision in the Agreement might conflict with a provision imposed on the Project by another local, state, or federal agency. In that event, CDFW shall contact Permittee to resolve any conflict.

1.4 Project Site Entry. Permittee agrees that CDFW personnel may enter the Project site at any time to verify compliance with the Agreement.

1.5 Regional Water Quality Control Board. CDFW believes that permit/certification(s) may be required from the Regional Water Quality Control Board for this Project. Should such permits/certification(s) be required, a copy shall be submitted to CDFW.

1.6 Personnel Compliance On Site. If the Permittee or any employees, agents, contractors and/or subcontractors violate any of the terms or conditions of this Agreement, all work shall terminate immediately and shall not proceed until CDFW has taken all of its legal actions.

1.7 Pre-Project Briefing. A pre-maintenance meeting/briefing shall be held involving all the contractors and subcontractors, concerning the conditions in this Agreement.

1.8 Notification Prior to Work. The Permittee shall notify CDFW, in writing, at least five (5) days prior to initiation of mitigation (Project) activities and at least five (5) days prior to completion of mitigation (Project) activities. Notification shall be sent to electronically to CDFW at R5LSACompliance@wildlife.ca.gov, Reference # 1600-2013-0292-R5.

1.9 Notification Requirements. CDFW requires that the Permittee:

1.9.1 Notification Timeline. Immediately notify CDFW in writing if monitoring reveals that any of the protective measures were not implemented during the period indicated

in this Agreement, or if it anticipates that measures will not be implemented within the time period specified.

1.9.2 Notification of Failed Measures. Immediately notify CDFW if any of the protective measures are not providing the level of protection that is appropriate for the impact that is occurring, and recommendations, if any, for alternative protective measures.

1.9.3 Notification Compliance. CDFW shall verify compliance with protective measures to ensure the accuracy of the Permittee's mitigation, monitoring and reporting efforts. CDFW may, at its sole discretion, review relevant documents maintained by the Permittee, interview the Permittee's employees and agents, inspect the work site, and take other actions to assess compliance with or effectiveness of protective measures in this Agreement.

1.10 Implementation Requirements. The agreed work includes activities associated with the Project Location and Project Description that is provided above. Specific work areas and mitigation measures are described on/in the plans and documents submitted by the Permittee with the Notification Package, and shall be implemented as proposed unless directed differently by this Agreement.

2. General Avoidance and Minimization Measures

(Additional information is available in Exhibit G located in the Notification Package for this Agreement)

2.1 Limit Work Area and Install Environmentally Sensitive Area (ESA) Fencing. The number of access routes, size of staging areas and the total area of the activity shall be limited to the minimum necessary to safely construct this Project. All access will be restricted to the existing roads and designated temporary access areas. ESA fencing will be installed to limit construction activities and protect biological habitats of concern. Proposed ESA fencing will be established at all wetlands, riparian areas, oak tree areas, and all areas that exhibit good wildlife habitat potential, in order to avoid, minimize and reduce any potential impacts to biological resources. ESA fencing locations will be determined in the Project Scoping and Engineering (PSE) phase of Project. The installation of ESA fencing shall also be included in the Construction Contract and shown on Project Plans and Layout Sheets. Routes and boundaries shall be clearly delineated in the field with ESA fencing to minimize activities adjacent to biological resources, including drainages, wetlands and/or native plant communities. All ESA fencing delineated in the field must be approved by the Project Biologist prior to beginning any construction activities, including equipment and materials storage. The Resident Engineer should contact George Sistek, Construction Liaison (805-549-3487), Larry Bonner, Senior Environmental Planner (805-549-3337), or Lara Bertaina, Associate Environmental Planner (805-542-4610).

2.2 Preconstruction Surveys. In order to ensure that potential impacts to the biological resources discussed in this document are avoided and/or minimized, and due to the long lead-time until construction, pre-construction surveys for tidewater goby, California red-legged frog, western pond turtle, and two-striped garter snake will be conducted by a qualified Permittee biologist or designee (must meet same qualification as qualified biologist). Surveys for nesting birds (if work is proposed to occur from February 15th to September 1st during the nesting season) will be conducted by a qualified biologist or designee within 14

days prior to initiation of construction. As delineated on Project maps in Appendix A, the Area of Direct Impact (ADI) encompasses all temporary and permanent impacts to vegetated areas. If any state-listed endangered or threatened species are found during the pre-construction surveys, the Project shall cease until consultation between Permittee and California Department of Fish and Wildlife (CDFW) is completed.

2.3 Duties of the Biologist and/or Environmental Monitor. If any special status species are found in the ADI during construction the Permittee Biologist or designee shall be present at the construction site until such time as instruction has been given to the workers, the special status species has been allowed to move out of the ADI on its own, or the special-status species has been relocated outside of the ADI (if authorized by the relevant regulatory agencies). A Biological/Environmental Monitor will be present on site during construction activities that may impact special status species and/or migratory birds. This includes clearing and grubbing of Carpinteria Creek, the stream diversion/dewatering of Carpinteria Creek, and the removal of trees during the nesting season from February 15th through September 1st.

2.4 Authority of the Biologist and/or Environmental Monitor. The Permittee Biologist and/or Environmental Monitor, shall have the authority to halt any action that might result in impacts that exceed the anticipated levels of impact that were determined during agency review (by Permittee, U.S. Army Corps of Engineers (ACOE), CDFW, California Coastal Commission (CCC), and/or USFWS) of the proposed actions. If work is stopped, these same regulatory agencies shall be notified immediately by the Permittee Biologist or Environmental Monitor.

2.5 Equipment Maintenance and Staging and Materials Storage Restrictions. All refueling and maintenance of equipment and vehicles shall be at least 60 feet from any aquatic habitat, wetland area or any water body. The contractor shall ensure contamination of habitat does not occur during such operations. All workers shall be informed of the importance of preventing spills of fuels and of the appropriate measures to take should a spill occur. Equipment staging and materials storage shall be located outside of stream corridors and associated riparian habitat.

2.6 Trash Control. During construction, all trash that may attract predators shall be properly contained, removed from the work site, and disposed of regularly. Following construction, all trash and construction debris shall be removed from work areas.

2.7 Invasive Plant Control. In compliance with Executive Order 13112 on Invasive Species and subsequent guidance from the FHWA, the landscaping and erosion control included in the Project will not use species on the California List of Noxious Weeds http://plants.usda.gov/java/noxious?rptType=State&statefips=06. Measures to control invasive exotic plants shall be implemented according to the Permittee Landscape Architect's recommendations. Exotic and invasive weeds such as ice plant (*Carpobrotus edulis*), kikuyu grass (*Pennisetum clandestinum*) , fennel (*Foeniculum vulgare Azoricum* Group; syn. *F. vulgare* var. *azoricum*), pampas grass (*Cortaderia selloana*), fountain grass (*Pennisetum setaceum*) and other assorted invasive plants that are listed as "most invasive" on the list will be removed within the ADI and topsoil from weed-infested areas will not be used in any revegetation areas due to the presence of a high quantity of weed seeds.

2.8 Revegetation and Site Restoration. The ADI, encompassing all temporary and permanent

impacts to vegetated areas (as opposed to existing impermeable surfaces such as US-101 and other roadways), has been estimated at approximately 25 acres. After construction is complete, Project sites shall be first evaluated for the potential for successful revegetation and restoration. An appropriate assemblage of suitable native riparian wetland and/or native vegetation shall be recommended by Biology and Landscape Architecture. Permanently impacted wetlands and waters shall be replaced as part of the Project and considered as part of the avoidance and minimization measures. Vegetation and habitat loss in these areas shall be replaced onsite using native plants at a 3:1 ratio for permanent impacts and at a 1:1 ratio for temporary impacts. Native riparian vegetation shall be replaced at 3:1 (acreage) for permanent impacts and 1:1 (acreage) for temporary impacts. Native oak trees ≥ 6" diameter at breast height (dbh) shall be replaced at 3:1 for trees removed. Plant salvage, local seed collection, and contract growing are potential techniques that may be used to minimize the loss of native wetland plants. Locally collected and salvaged plants and seeds can then be used for Project revegetation and restoration purposes.

Aquatic and Terrestrial Species Specific Protection

All avoidance, minimization, and mitigation measures shall be implemented, as appropriate, before, during, and/or post construction.

2.9 On-site Special-status Species Identification Training. Training shall be conducted and shall include a description of steelhead trout, tidewater goby, California red-legged frog, western pond turtle, two-striped garter snake, and nesting birds. A Permittee Biologist (or designee) will conduct training sessions for all construction personnel before they perform work onsite. The biologist will discuss a description of these special-status species and their habitats, their legal status, Project boundaries, general measures to be implemented to conserve these species as they relate to the Project, and what to do if these species are observed during construction. Brochures, photographs, books and briefings may be used in the training session, provided that a qualified person is on hand to answer any questions.

2.10 Steelhead and Tidewater Goby. Construction within Carpentaria Creek, from streambed to vegetation overhanging the creek, would only take place during the low flow period defined as between June 1st and October 31st in order to minimize impacts to steelhead trout and tidewater goby. Once the diversion is installed and inspected and operating properly, or no flow is present, vegetation removal can resume as needed. Only qualified personnel shall participate in activities associated with the capture, handling, and relocation of tidewater gobies. The names and credentials of personnel who desire to conduct these activities shall be supplied to CDFW for their review and approval at least 15 day prior to the onset to these activities. The Environmental Monitor/biologist shall monitor stream diversion/dewatering activities during construction.

2.11 Diversion.
(Additional information is available in Exhibit J located in the Notification Package for this Agreement)
The Contractor shall submit a Diversion and Dewatering Plan (DDP) to Caltrans at least 45 days prior to initial installation of the diversion/dewatering system. The plan shall include at a minimum the description and location of the area to be diverted/dewatered, schematic drawing(s) of the diversion/dewatering system including system outlet velocity dissipation method, duration of diversion/dewatering, and materials and methods of diversion/dewatering implementation and removal. Caltrans shall submit the DDP to CDFW and CDFW shall

provide review and approval within 14 days of submittal to CDFW.

2.12 Diversion Monitoring. On-site Project monitoring shall be continuous throughout installation and removal of the stream diversion, reverting to periodically (e.g., two site visits a week) to check on the status of the diversion once it has successfully been installed. If necessary to protect listed species, the monitor shall coordinate with the Resident Engineer to cease all activities until USFWS and NOAAF can be consulted to determine if additional avoidance and minimization measures are required. Fish passage would be maintained during construction through a flexible pipe culvert of adequate size in order to facilitate fish passage.

2.12.1 During De-watering. When ongoing de-watering efforts are scheduled to begin, prior to the de-watering, steelhead and tidewater gobies shall be removed prior to draining the site. After barriers are constructed, steelhead and tidewater gobies shall be captured with a seine and dip nets, transported in buckets, and released in the most appropriate habitat adjacent to the de-watered area. If a beach seine is used, it shall be pulled in a deliberate manner with care being taken to avoid rolling the lead line inward. The number of steelhead and tidewater gobies shall be estimated prior to release.

2.12.2 Debris. All debris and aquatic and emergent vegetation in the pumped area shall be carefully inspected for steelhead, tidewater gobies, and other vertebrates. If water is to be pumped around work sites, intakes shall be completely screened with wire mesh not larger than 0.2 inch to prevent small steelhead and tidewater gobies from entering the pump system. As the work site is de-watered, remaining pools shall be inspected for steelhead and tidewater gobies. As many individuals as possible shall be captured, using dip nets and other appropriate tools, and moved as described above.

2.12.3 Handling Times. Handling time for steelhead and tidewater gobies shall be minimized to the maximum extent practicable. In work areas that have been de-watered, water above the barrier shall be released or pumped downstream at an appropriate rate to maintain downstream flows during construction. Upon completion of construction activities, the barriers to flow shall be removed in a manner that will allow flow to resume with the least disturbance to the substrate.

2.12.4 Disturbances. All disturbance to potential steelhead and tidewater goby habitat including riparian vegetation and jurisdictional waters shall be minimized with the use of ESA (environmentally sensitive area) fencing and all soil exposed as a result of the Project shall be revegetated using native hydroseeding or live planting methods. If the substrate of the stream is altered during work activities, it shall be graded or otherwise treated to pre-construction conditions or better after the work is completed.

2.13 Predicted Rain.
(Additional information is available in Exhibit H located in the Notification Package for this Agreement)
Given the unpredictability of forecast for rain in the southern California area, if measurable rain with 80% chance or greater probability is predicted within 24 hours during Project-related activities, protective measures to prevent siltation/erosion shall be implemented/maintained. If it rains while Project-related activities are underway, all activities between the tops of the

banks of Carpinteria Creek shall cease, all equipment shall be removed from the channel, and protective measures to prevent siltation/erosion shall be implemented/maintained. If any concrete is poured after November 1st, Permittee must ensure no concrete used in the contract for construction-related activities may cause harm to any aquatic organism if poured within 150 feet of a wetted stream.

2.14 Western Pond Turtle and Two-striped Garter Snake. Prior to construction, a biologist determined qualified by Permittee shall survey the ADI and, if present, capture and relocate any western pond turtles or two-striped garter snakes to suitable habitat downstream of the ADI. Observations of California Species of Special Concern (SSCs) or other special-status species shall be documented on California Natural Diversity Database (CNDDB) forms and submitted to CDFW upon Project completion. If these species or other SSC aquatic species are observed during construction, they will likewise be relocated to suitable downstream habitat by a qualified biologist.

2.15 Migratory Bird Treaty Act Compliance and Fish and Game Code 3503. The Natural Environment Study (NES) included with the Notification Package for issuance of this Streambed Agreement shall be implemented as proposed.

2.15.1 Nesting Birds. It is anticipated that birds may nest on oak trees and other structures between February 15th and September 1st .The Permittee shall take such measures as necessary to prevent nesting on trees and structures that will cause a conflict between performing necessary work and to avoid violation of the Federal Migratory Bird Treaty Act (MBTA) of 1918 (50 C.F.R. Section 10.13) and Sections 3503, 3503.5 and 3513 of the FGC. Birds shall be allowed to nest on oak trees and structures where conflicts are not anticipated.

2.15.1.1. Exclusion Techniques. As an additional avoidance and minimization measure, it is recommended that bird nests be excluded from the existing Route 101 Carpinteria Creek Bridges. Nesting bird exclusion methods may include: installation of exclusion netting (only if monitored daily), The proper time for installation of bird exclusion netting is outside of the typical nesting season (i.e., implement exclusion methods from September 2 to February 14).

2.15.1.2 Exclusion Timing. If feasible, habitat used by migratory birds that will be removed to build the Project should be removed from September 2nd to February 14th, before the nesting season begins.

2.16. Active Breeding and/or Nest. If the nesting season for passerine birds (other than raptors) cannot be avoided and vegetation removal activities must occur between February 15th to September 1st (January 1st to June 30th for Raptors), the Permittee shall do one of the following to avoid and minimize impacts to nesting birds:

2.16.1 Default Buffers. Permittee may implement default 300 foot minimum avoidance buffers for all passerine birds and 500 foot minimum avoidance buffer for all raptor species. The breeding habitat/nest site shall be fenced and/or flagged in all directions, and this area shall not be disturbed until the nest becomes inactive, the young have fledged, the young are no longer being fed by the parents, the young have left the area, and the young will no longer be impacted by the Project.

2.16.2 Nesting Bird Management Plan .Permittee may develop a Project specific Nesting Bird Management Plan. ted to CDFW for review. . The Plan should include detailed methodologies and definitions to enable a CDFW approved biologist to monitor and implement nest-specific buffers based on topography, vegetation, species, and individual bird behavior. This Nesting Bird Management Plan shall be supported by a Nest Log which tracks each nest and its outcome. The Nest Log will be submitted to CDFW at the end of each week.

2.16.3 Alternative Nesting Management Plan. The Permittee has proposed an alternative plan for avoidance of nesting birds for CDFW concurrence. Preconstruction surveys shall be conducted by a qualified biologist or designee for presence/absence for active nests of birds that are protected under the Migratory Bird Treaty Act if vegetation removal or other work is proposed within potential nesting habitat during the nesting season (February 15th to September 1st). Exclusion zones around active nests shall be established by a qualified biologist or designee until nesting activity has ceased.

2.17 Bat Surveys. A qualified biologist familiar with the life history of bats shall conduct a survey to determine the specific species of locally occurring bats utilizing the oak woodland within the proposed work area. Once surveys are completed they shall be submitted to CDFW for review prior to any impacts to coast live oak trees within the Project limits, including trimming of branches or pruning of limbs to accommodate equipment clearance or Project staging. The same biologists shall prepare a "Bat Avoidance and Minimization Plan" (BAMP) and that plan shall be submitted to CDFW.CDFW must notify the Permittee in writing that CDFW concurs with the survey findings and the bat avoidance plan within 14 days of submittal to CDFW. Only after receiving written concurrence from CDFW regarding surveys and the avoidance plan may impacts within the coast live oak woodlands be initiated.

2.17.1. Coast Live Oak Tree(s) Removal. Performing all tree removal activities shall only occur after appropriate surveys have been conducted to establish the species of locally occurring bats and roosting habitats of that/those bat(s) species has been established. All coast live oak tree removal shall occur only when the absence of bats has been verified by the same biologist responsible for bat surveys and preparation of the BAMP. Once the biologist has determined the tree(s) slated for removal are free of bats, by conducting a presence/absence survey and keeping a record of those surveys, then the tree(s) may be removed. If however, bat(s) are observed in any tree(s) designated for removal the tree(s) shall remain untouched until such time the bat(s) leave of their own accord to minimize and reduce potential negative impacts to natal bat(s) within the Project area.

2.17.2 Bridge/Culvert/Drain Inspection. Prior to any disturbance to existing structures within the Project limits by the construction crew, the area will be cleared to ensure that no bats or other wildlife are using the structures for habitat.

2.18 Domestic Animals. The Permittee shall not permit pets on or adjacent to the construction site.

2.19 Weapons. The Permittee shall ensure that no guns/or other weapons are on site during construction, with the exception of the security personnel and only for security type functions. No hunting shall be authorized/permitted during Project-related activities.

Turbidity and Siltation

2.20 Runoff Control. Preparation shall be made so that runoff from steep, erodible surfaces will be diverted into stable areas with little erosion potential. Frequent water checks shall be placed on dirt roads, cat tracks, or other work trails to control erosion.

2.21 Contaminated Site Water. Water containing mud, silt, or other pollutants from equipment washing or other activities, shall not be allowed to enter a flowing stream, or dry ephemeral stream, or placed in locations that may be subjected to high storm flows.

Pollution, Litter and Cleanup

2.22 Pollutants and Debris. No debris, soil, silt, sand, bark, slash, sawdust, rubbish, construction waste, cement or concrete or washings thereof, asphalt, paint, oil or other petroleum products or any other substances which could be hazardous to aquatic life, or other organic or earthen material from any logging, construction, or other associated Project-related activity shall be allowed to contaminate the soil and/or enter into or placed where it may be washed by rainfall or runoff into, any stream/channel/culvert/ditch. Any of these materials, placed within or where they may enter a stream/channel/culvert/ditch, by the Permittee or any party working under contract, or with the permission of the Permittee, shall be removed immediately. When Project-related activities are completed, any excess materials or debris shall be removed from the work area. No rubbish shall be deposited within 150 feet of the high water mark of any stream or lake.

2.23 Pollution Compliance. The Permittee shall comply with all litter and pollution laws. All contractors, subcontractors and employees shall also obey these laws and it shall be the responsibility of the Permittee to insure compliance.

2.24 Pollution Prevention. Stationary equipment such as motors, pumps, generators, and welders, located within or adjacent to any stream/channel/culvert/ditch shall be positioned over drip pans. Stationary heavy equipment shall have suitable containment to handle a catastrophic spill/leak. Clean up equipment such as extra boom, absorbent pads, skimmers, shall be on site prior to the start of Project-related activities. No equipment maintenance shall be done within or near any stream/channel/culvert/ditch where petroleum products or other pollutants from the equipment may enter these areas under any circumstances that create flow in the stream/channel/culvert/ditch.

2.25 Pollution Clean-up. The clean-up of all spills shall begin immediately. CDFW shall be notified immediately by the Permittee of any spills that release hazardous material (oil, cement, fuel, etc.) into any stream/channel/culvert/ditch and CDFW shall be consulted regarding clean-up procedures.

2.26 Trash Receptacles. The Permittee shall install and use fully covered trash receptacles with secure lids (wildlife proof) that contain all food, food scrapes, food wrappers, beverage

containers and other miscellaneous trash generated by work force personnel.

3. Compensatory Mitigation Measures

This Agreement authorizes the Draft Mitigation Monitoring Plan (MMP) as proposed. However, if any changes are made to the MMP once implementation of the Project begins, regardless of scope, CDFW must be notified in writing before said changes are approved.

3.1 On-site Mitigation. On-site mitigation proposed for this Project will compensate for all permanent and temporary impacts. Proposed mitigation involves the planting of in-stream wetland and riparian vegetation along Carpinteria Creek and the planting of riparian vegetation along a drainage ditch leading to Franklin Creek. The primary objectives will be to re-establish/restore impacted in-stream wetlands and riparian vegetation along Carpinteria Creek and establish riparian vegetation along a drainage ditch leading to Franklin Creek. A secondary objective will be to reduce and control the presence and spread of non-native invasive plants. Combined, the post-construction planting of in-stream wetland and riparian vegetation along Carpinteria Creek is anticipated to exceed the acreage impacted for these resources. A summary of the mitigation proposal is included in the table below. On-site mitigation will be implemented along the area of Carpinteria Creek to be widened, the adjacent Carpinteria Creek floodplain, and along a ditch leading to Franklin Creek. Carpinteria Creek, below the ordinary high water mark (OHWM), in all areas except for the low-flow portion of the channel, which will be restored to un-vegetated streambed. Certain areas along the existing Carpinteria Creek streambed currently support emergent hydrophytic vegetation and the general strategy will be to plant generous amounts of appropriate emergent species (mainly in-kind) and riparian plantings in appropriate substrate and supplemented with irrigation for at least the first 18 months to assist with growth and vigor during the current California drought. Extensive native riparian tree plantings will also be installed along Carpinteria Creek (as bioengineering), along the banks, and extending out into the adjacent floodplain.

Table 3 - Onsite Mitigation
(Additional information is available in Exhibit K located in the Notification Package for this Agreement)

Resource	Non-wetland Streambed / Other Waters		In-stream Wetlands		Riparian Vegetation (above OHWM)	
	Perm Impact	Temp Impact	Perm Impact	Temp Impact	Perm Impact	Temp Impact
Carpinteria Creek	0 ac / 0 l.f.	0.136 ac / 385 l.f.	0 ac / 0 l.f.	0.059 ac / 150 l.f.	0.514 ac / 430 l.f.	1.104 ac / 460 l.f.
Drainage Ditch-to Franklin Ck - Linden/101 SB off ramp	0.023 ac / 160 l.f.	0.067 ac / 620 l.f.	0 ac / 0 l.f.	0 ac / 0 l.f.	0 ac / 0 l.f.	0 ac / 0 l.f.
Total Impacts (ac / l.f.)	**0.023 ac / 160 l.f.**	**0.203 ac / 1,005 l.f.**	**0 ac / 0 l.f.**	**0.059 ac / 150 l.f.**	**0.514 ac / 430 l.f.**	**1.104 ac / 460 l.f.**
Proposed Replacement Ratio for Impacts (ac))	**3:1**	**1:1**	**3:1**	**1:1**	**3:1**	**1:1**
Total Mitigation Required (ac)	(0.023 ac X 3)+(0.203 ac X 1) = **0.272 ac total**		**0.059 ac total**		(0.514 ac X 3)+(1.104 ac X 1) = **2.646 ac total**	

3.2 Carpinteria Creek. Mitigation implementation will involve a combination of techniques. Native vegetation in the channel will be reestablished via native streambed replacement, backfilled RSP, willow planting stabilization techniques, plug and container planting, and seeding using commercially produced seed. Streambed stabilization techniques with willows will transition the natural stream bank to the regraded RSP areas, concentrated under the new bridge structures. In addition to wetland species plantings along the streambed and riparian plantings for revegetation and bank stabilization, extensive riparian plantings are also proposed along the banks of Carpinteria Creek and the adjacent floodplain while the mitigation site is anticipated to be eventually supported by natural hydrology. Supplemental irrigation will be used early on in the restoration effort. As the plants become established, the supplemental water regime will change to prepare the plants to be self-sustaining.

3.3 Franklin Creek. Areas of the drainage ditch leading to Franklin Creek will be restored to match the pre-construction condition as close as possible with non-native trees removed and native riparian trees planted between the south side of the ditch and where a new soundwall will be installed.

3.4 Stockpiles. On-site stockpiled streambed materials supplemented by clean imported fill (if necessary) will be used for backfilling streambed substrate along Carpinteria Creek.

3.5 Temporarily Impacted Areas. The original contract will include a one year plant establishment period where the contractor is required to ensure success of the willows used in bioengineering (i.e., brush layering, willow poles, and live siltation) and provide a minimum of 70% cover on all disturbed soils above the OHWM (note: this is not related to success criteria for this MMP). Subsequently, a separate contract will involve installing the in-stream wetland and remainder of the riparian mitigation plantings (along with irrigation) with three years of plant establishment. This will ensure the continued viability of the natural resource once initial construction is complete. Plant establishment and maintenance will include watering, weed control and removal, and replacement of dead and dying plants.

3.6 Reference Sites and Success Criteria. The mitigation reference sites for this Project are located along Carpinteria Creek in the vicinity of the proposed grading work upstream and downstream of the Route 101 bridges. Monitoring will include comparisons to the reference sites per metrics captured on California Native Plant Society (CNPS)/CDFW Combined Vegetation Rapid Assessment Protocol forms. Success criteria for in-stream wetlands and riparian vegetation will primarily be determined by acreage targets that also include consideration of: 1) The percentage of established hydrophytic plants along the streambed (absolute cover) relative to the reference site (target of ≥ 75% of that of site Carpinteria Ck1 = ≥ 59%); 2) in-stream wetland weed control (max. allowed absolute cover) relative to the reference site (target of ≤ 100% of that of site Carpinteria Ck1 = ≤ 5%); 3) the percentage of established riparian vegetation (absolute canopy cover) relative to the reference sites (target of ≥ 75% of that of sites Carpinteria Ck2 and Carpinteria Ck3 = ≥ 56%); 4) a 3:1 replacement of the loss of native riparian trees, with a survivability of at least 573 native riparian trees; and 5) riparian weed control (max. allowed absolute cover) relative to the reference site (target of ≤ 100% of that of sites Carpinteria Ck1 and Carpinteria Ck2 = ≤ 10%).

3.7 Restoration Efforts. Reference sites will be used to establish success criteria. The focus of the restoration efforts is to mimic the species composition, diversity, and richness of the

reference site. Post-restoration, the percent cover (canopy/absolute) of each component species within the reference sites shall be used as an ecosystem indicator to compare trends over time for proper management. The mitigation reference sites for this Project are located along Carpinteria Creek in the vicinity of the proposed grading work upstream and downstream of the Route 101 bridges. Three separate locations were selected:

3.7.1 Carpinteria Creek Reference Site (Ck1). This site is located along the streambed immediately downstream of the existing bike path crossing located east of Route 101 and just north of Carpinteria Creek Park; this area is centered on the in-stream wetland vegetation that will be temporarily impacted by proposed grading along the channel. The vegetation has been given the field-assessed name of "*Nasturtium officinale* emergent wetland alliance" as stated by Caltrans in Exhibit K based on the dominance by common watercress and no other applicable characterization included *A Manual of California Vegetation* (as cited in Exhibit K). This vegetation may have formed as a result of the presence of the bike path crossing, which has led to an accumulation of sediments upstream and downstream of the crossing and often ponds water after storm events, and is the only location where such vegetation exists along Carpinteria Creek in or near the Project area, necessitating its use as the reference site for in-stream wetland vegetation.

3.7.2 Carpinteria Creek Reference Site (Ck2). This site is located toward the upstream limits of channel clearing/grading proposed for the Project and supports a riparian canopy dominated by arroyo willow/western sycamore characterized and Caltrans stated as "*Salix lasiolepis* shrubland alliance" (as cited in Exhibit K). Areas of the Carpinteria Creek riparian corridor immediately upstream of this location are also of comparable composition.

3.7.3 Carpinteria Creek Reference Site (Ck3). This site is located toward the downstream limits of channel clearing/grading proposed for the Project and supports a riparian canopy dominated by western sycamore/black cottonwood characterized as stated by Caltrans "*Platanus racemosa* woodland alliance" (as cited in Exhibit K). Areas of the Carpinteria Creek riparian corridor immediately downstream of this location are also of comparable composition.

3.8 Mitigation Compliance and Review. Monitoring will include comparisons to the reference sites per metrics captured on the data forms in Appendix D included with the Notification for issuance of this Agreement. Table 4 below describes the success criteria developed for this mitigation Project, using the reference sites to establish baselines.

Table 4 – Performance Standards

(Additional information for Chapter 9 is located in Exhibit K of the Notification Package for this Agreement)

Goal #	Resource Type	Performance Standard	Target					Tracking / Verification [1]
			Year 2	Year 4	Year 6	Year 8	Year 10	
1	In-stream Wetlands	Re-establish minimum 0.059 ac in-stream wetlands to compensate for 0.059 ac temporary impacts (1:1 ratio) to in-stream wetlands[2]	Delineation with ≥ 0.059 ac wetlands	Delineation with ≥ 0.059 ac wetlands	Delineation with ≥ 0.059 ac wetlands	Delineation with ≥ 0.059 ac wetlands	Delineation with ≥ 0.059 ac wetlands	Method 1
2	In-stream Wetlands	Re-establish minimum 0.059 ac in-stream wetlands with dominance by hydrophytic species (herb stratum) along Carpinteria Creek	Delineation with ≥ 20% absolute cover of hydrophytic species	Delineation with ≥ 30% absolute cover of hydrophytic species	Delineation with ≥ 40% absolute cover of hydrophytic species	Delineation with ≥ 50% absolute cover of hydrophytic species	Delineation with ≥ 59% absolute cover of hydrophytic species	Methods 1 and 2
3	In-stream Wetlands	Control of percent absolute cover for exotic species along the Carpinteria Creek streambed	Delineation with ≤ 20% absolute cover of exotic species	Delineation with ≤ 15% absolute cover of exotic species	Delineation with ≤ 10% absolute cover of exotic species	Delineation with ≤ 10% absolute cover of exotic species	Delineation with ≤ 5% absolute cover of exotic species	Method 2
4	Non-wetland Streambed / Other Waters	Re-establish approximately 0.272 ac non-wetland streambed/other waters and/or wetlands along Carpinteria Creek and the drainage ditch to Franklin Creek to compensate for permanent impacts (3:1 ratio) to 0.023 ac other waters and temporary impacts (1:1 ratio) to 0.203 ac other waters	Delineation with ≥ 0.272 ac other waters and/or wetlands (in addition to the 0.059 ac required wetlands in Goal 1)	Delineation with ≥ 0.272 ac other waters and/or wetlands (in addition to the 0.059 ac required wetlands in Goal 1)	Delineation with ≥ 0.272 ac other waters and/or wetlands (in addition to the 0.059 ac required wetlands in Goal 1)	Delineation with ≥ 0.272 ac other waters and/or wetlands (in addition to the 0.059 ac required wetlands in Goal 1)	Delineation with ≥ 0.272 ac other waters and/or wetlands (in addition to the 0.059 ac required wetlands in Goal 1)	Methods 1 and 2
5	Riparian Vegetation	Re-establish minimum 2.646 ac riparian vegetation along Carpinteria Creek, its floodplain, and the drainage ditch to Franklin Creek to compensate for permanent impacts (3:1 ratio) to 0.514 ac riparian vegetation and temporary impacts (1:1 ratio) to 1.104 ac riparian vegetation	Delineation with ≥ 2.646 ac planted riparian vegetation along Carpinteria Creek and floodplain	Delineation with ≥ 2.646 ac planted riparian vegetation along Carpinteria Creek and floodplain	Delineation with ≥ 2.646 ac planted riparian vegetation along Carpinteria Creek and floodplain	Delineation with ≥ 2.646 ac planted riparian vegetation along Carpinteria Creek and floodplain	Delineation with ≥ 2.646 ac planted riparian vegetation along Carpinteria Creek and floodplain	Method 1
6	Riparian Vegetation	Re-establish a minimum of 2.646 ac riparian vegetation with dominance by riparian tree species	Delineation with ≥ 20% absolute riparian cover	Delineation with ≥ 30% absolute riparian cover	Delineation with ≥ 40% absolute riparian cover	Delineation with ≥ 50% absolute riparian cover	Delineation with ≥ 56% absolute riparian cover	Methods 1 and 2
7	Riparian Vegetation	Plant native riparian trees along Carpinteria Creek, its floodplain, and the drainage ditch to Franklin Creek to compensate for removal (3:1) ratio of 191 native riparian trees[3]	Survival of a minimum of 573 planted native riparian trees	Survival of a minimum of 573 planted native riparian trees	Survival of a minimum of 573 planted native riparian trees	Survival of a minimum of 573 planted native riparian trees	Survival of a minimum of 573 planted native riparian trees	Method 3
8	Riparian Vegetation	Control of percent absolute cover for exotic species within riparian vegetation (tree and shrub stratum) along Carpinteria Creek and its floodplain	Delineation with ≤ 30% absolute cover of exotic species along Carpinteria Creek and its floodplain	Delineation with ≤ 25% absolute cover of exotic species along Carpinteria Creek and its floodplain	Delineation with ≤ 20% absolute cover of exotic species along Carpinteria Creek and its floodplain	Delineation with ≤ 20% absolute cover of exotic species along Carpinteria Creek and its floodplain	Delineation with ≤ 10% absolute cover of exotic species along Carpinteria Creek and its floodplain	Method 2

[1] Monitoring methods are described in Chapter 9.

[2] The emergent wetlands along Carpinteria Creek are intermittent or seasonal wetlands, and indicators for wetland soils and hydrology can be difficult to detect. Therefore, hydrophytic plants will be the primary indicator for delineating and quantifying mitigation wetlands.

[3] At a 3:1 replacement ratio (573 trees), the minimum numbers of each would be planted: 405 arroyo willow, 78 western sycamore, 45 coast live oak, 36 black cottonwood, and 9 white alder.

3.9 Monitoring Protocols. For a 10-year period, Permittee will perform biennial monitoring of the success of reestablishment/restoration of the on-site mitigation. Monitoring requirements will be implemented to determine if the mitigation Project is on track to meet performance standards and if adaptive management is necessary. Every other year (biennially) in the spring during the 10-year monitoring period (beginning in Year 2 after the initial planting), Permittee will conduct the following: 1) A delineation will be conducted to quantify the acreage of in-stream wetlands and planted riparian vegetation within the on-site mitigation areas at Carpinteria Creek and the drainage ditch to Franklin Creek; 2) vegetation sampling will be conducted for in-stream wetland species, riparian plantings, and non-native exotic species; and, 3) planted native riparian trees along Carpinteria Creek, the Carpinteria Creek floodplain, and the drainage ditch to Franklin Creek will be counted to confirm the number of trees that survive each year. Permittee will submit a total of five (5) biennial monitoring reports to CDFW.

3.9.1 Biennial Reports. These reports will be submitted biennially in January following completion of construction. Monitoring reports will include information such as planting plans, delineation maps, data forms, and photographs that assess site conditions quantitatively and qualitatively to determine if implemented mitigation has met the success criteria. In addition, the reports may include both qualitative and quantitative measures of the functions provided by the compensatory mitigation site.

3.9.2 Mitigation Signage. The monitoring program will be performed by a Permittee biologist, Permittee permit coordinator, or landscape architect and resourced via a separate Project split from the interchange Project. To protect the Carpinteria Creek mitigation site, Permittee will designate it as an ESA after construction.

3.10 Maintenance of Mitigation Area(s). The original contract will include a one year plant establishment period where the contractor is required to ensure success of the willows used in bioengineering (i.e., brush layering, willow poles, and live siltation) and provide a minimum of 70% cover on all disturbed soils above the OHWM (note: this is not related to success criteria for this MMP). Subsequently, a separate contract will involve installing the in-stream wetland and remainder of the riparian mitigation plantings (along with irrigation) with three years of plant establishment. This will ensure the continued viability of the natural resource once initial construction is complete. Plant establishment/maintenance will include watering, weed control and removal, and replacement of dead and dying plants. Throughout the plant establishment period, Permittee will inspect the mitigation site. Trash and weeds will be removed and replacement planting will occur on a regular basis as directed by the Resident Engineer. Maintenance will be conducted annually as needed and monitoring will be conducted biennially (i.e., every other year) for 10 years in total, including three years of plant establishment, to ensure success criteria for revegetation and non-native exotic species control.

3.11 Long-term Management Plan. The mitigation site is designed to be self-sustaining once performance standards have been met to ensure long-term sustainability. Occasional weeding will be employed along with supplemental plantings (if necessary) in the event that acreage and cover targets are not met. Otherwise, the need for active long-term management and maintenance is not anticipated to ensure long-term sustainability. However, if long-term management issues arise, the issue will be identified during annual monitoring to

determine whether adaptive management strategies should be employed and Permittee will initiate a subsequent Project to rectify the situation, if necessary. Regardless of whether or not the property along Carpinteria Creek is eventually relinquished to the City of Carpinteria in the future, Permittee will be ultimately responsible for ensuring the site's viability. A Memorandum of Agreement (MOA) will be established if necessary to clarify each agency's role and responsibilities in the short- and long-term.

3.12 Adaptive Management Plan. If performance standards are not met after the 10 years of monitoring, additional plantings, seeding, or weed control may be necessary. If so, Permittee would be responsible for implementing this work and any other unforeseen challenges. The actual monitoring results will be used to make adaptive management decisions. For a 10-year period, Permittee will perform biennial monitoring and will submit a total of five (5) biennial monitoring reports to CDFW. These reports will be submitted biennially in January following completion of construction. The monitoring reports will include information such as planting plans, delineation maps, data forms, and photographs that assess site conditions quantitatively and qualitatively to determine whether the implemented mitigation has met the success criteria. In addition, the reports may include both qualitative and quantitative measures of the functions provided by the compensatory mitigation site. The monitoring program will be performed by a Permittee and resourced via a separate Project split from the interchange Project. Adaptive management will be employed if performance standards are not met or in the case of unexpected events. Permittee provides assurance that sufficient funds have been budgeted for the proposed compensatory mitigation associated with the Project.

3.13 Funding Assurances. Permittee acknowledges its obligation to comply with requirements of the Lake and Streambed Alteration Agreement issued pursuant to Fish and Game Code Section 1602 by the CDFW. The Linden Avenue and Casitas Pass Road Interchanges Project, which includes funding for mitigation planting, is programmed in the State Transportation Improvement Program (STIP) in fiscal year 2015/2016 and is fully funded at this time. The on-site mitigation will be installed in phases. Phase 1, consisting of initial bank stabilization, willow poles, brush layering, live siltation, stockpiled streambed material replacement, duff placement, compost blanket and seeding, will be funded through construction as part of the interchange Project with a one-year plant establishment period. Due to contractor bonding issues, a separate contract (Phase 2) will involve installing the in-stream wetland vegetation, other riparian mitigation planting, ornamental planting, irrigation, and a three-year plant establishment period. In order to mitigate for impacts to CDFW jurisdictional resources that may be associated with the construction of the Linden Avenue and Casitas Pass Road Interchanges Project, Permittee proposes to provide funding, estimated at approximately $250,000 to $300,000, to implement the re-establishment/restoration along Carpinteria Creek, its floodplain, and the drainage ditch to Franklin Creek associated with the split-off planting Project.

4. Reporting Measures

Permittee shall meet each reporting requirement described below.

4.1 Mitigation Reporting. For a 10-year period, Permittee will perform biennial monitoring and will submit a total of five (5) biennial monitoring reports to CDFW. These reports will be submitted biennially in January following completion of construction. The monitoring reports will include information such as planting plans, delineation maps, data forms, and

photographs that assess site conditions quantitatively and qualitatively to determine whether the implemented mitigation has met the success criteria. In addition, the reports may include both qualitative and quantitative measures of the functions provided by the compensatory mitigation site. The monitoring program will be performed by a Permittee and resourced via a separate Project split from the interchange Project.

4.2 Final Construction Report. Permittee shall provide a final construction report to CDFW no later than two weeks after the Project is fully completed. This requirement may be waived by CDFW if Permittee submits 65% plans no later than two weeks after Project completion, that at a minimum must include color photographs of before and after Project-related activities, including the surrounding staging areas. The final construction report shall contain pre-Project photographs, total amount of area impacted post-Project, and post-Project photographs. Permittee shall submit the construction report no later than **December 31, 2022.**

CONTACT INFORMATION

Any communication that Permittee or CDFW submits to the other shall be in writing and any communication or documentation shall be delivered to the address below by U.S. mail, fax, or email, or to such other address as Permittee or CDFW specifies by written notice to the other.

To Permittee:
California Department of Transportation
Mr. Larry Bonner
50 Higuera Street
San Luis Obispo, California, 93401
Tel. (805) 549-3337 Fax. (805) 549-3233

To CDFW:
Department of Fish and Wildlife
South Coast Region
Lake and Streambed Alteration Program
3883 Ruffin Road
San Diego, California 92123
Notification #1600-2015-0137-R5

LIABILITY

Permittee shall be solely liable for any violations of the Agreement, whether committed by Permittee or any person acting on behalf of Permittee, including its officers, employees, representatives, agents or contractors and subcontractors, to complete the Project or any activity related to it that the Agreement authorizes.

This Agreement does not constitute CDFW's endorsement of, or require Permittee to proceed with the Project. The decision to proceed with the Project is Permittee's alone.

SUSPENSION AND REVOCATION

CDFW may suspend or revoke in its entirety the Agreement if it determines that Permittee or any person acting on behalf of Permittee, including its officers, employees, representatives, agents, or contractors and subcontractors, is not in compliance with the Agreement.

Before CDFW suspends or revokes the Agreement, it shall provide Permittee written notice by certified or registered mail that it intends to suspend or revoke. The notice shall state the reason(s) for the proposed suspension or revocation, provide Permittee an opportunity to correct any deficiency before CDFW suspends or revokes the Agreement, and include

instructions to Permittee, if necessary, including but not limited to a directive to immediately cease the specific activity or activities that caused CDFW to issue the notice.

ENFORCEMENT

Nothing in the Agreement precludes CDFW from pursuing an enforcement action against Permittee instead of, or in addition to, suspending or revoking the Agreement.

Nothing in the Agreement limits or otherwise affects CDFW's enforcement authority or that of its enforcement personnel.

OTHER LEGAL OBLIGATIONS

This Agreement does not relieve Permittee or any person acting on behalf of Permittee, including its officers, employees, representatives, agents, or contractors and subcontractors, from obtaining any other permits or authorizations that might be required under other federal, state, or local laws or regulations before beginning the Project or an activity related to it.

This Agreement does not relieve Permittee or any person acting on behalf of Permittee, including its officers, employees, representatives, agents, or contractors and subcontractors, from complying with other applicable statutes in the FGC including, but not limited to, FGC sections 2050 *et seq*. (threatened and endangered species), 3503 (bird nests and eggs), 3503.5 (birds of prey), 5650 (water pollution), 5652 (refuse disposal into water), 5901 (fish passage), 5937 (sufficient water for fish), and 5948 (obstruction of stream).

Nothing in the Agreement authorizes Permittee or any person acting on behalf of Permittee, including its officers, employees, representatives, agents, or contractors and subcontractors, to trespass.

AMENDMENT

CDFW may amend the Agreement at any time during its term if CDFW determines the amendment is necessary to protect an existing fish or wildlife resource.
Permittee may amend the Agreement at any time during its term, provided the amendment is mutually agreed to in writing by CDFW and Permittee. To request an amendment, Permittee shall submit to CDFW a completed CDFW "Request to Amend Lake or Streambed Alteration" form and include with the completed form payment of the corresponding amendment fee identified in CDFW's current fee schedule (see Cal. Code Regs., tit. 14, § 699.5).

TRANSFER AND ASSIGNMENT

This Agreement may not be transferred or assigned to another entity, and any purported transfer or assignment of the Agreement to another entity shall not be valid or effective, unless the transfer or assignment is requested by Permittee in writing, as specified below, and thereafter CDFW approves the transfer or assignment in writing.

The transfer or assignment of the Agreement to another entity shall constitute a minor amendment, and therefore to request a transfer or assignment, Permittee shall submit to

CDFW a completed CDFW "Request to Amend Lake or Streambed Alteration" form and include with the completed form payment of the minor amendment fee identified in CDFW's current fee schedule (see Cal. Code Regs., tit. 14, § 699.5).

EXTENSIONS

In accordance with FGC section 1605(b), Permittee may request one extension of the Agreement for the original term of the Agreement, provided the request is made prior to the expiration of the Agreement's term. To request an extension, Permittee shall submit to CDFW a completed CDFW "Request to Extend Lake or Streambed Alteration" form and include with the completed form payment of the extension fee identified in CDFW's current fee schedule (see Cal. Code Regs., tit. 14, § 699.5). CDFW shall process the extension request in accordance with FGC 1605(b) through (e).

If Permittee fails to submit a request to extend the Agreement prior to its expiration, Permittee must submit a new notification and notification fee before beginning or continuing the Project the Agreement covers (Fish & G. Code, § 1605, subd. (f)).

EFFECTIVE DATE

The Agreement becomes effective on the date of CDFW's signature, which shall be: 1) after Permittee's signature; 2) after CDFW complies with all applicable requirements under the California Environmental Quality Act (CEQA); and 3) after payment of the applicable FGC section 711.4 filing fee listed at http://www.dfg.ca.gov/habcon/ceqa/ceqa_changes.html

TERM

This Agreement shall expire on **October 31, 2022** unless it is terminated or extended before then. All provisions in the Agreement shall remain in force throughout its term. Permittee shall remain responsible for implementing any provisions specified herein to protect fish and wildlife resources after the Agreement expires or is terminated, as FGC section 1605(a) (2) requires.

EXHIBITS

The documents listed below are included as exhibits to the Agreement and incorporated herein by reference and may be found in the Agreement file located in the CDFW South Coast Regional Office.

Exhibit A: Application Package
Exhibit B: Project Description and Location Maps
Exhibit C: Project Engineering Plans
Exhibit D: Jurisdictional Mapping
Exhibit E: CEQA and NEPA Documents
Exhibit F: NES, NES Addendum, and Biological Opinion
Exhibit G: Avoidance, Minimization, and Mitigation Measures
Exhibit H: Hydraulics Report
Exhibit I: Rapid Stream Stability Assessment

Exhibit J: Conceptual De-watering and Diversion Plan
Exhibit K" Mitigation and Monitoring Plan

AUTHORITY

If the person signing the Agreement (signatory) is doing so as a representative of Permittee, the signatory hereby acknowledges that he or she is doing so on Permittee's behalf and represents and warrants that he or she has the authority to legally bind Permittee to the provisions herein

AUTHORIZATION

This Agreement authorizes only the Project described herein. If Permittee begins or completes a Project different from the Project the Agreement authorizes, Permittee may be subject to civil or criminal prosecution for failing to notify CDFW in accordance with FGC section 1602.

CONCURRENCE

The undersigned accepts and agrees to comply with all provisions contained herein.

FOR California Department of Transportation

Larry E. Bonner — 11-5-15

Larry Bonner
Senior Environmental Planner

Date

FOR California Department Of Fish And Wildlife

BV 11.16.15 — 11.16.15

Betty J. Courtney
Environmental Program Manager

Date

Prepared by: Jamie Jackson
Senior Environmental Scientist (Specialist)

M e m o r a n d u m

Flex your power!
Be energy efficient!

To: DAN ADAMS
Structure Design Branch 7
DIVISION OF ENGINEERING SERVICES

Attn: Rakesh Deo

Date: May 5, 2014
File: 05-SB-101-2.2/3.3
Carpinteria Creek Bridge
Bridge No. 51-0342
EA 05-4482U1

From: **DEPARTMENT OF TRANSPORTATION**
DIVISION OF ENGINEERING SERVICES
GEOTECHNICAL SERVICES

Subject: Foundation Report

Scope of Work

A Foundation Report (FR) is provided for the above referenced project. This report supercedes the report dated 2-5-2014. The project is along State Route 101 in the City of Carpinteria, in southern Santa Barbara County. Improvements are proposed to increase the highway level of service and accessibility, and include replacement of existing bridges and construction of new bridges, retaining walls, sound walls, ramps and frontage roads. Review of published geologic data and previous geotechnical reports, field reconnaissance, and foundation calculations were performed as part of the geotechnical investigation.

The purpose of this report is to document geotechnical conditions and provide foundation recommendations. This report supercedes the Preliminary Foundation Report (September, 2010).

Project Description

The existing structure at Carpinteria Creek is a three-span concrete slab right and left bridge with two lanes in each direction. Structures Design proposes replacing and widening the existing structure with a single span cast-in-place prestressed box girder bridge. The existing and proposed structures carry State Route 101 over Carpinteria Creek.

Pertinent Reports and Investigations

The following publications were used to assist in the assessment of site conditions:

1. *Preliminary Geotechnical Report.* Finegan, Michael. EA 05-448200. December 21, 2000.

2. *District Preliminary Geotechnical Report.* De Llamas, Zeke. EA 05-448200, July 30, 2008.

3. *Preliminary Foundation Report Carpinteria Creek Bridge.* Turner, Ryan. EA 05-4482U1, September, 2010.

Field Investigation and Laboratory Testing Program

Mud rotary borings and cone penetrometer test soundings (CPT) were advanced near each abutment location to determine the subsurface conditions to be used for foundation design. Refer to the project log of test borings for details of the (4) borings and (2) CPT soundings at the proposed bridge site. PS suspension logging was performed for the project to calculate an average shear wave velocity for use in generating the design ARS curve presented in the seismic section of this report. Refer to Table 1 for a summary of subsurface investigation information.

Table 1. Subsurface Exploration Summary

Boring	*Completion Date*	*Equipment*	*Hammer Type*	*Hammer Efficiency (%)*	*Approximate Ground Elevation (ft)*	*Depth (ft)*
RC-10-006	12-15-2010	Acker	Auto	74	44.5	121.0
RC-11-007	1-12-2011	Acker	Auto	74	42.5	122.0
RC-11-008	1-26-2011	CS2000	Auto	93	45.0	152.0
RC-11-015	10-26-2011	CS2000	Auto	84	42.7	106.5
CPT-11-005	6-22-2011	CPT	N/A	N/A	45.3	69.1
CPT-11-006	6-22-2011	CPT	N/A	N/A	45.7	85.0

Site Geology and Subsurface Conditions

Physical Setting

The project is located in the Carpinteria Valley, a sunken area north of the elevated coastal fault block southeast of the City of Carpinteria. Carpinteria Valley is a low-lying, flat plain comprised of alluvial deposits. Some low-lying areas in the valley are partly submerged under brackish water of the Carpinteria Slough. The plain meets the Pacific Ocean to the southwest, gradually gains elevation to the east as it approaches Rincon and La Granada Mountains, and abuts sharply against the foothills of the Santa Ynez Mountains at its the northern boundary.

A mild coastal climate prevails throughout the year, with marine fog often present in spring and summer months. Nearly all precipitation falls from Pacific storms between October and May, with the majority accumulating in the winter months. Average yearly rainfall is 17.5 inches. The average temperature is 72 degrees Fahrenheit with more than 275 days of sunny weather per year.

Regional Geology

The project area is located in the Transverse Ranges Geomorphic Province. State Route 101 is bordered to the north by the Santa Ynez Mountains and to the south by the Pacific Ocean as it traverses the Carpinteria Valley. Geologic maps and field observations indicate that soils in the valley were deposited in an alluvial environment and consist of unconsolidated deposits of clay, silt, sand, and gravel.

Groundwater

Open observation wells were installed to observe fluctuations in groundwater levels and determine if groundwater will influence construction and foundation design. Results of the groundwater-monitoring program are summarized in Table 2.

Table 2. Groundwater Elevations

Boring	Date	Depth to Groundwater (ft)	Groundwater Elevation(ft)
RC-10-006	2-9-2011	15.4	29.1
RC-10-006	12-14-2011	14.3	30.2
RC-10-006	2-24-2012	14.6	29.9
RC-10-006	3-22-2012	14.9	29.6
RC-10-006	4-19-2012	14.2	30.3
RC-10-006	2-5-2013	16.0	28.5
RC-10-006	4-5-2013	13.4	31.1
RC-10-006	5-23-2013	17.5	27.0
RC-11-008	2-9-2011	15.3	29.7
RC-11-008	12-14-2011	14.0	31.0
RC-11-008	2-24-2012	14.5	30.5
RC-11-008	3-22-2012	15.0	30.0
RC-11-008	4-19-2012	14.2	30.8
RC-11-008	2-5-2013	16.5	28.5
RC-11-008	4-5-2013	16.9	28.1
RC-11-008	5-23-2013	14.4	30.6
RC-11-015	12-14-2011	14.0	28.7
RC-11-015	2-24-2012	12.3	30.4
RC-11-015	3-22-2012	12.4	30.3
RC-11-015	4-19-2012	12.0	30.7
RC-11-015	7-26-2012	12.7	30.0
RC-11-015	2-5-2013	12.1	30.7
RC-11-015	4-5-2013	12.5	30.2
RC-11-015	5-23-2013	12.7	30.1

Scour Evaluation

Scour potential will be mitigated by placement of RSP on the slopes in front of both bridge abutments.

Corrosion Evaluation

The department considers a site to be corrosive to the foundation elements if the following conditions exist for the representative soil and/or water samples taken at the site: minimum resistivity of 1000 ohm-cm or less and/or PH of 5.5 or less.

Soil and water samples were obtained during the subsurface investigation and tested for corrosion potential at the District Materials Laboratory. The results of the corrosion testing are

presented in Table 3. Based on the results, soils are not considered corrosive to foundation elements.

Table 3. Corrosion Testing Summary

Boring	*Depth (ft)*	*pH*	*Resistivity ohm-cm*	*Chloride ppm*	*Sulphate ppm*	*Corrosive*
RC-10-006	8.0-10.0	7.9	1260	-	-	NO
RC-10-006	87.0-89.0	8.4	2100	-	-	NO
RC-11-008	10.0-11.5	8.25	2826	-	-	NO
RC-11-008	160.0-161.5	7.76	2070	-	-	NO

Seismic Recommendations

Based on the *Caltrans Seismic Design Procedure*, the following active and potentially active faults are located within the vicinity of the project site. The Caltrans ARS Online Tool was used to develop ARS curves for deterministic and probabilistic seismic prediction models. An average shear wave velocity of 679 ft/sec (207 m/s) for the upper 100 feet of soil was determined from PS logging and used to generate the ARS curves. The corresponding design envelope ARS curves are presented in Figure 1. Basin and near-fault factors were applied to the data due to the proximity of the faults and location of the project site. Curve data points are included as an attachment to this report.

Table 4. Active and Potentially Active Faults

Fault Name	*Fault Type*	*Moment magnitude of maximum credible earthquake*	*Peak ground acceleration T=0 sec (gravity)*
Red Mountain	Reverse	7.4	0.57
Mesa Rincon Creek	Reverse	6.6	0.50
Ventura-Pitas Point	Reverse	7.2	0.42

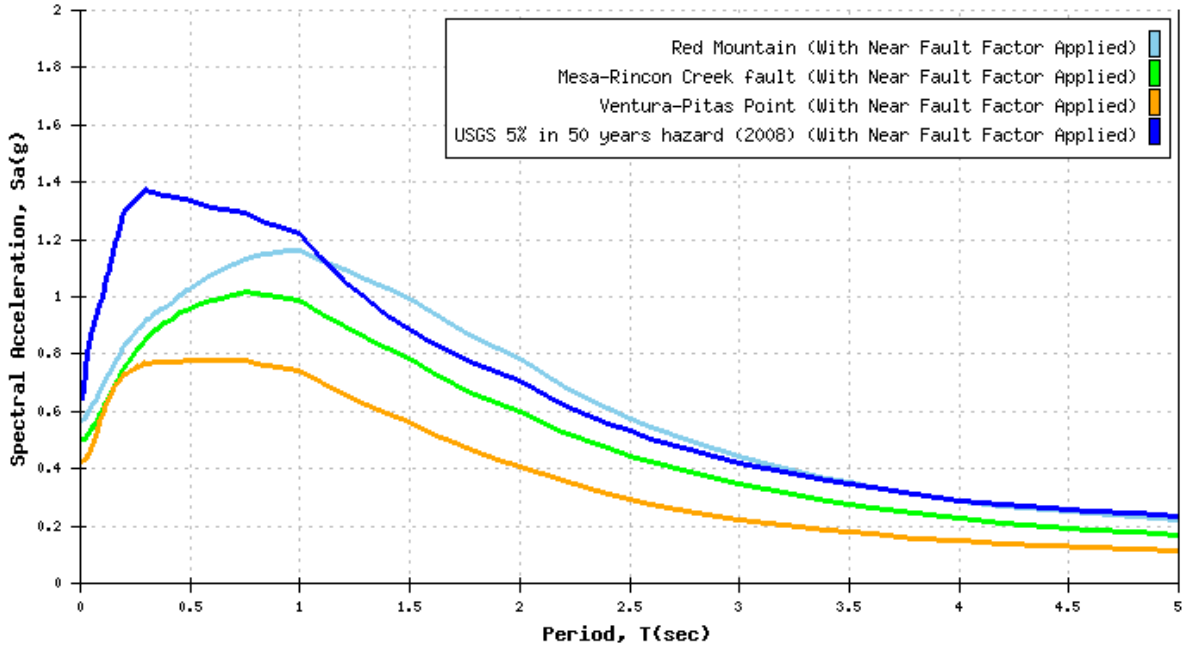

Figure 1. Design ARS Curve

Liquefaction is the partial or complete loss of soil shear strength due to the build-up of excess pore water pressure during a seismic event. The potential for liquefaction was estimated using correlations to SPT and CPT by calculating the cyclic resistance and cyclic stress ratios (CRR versus CSR). Although some thin layers were determined to be potentially liquefiable, the effects of liquefaction on the bridge are expected to be minimal, due to the thinly bedded nature of the soil profile, presence of interbedded fine grained soils, and the horizontally and vertically discontinuous nature of soil layers. Liquefaction of thin, discreet layers is not expected to cause significant seismic settlement or induce downdrag forces on pile foundations. In addition, construction of the approximately 10-foot high embankments and surcharging will densify in-situ soils and increase resistance to liquefaction.

As-Built Foundation Data

The as-built log of test borings for the existing Carpinteria Creek Bridge (Br. No. 51-0052) indicate that the area is underlain by alluvial deposits. One mud rotary boring and two penetrometer soundings were performed as part of the foundation investigation in 1951.

Foundation Recommendations

Driven Pipe Piles

Structure Design proposes that the bridge abutments be supported on Standard Plan Class 200 Alternative W driven pipe piles. Pile piles are assumed to plug during driving; piles will derive axial resistance from end bearing and skin friction.

Design calculations for pipe piles were performed using CTGeoDrive, an Excel spreadsheet that calculates predicted pile axial resistance and pile axial deflection using state-of-the-practice methods provided by FHWA and API. Working Stress Design (WSD) methodology was used at the abutments with a safety factor of 2.0 for axial compression. Structure Design provided cutoff elevations, loads, and permissible vertical deflections of 2" per support. Recommended pile tip elevations for each support location are provided in the following tables.

Preloading of the stage 1 approach embankments with 5-foot high earthen surcharges to minimize the effects of pile downdrag and differential settlement due to staged construction is recommended. 30-day embankment settlement periods for the surcharges and approach embankments constructed in Structure State 2 are recommended. Refer to the Geotechnical Design Report and the project plans and specifications for details regarding the limits and time of embankment preloading.

Abutment Foundation Design Recommendations

Support Location	Pile Type	Cut-off Elevation (ft)	LRFD Service-I Limit State Load (kips) per Support		LRFD Service-I Limit State Total Load (kips) per Pile (Compression)	Required Nominal Resistance (kips) (SF=2.0)	Design Tip Elevations (ft)	Specified Tip Elevation (ft)	Required Driving Resistance (kips)
			Total	Permanent					
Abut. 1	Class 200 Alt W	32.67	10385	9325	200	400	-19(a), -16(c) -7.33 (d)	-19.33	400
Abut. 2	Class 200 Alt W	30.42	10975	9900	190	380	-13(a), 0(c) -9.58 (d)	-13.58	440
Abut. 1 Wing Wall Left	Class 200 Alt W	48.73	40	40	40	80	28(a), 8.73 (d)	8.73	180
Abut. 1 Wing Wall Right	Class 200 Alt W	48.49	40	40	40	80	34 (a) 8.49(d)	8.49	230
Abut. 2 Wing Wall Left	Class 200 Alt W	45.68	40	40	40	80	31(a) 5.68 (d)	5.68	460
Abut. 2 Wing Wall Right	Class 200 Alt W	45.18	40	40	40	80	30(a) 5.18 (d)	5.18	450

Notes:

1) *Design tip elevations are controlled by: (a) Compression, (c) Settlement, and (d) Lateral Load, respectively. Lateral tip elevations provided by Structure Design.*
2) *The specified tip elevation shall not be raised above the design tip elevations for lateral and tolerable settlement.*

Pile Data Table						
Location	Pile Type	Nominal Resistance (kips)		Design Tip Elevation (ft)	Specified Tip Elevation (ft)	Nominal Driving Resistance (kips)
		Compression	Tension			
Abut. 1	Class 200 Alt W	400	0	-19(a), -16(c), -7.33(d)	-19.33	400
Abut. 2	Class 200 Alt W	440	0	-13(a), 0(c), -9.58 (d)	-13.58	440
Abut. 1 Wing Wall Left	Class 200 Alt W	180	0	28(a), 8.73 (d)	8.73	180
Abut. 1 Wing Wall Right	Class 200 Alt W	230	0	34 (a), 8.49(d)	8.49	230
Abut. 2 Wing Wall Left	Class 200 Alt W	460	0	31(a), 5.68 (d)	5.68	460
Abut. 2 Wing Wall Right	Class 200 Alt W	450	0	30(a), 5.18 (d)	5.18	450

Notes:

1) *Design tip elevations for Abutments are controlled by: (a) Compression, (c) Settlement, (d) Lateral Load. Lateral tip elevations provided by Structure Design.*
2) *The specified tip elevation shall not be raised above the design tip elevations for lateral load and tolerable settlement.*

Construction Considerations

Excavations for the bridge abutments may intercept groundwater. High groundwater may require methods to control and remove water at excavation locations. Refer to Standard Specifications 2010 Section 19-3.03D for details regarding water control and foundation treatment when wet excavation and construction conditions are encountered.

Layers of loose soil and high groundwater levels may generate excess pore pressures during pile driving that temporarily reduce the pile driving resistance. Should piles not reach the required nominal driving resistance within 1 foot of the specified tip elevation as determined using the formula in Standard Specifications 2010 Section 49-2.01A(4)(b), halt driving operations and allow a minimum of 24 hours for the soil to set up and excess pore pressures to dissipate. Restrike testing of the pile after the soil setup period should be conducted to ensure the pile develops the required resistance.

Due to the discontinuous nature of the alluvial soils at the site, dense layers not identified in the contract log of test borings may be encountered above the specified pile tip elevations that limit the depth to which piles can be driven. Contact Geotechnical Design North personnel if issues with pile driving arise during the project.

It is recommended that driving system submittals be required for piles at Abutment 1 and Abutment 2 per Standard Specification 49-2.01A(3)(b).

Additional Information

Standard Specifications 2010 Section 2-1.6.B, "Supplemental Project Information", discloses to bidders and contractors a list of pertinent information available for their inspection prior to bid opening. Items listed to be included in the Information Handout will be provided in Acrobat (.pdf) format to the Addressee of this report via electronic mail.

Data and information attached with the project plans are:

A. Log of Test Borings.

Data and information included in the Information Handout provided to the Bidders and Contractors are:

A. Foundation Report for Carpinteria Creek Bridge dated May 5, 2014.

If you have any questions or comments, please contact Ryan Turner at (805) 549-3750, or Michael Finegan at (805) 549-3194.

REGISTERED PROFESSIONAL ENGINEER
Ryan Turner
No. C 73956
Exp. 6-30-2015
CIVIL
STATE OF CALIFORNIA

REGISTERED PROFESSIONAL ENGINEER
Michael S.Finegan
No. C 50138
Exp. 6-30-2015
CIVIL
STATE OF CALIFORNIA

RYAN TURNER, P.E.
Transportation Engineer Civil
Geotechnical Design – North
Branch D

MICHAEL S. FINEGAN, P.E.
Branch Chief
Geotechnical Design – North
Branch D

c: Job File / Branch D Records
Structure Construction RE Pending File (email RE_pending_file@dot.ca.gov)
Craig Whitten / DES Office Engineer
Andrew Tan / PCE
Eric Karlson/ DME

LIST OF ATTACHMENTS

Vicinity Map	Attachment 1
Geologic Map and Legend	Attachment 2
Foundation Data Design Sheet	Attachment 3
Structure Plans	Attachment 4
ARS Data	Attachment 5

INDEX OF SHEETS

STATE OF CALIFORNIA
DEPARTMENT OF TRANSPORTATION

PROJECT PLANS FOR CONSTRUCTION ON
STATE HIGHWAY
IN SANTA BARBARA COUNTY
IN CARPINTERIA
FROM 0.4 KM SOUTH OF CARPINTERIA CREEK BRIDGE
TO 0.5 KM NORTH OF LINDEN AVENUE OVERCROSSING

TO BE SUPPLEMENTED BY STANDARD PLANS DATED JULY 2004

Dist	COUNTY	ROUTE	KILOMETER POST TOTAL PROJECT	SHEET NO.	TOTAL SHEETS
05	SB	101	3.5/5.5		

LOCATION MAP

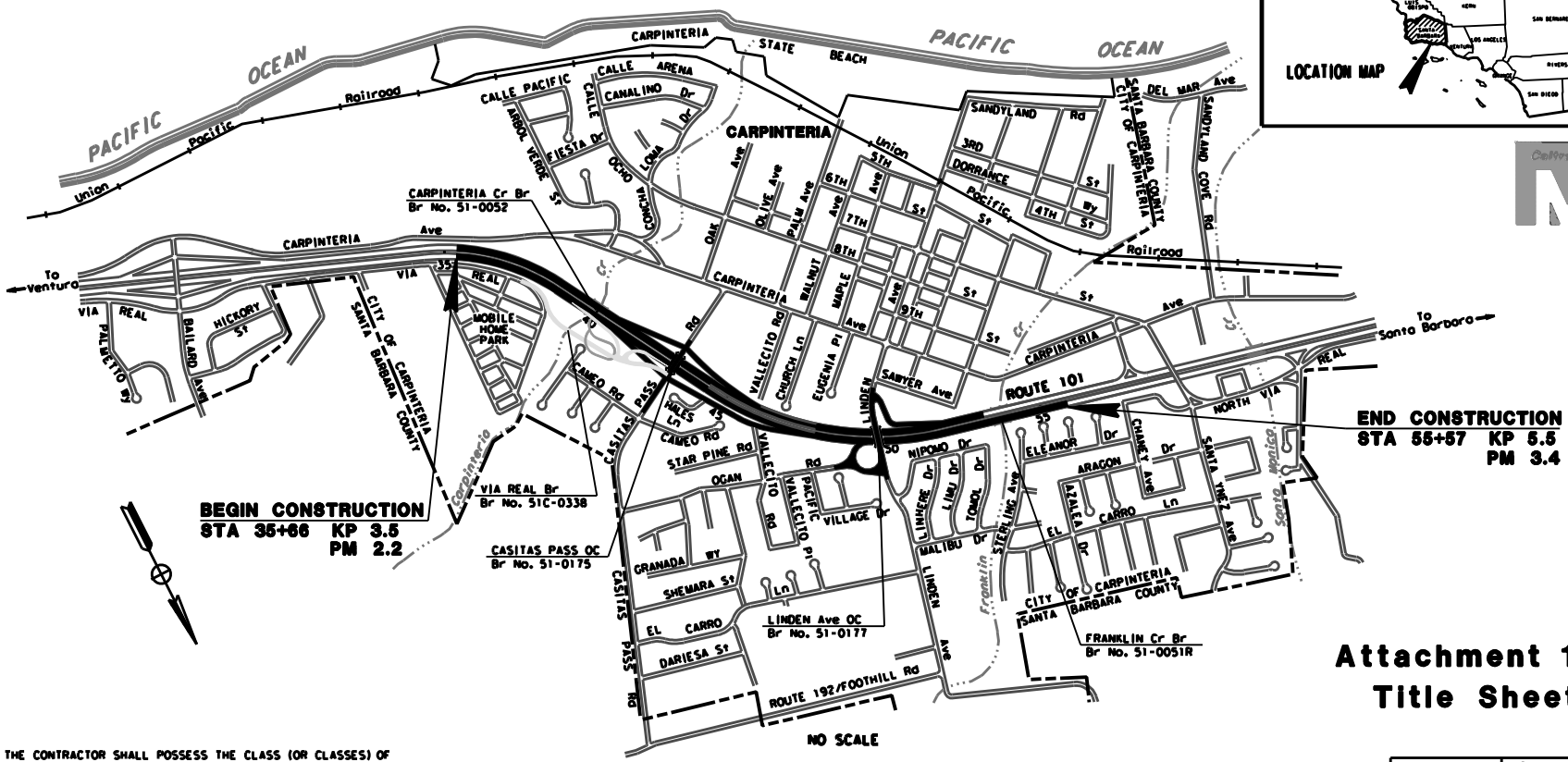

THE CONTRACTOR SHALL POSSESS THE CLASS (OR CLASSES) OF LICENSE AS SPECIFIED IN THE "NOTICE TO CONTRACTORS."

PROJECT MANAGER: DAVID BEARD
DESIGN ENGINEER: KARI BHANA

Attachment 1
Title Sheet

CONTRACT No. 05-4482U0
CU 06233 | EA 4482U0

BORDER LAST REVISED 3/1/2007 | CALTRANS WEB SITE IS: HTTP://WWW.DOT.CA.GOV/ | RELATIVE BORDER SCALE IS IN MILLIMETERS 0 20 40 60 80 | USERNAME => RUSER | DGN FILE => SREQUEST | DATE PLOTTED => 09-14-10 | TIME PLOTTED => 09:42

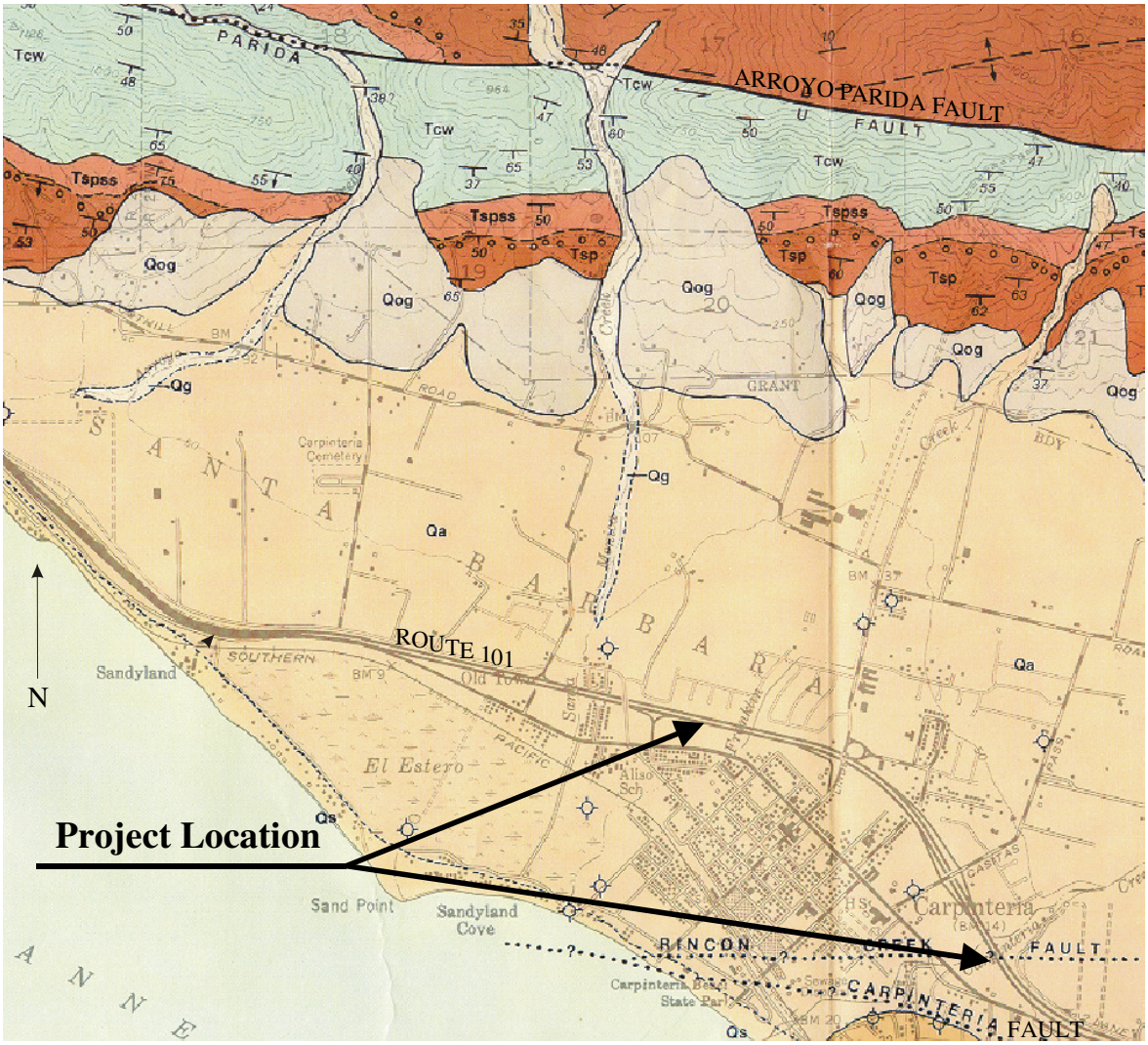

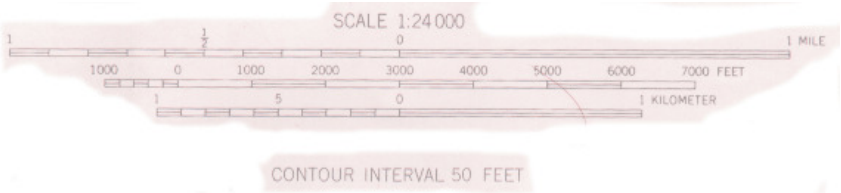

PART OF:

GEOLOGIC MAP OF THE CARPINTERIA QUADRANGLE
BY THOMAS W. DIBBLEE, JR., 1986

Geologic Map

05-SB-101-2.1/3.4
05-448201
Attachment 2

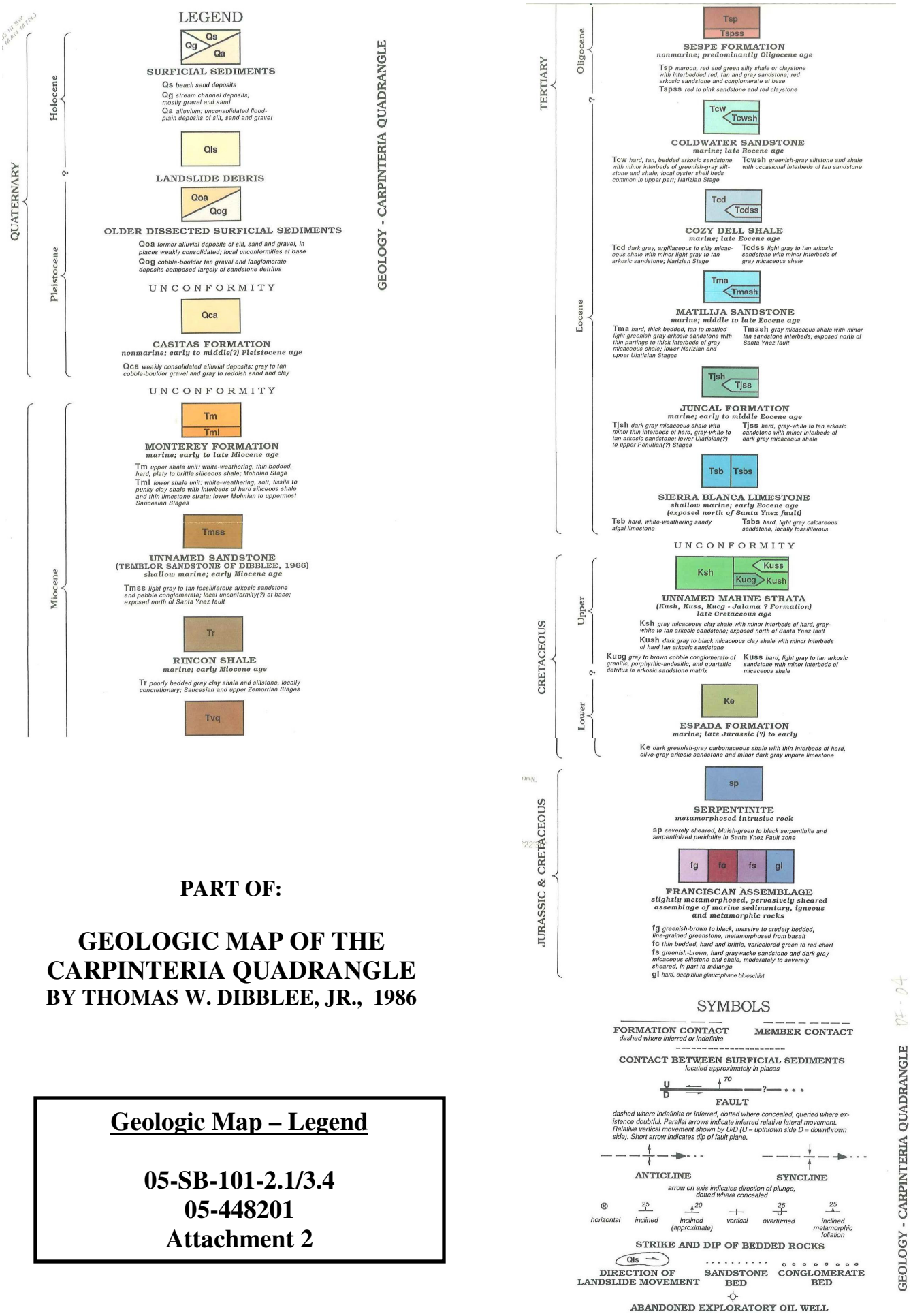

PART OF:

GEOLOGIC MAP OF THE CARPINTERIA QUADRANGLE

BY THOMAS W. DIBBLEE, JR., 1986

Geologic Map – Legend

05-SB-101-2.1/3.4
05-448201
Attachment 2

Rakesh Deo
01/30/14

Sujan Talukder
Rakesh Deo
Date: 1/14/2014

Br. Name: Carpinteria Creek Bridge
EA: 05-4482U1
Br. No.: 51-0342

Final Foundation Design Data

Support No.		Design Method	Pile Type	Finished Grade Elevation (ft)	Cut-off Elevation (ft)	Pile Cap Size (ft)		Permissible Movement under Service Load (in)		Number of Piles per Support
						B	L	Δ_V	Δ_H	
Abut 1		WSD	Class 200 Alt "W"	45.38	32.67	10	167.67	2"		72
Abut 2		WSD	Class 200 Alt "W"	43.13	30.42	10	182.50	2"		78
Abut 1 WW	Left	WSD	~~Class 90 Alt "W"~~	53.32	48.73	3	3	2"		1
	Right	WSD	~~Class 90 Alt "W"~~	53.56	48.49	3	3	2"		1
Abut 2 WW	Left	WSD	~~Class 90 Alt "W"~~	50.51	45.68	3	3	2"		1
	Right	WSD	~~Class 90 Alt "W"~~	50.01	45.18	3	3	2"		1

Use Class 200 Alt "W"

Final Foundation Design Loads

Support No.		Service-I Limit Stage (kips)			Strength Limit State				Extreme Event Limit State				Design Tip Elev (ft)
		Total Load		Permanent Loads	Compression		Tension		Compression		Tension		
		Per Support	Max. Per Pile	Per Support	Per Support	Max. Per Pile	Per Support	Max. Per Pile	Per Support	Max. Per Pile	Per Support	Max. Per Pile	(Lateral Load)
Abut 1		10385	200	9325	n/a	n/a	n/a	n/a	n/a	n/a	n/a	n/a	-7.33
Abut 2		10975	190	9900	n/a	n/a	n/a	n/a	n/a	n/a	n/a	n/a	-9.58
Abut 1 WW	Left	40	40	40	n/a	n/a	n/a	n/a	n/a	n/a	n/a	n/a	8.73
	Right	40	40	40	n/a	n/a	n/a	n/a	n/a	n/a	n/a	n/a	8.49
Abut 2 WW	Left	40	40	40	n/a	n/a	n/a	n/a	n/a	n/a	n/a	n/a	5.68
	Right	40	40	40	n/a	n/a	n/a	n/a	n/a	n/a	n/a	n/a	5.18

DIST	COUNTY	ROUTE	POST MILES TOTAL PROJECT	SHEET No.	TOTAL SHEETS
05	SB	101			

REGISTERED CIVIL ENGINEER X DATE

PLANS APPROVAL DATE

REGISTERED PROFESSIONAL ENGINEER Rakesh Deo No. C73814 Exp. 6/30/13 CIVIL STATE OF CALIFORNIA

The State of California or its officers or agents shall not be responsible for the accuracy or completeness of electronic copies of this plan sheet.

UNCHECKED DETAILS AS OF 10-23-13

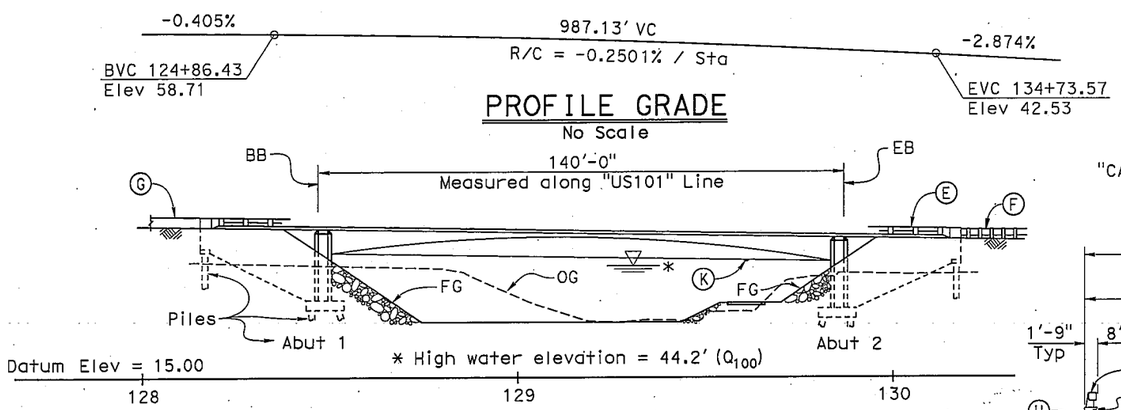

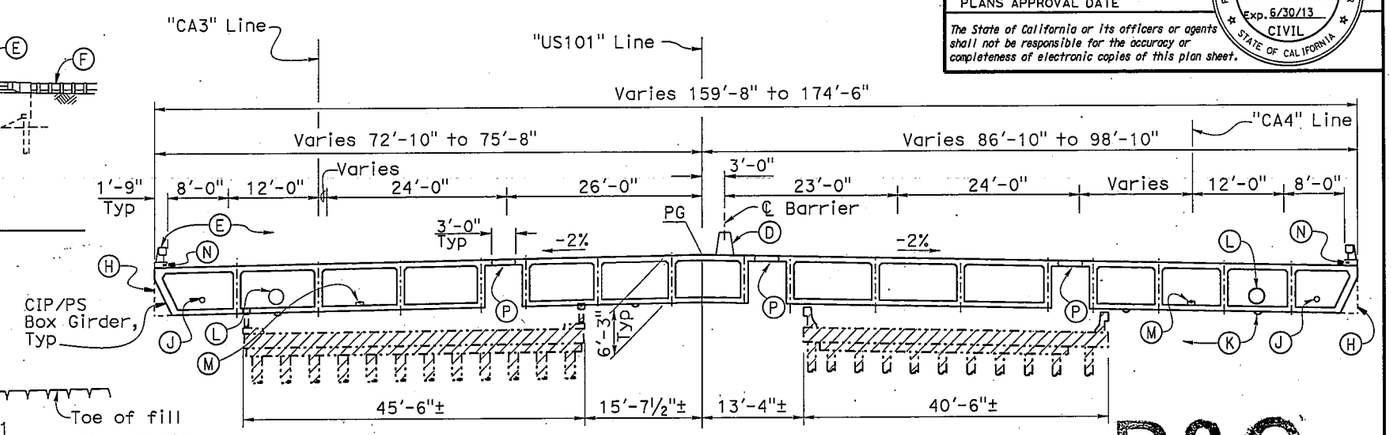

P&Q

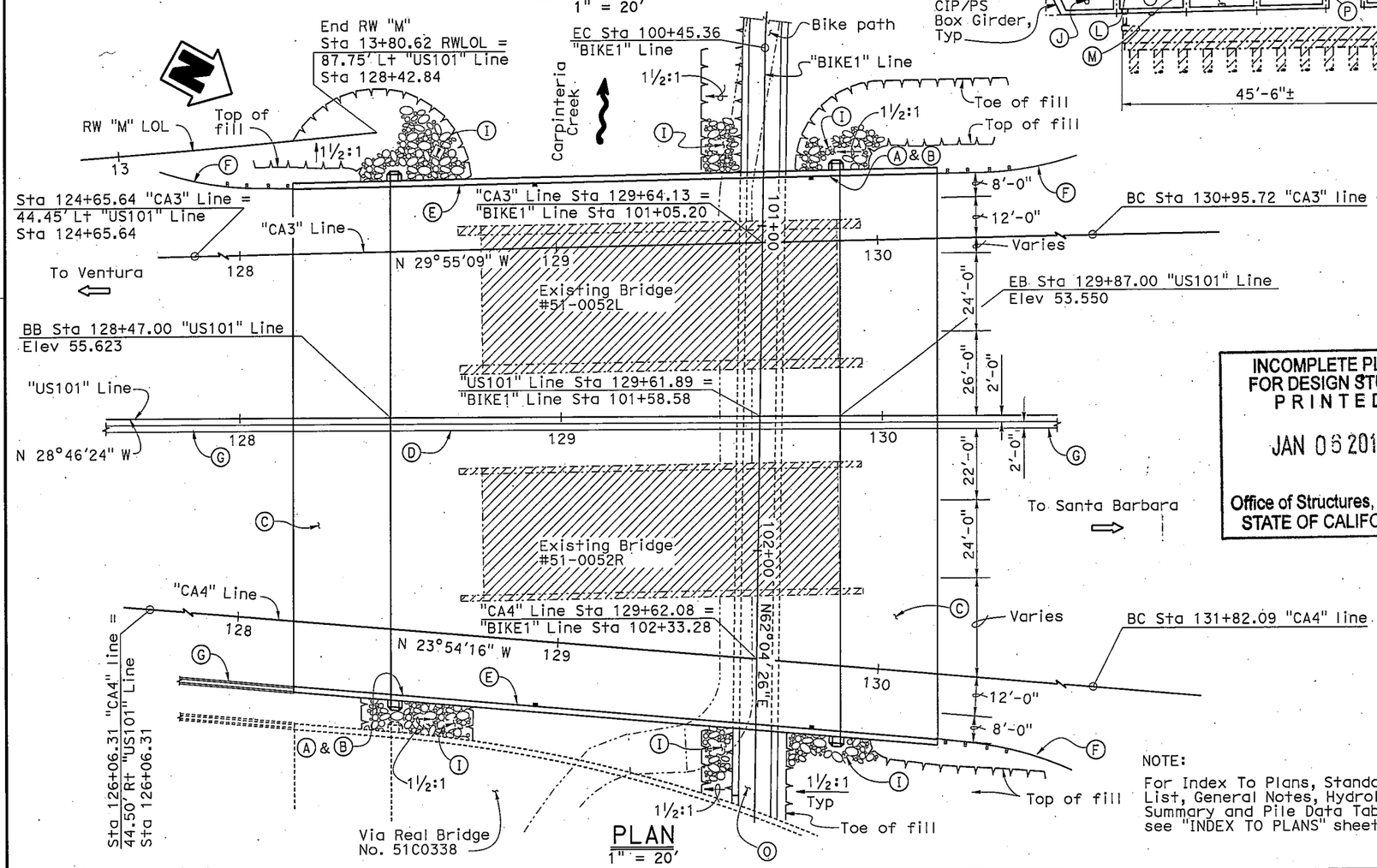

INCOMPLETE PLAN FOR DESIGN STUDY PRINTED

JAN 06 2014

Office of Structures, Design
STATE OF CALIFORNIA

NOTES:

- (A) Paint "Carpinteria Creek Bridge"
- (B) Paint "Br. No. 51-0342"
- (C) Structure Approach Slab Type N(30S)
- (D) Concrete Barrier Type 60 (Mod)
- (E) Concrete Barrier Type 80
- (F) MBGR, see "Road Plans"
- (G) Type 60 Barrier, see "Road Plans"
- (H) For Bridge Architectural details, see "BRIDGE GEOMETRICS" sheet.
- (I) Rock Slope Protection (RSP), see "Road Plans"
- (J) Deck Drainage pipe
- (K) Soffit lights, see "GIRDER LAYOUT NO. 1" and "GIRDER LAYOUT NO. 2" sheets.
- (L) Future Utility
- (M) NPS 3 Water Supply Line
- (N) 2" * Electric Conduit (Irrigation), see "Road Plans"
- (O) For Bike Path, see "Road Plans"
- (P) Closure pour

LEGEND:

- ——— Indicates new structure
- -·-·-·- Indicates existing structure
- ▨ Indicates limits of structure removal
- ▪ Indicates Deck Drain Type D-3

NOTE:

For Index To Plans, Standard Plans List, General Notes, Hydrologic/Hydraulic Summary and Pile Data Table, see "INDEX TO PLANS" sheet

X DESIGN ENGINEER	DESIGN	BY Sujan Talukder	CHECKED Minh Vo	LOAD & RESISTANCE FACTOR DESIGN	LIVE LOADING: HL93 W/"LOW-BOY" PERMIT DESIGN VEHICLE
	DETAILS	BY A.V. / B.J. / G.D.	CHECKED Minh Vo	LAYOUT BY S. Talukder	CHECKED Minh Vo
	QUANTITIES	BY X	CHECKED X	SPECIFICATIONS BY X	PLANS AND SPECS COMPARED X

ORIGINAL SCALE IN INCHES FOR REDUCED PLANS 0 1 2 3

STATE OF CALIFORNIA
DEPARTMENT OF TRANSPORTATION

DIVISION OF ENGINEERING SERVICES
STRUCTURE DESIGN
DESIGN BRANCH 7

BRIDGE NO. 51-0342
POST MILE 2.44

CARPINTERIA CREEK BRIDGE (REPLACE)

GENERAL PLAN

UNIT: 3592
PROJECT NUMBER & PHASE: 05 0000 0543
CONTRACT NO.: 05-4482U1

DISREGARD PRINTS BEARING EARLIER REVISION DATES → REVISION DATES 5-14-12 10-9-13 9-30-13

SHEET 1 OF 26

ISFRNAME => s12ROAD DATE PLOTTED => 03-JAN-2014 TIME PLOTTED => 10:22

STRUCTURES DESIGN GENERAL PLAN SHEET (ENGLISH) (REV.09-01-10)

FILE => 51-0342-a-gp01.dgn

Carpinteria Creek Bridge

Bridge No. 51-0342 **SDC Controlling Procedure :** **Probabalistic/Deterministic**

Period (s)	SDC
0.010	0.641
0.050	0.870
0.100	0.993
0.150	1.158
0.200	1.292
0.250	1.335
0.300	1.371
0.400	1.352
0.500	1.338
0.600	1.314
0.700	1.300
0.850	1.260
1.000	1.221
1.200	1.094
1.500	0.997
2.000	0.783
3.000	0.444
4.000	0.290
5.000	0.234

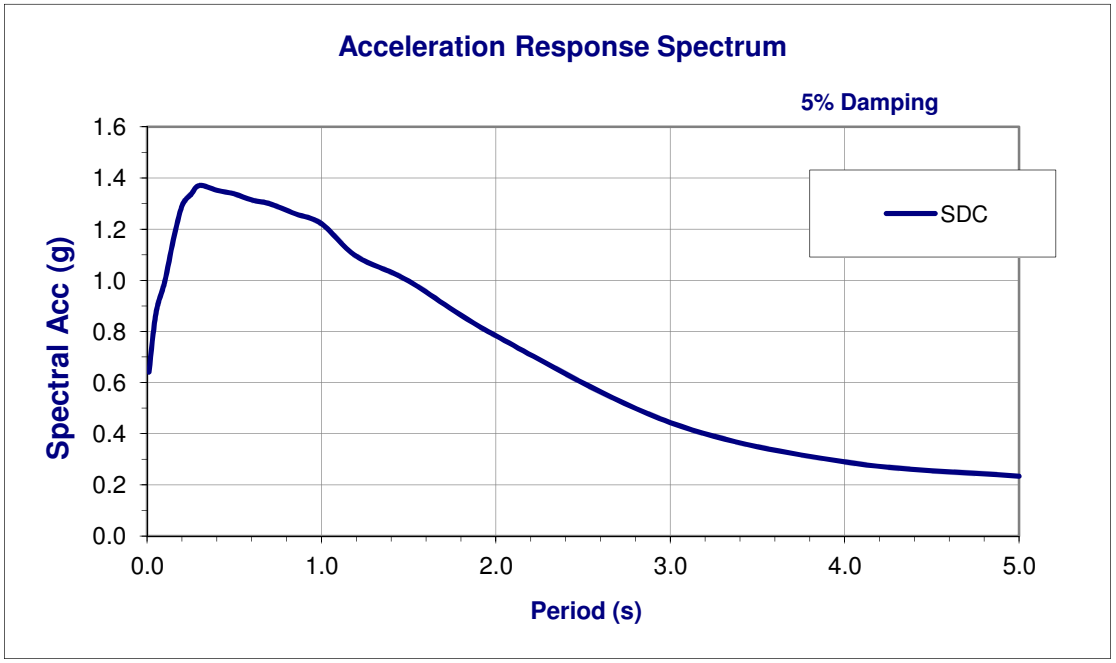

Notes

ARS curve was modified for Near Fault Directivity Effect

State of California – Department of Transportation
Division of Engineering Services
Structure Design Services

Structure Hydraulics and Hydrology

FINAL HYDRAULIC REPORT

Carpinteria Creek Bridge

Bridge No. 51-0342

Via Real Bridge

Bridge No. 51C0338

Located on US Route 101 over Carpinteria Creek in the County of Santa Barbara

Project 0500000543

05-SB-101- PM 2.44-CARP

June 14, 2012

PREPARED BY:	REVIEWED BY:
Ronald McGaugh	Diane O'Brien

This report has been prepared under my direction as the professional engineer in responsible charge of the work, in accordance with the provisions of the Professional Engineers Act of the State of California

REGISTERED PROFESSIONAL ENGINEER
RONALD L. McGAUGH
Lic. # C61217
Exp. 06/2013
CIVIL
STATE OF CALIFORNIA

Ronald L. McGaugh
REGISTERED ENGINEER

REGISTRATION NUMBER C 61217

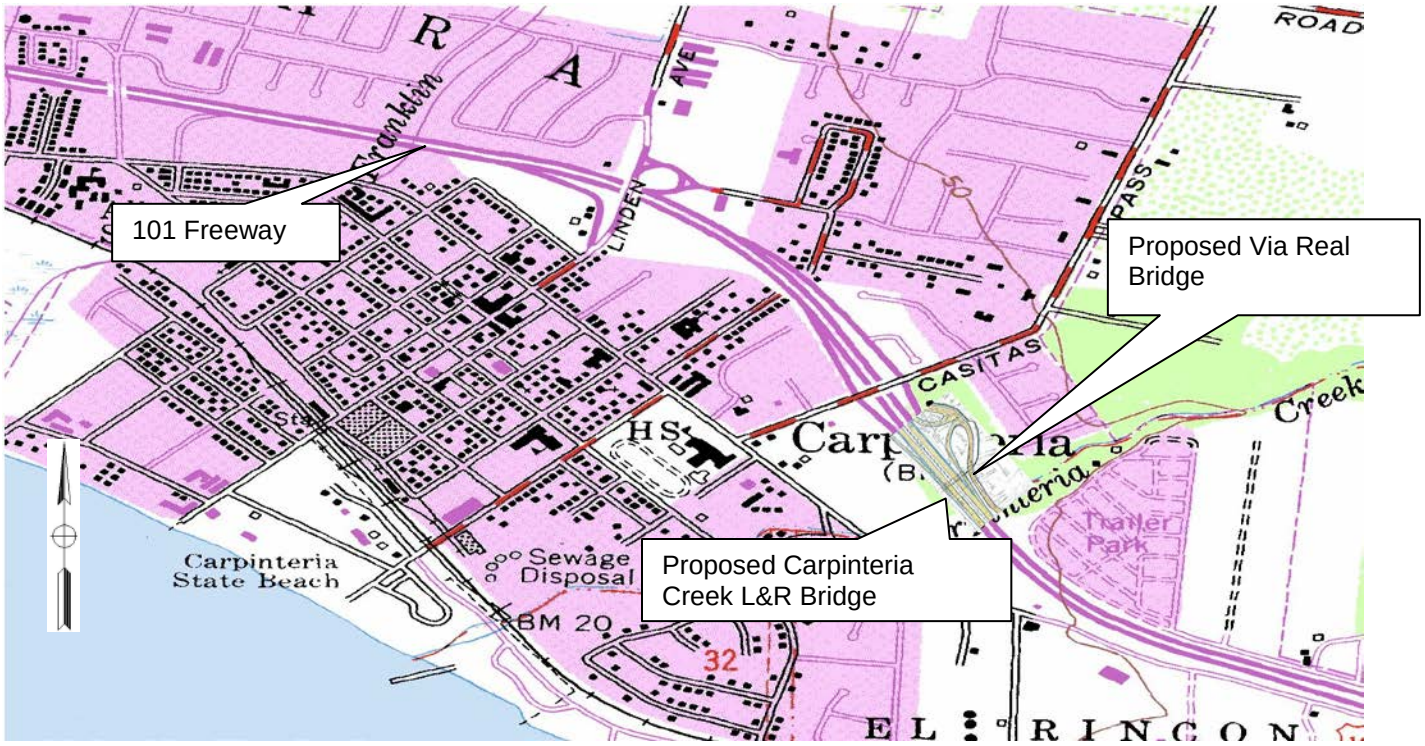

General:

This report evaluates the proposal to replace an undersized existing 3 span bridge structure (Carpinteria Creek Left and Right) along State Route 101, and to place a new structure (Via Real Bridge) just north of Carpinteria Creek Bridge as part of the off-ramp of the north bound State Route 101. All structures for this report are evaluated as single span structures.

The data and references of this hydraulic report are obtained from the following sources:

- Caltrans' Bridge Maintenance Records.
- Several Preliminary Hydraulic Reports dated from March 2000 to April 2010.
- Field documentation and bridge site submittal information received by this office from Lyn Wickham(District 5 Hydrologist) and District 5 Surveys.
- Preliminary Investigations North.
- Preliminary Structure Foundation Report dated May 2003.
- Historical cross sections for Carpinteria Creek Bridge.
- US Geological Survey (Regional Regression Method) Magnitude and Frequency of Floods in California--Bulletin 17B.
- FHWA HEC -18 Evaluating Scour at Bridges, 4th edition.
- California--Bulletin 77-21. Used for the National Stream Statistics Program.
- General Plans received from Structure Design.
- California Code of Regulations, (Vol. 32), Title 23, Waters

All elevations in this report are based on the survey data provided by District 5 CAiCE and in the Bridge Site Submittal. The Vertical Datum is NAVD 88.

Flood History:

In 1964, drainage from the new concrete ditch along the east side of the south approach caused a 3 ft. depression of channel under Span 3 of Carpinteria Creek Bridge (Bent 3 piles became exposed). Drainage flow into the channel was perpendicular to channel flow.

High flows in 1966, 1969 and 1995 created some issues for Carpinteria Creek Bridge. In 1966, approximately 40 ft. of sack PCC riprap was damaged at the toe, 5 ft. of channel degradation (from the original elevation) occurred and large amounts of drift accumulated in the channel bed between Bent 3 and the riprap along abutment 4. The metal pile extension casings at Bent 3 continued to be exposed, but the structure was still considered to be in good condition.

On 01/25/69, all the sack PCC riprap along both abutments of Carpinteria Creek Bridge and 40 ft. of the south approach roadway-washed out. The bridge did not sustain any damage and temporary emergency repair was completed on 02/09/69. Recommendation was made for permanent restoration work and to place grouted RSP along the banks. No record of work completion is available from past inspection reports.

The high flows of 1995 did not damage the structure; however a debris load was left under span 1. The City of Carpinteria built a bike path under Span 3 in 1976. The south edge of the bike trail is next to the existing bent 3 columns.

Basin:

Carpinteria Creek drains approximately 14.9 square miles at the Carpinteria bridge site. The watershed is located on the southern slopes of the Santa Ynez Mountains along the eastern edge of Santa Barbara County. Watershed elevations range from approximately 4900 ft. at the higher elevations to approximately 40 ft. at each bridge site. This watershed seems to have potential for moderate debris yield. Channel slope was estimated at 0.004 ft/ft. Average annual precipitation within the watershed is about 23.1 inches.

Drift:

It is anticipated that there will be a problem with drift or debris so 2 ft. of freeboard is recommended for the Q_{100} flow. Freeboard requirements for all streams are outlined in Title 23 and are subject to interpretation by the local agencies. Title 23 does not have recommendation for the Q_{50} so none will be calculated. For this project the local agency has not established freeboard requirements that District 5 is aware of.

Discharge:

Several methods have been used on this watershed to estimate the discharge. From Lyn Wickham in 2007—"The hydrology for Carpinteria Creek shown in the 1985 FEMA Flood Insurance Study was determined using the log Pearson Type III distribution with 32 years of data from the USGS gage (11119500) on the creek at Route 192. Hydrology was determined using the Log Pearson Type III distribution in accordance with Bulletin 17B, published by the Interagency Advisory Committee on Water Data. The gage data spans from 1941 to 2002, including two very large flows which occurred subsequent to development of the FEMA hydrology. A generalized skew coefficient of -0.37 was used, taken from Bulletin 17B, Plate 1." The hydrology has been revised to incorporate 61 years of data from the same gage. The data was analyzed using Gage66, a program written by Kevin Flora in the Caltrans Structures Hydraulics Department. The methods and results of Gage66 were compared to those of PKFQ Software program by the USGS. The results were similar, but the Gage66 results were used because Gage66 follows Bulletin 17B more rigorously and estimates the flow distribution more accurately for this particular analysis.

Return Period	CT Revised Discharge Gage66		1985 FEMA FIS Discharge	
	cfs	cms	cfs	cms
2	399	11		
5	1504	43		
10	2934	83	2750	78
25	5866	166		
50	9083	257	8000	227
100	13390	379	12000	340

There are two manmade basins upstream of the gage on Carpinteria Creek, both constructed in 1971. One is on Gobernador Creek. It has a design capacity of 46,500 Cubic Yards and is maintained regularly. The watershed area above it is 4500 acres. It has a 54 inch pipe low flow outlet. The other basin is on Lillingston Creek. It was constructed in response to a fire in the watershed and is not maintained. The original capacity was 45,000 CY, but it has decreased to an effective capacity of approximately 10,000 CY. It has a 42" pipe low flow outlet. It was determined that the basins don't have sufficient effect on the watershed to consider the gage data non-homogeneous due to their construction.

California--Bulletin 77-21 calculations done in 2010 yielded a Q_{100} flow value of 13,030 cfs after applying a burned and bulking factor of 2.

An updated run of the 2007 Bulletin 17B calculations using an updated generalized skew coefficient of -0.269 yielded a Q_{100} flow value of 13,390 cfs. For design purposes the following flow values were used: Q_{100}, 13,400 ft^3/s and $Q_{50,}$ 9,500 ft^3/s.

Streambed:

The existing channel carrying the anticipated flow to each of the proposed structures is relatively straight. From the General Plan and the Bridge Site Submittal, it is anticipated that the bridge will have no hydraulic skew to the centerline of the channel. For the natural channel bottom, geologic reports from June 2000 indicate hard clay layers with some gravel. There is no recent Log of Test Borings for the existing structures. If a revised geologic report becomes available and the findings differ from those in the June 2000 reports a new evaluation of the scour depths should be completed.

Model Preparation and Parameters

Lyn Wickham used the US Army Corps of Engineers software HEC-RAS to create the 1 dimensional model for this project. This model was updated for this report.

Starting parameters for the model include:

- Q_{100} of 13,400 ft^3/s Manning's n 0.045 to 0.06 slope of 0.004 ft/ft
- mixed flow regime Known water surface elevation downstream of 7 ft. from Lyn Wickham

The diagrams on this page show an assumed upstream face of the planned structures.

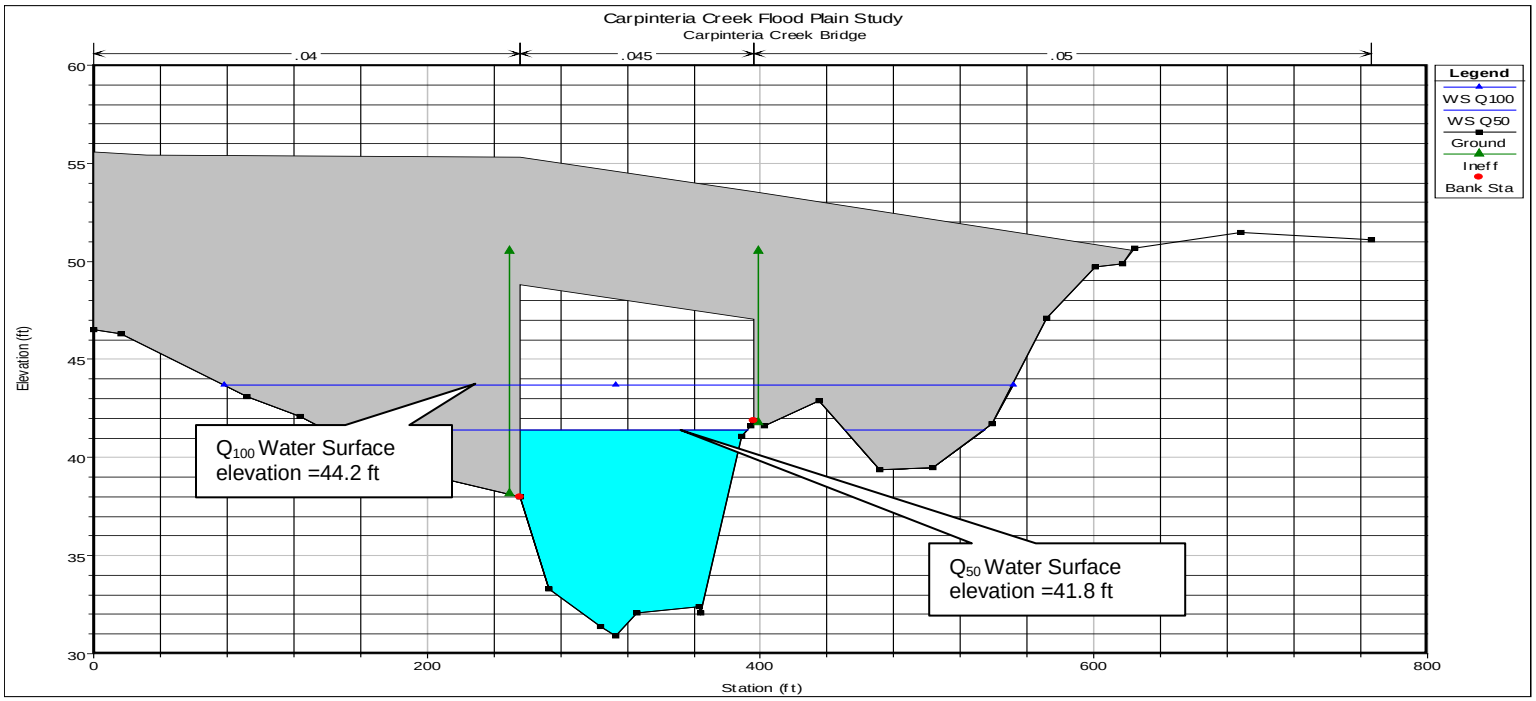

Figure 1 Modeled Proposed Carpinteria Creek Bridge

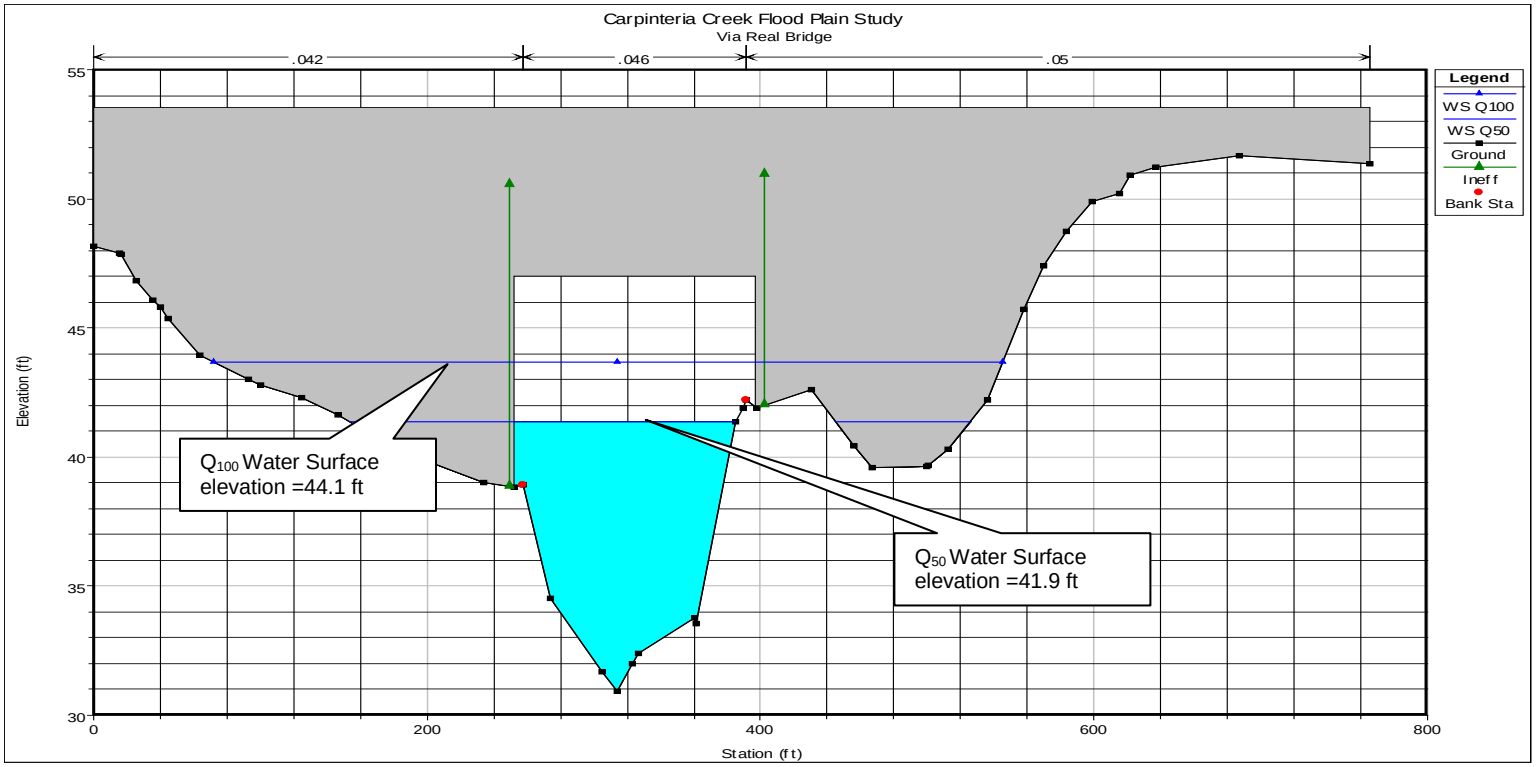

Figure 2 Modeled Proposed Via Real Bridge

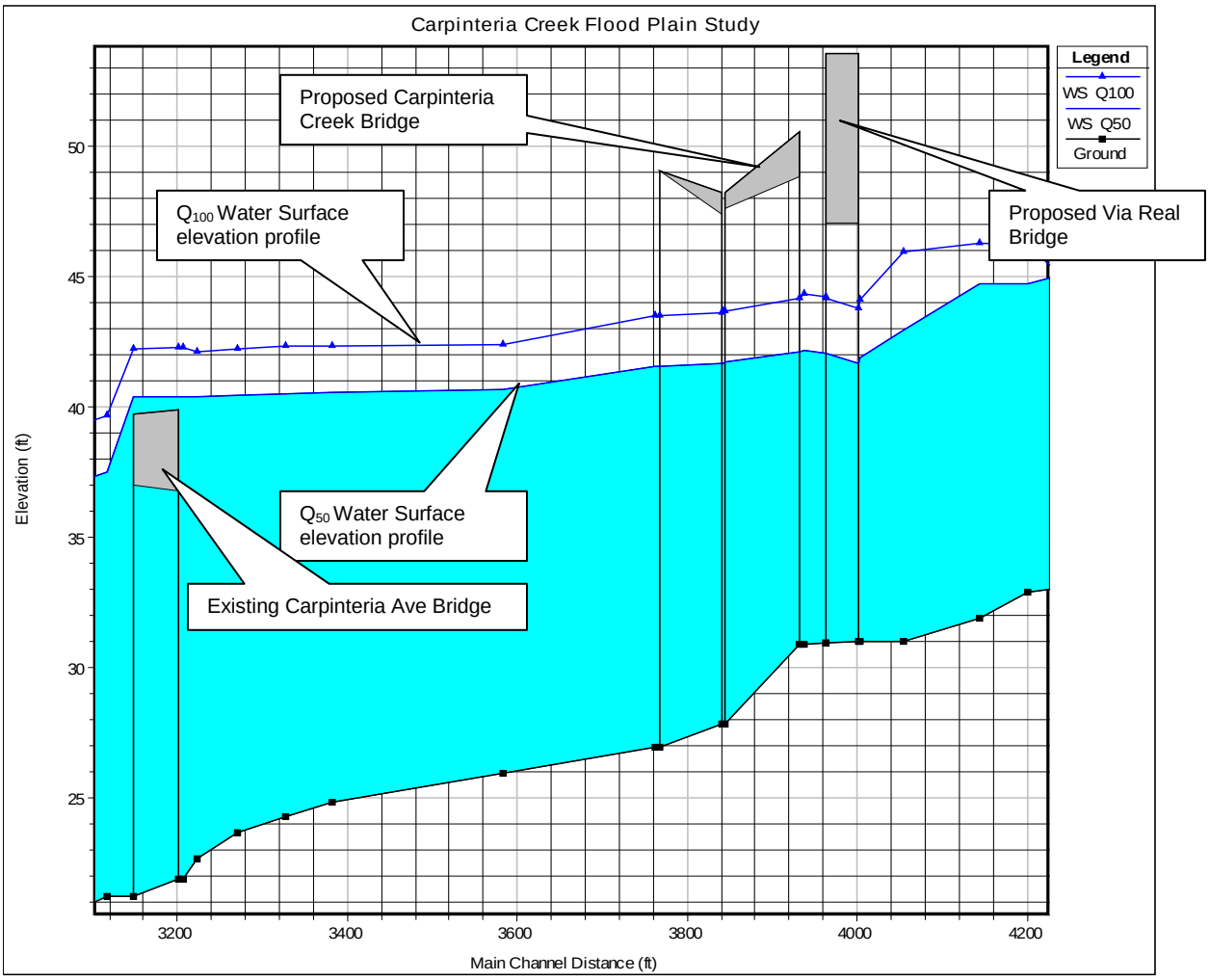

Figure 3 Modeled Proposed Via Real Bridge & Carpinteria Creek Bridge Profile

From the HEC-RAS model it is seen that the Carpinteria Ave Bridge creates a backwater condition that affects the proposed bridge sites.

Water Surface Elevations from model:

Calculated from the General Plan the water surface at the upstream end of the proposed structures and other parameters are shown in Table 1:

	Q_{100}		Q_{50}	
TABLE 1 Hydraulic Parameters	Proposed Via Real Bridge	Proposed Carpinteria Bridge	Proposed Via Real Bridge	Proposed Carpinteria Bridge
Water surface elevation (ft)	44.1	44.2	41.9	41.8
Velocity (ft/s)	12.8	9.3	11.8	7.8
Recommended Freeboard (ft)	1	1		
Minimum Soffit elevation (ft)	45.1	45.2		

Scour:

The Preliminary Structure Foundation report indicates clay layers with some gravel. For scour calculations this indicates no armoring and a with soil that is moderately scour resistant.

Degradation studies using historical cross sections indicate no degradation has occurred in this channel. The 1964 flow from the Flood History section was storm damage.

Table 2 shows anticipated scour for each proposed structure based on the dimensions outlined in the General Plan. If the final design of the structures differs greatly from the General Plan the contraction and abutment scour will need to be recomputed.

TABLE 2 Scour Predictions	Proposed Carpinteria Creek Bridge	Proposed Via Real Bridge
Local pier scour (ft)	N/A	N/A
Abutment scour (ft)	5.5	5.0
Contraction scour (ft)	1	2
Degradation (ft)	0	0
Total potential scour depth at abutments(ft)	6	7
Total Potential Scour Elevation in 75 years(ft)	32	33

It is recommended that wingwalls be included for the Via Real Bridge. Rock Riprap shown on the General plans was not included in calculations, and is the responsibility of District 5.

Flood plain data are based upon information available when the plans were prepared and are shown to meet federal requirements. **The accuracy of said information is not warranted by the State and interested or affected parties should make their own investigation. Addendums may be necessary as Foundation Reports are completed**

M e m o r a n d u m

Flex your power!
Be energy efficient!

To: DAN ADAMS
Structure Design Branch 7
DIVISION OF ENGINEERING SERVICES

Attn: Rakesh Deo

Date: May 5, 2014
File: 05-SB-101-2.2/3.3
Via Real Bridge
Bridge No. 51-C0338
EA 05-4482U1

From: **DEPARTMENT OF TRANSPORTATION**
DIVISION OF ENGINEERING SERVICES
GEOTECHNICAL SERVICES

Subject: Foundation Report

Scope of Work

A Foundation Report (FR) is provided for the above referenced project. This report supercedes the report dated 3-28-2014. The project is along State Route 101 in the City of Carpinteria, in southern Santa Barbara County. Improvements are proposed to increase the highway level of service and accessibility, and include replacement of existing bridges and construction of new bridges, retaining walls, sound walls, ramps, and frontage roads. Review of published geologic data and previous geotechnical reports, field reconnaissance, and preliminary foundation calculations were performed as part of the geotechnical investigation.

The purpose of this report is to document geotechnical conditions and provide foundation recommendations. This report supercedes the Preliminary Foundation Report (September, 2010).

Project Description

Design proposes to extend Via Real from Casitas Pass Road to the southeastern end of the project limits. Construction of a single span cast-in-place prestressed box girder bridge is proposed for the new section of the Via Real to cross Carpinteria Creek to the east of State Route 101.

Pertinent Reports and Investigations

The following publications were used to assist in the assessment of site conditions:

1. *Preliminary Geotechnical Report.* Finegan, Michael. EA 05-448200. December 21, 2000.

2. *District Preliminary Geotechnical Report.* De Llamas, Zeke. EA 05-448200, July 30, 2008.

3. *Preliminary Foundation Report Via Real Bridge*. Turner, Ryan. EA 05-4482U1, September, 2010.

Field Investigation and Laboratory Testing Program

Two mud rotary borings and one cone penetrometer test sounding (CPT) were advanced near the proposed abutment locations to determine the subsurface conditions to be used for foundation design. PS suspension logging was performed for the project to calculate an average shear wave velocity for use in generating the design ARS curve presented in the seismic section of this report. Refer to Table 1 for a summary of subsurface investigation information.

Table 1. Subsurface Exploration Summary

Boring	*Completion Date*	*Equipment*	*Hammer Type*	*Hammer Efficiency (%)*	*Approximate Ground Elevation (ft)*	*Depth (ft)*
RC-10-006	12-15-2010	Acker	Auto	74	44.5	121.0
RC-11-015	10-26-2011	CS2000	Auto	84	42.7	106.5
CPT-11-006	6-22-2011	CPT	N/A	N/A	45.7	85.0

Site Geology and Subsurface Conditions

Physical Setting

The project is located in the Carpinteria Valley, a sunken area north of the elevated coastal fault block southeast of the City of Carpinteria. Carpinteria Valley is a low-lying, flat plain comprised of alluvial deposits. Some low-lying areas in the valley are partly submerged under brackish water of the Carpinteria Slough. The plain meets the Pacific Ocean to the southwest, gradually gains elevation to the east as it approaches Rincon and La Granada Mountains, and abuts sharply against the foothills of the Santa Ynez Mountains at its the northern boundary.

A mild coastal climate prevails throughout the year, with marine fog often present in spring and summer months. Nearly all precipitation falls from Pacific storms between October and May, with the majority accumulating in the winter months. Average yearly rainfall is 17.5 inches. The average temperature is 72 degrees Fahrenheit with more than 275 days of sunny weather per year.

Regional Geology

The project area is located in the Transverse Ranges Geomorphic Province. State Route 101 is bordered to the north by the Santa Ynez Mountains and to the south by the Pacific Ocean as it traverses the Carpinteria Valley. Geologic maps and field observations indicate that soils in the valley were deposited in an alluvial environment and consist of normally consolidated deposits of clay, silt, sand, and gravel.

Groundwater

Open observation wells were installed in borings RC-10-006 and RC-11-015 to observe fluctuations in groundwater levels and determine if groundwater will influence construction and foundation design. Results of the groundwater-monitoring program are summarized in Table 2.

Table 2. Groundwater Elevations

Boring	Date	Depth to Groundwater (ft)	Groundwater Elevation(ft)
RC-10-006	2-9-2011	15.4	29.1
RC-10-006	12-14-2011	14.3	30.2
RC-10-006	2-24-2012	14.6	29.9
RC-10-006	3-22-2012	14.9	29.6
RC-10-006	4-19-2012	14.2	30.3
RC-10-006	2-5-2013	16.0	28.5
RC-10-006	4-5-2013	13.4	31.1
RC-10-006	5-23-2013	17.5	27.0
RC-11-015	12-14-2011	14.0	28.7
RC-11-015	2-24-2012	12.3	30.4
RC-11-015	3-22-2012	12.4	30.3
RC-11-015	4-19-2012	12.0	30.7
RC-11-015	7-26-2012	12.7	30.0
RC-11-015	2-5-2013	12.1	30.6
RC-11-015	4-5-2013	12.5	30.2
RC-11-015	5-23-2013	12.7	30.1

Scour Evaluation

Scour will be mitigated by placement of RSP on the slopes in front of both bridge abutments.

Corrosion Evaluation

The department considers a site to be corrosive to the foundation elements if the following conditions exist for the representative soil and/or water samples taken at the site: minimum resistivity of 1000 ohm-cm or less and/or PH of 5.5 or less.

Soil and water samples were obtained during the subsurface investigation and tested for corrosion potential at the District Materials Laboratory. The results of the corrosion testing are presented in Table 3. Based on the results, soils are not considered corrosive to foundation elements.

Table 3. Corrosion Testing Summary

Boring	*Depth (ft)*	*pH*	*Resistivity ohm-cm*	*Chloride ppm*	*Sulphate ppm*	*Corrosive*
RC-10-006	8.0-10.0	7.9	1260	-	-	NO
RC-10-006	87.0-89.0	8.4	2100	-	-	NO

Seismic Recommendations

Based on the *Caltrans Seismic Design Procedure*, the following active and potentially active faults are located within the vicinity of the project site. The Caltrans ARS Online Tool was used to develop ARS curves for deterministic and probabilistic seismic prediction models. An average shear wave velocity of 679 ft/sec (207 m/s) for the upper 100 feet of soil was determined from PS logging and used to generate the ARS curves. The corresponding design envelope ARS curves are presented in Figure 1. Basin and near-fault factors were applied to the data due to the

proximity of the faults and location of the project site. Curve data points are included as an attachment to this report.

Table 4. Active and Potentially Active Faults

Fault Name	*Fault Type*	*Moment magnitude of maximum credible earthquake*	*Peak ground acceleration T=0 sec (gravity)*
Red Mountain	Reverse	7.4	0.57
Mesa Rincon Creek	Reverse	6.6	0.50
Ventura-Pitas Point	Reverse	7.2	0.42

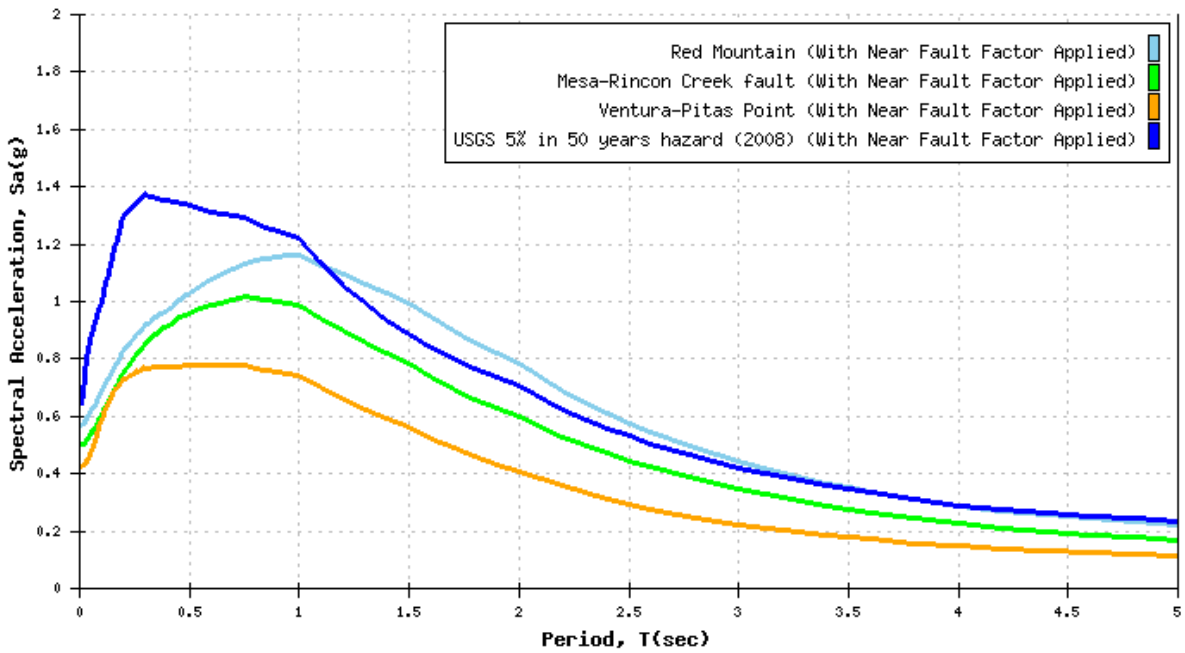

Figure 1. Design ARS Curve

Liquefaction is the partial or complete loss of soil strength due to the build-up of excess pore water pressure during a seismic event. The effects of liquefaction on the bridge are expected to be minimal, due to the thinly bedded nature of the soil profile, presence of interbedded fine grained soils, and the horizontally and vertically discontinuous nature of soil layers.

As-Built Foundation Data

The as-built log of test borings for the nearby Carpinteria Creek Bridge (Br. No. 51-0052) indicates that the area is underlain by alluvial deposits. One mud rotary boring and two penetrometer soundings were performed as part of the foundation investigation in 1951.

Foundation Recommendations

Driven Pipe Piles

Structure Design proposes that the bridge abutments be supported on Standard Plan Class 200 Alternative W driven pipe piles. Pile piles are assumed to plug during driving; piles will derive axial resistance from end bearing and skin friction.

Design calculations for pipe piles were performed using CTGeoDrive, an Excel spreadsheet that calculates predicted pile axial resistance and pile axial deflection using state-of-the-practice methods provided by FHWA and API. Working Stress Design (WSD) methodology was used at the abutments with a safety factor of 2.0 for axial compression. Structure Design provided cutoff elevations, loads, and permissible vertical deflections of 2" per support. Recommended pile tip elevations for each support location are provided in the following tables.

Preloading of the Abutment 1 approach embankment with a 5-foot high earthen surcharge with a 30 day fill delay period to minimize the effects of pile downdrag and differential settlement due to staged construction and the proximity to Carpinteria Creek Bridge is recommended prior to pile driving. No surcharge is required at Abutment 2, but a 30 day fill delay period is recommended to allow for consolidation to occur prior to pile driving. Refer to the Geotechnical Design Report and the project plans and specifications for details regarding the limits and time of embankment preloading.

Abutment Foundation Design Recommendations									
Support Location	Pile Type	Cut-off Elevation (ft)	LRFD Service-I Limit State Load (kips) per Support		LRFD Service-I Limit State Total Load (kips) per Pile (Compression)	Required Nominal Resistance (kips) (SF=2.0)	Design Tip Elevations (ft)	Specified Tip Elevation (ft)	Required Driving Resistance (kips)
			Total	Permanent					
Abut. 1	Class 200 Alt W	32.42	2928	2643	195	390	-18.58(a), 0(c) -2.58 (d)	-18.58	390
Abut. 2	Class 200 Alt W	30.67	3032	2747	195	390	-9.33(a), -9(c) -2.83 (d)	-9.33	390
Abut. 1 Wing Wall Left	Class 200 Alt W	48.92	40	40	40	80	34(a) 8.92(d)	8.92	230
Abut. 1 Wing Wall Right	Class 200 Alt W	47.32	40	40	40	80	34(a) 7.32 (d)	7.32	240
Abut. 2 Wing Wall Left	Class 200 Alt W	48.32	40	40	40	80	32(a) 8.32 (d)	8.32	230
Abut. 2 Wing Wall Right	Class 200 Alt W	46.62	40	40	40	80	32(a) 6.62 (d)	6.62	220

Notes:

1) *Design tip elevations are controlled by: (a) Compression, (c) Settlement, and (d) Lateral Load, respectively.*
2) *The specified tip elevation shall not be raised above the design tip elevations for lateral and tolerable settlement.*

Pile Data Table						
Location	Pile Type	Nominal Resistance (kips)		Design Tip Elevation (ft)	Specified Tip Elevation (ft)	Nominal Driving Resistance (kips)
		Compression	Tension			
Abut. 1	Class 200 Alt W	390	0	-18.58(a), -0(c), -2.58 (d)	-18.58	390
Abut. 2	Class 200 Alt W	390	0	-9.33(a), -9(c), -2.83 (d)	-9.33	390
Abut. 1 Wing Wall Left	Class 200 Alt W	230	0	34(a) 8.92(d)	8.92	230
Abut. 1 Wing Wall Right	Class 200 Alt W	240	0	34(a) 7.32 (d)	7.32	240
Abut. 2 Wing Wall Left	Class 200 Alt W	230	0	32(a) 8.32 (d)	8.32	230
Abut. 2 Wing Wall Right	Class 200 Alt W	220	0	32(a) 6.62 (d)	6.62	220

Notes:

1) *Design tip elevations for Abutments are controlled by: (a) Compression, (c) Settlement, (d) Lateral Load*
2) *The specified tip elevation shall not be raised above the design tip elevations for lateral load and tolerable settlement.*

Construction Considerations

Excavations for the bridge abutments may intercept groundwater. High groundwater may require methods to control and remove water at excavation locations. Refer to Standard Specifications 2010 Section 19-3.03D for details regarding water control and foundation treatment when wet excavation and construction conditions are encountered.

Layers of loose soil and high groundwater levels may generate excess pore pressures during pile driving that temporarily reduce the pile driving resistance. Should piles not reach the required nominal driving resistance within 1 foot of the specified tip elevation as determined using the formula in Standard Specifications 2010 Section 49-2.01A(4)(b), halt driving operations and allow a minimum of 24 hours for the soil to set up and excess pore pressures to dissipate. Restrike testing of the pile after the soil setup period should be conducted to ensure the pile develops the required resistance.

Due to the discontinuous nature of the alluvial soils at the site, dense layers not identified in the contract log of test borings may be encountered above the specified pile tip elevations that limit the depth to which piles can be driven. Contact Geotechnical Design North personnel if issues with pile driving arise during the project.

It is recommended that driving system submittals be required for piles at Abutment 1 and Abutment 2 per Standard Specification 49-2.01A(3)(b).

Additional Information

Standard Specifications 2010 Section 2-1.6.B, "Supplemental Project Information", discloses to bidders and contractors a list of pertinent information available for their inspection prior to bid opening. Items listed to be included in the Information Handout will be provided in Acrobat (.pdf) format to the Addressee of this report via electronic mail.

Data and information attached with the project plans are:

A. Log of Test Borings.

Data and information included in the Information Handout provided to the Bidders and Contractors are:

A. Foundation Report for Via Real Bridge dated May 5, 2014.

If you have any questions or comments, please contact Ryan Turner at (805) 549-3750, or Michael Finegan at (805) 549-3194.

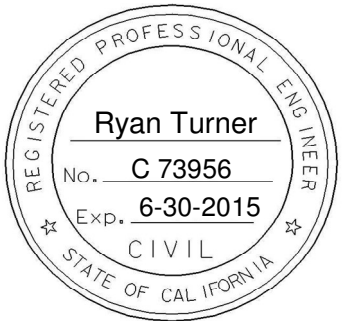

RYAN TURNER, P.E.
Transportation Engineer Civil
Geotechnical Design – North
Branch D

MICHAEL S. FINEGAN, P.E.
Branch Chief
Geotechnical Design – North
Branch D

c: Job File / Branch D Records
Structure Construction RE Pending File (email RE_pending_file@dot.ca.gov)
Craig Whitten / DES Office Engineer
Andrew Tan / PCE
Eric Karlson/ DME

LIST OF ATTACHMENTS

Vicinity Map	Attachment 1
Geologic Map and Legend	Attachment 2
Foundation Data Design Sheet	Attachment 3
Structure Plans	Attachment 4
ARS Data	Attachment 5

INDEX OF SHEETS

STATE OF CALIFORNIA
DEPARTMENT OF TRANSPORTATION

PROJECT PLANS FOR CONSTRUCTION ON
STATE HIGHWAY
IN SANTA BARBARA COUNTY
IN CARPINTERIA
FROM 0.4 KM SOUTH OF CARPINTERIA CREEK BRIDGE
TO 0.5 KM NORTH OF LINDEN AVENUE OVERCROSSING

TO BE SUPPLEMENTED BY STANDARD PLANS DATED JULY 2004

Dist	COUNTY	ROUTE	KILOMETER POST TOTAL PROJECT	SHEET NO.	TOTAL SHEETS
05	SB	101	3.5/5.5		

LOCATION MAP

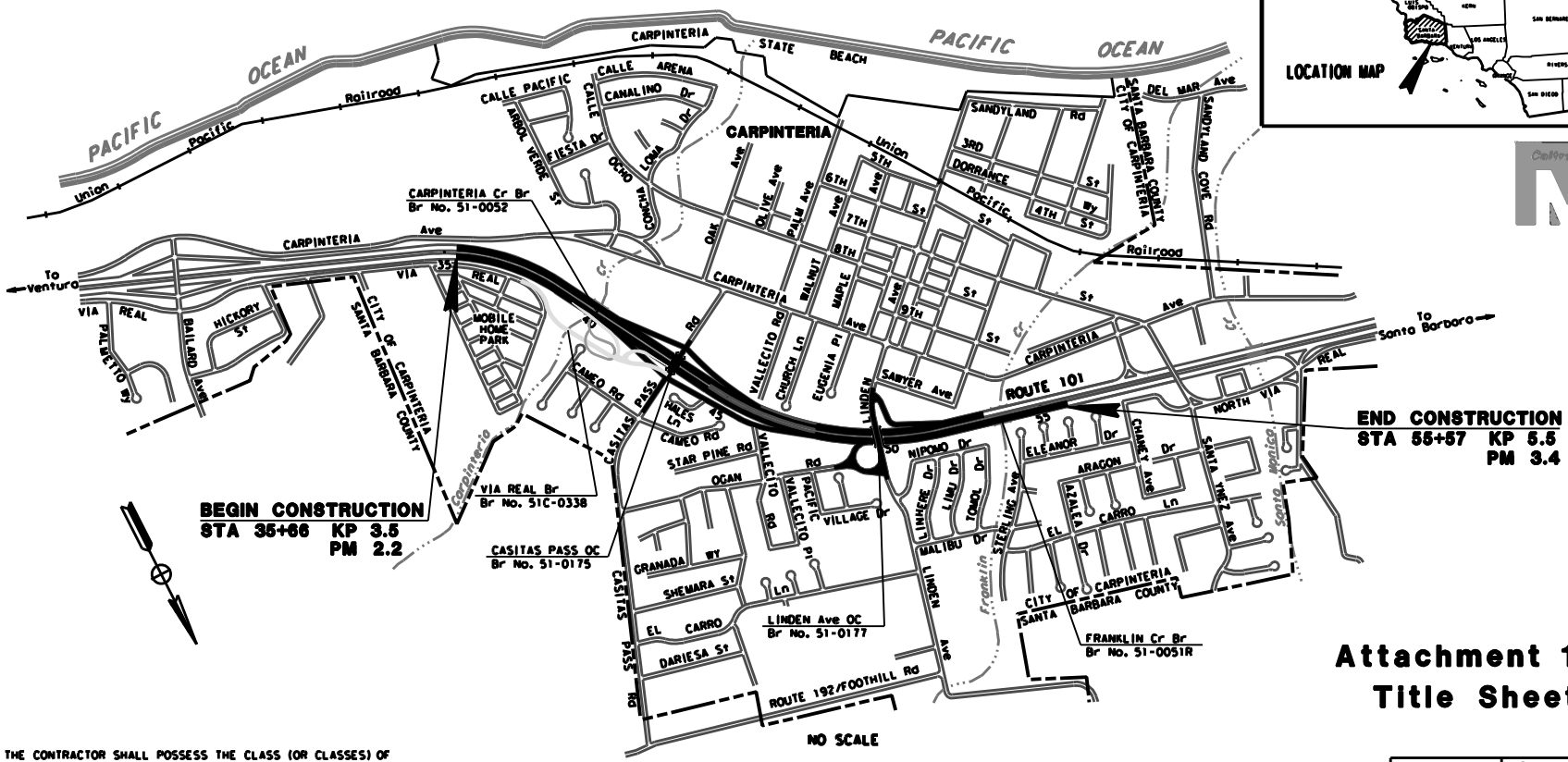

THE CONTRACTOR SHALL POSSESS THE CLASS (OR CLASSES) OF LICENSE AS SPECIFIED IN THE "NOTICE TO CONTRACTORS."

PROJECT MANAGER: DAVID BEARD
DESIGN ENGINEER: KARI BHANA

Attachment 1
Title Sheet

CONTRACT No. 05-4482U0
CU 06233 | EA 4482U0

BORDER LAST REVISED 3/1/2007 | CALTRANS WEB SITE IS: HTTP://WWW.DOT.CA.GOV/ | RELATIVE BORDER SCALE IS IN MILLIMETERS 0 20 40 60 80 | USERNAME => RUSER | DGN FILE => SREQUEST | DATE PLOTTED => 09-14-10 | TIME PLOTTED => 09:42

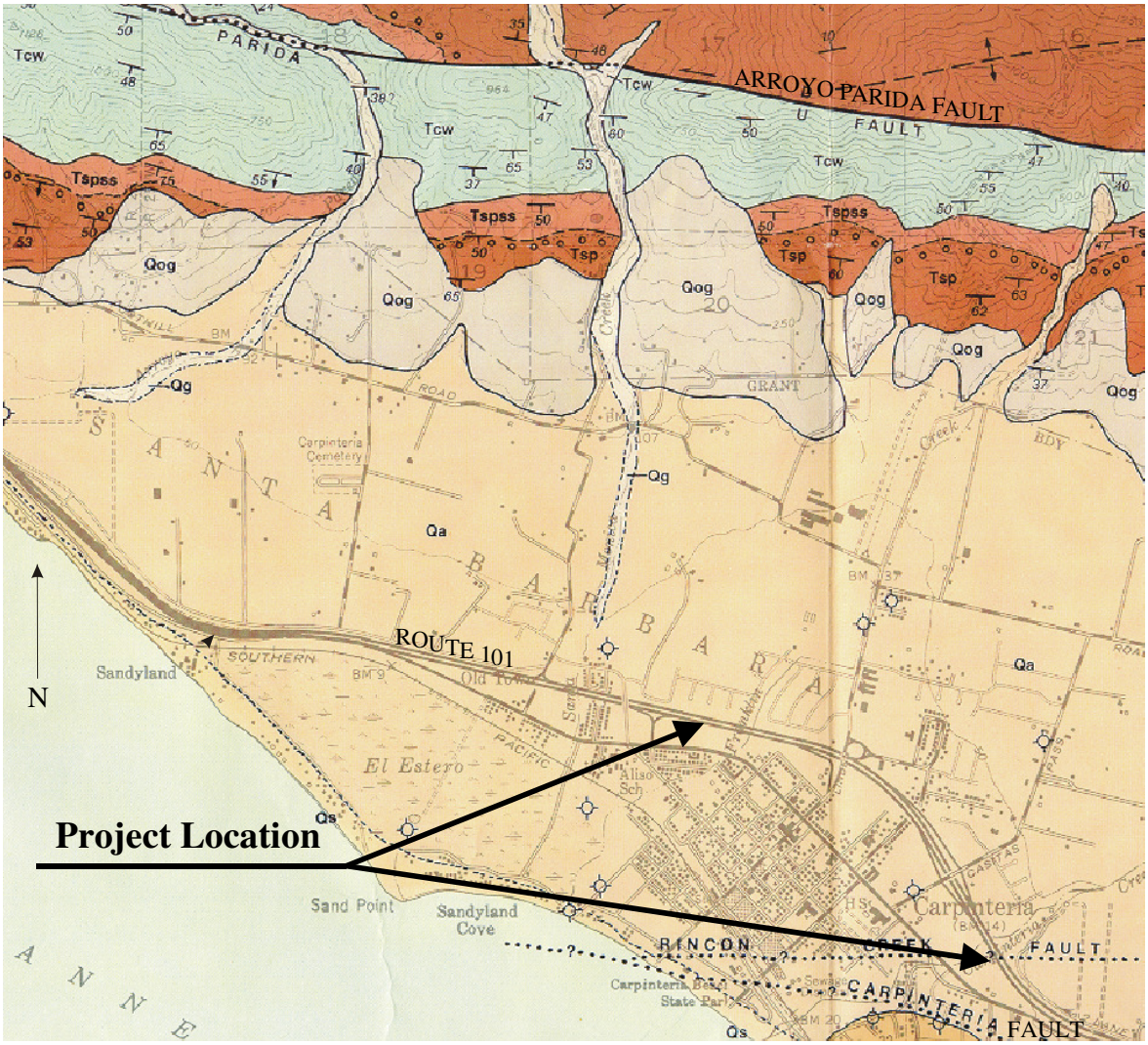

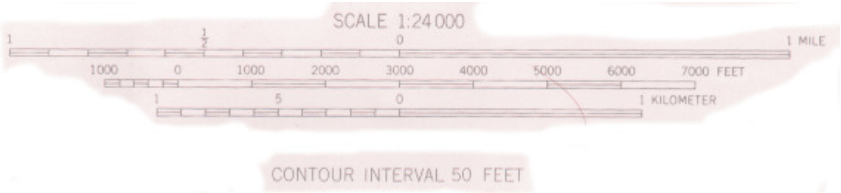

PART OF:

GEOLOGIC MAP OF THE CARPINTERIA QUADRANGLE
BY THOMAS W. DIBBLEE, JR., 1986

Geologic Map

05-SB-101-2.1/3.4
05-448201
Attachment 2

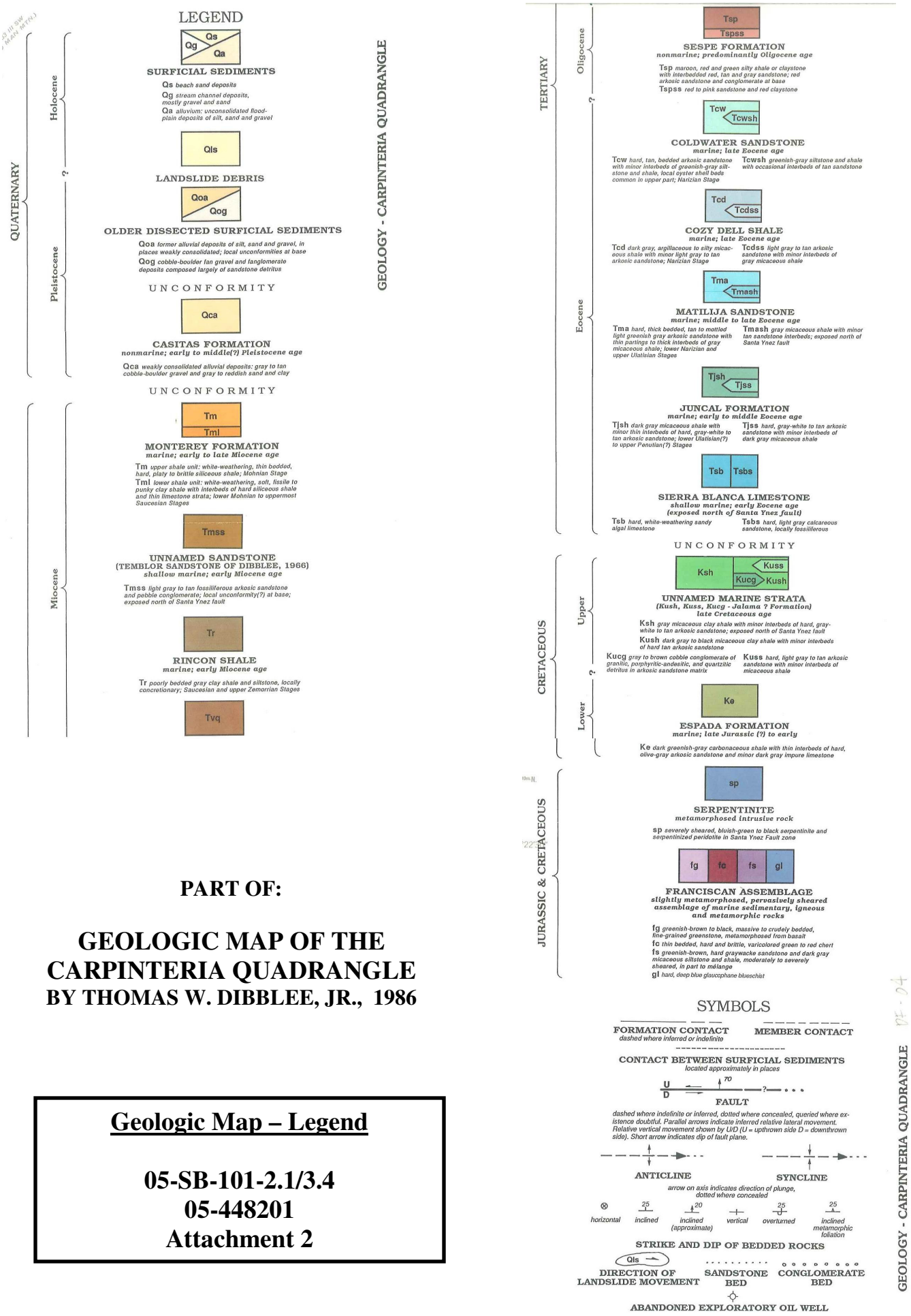

PART OF:

GEOLOGIC MAP OF THE CARPINTERIA QUADRANGLE

BY THOMAS W. DIBBLEE, JR., 1986

Geologic Map – Legend

05-SB-101-2.1/3.4
05-448201
Attachment 2

Rakesh Deo
01/30/14

Br. Name: Via Real Bridge
EA: 05-4482U1
Br. No.: 51C0338

Rakesh Deo
Date: 1/14/2014
Modified from loads provided by D. Desai
Revised by R. Deo

Foundation Design Data

Support No.	Design Method	Pile Type	Finished Grade Elevation (ft)	Cut-off Elevation (ft)	Pile Cap Size (ft)		Permissible Movement under Service Load (in)		Number of Piles per Support
					B	L	Δ_V	Δ_H	
Abut 1	WSD	Class 200 Alt "W"	44.33 - Varies	32.67	10	51	2"		20
Abut 2	WSD	Class 200 Alt "W"	44.00 - 45.55 Varies	30.42	10	55.5	2"		20
WW Abut 1 Left	WSD	Class 90 Alt "W"	53.77	48.94	3	3	2"		1
WW Abut 1 Right	WSD	Class 90 Alt "W"	52.13	47.3	3	3	2"		1
WW Abut 2 Left	WSD	Class 90 Alt "W"	53.21	48.38	3	3	2"		1
WW Abut 2 Right	WSD	Class 90 Alt "W"	51.41	46.58	3	3	2"		1

Use Class 200 Alt "W"

Foundation Design Loads

Support No.	Service-I Limit Stage (kips)			Strength Limit State				Extreme Event Limit State				Design Tip Elev (ft)
	Total Load		Permanent Loads	Compression		Tension		Compression		Tension		
	Per Support	Max. Per Pile	Per Support	Per Support	Max. Per Pile	Per Support	Max. Per Pile	Per Support	Max. Per Pile	Per Support	Max. Per Pile	(Lateral Load)
Abut 1	2928	195	2643	n/a	n/a	n/a	n/a	n/a	n/a	n/a	n/a	-2.58
Abut 2	3032	195	2747	n/a	n/a	n/a	n/a	n/a	n/a	n/a	n/a	-2.83
WW Abut 1 Left	40	40	40	n/a	n/a	n/a	n/a	n/a	n/a	n/a	n/a	8.94
WW Abut 1 Right	40	40	40	n/a	n/a	n/a	n/a	n/a	n/a	n/a	n/a	7.30
WW Abut 2 Left	40	40	40	n/a	n/a	n/a	n/a	n/a	n/a	n/a	n/a	8.38
WW Abut 2 Right	40	40	40	n/a	n/a	n/a	n/a	n/a	n/a	n/a	n/a	6.58

DIST	COUNTY	ROUTE	POST MILES TOTAL PROJECT	SHEET No.	TOTAL SHEETS
05	SB	101			

REGISTERED CIVIL ENGINEER X DATE

PLANS APPROVAL DATE

REGISTERED PROFESSIONAL ENGINEER Rakesh Deo No. C73814 Exp. 6/30/13 CIVIL STATE OF CALIFORNIA

The State of California or its officers or agents shall not be responsible for the accuracy or completeness of electronic copies of this plan sheet.

NOTES:
- (A) Paint "Via Real Bridge"
- (B) Paint "Br. No. 51C0338"
- (C) Structure Approach Slab Type N(30S)
- (D) Concrete Barrier Type 80 (Mod)
- (E) Concrete Barrier Type 80SW (Mod)
- (F) Tubular Bicycle Railing
- (G) Rock Slope Protection (RSP), see "Road Plans"
- (H) MBGR, see "Road Plans"
- (I) Existing Bike Path
- (J) Future utility, 2'-0" OD
- (K) Two 4"Ø opening for future utilities
- (L) Exterior Girder Facia details, see"EXTERIOR GIRDER FACIA DETAILS" sheet
- (M) Concrete Barrier Type 60, see "ROAD PLANS"
- (N) 2 inch Ø electric conduit, see "ROAD PLANS"
- (O) NPS 3 water supply line (Bridge)

For Index To Plans, Standard Plan List, Pile Data Table, Hydrologic Summary and General Notes, see "INDEX TO PLANS" sheet

P&Q

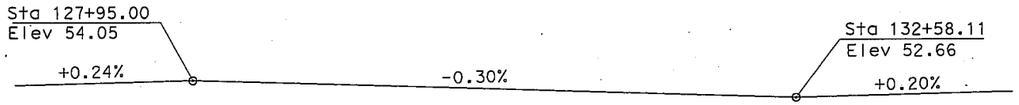

PROFILE GRADE
NO SCALE

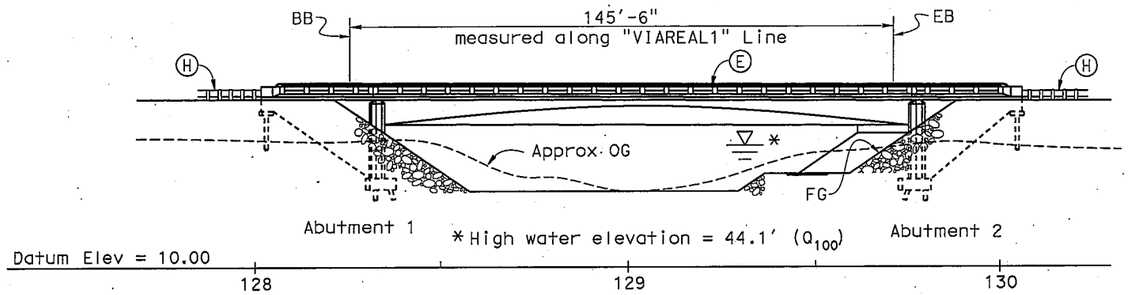

ELEVATION
1" = 20'

UNCHECKED DETAILS AS of 10-1-13

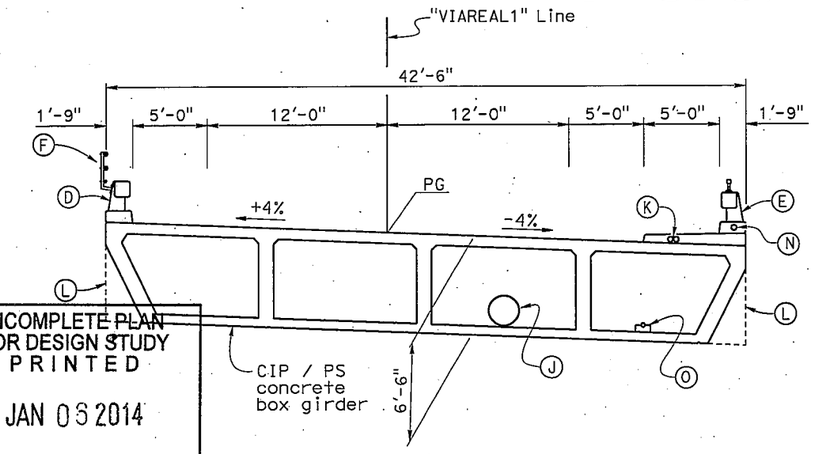

INCOMPLETE PLAN FOR DESIGN STUDY PRINTED JAN 03 2014 Office of Structures, Design STATE OF CALIFORNIA

TYPICAL SECTION
1" = 5'

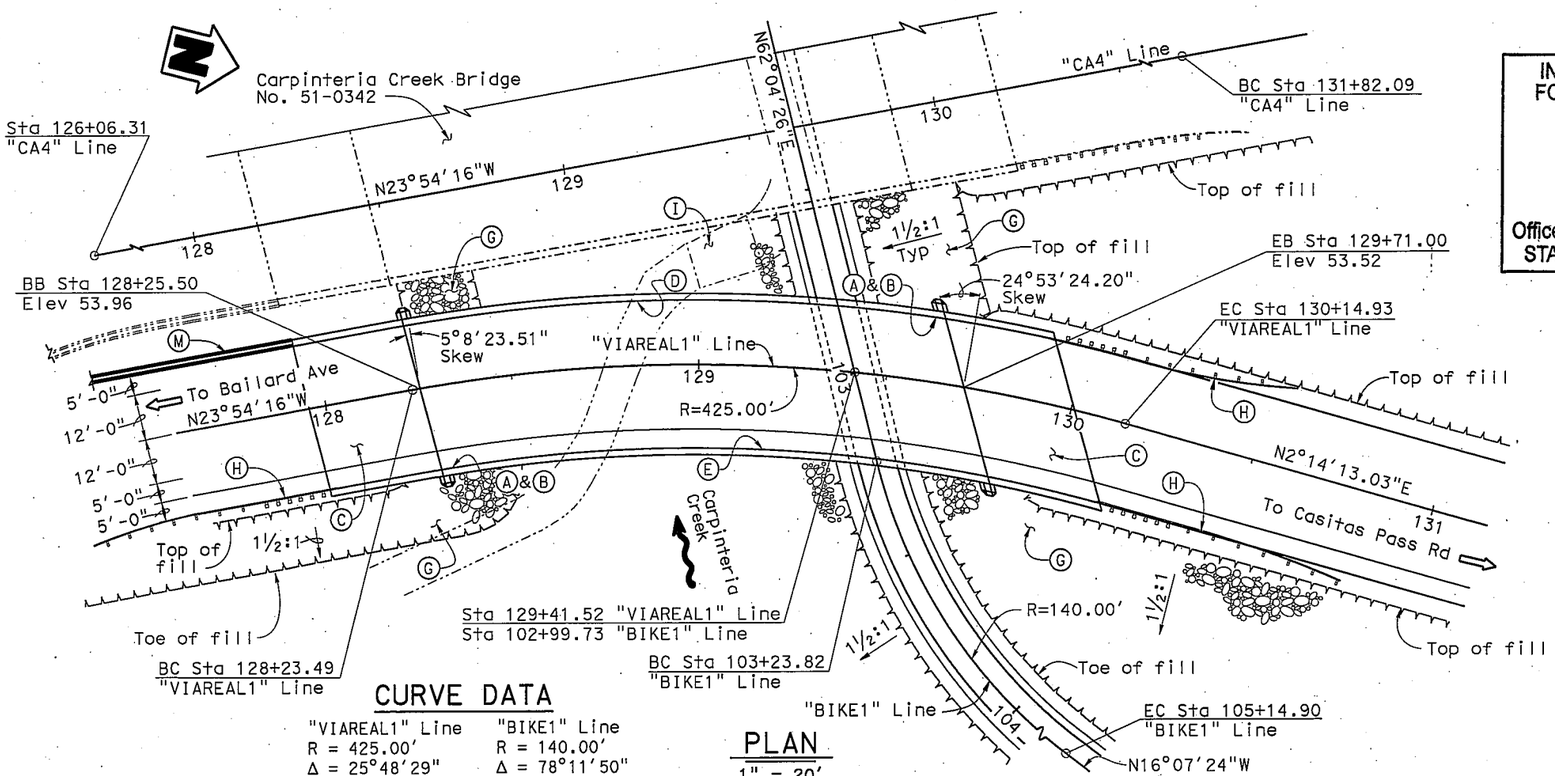

PLAN
1" = 20'

CURVE DATA

"VIAREAL1" Line	"BIKE1" Line
R = 425.00'	R = 140.00'
Δ = 25°48'29"	Δ = 78°11'50"
T = 97.37'	T = 113.77'
L = 191.44'	L = 191.07'

Vehicular Traffic

1. X New alignment. No traffic at the site.
2. ___ Traffic will be detoured away from the site.
3. ___ Traffic will be carried on the structure. Stage construction will/will not be required.
4. ___ Traffic will pass under the structure on _____ (Name of St. or Hwy.)
   - A. ___ No falsework allowed over traffic.
   - B. ___ Falsework opening(s) required:

	Temporary Vertical Clearance	Width of Traffic Opening
___ Bnd	_____	_____
___ Bnd	_____	_____
___ Two-way	_____	_____

   - C. ___ Temporary traffic lane reduction needed for footing excavation.

Pedestrian / Bike Traffic

Falsework opening required along existing bike path of creek

Location	Height	Width
Existing Ped/bike path under Via Real bridge	8'-0" Min	8'-0" Min

X DESIGN ENGINEER	DESIGN	BY Dhvani Desai	CHECKED X	LOAD & RESISTANCE FACTOR DESIGN	LIVE LOADING: HL93 AND PERMIT DESIGN VEHICLE	
	DETAILS	BY Y. Feng / G. Dickerson	CHECKED X	LAYOUT	BY Dhvani Desai	CHECKED R. Deo
	QUANTITIES	BY X	CHECKED X	SPECIFICATIONS	BY X	PLANS AND SPECS COMPARED X

ORIGINAL SCALE IN INCHES FOR REDUCED PLANS 0 1 2 3

STATE OF CALIFORNIA DEPARTMENT OF TRANSPORTATION

DIVISION OF ENGINEERING SERVICES STRUCTURE DESIGN DESIGN BRANCH 7

BRIDGE NO. 51C0338 POST MILE 2.44

VIA REAL BRIDGE
GENERAL PLAN

UNIT: 05
PROJECT NUMBER & PHASE: 05 0000 0543 1 CONTRACT NO.: 05-4482U1

DISREGARD PRINTS BEARING EARLIER REVISION DATES → REVISION DATES 12/23/11 9/6/13 9/6/13

SHEET 1 OF 20

FILE => 51c0038-a-gp.dgn

STRUCTURES DESIGN GENERAL PLAN SHEET (ENGLISH) (REV.09-01-10)

USERNAME => s120000 DATE PLOTTED => 03-JAN-2014 TIME PLOTTED => 11:00

Via Real Bridge

Bridge No. **51-C0338**

SDC Controlling Procedure : **Probabalistic/Deterministic**

Period (s)	SDC
0.010	0.641
0.050	0.870
0.100	0.993
0.150	1.158
0.200	1.292
0.250	1.335
0.300	1.371
0.400	1.352
0.500	1.338
0.600	1.314
0.700	1.300
0.850	1.260
1.000	1.221
1.200	1.094
1.500	0.997
2.000	0.783
3.000	0.444
4.000	0.290
5.000	0.234

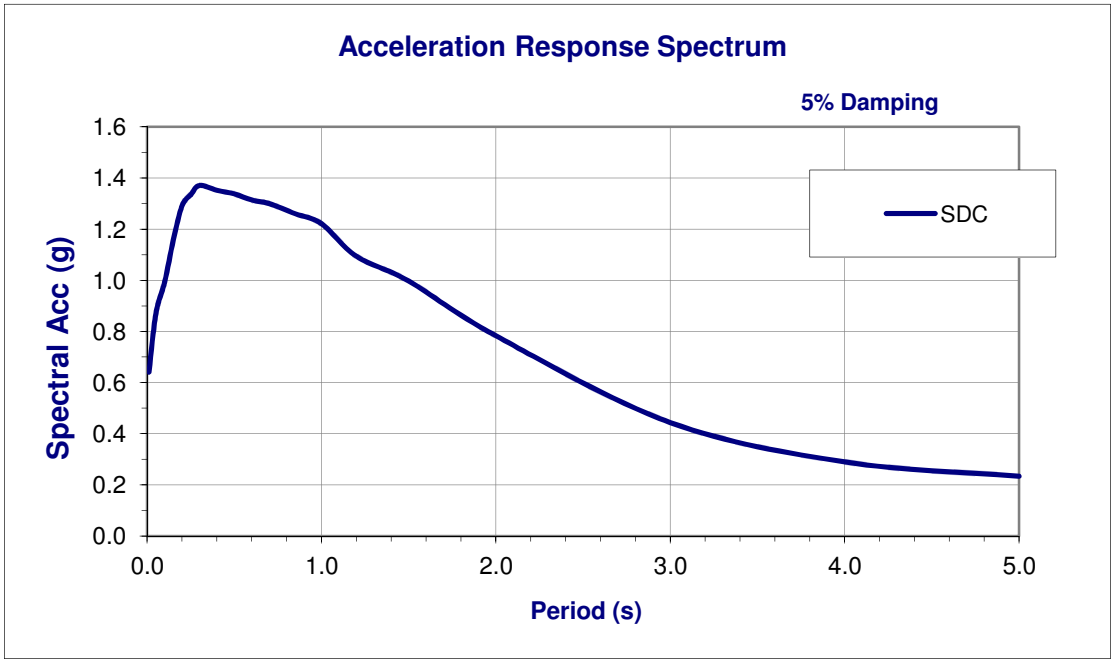

Notes

ARS curve was modified for Near Fault Directivity Effect

M e m o r a n d u m

Flex your power!
Be energy efficient!

To: DAN ADAMS
Structure Design Branch 7
DIVISION OF ENGINEERING SERVICES

Attn: Rakesh Deo

Date: May 5, 2014
File: 05-SB-101-2.2/3.3
Casitas Pass Road Bridge
Bridge No. 51-0343
EA 05-4482U1

From: **DEPARTMENT OF TRANSPORTATION**
DIVISION OF ENGINEERING SERVICES
GEOTECHNICAL SERVICES

Subject: Foundation Report

Scope of Work

A Foundation Report (FR) is provided for the above referenced project. This report supercedes the report dated 4-1-2014. The project is along State Route 101 in the City of Carpinteria, in southern Santa Barbara County. Improvements are proposed to increase the highway level of service and accessibility, and include replacement of existing bridges and construction of new bridges, retaining walls, sound walls, ramps, and frontage roads. Review of published geologic data and previous geotechnical reports, field reconnaissance, and preliminary foundation calculations were performed as part of the geotechnical investigation.

The purpose of this report is to document geotechnical conditions and provide foundation recommendations. This report supercedes the Preliminary Foundation Report (September, 2010).

Project Description

The existing structure at Casitas Pass Separation is a two-span concrete slab bridge. Structures Design proposes to replace the existing bridge with a two-span cast-in-place prestressed box girder bridge. The existing and proposed structure carries Casitas Pass Road/State Route 224 over State Route 101.

Pertinent Reports and Investigations

The following publications were used to assist in the assessment of site conditions:

1. *Preliminary Geotechnical Report.* Finegan, Michael. EA 05-448200. December 21, 2000.

2. *District Preliminary Geotechnical Report.* De Llamas, Zeke. EA 05-448200, July 30, 2008.

3. *Preliminary Foundation Report Casitas Pass Road Separation.* Turner, Ryan. EA 05-4482U1, September, 2010.

Field Investigation and Laboratory Testing Program

Mud rotary borings and cone penetrometer test soundings (CPT) were advanced near each support location to determine the subsurface conditions to be used for foundation design. Refer to the project log of test borings for details of the (4) borings and (3) CPT soundings at the proposed bridge site. PS suspension logging was performed for the project to calculate an average shear wave velocity for use in generating the design ARS curve presented in the seismic section of this report. Refer to Table 1 for a summary of subsurface investigation information.

Table 1. Subsurface Exploration Summary

Boring	*Completion Date*	*Equipment*	*Hammer Type*	*Hammer Efficiency (%)*	*Approximate Ground Elevation (ft)*	*Depth (ft)*
RC-11-009	1-28-2011	CS2000	Auto	93	51.0	170.5
RC-11-010	1-30-2011	CS2000	Auto	93	52.4	172.0
RC-11-011	2-1-2011	CS2000	Auto	93	50.1	171.5
RC-11-013	3-2-2011	CS2000	Auto	93	31.7	135.5
CPT-11-007	6-22-2011	CPT	N/A	N/A	52.6	86.0
CPT-11-008	6-22-2011	CPT	N/A	N/A	50.8	87.0
CPT-11-009	6-22-2011	CPT	N/A	N/A	51.1	100.0

Site Geology and Subsurface Conditions

Physical Setting

The project is located in the Carpinteria Valley, a sunken area north of the elevated coastal fault block southeast of the City of Carpinteria. The valley is a low-lying, flat plain comprised of alluvial deposits. Some low-lying areas in the valley are partly submerged under brackish water of the Carpinteria Slough. The plain meets the Pacific Ocean to the southwest, gradually gains elevation to the east as it approaches Rincon and La Granada Mountains, and abuts sharply against the foothills of the Santa Ynez Mountains at its the northern boundary.

A mild coastal climate prevails throughout the year, with marine fog often present in spring and summer months. Nearly all precipitation falls from Pacific storms between October and May, with the majority accumulating in the winter months. Average yearly rainfall is 17.5 inches. The average temperature is 72 degrees Fahrenheit with more than 275 days of sunny weather per year.

Regional Geology

The project area is located in the Transverse Ranges Geomorphic Province. State Route 101 is bordered to the north by the Santa Ynez Mountains and to the south by the Pacific Ocean as it traverses the Carpinteria Valley. Geologic maps and field observations indicate that soils in the valley were deposited in an alluvial environment and consist of unconsolidated deposits of clay, silt, sand, and gravel.

Groundwater

Open observation wells were installed in borings RC-11-009 and RC-11-010 to observe fluctuations in groundwater levels and determine if groundwater will influence construction and foundation design. Results of the groundwater-monitoring program are summarized in Table 1.

Table 1. Groundwater Elevations

Boring	Date	Depth to Groundwater (ft)	Groundwater Elevation(ft)
RC-11-009	2-9-2011	25.6	25.4
RC-11-009	12-14-2011	25.6	25.4
RC-11-009	2-24-2012	25.4	25.6
RC-11-009	3-22-2012	25.0	26.0
RC-11-009	4-19-2012	24.9	26.1
RC-11-009	7-26-2012	25.1	25.9
RC-11-009	2-5-2013	25.6	25.4
RC-11-009	4-5-2013	26.4	24.6
RC-11-009	5-23-2013	26.7	24.3
RC-11-010	2-9-2011	27.9	24.5
RC-11-010	2-5-2013	29.9	22.5
RC-11-010	4-5-2013	35.8	16.6

Corrosion Evaluation

The department considers a site to be corrosive to the foundation elements if the following conditions exist for the representative soil and/or water samples taken at the site: minimum resistivity of 1000 ohm-cm or less and/or PH of 5.5 or less.

Soil samples were obtained during the subsurface investigation and tested for corrosion potential at the District Materials Laboratory. The results of the corrosion testing are presented in Table 2.

Table 2. Corrosion Testing Summary

Boring	*Depth (ft)*	*pH*	*Resistivity ohm-cm*	*Chloride ppm*	*Sulphate ppm*	*Corrosive*
RC-11-011	10.0-11.5	7.55	3297	-	-	NO
RC-11-011	55.0-56.5	7.56	2596	-	-	NO
RC-11-011	70.0-71.5	7.42	1763	-	-	NO

Seismic Recommendations

Based on the *Caltrans Seismic Design Procedure*, the following active and potentially active faults are located within the vicinity of the project site. The Caltrans ARS Online Tool was used to develop ARS curves for deterministic and probabilistic seismic prediction models. An average shear wave velocity of 679 ft/sec (207 m/s) for the upper 100 feet of soil was determined from PS logging and used to generate the ARS curves. The corresponding design envelope ARS curves are presented in Figure 1. Basin and near-fault factors were applied to the data due to the

proximity of the faults and location of the project site. Curve data points are included as an attachment to this report.

Table 4. Active and Potentially Active Faults

Fault Name	*Fault Type*	*Moment magnitude of maximum credible earthquake*	*Peak ground acceleration T=0 sec (gravity)*
Red Mountain	Reverse	7.4	0.57
Mesa Rincon Creek	Reverse	6.6	0.50
Ventura-Pitas Point	Reverse	7.2	0.42

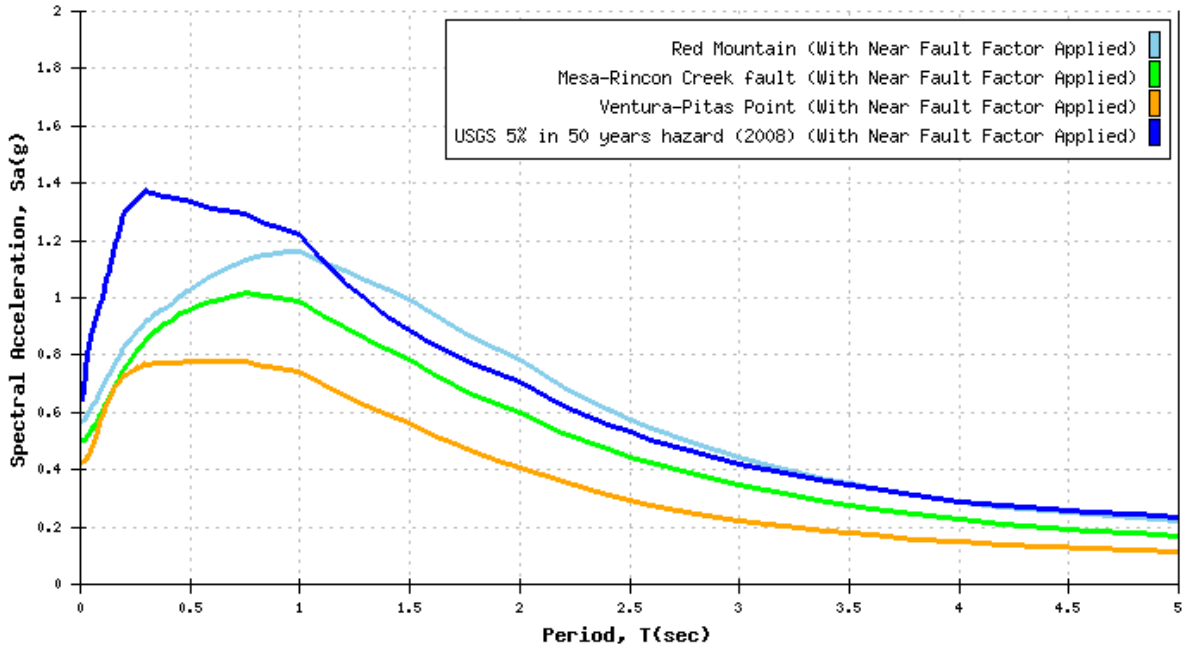

Figure 1. Design ARS Curve

Liquefaction is the partial or complete loss of soil shear strength due to the build-up of excess pore water pressure during a seismic event. The potential for liquefaction was estimated using correlations to SPT and CPT by calculating the cyclic resistance and cyclic stress ratios (CRR versus CSR). Although some thin layers were determined to be potentially liquefiable, the effects of liquefaction on the bridge are expected to be minimal, due to the thinly bedded nature of the soil profile, presence of interbedded fine grained soils, and the horizontally and vertically discontinuous nature of soil layers. Liquefaction of thin, discreet layers is not expected to cause significant seismic settlement or induce downdrag forces on pile foundations.

As-Built Foundation Data

The as-built Log of Test Borings for the Casitas Pass Road Separation (Br. No. 51-0175) indicate that the area is underlain by approximately 17 feet of very loose to compact silt and silty sand overlying slightly compact to compact silt, clayey silt, and silty sand. Three mud rotary borings and one penetrometer sounding were performed as part of the foundation investigation in 1951.

The ground surface elevation of the borings was approximately 47 feet to 49 feet. The ground water surface elevation measured during the 1951 investigation was determined to be from approximately elevation 34 feet to 40 feet.

Foundation Recommendations

Standard Plan Class 200 Alt W and Driven Steel Shells Filled with Concrete and Reinforcement

Structure Design proposes that the bridge abutments be supported on standard plan driven Class 200 Alt W pipe piles and the bent supports be founded on 78-inch driven steel shells filled with concrete and reinforcing, referred to heir in as cast-in-steel-shell (CISS) piles. CISS piles provide high resistance to lateral loads and are a good alternative where lateral loads cannot be efficiently resisted using a group of driven piles or a single large diameter driven pile. Base resistance and side resistance are assumed to provide axial resistance.

Note that the reported Bent 2 CISS pile nominal and required driving resistances exceed the required nominal resistance for the reported strength limit state load. The pile tip elevation is below a clay layer and was chosen to allow for construction of the base of the CISS pile in the sand underlying the clay layer. Do not raise the elevation of the pile tip.

Estimated settlement of 0.25 inches was calculated at the Service-I Limit State Load for the 78-inch CISS piles, less than the maximum allowable criteria of 1 inch. Because the specified tip elevation will not be raised, calculation of a design tip elevation for serviceability criteria is unnecessary. 30-day embankment settlement periods are recommended at Structure Stage 1 and 2 for both approach embankments.

Abutment Foundations Design Recommendations

Support Location	Pile Type	Cut-off Elevation (ft)	LRFD Service-I Limit State Load (kips) per Support		LRFD Service-I Limit State Total Load (kips) per Pile (Compression)	Required Nominal Resistance (kips)	Design Tip Elevations (ft)	Specified Tip Elevation (ft)	Required Driving Resistance (kips)
			Total	Permanent					
Abut. 1	Class 200 Alt W	36.67	3305	2915	175	350	-26.33 (a) -8(c)	-26.33	400
Abut. 3	Class 200 Alt W	31.42	5270	4750	195	390	-21.58 (a) -10(c)	-21.58	400
Abut. 3 Wingwalls	Class 140 Alt W	35.42	355	355	80	160	10.42 (a)	10.42	160

Notes:
1) *Design tip elevations are controlled by: (a) Compression, (c) Settlement*
2) *The specified tip elevation must not be raised above the design tip elevations for tension, lateral, and tolerable settlement.*

Bent Foundations Design Recommendations											
Support Location	Pile Type	Cut-off Elevation (ft)	Service-I Limit State Load per Support (kips)	Total Permissible Support Settlement	Required Nominal Resistance (kips)				Design Tip Elevations (ft)	Specified Tip Elevation (ft)	Required Driving Resistance (kips)
					Strength Limit		Extreme Event				
					Comp. (φ=0.8)	Tension (φ=0.7)	Comp. (φ=1)	Tension (φ=1)			
Bent 2	78" CISS	29.0	1115	1"	2620	0	1480	0	-47.0(a-I), -46.0 (d)	-47.0	3270

Notes:
1) *Design tip elevations are controlled by: (a-I) Compression (Strength Limit) and (d) Lateral.*
2) *The specified tip elevation must not be raised above the design tip elevations for tension, lateral, and tolerable settlement.*

Pile Data Table							
Location	Pile Type	Nominal Resistance (kips)		Design Tip Elevation (ft)	Specified Driven Steel Shell Tip Elevation (ft)	Specified Reinforcing and Concrete Tip Elevation (ft)	Required Driving Resistance (kips)
		Compression	Tension				
Abut. 1	Class 200 Alt W	400	N/A	-26.33 (a), -8(c)	-26.33	N/A	400
Bent 2	78" CISS	4610	N/A	-47.0 (a), -46.0 (d)	-47.0	-37.0	3270
Abut. 3	Class 200 Alt W	400	N/A	-21.58 (a), -10(c)	-21.58	N/A	400
Abut. 3 Wingwalls	Class 140 Alt W	160	N/A	10.42 (a)	10.42	N/A	160

Notes:
1) *Design tip elevations for Abutments are controlled by: (a) Compression, (c) Settlement.*
2) *Design tip elevations for Bents are controlled by: (a) Compression and (d) Lateral.*
3) *Required driving resistances at Abutments 1 and 3 exceed the required nominal resistances to provide sufficient penetration into a bearing layer.*
4) *The specified tip elevation must not be raised above the design tip elevations for tension load, lateral load, and tolerable settlement.*

Retaining Wall A Revised Standard Plan Type 5 Retaining Wall on Spread Footing

A revised standard plan cast-in-place cantilevered Type 5 retaining wall on spread footings is required to retain the bridge embankment past the extent of the Abutment 3 right wingwall. Refer to Revised Standard Plan B3-4A for details of construction. The depth of foundation embedment shall provide a minimum of 4 feet of horizontal cover from the top of the toe side of the footing to the face of the embankment slope. The net bearing pressure and effective footing width for the

service 1 limit state load provided in Revised Standard Plan B3-4A were used to evaluate foundation settlement. Extreme limit state bearing stresses were evaluated at a horizontal seismic earth pressure coefficient equal to 0.2. Settlement is expected to be immediate in the cohesionless soils underlying the proposed retaining wall. Calculated differential settlements are within tolerable limits for cast-in-place cantilevered concrete retaining walls. It is recommended to provide a joint between Retaining Wall A and the Abutment 3 right wingwall that can accommodate differential settlement that may occur due to different foundation types and loads.

Table 4. Retaining Wall Foundation Recommendations

Wall Station (ft) "CNOSE4"	*Design Height (ft)*	*Bottom of Footing Elevation (ft)*	*Footing Width (ft)*	*Strength Limit Factored Bearing Resistance (psf)* Φq_N Φ=0.45	*Extreme Limit Factored Bearing Resistance (psf)* Φq_N Φ=1.0	*Strength Limit Factored Gross Uniform Bearing Stress (psf)* q_0	*Extreme Limit Factored Gross Uniform Bearing Stress(psf)* q_0	*Service Limit State Net Bearing Stress(psf)* q'_0	*Calculated Settlement at Net Bearing Pressure (inches)*
11+83.60 to 11+99.60	12.0	41.00	10.50	7600	16,800	4000	4800	2800	1.8
11+99.60 to 12+15.60	8.0	44.50	8.50	7500	17,000	3000	3200	2100	1.4
12+15.60 to 12+25.60	4.0	48.00	7.25	7600	16,500	2400	2700	1400	1.0

Construction Considerations

It is recommended to maintain a permanent soil plug with a minimum length of 10 feet inside of the driven steel shell. Due to high regional groundwater and the potential for heave into the base of the excavation, construction of the reinforced concrete portion of the CISS piles is recommended to be performed using the wet method and specifications. Maintain an offsetting hydrostatic head using drilling slurry during excavation of the soil inside of the driven shell, clean the sides and base of the pipe and excavation, place the cage inside of the drilling fluid, and place concrete using a tremie to displace the slurry per the requirements of 2010 Standard Specification 49-3.02C(8). Use visual inspection and a weighted tape to ensure that the base of the excavation is level, clean, and free of loose material.

Driving of Bent 2 CISS piles shall not be performed until the results of the static load tests at the Linden OC are complete. Refer to the Linden Avenue Overcrossing Foundation Report and the project plans and specifications for details of the load tests.

It is recommended that driving system submittals be required for piles at Abutment 1, Bent 2, and Abutment 3 per Standard Specification 49-2.01A(3)(b).

Standard Specifications 2010 Section 2-1.6.B, "Supplemental Project Information", discloses to bidders and contractors a list of pertinent information available for their inspection prior to bid opening. Items listed to be included in the Information Handout will be provided in Acrobat (.pdf) format to the Addressee of this report via electronic mail.

Data and information attached with the project plans are:

A. Log of Test Borings.

Data and information included in the Information Handout provided to the Bidders and Contractors are:

A. Foundation Report dated May 5, 2014.

If you have any questions or comments, please contact Ryan Turner at (805) 549-3750, or Michael Finegan at (805) 549-3194.

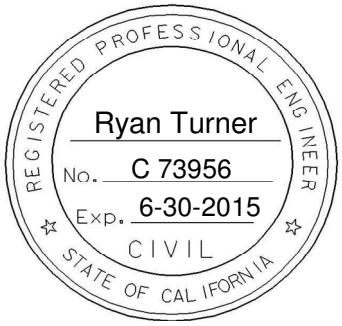

RYAN TURNER, P.E.
Transportation Engineer Civil
Geotechnical Design – North
Branch D

MICHAEL S. FINEGAN, P.E.
Branch Chief
Geotechnical Design – North
Branch D

c: Job File / Branch D Records
Structure Construction RE Pending File (email RE_pending_file@dot.ca.gov)
Craig Whitten / DES Office Engineer
Andrew Tan / PCE
Eric Karlson/ DME

LIST OF ATTACHMENTS

Vicinity Map	Attachment 1
Geologic Map and Legend	Attachment 2
Foundation Data Design Sheet	Attachment 3
Structure Plans	Attachment 4
ARS Data	Attachment 5

INDEX OF SHEETS

STATE OF CALIFORNIA
DEPARTMENT OF TRANSPORTATION

PROJECT PLANS FOR CONSTRUCTION ON
STATE HIGHWAY
IN SANTA BARBARA COUNTY
IN CARPINTERIA
FROM 0.4 KM SOUTH OF CARPINTERIA CREEK BRIDGE
TO 0.5 KM NORTH OF LINDEN AVENUE OVERCROSSING

TO BE SUPPLEMENTED BY STANDARD PLANS DATED JULY 2004

Dist	COUNTY	ROUTE	KILOMETER POST TOTAL PROJECT	SHEET NO.	TOTAL SHEETS
05	SB	101	3.5/5.5		

LOCATION MAP

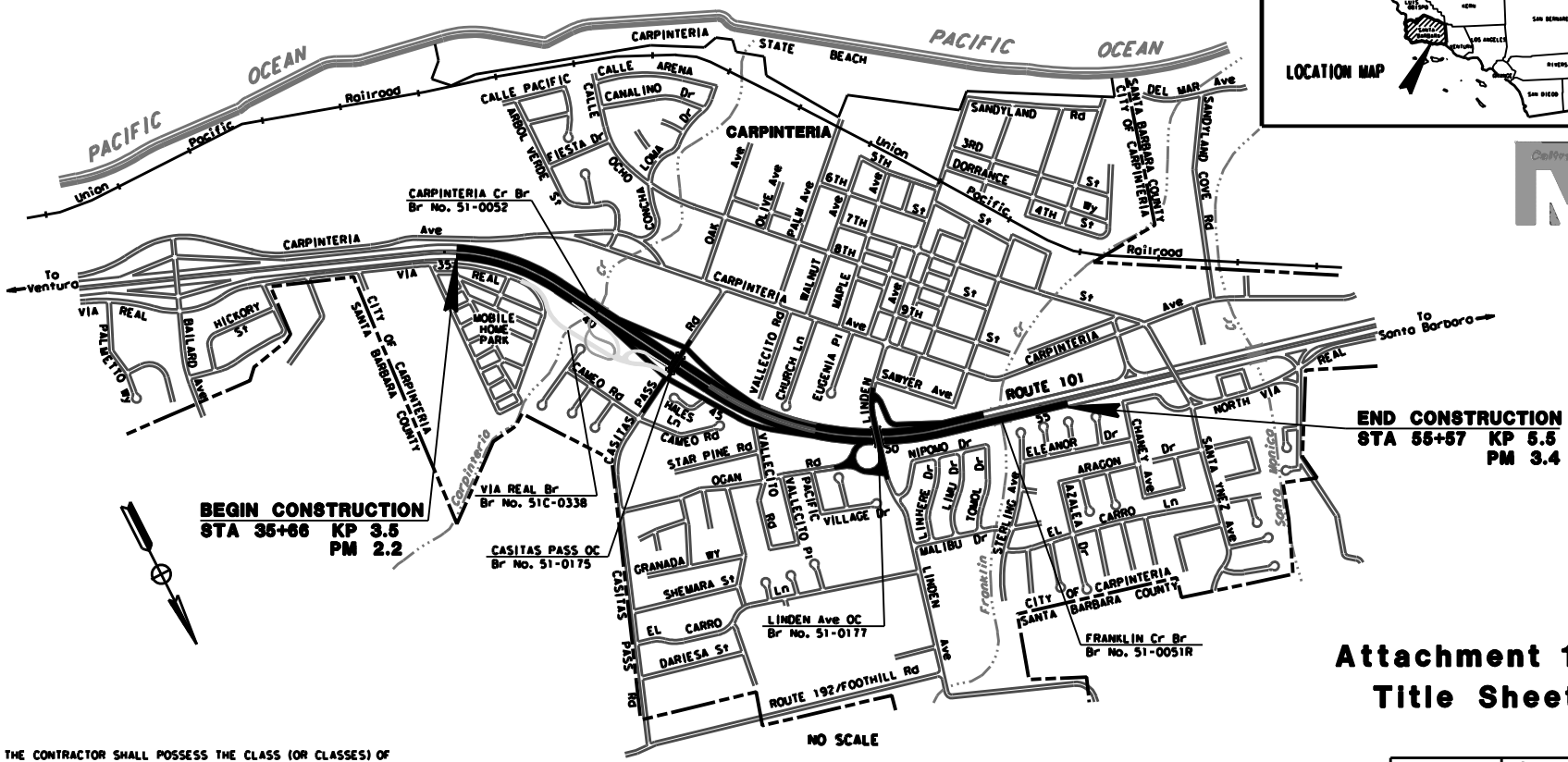

THE CONTRACTOR SHALL POSSESS THE CLASS (OR CLASSES) OF LICENSE AS SPECIFIED IN THE "NOTICE TO CONTRACTORS."

PROJECT MANAGER: DAVID BEARD
DESIGN ENGINEER: KARI BHANA

Attachment 1
Title Sheet

CONTRACT No. 05-4482U0
CU 06233 | EA 4482U0

BORDER LAST REVISED 3/1/2007 | CALTRANS WEB SITE IS: HTTP://WWW.DOT.CA.GOV/ | RELATIVE BORDER SCALE IS IN MILLIMETERS 0 20 40 60 80 | USERNAME => RUSER | DGN FILE => SREQUEST | DATE PLOTTED => 09-14-10 | TIME PLOTTED => 09:42

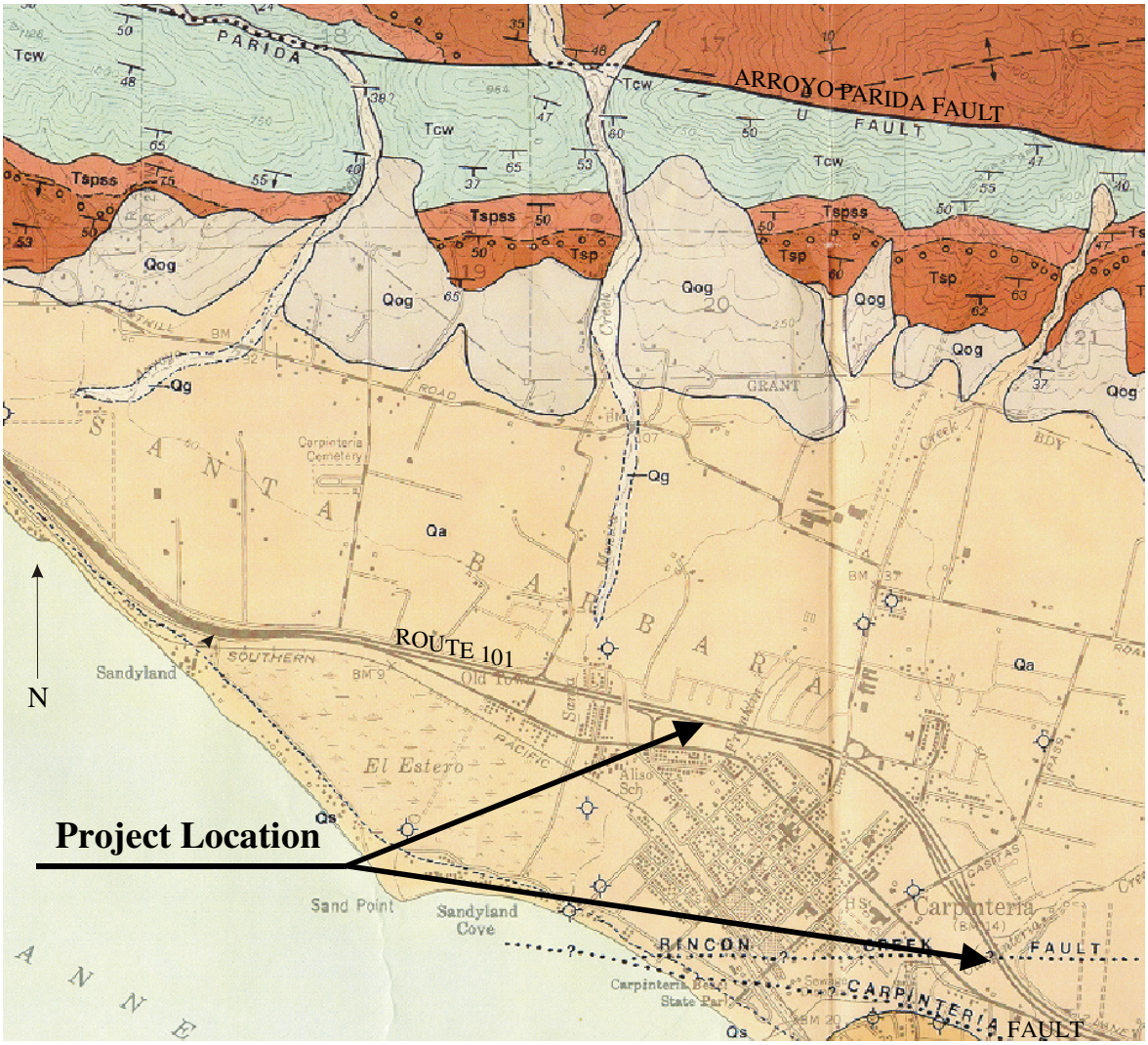

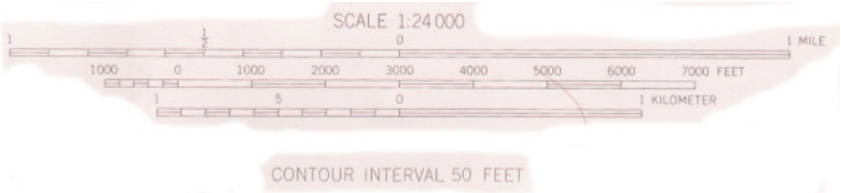

PART OF:

GEOLOGIC MAP OF THE CARPINTERIA QUADRANGLE
BY THOMAS W. DIBBLEE, JR., 1986

Geologic Map

05-SB-101-2.1/3.4
05-448201
Attachment 2

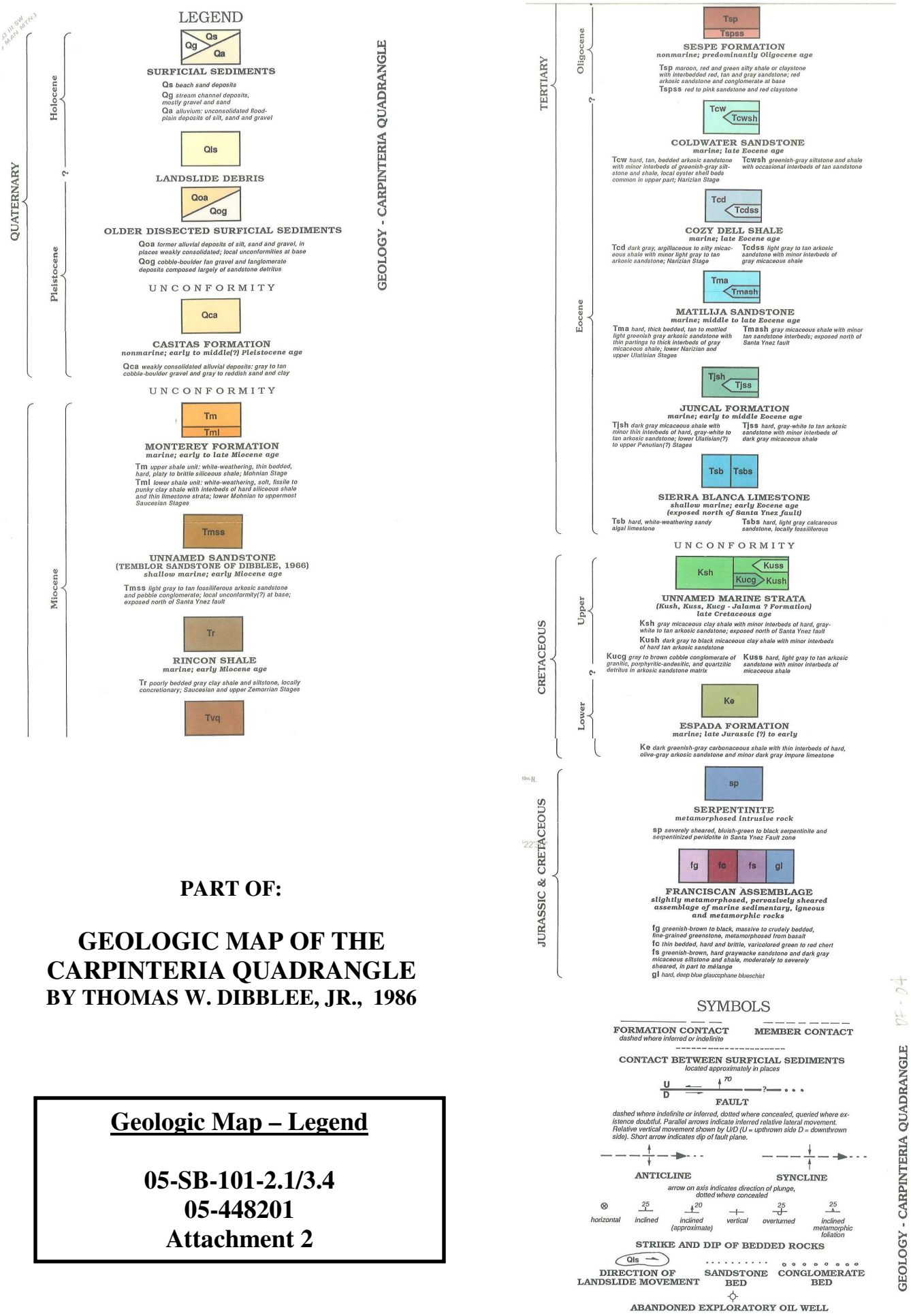

PART OF:

GEOLOGIC MAP OF THE CARPINTERIA QUADRANGLE

BY THOMAS W. DIBBLEE, JR., 1986

Geologic Map – Legend

05-SB-101-2.1/3.4
05-448201
Attachment 2

Rakesh Deo
2/03/14

05-4482U1
Casitas Pass Road OC
Bridge No. 51-0343

Huan Vu/ Sujan Talukder
Rakesh Deo
1/14/2014

Final Foundation Design Data

Support No.	Design Method	Pile Type	Finished Grade Elevation (ft)	Cut-off Elevation (ft)	Pile Cap Size (ft)		Permissible Movement under Service Load (in)		Number of Piles per Support
					B	L	Δ_V	Δ_H	
Abut 1	WSD	Class 200 Alt "W"	41.50	36.67	10	99	1"		21
Bent 2	LRFD	78" CISS	31.50	29	n/a				1
Abut 3	WSD	Class 200 Alt "W"	35.75	31.42	12	108	1"		29
Abut 3 WW Lt & Rt	WSD	Class 140 Alt "W"	39.00	35.42	11	15	1"		5

Final Foundation Design Loads

Support No.	Service-I Limit Stage (kips)			Strength Limit State (kips)				Extreme Event Limit State (kips)				Design Tip Elev (ft)
	Total Load		Permanent Loads Per Support	Compression		Tension		Compression		Tension		
	Per Support	Max Per Pile		Per Support	Max. Per Pile	Per Support	Max. Per Pile	Per Support	Max. Per Pile	Per Support	Max. Per Pile	(Lateral Load)
Abut 1	3305	175	2915	n/a	n/a	n/a	n/a	n/a	n/a	n/a	n/a	—
Bent 2	1340	1340	1035	2090	2090	0	0	1480	1480	0	0	−46.0
Abut 3	5270	195	4750	n/a	n/a	n/a	n/a	n/a	n/a	n/a	n/a	—
Abut 3 WW Lt & Rt	355	80	355	n/a	n/a	n/a	n/a	n/a	n/a	n/a	n/a	—

Note:
Foundation Loads for Bent 2 as shown are for each CISS pile.

DIST	COUNTY	ROUTE	POST MILES TOTAL PROJECT	SHEET No.	TOTAL SHEETS
05	SB	101			

REGISTERED CIVIL ENGINEER X DATE

PLANS APPROVAL DATE

REGISTERED PROFESSIONAL ENGINEER Rakesh Deo No. C73814 Exp. 6/30/13 CIVIL STATE OF CALIFORNIA

The State of California or its officers or agents shall not be responsible for the accuracy or completeness of electronic copies of this plan sheet.

P&Q

LEGEND:

- Indicates concrete removal
- Indicates existing structure
- Indicates location of Min Vert Cir

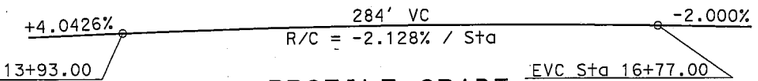

PROFILE GRADE

NO SCALE

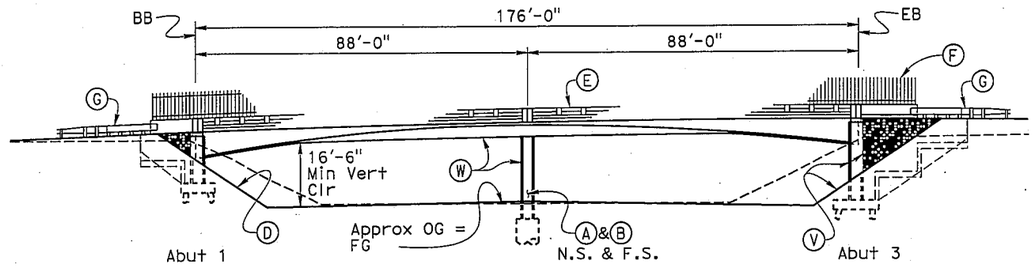

ELEVATION

1" = 20'

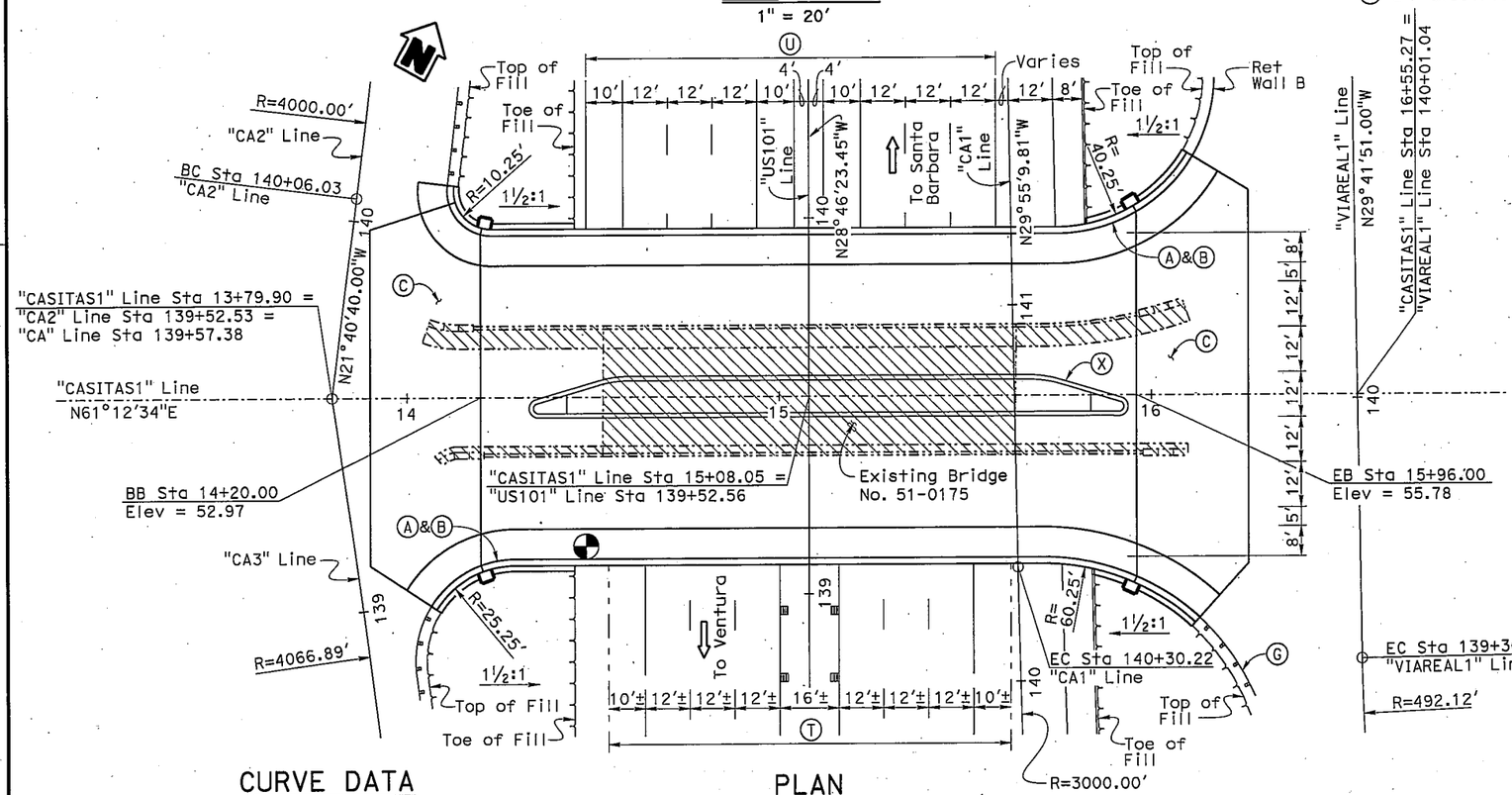

PLAN

1" = 20'

CURVE DATA

"VIAREAL1" Line	"CA1" Line	"CA2" Line	"CA3" Line
R = 492.12'	R = 3000.00'	R = 4000.00'	R = 4066.89'
Δ = 31°22'56"	Δ = 3°11'29"	Δ = 5°00'42"	Δ = 4°20'39"
T = 138.25'	T = 83.57'	T = 175.06'	T = 154.25'
L = 269.55'	L = 167.10'	L = 349.89'	L = 308.35'

NOTES:

- (A) Paint "Casitas Pass Road Overcrossing"
- (B) Paint "Br. No. 51-0343"
- (C) Structure Approach Slab Type N(30S)
- (D) Slope Paving
- (E) Concrete Barrier Type 80SW (Mod)
- (F) Picket Fence
- (G) MGS, see "Road Plans"
- (H) For Bridge Architectural details, see "BRIDGE GEOMETRICS NO. 1" sheet
- (I) 2" ø Electric Conduit (Decorative Lights)
- (J) 2" ø Future Electric Conduit (Caltrans)
- (K) 2" ø Electric Conduit (Irregation), see "ROAD PLANS"
- (L) 4 - 4"ø (Tot 8) Telephone Conduit, Verizon
- (M) NP3 3" Water supply line (Caltrans)
- (N) 4"ø Gas line (8"ø casing), SCG
- (O) 2 - 8"ø Water line (2 - 12"ø Casing), City of Carpinteria
- (P) 4 - 5"ø Power Conduit, SCE
- (Q) 4"ø Television Conduit COX Cable
- (R) 2"ø Electric Conduit (Traffic Signal)
- (S) Contractor shall provide temporary pedestrian walkway during Stage 2 construction
- (T) Existing "US101" lane configuration
- (U) Future "US101" lane configuration
- (V) Architectural treatment on front face of abutments, wingwalls and slope paving, see "BLOCK PATTERN DETAILS" sheet
- (W) All exposed concrete with no architectural treatment, except bridge deck, to be stained
- (X) Bridge Planter, see "BRIDGE PLANTER LAYOUT", "BRIDGE PLANTER DETAILS NO. 1, NO. 2 & NO. 3" and "BRIDGE PLANTER DRAINAGE" sheets.

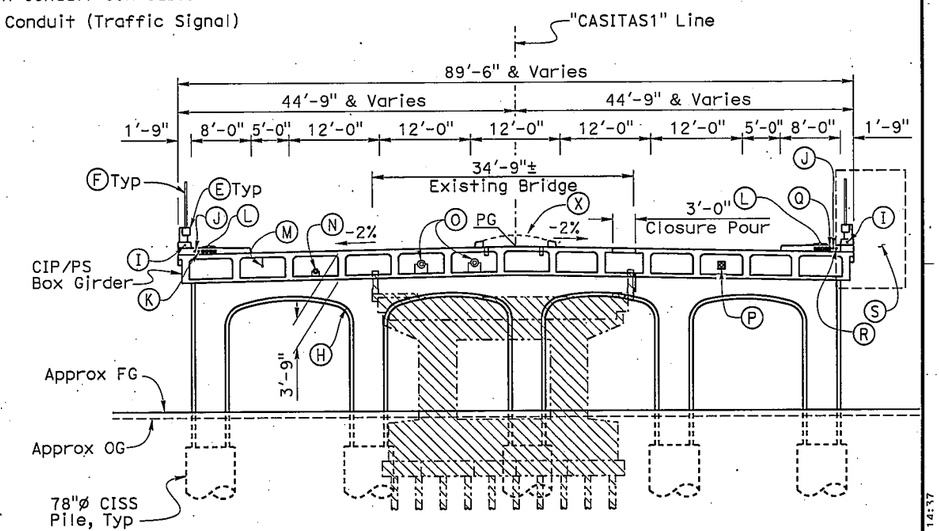

TYPICAL SECTION

1" = 10'

Vehicular Traffic

1. ___New alignment. No traffic at the site.
2. ___Traffic will be detoured away from the site.
3. x Traffic will be carried on the structure. Stage construction will/~~will not~~ be required.
4. x Traffic will pass under the structure on US 101 (Name of St. or Hwy.)
   - A. ___No falsework allowed over traffic.
   - B. x Falsework opening(s) required:

		Temporary Vertical Clearance	Width of Traffic Opening
South	Bnd	15'-0"	26'-0"
North	Bnd	15'-0"	28'-9"
North	Bnd Onramp	15'-0"	17'-3"

   - C. ___Temporary traffic lane reduction needed for footing excavation.

INCOMPLETE PLAN FOR DESIGN STUDY PRINTED JAN 03 2014 Office of Structures, Design STATE OF CALIFORNIA

DESIGN	BY Rakesh Deo	CHECKED X	LOAD & RESISTANCE FACTOR DESIGN	LIVE LOADING: HL93 W/"LOW-BOY"; PERMIT DESIGN VEHICLE
DETAILS	BY G. Dickerson/C. Cancino	CHECKED X	LAYOUT BY Rakesh Deo	CHECKED X
QUANTITIES	BY X	CHECKED X	SPECIFICATIONS BY X	PLANS AND SPECS COMPARED X

X DESIGN ENGINEER

ORIGINAL SCALE IN INCHES FOR REDUCED PLANS 0 1 2 3

STATE OF CALIFORNIA DEPARTMENT OF TRANSPORTATION

DIVISION OF ENGINEERING SERVICES STRUCTURE DESIGN DESIGN BRANCH 7

BRIDGE NO. 51-0343 POST MILE 2.6

CASITAS PASS ROAD OVERCROSSING (REPLACE)

GENERAL PLAN NO. 1

UNIT: 3592 PROJECT NUMBER & PHASE: 05 0000 0543 CONTRACT NO.: 05-4482U1

DISREGARD PRINTS BEARING EARLIER REVISION DATES 11-06-12 12-18-13 11-22-13

SHEET 1 OF 41

FILE => 51-0343-a-gp01.dgn

STRUCTURES GENERAL PLAN SHEET (ENGLISH) (REV.09-01-10)

TIME PLOTTED => 14:37 DATE PLOTTED => 03-JAN-2014 USERNAME => s120020

DIST	COUNTY	ROUTE	POST MILES TOTAL PROJECT	SHEET No.	TOTAL SHEETS
05	SB	101			

REGISTERED CIVIL ENGINEER X DATE

PLANS APPROVAL DATE

REGISTERED PROFESSIONAL ENGINEER Rakesh Deo No. C73814 Exp. 6/30/13 CIVIL STATE OF CALIFORNIA

The State of California or its officers or agents shall not be responsible for the accuracy or completeness of electronic copies of this plan sheet.

P&Q

INCOMPLETE PLAN FOR DESIGN STUDY PRINTED

JAN 06 2014

Office of Structures, Design STATE OF CALIFORNIA

NOTES:

1. Existing bridge elements within the limits of 78"ø CISS piles shall be removed fully. All other existing bridge elements shall be removed to 3'-0" below finish grade.

(E) Concrete Barrier Type 80SW (Mod)
(F) Picket Fence
(H) For Bridge Architectural details, see "BRIDGE GEOMETRICS NO. 1" sheet
(I) 2"ø Electric Conduit (Decorative Lights)
(J) 2"ø Future Electric Conduit (Caltrans)
(K) 2"ø Electric Conduit (Irregation), see "ROAD PLANS"
(L) 4 - 4"ø (Tot 8) Telephone Conduit, Verizon
(M) NP3 3" Water supply line (Caltrans)
(N) 4"ø Gas line (8"ø casing), SCG
(O) 2 - 8"ø Water line (2 - 12"ø Casing), City of Carpinteria
(S) Contractor shall provide temporary pedestrian walkway during Stage 2 construction
(P) 4 - 5"ø Power Conduit, SCE
(Q) 4"ø Television Conduit COX Cable
(R) 2"ø Electric Conduit (Traffic Signal)
(T) Sidewalk to be constructed at end of stage 2 construction
(X) Bridge Planter, see "BRIDGE PLANTER LAYOUT", "BRIDGE PLANTER DETAILS NO. 1, NO. 2 & NO. 3" and "BIRDGE PLANTER DRAINAGE"sheets
(Y) Temporary Concrete Barrier (Type K)

LEGEND:

Indicates existing structure

Indicates concrete removal

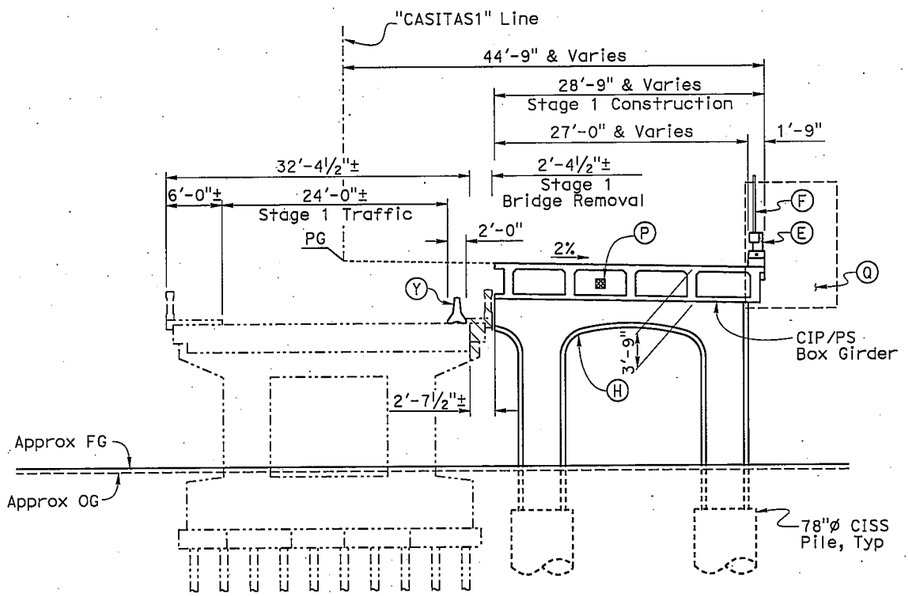

STAGE 1
⅛" = 1'-0"

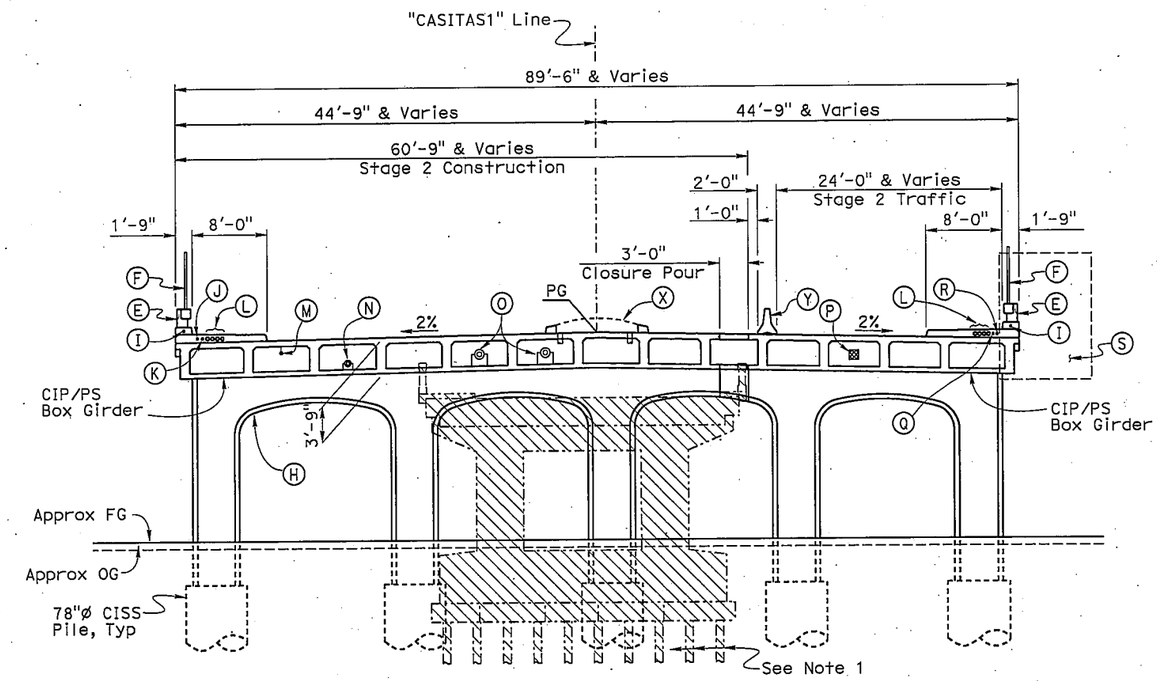

STAGE 2
⅛" = 1'-0"

X DESIGN ENGINEER	DESIGN	BY Rakesh Deo	CHECKED X	LOAD & RESISTANCE FACTOR DESIGN	LIVE LOADING: HL93 W/"LOW-BOY"; PERMIT DESIGN VEHICLE
	DETAILS	BY G. Dickerson/C. Cancino	CHECKED X	LAYOUT BY Rakesh Deo	CHECKED X
	QUANTITIES	BY X	CHECKED X	SPECIFICATIONS BY X	PLANS AND SPECS COMPARED X

ORIGINAL SCALE IN INCHES FOR REDUCED PLANS 0 1 2 3

STATE OF CALIFORNIA DEPARTMENT OF TRANSPORTATION

DIVISION OF ENGINEERING SERVICES STRUCTURE DESIGN DESIGN BRANCH 7

BRIDGE NO. 51-0343 POST MILE 2.6

CASITAS PASS ROAD OVERCROSSING (REPLACE)

GENERAL PLAN NO. 2

UNIT: 3592
PROJECT NUMBER & PHASE: 05 0000 0543 CONTRACT NO.: 05-4482U1

DISREGARD PRINTS BEARING EARLIER REVISION DATES

REVISION DATES 11-07-12 11-16-13 12-18-13 SHEET 2 OF 41

FILE => 51-0343-g-gp02.dgn

STRUCTURES DESIGN GENERAL PLAN SHEET (ENGLISH) (REV.09-01-10)

USERNAME => s17peaco DATE PLOTTED => 03-JAN-2014 TIME PLOTTED => 14:37

Casitas Pass Road Overcrossing

Bridge No. 51-0343 **SDC Controlling Procedure :** **Probabalistic/Deterministic**

Period (s)	SDC
0.010	0.641
0.050	0.870
0.100	0.993
0.150	1.158
0.200	1.292
0.250	1.335
0.300	1.371
0.400	1.352
0.500	1.338
0.600	1.314
0.700	1.300
0.850	1.260
1.000	1.221
1.200	1.094
1.500	0.997
2.000	0.783
3.000	0.444
4.000	0.290
5.000	0.234

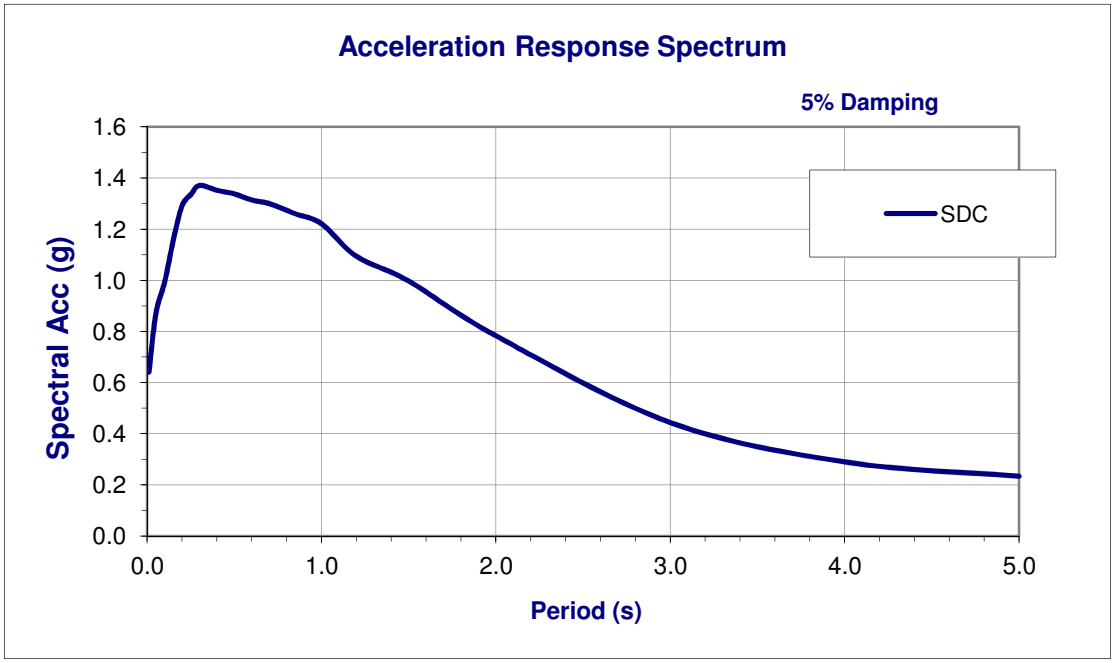

Notes

ARS curve was modified for Near Fault Directivity Effect

M e m o r a n d u m

Flex your power!
Be energy efficient!

To: DAN ADAMS
Structure Design Branch 7
DIVISION OF ENGINEERING SERVICES

Attn: Rakesh Deo

Date: May 5, 2014
File: 05-SB-101-2.2/3.3
Linden Avenue O.C.
Bridge No. 51-0344
EA 05-4482U1

From: **DEPARTMENT OF TRANSPORTATION**
DIVISION OF ENGINEERING SERVICES
GEOTECHNICAL SERVICES

Subject: Foundation Report

Scope of Work

A Foundation Report (FR) is provided for the above referenced project. This report supercedes the report dated 4-1-2014. The project is along State Route 101 in the City of Carpinteria, in southern Santa Barbara County. Improvements are proposed to increase the highway level of service and accessibility, and include replacement of existing bridges and construction of new bridges, retaining walls, sound walls, ramps, and frontage roads. Review of published geologic data and previous geotechnical reports, field reconnaissance, and foundation calculations were performed as part of the geotechnical investigation.

The purpose of this report is to document geotechnical conditions and provide foundation recommendations. This report supercedes the Preliminary Foundation Report (September, 2010).

Project Description

The existing structure at the Linden Avenue Overcrossing is a two-span concrete box girder bridge. Structures Design proposes to replace the existing bridge with a two-span cast-in-place prestressed concrete box girder bridge. The existing and proposed structures carry Linden Avenue over State Route 101.

Pertinent Reports and Investigations

The following publications were used to assist in the assessment of site conditions:

1. *Preliminary Geotechnical Report.* Finegan, Michael. EA 05-448200. December 21, 2000.

2. *District Preliminary Geotechnical Report.* De Llamas, Zeke. EA 05-448200, July 30, 2008.

3. *Preliminary Foundation Report Linden Avenue Overcrossing.* Turner, Ryan. EA 05-4482U1, September, 2010.

Field Investigation and Laboratory Testing Program

Mud rotary borings and cone penetrometer test soundings (CPT) were advanced near each support location to determine the subsurface conditions to be used for foundation design. Refer to the project log of test borings for details of the (7) borings and (3) CPT soundings at the proposed bridge site. PS suspension logging was performed for the project to calculate an average shear wave velocity for use in generating the design ARS curve presented in the seismic section of this report. Refer to Table 1 for a summary of subsurface investigation information.

Table 1. Subsurface Exploration Summary

Boring	*Completion Date*	*Equipment*	*Hammer Type*	*Hammer Efficiency (%)*	*Approximate Ground Elevation (ft)*	*Depth (ft)*
B-2-00	9-13-2000	CME750	Auto	76	24.7	61.5
RC-10-001	11-3-2010	CS2000	Auto	93	23.8	151.5
RC-10-004	12-1-2010	CS2000	Auto	93	24.5	171.5
RC-10-005	12-8-2010	CS2000	Auto	93	26.4	152.0
RC-11-012	2-2-2011	CS2000	Auto	93	25.8	91.5
RC-11-014	3-1-2011	Acker	Auto	68	20.8	152.5
RC-13-017	12-18-2013	CS 2000	Auto	85	25.2	152.0
CPT-11-001	6-22-2011	CPT	N/A	N/A	25.2	100.0
CPT-11-002	6-22-2011	CPT	N/A	N/A	26.6	100.0
CPT-11-004	6-22-2011	CPT	N/A	N/A	27.3	100.0

Site Geology and Subsurface Conditions

Physical Setting

The project is located in the Carpinteria Valley, a sunken area north of the elevated coastal fault block southeast of the City of Carpinteria. Carpinteria Valley is a low-lying, flat plain comprised of alluvial deposits. Some low-lying areas in the valley are partly submerged under brackish water of the Carpinteria Slough. The plain meets the Pacific Ocean to the southwest, gradually gains elevation to the east as it approaches Rincon and La Granada Mountains, and abuts sharply against the foothills of the Santa Ynez Mountains at its the northern boundary.

A mild coastal climate prevails throughout the year, with marine fog often present in spring and summer months. Nearly all precipitation falls from Pacific storms between October and May, with the majority accumulating in the winter months. Average yearly rainfall is 17.5 inches. The average temperature is 72 degrees Fahrenheit with more than 275 days of sunny weather per year.

Regional Geology

The project area is located in the Transverse Ranges Geomorphic Province. State Route 101 is bordered to the north by the Santa Ynez Mountains and to the south by the Pacific Ocean as it traverses the Carpinteria Valley. Geologic maps and field observations indicate that soils in the valley were deposited in an alluvial environment and consist of unconsolidated deposits of clay, silt, sand, and gravel.

Groundwater

Open observation wells were installed to observe fluctuations in groundwater levels and determine if groundwater will influence construction and foundation design. Results of the groundwater-monitoring program are summarized in Table 2.

Table 2. Groundwater Elevations

Boring	Date	Depth to Groundwater (ft)	Groundwater Elevation(ft)
B-2-00	2-9-2011	5.1	19.6
B-2-00	2-24-2012	5.3	19.4
B-2-00	3-22-2012	5.7	19.0
B-2-00	4-19-2012	4.9	19.8
B-2-00	2-5-2013	5.9	18.8
B-2-00	4-5-2013	5.7	19.0
B-2-00	5-23-2013	6.3	18.4
RC-10-004	2-9-2011	3.9	20.6
RC-10-004	12-14-2011	5.0	19.5
RC-10-004	2-24-2012	4.8	19.3
RC-10-004	3-22-2012	5.0	19.5
RC-10-004	4-19-2012	4.3	20.2
RC-10-004	7-26-2012	5.4	19.1
RC-10-004	2-5-2013	5.3	19.2
RC-10-004	4-5-2013	5.7	18.8
RC-10-004	5-23-2013	6.0	18.4

Corrosion Evaluation

The department considers a site to be potentially corrosive to the foundation elements if the following conditions exist for the representative soil and/or water samples taken at the site: minimum resistivity of 1000 ohm-cm or less and/or PH of 5.5 or less. Samples found to be potentially corrosive based on this criteria are sent to the Headquarters Material Laboratory for additional corrosion testing based on chloride and sulphate content.

Soil and water samples were obtained during the subsurface investigation and tested for corrosion potential at the District Materials Laboratory. The results of the corrosion testing are presented in Table 3. Based on the results, soils are not considered corrosive to foundation elements.

Table 3. Corrosion Testing Summary

Boring	*Depth (ft)*	*pH*	*Resistivity ohm-cm*	*Chloride ppm*	*Sulphate ppm*	*Corrosive*
RC-10-001	6.5-10.0	8.1	1940	-	-	NO
RC-10-001	22.0-25.0	8.2	5600	-	-	NO
RC-10-001	48.0-50.0	8.0	2450	-	-	NO
RC-10-001	67.0-70.0	7.8	2150	-	-	NO
RC-10-004	0.0-3.0	8.1	660	140	870	NO
RC-10-004	25.0-26.5	8.0	2650	-	-	NO
RC-10-004	57.0-59.0	8.2	6330	-	-	NO
RC-10-005	2.0-4.0	8.4	1260	-	-	NO
RC-10-005	47.0-49.0	8.4	2350	-	-	NO
RC-10-005	87-0-89.0	8.6	3560	-	-	NO
RC-11-014	6.0-7.5	8.04	3658	-	-	NO
RC-11-014	16.0-17.5	7.54	2499	-	-	NO
RC-11-014	60.0-61.5	7.79	2602	-	-	NO
RC-11-014	86.0-87.5	7.80	2591	-	-	NO

Seismic Recommendations

Based on the *Caltrans Seismic Design Procedure*, the following active and potentially active faults are located within the vicinity of the project site. The Caltrans ARS Online Tool was used to develop ARS curves for deterministic and probabilistic seismic prediction models. An average shear wave velocity of 679 ft/sec (207 m/s) for the upper 100 feet of soil was determined from PS logging and used to generate the ARS curves. The corresponding design envelope ARS curves are presented in Figure 1. Basin and near-fault factors were applied to the data due to the proximity of the faults and location of the project site. Curve data points are included as an attachment to this report.

Table 4. Active and Potentially Active Faults

Fault Name	*Fault Type*	*Moment magnitude of maximum credible earthquake*	*Peak ground acceleration T=0 sec (gravity)*
Red Mountain	Reverse	7.4	0.57
Mesa Rincon Creek	Reverse	6.6	0.50
Ventura-Pitas Point	Reverse	7.2	0.42

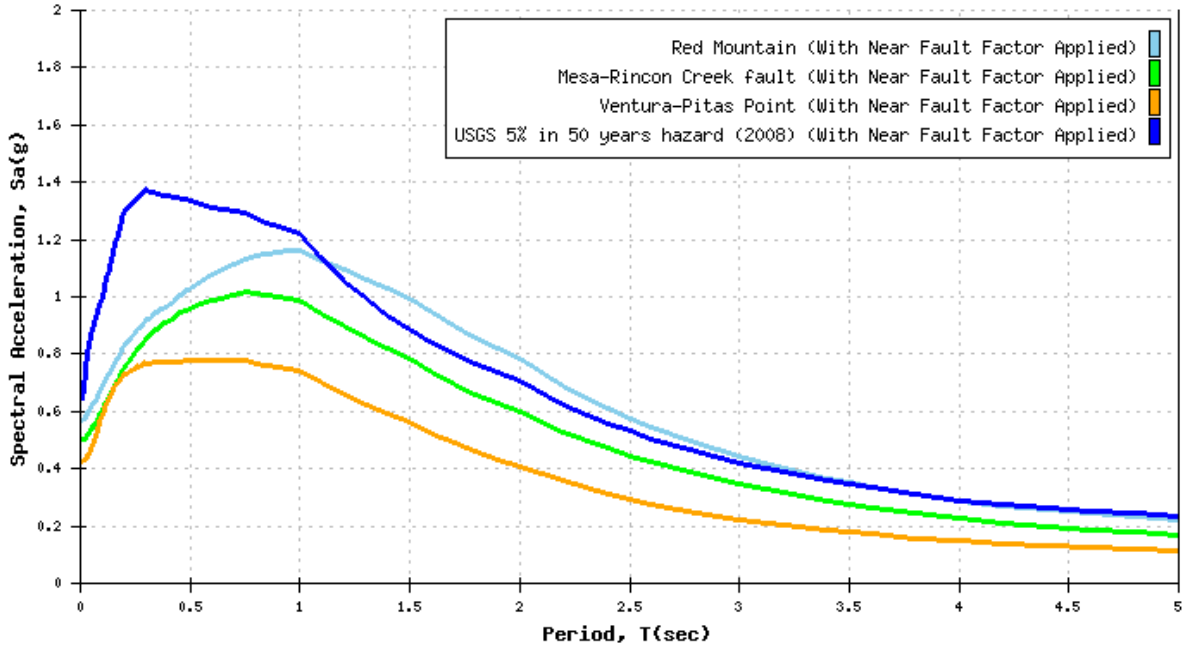

Figure 1. Design ARS Curve

Liquefaction is the partial or complete loss of soil shear strength due to the build-up of excess pore water pressure during a seismic event. The potential for liquefaction was estimated using correlations to SPT and CPT by calculating the cyclic resistance and cyclic stress ratios (CRR versus CSR). Although some thin layers were determined to be potentially liquefiable, the effects of liquefaction on the bridge are expected to be minimal, due to the thinly bedded nature of the soil profile, presence of interbedded fine grained soils, and the horizontally and vertically discontinuous nature of soil layers. Liquefaction of thin, discreet layers is not expected to cause significant seismic settlement or induce downdrag forces on pile foundations.

As-Built Foundation Data

The as-built Log of Test Borings for the Linden Avenue Overcrossing (Br. No. 51-0117) indicate that the area is underlain by approximately 16 feet of soft sandy clay and clayey silt above slightly compact sand and very stiff clayey silt and silt. One mud rotary boring and four penetrometer soundings were performed as part of the foundation investigation in 1951. The ground surface elevation of the borings was approximately 22 feet. The ground water surface elevation measured during the 1951 investigation was determined to be approximately at elevation 18 feet.

Foundation Recommendations

Standard Plan Class 200 Alt W and Driven Steel Shells Filled with Concrete and Reinforcing

Structure Design proposes that the bridge abutments be supported on standard plan driven Class 200 Alt W pipe piles and the bent supports be founded on 78-inch driven steel shells filled with concrete and reinforcing, referred to heir in as cast-in-steel-shell (CISS) piles. CISS piles provide high resistance to lateral loads and are a good alternative where lateral loads cannot be efficiently resisted using a group of driven piles or a single large diameter driven pile. Base resistance and side resistance are assumed to provide axial resistance. Axial geotechnical resistance of CISS piles will be provided by side and base resistance in the alluvial soils underlying the site. Driving resistance of the driven pipe portion of CISS piles was estimated by summing the exterior side resistance, base resistance of the pipe ring area, and the interior side resistance of the soil plug, which is estimated to be approximately 1/3 of the exterior side resistance. CISS pile tip elevations shall not be changed if calculated driving resistances exceed the estimated driving resistance; drive CISS piles to the specified tip elevation.

Estimated settlement of 0.8 inches was calculated at the Service-I Limit State Load for the 78-inch CISS piles, less than the maximum allowable criteria of 1 inch. Because the specified tip elevation will not be raised, calculation of a design tip elevation for serviceability criteria is unnecessary. 30-day embankment settlement periods are recommended at Structure Stage 1 and 2 for both approach embankments.

Abutment Foundations Design Recommendations

Support Location	Pile Type	Cut-off Elevation (ft)	LRFD Service-I Limit State Load (kips) per Support		LRFD Service-I Limit State Total Load (kips) per Pile (Compression)	Required Nominal Resistance (kips)	Design Tip Elevations (ft)	Specified Tip Elevation (ft)	Required Driving Resistance (kips)
			Total	Permanent					
Abut. 1	Class 200 Alt W	26.92	2590	2330	165	330	-31 (a) -20(c)	-31.08	330
Abut. 3	Class 200 Alt W	27.92	3185	2255	160	320	-40 (a) -38(c)	-40.08	330

Notes:
1) *Design tip elevations are controlled by: (a) Compression, (c) Settlement*
2) *The specified tip elevation must not be raised above the design tip elevations for tension, lateral, and tolerable settlement.*

Bent Foundations Design Recommendations											
Support Location	Pile Type	Cut-off Elevation (ft)	Service-I Limit State Load per Support (kips)	Total Permissible Support Settlement	Required Nominal Resistance (kips)				Design Tip Elevations (ft)	Specified Tip Elevation (ft)	Required Driving Resistance (kips)
					Strength Limit		Extreme Event				
					Comp. (φ=0.8)	Tension (φ=0.7)	Comp. (φ=1)	Tension (φ=1)			
Bent 2	78" CISS	17.8	1640	1"	3150	0	1245	0	-54.2 (a-I) -57.2(d)	-57.20	2560

Notes:
1) *Design tip elevations are controlled by: (a-I) Compression, (d) Lateral*
2) *The specified tip elevation must not be raised above the design tip elevation.*

Pile Data Table							
Location	Pile Type	Nominal Resistance (kips)		Design Tip Elevation (ft)	Specified Driven Steel Shell Tip Elevation (ft)	Specified Reinforcing and Concrete Tip Elevation (ft)	Required Driving Resistance (kips)
		Compression	Tension				
Abut. 1	Class 200 Alt W	300	N/A	-31 (a), -20 (c)	-31.08	N/A	330
Bent 2	78" CISS	3300	N/A	-54.2 (a), -57.2 (d)	-57.20	-47.2	2560
Abut. 3	Class 200 Alt W	330	N/A	-40 (a), -38(c)	-40.08	N/A	330

Notes:
1) *Design tip elevations for Abutments are controlled by: (a) Compression, (c) Settlement*
2) *Design tip elevations for Bents are controlled by: (a) Compression, (d) Lateral*
3) *Required driving resistances at Abutments 1 and 3 exceed the required nominal resistances to provide sufficient penetration into a bearing layer.*
4) *The specified tip elevation must not be raised above the design tip elevations for tension load, lateral load, and tolerable settlement.*

Load Test

Due to the large diameter of the driven CISS piles required at the Bent 2 support, a load test is required to verify the nominal axial resistance and load deflection behavior of the piles. Per Memo to Designers 3-1, load tests are recommended for driven piles greater than 3 feet in diameter. It is recommended to perform a static axial load test using the Department's testing equipment and 8000 kip load testing frame in the existing southbound Linden Avenue on-ramp circle. Four 4-foot diameter driven pipe anchor piles are required to resist the axial load applied to the test pile. Refer to the project plans for details of the load test frame. Monitoring of load

deformation behavior of the test pile using strain gauges on the driven steel shell and reinforcing to determine unit side and base resistances is recommended to be performed by the Foundation Testing Branch (FTB). FTB will work with Geotechnical Design North to determine the required pile instrumentation and test equipment to be provided by the contractor and specified in the contract plans and Special Provisions. The "proof" load test will verify the strength and serviceability requirements of the foundations to be used as production piles, and allow use of a higher strength limit state resistance factor for design in axial compression.

Dynamic monitoring of the load test pile and one anchor pile during driving using the Department's Pile Driving Analyzer (PDA) is recommended. Results of the dynamic monitoring will be used in conjunction with the static load test to determine pile driving acceptance criteria. Two static load tests are recommended: 1) load the test pile to the nominal axial geotechnical resistance after driving and before removal of the soil plug and 2) load the test pile to the nominal axial geotechnical resistance after removal of the soil plug and placement of reinforced concrete to the design tip elevation. Monitoring of the installed strain gauges during both load tests should be performed. After completing driving, a minimum setup period of 7 days is recommended prior to performing the first static load test to allow for dissipation of excess pore pressures.

Load Test Pile Data Table

Location	Pile Type	Approximate Ground Elevation (ft)	Cut-off Elevation (ft)	Specified Driven Steel Shell Tip Elevation (ft)	Specified Reinforcing and Concrete Tip Elevation (ft)	Estimated Driving Resistance (kips)
Anchor Piles	48" Driven Pipe Pile	23.0	26.0 *33.0	-45.0	N/A	1330
Test Pile	78" CISS	23.0	38.0	-66.0	-56.0	2940

Notes:

1) *Tip elevations of piles must not be raised if driving resistance exceeds estimated driving resistance*
2) *Cut-off elevation of Test Pile to allow for installation of PDA equipment. After dynamic monitoring, cut off Test Pile to the authorized elevation required for the load test.*
3) ** Cut-off elevation of one of the 4 anchor piles to allow for installation of PDA equipment. After dynamic monitoring, cut off anchor pile at the elevation shown.*

Axial geotechnical resistance of the test CISS pile will be provided by side and base resistance in the alluvial soils underlying the site. Driving resistance of the driven pipe portion of CISS pile was estimated by summing the exterior side resistance, base resistance of the pipe ring area, and the interior side resistance of the soil plug, which is estimated to be approximately 1/3 of the exterior side resistance. The load test CISS pile tip elevation shall not be changed if calculated/measured driving resistances exceed the estimated driving resistance; drive the load test CISS pile to the specified tip elevation.

Construction Considerations

Additional length of reaction piles and the test pile above finished grade are required to install the load test anchor heads and instrumentation required for dynamic monitoring of the piles during driving. Refer to the project plans for details of construction.

Coordination between Construction and the Foundation Testing Branch will be required to schedule the pile load test and ensure that representatives from FTB are available to assist the contractor during construction of the load test and perform the load test within the required time limits. Driving of Bent 2 CISS piles shall not be performed until the results of the static load tests are accepted.

It is recommended to maintain a permanent soil plug with a minimum length of 10 feet inside of the driven steel shell. Due to high regional groundwater and the potential for heave into the base of the excavation, construction of the reinforced concrete portion of the CISS piles is recommended to be performed using the wet method and specifications. Maintain an offsetting hydrostatic head using drilling slurry during excavation of the soil inside of the driven shell, clean the sides and base of the pipe and excavation, place the cage inside of the drilling fluid, and place concrete using a tremie to displace the slurry per the requirements of 2010 Standard Specification 49-3.02C(8). Use visual inspection and a weighted tape to ensure that the base of the excavation is level, clean, and free of loose material.

It is recommended that driving system submittals be required for piles at Abutment 1, Bent 2, Abutment 3, the load test pile, and load test anchor piles per Standard Specification 49-2.01A(3)(b).

Additional Information

Standard Specifications 2010 Section 2-1.6.B, "Supplemental Project Information", discloses to bidders and contractors a list of pertinent information available for their inspection prior to bid opening. Items listed to be included in the Information Handout will be provided in Acrobat (.pdf) format to the Addressee of this report via electronic mail.

Data and information attached with the project plans are:

A. Log of Test Borings.

Data and information included in the Information Handout provided to the Bidders and Contractors are:

A. Foundation Report for Linden Avenue Overcrossing dated May 5, 2014.

If you have any questions or comments, please contact Ryan Turner at (805) 549-3750, or Michael Finegan at (805) 549-3194.

REGISTERED PROFESSIONAL ENGINEER
Ryan Turner
No. C 73956
Exp. 6-30-2015
CIVIL
STATE OF CALIFORNIA

REGISTERED PROFESSIONAL ENGINEER
Michael S.Finegan
No. C 50138
Exp. 6-30-2015
CIVIL
STATE OF CALIFORNIA

RYAN TURNER, P.E.
Transportation Engineer Civil
Geotechnical Design – North
Branch D

MICHAEL S. FINEGAN, P.E.
Branch Chief
Geotechnical Design – North
Branch D

c: Job File / Branch D Records
Structure Construction RE Pending File (email RE_pending_file@dot.ca.gov)
Craig Whitten / DES Office Engineer
Andrew Tan / PCE
Eric Karlson/ DME

LIST OF ATTACHMENTS

Vicinity Map	Attachment 1
Geologic Map and Legend	Attachment 2
Foundation Data Design Sheet	Attachment 3
Structure Plans	Attachment 4
ARS Data	Attachment 5

INDEX OF SHEETS

STATE OF CALIFORNIA
DEPARTMENT OF TRANSPORTATION

PROJECT PLANS FOR CONSTRUCTION ON
STATE HIGHWAY
IN SANTA BARBARA COUNTY
IN CARPINTERIA
FROM 0.4 KM SOUTH OF CARPINTERIA CREEK BRIDGE
TO 0.5 KM NORTH OF LINDEN AVENUE OVERCROSSING

TO BE SUPPLEMENTED BY STANDARD PLANS DATED JULY 2004

Dist	COUNTY	ROUTE	KILOMETER POST TOTAL PROJECT	SHEET NO.	TOTAL SHEETS
05	SB	101	3.5/5.5		

LOCATION MAP

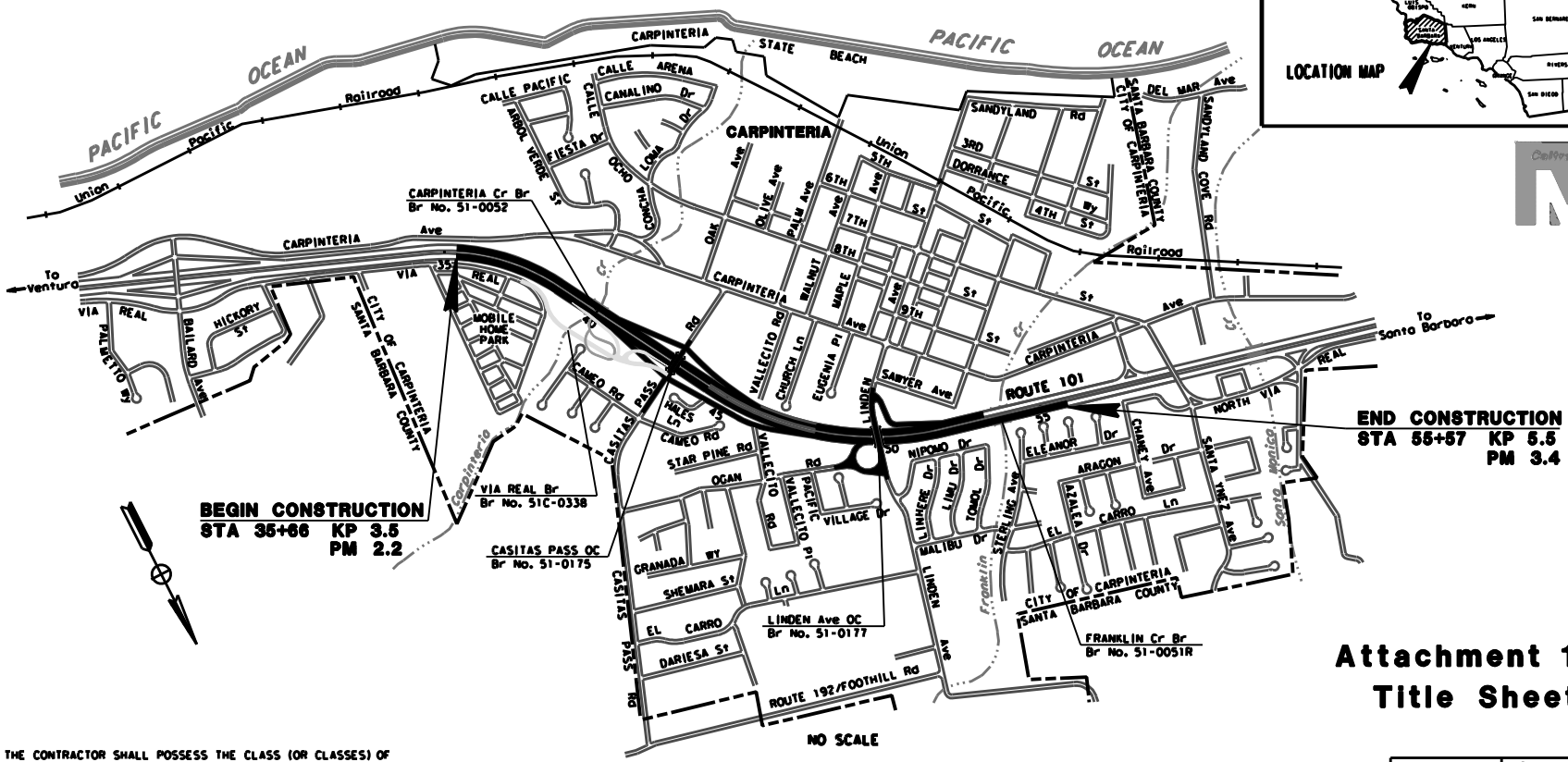

THE CONTRACTOR SHALL POSSESS THE CLASS (OR CLASSES) OF LICENSE AS SPECIFIED IN THE "NOTICE TO CONTRACTORS."

PROJECT MANAGER: DAVID BEARD
DESIGN ENGINEER: KARI BHANA

Attachment 1
Title Sheet

CONTRACT No. 05-4482U0
CU 06233 | EA 4482U0

BORDER LAST REVISED 3/1/2007 | CALTRANS WEB SITE IS: HTTP://WWW.DOT.CA.GOV/ | RELATIVE BORDER SCALE IS IN MILLIMETERS 0 20 40 60 80 | USERNAME => RUSER | DGN FILE => SREQUEST | DATE PLOTTED => 09-14-10 | TIME PLOTTED => 09:42

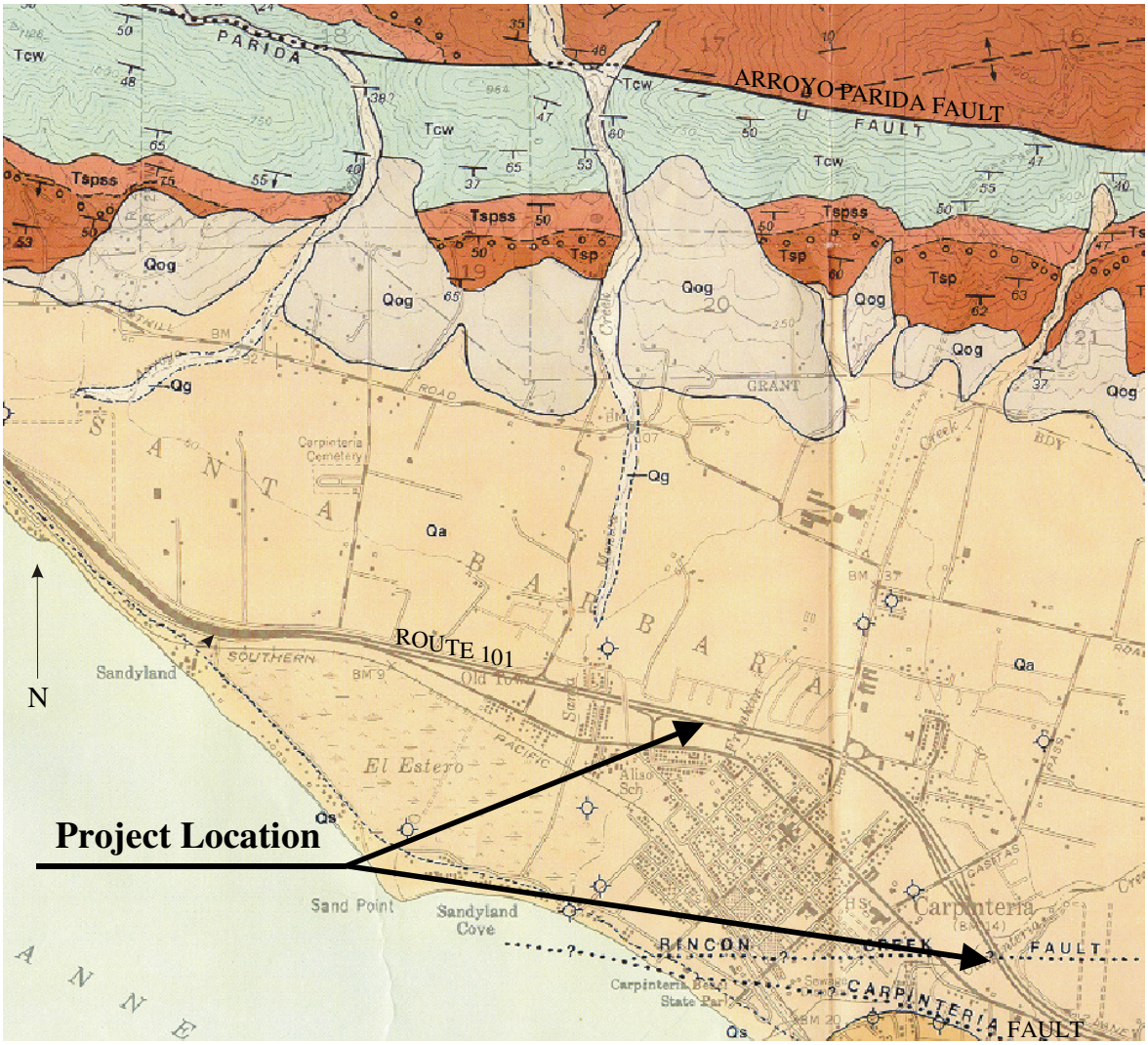

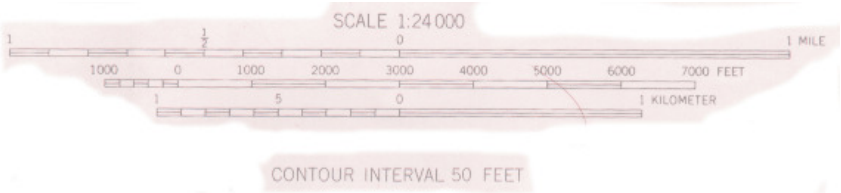

PART OF:

GEOLOGIC MAP OF THE CARPINTERIA QUADRANGLE
BY THOMAS W. DIBBLEE, JR., 1986

Geologic Map

05-SB-101-2.1/3.4
05-448201
Attachment 2

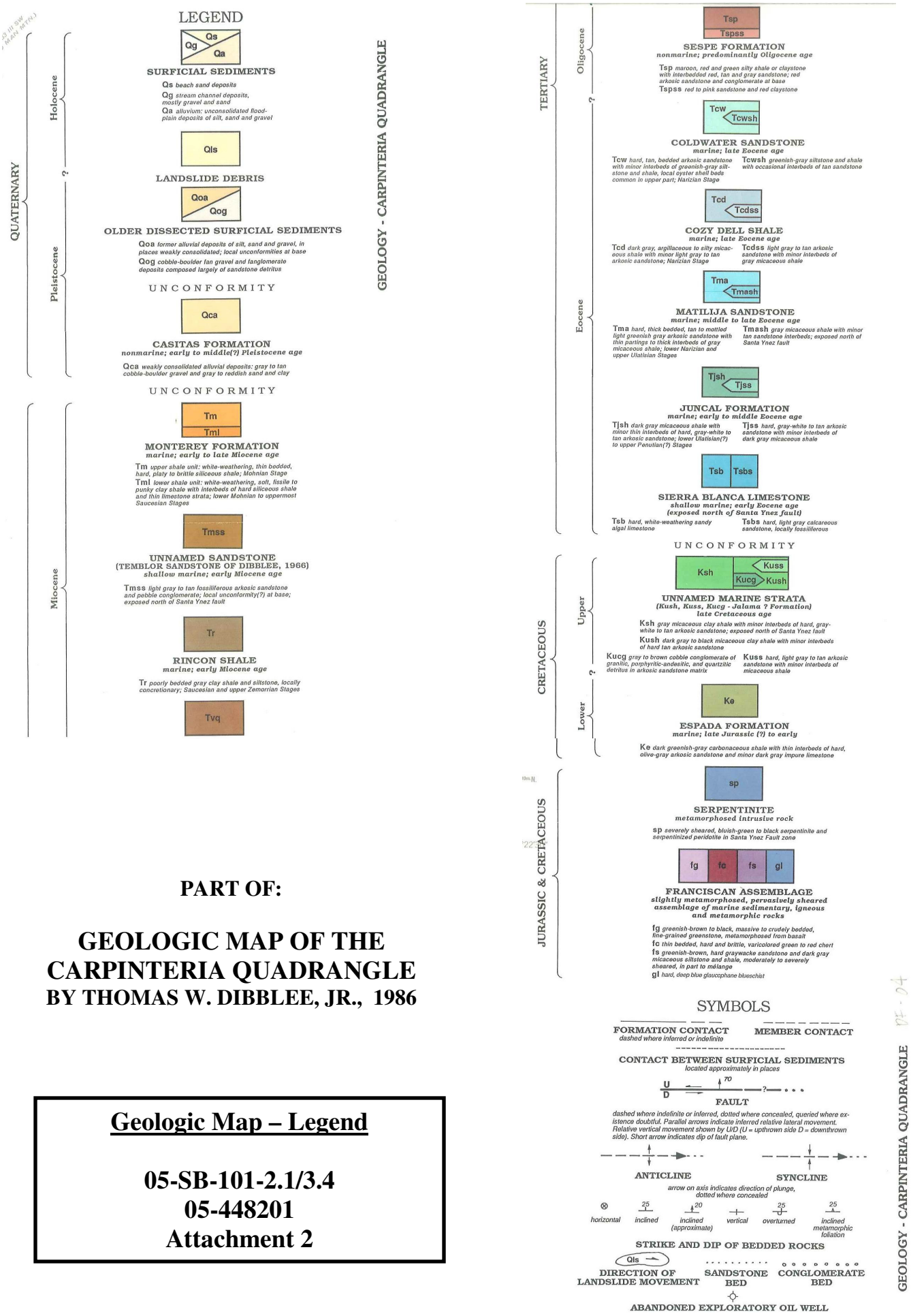

PART OF:

GEOLOGIC MAP OF THE CARPINTERIA QUADRANGLE

BY THOMAS W. DIBBLEE, JR., 1986

Geologic Map – Legend

05-SB-101-2.1/3.4
05-448201
Attachment 2

Rakesh Deo
2/03/14

05-4482U1
Linden Avenue OC
Bridge No. 51-0344

Keith Stillmukes
Rakesh Deo
1/14/2014

Final Foundation Design Data

Support No.	Design Method	Pile Type	Finished Grade Elevation (ft)	Cut-off Elevation (ft)	Pile Cap Size (ft)		Permissible Movement under Service Load (in)		Number of Piles per Support
					B	L	Δ_V	Δ_H	
Abut 1	WSD	Class 200 Alt "W"	33.6	28.5	10	80.08	1"		16
Bent 2	LRFD	78" CISS	20.8	17.8	n/a				1
Abut 3	WSD	Class 200 Alt "W"	34.9	29.8	10	74.50	1"		20

Final Foundation Design Loads

Support No.	Service-I Limit Stage (kips)			Strength Limit State (kips)				Extreme Event Limit State (kips)				Design Top Elev (ft)
	Total Load		Permanent Loads Per Support	Compression		Tension		Compression		Tension		
	Per Support	Max Per Pile		Per Support	Max. Per Pile	Per Support	Max. Per Pile	Per Support	Max. Per Pile	Per Support	Max. Per Pile	(Lateral Load)
Abut 1	2590	165	2330	n/a	n/a	n/a	n/a	n/a	n/a	n/a	n/a	—
Bent 2	1640	1640	1260	2520	2520	0	0	1245	1245	0	0	-57.2
Abut 3	3185	160	2255	n/a	n/a	n/a	n/a	n/a	n/a	n/a	n/a	—

Note:
Foundation Loads for Bent 2 as shown are for each CISS pile.

DIST	COUNTY	ROUTE	POST MILES TOTAL PROJECT	SHEET No.	TOTAL SHEETS
05	SB	101			

REGISTERED CIVIL ENGINEER X DATE

PLANS APPROVAL DATE

REGISTERED PROFESSIONAL ENGINEER Rakesh Deo No. C73814 Exp. 6/30/13 CIVIL STATE OF CALIFORNIA

The State of California or its officers or agents shall not be responsible for the accuracy or completeness of electronic copies of this plan sheet.

INCOMPLETE PLAN FOR DESIGN STUDY PRINTED JAN 06 2014 Office of Structures, Design STATE OF CALIFORNIA

NOTES:

(A) Paint "Linden Avenue Overcrossing"
(B) Paint "Br. No. 51-0344"
(C) Structure Approach Slab Type N(30S)
(D) Slope Paving with Arch. treatment
(E) Concrete Barrier Type 80 (Mod) with 8'-0" sidewalk
(F) Picket Fence
(G) MBGR, see "Road Plans"
(H) 1 - 12"ø water line (20" casing), City Of Carpinteria
(I) 1 - 6"ø gas line (10" casing), SoCal Gas
(J) 4 - 5"ø power conduits, SCE
(K) 1 - 4"ø television conduit, Cox Cable
(L) 1 - NPS 3 water supply line
(M) 4 - 4"ø Future Utility opening
(N) 1 - 2"ø electric conduit, see "ROAD PLANS"
(O) Temporary Railing Type K
(P) Existing "US101" lane configuration
(Q) Future "US101" lane configuration
(R) See "RETAINING WALL I" plans
(S) See "RETAINING WALL J" plans

P&Q

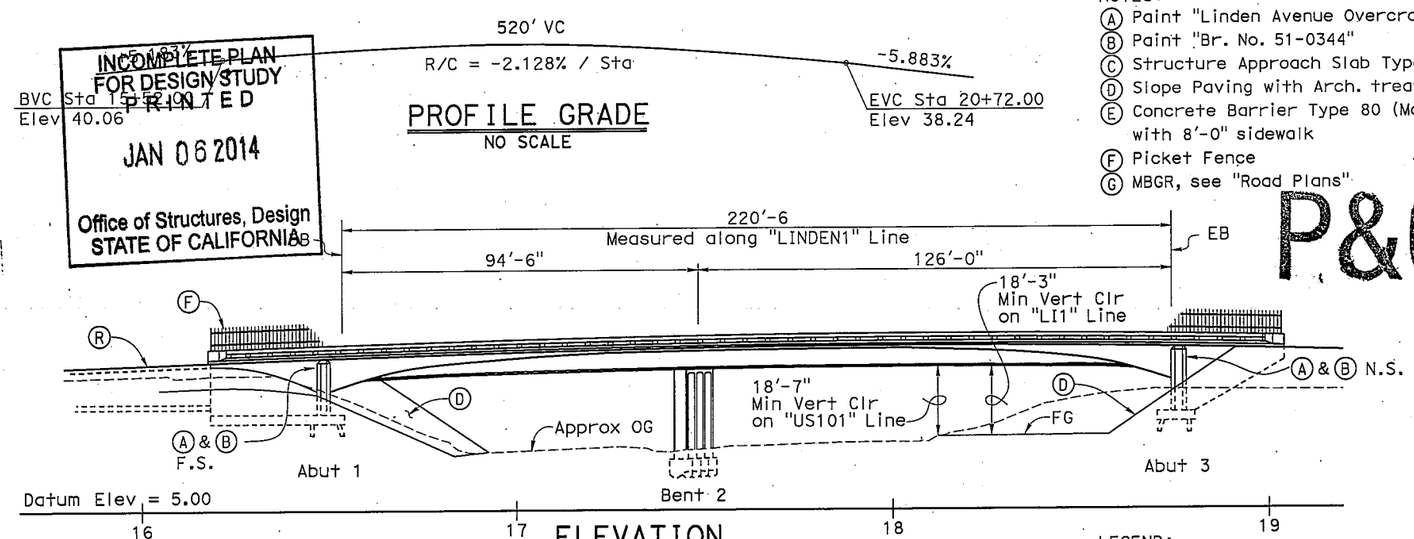

LEGEND:

------ Indicates existing
Indicates structure removal
Indicates point of minimum vertical clearance

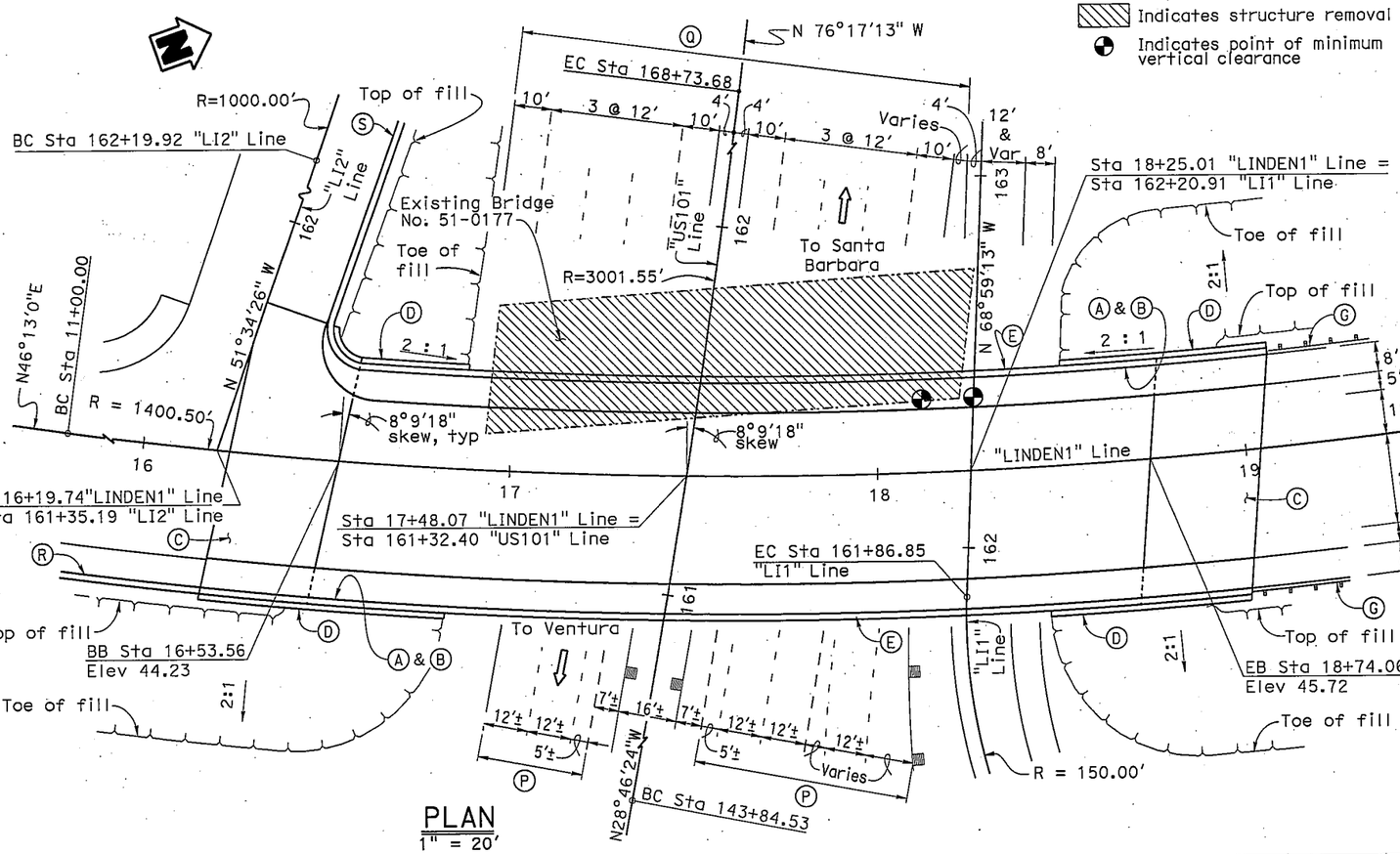

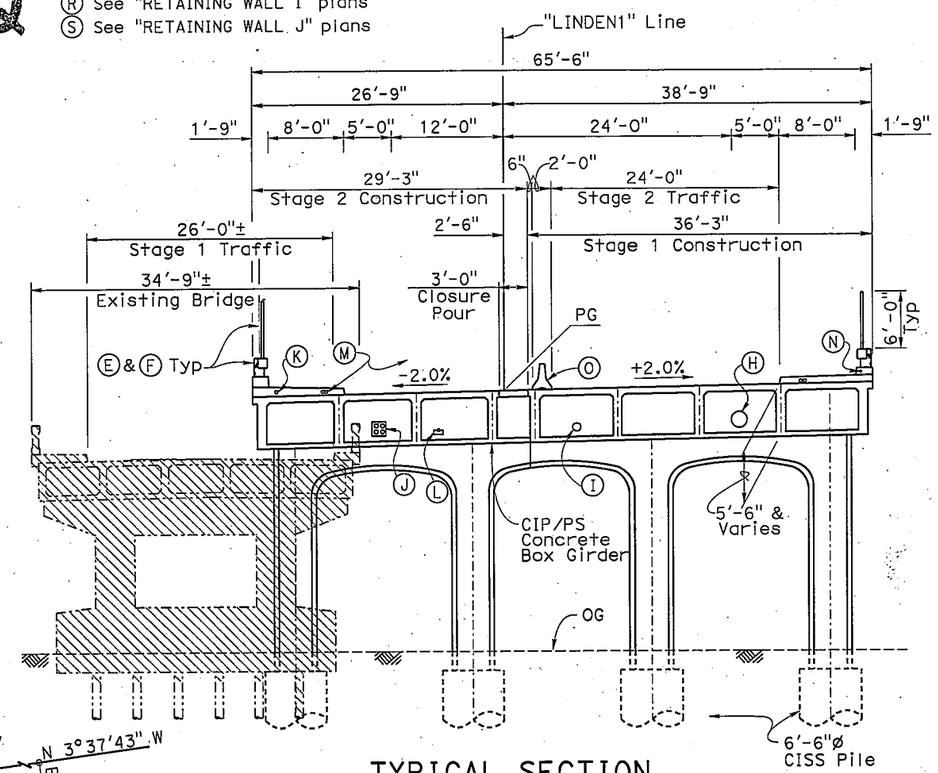

CURVE DATA

"LINDEN1" Line
R = 1400.50'
Δ = 49°50'54.91"
T = 650.81'
L = 1218.47'

"US101" Line
R = 3001.55'
Δ = 47°30'52.95"
T = 1321.18'
L = 2489.15'

"LI1" Line
R = 150.00'
Δ = 44°08'39.37"
T = 60.82'
L = 115.57'

"LI2" Line
R = 1000.00'
Δ =16°53'46.56"
T = 148.53'
L = 294.90'

Vehicular Traffic

1. ___New alignment. No traffic at the site.
2. ___Traffic will be detoured away from the site.
3. X Traffic will be carried on the structure. Stage construction (will) ~~will not~~ be required.
4. X Traffic will pass under the structure on Hwy 101 (Name of St. or Hwy.)

A. ___No falsework allowed over traffic.
B. X Falsework opening(s) required:

		Temporary Vertical Clearance	Width of Traffic Opening
N	Bnd	15'-0"	49'-0"
S	Bnd	15'-0"	37'-0"
	Two-way		

C. ___Temporary traffic lane reduction needed for footing excavation.

DESIGN	BY Keith Stillmunkes	CHECKED Daryoush Tavatli	LOAD & RESISTANCE FACTOR DESIGN	LIVE LOADING: HL93 W/"LOW-BOY" PERMIT DESIGN VEHICLE	
DETAILS	BY Yingjue Feng	CHECKED Daryoush Tavatli	LAYOUT	BY Keith Stillmunkes	CHECKED Daryoush Tavatli
QUANTITIES	BY Wendy Hou	CHECKED Fangfei Chen	SPECIFICATIONS	BY X	PLANS AND SPECS COMPARED X

X DESIGN ENGINEER

ORIGINAL SCALE IN INCHES FOR REDUCED PLANS 0 1 2 3

STATE OF CALIFORNIA DEPARTMENT OF TRANSPORTATION

DIVISION OF ENGINEERING SERVICES STRUCTURE DESIGN DESIGN BRANCH 7

BRIDGE NO. 51-0344
POST MILE 3.06

LINDEN AVENUE OVERCROSSING (REPLACE)

GENERAL PLAN

UNIT: 3592
PROJECT NUMBER & PHASE: 0500000543
CONTRACT NO.: 05-4482U4

DISREGARD PRINTS BEARING EARLIER REVISION DATES

REVISION DATES 10-17-12 8/20/13 12/17/13

SHEET 1 OF 32

FILE => 51-0344-a-gp.dgn

USERNAME => s-rapadan DATE PLOTTED => 03-JAN-2014 TIME PLOTTED => 11:03

DIST	COUNTY	ROUTE	POST MILES TOTAL PROJECT	SHEET No.	TOTAL SHEETS
05	SB	101			

REGISTERED CIVIL ENGINEER X DATE

PLANS APPROVAL DATE

The State of California or its officers or agents shall not be responsible for the accuracy or completeness of electronic copies of this plan sheet.

REGISTERED PROFESSIONAL ENGINEER Rakesh Deo No. C73814 Exp. 6/30/13 CIVIL STATE OF CALIFORNIA

INCOMPLETE PLAN FOR DESIGN STUDY PRINTED JAN 06 2014 Office of Structures, Design STATE OF CALIFORNIA

CURVE DATA

No.	R	Δ	T	L
Ⓐ	3001.55	47°30'53"	1321.18	2489.15
Ⓑ	1400.50	49°50'55"	650.81	1218.47
Ⓒ	150.00	44°08'39"	60.82	115.57
Ⓓ	1000.00	16°53'47"	148.53	294.90

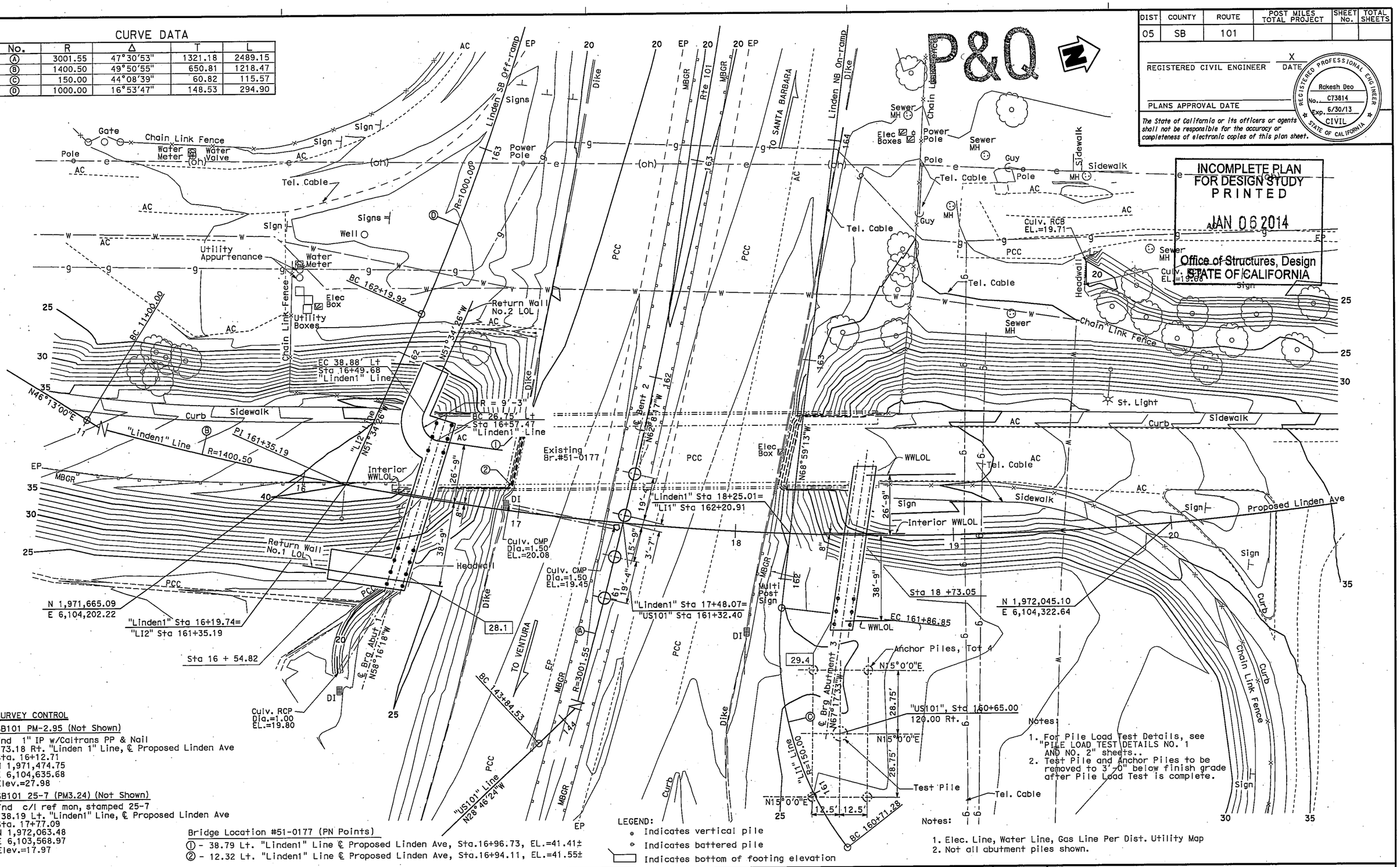

Notes:
1. For Pile Load Test Details, see "PILE LOAD TEST DETAILS NO. 1 AND NO. 2" sheets..
2. Test Pile and Anchor Piles to be removed to 3'-0" below finish grade after Pile Load Test is complete.

Notes:
1. Elec. Line, Water Line, Gas Line Per Dist. Utility Map
2. Not all abutment piles shown.

LEGEND:
- Indicates vertical pile
- Indicates battered pile
- Indicates bottom of footing elevation

SURVEY CONTROL

SB101 PM-2.95 (Not Shown)
Fnd 1" IP w/Caltrans PP & Nail
473.18 Rt. "Linden 1" Line, ℄ Proposed Linden Ave
Sta. 16+12.71
N 1,971,474.75
E 6,104,635.68
Elev.=27.98

SB101 25-7 (PM3.24) (Not Shown)
Fnd c/l ref mon, stamped 25-7
738.19 Lt. "Linden1" Line, ℄ Proposed Linden Ave
Sta. 17+77.09
N 1,972,063.48
E 6,103,568.97
Elev.=17.97

Bridge Location #51-0177 (PN Points)
① - 38.79 Lt. "Linden1" Line ℄ Proposed Linden Ave, Sta.16+96.73, EL.=41.41±
② - 12.32 Lt. "Linden1" Line ℄ Proposed Linden Ave, Sta.16+94.11, EL.=41.55±

PRELIMINARY INVESTIGATION SECTION

SCALE	VERT.DATUM NAVD88	PHOTOGRAMMETRY AS OF: X			
1"=20'	HORZ.DATUM NAD83 (1991.35)	SURVEYED	BY District	CHECKED	BY D.Ivy 09/2010
ALIGNMENT TIES Dist. Traverse Sheet		DRAFTED	BY S.Zheng 09/2010	CHECKED	BY T.Zolnikov 09/2010

STRUCTURES FOUNDATION PLAN SHEET (ENGLISH) (REV. 09-01-10)

DESIGN	BY Keith Stillmunkes	CHECKED Daryoush Tavatli
DETAILS	BY Yingjue Feng	CHECKED Daryoush Tavatli
QUANTITIES	BY Wendy Hou	CHECKED Fangfei Chen

ORIGINAL SCALE IN INCHES FOR REDUCED PLANS 0 1 2 3

STATE OF CALIFORNIA DEPARTMENT OF TRANSPORTATION

DIVISION OF ENGINEERING SERVICES STRUCTURE DESIGN DESIGN BRANCH 7

BRIDGE NO. 51-0344 POST MILE 3.06

LINDEN AVENUE OVERCROSSING (REPLACE)
FOUNDATION PLAN

UNIT: 3646
PROJECT NUMBER & PHASE: 05000005431 CONTRACT NO.: 05-4482U4

DISREGARD PRINTS BEARING EARLIER REVISION DATES

REVISION DATES 09/30/10 12/17/13 8/26/13 SHEET 4 OF 32

FILE => 51-0344-e-fp101.dgn

Linden Avenue Overcrossing

Bridge No. 51-0334 **SDC Controlling Procedure :** **Probabalistic/Deterministic**

Period (s)	SDC
0.010	0.641
0.050	0.870
0.100	0.993
0.150	1.158
0.200	1.292
0.250	1.335
0.300	1.371
0.400	1.352
0.500	1.338
0.600	1.314
0.700	1.300
0.850	1.260
1.000	1.221
1.200	1.094
1.500	0.997
2.000	0.783
3.000	0.444
4.000	0.290
5.000	0.234

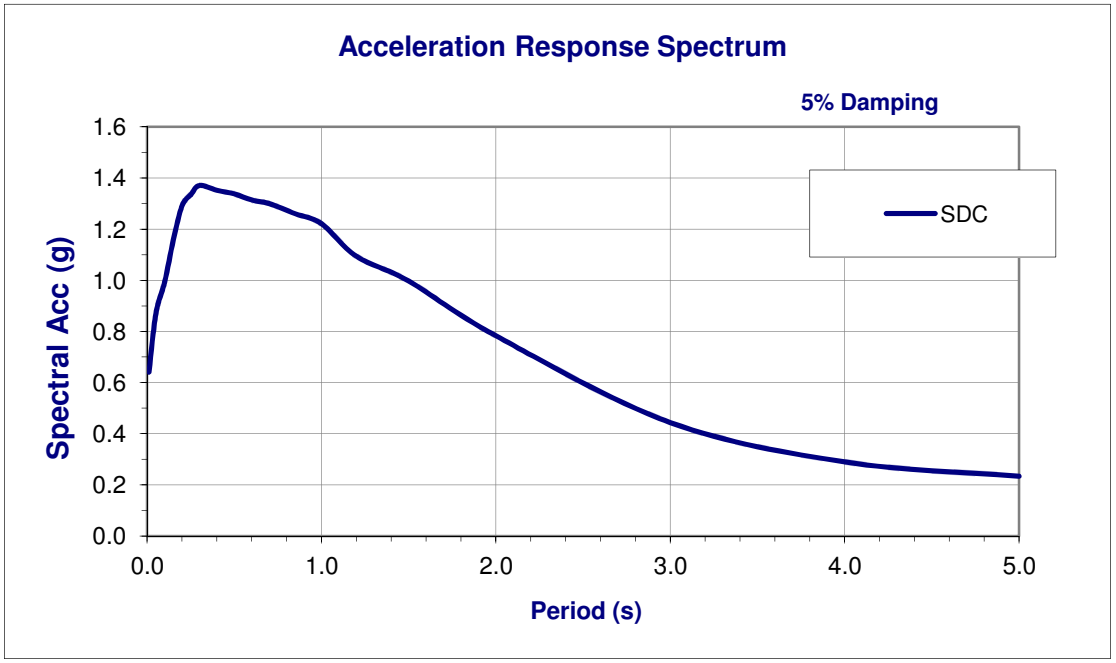

Notes

ARS curve was modified for Near Fault Directivity Effect

M e m o r a n d u m

Flex your power!
Be energy efficient!

To: MANODE KODSUNTIE
Structure Design Branch 7
DIVISION OF ENGINEERING SERVICES

Date: January 22, 2014
File: 05-SB-101-2.2/3.3
Linden Casitas
Retaining Wall B
EA 05-4482U1

From: **DEPARTMENT OF TRANSPORTATION**
DIVISION OF ENGINEERING SERVICES
GEOTECHNICAL SERVICES

Subject: Retaining Wall B Foundation Report

Scope of Work

A Foundation Report (FR) for Retaining Wall B is provided for the above referenced project. The project is on State Route 101 in the City of Carpinteria, in southern Santa Barbara County. Improvements are proposed to increase the highway level of service and accessibility, and include replacement of existing bridges and construction of new bridges, retaining walls, sound walls, ramps and frontage roads. Review of published geologic data and previous geotechnical reports, field reconnaissance, and foundation calculations were performed as part of the geotechnical investigation.

The purpose of this report is to document geotechnical conditions and provide foundation recommendations for proposed Retaining Wall B.

Project Description

Route 101 within the project limits is a four-lane divided urban freeway with (2) 12-foot portland cement concrete (PCC) lanes in each direction and asphalt concrete (AC) 5-foot inside shoulders and 8-foot outside shoulders. A landscaped median approximately 40 feet wide with thrie beam barriers facing each direction of travel provides separation between the northbound and southbound lanes.

The purpose of the Linden Casitas project is to improve access and operations on Route 101, reduce local trips, and provide pedestrian and bicycle connectivity. The project includes construction of (3) mainline bridges on Route 101 to replace existing structures at Linden Avenue, Casitas Pass Road, and Carpinteria Creek. Highway access will be modified and added at Linden Avenue and Casitas Pass Road. Extension of Via Real, a frontage road, will also require construction of a new bridge over Carpinteria Creek. Retaining walls and sound walls are also proposed as part of the project.

Retaining Wall B is proposed for a length of 136.15 feet at the northeast intersection of Via Real and Casitas Pass Road to accommodate a cut adjacent to northbound 101 and raising the profile of Via Real to match grade for the replacement Casitas Pass Road Overcrossing. The wall will begin 43.96 feet left of VIAREAL1 Station 140+65.53 and end 31.21 feet left of 142+00.0. The maximum design retained height will be 10 feet, with an embankment slope of 2:1 in front of the wall.

Pertinent Reports and Investigations

The following publications were used to assist in the assessment of site conditions:

1. *Preliminary Geotechnical Report.* Finegan, Michael. EA 05-448200. December 21, 2000.

2. *District Preliminary Geotechnical Report.* De Llamas, Zeke. EA 05-448200, July 30, 2008.

Field Investigation and Laboratory Testing Program

Three mud rotary borings were advanced near the retaining wall layout line to determine the subsurface conditions to be used for foundation design. In-situ soil strength parameters were determined using the Standard Penetration Test (SPT) for cohesionless soils. Laboratory tests were used to determine the particle size distribution and corrosion potential of representative samples obtained at depth. Refer to Table 1 for a summary of subsurface investigation information.

Table 1. Subsurface Exploration Summary

Boring	*Completion Date*	*Equipment*	*Hammer Type*	*Hammer Efficiency (%)*	*Approximate Ground Elevation (ft)*	*Depth (ft)*
RC-11-009	1-28-2011	CS2000	Auto	93	51.0	170.5
RC-11-010	1-30-2011	CS2000	Auto	93	52.4	172.0
RC-11-011	2-1-2011	CS2000	Auto	93	50.1	171.5

Site Geology and Subsurface Conditions

Physical Setting

The project is located in the Carpinteria Valley, a sunken area north of the elevated coastal fault block southeast of the City of Carpinteria. Carpinteria valley is a low-lying, flat plain comprised of alluvial deposits. Some low-lying areas in the valley are partly submerged under brackish water of the Carpinteria slough. The plain meets the Pacific Ocean to the southwest, gradually gains elevation to the east as it approaches Rincon and La Granada Mountains, and abuts sharply against the foothills of the Santa Ynez Mountains at its the northern boundary.

A mild coastal climate prevails throughout the year, with marine fog often present in spring and summer months. Nearly all precipitation falls from Pacific storms between October and May,

with the majority accumulating in the winter months. Average yearly rainfall is 17.5 inches. The average temperature is 72 degrees Fahrenheit with more than 275 days of sunny weather per year.

Regional Geology

The project area is located in the Transverse Ranges Geomorphic Province. State Route 101 is bordered to the north by the Santa Ynez Mountains and to the south by the Pacific Ocean as it traverses the Carpinteria Valley. Geologic maps and field observations indicate that soils in the valley were deposited in an alluvial environment and consist of normally-consolidated deposits of clay, silt, sand, and gravel.

Groundwater

Open observation wells were installed in borings RC-10-009 and RC-11-010 to observe fluctuations in groundwater levels and determine if groundwater will influence construction and foundation design. Results of the groundwater-monitoring program are summarized in Table 2.

Table 2. Groundwater Elevations

Boring	Date	Depth to Groundwater (ft)	Groundwater Elevation(ft)
RC-11-009	2-9-2011	25.6	25.4
RC-11-009	12-14-2011	25.6	25.4
RC-11-009	2-24-2012	25.4	25.6
RC-11-009	3-22-2012	25.0	26.0
RC-11-009	4-19-2012	24.9	26.1
RC-11-010	2-9-2011	27.9	24.5

Corrosion Evaluation

The department considers a site to be potentially corrosive to the foundation elements if the following conditions exist for the representative soil and/or water samples taken at the site: minimum resistivity of 1000 ohm-cm or less and/or PH of 5.5 or less.

Soil and water samples were obtained during the subsurface investigation and tested for corrosion potential at the District Materials Laboratory. The results of the corrosion testing are presented in Table 3. Based on the results, soils are not considered corrosive to foundation elements.

Table 3. Corrosion Testing Summary

Boring	*Depth (ft)*	*pH*	*Resistivity ohm-cm*	*Chloride ppm*	*Sulphate ppm*	*Corrosive*
RC-11-011	10.0-11.5	7.55	3297	-	-	NO
RC-11-011	55.0-56.5	7.56	2596	-	-	NO
RC-11-011	70.0-71.5	7.42	1763	-	-	NO

Foundation Recommendations

Revised Standard Plan Type 5 Retaining Wall on Spread Footing

Revised standard plan cast-in-place cantilevered Type 5 retaining walls on spread footings are the recommended structure and foundation types. Refer to Revised Standard Plan B3-4A for details of construction. The depth of foundation embedment shall provide a minimum of 4 feet of horizontal cover from the top of the toe side of the footing to the face of the embankment slope. The net bearing pressure and effective footing width for the service 1 limit state load provided in Revised Standard Plan B3-4A were used to evaluate foundation settlement. Extreme limit state bearing stresses were evaluated at a horizontal seismic earth pressure coefficient equal to 0.2. Settlement is expected to be immediate in the cohesionless soils underlying the proposed retaining wall. Calculated differential settlements are within tolerable limits for cast-in-place cantilevered concrete retaining walls.

Table 4. Retaining Wall Foundation Recommendations

Wall Station (ft)	*Design Height (ft)*	*Bottom of Footing Elevation (ft)*	*Footing Width (ft)*	*Strength Limit Factored Bearing Resistance (psf)* Φq_N Φ=0.45	*Extreme Limit Factored Bearing Resistance (psf)* Φq_N Φ=1.0	*Strength Limit Factored Gross Uniform Bearing Stress (psf)* q_0	*Extreme Limit Factored Gross Uniform Bearing Stress(psf)* q_0	*Service Limit State Net Bearing Stress(psf)* q'_0	*Calculated Settlement at Net Bearing Pressure (inches)*
0+00 to 0+20	10.0	43.50	9.50	6800	12,300	3500	3900	2500	1.6
0+20 to 1+1+00	8.0	43.50	8.50	6800	12,400	3000	3200	2100	1.4
1+00 to 1+36.15	6.0	43.50	7.75	6800	12,100	2900	3000	1800	1.2

Construction Considerations

Loose soils may be encountered during foundation excavations. Temporary slopes or shoring will be required to support the excavation to construct the retaining wall foundations. Groundwater is not expected to be encountered in foundation excavations.

Additional Information

Standard Specification 2-1.6.B, "Supplemental Project Information", discloses to bidders and contractors a list of pertinent information available for their inspection prior to bid opening. Items listed to be included in the Information Handout will be provided in Acrobat (.pdf) format to the Addressee of this report via electronic mail.

Data and information attached with the project plans are:

A. Log of Test Borings.

Data and information included in the Information Handout provided to the Bidders and Contractors are:

A. Foundation Report for the Retaining Wall dated January 22, 2014.

If you have any questions or comments, please contact Ryan Turner at (805) 549-3750, or Michael Finegan at (805) 549-3194.

RYAN TURNER, P.E., G.E.
Transportation Engineer Civil
Geotechnical Design – North
Branch D

MICHAEL S. FINEGAN, P.E.
Branch Chief
Geotechnical Design – North
Branch D

c: Job File / Branch D Records
Structure Construction RE Pending File (email RE_pending_file@dot.ca.gov)
Craig Whitten / DES Office Engineer
Andrew Tan / PCE
Eric Karlson/ DME

LIST OF ATTACHMENTS

Vicinity Map	Attachment 1
Geologic Map and Legend	Attachment 2
General Plan	Attachment 3

INDEX OF SHEETS

STATE OF CALIFORNIA
DEPARTMENT OF TRANSPORTATION

PROJECT PLANS FOR CONSTRUCTION ON
STATE HIGHWAY
IN SANTA BARBARA COUNTY
IN CARPINTERIA
FROM 0.4 KM SOUTH OF CARPINTERIA CREEK BRIDGE
TO 0.5 KM NORTH OF LINDEN AVENUE OVERCROSSING

TO BE SUPPLEMENTED BY STANDARD PLANS DATED JULY 2004

Dist	COUNTY	ROUTE	KILOMETER POST TOTAL PROJECT	SHEET NO.	TOTAL SHEETS
05	SB	101	3.5/5.5		

LOCATION MAP

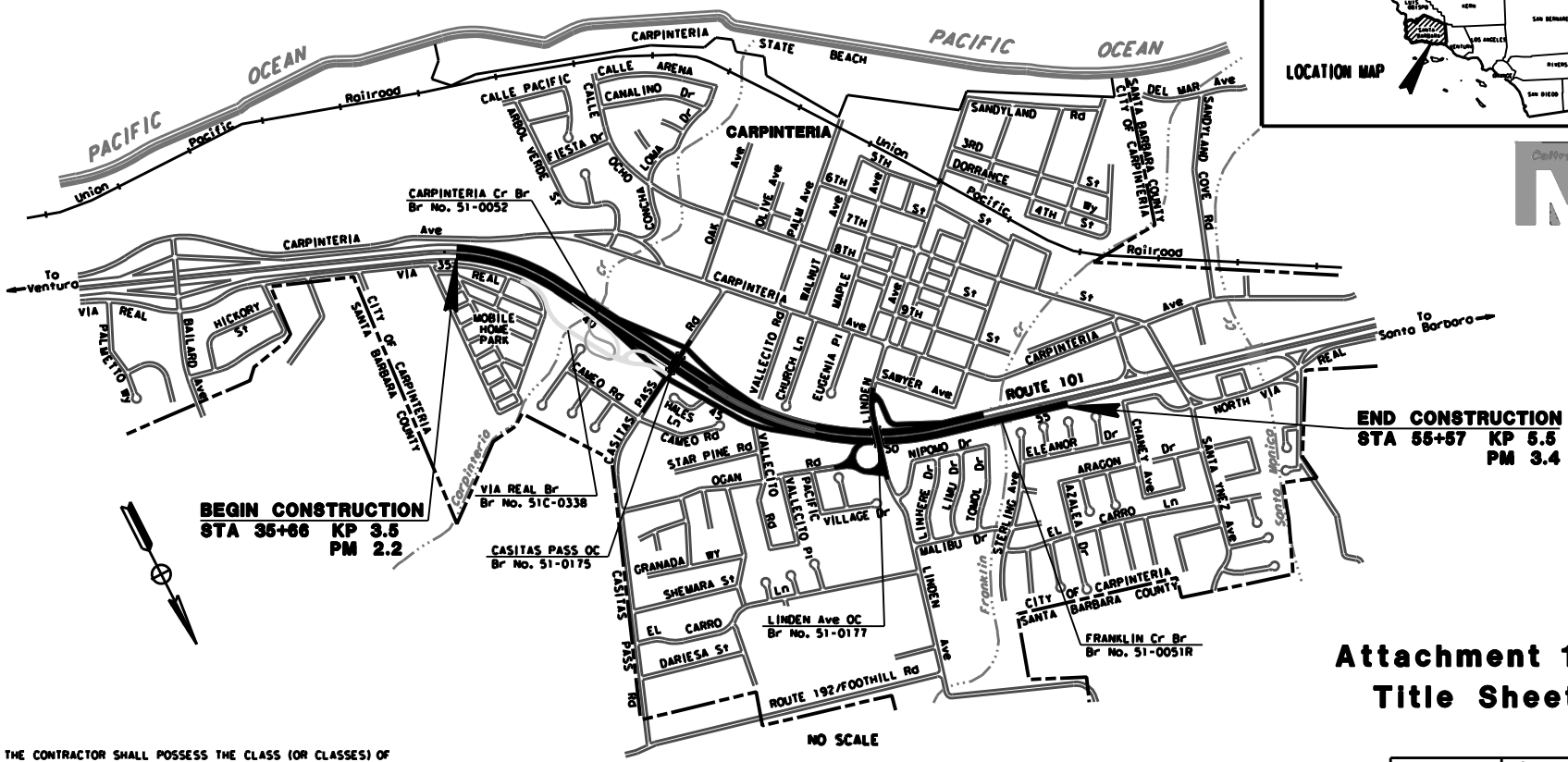

THE CONTRACTOR SHALL POSSESS THE CLASS (OR CLASSES) OF LICENSE AS SPECIFIED IN THE "NOTICE TO CONTRACTORS."

PROJECT MANAGER: DAVID BEARD
DESIGN ENGINEER: KARI BHANA

Attachment 1
Title Sheet

CONTRACT No. 05-4482U0
CU 06233 | EA 4482U0

BORDER LAST REVISED 3/1/2007 | CALTRANS WEB SITE IS: HTTP://WWW.DOT.CA.GOV/ | RELATIVE BORDER SCALE IS IN MILLIMETERS 0 20 40 60 80 | USERNAME => RUSER | DGN FILE => SREQUEST | DATE PLOTTED => 09-14-10 | TIME PLOTTED => 09:42

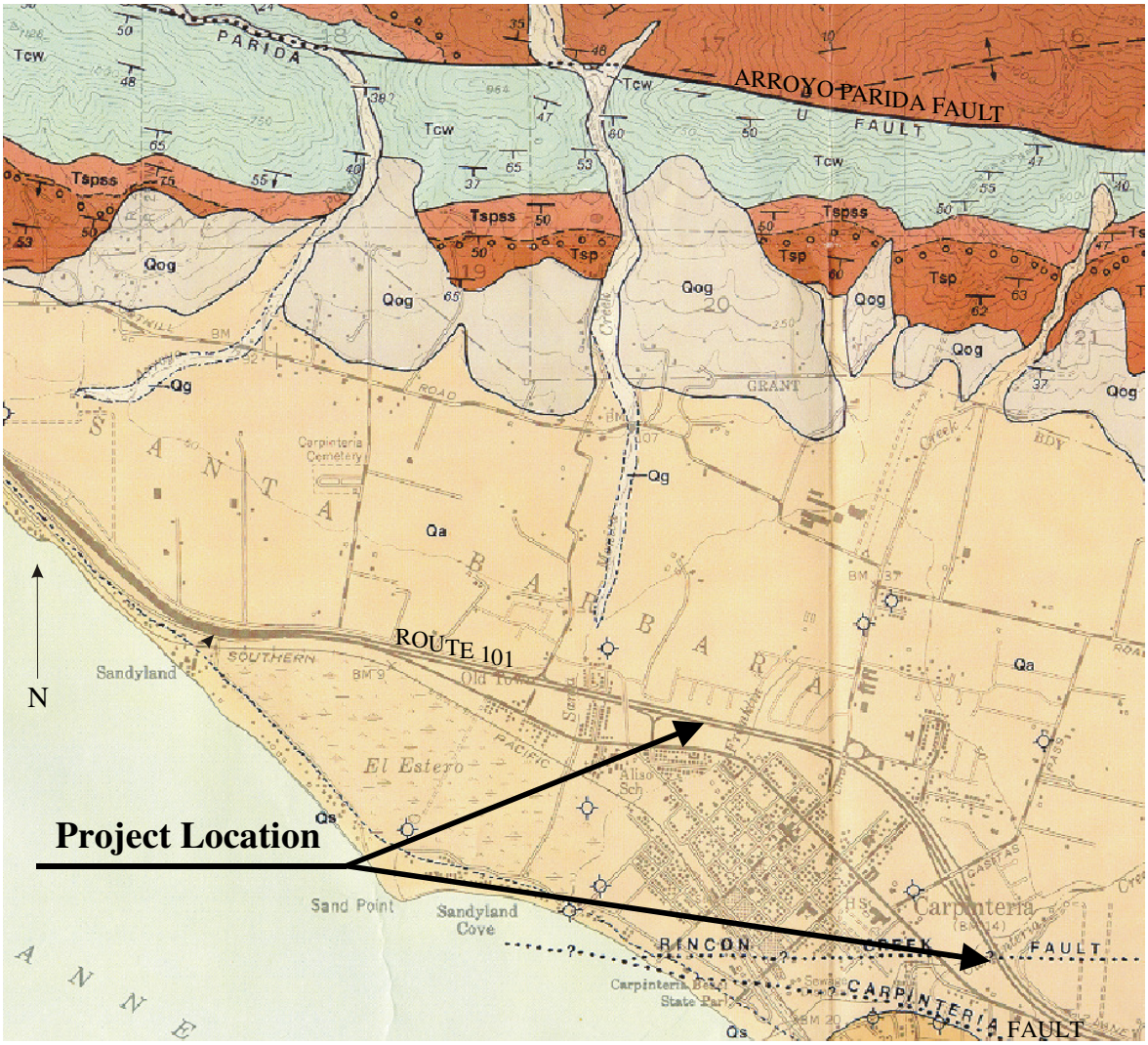

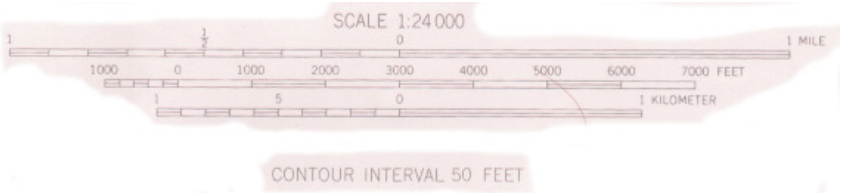

PART OF:

GEOLOGIC MAP OF THE CARPINTERIA QUADRANGLE
BY THOMAS W. DIBBLEE, JR., 1986

Geologic Map

05-SB-101-2.1/3.4
05-448201
Attachment 2

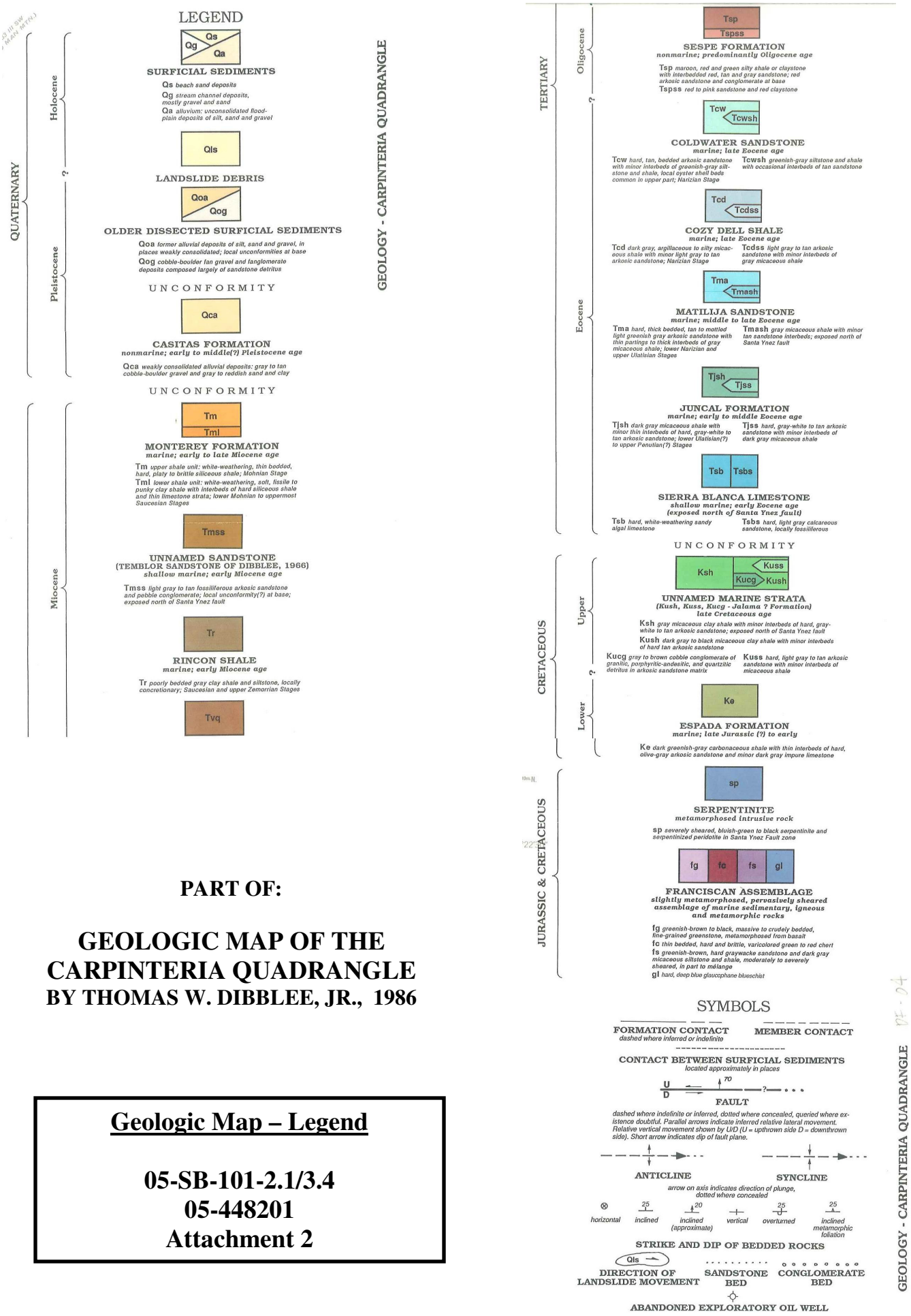

PART OF:

GEOLOGIC MAP OF THE CARPINTERIA QUADRANGLE

BY THOMAS W. DIBBLEE, JR., 1986

Geologic Map – Legend

05-SB-101-2.1/3.4
05-448201
Attachment 2

DIST	COUNTY	ROUTE	POST MILES TOTAL PROJECT	SHEET No.	TOTAL SHEETS
05	SB	101			

REGISTERED CIVIL ENGINEER X DATE

PLANS APPROVAL DATE

REGISTERED PROFESSIONAL ENGINEER Monode Kodsuntie No. 56671 Exp. 6-30-2015 CIVIL STATE OF CALIFORNIA

The State of California or its officers or agents shall not be responsible for the accuracy or completeness of scanned copies of this plan sheet.

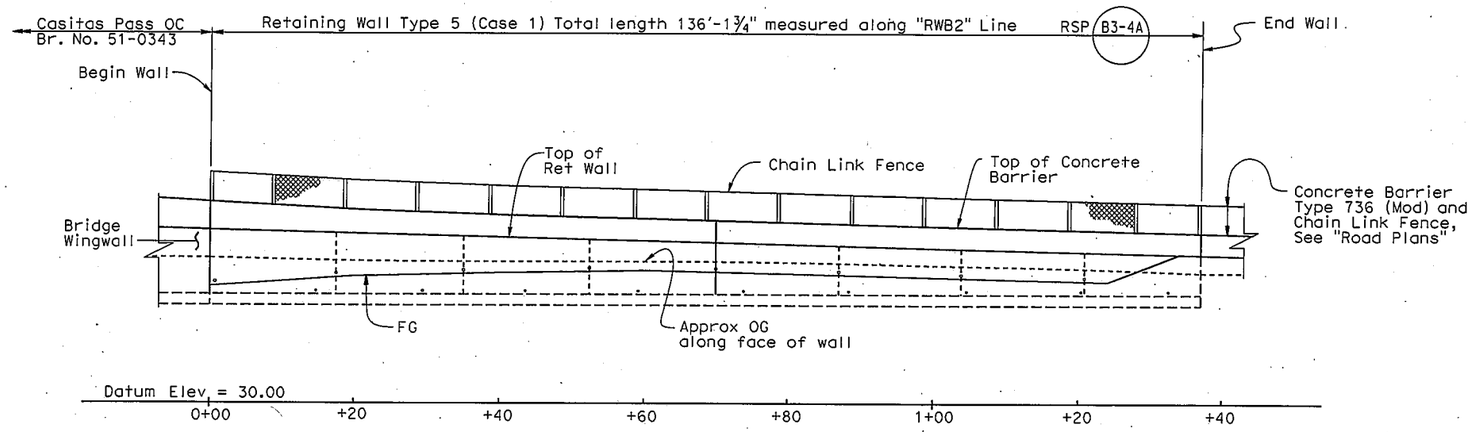

DEVELOPED MIRRORED ELEVATION

1" = 10'

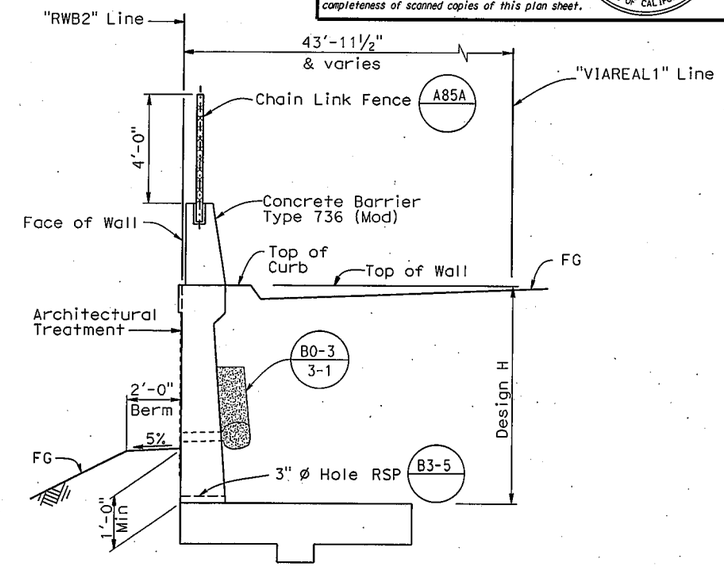

TYPICAL SECTION

3/8" = 1'-0"

RSP B3-4A

INDEX TO PLANS

SHEET NO.	TITLE
1.	GENERAL PLAN
2.	STRUCTURE PLAN
3.	FOUNDATION PLAN
4.	RETAINING WALL DETAILS
5.	LOG OF TEST BORINGS

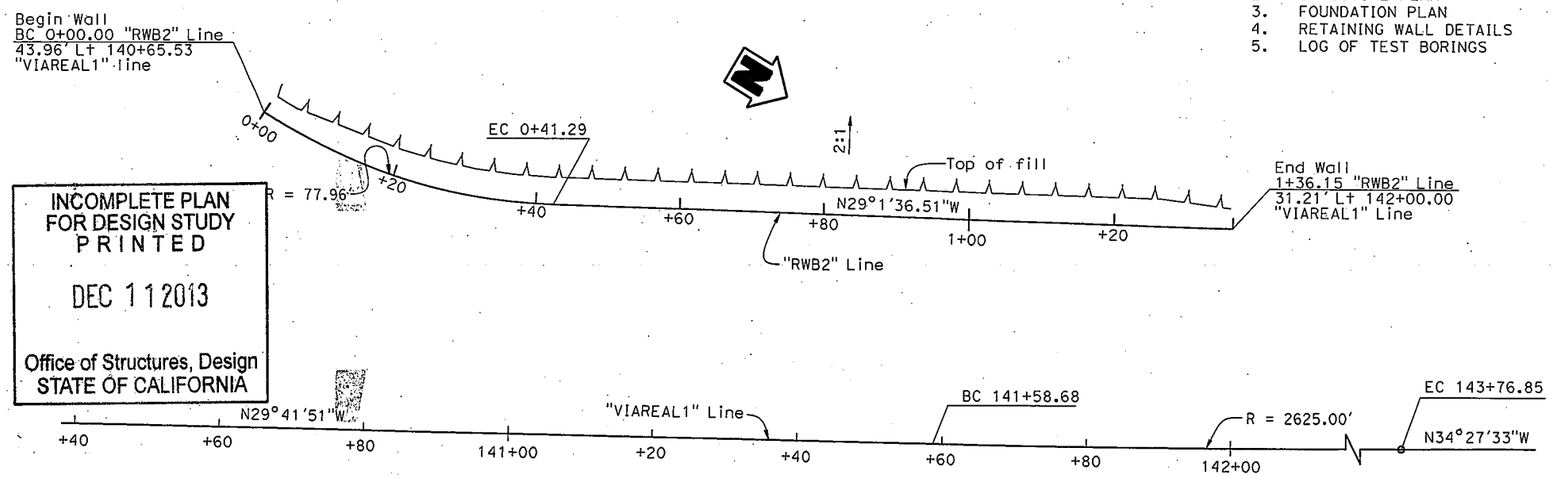

INCOMPLETE PLAN FOR DESIGN STUDY PRINTED

DEC 11 2013

Office of Structures, Design
STATE OF CALIFORNIA

CURVE DATA

"RWB2" Line	"VIAREAL1" Line
R = 75.00'	R = 2625.00'
Δ = 31°32'33"	Δ = 4°45'43"
T = 21.18'	T = 109.15'
L = 41.29'	L = 218.17'

PLAN

1" = 10'

STANDARD PLANS 2010

	A10A	ABBREVIATIONS (SHEET 1 OF 2)
	A10B	ABBREVIATIONS (SHEET 2 OF 2)
	A10C	LINES AND SYMBOLS (SHEET 1 OF 3)
	A10D	LINES AND SYMBOLS (SHEET 2 OF 3)
	A10E	LINES AND SYMBOLS (SHEET 3 OF 3)
	A10F	LEGEND - SOIL (SHEET 1 OF 2)
	A10G	LEGEND - SOIL (SHEET 2 OF 2)
	A10H	LEGEND - ROCK
	A62B	LIMIT OF PAYMENT FOR EXCAVATION
	B0-3	BRIDGE DETAILS
RSP	B3-4A	RETAINING WALL TYPE 5 (CASE 1)
RSP	B3-5	RETAINING WALL DETAILS NO. 1

STANDARD PLAN SHEET NO.

DETAIL NO.

CHECKED DETAILS

X DESIGN ENGINEER	DESIGN	BY E.Ortega / M.Kodsuntie	CHECKED J. Yolton / J. Jung	LOAD & RESISTANCE FACTOR DESIGN	LIVE LOADING: VARIED SURCHARGE ON LEVEL GROUND SURFACE
	DETAILS	BY Y.Feng / B.Huddleston	CHECKED J. Yolton / J. Jung	LAYOUT BY E.Ortega / M.Kodsuntie	CHECKED J. Yolton / J. Jung
	QUANTITIES	BY X	CHECKED X	SPECIFICATIONS BY X	PLANS AND SPECS COMPARED X

ORIGINAL SCALE IN INCHES FOR REDUCED PLANS 0 1 2 3

STATE OF CALIFORNIA
DEPARTMENT OF TRANSPORTATION

DIVISION OF ENGINEERING SERVICES
STRUCTURE DESIGN
DESIGN BRANCH 7

BRIDGE NO. X
POST MILE X

RETAINING WALL "B"
GENERAL PLAN

UNIT: 3592
PROJECT NUMBER & PHASE: 05 0000 0543 1 CONTRACT NO.: 05-4482U1

DISREGARD PRINTS BEARING EARLIER REVISION DATES → REVISION DATES 10-24-13 11-14-13 12-09-13

SHEET 1 OF 5

FILE => rw-b-a-gp.dgn

STRUCTURES DESIGN GENERAL PLAN SHEET (ENGLISH) (REV.09-01-10)

USERNAME => s101842 DATE PLOTTED => 09-DEC-2013 TIME PLOTTED => 15:20

DIST	COUNTY	ROUTE	POST MILES TOTAL PROJECT	SHEET No.	TOTAL SHEETS
05	SB	101			

REGISTERED CIVIL ENGINEER X DATE

PLANS APPROVAL DATE

REGISTERED PROFESSIONAL ENGINEER Manode Kodsuntie No. 56671 Exp. 6/30/2015 CIVIL STATE OF CALIFORNIA

The State of California or its officers or agents shall not be responsible for the accuracy or completeness of scanned copies of this plan sheet.

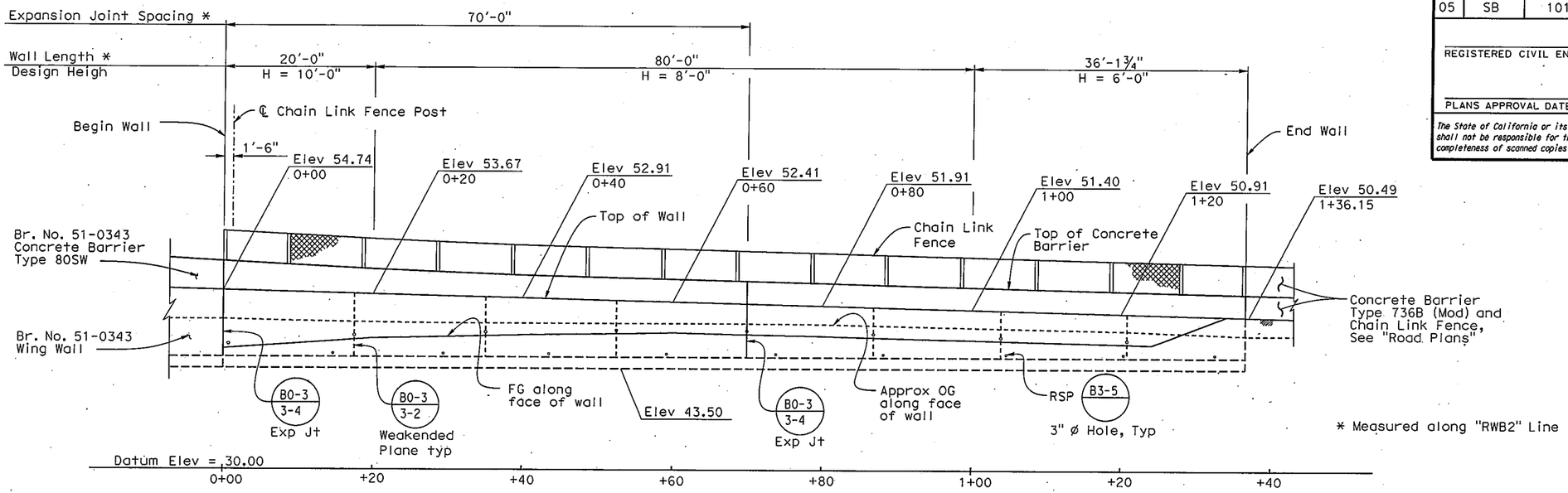

* Measured along "RWB2" Line

DEVELOPED MIRRORED ELEVATION

⅛" = 1'-0"

NOTE:

1. Transition ground line at front of wall between points shown.

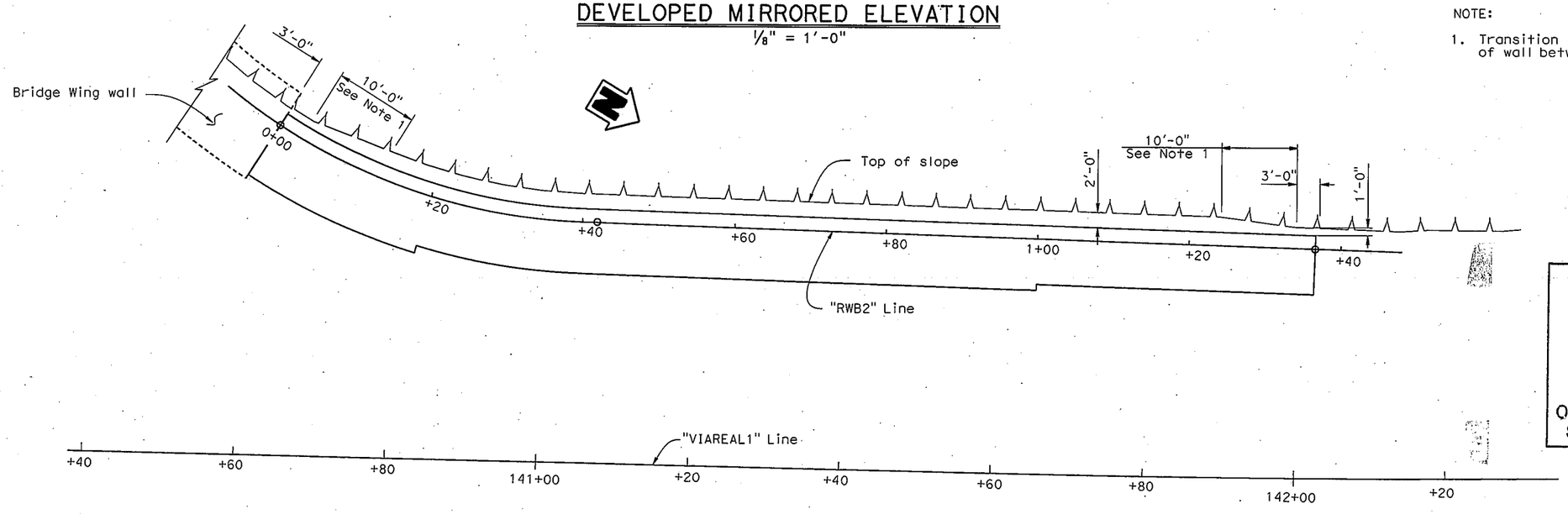

PLAN

⅛" = 1'-0"

INCOMPLETE PLAN FOR DESIGN STUDY PRINTED

DEC 11 2013

Office of Structures, Design STATE OF CALIFORNIA

CHECKED DETAILS

DESIGN	BY E.Ortega / M.Kodsuntie	CHECKED J. Yolton / J. Jung	
DETAILS	BY Yingjue Feng	CHECKED J. Yolton / J. Jung	
QUANTITIES	BY X	CHECKED X	

STATE OF CALIFORNIA DEPARTMENT OF TRANSPORTATION

DIVISION OF ENGINEERING SERVICES STRUCTURE DESIGN DESIGN BRANCH 7

BRIDGE NO. X

POST MILE X

RETAINING WALL "B"

STRUCTURE PLAN

STRUCTURES DESIGN DETAIL SHEET (ENGLISH) (REV. 09-01-10)

ORIGINAL SCALE IN INCHES FOR REDUCED PLANS 0 1 2 3

UNIT: 3592

PROJECT NUMBER & PHASE: 0500000543-1

CONTRACT NO.: 05-4482U1

DISREGARD PRINTS BEARING EARLIER REVISION DATES

REVISION DATES 10-28-13 11-14-13 12-09-13

SHEET 2 OF 5

FILE => rw-b-c-sp.dgn

USERNAME => 610842 DATE PLOTTED => 09-DEC-2013 TIME PLOTTED => 15:20

DIST	COUNTY	ROUTE	POST MILES TOTAL PROJECT	SHEET No.	TOTAL SHEETS
05	SB	101			

REGISTERED CIVIL ENGINEER X DATE

PLANS APPROVAL DATE

REGISTERED PROFESSIONAL ENGINEER Manode Kodsuntie No. 56671 Exp. 6/30/2015 CIVIL STATE OF CALIFORNIA

The State of California or its officers or agents shall not be responsible for the accuracy or completeness of scanned copies of this plan sheet.

NOTES:

1. Limits of stain concrete on barrier shall be all exposed surface from begin wall to end wall.
2. Limits of stain concrete on retaining wall shall be from top of wall to 1'-0" below finished grade from begin wall to end wall.

LEGEND:

Split face texture

Stain Concrete

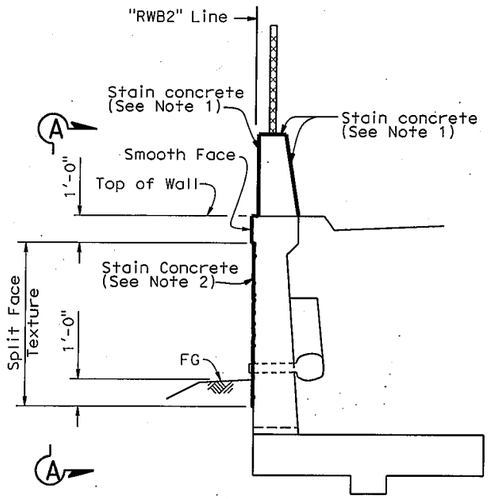

TYPICAL SECTION

3/8" = 1'-0"

LIMITS OF PAYMENT FOR ARCHITECTURAL TREATMENT

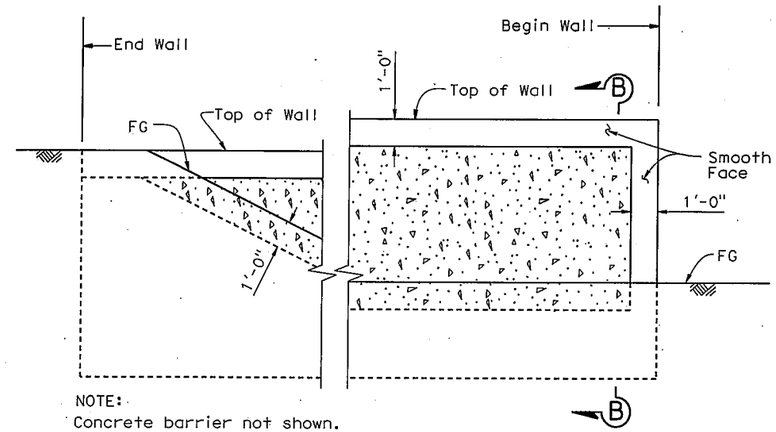

NOTE:
Concrete barrier not shown.

VIEW A-A

3/8" = 1'-0"

INCOMPLETE PLAN FOR DESIGN STUDY PRINTED

DEC 11 2013

Office of Structures, Design
STATE OF CALIFORNIA

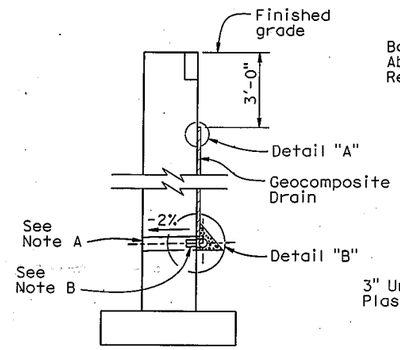

WALL SECTION

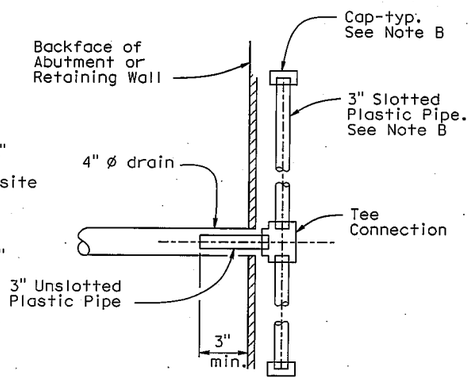

SECTION A-A

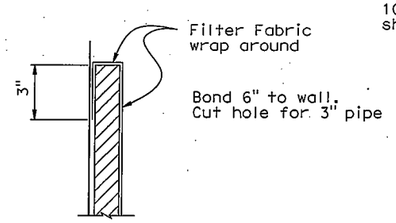

DETAIL "A"

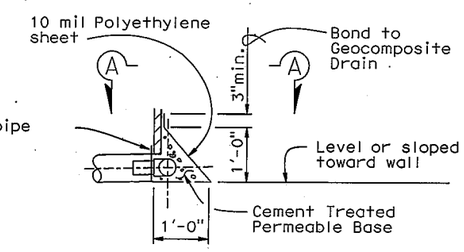

DETAIL "B"

WEEP HOLE AND GEOCOMPOSITE DRAIN

NO SCALE

ALTERNATIVE TO BRIDGE DETAIL (B0-3 / 3-1)

Notes:

A. 4" ø drains at intermediate sag points and at 25' max center to center (9' c-c for Type 3 and 9'-3" c-c for Type 4 retaining walls).
For walls adjacent to sidewalks or curbs, provide 4" cast iron or asbestos cement pipe under the sidewalk to discharge through curb face.
Exposed wall drains shall be located 3"± above finished grade.

B. Geocomposite drain, cement treated permeable base, and 3"ø slotted plastic pipe continuous behind retaining wall or abutment. Cap ends of pipe. Provide "Tee" connection at each 4" ø drain.

C. Connect the low end of plastic pipe to the main outlet pipe as apprlicable.

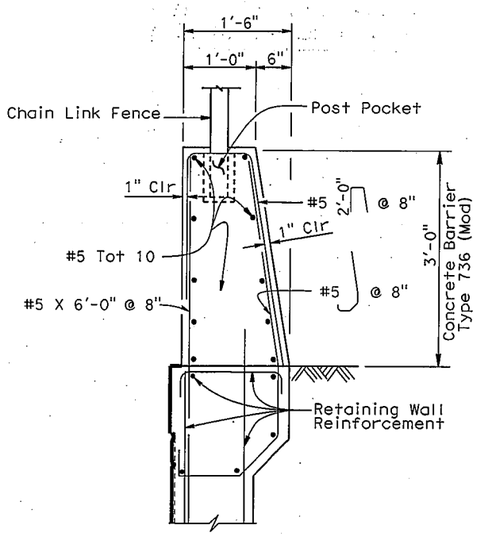

BARRIER SECTION

NO SCALE

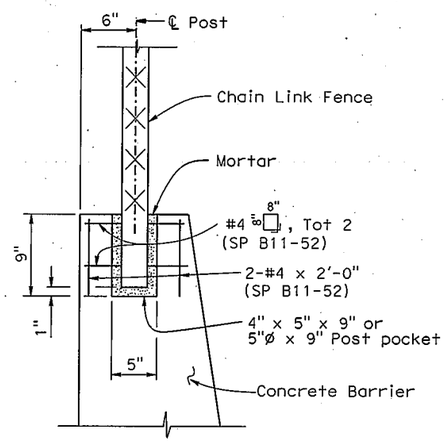

POST POCKET

1½" = 1'-0"

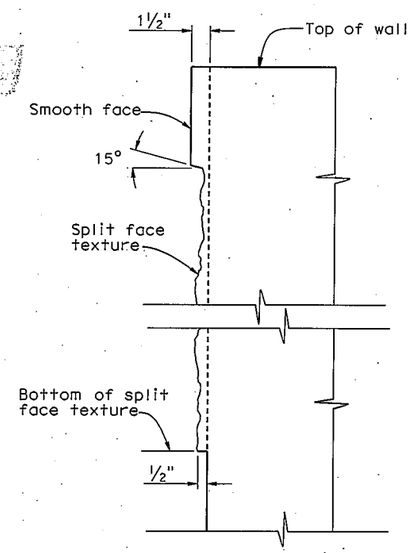

SECTION B-B

2" = 1'-0"

CHECKED DETAILS

DESIGN	BY Manode Kodsuntie	CHECKED Jun Jung	
DETAILS	BY Yingjue Feng	CHECKED Jun Jung	
QUANTITIES	BY X	CHECKED X	

STATE OF CALIFORNIA
DEPARTMENT OF TRANSPORTATION

DIVISION OF ENGINEERING SERVICES
STRUCTURE DESIGN
DESIGN BRANCH 7

BRIDGE NO. X
POST MILE X

RETAINING WALL "B"
RETAINING WALL DETAILS

STRUCTURES DESIGN DETAIL SHEET (ENGLISH) (REV. 09-01-10)

ORIGINAL SCALE IN INCHES FOR REDUCED PLANS 0 1 2 3

UNIT: 3592
PROJECT NUMBER & PHASE: 0500000543-1
CONTRACT NO.: 05-4482U1

DISREGARD PRINTS BEARING EARLIER REVISION DATES

REVISION DATES 10-30-13 11-4-13 12-09-13

SHEET 4 OF 5

FILE => rw-b-d-det1.dgn

USERNAME => s101842 DATE PLOTTED => 09-DEC-2013 TIME PLOTTED => 15:20

M e m o r a n d u m

Flex your power!
Be energy efficient!

To: MANODE KODSUNTIE
Structure Design Branch 7
DIVISION OF ENGINEERING SERVICES

Date: January 28, 2014
File: 05-SB-101-2.2/3.3
Linden Casitas
Retaining Wall C
EA 05-4482U1

From: **DEPARTMENT OF TRANSPORTATION**
DIVISION OF ENGINEERING SERVICES
GEOTECHNICAL SERVICES

Subject: Retaining Wall C Foundation Report

Scope of Work

A Foundation Report (FR) for Retaining Wall C is provided for the above referenced project. The project is on State Route 101 in the City of Carpinteria, in southern Santa Barbara County. Improvements are proposed to increase the highway level of service and accessibility, and include replacement of existing bridges and construction of new bridges, retaining walls, sound walls, ramps and frontage roads. Review of published geologic data and previous geotechnical reports, field reconnaissance, and foundation calculations were performed as part of the geotechnical investigation.

The purpose of this report is to document geotechnical conditions and provide foundation recommendations for proposed Retaining Wall C.

Project Description

Route 101 within the project limits is a four-lane divided urban freeway with (2) 12-foot portland cement concrete (PCC) lanes in each direction and asphalt concrete (AC) 5-foot inside shoulders and 8-foot outside shoulders. A landscaped median approximately 40 feet wide with thrie beam barriers facing each direction of travel provides separation between the northbound and southbound lanes.

The purpose of the Linden Casitas project is to improve access and operations on Route 101, reduce local trips, and provide pedestrian and bicycle connectivity. The project includes construction of (3) mainline bridges on Route 101 to replace existing structures at Linden Avenue, Casitas Pass Road, and Carpinteria Creek. Highway access will be modified and added at Linden Avenue and Casitas Pass Road. Extension of Via Real, a frontage road, will also require construction of a new bridge over Carpinteria Creek. Retaining walls and sound walls are also proposed as part of the project.

Retaining Wall C is proposed for a length of approximately 546 feet near the mid-slope of the proposed cut slope paralleling the Casitas Pass Road southbound off-ramp from 30 feet left of

CA2 Station 143+75 to 30 feet left of Station 149+25. Location of the wall mid-slope was controlled by planting and right of way requirements. The maximum retained height will be approximately 10 feet, with embankment slopes of 2:1 behind and in front of the wall.

Pertinent Reports and Investigations

The following publications were used to assist in the assessment of site conditions:

1. *Preliminary Geotechnical Report.* Finegan, Michael. EA 05-448200. December 21, 2000.

2. *District Preliminary Geotechnical Report.* De Llamas, Zeke. EA 05-448200, July 30, 2008.

Field Investigation and Laboratory Testing Program

Two mud rotary borings were advanced near the retaining wall layout line to determine the subsurface conditions to be used for foundation design. In-situ soil strength parameters were determined using the Standard Penetration Test (SPT) for cohesionless soils. Laboratory tests were used to determine the particle size distribution and corrosion potential of representative samples obtained at depth. Refer to Table 1 for a summary of subsurface investigation information.

Table 1. Subsurface Exploration Summary

Boring	*Completion Date*	*Equipment*	*Hammer Type*	*Hammer Efficiency (%)*	*Approximate Ground Elevation (ft)*	*Depth (ft)*
RC-10-002	11-16-2010	CS2000	Auto	93	42.5	82.0
RC-10-003	11-17-2010	CS2000	Auto	93	42.3	72.0

Site Geology and Subsurface Conditions

Physical Setting

The project is located in the Carpinteria Valley, a sunken area north of the elevated coastal fault block southeast of the City of Carpinteria. Carpinteria Valley is a low-lying, flat plain comprised of alluvial deposits. Some low-lying areas in the valley are partly submerged under brackish water of the Carpinteria Slough. The plain meets the Pacific Ocean to the southwest, gradually gains elevation to the east as it approaches Rincon and La Granada Mountains, and abuts sharply against the foothills of the Santa Ynez Mountains at its the northern boundary.

A mild coastal climate prevails throughout the year, with marine fog often present in spring and summer months. Nearly all precipitation falls from Pacific storms between October and May, with the majority accumulating in the winter months. Average yearly rainfall is 17.5 inches. The average temperature is 72 degrees Fahrenheit with more than 275 days of sunny weather per year.

Regional Geology

The project area is located in the Transverse Ranges Geomorphic Province. State Route 101 is bordered to the north by the Santa Ynez Mountains and to the south by the Pacific Ocean as it traverses the Carpinteria Valley. Geologic maps and field observations indicate that soils in the valley were deposited in an alluvial environment and consist of normally-consolidated deposits of clay, silt, sand, and gravel.

Groundwater

Open observation wells were installed in borings RC-10-002 and RC-10-003 to observe fluctuations in groundwater levels and determine if groundwater will influence construction and foundation design. Results of the groundwater-monitoring program are summarized in Table 2. Two hand auger borings to encounter water were also performed on June 5, 2012 to further characterize groundwater levels near the retaining wall layout line. Groundwater was encountered at approximately elevation 25 feet in both excavations.

Table 2. Groundwater Elevations

Boring	Date	Depth to Groundwater (ft)	Groundwater Elevation(ft)
RC-10-002	4-12-2012	16.6	25.9
RC-10-003	4-12-2012	16.0	26.3

Corrosion Evaluation

The department considers a site to be potentially corrosive to the foundation elements if the following conditions exist for the representative soil and/or water samples taken at the site: minimum resistivity of 1000 ohm-cm or less and/or PH of 5.5 or less.

Soil and water samples were obtained during the subsurface investigation and tested for corrosion potential at the District Materials Laboratory. The results of the corrosion testing are presented in Table 3. Based on the results, soils are not considered corrosive to foundation elements.

Table 3. Corrosion Testing Summary

Boring	*Depth (ft)*	*pH*	*Resistivity ohm-cm*	*Chloride ppm*	*Sulphate ppm*	*Corrosive*
RC-10-002	1.0-3.0	8.2	3150	-	-	NO
RC-10-002	23.0-25.0	8.2	5620	-	-	NO
RC-10-003	1.0-4.0	8.0	4410	-	-	NO

Foundation Recommendations

Standard Plan Type 1 Retaining Wall on Spread Footing

Standard plan cast-in-place cantilevered Type 1 Case 2 retaining walls on spread footings are the recommended structure and foundation types. Bearing capacity was evaluated using strength 1

limit state and extreme 1 limit state loads and the effective footing widths provided in the Revised 2010 Standard Plans. Settlement for each design wall height was calculated using a ½:1 vertical stress distribution with depth, and Hough's method for cohesionless soils utilizing a bearing capacity factor correlated to soil type and relative density. The net bearing pressure and effective footing width for the service 1 limit state load provided in the 2010 Standard Plans were used to evaluate foundation settlement. Extreme limit state bearing stresses were evaluated at a horizontal seismic earth pressure coefficient equal to 0.2. Settlement is expected to be immediate in the cohesionless soils underlying the proposed retaining wall. Calculated differential settlements are within tolerable limits for cast-in-place cantilevered concrete retaining walls.

Standard Plan Type 1 Retaining Walls show a flat slope in front of the wall. Retaining Wall C will require a 2:1 slope in front of the wall due to the location of the wall mid-slope. To ensure adequate bearing capacity, global slope stability of the foundation was evaluated using the limit equilibrium slope stability software SLOPE-W. The effect of the slope in front of the wall is to reduce the surcharge stress resisting a bearing capacity failure when compared to a flat slope. A circular failure surface approximating a bearing capacity failure was analyzed considering the effects of the foundation bearing stress as a surcharge load. The foundation was found to have a global stability factor of safety of 1.6 using Bishop's and Morgenstern-Price analyses methods. Reduction of the surcharge bearing capacity factor in the bearing capacity equation due to proximity to a slope was also considered per BDS 4.4.7.1.1.4, modeled after Meyerhof (1957). The factored bearing resistances for strength and extreme load cases were greater than the factored bearing stresses listed in the Revised 2010 Standard Plans.

The depth of foundation embedment shall provide a minimum of 4 feet of horizontal cover from the top of the toe side of the footing to the face of the embankment slope in front of the wall. Verify that future construction will not encroach on the minimum required horizontal footing cover. Foundation recommendations are presented in Table 4.

Table 4. Retaining Wall Foundation Recommendations

Wall Station (ft)	*Design Height (ft)*	*Bottom of Footing Elevation (ft)*	*Footing Width (ft)*	*Strength Limit Factored Bearing Resistance (psf)* Φq_N Φ=0.45	*Extreme Limit Factored Bearing Resistance (psf)* Φq_N Φ=1.0	*Strength Limit Factored Gross Uniform Bearing Stress (psf)* q_0	*Extreme Limit Factored Gross Uniform Bearing Stress(psf)* q_0	*Service Limit State Net Bearing Stress(psf)* q'_0	*Calculated Settlement at Net Bearing Pressure (inches)*
10+00 to 10+25	6.0	32.50	7.50	5500	11800	2200	4400	1000	1.2
10+25 to 10+50	8.0	30.00	9.50	5200	11300	2300	5000	1000	1.5
10+50 to 11+00	10.0	28.00	11.00	5500	12100	2600	6500	1300	1.9
11+00 to 11+25	8.0	28.25	9.50	5200	11300	2300	5000	1000	1.5
11+25 to 11+75	10.0	26.00	11.00	5500	12100	2600	6500	1300	1.9
11+75 to 12+00	8.0	26.25	9.50	5200	11300	2300	5000	1000	1.5
12+00 to 12+50	10.0	24.00	11.00	5500	12100	2600	6500	1300	1.9
12+50 to 13+25	8.0	24.25	9.50	5200	11300	2300	5000	1000	1.5
13+25 to 14+00	10.0	24.00	11.00	5500	12100	2600	6500	1300	1.9
14+00 to 14+50	10.0	23.25	11.00	5500	12100	2600	6500	1300	1.9
14+50 to 15+25	10.0	24.00	11.00	5500	12100	2600	6500	1300	1.9
15+25 to 15+45.96	8.0	24.25	9.50	5200	11300	2300	5000	1000	1.5

Construction Considerations

Loose soils and groundwater may be encountered during foundation excavations in the existing slope adjacent to the off-ramp. Temporary slopes and/or shoring will be required to support the excavation and construct the retaining wall foundations. Groundwater elevations were observed above the proposed bottom of footing elevations for some portions of the wall.

If groundwater infiltrates footing excavations and the contractor is able to dewater the excavation by pumping, construction of a permeable mattress to bridge soft and wet soils and provide a stable working platform to begin foundation construction is recommended. Over-excavate 18 inches below the bottom of footing elevation and 8 inches beyond the sides of the footing excavation. Replace the excavated material to the bottom of footing elevation with Class III Permeable material fully encapsulated in Class B3 subgrade enhancement geotextile to prevent contamination with fines. Overlap seams in the geotextile a minimum of 3 feet. The base layer

shall be pumped during forming, placement of concrete, and concrete curing, as required to keep the groundwater elevation below the bottom of footing, providing a dry uniform surface for construction and preventing segregation of the concrete by flowing water prior to curing. Alternatively, if groundwater infiltration into foundation excavations cannot be controlled by pumping, or at the option of the contractor instead of pumping, the contractor may propose a dewatering plan to be reviewed and approved by the Engineer.

Additional Information

Standard Special Provision S5-280, "Project Information", discloses to bidders and contractors a list of pertinent information available for their inspection prior to bid opening. The following is an excerpt from SSP S5-280 disclosing information originating from Geotechnical Services. Items listed to be included in the Information Handout will be provided in Acrobat (.pdf) format to the Addressee of this report via electronic mail.

Data and information attached with the project plans are:

A. Log of Test Borings.

Data and information included in the Information Handout provided to the Bidders and Contractors are:

A. Foundation Report for the Retaining Wall dated January 28, 2014.

If you have any questions or comments, please contact Ryan Turner at (805) 549-3750, or Michael Finegan at (805) 549-3194.

REGISTERED PROFESSIONAL ENGINEER
Ryan Turner
No. GE 3030
Exp. 6-30-2015
GEOTECHNICAL
STATE OF CALIFORNIA

REGISTERED PROFESSIONAL ENGINEER
Michael S.Finegan
No. C 50138
Exp. 6-30-2015
CIVIL
STATE OF CALIFORNIA

RYAN TURNER, P.E., G.E.
Transportation Engineer Civil
Geotechnical Design – North
Branch D

MICHAEL S. FINEGAN, P.E.
Branch Chief
Geotechnical Design – North
Branch D

c: Job File / Branch D Records
Structure Construction RE Pending File (email RE_pending_file@dot.ca.gov)
Craig Whitten / DES Office Engineer
Andrew Tan / PCE
Eric Karlson/ DME

LIST OF ATTACHMENTS

Vicinity Map	Attachment 1
Geologic Map and Legend	Attachment 2
Structure Plans	Attachment 3

INDEX OF SHEETS

STATE OF CALIFORNIA
DEPARTMENT OF TRANSPORTATION

PROJECT PLANS FOR CONSTRUCTION ON
STATE HIGHWAY
IN SANTA BARBARA COUNTY
IN CARPINTERIA
FROM 0.4 KM SOUTH OF CARPINTERIA CREEK BRIDGE
TO 0.5 KM NORTH OF LINDEN AVENUE OVERCROSSING

TO BE SUPPLEMENTED BY STANDARD PLANS DATED JULY 2004

Dist	COUNTY	ROUTE	KILOMETER POST TOTAL PROJECT	SHEET NO.	TOTAL SHEETS
05	SB	101	3.5/5.5		

LOCATION MAP

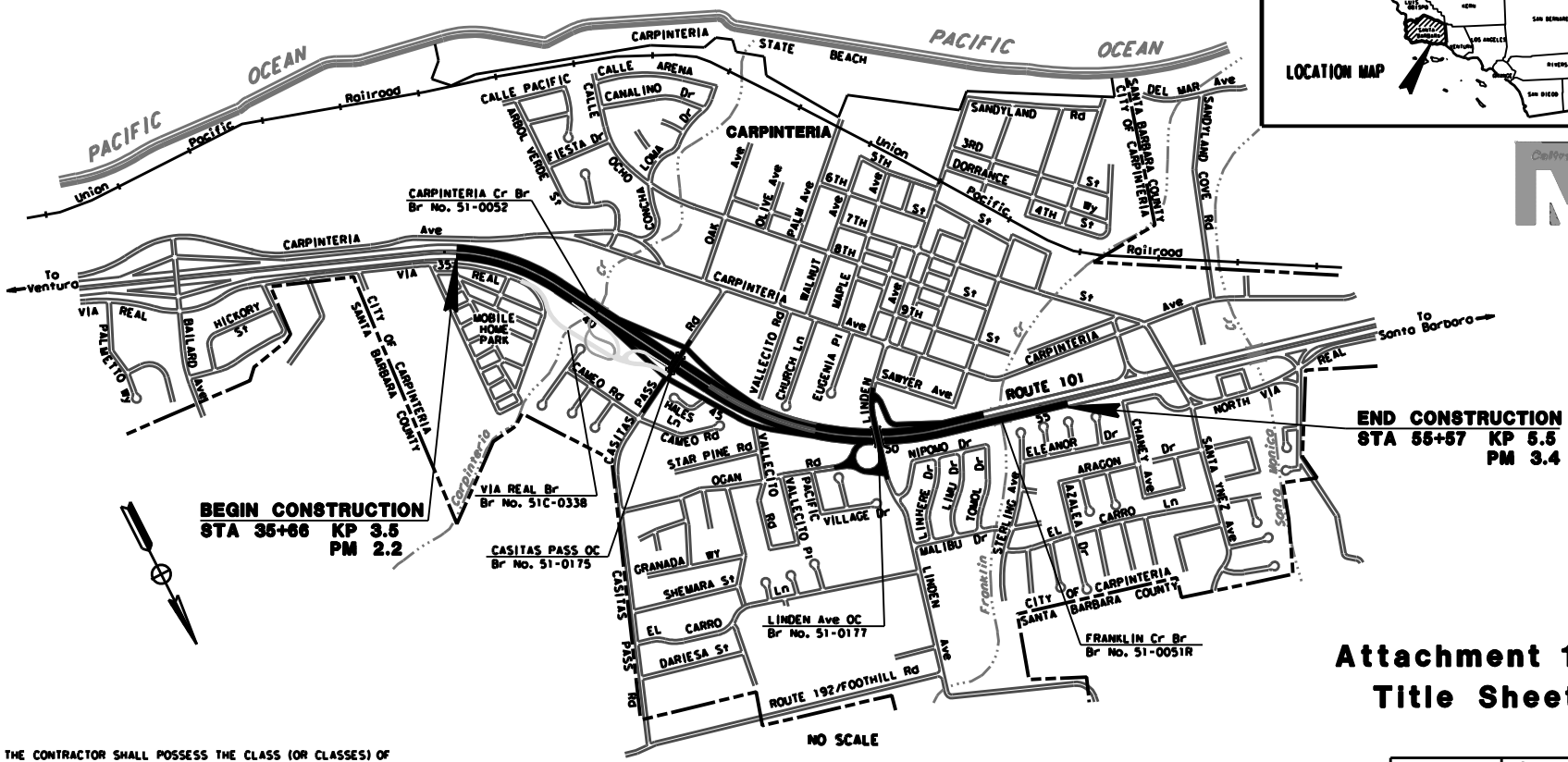

THE CONTRACTOR SHALL POSSESS THE CLASS (OR CLASSES) OF LICENSE AS SPECIFIED IN THE "NOTICE TO CONTRACTORS."

PROJECT MANAGER: DAVID BEARD
DESIGN ENGINEER: KARI BHANA

Attachment 1
Title Sheet

CONTRACT No. 05-4482U0
CU 06233 | EA 4482U0

BORDER LAST REVISED 3/1/2007 | CALTRANS WEB SITE IS: HTTP://WWW.DOT.CA.GOV/ | RELATIVE BORDER SCALE IS IN MILLIMETERS 0 20 40 60 80 | USERNAME => RUSER | DGN FILE => SREQUEST | DATE PLOTTED => 09-14-10 | TIME PLOTTED => 09:42

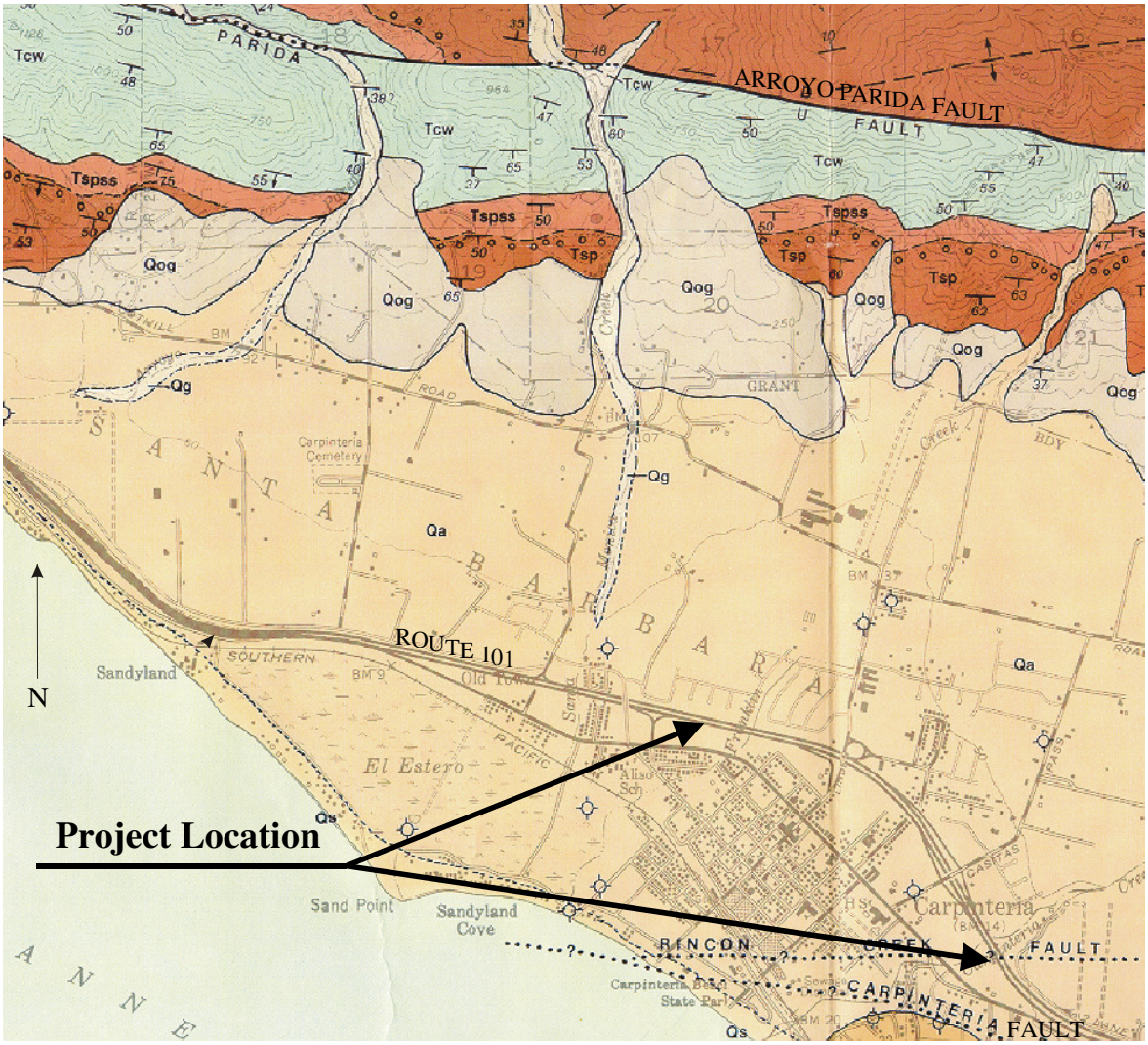

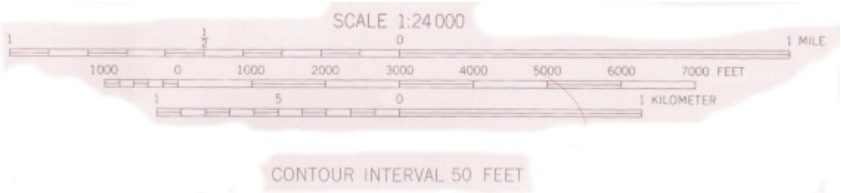

PART OF:

GEOLOGIC MAP OF THE CARPINTERIA QUADRANGLE
BY THOMAS W. DIBBLEE, JR., 1986

Geologic Map

05-SB-101-2.1/3.4
05-448201
Attachment 2

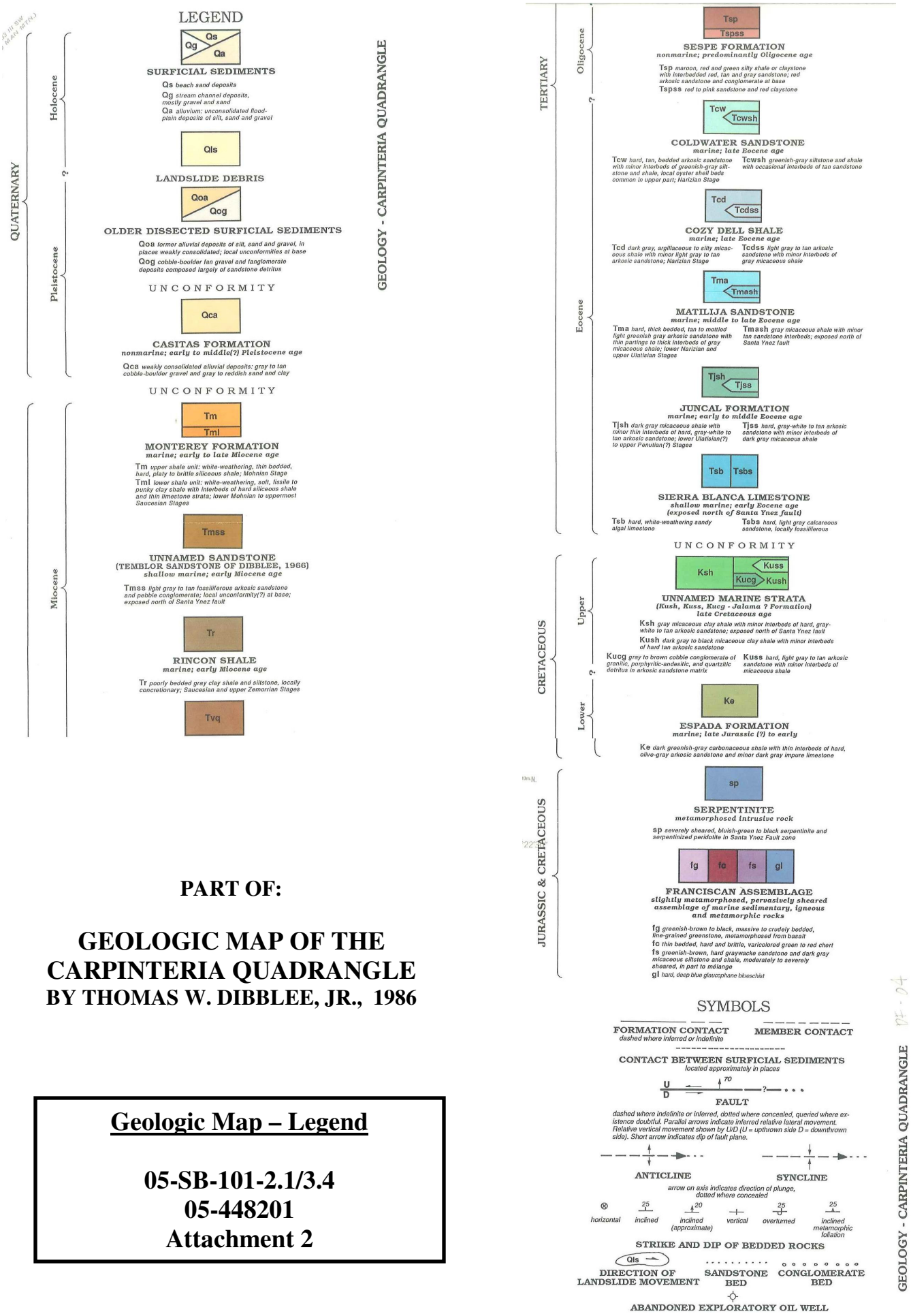

PART OF:

GEOLOGIC MAP OF THE CARPINTERIA QUADRANGLE

BY THOMAS W. DIBBLEE, JR., 1986

Geologic Map – Legend

05-SB-101-2.1/3.4
05-448201
Attachment 2

DIST	COUNTY	ROUTE	POST MILES TOTAL PROJECT	SHEET No.	TOTAL SHEETS
05	SB	101			

REGISTERED CIVIL ENGINEER X DATE

PLANS APPROVAL DATE

REGISTERED PROFESSIONAL ENGINEER Eduardo Ortega Jr. No. 77226 Exp. 6/30/2015 CIVIL STATE OF CALIFORNIA

The State of California or its officers or agents shall not be responsible for the accuracy or completeness of electronic copies of this plan sheet.

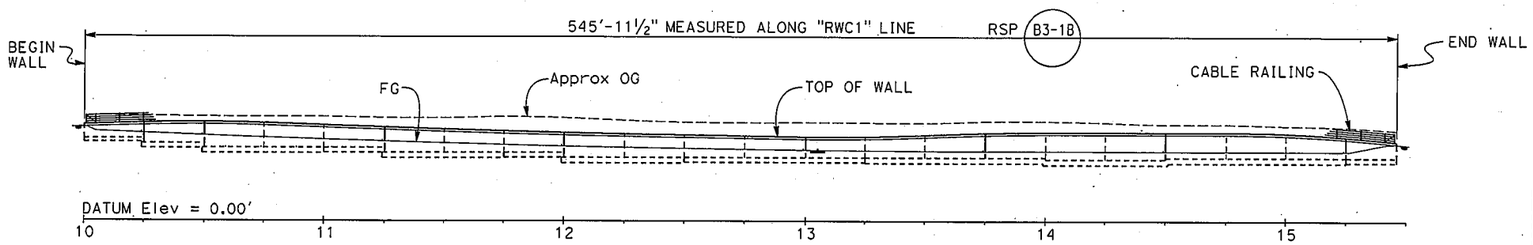

DEVELOPED ELEVATION

1" = 30'

INDEX TO PLANS

SHEET NO.	TITLE
1.	GENERAL PLAN
2.	STRUCTURE PLAN NO. 1
3.	STRUCTURE PLAN NO. 2
4.	FOUNDATION PLAN
5.	RETAINING WALL DETAILS NO. 1
6.	RETAINING WALL DETAILS NO. 2

STANDARD PLANS DATED MAY 2010

A10A	ABBREVIATIONS (SHEET 1 OF 2)
A10B	ABBREVIATIONS (SHEET 2 OF 2)
A10C	LINES AND SYMBOLS (SHEET 1 OF 3)
A10D	LINES AND SYMBOLS (SHEET 2 OF 3)
A10E	LINES AND SYMBOLS (SHEET 3 OF 3)
A10F	LEGEND - SOIL (SHEET 1 OF 2)
A10G	LEGEND - SOIL (SHEET 2 OF 2)
A10H	LEGEND - ROCK
B0-3	BRIDGE DETAILS
RSP B3-1B	RETAINING WALL TYPE 1 (CASE 2)
RSP B3-5	RETAINING WALL DETAILS NO. 1
B3-6	RETAINING WALL DETAILS NO. 2
RSP B11-47	CABLE RAILING

STANDARD PLAN SHEET NO.

DETAIL NO.

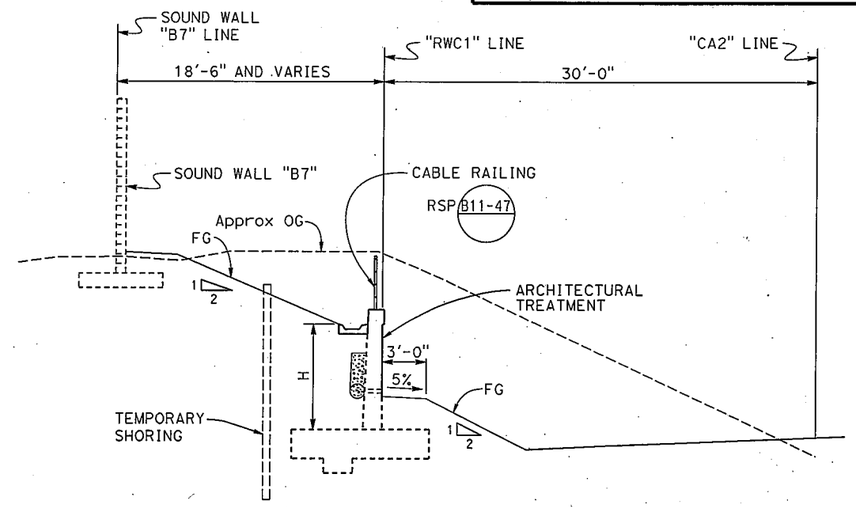

TYPICAL SECTION

1" = 5'

CURVE DATA

"CA2" LINE	"RWC1" LINE
R = 2951.56'	R = 2921.35'
Δ = 8°58'33"	Δ = 7°54'58"
T = 231.66'	T = 202.13'
L = 462.38'	L = 403.62'

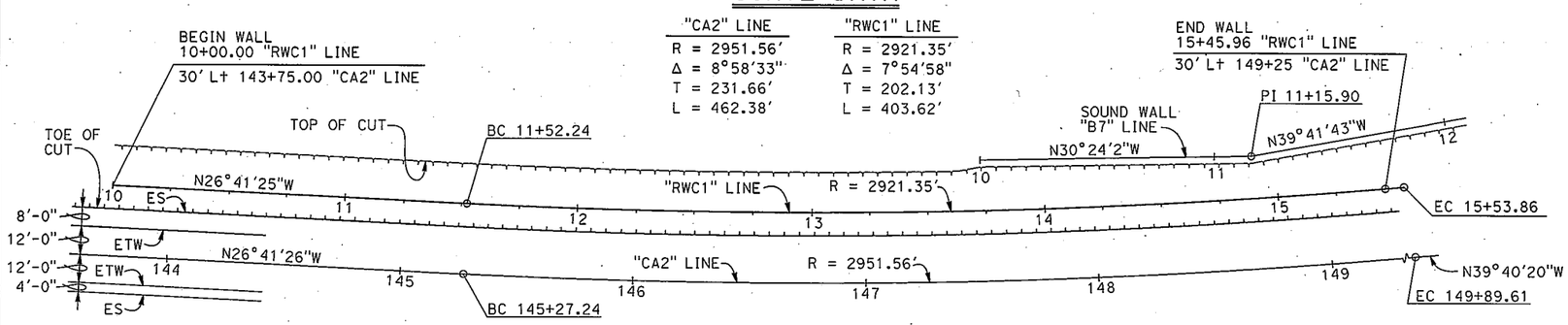

PLAN

1" = 30'

INCOMPLETE PLAN FOR DESIGN STUDY PRINTED

DEC 11 2013

Office of Structures, Design STATE OF CALIFORNIA

CHECKED DETAILS

X DESIGN ENGINEER	DESIGN	BY D. Soon / M. Kodsuntie	CHECKED J. Yolton / J. Jung	LOAD & RESISTANCE FACTOR DESIGN		
	DETAILS	BY Gerald Dickerson	CHECKED J. Yolton / J. Jung	LAYOUT	BY D. Soon / M. Kodsuntie	CHECKED J. Yolton / J. Jung
	QUANTITIES	BY X	CHECKED X	SPECIFICATIONS	BY X	PLANS AND SPECS COMPARED X

ORIGINAL SCALE IN INCHES FOR REDUCED PLANS 0 1 2 3

STATE OF CALIFORNIA DEPARTMENT OF TRANSPORTATION

DIVISION OF ENGINEERING SERVICES STRUCTURE DESIGN DESIGN BRANCH 7

BRIDGE NO. X

POST MILE 2.6

RETAINING WALL "C"

GENERAL PLAN

UNIT: 3592

PROJECT NO. & PHASE: 0500000543-1

CONTRACT NO.: 05-4482U1

DISREGARD PRINTS BEARING EARLIER REVISION DATES

REVISION DATES 6-28-13 12-09-13 12/09/13

SHEET 1 OF X

FILE => rw-c-a-gp.dgn

STRUCTURES DESIGN GENERAL PLAN SHEET (ENGLISH) (REV.09-01-10)

USERNAME => s101842 DATE PLOTTED => 09-DEC-2013 TIME PLOTTED => 15:20

DIST	COUNTY	ROUTE	POST MILES TOTAL PROJECT	SHEET No.	TOTAL SHEETS
05	SB	101			

REGISTERED CIVIL ENGINEER X DATE

PLANS APPROVAL DATE

REGISTERED PROFESSIONAL ENGINEER Eduardo Ortega Jr. No. 77226 Exp. 6/30/2015 CIVIL STATE OF CALIFORNIA

The State of California or its officers or agents shall not be responsible for the accuracy or completeness of electronic copies of this plan sheet.

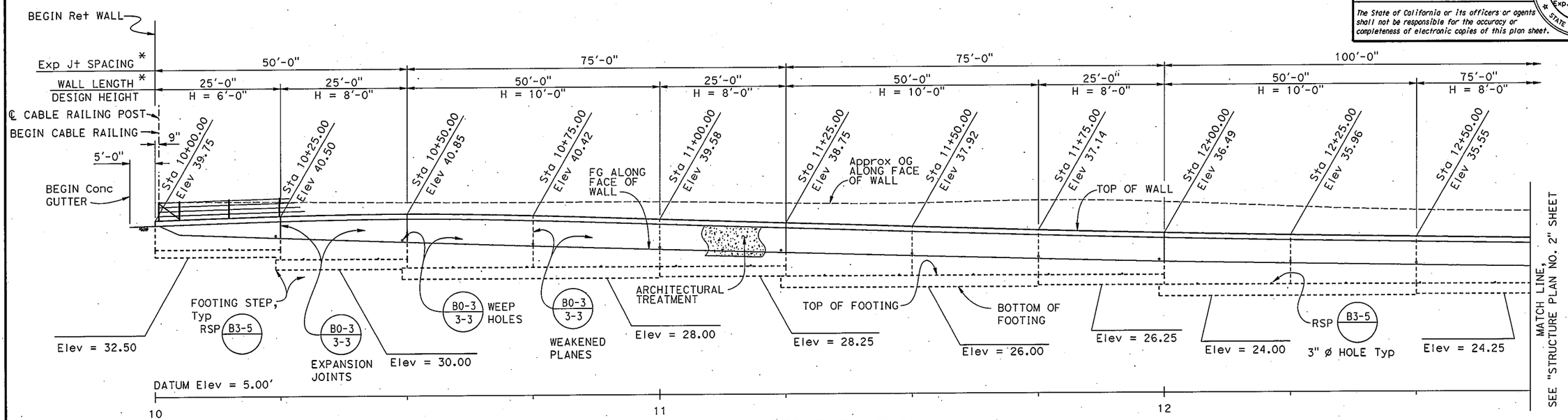

DEVELOPED ELEVATION

1" = 10'

NOTES:

1. Transition ground line at front of wall between points shown.

* Measured along "RWC1" line

INCOMPLETE PLAN FOR DESIGN STUDY PRINTED

DEC 11 2013

Office of Structures, Design STATE OF CALIFORNIA

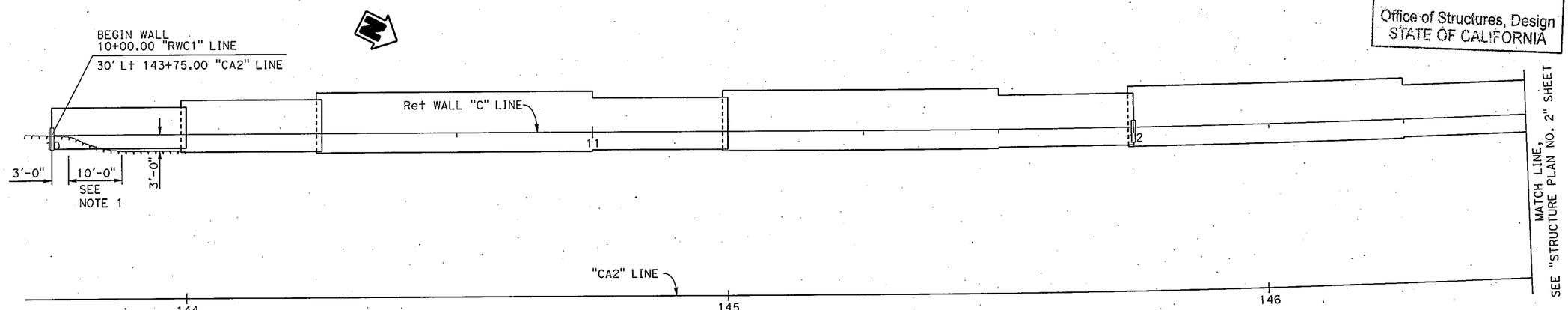

PLAN

1" = 10'

CHECKED DETAILS

	BY	CHECKED
DESIGN	D. Soon / M. Kodsuntie	J. Yolton / J. Jung
DETAILS	Gerald Dickerson	J. Yolton / J. Jung
QUANTITIES	X	X

STATE OF CALIFORNIA DEPARTMENT OF TRANSPORTATION

DIVISION OF ENGINEERING SERVICES STRUCTURE DESIGN DESIGN BRANCH 7

BRIDGE NO. X

POST MILE 2.6

RETAINING WALL "C"

STRUCTURE PLAN NO. 1

STRUCTURES DESIGN DETAIL SHEET (ENGLISH) (REV. 09-01-10)

ORIGINAL SCALE IN INCHES FOR REDUCED PLANS 0 1 2 3

UNIT: 3592

PROJECT NO. & PHASE: 0500000543-1

CONTRACT NO.: 05-4482U1

DISREGARD PRINTS BEARING EARLIER REVISION DATES

REVISION DATES 1-20-12 11/20/13 11/25/13

SHEET 2 OF X

FILE => rw-c-b-sp01.dgn

USERNAME => 6101842 DATE PLOTTED => 05-DEC-2013 TIME PLOTTED => 15:31

DIST	COUNTY	ROUTE	POST MILES TOTAL PROJECT	SHEET No.	TOTAL SHEETS
05	SB	101			

REGISTERED CIVIL ENGINEER X DATE

PLANS APPROVAL DATE

REGISTERED PROFESSIONAL ENGINEER Eduardo Ortega Jr. No. 77226 Exp. 6/30/2015 CIVIL STATE OF CALIFORNIA

The State of California or its officers or agents shall not be responsible for the accuracy or completeness of electronic copies of this plan sheet.

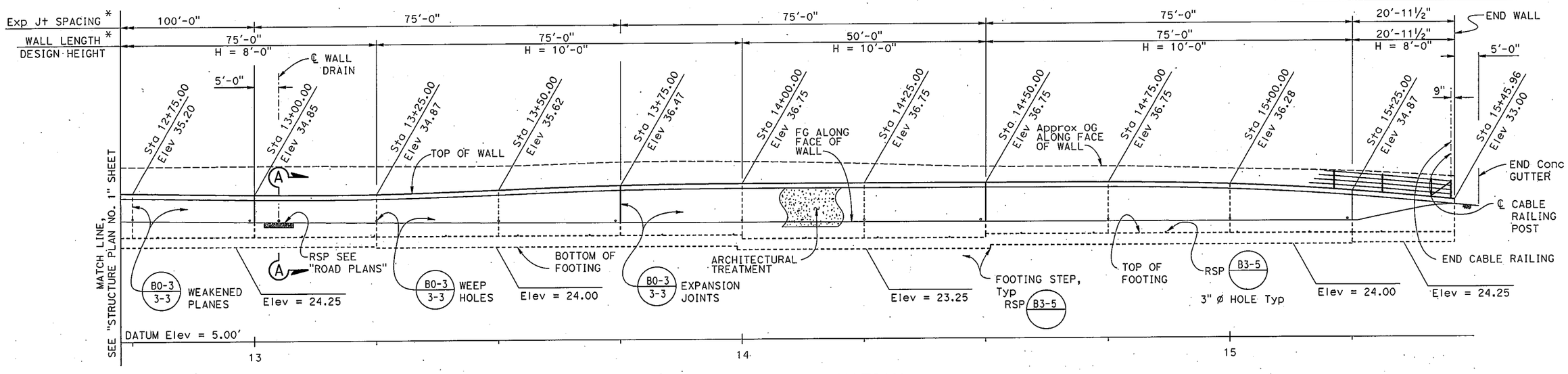

DEVELOPED ELEVATION

1" = 10'

NOTES:

1. Transition ground line at front of wall between positions shown.
2. For SECTION A-A, see "RETAINING WALL DETAILS NO. 2" sheet.

* Measured along "RWC1" line

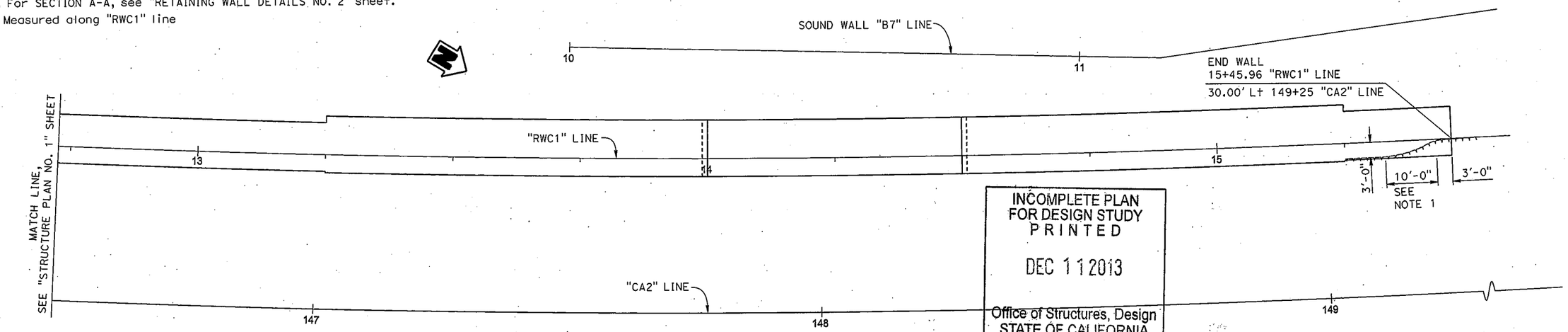

INCOMPLETE PLAN FOR DESIGN STUDY PRINTED

DEC 11 2013

Office of Structures, Design STATE OF CALIFORNIA

CHECKED DETAILS

PLAN

1" = 10'

	BY	CHECKED
DESIGN	D. Soon / M. Kodsuntie	J. Yolton / J. Jung
DETAILS	Gerald Dickerson	J. Yolton / J. Jung
QUANTITIES	X	X

STATE OF CALIFORNIA DEPARTMENT OF TRANSPORTATION

DIVISION OF ENGINEERING SERVICES STRUCTURE DESIGN DESIGN BRANCH 7

BRIDGE NO. X

POST MILE 2.6

RETAINING WALL "C"

STRUCTURE PLAN NO. 2

STRUCTURES DESIGN DETAIL SHEET (ENGLISH) (REV. 09-01-10)

ORIGINAL SCALE IN INCHES FOR REDUCED PLANS 0 1 2 3

UNIT: 3592

PROJECT NO. & PHASE: 0500000543-1

CONTRACT NO.: 05-4482U1

DISREGARD PRINTS BEARING EARLIER REVISION DATES

REVISION DATES 6-28-12 09/20/13 11/22/13

SHEET 3 OF X

FILE => rw-c-b-sp02.dgn

USERNAME => s101842 DATE PLOTTED => 05-DEC-2013 TIME PLOTTED => 15:32

DIST	COUNTY	ROUTE	POST MILES TOTAL PROJECT	SHEET No.	TOTAL SHEETS
05	SB	101			

REGISTERED CIVIL ENGINEER X DATE

PLANS APPROVAL DATE

REGISTERED PROFESSIONAL ENGINEER Eduardo Ortega Jr. No. 77226 Exp. 6/30/2015 CIVIL STATE OF CALIFORNIA

The State of California or its officers or agents shall not be responsible for the accuracy or completeness of electronic copies of this plan sheet.

INCOMPLETE PLAN FOR DESIGN STUDY PRINTED

DEC 11 2013

Office of Structures Design STATE OF CALIFORNIA

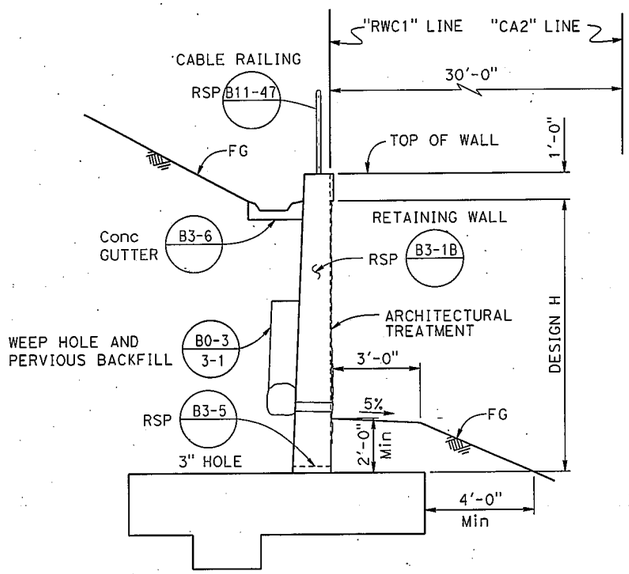

TYPICAL SECTION

3/8" = 1'-0"

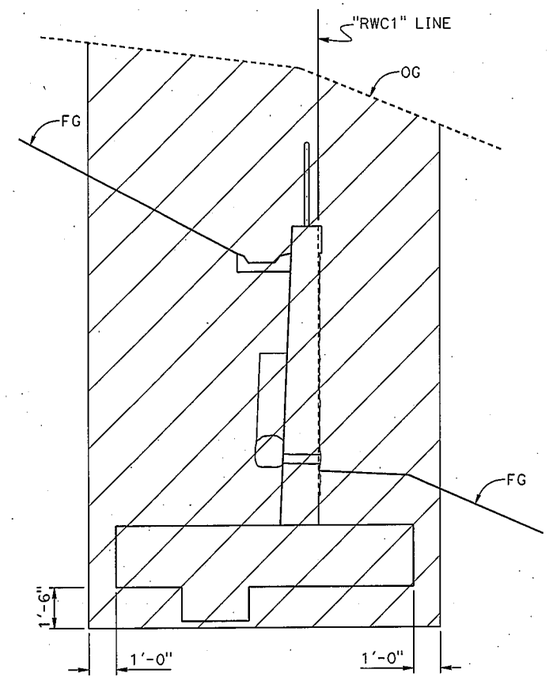

LIMITS OF PAYMENT FOR STRUCTURE EXCAVATION

3/8" = 1'-0"

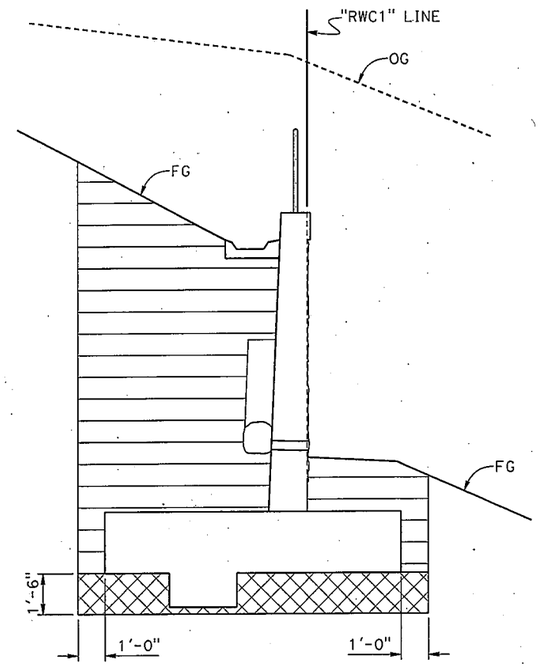

LIMITS OF PAYMENT FOR STRUCTURE BACKFILL

3/8" = 1'-0"

Structure Excavation (Type D Excavation from Sta 11+25 to 15+45.96)

Structure Backfill

Structure Backfill (Class III permeable material fully encapsulated in filter fabric)

CHECKED DETAILS

	BY	CHECKED
DESIGN	Manode Kodsuntie	J. Yolton / M. Kodsuntie
DETAILS	Jie Tang	J. Yolton / M. Kodsuntie
QUANTITIES	X	X

STATE OF CALIFORNIA DEPARTMENT OF TRANSPORTATION

DIVISION OF ENGINEERING SERVICES STRUCTURE DESIGN DESIGN BRANCH 7

BRIDGE NO. X

POST MILE 2.6

RETAINING WALL "C"

RETAINING WALL DETAILS NO. 1

STRUCTURES DESIGN DETAIL SHEET (ENGLISH) (REV. 09-01-10)

ORIGINAL SCALE IN INCHES FOR REDUCED PLANS 0 1 2 3

UNIT: 3592

PROJECT NO. & PHASE: 0500000543-1

CONTRACT NO.: 05-4482U1

DISREGARD PRINTS BEARING EARLIER REVISION DATES

REVISION DATES 11/14/13 11/20/13

SHEET 5 OF X

FILE => rw-c-a-rwdet01.dgn

USERNAME => s101842 DATE PLOTTED => 05-DEC-2013 TIME PLOTTED => 15:32

DIST	COUNTY	ROUTE	POST MILES TOTAL PROJECT	SHEET No.	TOTAL SHEETS
05	SB	101			

REGISTERED CIVIL ENGINEER X DATE

PLANS APPROVAL DATE

REGISTERED PROFESSIONAL ENGINEER Eduardo Ortega Jr. No. 77226 Exp. 6/30/2015 CIVIL STATE OF CALIFORNIA

The State of California or its officers or agents shall not be responsible for the accuracy or completeness of scanned copies of this plan sheet.

INCOMPLETE PLAN FOR DESIGN STUDY PRINTED

DEC 11 2013

Office of Structures, Design
STATE OF CALIFORNIA

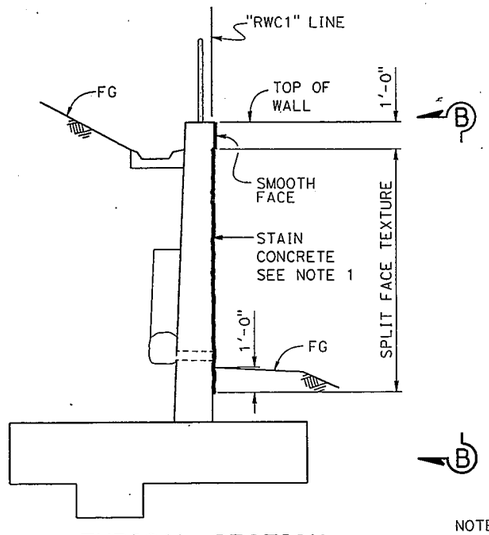

TYPICAL SECTION

NO SCALE

NOTE: Cable railing not shown.

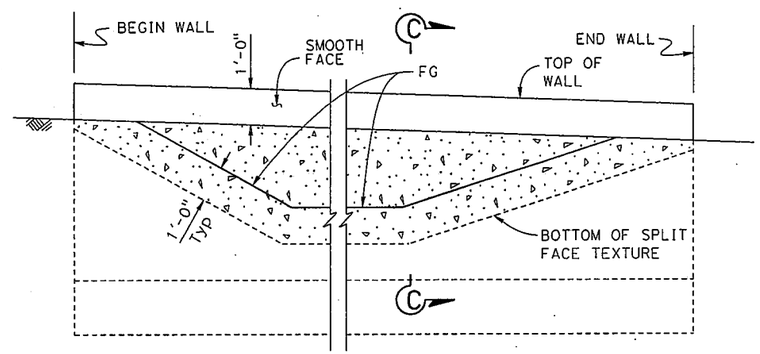

VIEW B-B

NO SCALE

NOTE:

1. Limits of stain concrete on retaining wall shall be from top of wall to 1'-0" below finished grade from begin wall to end wall.

LIMITS OF PAYMENT FOR ARCHITECTURAL TREATMENT

LEGEND:

Split face texture

Stain Concrete

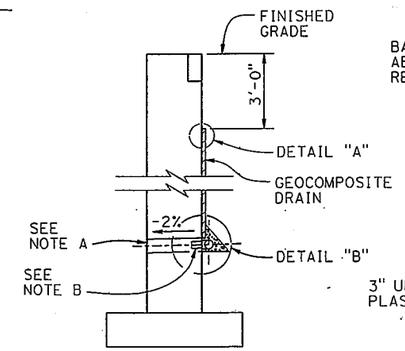

WALL SECTION

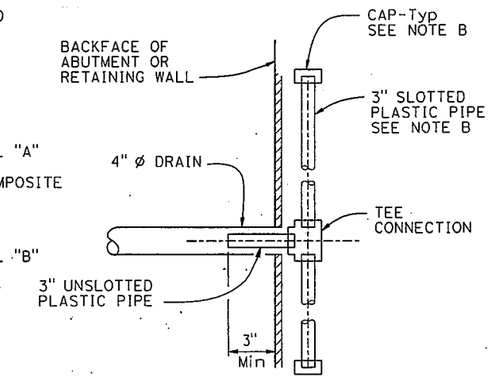

SECTION A-A

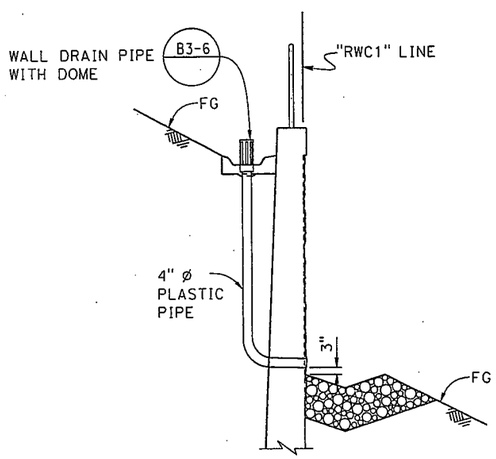

SECTION A-A

3/8" = 1'-0"

NOTE: For location of SECTION A-A, see "STRUCTURE PLAN NO. 2" sheet.

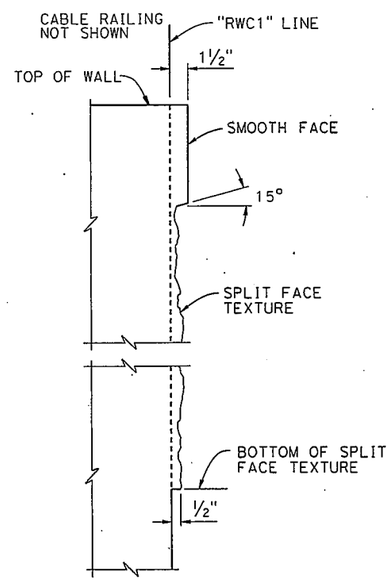

VIEW C-C

NO SCALE

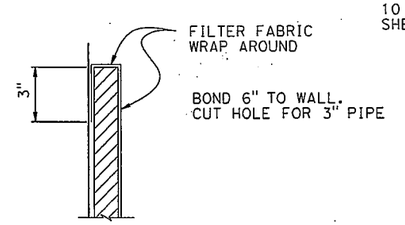

DETAIL "A"

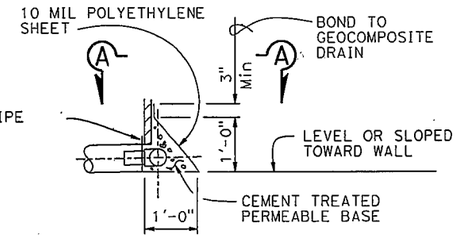

DETAIL "B"

WEEP HOLE AND GEOCOMPOSITE DRAIN

ALTERNATIVE TO BRIDGE DETAIL B0-3 / 3-1

NOTES:

A. 4" Ø drains at intermediate sag points and at 25' max center to center (9' c-c for Type 3 and 9'-3" c-c for Type 4 retaining walls).
For walls adjacent to sidewalks or curbs, provide 4" cast iron or asbestos cement pipe under the sidewalk to discharge through curb face.
Exposed wall drains shall be located 3"± above finished grade.

B. Geocomposite drain, cement treated permeable base, and 3"Ø slotted plastic pipe continuous behind retaining wall or abutment. Cap ends of pipe. Provide "Tee" connection at each 4" Ø drain.

C. Connect the low end of plastic pipe to the main outlet pipe as apprlicable.

CHECKED DETAILS

	BY	CHECKED
DESIGN	Manode Kodsuntie	Jun Jung
DETAILS	Jie Tang	Jun Jung
QUANTITIES	X	X

STATE OF CALIFORNIA
DEPARTMENT OF TRANSPORTATION

DIVISION OF ENGINEERING SERVICES
STRUCTURE DESIGN
DESIGN BRANCH 7

BRIDGE NO. X
POST MILE 2.6

RETAINING WALL "C"
RETAINING WALL DETAILS NO. 2

STRUCTURES DESIGN DETAIL SHEET (ENGLISH) (REV. 09-01-10)

ORIGINAL SCALE IN INCHES FOR REDUCED PLANS 0 1 2 3

UNIT: 3592
PROJECT NUMBER & PHASE: 0500000543-1 CONTRACT NO.: 05-4482U1

DISREGARD PRINTS BEARING EARLIER REVISION DATES

REVISION DATES 11/19/13 11/20/13

SHEET 6 OF X

FILE => rw-c-e-rwdet02.dgn

USERNAME => s101842 DATE PLOTTED => 05-DEC-2013 TIME PLOTTED => 15:33

M e m o r a n d u m

Flex your power!
Be energy efficient!

To: MANODE KODSUNTIE
Structure Design Branch 7
DIVISION OF ENGINEERING SERVICES

Date: January 28, 2014
File: 05-SB-101-2.2/3.3
Linden Casitas
Retaining Wall D
Sound Wall B4
EA 05-4482U1

From: **DEPARTMENT OF TRANSPORTATION**
DIVISION OF ENGINEERING SERVICES
GEOTECHNICAL SERVICES

Subject: Retaining Wall D & Sound Wall B4 Foundation Report

Scope of Work

A Foundation Report (FR) for Retaining Wall D and Sound Wall B4 is provided for the above referenced project. The project is on State Route 101 in the City of Carpinteria, in southern Santa Barbara County. Improvements are proposed to increase the highway level of service and accessibility, and include replacement of existing bridges and construction of new bridges, retaining walls, sound walls, ramps and frontage roads. Review of published geologic data and previous geotechnical reports, field reconnaissance, and foundation calculations were performed as part of the geotechnical investigation.

The purpose of this report is to document geotechnical conditions and provide foundation recommendations for proposed Retaining Wall D and Sound Wall B4.

Project Description

Route 101 within the project limits is a four-lane divided urban freeway with (2) 12-foot portland cement concrete (PCC) lanes in each direction and asphalt concrete (AC) 5-foot inside shoulders and 8-foot outside shoulders. A landscaped median approximately 40 feet wide with thrie beam barriers facing each direction of travel provides separation between the northbound and southbound lanes.

The purpose of the Linden Casitas project is to improve access and operations on Route 101, reduce local trips, and provide pedestrian and bicycle connectivity. The project includes construction of (3) mainline bridges on Route 101 to replace existing structures at Linden Avenue, Casitas Pass Road, and Carpinteria Creek. Highway access will be modified and added at Linden Avenue and Casitas Pass Road. Extension of Via Real, a frontage road, will also require construction of a new bridge over Carpinteria Creek. Retaining walls and sound walls are also proposed as part of the project.

Retaining Wall D is proposed for a length of 1365 feet between Via Real and northbound Highway 101 to provide grade separation between northbound 101 and Via Real. The wall begins 20.48 feet left of VIAREAL1 Station 145+01.04 and ends 19.28 feet left of 158+72.10. The maximum design retained height will be 14 feet, with an embankment slope of 2:1 in front of the wall. Sound Wall B4 on Type 736 concrete barrier will be constructed top of on Retaining Wall D from "Ret Wall D" Station 2+18.67 to 11+94.25, and Type 736 concrete barrier without sound wall will be constructed on top of Retaining Wall D from Station 0+00 to 2+18.67 and 11+94.25 to 13+65.00.

Pertinent Reports and Investigations

The following publications were used to assist in the assessment of site conditions:

1. *Preliminary Geotechnical Report.* Finegan, Michael. EA 05-448200. December 21, 2000.

2. *District Preliminary Geotechnical Report.* De Llamas, Zeke. EA 05-448200, July 30, 2008.

Field Investigation and Laboratory Testing Program

Two mud rotary borings were advanced near the retaining wall layout line to determine the subsurface conditions to be used for foundation design. In-situ soil strength parameters were determined using the Standard Penetration Test (SPT) for cohesionless soils. Laboratory tests were used to determine the particle size distribution and corrosion potential of representative samples obtained at depth. Refer to Table 1 for a summary of subsurface investigation information.

Table 1. Subsurface Exploration Summary

Boring	*Completion Date*	*Equipment*	*Hammer Type*	*Hammer Efficiency (%)*	*Approximate Ground Elevation (ft)*	*Depth (ft)*
RC-10-005	12-8-2010	CS2000	Auto	93	26.4	152.0
RC-11-010	1-30-2011	CS2000	Auto	93	52.4	172.0

Site Geology and Subsurface Conditions

Physical Setting

The project is located in the Carpinteria Valley, a sunken area north of the elevated coastal fault block southeast of the City of Carpinteria. Carpinteria valley is a low-lying, flat plain comprised of alluvial deposits. Some low-lying areas in the valley are partly submerged under brackish water of the Carpinteria slough. The plain meets the Pacific Ocean to the southwest, gradually gains elevation to the east as it approaches Rincon and La Granada Mountains, and abuts sharply against the foothills of the Santa Ynez Mountains at its the northern boundary.

A mild coastal climate prevails throughout the year, with marine fog often present in spring and summer months. Nearly all precipitation falls from Pacific storms between October and May, with the majority accumulating in the winter months. Average yearly rainfall is 17.5 inches. The average temperature is 72 degrees Fahrenheit with more than 275 days of sunny weather per year.

Regional Geology

The project area is located in the Transverse Ranges Geomorphic Province. State Route 101 is bordered to the north by the Santa Ynez Mountains and to the south by the Pacific Ocean as it traverses the Carpinteria Valley. Geologic maps and field observations indicate that soils in the valley were deposited in an alluvial environment and consist of normally-consolidated deposits of clay, silt, sand, and gravel.

Groundwater

Open observation wells were installed in borings RC-10-005 and RC-11-010 to observe fluctuations in groundwater levels and determine if groundwater will influence construction and foundation design. A hand auger boring HA-12-002 was also performed near the retaining wall layout line to further characterize groundwater levels. Results of the groundwater-monitoring program are summarized in Table 2.

Table 2. Groundwater Elevations

Boring	Date	Depth to Groundwater (ft)	Groundwater Elevation(ft)
RC-10-005	2-24-2012	7.3	19.1
RC-10-005	4-19-2012	6.7	19.7
RC-11-010	2-9-2011	27.9	24.5
HA-12-001	4-19-2012	12.5	23.2

Corrosion Evaluation

The Department considers a site to be potentially corrosive to the foundation elements if the following conditions exist for the representative soil and/or water samples taken at the site: minimum resistivity of 1000 ohm-cm or less and/or PH of 5.5 or less.

Soil and water samples were obtained during the subsurface investigation and tested for corrosion potential at the District Materials Laboratory. The results of the corrosion testing are presented in Table 3. Based on the results, soils are not considered corrosive to foundation elements.

Table 3. Corrosion Testing Summary

Boring	*Depth (ft)*	*pH*	*Resistivity ohm-cm*	*Chloride ppm*	*Sulphate ppm*	*Corrosive*
RC-10-005	2.0-4.0	8.4	1260	-	-	NO
RC-10-005	47.0-49.0	8.4	2350	-	-	NO
RC-10-005	87-0-89.0	8.6	3560	-	-	NO

Foundation Recommendations

Retaining Wall Type 5SWB: Sound Wall on Retaining Wall on Spread Footing and Standard Plan Retaining Wall Type 5 Case 1

Masonry block sound walls on concrete barriers on cast-in-place cantilevered retaining walls on spread footings are the recommended structure and foundation types. Details can be found in Bridge Standard Detail Sheets for Retaining Wall Type 5SWB, 2010 Standard Plan B15-6, and Revised Standard Plan B3-4A. The depth of foundation embedment shall provide a minimum of 4 feet of horizontal cover from the top of the toe side of the footing to the face of the embankment slope in front of the wall. The net bearing pressure and effective footing width for the service 1 limit state load provided in the Bridge Standard Detail Sheets and Revised Standard Plans were used to evaluate foundation settlement. Extreme limit state bearing stresses were evaluated at a horizontal seismic earth pressure coefficient equal to 0.2. Settlement is expected to be immediate in the cohesionless soils underlying the proposed retaining wall. Calculated differential settlements are within tolerable limits for cast-in-place cantilevered concrete retaining walls.

Table 4. Retaining Wall Foundation Recommendations

Wall Station (ft)	*Wall Type*	*Design Height (ft)*	*Bottom of Footing Elevation (ft)*	*Footing Width (ft)*	*Strength Limit Factored Bearing Resistance (psf)* Φq_N Φ=0.45	*Extreme Limit Factored Bearing Resistance (psf)* Φq_N Φ=1.0	*Strength Limit Factored Gross Uniform Bearing Stress (psf)* q_0	*Extreme Limit Factored Gross Uniform Bearing Stress(psf)* q_0	*Service Limit State Net Bearing Stress(psf)* q'_0	*Calculated Settlement at Net Bearing Pressure (inches)*
0+00 to 0+80	Type 5 Case 1	8.0	38.30	8.5	5200	3000	3200	2100	2100	2.4
0+80 to 2+18.67	Type 5 Case 1	8.0	37.30	8.5	5200	3000	3200	2100	2100	2.4
2+18.67 to 2+40	Type 5SWB	8.0	37.55	9.00	5200	11,600	3300	4700	1900	2.4
2+40 to 2+80	Type 5SWB	6.0	37.55	9.00	5200	11,700	2900	3400	1500	2.0
2+80 to 3+80	Type 5SWB	8.0	36.00	9.00	5200	11,600	3300	4700	1900	2.4
3+80 to 5+60	Type 5SWB	8.0	34.00	9.00	5200	11,600	3300	4700	1900	2.4
5+60 to 6+00	Type 5SWB	8.0	32.00	9.00	5200	11,600	3300	4700	1900	2.4
6+00 to 6+60	Type 5SWB	12.0	28.00	10.25	5200	11,800	3400	9200	2500	2.9
6+60 to 6+80	Type 5SWB	14.0	25.75	11.25	5600	13,300	3800	13,300	2800	3.2
6+80 to 7+80	Type 5SWB	12.0	26.00	10.25	5200	11,800	3400	9200	2500	2.9
7+80 to 8+40	Type 5SWB	12.0	25.00	10.25	5200	11,800	3400	9200	2500	2.9
8+40 to 9+20	Type 5SWB	12.0	24.00	10.25	5200	11,800	3400	9200	2500	2.9
9+20 to 9+80	Type 5SWB	10.0	24.00	9.50	5200	11,700	3700	6500	2200	2.6
9+80 to 10+20	Type 5SWB	12.0	22.00	10.25	5200	11,800	3400	9200	2500	2.9
10+20 to 11+40	Type 5SWB	10.0	22.00	9.50	5200	11,700	3700	6500	2200	2.6
11+40 to 11+94.67	Type 5SWB	10.0	21.00	9.50	5200	11,700	3700	6500	2200	2.6
11+94.67 To 12+00	Type 5 Case 1	10.0	20.75	9.5	5200	11,700	3500	3900	2500	2.8
12+00 to 13+20	Type 5 Case 1	8.0	20.75	8.5	5200	11,800	3000	3200	2100	2.4
13+20 to 13+65	Type 5 Case 1	6.0	20.75	7.75	5200	11,700	2900	3000	1800	2.2

Construction Considerations

Loose soils and groundwater may be encountered during foundation excavations. Temporary slopes and/or shoring will be required to support the excavation to construct the retaining wall foundations. Groundwater levels were measured near the bottom of footing excavation.

If groundwater infiltrates footing excavations and the contractor is able to dewater the excavation by pumping, construction of a permeable mattress to bridge soft and wet soils and provide a stable working platform to begin foundation construction is recommended. Over-excavate 18 inches below the bottom of footing elevation and 8 inches beyond the sides of the footing excavation. Replace the excavated material to the bottom of footing elevation with Class III Permeable material fully encapsulated in Class B3 subgrade enhancement geotextile to prevent contamination with fines. Overlap seams in the fabric a minimum of 3 feet. The base layer shall be pumped during forming, placement of concrete, and concrete curing, as required to keep the groundwater elevation below the bottom of footing, providing a dry uniform surface for construction and preventing segregation of the concrete by flowing water prior to curing.

Additional Information

Standard Specification 2-1.6.B, "Supplemental Project Information", discloses to bidders and contractors a list of pertinent information available for their inspection prior to bid opening. Items listed to be included in the Information Handout will be provided in Acrobat (.pdf) format to the Addressee of this report via electronic mail.

Data and information attached with the project plans are:

A. Log of Test Borings.

Data and information included in the Information Handout provided to the Bidders and Contractors are:

A. Foundation Report for the Retaining Wall dated January 28, 2014.

If you have any questions or comments, please contact Ryan Turner at (805) 549-3750, or Michael Finegan at (805) 549-3194.

RYAN TURNER, P.E., G.E.
Transportation Engineer Civil
Geotechnical Design – North
Branch D

MICHAEL S. FINEGAN, P.E.
Branch Chief
Geotechnical Design – North
Branch D

c: Job File / Branch D Records
Structure Construction RE Pending File (email RE_pending_file@dot.ca.gov)
Craig Whitten / DES Office Engineer
Andrew Tan / PCE
Eric Karlson/ DME

LIST OF ATTACHMENTS

Vicinity Map	Attachment 1
Geologic Map and Legend	Attachment 2
Structure Plans	Attachment 3

INDEX OF SHEETS

STATE OF CALIFORNIA
DEPARTMENT OF TRANSPORTATION

PROJECT PLANS FOR CONSTRUCTION ON
STATE HIGHWAY
IN SANTA BARBARA COUNTY
IN CARPINTERIA
FROM 0.4 KM SOUTH OF CARPINTERIA CREEK BRIDGE
TO 0.5 KM NORTH OF LINDEN AVENUE OVERCROSSING

TO BE SUPPLEMENTED BY STANDARD PLANS DATED JULY 2004

Dist	COUNTY	ROUTE	KILOMETER POST TOTAL PROJECT	SHEET NO.	TOTAL SHEETS
05	SB	101	3.5/5.5		

LOCATION MAP

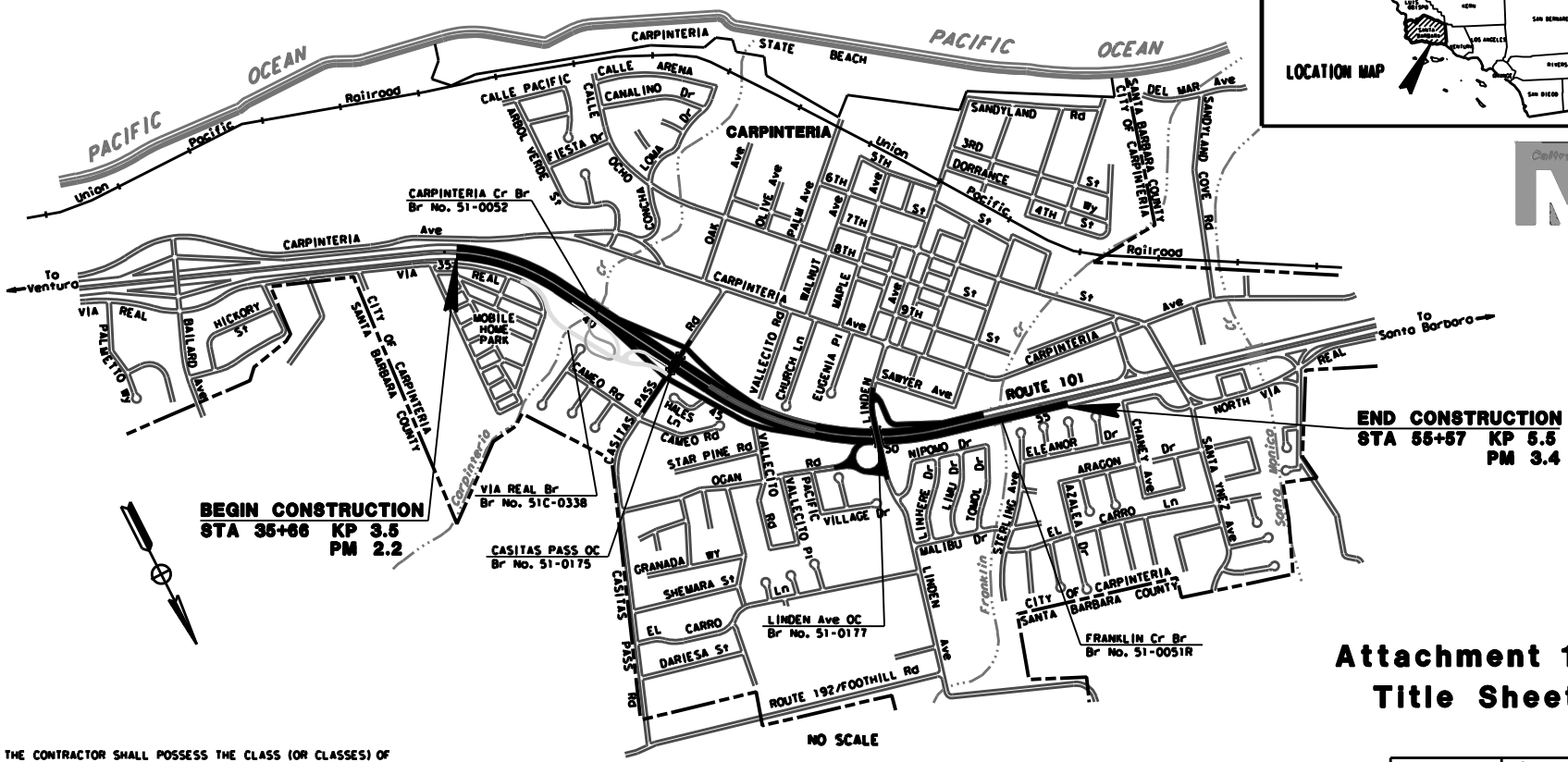

THE CONTRACTOR SHALL POSSESS THE CLASS (OR CLASSES) OF LICENSE AS SPECIFIED IN THE "NOTICE TO CONTRACTORS."

PROJECT MANAGER: DAVID BEARD
DESIGN ENGINEER: KARI BHANA

Attachment 1
Title Sheet

CONTRACT No. 05-4482U0
CU 06233 | EA 4482U0

BORDER LAST REVISED 3/1/2007 | CALTRANS WEB SITE IS: HTTP://WWW.DOT.CA.GOV/ | RELATIVE BORDER SCALE IS IN MILLIMETERS 0 20 40 60 80 | USERNAME => RUSER | DGN FILE => SREQUEST | DATE PLOTTED => 09-14-10 | TIME PLOTTED => 09:42

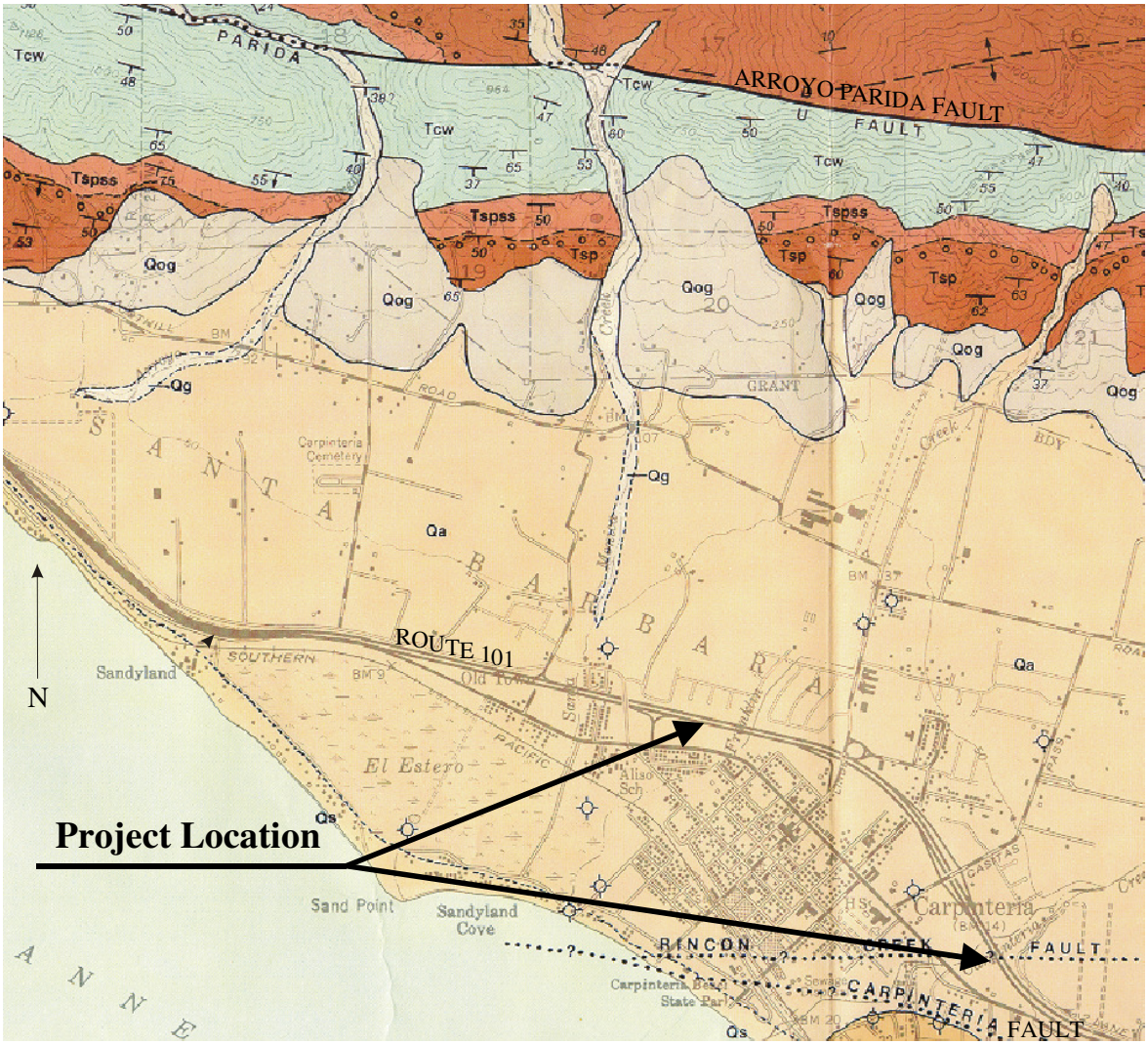

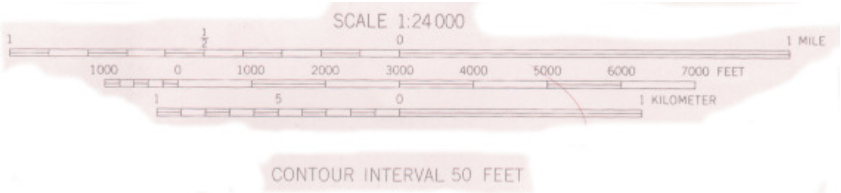

PART OF:

GEOLOGIC MAP OF THE CARPINTERIA QUADRANGLE
BY THOMAS W. DIBBLEE, JR., 1986

Geologic Map

05-SB-101-2.1/3.4
05-448201
Attachment 2

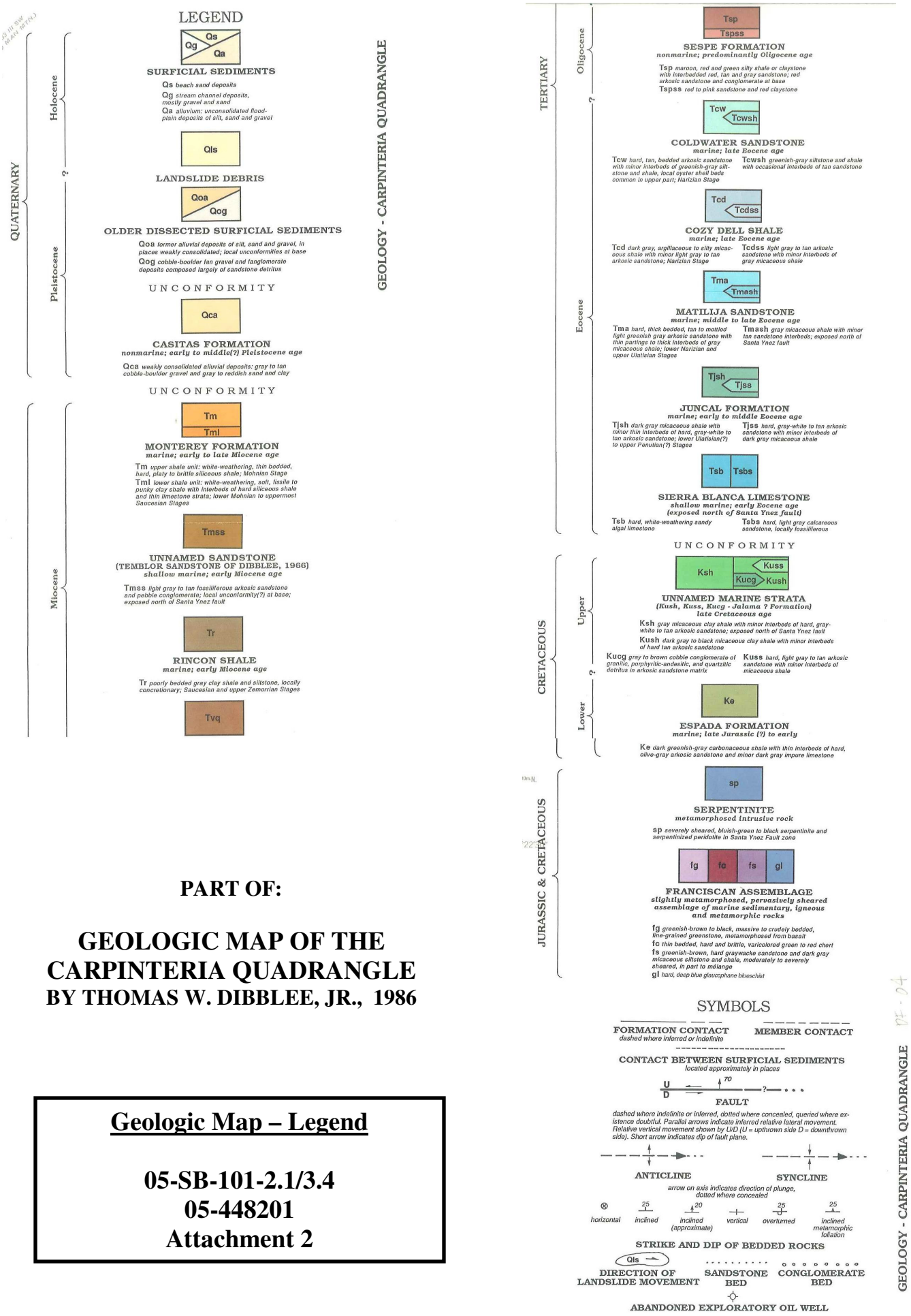

PART OF:

GEOLOGIC MAP OF THE CARPINTERIA QUADRANGLE

BY THOMAS W. DIBBLEE, JR., 1986

Geologic Map – Legend

05-SB-101-2.1/3.4
05-448201
Attachment 2

INCOMPLETE PLAN FOR DESIGN STUDY PRINTED

DEC 2 0 2013

Office of Structures, Design
STATE OF CALIFORNIA

CHECKED DETAILS

DIST	COUNTY	ROUTE	POST MILES TOTAL PROJECT	SHEET No.	TOTAL SHEETS
05	SB	101			

REGISTERED CIVIL ENGINEER X DATE

PLANS APPROVAL DATE

REGISTERED PROFESSIONAL ENGINEER M. Kodsuntie No. 56671 Exp. 6/30/2015 CIVIL STATE OF CALIFORNIA

The State of California or its officers or agents shall not be responsible for the accuracy or completeness of scanned copies of this plan sheet.

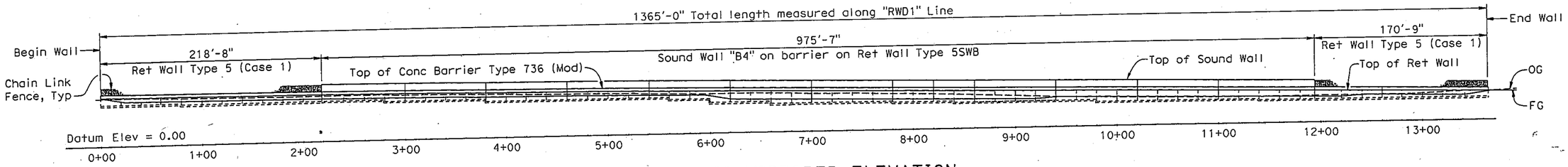

DEVELOPED MIRRORED ELEVATION

1" = 50'

INDEX TO PLANS

SHEET NO.	TITLE
1.	GENERAL PLAN
2.	STRUCTURE PLAN NO. 1
3.	STRUCTURE PLAN NO. 2
4.	STRUCTURE PLAN NO. 3
5.	STRUCTURE PLAN NO. 4
6.	STRUCTURE PLAN NO. 5
7.	STRUCTURE PLAN NO. 6
8.	FOUNDATION PLAN
9.	RETAINING WALL TYPE 5SWB - DETAILS NO. 1
	RETAINING WALL TYPE 5SWB - DETAILS NO. 2
10.	MASONRY BLOCK SOUND WALL BARRIER ON RETAINING WALL DETAILS NO. 1
11.	MASONRY BLOCK SOUND WALL BARRIER ON
12.	RETAINING WALL DETAILS NO. 2
13.	WALL DETAILS
14.	ARCHITECTURAL DETAILS

STANDARD PLANS 2010

	A10A	ABBREVIATIONS (SHEET 1 OF 2)
	A10B	ABBREVIATIONS (SHEET 2 OF 2)
	A10C	LINES AND SYMBOLS (SHEET 1 OF 3)
	A10D	LINES AND SYMBOLS (SHEET 2 OF 3)
	A10E	LINES AND SYMBOLS (SHEET 3 OF 3)
	A10F	LEGEND - SOIL (SHEET 1 OF 2)
	A10G	LEGEND - SOIL (SHEET 2 OF 2)
	A10H	LEGEND - ROCK
	B0-3	BRIDGE DETAILS
RSP	B3-4A	RETAINING WALL TYPE 5 (CASE 1)
RSP	B3-5	RETAINING WALL DETAILS NO. 1
	B11-7	CHAIN LINK RAILING
	B15-9	SOUND WALL MASONRY BLOCK MISCELLANEOUS DETAILS

STANDARD PLAN SHEET No.

DETAIL No.

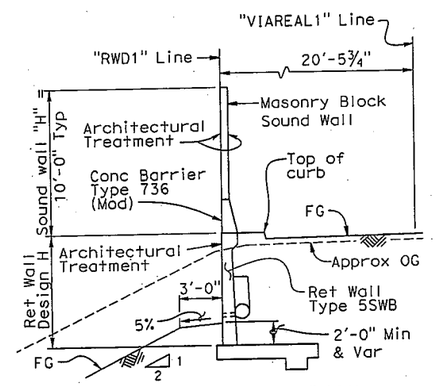

TYPICAL SECTION

Sta 2+18.67 to 11+94.25

1" = 5'

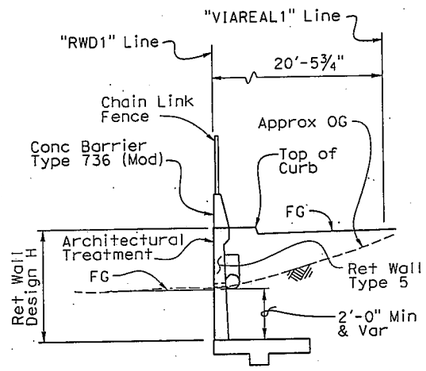

TYPICAL SECTION

Sta 0+00.00 to 2+18.67 &
Sta 11+94.25 to 13+65.00

RSP B3-4A

1" = 5'

CURVE DATA

① "VIAREAL1" LINE	② "RWD1" Line	③ "VIAREAL1" LINE	④ "RWD1" Line
R = 1312.00'	R = 1291.52'	R = 3100.00'	R = 3080.00'
Δ = 7°30'40.81"	Δ = 7°30'40.7"	Δ = 9°43'29.79"	Δ = 9°43'29.7"
T = 86.12'	T = 84.78'	T = 263.71'	T = 262.02'
L = 172.00'	L = 169.31'	L = 526.17'	L = 522.77'

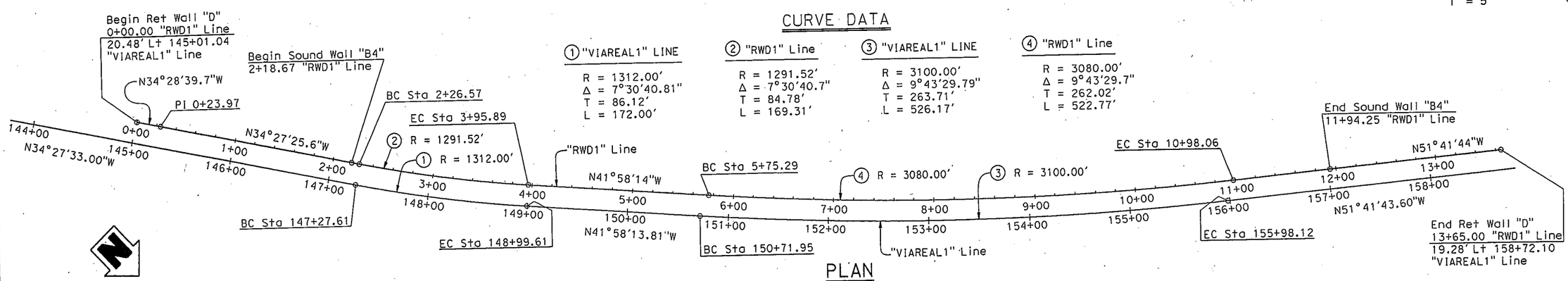

PLAN

1" = 50'

X DESIGN ENGINEER	DESIGN	BY M. Kodsuntie	CHECKED Jun Ki Jung	LOAD & RESISTANCE FACTOR DESIGN	
	DETAILS	BY B.Jenko / B.Huddleston	CHECKED John Yolton	LAYOUT	BY M. Kodsuntie
	QUANTITIES	BY X	CHECKED X	SPECIFICATIONS	BY X

CHECKED Jun Ki Jung
PLANS AND SPECS COMPARED X

ORIGINAL SCALE IN INCHES FOR REDUCED PLANS 0 1 2 3

STATE OF CALIFORNIA
DEPARTMENT OF TRANSPORTATION

DIVISION OF ENGINEERING SERVICES
STRUCTURE DESIGN
DESIGN BRANCH 7

BRIDGE No. X
POST MILE X

RETAINING WALL "D" & SOUND WALL "B4"
GENERAL PLAN

UNIT: 3592
PROJECT NUMBER & PHASE: 05 0000 0543 1 CONTRACT NO.: 05-4482U1

DISREGARD PRINTS BEARING EARLIER REVISION DATES

REVISION DATES			SHEET	OF
10-24-12		12-16-13	1	X

FILE => rwd-a-gp01.dgn

USERNAME => s134008 DATE PLOTTED => 18-DEC-2013 TIME PLOTTED => 15:39

STRUCTURES DESIGN GENERAL PLAN SHEET (ENGLISH) (REV.09-01-10)

DIST	COUNTY	ROUTE	POST MILES TOTAL PROJECT	SHEET No.	TOTAL SHEETS
05	SB	101			

REGISTERED CIVIL ENGINEER X DATE

PLANS APPROVAL DATE

REGISTERED PROFESSIONAL ENGINEER M. Kodsuntie No. 56671 Exp. 6/30/2015 CIVIL STATE OF CALIFORNIA

The State of California or its officers or agents shall not be responsible for the accuracy or completeness of scanned copies of this plan sheet.

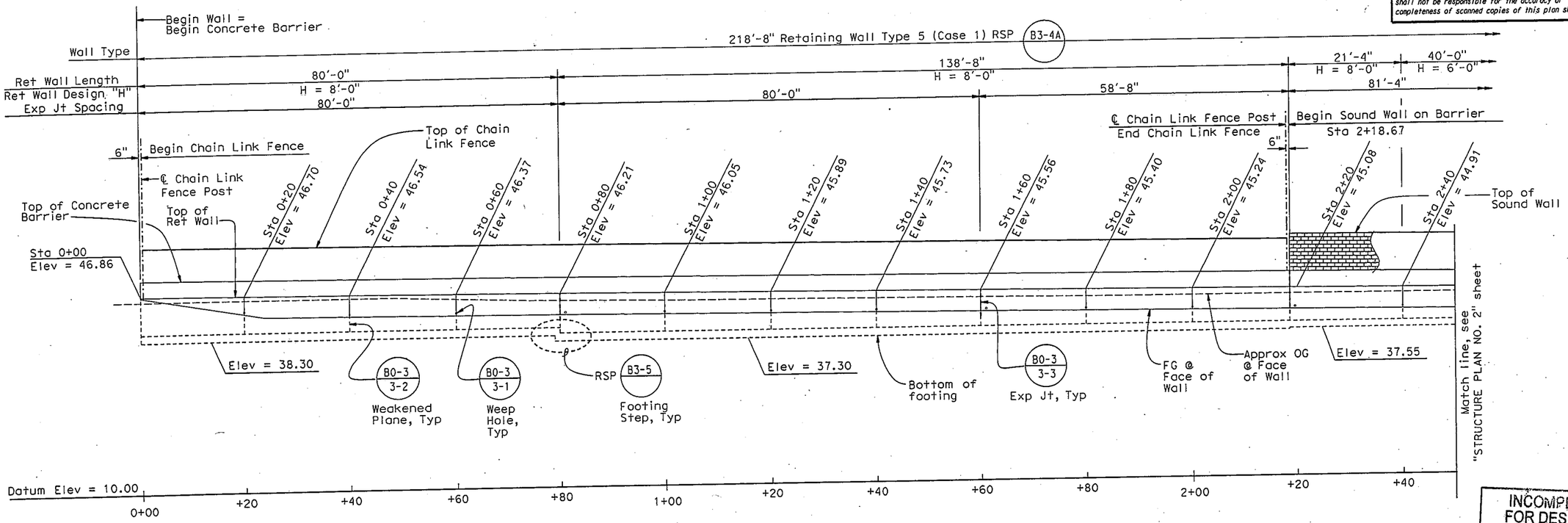

DEVELOPED MIRRORED ELEVATION

1" = 10'

INCOMPLETE PLAN FOR DESIGN STUDY PRINTED

DEC 2 0 2013

Office of Structures Design STATE OF CALIFORNIA

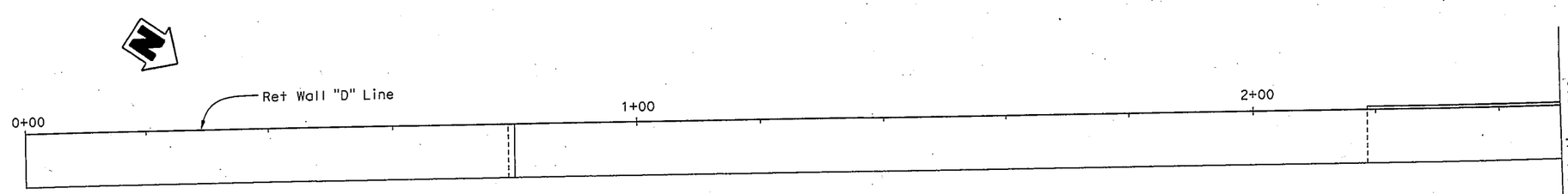

FOOTING PLAN

1" = 10'

CHECKED DETAILS

	BY	CHECKED
DESIGN	Manode Kodsuntie	Jun Ki Jung
DETAILS	B. Huddleston / J. Zhou	Jun Ki Jung
QUANTITIES	X	X

STATE OF CALIFORNIA DEPARTMENT OF TRANSPORTATION

DIVISION OF ENGINEERING SERVICES STRUCTURE DESIGN DESIGN BRANCH 7

BRIDGE NO. X

POST MILE X

RETAINING WALL "D" & SOUND WALL "B4"

STRUCTURE PLAN NO. 1

ORIGINAL SCALE IN INCHES FOR REDUCED PLANS 0 1 2 3

UNIT: 3592

PROJECT NUMBER & PHASE: 05000005431

CONTRACT NO.: 05-4482U1

DISREGARD PRINTS BEARING EARLIER REVISION DATES

REVISION DATES 11-1-12 12-16-13 12-3-13

SHEET 2 OF X

STRUCTURES DESIGN DETAIL SHEET (ENGLISH) (REV. 09-01-10)

FILE => rwd-b-sp01.dgn

USERNAME => s134008 DATE PLOTTED => 18-DEC-2013 TIME PLOTTED => 15:40

DIST	COUNTY	ROUTE	POST. MILES TOTAL PROJECT	SHEET No.	TOTAL SHEETS
05	SB	101			

REGISTERED CIVIL ENGINEER X DATE

PLANS APPROVAL DATE

REGISTERED PROFESSIONAL ENGINEER M. Kodsuntie No. 56671 Exp. 6/30/2015 CIVIL STATE OF CALIFORNIA

The State of California or its officers or agents shall not be responsible for the accuracy or completeness of scanned copies of this plan sheet.

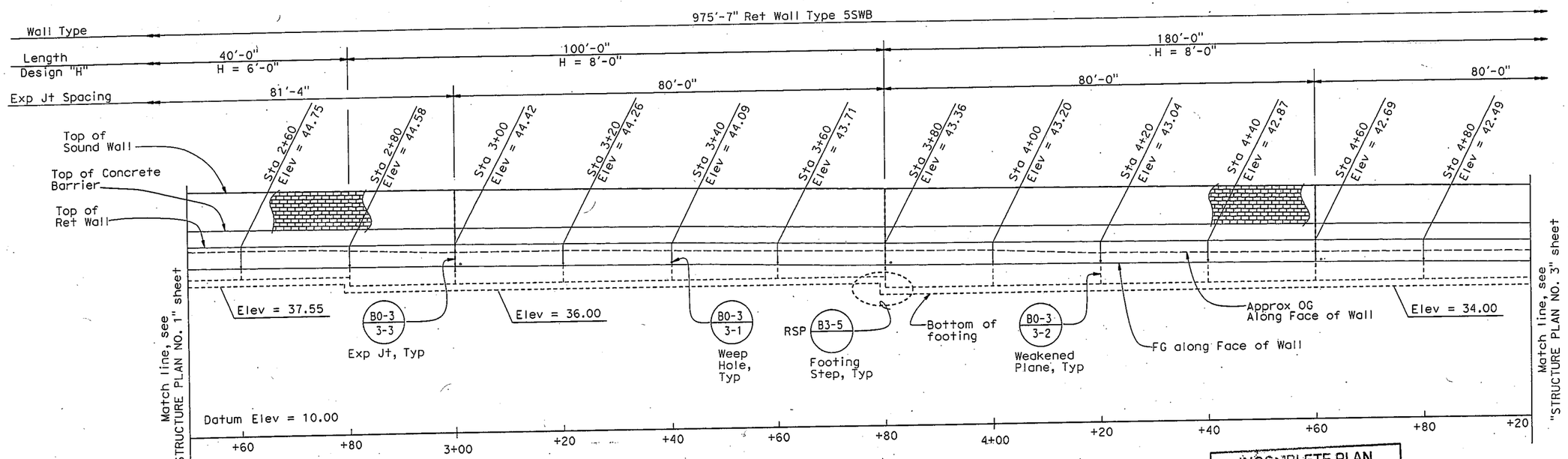

DEVELOPED MIRRORED ELEVATION

1" = 10'

INCOMPLETE PLAN FOR DESIGN STUDY PRINTED

DEC 20 2013

Office of Structures Design

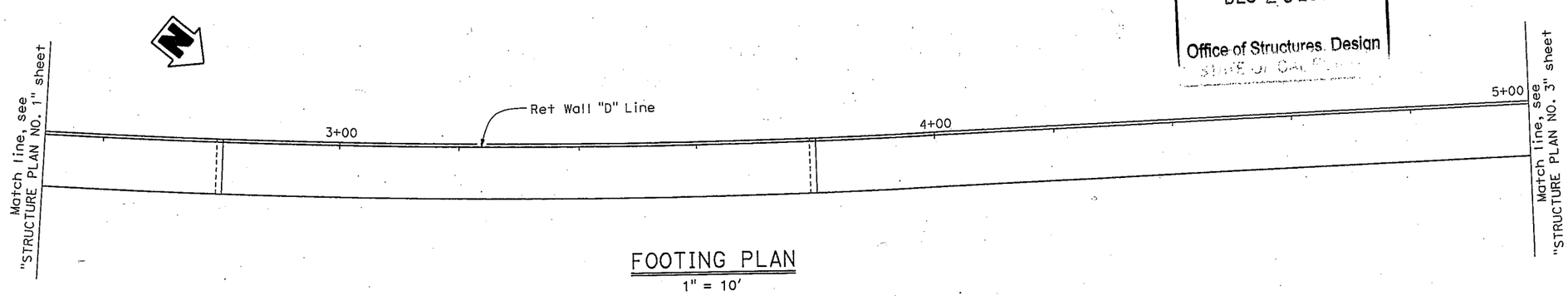

FOOTING PLAN

1" = 10'

CHECKED DETAILS

	BY	CHECKED
DESIGN	Manode Kodsuntie	Jun Ki Jung
DETAILS	B. Huddleston / J. Zhou	Jun Ki Jung
QUANTITIES	X	X

STATE OF CALIFORNIA DEPARTMENT OF TRANSPORTATION

DIVISION OF ENGINEERING SERVICES STRUCTURE DESIGN DESIGN BRANCH 7

BRIDGE NO. X

POST MILE X

RETAINING WALL "D" & SOUND WALL "B4"

STRUCTURE PLAN NO. 2

ORIGINAL SCALE IN INCHES FOR REDUCED PLANS 0 1 2 3

UNIT: 3592

PROJECT NUMBER & PHASE: 0500000543I

CONTRACT NO.: 05-4482U1

DISREGARD PRINTS BEARING EARLIER REVISION DATES

REVISION DATES 09-04-13 12-16-13 12-3-13

SHEET 3 OF X

FILE => rwd-b-sp02.dgn

STRUCTURES DESIGN DETAIL SHEET (ENGLISH) (REV. 09-01-10)

USERNAME => s134008 DATE PLOTTED => 18-DEC-2013 TIME PLOTTED => 15:40

DIST	COUNTY	ROUTE	POST MILES TOTAL PROJECT	SHEET No.	TOTAL SHEETS
05	SB	101			

REGISTERED CIVIL ENGINEER X DATE

PLANS APPROVAL DATE

REGISTERED PROFESSIONAL ENGINEER M. Kodsuntie No. 56671 Exp. 6/30/2015 CIVIL STATE OF CALIFORNIA

The State of California or its officers or agents shall not be responsible for the accuracy or completeness of scanned copies of this plan sheet.

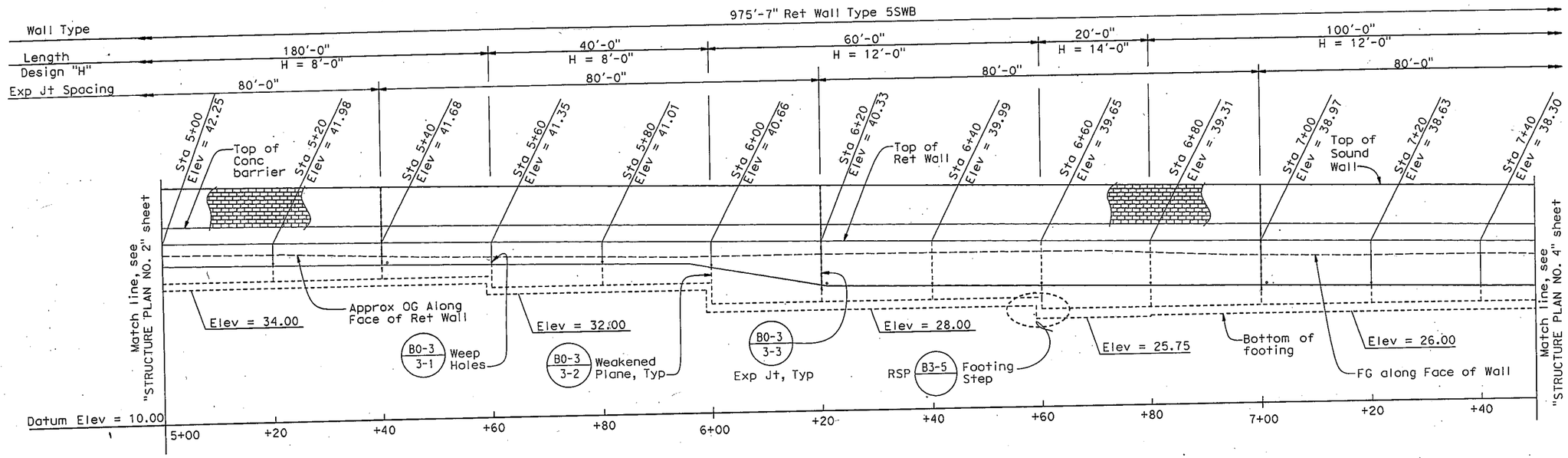

DEVELOPED MIRRORED ELEVATION

1" = 10'

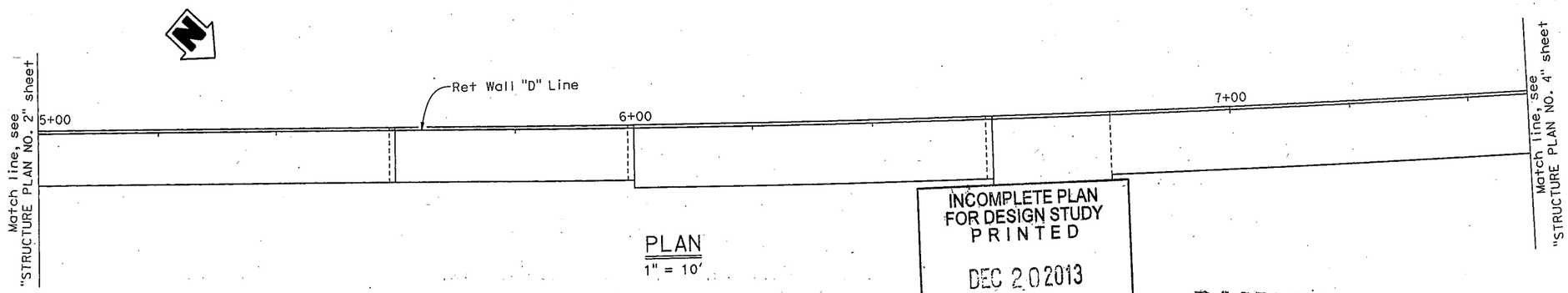

PLAN

1" = 10'

INCOMPLETE PLAN FOR DESIGN STUDY PRINTED

DEC 2 0 2013

Office of Structures, Design

STATE OF CALIFORNIA

DIVISION OF ENGINEERING SERVICES

STRUCTURE DESIGN

DESIGN BRANCH 7

CHECKED DETAILS

	BY	CHECKED
DESIGN	Manode Kodsuntie	Jun Ki Jung
DETAILS	B.Huddleston / J. Zhou	Jun Ki Jung
QUANTITIES	X	X

STATE OF CALIFORNIA DEPARTMENT OF TRANSPORTATION

ORIGINAL SCALE IN INCHES FOR REDUCED PLANS 0 1 2 3

BRIDGE NO. X

POST MILE X

RETAINING WALL "D" & SOUND WALL "B4"

STRUCTURE PLAN NO. 3

UNIT: 3592

PROJECT NUMBER & PHASE: 05000005431

CONTRACT NO.: 05-4482U1

DISREGARD PRINTS BEARING EARLIER REVISION DATES

REVISION DATES 11-5-12 12-16-13 11-21-13

SHEET 4 OF X

FILE => rwa-b-sp03.dgn

STRUCTURES DESIGN DETAIL SHEET (ENGLISH) (REV. 09-01-10)

USERNAME => s133408 DATE PLOTTED => 18-DEC-2013 TIME PLOTTED => 15:40

DIST	COUNTY	ROUTE	POST MILES TOTAL PROJECT	SHEET NO.	TOTAL SHEETS
05	SB	101			

REGISTERED CIVIL ENGINEER X DATE

PLANS APPROVAL DATE

REGISTERED PROFESSIONAL ENGINEER M. Kodsuntie No. 56671 Exp. 6/30/2015 CIVIL STATE OF CALIFORNIA

The State of California or its officers or agents shall not be responsible for the accuracy or completeness of scanned copies of this plan sheet.

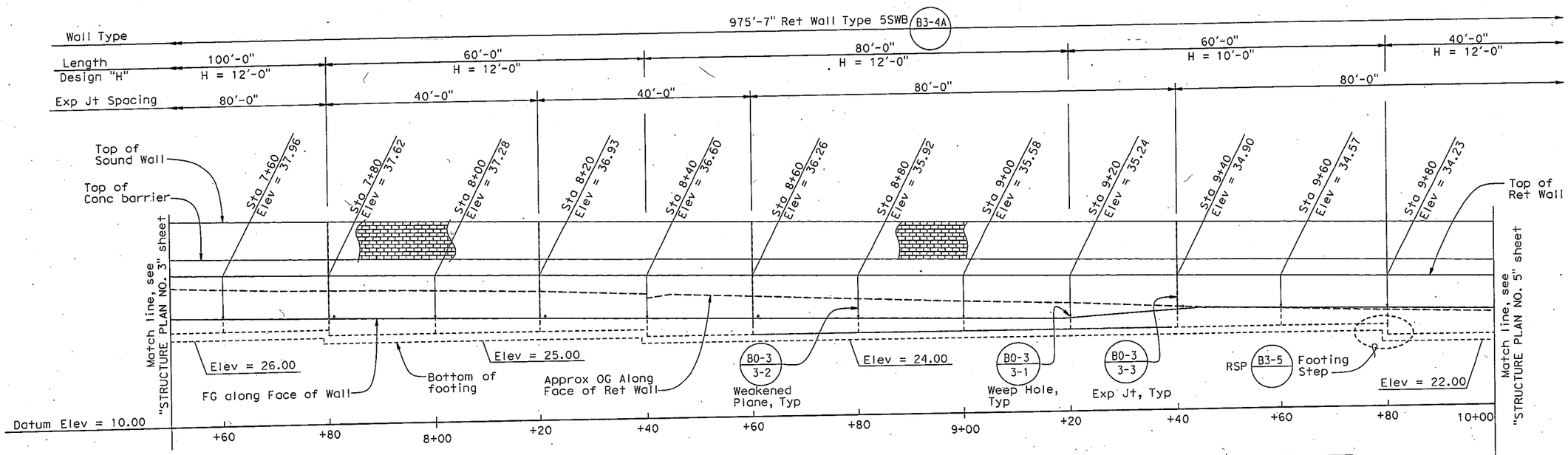

DEVELOPED MIRRORED ELEVATION

1" = 10'

INCOMPLETE PLAN FOR DESIGN STUDY PRINTED

DEC 2 0 2013

Office of Structures, Design STATE OF CALIFORNIA

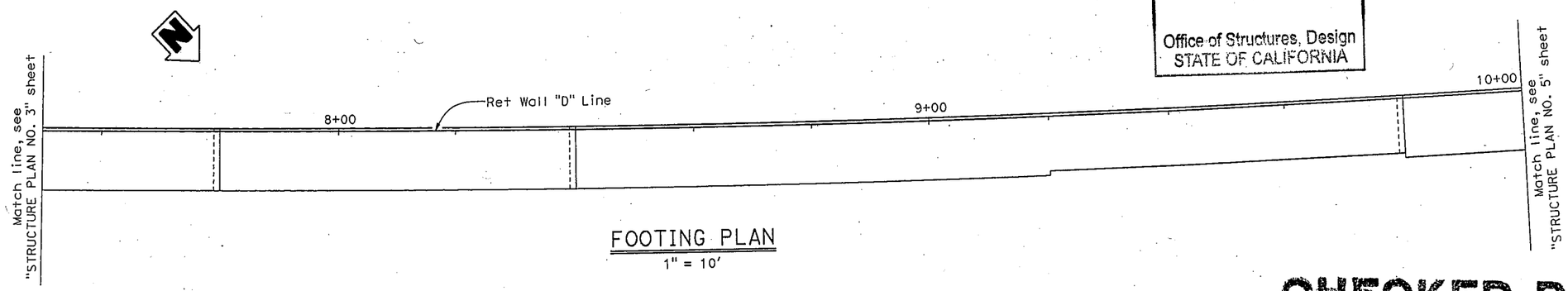

FOOTING PLAN

1" = 10'

CHECKED DETAILS

	BY	CHECKED
DESIGN	Manode Kodsuntie	Jun Ki Jung
DETAILS	B.Huddleston / J.Zhou	Jun Ki Jung
QUANTITIES	X	X

STATE OF CALIFORNIA DEPARTMENT OF TRANSPORTATION

DIVISION OF ENGINEERING SERVICES STRUCTURE DESIGN DESIGN BRANCH 7

BRIDGE NO. X

POST MILE X

RETAINING WALL "D" & SOUND WALL "B4"

STRUCTURE PLAN NO. 4

ORIGINAL SCALE IN INCHES FOR REDUCED PLANS 0 1 2 3

UNIT: 3592

PROJECT NUMBER & PHASE: 05000005431

CONTRACT NO.: 05-4482U1

DISREGARD PRINTS BEARING EARLIER REVISION DATES

REVISION DATES 11-6-12 12-16-13 11-22-13

SHEET 5 OF X

STRUCTURES DESIGN DETAIL SHEET (ENGLISH) (REV. 09-01-10)

FILE => rwd-b-sp04.dgn

USERNAME => s134008 DATE PLOTTED => 18-DEC-2013 TIME PLOTTED => 15:40

DIST	COUNTY	ROUTE	POST MILES TOTAL PROJECT	SHEET No.	TOTAL SHEETS
05	SB	101			

REGISTERED CIVIL ENGINEER X DATE

PLANS APPROVAL DATE

REGISTERED PROFESSIONAL ENGINEER W. Kodsuntie No. 56671 Exp. 6/30/2015 CIVIL STATE OF CALIFORNIA

The State of California or its officers or agents shall not be responsible for the accuracy or completeness of scanned copies of this plan sheet.

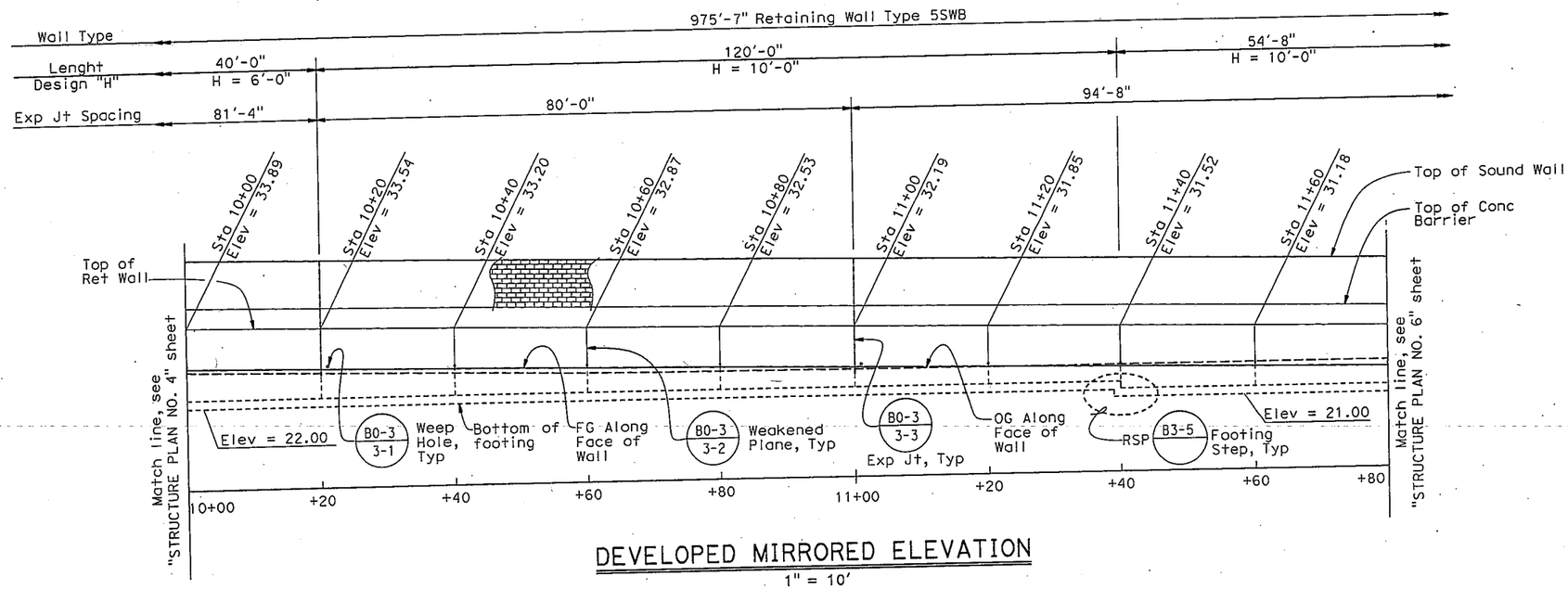

DEVELOPED MIRRORED ELEVATION

1" = 10'

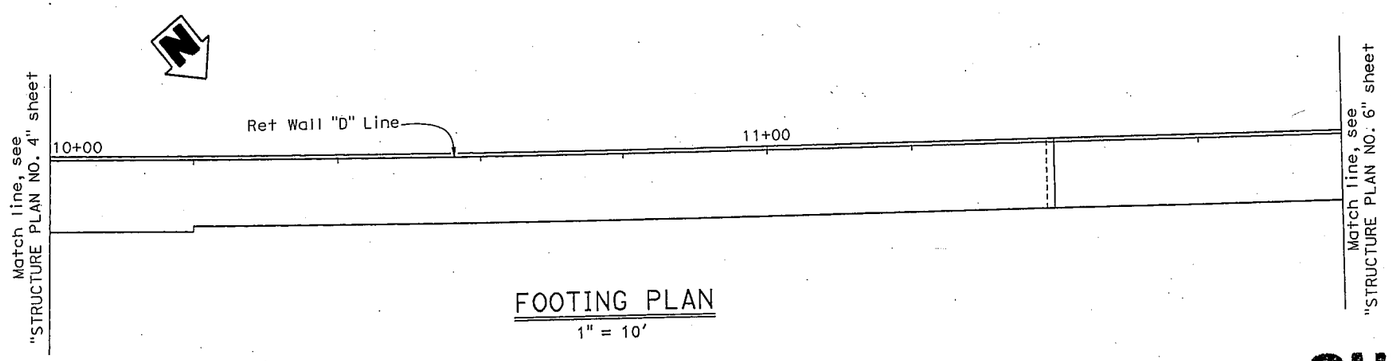

FOOTING PLAN

1" = 10'

INCOMPLETE PLAN FOR DESIGN STUDY PRINTED

DEC 2 0 2013

Office of Structures, Design
STATE OF CALIFORNIA

CHECKED DETAILS

	BY	CHECKED
DESIGN	Manode Kodsuntie	Jun Ki Jung
DETAILS	B.Huddleston / J. Zhou	Jun Ki Jung
QUANTITIES	X	X

STATE OF CALIFORNIA
DEPARTMENT OF TRANSPORTATION

DIVISION OF ENGINEERING SERVICES
STRUCTURE DESIGN
DESIGN BRANCH 7

BRIDGE NO. X
POST MILE X

RETAINING WALL "D" & SOUND WALL "B4"

STRUCTURE PLAN NO. 5

ORIGINAL SCALE IN INCHES FOR REDUCED PLANS 0 1 2 3

UNIT: 3592
PROJECT NUMBER & PHASE: 05000005431
CONTRACT NO.: 05-4482U1

DISREGARD PRINTS BEARING EARLIER REVISION DATES

REVISION DATES 11-4-12 12-16-13 12-23-13

SHEET 6 OF X

STRUCTURES DESIGN DETAIL SHEET (ENGLISH) (REV. 09-01-10)

FILE => rwd-b-sp05.dgn

USERNAME => s134008 DATE PLOTTED => 18-DEC-2013 TIME PLOTTED => 15:40

DIST	COUNTY	ROUTE	POST MILES TOTAL PROJECT	SHEET No.	TOTAL SHEETS
05	SB	101			

REGISTERED CIVIL ENGINEER X DATE

PLANS APPROVAL DATE

REGISTERED PROFESSIONAL ENGINEER M. Kodsuntie No. 56671 Exp. 6/30/2015 CIVIL STATE OF CALIFORNIA

The State of California or its officers or agents shall not be responsible for the accuracy or completeness of scanned copies of this plan sheet.

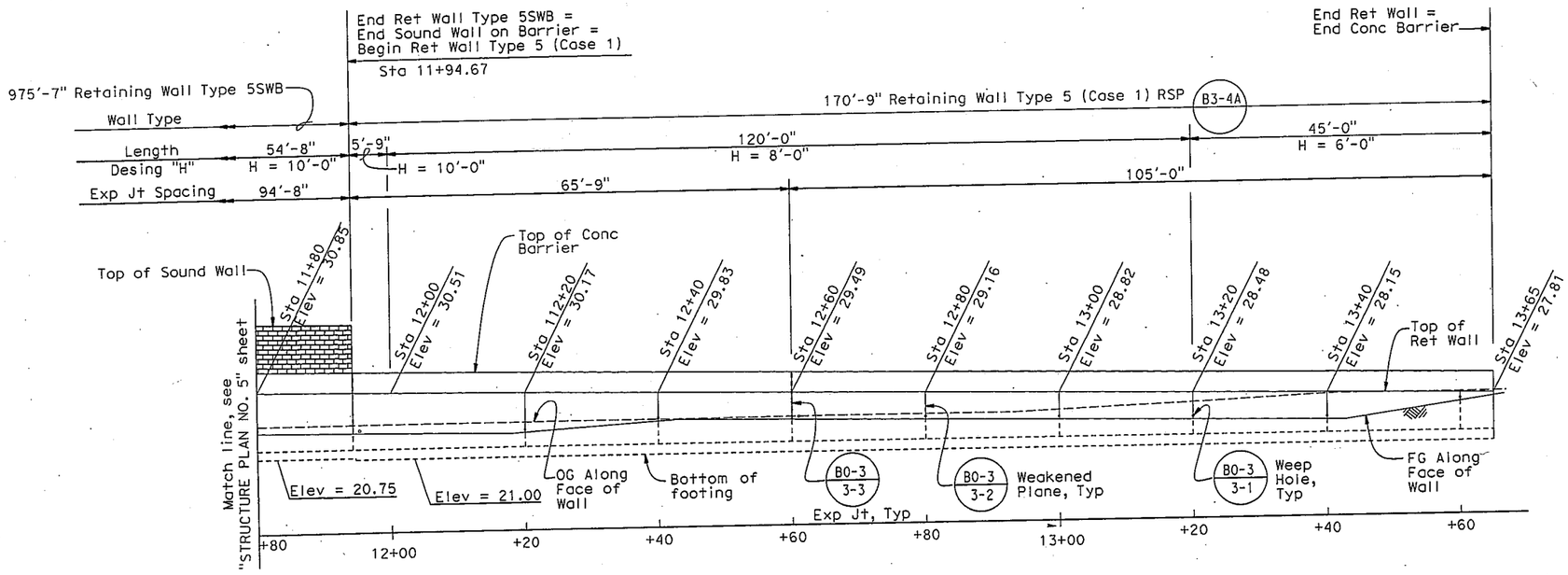

DEVELOPED MIRRORED ELEVATION

1" = 10'

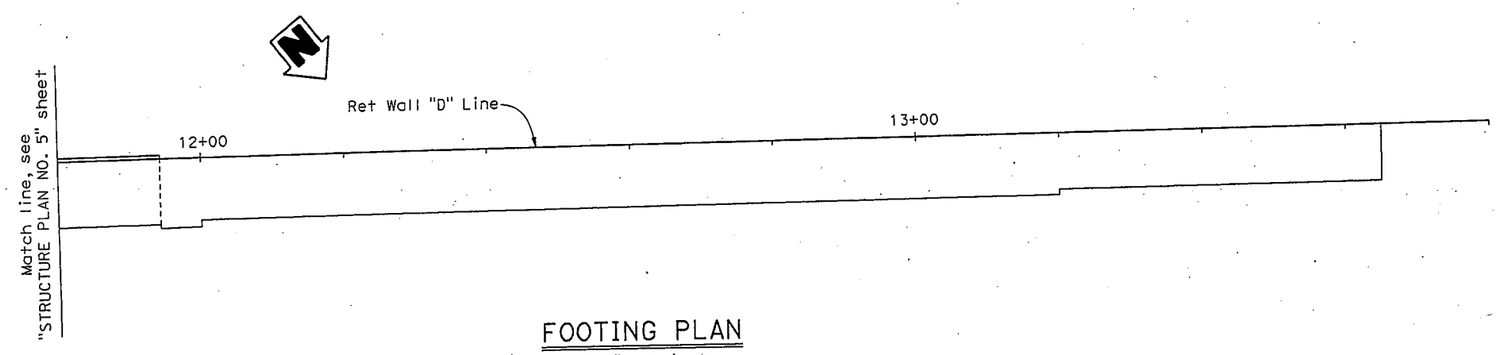

FOOTING PLAN

1" = 10'

INCOMPLETE PLAN FOR DESIGN STUDY PRINTED

DEC 2 0 2013

Office of Structures, Design STATE OF CALIFORNIA

CHECKED DETAILS

	BY	CHECKED
DESIGN	Manode Kodsuntie	Jun Ki Jung
DETAILS	B.Huddleston / J. Zhou	Jun Ki Jung
QUANTITIES	X	X

ORIGINAL SCALE IN INCHES FOR REDUCED PLANS 0 1 2 3

STATE OF CALIFORNIA DEPARTMENT OF TRANSPORTATION

DIVISION OF ENGINEERING SERVICES STRUCTURE DESIGN DESIGN BRANCH 7

BRIDGE NO. X

POST MILE X

RETAINING WALL "D" & SOUND WALL "B4"

STRUCTURE PLAN NO. 6

UNIT: 3592

PROJECT NUMBER & PHASE: 05000005431

CONTRACT NO.: 05-4482U1

DISREGARD PRINTS BEARING EARLIER REVISION DATES

REVISION DATES 11-6-12 12-16-13 11-22-13

SHEET 7 OF X

STRUCTURES DESIGN DETAIL SHEET (ENGLISH) (REV. 09-01-10)

FILE => rwd-b-sp06.dgn

USERNAME => s134008 DATE PLOTTED => 18-DEC-2013 TIME PLOTTED => 15:40

DIST	COUNTY	ROUTE	POST MILES TOTAL PROJECT	SHEET No.	TOTAL SHEETS
05	SB	101	X	X	X

REGISTERED CIVIL ENGINEER X DATE

PLANS APPROVAL DATE

REGISTERED PROFESSIONAL ENGINEER M. Kodsuntie No. 56671 Exp. 6/30/2015 CIVIL STATE OF CALIFORNIA

The State of California or its officers or agents shall not be responsible for the accuracy or completeness of electronic copies of this plan sheet.

CHECKED DETAILS

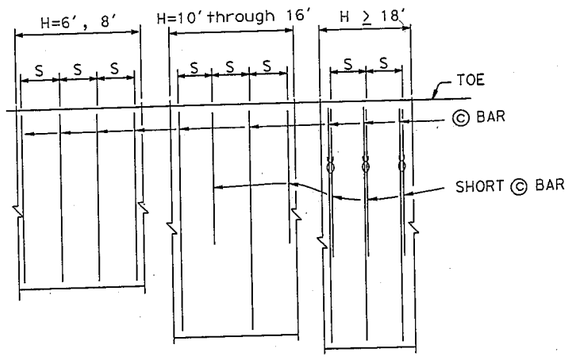

PLAN
NO SCALE

NOTES:
Only © bars shown
"S" is © bar spacing, see table
℄ : 2 bar bundle

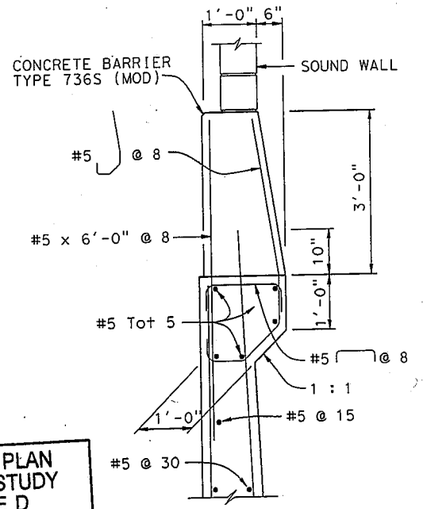

DETAIL A
¾" = 1'-0"

INCOMPLETE PLAN FOR DESIGN STUDY PRINTED
DEC 2 0 2013
Office of Structures, Design
STATE OF CALIFORNIA

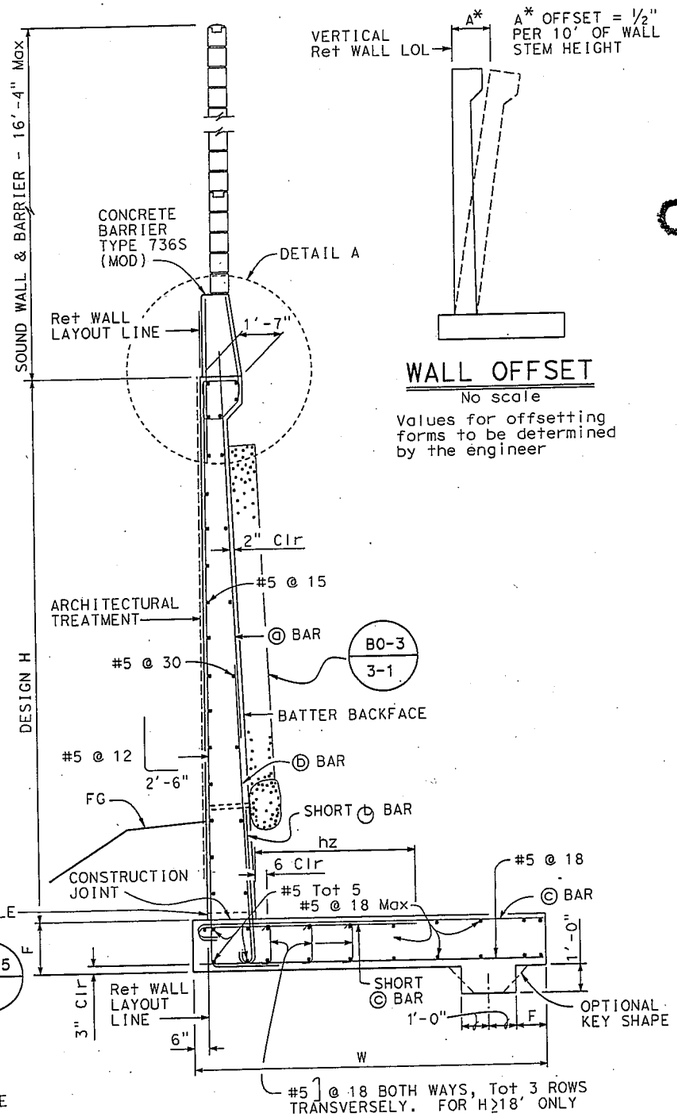

① SPREAD FOOTING SECTION
⅜" = 1'-0"

WALL OFFSET
No scale

Values for offsetting forms to be determined by the engineer

DESIGN DATA

Design: AASHTO LRFD Bridge Design Specifications 4th edition with California Amendments

WS: 33 psf on Sound Wall and Barrier

LS: Varied surcharge on level ground surface

CT: 54 kip maximum traffic impact loading evenly distributed over 10 feet at top of the barrier and 1:1 distribution down and outward

EQE: Mononabe-Okabe Method
K_h = 0.3
K_v = 0.0

Soil: ø = 34°
γ = 120 pcf

Reinforced Concrete: f'c = 3600 psi
fy = 60,000 psi

Load Combinations and Limit States

Service I	Q=1.00DC+1.00EV+1.00EH+1.00LS+0.30WS
Service II	Q=1.00DC+1.00EV+1.00EH+1.00WS
Strength I	Q=αDC+βEV+1.50EH+1.75LS
Strength III	Q=αDC+βEV+1.50EH+1.40WS
Strength V	Q=αDC+βEV+1.50EH+1.35LS+0.40WS
Extreme I	Q=1.00DC+1.00EV+1.00EH+1.00EQD+1.00EQE
Extreme II	Q=1.00DC+1.00EV+1.00EH+1.00CT

Where:

Q: Force Effects
α: 1.25 or 0.90, Which ever Controls Design
β: 1.35 or 1.00, which ever Controls Design
DC: Dead Load of Structure Components
EV: Vertical Earth Fill Pressure
LS: Live Load Surcharge
EQE: Seismic Earth Pressure
EQD: Soil and Structure Components Inertia. Soil inertia ignored for stem design
WS: Wind Load on Sound Wall and Barrier
CT: Vehicular Collision Force

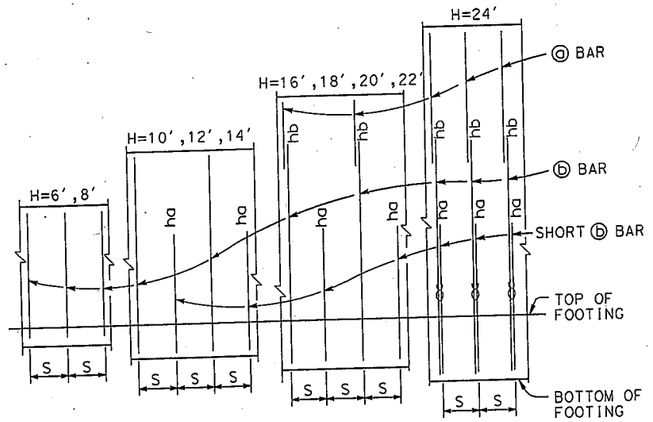

ELEVATION
No scale

NOTES:
"ha" and "hb" above ⓑ bars indicate distance from top of footing to upper end of ⓑ bars, see table.
"S" is ⓑ bar spacing, see table.
℄ : 2 bar bundle

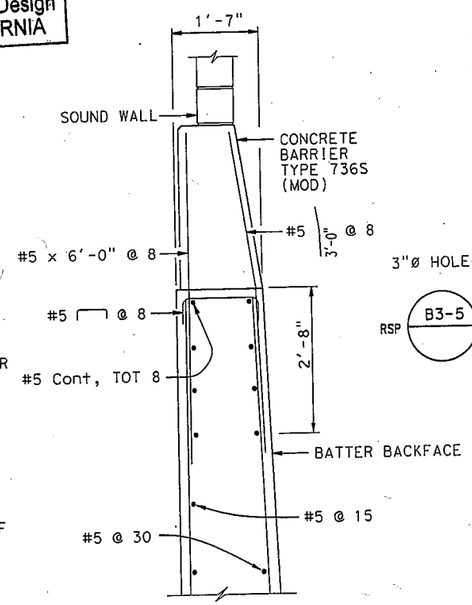

OPTIONAL DETAIL A
¾" = 1'-0"

For Details not shown, see "DETAIL A"

NOTES:
1. For sound wall and retaining wall Architectural treatment or texture see Details elsewhere in Project Plans
2. For Details not shown and Drainage Notes see RSP B3-5 ②
3. Footing cover, 1'-6" minimum.
4. For sound wall and barrier reinforcement details, see "MASONRY BLOCK SOUND WALL WITH BARRIER ON RETAINING WALL" sheet. ②
5. For H=6' through 14', extend ⓑ bars into Barrier for stem with haunch.
6. For H≥16', extend ⓐ bars into Barrier for stem with haunch.

REVISED STANDARD DRAWING

FILE NO. xs14-350-1 APPROVAL DATE July 2011

① MODIFIED DETAIL
② MODIFIED NOTE

DS OSD 2147A (ENGLISH STANDARD DRAWING "XS" BORDER REV. (02-02-11)

ORIGINAL SCALE IN INCHES FOR REDUCED PLANS 0 1 2 3

STATE OF CALIFORNIA DEPARTMENT OF TRANSPORTATION

DIVISION OF ENGINEERING SERVICES

BRIDGE NO. X
POST MILE X

RETAINING WALL "D" & SOUND WALL "B4"
RETAINING WALL TYPE 5SWB-DETAILS NO. 1

UNIT: X
PROJECT NUMBER & PHASE: 05000005431
CONTRACT NO.: 05-4482U4

DISREGARD PRINTS BEARING EARLIER REVISION DATES 11-12-13 11-27-13 12-3-13

SHEET 7 OF X

FILE => rwd-g-rwdt01.dgn

USERNAME => s134008 DATE PLOTTED => 18-DEC-2013 TIME PLOTTED => 15:40

DIST	COUNTY	ROUTE	POST MILES TOTAL PROJECT	SHEET No.	TOTAL SHEETS
05	SB	101	X	X	X

REGISTERED CIVIL ENGINEER X DATE

PLANS APPROVAL DATE

The State of California or its officers or agents shall not be responsible for the accuracy or completeness of electronic copies of this plan sheet.

REGISTERED PROFESSIONAL ENGINEER M. Kodsuntie No. 56671 Exp. 6/30/2015 CIVIL STATE OF CALIFORNIA

TABLE OF REINFORCING STEEL DIMENSIONS AND DATA

DESIGN H	6'	8'	10'	12'	14'	16'	18'	20'	22'	24'
W	9'-0"	9'-0"	9'-6"	10'-3"	11'-3"	12'-9"	14'-0"	15'-9"	17'-3"	18'-9"
F SPREAD FOOTING	1'-3"	1'-3"	1'-3"	1'-3"	1'-6"	1'-9"	2'-0"	2'-3"	2'-6"	2'-6"
STEM WITH HAUNCH, BATTER	0	1/2:12	1/2:12	1/2:12	1/2:12	1/2:12	1/2:12	1/2:12	1/2:12	5/8:12
STEM WITHOUT HAUNCH, BATTER	0	0	0	0	0	0	0	0	1/4:12	1/4:12
ⓐ BARS						#7 @ 15	#7 @ 12	#7 @ 12	#8 @ 12	#6 @ 6
Ⓑ BARS	#8 @ 12	#8 @ 12	#7 @ 6	#7 @ 6	#7 @ 6	#9 @ 7.5	#9 @ 6	#10 @ 6	#10 @ 6	#8 @ 6 ℧
ha			5'-0"	6'-0"	7'-0"	7'-0"	6'-0"	7'-0"	6'-9"	7'-6"
hb						11'-6"	12'-0"	13'-3"	16'-0"	15'-6"
Ⓒ BARS	#7 @ 12	#8 @ 12	#7 @ 6	#9 @ 6	#9 @ 6	#11 @ 7.5	#8 @ 6 ℧	#9 @ 6 ℧	#9 @ 6 ℧	#10 @ 6 ℧
hz			3'-6"	4'-0"	4'-9"	7'-0"	5'-9"	6'-9"	7'-6"	9'-0"
SER I: B'(ft), q_0'(ksf)	7.5, 1.5	7.1, 1.9	7.2, 2.2	7.6, 2.5	8.3, 2.8	9.6, 3.0	10.6, 3.3	12.1, 3.6	13.3, 3.9	14.6, 4.1
STR, Ia: B'(ft), q_0(ksf)	7.9, 2.9	7.4, 3.3	7.4, 3.7	7.8, 4.1	8.3, 4.5	9.5, 4.8	10.5, 5.0	11.9, 5.6	13.1, 6.0	14.3, 6.4
STR, Ib: B'(ft), q_0(ksf)	6.0, 2.0	5.5, 2.5	5.6, 2.9	5.9, 3.3	6.4, 3.7	7.6, 3.9	8.7, 4.1	9.9, 4.5	11.0, 4.9	12.1, 5.2
STR, IIIa: B'(ft), q_0(ksf)	6.0, 2.7	6.0, 3.0	6.4, 3.4	7.0, 3.7	7.8, 4.1	9.1, 4.4	10.2, 4.6	11.7, 5.1	12.9, 5.4	14.2, 5.7
STR, IIIb: B'(ft), q_0(ksf)	5.3, 2.5	5.2, 2.8	5.5, 3.1	6.0, 3.3	6.7, 3.7	8.0, 3.9	8.9, 4.0	10.4, 4.4	11.5, 4.7	12.7, 5.0
STR, Va: B'(ft), q_0(ksf)	7.5, 2.8	7.1, 3.2	7.2, 3.5	7.6, 3.9	8.2, 4.3	9.4, 4.6	10.4, 4.9	11.8, 5.3	13.0, 5.8	14.3, 6.1
STR, Vb: B'(ft), q_0(ksf)	5.7, 2.2	5.3, 2.6	5.4, 3.0	5.8, 3.4	6.4, 3.8	7.7, 3.9	8.7, 4.0	10.0, 4.5	11.1, 4.9	12.2, 5.1
Ext I: B'(ft), q_0(ksf)	4.0, 3.4	3.0, 4.7	2.5, 6.5	2.1, 9.2	1.8, 13.3	2.1, 14.4	2.3, 16.9	2.6, 17.2	2.9, 18.4	3.3, 19.3
Ext II: B'(ft), q_0(ksf)	3.9, 3.3	4.3, 3.5	5.1, 3.5	6.0, 3.6	7.1, 3.7	8.7, 3.7	9.9, 3.8	11.9, 3.8	13.0, 4.3	14.4, 4.5

LEGEND:

SER: service limit state
STR: strength limit state
EXT: extreme event limit state
B': effective footing width (ft)
q_0': net bearing stress (ksf)
q_0: gross uniform bearing stress (ksf)

℧: 2 bar bundle

INCOMPLETE PLAN
FOR DESIGN STUDY
PRINTED

DEC 20 2013

Office of Structures, Design
STATE OF CALIFORNIA

CHECKED DETAILS

STANDARD DRAWING

FILE NO. xs14-350-2

APPROVAL DATE July 2011

DS OSD 2147A (ENGLISH STANDARD DRAWING "XS" BORDER REV. (02-02-11)

ORIGINAL SCALE IN INCHES FOR REDUCED PLANS 0 1 2 3

STATE OF CALIFORNIA DEPARTMENT OF TRANSPORTATION

DIVISION OF ENGINEERING SERVICES

BRIDGE NO. X

POST MILE X

RETAINING WALL "D" & SOUND WALL "B4"

RETAINING WALL TYPE 5SWB-DETAILS NO. 2

UNIT: X
PROJECT NUMBER & PHASE: 05000005431 CONTRACT NO.: 05-4482U4

DISREGARD PRINTS BEARING EARLIER REVISION DATES

REVISION DATES 11-12-13

SHEET 8 OF X

FILE => rwd-g-rwd102.dgn

USERNAME => s134008 DATE PLOTTED => 18-DEC-2013 TIME PLOTTED => 15:40

INCOMPLETE PLAN
FOR DESIGN STUDY
PRINTED
DEC 20 2013
Office of Structures, Design
STATE OF CALIFORNIA

DIST	COUNTY	ROUTE	POST MILES TOTAL PROJECT	SHEET No.	TOTAL SHEETS
X	X	X	X	X	X

REGISTERED CIVIL ENGINEER X DATE

PLANS APPROVAL DATE

REGISTERED PROFESSIONAL ENGINEER M. Kodsuntie No. 56671 Exp. 6/30/2015 CIVIL STATE OF CALIFORNIA

The State of California or its officers or agents shall not be responsible for the accuracy or completeness of electronic copies of this plan sheet.

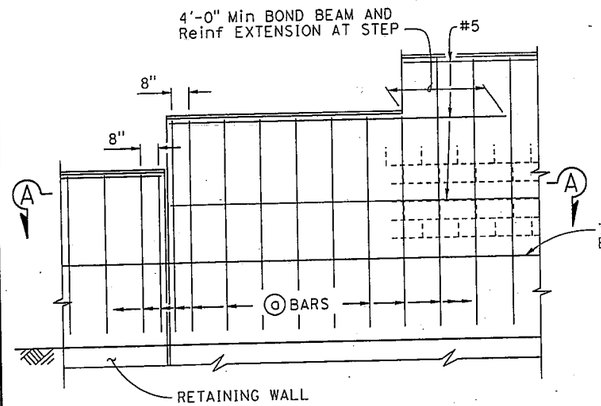

H=6'-4" THRU H=10'-4"

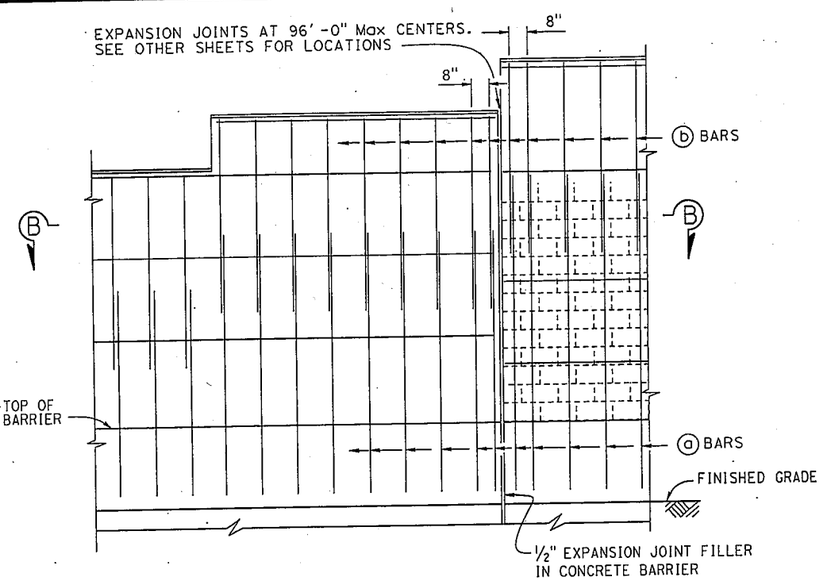

H=12'-4" THRU H=16'-4"

PART ELEVATION

SOUND WALL REINFORCEMENT TABLE						
MAXIMUM "H"	ⓐ BARS @ 1'-4" Max	ⓑ BARS @ 1'-4" Max	"Y"	f'm (psi)	COMPRESSIVE STRENGTH OF CMU (psi)	MAXIMUM "H"
6'-4"	#4	——	——	1500	1900	6'-4"
8'-4"	#4	——	——	1500	1900	8'-4"
10'-4"	#4	——	——	1500	1900	10'-4"
12'-4"	#5	#4	5'-0"	1500	1900	12'-4"
14'-4"	#6	#4	7'-0"	1500	1900	14'-4"
16'-4"	#6	#4	9'-0"	2500	3700	16'-4"

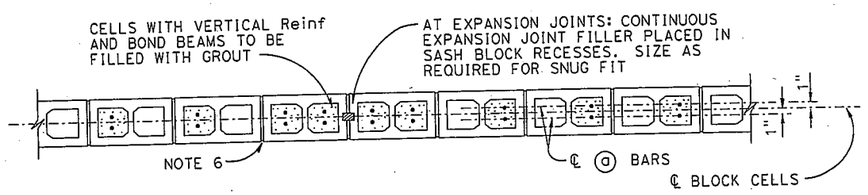

SECTION A-A

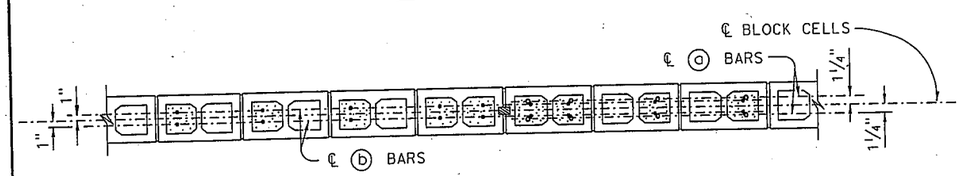

SECTION B-B

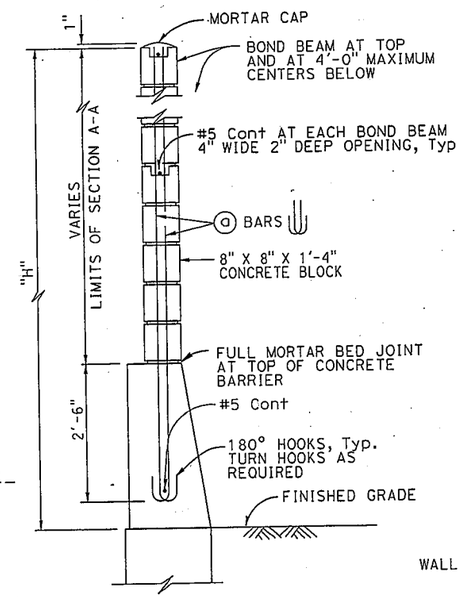

H=6'-4" THRU H=10'-4"

For details not shown, see H=12'-4" thru H=16'-4"

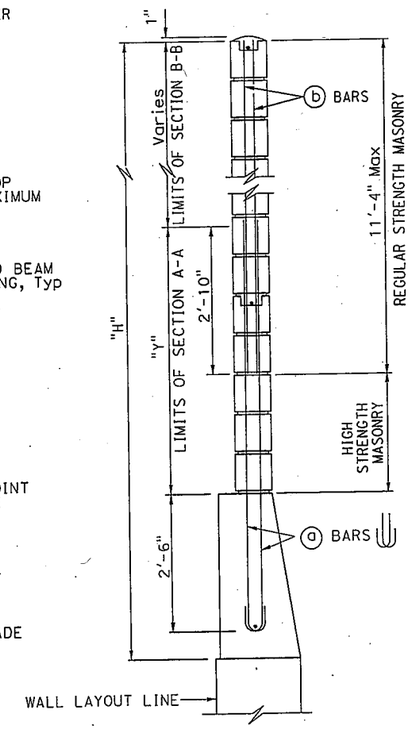

H=12'-4" THRU H=16'-4"

For details not shown, see H=6'-4" thru H=10'-4"

TYPICAL SECTION

NOTES:

1. For details not shown, see "MASONRY BLOCK SOUND WALL WITH BARRIER ON RETAINING WALL - DETAILS NO. 2" sheet
2. Slope ground at traffic side of barrier to drain. Maximum slope ±10%
3. See STANDARD PLANS B15-9 for other details
4. For type of block and joint finish, see "ARCHTECTURAL DETAILS" sheet.
5. When blocks are laid in stacked bond, ladder type, galvanized joint reinforcement shall be provided. A minimum of 2-9 gauge wire continuous at 4'-0" maximum to be used. Locate reinforcement in joints that are at the approximate midpoint between bond beams
6. Horizontal joints shall be tooled concave or may be weathered. Vertical joints shall be tooled concave or may be raked
7. For intermediate wall heights that are between the "H's" given, use the tabular information for the next higher "H"
8. Masonry strengths are listed in "SOUND WALL REINFORCEMENT TABLE"
9. Concrete to be used for the barrier shall contain not less than 590 pounds of cementitious material per cubic yard

CHECKED DETAILS

NO SCALE

RETAINING WALL "D" & SOUND WALL "B4"

MASONRY BLOCK SOUND WALL WITH BARRIER ON RETAINING WALL

DETAILS NO. 1

STANDARD DRAWING

FILE NO. xs15-130-1 APPROVAL DATE July 2012

DS OSD 2147A (ENGLISH STANDARD DRAWING "XS" BORDER REV. (02-02-11)

ORIGINAL SCALE IN INCHES FOR REDUCED PLANS 0 1 2 3

STATE OF CALIFORNIA DEPARTMENT OF TRANSPORTATION

DIVISION OF ENGINEERING SERVICES

BRIDGE NO. X

POST MILE X

UNIT: X
PROJECT NUMBER & PHASE: X
CONTRACT NO.: X

DISREGARD PRINTS BEARING EARLIER REVISION DATES 7/19/12

REVISION DATES

SHEET 9 OF X

FILE => rwd-u-sw-det01.dgn

USERNAME => s134008 DATE PLOTTED => 18-DEC-2013 TIME PLOTTED => 15:40

DIST	COUNTY	ROUTE	POST MILES TOTAL PROJECT	SHEET No.	TOTAL SHEETS
X	X	X	X	X	X

REGISTERED CIVIL ENGINEER X DATE

PLANS APPROVAL DATE

REGISTERED PROFESSIONAL ENGINEER M. Kodsuntie No. 56671 Exp. 6/30/2015 CIVIL STATE OF CALIFORNIA

The State of California or its officers or agents shall not be responsible for the accuracy or completeness of electronic copies of this plan sheet.

INCOMPLETE PLAN FOR DESIGN STUDY PRINTED

DEC 20 2013

Office of Structures, Design STATE OF CALIFORNIA

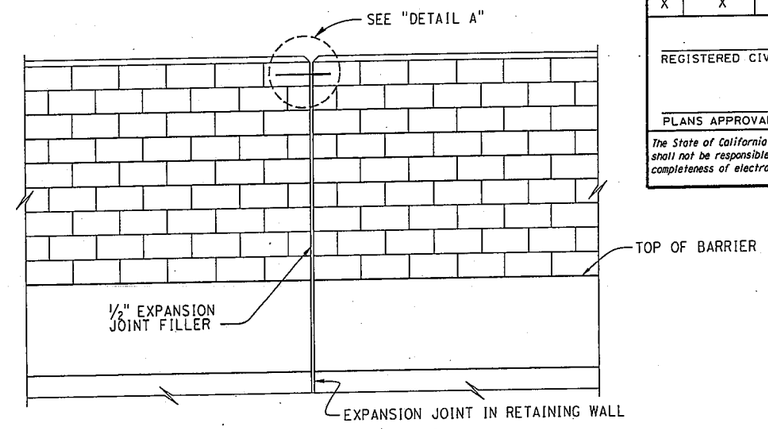

ALIGNMENT KEY DETAIL

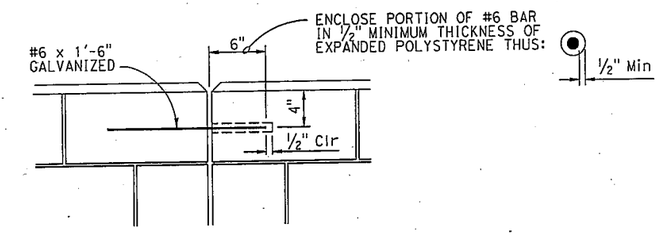

DETAIL A

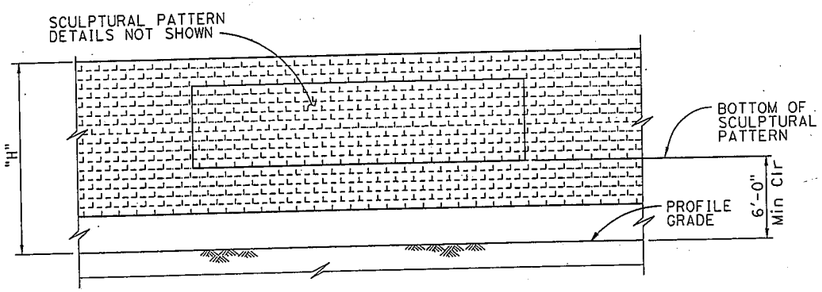

CLEARANCE DETAIL

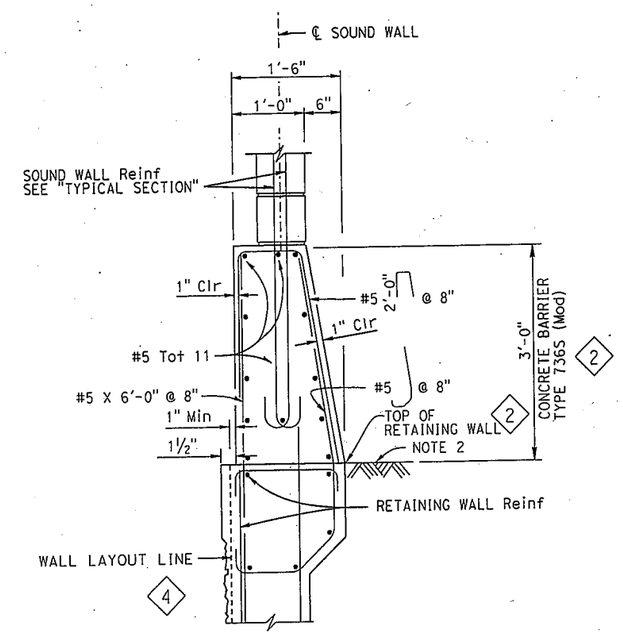

BARRIER SECTION

DESIGN NOTES

DESIGN
Uniform Building Code, 1997 Edition and the Bridge Design Specifications

DESIGN WIND LOAD
33 psf

DESIGN SEISMIC LOAD
0.57 Dead load

REINFORCED CONCRETE
f'c = 3600 psi
fy = 60 ksi

CONCRETE MASONRY

REGULAR STRENGTH	HIGH STRENGTH	
f'm = 1500 psi	f'm = 2000 psi	f'm = 2500 psi
fb = 495 psi	fb = 660 psi	fb = 830 psi
fs = 24,000 psi	fs = 24,000 psi	fs = 24,000 psi
n = 25.8	n = 19.3	n = 15.5

NOTES:
1. For details not shown, see STANDARD PLAN B15-6
2. Slope ground at traffic side of barrier to drain. Maximum slope ±10% ~~See STANDARD PLAN B11-56, Note 3.~~

CHECKED DETAILS

NO SCALE

RETAINING WALL "D" & SOUND WALL "B4"

MASONRY BLOCK SOUND WALL W/BARRIER ON RETAINING WALL

DETAILS NO. 2

REVISED STANDARD DRAWING

FILE NO. xs15-130-2 APPROVAL DATE September 2013

1 DELETED NOTE 3 DELETED DETAIL
2 MODIFIED NOTE 4 MODIFIED DETAIL

STATE OF CALIFORNIA DEPARTMENT OF TRANSPORTATION

DIVISION OF ENGINEERING SERVICES

BRIDGE NO. X
POST MILE X

UNIT: X
PROJECT NUMBER & PHASE: X
CONTRACT NO.: X

DISREGARD PRINTS BEARING EARLIER REVISION DATES

REVISION DATES | SHEET 10 | OF X

ORIGINAL SCALE IN INCHES FOR REDUCED PLANS 0 1 2 3

FILE => rwd-u-sw-det02.dgn

DS OSD 2147A (ENGLISH STANDARD DRAWING "XS" BORDER REV. (02-02-11)

USERNAME => s134008 DATE PLOTTED => 18-DEC-2013 TIME PLOTTED => 15:40

DIST	COUNTY	ROUTE	POST MILES - TOTAL PROJECT	SHEET No.	TOTAL SHEETS
05	SB	101			

REGISTERED CIVIL ENGINEER X DATE

PLANS APPROVAL DATE

REGISTERED PROFESSIONAL ENGINEER Manode Kodsuntie No. 56671 Exp. 6/30/2015 CIVIL STATE OF CALIFORNIA

The State of California or its officers or agents shall not be responsible for the accuracy or completeness of scanned copies of this plan sheet.

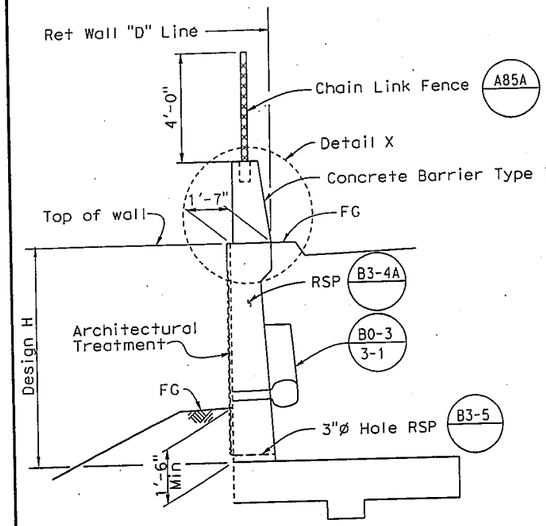

SECTION A-A

3/8" = 1'-0"

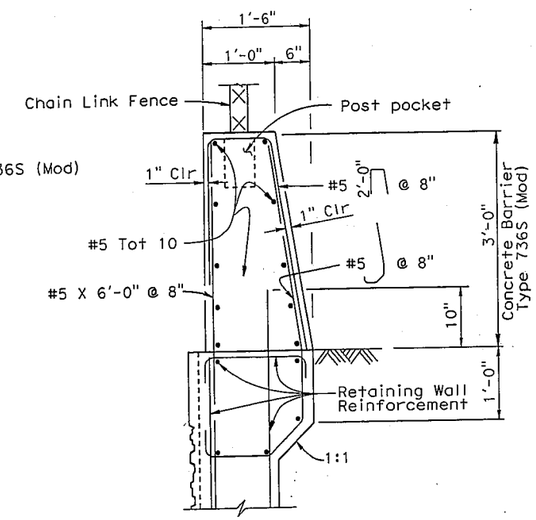

DETAIL X

NO SCALE

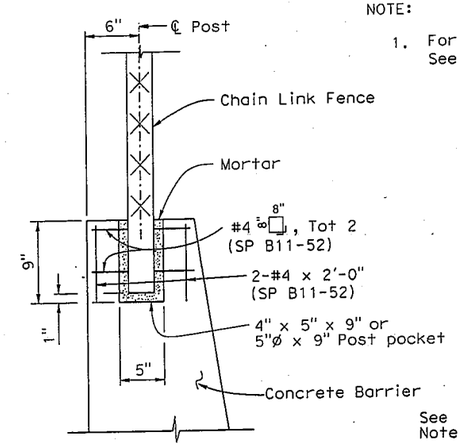

POST POCKET

1½" = 1'-0"

NOTE:

1. For location of Section A-A, See "STRUCTURE PLAN NO. 4" sheet.

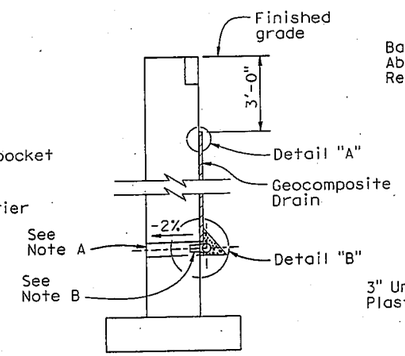

WALL SECTION

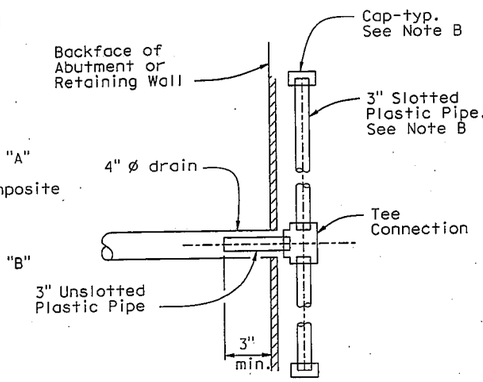

SECTION A-A

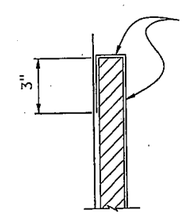

DETAIL "A"

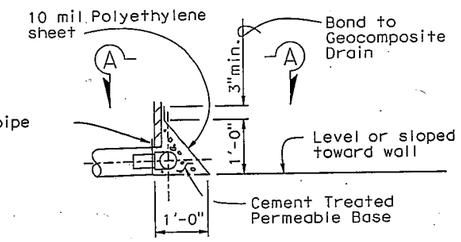

DETAIL "B"

WEEP HOLE AND GEOCOMPOSITE DRAIN

NO SCALE

ALTERNATIVE TO BRIDGE DETAIL B0-3 / 3-1

INCOMPLETE PLAN FOR DESIGN STUDY PRINTED

DEC 2 0 2013

Office of Structures, Design STATE OF CALIFORNIA

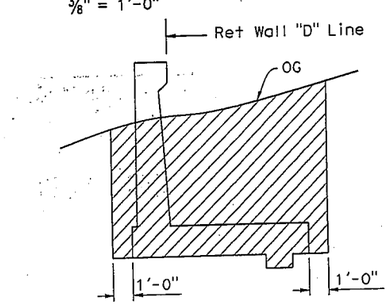

Sta 0+00 to Sta 7+20

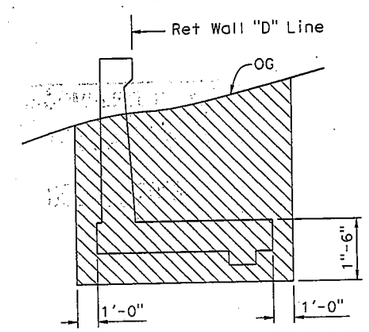

Sta 7+20 to Sta 11+24.25

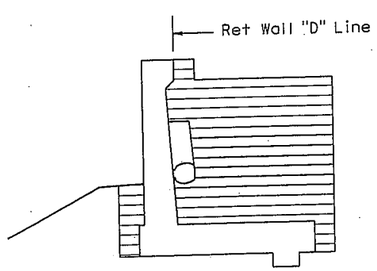

Sta 0+00 to Sta 7+20

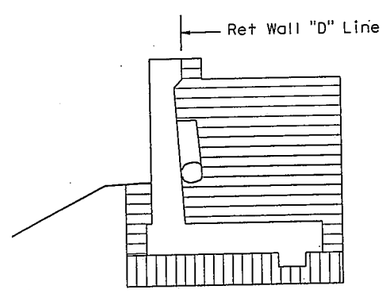

Sta 7+20 to Sta 11+24.25

LIMITS OF STRUCTURE EXCAVATION AND STRUCTURE BACKFILL

NO SCALE

LEGEND:

- Structure Excavation
- Structure Excavation (Type D)
- Structure Backfill
- Structure Backfill (Class III permeable material fully encapsolated in Class 3B subgrade enhancement geotextile)

Notes:

A. 4" ø drains at intermediate sag points and at 25' max center to center (9' c-c for Type 3 and 9'-3" c-c for Type 4 retaining walls).
For walls adjacent to sidewalks or curbs, provide 4" cast iron or asbestos cement pipe under the sidewalk to discharge through curb face.
Exposed wall drains shall be located 3"± above finished grade.

B. Geocomposite drain, cement treated permeable base, and 3"ø slotted plastic pipe continuous behind retaining wall or abutment. Cap ends of pipe. Provide "Tee" connection at each 4" ø drain.

C. Connect the low end of plastic pipe to the main outlet pipe as apprlicable.

CHECKED DETAILS

	BY	CHECKED
DESIGN	Manode Kodsuntie	X
DETAILS	Yingjue Feng	X
QUANTITIES	X	X

ORIGINAL SCALE IN INCHES FOR REDUCED PLANS 0 1 2 3

STATE OF CALIFORNIA DEPARTMENT OF TRANSPORTATION

DIVISION OF ENGINEERING SERVICES STRUCTURE DESIGN DESIGN BRANCH 7

BRIDGE NO. X

POST MILE X

RETAINING WALL "D" & SOUND WALL "B4"

WALL DETAILS

UNIT: 3592

PROJECT NUMBER & PHASE: 0500000543-1

CONTRACT NO.: 05-4482U1

DISREGARD PRINTS BEARING EARLIER REVISION DATES

REVISION DATES 10-24-13 11-4-13 12-2-13 12-3-13

SHEET 11 OF 12

STRUCTURES DESIGN DETAIL SHEET (ENGLISH) (REV. 09-01-10)

FILE => rwd-u-wdet.dgn

USERNAME => s13408 DATE PLOTTED => 18-DEC-2013 TIME PLOTTED => 15:40

DIST	COUNTY	ROUTE	POST MILES TOTAL PROJECT	SHEET No.	TOTAL SHEETS
05	SB	101			

REGISTERED CIVIL ENGINEER X DATE

PLANS APPROVAL DATE

REGISTERED PROFESSIONAL ENGINEER M. Kodsuntie No. 56671 Exp. 6/30/2015 CIVIL STATE OF CALIFORNIA

The State of California or its officers or agents shall not be responsible for the accuracy or completeness of scanned copies of this plan sheet.

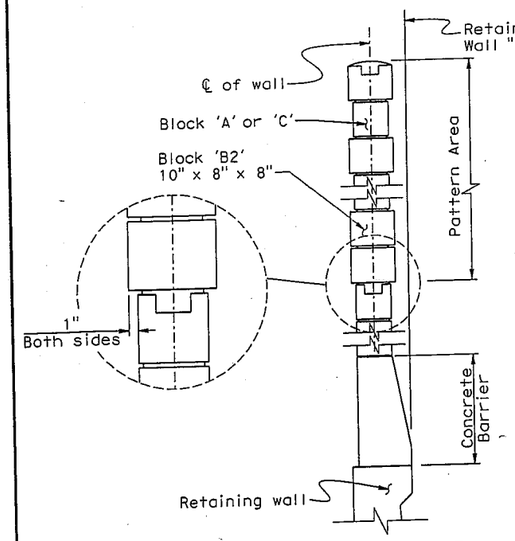

SECTION B-B

No Scale

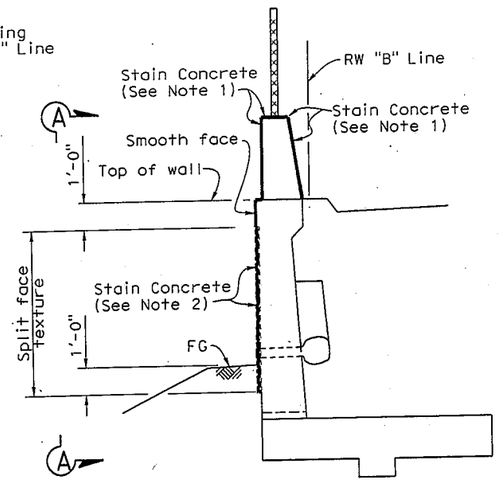

TYPICAL SECTION

3/8" = 1'-0"

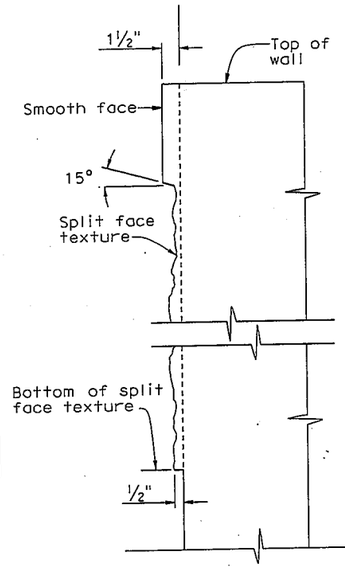

SECTION B-B

2" = 1'-0"

NOTES:

1. Limits of stain concrete on barrier shall be exposed surface from begin wall to end wall.
2. Limits of stain concrete on retaining wall shall be from top of wall to 1'-0" below finished grade from begin wall to end wall.

LEGEND:

Split face texture

Stain Concrete

INCOMPLETE PLAN FOR DESIGN STUDY PRINTED

DEC 2 0 2013

Office of Structures, Design STATE OF CALIFORNIA

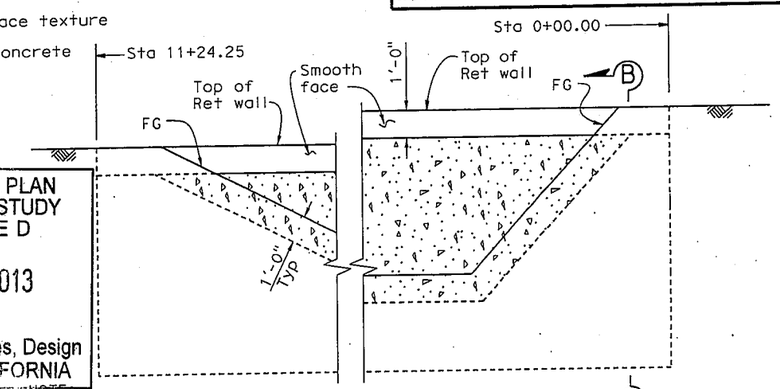

NOTE:
Concrete Barrier and Sound Wall not shown

VIEW A-A

3/8" = 1'-0"

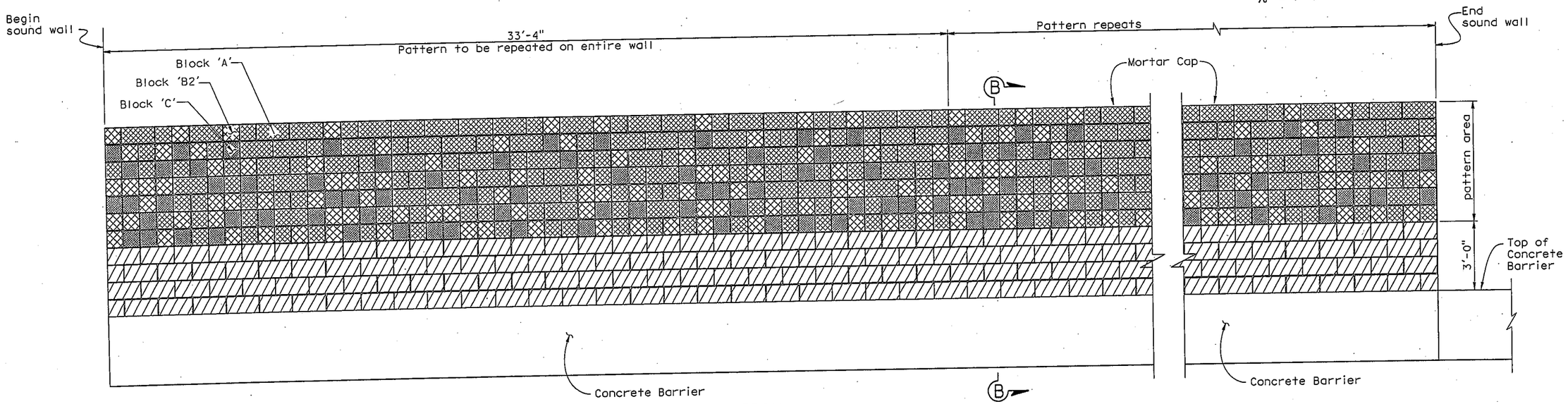

BLOCK PATTERN ELEVATION

No Scale

NOTES:

CHECKED DETAILS

1. The wall colors shall be from Air Vol Block Inc.; 1 Suburban Road, San Luis Obispo, Ca. 93406; Phone (805) 543-1314; or equal.
2. Repeat vertical pattern, starting from top of wall, in 8" lift increments. Bottom single lift can be cut to less than 8" to match grade below.

MASONRY BLOCK LEGEND:

Block 'A' : 8" x 8" x 16" split face all exposed sides. Use half blocks where necessary. Air Vol Block color #60H59804B

Block 'B1' : 8" x 8" x 16" split face all exposed sides. Use half blocks where necessary. Air Vol Block color #60H607E7

Block 'B2' : 10" x 8" x 8" split face all exposed sides. Block will project 1" both sides of wall. Air Vol Block color #60H607E7

Block 'C' : 8" x 8" x 8" split face all exposed sides. Use half blocks where necessary. Air Vol Block color #60B401G

	BY	CHECKED
DESIGN	Manode Kodsuntie	Jun Ki Jung
DETAILS	Yingjue Feng	Jun Ki Jung
QUANTITIES	X	X

STATE OF CALIFORNIA DEPARTMENT OF TRANSPORTATION

DIVISION OF ENGINEERING SERVICES STRUCTURE DESIGN

DESIGN BRANCH 7

BRIDGE NO. X

POST MILE X

RETAINING WALL "D" & SOUND WALL "B4"

ARCHITECTURAL DETAILS

ORIGINAL SCALE IN INCHES FOR REDUCED PLANS 0 1 2 3

UNIT: 3592

PROJECT NUMBER & PHASE: 0500000543-1

CONTRACT NO.: 05-4482U1

DISREGARD PRINTS BEARING EARLIER REVISION DATES

REVISION DATES 8-26-13 12-2-13 12-3-13

SHEET 12 OF X

FILE => rwd-v-archdet.dgn

STRUCTURES DESIGN DETAIL SHEET (ENGLISH) (REV. 09-01-10)

USERNAME => s134008 DATE PLOTTED => 18-DEC-2013 TIME PLOTTED => 15:40

M e m o r a n d u m

Flex your power!
Be energy efficient!

To: MANODE KODSUNTIE
Structure Design Branch 7
DIVISION OF ENGINEERING SERVICES

Date: March 28, 2014
File: 05-SB-101-2.2/3.3
Linden Casitas
Retaining Wall I
EA 05-4482U1

From: **DEPARTMENT OF TRANSPORTATION**
DIVISION OF ENGINEERING SERVICES
GEOTECHNICAL SERVICES

Subject: Retaining Wall I Foundation Report

Scope of Work

A Foundation Report Addendum (FR) for Retaining Wall I is provided for the above referenced project. This report supercedes the report dated January 22, 2014. The project is on State Route 101 in the City of Carpinteria, in southern Santa Barbara County. Improvements are proposed to increase the highway level of service and accessibility, and include replacement of existing bridges and construction of new bridges, retaining walls, sound walls, ramps and frontage roads. Review of published geologic data and previous geotechnical reports, field reconnaissance, and foundation calculations were performed as part of the geotechnical investigation.

The purpose of this report is to document geotechnical conditions and provide foundation recommendations for proposed Retaining Wall I.

Project Description

Route 101 within the project limits is a four-lane divided urban freeway with (2) 12-foot portland cement concrete (PCC) lanes in each direction and asphalt concrete (AC) 5-foot inside shoulders and 8-foot outside shoulders. A landscaped median approximately 40 feet wide with thrie beam barriers facing each direction of travel provides separation between the northbound and southbound lanes.

The purpose of the Linden Casitas project is to improve access and operations on Route 101, reduce local trips, and provide pedestrian and bicycle connectivity. The project includes construction of (3) mainline bridges on Route 101 to replace existing structures at Linden Avenue, Casitas Pass Road, and Carpinteria Creek. Highway access will be modified and added at Linden Avenue and Casitas Pass Road. Extension of Via Real, a frontage road, will also require construction of a new bridge over Carpinteria Creek. Retaining walls and sound walls are also proposed as part of the project.

Retaining Wall I is proposed for a length of approximately 173.7 feet adjacent to the northbound lane of Linden Avenue across from the intersection of the proposed southbound off-ramp and Linden Avenue. Grade separation is required to maintain a 2:1 slope at the Linden Avenue Overcrossing Abutment 1 approach embankment and allow for construction of an 8 foot sidewalk next to the travelled way. The wall begins 38.75 feet right of "Linden1" Station 14+50.00 and ends 38.75 feet right of 16+19.00. The maximum design height will be 10 feet, with the wall footing founded in the embankment slope in front of the wall. Type 80 concrete barrier will be constructed on top of the retaining wall and abut the bridge rail of the Linden Avenue Overcrossing. Refer to the project plans and specifications for complete details.

Pertinent Reports and Investigations

The following publications were used to assist in the assessment of site conditions:

1. *Preliminary Geotechnical Report.* Finegan, Michael. EA 05-448200. December 21, 2000.

2. *District Preliminary Geotechnical Report.* De Llamas, Zeke. EA 05-448200, July 30, 2008.

Field Investigation and Laboratory Testing Program

One mud rotary boring was advanced near the retaining wall layout line to determine the subsurface conditions to be used for foundation design. In-situ soil strength parameters were determined using the Standard Penetration Test (SPT) for cohesionless soils. Laboratory tests were used to determine the particle size distribution and corrosion potential of representative samples obtained at depth. Refer to Table 1 for a summary of subsurface investigation information.

Table 1. Subsurface Exploration Summary

Boring	*Completion Date*	*Equipment*	*Hammer Type*	*Hammer Efficiency (%)*	*Approximate Ground Elevation (ft)*	*Depth (ft)*
RC-10-001	11-3-2010	CS2000	Auto	93	23.8	151.5

Site Geology and Subsurface Conditions

Physical Setting

The project is located in the Carpinteria Valley, a sunken area north of the elevated coastal fault block southeast of the City of Carpinteria. Carpinteria Valley is a low-lying, flat plain comprised of alluvial deposits. Some low-lying areas in the valley are partly submerged under brackish water of the Carpinteria Slough. The plain meets the Pacific Ocean to the southwest, gradually gains elevation to the east as it approaches the Rincon and La Granada Mountains, and abuts sharply against the foothills of the Santa Ynez Mountains at its the northern boundary.

A mild coastal climate prevails throughout the year, with marine fog often present in spring and summer months. Nearly all precipitation falls from Pacific storms between October and May, with the majority accumulating in the winter months. Average yearly rainfall is 17.5 inches. The average temperature is 72 degrees Fahrenheit with more than 275 days of sunny weather per year.

Regional Geology

The project area is located in the Transverse Ranges Geomorphic Province. State Route 101 is bordered to the north by the Santa Ynez Mountains and to the south by the Pacific Ocean as it traverses the Carpinteria Valley. Geologic maps and field observations indicate that soils in the valley were deposited in an alluvial environment and consist of normally-consolidated deposits of clay, silt, sand, and gravel.

Groundwater

Foundations for Retaining Wall I will be constructed in fill and groundwater is not anticipated to be encountered during construction or influence foundation design.

Corrosion Evaluation

The department considers a site to be potentially corrosive to the foundation elements if the following conditions exist for the representative soil and/or water samples taken at the site: minimum resistivity of 1000 ohm-cm or less and/or PH of 5.5 or less.

Soil samples were obtained during the subsurface investigation and tested for corrosion potential at the District Materials Laboratory. The results of the corrosion testing are presented in Table 3. Based on the results, soils are not considered corrosive to foundation elements.

Table 3. Corrosion Testing Summary

Boring	*Depth (ft)*	*pH*	*Resistivity ohm-cm*	*Chloride ppm*	*Sulphate ppm*	*Corrosive*
RC-10-001	6.5-10.0	8.1	1940	-	-	NO
RC-10-001	22.0-25.0	8.2	5600	-	-	NO
RC-10-001	48.0-50.0	8.0	2450	-	-	NO
RC-10-001	67.0-70.0	7.8	2150	-	-	NO

Foundation Recommendations

Standard Plan Type 1 Retaining Wall on Spread Footing

Standard plan cast-in-place cantilevered Type 1 retaining wall on spread footings are the recommended structure and foundation types. The depth of foundation embedment shall provide a minimum of 4 feet of horizontal cover from the top of the toe side of the footing to the face of the embankment slope. The net bearing pressure and effective footing width for the service 1 limit state load combination provided in the 2010 Revised Standard Plan B3-1A were used to evaluate foundation settlement. Extreme limit state bearing stresses were evaluated at a horizontal seismic earth pressure coefficient equal to 0.2. Settlement is expected to be immediate

in the cohesionless soils underlying the proposed retaining wall. Calculated settlements are within tolerable limits for cast-in-place cantilevered concrete retaining walls and minimal differential settlement is anticipated. An effective friction angle of 33 degrees was assumed for embankment and foundation soils to be compacted to 95% relative compaction. Bearing capacity equation factors were adjusted for an adjacent to slope condition per the recommendations of FHWA Geotechnical Engineering Circular 8 Shallow Foundations.

Table 4. Retaining Wall Foundation Recommendations

Wall Station (ft)	*Design Height (ft)*	*Bottom of Footing Elevation (ft)*	*Footing Width (ft)*	*Strength Limit Factored Bearing Resistance (psf)* Φq_N Φ=0.45	*Extreme Limit Factored Bearing Resistance (psf)* Φq_N Φ=1.0	*Strength Limit Factored Gross Uniform Bearing Stress (psf)* q_0	*Extreme Limit Factored Gross Uniform Bearing Stress(psf)* q_0	*Service Limit State Net Bearing Stress(psf)* q'_0	*Calculated Settlement at Net Bearing Pressure (inches)*
10+00 to 10+25	8.0	27.45	7.25	6500	14100	2300	3100	1300	1.3
10+25 to 10+50	10.0	27.45	7.58	6400	14100	3300	3600	1600	1.5
10+50 to 10+75	8.0	30.05	7.25	6500	14100	2300	3100	1300	1.3
10+75 to 11+00	10.0	30.05	7.58	6400	14100	3300	3600	1600	1.5
11+00 to 11+25	8.0	32.65	7.25	6500	14100	2300	3100	1300	1.3
11+25 to 11+73.69	10.0	32.65	7.58	6400	14100	3300	3600	1600	1.5

Construction Considerations

Excavation for the retaining wall foundations will be in compacted embankment material near the face of the 2:1 embankment slope. Prepare embankment slopes per the requirements of 2010 Standard Specifications Section 19-2.03G and compact embankment soils beneath of retaining wall footings per Section 19-5.03B.

Additional Information

Standard Special Provision S5-280, "Project Information", discloses to bidders and contractors a list of pertinent information available for their inspection prior to bid opening. The following is an excerpt from SSP S5-280 disclosing information originating from Geotechnical Services. Items listed to be included in the Information Handout will be provided in Acrobat (.pdf) format to the Addressee of this report via electronic mail.

Data and information attached with the project plans are:

A. Log of Test Borings.

Data and information included in the Information Handout provided to the Bidders and Contractors are:

A. Foundation Report for the Retaining Wall dated March 28, 2014.

If you have any questions or comments, please contact Ryan Turner at (805) 549-3750, or Michael Finegan at (805) 549-3194.

REGISTERED PROFESSIONAL ENGINEER
Ryan Turner
No. GE 3030
Exp. 6-30-2015
GEOTECHNICAL
STATE OF CALIFORNIA

REGISTERED PROFESSIONAL ENGINEER
Michael S.Finegan
No. C 50138
Exp. 6-30-2015
CIVIL
STATE OF CALIFORNIA

RYAN TURNER, P.E., G.E.
Transportation Engineer Civil
Geotechnical Design – North
Branch D

MICHAEL S. FINEGAN, P.E.
Branch Chief
Geotechnical Design – North
Branch D

c: Job File / Branch D Records
Structure Construction RE Pending File (email RE_pending_file@dot.ca.gov)
Craig Whitten / DES Office Engineer
Andrew Tan / PCE
Eric Karlson/ DME

LIST OF ATTACHMENTS

Vicinity Map	Attachment 1
Geologic Map and Legend	Attachment 2
Structure Plans	Attachment 3

INDEX OF SHEETS

STATE OF CALIFORNIA
DEPARTMENT OF TRANSPORTATION

PROJECT PLANS FOR CONSTRUCTION ON
STATE HIGHWAY
IN SANTA BARBARA COUNTY
IN CARPINTERIA
FROM 0.4 KM SOUTH OF CARPINTERIA CREEK BRIDGE
TO 0.5 KM NORTH OF LINDEN AVENUE OVERCROSSING

TO BE SUPPLEMENTED BY STANDARD PLANS DATED JULY 2004

Dist	COUNTY	ROUTE	KILOMETER POST TOTAL PROJECT	SHEET NO.	TOTAL SHEETS
05	SB	101	3.5/5.5		

LOCATION MAP

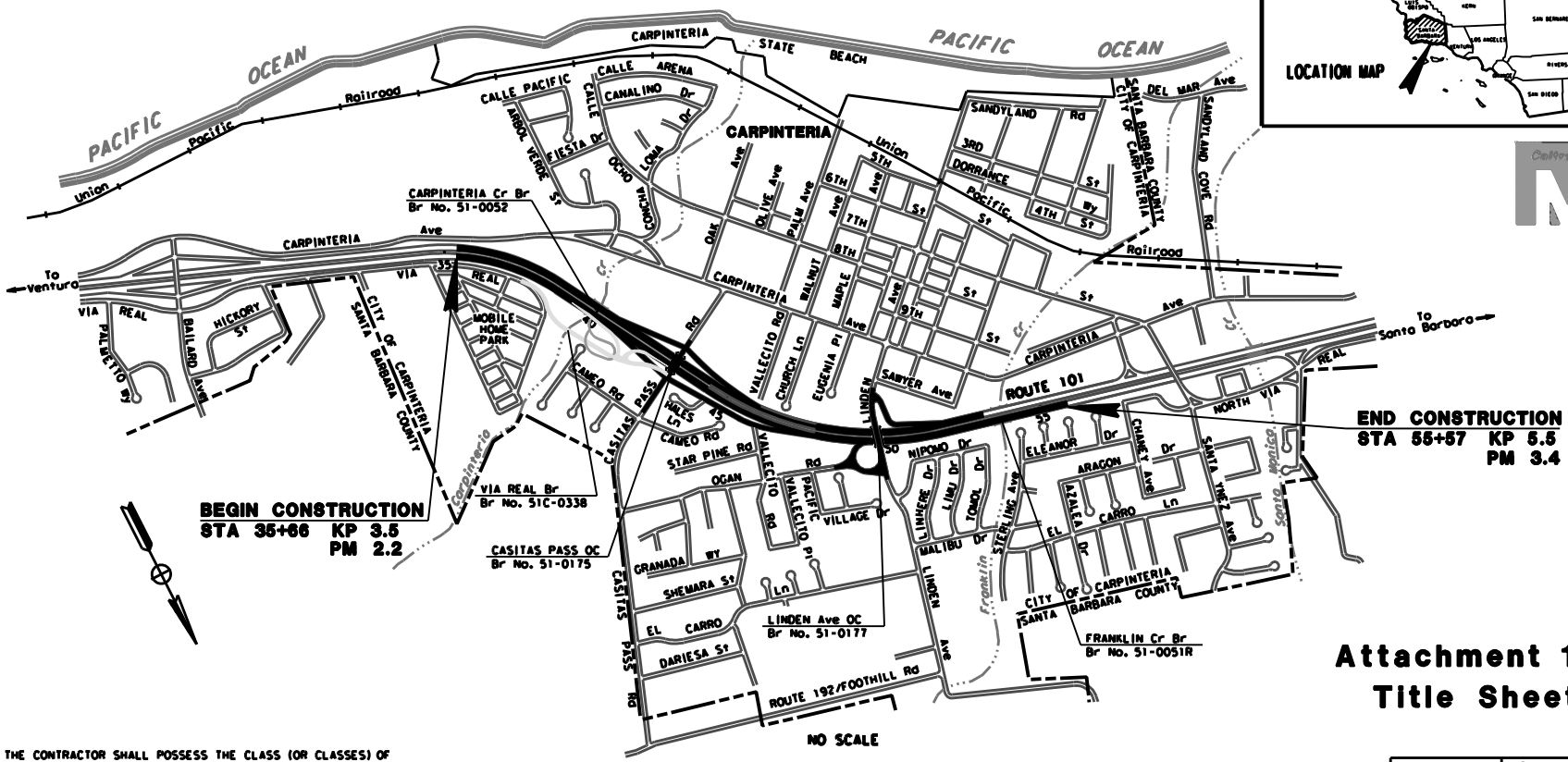

THE CONTRACTOR SHALL POSSESS THE CLASS (OR CLASSES) OF LICENSE AS SPECIFIED IN THE "NOTICE TO CONTRACTORS."

PROJECT MANAGER: DAVID BEARD
DESIGN ENGINEER: KARI BHANA

Attachment 1
Title Sheet

CONTRACT No. 05-4482U0
CU 06233 | EA 4482U0

BORDER LAST REVISED 3/1/2007 | CALTRANS WEB SITE IS: HTTP://WWW.DOT.CA.GOV/ | RELATIVE BORDER SCALE IS IN MILLIMETERS 0 20 40 60 80 | USERNAME => RUSER | DGN FILE => SREQUEST | DATE PLOTTED => 09-14-10 | TIME PLOTTED => 09:42

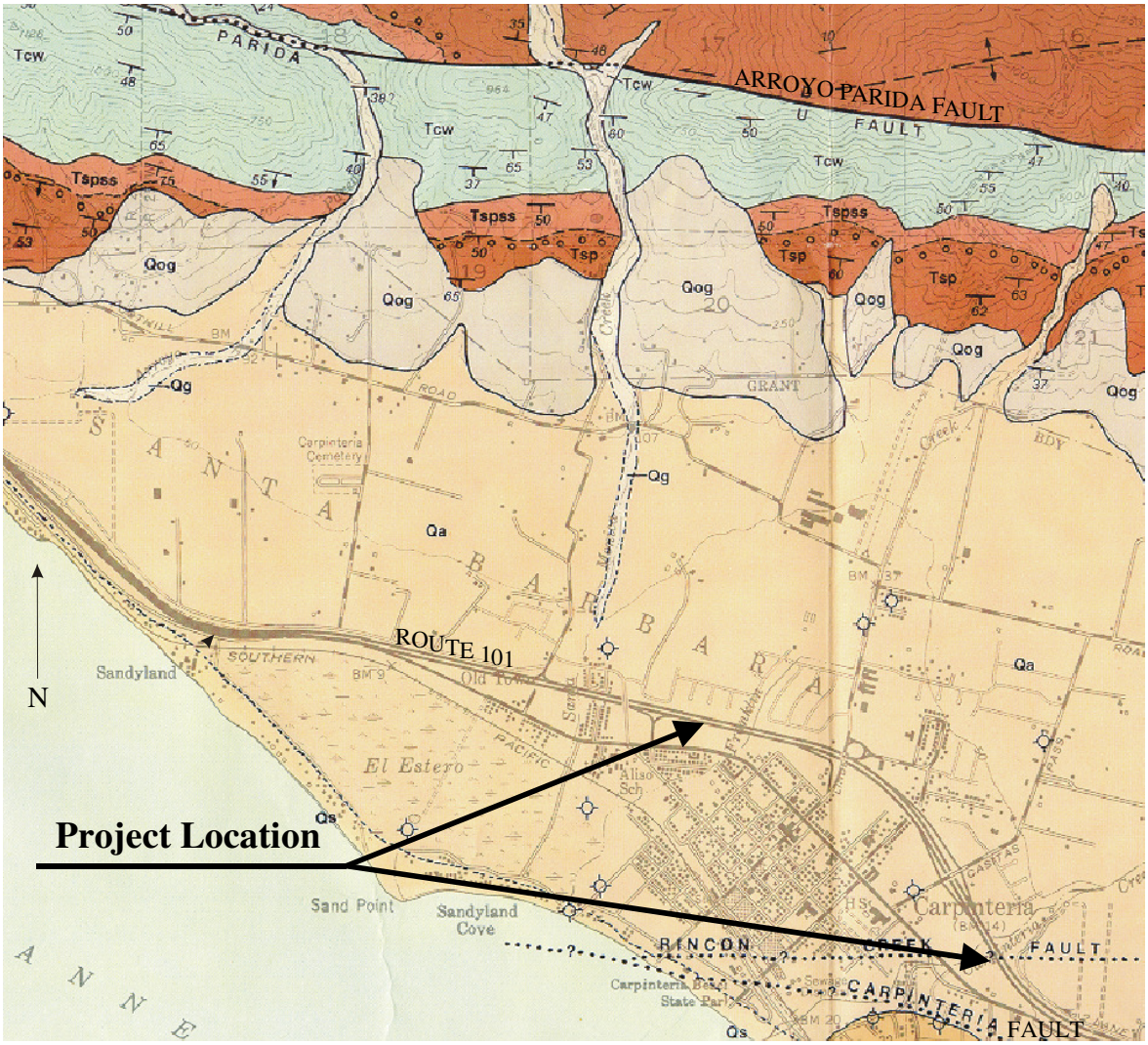

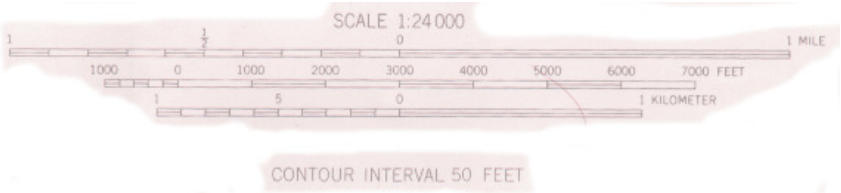

PART OF:

GEOLOGIC MAP OF THE CARPINTERIA QUADRANGLE
BY THOMAS W. DIBBLEE, JR., 1986

Geologic Map

05-SB-101-2.1/3.4
05-448201
Attachment 2

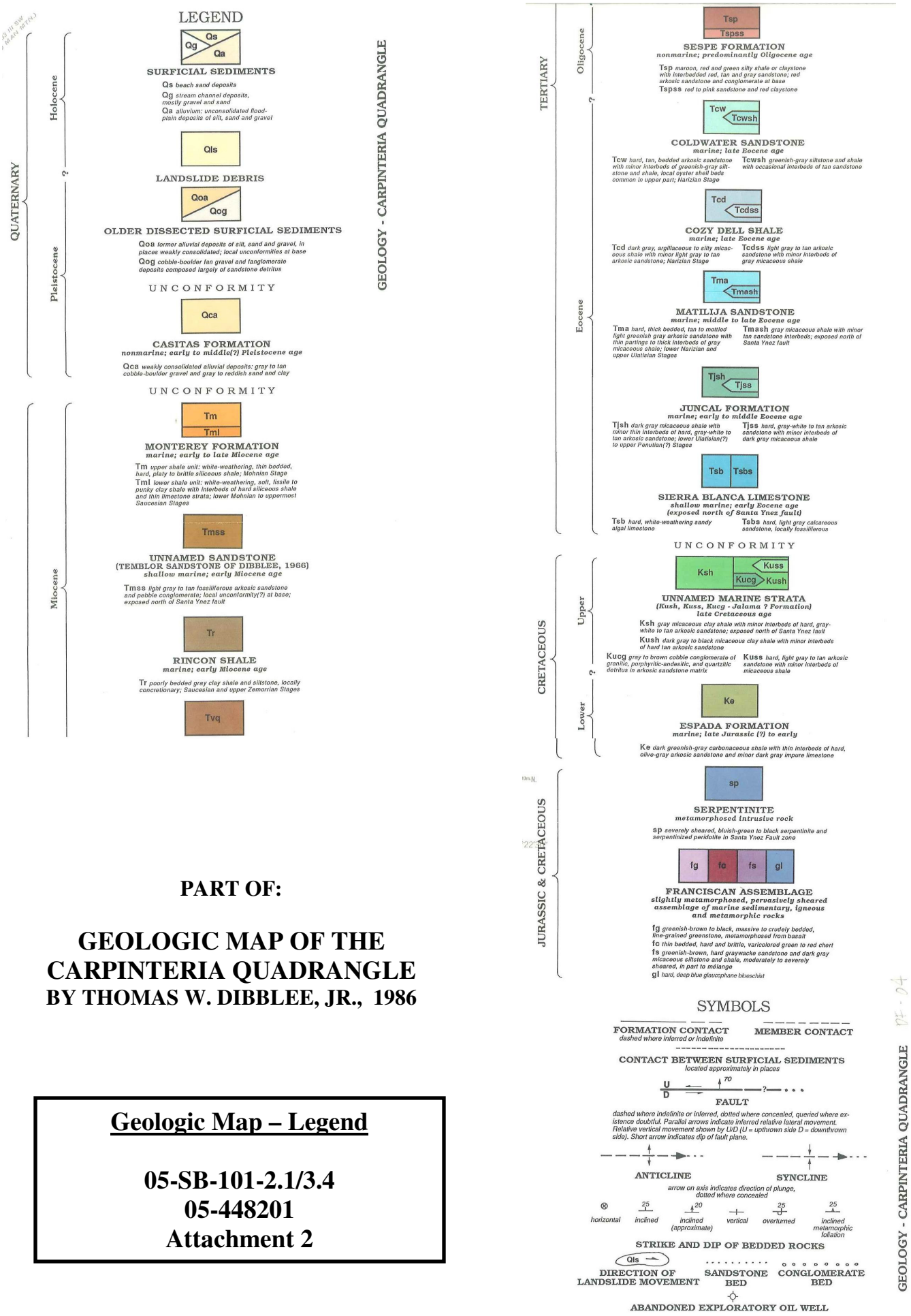

PART OF:

GEOLOGIC MAP OF THE CARPINTERIA QUADRANGLE

BY THOMAS W. DIBBLEE, JR., 1986

Geologic Map – Legend

05-SB-101-2.1/3.4
05-448201
Attachment 2

DIST	COUNTY	ROUTE	POST MILES TOTAL PROJECT	SHEET No.	TOTAL SHEETS
05	SB	101			

REGISTERED CIVIL ENGINEER X DATE

PLANS APPROVAL DATE

REGISTERED PROFESSIONAL ENGINEER Eduardo Ortega Jr. No. 77226 Exp. 6/30/2015 CIVIL STATE OF CALIFORNIA

The State of California or its officers or agents shall not be responsible for the accuracy or completeness of electronic copies of this plan sheet.

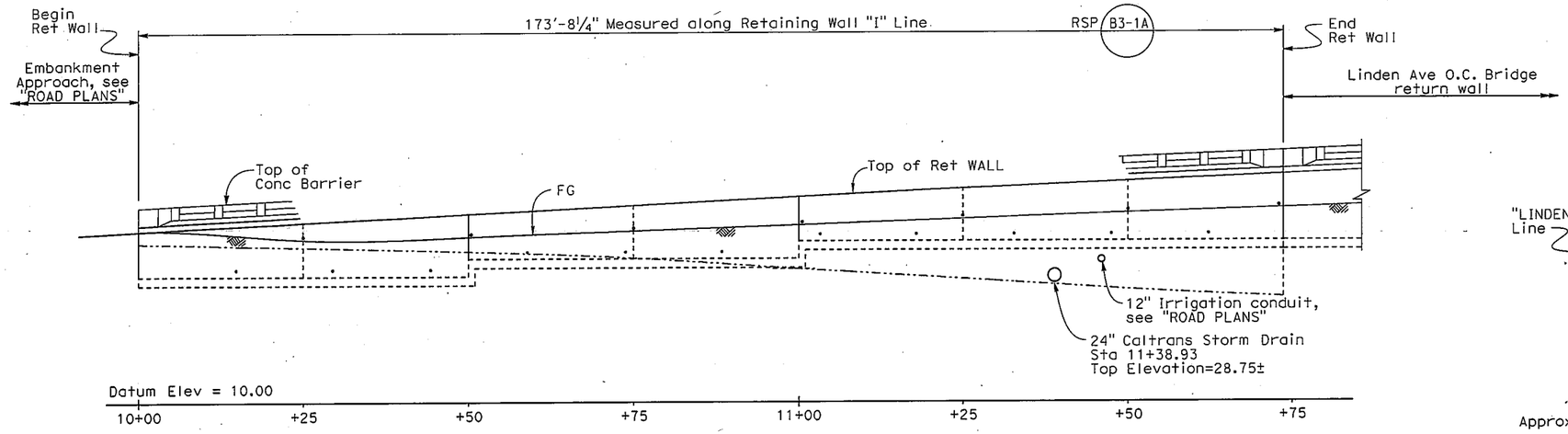

DEVELOPED ELEVATION

1" = 10'

INCOMPLETE PLAN FOR DESIGN STUDY PRINTED

DEC 11 2013

Office of Structures, Design STATE OF CALIFORNIA

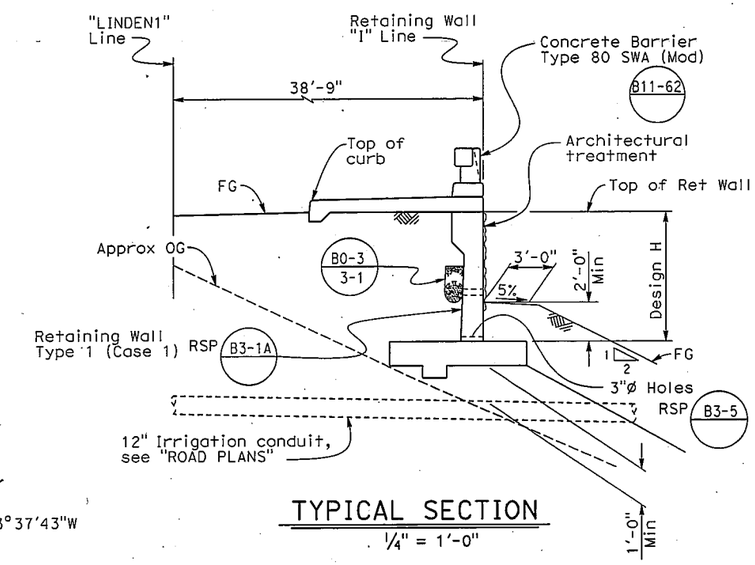

TYPICAL SECTION

¼" = 1'-0"

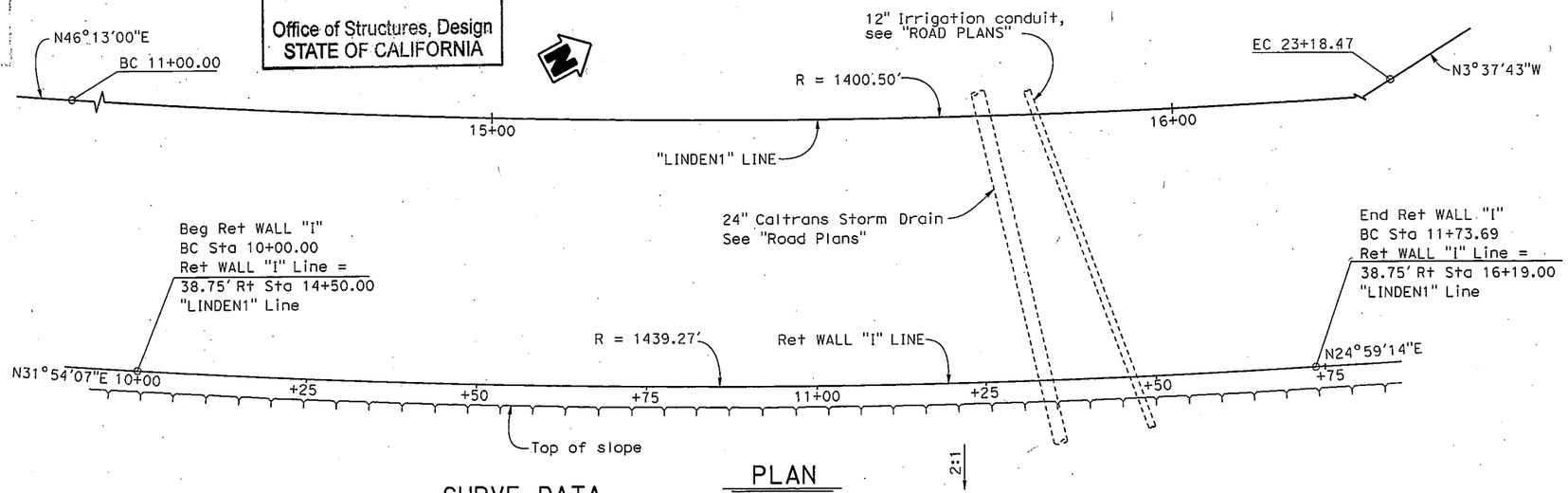

PLAN

1" = 10'

CURVE DATA

"LINDEN1" LINE	Ret WALL "I" LINE
R = 1400.50'	R = 1439.27'
Δ = 49°50'55"	Δ = 6°54'52"
T = 650.81'	T = 86.95'
L = 1218.47'	L = 173.69'

INDEX TO PLANS

SHEET NO.	TITLE
1.	GENERAL PLAN
2.	STRUCTURE PLAN
3.	FOUNDATION PLAN
4.	RETAINING WALL DETAILS
5.	LOG OF TEST BORINGS

STANDARD PLANS DATED MAY 2010

A10A	ABBREVIATIONS (SHEET 1 OF 2)
A10B	ABBREVIATIONS (SHEET 2 OF 2)
A62B	LIMIT OF PAYMENT FOR EXCAVATION
B0-3	BRIDGE DETAILS
RSP B3-1A	RETAINING WALL TYPE 1 (CASE 1)
RSP B3-5	RETAINING WALL DETAILS No. 1
RSP B11-62	CONCRETE BARRIER TYPE 80SW (SHEET 1 OF 3))

STANDARD PLAN SHEET No.

DETAIL NO.

CHECKED DETAILS

X DESIGN ENGINEER	DESIGN	BY E. Ortega/J. Jung	CHECKED X M. Kodsuntie	LOAD & RESISTANCE FACTOR DESIGN — LIVE LOADING: 240 lbs per sf
	DETAILS	BY G. Dickerson/ Y. Tang	CHECKED X M. Kodsuntie	LAYOUT — BY Eduardo Ortega Jr. — CHECKED X M. Kodsuntie
	QUANTITIES	BY X	CHECKED X	SPECIFICATIONS — BY X — PLANS AND SPECS COMPARED X

ORIGINAL SCALE IN INCHES FOR REDUCED PLANS 0 1 2 3

STATE OF CALIFORNIA DEPARTMENT OF TRANSPORTATION

DIVISION OF ENGINEERING SERVICES STRUCTURE DESIGN DESIGN BRANCH 7

BRIDGE NO. X

POST MILE X

RETAINING WALL "I"

GENERAL PLAN

UNIT: 3592

PROJECT NO. & PHASE: 0500000543-1

CONTRACT NO.: 05-4482U1

DISREGARD PRINTS BEARING EARLIER REVISION DATES

REVISION DATES 7-29-13 8-29-13 09/09/13 11/12/13

SHEET 1 OF X

USERNAME => s136697 DATE PLOTTED => 12-DEC-2013 TIME PLOTTED => 10:37

STRUCTURES DESIGN GENERAL PLAN SHEET (ENGLISH) (REV.09-01-10)

FILE => rw-i-a-gp.dgn

DIST	COUNTY	ROUTE	POST MILES TOTAL PROJECT	SHEET No.	TOTAL SHEETS
05	SB	101			

REGISTERED CIVIL ENGINEER X DATE

PLANS APPROVAL DATE

REGISTERED PROFESSIONAL ENGINEER Eduardo Ortega Jr. No. 77226 Exp. 6/30/2015 CIVIL STATE OF CALIFORNIA

The State of California or its officers or agents shall not be responsible for the accuracy or completeness of scanned copies of this plan sheet.

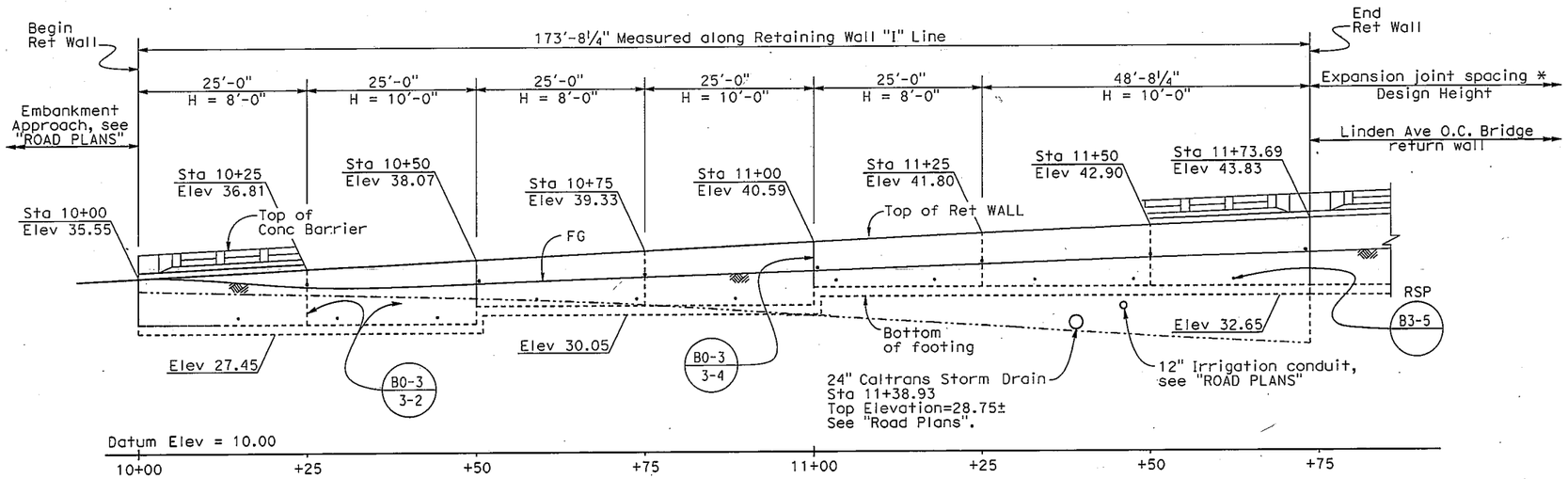

DEVELOPED ELEVATION

1" = 10'

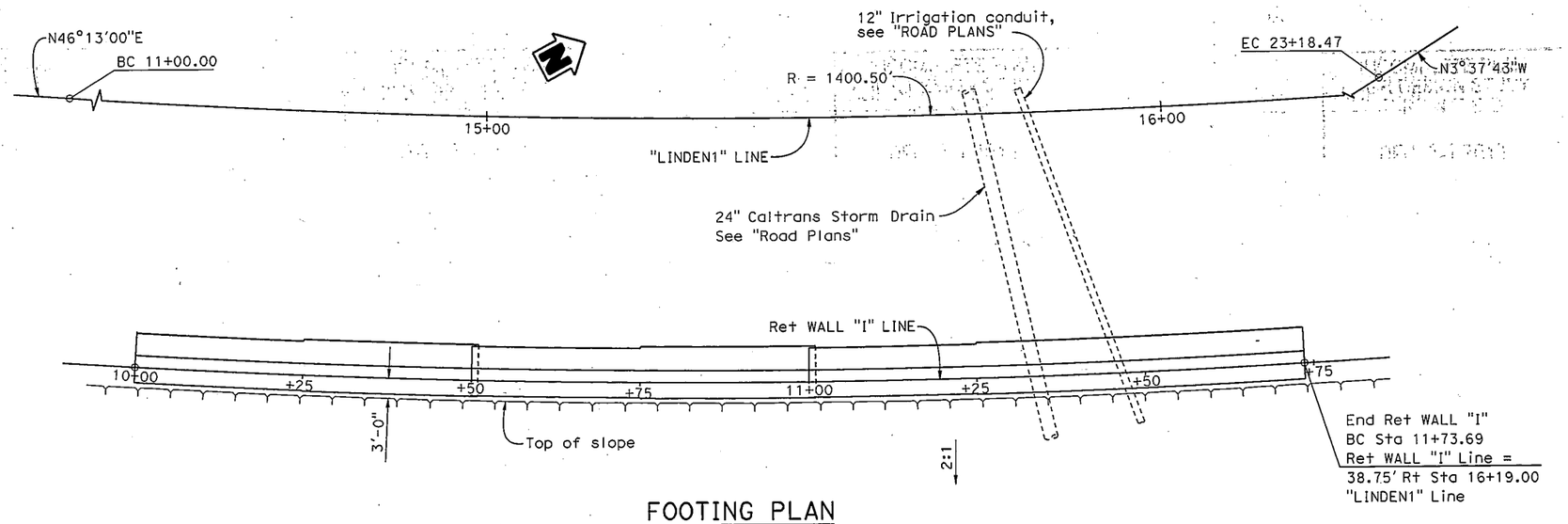

FOOTING PLAN

1" = 10'

INCOMPLETE PLAN FOR DESIGN STUDY PRINTED

DEC 11 2013

Office of Structures, Design
STATE OF CALIFORNIA

NOTE:

* Measured along RW "I" Line.

CHECKED DETAILS

	BY	CHECKED
DESIGN	Jun Ki Jung	X M. Kodsuntie
DETAILS	Yanli Tang	X M. Kodsuntie
QUANTITIES	X	X

STATE OF CALIFORNIA DEPARTMENT OF TRANSPORTATION

DIVISION OF ENGINEERING SERVICES STRUCTURE DESIGN DESIGN BRANCH 7

BRIDGE NO. X

POST MILE X

RETAINING WALL "I"

STRUCTURE PLAN

STRUCTURES DESIGN DETAIL SHEET (ENGLISH) (REV. 09-01-10)

ORIGINAL SCALE IN INCHES FOR REDUCED PLANS 0 1 2 3

UNIT: 3592

PROJECT NUMBER & PHASE: 0500000543-1

CONTRACT NO.: 05-4482U1

DISREGARD PRINTS BEARING EARLIER REVISION DATES

REVISION DATES 11-07-13 11-12-13

SHEET 2 OF X

FILE => rw-i-b-sp.dgn

USERNAME => s136697 DATE PLOTTED => 12-DEC-2013 TIME PLOTTED => 10:37

DIST	COUNTY	ROUTE	POST MILES TOTAL PROJECT	SHEET No.	TOTAL SHEETS
05	SB	101			

REGISTERED CIVIL ENGINEER X DATE

PLANS APPROVAL DATE

The State of California or its officers or agents shall not be responsible for the accuracy or completeness of scanned copies of this plan sheet.

REGISTERED PROFESSIONAL ENGINEER Eduardo Ortega Jr. No. 77226 Exp. 6/30/2015 CIVIL STATE OF CALIFORNIA

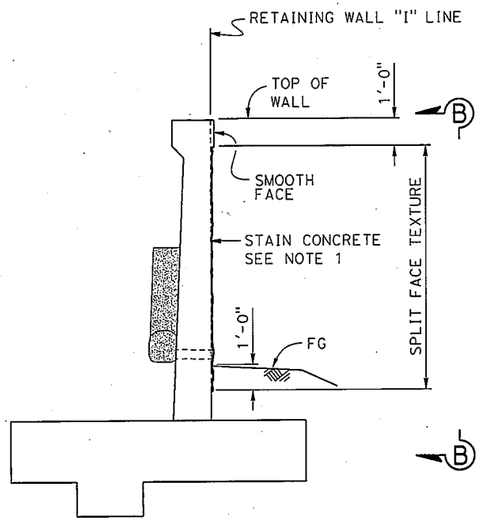

TYPICAL SECTION

NO SCALE

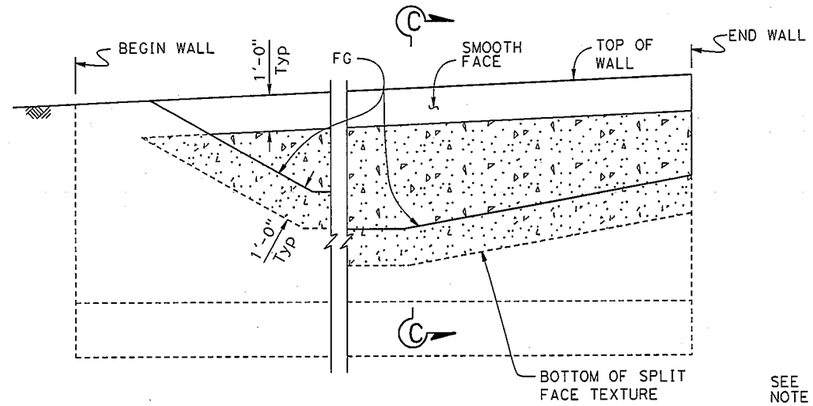

NOTE: Concrete barrier not shown.

VIEW B-B

NO SCALE

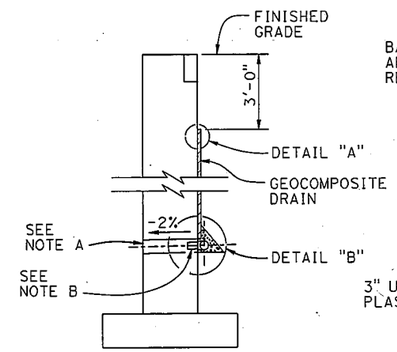

WALL SECTION

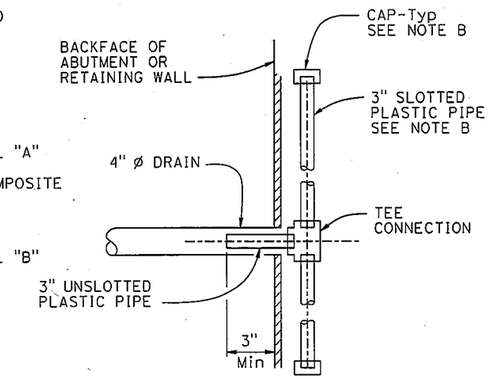

SECTION A-A

LIMITS OF PAYMENT FOR ARCHITECTURAL TREATMENT

NOTE:

1. Limits of Stain Concrete on retaining wall shall be from top of wall to 1'-0" below finished grade from beginning of wall to end of wall.

LEGEND:

Split face texture

Stain Concrete

INCOMPLETE PLAN FOR DESIGN STUDY PRINTED

DEC 11 2013

Office of Structures, Design
STATE OF CALIFORNIA

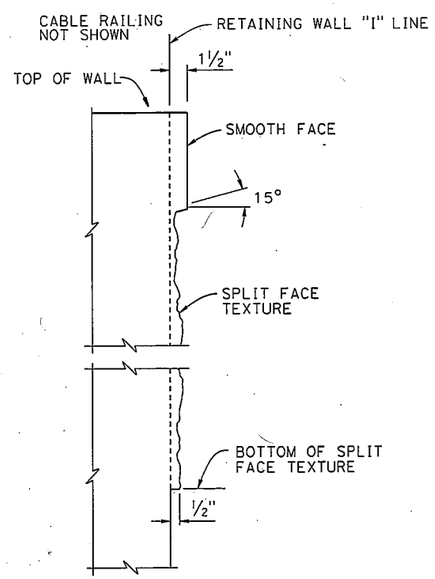

VIEW C-C

NO SCALE

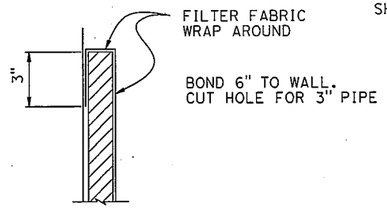

DETAIL "A"

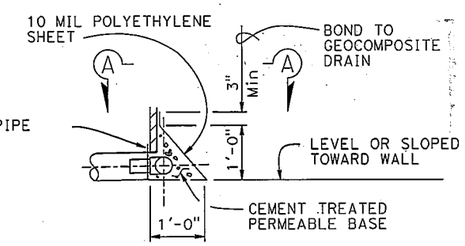

DETAIL "B"

WEEP HOLE AND GEOCOMPOSITE DRAIN

ALTERNATIVE TO BRIDGE DETAIL BO-3 / 3-1

NOTES:

A. 4" ø drains at intermediate sag points and at 25' max center to center (9' c-c for Type 3 and 9'-3" c-c for Type 4 retaining walls).
For walls adjacent to sidewalks or curbs, provide 4" cast iron or asbestos cement pipe under the sidewalk to discharge through curb face.
Exposed wall drains shall be located 3"± above finished grade.

B. Geocomposite drain, cement treated permeable base, and 3"ø slotted plastic pipe continuous behind retaining wall or abutment. Cap ends of pipe. Provide "Tee" connection at each 4" ø drain.

C. Connect the low end of plastic pipe to the main outlet pipe as apprlicable.

CHECKED DETAILS

	BY	CHECKED
DESIGN	Jun Ki Jung	X M. Kodsuntie
DETAILS	Bob Huddleston	X M. Kodsuntie
QUANTITIES	X	X

STATE OF CALIFORNIA
DEPARTMENT OF TRANSPORTATION

DIVISION OF ENGINEERING SERVICES
STRUCTURE DESIGN
DESIGN BRANCH 7

BRIDGE NO. X
POST MILE

RETAINING WALL "I"
RETAINING WALL DETAILS

STRUCTURES DESIGN DETAIL SHEET (ENGLISH) (REV. 09-01-10)

ORIGINAL SCALE IN INCHES FOR REDUCED PLANS 0 1 2 3

UNIT: 3592
PROJECT NUMBER & PHASE: 0500000543-1
CONTRACT NO.: 05-4482U1

DISREGARD PRINTS BEARING EARLIER REVISION DATES

REVISION DATES				SHEET	OF
12-01-13				X	X

FILE => rw-i-g-rwdt01.dgn

USERNAME => 6136697 DATE PLOTTED => 12-DEC-2013 TIME PLOTTED => 10:37

M e m o r a n d u m

Flex your power!
Be energy efficient!

To: MANODE KODSUNTIE
Structure Design Branch 7
DIVISION OF ENGINEERING SERVICES

Attn: Jun Jung

Date: January 22, 2014
File: 05-SB-101-2.2/3.3
Linden Casitas
Retaining Wall J
EA 05-4482U1

From: **DEPARTMENT OF TRANSPORTATION**
DIVISION OF ENGINEERING SERVICES
GEOTECHNICAL SERVICES

Subject: Retaining Wall J Foundation Report

Scope of Work

A Foundation Report (FR) for Retaining Wall J is provided for the above referenced project. The project is on State Route 101 in the City of Carpinteria, in southern Santa Barbara County. Improvements are proposed to increase the highway level of service and accessibility, and include replacement of existing bridges and construction of new bridges, retaining walls, sound walls, ramps and frontage roads. Review of published geologic data and previous geotechnical reports, field reconnaissance, and foundation calculations were performed as part of the geotechnical investigation.

The purpose of this report is to document geotechnical conditions and provide foundation recommendations for proposed Retaining Wall J.

Project Description

Route 101 within the project limits is a four-lane divided urban freeway with (2) 12-foot portland cement concrete (PCC) lanes in each direction and asphalt concrete (AC) 5-foot inside shoulders and 8-foot outside shoulders. A landscaped median approximately 40 feet wide with thrie beam barriers facing each direction of travel provides separation between the northbound and southbound lanes.

The purpose of the Linden Casitas project is to improve access and operations on Route 101, reduce local trips, and provide pedestrian and bicycle connectivity. The project includes construction of (3) mainline bridges on Route 101 to replace existing structures at Linden Avenue, Casitas Pass Road, and Carpinteria Creek. Highway access will be modified and added at Linden Avenue and Casitas Pass Road. Extension of Via Real, a frontage road, will also require construction of a new bridge over Carpinteria Creek. Retaining walls and sound walls are also proposed as part of the project.

Retaining Wall J is proposed for a length of approximately 430.26 feet to support the proposed southbound Linden Avenue off-ramp adjacent to southbound Highway 101, from 16 feet right of "LI2" Station 162+00 to 5 feet right of 166+25. Type 80 Modified Concrete Barrier and 2:1 slopes in front of and below the wall are proposed for planting and to limit the exposed visible height of the wall. Retaining wall K is proposed for a length of approximately 225 feet to support the other side of the proposed southbound Linden Avenue off-ramp. Refer to the project plans and specifications for details of construction.

Pertinent Reports and Investigations

The following publications were used to assist in the assessment of site conditions:

1. *Preliminary Geotechnical Report.* Finegan, Michael. EA 05-448200. December 21, 2000.

2. *District Preliminary Geotechnical Report.* De Llamas, Zeke. EA 05-448200, July 30, 2008.

Field Investigation and Laboratory Testing Program

Two mud rotary borings and one CPT sounding were advanced near the retaining wall layout lines to determine the subsurface conditions to be used for foundation design. In-situ soil strength parameters were determined using the Standard Penetration Test (SPT) for cohesionless soils. Consolidated undrained with pore pressure measurement triaxial shear testing was performed on 6 cohesive samples to determine their shear strength, and used to support the results of field methods of determining undrained shear strength of cohesive soils. Laboratory tests were also used to determine the particle size distribution and corrosion potential of representative samples obtained at depth. Refer to Table 1 for a summary of subsurface investigation information.

Table 1. Subsurface Exploration Summary

Boring	*Completion Date*	*Equipment*	*Hammer Type*	*Hammer Efficiency (%)*	*Approximate Ground Elevation (ft)*	*Depth (ft)*
CPT-11-001	6-22-2011	CPT	N/A	N/A	25.2	100.0
RC-10-004	12-1-2010	CS2000	Auto	93	24.5	171.5
RC-13-016	1-30-2013	CME 85	Auto	68	19.2	153.5

Site Geology and Subsurface Conditions

Physical Setting

The project is located in the Carpinteria Valley, a sunken area north of the elevated coastal fault block southeast of the City of Carpinteria. Carpinteria Valley is a low-lying, flat plain comprised of alluvial deposits. Some low-lying areas in the valley are partly submerged under brackish water of the Carpinteria Slough. The plain meets the Pacific Ocean to the southwest, gradually gains elevation to the east as it approaches Rincon and La Granada Mountains, and abuts sharply against the foothills of the Santa Ynez Mountains at its the northern boundary.

A mild coastal climate prevails throughout the year, with marine fog often present in spring and summer months. Nearly all precipitation falls from Pacific storms between October and May, with the majority accumulating in the winter months. Average yearly rainfall is 17.5 inches. The average temperature is 72 degrees Fahrenheit with more than 275 days of sunny weather per year.

Regional Geology

The project area is located in the Transverse Ranges Geomorphic Province. State Route 101 is bordered to the north by the Santa Ynez Mountains and to the south by the Pacific Ocean as it traverses the Carpinteria Valley. Geologic maps and field observations indicate that soils in the valley were deposited in an alluvial environment and consist of normally-consolidated deposits of clay, silt, sand, and gravel.

Groundwater

Open observation wells were installed in borings to observe fluctuations in groundwater levels and determine if groundwater will influence construction and foundation design. Results of the groundwater-monitoring program are summarized in Table 2.

Table 2. Groundwater Elevations

Boring	Date	Depth to Groundwater (ft)	Groundwater Elevation(ft)
RC-10-004	2-9-2011	3.9	20.6
RC-10-004	12-14-2011	5.0	19.5
RC-10-004	2-24-2012	4.8	19.3
RC-10-004	3-22-2012	5.0	19.5
RC-10-004	4-19-2012	4.3	20.2
RC-10-004	7-26-2012	5.4	19.1
RC-10-004	2-5-2013	5.3	19.2
RC-10-004	4-19-2012	4.3	20.2
RC-13-016	2-5-2013	7.7	11.5
RC-13-016	4-5-2013	7.5	11.7

Corrosion Evaluation

The department considers a site to be potentially corrosive to the foundation elements if the following conditions exist for the representative soil and/or water samples taken at the site: minimum resistivity of 1000 ohm-cm or less and/or PH of 5.5 or less. Samples found to be potentially corrosive based on this criteria are sent to the Headquarters Material Laboratory for additional corrosion testing based on chloride and sulphate content.

Soil and water samples were obtained during the subsurface investigation and tested for corrosion potential at the District Materials Laboratory. The results of the corrosion testing are presented in Table 3. Based on the results, soils are not considered corrosive to foundation elements.

Table 3. Corrosion Testing Summary

Boring	*Depth (ft)*	*pH*	*Resistivity ohm-cm*	*Chloride ppm*	*Sulphate ppm*	*Corrosive*
RC-10-004	0.0-3.0	8.1	660	140	870	NO
RC-10-004	25.0-26.5	8.0	2650	-	-	NO
RC-10-004	57.0-59.0	8.2	6330	-	-	NO

Foundation Recommendations

Wire Basket Geosynthetic Wrapped-Face Mechanically Stabilized Earth (MSE) Wall

Due to the potential for large differential settlements to occur and damage rigid cast-in-place concrete elements, a two-stage facing MSE wall is recommended. Calculated settlements of approximately 13 inches at the highest wall and embankment height and approximately 4 inches at the lowest wall height were calculated using Hough's method for cohesionless soils and correlations to consolidation coefficients with Atterburg Limits for cohesive soils. Due to the laterally discontinuous nature of the soil layers and interbedded sands, quality undisturbed samples of cohesive soils within the zone of vertical stress influence were not possible to obtain for consolidation testing.

The first stage facing consists of a geosynthetic wrapped face and a half-gabion wire basket to prevent bulging of the face. 1.5-foot vertical spacing of reinforcing layers and 1.5-foot high wire baskets are recommended. Wrap the tail of the geosynthetic soil reinforcing a minimum of three feet back into the reinforced zone, and provide a minimum of 6" of soil between the wrapped tail and the overlying layer of geosynthetic reinforcing. The second stage facing consists of a cast-in-place reinforced concrete wall with a form liner to provide the desired architectural finish. The cast-in-place wall will be anchored to a barrier slab at the top of the wall. Refer to the project plans and specifications for details of construction.

Structure backfill for the MSE walls must comply with 2010 Standard Specifications Section 47-2.02C for geosynthetic soil reinforcement. Construct the outer three feet of backfill behind the wire baskets and geosynthetic wrapped faces with permeable material complying with Section 47-2.02D. Grade the wall foundations and compact foundation soils to 95% relative compaction per Section 47-2.03B and the project plans. High regional groundwater may infiltrate excavations below or near the groundwater table and/or cause pumping of foundation soils. If the required compaction cannot be obtained in native foundation soils, it is recommended to over-excavate 1.5 feet below the base of foundation elevation and 1 foot beyond the plan limits of the excavation where pumping or groundwater is encountered. Replace the excavated material with Class III permeable material fully encapsulated in Class B3 subgrade enhancement geotextile to prevent contamination with fines and confine the permeable material. Overlap joints in the geotextile a minimum of 3 feet. The permeable mattress will provide a stable working platform from which to begin embankment or MSE wall construction. Pumping of the permeable mattress during construction of the first lifts of backfill may be required to prevent water from saturating the structure backfill or roadway embankment and allow for the required compaction and moisture content specifications to be met.

A 30 day settlement period is recommended to begin after completion of the stage 1 flexible facings at both Retaining Walls J and K prior to beginning construction of the concrete facings to allow for differential settlement to occur. Monitoring of the magnitude of settlement using surface monuments during the settlement period is recommended. If settlement continues to occur after the required 30-day settlement period, contact Geotechnical Design North to assess whether the settlement period should be extended.

Design reinforcing lengths required for internal and external stability of the MSE wall are provided in Table 4. Design reinforcing length is defined from the face of the wire basket to the point of termination in the reinforced soil zone. Sliding resistance under seismic loading is the controlling design case for reinforcing length. Design and analyses of the structure were performed using the computer software MSEW Version 3.0 and checked by hand calculations using the methods and recommendations provided in *FHWA Geotechnical Circular Number 11: Design and Construction of Mechanically Stabilized Earth Walls and Reinforced Soil Slopes, 2009*. Pseudo-static seismic stability of the structure was checked using horizontal ground acceleration equal to 1/3 of the site PGA, or 0.21g. Global stability was checked using Bishop's Method in MSEW with a target factor of safety of 1.3 for static and 1.1 for pseudo-static conditions per AASHTO 2010 LRFD Bridge Design Specifications. Geogrid is the recommended geosynthetic reinforcing type. Metal strip or welded wire reinforcing types are not recommended due to the proximity of the structure to groundwater and potential for corrosion. The required Long Term Design Strength (LTDS) of the geosynthetic reinforcing must be determined by dividing the ultimate tensile strength (T_{ult}) by the appropriate reduction factors according to the Geosynthetic Research Institute Standard Practice GG4a or GG4b. The minimum recommended LTDS is 2500 lb/ft. Place each layer of geosynthetic reinforcing at 1.5-foot vertical spacing at the bottom of each half gabion basket, as detailed in the project plans.

Table 4. Geosynthetic Reinforcing Recommendations

Wall Station (ft)	*Maximum Height (ft)*	*Design Geosynthetic Reinforcing Length, L_e (ft)*
10+00 to 12+25	19.90	20.0
12+25 to 13+25	14.97	15.0
13+25 to 14+30.26	9.34	10.0

Construction Considerations

Loose soils and groundwater will be encountered during foundation preparation and excavations. Refer to the Foundation Recommendations Section and project plans and specifications for details and limits of the permeable mattress to provide a stable working platform. Construction of the permeable mattress outside of the limits shown on the plans may be required if pumping soils and/or groundwater make it impossible to achieve the required compaction outside of the designated limits. Contact Geotechnical Design North for additional recommendations in the field if required.

Additional Information

Standard Special Provision S5-280, "Project Information", discloses to bidders and contractors a list of pertinent information available for their inspection prior to bid opening. The following is an excerpt from SSP S5-280 disclosing information originating from Geotechnical Services. Items listed to be included in the Information Handout will be provided in Acrobat (.pdf) format to the Addressee of this report via electronic mail.

Data and information attached with the project plans are:

A. Log of Test Borings.

Data and information included in the Information Handout provided to the Bidders and Contractors are:

A. Foundation Report for the Retaining Wall J dated January 22, 2014.

If you have any questions or comments, please contact Ryan Turner at (805) 549-3750, or Michael Finegan at (805) 549-3194.

RYAN TURNER, P.E., G.E.
Transportation Engineer Civil
Geotechnical Design – North
Branch D

MICHAEL S. FINEGAN, P.E.
Branch Chief
Geotechnical Design – North
Branch D

c: Job File / Branch D Records
Structure Construction RE Pending File (email RE_pending_file@dot.ca.gov)
Craig Whitten / DES Office Engineer
Andrew Tan / PCE
Eric Karlson/ DME

LIST OF ATTACHMENTS

Vicinity Map	Attachment 1
Geologic Map and Legend	Attachment 2
Structure Plans	Attachment 3

INDEX OF SHEETS

STATE OF CALIFORNIA
DEPARTMENT OF TRANSPORTATION

PROJECT PLANS FOR CONSTRUCTION ON
STATE HIGHWAY
IN SANTA BARBARA COUNTY
IN CARPINTERIA
FROM 0.4 KM SOUTH OF CARPINTERIA CREEK BRIDGE
TO 0.5 KM NORTH OF LINDEN AVENUE OVERCROSSING

TO BE SUPPLEMENTED BY STANDARD PLANS DATED JULY 2004

Dist	COUNTY	ROUTE	KILOMETER POST TOTAL PROJECT	SHEET NO.	TOTAL SHEETS
05	SB	101	3.5/5.5		

LOCATION MAP

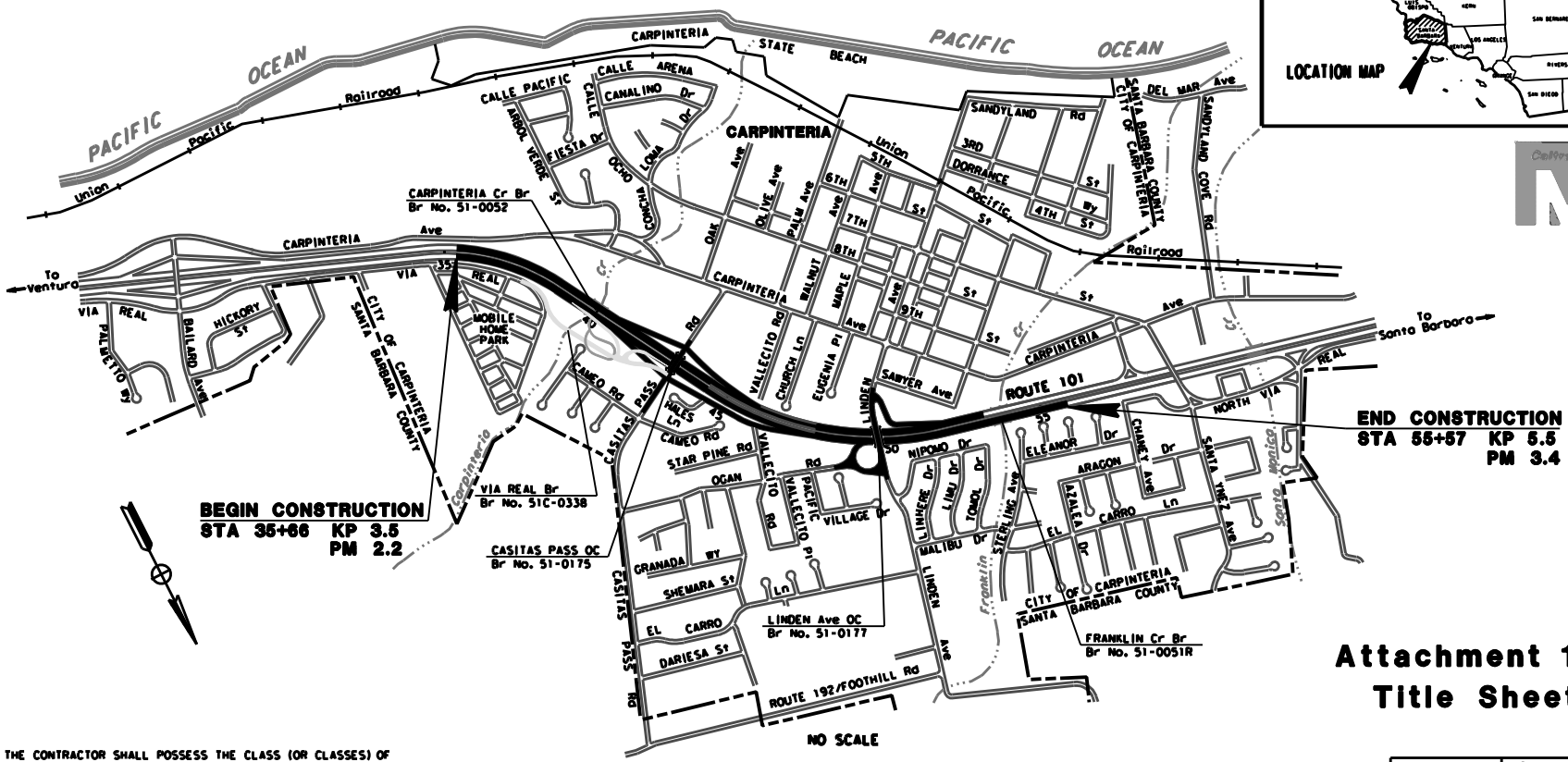

THE CONTRACTOR SHALL POSSESS THE CLASS (OR CLASSES) OF LICENSE AS SPECIFIED IN THE "NOTICE TO CONTRACTORS."

PROJECT MANAGER: DAVID BEARD
DESIGN ENGINEER: KARI BHANA

Attachment 1
Title Sheet

CONTRACT No. 05-4482U0
CU 06233 | EA 4482U0

BORDER LAST REVISED 3/1/2007 | CALTRANS WEB SITE IS: HTTP://WWW.DOT.CA.GOV/ | RELATIVE BORDER SCALE IS IN MILLIMETERS 0 20 40 60 80 | USERNAME => RUSER | DGN FILE => SREQUEST | DATE PLOTTED => 09-14-10 | TIME PLOTTED => 09:42

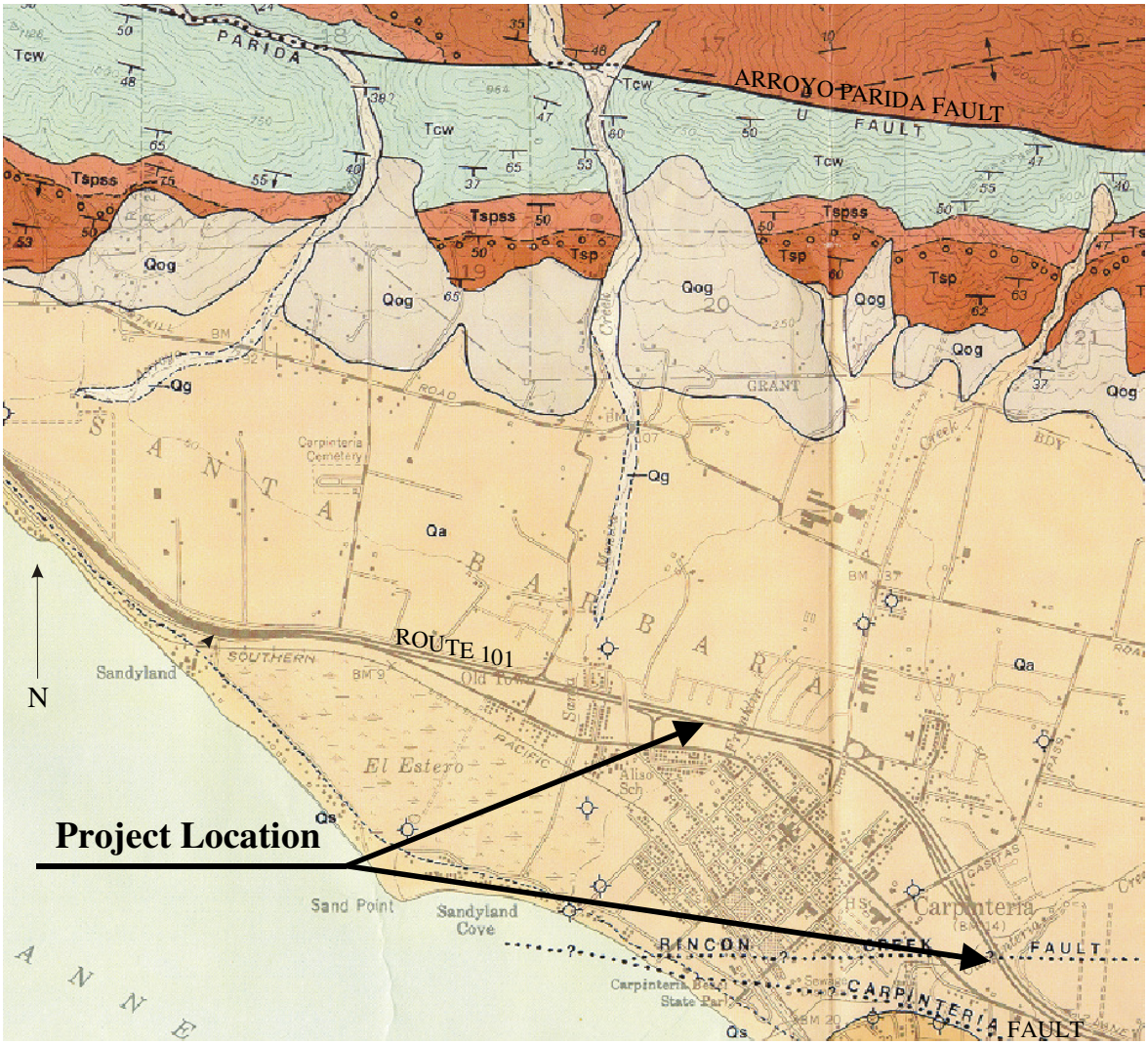

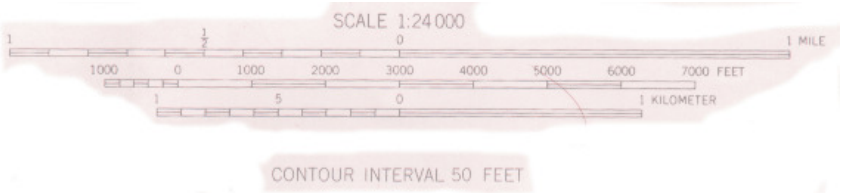

PART OF:

GEOLOGIC MAP OF THE CARPINTERIA QUADRANGLE
BY THOMAS W. DIBBLEE, JR., 1986

Geologic Map

05-SB-101-2.1/3.4
05-448201
Attachment 2

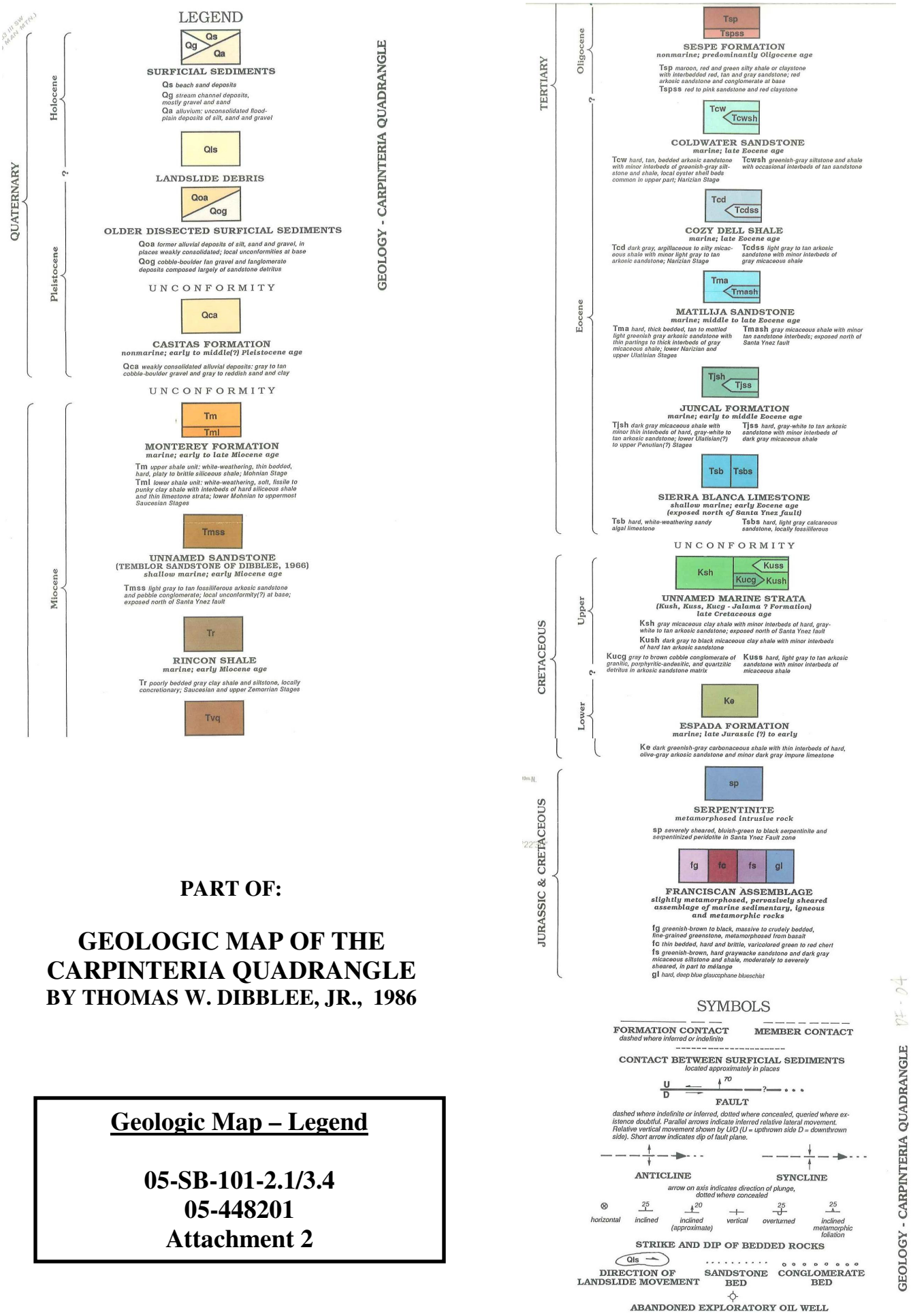

PART OF:

GEOLOGIC MAP OF THE CARPINTERIA QUADRANGLE

BY THOMAS W. DIBBLEE, JR., 1986

Geologic Map – Legend

05-SB-101-2.1/3.4
05-448201
Attachment 2

DIST	COUNTY	ROUTE	POST MILES TOTAL PROJECT	SHEET No.	TOTAL SHEETS
05	SB	101			

REGISTERED CIVIL ENGINEER X DATE

PLANS APPROVAL DATE

REGISTERED PROFESSIONAL ENGINEER Eduardo Ortega Jr. No. 77226 Exp. 6/30/2015 CIVIL STATE OF CALIFORNIA

The State of California or its officers or agents shall not be responsible for the accuracy or completeness of electronic copies of this plan sheet.

NOTE:
For Ret Wall K details, see "RETAINING WALL K" plans.

INDEX TO PLANS

SHEET NO.	TITLE
1.	GENERAL PLAN
2.	STRUCTURE PLAN NO. 1
3.	STRUCTURE PLAN NO. 2
4.	FOUNDATION PLAN
5.	MSE RETAINING WALL DETAILS
6.	PERMEABLE MATTRESS DETAILS
7.	ARCHITECTURAL DETAILS

STANDARD PLANS DATED 2010

	A10A	ACRONYMS AND ABBREVIATIONS (SHEET 1 OF 2)
	A10B	ACRONYMS AND ABBREVIATIONS (SHEET 2 OF 2)
	A10C	LINES AND SYMBOLS (SHEET 1 OF 3)
	A10D	LINES AND SYMBOLS (SHEET 2 OF 3)
	A10E	LINES AND SYMBOLS (SHEET 3 OF 3)
	A10F	LEGEND - SOIL (SHEET 1 OF 2)
	A10G	LEGEND - SOIL (SHEET 2 OF 2)
	A10H	LEGEND - ROCK
	A62B	LIMITS OF PAYMENT FOR EXCAVATION AND BACKFILL - BRIDGE SURCHARGE AND WALL
	B0-3	BRIDGE DETAILS
RSP	B11-60	CONCRETE BARRIER TYPE 80 (SHEET 1 OF 2)
RSP	B11-60	CONCRETE BARRIER TYPE 80 (SHEET 2 OF 2)
	D100A	GABION BASKET DETAILS NO. 1
	D100B	GABION BASKET DETAILS NO. 2

STANDARD PLAN SHEET No.

DETAIL No.

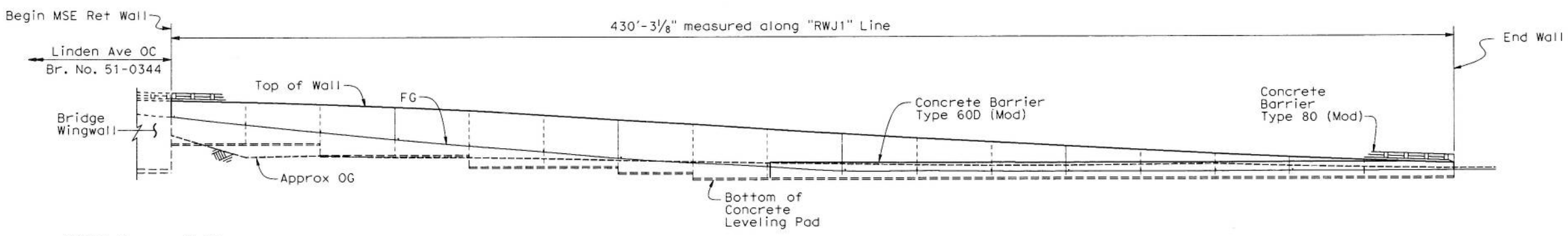

DEVELOPED ELEVATION

1" = 20'

CURVE DATA

① "LI2" Line	② "RWJ1" Line	③ "RWJ1" Line	④ "RWK1" Line	⑤ "LINDEN1" LINE
R = 1000.00'	R = 15.00'	R = 1016.00'	R = 980.00'	R = 1400.50'
Δ = 16°53'47"	Δ = 105°7'49"	Δ = 16°54'13"	Δ = 12°35'41"	Δ = 49°50'55"
T = 148.53'	T = 19.59'	T = 150.97'	T = 108.15'	T = 650.81'
L = 294.90'	L = 27.52'	L = 299.75'	L = 215.42'	L = 1218.47'

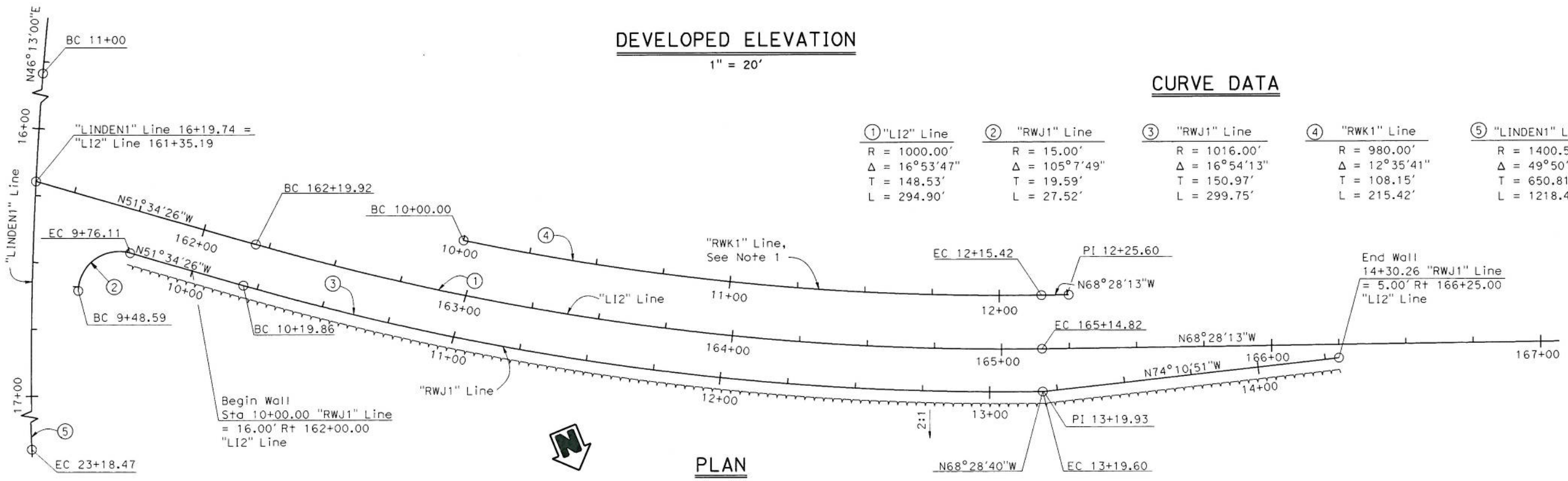

PLAN

1" = 20'

X DESIGN ENGINEER	DESIGN	BY E. Ortega / J. Jung	CHECKED M. Kodsuntie	LOAD & RESISTANCE FACTOR DESIGN			
	DETAILS	BY Y.Feng / B.Huddleston	CHECKED M. Kodsuntie	LAYOUT	BY E. Ortega / J. Jung	CHECKED M. Kodsuntie	
	QUANTITIES	BY X	CHECKED X	SPECIFICATIONS	BY X	PLANS AND SPECS COMPARED X	

ORIGINAL SCALE IN INCHES FOR REDUCED PLANS 0 1 2 3

STATE OF CALIFORNIA
DEPARTMENT OF TRANSPORTATION

DIVISION OF ENGINEERING SERVICES
STRUCTURE DESIGN
DESIGN BRANCH 7

BRIDGE NO. X
POST MILE 3.07

RETAINING WALL "J"
GENERAL PLAN

UNIT: 3592
PROJECT NO. & PHASE: 0500000543-1
CONTRACT NO.: 05-4482U1

DISREGARD PRINTS BEARING EARLIER REVISION DATES

REVISION DATES 1-24-13 12-02-13 11-25-13

SHEET 1 OF X

FILE => rw-j-a-gp1.dgn

STRUCTURES DESIGN GENERAL PLAN SHEET (ENGLISH) (REV.09-01-10)

USERNAME => s124008 DATE PLOTTED => 10-DEC-2013 TIME PLOTTED => 15:51

DIST	COUNTY	ROUTE	POST MILES TOTAL PROJECT	SHEET No.	TOTAL SHEETS
05	SB	101			

REGISTERED CIVIL ENGINEER X DATE

PLANS APPROVAL DATE

The State of California or its officers or agents shall not be responsible for the accuracy or completeness of electronic copies of this plan sheet.

REGISTERED PROFESSIONAL ENGINEER Eduardo Ortega Jr. No. 77226 Exp. 6/30/2015 CIVIL STATE OF CALIFORNIA

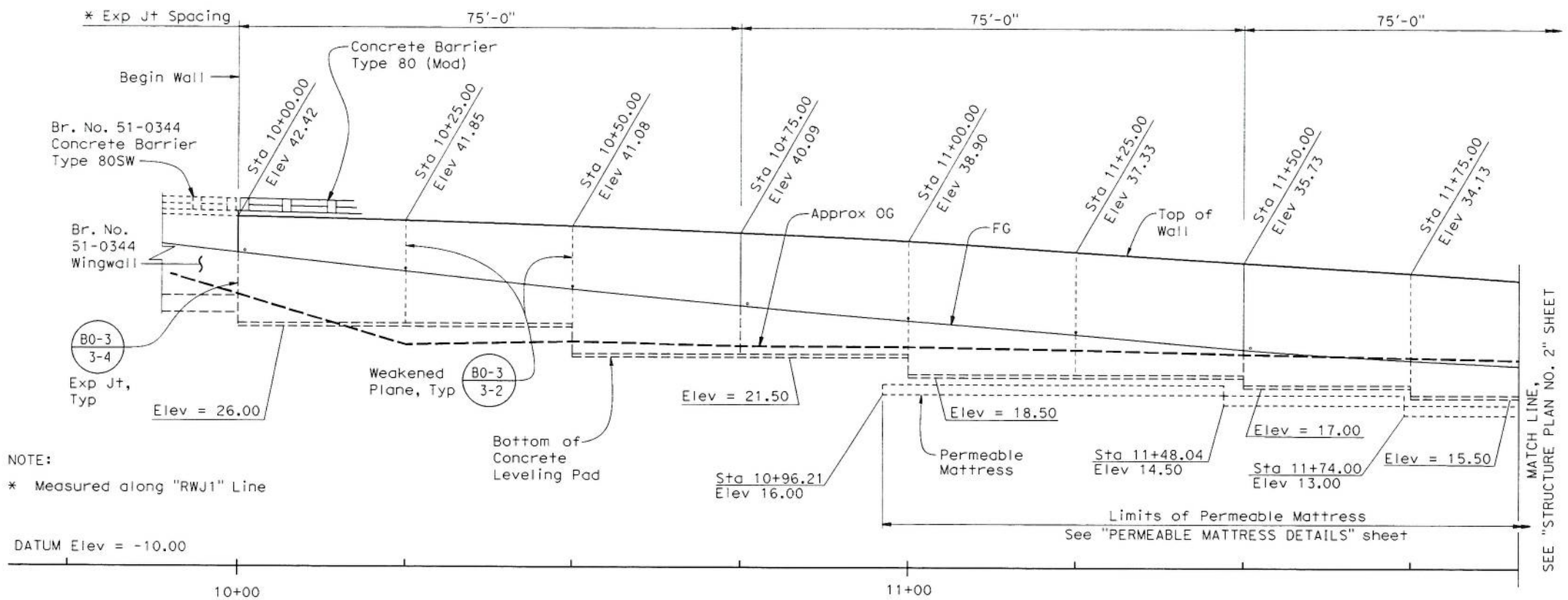

DEVELOPED ELEVATION

1" = 10'

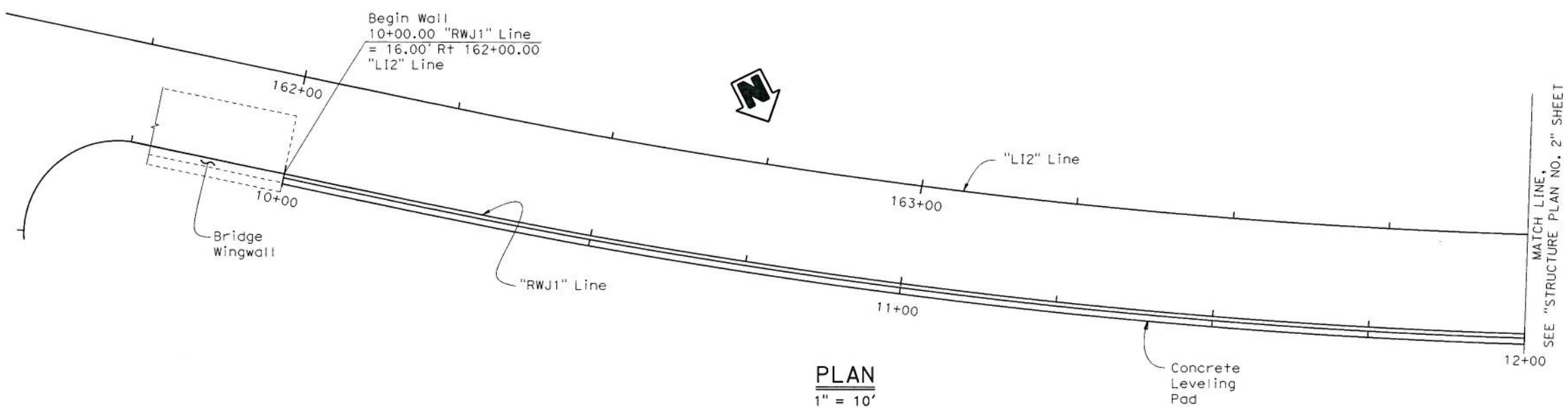

PLAN

1" = 10'

GENERAL NOTES

DESIGN: AASHTO LRFD Bridge Design Specifications, 4th edition and the California Amendments, preface dated November 2011

LIVE LOAD: Ft = 54 kips on barrier

CONCRETE: f'c = 3.6 ksi
fy = 60 ksi
n = 8

	BY	CHECKED
DESIGN	E. Ortego / J. Jung	M. Kodsuntie
DETAILS	Y.Feng / B.Huddleston	M. Kodsuntie
QUANTITIES	X	X

STATE OF CALIFORNIA
DEPARTMENT OF TRANSPORTATION

DIVISION OF ENGINEERING SERVICES
STRUCTURE DESIGN
DESIGN BRANCH 7

BRIDGE NO. X
POST MILE 3.07

RETAINING WALL "J"
STRUCTURE PLAN NO. 1

STRUCTURES DESIGN DETAIL SHEET (ENGLISH) (REV. 09-01-10)

ORIGINAL SCALE IN INCHES FOR REDUCED PLANS 0 1 2 3

UNIT: 3592
PROJECT NO. & PHASE: 0500000543-1
CONTRACT NO.: 05-4482U1

DISREGARD PRINTS BEARING EARLIER REVISION DATES

REVISION DATES 1-30-13 11-14-13 11-25-13

SHEET 2 OF X

FILE => rw-j-b-sp01.dgn

USERNAME => s134008 DATE PLOTTED => 10-DEC-2013 TIME PLOTTED => 15:51

DIST	COUNTY	ROUTE	POST MILES TOTAL PROJECT	SHEET No.	TOTAL SHEETS
05	SB	101			

REGISTERED CIVIL ENGINEER X DATE

PLANS APPROVAL DATE

REGISTERED PROFESSIONAL ENGINEER Eduardo Ortega Jr. No. 77226 Exp. 6/30/2015 CIVIL STATE OF CALIFORNIA

The State of California or its officers or agents shall not be responsible for the accuracy or completeness of electronic copies of this plan sheet.

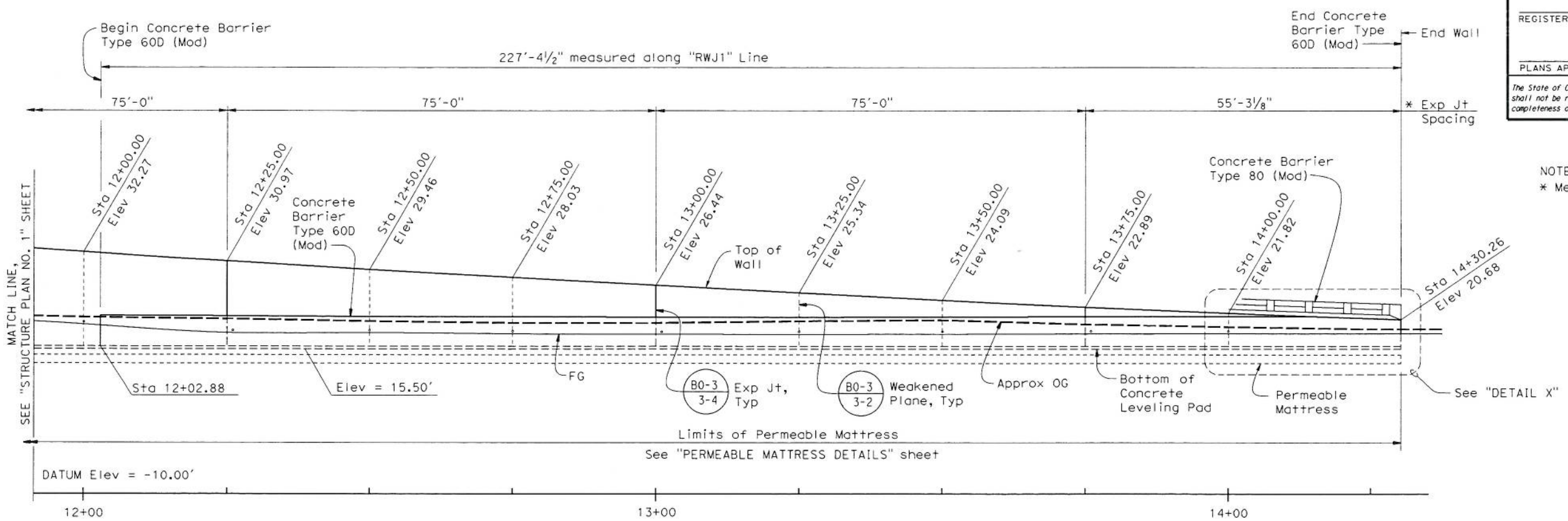

NOTE:
* Measured along "RWJ1" Line

DEVELOPED ELEVATION

1" = 10'

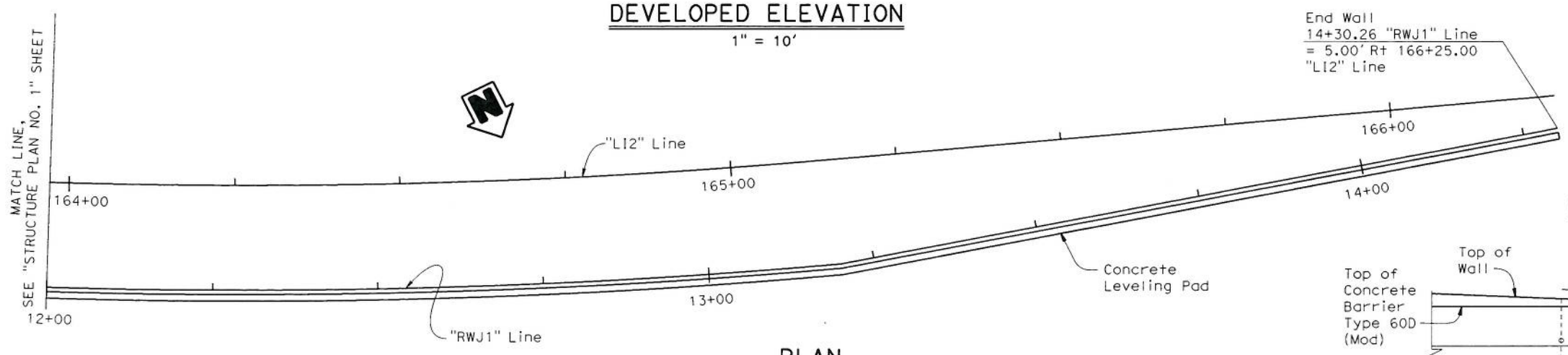

PLAN

1" = 10'

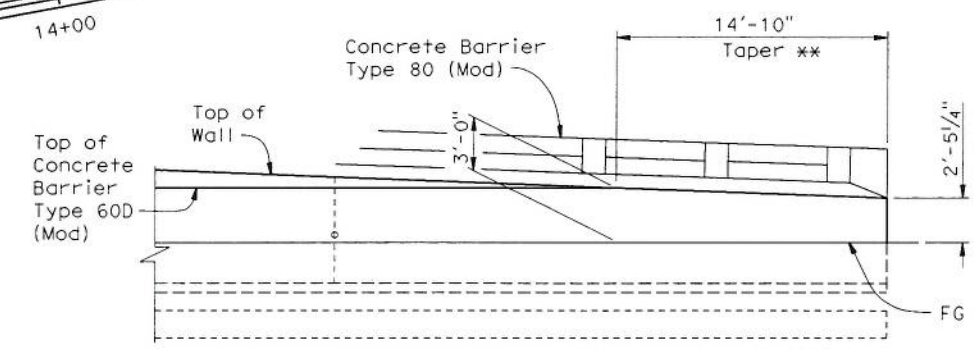

NOTE: ** - Top of Concrete Barrier Type 60D (Mod) to be tapered down to match the top of retaining wall and bottom of Concrete Barrier Type 80 (Mod) from their intersection to the end of wall.

DETAIL X

1" = 5'

	BY	CHECKED
DESIGN	E. Ortego / J. Jung	M. Kodsuntie
DETAILS	Y.Feng / B.Huddleston	M. Kodsuntie
QUANTITIES	X	X

STATE OF CALIFORNIA DEPARTMENT OF TRANSPORTATION

DIVISION OF ENGINEERING SERVICES STRUCTURE DESIGN DESIGN BRANCH 7

BRIDGE NO. X

POST MILE 3.07

RETAINING WALL "J"

STRUCTURE PLAN NO. 2

STRUCTURES DESIGN DETAIL SHEET (ENGLISH) (REV. 09-01-10)

ORIGINAL SCALE IN INCHES FOR REDUCED PLANS 0 1 2 3

UNIT: 3592

PROJECT NO. & PHASE: 0500000543-1

CONTRACT NO.: 05-4482U1

DISREGARD PRINTS BEARING EARLIER REVISION DATES

REVISION DATES 2-1-13 12-05-13 11-25-13

SHEET 3 OF X

FILE => rw-j-b-sp02.dgn

USERNAME => s134608 DATE PLOTTED => 10-DEC-2013 TIME PLOTTED => 15:51

DIST	COUNTY	ROUTE	POST MILES TOTAL PROJECT	SHEET No.	TOTAL SHEETS
05	SB	101			

REGISTERED CIVIL ENGINEER X DATE

PLANS APPROVAL DATE

REGISTERED PROFESSIONAL ENGINEER Eduardo Ortega Jr. No. 77226 Exp. 6/30/2015 CIVIL STATE OF CALIFORNIA

The State of California or its officers or agents shall not be responsible for the accuracy or completeness of scanned copies of this plan sheet.

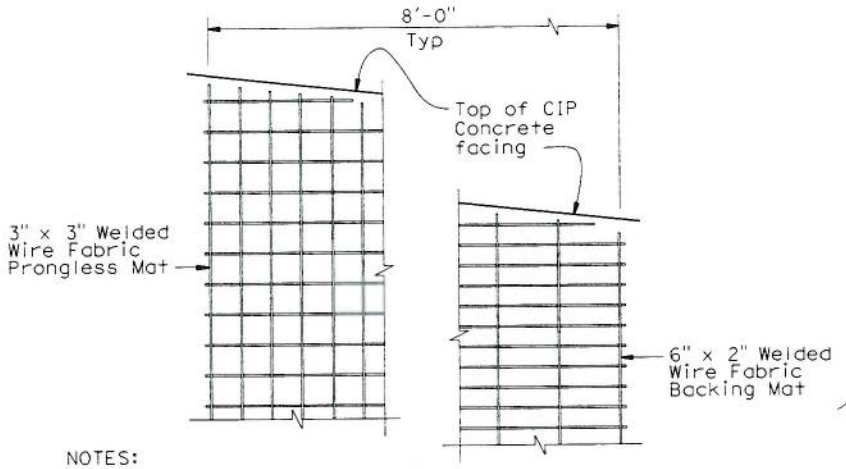

NOTES:

1. 3" x 3" welded wire fabric mat and 6" x 2" welded wire fabric backing mat shall be cut where necessary.
2. Continuous filter fabric shall be either cut or folded where necessary.
3. Not all welded wire mat and filter fabric shown.

HALF GABION CAGE CUT DETAIL

NO SCALE

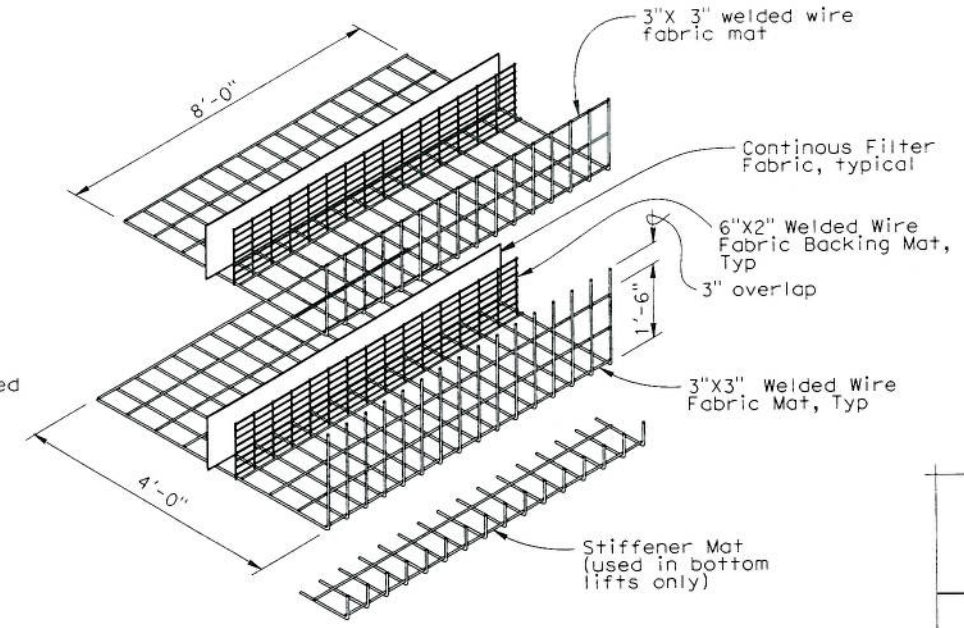

NOTE: For connecting individual components, see Standard Plans D100A and D100B.

HALF GABION CAGE DETAIL

NO SCALE

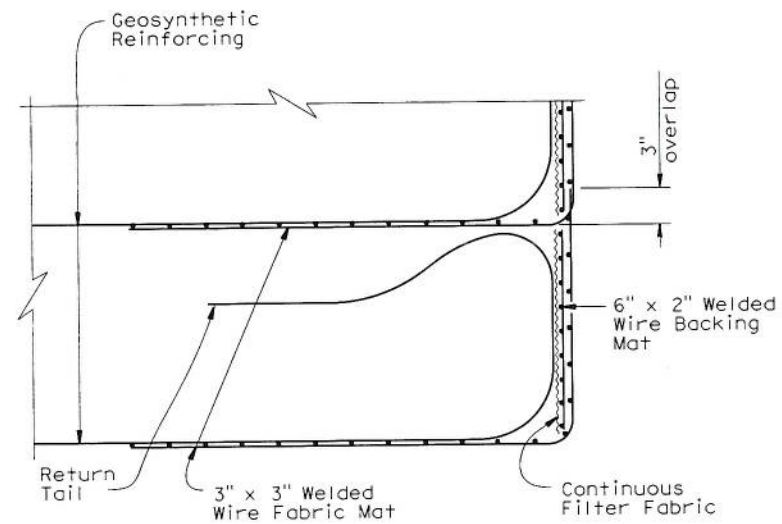

NOTE: Clean crushed rock not shown.

HALF GABION CAGE INSTALLATION DETAIL

NO SCALE

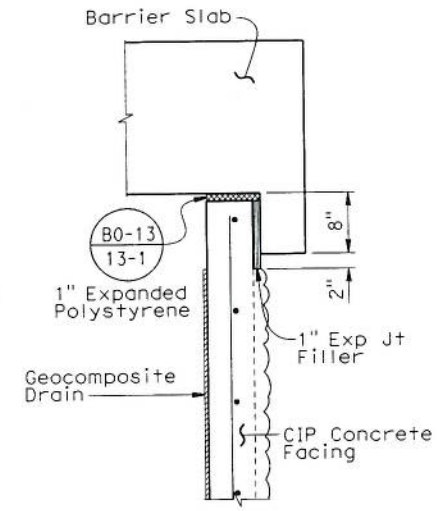

DETAIL C

1" = 1'-0"

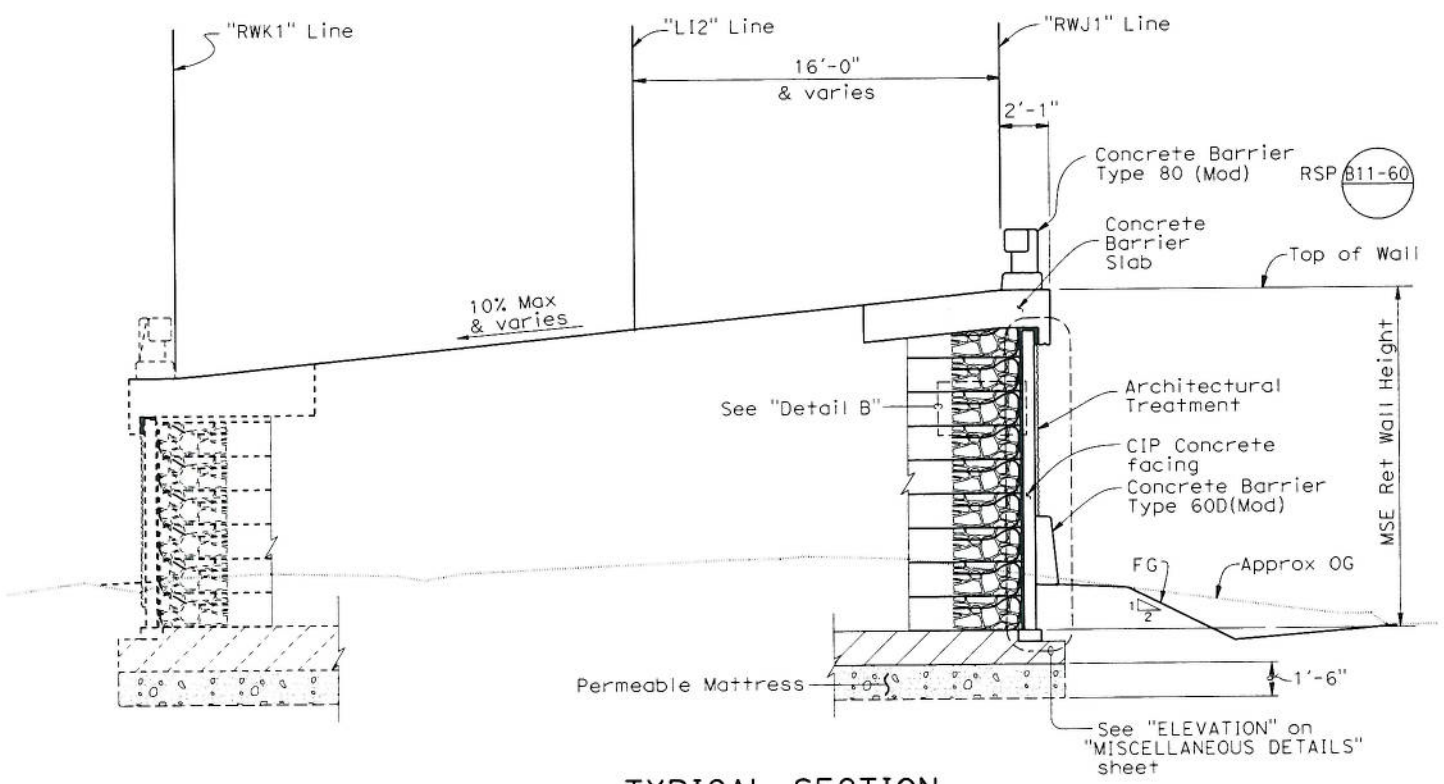

TYPICAL SECTION

1/4" = 1'-0"

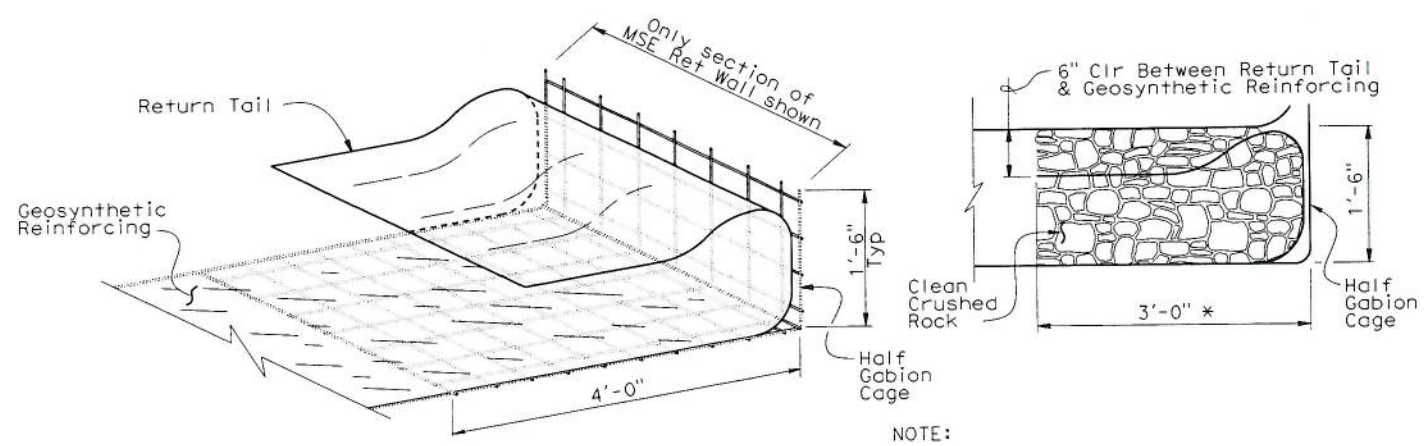

NOTE:

1. Clean crushed rock not shown.

* Limits of clean crushed rock and return tail

DETAIL B

NO SCALE

	BY	CHECKED
DESIGN	Jun Jung	X
DETAILS	Y.Feng / B.Huddleston	X
QUANTITIES	X	X

ORIGINAL SCALE IN INCHES FOR REDUCED PLANS 0 1 2 3

STATE OF CALIFORNIA
DEPARTMENT OF TRANSPORTATION

DIVISION OF ENGINEERING SERVICES
STRUCTURE DESIGN
DESIGN BRANCH 7

BRIDGE NO. X
POST MILE 3.07

RETAINING WALL "J"
MSE RETAINING WALL DETAILS

UNIT: 3592
PROJECT NUMBER & PHASE: 0500000543-1 CONTRACT NO.: 05-4482U1

DISREGARD PRINTS BEARING EARLIER REVISION DATES

REVISION DATES 10-11-13 11-27-13 11-26-13

SHEET 5 OF X

FILE => rw-j-g-rwd+01.dgn

USERNAME => s134008 DATE PLOTTED => 10-DEC-2013 TIME PLOTTED => 15:51

DIST	COUNTY	ROUTE	POST MILES TOTAL PROJECT	SHEET No.	TOTAL SHEETS
05	SB	101			

REGISTERED CIVIL ENGINEER X DATE

PLANS APPROVAL DATE

REGISTERED PROFESSIONAL ENGINEER Eduardo Ortega Jr. No. 77226 Exp. 6/30/2015 CIVIL STATE OF CALIFORNIA

The State of California or its officers or agents shall not be responsible for the accuracy or completeness of scanned copies of this plan sheet.

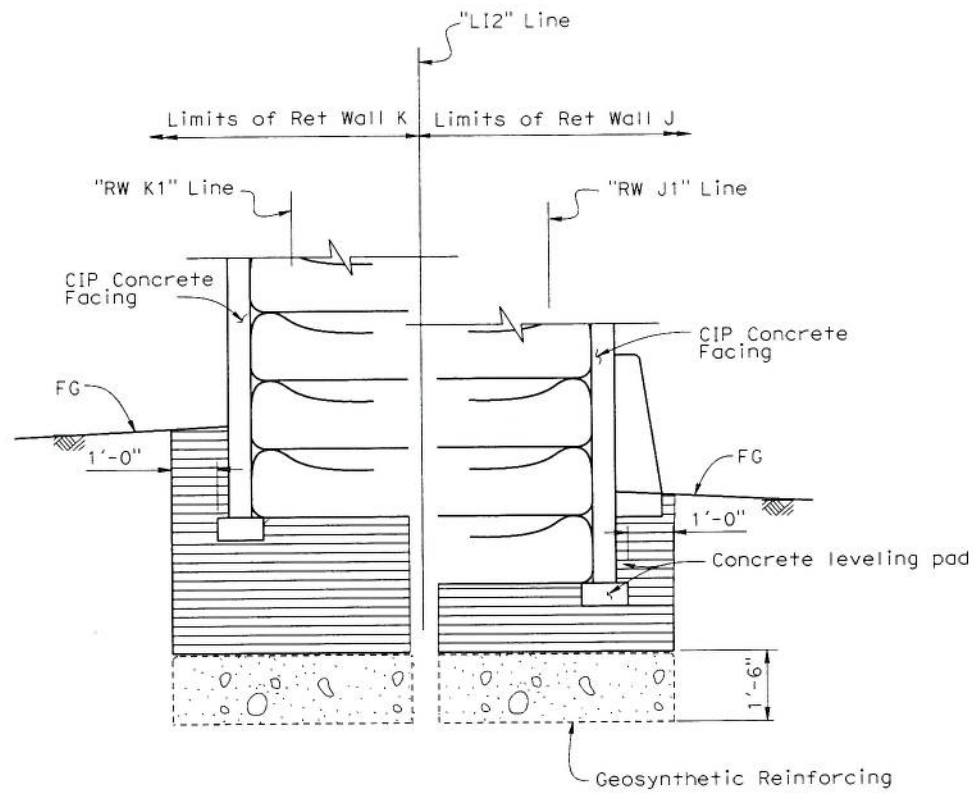

SECTION A-A
No scale

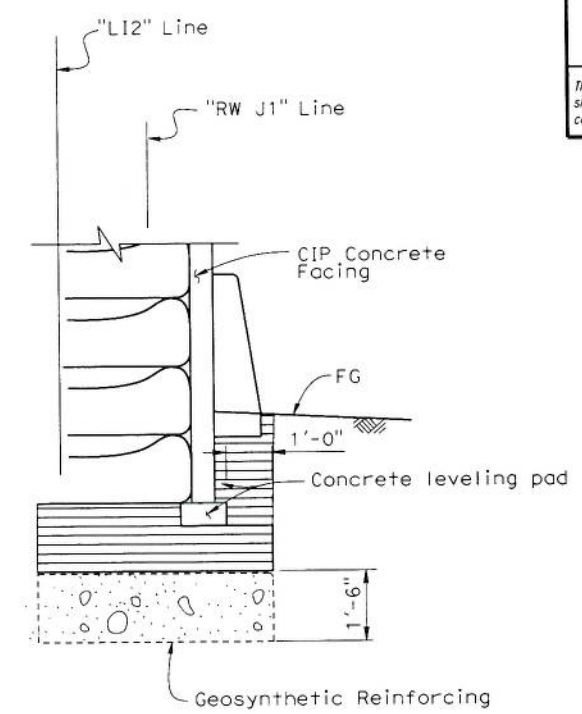

SECTION B-B
No scale

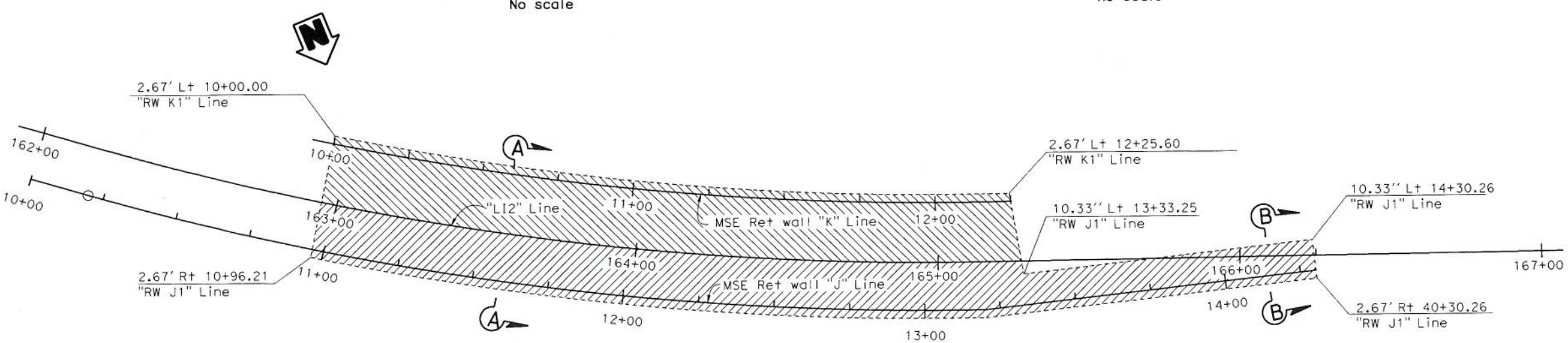

PLAN
1" = 20'

LEGEND:

- Indicates Permeable Mattress
- Indicates Retaining Wall J permeable mattress and structure backfill
- Indicates Retaining Wall K permeable mattress and structure backfill
- Indicates structure backfill

LIMITS OF PERMEABLE MATTRESS AND STRUCTURE BACKFILL

	BY	CHECKED
DESIGN	Jun Jung	M. Kodsuntie
DETAILS	Yingjue Feng	M. Kodsuntie
QUANTITIES	X	X

ORIGINAL SCALE IN INCHES FOR REDUCED PLANS 0 1 2 3

STATE OF CALIFORNIA
DEPARTMENT OF TRANSPORTATION

DIVISION OF ENGINEERING SERVICES
STRUCTURE DESIGN
DESIGN BRANCH 7

BRIDGE NO. X
POST MILE 3.07

RETAINING WALL "J"
PERMEABLE MATTRESS DETAILS

UNIT: 3592
PROJECT NUMBER & PHASE: 0500000543-1
CONTRACT NO.: 05-4482U1

DISREGARD PRINTS BEARING EARLIER REVISION DATES

REVISION DATES 11/13/13 12/2/13

SHEET 6 OF X

FILE => rw-j-h-pmld.dgn

USERNAME => s134008 DATE PLOTTED => 10-DEC-2013 TIME PLOTTED => 15:51

DIST	COUNTY	ROUTE	POST MILES TOTAL PROJECT	SHEET No.	TOTAL SHEETS
05	SB	101			

REGISTERED CIVIL ENGINEER X DATE

PLANS APPROVAL DATE

REGISTERED PROFESSIONAL ENGINEER Eduardo Jose Ortega Jr. No. 77226 Exp. 6/30/2015 CIVIL STATE OF CALIFORNIA

The State of California or its officers or agents shall not be responsible for the accuracy or completeness of electronic copies of this plan sheet.

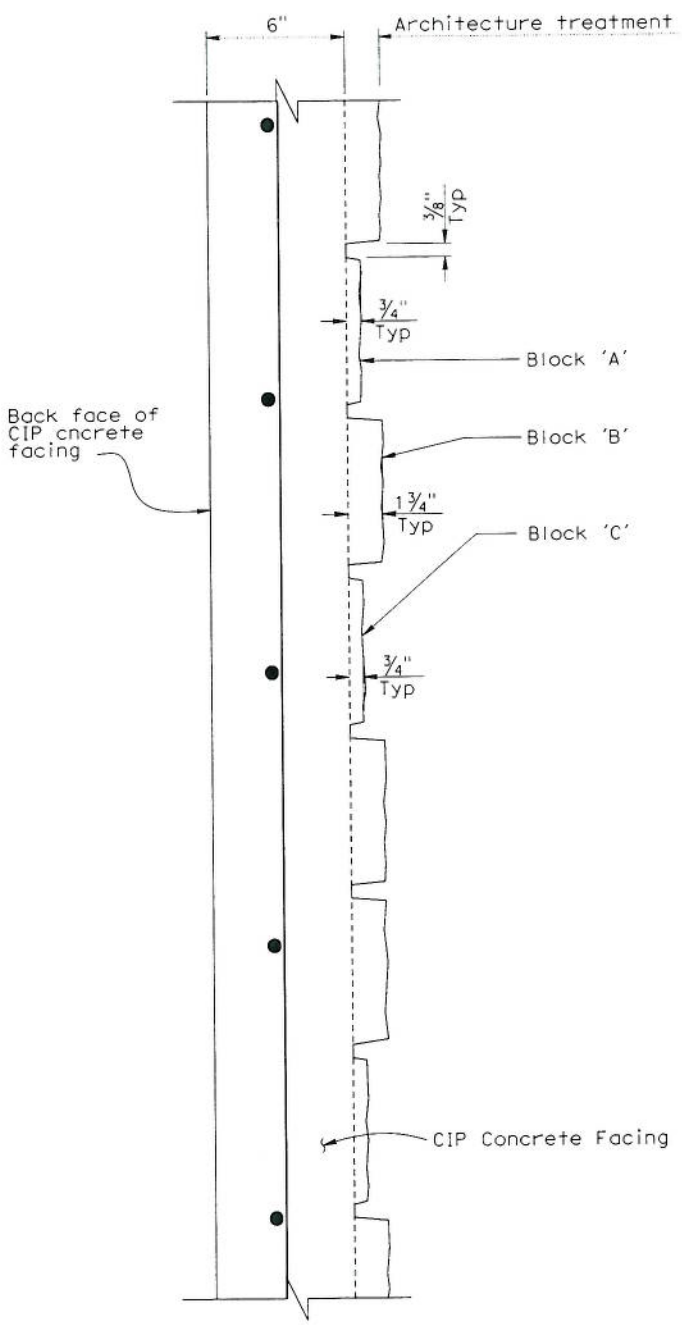

SECTION A-A

No Scale

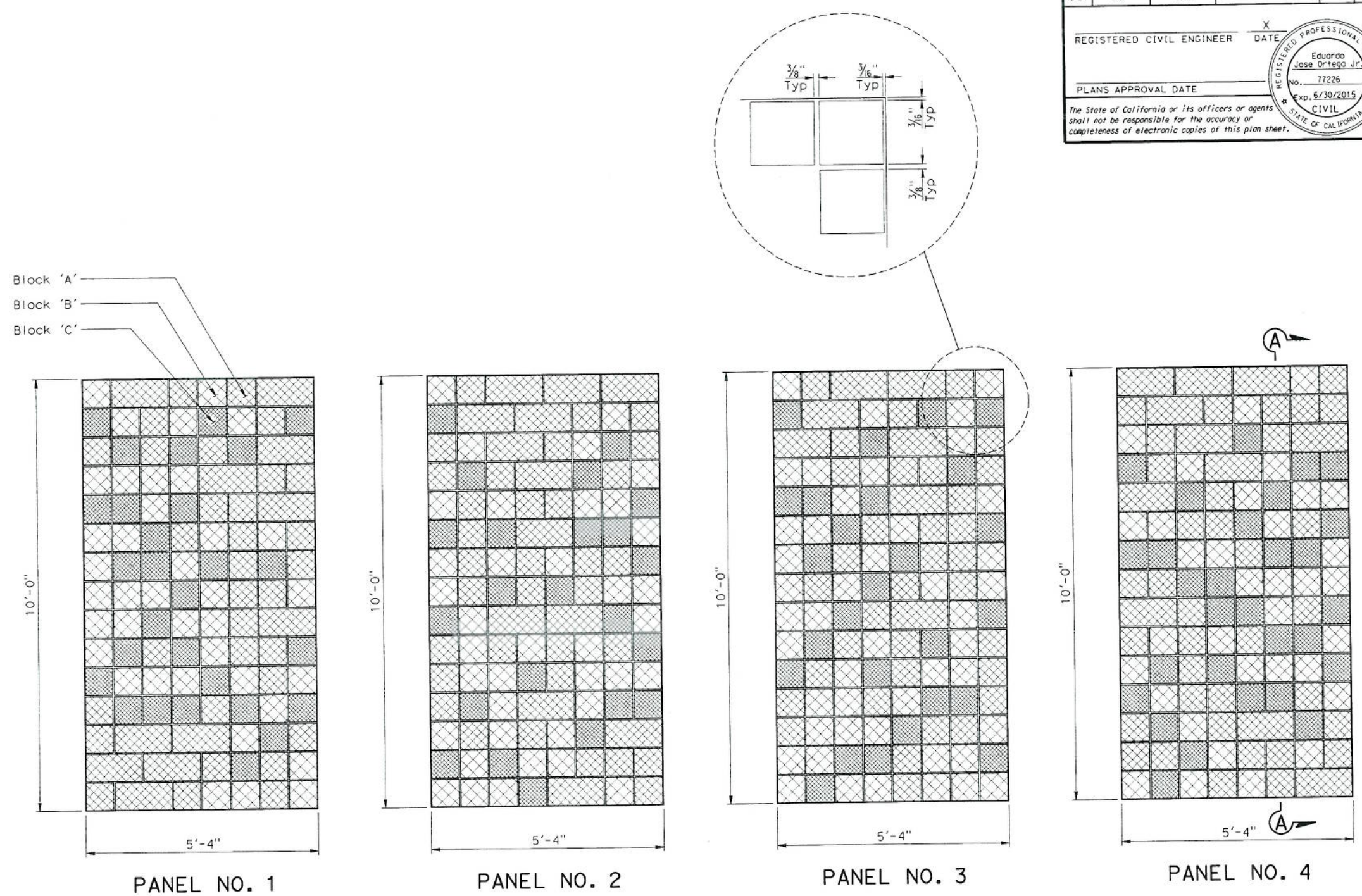

PATTERN ELEVATION

No Scale

PATTERN LEGEND:

BLOCK 'A' : 7 5/8" x 15 5/8" x 3/4" depth or 7 5/8" x 7 5/8" x 3/4" depth split face texture. Color equal to Air Vol Black color #60H59804B

BLOCK 'B' : 7 5/8" x 7 5/8" x 1 3/4" depth split face texture. Color equal to Air Vol Black color #60H607E7

BLOCK 'C' : 7 5/8" x 7 5/8" x 3/4" depth split face texture. Color equal to Air Vol Black color #60B401G

NOTE:

1. Alternate panel layouts so identical panels are not adjacent to each other.
2. Color shall be from Air Black Inc.; Suburban Road, San Luis Obispo, CA 93406; Phone (805)543-1314, or equal.

	BY	CHECKED
DESIGN	E. Ortega Jr. / S. Heath	X
DETAILS	Gerald Dickerson	X
QUANTITIES	X	X

STATE OF CALIFORNIA
DEPARTMENT OF TRANSPORTATION

DIVISION OF ENGINEERING SERVICES
STRUCTURE DESIGN
DESIGN BRANCH 7

BRIDGE NO. X
POST MILE X

RETAINING WALL "J"
ARCHITECTURAL DETAILS

STRUCTURES DESIGN DETAIL SHEET (ENGLISH) (REV. 09-01-10)

ORIGINAL SCALE IN INCHES FOR REDUCED PLANS 0 1 2 3

UNIT: 3592
PROJECT NO. & PHASE: 0500000543 1
CONTRACT NO.: 05-4482U1

DISREGARD PRINTS BEARING EARLIER REVISION DATES

REVISION DATES 8-26-13 12-2-13

SHEET 7 OF X

FILE => rw-j-u-archdet.dgn

USERNAME => s134008 DATE PLOTTED => 10-DEC-2013 TIME PLOTTED => 15:51

DIST	COUNTY	ROUTE	POST MILES TOTAL PROJECT	SHEET No.	TOTAL SHEETS
05	SB	101			

REGISTERED CIVIL ENGINEER X DATE

PLANS APPROVAL DATE

REGISTERED PROFESSIONAL ENGINEER Eduardo Ortega Jr. No. 77226 EXP. 6/30/2015 CIVIL STATE OF CALIFORNIA

The State of California or its officers or agents shall not be responsible for the accuracy or completeness of scanned copies of this plan sheet.

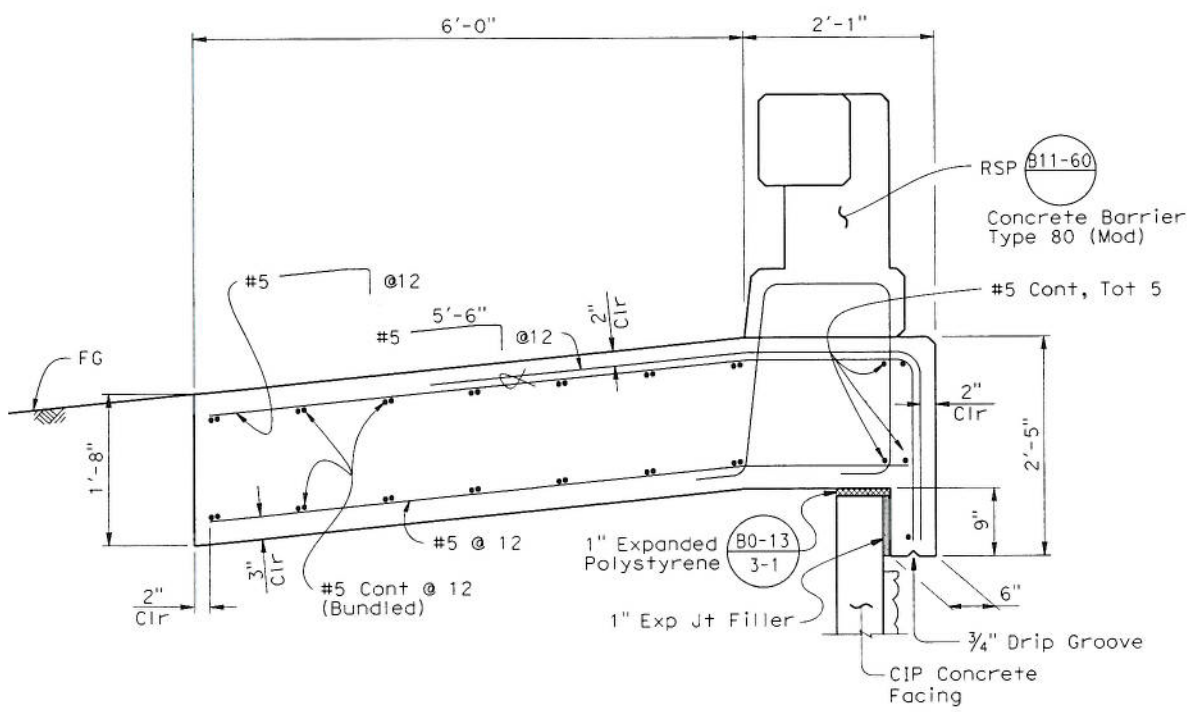

LEGEND:

⌒ Indicates Bundled Bars

CONCRETE BARRIER SLAB

1" = 1'-0"

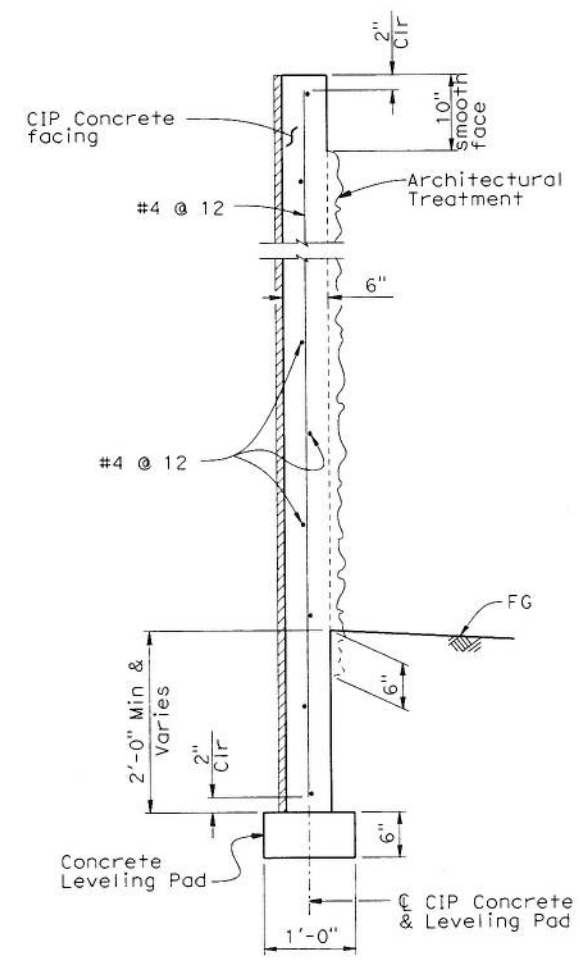

WITHOUT BARRIER

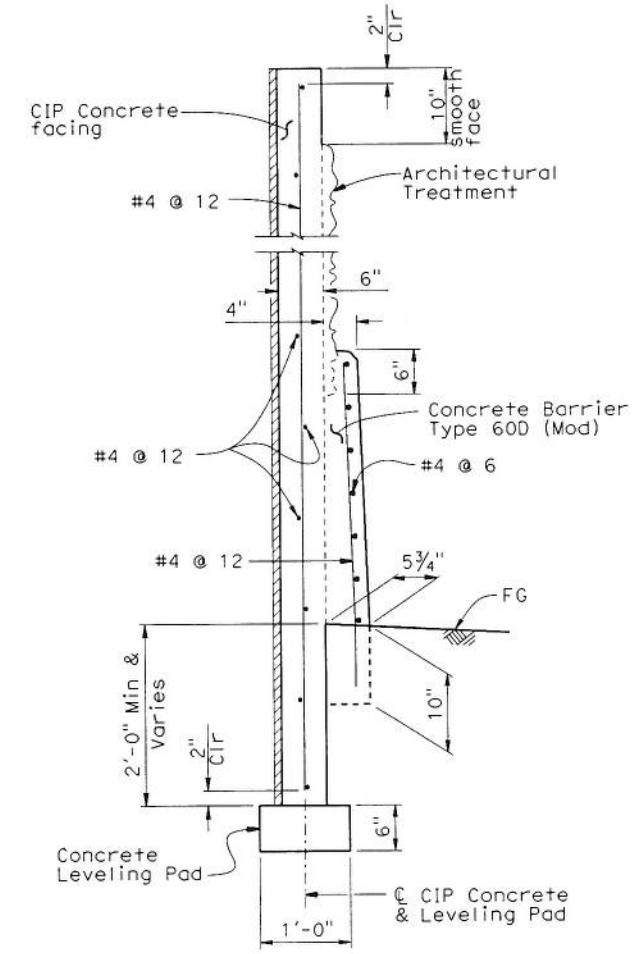

WITH BARRIER

NOTE:

Barrier slab and MSE Retaining Wall not shown.

ELEVATION

1" = 1'-0"

DESIGN	BY Jun Ki Jung	CHECKED X	
DETAILS	BY Bob Huddleston	CHECKED X	
QUANTITIES	BY X	CHECKED X	

STATE OF CALIFORNIA DEPARTMENT OF TRANSPORTATION

DIVISION OF ENGINEERING SERVICES STRUCTURE DESIGN DESIGN BRANCH 7

BRIDGE NO. X

POST MILE 3.07

RETAINING WALL "J"

MISCELLANEOUS DETAILS

STRUCTURES DESIGN DETAIL SHEET (ENGLISH) (REV. 09-01-10)

ORIGINAL SCALE IN INCHES FOR REDUCED PLANS 0 1 2 3

UNIT: 3592

PROJECT NUMBER & PHASE: 0500000543-1 CONTRACT NO.: 05-4482U1

DISREGARD PRINTS BEARING EARLIER REVISION DATES

REVISION DATES 11-06-13 12-02-13

SHEET 8 OF X

FILE => rw-j-u-miscd+01.dgn

USERNAME => s134008 DATE PLOTTED => 10-DEC-2013 TIME PLOTTED => 15:51

M e m o r a n d u m

Flex your power!
Be energy efficient!

To: MANODE KODSUNTIE
Structure Design Branch 7
DIVISION OF ENGINEERING SERVICES

Attn: Jun Jung

Date: January 22, 2014
File: 05-SB-101-2.2/3.3
Linden Casitas
Retaining Wall K
EA 05-4482U1

From: **DEPARTMENT OF TRANSPORTATION**
DIVISION OF ENGINEERING SERVICES
GEOTECHNICAL SERVICES

Subject: Retaining Wall K Foundation Report

Scope of Work

A Foundation Report (FR) for Retaining Wall K is provided for the above referenced project. The project is on State Route 101 in the City of Carpinteria, in southern Santa Barbara County. Improvements are proposed to increase the highway level of service and accessibility, and include replacement of existing bridges and construction of new bridges, retaining walls, sound walls, ramps and frontage roads. Review of published geologic data and previous geotechnical reports, field reconnaissance, and foundation calculations were performed as part of the geotechnical investigation.

The purpose of this report is to document geotechnical conditions and provide foundation recommendations for proposed Retaining Wall K.

Project Description

Route 101 within the project limits is a four-lane divided urban freeway with (2) 12-foot portland cement concrete (PCC) lanes in each direction and asphalt concrete (AC) 5-foot inside shoulders and 8-foot outside shoulders. A landscaped median approximately 40 feet wide with thrie beam barriers facing each direction of travel provides separation between the northbound and southbound lanes.

The purpose of the Linden Casitas project is to improve access and operations on Route 101, reduce local trips, and provide pedestrian and bicycle connectivity. The project includes construction of (3) mainline bridges on Route 101 to replace existing structures at Linden Avenue, Casitas Pass Road, and Carpinteria Creek. Highway access will be modified and added at Linden Avenue and Casitas Pass Road. Extension of Via Real, a frontage road, will also require construction of a new bridge over Carpinteria Creek. Retaining walls and sound walls are also proposed as part of the project.

Retaining Wall K is proposed for a length of approximately 225.6 feet to support the proposed southbound Linden Avenue off-ramp adjacent to the private property to the south, from 20 feet left of "LI2" Station 162+95 to 20 feet left of 165+25. 2:1 slopes in front of and below the wall are proposed for planting and to limit the exposed visible height of the wall. Retaining wall J is proposed for a length of approximately 430 feet to support the other side of the proposed southbound Linden Avenue off-ramp adjacent to 101. Refer to the project plans and specifications for details of construction.

Pertinent Reports and Investigations

The following publications were used to assist in the assessment of site conditions:

1. *Preliminary Geotechnical Report.* Finegan, Michael. EA 05-448200. December 21, 2000.

2. *District Preliminary Geotechnical Report.* De Llamas, Zeke. EA 05-448200, July 30, 2008.

Field Investigation and Laboratory Testing Program

Two mud rotary borings and one CPT sounding were advanced near the retaining wall layout lines to determine the subsurface conditions to be used for foundation design. In-situ soil strength parameters were determined using the Standard Penetration Test (SPT) for cohesionless soils. Consolidated undrained with pore pressure measurement triaxial shear testing was performed on 6 cohesive samples to determine their shear strength, and used to support the results of field methods of determining undrained shear strength of cohesive soils. Laboratory tests were also used to determine the particle size distribution and corrosion potential of representative samples obtained at depth. Refer to Table 1 for a summary of subsurface investigation information.

Table 1. Subsurface Exploration Summary

Boring	*Completion Date*	*Equipment*	*Hammer Type*	*Hammer Efficiency (%)*	*Approximate Ground Elevation (ft)*	*Depth (ft)*
CPT-11-001	6-22-2011	CPT	N/A	N/A	25.2	100.0
RC-10-004	12-1-2010	CS2000	Auto	93	24.5	171.5
RC-13-016	1-30-2013	CME 85	Auto	68	19.2	153.5

Site Geology and Subsurface Conditions

Physical Setting

The project is located in the Carpinteria Valley, a sunken area north of the elevated coastal fault block southeast of the City of Carpinteria. Carpinteria Valley is a low-lying, flat plain comprised of alluvial deposits. Some low-lying areas in the valley are partly submerged under brackish water of the Carpinteria Slough. The plain meets the Pacific Ocean to the southwest, gradually gains elevation to the east as it approaches Rincon and La Granada Mountains, and abuts sharply against the foothills of the Santa Ynez Mountains at its the northern boundary.

A mild coastal climate prevails throughout the year, with marine fog often present in spring and summer months. Nearly all precipitation falls from Pacific storms between October and May, with the majority accumulating in the winter months. Average yearly rainfall is 17.5 inches. The average temperature is 72 degrees Fahrenheit with more than 275 days of sunny weather per year.

Regional Geology

The project area is located in the Transverse Ranges Geomorphic Province. State Route 101 is bordered to the north by the Santa Ynez Mountains and to the south by the Pacific Ocean as it traverses the Carpinteria Valley. Geologic maps and field observations indicate that soils in the valley were deposited in an alluvial environment and consist of normally-consolidated deposits of clay, silt, sand, and gravel.

Groundwater

Open observation wells were installed in borings to observe fluctuations in groundwater levels and determine if groundwater will influence construction and foundation design. Results of the groundwater-monitoring program are summarized in Table 2.

Table 2. Groundwater Elevations

Boring	Date	Depth to Groundwater (ft)	Groundwater Elevation(ft)
RC-10-004	2-9-2011	3.9	20.6
RC-10-004	12-14-2011	5.0	19.5
RC-10-004	2-24-2012	4.8	19.3
RC-10-004	3-22-2012	5.0	19.5
RC-10-004	4-19-2012	4.3	20.2
RC-10-004	7-26-2012	5.4	19.1
RC-10-004	2-5-2013	5.3	19.2
RC-10-004	4-19-2012	4.3	20.2
RC-13-016	2-5-2013	7.7	11.5
RC-13-016	4-5-2013	7.5	11.7

Corrosion Evaluation

The department considers a site to be potentially corrosive to the foundation elements if the following conditions exist for the representative soil and/or water samples taken at the site: minimum resistivity of 1000 ohm-cm or less and/or PH of 5.5 or less. Samples found to be potentially corrosive based on this criteria are sent to the Headquarters Material Laboratory for additional corrosion testing based on chloride and sulphate content.

Soil and water samples were obtained during the subsurface investigation and tested for corrosion potential at the District Materials Laboratory. The results of the corrosion testing are presented in Table 3. Based on the results, soils are not considered corrosive to foundation elements.

Table 3. Corrosion Testing Summary

Boring	*Depth (ft)*	*pH*	*Resistivity ohm-cm*	*Chloride ppm*	*Sulphate ppm*	*Corrosive*
RC-10-004	0.0-3.0	8.1	660	140	870	NO
RC-10-004	25.0-26.5	8.0	2650	-	-	NO
RC-10-004	57.0-59.0	8.2	6330	-	-	NO

Foundation Recommendations

Wire Basket Geosynthetic Wrapped-Face Mechanically Stabilized Earth (MSE) Wall

Due to the potential for large differential settlements to occur and damage rigid cast-in-place concrete elements, a two-stage facing MSE wall is recommended. Calculated settlements of approximately 13 inches at the highest wall and embankment height and approximately 4 inches at the lowest wall height were calculated using Hough's method for cohesionless soils and correlations to consolidation coefficients with Atterburg Limits for cohesive soils. Due to the laterally discontinuous nature of the soil layers and interbedded sands, quality undisturbed samples of cohesive soils within the zone of vertical stress influence were not possible to obtain for consolidation testing.

The first stage facing consists of a geosynthetic wrapped face and a half-gabion wire basket to prevent bulging of the face. 1.5-foot vertical spacing of reinforcing layers and 1.5-foot high wire baskets are recommended. Wrap the tail of the geosynthetic soil reinforcing a minimum of three feet back into the reinforced zone, and provide a minimum of 6" of soil between the wrapped tail and the overlying layer of geosynthetic reinforcing. The second stage facing consists of a cast-in-place reinforced concrete wall with a form liner to provide the desired architectural finish. The cast-in-place wall will be anchored to a barrier slab at the top of the wall. Refer to the project plans and specifications for details of construction.

Structure backfill for the MSE walls must comply with 2010 Standard Specifications Section 47-2.02C for geosynthetic soil reinforcement. Construct the outer three feet of backfill behind the wire baskets and geosynthetic wrapped faces with permeable material complying with Section 47-2.02D. Grade the wall foundations and compact foundation soils to 95% relative compaction per Section 47-2.03B and the project plans. High regional groundwater may infiltrate excavations below or near the groundwater table and/or cause pumping of foundation soils. If the required compaction cannot be obtained in native foundation soils, it is recommended to over-excavate 1.5 feet below the base of foundation elevation and 1 foot beyond the plan limits of the excavation where pumping or groundwater is encountered. Replace the excavated material with Class III permeable material fully encapsulated in Class B3 subgrade enhancement geotextile to prevent contamination with fines and confine the permeable material. Overlap joints in the geotextile a minimum of 3 feet. The permeable mattress will provide a stable working platform from which to begin embankment or MSE wall construction. Pumping of the permeable mattress during construction of the first lifts of backfill may be required to prevent water from saturating the structure backfill or roadway embankment and allow for the required compaction and moisture content specifications to be met.

A 30 day settlement period is recommended to begin after completion of the stage 1 flexible facings at both Retaining Walls J and K prior to beginning construction of the concrete facings to allow for differential settlement to occur. Monitoring of the magnitude of settlement using surface monuments during the settlement period is recommended. If settlement continues to occur after the required 30-day settlement period, contact Geotechnical Design North to assess whether the settlement period should be extended.

Design reinforcing lengths required for internal and external stability of the MSE wall are provided in Table 4. Design reinforcing length is defined from the face of the wire basket to the point of termination in the reinforced soil zone. Sliding resistance under seismic loading is the controlling design case for reinforcing length. Design and analyses of the structure were performed using the computer software MSEW Version 3.0 and checked by hand calculations using the methods and recommendations provided in *FHWA Geotechnical Circular Number 11: Design and Construction of Mechanically Stabilized Earth Walls and Reinforced Soil Slopes, 2009*. Pseudo-static seismic stability of the structure was checked using horizontal ground acceleration equal to 1/3 of the site PGA, or 0.21g. Global stability was checked using Bishop's Method in MSEW with a target factor of safety of 1.3 for static and 1.1 for pseudo-static conditions per AASHTO 2010 LRFD Bridge Design Specifications. Geogrid is the recommended geosynthetic reinforcing type. Metal strip or welded wire reinforcing types are not recommended due to the proximity of the structure to groundwater and potential for corrosion. The required Long Term Design Strength (LTDS) of the geosynthetic reinforcing must be determined by dividing the ultimate tensile strength (T_{ult}) by the appropriate reduction factors according to the Geosynthetic Research Institute Standard Practice GG4a or GG4b. The minimum recommended LTDS is 2500 lb/ft. Place each layer of geosynthetic reinforcing at 1.5-foot vertical spacing at the bottom of each half gabion basket, as detailed in the project plans.

Table 4. Geosynthetic Reinforcing Recommendations

Wall Station (ft)	*Maximum Height (ft)*	*Design Geosynthetic Reinforcing Length, L_e (ft)*
10+00 to 11+25	14.60	15.0
11+25 to 12+25.60	9.33	10.0

Construction Considerations

Loose soils and groundwater will be encountered during foundation preparation and excavations. Refer to the Foundation Recommendations Section and project plans and specifications for details and limits of the permeable mattress to provide a stable working platform. Construction of the permeable mattress outside of the limits shown on the plans may be required if pumping soils and/or groundwater make it impossible to achieve the required compaction outside of the designated limits. Contact Geotechnical Design North for additional recommendations in the field if required.

Additional Information

Standard Special Provision S5-280, "Project Information", discloses to bidders and contractors a list of pertinent information available for their inspection prior to bid opening. The following is an excerpt from SSP S5-280 disclosing information originating from Geotechnical Services. Items listed to be included in the Information Handout will be provided in Acrobat (.pdf) format to the Addressee of this report via electronic mail.

Data and information attached with the project plans are:

A. Log of Test Borings.

Data and information included in the Information Handout provided to the Bidders and Contractors are:

A. Foundation Report for the Retaining Wall K dated January 22, 2014.

If you have any questions or comments, please contact Ryan Turner at (805) 549-3750, or Michael Finegan at (805) 549-3194.

RYAN TURNER, P.E., G.E.
Transportation Engineer Civil
Geotechnical Design – North
Branch D

MICHAEL S. FINEGAN, P.E.
Branch Chief
Geotechnical Design – North
Branch D

c: Job File / Branch D Records
Structure Construction RE Pending File (email RE_pending_file@dot.ca.gov)
Craig Whitten / DES Office Engineer
Andrew Tan / PCE
Eric Karlson/ DME

LIST OF ATTACHMENTS

Vicinity Map	Attachment 1
Geologic Map and Legend	Attachment 2
Structure Plans	Attachment 3

INDEX OF SHEETS

STATE OF CALIFORNIA
DEPARTMENT OF TRANSPORTATION

PROJECT PLANS FOR CONSTRUCTION ON
STATE HIGHWAY
IN SANTA BARBARA COUNTY
IN CARPINTERIA
FROM 0.4 KM SOUTH OF CARPINTERIA CREEK BRIDGE
TO 0.5 KM NORTH OF LINDEN AVENUE OVERCROSSING

TO BE SUPPLEMENTED BY STANDARD PLANS DATED JULY 2004

Dist	COUNTY	ROUTE	KILOMETER POST TOTAL PROJECT	SHEET NO.	TOTAL SHEETS
05	SB	101	3.5/5.5		

LOCATION MAP

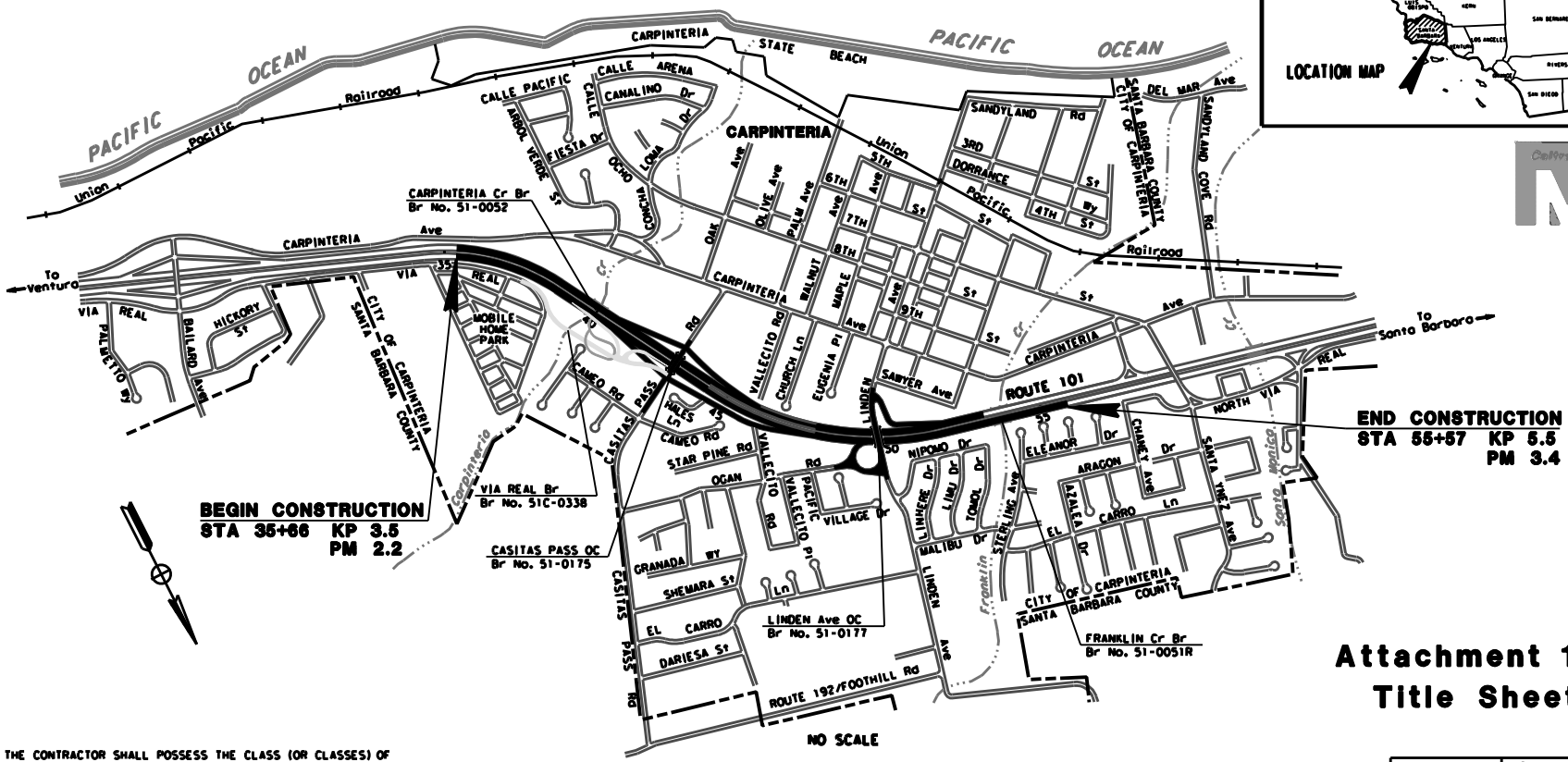

THE CONTRACTOR SHALL POSSESS THE CLASS (OR CLASSES) OF LICENSE AS SPECIFIED IN THE "NOTICE TO CONTRACTORS."

PROJECT MANAGER: DAVID BEARD
DESIGN ENGINEER: KARI BHANA

Attachment 1
Title Sheet

CONTRACT No. 05-4482U0
CU 06233 | EA 4482U0

BORDER LAST REVISED 3/1/2007 | CALTRANS WEB SITE IS: HTTP://WWW.DOT.CA.GOV/ | RELATIVE BORDER SCALE IS IN MILLIMETERS 0 20 40 60 80 | USERNAME => RUSER | DGN FILE => SREQUEST | DATE PLOTTED => 09-14-10 | TIME PLOTTED => 09:42

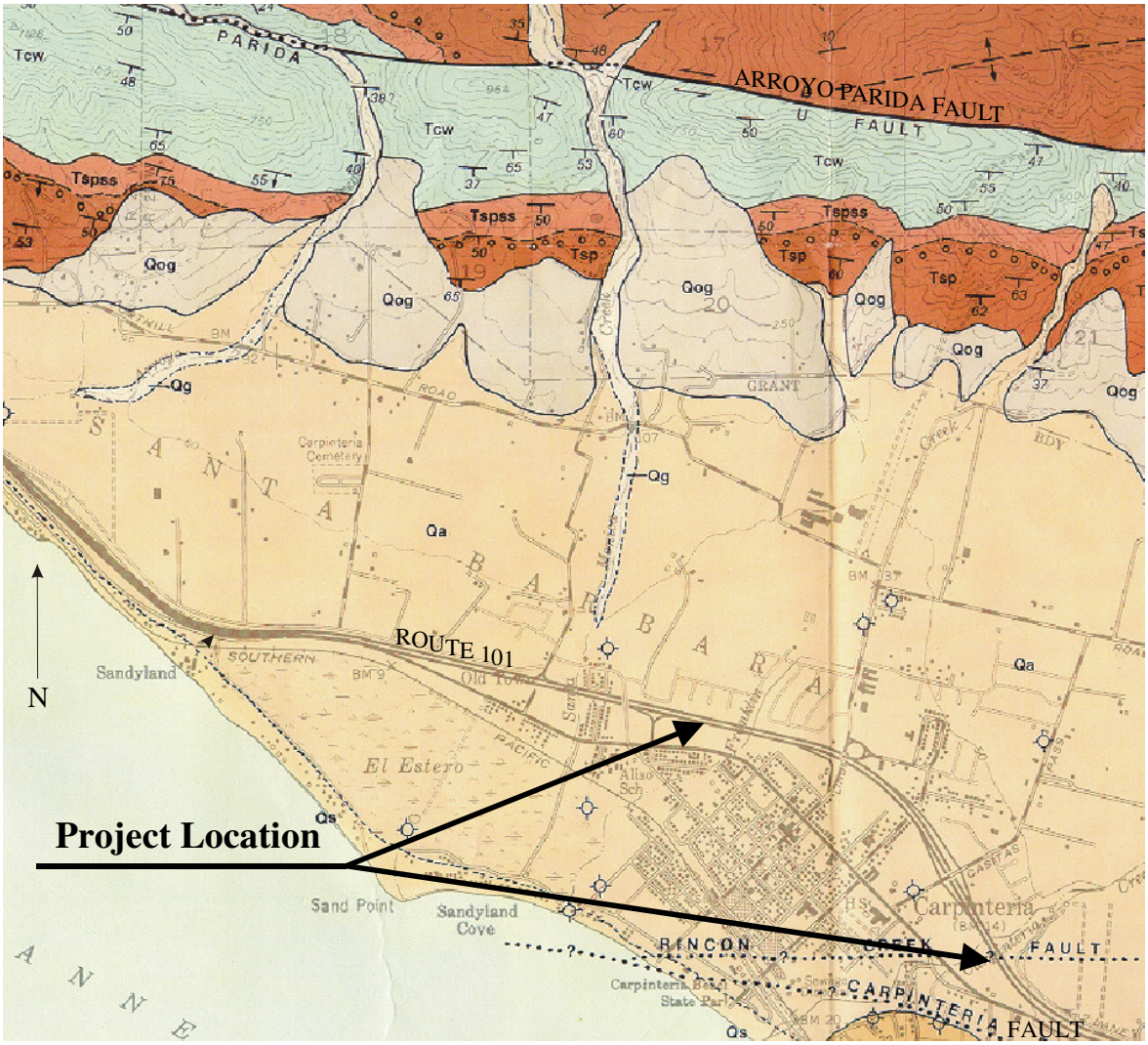

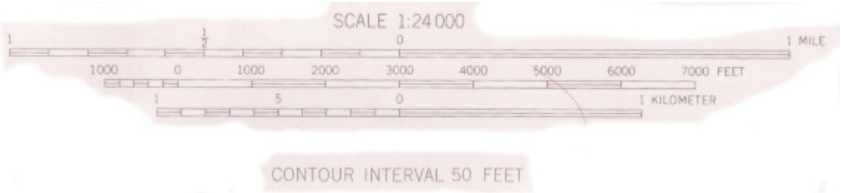

PART OF:

GEOLOGIC MAP OF THE CARPINTERIA QUADRANGLE
BY THOMAS W. DIBBLEE, JR., 1986

Geologic Map

05-SB-101-2.1/3.4
05-448201
Attachment 2

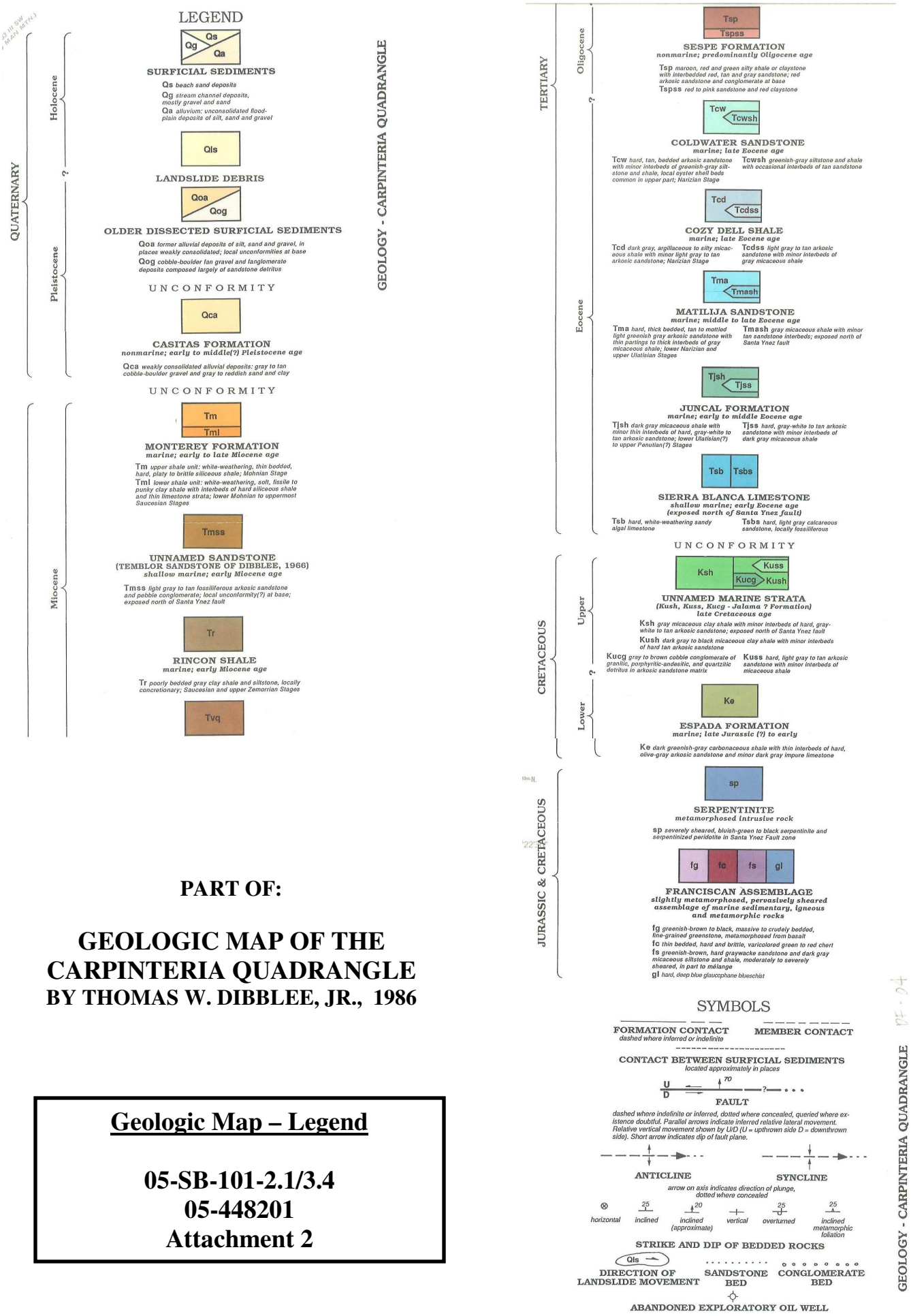

PART OF:

GEOLOGIC MAP OF THE CARPINTERIA QUADRANGLE

BY THOMAS W. DIBBLEE, JR., 1986

Geologic Map – Legend

05-SB-101-2.1/3.4
05-448201
Attachment 2

DIST	COUNTY	ROUTE	POST MILES TOTAL PROJECT	SHEET No.	TOTAL SHEETS
05	SB	101			

REGISTERED CIVIL ENGINEER X DATE

PLANS APPROVAL DATE

REGISTERED PROFESSIONAL ENGINEER Eduardo Ortega Jr. No. 77226 Exp. 6/30/2015 CIVIL STATE OF CALIFORNIA

The State of California or its officers or agents shall not be responsible for the accuracy or completeness of electronic copies of this plan sheet.

Notes:

1. For Ret Wall "J" details, see "RETAINING WALL J" plans.
2. Continue Concrete Barrier Type 80 (Mod) and Concrete Barrier Slab to sidewalk at Linden Ave.

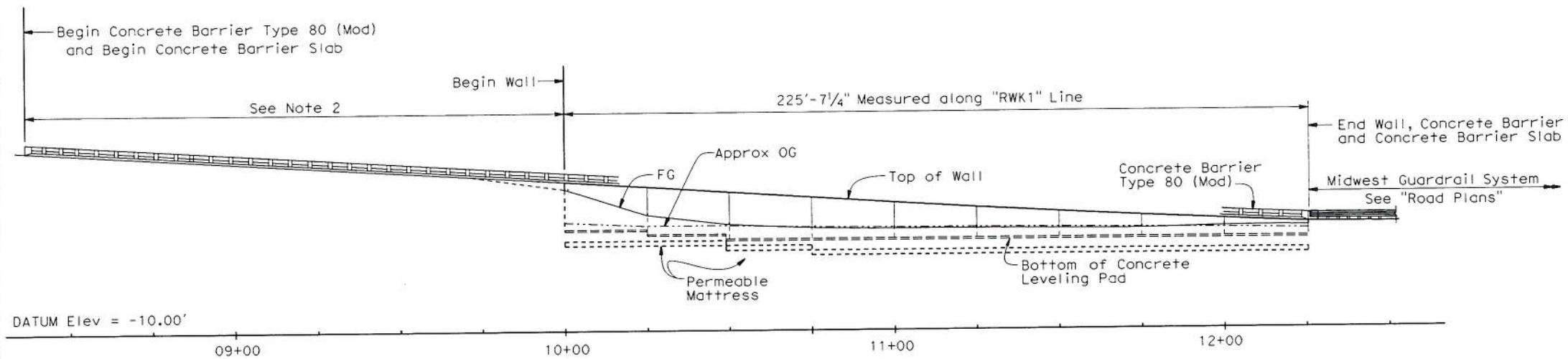

DEVELOPED MIRROR ELEVATION

1" = 20'

INDEX TO PLANS

SHEET NO.	TITLE
1.	GENERAL PLAN
2.	STRUCTURE PLAN
3.	FOUNDATION PLAN
4.	MSE RETAINING WALL DETAILS
5.	PERMEABLE MATTRESS DETAILS
6.	MISCELLANEOUS DETAILS
7.	ARCHITECTURAL DETAILS

CURVE DATA

① "LI2" Line	② "RWJ1" Line	③ "RWJ1" Line	④ "RWK1" Line	⑤ "RWK1" Line	⑥ "RWK1" Line	⑦ "LINDEN1" LINE
R = 1000.00'	R = 15.00'	R = 1016.00'	R = 980.00'	R = 980.00'	R = 60.00'	R = 1400.50'
Δ = 16°53'47"	Δ = 105°7'49"	Δ = 16°54'13"	Δ = 12°35'41"	Δ = 05°00'24"	Δ = 49°56'01"	Δ = 49°50'55"
T = 148.53'	T = 19.59'	T = 150.97'	T = 108.15'	T = 42.85'	T = 27.94'	T = 650.81'
L = 294.90'	L = 27.52'	L = 299.75'	L = 215.42'	L = 85.64'	L = 52.29'	L = 1218.47'

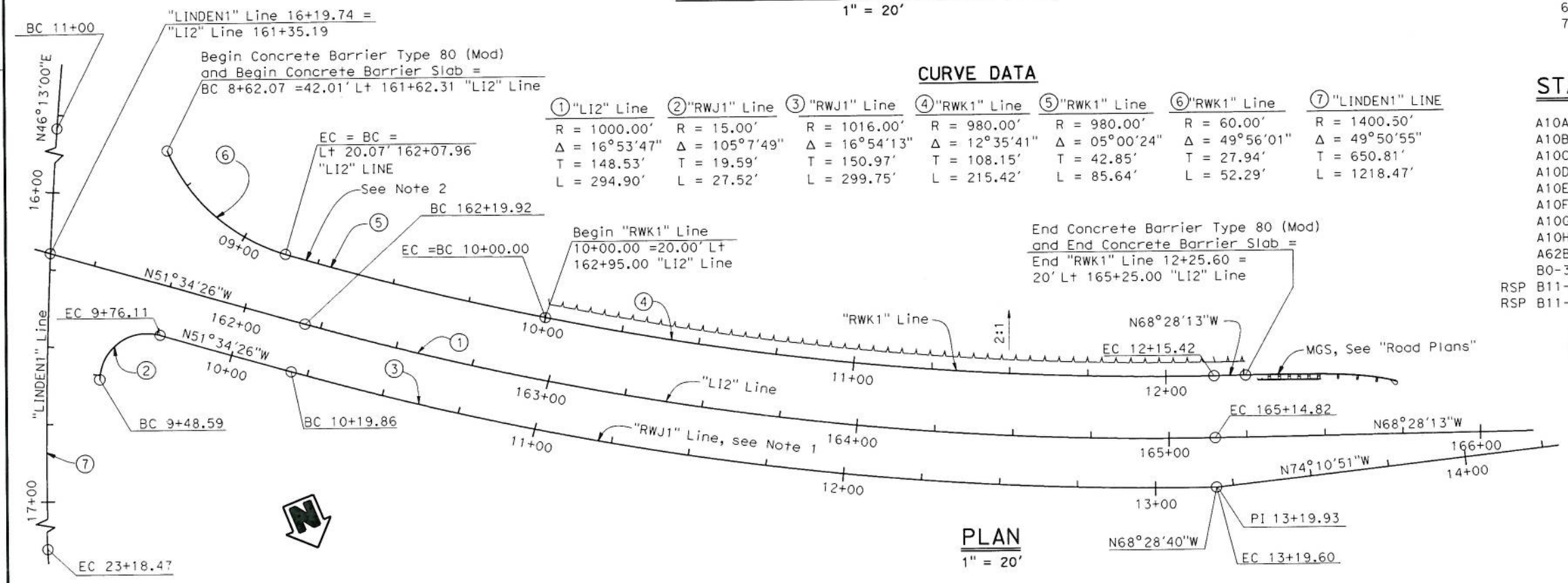

PLAN

1" = 20'

STANDARD PLANS DATED 2010

A10A	ACRONYMS AND ABBREVIATIONS (SHEET 1 OF 2)
A10B	ACRONYMS AND ABBREVIATIONS (SHEET 2 OF 2)
A10C	LINES AND SYMBOLS (SHEET 1 OF 3)
A10D	LINES AND SYMBOLS (SHEET 2 OF 3)
A10E	LINES AND SYMBOLS (SHEET 3 OF 3)
A10F	LEGEND - SOIL (SHEET 1 OF 2)
A10G	LEGEND - SOIL (SHEET 2 OF 2)
A10H	LEGEND - ROCK
A62B	LIMITS OF PAYMENT FOR EXCAVATION AND BACKFILL
B0-3	BRIDGE DETAILS
RSP B11-60	CONCRETE BARRIER TYPE 80 (SHEET 1 OF 2)
RSP B11-60	CONCRETE BARRIER TYPE 80 (SHEET 2 OF 2)

STANDARD PLAN SHEET No.

DETAIL No.

X DESIGN ENGINEER	DESIGN	BY E.Ortega/J. Jung	CHECKED M. Kodsuntie	LOAD & RESISTANCE FACTOR DESIGN	LIVE LOADING: 240 lbs per sf
	DETAILS	BY Y.Feng/B.Huddleston	CHECKED M. Kodsuntie	LAYOUT	BY Eduardo Ortega Jr/J. Jung
	QUANTITIES	BY X	CHECKED X	SPECIFICATIONS	BY X

CHECKED J. Yolton/ M. Kodsuntie; PLANS AND SPECS COMPARED X

ORIGINAL SCALE IN INCHES FOR REDUCED PLANS 0 1 2 3

STATE OF CALIFORNIA DEPARTMENT OF TRANSPORTATION

DIVISION OF ENGINEERING SERVICES STRUCTURE DESIGN DESIGN BRANCH 7

BRIDGE NO. X

POST MILE 3.09

RETAINING WALL "K"

GENERAL PLAN

UNIT: 3592

PROJECT NO. & PHASE: 0500000543-1

CONTRACT NO.: 05-4482U1

DISREGARD PRINTS BEARING EARLIER REVISION DATES

REVISION DATES 2-1-13 10-24-13 11-13-13

SHEET 1 OF 7

FILE => rw-k-a-gp1.dgn

STRUCTURES DESIGN GENERAL PLAN SHEET (ENGLISH) (REV.09-01-10)

USERNAME => s134008 DATE PLOTTED => 10-DEC-2013 TIME PLOTTED => 15:51

DIST	COUNTY	ROUTE	POST MILES TOTAL PROJECT	SHEET No.	TOTAL SHEETS
05	SB	101			

REGISTERED CIVIL ENGINEER X DATE

PLANS APPROVAL DATE

REGISTERED PROFESSIONAL ENGINEER Eduardo Ortega Jr. No. 77226 Exp. 6/30/2015 CIVIL STATE OF CALIFORNIA

The State of California or its officers or agents shall not be responsible for the accuracy or completeness of electronic copies of this plan sheet.

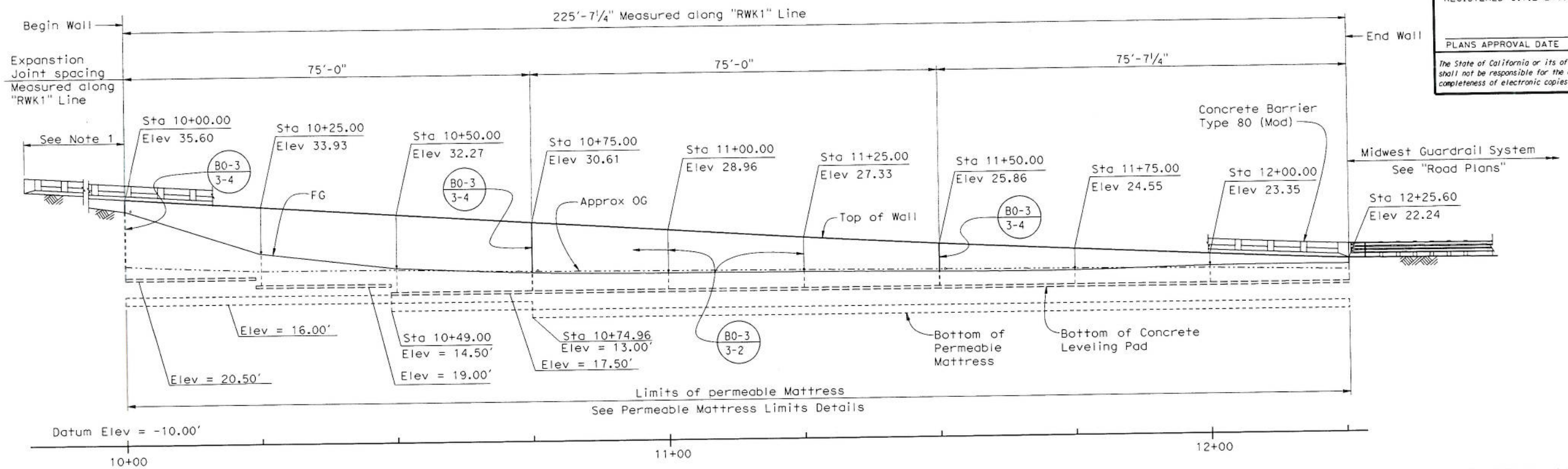

DEVELOPED MIRROR ELEVATION

1" = 10'

GENERAL NOTES

DESIGN: AASHTO LRFD Bridge Design Specifications 4th edition and the California Amendments preface dated November 2011

LIVE LOAD: Ft = 54 kips on barrier

REINFORCED CONCRETE: f'c = 3.6 ksi
fy = 60 ksi
n = 8

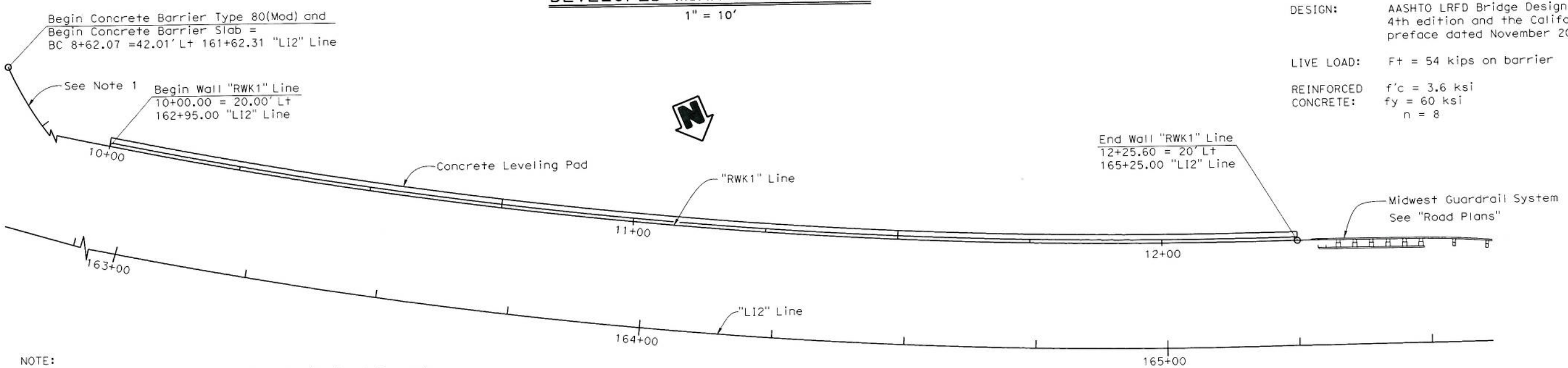

NOTE:

1. Continue Concrete Barrier Type 80 (Mod) and Concrete Barrier Slab to sidewalk at Linden Ave.

PLAN

1" = 10'

	BY	CHECKED
DESIGN	Eduardo Ortega Jr.	X
DETAILS	Y.Feng / B.Huddleston	X
QUANTITIES	X	X

STATE OF CALIFORNIA
DEPARTMENT OF TRANSPORTATION

DIVISION OF ENGINEERING SERVICES
STRUCTURE DESIGN
DESIGN BRANCH 7

BRIDGE NO. X
POST MILE 3.09

RETAINING WALL "K"
STRUCTURE PLAN

STRUCTURES DESIGN DETAIL SHEET (ENGLISH) (REV. 09-01-10)

ORIGINAL SCALE IN INCHES FOR REDUCED PLANS 0 1 2 3

UNIT: 3592
PROJECT NO. & PHASE: 0500000543-1
CONTRACT NO.: 05-448201

DISREGARD PRINTS BEARING EARLIER REVISION DATES

REVISION DATES: 8-8-13 10-24-13 10-30-13

SHEET 2 OF 7

FILE => rw-k-b-sp.dgn

USERNAME => s134008 DATE PLOTTED => 10-DEC-2013 TIME PLOTTED => 15:51

DIST	COUNTY	ROUTE	POST MILES TOTAL PROJECT	SHEET No.	TOTAL SHEETS
05	SB	101			

REGISTERED CIVIL ENGINEER X DATE

PLANS APPROVAL DATE

REGISTERED PROFESSIONAL ENGINEER Eduardo Ortega Jr. No. 77226 Exp. 6/30/2015 CIVIL STATE OF CALIFORNIA

The State of California or its officers or agents shall not be responsible for the accuracy or completeness of scanned copies of this plan sheet.

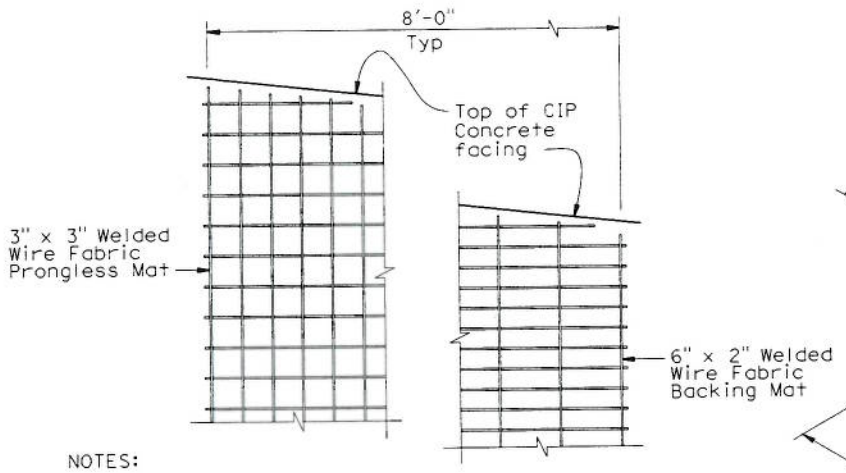

NOTES:

1. 3" x 3" welded wire fabric mat and 6" x 2" welded wire fabric backing mat shall be cut where necessary.
2. Continuous filter fabric shall be either cut or folded where necessary.
3. Not all welded wire mat and filter fabric shown.

HALF GABION CAGE CUT DETAIL

NO SCALE

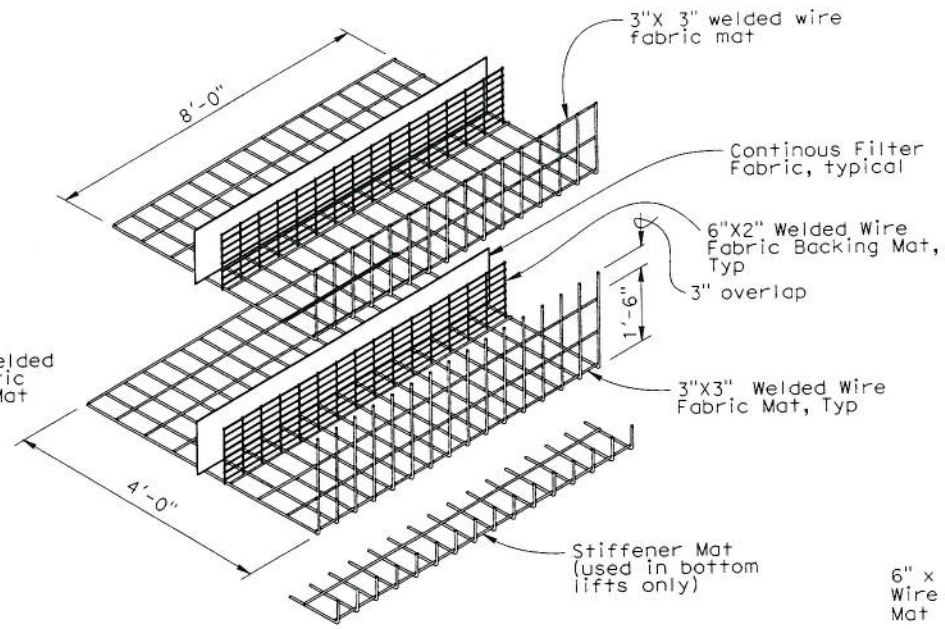

NOTE: For connecting individual components, see Standard Plans D100A and D100B.

HALF GABION CAGE DETAIL

NO SCALE

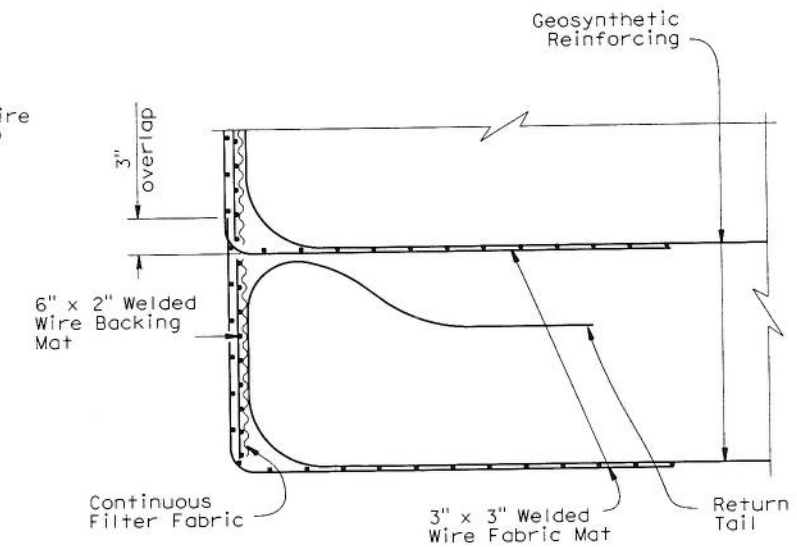

NOTE: Clean crushed rock not shown.

HALF GABION CAGE INSTALLATION DETAIL

NO SCALE

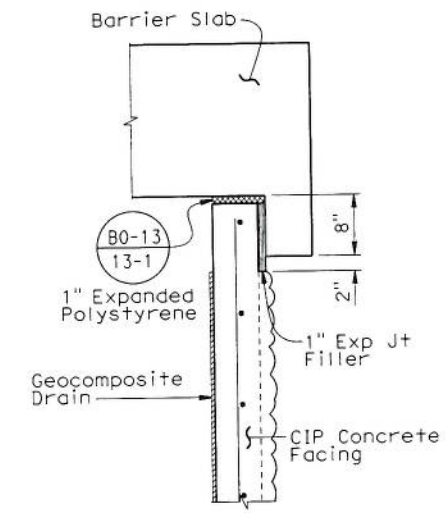

DETAIL C

1" = 1'-0"

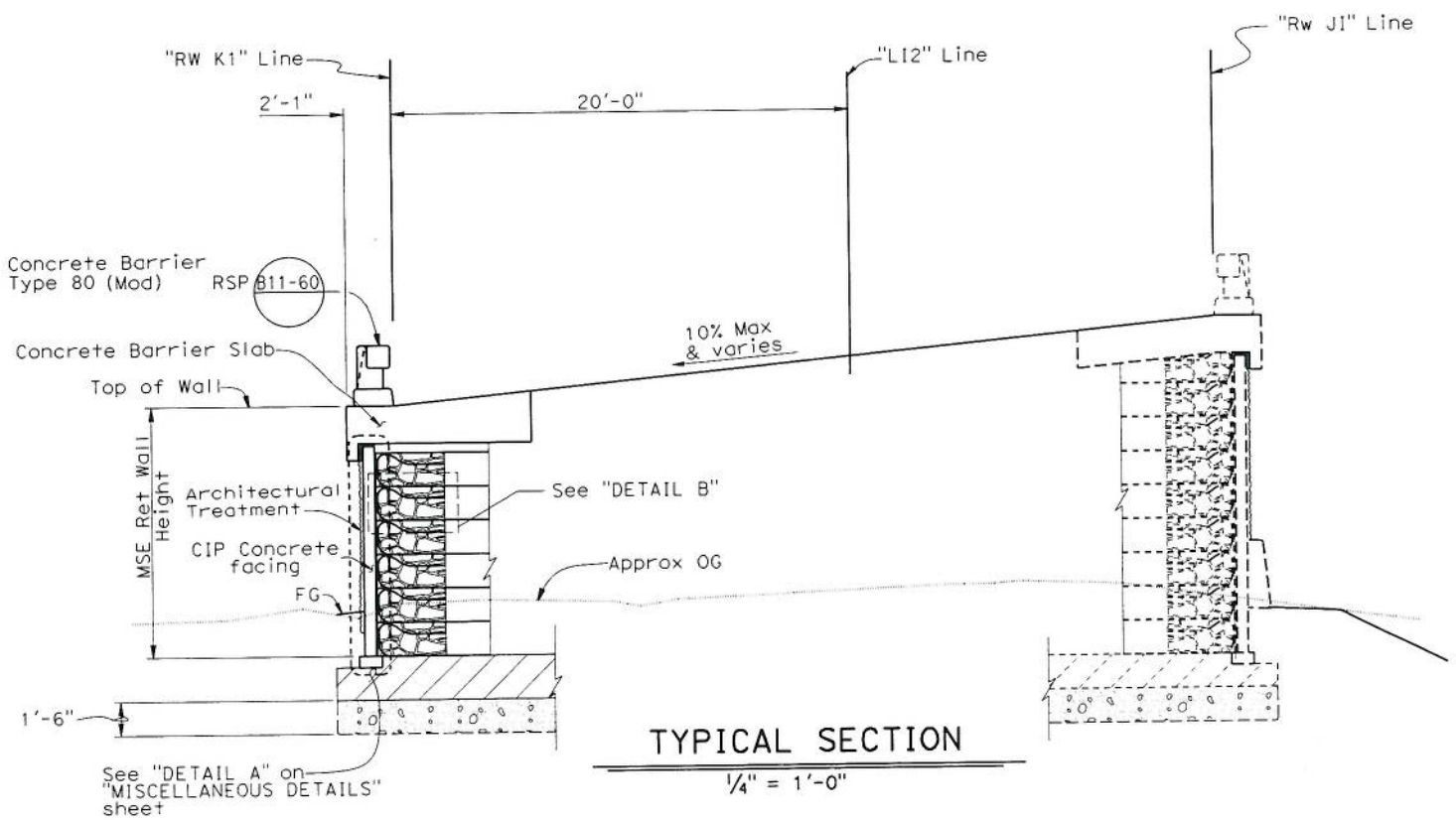

TYPICAL SECTION

1/4" = 1'-0"

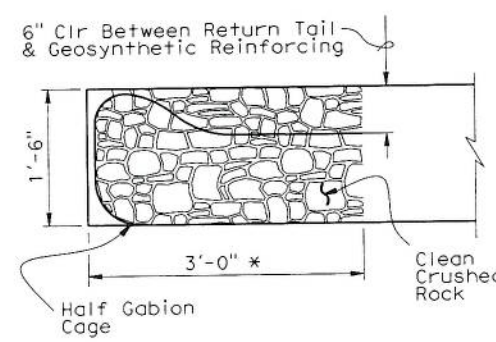

DETAIL B

1" = 1'-0"

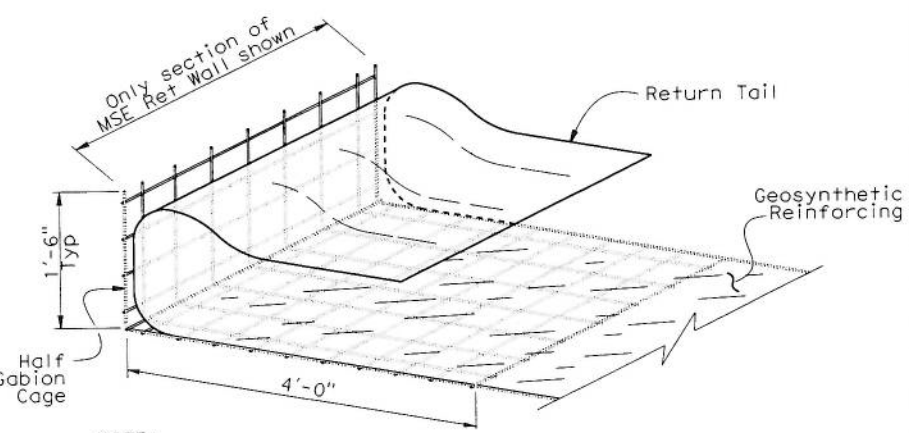

NOTE:

1. Clean crushed Rock not shown.

* Limits of clean crushed Rock and Return Tail.

DESIGN	BY Jun Jung	CHECKED X
DETAILS	BY Yingjue Feng	CHECKED X
QUANTITIES	BY X	CHECKED X

ORIGINAL SCALE IN INCHES FOR REDUCED PLANS 0 1 2 3

STATE OF CALIFORNIA DEPARTMENT OF TRANSPORTATION

DIVISION OF ENGINEERING SERVICES STRUCTURE DESIGN DESIGN BRANCH 7

BRIDGE NO. X

POST MILE 3.07

RETAINING WALL "K"

MSE RETAINING WALL DETAILS

UNIT: 3592

PROJECT NUMBER & PHASE: 0500000543-1

CONTRACT NO.: 05-4482U1

DISREGARD PRINTS BEARING EARLIER REVISION DATES

REVISION DATES 10-21-13

SHEET 4 OF 7

FILE => rw-k-g-rwdt01.dgn

USERNAME => s134008 DATE PLOTTED => 10-DEC-2013 TIME PLOTTED => 15:51

DIST	COUNTY	ROUTE	POST MILES TOTAL PROJECT	SHEET No.	TOTAL SHEETS
05	SB	101			

REGISTERED CIVIL ENGINEER X DATE

PLANS APPROVAL DATE

REGISTERED PROFESSIONAL ENGINEER Eduardo Ortega Jr. No. 77226 Exp. 6/30/2015 CIVIL STATE OF CALIFORNIA

The State of California or its officers or agents shall not be responsible for the accuracy or completeness of scanned copies of this plan sheet.

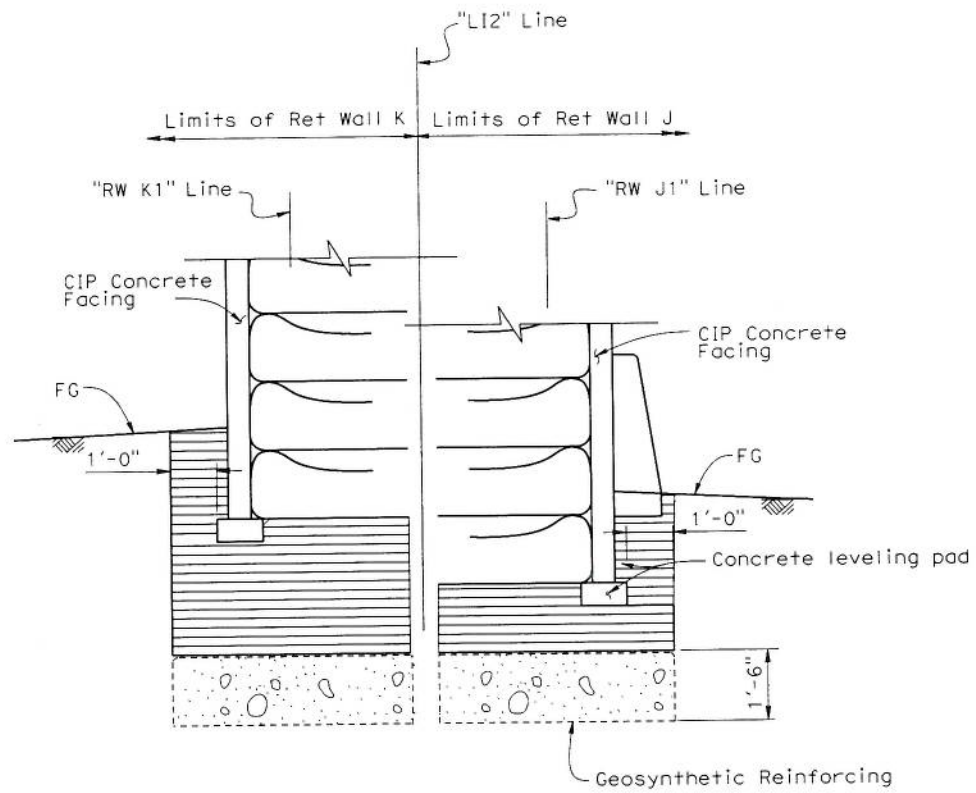

SECTION A-A

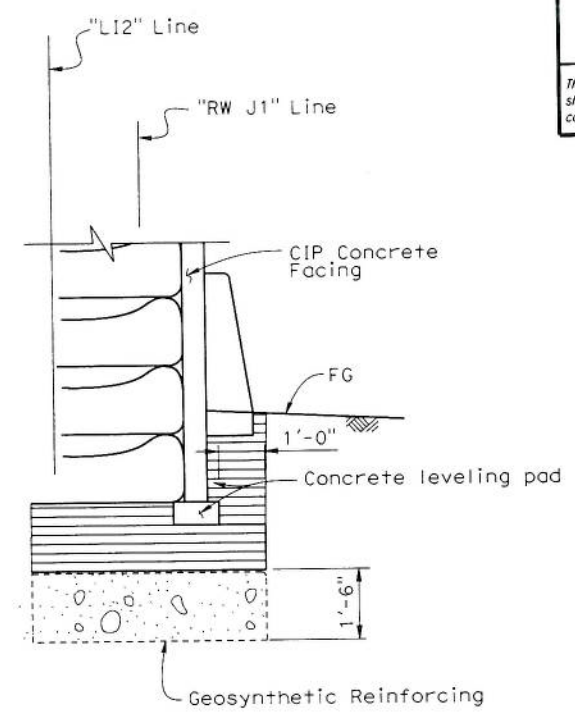

SECTION B-B

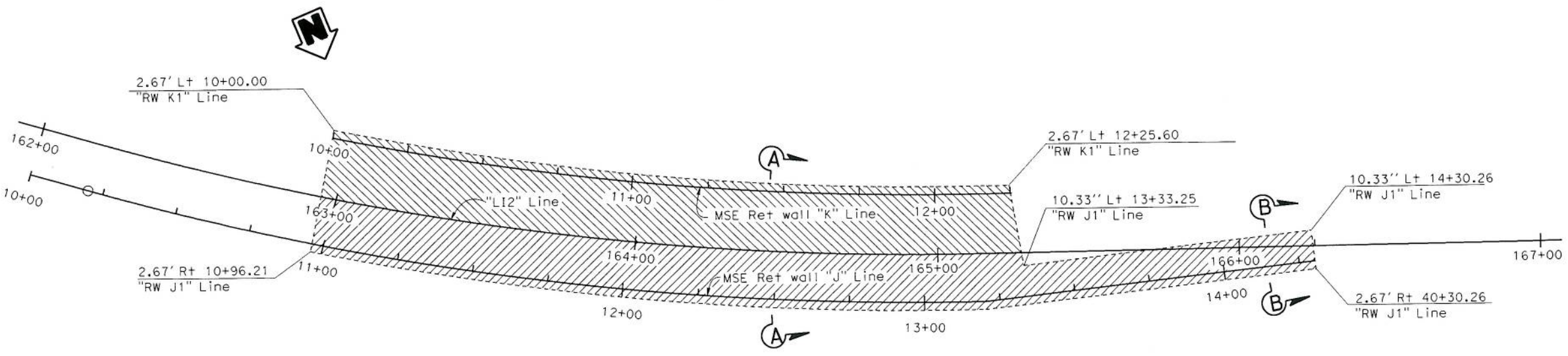

PLAN

LEGEND:

- Indicates Permeable Mattress
- Indicates Retaining Wall J permeable mattress and structure backfill
- Indicates Retaining Wall K permeable mattress and structure backfill
- Indicates structure backfill

LIMITS OF PERMEABLE MATTRESS AND STRUCTURE BACKFILL

No scale

	BY	CHECKED
DESIGN	Jun Jung	M. Kodsuntie
DETAILS	Yingjue Feng	M. Kodsuntie
QUANTITIES	X	X

ORIGINAL SCALE IN INCHES FOR REDUCED PLANS 0 1 2 3

STATE OF CALIFORNIA DEPARTMENT OF TRANSPORTATION

DIVISION OF ENGINEERING SERVICES STRUCTURE DESIGN DESIGN BRANCH 7

BRIDGE NO. X

POST MILE 3.07

RETAINING WALL "K"

PERMEABLE MATTRESS DETAILS

UNIT: 3592

PROJECT NUMBER & PHASE: 0500000543-1

CONTRACT NO.: 05-4482U1

DISREGARD PRINTS BEARING EARLIER REVISION DATES

REVISION DATES 11/13/13 12/2/13

SHEET 5 OF 7

FILE => rw-k-h-pmld.dgn

USERNAME => s134008 DATE PLOTTED => 10-DEC-2013 TIME PLOTTED => 15:51

DIST	COUNTY	ROUTE	POST MILES TOTAL PROJECT	SHEET No.	TOTAL SHEETS
05	SB	101			

REGISTERED CIVIL ENGINEER X DATE

PLANS APPROVAL DATE

REGISTERED PROFESSIONAL ENGINEER Eduardo Ortega Jr. No. 77226 Exp. 6/30/2015 CIVIL STATE OF CALIFORNIA

The State of California or its officers or agents shall not be responsible for the accuracy or completeness of scanned copies of this plan sheet.

NOTE:

1. Transition starts with 8'-0" section at sta 8+62.07 and ends with 6'-0" section at sta 8+82.07.

LEGEND:

Indicates Bundled Bars

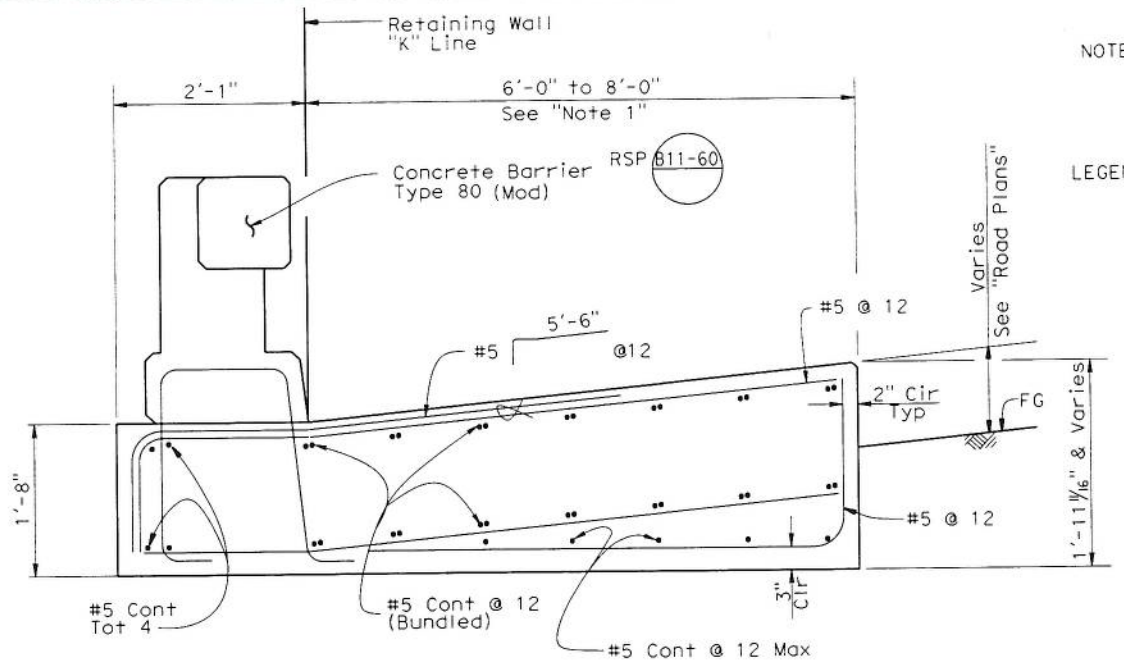

CONCRETE BARRIER SLAB, TYPE B

1" = 1'-0"

Sta 08+62.07 to Sta 10+00.00

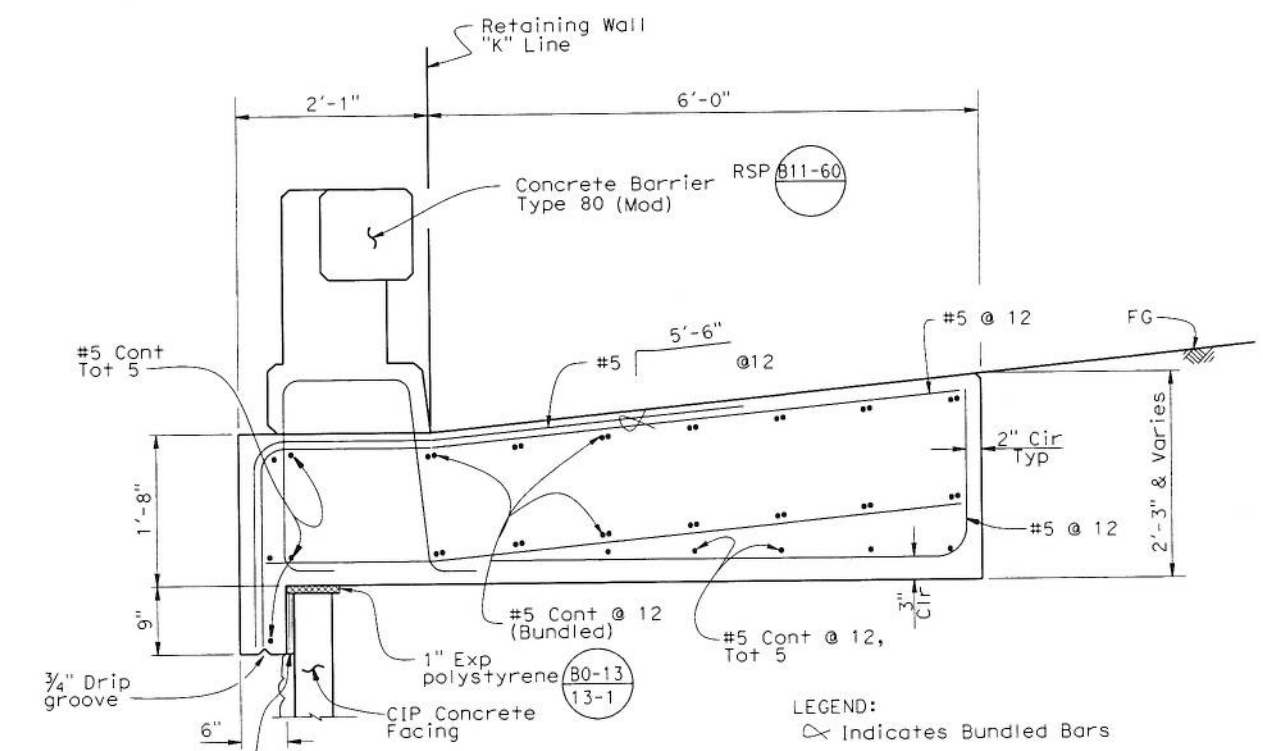

LEGEND:

Indicates Bundled Bars

CONCRETE BARRIER SLAB, TYPE A

1" = 1'-0"

Sta 10+00.00 to Sta 12+25.60

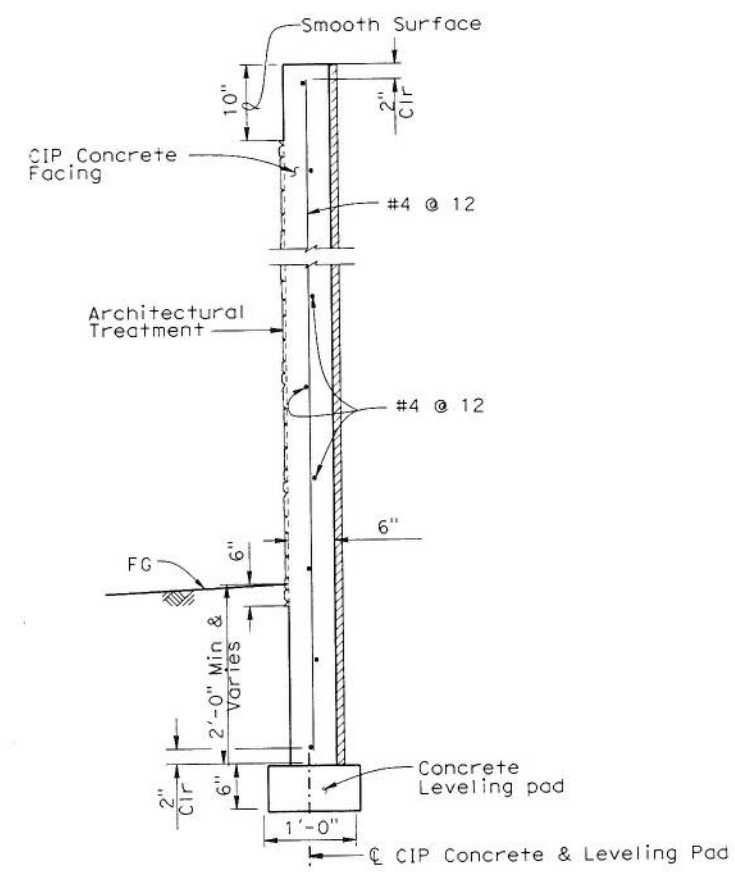

NOTE: Architectural treatment not shown, Barrier slab not shown. MSE Ret wall not shown.

DETAIL A

1" = 1'-0"

	BY	CHECKED
DESIGN	Jun Jung	X
DETAILS	Yingjue Feng	X
QUANTITIES	X	X

ORIGINAL SCALE IN INCHES FOR REDUCED PLANS 0 1 2 3

STATE OF CALIFORNIA DEPARTMENT OF TRANSPORTATION

DIVISION OF ENGINEERING SERVICES STRUCTURE DESIGN DESIGN BRANCH 7

BRIDGE NO. X

POST MILE 3.07

RETAINING WALL "K"

MISCELLANEOUS DETAILS

UNIT: 3592

PROJECT NUMBER & PHASE: 0500000543-1

CONTRACT NO.: 05-4482U1

DISREGARD PRINTS BEARING EARLIER REVISION DATES

REVISION DATES 10-31-13 12-4-13

SHEET 6 OF 7

FILE => rw-k-1-misdt01 -.dgn

USERNAME => S134008 DATE PLOTTED => 10-DEC-2013 TIME PLOTTED => 15:51

DIST	COUNTY	ROUTE	POST MILES TOTAL PROJECT	SHEET No.	TOTAL SHEETS
05	SB	101			

REGISTERED CIVIL ENGINEER X DATE

PLANS APPROVAL DATE

REGISTERED PROFESSIONAL ENGINEER Eduardo Jose Ortega Jr. No. 77226 Exp. 6/30/2015 CIVIL STATE OF CALIFORNIA

The State of California or its officers or agents shall not be responsible for the accuracy or completeness of electronic copies of this plan sheet.

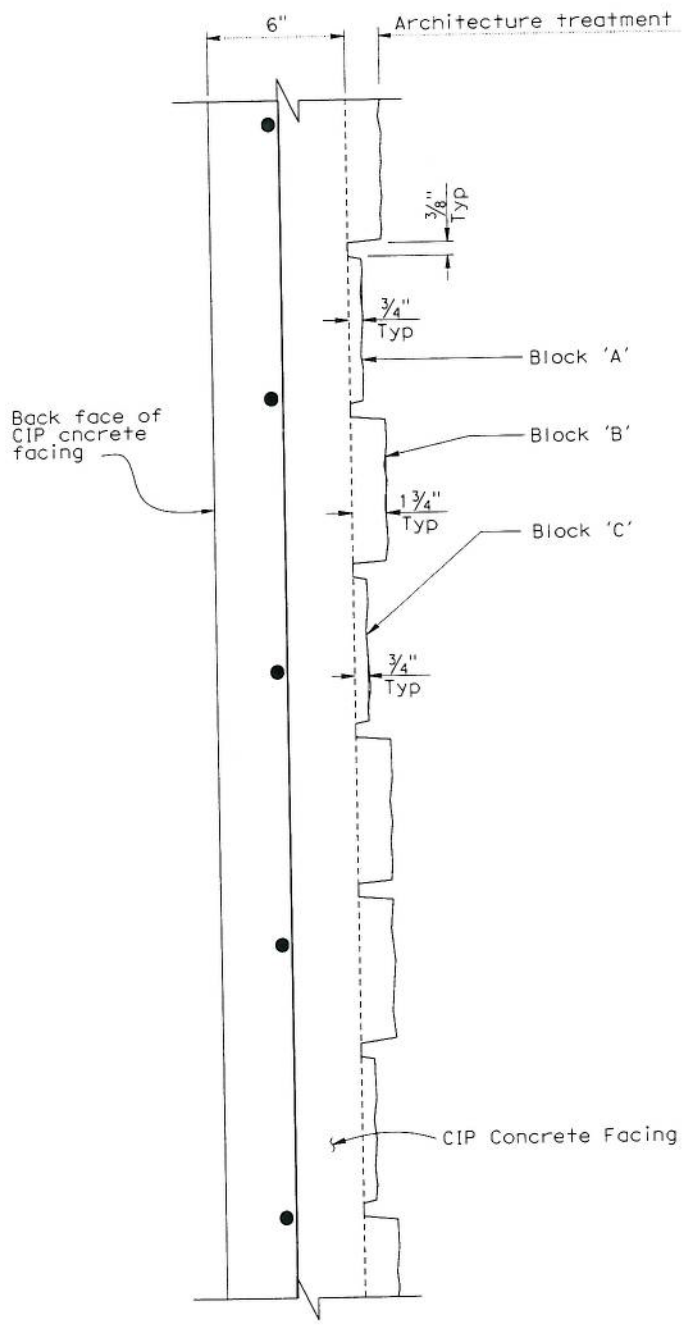

SECTION A-A

No Scale

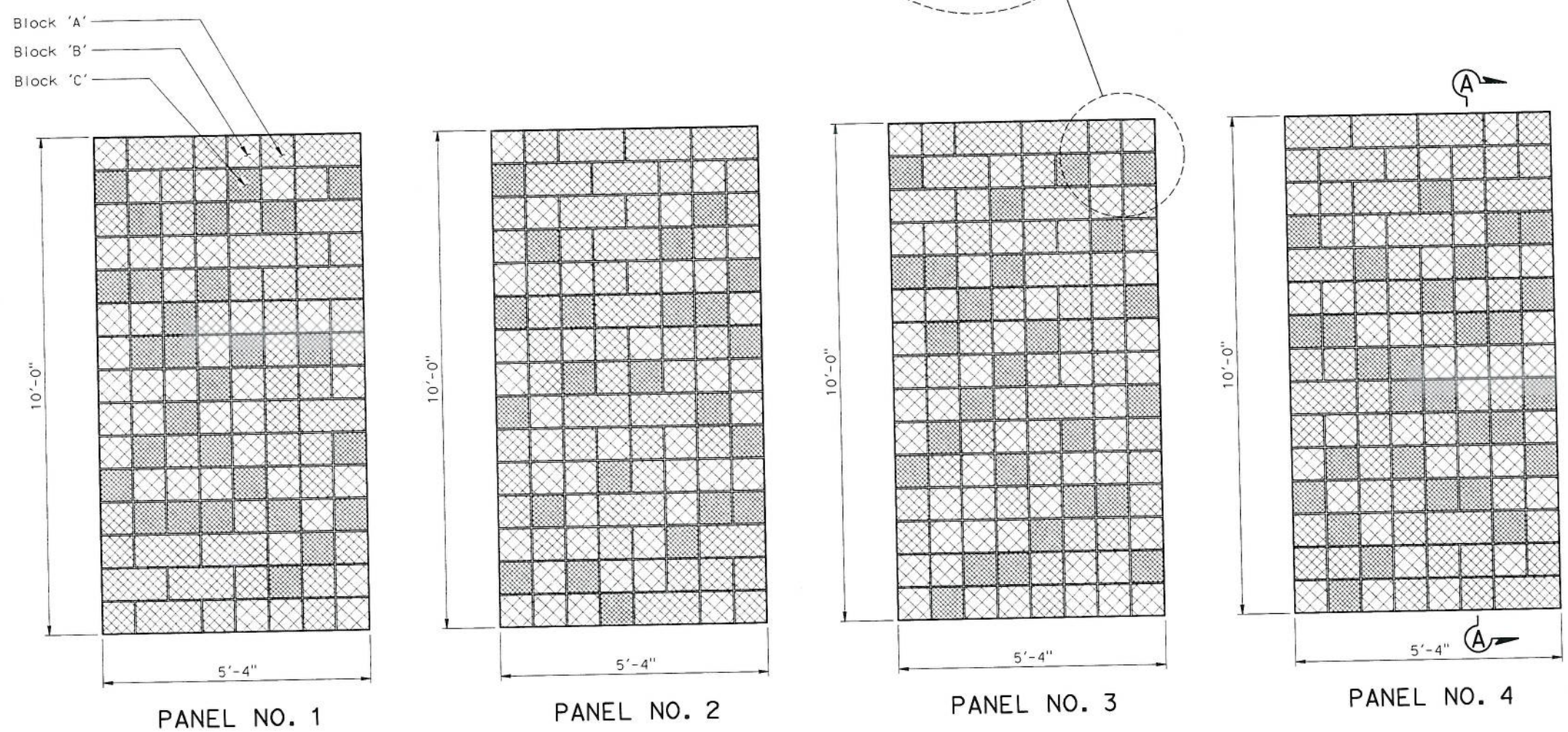

PATTERN ELEVATION

No Scale

PATTERN LEGEND:

BLOCK 'A' : 7 5/8" x 15 5/8" x 3/4" depth or 7 5/8" x 7 5/8" x 3/4" depth split face texture. Color equal to Air Vol Black color #60H59804B

BLOCK 'B' : 7 5/8" x 7 5/8" x 1 3/4" depth split face texture. Color equal to Air Vol Black color #60H607E7

BLOCK 'C' : 7 5/8" x 7 5/8" x 3/4" depth split face texture. Color equal to Air Vol Black color #60B401G

NOTE:

1. Alternate panel layouts so identical panels are not adjacent to each other.
2. Color shall be from Air Black Inc.; Suburban Road, San Luis Obispo, CA 93406; Phone (805)543-1314, or equal.

	BY	CHECKED
DESIGN	E. Ortega Jr. / S. Heath	X
DETAILS	Gerald Dickerson	X
QUANTITIES	X	X

ORIGINAL SCALE IN INCHES FOR REDUCED PLANS 0 1 2 3

STATE OF CALIFORNIA DEPARTMENT OF TRANSPORTATION

DIVISION OF ENGINEERING SERVICES STRUCTURE DESIGN DESIGN BRANCH 7

BRIDGE NO. X

POST MILE X

RETAINING WALL "K"

ARCHITECTURAL DETAILS

UNIT: 3592

PROJECT NO. & PHASE: 0500000543 1

CONTRACT NO.: 05-4482U1

DISREGARD PRINTS BEARING EARLIER REVISION DATES

REVISION DATES 8-26-13 12-2-13

SHEET 7 OF 7

STRUCTURES DESIGN DETAIL SHEET (ENGLISH) (REV. 09-01-10)

FILE => rw-k-u-archdet.dgn

USERNAME => s134008 DATE PLOTTED => 10-DEC-2013 TIME PLOTTED => 15:51

M e m o r a n d u m

Flex your power!
Be energy efficient!

To: MANODE KODSUNTIE
Structure Design Branch 7
DIVISION OF ENGINEERING SERVICES

Date: January 22, 2014
File: 05-SB-101-2.2/3.3
Linden Casitas
Retaining Wall L
EA 05-4482U1

From: **DEPARTMENT OF TRANSPORTATION**
DIVISION OF ENGINEERING SERVICES
GEOTECHNICAL SERVICES

Subject: Retaining Wall L Foundation Report

Scope of Work

A Foundation Report (FR) for Retaining Wall L is provided for the above referenced project. The project is on State Route 101 in the City of Carpinteria, in southern Santa Barbara County. Improvements are proposed to increase the highway level of service and accessibility, and include replacement of existing bridges and construction of new bridges, retaining walls, sound walls, ramps and frontage roads. Review of published geologic data and previous geotechnical reports, field reconnaissance, and foundation calculations were performed as part of the geotechnical investigation.

The purpose of this report is to document geotechnical conditions and provide foundation recommendations for proposed Retaining Wall L.

Project Description

Route 101 within the project limits is a four-lane divided urban freeway with (2) 12-foot portland cement concrete (PCC) lanes in each direction and asphalt concrete (AC) 5-foot inside shoulders and 8-foot outside shoulders. A landscaped median approximately 40 feet wide with thrie beam barriers facing each direction of travel provides separation between the northbound and southbound lanes.

The purpose of the Linden Casitas project is to improve access and operations on Route 101, reduce local trips, and provide pedestrian and bicycle connectivity. The project includes construction of (3) mainline bridges on Route 101 to replace existing structures at Linden Avenue, Casitas Pass Road, and Carpinteria Creek. Highway access will be modified and added at Linden Avenue and Casitas Pass Road. Extension of Via Real, a frontage road, will also require construction of a new bridge over Carpinteria Creek. Retaining walls and sound walls are also proposed as part of the project.

Retaining Wall L is proposed for a length of 75.0 ft at the intersection of Ogan Road and Linden Avenue to provide grade separation as Linden Avenue gains elevation as it approaches the

proposed overcrossing structure. The wall begins 46.12 feet right of OGAN2 Station 162+38 and ends 38 feet right of LINDEN1 Station 22+85. The maximum retained height will be approximately 8 feet, with an embankment slope of 2:1 in front of the wall. Type 80 concrete barrier will be constructed on top of the retaining wall.

Pertinent Reports and Investigations

The following publications were used to assist in the assessment of site conditions:

1. *Preliminary Geotechnical Report.* Finegan, Michael. EA 05-448200. December 21, 2000.

2. *District Preliminary Geotechnical Report.* De Llamas, Zeke. EA 05-448200, July 30, 2008.

Field Investigation and Laboratory Testing Program

Two mud rotary borings were advanced near the retaining wall layout line to determine the subsurface conditions to be used for foundation design. In-situ soil strength parameters were determined using the Standard Penetration Test (SPT) for cohesionless soils. Laboratory tests were used to determine the particle size distribution and corrosion potential of representative samples obtained at depth. Refer to Table 1 for a summary of subsurface investigation information.

Table 1. Subsurface Exploration Summary

Boring	*Completion Date*	*Equipment*	*Hammer Type*	*Hammer Efficiency (%)*	*Approximate Ground Elevation (ft)*	*Depth (ft)*
RC-10-005	12-8-2010	CS2000	Auto	93	26.4	152.0
RC-11-012	2-2-2011	CS2000	Auto	93	25.8	91.5

Site Geology and Subsurface Conditions

Physical Setting

The project is located in the Carpinteria Valley, a sunken area north of the elevated coastal fault block southeast of the City of Carpinteria. Carpinteria valley is a low-lying, flat plain comprised of alluvial deposits. Some low-lying areas in the valley are partly submerged under brackish water of the Carpinteria slough. The plain meets the Pacific Ocean to the southwest, gradually gains elevation to the east as it approaches Rincon and La Granada Mountains, and abuts sharply against the foothills of the Santa Ynez Mountains at its the northern boundary.

A mild coastal climate prevails throughout the year, with marine fog often present in spring and summer months. Nearly all precipitation falls from Pacific storms between October and May, with the majority accumulating in the winter months. Average yearly rainfall is 17.5 inches. The average temperature is 72 degrees Fahrenheit with more than 275 days of sunny weather per year.

Regional Geology

The project area is located in the Transverse Ranges Geomorphic Province. State Route 101 is bordered to the north by the Santa Ynez Mountains and to the south by the Pacific Ocean as it traverses the Carpinteria Valley. Geologic maps and field observations indicate that soils in the valley were deposited in an alluvial environment and consist of normally-consolidated deposits of clay, silt, sand, and gravel.

Groundwater

An open observation well was installed in boring RC-10-005 to observe fluctuations in groundwater levels and determine if groundwater will influence construction and foundation design. Results of the groundwater-monitoring program are summarized in Table 2.

Table 2. Groundwater Elevations

Boring	Date	Depth to Groundwater (ft)	Groundwater Elevation(ft)
RC-10-005	2-24-2012	7.3	19.1
RC-10-005	4-19-2012	6.7	19.7

Corrosion Evaluation

The department considers a site to be potentially corrosive to the foundation elements if the following conditions exist for the representative soil and/or water samples taken at the site: minimum resistivity of 1000 ohm-cm or less and/or PH of 5.5 or less.

Soil and water samples were obtained during the subsurface investigation and tested for corrosion potential at the District Materials Laboratory. The results of the corrosion testing are presented in Table 3. Based on the results, soils are not considered corrosive to foundation elements.

Table 3. Corrosion Testing Summary

Boring	*Depth (ft)*	*pH*	*Resistivity ohm-cm*	*Chloride ppm*	*Sulphate ppm*	*Corrosive*
RC-10-005	2.0-4.0	8.4	1260	-	-	NO
RC-10-005	47.0-49.0	8.4	2350	-	-	NO
RC-10-005	87-0-89.0	8.6	3560	-	-	NO

Foundation Recommendations

Standard Plan Type 5 Retaining Wall on Spread Footing

Standard plan cast-in-place cantilevered Type 5 retaining wall on spread footings are the recommended structure and foundation types. The depth of foundation embedment shall provide a minimum of 4 feet of horizontal cover from the top of the toe side of the footing to the face of the embankment slope. The net bearing pressure and effective footing width for the service 1 limit state load provided in the 2010 Revised Standard Plan B3-4A were used to evaluate foundation settlement. Extreme limit state bearing stresses were evaluated at a horizontal seismic earth pressure coefficient equal to 0.2. Settlement is expected to be immediate in the cohesionless soils underlying the proposed retaining wall. Calculated differential settlements are within tolerable limits for cast-in-place cantilevered concrete retaining walls.

Table 4. Retaining Wall Foundation Recommendations

Wall Station (ft)	*Design Height (ft)*	*Bottom of Footing Elevation (ft)*	*Footing Width (ft)*	*Strength Limit Factored Bearing Resistance (psf)* Φq_N Φ=0.45	*Extreme Limit Factored Bearing Resistance (psf)* Φq_N Φ=1.0	*Strength Limit Factored Gross Uniform Bearing Stress (psf)* q_0	*Extreme Limit Factored Gross Uniform Bearing Stress(psf)* q_0	*Service Limit State Net Bearing Stress(psf)* q'_0	*Calculated Settlement at Net Bearing Pressure (inches)*
20+50 to 20+75	8.0	27.65	8.50	10,200	21,100	3000	3200	2100	1.56
20+75 to 21+00	6.0	27.65	7.75	10,600	19,700	2900	3000	1800	1.34
21+00 to 21+25	4.0	27.65	7.25	10,500	18,500	2400	2700	1400	1.10

Construction Considerations

Loose soils may be encountered during foundation excavations. Temporary slopes or shoring will be required to support the excavation to construct the retaining wall foundations. Groundwater is not expected to be encountered in foundation excavations.

Additional Information

Standard Special Provision S5-280, "Project Information", discloses to bidders and contractors a list of pertinent information available for their inspection prior to bid opening. The following is an excerpt from SSP S5-280 disclosing information originating from Geotechnical Services. Items listed to be included in the Information Handout will be provided in Acrobat (.pdf) format to the Addressee of this report via electronic mail.

Data and information attached with the project plans are:

A. Log of Test Borings.

Data and information included in the Information Handout provided to the Bidders and Contractors are:

A. Foundation Report for the Retaining Wall dated January 22, 2014.

If you have any questions or comments, please contact Ryan Turner at (805) 549-3750, or Michael Finegan at (805) 549-3194.

RYAN TURNER, P.E., G.E.
Transportation Engineer Civil
Geotechnical Design – North
Branch D

MICHAEL S. FINEGAN, P.E.
Branch Chief
Geotechnical Design – North
Branch D

c: Job File / Branch D Records
Structure Construction RE Pending File (email RE_pending_file@dot.ca.gov)
Craig Whitten / DES Office Engineer
Andrew Tan / PCE
Eric Karlson/ DME

LIST OF ATTACHMENTS

Vicinity Map	Attachment 1
Geologic Map and Legend	Attachment 2
Structure Plans	Attachment 3

INDEX OF SHEETS

STATE OF CALIFORNIA
DEPARTMENT OF TRANSPORTATION

PROJECT PLANS FOR CONSTRUCTION ON
STATE HIGHWAY
IN SANTA BARBARA COUNTY
IN CARPINTERIA
FROM 0.4 KM SOUTH OF CARPINTERIA CREEK BRIDGE
TO 0.5 KM NORTH OF LINDEN AVENUE OVERCROSSING

TO BE SUPPLEMENTED BY STANDARD PLANS DATED JULY 2004

Dist	COUNTY	ROUTE	KILOMETER POST TOTAL PROJECT	SHEET NO.	TOTAL SHEETS
05	SB	101	3.5/5.5		

LOCATION MAP

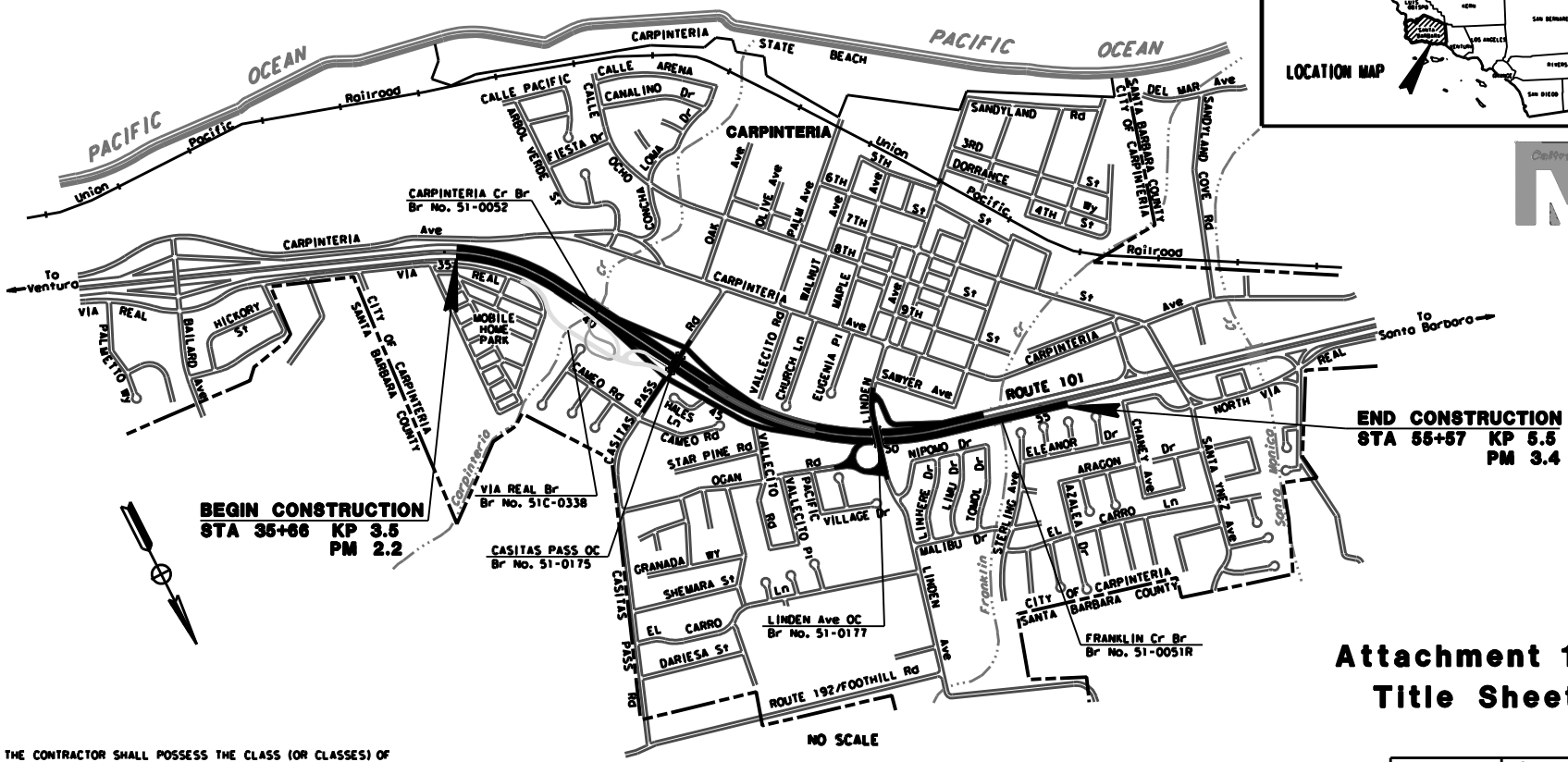

THE CONTRACTOR SHALL POSSESS THE CLASS (OR CLASSES) OF LICENSE AS SPECIFIED IN THE "NOTICE TO CONTRACTORS."

PROJECT MANAGER: DAVID BEARD
DESIGN ENGINEER: KARI BHANA

Attachment 1
Title Sheet

CONTRACT No. 05-4482U0
CU 06233 | EA 4482U0

BORDER LAST REVISED 3/1/2007 | CALTRANS WEB SITE IS: HTTP://WWW.DOT.CA.GOV/ | RELATIVE BORDER SCALE IS IN MILLIMETERS 0 20 40 60 80 | USERNAME => RUSER | DGN FILE => SREQUEST | DATE PLOTTED => 09-14-10 | TIME PLOTTED => 09:42

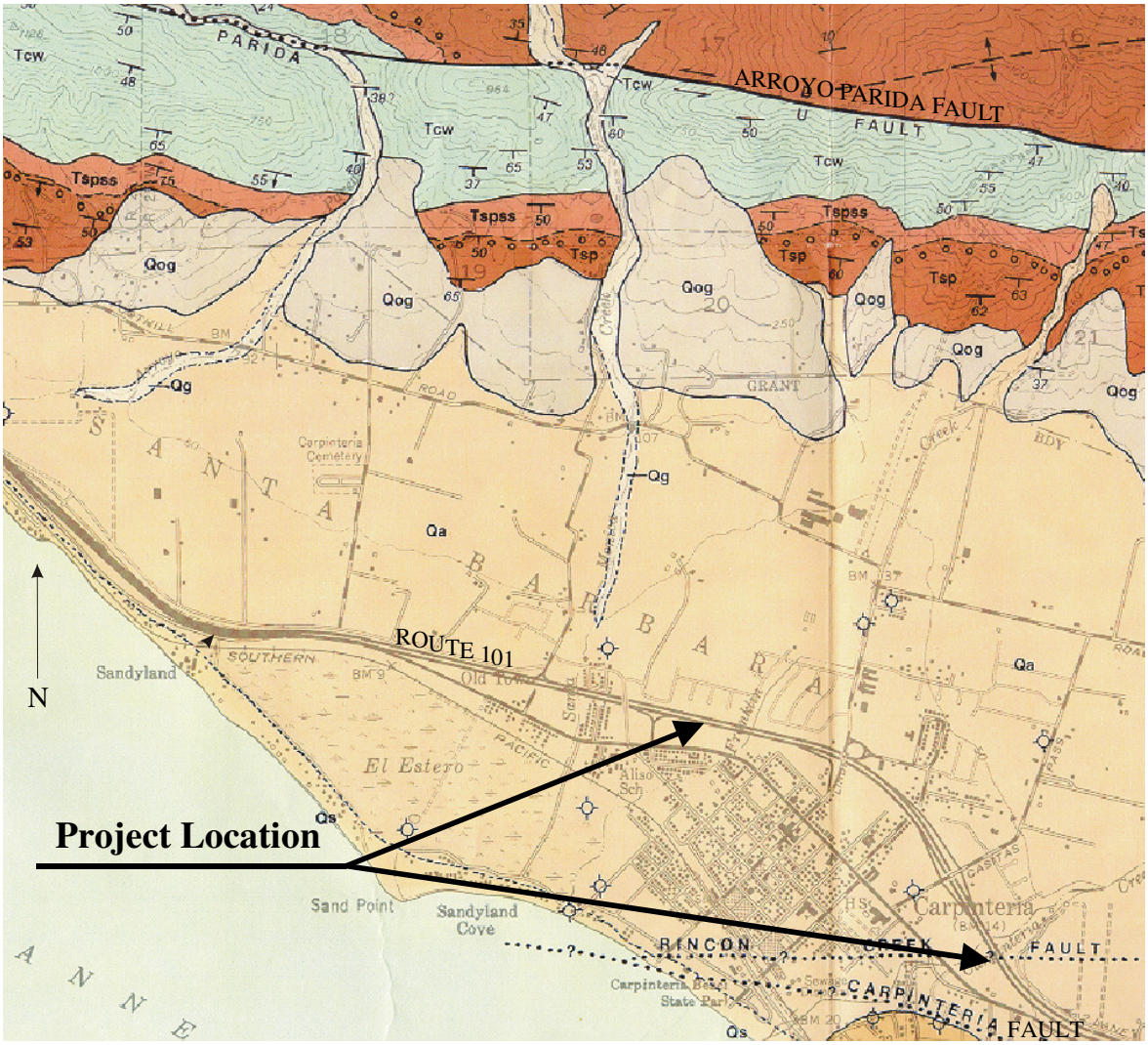

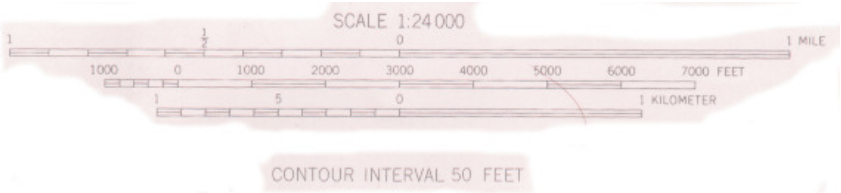

PART OF:

GEOLOGIC MAP OF THE CARPINTERIA QUADRANGLE
BY THOMAS W. DIBBLEE, JR., 1986

Geologic Map

05-SB-101-2.1/3.4
05-448201
Attachment 2

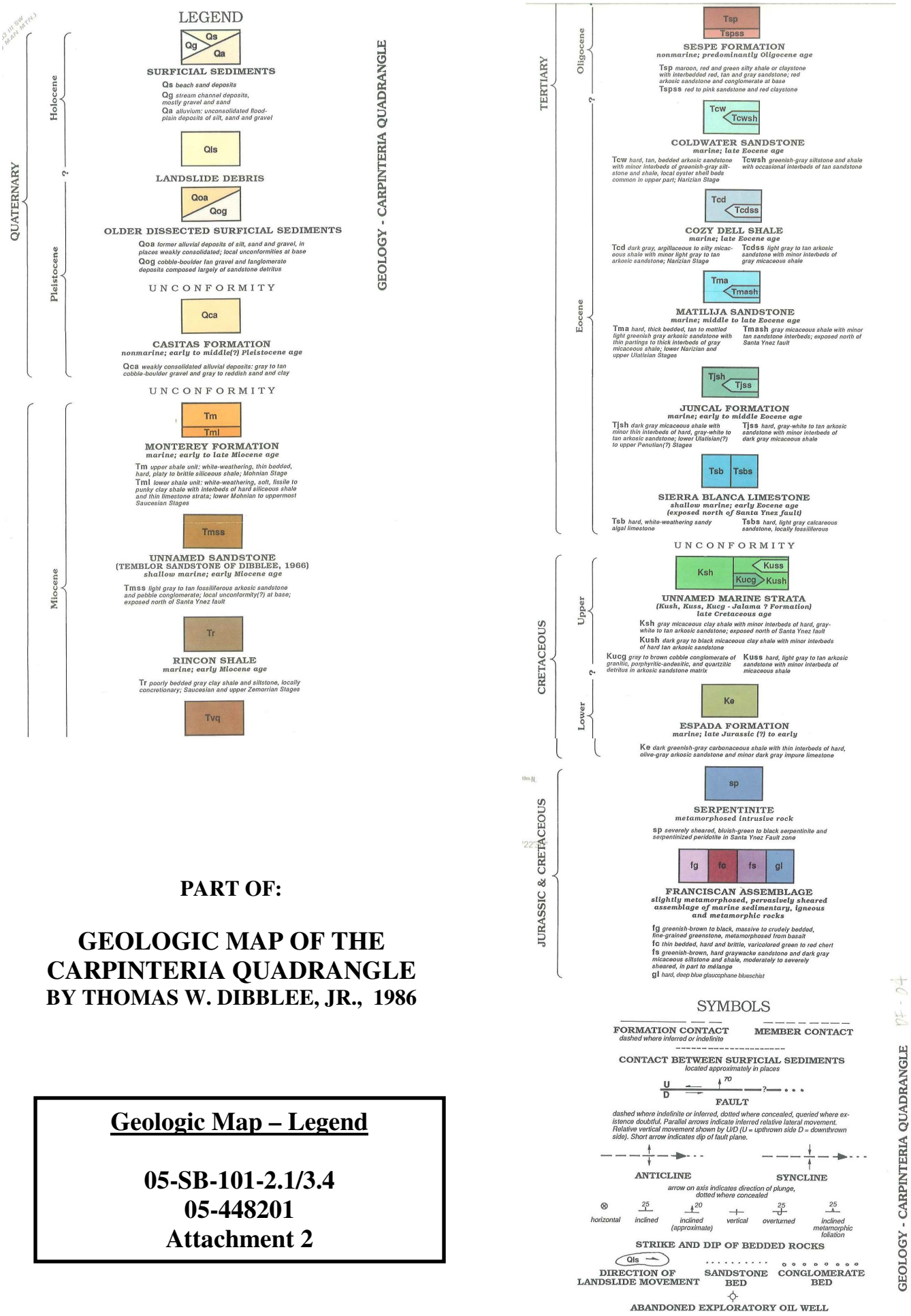

PART OF:

GEOLOGIC MAP OF THE CARPINTERIA QUADRANGLE

BY THOMAS W. DIBBLEE, JR., 1986

Geologic Map – Legend

05-SB-101-2.1/3.4
05-448201
Attachment 2

DIST	COUNTY	ROUTE	POST MILES TOTAL PROJECT	SHEET No.	TOTAL SHEETS
05	SB	101			

REGISTERED CIVIL ENGINEER X DATE

PLANS APPROVAL DATE

REGISTERED PROFESSIONAL ENGINEER Manode Kodsuntie No. 56671 Exp. 6-30-2015 CIVIL STATE OF CALIFORNIA

The State of California or its officers or agents shall not be responsible for the accuracy or completeness of scanned copies of this plan sheet.

INCOMPLETE PLAN FOR DESIGN STUDY PRINTED

DEC 2 0 2013

Office of Structures, Design STATE OF CALIFORNIA

CHECKED DETAILS

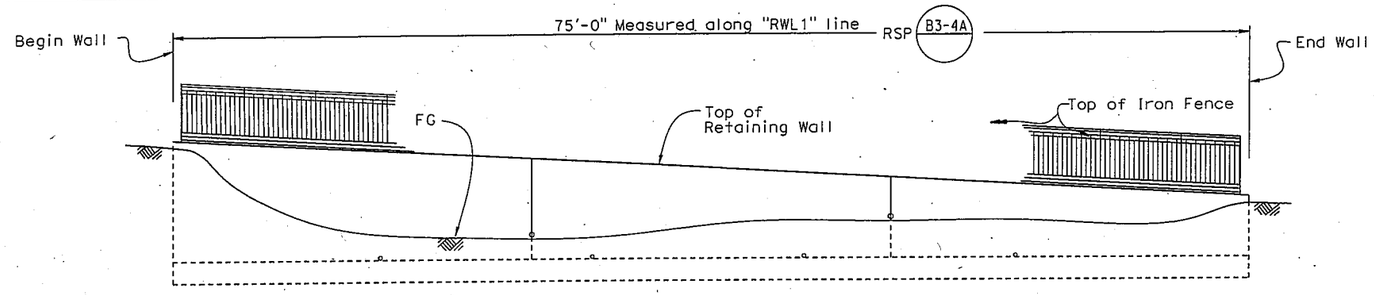

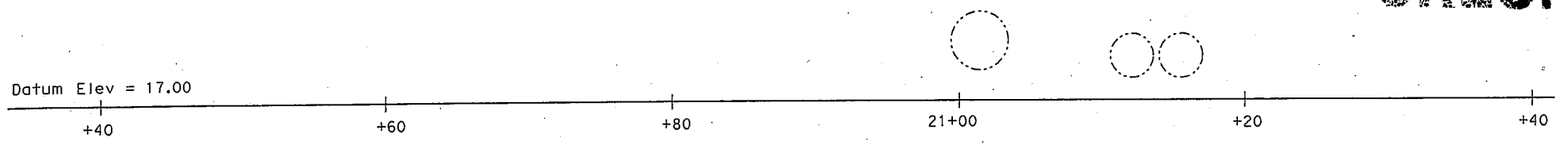

DEVELOPED ELEVATION

1" = 5'-0"

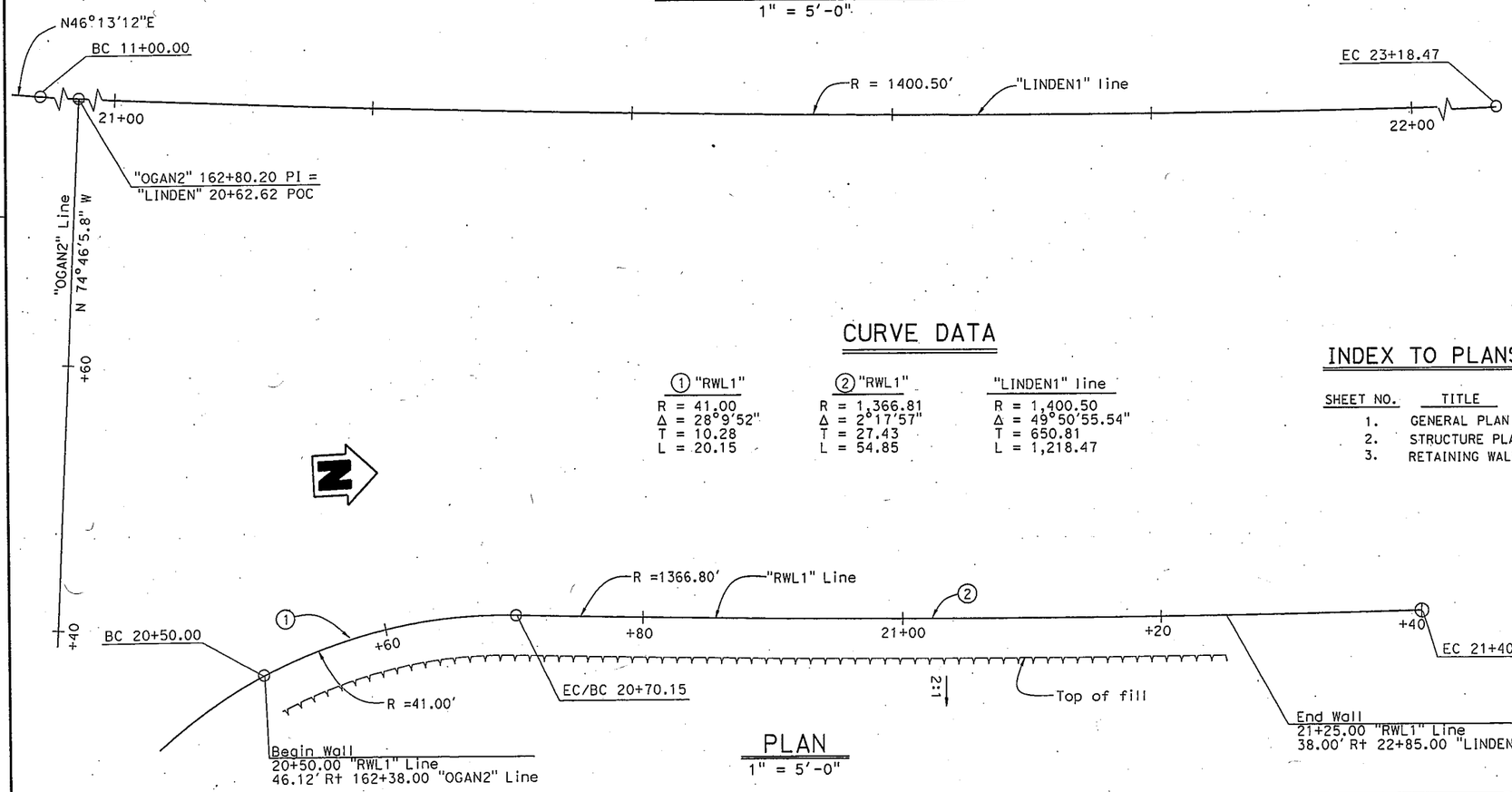

PLAN

1" = 5'-0"

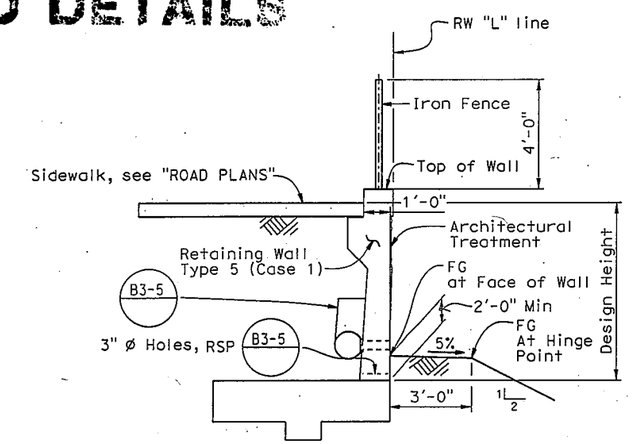

TYPICAL SECTION

3/8" = 1'-0"

CURVE DATA

① "RWL1"	② "RWL1"	"LINDEN1" line
R = 41.00	R = 1,366.81	R = 1,400.50
Δ = 28°9'52"	Δ = 2°17'57"	Δ = 49°50'55.54"
T = 10.28	T = 27.43	T = 650.81
L = 20.15	L = 54.85	L = 1,218.47

INDEX TO PLANS

SHEET NO.	TITLE
1.	GENERAL PLAN
2.	STRUCTURE PLAN
3.	RETAINING WALL DETAILS

STANDARD PLANS DATED 2010

A10A	ACRONYMS AND ABBREVIATIONS (SHEET 1 OF 2)
A10B	ACRONYMS AND ABBREVIATIONS (SHEET 2 OF 2)
A62B	LIMIT OF PAYMENT FOR EXCAVATION AND BACKFILL
B0-3	BRIDGE DETAILS
RSP B3-4A	RETAINING WALL TYPE 5 (CASE 1)
RSP B3-5	RETAINING WALL DETAILS NO. 1
A10C	LINES AND SYMBOLS (SHEET 1 OF 3)
A10D	LINES AND SYMBOLS (SHEET 2 OF 3)
A10E	LINES AND SYMBOLS (SHEET 3 OF 3)
A10F	LEGEND - SOIL (SHEET 1 OF 2)
A10G	LEGEND - SOIL (SHEET 2 OF 2)
A10H	LEGEND - ROCK

STANDARD PLAN SHEET No.

DETAIL No.

NOTE:
THE CONTRACTOR SHALL VERIFY ALL CONTROLLING FIELD DIMENSIONS BEFORE ORDERING OR FABRICATING ANY MATERIAL.

X DESIGN ENGINEER	DESIGN	BY Jun Ki Jung	CHECKED Manode Kodsuntie	LOAD & RESISTANCE FACTOR DESIGN	
	DETAILS	BY Bruno Jenko	CHECKED John Yolton	LAYOUT	BY Jun Ki Jung
	QUANTITIES	BY X	CHECKED X	SPECIFICATIONS	BY X

CHECKED Manode Kodsuntie; PLANS AND SPECS COMPARED X

ORIGINAL SCALE IN INCHES FOR REDUCED PLANS 0 1 2 3

STATE OF CALIFORNIA DEPARTMENT OF TRANSPORTATION

DIVISION OF ENGINEERING SERVICES STRUCTURE DESIGN DESIGN BRANCH 7

BRIDGE NO. X

POST MILE X

RETAINING WALL "L"

GENERAL PLAN

UNIT: 3592

PROJECT NUMBER & PHASE: 05 0000 0543 1 CONTRACT NO.: 05-4482U1

DISREGARD PRINTS BEARING EARLIER REVISION DATES

REVISION DATES 11-21-12 08/26/13 09/27/13 12/12/13

SHEET X OF X

FILE => rw-1-a-gp.dgn

STRUCTURES DESIGN GENERAL PLAN SHEET (ENGLISH) (REV.09-01-10)

USERNAME => s128080 DATE PLOTTED => 20-DEC-2013 TIME PLOTTED => 14:18

DIST	COUNTY	ROUTE	POST MILES TOTAL PROJECT	SHEET No.	TOTAL SHEETS
05	SB	101			

REGISTERED CIVIL ENGINEER X DATE

PLANS APPROVAL DATE

REGISTERED PROFESSIONAL ENGINEER Wanode Kodsuntie No. 56671 Exp. 6-30-2015 CIVIL STATE OF CALIFORNIA

The State of California or its officers or agents shall not be responsible for the accuracy or completeness of scanned copies of this plan sheet.

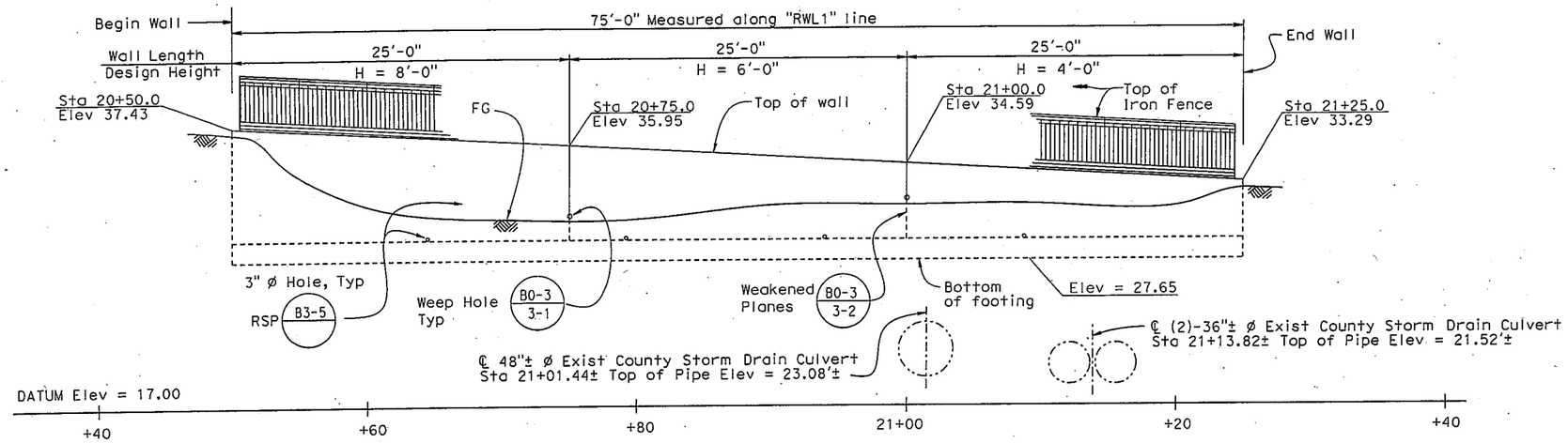

DEVELOPED ELEVATION

1" = 5'-0"

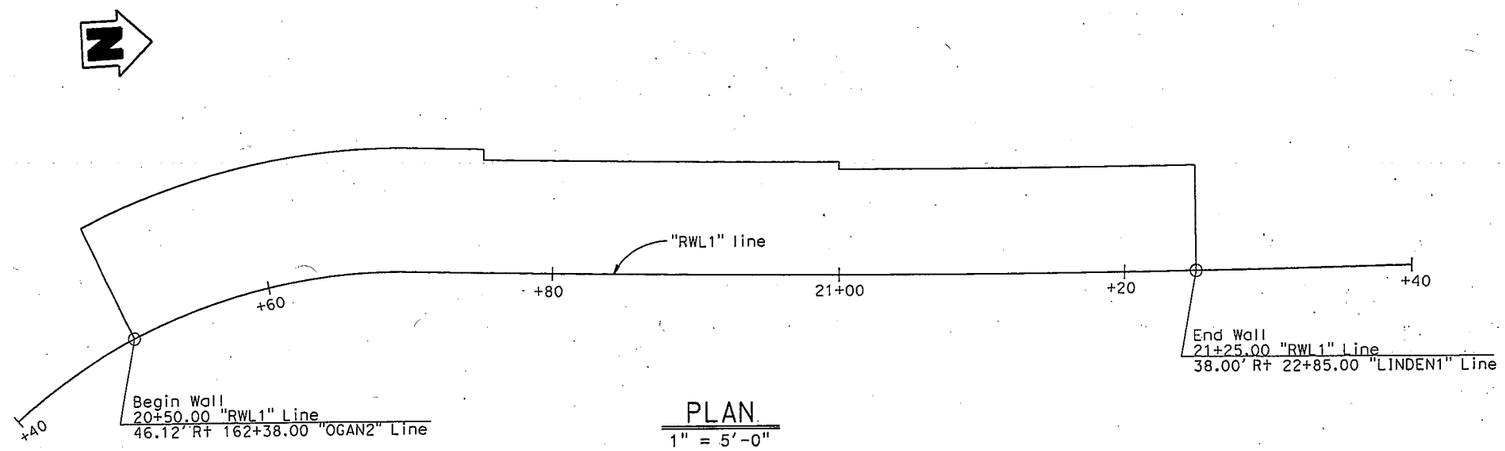

PLAN

1" = 5'-0"

INCOMPLETE PLAN
FOR DESIGN STUDY
PRINTED
DEC 20 2013
Office of Structures, Design
STATE OF CALIFORNIA

NOTE:
THE CONTRACTOR SHALL VERIFY ALL CONTROLLING FIELD DIMENSIONS BEFORE ORDERING OR FABRICATING ANY MATERIAL.

CHECKED DETAILS

	BY	CHECKED
DESIGN	Jun Ki Jung	M. Kodsuntie
DETAILS	Bruno Jenko	M. Kodsuntie
QUANTITIES	X	X

STATE OF CALIFORNIA
DEPARTMENT OF TRANSPORTATION

DIVISION OF ENGINEERING SERVICES
STRUCTURE DESIGN
DESIGN BRANCH 7

BRIDGE NO. X
POST MILE X

RETAINING WALL "L"
STRUCTURE PLAN

STRUCTURES DESIGN DETAIL SHEET (ENGLISH) (REV. 09-01-10)

ORIGINAL SCALE IN INCHES FOR REDUCED PLANS 0 1 2 3

UNIT: 3592
PROJECT NUMBER & PHASE: 0500000543-1 CONTRACT NO.: 05-4482U1

DISREGARD PRINTS BEARING EARLIER REVISION DATES

REVISION DATES 8-26-13 12-13-13 SHEET X OF X

FILE => rw-1-b-sp.dgn

USERNAME => s128080 DATE PLOTTED => 20-DEC-2013 TIME PLOTTED => 14:18

DIST	COUNTY	ROUTE	POST MILES TOTAL PROJECT	SHEET No.	TOTAL SHEETS
05	SB	101			

REGISTERED CIVIL ENGINEER X DATE

PLANS APPROVAL DATE

The State of California or its officers or agents shall not be responsible for the accuracy or completeness of scanned copies of this plan sheet.

REGISTERED PROFESSIONAL ENGINEER Manoch Kodsuntie No. 56671 Exp. 6-30-2015 CIVIL STATE OF CALIFORNIA

INCOMPLETE PLAN FOR DESIGN STUDY PRINTED

DEC 2 0 2013

Office of Structures, Design
STATE OF CALIFORNIA

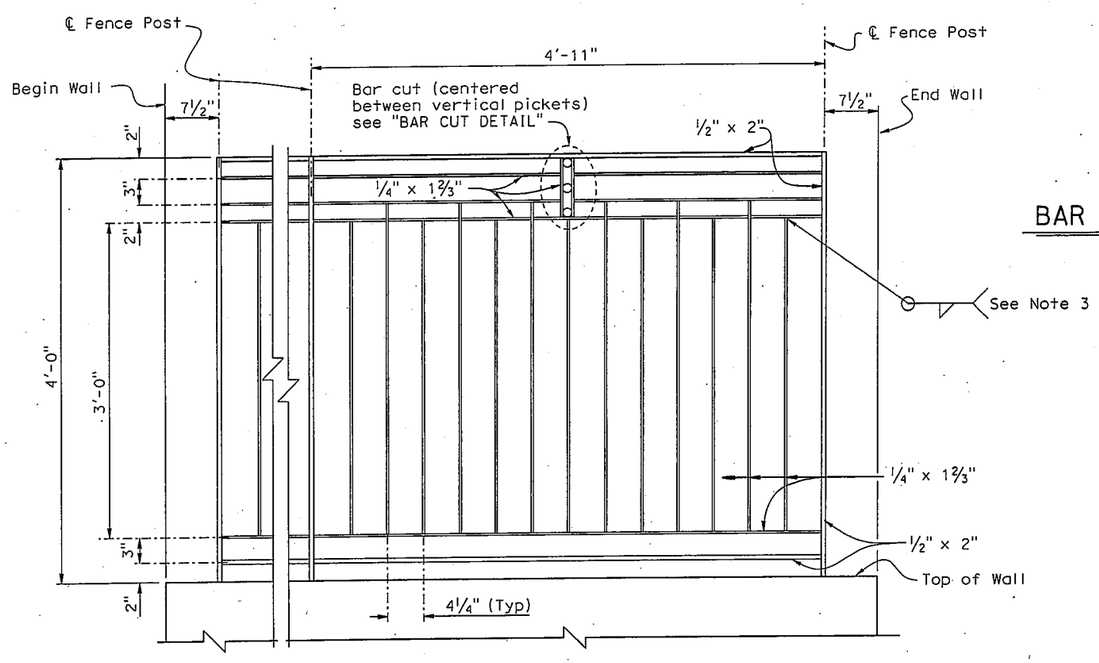

IRON FENCE PANEL DETAIL

No Scale

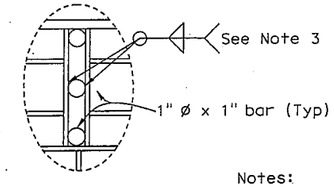

BAR CUT DETAIL

No Scale

Notes:

1. All iron fence components to be painted.
2. Pickets and fence post shell be vertical. Horizontal bars shall be parallel to top of wall.
3. Typical at all bar intersections except as noted.

CHECKED DETAILS

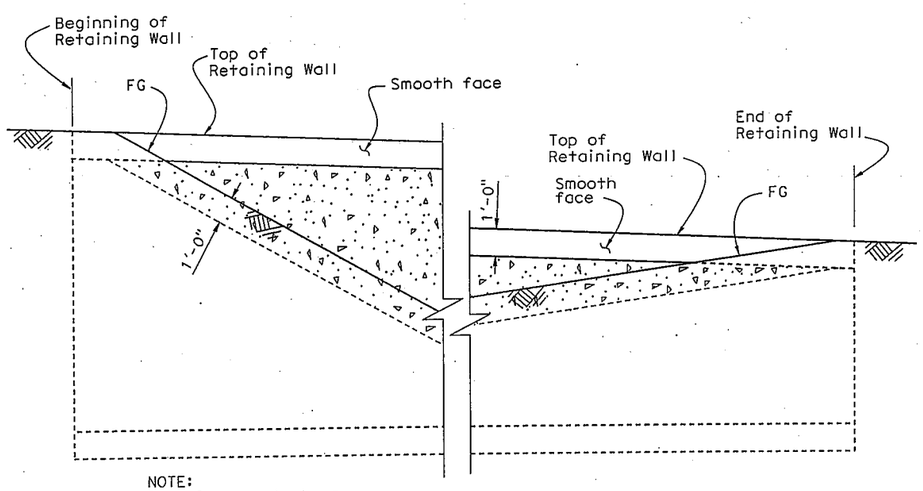

NOTE:
Iron fence not shown.

VIEW A-A

No Scale

LEGEND:

Split face texture

Stain concrete

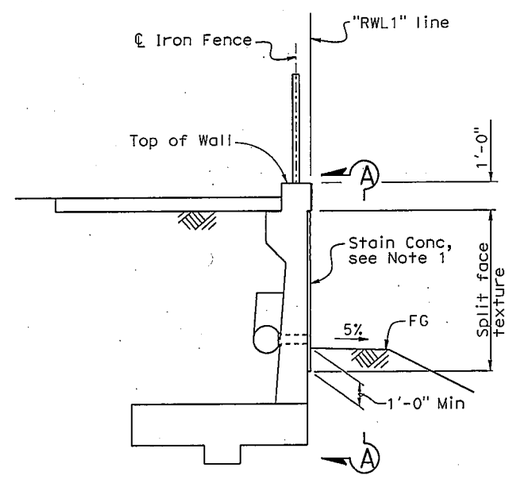

LIMITS OF PAYMENT FOR ARCHITECTURAL TREATMENT

No Scale

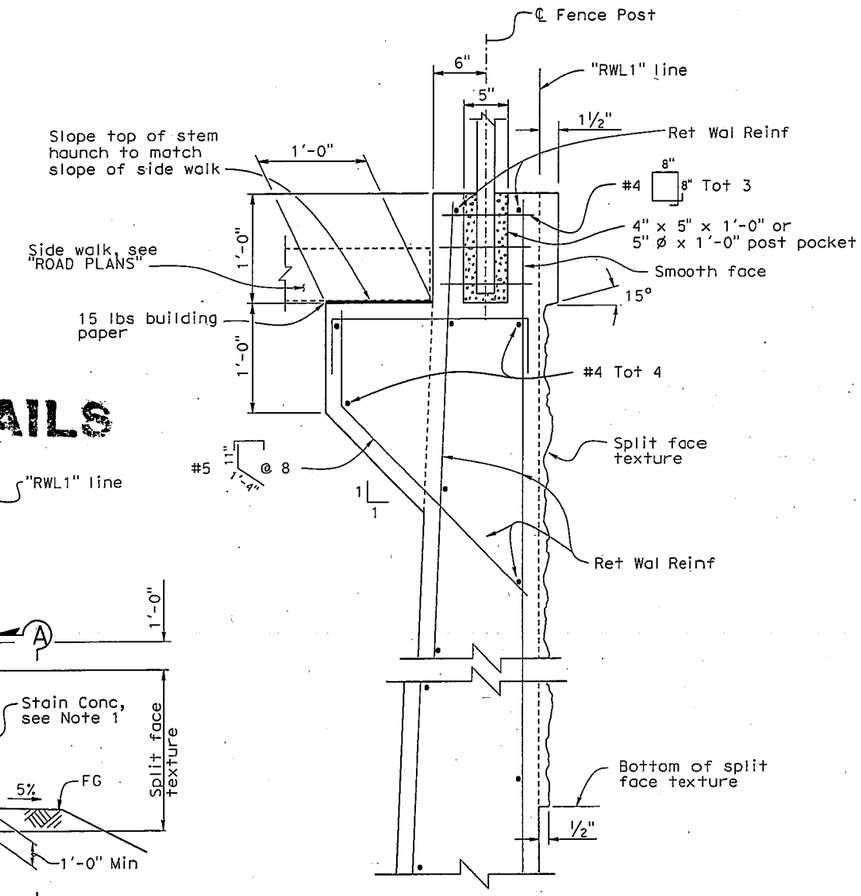

STEM HAUNCH AND POST POCKET DETAIL

No Scale

Note 1:
Limits of stain concrete on retaining wall shall be from top of wall to 1'-0" below finished grade from begin wall to end wall.

DESIGN	BY Jun Ki Jung	CHECKED M. Kodsuntie	
DETAILS	BY Bruno Jenko	CHECKED M. Kodsuntie	
QUANTITIES	BY X	CHECKED X	

STATE OF CALIFORNIA
DEPARTMENT OF TRANSPORTATION

DIVISION OF ENGINEERING SERVICES
STRUCTURE DESIGN
DESIGN BRANCH 7

BRIDGE NO. X
POST MILE X

RETAINING WALL "L"

RETAINING WALL DETAILS

STRUCTURES DESIGN DETAIL SHEET (ENGLISH) (REV. 09-01-10)

ORIGINAL SCALE IN INCHES FOR REDUCED PLANS 0 1 2 3

UNIT: 3592
PROJECT NUMBER & PHASE: 0500000543-1 CONTRACT NO.: 05-4482U1

DISREGARD PRINTS BEARING EARLIER REVISION DATES

REVISION DATES 8-26-13 12-13-13

SHEET X OF X

FILE => rw-1-u-archdet.dgn

USERNAME => s128080 DATE PLOTTED => 20-DEC-2013 TIME PLOTTED => 14:18

M e m o r a n d u m

Flex your power!
Be energy efficient!

To: MANODE KODSUNTIE
Structure Design Branch 7
DIVISION OF ENGINEERING SERVICES

Date: January 22, 2014
File: 05-SB-101-2.2/3.3
Linden Casitas
Retaining Wall M
EA 05-4482U1

From: **DEPARTMENT OF TRANSPORTATION**
DIVISION OF ENGINEERING SERVICES
GEOTECHNICAL SERVICES

Subject: Retaining Wall M Foundation Report

Scope of Work

A Foundation Report (FR) for Retaining Wall M is provided for the above referenced project. The project is on State Route 101 in the City of Carpinteria, in southern Santa Barbara County. Improvements are proposed to increase the highway level of service and accessibility, and include replacement of existing bridges and construction of new bridges, retaining walls, sound walls, ramps and frontage roads. Review of published geologic data and previous geotechnical reports, field reconnaissance, and foundation design calculations were performed as part of the geotechnical investigation.

The purpose of this report is to document geotechnical conditions and provide foundation recommendations for proposed Retaining Wall M.

Project Description

Route 101 within the project limits is a four-lane divided urban freeway with (2) 12-foot portland cement concrete (PCC) lanes in each direction and asphalt concrete (AC) 5-foot inside shoulders and 8-foot outside shoulders. A landscaped median approximately 40 feet wide with thrie beam barriers facing each direction of travel provides separation between the northbound and southbound lanes.

The purpose of the Linden Casitas project is to improve access and operations on Route 101, reduce local trips, and provide pedestrian and bicycle connectivity. The project includes construction of (3) mainline bridges on Route 101 to replace existing structures at Linden Avenue, Casitas Pass Road, and Carpinteria Creek. Highway access will be modified and added at Linden Avenue and Casitas Pass Road. Extension of Via Real, a frontage road, will also require construction of a new bridge over Carpinteria Creek. Retaining walls and sound walls are also proposed as part of the project.

Retaining Wall M is proposed for a length of approximately 381 feet parallel to the southbound lanes of Highway 101 to the south of the new Carpinteria Creek Bridge beginning 71.31 feet left

of US101 Station 124+65.64 and ending 87.76 feet left of Station 128+43.15. The purpose of the wall is to provide the recommended distance between the right of way line and the toe of the new embankment proposed to raise the profile of the highway above the floodplain. The maximum retained height will be approximately 14 feet, with embankment slopes of 2:1 behind the wall in the vicinity of Carpinteria Creek Bridge and the south end of the wall, and flat slopes behind the wall elsewhere.

Pertinent Reports and Investigations

The following publications were used to assist in the assessment of site conditions:

1. *Preliminary Geotechnical Report.* Finegan, Michael. EA 05-448200. December 21, 2000.

2. *District Preliminary Geotechnical Report.* De Llamas, Zeke. EA 05-448200, July 30, 2008.

Field Investigation and Laboratory Testing Program

One mud rotary boring was advanced near the retaining wall layout line to determine the subsurface conditions to be used for foundation design. In-situ soil strength parameters were determined using the Standard Penetration Test (SPT) for cohesionless soils. Laboratory tests were used to determine the particle size distribution and corrosion potential of representative samples obtained at depth. Refer to Table 1 for a summary of subsurface investigation information.

Table 1. Subsurface Exploration Summary

Boring	*Completion Date*	*Equipment*	*Hammer Type*	*Hammer Efficiency (%)*	*Approximate Ground Elevation (ft)*	*Depth (ft)*
RC-11-008	1-26-2011	CS2000	Auto	93	45.0	152.0

Site Geology and Subsurface Conditions

Physical Setting

The project is located in the Carpinteria Valley, a sunken area north of the elevated coastal fault block southeast of the City of Carpinteria. Carpinteria Valley is a low-lying, flat plain comprised of alluvial deposits. Some low-lying areas in the valley are partly submerged under brackish water of the Carpinteria Slough. The plain meets the Pacific Ocean to the southwest, gradually gains elevation to the east as it approaches Rincon and La Granada Mountains, and abuts sharply against the foothills of the Santa Ynez Mountains at its the northern boundary.

A mild coastal climate prevails throughout the year, with marine fog often present in spring and summer months. Nearly all precipitation falls from Pacific storms between October and May, with the majority accumulating in the winter months. Average yearly rainfall is 17.5 inches. The average temperature is 72 degrees Fahrenheit with more than 275 days of sunny weather per year.

Regional Geology

The project area is located in the Transverse Ranges Geomorphic Province. State Route 101 is bordered to the north by the Santa Ynez Mountains and to the south by the Pacific Ocean as it traverses the Carpinteria Valley. Geologic maps and field observations indicate that soils in the valley were deposited in an alluvial environment and consist of normally-consolidated deposits of clay, silt, sand, and gravel.

Groundwater

An open observation well was installed in boring RC-11-008 to observe fluctuations in groundwater levels and determine if groundwater will influence construction and foundation design. Results of the groundwater-monitoring program are summarized in Table 2.

Table 2. Groundwater Elevations

Boring	Date	Depth to Groundwater (ft)	Groundwater Elevation(ft)
RC-11-008	2-9-2011	15.3	29.7
RC-11-008	12-14-2011	14.0	31.0
RC-11-008	2-24-2012	14.5	30.5
RC-11-008	3-22-2012	15.0	30.0
RC-11-008	4-19-2012	14.2	30.8

Corrosion Evaluation

The department considers a site to be potentially corrosive to the foundation elements if the following conditions exist for the representative soil and/or water samples taken at the site: minimum resistivity of 1000 ohm-cm or less and/or PH of 5.5 or less. The structure is approximately 3000 feet from the Pacific Ocean.

Soil and water samples were obtained during the subsurface investigation and tested for corrosion potential at the District Materials Laboratory. The results of the corrosion testing are presented in Table 3. Based on the results, soils are not considered corrosive to foundation elements.

Table 3. Corrosion Testing Summary

Boring	*Depth (ft)*	*pH*	*Resistivity ohm-cm*	*Chloride ppm*	*Sulphate ppm*	*Corrosive*
RC-11-008	10.0-11.5	8.25	2826	-	-	NO
RC-11-008	160.0-161.5	7.76	2070	-	-	NO

Foundation Recommendations

Standard Plan Type 1 Retaining Wall on Spread Footing

Standard plan cast-in-place cantilevered Type 1 retaining walls on spread footings are the recommended structure and foundation types. Bearing capacity was evaluated for loading case III using strength limit state 1 and extreme event limit state 1 bearing stresses and effective footing widths provided in the revised 2010 Standard Plans. Settlement for each design wall height was calculated using a ½:1 vertical stress distribution with depth, and Hough's method for cohesionless soils utilizing a bearing capacity factor correlated to soil type and relative density. The net bearing stress and effective footing width for the service limit state 1 provided in the revised 2010 Standard Plans were used to evaluate foundation settlement. Extreme limit state bearing stresses were evaluated at a horizontal seismic earth pressure coefficient equal to 0.2. Settlement is expected to be immediate in the cohesionless soils underlying the proposed retaining wall. Calculated differential settlements are within tolerable limits for cast-in-place cantilevered concrete retaining walls.

Table 4. Retaining Wall Foundation Recommendations

Wall Station (ft)	*Design Height (ft)*	*Bottom of Footing Elevation (ft)*	*Footing Width (ft)*	*Strength Limit Factored Bearing Resistance (psf)* Φq_N Φ=0.45	*Extreme Limit Factored Bearing Resistance (psf)* Φq_N Φ=1.0	*Strength Limit Factored Gross Uniform Bearing Stress (psf)* q_0	*Extreme Limit Factored Gross Uniform Bearing Stress(psf)* q_0	*Service Limit State Net Bearing Stress(psf)* q'_0	*Calculated Settlement at Net Bearing Pressure (inches)*
10+00 to 10+25	10.0	49.50	9.25	6000	14100	3700	3900	1500	1.4
10+25 to 11+25	14.0	46.50	12.50	5500	10500	3800	5500	2100	1.9
11+25 to 12+25	12.0	46.50	10.67	6900	14200	3800	4900	1800	1.6
12+25 to 12+75	10.0	46.50	9.25	6000	14100	3700	3900	1500	1.4
12+75 to 13+35	10.0	43.50	9.25	6000	14100	3700	3900	1500	1.4
13+35 to 13+60	10.0	40.50	9.25	6000	14100	3700	3900	1500	1.4
13+60 to 13+75	14.0	36.50	12.50	5500	10500	3800	5500	2100	1.9
13+75 to 13+80.62	8.0	36.67	8.25	5600	13900	3200	2800	1300	1.3

Construction Considerations

Loose soils may be encountered during foundation excavations. Temporary slopes or shoring will be required to support the excavation to construct the retaining wall foundations. Groundwater is not expected to be encountered in foundation excavations.

Standard Special Provision S5-280, "Project Information", discloses to bidders and contractors a list of pertinent information available for their inspection prior to bid opening. The following is

an excerpt from SSP S5-280 disclosing information originating from Geotechnical Services. Items listed to be included in the Information Handout will be provided in Acrobat (.pdf) format to the Addressee of this report via electronic mail.

Data and information attached with the project plans are:

A. Log of Test Borings.

Data and information included in the Information Handout provided to the Bidders and Contractors are:

A. Foundation Report for the Retaining Wall dated January 22, 2014.

If you have any questions or comments, please contact Ryan Turner at (805) 549-3750, or Michael Finegan at (805) 549-3194.

RYAN TURNER, P.E., G.E.
Transportation Engineer Civil
Geotechnical Design – North
Branch D

MICHAEL S. FINEGAN, P.E.
Branch Chief
Geotechnical Design – North
Branch D

c: Job File / Branch D Records
Structure Construction RE Pending File (email RE_pending_file@dot.ca.gov)
Craig Whitten / DES Office Engineer
Andrew Tan / PCE
Eric Karlson/ DME

LIST OF ATTACHMENTS

Vicinity Map	Attachment 1
Geologic Map and Legend	Attachment 2
Structure Plans	Attachment 3

INDEX OF SHEETS

STATE OF CALIFORNIA
DEPARTMENT OF TRANSPORTATION

PROJECT PLANS FOR CONSTRUCTION ON
STATE HIGHWAY
IN SANTA BARBARA COUNTY
IN CARPINTERIA
FROM 0.4 KM SOUTH OF CARPINTERIA CREEK BRIDGE
TO 0.5 KM NORTH OF LINDEN AVENUE OVERCROSSING

TO BE SUPPLEMENTED BY STANDARD PLANS DATED JULY 2004

Dist	COUNTY	ROUTE	KILOMETER POST TOTAL PROJECT	SHEET NO.	TOTAL SHEETS
05	SB	101	3.5/5.5		

LOCATION MAP

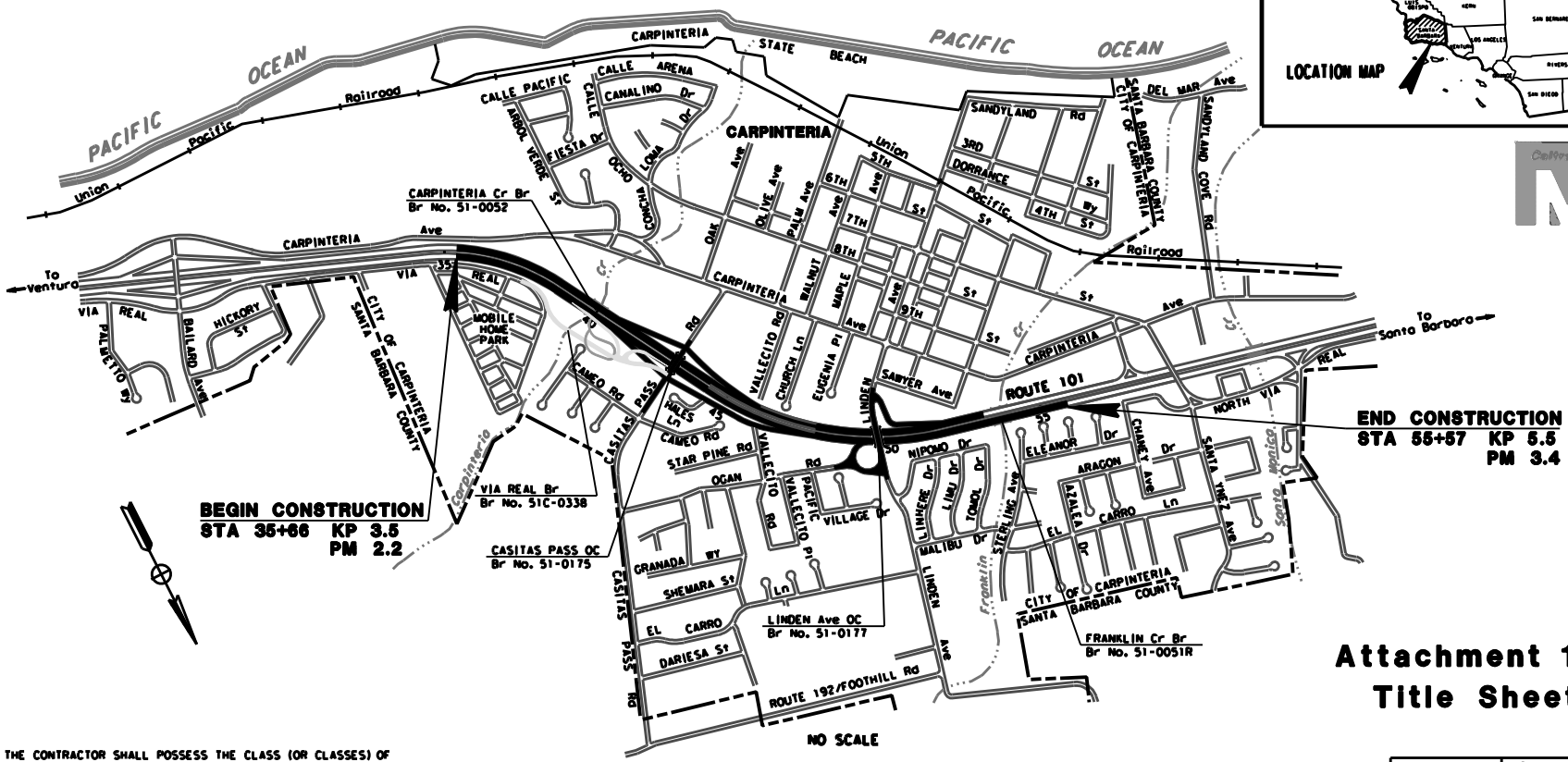

THE CONTRACTOR SHALL POSSESS THE CLASS (OR CLASSES) OF LICENSE AS SPECIFIED IN THE "NOTICE TO CONTRACTORS."

PROJECT MANAGER: DAVID BEARD
DESIGN ENGINEER: KARI BHANA

Attachment 1
Title Sheet

CONTRACT No. 05-4482U0
CU 06233 | EA 4482U0

BORDER LAST REVISED 3/1/2007 | CALTRANS WEB SITE IS: HTTP://WWW.DOT.CA.GOV/ | RELATIVE BORDER SCALE IS IN MILLIMETERS 0 20 40 60 80 | USERNAME => RUSER | DGN FILE => SREQUEST | DATE PLOTTED => 09-14-10 | TIME PLOTTED => 09:42

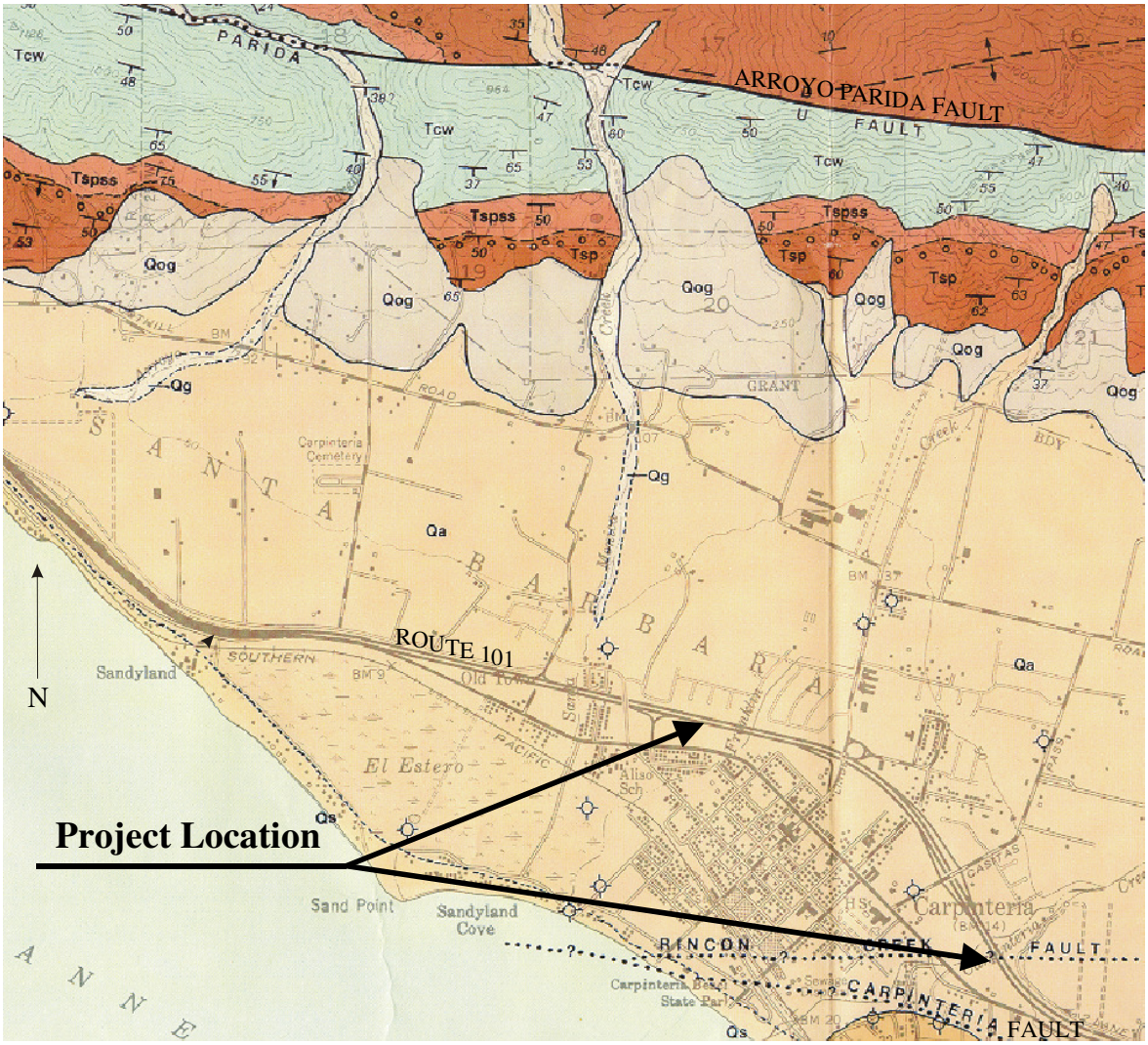

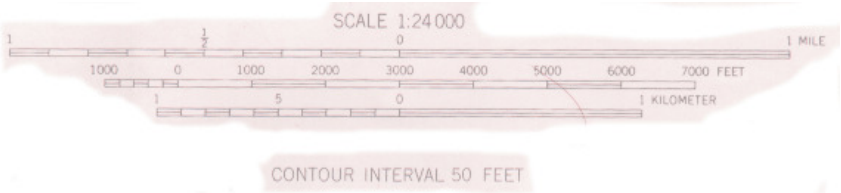

PART OF:

GEOLOGIC MAP OF THE CARPINTERIA QUADRANGLE
BY THOMAS W. DIBBLEE, JR., 1986

Geologic Map

05-SB-101-2.1/3.4
05-448201
Attachment 2

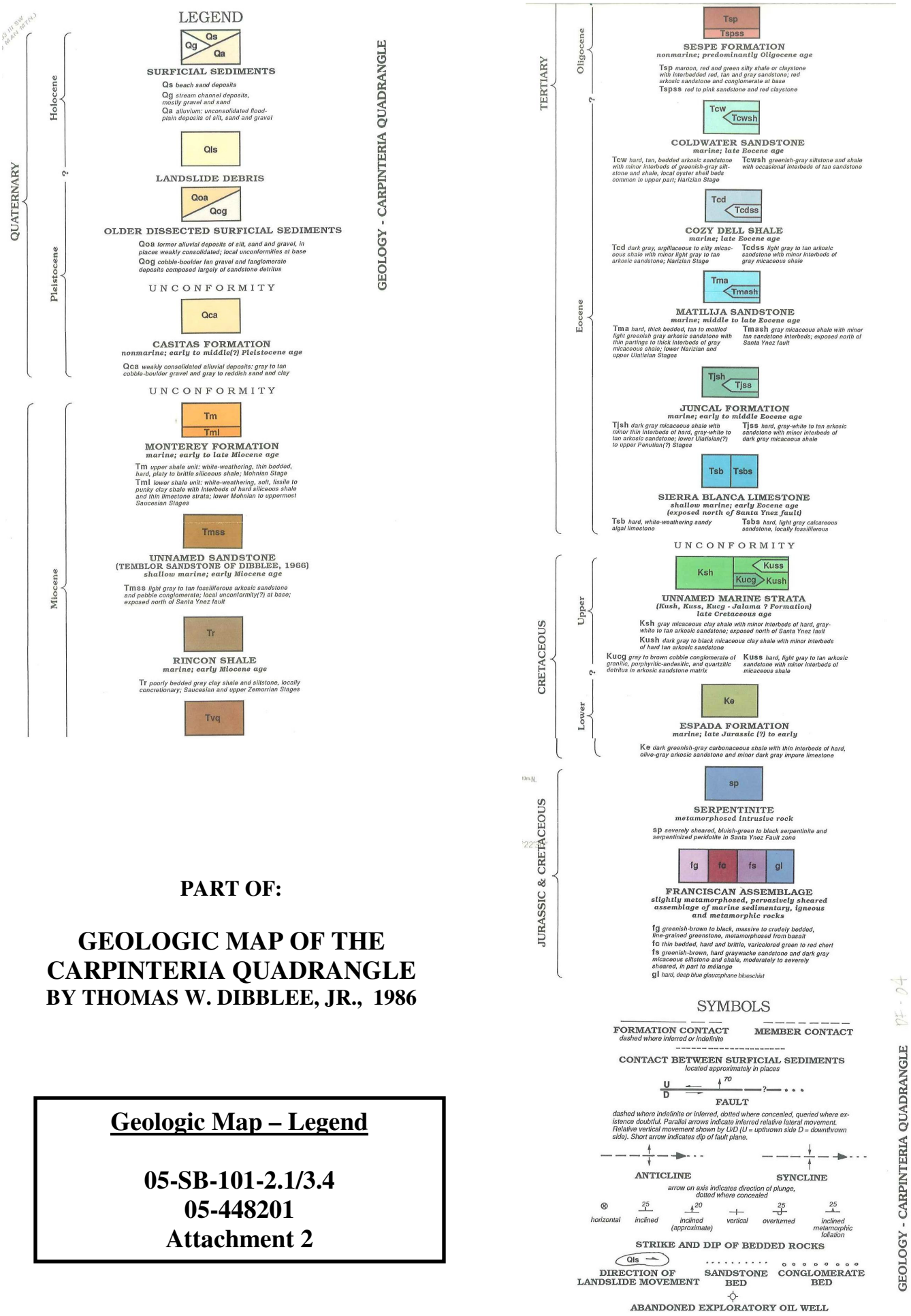

PART OF:

GEOLOGIC MAP OF THE CARPINTERIA QUADRANGLE

BY THOMAS W. DIBBLEE, JR., 1986

Geologic Map – Legend

05-SB-101-2.1/3.4
05-448201
Attachment 2

DIST	COUNTY	ROUTE	POST MILES TOTAL PROJECT	SHEET No.	TOTAL SHEETS
05	SB	101			

REGISTERED CIVIL ENGINEER X DATE

PLANS APPROVAL DATE

The State of California or its officers or agents shall not be responsible for the accuracy or completeness of electronic copies of this plan sheet.

REGISTERED PROFESSIONAL ENGINEER Eduardo Ortega Jr. No. 77226 Exp. 6/30/2015 CIVIL STATE OF CALIFORNIA

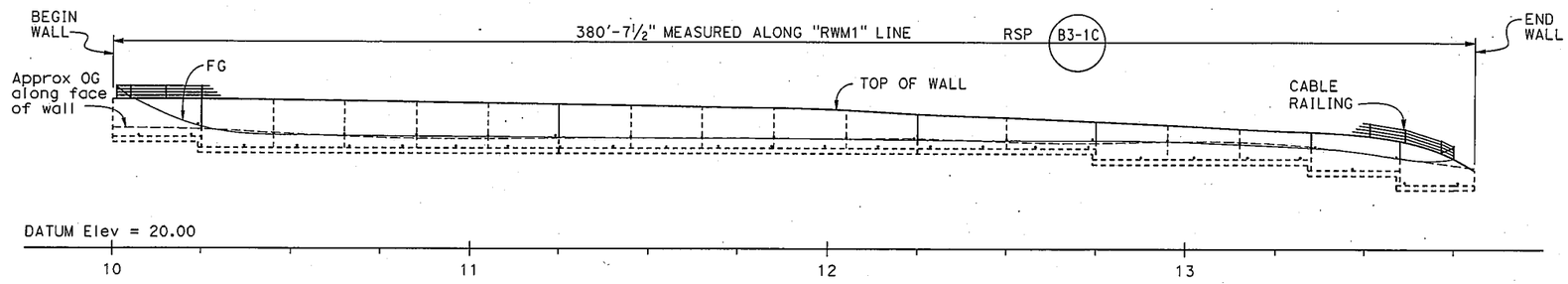

DEVELOPED MIRRORED ELEVATION

1" = 20'

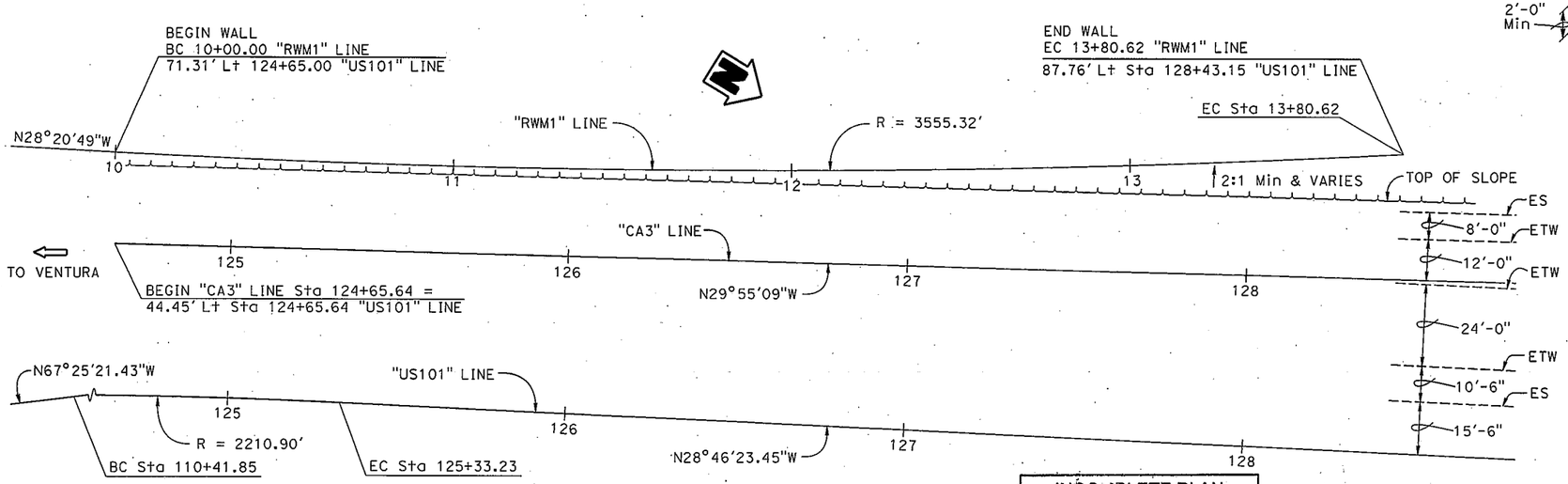

PLAN

1" = 20'

CURVE DATA

"US101" LINE	"RWM1" LINE
R = 2210.90'	R = 3555.32'
Δ = 38°38'56.97"	Δ = 6°08'24"
T = 775.31'	T = 190.68'
L = 1491.38'	L = 381.00'

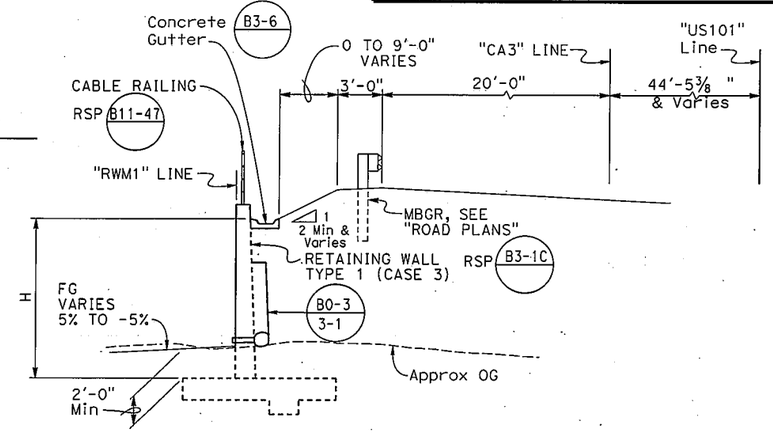

TYPICAL SECTION

1" = 5'

INDEX TO PLANS

SHEET NO. TITLE

1. GENERAL PLAN
2. STRUCTURE PLAN NO. 1
3. STRUCTURE PLAN NO. 2
4. FOUNDATION PLAN

STANDARD PLANS DATED MAY 2010

A10A	ABBREVIATIONS (SHEET 1 OF 2)
A10B	ABBREVIATIONS (SHEET 2 OF 2)
A10C	LINES AND SYMBOLS (SHEET 1 OF 3)
A10D	LINES AND SYMBOLS (SHEET 2 OF 3)
A10E	LINES AND SYMBOLS (SHEET 3 OF 3)
A10F	LEGEND - SOIL (SHEET 1 OF 2)
A10G	LEGEND - SOIL (SHEET 2 OF 2)
A10H	LEGEND - ROCK
A62B	LIMITS OF PAYMENT FOR EXCAVATION AND BACKFILL BRIDGE SURCHARGE AND WALL
RSP B3-1C	RETAINING WALL TYPE 1 (CASE 3)
RSP B3-5	RETAINING WALL DETAILS NO. 1
B3-6	RETAINING WALL DETAILS NO. 2
RSP B11-47	CABLE RAILING

STANDARD PLAN SHEET NO.

DETAIL NO.

INCOMPLETE PLAN FOR DESIGN STUDY PRINTED

DEC 11 2013

Office of Structures, Design
STATE OF CALIFORNIA

CHECKED DETAILS

X DESIGN ENGINEER	DESIGN	BY David Soon	CHECKED J.Yolton / M.Kodsuntie	LOAD & RESISTANCE FACTOR DESIGN	
	DETAILS	BY G. Dickerson / Y. Feng	CHECKED J.Yolton / M.Kodsuntie	LAYOUT BY David Soon	CHECKED J.Yolton / M.Kodsuntie
	QUANTITIES	BY X	CHECKED X	SPECIFICATIONS BY X	PLANS AND SPECS COMPARED X

ORIGINAL SCALE IN INCHES FOR REDUCED PLANS 0 1 2 3

STATE OF CALIFORNIA DEPARTMENT OF TRANSPORTATION

DIVISION OF ENGINEERING SERVICES STRUCTURE DESIGN DESIGN BRANCH 7

BRIDGE NO. X

POST MILE 2.4

RETAINING WALL "M"

GENERAL PLAN

UNIT: 3592
PROJECT NO. & PHASE: 0500000543-1
CONTRACT NO.: 05-4482U1

DISREGARD PRINTS BEARING EARLIER REVISION DATES

REVISION DATES 4-20-12 12-03-13 11-21-13

SHEET 1 OF X

FILE => rw-m-a-gp.dgn

STRUCTURES DESIGN GENERAL PLAN SHEET (ENGLISH) (REV.09-01-10)

USERNAME => s101842 DATE PLOTTED => 09-DEC-2013 TIME PLOTTED => 15:20

DIST	COUNTY	ROUTE	POST MILES TOTAL PROJECT	SHEET No.	TOTAL SHEETS
05	SB	101			

REGISTERED CIVIL ENGINEER X DATE

PLANS APPROVAL DATE

REGISTERED PROFESSIONAL ENGINEER Eduardo Ortega Jr. No. 77226 Exp. 6/30/2015 CIVIL STATE OF CALIFORNIA

The State of California or its officers or agents shall not be responsible for the accuracy or completeness of electronic copies of this plan sheet.

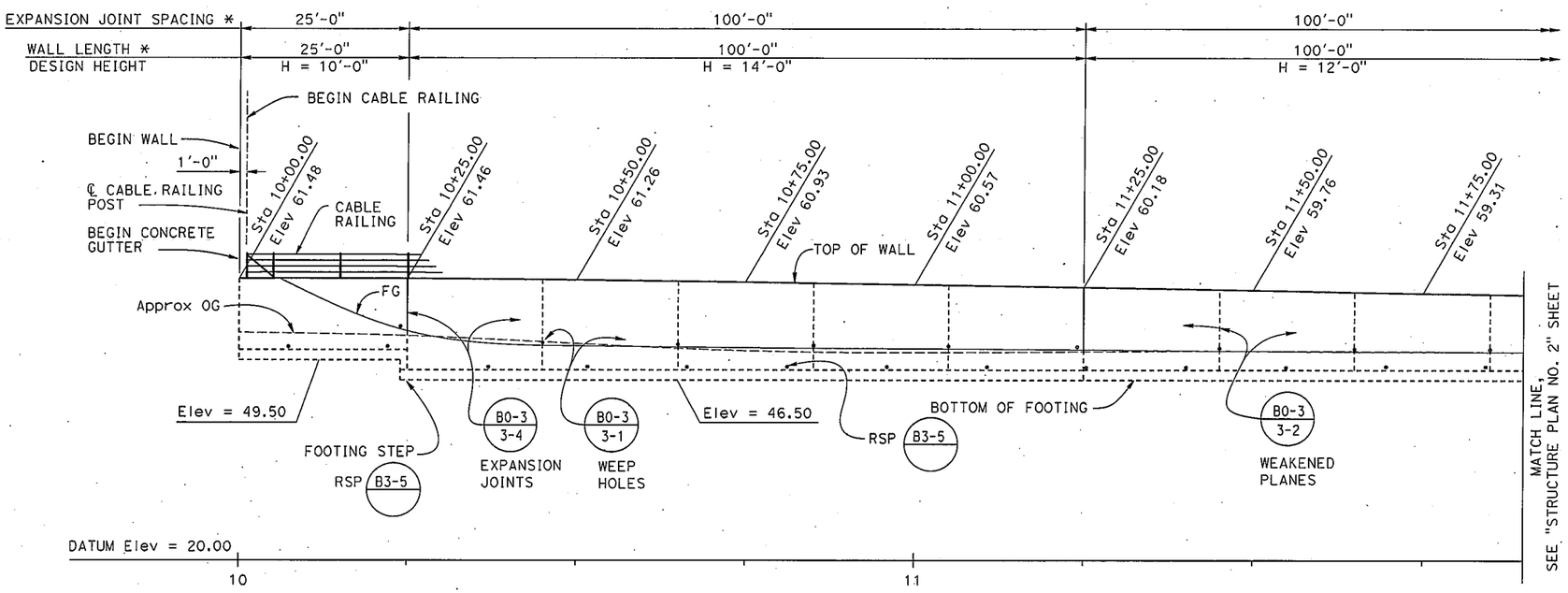

DEVELOPED MIRRORED ELEVATION

1" = 10'

NOTE:

* Indicates measured along "RWM1" Line.

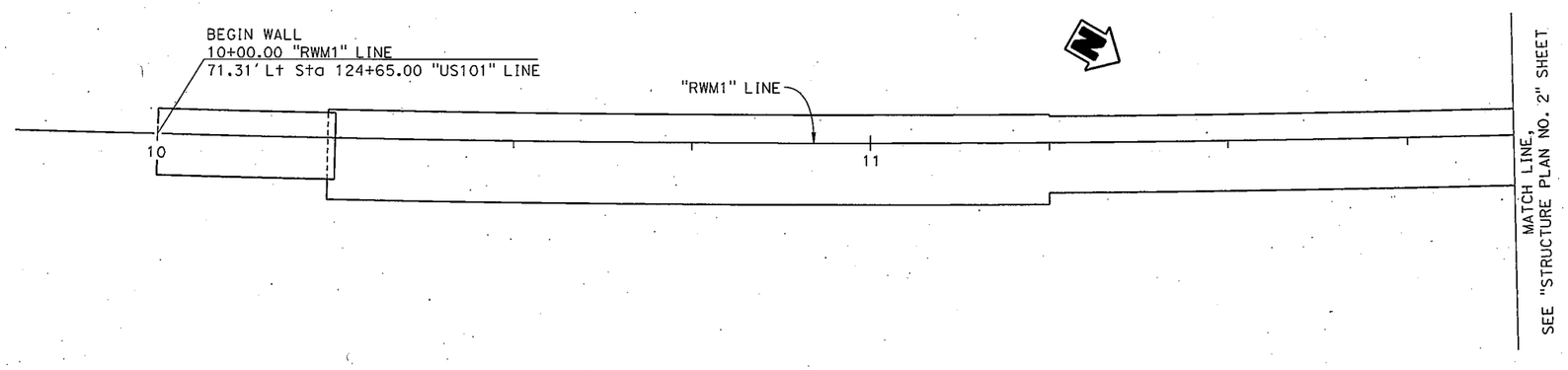

PLAN

1" = 10'

INCOMPLETE PLAN FOR DESIGN STUDY PRINTED

DEC 11 2013

Office of Structures, Design STATE OF CALIFORNIA

CHECKED DETAILS

	BY	CHECKED
DESIGN	David Soon	J. Yolton \ M. Kodsuntie
DETAILS	G. Dickerson \ Y. Feng	J. Yolton \ M. Kodsuntie
QUANTITIES	X	X

STATE OF CALIFORNIA DEPARTMENT OF TRANSPORTATION

DIVISION OF ENGINEERING SERVICES STRUCTURE DESIGN DESIGN BRANCH 7

BRIDGE NO. X

POST MILE 2.4

RETAINING WALL "M"

STRUCTURE PLAN NO. 1

STRUCTURES DESIGN DETAIL SHEET (ENGLISH) (REV. 09-01-10)

ORIGINAL SCALE IN INCHES FOR REDUCED PLANS 0 1 2 3

UNIT: 3592

PROJECT NO. & PHASE: 0500000543-1

CONTRACT NO.: 05-4482U1

DISREGARD PRINTS BEARING EARLIER REVISION DATES

REVISION DATES 4-20-12 12-09-13 11/25/13

SHEET 2 OF X

FILE => rw-m-b-sp01.dgn

USERNAME => 6101842 DATE PLOTTED => 09-DEC-2013 TIME PLOTTED => 15:20

DIST	COUNTY	ROUTE	POST MILES TOTAL PROJECT	SHEET No.	TOTAL SHEETS
05	SB	101			

REGISTERED CIVIL ENGINEER X DATE

PLANS APPROVAL DATE

REGISTERED PROFESSIONAL ENGINEER Eduardo Ortega Jr. No. 77226 Exp. 6/30/2015 CIVIL STATE OF CALIFORNIA

The State of California or its officers or agents shall not be responsible for the accuracy or completeness of electronic copies of this plan sheet.

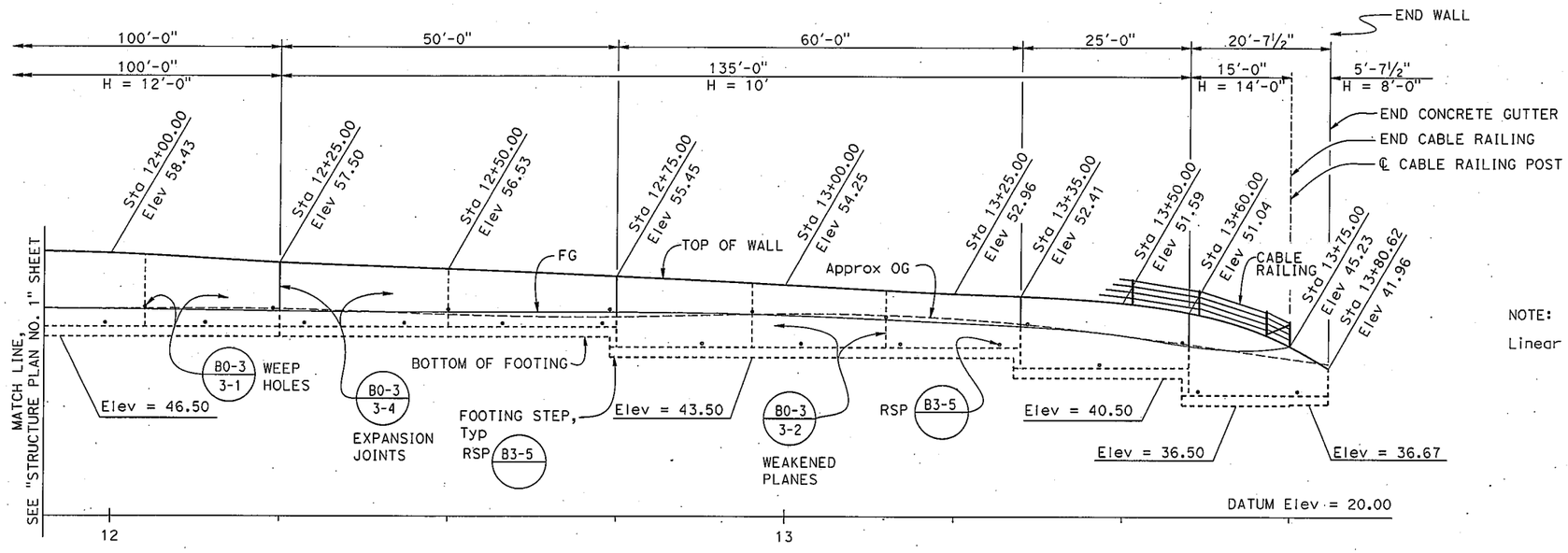

NOTE:

Linear dimensions measured along "RWM1" Line.

DEVELOPED MIRRORED ELEVATION

1" = 10'

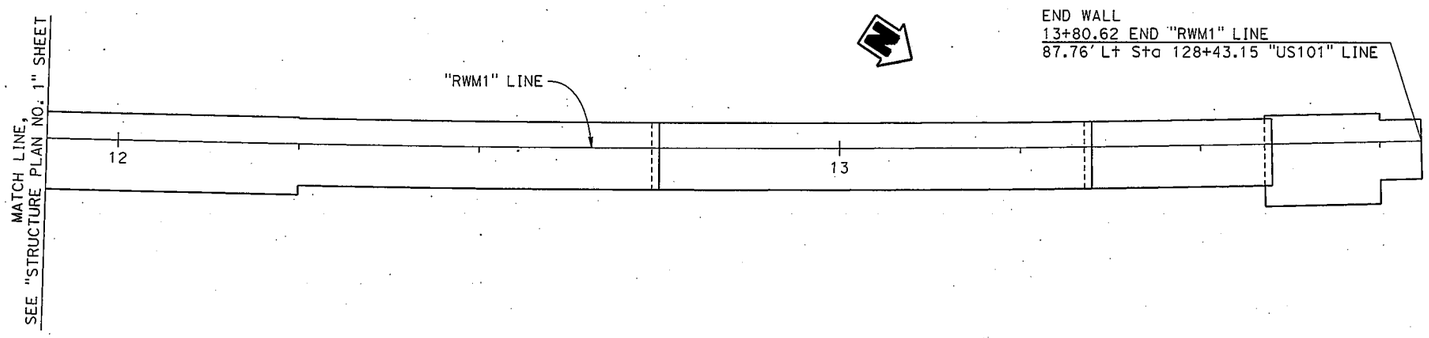

PLAN

1" = 10'

INCOMPLETE PLAN FOR DESIGN STUDY PRINTED

DEC 11 2013

Office of Structures, Design STATE OF CALIFORNIA

CHECKED DETAILS

DESIGN	BY David Soon	CHECKED J. Yolton \ M. Kodsuntie	
DETAILS	BY G. Dickerson \ Y. Feng	CHECKED J. Yolton \ M. Kodsuntie	
QUANTITIES	BY X	CHECKED X	

STATE OF CALIFORNIA DEPARTMENT OF TRANSPORTATION

DIVISION OF ENGINEERING SERVICES STRUCTURE DESIGN DESIGN BRANCH 7

BRIDGE NO. X

POST MILE 2.4

RETAINING WALL "M"

STRUCTURE PLAN NO. 2

STRUCTURES DESIGN DETAIL SHEET (ENGLISH) (REV. 09-01-10)

ORIGINAL SCALE IN INCHES FOR REDUCED PLANS 0 1 2 3

UNIT: 3592

PROJECT NO. & PHASE: 0500000543-1

CONTRACT NO.: 05-4482U1

DISREGARD PRINTS BEARING EARLIER REVISION DATES

REVISION DATES 5-09-12 12-09-13 11-20-13

SHEET 3 OF X

FILE => rw-m-b-sp02.dgn

USERNAME => 6101842 DATE PLOTTED => 09-DEC-2013 TIME PLOTTED => 15:20

M e m o r a n d u m

Flex your power!
Be energy efficient!

To: MANODE KODSUNTIE
Structure Design Branch 7
DIVISION OF ENGINEERING SERVICES

Attn: Jun Ki Jung

Date: January 22, 2014
File: 05-SB-101-2.2/3.3
Linden Casitas
Sound Wall B2
EA 05-4482U1

From: **DEPARTMENT OF TRANSPORTATION**
DIVISION OF ENGINEERING SERVICES
GEOTECHNICAL SERVICES

Subject: Sound Wall B2 Foundation Report

Scope of Work

A Foundation Report (FR) for Sound Wall B2 is provided for the above referenced project. The project is on State Route 101 in the City of Carpinteria, in southern Santa Barbara County. Improvements are proposed to increase the highway level of service and accessibility, and include replacement of existing bridges and construction of new bridges, retaining walls, sound walls, ramps and frontage roads. Review of published geologic data and previous geotechnical reports, field reconnaissance, and foundation calculations were performed as part of the geotechnical investigation.

The purpose of this report is to document geotechnical conditions and provide foundation recommendations for proposed Sound Wall B2.

Project Description

Route 101 within the project limits is a four-lane divided urban freeway with (2) 12-foot portland cement concrete (PCC) lanes in each direction and asphalt concrete (AC) 5-foot inside shoulders and 8-foot outside shoulders. A landscaped median approximately 40 feet wide with thrie beam barriers facing each direction of travel provides separation between the northbound and southbound lanes.

The purpose of the Linden Casitas project is to improve access and operations on Route 101, reduce local trips, and provide pedestrian and bicycle connectivity. The project includes construction of (3) mainline bridges on Route 101 to replace existing structures at Linden Avenue, Casitas Pass Road, and Carpinteria Creek. Highway access will be modified and added at Linden Avenue and Casitas Pass Road. Extension of Via Real, a frontage road, will also require construction of a new bridge over Carpinteria Creek. Retaining walls and sound walls are also proposed as part of the project.

Sound Wall B2 is proposed along the new Linden Avenue northbound on-ramp and northbound lanes from 43.96 feet right of LI1 Station 162+80.80 to 38.16 feet right of Station 175+77.17. It extends from the northwest side of the northern Linden Avenue approach embankment towards Franklin Creek, and is proposed to provide sound attenuation for the residential properties adjacent to Highway 101.

Pertinent Reports and Investigations

The following publications were used to assist in the assessment of site conditions:

1. *Preliminary Geotechnical Report.* Finegan, Michael. EA 05-448200. December 21, 2000.

2. *District Preliminary Geotechnical Report.* De Llamas, Zeke. EA 05-448200, July 30, 2008.

Field Investigation and Laboratory Testing Program

Three mud rotary borings were advanced near the sound wall layout line to determine the subsurface conditions to be used for foundation design. In-situ soil strength parameters were determined using the Standard Penetration Test (SPT) for cohesionless soils. Laboratory tests were used to determine the particle size distribution and corrosion potential of representative samples obtained at depth. Refer to Table 1 for a summary of subsurface investigation information.

Table 1. Subsurface Exploration Summary

Boring	*Completion Date*	*Equipment*	*Hammer Type*	*Hammer Efficiency (%)*	*Approximate Ground Elevation (ft)*	*Depth (ft)*
RC-10-004	12-1-2010	CS2000	Auto	93	24.5	171.5
RC-10-005	12-8-2010	CS2000	Auto	93	26.4	152.0
RC-11-012	2-2-2011	CS2000	Auto	93	25.8	91.5

Site Geology and Subsurface Conditions

Physical Setting

The project is located in the Carpinteria Valley, a sunken area north of the elevated coastal fault block southeast of the City of Carpinteria. Carpinteria Valley is a low-lying, flat plain comprised of alluvial deposits. Some low-lying areas in the valley are partly submerged under brackish water of the Carpinteria Slough. The plain meets the Pacific Ocean to the southwest, gradually gains elevation to the east as it approaches Rincon and La Granada Mountains, and abuts sharply against the foothills of the Santa Ynez Mountains at its the northern boundary.

A mild coastal climate prevails throughout the year, with marine fog often present in spring and summer months. Nearly all precipitation falls from Pacific storms between October and May,

with the majority accumulating in the winter months. Average yearly rainfall is 17.5 inches. The average temperature is 72 degrees Fahrenheit with more than 275 days of sunny weather per year.

Regional Geology

The project area is located in the Transverse Ranges Geomorphic Province. State Route 101 is bordered to the north by the Santa Ynez Mountains and to the south by the Pacific Ocean as it traverses the Carpinteria Valley. Geologic maps and field observations indicate that soils in the valley were deposited in an alluvial environment and consist of normally-consolidated deposits of clay, silt, sand, and gravel.

Groundwater

Open observation wells were installed in borings RC-10-004 and RC-11-005 to observe fluctuations in groundwater levels and determine if groundwater will influence construction and foundation design. Results of the groundwater-monitoring program are summarized in Table 2.

Table 2. Groundwater Elevations

Boring	Date	Depth to Groundwater (ft)	Groundwater Elevation(ft)
RC-10-004	2-9-2011	3.9	20.6
RC-10-004	12-14-2011	5.0	19.5
RC-10-004	2-24-2012	4.8	19.3
RC-10-004	3-22-2012	5.0	19.5
RC-10-004	4-19-2012	4.3	20.2
RC-10-005	2-24-2012	7.3	19.1
RC-10-005	4-19-2012	6.7	19.7

Corrosion Evaluation

The department considers a site to be potentially corrosive to the foundation elements if the following conditions exist for the representative soil and/or water samples taken at the site: minimum resistivity of 1000 ohm-cm or less and/or PH of 5.5 or less. Samples found to be potentially corrosive based on this criteria are sent to the Headquarters Material Laboratory for additional corrosion testing based on chloride and sulphate content.

Soil and water samples were obtained during the subsurface investigation and tested for corrosion potential at the District Materials Laboratory. The results of the corrosion testing are presented in Table 3. Based on the results, soils are not considered corrosive to foundation elements.

Table 3. Corrosion Testing Summary

Boring	*Depth (ft)*	*pH*	*Resistivity ohm-cm*	*Chloride ppm*	*Sulphate ppm*	*Corrosive*
RC-10-004	0.0-3.0	8.1	660	140	870	NO
RC-10-004	25.0-26.5	8.0	2650	-	-	NO
RC-10-004	57.0-59.0	8.2	6330	-	-	NO
RC-10-005	2.0-4.0	8.4	1260	-	-	NO
RC-10-005	47.0-49.0	8.4	2350	-	-	NO
RC-10-005	87-0-89.0	8.6	3560	-	-	NO

Foundation Recommendations

Masonry Block Sound Wall on 24" CIDH Piles

24" diameter cast-in-drilled-hole piles are the recommended foundation type. Due to the high groundwater table, Standard Plan foundation types of spread footings, 16" CIDH piles, and trench footings are not suitable alternatives. 24" CIDH piles are the minimum diameter that allow for installation of gamma-gamma casings required to verify the soundness of piles constructed using the wet method. Driven piles were considered, but potential to damage the nearby high-pressure gas transmission line due to driving vibrations precludes their use. Pile axial resistance was estimated using Alpha and Beta Methods for cohesive and cohesionless soils per the recommendations of *FHWA Geotechnical Engineering Circular 10, Drilled Shafts: Construction Procedures and LRFD Design Methods*. Pile lateral resistance and load deflection behavior was evaluated using the computer analysis program L-Pile to estimate pile head deflection under lateral loading using a design criteria of a maximum of 0.5 inches of lateral pile head deflection. Pile lengths required for axial resistance resulted in calculated pile head deflections of less than 0.5 inches. Foundation loads provided by Structure Design and foundation recommendations are provided in Tables 4 and 5.

Table 4. Sound Wall Foundation Loads

Pile Number	*Max WSD Axial Load (kips)*	*Required Nominal Axial Resistance (kips) FOS=2.0*	*Max LFD Seismic Lateral Load (kips)*	*Max LFD Wind Lateral Load (kips)*
1-6	22	44	12	4
7-11	16	32	9	3
12-13	17	34	10	3
14-27	22	44	12	5
28-44	23	46	13	5
45-64	23	46	13	5
65-75	23	46	13	5
76-91	23	46	13	5
92-115	23	46	13	5

Table 5. Sound Wall Foundation Recommendations

Pile Number	*Foundation Type*	*Pile Cutoff Elevation (ft)*	*Pile Length (ft)*	*Pile Tip Elevation (ft)*
1-6	24" CIDH	23.00	16.00	7.00
7-11	24" CIDH	21.25	16.00	5.25
12-13	24" CIDH	20.50	16.00	4.50
14-27	24" CIDH	17.75	16.00	1.75
28-44	24" CIDH	16.25	16.00	0.25
45-64	24" CIDH	14.75	16.00	-1.25
65-75	24" CIDH	13.75	16.00	-2.25
76-91	24" CIDH	12.75	16.00	-3.25
92-115	24" CIDH	11.25	16.00	-4.75

Construction Considerations

Loose soils and high groundwater are expected to be encountered during foundation excavations. Groundwater levels very near to the ground surface were observed in the vicinity of the proposed sound wall. Casing may be required to control caving soils. Pile excavation and placement of concrete using the wet method will be required. Surface casing may be required to protrude above the ground surface to maintain a minimum of 5 feet of offsetting drill fluid head above the groundwater elevation. Type D excavation for the pile cap is shown on the plans where groundwater will likely be encountered during construction based on groundwater levels observed nearby.

A high-pressure gas transmission line is located near the sound wall layout line. Care shall be taken to locate the line prior to excavation work and ensure that the foundation construction does not influence the gas line.

Additional Information

Standard Special Provision S5-280, "Project Information", discloses to bidders and contractors a list of pertinent information available for their inspection prior to bid opening. The following is an excerpt from SSP S5-280 disclosing information originating from Geotechnical Services. Items listed to be included in the Information Handout will be provided in Acrobat (.pdf) format to the Addressee of this report via electronic mail.

Data and information attached with the project plans are:

A. Log of Test Borings.

Data and information included in the Information Handout provided to the Bidders and Contractors are:

A. Foundation Report for the Sound Wall dated January 22, 2014.

If you have any questions or comments, please contact Ryan Turner at (805) 549-3750, or Michael Finegan at (805) 549-3194.

RYAN TURNER, P.E., G.E.
Transportation Engineer Civil
Geotechnical Design – North
Branch D

MICHAEL S. FINEGAN, P.E.
Branch Chief
Geotechnical Design – North
Branch D

c: Job File / Branch D Records
Structure Construction RE Pending File (email RE_pending_file@dot.ca.gov)
Craig Whitten / DES Office Engineer
Andrew Tan / PCE
Eric Karlson/ DME

LIST OF ATTACHMENTS

Vicinity Map	Attachment 1
Geologic Map and Legend	Attachment 2
Structure Plans	Attachment 3
L-Pile Output	Attachment 4
Design Information	Attachment 5

INDEX OF SHEETS

STATE OF CALIFORNIA
DEPARTMENT OF TRANSPORTATION

PROJECT PLANS FOR CONSTRUCTION ON
STATE HIGHWAY
IN SANTA BARBARA COUNTY
IN CARPINTERIA
FROM 0.4 KM SOUTH OF CARPINTERIA CREEK BRIDGE
TO 0.5 KM NORTH OF LINDEN AVENUE OVERCROSSING

TO BE SUPPLEMENTED BY STANDARD PLANS DATED JULY 2004

Dist	COUNTY	ROUTE	KILOMETER POST TOTAL PROJECT	SHEET NO.	TOTAL SHEETS
05	SB	101	3.5/5.5		

LOCATION MAP

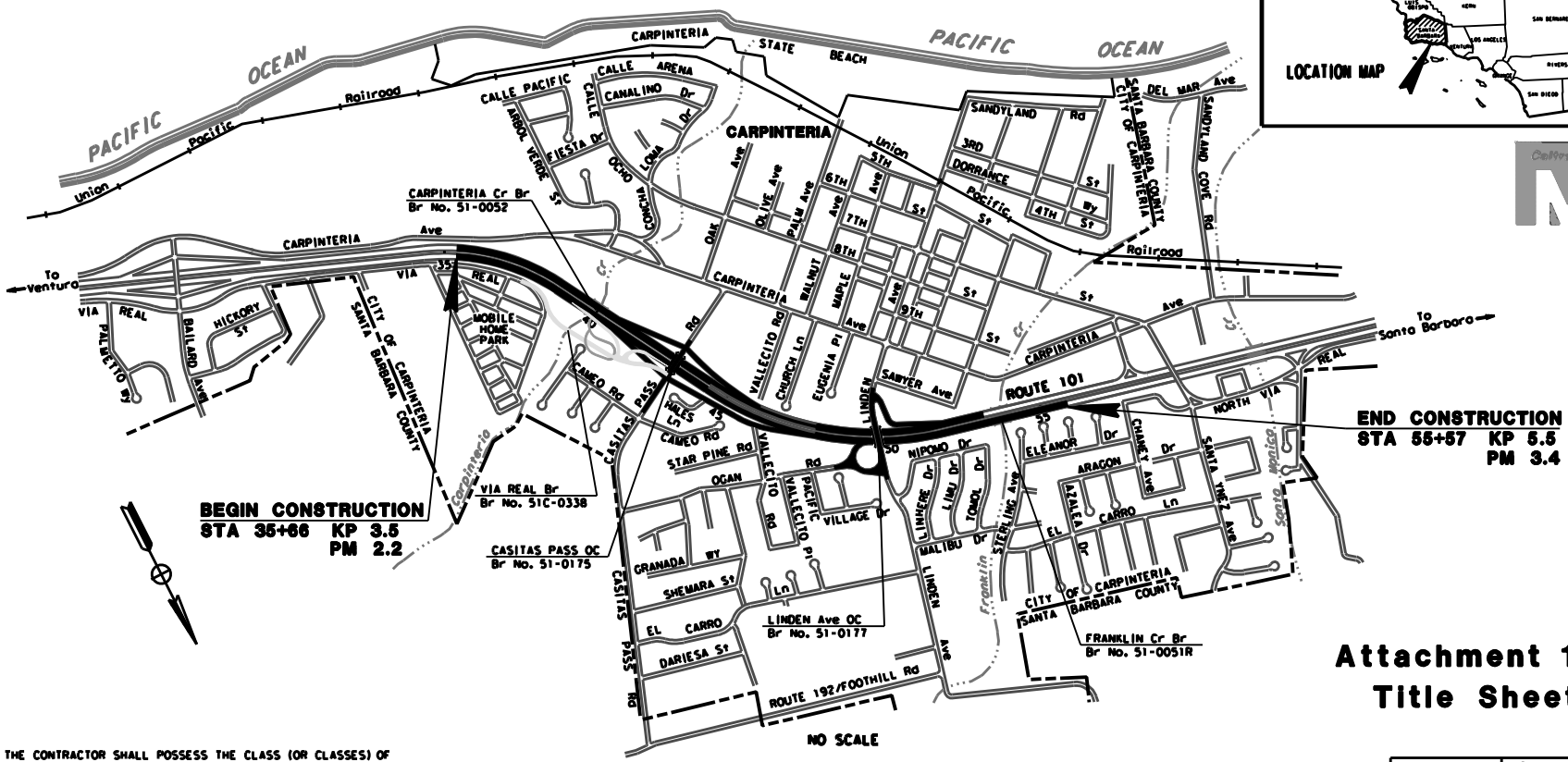

THE CONTRACTOR SHALL POSSESS THE CLASS (OR CLASSES) OF LICENSE AS SPECIFIED IN THE "NOTICE TO CONTRACTORS."

PROJECT MANAGER: DAVID BEARD
DESIGN ENGINEER: KARI BHANA

Attachment 1
Title Sheet

CONTRACT No. 05-4482U0
CU 06233 | EA 4482U0

BORDER LAST REVISED 3/1/2007 | CALTRANS WEB SITE IS: HTTP://WWW.DOT.CA.GOV/ | RELATIVE BORDER SCALE IS IN MILLIMETERS 0 20 40 60 80 | USERNAME => RUSER | DGN FILE => SREQUEST | DATE PLOTTED => 09-14-10 | TIME PLOTTED => 09:42

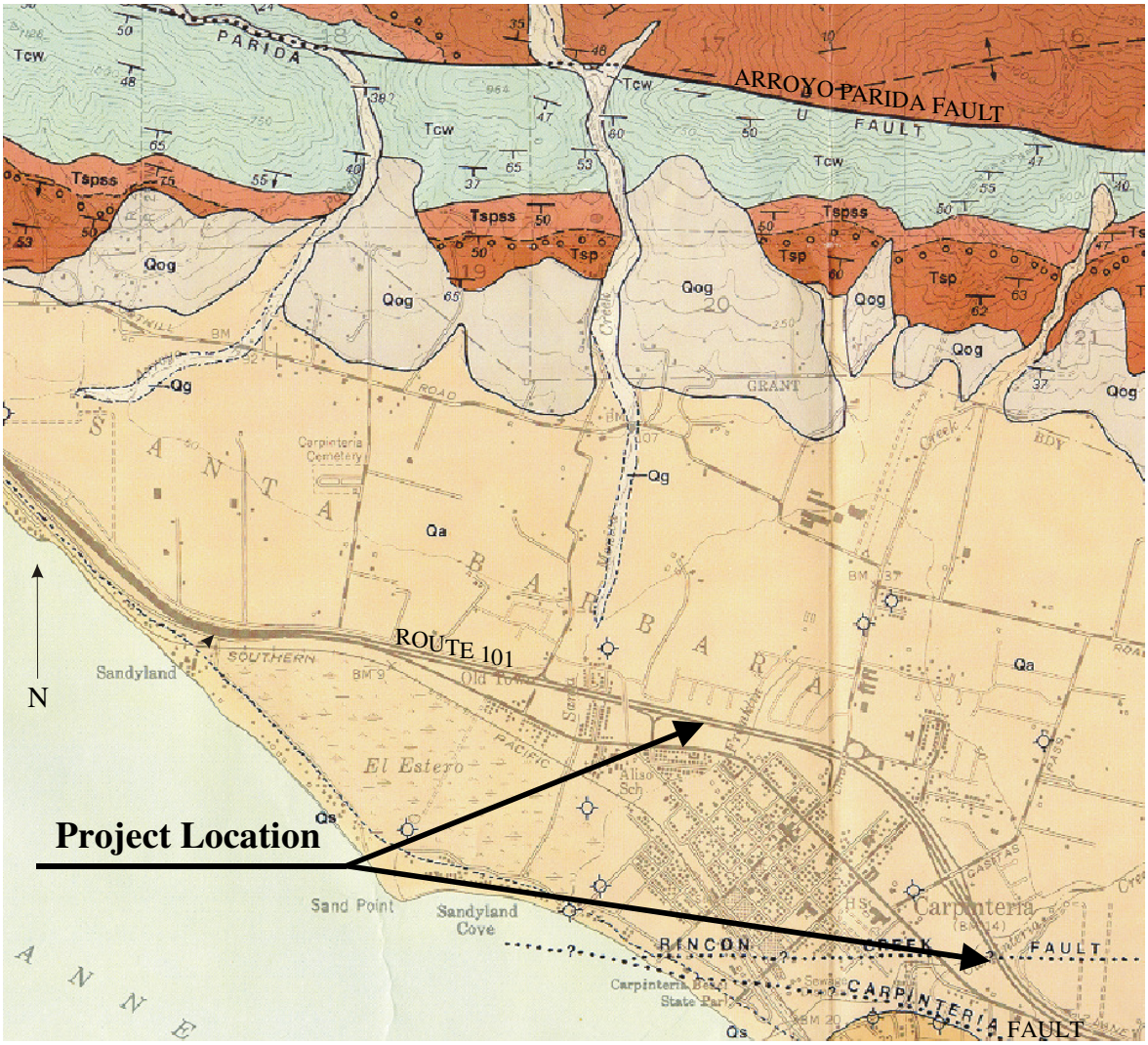

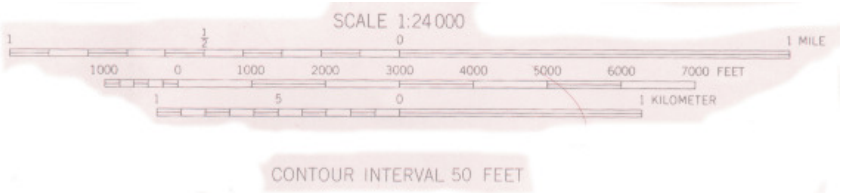

PART OF:

GEOLOGIC MAP OF THE CARPINTERIA QUADRANGLE
BY THOMAS W. DIBBLEE, JR., 1986

Geologic Map

05-SB-101-2.1/3.4
05-448201
Attachment 2

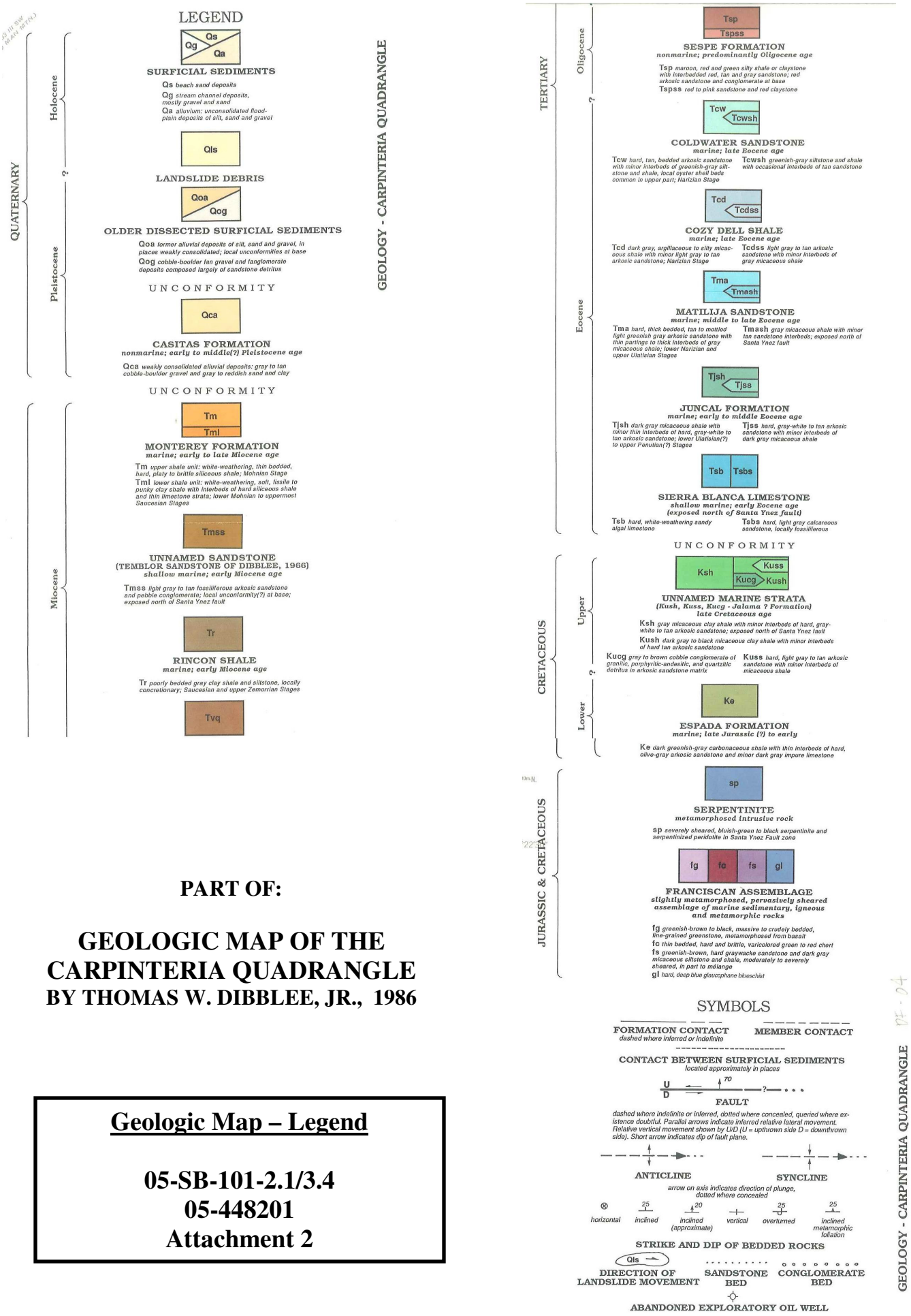

PART OF:

GEOLOGIC MAP OF THE CARPINTERIA QUADRANGLE

BY THOMAS W. DIBBLEE, JR., 1986

Geologic Map – Legend

05-SB-101-2.1/3.4
05-448201
Attachment 2

DIST	COUNTY	ROUTE	POST MILES TOTAL PROJECT	SHEET No.	TOTAL SHEETS
05	SB	101			

REGISTERED CIVIL ENGINEER X DATE

PLANS APPROVAL DATE

The State of California or its officers or agents shall not be responsible for the accuracy or completeness of scanned copies of this plan sheet.

REGISTERED PROFESSIONAL ENGINEER Manode Kodsuntie No. 56671 Exp. 6/30/2015 CIVIL STATE OF CALIFORNIA

CHECKED DETAILS

INCOMPLETE PLAN FOR DESIGN STUDY PRINTED DEC 11 2013 Office of Structures Design STATE OF CALIFORNIA

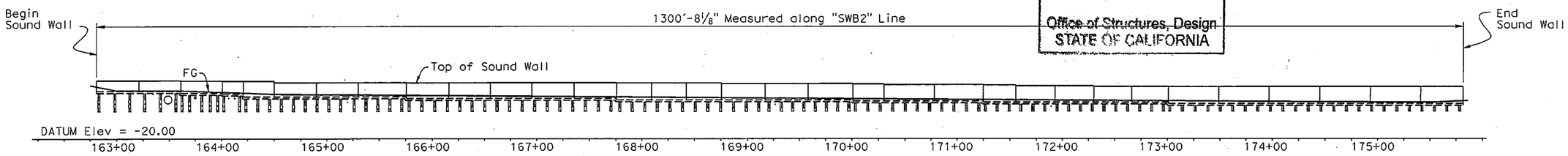

DEVELOPED MIRROR ELEVATION

1" = 50'

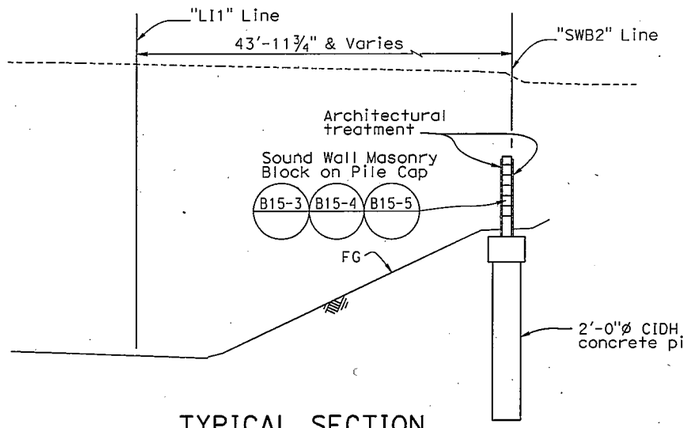

TYPICAL SECTION

"SWB2" Line Sta 162+80.80 to 164+50

1" = 5'

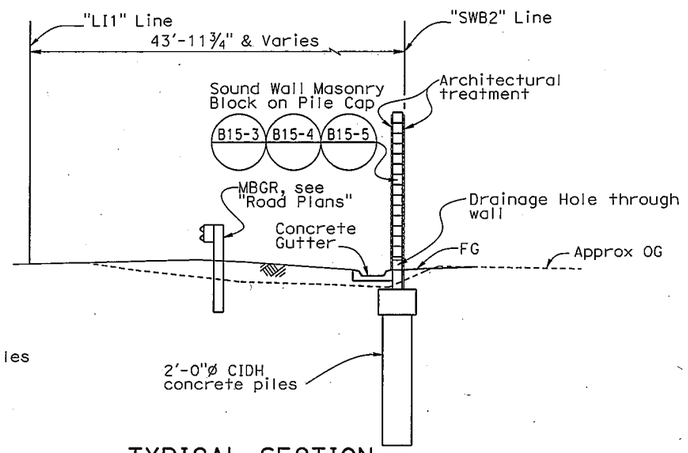

TYPICAL SECTION

"SWB2" Line Sta 164+50 to 175+81.48

1" = 5'

INDEX TO PLANS

SHEET NO.	TITLE
1.	GENERAL PLAN
2.	STRUCTURE PLAN NO. 1
3.	STRUCTURE PLAN NO. 2
4.	STRUCTURE PLAN NO. 3
5.	STRUCTURE PLAN NO. 4
6.	STRUCTURE PLAN NO. 5
7.	WALL DETAILS
8.	PILE DETAILS
9.	ARCHITECTURAL DETAILS

STANDARD PLANS DATED 2010

A10A	ABBREVIATIONS (SHEET 1 OF 2)
A10B	ABBREVIATIONS (SHEET 2 OF 2)
A10C	LINES AND SYMBOLS (SHEET 1 OF 3)
A10D	LINES AND SYMBOLS (SHEET 2 OF 3)
A10E	LINES AND SYMBOLS (SHEET 3 OF 3)
A10F	LEGEND - SOIL (SHEET 1 OF 2)
A10G	LEGEND - SOIL (SHEET 2 OF 2)
A10H	LEGEND - ROCK
B15-3	SOUND WALL MASONRY BLOCK ON PILE CAP DETAILS (1)
B15-4	SOUND WALL MASONRY BLOCK ON PILE CAP DETAILS (2)
B15-5	SOUND WALL MASONRY BLOCK ON PILE CAP DETAILS (3)

CURVE DATA

R = 3051.60'
Δ = 07°45'19"
T = 206.84'
L = 413.04'

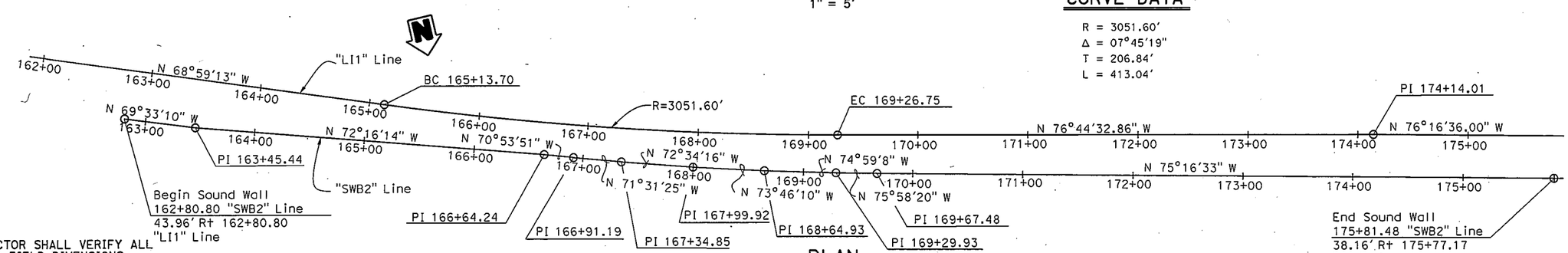

PLAN

1" = 50'

NOTE:
THE CONTRACTOR SHALL VERIFY ALL CONTROLLING FIELD DIMENSIONS BEFORE ORDERING OR FABRICATING ANY MATERIAL.

X DESIGN ENGINEER	DESIGN	BY Manode Kodsuntie	CHECKED X Jun Ki Jung	LOAD & RESISTANCE FACTOR DESIGN	
	DETAILS	BY Yingjue Feng	CHECKED X Jun Ki Jung	LAYOUT	BY X M. Kodsuntie
	QUANTITIES	BY X	CHECKED X	SPECIFICATIONS	BY X

CHECKED X Jun Ki Jung PLANS AND SPECS COMPARED X

ORIGINAL SCALE IN INCHES FOR REDUCED PLANS 0 1 2 3

STATE OF CALIFORNIA DEPARTMENT OF TRANSPORTATION

DIVISION OF ENGINEERING SERVICES STRUCTURE DESIGN DESIGN BRANCH 7

BRIDGE NO. X POST MILE X

SOUND WALL "B2"
GENERAL PLAN

UNIT: 3592
PROJECT NUMBER & PHASE: 05 0000 0543 1 CONTRACT NO.: 05-4482U1

DISREGARD PRINTS BEARING EARLIER REVISION DATES

REVISION DATES 10-31-13 11-15-13 11-27-13

SHEET 1 OF X

FILE => rwb2-a-gp01.dgn

STRUCTURES DESIGN GENERAL PLAN SHEET (ENGLISH) (REV.09-01-10)

USERNAME => s136697 DATE PLOTTED => 27-NOV-2013 TIME PLOTTED => 10:18

DIST	COUNTY	ROUTE	POST MILES TOTAL PROJECT	SHEET No.	TOTAL SHEETS
05	SB	101			

REGISTERED CIVIL ENGINEER X DATE

PLANS APPROVAL DATE

REGISTERED PROFESSIONAL ENGINEER Manode Kodsuntie No. 56671 Exp. 6/30/2015 CIVIL STATE OF CALIFORNIA

The State of California or its officers or agents shall not be responsible for the accuracy or completeness of scanned copies of this plan sheet.

INCOMPLETE PLAN FOR DESIGN STUDY PRINTED DEC 11 2013 Office of Structures, Design STATE OF CALIFORNIA

CHECKED DETAILS

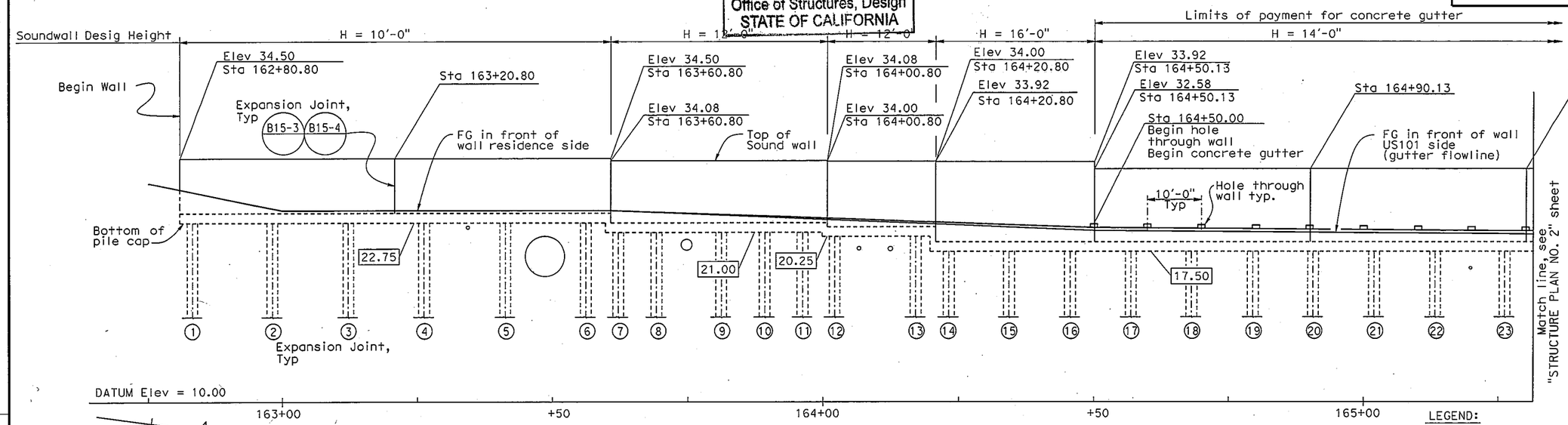

DEVELOPED MIRROR ELEVATION

1" = 10'

LEGEND:

(**) Indicates pile number

00.00 Indicates bottom of pile cap elev.

NOTES:

1. For concrete gutter profile grade, see "WALL DETAILS No. 1" sheet.
2. Pile spacing measured along "SWB2" line.

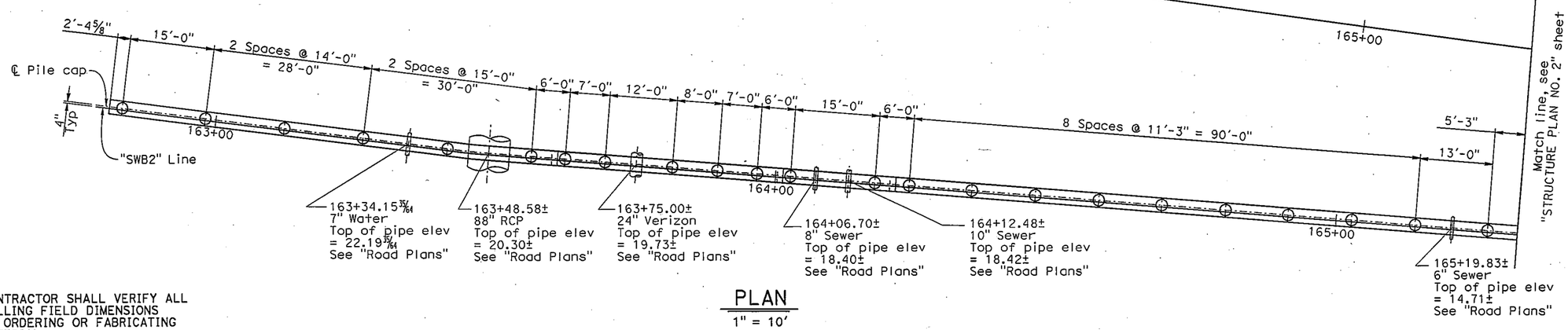

PLAN

1" = 10'

NOTE:
THE CONTRACTOR SHALL VERIFY ALL CONTROLLING FIELD DIMENSIONS BEFORE ORDERING OR FABRICATING ANY MATERIAL.

	BY	CHECKED
DESIGN	Manode Kodsuntie	X Jun Ki Jung
DETAILS	Yingjue Feng	X Jun Ki Jung
QUANTITIES	X	X

STATE OF CALIFORNIA DEPARTMENT OF TRANSPORTATION

DIVISION OF ENGINEERING SERVICES STRUCTURE DESIGN DESIGN BRANCH 7

BRIDGE NO. X

POST MILE X

SOUND WALL "B2"

STRUCTURE PLAN NO. 1

STRUCTURES DESIGN DETAIL SHEET (ENGLISH) (REV. 09-01-10)

ORIGINAL SCALE IN INCHES FOR REDUCED PLANS 0 1 2 3

UNIT: 3592

PROJECT NUMBER & PHASE: 0500000543-1

CONTRACT NO.: 05-4482U1

DISREGARD PRINTS BEARING EARLIER REVISION DATES

REVISION DATES 11-4-2013 11-26-13

SHEET 2 OF X

FILE => rwb2-b-sp01.dgn

USERNAME => s136697 DATE PLOTTED => 27-NOV-2013 TIME PLOTTED => 10:19

INCOMPLETE PLAN
FOR DESIGN STUDY
PRINTED
DEC 11 2013
Office of Structures, Design
STATE OF CALIFORNIA

CHECKED DETAILS

DIST	COUNTY	ROUTE	POST MILES TOTAL PROJECT	SHEET No.	TOTAL SHEETS
05	SB	101			

REGISTERED CIVIL ENGINEER X DATE

PLANS APPROVAL DATE

The State of California or its officers or agents shall not be responsible for the accuracy or completeness of scanned copies of this plan sheet.

REGISTERED PROFESSIONAL ENGINEER
Manode Kodsuntie
No. 56671
Exp. 6/30/2015
CIVIL
STATE OF CALIFORNIA

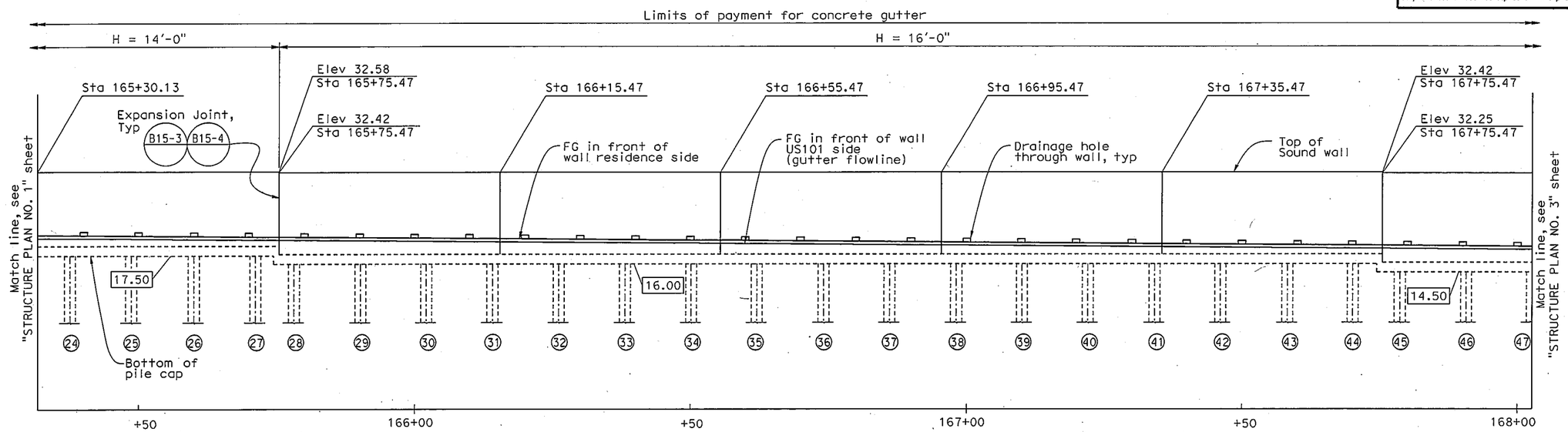

LEGEND:

(**) Indicates pile number

00.00 Indicates bottom of pile cap elev.

NOTES:

1. For concrete gutter profile grade, see "WALL DETAILS No. 1" sheet.
2. Pile spcing measured along "SWB2" line.

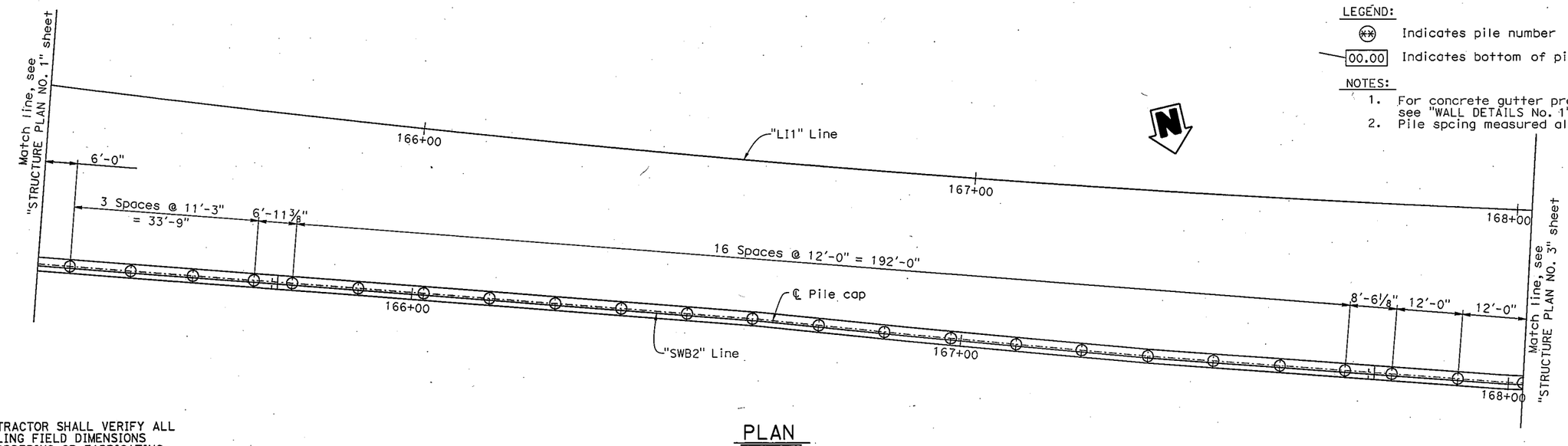

NOTE:
THE CONTRACTOR SHALL VERIFY ALL CONTROLLING FIELD DIMENSIONS BEFORE ORDERING OR FABRICATING ANY MATERIAL.

PLAN
1" = 10'

	BY	CHECKED
DESIGN	Manode Kodsuntie	X Jun Ki Jung
DETAILS	Yingjue Feng	X Jun Ki Jung
QUANTITIES	X	X

STATE OF CALIFORNIA
DEPARTMENT OF TRANSPORTATION

DIVISION OF ENGINEERING SERVICES
STRUCTURE DESIGN
DESIGN BRANCH 7

BRIDGE NO. X
POST MILE X

SOUND WALL "B2"
STRUCTURE PLAN NO. 2

STRUCTURES DESIGN DETAIL SHEET (ENGLISH) (REV. 09-01-10)

ORIGINAL SCALE IN INCHES FOR REDUCED PLANS 0 1 2 3

UNIT: 3592
PROJECT NUMBER & PHASE: 0500000543-1
CONTRACT NO.: 05-4482U1

DISREGARD PRINTS BEARING EARLIER REVISION DATES

REVISION DATES: 11-15-13 11-18-13 11-26-13

SHEET 3 OF X

FILE => rwb2-b-sp02.dgn

USERNAME => s136697 DATE PLOTTED => 27-NOV-2013 TIME PLOTTED => 10:31

INCOMPLETE PLAN
FOR DESIGN STUDY
PRINTED
DEC 11 2013
Office of Structures, Design
STATE OF CALIFORNIA

CHECKED DETAILS

DIST	COUNTY	ROUTE	POST MILES TOTAL PROJECT	SHEET No.	TOTAL SHEETS
05	SB	101			

REGISTERED CIVIL ENGINEER X DATE

PLANS APPROVAL DATE

The State of California or its officers or agents shall not be responsible for the accuracy or completeness of scanned copies of this plan sheet.

REGISTERED PROFESSIONAL ENGINEER Manode Kodsuntie No. 56671 Exp. 6/30/2015 CIVIL STATE OF CALIFORNIA

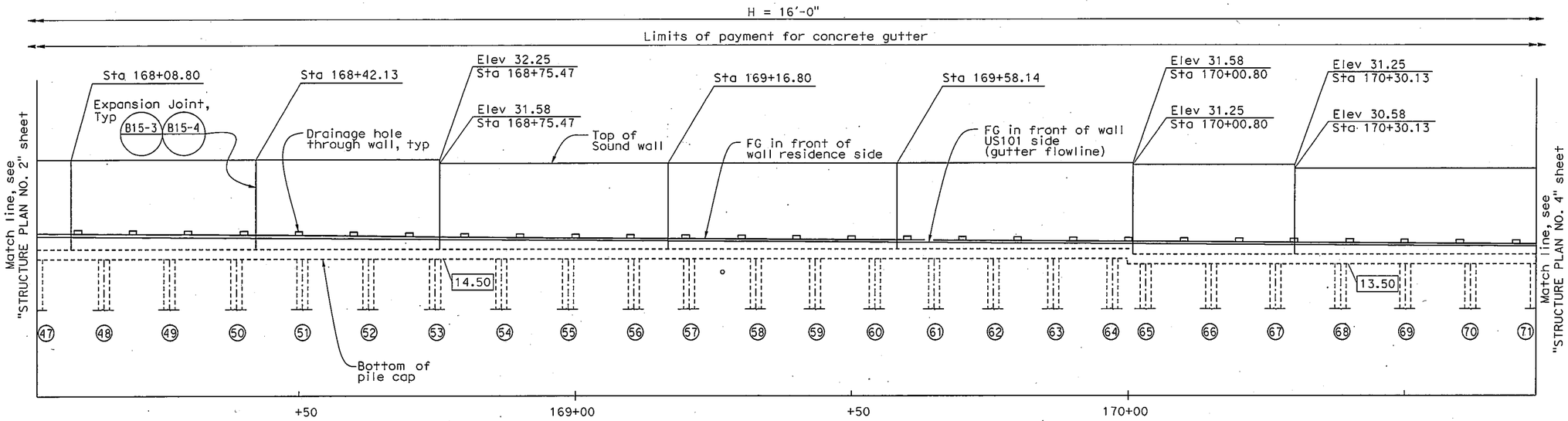

DEVELOPED MIRROR ELEVATION

1" = 10'

LEGEND:

(**) Indicates pile number

00.00 Indicates bottom of pile cap elev.

NOTES:

1. For concrete gutter profile grade, see "WALL DETAILS No. 1" sheet.
2. Pile spcing measured along "SWB2" line.

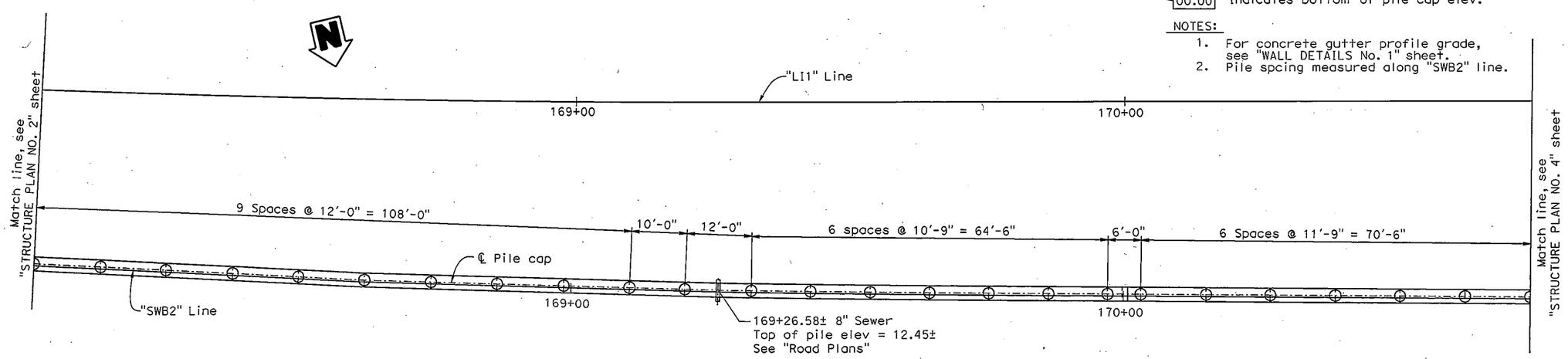

PLAN

1" = 10'

NOTE:
THE CONTRACTOR SHALL VERIFY ALL CONTROLLING FIELD DIMENSIONS BEFORE ORDERING OR FABRICATING ANY MATERIAL.

	BY	CHECKED
DESIGN	Manode Kodsuntie	X Jun Ki Jung
DETAILS	Yingjue Feng	X Jun Ki Jung
QUANTITIES	X	X

STATE OF CALIFORNIA
DEPARTMENT OF TRANSPORTATION

DIVISION OF ENGINEERING SERVICES
STRUCTURE DESIGN
DESIGN BRANCH 7

BRIDGE NO. X
POST MILE X

SOUND WALL "B2"
STRUCTURE PLAN NO. 3

STRUCTURES DESIGN DETAIL SHEET (ENGLISH) (REV. 09-01-10)

ORIGINAL SCALE IN INCHES FOR REDUCED PLANS 0 1 2 3

UNIT: 3592
PROJECT NUMBER & PHASE: 0500000543-1
CONTRACT NO.: 05-4482U1

DISREGARD PRINTS BEARING EARLIER REVISION DATES

REVISION DATES 11-6-13 11-18-13 11-26-13

SHEET 4 OF X

FILE => rwb2-b-sp03.dgn

USERNAME => s136697 DATE PLOTTED => 27-NOV-2013 TIME PLOTTED => 10:21

INCOMPLETE PLAN FOR DESIGN STUDY PRINTED

DEC 11 2013

Office of Structures, Design
STATE OF CALIFORNIA

CHECKED DETAILS

DIST	COUNTY	ROUTE	POST MILES TOTAL PROJECT	SHEET No.	TOTAL SHEETS
05	SB	101			

REGISTERED CIVIL ENGINEER X DATE

PLANS APPROVAL DATE

The State of California or its officers or agents shall not be responsible for the accuracy or completeness of scanned copies of this plan sheet.

REGISTERED PROFESSIONAL ENGINEER Manode Kodsuntie No. 56671 Exp. 6/30/2015 CIVIL STATE OF CALIFORNIA

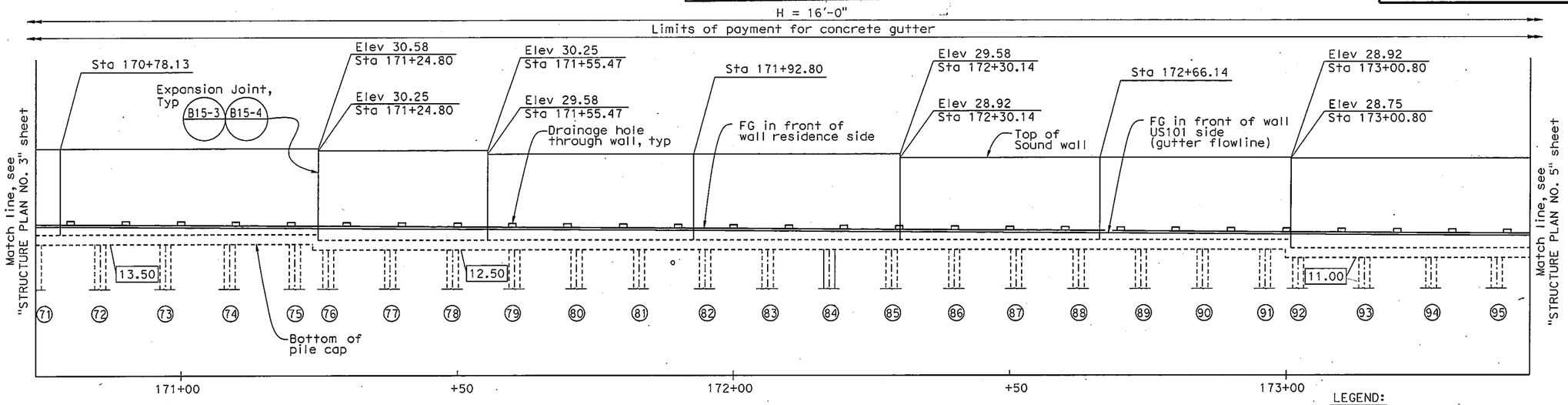

DEVELOPED MIRROR ELEVATION

1" = 10'

LEGEND:

(**) Indicates pile number

00.00 Indicates bottom of pile cap elev.

NOTES:

1. For concrete gutter profile grade, see "WALL DETAILS No. 1" sheet.
2. Pile spacing measured along "SWB2" line.

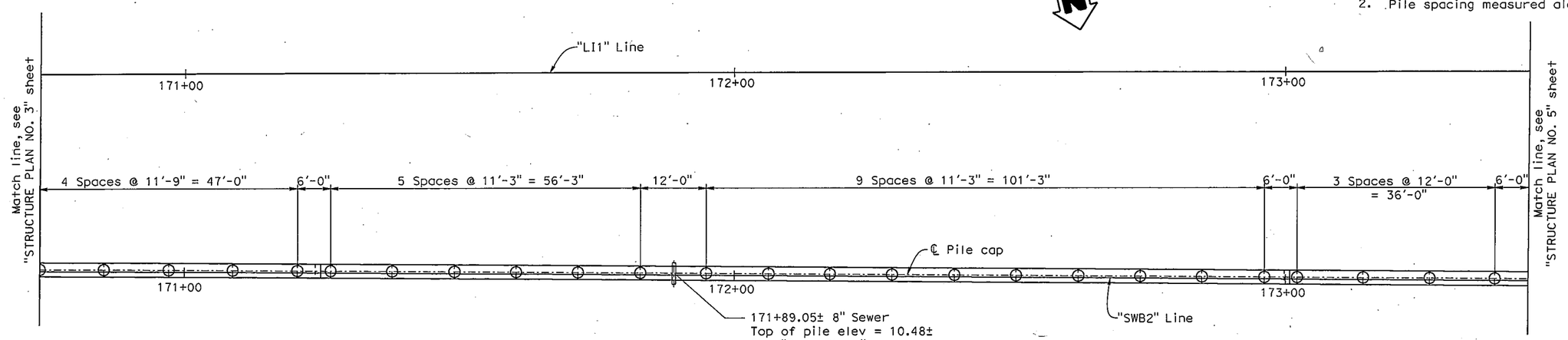

PLAN

1" = 10'

NOTE:
THE CONTRACTOR SHALL VERIFY ALL CONTROLLING FIELD DIMENSIONS BEFORE ORDERING OR FABRICATING ANY MATERIAL.

	BY	CHECKED
DESIGN	Manode Kodsuntie	X Jun Ki Jung
DETAILS	Yingjue Feng	X Jun Ki Jung
QUANTITIES	X	X

STATE OF CALIFORNIA
DEPARTMENT OF TRANSPORTATION

DIVISION OF ENGINEERING SERVICES
STRUCTURE DESIGN
DESIGN BRANCH 7

BRIDGE NO. X
POST MILE X

SOUND WALL "B2"
STRUCTURE PLAN NO. 4

STRUCTURES DESIGN DETAIL SHEET (ENGLISH) (REV. 09-01-10)

ORIGINAL SCALE IN INCHES FOR REDUCED PLANS 0 1 2 3

UNIT: 3592
PROJECT NUMBER & PHASE: 0500000543-1
CONTRACT NO.: 05-4482U1

DISREGARD PRINTS BEARING EARLIER REVISION DATES

REVISION DATES 11-6-13 11-19-13 11-26-13

SHEET X OF X

FILE => rwb2-b-sp04.dgn

USERNAME => s136697 DATE PLOTTED => 27-NOV-2013 TIME PLOTTED => 10:22

DIST	COUNTY	ROUTE	POST MILES TOTAL PROJECT	SHEET No.	TOTAL SHEETS
05	SB	101			

REGISTERED CIVIL ENGINEER X DATE

PLANS APPROVAL DATE

The State of California or its officers or agents shall not be responsible for the accuracy or completeness of scanned copies of this plan sheet.

REGISTERED PROFESSIONAL ENGINEER Manode Kodsuntie No. 56671 Exp. 6/30/2015 CIVIL STATE OF CALIFORNIA

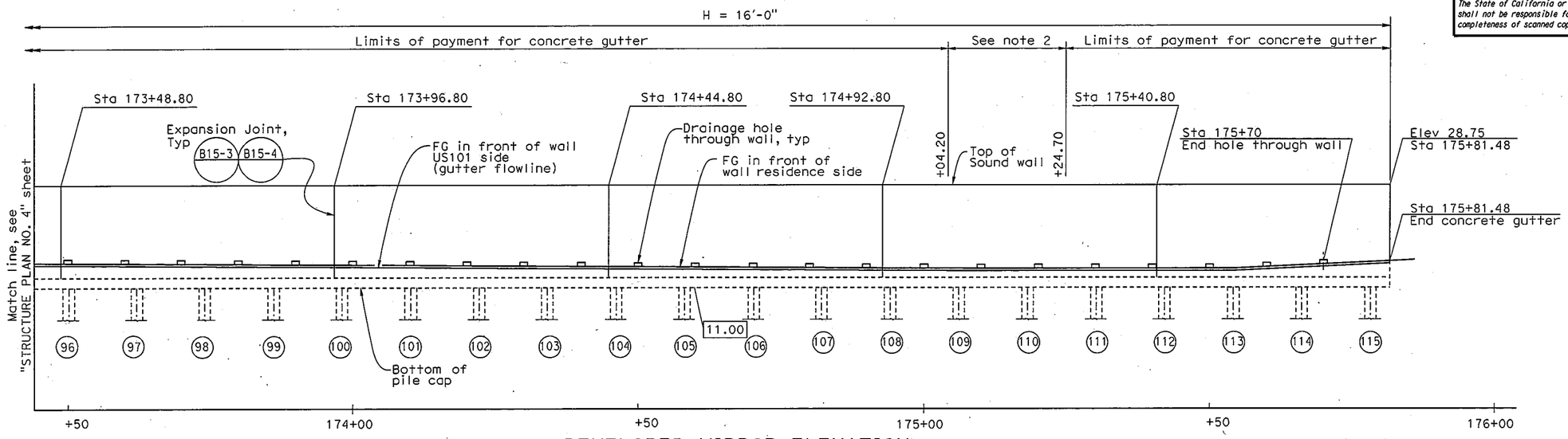

DEVELOPED MIRROR ELEVATION

1" = 10'

LEGEND:

(**) Indicates pile number

00.00 Indicates bottom of pile cap elev.

NOTES:

1. For concrete gutter profile grade, see "WALL DETAILS No. 1" sheet.
2. Concrete gutter transition region to drainage inlet, see "ROAD PLANS".
3. Pile spacing measured along "SWB2" line.

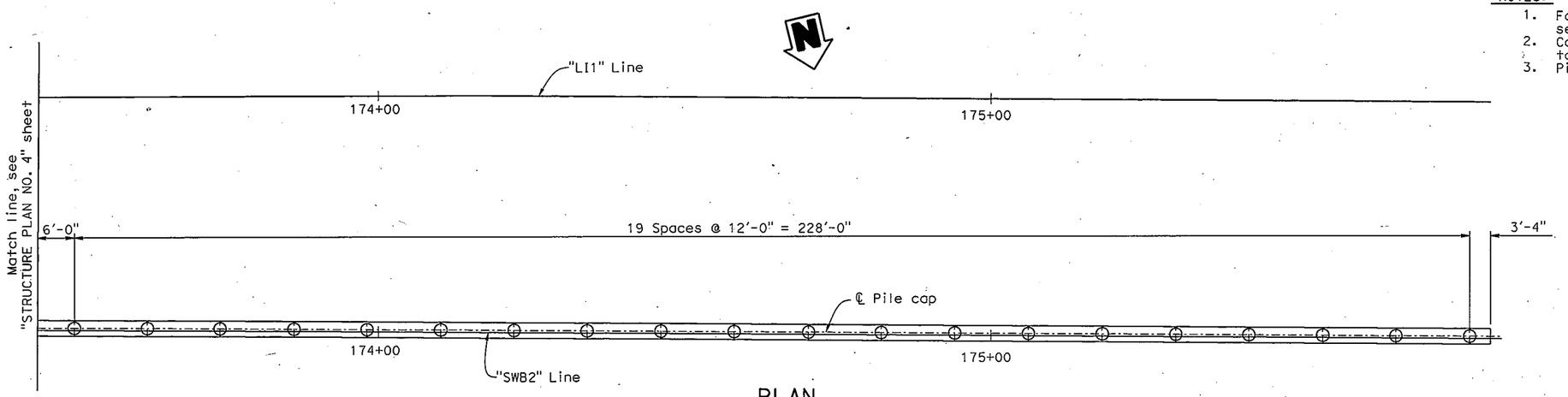

PLAN

1" = 10'

INCOMPLETE PLAN FOR DESIGN STUDY PRINTED

DEC 11 2013

Office of Structures, Design STATE OF CALIFORNIA

NOTE:
THE CONTRACTOR SHALL VERIFY ALL CONTROLLING FIELD DIMENSIONS BEFORE ORDERING OR FABRICATING ANY MATERIAL.

CHECKED DETAILS

	BY	CHECKED
DESIGN	Manode Kodsuntie	X Jun Ki Jung
DETAILS	Yingjue Feng	X Jun Ki Jung
QUANTITIES	X	X

STATE OF CALIFORNIA DEPARTMENT OF TRANSPORTATION

DIVISION OF ENGINEERING SERVICES STRUCTURE DESIGN DESIGN BRANCH 7

BRIDGE NO. X

POST MILE X

SOUND WALL "B2"

STRUCTURE PLAN NO. 5

STRUCTURES DESIGN DETAIL SHEET (ENGLISH) (REV. 09-01-10)

ORIGINAL SCALE IN INCHES FOR REDUCED PLANS 0 1 2 3

UNIT: 3592
PROJECT NUMBER & PHASE: 0500000543-1 CONTRACT NO.: 05-4482U1

DISREGARD PRINTS BEARING EARLIER REVISION DATES

REVISION DATES 11-14-13 11-18-13 11-26-13

SHEET 6 OF X

FILE => rwb2-b-sp05.dgn

USERNAME => s136697 DATE PLOTTED => 27-NOV-2013 TIME PLOTTED => 10:34

DIST	COUNTY	ROUTE	POST MILES TOTAL PROJECT	SHEET No.	TOTAL SHEETS
05	SB	101			

REGISTERED CIVIL ENGINEER X DATE

PLANS APPROVAL DATE

REGISTERED PROFESSIONAL ENGINEER Manade Kodsuntie No. 56671 Exp. 6/30/2015 CIVIL STATE OF CALIFORNIA

The State of California or its officers or agents shall not be responsible for the accuracy or completeness of scanned copies of this plan sheet.

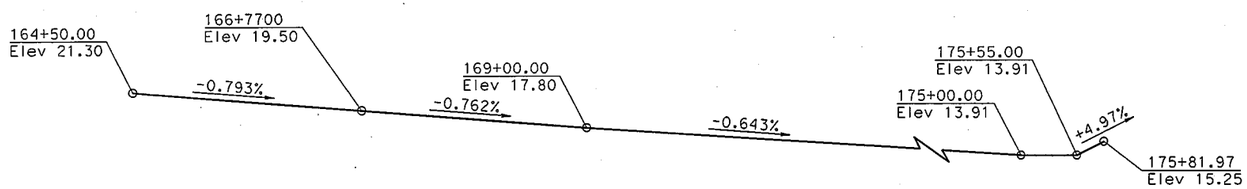

CONCRETE GUTTER FLOWLINE PROFILE GRADE

NO SCALE

LEGEND:

- Indicates blocks to be filled with high strength grout
- Indicates structure backfill
- Indicates structure excavation (Structure Excavation Type D from Sta 164+00 to 175+81.48)

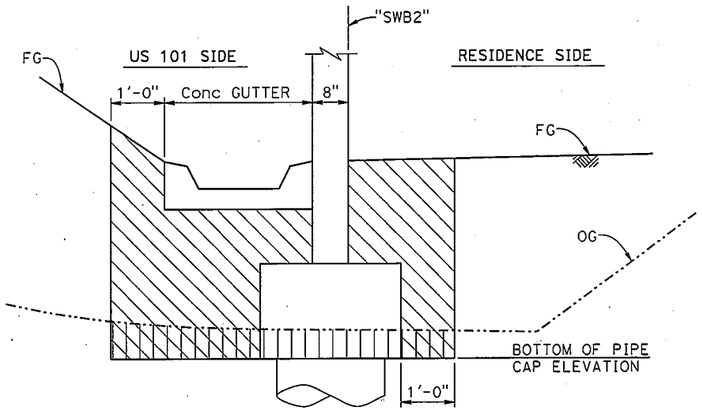

Sta 164+50 TO Sta 175+81.48

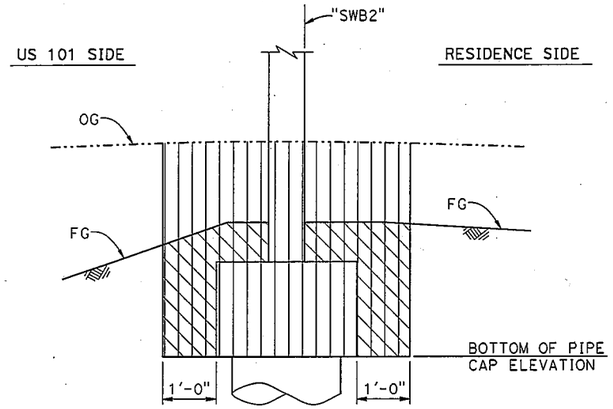

Sta 162+80.80 TO Sta 164+50

LIMITS OF STRUCTURE EXCAVATION AND STRUCTURE BACKFILL

3/4" = 1'-0"

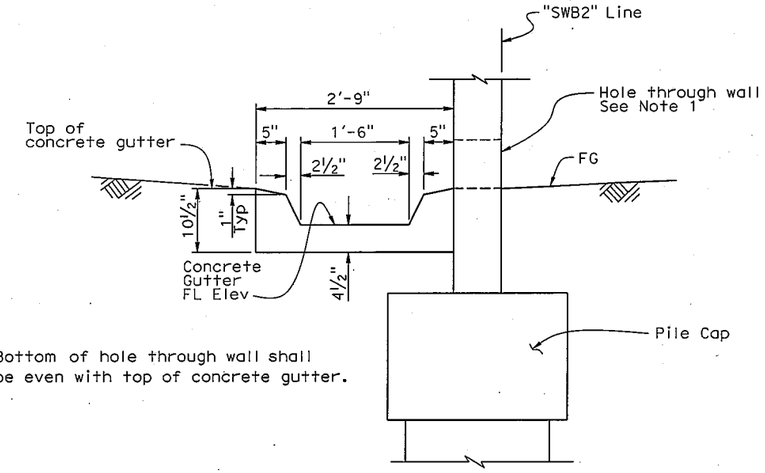

NOTES:

1. Bottom of hole through wall shall be even with top of concrete gutter.

CONCRETE GUTTER DETAIL

1" = 1'

INCOMPLETE PLAN FOR DESIGN STUDY PRINTED

DEC 11 2013

Office of Structures, Design
STATE OF CALIFORNIA

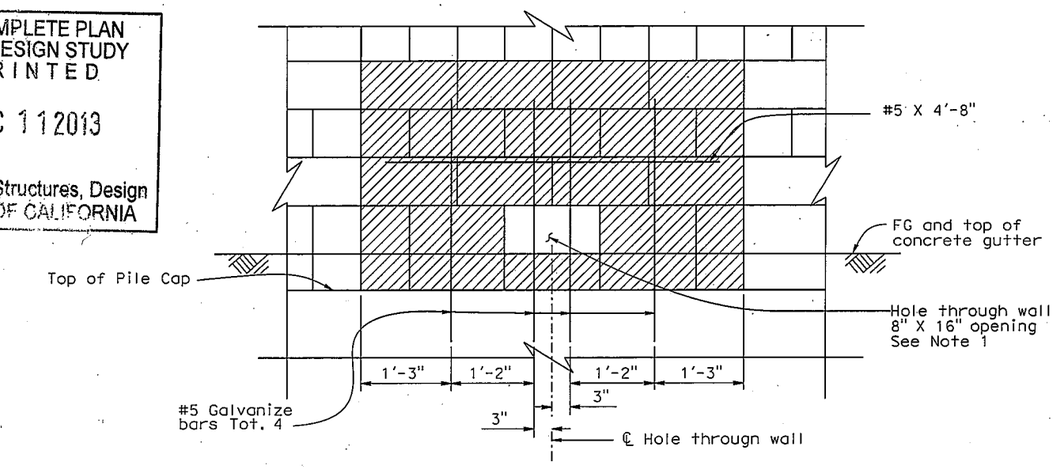

HOLE THROUGH WALL DETAIL

1" = 1'

PILE DATA TABLE

Location	Pile Type (CIDH)	Cut-Off Elevation	Nominal Resistance Compression	Nominal Resistance Tension	Design Tip Elevation	Specified Tip Elevation
	In	Ft	Kips			
Piles 1 thru 6	24	23.00			-2.00 (a)(c)(d)	-2.00
Piles 7 thru 11	24	21.75			-3.25 (a)(c)(d)	-3.25
Piles 12 thru 13	24	20.50			-4.50 (a)(c)(d)	-4.50
Piles 14 thru 27	24	17.75			-7.25 (a)(c)(d)	-7.25
Piles 28 thru 44	24	16.25			-8.75 (a)(c)(d)	-8.75
Piles 45 thru 64	24	14.75			-10.25 (a)(c)(d)	-10.25
Piles 65 thru 75	24	13.75			-11.25 (a)(c)(d)	-11.25
Piles 76 thru 91	24	12.75			-12.25 (a)(c)(d)	-12.25
Piles 92 thru 125	24	11.25			-13.75 (a)(c)(d)	-13.75

NOTES:

1. Design tip elevations are controlled by: (a) Compression, (c) Settlement, and (d) Lateral Load.
2. The specified tip elevations shall not be raised unless directed by the Engineer.

CHECKED DETAILS

	BY	CHECKED
DESIGN	E. Ortega / M. Kodsuntie	X Jun Ki Jung
DETAILS	Yingjue Feng	X Jun Ki Jung
QUANTITIES	X	X

STATE OF CALIFORNIA DEPARTMENT OF TRANSPORTATION

DIVISION OF ENGINEERING SERVICES STRUCTURE DESIGN DESIGN BRANCH 7

BRIDGE NO. X

POST MILE X

SOUND WALL "B2"
WALL DETAILS

STRUCTURES DESIGN DETAIL SHEET (ENGLISH) (REV. 09-01-10)

ORIGINAL SCALE IN INCHES FOR REDUCED PLANS 0 1 2 3

UNIT: 3592
PROJECT NUMBER & PHASE: 0500000543-1 CONTRACT NO.: 05-4482U1

DISREGARD PRINTS BEARING EARLIER REVISION DATES

REVISION DATES 8-14-13 11-26-13 11-26-13

SHEET 7 OF X

FILE => rwb2-f-det01.dgn

USERNAME => s136697 DATE PLOTTED => 27-NOV-2013 TIME PLOTTED => 10:08

DIST	COUNTY	ROUTE	POST MILES TOTAL PROJECT	SHEET No.	TOTAL SHEETS
05	SB	101			

REGISTERED CIVIL ENGINEER X DATE

PLANS APPROVAL DATE

REGISTERED PROFESSIONAL ENGINEER Manode Kodsuntie No. 56671 Exp. 6/30/2015 CIVIL STATE OF CALIFORNIA

The State of California or its officers or agents shall not be responsible for the accuracy or completeness of scanned copies of this plan sheet.

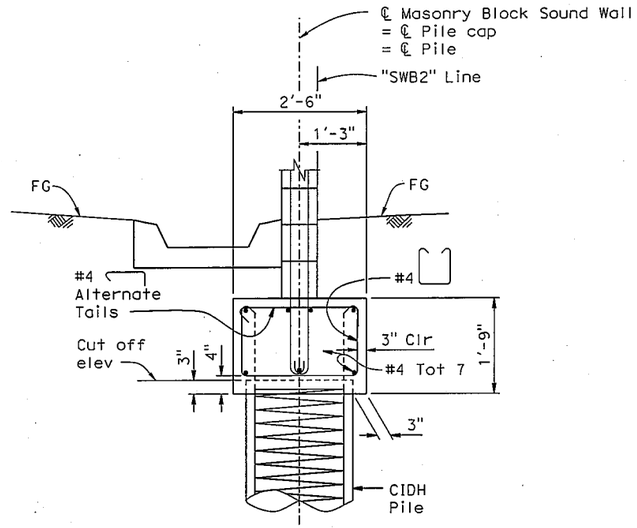

PILE CAP SECTION

3/4" = 1'-0"

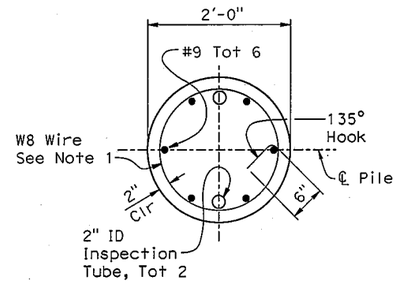

SECTION A-A

1" = 1'-0"

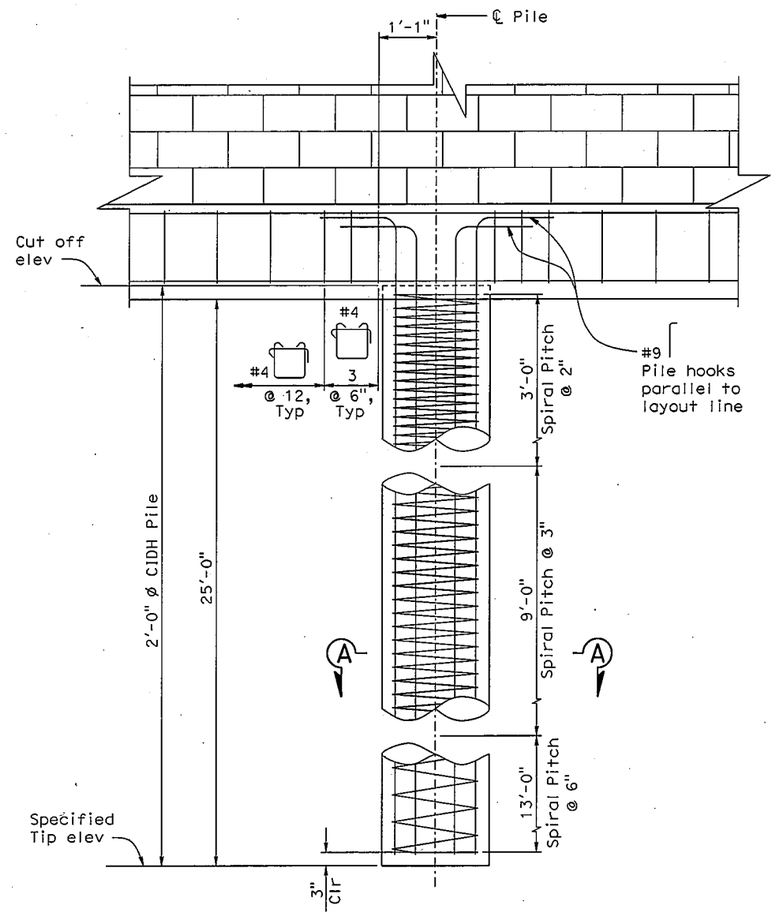

ELEVATION

3/4" = 1'-0"

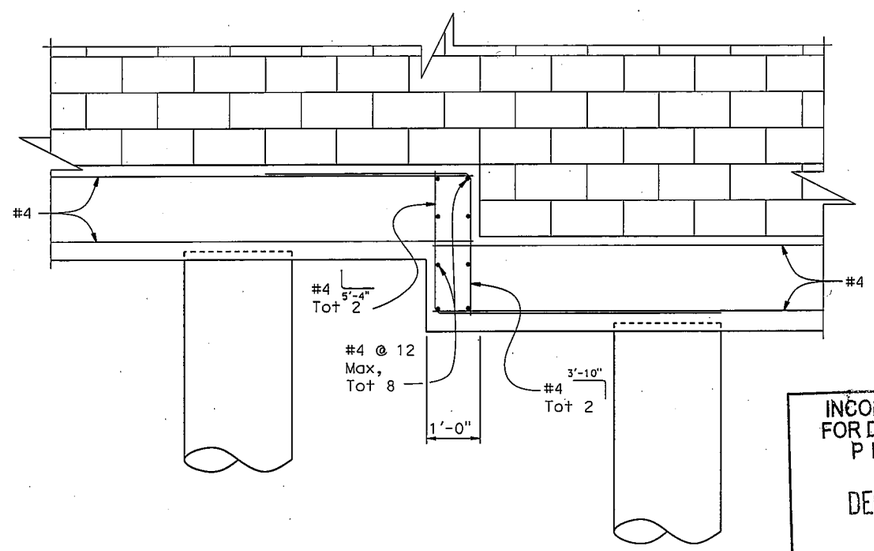

PILE CAP STEP DETAIL

3/4" = 1'-0"

INCOMPLETE PLAN FOR DESIGN STUDY PRINTED

DEC 11 2013

Office of Structures, Design
STATE OF CALIFORNIA

CHECKED DETAILS

NOTE:

1. Lapped splices in spiral reinforcement shall be lapped at least 80 wire diameters. Spiral reinforcement at splices and at ends shall be terminated with a 135° hook with a 6" tail hooked around a longitudinal bar.

	BY	CHECKED
DESIGN	Jun Ki Jung	X Jun Ki Jung
DETAILS	B. Huddleston \ Y. Feng	X Jun Ki Jung
QUANTITIES	X	X

STATE OF CALIFORNIA DEPARTMENT OF TRANSPORTATION

DIVISION OF ENGINEERING SERVICES STRUCTURE DESIGN DESIGN BRANCH 7

BRIDGE NO. X

POST MILE X

SOUND WALL "B2"

PILE DETAILS

STRUCTURES DESIGN DETAIL SHEET (ENGLISH) (REV. 09-01-10)

ORIGINAL SCALE IN INCHES FOR REDUCED PLANS 0 1 2 3

UNIT: 3592
PROJECT NUMBER & PHASE: 0500000543-1 CONTRACT NO.: 05-4482U1

DISREGARD PRINTS BEARING EARLIER REVISION DATES

REVISION DATES 11-27-13

SHEET 8 OF X

FILE => rwb2-v-pdt01.dgn

USERNAME => 6136697 DATE PLOTTED => 27-NOV-2013 TIME PLOTTED => 10:28

DIST	COUNTY	ROUTE	POST MILES TOTAL PROJECT	SHEET No.	TOTAL SHEETS
05	SB	101			

REGISTERED CIVIL ENGINEER X DATE

PLANS APPROVAL DATE

REGISTERED PROFESSIONAL ENGINEER Eduardo Jose Ortega Jr. No. 77226 Exp. 6/30/2015 CIVIL STATE OF CALIFORNIA

The State of California or its officers or agents shall not be responsible for the accuracy or completeness of scanned copies of this plan sheet.

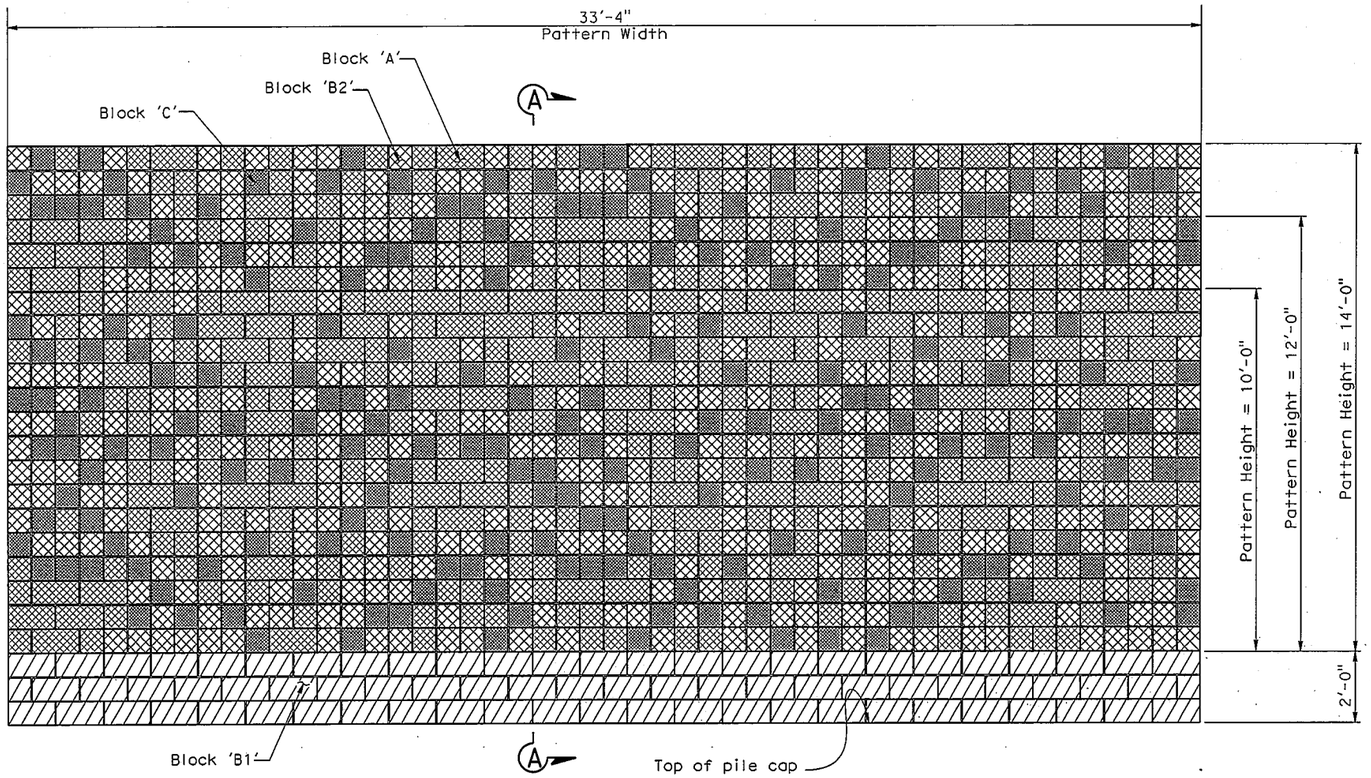

BLOCK PATTERN ELEVATION

No Scale

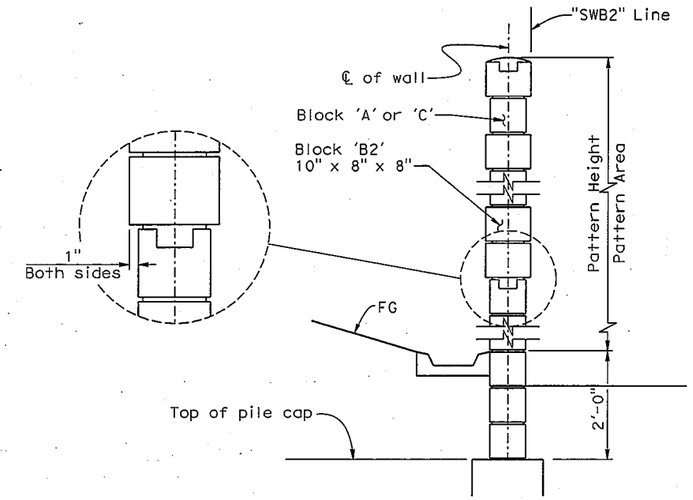

SECTION A-A

No Scale

INCOMPLETE PLAN FOR DESIGN STUDY PRINTED

DEC 11 2013

Office of Structures, Design
STATE OF CALIFORNIA

MASONRY BLOCK LEGEND:

- Block 'A' : 8" x 8" x 16" split face all exposed sides. Use half blocks where necessary. Air Vol Block color #60H59804B
- Block 'B1' : 8" x 8" x 16" split face all exposed sides. Use half blocks where necessary. Air Vol Block color #60H607E7
- Block 'B2' : 10" x 8" x 8" split face all exposed sides. Block will project 1" both sides of wall. Air Vol Block color #60H607E7
- Block 'C' : 8" x 8" x 8" split face all exposed sides. Use half blocks where necessary. Air Vol Block color #60B401G

NOTE:

1. The wall colors shall be from Air Vol Block Inc.; 1 Suburban Road, San Luis Obispo, Ca. 93406; Phone (805) 543-1314; or equal. The colors shall be the ones indicated.

CHECKED DETAILS

	BY	CHECKED
DESIGN	E. O / S. H / J. J	Manode Kodsuntie
DETAILS	Gerald Dickerson	Manode Kodsuntie
QUANTITIES	X	X

STATE OF CALIFORNIA
DEPARTMENT OF TRANSPORTATION

DIVISION OF ENGINEERING SERVICES
STRUCTURE DESIGN
DESIGN BRANCH 7

BRIDGE NO. X
POST MILE X

SOUND WALL "B2"
ARCHITECTURAL DETAILS

STRUCTURES DESIGN DETAIL SHEET (ENGLISH) (REV. 09-01-10)

ORIGINAL SCALE IN INCHES FOR REDUCED PLANS 0 1 2 3

UNIT: 3592
PROJECT NUMBER & PHASE: 0500000543-1
CONTRACT NO.: 05-4482U1

DISREGARD PRINTS BEARING EARLIER REVISION DATES

REVISION DATES: 8-26-13, 11-27-13

SHEET 9 OF X

FILE => rwb2-u-archdet.dgn

USERNAME => 6136697 DATE PLOTTED => 27-NOV-2013 TIME PLOTTED => 10:25

==========

LPILE Plus for Windows, Version 5.0 (5.0.47)

Analysis of Individual Piles and Drilled Shafts
Subjected to Lateral Loading Using the p-y Method

(c) 1985-2010 by Ensoft, Inc.
All Rights Reserved

==========

This program is licensed to:

Caltrans
Caltrans

Files Used for Analysis

Path to file locations: H:\SB\SB-101-2.2-3.3 Linden Casitas\Walls\Calculations\B2 and B9\
Name of input data file: SW B2.lpd
Name of output file: SW B2.lpo
Name of plot output file: SW B2.lpp
Name of runtime file: SW B2.lpr

Time and Date of Analysis

Date: November 26, 2013 Time: 12:24:29

Problem Title

Sound Wall B2 Linden Casitas

Program Options

Units Used in Computations - US Customary Units: Inches, Pounds

Basic Program Options:

Analysis Type 1:
- Computation of Lateral Pile Response Using User-specified Constant EI

Computation Options:
- Only internally-generated p-y curves used in analysis
- Analysis does not use p-y multipliers (individual pile or shaft action only)
- Analysis assumes no shear resistance at pile tip
- Analysis for fixed-length pile or shaft only
- No computation of foundation stiffness matrix elements
- Output pile response for full length of pile
- Analysis assumes no soil movements acting on pile
- No additional p-y curves to be computed at user-specified depths

Solution Control Parameters:
- Number of pile increments = 100
- Maximum number of iterations allowed = 100
- Deflection tolerance for convergence = 1.0000E-05 in
- Maximum allowable deflection = 1.0000E+02 in

Printing Options:
- Values of pile-head deflection, bending moment, shear force, and soil reaction are printed for full length of pile.
- Printing Increment (spacing of output points) = 1

Pile Structural Properties and Geometry

Pile Length = 168.00 in

Depth of ground surface below top of pile = -60.00 in

Slope angle of ground surface = 0.00 deg.

Structural properties of pile defined using 2 points

Point No.	Point Depth in	Pile Diameter in	Moment of Inertia in**4	Pile Area Sq.in	Modulus of Elasticity lbs/Sq.in
1	0.0000	24.00000000	16286.0000	452.0000	4000000.
2	168.0000	24.00000000	16286.0000	452.0000	4000000.

Soil and Rock Layering Information

The soil profile is modelled using 5 layers

Layer 1 is stiff clay without free water
Distance from top of pile to top of layer = -60.000 in
Distance from top of pile to bottom of layer = 12.000 in

Layer 2 is stiff clay without free water
Distance from top of pile to top of layer = 12.000 in
Distance from top of pile to bottom of layer = 48.000 in

Layer 3 is sand, p-y criteria by Reese et al., 1974
Distance from top of pile to top of layer = 48.000 in
Distance from top of pile to bottom of layer = 84.000 in
p-y subgrade modulus k for top of soil layer = 0.000 lbs/in**3
p-y subgrade modulus k for bottom of layer = 0.000 lbs/in**3

NOTE: Internal default values for p-y subgrade modulus will be computed for the above soil layer.

Layer 4 is stiff clay without free water
Distance from top of pile to top of layer = 84.000 in
Distance from top of pile to bottom of layer = 156.000 in

Layer 5 is sand, p-y criteria by Reese et al., 1974
Distance from top of pile to top of layer = 156.000 in
Distance from top of pile to bottom of layer = 222.000 in

p-y subgrade modulus k for top of soil layer = 0.000 lbs/in**3
p-y subgrade modulus k for bottom of layer = 0.000 lbs/in**3

NOTE: Internal default values for p-y subgrade modulus will be computed for the above soil layer.

(Depth of lowest layer extends 54.00 in below pile tip)

Effective Unit Weight of Soil vs. Depth

Effective unit weight of soil with depth defined using 10 points

Point No.	Depth X in	Eff. Unit Weight lbs/in**3
1	-60.00	0.06900
2	12.00	0.06900
3	12.00	0.06900
4	48.00	0.06900
5	48.00	0.03300
6	84.00	0.03300
7	84.00	0.03300
8	156.00	0.03300
9	156.00	0.03300
10	222.00	0.03300

Shear Strength of Soils

Shear strength parameters with depth defined using 10 points

Point No.	Depth X in	Cohesion c lbs/in**2	Angle of Friction Deg.	E50 or k_rm	RQD %
1	-60.000	10.41000	0.00	------	------
2	12.000	10.41000	0.00	------	------
3	12.000	10.41000	0.00	------	------
4	48.000	10.41000	0.00	------	------
5	48.000	0.00000	34.00	------	------
6	84.000	0.00000	34.00	------	------
7	84.000	6.94000	0.00	------	------
8	156.000	6.94000	0.00	------	------
9	156.000	0.00000	38.00	------	------
10	222.000	0.00000	38.00	------	------

Notes:

(1) Cohesion = uniaxial compressive strength for rock materials.
(2) Values of E50 are reported for clay strata.
(3) Default values will be generated for E50 when input values are 0.
(4) RQD and k_rm are reported only for weak rock strata.

Loading Type

Static loading criteria was used for computation of p-y curves.

Pile-head Loading and Pile-head Fixity Conditions

Number of loads specified = 1

Load Case Number 1

Pile-head boundary conditions are Shear and Moment (BC Type 1)
Shear force at pile head = 13000.000 lbs
Bending moment at pile head = 0.000 in-lbs
Axial load at pile head = 23000.000 lbs

(Zero moment at pile head for this load indicates a free-head condition)

Computed Values of Load Distribution and Deflection
for Lateral Loading for Load Case Number 1

Pile-head boundary conditions are Shear and Moment (Pile-head Condition Type 1)
Specified shear force at pile head = 13000.000 lbs
Specified moment at pile head = 0.000 in-lbs
Specified axial load at pile head = 23000.000 lbs

Depth X in	Deflect. y in	Moment M lbs-in	Shear V lbs	Slope S Rad.	Total Stress lbs/in**2	Soil Res. p lbs/in	Es*h F/L lbs/in
0.000	0.024338	1.8418E-06	13000.0000	-0.0004004	50.8850	-284.9185	9833.6438
1.680	0.023665	21453.3925	12520.6481	-0.0004001	66.6924	-285.7384	20284.4515
3.360	0.022994	42100.2955	12039.9863	-0.0003993	81.9057	-286.4781	20931.0106
5.040	0.022324	61938.6009	11558.1496	-0.0003979	96.5231	-287.1370	21608.6410
6.720	0.021657	80966.4291	11075.2741	-0.0003961	110.5434	-287.7149	22319.1385
8.400	0.020993	99182.1302	10591.4961	-0.0003937	123.9652	-288.2113	23064.4276
10.080	0.020334	116584.	10106.9530	-0.0003910	136.7877	-288.6258	23846.5728
11.760	0.019680	133172.	9621.7823	-0.0003877	149.0098	-288.9582	24667.7901
13.440	0.019031	148943.	9136.1861	-0.0003841	160.6308	-289.1326	25523.7972
15.120	0.018389	163899.	8650.3026	-0.0003801	171.6505	-289.3001	26430.3058
16.800	0.017754	178038.	8164.2076	-0.0003757	182.0684	-289.3845	

```
27383.5724
  18.480  0.017127     191360.   7678.0410  -0.0003709    191.8844   -289.3852
28386.5637
  20.160  0.016508     203865.   7191.9437  -0.0003658    201.0984   -289.3021
29442.4789
  21.840  0.015898     215553.   6706.0568  -0.0003604    209.7107   -289.1347
30554.7714
  23.520  0.015297     226425.   6220.5222  -0.0003547    217.7214   -288.8827
31727.1736
  25.200  0.014706     236481.   5735.4822  -0.0003487    225.1313   -288.5459
32963.7249
  26.880  0.014125     245723.   5251.0797  -0.0003425    231.9409   -288.1237
34268.8024
  28.560  0.013555     254151.   4767.4583  -0.0003361    238.1511   -287.6160
35647.1564
  30.240  0.012996     261768.   4284.7622  -0.0003294    243.7630   -287.0223
37103.9508
  31.920  0.012448     268574.   3803.1361  -0.0003226    248.7779   -286.3421
38644.8083
  33.600  0.011912     274571.   3322.7257  -0.0003156    253.1970   -285.5750
40275.8635
  35.280  0.011388     279762.   2843.6774  -0.0003084    257.0221   -284.7206
42003.8226
  36.960  0.010876     284150.   2366.1384  -0.0003012    260.2548   -283.7782
43836.0337
  38.640  0.010376     287736.   1890.2570  -0.0002938    262.8972   -282.7472
45780.5680
  40.320  0.009889     290524.   1416.1827  -0.0002863    264.9513   -281.6269
47846.3153
  42.000  0.009414     292516.    944.0663  -0.0002788    266.4196   -280.4164
50043.0954
  43.680  0.008952     293717.    474.0602  -0.0002712    267.3045   -279.1146
52381.7916
  45.360  0.008502     294130.      6.3188  -0.0002637    267.6087   -277.7204
54874.5087
  47.040  0.008066     293759.   -459.0016  -0.0002561    267.3351   -276.2324
57534.7639
  48.720  0.007642     292608.   -753.1577  -0.0002485    266.4869    -73.9534
16257.6363
  50.400  0.007231     291248.   -874.9754  -0.0002410    265.4846    -71.0677
16511.6523
  52.080  0.006832     289686.   -991.9465  -0.0002335    264.3344    -68.1835
16765.6683
  53.760  0.006446     287933.  -1104.0777  -0.0002261    263.0421    -65.3060
17019.6843
  55.440  0.006073     285994.  -1211.3843  -0.0002187    261.6139    -62.4400
17273.7003
  57.120  0.005712     283879.  -1313.8898  -0.0002113    260.0555    -59.5903
17527.7163
  58.800  0.005363     281596.  -1411.6255  -0.0002040    258.3730    -56.7616
17781.7323
  60.480  0.005026     279152.  -1504.6303  -0.0001968    256.5723    -53.9584
18035.7483
  62.160  0.004702     276556.  -1592.9508  -0.0001896    254.6591    -51.1851
18289.7643
  63.840  0.004389     273814.  -1676.6407  -0.0001825    252.6394    -48.4458
18543.7803
  65.520  0.004088     270936.  -1755.7609  -0.0001755    250.5186    -45.7448
18797.7963
  67.200  0.003799     267929.  -1830.3787  -0.0001685    248.3025    -43.0860
19051.8123
  68.880  0.003522     264799.  -1900.5683  -0.0001617    245.9967    -40.4731
19305.8283
```

70.560	0.003256	261555.	-1966.4101	-0.0001549	243.6064	-37.9100	19559.8443
72.240	0.003002	258204.	-2027.9906	-0.0001482	241.1371	-35.4001	19813.8603
73.920	0.002758	254753.	-2085.4021	-0.0001416	238.5941	-32.9469	20067.8763
75.600	0.002526	251208.	-2138.7425	-0.0001351	235.9823	-30.5536	20321.8923
77.280	0.002304	247577.	-2188.1151	-0.0001286	233.3068	-28.2233	20575.9083
78.960	0.002094	243866.	-2233.6283	-0.0001223	230.5724	-25.9591	20829.9243
80.640	0.001894	240081.	-2275.3954	-0.0001160	227.7838	-23.7637	21083.9403
82.320	0.001704	236229.	-2313.5345	-0.0001099	224.9457	-21.6399	21337.9563
84.000	0.001524	232316.	-2469.8162	-0.0001039	222.0624	-164.4098	181209.
85.680	0.001355	227939.	-2742.0197	-9.7926E-05	218.8370	-159.6419	197961.
87.360	0.001195	223111.	-3006.0870	-9.2109E-05	215.2794	-154.7239	217478.
89.040	0.001045	217846.	-3261.7465	-8.6424E-05	211.3999	-149.6327	240485.
90.720	0.000905	212158.	-3508.6823	-8.0879E-05	207.2091	-144.3384	267989.
92.400	0.000774	206063.	-3746.5191	-7.5486E-05	202.7179	-138.8007	301443.
94.080	0.000651	199575.	-3974.8015	-7.0256E-05	197.9379	-132.9641	343022.
95.760	0.000538	192713.	-4192.9610	-6.5197E-05	192.8813	-126.7497	396163.
97.440	0.000432	185492.	-4392.5154	-6.0320E-05	187.5609	-110.8151	430800.
99.120	0.000335	177959.	-4557.7219	-5.5634E-05	182.0100	-85.8594	430800.
100.800	0.000245	170182.	-4682.6638	-5.1145E-05	176.2803	-62.8809	430800.
102.480	0.000163	162229.	-4770.5898	-4.6859E-05	170.4198	-41.7930	430800.
104.160	8.78E-05	154157.	-4824.6023	-4.2779E-05	164.4722	-22.5075	430800.
105.840	1.92E-05	146021.	-4847.6537	-3.8908E-05	158.4778	-4.9347	430800.
107.520	-4.30E-05	137872.	-4842.5456	-3.5248E-05	152.4729	11.0158	430800.
109.200	-9.92E-05	129753.	-4811.9271	-3.1797E-05	146.4908	25.4346	430800.
110.880	-0.000150	121706.	-4758.2960	-2.8554E-05	140.5616	38.4119	430800.
112.560	-0.000195	113767.	-4683.9989	-2.5518E-05	134.7121	50.0370	430800.
114.240	-0.000236	105970.	-4591.2334	-2.2685E-05	128.9667	60.3982	430800.
115.920	-0.000271	98342.6729	-4482.0500	-2.0050E-05	123.3467	69.5820	430800.
117.600	-0.000303	90911.7488	-4358.3555	-1.7610E-05	117.8714	77.6733	430800.
119.280	-0.000331	83699.9592	-4221.9161	-1.5358E-05	112.5575	84.7545	430800.
120.960	-0.000355	76727.2975	-4074.3614	-1.3290E-05	107.4199	90.9059	430800.
122.640	-0.000375	70011.1321	-3917.1884	-1.1397E-05	102.4712	96.2048	

```
430800.
 124.320 -0.000393  63566.4254  -3751.7665 -9.6750E-06     97.7226    100.7259
430800.
 126.000 -0.000408  57405.9442  -3579.3425 -8.1151E-06     93.1833    104.5408
430800.
 127.680 -0.000420  51540.4618  -3401.0452 -6.7103E-06     88.8615    107.7179
430800.
 129.360 -0.000430  45978.9511  -3217.8913 -5.4529E-06     84.7636    110.3224
430800.
 131.040 -0.000438  40728.7685  -3030.7910 -4.3348E-06     80.8951    112.4161
430800.
 132.720 -0.000445  35795.8284  -2840.5533 -3.3481E-06     77.2604    114.0573
430800.
 134.400 -0.000450  31184.7680  -2647.8926 -2.4844E-06     73.8628    115.3008
430800.
 136.080 -0.000453  26899.1014  -2453.4338 -1.7354E-06     70.7050    116.1978
430800.
 137.760 -0.000455  22941.3646  -2257.7190 -1.0927E-06     67.7888    116.7960
430800.
 139.440 -0.000457  19313.2500  -2061.2133 -5.4788E-07     65.1155    117.1393
430800.
 141.120 -0.000457  16015.7301  -1864.3112 -9.2335E-08     62.6858    117.2681
430800.
 142.800 -0.000457  13049.1716  -1667.3422  2.8244E-07     60.5000    117.2189
430800.
 144.480 -0.000456  10413.4386  -1470.5776  5.8498E-07     58.5579    117.0247
430800.
 146.160 -0.000455   8107.9858  -1274.2364  8.2381E-07     56.8592    116.7148
430800.
 147.840 -0.000454   6131.9408  -1078.4914  1.0074E-06     55.4031    116.3149
430800.
 149.520 -0.000452   4484.1769   -883.4755  1.1443E-06     54.1890    115.8468
430800.
 151.200 -0.000450   3163.3747   -689.2878  1.2429E-06     53.2158    115.3290
430800.
 152.880 -0.000448   2168.0738   -495.9997  1.3117E-06     52.4825    114.7759
430800.
 154.560 -0.000445   1496.7144   -303.6609  1.3589E-06     51.9878    114.1988
430800.
 156.240 -0.000443   1147.6683   -194.0899  1.3930E-06     51.7306     16.2428
61593.8842
 157.920 -0.000441    844.4646   -166.7350  1.4187E-06     51.5072     16.3226
62228.9242
 159.600 -0.000438    587.3290   -139.2486  1.4372E-06     51.3177     16.3993
62863.9642
 161.280 -0.000436    376.4782   -111.6357  1.4496E-06     51.1624     16.4732
63499.0042
 162.960 -0.000433    212.1211    -83.9006  1.4572E-06     51.0413     16.5447
64134.0442
 164.640 -0.000431     94.4596    -56.0473  1.4611E-06     50.9546     16.6140
64769.0842
 166.320 -0.000428     23.6893    -28.0793  1.4627E-06     50.9024     16.6812
65404.1242
 168.000 -0.000426      0.0000      0.0000  1.4630E-06     50.8850     16.7466
33019.5821
```

Output Verification:

Computed forces and moments are within specified convergence limits.

Output Summary for Load Case No. 1:

```
Pile-head deflection            =     0.02433804 in
Computed slope at pile head     =    -0.00040035
Maximum bending moment          =   294130.21356 lbs-in
Maximum shear force             =    13000.00000 lbs
Depth of maximum bending moment =    45.36000000 in
Depth of maximum shear force    =        0.00000 in
Number of iterations            =             16
Number of zero deflection points =             1
```

Summary of Pile Response(s)

Definition of Symbols for Pile-Head Loading Conditions:

```
Type 1 = Shear and Moment,          y = pile-head displacment in
Type 2 = Shear and Slope,           M = Pile-head Moment lbs-in
Type 3 = Shear and Rot. Stiffness,  V = Pile-head Shear Force lbs
Type 4 = Deflection and Moment,     S = Pile-head Slope, radians
Type 5 = Deflection and Slope,      R = Rot. Stiffness of Pile-head in-lbs/rad
```

Load Type	Pile-Head Condition 1	Pile-Head Condition 2	Axial Load lbs	Pile-Head Deflection in	Maximum Moment in-lbs	Maximum Shear lbs
1	V= 13000.	M= 0.000	23000.0000	0.0243380	294130.	13000.0000

The analysis ended normally.

Lateral Deflection vs. Depth
Sound Wall B2

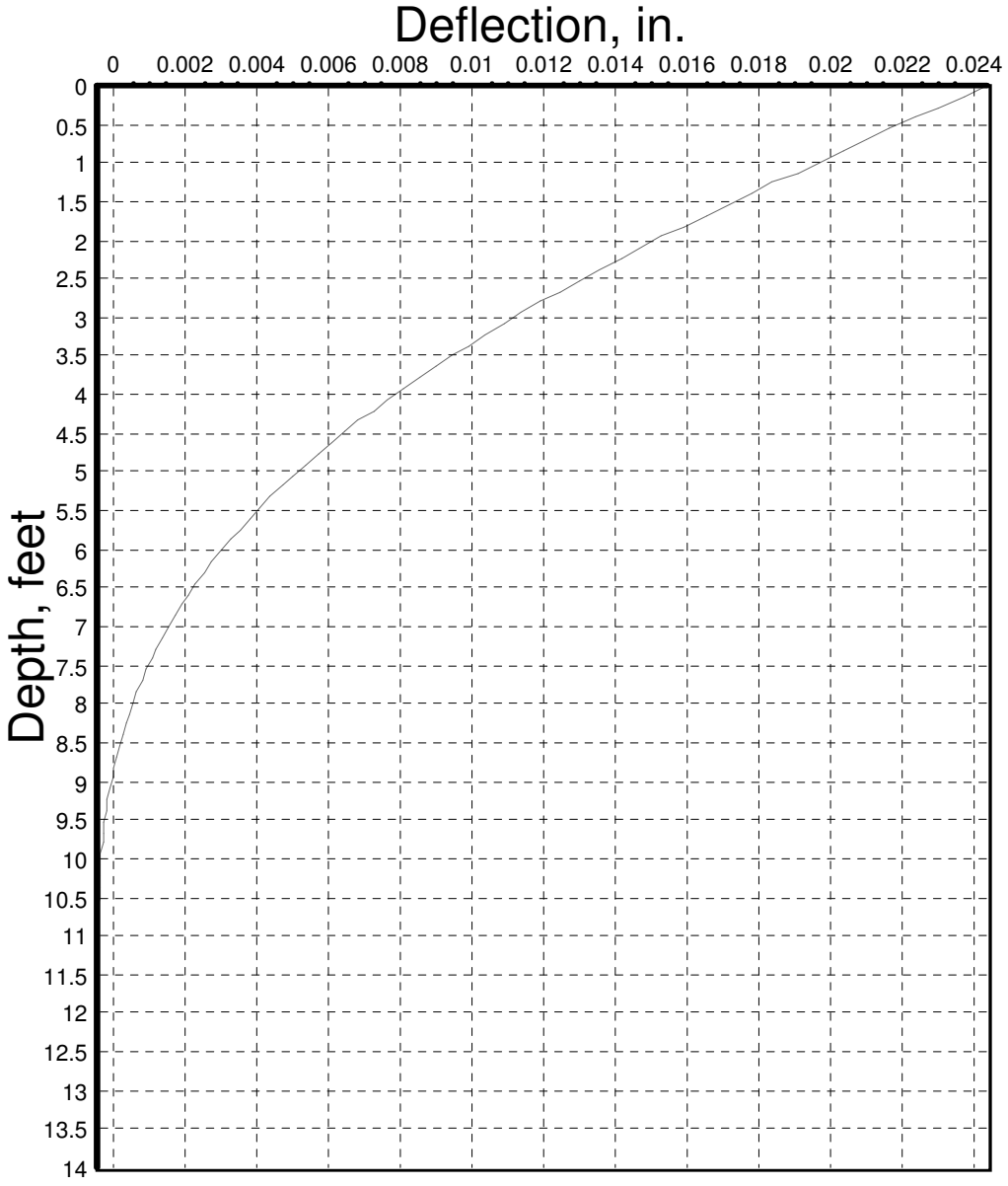

LPILE Plus 5.0, (c) 2008 by Ensoft, Inc.

Bending Moment vs. Depth
Sound Wall B2

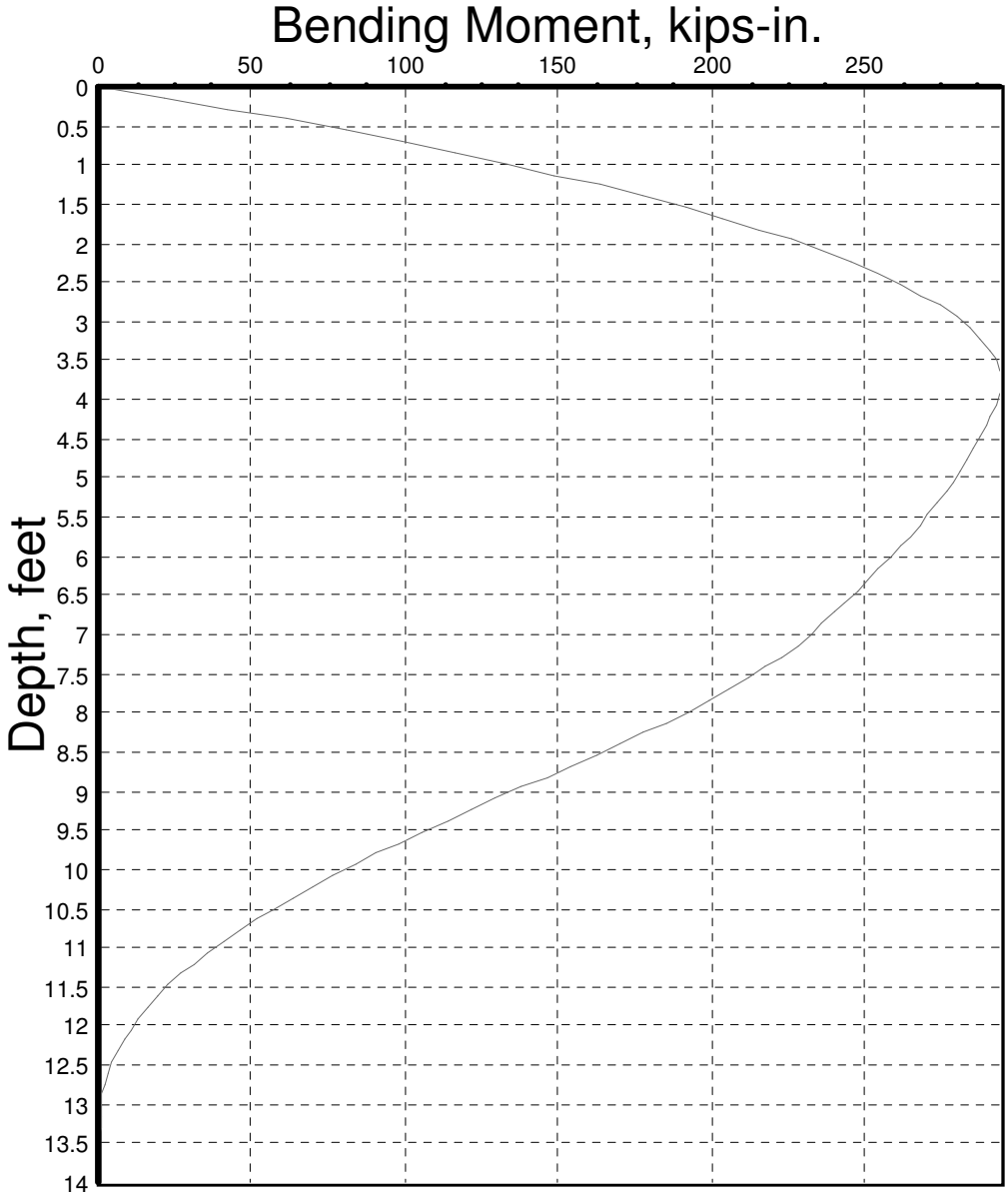

LPILE Plus 5.0, (c) 2008 by Ensoft, Inc.

Contract No. : 05-4482U1
Structure Design Branch 7

Carpinteria Project
Sound Wall No. B2

10/29/2013
M. Kodsuntie

Table 1. General Foundation Information to GS

Location	Pile Type	Finished Grade Elevation (ft)	Cut-off elevation (ft)	Pile Cap Size (ft)		Permissible Settlement under Service Load (in)	Number of Piles per Support
				B	L		
1 to 6	24" CIDH	See Note 2	23.00	2.5	80	1"	1 EA
7 to 11	24" CIDH	See Note 2	21.25	2.5	40	1"	1 EA
12 to 13	24" CIDH	See Note 2	20.50	2.5	20	1"	1 EA
14 to 27	24" CIDH	See Note 2	17.75	2.5	154.67	1"	1 EA
28 to 44	24" CIDH	See Note 2	16.25	2.5	200	1"	1 EA
45 to 64	24" CIDH	See Note 2	14.75	2.5	225.33	1"	1 EA
65 to 75	24" CIDH	See Note 2	13.75	2.5	124	1"	1 EA
76 to 91	24" CIDH	See Note 2	12.75	2.5	176	1"	1 EA
92 to 115	24" CIDH	See Note 2	11.25	2.5	280.68	1"	1 EA

Table 2. Design Loads to GS

Location	WSD (kips)		LFD (kips)			Lateral Loads	
	Total Loads	Permannet Loads Per Support	Compression	Tension			
			Max. Per Pile	Max. Per Pile		Wind Load	Seismic
1	14	14	17	0	0	3	8
2	21	21	25	0	0	4	12
3	20	20	24	0	0	4	12
4	21	21	25	0	0	4	12
5	22	22	26	0	0	4	12
6	15	15	18	0	0	3	9
7	11	11	13	0	0	2	6
8	15	15	18	0	0	3	9
9	16	16	19	0	0	3	9
10	12	12	15	0	0	2	7
11	11	11	13	0	0	2	6
12, 13	17	17	20	0	0	3	10
14	17	17	20	0	0	4	10
15, 16	22	22	26	0	0	5	12
17 thru 21	20	20	24	0	0	4	11
22, 23	22	22	26	0	0	4	12
24, 25, 26	20	20	24	0	0	4	11
27	16	16	19	0	0	3	9
28	18	18	22	0	0	4	10
29 thru 43	23	23	28	0	0	5	13
44, 45	20	20	24	0	0	4	11
46 thru 55	23	23	28	0	0	5	13
56, 57	21	21	26	0	0	5	12
58	22	22	26	0	0	5	13
59 thru 63	21	21	25	0	0	4	12
64	16	16	19	0	0	3	9
65	17	17	21	0	0	4	10
66 thru 74	23	23	27	0	0	5	13
75	17	17	21	0	0	4	10
76	17	17	20	0	0	4	10
77 thru 80	22	22	26	0	0	5	12
81, 82	23	23	27	0	0	5	13
83 thru 90	22	22	26	0	0	5	12
91	17	17	20	0	0	4	10
92	17	17	21	0	0	4	10
93 thru 114	23	23	28	0	0	5	13
115	18	18	22	0	0	4	10

Notes:

1.

Pile No.	Station on SW "B2" Line
1	162+83.18
2	162+98.18
3	163+12.18
4	163+26.18
5	163+41.18
6	163+56.18
7	163+62.18
8	163+69.18
9	163+81.18
10	163+89.18
11	163+96.18
12	164+02.18
13	164+17.18
14	164+23.18
15	164+34.43
16	164+45.68
17	164+56.93
18	164+68.18
19	164+79.43
20	164+90.68
21	165+01.93
22	165+13.18
23	165+26.18
24	165+37.43
25	165+48.68
26	165+59.93
27	165+71.18
28	165+78.13
29	165+90.13
30	166+02.13
31	166+14.13
32	166+26.13
33	166+38.13
34	166+50.13
35	166+62.13
36	166+74.13
37	166+86.13
38	166+98.13
39	167+10.13

Pile No.	Station on SW "B2" Line
40	167+22.13
41	167+34.13
42	167+46.13
43	167+58.13
44	167+70.13
45	167+78.64
46	167+90.64
47	168+02.64
48	168+14.64
49	168+26.64
50	168+38.64
51	168+50.64
52	168+62.64
53	168+74.64
54	168+86.64
55	168+98.64
56	169+10.64
57	169+20.64
58	169+32.64
59	169+43.39
60	169+54.14
61	169+64.89
62	169+75.64
63	169+86.39
64	169+97.14
65	170+03.14
66	170+14.89
67	170+26.64
68	170+38.39
69	170+50.14
70	170+61.89
71	170+73.64
72	170+85.39
73	170+97.14
74	171+08.89
75	171+20.64
76	171+26.64
77	171+37.89
78	171+49.14

Pile No.	Station on SW "B2" Line
79	171+60.39
80	171+71.64
81	171+82.89
82	171+94.89
83	172+06.14
84	172+17.39
85	172+28.64
86	172+39.89
87	172+51.14
88	172+62.39
89	172+73.64
90	172+84.89
91	172+96.14
92	173+02.14
93	173+14.14
94	173+26.14
95	173+38.14
96	173+50.14
97	173+62.14
98	173+74.14
99	173+86.14
100	173+98.14
101	174+10.14
102	174+22.14
103	174+34.14
104	174+46.14
105	174+58.14
106	174+70.14
107	174+82.14
108	174+94.14
109	175+06.14
110	175+18.14
111	175+30.14
112	175+42.14
113	175+54.14
114	175+66.14
115	175+78.14

2. Finished Grade Elevation at 25' interval

Statioin on SW "B2" Line	Elev. on US 101 side	Elev. on residence side
162+75	30.0	30.0
163+00	25.0	25.0
163+25	25.0	25.0
163+50	25.0	25.0
163+75	24.4	24.5
164+00	23.3	23.6
164+25	22.3	22.7
164+50	21.3	21.9
164+75	21.1	21.7
165+00	20.9	21.5
165+25	20.7	21.3
165+50	20.5	21.1
165+75	20.3	20.9
166+00	20.1	20.7
166+25	19.9	20.5
166+50	19.7	20.3
166+75	19.5	20.1
167+00	19.3	19.9
167+25	19.1	19.7
167+50	18.9	19.5
167+75	18.8	19.3
168+00	18.6	19.1
168+25	18.4	19.0
168+50	18.2	18.8
168+75	18.0	18.4
169+00	17.8	18.2
169+25	17.6	18.1
169+50	17.5	17.9

Statioin on SW "B2" Line	Elev. on US 101 side	Elev. on residence side
169+75	17.3	17.7
170+00	17.2	17.6
170+25	17.0	17.4
170+50	16.8	17.3
170+75	16.7	17.1
171+00	16.5	16.9
171+25	16.3	16.8
171+50	16.2	16.6
171+75	16.0	16.4
172+00	15.9	16.3
172+25	15.7	16.1
172+50	15.5	16.0
172+75	15.4	15.8
173+00	15.2	15.6
173+25	15.1	15.5
173+50	14.9	15.3
173+75	14.7	15.2
174+00	14.6	15.0
174+25	14.4	14.8
174+50	14.2	14.7
174+75	14.1	14.5
175+00	13.9	14.4
175+25	13.9	14.3
175+50	13.9	14.3
175+75	14.9	15.3
175+81	15.2	15.6

M e m o r a n d u m

Flex your power!
Be energy efficient!

To: MANODE KODSUNTIE
Structure Design Branch 7
DIVISION OF ENGINEERING SERVICES

Date: January 22, 2014
File: 05-SB-101-2.2/3.3
Linden Casitas
Sound Wall B7
EA 05-4482U1

From: **DEPARTMENT OF TRANSPORTATION**
DIVISION OF ENGINEERING SERVICES
GEOTECHNICAL SERVICES

Subject: Sound Wall B7 Foundation Report

Scope of Work

A Foundation Report (FR) for Sound Wall B7 is provided for the above referenced project. The project is on State Route 101 in the City of Carpinteria, in southern Santa Barbara County. Improvements are proposed to increase the highway level of service and accessibility, and include replacement of existing bridges and construction of new bridges, retaining walls, sound walls, ramps and frontage roads. Review of published geologic data and previous geotechnical reports, field reconnaissance, and foundation calculations were performed as part of the geotechnical investigation.

The purpose of this report is to document geotechnical conditions and provide foundation recommendations for proposed Sound Wall B7.

Project Description

Route 101 within the project limits is a four-lane divided urban freeway with (2) 12-foot portland cement concrete (PCC) lanes in each direction and asphalt concrete (AC) 5-foot inside shoulders and 8-foot outside shoulders. A landscaped median approximately 40 feet wide with thrie beam barriers facing each direction of travel provides separation between the northbound and southbound lanes.

The purpose of the Linden Casitas project is to improve access and operations on Route 101, reduce local trips, and provide pedestrian and bicycle connectivity. The project includes construction of (3) mainline bridges on Route 101 to replace existing structures at Linden Avenue, Casitas Pass Road, and Carpinteria Creek. Highway access will be modified and added at Linden Avenue and Casitas Pass Road. Extension of Via Real, a frontage road, will also require construction of a new bridge over Carpinteria Creek. Retaining walls and sound walls are also proposed as part of the project.

Sound Wall B7 is proposed for a distance of approximately 584 feet at the top of the slope adjacent to southbound 101 between Linden Avenue and Casitas Pass Road from 51.56 feet left

of CA2 Station 147+52.44 to 50.64 feet left of Station 153+50. Slopes below the wall vary to a maximum of 2:1 at the steepest locations.

Pertinent Reports and Investigations

The following publications were used to assist in the assessment of site conditions:

1. *Preliminary Geotechnical Report.* Finegan, Michael. EA 05-448200. December 21, 2000.

2. *District Preliminary Geotechnical Report.* De Llamas, Zeke. EA 05-448200, July 30, 2008.

Field Investigation and Laboratory Testing Program

Two mud rotary borings were advanced near the sound wall layout line to determine the subsurface conditions to be used for foundation design. In-situ soil strength parameters were determined using the Standard Penetration Test (SPT) for cohesionless soils. Laboratory tests were used to determine the particle size distribution and corrosion potential of representative samples obtained at depth. Refer to Table 1 for a summary of subsurface investigation information.

Table 1. Subsurface Exploration Summary

Boring	*Completion Date*	*Equipment*	*Hammer Type*	*Hammer Efficiency (%)*	*Approximate Ground Elevation (ft)*	*Depth (ft)*
RC-10-002	11-16-2010	CS2000	Auto	93	42.5	82.0
RC-10-003	11-17-2010	CS2000	Auto	93	42.3	72.0

Site Geology and Subsurface Conditions

Physical Setting

The project is located in the Carpinteria Valley, a sunken area north of the elevated coastal fault block southeast of the City of Carpinteria. Carpinteria Valley is a low-lying, flat plain comprised of alluvial deposits. Some low-lying areas in the valley are partly submerged under brackish water of the Carpinteria Slough. The plain meets the Pacific Ocean to the southwest, gradually gains elevation to the east as it approaches Rincon and La Granada Mountains, and abuts sharply against the foothills of the Santa Ynez Mountains at its the northern boundary.

A mild coastal climate prevails throughout the year, with marine fog often present in spring and summer months. Nearly all precipitation falls from Pacific storms between October and May, with the majority accumulating in the winter months. Average yearly rainfall is 17.5 inches. The average temperature is 72 degrees Fahrenheit with more than 275 days of sunny weather per year.

Regional Geology

The project area is located in the Transverse Ranges Geomorphic Province. State Route 101 is bordered to the north by the Santa Ynez Mountains and to the south by the Pacific Ocean as it traverses the Carpinteria Valley. Geologic maps and field observations indicate that soils in the valley were deposited in an alluvial environment and consist of normally-consolidated deposits of clay, silt, sand, and gravel.

Groundwater

Open observation wells were installed in borings RC-10-002 and RC-10-003 to observe fluctuations in groundwater levels and determine if groundwater will influence construction and foundation design. Results of the groundwater-monitoring program are summarized in Table 2.

Table 2. Groundwater Elevations

Boring	Date	Depth to Groundwater (ft)	Groundwater Elevation(ft)
RC-10-002	4-12-2012	16.6	25.9
RC-10-003	4-12-2012	16.0	26.3

Corrosion Evaluation

The department considers a site to be potentially corrosive to the foundation elements if the following conditions exist for the representative soil and/or water samples taken at the site: minimum resistivity of 1000 ohm-cm or less and/or PH of 5.5 or less.

Soil and water samples were obtained during the subsurface investigation and tested for corrosion potential at the District Materials Laboratory. The results of the corrosion testing are presented in Table 3. Based on the results, soils are not considered corrosive to foundation elements.

Table 3. Corrosion Testing Summary

Boring	*Depth (ft)*	*pH*	*Resistivity ohm-cm*	*Chloride ppm*	*Sulphate ppm*	*Corrosive*
RC-10-002	1.0-3.0	8.2	3150	-	-	NO
RC-10-002	23.0-25.0	8.2	5620	-	-	NO
RC-10-003	1.0-4.0	8.0	4410	-	-	NO

Foundation Recommendations

Masonry Block on Spread Footing

Spread footings as are the recommended foundation type for the site. Refer to the 2010 Standard Plans for details of construction. Due to the high groundwater table, Standard Plan foundation types of CIDH piles or trench footings are not suitable alternatives. Foundation recommendations are provided in Table 4.

Sound wall B7 is proposed near the hinge point at the top of the slope adjacent to southbound Highway 101. Per the 2010 Standard Plans ground line condition case 2, provide a minimum distance of 1'-0" from the top of the toe side of the footing to the slope control point.

Table 4. Sound Wall Foundation Recommendations

Wall Station (ft)	*Design Wall Height (ft)*	*Bottom of Footing Elevation (ft)*	*Ground Line Condition*	*Footing Width W (ft)*
10+00 to 11+60	12.0	38.00	Case 2	5.75
11+60 to 12+00	14.0	37.33	Case 2	6.50
12+00 to 12+60	14.0	36.00	Case 2	6.50
12+60 to 13+40	16.0	34.67	Case 2	7.50
13+40 to 14+00	16.0	33.33	Case 2	7.50
14+00 to 14+40	14.0	33.33	Case 2	6.50
14+40 to 15+00	14.0	32.66	Case 2	6.50
15+00 to 15+40	16.0	32.00	Case 2	7.50
15+40 to 15+84.30	14.0	31.33	Case 2	6.50

Construction Considerations

Limited construction access is available due to the location of the proposed sound wall approximately 3-5 feet from the right of way line. Temporary construction access and use of the private property outside of the right of way line may be required to construct the sound wall.

Groundwater is not expected to be encountered in the foundation excavations.

Additional Information

Standard Special Provision S5-280, "Project Information", discloses to bidders and contractors a list of pertinent information available for their inspection prior to bid opening. The following is an excerpt from SSP S5-280 disclosing information originating from Geotechnical Services. Items listed to be included in the Information Handout will be provided in Acrobat (.pdf) format to the Addressee of this report via electronic mail.

Data and information attached with the project plans are:

A. Log of Test Borings.

Data and information included in the Information Handout provided to the Bidders and Contractors are:

A. Foundation Report for the Retaining Wall dated January 22, 2014.

If you have any questions or comments, please contact Ryan Turner at (805) 549-3750, or Michael Finegan at (805) 549-3194.

REGISTERED PROFESSIONAL ENGINEER
Ryan Turner
No. GE 3030
Exp. 6-30-2015
GEOTECHNICAL
STATE OF CALIFORNIA

REGISTERED PROFESSIONAL ENGINEER
Michael S.Finegan
No. C 50138
Exp. 6-30-2015
CIVIL
STATE OF CALIFORNIA

RYAN TURNER, P.E., G.E.
Transportation Engineer Civil
Geotechnical Design – North
Branch D

MICHAEL S. FINEGAN, P.E.
Branch Chief
Geotechnical Design – North
Branch D

c: Job File / Branch D Records
Structure Construction RE Pending File (email RE_pending_file@dot.ca.gov)
Craig Whitten / DES Office Engineer
Andrew Tan / PCE
Eric Karlson/ DME

LIST OF ATTACHMENTS

Vicinity Map	Attachment 1
Geologic Map and Legend	Attachment 2
Sound Wall Structure Plans	Attachment 3

INDEX OF SHEETS

STATE OF CALIFORNIA
DEPARTMENT OF TRANSPORTATION

PROJECT PLANS FOR CONSTRUCTION ON
STATE HIGHWAY
IN SANTA BARBARA COUNTY
IN CARPINTERIA
FROM 0.4 KM SOUTH OF CARPINTERIA CREEK BRIDGE
TO 0.5 KM NORTH OF LINDEN AVENUE OVERCROSSING

TO BE SUPPLEMENTED BY STANDARD PLANS DATED JULY 2004

Dist	COUNTY	ROUTE	KILOMETER POST TOTAL PROJECT	SHEET NO.	TOTAL SHEETS
05	SB	101	3.5/5.5		

LOCATION MAP

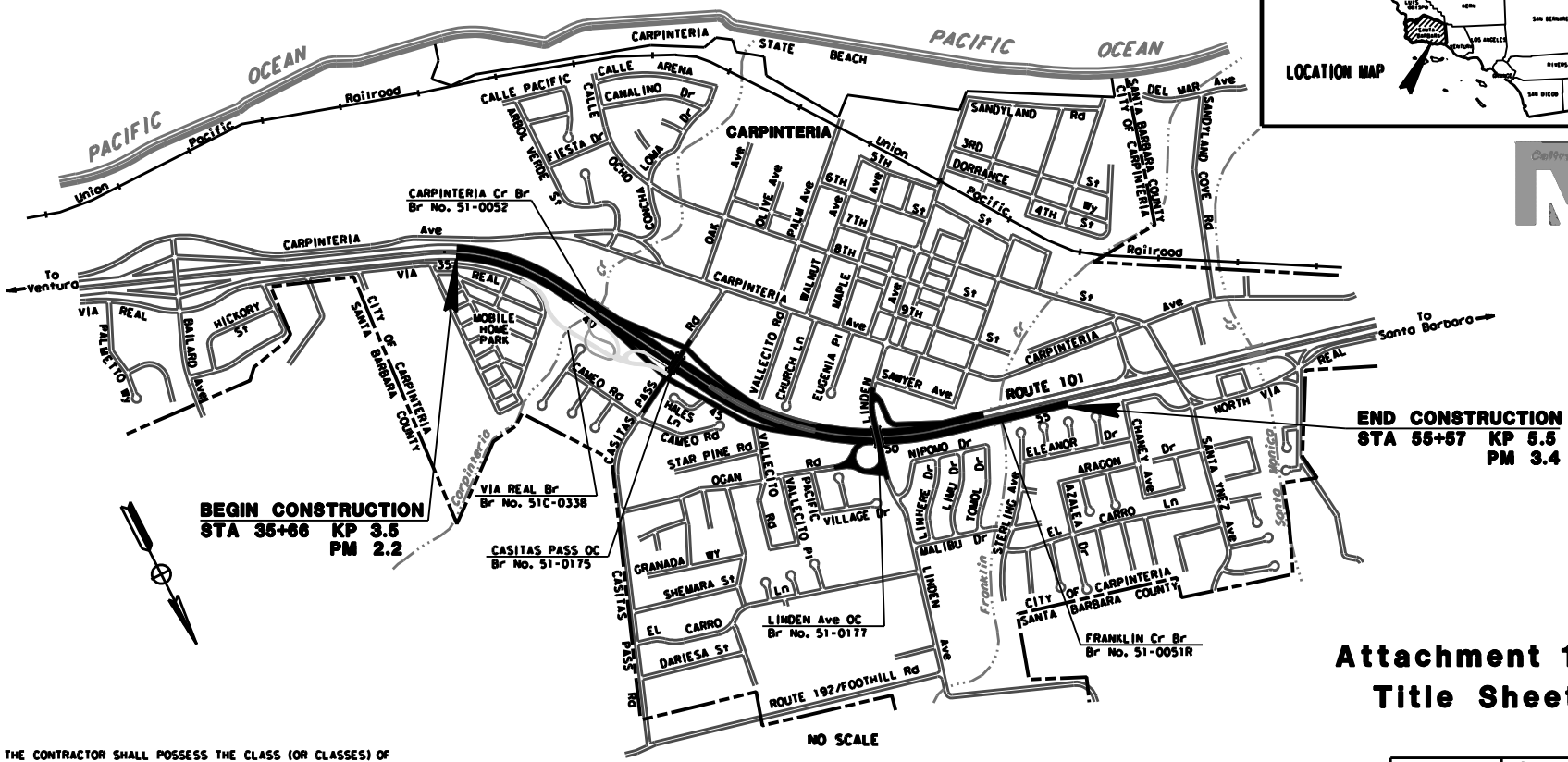

THE CONTRACTOR SHALL POSSESS THE CLASS (OR CLASSES) OF LICENSE AS SPECIFIED IN THE "NOTICE TO CONTRACTORS."

PROJECT MANAGER: DAVID BEARD
DESIGN ENGINEER: KARI BHANA

Attachment 1
Title Sheet

CONTRACT No. 05-4482U0
CU 06233 | EA 4482U0

BORDER LAST REVISED 3/1/2007 | CALTRANS WEB SITE IS: HTTP://WWW.DOT.CA.GOV/ | RELATIVE BORDER SCALE IS IN MILLIMETERS 0 20 40 60 80 | USERNAME => RUSER | DGN FILE => SREQUEST | DATE PLOTTED => 09-14-10 | TIME PLOTTED => 09:42

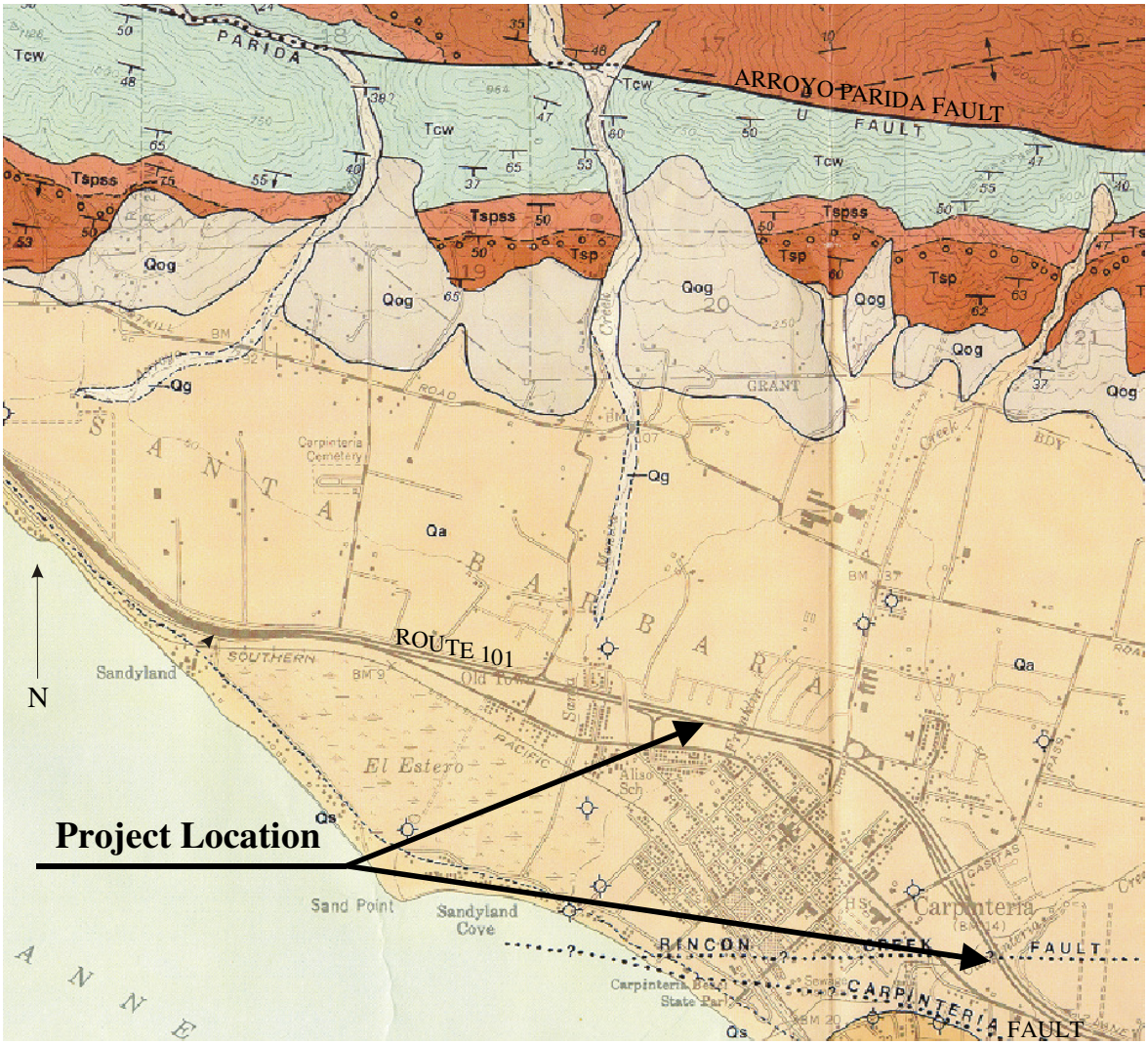

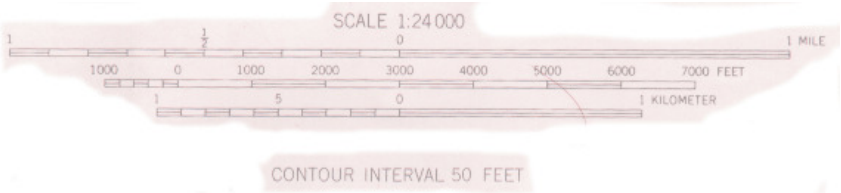

PART OF:

GEOLOGIC MAP OF THE CARPINTERIA QUADRANGLE
BY THOMAS W. DIBBLEE, JR., 1986

Geologic Map

05-SB-101-2.1/3.4
05-448201
Attachment 2

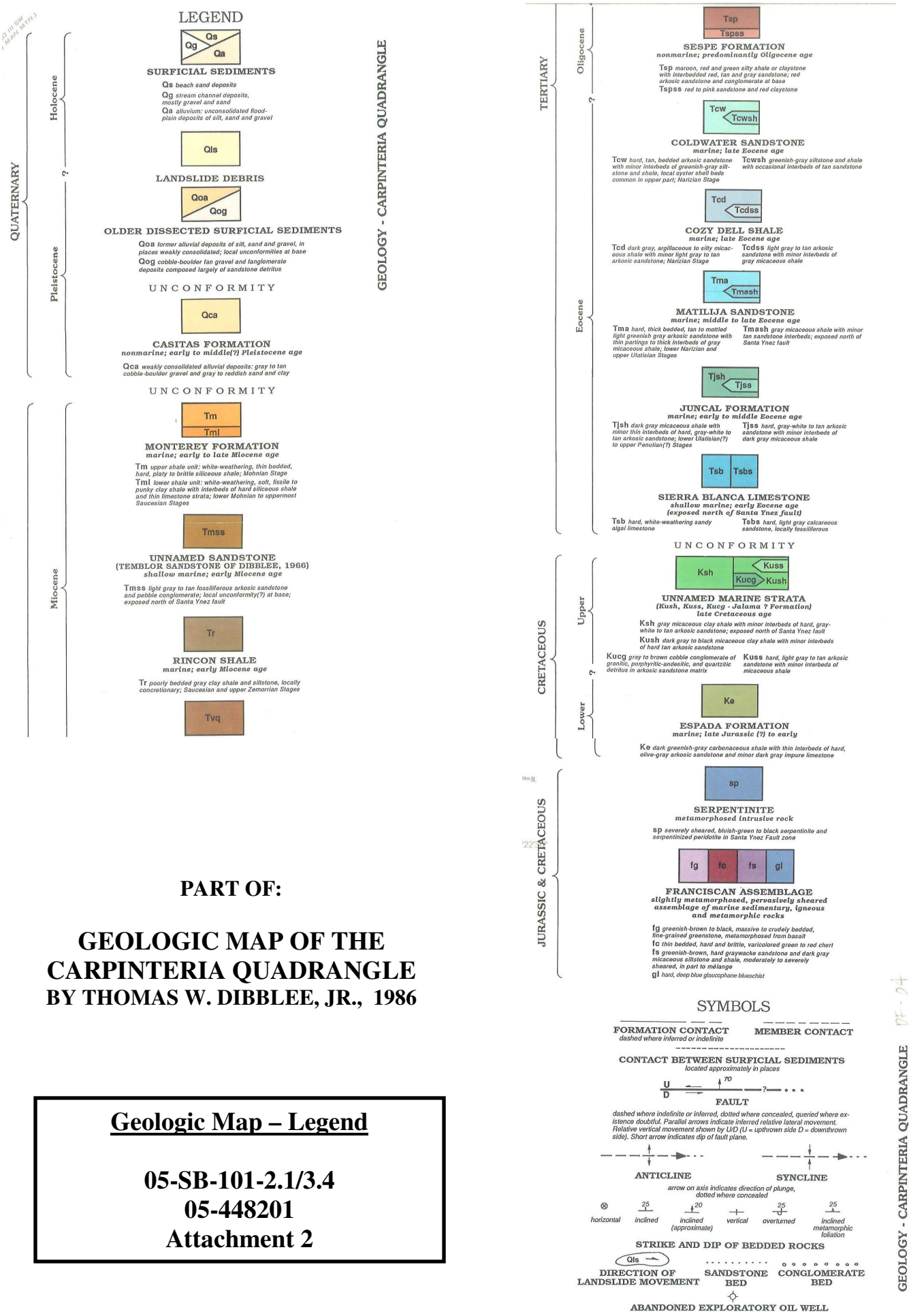

PART OF:

GEOLOGIC MAP OF THE CARPINTERIA QUADRANGLE

BY THOMAS W. DIBBLEE, JR., 1986

Geologic Map – Legend

05-SB-101-2.1/3.4
05-448201
Attachment 2

DIST	COUNTY	ROUTE	POST MILES TOTAL PROJECT	SHEET No.	TOTAL SHEETS
05	SB	101			

REGISTERED CIVIL ENGINEER X DATE

PLANS APPROVAL DATE

REGISTERED PROFESSIONAL ENGINEER Eduardo Ortega Jr. No. 77226 Exp. 6/30/2015 CIVIL STATE OF CALIFORNIA

The State of California or its officers or agents shall not be responsible for the accuracy or completeness of electronic copies of this plan sheet.

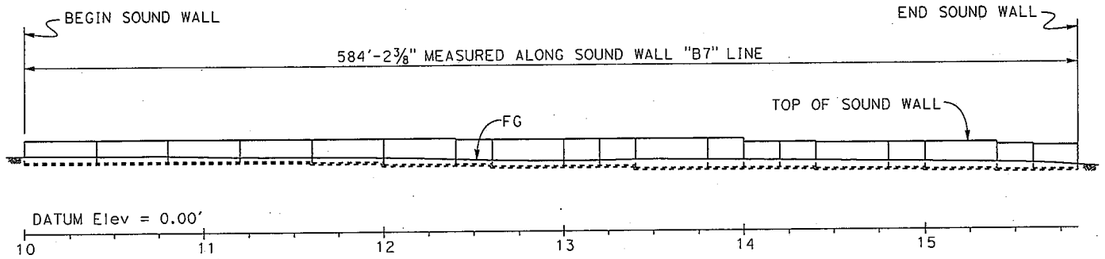

DEVELOPED ELEVATION

1" = 40'

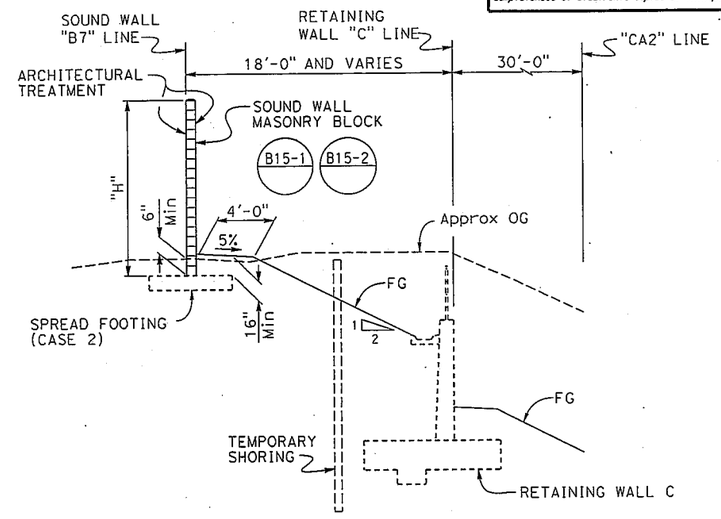

TYPICAL SECTION

Sta 10+00.00 TO 11+70.00

1" = 5'

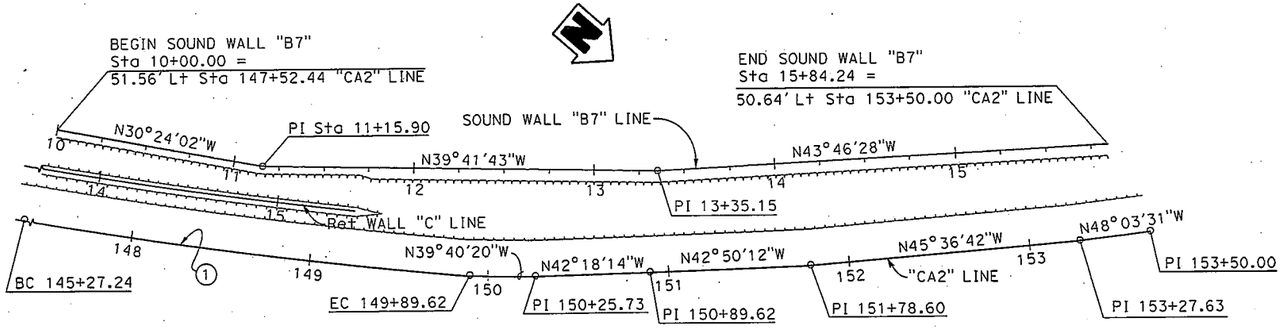

PLAN

1" = 40'

CURVE DATA

(1) "CA2" LINE

R = 2952.56'
Δ = 08°58'33"
T = 231.66'
L = 462.38'

NOTES:

For "INDEX TO PLANS" and "STANDARD PLANSLIST", see "STRUCTURE PLAN NO. 1" sheet.

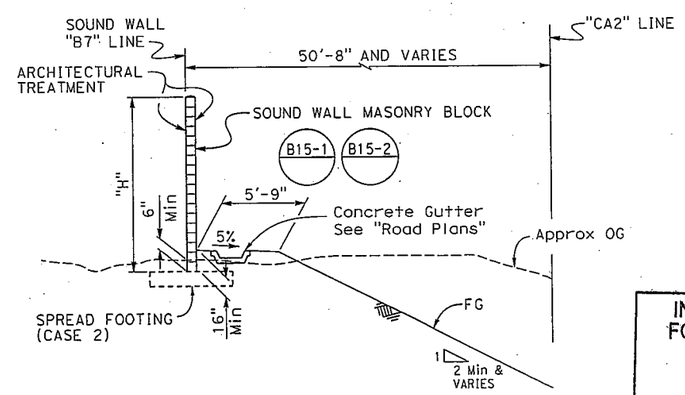

TYPICAL SECTION

Sta 11+70.00 TO 15+84.20

1" = 5'

INCOMPLETE PLAN FOR DESIGN STUDY PRINTED

DEC 11 2013

Office of Structures, Design
STATE OF CALIFORNIA

CHECKED DETAILS

X DESIGN ENGINEER	DESIGN	BY Jun Ki Jung	CHECKED Monode Kodsuntie	LOAD & RESISTANCE FACTOR DESIGN	
	DETAILS	BY G. Dickerson / Y. Feng	CHECKED Monode Kodsuntie	LAYOUT BY Jun Jung	CHECKED Monode Kodsuntie
	QUANTITIES	BY X	CHECKED X	SPECIFICATIONS BY X	PLANS AND SPECS COMPARED X

ORIGINAL SCALE IN INCHES FOR REDUCED PLANS 0 1 2 3

STATE OF CALIFORNIA DEPARTMENT OF TRANSPORTATION

DIVISION OF ENGINEERING SERVICES STRUCTURE DESIGN DESIGN BRANCH 7

UNIT: 3592
PROJECT NO. & PHASE: 0500000543-1
CONTRACT NO.: 05-4482U1

BRIDGE NO. X
POST MILE 2.6

SOUND WALL B7
GENERAL PLAN

DISREGARD PRINTS BEARING EARLIER REVISION DATES → REVISION DATES 6-04-12 11/1/13 11/07/13 SHEET 1 OF X

FILE => rw-b7-a-gp.dgn

STRUCTURES DESIGN GENERAL PLAN SHEET (ENGLISH) (REV.09-01-10)

USERNAME => s136697 DATE PLOTTED => 13-NOV-2013 TIME PLOTTED => 08:57

DIST	COUNTY	ROUTE	POST MILES TOTAL PROJECT	SHEET No.	TOTAL SHEETS
05	SB	101			

REGISTERED CIVIL ENGINEER X DATE

PLANS APPROVAL DATE

REGISTERED PROFESSIONAL ENGINEER Eduardo Ortega Jr. No. 77226 Exp. 6/30/2015 CIVIL STATE OF CALIFORNIA

The State of California or its officers or agents shall not be responsible for the accuracy or completeness of electronic copies of this plan sheet.

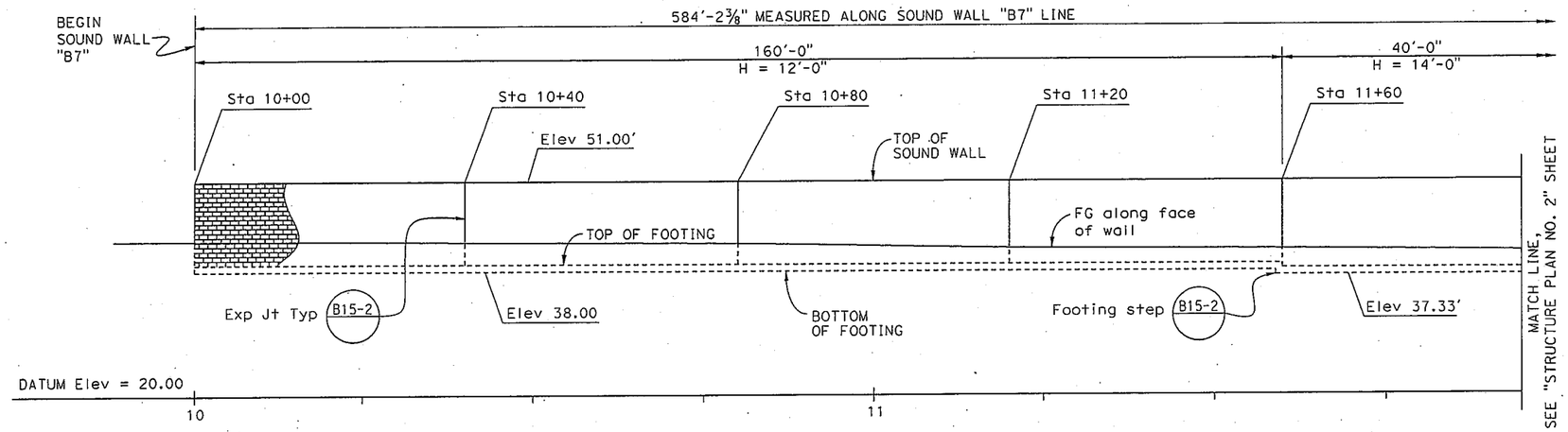

DEVELOPED ELEVATION B15-1 B15-2

1" = 10'

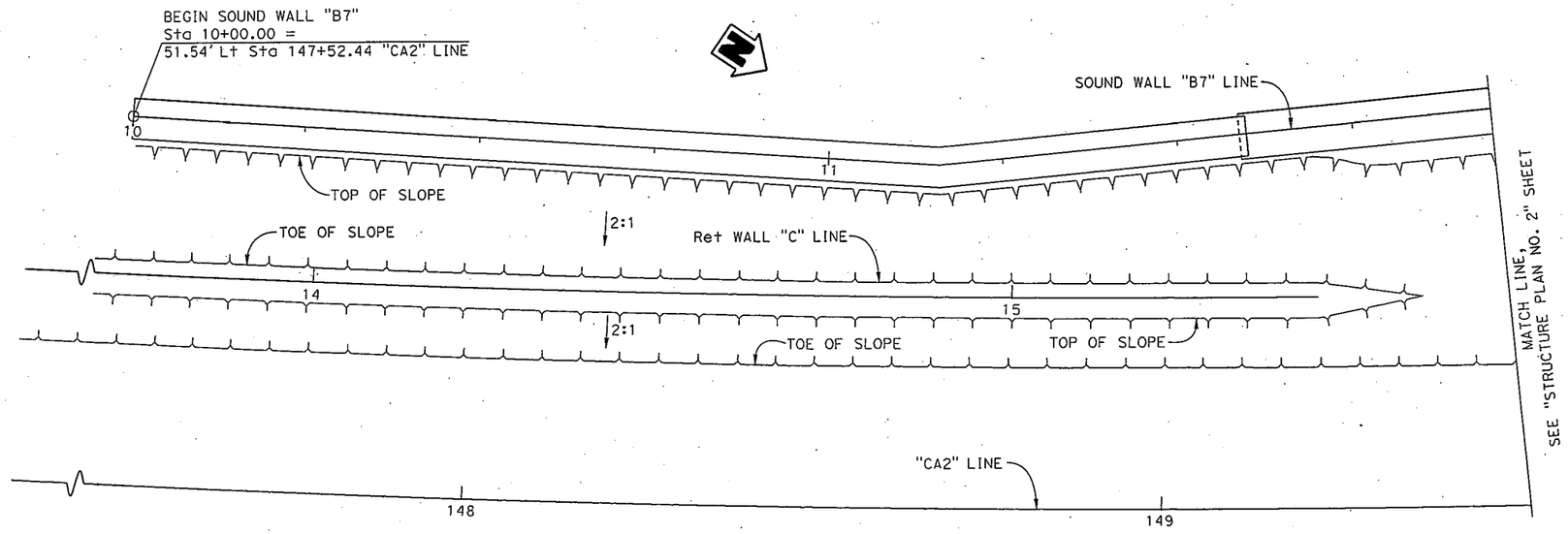

FOOTING PLAN

1" = 10'

INDEX TO PLANS

SHEET NO. TITLE

1. GENERAL PLAN
2. STRUCTURE PLAN NO. 1
3. STRUCTURE PLAN NO. 2
4. STRUCTURE PLAN NO. 3
5. ARCHITECTURAL DETAILS

STANDARD PLANS DATED MAY 2010

A10A	ABBREVIATIONS (SHEET 1 OF 2)
A10B	ABBREVIATIONS (SHEET 2 OF 2)
A10C	LINES AND SYMBOLS (SHEET 1 OF 3)
A10D	LINES AND SYMBOLS (SHEET 2 OF 3)
A10E	LINES AND SYMBOLS (SHEET 3 OF 3)
A10F	LEGEND - SOIL (SHEET 1 OF 2)
A10G	LEGEND - SOIL (SHEET 2 OF 2)
A10H	LEGEND - ROCK
B15-1	SOUND WALL MASONRY BLOCK ON FOOTING DETAILS (1)
B15-2	SOUND WALL MASONRY BLOCK ON FOOTING DETAILS (2)

STANDARD PLAN SHEET NO.

DETAIL NO.

INCOMPLETE PLAN FOR DESIGN STUDY PRINTED

DEC 11 2013

Office of Structures, Design STATE OF CALIFORNIA

CHECKED DETAILS

	BY	CHECKED
DESIGN	Jun Ki Jung	Monode Kodsuntie
DETAILS	G. Dickerson / Y. Feng	Monode Kodsuntie
QUANTITIES	X	X

STATE OF CALIFORNIA DEPARTMENT OF TRANSPORTATION

DIVISION OF ENGINEERING SERVICES STRUCTURE DESIGN DESIGN BRANCH 7

BRIDGE NO. X

POST MILE 2.6

SOUND WALL B7

STRUCTURE PLAN NO. 1

STRUCTURES DESIGN DETAIL SHEET (ENGLISH) (REV. 09-01-10)

ORIGINAL SCALE IN INCHES FOR REDUCED PLANS 0 1 2 3

UNIT: 3592

PROJECT NO. & PHASE: 0500000543-1

CONTRACT NO.: 05-4482U1

DISREGARD PRINTS BEARING EARLIER REVISION DATES

REVISION DATES 6-04-12 11/01/13 03/05/13

SHEET 2 OF X

FILE => rw-b7-b-sp01.dgn

USERNAME => s136697 DATE PLOTTED => 13-NOV-2013 TIME PLOTTED => 08:57

DIST	COUNTY	ROUTE	POST MILES TOTAL PROJECT	SHEET No.	TOTAL SHEETS
05	SB	101			

REGISTERED CIVIL ENGINEER X DATE

PLANS APPROVAL DATE

REGISTERED PROFESSIONAL ENGINEER Eduardo Ortega Jr. No. 77226 Exp. 6/30/2015 CIVIL STATE OF CALIFORNIA

The State of California or its officers or agents shall not be responsible for the accuracy or completeness of electronic copies of this plan sheet.

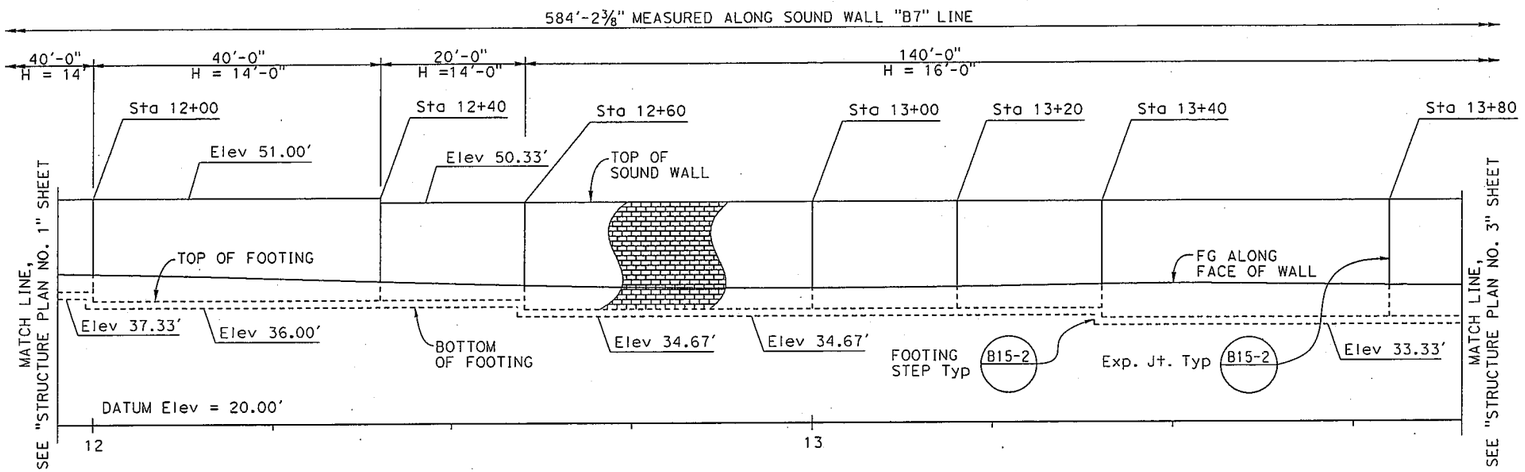

DEVELOPED ELEVATION

B15-1 B15-2

1" = 10'

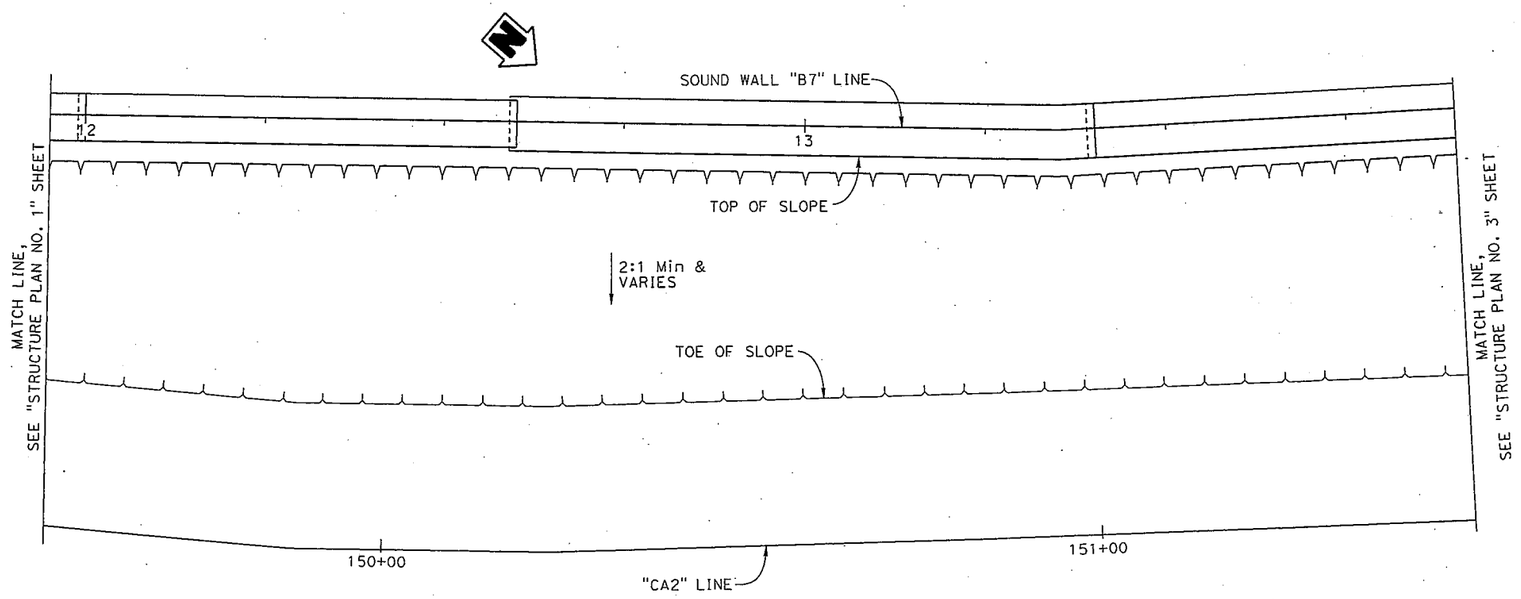

FOOTING PLAN

1" = 10'

INCOMPLETE PLAN FOR DESIGN STUDY PRINTED

DEC 11 2013

Office of Structures, Design STATE OF CALIFORNIA

CHECKED DETAILS

	BY	CHECKED
DESIGN	Jun Ki Jung	Monode Kodsuntie
DETAILS	G. Dickerson / Y. Feng	Monode Kodsuntie
QUANTITIES	X	X

STATE OF CALIFORNIA DEPARTMENT OF TRANSPORTATION

DIVISION OF ENGINEERING SERVICES STRUCTURE DESIGN DESIGN BRANCH 7

BRIDGE NO. X

POST MILE 2.6

SOUND WALL B7

STRUCTURE PLAN NO. 2

STRUCTURES DESIGN DETAIL SHEET (ENGLISH) (REV. 09-01-10)

ORIGINAL SCALE IN INCHES FOR REDUCED PLANS 0 1 2 3

UNIT: 3592

PROJECT NO. & PHASE: 0500000543-1

CONTRACT NO.: 05-4482U1

DISREGARD PRINTS BEARING EARLIER REVISION DATES

REVISION DATES ~~5-25-12~~ 11-12-13 ~~11-07-13~~

SHEET 3 OF X

FILE => rw-b7-b-sp02.dgn

USERNAME => e136697 DATE PLOTTED => 13-NOV-2013 TIME PLOTTED => 08:57

DIST	COUNTY	ROUTE	POST MILES TOTAL PROJECT	SHEET No.	TOTAL SHEETS
05	SB	101			

REGISTERED CIVIL ENGINEER X DATE

PLANS APPROVAL DATE

The State of California or its officers or agents shall not be responsible for the accuracy or completeness of electronic copies of this plan sheet.

REGISTERED PROFESSIONAL ENGINEER Eduardo Ortega Jr. No. 77226 Exp. 6/30/2015 CIVIL STATE OF CALIFORNIA

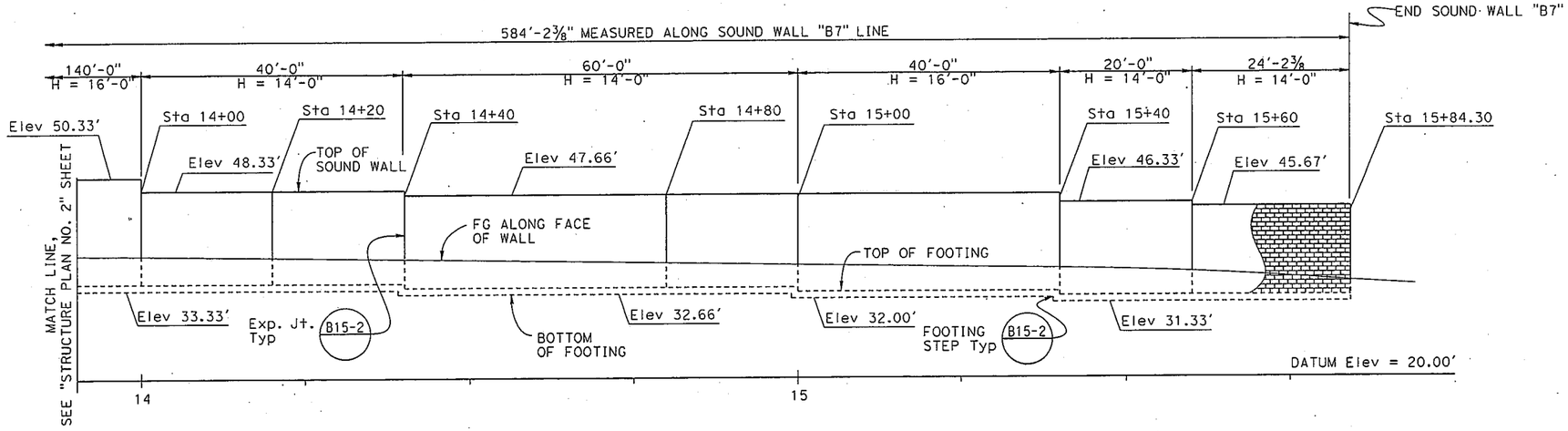

DEVELOPED ELEVATION B15-1 B15-2

1" = 10'

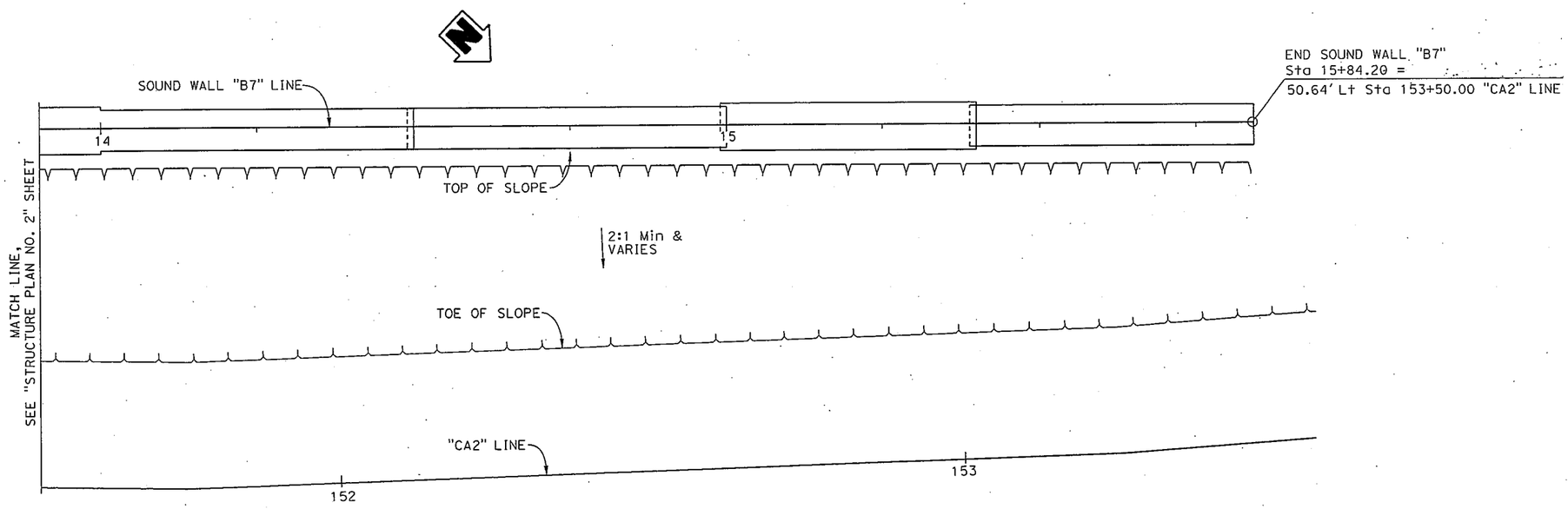

FOOTING PLAN

1" = 10'

INCOMPLETE PLAN FOR DESIGN STUDY PRINTED

DEC 11 2013

Office of Structures, Design STATE OF CALIFORNIA

CHECKED DETAILS

	BY	CHECKED
DESIGN	Jun Ki Jung	Manode Kodsuntie
DETAILS	G. Dickerson / Y. Feng	Manode Kodsuntie
QUANTITIES	X	X

STATE OF CALIFORNIA DEPARTMENT OF TRANSPORTATION

DIVISION OF ENGINEERING SERVICES STRUCTURE DESIGN DESIGN BRANCH 7

BRIDGE NO. X

POST MILE 2.6

SOUND WALL B7

STRUCTURE PLAN NO. 3

STRUCTURES DESIGN DETAIL SHEET (ENGLISH) (REV. 09-01-10)

ORIGINAL SCALE IN INCHES FOR REDUCED PLANS 0 1 2 3

UNIT: 3592

PROJECT NO. & PHASE: 0500000543-1

CONTRACT NO.: 05-4482U1

DISREGARD PRINTS BEARING EARLIER REVISION DATES

REVISION DATES 5-08-12 5-14-12 09/09/13 11/12/13

SHEET 4 OF X

FILE => rw-b7-b-sp03.dgn

USERNAME => s136697 DATE PLOTTED => 13-NOV-2013 TIME PLOTTED => 08:57

DIST	COUNTY	ROUTE	POST MILES TOTAL PROJECT	SHEET No.	TOTAL SHEETS
05	SB	101			

REGISTERED CIVIL ENGINEER X DATE

PLANS APPROVAL DATE

REGISTERED PROFESSIONAL ENGINEER Eduardo Jose Ortega Jr. No. 77226 Exp. 6/30/2015 CIVIL STATE OF CALIFORNIA

The State of California or its officers or agents shall not be responsible for the accuracy or completeness of scanned copies of this plan sheet.

CHECKED DETAILS

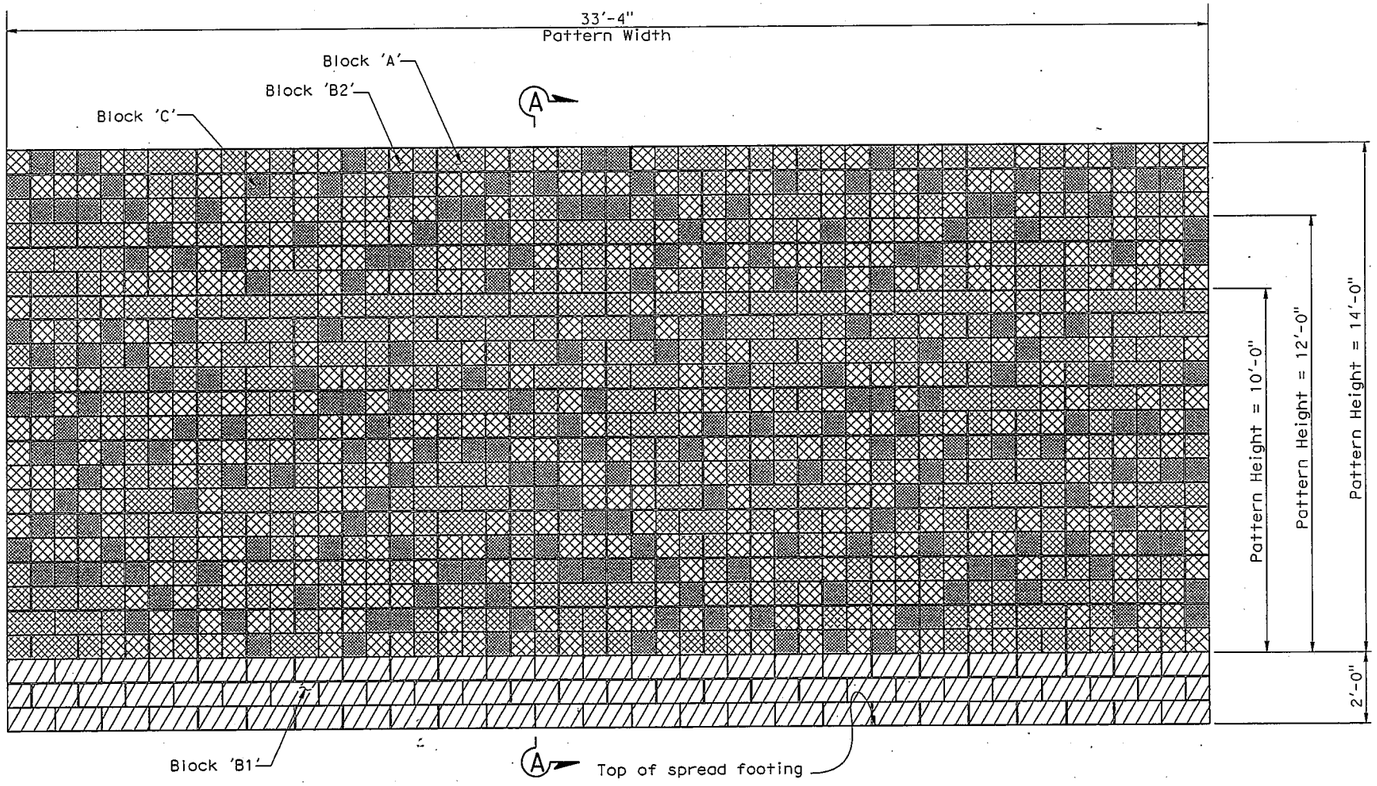

BLOCK PATTERN ELEVATION

No Scale

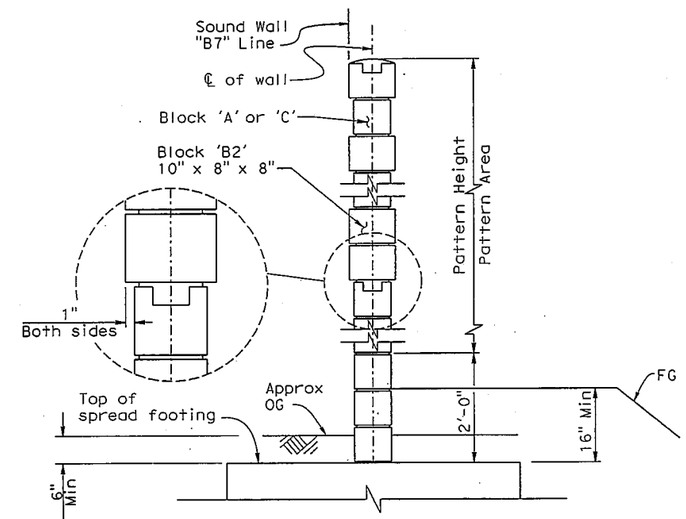

SECTION A-A

No Scale

INCOMPLETE PLAN
FOR DESIGN STUDY
PRINTED

DEC 11 2013

Office of Structures, Design
STATE OF CALIFORNIA

MASONRY BLOCK LEGEND:

- Block 'A' : 8" x 8" x 16" split face all exposed sides. Use half blocks where necessary. Air Vol Block color #60H59804B
- Block 'B1' : 8" x 8" x 16" split face all exposed sides. Use half blocks where necessary. Air Vol Block color #60H607E7
- Block 'B2' : 10" x 8" x 8" split face all exposed sides. Block will project 1" both sides of wall. Air Vol Block color #60H607E7
- Block 'C' : 8" x 8" x 8" split face all exposed sides. Use half blocks where necessary. Air Vol Block color #60B401G

NOTES:

1. The wall colors shall be from Air Vol Block Inc.; 1 Suburban Road, San Luis Obispo, Ca. 93406; Phone (805) 543-1314; or equal. The colors shall be the ones indicated in detail below.
2. Pattern matches in existing Serena Park Soundwall, Br. No. 51-SW, per aesthetic recommendations.

	BY	CHECKED
DESIGN	Jun Ki Jung	Manodo Kodsuntie
DETAILS	G. Dickerson / Y. Feng	Manodo Kodsuntie
QUANTITIES	X	X

STATE OF CALIFORNIA
DEPARTMENT OF TRANSPORTATION

DIVISION OF ENGINEERING SERVICES
STRUCTURE DESIGN
DESIGN BRANCH 7

BRIDGE NO. X
POST MILE X

SOUND WALL B7
ARCHITECTURAL DETAILS

STRUCTURES DESIGN DETAIL SHEET (ENGLISH) (REV. 09-01-10)

ORIGINAL SCALE IN INCHES FOR REDUCED PLANS 0 1 2 3

UNIT: 3592
PROJECT NUMBER & PHASE: 0500000543-1
CONTRACT NO.: 05-4482U1

DISREGARD PRINTS BEARING EARLIER REVISION DATES

REVISION DATES 8-28-13 11-12-13

SHEET 5 OF X

FILE => rw-b7-u-archdet.dgn

USERNAME => 613697 DATE PLOTTED => 13-NOV-2013 TIME PLOTTED => 08:59

M e m o r a n d u m

Flex your power!
Be energy efficient!

To: MANODE KODSUNTIE
Structure Design Branch 7
DIVISION OF ENGINEERING SERVICES

Attn: Jun Ki Jung

Date: January 22, 2014
File: 05-SB-101-2.2/3.3
Linden Casitas
Sound Wall B9
EA 05-4482U1

From: **DEPARTMENT OF TRANSPORTATION**
DIVISION OF ENGINEERING SERVICES
GEOTECHNICAL SERVICES

Subject: Sound Wall B9 Foundation Report

Scope of Work

A Foundation Report (FR) for Sound Wall B9 is provided for the above referenced project. The project is on State Route 101 in the City of Carpinteria, in southern Santa Barbara County. Improvements are proposed to increase the highway level of service and accessibility, and include replacement of existing bridges and construction of new bridges, retaining walls, sound walls, ramps and frontage roads. Review of published geologic data and previous geotechnical reports, field reconnaissance, and foundation calculations were performed as part of the geotechnical investigation.

The purpose of this report is to document geotechnical conditions and provide foundation recommendations for proposed Sound Wall B9.

Project Description

Route 101 within the project limits is a four-lane divided urban freeway with (2) 12-foot portland cement concrete (PCC) lanes in each direction and asphalt concrete (AC) 5-foot inside shoulders and 8-foot outside shoulders. A landscaped median approximately 40 feet wide with thrie beam barriers facing each direction of travel provides separation between the northbound and southbound lanes.

The purpose of the Linden Casitas project is to improve access and operations on Route 101, reduce local trips, and provide pedestrian and bicycle connectivity. The project includes construction of (3) mainline bridges on Route 101 to replace existing structures at Linden Avenue, Casitas Pass Road, and Carpinteria Creek. Highway access will be modified and added at Linden Avenue and Casitas Pass Road. Extension of Via Real, a frontage road, will also require construction of a new bridge over Carpinteria Creek. Retaining walls and sound walls are also proposed as part of the project.

Sound Wall B9 is proposed parallel to the southbound lanes just before the Linden Avenue southbound off-ramp from 95.27 feet left of US101 Station 170+38.02 to 95.18 feet left of Station 175+15.60.

Pertinent Reports and Investigations

The following publications were used to assist in the assessment of site conditions:

1. *Preliminary Geotechnical Report.* Finegan, Michael. EA 05-448200. December 21, 2000.
2. *District Preliminary Geotechnical Report.* De Llamas, Zeke. EA 05-448200, July 30, 2008.

Field Investigation and Laboratory Testing Program

Two mud rotary borings were advanced near the sound wall layout line to determine the subsurface conditions to be used for foundation design. In-situ soil strength parameters were determined using the Standard Penetration Test (SPT) for cohesionless soils. Laboratory tests were used to determine the particle size distribution and corrosion potential of representative samples obtained at depth. Refer to Table 1 for a summary of subsurface investigation information.

Table 1. Subsurface Exploration Summary

Boring	*Completion Date*	*Equipment*	*Hammer Type*	*Hammer Efficiency (%)*	*Approximate Ground Elevation (ft)*	*Depth (ft)*
RC-10-004	11-16-2010	CS2000	Auto	93	42.5	82.0
RC-13-016	1-30-2013	CME 85	Auto	68	19.2	153.6

Site Geology and Subsurface Conditions

Physical Setting

The project is located in the Carpinteria Valley, a sunken area north of the elevated coastal fault block southeast of the City of Carpinteria. Carpinteria Valley is a low-lying, flat plain comprised of alluvial deposits. Some low-lying areas in the valley are partly submerged under brackish water of the Carpinteria Slough. The plain meets the Pacific Ocean to the southwest, gradually gains elevation to the east as it approaches Rincon and La Granada Mountains, and abuts sharply against the foothills of the Santa Ynez Mountains at its the northern boundary.

A mild coastal climate prevails throughout the year, with marine fog often present in spring and summer months. Nearly all precipitation falls from Pacific storms between October and May, with the majority accumulating in the winter months. Average yearly rainfall is 17.5 inches. The average temperature is 72 degrees Fahrenheit with more than 275 days of sunny weather per year.

Regional Geology

The project area is located in the Transverse Ranges Geomorphic Province. State Route 101 is bordered to the north by the Santa Ynez Mountains and to the south by the Pacific Ocean as it traverses the Carpinteria Valley. Geologic maps and field observations indicate that soils in the valley were deposited in an alluvial environment and consist of normally-consolidated deposits of clay, silt, sand, and gravel.

Groundwater

Open observation wells were installed in borings RC-10-004 and RC-13-016 to observe fluctuations in groundwater levels and determine if groundwater will influence construction and foundation design. Results of the groundwater-monitoring program are summarized in Table 2.

Table 2. Groundwater Elevations

Boring	Date	Depth to Groundwater (ft)	Groundwater Elevation(ft)
RC-10-004	2-9-2011	3.9	20.6
RC-10-004	12-14-2011	5.0	19.5
RC-10-004	2-24-2012	4.8	19.3
RC-10-004	3-22-2012	5.0	19.5
RC-10-004	4-19-2012	4.3	20.2
RC-13-016	2-5-2013	7.7	11.5
RC-13-016	4-5-2013	7.5	11.7

Corrosion Evaluation

The department considers a site to be potentially corrosive to the foundation elements if the following conditions exist for the representative soil and/or water samples taken at the site: minimum resistivity of 1000 ohm-cm or less and/or PH of 5.5 or less. Samples found to be potentially corrosive based on this criteria are sent to the Headquarters Material Laboratory for additional corrosion testing based on chloride and sulphate content.

Soil and water samples were obtained during the subsurface investigation and tested for corrosion potential at the District Materials Laboratory. The results of the corrosion testing are presented in Table 3. Based on the results, soils are not considered corrosive to foundation elements.

Table 3. Corrosion Testing Summary

Boring	*Depth (ft)*	*pH*	*Resistivity ohm-cm*	*Chloride ppm*	*Sulphate ppm*	*Corrosive*
RC-10-004	0.0-3.0	8.1	660	140	870	NO
RC-10-004	25.0-26.5	8.0	2650	-	-	NO
RC-10-004	57.0-59.0	8.2	6330	-	-	NO

Foundation Recommendations

Masonry Block Sound Wall on 24" CIDH Piles

24" diameter cast-in-drilled-hole piles are the recommended foundation type. Due to the high groundwater table, Standard Plan foundation types of spread footings, 16" CIDH piles, and trench footings are not suitable alternatives. 24" CIDH piles are the minimum diameter that allow for installation of gamma-gamma casings required to verify the soundness of piles constructed using the wet method. Pile axial resistance was estimated using Alpha and Beta Methods for cohesive and cohesionless soils per the recommendations of *FHWA Geotechnical Engineering Circular 10, Drilled Shafts: Construction Procedures and LRFD Design Methods*. Pile lateral resistance and load deflection behavior was evaluated using the computer analysis program L-Pile to estimate pile head deflection under lateral loading using a design criteria of a maximum of 0.5 inches of lateral pile head deflection. Pile lengths required for axial resistance resulted in calculated pile head deflections of less than 0.5 inches. Foundation loads provided by Structure Design and foundation recommendations are provided in Tables 4 and 5.

Table 4. Sound Wall Foundation Loads

Pile Number	*Max WSD Axial Load (kips)*	*Required Nominal Axial Resistance (kips) FOS=2.0*	*Max LFD Seismic Lateral Load (kips)*	*Max LFD Wind Lateral Load (kips)*
1	9.8	19.6	5.9	2.0
2-9	14.2	28.4	8.5	2.9
10-55	15.5	31.0	9.3	3.3
56	16.0	32.0	8.4	3.0
57-58	16.0	32.0	9.6	3.3
59	16.0	32.0	8.0	2.8
60	16.0	32.0	8.8	3.1

Table 5. Sound Wall Foundation Recommendations

Pile Number	*Foundation Type*	*Pile Cutoff Elevation (ft)*	*Pile Length (ft)*	*Pile Tip Elevation (ft)*
1-56	24" CIDH	14.0	17.0	-3.0
57-60	24" CIDH	15.33	17.0	-1.67

Construction Considerations

Loose soils and high groundwater are expected to be encountered during foundation excavations. Groundwater levels very near to the ground surface were observed in the vicinity of the proposed sound wall. Casing may be required to control caving soils. Pile excavation and placement of concrete using the wet method will be required. Surface casing may be required to protrude above the ground surface to maintain a minimum of 5 feet of offsetting drill fluid head above the groundwater elevation. Type D excavation for the pile cap is shown on the plans where groundwater will likely be encountered during construction based on groundwater levels observed nearby.

Limited construction access is available due to the location of the proposed sound wall very near to the right of way line. Construction access is expected to be from the State right of way; however care should be taken to avoid damage to the nearby private property.

Additional Information

Standard Special Provision S5-280, "Project Information", discloses to bidders and contractors a list of pertinent information available for their inspection prior to bid opening. The following is an excerpt from SSP S5-280 disclosing information originating from Geotechnical Services. Items listed to be included in the Information Handout will be provided in Acrobat (.pdf) format to the Addressee of this report via electronic mail.

Data and information attached with the project plans are:

A. Log of Test Borings.

Data and information included in the Information Handout provided to the Bidders and Contractors are:

A. Foundation Report for the Sound Wall dated January 22, 2014.

If you have any questions or comments, please contact Ryan Turner at (805) 549-3750, or Michael Finegan at (805) 549-3194.

RYAN TURNER, P.E., G.E.
Transportation Engineer Civil
Geotechnical Design – North
Branch D

MICHAEL S. FINEGAN, P.E.
Branch Chief
Geotechnical Design – North
Branch D

c: Job File / Branch D Records
Structure Construction RE Pending File (email RE_pending_file@dot.ca.gov)
Craig Whitten / DES Office Engineer
Andrew Tan / PCE
Eric Karlson/ DME

LIST OF ATTACHMENTS

Vicinity Map	Attachment 1
Geologic Map and Legend	Attachment 2
Structure Plans	Attachment 3
L-Pile Output	Attachment 4
Design Information	Attachment 5

INDEX OF SHEETS

STATE OF CALIFORNIA
DEPARTMENT OF TRANSPORTATION

PROJECT PLANS FOR CONSTRUCTION ON
STATE HIGHWAY
IN SANTA BARBARA COUNTY
IN CARPINTERIA
FROM 0.4 KM SOUTH OF CARPINTERIA CREEK BRIDGE
TO 0.5 KM NORTH OF LINDEN AVENUE OVERCROSSING

TO BE SUPPLEMENTED BY STANDARD PLANS DATED JULY 2004

Dist	COUNTY	ROUTE	KILOMETER POST TOTAL PROJECT	SHEET NO.	TOTAL SHEETS
05	SB	101	3.5/5.5		

LOCATION MAP

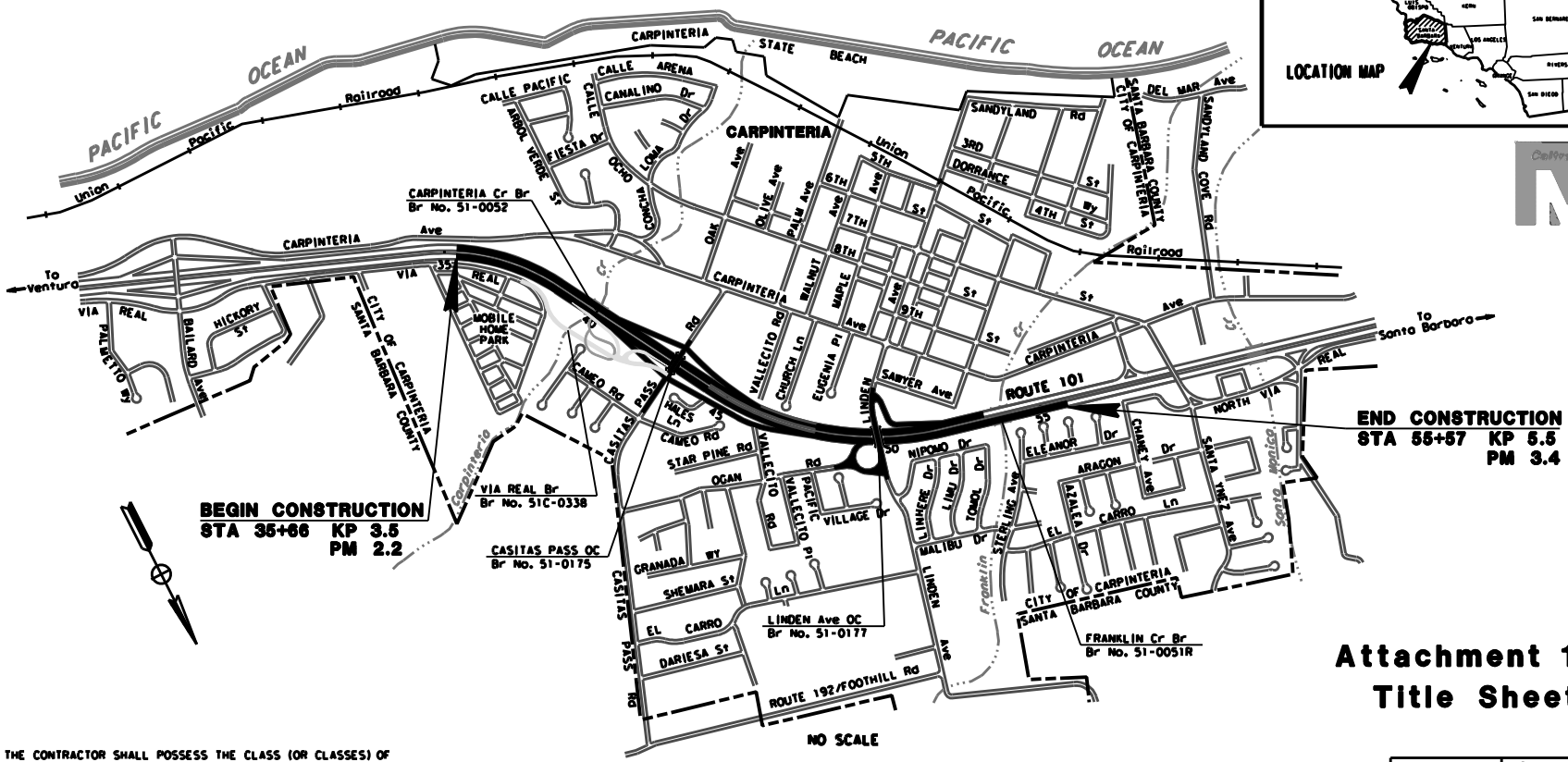

THE CONTRACTOR SHALL POSSESS THE CLASS (OR CLASSES) OF LICENSE AS SPECIFIED IN THE "NOTICE TO CONTRACTORS."

PROJECT MANAGER: DAVID BEARD
DESIGN ENGINEER: KARI BHANA

Attachment 1
Title Sheet

CONTRACT No. 05-4482U0
CU 06233 | EA 4482U0

BORDER LAST REVISED 3/1/2007 | CALTRANS WEB SITE IS: HTTP://WWW.DOT.CA.GOV/ | RELATIVE BORDER SCALE IS IN MILLIMETERS 0 20 40 60 80 | USERNAME => RUSER | DGN FILE => SREQUEST | DATE PLOTTED => 09-14-10 | TIME PLOTTED => 09:42

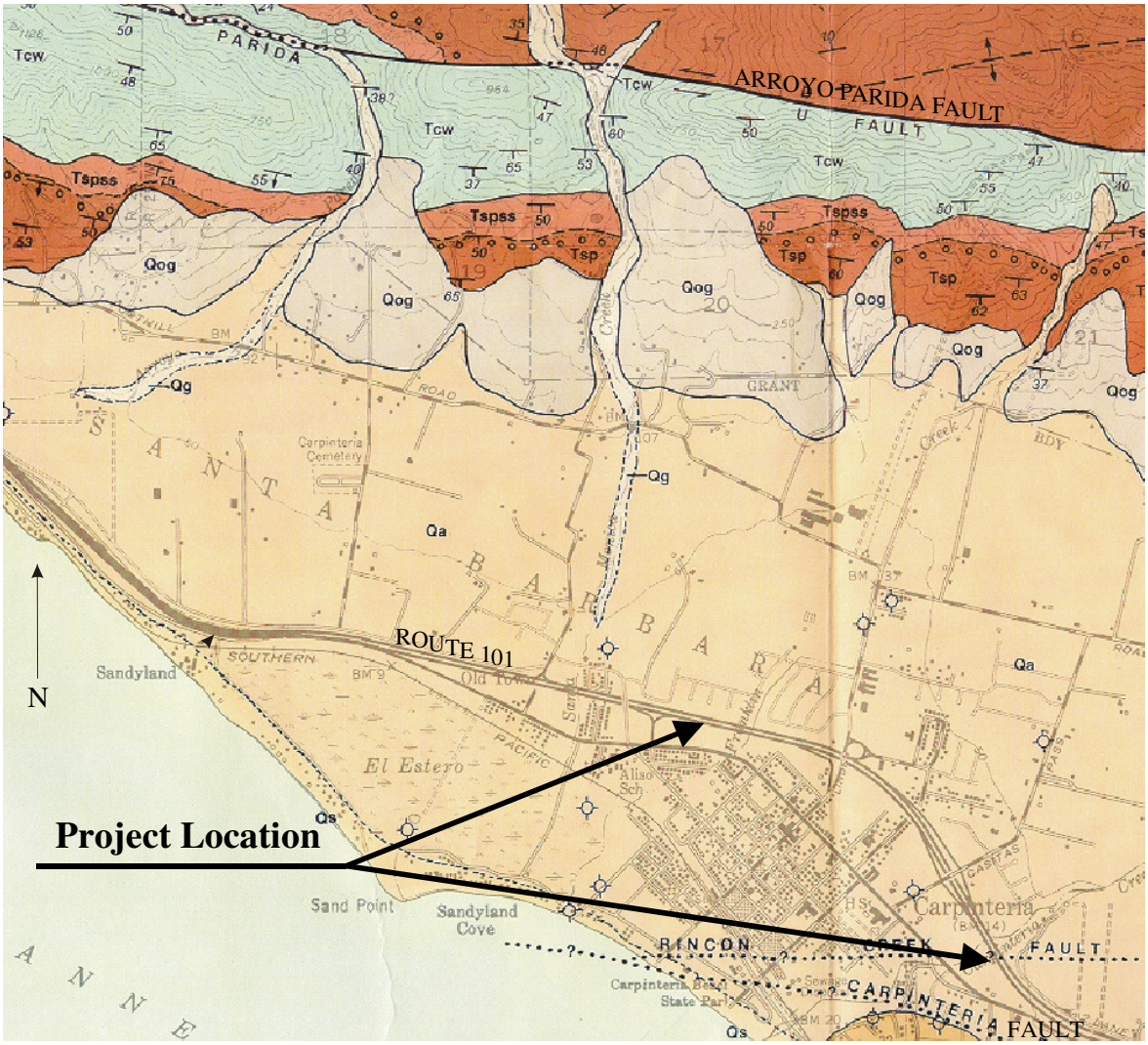

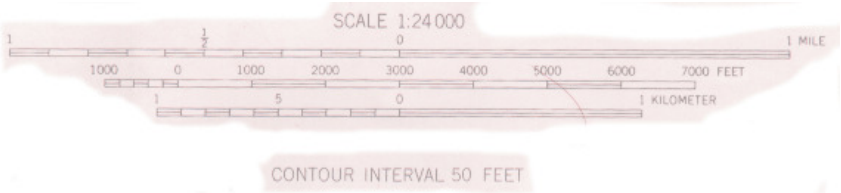

PART OF:

GEOLOGIC MAP OF THE CARPINTERIA QUADRANGLE
BY THOMAS W. DIBBLEE, JR., 1986

Geologic Map

05-SB-101-2.1/3.4
05-448201
Attachment 2

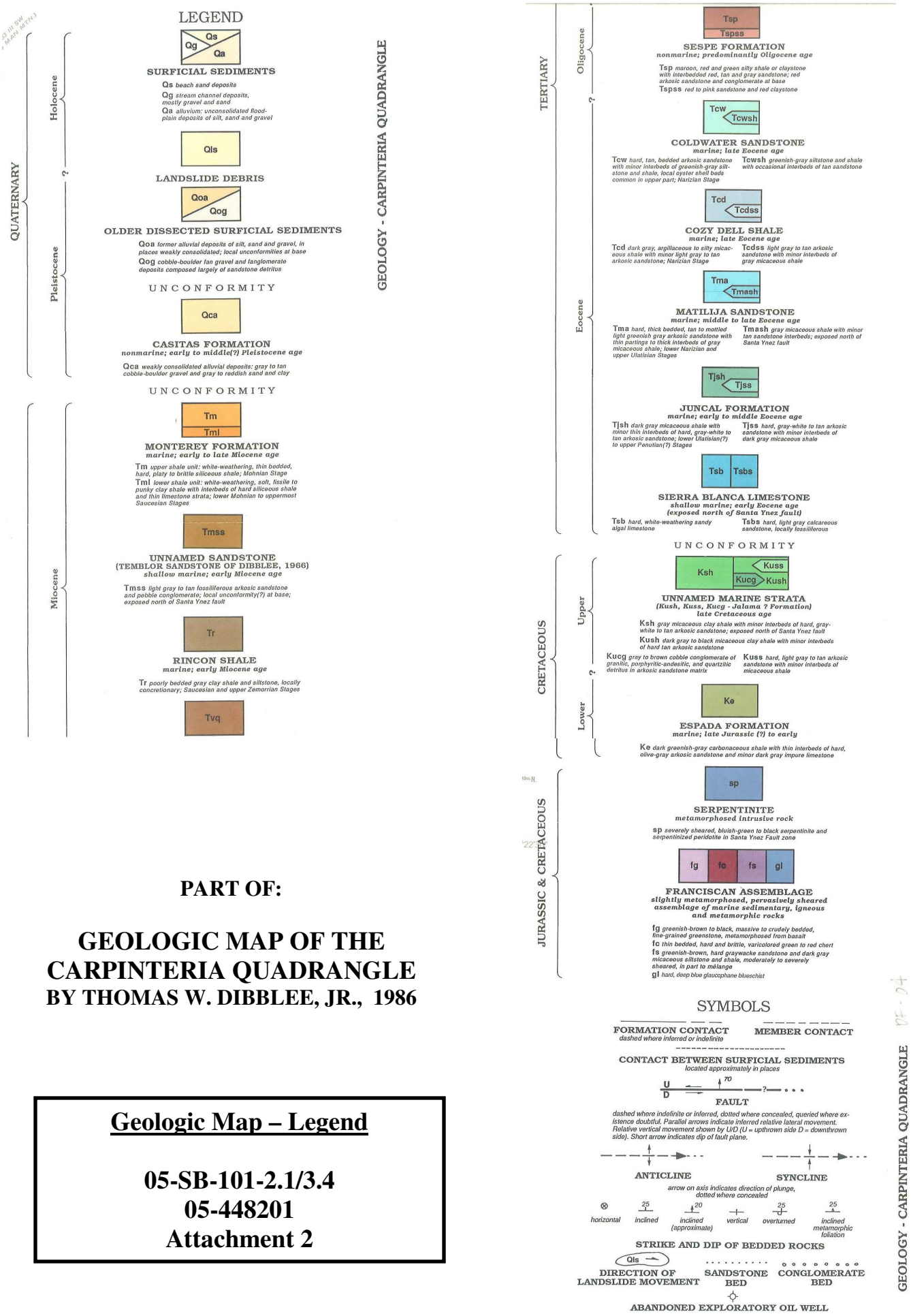

PART OF:

GEOLOGIC MAP OF THE CARPINTERIA QUADRANGLE

BY THOMAS W. DIBBLEE, JR., 1986

Geologic Map – Legend

05-SB-101-2.1/3.4
05-448201
Attachment 2

DIST	COUNTY	ROUTE	POST MILES TOTAL PROJECT	SHEET No.	TOTAL SHEETS
05	SB	101			

REGISTERED CIVIL ENGINEER X DATE

PLANS APPROVAL DATE

REGISTERED PROFESSIONAL ENGINEER Eduardo Jose Ortega Jr. No. 77226 Exp. 6/30/2015 CIVIL STATE OF CALIFORNIA

The State of California or its officers or agents shall not be responsible for the accuracy or completeness of scanned copies of this plan sheet.

CHECKED DETAILS

INDEX TO PLANS

Sheet No.	Title
1.	GENERAL PLAN
2.	STRUCTURE PLAN NO. 1
3.	STRUCTURE PLAN NO. 2
4.	PILE DETAILS
5.	ARCHITECTURAL DETAILS

STANDARD PLANS DATED 2010

A10A	ABBREVIATIONS (SHEET 1 OF 2)
A10B	ABBREVIATIONS (SHEET 2 OF 2)
A10C	LINES AND SYMBOLS (SHEET 1 OF 3)
A10D	LINES AND SYMBOLS (SHEET 2 OF 3)
A10E	LINES AND SYMBOLS (SHEET 3 OF 3)
A10F	LEGEND - SOIL (SHEET 1 OF 2)
A10G	LEGEND - SOIL (SHEET 2 OF 2)
A10H	LEGEND - ROCK
B15-3	SOUND WALL MASONRY BLOCK ON PILE CAP DETAILS (1)
B15-4	SOUND WALL MASONRY BLOCK ON PILE CAP DETAILS (2)
B15-5	SOUND WALL MASONRY BLOCK ON PILE CAP DETAILS (3)

STANDARD PLAN SHEET No.

DETAIL No.

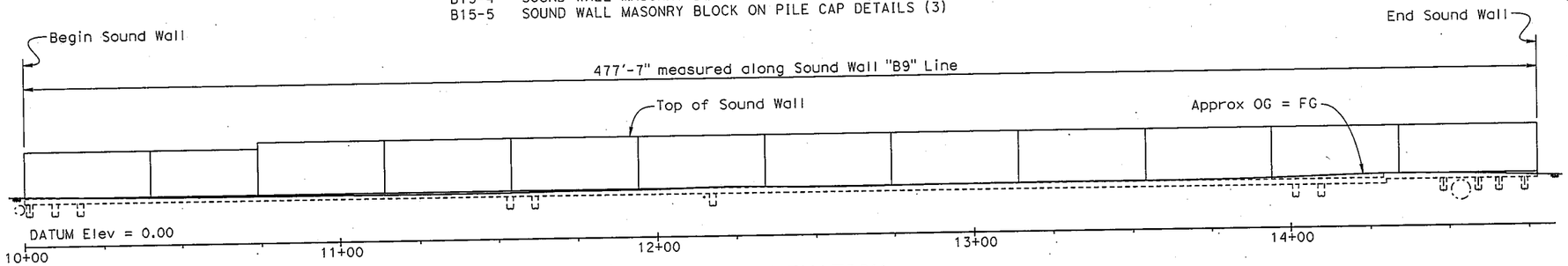

Note: Not all piles shown

ELEVATION

1" = 20'

PILE DATA TABLE

LOCATION	PILE TYPE (CIDH)	CUT-OFF ELEV (ft)	NOMINAL RESISTANCE (KIPS)		DESIGN TIP ELEVATION	SPECIFIED TIP ELEVATION
			COMPRESSION	TENSION		
Pile 1	24"	14.0	19.6	0	-3.0 (a)(c)(d)	-3.0
Piles 2 through 9	24"	14.0	28.4	0	-3.0 (a)(c)(d)	-3.0
Piles 10 through 55	24"	14.0	21.0	0	-3.0 (a)(c)(d)	-3.0
Pile 56	24"	14.0	32.0	0	-3.0 (a)(c)(d)	-3.0
Piles 57 through 60	24"	15.33	32.0	0	-1.67 (a)(c)(d)	-1.67

NOTES: 1. Design tip elevations are controlled by: (a) compression, (c) settlement and (d) lateral load.
2. The specified tip elevations shall not be raised unless directed by the Engineer.

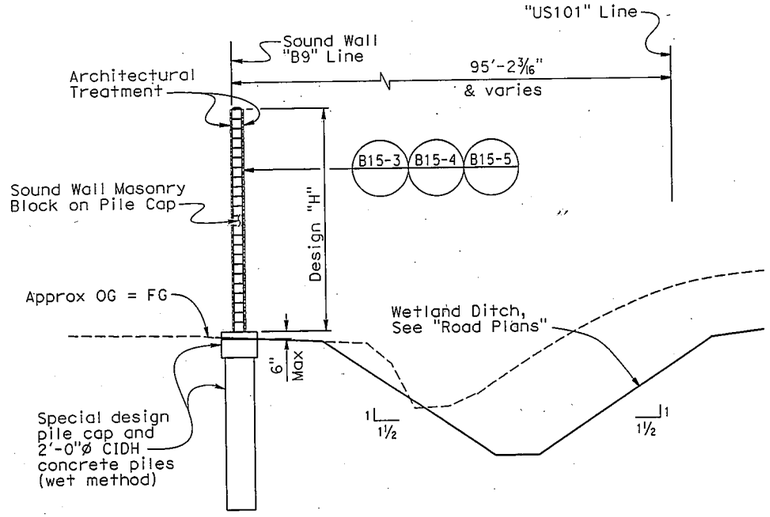

TYPICAL SECTION

1" = 5'

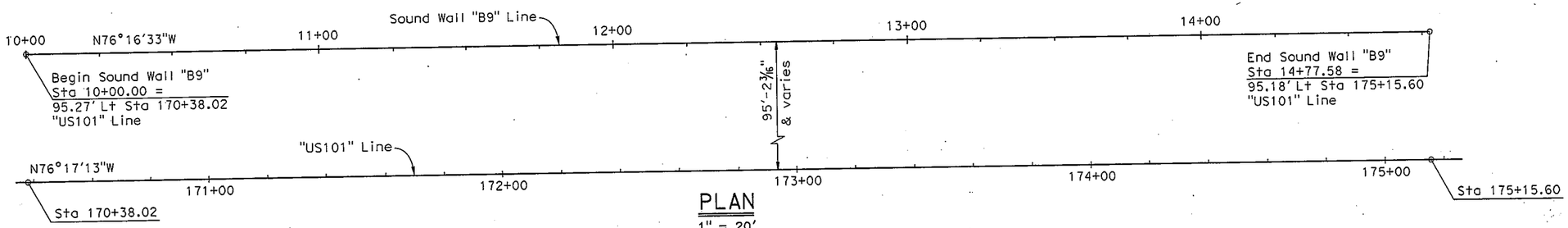

PLAN

1" = 20'

INCOMPLETE PLAN FOR DESIGN STUDY PRINTED

DEC 11 2013

Office of Structures, Design
STATE OF CALIFORNIA

X DESIGN ENGINEER	DESIGN	BY Jun Ki Jung	CHECKED X M. Kodsuntie	LOAD & RESISTANCE FACTOR DESIGN	LIVE LOADING: 240 lbs per sf
	DETAILS	BY G.Dickerson/B.Huddleston	CHECKED X M. Kodsuntie	LAYOUT	BY X Jun Ki Jung
	QUANTITIES	BY X	CHECKED X	SPECIFICATIONS	BY X

CHECKED X M. Kodsuntie PLANS AND SPECS COMPARED X

ORIGINAL SCALE IN INCHES FOR REDUCED PLANS 0 1 2 3

STATE OF CALIFORNIA DEPARTMENT OF TRANSPORTATION

DIVISION OF ENGINEERING SERVICES STRUCTURE DESIGN DESIGN BRANCH 7

BRIDGE NO. X POST MILE X

SOUND WALL "B9"

GENERAL PLAN

UNIT: 3592
PROJECT NUMBER & PHASE: 05 0000 0543 1 CONTRACT NO.: 05-4482U1

DISREGARD PRINTS BEARING EARLIER REVISION DATES

REVISION DATES 3-30-13 11-25-13 11-14-13 SHEET OF X

FILE => swb9-a-gp01.dgn

STRUCTURES DESIGN GENERAL PLAN SHEET (ENGLISH) (REV.09-01-10)

USERNAME => s101942 DATE PLOTTED => 25-NOV-2013 TIME PLOTTED => 10:13

DIST	COUNTY	ROUTE	POST MILES TOTAL PROJECT	SHEET No.	TOTAL SHEETS
05	SB	101			

REGISTERED CIVIL ENGINEER X DATE

PLANS APPROVAL DATE

REGISTERED PROFESSIONAL ENGINEER Eduardo Jose Ortega Jr. No. 77226 Exp. 6/30/2015 CIVIL STATE OF CALIFORNIA

The State of California or its officers or agents shall not be responsible for the accuracy or completeness of scanned copies of this plan sheet.

CHECKED DETAILS

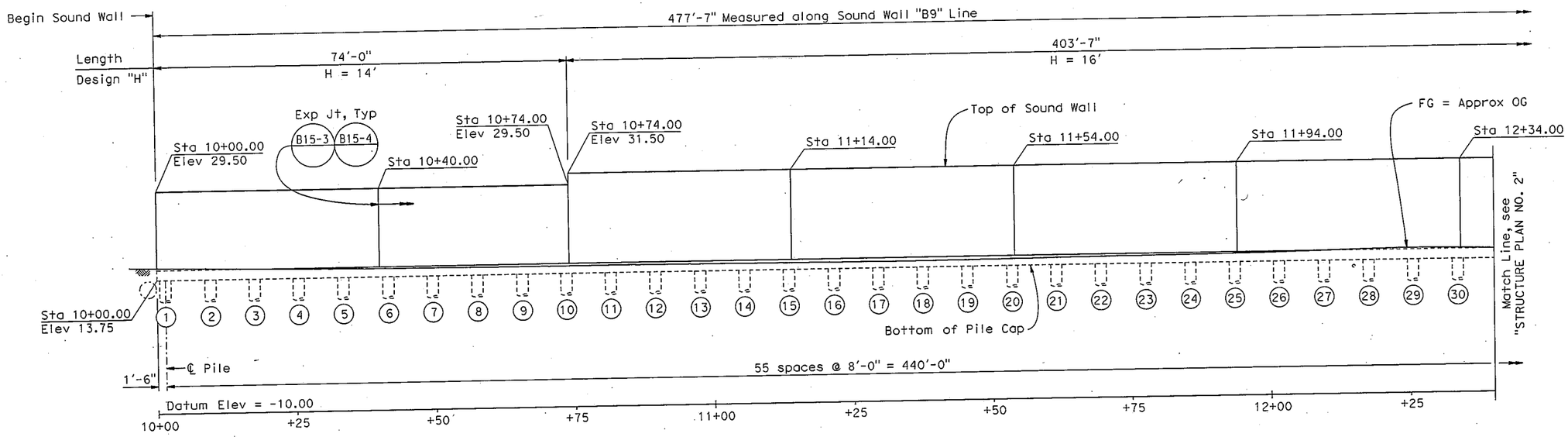

ELEVATION

1" = 10'

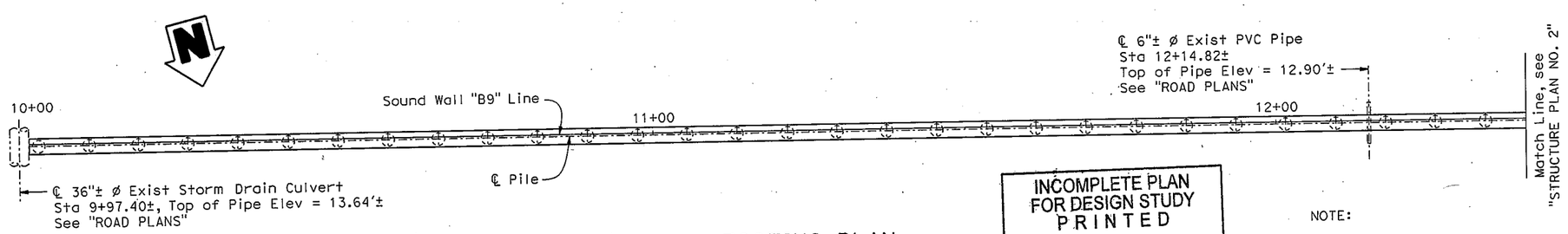

FOOTING PLAN

1" = 10'

INCOMPLETE PLAN FOR DESIGN STUDY PRINTED

DEC 11 2013

Office of Structures, Design
STATE OF CALIFORNIA

NOTE:

1. Pile spacing measured along Sound Wall "B9" Line.

LEGEND:

(xx) Indicates Pile number

	BY	CHECKED
DESIGN	Jun Ki Jung	X M. Kodsuntie
DETAILS	Bob Huddleston	X M. Kodsuntie
QUANTITIES	X	X

STATE OF CALIFORNIA
DEPARTMENT OF TRANSPORTATION

DIVISION OF ENGINEERING SERVICES
STRUCTURE DESIGN
DESIGN BRANCH 7

BRIDGE NO. X
POST MILE X

SOUND WALL "B9"
STRUCTURE PLAN NO. 1

ORIGINAL SCALE IN INCHES FOR REDUCED PLANS 0 1 2 3

UNIT: 3592
PROJECT NUMBER & PHASE: 0500000543-1
CONTRACT NO.: 05-4482U1

DISREGARD PRINTS BEARING EARLIER REVISION DATES:

REVISION DATES 1-31-13 11-15-13 11-25-13 SHEET 2 OF X

FILE => swb9-c-sp01.dgn

STRUCTURES DESIGN DETAIL SHEET (ENGLISH) (REV. 09-01-10)

USERNAME => s101842 DATE PLOTTED => 25-NOV-2013 TIME PLOTTED => 10:18

DIST	COUNTY	ROUTE	POST MILES TOTAL PROJECT	SHEET No.	TOTAL SHEETS
05	SB	101			

REGISTERED CIVIL ENGINEER X DATE

PLANS APPROVAL DATE

REGISTERED PROFESSIONAL ENGINEER X No. X Exp. X CIVIL STATE OF CALIFORNIA

The State of California or its officers or agents shall not be responsible for the accuracy or completeness of scanned copies of this plan sheet.

CHECKED DETAILS

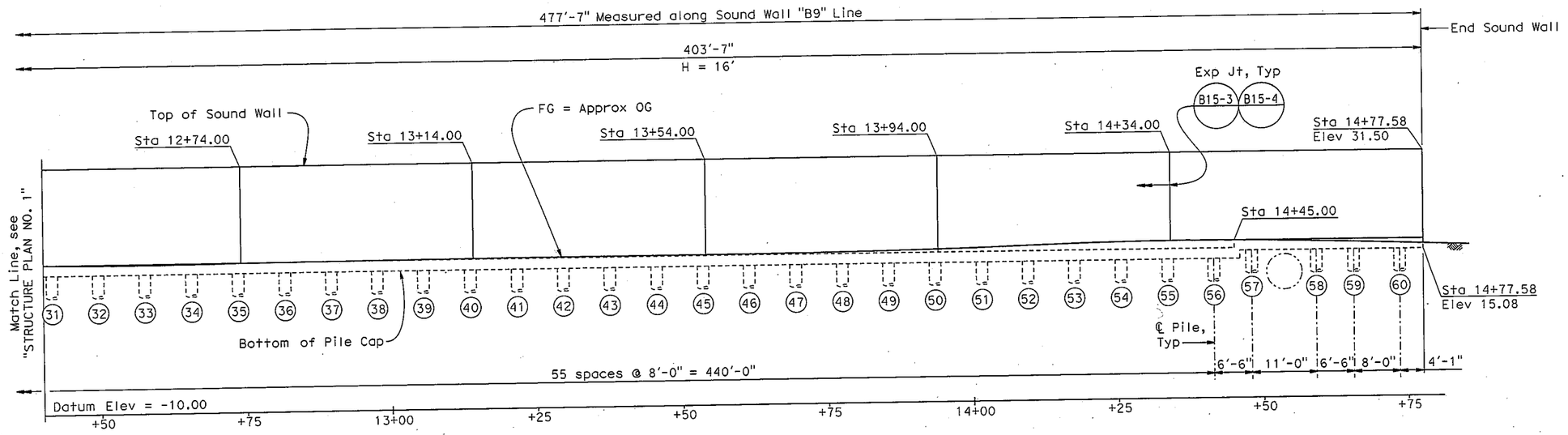

ELEVATION

1" = 10'

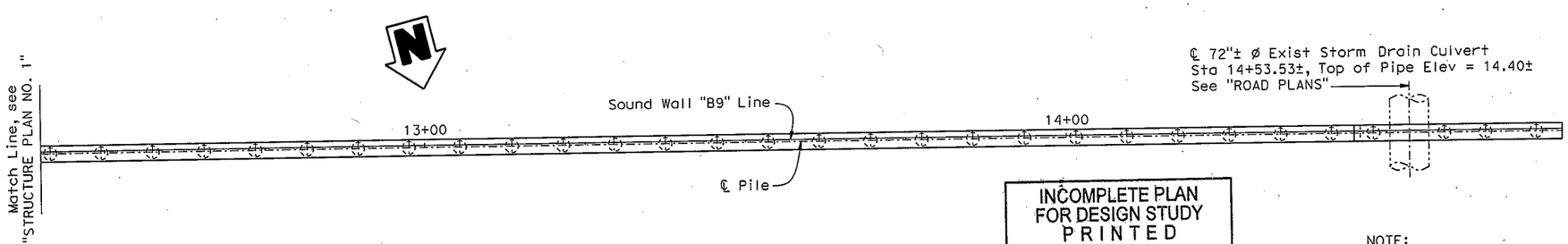

FOOTING PLAN

1" = 10'

INCOMPLETE PLAN FOR DESIGN STUDY PRINTED

DEC 11 2013

Office of Structures, Design
STATE OF CALIFORNIA

NOTE:

1. Pile spacing measured along Sound Wall "B9" Line.

LEGEND:

(xx) Indicates Pile number

	BY	CHECKED
DESIGN	Jun Ki Jung	X M. Kodsuntie
DETAILS	Bob Huddleston	X M. Kodsuntie
QUANTITIES	X	X

STATE OF CALIFORNIA
DEPARTMENT OF TRANSPORTATION

DIVISION OF ENGINEERING SERVICES
STRUCTURE DESIGN
DESIGN BRANCH

BRIDGE NO. X
POST MILE X

SOUND WALL "B9"
STRUCTURE PLAN NO. 2

STRUCTURES DESIGN DETAIL SHEET (ENGLISH) (REV. 09-01-10)

ORIGINAL SCALE IN INCHES FOR REDUCED PLANS 0 1 2 3

UNIT: 3592
PROJECT NUMBER & PHASE: 0500000543-1
CONTRACT NO.: 05-4482U1

DISREGARD PRINTS BEARING EARLIER REVISION DATES

REVISION DATES: 11-15-13 11-25-13

SHEET 3 OF X

FILE => swb9-c-sp02.dgn

USERNAME => s101842 DATE PLOTTED => 25-NOV-2013 TIME PLOTTED => 10:58

DIST	COUNTY	ROUTE	POST MILES TOTAL PROJECT	SHEET No.	TOTAL SHEETS
05	SB	101			

REGISTERED CIVIL ENGINEER X DATE

PLANS APPROVAL DATE

REGISTERED PROFESSIONAL ENGINEER X No. X Exp. X CIVIL STATE OF CALIFORNIA

The State of California or its officers or agents shall not be responsible for the accuracy or completeness of scanned copies of this plan sheet.

CHECKED DETAILS

LEGEND:

Indicates limits of Structure Excavation and Backfill

(XX) Indicates Pile Number

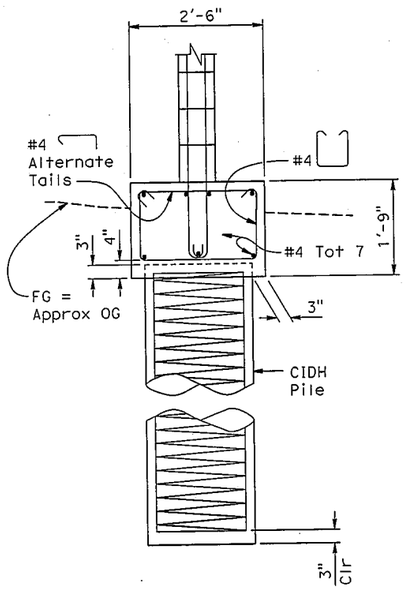

B15-3 PILE CAP SECTION B15-5

3/4" = 1'-0"

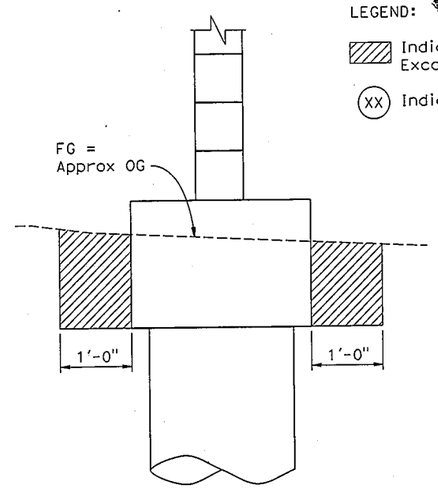

LIMITS OF EXCAVATION AND BACKFILL

NO SCALE

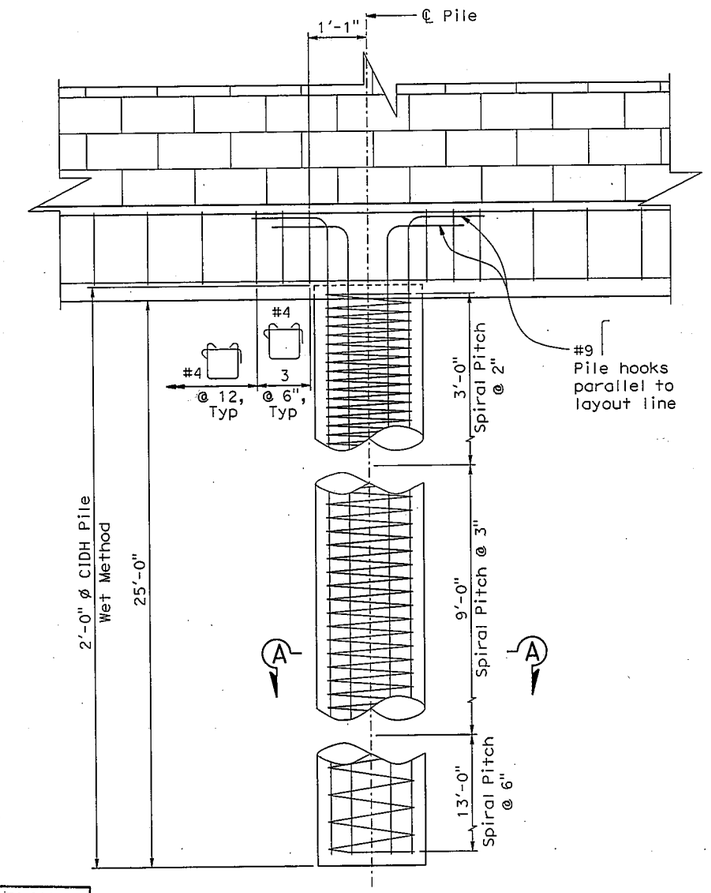

ELEVATION

3/4" = 1'-0"

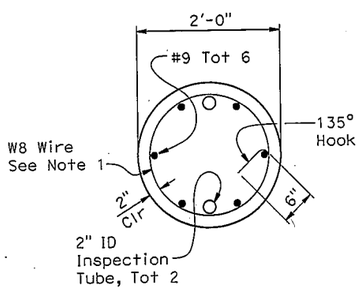

VIEW A-A

1" = 1'-0"

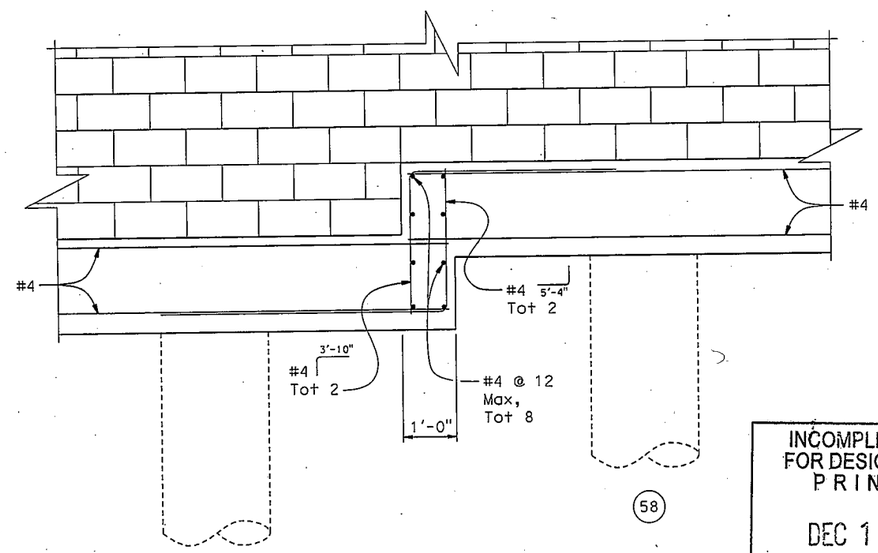

PILE CAP STEP DETAIL

3/4" = 1'-0"

INCOMPLETE PLAN FOR DESIGN STUDY PRINTED

DEC 11 2013

Office of Structures, Design
STATE OF CALIFORNIA

NOTE:

1. Lapped splices in spiral reinforcement shall be lapped at least 80 wire diameters. Spiral reinforcement at splices and at ends shall be terminated with a 135° hook with a 6" tail hooked around a longitudinal bar.

	BY	CHECKED
DESIGN	Jun Ki Jung	X M. Kodsuntie
DETAILS	Bob Huddleston	X M. Kodsuntie
QUANTITIES	X	X

STATE OF CALIFORNIA
DEPARTMENT OF TRANSPORTATION

DIVISION OF ENGINEERING SERVICES
STRUCTURE DESIGN
DESIGN BRANCH 7

BRIDGE NO. X
POST MILE X

SOUND WALL "B9"

PILE DETAILS

STRUCTURES DESIGN DETAIL SHEET (ENGLISH) (REV. 09-01-10)

ORIGINAL SCALE IN INCHES FOR REDUCED PLANS 0 1 2 3

UNIT: 3592
PROJECT NUMBER & PHASE: 0500000543-1 CONTRACT NO.: 05-4482U1

DISREGARD PRINTS BEARING EARLIER REVISION DATES 11-26-13 11-25-13

REVISION DATES

SHEET 4 OF X

FILE => swb9-p-pdt01.dgn

USERNAME => s101842 DATE PLOTTED => 25-NOV-2013 TIME PLOTTED => 11:37

DIST	COUNTY	ROUTE	POST MILES TOTAL PROJECT	SHEET No.	TOTAL SHEETS
05	SB	101			

REGISTERED CIVIL ENGINEER X DATE

PLANS APPROVAL DATE

REGISTERED PROFESSIONAL ENGINEER Eduardo Jose Ortega Jr. No. 77226 Exp. 6/30/2015 CIVIL STATE OF CALIFORNIA

The State of California or its officers or agents shall not be responsible for the accuracy or completeness of scanned copies of this plan sheet.

NOTES:

1. The wall colors shall be from Air Vol Block Inc.; 1 Suburban Road, San Luis Obispo, Ca. 93406; Phone (805) 543-1314; or equal. The colors shall be the ones indicated in detail below.
2. Pattern matches the one in existing Serena Park Soundwall, Br. No. 51-SW, per aesthetic recommendations.

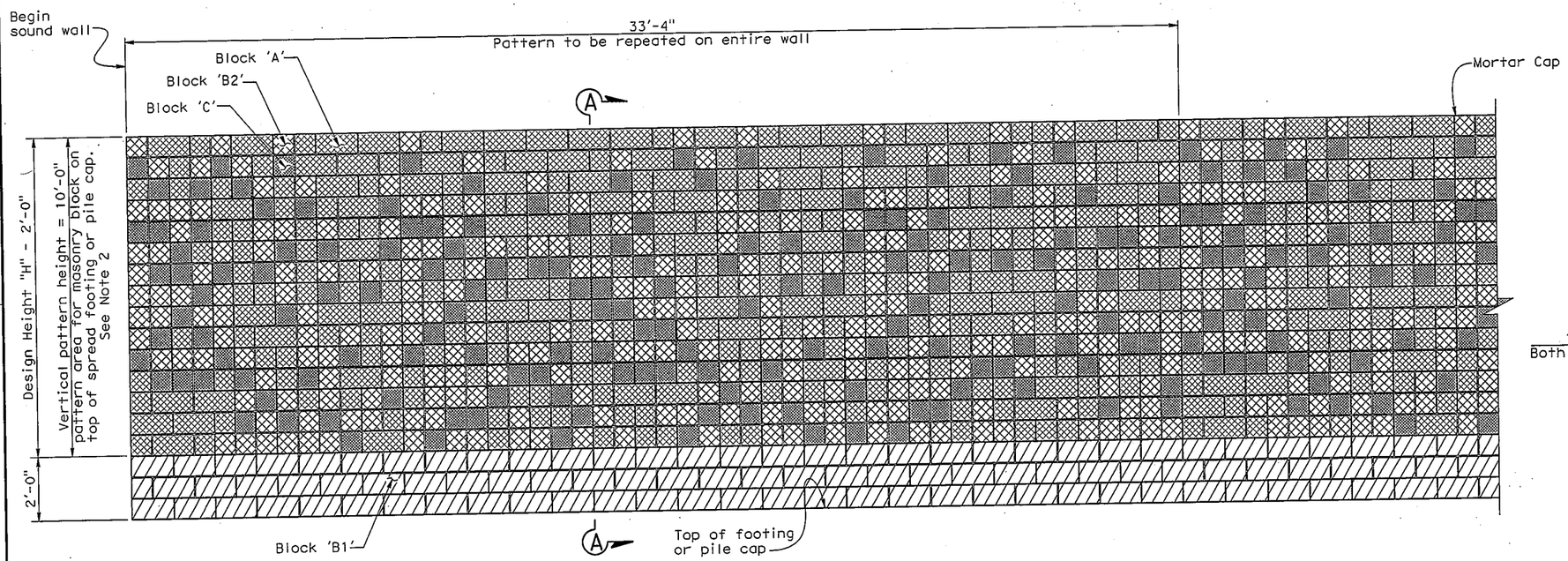

BLOCK PATTERN ELEVATION

No Scale

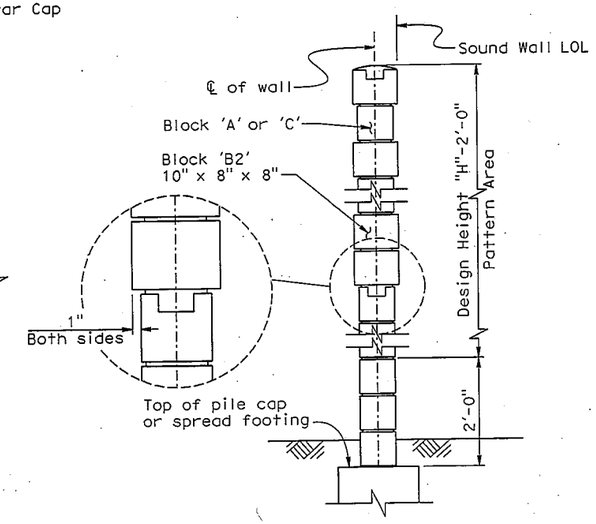

SECTION A-A

No Scale

MASONRY BLOCK LEGEND:

- Block 'A' : 8" x 8" x 16" split face all exposed sides. Use half blocks where necessary. Air Vol Block color #60H59804B
- Block 'B1' : 8" x 8" x 16" split face all exposed sides. Use half blocks where necessary. Air Vol Block color #60H607E7
- Block 'B2' : 10" x 8" x 8" split face all exposed sides. Block will project 1" both sides of wall. Air Vol Block color #60H607E7
- Block 'C' : 8" x 8" x 8" split face all exposed sides. Use half blocks where necessary. Air Vol Block color #60B401G

INCOMPLETE PLAN FOR DESIGN STUDY PRINTED

DEC 11 2013

Office of Structures, Design
STATE OF CALIFORNIA

CHECKED DETAILS

	BY	CHECKED
DESIGN	E. Ortega Jr. / S. Heath	X M. Kodsuntie
DETAILS	Gerald Dickerson	X M. Kodsuntie
QUANTITIES	X	X

STATE OF CALIFORNIA
DEPARTMENT OF TRANSPORTATION

DIVISION OF ENGINEERING SERVICES
STRUCTURE DESIGN
DESIGN BRANCH 7

BRIDGE NO. X
POST MILE X

SOUND WALL "B9"
ARCHITECTURAL DETAILS

STRUCTURES DESIGN DETAIL SHEET (ENGLISH) (REV. 09-01-10)

ORIGINAL SCALE IN INCHES FOR REDUCED PLANS 0 1 2 3

UNIT: 3592
PROJECT NUMBER & PHASE: 0500000543-1
CONTRACT NO.: 05-4482U1

DISREGARD PRINTS BEARING EARLIER REVISION DATES

REVISION DATES: 8-23-13 8-26-13 11-21-13 11-25-13

SHEET 5 OF X

FILE => swb9-u-archdet.dgn

USERNAME => s101842 DATE PLOTTED => 25-NOV-2013 TIME PLOTTED => 11:41

==========

LPILE Plus for Windows, Version 5.0 (5.0.47)

Analysis of Individual Piles and Drilled Shafts
Subjected to Lateral Loading Using the p-y Method

(c) 1985-2010 by Ensoft, Inc.
All Rights Reserved

==========

This program is licensed to:

Caltrans
Caltrans

Files Used for Analysis

Path to file locations: H:\SB\SB-101-2.2-3.3 Linden Casitas\Walls\Calculations\B2 and B9\
Name of input data file: SW B9.lpd
Name of output file: SW B9.lpo
Name of plot output file: SW B9.lpp
Name of runtime file: SW B9.lpr

Time and Date of Analysis

Date: November 26, 2013 Time: 12:30:13

Problem Title

Sound Wall B9 Linden Casitas

Program Options

Units Used in Computations - US Customary Units: Inches, Pounds

Basic Program Options:

Analysis Type 1:
- Computation of Lateral Pile Response Using User-specified Constant EI

Computation Options:
- Only internally-generated p-y curves used in analysis
- Analysis does not use p-y multipliers (individual pile or shaft action only)
- Analysis assumes no shear resistance at pile tip
- Analysis for fixed-length pile or shaft only
- No computation of foundation stiffness matrix elements
- Output pile response for full length of pile
- Analysis assumes no soil movements acting on pile
- No additional p-y curves to be computed at user-specified depths

```
Solution Control Parameters:
- Number of pile increments            =          100
- Maximum number of iterations allowed =          100
- Deflection tolerance for convergence =   1.0000E-05 in
- Maximum allowable deflection         =   1.0000E+02 in

Printing Options:
- Values of pile-head deflection, bending moment, shear force, and
  soil reaction are printed for full length of pile.
- Printing Increment (spacing of output points) =  1


--------------------------------------------------------------------------------
                    Pile Structural Properties and Geometry
--------------------------------------------------------------------------------

Pile Length                                =     156.00 in

Depth of ground surface below top of pile =     -60.00 in

Slope angle of ground surface              =       0.00 deg.

Structural properties of pile defined using  2 points

Point    Point         Pile      Moment of       Pile      Modulus of
 No.     Depth       Diameter     Inertia        Area      Elasticity
          in           in         in**4        Sq.in      lbs/Sq.in
-----  ---------   -----------   ----------   ----------   -----------
  1       0.0000   24.00000000   16286.0000     452.0000      4000000.
  2     156.0000   24.00000000   16286.0000     452.0000      4000000.


--------------------------------------------------------------------------------
                       Soil and Rock Layering Information
--------------------------------------------------------------------------------

The soil profile is modelled using  6 layers

Layer  1 is sand, p-y criteria by Reese et al., 1974
Distance from top of pile to top of layer    =      -60.000 in
Distance from top of pile to bottom of layer =       24.000 in
p-y subgrade modulus k for top of soil layer =        0.000 lbs/in**3
p-y subgrade modulus k for bottom of layer   =        0.000 lbs/in**3

NOTE:  Internal default values for p-y subgrade modulus will be computed for
the above soil layer.

Layer  2 is sand, p-y criteria by Reese et al., 1974
Distance from top of pile to top of layer    =       24.000 in
Distance from top of pile to bottom of layer =       60.000 in
p-y subgrade modulus k for top of soil layer =        0.000 lbs/in**3
p-y subgrade modulus k for bottom of layer   =        0.000 lbs/in**3

NOTE:  Internal default values for p-y subgrade modulus will be computed for
the above soil layer.

Layer  3 is sand, p-y criteria by Reese et al., 1974
Distance from top of pile to top of layer    =       60.000 in
Distance from top of pile to bottom of layer =      204.000 in
p-y subgrade modulus k for top of soil layer =        0.000 lbs/in**3
p-y subgrade modulus k for bottom of layer   =        0.000 lbs/in**3
```

NOTE: Internal default values for p-y subgrade modulus will be computed for the above soil layer.

Layer 4 is sand, p-y criteria by Reese et al., 1974
Distance from top of pile to top of layer = 204.000 in
Distance from top of pile to bottom of layer = 276.000 in
p-y subgrade modulus k for top of soil layer = 0.000 lbs/in**3
p-y subgrade modulus k for bottom of layer = 0.000 lbs/in**3

NOTE: Internal default values for p-y subgrade modulus will be computed for the above soil layer.

Layer 5 is sand, p-y criteria by Reese et al., 1974
Distance from top of pile to top of layer = 276.000 in
Distance from top of pile to bottom of layer = 348.000 in
p-y subgrade modulus k for top of soil layer = 0.000 lbs/in**3
p-y subgrade modulus k for bottom of layer = 0.000 lbs/in**3

NOTE: Internal default values for p-y subgrade modulus will be computed for the above soil layer.

Layer 6 is sand, p-y criteria by Reese et al., 1974
Distance from top of pile to top of layer = 348.000 in
Distance from top of pile to bottom of layer = 456.000 in
p-y subgrade modulus k for top of soil layer = 0.000 lbs/in**3
p-y subgrade modulus k for bottom of layer = 0.000 lbs/in**3

NOTE: Internal default values for p-y subgrade modulus will be computed for the above soil layer.

(Depth of lowest layer extends 300.00 in below pile tip)

Effective Unit Weight of Soil vs. Depth

Effective unit weight of soil with depth defined using 12 points

Point No.	Depth X in	Eff. Unit Weight lbs/in**3
1	-60.00	0.06900
2	24.00	0.06900
3	24.00	0.03300
4	60.00	0.03300
5	60.00	0.03300
6	204.00	0.03300
7	204.00	0.03300
8	276.00	0.03300
9	276.00	0.03300
10	348.00	0.03300
11	348.00	0.03300
12	456.00	0.03300

Shear Strength of Soils

Shear strength parameters with depth defined using 12 points

Point No.	Depth X in	Cohesion c lbs/in**2	Angle of Friction Deg.	E50 or k_rm	RQD %
1	-60.000	0.00000	30.00	------	------
2	24.000	0.00000	30.00	------	------
3	24.000	0.00000	30.00	------	------
4	60.000	0.00000	30.00	------	------
5	60.000	0.00000	31.00	------	------
6	204.000	0.00000	31.00	------	------
7	204.000	0.00000	34.00	------	------
8	276.000	0.00000	34.00	------	------
9	276.000	0.00000	36.00	------	------
10	348.000	0.00000	36.00	------	------
11	348.000	0.00000	36.00	------	------
12	456.000	0.00000	36.00	------	------

Notes:

(1) Cohesion = uniaxial compressive strength for rock materials.
(2) Values of E50 are reported for clay strata.
(3) Default values will be generated for E50 when input values are 0.
(4) RQD and k_rm are reported only for weak rock strata.

Loading Type

Static loading criteria was used for computation of p-y curves.

Pile-head Loading and Pile-head Fixity Conditions

Number of loads specified = 1

Load Case Number 1

Pile-head boundary conditions are Shear and Moment (BC Type 1)
Shear force at pile head = 9600.000 lbs
Bending moment at pile head = 0.000 in-lbs
Axial load at pile head = 16000.000 lbs

(Zero moment at pile head for this load indicates a free-head condition)

Computed Values of Load Distribution and Deflection for Lateral Loading for Load Case Number 1

Pile-head boundary conditions are Shear and Moment (Pile-head Condition Type 1)
Specified shear force at pile head = 9600.000 lbs
Specified moment at pile head = 0.000 in-lbs
Specified axial load at pile head = 16000.000 lbs

Depth	Deflect.	Moment	Shear	Slope	Total	Soil Res.

X in	y in	M lbs-in	V lbs	S Rad.	Stress lbs/in**2	p lbs/in	Es*h F/L lbs/in
0.000	0.082514	1.2259E-05	9600.0000	-0.0009146	35.3982	-123.7703	1170.0000
1.560	0.081087	14848.2247	9406.1209	-0.0009144	46.3388	-124.7925	2400.8400
3.120	0.079661	29392.7454	9210.7334	-0.0009139	57.0557	-125.7044	2461.6800
4.680	0.078235	43631.3343	9014.0088	-0.0009130	67.5471	-126.5067	2522.5200
6.240	0.076812	57562.0306	8816.1171	-0.0009118	77.8116	-127.2006	2583.3600
7.800	0.075391	71183.1371	8617.2267	-0.0009103	87.8480	-127.7871	2644.2000
9.360	0.073972	84493.2185	8417.5044	-0.0009084	97.6553	-128.2673	2705.0400
10.920	0.072556	97491.0981	8217.1148	-0.0009062	107.2325	-128.6425	2765.8800
12.480	0.071144	110176.	8016.2209	-0.0009037	116.5790	-128.9138	2826.7200
14.040	0.069737	122547.	7814.9836	-0.0009009	125.6943	-129.0827	2887.5600
15.600	0.068334	134604.	7613.5618	-0.0008979	134.5781	-129.1504	2948.4000
17.160	0.066935	146346.	7412.1122	-0.0008945	143.2302	-129.1183	3009.2400
18.720	0.065543	157774.	7210.7893	-0.0008909	151.6507	-128.9880	3070.0800
20.280	0.064156	168888.	7009.7452	-0.0008870	159.8399	-128.7608	3130.9200
21.840	0.062775	179689.	6809.1298	-0.0008828	167.7981	-128.4384	3191.7600
23.400	0.061402	190177.	6609.0905	-0.0008784	175.5259	-128.0223	3252.6000
24.960	0.060035	200353.	6410.5788	-0.0008737	183.0241	-126.4798	3286.5633
26.520	0.058676	210221.	6213.7188	-0.0008688	190.2954	-125.9047	3347.4033
28.080	0.057324	219783.	6017.8255	-0.0008636	197.3408	-125.2407	3408.2433
29.640	0.055981	229040.	5823.0359	-0.0008582	204.1616	-124.4895	3469.0833
31.200	0.054647	237994.	5629.4848	-0.0008526	210.7590	-123.6530	3529.9233
32.760	0.053321	246647.	5437.3039	-0.0008468	217.1346	-122.7328	3590.7633
34.320	0.052005	255000.	5246.6224	-0.0008408	223.2900	-121.7307	3651.6033
35.880	0.050698	263058.	5057.5664	-0.0008346	229.2270	-120.6487	3712.4433
37.440	0.049400	270822.	4870.2594	-0.0008282	234.9476	-119.4885	3773.2833
39.000	0.048113	278295.	4684.8219	-0.0008217	240.4538	-118.2520	3834.1233
40.560	0.046837	285479.	4501.3714	-0.0008149	245.7478	-116.9410	3894.9633
42.120	0.045571	292379.	4320.0225	-0.0008080	250.8320	-115.5575	3955.8033

43.680	0.044316	298998.	4140.8870	-0.0008009	255.7088	-114.1034	4016.6433
45.240	0.043072	305339.	3964.0735	-0.0007937	260.3809	-112.5806	4077.4833
46.800	0.041840	311406.	3789.6876	-0.0007863	264.8511	-110.9911	4138.3233
48.360	0.040619	317202.	3617.8319	-0.0007788	269.1220	-109.3367	4199.1633
49.920	0.039410	322732.	3448.6062	-0.0007711	273.1968	-107.6194	4260.0033
51.480	0.038213	328000.	3282.1068	-0.0007633	277.0784	-105.8413	4320.8433
53.040	0.037028	333011.	3118.4273	-0.0007554	280.7701	-104.0042	4381.6833
54.600	0.035856	337767.	2957.6581	-0.0007474	284.2752	-102.1101	4442.5233
56.160	0.034697	342276.	2799.8866	-0.0007392	287.5970	-100.1611	4503.3633
57.720	0.033550	346540.	2645.1970	-0.0007310	290.7390	-98.1590	4564.2033
59.280	0.032416	350565.	2493.6704	-0.0007226	293.7049	-96.1058	4625.0433
60.840	0.031295	354356.	2230.2696	-0.0007142	296.4983	-241.5876	12042.6462
62.400	0.030188	357559.	1854.2613	-0.0007057	298.8584	-240.4744	12426.9405
63.960	0.029093	360177.	1480.1144	-0.0006971	300.7871	-239.2011	12826.0240
65.520	0.028013	362212.	1108.0816	-0.0006884	302.2867	-237.7640	13240.8123
67.080	0.026946	363668.	738.4213	-0.0006797	303.3598	-236.1594	13672.3120
68.640	0.025892	364550.	371.3983	-0.0006710	304.0092	-234.3830	14121.6349
70.200	0.024852	364861.	7.2837	-0.0006623	304.2382	-232.4305	14590.0126
71.760	0.023826	364606.	-353.6437	-0.0006535	304.0503	-230.2970	15078.8151
73.320	0.022813	363790.	-711.0976	-0.0006448	303.4493	-227.9773	15589.5724
74.880	0.021814	362419.	-1064.7832	-0.0006361	302.4393	-225.4657	16124.0012
76.440	0.020828	360500.	-1414.3961	-0.0006275	301.0249	-222.7560	16684.0365
78.000	0.019856	358038.	-1759.6221	-0.0006189	299.2108	-219.8414	17271.8705
79.560	0.018897	355040.	-2100.1354	-0.0006103	297.0024	-216.7142	17890.0006
81.120	0.017952	351516.	-2435.5982	-0.0006019	294.4052	-213.3662	18541.2880
82.680	0.017020	347471.	-2765.6585	-0.0005935	291.4253	-209.7881	19229.0325
84.240	0.016100	342916.	-3089.9493	-0.0005852	288.0691	-205.9693	19957.0653
85.800	0.015194	337860.	-3407.1690	-0.0005771	284.3434	-200.7226	20609.1404
87.360	0.014300	332315.	-3712.6505	-0.0005691	280.2575	-190.9204	20828.1644
88.920	0.013418	326305.	-4002.7755	-0.0005612	275.8292	-181.0347	21047.1884
90.480	0.012549	319854.	-4277.4154	-0.0005534	271.0762	-171.0676	21266.2124
92.040	0.011691	312987.	-4536.4445	-0.0005459	266.0162	-161.0210	

21485.2364							
93.600	0.010846	305728.	-4779.7401	-0.0005385	260.6674	-150.8964	
21704.2604							
95.160	0.010011	298101.	-5007.1812	-0.0005312	255.0478	-140.6947	
21923.2844							
96.720	0.009188	290132.	-5218.6482	-0.0005242	249.1759	-130.4169	
22142.3084							
98.280	0.008376	281845.	-5414.0227	-0.0005173	243.0699	-120.0633	
22361.3324							
99.840	0.007574	273266.	-5593.1865	-0.0005107	236.7486	-109.6339	
22580.3564							
101.400	0.006783	264420.	-5756.0214	-0.0005042	230.2305	-99.1287	
22799.3804							
102.960	0.006001	255332.	-5902.4084	-0.0004980	223.5346	-88.5469	
23018.4044							
104.520	0.005229	246029.	-6032.2274	-0.0004920	216.6797	-77.8877	
23237.4284							
106.080	0.004466	236536.	-6145.3568	-0.0004862	209.6851	-67.1499	
23456.4524							
107.640	0.003712	226880.	-6241.6727	-0.0004807	202.5700	-56.3320	
23675.4764							
109.200	0.002966	217086.	-6321.0488	-0.0004754	195.3538	-45.4321	
23894.5004							
110.760	0.002229	207182.	-6383.3554	-0.0004703	188.0560	-34.4482	
24113.5244							
112.320	0.001499	197194.	-6428.4599	-0.0004655	180.6964	-23.3780	
24332.5484							
113.880	0.000776	187148.	-6456.2253	-0.0004609	173.2947	-12.2187	
24551.5724							
115.440	6.09E-05	177073.	-6466.5106	-0.0004565	165.8710	-0.9676102	
24770.5964							
117.000	-0.000648	166996.	-6459.1702	-0.0004524	158.4456	10.3784	
24989.6204							
118.560	-0.001350	156943.	-6434.0533	-0.0004485	151.0387	21.8227	
25208.6444							
120.120	-0.002047	146944.	-6391.0041	-0.0004449	143.6708	33.3687	
25427.6684							
121.680	-0.002738	137026.	-6329.8609	-0.0004415	136.3627	45.0200	
25646.6924							
123.240	-0.003425	127217.	-6250.4564	-0.0004383	129.1353	56.7806	
25865.7164							
124.800	-0.004106	117546.	-6152.6171	-0.0004354	122.0096	68.6544	
26084.7404							
126.360	-0.004783	108042.	-6036.1632	-0.0004327	115.0070	80.6455	
26303.7644							
127.920	-0.005456	98734.8227	-5900.9085	-0.0004302	108.1489	92.7580	
26522.7884							
129.480	-0.006125	89652.9813	-5746.6601	-0.0004279	101.4572	104.9963	
26741.8124							
131.040	-0.006791	80826.6053	-5573.2186	-0.0004259	94.9536	117.3646	
26960.8364							
132.600	-0.007454	72285.7995	-5380.3777	-0.0004241	88.6605	129.8673	
27179.8604							
134.160	-0.008114	64060.9955	-5167.9245	-0.0004224	82.6002	142.5087	
27398.8844							
135.720	-0.008772	56182.9624	-4935.6391	-0.0004210	76.7955	155.2931	
27617.9084							
137.280	-0.009427	48682.8169	-4683.2952	-0.0004197	71.2692	168.2247	
27836.9324							
138.840	-0.010081	41592.0340	-4410.6598	-0.0004186	66.0445	181.3078	
28055.9564							
140.400	-0.010734	34942.4570	-4117.4936	-0.0004177	61.1449	194.5463	
28274.9804							

```
 141.960 -0.011385  28766.3069  -3803.5511  -0.0004170     56.5941    207.9441
28494.0044
 143.520 -0.012035  23096.1926  -3468.5807  -0.0004163     52.4162    221.5050
28713.0284
 145.080 -0.012684  17965.1189  -3112.3256  -0.0004159     48.6355    235.2323
28932.0524
 146.640 -0.013332  13406.4960  -2734.5235  -0.0004155     45.2765    249.1294
29151.0764
 148.200 -0.013980   9454.1464  -2334.9072  -0.0004152     42.3643    263.1991
29370.1004
 149.760 -0.014627   6142.3125  -1913.2055  -0.0004150     39.9241    277.4441
29589.1244
 151.320 -0.015275   3505.6628  -1469.1433  -0.0004149     37.9813    291.8664
29808.1484
 152.880 -0.015922   1579.2972  -1002.4424  -0.0004148     36.5619    306.4681
30027.1724
 154.440 -0.016569    398.7514   -512.8221  -0.0004148     35.6920    321.2503
30246.1964
 156.000 -0.017216      0.0000      0.0000  -0.0004148     35.3982    336.2139
15232.6102

Output Verification:

Computed forces and moments are within specified convergence limits.


Output Summary for Load Case No.  1:

Pile-head deflection             =     0.08251355 in
Computed slope at pile head      =    -0.00091460
Maximum bending moment           =   364860.70838 lbs-in
Maximum shear force              =     9600.00000 lbs
Depth of maximum bending moment  =    70.20000000 in
Depth of maximum shear force     =        0.00000 in
Number of iterations             =              6
Number of zero deflection points =              1




--------------------------------------------------------------------------------
                           Summary of Pile Response(s)
--------------------------------------------------------------------------------

Definition of Symbols for Pile-Head Loading Conditions:

Type 1 = Shear and Moment,          y = pile-head displacment in
Type 2 = Shear and Slope,           M = Pile-head Moment lbs-in
Type 3 = Shear and Rot. Stiffness,  V = Pile-head Shear Force lbs
Type 4 = Deflection and Moment,     S = Pile-head Slope, radians
Type 5 = Deflection and Slope,      R = Rot. Stiffness of Pile-head in-lbs/rad

Load  Pile-Head    Pile-Head       Axial    Pile-Head    Maximum     Maximum
Type  Condition    Condition       Load     Deflection    Moment      Shear
          1           2            lbs         in        in-lbs       lbs
---- ------------ ------------ ----------- ----------- ----------- -----------
  1  V=  9600.000 M=     0.000  16000.0000   0.0825136     364861.   9600.0000

The analysis ended normally.
```

Lateral Deflection vs. Depth
Sound Wall B9

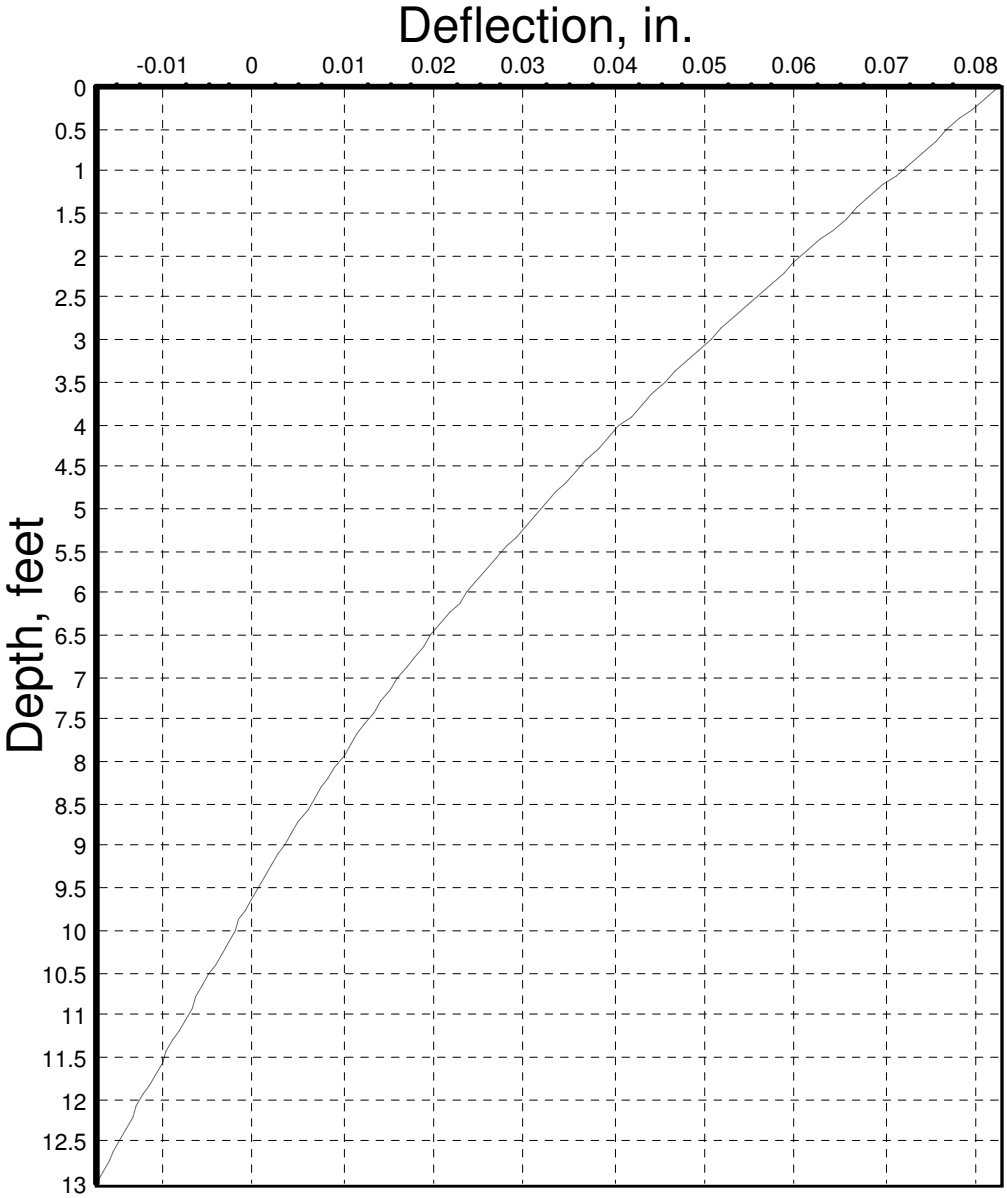

LPILE Plus 5.0, (c) 2008 by Ensoft, Inc.

Bending Moment vs. Depth
Sound Wall B9

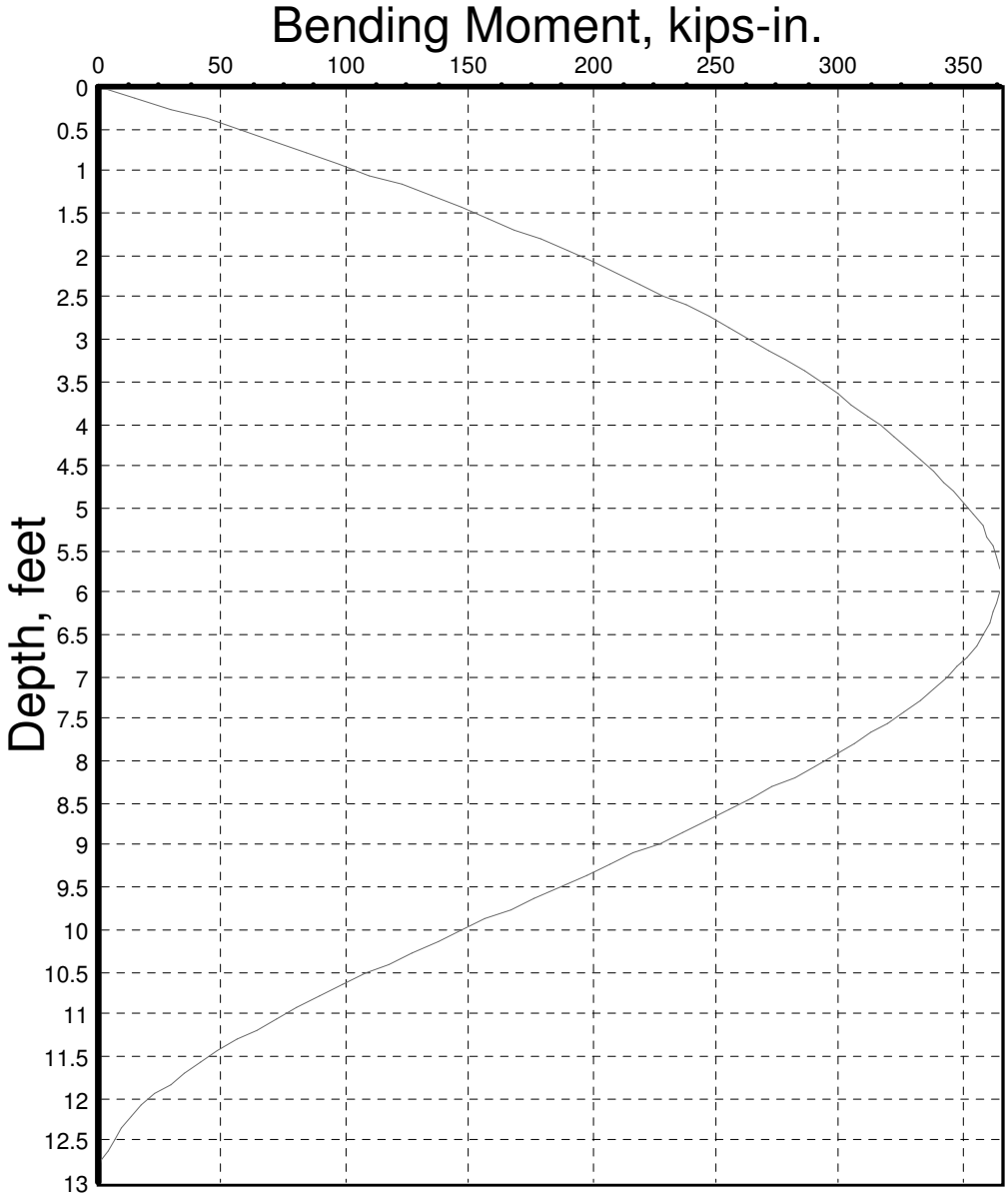

LPILE Plus 5.0, (c) 2008 by Ensoft, Inc.

Contract No.: 05-4482U1 | Carpenteria Creek Project | 10/31/2013
Structure Design Branch 7 | Sound Wall No. B9 | Jun Ki Jung

Table 1. General Foundation Information to GS

Location	Pile Type	Finished Grade Elevation (ft)	Cut-off elevation (ft)	Pile Cap Size (ft)		Permissible Settlement under Service Load (in)	Number of Piles per Support
				B	L		
1 to 56	24" CIDH	FG=OG, See Note 2	14.00	2.5	446	1"	1 EA
56 to 60	24" CIDH	FG=OG, See Note 2	15.33	2.5	29	1"	1 EA

Table 2. Design Loads to GS

Location	WSD (kips)		LFD (kips)		Lateral Loads	
	Total Loads	Permannet Loads Per Support	Compression	Tension		
			Max. Per Pile	Max. Per Pile	Wind Load	Seismic
1	9.80	9.80	11.76	0.00	2.00	5.90
2 to 9	14.20	14.20	17.04	0.00	2.90	8.50
10 to 55	15.50	15.50	18.60	0.00	3.30	9.30
56	14.00	14.00	16.80	0.00	3.00	8.40
57	16.00	16.00	19.20	0.00	3.30	9.60
58	16.00	16.00	19.20	0.00	3.30	9.60
59	13.30	13.30	15.96	0.00	2.80	8.00
60	10.10	10.10	12.12	0.00	2.10	6.00

Notes:

1. CIDH Piles are spaced every 8 feet (typ.).

No.	Station	Space
1	10+01.50	1.50
2	10+09.50	8.00
⋮	⋮	⋮
56	14+41.50	8.00
57	14+48.75	6.50
58	14+57.50	11.00
59	14+66.25	6.50
60	14+73.50	8.00

2. Elevation of Approx. OG (= FG) at 25' interval

Sta.	Elev.
10+00	15.88
10+25	15.41
10+50	15.15
10+75	15.07
11+00	14.99
11+25	14.88
11+50	14.91
11+75	15.14
12+00	15.33
12+25	15.77
12+50	15.36
12+75	15.47
13+00	15.59
13+25	15.70
13+50	15.69
13+75	15.76
14+00	16.19
14+25	16.82
14+50	16.76
14+75	16.07

DRAWING 1

ASSEMBLED REMOVABLE FRONT SCREEN CPS

UNITED STORM WATER, Inc
Protecting Our Water Resources

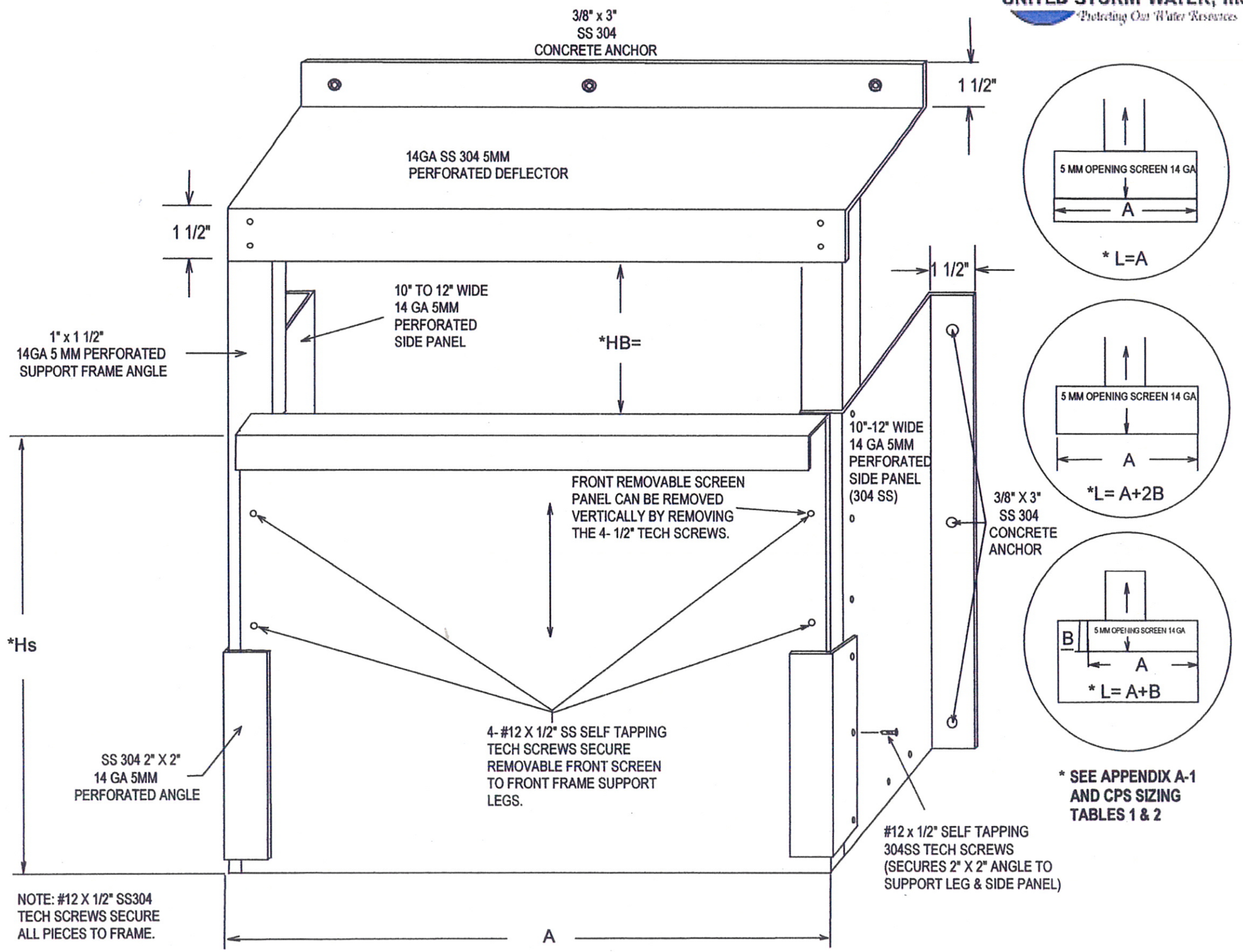

*** SEE APPENDIX A-1 AND CPS SIZING TABLES 1 & 2**

DRAWING 2

CONNECTOR PIPE SCREEN FRAME & DIVERTER (CPS)

UNITED STORM WATER, Inc.
Protecting Our Water Resources

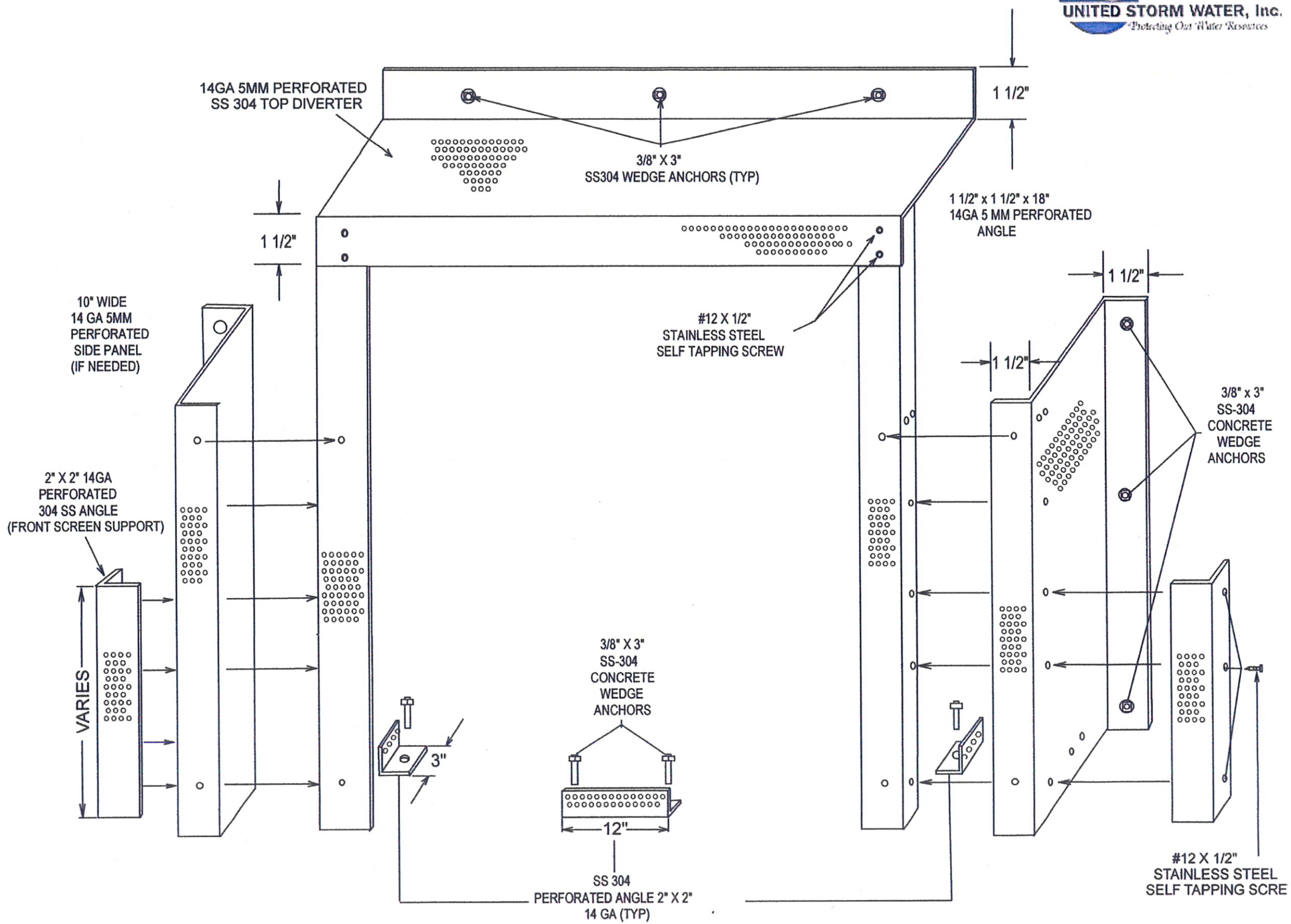

DRAWING 3

REMOVABLE FRONT CPS SCREEN PANEL WITH SUPPORT BRACING

UNITED STORM WATER, Inc.
Protecting Our Water Resources

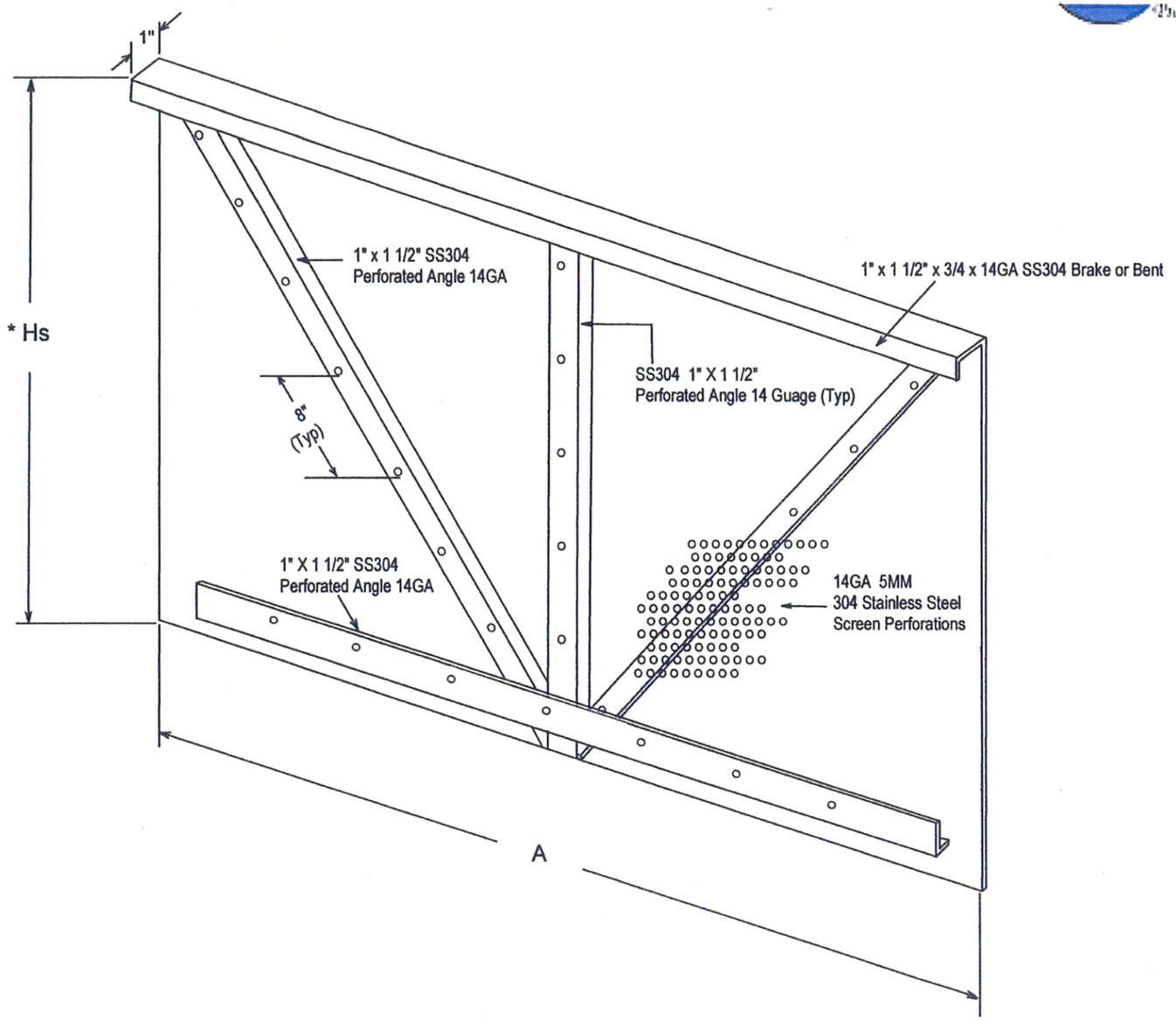

UNITED STORM WATER, Inc.
Protecting Our Water Resources

14000 E Valley Blvd
City of Industry, CA 9146
(877) 71 STORM. Fax (626) 961-3166
Ramon Menjivar Ext 243

LOS ANGELES COUNTY
DEPARTMENT OF PUBLIC WORKS

- [x] ACCEPTED
- [ ] MAKE CORRECTIONS NOTED
- [ ] REVISE CALCULATIONS
- [ ] REJECTED

REVIEW IS PERFORMED BY THE DEPARTMENT TO ENSURE THE CONTRACTOR'S GENERAL CONFORMANCE WITH THE DESIGN CONCEPT OF THE PROJECT AND GENERAL COMPLIANCE WITH THE SPECIFICATIONS. THE CONTRACTOR IS SOLELY RESPONSIBLE FOR THE CORRECTNESS OF DIMENSIONS, PROPER CONSTRUCTION AND INSTALLATION METHODS, AND FOR FULFILLING ALL CONTRACTUAL REQUIREMENTS. ACCEPTANCE INDICATED HEREON DOES NOT RELIEVE THE CONTRACTOR OF THESE OBLIGATIONS.

BY Amir Zandieh DATE 06-09-14

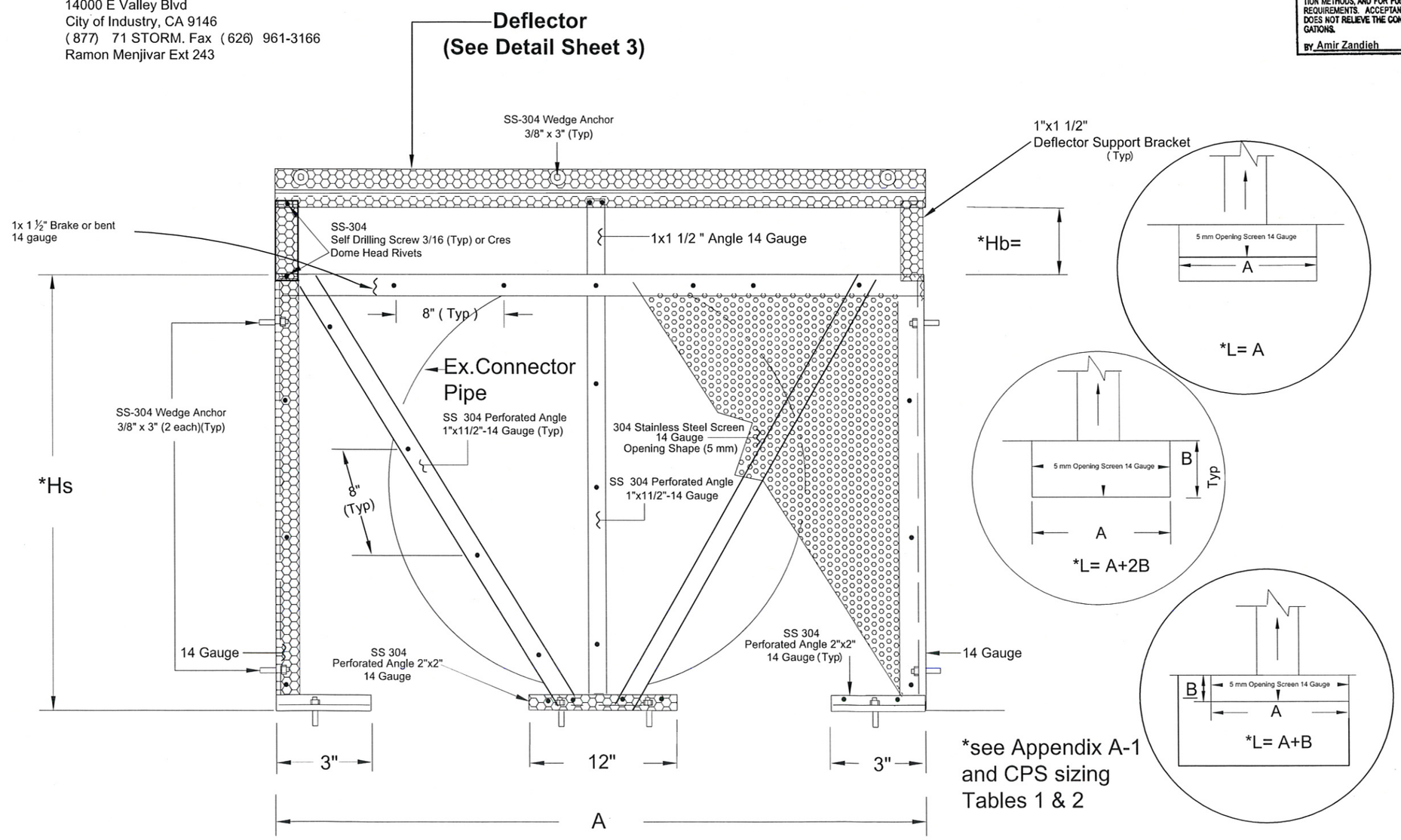

*see Appendix A-1
and CPS sizing
Tables 1 & 2

General Notes

No.	Revision/Issue	Date

Firm Name and Address
UNITED STORM WATER, Inc.
United Storm Water Inc.
14000 E. Valley Blvd
City of Industry, CA 91746

Project Name and Address
County of Los Angeles .

Project

Date
02-19-2014

Scale
Not to Scale

Sheet
1 of 5

UNITED STORM WATER, Inc.
Protecting Our Water Resources
14000 E Valley Blvd
City of Industry, CA 9146
(877) 71 STORM. Fax (626) 961-3166
Ramon Menjivar Ext 243

LOS ANGELES COUNTY
DEPARTMENT OF PUBLIC WORKS
☒ ACCEPTED
☐ MAKE CORRECTIONS NOTED
☐ REVISE CALCULATIONS
☐ REJECTED

REVIEW IS PERFORMED BY THE DEPARTMENT TO ENSURE THE CONTRACTOR'S GENERAL CONFORMANCE WITH THE DESIGN CONCEPT OF THE PROJECT AND GENERAL COMPLIANCE WITH THE SPECIFICATIONS. THE CONTRACTOR IS SOLELY RESPONSIBLE FOR THE CORRECTNESS OF DIMENSIONS, PROPER CONSTRUCTION AND INSTALLATION METHODS, AND FOR FULFILLING ALL CONTRACTUAL REQUIREMENTS. ACCEPTANCE INDICATED HEREON DOES NOT RELIEVE THE CONTRACTOR OF THESE OBLIGATIONS.

BY Amir Zandieh DATE 06-09-14

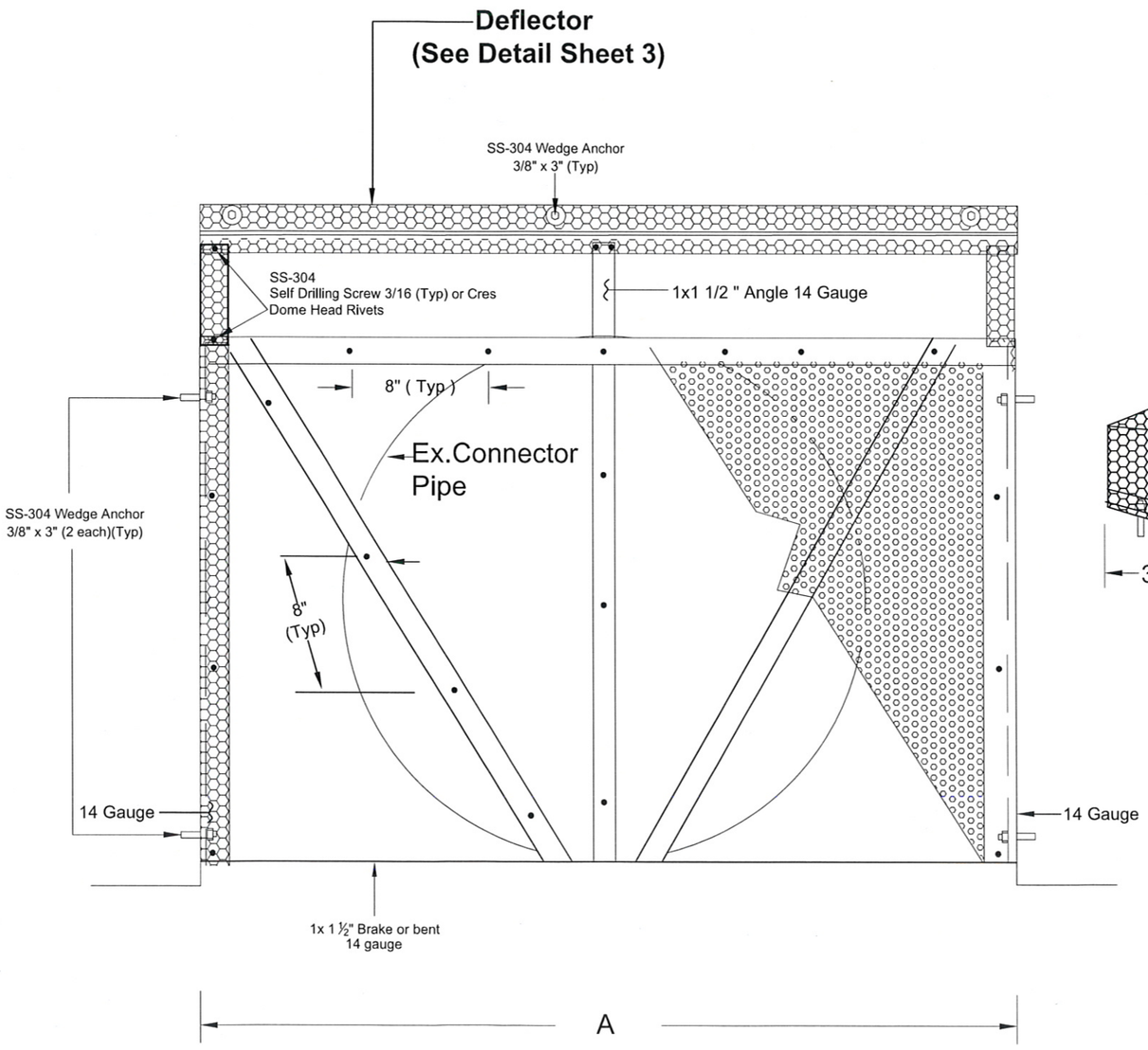

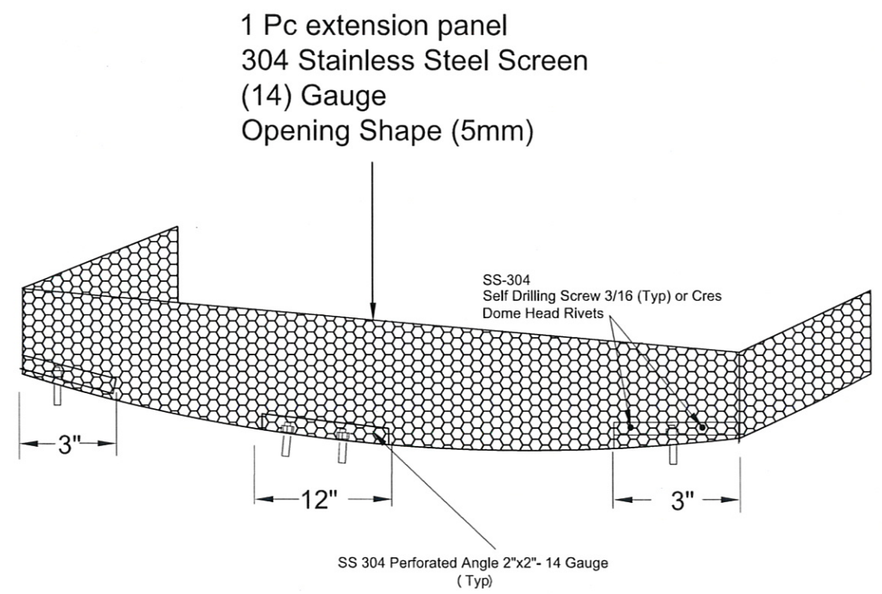

Top View

General Notes

No.	Revision/Issue	Date

Firm Name and Address
UNITED STORM WATER, Inc.
United Storm Water Inc.
14000 E. Valley Blvd
City of Industry, CA 91746

Project Name and Address
County of Los Angeles .

Project

Date
02-19-2014

Scale
Not to Scale

Sheet
2 of 5

UNITED STORM WATER, Inc.
Protecting Our Water Resources

14000 E Valley Blvd
City of Industry, CA 91746
(877)71-storm. Fax (626)961-3166
Ramon Menjivar, Ext 243

LOS ANGELES COUNTY
DEPARTMENT OF PUBLIC WORKS

- [x] ACCEPTED
- [ ] MAKE CORRECTIONS NOTED
- [ ] REVISE CALCULATIONS
- [ ] REJECTED

REVIEW IS PERFORMED BY THE DEPARTMENT TO ENSURE THE CONTRACTOR'S GENERAL CONFORMANCE WITH THE DESIGN CONCEPT OF THE PROJECT AND GENERAL COMPLIANCE WITH THE SPECIFICATIONS. THE CONTRACTOR IS SOLELY RESPONSIBLE FOR THE CORRECTNESS OF DIMENSIONS, PROPER CONSTRUCTION AND INSTALLATION METHODS, AND FOR FULFILLING ALL CONTRACTUAL REQUIREMENTS. ACCEPTANCE INDICATED HEREON DOES NOT RELIEVE THE CONTRACTOR OF THESE OBLIGATIONS.

BY Amir Zandieh DATE 06-09-14

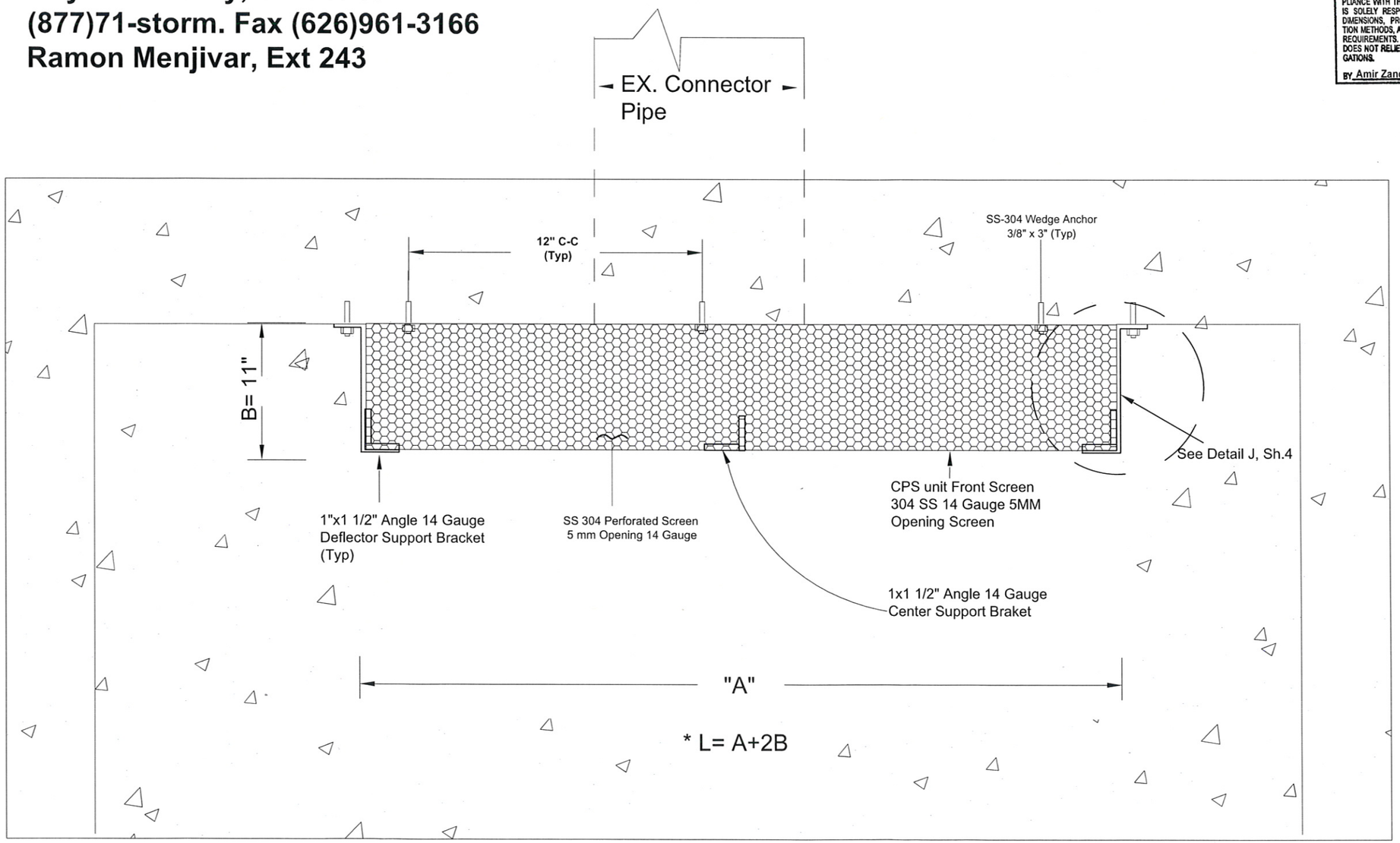

* see Appendix A-1 and CPS Sizing Tables 1 & 2

Deflector Detail
Plain View (Sheet 1)
N.T.S.

General Notes

No.	Revision/Issue	Date

Firm Name and Address
United Storm Water Inc.
14000 E. Valley Blvd
City of Industry, CA 91746

Project Name and Address
County of Los Angeles

Project
Date 02-19-2014
Scale Not to Scale
Sheet 3 of 5

UNITED STORM WATER, Inc.
Protecting Our Water Resources

14000 E Valley Blvd
City of Industry, CA 91746
(877) 71-STORM. Fax (626)961-3166
Ramon Menjivar, Ext 243

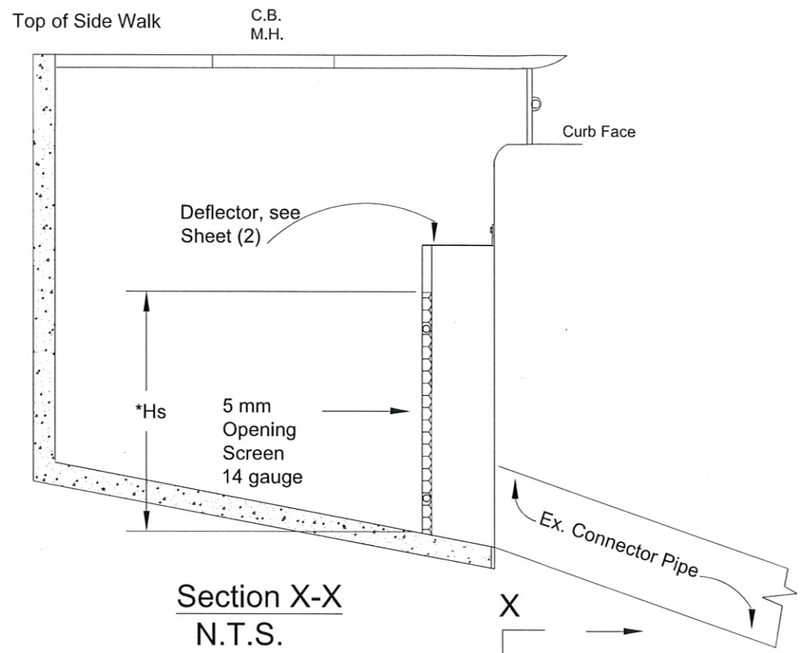

Section X-X
N.T.S.

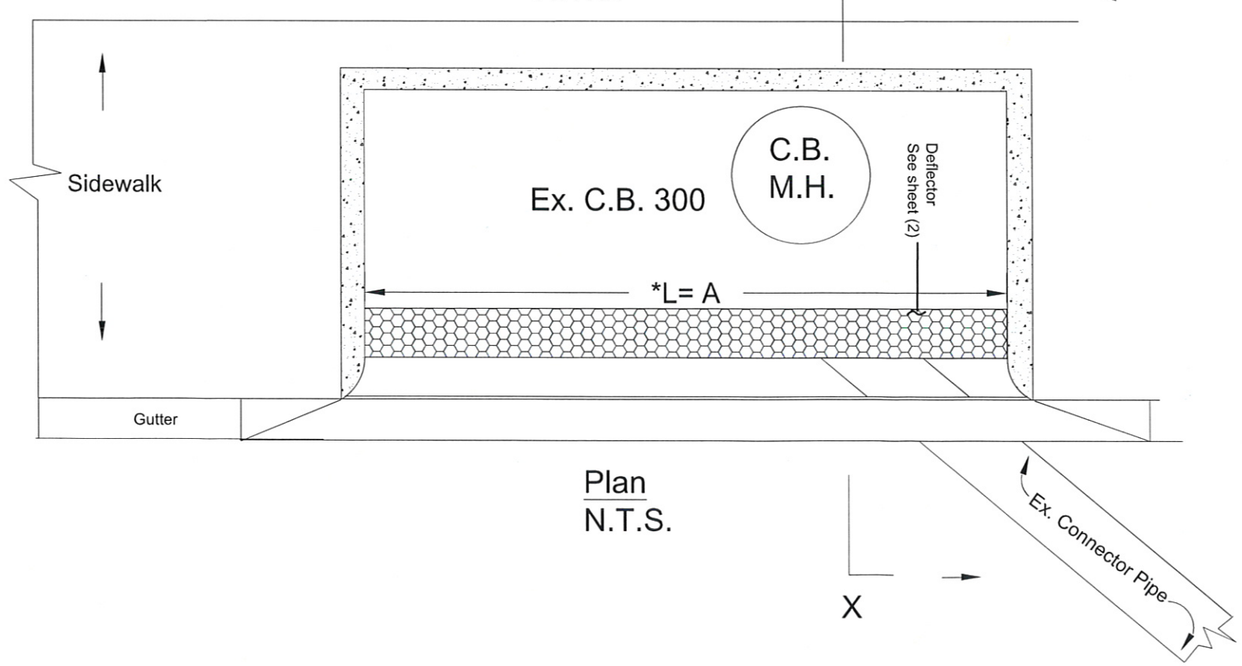

Plan
N.T.S.

* See Appendix
A-1 and CPS sizing Tables 1 & 2

LOS ANGELES COUNTY
DEPARTMENT OF PUBLIC WORKS

- [x] ACCEPTED
- [ ] MAKE CORRECTIONS NOTED
- [ ] REVISE CALCULATIONS
- [ ] REJECTED

REVIEW IS PERFORMED BY THE DEPARTMENT TO ENSURE THE CONTRACTOR'S GENERAL CONFORMANCE WITH THE DESIGN CONCEPT OF THE PROJECT AND GENERAL COMPLIANCE WITH THE SPECIFICATIONS. THE CONTRACTOR IS SOLELY RESPONSIBLE FOR THE CORRECTNESS OF DIMENSIONS, PROPER CONSTRUCTION AND INSTALLATION METHODS, AND FOR FULFILLING ALL CONTRACTUAL REQUIREMENTS. ACCEPTANCE INDICATED HEREON DOES NOT RELIEVE THE CONTRACTOR OF THESE OBLIGATIONS.

BY Amir Zandieh DATE 06-09-14

General Notes

No.	Revision/Issue	Date

Firm Name and Address
United Storm Water Inc.
14000 E. Valley Blvd
City of Industry, CA 91746

Project Name and Address
County of Los Angeles

Project

Date 02-19-2014

Scale Not to Scale

Sheet 4 of 5

UNITED STORM WATER, Inc.
Protecting Our Water Resources

14000 E. Valley Blvd
City of Industry, CA 91746
Ramon Menjivar, Office (877)
71-STORM. Ext 243 (626)890-7104

LOS ANGELES COUNTY
DEPARTMENT OF PUBLIC WORKS

- [x] ACCEPTED
- [ ] MAKE CORRECTIONS NOTED
- [ ] REVISE CALCULATIONS
- [ ] REJECTED

REVIEW IS PERFORMED BY THE DEPARTMENT TO ENSURE THE CONTRACTOR'S GENERAL CONFORMANCE WITH THE DESIGN CONCEPT OF THE PROJECT AND GENERAL COMPLIANCE WITH THE SPECIFICATIONS. THE CONTRACTOR IS SOLELY RESPONSIBLE FOR THE CORRECTNESS OF DIMENSIONS, PROPER CONSTRUCTION AND INSTALLATION METHODS, AND FOR FULFILLING ALL CONTRACTUAL REQUIREMENTS. ACCEPTANCE INDICATED HEREON DOES NOT RELIEVE THE CONTRACTOR OF THESE OBLIGATIONS.

BY Amir Zandieh DATE 06-09-14

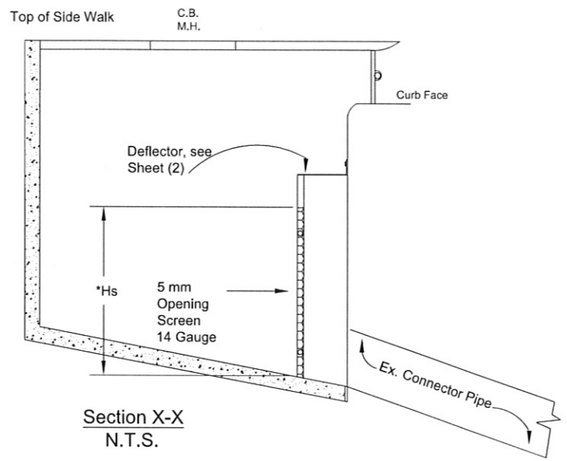

Section X-X
N.T.S.

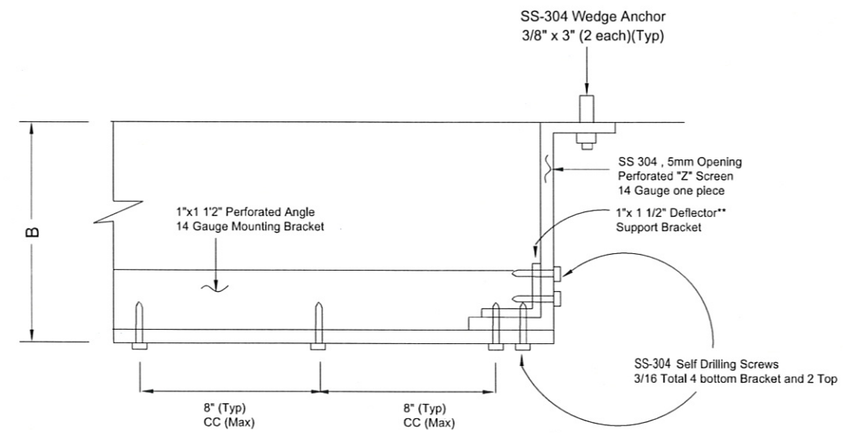

Detail J (Sh.2)
NTS

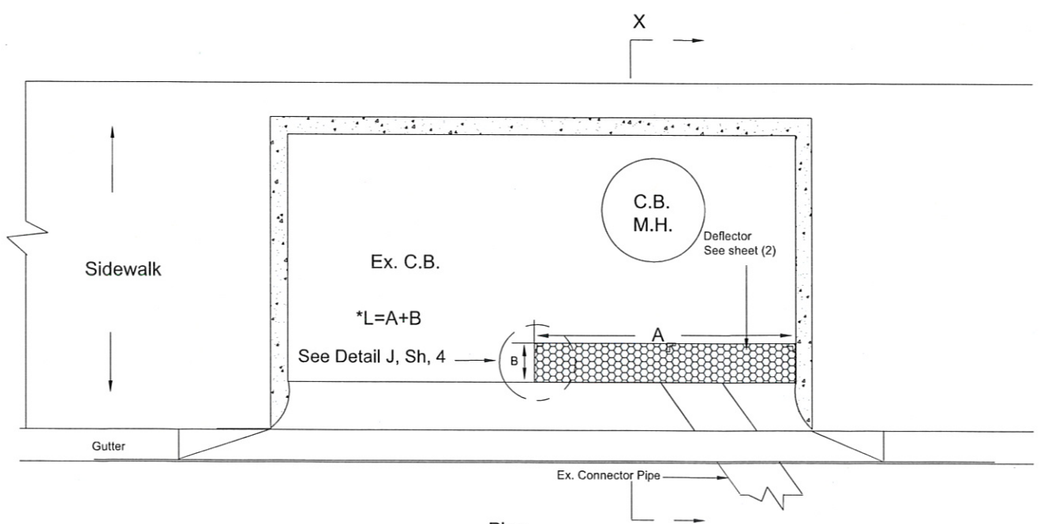

Plan
N.T.S

* See Appendix A-1
and CPS Sizing Tables 1 & 2

** Both legs of Deflector Support Bracket must extend to the top of the Deflector and Also extend at least to the bottom of the Mounting Bracket.

General Notes

No.	Revision/Issue	Date

Firm Name and Address
United Storm Water Inc.
14000 E. Valley Blvd
City of Industry, CA 91746

Project Name and Address
County of Los Angeles

Project

Date
02-19-2014

Scale
Not to Scale

Sheet
5 of 5

FRONT VIEW WING-GATE IN CLOSED POSITION

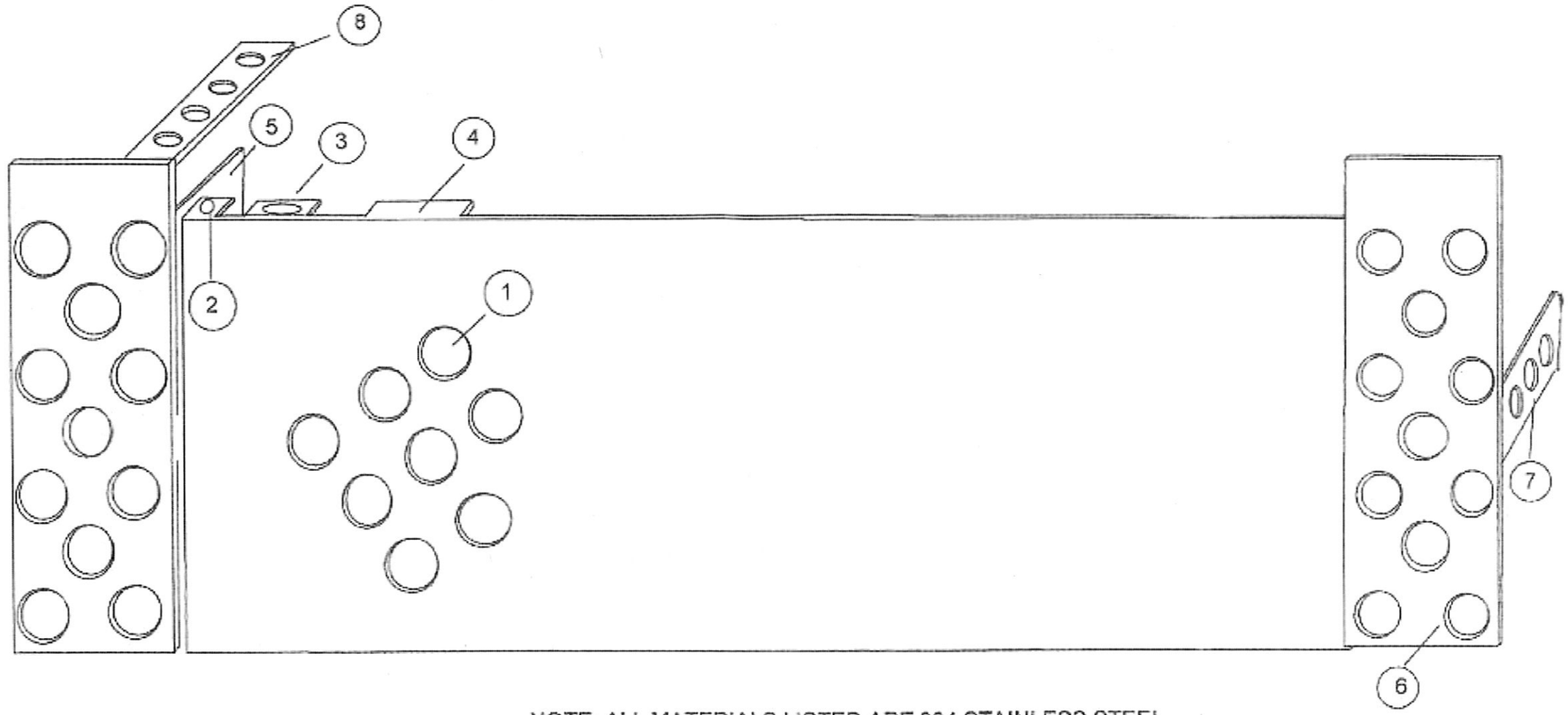

NOTE: ALL MATERIALS LISTED ARE 304 STAINLESS STEEL.

ITEM	QUANTITY	DESCRIPTION
1	1	3/4" PERFORATED 14GA SCREEN
2	1	14GA PIVOT PIN MOUNT BRACKET
3	2	1/2" X 1 1/4" SPRING HOLDER
4	2	SPRING TENSIONER PLATE
5	2	14GA SPRING LEG STOP
6	1	3" PERFORATED MOUNTING BRACKET
7	2	1 1/4" X 7GA X 7" MOUNTING BRACKET
8	2	1 1/4" X 8" X 7GA CIELING MOUNT BRACKET

DRAWN BY: TF	DATE: 8/03/13	UNITED STORM WATER, INC. 14000 E. VALLEY BLVD. INDUSTRY, CA 91746
CHECKED BY: TF	DATE: 8/03/13	DRAWING TITLE: FRONT VIEW WING-GATE
DESIGNED BY: TF	DATE: 8/03/13	DRAWING 1 OF 7

REAR VIEW WING-GATE IN CLOSED POSITION

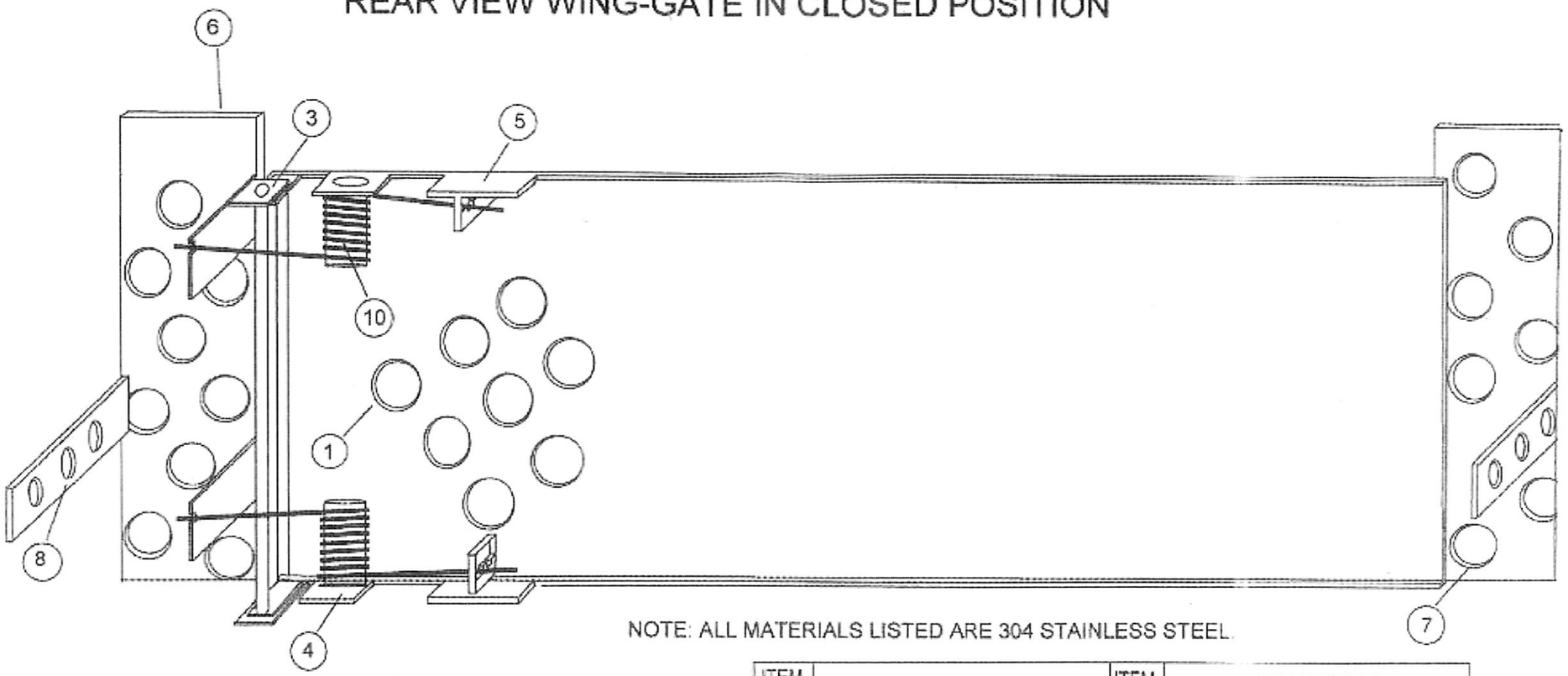

NOTE: ALL MATERIALS LISTED ARE 304 STAINLESS STEEL.

ITEM	QTY	DESCRIPTION	ITEM	QTY	DESCRIPTION
1.	1	3/4" X 14GA PERFORATED SCREEN	9.	1	1 1/4" X 8" X 7GA CIELING MOUNT
2.	1	3/4" RD PROTECTION BAR	10.	1-2	1/2" X 1 1/4" TORSION SPRING
3.	1	14GA PIVOT PIN/MOUNT BRACKET			
4.	2	1/2" X 1 1/4" SPRING HOLDER			
5.	2	SPRING TENSIONER PLATE			
6.	2	14GA SPRING LEG STOP			
7.	2	3" PERFORATED MOUNT BRACKET			
8.	2	1 1/4" X 7GA X 7" MOUNT BRACKET			

DRAWN BY: TF	DATE: 8/03/13	UNITED STORM WATER, INC. 14000 E. VALLEY BLVD. INDUSTRY, CA 91746
CHECKED BY: TF	DATE: 8/03/13	DRAWING TITLE: REAR VIEW WING-GATE
DESIGNED BY: TF	DATE: 8/03/13	DRAWING 2 OF 7

TOP VIEW
WING-GATE IN
CLOSED POSITION
(FLOW FROM BOTH DIRECTIONS)

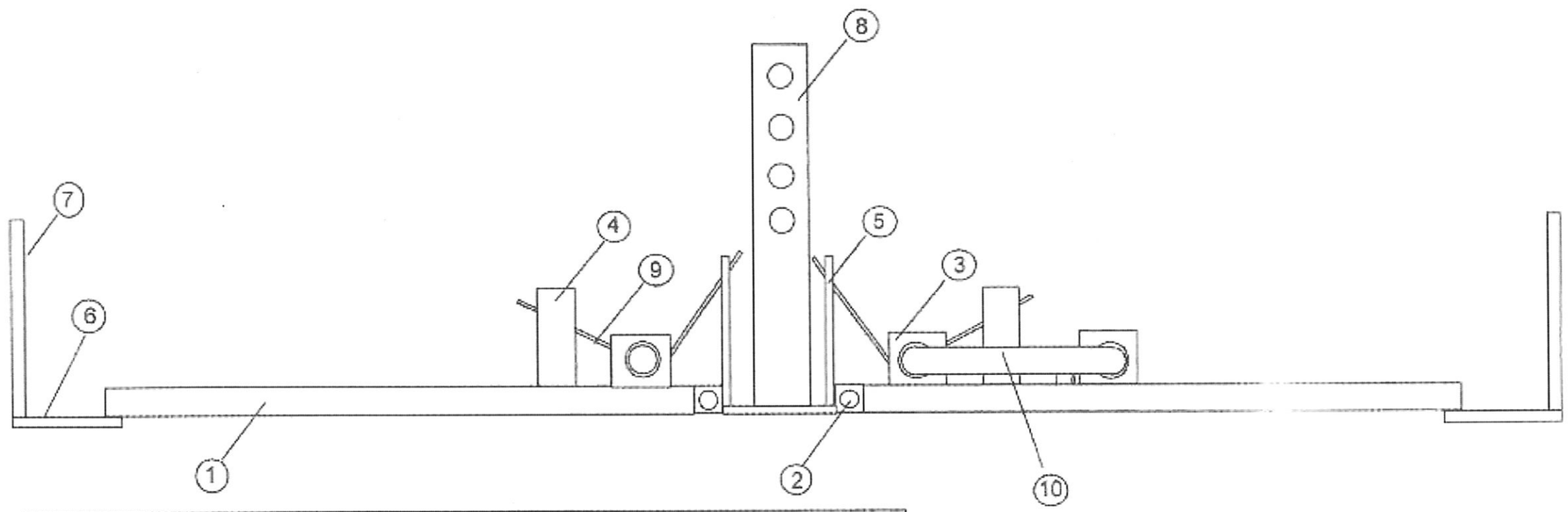

ITEM	QUANTITY	DESCRIPTION
1	2	3/4" PERFORATED 14GA SCREEN
2	2	14GA PIVOT PIN/MOUNT BRACKET
3	2-4	1/2" X 1 1/4" SPRING HOLDER
4	2-4	SPRING TENSIONER PLATE
5	2	14GA SPRING LEG STOP
6	3	3" PERFORATED MOUNTING BRACKET
7	2	1 1/4" X 7GA X 7" MOUNTING BRACKET
8	1	1 1/4" X 8" X 7GA CIELING MOUNT BRACKET
9	2	1/2" X 1 1/4" SPRING
10	1	OPTIONAL 5/16" X 6" MANUAL LOCKING PIN

NOTE: ALL MATERIALS LISTED ARE 304 STAINLESS STEEL.

DRAWN BY: TF	DATE: 8/03/13	UNITED STORM WATER, INC. 14000 E. VALLEY BLVD. INDUSTRY, CA 91746
CHECKED BY: TF	DATE: 8/03/13	DRAWING TITLE: DOUBLE ENTRY LOCKING WING-GATE ARS TOP VIEW IN CLOSED POSITION
DESIGNED BY: TF	DATE: 8/03/13	DRAWING 3 OF 7

TOP VIEW
WING-GATE
IN OPEN POSITION
(IN SEQUENCE)

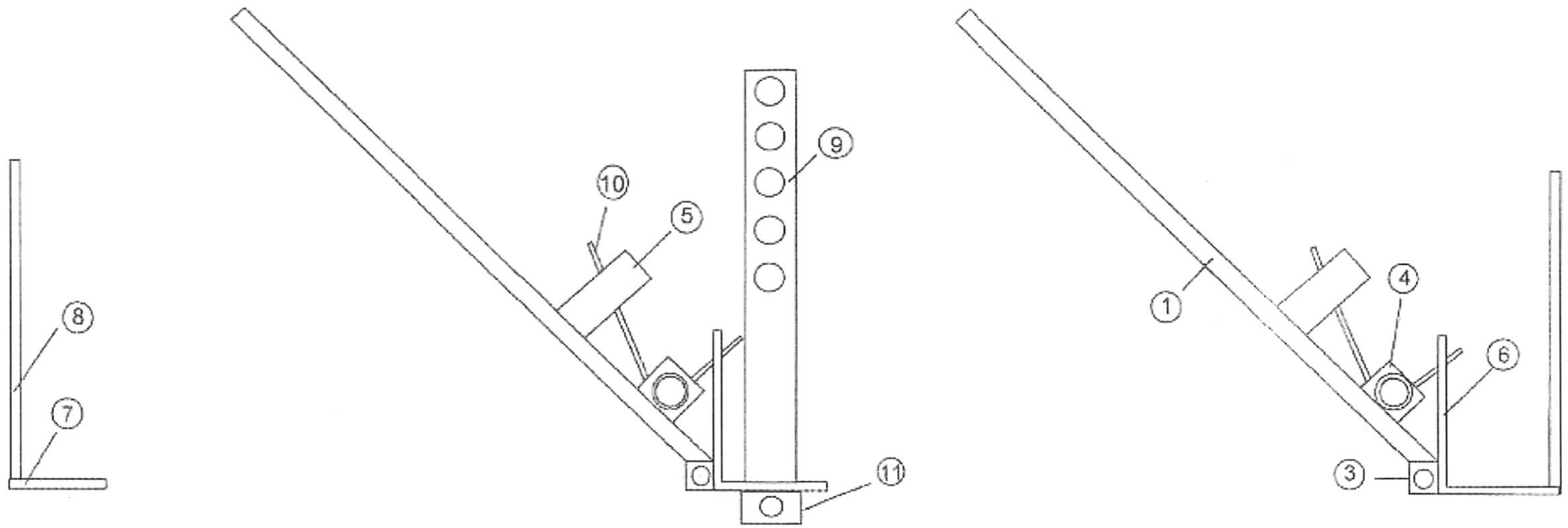

ITEM	QUANTITY	DESCRIPTION
1	2	3/4" PERFORATED 14GA SCREEN
2	1	3/4" RD PROTECTION BAR
3	4	14GA PIVOT PIN MOUNT BRACKET
4	2-4	1/2" X 1 1/4" SPRING HOLDER
5	2	SPRING TENSIONER PLATE
6	2	14GA SPRING LEG STOP
7	3	3" PERFORATED MOUNTING BRACKET
8	2	1 1/4" X 7GA X 7" MOUNTING BRACKET
9	1	1 1/4" X 8" X 7GA CIELING MOUNT BRACKET
10	2-4	1/2" X 1 1/4" SPRING
11	1	FRONT MOUNTING PLATE

NOTE: ALL MATERIALS LISTED ARE 304 STAINLESS STEEL.

DRAWN BY: TF	DATE: 8/03/13	UNITED STORM WATER, INC. 14000 E. VALLEY BLVD. INDUSTRY, CA 91746
CHECKED BY TF	DATE: 8/03/13	DRAWING TITLE: WING-GATE ARS - TOP VIEW IN OPENED POSITION IN SEQUENCE.
DESIGNED BY TF	DATE: 8/03/13	DRAWING 7OF 7

CONNECTOR PIPE SCREENS (CPS)

A metal screen assembly installed inside a catch basin in front of the entrance to a connector pipe to prevent debris from entering the pipe. The CPS unit is designed to retain all trash and gross solids larger than 5 mm (0.197 in) in the catch basin. Therefore, the trash capture and storage capacity of this product is dependent upon the size of the catch basin where it is installed. A CPS unit could be used in conjunction with a curb inlet screen cover and/or DrainPac for added effectiveness based on the level of trash and debris that commonly accumulates at the site. This product is listed within both the Los Angeles and San Francisco Bay Regional Water Quality Control Boards' full trash capture certification program.

PRODUCT SPECIFICATIONS:

- Manufactured using S-304 perforated stainless steel having 5 mm diameter holes
- Has a minimum overall vertical height of 2 feet
- Has a deflector to prohibit debris from falling behind the screen
- Has an open area of 50 % for overflow bypass
- The perimeter of the insert includes a structural frame for stiffness and a bolting surface to fasten the insert to the catch basin floor and wall
- Has a structural integrity to withstand a force of standing water within the catchment area
- Not recommended for installation in drop inlet type catch basins nor catch basins having connector pipes greater than 42" diameter

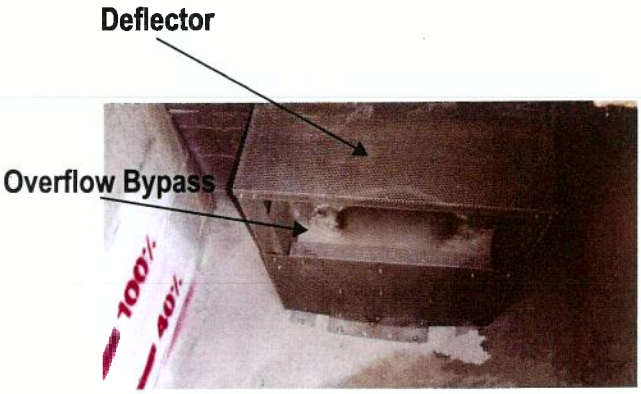

STANDARD CONFIGURATION - CLEAN

New installation with staff gauge painted on catch basin wall for inspecting drains requiring cleaning.

DIRTY DRAINS – CUSTOM CONFIGURATIONS

Custom configurations are designed as needed for nearly any shape. Can be configured to be permanently mounted to the catch basin or having a quick disconnect feature to facilitate pipe line jetting or to prevent flooding should the system become clogged. Catch basins containing CPS units should be cleaned when the screen is ≤ 40% covered to prevent the possibility of flooding and pollutant overflow into lateral line.

Certified full capture devices are custom made to client specifications!

Los Angeles
(877) 71-STORM
78676

www.unitedstormwater.com

San Diego
(866) 440-2790

WING GATE AUTOMATIC RETRACTABLE SCREEN (ARS)

The WingGate is an automatic retractable curb inlet screen cover (ARS) that prohibits most trash and debris from entering storm drains during the dry season, and opens automatically with the pressure of water on the screen face to prevent street flooding. The device's screen remains in a closed position during the dry season or low water flow, and the retained pollutants can be removed using routine street sweeping. During periods of increased or heavy water flow the spring activated wings will open laterally to prevent flooding that may otherwise be caused by accumulated debris on the screen.

Non locking flood preventive design!

DOUBLE GATE INSTALLATION

ADJUSTABLE ENDS

FUNTIONALITY SPECIFICATIONS

- Curb inlet opening from 4" in height
- Depth from the street wall to back wall of catch basin of minimum 6"
- No limit on height from water flow line to bottom of catch basin
- Can be calibrated to open when subjected to water flow levels of approximately 1" to 4"

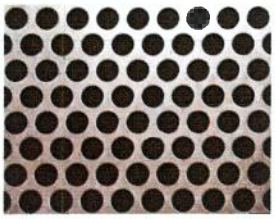

PERFORATED METAL

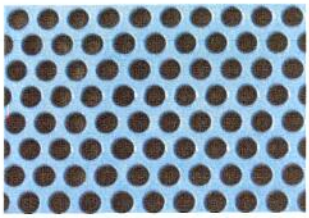

CUSTOM COATINGS

PRODUCT FEATURES:

- Fabricated from perforated S-304 stainless steel having 3/4" diameter holes
- Custom made and calibrated to each catch basin where it is installed
- Adjustable ends of wings ensure good fit
- Installed with a 1" to 2" gap at the top of screen for overflow bypass
- Remains closed during the dry season or periods of low water flow
- Opens from winged end(s) laterally and is mounted at center of gate section only
- Spring activated to open with the pressure of water and debris on the face of the screen
- Closes automatically as a storm subsides
- Wings can be manually pinned in the open position as needed during catch basin cleaning and/or extreme storm conditions
- Gates with double or single wings can be installed in series based on catch basin length and flows to the site
- Can be used in conjunction with various storm drain filters

WINGS PINNED OPEN

SINGLE WINGS INSTALLED IN SERIES

Ask to see a demonstration of the WingGate in action!

Los Angeles
(877) 71-STORM
78676

www.unitedstormwater.com

San Diego
(866) 440-2790

Structural Calculation

Prepared For

Santa Barbara Transit Shelters

Santa Barbara, CA

Prepared By:

Cerenico G. Madrona, PE

7432 Ostrom Ave.,

Van Nuys, CA 91406

W: 818-757-3329 C: 818-667-1279

10/12/2010

REGISTERED PROFESSIONAL ENGINEER
CERENICO G. MADRONA
No. 72319
Exp: 6-30-12
CIVIL
STATE OF CALIFORNIA

Design based on 2007 CBC

Design Loads

Dead Load, D = 3 psf

Live load, L = 20 psf

Wind acting against long face

INPUT DATA (See sht. #3 of arch. Dwgs.)

Exposure category (B, C or D)		=	C	
Importance factor, pg 77, (0.87, 1.0 or 1.15)	I	=	1.00	Category II
Basic wind speed (3 sec. gust wind)	V	=	85	mph
Topographic factor (pg 79)	K_z	=	1	
Roof height		=	119.33	in
Roof Vertical dimension (Average)	s	=	25.7	in
Roof width	B	=	180	in
Mean Roof Height	h	=	111	in
Horizontal dimension	L	=	72	in
	h/L	=	1.54	> 1.0
Roof slope @ eave		=	24	degrees

REGISTERED PROFESSIONAL ENGINEER
CERENICO G. MADRONA
No. 72319
Exp: 10-30-12
CIVIL
STATE OF CALIFORNIA

ANALYSIS

Velocity pressure

$q_h = 0.00256\ K_h\ K_{zt}\ K_d\ V^2\ I$ = **13.36** psf

where:

q_h = velocity pressure at mean roof height, h. (Eq. 6-15, page 27)

K_h = velocity pressure exposure coefficient = **0.85**

evaluated at height, h,(Tab. 6-3, Case 1, pg 79)

K_d = wind directionality factor. (Tab. 6-4, for building, page 80) = **0.85**

G = Gust effect factor (Section 6.5.8.1) = **0.85**

Wind Force Case A: resultant force through the geometric center (Sec. 6.5.14 & Fig. 6-20)

$p = q_h\ G\ C_f$ = = **21** psf

$F = p\ A_s$ (Roof wind load) = **664.12** Lbs

where: G = gust effect factor. (Sec. 6.5.8, page 26). = **0.85**

C_f = net force coefficient. (Fig. 6-20, page 73) = **1.82**

A_s = B x s = **32.1** ft^2

Summary of wind force

Element	Area (sq. ft.)	F (Lbs)	M - arm (ft)	Moment		
Roof	32.13	664.12	9.25	6143.1		
Posts	5.50	113.70	4.1	466.2		
		778		**6609.3**	**Lbs-ft**	= Moment at base

Seismic Design Check

IBC2006 (1613), ASCE 7-05 CHAPTER 11, 12, 13, 15 SEISMIC DESIGN CRITERIA

Latitude (degrees) : =	34.423	
Longitude (degrees) : =	-119.6911	
Response Spectral Acc. (0.2 sec) S_s =	209.40%g	= 2.094g
Response Spectral Acc.(1.0 sec) S_1 =	80.10%g	= 0.801g
Soil Site Class	D	
Site Coefficient F_a =	1.000	
Site Coefficient F_v =	1.500	
Max Considered Earthquake Acc. S_{MS} =	$F_a.S_s$	= 2.094
Max Considered Earthquake Acc. S_{M1} =	$F_v.S_1$	= 1.202
@ 5% Damped Design S_{DS} =	$2/3(S_{MS})$	= 1.396
S_{D1} =	$2/3(S_{M1})$	= 0.801
Seismic Design Category =	D	

Structure dead load, W

Solar panel weight =	11 Lbs
Roof weight =	170 Lbs
Steel post & Beam =	350 Lbs
Total weight =	**531** Lbs

Design Base shear (Equivalent Lateral Force Procedure)

W =	531	Lbs		
V =	Cs W			
Cs =	S_{DS} / (R / I)			
R =	1.25			
I =	1			
Cs =	1.1168			
		h_n =	9.94	ft
		T = 0.02*hn^0.75=	0.1119618	sec
Csmax =	S_{D1} / (T*(R / I)) =		5.7233818	
Csmin =			0.01	
Cs =			1.1168	governs
V =	593	Lbs		

Consider 2 columns, Force per column = 297 Lbs

Wind load per column = 778/2 = 389 lbs > 297

Therefore wind load governs.

REGISTERED PROFESSIONAL ENGINEER
CLEMENCO G. MADRONA
No. 72319
Exp: 6-30-12
CIVIL
STATE OF CALIFORNIA

Footing Design (Constrained)

(See sht. #13 of arch. Dwgs.)

Diameter	1.50	FT
Soil Pressure	100.00	PSF/FT
S_3	872.48	PSF
EMBED.	3.28	FT

Use 18" Dia. X 41" Depth conc. footing, f'c = 2500 psi

Design of posts

Use HSS 6" x 4" x 1/4" Fy=46 ksi Fu=58 ksi

Material properties

ASTM A500 Grade B

Zx = 8.53 in^3 Sx = 6.96 in^3

b/t= 14.2 < 28.1 h/t= 22.8 < 60.8

Therefore flange and web are compact

Mp = Fy Z = 46 x 8.53 = 392.38 kip-in = Mn

Available flexural strength = Mn/Ω_b Ω_b = 1.67

= 234.96 kip-in

Moment per post = 6609.3 / 2 = 3304.66 ft-Lbs

Moment per post = 39.66 kip-in (Ok)

Design of Anchor Bolts

(See sht. #6 & #13 of arch. Dwgs.)

Use 1/2" Dia. Steel J- Bolts

Material properties

ASTM F1554 grade 36

Tension required = 39660 / (9 x 2) = 2,203 Lbs

Tension capacity of 1/2" dia. Anchor rod = 4,200 Lbs (Ok)

Design of Base Plate

(See sht. #6 & #13 of arch. Dwgs.)

Use 12" x 12" x 1/2" thk steel plates

Material properties

ASTM A36

Moment per post = 39.66 kip-in

Thickness required = SQRT(6*((39.66*1000*1.5)/(12*9*0.75*36000)))

Thickness required = 0.35 kip-in < 0.50 in (Ok)

REGISTERED PROFESSIONAL ENGINEER
GERENICO G. MADRONA
No. 72319
Exp: 6-30-12
CIVIL
STATE OF CALIFORNIA

Design of Rafters (See sht. #3 & #4 of arch. Dwgs.)

Use Alum. Rect Tube 4" x 1.5" x 1/8"

Material properties

6061 - T6 S = 1.25 in^3

Tributary width = 3.00 ft

Span = 2.80 ft

Inclined Length = 3.03 ft

D = 3 psf

L = 20 psf

Total UDL = 3*(3.03/2.80) + 20 = 23.25 PLF

Moment = wl^2 / 8 = 22.78 ft-Lbs

Section Modulus required = S =M / F

F = 19000 psi (2005 ADM Table 2-21, Spec 3.4.2)

S = 0.014 in^3 < 1.25 in^3 (Ok)

Design of Cross- beam (See sht. #3 & #4 of arch. Dwgs.)

Use Alum. SQ. Tube 4" x 4" x 3/16"

Material properties

6061 - T6 S = 3.47 in^3

D = 3 psf

L = 20 psf

Total Load = 23 psf

Beam Length = 3.00 ft

Point load at ends = (23 x 9 x 6) / 4 = 311.00 Lbs

Moment at center = 311 x (3/2) = 467.00 ft-Lbs

Section Modulus required = S =M / F

F = 19000 psi (2005 ADM Table 2-21, Spec 3.4.2)

S = 0.29 in^3 < 3.47 in^3 (Ok)

REGISTERED PROFESSIONAL ENGINEER
CERENICO G. MADRONA
No. 72319
Exp: 6-30-12
CIVIL
STATE OF CALIFORNIA

NOTE: PROVIDE ISOLATION FOR DIFFERENT MATERIALS

Santa Barbara, CA

3/25/2010

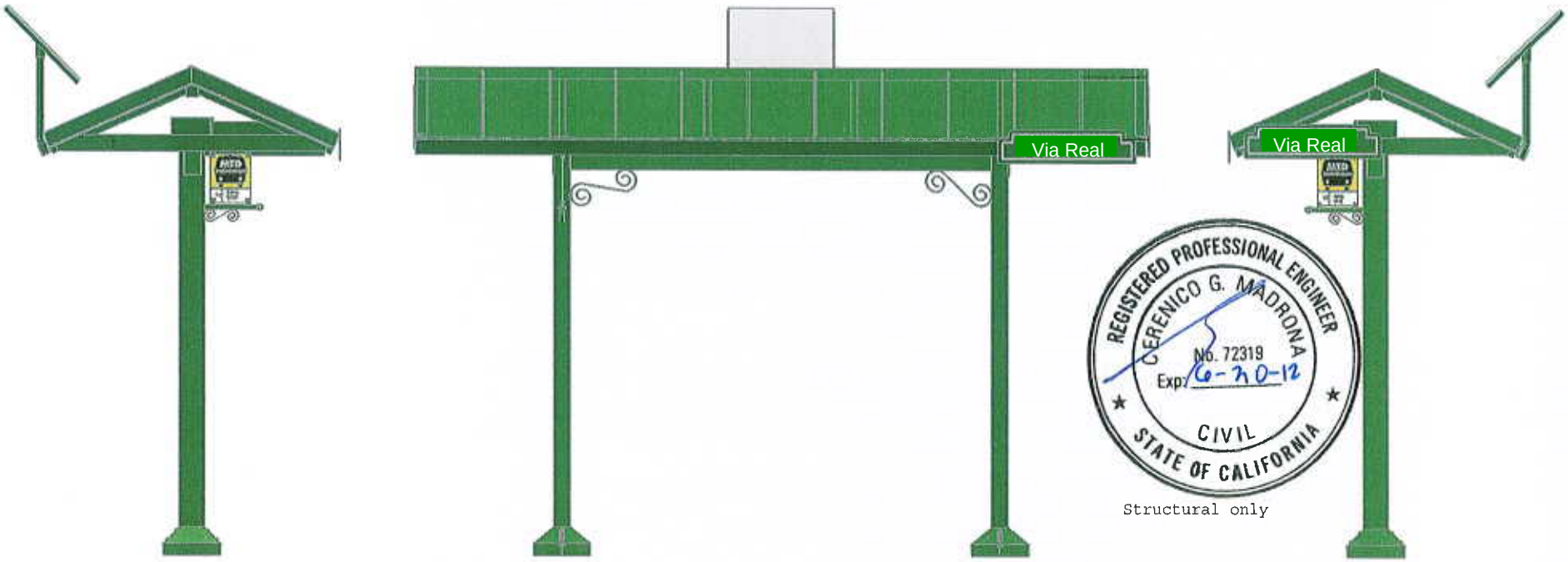

REGISTERED PROFESSIONAL ENGINEER
CERENICO G. MADRONA
No. 72319
Exp: 6-30-12
CIVIL
STATE OF CALIFORNIA

Structural only

CUSTOM MANUFACTURING
Since 1952

© 2010 LNI CUSTOM MANUFACTURING INC.
12536 CHADRON AVE., HAWTHORNE, CA 90250
PHONE: 310.978.2000 FACSIMILE: 310.978.4000
HTTP:\\WWW.LNISIGNS.COM

REGISTERED PROFESSIONAL ENGINEER
CERENICO G. MADRONA
No. 72319
Exp: 6-30-12
CIVIL
STATE OF CALIFORNIA

Structural Only

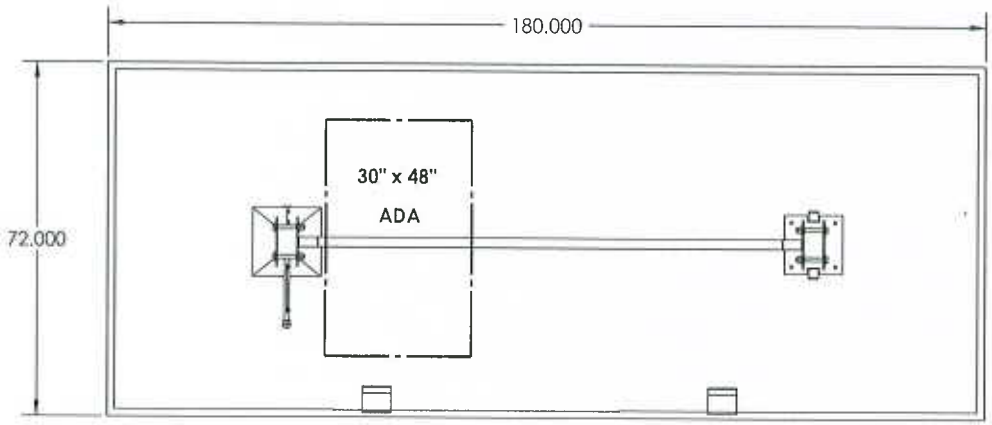

1/2 LAYOUT
SCALE: 1/2" = 1'

CONTENTS

DESCRIPTION	SHT
SHELTER FRONT PAGE	1
LAYOUT STREET	1.1
LAYOUT	2
SHELTER FRONT,SIDE VIEW	3
ROOF TOP,FRONT,SIDE VIEW	4
STANDING SEAM,RIDGE CAP,ZEE METAL CHANNEL,GABLE END CAP,ANGLE	5
FRAME SHELTER	6
LEFT SIDE ELEVATION, FRONT LEFT	7
OUTSIDE MOUNTING STEEL PLATE, INSIDE MOUNTING STEEL PLATE	8
SCROLL PATTERN	9
SCROLL PATTERN	10
ESCUTCHEON DETAIL	11-12
BASE PLATE & FOOTING DET. ,ESCUTCHEON DETAIL	13
NEW STREET LABELS	13.1
SOLAR PANEL BASE	13.2
SOLAR HOLDER	13.3
BASE PLATE & FOOTING TEMPLATE	14
SOLAR DIAGRAM	15

PROJECT NAME: Santa Barbara, CA	DRAWING: Name
ADDRESS: Various	SCALE: As Shown
CITY/STATE: Various	DRAWN BY: HLM
TELEPHONE: N/A	DESIGN DATE: 3/25/2010
FAX NUMBER: N/A	SALES PERSON: CRISTIAN

APROVAL	DATE
CLIENT	
SALES	
LANDLORD	
PROGRAMING	
ENGINEER	

12536 Chadron Avenue
Hawthorne, CA 90250
P: 310.978.2500
Fx: 310.978.4000
http:\ www.integra.com
CUSTOM MANUFACTURING SINCE 1952

△	DATE	BY	REVISION
R1	08/11/2010	HLM	Add ADA Area

NOTE: THIS IS AN ORIGINAL UNPUBLISHED DRAWING CREATED BY UNI CUSTOM MFG., INC. IT IS SUBMITTED FOR YOUR PERSONAL USE IN CONJUNCTION WITH A PROJECT BEING PLANNED FOR YOU BY UNI CUSTOM MFG., INC. IT IS NOT TO BE SHOWN TO ANYONE OUTSIDE YOUR ORGANIZATION, NOR IS IT TO BE USED, REPRODUCED, COPIED OR EXHIBITED IN ANY FASHIONS.

GENERAL NOTES

CUSTOMER TO PROVIDE PRIMARY ELECTRICAL SERVICE WITHIN 4'-0" OF WORK ELECTRICAL CONNECTION. ELECTRICAL WIRING TO BE INSTALLED IN ACCORDANCE WITH THE REQUIREMENTS OF AN ACCEPTABLE ELECTRICAL CODE AND FOR WHICH APPLICABLE LOCAL CODES. THIS INCLUDES PROPER GROUNDING AND BONDING OF THE UNIT. ALL ELECTRICAL COMPONENTS TO BE UL APPROVED. MANUFACTURER'S LABEL AND UL LABEL SHALL REMAIN ON UNIT ACCORDING TO CITY CODE.

SHEET 2

W:\Quotes\JAN-JUNE 2010\ Theresa\McGillivray Construction

REGISTERED PROFESSIONAL ENGINEER
LORENZO G. MADRONA
No. 72319
Exp: 6-30-12
CIVIL
STATE OF CALIFORNIA

Structural only

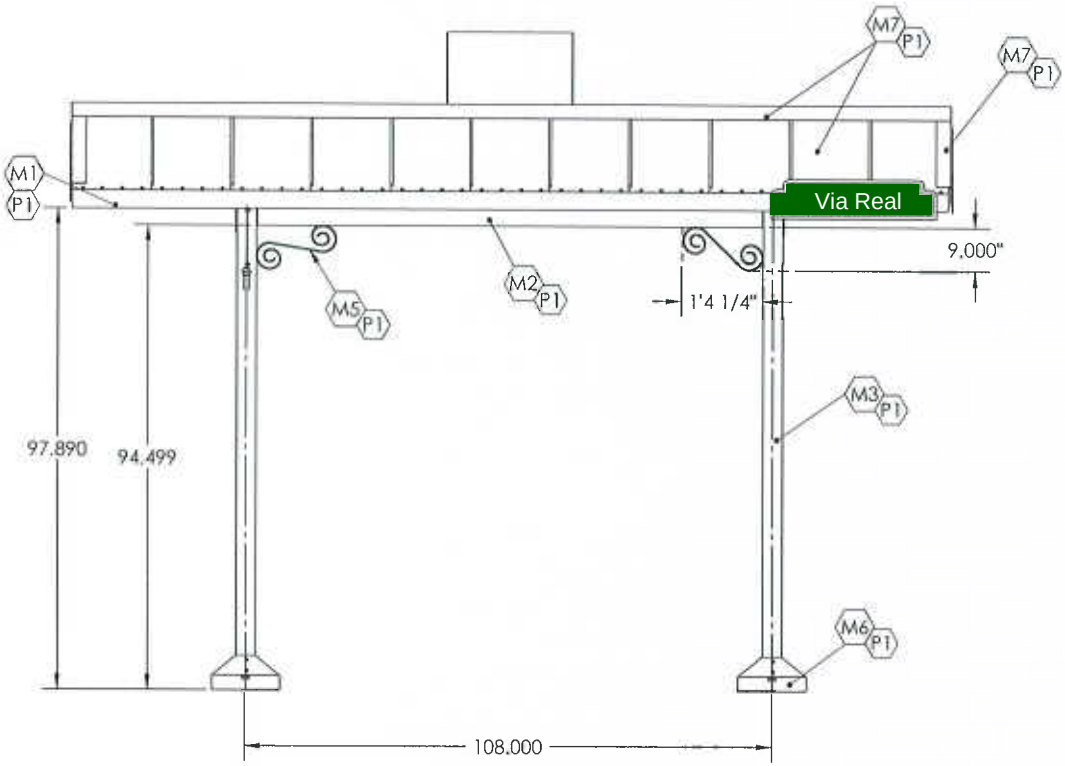

1/3 SHELTER FRONT VIEW
SCALE: 1/2" = 1'

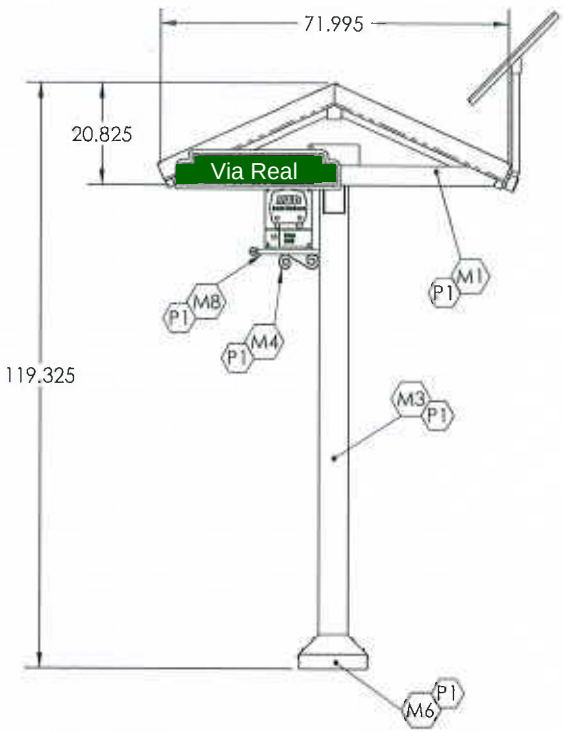

2/3 SHELTER SIDE VIEW
SCALE: 1/2" = 1'

LNI MATERIAL LEGEND

MATERIAL FINISH - Paint/Powder

P1	Powder Coat Finish RAL # 6005 Green

MATERIALS - Substrate

M1	1 1/2" x 4" x 1/8" Alum Rect Tube
M2	2" x 4" x 3/16" Steel Rect Tube
M3	4" x 6" x 1/4" Steel Rect Tube
M4	1" x 1/8" Steel Flat Bar
M5	1 1/2" x 1/4" Steel Flat Bar
M6	1/8" Alum Sheet
M7	22 Ga Sheet Metal
M8	1" Pipe Sch 40
M9	4" x 4" x 3/16" Alum Rect Tube
M10	3" x 5" x 1/8" Alum Rect Tube
M11	1 1/2 x 1/8" Alum Flat Bar
M12	1 1/2" x 2" x 1/4 Steel Angle
M13	.090 Alum sheet
M14	1/4" Steel Plate
M15	1/2" Steel Plate
M16	1 1/2 x 1/8" steel Flat Bar
M17	1 1/2" Standar Alum Pipe
M18	1 1/4" Standar Alum Pipe
M19	1/2" Alum Plate

MATERIAL - Illumination

N1	
N2	
N3	
N4	

MATERIAL - Vinyl

N1	
N2	

NOTE: MATERIAL LEGEND KEYS ARE FOR LNI INTERNAL USE AND MAY NOT CORRESPOND WITH ARCHITECT/CLIENT MATERIAL KEYS.

PROJECT NAME: Santa barbara, CA	DRAWING: Name
ADDRESS: Various	SCALE: As Shown
CITY/STATE: Various	DRAWN BY: HLM
TELEPHONE: N/A	DESIGN DATE: 3/25/2010
FAX NUMBER: N/A	SALES PERSON: CRISTIAN

APROVAL	DATE
CLIENT	
SALES	
LANDLORD	
PROGRAMING	
ENGINEER	

12538 Chadron Avenue
Hawthorne, CA 90250
Ph 310.978.2000
Fx 310.978.4000
http://www.lnilights.com
CUSTOM MANUFACTURING SINCE 1952

△	DATE	BY	REVISION
R1	08/11/2010	HLM	Street Label

GENERAL NOTES

SHEET 3

W:\Quotes\JAN-JUNE 2010\ Theresa\McGillivray Construction

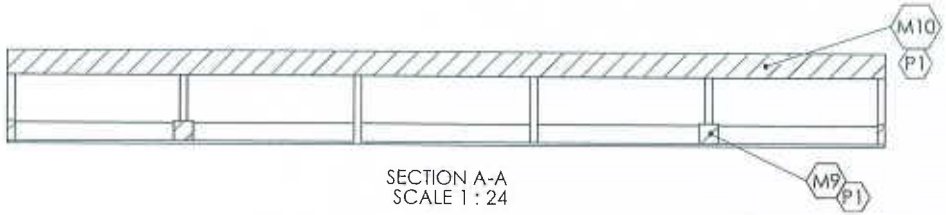

SECTION A-A
SCALE 1 : 24

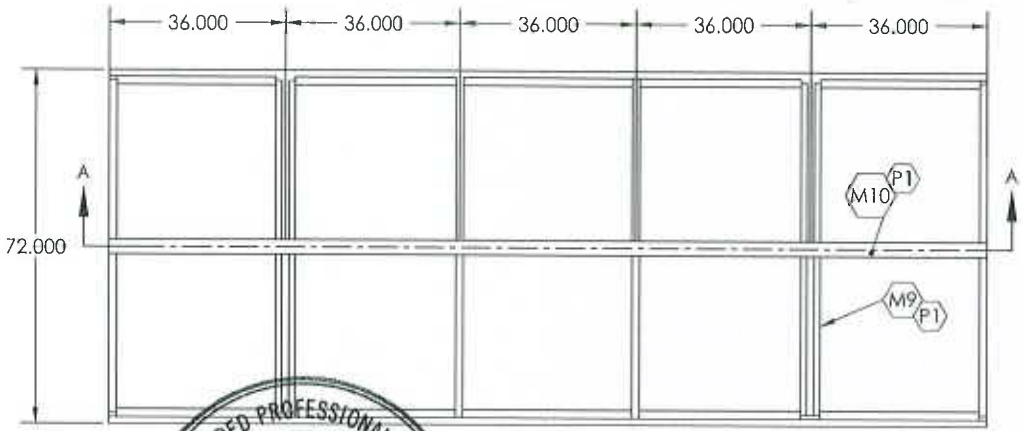

ROOF TOP VIEW
SCALE: 1/2" = 1'

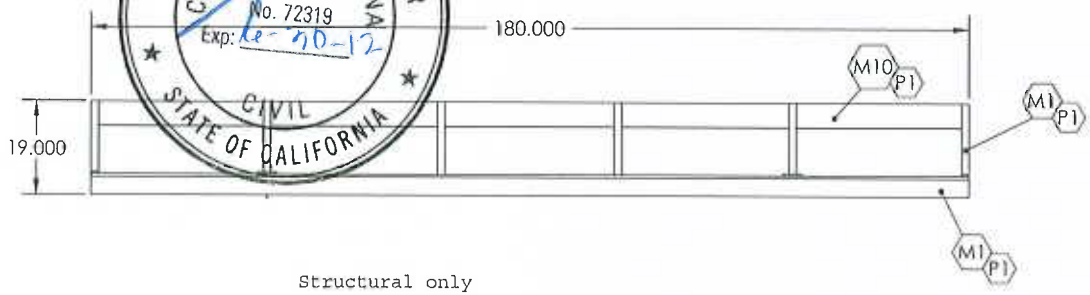

Structural only

2/4 ROOF FRONT VIEW
SCALE: 1/2" = 1'

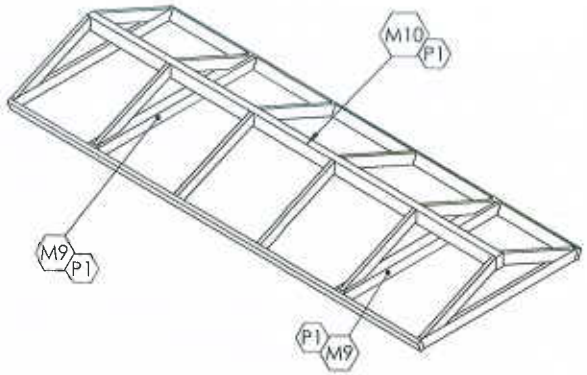

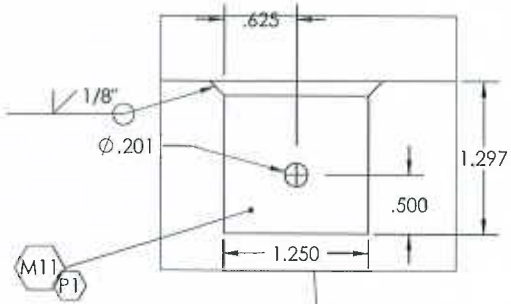

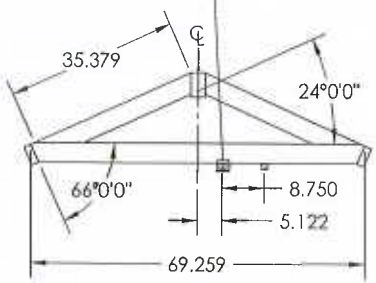

3/4 ROOF SIDE VIEW
SCALE: 1/2" = 1'

LNI MATERIAL LEGEND

MATERIAL FINISH - Paint/Powder

P1	Powder Coat Finish RAL # 6005 Green

MATERIALS - Substrate

M1	1 1/2" x 4" x 1/8" Alum Rect Tube
M2	2" x 4" x 3/16" Steel Rect Tube
M3	4" x 6" x 1/4" Steel Rect Tube
M4	1" x 1/8" Steel Flat Bar
M5	1 1/2" x 1/4" Steel Flat Bar
M6	1/8" Alum Sheet
M7	22 Ga Sheet Metal
M8	1" Pipe Sch 40
M9	4" x 4" x 3/16" Alum Rect Tube
M10	3" x 5" x 1/8" Alum Rect Tube
M11	1 1/2 x 1/8" Alum Flat Bar
M12	1 1/2" x 2" x 1/4 Steel Angle
M13	.090 Alum sheet
M14	1/4" Steel Plate
M15	1/2" Steel Plate
M16	1 1/2 x 1/8" steel Flat Bar
M17	1 1/2" Standar Alum Pipe
M18	1 1/4" Standar Alum Pipe
M19	1/2" Alum Plate

MATERIAL - Illumination

N1	
N2	
N3	
N4	

MATERIAL - Vinyl

N1	
N2	

NOTE: MATERIAL LEGEND KEYS ARE FOR LNI INTERNAL USE AND MAY NOT CORRESPOND WITH ARCHITECT/CLIENT MATERIAL KEYS.

REGISTERED PROFESSIONAL ENGINEER
CERENICO G. MADRONA
No. 72319
Exp: 12-30-12
CIVIL
STATE OF CALIFORNIA

PROJECT NAME: Santa barbara, CA	DRAWING: Name	APROVAL	DATE
ADDRESS: Various	SCALE: As Shown	CLIENT	
CITY/STATE: Various	DRAWN BY: HLM	SALES	
TELEPHONE: N/A	DESIGN DATE: 3/25/2010	LANDLORD	
FAX NUMBER: N/A	SALES PERSON: CRISTIAN	PROGRAMING	
		ENGINEER	

LNI
12536 Chadron Avenue
Hawthorne, CA 90250
Ph 310 678 2000
Fx 310 678 4000
www.lnidesign.com
CUSTOM MANUFACTURING SINCE 1952

△	DATE	BY	REVISION
R1			

NOTE: THIS IS AN ORIGINAL UNPUBLISHED DRAWING CREATED BY LNI CUSTOM MFG., INC. IT IS SUBMITTED FOR YOUR PERSONAL USE IN CONJUNCTION WITH A PROJECT BEING PLANNED FOR YOU BY LNI CUSTOM MFG., INC. IT IS NOT TO BE SHOWN TO ANYONE OUTSIDE YOUR ORGANIZATION, NOR IS IT TO BE USED, REPRODUCED, COPIED OR EXHIBITED IN ANY FASHION.

GENERAL NOTES

CUSTOMER TO PROVIDE PRIMARY ELECTRICAL SERVICE WITHIN 6'-0" OF SIGN. ELECTRICAL CONNECTION THIS SIGN IS INTENDED TO BE INSTALLED IN ACCORDANCE WITH THE REQUIREMENTS OF ARTICLE 600 OF THE NATIONAL ELECTRICAL CODE AND/OR OTHER APPLICABLE LOCAL CODES. THIS INCLUDES PROPER GROUNDING AND BONDING OF THE SIGN. ALL ELECTRICAL COMPONENTS TO BE UL LISTED. MANUFACTURER'S LABEL AND UL LISTING SHALL BE FOUND ON SIGN ACCORDING TO CITY CODE.

SHEET
4

W:\Quotes\JAN-JUNE 2010\ Theresa\McGillivray Construction

REGISTERED PROFESSIONAL ENGINEER
CERENICO G. MADRONA
No. 72319
Exp: 6-30-12
CIVIL
STATE OF CALIFORNIA

Structural only

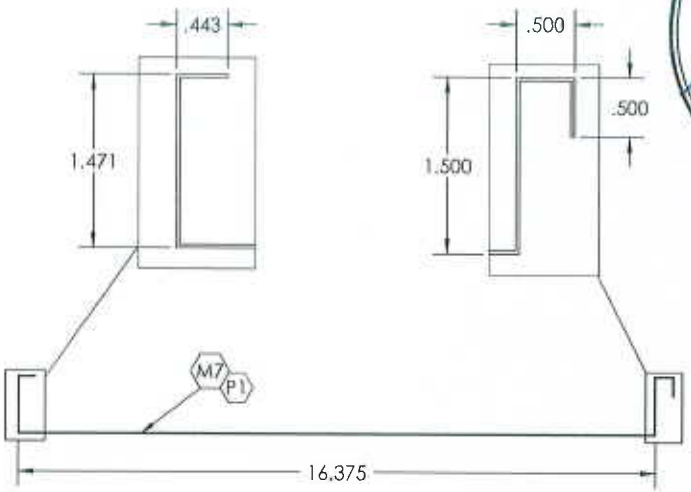

1/5 STANDING SEAM ROOF PANEL
SCALE: 4" = 1'

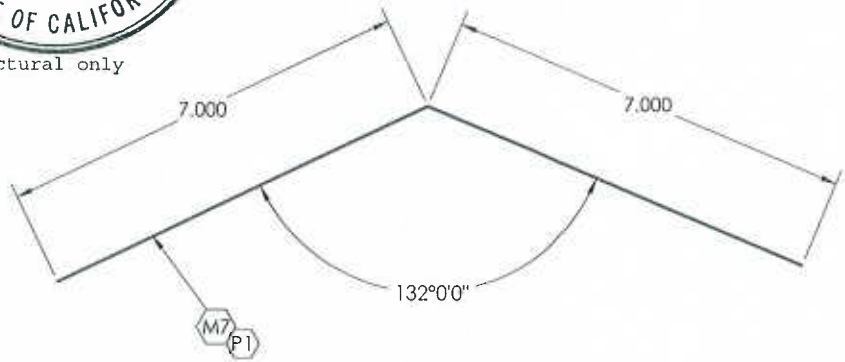

4/5 RIDGE CAP
HALF SCALE

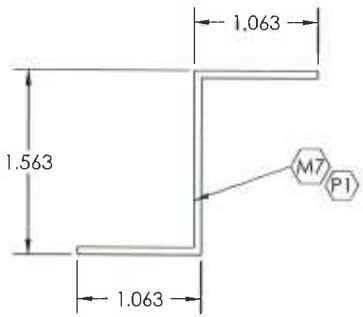

2/5 ZEE METAL CHANNEL
FULL SCALE

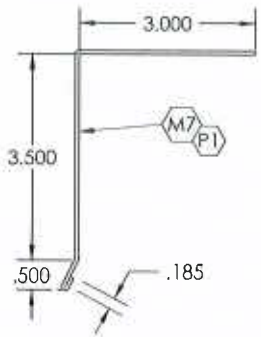

3/5 GABLE END CAP
HALF SCALE

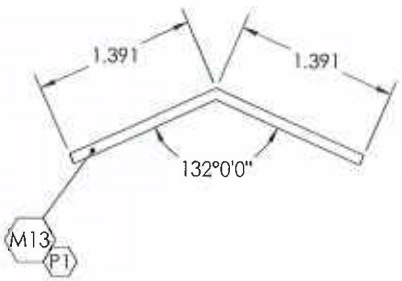

5/5 ANGLE
FULL SCALE

LNI MATERIAL LEGEND

MATERIAL FINISH - Paint/Powder

P1	Powder Coat Finish RAL # 6005 Green

MATERIALS - Substrate

M1	1 1/2" x 4" x 1/8"Alum Rect Tube
M2	2" x 4" x 3/16" Steel Rect Tube
M3	4" x 6" x 1/4" Steel Rect Tube
M4	1" x 1/8" Steel Flat Bar
M5	1 1/2" x 1/4" Steel Flat Bar
M6	1/8" Alum Sheet
M7	22 Ga Sheet Metal
M8	1" Pipe Sch 40
M9	4" x 4" x 3/16" Alum Rect Tube
M10	3" x 5" x 1/8" Alum Rect Tube
M11	1 1/2 x 1/8" Alum Flat Bar
M12	1 1/2" x 2" x 1/4 Steel Angle
M13	.080 Alum sheet
M14	1/4" Steel Plate
M15	1/2" Steel Plate
M16	1 1/2 x 1/8" steel Flat Bar
M17	1 1/2" Standar Alum Pipe
M18	1 1/4" Standar Alum Pipe
M19	1/2" Alum Plate

MATERIAL - Illumination

N1	
N2	
N3	
N4	

MATERIAL - Vinyl

N1	
N2	

NOTE: MATERIAL LEGEND KEYS ARE FOR LNI INTERNAL USE AND MAY NOT CORRESPOND WITH ARCHITECT/CLIENT MATERIAL KEYS.

PROJECT NAME: Santa barbara, CA	DRAWING: Name
ADDRESS: Various	SCALE: As Shown
CITY/STATE: Various	DRAWN BY: HLM
TELEPHONE: N/A	DESIGN DATE: 3/25/2010
FAX NUMBER: N/A	SALES PERSON: CRISTIAN

APROVAL	DATE
CLIENT	
SALES	
LANDLORD	
PROGRAMING	
ENGINEER	

12539 Chadron Avenue
Hawthorne, CA 90250
Ph 310.978.2600
Fx 310.978.3000
http://www.lnidigital.com

CUSTOM MANUFACTURING SINCE 1952

△	DATE	BY	REVISION
R1			

NOTE: THIS DRAWING WAS PUBLISHED DRAWING CREATED BY LNI DESIGN DIV. INC. IT IS SUBMITTED FOR YOUR PERSONAL USE IN CONJUNCTION WITH A PROJECT BEING PLANNED FOR YOU BY LNI DESIGN DIV. INC. IT IS NOT TO BE SHOWN TO ANYONE OUTSIDE YOUR ORGANIZATION, NOR IS IT TO BE USED, REPRODUCED, COPIED, OR POSTED IN ANY FASHION.

GENERAL NOTES

CUSTOMER TO PROVIDE PRIMARY ELECTRICAL SERVICE WITHIN 6'-0" OF SIGN ELECTRICAL CONNECTION. THIS SIGN IS INTENDED TO BE INSTALLED IN ACCORDANCE WITH THE REQUIREMENTS OF ARTICLE 600 OF THE NATIONAL ELECTRICAL CODE AND/OR ANY OTHER APPLICABLE LOCAL CODES. THIS INCLUDES PROPER GROUNDING AND BONDING OF THE SIGN. ALL ELECTRICAL COMPONENTS TO BE ULL APPROVED, MANUFACTURER'S LABEL AND ULL LABELS WILL BE LATER ON SIGN ACCEPTING TO CITY CODE.

SHEET 5

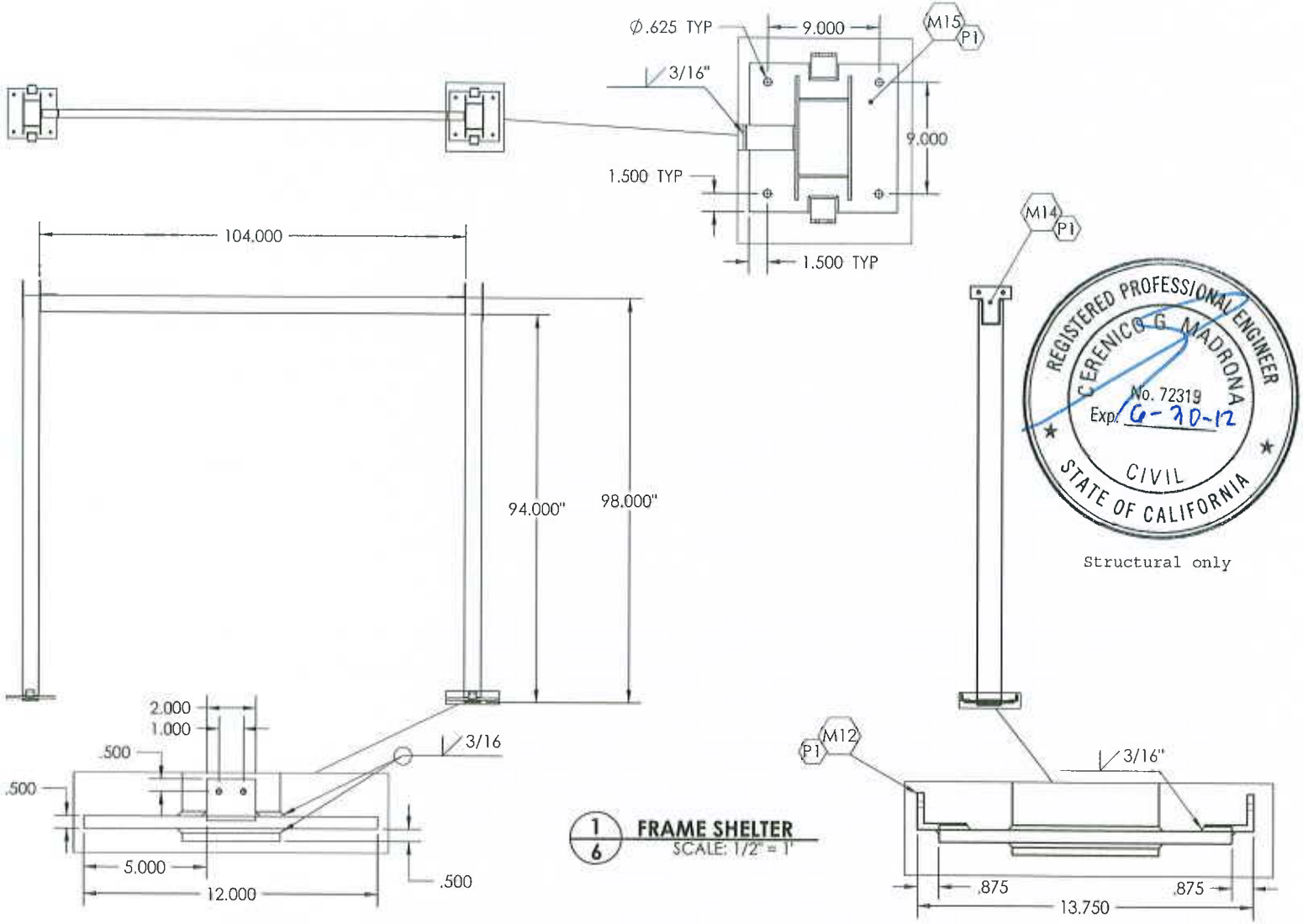

REGISTERED PROFESSIONAL ENGINEER
CERENICO G. MADRONA
No. 72319
Exp. 6-30-12
CIVIL
STATE OF CALIFORNIA

Structural only

1/6 **FRAME SHELTER**
SCALE: 1/2" = 1'

LNI MATERIAL LEGEND

MATERIAL FINISH - Paint/Powder

P1	Powder Coat Finish RAL # 6005 Green

MATERIALS - Substrate

M1	1 1/2" x 4" x 1/8"Alum Rect Tube
M2	2" x 4" x 3/16" Steel Rect Tube
M3	4" x 6" x 1/4" Steel Rect Tube
M4	1" x 1/8" Steel Flat Bar
M5	1 1/2" x 1/4" Steel Flat Bar
M6	1/8" Alum Sheet
M7	22 Ga Sheet Metal
M8	1" Pipe Sch 40
M9	4" x 4" x 3/16" Alum Rect Tube
M10	3" x 5" x 1/8" Alum Rect Tube
M11	1 1/2 x 1/8" Alum Flat Bar
M12	1 1/2" x 2" x 1/4 Steel Angle
M13	.080 Alum sheet
M14	1/4" Steel Plate
M15	1/2" Steel Plate
M16	1 1/2 x 1/8" steel Flat Bar
M17	1 1/2" Standar Alum Pipe
M18	1 1/4" Standar Alum Pipe
M19	1/2" Alum Plate

MATERIAL - Illumination

N1	
N2	
N3	
N4	

MATERIAL - Vinyl

N1	
N2	

NOTE: MATERIAL LEGEND KEYS ARE FOR LNI INTERNAL USE AND MAY NOT CORRESPOND WITH ARCHITECT/CLIENT MATERIAL KEYS.

PROJECT NAME: Santa barbara, CA	DRAWING: Name
ADDRESS: Various	SCALE: As Shown
CITY/STATE: Various	DRAWN BY: HLM
TELEPHONE: N/A	DESIGN DATE: 3/25/2010
FAX NUMBER: N/A	SALES PERSON: CHRISTIAN

APROVAL	DATE
CLIENT	
SALES	
LANDLORD	
PROGRAMING	
ENGINEER	

12535 Chadron Avenue
Hawthorne, CA 90250
Ph 310.978.2000
Fx 310.978.4000
http://www.lnilights.com
CUSTOM MANUFACTURING SINCE 1952

△	DATE	BY	REVISION
R1			

NOTE: THIS IS AN ORIGINAL UNPUBLISHED DRAWING CREATED BY LNI CUSTOM MFG., INC. ITS SUBMITTED FOR YOUR PERSONAL USE IN CONNECTION WITH A PROJECT BEING PLANNED FOR YOU BY LNI CUSTOM MFG., INC. IT IS NOT TO BE REPRODUCED OR SHOWN OR USED OUTSIDE YOUR ORGANIZATION, NOR IS IT TO BE USED, REPRODUCED, COPIED OR EXHIBITED IN ANY FASHION.

GENERAL NOTES

CUSTOMER TO PROVIDE PRIMARY ELECTRICAL SERVICE WITHIN 3-4' OF SIGN ELECTRICAL CONNECTION. THIS SIGN IS INTENDED TO BE INSTALLED IN ACCORDANCE WITH THE REQUIREMENTS OF ARTICLE 600 OF THE NATIONAL ELECTRICAL CODE AND/OR OTHER APPLICABLE LOCAL CODES. THIS INCLUDES PROPER GROUNDING AND BONDING OF THE SIGN. ALL ELECTRICAL COMPONENTS TO BE U.L. APPROVED. MANUFACTURER'S LABELING/U.L. LABEL SHALL BE LISTED FOR SIGN ACCORDING TO ELECTRICAL CODE.

SHEET
6

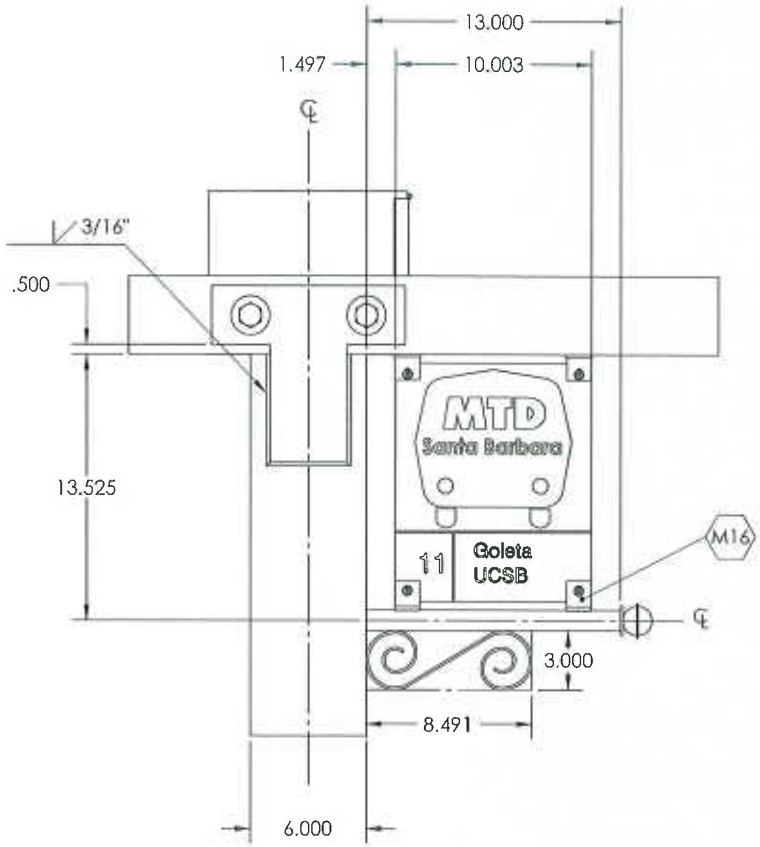

1/7 LEFT SIDE ELEVATION
SCALE: 2"= 1'

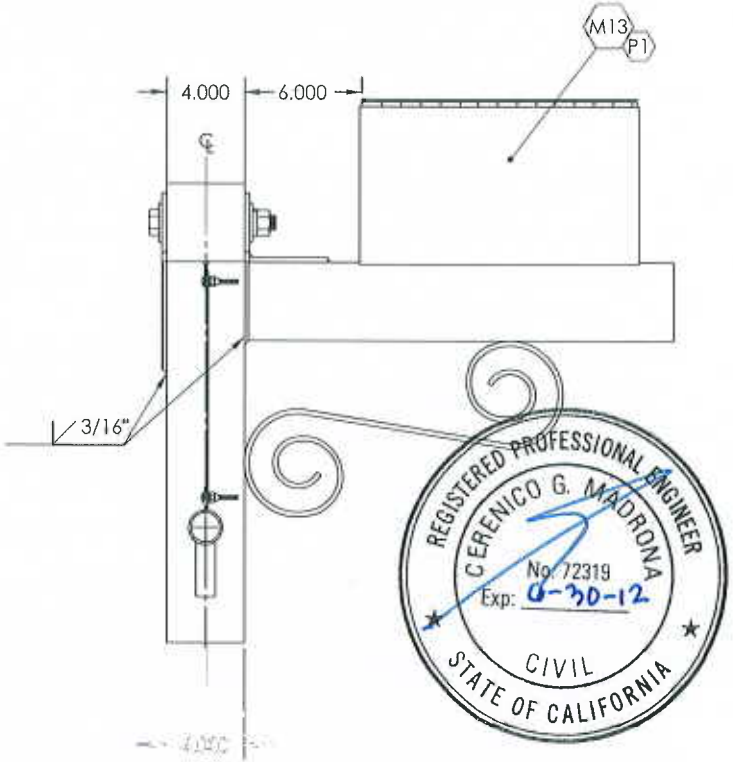

Structural only

2/7 FRONT LEFT
SCALE: 2"= 1'

MATERIAL LEGEND

MATERIAL FINISH - Paint/Powder

- P1 Powder Coat Finish RAL # 6005 Green

MATERIALS - Substrate

- M1 1 1/2" x 4" x 1/8" Alum Rect Tube
- M2 2" x 4" x 3/16" Steel Rect Tube
- M3 4" x 8" x 1/4" Steel Rect Tube
- M4 1" x 1/8" Steel Flat Bar
- M5 1 1/2" x 1/4" Steel Flat Bar
- M6 1/8" Alum Sheet
- M7 22 Ga Sheet Metal
- M8 1" Pipe Sch 40
- M9 4" x 4" x 3/16" Alum Rect Tube
- M10 3" x 5" x 1/8" Alum Rect Tube
- M11 1 1/2 x 1/8" Alum Flat Bar
- M12 1 1/2" x 2" x 1/4 Steel Angle
- M13 .090 Alum sheet
- M14 1/4" Steel Plate
- M15 1/2" Steel Plate
- M16 1 1/2 x 1/8" steel Flat Bar
- M17 1 1/2" Standar Alum Pipe
- M18 1 1/4" Standar Alum Pipe
- M19 1/2" Alum Plate

MATERIAL - Illumination

- N1
- N2
- N3
- N4

MATERIAL - Vinyl

- N1
- N2

NOTE: MATERIAL LEGEND KEYS ARE FOR LNI INTERNAL USE AND MAY NOT CORRESPOND WITH ARCHITECT/CLIENT MATERIAL KEYS.

PROJECT NAME: Santa barbara, CA	DRAWING: Name
ADDRESS: Various	SCALE: As Shown
CITY/STATE: Various	DRAWN BY: HLM
TELEPHONE: N/A	DESIGN DATE: 3/25/2010
FAX NUMBER: N/A	SALES PERSON: CRISTIAN

APROVAL	DATE
CLIENT	
SALES	
LANDLORD	
PROGRAMING	
ENGINEER	

12530 Chadron Avenue
Hawthorne, CA 90250
P: 310.978.2000
F: 310.978.2900
http://www.lnisignage.com

CUSTOM MANUFACTURING SINCE 1952

△	DATE	BY	REVISION
R1			

GENERAL NOTES

SHEET 7

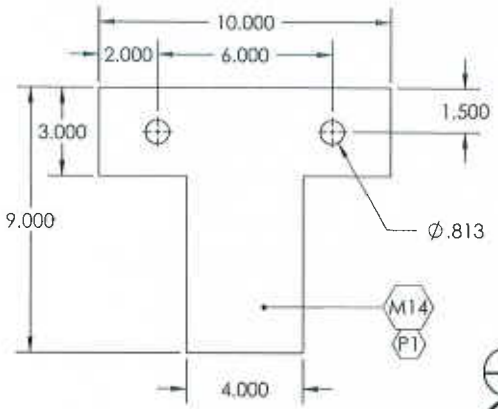

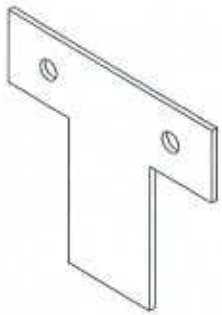

1/8 **OUTSIDE MOUNTING STEEL PLATE**
SCALE: 1"= 1'

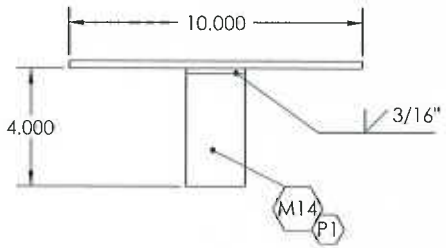

REGISTERED PROFESSIONAL ENGINEER
CERENICO G. MADRONA
No. 72319
Exp: 6-30-12
CIVIL
STATE OF CALIFORNIA

Structural only

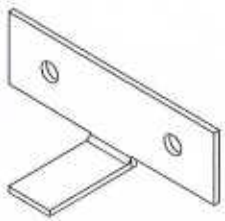

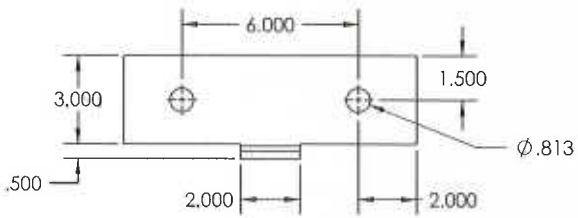

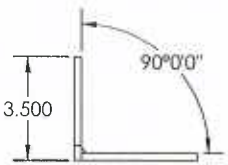

2/8 **INSIDE MOUNTING STEEL PLATE**
SCALE: 1"= 1'

MATERIAL LEGEND

MATERIAL FINISH - Paint/Powder

P1	Powder Coat Finish RAL # 6005 Green

MATERIALS - Substrate

M1	1 1/2" x 4" x 1/8"Alum Rect Tube
M2	2" x 4" x 3/16" Steel Rect Tube
M3	4" x 6" x 1/4" Steel Rect Tube
M4	1" x 1/8" Steel Flat Bar
M5	1 1/2" x 1/4" Steel Flat Bar
M6	1/8" Alum Sheet
M7	22 Ga Sheet Metal
M8	1" Pipe Sch 40
M9	4" x 4" x 3/16" Alum Rect Tube
M10	3" x 5" x 1/8" Alum Rect Tube
M11	1 1/2 x 1/8" Alum Flat Bar
M12	1 1/2" x 2" x 1/4 Steel Angle
M13	.090 Alum sheet
M14	1/4" Steel Plate
M15	1/2" Steel Plate
M16	1 1/2 x 1/8" steel Flat Bar
M17	1 1/2" Standar Alum Pipe
M18	1 1/4" Standar Alum Pipe
M19	1/2" Alum Plate

MATERIAL - Illumination

N1	
N2	
N3	
N4	

MATERIAL - Vinyl

N1	
N2	

NOTE: MATERIAL LEGEND KEYS ARE FOR LNI INTERNAL USE AND MAY NOT CORRESPOND WITH ARCHITECT/CLIENT MATERIAL KEYS.

PROJECT NAME: Santa barbara, CA	DRAWING: Name
ADDRESS: Various	SCALE: As Shown
CITY/STATE: Various	DRAWN BY: HLM
TELEPHONE: N/A	DESIGN DATE: 3/25/2010
FAX NUMBER: N/A	SALES PERSON: CRISTIAN

APROVAL	DATE
CLIENT	
SALES	
LANDLORD	
PROGRAMING	
ENGINEER	

1254 Chestnut Avenue
Manchester, CA 92253
P: 310 978 2000
F: 310 978 4000
http://www.lnisignage.com
CUSTOM MANUFACTURING SINCE 1952

△	DATE	BY	REVISION
R1			

GENERAL NOTES

SHEET 8

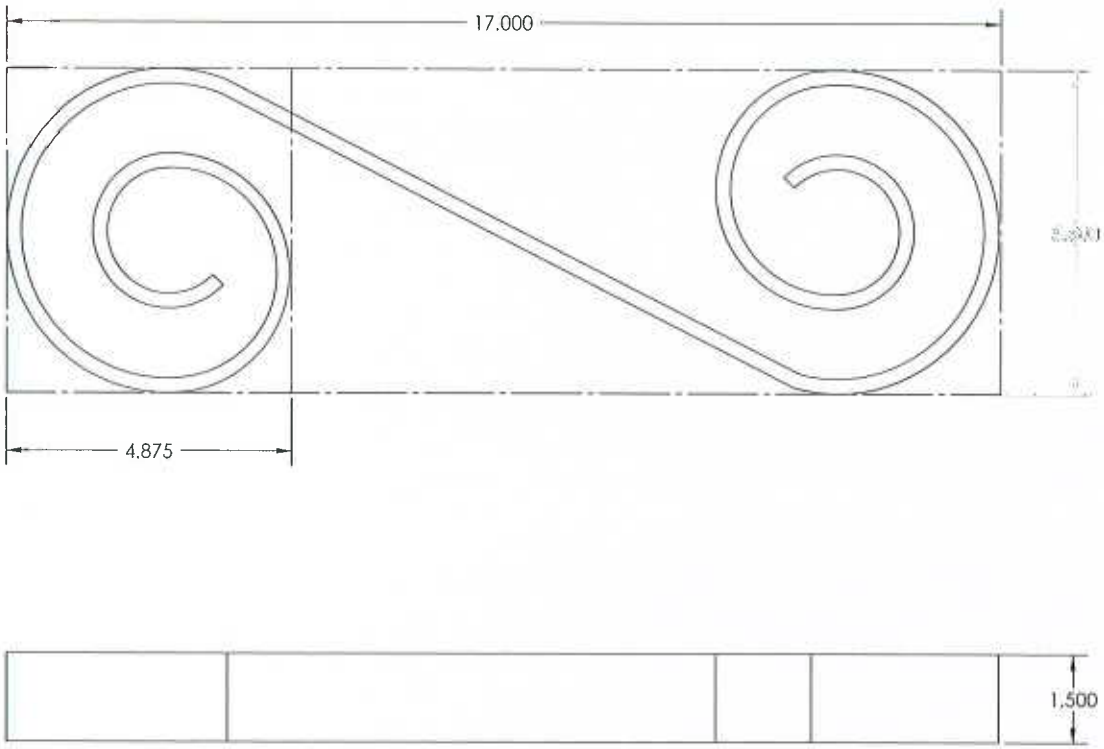

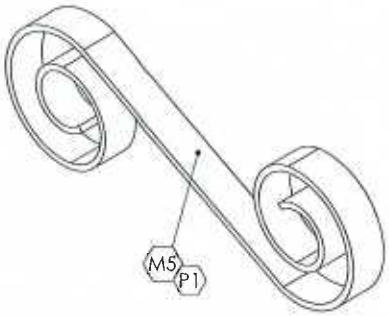

Structural only

1/9 LARGE SCROLL PATTERN
HALF SCALE

LNI MATERIAL LEGEND

MATERIAL FINISH - Paint/Powder

P1	Powder Coat Finish RAL # 6005 Green

MATERIALS - Substrate

M1	1 1/2" x 4" x 1/8"Alum Rect Tube
M2	2" x 4" x 3/16" Steel Rect Tube
M3	4" x 6" x 1/4" Steel Rect Tube
M4	1" x 1/8" Steel Flat Bar
M5	1 1/2" x 1/4" Steel Flat Bar
M6	1/8" Alum Sheet
M7	22 Ga Sheet Metal
M8	1" Pipe Sch 40
M9	4" x 4" x 3/16" Alum Rect Tube
M10	3" x 5" x 1/8" Alum Rect Tube
M11	1 1/2 x 1/8" Alum Flat Bar
M12	1 1/2" x 2" x 1/4 Steel Angle
M13	.090 Alum sheet
M14	1/4" Steel Plate
M15	1/2" Steel Plate
M16	1 1/2 x 1/8" steel Flat Bar
M17	1 1/2" Standar Alum Pipe
M18	1 1/4" Standar Alum Pipe
M19	1/2" Alum Plate

MATERIAL - Illumination

N1	
N2	
N3	
N4	

MATERIAL - Vinyl

N1	
N2	

NOTE: MATERIAL LEGEND KEYS ARE FOR LNI INTERNAL USE AND MAY NOT CORRESPOND WITH ARCHITECT/CLIENT MATERIAL KEYS.

PROJECT NAME: Santa barbara, CA	DRAWING: Name
ADDRESS: Various	SCALE: As Shown
CITY/STATE: Various	DRAWN BY: H.M
TELEPHONE: N/A	DESIGN DATE: 03/30/2010
FAX NUMBER: N/A	SALES PERSON: CARSTAN

APROVAL	DATE
CLIENT	
SALES	
LANDLORD	
PROGRAMING	
ENGINEER	

LNI
12535 Chadron Avenue
Hawthorne, CA 90250
Ph 310.978.2000
Fx 310.978.4000
http://www.lnidesigns.com
CUSTOM MANUFACTURING SINCE 1952

△	DATE	BY	REVISION
R1			

NOTE: THIS IS AN ORIGINAL UNPUBLISHED DRAWING CREATED BY LNI CUSTOM MFG., INC. ITS SUBMITTED FOR YOUR PERSONAL USE IN CONNECTION WITH A PROJECT BEING PLANNED FOR YOU BY LNI CUSTOM MFG., INC. IT IS NOT TO BE SHOWN TO ANYONE OUTSIDE YOUR ORGANIZATION, NOR IS IT TO BE USED, REPRODUCED, COPIED OR EXHIBITED IN ANY FASHION.

GENERAL NOTES

CUSTOMER TO PROVIDE PRIMARY ELECTRICAL SERVICE WITHIN 5' OF SIGN. ELECTRICAL CONNECTIONS AND SERVICE INTERCONNECTS TO BE INSTALLED IN ACCORDANCE WITH ONE REQUIREMENTS OF ARTICLE 600 OF THE NATIONAL ELECTRICAL CODE AND THE CURRENT EDITION IN EFFECT AT THE TIME OF INSTALLATION. THIS INCLUDES PROPER GROUNDING AND BONDING OF THE SIGN. ALL ELECTRICAL COMPONENTS TO BE W.L. APPROVED. MANUFACTURER'S NAME, NO. OF LAMPS, VOLT, DETAILED ENERGY ACCEPTANCE TO CITY CODE.

SHEET
9

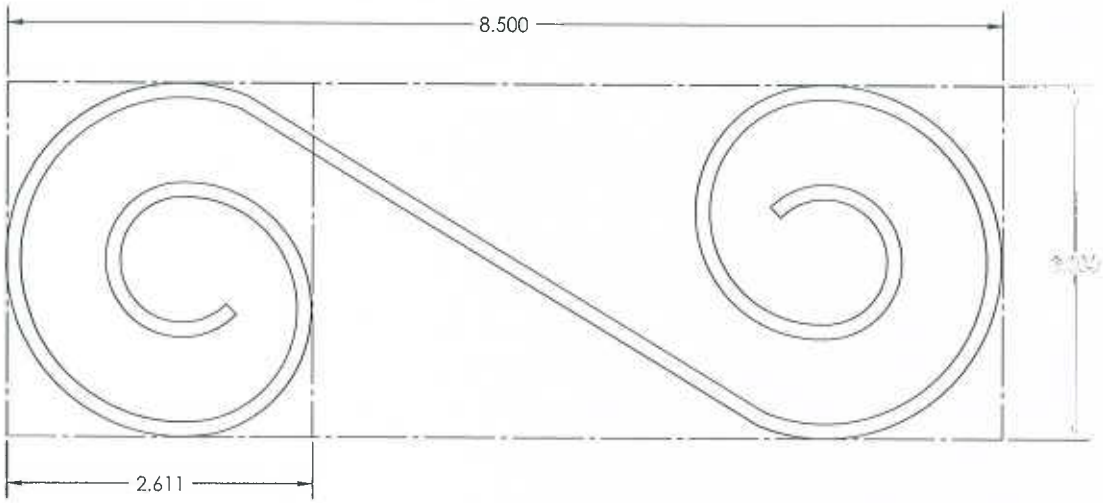

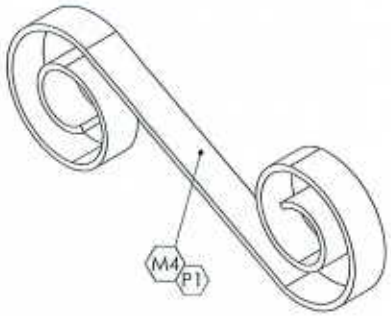

Structural only

1/9 SMALL SCROLL PATTERN
FULL SCALE

LNI MATERIAL LEGEND

MATERIAL FINISH - Paint/Powder

P1	Powder Coat Finish RAL # 6005 Green

MATERIALS - Substrate

M1	1 1/2" x 4" x 1/8" Alum Rect Tube
M2	2" x 4" x 3/16" Steel Rect Tube
M3	4" x 6" x 1/4" Steel Rect Tube
M4	1" x 1/8" Steel Flat Bar
M5	1 1/2" x 1/4" Steel Flat Bar
M6	1/8" Alum Sheet
M7	22 Ga Sheet Metal
M8	1" Pipe Sch 40
M9	4" x 4" x 3/16" Alum Rect Tube
M10	3" x 5" x 1/8" Alum Rect Tube
M11	1 1/2 x 1/8" Alum Flat Bar
M12	1 1/2" x 2" x 1/4 Steel Angle
M13	.090 Alum sheet
M14	1/4" Steel Plate
M15	1/2" Steel Plate
M16	1 1/2 x 1/8" steel Flat Bar
M17	1 1/2" Standar Alum Pipe
M18	1 1/4" Standar Alum Pipe
M19	1/2" Alum Plate

MATERIAL - Illumination

N1	
N2	
N3	
N4	

MATERIAL - Vinyl

N1	
N2	

NOTE: MATERIAL LEGEND KEYS ARE FOR LNI INTERNAL USE AND MAY NOT CORRESPOND WITH ARCHITECT/CLIENT MATERIAL KEYS.

PROJECT NAME: Santa barbara, CA	DRAWING: Name
ADDRESS: Various	SCALE: As Shown
CITY/STATE: Various	DRAWN BY: HLM
TELEPHONE: N/A	DESIGN DATE: 3/25/2010
FAX NUMBER: N/A	SALES PERSON: CRISTIAN

APROVAL	DATE
CLIENT	
SALES	
LANDLORD	
PROGRAMING	
ENGINEER	

12636 Chadron Avenue
Hawthorne, CA 90250
P: 310.978.2000
F: 310.978.2300
info@lnidesigns.com
CUSTOM MANUFACTURING SINCE 1952

△	DATE	BY	REVISION
R1			

GENERAL NOTES

NOTE: THIS IS AN ORIGINAL UNPUBLISHED DRAWING CREATED BY LNI CUSTOM MFG., INC. IT IS SUBMITTED FOR YOUR PERSONAL USE IN CONNECTION WITH A PROJECT BEING PLANNED FOR YOU BY LNI CUSTOM MFG., INC. IT IS NOT TO BE SHOWN TO ANYONE OUTSIDE YOUR ORGANIZATION, NOR IS IT TO BE USED, REPRODUCED, COPIED OR EXHIBITED IN ANY FASHION.

CUSTOMER TO PROVIDE PRIMARY ELECTRICAL SERVICE WITHIN 6'-0" OF BASE OF ELECTRIC ALL CONDUITS, CHECKS, INSTALLED, TO BE INSTALLED IN ACCORDANCE WITH THE REQUIREMENTS OF ARTICLE 600 OF THE NATIONAL ELECTRICAL CODE AND ANY OTHER APPLICABLE LOCAL CODES. THIS INCLUDES PROPER GROUNDING AND BONDING OF THE SIGN. FOR SIGNS ON A LOAD CENTER TO BE INSTALL APPROVED. WHERE WIRE IS EXISTING, AND WILL LAND BUSS, BE PLACED ON SIGN PER CURRENT NEC CITY CODE.

SHEET 10

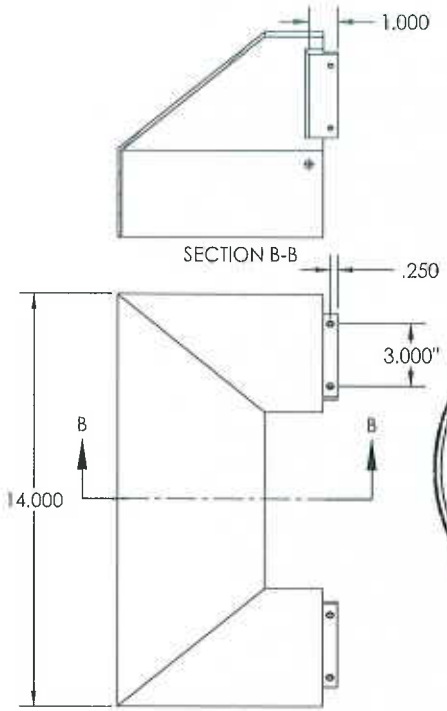

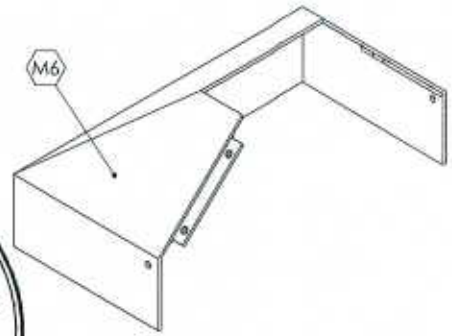

REGISTERED PROFESSIONAL ENGINEER
CERENICO G. MADRONA
No. 72319
Exp: 6-30-12
CIVIL
STATE OF CALIFORNIA

Structural only

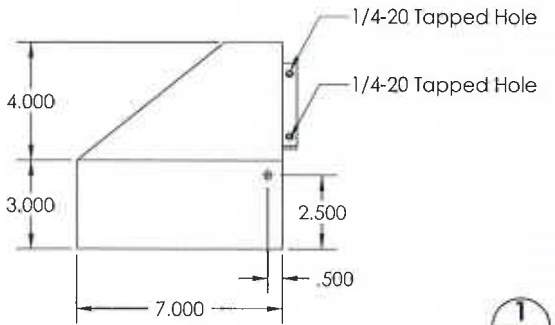

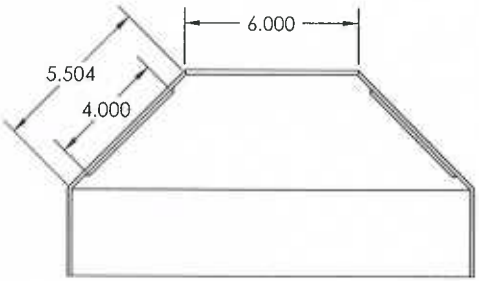

1/11 **ESCUTCHEON**
SCALE:4" = 1'

MATERIAL LEGEND

MATERIAL FINISH - Paint/Powder

P1	Powder Coat Finish RAL # 6005 Green

MATERIALS - Substrate

M1	1 1/2" x 4" x 1/8"Alum Rect Tube
M2	2" x 4" x 3/16" Steel Rect Tube
M3	4" x 6" x 1/4" Steel Rect Tube
M4	1" x 1/8" Steel Flat Bar
M5	1 1/2" x 1/4" Steel Flat Bar
M6	1/8" Alum Sheet
M7	22 Ga Sheet Metal
M8	1" Pipe Sch 40
M9	4" x 4" x 3/16" Alum Rect Tube
M10	3" x 5" x 1/8" Alum Rect Tube
M11	1 1/2 x 1/8" Alum Flat Bar
M12	1 1/2" x 2" x 1/4 Steel Angle
M13	.050 Alum sheet
M14	1/4" Steel Plate
M15	1/2" Steel Plate
M16	1 1/2 x 1/8" steel Flat Bar
M17	1 1/2" Standar Alum Pipe
M18	1 1/4" Standar Alum Pipe
M19	1/2" Alum Plate

MATERIAL - Illumination

N1	
N2	
N3	
N4	

MATERIAL - Vinyl

N1	
N2	

NOTE: MATERIAL LEGEND KEYS ARE FOR LNI INTERNAL USE AND MAY NOT CORRESPOND WITH ARCHITECT/CLIENT MATERIAL KEYS.

PROJECT NAME: Santa barbara, CA	DRAWING: Name
ADDRESS: Various	SCALE: As Shown
CITY/STATE: Various	DRAWN BY: HLM
TELEPHONE: N/A	DESIGN DATE: 3/25/2010
FAX NUMBER: N/A	SALES PERSON: CRISTIAN

APROVAL	DATE
CLIENT	
SALES	
LANDLORD	
PROGRAMING	
ENGINEER	

12516 Cranson Avenue
Hawthorne, CA 90250
Ph 310 978 4000
Fx 310 978 4000
http://www.lnisigns.com
CUSTOM MANUFACTURING SINCE 1952

△	DATE	BY	REVISION
R1			

NOTE: THIS IS AN ORIGINAL UNPUBLISHED DRAWING CREATED BY LNI CUSTOM MFG., INC. IT IS SUBMITTED FOR YOUR PERSONAL USE IN CONJUNCTION WITH A PROJECT BEING PLANNED FOR YOU BY LNI CUSTOM MFG., INC. IT IS NOT TO BE SHOWN TO ANYONE OUTSIDE YOUR ORGANIZATION, NOR USED TO BE USED, FOR ANY OTHER PURPOSE WITHOUT WRITTEN PERMISSION.

GENERAL NOTES

CUSTOMER TO PROVIDE PRIMARY ELECTRICAL SERVICE TO WITHIN 6.0' OF SIGN ELECTRICAL CONNECTION. THIS SIGNAGE INTENDED TO BE INSTALLED IN ACCORDANCE WITH THE REQUIREMENTS OF ARTICLE 600 OF THE NATIONAL ELECTRICAL CODE AND ALL OTHER APPLICABLE LOCAL CODES. THIS SIGNAGE IS EXPECTED TO BE MANUFACTURED IN CONFORMITY WITH THE NATIONAL ELECTRICAL CODE. ALL ELECTRICAL COMPONENTS TO BE UL APPROVED, MANUFACTURER'S NAME AND U.L. LABEL MUST BE PLACED ON SIGN ACCORDING TO CITY CODE.

SHEET 11

Structural only

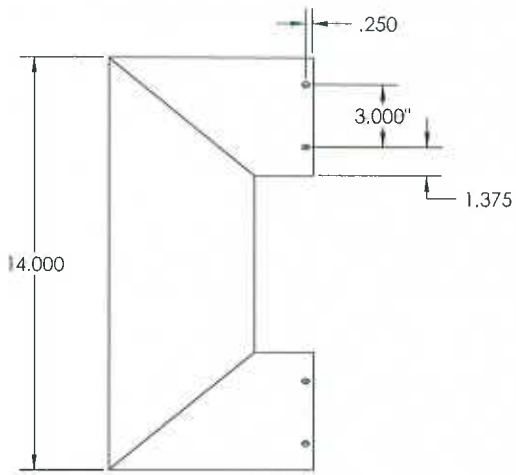

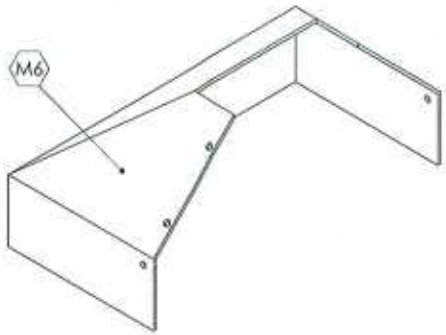

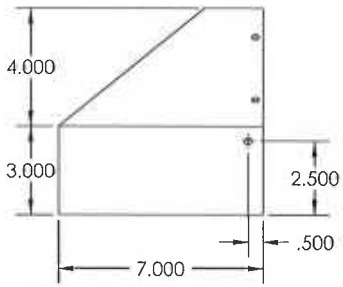

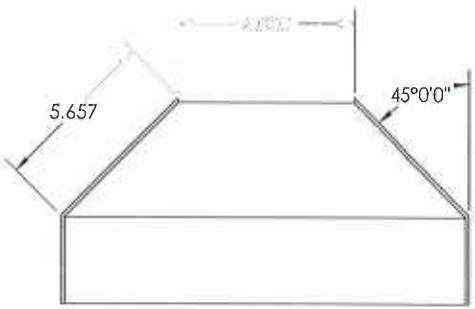

1/12 **ESCUTCHEON**
SCALE: 3"=1"

LNI MATERIAL LEGEND

MATERIAL FINISH - Paint/Powder

P1	Powder Coat Finish RAL # 6005 Green

MATERIALS - Substrate

M1	1 1/2" x 4" x 1/8" Alum Rect Tube
M2	2" x 4" x 3/16" Steel Rect Tube
M3	4" x 6" x 1/4" Steel Rect Tube
M4	1" x 1/8" Steel Flat Bar
M5	1 1/2" x 1/4" Steel Flat Bar
M6	1/8" Alum Sheet
M7	22 Ga Sheet Metal
M8	1" Pipe Sch 40
M9	4" x 4" x 3/16" Alum Rect Tube
M10	3" x 5" x 1/8" Alum Rect Tube
M11	1 1/2 x 1/8" Alum Flat Bar
M12	1 1/2" x 2" x 1/4 Steel Angle
M13	.090 Alum sheet
M14	1/4" Steel Plate
M15	1/2" Steel Plate
M16	1 1/2 x 1/8" steel Flat Bar
M17	1 1/2" Standar Alum Pipe
M18	1 1/4" Standar Alum Pipe
M19	1/2" Alum Plate

MATERIAL - Illumination

N1	
N2	
N3	
N4	

MATERIAL - Vinyl

N1	
N2	

NOTE: MATERIAL LEGEND KEYS ARE FOR LNI INTERNAL USE AND MAY NOT CORRESPOND WITH ARCHITECT/CLIENT MATERIAL KEYS.

PROJECT NAME: Santa barbara, CA	DRAWING: Name
ADDRESS: Various	SCALE: As Shown
CITY/STATE: Various	DRAWN BY: HLM
TELEPHONE: N/A	DESIGN DATE: 3/25/2010
FAX NUMBER: N/A	SALES PERSON: CHRISTIAN

APROVAL	DATE
CLIENT	
SALES	
LANDLORD	
PROGRAMING	
ENGINEER	

LNI
14556 Chestnut Avenue
Westminster, CA 92683
Ph 714 978 2000
Fx 714 978 2000
http://www.lnisigns.com
CUSTOM MANUFACTURING SINCE 1952

△	DATE	BY	REVISION
R1			

NOTE: THIS IS AN ORIGINAL UNPUBLISHED DRAWING CREATED BY LNI CUSTOM MFG., INC. IT IS SUBMITTED FOR YOUR PERSONAL USE IN CONJUNCTION WITH A PROJECT BEING PLANNED FOR YOU BY LNI CUSTOM MFG., INC. IT IS NOT TO BE SHOWN TO ANYONE OUTSIDE YOUR ORGANIZATION, NOR IS IT TO BE USED, REPRODUCED, COPIED, OR EXHIBITED IN ANY FASHION.

GENERAL NOTES

SHEET 12

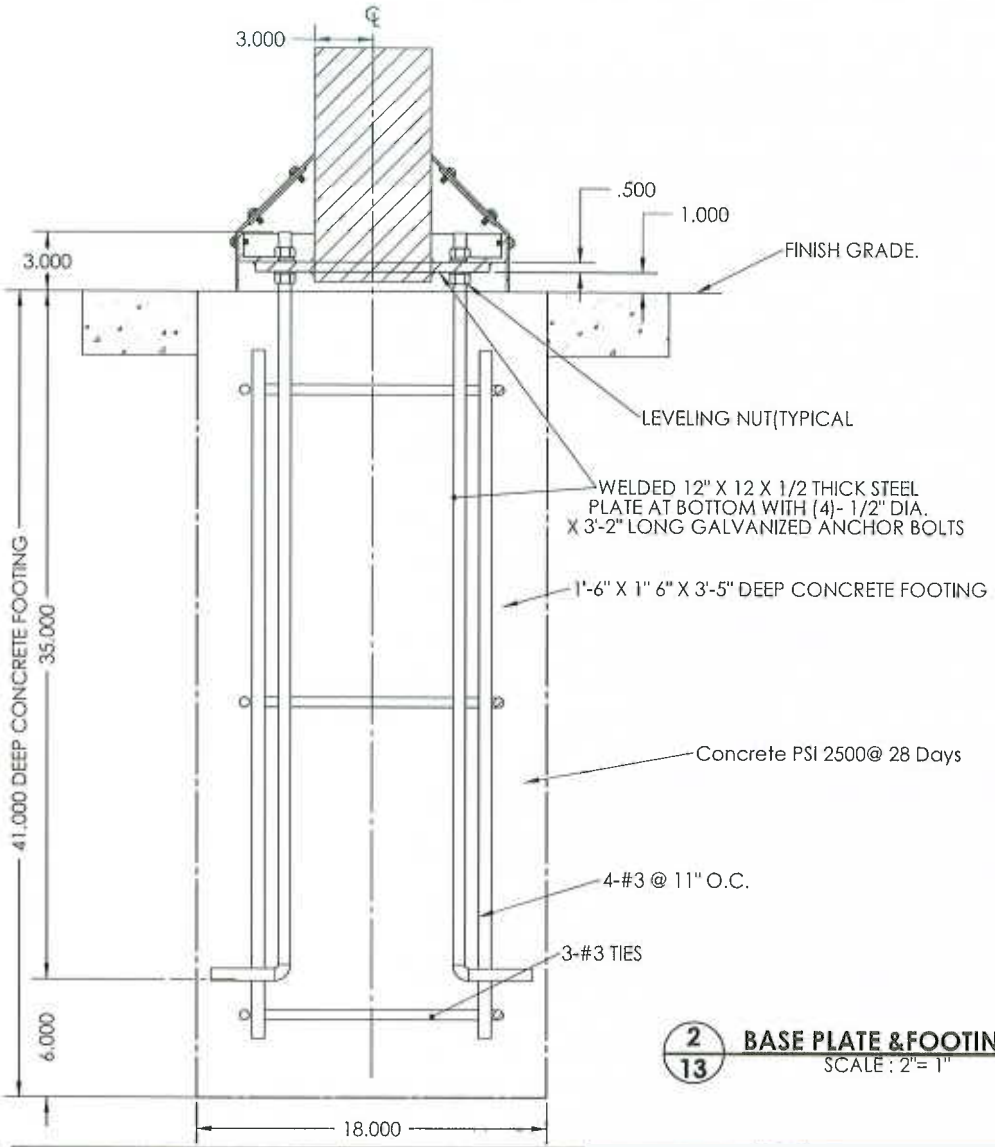

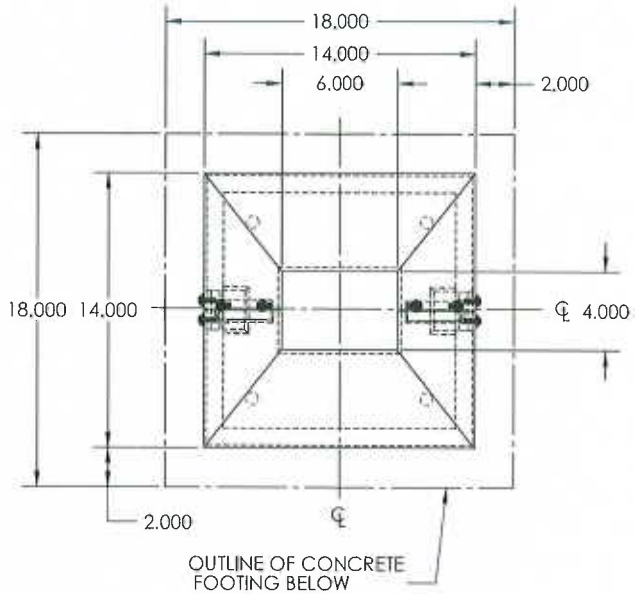

2/13 **BASE PLATE &FOOTING DET.**
SCALE : 2"= 1"

Structural only

MATERIAL LEGEND

MATERIAL FINISH - Paint/Powder

P1	Powder Coat Finish RAL # 6005 Green

MATERIALS - Substrate

M1	1 1/2" x 4" x 1/8" Alum Rect Tube
M2	2" x 4" x 3/16" Steel Rect Tube
M3	4" x 8" x 1/4" Steel Rect Tube
M4	1" x 1/8" Steel Flat Bar
M5	1 1/2" x 1/4" Steel Flat Bar
M6	1/8" Alum Sheet
M7	22 Ga Sheet Metal
M8	1" Pipe Sch 40
M9	4" x 4" x 3/16" Alum Rect Tube
M10	3" x 5" x 1/8" Alum Rect Tube
M11	1 1/2 x 1/8" Alum Flat Bar
M12	1 1/2" x 2" x 1/4 Steel Angle
M13	.090 Alum sheet
M14	1/4" Steel Plate
M15	1/2" Steel Plate
M16	1 1/2 x 1/8" steel Flat Bar
M17	1 1/2" Standar Alum Pipe
M18	1 1/4" Standar Alum Pipe
M19	1/2" Alum Plate

MATERIAL - Illumination

N1	
N2	
N3	
N4	

MATERIAL - Vinyl

N1	
N2	

NOTE: MATERIAL LEGEND KEYS ARE FOR LNI INTERNAL USE AND MAY NOT CORRESPOND WITH ARCHITECT/CLIENT MATERIAL KEYS.

PROJECT NAME: Santa barbara, CA	DRAWN: Name
ADDRESS: Various	SCALE: As Shown
CITY/STATE: Various	DRAWN BY: HLM
TELEPHONE: N/A	DESIGN DATE: 3/25/2010
FAX NUMBER: N/A	SALES PERSON: CRISTIAN

APPROVAL	DATE
CLIENT	
SALES	
LANDLORD	
PROGRAMING	
ENGINEER	

12539 Chadron Avenue
Hawthorne, CA 90250
Ph 310.978.2000
Fx 310.978.4000
http://www.lni-usa.com
CUSTOM MANUFACTURING SINCE 1952

△	DATE	BY	REVISION
R1	08/11/2010	MHL	Galvanize Anchor Bolts,concret PSI 2500@

GENERAL NOTES

NOTE: THIS IS AN ORIGINAL UNPUBLISHED DRAWING CREATED BY LNI CUSTOM MFG., INC. (LNI) SUBMITTED FOR YOUR PERSONAL USE IN CONNECTION WITH A PROJECT BEING PLANNED FOR YOU BY LNI CUSTOM MFG., INC. IT IS NOT TO BE SHOWN TO ANYONE OUTSIDE YOUR ORGANIZATION, NOR IS IT TO BE USED, REPRODUCED, COPIED, OR EXHIBITED IN ANY FASHION.

SHEET 13

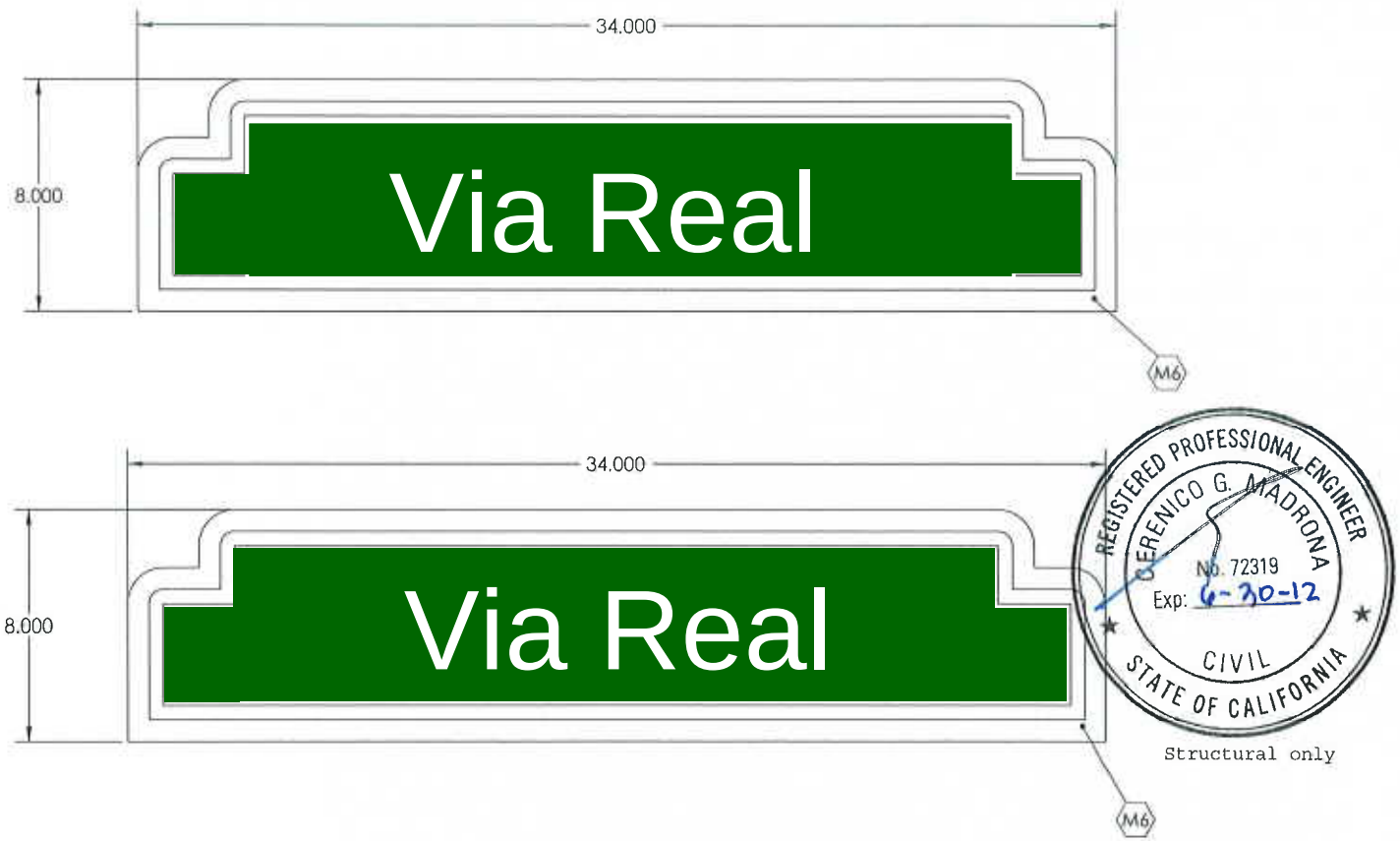

ORIENTATION STREET SIGN (PAGE1.1)

① Via Real

② Via Real

2/13 STREET SIGN
SCALE : 3"= 1"

MATERIAL LEGEND

MATERIAL FINISH - Paint/Powder

P1	Powder Coat Finish RAL # 6005 Green

MATERIALS - Substrate

M1	1 1/2" x 4" x 1/8" Alum Rect Tube
M2	2" x 4" x 3/16" Steel Rect Tube
M3	4" x 6" x 1/4" Steel Rect Tube
M4	1" x 1/8" Steel Flat Bar
M5	1 1/2" x 1/4" Steel Flat Bar
M6	1/8" Alum Sheet
M7	22 Ga Sheet Metal
M8	1" Pipe Sch 40
M9	4" x 4" x 3/16" Alum Rect Tube
M10	3" x 5" x 1/8" Alum Rect Tube
M11	1 1/2 x 1/8" Alum Flat Bar
M12	1 1/2" x 2" x 1/4 Steel Angle
M13	.090 Alum sheet
M14	1/4" Steel Plate
M15	1/2" Steel Plate
M16	1 1/2 x 1/8" steel Flat Bar
M17	1 1/2" Standar Alum Pipe
M18	1 1/4" Standar Alum Pipe
M19	1/2" Alum Plate

MATERIAL - Illumination

N1	
N2	
N3	
N4	

MATERIAL - Vinyl

N1	
N2	

NOTE: MATERIAL LEGEND KEYS ARE FOR LNI INTERNAL USE AND MAY NOT CORRESPOND WITH ARCHITECT/CLIENT MATERIAL KEYS.

PROJECT NAME: Santa barbara, CA	DRAWING: Name
ADDRESS: Various	SCALE: As Shown
CITY/STATE: Various	DRAWN BY: HLM
TELEPHONE: N/A	DESIGN DATE: 8/25/2010
FAX NUMBER: N/A	SALES PERSON: CANSTAN

APROVAL	DATE
CLIENT	
SALES	
LANDLORD	
PROGRAMING	
ENGINEER	

LNI CUSTOM MANUFACTURING SINCE 1952

△	DATE	BY	REVISION
R1	08/11/2010	HLM	Orientation Label

GENERAL NOTES

SHEET 13.1

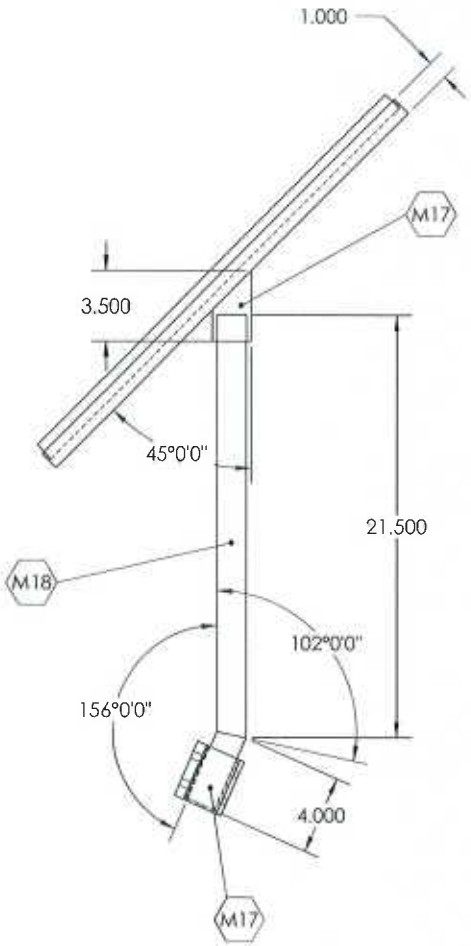

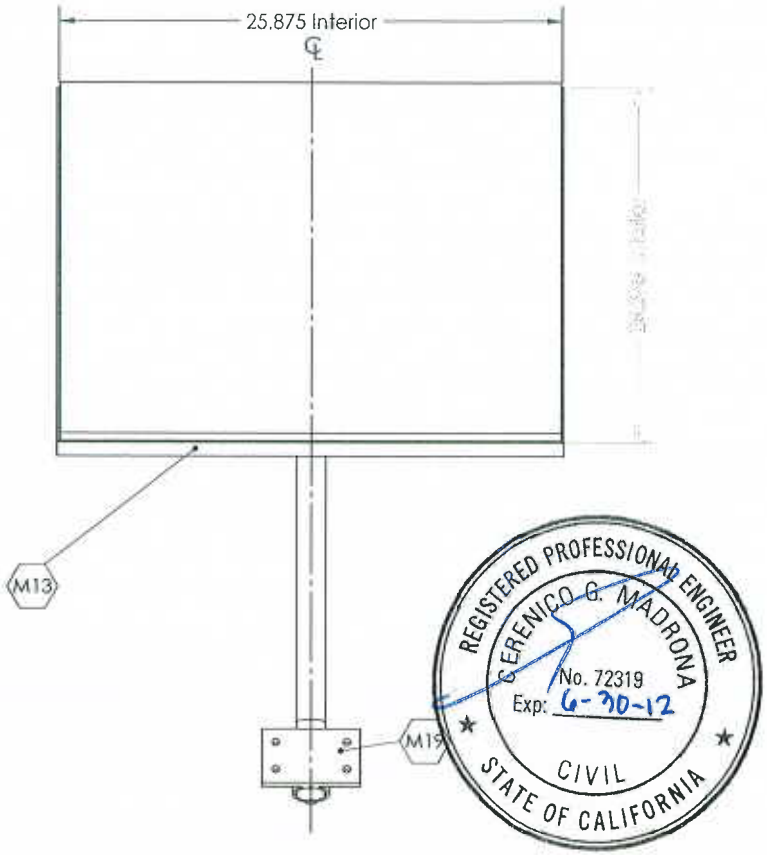

Structural only

1 / 13.2 SOLAR PANEL BASE

SCALE : 2"= 1'

LNI MATERIAL LEGEND

MATERIAL FINISH - Paint/Powder

P1	Powder Coat Finish RAL # 6005 Green

MATERIALS - Substrate

M1	1 1/2" x 4" x 1/8" Alum Rect Tube
M2	2" x 4" x 3/16" Steel Rect Tube
M3	4" x 6" x 1/4" Steel Rect Tube
M4	1" x 1/8" Steel Flat Bar
M5	1 1/2" x 1/4" Steel Flat Bar
M6	1/8" Alum Sheet
M7	22 Ga Sheet Metal
M8	1" Pipe Sch 40
M9	4" x 4" x 3/16" Alum Rect Tube
M10	3" x 5" x 1/8" Alum Rect Tube
M11	1 1/2 x 1/8" Alum Flat Bar
M12	1 1/2" x 2" x 1/4 Steel Angle
M13	.090 Alum sheet
M14	1/4" Steel Plate
M15	1/2" Steel Plate
M16	1 1/2 x 1/8" steel Flat Bar
M17	1 1/2" Standar Alum Pipe
M18	1 1/4" Standar Alum Pipe
M19	1/2" Alum Plate

MATERIAL - Illumination

N1	
N2	
N3	
N4	

MATERIAL - Vinyl

N1	
N2	

NOTE: MATERIAL LEGEND KEYS ARE FOR LNI INTERNAL USE AND MAY NOT CORRESPOND WITH ARCHITECT/CLIENT MATERIAL KEYS.

PROJECT NAME: Santa barbara, CA	DRAWING: Name
ADDRESS: Various	SCALE: As Shown
CITY/STATE: Various	DRAWN BY: HLM
TELEPHONE: N/A	DESIGN DATE: 4/14/2010
FAX NUMBER: N/A	SALES PERSON: CRISTIAN

APROVAL	DATE
CLIENT	
SALES	
LANDLORD	
PROGRAMING	
ENGINEER	

12235 Crenshaw Avenue
Hawthorne, CA 90250
Ph 310 978 2000
Fx 310 978 4000
http://www.lnisignsco.com
CUSTOM MANUFACTURING SINCE 1952

△	DATE	BY	REVISION
L1	04-14-10	HLM	New Sheet

NOTE: THIS IS AN ORIGINAL UNPUBLISHED DRAWING CREATED BY LNI CUSTOM MFG., INC. IT IS SUBMITTED FOR YOUR PERSONAL USE IN CONNECTION WITH A PROJECT BEING PLANNED FOR YOU BY LNI CUSTOM MFG., INC. IT IS NOT TO BE SHOWN TO ANYONE OUTSIDE YOUR ORGANIZATION NOR USED, REPRODUCED, COPIED OR EXHIBITED IN ANY FASHION.

GENERAL NOTES

CONTRACTOR TO PROVIDE PRIMARY ELECTRICAL SERVICE WITHIN 6'-0" OF SIGN. ELECTRICAL INSPECTION, PERMITS AND WIRING TO BE INSTALLED IN ACCORDANCE WITH THE REQUIREMENTS OF ARTICLE 600 OF THE NATIONAL ELECTRICAL CODE, LOCAL AND OTHER APPLICABLE ELECTRICAL CODES. THE INSTALLER IS RESPONSIBLE FOR ENSURING THAT ALL ELECTRICAL COMPONENTS TO BE UL APPROVED. MANUFACTURER'S LABEL AND/OR LABEL SHOULD BE LOCATED ON SIGN ACCORDING TO CODE.

SHEET 13.2

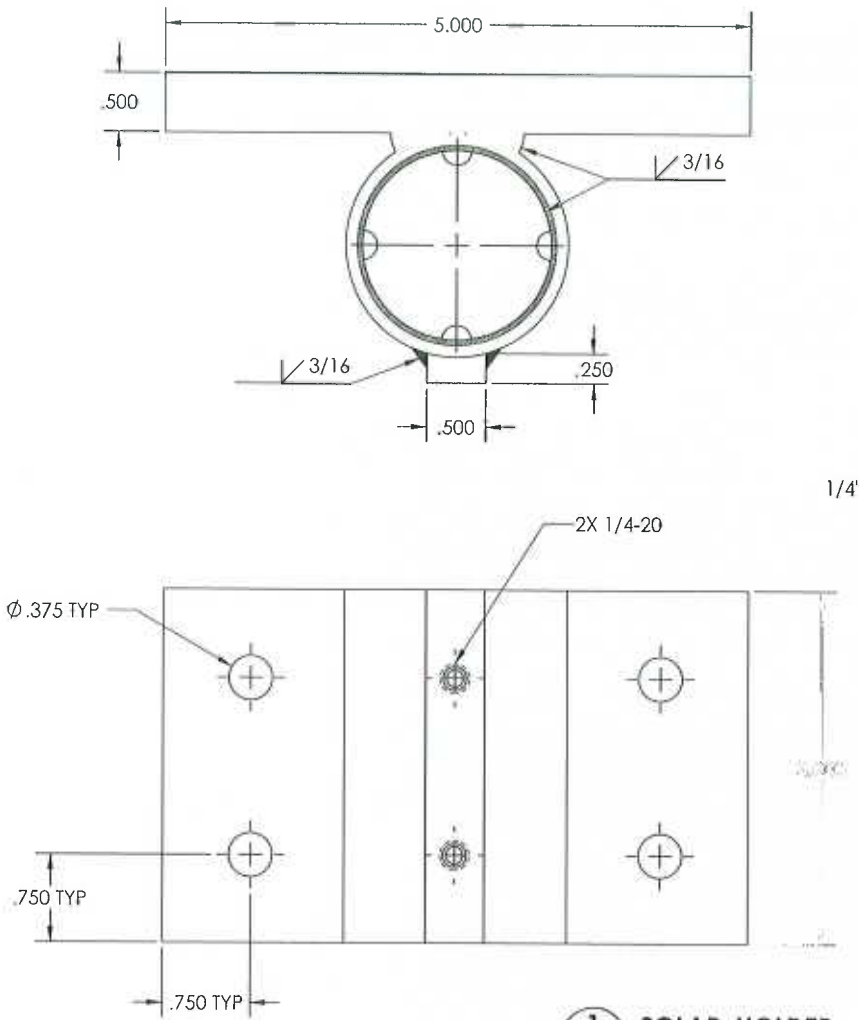

1 / 13.3 **SOLAR HOLDER**
FULL SCALE

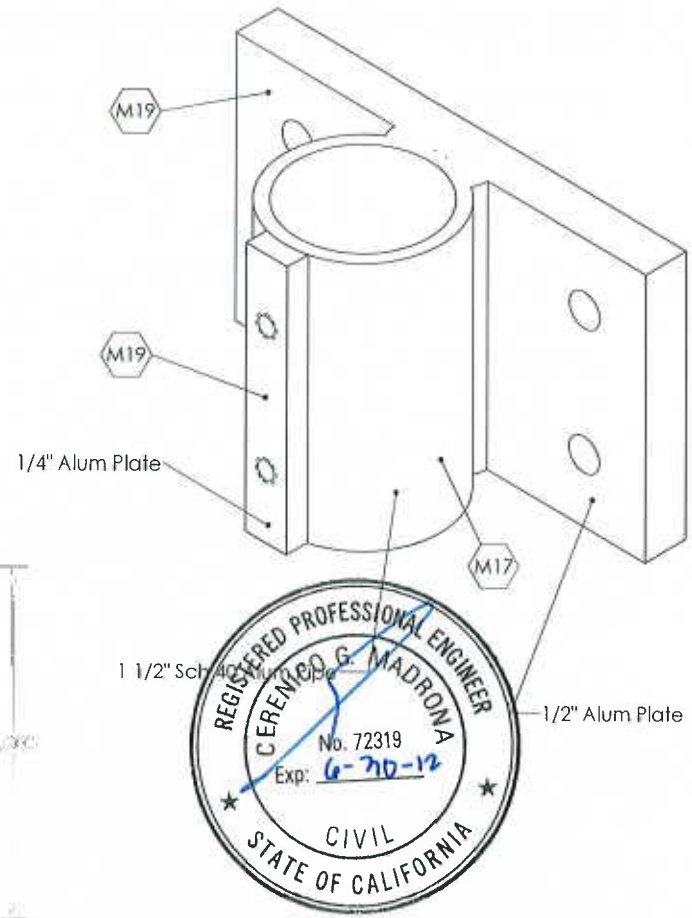

Structural only

MATERIAL LEGEND

MATERIAL FINISH - Paint/Powder

P1	Powder Coat Finish RAL # 6005 Green

MATERIALS - Substrate

M1	1 1/2" x 4" x 1/8" Alum Rect Tube
M2	2" x 4" x 3/16" Steel Rect Tube
M3	4" x 6" x 1/4" Steel Rect Tube
M4	1" x 1/8" Steel Flat Bar
M5	1 1/2" x 1/4" Steel Flat Bar
M6	1/8" Alum Sheet
M7	22 Ga Sheet Metal
M8	1" Pipe Sch 40
M9	4" x 4" x 3/16" Alum Rect Tube
M10	3" x 5" x 1/8" Alum Rect Tube
M11	1 1/2 x 1/8" Alum Flat Bar
M12	1 1/2" x 2" x 1/4 Steel Angle
M13	.090 Alum sheet
M14	1/4" Steel Plate
M15	1/2" Steel Plate
M16	1 1/2 x 1/8" steel Flat Bar
M17	1 1/2" Standar Alum Pipe
M18	1 1/4" Standar Alum Pipe
M19	1/2" Alum Plate

MATERIAL - Illumination

N1	
N2	
N3	
N4	

MATERIAL - Vinyl

N1	
N2	

NOTE: MATERIAL LEGEND KEYS ARE FOR LNI INTERNAL USE AND MAY NOT CORRESPOND WITH ARCHITECT/CLIENT MATERIAL KEYS.

PROJECT NAME: Santa barbara, CA	DRAWING: Name
ADDRESS: Various	SCALE: As Shown
CITY/STATE: Various	DRAWN BY: FLM
TELEPHONE: N/A	DESIGN DATE: 4/14/2010
FAX NUMBER: N/A	SALES PERSON: CRISTIAN

APROVAL	DATE
CLIENT	
SALES	
LANDLORD	
PROGRAMING	
ENGINEER	

12538 Chadron Avenue
Hawthorne, CA 90250
Ph 310.978.2000
Fx 310.978.4000
http://www.lnisigns.com
CUSTOM MANUFACTURING SINCE 1952

△	DATE	BY	REVISION
L1	04-14-10	HLM	New Sheet

NOTE: THIS IS AN ORIGINAL UNPUBLISHED DRAWING CREATED BY LNI CUSTOM MFG., INC. IT IS SUBMITTED FOR YOUR PERSONAL USE IN CONNECTION WITH A PROJECT BEING PLANNED FOR YOU BY LNI CUSTOM MFG., INC. IT IS NOT TO BE SHOWN TO ANYONE OUTSIDE YOUR ORGANIZATION, NOR IS IT TO BE USED, REPRODUCED, COPIED OR DISPERSED IN ANY FASHION.

GENERAL NOTES

CUSTOMER TO PROVIDE PRIMARY ELECTRICAL WIRING AT THE SIGN. ELECTRICAL CONNECTION, THE SIGN IS INTENDED TO BE INSTALLED IN ACCORDANCE WITH THE REQUIREMENTS OF ARTICLE 600 OF THE NATIONAL ELECTRICAL CODE AND/OR OTHER APPLICABLE LOCAL CODES. THIS INCLUDES PROVISIONS FOR GROUNDING AND BONDING OF THE SIGN. ALL ELECTRICAL COMPONENTS TO BE UL-APPROVED. MANUFACTURER'S LABEL AND USE LABEL SHALL BE PLACED ON ANY ELECTRICAL "IN CITY CODE".

SHEET 13.3

REGISTERED PROFESSIONAL ENGINEER
CERENICO G. MADRONA
No. 72319
Exp: 6-30-12
CIVIL
STATE OF CALIFORNIA

Structural only

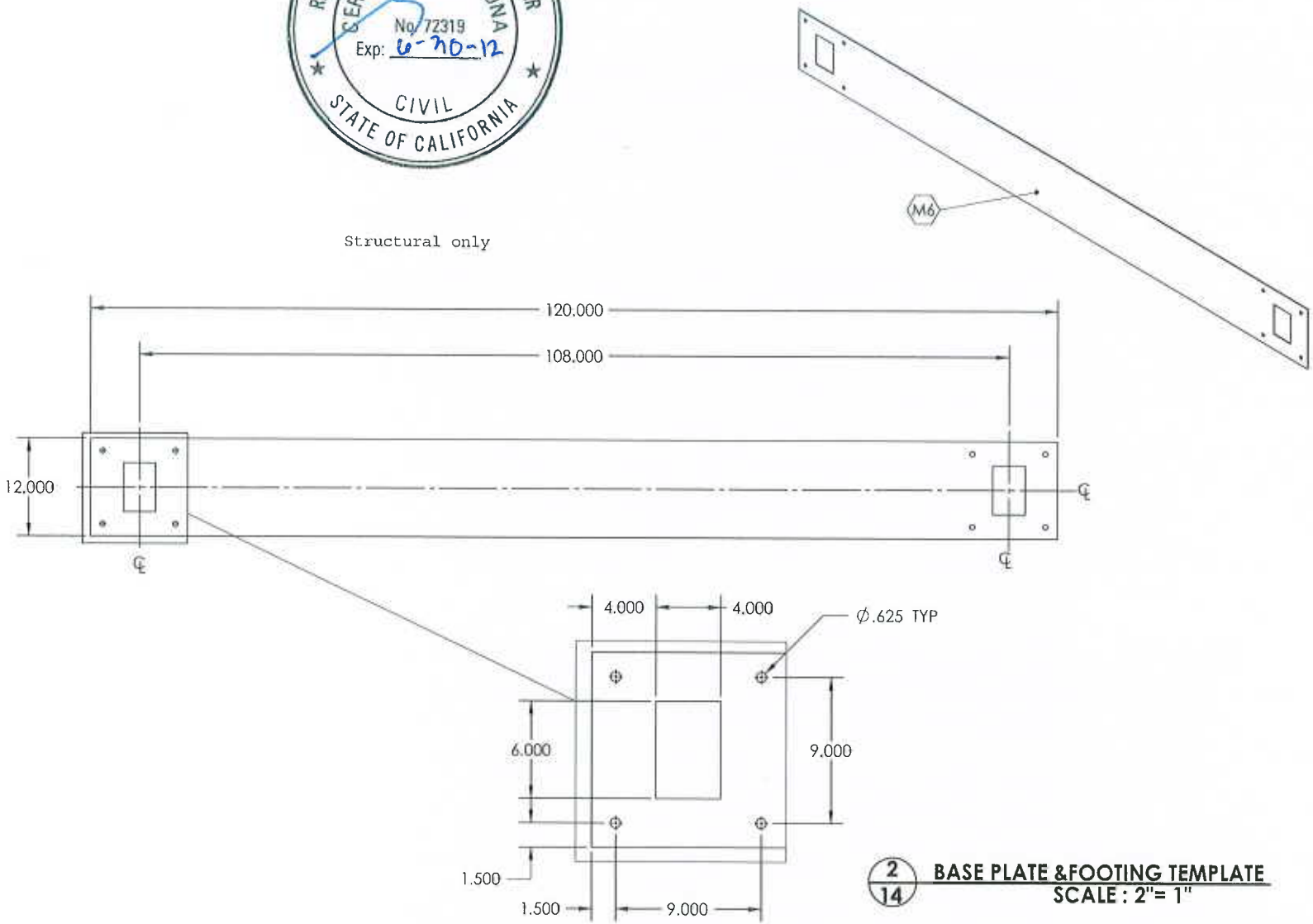

2/14 **BASE PLATE &FOOTING TEMPLATE**
SCALE : 2"= 1"

LNI MATERIAL LEGEND

MATERIAL FINISH - Paint/Powder

P1	Powder Coat Finish RAL # 6005 Green

MATERIALS - Substrate

M1	1 1/2" x 4" x 1/8"Alum Rect Tube
M2	2" x 4" x 3/16" Steel Rect Tube
M3	4" x 8" x 1/4" Steel Rect Tube
M4	1" x 1/8" Steel Flat Bar
M5	1 1/2" x 1/4" Steel Flat Bar
M6	1/8" Alum Sheet
M7	22 Ga Sheet Metal
M8	1" Pipe Sch 40
M9	4" x 4" x 3/16" Alum Rect Tube
M10	3" x 5" x 1/8" Alum Rect Tube
M11	1 1/2 x 1/8" Alum Flat Bar
M12	1 1/2" x 2" x 1/4 Steel Angle
M13	.090 Alum sheet
M14	1/4" Steel Plate
M15	1/2" Steel Plate
M16	1 1/2 x 1/8" steel Flat Bar
M17	1 1/2" Standar Alum Pipe
M18	1 1/4" Standar Alum Pipe
M19	1/2" Alum Plate

MATERIAL - Illumination

N1	
N2	
N3	
N4	

MATERIAL - Vinyl

H1	
H2	

NOTE: MATERIAL LEGEND KEYS ARE FOR LNI INTERNAL USE AND MAY NOT CORRESPOND WITH ARCHITECT/CLIENT MATERIAL KEYS.

PROJECT NAME: Santa barbara, CA	DRAWING: Name
ADDRESS: Various	SCALE: As Shown
CITY/STATE: Various	DRAWN BY: HLM
TELEPHONE: N/A	DESIGN DATE: 3/25/2010
FAX NUMBER: N/A	SALES PERSON: CRISTIAN

APROVAL	DATE
CLIENT	
SALES	
LANDLORD	
PROGRAMING	
ENGINEER	

LNI — CUSTOM MANUFACTURING SINCE 1952
12636 Chadron Avenue Hawthorne, CA 90250 Ph 310.978.2000 Fx 310.978.4000 http://www.lnisgns.com

△	DATE	BY	REVISION
R1			

GENERAL NOTES

SHEET 14

SANTA BARBARA - MTD

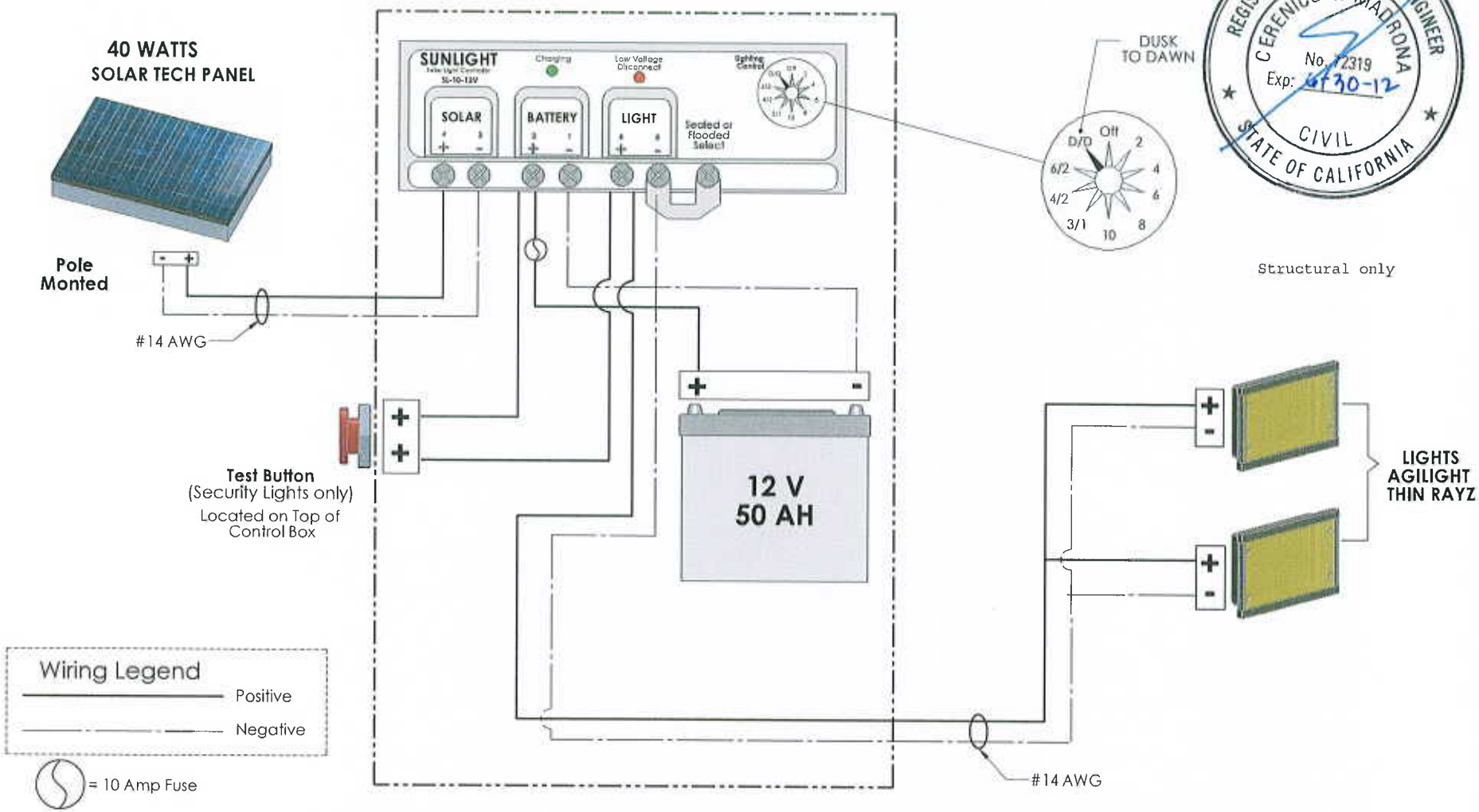

REGISTERED PROFESSIONAL ENGINEER
CERENICO G. MADRONA
No. 72319
Exp: 6/30-12
CIVIL
STATE OF CALIFORNIA

Structural only

PROJECT NAME: Santa barbara, CA	DRAWING: Name
ADDRESS: Various	SCALE: As Shown
CITY/STATE: Various	DRAWN BY: HLM
TELEPHONE: N/A	DESIGN DATE: 3/25/2010
FAX NUMBER: N/A	SALES PERSON: CHRISTIAN

APROVAL	DATE
CLIENT	
SALES	
LANDLORD	
PROGRAMING	
ENGINEER	

12535 Chadron Avenue
Hawthorne, CA 90250
Ph 310.978.2000
Fx 310.978.4000
http://www.linlights.com

CUSTOM MANUFACTURING SINCE 1952

△	DATE	BY	REVISION
R1			

NOTE: THIS IS AN ORIGINAL UNPUBLISHED DRAWING CREATED BY LINI CUSTOM MFG., INC. IT IS SUBMITTED FOR YOUR PERSONAL USE IN CONNECTION WITH A PROJECT PROPOSED FOR YOU BY LINI CUSTOM MFG., INC. IT IS NOT TO BE SHOWN TO ANYONE OUTSIDE YOUR ORGANIZATION, NOR IS IT TO BE USED, REPRODUCED, COPIED OR EXHIBITED IN ANY FASHION.

GENERAL NOTES

CUSTOMER TO PROVIDE PRIMARY ELECTRICAL SERVICE WITHIN 1 FT OF SIGN ELECTRICAL CONNECTION. THIS SIGN IS INTENDED TO BE INSTALLED IN ACCORDANCE WITH THE REQUIREMENTS OF ARTICLE 600 OF THE NATIONAL ELECTRICAL CODE AND/OR OTHER APPLICABLE LOCAL CODES. THE FACILITIES FROM GROUNDING AND BONDING OF THE SIGN, ALL ELECTRICAL COMPONENTS TO BE UL LISTED FOR THEIR PURPOSES. MANUFACTURER'S LISTED AND UL LABELS SHALL BE PLACED ON AND ACCESSIBLE TO LOCAL CODES.

SHEET
15

W:\Quotes\JAN-JUNE 2010\ Theresa\McGillivray Construction

LED High-Power Acorn Bulbs for Globe/Pendant Street & Walkway Lamps / Base Up

LED30HPS-600-SIW-00x-BU

Only 27 Watts – 100-to-277VAC Range – Warm White – E39 Mogul Base or E26 Edison Screw-in Base

Plug-in Replacement for HPS Lamps up to 150 Watts — Typical Mounting Height: 14-16 ft.

FEATURES

- **Warranty:** 5 Years
- **Low Power Consumed:** Only 27 Watts
- **Wide Voltage Range:** 100-277VAC
- **Choice of Base:** E39 or E26 Screw-in
- **Ventilated:** Lamp Assembly Feature Aids in Maintaining Cool-Running Lamp
- **Optimized Design:** LEDs Mounted to Provide Maximum Luminance at Desired Angles to Targeted Area
- **Optimized Circuitry:** Power Factor Corrected for Maximum Efficiency
- **Instant-On:** No Delay in Re-Strike
- **Longer Life:** White LEDs Last for up to 50,000+ Hours
- **Lab Tested** in Accordance with IES Standards
- **Solid-State:** High-Shock & High-Vibration Resistant
- **Reduces Light Pollution:** "Dark Skies" Initiative-Compatible
- **Wide Ambient Oper. Temp. Range:** ~-22°F to ~+122°F [~-30°C to ~+50°C]
- **Safety Assurance:** ETL Listed

Intertek

LED30HPS-600-SIW-001-BU
E39 Base

***White LED technology** is patent protected in the United States. LEDtronics white LED products are covered under these patents.*

Utility Patents
US 8,128,258 B2
US 8,157,416 B2
US 7,862,204 B

Design Patent
US D631,567 S

APPLICATIONS

- Washington Globe Street & Walkway Lamps
- Enclosures

Ideal for Use with Alternate or Renewable Energy Resources – Solar & Wind Power

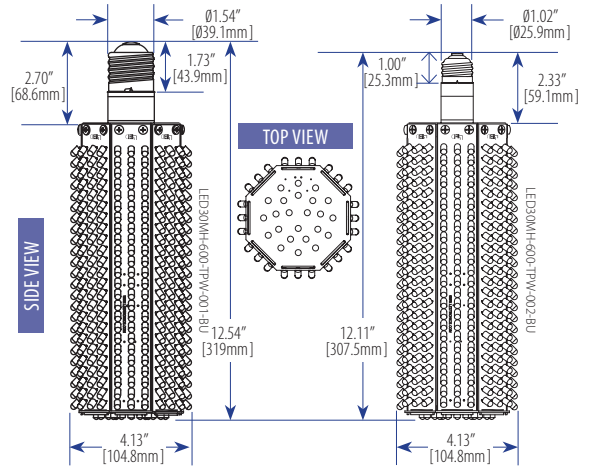

PART NUMBER	BASE TYPE	DIMENSIONS (L x W)
LED30HPS-600-SIW-001-BU	E39 Mogul Screw	12.54"×4.13" (319.0×104.8mm)
LED30HPS-600-SIW-002-BU	E26 Edison Screw	12.11"×4.13" (307.5×104.8mm)

BENEFITS

- **Major Energy Savings:** Up to 85% – LED Bulb Consumes 27 Watts vs 175 Watts by HPS (150W Lamp & 16-25W Transformer)–A Reduction of up to 125 Watts
- **Longer Lifespan** than HPS or Other HID Lamps
- **Maintenance-Free** for over 5 Years of Operation – Lowers Costs by Reducing Re-lamp Frequency
- **No Wasted Light:** Eliminates Light Intrusion into Offices, Residences, Stores...
- **Enhances Vision:** Better Optical Acuity – Little or No Glare as Compared with High Glare from HID Lamps
- **No Ultraviolet Emission:** Does Not Attract Insects

OPTIONS

- Base Down Available, with LEDs above Base

SPECIFICATIONS

SPECIFICATIONS SUBJECT TO CHANGE WITHOUT NOTICE

PART NO.	LED30HPS-600-SIW-00x-BU
Emitted Color	Warm White
Color Temperature	2800K~3200K
Beam Pattern	Type V – Circular
Viewing Angle *(Full Beam Width @ 50% Intensity)*	~55°@ 50° from vertical
Input Voltage	100-277 VAC *[Tested @ 120VAC]*
Energy Used	27.5 Watts
Input Current	0.235A
Power Factor	0.97
Total Lumens	2,304 lm
Maximum Candela	448 cd
Efficacy	84 lm/W
Base Configuration	Vertically Up
LEDs	Facing Down
Weight	2.06 lbs / 0.9kg

LEDTRONICS®
Creating the Future of Light Since 1983™

23105 Kashiwa Court, Torrance, CA 90505
Phone: (800) 579.4875 / (310) 534.1505
Fax: (310) 534.1424
E-mail: info@ledtronics.com
Website: http://www.ledtronics.com

© 2012 LEDtronics, Inc.

www.LEDtronics.com

LOG #365 / Rev 5-2012

Check LEDTRONICS.COM for latest data. Printed material may be outdated.

LED High-Power Bulbs for Post-Top Street & Walkway Luminaires / Base Up

LEDTRONICS® Creating the Future of Light Since 1983™

LED30HPS-600-SIW-001-BU

Luminaire Photometric Report

Filename: LED30HPS-600-SIW-001-BU
Manufacturer: LEDTRONICS
Luminaire: WITH NO GLOBE, 120VAC, 27.4W
Luminaire Cat: LED30HPS-600-SIW-001-BU
Lamp: LUMEN RATING: 2303.7Lms.
Lamp Output: 1 lamp(s), rated Lumens/lamp: 2303.7
Max Candela: 448.4 at Horizontal: 67.5°, Vertical: 45°
Luminous Opening: Point
Test: 4-22-11

Zonal Lumen Summary

Zone	Lumens	% Lamp	% Luminaire
0-30	169.6	7.4%	7.4%
0-40	431.7	18.7%	18.7%
0-60	1,140.9	49.5%	49.5%
60-90	781.9	33.9%	33.9%
70-100	561.7	24.4%	24.4%
90-120	269.2	11.7%	11.7%
0-90	1,922.8	83.5%	83.5%
90-180	380.9	16.5%	16.5%
0-180	2,303.7	100%	100%

Illuminance at a Distance

	Center Beam FC	Beam Width	
1.7ft	22.25 fc	11.9ft	14.0ft
3.3ft	5.56 fc	23.8ft	28.0ft
5.0ft	2.47 fc	35.6ft	42.0ft
6.7ft	1.39 fc	47.5ft	55.9ft
8.3ft	0.89 fc	59.4ft	69.9ft
10.0ft	0.62 fc	71.3ft	83.9ft

Vert. Spread: 148.6° Horiz. Spread: 153.2°

Polar Candela Distribution

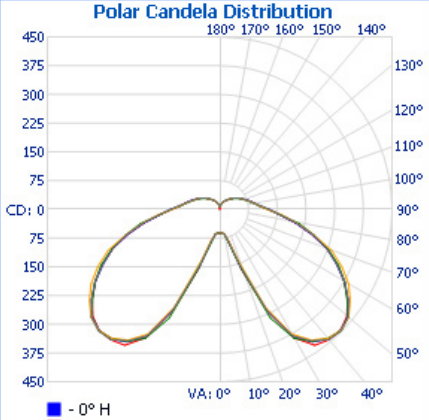

Isofootcandle Plot

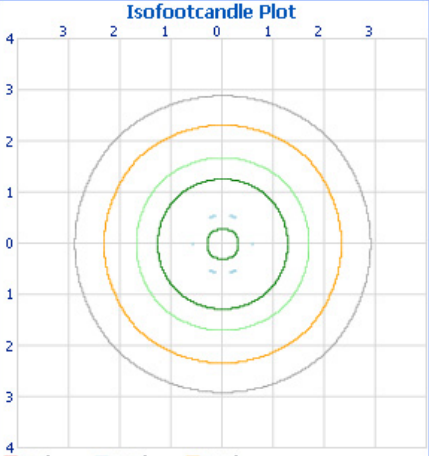

LED30HPS-600-SIW-002-BU

Luminaire Photometric Report

Filename: LED30HPS-600-SIW-002-BU
Manufacturer: LEDTRONICS -
Luminaire: WITH NO GLOBE,120VAC,27.4W
Luminaire Cat: LED30HPS-600-SIW-002-BU
Lamp: . LUMEN RATING: 2303.7Lms.
Lamp Output: 1 lamp(s), rated lamp lumens: 2303.7
Max Candela: 448.4 at Horizontal: 67.5, Vertical: 45
Luminous Opening: Point
Test: 1-31-11

Zonal Lumen Summary

Zone	Lumens	% Lamp	% Luminaire
0-30	169.6	7.4%	7.4%
0-40	431.7	18.7%	18.7%
0-60	1,140.9	49.5%	49.5%
60-90	781.9	33.9%	33.9%
0-90	1,922.8	83.5%	83.5%
90-180	380.9	16.5%	16.5%
0-180	2,303.7	100%	100%

Total Efficiency: 100%

Illuminance at a Distance

	Center Beam FC	Beam Width	
1.7ft	22.25 fc	11.4ft	2.0ft
3.3ft	5.56 fc	22.9ft	4.0ft
5.0ft	2.47 fc	34.3ft	6.0ft
6.7ft	1.39 fc	45.7ft	8.0ft
8.3ft	0.89 fc	57.2ft	10.0ft
10.0ft	0.62 fc	68.6ft	12.0ft

Vert. Spread: 147.5° Horiz. Spread: 61.7°

Polar Candela Distribution

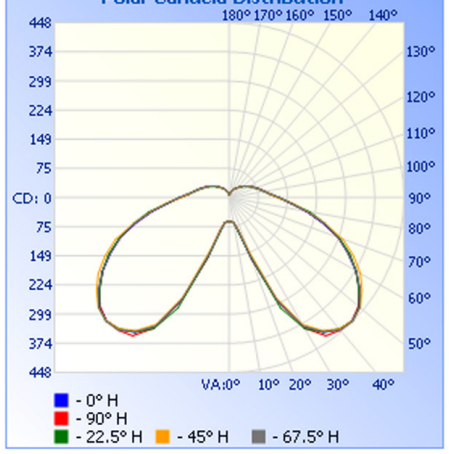

Isofootcandle Plot

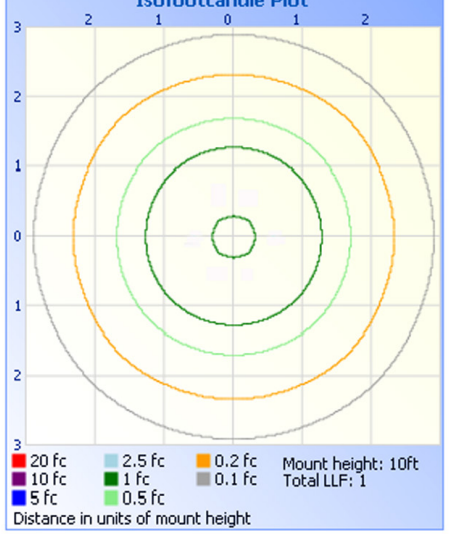

NOTE

If a ballast is present and used by an old preexisting lamp, the ballast needs to be bypassed for the LED lamp (Operating Voltage 100-277 VAC).

© 2012 LEDtronics, Inc.

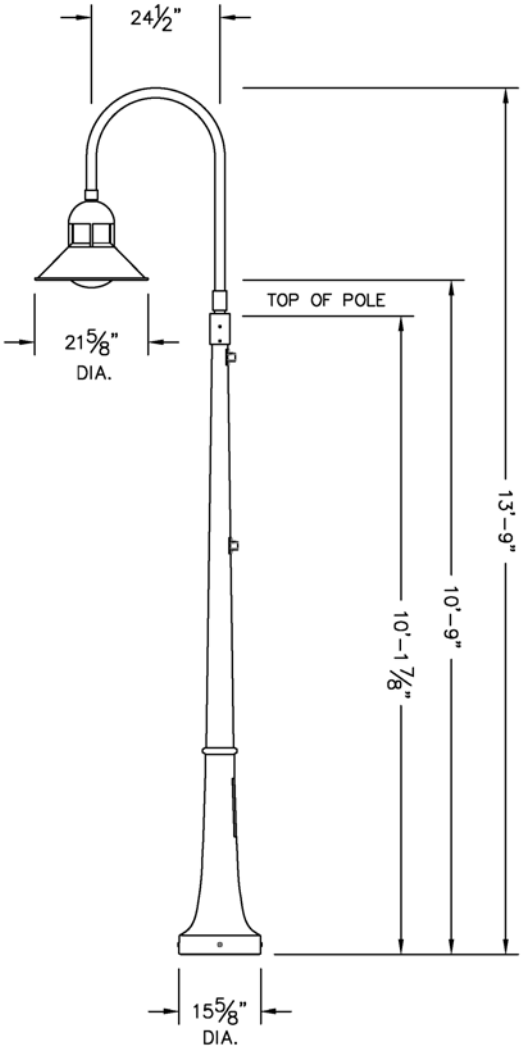

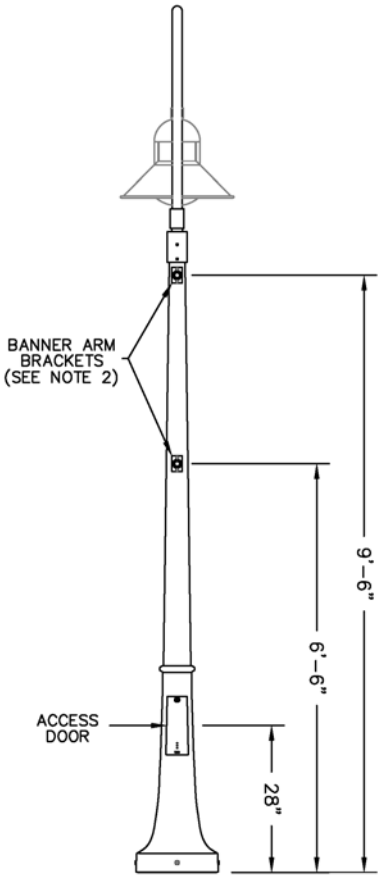

NOTES:

1. LUMINAIRE # 9587MH – MODIFIED – SEE SPECIFICATIONS;
   - LUMINAIRE SUPPLIED WITH LINE VOLTAGE MED. BASE LAMPHOLDER. (NO BALLAST ASSEMBLY)
   - LUMINAIRE SUPPLIED WITH WHITE POLYCARBONATE DIFFUSER.
2. THIS POLE & POLE TOP CONFIGURATION IS RATED AT GRADE LEVEL FOR 70 MPH WITH A 1.3 GUST FACTOR ACCORDING TO 1994 AASHTO.
   - CUSTOM POLE SUPPLIED WITH BANNER BRACKETS ON SAME SIDE OF POLE AS ACCESS DOOR, AS SHOWN. LOWER BANNER ARM LOCATION WILL BE PRONE TO VANDALISM.
3. RAL 6004 FINISH.

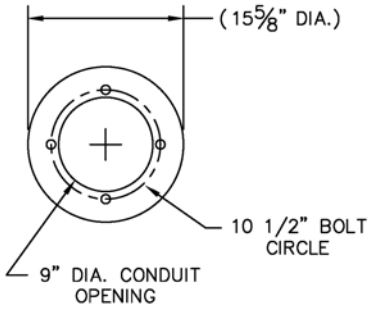

BASE DETAIL

ANCHORAGE KIT SUPPLIED WITH POLE OR IN ADVANCE

TYPE: _____

SUBMITTAL APPROVAL

APPROVED BY: _____

SIGNED: DATE:

REV.	DATE	DESCRIPTION

CAT NO.: 9587MH / Custom 927 Bell Base Pole

PROJECT: Carpinteria Caltrans Project

LOCATION: Carpinteria, CA.

DRAWN: Bob Mc DATE: 9/25/14 File Name: # 12729

BEGA

1000 Bega Way
Carpinteria, Ca. 93013
(805) 684-0533

This print contains confidential information which is the property of BEGA U.S. By acception this information, the borrower agrees that it will not be used for any other purpose other than that which is was loaned.

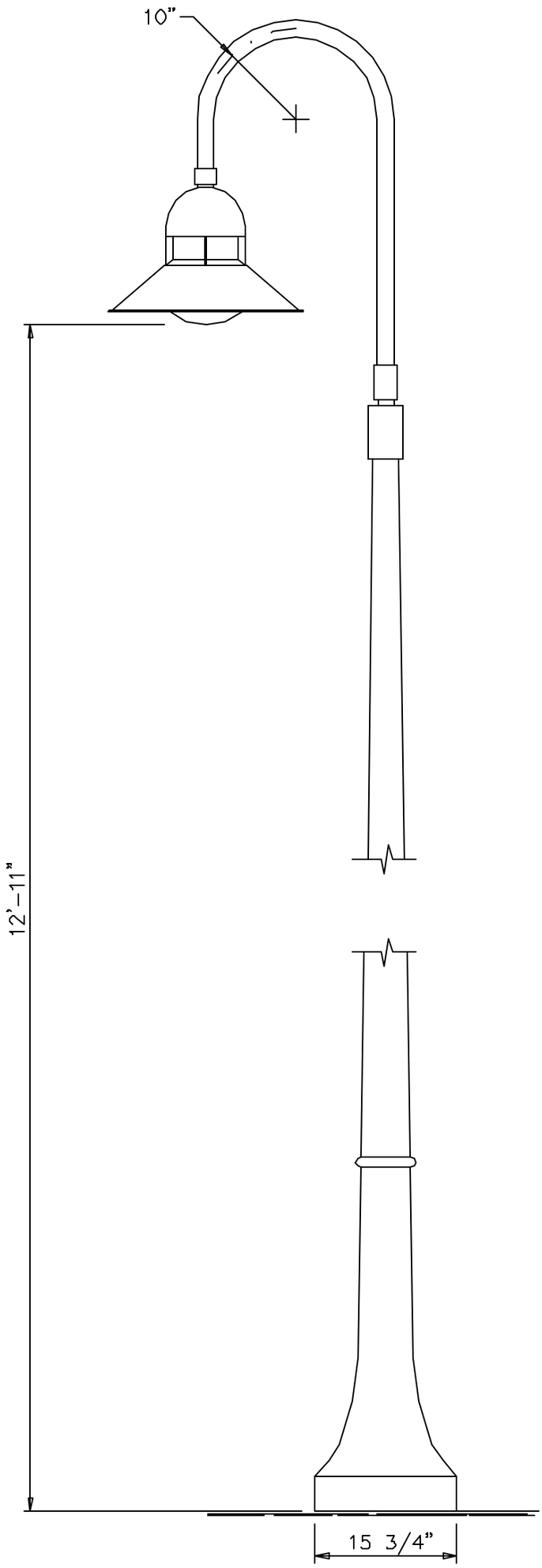

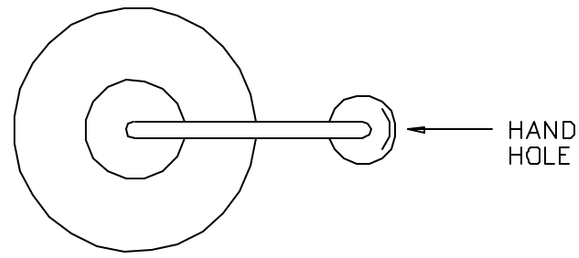

NOTES :

1. LUMINAIRE #9587S – SEE SPECIFICATIONS
2. 100W HPS 240v BALLAST LOCATED IN FIXTURE
3. (1) 100W E-17 HPS LAMP (BY OTHERS)
4. SEE POLE DATA SHEET FOR ANCHOR BOLT DETAIL
5. FINISH : RAL 6004

REV.	DATE	DESCRIPTION

CAT NO.: 9587S ON 927 POLE
PROJECT: LINDEN AVE.,CITY OF CARPINTERIA
LOCATION: CARPINTERIA, CA.
DRAWN BY: J M DATE: 9-AUG-93

BEGA

Pole top luminaires with **asymmetrical** light distribution

Type:
BEGA Product:
Project:
Voltage:
Color:
Options:
Modified:

Housing: Two interlocking die-cast aluminum housings. Lower housing provides four “windows” for additional top light output. Heavy gauge .080” spun aluminum shade with rolled edge, finished white inside.

Arm: Fabricated from .125" wall aluminum extrusion formed into a continuous smooth radius, terminating and welded into a one piece die-cast aluminum fitter. Fitter slip fits a 3" O.D. pole top and is secured by six (6) socket head stainless steel set screws threaded into stainless steel inserts.

Enclosure: Clear acrylic diffuser with screw neck, fully gasketed for weather tight operation using a high temperature silicone rubber O-ring gasket. Pure anodized aluminum reflector, can be adjusted ± 90° in the vertical plane and from 0° to 15° in the horizontal plane.

Electrical: Lampholders are medium base porcelain with nickel plated copper screw shell, rated 4 KV. Ballasts are magnetic, located in the base of the selected BEGA pole and are available in 120V, 208V, 240V, or 277V, HPF - specify.

Finish: Available in four standard BEGA colors: Black (BLK); White (WHT); Bronze (BRZ); Silver (SLV). To specify, add appropriate suffix to catalog number. Custom colors supplied on special order.

UL listed, suitable for wet locations. Protection class: IP54.

Weight: 22 lbs.

Effective Projection Area (EPA): 2.4 ft^2

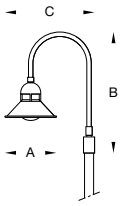

Single pole-top luminaires

	Lamp	Lumen		A	B	C
7978 MH	1 150 W ED - 17 MH	13000	**asymmetrical**	21⅝	46¼	37⅝

BEGA-US 1000 BEGA Way, Carpinteria, CA 93013 (805) 684-0533 FAX (805) 566-9474 www.bega-us.com
©copyright BEGA-US 2012 Updated 8/12

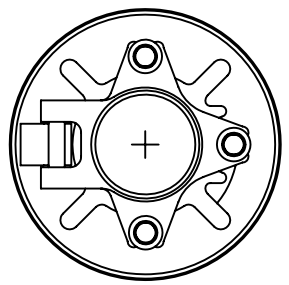

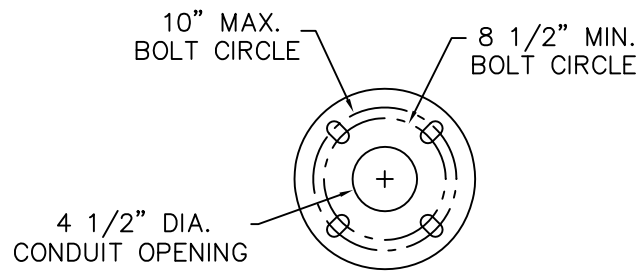

BASE DETAIL

STANDARD (4) 3/4" x 17"
ANCHOR BOLTS & MTG. TEMPLATE
SUPPLIED WITH POLE
OR IN ADVANCE.

NOTE: TWO PIECE
COLLAR NOT SHOWN

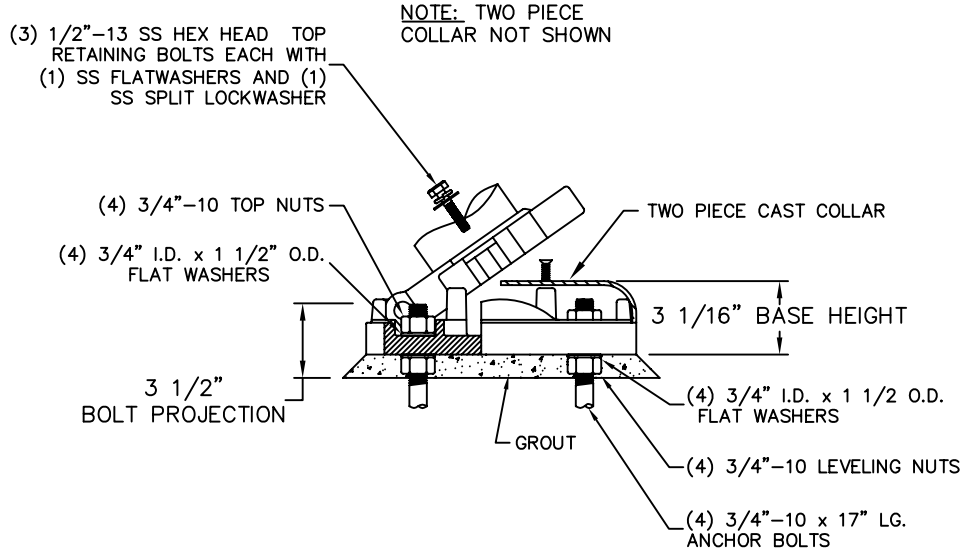

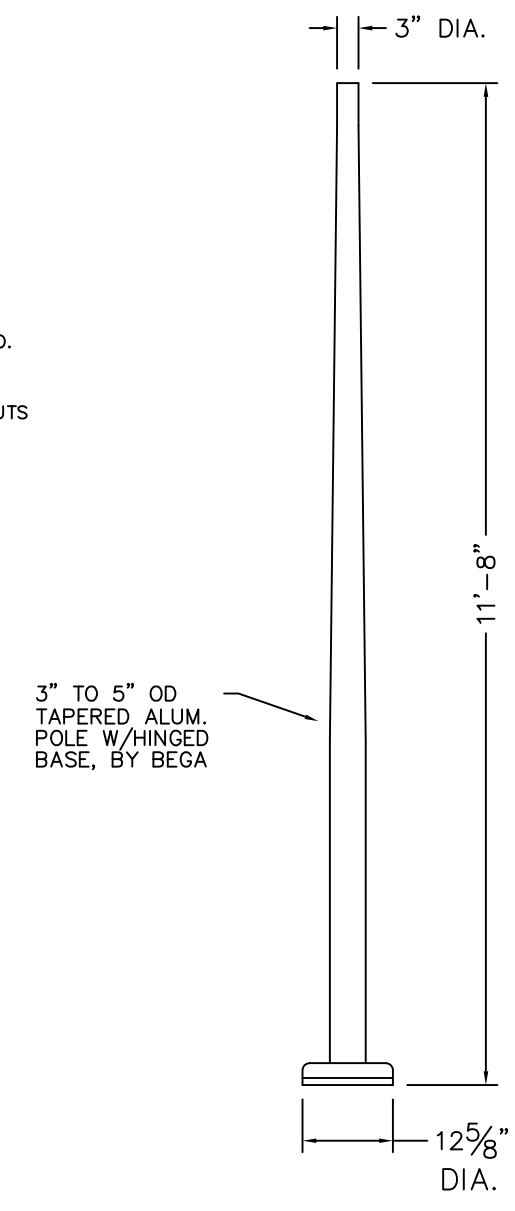

DISCLAIMER

BEGA–US WARRANTS THE SPECIFIC ANCHOR BOLTS & POLE COMBINATION ACCORDING TO THE PRODUCT NUMBER(S) AND DESCRIPTIONS(S). STRUCTURAL CHANGES TO THE POLE REQUESTED BY THE CUSTOMER INCLUDING CHANGES TO POLE LENGTH, MAY AFFECT THE COMPATIBILITY OF THE ANCHOR BOLTS AND CORRESPONDING POLES.
BEGA–US IS NOT RESPONSIBLE FOR THE INCOMPATIBILITY OF THE ANCHOR BOLTS AND POLES RESULTING FROM SUCH STRUCTURAL CHANGES WITHOUT REVIEW BY THE BEGA–US ENGINEERING DEPT. THIS INCLUDES, BUT IS NOT LIMITED TO; ANY LABOR CHARGES, CHARGES FOR REPLACEMENT MATERIALS AND SHIPPING.

SEE LUMINAIRE SPECIFICATION SHEET FOR ADDITONAL DETAILS

MAXIMUM EPA AT VARIOUS MPH, ALLOWS FOR 1.3 GUST FACTOR*						
POLE NO.	MPH –	70	80	90	100	120
1108HR	EPA –	15.5	11.5	8.7	6.8	4.4

*PER AASHTO 1994 WIND MAP

NOTE: DATA ABOVE ASSUMES GRADE LEVEL INSTALLATION AND A MAXIMUM LUMINAIRE WEIGHT OF 50 LBS.

CAUTION: RAISING OR LOWERING OF THE POLE REQUIES ADEQUATE PREPERATION DO NOT UNDERESTIMATE THE FORCE REQUIRED TO RAISE OR LOWER POLES WITH HEAVY LUMINAIRES AT THE TOP.

POLE OPTIONS / ACCESSORIES:

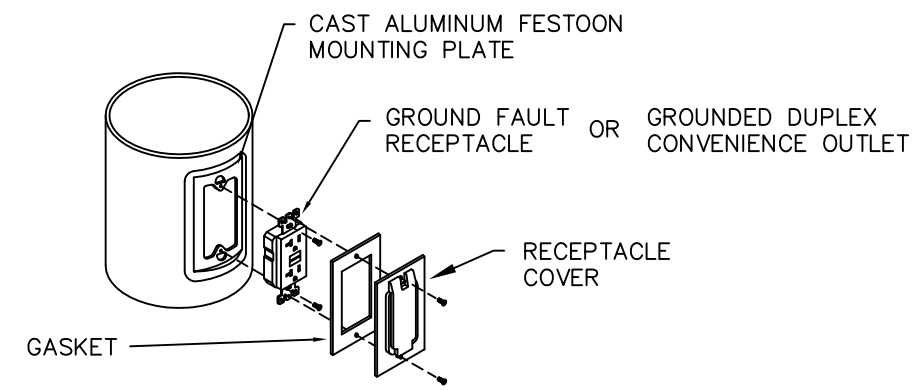

NOTE:
GFI COVERS PROVIDED ARE INTENDED FOR PORTABLE TOOLS OR OTHER PORTABLE EQUIPMENT CONNECTED TO THE OUTLET WHEN ATTENDED.
WET LOCATION LISTED WHEN COVER IS CLOSED.

RECEPTACLE OPTION

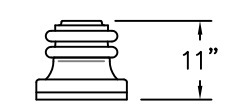

DPC-1

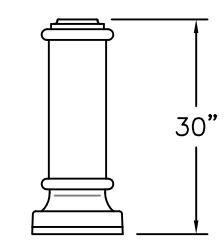

DPC-2

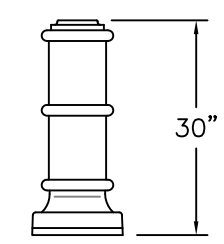

DPC-3

DECORATIVE POLE BASE COVERS (DPC)

BEGA
1000 Bega Way
Carpinteria, Ca. 93013
(805) 684-0533

Catalog No.: 1108HR
Description: POLE - Aluminum Tapered 3" to 5" Dia. x 11'-8"
Drawn by: Bob Mc
Date: 8/1/2012
File Name: 1108HR
SCALE: NONE – DO NOT SCALE DRAWING

This print contains confidential information which is the property of BEGA/US. By accepting this information, the borrower agrees that it will not be used for any other purpose other than that which is was loaned.

Pole top luminaires with asymmetrical light distribution

Housing: Die-cast aluminum housing and slip fitter. Slip fits 3" O.D. pole top, secures to pole with six stainless steel set screws. Die-cast aluminum knuckle allows for 0° or 15° tilt adjustment from horizontal. All aluminum used in the construction is marine grade and copper free.

Enclosure: Faceplate is constructed of die-cast aluminum and is hinged for easy maintenance. The faceplate is secured to the housing with captive stainless steel fasteners. Tempered clear glass, 1/4" thick. Reflector of pure anodized aluminum. Fully shielded to comply with LEED zones 1 and higher. Fully gasketed with a molded silicone gasket.

Electrical: 39 W LED luminaire, 41 total system watts, -30° C start temperature. Integral 120 V through 277 V electronic LED driver, 0-10 V dimming. Standard LED color temperature is 4000K with a >80 CRI. Available in 3000K (>80 CRI); add suffix K3 to order.

Note: LEDs supplied with luminaire. Due to the dynamic nature of LED technology, LED luminaire data on this sheet is subject to change at the discretion of BEGA-US. For the most current technical data, please refer to www.bega-us.com.

Finish: These luminaires are available in four standard BEGA colors: Black (BLK); White (WHT); Bronze (BRZ); Silver (SLV). To specify, add appropriate suffix to catalog number. Custom colors supplied on special order.

UL listed, suitable for wet locations. Protection class: IP66.

Weight: 18.2 lbs.

EPA: .53 ft^2

Luminaire Lumens: 1989
Tested in accordance with LM-79-08

Type:
BEGA Product:
Project:
Voltage:
Color:
Options:
Modified:

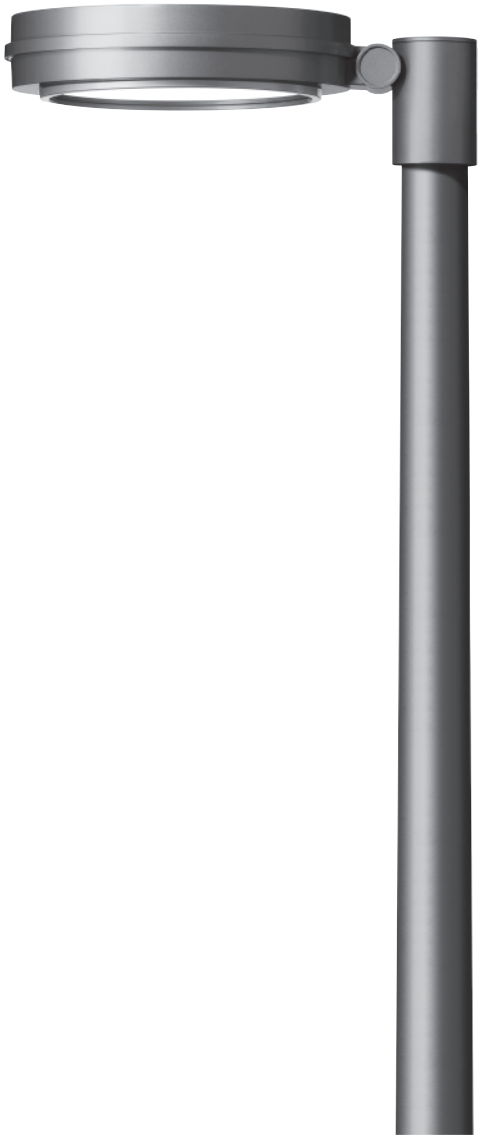

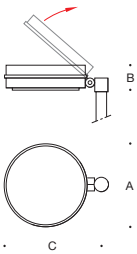

Single pole-top luminaires

	Lamp	LEED	A	B	C
9002 LED	39 W LED	LZ-1	16½	4	20

Type - II distribution
Recommended for use with 14' to 20' poles.

BEGA-US 1000 BEGA Way, Carpinteria, CA 93013 (805) 684-0533 FAX (805) 566-9474 www.bega-us.com
©copyright BEGA-US 2013 Updated 10/13

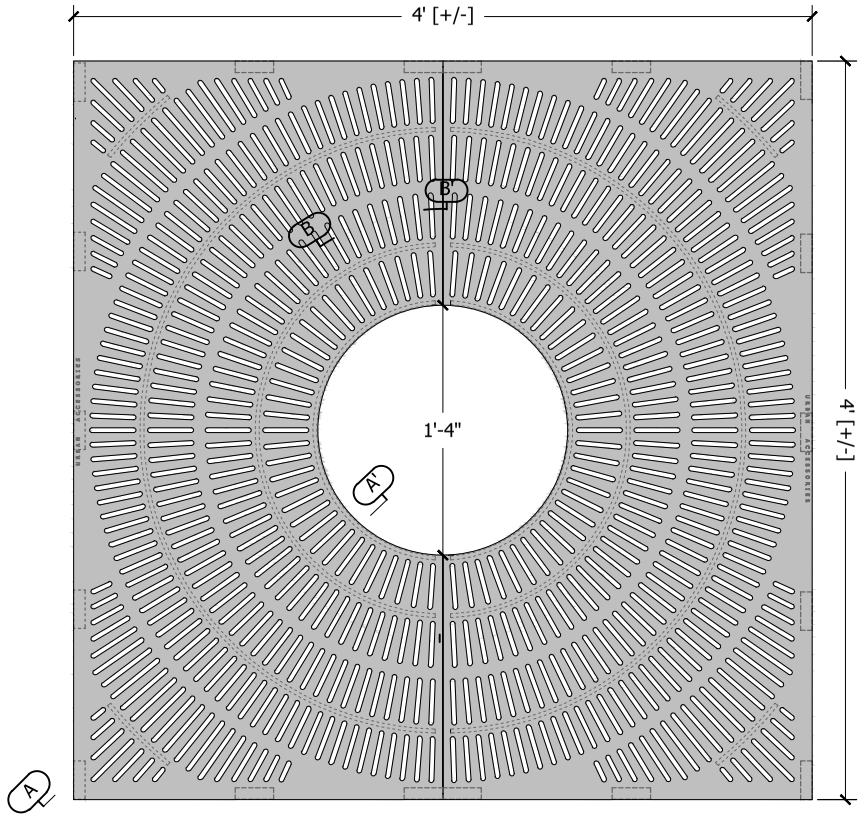

Plan

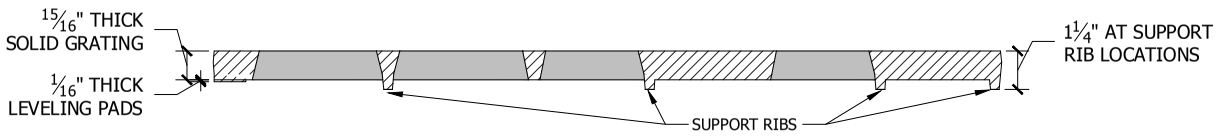

Section A-A'

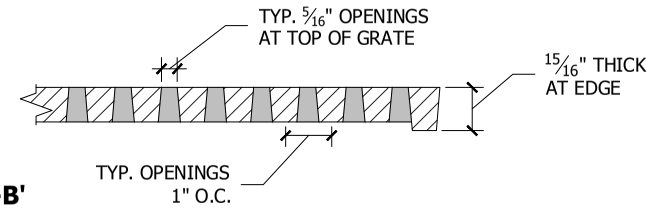

Section B-B'

SPECIFICATIONS

- Material will be high quality 100% recycled grey iron; ASTM A48 class 35b or better; hardness 170-223 brinnell (unless specified otherwise; see below).

Material:

- □ Grey iron ASTM A48 (standard)
- □ Aluminum, ASTM B26
- □ Ductile iron, (required for all load ratings higher than pedestrian) ASTM A536 class 65-45-12.
- □ Nickel bronze (ASTM B30)
- □ Bronze (ASTM B26)

- Finish will be natural patina of raw iron (unless specified otherwise; see below).

Finish:

- □ Raw (standard)
- □ Rust conditioner
- □ Polyester Powder Coat*
- □ Liquid Coat (wet paint)*
  Color:
  *Please specify standard UA color or mfr. name and color code.
- □ Brush (bronze/nickel/aluminum only)
- □ Polish (bronze/nickel/aluminum only)
- □ Galvanized (grey iron and ductile iron only)
- □ Other:

- Dimensions are nominal.

Notes

1) Cast in two pieces.
2) Grate is 1" thick at edge.
3) Center opening expansions at 2'-0" and 2'-7".
4) No openings greater than 5/16", in conformance with ADA Accessibility Guidelines.
5) Grate weighs 226 lbs.

Comments:

Tree Grate

4' Sq. Kiva

Page 1 of 1 Date: 5/22/12

URBAN ACCESSORIES
Founded 1972

465 E. FIFTEENTH ST. sales@urbanaccessories.com
TACOMA, WA 98421 www.urbanaccessories.com
(877) 487-0488

Carpinteria Valley Water District

1301 Santa Ynez Avenue • Carpinteria, CA 93013
Phone (805) 684-2816

BOARD OF DIRECTORS

Alonzo Orozco
President
Polly Holcombe
Vice President
Richard Forde
Matthew Roberts
June Van Wingerden

GENERAL MANAGER

Charles B. Hamilton

November 16, 2015

CA Department of Transportation
C/O David Beard
50 Higuera Street
San Luis Obispo, CA. 93401

SUBJECT: CALTRANS LINDEN AND CASITAS PASS INTERCHANGE CONSTRUCTION PROJECT, INTENT TO SERVE LETTER

Hello Mr. Bread

Please be advised, this parcel is within the Carpinteria Valley Water District and therefore is entitled to District water service in accordance with District Rules and Regulations. Currently the District is in a Stage II Drought Emergency for more information on the recently passed Ordinance 15-2, please visit the District website www.cvwd.net.

The District intents to serve the project for the construction of the Linden and Casitas Pass interchanges, replacement of the Carpinteria Creek Bridge and Via Real frontage road with an estimated volume of 4.9 million gallons of water (15.03 acre-feet) for the duration of the project. Additionally the District plans on issuing several new landscape meters for the project, the relocation of an existing landscape meter. Plus the District would issue a temporary construction meter for the project if required per District rules and regulations.

If you have any questions please feel free to contact me at Brian@cvwd.net or 805-684-2816x103.

Thank you,
Carpinteria Valley Water District

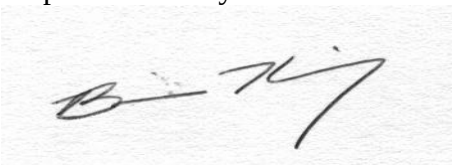

Brian King, P.E.
Associate Engineer

C: File Copy
David_beard@dot.ca.gov

U:\CVWD Letters\Cal Trans Casitas Pass and Linden Ave Interchange replacements intent to serve.docx

Dist	COUNTY	ROUTE	POST MILES TOTAL PROJECT	SHEET No.	TOTAL SHEETS

REGISTERED CIVIL ENGINEER DATE

PLANS APPROVAL DATE

REGISTERED PROFESSIONAL ENGINEER No. Exp. CIVIL STATE OF CALIFORNIA

THE STATE OF CALIFORNIA OR ITS OFFICERS OR AGENTS SHALL NOT BE RESPONSIBLE FOR THE ACCURACY OR COMPLETENESS OF SCANNED COPIES OF THIS PLAN SHEET.

NOTE:
1. USE 15'-7½" LENGTH RAIL.

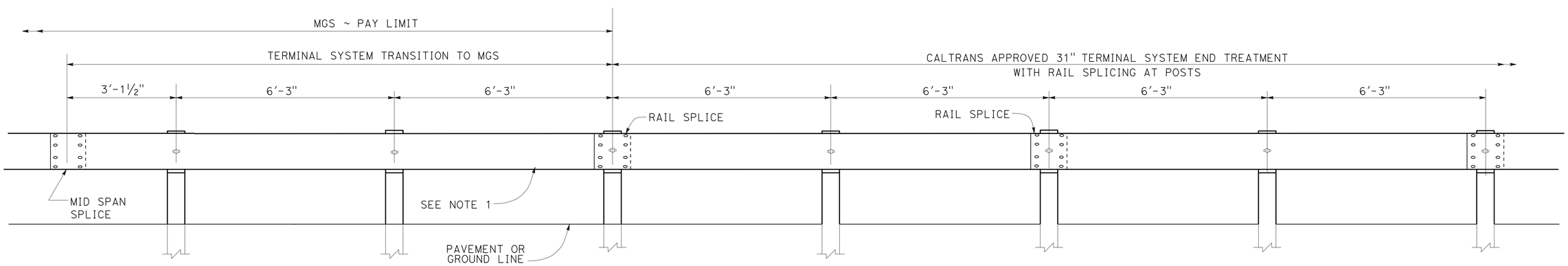

TRANSITION DETAIL FOR 31" TERMINAL SYSTEM END TREATMENT WITH RAIL SPLICING AT POSTS TO MIDWEST GUARDRAIL SYSTEM

STATE OF CALIFORNIA - DEPARTMENT OF TRANSPORTATION

Caltrans

FUNCTIONAL SUPERVISOR

CALCULATED-DESIGNED BY

CHECKED BY

REVISED BY

DATE REVISED

LAST REVISION 00-00-00

DATE PLOTTED => 28-FEB-2014
TIME PLOTTED => 12:35

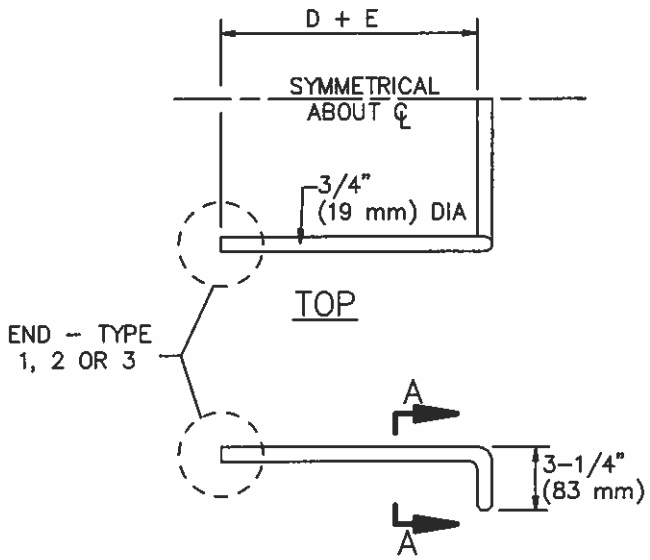

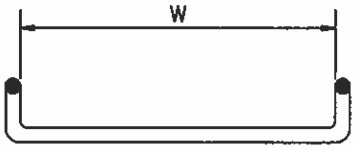

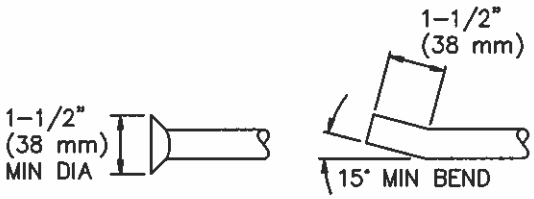

END DETAILS–SIDE VIEW

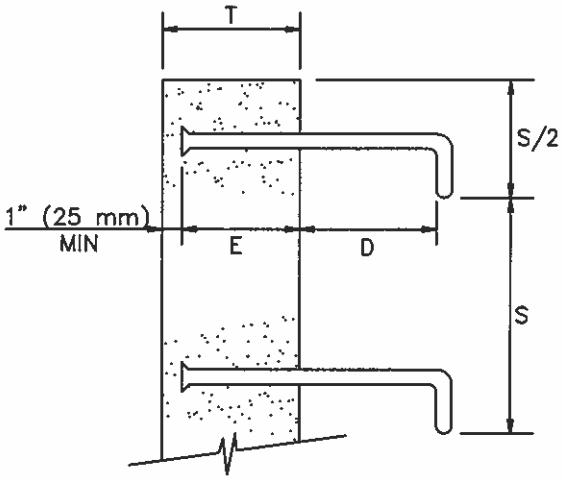

INSTALLATION DETAIL

UNLESS OTHERWISE NOTED:

D = 7" (175 mm)
E = 6" (150 mm) OR T – 1" (25 mm), WHICHEVER IS LESS
MINIMUM E IS 3" (75 mm)
S = 12" (300 mm) MAX, EVENLY SPACED
W = 16" (400 mm) MIN

FOR MANHOLES AND UNDERGROUND VAULTS:
S = 16" (400 mm) MAX, EVENLY SPACED
W = 14" (350 mm) MIN

STANDARD PLANS FOR PUBLIC WORKS CONSTRUCTION

PROMULGATED BY THE
PUBLIC WORKS STANDARDS INC.
GREENBOOK COMMITTEE
1984
REV. 1992, 1996, 2009

STEEL STEP

USE WITH STANDARD SPECIFICATIONS FOR PUBLIC WORKS CONSTRUCTION

STANDARD PLAN
635–3
SHEET 1 OF 2

NOTES:

1. STEPS SHALL BE STEEL CONFORMING TO ASTM A307 AND SHALL BE GALVANIZED AFTER FABRICATION. UNLESS OTHERWISE NOTED, STEPS MAY ALSO BE POLYPROPYLENE STEPS, STEEL REINFORCED, CONFORMING TO SPPWC 636.

2. IF STAINLESS STEEL STEPS ARE REQUIRED, THE MATERIAL SHALL CONFORM TO ASTM A276, 300 SERIES.

3. STEP ENDS MAY BE TYPE 1, 2 OR 3, AS SHOWN.

4. BOTTOM STEP SHALL BE A MAXIMUM OF 2' (600 mm) ABOVE FLOOR OR SHELF.

5. STEPS WITH TYPE 1 OR 2 ENDS MAY BE CAST IN PLACE, OR PLACED IN THE CENTER OF 1-1/2" (40 mm) MIN DIA DRILLED OR FORMED HOLES AND SET WITH HIGH STRENGTH NON-SHRINK GROUT, 6000 PSI (40 MPa) MIN. STEPS WITH TYPE 3 ENDS SHALL BE CAST-IN-PLACE.

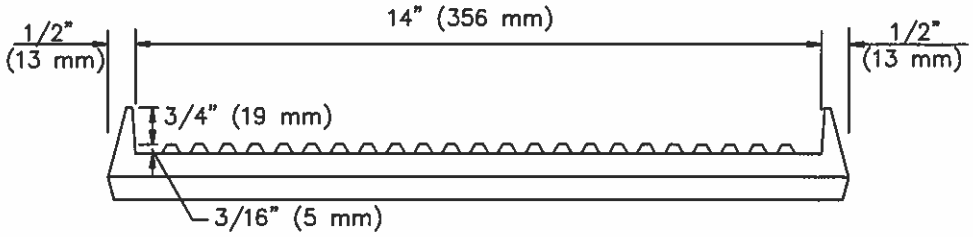

FRONT

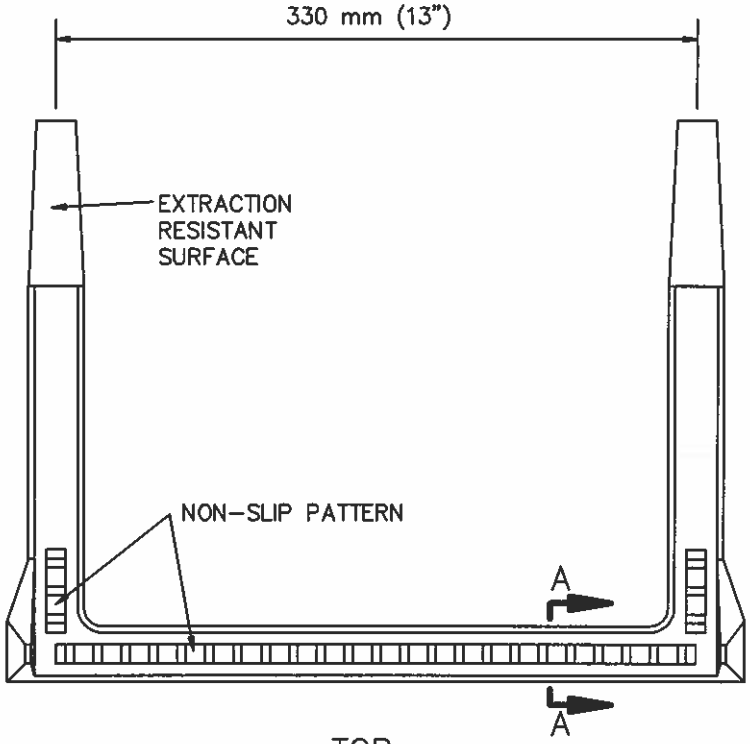

TOP

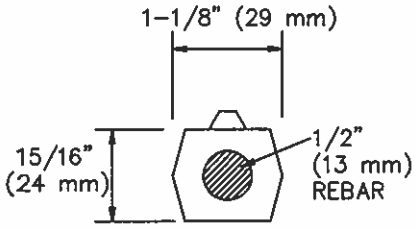

SECTION A-A

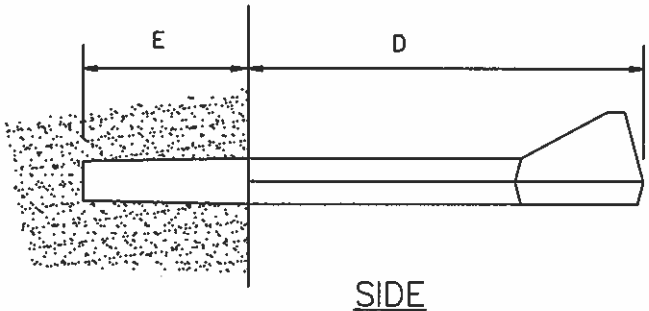

SIDE

STANDARD PLANS FOR PUBLIC WORKS CONSTRUCTION

PROMULGATED BY THE
PUBLIC WORKS STANDARDS INC.
GREENBOOK COMMITTEE
1991
REV. 1996, 2009

POLYPROPYLENE-PLASTIC STEP

USE WITH STANDARD SPECIFICATIONS FOR PUBLIC WORKS CONSTRUCTION

STANDARD PLAN
636-2
SHEET 1 OF 2

NOTES:

1. STEPS SHALL BE STEEL-REINFORCED COPOLYMER POLYPROPYLENE PLASTIC CONFORMING TO:

   (A) ASTM D478 AND C497, EXCEPT THAT THE MINIMUM HORIZONTAL PULLOUT LOAD SHALL BE 1,500 LBS (6.7 kN).
   (B) ASTM A615 GRADE 60 DEFORMED REINFORCING STEEL BAR.
   (C) CALIFORNIA CODE OF REGULATIONS TITLE 8, GENERAL INDUSTRY SAFETY ORDERS.

2. STEPS SHALL BE CAPABLE OF WITHSTANDING AN IMPACT LOAD OF 70 FT-LBS (95 N.m) AT 20°F (-7°C) WITHOUT CRACKING OR FRACTURING.

3. THE MINIMUM TOTAL CROSS-SECTIONAL AREA OF THE EXPOSED PORTION OF THE STEP, INCLUDING THE DEFORMED STEEL BAR AND EXCLUDING THE NON-SLIP TREAD SURFACE, SHALL BE 1.0 SQ IN (645 mm2).

4. THE ENTIRE POLYPROPYLENE PLASTIC MATERIAL SURROUNDING THE REINFORCING STEEL BAR SHALL BE CAST MONOLITHICALLY. MINIMUM COVER SHALL BE 3/16" (5 mm).

5. A CERTIFICATION OF COMPLIANCE WITH THE REQUIREMENTS OF NOTES 1 THROUGH 4 PREPARED BY AN INDEPENDENT CERTIFIED LABORATORY SHALL BE SUBMITTED TO THE ENGINEER CONCURRENTLY WITH A REQUEST FOR APPROVAL.

6. E = 3-3/8" (86 mm). FOR VAULTS AND MANHOLES, D = 5-1/2" (140 mm). FOR OTHER INSTALLATIONS, D = 7-1/2" (190 mm). THESE DIMENSIONS MAY BE PLUS OR MINUS 1/4" (6 mm).

7. STEPS SHALL BE EVENLY SPACED. MAXIMUM VERTICAL SPACING OF STEPS SHALL BE 16" (400 mm), WITH THE BOTTOM STEP A MAXIMUM OF 2' (600 mm) ABOVE FLOOR OR SHELF.

8. IF TAPERED STEPS ARE INSTALLED INTO STRAIGHT DRILLED OR FORMED HOLES, APPROVED NON-SHRINK GROUT SHALL BE INJECTED INTO THE HOLE PRIOR TO INSTALLATION. HOLES SHALL BE STRAIGHT AND PARALLEL. EXCEPT AS OTHERWISE NOTED, STEPS SHALL BE INSTALLED IN ACCORDANCE WITH MANUFACTURER'S RECOMMENDED PROCEDURES.

9. A DROP STEP WITH A MINIMUM DROP OF 3/4" (19 mm) MAY BE USED. THE DROP STEP SHALL MEET ALL OTHER CRITERIA OF THIS PLAN.

STATE OF CALIFORNIA
DEPARTMENT OF TRANSPORTATION

INFORMATIONAL HANDOUT

05-SB-101-2.2-3.3
LINDEN AND CASITAS PASS INTERCHANGES
05-4482U1 (0500000543)

March 6, 2014

INDEX

Aerially Deposited Lead Concentration Data
and Sample Location Maps

Department of Transportation
Construction Department
1150 Laurel Lane
San Luis Obispo, CA 93403

GEOCON CONSULTANTS, INC.

3160 GOLD VALLEY DR – SUITE 800 – RANCHO CORDOVA, CA 95742
PHONE 916.852.9118 – FAX 916.852.9132

Casitas Pass Linden Avenue Overcrossing

SR-101, Post Mile 2.2 to 3.3
Santa Barbara County, California

VICINITY MAP

GEOCON Proj. No. S9525-02-78

Task Order No. 78 | May 2013 | Figure 1

GEOCON
CONSULTANTS, INC.
6671 BRISA STREET, LIVERMORE, CA 94550; PHONE 925 371-5900 - FAX 925 371-5915

Linden & Casitas Pass Interchanges

Carpinteria, California	**SITE PLAN**
GEOCON Proj. No. S9525-02-78	
EA No. 4482[illegible]1	June 201[illegible] — Figure 2

SITE0613

TABLE 1
Boring Coordinates
Casitas Pass/Linden Avenue Overcrossings
Santa Barbara County, California

Boring	Latitude	Longitude
R3A-0.0	34.395954	-119.511478
R3B-0	34.395760	-119.511356
R3C-0.0	34.395485	-119.511103
R3D-0.0	34.395346	-119.511002
R4A-0.0	34.396114	-119.510647
R4-0.0	34.395887	-119.510509
SW1-0.0	34.401879	-119.518161
SW2-0.0	34.402004	-119.518671
SW3-0.0	34.402110	-119.519291

TABLE 2
Summary of Lead and pH Results
Casitas Pass/Linden Avenue Overcrossings
Santa Barbara County, California

Sample ID	Sample Depth (feet)	Total Lead (mg/kg)	WET Lead (mg/l)	DI-WET Lead (mg/l)	TCLP Lead (mg/l)	pH
R3A-0.0	0	15/16	---	---	---	---
R3A-0.5	0.5	25	---	---	---	---
R3A-1.0	1	7.6	---	---	---	---
R3A-1.5	1.5	<5.0	---	---	---	---
R3A-2.5	2.5	8.1	---	---	---	---
R3A-3.5	3.5	7.2	---	---	---	---
R3A-4.5	4.5	7.8	---	---	---	---
R3B-0	0	21	---	---	---	8.1
R3B-0.5	0.5	11	---	---	---	---
R3B-1.0	1	<5.0	---	---	---	---
R3B-1.5	1.5	6.0	---	---	---	---
R3B-2.5	2.5	8.1	---	---	---	---
R3B-3.5	3.5	7.1	---	---	---	---
R3B-4.5	4.5	6.9/6.1	---	---	---	---
R3C-0.0	0	17	---	---	---	---
R3C-0.5	0.5	15	---	---	---	---
R3C-1.0	1	5.3	---	---	---	---
R3C-1.5	1.5	5.3	---	---	---	---
R3C-2.5	2.5	8.2	---	---	---	---
R3C-3.5	3.5	6.6	---	---	---	---
R3C-4.5	4.5	5.7	---	---	---	---
R3D-0.0	0	16	---	---	---	---
R3D-1.0	0.5	6.9	---	---	---	---
R3D-0.5	1	9.2	---	---	---	---
R3D-1.5	1.5	<5.0	---	---	---	---
R3D-2.5	2.5	5.5	---	---	---	---
R3D-3.5	3.5	<5.0	---	---	---	---
R3D-4.5	4.5	6.3	---	---	---	---
R4-0.0	0	19	---	---	---	---
R4-0.5	0.5	15	---	---	---	---
R4-1.0	1	5.3	---	---	---	---
R4-1.5	1.5	<5.0	---	---	---	---
R4-2.5	2.5	7.5	---	---	---	---
R4-3.5	3.5	6.5	---	---	---	---
R4-4.5	4.5	7.3	---	---	---	---

TABLE 2
Summary of Lead and pH Results
Casitas Pass/Linden Avenue Overcrossings
Santa Barbara County, California

Sample ID	Sample Depth (feet)	Total Lead (mg/kg)	WET Lead (mg/l)	DI-WET Lead (mg/l)	TCLP Lead (mg/l)	pH
R4A-0.0	0	16	---	---	---	---
R4A-0.5	0.5	15	---	---	---	---
R4A-1.0	1	6.5	---	---	---	---
R4A-1.5	1.5	5.6	---	---	---	---
R4A-2.5	2.5	6.2/7.1	---	---	---	---
R4A-3.5	3.5	8.0	---	---	---	---
R4A-4.5	4.5	7.5	---	---	---	---
SW1-0.0	0	100	2.5	---	---	---
SW1-0.5	0.5	81	3.1	---	---	7.9
SW1-1.0	1	12	---	---	---	---
SW1-1.5	1.5	7.9	---	---	---	---
SW1-2.5	2.5	7.2	---	---	---	---
SW1-3.5	3.5	6.9	---	---	---	---
SW1-4.5	4.5	<5.0	---	---	---	---
SW2-0.0	0	80	3.7	---	---	---
SW2-0.5	0.5	61/71	2.5	---	---	7.8
SW2-1.0	1	59	1.8	---	---	---
SW2-1.5	1.5	8.5	---	---	---	---
SW2-2.5	2.5	13	---	---	---	---
SW2-3.5	3.5	5.1	---	---	---	---
SW2-4.5	4.5	6.5	---	---	---	---
SW3-0.0	0	450/500	12	<0.25	0.41	8.2
SW3-0.5	0.5	22	---	---	---	---
SW3-1.0	1	76	4.2	---	---	8.6
SW3-1.5	1.5	19	---	---	---	---
SW3-2.5	2.5	12	---	---	---	---
SW3-3.5	3.5	<5.0	---	---	---	---
SW3-4.5	4.5	7.8	---	---	---	---
Hazardous Waste Criteria						
TTLC (mg/kg)		1,000	---	---	---	---
STLC (mg/l)		---	5.0	---	---	---
TCLP (mg/l)		---	---	---	5.0	---

Notes:

mg/kg = Milligrams per kilogram
WET = Waste Extraction Test using citric acid as the extraction fluid
DI-WET = Waste Extraction Test using de-ionized water as the extraction fluid
TCLP = Toxicity Characteristic Leaching Procedure
TTLC = Total Threshold Limit Concentration
STLC = Soluble Threshold Limit Concentration
450/500 Primary/secondary analyses

TABLE 3
Summary of CAM 17 Metals Results
Casitas Pass/Linden Avenue Overcrossings
Santa Barbara County, California

Sample ID	Sample Depth (ft)	Antimony	Arsenic	Barium	Beryllium	Cadmium	Chromium	Cobalt	Copper	Lead	Mercury	Molybdenum	Nickel	Selenium	Silver	Thallium	Vanadium	Zinc
R3A-0.0	0.0 to 0.5	<2.0	3.0	85	<1.0	<1.0	20	5.8	27	15/16	<0.10	<1.0	23	<1.0	<1.0	<1.0	18	42
R3B-4.5	4.5 to 5.0	<2.0	4.0	150	<1.0	<1.0	31	9.1	13	6.9/6.1	<0.099	<1.0	40	<1.0	<1.0	<1.0	27	32
R3C-1.0	1.0 to 1.5	<2.0	3.8	110	<1.0	<1.0	22	7.5	10	5.3/5.8	<0.10	<1.0	29	<1.0	<1.0	<1.0	20	30
R4A-2.5	2.5 to 3.0	<2.0	3.0	93	<1.0	<1.0	23	6.5	8.2	6.2/7.1	<0.10	<1.0	25	<1.0	<1.0	<1.0	18	27
SW2-0.5	0.5 to 1.0	<2.0	7.4	150	<1.0	<1.0	31	9.4	19	61/71	<0.10	<1.0	41	<1.0	<1.0	<1.0	25	76
SW3-0.0	0.0 to 0.5	<2.0	2.6	64	<1.0	<1.0	15	4.2	20	450/500	<0.10	<1.0	17	<1.0	<1.0	<1.0	16	73
ESLs																		
Residential Land Use		20	0.39	750	4.0	12	750	23	230	80	6.7	40	150	10	20	0.78	200	600
Commercial/Industrial Land Use		40	0.96	1,500	8.0	12	750	80	230	320	10	40	150	10	40	10	200	600
Construction Worker Exposure		120	10	61,000	180	110	460,000	49	12,000	320	27	1,500	6,100	1,500	1,500	3.1	1,500	93,000
Hazardous Waste Criteria																		
TTLC		500	500	10,000	75	100	2,500	8,000	2,500	1,000	20	3,500	2,000	100	500	700	2,400	5,000
STLC		15	5.0	100	0.75	1.0	5.0	80	25	5.0	0.2	350	20	1.0	5.0	7.0	24	250
TCLP		---	5.0	100	---	1.0	6.0	---	---	5.0	0.2	---	---	1.0	5.0	---	---	---

Notes:

Results are shown in milligrams per kilogram (mg/kg).
ESL, TTLC, and STLC values listed for chromium are for Chromium III, as there is no standard for total chromium.
< = Analyte was not detected above the laboratory reporting limit.
ESLs = Environmental Screening Levels, Tables A and K-3, SFRWQCB, Revised May 2013.
TTLC = total threshold limit concentration
STLC = soluble threshold limit concentration
TCLP = toxicity characteristic leaching procedure
--- = not analyzed or no standard exists for this compound
Lead results shown primary/secondary analyses

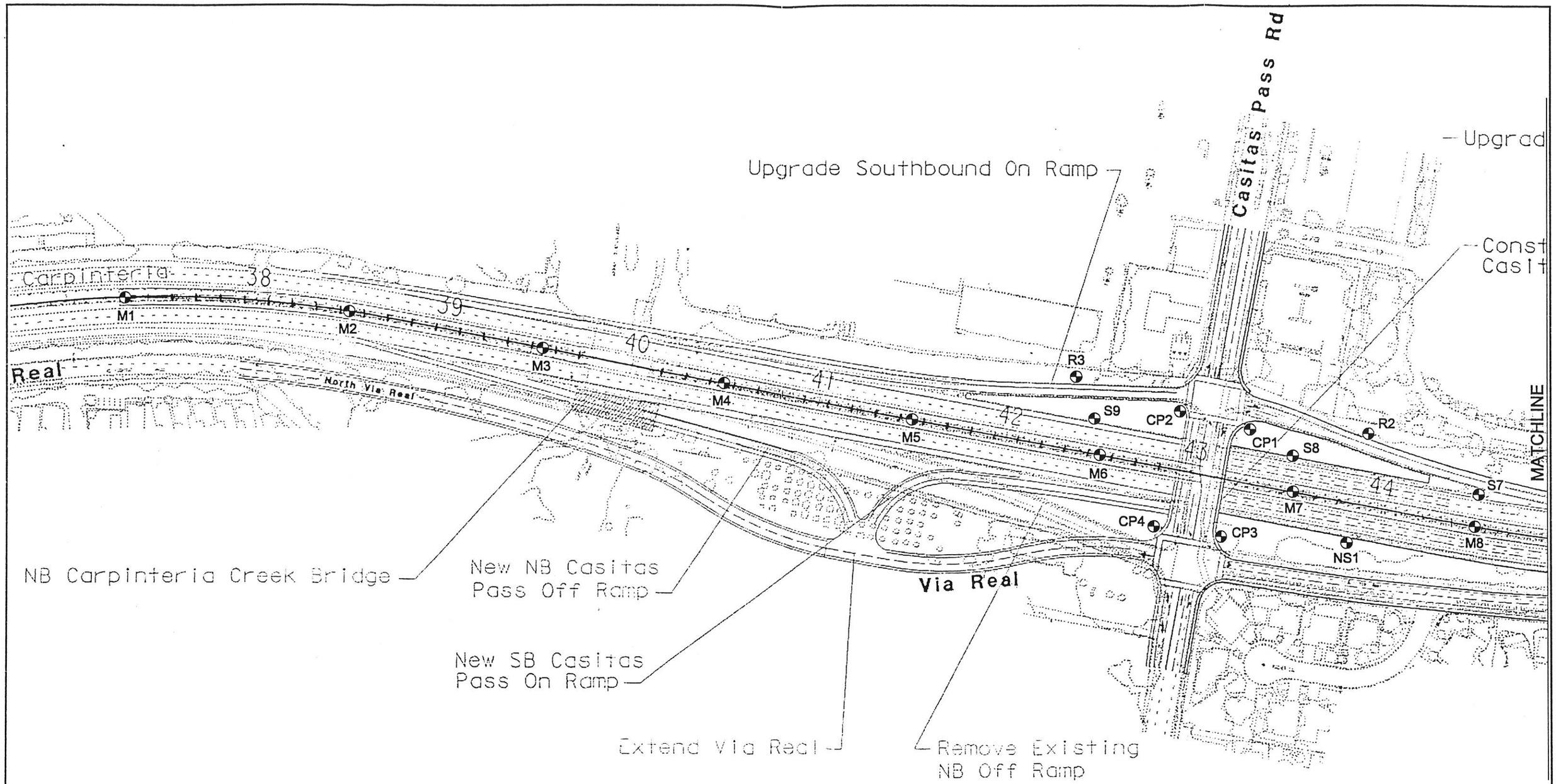

LEGEND:

Approximate Hand Auger Boring Location(s)

Note: The hand auger boring location may contain numerous borings advanced at varying distances from the edge of pavement. See Table 1 for more information.

1:2000

GEOCON
CONSULTANTS INC.
5673 W. LAS POSITAS BLVD. SUITE 205 - PLEASANTON, CA 94588
PHONE 925 469-9750 - FAX 925 469-9749

Route 101-Casitas Pass/Linden Avenue Interchanges

Santa Barbara County, California	SITE PLAN	
GEOCON Proj. No. E8000-06-33		
Task Order No. 05-448200-GI	November 2000	Figure 2a

S-BARBRA.DWG

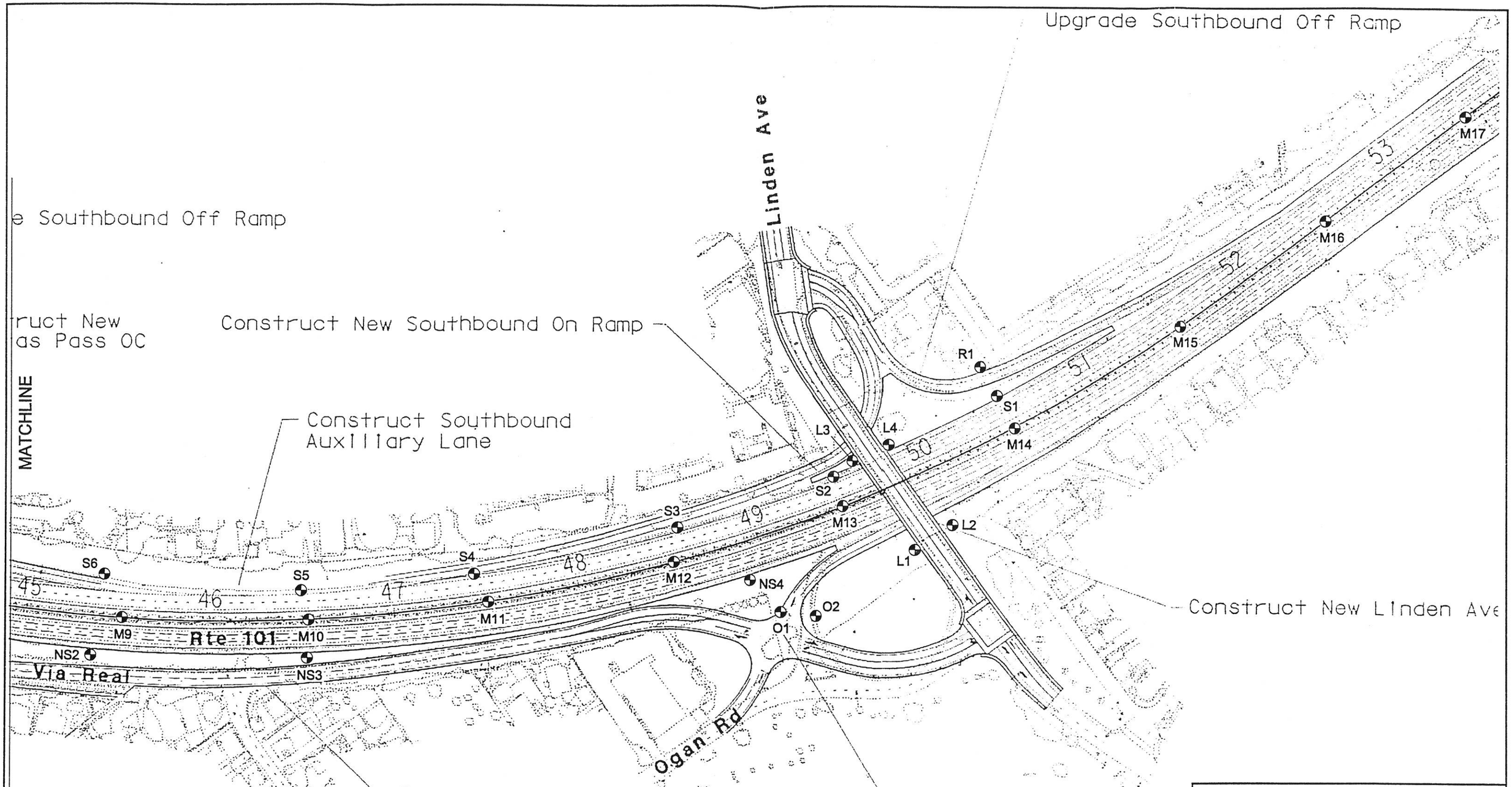

LEGEND:

Approximate Hand Auger Boring Location(s)

Note: The hand auger boring location may contain numerous borings advanced at varying distances from the edge of pavement. See Table 1 for more information.

N

1:2000

GEOCON
CONSULTANTS INC.
5673 W. LAS POSITAS BLVD. SUITE 205 - PLEASANTON, CA 94588
PHONE 925 469-9750 - FAX 925 469-9749

Route 101-Casitas Pass/Linden Avenue Interchanges

Santa Barbara County, California	SITE PLAN	
GEOCON Proj. No. E8000-06-33		
Task Order No. 05-448200-GI	November 2000	Figure 2b

S-BARBRA.DWG

TABLE 1
SUMMARY OF ANALYTICAL LABORATORY TEST RESULTS
ROUTE 101 - CASITAS PASS/LINDEN AVENUE INTERCHANGES

Total Lead - EPA Test Method 6010
Soluble Lead (WET,WET-DI, and TCLP) - EPA Test Method 7420
Soil pH - EPA Test Method 9045

Sample ID.	Sample Depth meters (feet)	Distance from EOP	Total Lead (mg/kg)	Soluble Lead WET (mg/l)	Soluble Lead WET-DI (mg/l)	Soluble Lead TCLP (mg/l)	pH
Borings at Casitas Pass Road Overcrossing Abutments							
CP1-0	Surface	NA	263	26	---	---	---
CP1-1	0.3 (1)		25	---	---	---	---
CP1-2	0.6 (2)		12	---	---	---	---
CP1-3	0.9 (3)		14	---	---	---	---
CP2-0	Surface	NA	57	3.9	---	---	---
CP2-1	0.3 (1)		25	---	---	---	---
CP2-2	0.6 (2)		16	---	---	---	---
CP2-3	0.9 (3)		9.9	---	---	---	6.6
CP3-0	Surface	NA	195	16	---	---	---
CP3-1	0.3 (1)		9.7	---	---	---	---
CP3-2	0.6 (2)		7.5	---	---	---	---
CP3-3	0.9 (3)		3.9	---	---	---	---
CP4-0	Surface	NA	159	20	---	---	---
CP4-1	0.3 (1)		5.6	---	---	---	---
CP4-2	0.6 (2)		4.4	---	---	---	---
CP4-3	0.9 (3)		2.7	---	---	---	---
Borings at Linden Avenue Overcrossing Abutments							
L1-0	Surface	NA	257	21	---	---	---
L1-1	0.3 (1)		117	7.3	---	---	---
L1-2	0.6 (2)		15	---	---	---	7.8
L1-3	0.9 (3)		17	---	---	---	---
L2-0	Surface	NA	142	12	---	---	---
L2-1	0.3 (1)		10	---	---	---	---
L2-2	0.6 (2)		5.4	---	---	---	---
L2-3	0.9 (3)		6.2	---	---	---	---
L3-0	Surface	NA	136	13	---	---	7.7
L3-1	0.3 (1)		7.9	---	---	---	---
L3-2	0.6 (2)		6.0	---	---	---	---
L3-3	0.9 (3)		6.1	---	---	---	---
L4-0	Surface	NA	46	---	---	---	---
L4-1	0.3 (1)		6.6	---	---	---	---
L4-2	0.6 (2)		8.7	---	---	---	7.6
L4-3	0.9 (3)		7.2	---	---	---	---
Borings in Vicinity of Ogan Road							
O1-0	Surface	NA	36	---	---	---	---
O1-1	0.3 (1)		6.7	---	---	---	---
O1-2	0.6 (2)		5.5	---	---	---	---
O1-3	0.9 (3)		6.4	---	---	---	---
O2-0	Surface	NA	28	---	---	---	---
O2-1	0.3 (1)		5.6	---	---	---	7.9
O2-2	0.6 (2)		5.2	---	---	---	---
O2-3	0.9 (3)		5.0	---	---	---	---

TABLE 1
SUMMARY OF ANALYTICAL LABORATORY TEST RESULTS
ROUTE 101 - CASITAS PASS/LINDEN AVENUE INTERCHANGES

Total Lead - EPA Test Method 6010
Soluble Lead (WET,WET-DI, and TCLP) - EPA Test Method 7420
Soil pH - EPA Test Method 9045

Sample ID.	Sample Depth meters (feet)	Distance from SB EOP	Total Lead (mg/kg)	Soluble Lead			pH
				WET (mg/l)	WET-DI (mg/l)	TCLP (mg/l)	
Median Borings							
M1A-0	Surface	1 foot	28	---	---	---	---
M1A-1	0.3 (1)		21	---	---	---	---
M1A-2	0.6 (2)		8.2	---	---	---	7.2
M1B-0	Surface	4 feet	44	---	---	---	---
M1B-1	0.3 (1)		14	---	---	---	---
M1B-2	0.6 (2)		7.5	---	---	---	---
M2A-0	Surface	4 feet	22	---	---	---	---
M2A-1	0.3 (1)		12	---	---	---	7.4
M2A-2	0.6 (2)		7.6	---	---	---	---
M2B-0	Surface	8 feet	47	---	---	---	---
M2B-1	0.3 (1)		28	---	---	---	---
M2B-2	0.6 (2)		5.3	---	---	---	---
M3A-0	Surface	1 foot	31	---	---	---	---
M3A-1	0.3 (1)		5.8	---	---	---	---
M3A-2	0.6 (2)		6.5	---	---	---	---
M3B-0	Surface	4 feet	44	---	---	---	---
M3B-1	0.3 (1)		123	7.9	---	---	---
M3B-2	0.6 (2)		6.7	---	---	---	7.7
M4A-0	Surface	4 feet	135	6.7	---	---	---
M4A-1	0.3 (1)		6.8	---	---	---	---
M4A-2	0.6 (2)		5.0	---	---	---	---
M4B-0	Surface	8 feet	192	14	---	---	---
M4B-1	0.3 (1)		20	---	---	---	---
M4B-2	0.6 (2)		5.3	---	---	---	---
M5A-0	Surface	1 foot	145	16	---	---	---
M5A-1	0.3 (1)		16	---	---	---	---
M5A-2	0.6 (2)		4.3	---	---	---	7.6
M5B-0	Surface	4 feet	110	10	---	---	---
M5B-1	0.3 (1)		13	---	---	---	---
M5B-2	0.6 (2)		5.2	---	---	---	---
M6A-0	Surface	4 feet	155	19	---	---	---
M6A-1	0.3 (1)		5.3	---	---	---	---
M6A-2	0.6 (2)		8.3	---	---	---	---
M6B-0	Surface	8 feet	135	13	---	---	---
M6B-1	0.3 (1)		6.6	---	---	---	---
M6B-2	0.6 (2)		4.5	---	---	---	---
M7A-0	Surface	1 foot	258	29	---	---	---
M7A-1	0.3 (1)		8.9	---	---	---	---
M7A-2	0.6 (2)		6.1	---	---	---	---
M7B-0	Surface	4 feet	252	21	---	---	---
M7B-1	0.3 (1)		7.8	---	---	---	7.4
M7B-2	0.6 (2)		9.0	---	---	---	---

TABLE 1
SUMMARY OF ANALYTICAL LABORATORY TEST RESULTS
ROUTE 101 - CASITAS PASS/LINDEN AVENUE INTERCHANGES

Total Lead - EPA Test Method 6010
Soluble Lead (WET,WET-DI, and TCLP) - EPA Test Method 7420
Soil pH - EPA Test Method 9045

Sample ID.	Sample Depth meters (feet)	Distance from SB EOP	Total Lead (mg/kg)	Soluble Lead WET (mg/l)	Soluble Lead WET-DI (mg/l)	Soluble Lead TCLP (mg/l)	pH
Median Borings (continued)							
M8A-0	Surface	4 feet	103	4.8	---	---	---
M8A-1	0.3 (1)		121	7.0	---	---	---
M8A-2	0.6 (2)		16	---	---	---	---
M8B-0	Surface	8 feet	72	5.4	---	---	---
M8B-1	0.3 (1)		9.7	---	---	---	7.8
M8B-2	0.6 (2)		6.5	---	---	---	---
M9A-0	Surface	1 foot	520	47	0.18	0.49	---
M9A-1	0.3 (1)		6.1	---	---	---	---
M9A-2	0.6 (2)		10	---	---	---	---
M9B-0	Surface	4 feet	397	27	---	---	---
M9B-1	0.3 (1)		57	3.4	---	---	---
M9B-2	0.6 (2)		21	---	---	---	---
M10A-0	Surface	4 feet	342	35	< 0.15	0.63	---
M10A-1	0.3 (1)		6.5	---	---	---	7.6
M10A-2	0.6 (2)		5.5	---	---	---	---
M10B-0	Surface	8 feet	238	14	---	---	---
M10B-1	0.3 (1)		144	12	---	---	---
M10B-2	0.6 (2)		5.0	---	---	---	---
M11A-0	Surface	1 foot	323	28	---	---	---
M11A-1	0.3 (1)		6.5	---	---	---	---
M11A-2	0.6 (2)		11	---	---	---	---
M11B-0	Surface	4 feet	298	34	---	---	---
M11B-1	0.3 (1)		7.3	---	---	---	---
M11B-2	0.6 (2)		6.1	---	---	---	---
M12A-0	Surface	4 feet	374	32	---	1.2	---
M12A-1	0.3 (1)		49	---	---	---	---
M12A-2	0.6 (2)		9.0	---	---	---	---
M12B-0	Surface	8 feet	271	29	0.19	---	---
M12B-1	0.3 (1)		242	19	---	---	7.7
M12B-2	0.6 (2)		9.2	---	---	---	---
M13A-0	Surface	1 foot	69	5.2	---	---	---
M13A-1	0.3 (1)		9.7	---	---	---	---
M13A-2	0.6 (2)		9.4	---	---	---	---
M13B-0	Surface	4 feet	113	13	---	---	---
M13B-1	0.3 (1)		97	5.5	---	---	7.6
M13B-2	0.6 (2)		72	5.6	---	---	---
M14A-0	Surface	4 feet	126	9.7	---	---	---
M14A-1	0.3 (1)		7.0	---	---	---	---
M14A-2	0.6 (2)		8.4	---	---	---	---

TABLE 1
SUMMARY OF ANALYTICAL LABORATORY TEST RESULTS
ROUTE 101 - CASITAS PASS/LINDEN AVENUE INTERCHANGES

Total Lead - EPA Test Method 6010
Soluble Lead (WET,WET-DI, and TCLP) - EPA Test Method 7420
Soil pH - EPA Test Method 9045

Sample ID.	Sample Depth meters (feet)	Distance from SB EOP	Total Lead (mg/kg)	Soluble Lead			pH
				WET (mg/l)	WET-DI (mg/l)	TCLP (mg/l)	
Median Borings (continued)							
M14B-0	Surface	8 feet	92	11	---	---	---
M14B-1	0.3 (1)		34	---	---	---	---
M14B-2	0.6 (2)		7.0	---	---	---	---
M15A-0	Surface	1 foot	362	41	< 0.15	---	---
M15A-1	0.3 (1)		8.5	---	---	---	---
M15A-2	0.6 (2)		6.0	---	---	---	---
M15B-0	Surface	4 feet	145	14	---	---	---
M15B-1	0.3 (1)		7.3	---	---	---	---
M15B-2	0.6 (2)		6.1	---	---	---	---
M16A-0	Surface	4 feet	167	21	---	---	---
M16A-1	0.3 (1)		7.1	---	---	---	---
M16A-2	0.6 (2)		7.0	---	---	---	---
M16B-0	Surface	8 feet	213	15	---	---	7.6
M16B-1	0.3 (1)		9.4	---	---	---	---
M16B-2	0.6 (2)		8.1	---	---	---	---
M17A-0	Surface	1 foot	604	56	0.23	1.3	---
M17A-1	0.3 (1)		58	6.7	---	---	---
M17A-2	0.6 (2)		12	---	---	---	7.7
M17B-0	Surface	4 feet	321	26	---	---	---
M17B-1	0.3 (1)		28	---	---	---	---
M17B-2	0.6 (2)		51	1.7	---	---	---

TABLE 1
SUMMARY OF ANALYTICAL LABORATORY TEST RESULTS
ROUTE 101 - CASITAS PASS/LINDEN AVENUE INTERCHANGES

Total Lead - EPA Test Method 6010
Soluble Lead (WET,WET-DI, and TCLP) - EPA Test Method 7420
Soil pH - EPA Test Method 9045

Sample ID.	Sample Depth meters (feet)	Distance from NB EOP	Total Lead (mg/kg)	Soluble Lead			pH
				WET (mg/l)	WET-DI (mg/l)	TCLP (mg/l)	
Northbound Shoulder Borings							
NS1-3-0	Surface	3 feet	339	---	---	---	---
NS1-3-1	0.3 (1)		7.3	---	---	---	---
NS1-3-2	0.6 (2)		158	---	---	---	---
NS1-3-3	0.9 (3)		5.1	---	---	---	---
NS1-6-0	Surface	6 feet	463	---	---	---	---
NS1-6-1	0.3 (1)		167	---	---	---	---
NS1-6-2	0.6 (2)		5.2	---	---	---	8.9
NS1-6-3	0.9 (3)		8.1	---	---	---	---
NS1-12-0	Surface	12 feet	205	---	---	---	---
NS1-12-1	0.3 (1)		6.5	---	---	---	---
NS1-12-2	0.6 (2)		17	---	---	---	---
NS1-12-3	0.9 (3)		5.4	---	---	---	---
NS1-18-0	Surface	18 feet	77	---	---	---	8.3
NS1-18-1	0.3 (1)		14	---	---	---	---
NS1-18-2	0.6 (2)		3	---	---	---	---
NS1-18-3	0.9 (3)		7.1	---	---	---	---
NS2-3-0	Surface	3 feet	407	---	---	---	---
NS2-3-1	0.3 (1)		43	---	---	---	---
NS2-3-2	0.6 (2)		6.6	---	---	---	---
NS2-3-3	0.9 (3)		4.9	---	---	---	---
NS2-6-0	Surface	6 feet	291	---	---	---	---
NS2-6-1	0.3 (1)		20	---	---	---	---
NS2-6-2	0.6 (2)		3.9	---	---	---	---
NS2-6-3	0.9 (3)		8.4	---	---	---	---
NS2-12-0	Surface	12 feet	59	---	---	---	---
NS2-12-1	0.3 (1)		45	---	---	---	---
NS2-12-2	0.6 (2)		5.3	---	---	---	---
NS2-12-3	0.9 (3)		3.4	---	---	---	8.4

TABLE 1
SUMMARY OF ANALYTICAL LABORATORY TEST RESULTS
ROUTE 101 - CASITAS PASS/LINDEN AVENUE INTERCHANGES

Total Lead - EPA Test Method 6010
Soluble Lead (WET,WET-DI, and TCLP) - EPA Test Method 7420
Soil pH - EPA Test Method 9045

Sample ID.	Sample Depth meters (feet)	Distance from NB EOP	Total Lead (mg/kg)	Soluble Lead WET (mg/l)	Soluble Lead WET-DI (mg/l)	Soluble Lead TCLP (mg/l)	pH
Northbound Shoulder Borings (continued)							
NS3-3-0	Surface	3 feet	308	---	---	---	---
NS3-3-1	0.3 (1)		69	---	---	---	---
NS3-3-2	0.6 (2)		8.6	---	---	---	---
NS3-3-3	0.9 (3)		13	---	---	---	---
NS3-6-0	Surface	6 feet	243	---	---	---	---
NS3-6-1	0.3 (1)		16	---	---	---	---
NS3-6-2	0.6 (2)		2.7	---	---	---	---
NS3-6-3	0.9 (3)		4.4	---	---	---	8.8
NS3-12-0	Surface	12 feet	118	---	---	---	---
NS3-12-1	0.3 (1)		12	---	---	---	---
NS3-12-2	0.6 (2)		3.9	---	---	---	---
NS3-12-3	0.9 (3)		4.9	---	---	---	---
NS3-18-0	Surface	18 feet	110	---	---	---	---
NS3-18-1	0.3 (1)		5.9	---	---	---	---
NS3-18-2	0.6 (2)		2.3	---	---	---	---
NS3-18-3	0.9 (3)		5.4	---	---	---	---
NS4-3-0	Surface	3 feet	1050	---	---	---	---
NS4-3-1	0.3 (1)		155	---	---	---	---
NS4-3-2	0.6 (2)		12	---	---	---	---
NS4-3-3	0.9 (3)		6.4	---	---	---	---
NS4-6-0	Surface	6 feet	275	---	---	---	---
NS4-6-1	0.3 (1)		8.7	---	---	---	---
NS4-6-2	0.6 (2)		6.7	---	---	---	---
NS4-6-3	0.9 (3)		6.5	---	---	---	---
NS4-12-0	Surface	12 feet	160	---	---	---	---
NS4-12-1	0.3 (1)		8.9	---	---	---	---
NS4-12-2	0.6 (2)		7.2	---	---	---	---
NS4-12-3	0.9 (3)		6.8	---	---	---	---
NS4-18-0	Surface	18 feet	117	---	---	---	---
NS4-18-1	0.3 (1)		3.7	---	---	---	---
NS4-18-2	0.6 (2)		22	---	---	---	---
NS4-18-3	0.9 (3)		4.8	---	---	---	---

TABLE 1
SUMMARY OF ANALYTICAL LABORATORY TEST RESULTS
ROUTE 101 - CASITAS PASS/LINDEN AVENUE INTERCHANGES

Total Lead - EPA Test Method 6010
Soluble Lead (WET,WET-DI, and TCLP) - EPA Test Method 7420
Soil pH - EPA Test Method 9045

Sample ID.	Sample Depth meters (feet)	Distance from SB EOP	Total Lead (mg/kg)	Soluble Lead			pH
				WET (mg/l)	WET-DI (mg/l)	TCLP (mg/l)	
Southbound Shoulder Borings							
S1-0	Surface	6 feet	190	12	---	---	---
S1-1	0.3 (1)		15	---	---	---	---
S1-2	0.6 (2)		8.1	---	---	---	---
S2A-0	Surface	3 feet	321	22	---	---	---
S2A-1	0.3 (1)		5.3	---	---	---	---
S2A-2	0.6 (2)		8	---	---	---	---
S2B-0	Surface	9 feet	194	12	---	---	7.9
S2B-1	0.3 (1)		11	---	---	---	---
S2B-2	0.6 (2)		7.3	---	---	---	---
S3-0	Surface	6 feet	227	12	---	---	---
S3-1	0.3 (1)		35	---	---	---	---
S3-2	0.6 (2)		7.9	---	---	---	---
S3-12-0	Surface	12 feet	60	---	---	---	---
S3-12-1	0.3 (1)		9	---	---	---	---
S3-12-2	0.6 (2)		5.1	---	---	---	---
S3-12-3	0.9 (3)		5.4	---	---	---	8.8
S3-17-0	Surface	17 feet	43	---	---	---	---
S3-17-1	0.3 (1)		5.2	---	---	---	---
S3-17-2	0.6 (2)		4.8	---	---	---	---
S3-17-3	0.9 (3)		4.9	---	---	---	---
S3-17-4	1.2 (4)		5.0	---	---	---	---
S3-17-5	1.5 (5)		6.7	---	---	---	---
S3-22-0	Surface	22 feet	29	---	---	---	---
S3-22-1	0.3 (1)		7.6	---	---	---	---
S3-22-2	0.6 (2)		4.3	---	---	---	8.5
S3-22-3	0.9 (3)		4.7	---	---	---	---
S3-27-0	Surface	27 feet	40	---	---	---	---
S3-27-1	0.3 (1)		5.7	---	---	---	---
S3-27-2	0.6 (2)		4.6	---	---	---	---
S3-27-3	0.9 (3)		4.4	---	---	---	---
S3-27-4	1.2 (4)		3.8	---	---	---	---
S3-27-5	1.5 (5)		4.5	---	---	---	---
S3-32-0	Surface	32 feet	22	---	---	---	---
S3-32-1	0.3 (1)		6.3	---	---	---	---
S3-32-2	0.6 (2)		4.6	---	---	---	---
S3-32-3	0.9 (3)		4.8	---	---	---	8.7

TABLE 1
SUMMARY OF ANALYTICAL LABORATORY TEST RESULTS
ROUTE 101 - CASITAS PASS/LINDEN AVENUE INTERCHANGES

Total Lead - EPA Test Method 6010
Soluble Lead (WET,WET-DI, and TCLP) - EPA Test Method 7420
Soil pH - EPA Test Method 9045

Sample ID.	Sample Depth meters (feet)	Distance from SB EOP	Total Lead (mg/kg)	Soluble Lead			pH
				WET (mg/l)	WET-DI (mg/l)	TCLP (mg/l)	
Southbound Shoulder Borings (continued)							
S4A-0	Surface	3 feet	190	8.2	---	---	---
S4A-1	0.3 (1)		7.9	---	---	---	---
S4A-2	0.6 (2)		5.6	---	---	---	7.7
S4B-0	Surface	9 feet	52	6.4	---	---	---
S4B-1	0.3 (1)		5.8	---	---	---	---
S4B-2	0.6 (2)		4.5	---	---	---	---
S5-0	Surface	6 feet	106	5.3	---	---	---
S5-1	0.3 (1)		6.8	---	---	---	---
S5-2	0.6 (2)		5.3	---	---	---	---
S5-12-0	Surface	12 feet	9.3	---	---	---	---
S5-12-1	0.3 (1)		68	---	---	---	---
S5-12-2	0.6 (2)		6.3	---	---	---	---
S5-12-3	0.9 (3)		13	---	---	---	---
S5-17-0	Surface	17 feet	35	---	---	---	---
S5-17-1	0.3 (1)		6.7	---	---	---	---
S5-17-2	0.6 (2)		6.6	---	---	---	---
S5-17-3	0.9 (3)		2.1	---	---	---	---
S5-17-4	1.2 (4)		2.7	---	---	---	---
S5-17-5	1.5 (5)		2.4	---	---	---	8.8
S5-22-0	Surface	22 feet	26	---	---	---	---
S5-22-1	0.3 (1)		2.5	---	---	---	---
S5-22-2	0.6 (2)		3.9	---	---	---	---
S5-22-3	0.9 (3)		5.1	---	---	---	---
S5-27-0	Surface	27 feet	26	---	---	---	---
S5-27-1	0.3 (1)		3.4	---	---	---	---
S5-27-2	0.6 (2)		3.9	---	---	---	---
S5-27-3	0.9 (3)		3.4	---	---	---	---
S5-27-4	1.2 (4)		5.4	---	---	---	---
S5-27-5	1.5 (5)		3.4	---	---	---	8.5
S5-32-0	Surface	32 feet	32	---	---	---	---
S5-32-1	0.3 (1)		7.8	---	---	---	---
S5-32-2	0.6 (2)		4.3	---	---	---	---
S5-32-3	0.9 (3)		3.1	---	---	---	---

TABLE 1
SUMMARY OF ANALYTICAL LABORATORY TEST RESULTS
ROUTE 101 - CASITAS PASS/LINDEN AVENUE INTERCHANGES

Total Lead - EPA Test Method 6010
Soluble Lead (WET,WET-DI, and TCLP) - EPA Test Method 7420
Soil pH - EPA Test Method 9045

Sample ID.	Sample Depth meters (feet)	Distance from SB EOP	Total Lead (mg/kg)	Soluble Lead WET (mg/l)	Soluble Lead WET-DI (mg/l)	Soluble Lead TCLP (mg/l)	pH
Southbound Shoulder Borings (continued)							
S6A-0	Surface	3 feet	151	6.2	---	---	---
S6A-1	0.3 (1)		21	---	---	---	---
S6A-2	0.6 (2)		6.0	---	---	---	---
S6B-0	Surface	9 feet	42	---	---	---	---
S6B-1	0.3 (1)		6.1	---	---	---	---
S6B-2	0.6 (2)		5.5	---	---	---	---
S6-12-0	Surface	12 feet	50	---	---	---	---
S6-12-1	0.3 (1)		22	---	---	---	---
S6-12-2	0.6 (2)		23	---	---	---	---
S6-12-3	0.9 (3)		8.1	---	---	---	---
S6-17-0	Surface	17 feet	50	---	---	---	---
S6-17-1	0.3 (1)		4.3	---	---	---	---
S6-17-2	0.6 (2)		2.4	---	---	---	---
S6-17-3	0.9 (3)		2.3	---	---	---	---
S6-17-4	1.2 (4)		3.8	---	---	---	---
S6-17-5	1.5 (5)		2.3	---	---	---	---
S6-22-0	Surface	22 feet	39	---	---	---	---
S6-22-1	0.3 (1)		7.0	---	---	---	---
S6-22-2	0.6 (2)		4.1	---	---	---	---
S6-22-3	0.9 (3)		3.6	---	---	---	8.6
S6-27-0	Surface	27 feet	44	---	---	---	---
S6-27-1	0.3 (1)		10	---	---	---	---
S6-27-2	0.6 (2)		6.3	---	---	---	---
S6-27-3	0.9 (3)		4.5	---	---	---	---
S6-27-4	1.2 (4)		5.9	---	---	---	8.7
S6-27-5	1.5 (5)		4.0	---	---	---	---
S6-32-0	Surface	32 feet	27	---	---	---	---
S3-32-1	0.3 (1)		11	---	---	---	---
S3-32-2	0.6 (2)		3.3	---	---	---	---
S3-32-3	0.9 (3)		5.1	---	---	---	---
S7-0	Surface	6 feet	37	---	---	---	---
S7-1	0.3 (1)		5.1	---	---	---	---
S7-2	0.6 (2)		7.4	---	---	---	---
S8A-0	Surface	3 feet	300	21	---	---	---
S8A-1	0.3 (1)		100	6.8	---	---	---
S8A-2	0.6 (2)		35	---	---	---	---
S8B-0	Surface	9 feet	557	26	---	0.75	---
S8B-1	0.3 (1)		84	4.2	---	---	---
S8B-2	0.6 (2)		13	---	---	---	---
S9-0	Surface	6 feet	285	11	---	---	---
S9-1	0.3 (1)		211	9.9	---	---	---
S9-2	0.6 (2)		31	---	---	---	---

TABLE 1
SUMMARY OF ANALYTICAL LABORATORY TEST RESULTS
ROUTE 101 - CASITAS PASS/LINDEN AVENUE INTERCHANGES

Total Lead - EPA Test Method 6010
Soluble Lead (WET,WET-DI, and TCLP) - EPA Test Method 7420
Soil pH - EPA Test Method 9045

Sample ID.	Sample Depth meters (feet)	Distance from EOP	Total Lead (mg/kg)	Soluble Lead			pH
				WET (mg/l)	WET-DI (mg/l)	TCLP (mg/l)	
On-ramp and Off-ramp Borings							
R1-0	Surface	6 feet	18	---	---	---	---
R1-1	0.3 (1)		7.8	---	---	---	---
R1-2	0.6 (2)		5.4	---	---	---	7.9
R2-0	Surface	6 feet	17	---	---	---	---
R2-1	0.3 (1)		3.5	---	---	---	---
R2-2	0.6 (2)		3.0	---	---	---	---
R3-0	Surface	6 feet	103	5.5	---	---	---
R3-1	0.3 (1)		3.9	---	---	---	---
R3-2	0.6 (2)		3.1	---	---	---	---

Note:
mg/kg = milligrams per kilogram
mg/l = milligrams per liter
--- = Analysis not performed
< = Less than indicated laboratory reporting limit