DIST	COUNTY	ROUTE	POST MILES TOTAL PROJECT	SHEET No.	TOTAL SHEETS
05	SLO	1	64.0/R66.9	205	265

REGISTERED CIVIL ENGINEER 10-27-14 DATE

PLANS APPROVAL DATE 10-27-14

The State of California or its officers or agents shall not be responsible for the accuracy or completeness of scanned copies of this plan sheet.

REGISTERED PROFESSIONAL ENGINEER MICHAEL R POPE No. C54503 Exp. 12/31/15 CIVIL STATE OF CALIFORNIA

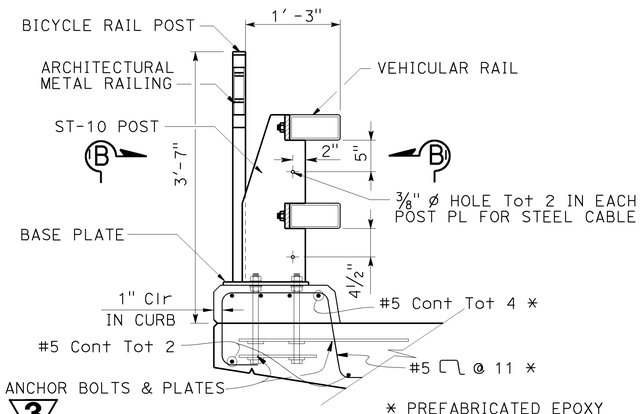

3

* PREFABRICATED EPOXY COATED REINFORCEMENT SHALL BE USED IN CURB

TYPICAL SECTION

1 " = 1'-0"

FOR CA ST-10 RAILING DETAILS NOT SHOWN SEE: B11-68 B11-69 B11-70

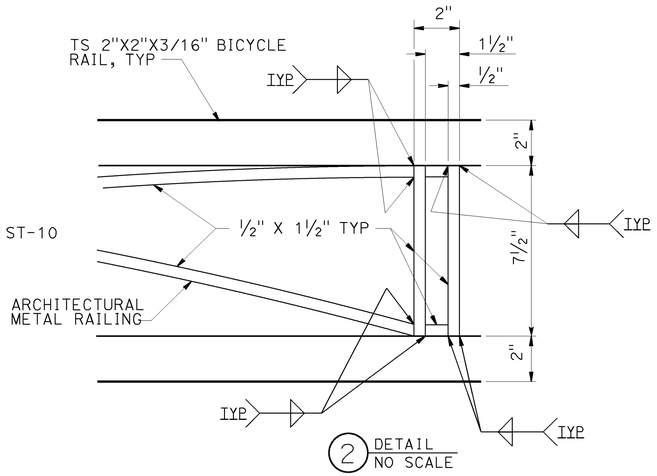

2 DETAIL NO SCALE

DETAIL _

NO SCALE

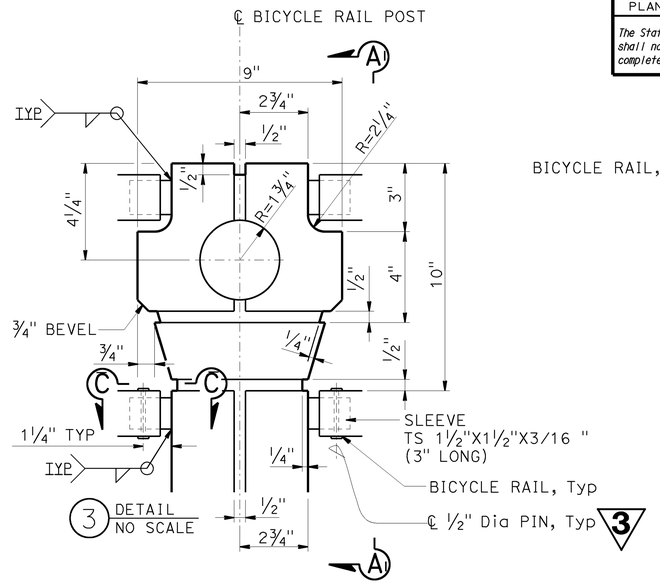

3 DETAIL NO SCALE

3

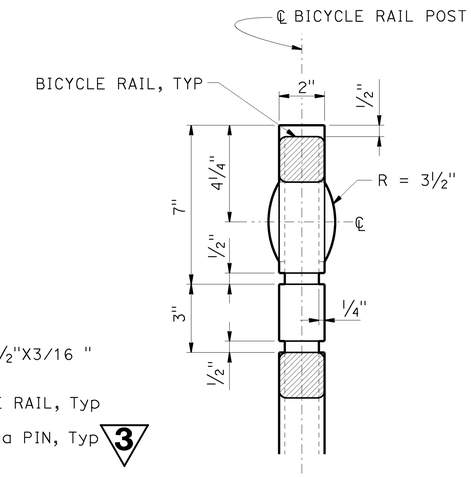

SECTION A - A

NO SCALE

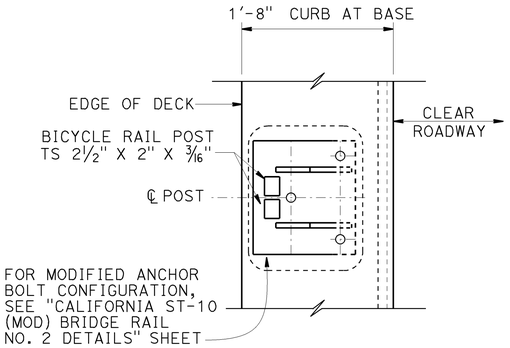

SECTION B - B

NO SCALE

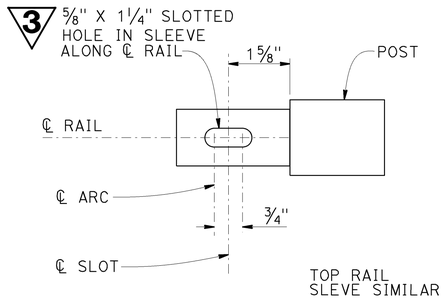

SECTION C - C

NO SCALE

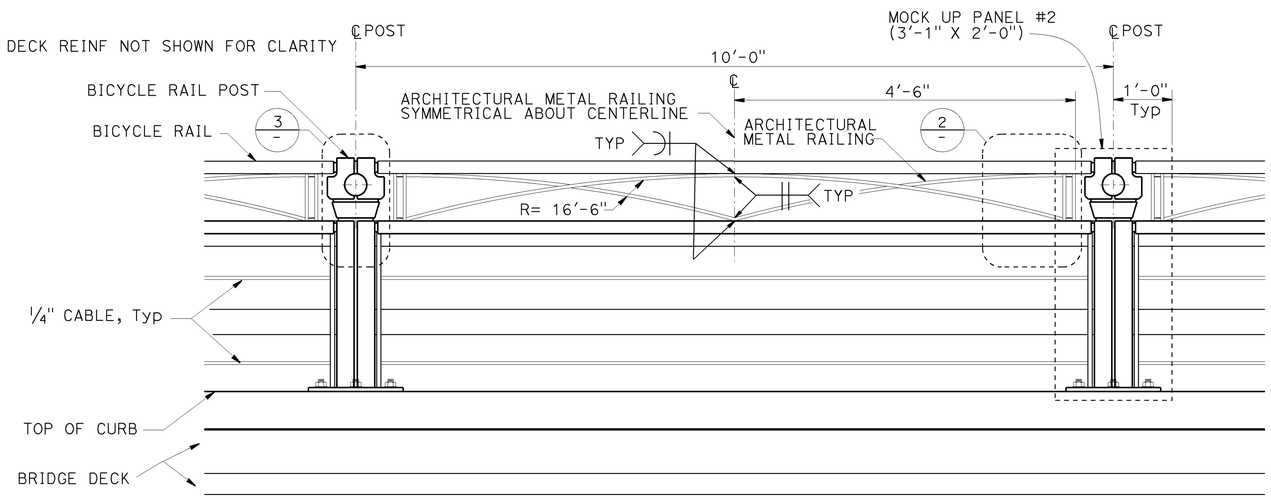

ELEVATION VIEW - CALIFORNIA ST-10(MODIFIED)

1 " = 1'-0"

3 **REPLACED PER ADDENDUM No. 3 APRIL 2, 2015**

DESIGN	BY ZIHAN YAN	CHECKED PREM RIMAL	
DETAILS	BY JINLI GUO	CHECKED PREM RIMAL	
QUANTITIES	BY ZIHAN YAN	CHECKED PREM RIMAL	

STATE OF CALIFORNIA DEPARTMENT OF TRANSPORTATION

DIVISION OF ENGINEERING SERVICES STRUCTURE DESIGN DESIGN BRANCH 18

BRIDGE NO. 49-0258 POST MILE R 64.62

ARROYO DE LOS PLAYANOS BRIDGE

CALIFORNIA ST-10 BRIDGE RAIL(MOD) DETAILS NO. 1

STRUCTURES DESIGN DETAIL SHEET (ENGLISH) (REV. 09-01-10)

ORIGINAL SCALE IN INCHES FOR REDUCED PLANS 0 1 2 3

UNIT:3603 PROJECT NUMBER & PHASE:0500000576 1 CONTRACT NO.: 05-492801

DISREGARD PRINTS BEARING EARLIER REVISION DATES

REVISION DATES 08/01/13 03/12/15 04/16/13 12/19/13

SHEET 16 OF 24

FILE => 49-0258-r-railing01.dgn

USERNAME => s115755 DATE PLOTTED => 17-MAR-2015 TIME PLOTTED => 16:50

DIST	COUNTY	ROUTE	POST MILES TOTAL PROJECT	SHEET No.	TOTAL SHEETS
05	SLO	1	64.0/R66.9	227	265

REGISTERED CIVIL ENGINEER — 10-27-14 DATE

10-27-14
PLANS APPROVAL DATE

MICHAEL R POPE No. C54503 Exp. 12/31/15 CIVIL — REGISTERED PROFESSIONAL ENGINEER — STATE OF CALIFORNIA

The State of California or its officers or agents shall not be responsible for the accuracy or completeness of scanned copies of this plan sheet.

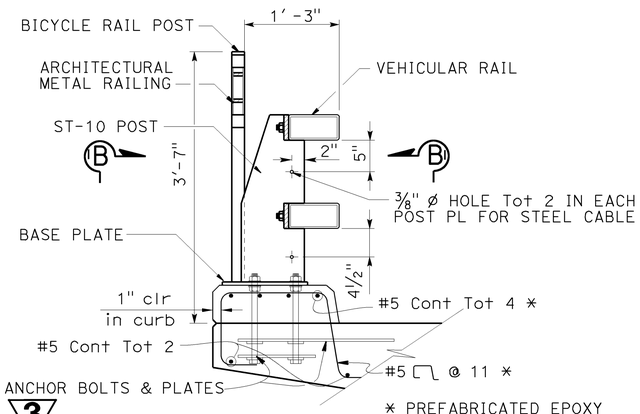

TYPICAL SECTION

1 " = 1'-0"

FOR CA ST-10 RAILING DETAILS NOT SHOWN SEE: B11-68 B11-69 B11-70

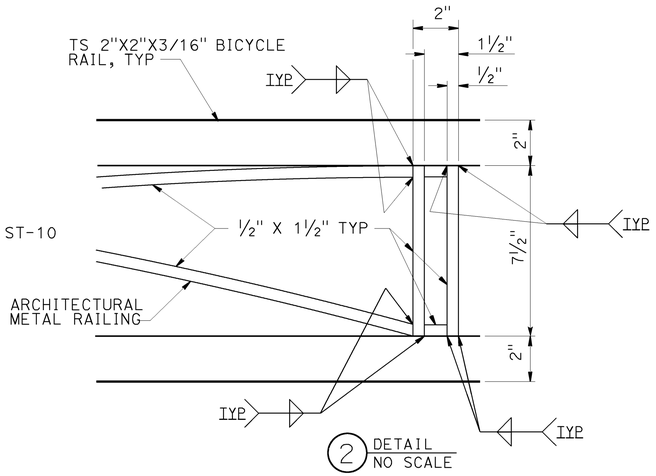

DETAIL _

NO SCALE

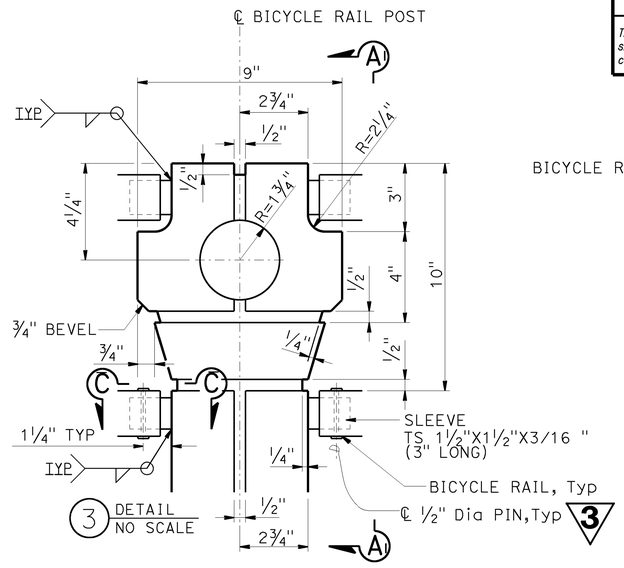

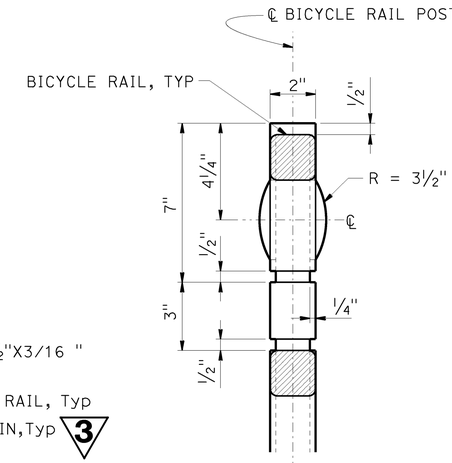

SECTION A - A

NO SCALE

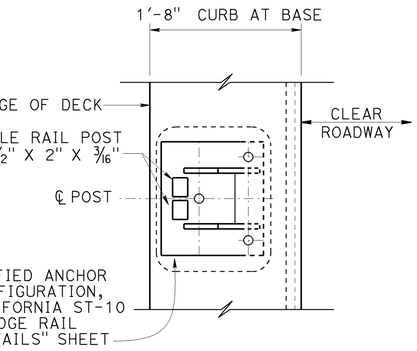

SECTION B - B

NO SCALE

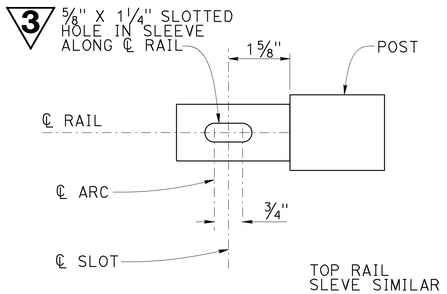

SECTION C - C

NO SCALE

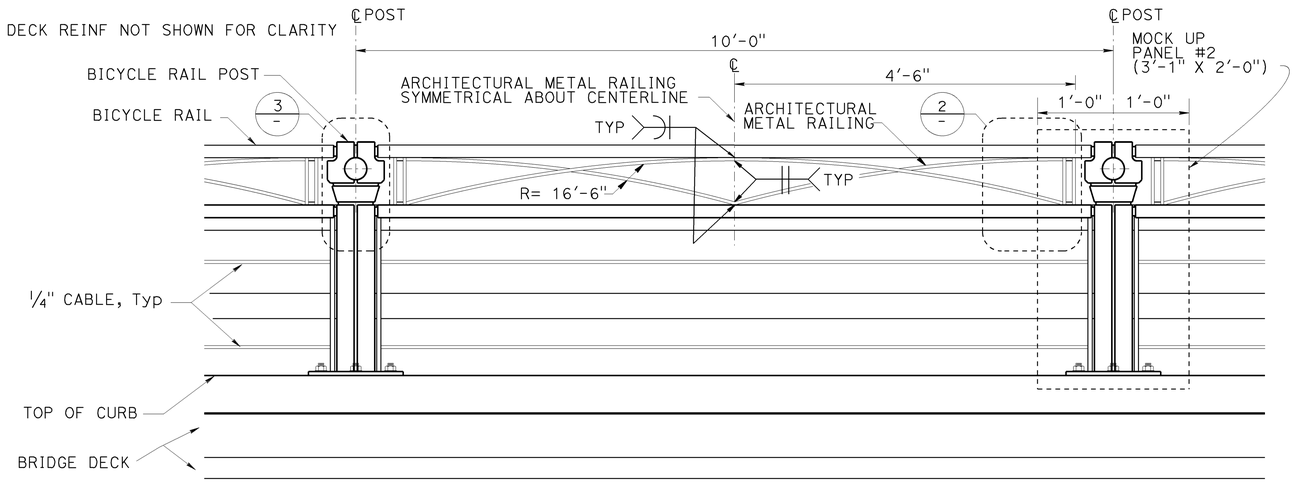

ELEVATION VIEW - CALIFORNIA ST-10

1 " = 1'-0"

3 REPLACED PER ADDENDUM No. 3 APRIL 2, 2015

DESIGN	BY ZIHAN YAN	CHECKED PREM RIMAL	STATE OF CALIFORNIA DEPARTMENT OF TRANSPORTATION	DIVISION OF ENGINEERING SERVICES STRUCTURE DESIGN DESIGN BRANCH 18	BRIDGE NO. 49-0259 / POST MILE R 64.86
DETAILS	BY JINLI GUO	CHECKED PREM RIMAL			
QUANTITIES	BY ZIHAN YAN	CHECKED PREM RIMAL			

ARROYO DEL CORREL BRIDGE

CALIFORNIA ST-10 BRIDGE RAIL(MOD) DETAILS NO. 1

STRUCTURES DESIGN DETAIL SHEET (ENGLISH) (REV. 09-01-10)

ORIGINAL SCALE IN INCHES FOR REDUCED PLANS 0 1 2 3

UNIT:3603 PROJECT NUMBER & PHASE:0500000576 1 CONTRACT NO.: 05-492801

DISREGARD PRINTS BEARING EARLIER REVISION DATES →

REVISION DATES				SHEET	OF
03/27/15	04/15/13	04/26/13	03/12/15	14	29

FILE => 49-0259-q-st10brdet-01.dgn

USERNAME => s115755 DATE PLOTTED => 17-MAR-2015 TIME PLOTTED => 16:51

DIST	COUNTY	ROUTE	POST MILES TOTAL PROJECT	SHEET No.	TOTAL SHEETS
05	SLO	1	64.0/R66.9	258	265

REGISTERED CIVIL ENGINEER — 10-27-14 DATE

10-27-14
PLANS APPROVAL DATE

MICHAEL R POPE No. C54503 Exp. 12/31/15 CIVIL — REGISTERED PROFESSIONAL ENGINEER — STATE OF CALIFORNIA

The State of California or its officers or agents shall not be responsible for the accuracy or completeness of scanned copies of this plan sheet.

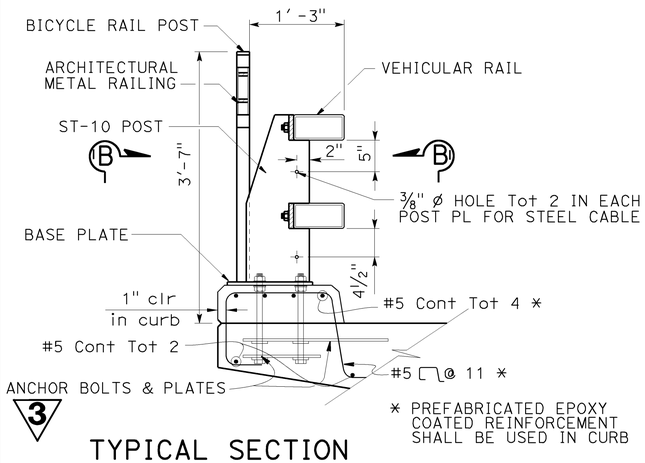

TYPICAL SECTION

1 " = 1'-0"

FOR CA ST-10 RAILING DETAILS NOT SHOWN SEE: B11-68 B11-69 B11-70

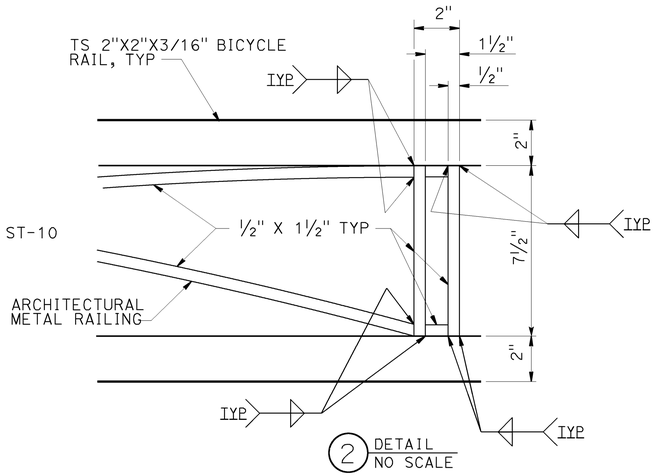

DETAIL _

NO SCALE

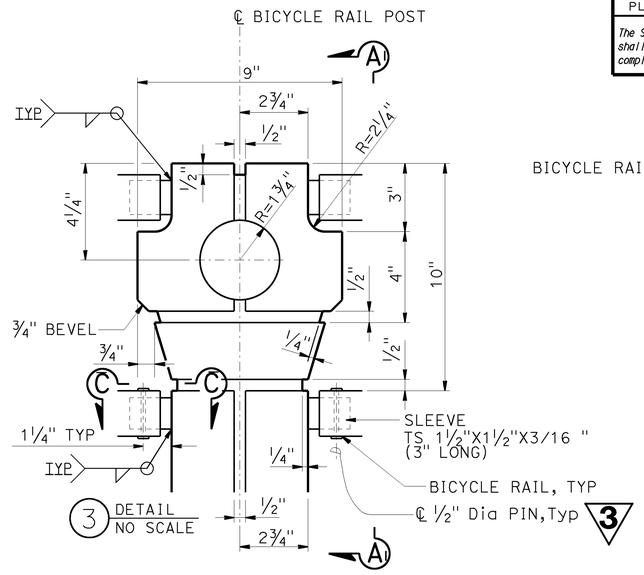

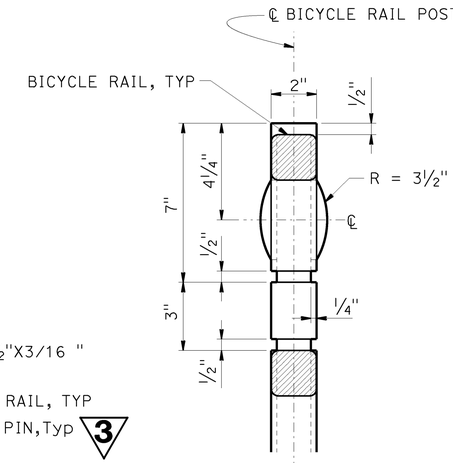

SECTION A - A

NO SCALE

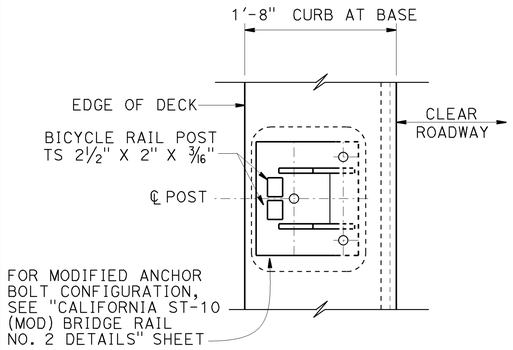

SECTION B - B

NO SCALE

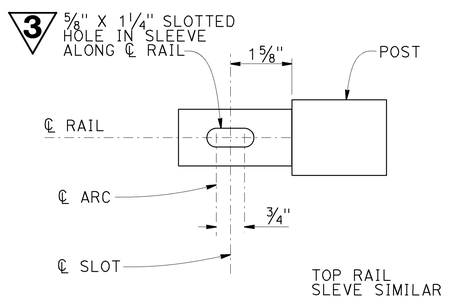

SECTION C - C

NO SCALE

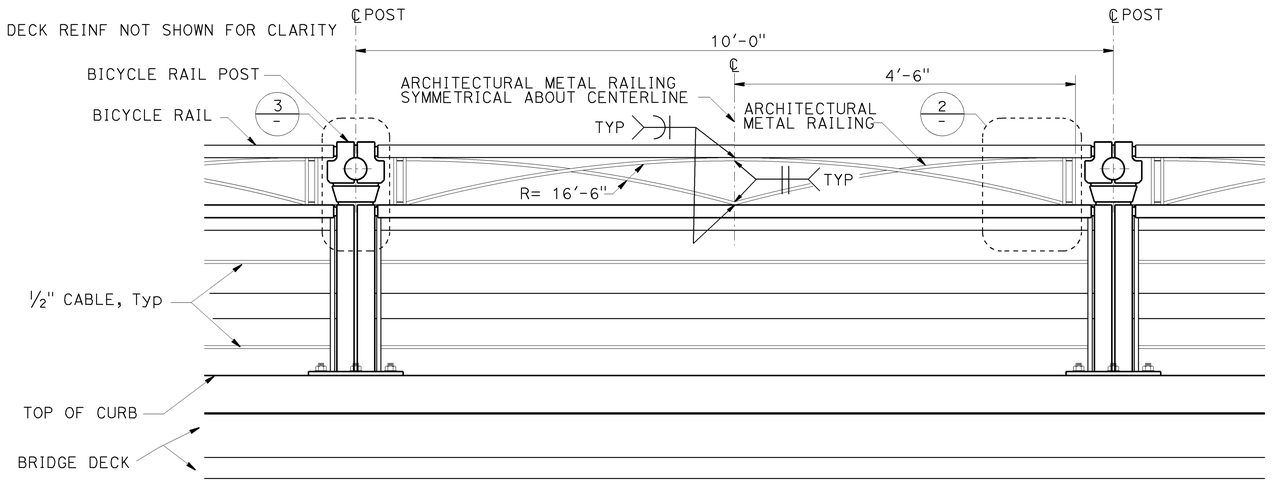

ELEVATION VIEW - CALIFORNIA ST-10

1 " = 1'-0"

3 REPLACED PER ADDENDUM No. 3 APRIL 2, 2015

DESIGN	BY ZIHAN YAN	CHECKED PREM RIMAL	STATE OF CALIFORNIA DEPARTMENT OF TRANSPORTATION	DIVISION OF ENGINEERING SERVICES STRUCTURE DESIGN DESIGN BRANCH 18	BRIDGE NO. 49-0260 / POST MILE R 65.64
DETAILS	BY JINLI GUO	CHECKED PREM RIMAL			
QUANTITIES	BY ZIHAN YAN	CHECKED PREM RIMAL			

ARROYO DE OSO BRIDGE

CALIFORNIA ST-10 BRIDGE RAIL (MOD) DETAILS NO. 1

STRUCTURES DESIGN DETAIL SHEET (ENGLISH) (REV. 09-01-10)

ORIGINAL SCALE IN INCHES FOR REDUCED PLANS 0 1 2 3

UNIT:3603 PROJECT NUMBER & PHASE:0500000576 1 CONTRACT NO.: 05-492801

DISREGARD PRINTS BEARING EARLIER REVISION DATES

REVISION DATES				SHEET	OF
03/27/15	04/15/13	04/26/13	03/12/15	16	23

FILE => 49-0260-p-st10-det01.dgn

DATE PLOTTED => 17-MAR-2015 TIME PLOTTED => 16:51

USERNAME => s115755