DIST	COUNTY	ROUTE	POST MILES TOTAL PROJECT	SHEET No.	TOTAL SHEETS
07	LA	5	2.4/4.0	501	1288

REGISTERED CIVIL ENGINEER 12-13-11 DATE

3-26-12
PLANS APPROVAL DATE

REGISTERED PROFESSIONAL ENGINEER Kevin Harper No. 42221 Exp. 3-31-12 CIVIL STATE OF CALIFORNIA

The State of California or its officers or agents shall not be responsible for the accuracy or completeness of electronic copies of this plan sheet.

NOTES:

1. All notes and dimensions symetrical about ℄ pilaster.
2. Beveled edges are 45° unless otherwise noted.
3. For location of "DETAIL J", "DETAIL D" and "SECTION B-B", "SECTION C-C", "SECTION G-G", "SECTION H-H" and "SECTION L-L", see "PILASTER ARCHITECTURAL DETAILS NO. 2" sheet.
4. For Type 736SV (Mod) Barrier fractured granite texture, see "CONCRETE BARRIER TYPE 736SV (MOD) DETAILS" sheet.

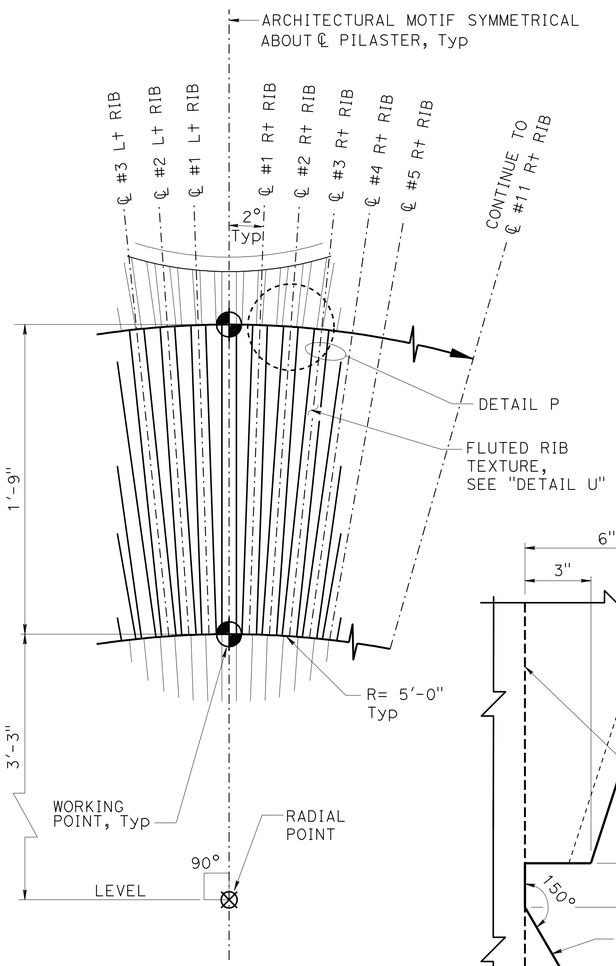

DETAIL J
NO SCALE

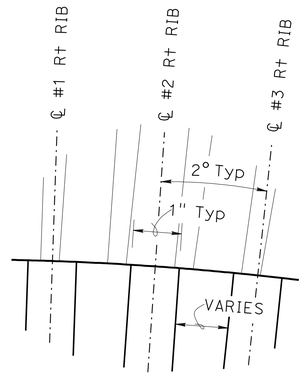

DETAIL P
NO SCALE

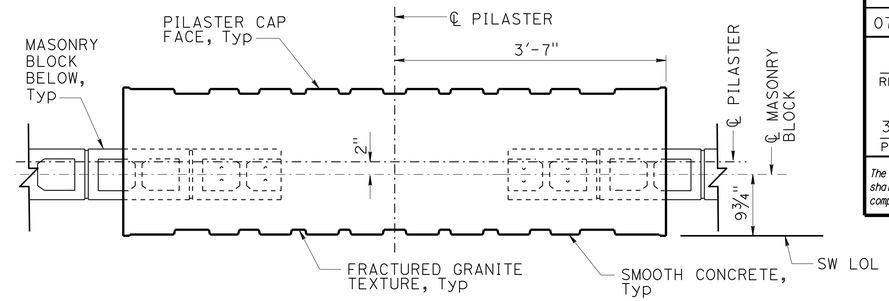

SECTION B-B
1" = 1'-0"

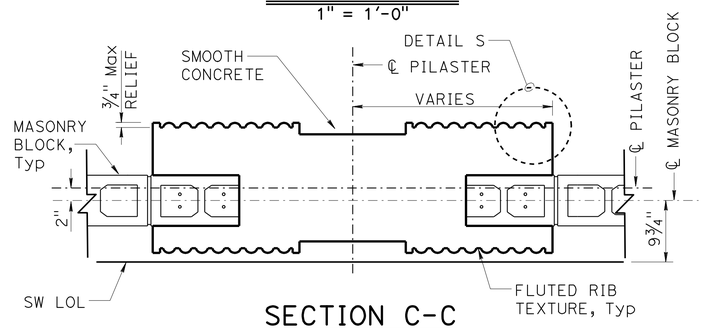

SECTION C-C
1" = 1'-0"

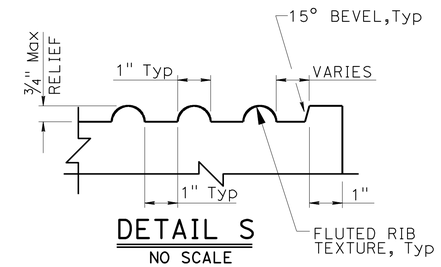

DETAIL S
NO SCALE

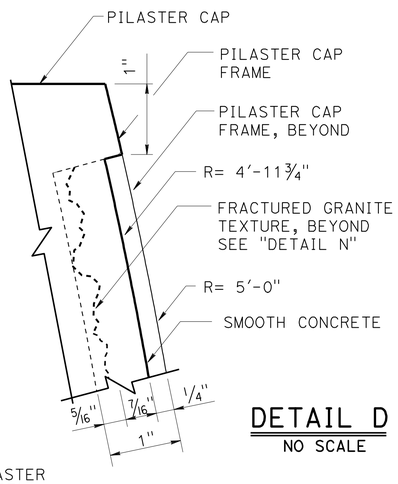

DETAIL D
NO SCALE

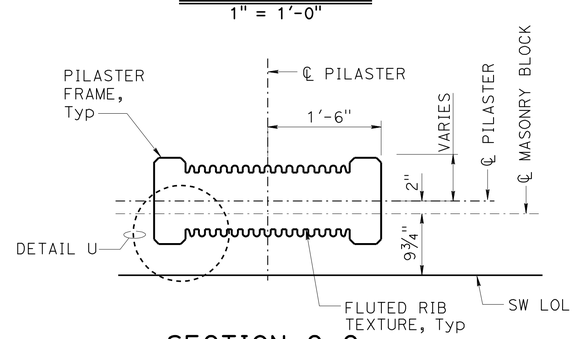

SECTION G-G
1" = 1'-0"

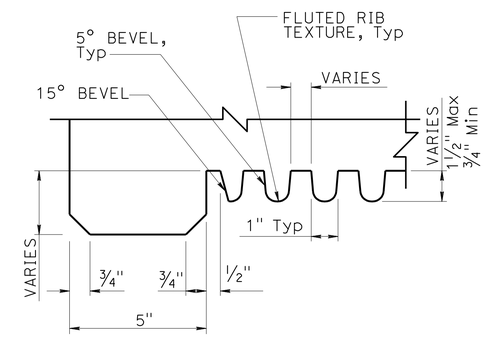

DETAIL U
NO SCALE

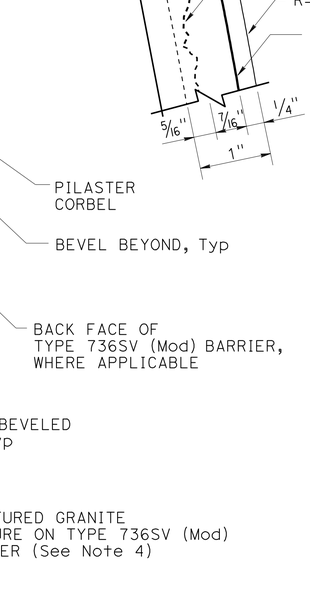

SECTION L-L
NO SCALE

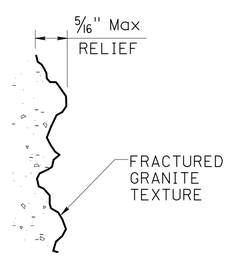

DETAIL N
NO SCALE

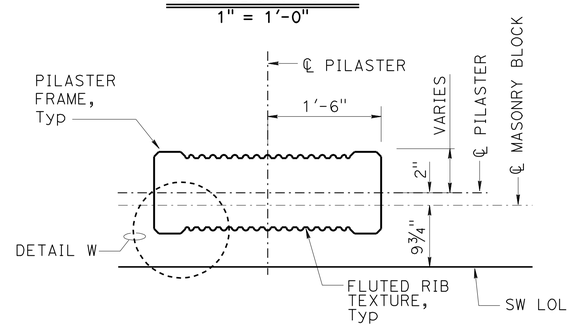

SECTION H-H
1" = 1'-0"

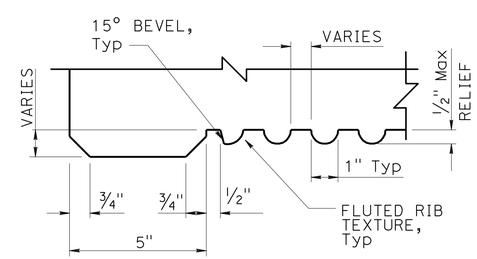

DETAIL W
NO SCALE

SW-26

DESIGN	BY Isaac Tasabia	CHECKED Javier Chavez	
DETAILS	BY Jin Zhou / Jie Tang	CHECKED K. Harper / D. Sessions	
QUANTITIES	BY	CHECKED	

STATE OF CALIFORNIA
DEPARTMENT OF TRANSPORTATION

DIVISION OF ENGINEERING SERVICES
STRUCTURE DESIGN
DESIGN BRANCH 1

BRIDGE NO.
POST MILE

SOUND WALL NO. 160, 204 & 205
PILASTER ARCHITECTURAL DETAILS NO. 3

STRUCTURES DESIGN DETAIL SHEET (ENGLISH) (REV. 09-01-10)

ORIGINAL SCALE IN INCHES FOR REDUCED PLANS 0 1 2 3

UNIT: 3576
PROJECT NUMBER & PHASE: 07000018331
CONTRACT NO.: 07-215934

DISREGARD PRINTS BEARING EARLIER REVISION DATES

REVISION DATES 12/09/10 12/13/11 12/06/11 SHEET OF

FILE => 721593rd005.dgn

USERNAME => s124496 DATE PLOTTED => 28-MAR-2012 TIME PLOTTED => 11:14

DIST	COUNTY	ROUTE	POST MILES TOTAL PROJECT	SHEET No.	TOTAL SHEETS
07	LA	5	2.4/4.0	502	1288

REGISTERED CIVIL ENGINEER 12-13-11 DATE

3-26-12
PLANS APPROVAL DATE

REGISTERED PROFESSIONAL ENGINEER Kevin Harper No. 42221 Exp. 3-31-12 CIVIL STATE OF CALIFORNIA

The State of California or its officers or agents shall not be responsible for the accuracy or completeness of electronic copies of this plan sheet.

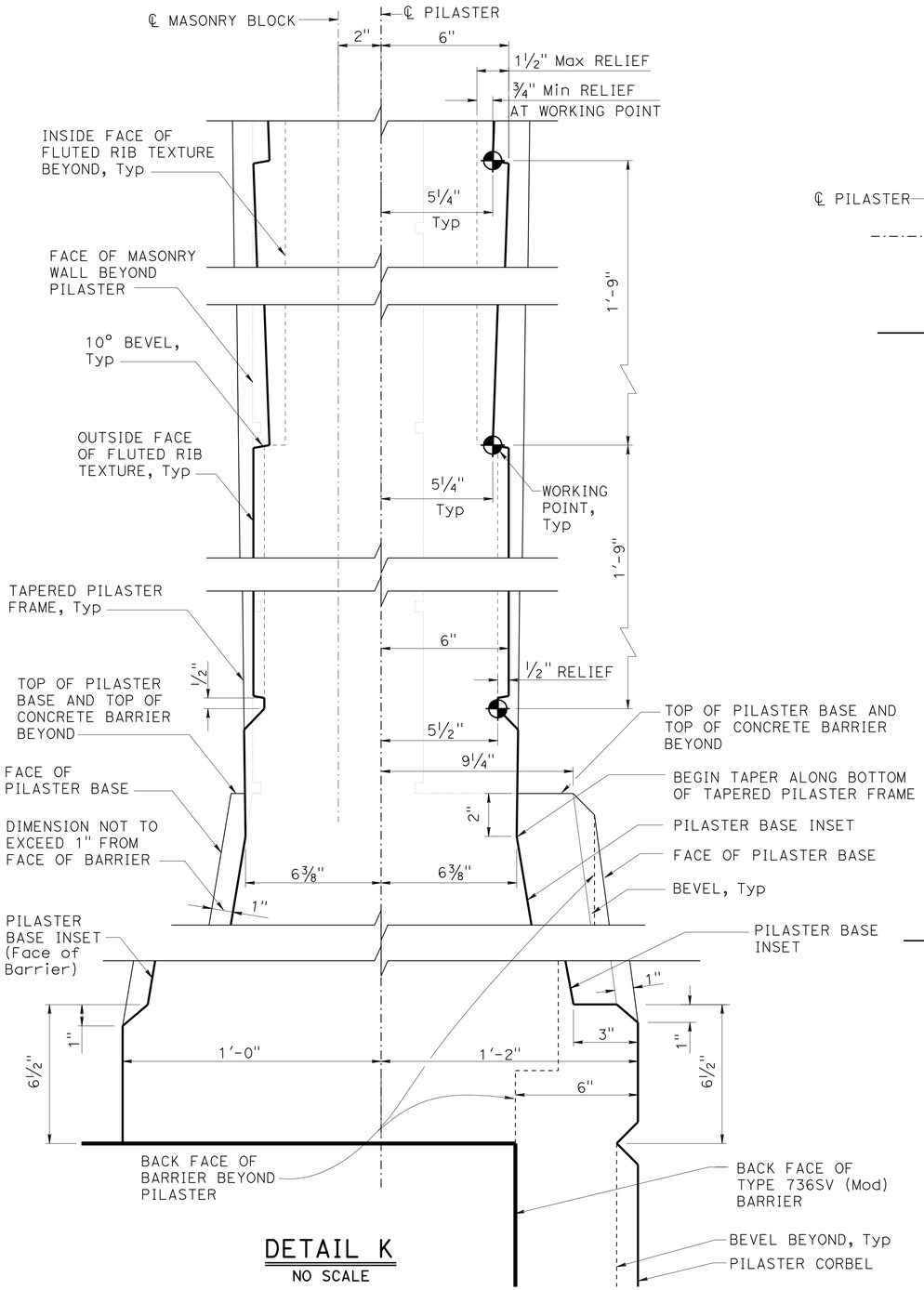

DETAIL K
NO SCALE

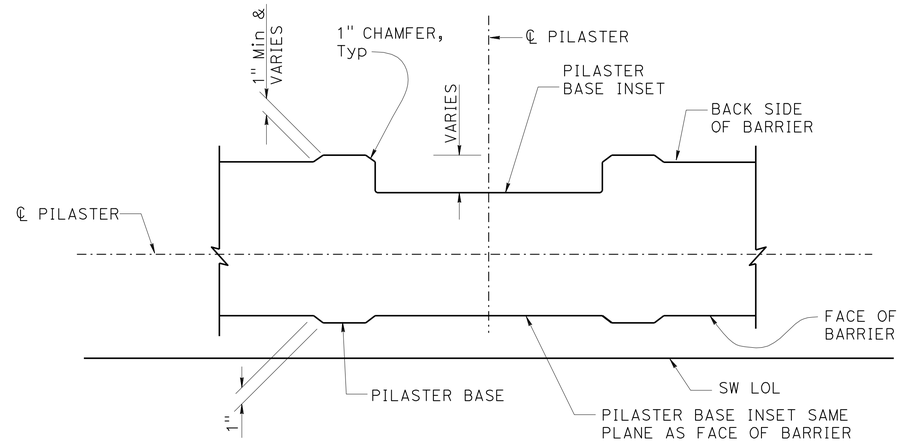

SECTION M-M
1½" = 1'-0"

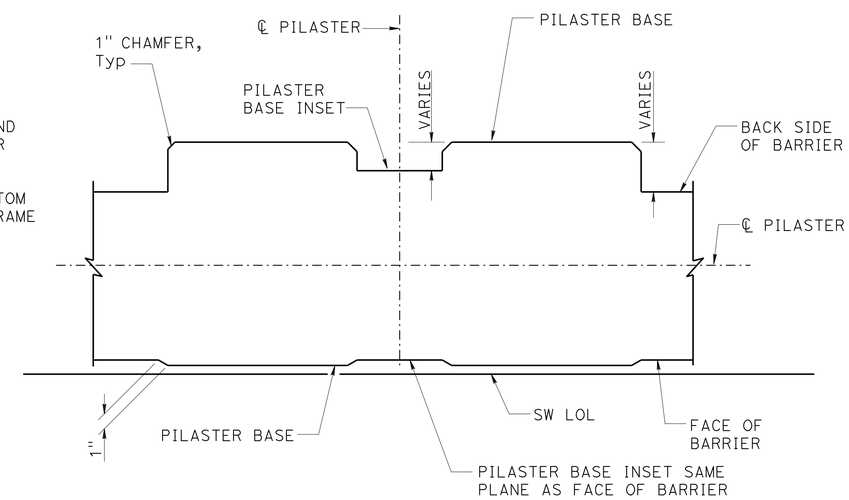

SECTION N-N
1½" = 1'-0"

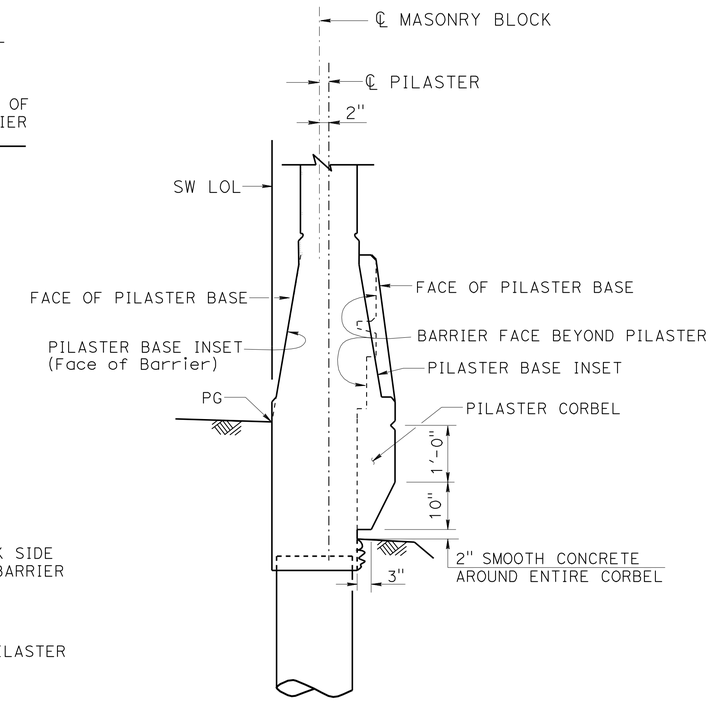

NOTE: For Pilaster details not shown, see "SECTION A-A" on "PILASTER ARCHITECTURAL DETAILS NO. 2" sheet.

DETAIL X
¾" = 1'-0"

NOTES:

1. For location of "SECTION M-M", "SECTION N-N" and "DETAIL K", see "PILASTER ARCHITECTURAL DETAILS NO. 2" sheet.
2. All dimensions symmetrical about ℄ Pilaster.
3. All vertical dimension are measured along the ℄ Pilaster (Pilaster shall be vertical).

SW-27

	BY	CHECKED
DESIGN	Isaac Tasabia	Javier Chavez
DETAILS	Jin Zhou / Jie Tang	K. Harper / D. Sessions
QUANTITIES		

STATE OF CALIFORNIA DEPARTMENT OF TRANSPORTATION

DIVISION OF ENGINEERING SERVICES STRUCTURE DESIGN DESIGN BRANCH 1

BRIDGE NO.
POST MILE

SOUND WALL NO. 160, 204 & 205
PILASTER ARCHITECTURAL DETAILS NO. 4

STRUCTURES DESIGN DETAIL SHEET (ENGLISH) (REV. 09-01-10)

ORIGINAL SCALE IN INCHES FOR REDUCED PLANS 0 1 2 3

UNIT: 3576
PROJECT NUMBER & PHASE: 07000018331
CONTRACT NO.: 07-215934

DISREGARD PRINTS BEARING EARLIER REVISION DATES

REVISION DATES 12/9/10 12/13/11 12/26/11 SHEET OF

FILE => 721593rd006.dgn

USERNAME => s124496 DATE PLOTTED => 28-MAR-2012 TIME PLOTTED => 11:14

DIST	COUNTY	ROUTE	POST MILES TOTAL PROJECT	SHEET No.	TOTAL SHEETS
07	LA	5	2.4/4.0	503	1288

REGISTERED CIVIL ENGINEER 12-13-11 DATE

3-26-12
PLANS APPROVAL DATE

REGISTERED PROFESSIONAL ENGINEER Kevin Harper No. 42221 Exp. 3-31-12 CIVIL STATE OF CALIFORNIA

The State of California or its officers or agents shall not be responsible for the accuracy or completeness of electronic copies of this plan sheet.

NOTE:
For "SECTION B-B", "SECTION C-C", "SECTION D-D" and "SECTION G-G", see "PILASTER STRUCTURAL DETAILS NO. 2" sheet.

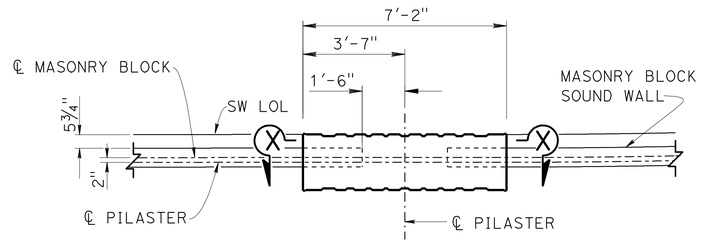

PART SOUND WALL PLAN

⅜" = 1'-0"

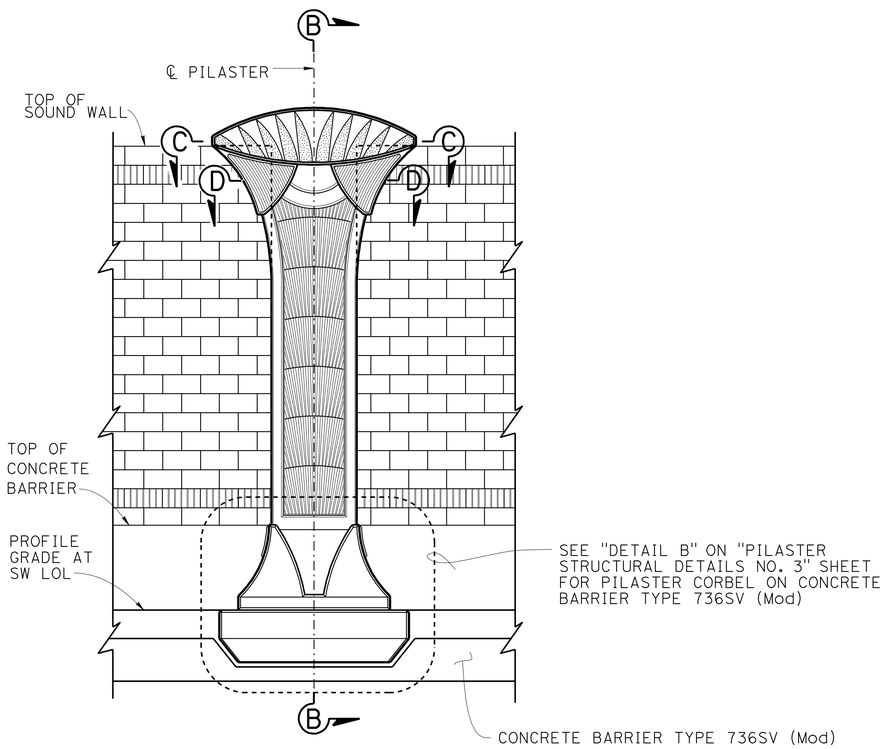

PART SOUND WALL ELEVATION

⅜" = 1'-0"

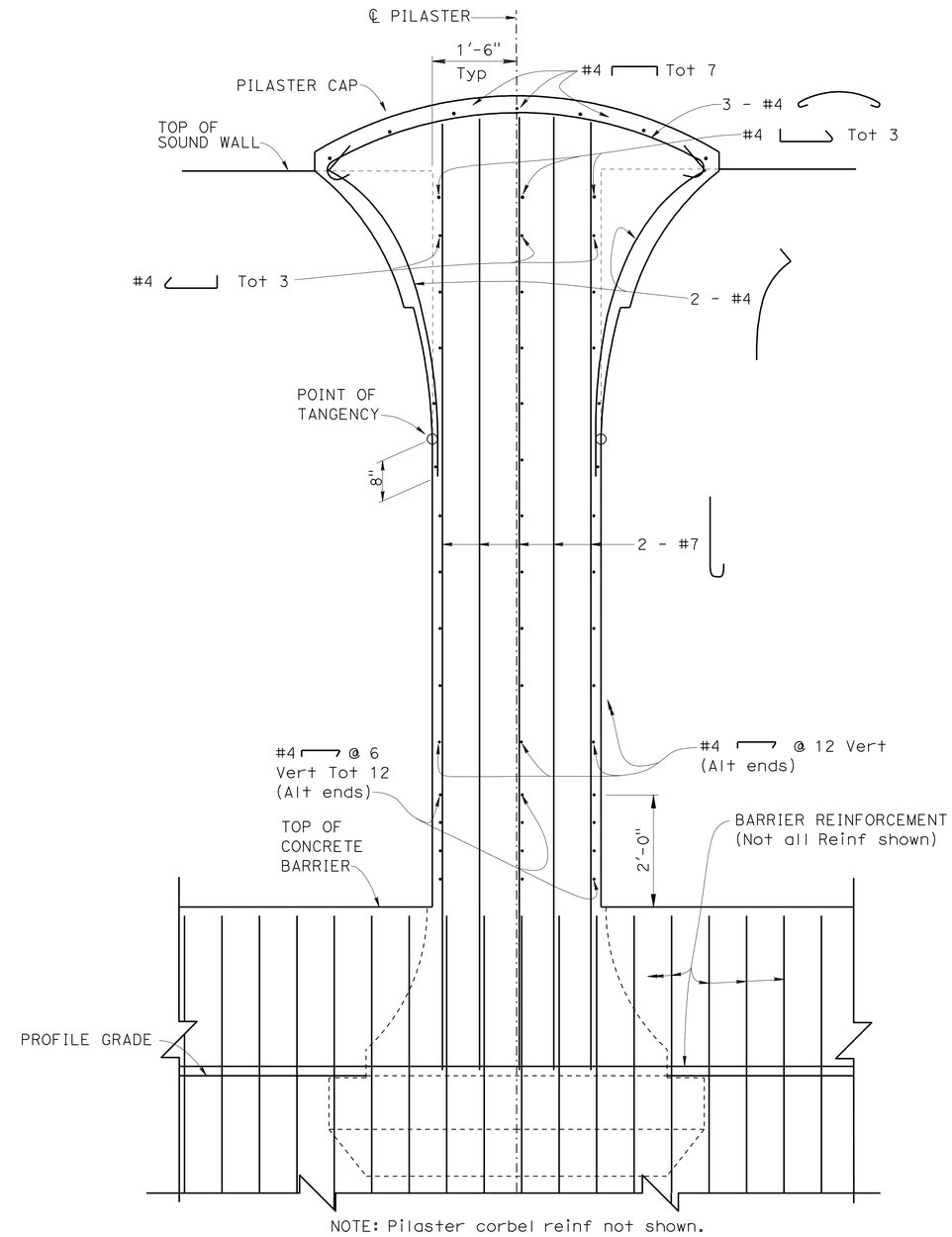

NOTE: Pilaster corbel reinf not shown.

SECTION X-X

¾" = 1'-0"

SW-28

DESIGN	BY Kevin Harper	CHECKED Daniel Sessions	
DETAILS	BY Jin Zhou / Jie Tang	CHECKED Daniel Sessions	
QUANTITIES	BY	CHECKED	

STATE OF CALIFORNIA
DEPARTMENT OF TRANSPORTATION

DIVISION OF ENGINEERING SERVICES
STRUCTURE DESIGN
DESIGN BRANCH 1

BRIDGE NO.
POST MILE

SOUND WALL NO. 160, 204 & 205
PILASTER STRUCTURAL DETAILS NO. 1

STRUCTURES DESIGN DETAIL SHEET (ENGLISH) (REV. 09-01-10)

ORIGINAL SCALE IN INCHES FOR REDUCED PLANS 0 1 2 3

UNIT: 3576
PROJECT NUMBER & PHASE: 07000018331
CONTRACT NO.: 07-215934

DISREGARD PRINTS BEARING EARLIER REVISION DATES

REVISION DATES 12/23/10 12/13/11 12/14/11 SHEET OF

FILE => 721593rd007.dgn

USERNAME => s124496 DATE PLOTTED => 28-MAR-2012 TIME PLOTTED => 11:14

DIST	COUNTY	ROUTE	POST MILES TOTAL PROJECT	SHEET No.	TOTAL SHEETS
07	LA	5	2.4/4.0	504	1288

REGISTERED CIVIL ENGINEER 12-13-11 DATE

3-26-12
PLANS APPROVAL DATE

REGISTERED PROFESSIONAL ENGINEER Kevin Harper No. 42221 Exp. 3-31-12 CIVIL STATE OF CALIFORNIA

The State of California or its officers or agents shall not be responsible for the accuracy or completeness of electronic copies of this plan sheet.

NOTES:

1. For location of "SECTION B-B", "SECTION C-C", "SECTION D-D" and "SECTION G-G", see "PILASTER STRUCTURAL DETAILS NO. 1" sheet.
2. For Pilaster geometry, dimensions and architectural treatments, see "PILASTER ARCHITECTURAL DETAILS" sheets.

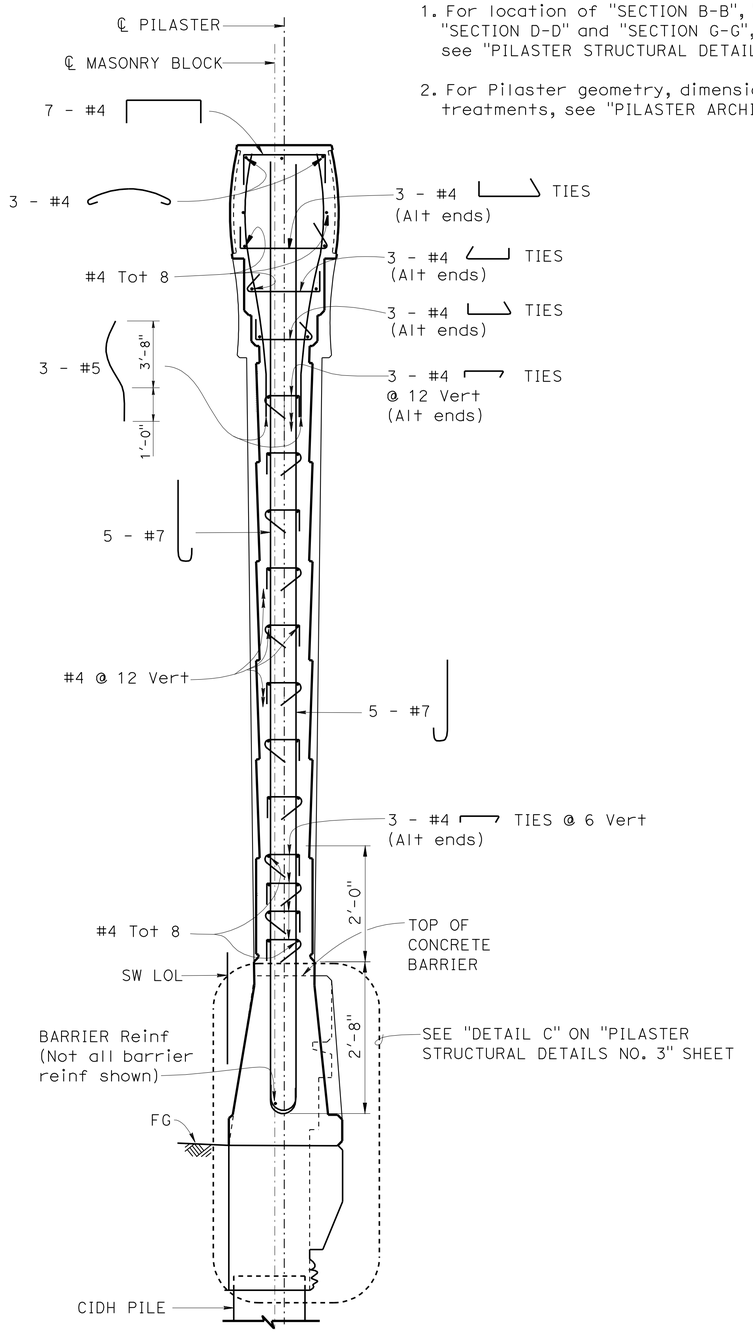

SECTION B-B
3/4" = 1'-0"

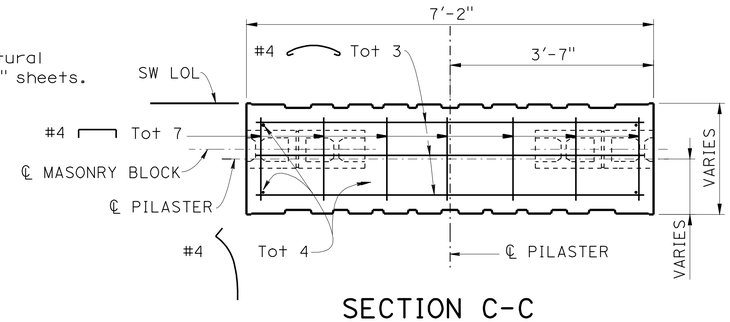

SECTION C-C
3/4" = 1'-0"

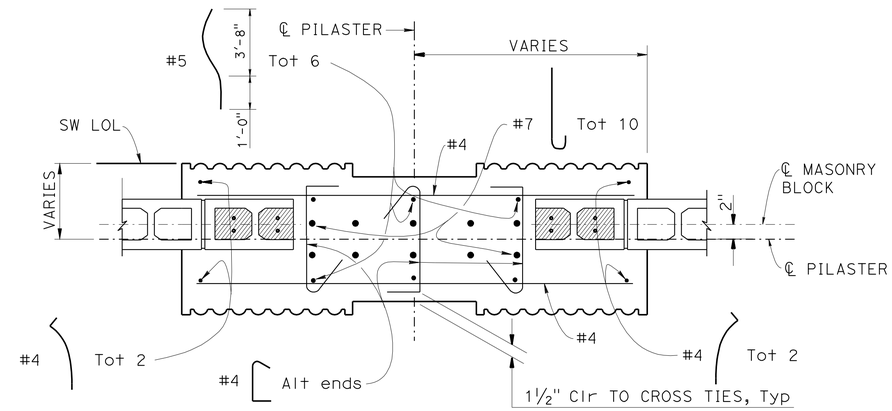

SECTION D-D
1" = 1'-0"

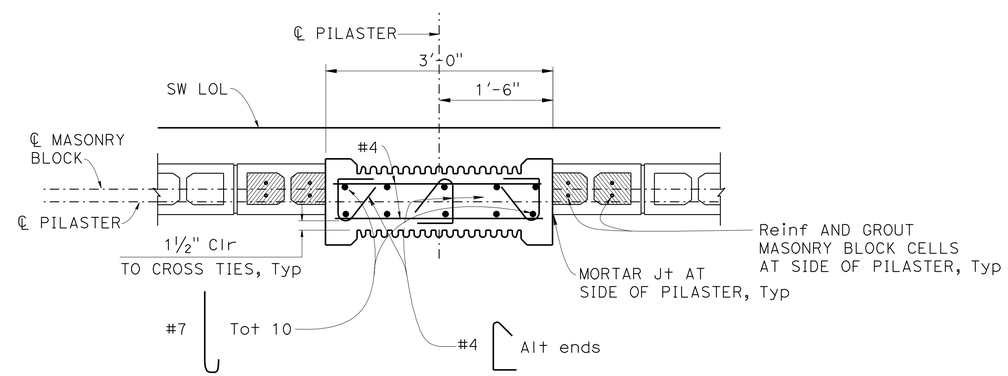

SECTION G-G
1" = 1'-0"

SW-29

DESIGN	BY Kevin Harper	CHECKED Daniel Sessions	
DETAILS	BY Jin Zhou / Jie Tang	CHECKED Daniel Sessions	
QUANTITIES	BY	CHECKED	

STATE OF CALIFORNIA
DEPARTMENT OF TRANSPORTATION

DIVISION OF ENGINEERING SERVICES
STRUCTURE DESIGN
DESIGN BRANCH 1

BRIDGE NO.
POST MILE

SOUND WALL NO. 160, 204 & 205
PILASTER STRUCTURAL DETAILS NO. 2

STRUCTURES DESIGN DETAIL SHEET (ENGLISH) (REV. 09-01-10)

ORIGINAL SCALE IN INCHES FOR REDUCED PLANS 0 1 2 3

UNIT: 3576
PROJECT NUMBER & PHASE: 07000018331
CONTRACT NO.: 07-215934

DISREGARD PRINTS BEARING EARLIER REVISION DATES

REVISION DATES 12/30/10 12/13/11 12/14/11 SHEET OF

FILE => 721593rd008.dgn

USERNAME => s124436 DATE PLOTTED => 28-MAR-2012 TIME PLOTTED => 11:15

DIST	COUNTY	ROUTE	POST MILES TOTAL PROJECT	SHEET No.	TOTAL SHEETS
07	LA	5	2.4/4.0	505	1288

REGISTERED CIVIL ENGINEER 12-13-11 DATE

3-26-12
PLANS APPROVAL DATE

REGISTERED PROFESSIONAL ENGINEER Kevin Harper No. 42221 Exp. 3-31-12 CIVIL STATE OF CALIFORNIA

The State of California or its officers or agents shall not be responsible for the accuracy or completeness of electronic copies of this plan sheet.

NOTES:

1. For location of "DETAIL B", see "PILASTER STRUCTURAL DETAILS NO. 1" sheet.
2. For location of "DETAIL C", see "PILASTER STRUCTURAL DETAILS NO. 2" sheet.

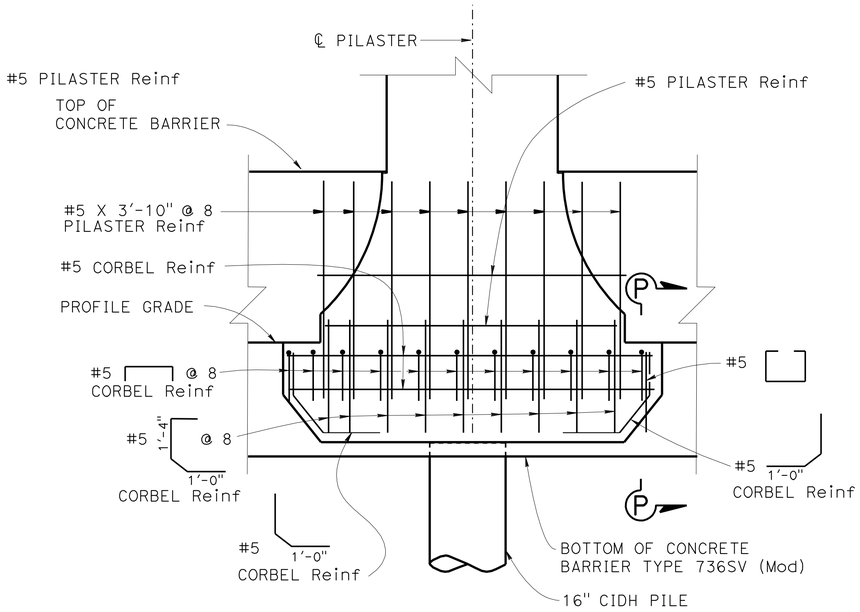

NOTE: Concrete barrier reinf not shown.

DETAIL B

¾" = 1'-0"

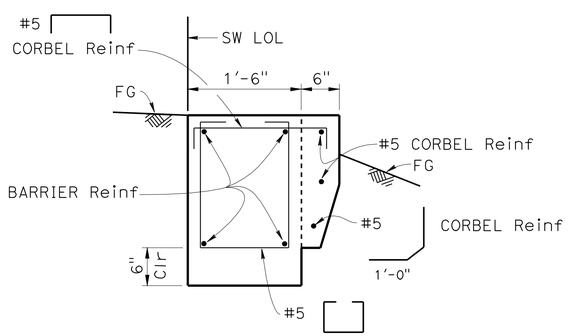

SECTION P-P

1" = 1'-0"

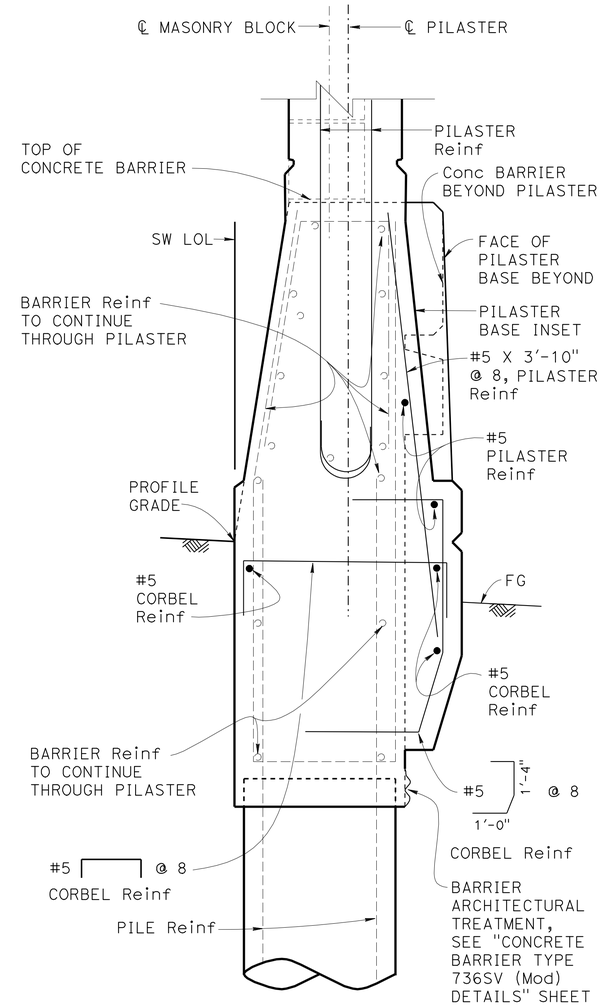

PILASTER CORBEL ON
CONCRETE BARRIER TYPE 736SV (MOD)

DETAIL C

1½" = 1'-0"

SW-30

DESIGN	BY Kevin Harper	CHECKED Daniel Sessions	
DETAILS	BY Jin Zhou / Jie Tang	CHECKED Daniel Sessions	
QUANTITIES	BY	CHECKED	

STATE OF CALIFORNIA
DEPARTMENT OF TRANSPORTATION

DIVISION OF ENGINEERING SERVICES
STRUCTURE DESIGN
DESIGN BRANCH 1

BRIDGE NO.
POST MILE

SOUND WALL NO. 160, 204 & 205
PILASTER STRUCTURAL DETAILS NO. 3

STRUCTURES DESIGN DETAIL SHEET (ENGLISH) (REV. 09-01-10)

ORIGINAL SCALE IN INCHES FOR REDUCED PLANS 0 1 2 3

UNIT: 3576
PROJECT NUMBER & PHASE: 07000018331
CONTRACT NO.: 07-215934

DISREGARD PRINTS BEARING EARLIER REVISION DATES

REVISION DATES 12/30/10 12/13/11 12/14/11 SHEET OF

FILE => 721593rd009.dgn

USERNAME => s124096 DATE PLOTTED => 28-MAR-2012 TIME PLOTTED => 11:15

Dist	COUNTY	ROUTE	POST MILES TOTAL PROJECT	SHEET No.	TOTAL SHEETS
07	LA	5	2.4/4.0	506	1288

George Olguin
LICENSED LANDSCAPE ARCHITECT

3-26-12
PLANS APPROVAL DATE

LICENSED LANDSCAPE ARCHITECT GEORGE OLGUIN No. 4333 George Olguin Signature 08-31-12 Renewal Date 10-10-10 Date STATE OF CALIFORNIA

THE STATE OF CALIFORNIA OR ITS OFFICERS OR AGENTS SHALL NOT BE RESPONSIBLE FOR THE ACCURACY OR COMPLETENESS OF SCANNED COPIES OF THIS PLAN SHEET.

PLANT LIST AND PLANTING SPECIFICATIONS

PLANT GROUP	PLANT No.	SYMBOL	BOTANICAL NAME	COMMON NAME	SIZE	QUANTITY EACH	HOLE SIZE (INCH) Dia	HOLE SIZE (INCH) DEPTH	BASIN TYPE	IRON SULFATE ①	SOIL AMEND ①	COMMERCIAL FERTILIZER ① PLANTING	COMMERCIAL FERTILIZER ① PLT ESTB	BASIN MULCH ①	STAKING	PLANTING LIMITS MINIMUM DISTANCE (Ft) FROM TRVD WAY	PVMT	FENCE	WALL	PAVED DITCH	EARTH DITCH	ON CENTER (Ft)	REMARKS
A	1		DIETES VEGETA	FORTNIGHT LILY	No. 1	35	②	②	I	—	—	0.5 Oz	0.5 Oz	0.05 CY	—	—	3	3	3	6	6	④	SHRUB
	2		JUNIPERUS CHINENSIS 'PFITZERANA'	PFITZER JUNIPER	No. 1	10	②	②	I	—	—	0.5 Oz	0.5 Oz	0.05 CY	—	—	6	6	6	6	8	④	SHRUB
	3		DISTICTIS BUCCINATORIA	BLOOD RED TRUMPET VINE	No. 1	127	②	②	III	0.35 Oz	0.04 CY	0.5 Oz	0.5 Oz	0.08 CY	⑥	—	—	—	—	8	10	30	VINE
	4		PARTHENOCISSUS TRICUSPIDATA	BOSTON IVY	No. 1	394	②	②	III	0.35 Oz	0.04 CY	0.5 Oz	0.5 Oz	0.08 CY	⑥	—	—	—	—	12	15	10	VINE
	5		RHAPHIOLEPIS INDICA 'BALLERINA'	NO COMMON NAME	No. 1	508	②	②	I	—	—	0.5 Oz	0.5 Oz	0.05 CY	—	—	3	3	3	6	6	3	SHRUB
H	6		CARPOBROTUS EDULIS	HOTTENTOT FIG	CUTTINGS	89,524	—	—	—	—	—	15 Oz/ 100 SQFT	15 Oz/ 100 SQFT	—	—	—	6	6	6	6	8	1.5	GROUND COVER
T	7		TURF - SOD	NO COMMON NAME	SOD	10,654 SQFT	—	—	—	—	3 CY/ 1,000 SQFT	10 LBS/ 1,000 SQFT	10 LBS/ 1,000 SQFT	—	—	—	—	—	—	—	—	—	TURF
U	8		CINNAMOMUM CAMPHORA	CAMPHOR TREE	No. 15	28	②	②	I	—	—	5 Oz	5 Oz	0.078 CY	⑥	40	—	30	30	20	22	④	TREE
	9		JACARANDA MIMOSIFOLIA	JACARANDA	No. 15	12	②	②	I	—	—	5 Oz	5 Oz	0.078 CY	⑥	30	—	15	15	15	17	④	TREE
	10		LAGERSTROEMIA INDICA 'ACOMA'	WHITE CRAPE MYRTLE	No. 15	49	②	②	I	—	—	5 Oz	5 Oz	0.078 CY	⑥	30	—	15	15	15	17	④	TREE
	11		LAGERSTROEMIA INDICA 'TUSKEGEE'	DARK PINK CRAPE MYRTLE	No. 15	149	②	②	I	—	—	5 Oz	5 Oz	0.078 CY	⑥	30	—	15	15	15	17	④	TREE
	12		PHOENIX ROEBELENII	PIGMY DATE PALM	No. 15	25	②	②	I	—	—	5 Oz	5 Oz	0.078 CY	—	30	—	15	15	15	17	④	MULTI-TRUNK TREE
	13		PINUS CANARIENSIS	CANARY ISLAND PINE	No. 15	65	②	②	I	—	—	5 Oz	5 Oz	0.078 CY	⑥	30	—	15	15	15	17	④	TREE
	14		PLATANUS RACEMOSA	CALIFORNIA SYCAMORE	No. 15	32	②	②	I	—	—	5 Oz	5 Oz	0.078 CY	⑥	40	—	20	20	10	12	④	TREE
	15		TRISTANIA LAURINA	WATER GUM	No. 15	13	②	②	I	—	—	5 Oz	5 Oz	0.078 CY	⑥	30	—	20	20	20	22	④	TREE
Z	16		WASHINGTONIA ROBUSTA	MEXICAN FAN PALM	B & B 33 ⑥	77	②	②	I	—	—	5 Oz	5 Oz	0.12 CY	—	42	—	10	10	15	17	—	PALM TREE ⑧

APPLICABLE WHEN CIRCLED:

① - QUANTITIES SHOWN ARE "PER PLANT" UNLESS SHOWN AS SQFT OR SQYD APPLICATION RATES.
② - SUFFICIENT TO RECEIVE ROOT BALL.
3 - DOES NOT APPLY TO MULCH AREAS.
④ - AS SHOWN ON PLANS.
5 - UNLESS OTHERWISE SHOWN ON PLANS.
⑥ - SEE DETAIL.
7 - SEE SPECIAL PROVISIONS.
⑧ - HEIGHT OF PALM TREES SHALL BE FROM THE TOP OF THE ROOT BALL TO THE BOTTOM OF THE FIRST FROND
9 - MULCH SHALL BE KEPT 6" AWAY FROM STEM OF PLANT

LEGEND:

ROCK BLANKET (SEE LAYOUT PLANS)

MULCH

MINOR CONCRETE (TEXTURE PAVING) (SEE LAYOUT PLANS)

NOTE:

UNDERLINED PORTIONS OF BOTANICAL NAME INDICATE ABBREVIATIONS USED ON PLANTING PLANS.

PLANT LIST
PL-1

REVISED BY | DATE REVISED
XUAN WU | GEORGE OLGUIN
CALCULATED-DESIGNED BY | CHECKED BY
SENIOR LANDSCAPE ARCHITECT | JENNIFER TAIRA
STATE OF CALIFORNIA - DEPARTMENT OF TRANSPORTATION
Caltrans® LANDSCAPE ARCHITECTURE

LAST REVISION 00-00-00 | DATE PLOTTED => 28-MAR-2012 | TIME PLOTTED => 11:15

Dist	COUNTY	ROUTE	POST MILES TOTAL PROJECT	SHEET No.	TOTAL SHEETS
07	LA	5	2.4/4.0	507	1288

George Olguin
LICENSED LANDSCAPE ARCHITECT

3-26-12
PLANS APPROVAL DATE

LICENSED LANDSCAPE ARCHITECT GEORGE OLGUIN NO. 4333 STATE OF CALIFORNIA
George Olguin
Signature
08-31-12
Renewal Date
10-10-10
Date

THE STATE OF CALIFORNIA OR ITS OFFICERS OR AGENTS SHALL NOT BE RESPONSIBLE FOR THE ACCURACY OR COMPLETENESS OF SCANNED COPIES OF THIS PLAN SHEET.

NOTES:

1. FOR ACCURATE RIGHT OF WAY DATA, CONTACT RIGHT OF WAY ENGINEERING AT THE DISTRICT OFFICE.
2. Exist UTILITY FACILITIES HAVE NOT BEEN SHOWN ON THESE PLANS.

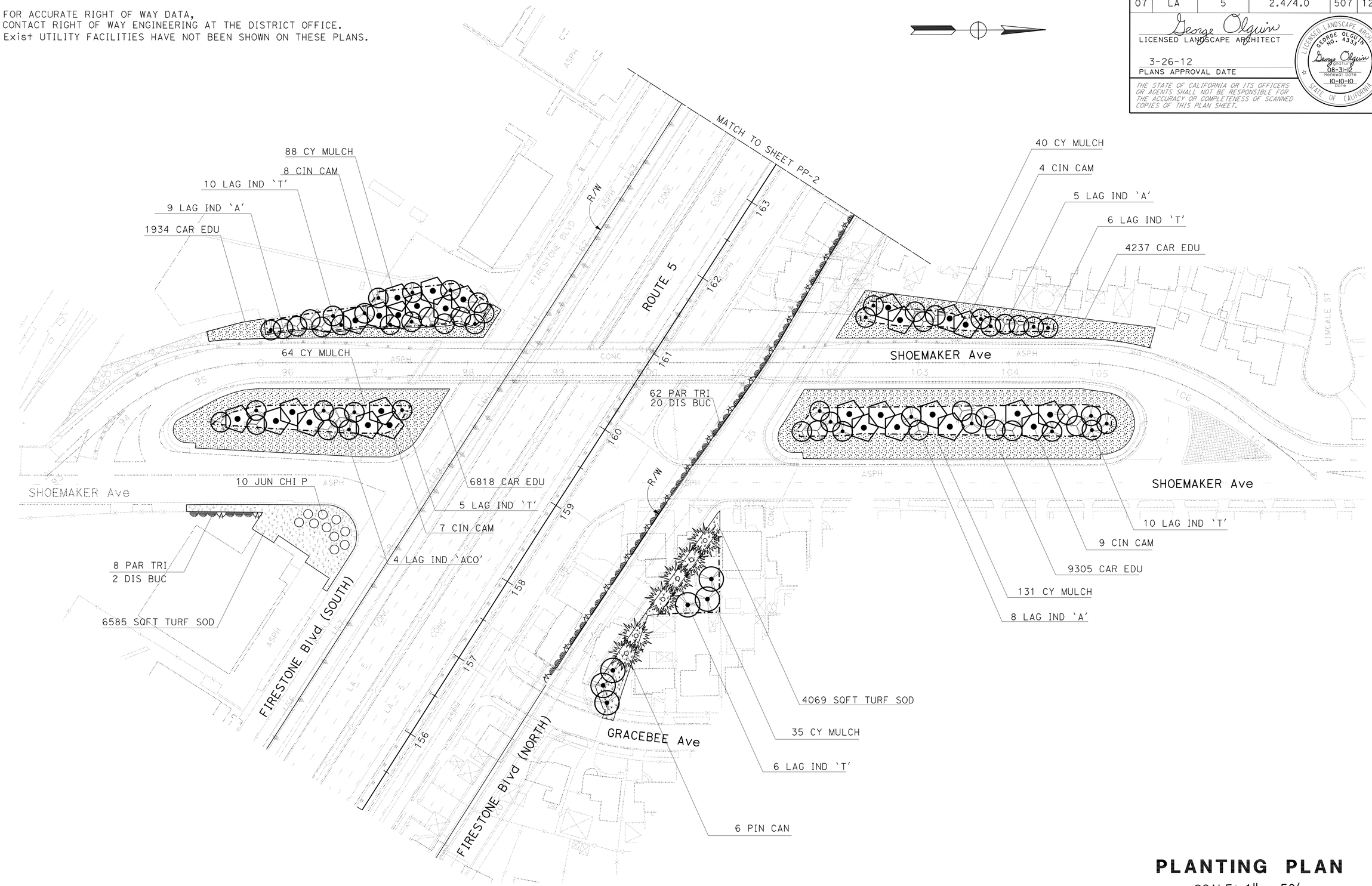

PLANTING PLAN

SCALE: 1" = 50'

PP-1

APPROVED FOR PLANTING WORK ONLY

STATE OF CALIFORNIA - DEPARTMENT OF TRANSPORTATION
Caltrans® LANDSCAPE ARCHITECTURE

SENIOR LANDSCAPE ARCHITECT: JENNIFER TAIRA
CALCULATED-DESIGNED BY: XUAN WU
CHECKED BY: GEORGE OLGUIN
REVISED BY
DATE REVISED

LAST REVISION 00-00-00
DATE PLOTTED => 28-MAR-2012
TIME PLOTTED => 11:08

Dist	COUNTY	ROUTE	POST MILES TOTAL PROJECT	SHEET No.	TOTAL SHEETS
07	LA	5	2.4/4.0	508	1288

George Olguin
LICENSED LANDSCAPE ARCHITECT

3-26-12
PLANS APPROVAL DATE

LICENSED LANDSCAPE ARCHITECT
GEORGE OLGUIN
NO. 4333
George Olguin
Prefered
08-31-12
Renewal Date
10-10-10
Date
STATE OF CALIFORNIA

THE STATE OF CALIFORNIA OR ITS OFFICERS OR AGENTS SHALL NOT BE RESPONSIBLE FOR THE ACCURACY OR COMPLETENESS OF SCANNED COPIES OF THIS PLAN SHEET.

NOTES:

1. FOR ACCURATE RIGHT OF WAY DATA, CONTACT RIGHT OF WAY ENGINEERING AT THE DISTRICT OFFICE.
2. Exist UTILITY FACILITIES HAVE NOT BEEN SHOWN ON THESE PLANS.

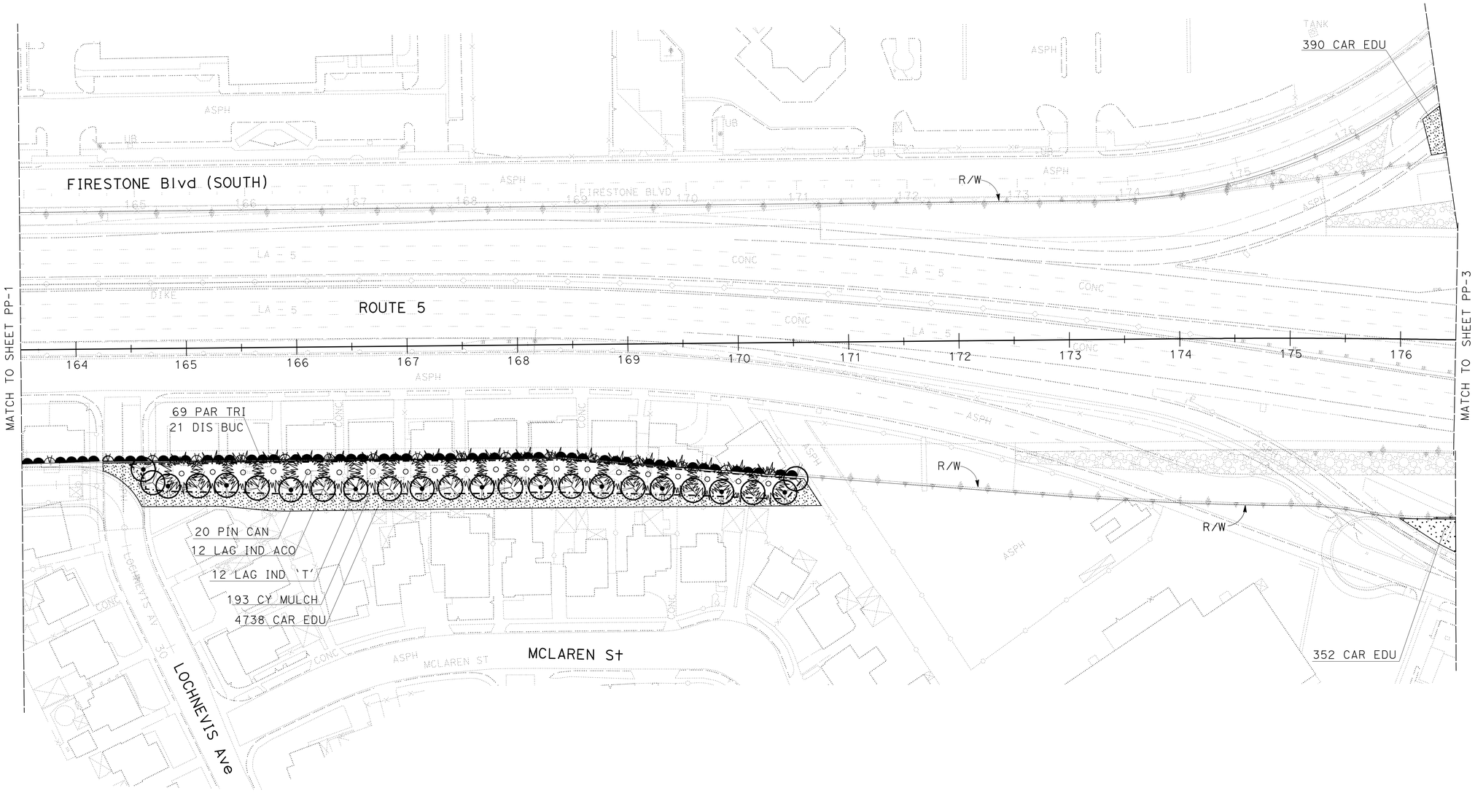

PLANTING PLAN

SCALE: 1" = 50'

PP-2

APPROVED FOR PLANTING WORK ONLY

STATE OF CALIFORNIA - DEPARTMENT OF TRANSPORTATION
Caltrans® LANDSCAPE ARCHITECTURE

SENIOR LANDSCAPE ARCHITECT: JENNIFER TAIRA
CALCULATED-DESIGNED BY: GEORGE OLGUIN
CHECKED BY: XUAN WU
REVISED BY
DATE REVISED

LAST REVISION 00-00-00
DATE PLOTTED => 28-MAR-2012
TIME PLOTTED => 11:08

Dist	COUNTY	ROUTE	POST MILES TOTAL PROJECT	SHEET No.	TOTAL SHEETS
07	LA	5	2.4/4.0	509	1288

George Olguin
LICENSED LANDSCAPE ARCHITECT

3-26-12
PLANS APPROVAL DATE

LICENSED LANDSCAPE ARCHITECT GEORGE OLGUIN NO. 4333 George Olguin Expiration Date 08-31-12 Renewal Date 10-10-10 Date STATE OF CALIFORNIA

THE STATE OF CALIFORNIA OR ITS OFFICERS OR AGENTS SHALL NOT BE RESPONSIBLE FOR THE ACCURACY OR COMPLETENESS OF SCANNED COPIES OF THIS PLAN SHEET.

NOTES:

1. FOR ACCURATE RIGHT OF WAY DATA, CONTACT RIGHT OF WAY ENGINEERING AT THE DISTRICT OFFICE.
2. Exist UTILITY FACILITIES HAVE NOT BEEN SHOWN ON THESE PLANS.

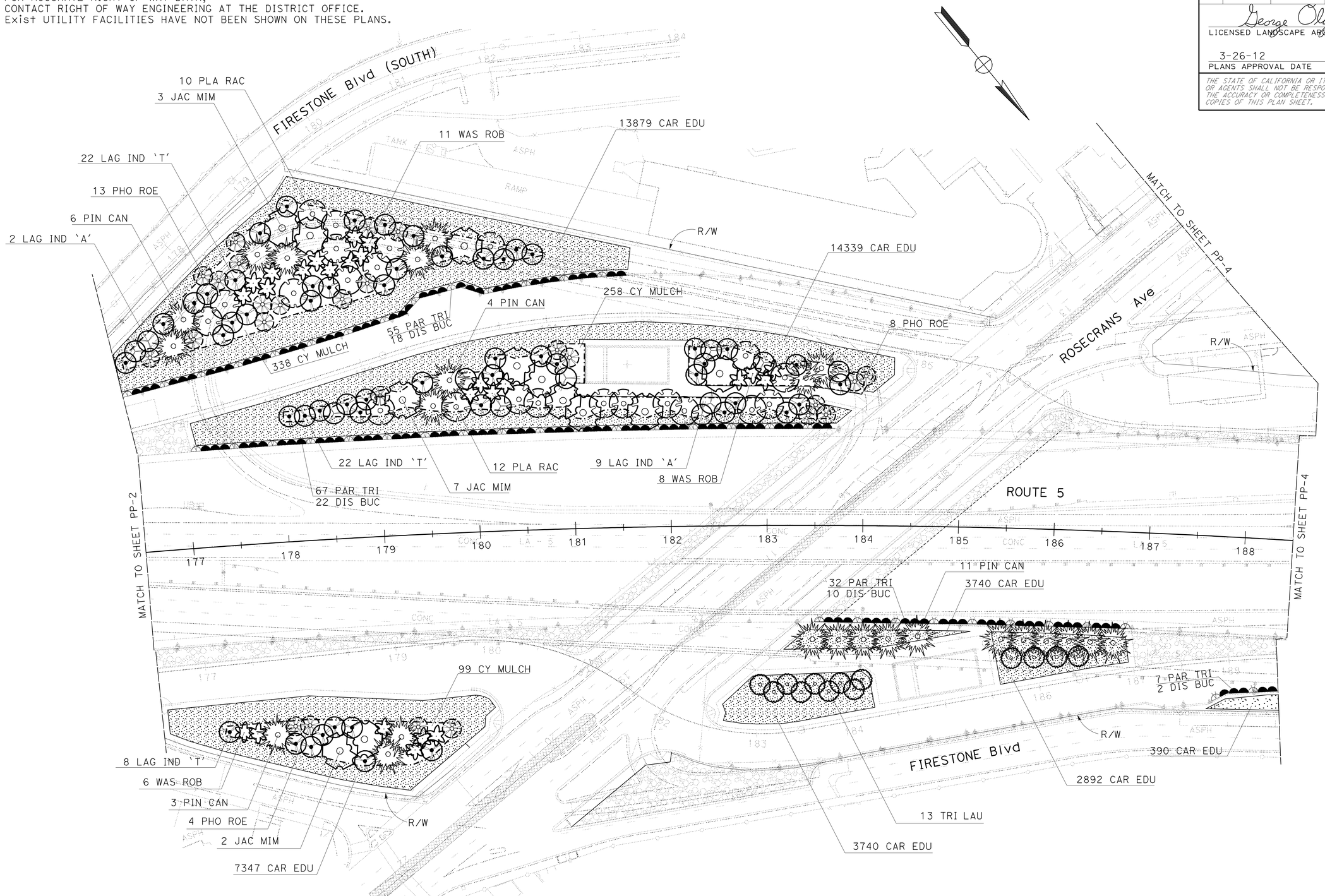

PLANTING PLAN

SCALE: 1" = 50'

PP-3

APPROVED FOR PLANTING WORK ONLY

STATE OF CALIFORNIA - DEPARTMENT OF TRANSPORTATION
Caltrans® LANDSCAPE ARCHITECTURE

SENIOR LANDSCAPE ARCHITECT: JENNIFER TAIRA
CALCULATED-DESIGNED BY: GEORGE OLGUIN
CHECKED BY: XUAN WU
REVISED BY
DATE REVISED

LAST REVISION 00-00-00
DATE PLOTTED => 28-MAR-2012
TIME PLOTTED => 11:08

Dist	COUNTY	ROUTE	POST MILES TOTAL PROJECT	SHEET No.	TOTAL SHEETS
07	LA	5	2.4/4.0	510	1288

George Olguin
LICENSED LANDSCAPE ARCHITECT

3-26-12
PLANS APPROVAL DATE

LICENSED LANDSCAPE ARCHITECT
GEORGE OLGUIN
NO. 4333
George Olguin
Signature
08-31-12
Renewal Date
10-10-10
Date
STATE OF CALIFORNIA

THE STATE OF CALIFORNIA OR ITS OFFICERS OR AGENTS SHALL NOT BE RESPONSIBLE FOR THE ACCURACY OR COMPLETENESS OF SCANNED COPIES OF THIS PLAN SHEET.

NOTES:
1. FOR ACCURATE RIGHT OF WAY DATA, CONTACT RIGHT OF WAY ENGINEERING AT THE DISTRICT OFFICE.
2. Exist UTILITY FACILITIES HAVE NOT BEEN SHOWN ON THESE PLANS.

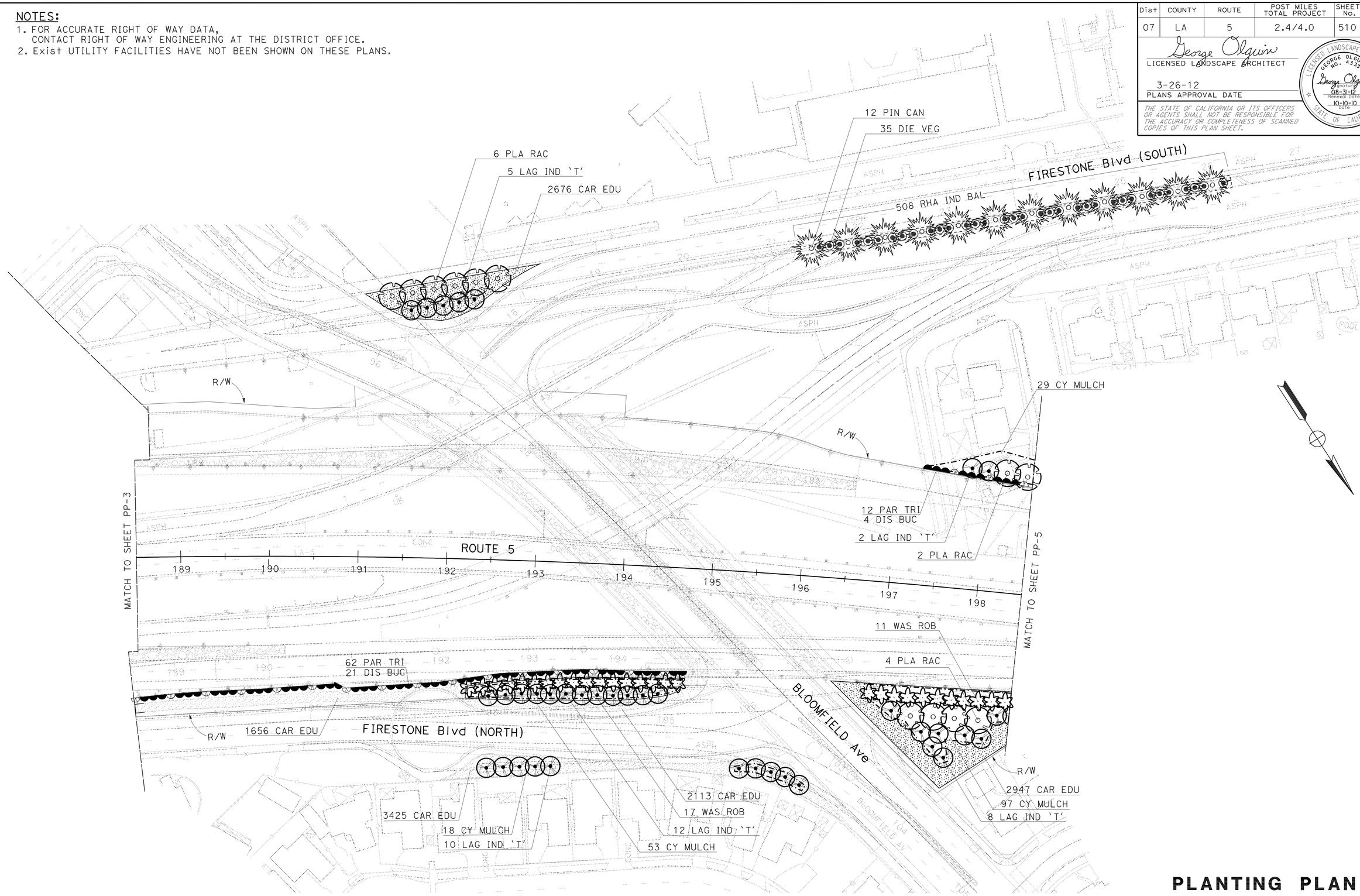

PLANTING PLAN

SCALE: 1" = 50'

PP-4

APPROVED FOR PLANTING WORK ONLY

REVISED BY	DATE REVISED

CALCULATED-DESIGNED BY	CHECKED BY
XUAN WU	GEORGE OLGUIN

SENIOR LANDSCAPE ARCHITECT: JENNIFER TAIRA

STATE OF CALIFORNIA - DEPARTMENT OF TRANSPORTATION
Caltrans® LANDSCAPE ARCHITECTURE

LAST REVISION 00-00-00
DATE PLOTTED => 28-MAR-2012
TIME PLOTTED => 11:09

Dist	COUNTY	ROUTE	POST MILES TOTAL PROJECT	SHEET No.	TOTAL SHEETS
07	LA	5	2.4/4.0	511	1288

George Olguin
LICENSED LANDSCAPE ARCHITECT

3-26-12
PLANS APPROVAL DATE

LICENSED LANDSCAPE ARCHITECT
GEORGE OLGUIN
No. 4333
George Olguin
08-31-12
10-10-10
STATE OF CALIFORNIA

THE STATE OF CALIFORNIA OR ITS OFFICERS OR AGENTS SHALL NOT BE RESPONSIBLE FOR THE ACCURACY OR COMPLETENESS OF SCANNED COPIES OF THIS PLAN SHEET.

NOTES:

1. FOR ACCURATE RIGHT OF WAY DATA, CONTACT RIGHT OF WAY ENGINEERING AT THE DISTRICT OFFICE.
2. Exist UTILITY FACILITIES HAVE NOT BEEN SHOWN ON THESE PLANS.

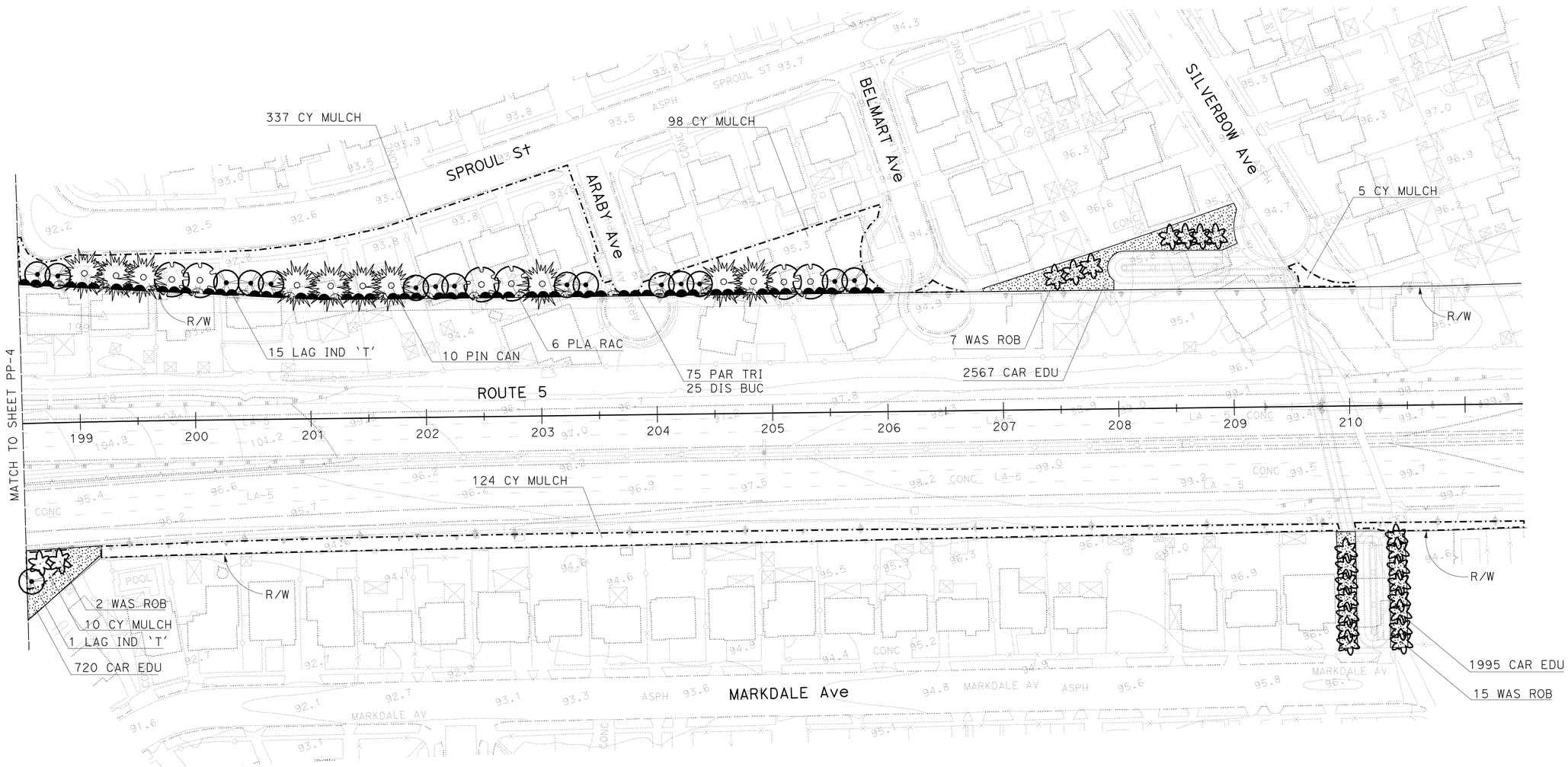

PLANTING PLAN

SCALE: 1" = 50'

PP-5

APPROVED FOR PLANTING WORK ONLY

STATE OF CALIFORNIA - DEPARTMENT OF TRANSPORTATION
Caltrans® LANDSCAPE ARCHITECTURE

SENIOR LANDSCAPE ARCHITECT: JENNIFER TAIRA
CALCULATED-DESIGNED BY: XUAN WU
CHECKED BY: GEORGE OLGUIN
REVISED BY
DATE REVISED

LAST REVISION 00-00-00
DATE PLOTTED => 28-MAR-2012
TIME PLOTTED => 11:09

Dist	COUNTY	ROUTE	POST MILES TOTAL PROJECT	SHEET No.	TOTAL SHEETS
07	LA	5	2.4/4.0	512	1288

George Olguin
LICENSED LANDSCAPE ARCHITECT

3-26-12
PLANS APPROVAL DATE

LICENSED LANDSCAPE ARCHITECT GEORGE OLGUIN NO. 4333 STATE OF CALIFORNIA
George Olguin signature
08-31-12 Renewal Date
10-10-10 Date

THE STATE OF CALIFORNIA OR ITS OFFICERS OR AGENTS SHALL NOT BE RESPONSIBLE FOR THE ACCURACY OR COMPLETENESS OF SCANNED COPIES OF THIS PLAN SHEET.

NOTES:

1. FOR ACCURATE RIGHT OF WAY DATA, CONTACT RIGHT OF WAY ENGINEERING AT THE DISTRICT OFFICE.
2. Exist UTILITY FACILITIES HAVE NOT BEEN SHOWN ON THESE PLANS.

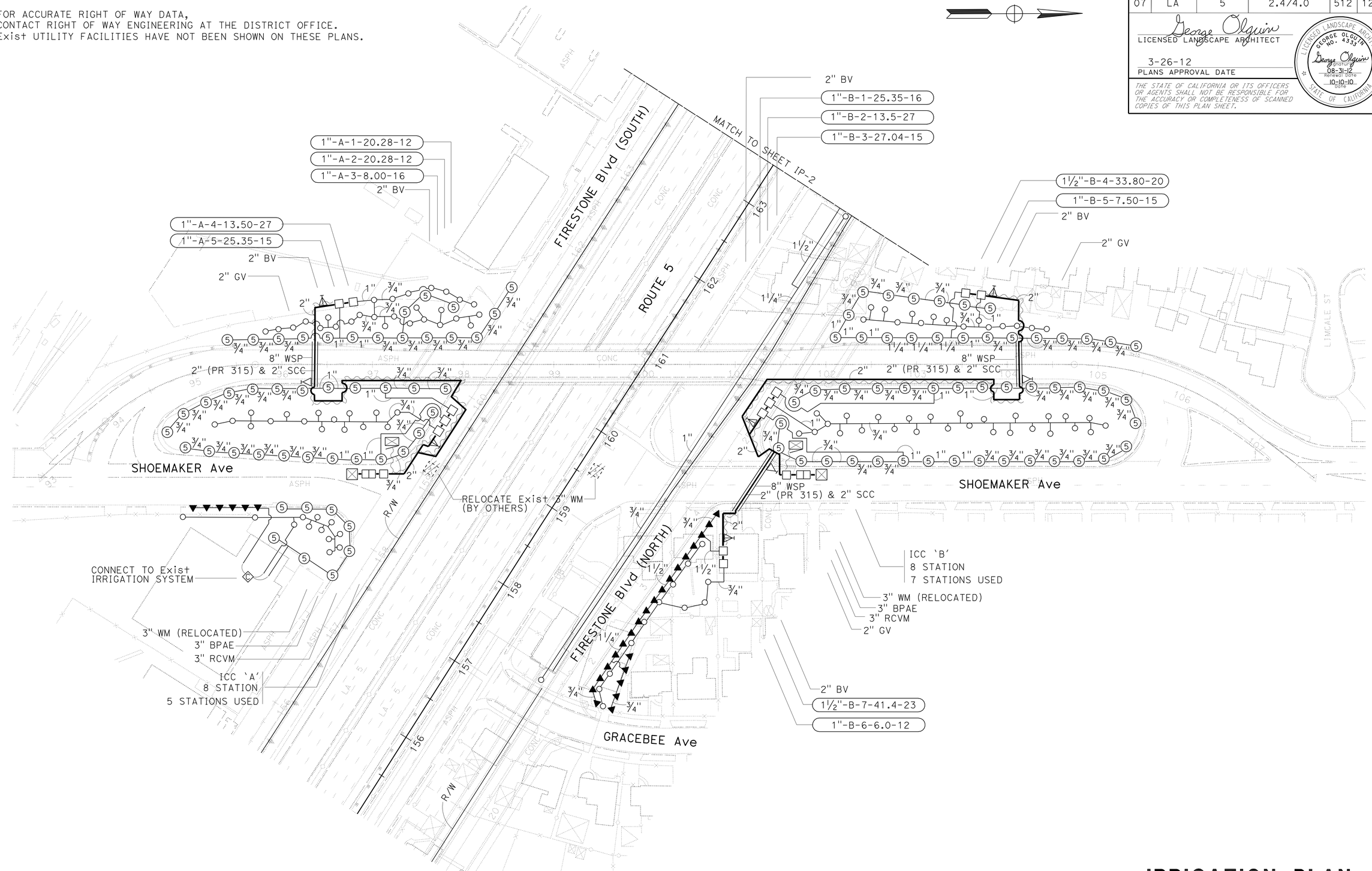

APPROVED FOR IRRIGATION WORK ONLY

IRRIGATION PLAN

SCALE: 1" = 50'

IP-1

STATE OF CALIFORNIA - DEPARTMENT OF TRANSPORTATION
Caltrans LANDSCAPE ARCHITECTURE
SENIOR LANDSCAPE ARCHITECT: JENNIFER TAIRA
CALCULATED-DESIGNED BY: GEORGE OLGUIN
CHECKED BY: XUAN WU
REVISED BY
DATE REVISED

LAST REVISION 00-00-00
DATE PLOTTED => 28-MAR-2012
TIME PLOTTED => 11:09

Dist	COUNTY	ROUTE	POST MILES TOTAL PROJECT	SHEET No.	TOTAL SHEETS
07	LA	5	2.4/4.0	513	1288

George Olguin
LICENSED LANDSCAPE ARCHITECT

3-26-12
PLANS APPROVAL DATE

THE STATE OF CALIFORNIA OR ITS OFFICERS OR AGENTS SHALL NOT BE RESPONSIBLE FOR THE ACCURACY OR COMPLETENESS OF SCANNED COPIES OF THIS PLAN SHEET.

LICENSED LANDSCAPE ARCHITECT
GEORGE OLGUIN
NO. 4333
George Olguin
Signature
08-31-12
Renewal Date
10-10-10
Date
STATE OF CALIFORNIA

NOTES:

1. FOR ACCURATE RIGHT OF WAY DATA, CONTACT RIGHT OF WAY ENGINEERING AT THE DISTRICT OFFICE.
2. Exist UTILITY FACILITIES HAVE NOT BEEN SHOWN ON THESE PLANS.

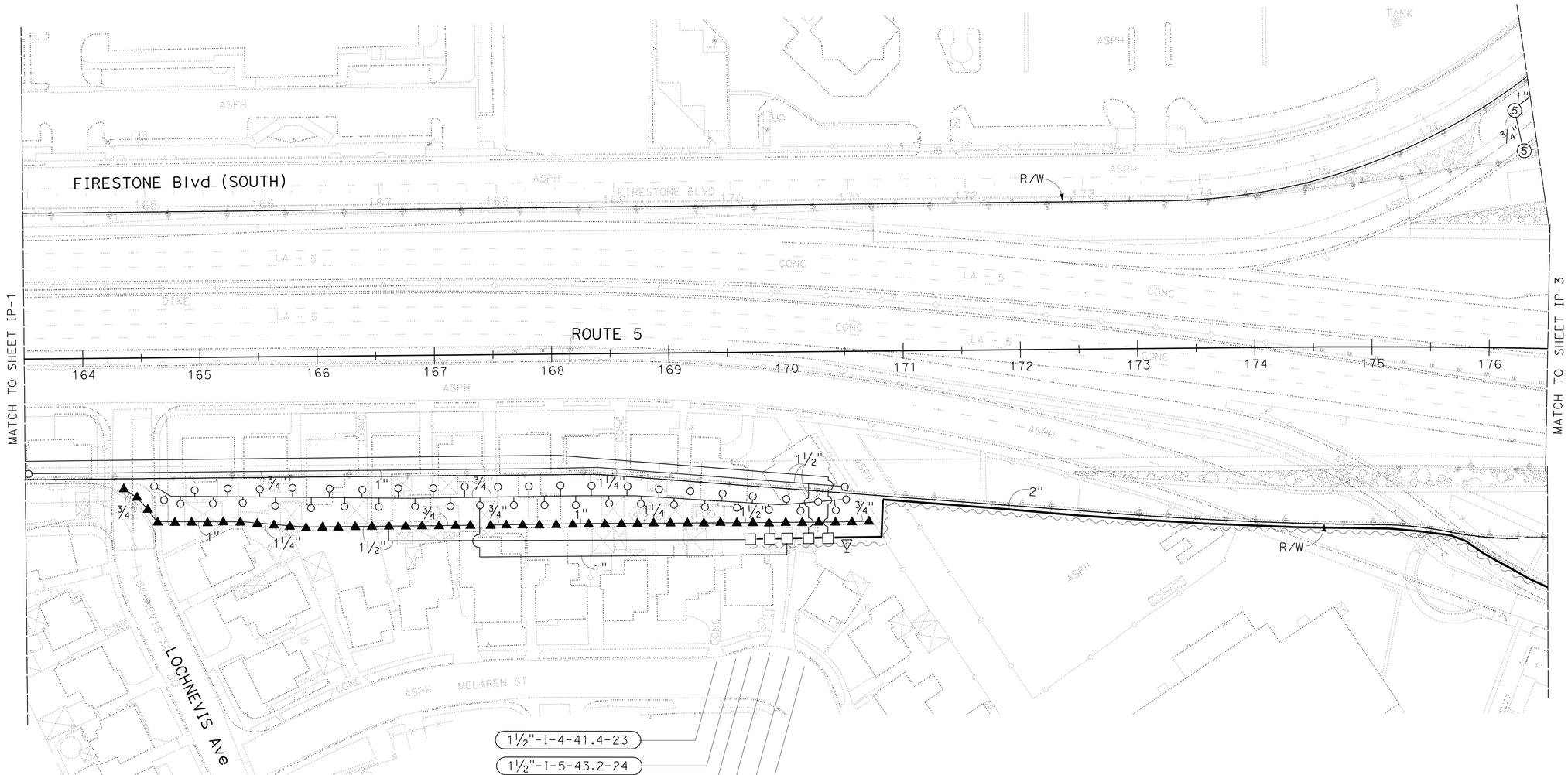

IRRIGATION PLAN

SCALE: 1" = 50'

IP-2

APPROVED FOR IRRIGATION WORK ONLY

STATE OF CALIFORNIA - DEPARTMENT OF TRANSPORTATION
Caltrans® LANDSCAPE ARCHITECTURE

SENIOR LANDSCAPE ARCHITECT: JENNIFER TAIRA
CALCULATED-DESIGNED BY: XUAN WU
CHECKED BY: GEORGE OLGUIN
REVISED BY
DATE REVISED

LAST REVISION 00-00-00
DATE PLOTTED => 28-MAR-2012
TIME PLOTTED => 11:10

Dist	COUNTY	ROUTE	POST MILES TOTAL PROJECT	SHEET No.	TOTAL SHEETS
07	LA	5	2.4/4.0	514	1288

George Olguin
LICENSED LANDSCAPE ARCHITECT

3-26-12
PLANS APPROVAL DATE

LICENSED LANDSCAPE ARCHITECT
GEORGE OLGUIN
NO. 4335
George Olguin
Signature
08-31-12
Renewal Date
10-10-10
Date
STATE OF CALIFORNIA

THE STATE OF CALIFORNIA OR ITS OFFICERS OR AGENTS SHALL NOT BE RESPONSIBLE FOR THE ACCURACY OR COMPLETENESS OF SCANNED COPIES OF THIS PLAN SHEET.

NOTES:

1. FOR ACCURATE RIGHT OF WAY DATA, CONTACT RIGHT OF WAY ENGINEERING AT THE DISTRICT OFFICE.
2. Exist UTILITY FACILITIES HAVE NOT BEEN SHOWN ON THESE PLANS.

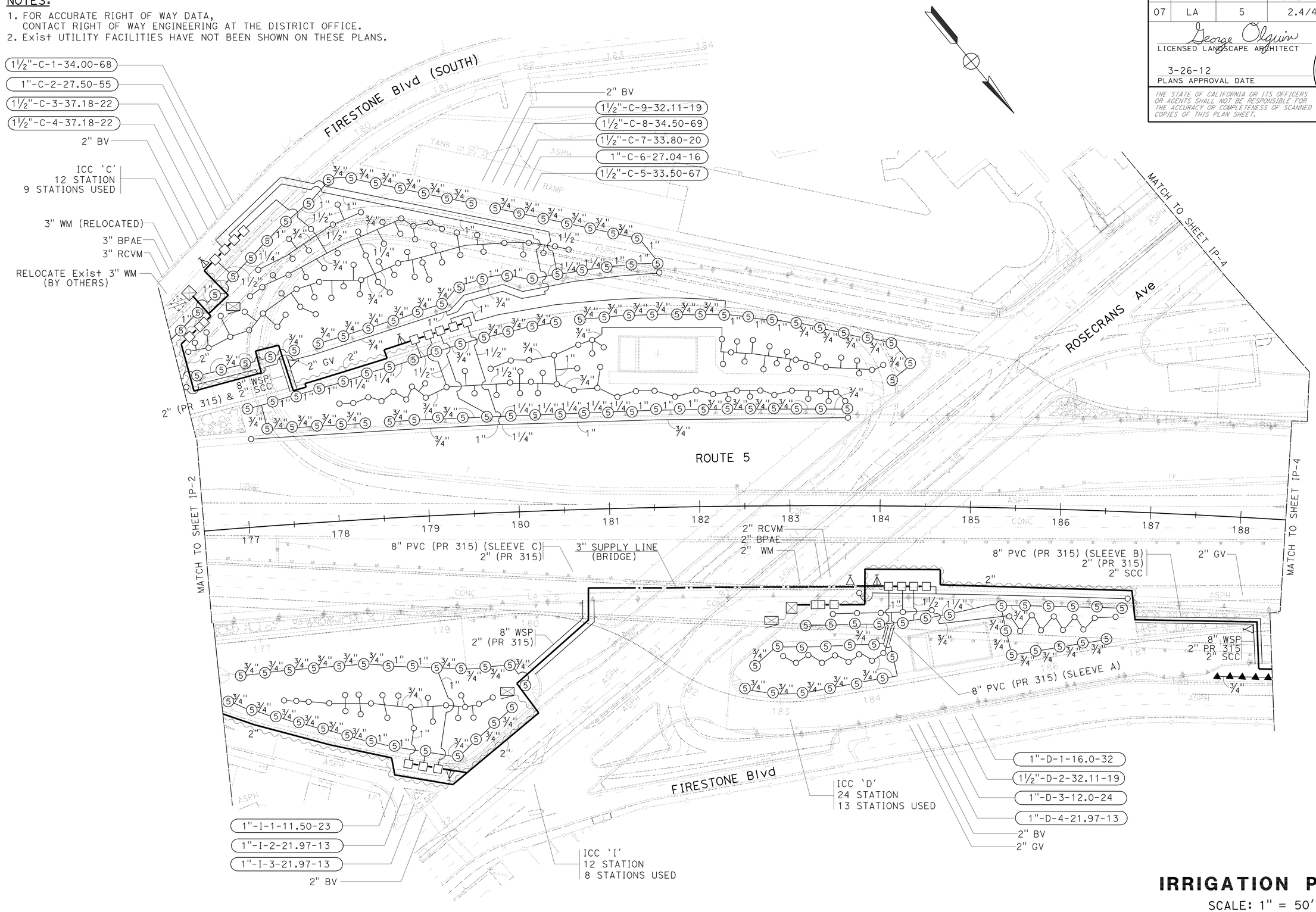

IRRIGATION PLAN

SCALE: 1" = 50'

IP-3

APPROVED FOR IRRIGATION WORK ONLY

REVISED BY | DATE REVISED
XUAN WU | GEORGE OLGUIN
CALCULATED-DESIGNED BY | CHECKED BY
SENIOR LANDSCAPE ARCHITECT | JENNIFER TAIRA
STATE OF CALIFORNIA - DEPARTMENT OF TRANSPORTATION
Caltrans® LANDSCAPE ARCHITECTURE

LAST REVISION 00-00-00 | DATE PLOTTED => 28-MAR-2012 | TIME PLOTTED => 11:10

Dist	COUNTY	ROUTE	POST MILES TOTAL PROJECT	SHEET No.	TOTAL SHEETS
07	LA	5	2.4/4.0	515	1288

George Olguin
LICENSED LANDSCAPE ARCHITECT

3-26-12
PLANS APPROVAL DATE

LICENSED LANDSCAPE ARCHITECT
GEORGE OLGUIN
No. 4333
George Olguin
Approved
08-31-12
Renewal Date
10-10-10
Date
STATE OF CALIFORNIA

THE STATE OF CALIFORNIA OR ITS OFFICERS OR AGENTS SHALL NOT BE RESPONSIBLE FOR THE ACCURACY OR COMPLETENESS OF SCANNED COPIES OF THIS PLAN SHEET.

NOTES:

1. FOR ACCURATE RIGHT OF WAY DATA, CONTACT RIGHT OF WAY ENGINEERING AT THE DISTRICT OFFICE.
2. Exist UTILITY FACILITIES HAVE NOT BEEN SHOWN ON THESE PLANS.

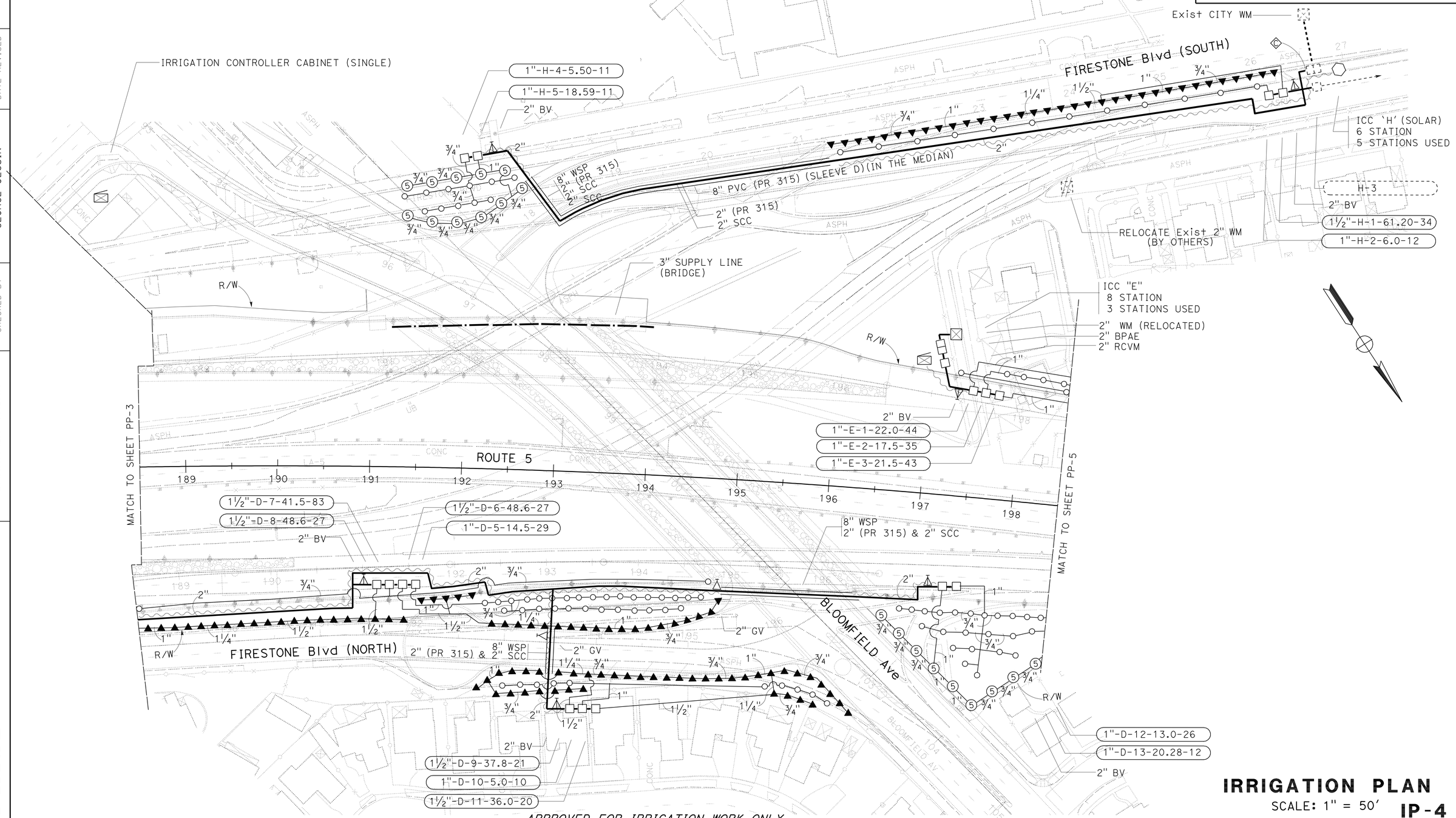

APPROVED FOR IRRIGATION WORK ONLY

IRRIGATION PLAN

SCALE: 1" = 50'

IP-4

REVISED BY	DATE REVISED
XUAN WU	GEORGE OLGUIN

CALCULATED-DESIGNED BY
CHECKED BY

SENIOR LANDSCAPE ARCHITECT
JENNIFER TAIRA

STATE OF CALIFORNIA - DEPARTMENT OF TRANSPORTATION
Caltrans® LANDSCAPE ARCHITECTURE

LAST REVISION 00-00-00
DATE PLOTTED => 29-MAR-2012
TIME PLOTTED => 08:35

Dist	COUNTY	ROUTE	POST MILES TOTAL PROJECT	SHEET No.	TOTAL SHEETS
07	LA	5	2.4/4.0	516	1288

George Olguin
LICENSED LANDSCAPE ARCHITECT

3-26-12
PLANS APPROVAL DATE

LICENSED LANDSCAPE ARCHITECT
GEORGE OLGUIN
No. 4333
George Olguin
Signature
08-31-12
Renewal Date
10-10-10
Date
STATE OF CALIFORNIA

THE STATE OF CALIFORNIA OR ITS OFFICERS OR AGENTS SHALL NOT BE RESPONSIBLE FOR THE ACCURACY OR COMPLETENESS OF SCANNED COPIES OF THIS PLAN SHEET.

NOTES:

1. FOR ACCURATE RIGHT OF WAY DATA, CONTACT RIGHT OF WAY ENGINEERING AT THE DISTRICT OFFICE.
2. Exist UTILITY FACILITIES HAVE NOT BEEN SHOWN ON THESE PLANS.

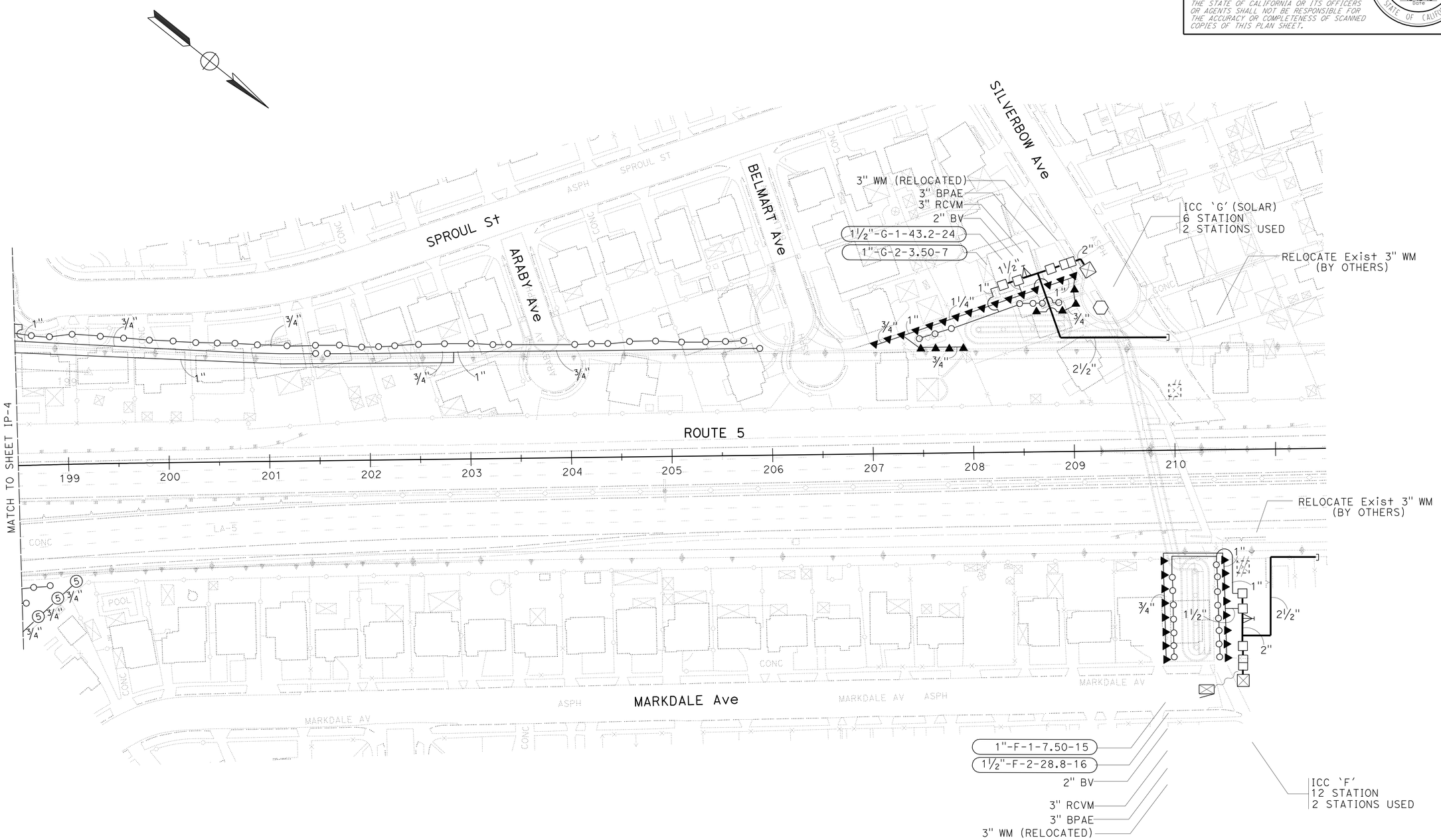

IRRIGATION PLAN

SCALE: 1" = 50'

IP-5

APPROVED FOR IRRIGATION WORK ONLY

STATE OF CALIFORNIA - DEPARTMENT OF TRANSPORTATION
Caltrans® LANDSCAPE ARCHITECTURE

SENIOR LANDSCAPE ARCHITECT: JENNIFER TAIRA
CALCULATED-DESIGNED BY: XUAN WU
CHECKED BY: GEORGE OLGUIN
REVISED BY
DATE REVISED

LAST REVISION 00-00-00
DATE PLOTTED => 28-MAR-2012
TIME PLOTTED => 11:10

Dist	COUNTY	ROUTE	POST MILES TOTAL PROJECT	SHEET No.	TOTAL SHEETS
07	LA	5	2.4/4.0	517	1288

George Olguin
LICENSED LANDSCAPE ARCHITECT

3-26-12
PLANS APPROVAL DATE

LICENSED LANDSCAPE ARCHITECT GEORGE OLGUIN NO. 4333 STATE OF CALIFORNIA
George Olguin 3-26-12
08-31-12 Renewal Date
10-10-10 Date

THE STATE OF CALIFORNIA OR ITS OFFICERS OR AGENTS SHALL NOT BE RESPONSIBLE FOR THE ACCURACY OR COMPLETENESS OF SCANNED COPIES OF THIS PLAN SHEET.

SPRINKLER SCHEDULE

SYMBOL	TYPE	DESCRIPTION	SPRAY PATTERN	OPERATING PRESSURE (PSI)	PRESSURE COMPENSATING	PLUS/MINUS 5% ② DISCHARGE: GALLONS PER MINUTE (GPM)	GALLONS PER HOUR (GPH)	RADIUS (F†)	WIDTH x LENGTH (F†)	MATERIAL	NOZZLE SIZE (INCH)	INLET CONNECTION (NPT INCH)	POSITIVE-LOCKING ADJ ARC STOP	BACKSPLASH PREVENTER	DIFFUSER PIN	DISTANCE CONTROL FLAP	ADJ DISCHARGE	RISER: TYPE	MATERIAL: PLASTIC	MATERIAL: GALVANIZED	SIZE (IPS INCH)	HEIGHT (INCH)	FLOW SHUTOFF DEVICE	⑤ SWING JOINT (TYPE)	RISER SUPPORT	SPRINKLER PROTECTOR (TYPE)	REMARKS
⑤	A-5	GEAR DRIVEN	P	35	—	1.69	—	27	—	PL	—	½	—	—	—	—	X	IV	—	X	½	18	X	III	—	—	①
▲	B-2	SHRUB SPRAY	P	30	—	1.8	—	14	—	PL	—	½	—	—	—	—	—	—	X	—	½	12	—	II	—	—	12" POP UP
○	C-2	FLOOD BUBBLER	—	30	X	.50	—	—	—	PL	—	½	—	—	—	—	X	V	X	—	½	4	—	—	—	—	

X IN BOX DENOTES REQUIREMENT

APPLICABLE WHEN CIRCLED BELOW:

① - SEE SPECIAL PROVISIONS.
② - IF A PRESSURE COMPENSATING DEVICE IS SPECIFIED, THE DISCHARGE AND RADII SHOWN REFLECT ITS USE.
3 - ARC STOP SHALL BE FITTED WITH A NUT AND BOLT.
4 - VINYL-COATED CAST IRON HOUSING.
⑤ - SWING JOINTS REQUIRED ADJACENT TO SHOULDERS, CURBS, SIDEWALKS, AND DIKES.
6 - UNLESS OTHERWISE SHOWN ON PLANS.

ABBREVIATIONS

F — FULL CIRCLE
P — PART CIRCLE
F/P — FULL/PART CIRCLE
Q — QUARTER CIRCLE
T — THIRD CIRCLE
H — HALF CIRCLE
TT — TWO THIRD CIRCLE
TQ — THREE QUARTER CIRCLE
CST — CENTER STRIP
SST — SIDE STRIP
EST — END STRIP
F† — FEET/FOOT
GPM — GALLONS PER MINUTE
GPH — GALLONS PER HOUR
Adj — ADJUSTABLE
PL — PLASTIC
B/B — BRASS/BRONZE
B/PL — BRASS/PLASTIC
B/B/PL — BRASS/BRONZE/PLASTIC
NPT — NATIONAL PIPE THREAD
IPS — IRON PIPE SIZE
PSI — POUNDS PER SQUARE INCH

IRRIGATION CROSSOVERS

LOCATION: LINE	STATION	SIDE: R†	SIDE: L†	CONDUIT TYPE ④ SIZE (INCH)	CONDUIT TYPE ④ LENGTH (LF)	CONDUIT TYPE ⑤ SIZE (INCH)	CONDUIT TYPE ⑤ LENGTH (LF)	(N) WATER LINE CROSSOVER SIZE (INCH)	(N) SPRINKLER CONTROL CROSSOVER SIZE (INCH)
ON SHOEMAKER AVE OVERCROSSING	96+35	X	X	50	—	—	—	2	2
ON SHOEMAKER AVE OVERCROSSING	104+15	X	X	50	—	—	—	2	2
ON SHOEMAKER AVE	12+78	X	X	81	—	—	—	2	2
ON FIRESTONE BLVD (NORTH)	193+50	—	—	50	—	—	—	2	2
ON BLOOMFIELD AVE	101+77	X	X	150	—	—	—	2	2
SB ON RAMP FROM ROSECRANS AVE	177+75	—	—	40	—	—	—	2	2
NB OFF RAMP TO ROSECRANS AVE	180+60	—	—	88	—	—	—	2	2
NB ON RAMP FROM ROSECRANS AVE	188+35	—	—	42	—	—	—	2	2
SLEEVE A (SEE PLAN IP-3)	—	—	—	—	—	21	—	1	—
SLEEVE B (SEE PLAN IP-3)	—	—	—	—	—	155	—	2	2
SLEEVE C (SEE PLAN IP-3)	—	—	—	—	—	25	—	2	2
SLEEVE D (SEE PLAN IP-4)	—	—	—	—	—	305	—	2	2
ON FIRESTONE BLVD SB (SEE IP-4)	18+23	—	X	47	—	—	—	2	2
TOTAL				598		506			

CONDUIT TYPE

(APPLICABLE WHEN CIRCLED BELOW AND SHOWN UNDER THE 'CONDUIT TYPE' COLUMN HEADING)

1 BITUMINOUS COATED CORRUGATED STEEL PIPE (0.064 INCH THICK)
2 CORRUGATED STEEL PIPE (0.064 INCH THICK)
3 CORRUGATED HIGH DENSITY POLYETHYLENE PIPE
④ WELDED STEEL PIPE CONDUIT
⑤ PVC CLASS 315 IPS PLASTIC PIPE

(N) - NOT A SEPARATE PAY ITEM, FOR INFORMATION ONLY
X - DENOTES REQUIREMENT

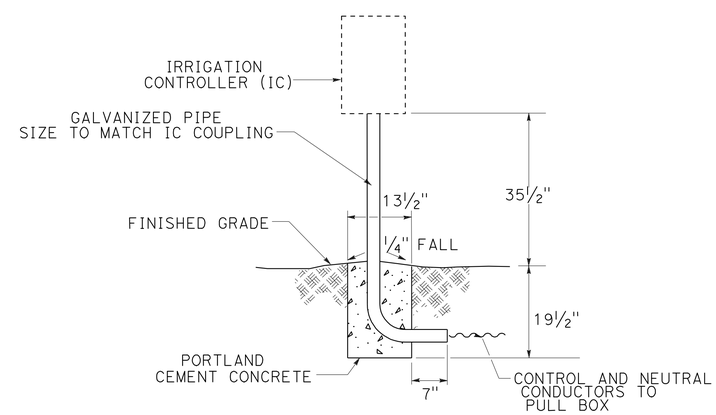

SOLAR IRRIGATION CONTROLLER

SPRINKLER SCHEDULE

NO SCALE

LD-1

STATE OF CALIFORNIA - DEPARTMENT OF TRANSPORTATION
Caltrans® LANDSCAPE ARCHITECTURE
SENIOR LANDSCAPE ARCHITECT: JENNIFER TAIRA
CALCULATED-DESIGNED BY: GEORGE OLGUIN
CHECKED BY: XUAN WU
REVISED BY
DATE REVISED

LAST REVISION 00-00-00
DATE PLOTTED => 28-MAR-2012
TIME PLOTTED => 11:10

Dist	COUNTY	ROUTE	POST MILES TOTAL PROJECT	SHEET No.	TOTAL SHEETS
07	LA	5	2.4/4.0	518	1288

George Olguin
LICENSED LANDSCAPE ARCHITECT

3-26-12
PLANS APPROVAL DATE

LICENSED LANDSCAPE ARCHITECT
GEORGE OLGUIN
No. 4333
George Olguin
Signature
08-31-12
Renewal Date
10-10-10
Date
STATE OF CALIFORNIA

THE STATE OF CALIFORNIA OR ITS OFFICERS OR AGENTS SHALL NOT BE RESPONSIBLE FOR THE ACCURACY OR COMPLETENESS OF SCANNED COPIES OF THIS PLAN SHEET.

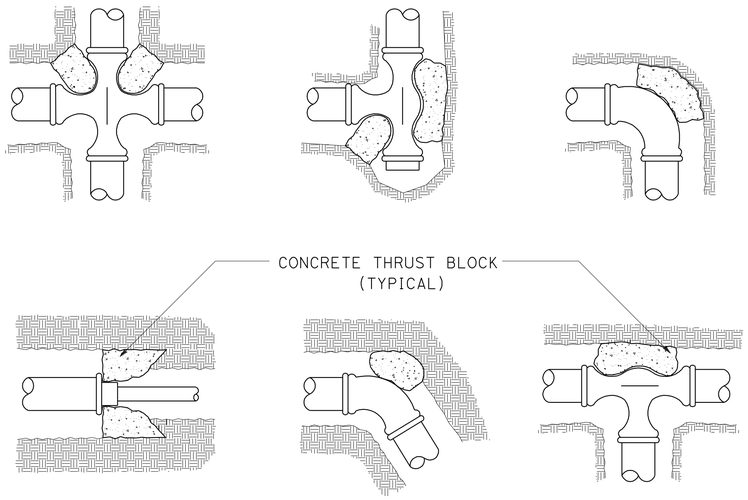

THRUST BLOCKS

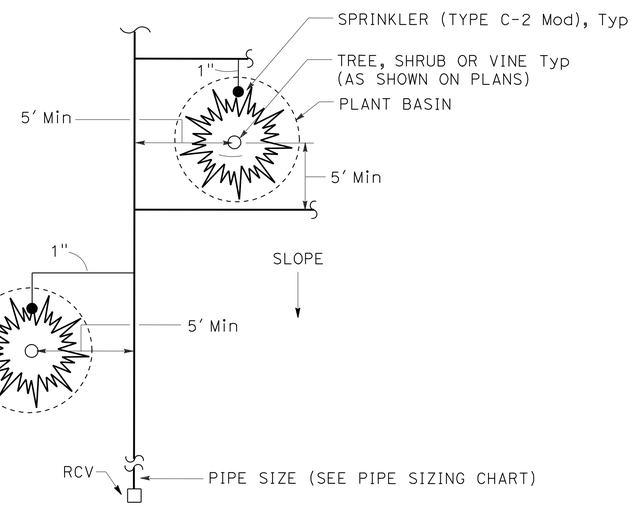

PLAN

SPRINKLER (TYPE C-2 MOD)

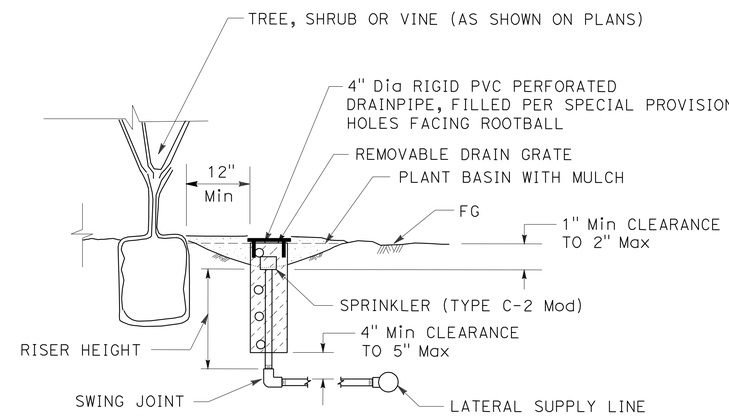

NOTE:
INSTALL SPRINKLER (TYPE C-2 Mod) ON UP-HILL SIDE OF PLANT WHEN ON SLOPE.

SECTION

SPRINKLER (TYPE C-2 MOD)

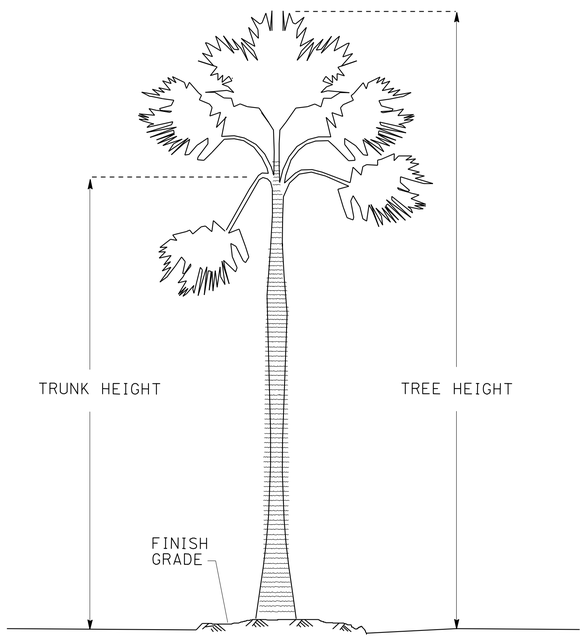

ELEVATION

PALMATE PALMS

LANDSCAPE DETAILS

NO SCALE

LD-2

REVISED BY	DATE REVISED

CALCULATED-DESIGNED BY: XUAN WU
CHECKED BY: GEORGE OLGUIN

SENIOR LANDSCAPE ARCHITECT: JENNIFER TAIRA

STATE OF CALIFORNIA - DEPARTMENT OF TRANSPORTATION
Caltrans® LANDSCAPE ARCHITECTURE

LAST REVISION 00-00-00 | DATE PLOTTED => 28-MAR-2012 | TIME PLOTTED => 11:10

FOR ACCURATE RIGHT OF WAY DATA, CONTACT
RIGHT OF WAY ENGINEERING AT THE DISTRICT OFFICE.

GENERAL NOTES: (SHEETS E-1 TO E-43)

1. FOR INSTALLATION OF CONDUIT, PULL BOXES, FOUNDATIONS AND RELATED ELECTROLIER EQUIPMENT IN SOUNDWALL BARRIER AND BRIDGE CONCRETE BARRIER, SEE SOUNDWALL AND STRUCTURE PLANS DETAIL SHEETS.
2. ALL FREEWAY LIGHTING SHALL USE LED LUMINAIRE.

ABBREVIATIONS: (SHEETS E-1 TO E-53)

6 PR#19	6 PAIR #19 CABLE
COAX	COAXIAL
CTID	CALTRANS IDENTIFICATION
CTNET	CALTRAN ADVANCED TRAFFIC SIGNAL MANAGEMENT NETWORK SYSTEM
DC	DIRECT CURRENT
DLC (#12)	TWO #12 STRANDED TINNED COPPER SHIELDED TWISTED PAIR CONDUCTORS
GA	GREEN ARROW
GPRS	GENERAL PACKET RADIO SERVICE
GPS	GLOBAL POSITIONING SYSTEM
ID	IDENTIFICATION
IP	INTERNET PROTOCOL
J-BOX	JUNCTION BOX
LARTMC	LOS ANGELES REGIONAL TMC
MVDS CABLE	12 PAIR #20 MVDS CONTROL CABLE
21TS	TYPE 15TS MODIFIED STANDARD
MVDS	MICROWAVE VEHICLE DETECTION SYSYTEM
MTA	MVDS TERMINATION ASSEMBLY
(N)	NEW
OLA	OVERLAP A
PDA	POWER DISTRIBUTION ASSEMBLY
PR	PAIR
RA	RED ARROW
RX	RECEIVE
SCE	SOUTHERN CALIFORNIA EDISON
TB	TERMINAL BLOCK
TX	TRANSMIT
VAC	VOLTS ALTERNATING CURRENT
VDC	VOLTS DIRECT CURRENT
VIVDS	VIDEO IMAGE VEHICLE DETECTION SYSTEM
VPN	VIRTUAL PRIVATE NETWORK
YA	YELLOW ARROW

Dist	COUNTY	ROUTE	POST MILES TOTAL PROJECT	SHEET No.	TOTAL SHEETS
07	LA	5	2.4/4.0	519	1288

REGISTERED ELECTRICAL ENGINEER — DATE 11/2/11

3-26-12
PLANS APPROVAL DATE

REGISTERED PROFESSIONAL ENGINEER CECILIO BURCIAGA No. E015302 Exp. 03-31-13 ELECTRICAL STATE OF CALIFORNIA

THE STATE OF CALIFORNIA OR ITS OFFICERS OR AGENTS SHALL NOT BE RESPONSIBLE FOR THE ACCURACY OR COMPLETENESS OF SCANNED COPIES OF THIS PLAN SHEET.

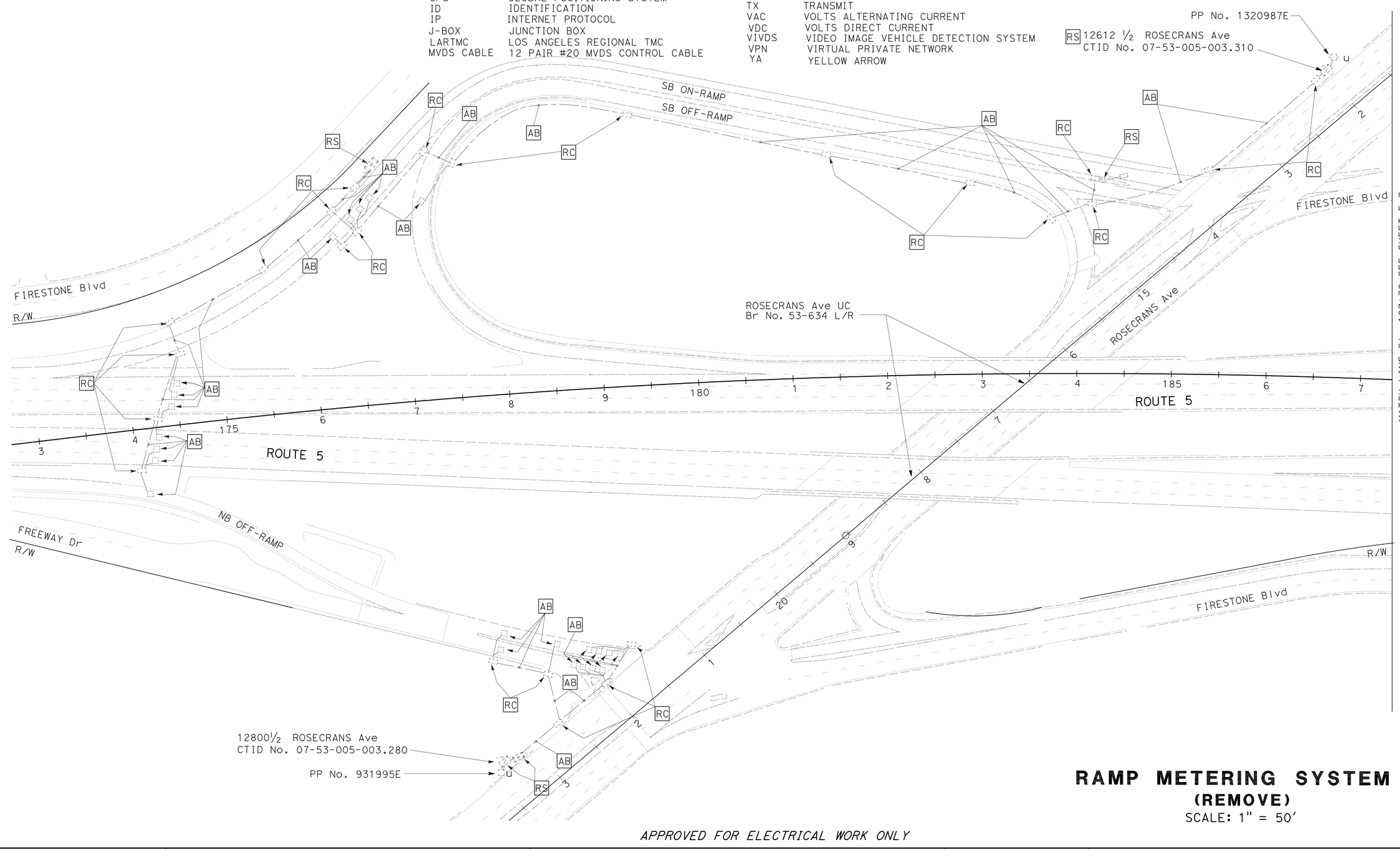

RAMP METERING SYSTEM
(REMOVE)
SCALE: 1" = 50'

E-1

APPROVED FOR ELECTRICAL WORK ONLY

STATE OF CALIFORNIA - DEPARTMENT OF TRANSPORTATION
Caltrans® TRAFFIC DESIGN

FUNCTIONAL SUPERVISOR: YI TSAU
CALCULATED-DESIGNED BY: LUKE SUN
CHECKED BY: CECILIO BURCIAGA
REVISED BY / DATE REVISED

LAST REVISION 00-00-00
DATE PLOTTED => 28-MAR-2012
TIME PLOTTED => 13:20

FOR ACCURATE RIGHT OF WAY DATA, CONTACT
RIGHT OF WAY ENGINEERING AT THE DISTRICT OFFICE.

Dist	COUNTY	ROUTE	POST MILES TOTAL PROJECT	SHEET No.	TOTAL SHEETS
07	LA	5	2.4/4.0	520	1288

REGISTERED ELECTRICAL ENGINEER 11/2/11 DATE

3-26-12
PLANS APPROVAL DATE

REGISTERED PROFESSIONAL ENGINEER
CECILIO BURCIAGA
No. E015302
Exp. 03-31-13
ELECTRICAL
STATE OF CALIFORNIA

THE STATE OF CALIFORNIA OR ITS OFFICERS OR AGENTS SHALL NOT BE RESPONSIBLE FOR THE ACCURACY OR COMPLETENESS OF SCANNED COPIES OF THIS PLAN SHEET.

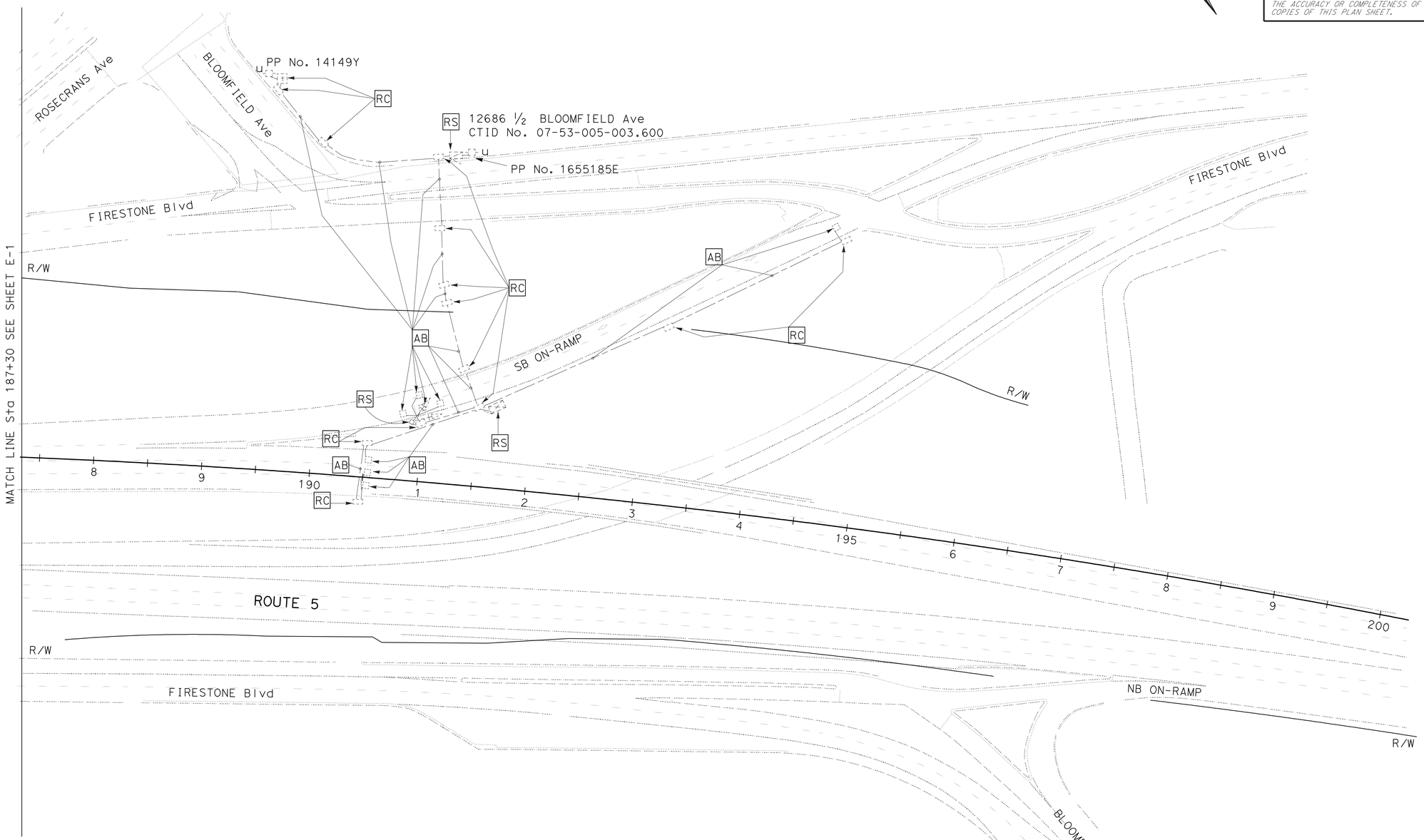

RAMP METERING SYSTEM
(REMOVE)
SCALE: 1" = 50'

E-2

APPROVED FOR ELECTRICAL WORK ONLY

STATE OF CALIFORNIA - DEPARTMENT OF TRANSPORTATION
Caltrans
TRAFFIC DESIGN

FUNCTIONAL SUPERVISOR: YI TSAU
CALCULATED-DESIGNED BY: LUKE SUN
CHECKED BY: CECILIO BURCIAGA
REVISED BY
DATE REVISED

LAST REVISION 00-00-00
DATE PLOTTED => 28-MAR-2012
TIME PLOTTED => 13:15

BORDER LAST REVISED 7/2/2010
USERNAME => s114937
DGN FILE => 721593ua002.dgn
RELATIVE BORDER SCALE IS IN INCHES 0 1 2 3
UNIT 1880
PROJECT NUMBER & PHASE 07000018331

Dist	COUNTY	ROUTE	POST MILES TOTAL PROJECT	SHEET No.	TOTAL SHEETS
07	LA	5	2.4/4.0	521	1288

REGISTERED ELECTRICAL ENGINEER 11/2/11 DATE

3-26-12
PLANS APPROVAL DATE

REGISTERED PROFESSIONAL ENGINEER CECILIO BURCIAGA No. E015302 Exp. 03-31-13 ELECTRICAL STATE OF CALIFORNIA

THE STATE OF CALIFORNIA OR ITS OFFICERS OR AGENTS SHALL NOT BE RESPONSIBLE FOR THE ACCURACY OR COMPLETENESS OF SCANNED COPIES OF THIS PLAN SHEET.

FOR ACCURATE RIGHT OF WAY DATA, CONTACT
RIGHT OF WAY ENGINEERING AT THE DISTRICT OFFICE.

GENERAL NOTE: (SHEETS E-3 TO E-7)

1. PRIOR TO THE START OF ANY CONSTRUCTION OF RAMP METERING ELEMENTS, THE CONTRACTOR SHALL INFORM TRAFFIC ENGINEER AT (323-259-1843) OF RAMP METERING BRANCH 2 WEEKS IN ADVANCE TO ENSURE THE PRE-MARKED LOCATIONS OF STOP BARS, CABINETS, METER ON SIGNS, FLASHING BEACONS, LOOPS, ETC, ARE CORRECT.

PROJECT NOTES: (THIS SHEET ONLY)

1. INSTALL TYPE H SERVICE RISER.
2. 3"C, MT (SCE WILL INSTALL CONDUCTORS).
3. 120/240 V METERED TYPE III-CF SERVICE EQUIPMENT ENCLOSURE WITH:

METER 1: CIRCUIT BREAKERS	METER 2: CIRCUIT BREAKER
1-100 A, 240 V, 2P, CB - MAIN	1-100 A, 240 V, 2P, CB - MAIN
2- 30 A, 240 V, 2P, CB - FREEWAY LIGHTING AND SIGN ILLUMINATION	1- 50 A, 120 V, 1P, CB - SIGNAL
1- 30 A, 120 V, 1P, CB - RAMP METERING	1- 30 A, 120 V, 1P, CB - SIGNAL LIGHTING (UNMETERED)
1- 15 A, 120 V, 1P, CB - PEU	1- 15 A, 120 V, 1P, CB - IISNS
1- 30 A, 120 V, 1P, CB - CCTV	1- 15 A, 120 V, 1P, CB - PEU
3- 20 A, 120 V, 1P, CB - IRRIGATION	
CTID No. 07-53-005R-002.191 ADDRESS: 12601 1/4 ROSECRANS Ave, NORWALK	CTID No. 07-53-005R-002.193 ADDRESS: 12601 3/4 ROSECRANS Ave, NORWALK

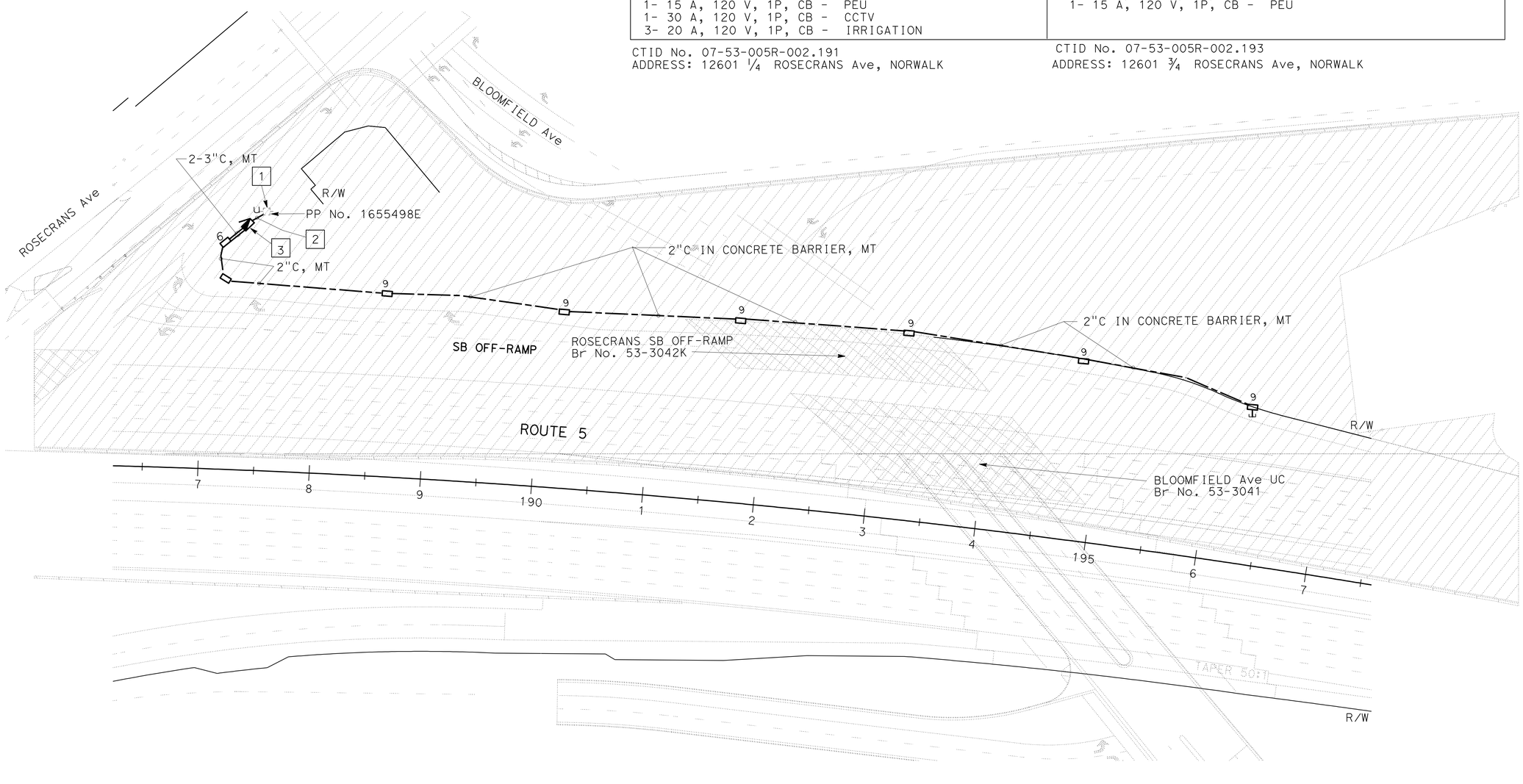

RAMP METERING SYSTEM
(STAGE 1 PHASE 3)
SCALEL: 1" = 50'

E-3

APPROVED FOR ELECTRICAL WORK ONLY

STATE OF CALIFORNIA - DEPARTMENT OF TRANSPORTATION
Caltrans TRAFFIC DESIGN
FUNCTIONAL SUPERVISOR: YI TSAU
CALCULATED-DESIGNED BY: LUKE SUN
CHECKED BY: CECILIO BURCIAGA
REVISED BY
DATE REVISED

LAST REVISION 00-00-00
DATE PLOTTED => 29-MAR-2012
TIME PLOTTED => 12:13

BORDER LAST REVISED 7/2/2010
USERNAME => s121614
DGN FILE => 721593ua003.dgn
RELATIVE BORDER SCALE IS IN INCHES 0 1 2 3
UNIT 1880
PROJECT NUMBER & PHASE 07000018331

Dist	COUNTY	ROUTE	POST MILES TOTAL PROJECT	SHEET No.	TOTAL SHEETS
07	LA	5	2.4/4.0	522	1288

REGISTERED ELECTRICAL ENGINEER — DATE 11/2/11

3-26-12
PLANS APPROVAL DATE

REGISTERED PROFESSIONAL ENGINEER — CECILIO BURCIAGA — No. E015302 — Exp. 03-31-13 — ELECTRICAL — STATE OF CALIFORNIA

THE STATE OF CALIFORNIA OR ITS OFFICERS OR AGENTS SHALL NOT BE RESPONSIBLE FOR THE ACCURACY OR COMPLETENESS OF SCANNED COPIES OF THIS PLAN SHEET.

FOR ACCURATE RIGHT OF WAY DATA, CONTACT
RIGHT OF WAY ENGINEERING AT THE DISTRICT OFFICE.

PROJECT NOTES: (THIS SHEET ONLY)

1. STATE-FURNISHED MODEL 2070 CONTROLLER ASSEMBLY. INSTALL WIRELESS MODEM AND CABLE. (SEE SHEET E-52 FOR INSTALLATION DETAILS)
2. TYPE 1-A STANDARD WITH TP-1-T MOUNTING AND "METER ON" SIGNAL. (SEE SHEET E-46 FOR INSTALLATION DETAILS)
3. 3"C, 2#6, 1-5CSC, 3 DLC, 1 DLC (#12), 1#8G IN CONCRETE BARRIER.
4. FOR REFERENCE ONLY (FOR MODEL 334-TV CONTRELLER CABINET, SEE MODIFY COMMUNICATION SYSTEM PLANS).

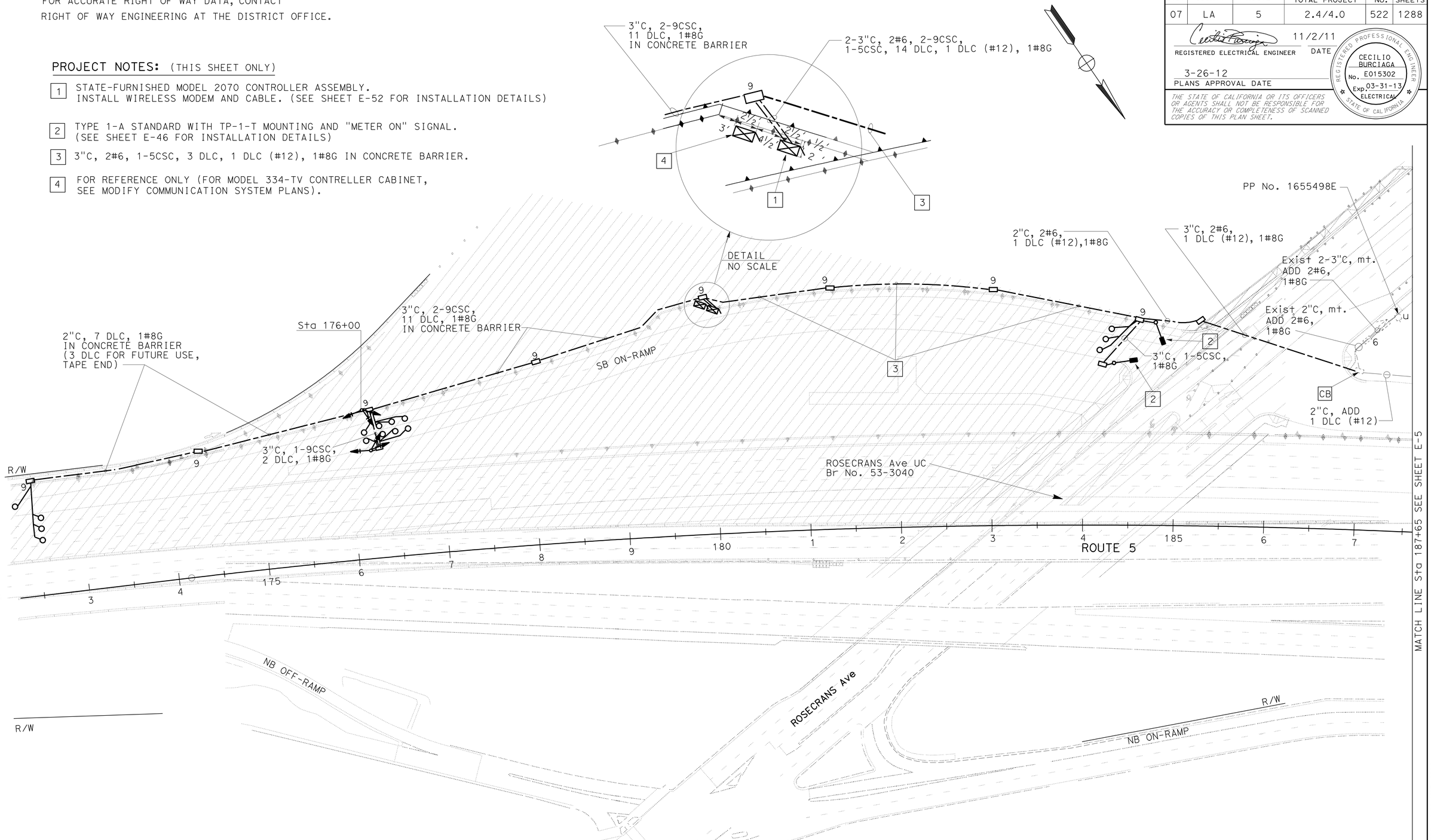

RAMP METERING SYSTEM
(STAGE 2)

SCALE: 1" = 50'

E-4

APPROVED FOR ELECTRICAL WORK ONLY

STATE OF CALIFORNIA - DEPARTMENT OF TRANSPORTATION
Caltrans® TRAFFIC DESIGN

FUNCTIONAL SUPERVISOR: YI TSAU
CALCULATED-DESIGNED BY: LUKE SUN
CHECKED BY: CECILIO BURCIAGA
REVISED BY / DATE REVISED

LAST REVISION 00-00-00
DATE PLOTTED => 29-MAR-2012
TIME PLOTTED => 12:13

BORDER LAST REVISED 7/2/2010
USERNAME => s121614
DGN FILE => 721593ua004.dgn
RELATIVE BORDER SCALE IS IN INCHES 0 1 2 3
UNIT 1880
PROJECT NUMBER & PHASE 07000018331

FOR ACCURATE RIGHT OF WAY DATA, CONTACT
RIGHT OF WAY ENGINEERING AT THE DISTRICT OFFICE.

Dist	COUNTY	ROUTE	POST MILES TOTAL PROJECT	SHEET No.	TOTAL SHEETS
07	LA	5	2.4/4.0	523	1288

REGISTERED ELECTRICAL ENGINEER — DATE 11/2/11

3-26-12
PLANS APPROVAL DATE

REGISTERED PROFESSIONAL ENGINEER
CECILIO BURCIAGA
No. E015302
Exp. 03-31-13
ELECTRICAL
STATE OF CALIFORNIA

THE STATE OF CALIFORNIA OR ITS OFFICERS OR AGENTS SHALL NOT BE RESPONSIBLE FOR THE ACCURACY OR COMPLETENESS OF SCANNED COPIES OF THIS PLAN SHEET.

PROJECT NOTE: (THIS SHEET ONLY)

1 Exist 2"C, mt. ADD 1 DLC (#12), 1#8G.

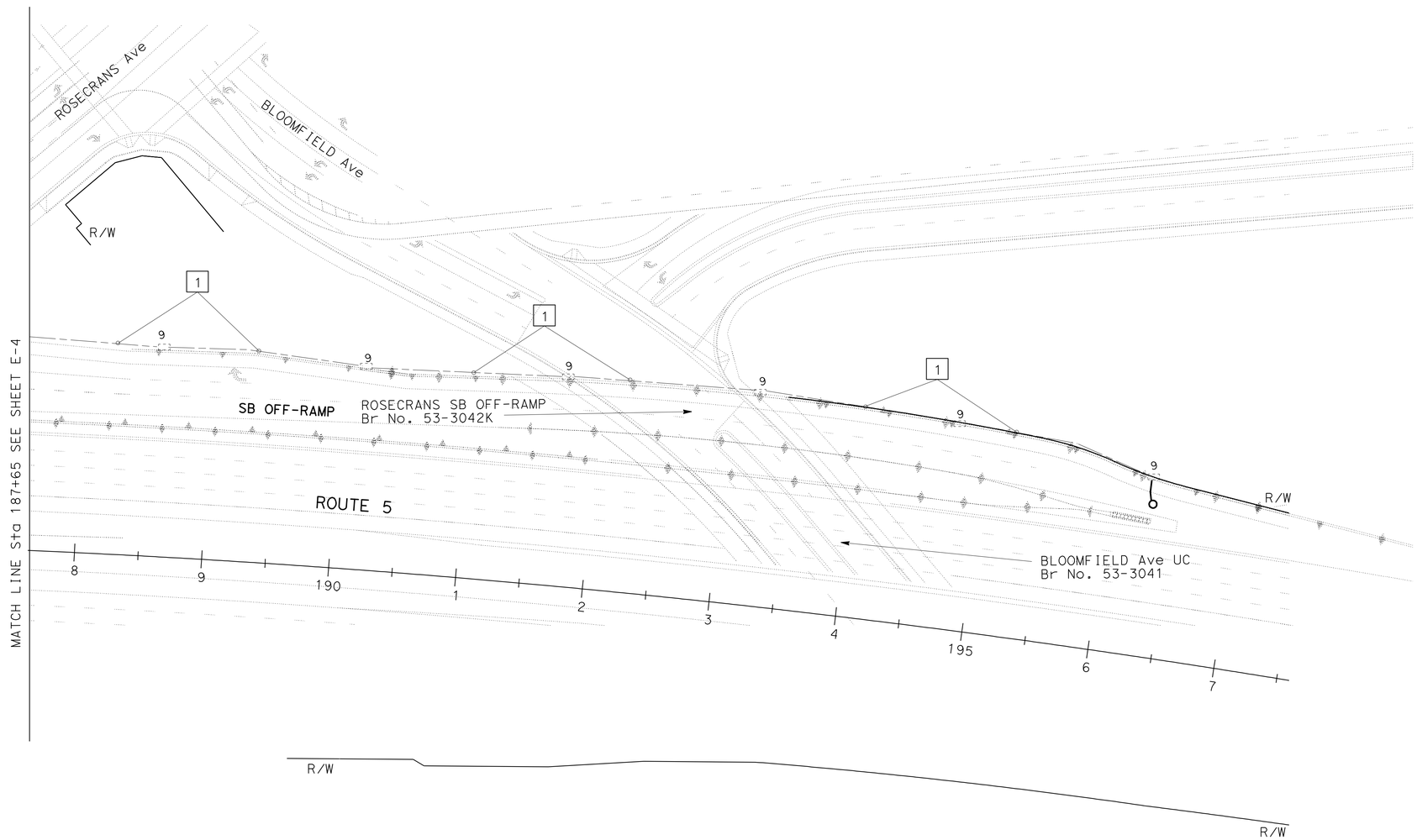

RAMP METERING SYSTEM
(STAGE 2)
SCALE: 1" = 50'

E-5

APPROVED FOR ELECTRICAL WORK ONLY

STATE OF CALIFORNIA - DEPARTMENT OF TRANSPORTATION
Caltrans® **TRAFFIC DESIGN**

FUNCTIONAL SUPERVISOR: YI TSAU
CALCULATED-DESIGNED BY: LUKE SUN
CHECKED BY: CECILIO BURCIAGA
REVISED BY
DATE REVISED

LAST REVISION 00-00-00
DATE PLOTTED => 28-MAR-2012
TIME PLOTTED => 13:47

FOR ACCURATE RIGHT OF WAY DATA, CONTACT
RIGHT OF WAY ENGINEERING AT THE DISTRICT OFFICE.

Dist	COUNTY	ROUTE	POST MILES TOTAL PROJECT	SHEET No.	TOTAL SHEETS
07	LA	5	2.4/4.0	524	1288

REGISTERED ELECTRICAL ENGINEER — DATE 11/2/11

3-26-12
PLANS APPROVAL DATE

REGISTERED PROFESSIONAL ENGINEER CECILIO BURCIAGA No. E015302 Exp. 03-31-13 ELECTRICAL STATE OF CALIFORNIA

THE STATE OF CALIFORNIA OR ITS OFFICERS OR AGENTS SHALL NOT BE RESPONSIBLE FOR THE ACCURACY OR COMPLETENESS OF SCANNED COPIES OF THIS PLAN SHEET.

PROJECT NOTES: (THIS SHEET ONLY)

1. 3"C, 2#6, 1-5CSC, 2 DLC, 1 DLC (#12), 1#8G IN CONCRETE BARRIER.
2. TYPE 1-A STANDARD WITH TP-1-T MOUNTING AND "METER ON" SIGNAL. (SEE SHEET E-46 FOR INSTALLATION DETAILS)
3. INSTALL TYPE H SERVICE RISER.
4. 3"C, MT (SCE SHALL INSTALL CONDUCTORS).
5. 120/240 V METERED TYPE III-CF SERVICE EQUIPMENT ENCLOSURE WITH:

METER 1: CIRCUIT BREAKERS	METER 2: CIRCUIT BREAKER
1-100 A, 240 V, 2P, CB - MAIN	1-100 A, 240 V, 2P, CB - MAIN
2- 30 A, 240 V, 2P, CB - FREEWAY LIGHTING, AND SIGN ILLUMINATION	1- 50 A, 120 V, 1P, CB - SIGNAL
1- 30 A, 120 V, 1P, CB - RAMP METERING	1- 30 A, 120 V, 1P, CB - SIGNAL LIGHTING (UNMETERED)
2- 20 A, 120 V, 1P, CB - IRRIGATION	1- 15 A, 120 V, 1P, CB - IISNS
1- 15 A, 120 V, 1P, CB - PEU	1- 15 A, 120 V, 1P, CB - PEU

CTID No. 07-53-005R-002.180
ADDRESS: 12706 1/4 ROSECRANS Ave, NORWALK

CTID No. 07-53-005R-002.182
ADDRESS: 12706 3/4 ROSECRANS Ave, NORWALK

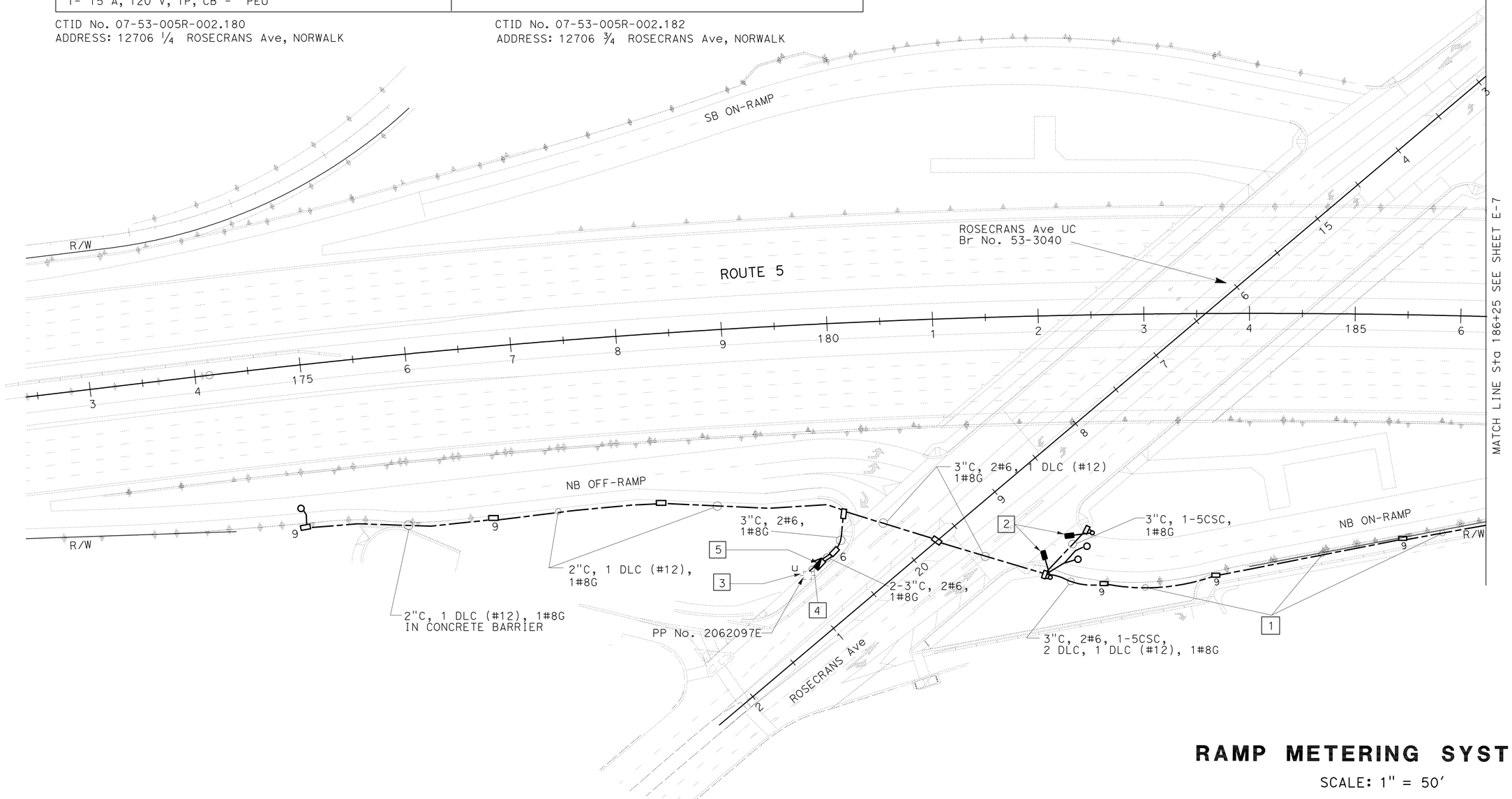

RAMP METERING SYSTEM

SCALE: 1" = 50'

E-6

APPROVED FOR ELECTRICAL WORK ONLY

STATE OF CALIFORNIA - DEPARTMENT OF TRANSPORTATION
Caltrans® TRAFFIC DESIGN

FUNCTIONAL SUPERVISOR: YI TSAU
CALCULATED-DESIGNED BY: LUKE SUN
CHECKED BY: CECILIO BURCIAGA
REVISED BY / DATE REVISED

LAST REVISION 00-00-00 | DATE PLOTTED => 28-MAR-2012 | TIME PLOTTED => 13:25

BORDER LAST REVISED 7/2/2010 | USERNAME => s114937 | DGN FILE => 721593ua006.dgn | RELATIVE BORDER SCALE IS IN INCHES 0 1 2 3 | UNIT 1880 | PROJECT NUMBER & PHASE 07000018331

Dist	COUNTY	ROUTE	POST MILES TOTAL PROJECT	SHEET No.	TOTAL SHEETS
07	LA	5	2.4/4.0	525	1288

REGISTERED ELECTRICAL ENGINEER 11/2/11 DATE

3-26-12
PLANS APPROVAL DATE

REGISTERED PROFESSIONAL ENGINEER CECILIO BURCIAGA No. E015302 Exp. 03-31-13 ELECTRICAL STATE OF CALIFORNIA

THE STATE OF CALIFORNIA OR ITS OFFICERS OR AGENTS SHALL NOT BE RESPONSIBLE FOR THE ACCURACY OR COMPLETENESS OF SCANNED COPIES OF THIS PLAN SHEET.

FOR ACCURATE RIGHT OF WAY DATA, CONTACT
RIGHT OF WAY ENGINEERING AT THE DISTRICT OFFICE.

PROJECT NOTES: (THIS SHEET ONLY)

1. STATE-FURNISHED MODEL 2070 CONTROLLER ASSEMBLY.
INSTALL WIRELESS MODEM AND CABLE. (SEE SHEET E-52 FOR INSTALLATION DETAILS)

2. 3"C, 2#6, 1-5CSC, 2 DLC, 1 DLC (#12), 1#8G IN CONCRETE BARRIER.

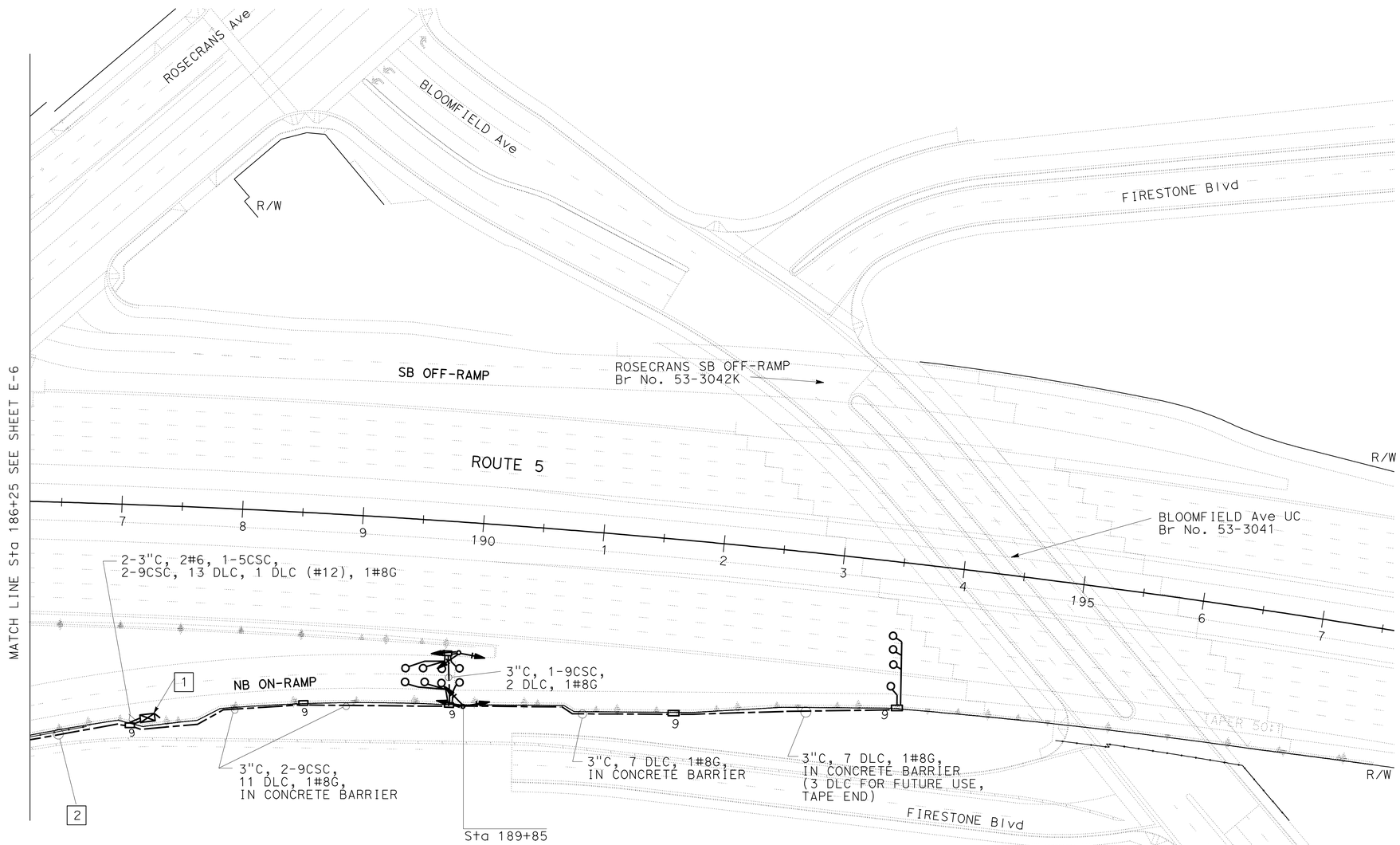

RAMP METERING SYSTEM

SCALE: 1" = 50'

E-7

APPROVED FOR ELECTRICAL WORK ONLY

STATE OF CALIFORNIA - DEPARTMENT OF TRANSPORTATION
Caltrans® TRAFFIC DESIGN

FUNCTIONAL SUPERVISOR: YI TSAU
CALCULATED-DESIGNED BY: LUKE SUN
CHECKED BY: CECILIO BURCIAGA
REVISED BY
DATE REVISED

LAST REVISION 00-00-00
DATE PLOTTED => 28-MAR-2012
TIME PLOTTED => 13:16

Dist	COUNTY	ROUTE	POST MILES TOTAL PROJECT	SHEET No.	TOTAL SHEETS
07	LA	5	2.4/4.0	526	1288

REGISTERED ELECTRICAL ENGINEER 11/2/11 DATE

3-26-12
PLANS APPROVAL DATE

REGISTERED PROFESSIONAL ENGINEER CECILIO BURCIAGA No. E015302 Exp. 03-31-13 ELECTRICAL STATE OF CALIFORNIA

THE STATE OF CALIFORNIA OR ITS OFFICERS OR AGENTS SHALL NOT BE RESPONSIBLE FOR THE ACCURACY OR COMPLETENESS OF SCANNED COPIES OF THIS PLAN SHEET.

FOR ACCURATE RIGHT OF WAY DATA, CONTACT
RIGHT OF WAY ENGINEERING AT THE DISTRICT OFFICE.

PROJECT NOTES: (THIS SHEET ONLY)

1. 2"C, 2#6, 1#8G IN CONCRETE BARRIER.
2. 2"C, 2#8, 1#8G IN CONCRETE BARRIER.

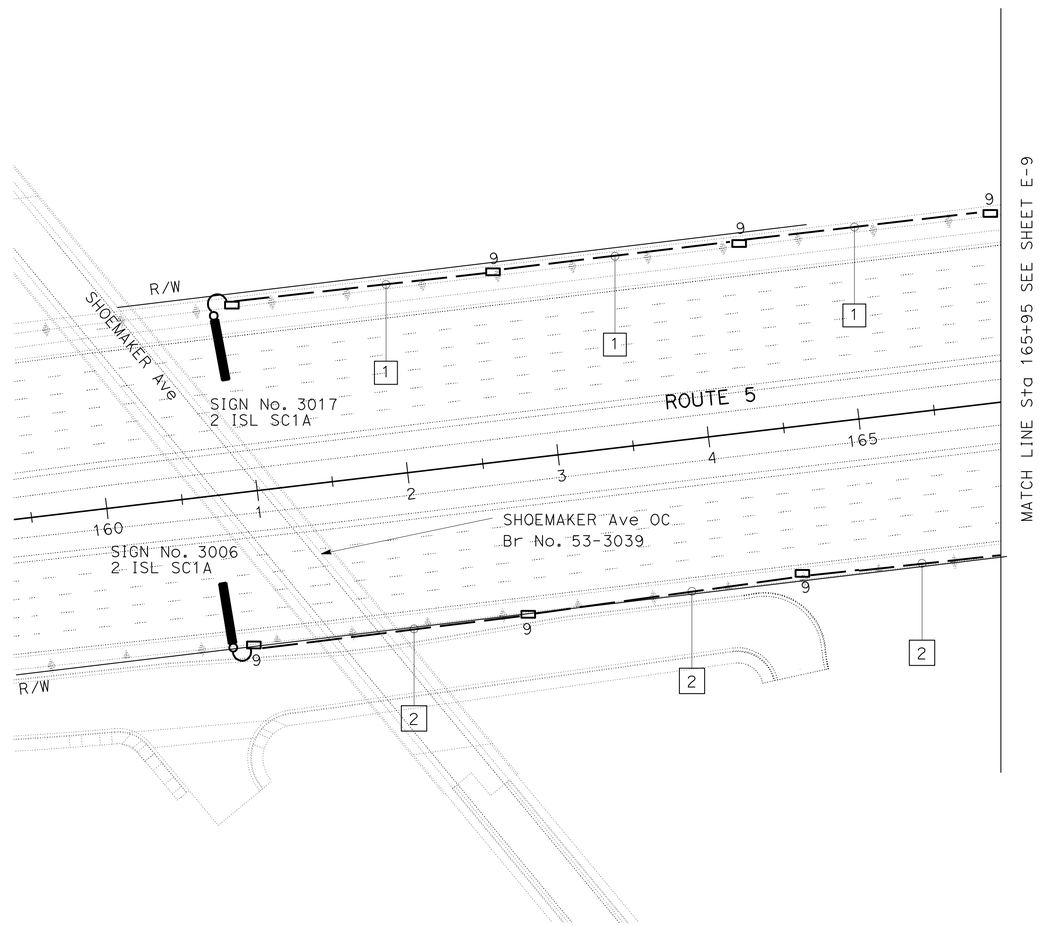

FOR WIRING DIAGRAM SEE SHEET E-51.

APPROVED FOR ELECTRICAL WORK ONLY

LIGHTING AND SIGN ILLUMINATION

SCALE: 1" = 50'

E-8

STATE OF CALIFORNIA - DEPARTMENT OF TRANSPORTATION
Caltrans® **TRAFFIC DESIGN**

FUNCTIONAL SUPERVISOR: YI TSAU
CALCULATED-DESIGNED BY: LUKE SUN
CHECKED BY: CECILIO BURCIAGA
REVISED BY
DATE REVISED

LAST REVISION 00-00-00
DATE PLOTTED => 28-MAR-2012
TIME PLOTTED => 13:16

Dist	COUNTY	ROUTE	POST MILES TOTAL PROJECT	SHEET No.	TOTAL SHEETS
07	LA	5	2.4/4.0	527	1288

REGISTERED ELECTRICAL ENGINEER 11/2/11 DATE

3-26-12
PLANS APPROVAL DATE

REGISTERED PROFESSIONAL ENGINEER CECILIO BURCIAGA No. E015302 Exp. 03-31-13 ELECTRICAL STATE OF CALIFORNIA

THE STATE OF CALIFORNIA OR ITS OFFICERS OR AGENTS SHALL NOT BE RESPONSIBLE FOR THE ACCURACY OR COMPLETENESS OF SCANNED COPIES OF THIS PLAN SHEET.

FOR ACCURATE RIGHT OF WAY DATA, CONTACT
RIGHT OF WAY ENGINEERING AT THE DISTRICT OFFICE.

PROJECT NOTES: (THIS SHEET ONLY)

1. 2"C, 2#6, 1#8G IN CONCRETE BARRIER.
2. 2"C, 2#8, 1#8G IN CONCRETE BARRIER.
3. 3"C, 2#8, 1#8G.
4. 2"C, 2#6, 2#8, 1#8G IN CONCRETE BARRIER.
5. 2"C, 2#8, 1#8G.
6. 1"C, 2#8, 1#8G.
7. IRRIGATION CONTROLLER ENCLOSURE CABINET.
   (REFERENCE ONLY, SEE IRRIGATION PLANS FOR INSTALLATION)

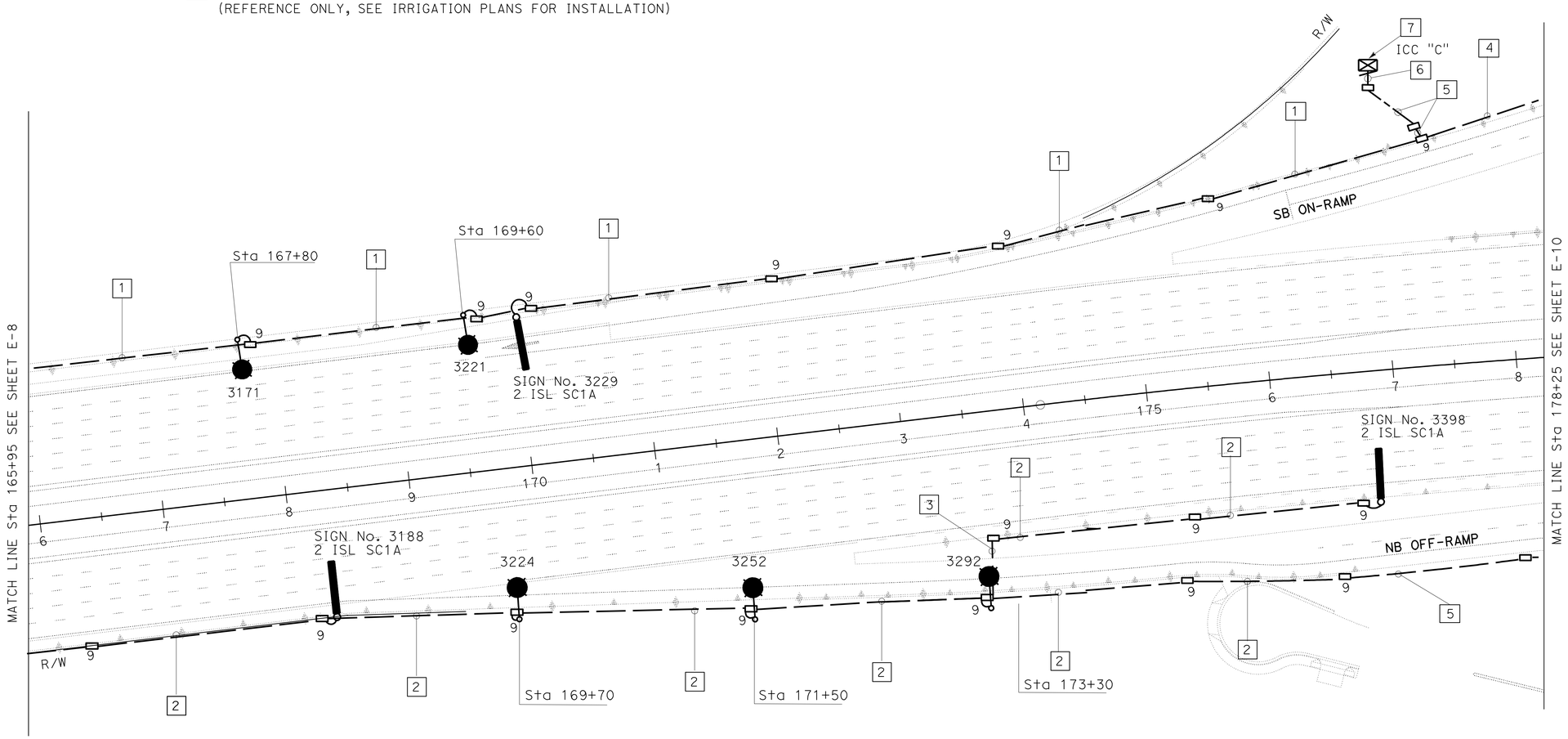

FOR WIRING DIAGRAM SEE SHEET E-51.

APPROVED FOR ELECTRICAL WORK ONLY

ELECTRIC SERVICE (IRRIGATION) LIGHTING AND SIGN ILLUMINATION

SCALE: 1" = 50'

E-9

STATE OF CALIFORNIA - DEPARTMENT OF TRANSPORTATION
Caltrans® **TRAFFIC DESIGN**

FUNCTIONAL SUPERVISOR: YI TSAU
CALCULATED-DESIGNED BY: LUKE SUN
CHECKED BY: CECILIO BURCIAGA
REVISED BY
DATE REVISED

LAST REVISION 00-00-00
DATE PLOTTED => 28-MAR-2012
TIME PLOTTED => 13:16

FOR ACCURATE RIGHT OF WAY DATA, CONTACT
RIGHT OF WAY ENGINEERING AT THE DISTRICT OFFICE.

PROJECT NOTES: (THIS SHEET ONLY)

1. 2"C, 2#6, 2#8, 1#8G IN CONCRETE BARRIER.
2. 2"C, 2#6, 2#8, 1#8G.
3. 3"C, 2#6, 2#8, 1#8G.
4. INSTALL 2#6, 8#8, 1#8G. (SEE SHEET E-3 FOR CONDUIT INSTALLATION)
5. FOR REFERENCE ONLY. (SEE SHEET E-3 FOR INSTALLATION)
6. 2"C, 4#8, 1#8G IN CONCRETE BARRIER.
7. 2"C, 2#8, 1#8G.
8. INSTALL 2#6, 6#8, 1#8G. (SEE SHEET E-6 FOR CONDUIT INSTALLATION)
9. FOR REFERENCE ONLY. (SEE SHEET E-6 FOR INSTALLATION)
10. 1"C, 2#8, 1#8G.
11. IRRIGATION CONTROLLER ENCLOSURE CABINET. (REFERENCE ONLY, SEE IRRIGATION PLANS FOR INSTALLATION)
12. 2"C, 2#6, 1#8G IN CONCRETE BARRIER.
13. 1½"C, MT, SCC.

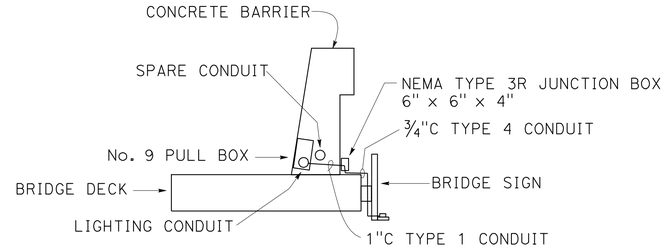

NOTE:

1. TYPE 4 CONDUIT SHALL BE SECURED TO THE NEAREST WALKWAY BRACKET USING ONE-HOLE GALVANIZED MALLEABLE IRON OR STEEL STRAPS AND BRASS MACHINE SCREWS TAPPED INTO THE BRACKET.

DETAIL A

NO SCALE

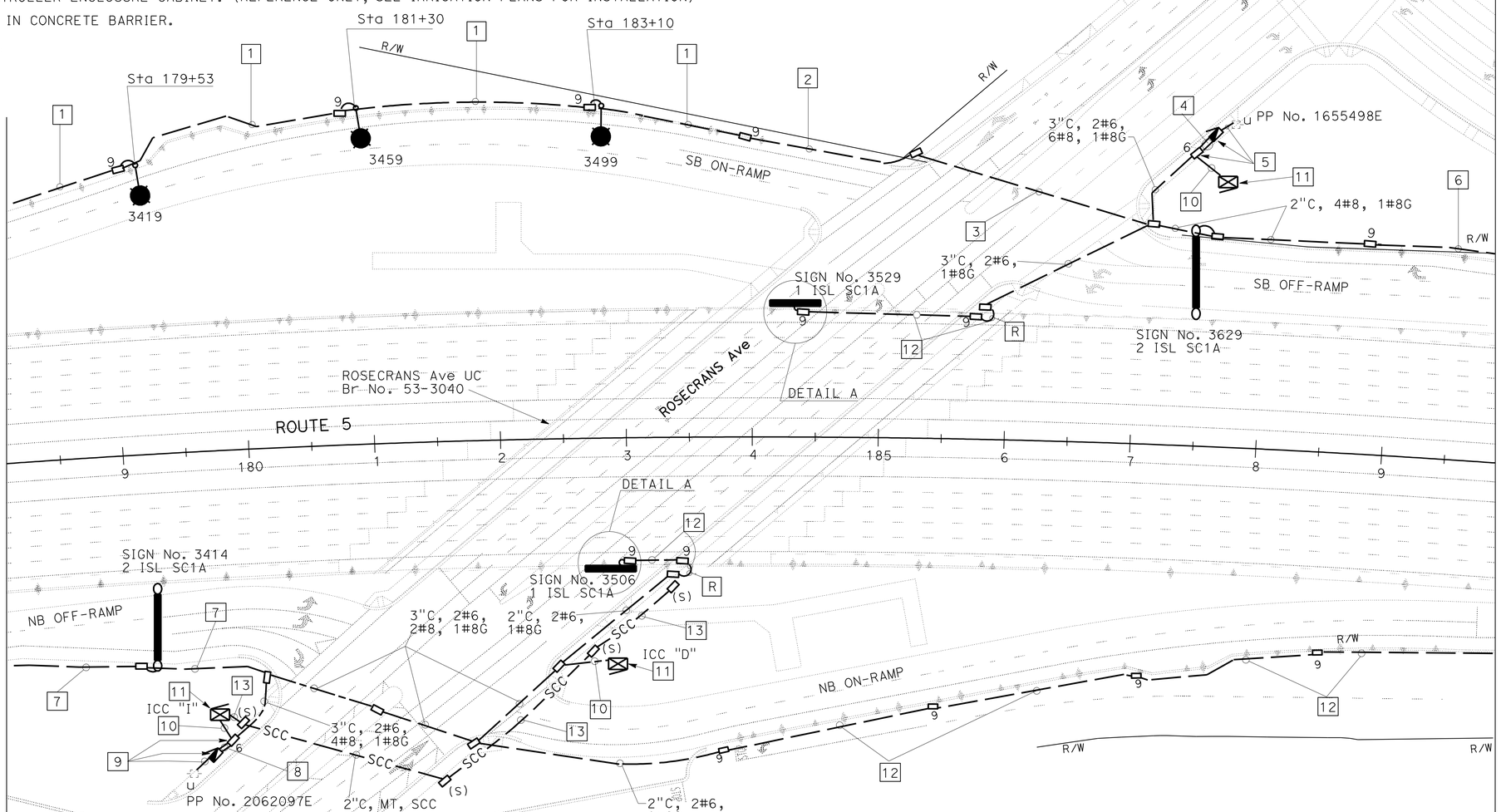

FOR WIRING DIAGRAM SEE SHEET E-51.

APPROVED FOR ELECTRICAL WORK ONLY

ELECTRIC SERVICE (IRRIGATION) LIGHTING AND SIGN ILLUMINATION

SCALE: 1" = 50'

E-10

Dist	COUNTY	ROUTE	POST MILES TOTAL PROJECT	SHEET No.	TOTAL SHEETS
07	LA	5	2.4/4.0	528	1288

REGISTERED ELECTRICAL ENGINEER — DATE 11/2/11

3-26-12
PLANS APPROVAL DATE

REGISTERED PROFESSIONAL ENGINEER — CECILIO BURCIAGA — No. E015302 — Exp. 03-31-13 — ELECTRICAL — STATE OF CALIFORNIA

THE STATE OF CALIFORNIA OR ITS OFFICERS OR AGENTS SHALL NOT BE RESPONSIBLE FOR THE ACCURACY OR COMPLETENESS OF SCANNED COPIES OF THIS PLAN SHEET.

REVISED BY | DATE REVISED
LUKE SUN | CECILIO BURCIAGA
CALCULATED-DESIGNED BY | CHECKED BY
FUNCTIONAL SUPERVISOR: YI TSAU

STATE OF CALIFORNIA - DEPARTMENT OF TRANSPORTATION
Caltrans
TRAFFIC DESIGN

LAST REVISION 00-00-00 | DATE PLOTTED => 28-MAR-2012 | TIME PLOTTED => 13:16

FOR ACCURATE RIGHT OF WAY DATA, CONTACT
RIGHT OF WAY ENGINEERING AT THE DISTRICT OFFICE.

Dist	COUNTY	ROUTE	POST MILES TOTAL PROJECT	SHEET No.	TOTAL SHEETS
07	LA	5	2.4/4.0	529	1288

REGISTERED ELECTRICAL ENGINEER — DATE 11/2/11

3-26-12
PLANS APPROVAL DATE

REGISTERED PROFESSIONAL ENGINEER — CECILIO BURCIAGA — No. E015302 — Exp. 03-31-13 — ELECTRICAL — STATE OF CALIFORNIA

THE STATE OF CALIFORNIA OR ITS OFFICERS OR AGENTS SHALL NOT BE RESPONSIBLE FOR THE ACCURACY OR COMPLETENESS OF SCANNED COPIES OF THIS PLAN SHEET.

PROJECT NOTES: (THIS SHEET ONLY)

1. 2"C, 4#8, 1#8G IN CONCRETE BARRIER.
2. 2"C, 2#8, 1#8G IN CONCRETE BARRIER.
3. 1"C, 2#8, 1#8G INSIDE RETAINING WALL.
4. 1"C, 2#8, 1#8G.
5. IRRIGATION CONTROLLER ENCLOSURE CABINET. (REFERENCE ONLY, SEE IRRIGATION PLANS FOR INSTALLATION)
6. 2"C, 2#6, 1#8G IN CONCRETE BARRIER.

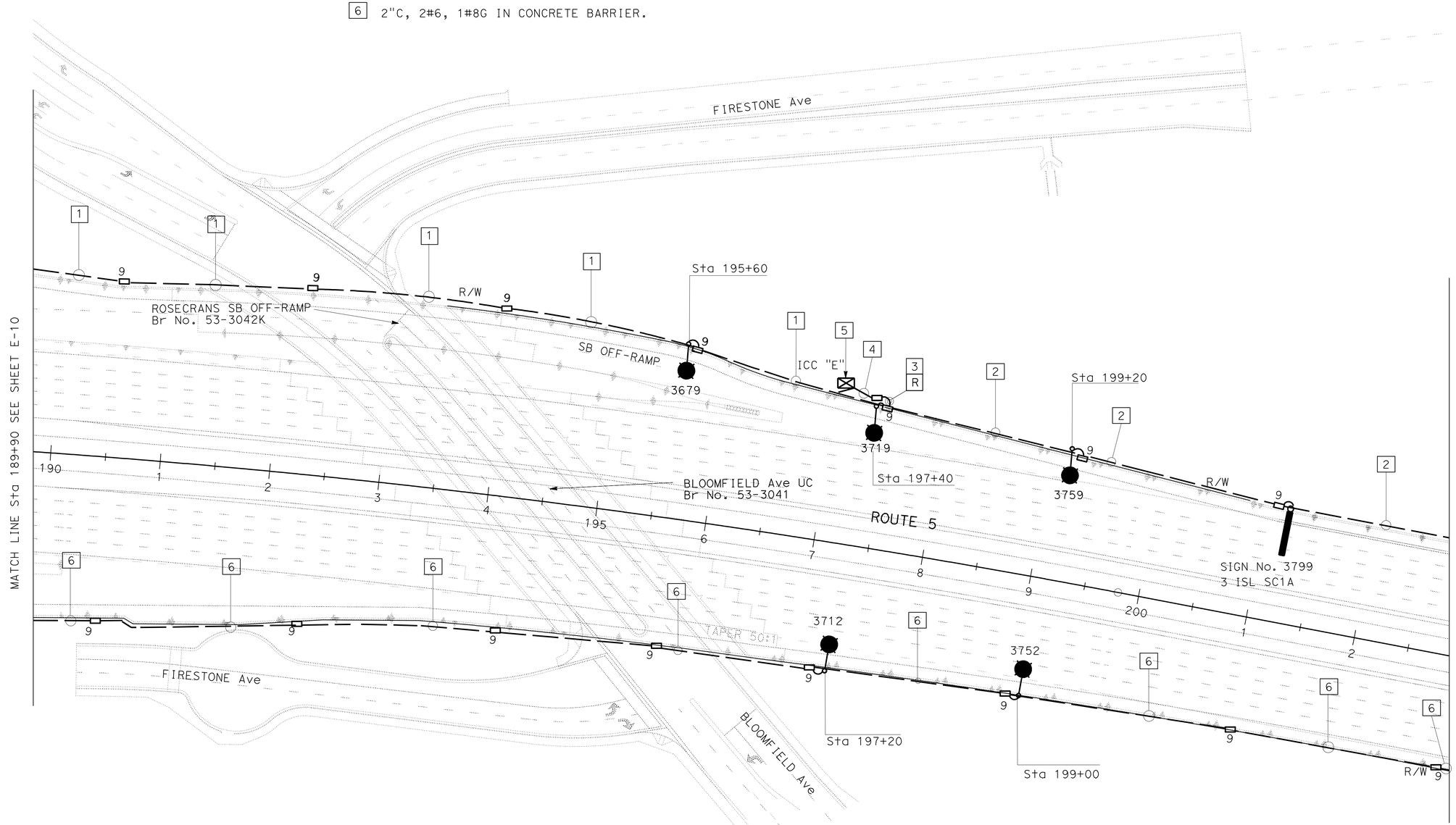

FOR WIRING DIAGRAM SEE SHEET E-51.

APPROVED FOR ELECTRICAL WORK ONLY

ELECTRIC SERVICE (IRRIGATION) LIGHTING AND SIGN ILLUMINATION

SCALE: 1" = 50'

E-11

STATE OF CALIFORNIA - DEPARTMENT OF TRANSPORTATION
Caltrans® **TRAFFIC DESIGN**

FUNCTIONAL SUPERVISOR: YI TSAU
CALCULATED-DESIGNED BY: LUKE SUN
CHECKED BY: CECILIO BURCIAGA
REVISED BY
DATE REVISED

LAST REVISION 00-00-00
DATE PLOTTED => 28-MAR-2012
TIME PLOTTED => 13:16

BORDER LAST REVISED 7/2/2010
USERNAME => s114937
DGN FILE => 721593ua011.dgn
RELATIVE BORDER SCALE IS IN INCHES 0 1 2 3
UNIT 1880
PROJECT NUMBER & PHASE 07000018331

FOR ACCURATE RIGHT OF WAY DATA, CONTACT
RIGHT OF WAY ENGINEERING AT THE DISTRICT OFFICE.

Dist	COUNTY	ROUTE	POST MILES TOTAL PROJECT	SHEET No.	TOTAL SHEETS
07	LA	5	2.4/4.0	530	1288

REGISTERED ELECTRICAL ENGINEER — DATE 11/2/11

3-26-12
PLANS APPROVAL DATE

REGISTERED PROFESSIONAL ENGINEER — CECILIO BURCIAGA — No. E015302 — Exp. 03-31-13 — ELECTRICAL — STATE OF CALIFORNIA

THE STATE OF CALIFORNIA OR ITS OFFICERS OR AGENTS SHALL NOT BE RESPONSIBLE FOR THE ACCURACY OR COMPLETENESS OF SCANNED COPIES OF THIS PLAN SHEET.

PROJECT NOTE: (THIS SHEET ONLY)

1. 2"C, 2#8, 1#8G IN CONCRETE BARRIER.
2. 2"C, 2#6, 1#8G IN CONCRETE BARRIER.

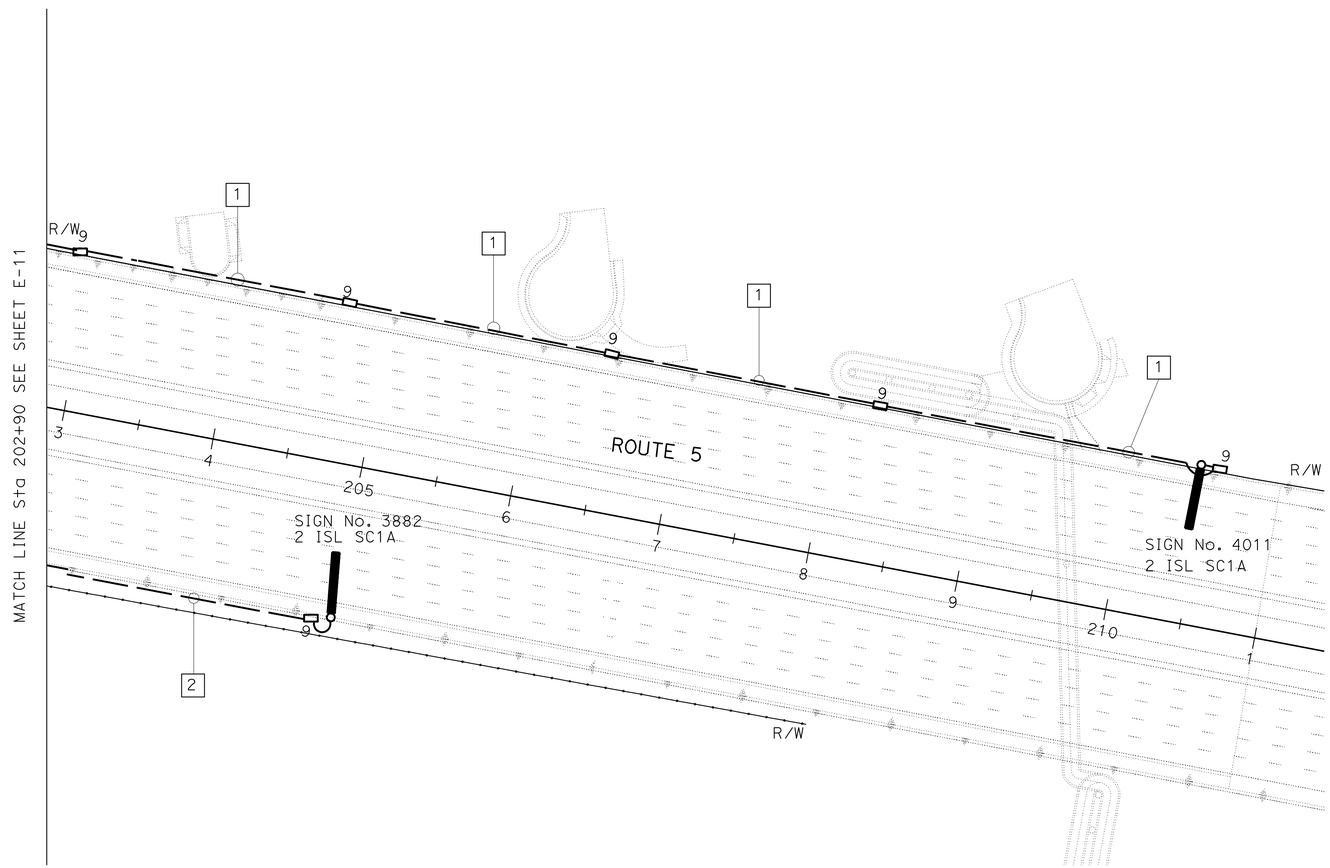

FOR WIRING DIAGRAM SEE SHEET E-51.

APPROVED FOR ELECTRICAL WORK ONLY

LIGHTING AND SIGN ILLUMINATION

SCALE: 1" = 50'

E-12

STATE OF CALIFORNIA - DEPARTMENT OF TRANSPORTATION
Caltrans® **TRAFFIC DESIGN**

FUNCTIONAL SUPERVISOR: YI TSAU
CALCULATED-DESIGNED BY: LUKE SUN
CHECKED BY: CECILIO BURCIAGA
REVISED BY
DATE REVISED

LAST REVISION 00-00-00 | DATE PLOTTED => 28-MAR-2012 | TIME PLOTTED => 13:17

Dist	COUNTY	ROUTE	POST MILES TOTAL PROJECT	SHEET No.	TOTAL SHEETS
07	LA	5	2.4/4.0	531	1288

REGISTERED ELECTRICAL ENGINEER 11/2/11 DATE

3-26-12
PLANS APPROVAL DATE

REGISTERED PROFESSIONAL ENGINEER CECILIO BURCIAGA No. E015302 Exp. 03-31-13 ELECTRICAL STATE OF CALIFORNIA

THE STATE OF CALIFORNIA OR ITS OFFICERS OR AGENTS SHALL NOT BE RESPONSIBLE FOR THE ACCURACY OR COMPLETENESS OF SCANNED COPIES OF THIS PLAN SHEET.

FOR ACCURATE RIGHT OF WAY DATA, CONTACT
RIGHT OF WAY ENGINEERING AT THE DISTRICT OFFICE.

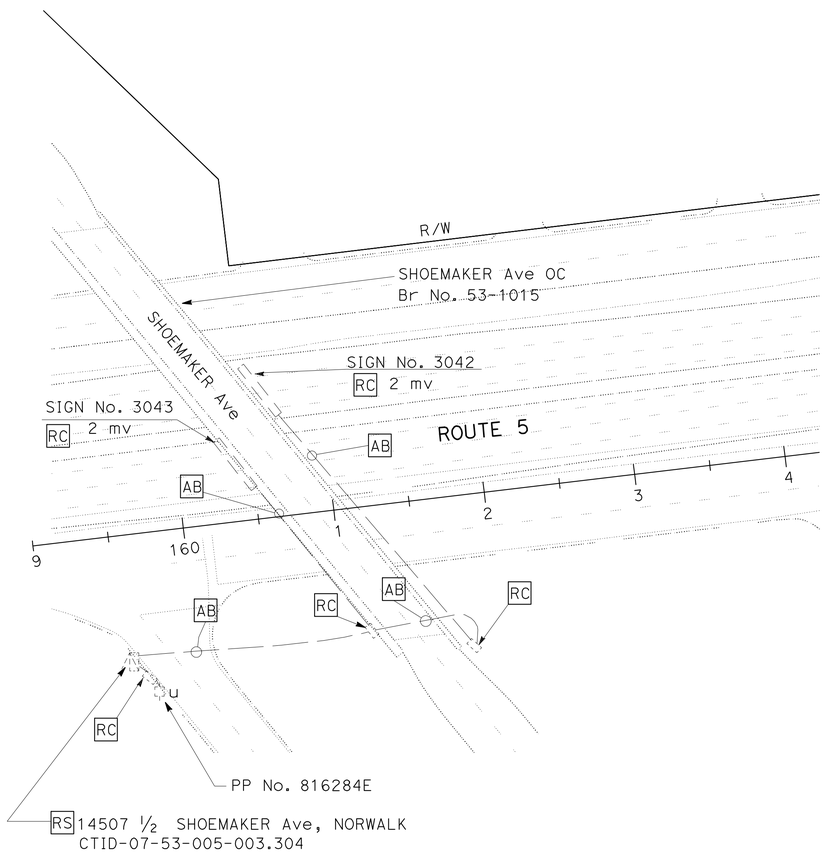

FOR WIRING DIAGRAM SEE SHEET E-50.

APPROVED FOR ELECTRICAL WORK ONLY

LIGHTING AND SIGN ILLUMINATION
(REMOVE)

SCALE: 1" = 50'

E-13

STATE OF CALIFORNIA - DEPARTMENT OF TRANSPORTATION
Caltrans® **TRAFFIC DESIGN**

FUNCTIONAL SUPERVISOR: YI TSAU
CALCULATED-DESIGNED BY: LUKE SUN
CHECKED BY: CECILIO BURCIAGA
REVISED BY
DATE REVISED

LAST REVISION 00-00-00
DATE PLOTTED => 28-MAR-2012
TIME PLOTTED => 13:17

Dist	COUNTY	ROUTE	POST MILES TOTAL PROJECT	SHEET No.	TOTAL SHEETS
07	LA	5	2.4/4.0	532	1288

REGISTERED ELECTRICAL ENGINEER 11/2/11 DATE

3-26-12
PLANS APPROVAL DATE

REGISTERED PROFESSIONAL ENGINEER CECILIO BURCIAGA No. E015302 Exp. 03-31-13 ELECTRICAL STATE OF CALIFORNIA

THE STATE OF CALIFORNIA OR ITS OFFICERS OR AGENTS SHALL NOT BE RESPONSIBLE FOR THE ACCURACY OR COMPLETENESS OF SCANNED COPIES OF THIS PLAN SHEET.

FOR ACCURATE RIGHT OF WAY DATA, CONTACT
RIGHT OF WAY ENGINEERING AT THE DISTRICT OFFICE.

PROJECT NOTES: (THIS SHEET ONLY)

1. 2#6, 1#8G OVERHEAD CONDUCTORS WITH 20′ MINIMUN VERTICAL CLEARANCE.
2. INSTALL TEMPORARY 40′ WOOD POLE WITH LUMINAIRE.
3. INSTALL TEMPORARY 40′ WOOD POLE.
4. INSTALL TEMPORARY 40′ WOOD POLE WITH 1½"C RISER.
5. 2"C, TYPE 3, 2#6, 1#8G.

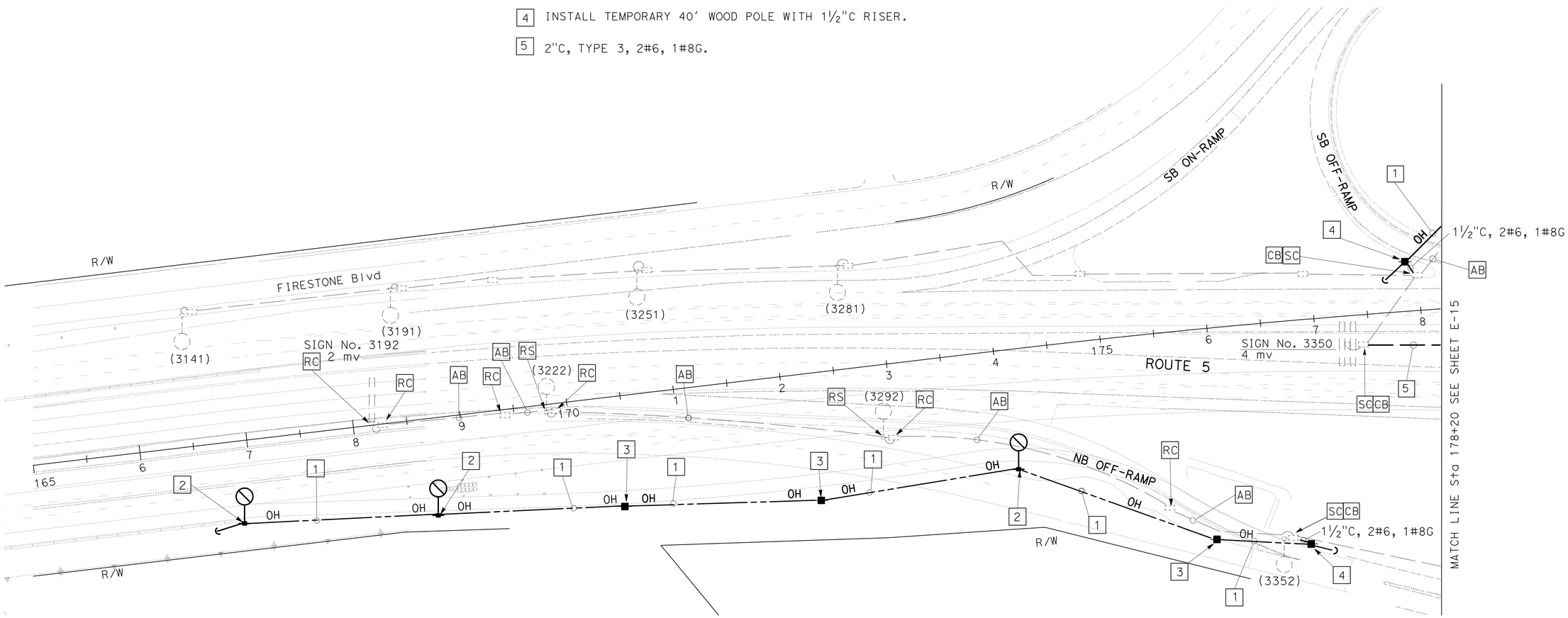

MODIFY LIGHTING AND SIGN ILLUMINATION LIGHTING (TEMPORARY)
(STAGE 1 PHASE 3)

SCALE: 1" = 50′

FOR WIRING DIAGRAM SEE SHEET E-50.

APPROVED FOR ELECTRICAL WORK ONLY

E-14

STATE OF CALIFORNIA - DEPARTMENT OF TRANSPORTATION
Caltrans® TRAFFIC DESIGN

FUNCTIONAL SUPERVISOR: YI TSAU
CALCULATED-DESIGNED BY: LUKE SUN
CHECKED BY: CECILIO BURCIAGA
REVISED BY
DATE REVISED

LAST REVISION 00-00-00 | DATE PLOTTED => 04-APR-2012 | TIME PLOTTED => 14:20

Dist	COUNTY	ROUTE	POST MILES TOTAL PROJECT	SHEET No.	TOTAL SHEETS
07	LA	5	2.4/4.0	533	1288

REGISTERED ELECTRICAL ENGINEER 11/2/11 DATE

3-26-12
PLANS APPROVAL DATE

REGISTERED PROFESSIONAL ENGINEER CECILIO BURCIAGA No. E015302 Exp. 03-31-13 ELECTRICAL STATE OF CALIFORNIA

THE STATE OF CALIFORNIA OR ITS OFFICERS OR AGENTS SHALL NOT BE RESPONSIBLE FOR THE ACCURACY OR COMPLETENESS OF SCANNED COPIES OF THIS PLAN SHEET.

FOR ACCURATE RIGHT OF WAY DATA, CONTACT
RIGHT OF WAY ENGINEERING AT THE DISTRICT OFFICE.

PROJECT NOTES: (THIS SHEET ONLY)

1. 2"C, TYPE 3, 2#6, 1#8G.
2. 2#6, 1#8G OVERHEAD CONDUCTORS WITH 20' MINIMUM VERTICAL CLEARANCE.
3. INSTALL TEMPORARY 40' WOOD POLE.
4. INSTALL TEMPORARY 40' WOOD POLE WITH LUMINAIRE.

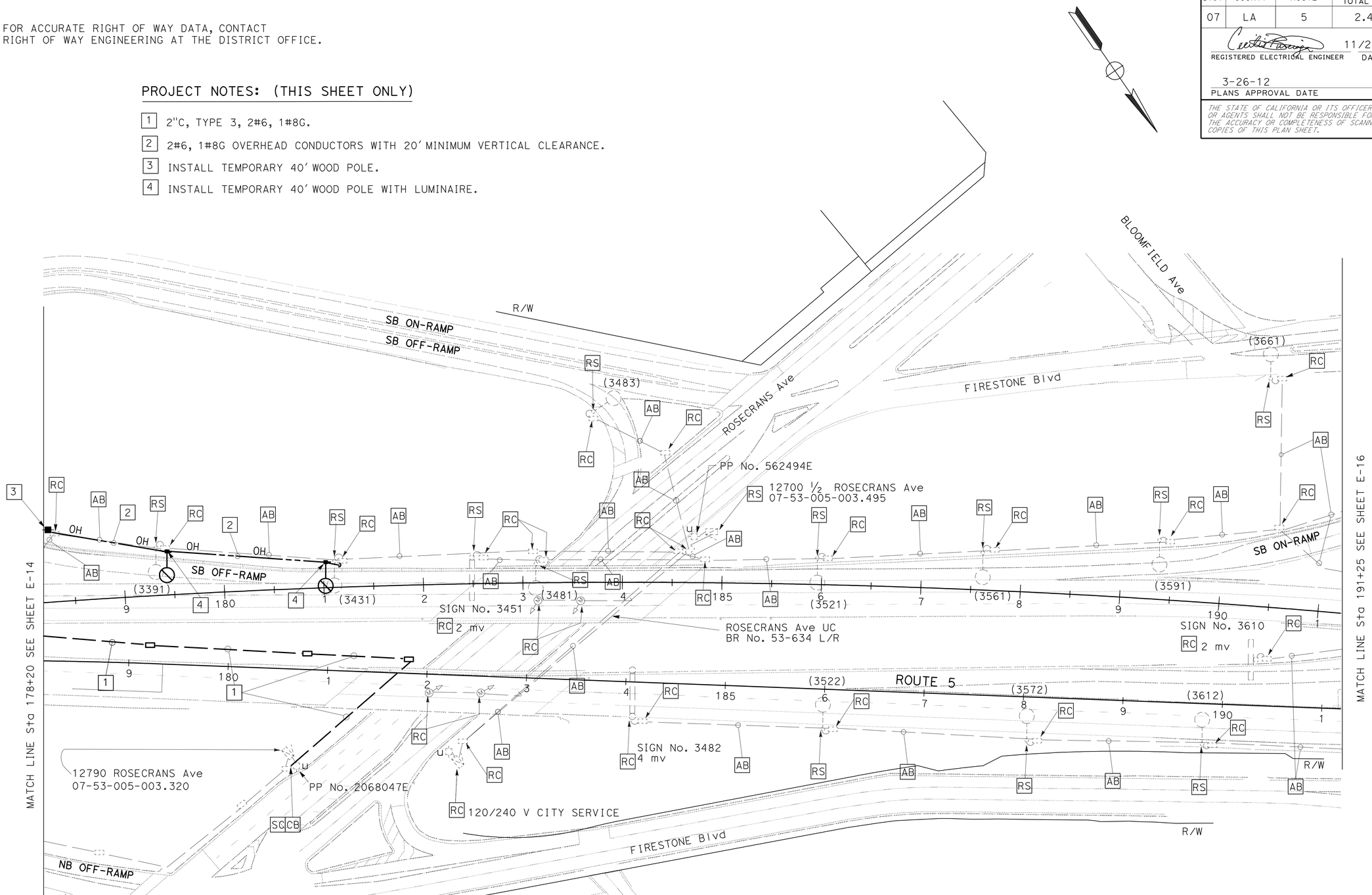

FOR WIRING DIAGRAM SEE SHEET E-50.

APPROVED FOR ELECTRICAL WORK ONLY

MODIFY LIGHTING AND SIGN ILLUMINATION

(STAGE 1 PHASE 3)

SCALE: 1" = 50'

E-15

STATE OF CALIFORNIA - DEPARTMENT OF TRANSPORTATION
Caltrans® **TRAFFIC DESIGN**

FUNCTIONAL SUPERVISOR: YI TSAU
CALCULATED-DESIGNED BY: LUKE SUN
CHECKED BY: CECILIO BURCIAGA
REVISED BY
DATE REVISED

LAST REVISION 00-00-00 | DATE PLOTTED => 04-APR-2012 | TIME PLOTTED => 14:20

Dist	COUNTY	ROUTE	POST MILES TOTAL PROJECT	SHEET No.	TOTAL SHEETS
07	LA	5	2.4/4.0	534	1288

REGISTERED ELECTRICAL ENGINEER 11/2/11 DATE

3-26-12
PLANS APPROVAL DATE

REGISTERED PROFESSIONAL ENGINEER CECILIO BURCIAGA No. E015302 Exp. 03-31-13 ELECTRICAL STATE OF CALIFORNIA

THE STATE OF CALIFORNIA OR ITS OFFICERS OR AGENTS SHALL NOT BE RESPONSIBLE FOR THE ACCURACY OR COMPLETENESS OF SCANNED COPIES OF THIS PLAN SHEET.

FOR ACCURATE RIGHT OF WAY DATA, CONTACT
RIGHT OF WAY ENGINEERING AT THE DISTRICT OFFICE.

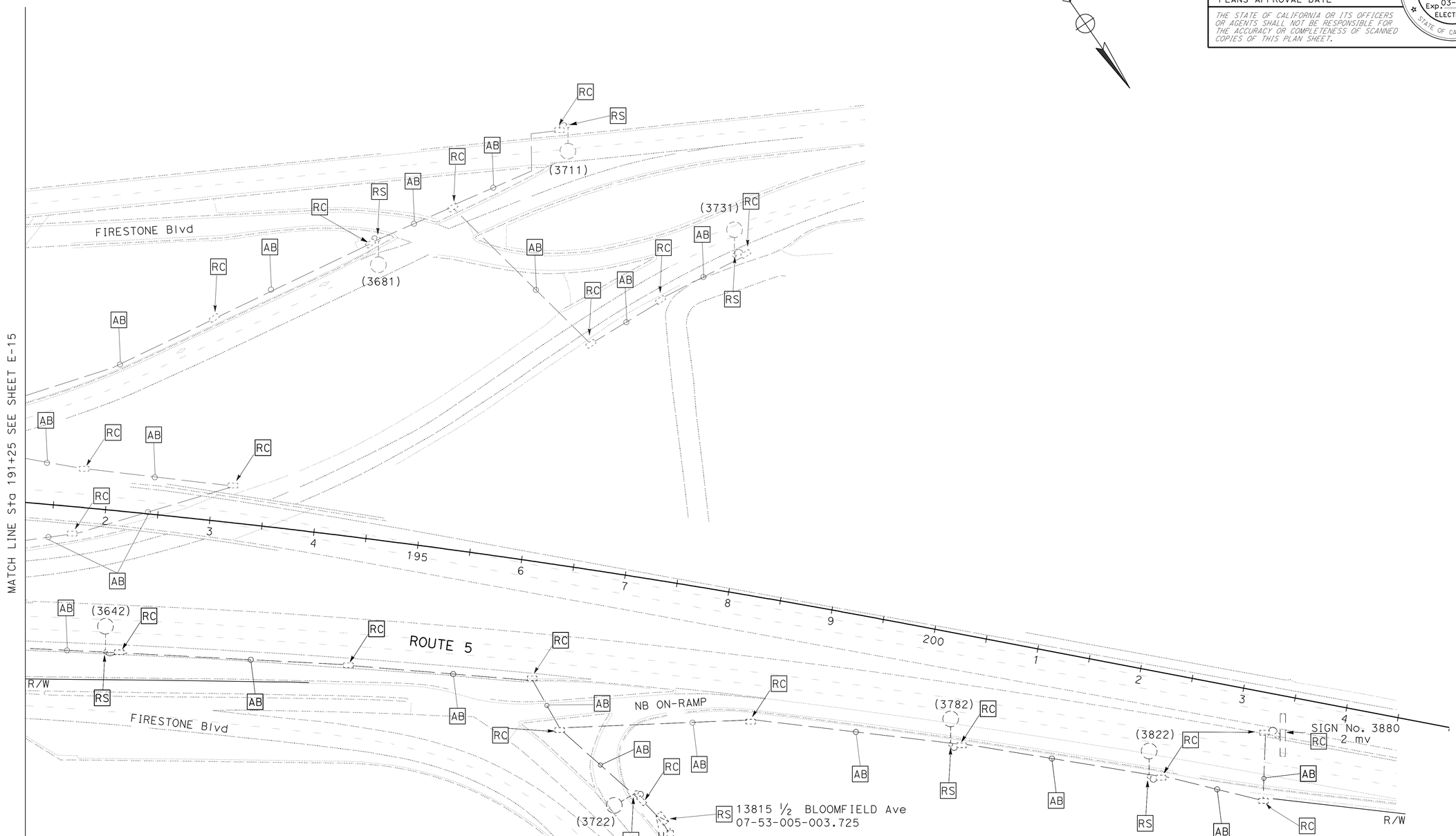

LIGHTING AND SIGN ILLUMINATION
(REMOVE)

SCALE: 1" = 50'

APPROVED FOR ELECTRICAL WORK ONLY

E-16

STATE OF CALIFORNIA - DEPARTMENT OF TRANSPORTATION
Caltrans® **TRAFFIC DESIGN**

FUNCTIONAL SUPERVISOR: YI TSAU
CALCULATED-DESIGNED BY: LUKE SUN
CHECKED BY: CECILIO BURCIAGA
REVISED BY
DATE REVISED

LAST REVISION 00-00-00
DATE PLOTTED => 28-MAR-2012
TIME PLOTTED => 13:17

Dist	COUNTY	ROUTE	POST MILES TOTAL PROJECT	SHEET No.	TOTAL SHEETS
07	LA	5	2.4/4.0	535	1288

REGISTERED ELECTRICAL ENGINEER — DATE 11/2/11

3-26-12
PLANS APPROVAL DATE

REGISTERED PROFESSIONAL ENGINEER
CECILIO BURCIAGA
No. E015302
Exp. 03-31-13
ELECTRICAL
STATE OF CALIFORNIA

THE STATE OF CALIFORNIA OR ITS OFFICERS OR AGENTS SHALL NOT BE RESPONSIBLE FOR THE ACCURACY OR COMPLETENESS OF SCANNED COPIES OF THIS PLAN SHEET.

FOR ACCURATE RIGHT OF WAY DATA, CONTACT
RIGHT OF WAY ENGINEERING AT THE DISTRICT OFFICE.

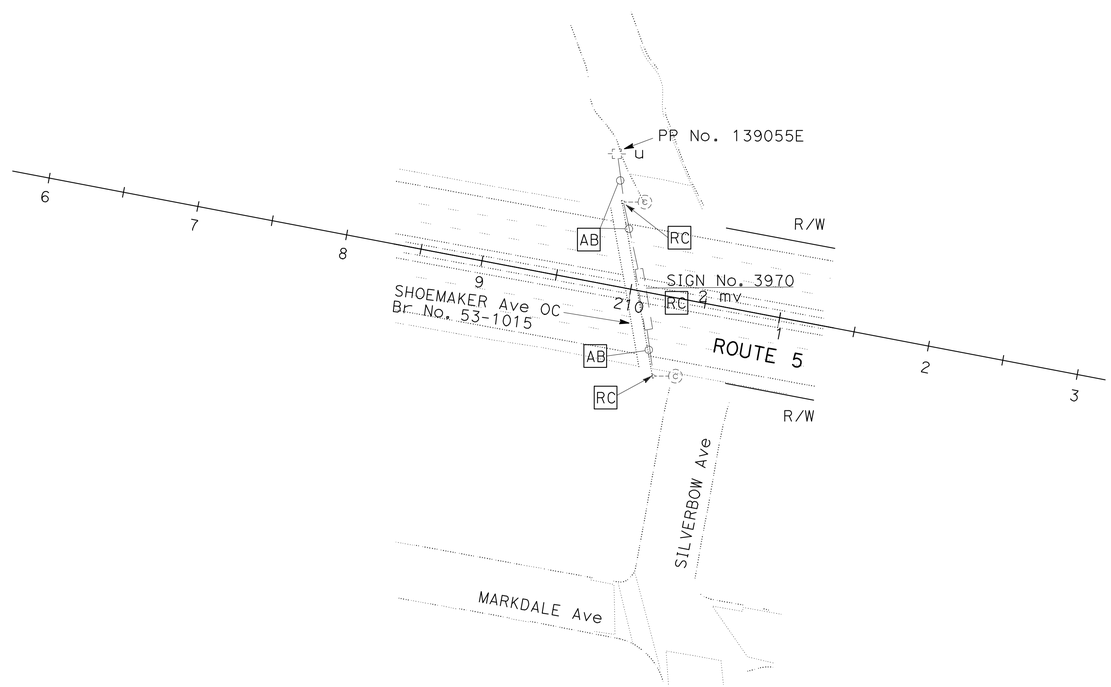

FOR WIRING DIAGRAM SEE SHEET E-50.

APPROVED FOR ELECTRICAL WORK ONLY

LIGHTING AND SIGN ILLUMINATION
(REMOVE)

SCALE: 1" = 50'

E-17

STATE OF CALIFORNIA - DEPARTMENT OF TRANSPORTATION
Caltrans® **TRAFFIC DESIGN**

FUNCTIONAL SUPERVISOR: YI TSAU

CALCULATED-DESIGNED BY: LUKE SUN
CHECKED BY: CECILIO BURCIAGA

REVISED BY
DATE REVISED

LAST REVISION 00-00-00
DATE PLOTTED => 28-MAR-2012
TIME PLOTTED => 13:47

Dist	COUNTY	ROUTE	POST MILES TOTAL PROJECT	SHEET No.	TOTAL SHEETS
07	LA	5	2.4/4.0	536	1288

REGISTERED ELECTRICAL ENGINEER — 11/2/11 DATE

3-26-12
PLANS APPROVAL DATE

REGISTERED PROFESSIONAL ENGINEER — CECILIO BURCIAGA — No. E015302 — Exp. 03-31-13 — ELECTRICAL — STATE OF CALIFORNIA

THE STATE OF CALIFORNIA OR ITS OFFICERS OR AGENTS SHALL NOT BE RESPONSIBLE FOR THE ACCURACY OR COMPLETENESS OF SCANNED COPIES OF THIS PLAN SHEET.

FOR ACCURATE RIGHT OF WAY DATA, CONTACT
RIGHT OF WAY ENGINEERING AT THE DISTRICT OFFICE.

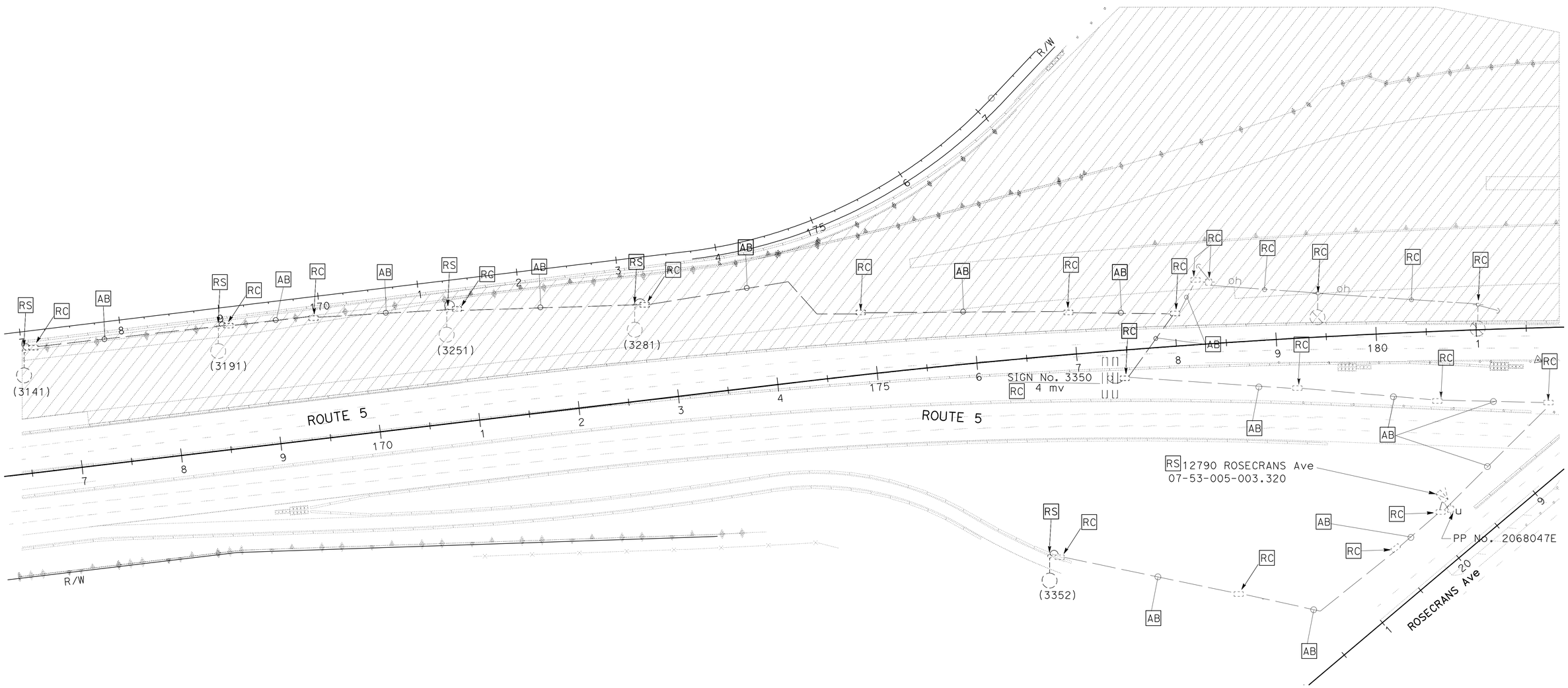

LIGHTING AND SIGN ILLUMINATION
(REMOVE)

SCALE: 1" = 50'

FOR WIRING DIAGRAM SEE SHEET E-50.

APPROVED FOR ELECTRICAL WORK ONLY

E-18

REVISED BY | DATE REVISED
LUKE SUN | CECILIO BURCIAGA
CALCULATED-DESIGNED BY | CHECKED BY
FUNCTIONAL SUPERVISOR: YI TSAU

STATE OF CALIFORNIA - DEPARTMENT OF TRANSPORTATION
Caltrans® TRAFFIC DESIGN

LAST REVISION 00-00-00 | DATE PLOTTED => 28-MAR-2012 | TIME PLOTTED => 14:53

Dist	COUNTY	ROUTE	POST MILES TOTAL PROJECT	SHEET No.	TOTAL SHEETS
07	LA	5	2.4/4.0	537	1288

REGISTERED ELECTRICAL ENGINEER 11/2/11 DATE

3-26-12
PLANS APPROVAL DATE

REGISTERED PROFESSIONAL ENGINEER CECILIO BURCIAGA No. E015302 Exp. 03-31-13 ELECTRICAL STATE OF CALIFORNIA

THE STATE OF CALIFORNIA OR ITS OFFICERS OR AGENTS SHALL NOT BE RESPONSIBLE FOR THE ACCURACY OR COMPLETENESS OF SCANNED COPIES OF THIS PLAN SHEET.

FOR ACCURATE RIGHT OF WAY DATA, CONTACT
RIGHT OF WAY ENGINEERING AT THE DISTRICT OFFICE.

PROJECT NOTES: (THIS SHEET ONLY)

1. 2"C, 6 PR#19 SIC, 1#8G.
2. FOR REFERENCE ONLY, SEE SHEET E-41 FOR INSTALLATION DETAILS.
3. FOR REFERENCE ONLY, SEE SHEET E-43 FOR INSTALLATION DETAILS.

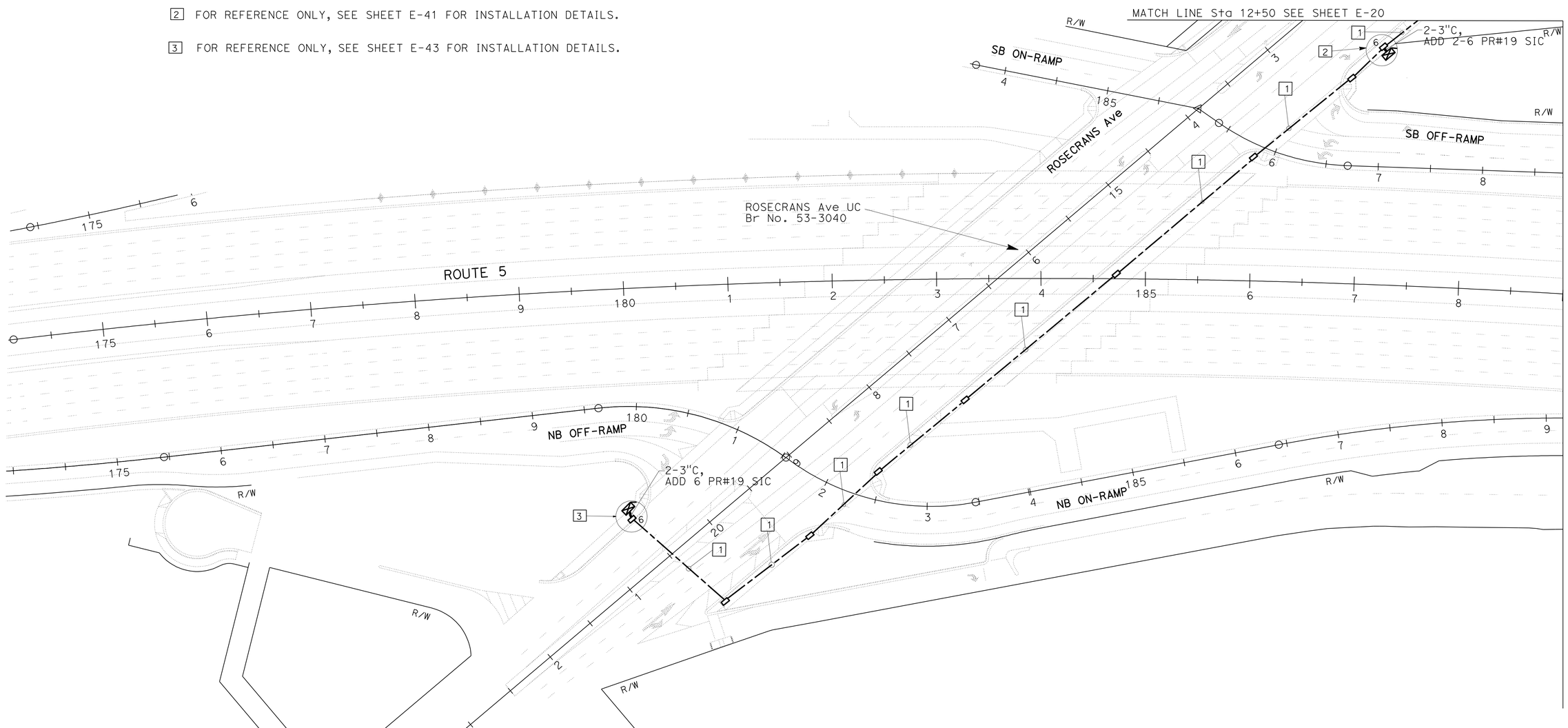

INTERCONNECTION CONDUIT AND CABLE

SCALE: 1" = 50'

APPROVED FOR ELECTRICAL WORK ONLY

E-19

STATE OF CALIFORNIA - DEPARTMENT OF TRANSPORTATION
Caltrans® **TRAFFIC DESIGN**

FUNCTIONAL SUPERVISOR: YI TSAU
CALCULATED-DESIGNED BY: LUKE SUN
CHECKED BY: CECILIO BURCIAGA
REVISED BY / DATE REVISED

LAST REVISION 00-00-00
DATE PLOTTED => 28-MAR-2012
TIME PLOTTED => 14:53

Dist	COUNTY	ROUTE	POST MILES TOTAL PROJECT	SHEET No.	TOTAL SHEETS
07	LA	5	2.4/4.0	538	1288

REGISTERED ELECTRICAL ENGINEER 11/2/11 DATE

3-26-12
PLANS APPROVAL DATE

REGISTERED PROFESSIONAL ENGINEER CECILIO BURCIAGA No. E015302 Exp. 03-31-13 ELECTRICAL STATE OF CALIFORNIA

THE STATE OF CALIFORNIA OR ITS OFFICERS OR AGENTS SHALL NOT BE RESPONSIBLE FOR THE ACCURACY OR COMPLETENESS OF SCANNED COPIES OF THIS PLAN SHEET.

FOR ACCURATE RIGHT OF WAY DATA, CONTACT
RIGHT OF WAY ENGINEERING AT THE DISTRICT OFFICE.

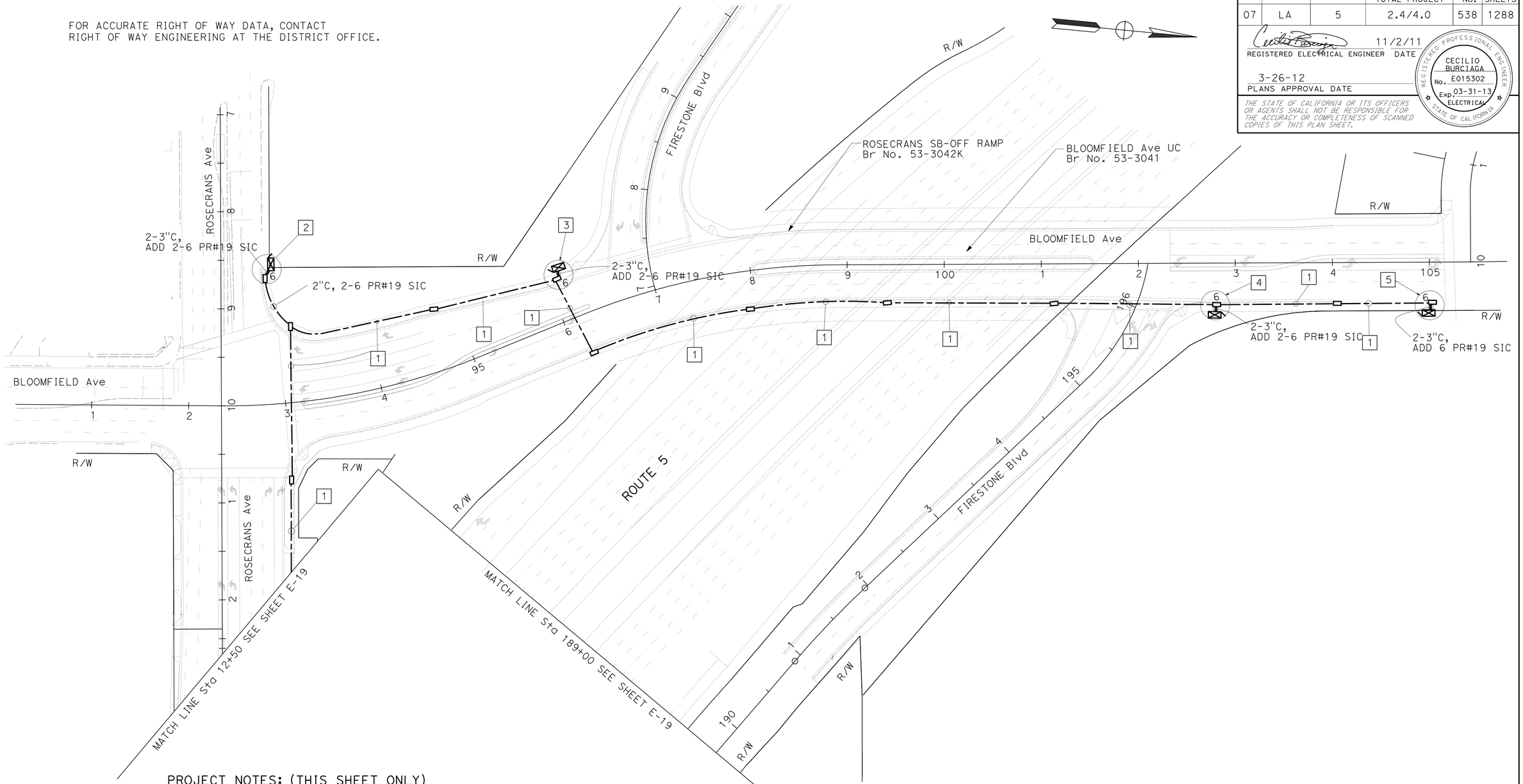

PROJECT NOTES: (THIS SHEET ONLY)

1. 2"C, 6 PR#19 SIC, 1#8G.
2. FOR REFERENCE ONLY, SEE SHEET E-37 FOR INSTALLATION DETAILS.
3. FOR REFERENCE ONLY, SEE SHEET E-32 FOR INSTALLATION DETAILS.
4. FOR REFERENCE ONLY, SEE SHEET E-31 FOR INSTALLATION DETAILS.
5. FOR REFERENCE ONLY, SEE SHEET E-30 FOR INSTALLATION DETAILS.

INTERCONNECTION CONDUIT AND CABLE

SCALE: 1" = 50'

E-20

APPROVED FOR ELECTRICAL WORK ONLY

STATE OF CALIFORNIA - DEPARTMENT OF TRANSPORTATION
Caltrans® TRAFFIC DESIGN

FUNCTIONAL SUPERVISOR: YI TSAU
CALCULATED-DESIGNED BY: LUKE SUN
CHECKED BY: CECILIO BURCIAGA
REVISED BY
DATE REVISED

LAST REVISION 00-00-00
DATE PLOTTED => 28-MAR-2012
TIME PLOTTED => 14:53

Dist	COUNTY	ROUTE	POST MILES TOTAL PROJECT	SHEET No.	TOTAL SHEETS
07	LA	5	2.4/4.0	539	1288

REGISTERED ELECTRICAL ENGINEER — DATE 11/2/11

3-26-12
PLANS APPROVAL DATE

REGISTERED PROFESSIONAL ENGINEER — CECILIO BURCIAGA — No. E015302 — Exp. 03-31-13 — ELECTRICAL — STATE OF CALIFORNIA

THE STATE OF CALIFORNIA OR ITS OFFICERS OR AGENTS SHALL NOT BE RESPONSIBLE FOR THE ACCURACY OR COMPLETENESS OF SCANNED COPIES OF THIS PLAN SHEET.

FOR ACCURATE RIGHT OF WAY DATA, CONTACT
RIGHT OF WAY ENGINEERING AT THE DISTRICT OFFICE.

GENERAL NOTE: (THIS SHEET ONLY)

MVDS DETECTION ZONES MUST BE ADJUSTED WITH SHIFT IN LANES
THROUGH THE DIFFERENT CONSTRUCTION STAGES, OR AS DIRECTED BY THE ENGINEER.

PROJECT NOTES: (THIS SHEET ONLY)

1. MVDS SENSOR UNIT ON TYPE 15TS POLE ON CONCRETE BARRIER.
2. EXISTING 3"C, 1 mvds CABLE, 6 dlc, 1#8G.
3. 120/240 V TYPE III-BF METERED SERVICE EQUIPMENT ENCLOSURE.
   CTID No. 07-53-005-008.582
   ADDRESS: 13162 ½ FREEWAY Dr, NORWALK
4. 2"C STUBOUT, CAP FOR FUTURE USE.

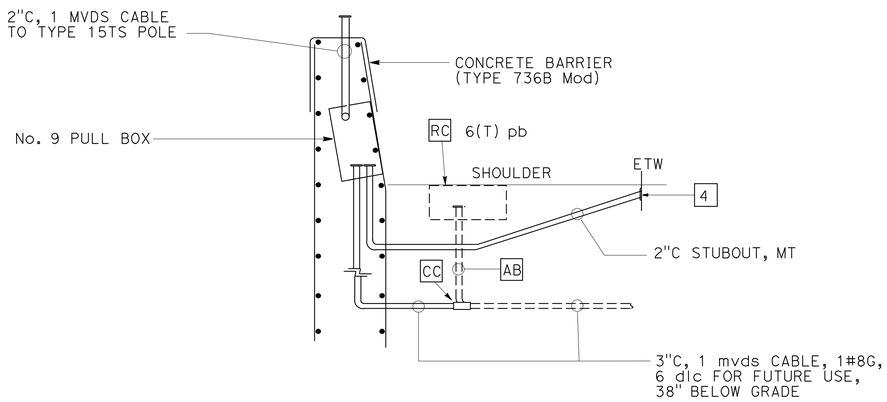

DETAIL A
NO SCALE

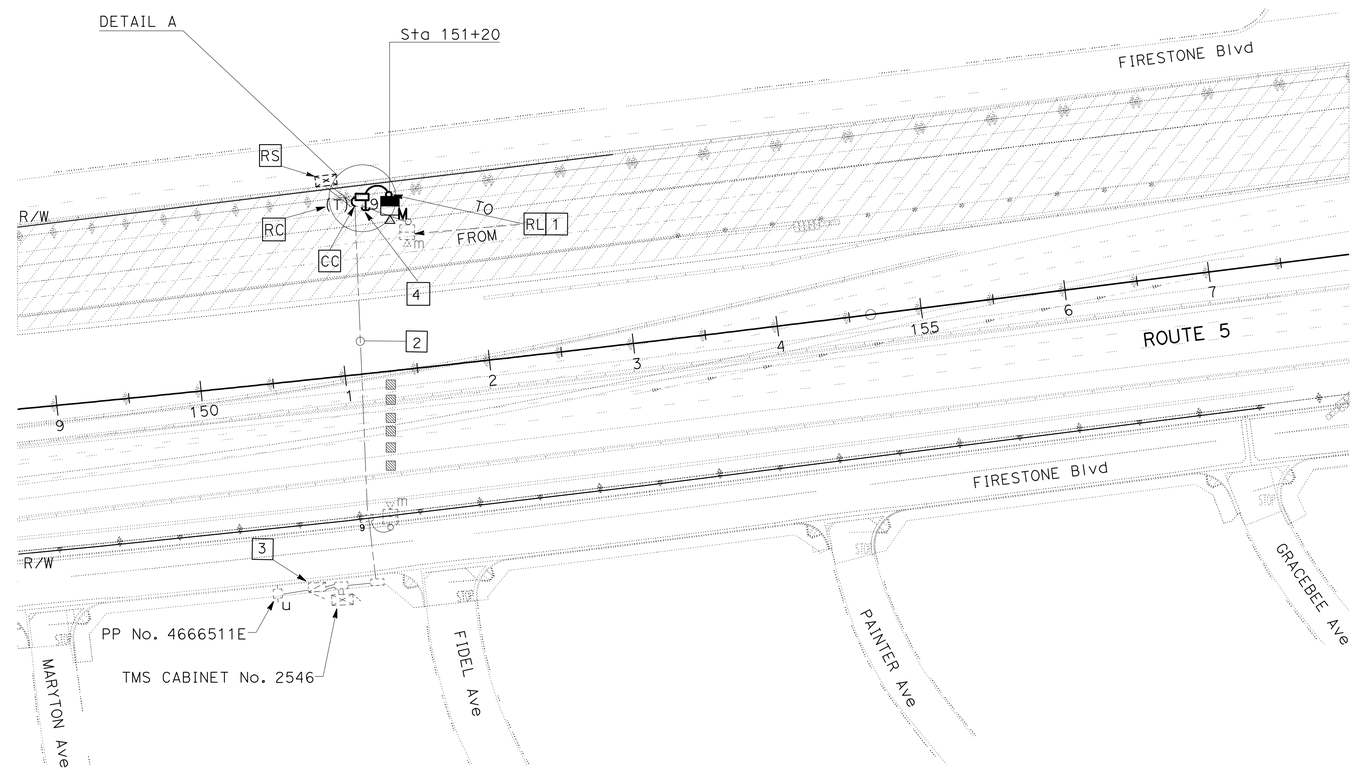

MODIFY TRAFFIC MONITORING STATION
(STAGE 2)

SCALE: 1" = 50'

APPROVED FOR ELECTRICAL WORK ONLY

E-21

STATE OF CALIFORNIA - DEPARTMENT OF TRANSPORTATION
Caltrans® TRAFFIC DESIGN
FUNCTIONAL SUPERVISOR: YI TSAU
CALCULATED-DESIGNED BY: LUKE SUN
CHECKED BY: CECILIO BURCIAGA
REVISED BY / DATE REVISED

LAST REVISION 00-00-00 | DATE PLOTTED => 13-APR-2012 | TIME PLOTTED => 10:13

FOR ACCURATE RIGHT OF WAY DATA, CONTACT
RIGHT OF WAY ENGINEERING AT THE DISTRICT OFFICE.

Dist	COUNTY	ROUTE	POST MILES TOTAL PROJECT	SHEET No.	TOTAL SHEETS
07	LA	5	2.4/4.0	540	1288

REGISTERED ELECTRICAL ENGINEER — DATE 11/2/11

3-26-12
PLANS APPROVAL DATE

REGISTERED PROFESSIONAL ENGINEER — CECILIO BURCIAGA — No. E015302 — Exp. 03-31-13 — ELECTRICAL — STATE OF CALIFORNIA

THE STATE OF CALIFORNIA OR ITS OFFICERS OR AGENTS SHALL NOT BE RESPONSIBLE FOR THE ACCURACY OR COMPLETENESS OF SCANNED COPIES OF THIS PLAN SHEET.

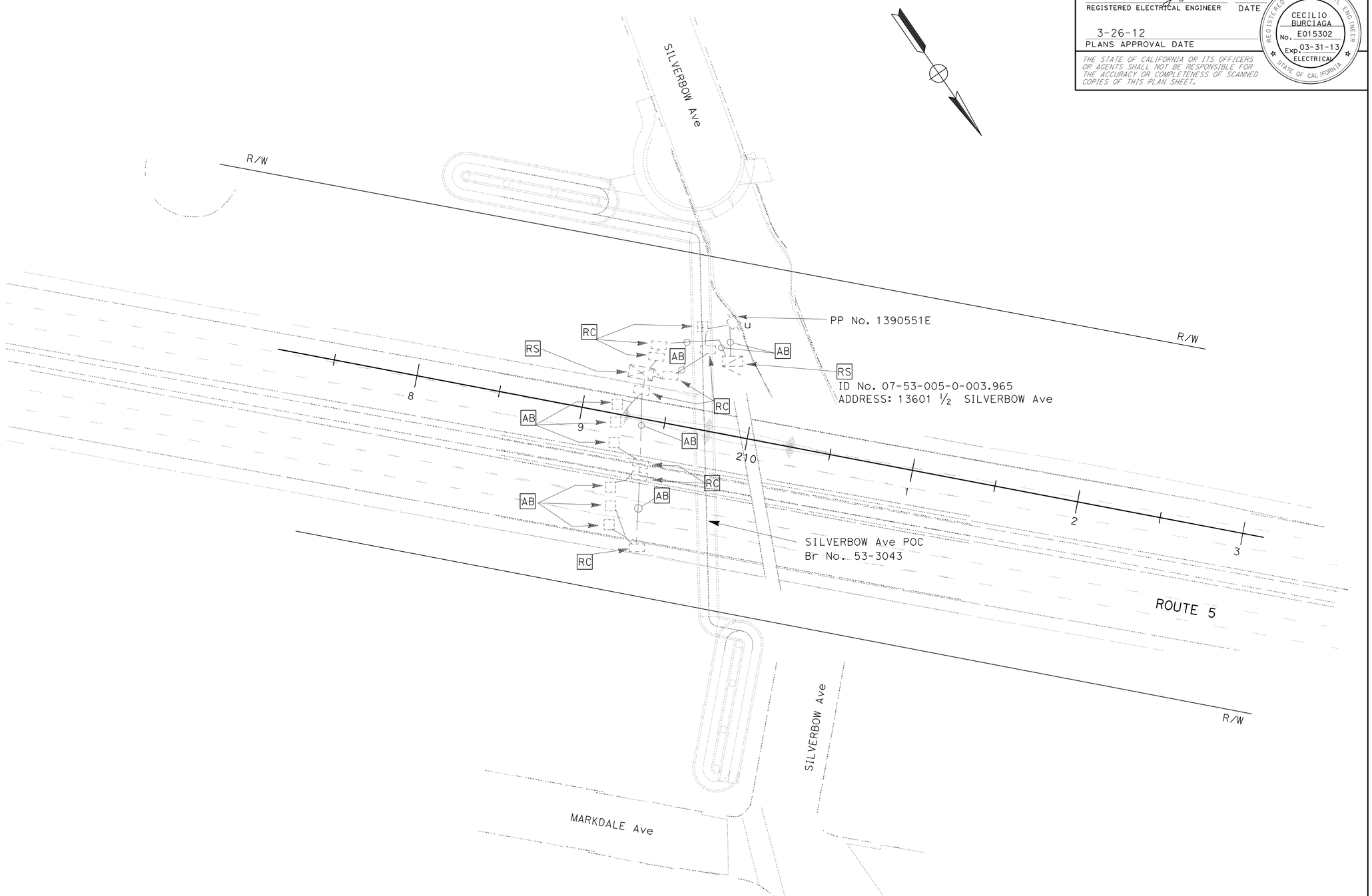

TRAFFIC MONITORING STATION
(REMOVE)

SCALE: 1" = 30'

APPROVED FOR ELECTRICAL WORK ONLY

E-22

STATE OF CALIFORNIA - DEPARTMENT OF TRANSPORTATION
Caltrans® **TRAFFIC DESIGN**

FUNCTIONAL SUPERVISOR: YI TSAU
CALCULATED-DESIGNED BY: LUKE SUN
CHECKED BY: CECILIO BURCIAGA
REVISED BY
DATE REVISED

LAST REVISION 00-00-00
DATE PLOTTED => 28-MAR-2012
TIME PLOTTED => 14:54

Dist	COUNTY	ROUTE	POST MILES TOTAL PROJECT	SHEET No.	TOTAL SHEETS
07	LA	5	2.4/4.0	541	1288

REGISTERED ELECTRICAL ENGINEER 11/2/11 DATE

3-26-12
PLANS APPROVAL DATE

REGISTERED PROFESSIONAL ENGINEER CECILIO BURCIAGA No. E015302 Exp. 03-31-13 ELECTRICAL STATE OF CALIFORNIA

THE STATE OF CALIFORNIA OR ITS OFFICERS OR AGENTS SHALL NOT BE RESPONSIBLE FOR THE ACCURACY OR COMPLETENESS OF SCANNED COPIES OF THIS PLAN SHEET.

FOR ACCURATE RIGHT OF WAY DATA, CONTACT
RIGHT OF WAY ENGINEERING AT THE DISTRICT OFFICE.

GENERAL NOTE: (THIS SHEET ONLY)

MVDS DETECTION ZONES MUST BE ADJUSTED WITH SHIFT IN LANES
THROUGH THE DIFFERENT CONSTRUCTION STAGES, OR AS DIRECTED BY THE ENGINEER.

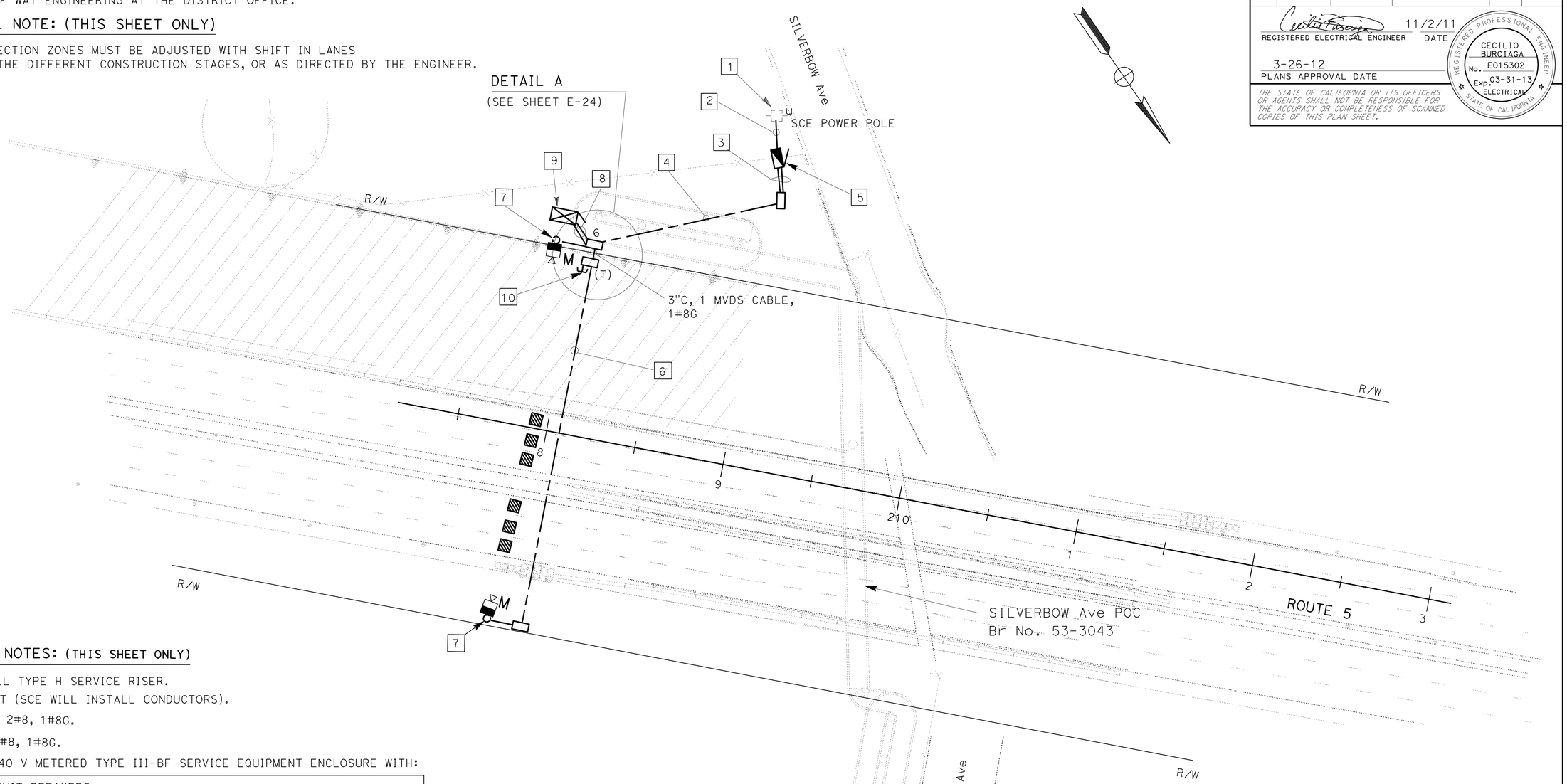

PROJECT NOTES: (THIS SHEET ONLY)

1. INSTALL TYPE H SERVICE RISER.
2. 3"C, MT (SCE WILL INSTALL CONDUCTORS).
3. 2-3"C, 2#8, 1#8G.
4. 2"C, 2#8, 1#8G.
5. 120/240 V METERED TYPE III-BF SERVICE EQUIPMENT ENCLOSURE WITH:

   CIRCUIT BREAKERS
   1-100 A, 240 V, 2P, CB - MAIN
   1- 30 A, 120 V, 1P, CB - TRAFFIC MONITORING STATION SYSTEM

   CTID No. 07-53-005R-003.961
   ADDRESS: 13590 ¼ SILVERBOW Ave, NORWALK
6. JACK 3"C, 38" BELOW GRADE, 1 MVDS CABLE, 1#8G.
7. MVDS SENSOR UNIT ON TYPE 15TS POLE WITHOUT LMA.
8. 2-3"C, 2#8, 2 MVDS CABLE, 1#8G.
9. MODEL 2070 CONTROLLER ASSEMBLY.
   INSTALL WIRELESS DATA SERVICE EQUIPMENT PER DETAIL SHEET E-52.
10. 2"C STUBOUT, CAP FOR FUTURE USE.

TRAFFIC MONITORING STATION
(STAGE 1 PHASE 3)

SCALE: 1" = 30'

E-23

APPROVED FOR ELECTRICAL WORK ONLY

STATE OF CALIFORNIA - DEPARTMENT OF TRANSPORTATION
Caltrans® TRAFFIC DESIGN

FUNCTIONAL SUPERVISOR: YI TSAU
CALCULATED-DESIGNED BY: LUKE SUN
CHECKED BY: CECILIO BURCIAGA
REVISED BY
DATE REVISED

LAST REVISION 00-00-00
DATE PLOTTED => 04-APR-2012
TIME PLOTTED => 14:20

Dist	COUNTY	ROUTE	POST MILES TOTAL PROJECT	SHEET No.	TOTAL SHEETS
07	LA	5	2.4/4.0	542	1288

REGISTERED ELECTRICAL ENGINEER 11/2/11 DATE

3-26-12
PLANS APPROVAL DATE

REGISTERED PROFESSIONAL ENGINEER CECILIO BURCIAGA No. E015302 Exp. 03-31-13 ELECTRICAL STATE OF CALIFORNIA

THE STATE OF CALIFORNIA OR ITS OFFICERS OR AGENTS SHALL NOT BE RESPONSIBLE FOR THE ACCURACY OR COMPLETENESS OF SCANNED COPIES OF THIS PLAN SHEET.

FOR ACCURATE RIGHT OF WAY DATA, CONTACT
RIGHT OF WAY ENGINEERING AT THE DISTRICT OFFICE.

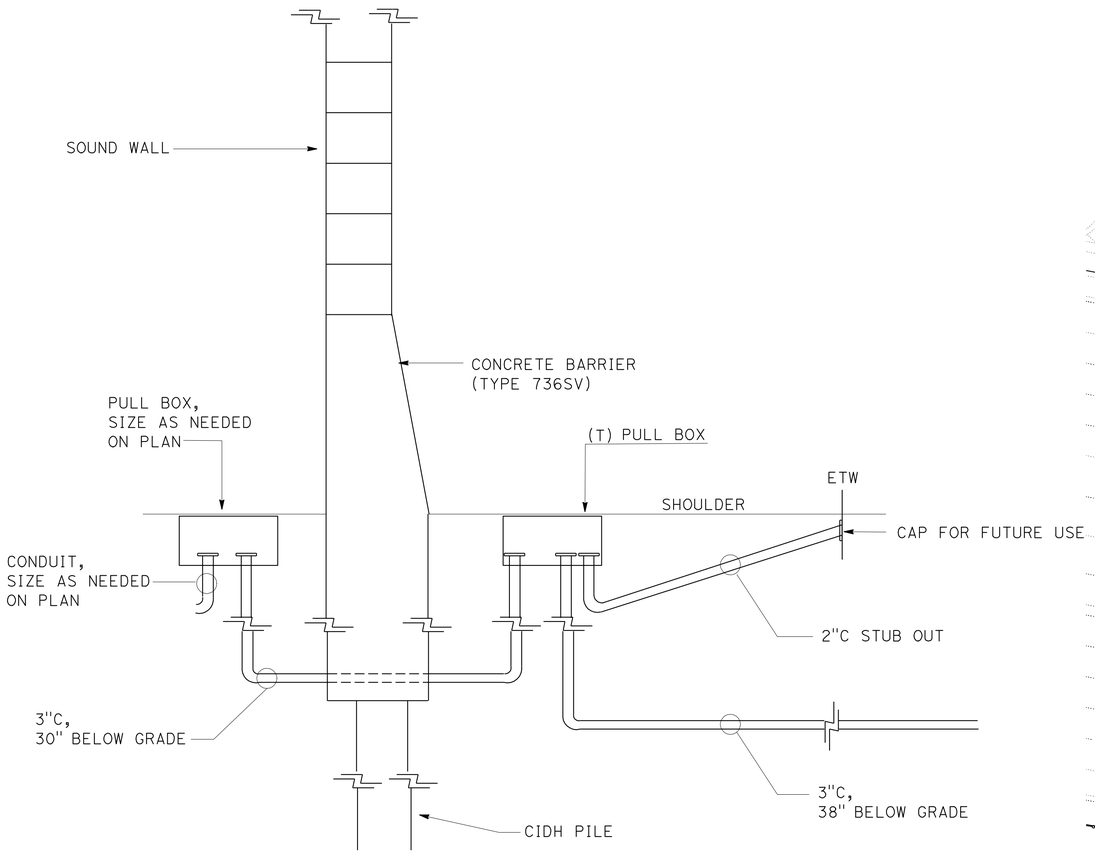

DETAIL A
NO SCALE

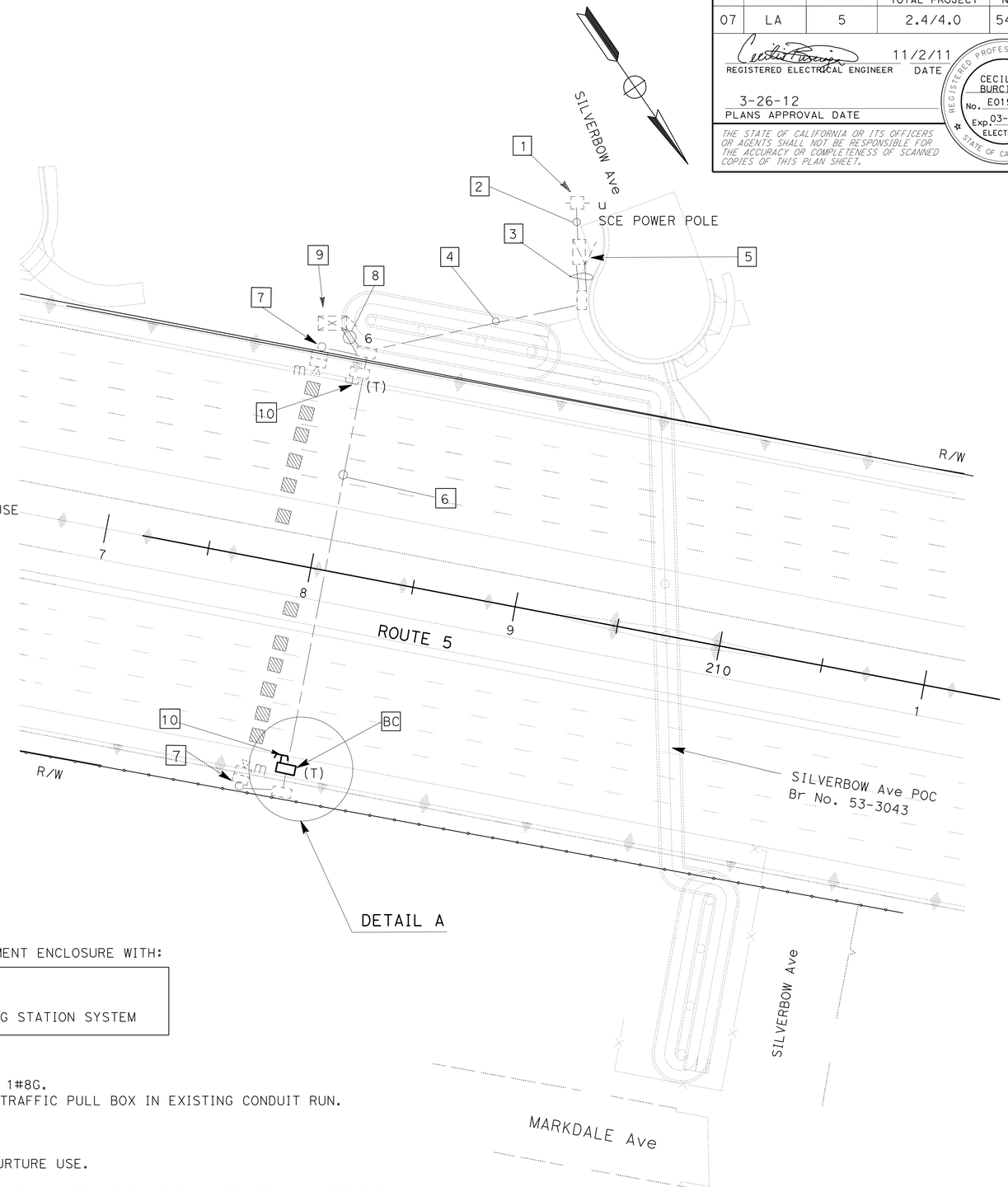

PROJECT NOTES: (THIS SHEET ONLY)

1. Exist TYPE H SERVICE RISER.
2. ExisT 3"C, SCE CONDUCTORS.
3. 2-3"C, 2#8, 1#8G.
4. 2"C, 2#8, 1#8G.
5. 120/240 V METERED TYPE III-BF SERVICE EQUIPMENT ENCLOSURE WITH:

   CIRCUIT BREAKERS
   1-100 A, 240 V, 2P, CB - MAIN
   1- 30 A, 120 V, 1P, CB - TRAFFIC MONITORING STATION SYSTEM

   CTID No. 07-53-005R-003.961
   ADDRESS: 13590 1/4 SILVERBOW Ave, NORWALK
6. 3"C, 38" BELOW GRADE. PULL OUT 1 MVDS CABLE, 1#8G.
   REINSTALL 1 MVDS CABLE, 1#8G AFTER INSTALL TRAFFIC PULL BOX IN EXISTING CONDUIT RUN.
   INSTALL 6 DLC FOR FURTURE USE.
7. Exist mvds SENSOR UNIT ON TYPE 15TS POLE.
8. 2-3"C, 2#8, 2 MVDS CABLE, 1#8G, 12 DLC FOR FURTURE USE.
9. MODEL 2070 CONTROLLER ASSEMBLY WITH WIRELESS DATA SERVICE EQUIPMENT PER DETAIL SHEET E-52.
10. 2"C STUBOUT, CAP FOR FUTURE USE.

APPROVED FOR ELECTRICAL WORK ONLY

MODIFY TRAFFIC MONITORING STATION
(STAGE 4 PHASE 1)
SCALE: 1" = 30'

E-24

STATE OF CALIFORNIA - DEPARTMENT OF TRANSPORTATION
Caltrans® TRAFFIC DESIGN

FUNCTIONAL SUPERVISOR: YI TSAU
CALCULATED-DESIGNED BY: CECILIO BURCIAGA
CHECKED BY: LUKE SUN
REVISED BY
DATE REVISED

LAST REVISION 00-00-00 | DATE PLOTTED => 13-APR-2012 | TIME PLOTTED => 09:25

Dist	COUNTY	ROUTE	POST MILES TOTAL PROJECT	SHEET No.	TOTAL SHEETS
07	LA	5	2.4/4.0	543	1288

REGISTERED ELECTRICAL ENGINEER — DATE 11/2/11

3-26-12
PLANS APPROVAL DATE

REGISTERED PROFESSIONAL ENGINEER — CECILIO BURCIAGA — No. E015302 — Exp. 03-31-13 — ELECTRICAL — STATE OF CALIFORNIA

THE STATE OF CALIFORNIA OR ITS OFFICERS OR AGENTS SHALL NOT BE RESPONSIBLE FOR THE ACCURACY OR COMPLETENESS OF SCANNED COPIES OF THIS PLAN SHEET.

FOR ACCURATE RIGHT OF WAY DATA, CONTACT
RIGHT OF WAY ENGINEERING AT THE DISTRICT OFFICE.

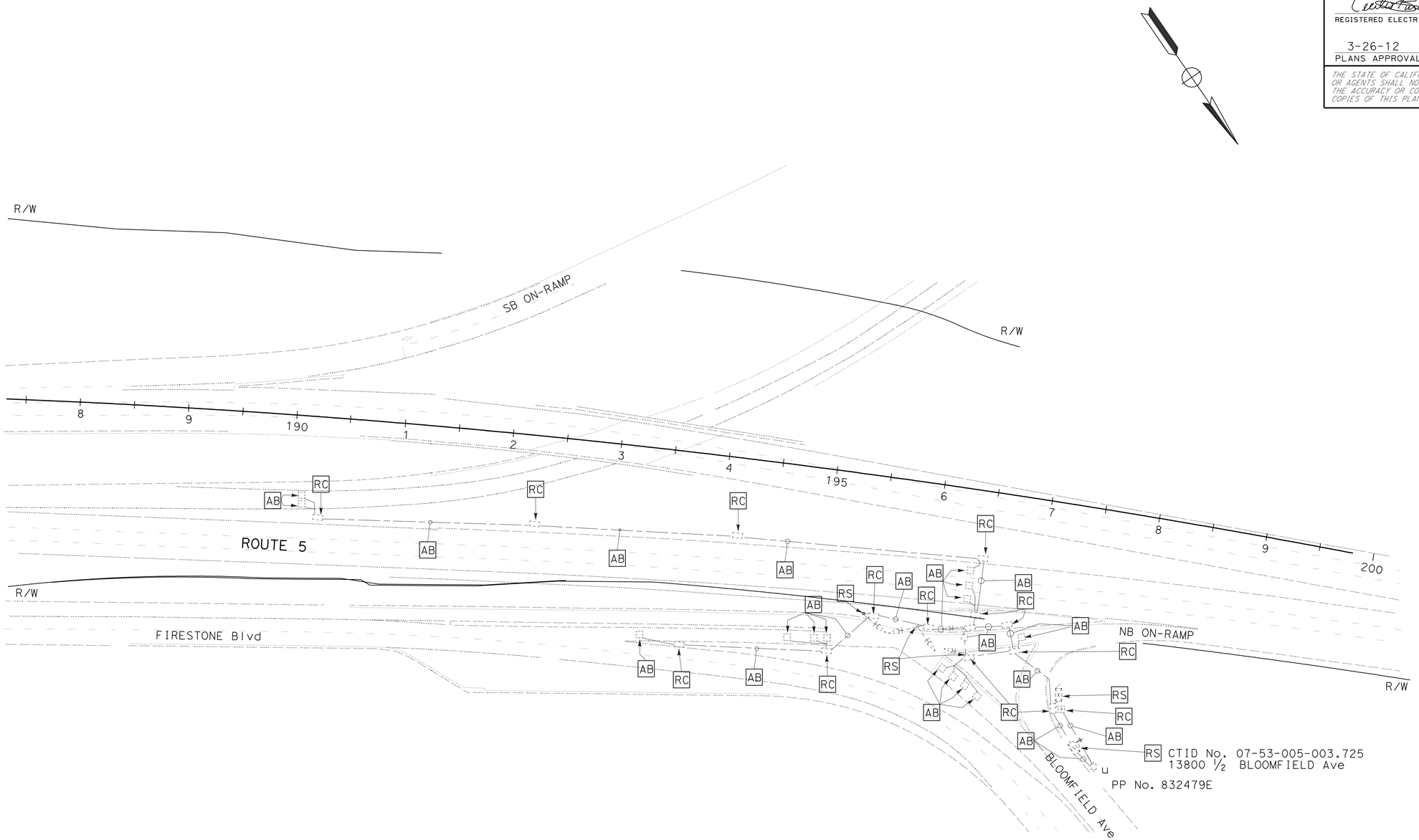

APPROVED FOR ELECTRICAL WORK ONLY

SIGNAL AND LIGHTING
(REMOVE)

SCALE: 1" = 50'

E-25

STATE OF CALIFORNIA - DEPARTMENT OF TRANSPORTATION
Caltrans® **TRAFFIC DESIGN**

FUNCTIONAL SUPERVISOR: YI TSAU
CALCULATED-DESIGNED BY: CECILIO BURCIAGA
CHECKED BY: LUKE SUN
REVISED BY
DATE REVISED

LAST REVISION 00-00-00 | DATE PLOTTED => 28-MAR-2012 | TIME PLOTTED => 15:33

BORDER LAST REVISED 7/2/2010 | USERNAME => s119571 | DGN FILE => 721593ua025.dgn | RELATIVE BORDER SCALE IS IN INCHES 0 1 2 3 | UNIT 1880 | PROJECT NUMBER & PHASE 07000018331

Dist	COUNTY	ROUTE	POST MILES TOTAL PROJECT	SHEET No.	TOTAL SHEETS
07	LA	5	2.4/4.0	544	1288

REGISTERED ELECTRICAL ENGINEER 11/2/11 DATE

3-26-12
PLANS APPROVAL DATE

REGISTERED PROFESSIONAL ENGINEER CECILIO BURCIAGA No. E015302 Exp. 03-31-13 ELECTRICAL STATE OF CALIFORNIA

THE STATE OF CALIFORNIA OR ITS OFFICERS OR AGENTS SHALL NOT BE RESPONSIBLE FOR THE ACCURACY OR COMPLETENESS OF SCANNED COPIES OF THIS PLAN SHEET.

FOR ACCURATE RIGHT OF WAY DATA, CONTACT
RIGHT OF WAY ENGINEERING AT THE DISTRICT OFFICE.

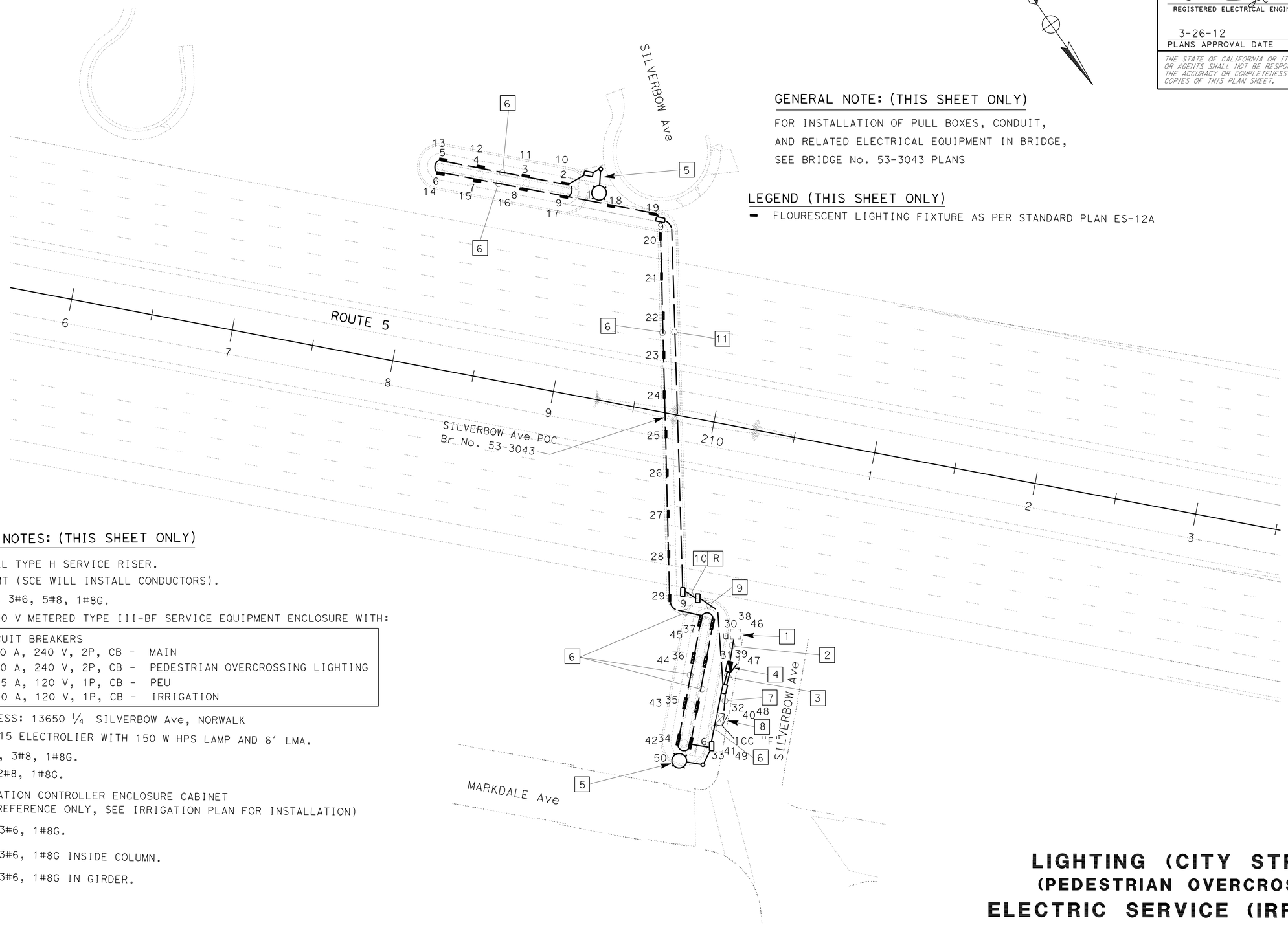

GENERAL NOTE: (THIS SHEET ONLY)

FOR INSTALLATION OF PULL BOXES, CONDUIT,
AND RELATED ELECTRICAL EQUIPMENT IN BRIDGE,
SEE BRIDGE No. 53-3043 PLANS

LEGEND (THIS SHEET ONLY)

- FLOURESCENT LIGHTING FIXTURE AS PER STANDARD PLAN ES-12A

PROJECT NOTES: (THIS SHEET ONLY)

1. INSTALL TYPE H SERVICE RISER.
2. 3"C, MT (SCE WILL INSTALL CONDUCTORS).
3. 2-3"C, 3#6, 5#8, 1#8G.
4. 120/240 V METERED TYPE III-BF SERVICE EQUIPMENT ENCLOSURE WITH:

CIRCUIT BREAKERS	
1-100 A, 240 V, 2P, CB -	MAIN
2- 20 A, 240 V, 2P, CB -	PEDESTRIAN OVERCROSSING LIGHTING
1- 15 A, 120 V, 1P, CB -	PEU
1- 20 A, 120 V, 1P, CB -	IRRIGATION

ADDRESS: 13650 1/4 SILVERBOW Ave, NORWALK

5. TYPE 15 ELECTROLIER WITH 150 W HPS LAMP AND 6' LMA.
6. 1 1/4"C, 3#8, 1#8G.
7. 1"C, 2#8, 1#8G.
8. IRRIGATION CONTROLLER ENCLOSURE CABINET
(FOR REFERENCE ONLY, SEE IRRIGATION PLAN FOR INSTALLATION)
9. 2"C, 3#6, 1#8G.
10. 2"C, 3#6, 1#8G INSIDE COLUMN.
11. 2"C, 3#6, 1#8G IN GIRDER.

FOR WIRING DIAGRAM SEE SHEET E-47.

APPROVED FOR ELECTRICAL WORK ONLY

LIGHTING (CITY STREET)
(PEDESTRIAN OVERCROSSING)
ELECTRIC SERVICE (IRRIGATION)

SCALE: 1" = 30'

E-26

STATE OF CALIFORNIA - DEPARTMENT OF TRANSPORTATION
Caltrans® TRAFFIC DESIGN

FUNCTIONAL SUPERVISOR: YI TSAU
CALCULATED-DESIGNED BY: LUKE SUN
CHECKED BY: CECILIO BURCIAGA
REVISED BY
DATE REVISED

LAST REVISION 00-00-00
DATE PLOTTED => 28-MAR-2012
TIME PLOTTED => 15:33

Dist	COUNTY	ROUTE	POST MILES TOTAL PROJECT	SHEET No.	TOTAL SHEETS
07	LA	5	2.4/4.0	545	1288

REGISTERED ELECTRICAL ENGINEER 11/2/11 DATE

3-26-12
PLANS APPROVAL DATE

REGISTERED PROFESSIONAL ENGINEER CECILIO BURCIAGA No. E015302 Exp. 03-31-13 ELECTRICAL STATE OF CALIFORNIA

THE STATE OF CALIFORNIA OR ITS OFFICERS OR AGENTS SHALL NOT BE RESPONSIBLE FOR THE ACCURACY OR COMPLETENESS OF SCANNED COPIES OF THIS PLAN SHEET.

FOR ACCURATE RIGHT OF WAY DATA, CONTACT
RIGHT OF WAY ENGINEERING AT THE DISTRICT OFFICE.

PROJECT NOTES: (THIS SHEET ONLY)

1. 3"C, MT (SCE WILL INSTALL CONDUCTORS).
2. 120/240 V METERED TYPE III-BF SERVICE EQUIPMENT ENCLOSURE WITH:

   100 A, 240 V, 2P, CB - MAIN
   30 A, 240 V, 2P, CB - STREET LIGHTING (UNMETERED)
   15 A, 120 V, 1P, CB - PEU
   20 A, 120 V, 1P, CB - IRRIGATION

   ADDRESS: 14886 1/4 SHOEMAKER Ave, SANTA FE SPRINGS
3. 2-3"C, 6#6, 2#8, 1#8G.
4. 2"C, 6#6, 2#8, 1#8G.
5. 2"C, 3#6, 2#8, 1#8G.
6. 2"C, 3#6, 1#8G.
7. 2"C, 3#6, 1#8G IN CONCRETE BARRIER.
8. 2"C, 2#6, 1#8G.
9. 1"C, 2#8, 1#8G.
10. IRRIGATION CONTROLLER ENCLOSURE CABINET
    (REFERENCE ONLY. SEE IRRIGATION PLANS FOR INSTALLITION)
11. 120/240 V METERED TYPE III-BF SERVICE EQUIPMENT ENCLOSURE WITH:

    100 A, 240 V, 2P, CB - MAIN
    20 A, 120 V, 1P, CB - IRRIGATION

    ADDRESS: 14614 1/4 SHOEMAKER Ave, NORWALK

GENERAL NOTE: (SHEET E-27 TO E-29)

FOR INSTALLATION OF PULL BOXES, CONDUIT,
AND RELATED ELECTRICAL EQUIPMENT IN BRIDGE,
SEE BRIDGE PLANS

LEGEND: (THIS SHEET ONLY)

CITY MARBELITE CONCRETE LIGHTING STANDARD WITH 200 W HPS LUMINAIRE.
(SEE STRUCTURE DETAILS SHEET FOR INSTALLATION DETAILS)

CITY DECORATIVE LIGHTING STANDARD WITH 200 W HPS LUMINAIRE.
(SEE STRUCTURE DETAILS SHEET FOR INSTALLATION DETAILS)

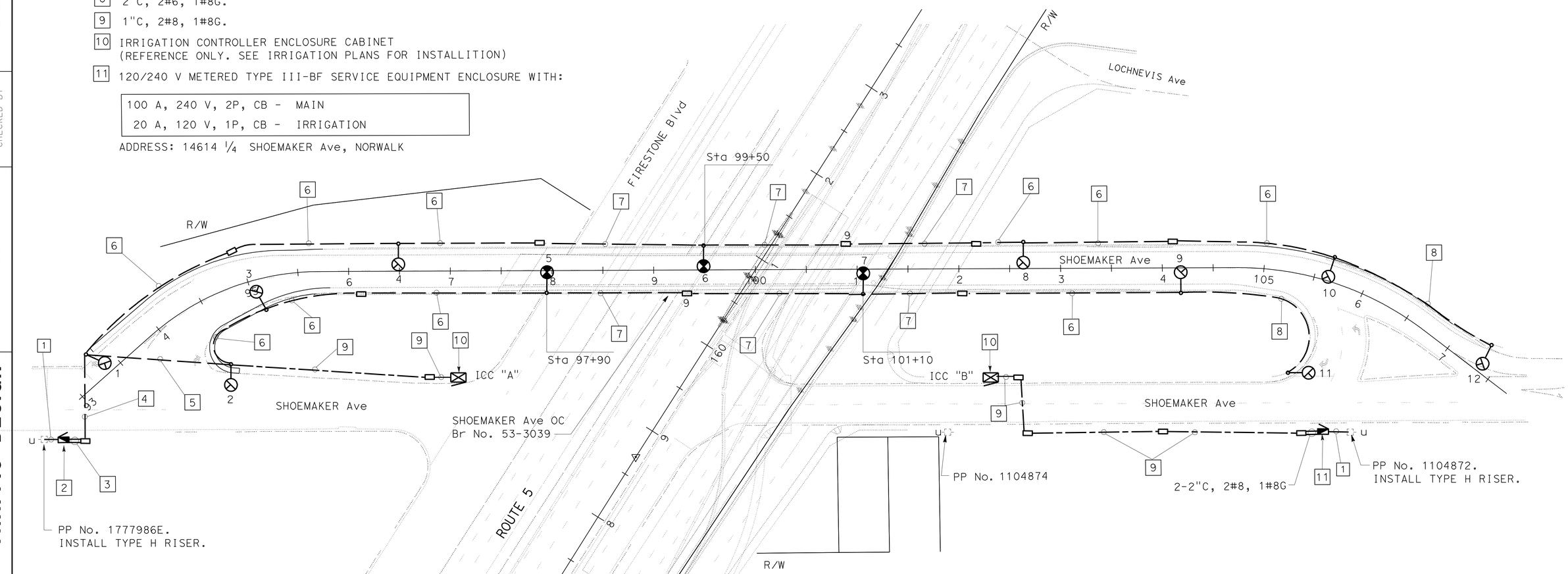

FOR WIRING DIAGRAM SEE SHEET E-48.

APPROVED FOR ELECTRICAL WORK ONLY

ELECTRIC SERVICE (IRRIGATION)
LIGHTING (CITY STREET)

SCALE: 1" = 50'

E-27

STATE OF CALIFORNIA - DEPARTMENT OF TRANSPORTATION
Caltrans® TRAFFIC DESIGN

FUNCTIONAL SUPERVISOR: YI TSAU
CALCULATED-DESIGNED BY: LUKE SUN
CHECKED BY: CECILIO BURCIAGA
REVISED BY
DATE REVISED

LAST REVISION 00-00-00
DATE PLOTTED => 28-MAR-2012
TIME PLOTTED => 14:54

BORDER LAST REVISED 7/2/2010
USERNAME => s119571
DGN FILE => 721593ua027.dgn
RELATIVE BORDER SCALE IS IN INCHES 0 1 2 3
UNIT 1880
PROJECT NUMBER & PHASE 07000018331

Dist	COUNTY	ROUTE	POST MILES TOTAL PROJECT	SHEET No.	TOTAL SHEETS
07	LA	5	2.4/4.0	546	1288

REGISTERED ELECTRICAL ENGINEER — DATE 11/2/11

3-26-12
PLANS APPROVAL DATE

REGISTERED PROFESSIONAL ENGINEER — CECILIO BURCIAGA — No. E015302 — Exp. 03-31-13 — ELECTRICAL — STATE OF CALIFORNIA

THE STATE OF CALIFORNIA OR ITS OFFICERS OR AGENTS SHALL NOT BE RESPONSIBLE FOR THE ACCURACY OR COMPLETENESS OF SCANNED COPIES OF THIS PLAN SHEET.

FOR ACCURATE RIGHT OF WAY DATA, CONTACT
RIGHT OF WAY ENGINEERING AT THE DISTRICT OFFICE.

PROJECT NOTES: (THIS SHEET ONLY)

1. INSTALL TYPE H RISER.
2. 3"C, MT (CONDUCTORS INSTALL BY SCE).
3. 120/240 V METERED TYPE III-BF SERVICE EQUIPMENT ENCLOSURE WITH:

   100 A, 240 V, 2P, CB - MAIN
   3-30 A, 240 V, 2P, CB - SOFFIT LIGHTING
   1-15 A, 120 V, 1P, CB - PEU

   ADDRESS: 12605 3/4 ROSECRANS Ave, NORWALK
4. 3"C, 6#4, 3#6, 1#8G.
5. 1"C, 3#8, 1#8G INSIDE COLUMN.
   (SEE SHEET E-49 WIRING DIAGRAM CIRCUIT 1 FOR REFERENCE)
6. 1"C, 3#8, 1#8G INSIDE COLUMN.
   (SEE SHEET E-49 WIRING DIAGRAM CIRCUIT 2 FOR REFERENCE)
7. 1"C, 3#8, 1#8G.
8. 2"C, 3#6, 1#8G.
9. 2"C, 6#4, 1#8G.
10. 1"C, 2#8, 1#8G.
11. 2"C, 2#6, 1#8G.

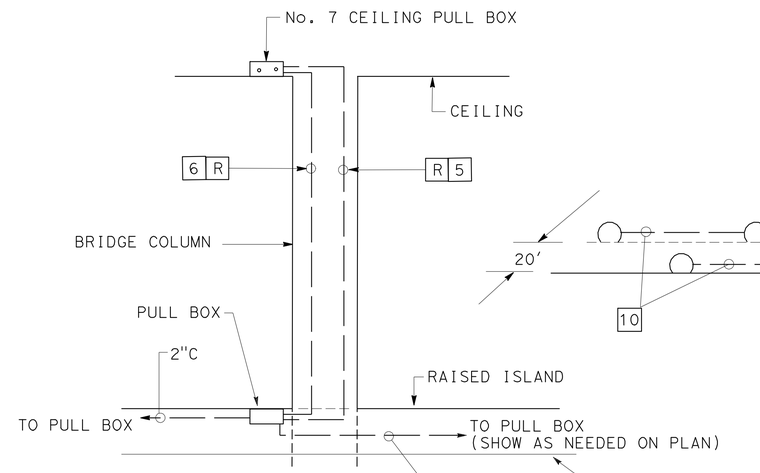

SECTION A-A
NO SCALE

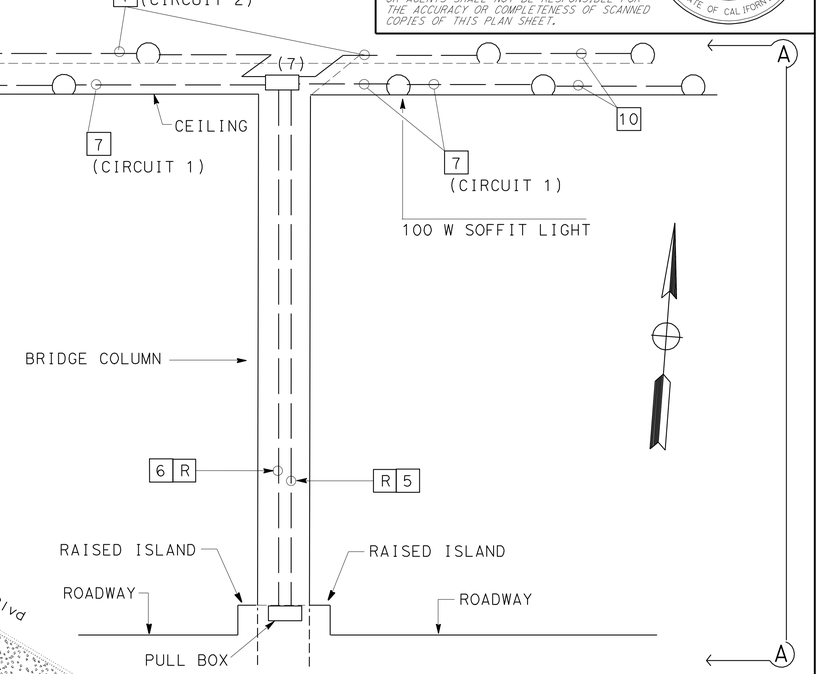

DETAIL A (SIDE VIEW)
TYPICAL DETAIL FOR SOFFIT LIGHTING CONDUIT IN COLUMN
NO SCALE

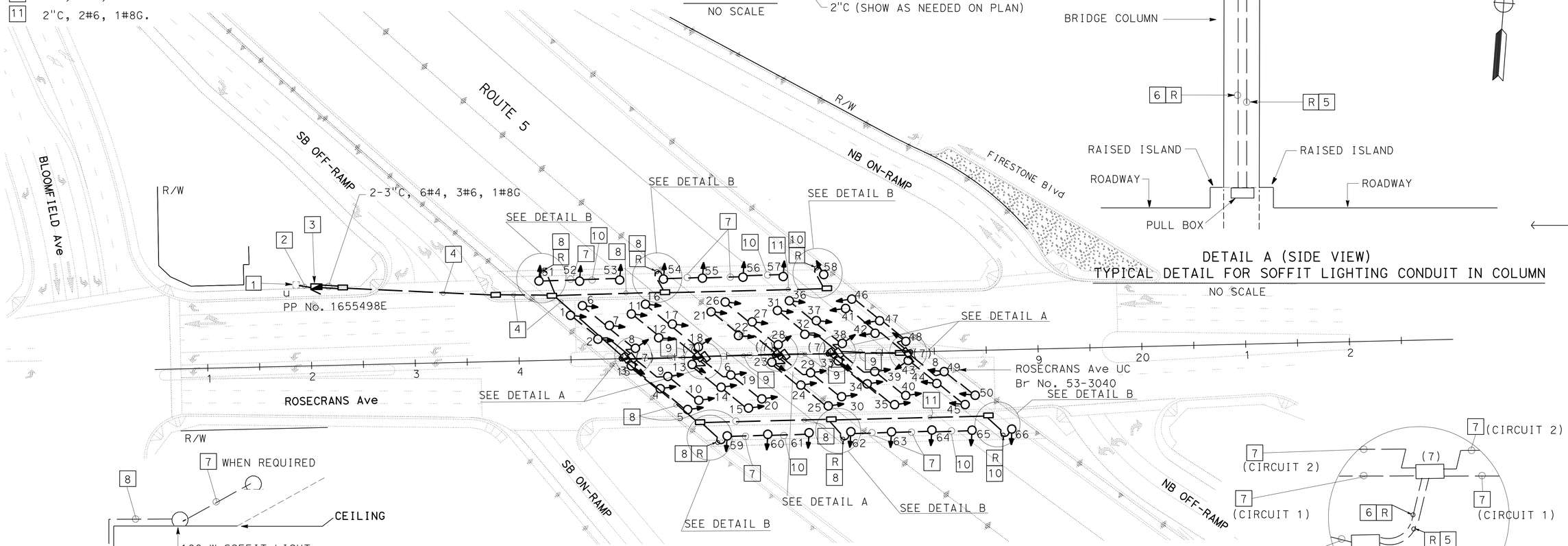

DETAIL A (TOP VIEW)
NO SCALE

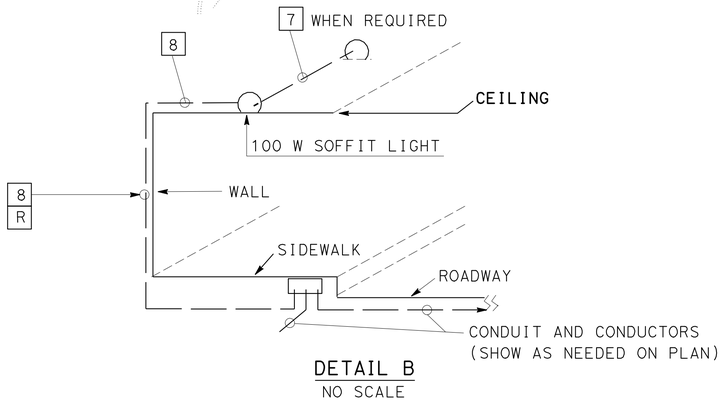

DETAIL B
NO SCALE

FOR WIRING DIAGRAM SEE SHEET E-49.

APPROVED FOR ELECTRICAL WORK ONLY

LIGHTING (CITY STREET)
(SOFFIT)
SCALE: 1" = 50'

E-28

STATE OF CALIFORNIA - DEPARTMENT OF TRANSPORTATION
Caltrans® TRAFFIC DESIGN

FUNCTIONAL SUPERVISOR: YI TSAU
CALCULATED-DESIGNED BY: CECILIO BURCIAGA
CHECKED BY: LUKE SUN
REVISED BY / DATE REVISED

LAST REVISION 00-00-00 | DATE PLOTTED => 28-MAR-2012 | TIME PLOTTED => 14:54

Dist	COUNTY	ROUTE	POST MILES TOTAL PROJECT	SHEET No.	TOTAL SHEETS
07	LA	5	2.4/4.0	547	1288

REGISTERED ELECTRICAL ENGINEER — DATE 11/2/11

3-26-12
PLANS APPROVAL DATE

REGISTERED PROFESSIONAL ENGINEER — CECILIO BURCIAGA — No. E015302 — Exp. 03-31-13 — ELECTRICAL — STATE OF CALIFORNIA

THE STATE OF CALIFORNIA OR ITS OFFICERS OR AGENTS SHALL NOT BE RESPONSIBLE FOR THE ACCURACY OR COMPLETENESS OF SCANNED COPIES OF THIS PLAN SHEET.

FOR ACCURATE RIGHT OF WAY DATA, CONTACT
RIGHT OF WAY ENGINEERING AT THE DISTRICT OFFICE.

PROJECT NOTES: (THIS SHEET ONLY)

1. INSTALL TYPE H SERVICE.
2. 3"C, MT (SCE WILL INSTALL CONDUCTORS).
3. 120/240 V METERED TYPE III-BF SERVICE EQUIPMENT ENCLOSURE WITH:

   1-100 A, 240 V, 2P, CB - MAIN
   3-30 A, 240 V, 2P, CB - SOFFIT LIGHTING
   1-15 A, 120 V, 1P, CB - PEU

   ADDRESS: 14061 ½ BLOOMFIELD Ave, NORWALK
4. 3"C, 9#6, 1#8G.
5. 1"C, 3#8, 1#8G INSIDE COLUMN.
   (SEE SHEET E-49 WIRING DIAGRAM CIRCUIT 3 FOR REFERENCE)
6. 1"C, 3#8, 1#8G INSIDE COLUMN.
   (SEE SHEET E-49 WIRING DIAGRAM CIRCUIT 4 FOR REFERENCE)
7. 1"C, 3#8, 1#8G.
8. 2"C, 3#6, 1#8G.
9. 2"C, 6#6, 1#8G.
10. 1"C, 2#8, 1#8G.

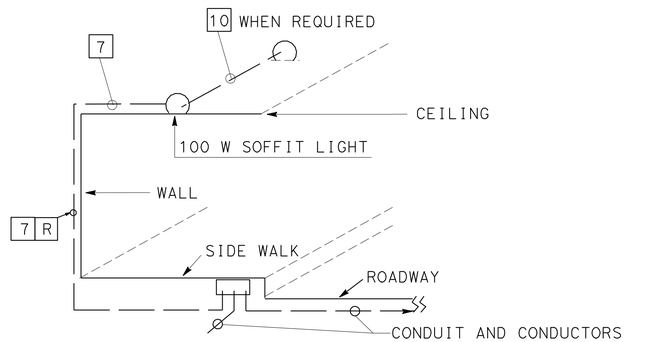

DETAIL B
NO SCALE

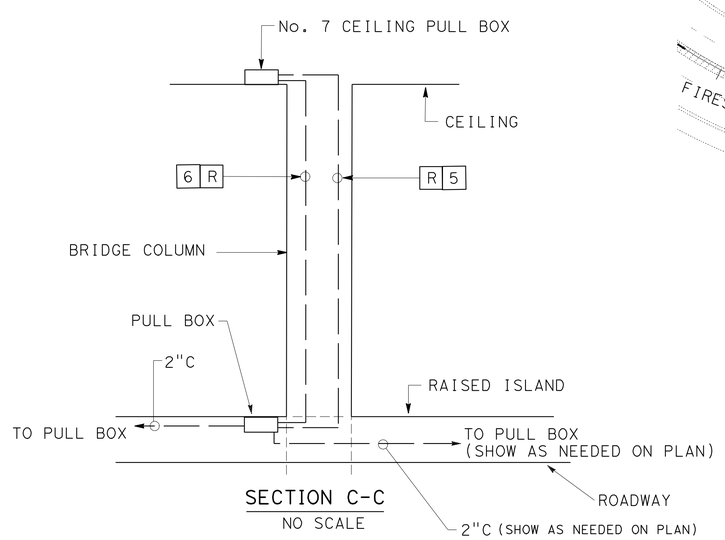

SECTION C-C
NO SCALE

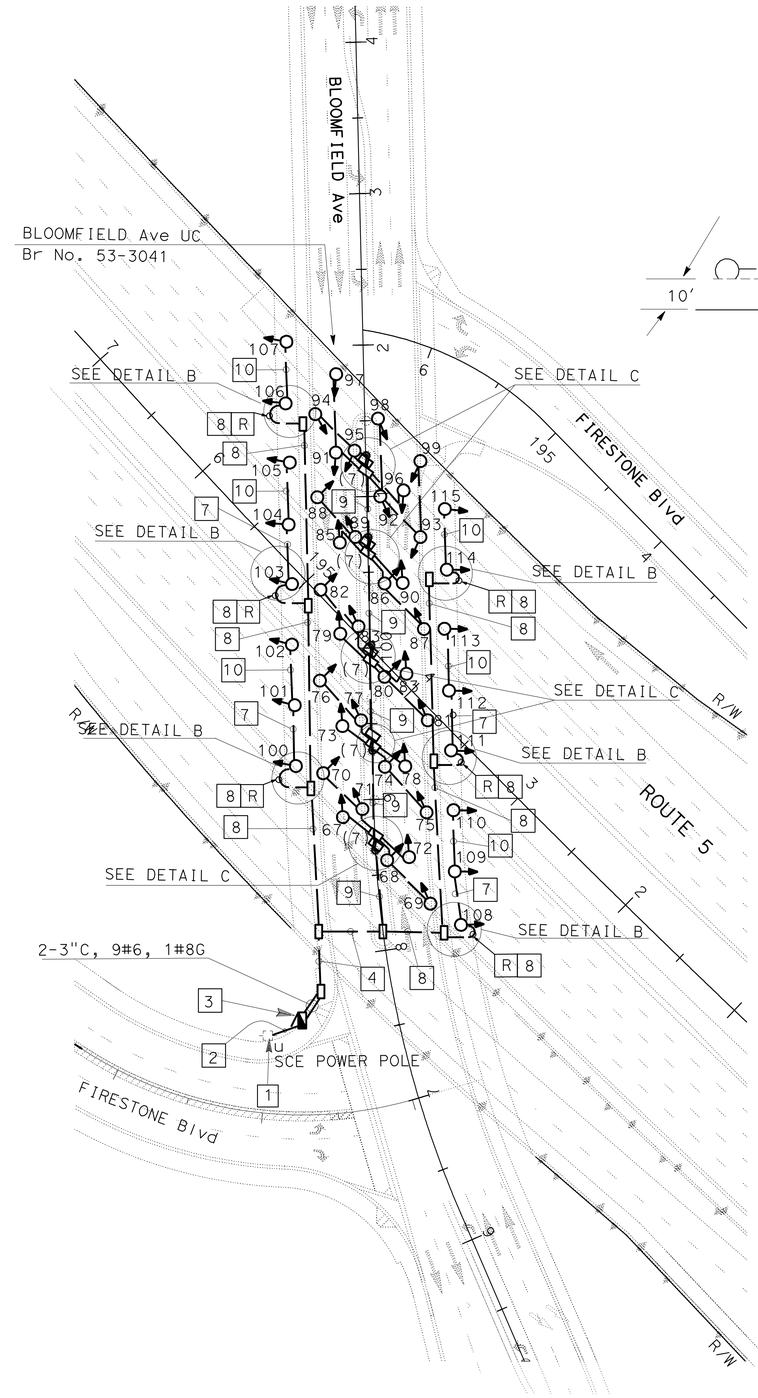

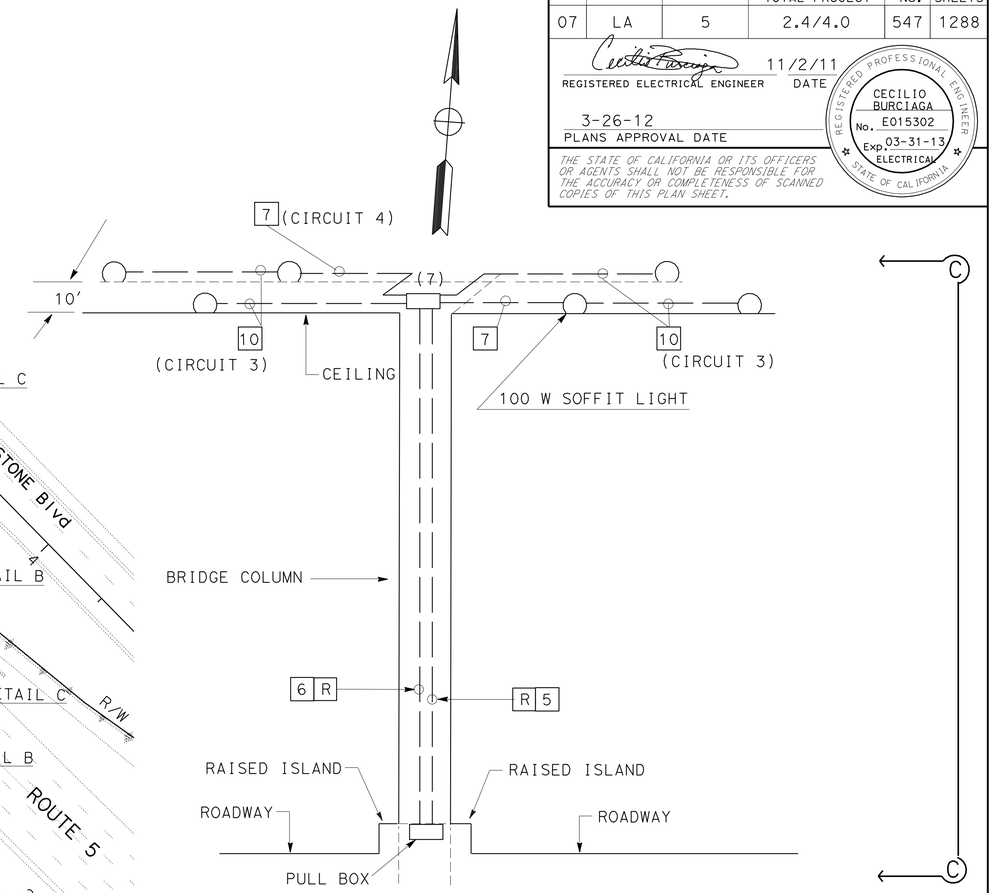

DETAIL C (SIDE VIEW)
TYPICAL DETAIL FOR SOFFIT LIGHTING CONDUIT IN COLUMN
NO SCALE

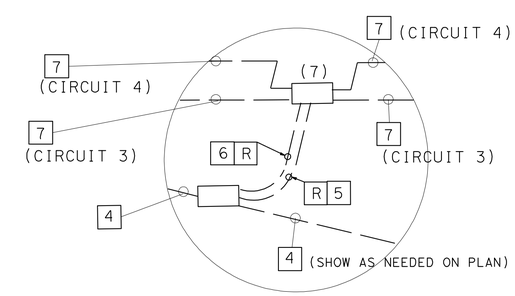

DETAIL C (TOP VIEW)
NO SCALE

FOR WIRING DIAGRAM SEE SHEET E-49.

APPROVED FOR ELECTRICAL WORK ONLY

LIGHTING (CITY STREET)
(SOFFIT)

SCALE: 1" = 50'

E-29

STATE OF CALIFORNIA - DEPARTMENT OF TRANSPORTATION
Caltrans® TRAFFIC DESIGN

FUNCTIONAL SUPERVISOR: YI TSAU
CALCULATED-DESIGNED BY: LUKE SUN
CHECKED BY: CECILIO BURCIAGA
REVISED BY / DATE REVISED

LAST REVISION 00-00-00 — DATE PLOTTED => 28-MAR-2012 — TIME PLOTTED => 15:34

FOR ACCURATE RIGHT OF WAY DATA, CONTACT
RIGHT OF WAY ENGINEERING AT THE DISTRICT OFFICE.

PROJECT NOTES: (THIS SHEET ONLY)

1. PP No. 1231451E. INSTALL TYPE H RISER.
2. 3"C, MT (SCE WILL INSTALL CONDUCTORS).
3. 120/240 V METERED TYPE III-BF SERVICE EQUIPMENT ENCLOSURE WITH:

100 A, 240 V, 2P, CB - MAIN
50 A, 120 V, 1P, CB - SIGNAL
30 A, 120 V, 1P, CB - SIGNAL LIGHTING (UNMETERED)
15 A, 120 V, 1P, CB - IISNS
15 A, 120 V, 1P, CB - PEU

ADDRESS: 13816 ½ BLOOMFIELD Ave, NORWALK

4. ECONOLITE ASC/3 NEMA TS2 CONTROLLER ASSEMBLY,
SPREAD SPECTRUM RADIO SYSTEM AND ASSOCIATED EQUIPMENT,
VIDEO DETECTION CONTROLLER AND EQUIPMENT IN CABINET.
BBS BATTERIES AND EXTERNAL CABINET.
BBS COMPONENTS ARE STATE-FURNISHED.
(FOR INSTALLATION OF TRAFFIC SIGNAL INTERCONNECT AND
WIRELESS DATA SERVICE EQUIPMENT DETAILS SEE SHEET E-53)

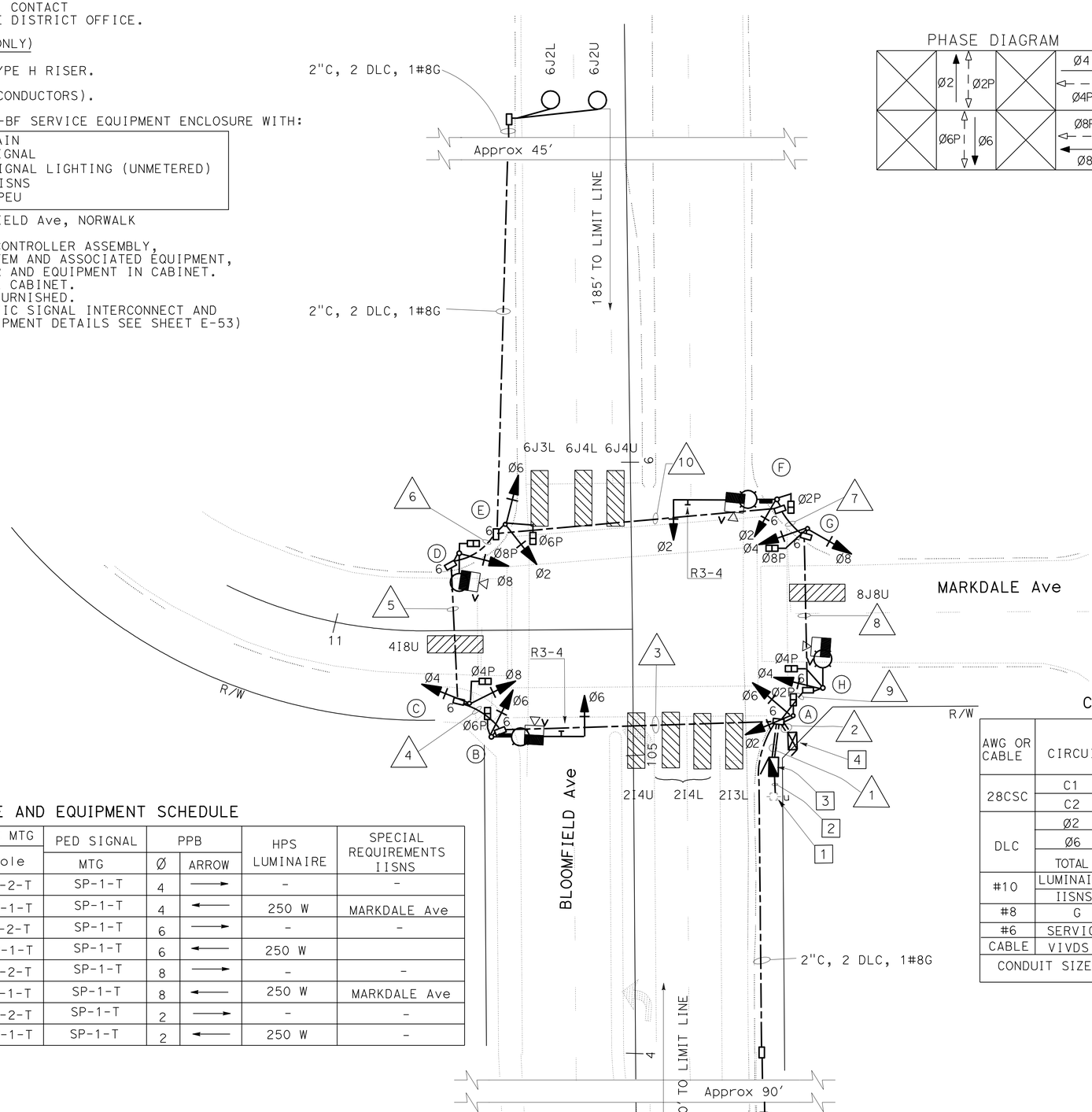

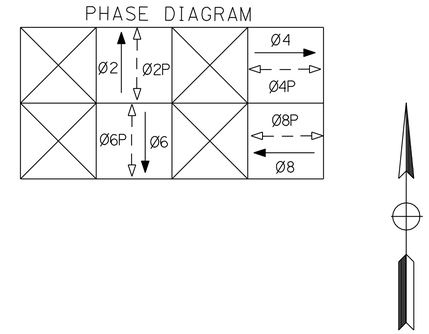

POLE AND EQUIPMENT SCHEDULE

No.	STANDARD			VEH SIG MTG		PED SIGNAL	PPB		HPS LUMINAIRE	SPECIAL REQUIREMENTS IISNS
	Type	SMA	LMA	Mast Arm	Pole	MTG	Ø	ARROW		
A	1-A	—	—	—	TV-2-T	SP-1-T	4	→	-	-
B	24-3-100	35'	12'	MAS	SV-1-T	SP-1-T	4	←	250 W	MARKDALE Ave
C	1-A	—	—	—	TV-2-T	SP-1-T	6	→	-	-
D	15TS	—	12'	—	SV-1-T	SP-1-T	6	←	250 W	
E	1-A	—	—	—	TV-2-T	SP-1-T	8	→	-	-
F	19-3-100	30'	12'	MAS	SV-1-T	SP-1-T	8	←	250 W	MARKDALE Ave
G	1-A	—	—	—	TV-2-T	SP-1-T	2	→	-	-
H	15TS	—	12'	—	SV-1-T	SP-1-T	2	←	250 W	-

CONDUIT AND CONDUCTOR SCHEDULE

AWG OR CABLE	CIRCUIT	CONDUIT RUN NUMBER AND SIZE									
		1	2	3	4	5	6	7	8	9	10
28CSC	C1	-	2	1	1	1	1	1	1	1	-
	C2	-	2	1	1	1	1	1	1	1	-
DLC	Ø2	-	2	-	-	-	-	-	-	-	-
	Ø6	-	2	2	2	2	2	-	-	-	-
	TOTAL	-	4	2	2	2	2	-	-	-	-
#10	LUMINAIRE	2	-	2	2	2	-	2	2	2	-
	IISNS	2	-	2	-	-	-	2	2	2	-
#8	G	1	1	1	1	1	1	1	1	1	1
#6	SERVICE	2	2	-	-	-	-	-	-	-	-
CABLE	VIVDS	-	4	2	1	1	-	1	1	2	-
CONDUIT SIZE		2-3"	2-3"	3"	3"	3"	3"	3"	3"	3"	3"

Dist	COUNTY	ROUTE	POST MILES TOTAL PROJECT	SHEET No.	TOTAL SHEETS
07	LA	5	2.4/4.0	548	1288

REGISTERED ELECTRICAL ENGINEER 11/2/11 DATE

3-26-12
PLANS APPROVAL DATE

REGISTERED PROFESSIONAL ENGINEER CECILIO BURCIAGA No. E015302 Exp. 03-31-13 ELECTRICAL STATE OF CALIFORNIA

THE STATE OF CALIFORNIA OR ITS OFFICERS OR AGENTS SHALL NOT BE RESPONSIBLE FOR THE ACCURACY OR COMPLETENESS OF SCANNED COPIES OF THIS PLAN SHEET.

SIGNAL AND LIGHTING (CITY STREET LOCATION 1)

(BLOOMFIELD Ave AND MARKDALE Ave)

SCALE: 1" = 20'

E-30

APPROVED FOR ELECTRICAL WORK ONLY

REVISED BY | DATE REVISED
LUKE SUN | CECILIO BURCIAGA
CALCULATED-DESIGNED BY | CHECKED BY
FUNCTIONAL SUPERVISOR: YI TSAU
STATE OF CALIFORNIA - DEPARTMENT OF TRANSPORTATION
Caltrans® TRAFFIC DESIGN

LAST REVISION 00-00-00 | DATE PLOTTED => 28-MAR-2012 | TIME PLOTTED => 14:55

FOR ACCURATE RIGHT OF WAY DATA, CONTACT
RIGHT OF WAY ENGINEERING AT THE DISTRICT OFFICE.

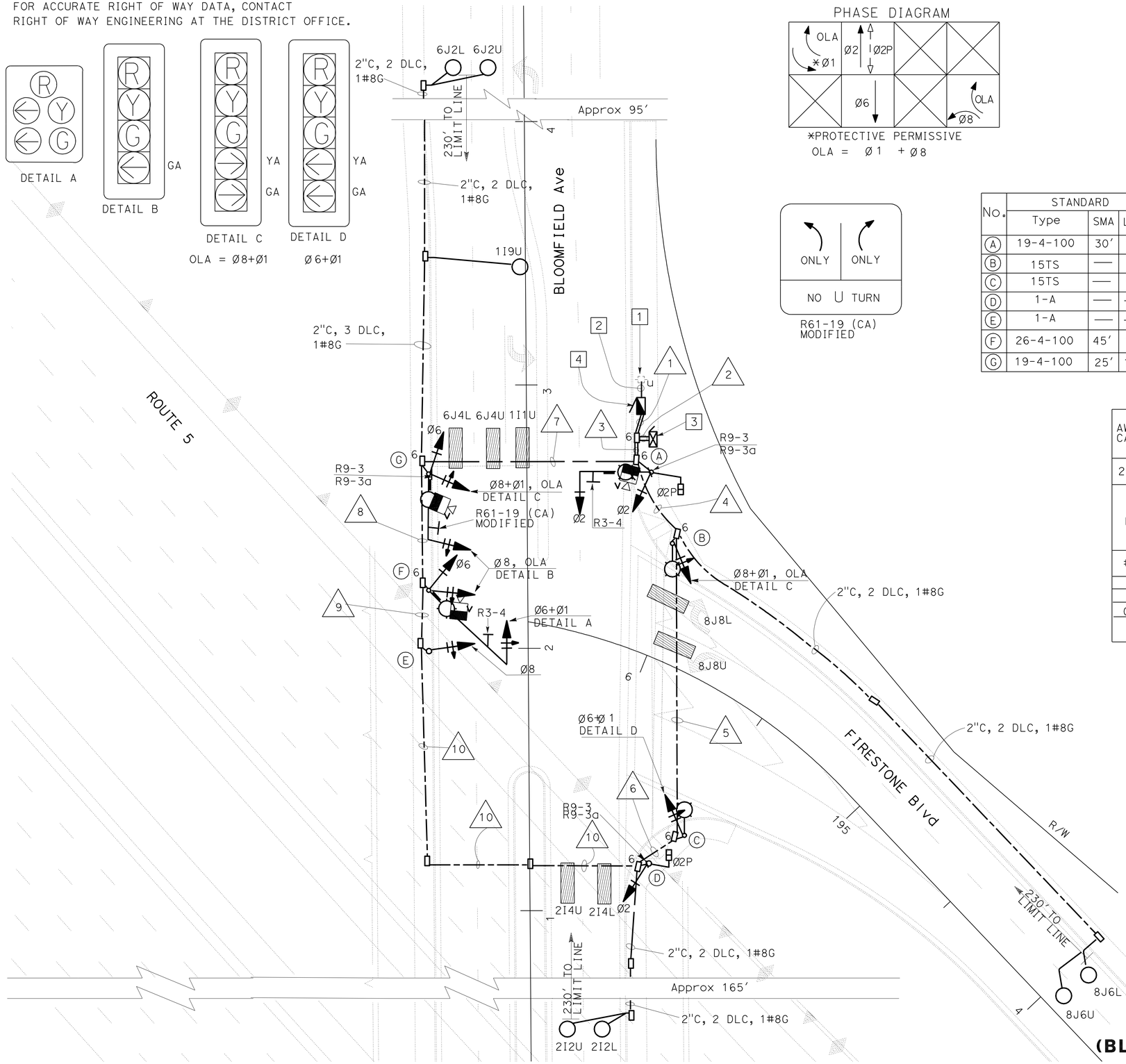

PHASE DIAGRAM

*PROTECTIVE PERMISSIVE
OLA = Ø1 + Ø8

R61-19 (CA)
MODIFIED

Dist	COUNTY	ROUTE	POST MILES TOTAL PROJECT	SHEET No.	TOTAL SHEETS
07	LA	5	2.4/4.0	549	1288

REGISTERED ELECTRICAL ENGINEER — DATE 11/2/11

3-26-12
PLANS APPROVAL DATE

REGISTERED PROFESSIONAL ENGINEER — CECILIO BURCIAGA — No. E015302 — Exp. 03-31-13 — ELECTRICAL — STATE OF CALIFORNIA

THE STATE OF CALIFORNIA OR ITS OFFICERS OR AGENTS SHALL NOT BE RESPONSIBLE FOR THE ACCURACY OR COMPLETENESS OF SCANNED COPIES OF THIS PLAN SHEET.

POLE AND EQUIPMENT SCHEDULE

No.	STANDARD Type	SMA	LMA	VEH SIG MTG Mast Arm	Pole	PED SIGNAL MTG	PPB Ø	ARROW	HPS LUMINAIRE	SPECIAL REQUIREMENTS IISNS
A	19-4-100	30'	12'	MAS	SV-1-T	SP-1-T	—	—	250 W	FIRESTONE Blvd
B	15TS	—	—	—	SV-1-T	—	2	→	250 W	—
C	15TS	—	12'	—	SV-1-T	—	—	—	250 W	—
D	1-A	—	—	—	TV-1-T	SP-1-T	2	←	—	—
E	1-A	—	—	—	TV-1-T	—	—	—	—	—
F	26-4-100	45'	12'	MAS	SV-2-TA	—	—	—	250 W	FIRESTONE Blvd
G	19-4-100	25'	12'	MAS	SV-2-TA	—	—	—	250 W	BLOOMFIELD Ave

CONDUIT AND CONDUCTOR SCHEDULE

AWG OR CABLE	CIRCUIT	CONDUIT RUN NUMBER AND SIZE 1	2	3	4	5	6	7	8	9	10
28CSC	C1	-	2	1	1	1	1	1	1	1	-
	C2	-	2	1	1	1	1	1	1	1	-
DLC	Ø1	-	1	1	-	-	-	1	-	-	-
	Ø2	-	2	2	2	2	2	-	-	-	-
	Ø6	-	2	2	-	-	-	2	-	-	-
	Ø8	-	2	2	2	-	-	-	-	-	-
	TOTAL	-	7	7	4	2	2	3	-	-	-
#10	LUMINAIRE	2	-	2	2	2	-	2	2	-	-
	IISNS	2	-	2	-	-	-	2	2	-	-
#8	G	1	1	1	1	1	1	1	1	1	1
#6	SERVICE	2	2	-	-	-	-	-	-	-	-
CABLE	VIVDS	-	3	3	-	-	-	2	1	-	-
CONDUIT SIZE		2-3"	2-3"	2-3"	3"	3"	3"	3"	3"	3"	3"

PROJECT NOTES: (THIS SHEET ONLY)

1. PP No. 1131452E. INSTALL TYPE H RISER.
2. 3"C, MT. SCE WILL INSTALL CONDUCTORS.
3. ECONOLITE ASC/3 NEMA TS2 CONTROLLER ASSEMBLY, SPREAD SPECTRUM RADIO SYSTEM AND ASSOCIATED EQUIPMENT, VIDEO DETECTION CONTROLLER AND EQUIPMENT IN CABINET. BBS BATTERIES AND EXTERNAL CABINET. BBS COMPONENTS ARE STATE-FURNISHED. (FOR INSTALLATION OF TRAFFIC SIGNAL INTERCONNECT AND WIRELESS DATA SERVICE EQUIPMENT DETAILS SEE SHEET E-53)
4. 120/240 V METERED TYPE III-BF SERVICE EQUIPMENT ENCLOSURE WITH:

   100 A, 240 V, 2P, CB - MAIN
   50 A, 120 V, 1P, CB - SIGNAL
   30 A, 120 V, 1P, CB - SIGNAL LIGHTING (UNMETERED)
   15 A, 120 V, 1P, CB - IISNS
   15 A, 120 V, 1P, CB - PEU

ADDRESS: 13828 1/2 BLOOMFIELD Ave, NORWALK

SIGNAL AND LIGHTING (CITY STREET LOCATION 2)

(BLOOMFIELD Ave AND NORTH FIRESTONE Blvd)

SCALE: 1" = 20'

APPROVED FOR ELECTRICAL WORK ONLY

E-31

STATE OF CALIFORNIA - DEPARTMENT OF TRANSPORTATION
Caltrans® TRAFFIC DESIGN
FUNCTIONAL SUPERVISOR: YI TSAU
CALCULATED-DESIGNED BY: LUKE SUN
CHECKED BY: CECILIO BURCIAGA
REVISED BY
DATE REVISED

LAST REVISION 00-00-00
DATE PLOTTED => 29-MAR-2012
TIME PLOTTED => 12:14

FOR ACCURATE RIGHT OF WAY DATA, CONTACT
RIGHT OF WAY ENGINEERING AT THE DISTRICT OFFICE.

Dist	COUNTY	ROUTE	POST MILES TOTAL PROJECT	SHEET No.	TOTAL SHEETS
07	LA	5	2.4/4.0	550	1288

REGISTERED ELECTRICAL ENGINEER — DATE 11/2/11

3-26-12
PLANS APPROVAL DATE

REGISTERED PROFESSIONAL ENGINEER — CECILIO BURCIAGA — No. E015302 — Exp. 03-31-13 — ELECTRICAL — STATE OF CALIFORNIA

THE STATE OF CALIFORNIA OR ITS OFFICERS OR AGENTS SHALL NOT BE RESPONSIBLE FOR THE ACCURACY OR COMPLETENESS OF SCANNED COPIES OF THIS PLAN SHEET.

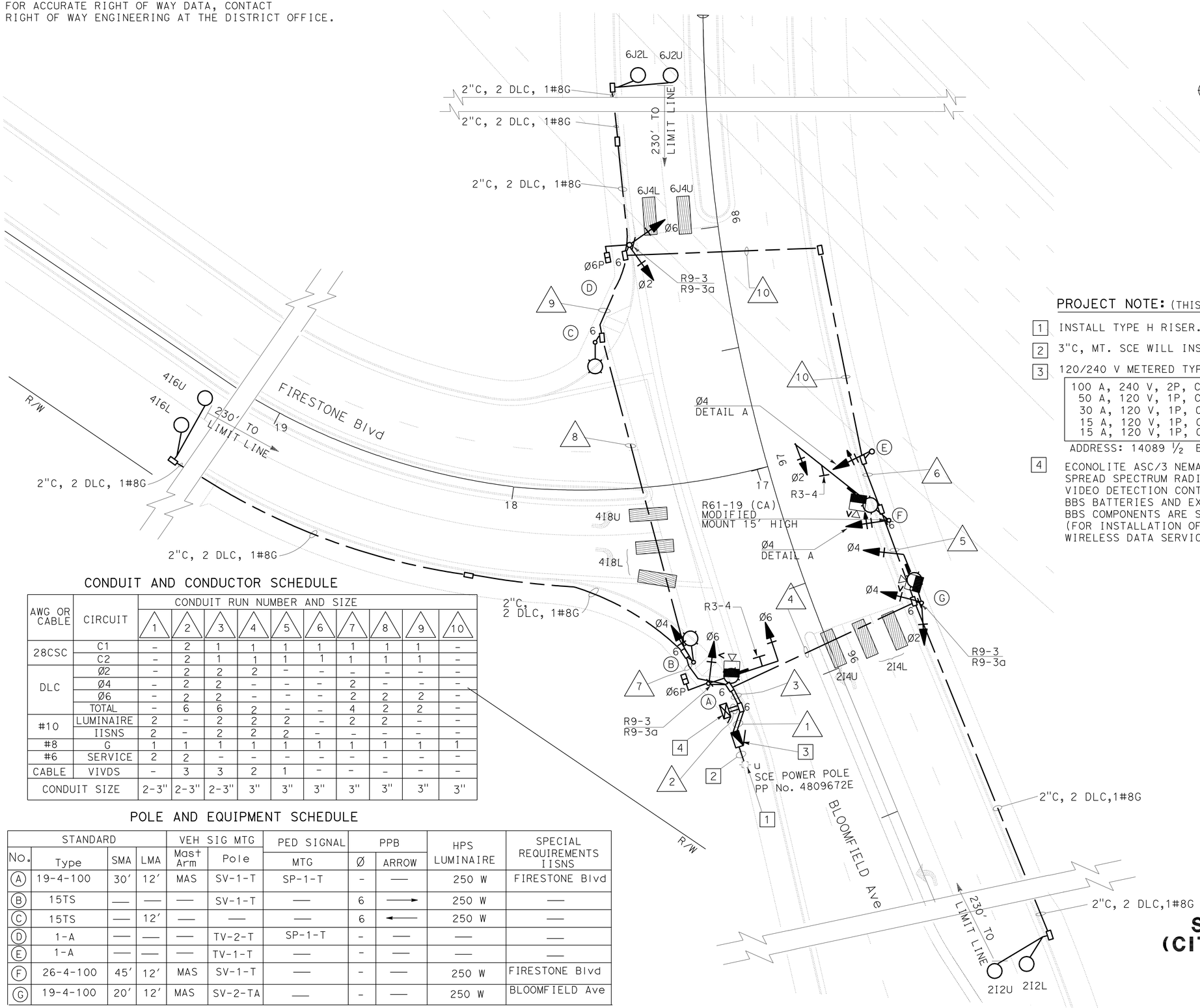

PHASE DIAGRAM

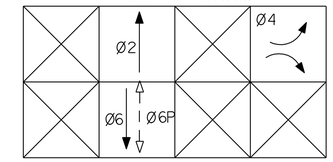

PROJECT NOTE: (THIS SHEET ONLY)

1. INSTALL TYPE H RISER.
2. 3"C, MT. SCE WILL INSTALL CONDUCTORS.
3. 120/240 V METERED TYPE III-BF SERVICE EQUIPMENT ENCLOSURE WITH:

100 A, 240 V, 2P, CB - MAIN
50 A, 120 V, 1P, CB - SIGNAL
30 A, 120 V, 1P, CB - SIGNAL LIGHTING (UNMETERED)
15 A, 120 V, 1P, CB - IISNS
15 A, 120 V, 1P, CB - PEU

ADDRESS: 14089 ½ BLOOM FIELD Ave, NORWALK

4. ECONOLITE ASC/3 NEMA TS2 CONTROLLER ASSEMBLY,
SPREAD SPECTRUM RADIO SYSTEM AND ASSOCIATED EQUIPMENT,
VIDEO DETECTION CONTROLLER AND EQUIPMENT IN CABINET.
BBS BATTERIES AND EXTERNAL CABINET.
BBS COMPONENTS ARE STATE-FURNISHED.
(FOR INSTALLATION OF TRAFFIC SIGNAL INTERCONNECT AND
WIRELESS DATA SERVICE EQUIPMENT DETAILS SEE SHEET E-53)

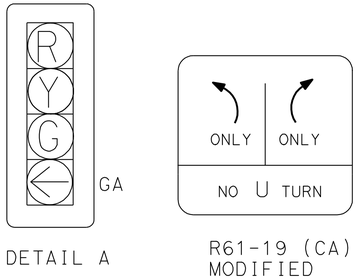

DETAIL A — R61-19 (CA) MODIFIED

NO SCALE

CONDUIT AND CONDUCTOR SCHEDULE

AWG OR CABLE	CIRCUIT	CONDUIT RUN NUMBER AND SIZE									
		1	2	3	4	5	6	7	8	9	10
28CSC	C1	-	2	1	1	1	1	1	1	1	-
	C2	-	2	1	1	1	1	1	1	1	-
DLC	Ø2	-	2	2	2	-	-	-	-	-	-
	Ø4	-	2	2	-	-	-	2	-	-	-
	Ø6	-	2	2	-	-	-	2	2	2	-
	TOTAL	-	6	6	2	-	-	4	2	2	-
#10	LUMINAIRE	2	-	2	2	2	-	2	2	-	-
	IISNS	2	-	2	2	2	-	-	-	-	-
#8	G	1	1	1	1	1	1	1	1	1	1
#6	SERVICE	2	2	-	-	-	-	-	-	-	-
CABLE	VIVDS	-	3	3	2	1	-	-	-	-	-
CONDUIT SIZE		2-3"	2-3"	2-3"	3"	3"	3"	3"	3"	3"	3"

POLE AND EQUIPMENT SCHEDULE

STANDARD				VEH SIG MTG		PED SIGNAL	PPB		HPS LUMINAIRE	SPECIAL REQUIREMENTS IISNS
No.	Type	SMA	LMA	Mast Arm	Pole	MTG	Ø	ARROW		
A	19-4-100	30'	12'	MAS	SV-1-T	SP-1-T	-	—	250 W	FIRESTONE Blvd
B	15TS	—	—	—	SV-1-T	—	6	→	250 W	—
C	15TS	—	12'	—	—	—	6	←	250 W	—
D	1-A	—	—	—	TV-2-T	SP-1-T	-	—	—	—
E	1-A	—	—	—	TV-1-T	—	-	—	—	—
F	26-4-100	45'	12'	MAS	SV-1-T	—	-	—	250 W	FIRESTONE Blvd
G	19-4-100	20'	12'	MAS	SV-2-TA	—	-	—	250 W	BLOOMFIELD Ave

SIGNAL AND LIGHTING (CITY STREET LOCATION 3)
(BLOOMFIELD Ave AND SOUTH FIRESTONE Blvd)

SCALE: 1" = 20'

E-32

APPROVED FOR ELECTRICAL WORK ONLY

STATE OF CALIFORNIA - DEPARTMENT OF TRANSPORTATION
Caltrans® TRAFFIC DESIGN

FUNCTIONAL SUPERVISOR: YI TSAU
CALCULATED-DESIGNED BY: CECILIO BURCIAGA
CHECKED BY: LUKE SUN
REVISED BY
DATE REVISED

LAST REVISION 00-00-00 | DATE PLOTTED => 29-MAR-2012 | TIME PLOTTED => 12:14

FOR ACCURATE RIGHT OF WAY DATA, CONTACT
RIGHT OF WAY ENGINEERING AT THE DISTRICT OFFICE.

Dist	COUNTY	ROUTE	POST MILES TOTAL PROJECT	SHEET No.	TOTAL SHEETS
07	LA	5	2.4/4.0	551	1288

REGISTERED ELECTRICAL ENGINEER 11/2/11 DATE

3-26-12
PLANS APPROVAL DATE

REGISTERED PROFESSIONAL ENGINEER CECILIO BURCIAGA No. E015302 Exp. 03-31-13 ELECTRICAL STATE OF CALIFORNIA

THE STATE OF CALIFORNIA OR ITS OFFICERS OR AGENTS SHALL NOT BE RESPONSIBLE FOR THE ACCURACY OR COMPLETENESS OF SCANNED COPIES OF THIS PLAN SHEET.

PROJECT NOTES: (THIS SHEET ONLY)

1. PP No. 529955E. INSTALL TYPE H RISER.
2. 120/240 V METERED TYPE III-BF SERVICE EQUIPMENT ENCLOSURE WITH:

100 A, 240 V, 2P, CB - MAIN
50 A, 120 V, 1P, CB - SIGNAL
30 A, 120 V, 1P, CB - SIGNAL LIGHTING (UNMETERED)
15 A, 120 V, 1P, CB - IISNS
15 A, 120 V, 1P, CB - PEU

CTID No. 07-53-005-003.481
ADDRESS: 12547 ½ ROSECRANS Ave, NORWALK

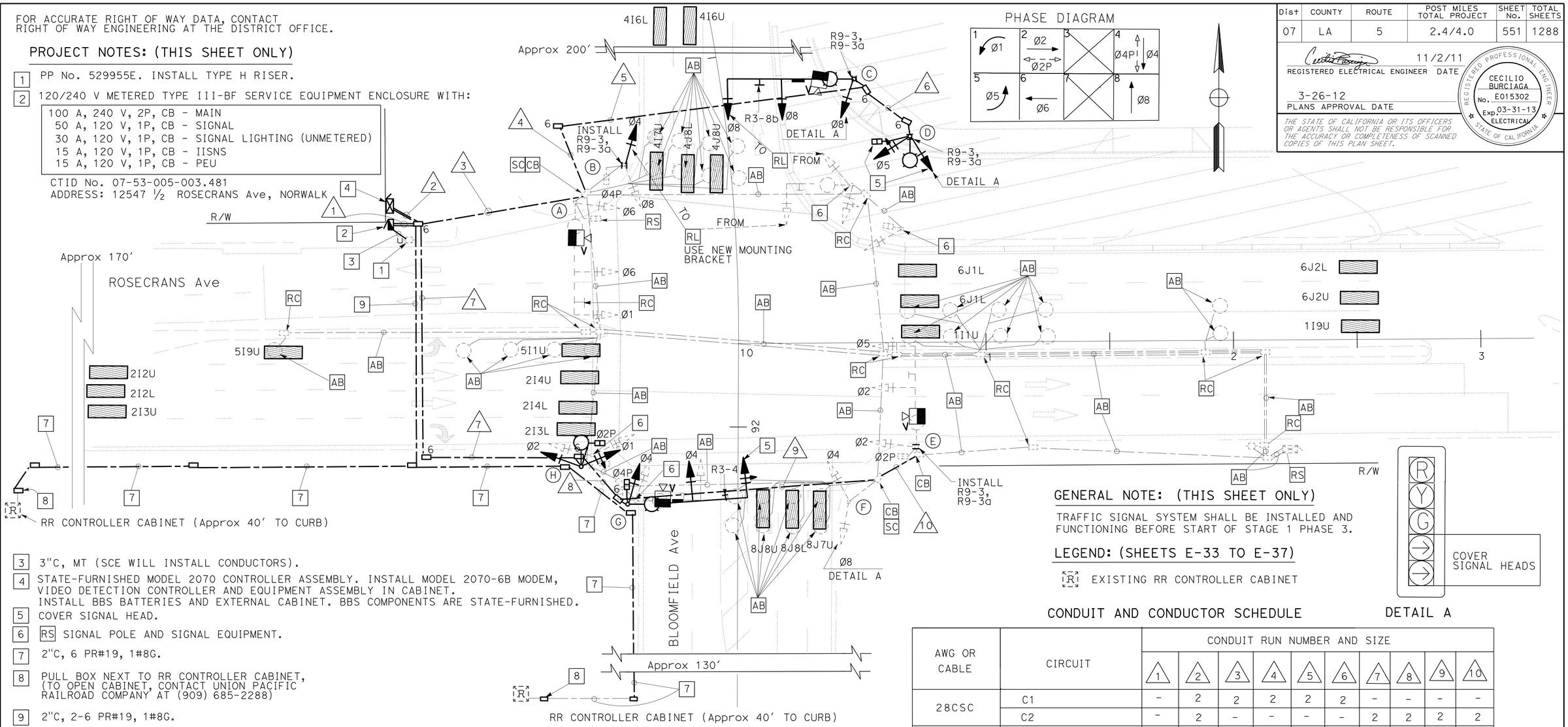

3. 3"C, MT (SCE WILL INSTALL CONDUCTORS).
4. STATE-FURNISHED MODEL 2070 CONTROLLER ASSEMBLY. INSTALL MODEL 2070-6B MODEM, VIDEO DETECTION CONTROLLER AND EQUIPMENT ASSEMBLY IN CABINET. INSTALL BBS BATTERIES AND EXTERNAL CABINET. BBS COMPONENTS ARE STATE-FURNISHED.
5. COVER SIGNAL HEAD.
6. RS SIGNAL POLE AND SIGNAL EQUIPMENT.
7. 2"C, 6 PR#19, 1#8G.
8. PULL BOX NEXT TO RR CONTROLLER CABINET, (TO OPEN CABINET, CONTACT UNION PACIFIC RAILROAD COMPANY AT (909) 685-2288)
9. 2"C, 2-6 PR#19, 1#8G.

GENERAL NOTE: (THIS SHEET ONLY)

TRAFFIC SIGNAL SYSTEM SHALL BE INSTALLED AND FUNCTIONING BEFORE START OF STAGE 1 PHASE 3.

LEGEND: (SHEETS E-33 TO E-37)

R EXISTING RR CONTROLLER CABINET

CONDUIT AND CONDUCTOR SCHEDULE

AWG OR CABLE	CIRCUIT	CONDUIT RUN NUMBER AND SIZE									
		1	2	3	4	5	6	7	8	9	10
28CSC	C1	-	2	2	2	2	2	-	-	-	-
	C2	-	2	-	-	-	-	2	2	2	2
#10	IISNS	2	-	2	2	2	-	2	2	-	-
#10	LUMINAIRES	2	-	2	2	2	2	2	2	2	2
#8	G	1	1	1	1	1	1	1	1	1	1
CABLE	VIVDS CABLE	-	4	2	1	1	-	2	2	1	1
#6	SIGNAL SERVICE	2	2	-	-	-	-	-	-	-	-
6 PR#19	RR PRE-EMPTION CABLE	-	2	-	-	-	-	-	-	-	-
-	CONDUIT SIZE	2-3" **	2-3" **	3"	3"	3" **	3" **	3"	3"	3"	3"

** BURY CONDUIT 36" BELOW FINAL GRADE

EXISTING POLE AND EQUIPMENT SCHEDULE

STANDARD				veh sig mtg		ped SIGNAL	ppb		hps LUMINAIRE	SPECIAL REQUIREMENTS
No.	Type	SMA	LMA	Mast Arm	Pole	mtg	Ø	ARROW		
A	26-4-70	45'	15'	2-mas	SV-1-T	-	4	←	400 W	BLOOMFIELD Ave (sns)
B	1-A	-	-	-	TV-2-T (N)	SP-1-T	-	-	-	-
C	29-5-100 (N)	50' (N)	12' (N)	2-MAS (N)	SV-1-T (N)	-	-	→ (N)	250 W (N)	ROSECRANS Ave (N)(IISNS)
D	15TS (N)	-	-	-	SV-2-T (N)	SP-1-T (N)	-	-	250 W (N)	-
E	26-4-70	40'	15'	2-mas	SV-1-T	SP-1-T	-	-	400 W	BLOOMFIELD Ave (sns)
F	1-A	-	-	-	TV-2-T	-	2	←	-	-
G	29-5-100 (N)	50' (N)	12' (N)	2-MAS(N)	SV-1-T (N)	SP-1-T (N)	2 (N)	→ (N)	250 W (N)	ROSECRANS Ave (N)(IISNS)
H	15TS (N)	-	-	-	SV-2-T (N)	SP-1-T (N)	4 (N)	→ (N)	250 W (N)	-

APPROVED FOR ELECTRICAL WORK ONLY

MODIFY SIGNAL AND LIGHTING (CITY STREET LOCATION 4)
(BLOOMFIELD Ave AND ROSECRANS Ave)
(STAGE 1 PHASE 3)

SCALE: 1" = 20'

E-33

STATE OF CALIFORNIA - DEPARTMENT OF TRANSPORTATION
Caltrans TRAFFIC DESIGN
FUNCTIONAL SUPERVISOR: YI TSAU
CALCULATED-DESIGNED BY: LUKE SUN
CHECKED BY: CECILIO BURCIAGA
REVISED BY / DATE REVISED

LAST REVISION 00-00-00 | DATE PLOTTED => 29-MAR-2012 | TIME PLOTTED => 12:14

Dist	COUNTY	ROUTE	POST MILES TOTAL PROJECT	SHEET No.	TOTAL SHEETS
07	LA	5	2.4/4.0	552	1288

REGISTERED ELECTRICAL ENGINEER 11/2/11 DATE

3-26-12
PLANS APPROVAL DATE

REGISTERED PROFESSIONAL ENGINEER CECILIO BURCIAGA No. E015302 Exp. 03-31-13 ELECTRICAL STATE OF CALIFORNIA

THE STATE OF CALIFORNIA OR ITS OFFICERS OR AGENTS SHALL NOT BE RESPONSIBLE FOR THE ACCURACY OR COMPLETENESS OF SCANNED COPIES OF THIS PLAN SHEET.

FOR ACCURATE RIGHT OF WAY DATA, CONTACT RIGHT OF WAY ENGINEERING AT THE DISTRICT OFFICE.

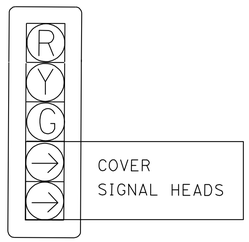

DETAIL A

DETAIL B

PHASE DIAGRAM

R3-8b MODIFIED

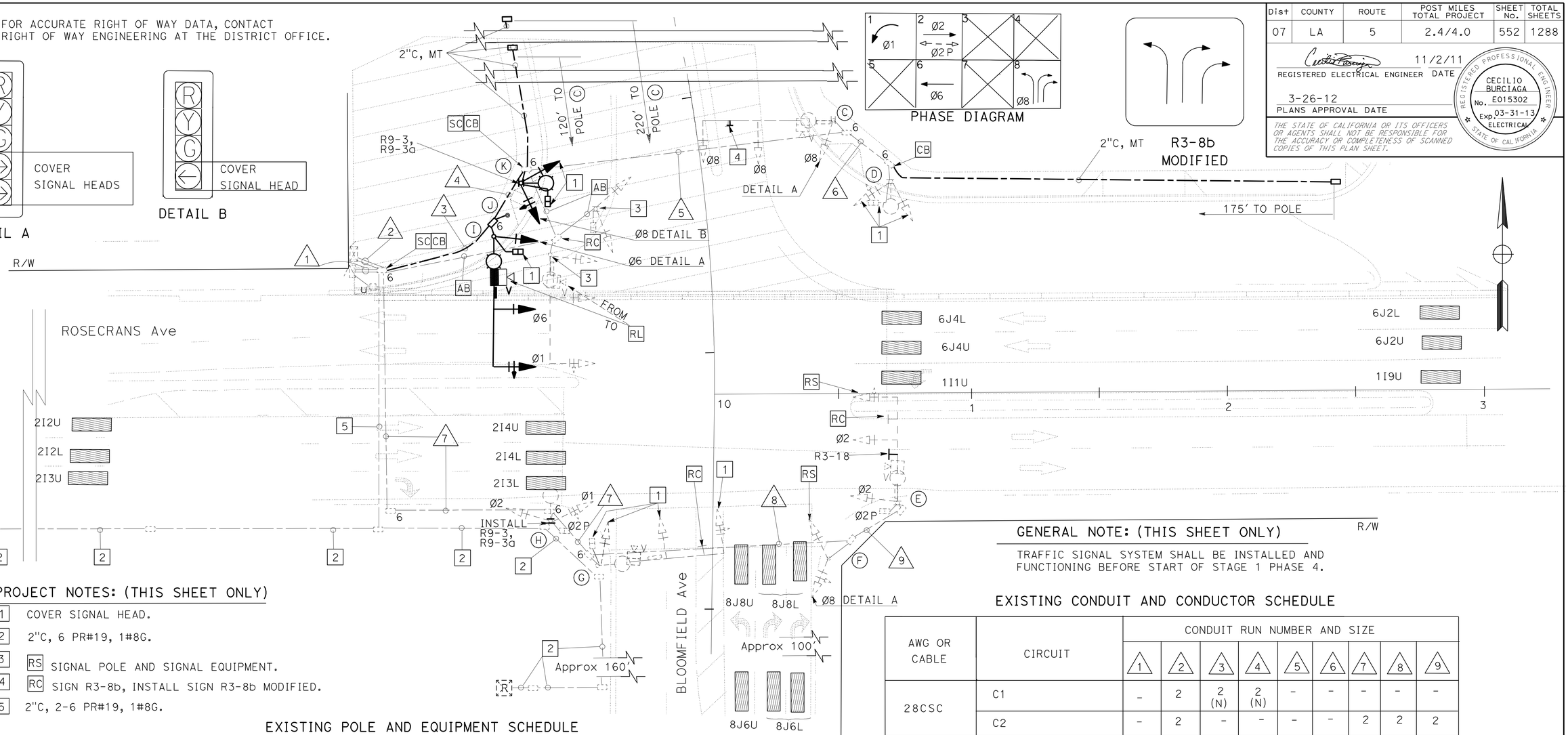

GENERAL NOTE: (THIS SHEET ONLY)

TRAFFIC SIGNAL SYSTEM SHALL BE INSTALLED AND FUNCTIONING BEFORE START OF STAGE 1 PHASE 4.

PROJECT NOTES: (THIS SHEET ONLY)

1. COVER SIGNAL HEAD.
2. 2"C, 6 PR#19, 1#8G.
3. RS SIGNAL POLE AND SIGNAL EQUIPMENT.
4. RC SIGN R3-8b, INSTALL SIGN R3-8b MODIFIED.
5. 2"C, 2-6 PR#19, 1#8G.

EXISTING POLE AND EQUIPMENT SCHEDULE

STANDARD				veh sig mtg		ped SIGNAL	ppb		hps LUMINAIRE	SPECIAL REQUIREMENTS
No.	Type	sma	lma	Mast Arm	Pole	mtg	Ø	ARROW		
I	29-5-100 (N)	50' (N)	12' (N)	2-MAS(N)	SV-1-T (N)	SP-1-T (N)	—	—	250 W (N)	BLOOMFIELD Ave (N)(IISNS)
J	PPB (N)	—	—	—	—	—	—	→ (N)	—	—
K	15TS (N)	—	—	—	SV-2-T (N)	SP-1-T (N)	—	← (N)	250 W	—
C	29-5-100	50'	12'	2-mas	SV-1-T	—	—	←	250 W	ROSECRANS Ave (iisns)
D	15TS	—	—	—	SV-2-T	SP-1-T	—	—	250 W	—
E	26-4-70	40'	15'	mas	SV-1-T	SP-1-T	—	—	400 W	BLOOMFIELD Ave (sns)
F	1-A	—	—	—	TV-2-T	—	2	←	—	—
G	29-5-100	50'	12'	2-mas	SV-1-T	SP-1-T	2	→	250 W	ROSECRANS Ave (iisns)
H	15TS	—	—	—	SV-2-T	SP-1-T	—	→	250 W	—

EXISTING CONDUIT AND CONDUCTOR SCHEDULE

AWG OR CABLE	CIRCUIT	CONDUIT RUN NUMBER AND SIZE								
		1	2	3	4	5	6	7	8	9
28CSC	C1	-	2	2 (N)	2 (N)	-	-	-	-	-
	C2	-	2	-	-	-	-	2	2	2
#10	IISNS	2	-	2 (N)	2 (N)	2	-	2	-	-
#10	LUMINAIRES	2	-	2 (N)	2 (N)	2	2	2	2	2
#6	SIGNAL SERVICE	2	2	-	-	-	-	-	-	-
CABLE	VIVDS CABLE	-	4	2 (N)	1 (N)	1 (N)	-	2	1	1
6 PR#19	RR PRE-EMPTION CABLE	-	2	-	-	-	-	-	-	-
#8	G	1	1	1 (N)	1 (N)	1	1	1	1	1
	CONDUIT SIZE	2-3" **	2-3" **	4"(N)	4" (N)	3" **	3" **	3"	3"	3"

** BURIED CONDUIT 36" BELOW FINAL GRADE

MODIFY SIGNAL AND LIGHTING (CITY STREET LOCATION 4)
(BLOOMFIELD Ave AND ROSECRANS Ave)
(STAGE 1 PHASE 4)

SCALE: 1" = 20'

E-34

APPROVED FOR ELECTRICAL WORK ONLY

STATE OF CALIFORNIA - DEPARTMENT OF TRANSPORTATION
Caltrans TRAFFIC DESIGN

FUNCTIONAL SUPERVISOR: YI TSAU
CALCULATED-DESIGNED BY: LUKE SUN
CHECKED BY: CECILIO BURCIAGA
REVISED BY / DATE REVISED

LAST REVISION 00-00-00 | DATE PLOTTED => 29-MAR-2012 | TIME PLOTTED => 12:14

BORDER LAST REVISED 7/2/2010 | USERNAME => s121614 | DGN FILE => 721593ua034.dgn | RELATIVE BORDER SCALE IS IN INCHES 0 1 2 3 | UNIT 1880 | PROJECT NUMBER & PHASE 07000018331

Dist	COUNTY	ROUTE	POST MILES TOTAL PROJECT	SHEET No.	TOTAL SHEETS
07	LA	5	2.4/4.0	553	1288

REGISTERED ELECTRICAL ENGINEER 11/2/11 DATE

3-26-12
PLANS APPROVAL DATE

REGISTERED PROFESSIONAL ENGINEER CECILIO BURCIAGA No. E015302 Exp. 03-31-13 ELECTRICAL STATE OF CALIFORNIA

THE STATE OF CALIFORNIA OR ITS OFFICERS OR AGENTS SHALL NOT BE RESPONSIBLE FOR THE ACCURACY OR COMPLETENESS OF SCANNED COPIES OF THIS PLAN SHEET.

FOR ACCURATE RIGHT OF WAY DATA, CONTACT RIGHT OF WAY ENGINEERING AT THE DISTRICT OFFICE.

GENERAL NOTE: (THIS SHEET ONLY)

TRAFFIC SIGNAL SYSTEM SHALL BE INSTALLED AND FUNCTIONING BEFORE STAGE 2.

PROJECT NOTES: (FOR THIS SHEET ONLY)

1. RS SIGNAL POLE AND SIGNAL EQUIPMENT.
2. 2"C, 6 PR#19, 1#8G.
3. COVER SIGNAL HEAD.
4. 2"C, 2-6 PR#19, 1#8G.

PHASE DIAGRAM

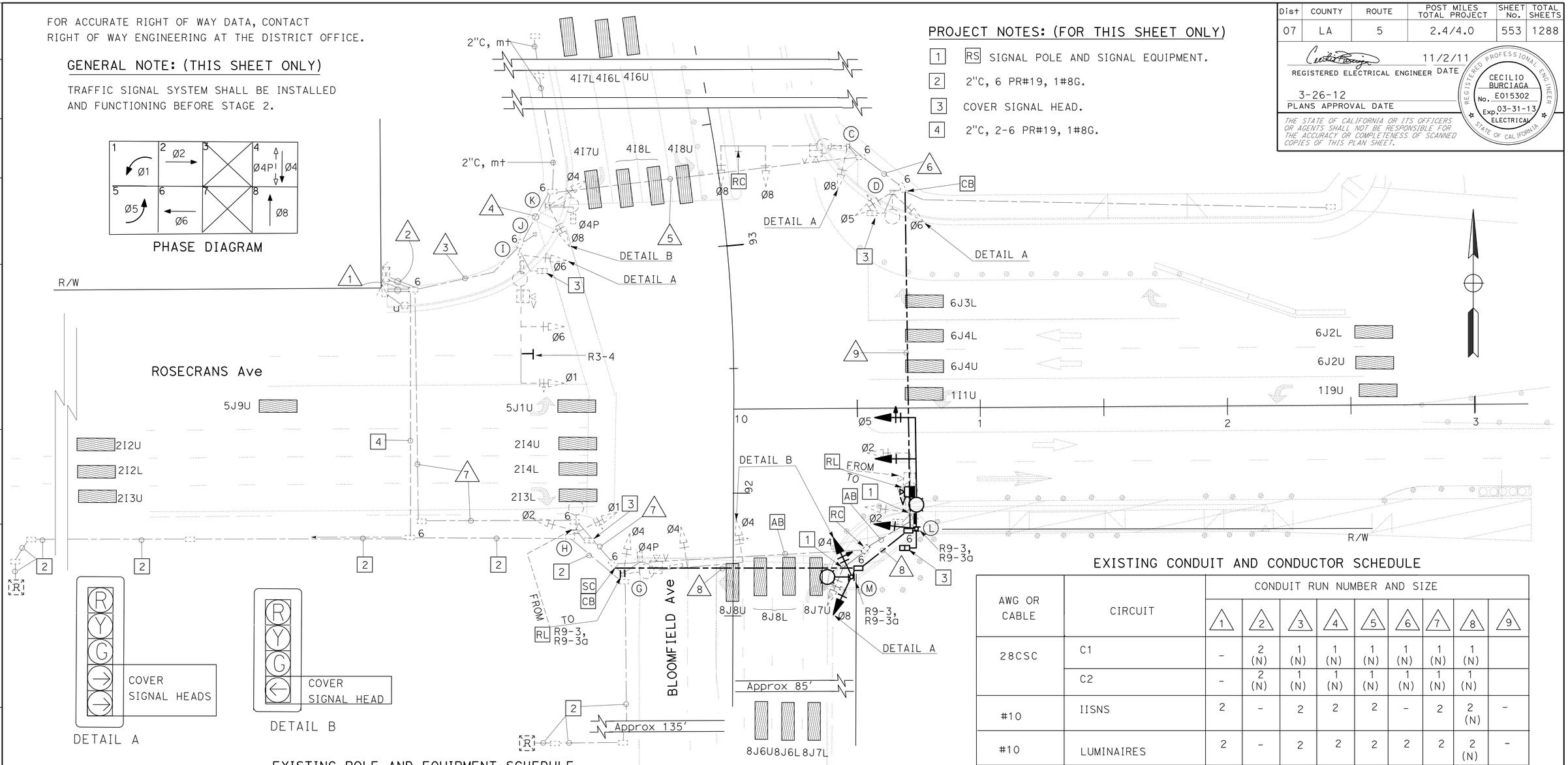

EXISTING POLE AND EQUIPMENT SCHEDULE

STANDARD				veh sig mtg		ped SIGNAL	ppb		hps	SPECIAL
No.	Type	sma	lma	Mast Arm	Pole	mtg	Ø	ARROW	LUMINAIRE	REQUIREMENTS
I	29-5-100	50'	12'	2-mas	SV-1-T	SP-1-T	-	-	250 W	BLOOMFIELD Ave (iisns)
J	PPB	-	-	-	-	-	4	→	-	-
K	15TS	-	-	-	SV-2-T	SP-1-T	6	→	250 W	-
C	29-5-100	50'	12'	2-mas	SV-1-T	-	6	←	250 W	ROSECRANS Ave (iisns)
D	15TS	-	-	-	SV-2-T	SP-1-T	-	-	250 W	-
L	26-4-100 (N)	45'(N)	12' (N)	2-MAS(N)	SV-1-T (N)	SP-1-T (N)	-	-	250 W (N)	BLOOMFIELD Ave (N)(IISNS)
M	15TS (N)	-	-	-	SV-2-T (N)	-	2 (N)	←(N)	250 W (N)	-
G	29-5-100	50'	12'	2-mas	SV-1-T	SP-1-T	2	→	250 W	ROSECRANS Ave (iisns)
H	15TS	-	-	-	SV-2-T	SP-1-T	4	←	250 W	-

EXISTING CONDUIT AND CONDUCTOR SCHEDULE

AWG OR CABLE	CIRCUIT	CONDUIT RUN NUMBER AND SIZE								
		1	2	3	4	5	6	7	8	9
28CSC	C1	-	2 (N)	1 (N)	1 (N)	1 (N)	1 (N)	1 (N)	1 (N)	
	C2	-	2 (N)	1 (N)	1 (N)	1 (N)	1 (N)	1 (N)	1 (N)	
#10	IISNS	2	-	2	2	2	-	2	2 (N)	-
#10	LUMINAIRES	2	-	2	2	2	2	2	2 (N)	-
CABLE	VIVDS CABLE	-	4	2	1	1	-	2	1 (N)	-
#8	G	1	1	1	1	1	1	1	1 (N)	1 (N)
6 PR#19	RR PRE-EMPTION CABLE	-	2	-	-	-	-	-	-	-
#6	SIGNAL SERVICE	2	2	-	-	-	-	-	-	-
-	CONDUIT SIZE	2-3" **	2-3" **	4"	4"	3" **	3" **	3"	3" (N)	3" (N)

** BURIED CONDUIT 36" BELOW FINAL GRADE

MODIFY SIGNAL AND LIGHTING (CITY STREET LOCATION 4)
(BLOOMFIELD Ave AND ROSECRANS Ave)
(STAGE 2)

SCALE: 1" = 20'

E-35

APPROVED FOR ELECTRICAL WORK ONLY

STATE OF CALIFORNIA - DEPARTMENT OF TRANSPORTATION
Caltrans TRAFFIC DESIGN

FUNCTIONAL SUPERVISOR: YI TSAU
CALCULATED-DESIGNED BY: LUKE SUN
CHECKED BY: CECILIO BURCIAGA
REVISED BY
DATE REVISED

LAST REVISION 00-00-00 | DATE PLOTTED => 29-MAR-2012 | TIME PLOTTED => 14:04

FOR ACCURATE RIGHT OF WAY DATA, CONTACT
RIGHT OF WAY ENGINEERING AT THE DISTRICT OFFICE.

PROJECT NOTES: (THIS SHEET ONLY)

1. RC R9-3a, R9-3.
2. NOT USED.
3. RC SIGN R3-4, INSTALL SIGN R73-6(CA).
4. 2"C, 6 PR#19, 1#8G.
5. 2"C, 2-6 PR#19, 1#8G.

Dist	COUNTY	ROUTE	POST MILES TOTAL PROJECT	SHEET No.	TOTAL SHEETS
07	LA	5	2.4/4.0	554	1288

REGISTERED ELECTRICAL ENGINEER 11/2/11 DATE

3-26-12
PLANS APPROVAL DATE

REGISTERED PROFESSIONAL ENGINEER CECILIO BURCIAGA No. E015302 Exp. 03-31-13 ELECTRICAL STATE OF CALIFORNIA

THE STATE OF CALIFORNIA OR ITS OFFICERS OR AGENTS SHALL NOT BE RESPONSIBLE FOR THE ACCURACY OR COMPLETENESS OF SCANNED COPIES OF THIS PLAN SHEET.

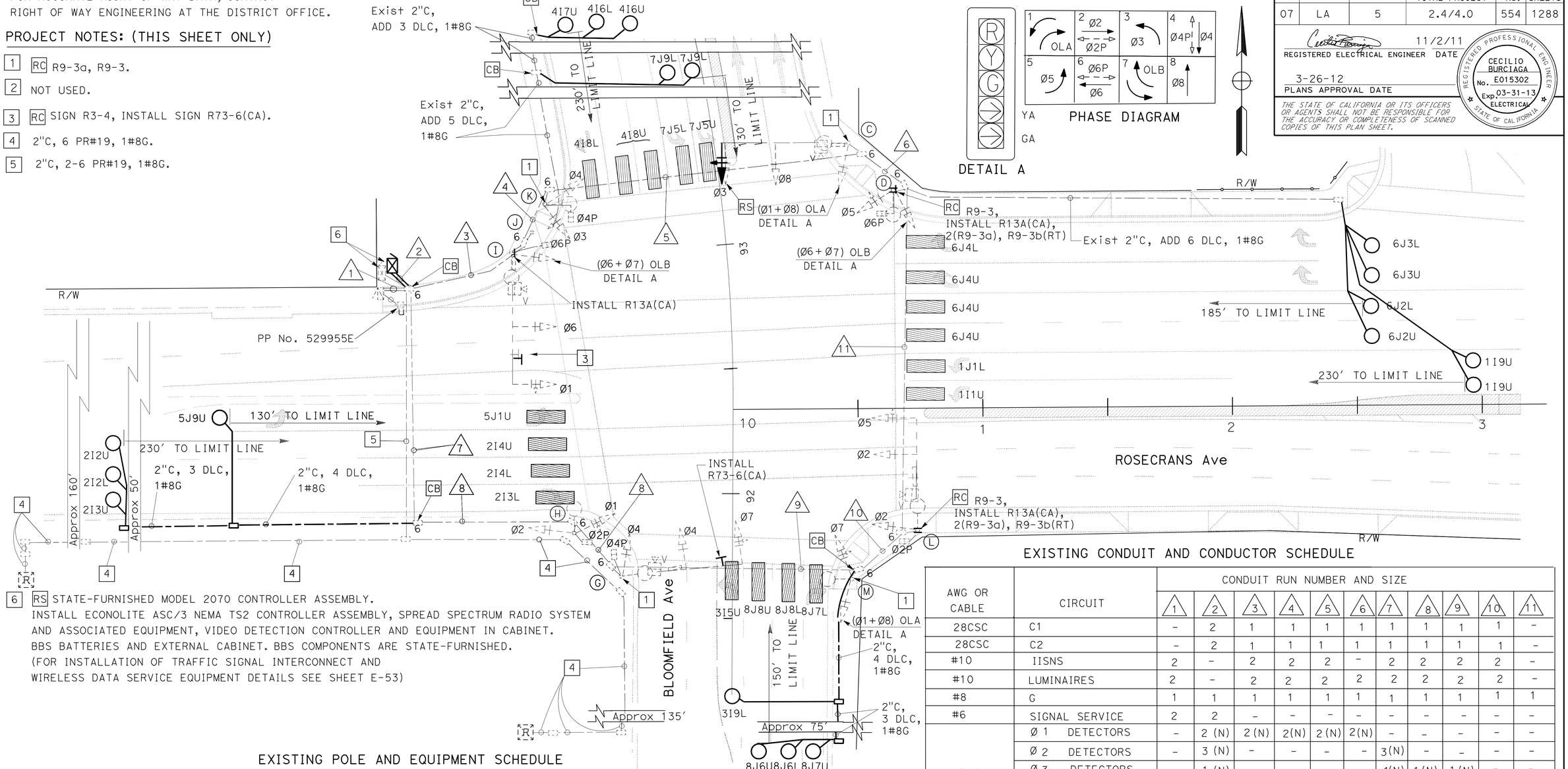

6 RS STATE-FURNISHED MODEL 2070 CONTROLLER ASSEMBLY.
INSTALL ECONOLITE ASC/3 NEMA TS2 CONTROLLER ASSEMBLY, SPREAD SPECTRUM RADIO SYSTEM AND ASSOCIATED EQUIPMENT, VIDEO DETECTION CONTROLLER AND EQUIPMENT IN CABINET. BBS BATTERIES AND EXTERNAL CABINET. BBS COMPONENTS ARE STATE-FURNISHED. (FOR INSTALLATION OF TRAFFIC SIGNAL INTERCONNECT AND WIRELESS DATA SERVICE EQUIPMENT DETAILS SEE SHEET E-53)

EXISTING POLE AND EQUIPMENT SCHEDULE

STANDARD				veh sig mtg		ped SIGNAL	ppb		hps	SPECIAL
No.	Type	sma	lma	Mast Arm	Pole	mtg	Ø	ARROW	LUMINAIRE	REQUIREMENTS iisns
I	29-5-100	50'	12'	2-mas	SV-1-T	SP-1-T	-	-	250 W	BLOOMFIELD Ave
J	PPB	-	-	-	-	-	4	→	-	-
K	15TS	-	-	-	SV-2-T	SP-1-T	6	→	250 W	-
C	29-5-100	50'	12'	2-mas	SV-1-T	-	6	←	250 W	ROSECRANS Ave
D	15TS	-	-	-	SV-2-T	SP-1-T	-	-	250 W	-
L	26-4-100	45'	12'	2-mas	SV-1-T	SP-1-T	-	-	250 W	BLOOMFIELD Ave
M	15TS	-	-	-	SV-2-T	-	2	←	250 W	-
G	29-5-100	50'	12'	2-mas	SV-1-T	SP-1-T	2	→	250 W	ROSECRANS Ave
H	15TS	-	-	-	SV-2-T	SP-1-T	4	←	250 W	-

APPROVED FOR ELECTRICAL WORK ONLY

EXISTING CONDUIT AND CONDUCTOR SCHEDULE

AWG OR CABLE	CIRCUIT	CONDUIT RUN NUMBER AND SIZE										
		1	2	3	4	5	6	7	8	9	10	11
28CSC	C1	-	2	1	1	1	1	1	1	1	1	-
28CSC	C2	-	2	1	1	1	1	1	1	1	1	-
#10	IISNS	2	-	2	2	2	-	2	2	2	2	-
#10	LUMINAIRES	2	-	2	2	2	2	2	2	2	2	-
#8	G	1	1	1	1	1	1	1	1	1	1	1
#6	SIGNAL SERVICE	2	2	-	-	-	-	-	-	-	-	-
DLC	Ø 1 DETECTORS	-	2 (N)	2 (N)	2(N)	2 (N)	2(N)	-	-	-	-	-
	Ø 2 DETECTORS	-	3 (N)	-	-	-	-	3(N)	-	-	-	-
	Ø 3 DETECTORS	-	1 (N)	-	-	-	-	1(N)	1 (N)	1 (N)	-	-
	Ø 4 DETECTORS	-	3 (N)	3 (N)	3 (N)	-	-	-	-	-	-	-
	Ø 5 DETECTORS	-	1 (N)	-	-	-	-	1 (N)	-	-	-	-
	Ø 6 DETECTORS	-	4 (N)	4 (N)	4 (N)	4 (N)	4 (N)	-	-	-	-	-
	Ø 7 DETECTORS	-	2 (N)	2 (N)	2 (N)	-	-	-	-	-	-	-
	Ø 8 DETECTORS	-	3 (N)	-	-	-	-	3 (N)	3 (N)	3 (N)	-	-
	TOTAL	-	19(N)	11 (N)	11(N)	6 (N)	6 (N)	8 (N)	4 (N)	4 (N)	-	-
6 PR#19	RR PRE-EMPTION	-	2	-	-	-	-	-	-	-	-	-
CABLE	VIVDS	-	4	2	1	1	-	2	2	1	1	-
CONDUIT SIZE		2-3" **	2-3" (N)	4"	4"	3" **	3" **	3"	3"	3"	3"	3"

** BURIED CONDUIT 36" BELOW FINAL GRADE

MODIFY SIGNAL AND LIGHTING (CITY STREET LOCATION 4) (BLOOMFIELD Ave AND ROSECRANS Ave) (STAGE 4 PHASE 2)

SCALE: 1" = 20'

E-36

STATE OF CALIFORNIA - DEPARTMENT OF TRANSPORTATION
Caltrans TRAFFIC DESIGN

FUNCTIONAL SUPERVISOR: YI TSAU
CALCULATED-DESIGNED BY: LUKE SUN
CHECKED BY: CECILIO BURCIAGA
REVISED BY / DATE REVISED

LAST REVISION 00-00-00
DATE PLOTTED => 04-APR-2012
TIME PLOTTED => 14:20

FOR ACCURATE RIGHT OF WAY DATA, CONTACT
RIGHT OF WAY ENGINEERING AT THE DISTRICT OFFICE.

Dist	COUNTY	ROUTE	POST MILES TOTAL PROJECT	SHEET No.	TOTAL SHEETS
07	LA	5	2.4/4.0	555	1288

REGISTERED ELECTRICAL ENGINEER 11/2/11 DATE

3-26-12
PLANS APPROVAL DATE

REGISTERED PROFESSIONAL ENGINEER CECILIO BURCIAGA No. E015302 Exp. 03-31-13 ELECTRICAL STATE OF CALIFORNIA

THE STATE OF CALIFORNIA OR ITS OFFICERS OR AGENTS SHALL NOT BE RESPONSIBLE FOR THE ACCURACY OR COMPLETENESS OF SCANNED COPIES OF THIS PLAN SHEET.

PROJECT NOTES: (THIS SHEET ONLY)

1. PP No. 529955E. INSTALL TYPE H RISER.
2. 120/240 V METERED TYPE III-BF SERVICE EQUIPMENT ENCLOSURE WITH:

100 A,	240 V,	2P,	CB - MAIN
50 A,	120 V,	1P,	CB - SIGNAL
30 A,	120 V,	1P,	CB - SIGNAL LIGHTING (UNMETERED)
15 A,	120 V,	1P,	CB - IISNS
15 A,	120 V,	1P,	CB - PEU

CTID No. 07-53-005-003.481
ADDRESS: 12547 ½ ROSECRANS Ave, NORWALK

3. 3"C, MT. SCE WILL INSTALL CONDUCTORS.
4. 2"C, 6 PR#19, 1#8G.
5. PULL BOX NEXT TO RR CONTOLLER CABINET. (TO OPEN CABINET, CONTACT UNION PACIFIC RAILROAD COMPANY AT (909) 685-2288)

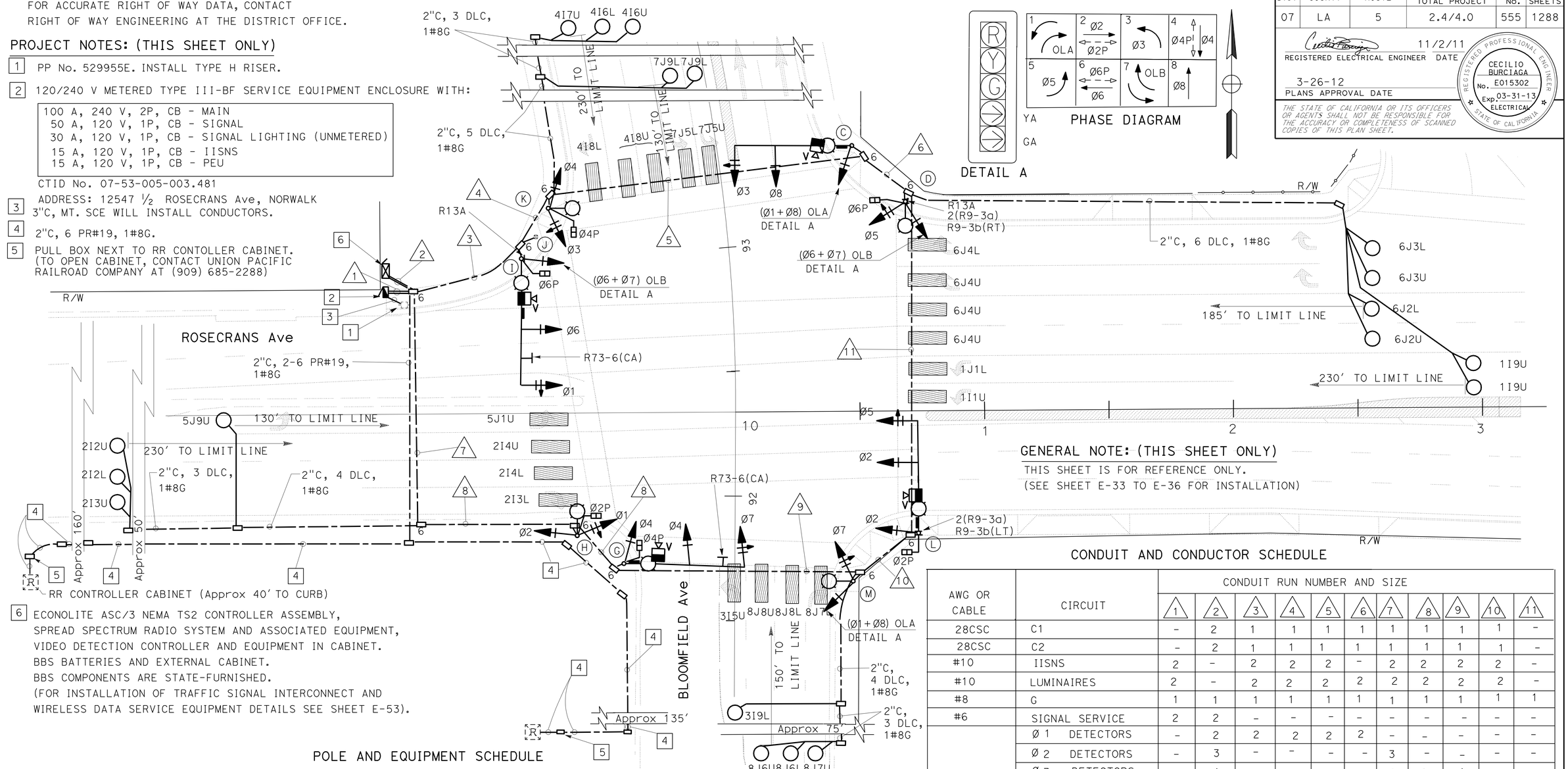

6. ECONOLITE ASC/3 NEMA TS2 CONTROLLER ASSEMBLY, SPREAD SPECTRUM RADIO SYSTEM AND ASSOCIATED EQUIPMENT, VIDEO DETECTION CONTROLLER AND EQUIPMENT IN CABINET. BBS BATTERIES AND EXTERNAL CABINET. BBS COMPONENTS ARE STATE-FURNISHED. (FOR INSTALLATION OF TRAFFIC SIGNAL INTERCONNECT AND WIRELESS DATA SERVICE EQUIPMENT DETAILS SEE SHEET E-53).

GENERAL NOTE: (THIS SHEET ONLY)

THIS SHEET IS FOR REFERENCE ONLY.
(SEE SHEET E-33 TO E-36 FOR INSTALLATION)

POLE AND EQUIPMENT SCHEDULE

STANDARD				VEH SIG MTG		PED SIGNAL	PPB		HPS	SPECIAL
No.	Type	SMA	LMA	Mast Arm	Pole	MTG	Ø	ARROW	LUMINAIRE	REQUIREMENTS IISNS
I	29-5-100	50'	12'	2-MAS	SV-1-T	SP-1-T	-	-	250 W	BLOOMFIELD Ave
J	PPB	-	-	-	-	-	4	→	-	-
K	15TS	-	-	-	SV-2-T	SP-1-T	6	→	250 W	-
C	26-4-100	45'	12'	2-MAS	SV-1-T	-	6	←	250 W	ROSECRANS Ave
D	15TS	-	-	-	SV-2-T	SP-1-T	-	-	250 W	-
L	26-4-100	45'	12'	2-MAS	SV-1-T	SP-1-T	-	-	250 W	BLOOMFIELD Ave
M	15TS	-	-	-	SV-2-T	-	2	←	250 W	-
G	29-5-100	50'	12'	2-MAS	SV-1-T	SP-1-T	2	→	250 W	ROSECRANS Ave
H	15TS	-	-	-	SV-2-T	SP-1-T	4	→	250 W	-

CONDUIT AND CONDUCTOR SCHEDULE

AWG OR CABLE	CIRCUIT	CONDUIT RUN NUMBER AND SIZE										
		1	2	3	4	5	6	7	8	9	10	11
28CSC	C1	-	2	1	1	1	1	1	1	1	1	-
28CSC	C2	-	2	1	1	1	1	1	1	1	1	-
#10	IISNS	2	-	2	2	2	-	2	2	2	2	-
#10	LUMINAIRES	2	-	2	2	2	2	2	2	2	2	-
#8	G	1	1	1	1	1	1	1	1	1	1	1
#6	SIGNAL SERVICE	2	2	-	-	-	-	-	-	-	-	-
DLC	Ø 1 DETECTORS	-	2	2	2	2	2	-	-	-	-	-
	Ø 2 DETECTORS	-	3	-	-	-	-	3	-	-	-	-
	Ø 3 DETECTORS	-	1	-	-	-	-	1	1	1	-	-
	Ø 4 DETECTORS	-	3	3	3	-	-	-	-	-	-	-
	Ø 5 DETECTORS	-	1	-	-	-	-	1	-	-	-	-
	Ø 6 DETECTORS	-	4	4	4	4	4	-	-	-	-	-
	Ø 7 DETECTORS	-	2	2	2	-	-	-	-	-	-	-
	Ø 8 DETECTORS	-	3	-	-	-	-	3	3	3	-	-
	TOTAL	-	19	11	11	6	6	8	4	4	-	-
6 PR#19	RR PRE-EMPTION	-	2	-	-	-	-	-	-	-	-	-
CABLE	VIVDS	-	4	2	1	1	-	2	2	1	1	-
CONDUIT SIZE		2-3" **	2-3"	4"	4"	3" **	3" **	3"	3"	3"	3"	3"

** BURIED CONDUIT 36" BELOW FINAL GRADE

MODIFY SIGNAL AND LIGHTING (CITY STREET LOCATION 4) (BLOOMFIELD Ave AND ROSECRANS Ave) (FINAL)

SCALE: 1" = 20'

E-37

APPROVED FOR ELECTRICAL WORK ONLY

STATE OF CALIFORNIA - DEPARTMENT OF TRANSPORTATION
Caltrans TRAFFIC DESIGN
FUNCTIONAL SUPERVISOR: YI TSAU
CALCULATED-DESIGNED BY: LUKE SUN
CHECKED BY: CECILIO BURCIAGA
REVISED BY / DATE REVISED

LAST REVISION 00-00-00 | DATE PLOTTED => 02-MAY-2012 | TIME PLOTTED => 07:36

Dist	COUNTY	ROUTE	POST MILES TOTAL PROJECT	SHEET No.	TOTAL SHEETS
07	LA	5	2.4/4.0	556	1288

REGISTERED ELECTRICAL ENGINEER 11/2/11 DATE

3-26-12
PLANS APPROVAL DATE

REGISTERED PROFESSIONAL ENGINEER CECILIO BURCIAGA No. E015302 Exp. 03-31-13 ELECTRICAL STATE OF CALIFORNIA

THE STATE OF CALIFORNIA OR ITS OFFICERS OR AGENTS SHALL NOT BE RESPONSIBLE FOR THE ACCURACY OR COMPLETENESS OF SCANNED COPIES OF THIS PLAN SHEET.

FOR ACCURATE RIGHT OF WAY DATA, CONTACT RIGHT OF WAY ENGINEERING AT THE DISTRICT OFFICE.

GENERAL NOTE: (THIS SHEET ONLY)

TRAFFIC SIGNAL SYSTEM SHALL BE INSTALLED AND FUNCTIONING BEFORE START OF STAGE 1 PHASE 3.

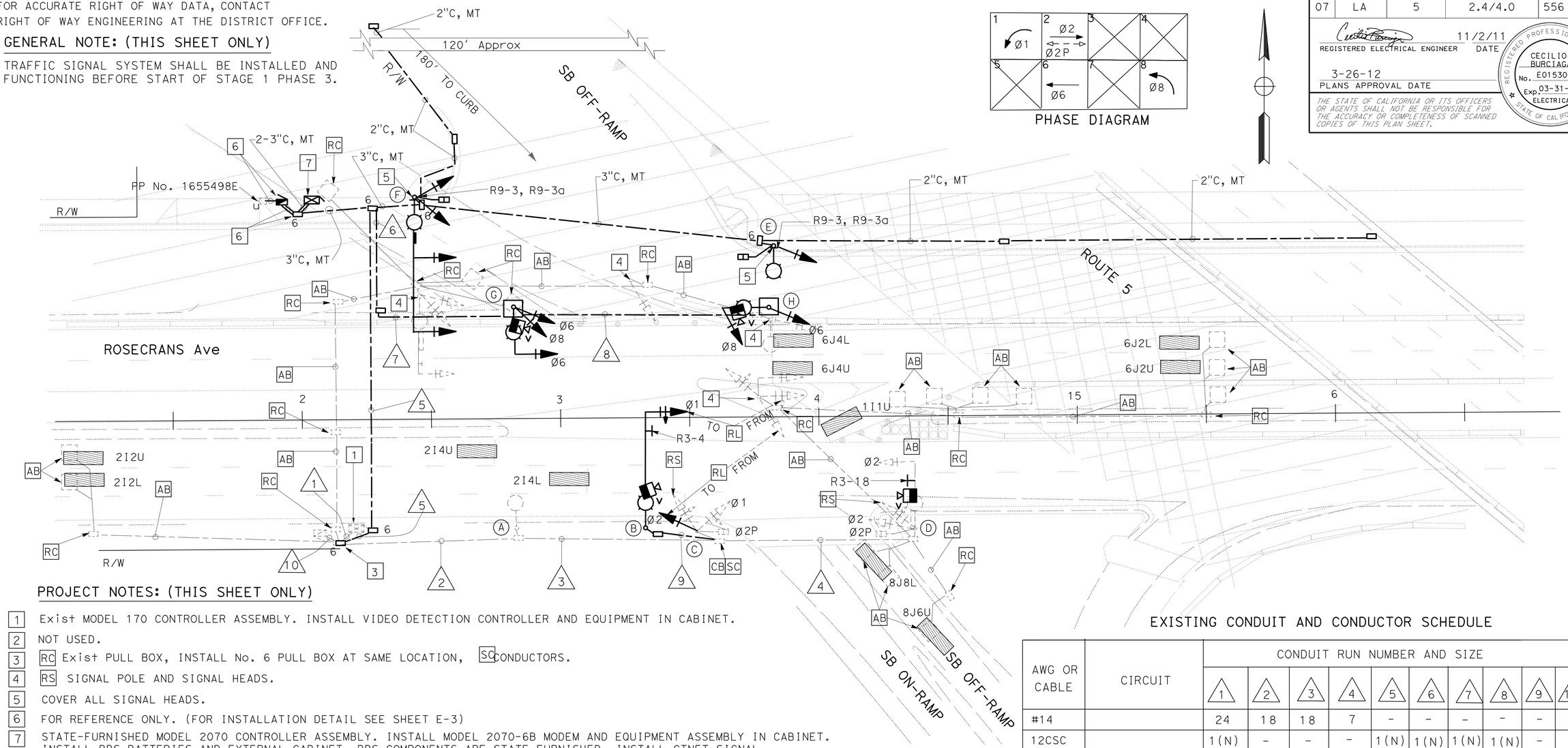

PROJECT NOTES: (THIS SHEET ONLY)

1. Exist MODEL 170 CONTROLLER ASSEMBLY. INSTALL VIDEO DETECTION CONTROLLER AND EQUIPMENT IN CABINET.
2. NOT USED.
3. RC Exist PULL BOX, INSTALL No. 6 PULL BOX AT SAME LOCATION, SC CONDUCTORS.
4. RS SIGNAL POLE AND SIGNAL HEADS.
5. COVER ALL SIGNAL HEADS.
6. FOR REFERENCE ONLY. (FOR INSTALLATION DETAIL SEE SHEET E-3)
7. STATE-FURNISHED MODEL 2070 CONTROLLER ASSEMBLY. INSTALL MODEL 2070-6B MODEM AND EQUIPMENT ASSEMBLY IN CABINET. INSTALL BBS BATTERIES AND EXTERNAL CABINET. BBS COMPONENTS ARE STATE-FURNISHED. INSTALL CTNET SIGNAL INTERCONNECT EQUIPMENT AND CTNET WIRELESS DATA SERVICE EQUIPMENT ASSEMBLY IN CABINET.

EXISTING POLE AND EQUIPMENT SCHEDULE

STANDARD				veh sig mtg		ped SIGNAL	ppb		LED		SPECAIL
No.	Type	sma	lma	Mast arm	Pole	mtg	Ø	ARROW	LUMINAIRE	sns	REQUIREMENT
A	30	–	12'	–	–	–	–	–	400 W hps	–	–
B	26A-3-100 (N)	45' (N)	12' (N)	MAS (R)	–	–	–	–	235 W (N)	–	–
C	1-A	–	–	–	SV-2-T (R)	SP-1-T	6	→	–	–	–
D	19A-2-70	25'	12'	mas	SV-1-T	SP-1-T	6	←	400 W hps	5 SOUTH ⇨	–
E	21TS (N)	–	12' (N)	–	SV-1-T (N)	SP-1-T (N)	–	← (N)	235 W (N)	–	–
F	29A-5-100 (N)	55' (N)	12' (N)	2-MAS (N)	SV-2-TA (N)	SP-1-T (N)	–	→ (N)	235 W (N)	–	⇦ 5 SOUTH (N)(IISNS)
G	19-1-100 (*)	15' (N)	12' (N)	MAS (N)	SV-2-T (N)	–	–	–	235 W (N)	–	–
H	19-1-100 (*)	15' (N)	12' (N)	MAS (N)	SV-1-TA (N)	–	–	–	235 W (N)	–	–

(*) INSTALL NEW POLE ON PLATE WITH CONCRETE BLOCK. (FOR INSTALLATION DETAILS, SEE SHEET SES-10)
(R) RELOCATED

EXISTING CONDUIT AND CONDUCTOR SCHEDULE

AWG OR CABLE	CIRCUIT	CONDUIT RUN NUMBER AND SIZE									
		1	2	3	4	5	6	7	8	9	10
#14		24	18	18	7	–	–	–	–	–	–
12CSC		1(N)	–	–	–	1(N)	1(N)	1(N)	1(N)	–	–
#10	IISNS	–	–	–	–	–	–	–	–	–	–
#10	LUMINAIRES	–	2	2	2	2	2	2	2	2	2
#6	SIGNAL SERVICE	2	–	–	–	–	–	–	–	–	2
CABLE	VIVDS CABLE	4(N)	2(N)	2(N)	1(N)	2(N)	2(N)	2(N)	1(N)	1(N)	–
#8	G	1	1	1	1	1(N)	1(N)	1(N)	1(N)	1(N)	1(N)
	CONDUIT SIZE	2-3"	3"	3"	3"	3" ** (N)	2" ** (N)	2" * (N)	2" * (N)	2" (N)	2"

* CONDUIT AT GROUND LEVEL AGAINST K-RAIL.
** CONDUIT SHALL BE BURIED 36" BELOW FINAL GRADE.

MODIFY SIGNAL AND LIGHTING (LOCATION 1)
(ROUTE 5 SB ON/OFF-RAMP AT ROSECRANS Ave)
(STAGE 1 PHASE 3)

SCALE: 1" = 20'

E-38

APPROVED FOR ELECTRICAL WORK ONLY

STATE OF CALIFORNIA - DEPARTMENT OF TRANSPORTATION
Caltrans TRAFFIC DESIGN
FUNCTIONAL SUPERVISOR: YI TSAU
CALCULATED-DESIGNED BY: LUKE SUN
CHECKED BY: CECILIO BURCIAGA
REVISED BY / DATE REVISED

LAST REVISION 00-00-00 | DATE PLOTTED => 29-MAR-2012 | TIME PLOTTED => 14:05

Dist	COUNTY	ROUTE	POST MILES TOTAL PROJECT	SHEET No.	TOTAL SHEETS
07	LA	5	2.4/4.0	557	1288

REGISTERED ELECTRICAL ENGINEER 11/2/11 DATE

3-26-12
PLANS APPROVAL DATE

REGISTERED PROFESSIONAL ENGINEER CECILIO BURCIAGA No. E015302 Exp. 03-31-13 ELECTRICAL STATE OF CALIFORNIA

THE STATE OF CALIFORNIA OR ITS OFFICERS OR AGENTS SHALL NOT BE RESPONSIBLE FOR THE ACCURACY OR COMPLETENESS OF SCANNED COPIES OF THIS PLAN SHEET.

FOR ACCURATE RIGHT OF WAY DATA, CONTACT RIGHT OF WAY ENGINEERING AT THE DISTRICT OFFICE.

GENERAL NOTE: (THIS SHEET ONLY)

COVER ALL SIGNAL HEADS AFTER INSTALLATION IS COMPLETED. TRAFFIC SIGNAL NOT ACTIVE AT THIS STAGE UNTIL STAGE 4, PHASE 3, OR AS DIRECTED BY THE ENGINEER.

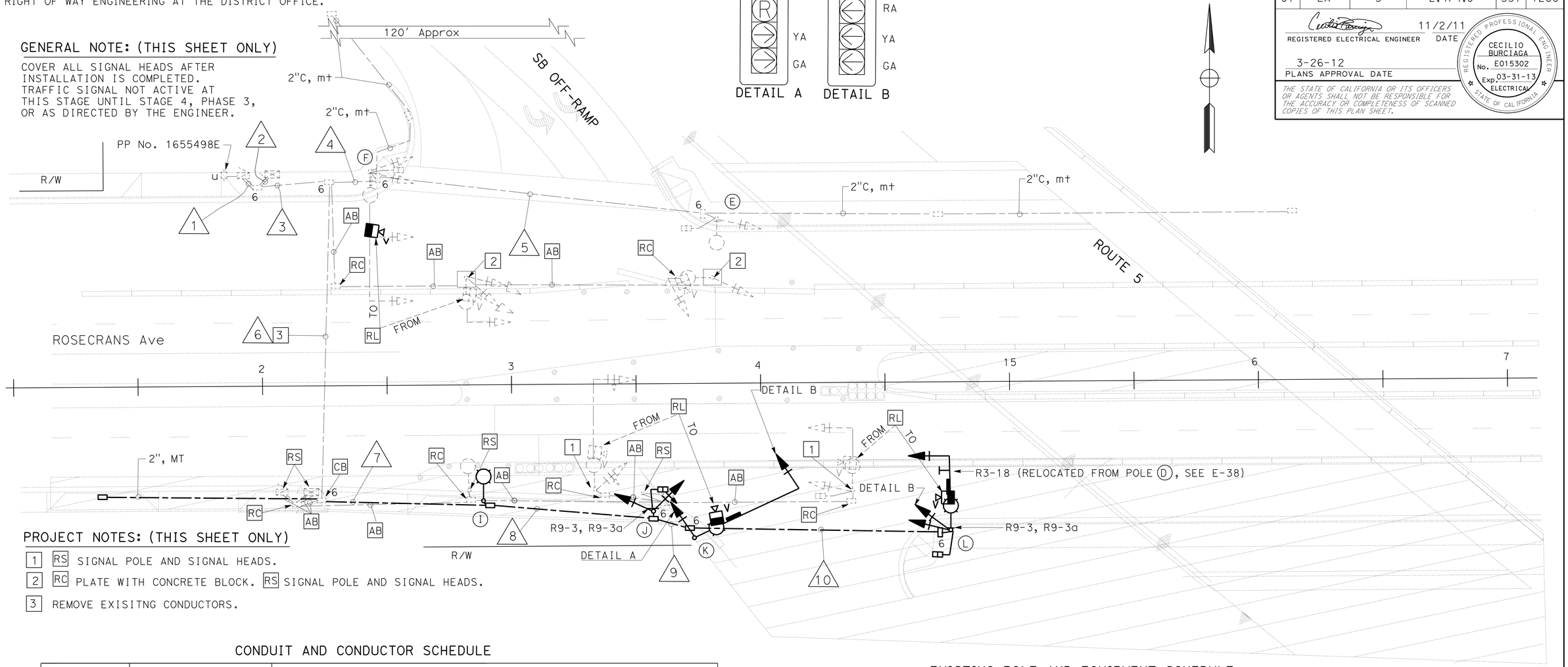

PROJECT NOTES: (THIS SHEET ONLY)

1. RS SIGNAL POLE AND SIGNAL HEADS.
2. RC PLATE WITH CONCRETE BLOCK. RS SIGNAL POLE AND SIGNAL HEADS.
3. REMOVE EXISITNG CONDUCTORS.

CONDUIT AND CONDUCTOR SCHEDULE

AWG OR CABLE	CIRCUIT	CONDUIT RUN NUMBER AND SIZE									
		1	2	3	4	5	6	7	8	9	10
28CSC	C1	-	2	2	1	1	1	1	1	1	1
28CSC	C2	-	2	2	1	1	1	1	1	1	1
#10	IISNS	2	-	2	2	-	2	2	2	2	2
#10	LUMINAIRES	2	-	2	2	2	2	2	2	2	2
#6	SIGNAL SERVICE	2	2	-	-	-	-	-	-	-	-
CABLE	VIVDS CABLE	-	3	3	1	-	2	2	2	2	1
#8	G	1	1	1	1	1	1	1	1	1	1
DLC	Ø 1 DETECTORS	-	-	-	-	-	-	-	-	-	-
	Ø 2 DETECTORS	-	-	-	-	-	-	-	-	-	-
	Ø 4 DETECTORS	-	-	-	-	-	-	-	-	-	-
	Ø 6 DETECTORS	-	-	-	-	-	-	-	-	-	-
	TOTAL	-	-	-	-	-	-	-	-	-	-
	CONDUIT SIZE	2-3"	2-3"	3"	3"	3"	3"	3" (N)	3" (N)	3" (N)	3" (N)

EXISTING POLE AND EQUIPMENT SCHEDULE

STANDARD				veh sig mtg		ped SIGNAL	ppb		LED	IISNS
No.	Type	sma	lma	Mast Arm	Pole	mtg	Ø	ARROW	LUMINAIRE	
E	21TS	-	12'	-	SV-1-T	SP-1-T	-	←	235 W	-
F	29A-5-100	55'	12'	2-MAS	SV-2-TA	SP-1-T	-	→	235 W	⇦ 5 SOUTH
I	21 (N)	-	12'	-	-	-	-	-	235 W	-
J	1-A (N)	-	-	-	TV-2-T(N)	SP-1-T (N)	-	-	-	-
K	26A-3-100(N)	45'(N)	12'(N)	MAS (N)	SV-1-T(N)	-	-	→ (N)	235 W (N)	ROSECRANS Ave (N)
L	19A-3-100(N)	30'(N)	12'(N)	MAS (N)	SV-2-TA(N)	SP-1-T (N)	-	← (N)	235 W (N)	⇨ 5 SOUTH (N)

MODIFY SIGNAL AND LIGHTING (LOCATION 1)
(ROUTE 5 SB ON/OFF-RAMP AT ROSECRANS Ave)
(STAGE 2)

SCALE: 1" = 20'

E-39

APPROVED FOR ELECTRICAL WORK ONLY

REVISED BY | DATE REVISED
LUKE SUN | CECILIO BURCIAGA
CALCULATED-DESIGNED BY | CHECKED BY
FUNCTIONAL SUPERVISOR: YI TSAU

STATE OF CALIFORNIA - DEPARTMENT OF TRANSPORTATION
Caltrans® TRAFFIC DESIGN

LAST REVISION 00-00-00 | DATE PLOTTED => 29-MAR-2012 | TIME PLOTTED => 14:05

Dist	COUNTY	ROUTE	POST MILES TOTAL PROJECT	SHEET No.	TOTAL SHEETS
07	LA	5	2.4/4.0	558	1288

REGISTERED ELECTRICAL ENGINEER 11/2/11 DATE

3-26-12
PLANS APPROVAL DATE

REGISTERED PROFESSIONAL ENGINEER CECILIO BURCIAGA No. E015302 Exp. 03-31-13 ELECTRICAL STATE OF CALIFORNIA

THE STATE OF CALIFORNIA OR ITS OFFICERS OR AGENTS SHALL NOT BE RESPONSIBLE FOR THE ACCURACY OR COMPLETENESS OF SCANNED COPIES OF THIS PLAN SHEET.

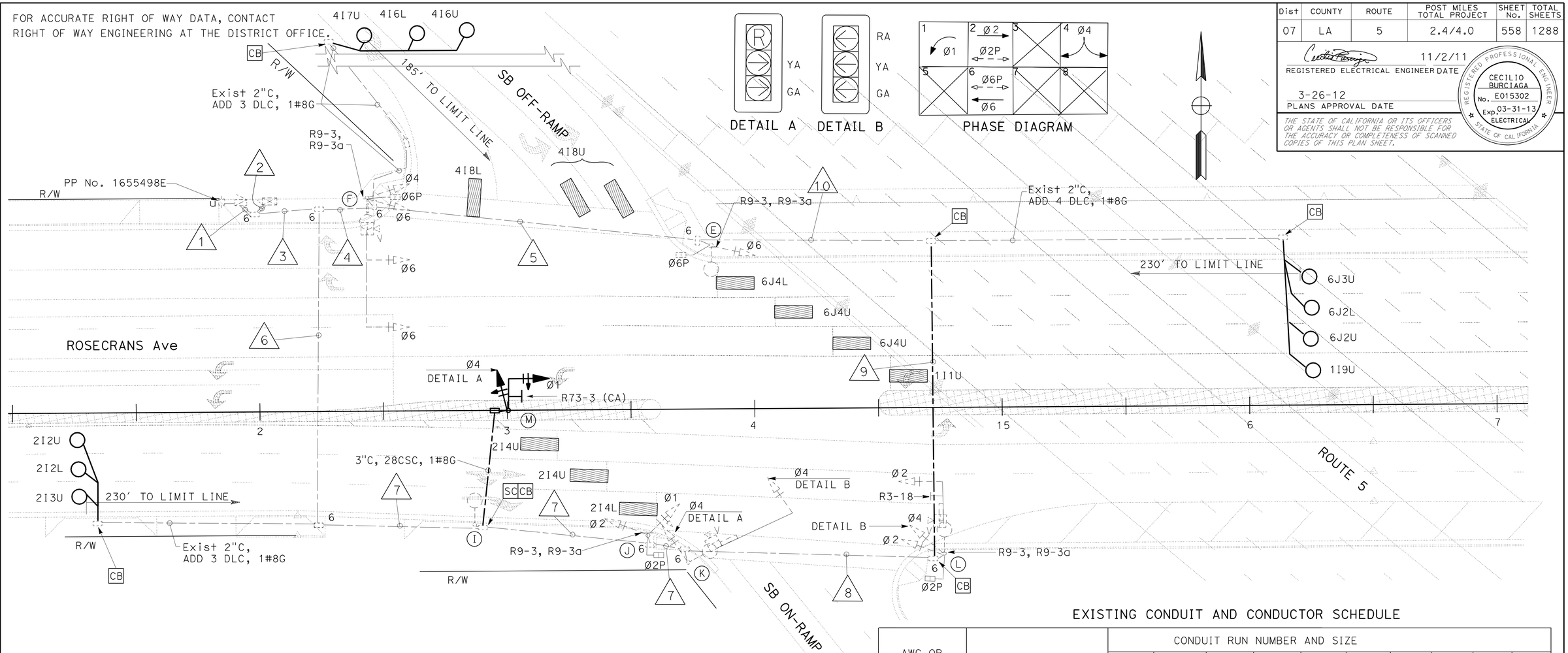

EXISTING POLE AND EQUIPMENT SCHEDULE

STANDARD				veh sig mtg		ped SIGNAL	ppb		LED	iisns
No.	Type	sma	lma	Mast Arm	Pole	mtg	Ø	ARROW	LUMINAIRE	
E	21TS	-	12'	-	SV-1-T	SP-1-T	6	←	235 W	-
F	29A-5-100	55'	12'	2-MAS	SV-2-TA	SP-1-T	6	→	235 W	⇦ 5 SOUTH
I	21	-	12'	-	-	-	-	-	235 W	-
J	1-A	-	-	-	TV-2-T	SP-1-T	-	-	-	-
K	26A-3-100	45'	12'	MAS	SV-1-T	-	2	→	235 W	ROSECRANS Ave
L	19A-3-100	30'	12'	MAS	SV-2-TA	SP-1-T	2	←	235 W	⇨ 5 SOUTH
M	33 (N)	12'(N)	-	MAS (N)	SV-1-T (N)	-	-	-	-	-

EXISTING CONDUIT AND CONDUCTOR SCHEDULE

AWG OR CABLE	CIRCUIT	CONDUIT RUN NUMBER AND SIZE									
		1	2	3	4	5	6	7	8	9	10
28CSC	C1	-	2	2	1	1	1	1	1	-	-
28CSC	C2	-	2	2	1	1	1	1	1	-	-
#10	IISNS	2	-	2	2	-	2	2	2	-	-
#10	LUMINAIRES	2	-	2	2	2	2	2	2	-	-
#6	SIGNAL SERVICE	2	2	-	-	-	-	-	-	-	-
CABLE	VIVDS CABLE	-	3	3	1	-	2	2	1	-	-
#8	G	1	1	1	1	1	1	1	1	1(N)	1 (N)
DLC	Ø 1 DETECTORS	-	1 (N)	1 (N)	1 (N)	1 (N)	-	-	-	-	1 (N)
	Ø 2 DETECTORS	-	3 (N)	3 (N)	-	-	3 (N)	-	-	-	-
	Ø 4 DETECTORS	-	3 (N)	3 (N)	3 (N)	-	-	-	-	-	-
	Ø 6 DETECTORS	-	3 (N)	3 (N)	3 (N)	3 (N)	-	-	-	-	3 (N)
	TOTAL	-	10 (N)	10(N)	7 (N)	4 (N)	3 (N)	-	-	-	4 (N)
	CONDUIT SIZE	2-3"	2-3"	3"	3"	3"	3"	3"	3"	3" (N)	2"

MODIFY SIGNAL AND LIGHTING (LOCATION 1)
(ROUTE 5 SB ON/OFF-RAMP AT ROSECRANS Ave)
(STAGE 4 PHASE 3)

SCALE: 1" = 20'

E-40

APPROVED FOR ELECTRICAL WORK ONLY

STATE OF CALIFORNIA - DEPARTMENT OF TRANSPORTATION
Caltrans TRAFFIC DESIGN

FUNCTIONAL SUPERVISOR: YI TSAU
CALCULATED-DESIGNED BY: LUKE SUN
CHECKED BY: CECILIO BURCIAGA
REVISED BY / DATE REVISED

LAST REVISION 00-00-00 | DATE PLOTTED => 29-MAR-2012 | TIME PLOTTED => 12:15

Dist	COUNTY	ROUTE	POST MILES TOTAL PROJECT	SHEET No.	TOTAL SHEETS
07	LA	5	2.4/4.0	559	1288

REGISTERED ELECTRICAL ENGINEER 11/2/11 DATE

3-26-12
PLANS APPROVAL DATE

REGISTERED PROFESSIONAL ENGINEER CECILIO BURCIAGA No. E015302 Exp. 03-31-13 ELECTRICAL STATE OF CALIFORNIA

THE STATE OF CALIFORNIA OR ITS OFFICERS OR AGENTS SHALL NOT BE RESPONSIBLE FOR THE ACCURACY OR COMPLETENESS OF SCANNED COPIES OF THIS PLAN SHEET.

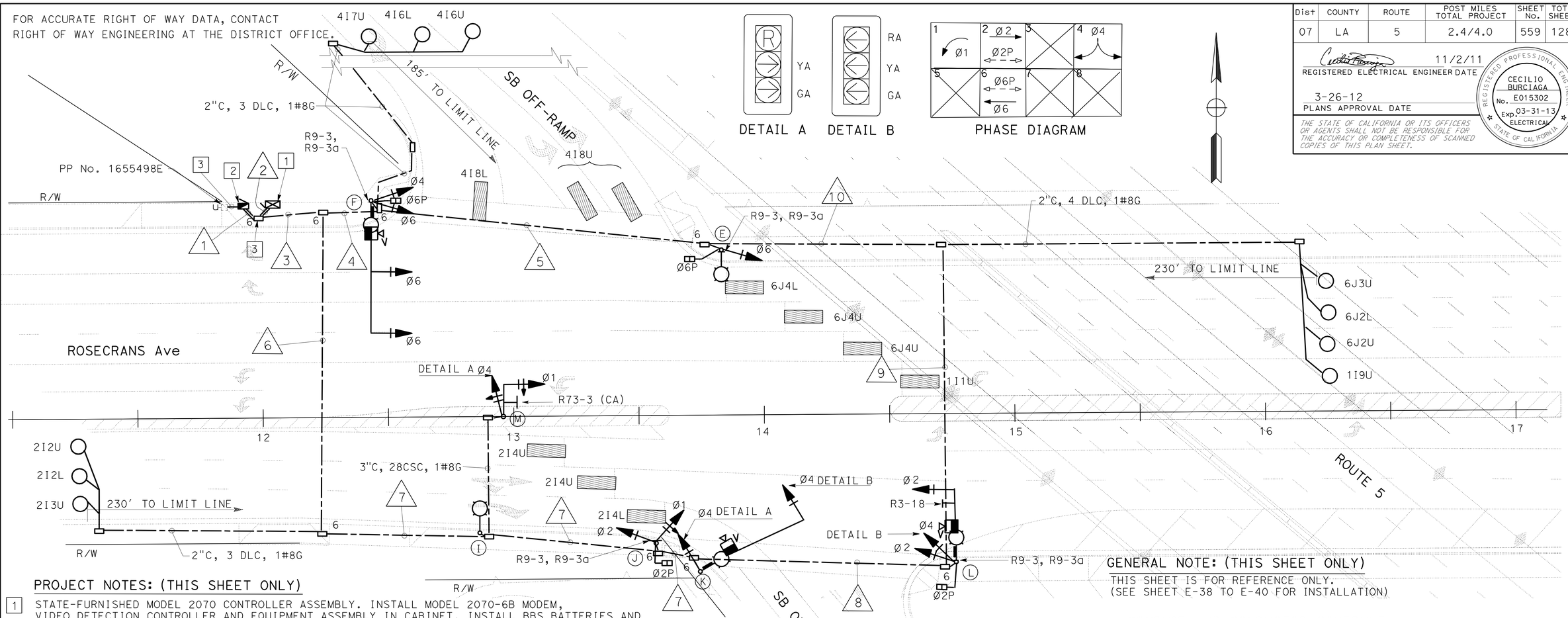

PROJECT NOTES: (THIS SHEET ONLY)

1. STATE-FURNISHED MODEL 2070 CONTROLLER ASSEMBLY. INSTALL MODEL 2070-6B MODEM, VIDEO DETECTION CONTROLLER AND EQUIPMENT ASSEMBLY IN CABINET. INSTALL BBS BATTERIES AND EXTERNAL CABINET. BBS COMPONENTS ARE STATE-FURNISHED. INSTALL CTNET SIGNAL INTERCONNECT EQUIPMENT AND CTNET WIRELESS DATA SERVICE EQUIPMENT ASSEMBLY IN CABINET.
(FOR INSTALLATION OF TRAFFIC SIGNAL INTERCONNECT AND WIRELESS DATA SERVICE EQUIPMENT DETAILS SEE SHEET E-52)

2. 120/240 V METERED TYPE III-CF SERVICE EQUIPMENT ENCLOSURE WITH:
(FOR REFERENCE ONLY, SEE SHEET E-3 FOR INSTALLATION)

METER 1: CIRCUIT BREAKERS	METER 2: CIRCUIT BREAKER
1-100 A, 240 V, 2P, CB - MAIN	1-100 A, 240 V, 2P, CB - MAIN
2- 30 A, 240 V, 2P, CB - FREEWAY LIGHTING AND SIGN ILLUMINATION	1- 50 A, 120 V, 1P, CB - SIGNAL
1- 30 A, 120 V, 1P, CB - RAMP METERING	1- 30 A, 120 V, 1P, CB - SIGNAL LIGHTING (UNMETERED)
1- 15 A, 120 V, 1P, CB - PEU	1- 15 A, 120 V, 1P, CB - IISNS
1- 30 A, 120 V, 1P, CB - CCTV	1- 15 A, 120 V, 1P, CB - PEU
3- 20 A, 120 V, 1P, CB - IRRIGATION	
CTID No. 07-53-005R-002.191	CTID No. 07-53-005R-002.193
ADDRESS: 12601 1/4 ROSECRANS Ave, NORWALK	ADDRESS: 12601 3/4 ROSECRANS Ave, NORWALK

3. FOR REFERENCE ONLY. (SEE SHEET E-3 FOR INSTALLATION)

POLE AND EQUIPMENT SCHEDULE

STANDARD				VEH SIG MTG		PED SIGNAL	PPB		LED LUMINAIRE	SPECIAL REQUIREMENTS IISNS
No.	Type	SMA	LMA	Mast Arm	Pole	MTG	Ø	ARROW		
E	21TS	-	12'	-	SV-1-T	SP-1-T	6	←	235 W	-
F	29A-5-100	55'	12'	2-MAS	SV-2-TA	SP-1-T	6	→	235 W	⇦ 5 SOUTH
I	21	-	12'	-	-	-	-	-	235 W	-
J	1-A	-	-	-	TV-2-T	SP-1-T	-	-	-	-
K	26A-3-100	45'	12'	MAS	SV-1-T	-	2	→	235 W	ROSECRANS Ave
L	19A-3-100	30'	12'	MAS	SV-2-TA	SP-1-T	2	←	235 W	⇨ 5 SOUTH
M	33	12'	-	MAS	SV-1-T	-	-	-	-	-

GENERAL NOTE: (THIS SHEET ONLY)

THIS SHEET IS FOR REFERENCE ONLY.
(SEE SHEET E-38 TO E-40 FOR INSTALLATION)

CONDUIT AND CONDUCTOR SCHEDULE

AWG OR CABLE	CIRCUIT	CONDUIT RUN NUMBER AND SIZE									
		1	2	3	4	5	6	7	8	9	10
28CSC	C1	-	2	2	1	1	1	1	1	-	-
28CSC	C2	-	2	2	1	1	1	1	1	-	-
#10	IISNS	2	-	2	2	-	2	2	2	-	-
#10	LUMINAIRES	2	-	2	2	2	2	2	2	-	-
#6	SIGNAL SERVICE	2	2	-	-	-	-	-	-	-	-
CABLE	VIVDS CABLE	-	3	3	1	-	2	2	1	-	-
#8	G	1	1	1	1	1	1	1	1	1	1
DLC	Ø 1 DETECTORS	-	1	1	1	1	-	-	-	-	1
	Ø 2 DETECTORS	-	3	3	-	-	3	-	-	-	-
	Ø 4 DETECTORS	-	3	3	3	-	-	-	-	-	-
	Ø 6 DETECTORS	-	3	3	3	3	-	-	-	-	3
	TOTAL	-	10	10	7	4	3	-	-	-	4
	CONDUIT SIZE	2-3"	2-3"	3"	3"	3"	3"	3"	3"	3"	2"

MODIFY SIGNAL AND LIGHTING (LOCATION 1)
(ROUTE 5 SB ON/OFF-RAMP AT ROSECRANS Ave)
(FINAL)

APPROVED FOR ELECTRICAL WORK ONLY

SCALE: 1" = 20'

E-41

STATE OF CALIFORNIA - DEPARTMENT OF TRANSPORTATION
Caltrans® TRAFFIC DESIGN
FUNCTIONAL SUPERVISOR: YI TSAU
CALCULATED-DESIGNED BY: LUKE SUN
CHECKED BY: CECILIO BURCIAGA
REVISED BY / DATE REVISED

LAST REVISION 00-00-00 | DATE PLOTTED => 29-MAR-2012 | TIME PLOTTED => 14:05

Dist	COUNTY	ROUTE	POST MILES TOTAL PROJECT	SHEET No.	TOTAL SHEETS
07	LA	5	2.4/4.0	560	1288

REGISTERED ELECTRICAL ENGINEER 11/2/11 DATE

3-26-12
PLANS APPROVAL DATE

REGISTERED PROFESSIONAL ENGINEER CECILIO BURCIAGA No. E015302 Exp. 03-31-13 ELECTRICAL STATE OF CALIFORNIA

THE STATE OF CALIFORNIA OR ITS OFFICERS OR AGENTS SHALL NOT BE RESPONSIBLE FOR THE ACCURACY OR COMPLETENESS OF SCANNED COPIES OF THIS PLAN SHEET.

FOR ACCURATE RIGHT OF WAY DATA, CONTACT
RIGHT OF WAY ENGINEERING AT THE DISTRICT OFFICE.

GENERAL NOTES: (THIS SHEET ONLY)

1. RC EXISTING TRAFFIC SIGNAL AND LIGHTING SYSTEM.
2. AB CONDUITS AND INDUCTIVE LOOP DETECTORS.
3. RS MODEL 170 CONTROLLER ASSEMLY, SIGNAL POLES AND SIGNAL HEADS.

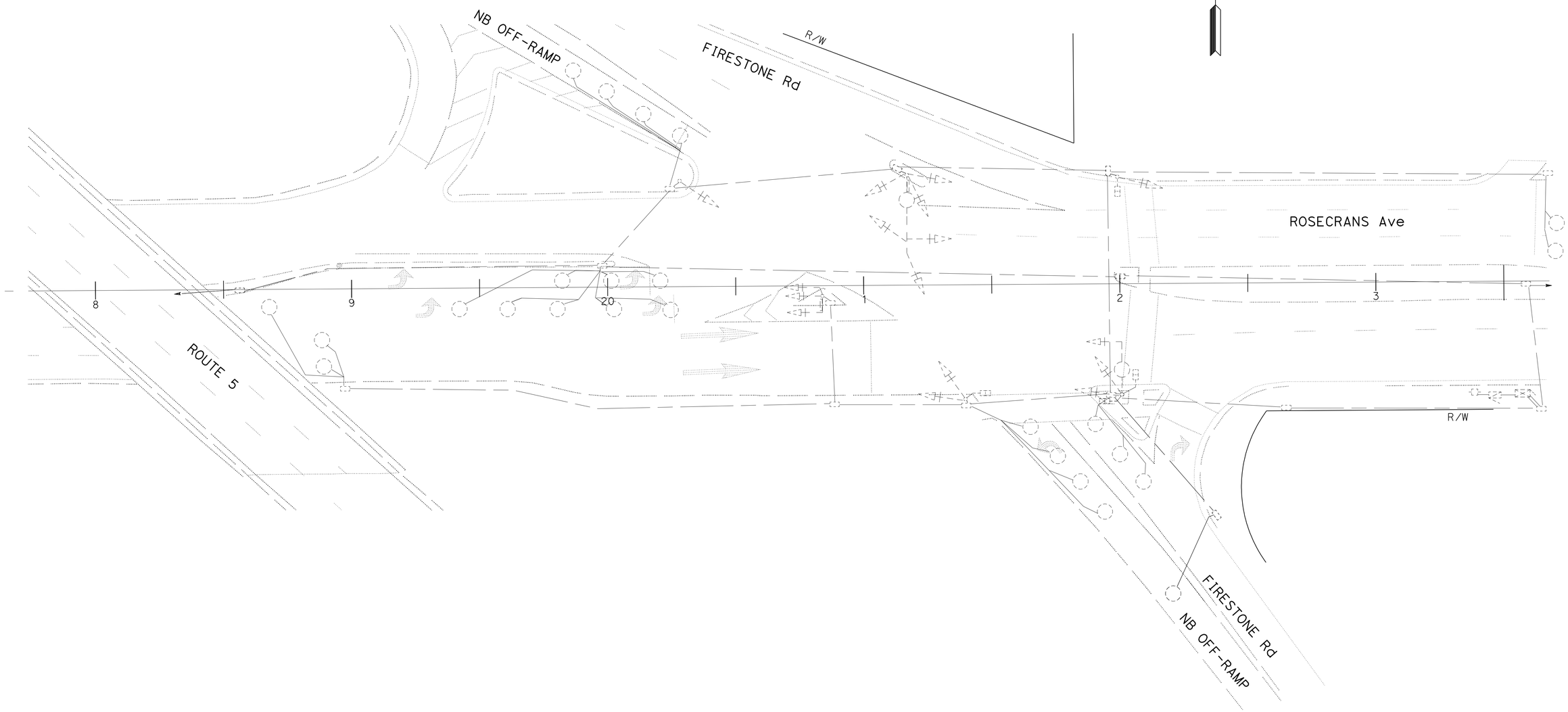

SIGNAL AND LIGHTING (LOCATION 2)
(REMOVE)
(ROUTE 5 NB ON/OFF-RAMP AT ROSECRANS Ave)

SCALE: 1" = 20'

APPROVED FOR ELECTRICAL WORK ONLY

E-42

STATE OF CALIFORNIA - DEPARTMENT OF TRANSPORTATION
Caltrans® **TRAFFIC DESIGN**

FUNCTIONAL SUPERVISOR: YI TSAU
CALCULATED-DESIGNED BY: LUKE SUN
CHECKED BY: CECILIO BURCIAGA
REVISED BY
DATE REVISED

LAST REVISION 00-00-00
DATE PLOTTED => 29-MAR-2012
TIME PLOTTED => 12:15

Dist	COUNTY	ROUTE	POST MILES TOTAL PROJECT	SHEET No.	TOTAL SHEETS
07	LA	5	2.4/4.0	561	1288

REGISTERED ELECTRICAL ENGINEER 11/2/11 DATE

3-26-12
PLANS APPROVAL DATE

REGISTERED PROFESSIONAL ENGINEER CECILIO BURCIAGA No. E015302 Exp. 03-31-13 ELECTRICAL STATE OF CALIFORNIA

THE STATE OF CALIFORNIA OR ITS OFFICERS OR AGENTS SHALL NOT BE RESPONSIBLE FOR THE ACCURACY OR COMPLETENESS OF SCANNED COPIES OF THIS PLAN SHEET.

FOR ACCURATE RIGHT OF WAY DATA, CONTACT RIGHT OF WAY ENGINEERING AT THE DISTRICT OFFICE.

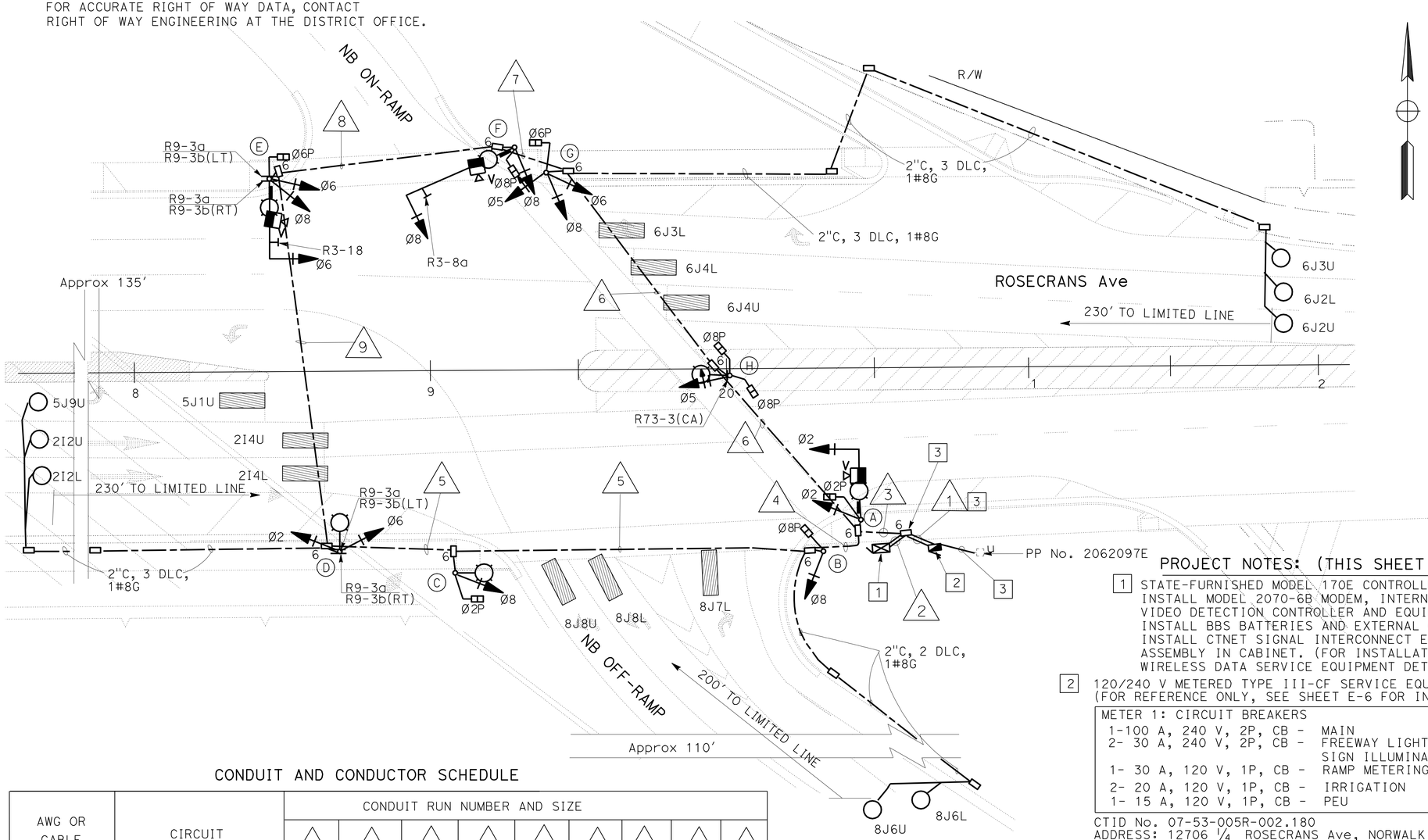

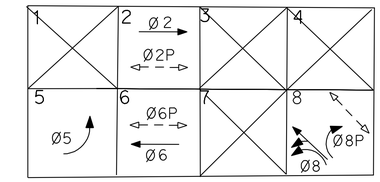

PHASE DIAGRAM

PROJECT NOTES: (THIS SHEET ONLY)

1. STATE-FURNISHED MODEL 170E CONTROLLER AND MODEL 2070 CONTROLLER ASSEMBLY. INSTALL MODEL 2070-6B MODEM, INTERNAL MODEL 496 MODEM, VIDEO DETECTION CONTROLLER AND EQUIPMENT ASSEMBLY IN CABINET. INSTALL BBS BATTERIES AND EXTERNAL CABINET. BBS COMPONENTS ARE STATE-FURNISHED. INSTALL CTNET SIGNAL INTERCONNECT EQUIPMENT AND CTNET WIRELESS DATA SERVICE EQUIPMENT ASSEMBLY IN CABINET. (FOR INSTALLATION OF TRAFFIC SIGNAL INTERCONNECT AND WIRELESS DATA SERVICE EQUIPMENT DETAILS SEE SHEET E-52)
2. 120/240 V METERED TYPE III-CF SERVICE EQUIPMENT ENCLOSURE WITH: (FOR REFERENCE ONLY, SEE SHEET E-6 FOR INSTALLATION)

METER 1: CIRCUIT BREAKERS	METER 2: CIRCUIT BREAKER
1-100 A, 240 V, 2P, CB - MAIN	1-100 A, 240 V, 2P, CB - MAIN
2- 30 A, 240 V, 2P, CB - FREEWAY LIGHTING AND SIGN ILLUMINATION	1- 50 A, 120 V, 1P, CB - SIGNAL
1- 30 A, 120 V, 1P, CB - RAMP METERING	1- 30 A, 120 V, 1P, CB - SIGNAL LIGHTING (UNMETERED)
2- 20 A, 120 V, 1P, CB - IRRIGATION	1- 15 A, 120 V, 1P, CB - IISNS
1- 15 A, 120 V, 1P, CB - PEU	1- 15 A, 120 V, 1P, CB - PEU
CTID No. 07-53-005R-002.180 ADDRESS: 12706 1/4 ROSECRANS Ave, NORWALK	CTID No. 07-53-005R-002.182 ADDRESS: 12706 3/4 ROSECRANS Ave, NORWALK

3. FOR REFERENCE ONLY. (SEE SHEET E-6 FOR INSTALLATION)

CONDUIT AND CONDUCTOR SCHEDULE

AWG OR CABLE	CIRCUIT	CONDUIT RUN NUMBER AND SIZE								
		1	2	3	4	5	6	7	8	9
28CSC	C1	-	2	2	1	1	1	1	1	-
28CSC	C2	-	2	2	1	1	1	1	1	-
#10	IISNS	2	-	2	-	-	2	2	2	-
#10	LUMINAIRES	2	-	2	2	2	2	2	2	-
#6	SIGNAL SERVICE	2	2	-	-	-	-	-	-	-
CABLE	VIVDS CABLE	-	3	3	-	-	2	2	1	-
#8	G	1	1	1	1	1	1	1	1	1
DLC	Ø 2 DETECTORS	-	2	2	2	2	-	-	-	-
	Ø 5 DETECTORS	-	1	1	1	1	-	-	-	-
	Ø 6 DETECTORS	-	3	3	-	-	3	-	-	-
	Ø 8 DETECTORS	-	2	2	2	-	-	-	-	-
	TOTAL	-	8	8	5	3	3	-	-	-
	CONDUIT SIZE	2-3"	2-3"	3"	3"	3"	3"	3"	3"	3"

POLE AND EQUIPMENT SCHEDULE

STANDARD				VEH SIG MTG		PED SIGNAL	PPB		LED	IISNS
No.	Type	SMA	LMA	Mast Arm	Pole	MTG	Ø	ARROW	LUMINAIRE	
A	19A-3-100	25'	12'	MAS	SV-1-T	SP-1-T	2	←	235 W	⇦ 5 NORTH
B	1-A	-	-	-	TV-1-T	SP-1-T	8	←	-	-
C	21TS	-	12'	-	SV-1-T	SP-1-T	2	→	235 W	-
D	21TS	-	12'	-	SV-2-TA	-	-	-	235 W	-
E	19A-3-100	25'	12'	MAS	SV-2-TA	SP-1-T	6	→	235 W	⇨ 5 NORTH
F	26A-3-100	40'	12'	MAS	SV-1-T	SP-1-T	6	←	235 W	ROSECRANS Ave
G	1-A	-	-	-	TV-3-T	SP-1-T	8	→	-	-
H	21TS	-	12'	-	SV-1-T	SP-2-T	8	⇄	235 W	-

SIGNAL AND LIGHTING (LOCATION 2)
(ROUTE 5 NB ON/OFF-RAMP AT ROSECRANS Ave)

SCALE: 1" = 20'

E-43

APPROVED FOR ELECTRICAL WORK ONLY

REVISED BY | DATE REVISED
LUKE SUN | CECILIO BURCIAGA
CALCULATED-DESIGNED BY | CHECKED BY
FUNCTIONAL SUPERVISOR: YI TSAU

STATE OF CALIFORNIA - DEPARTMENT OF TRANSPORTATION
Caltrans TRAFFIC DESIGN

LAST REVISION 00-00-00 | DATE PLOTTED => 29-MAR-2012 | TIME PLOTTED => 14:05

Dist	COUNTY	ROUTE	POST MILES TOTAL PROJECT	SHEET No.	TOTAL SHEETS
07	LA	5	2.4/4.0	562	1288

REGISTERED ELECTRICAL ENGINEER 11/2/11 DATE

3-26-12
PLANS APPROVAL DATE

REGISTERED PROFESSIONAL ENGINEER CECILIO BURCIAGA No. E015302 Exp. 03-31-13 ELECTRICAL STATE OF CALIFORNIA

THE STATE OF CALIFORNIA OR ITS OFFICERS OR AGENTS SHALL NOT BE RESPONSIBLE FOR THE ACCURACY OR COMPLETENESS OF SCANNED COPIES OF THIS PLAN SHEET.

MVDS TERMINATION ASSEMBLY PANEL

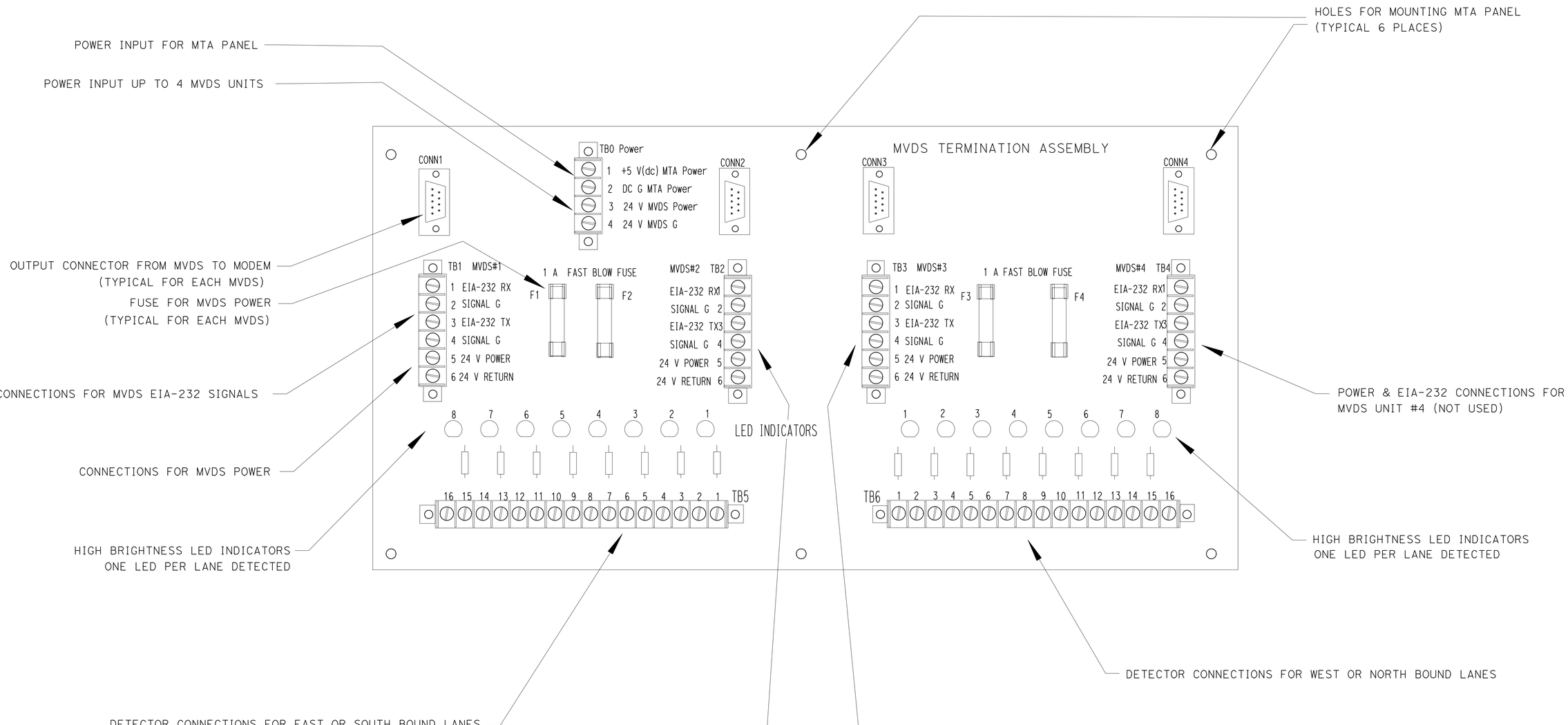

MICROWAVE VEHICLE DETECTION SYSTEM (DETAILS)

NO SCALE

E-44

STATE OF CALIFORNIA - DEPARTMENT OF TRANSPORTATION
Caltrans® TRAFFIC DESIGN

FUNCTIONAL SUPERVISOR: YI TSAU
CALCULATED-DESIGNED BY: LUKE SUN
CHECKED BY: CECILIO BURCIAGA
REVISED BY
DATE REVISED

LAST REVISION 00-00-00
DATE PLOTTED => 29-MAR-2012
TIME PLOTTED => 12:16

Dist	COUNTY	ROUTE	POST MILES TOTAL PROJECT	SHEET No.	TOTAL SHEETS
07	LA	5	2.4/4.0	563	1288

REGISTERED ELECTRICAL ENGINEER — DATE 11/2/11

3-26-12
PLANS APPROVAL DATE

REGISTERED PROFESSIONAL ENGINEER — CECILIO BURCIAGA — No. E015302 — Exp. 03-31-13 — ELECTRICAL — STATE OF CALIFORNIA

THE STATE OF CALIFORNIA OR ITS OFFICERS OR AGENTS SHALL NOT BE RESPONSIBLE FOR THE ACCURACY OR COMPLETENESS OF SCANNED COPIES OF THIS PLAN SHEET.

WIRE USAGE IN MVDS CABLE

MS CONNECTOR PIN ID	WIRE NUMBER	PAIR NUMBER	FUNCTION	CONNECTS TO MTA PANEL	CONNECTS TO POSITION	SAMPLE LANE ASSIGNMENT
A	1	1	DETECTOR #1	TB 5	1	LANE#1 WB or NB
B	2	1	DETECTOR #1 RETURN	TB 5	2	
C	3	2	DETECTOR #2	TB 5	3	LANE#2 WB or NB
D	4	2	DETECTOR #2 RETURN	TB 5	4	
E	5	3	DETECTOR #3	TB 5	5	LANE#3 WB or NB
F	6	3	DETECTOR #3 RETURN	TB 5	6	
G	7	4	DETECTOR #4	TB 5	7	LANE#4 WB or NB
H	8	4	DETECTOR #4 RETURN	TB 5	8	
J	9	5	DETECTOR #5	TB 6	1	LANE#1 EB or SB
K	10	5	DETECTOR #5 RETURN	TB 6	2	
L	11	6	DETECTOR #6	TB 6	3	LANE#2 EB or SB
M	12	6	DETECTOR #6 RETURN	TB 6	4	
N	13	7	DETECTOR #7	TB 6	5	LANE#3 EB or SB
P	14	7	DETECTOR #7 RETURN	TB 6	6	
R	15	8	DETECTOR #8	TB 6	7	LANE#4 EB or SB
S	16	8	DETECTOR #8 RETURN	TB 6	8	
T	17	9	RS232 RX (RECEIVE)	TB 1	1	
U	18	9	RS232 G (RECEIVE GROUND)	TB 1	2	
V	19	10	RS232 TX (TRANSMIT)	TB 1	3	
W	20	10	RS232 G (TRANSMIT GROUND)	TB 1	4	
f	21	11	12-24 VOLTS AC/DC POWER	TB 1	5	
g	22	11	12-24 VOLTS AC/DC POWER	TB 1	6	

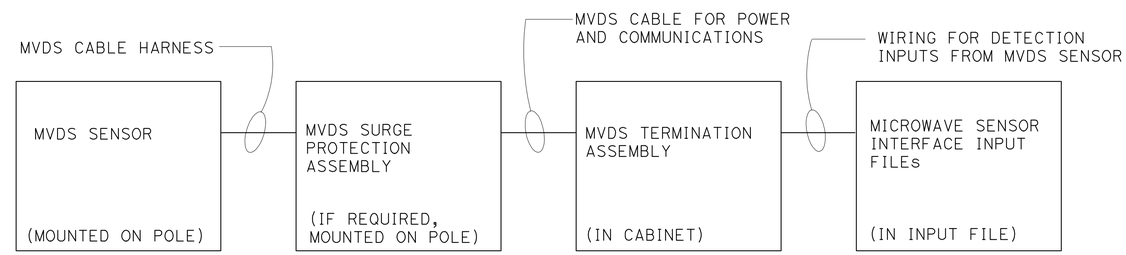

MVDS UNIT CONNECTIONS DETAIL

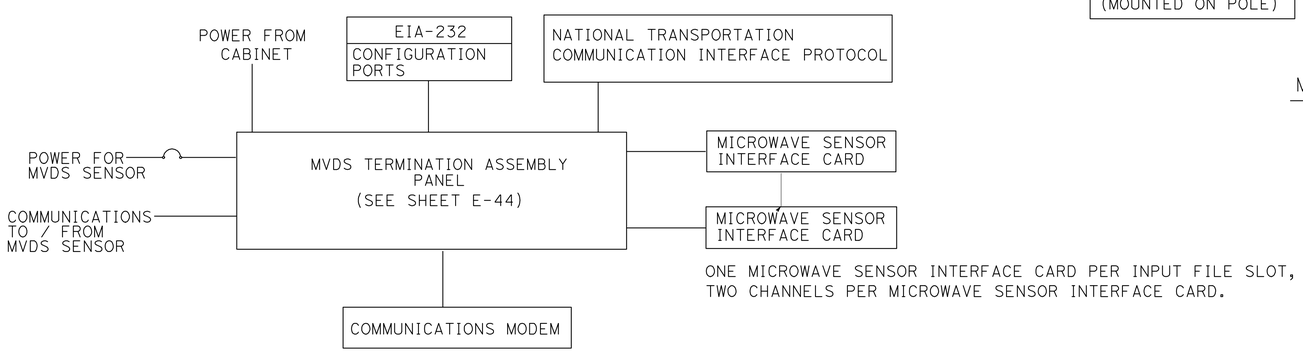

MVDS TERMINATION ASSEMBLY DETAIL

MICROWAVE VEHICLE DETECTION SYSTEM (DETAILS)

NO SCALE

E-45

STATE OF CALIFORNIA - DEPARTMENT OF TRANSPORTATION
Caltrans TRAFFIC DESIGN

FUNCTIONAL SUPERVISOR: YI TSAU
CALCULATED-DESIGNED BY: LUKE SUN
CHECKED BY: CECILIO BURCIAGA
REVISED BY / DATE REVISED

LAST REVISION 00-00-00 | DATE PLOTTED => 28-MAR-2012 | TIME PLOTTED => 09:45

Dist	COUNTY	ROUTE	POST MILES TOTAL PROJECT	SHEET No.	TOTAL SHEETS
07	LA	5	2.4/4.0	564	1288

REGISTERED ELECTRICAL ENGINEER — DATE 11/2/11

3-26-12
PLANS APPROVAL DATE

REGISTERED PROFESSIONAL ENGINEER — CECILIO BURCIAGA — No. E015302 — Exp. 03-31-13 — ELECTRICAL — STATE OF CALIFORNIA

THE STATE OF CALIFORNIA OR ITS OFFICERS OR AGENTS SHALL NOT BE RESPONSIBLE FOR THE ACCURACY OR COMPLETENESS OF SCANNED COPIES OF THIS PLAN SHEET.

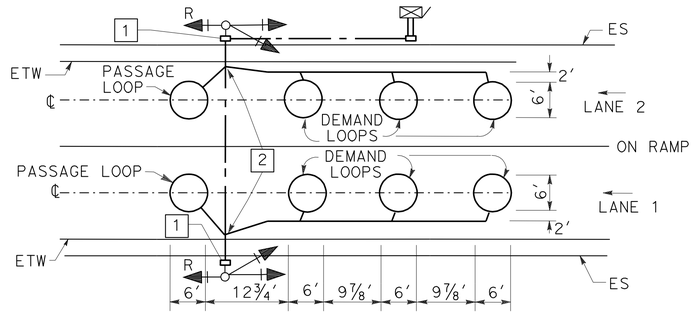

TYPICAL 2-LANE RAMP METERING SYSTEM INSTALLATION

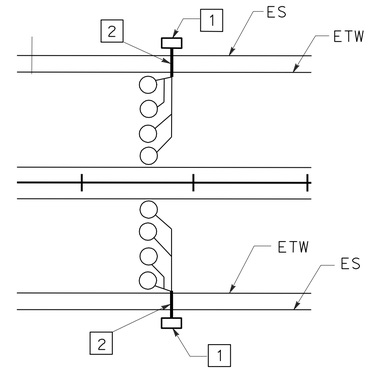

TYPICAL TRAFFIC MONITORING LOOP CONFIGURATION

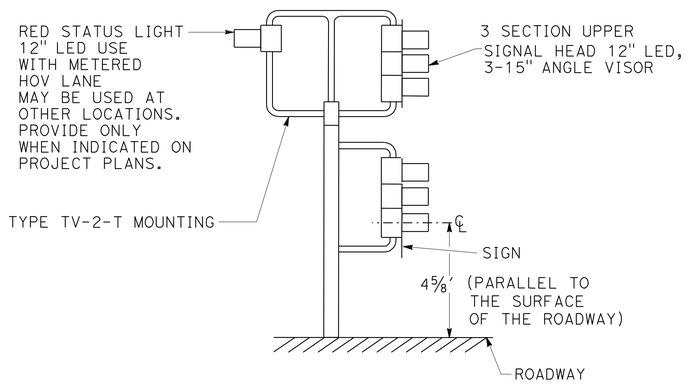

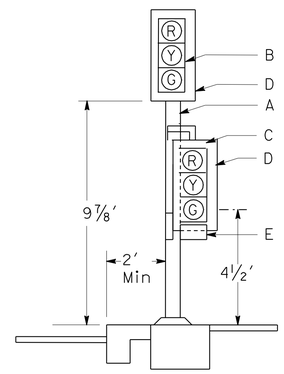

RAMP METER SIGNAL

A. TYPE 1-A SIGNAL STANDARD.

B. 3-SECTION 12" LED SIGNAL HEAD (RED, YELLOW, GREEN). 18" x 7⅞" ANGLED VISORS ARE REQUIRED WHERE SHOWN ON PLANS.

C. 3-SECTION 12" LED SIGNAL HEAD (RED, YELLOW, GREEN). 8" FULL CIRCLE VISORS TYPE SV-1-T BRACKET MOUNTING ON SIDE OF STANDARD, AWAY FROM TRAFFIC.

D. BACKPLATE.

E. R89(CA) MOUNT ON BACKPLATE AND CENTER BETWEEN GREEN SECTION AND BOTTOM OF BACKPLATES AND SIDES. ATTACH WITH ¼" x ¾" BOLTS, HEX NUTS, PLAIN AND LOCK WASHERS.

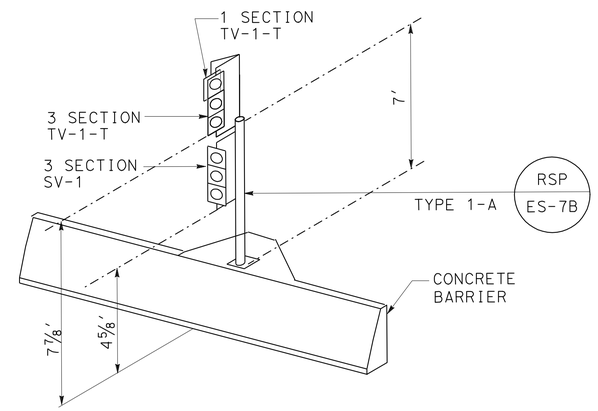

TYPICAL DETAIL FOR RAMP METER SIGNAL ON CONCRETE BARRIER

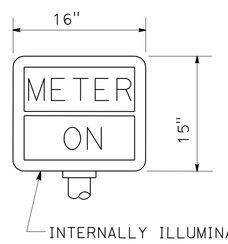

DETAIL D
METER-ON SIGN

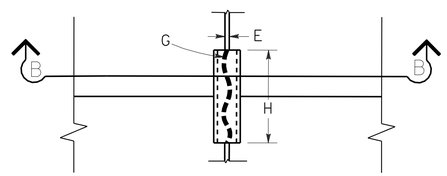

PLAN VIEW

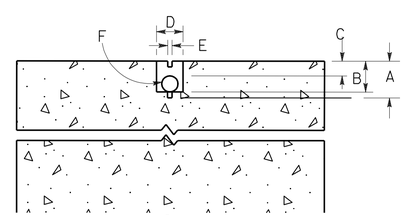

SECTION B-B

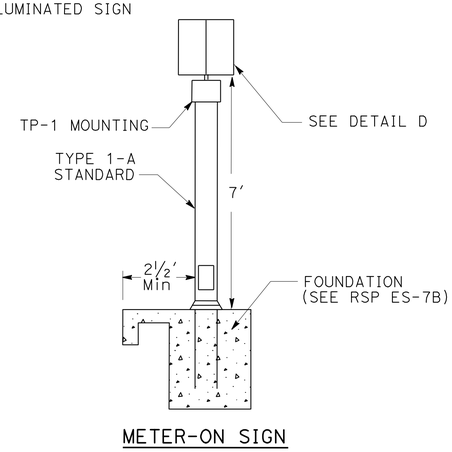

METER-ON SIGN

A. SAWCUT DEPTH TO ACCOMMODATE SPECIFIED NUMBER OF CONDUCTORS WITH A MINIMUM OF ½" FROM TOP OF WIRE TO PAVEMENT SURFACE (3¼" Max).

B. SLOT SAWCUT DEPTH TO ACCOMMODATE 1" TYPE 3 CONDUIT WITH ½" MINIMUM FROM TOP OF CONDUIT TO PAVEMENT SURFACE.

C. ½" MINIMUM BETWEEN TOP OF CONDUIT AND PAVEMENT SURFACE.

D. SAWCUT WIDTH TO ACCOMMODATE 1" TYPE 3 CONDUIT WITH ½" CLEARANCE.

E. SAWCUT 2/5" WIDE (Max).

F. 1" TYPE 3 CONDUIT, 6" LONG, PLUG BOTH ENDS WITH CAULKING COMPOUND TO KEEP OUT EPOXY.

G. CONDUCTORS WITH ½" MINIMUM SLACK INSIDE CONDUIT.

H. SAWCUT LENGTH OF SLOT ⅛" LONGER THAN CONDUIT.

TYPICAL LOOP LEAD-IN DETAIL AT PAVEMENT JOINT

NOTES: (THIS SHEET ONLY)

1. SEE PLANS FOR CONDUIT SIZES & TYPES OF PULL BOXES. SEE TYPICAL LOOP LEAD-IN DETAIL AT PAVEMENT JOINT ON THIS SHEET.

2. SEE ES-5D.

3. THE CONTRACTOR SHALL VERIFY ALL CONTROLLER FIELD DIMENSIONS BEFORE ORDERING OR FABRICATING MATERIAL.

RAMP METERING SYSTEM (DETAILS)

NO SCALE

E-46

STATE OF CALIFORNIA - DEPARTMENT OF TRANSPORTATION
Caltrans® TRAFFIC DESIGN

FUNCTIONAL SUPERVISOR: YI TSAU
CALCULATED-DESIGNED BY: LUKE SUN
CHECKED BY: CECILIO BURCIAGA
REVISED BY
DATE REVISED

LAST REVISION 00-00-00
DATE PLOTTED => 28-MAR-2012
TIME PLOTTED => 09:45

Dist	COUNTY	ROUTE	POST MILES TOTAL PROJECT	SHEET No.	TOTAL SHEETS
07	LA	5	2.4/4.0	565	1288

REGISTERED ELECTRICAL ENGINEER — DATE 11/2/11

3-26-12
PLANS APPROVAL DATE

REGISTERED PROFESSIONAL ENGINEER — CECILIO BURCIAGA — No. E015302 — Exp. 03-31-13 — ELECTRICAL — STATE OF CALIFORNIA

THE STATE OF CALIFORNIA OR ITS OFFICERS OR AGENTS SHALL NOT BE RESPONSIBLE FOR THE ACCURACY OR COMPLETENESS OF SCANNED COPIES OF THIS PLAN SHEET.

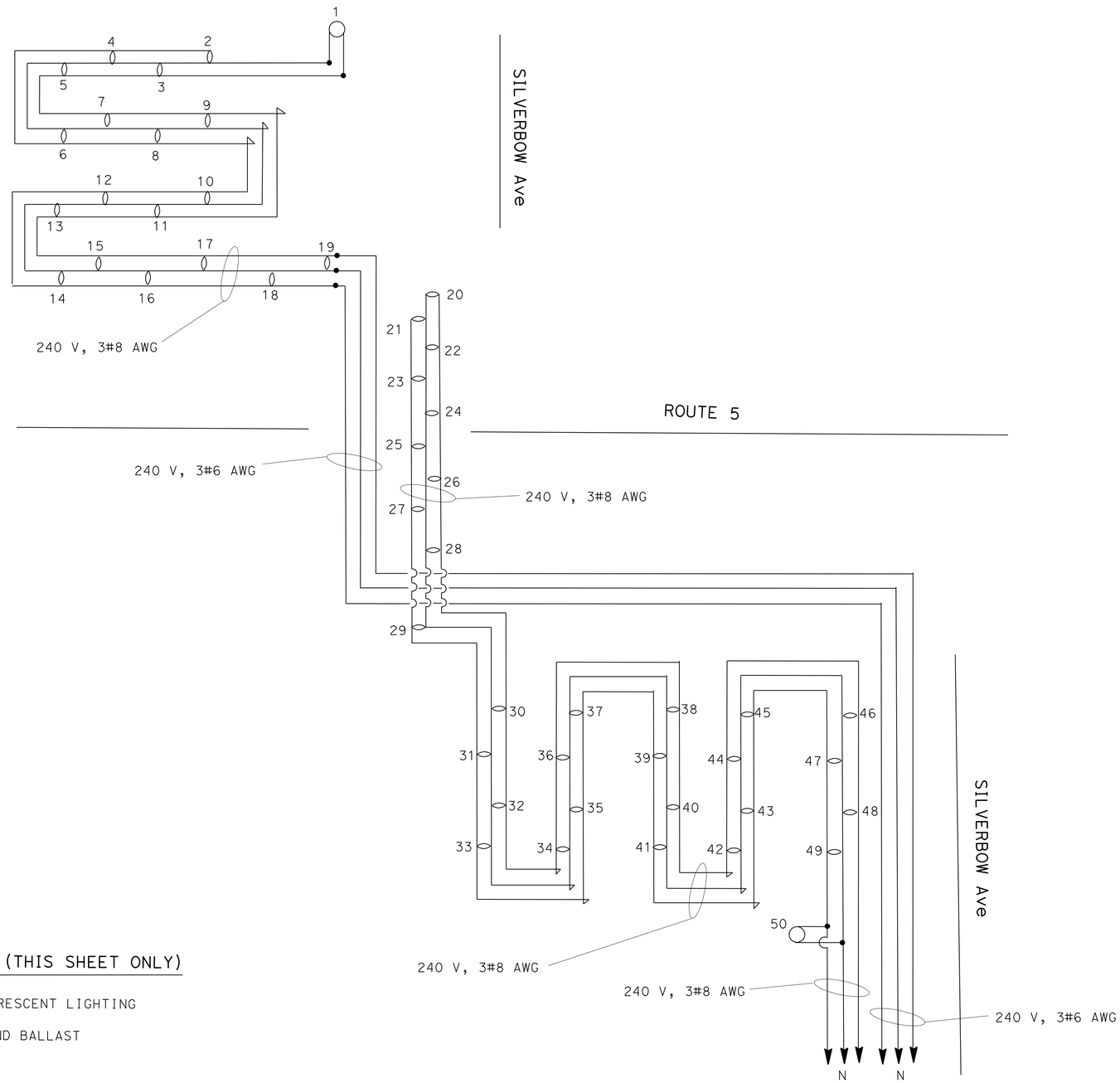

WIRING DIAGRAM LEGEND: (THIS SHEET ONLY)

- INSTALL SINGLE LAMP FLOURESCENT LIGHTING
- INSTALL 150 W HPS LAMP AND BALLAST
- INSTALL CONDUCTORS
- SPLICE POINT

LIGHTING (CITY STREET)
(PEDESTRIAN OVERCROSSING)
(WIRING DIAGRAM)

NO SCALE

E-47

STATE OF CALIFORNIA - DEPARTMENT OF TRANSPORTATION
Caltrans® TRAFFIC DESIGN

FUNCTIONAL SUPERVISOR: YI TSAU
CALCULATED-DESIGNED BY: LUKE SUN
CHECKED BY: CECILIO BURCIAGA
REVISED BY
DATE REVISED

LAST REVISION 00-00-00
DATE PLOTTED => 28-MAR-2012
TIME PLOTTED => 09:45

Dist	COUNTY	ROUTE	POST MILES TOTAL PROJECT	SHEET No.	TOTAL SHEETS
07	LA	5	2.4/4.0	566	1288

REGISTERED ELECTRICAL ENGINEER — DATE 11/2/11

3-26-12
PLANS APPROVAL DATE

REGISTERED PROFESSIONAL ENGINEER — CECILIO BURCIAGA — No. E015302 — Exp. 03-31-13 — ELECTRICAL — STATE OF CALIFORNIA

THE STATE OF CALIFORNIA OR ITS OFFICERS OR AGENTS SHALL NOT BE RESPONSIBLE FOR THE ACCURACY OR COMPLETENESS OF SCANNED COPIES OF THIS PLAN SHEET.

WIRING DIAGRAM LEGEND: (THIS SHEET ONLY)

○ INSTALL 200 W HPS LAMP AND BALLAST

— INSTALL CONDUCTORS

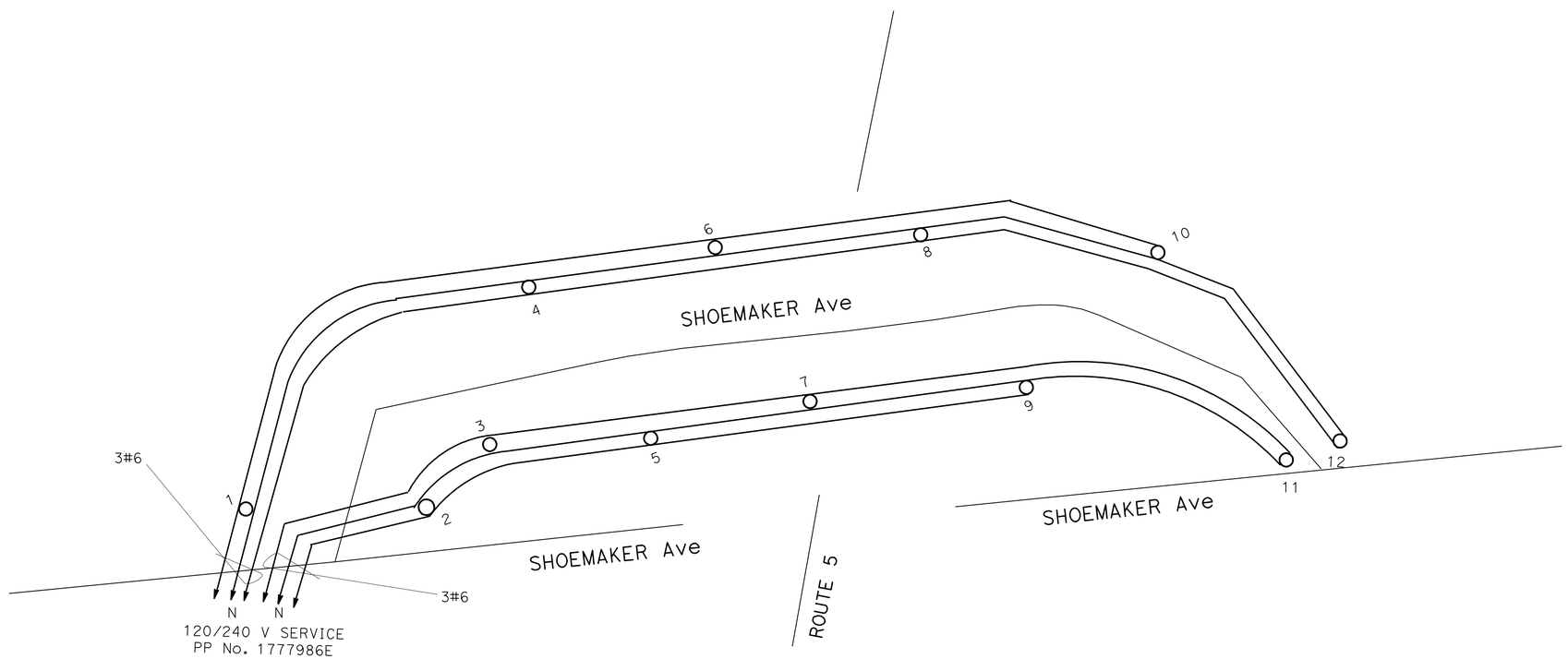

LIGHTING (CITY STREET)
(WIRING DIAGRAM)
NO SCALE

E-48

REVISED BY | DATE REVISED

LUKE SUN | CECILIO BURCIAGA

CALCULATED-DESIGNED BY | CHECKED BY

FUNCTIONAL SUPERVISOR: YI TSAU

STATE OF CALIFORNIA - DEPARTMENT OF TRANSPORTATION
Caltrans® TRAFFIC DESIGN

LAST REVISION 00-00-00 | DATE PLOTTED => 28-MAR-2012 | TIME PLOTTED => 09:45

Dist	COUNTY	ROUTE	POST MILES TOTAL PROJECT	SHEET No.	TOTAL SHEETS
07	LA	5	2.4/4.0	567	1288

REGISTERED ELECTRICAL ENGINEER — DATE 11/2/11

3-26-12
PLANS APPROVAL DATE

REGISTERED PROFESSIONAL ENGINEER — CECILIO BURCIAGA — No. E015302 — Exp. 03-31-13 — ELECTRICAL — STATE OF CALIFORNIA

THE STATE OF CALIFORNIA OR ITS OFFICERS OR AGENTS SHALL NOT BE RESPONSIBLE FOR THE ACCURACY OR COMPLETENESS OF SCANNED COPIES OF THIS PLAN SHEET.

WIRING DIAGRAM LEGEND: (THIS SHEET ONLY)

- INSTALL 100 W HPS SOFFIT LAMP AND BALLAST
- SPLICE CONDUCTORS
- INSTALL CONDUCTORS

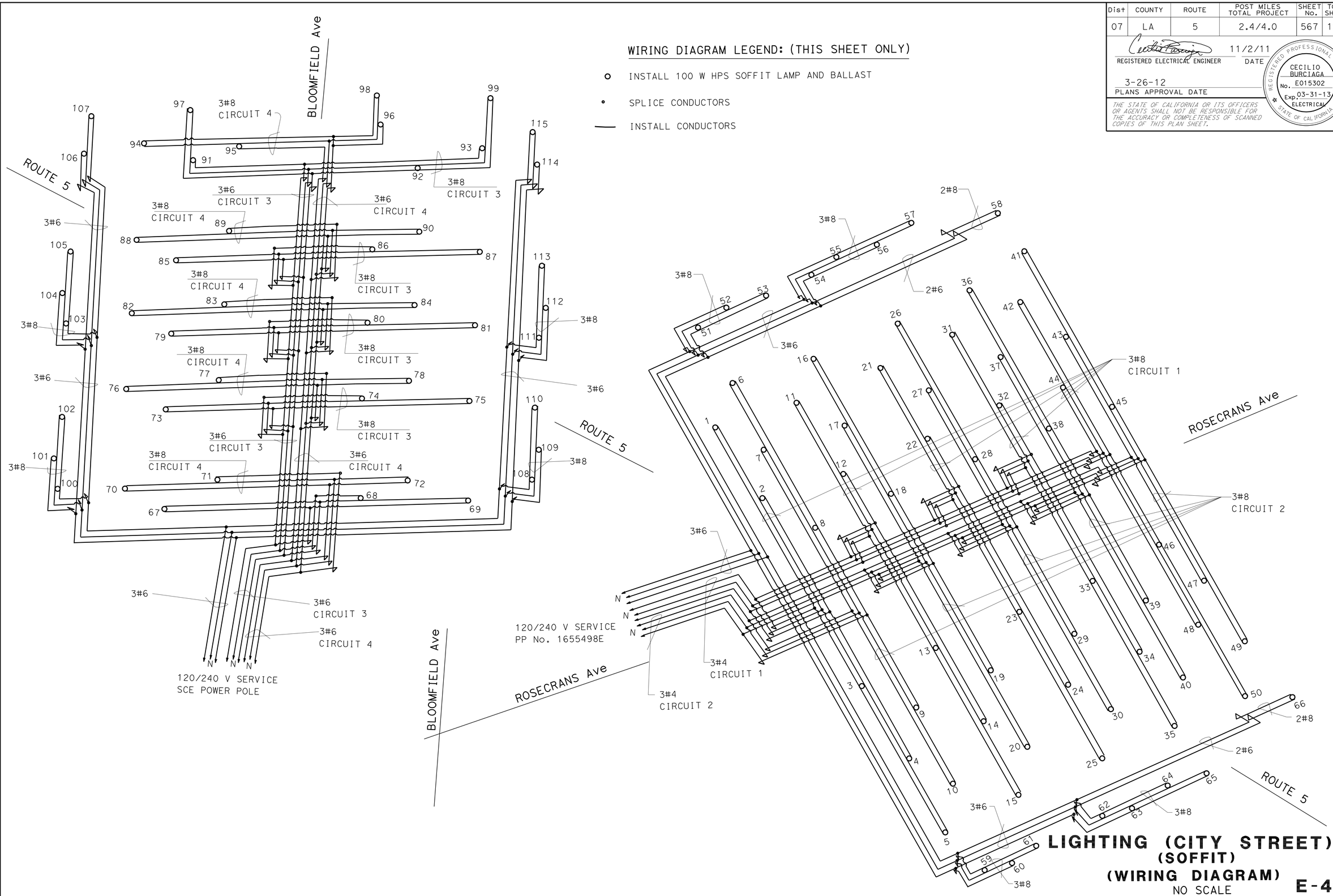

LIGHTING (CITY STREET)
(SOFFIT)
(WIRING DIAGRAM)
NO SCALE

E-49

STATE OF CALIFORNIA - DEPARTMENT OF TRANSPORTATION
Caltrans
TRAFFIC DESIGN

FUNCTIONAL SUPERVISOR: YI TSAU
CALCULATED-DESIGNED BY: LUKE SUN
CHECKED BY: CECILIO BURCIAGA
REVISED BY
DATE REVISED

LAST REVISION 00-00-00
DATE PLOTTED => 28-MAR-2012
TIME PLOTTED => 09:45

Dist	COUNTY	ROUTE	POST MILES TOTAL PROJECT	SHEET No.	TOTAL SHEETS
07	LA	5	2.4/4.0	568	1288

REGISTERED ELECTRICAL ENGINEER — DATE 11/2/11

3-26-12
PLANS APPROVAL DATE

REGISTERED PROFESSIONAL ENGINEER — CECILIO BURCIAGA — No. E015302 — Exp. 03-31-13 — ELECTRICAL — STATE OF CALIFORNIA

THE STATE OF CALIFORNIA OR ITS OFFICERS OR AGENTS SHALL NOT BE RESPONSIBLE FOR THE ACCURACY OR COMPLETENESS OF SCANNED COPIES OF THIS PLAN SHEET.

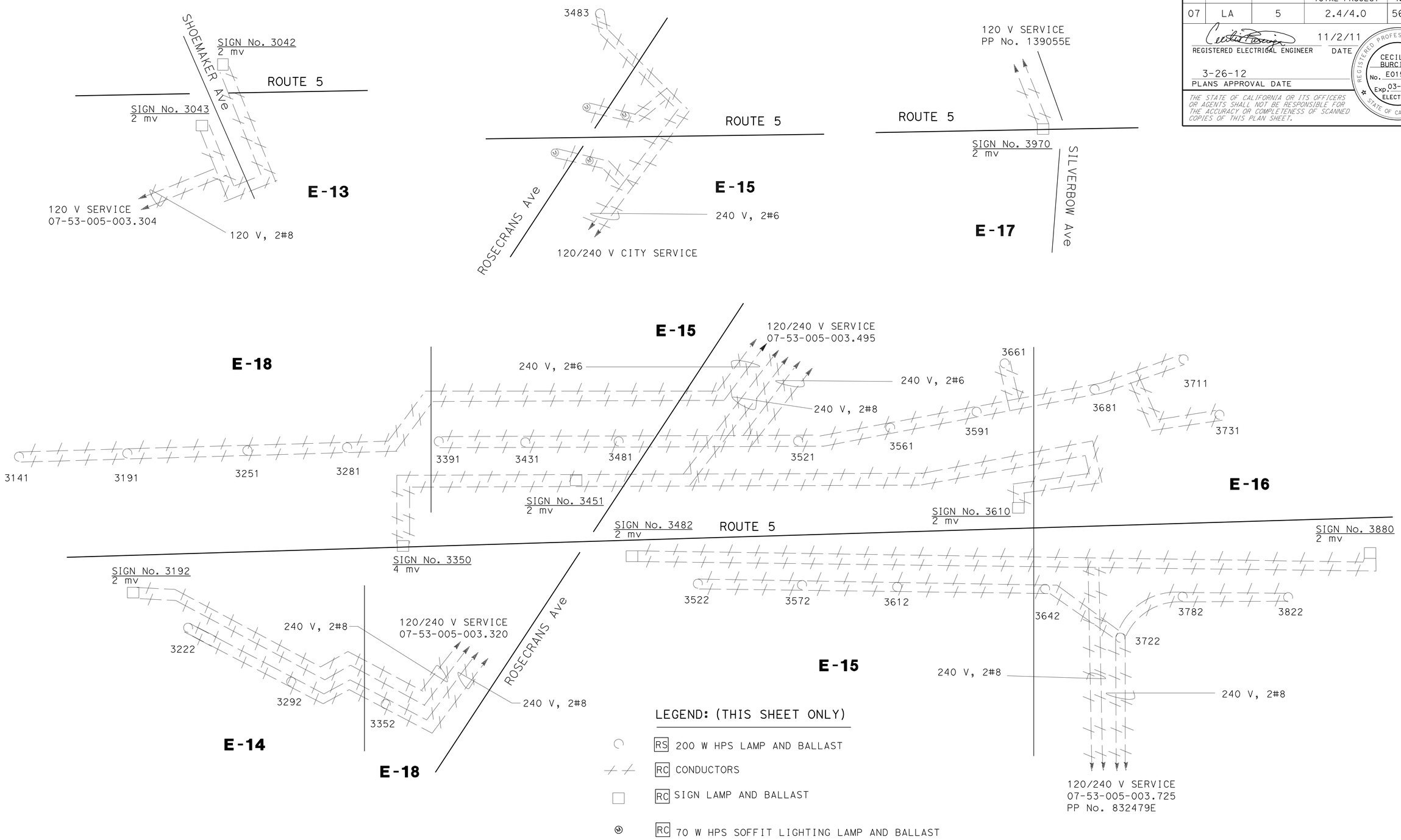

LEGEND: (THIS SHEET ONLY)

- RS 200 W HPS LAMP AND BALLAST
- RC CONDUCTORS
- RC SIGN LAMP AND BALLAST
- RC 70 W HPS SOFFIT LIGHTING LAMP AND BALLAST

MODIFY LIGHTING AND SIGN ILLUMINATION
LIGHTING AND SIGN ILLUMINATION
(REMOVE)
(WIRING DIAGRAM)

NO SCALE

E-50

STATE OF CALIFORNIA - DEPARTMENT OF TRANSPORTATION
Caltrans® TRAFFIC DESIGN

FUNCTIONAL SUPERVISOR: YI TSAU
CALCULATED-DESIGNED BY: LUKE SUN
CHECKED BY: CECILIO BURCIAGA
REVISED BY
DATE REVISED

LAST REVISION 00-00-00
DATE PLOTTED => 28-MAR-2012
TIME PLOTTED => 09:45

Dist	COUNTY	ROUTE	POST MILES TOTAL PROJECT	SHEET No.	TOTAL SHEETS
07	LA	5	2.4/4.0	569	1288

REGISTERED ELECTRICAL ENGINEER — DATE 11/2/11

3-26-12
PLANS APPROVAL DATE

REGISTERED PROFESSIONAL ENGINEER — CECILIO BURCIAGA — No. E015302 — Exp. 03-31-13 — ELECTRICAL — STATE OF CALIFORNIA

THE STATE OF CALIFORNIA OR ITS OFFICERS OR AGENTS SHALL NOT BE RESPONSIBLE FOR THE ACCURACY OR COMPLETENESS OF SCANNED COPIES OF THIS PLAN SHEET.

LEGEND: (THIS SHEET ONLY)

- ○ INSTALL 235 W LED LUMINAIRE
- —— INSTALL CONDUCTORS
- □ INSTALL SIGN LAMP AND BALLAST

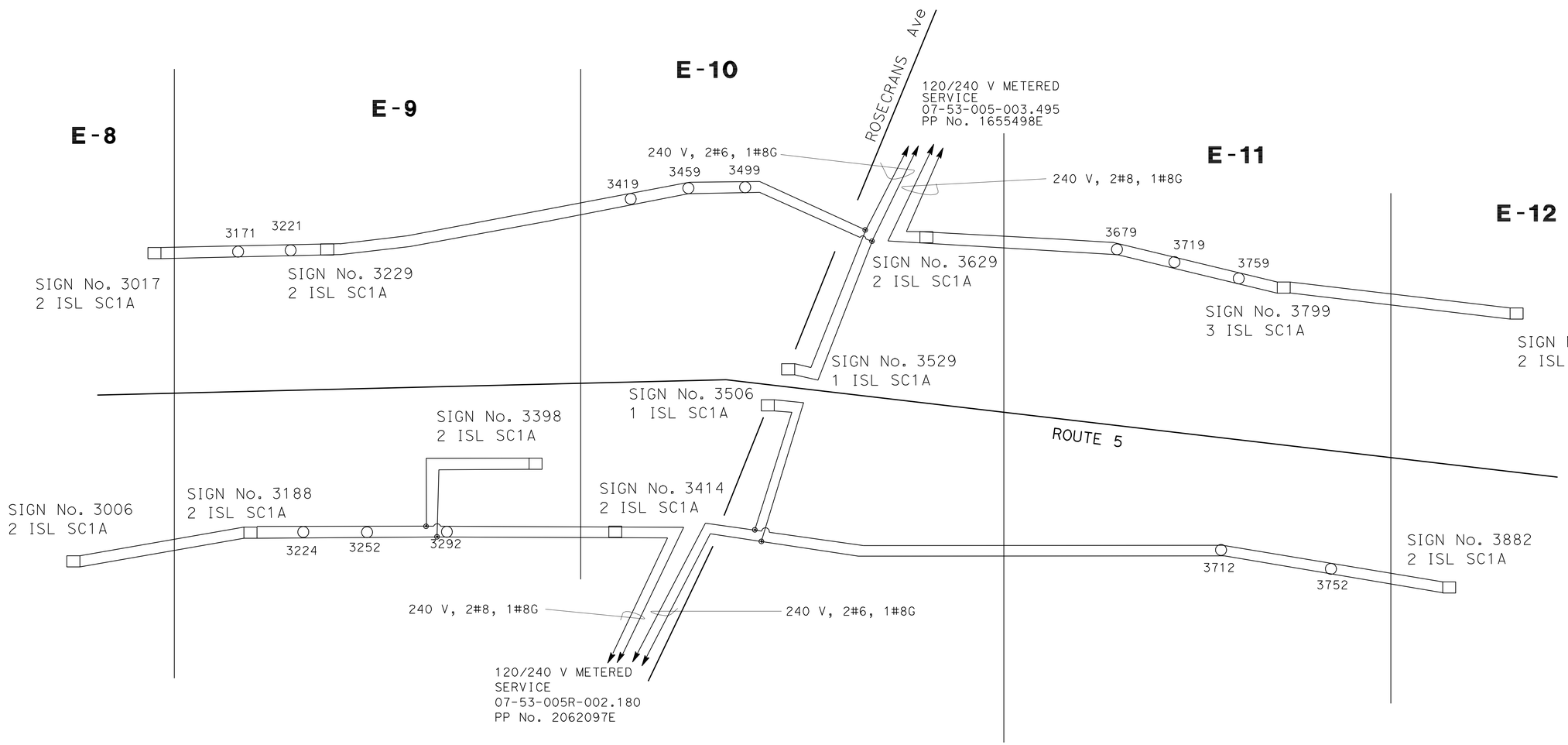

LIGHTING AND SIGN ILLUMINATION
(WIRING DIAGRAM)

NO SCALE

E-51

STATE OF CALIFORNIA - DEPARTMENT OF TRANSPORTATION
Caltrans® **TRAFFIC DESIGN**

FUNCTIONAL SUPERVISOR: YI TSAU
CALCULATED-DESIGNED BY: CECILIO BURCIAGA
CHECKED BY: LUKE SUN
REVISED BY
DATE REVISED

LAST REVISION 00-00-00
DATE PLOTTED => 28-MAR-2012
TIME PLOTTED => 09:45

Dist	COUNTY	ROUTE	POST MILES TOTAL PROJECT	SHEET No.	TOTAL SHEETS
07	LA	5	2.4/4.0	570	1288

REGISTERED ELECTRICAL ENGINEER 11/2/11 DATE

3-26-12
PLANS APPROVAL DATE

REGISTERED PROFESSIONAL ENGINEER CECILIO BURCIAGA No. E015302 Exp. 03-31-13 ELECTRICAL STATE OF CALIFORNIA

THE STATE OF CALIFORNIA OR ITS OFFICERS OR AGENTS SHALL NOT BE RESPONSIBLE FOR THE ACCURACY OR COMPLETENESS OF SCANNED COPIES OF THIS PLAN SHEET.

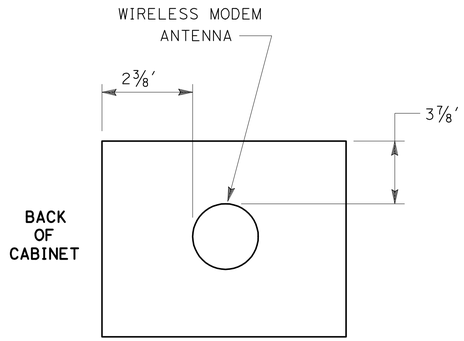

Top View

MODEL 332/334 CABINET

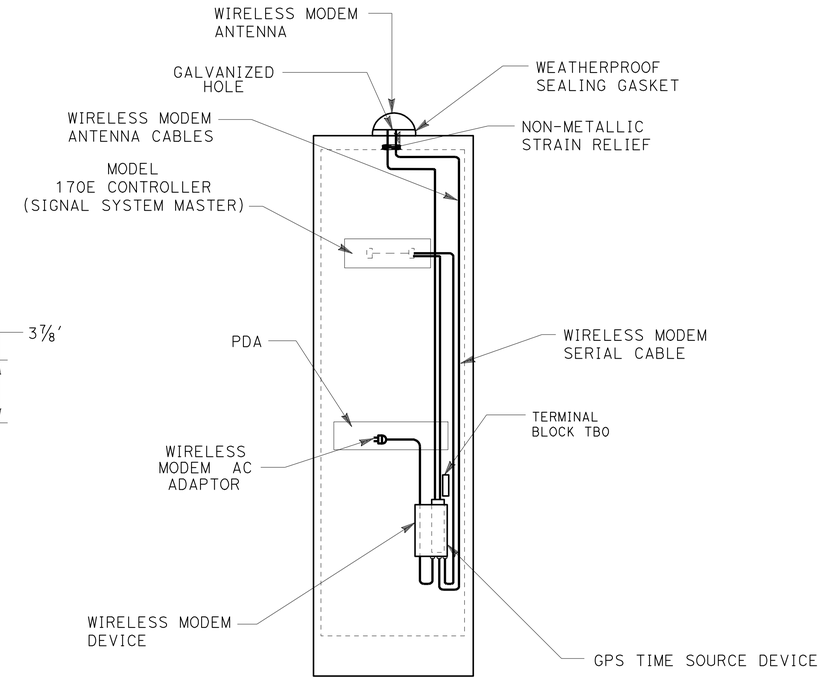

Back View

TRAFFIC SIGNAL INTERCONNECT AND WIRELESS DATA SERVICE EQUIPMENT INSTALLATION DETAILS

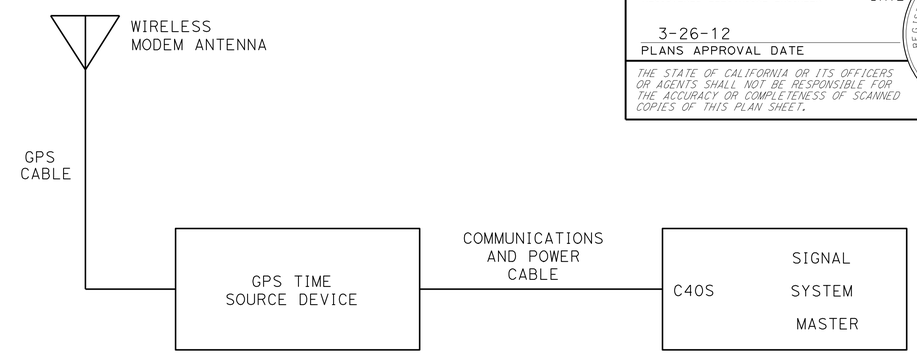

GPS TIME SOURCE DEVICE CONNECTIVITY DETAIL

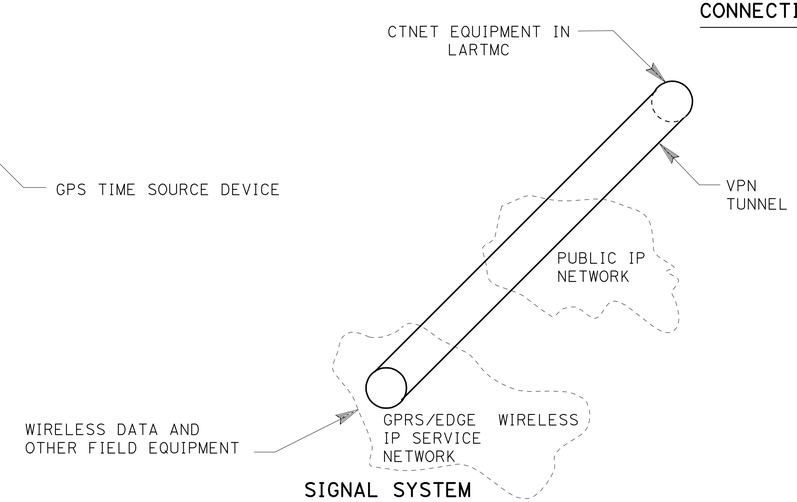

SIGNAL SYSTEM WIRELESS CONNECTIVITY DETAIL

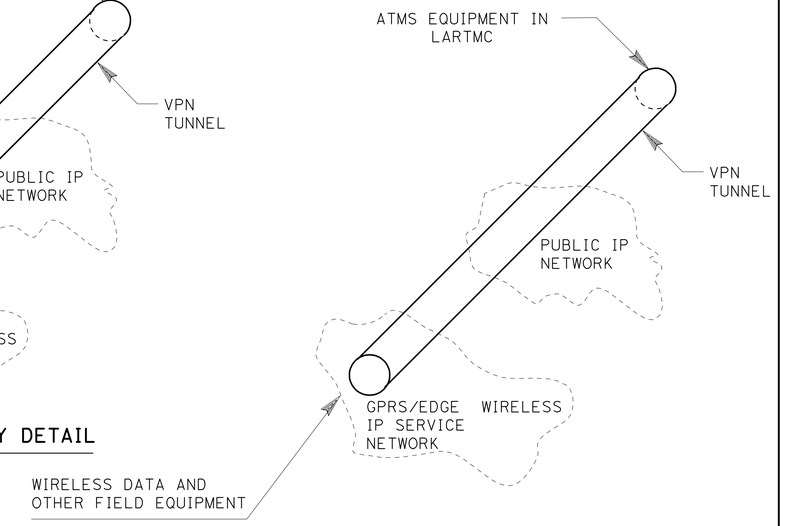

RAMP METERING SYSTEM WIRELESS CONNECTIVITY DETAIL

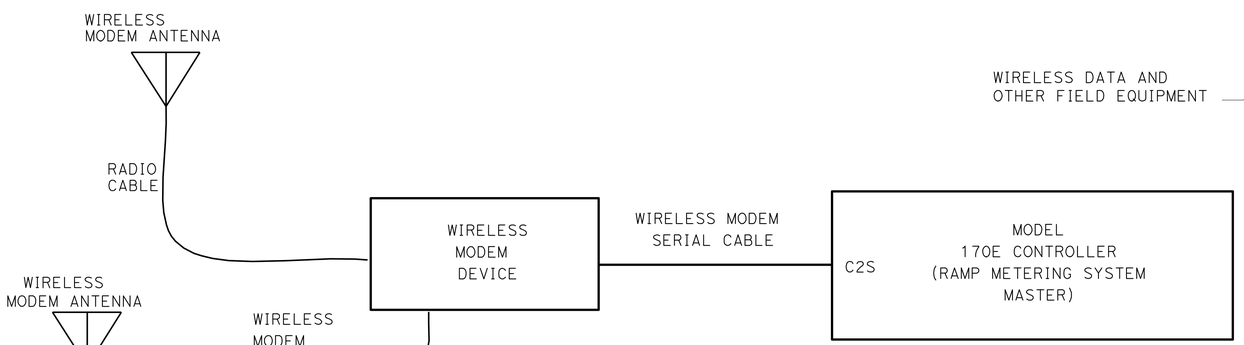

RAMP METERING WIRELESS MODEM CONNECTION DETAIL

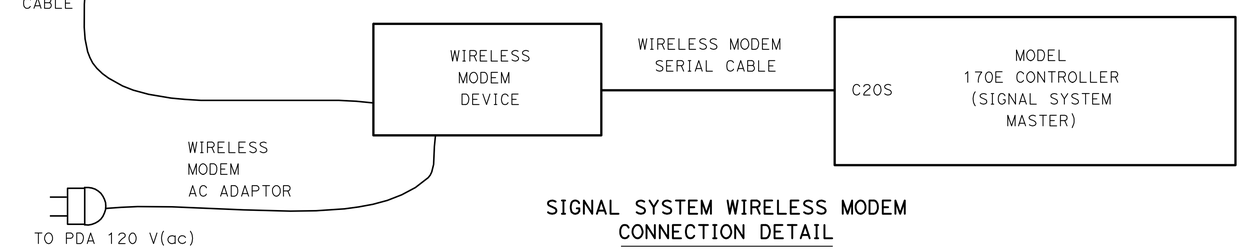

SIGNAL SYSTEM WIRELESS MODEM CONNECTION DETAIL

WIRELESS DATA SERVICE EQUIPMENT (DETAILS)

NO SCALE

E-52

STATE OF CALIFORNIA - DEPARTMENT OF TRANSPORTATION
Caltrans TRAFFIC DESIGN

FUNCTIONAL SUPERVISOR: YI TSAU
CALCULATED-DESIGNED BY: LUKE SUN
CHECKED BY: CECILIO BURCIAGA
REVISED BY
DATE REVISED

LAST REVISION 00-00-00
DATE PLOTTED => 28-MAR-2012
TIME PLOTTED => 09:46

BORDER LAST REVISED 7/2/2010
USERNAME => s114640
DGN FILE => 721593ua052.dgn
RELATIVE BORDER SCALE IS IN INCHES 0 1 2 3
UNIT 1880
PROJECT NUMBER & PHASE 07000018331

Dist	COUNTY	ROUTE	POST MILES TOTAL PROJECT	SHEET No.	TOTAL SHEETS
07	LA	5	2.4/4.0	571	1288

REGISTERED ELECTRICAL ENGINEER 11/2/11 DATE

3-26-12
PLANS APPROVAL DATE

REGISTERED PROFESSIONAL ENGINEER CECILIO BURCIAGA No. E015302 Exp. 03-31-13 ELECTRICAL STATE OF CALIFORNIA

THE STATE OF CALIFORNIA OR ITS OFFICERS OR AGENTS SHALL NOT BE RESPONSIBLE FOR THE ACCURACY OR COMPLETENESS OF SCANNED COPIES OF THIS PLAN SHEET.

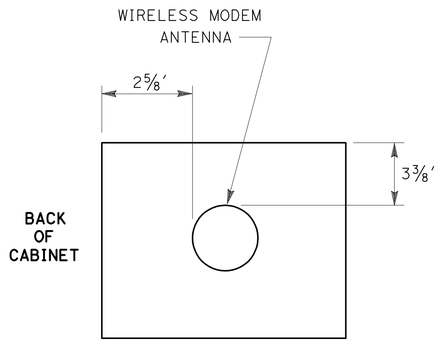

TOP VIEW

ECONOLITE ASC/3 TYPE TS2 P ALUMINUM CABINET

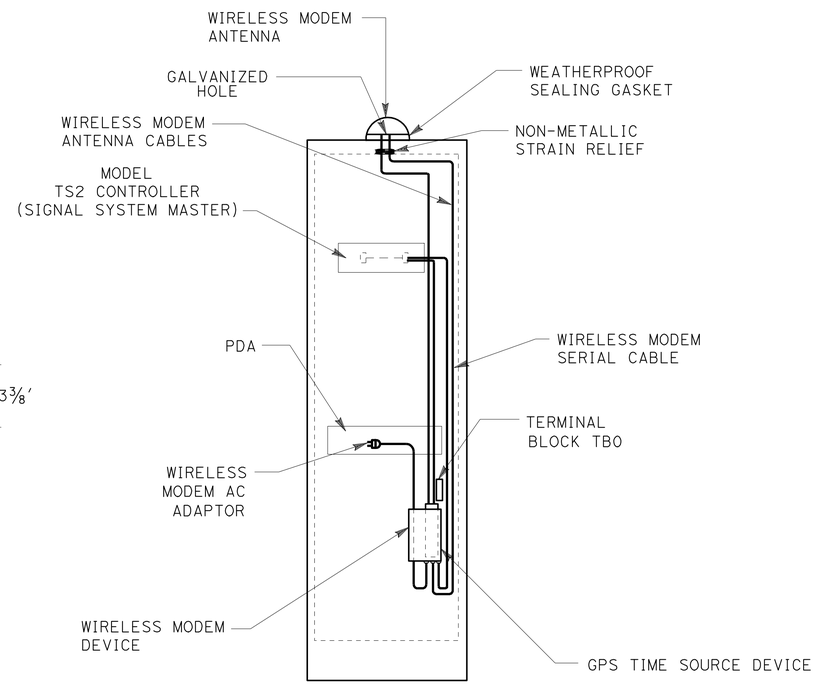

BACK VIEW

TRAFFIC SIGNAL INTERCONNECT AND WIRELESS DATA SERVICE EQUIPMENT INSTALLATION DETAILS

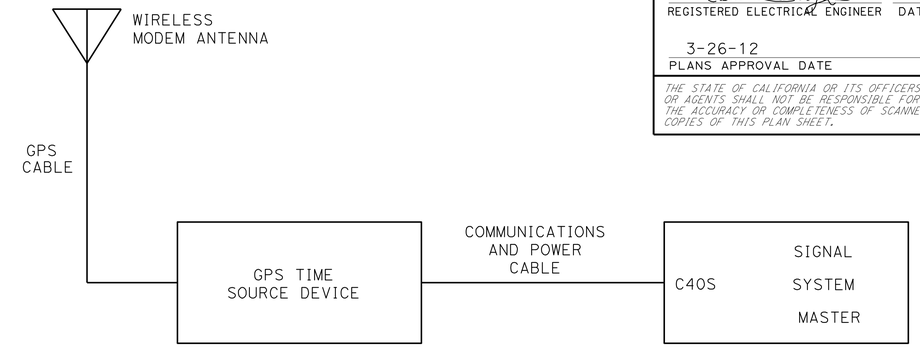

GPS TIME SOURCE DEVICE CONNECTIVITY DETAIL

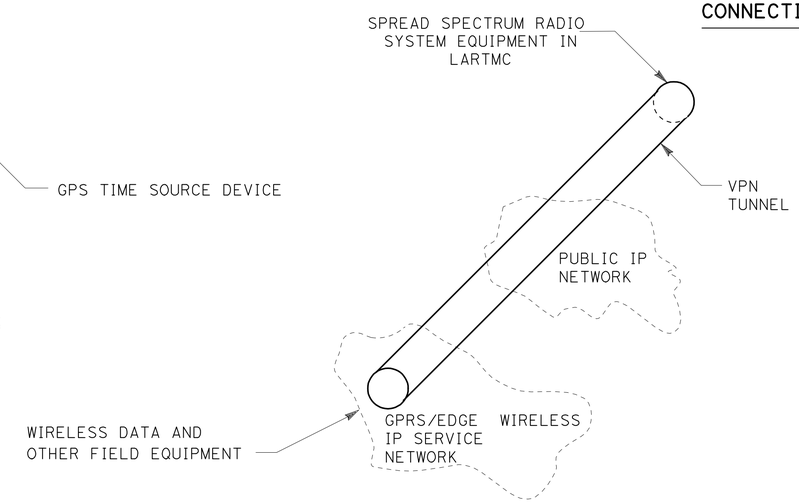

SIGNAL SYSTEM WIRELESS CONNECTIVITY DETAIL

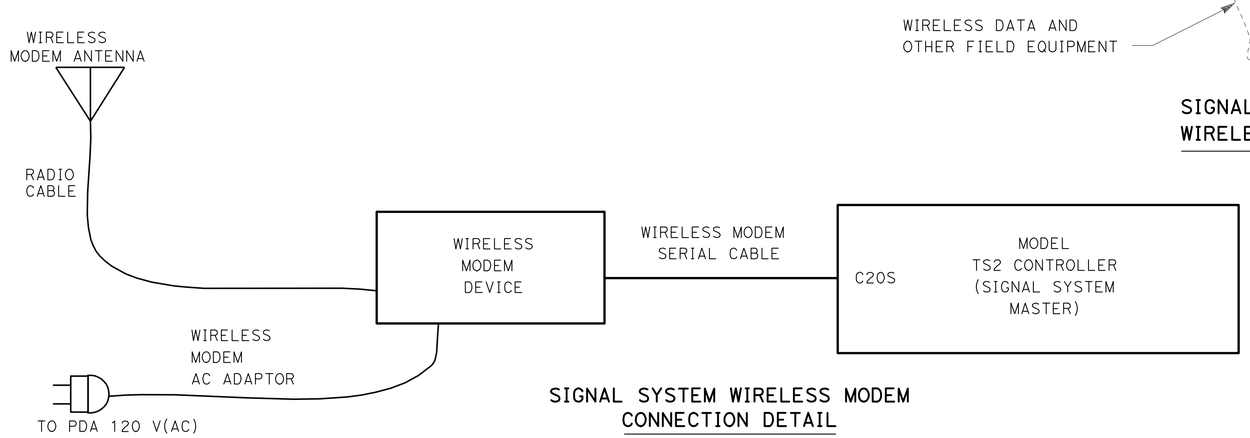

SIGNAL SYSTEM WIRELESS MODEM CONNECTION DETAIL

WIRELESS DATA SERVICE EQUIPMENT (DETAILS FOR CITY STREET)

NO SCALE

E-53

STATE OF CALIFORNIA - DEPARTMENT OF TRANSPORTATION
Caltrans TRAFFIC DESIGN

FUNCTIONAL SUPERVISOR: YI TSAU
CALCULATED-DESIGNED BY: CECILIO BURCIAGA
CHECKED BY
REVISED BY
DATE REVISED

LUKE SUN

LAST REVISION 00-00-00
DATE PLOTTED => 28-MAR-2012
TIME PLOTTED => 13:39

Dist	COUNTY	ROUTE	POST MILES TOTAL PROJECT	SHEET No.	TOTAL SHEETS
07	LA	5	2.4/4.0	572	1288

David Padilla 11/2/11
REGISTERED ELECTRICAL ENGINEER

3-26-12
PLANS APPROVAL DATE

REGISTERED PROFESSIONAL ENGINEER
DAVID PADILLA
No. E16233
Exp. 12/31/12
ELECTRICAL
STATE OF CALIFORNIA

THE STATE OF CALIFORNIA OR ITS OFFICERS OR AGENTS SHALL NOT BE RESPONSIBLE FOR THE ACCURACY OR COMPLETENESS OF SCANNED COPIES OF THIS PLAN SHEET.

GENERAL NOTES: (SHEETS E-54 TO E-70)

1. EXISTING IRRIGATION SYSTEMS ARE NOT SHOWN FOR CLARITY.
2. THE LOCATION OF EXISTING CONTROLLER CABINETS, SERVICE ENCLOSURES, PULL BOXES, CONDUITS AND POWER VAULT ARE APPROXIMATE, THE CONTRACTOR MUST VERIFY THEIR LOCATIONS PRIOR TO THE CONSTRUCTION PER FIELD CONDITION.
3. BEFORE REMOVING OR MODIFYING ANY EXISTING ELECTRICAL FACILITIES, THE CONTRACTOR MUST PROVIDE 72-HOUR ADVANCE WRITTEN NOTICE TO THE ENGINEER.
4. ALL PULL BOXES INSTALLED IN THE SHOULDER MUST BE TRAFFIC RATED.

ABBREVIATIONS: (SHEETS E-54 TO E-70)

AC	-	ALTERNATING CURRENT
ATMS	-	ADVANCED TRANSPORTATION MANAGEMENT SYSTEM
CAT 5(E) CABLE	-	ENHANCED CATEGORY 5 CABLE
CHAN	-	CHANNEL
COAX	-	COAXIAL CABLE
FDU	-	FIBER DISTRIBUTION UNIT
FOSC	-	FIBER OPTIC SPLICE CLOSURE
FEP	-	FRONT END PROCESSOR
GBIC	-	GIGABIT INTERFACE CONVERTER
GND	-	GROUND
HI	-	HIGH (HOT)
INTRFCE	-	INTERFACE
IP	-	INTERNET PROTOCOL
LARTMC	-	LOS ANGELES REGIONAL TRANSPORTATION MANAGEMENT CENTER
LO	-	LOW (NEUTRAL)
LPP	-	LOCAL PATCH PANEL
P22	-	PAIR 22 AMERICAN WIRE GAUGE
PC	-	PERSONAL COMPUTER
RMS	-	RAMP METERING SYSTEM
RX	-	RECEIVE
SFP	-	SMALL FORM FACTOR PLUGGABLE TRANSCEIVER (LX TYPE)
SMFO	-	SINGLEMODE FIBER OPTIC CABLE
TS	-	TEMPERATURE SENSOR
TX	-	TRANSMIT
VAC	-	VOLTAGE ALTERNATING CURRENT

LEGEND: (SHEETS E-54 TO E-70)

V	EXISTING SPLICE VAULT
V S	EXISTING SPLICE VAULT WITH NEW SPLICE CLOSURE
CCTV	EXISTING CCTV CABINET
CCTV	RELOCATED CCTV CABINET
V S	NEW SPLICE VAULT WITH SPLICE CLOSURE
V	NEW SPLICE VAULT

MODIFY COMMUNICATION SYSTEM
(ABBREVIATIONS, LEGENDS AND NOTES)

E-54

STATE OF CALIFORNIA - DEPARTMENT OF TRANSPORTATION
Caltrans® OFFICE OF ITS

FUNCTIONAL SUPERVISOR: JACQUELINE C. TAN
CALCULATED-DESIGNED BY: SUNG LEE
CHECKED BY: DAVID PADILLA
REVISED BY
DATE REVISED

LAST REVISION 00-00-00
DATE PLOTTED => 28-MAR-2012
TIME PLOTTED => 13:39

Dist	COUNTY	ROUTE	POST MILES TOTAL PROJECT	SHEET No.	TOTAL SHEETS
07	LA	5	2.4/4.0	573	1288

REGISTERED ELECTRICAL ENGINEER 11/2/11

3-26-12
PLANS APPROVAL DATE

REGISTERED PROFESSIONAL ENGINEER DAVID PADILLA No. E16233 Exp. 12/31/12 ELECTRICAL STATE OF CALIFORNIA

THE STATE OF CALIFORNIA OR ITS OFFICERS OR AGENTS SHALL NOT BE RESPONSIBLE FOR THE ACCURACY OR COMPLETENESS OF SCANNED COPIES OF THIS PLAN SHEET.

FOR ACCURATE RIGHT OF WAY DATA, CONTACT RIGHT OF WAY ENGINEERING AT THE DISTRICT OFFICE.

PROJECT NOTES: (THIS SHEET ONLY)

1. RC COMMUNICATION CONDUIT AND CONTENTS.
2. INSTALL CONDUITS IN TRENCH IN NEW PAVEMENT. SEE SHEET E-62 FOR DETAILS.
3. MATCH AND SPLICE 48SMFO, 36SMFO AND 48SMFO WITH PROPOSED CABLES FROM ADJACENT CONTRACT.

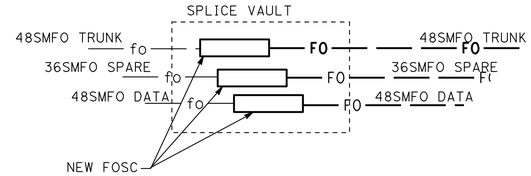

DETAIL A

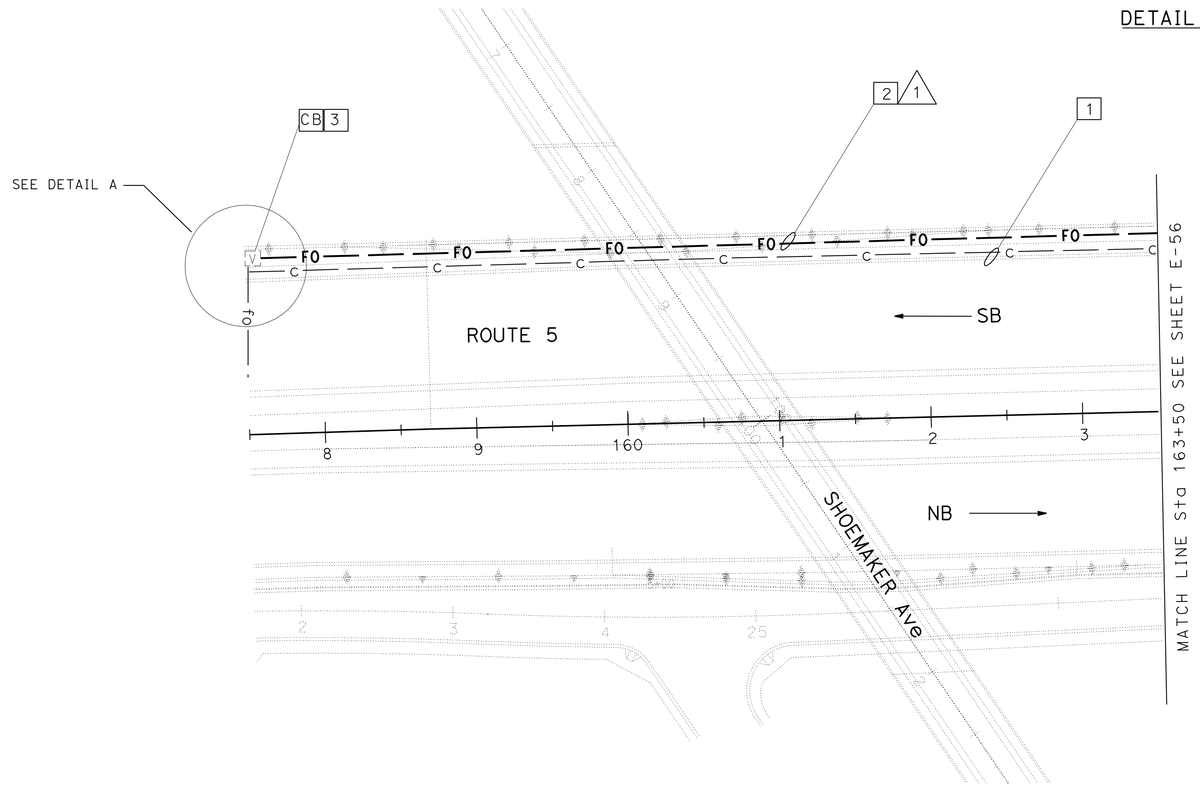

CONDUIT AND CONDUCTOR SCHEDULE									
CONDUIT/ CONDUCTOR	FUNCTION	RUN							
						1			
48SMFO CABLE	TRUNK CABLE					1			
36SMFO CABLE	SPARE						1		
48SMFO CABLE	DATA DISTRIBUTION							1	
1 INCH INNERDUCT						1	1	1	1
TRACER WIRE		1							
CONDUIT SIZE		4" (MT)				4"			

FOR LEGEND, ABBREVIATIONS AND GENERAL NOTES SEE SHEET E-54.

APPROVED FOR ELECTRICAL WORK ONLY

MODIFY COMMUNICATION SYSTEM

SCALE: 1" = 50'

E-55

STATE OF CALIFORNIA - DEPARTMENT OF TRANSPORTATION
Caltrans® OFFICE OF ITS

FUNCTIONAL SUPERVISOR: JACQUELINE C. TAN
CALCULATED-DESIGNED BY: SUNG LEE
CHECKED BY: DAVID PADILLA
REVISED BY
DATE REVISED

LAST REVISION 00-00-00
DATE PLOTTED => 29-MAR-2012
TIME PLOTTED => 12:16

Dist	COUNTY	ROUTE	POST MILES TOTAL PROJECT	SHEET No.	TOTAL SHEETS
07	LA	5	2.4/4.0	574	1288

REGISTERED ELECTRICAL ENGINEER 11/2/11

3-26-12
PLANS APPROVAL DATE

REGISTERED PROFESSIONAL ENGINEER DAVID PADILLA No. E16233 Exp. 12/31/12 ELECTRICAL STATE OF CALIFORNIA

THE STATE OF CALIFORNIA OR ITS OFFICERS OR AGENTS SHALL NOT BE RESPONSIBLE FOR THE ACCURACY OR COMPLETENESS OF SCANNED COPIES OF THIS PLAN SHEET.

FOR ACCURATE RIGHT OF WAY DATA, CONTACT RIGHT OF WAY ENGINEERING AT THE DISTRICT OFFICE.

PROJECT NOTES: (THIS SHEET ONLY)

1. RC COMMUNICATION CONDUIT AND CONTENTS.
2. INSTALL CONDUITS IN TRENCH IN NEW PAVEMENT. SEE SHEET E-62 FOR DETAILS.
3. JACK TYPE 1 CONDUIT BENEATH ROADWAY. SEE SHEET E-61 FOR DETAILS.

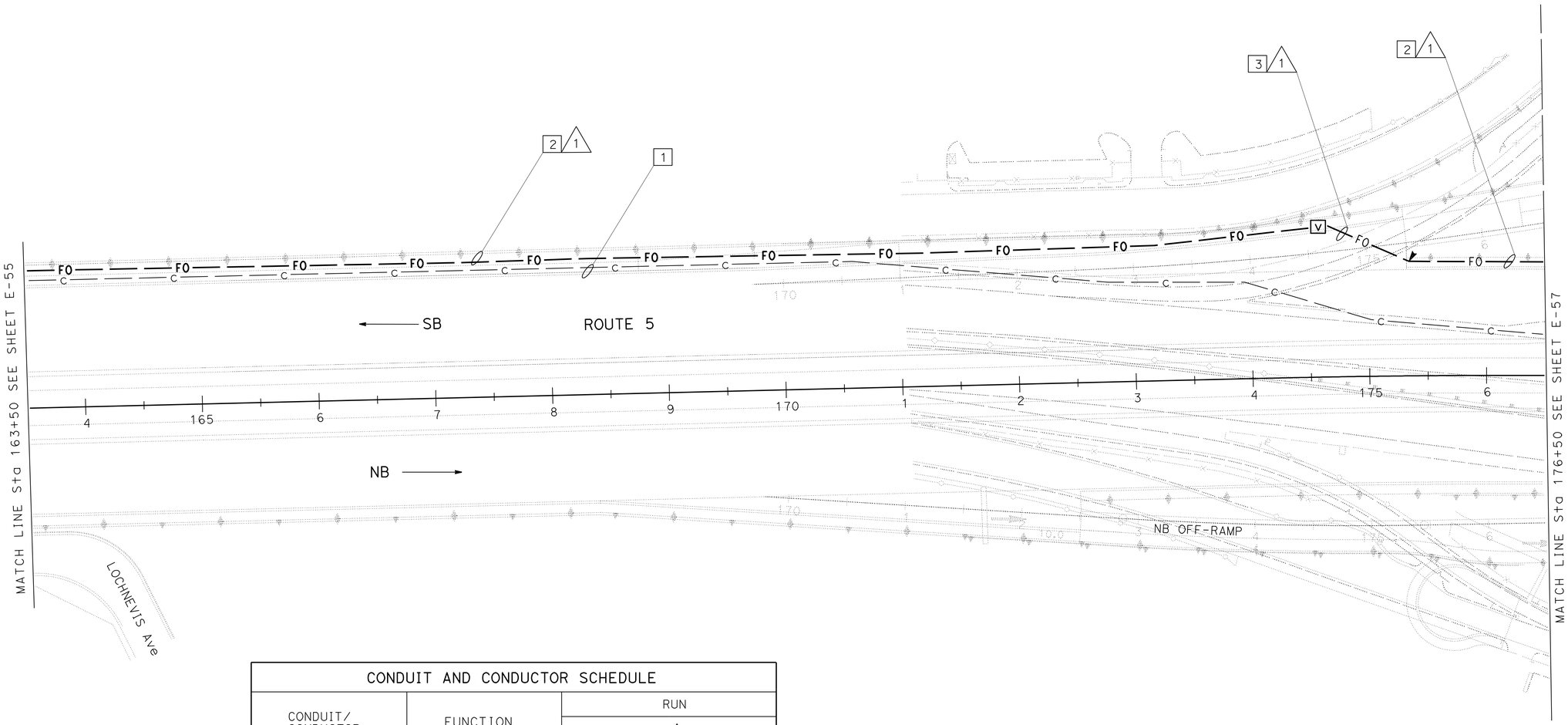

CONDUIT AND CONDUCTOR SCHEDULE									
CONDUIT/ CONDUCTOR	FUNCTION	RUN							
		1							
48SMFO CABLE	TRUNK CABLE					1			
36SMFO CABLE	SPARE						1		
48SMFO CABLE	DATA DISTRIBUTION							1	
1 INCH INNERDUCT						1	1	1	1
TRACER WIRE		1							
CONDUIT SIZE		4" (MT)				4"			

MODIFY COMMUNICATION SYSTEM

SCALE: 1" = 50'

FOR LEGEND, ABBREVIATIONS AND GENERAL NOTES SEE SHEET E-54.

APPROVED FOR ELECTRICAL WORK ONLY

E-56

STATE OF CALIFORNIA - DEPARTMENT OF TRANSPORTATION
Caltrans® OFFICE OF ITS

FUNCTIONAL SUPERVISOR: JACQUELINE C. TAN
CALCULATED-DESIGNED BY: SUNG LEE
CHECKED BY: DAVID PADILLA
REVISED BY
DATE REVISED

LAST REVISION 00-00-00
DATE PLOTTED => 29-MAR-2012
TIME PLOTTED => 12:16

FOR ACCURATE RIGHT OF WAY DATA, CONTACT RIGHT OF WAY ENGINEERING AT THE DISTRICT OFFICE.

PROJECT NOTES: (THIS SHEET ONLY)

1. RC COMMUNICATION CONDUIT AND CONTENTS.
2. INSTALL CONDUITS IN TRENCH IN NEW PAVEMENT.
3. SEE SHEET E-1 FOR RMS REMOVAL.
4. INSTALL ETHERNET NETWORK SWITCH, AND FDU. TERMINATE 12SMFO IN Exist CONTROLLER CABINET.
5. SEE BRIDGE STRUCTURE PLANS FOR CONDUIT INSTALLATION AND DETAILS.
6. INSTALL 12SMFO.

CONDUIT AND CONDUCTOR SCHEDULE

CONDUIT/ CONDUCTOR	FUNCTION	RUN 1								RUN 2							
48SMFO CABLE	TRUNK CABLE					1								1			
36SMFO CABLE	SPARE						1								1		
48SMFO CABLE	DATA DISTRIBUTION							1								1	
1 INCH INNERDUCT						1	1	1	1					1	1	1	
TRACER WIRE		1								1							
CONDUIT SIZE		4" (MT)				4"				3-1/2" (MT)				3-1/2"			

Dist	COUNTY	ROUTE	POST MILES TOTAL PROJECT	SHEET No.	TOTAL SHEETS
07	LA	5	2.4/4.0	575	1288

David Padilla 11/2/11
REGISTERED ELECTRICAL ENGINEER

3-26-12
PLANS APPROVAL DATE

REGISTERED PROFESSIONAL ENGINEER DAVID PADILLA No. E16233 Exp. 12/31/12 ELECTRICAL STATE OF CALIFORNIA

THE STATE OF CALIFORNIA OR ITS OFFICERS OR AGENTS SHALL NOT BE RESPONSIBLE FOR THE ACCURACY OR COMPLETENESS OF SCANNED COPIES OF THIS PLAN SHEET.

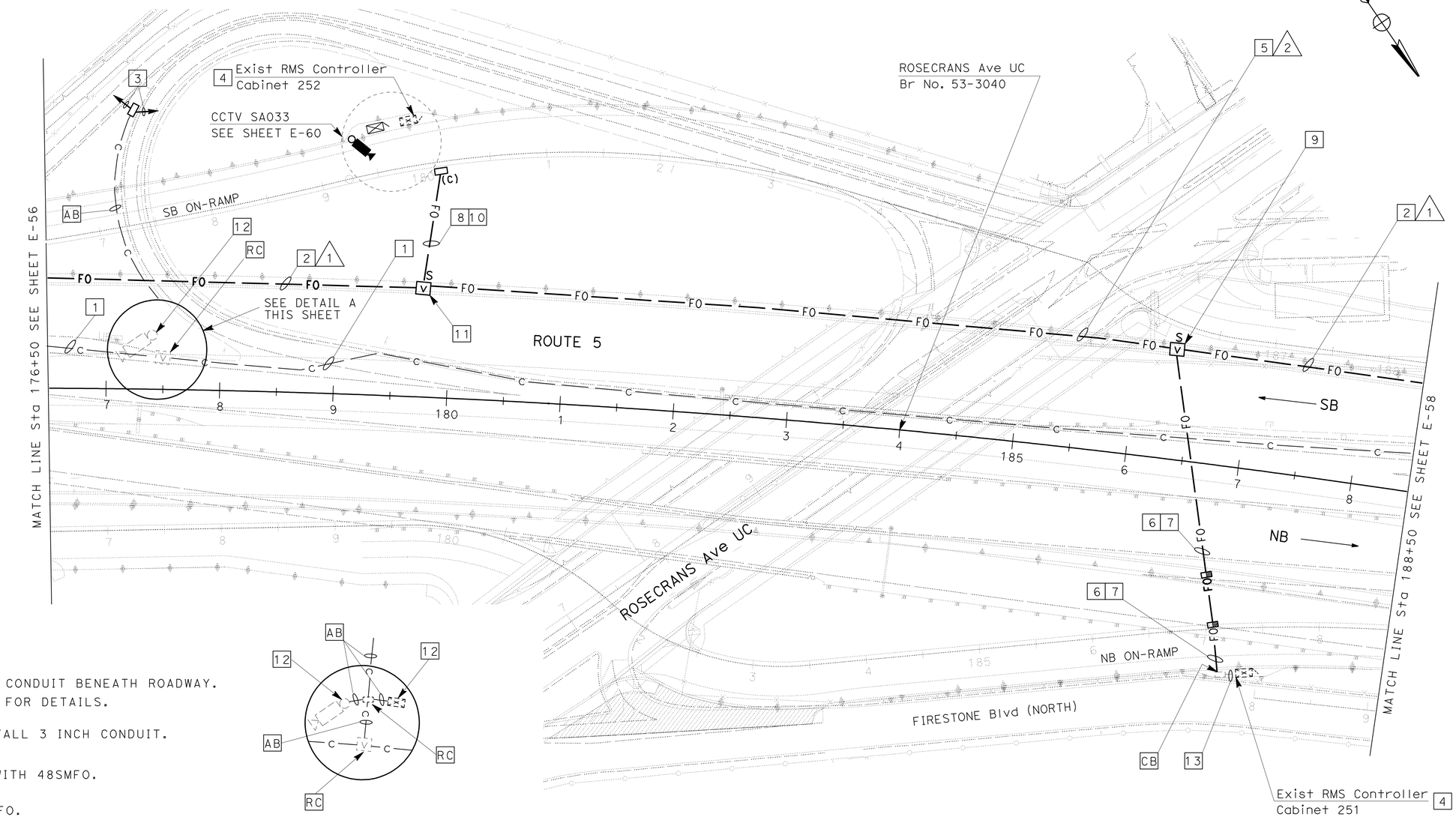

DETAIL A

7. JACK TYPE 1, 3" CONDUIT BENEATH ROADWAY. SEE SHEET E-61 FOR DETAILS.
8. TRENCH AND INSTALL 3 INCH CONDUIT.
9. SPLICE 12SMFO WITH 48SMFO.
10. INSTALL 2-12SMFO.
11. SPLICE 2-12SMFO WITH 48SMFO.
12. RS Exist cctv CAMERA AND CONTROLLER CABINET ASSEMBLY. RC POLE.
13. INSTALL 12SMFO IN Exist 3" CONDUIT.

FOR LEGEND, ABBREVIATIONS AND GENERAL NOTES SEE SHEET E-54.

APPROVED FOR ELECTRICAL WORK ONLY

MODIFY COMMUNICATION SYSTEM

SCALE: 1" = 50'

E-57

STATE OF CALIFORNIA - DEPARTMENT OF TRANSPORTATION
Caltrans® OFFICE OF ITS

FUNCTIONAL SUPERVISOR: JACQUELINE C. TAN
CALCULATED-DESIGNED BY: SUNG LEE
CHECKED BY: DAVID PADILLA
REVISED BY
DATE REVISED

LAST REVISION 00-00-00
DATE PLOTTED => 29-MAR-2012
TIME PLOTTED => 12:16

Dist	COUNTY	ROUTE	POST MILES TOTAL PROJECT	SHEET No.	TOTAL SHEETS
07	LA	5	2.4/4.0	576	1288

REGISTERED ELECTRICAL ENGINEER 11/2/11

3-26-12
PLANS APPROVAL DATE

REGISTERED PROFESSIONAL ENGINEER DAVID PADILLA No. E16233 Exp. 12/31/12 ELECTRICAL STATE OF CALIFORNIA

THE STATE OF CALIFORNIA OR ITS OFFICERS OR AGENTS SHALL NOT BE RESPONSIBLE FOR THE ACCURACY OR COMPLETENESS OF SCANNED COPIES OF THIS PLAN SHEET.

FOR ACCURATE RIGHT OF WAY DATA, CONTACT RIGHT OF WAY ENGINEERING AT THE DISTRICT OFFICE.

PROJECT NOTES: (THIS SHEET ONLY)

1. RC COMMUNICATION CONDUIT AND CONTENTS.
2. INSTALL CONDUITS IN TRENCH IN NEW PAVEMENT. SEE SHEET E-62 FOR DETAILS.
3. JACK TYPE 1 CONDUIT BENEATH ROADWAY. SEE SHEET E-61 FOR DETAILS.
4. SEE BRIDGE STRUCTURE PLANS FOR CONDUIT INSTALLATION AND DETAILS.

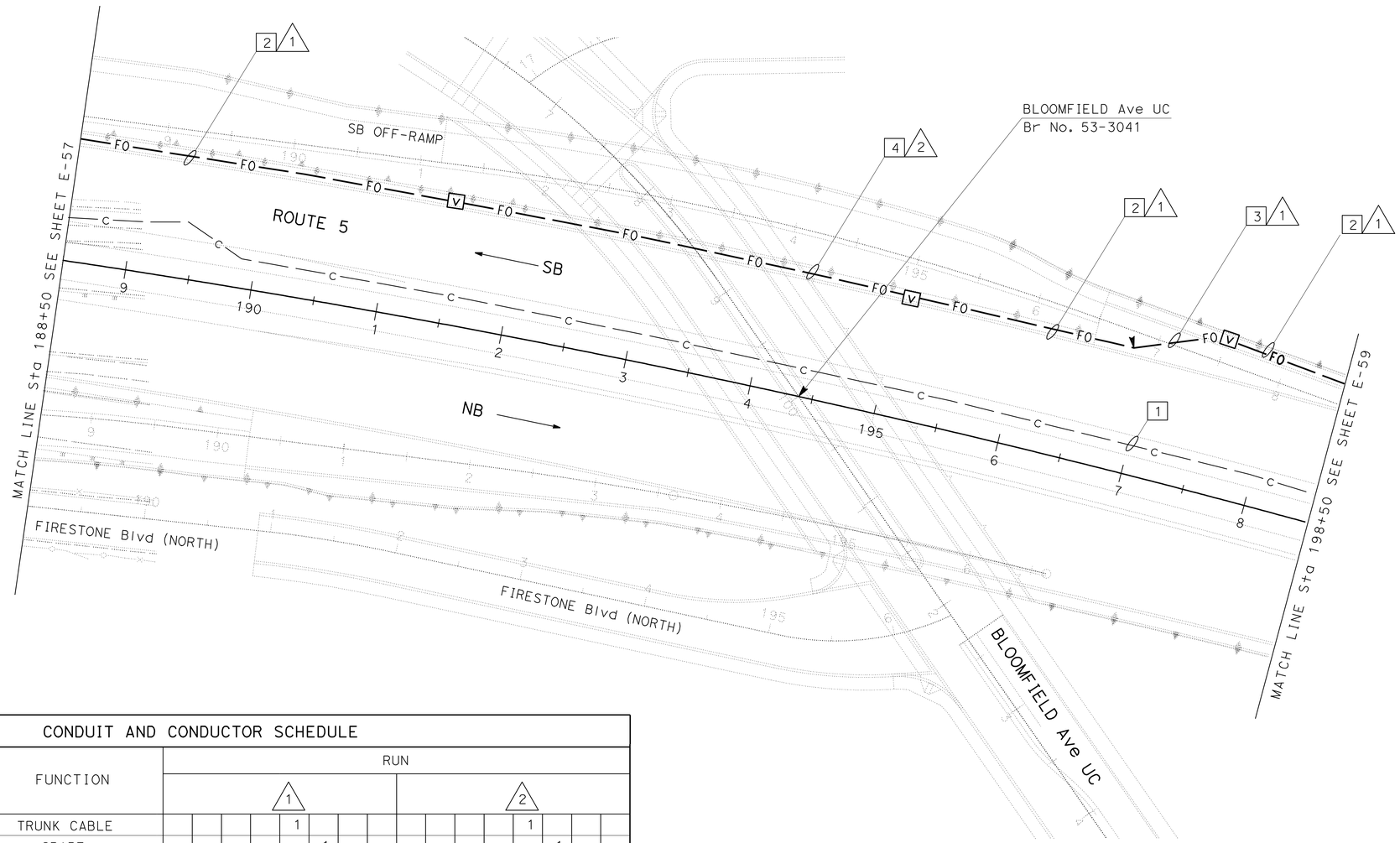

CONDUIT AND CONDUCTOR SCHEDULE

CONDUIT/ CONDUCTOR	FUNCTION	RUN 1								RUN 2							
48SMFO CABLE	TRUNK CABLE					1								1			
36SMFO CABLE	SPARE						1								1		
48SMFO CABLE	DATA DISTRIBUTION							1								1	
1 INCH INNERDUCT						1	1	1	1					1	1	1	
TRACER WIRE		1								1							
CONDUIT SIZE		4" (MT)				4"				3-1/2" (MT)				3-1/2"			

FOR LEGEND, ABBREVIATIONS AND GENERAL NOTES SEE SHEET E-54.

APPROVED FOR ELECTRICAL WORK ONLY

MODIFY COMMUNICATION SYSTEM

SCALE: 1" = 50'

E-58

STATE OF CALIFORNIA - DEPARTMENT OF TRANSPORTATION
Caltrans® OFFICE OF ITS

FUNCTIONAL SUPERVISOR: JACQUELINE C. TAN
CALCULATED-DESIGNED BY: SUNG LEE
CHECKED BY: DAVID PADILLA
REVISED BY
DATE REVISED

LAST REVISION 00-00-00 | DATE PLOTTED => 29-MAR-2012 | TIME PLOTTED => 12:16

Dist	COUNTY	ROUTE	POST MILES TOTAL PROJECT	SHEET No.	TOTAL SHEETS
07	LA	5	2.4/4.0	577	1288

REGISTERED ELECTRICAL ENGINEER 11/2/11

3-26-12
PLANS APPROVAL DATE

REGISTERED PROFESSIONAL ENGINEER DAVID PADILLA No. E16233 Exp. 12/31/12 ELECTRICAL STATE OF CALIFORNIA

THE STATE OF CALIFORNIA OR ITS OFFICERS OR AGENTS SHALL NOT BE RESPONSIBLE FOR THE ACCURACY OR COMPLETENESS OF SCANNED COPIES OF THIS PLAN SHEET.

FOR ACCURATE RIGHT OF WAY DATA, CONTACT RIGHT OF WAY ENGINEERING AT THE DISTRICT OFFICE.

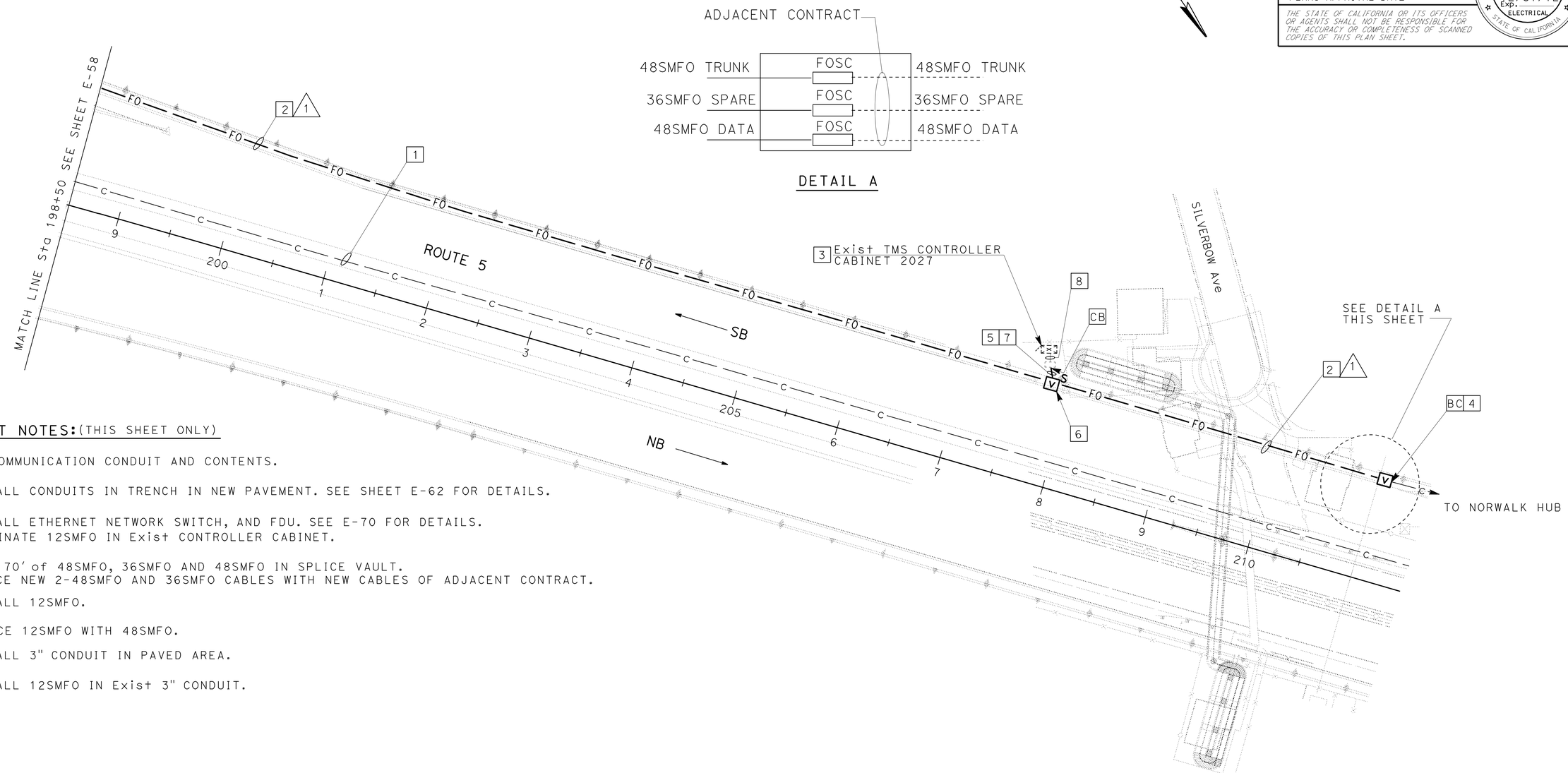

PROJECT NOTES: (THIS SHEET ONLY)

1. RC COMMUNICATION CONDUIT AND CONTENTS.
2. INSTALL CONDUITS IN TRENCH IN NEW PAVEMENT. SEE SHEET E-62 FOR DETAILS.
3. INSTALL ETHERNET NETWORK SWITCH, AND FDU. SEE E-70 FOR DETAILS. TERMINATE 12SMFO IN Exist CONTROLLER CABINET.
4. COIL 70′ of 48SMFO, 36SMFO AND 48SMFO IN SPLICE VAULT. SPLICE NEW 2-48SMFO AND 36SMFO CABLES WITH NEW CABLES OF ADJACENT CONTRACT.
5. INSTALL 12SMFO.
6. SPLICE 12SMFO WITH 48SMFO.
7. INSTALL 3" CONDUIT IN PAVED AREA.
8. INSTALL 12SMFO IN Exist 3" CONDUIT.

CONDUIT AND CONDUCTOR SCHEDULE

CONDUIT/ CONDUCTOR	FUNCTION	RUN							
						1			
48SMFO CABLE	TRUNK CABLE					1			
36SMFO CABLE	SPARE						1		
48SMFO CABLE	DATA DISTRIBUTION							1	
1 INCH INNERDUCT						1	1	1	1
WIRE TRACER		1							
CONDUIT SIZE		4" (MT)				4"			

FOR LEGEND, ABBREVIATIONS AND GENERAL NOTES SEE SHEET E-54.

APPROVED FOR ELECTRICAL WORK ONLY

MODIFY COMMUNICATION SYSTEM

SCALE: 1" = 50′

E-59

STATE OF CALIFORNIA - DEPARTMENT OF TRANSPORTATION
Caltrans® OFFICE OF ITS

FUNCTIONAL SUPERVISOR: JACQUELINE C. TAN
CALCULATED-DESIGNED BY: SUNG LEE
CHECKED BY: DAVID PADILLA
REVISED BY
DATE REVISED

LAST REVISION 00-00-00
DATE PLOTTED => 29-MAR-2012
TIME PLOTTED => 12:16

Dist	COUNTY	ROUTE	POST MILES TOTAL PROJECT	SHEET No.	TOTAL SHEETS
07	LA	5	2.4/4.0	578	1288

David Padilla 11/2/11
REGISTERED ELECTRICAL ENGINEER

3-26-12
PLANS APPROVAL DATE

REGISTERED PROFESSIONAL ENGINEER DAVID PADILLA No. E16233 EXP. 12/31/12 ELECTRICAL STATE OF CALIFORNIA

THE STATE OF CALIFORNIA OR ITS OFFICERS OR AGENTS SHALL NOT BE RESPONSIBLE FOR THE ACCURACY OR COMPLETENESS OF SCANNED COPIES OF THIS PLAN SHEET.

FOR ACCURATE RIGHT OF WAY DATA, CONTACT RIGHT OF WAY ENGINEERING AT THE DISTRICT OFFICE.

PROJECT NOTES: (THIS SHEET ONLY)

1. INSTALL CCTV CONTROL CABLE. SEE SHEET E-67 FOR DETAILS.
2. INSTALL 2" CONDUIT IN PAVED AREA.
3. JACK TYPE 1, 3" CONDUIT BENEATH ROADWAY. SEE SHEET E-61 FOR DETAILS.
4. INSTALL 4" CONDUIT IN PAVED AREA.
5. SHOWN FOR REFERENCE ONLY.
6. INSTALL 2#6, 1#8G.
7. INSTALL 2-12SMFO.
8. INSTALL NEW CCTV CAMERA ASSEMBLY AND PAN/TILT UNIT ON NEW POLE TYPE CCTV 45. SEE SHEET E-67 FOR DETAILS.
9. INSTALL MODEL 334-TV CABINET. INSTALL LOCAL PATCH PANEL, VIDEO ENCODER, SWITCH, FIBER DISTRIBUTION UNIT, AND COMPOSITE VIDEO CABLE PER SHEET E-67, E-68 AND E-69. CONSTRUCT CONCRETE PAD PER SHEET E-66 AND DETAIL "C" (THIS SHEET).
11. INSTALL 12SMFO.
12. FOR REFERENCE ONLY. SEE MODEL 334 CONTROLLER CABINET ON SHEET E-4, RAMP METERING SYSTEM, FOR MORE DETAILS.
13. SEE SHEET E-3 FOR SERVICE INSTALLATION.
14. SEE SHEET E-4 FOR PB INSTALLATION.
15. SEE SHEET E-4 FOR RMS CABINET INSTALLATION.
16. SEE SHEET E-4 FOR CONDUIT INSTALLATION. ADD 12SMFO.

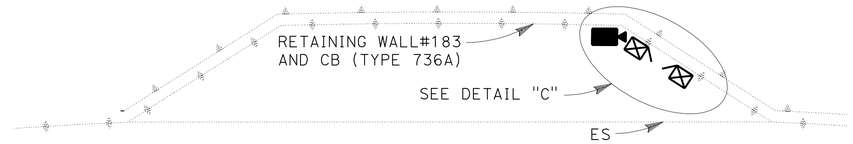

DETAIL "B"
NO SCALE

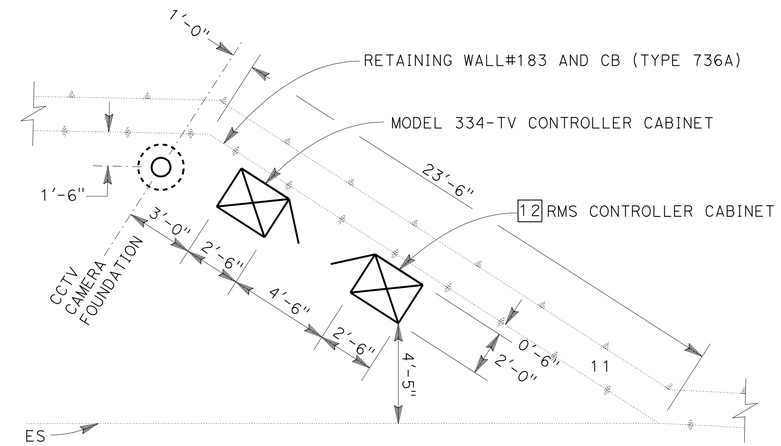

DETAIL "C"
NO SCALE

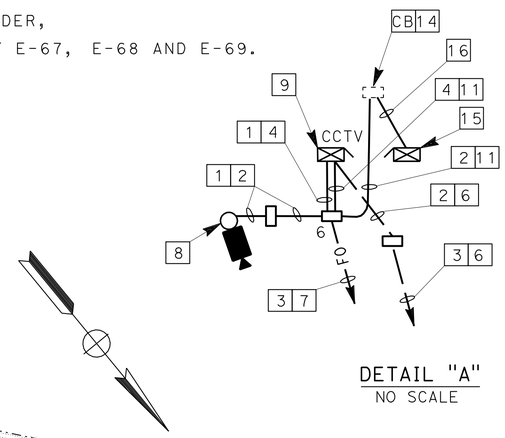

DETAIL "A"
NO SCALE

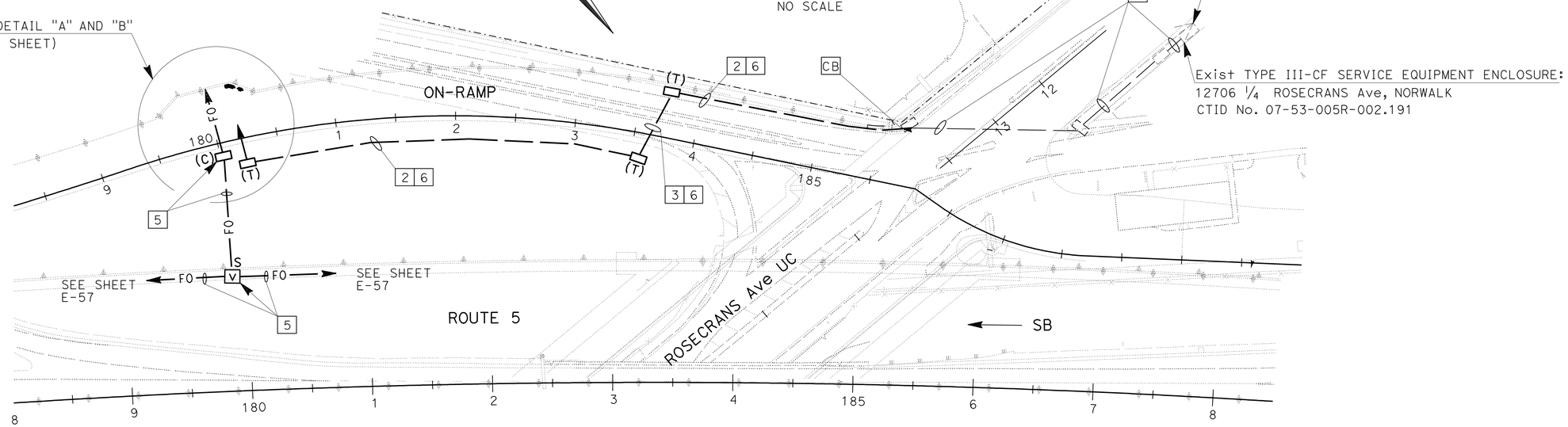

MODIFY COMMUNICATION SYSTEM
(MODIFY CCTV CAMERA LOCATION SA033)

FOR LEGEND, ABBREVIATIONS AND GENERAL NOTES SEE SHEET E-54.

APPROVED FOR ELECTRICAL WORK ONLY

SCALE: 1" = 50'

E-60

STATE OF CALIFORNIA - DEPARTMENT OF TRANSPORTATION
Caltrans® OFFICE OF ITS

FUNCTIONAL SUPERVISOR: JACQUELINE C. TAN
CALCULATED-DESIGNED BY: SUNG LEE
CHECKED BY: DAVID PADILLA
REVISED BY
DATE REVISED

LAST REVISION 00-00-00
DATE PLOTTED => 29-MAR-2012
TIME PLOTTED => 12:16

Dist	COUNTY	ROUTE	POST MILES TOTAL PROJECT	SHEET No.	TOTAL SHEETS
07	LA	5	2.4/4.0	579	1288

REGISTERED ELECTRICAL ENGINEER 11/2/11

3-26-12
PLANS APPROVAL DATE

REGISTERED PROFESSIONAL ENGINEER DAVID PADILLA No. E16233 Exp. 12/31/12 ELECTRICAL STATE OF CALIFORNIA

THE STATE OF CALIFORNIA OR ITS OFFICERS OR AGENTS SHALL NOT BE RESPONSIBLE FOR THE ACCURACY OR COMPLETENESS OF SCANNED COPIES OF THIS PLAN SHEET.

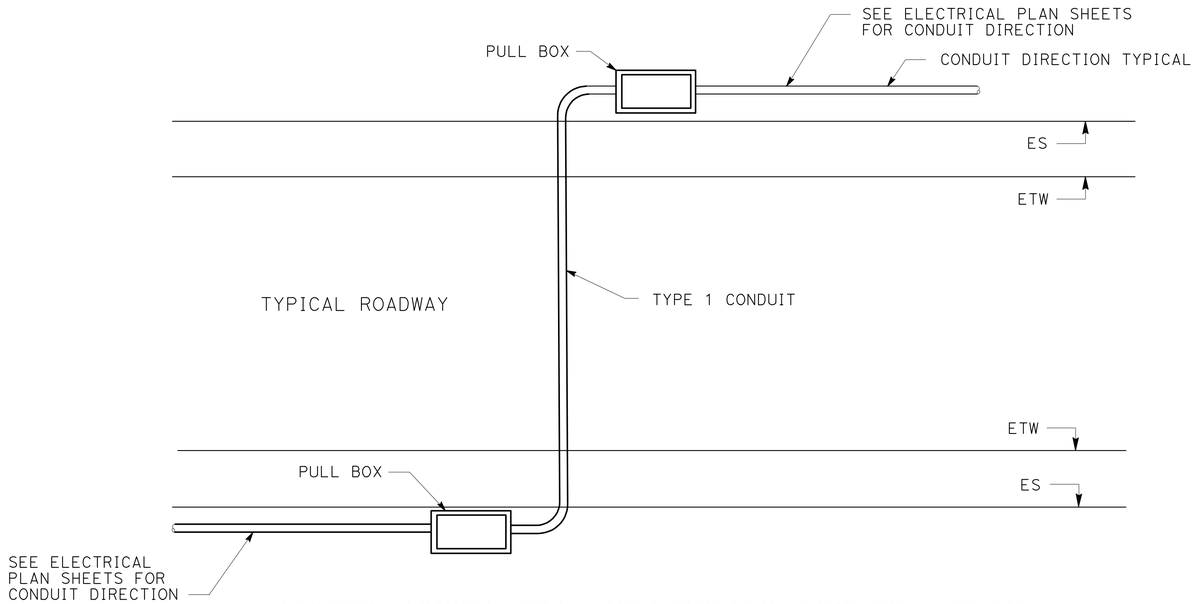

JACKED POWER AND DISTRIBUTION CONDUIT DETAIL

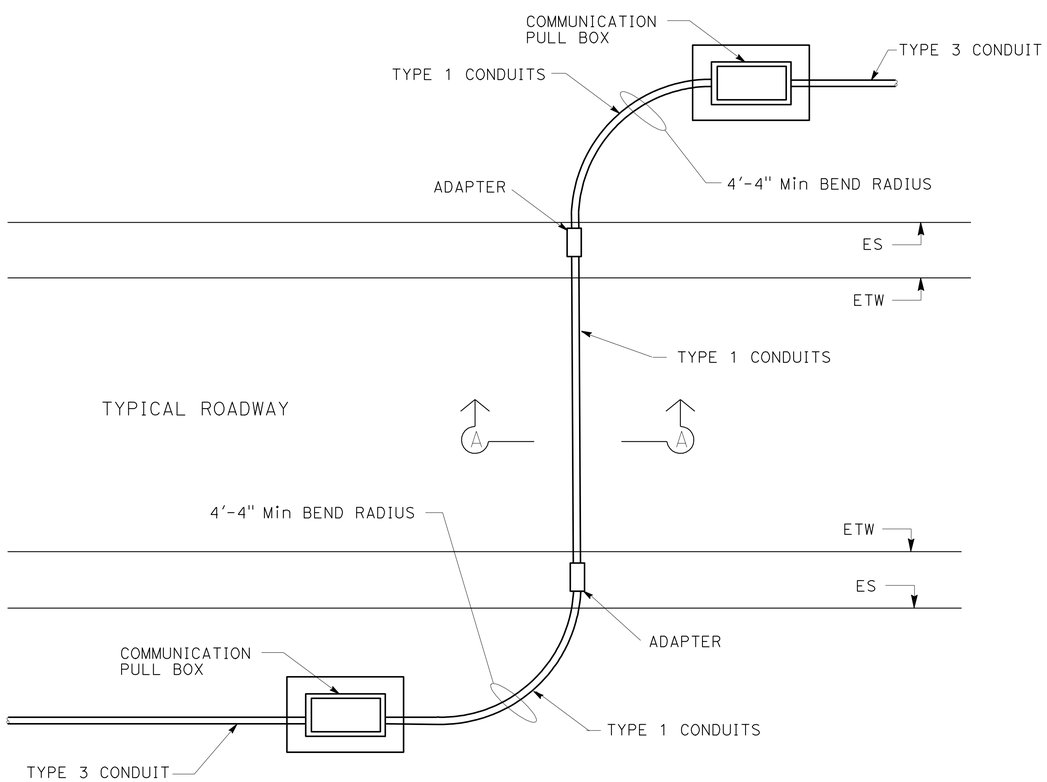

JACKED COMMUNICATION CONDUIT DETAIL

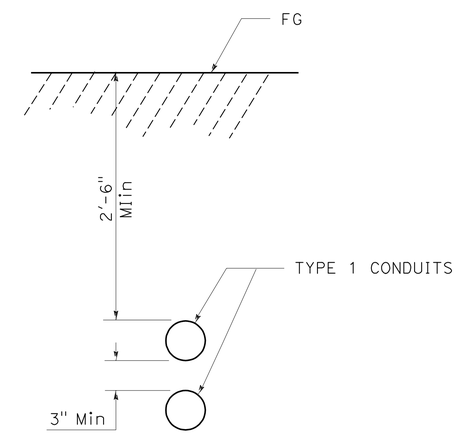

SECTION A-A

FOR LEGENDS, ABBREVIATIONS AND GENERAL NOTES SEE SHEET E-54.

MODIFY COMMUNICATION SYSTEM
(JACKED CONDUIT DETAILS)

NO SCALE

E-61

STATE OF CALIFORNIA - DEPARTMENT OF TRANSPORTATION
Caltrans® OFFICE OF ITS

FUNCTIONAL SUPERVISOR: JACQUELINE C. TAN
CALCULATED-DESIGNED BY: SUNG LEE
CHECKED BY: DAVID PADILLA
REVISED BY
DATE REVISED

LAST REVISION 00-00-00
DATE PLOTTED => 28-MAR-2012
TIME PLOTTED => 13:40

Dist	COUNTY	ROUTE	POST MILES TOTAL PROJECT	SHEET No.	TOTAL SHEETS
07	LA	5	2.4/4.0	580	1288

REGISTERED ELECTRICAL ENGINEER 11/2/11

3-26-12
PLANS APPROVAL DATE

REGISTERED PROFESSIONAL ENGINEER DAVID PADILLA No. E16233 Exp. 12/31/12 ELECTRICAL STATE OF CALIFORNIA

THE STATE OF CALIFORNIA OR ITS OFFICERS OR AGENTS SHALL NOT BE RESPONSIBLE FOR THE ACCURACY OR COMPLETENESS OF SCANNED COPIES OF THIS PLAN SHEET.

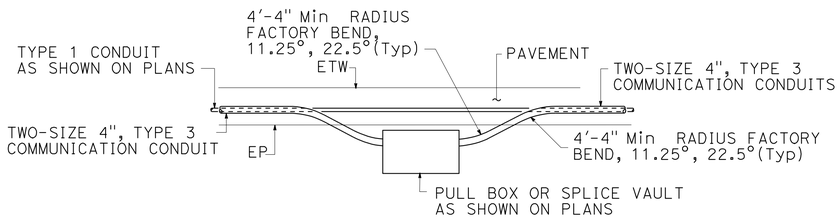

OUTSIDE SHOULDER PULL BOX INSTALLATION (TOP VIEW)

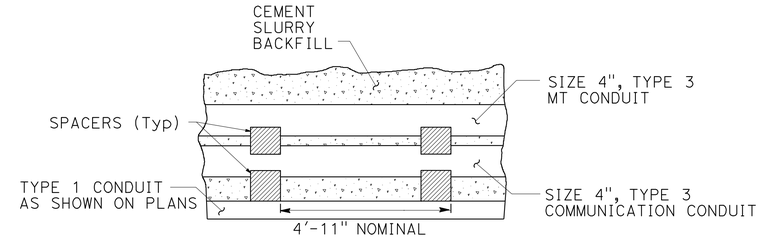

CONDUIT SPACER PLACEMENT (SIDE VIEW)

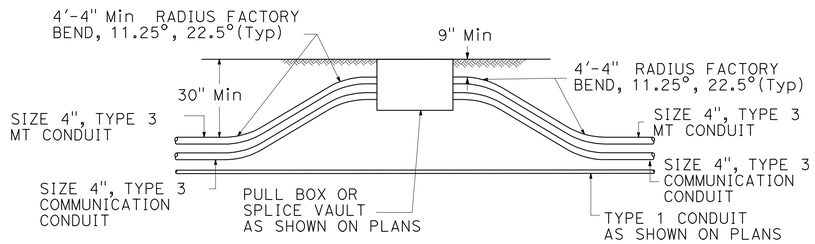

PULL BOX FOR SOIL AREA TRENCHING (ELEVATION)

NOTES: (THIS SHEET ONLY)

1. TRENCH TO BE CENTERED IN SHOULDER OR AS DIRECTED BY THE ENGINEER.
2. MAINTAIN 24" MINIMUM COVER AND BACKFILL TRENCH WITH SLURRY CEMENT BETWEEN PULL BOX AND PAVED SHOULDER.
3. WHERE TRENCH TRANSITIONS FROM ASPHALT TO UNPAVED AREA, CONDUIT TO GRADUALLY TRANSITION FROM 24" MINIMUM DEPTH TO KNOCK OUT ENTRANCE LOCATIONS IN PULL BOX.
4. 24" MINIMUM COVER MAY BE REDUCED TO 9" MINIMUM COVER IF NEEDED TO CLEAR A STORM DRAIN OR OTHER FIXED OBJECT AS DIRECTED BY THE ENGINEER.
5. CONDUITS SHALL BE INSTALLED IN NEW ASPHALT PAVEMENT AFTER AGGREGATE BASE IS PLACED AND COMPACTED.

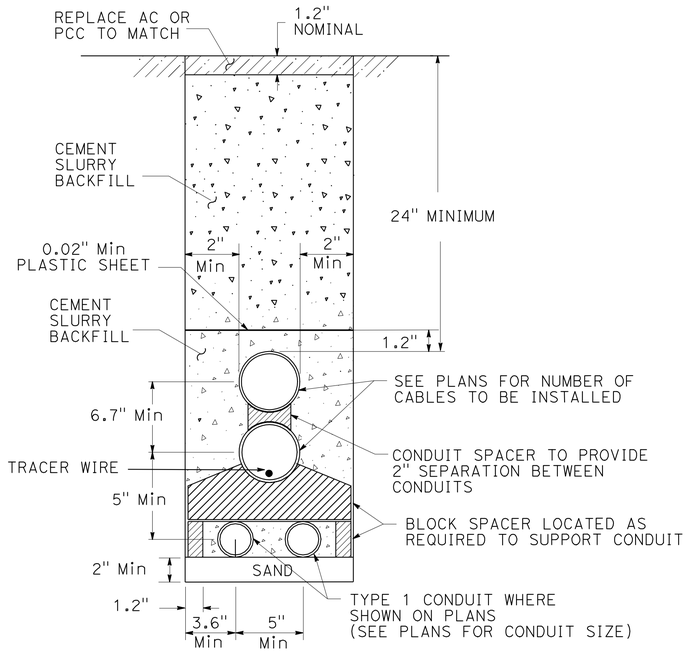

TRENCH IN PAVEMENT (CONCRETE OR ASPHALT) WITH TWO 4" TYPE 3 CONDUITS AND TWO TYPE 1 CONDUITS

TYPICAL

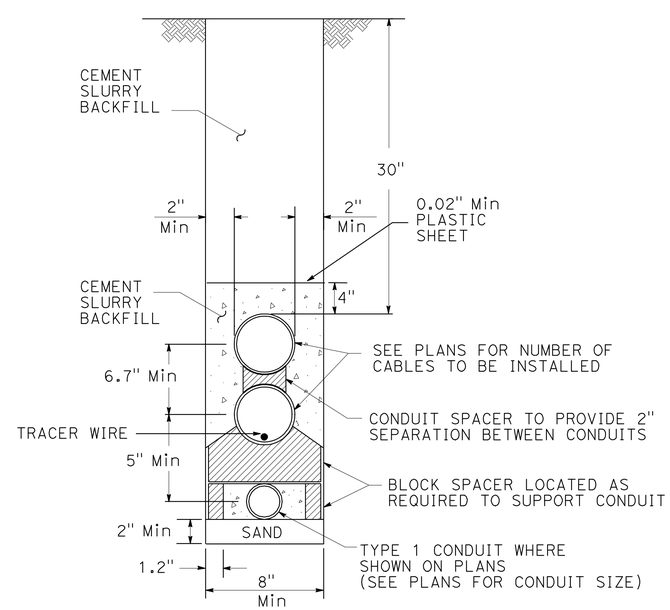

TRENCH IN SOIL WITH TWO 4" TYPE 1 CONDUITS AND ONE TYPE 1 CONDUIT

TYPICAL

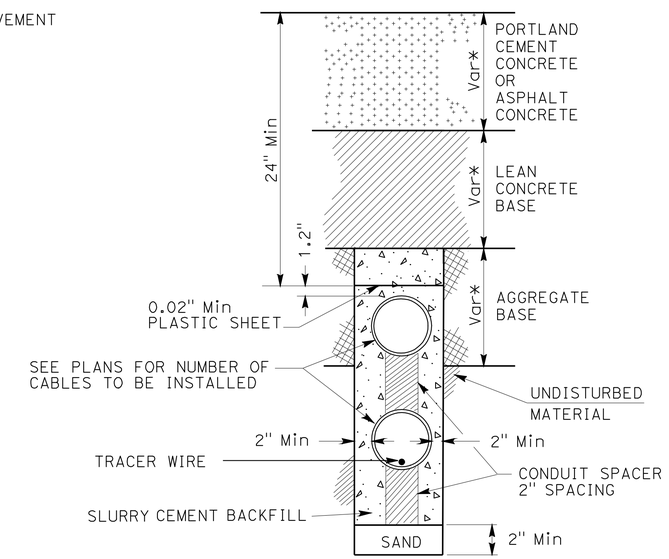

TRENCH IN NEW PAVEMENT (PCC or ASPHALT) WITH TWO 4" TYPE 3 CONDUITS

(* PAVEMENT THICKNESS, SEE TYPICAL CROSS SECTION PLANS)

FOR LEGENDS, ABBREVIATIONS AND GENERAL NOTES SEE SHEET E-54.

MODIFY COMMUNICATION SYSTEM (TRENCH DETAILS)

NO SCALE

E-62

STATE OF CALIFORNIA - DEPARTMENT OF TRANSPORTATION
Caltrans® OFFICE OF ITS

FUNCTIONAL SUPERVISOR: JACQUELINE C. TAN
CALCULATED-DESIGNED BY: SUNG LEE
CHECKED BY: DAVID PADILLA
REVISED BY
DATE REVISED

LAST REVISION 00-00-00
DATE PLOTTED => 28-MAR-2012
TIME PLOTTED => 13:40

Dist	COUNTY	ROUTE	POST MILES TOTAL PROJECT	SHEET No.	TOTAL SHEETS
07	LA	5	2.4/4.0	581	1288

REGISTERED ELECTRICAL ENGINEER 11/2/11

3-26-12
PLANS APPROVAL DATE

REGISTERED PROFESSIONAL ENGINEER DAVID PADILLA No. E16233 Exp. 12/31/12 ELECTRICAL STATE OF CALIFORNIA

THE STATE OF CALIFORNIA OR ITS OFFICERS OR AGENTS SHALL NOT BE RESPONSIBLE FOR THE ACCURACY OR COMPLETENESS OF SCANNED COPIES OF THIS PLAN SHEET.

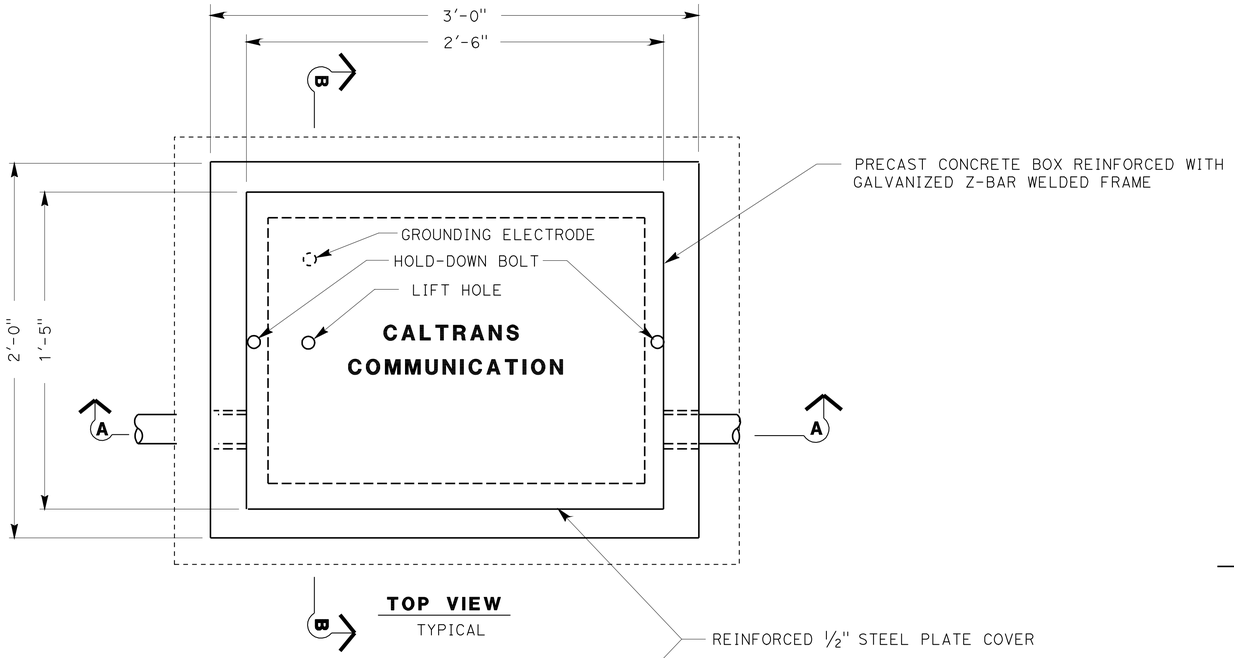

TOP VIEW
TYPICAL

REINFORCED ½" STEEL PLATE COVER

NOTES: (THIS SHEET ONLY)

1. CONDUITS SHOWN ARE FOR EXAMPLE ONLY.
   ADDITIONAL CONDUITS MAY BE REQURIED AS SHOWN ON THE PLAN SHEETS.
2. KNOCK OUT HOLE LOCATIONS AND NUMBER MAY BARY.

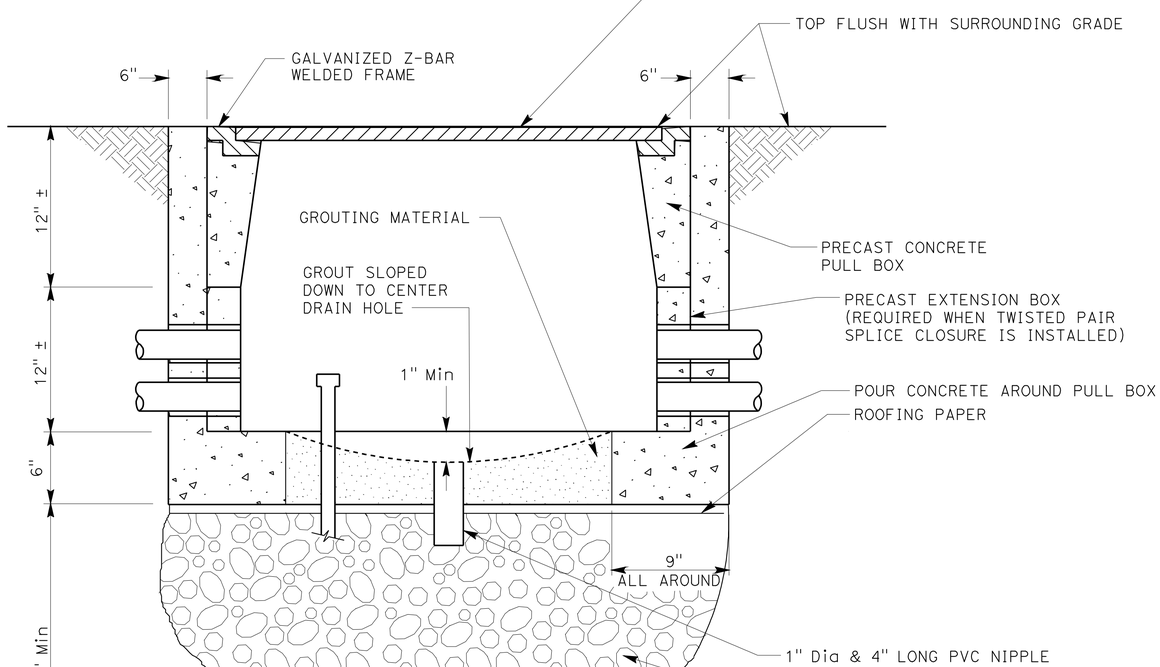

SECTION A-A
TYPICAL

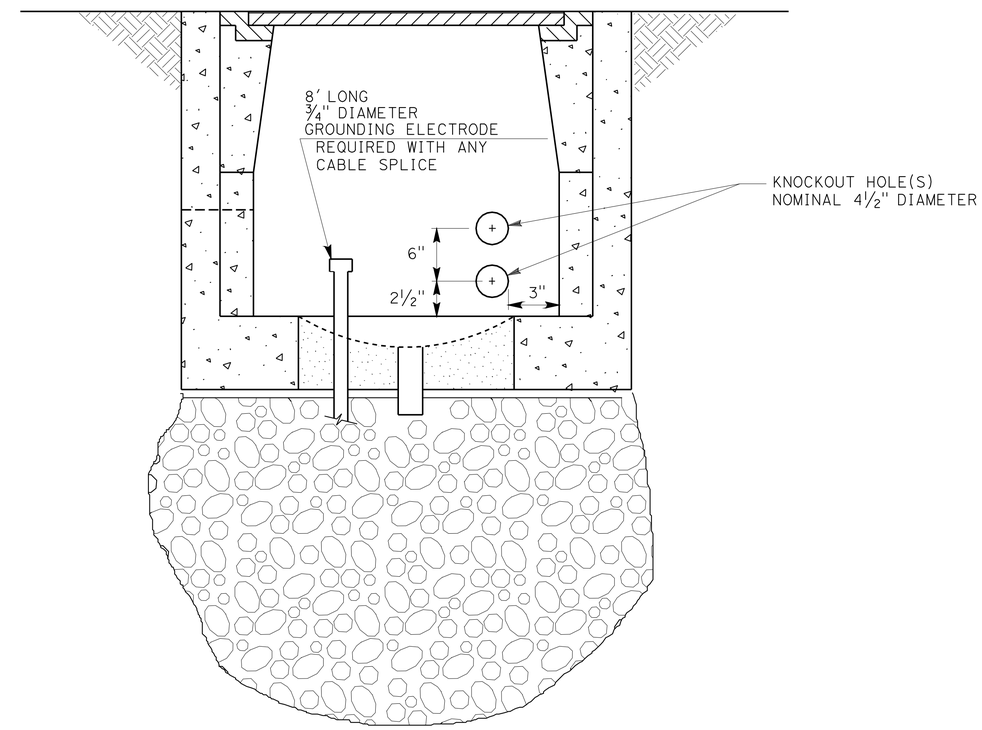

SECTION B-B
TYPICAL

MODIFY COMMUNICATION SYSTEM
(COMMUNICATION PULL BOX DETAILS)

NO SCALE

E-63

FOR LEGENDS, ABBREVIATIONS AND GENERAL NOTES SEE SHEET E-54.

STATE OF CALIFORNIA - DEPARTMENT OF TRANSPORTATION
Caltrans® OFFICE OF ITS

FUNCTIONAL SUPERVISOR: JACQUELINE C. TAN
CALCULATED-DESIGNED BY: SUNG LEE
CHECKED BY: DAVID PADILLA
REVISED BY
DATE REVISED

LAST REVISION 00-00-00
DATE PLOTTED => 28-MAR-2012
TIME PLOTTED => 13:40

Dist	COUNTY	ROUTE	POST MILES TOTAL PROJECT	SHEET No.	TOTAL SHEETS
07	LA	5	2.4/4.0	582	1288

David Padilla 11/2/11
REGISTERED ELECTRICAL ENGINEER

3-26-12
PLANS APPROVAL DATE

REGISTERED PROFESSIONAL ENGINEER DAVID PADILLA No. E16233 EXP. 12/31/12 ELECTRICAL STATE OF CALIFORNIA

THE STATE OF CALIFORNIA OR ITS OFFICERS OR AGENTS SHALL NOT BE RESPONSIBLE FOR THE ACCURACY OR COMPLETENESS OF SCANNED COPIES OF THIS PLAN SHEET.

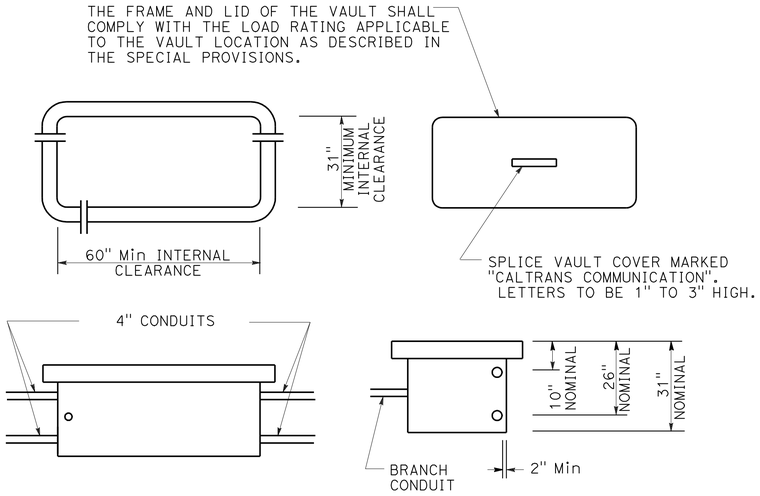

SPLICE VAULT DIMENSIONS

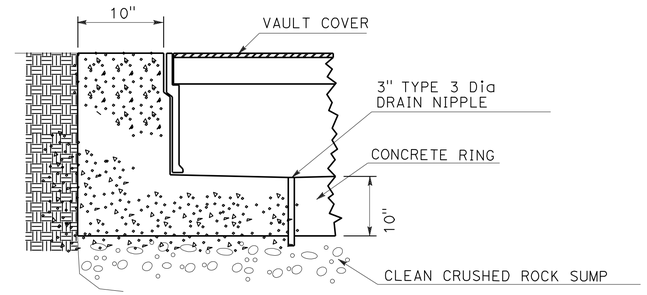

DETAIL A

INSTALLATION IN ASPHALT PAVEMENT

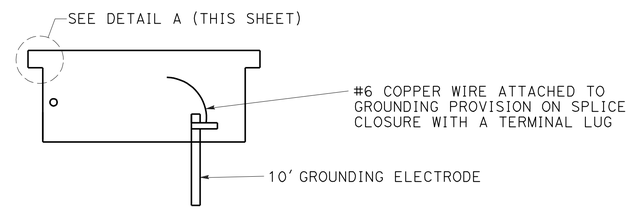

SPLICE VAULT INSTALLATION

INSTALLATION NOTES

1. CONCRETE ENCASEMENT AROUND SPLICE VAULT SHALL BE MINOR CONCRETE.
2. PAVEMENT AND SUBGRADE TO BE AS DIRECTED BY THE ENGINEER.

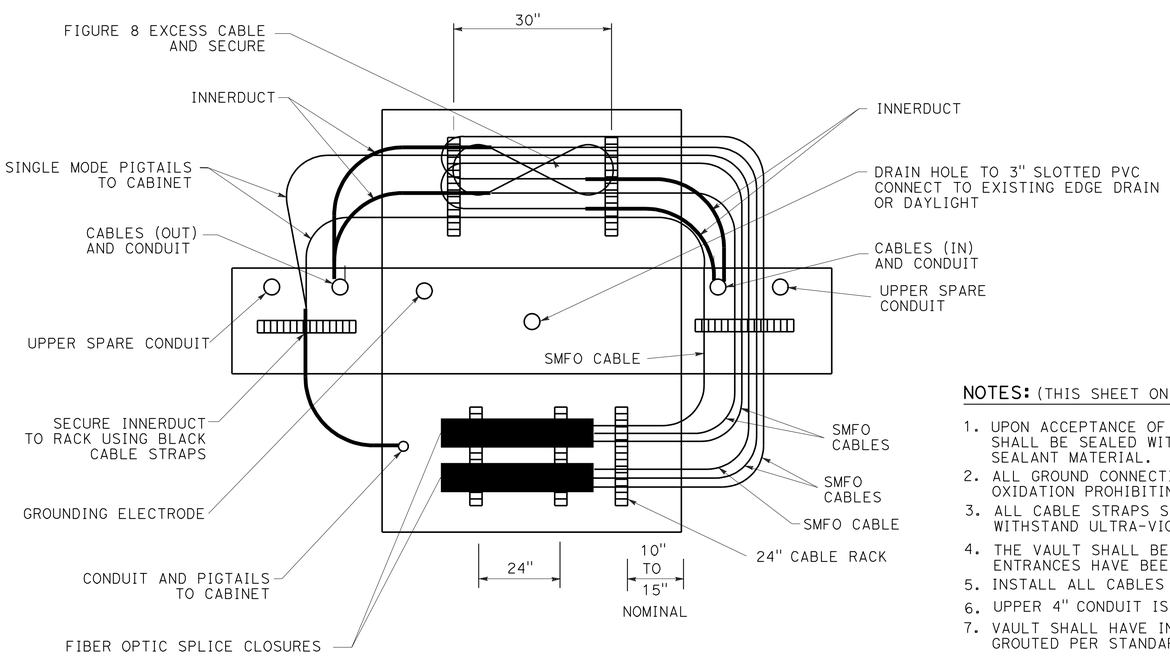

CABLE INSTALLATION

TOP VIEW - WALLS FOLDED DOWN FOR CLARITY

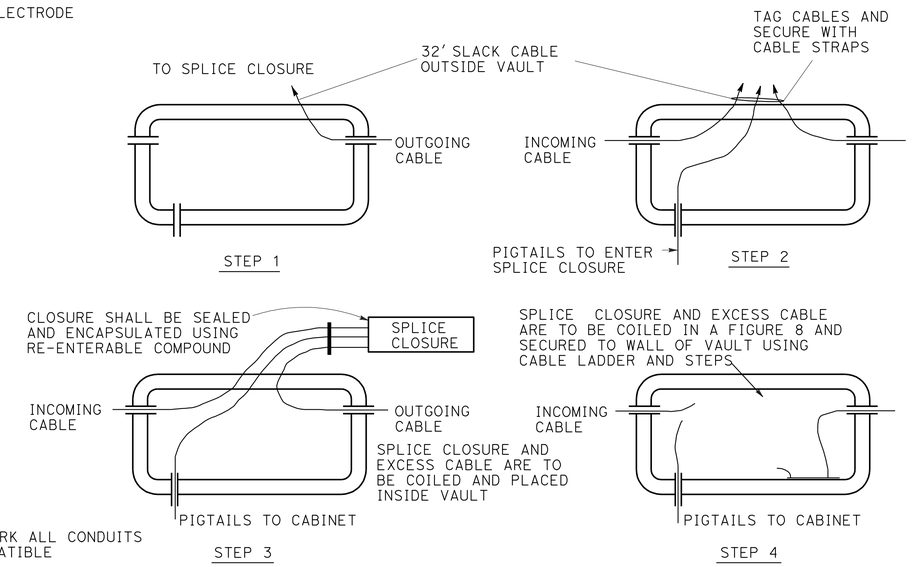

SPLICE PROCEDURE

NOTES: (THIS SHEET ONLY)

1. UPON ACCEPTANCE OF THE WORK ALL CONDUITS SHALL BE SEALED WITH COMPATIBLE SEALANT MATERIAL.
2. ALL GROUND CONNECTIONS SHALL BE COATED WITH OXIDATION PROHIBITING COMPOUND.
3. ALL CABLE STRAPS SHALL BE DESIGNED TO WITHSTAND ULTRA-VIOLET EXPOSURE.
4. THE VAULT SHALL BE CAULKED AFTER ALL KNOWN ENTRANCES HAVE BEEN MADE.
5. INSTALL ALL CABLES IN LOWER 4" CONDUIT.
6. UPPER 4" CONDUIT IS SPARE ONLY.
7. VAULT SHALL HAVE INTEGRAL BASE OR SHALL BE GROUTED PER STANDARD SPECIFICATION OF PULL BOXES.
8. NUMBER OF SPLICE CLOSURES MAY VARY.

(SPLICE VAULT DETAILS)

MODIFY COMMUNICATION SYSTEM

NO SCALE

FOR LEGENDS, ABBREVIATIONS AND GENERAL NOTES SEE SHEET E-54.

E-64

STATE OF CALIFORNIA - DEPARTMENT OF TRANSPORTATION
Caltrans® OFFICE OF ITS
FUNCTIONAL SUPERVISOR: JACQUELINE C. TAN
CALCULATED-DESIGNED BY: SUNG LEE
CHECKED BY: DAVID PADILLA
REVISED BY
DATE REVISED

LAST REVISION 00-00-00 | DATE PLOTTED => 28-MAR-2012 | TIME PLOTTED => 13:40

Dist	COUNTY	ROUTE	POST MILES TOTAL PROJECT	SHEET No.	TOTAL SHEETS
07	LA	5	2.4/4.0	583	1288

David Padilla 11/2/11
REGISTERED ELECTRICAL ENGINEER

3-26-12
PLANS APPROVAL DATE

REGISTERED PROFESSIONAL ENGINEER
DAVID PADILLA
No. E16233
Exp. 12/31/12
ELECTRICAL
STATE OF CALIFORNIA

THE STATE OF CALIFORNIA OR ITS OFFICERS OR AGENTS SHALL NOT BE RESPONSIBLE FOR THE ACCURACY OR COMPLETENESS OF SCANNED COPIES OF THIS PLAN SHEET.

NOTES: (THIS SHEET ONLY)

1. DIMENSIONS VARY ACCORDING TO SIZE OF CONDUIT. BUT THE MINIMUM BEND RADIUS OF 4.3' SHALL BE MAINTAINED ON ALL CONDUITS CONTAINING FIBER OPTIC CABLE AND SIX TIMES THE CONDUIT DIAMETER FOR ALL OTHER CONDUITS.
2. ALL BENDS SHALL BE FACTORY BENDS.

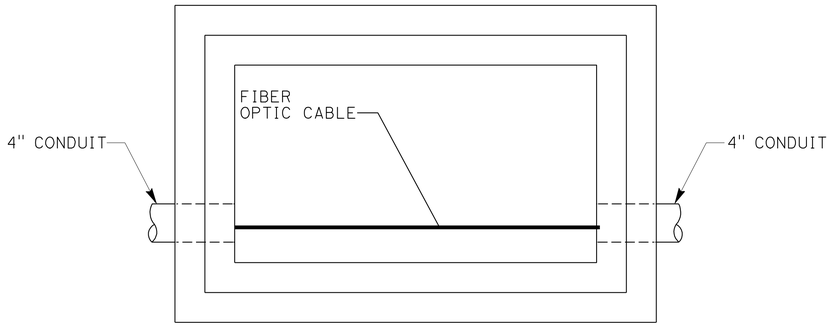

DETAIL A
COMMUNICATIONS PULL BOX

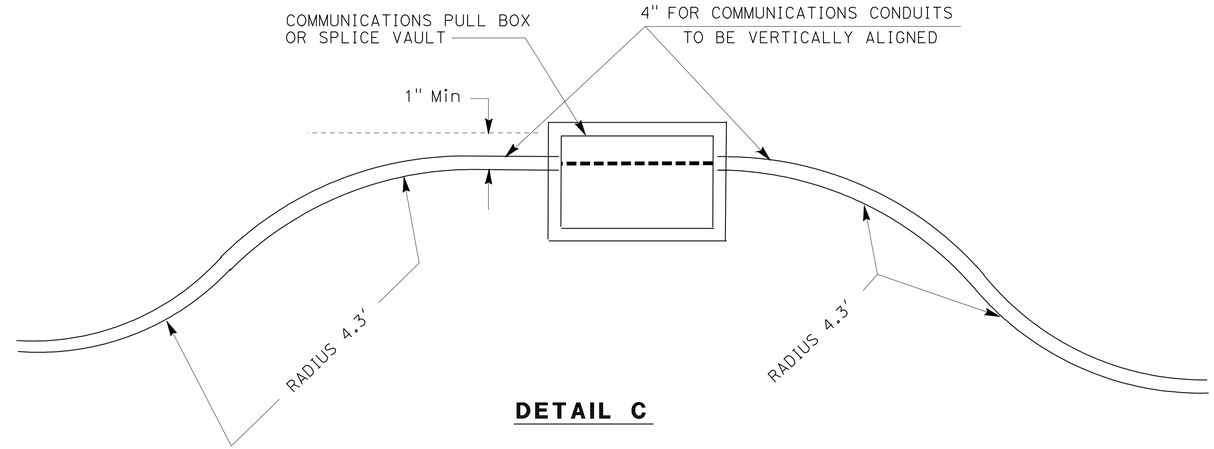

DETAIL C

MODIFY COMMUNICATION SYSTEM
(COMMUNICATIONS PULL BOX DETAILS)
NO SCALE

FOR LEGENDS, ABBREVIATIONS AND GENERAL NOTES SEE SHEET E-54.

E-65

STATE OF CALIFORNIA - DEPARTMENT OF TRANSPORTATION
Caltrans® OFFICE OF ITS

FUNCTIONAL SUPERVISOR: JACQUELINE C. TAN
CALCULATED-DESIGNED BY: SUNG LEE
CHECKED BY: DAVID PADILLA
REVISED BY
DATE REVISED

LAST REVISION 00-00-00
DATE PLOTTED => 28-MAR-2012
TIME PLOTTED => 13:40

Dist	COUNTY	ROUTE	POST MILES TOTAL PROJECT	SHEET No.	TOTAL SHEETS
07	LA	5	2.4/4.0	584	1288

David Padilla 11/2/11
REGISTERED ELECTRICAL ENGINEER

3-26-12
PLANS APPROVAL DATE

REGISTERED PROFESSIONAL ENGINEER
DAVID PADILLA
No. E16233
Exp. 12/31/12
ELECTRICAL
STATE OF CALIFORNIA

THE STATE OF CALIFORNIA OR ITS OFFICERS OR AGENTS SHALL NOT BE RESPONSIBLE FOR THE ACCURACY OR COMPLETENESS OF SCANNED COPIES OF THIS PLAN SHEET.

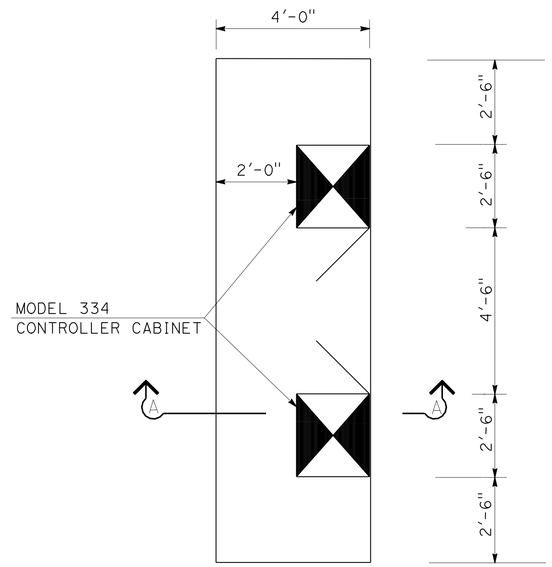

DETAIL A
PLAN VIEW

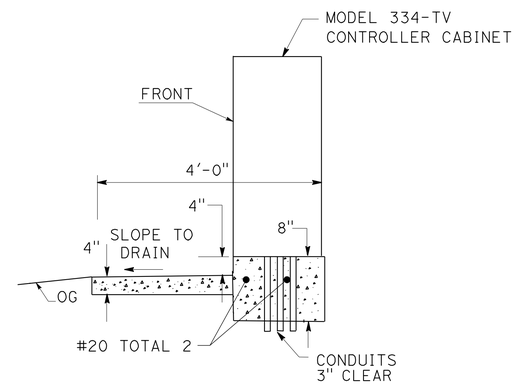

SECTION A-A
ELEVATION VIEW

MODIFY COMMUNICATION SYSTEM
(CONTROLLER CABINET FOUNDATION DETAILS)

NO SCALE

FOR LEGENDS, ABBREVIATIONS AND GENERAL NOTES SEE SHEET E-54.

E-66

STATE OF CALIFORNIA - DEPARTMENT OF TRANSPORTATION
Caltrans® OFFICE OF ITS

FUNCTIONAL SUPERVISOR: JACQUELINE C. TAN
CALCULATED-DESIGNED BY: SUNG LEE
CHECKED BY: DAVID PADILLA
REVISED BY
DATE REVISED

LAST REVISION 00-00-00
DATE PLOTTED => 28-MAR-2012
TIME PLOTTED => 13:40

Dist	COUNTY	ROUTE	POST MILES TOTAL PROJECT	SHEET No.	TOTAL SHEETS
07	LA	5	2.4/4.0	585	1288

REGISTERED ELECTRICAL ENGINEER 11/2/11

3-26-12
PLANS APPROVAL DATE

REGISTERED PROFESSIONAL ENGINEER DAVID PADILLA No. E16233 Exp. 12/31/12 ELECTRICAL STATE OF CALIFORNIA

THE STATE OF CALIFORNIA OR ITS OFFICERS OR AGENTS SHALL NOT BE RESPONSIBLE FOR THE ACCURACY OR COMPLETENESS OF SCANNED COPIES OF THIS PLAN SHEET.

NOTES: (THIS SHEET ONLY)

1. THE CONTRACTOR MUST PROVIDE CABLE LENGTH FROM THE CAMERA ASSEMBLY TO THE LOCAL PATCH PANEL INCLUDING CONNECTORS AS SHOWN IN THIS SHEET.
2. THE CONTRACTOR MUST PROVIDE ALL CABLES FROM THE LOCAL PATCH PANEL TO ENCODER, SWITCH, PDA AND FDU.
3. IN THE CCTV CAMERA CONTROLLER CABINET, THE NUMBER INDENTIFIES THE SPECIFIC CONDUCTOR TO BE USED FOR THE INDICATED FUNCTION.
4. CONNECT ALL DRAIN WIRES OF SHIELDED-CONDUCTORS TO CABINET GROUND AT THE LOCAL PATCH PANEL.
5. INSTALL CONNECTORS IN ACCORDANCE WITH THE MANUFACTURER'S INSTRUCTIONS.
6. WATERPROOF ALL CONNECTORS AND CABLES USING WATER-TIGHT GROMMETS, SEALING COMPOUNDS, AND TAPE.
7. THE CONTRACTOR MUST INSTALL ADAPTER MOUNTING PLATES TO MOUNT CCTV CAMERA ON NEW POLE, TRUSS MOUNT OR TOWER AS REQUIRED.
8. THE CONTRACTOR MUST INSTALL LOCAL PATCH PANEL ACCORDING TO EXISTING CONFIGURATIONS AS REQUIRED.

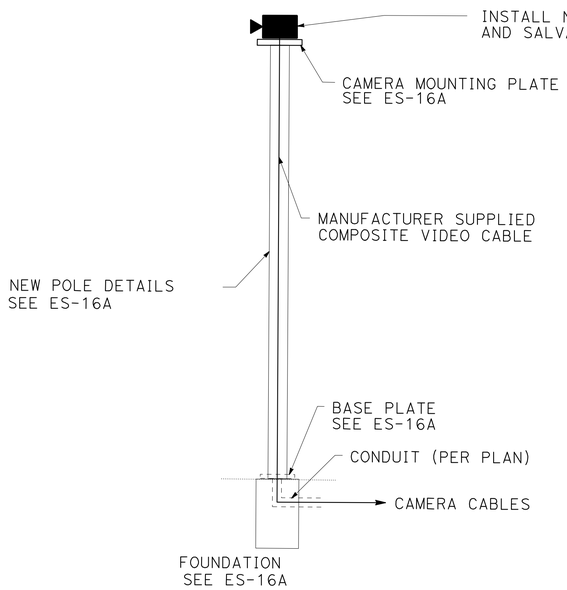

PROPOSED TYPICAL CAMERA WITH PAN/TILT UNIT

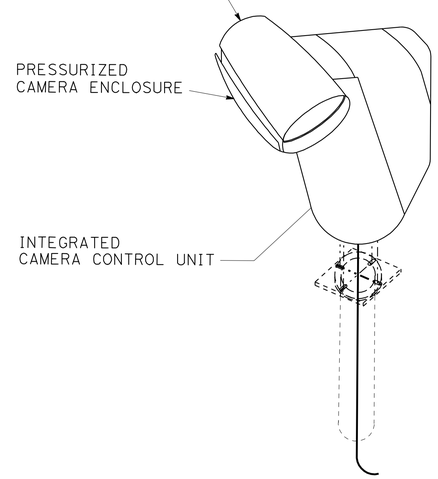

PROPOSED TYPICAL CAMERA WITH PAN/TILT UNIT

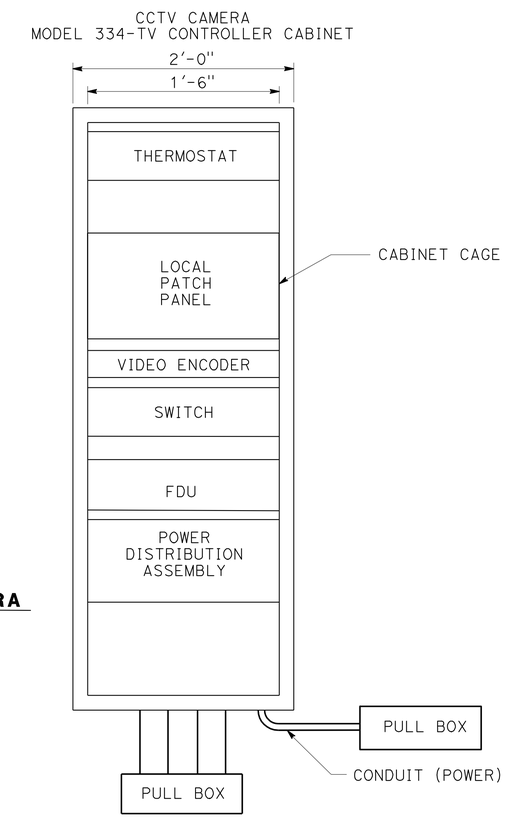

MODEL 334-TV CONTROLLER CABINET EQUIPMENT LAYOUT

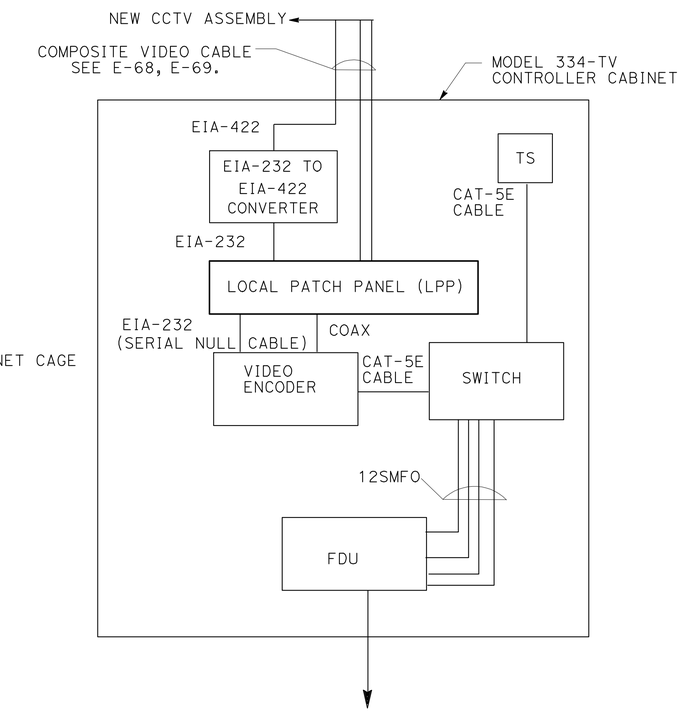

MODEL 334-TV CONTROLLER CABINET WIRING DETAIL

VIDEO BLANKING PRIVACY ZONES TO EXCLUDE NON-TRAFFIC FEATURES WHICH ARE NOT TO BE VIEWED (EG, RESIDENTIAL HOUSING). THE PRIVACY ZONES SHALL BE ADJUSTED AS DIRECTED BY THE ENGINEER.

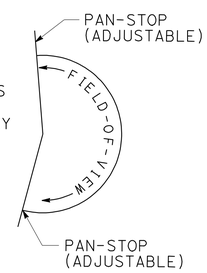

MODIFY COMMUNICATION SYSTEM
(CLOSED CIRCUIT TELEVISION CAMERA WIRING DIAGRAM WITH PAN/TILT UNIT AND MODEL 334-TV CONTROLLER CABINET DETAILS)

NO SCALE

E-67

FOR LEGENDS, ABBREVIATIONS AND GENERAL NOTES SEE SHEET E-54.

STATE OF CALIFORNIA - DEPARTMENT OF TRANSPORTATION
Caltrans® OFFICE OF ITS

FUNCTIONAL SUPERVISOR: JACQUELINE C. TAN
CALCULATED-DESIGNED BY: SUNG LEE
CHECKED BY: DAVID PADILLA
REVISED BY
DATE REVISED

LAST REVISION 00-00-00
DATE PLOTTED => 29-MAR-2012
TIME PLOTTED => 15:03

Dist	COUNTY	ROUTE	POST MILES TOTAL PROJECT	SHEET No.	TOTAL SHEETS
07	LA	5	2.4/4.0	586	1288

David Padilla 11/2/11
REGISTERED ELECTRICAL ENGINEER

3-26-12
PLANS APPROVAL DATE

REGISTERED PROFESSIONAL ENGINEER
DAVID PADILLA
No. E16233
Exp. 12/31/12
ELECTRICAL
STATE OF CALIFORNIA

THE STATE OF CALIFORNIA OR ITS OFFICERS OR AGENTS SHALL NOT BE RESPONSIBLE FOR THE ACCURACY OR COMPLETENESS OF SCANNED COPIES OF THIS PLAN SHEET.

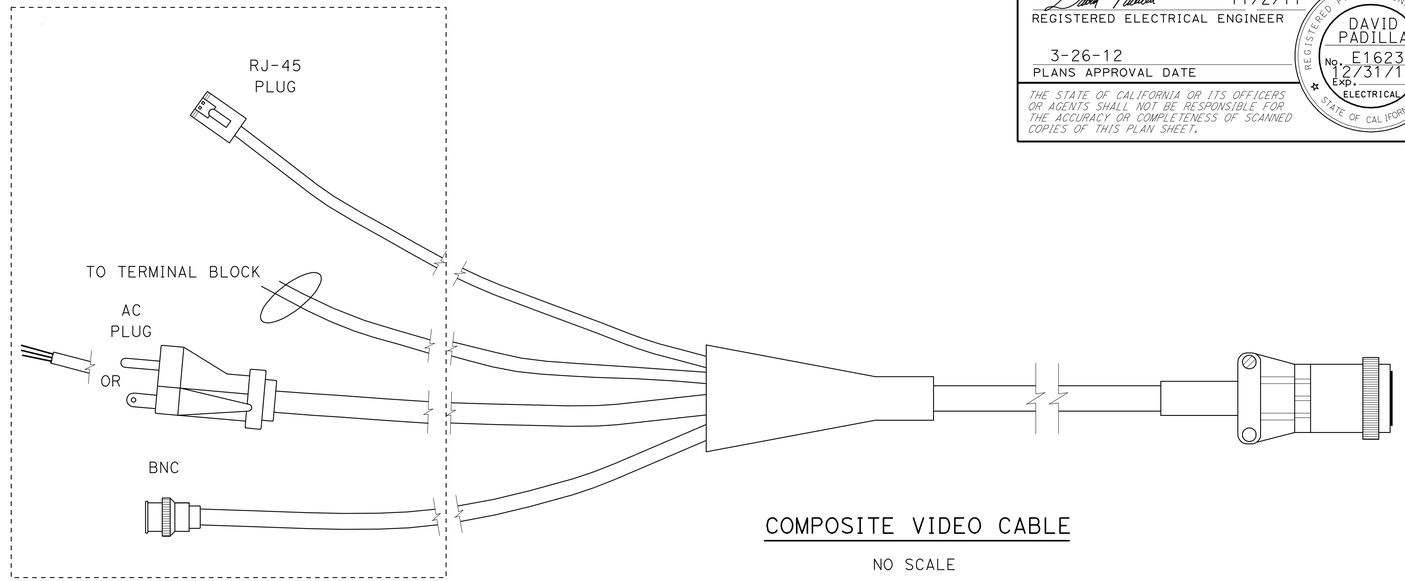

COMPOSITE VIDEO CABLE

NO SCALE

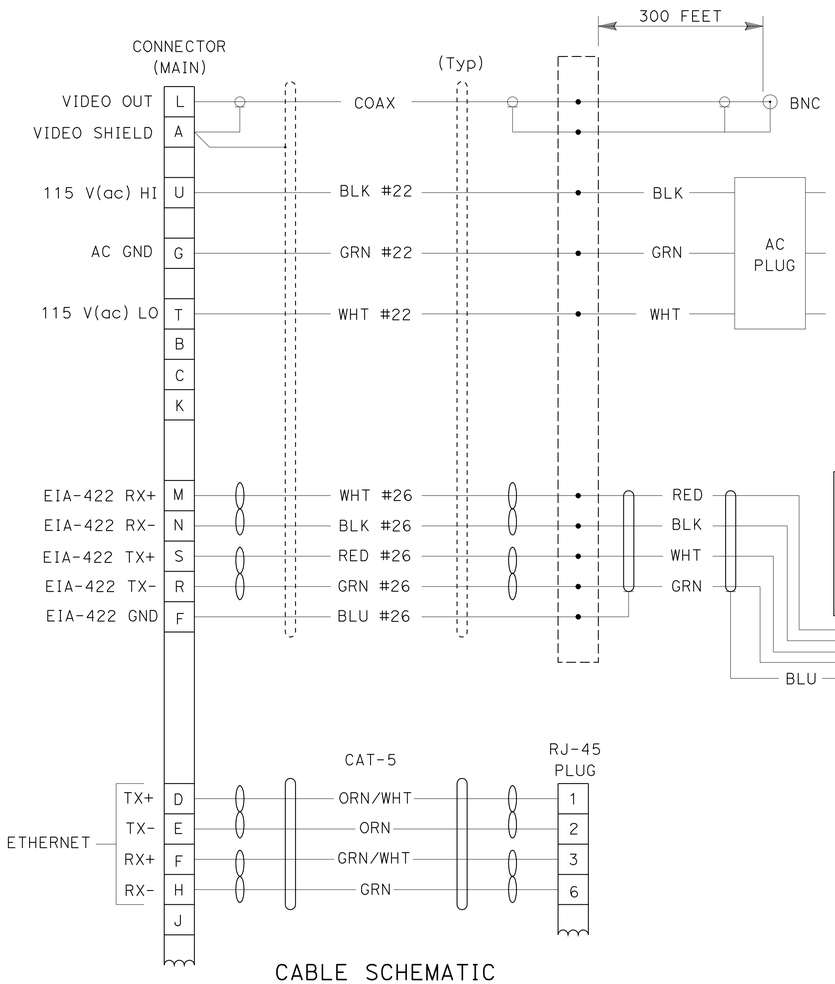

CABLE SCHEMATIC

NO SCALE

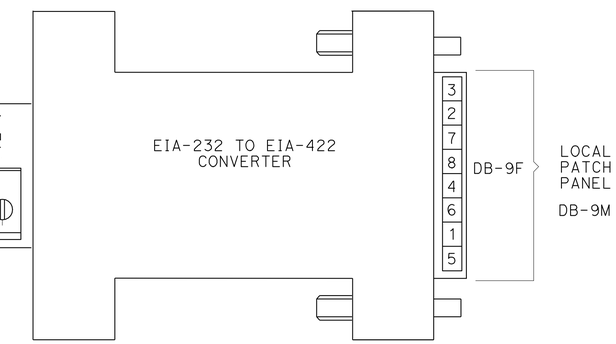

EIA-232 TO EIA-422 CONVERTER

NO SCALE

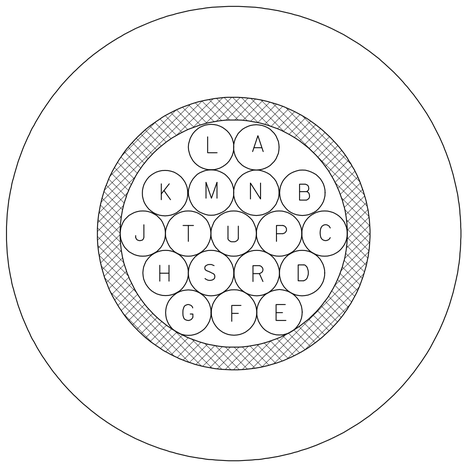

WIRING END VIEW

NO SCALE

MODIFY COMMUNICATION SYSTEM
(COMPOSITE VIDEO CABLE)

NO SCALE

E-68

FOR LEGENDS, ABBREVIATIONS AND GENERAL NOTES SEE SHEET E-54.

STATE OF CALIFORNIA - DEPARTMENT OF TRANSPORTATION
Caltrans® OFFICE OF ITS

FUNCTIONAL SUPERVISOR: JACQUELINE C. TAN
CALCULATED-DESIGNED BY: DAVID PADILLA
CHECKED BY: SUNG LEE
REVISED BY
DATE REVISED

LAST REVISION 00-00-00
DATE PLOTTED => 29-MAR-2012
TIME PLOTTED => 12:16

Dist	COUNTY	ROUTE	POST MILES TOTAL PROJECT	SHEET No.	TOTAL SHEETS
07	LA	5	2.4/4.0	587	1288

David Padilla 11/2/11
REGISTERED ELECTRICAL ENGINEER

3-26-12
PLANS APPROVAL DATE

REGISTERED PROFESSIONAL ENGINEER DAVID PADILLA No. E16233 Exp. 12/31/12 ELECTRICAL STATE OF CALIFORNIA

THE STATE OF CALIFORNIA OR ITS OFFICERS OR AGENTS SHALL NOT BE RESPONSIBLE FOR THE ACCURACY OR COMPLETENESS OF SCANNED COPIES OF THIS PLAN SHEET.

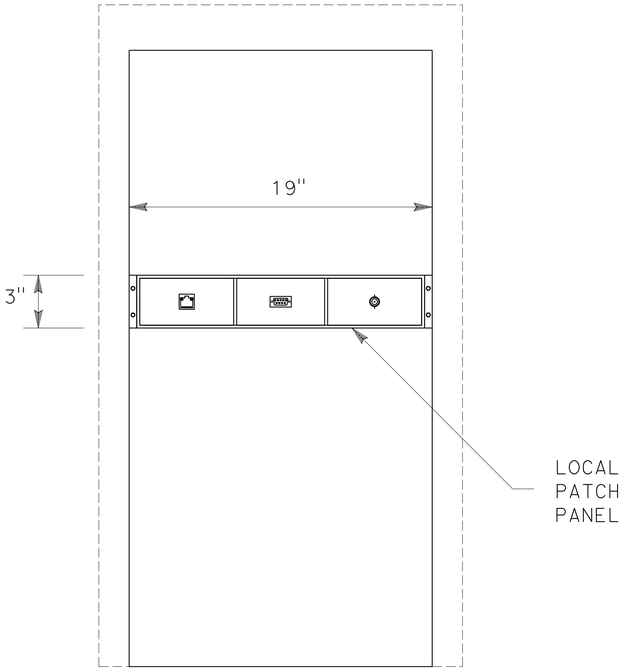

CABINET DETAIL

NO SCALE

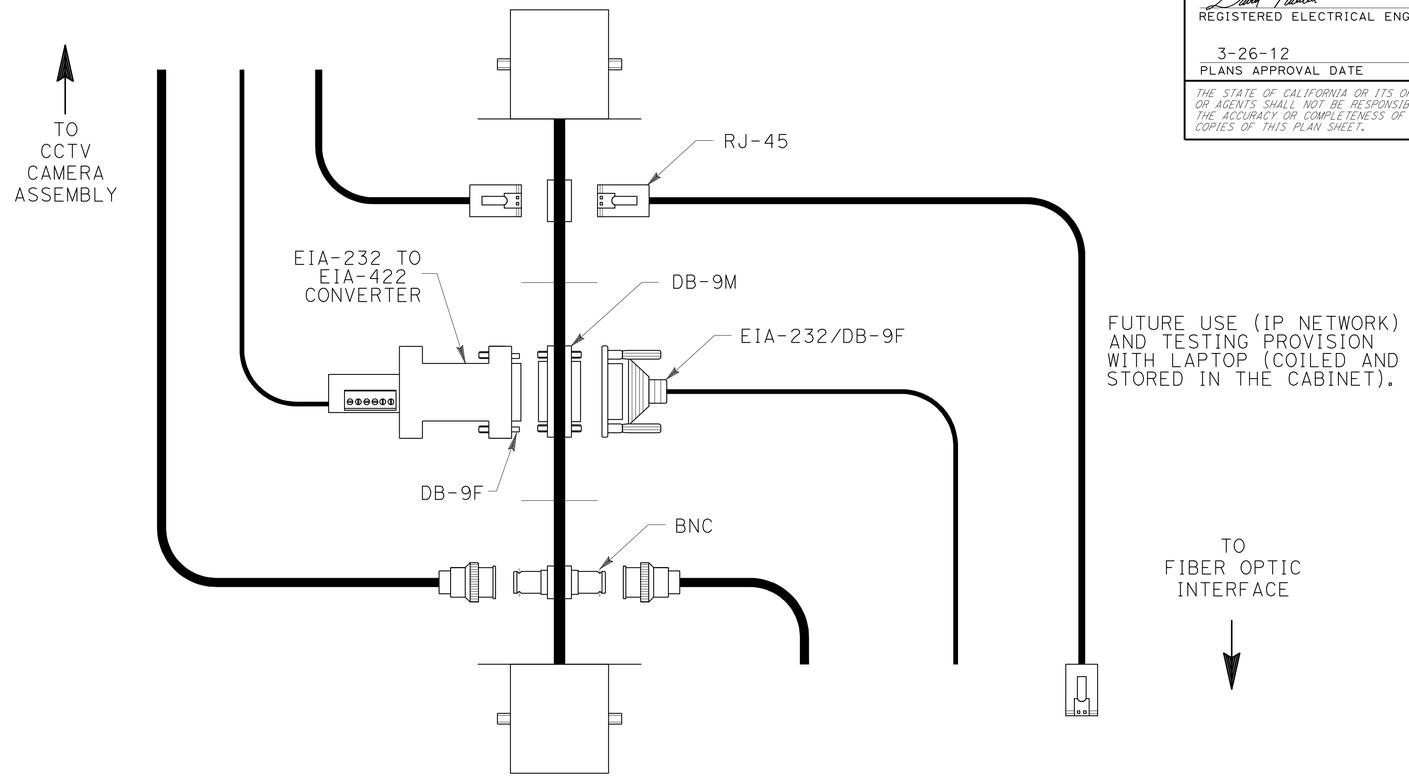

TOP VIEW
LOCAL PATCH CONTROL DETAIL

NO SCALE

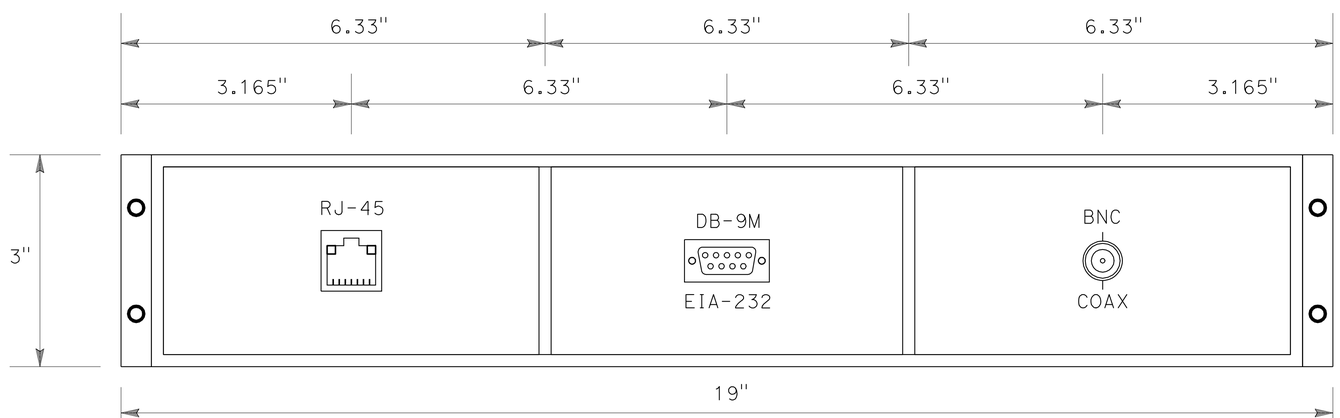

LOCAL PATCH PANEL DETAIL

NO SCALE

FOR LEGENDS, ABBREVIATIONS AND GENERAL NOTES SEE SHEET E-54.

MODIFY COMMUNICATION SYSTEM
(LOCAL PATCH PANEL)

NO SCALE

E-69

REVISED BY	DATE REVISED

CALCULATED-DESIGNED BY: SUNG LEE
CHECKED BY: DAVID PADILLA
FUNCTIONAL SUPERVISOR: JACQUELINE C. TAN

STATE OF CALIFORNIA - DEPARTMENT OF TRANSPORTATION
Caltrans® OFFICE OF ITS

LAST REVISION 00-00-00
DATE PLOTTED => 28-MAR-2012
TIME PLOTTED => 13:41

Dist	COUNTY	ROUTE	POST MILES TOTAL PROJECT	SHEET No.	TOTAL SHEETS
07	LA	5	2.4/4.0	588	1288

REGISTERED ELECTRICAL ENGINEER 11/2/11

3-26-12
PLANS APPROVAL DATE

REGISTERED PROFESSIONAL ENGINEER DAVID PADILLA No. E16233 Exp. 12/31/12 ELECTRICAL STATE OF CALIFORNIA

THE STATE OF CALIFORNIA OR ITS OFFICERS OR AGENTS SHALL NOT BE RESPONSIBLE FOR THE ACCURACY OR COMPLETENESS OF SCANNED COPIES OF THIS PLAN SHEET.

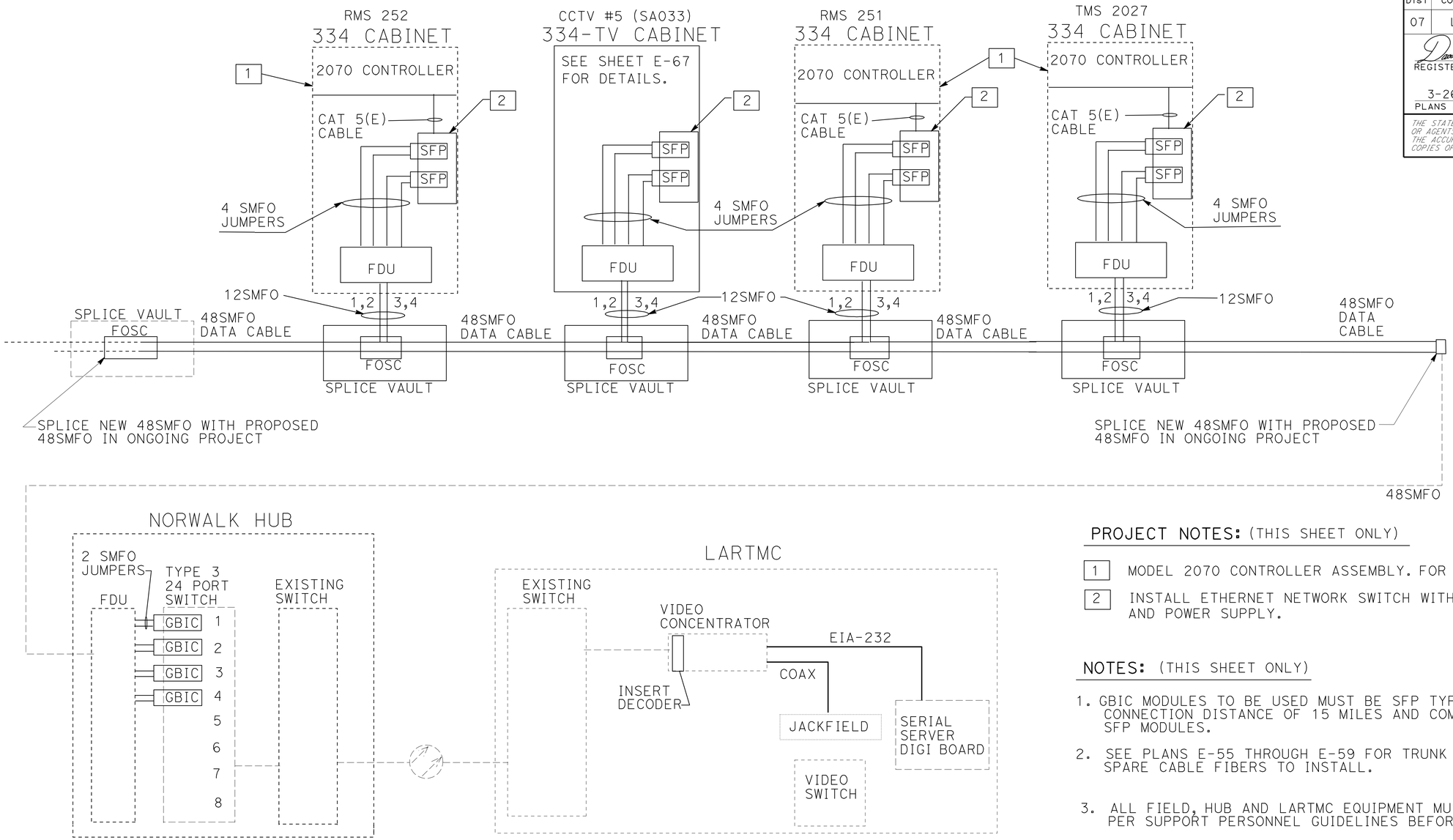

PROJECT NOTES: (THIS SHEET ONLY)

1. MODEL 2070 CONTROLLER ASSEMBLY. FOR REFERENCE ONLY.
2. INSTALL ETHERNET NETWORK SWITCH WITH SFP-LX TYPE MODULES AND POWER SUPPLY.

NOTES: (THIS SHEET ONLY)

1. GBIC MODULES TO BE USED MUST BE SFP TYPE LINE CARDS WITH MINIMUM CONNECTION DISTANCE OF 15 MILES AND COMPATIBLE WITH FIELD SFP MODULES.
2. SEE PLANS E-55 THROUGH E-59 FOR TRUNK CABLE AND SPARE CABLE FIBERS TO INSTALL.
3. ALL FIELD, HUB AND LARTMC EQUIPMENT MUST BE CONFIGURED PER SUPPORT PERSONNEL GUIDELINES BEFORE INSTALLATION.

FIBER ASSIGNMENT TABLE

48SMFO FIBER No.	RMS 252	CCTV SA033	RMS 251	TMS 2027					NORWALK HUB	LARTMC
9	X		X						T	T
10	X		X						T	T
11		X		X					T	T
12		X		X					T	T

X- TERMINATED SPLICE T- TERMINATED PER SUPPORT ENGINEER

FOR LEGENDS, ABBREVIATIONS AND GENERAL NOTES SEE SHEET E-54.

MODIFY COMMUNICATION SYSTEM WORK AT NORWALK HUB AND LOS ANGELES REGIONAL TRANSPORTATION MANAGEMENT CENTER

NO SCALE

E-70

STATE OF CALIFORNIA - DEPARTMENT OF TRANSPORTATION
Caltrans OFFICE OF ITS
FUNCTIONAL SUPERVISOR: JACQUELINE C. TAN
CALCULATED-DESIGNED BY: SUNG LEE
CHECKED BY: DAVID PADILLA
REVISED BY
DATE REVISED

LAST REVISION 00-00-00
DATE PLOTTED => 28-MAR-2012
TIME PLOTTED => 13:41

DIST	COUNTY	ROUTE	POST MILES TOTAL PROJECT	SHEET No	TOTAL SHEETS
07	LA	5	2.4/4.0	589	1288

REGISTERED CIVIL ENGINEER 8/17/11 DATE

3-26-12
PLANS APPROVAL DATE

REGISTERED PROFESSIONAL ENGINEER ANDREW BUI No. C63560 Exp. 9/30/12 CIVIL STATE OF CALIFORNIA

The State of California or its officers or agents shall not be responsible for the accuracy or completeness of electronic copies of this plan sheet.

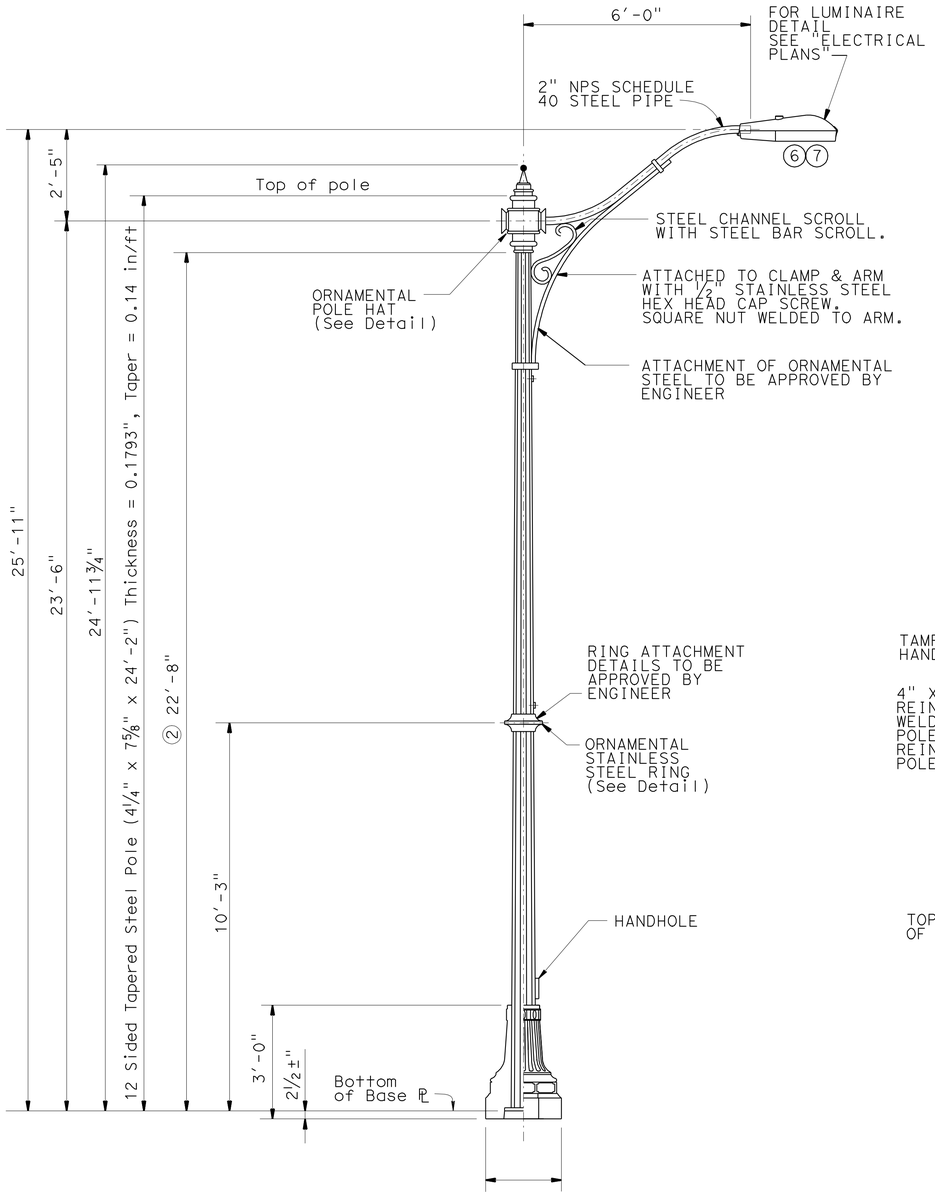

ELEVATION VIEW OF POLE

½"= 1'-0"

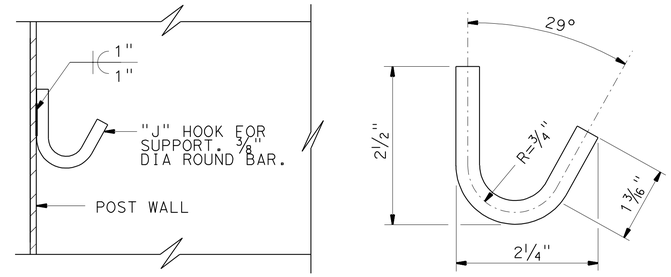

J HOOK DETAILS

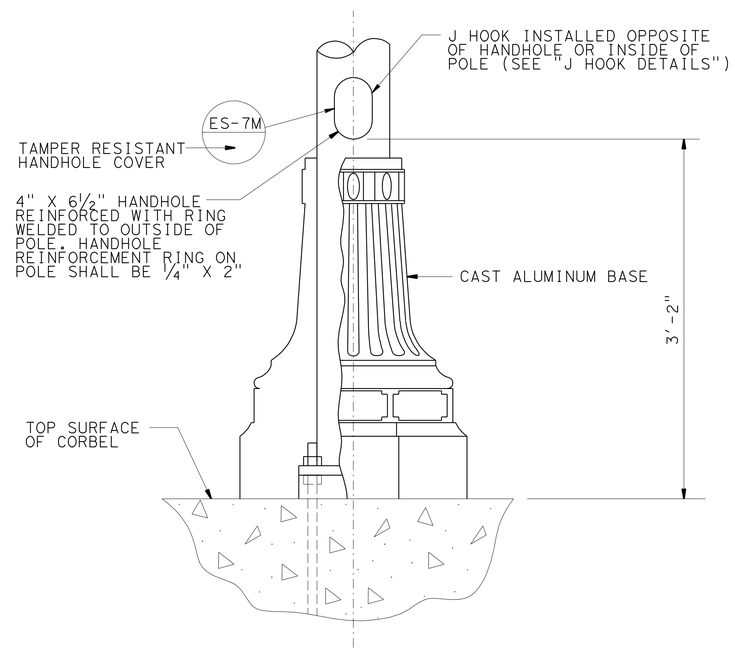

CUT-AWAY OF LOWER POLE VIEWED FROM STREET

1½"= 1'-0"

GENERAL NOTES:

SPECIFICATIONS:

a. Design: AASHTO Standard Specifications for Structural Supports for Highway Signs, Luminaires and Traffic Signals" dated 2001 and including 2002 interims.

b. Loading: Wind loading shall be 100 mph (3-second gust) for the purposes of analysis.

c. Unit Stresses:

i. f_y = 48 ksi tapered steel tube

ii. f_y = 36 ksi unless otherwise specified

NOTES:

① Three decorative poles shall be mounted on corbels located on "B" Line at stationing 97+90, 99+50 and 101+10. See Sheet E-27.

② Alternative pole sections require approval by the Engineer.

③ The contractor shall match pole paint color with existing adjacent poles owned by the City of Santa Fe Spring and Norwalk. Paint color shall be approved by the Engineer.

④ Wiring connections at base of pole shall be avoided except as necessary. Wiring connections shall be accommodated in the nearest pull box where possible.

⑤ A design for the luminaire connection to luminaire arm shall be submitted to Engineer for approval.

⑥ Luminaire shall not have an effective pressure area and weight exceeding 3 square feet and 75 lb, respectively.

⑦ All fasteners shall meet requirements in Section 55 of Standard Specifications. Where fasteners are not covered by these specifications, fittings shall be stainless steel.

THE CONTRACTOR SHALL VERIFY ALL CONTROLLING FIELD DIMENSIONS BEFORE ORDERING OR FABRICATING ANY MATERIAL.

BRANCH CHIEF JEFFREY B WOODY

	BY	CHECKED
DESIGN	A BUI	K C LIU
DETAILS	A R DUDSAK	A BUI
QUANTITIES		

STATE OF CALIFORNIA DEPARTMENT OF TRANSPORTATION

DIVISION OF ENGINEERING SERVICES DESIGN AND TECHNICAL SERVICES SPECIAL DESIGNS BRANCH A

BRIDGE NO. 53-3039
POST MILE 3.0

DECORATIVE LIGHTING STANDARD
POLE DETAILS No. 1

SES-1

(ENGLISH) SPECIAL DESIGNS BRANCH BORDER SHEET (REV. 7-1-09)

ORIGINAL SCALE IN INCHES FOR REDUCED PLANS 0 1 2 3

UNIT: 3619
PROJECT NUMBER & PHASE: 0700001833-1
CONTRACT NO.: 07-215931

DISREGARD PRINTS BEARING EARLIER REVISION DATES

REVISION DATES 4/27/11 5/24/11 8/17/11 8/30/11

SHEET OF

FILE => spec_des_br_prj/2010sd/07-215931/07-215931_ses-1.dgn

USERNAME => s121614 DATE PLOTTED => 29-MAR-2012 TIME PLOTTED => 12:20

DIST	COUNTY	ROUTE	POST MILES TOTAL PROJECT	SHEET No	TOTAL SHEETS
07	LA	5	2.4/4.0	590	1288

REGISTERED CIVIL ENGINEER 8/17/11 DATE

3-26-12
PLANS APPROVAL DATE

REGISTERED PROFESSIONAL ENGINEER ANDREW BUI No. C63560 Exp. 9/30/12 CIVIL STATE OF CALIFORNIA

The State of California or its officers or agents shall not be responsible for the accuracy or completeness of electronic copies of this plan sheet.

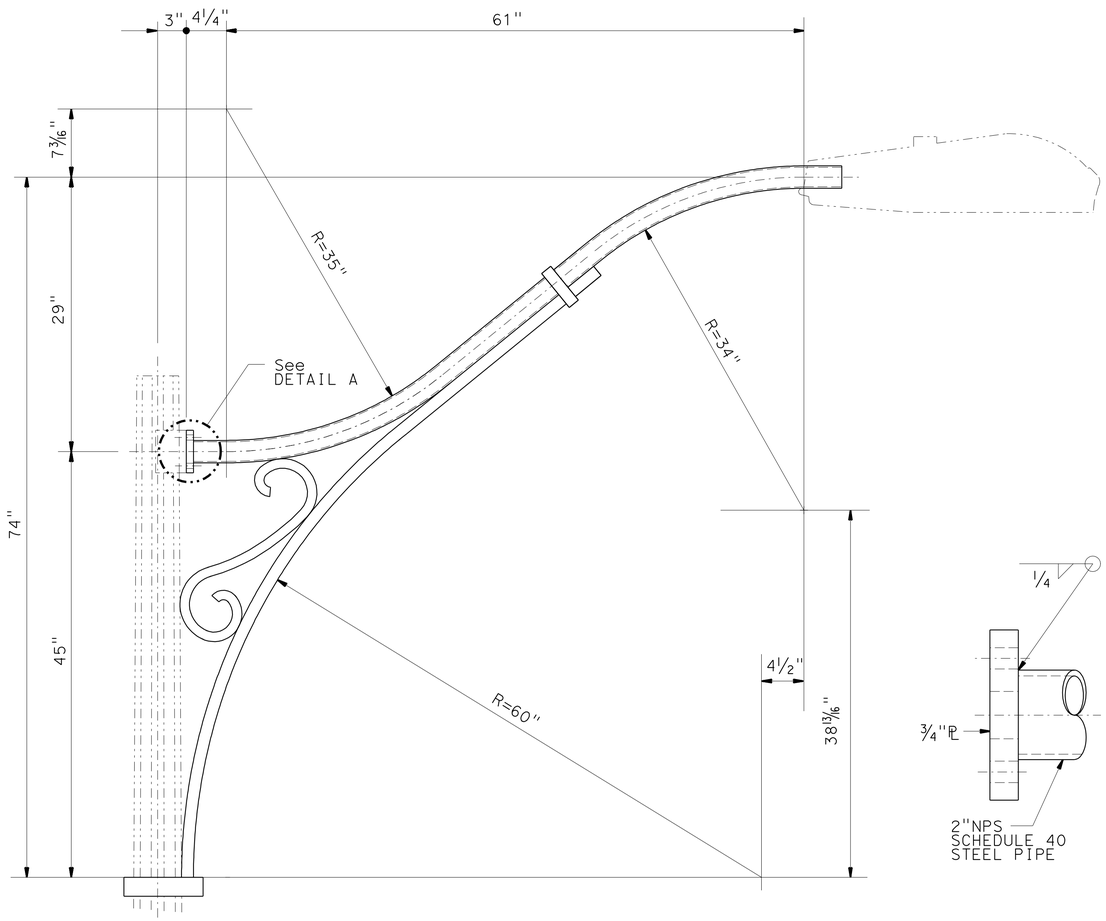

DECORATIVE ARM

1½"= 1'-0"

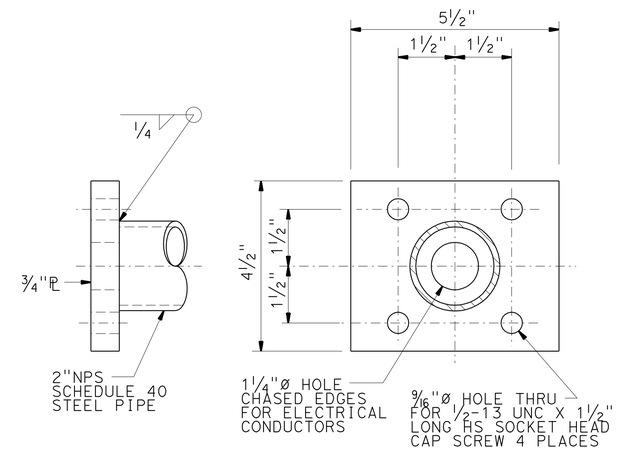

DETAIL A

6"= 1'-0"

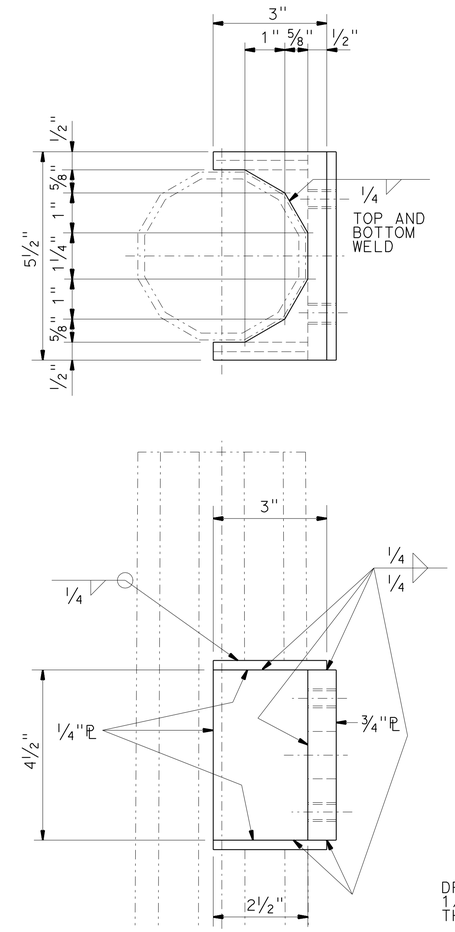

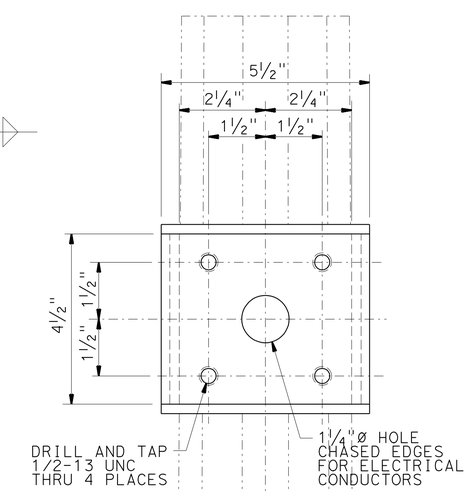

DECORATIVE ARM CONNECTION DETAIL

6"= 1'-0"

THE CONTRACTOR SHALL VERIFY ALL CONTROLLING FIELD DIMENSIONS BEFORE ORDERING OR FABRICATING ANY MATERIAL.

BRANCH CHIEF	JEFFREY B WOODY	DESIGN	BY A BUI / CHECKED K C LIU
		DETAILS	BY A R DUDSAK / CHECKED A BUI
		QUANTITIES	BY / CHECKED

STATE OF CALIFORNIA
DEPARTMENT OF TRANSPORTATION

DIVISION OF ENGINEERING SERVICES
DESIGN AND TECHNICAL SERVICES
SPECIAL DESIGNS BRANCH A

BRIDGE NO. 53-3039
POST MILE 3.0

DECORATIVE LIGHTING STANDARD POLE DETAILS No. 2

SES-2

(ENGLISH) SPECIAL DESIGNS BRANCH BORDER SHEET (REV. 7-1-09)

ORIGINAL SCALE IN INCHES FOR REDUCED PLANS 0 1 2 3

UNIT: 3619
PROJECT NUMBER & PHASE: 0700001833-1
CONTRACT NO.: 07-215931

DISREGARD PRINTS BEARING EARLIER REVISION DATES

REVISION DATES 8/30/11 8/24/11 8/12/11 SHEET OF

FILE => spec_des_br_prj/2010sd/07-215931/07-215931_ses-2.dgn

USERNAME => s114926 DATE PLOTTED => 28-MAR-2012 TIME PLOTTED => 13:43

DIST	COUNTY	ROUTE	POST MILES TOTAL PROJECT	SHEET No	TOTAL SHEETS
07	LA	5	2.4/4.0	591	1288

REGISTERED CIVIL ENGINEER 8/17/11 DATE

3-26-12
PLANS APPROVAL DATE

REGISTERED PROFESSIONAL ENGINEER ANDREW BUI No. C63560 Exp. 9/30/12 CIVIL STATE OF CALIFORNIA

The State of California or its officers or agents shall not be responsible for the accuracy or completeness of electronic copies of this plan sheet.

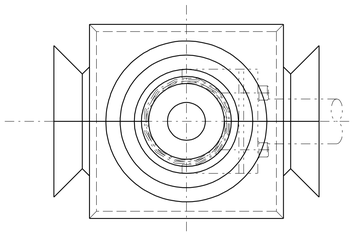

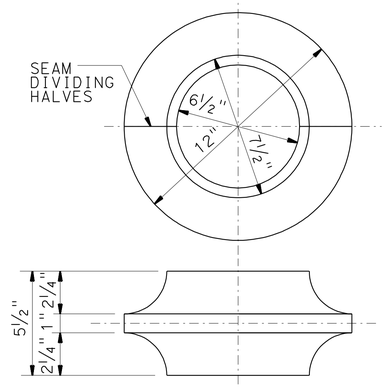

ORNAMENTAL RING

3"= 1'-0"

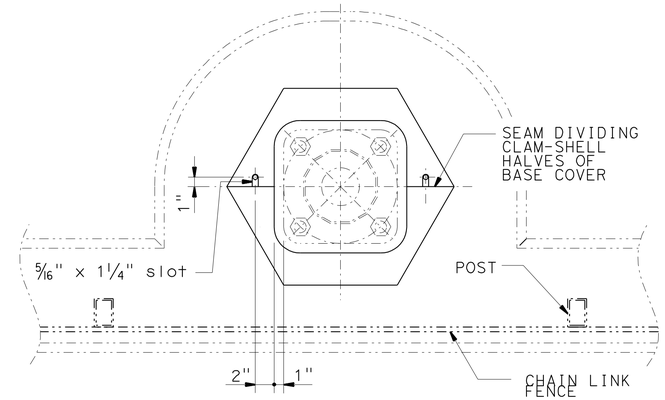

PLAN VIEW

1½"= 1'-0"

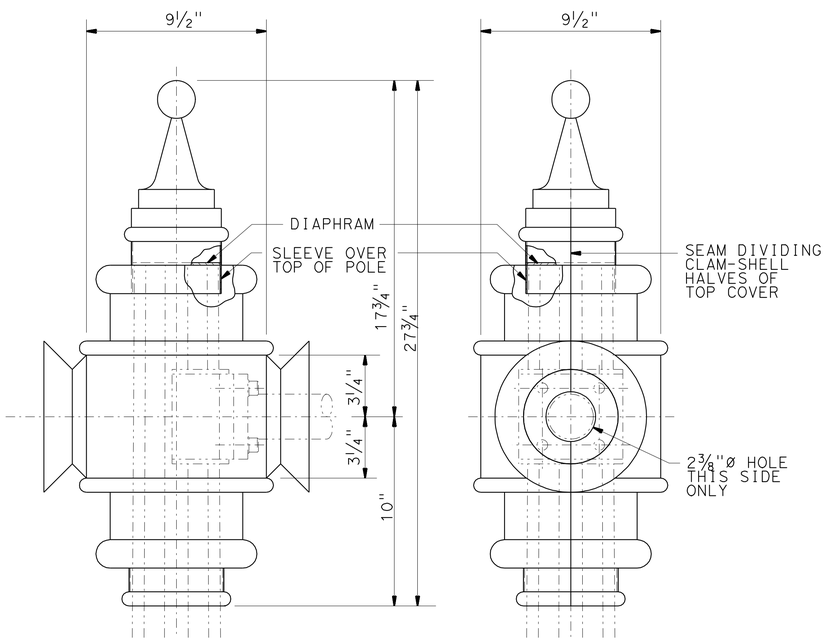

DECORATIVE POLE HAT

3"= 1'-0"

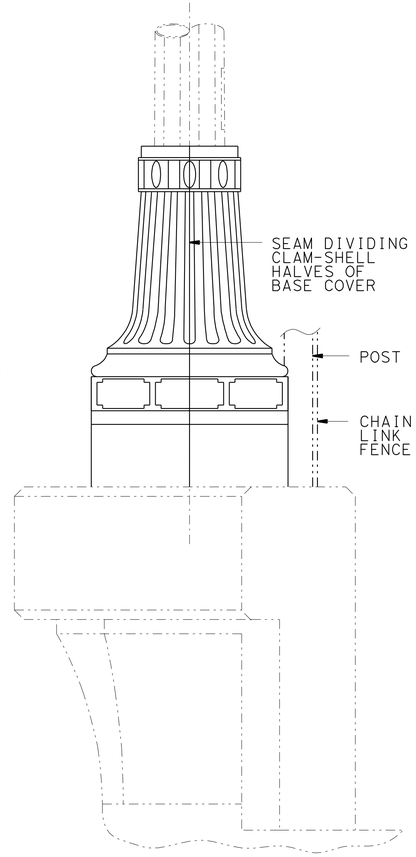

PROFILE VIEW

1½"= 1'-0"

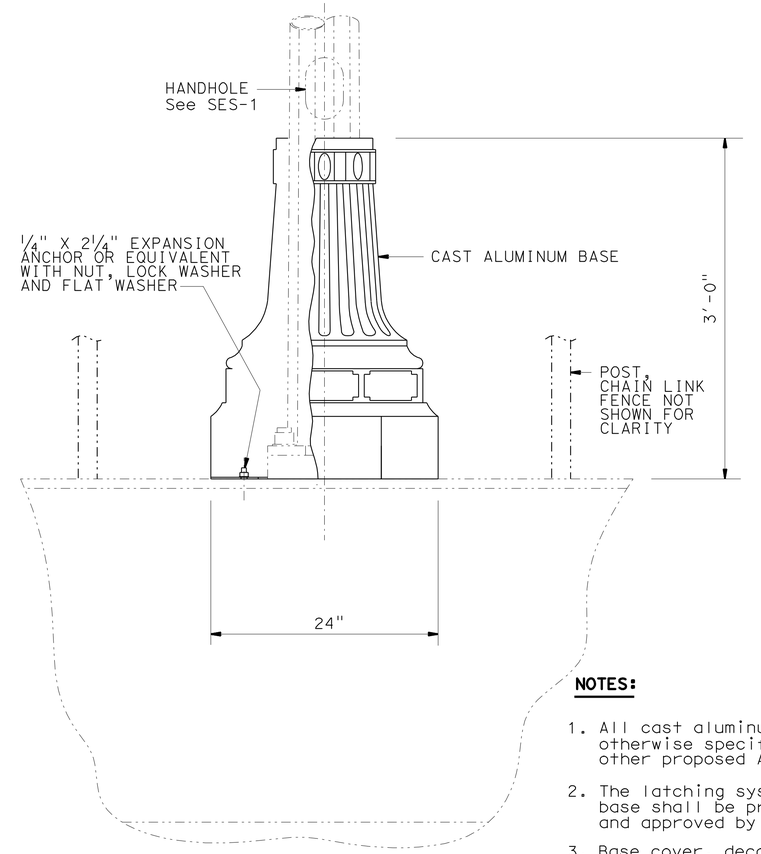

ELEVATION VIEW

1½"= 1'-0"

NOTES:

1. All cast aluminum shall be ASTM 356 unless otherwise specified. The Engineer may approve other proposed ASTM specification.
2. The latching system for the cast aluminum base shall be proposed by the Contractor and approved by the Engineer.
3. Base cover, decorative pole hat and ornamental ring shall meet stated specifications and shall be of similar design as shown. Designs to be approved by the Engineer.

THE CONTRACTOR SHALL VERIFY ALL CONTROLLING FIELD DIMENSIONS BEFORE ORDERING OR FABRICATING ANY MATERIAL.

BRANCH CHIEF	JEFFREY B WOODY	DESIGN	BY A BUI / CHECKED K C LIU
		DETAILS	BY A R DUDSAK / CHECKED A BUI
		QUANTITIES	BY / CHECKED

STATE OF CALIFORNIA
DEPARTMENT OF TRANSPORTATION

DIVISION OF ENGINEERING SERVICES
DESIGN AND TECHNICAL SERVICES
SPECIAL DESIGNS BRANCH A

BRIDGE NO. 53-3039
POST MILE 3.0

DECORATIVE LIGHTING STANDARD
POLE DETAILS No. 3

SES-3

(ENGLISH) SPECIAL DESIGNS BRANCH BORDER SHEET (REV. 7-1-09)

ORIGINAL SCALE IN INCHES FOR REDUCED PLANS 0 1 2 3

UNIT: 3619
PROJECT NUMBER & PHASE: 0700001833-1
CONTRACT NO.: 07-215931

DISREGARD PRINTS BEARING EARLIER REVISION DATES
REVISION DATES 8/30/11 8/23/11 8/17/11
SHEET OF

FILE => spec_des_br_prj/2010sd/07-215931/07-215931_ses-3.dgn

USERNAME => s114926 DATE PLOTTED => 28-MAR-2012 TIME PLOTTED => 13:44

DIST	COUNTY	ROUTE	POST MILES TOTAL PROJECT	SHEET No	TOTAL SHEETS
07	LA	5	2.4/4.0	592	1288

REGISTERED CIVIL ENGINEER 8/17/11 DATE

3-26-12
PLANS APPROVAL DATE

REGISTERED PROFESSIONAL ENGINEER ANDREW BUI No. C63560 Exp. 9/30/12 CIVIL STATE OF CALIFORNIA

The State of California or its officers or agents shall not be responsible for the accuracy or completeness of electronic copies of this plan sheet.

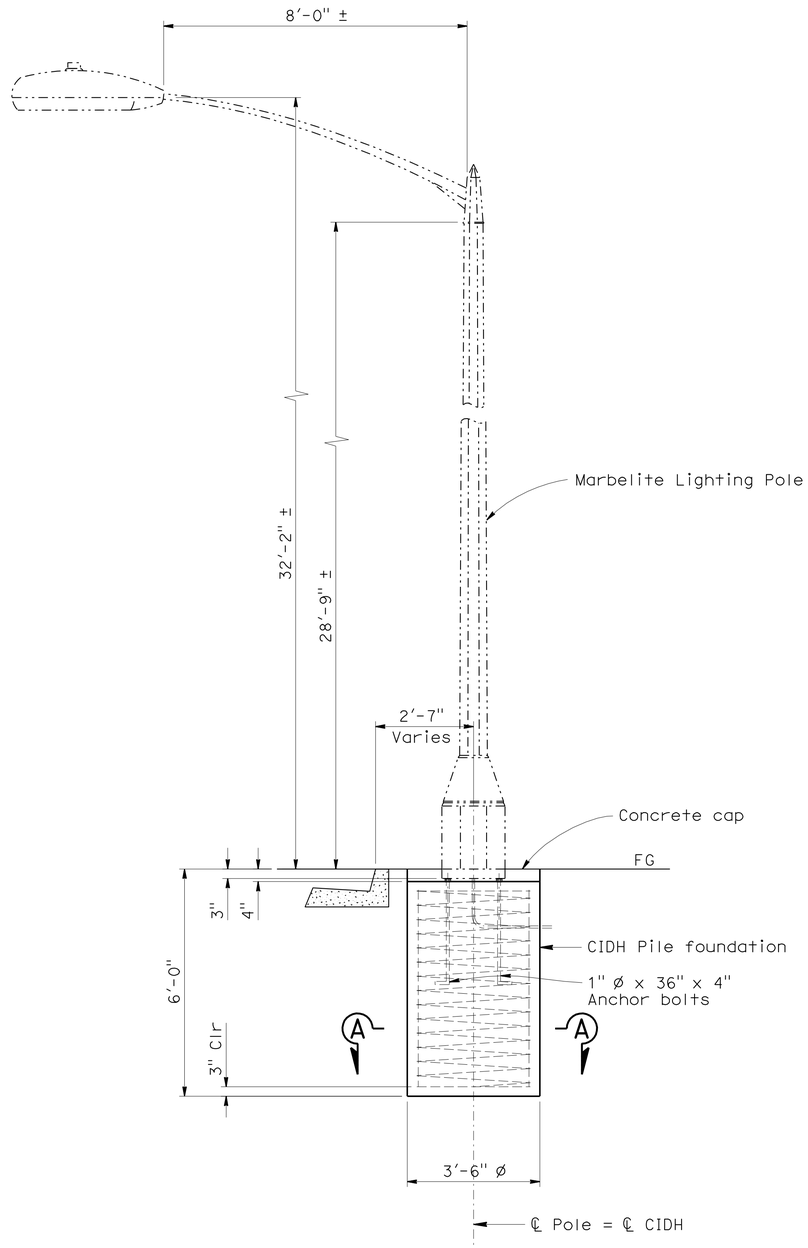

ELEVATION

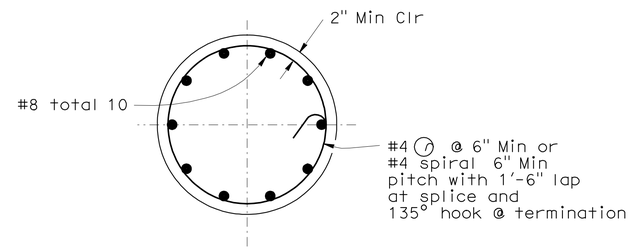

SECTION A-A

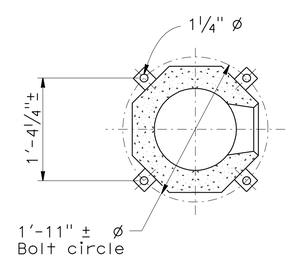

BASE DETAIL

NOTES:

1. See "ROAD PLANS" for locations.
2. Street light conduit must be installed within 2" from the back of curb and 18" below top of curb, unless otherwise specified.
3. The marbelite poles are proprietary and are not warranted for performance. Anchor bolts are pre-specified and their performance is not warranted.
4. CIDH pile foundation was analyzed only for overturning moment resistance.
5. During pole erection, the post shall be raked as necessary with the use of leveling nuts to provide a plumb pole.

NOTE:
THE CONTRACTOR SHALL VERIFY ALL CONTROLLING FIELD DIMENSIONS BEFORE ORDERING OR FABRICATING ANY MATERIAL.

NO SCALE

BRANCH CHIEF JEFFREY B WOODY

	BY	CHECKED
DESIGN	A BUI	K.C. LIU
DETAILS	D W JUSTICE Jr	A BUI
QUANTITIES		

STATE OF CALIFORNIA DEPARTMENT OF TRANSPORTATION

DIVISION OF ENGINEERING SERVICES DESIGN AND TECHNICAL SERVICES SPECIAL DESIGNS BRANCH A

BRIDGE NO. N/A
POST MILE

MARBELITE LIGHTING POLE FOUNDATION DETAILS

SES-4

(ENGLISH) SPECIAL DESIGNS BRANCH BORDER SHEET (REV. 7-1-09)

ORIGINAL SCALE IN INCHES FOR REDUCED PLANS 0 1 2 3

UNIT: 3619
PROJECT NUMBER & PHASE: 0700001833-1
CONTRACT NO.: 07-215931

DISREGARD PRINTS BEARING EARLIER REVISION DATES

REVISION DATES 3-9-11 8-12-11 8-25-11 8-30-11

SHEET OF

FILE => spec_des_br_prj/2010sd/07-215931/07-215931_ses-4.dgn

USERNAME => s124496 DATE PLOTTED => 28-MAR-2012 TIME PLOTTED => 08:46

DIST	COUNTY	ROUTE	POST MILES TOTAL PROJECT	SHEET No	TOTAL SHEETS
07	LA	5	2.4/4.0	593	1288

REGISTERED CIVIL ENGINEER 9/27/11 DATE

3-26-12
PLANS APPROVAL DATE

REGISTERED PROFESSIONAL ENGINEER
ANDREW BUI
No. C63560
Exp. 9/30/12
CIVIL
STATE OF CALIFORNIA

The State of California or its officers or agents shall not be responsible for the accuracy or completeness of electronic copies of this plan sheet.

NOTES:

1. All metallic conduits, bolts straps and misc hardware shall be galvanized.
2. Elements (total VIVDS assembly) shall have a maximum weight of 10 lb and a maximum effective pressure area os 1 square foot.
3. Maximum of 2 VIVDS elements added per traffic signal structure. Maximum of 1 element per arm (lighting arm or traffic signal arm).
4. This detail applies only for steel luminaire arms on newly installed and temporary poles designated according to Caltrans Standard Plans.

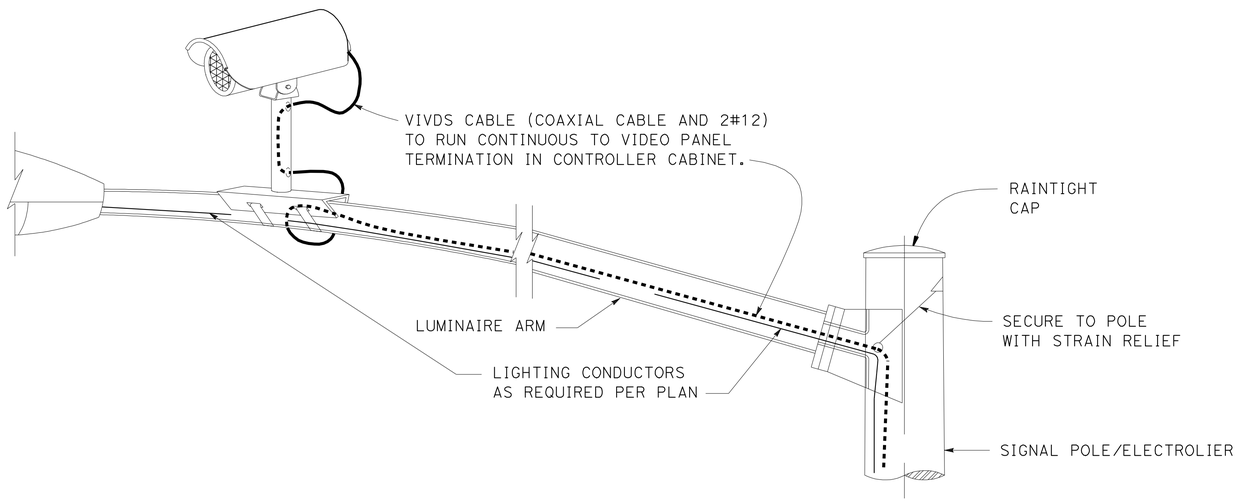

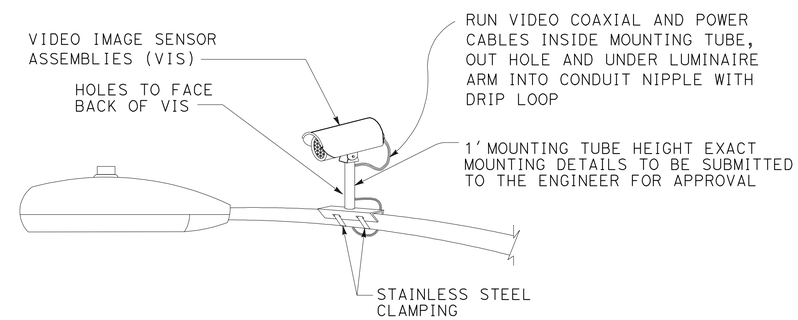

CAMERA MOUNTING DETAILS

NO SCALE

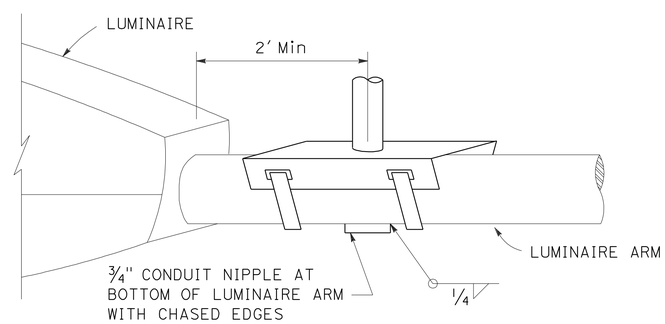

DETAIL A

NO SCALE

NOTE:
THE CONTRACTOR SHALL VERIFY ALL CONTROLLING FIELD DIMENSIONS BEFORE ORDERING OR FABRICATING ANY MATERIAL.

NO SCALE

BRANCH CHIEF	JEFFREY B WOODY	DESIGN	BY A BUI / CHECKED K.C. LIU
		DETAILS	BY D W JUSTICE Jr / CHECKED A BUI
		QUANTITIES	BY / CHECKED

STATE OF CALIFORNIA
DEPARTMENT OF TRANSPORTATION

DIVISION OF ENGINEERING SERVICES
DESIGN AND TECHNICAL SERVICES
SPECIAL DESIGNS BRANCH
A

BRIDGE NO. N/A
POST MILE

CAMERA MOUNTING DETAILS
SIGNAL AND LIGHTING SYSTEM

SES-5

(ENGLISH) SPECIAL DESIGNS BRANCH BORDER SHEET (REV. 7-1-09)

ORIGINAL SCALE IN INCHES FOR REDUCED PLANS 0 1 2 3

UNIT: 3619
PROJECT NUMBER & PHASE: 0700001833-1
CONTRACT NO.: 07-215931

DISREGARD PRINTS BEARING EARLIER REVISION DATES

REVISION DATES: 8-30-11 9-9-11 9-26-11

SHEET OF

FILE => spec_des_br_prj/2010sd/07-215931/07-215931_ses-5.dgn

USERNAME => s124496 DATE PLOTTED => 28-MAR-2012 TIME PLOTTED => 08:46

DIST	COUNTY	ROUTE	POST MILES TOTAL PROJECT	SHEET No	TOTAL SHEETS
07	LA	5	2.4/4.0	594	1288

REGISTERED CIVIL ENGINEER — 8/24/11 DATE

3-26-12
PLANS APPROVAL DATE

The State of California or its officers or agents shall not be responsible for the accuracy or completeness of electronic copies of this plan sheet.

REGISTERED PROFESSIONAL ENGINEER — ELISEO LOPEZ No. C72910 Exp. 12/31/12 CIVIL — STATE OF CALIFORNIA

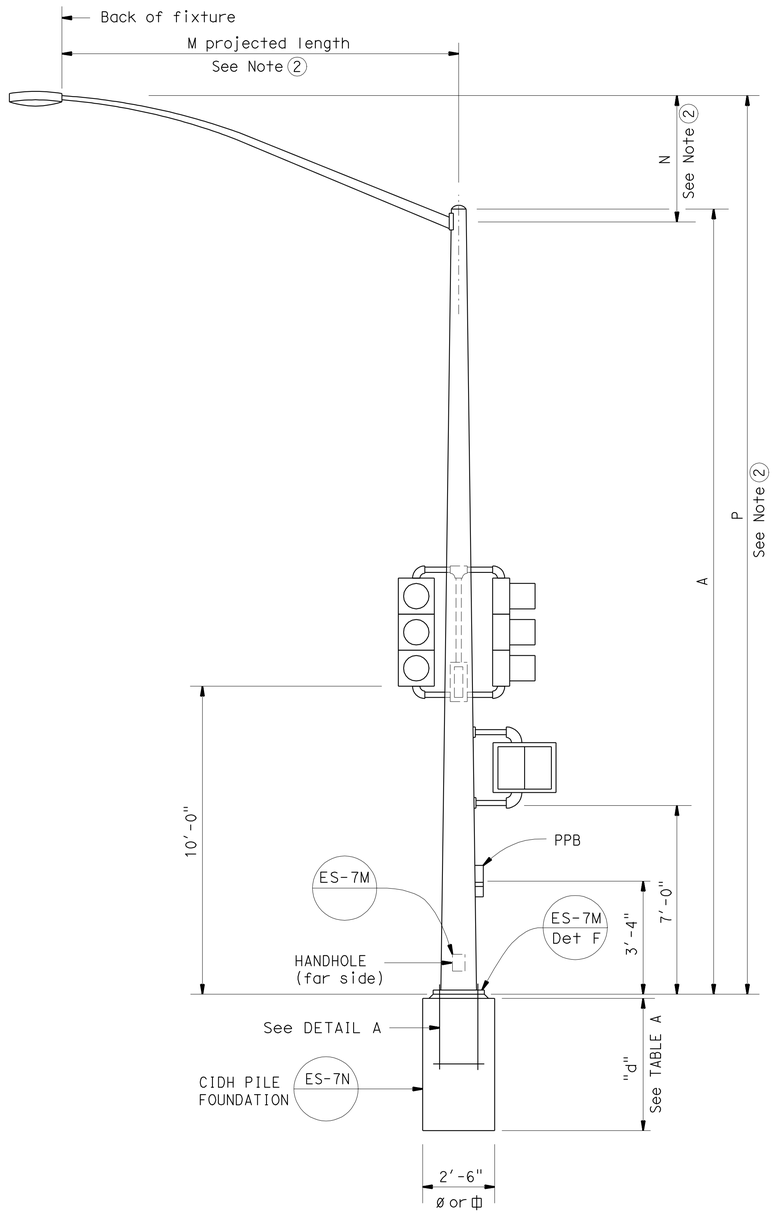

ELEVATION
TYPE 15TS MODIFIED

See Note (2)

THE CONTRACTOR SHALL VERIFY ALL CONTROLLING FIELD DIMENSIONS BEFORE ORDERING OR FABRICATING ANY MATERIAL.

TABLE A

Pole Type	Pole Data				Base Plate Data				"d" 2'-6"ø CIDH Pile		Structural Steel LBS plus 3.5% Galvanizing
	Height "A"	Min OD		Thickness	"C"	Thickness	Anchor Bolts				
		BASE	TOP				SIZE	BC = BOLT CIRCLE	LEVEL GROUND	SLOPING GROUND	
15TS MODIFIED	35'	9⅜"	3⁹⁄₁₆"	0.1793"	1'-3"	2"	1½"ø x 42"	1'-2"	10'-0"	12'-0"	742

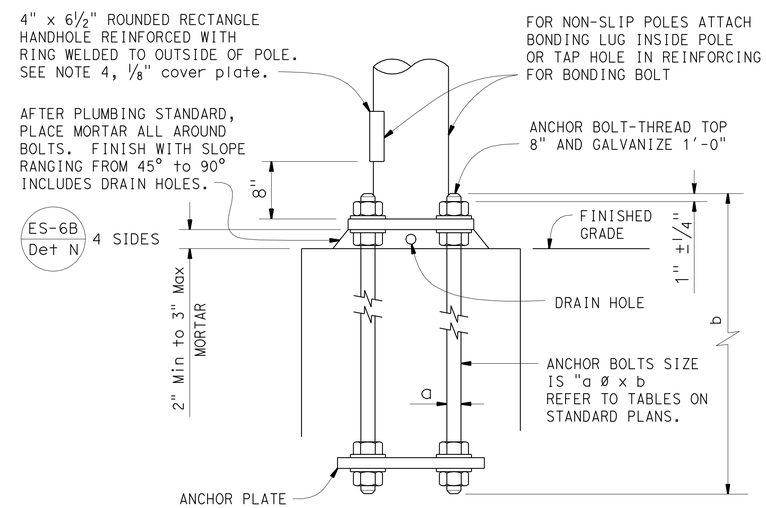

HANDHOLE AND ANCHORAGE
DETAIL A

GENERAL NOTES:

SPECIFICATIONS

Design: AASHTO Standard Specifications for Structural Supports for Highway Signs, Luminaires and Traffic Signals dated 2001.

LOADING

Wind Loadings: 100 MPH

UNIT STRESSES

Structural Steel: fy = 48,000 psi tapered steel tube
fy = 36,000 psi unless otherwise noted.

Anchor bolts = A307

Reinforced Concrete: f'c = 3,600 psi
fy = 60,000 psi

NOTES:

1. For pole locations, see "ELECTRICAL"Plans.
2. All steel shall be galvanized after fabrication.
3. During pole erection the post shall be raked as necessary with the use of leveling nuts to provide a plumb pole axis.
4. The foundation shall be treated as level ground condition if the slope inclination is flatter than 4H:1V.
5. Foundation design is based on AASHTO 2001 article 13.6 Broms' approximate procedure assuming a cohessionless material. The angle of Internal friction used is 30 degrees and unit weight of soil used is 120 lbs/ft³.
6. For details not shown, see "2006 STANDARD PLANS" and "2006 REVISED STANDARD PLANS".

NOTES:

(1) Pipe dimensions for pedestrian push button post are nominal, See ASTM A6M.

(2) For additional details and data for Type 15TS Standard, see RSP ES-6A.

NO SCALE

BRANCH CHIEF	JEFFREY B WOODY	DESIGN	BY E LOPEZ	CHECKED A BUI
		DETAILS	BY A R DUDSAK	CHECKED E LOPEZ
		QUANTITIES	BY	CHECKED

STATE OF CALIFORNIA
DEPARTMENT OF TRANSPORTATION

DIVISION OF ENGINEERING SERVICES
DESIGN AND TECHNICAL SERVICES
SPECIAL DESIGNS BRANCH A

BRIDGE NO. N/A
POST MILE

TYPE 15TS MODIFIED
POLE DETAILS

SES-6

(ENGLISH) SPECIAL DESIGNS BRANCH BORDER SHEET (REV. 7-1-09)

ORIGINAL SCALE IN INCHES FOR REDUCED PLANS 0 1 2 3

UNIT: 3619
PROJECT NUMBER & PHASE: 0700001833-1
CONTRACT NO.: 07-215931

DISREGARD PRINTS BEARING EARLIER REVISION DATES

REVISION DATES: 8-17-11 8-24-11 8-30-11

SHEET OF

USERNAME => s12614 DATE PLOTTED => 29-MAR-2012 TIME PLOTTED => 12:20

FILE => spec_des_br_prj/2010sd/07-215931/07-215931_ses-6.dgn

DIST	COUNTY	ROUTE	POST MILES TOTAL PROJECT	SHEET No	TOTAL SHEETS
07	LA	5	2.4/4.0	595	1288

REGISTERED CIVIL ENGINEER 8/30/11 DATE

3-26-12
PLANS APPROVAL DATE

The State of California or its officers or agents shall not be responsible for the accuracy or completeness of electronic copies of this plan sheet.

REGISTERED PROFESSIONAL ENGINEER TAMARA S. MARCHENKO No. C76837 Exp. 12/31/12 CIVIL STATE OF CALIFORNIA

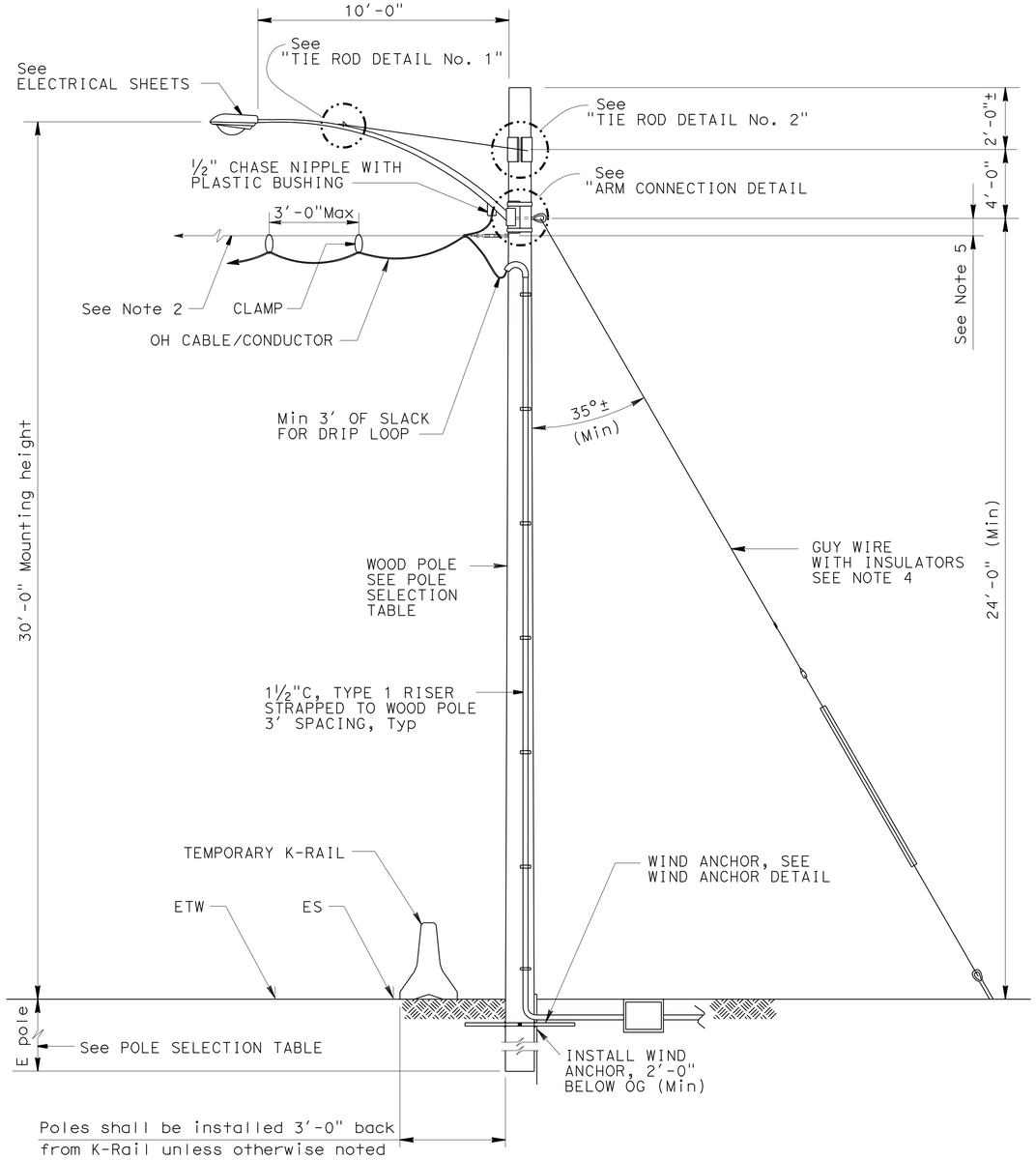

TYPICAL LUMINAIRE MOUNTING DETAIL ON WOOD POLE

THE CONTRACTOR SHALL VERIFY ALL CONTROLLING FIELD DIMENSIONS BEFORE ORDERING OR FABRICATING ANY MATERIAL.

POLE SELECTION TABLE

LOCATION	CLASS	LENGTH	"E pole" EMBEDMENT (FT)
2 3 SHEET E-14, E-15 MAX SPAN = 190'	2	45	10
3 4 SHEET E-14, E-15	1	40	10

LUMINAIRE ARM DATA

Projected Length	N Rise	Min OD At Pole	Thickness
15'-0"	4'-9"	4 1/4"	0.1196"

Refer to ES-6A for Luminaire arm details

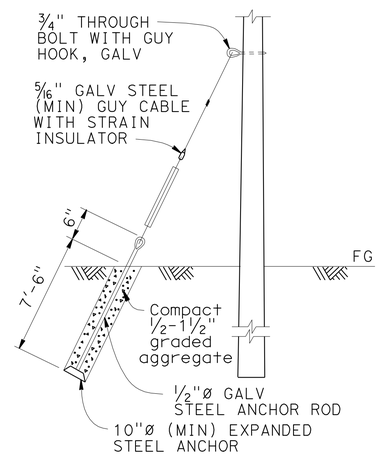

GUY WIRE INSTALLATION DETAIL

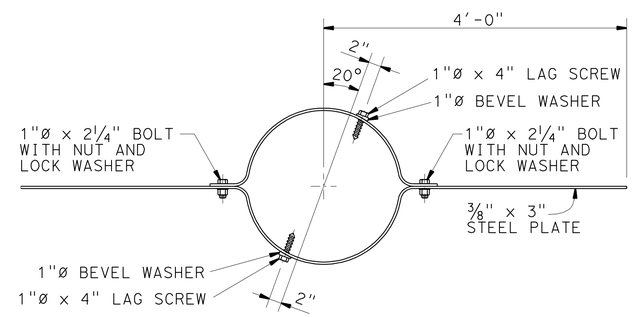

WIND ANCHOR

To be installed perpendicular to mast arms and 2'-0" minimum below grade

GENERAL NOTES:

SPECIFICATIONS

Design: AASHTO Standard Specifications for Structural Supports for Highway Signs, Luminaires and Traffic Signals dated 2001.

LOADING

Wind Loadings: 100 MPH

UNIT STRESSES

Timber Poles: Fb = 1850 Tapered treated round pole
Fv = 110 psi ASTM D2899 Standard
E = 1500 x 10^3 psi

TREATMENT

AWPA UI Use category UC4B.

SPECIFICATIONS

Caltrans Standard Specifications May 2006
ANSI 05.1 Wood Poles
ASTM A475 Utility Grade Wires

NOTES:

1. All overhead cables shall be sagged with 20'-0" minimum overhead clearance.
2. Conductors shall be suspended from span wire as follows: A)Main run 5/16" span-wire with 4.5%± sag. No spare conductors allowed except as noted.
3. Overhead line construction not specifically covered here shall conform with the provisions of General Order No. 95 of Public Utilities Commission.
4. Wood poles shall be stabilized using guy wires, Push braces or rakes at each dead end, corner, drop or line deviation more than 15° from straight line. The direction of the guy shall counteract the resultant of unbalanced force applied to pole. Where space or conflict prevent guy installation, a diagonal Push brace shall be used. The brace shall be wood and shall be connected to the pole by means to satisfy structural and electrical requirements.
The direction of the brace shall counteract the resultant of unbalanced horizontal force of 2500 (Min) applied to the pole.
5. Guy shall be attached to pole as nearly as practical to the center of conductors load, or 2'-0" Max otherwise, See Note 4.
6. All attachments shall be mounted with stainless steel straps or other manufacturers methods without drilling holes in pole, except as shown. Drilling through pole will require the Engineer's approval.
7. Foundation design is based on AASHTO 2001 article 13.6 Broms' approximate procedure assuming a cohesionless material. The angle of Internal friction used is 30° and unit weight of soil used is 120 lb/ft^3. The Contractor to verify actual soil condition.
8. If pole is located on a steep slope add 2 feet extra for embedment.
9. For details not shown, see "2006 STANDARD PLANS"and "2006 REVISED STANDARD PLANS"
10. All temporary poles support OH Conductors. Attach luminaire arm and/or combination of attachments as specified at locations where indicated on Electrical Sheets.

BRANCH CHIEF	JAMES SAGAR	DESIGN	BY TAMARA MARCHENKO	CHECKED STAN JOHNSON
		DETAILS	BY A R DUDSAK	CHECKED TAMARA MARCHENKO
		QUANTITIES	BY	CHECKED

STATE OF CALIFORNIA
DEPARTMENT OF TRANSPORTATION

DIVISION OF ENGINEERING SERVICES
DESIGN AND TECHNICAL SERVICES
SPECIAL DESIGNS BRANCH B

BRIDGE NO. N/A
POST MILE

LIGHTING-TEMPORARY
WOOD POLE DETAILS

SES-7

(ENGLISH) SPECIAL DESIGNS BRANCH BORDER SHEET (REV. 7-1-09)

ORIGINAL SCALE IN INCHES FOR REDUCED PLANS 0 1 2 3

UNIT: 3619
PROJECT NUMBER & PHASE: 0700001833-1
CONTRACT NO.: 07-215931

DISREGARD PRINTS BEARING EARLIER REVISION DATES

REVISION DATES 8-14-11 8-30-11 3-20-11

SHEET OF

FILE => spec_des_br_prj/2010sd/07-215931/07-215931_ses-7.dgn

USERNAME => s121614 DATE PLOTTED => 29-MAR-2012 TIME PLOTTED => 12:20

DIST	COUNTY	ROUTE	POST MILES TOTAL PROJECT	SHEET No	TOTAL SHEETS
07	LA	5	2.4/4.0	596	1288

REGISTERED CIVIL ENGINEER 8/30/11 DATE

3-26-12
PLANS APPROVAL DATE

REGISTERED PROFESSIONAL ENGINEER TAMARA S. MARCHENKO No. C76837 Exp. 12/31/12 CIVIL STATE OF CALIFORNIA

The State of California or its officers or agents shall not be responsible for the accuracy or completeness of electronic copies of this plan sheet.

NOTES:

1. All hardware and steel shall be galvanized after fabrication.
2. Arm Base connection details shall be in compliance with Standard Plans Detail Sheet ES-6A with noted modifications.
3. 3500 LB Min capacity strap system shall be used for top and bottom of plate.
4. The Contractor to verify pole dimensions at Tie-Rod attachment height. Fabricate 8" flat bar with "L" Dimension to maintain an open gap between encasement in finished installation.

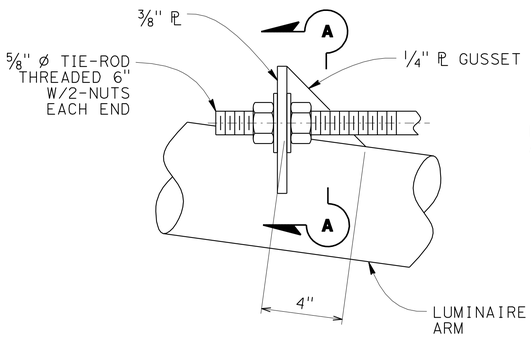

ELEVATION

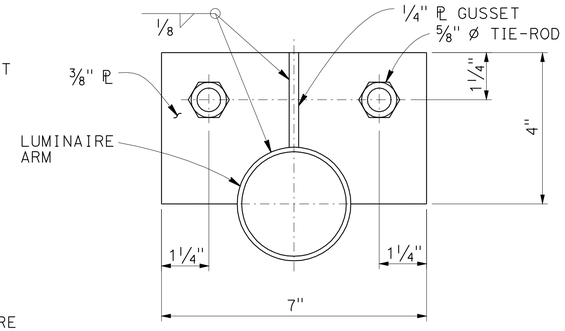

SECTION A-A

TIE-ROD DETAIL No. 1

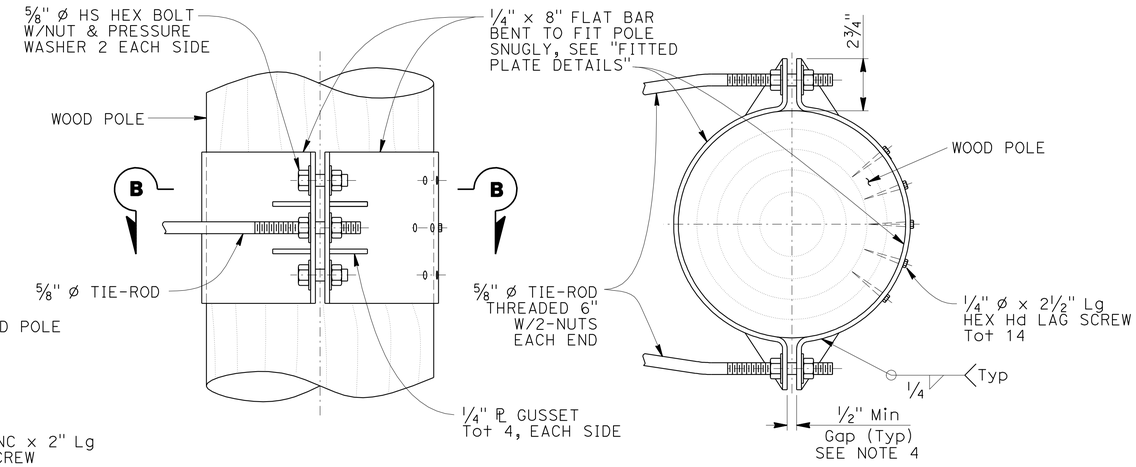

ELEVATION **SECTION B-B**

TIE-ROD DETAIL No. 2

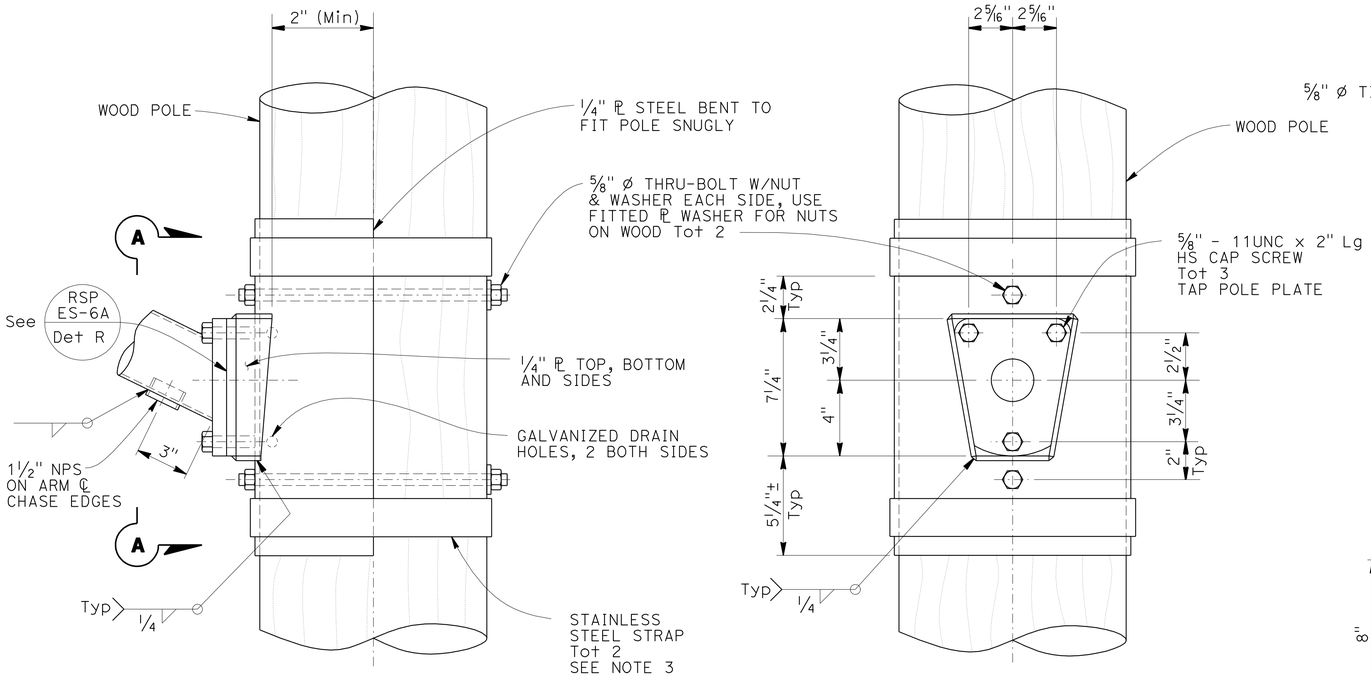

ELEVATION **VIEW A-A**

ARM CONNECTION DETAILS

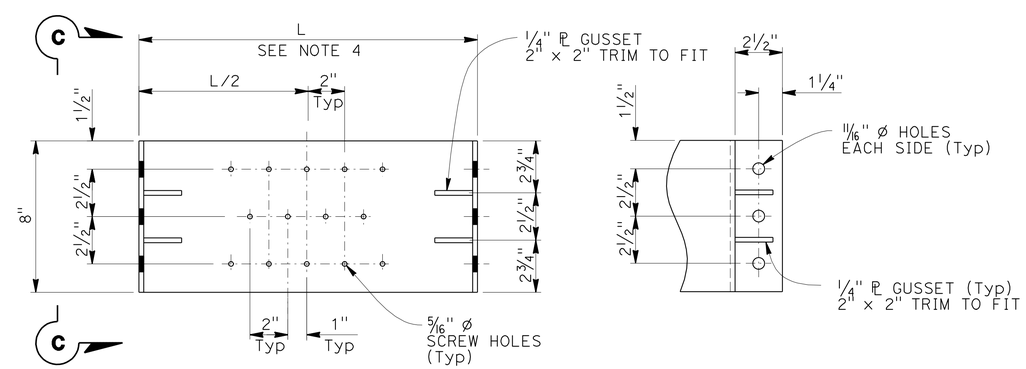

ELEVATION **SECTION C-C**

FITTED PLATE DETAILS

Note: 2 Required (1 w/screw holes, 1 without)

NOTE:
THE CONTRACTOR SHALL VERIFY ALL CONTROLLING FIELD DIMENSIONS BEFORE ORDERING OR FABRICATING ANY MATERIAL.

NO SCALE

BRANCH CHIEF JAMES SAGAR	DESIGN	BY TAMARA MARCHENKO	CHECKED STAN JOHNSON
	DETAILS	BY A R DUDSAK	CHECKED TAMARA MARCHENKO
	QUANTITIES	BY	CHECKED

STATE OF CALIFORNIA
DEPARTMENT OF TRANSPORTATION

DIVISION OF ENGINEERING SERVICES
DESIGN AND TECHNICAL SERVICES
SPECIAL DESIGNS BRANCH

B

BRIDGE NO. N/A
POST MILE Varies

TEMPORARY WOOD POLE
WOOD POLE DETAILS

SES-8

(ENGLISH) SPECIAL DESIGNS BRANCH BORDER SHEET (REV. 7-1-09)

ORIGINAL SCALE IN INCHES FOR REDUCED PLANS 0 1 2 3

UNIT: 3619
PROJECT NUMBER & PHASE: 0700001833-1
CONTRACT NO.: 07-215931

DISREGARD PRINTS BEARING EARLIER REVISION DATES

REVISION DATES 7-14-11 7-18-11 7-28-11 8-30-11

SHEET OF

FILE => spec_des_br_prj/2010sd/07-215931/07-215931_ses-8.dgn

USERNAME => s121614 DATE PLOTTED => 29-MAR-2012 TIME PLOTTED => 12:20

DIST	COUNTY	ROUTE	POST MILES TOTAL PROJECT	SHEET No	TOTAL SHEETS
07	LA	5	2.4/4.0	597	1288

REGISTERED CIVIL ENGINEER 9/27/11 DATE

3-26-12
PLANS APPROVAL DATE

REGISTERED PROFESSIONAL ENGINEER ANDREW BUI No. C63560 Exp. 9/30/12 CIVIL STATE OF CALIFORNIA

The State of California or its officers or agents shall not be responsible for the accuracy or completeness of electronic copies of this plan sheet.

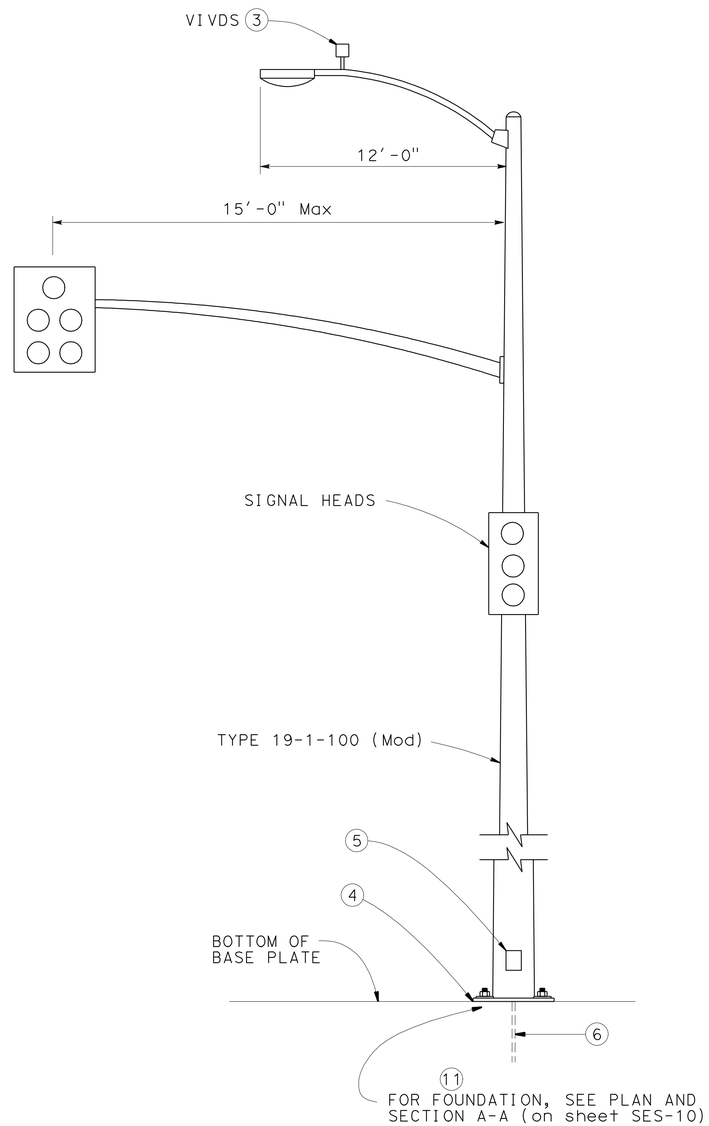

TYPE 19-1-100 (Mod)

NOTES:

1. Type 19-1-100 (Mod) shall conform to 2006 Standard Plan RSP ES-7C (foundation excluded).
2. Type 19-1-100 (Mod) shall have a maximum of two 3-section heads and 2-ped heads mounted to the pole and one 5-section signal head mounted on the signal arm. (2-ped heads not shown)
3. For VIVDS details, see sheet SES-5.
4. No grout required.
5. For Handhole details, see 2006 Standard Plan ES-7M.
6. For wiring connection details, See Electrical Plans.
7. Pole Locations:
   -Rte 5 12+80 SB Off Ramp
   -Rte 5 13+80 SB Off Ramp
8. For details not shown, see 2006 Standard Plans and 2006 Revised Standard Plans.
9. All steel shall be galvanized after fabrication.
10. During pole installation the post shall be raked as necessary with the use of leveling nuts to provide a plumb pole axis.
11. The foundation shall be on level ground with slope inclination Max 4:1 (Horizontal : Vertical).
12. Design Specification: AASHTO Standard Specifications for Structural Supports for Highway Signs, Luminaires and Traffic Signals dated 2001.
13. Wind Loadings: 100 mph (3-second gust)
14. Unit Stresses (Structural Steel):
    a. fy = 55,000 psi (tapered steeltube)
    b. fy = 50,000 psi (unless otherwise noted)
15. Anchor bolts: fy = 55,000 psi
16. Threaded rod: fy = 55,000 psi
17. Unit Stresses (Reinforced Concrete):
    a. minor concrete
    b. fy = 60,000 psi (rebar)

NOTE:
THE CONTRACTOR SHALL VERIFY ALL CONTROLLING FIELD DIMENSIONS BEFORE ORDERING OR FABRICATING ANY MATERIAL.

NO SCALE

BRANCH CHIEF JEFFREY B WOODY

	BY	CHECKED
DESIGN	A HOUGH	A BUI
DETAILS	A R DUDSAK	A HOUGH
QUANTITIES		

STATE OF CALIFORNIA
DEPARTMENT OF TRANSPORTATION

DIVISION OF ENGINEERING SERVICES
DESIGN AND TECHNICAL SERVICES
SPECIAL DESIGNS BRANCH A

BRIDGE NO. N/A
POST MILE

ELECTRICAL SYSTEMS
MODIFY SIGNAL AND LIGHTING TEMPORARY POLE DETAILS

SES-9

(ENGLISH) SPECIAL DESIGNS BRANCH BORDER SHEET (REV. 7-1-09)

ORIGINAL SCALE IN INCHES FOR REDUCED PLANS 0 1 2 3

UNIT: 3619
PROJECT NUMBER & PHASE: 0700001833-1
CONTRACT NO.: 07-215931

DISREGARD PRINTS BEARING EARLIER REVISION DATES

REVISION DATES: 9-27-11 ~~9-9-11~~ ~~9-26-11~~

SHEET OF

FILE => spec_des_br_prj/2010sd/07-215931/07-215931_ses-9.dgn

USERNAME => s124496 DATE PLOTTED => 28-MAR-2012 TIME PLOTTED => 08:47

DIST	COUNTY	ROUTE	POST MILES TOTAL PROJECT	SHEET No	TOTAL SHEETS
07	LA	5	2.4/4.0	598	1288

REGISTERED CIVIL ENGINEER 9/27/11 DATE

3-26-12
PLANS APPROVAL DATE

REGISTERED PROFESSIONAL ENGINEER ANDREW BUI No. C63560 Exp. 9/30/12 CIVIL STATE OF CALIFORNIA

The State of California or its officers or agents shall not be responsible for the accuracy or completeness of electronic copies of this plan sheet.

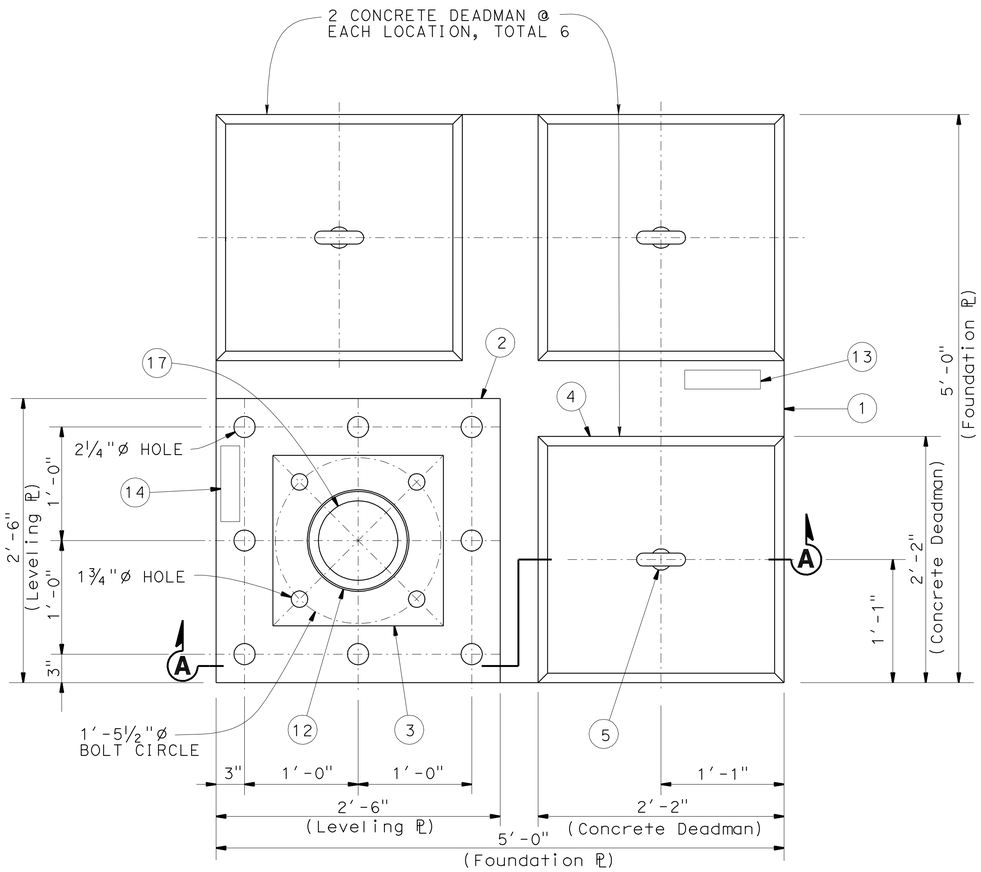

PLAN

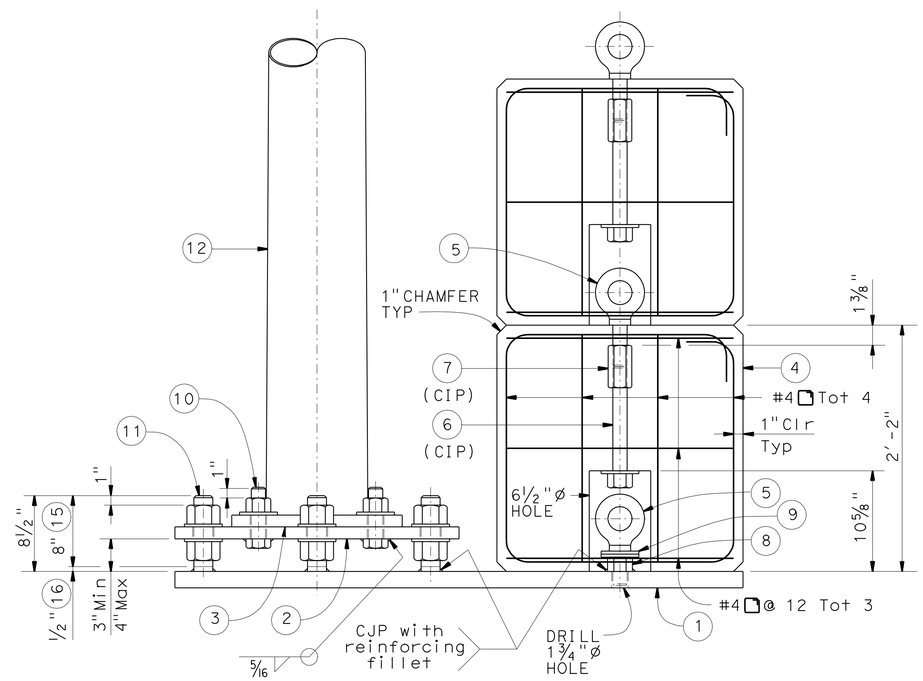

SECTION A-A

NOTES:

1. Foundation ℄ 1¾" X 5'-0" X 5'-0"
2. Leveling ℄ 1¼" X 2'-6" X 2'-6"
3. Base ℄ 1¼" X 1'-6" X 1'-6"
4. Concrete Deadman 2'-2" X 2'-2" X 2'-2"
5. 1½"ø Forged eyebolt with 3⅝" shank
6. 1½"ø X 12" Heavy hex bolt with 4"ø X 5/16" thick washer (CIP)
7. 1½"ø Hex coupling nut (CIP)
8. 1½"ø Heavy hex nut
9. 1½"ø X 5/16" thick washer total (2) each location.
10. 1½"ø Heavy hex bolt with nut and 4"ø X 5/16" thick washers
11. 2"ø X 8½" Threaded rod with (2) heavy hex nuts and (2) 4"ø X 5/16" thick washer
12. Type 19-1-100 (MOD) Mod Pole
13. Stamp Foundation ℄ with "Lift ℄ with minimum of (2) forged eyebolts".
14. Stamp Leveling ℄ with "℄ for Type 19-1-100 (MOD) pole".
15. Threaded rod
16. Non-Threaded Rod
17. Hole in Leveling ℄ to be same size as hole in Base ℄.

NOTE:
THE CONTRACTOR SHALL VERIFY ALL CONTROLLING FIELD DIMENSIONS BEFORE ORDERING OR FABRICATING ANY MATERIAL.

NO SCALE

BRANCH CHIEF	JEFFREY B WOODY	DESIGN	BY A HOUGH	CHECKED A BUI
		DETAILS	BY A R DUDSAK	CHECKED A HOUGH
		QUANTITIES	BY	CHECKED

STATE OF CALIFORNIA
DEPARTMENT OF TRANSPORTATION

DIVISION OF ENGINEERING SERVICES
DESIGN AND TECHNICAL SERVICES
SPECIAL DESIGNS BRANCH A

BRIDGE NO. N/A
POST MILE

ELECTRICAL SYSTEMS
MODIFY SIGNAL AND LIGHTING TEMPORARY POLE DETAILS

SES-10

(ENGLISH) SPECIAL DESIGNS BRANCH BORDER SHEET (REV. 7-1-09)

ORIGINAL SCALE IN INCHES FOR REDUCED PLANS 0 1 2 3

UNIT: 3619
PROJECT NUMBER & PHASE: 0700001833-1
CONTRACT NO.: 07-215931

DISREGARD PRINTS BEARING EARLIER REVISION DATES
REVISION DATES: 9-15-11 9-26-11 9-27-11
SHEET OF

FILE => spec_des_br_prj/2010sd/07-215931/07-215931_ses-10.dgn

USERNAME => s124496 DATE PLOTTED => 28-MAR-2012 TIME PLOTTED => 08:47

DIST	COUNTY	ROUTE	POST MILES TOTAL PROJECT	SHEET No	TOTAL SHEETS
07	LA	5	2.4/4.0	599	1288

REGISTERED CIVIL ENGINEER 9/27/11 DATE

3-26-12
PLANS APPROVAL DATE

REGISTERED PROFESSIONAL ENGINEER
ANDREW BUI
No. C63560
Exp. 9/30/12
CIVIL
STATE OF CALIFORNIA

The State of California or its officers or agents shall not be responsible for the accuracy or completeness of electronic copies of this plan sheet.

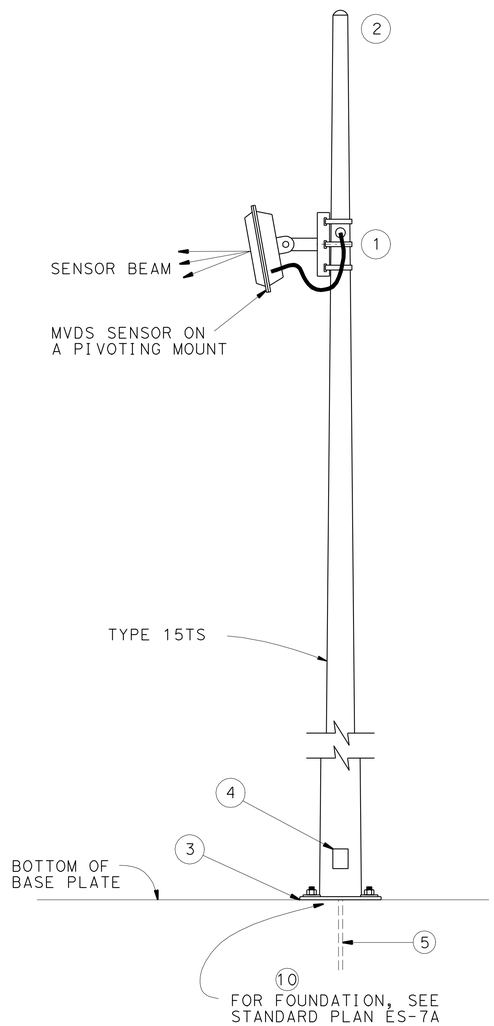

TYPE 15TS

NOTES:

1. For devices mounted and mounting heights, see TABLE B on sheet SES-12.
2. Rain tight cap.
3. No grout required.
4. For Handhole details, see 2006 Standard Plan ES-7M.
5. For wiring connection details, See Electrical Plans.
6. Pole Locations:
   -Rte 5 207+90 SB
   -Rte 5 207+90 NB
7. For details not shown, see 2006 Standard Plans and 2006 Revised Standard Plans .
8. All steel shall be galvanized after fabrication.
9. During pole installation the post shall be raked as necessary with the use of leveling nuts to provide a plumb pole axis.
10. The foundation shall be on level ground with slope inclination Max 4:1 (Horizontal:Vertical).
11. Design Specification: AASHTO Standard Specifications for Structural Supports for Highway Signs, Luminaires and Traffic Signals dated 2001.
12. Wind Loadings: 100 mph (3-second gust)
13. Unit Stresses (Structural Steel):
    a. fy = 55,000 psi (tapered steeltube)
    b. fy = 50,000 psi (unless otherwise noted)
14. Anchor bolts: fy = 55,000 psi
15. Threaded rod: fy = 55,000 psi
16. Unit Stresses (Reinforced Concrete):
    a. minor concrete
    b. fy = 60,000 psi (rebar)

NOTE:
THE CONTRACTOR SHALL VERIFY ALL CONTROLLING FIELD DIMENSIONS BEFORE ORDERING OR FABRICATING ANY MATERIAL.

NO SCALE

BRANCH CHIEF	JEFFREY B WOODY	DESIGN	BY A HOUGH / CHECKED A BUI
		DETAILS	BY A R DUDSAK / CHECKED A HOUGH
		QUANTITIES	BY / CHECKED

STATE OF CALIFORNIA
DEPARTMENT OF TRANSPORTATION

DIVISION OF ENGINEERING SERVICES
DESIGN AND TECHNICAL SERVICES
SPECIAL DESIGNS BRANCH A

BRIDGE NO. N/A
POST MILE

ELECTRICAL SYSTEMS
MICROWAVE VEHICLE DETECTION SYSTEM POLE DETAILS

SES-11

(ENGLISH) SPECIAL DESIGNS BRANCH BORDER SHEET (REV. 7-1-09)

ORIGINAL SCALE IN INCHES FOR REDUCED PLANS 0 1 2 3

UNIT: 3619
PROJECT NUMBER & PHASE: 0700001833-1
CONTRACT NO.: 07-215931

DISREGARD PRINTS BEARING EARLIER REVISION DATES

REVISION DATES: 9-22-11 3-25-12 9-26-11

SHEET OF

FILE => spec_des_br_prj/2010sd/07-215931/07-215931_ses-11.dgn

USERNAME => s124496 DATE PLOTTED => 28-MAR-2012 TIME PLOTTED => 08:47

DIST	COUNTY	ROUTE	POST MILES TOTAL PROJECT	SHEET No	TOTAL SHEETS
07	LA	5	2.4/4.0	600	1288

REGISTERED CIVIL ENGINEER 9/27/11 DATE

3-26-12
PLANS APPROVAL DATE

REGISTERED PROFESSIONAL ENGINEER ANDREW BUI No. C63560 Exp. 9/30/12 CIVIL STATE OF CALIFORNIA

The State of California or its officers or agents shall not be responsible for the accuracy or completeness of electronic copies of this plan sheet.

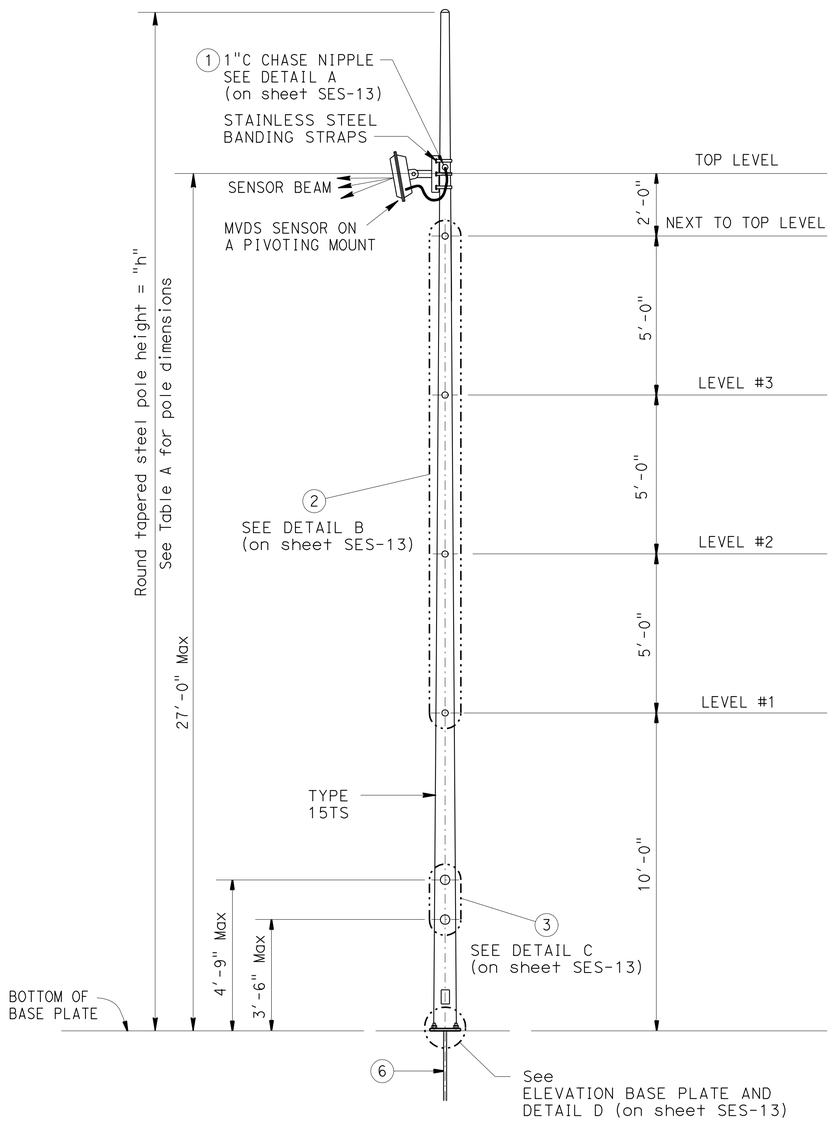

ELEVATION

TABLE A								
POLE TYPE	POLE DATA				BASE PLATE DATA			
	HEIGHT "h"	Min OD		THICKNESS	"C"	THICKNESS	ANCHOR BOLTS	
		BASE	TOP				SIZE	BC = BOLT CIRCLE
15TS	30'	8"	3⅞"	0.1793"	1'-1 1/2"	1 1/2"	1 1/2"Ø	1'-1 1/2"

TABLE B		
ATTACHMENT	MOUNTED HEIGHT	WEIGHT LIMITS (Max)
MVDS	27' Max	10 LBS

TABLE C - LIMITATION ON ATTACHMENTS *		
LOCATION	MAXIMUM TOTAL EPA PER LEVEL (SQUARE FEET)	MAXIMUM TOTAL WEIGHT (LB)
TOP LEVEL	2.5	50
NEXT TO TOP LEVEL		
LEVEL #3	10 **	200
LEVEL #2	14	
LEVEL #1		

* MAXIMUM HORIZONTAL EXTENT BEYOND POLE FACE IS 4 FEET.
** 14 IF LEVEL #1 IS ZERO.

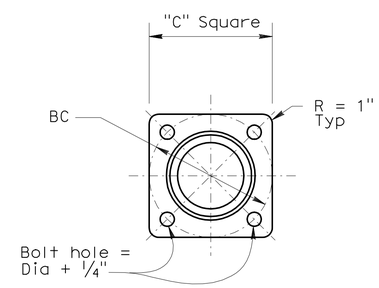

BASE PLATE

ABBREVIATIONS:
VDS = Vehicle Detection System
MVDS = Microwave Vehicle Detection System

NOTES:

1. Drill and tap for 1" C Chase nipple and plug with raintight plug.
2. Place all nipples & couplings on the same side of pole.
3. Coupling location above ground and spacing shall be verified to match choice of enclosure, prior to fabrication.
4. All attachments, unless otherwise noted, shall be mounted to pole with stainless steel straps or other method without drilling holes in pole. Enclosure may require drilling through post for mounting. Method of mounting enclosure will require Engineer approval.
5. Use the manufacturer's Effective Projected Area (EPA) for attachments. Assign attachments to nearest level and sum the total at each level, See Table C for limitations.
6. For wiring connection details, see Electrical plans.

NOTE:
THE CONTRACTOR SHALL VERIFY ALL CONTROLLING FIELD DIMENSIONS BEFORE ORDERING OR FABRICATING ANY MATERIAL.

NO SCALE

BRANCH CHIEF JEFFREY B WOODY

	BY	CHECKED
DESIGN	A HOUGH	A BUI
DETAILS	A R DUDSAK	A HOUGH
QUANTITIES		

STATE OF CALIFORNIA
DEPARTMENT OF TRANSPORTATION

DIVISION OF ENGINEERING SERVICES
DESIGN AND TECHNICAL SERVICES
SPECIAL DESIGNS BRANCH A

BRIDGE NO. N/A
POST MILE

ELECTRICAL SYSTEMS
MICROWAVE VEHICLE DETECTION SYSTEM POLE DETAILS

SES-12

(ENGLISH) SPECIAL DESIGNS BRANCH BORDER SHEET (REV. 7-1-09)

ORIGINAL SCALE IN INCHES FOR REDUCED PLANS 0 1 2 3

UNIT: 3619
PROJECT NUMBER & PHASE: 0700001833-1
CONTRACT NO.: 07-215931

DISREGARD PRINTS BEARING EARLIER REVISION DATES

REVISION DATES: 9-27-11 3-25-12 9-26-11

SHEET OF

FILE => spec_des_br_prj/2010sd/07-215931/07-215931_ses-12.dgn

USERNAME => s124436 DATE PLOTTED => 28-MAR-2012 TIME PLOTTED => 08:47