DIST	COUNTY	ROUTE	POST MILES TOTAL PROJECT	SHEET No	TOTAL SHEETS
07	LA	5	2.4/4.0	801	1288

Andrew Rittenhouse 12-12-11
REGISTERED CIVIL ENGINEER DATE

3-26-12
PLANS APPROVAL DATE

REGISTERED PROFESSIONAL ENGINEER Andrew P. Rittenhouse No. 61006 Exp. 12-31-12 CIVIL STATE OF CALIFORNIA

The State of California or its officers or agents shall not be responsible for the accuracy or completeness of electronic copies of this plan sheet.

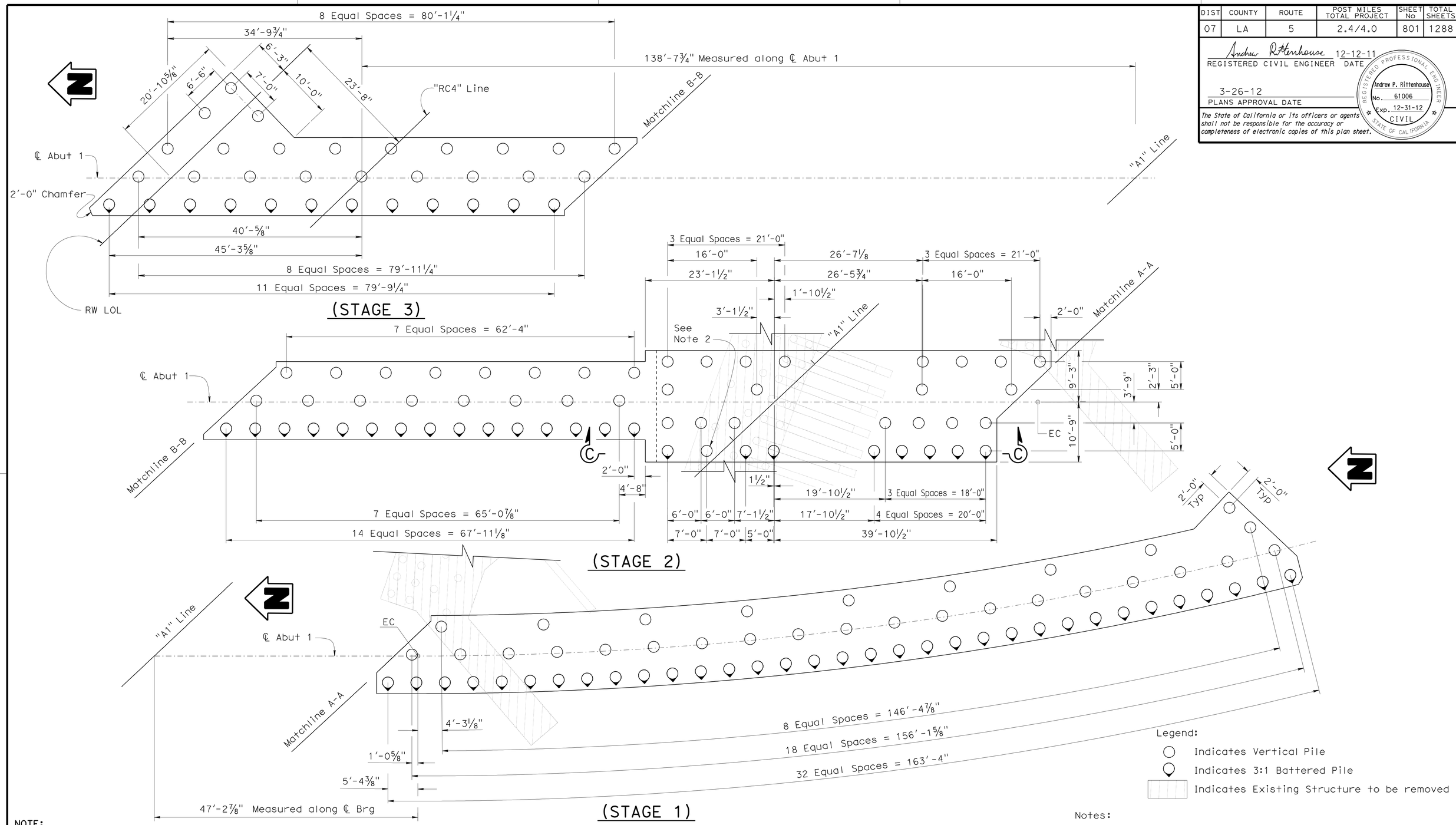

Legend:

- Indicates Vertical Pile
- Indicates 3:1 Battered Pile
- Indicates Existing Structure to be removed

NOTE:
THE CONTRACTOR SHALL VERIFY ALL CONTROLLING FIELD DIMENSIONS BEFORE ORDERING OR FABRICATING ANY MATERIAL.

ABUTMENT 1 FOOTING & PILE LAYOUT

⅛" = 1'-0"

Notes:

1. For "SECTION C-C" see "ABUTMENT DETAILS NO. 13" sheet.
2. Pile not battered to avoid conflict with existing piles.

	BY	CHECKED
DESIGN	Fred Feng	Sara Yip
DETAILS	Herman Mauroschadt	Sara Yip
QUANTITIES	Gabriel Galo	Ruslan Novik

STATE OF CALIFORNIA
DEPARTMENT OF TRANSPORTATION

DIVISION OF ENGINEERING SERVICES
STRUCTURE DESIGN
DESIGN BRANCH 15

BRIDGE NO. 53-3041
POST MILE 3.66

BLOOMFIELD AVENUE UC
ABUTMENT DETAILS NO. 1

STRUCTURES DESIGN DETAIL SHEET (ENGLISH) (REV. 10/25/05)

ORIGINAL SCALE IN INCHES FOR REDUCED PLANS 0 1 2 3

CU 07
EA 215931

DISREGARD PRINTS BEARING EARLIER REVISION DATES

REVISION DATES: 7-14-11 10-13-11 10-24-11 12-2-11 1-5-12 2-24-11 3-8-11 3-16-11 3-7-11

SHEET 7 OF 80

FILE => 53-3041-i-ad01.dgn

USERNAME => s135318 DATE PLOTTED => 28-MAR-2012 TIME PLOTTED => 09:43

DIST	COUNTY	ROUTE	POST MILES TOTAL PROJECT	SHEET No	TOTAL SHEETS
07	LA	5	2.4/4.0	802	1288

Andrew Rittenhouse 12-12-11
REGISTERED CIVIL ENGINEER DATE

3-26-12
PLANS APPROVAL DATE

The State of California or its officers or agents shall not be responsible for the accuracy or completeness of electronic copies of this plan sheet.

REGISTERED PROFESSIONAL ENGINEER
Andrew P. Rittenhouse
No. 61006
Exp. 12-31-12
CIVIL
STATE OF CALIFORNIA

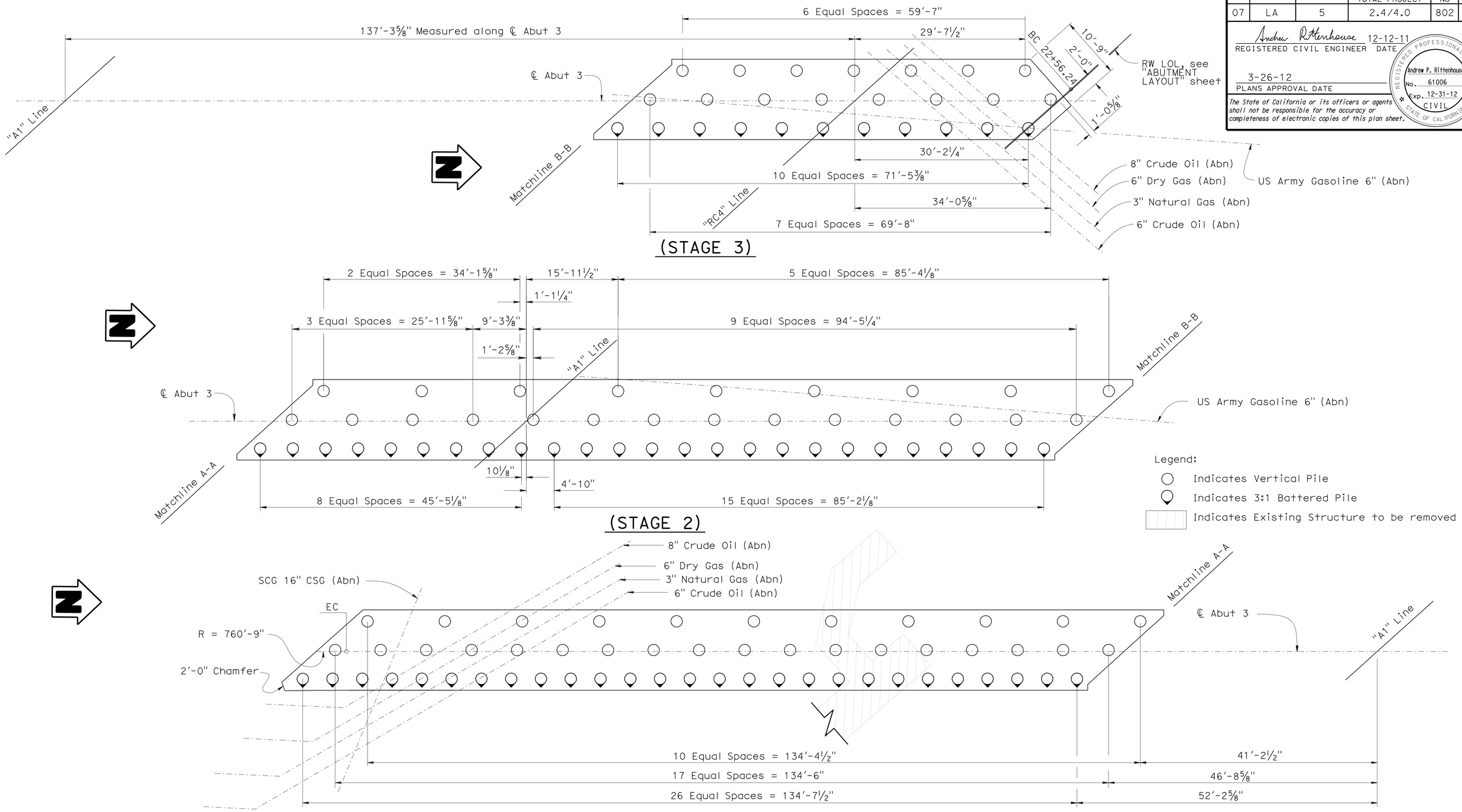

NOTE:
THE CONTRACTOR SHALL VERIFY ALL CONTROLLING FIELD DIMENSIONS BEFORE ORDERING OR FABRICATING ANY MATERIAL.

ABUTMENT 3 FOOTING & PILE LAYOUT

⅛" = 1'-0"

	BY	CHECKED
DESIGN	Fred Feng	Sara Yip
DETAILS	Herman Mauroschadt	Sara Yip
QUANTITIES	Gabriel Galo	Rusian Novik

STATE OF CALIFORNIA
DEPARTMENT OF TRANSPORTATION

DIVISION OF ENGINEERING SERVICES
STRUCTURE DESIGN
DESIGN BRANCH 15

BRIDGE NO. 53-3041
POST MILE 3.66

BLOOMFIELD AVENUE UC
ABUTMENT DETAILS NO. 2

STRUCTURES DESIGN DETAIL SHEET (ENGLISH) (REV. 10/25/05)

ORIGINAL SCALE IN INCHES FOR REDUCED PLANS 0 1 2 3

CU 07
EA 215931

DISREGARD PRINTS BEARING EARLIER REVISION DATES

REVISION DATES: 12-2-11 | 1-5-12 | 7-14-10 | 2-23-11 | 3-18-11 | 7-5-11 | 7-14-11 | 10-13-11 | 10-24-11

SHEET 8 OF 80

FILE => 53-3041-i-ad02.dgn

USERNAME => s135318 DATE PLOTTED => 28-MAR-2012 TIME PLOTTED => 09:43

DIST	COUNTY	ROUTE	POST MILES TOTAL PROJECT	SHEET No	TOTAL SHEETS
07	LA	5	2.4/4.0	803	1288

Andrew Rittenhouse 12-12-11
REGISTERED CIVIL ENGINEER DATE

3-26-12
PLANS APPROVAL DATE

The State of California or its officers or agents shall not be responsible for the accuracy or completeness of electronic copies of this plan sheet.

REGISTERED PROFESSIONAL ENGINEER
Andrew P. Rittenhouse
No. 61006
Exp. 12-31-12
CIVIL
STATE OF CALIFORNIA

Notes:

1. For "SECTION A-A" and "SECTION B-B" see "ABUTMENT DETAILS NO. 9" sheet.
2. For "SECTION V-V", "SECTION W-W", "SECTION X-X" and "SECTION Y-Y" see "ABUTMENT DETAILS NO. 10" sheet.
3. For Architectural Treatment details see "ARCHITECTURAL" sheets.
4. For "SECTION D-D" see "RETAINING WALL DETAILS NO. 3" sheet.

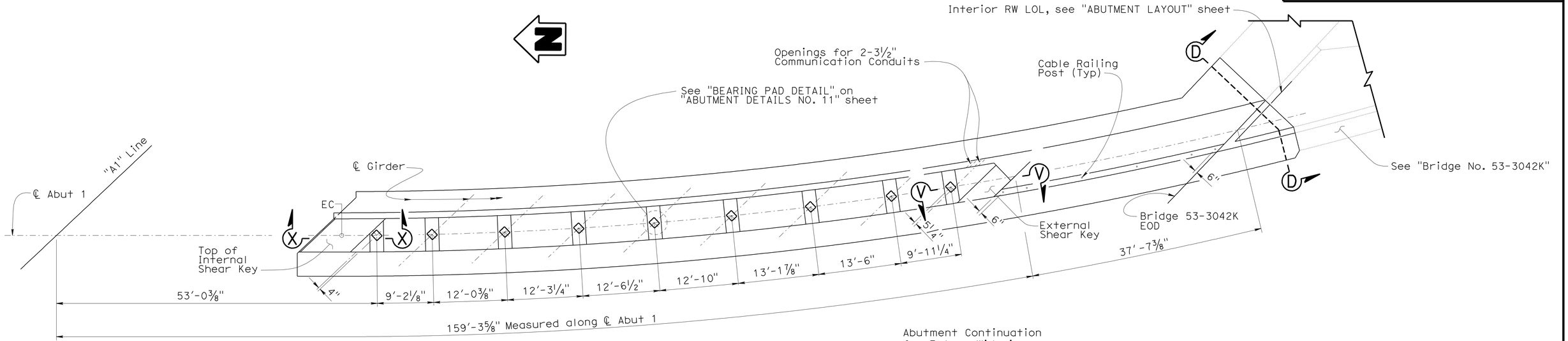

PLAN

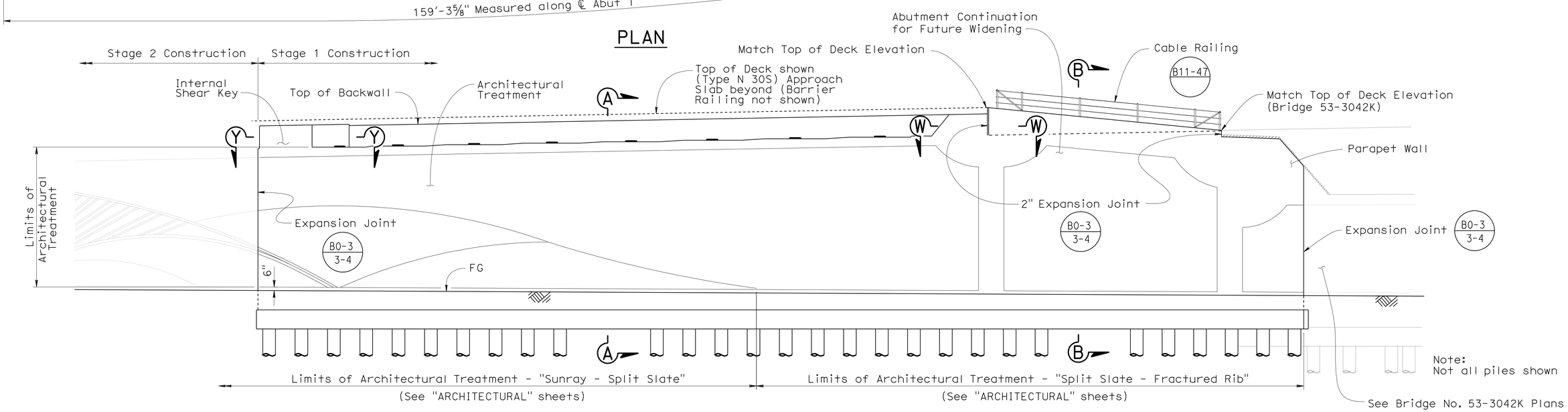

ELEVATION

ABUTMENT 1 (STAGE 1)

⅛" = 1'-0"

DESIGN	BY Fred Feng	CHECKED Sara Yip	
DETAILS	BY Herman Mauroschadt	CHECKED Sara Yip	
QUANTITIES	BY Gabriel Galo	CHECKED Ruslan Novik	

STATE OF CALIFORNIA
DEPARTMENT OF TRANSPORTATION

DIVISION OF ENGINEERING SERVICES
STRUCTURE DESIGN
DESIGN BRANCH 15

BRIDGE NO. 53-3041
POST MILE 3.66

BLOOMFIELD AVENUE UC
ABUTMENT DETAILS NO. 3

STRUCTURES DESIGN DETAIL SHEET (ENGLISH) (REV. 10/25/05)

ORIGINAL SCALE IN INCHES FOR REDUCED PLANS 0 1 2 3

CU 07
EA 215931

DISREGARD PRINTS BEARING EARLIER REVISION DATES

REVISION DATES: 12-12-11 12-13-11 1-4-12 2-14-12 7-13-10 7-5-11 7-15-11 10-13-11 10-24-11

SHEET 9 OF 80

FILE => 53-3041-i-ad03.dgn

USERNAME => s135318 DATE PLOTTED => 28-MAR-2012 TIME PLOTTED => 09:43

DIST	COUNTY	ROUTE	POST MILES TOTAL PROJECT	SHEET No	TOTAL SHEETS
07	LA	5	2.4/4.0	804	1288

Andrew Rittenhouse 12-12-11
REGISTERED CIVIL ENGINEER DATE

3-26-12
PLANS APPROVAL DATE

REGISTERED PROFESSIONAL ENGINEER
Andrew P. Rittenhouse
No. 61006
Exp. 12-31-12
CIVIL
STATE OF CALIFORNIA

The State of California or its officers or agents shall not be responsible for the accuracy or completeness of electronic copies of this plan sheet.

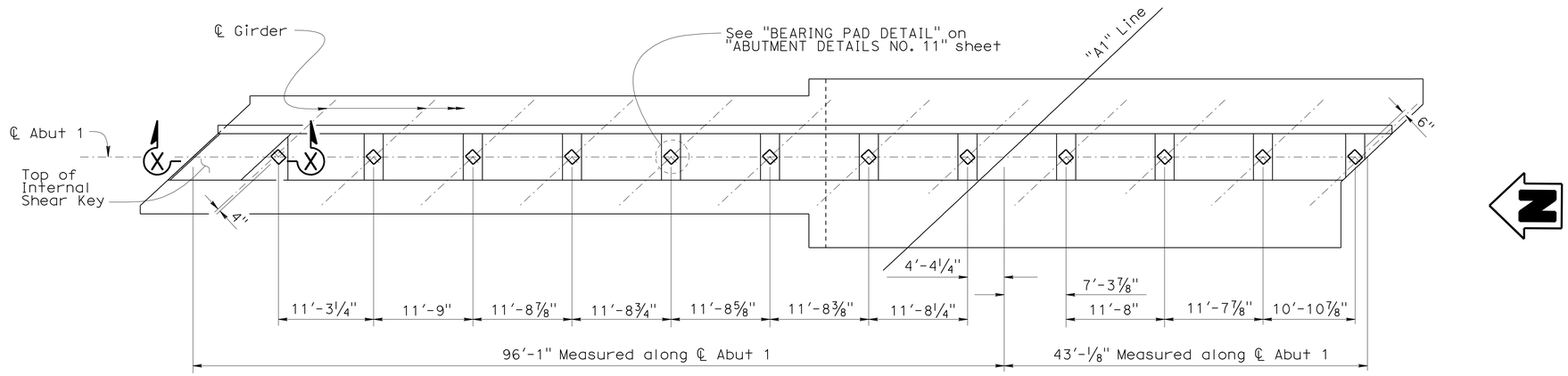

PLAN

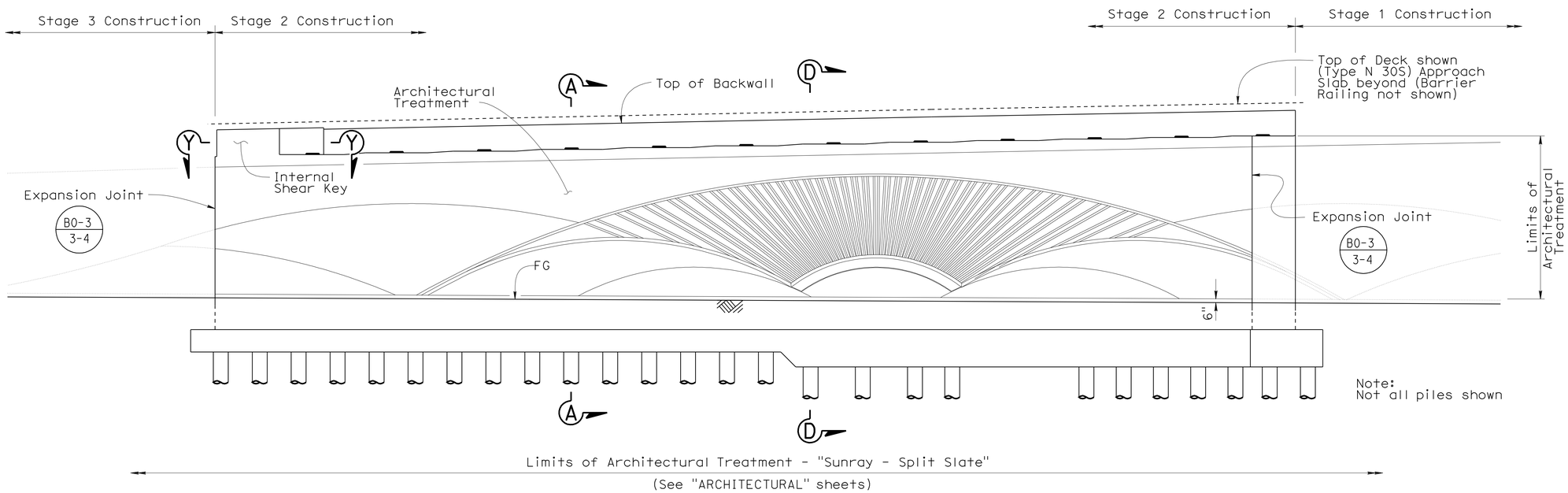

ELEVATION
ABUTMENT 1 (STAGE 2)

⅛" = 1'-0"

Notes:
1. For "SECTION A-A" see "ABUTMENT DETAILS NO. 9" sheet.
2. For "SECTION D-D" see "ABUTMENT DETAILS NO. 13" sheet.
3. For "SECTION X-X" and "SECTION Y-Y" see "ABUTMENT DETAILS NO. 10" sheet.
4. For Architectural Treatment details see "ARCHITECTURAL" sheets.

	BY	CHECKED
DESIGN	Fred Feng	Sara Yip
DETAILS	Herman Mauroschadt	Sara Yip
QUANTITIES	Gabriel Galo	Rustan Novik

STATE OF CALIFORNIA
DEPARTMENT OF TRANSPORTATION

DIVISION OF ENGINEERING SERVICES
STRUCTURE DESIGN
DESIGN BRANCH 15

BRIDGE NO. 53-3041
POST MILE 3.66

BLOOMFIELD AVENUE UC
ABUTMENT DETAILS NO. 4

STRUCTURES DESIGN DETAIL SHEET (ENGLISH) (REV. 10/25/05)

ORIGINAL SCALE IN INCHES FOR REDUCED PLANS 0 1 2 3

CU 07
EA 215931

DISREGARD PRINTS BEARING EARLIER REVISION DATES

REVISION DATES: 12-14-11 1-4-12 2-14-12 3-22-10 2-28-11 7-8-11 7-15-11 10-13-11 12-3-11

SHEET 10 OF 80

FILE => 53-3041-i-ad04.dgn

USERNAME => s135318 DATE PLOTTED => 28-MAR-2012 TIME PLOTTED => 09:43

DIST	COUNTY	ROUTE	POST MILES TOTAL PROJECT	SHEET No	TOTAL SHEETS
07	LA	5	2.4/4.0	805	1288

Andrew Rittenhouse 12-12-11
REGISTERED CIVIL ENGINEER DATE

3-26-12
PLANS APPROVAL DATE

REGISTERED PROFESSIONAL ENGINEER
Andrew P. Rittenhouse
No. 61006
Exp. 12-31-12
CIVIL
STATE OF CALIFORNIA

The State of California or its officers or agents shall not be responsible for the accuracy or completeness of electronic copies of this plan sheet.

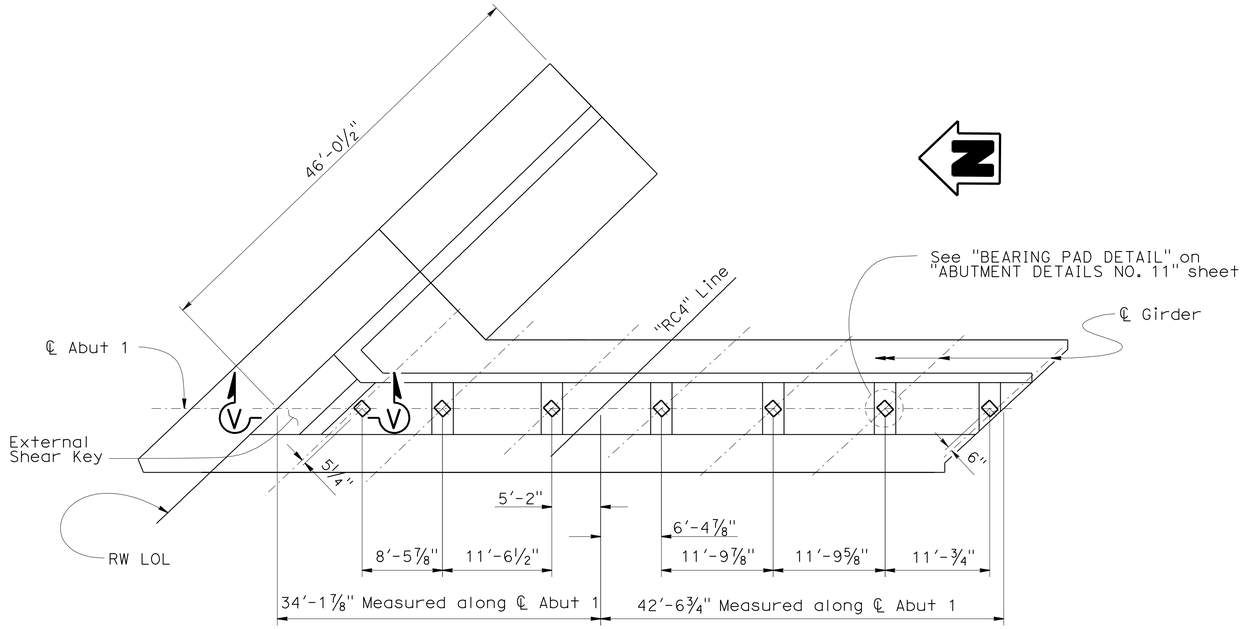

PLAN

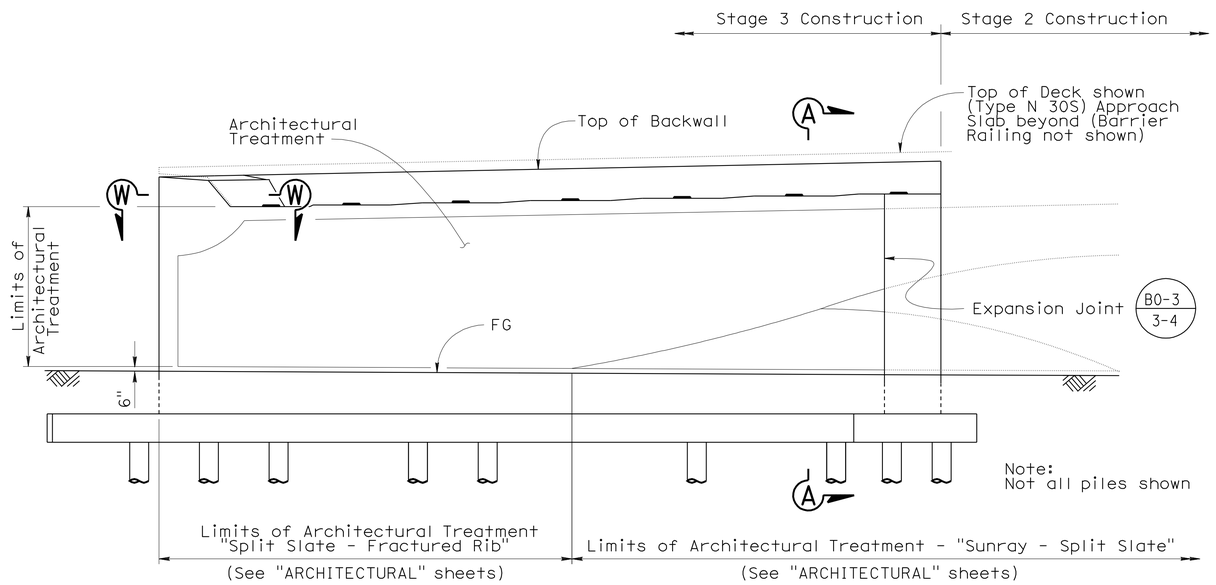

ELEVATION
ABUTMENT 1 (STAGE 3)

⅛" = 1'-0"

Notes:

1. For "SECTION A-A" see "ABUTMENT DETAILS NO. 9" sheet.
2. For "SECTION V-V" and "SECTION W-W" see "ABUTMENT DETAILS NO. 10" sheet.
3. For Architectural Treatment details see "ARCHITECTURAL" sheets.

	BY	CHECKED
DESIGN	Fred Feng	Sara Yip
DETAILS	Herman Mauroschadt	Sara Yip
QUANTITIES	Gabriel Galo	Ruslan Novik

STATE OF CALIFORNIA
DEPARTMENT OF TRANSPORTATION

DIVISION OF ENGINEERING SERVICES
STRUCTURE DESIGN
DESIGN BRANCH 15

BRIDGE NO. 53-3041
POST MILE 3.66

BLOOMFIELD AVENUE UC
ABUTMENT DETAILS NO. 5

STRUCTURES DESIGN DETAIL SHEET (ENGLISH) (REV. 10/25/05)

ORIGINAL SCALE IN INCHES FOR REDUCED PLANS 0 1 2 3

CU 07
EA 215931

DISREGARD PRINTS BEARING EARLIER REVISION DATES

REVISION DATES: 12-14-11 1-4-12 2-14-12 5-25-10 2-23-11 7-1-11 7-14-11 10-31-11 12-5-11

SHEET 11 OF 80

FILE => 53-3041-i-ad05.dgn

USERNAME => s135318 DATE PLOTTED => 28-MAR-2012 TIME PLOTTED => 09:43

DIST	COUNTY	ROUTE	POST MILES TOTAL PROJECT	SHEET No	TOTAL SHEETS
07	LA	5	2.4/4.0	806	1288

Andrew Rittenhouse 12-12-11
REGISTERED CIVIL ENGINEER DATE

3-26-12
PLANS APPROVAL DATE

REGISTERED PROFESSIONAL ENGINEER Andrew P. Rittenhouse No. 61006 Exp. 12-31-12 CIVIL STATE OF CALIFORNIA

The State of California or its officers or agents shall not be responsible for the accuracy or completeness of electronic copies of this plan sheet.

Notes:

1. For "SECTION A-A" and "SECTION B-B" see "ABUTMENT DETAILS NO. 9" sheet.
2. For "SECTION V-V", "SECTION W-W", "SECTION X-X" and "SECTION Y-Y" see "ABUTMENT DETAILS NO. 10" sheet.
3. For Architectural Treatment details see "ARCHITECTURAL" sheets.

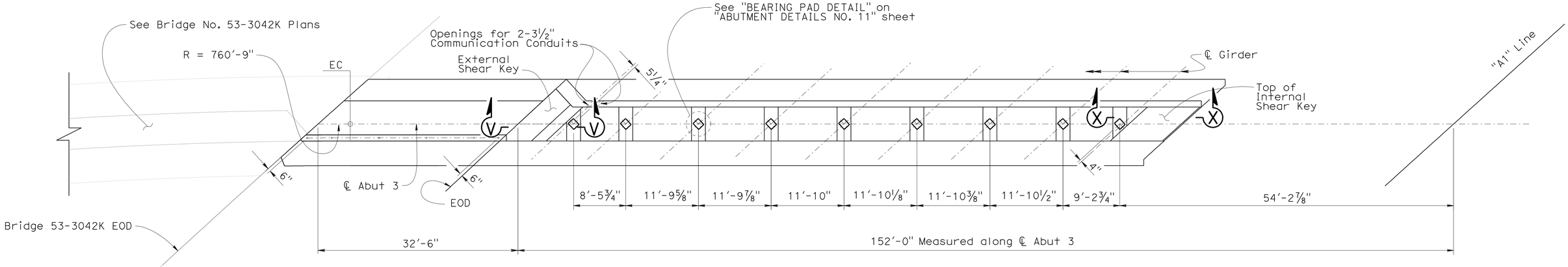

PLAN

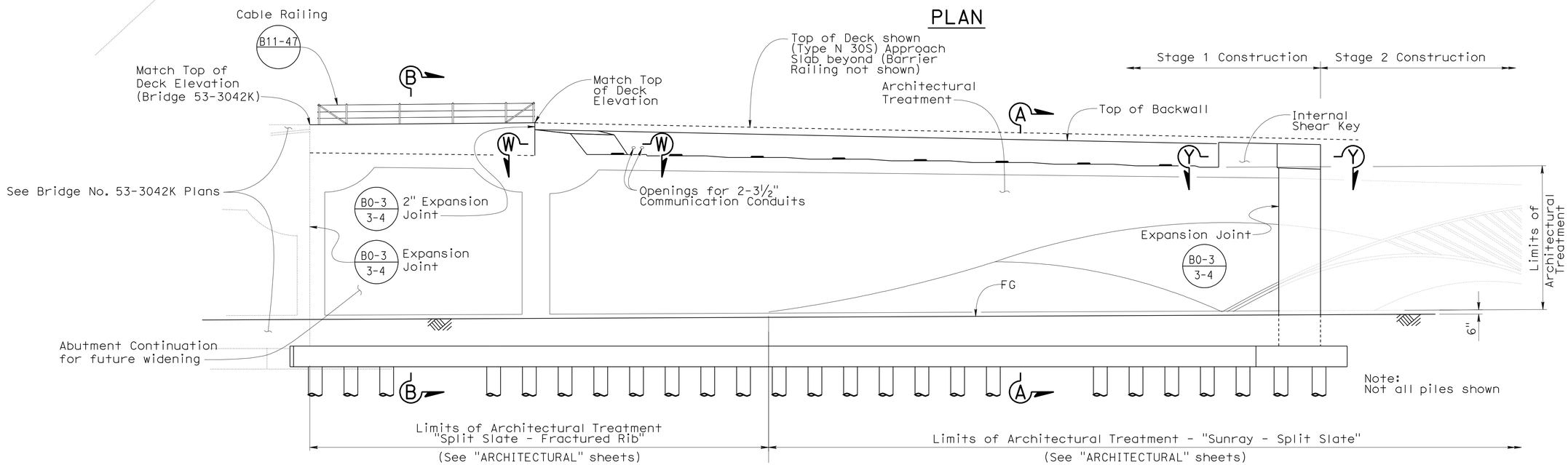

ELEVATION
ABUTMENT 3 (STAGE 1)

⅛" = 1'-0"

	BY	CHECKED
DESIGN	Fred Feng	Sara Yip
DETAILS	Herman Mauroschadt	Sara Yip
QUANTITIES	Gabriel Galo	Ruslan Novik

STATE OF CALIFORNIA
DEPARTMENT OF TRANSPORTATION

DIVISION OF ENGINEERING SERVICES
STRUCTURE DESIGN
DESIGN BRANCH 15

BRIDGE NO. 53-3041
POST MILE 3.66

BLOOMFIELD AVENUE UC
ABUTMENT DETAILS NO. 6

STRUCTURES DESIGN DETAIL SHEET (ENGLISH) (REV. 10/25/05)

ORIGINAL SCALE IN INCHES FOR REDUCED PLANS 0 1 2 3

CU 07
EA 215931

DISREGARD PRINTS BEARING EARLIER REVISION DATES

REVISION DATES: 12-8-11 12-16-11 1-4-12 2-14-12 1-28-10 7-6-11 7-14-11 10-14-11 10-24-11

SHEET 12 OF 80

FILE => 53-3041-i-ad06.dgn

USERNAME => s135318 DATE PLOTTED => 28-MAR-2012 TIME PLOTTED => 09:43

DIST	COUNTY	ROUTE	POST MILES TOTAL PROJECT	SHEET No	TOTAL SHEETS
07	LA	5	2.4/4.0	807	1288

Andrew Rittenhouse 12-12-11
REGISTERED CIVIL ENGINEER DATE

3-26-12
PLANS APPROVAL DATE

REGISTERED PROFESSIONAL ENGINEER
Andrew P. Rittenhouse
No. 61006
Exp. 12-31-12
CIVIL
STATE OF CALIFORNIA

The State of California or its officers or agents shall not be responsible for the accuracy or completeness of electronic copies of this plan sheet.

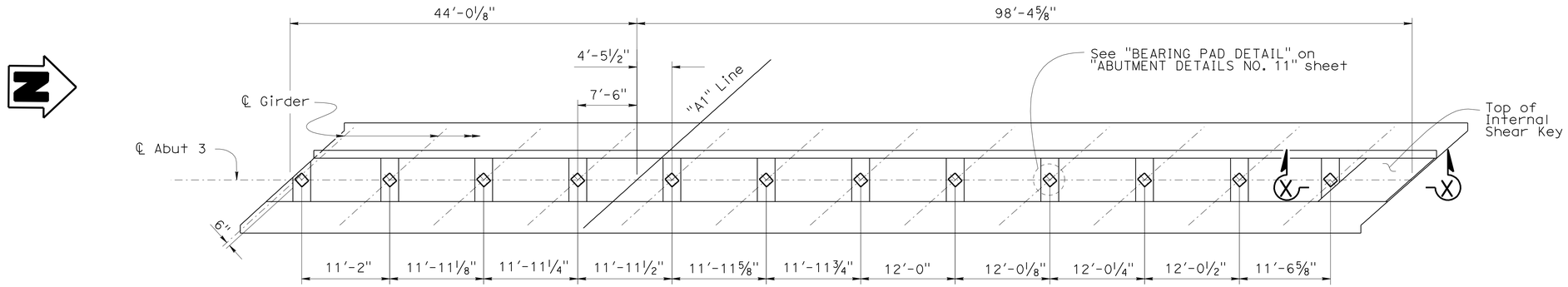

PLAN

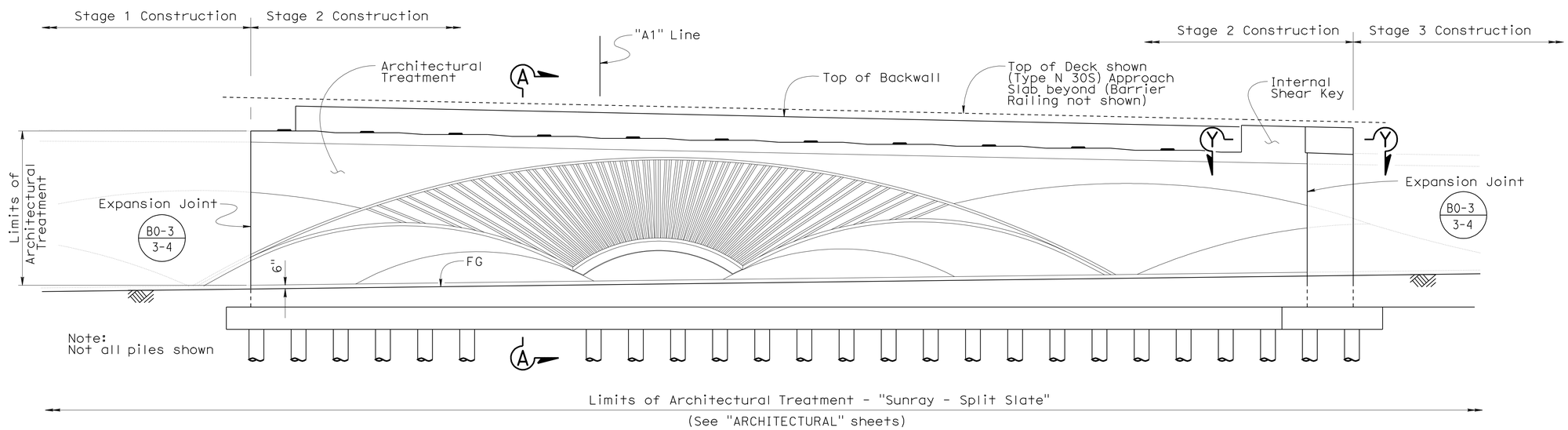

ELEVATION
ABUTMENT 3 (STAGE 2)

1/8" = 1'-0"

Notes:
1. For "SECTION A-A" see "ABUTMENT DETAILS NO. 9" sheet.
2. For "SECTION X-X" and "SECTION Y-Y" see "ABUTMENT DETAILS NO. 10" sheet.
3. For Architectural Treatment details see "ARCHITECTURAL" sheets.

	BY	CHECKED
DESIGN	Fred Feng	Sara Yip
DETAILS	Herman Mauroschadt	Sara Yip
QUANTITIES	Gabriel Galo	Ruslan Novik

STATE OF CALIFORNIA
DEPARTMENT OF TRANSPORTATION

DIVISION OF ENGINEERING SERVICES
STRUCTURE DESIGN
DESIGN BRANCH 15

BRIDGE NO. 53-3041
POST MILE 3.66

BLOOMFIELD AVENUE UC
ABUTMENT DETAILS NO. 7

STRUCTURES DESIGN DETAIL SHEET (ENGLISH) (REV. 10/25/05)

ORIGINAL SCALE IN INCHES FOR REDUCED PLANS 0 1 2 3

CU 07
EA 215931

DISREGARD PRINTS BEARING EARLIER REVISION DATES

REVISION DATES: 12-14-11 1-4-12 2-14-12 3-23-10 7-8-11 7-14-11 10-14-11 10-24-11 12-2-11

SHEET 13 OF 80

FILE => 53-3041-i-ad07.dgn

USERNAME => s135318 DATE PLOTTED => 28-MAR-2012 TIME PLOTTED => 09:43

DIST	COUNTY	ROUTE	POST MILES TOTAL PROJECT	SHEET No	TOTAL SHEETS
07	LA	5	2.4/4.0	808	1288

Andrew Rittenhouse 12-12-11
REGISTERED CIVIL ENGINEER DATE

3-26-12
PLANS APPROVAL DATE

REGISTERED PROFESSIONAL ENGINEER
Andrew P. Rittenhouse
No. 61006
Exp. 12-31-12
CIVIL
STATE OF CALIFORNIA

The State of California or its officers or agents shall not be responsible for the accuracy or completeness of electronic copies of this plan sheet.

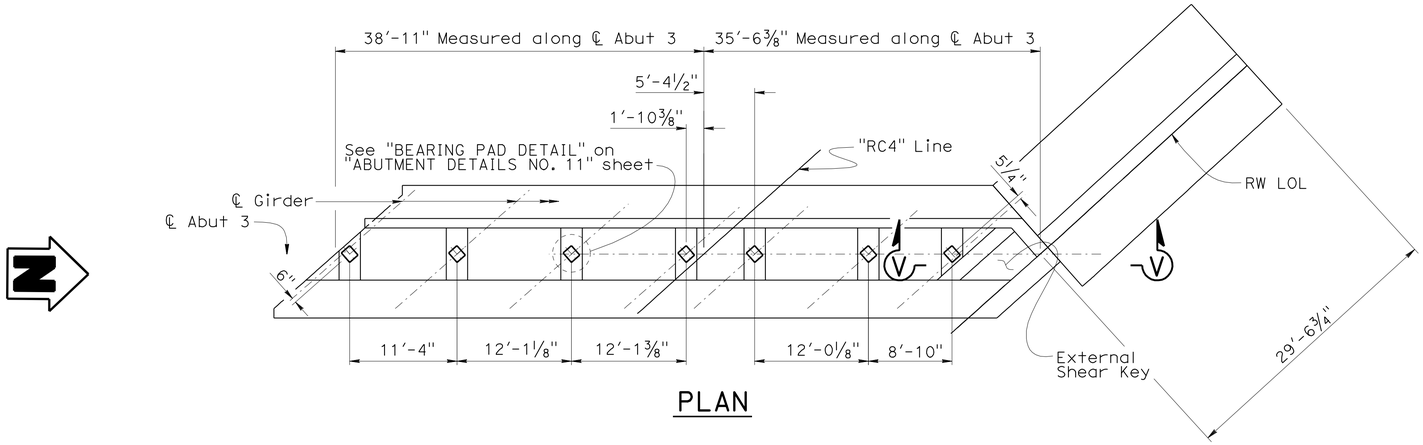

PLAN

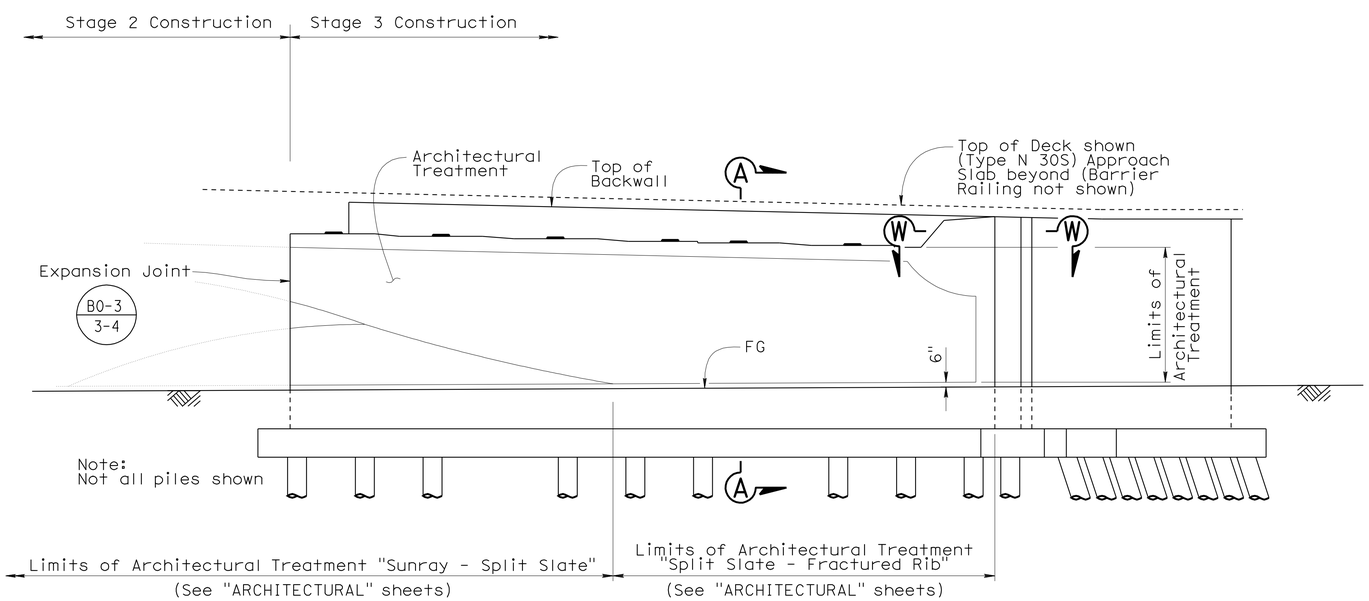

Notes:

1. For "SECTION A-A" see "ABUTMENT DETAILS NO. 9" sheet.
2. For "SECTION V-V" and "SECTION W-W" see "ABUTMENT DETAILS NO. 10" sheet.
3. For Architectural Treatment details see "ARCHITECTURAL" sheets.

ELEVATION
ABUTMENT 3 (STAGE 3)

1/8" = 1'-0"

	BY	CHECKED
DESIGN	Fred Feng	Sara Yip
DETAILS	Herman Mauroschadt	Sara Yip
QUANTITIES	Gabriel Galo	Rusian Novik

STATE OF CALIFORNIA
DEPARTMENT OF TRANSPORTATION

DIVISION OF ENGINEERING SERVICES
STRUCTURE DESIGN
DESIGN BRANCH 15

BRIDGE NO. 53-3041
POST MILE 3.66

BLOOMFIELD AVENUE UC
ABUTMENT DETAILS NO. 8

STRUCTURES DESIGN DETAIL SHEET (ENGLISH) (REV. 10/25/05)

ORIGINAL SCALE IN INCHES FOR REDUCED PLANS 0 1 2 3

CU 07
EA 215931

DISREGARD PRINTS BEARING EARLIER REVISION DATES

REVISION DATES: 12-16-11 1-4-12 2-14-12 3-23-10 2-24-11 7-6-11 7-14-11 10-24-11 12-5-11

SHEET 14 OF 80

FILE => 53-3041-i-ad08.dgn

USERNAME => s135318 DATE PLOTTED => 28-MAR-2012 TIME PLOTTED => 09:43

DIST	COUNTY	ROUTE	POST MILES TOTAL PROJECT	SHEET No	TOTAL SHEETS
07	LA	5	2.4/4.0	809	1288

Andrew Rittenhouse 12-12-11
REGISTERED CIVIL ENGINEER DATE

3-26-12
PLANS APPROVAL DATE

The State of California or its officers or agents shall not be responsible for the accuracy or completeness of electronic copies of this plan sheet.

REGISTERED PROFESSIONAL ENGINEER
Andrew P. Rittenhouse
No. 61006
Exp. 12-31-12
CIVIL
STATE OF CALIFORNIA

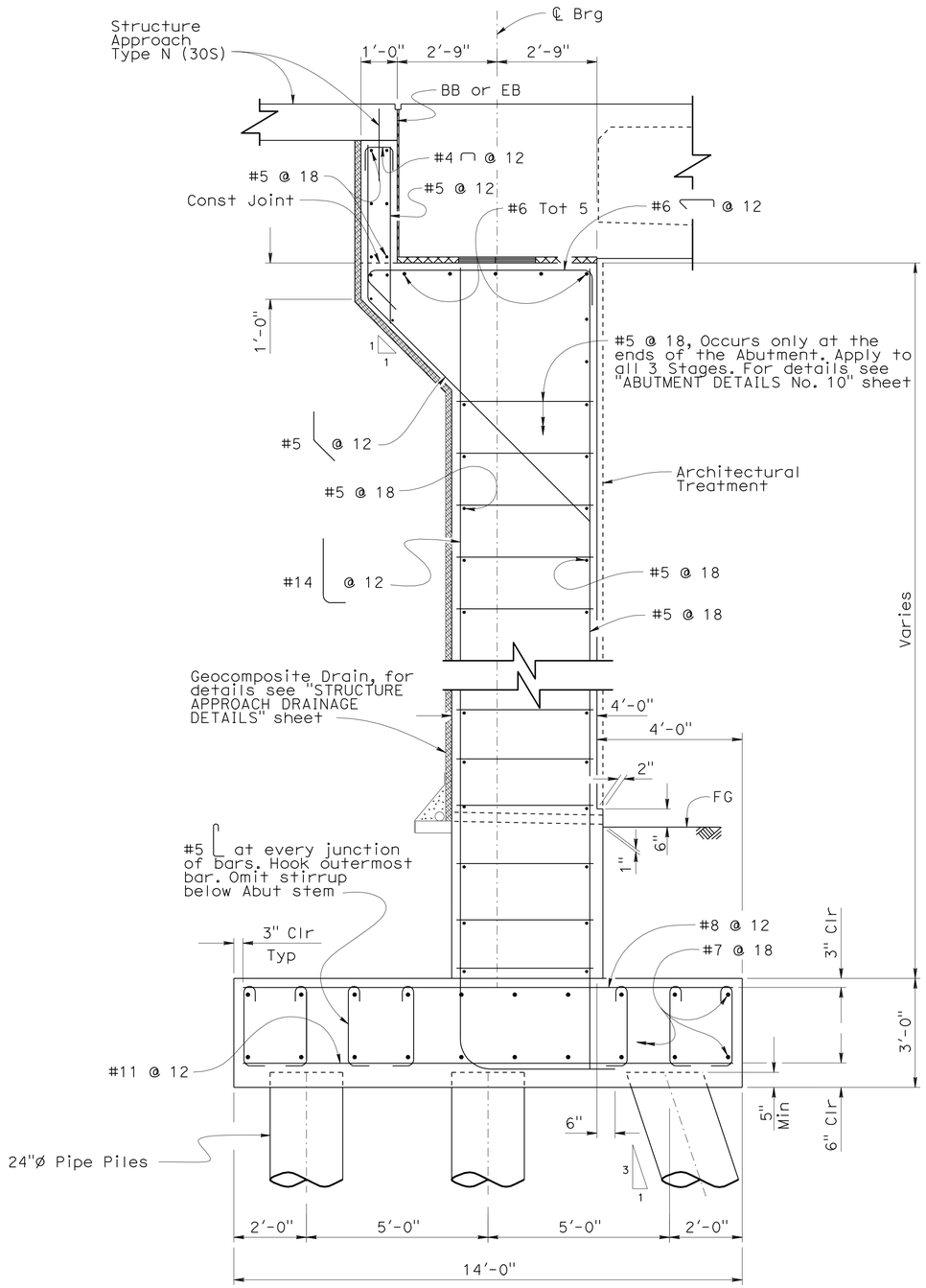

Note:
Abutment 1 shown, Abutment 3 similar.

SECTION A-A

½" = 1'-0"

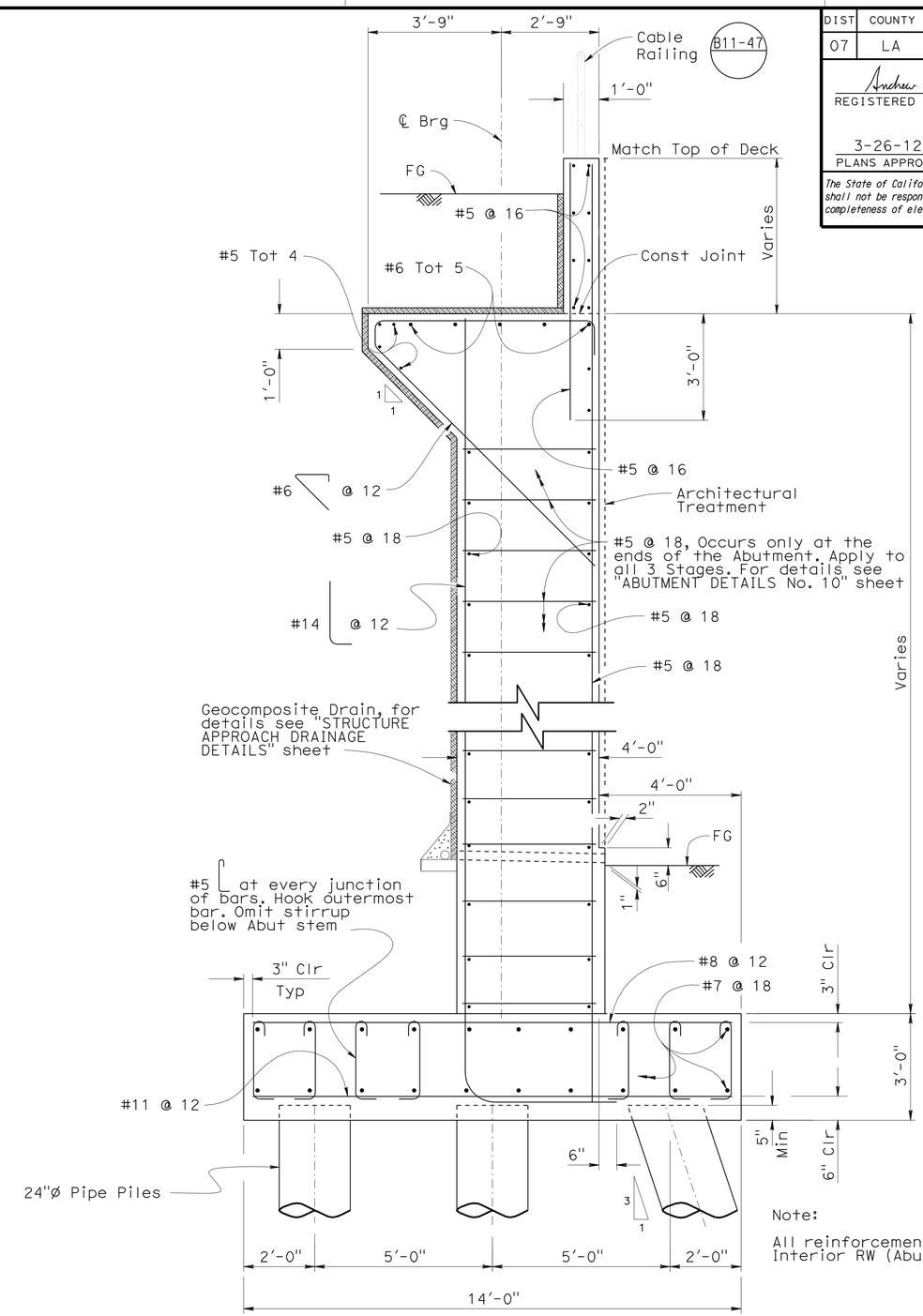

Note:
All reinforcement to be continued into Interior RW (Abutment 1 only).

SECTION B-B

½" = 1'-0"

DESIGN	BY Fred Feng	CHECKED Sara Yip	
DETAILS	BY Herman Mauroschadt	CHECKED Sara Yip	
QUANTITIES	BY Gabriel Galo	CHECKED Ruslan Novik	

STATE OF CALIFORNIA
DEPARTMENT OF TRANSPORTATION

DIVISION OF ENGINEERING SERVICES
STRUCTURE DESIGN
DESIGN BRANCH 15

BRIDGE NO. 53-3041
POST MILE 3.66

BLOOMFIELD AVENUE UC
ABUTMENT DETAILS NO. 9

STRUCTURES DESIGN DETAIL SHEET (ENGLISH) (REV. 10/25/05)

ORIGINAL SCALE IN INCHES FOR REDUCED PLANS 0 1 2 3

CU 07
EA 215931

DISREGARD PRINTS BEARING EARLIER REVISION DATES

REVISION DATES: 10-25-11 12-12-11 12-16-11 1-5-12 2-24-12 7-13-10 7-15-11 7-13-11 7-14-11

SHEET 15 OF 80

FILE => 53-3041-i-ad09.dgn

USERNAME => s135318 DATE PLOTTED => 28-MAR-2012 TIME PLOTTED => 09:44

DIST	COUNTY	ROUTE	POST MILES TOTAL PROJECT	SHEET No	TOTAL SHEETS
07	LA	5	2.4/4.0	810	1288

Andrew Rittenhouse 12-12-11
REGISTERED CIVIL ENGINEER DATE

3-26-12
PLANS APPROVAL DATE

The State of California or its officers or agents shall not be responsible for the accuracy or completeness of electronic copies of this plan sheet.

REGISTERED PROFESSIONAL ENGINEER
Andrew P. Rittenhouse
No. 61006
Exp. 12-31-12
CIVIL
STATE OF CALIFORNIA

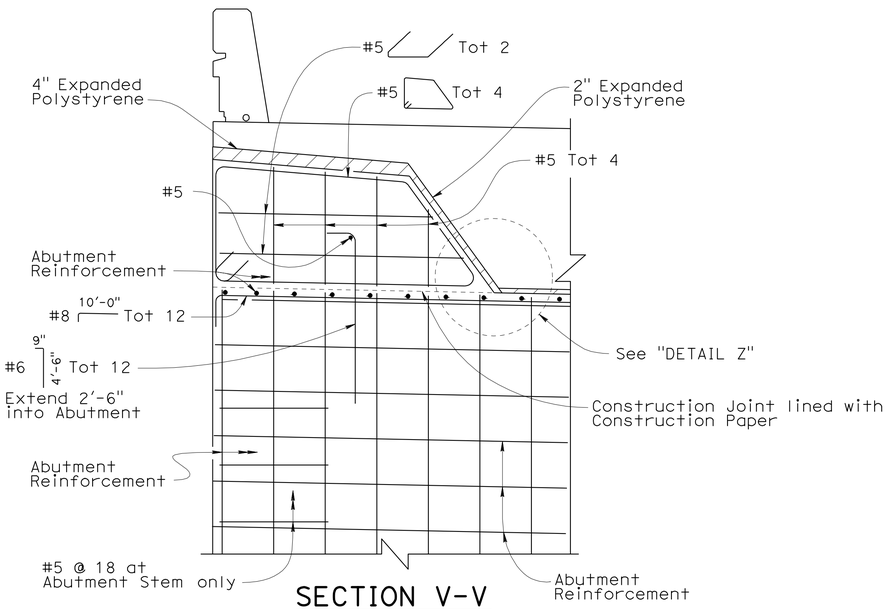

SECTION V-V

½" = 1'-0"

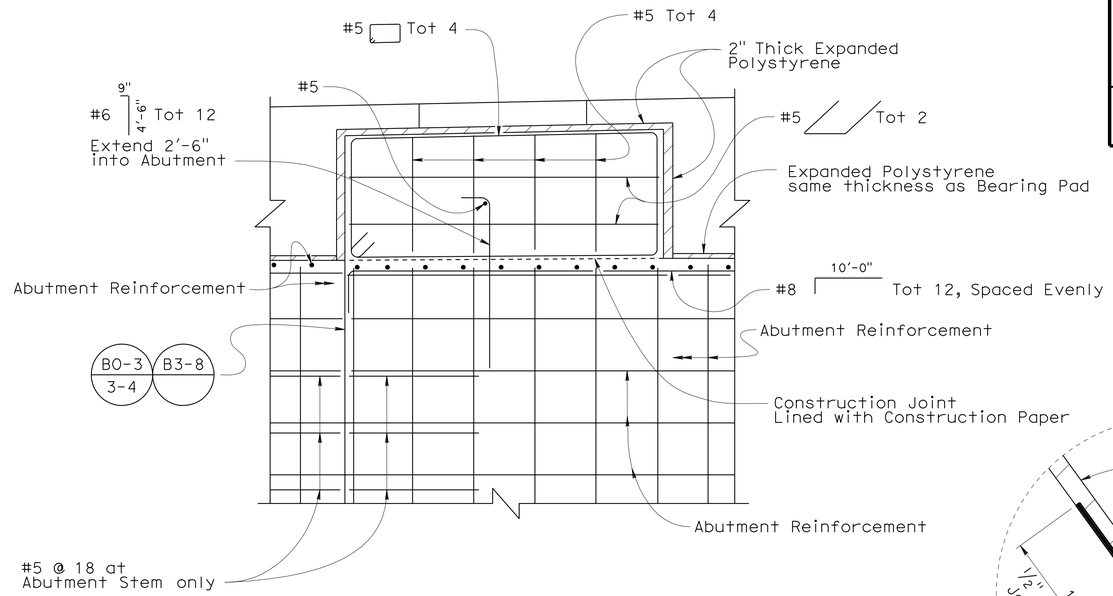

Note:

Abutment 1 (Stage 2) shown, other Interior Shear Keys similar.

SECTION X-X

½" = 1'-0"

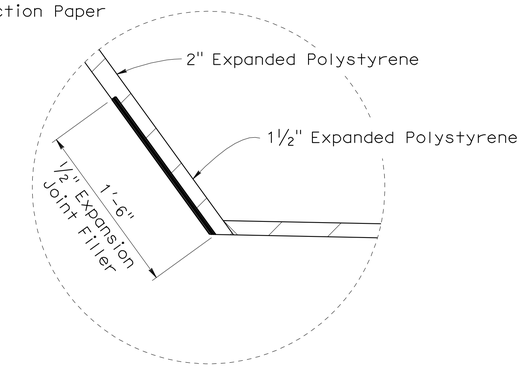

Note:

Reinforcement and Bearing Pad not shown for clarity

DETAIL Z

1½" = 1'-0"

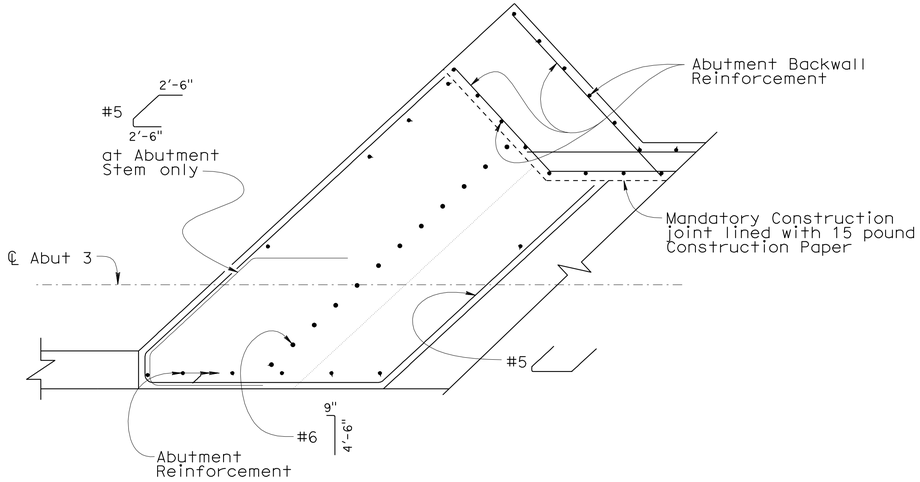

Note:
Not all Abutment Reinforcement shown

Abutment 3 (Stage 1) shown other Exterior Shear Keys similar.

SECTION W-W

½" = 1'-0"

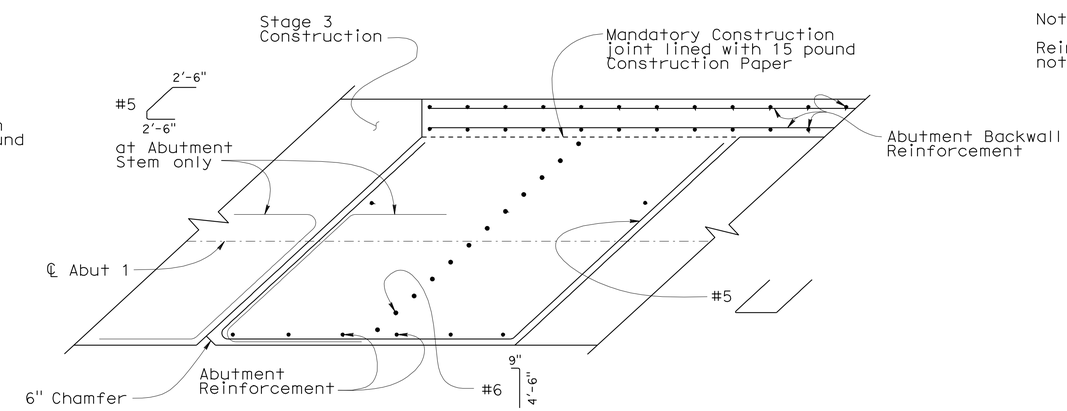

Note:
Not all Abutment Reinforcement shown

Abutment 1 (Stage 2) shown, other Interior Shear Keys similar.

SECTION Y-Y

½" = 1'-0"

DESIGN	BY Fred Feng	CHECKED Sara Yip	
DETAILS	BY Herman Mauroschadt	CHECKED Sara Yip	
QUANTITIES	BY Gabriel Galo	CHECKED Ruslan Novik	

STATE OF CALIFORNIA
DEPARTMENT OF TRANSPORTATION

DIVISION OF ENGINEERING SERVICES
STRUCTURE DESIGN
DESIGN BRANCH 15

BRIDGE NO. 53-3041
POST MILE 3.66

BLOOMFIELD AVENUE UC
ABUTMENT DETAILS NO. 10

STRUCTURES DESIGN DETAIL SHEET (ENGLISH) (REV. 10/25/05)

ORIGINAL SCALE IN INCHES FOR REDUCED PLANS 0 1 2 3

CU 07
EA 215931

DISREGARD PRINTS BEARING EARLIER REVISION DATES

REVISION DATES: 8-5-10 9-3-10 2-18-11 7-6-11 7-14-11 10-24-11 12-5-11 1-5-12

SHEET 16 OF 80

FILE => 53-3041-i-ad10.dgn

USERNAME => s135318 DATE PLOTTED => 28-MAR-2012 TIME PLOTTED => 09:44

DIST	COUNTY	ROUTE	POST MILES TOTAL PROJECT	SHEET No	TOTAL SHEETS
07	LA	5	2.4/4.0	811	1288

Andrew Rittenhouse 12-12-11
REGISTERED CIVIL ENGINEER DATE

3-26-12
PLANS APPROVAL DATE

REGISTERED PROFESSIONAL ENGINEER
Andrew P. Rittenhouse
No. 61006
Exp. 12-31-12
CIVIL
STATE OF CALIFORNIA

The State of California or its officers or agents shall not be responsible for the accuracy or completeness of electronic copies of this plan sheet.

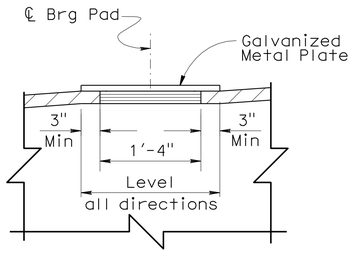

SECTION B-B

1" = 1'-0"

Note:

Coat Top of Bearing Pad with Silicone Grease prior to placing Galvanized Metal Plate

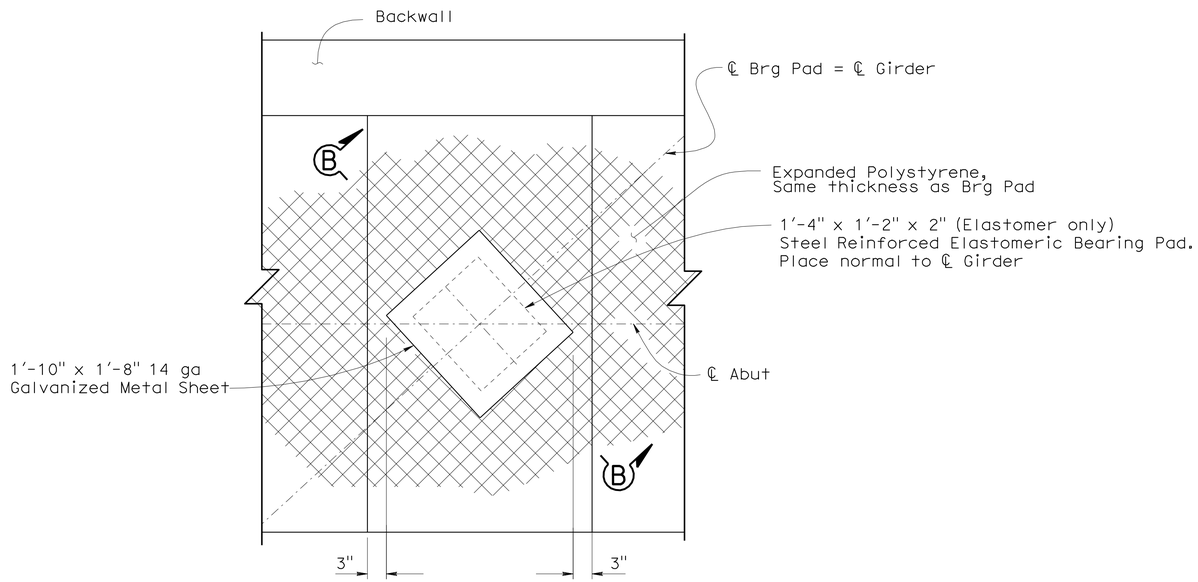

BEARING PAD DETAIL

1" = 1'-0"

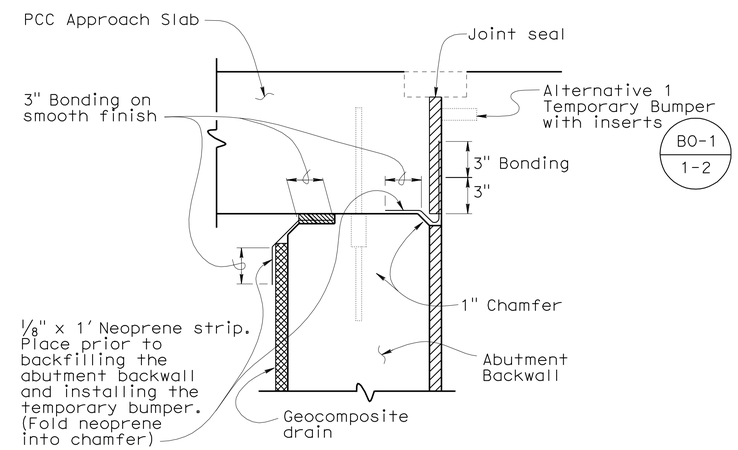

JOINT PROTECTION DETAIL

No Scale

DESIGN	BY Fred Feng	CHECKED Sara Yip	
DETAILS	BY Herman Mauroschadt	CHECKED Sara Yip	
QUANTITIES	BY Gabriel Galo	CHECKED Ruslan Novik	

STATE OF CALIFORNIA
DEPARTMENT OF TRANSPORTATION

DIVISION OF ENGINEERING SERVICES
STRUCTURE DESIGN
DESIGN BRANCH 15

BRIDGE NO. 53-3041
POST MILE 3.66

BLOOMFIELD AVENUE UC
ABUTMENT DETAILS NO. 11

STRUCTURES DESIGN DETAIL SHEET (ENGLISH) (REV. 10/25/05)

ORIGINAL SCALE IN INCHES FOR REDUCED PLANS 0 1 2 3

CU 07
EA 215931

DISREGARD PRINTS BEARING EARLIER REVISION DATES

REVISION DATES: 12-5-11 1-5-12 3-5-10 1-5-10 1-5-11 3-5-11 7-5-11 10-5-11 12-5-11

SHEET 17 OF 80

FILE => 53-3041-i-ad11.dgn

USERNAME => s124936 DATE PLOTTED => 28-MAR-2012 TIME PLOTTED => 03:45

DIST	COUNTY	ROUTE	POST MILES TOTAL PROJECT	SHEET No	TOTAL SHEETS
07	LA	5	2.4/4.0	812	1288

REGISTERED CIVIL ENGINEER 12-12-11 DATE

3-26-12
PLANS APPROVAL DATE

The State of California or its officers or agents shall not be responsible for the accuracy or completeness of electronic copies of this plan sheet.

REGISTERED PROFESSIONAL ENGINEER Andrew P. Rittenhouse No. 61006 Exp. 12-31-12 CIVIL STATE OF CALIFORNIA

Notes:

1. Abutment 1 shown , Abutment 3 similar.
2. Next Stage Longitudinal Reinf not shown for clarity.
3. Interior Shear Key Reinf not shown for clarity.

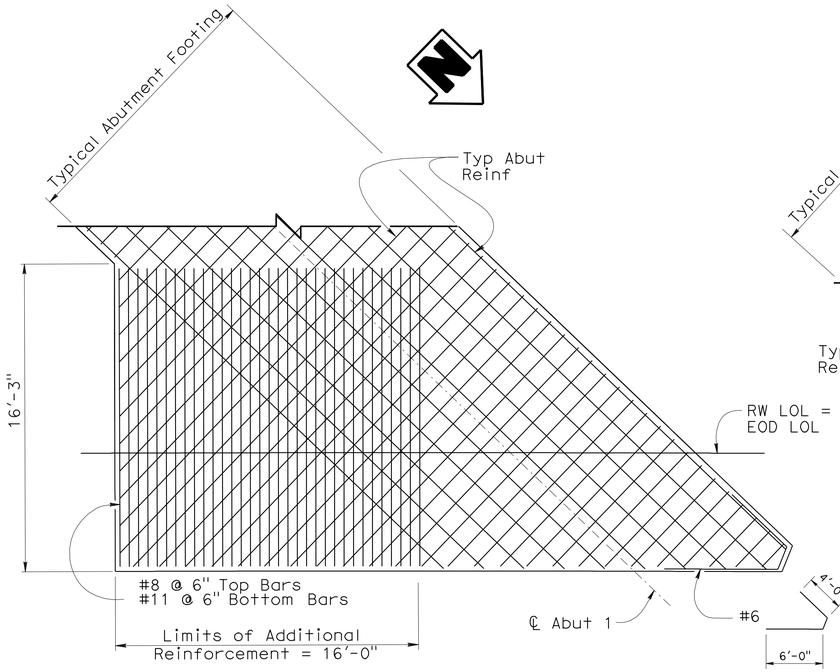

ABUTMENT 1

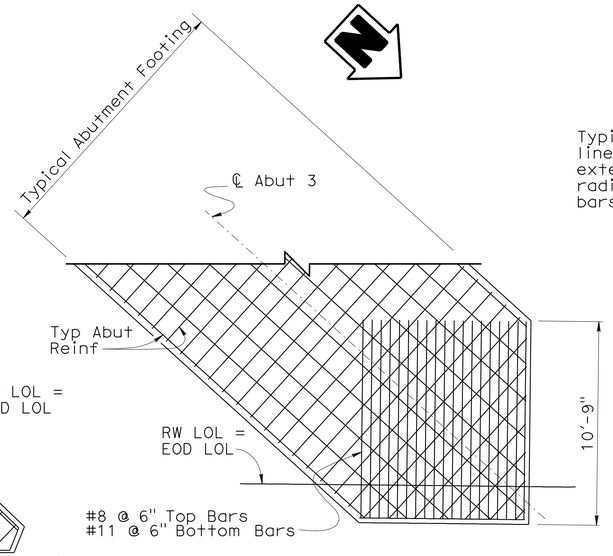

ABUTMENT 3

ADDITIONAL FOOTING REINFORCEMENT (STAGE 3)

1/4" = 1'-0"

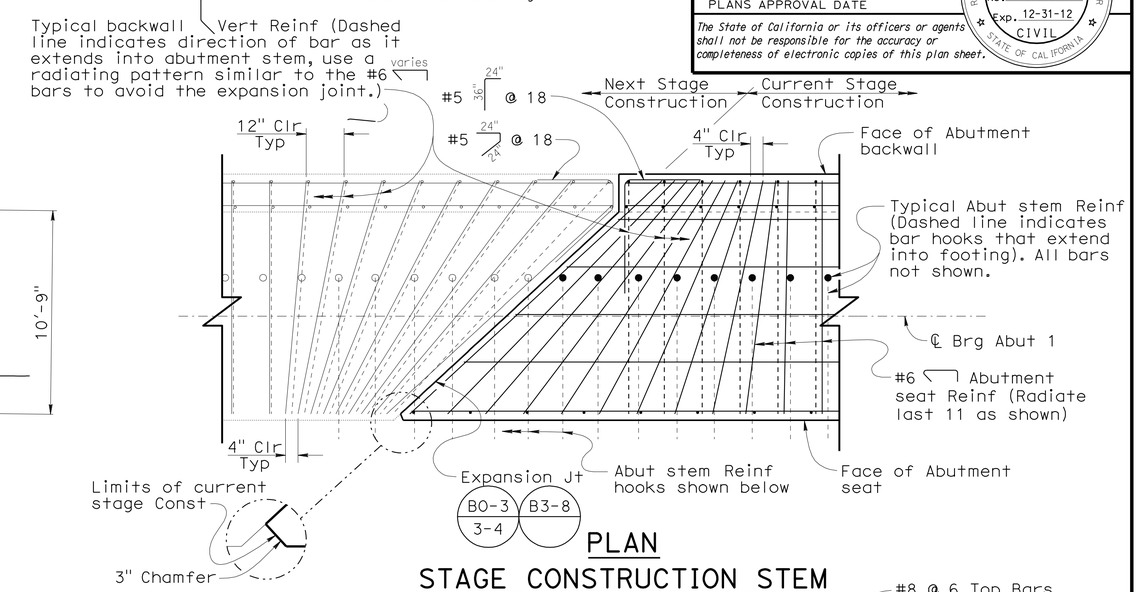

PLAN
STAGE CONSTRUCTION STEM

1/2" = 1'-0"

Notes:
1. Abutment 1 Footing shown, Abutment 3 similar.
2. Not all Reinforcing shown.

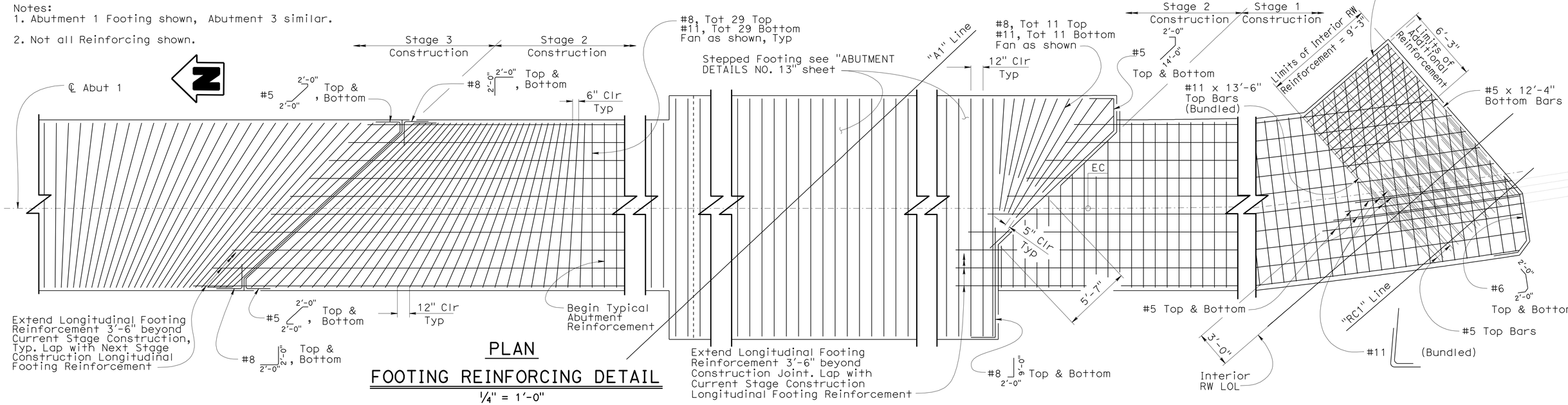

PLAN
FOOTING REINFORCING DETAIL

1/4" = 1'-0"

	BY	CHECKED
DESIGN	Fred Feng	Sara Yip
DETAILS	Herman Mauroschadt	Sara Yip
QUANTITIES	Gabriel Galo	Ruslan Novik

STATE OF CALIFORNIA
DEPARTMENT OF TRANSPORTATION

DIVISION OF ENGINEERING SERVICES
STRUCTURE DESIGN
DESIGN BRANCH 15

BRIDGE NO. 53-3041
POST MILE 3.66

BLOOMFIELD AVENUE UC
ABUTMENT DETAILS NO. 12

STRUCTURES DESIGN DETAIL SHEET (ENGLISH) (REV. 10/25/05)

ORIGINAL SCALE IN INCHES FOR REDUCED PLANS 0 1 2 3

CU 07
EA 215931

DISREGARD PRINTS BEARING EARLIER REVISION DATES

REVISION DATES: 9-29-10 2-4-11 03-29-11 1-3-11 3-24-11 10-3-11 12-1-11 12-12-11 1-5-12

SHEET 18 OF 80

FILE => 53-3041-i-ad12.dgn

USERNAME => s124496 DATE PLOTTED => 28-MAR-2012 TIME PLOTTED => 09:45

DIST	COUNTY	ROUTE	POST MILES TOTAL PROJECT	SHEET No	TOTAL SHEETS
07	LA	5	2.4/4.0	813	1288

Andrew Rittenhouse 12-12-11
REGISTERED CIVIL ENGINEER DATE

3-26-12
PLANS APPROVAL DATE

REGISTERED PROFESSIONAL ENGINEER
Andrew P. Rittenhouse
No. 61006
Exp. 12-31-12
CIVIL
STATE OF CALIFORNIA

The State of California or its officers or agents shall not be responsible for the accuracy or completeness of electronic copies of this plan sheet.

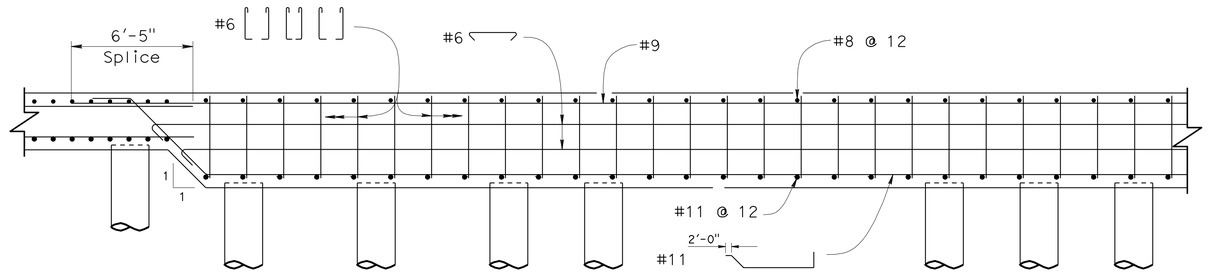

Note:

Top bars shown are to be spliced in addition to Typical Abutment reinforcement, see "SECTION A-A" on "ABUTMENT DETAILS NO. 9" sheet for additional details.

SECTION C-C

1/4" = 1'

Notes:

1. For Limits of Typical Reinforcement in Footing Thickness Transition see "ABUTMENT DETAILS NO. 12" sheet.
2. For Abutment Reinforcement not shown see "SECTION A-A" on "ABUTMENT DETAILS NO. 9" sheet.

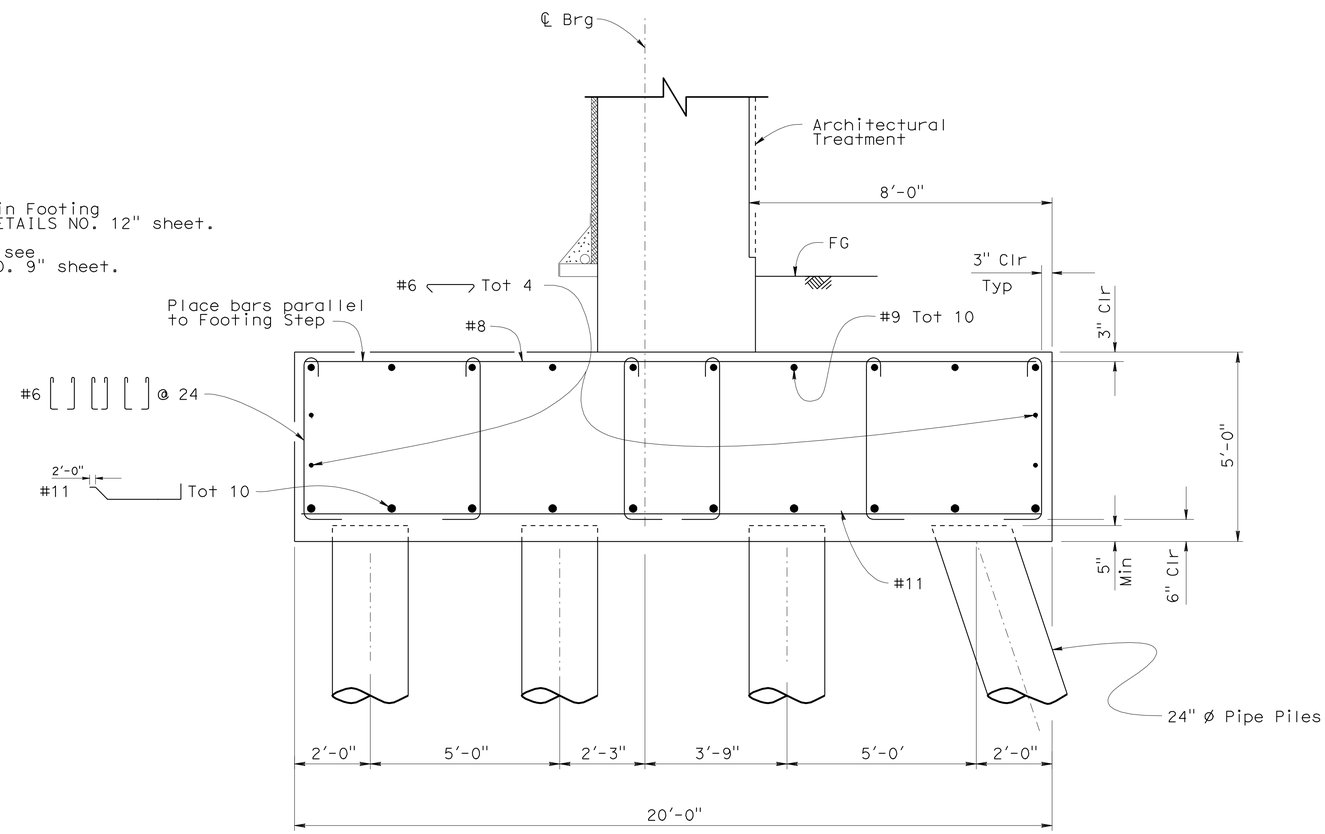

SECTION D-D

1/2" = 1'

DESIGN	BY Fred Feng	CHECKED Sara Yip	
DETAILS	BY Herman Mauroschadt	CHECKED Sara Yip	
QUANTITIES	BY Gabriel Galo	CHECKED Ruslan Novik	

STATE OF CALIFORNIA
DEPARTMENT OF TRANSPORTATION

DIVISION OF ENGINEERING SERVICES
STRUCTURE DESIGN
DESIGN BRANCH 15

BRIDGE NO. 53-3041
POST MILE 3.66

BLOOMFIELD AVENUE UC
ABUTMENT DETAILS NO. 13

STRUCTURES DESIGN DETAIL SHEET (ENGLISH) (REV. 10/25/05)

ORIGINAL SCALE IN INCHES FOR REDUCED PLANS 0 1 2 3

CU 07
EA 215931

DISREGARD PRINTS BEARING EARLIER REVISION DATES

REVISION DATES: 2-14-11 2-28-11 3-4-11 3-8-11 3-18-11 10-28-11 12-9-11 12-12-11 1-5-12

SHEET 19 OF 80

FILE => 53-3041-i-ad13.dgn

USERNAME => s124496 DATE PLOTTED => 28-MAR-2012 TIME PLOTTED => 09:45

DIST	COUNTY	ROUTE	POST MILES TOTAL PROJECT	SHEET No	TOTAL SHEETS
07	LA	5	2.4/4.0	814	1288

Andrew Rittenhouse 12-12-11
REGISTERED CIVIL ENGINEER DATE

3-26-12
PLANS APPROVAL DATE

REGISTERED PROFESSIONAL ENGINEER Andrew P. Rittenhouse No. 61006 Exp. 12-31-12 CIVIL STATE OF CALIFORNIA

The State of California or its officers or agents shall not be responsible for the accuracy or completeness of electronic copies of this plan sheet.

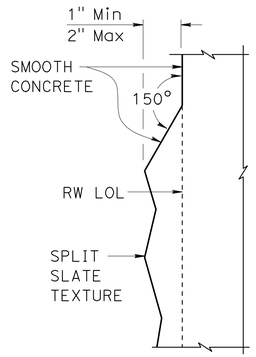

DETAIL A
3" = 1'-0"

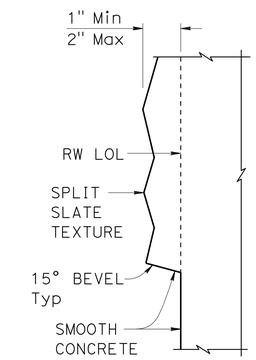

DETAIL B
3" = 1'-0"

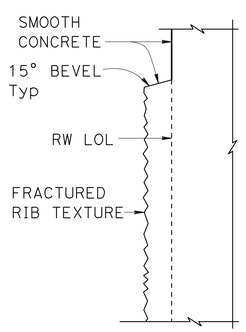

DETAIL C
3" = 1'-0"

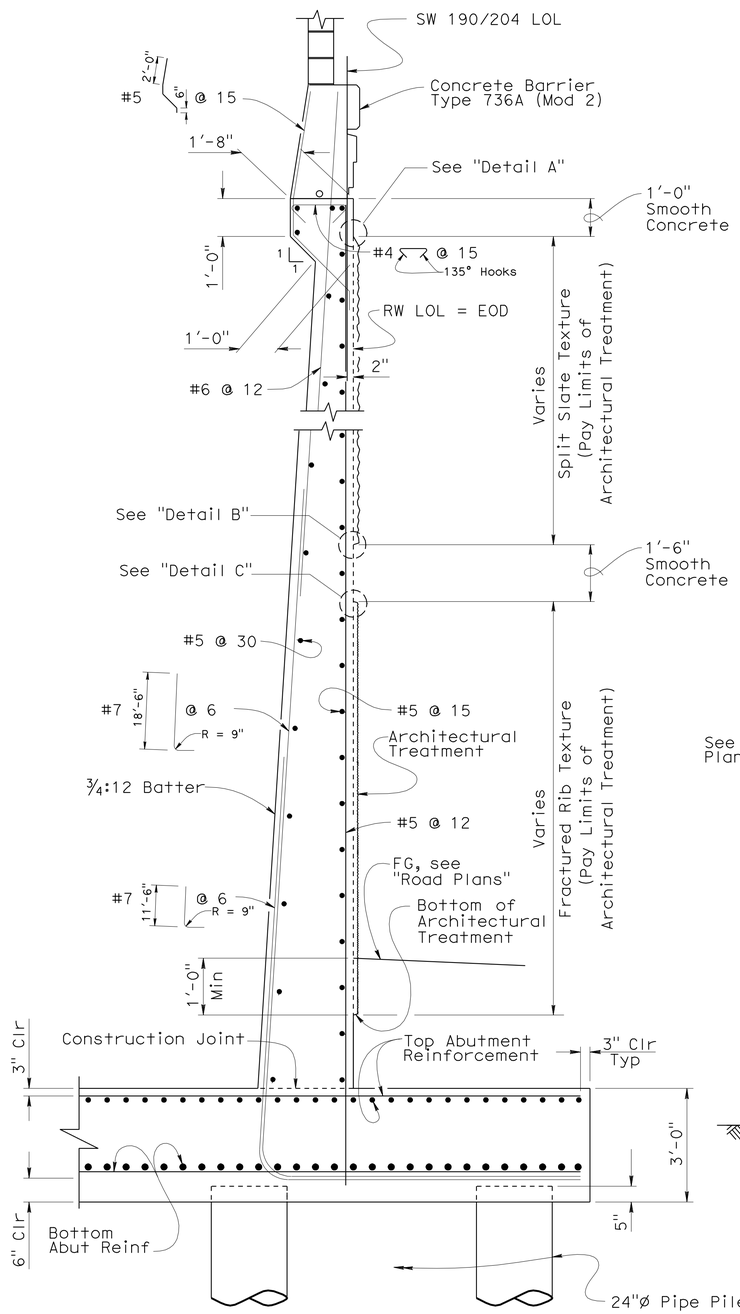

SECTION A-A
1/2" = 1'-0"

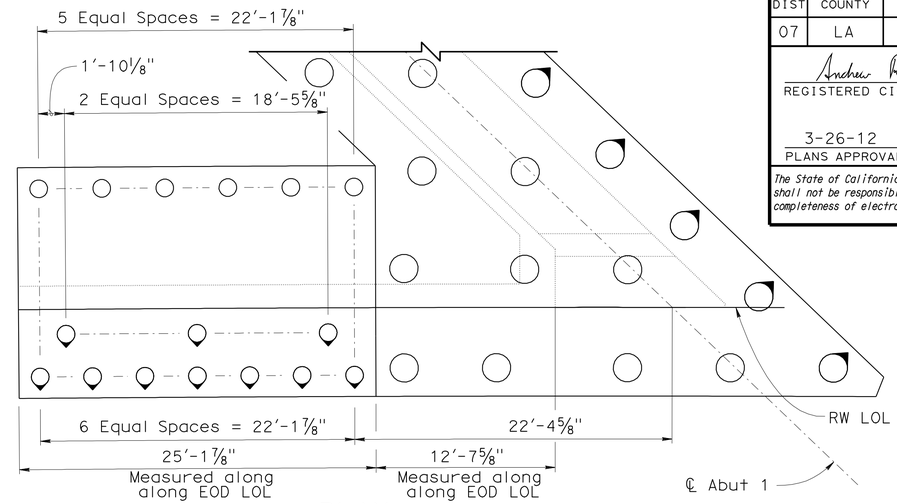

PLAN

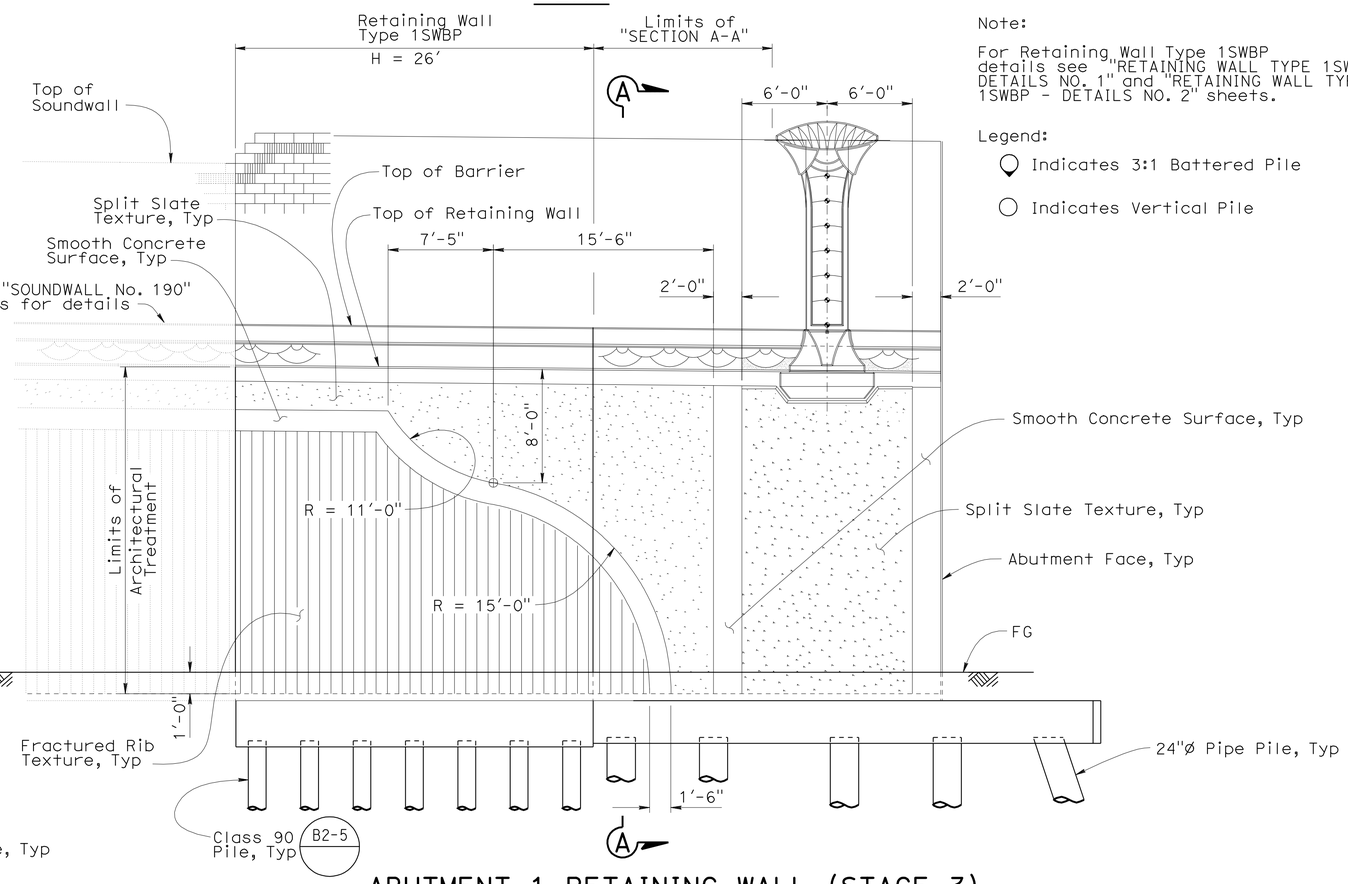

Note:

For Retaining Wall Type 1SWBP details see "RETAINING WALL TYPE 1SWBP - DETAILS NO. 1" and "RETAINING WALL TYPE 1SWBP - DETAILS NO. 2" sheets.

Legend:

- Indicates 3:1 Battered Pile
- Indicates Vertical Pile

ABUTMENT 1 RETAINING WALL (STAGE 3)
3/16" = 1'-0"

DESIGN	BY Andrew Rittenhouse	CHECKED Sara Yip	
DETAILS	BY Herman Mauroschadt	CHECKED Sara Yip	
QUANTITIES	BY Gabriel Galo	CHECKED Rustan Novik	

STATE OF CALIFORNIA
DEPARTMENT OF TRANSPORTATION

DIVISION OF ENGINEERING SERVICES
STRUCTURE DESIGN
DESIGN BRANCH 15

BRIDGE NO. 53-3041
POST MILE 3.66

BLOOMFIELD AVENUE UC
RETAINING WALL DETAILS NO. 1

STRUCTURES DESIGN DETAIL SHEET (ENGLISH) (REV. 10/25/05)

ORIGINAL SCALE IN INCHES FOR REDUCED PLANS 0 1 2 3

CU 07
EA 215931

DISREGARD PRINTS BEARING EARLIER REVISION DATES

REVISION DATES: 3-8-12 2-7-12 3-10-12 5-2-11 7-11-11 7-14-11 10-21-11 10-28-11 12-5-11

SHEET 20 OF 80

FILE => 53-3041-j-ww01.dgn

USERNAME => s124496 DATE PLOTTED => 28-MAR-2012 TIME PLOTTED => 09:45

DIST	COUNTY	ROUTE	POST MILES TOTAL PROJECT	SHEET No	TOTAL SHEETS
07	LA	5	2.4/4.0	815	1288

Andrew Rittenhouse 12-12-11
REGISTERED CIVIL ENGINEER DATE

3-26-12
PLANS APPROVAL DATE

REGISTERED PROFESSIONAL ENGINEER
Andrew P. Rittenhouse
No. 61006
Exp. 12-31-12
CIVIL
STATE OF CALIFORNIA

The State of California or its officers or agents shall not be responsible for the accuracy or completeness of electronic copies of this plan sheet.

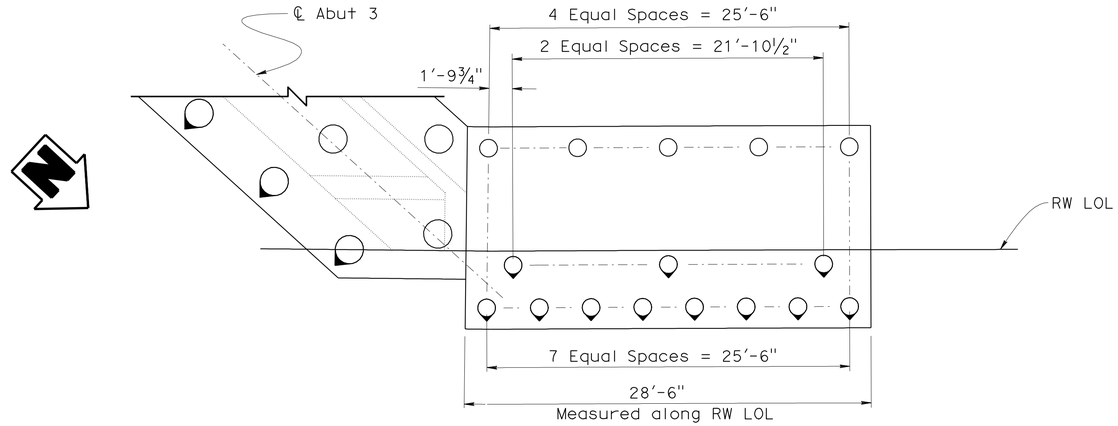

PLAN

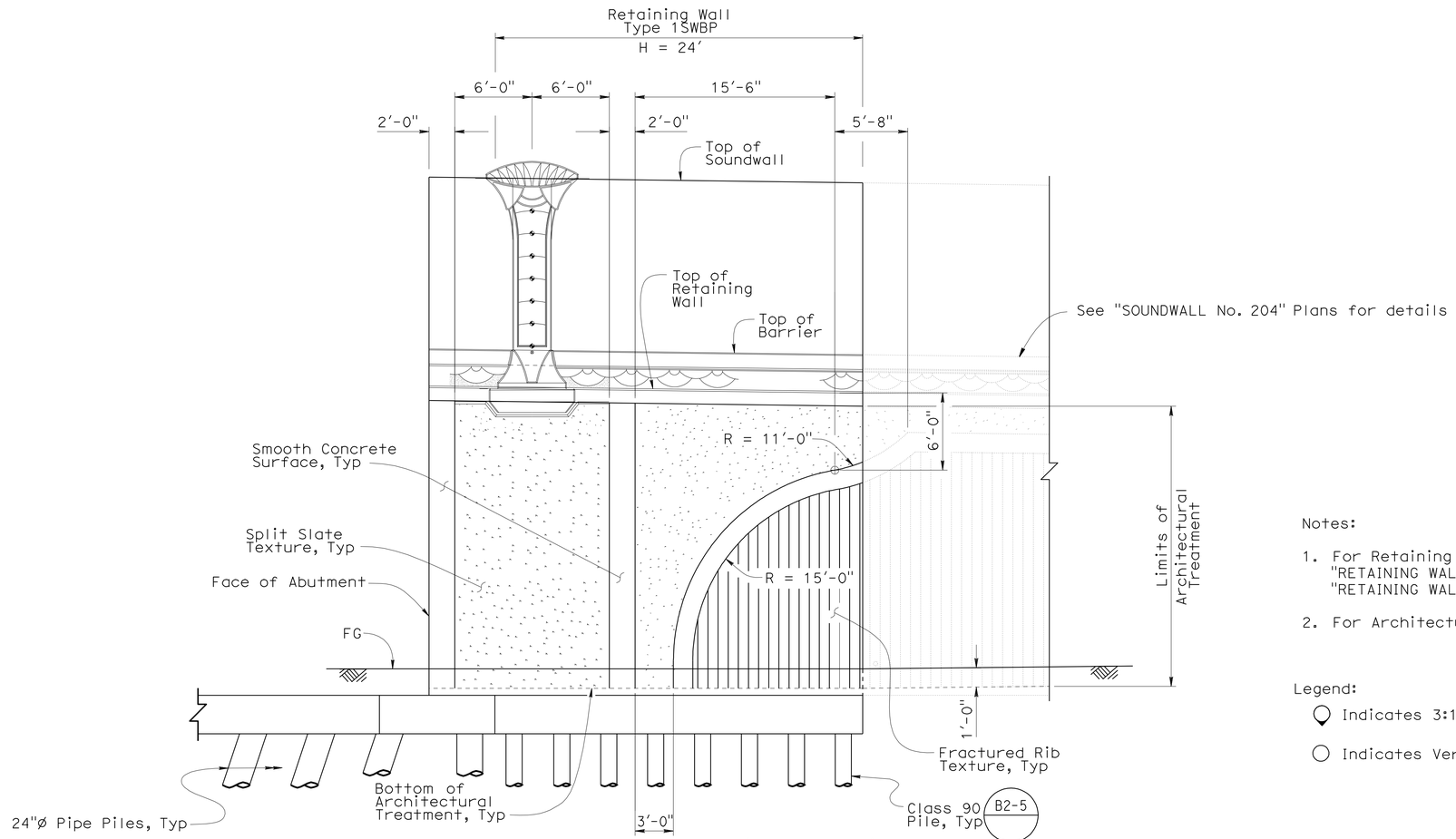

ABUTMENT 3 RETAINING WALL (STAGE 3)

3/16" = 1'-0"

Notes:

1. For Retaining Wall Type 1SWBP details see "RETAINING WALL TYPE 1SWBP - DETAILS NO. 1" and "RETAINING WALL TYPE 1SWBP - DETAILS NO. 2" sheets.
2. For Architectural details see "RETAINING WALL DETAILS NO. 1" sheet.

Legend:

- Indicates 3:1 Battered Pile
- Indicates Vertical Pile

	BY	CHECKED
DESIGN	Andrew Rittenhouse	Sara Yip
DETAILS	Herman Mauroschadt	Sara Yip
QUANTITIES	Gabriel Galo	Ruslan Novik

STATE OF CALIFORNIA
DEPARTMENT OF TRANSPORTATION

DIVISION OF ENGINEERING SERVICES
STRUCTURE DESIGN
DESIGN BRANCH 15

BRIDGE NO. 53-3041
POST MILE 3.66

BLOOMFIELD AVENUE UC
RETAINING WALL DETAILS NO. 2

STRUCTURES DESIGN DETAIL SHEET (ENGLISH) (REV. 10/25/05)

ORIGINAL SCALE IN INCHES FOR REDUCED PLANS 0 1 2 3

CU 07
EA 215931

DISREGARD PRINTS BEARING EARLIER REVISION DATES

REVISION DATES: 9-13-10 1-21-11 4-25-11 5-5-11 7-14-11 10-26-11 10-28-11 12-9-11 1-5-12

SHEET 21 OF 80

FILE => 53-3041-j-ww02.dgn

USERNAME => s124496 DATE PLOTTED => 28-MAR-2012 TIME PLOTTED => 09:45

DIST	COUNTY	ROUTE	POST MILES TOTAL PROJECT	SHEET No	TOTAL SHEETS
07	LA	5	2.4/4.0	816	1288

Andrew Rittenhouse 12-12-11
REGISTERED CIVIL ENGINEER DATE

3-26-12
PLANS APPROVAL DATE

REGISTERED PROFESSIONAL ENGINEER
Andrew P. Rittenhouse
No. 61006
Exp. 12-31-12
CIVIL
STATE OF CALIFORNIA

The State of California or its officers or agents shall not be responsible for the accuracy or completeness of electronic copies of this plan sheet.

Notes:
1. For "SECTION B-B" see "ABUTMENT DETAILS NO. 9" sheet.
2. To be placed normal to "Interior RW LOL".

Legend:
Indicates Bundled Bars:

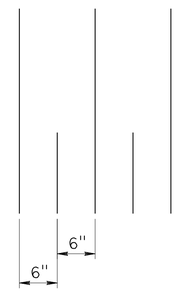

DETAIL A
No Scale

Note:

All reinforcement of Parapet Wall to be continued into Interior RW. For limits of bars in footing see "FOOTING REINFORCING DETAIL" on "ABUTMENT DETAILS NO. 12" sheet.

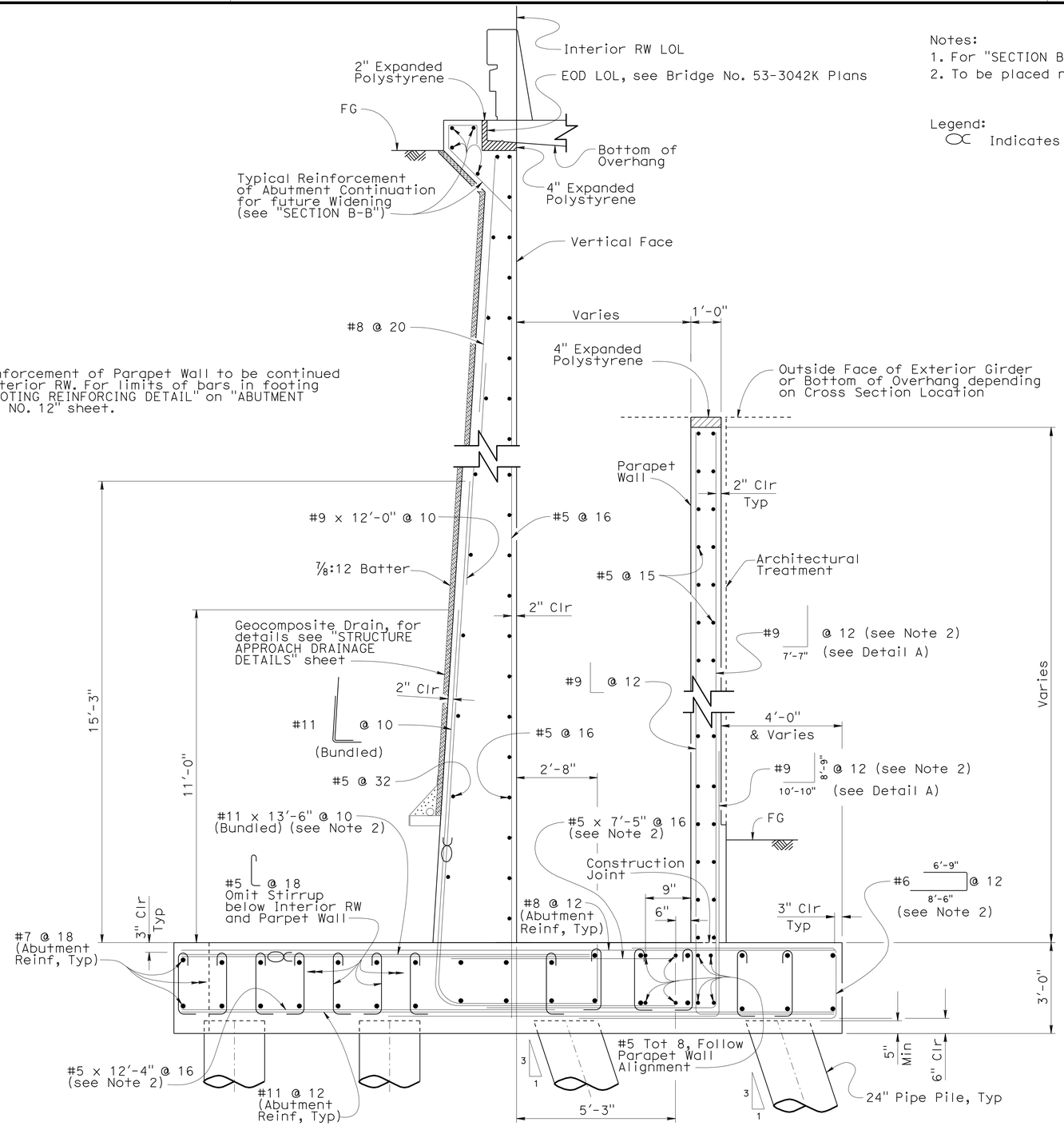

SECTION D-D
1/2" = 1'-0"

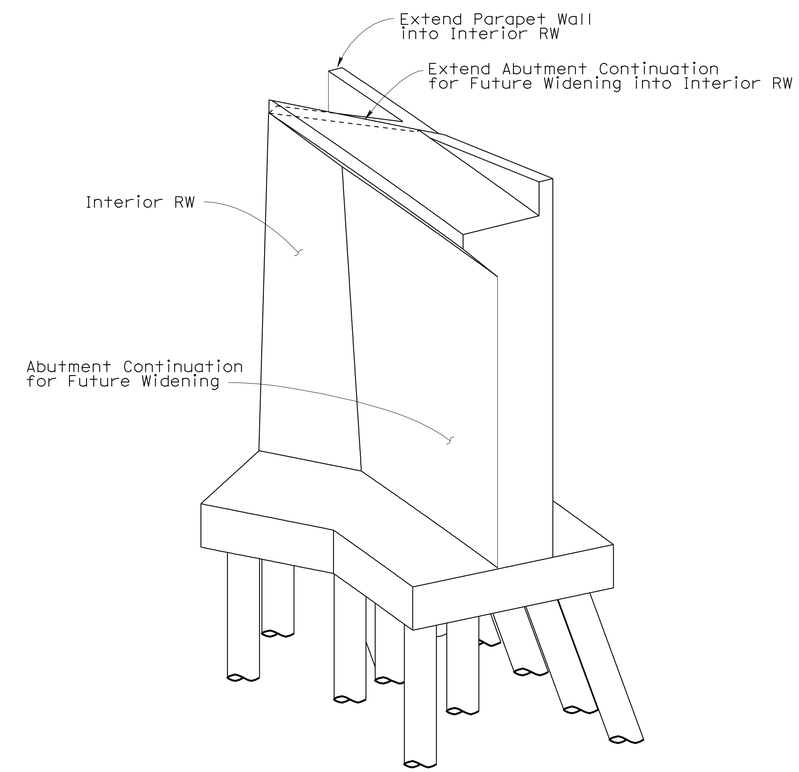

ABUTMENT 1 (STAGE 1) CORNER ISOMETRIC VIEW
No Scale

B0-3

	BY	CHECKED
DESIGN	Ruslan Novik	Sara Yip
DETAILS	Herman Mauroschadt	Sara Yip
QUANTITIES	Gabriel Galo	Ruslan Novik

STATE OF CALIFORNIA
DEPARTMENT OF TRANSPORTATION

DIVISION OF ENGINEERING SERVICES
STRUCTURE DESIGN
DESIGN BRANCH 15

BRIDGE NO. 53-3041
POST MILE 3.66

BLOOMFIELD AVENUE UC
RETAINING WALL DETAILS NO. 3

STRUCTURES DESIGN DETAIL SHEET (ENGLISH) (REV. 10/25/05)

ORIGINAL SCALE IN INCHES FOR REDUCED PLANS 0 1 2 3

CU 07
EA 215931

DISREGARD PRINTS BEARING EARLIER REVISION DATES

REVISION DATES: 9-13-10, 1-21-11, 4-29-11, 7-11-11, 7-14-11, 12-5-11, 12-21-11, 1-5-12

SHEET 22 OF 80

FILE => 53-3041-j-ww03.dgn

USERNAME => s124496 DATE PLOTTED => 28-MAR-2012 TIME PLOTTED => 09:45

DIST	COUNTY	ROUTE	POST MILES TOTAL PROJECT	SHEET No	TOTAL SHEETS
07	LA	5	2.4/4.0	817	1288

Andrew Rittenhouse 12-12-11
REGISTERED CIVIL ENGINEER DATE

3-26-12
PLANS APPROVAL DATE

REGISTERED PROFESSIONAL ENGINEER
Andrew P. Rittenhouse
No. 61006
Exp. 12-31-12
CIVIL
STATE OF CALIFORNIA

The State of California or its officers or agents shall not be responsible for the accuracy or completeness of electronic copies of this plan sheet.

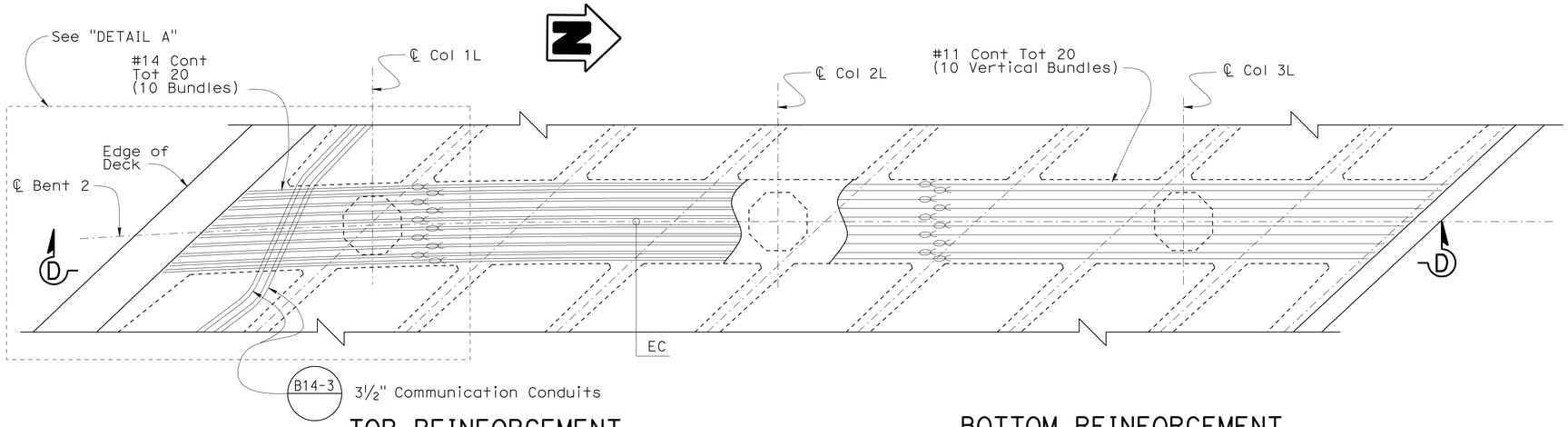

TOP REINFORCEMENT

PLAN (STAGE 1)

3/16" = 1'-0"

BOTTOM REINFORCEMENT

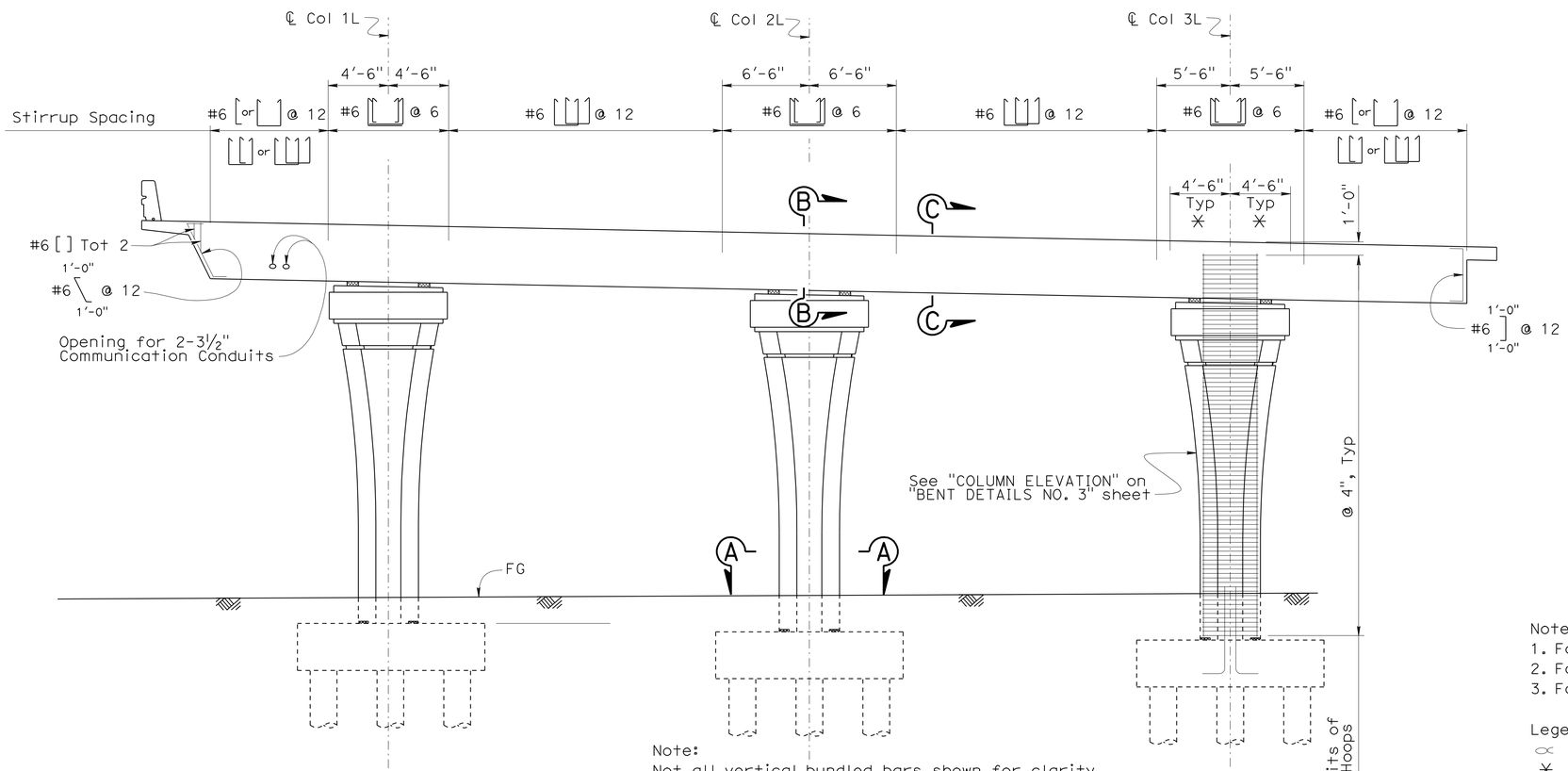

Note:
Not all vertical bundled bars shown for clarity.

ELEVATION (STAGE 1)

3/16" = 1'-0"

Detail A Notes:

1. Inside the bent cap:
   Conduits shall pass through the bent cap without interference with the stirrups. Stirrups are shown at locations where the conduits are present.
2. Transition regions:
   Bend Conduits as necessary to pass through bent cap. Minimize degree of bends and maintain minimum bend radius of 3'-6" (4'-0" radius shown in detail below).
3. Outside the bent cap:
   Clear spacing of 6" shall be kept between the face of girder and edge of adjacent conduit. Clear spacing of 6" shall be maintained between conduits.

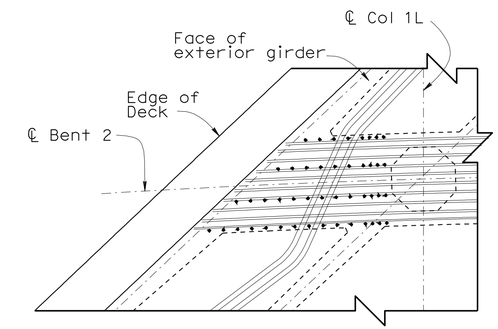

DETAIL A

3/16" = 1'-0"

Notes:
1. For "SECTION A-A" see "BENT DETAILS NO. 3" sheet.
2. For "SECTION B-B" and "SECTION C-C" see "BENT LAYOUT NO. 3" sheet.
3. For "SECTION D-D" see "BENT DETAILS NO. 1" sheet.

Legend:
∝ Indicates Bundled bars
⋇ Limits for Distribution of J-Dowels and horizontal stirrups.

	BY	CHECKED
DESIGN	Fred Feng	Shervin Pahlavan
DETAILS	Herman Mauroschadt	Shervin Pahlavan
QUANTITIES	Gabriel Galo	Rusian Novik

STATE OF CALIFORNIA
DEPARTMENT OF TRANSPORTATION

DIVISION OF ENGINEERING SERVICES
STRUCTURE DESIGN
DESIGN BRANCH 15

BRIDGE NO. 53-3041
POST MILE 3.66

BLOOMFIELD AVENUE UC
BENT LAYOUT NO. 1

STRUCTURES DESIGN DETAIL SHEET (ENGLISH) (REV. 10/25/05)

ORIGINAL SCALE IN INCHES FOR REDUCED PLANS 0 1 2 3

CU 07
EA 215931

DISREGARD PRINTS BEARING EARLIER REVISION DATES

REVISION DATES: 1-5-12 3-8-12 7-14-10 1-14-11 2-3-11 7-14-11 7-14-11 10-25-11 12-5-11

SHEET 23 OF 80

FILE => 53-3041-k-b20-1o1.dgn

USERNAME => s124496 DATE PLOTTED => 28-MAR-2012 TIME PLOTTED => 09:45

Notes:

1. For "SECTION A-A" see "BENT DETAILS NO. 3" sheet.
2. For "SECTION B-B" and "SECTION C-C" see "BENT LAYOUT NO. 3" sheet.
3. For "SECTION D-D" see "BENT DETAILS NO. 1" sheet.
4. For details of bent cap reinforcement at Col 1M, see "SECTION E-E" and "SECTION F-F" on "BENT DETAILS NO. 1" sheet.
5. For additional reinforcement at Col 4M, see "SECTION E-E" and "SECTION F-F" on "BENT DETAILS NO. 1" sheet.
6. For Drainage details see "DECK DRAIN DETAILS" sheet.

DIST	COUNTY	ROUTE	POST MILES TOTAL PROJECT	SHEET No	TOTAL SHEETS
07	LA	5	2.4/4.0	818	1288

Andrew Rittenhouse 12-12-11
REGISTERED CIVIL ENGINEER DATE

3-26-12
PLANS APPROVAL DATE

REGISTERED PROFESSIONAL ENGINEER Andrew P. Rittenhouse No. 61006 Exp. 12-31-12 CIVIL STATE OF CALIFORNIA

The State of California or its officers or agents shall not be responsible for the accuracy or completeness of electronic copies of this plan sheet.

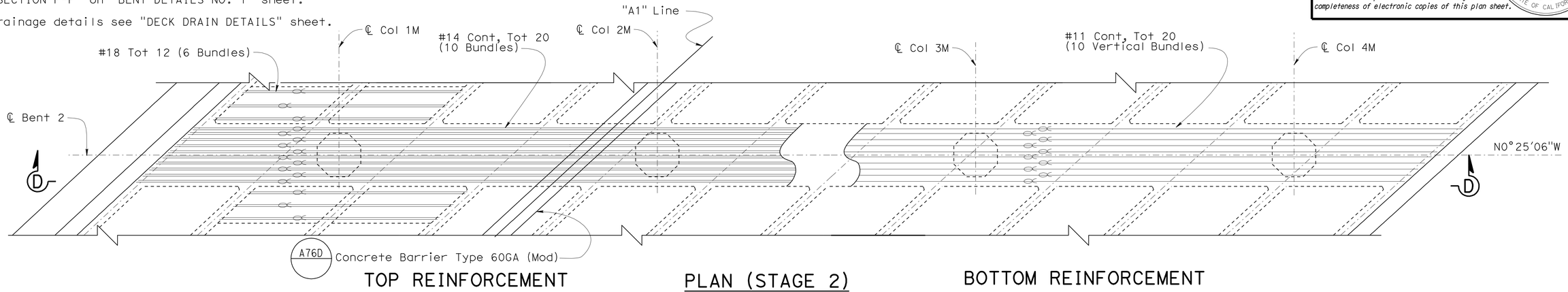

TOP REINFORCEMENT

PLAN (STAGE 2)
3/16" = 1'-0"

BOTTOM REINFORCEMENT

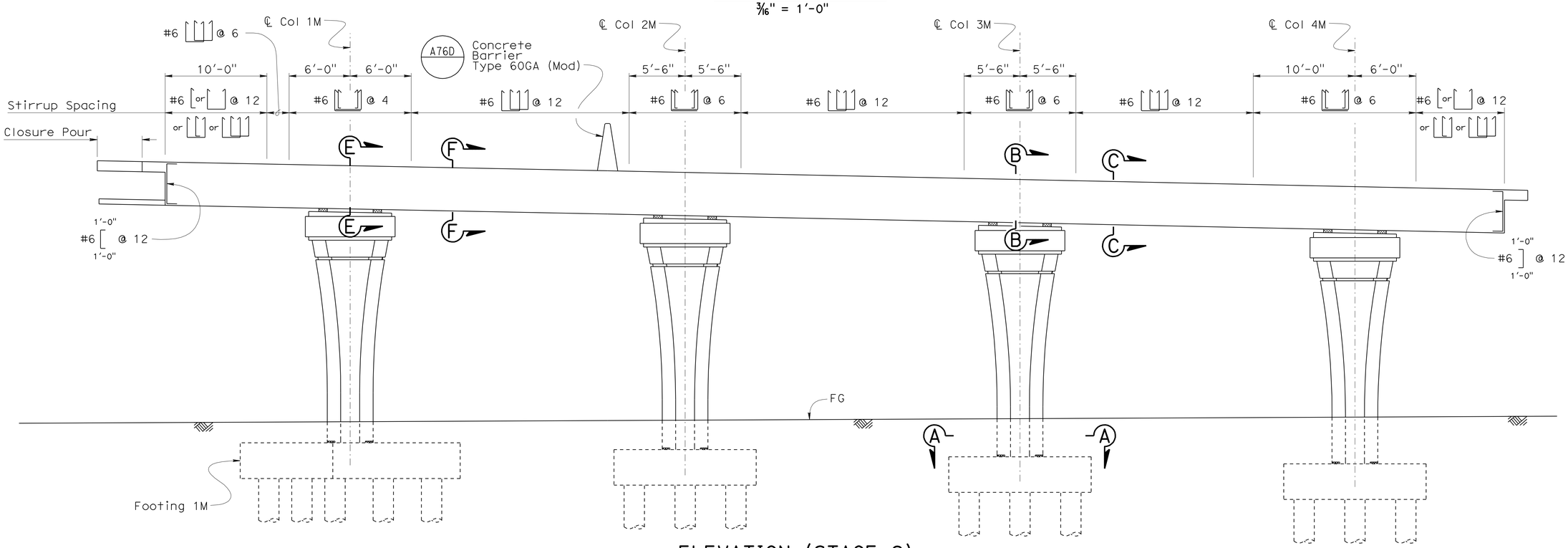

ELEVATION (STAGE 2)
3/16" = 1'-0"

DESIGN	BY Fred Feng	CHECKED Sara Yip	
DETAILS	BY Herman Mauroschadt	CHECKED Sara Yip	
QUANTITIES	BY Gabriel Galo	CHECKED Ruslan Novik	

STATE OF CALIFORNIA
DEPARTMENT OF TRANSPORTATION

DIVISION OF ENGINEERING SERVICES
STRUCTURE DESIGN
DESIGN BRANCH 15

BRIDGE NO. 53-3041
POST MILE 3.66

BLOOMFIELD AVENUE UC
BENT LAYOUT NO. 2

STRUCTURES DESIGN DETAIL SHEET (ENGLISH) (REV. 10/25/05)

ORIGINAL SCALE IN INCHES FOR REDUCED PLANS 0 1 2 3

CU 07
EA 215931

DISREGARD PRINTS BEARING EARLIER REVISION DATES

REVISION DATES: 12-3-11 3-8-10 7-14-10 2-18-11 4-18-11 5-3-11 7-15-11 7-14-11 10-25-11

SHEET 24 OF 80

FILE => 53-3041-k-b20-lo2.dgn

USERNAME => s124496 DATE PLOTTED => 28-MAR-2012 TIME PLOTTED => 09:45

DIST	COUNTY	ROUTE	POST MILES TOTAL PROJECT	SHEET No	TOTAL SHEETS
07	LA	5	2.4/4.0	819	1288

Andrew Rittenhouse 12-12-11
REGISTERED CIVIL ENGINEER DATE

3-26-12
PLANS APPROVAL DATE

The State of California or its officers or agents shall not be responsible for the accuracy or completeness of electronic copies of this plan sheet.

REGISTERED PROFESSIONAL ENGINEER
Andrew P. Rittenhouse
No. 61006
Exp. 12-31-12
CIVIL
STATE OF CALIFORNIA

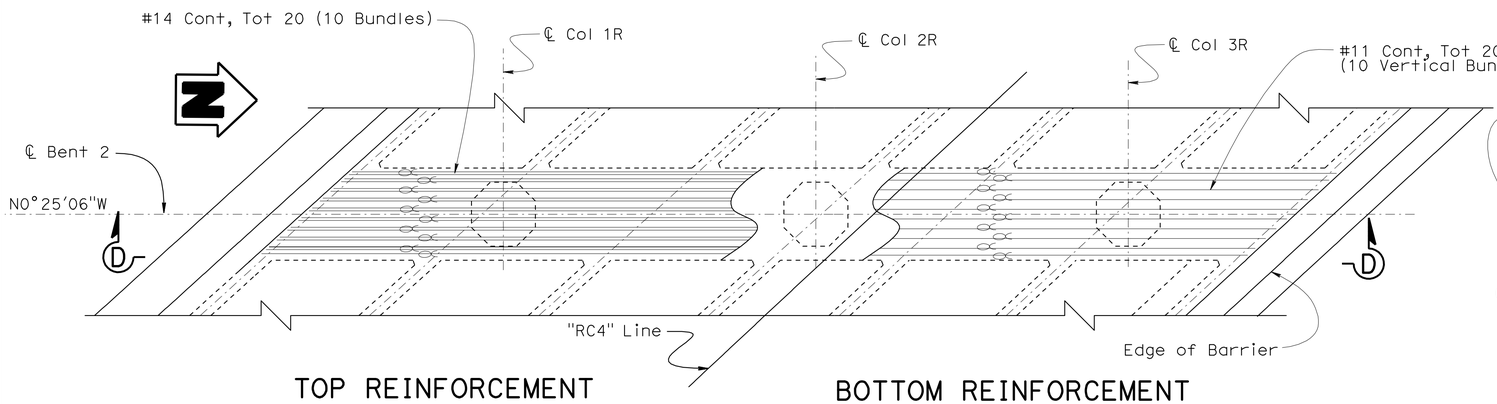

#5 1 2'-6" and #5 1 2'-0" J-Dowels @ 18" max each way. Hook around deck longitudinal reinf.

Alternate 1 2'-6" and 1 2'-0" dowels both directions. See Note 3.

PLAN (STAGE 3)

3/16" = 1'-0"

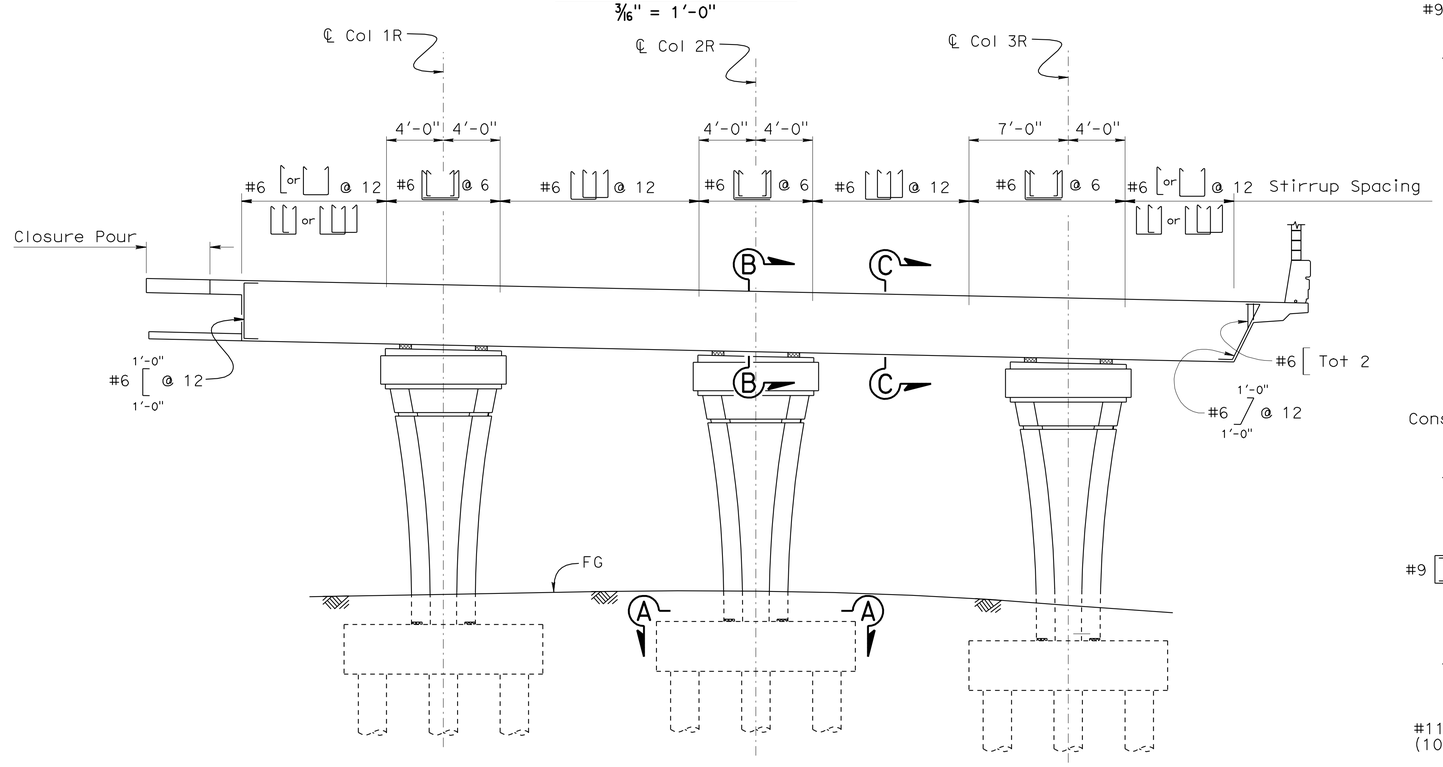

ELEVATION (STAGE 3)

3/16" = 1'-0"

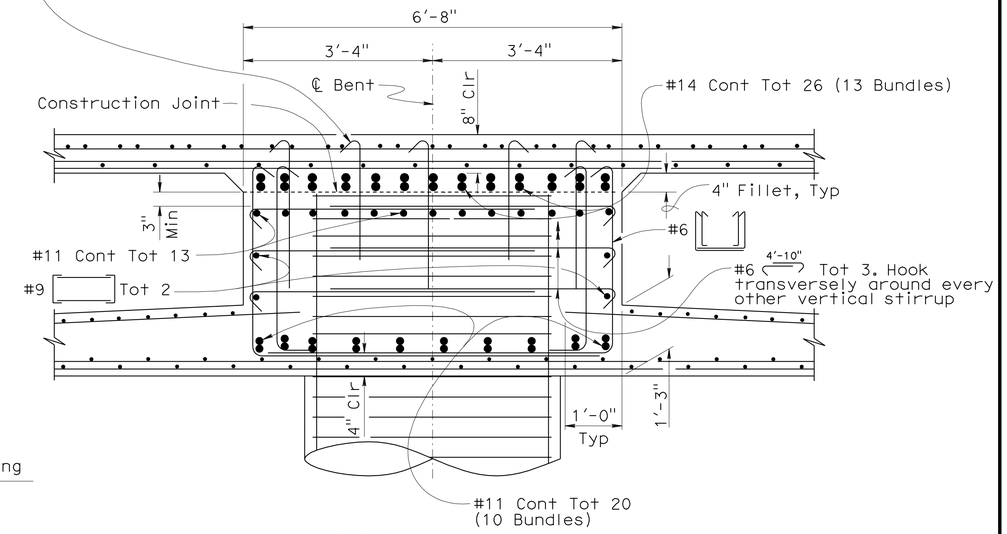

SECTION B-B

3/4" = 1'-0"

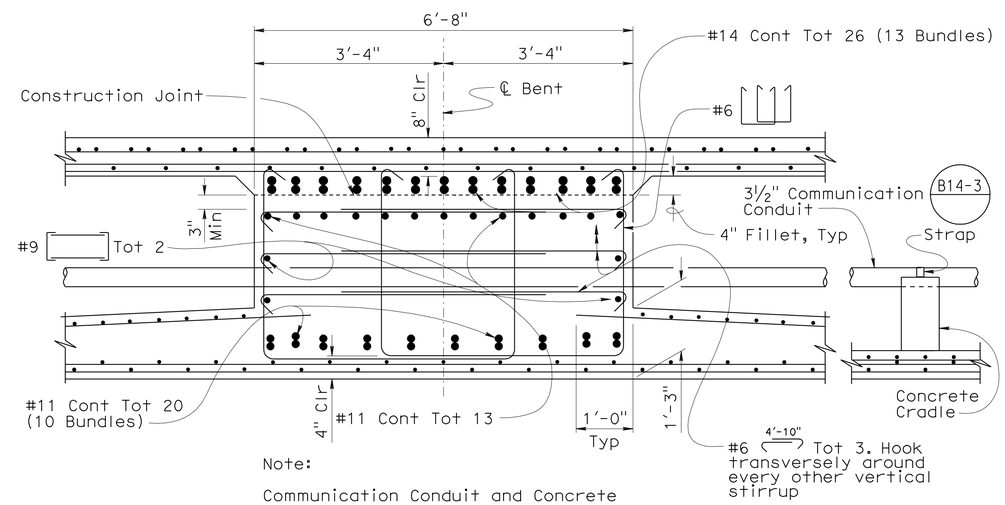

Note:

Communication Conduit and Concrete Cradle for Stage 1 only

SECTION C-C

3/4" = 1'-0"

Notes:

1. For "SECTION A-A" see "BENT DETAILS NO. 3" sheet.
2. For "SECTION D-D" see "BENT DETAILS NO. 1" sheet.
3. For limits of J-dowels and horizontal stirrups, see "ELEVATION (STAGE 1)" on "BENT LAYOUT NO. 1" sheet.

	BY	CHECKED
DESIGN	Fred Feng	Shervin Pahlavan
DETAILS	Herman Mauroschadt	Shervin Pahlavan
QUANTITIES	Gabriel Galo	Ruslan Novik

STATE OF CALIFORNIA
DEPARTMENT OF TRANSPORTATION

DIVISION OF ENGINEERING SERVICES
STRUCTURE DESIGN
DESIGN BRANCH 15

BRIDGE NO. 53-3041
POST MILE 3.66

BLOOMFIELD AVENUE UC
BENT LAYOUT NO. 3

STRUCTURES DESIGN DETAIL SHEET (ENGLISH) (REV. 10/25/05)

ORIGINAL SCALE IN INCHES FOR REDUCED PLANS 0 1 2 3

CU 07
EA 215931

DISREGARD PRINTS BEARING EARLIER REVISION DATES

REVISION DATES: 12-8-11 1-5-12 3-4-10 2-18-11 2-28-11 4-18-11 7-14-11 7-14-11 10-25-11

SHEET 25 OF 80

FILE => 53-3041-K-b20-1o3.dgn

USERNAME => s124436 DATE PLOTTED => 28-MAR-2012 TIME PLOTTED => 09:45

DIST	COUNTY	ROUTE	POST MILES TOTAL PROJECT	SHEET No	TOTAL SHEETS
07	LA	5	2.4/4.0	820	1288

Andrew Rittenhouse 12-12-11
REGISTERED CIVIL ENGINEER DATE

3-26-12
PLANS APPROVAL DATE

REGISTERED PROFESSIONAL ENGINEER
Andrew P. Rittenhouse
No. 61006
Exp. 12-31-12
CIVIL
STATE OF CALIFORNIA

The State of California or its officers or agents shall not be responsible for the accuracy or completeness of electronic copies of this plan sheet.

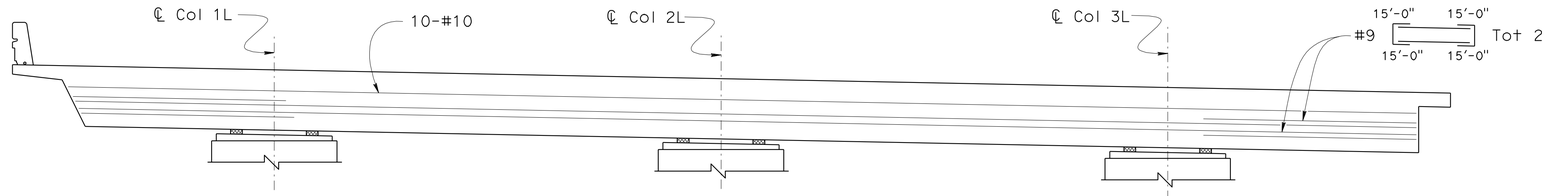

SECTION D-D (STAGE 1)

3/16" = 1'

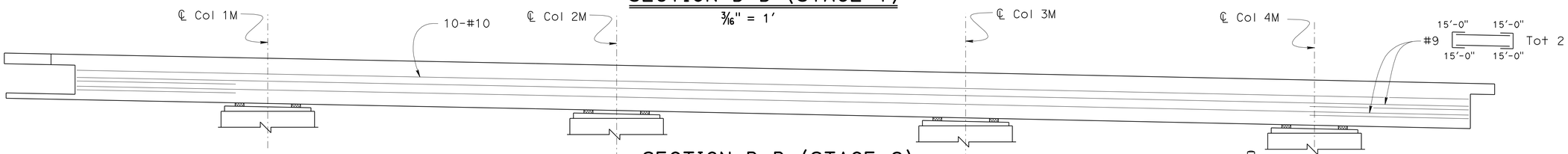

SECTION D-D (STAGE 2)

3/16" = 1'

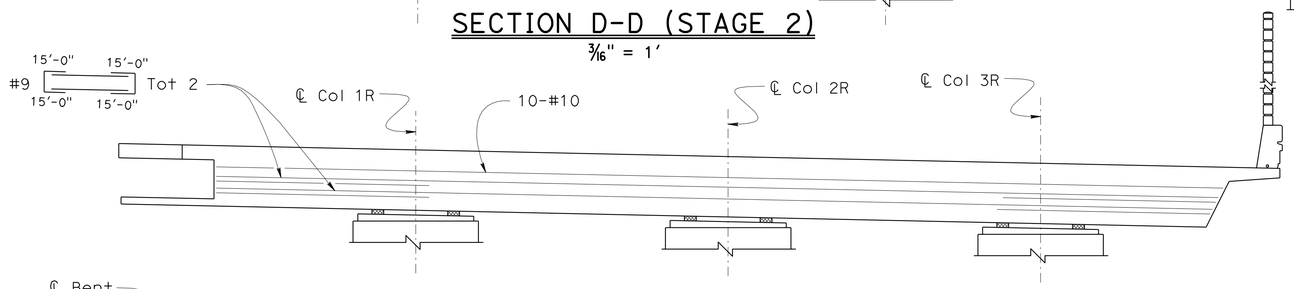

SECTION D-D (STAGE 3)

3/16" = 1'

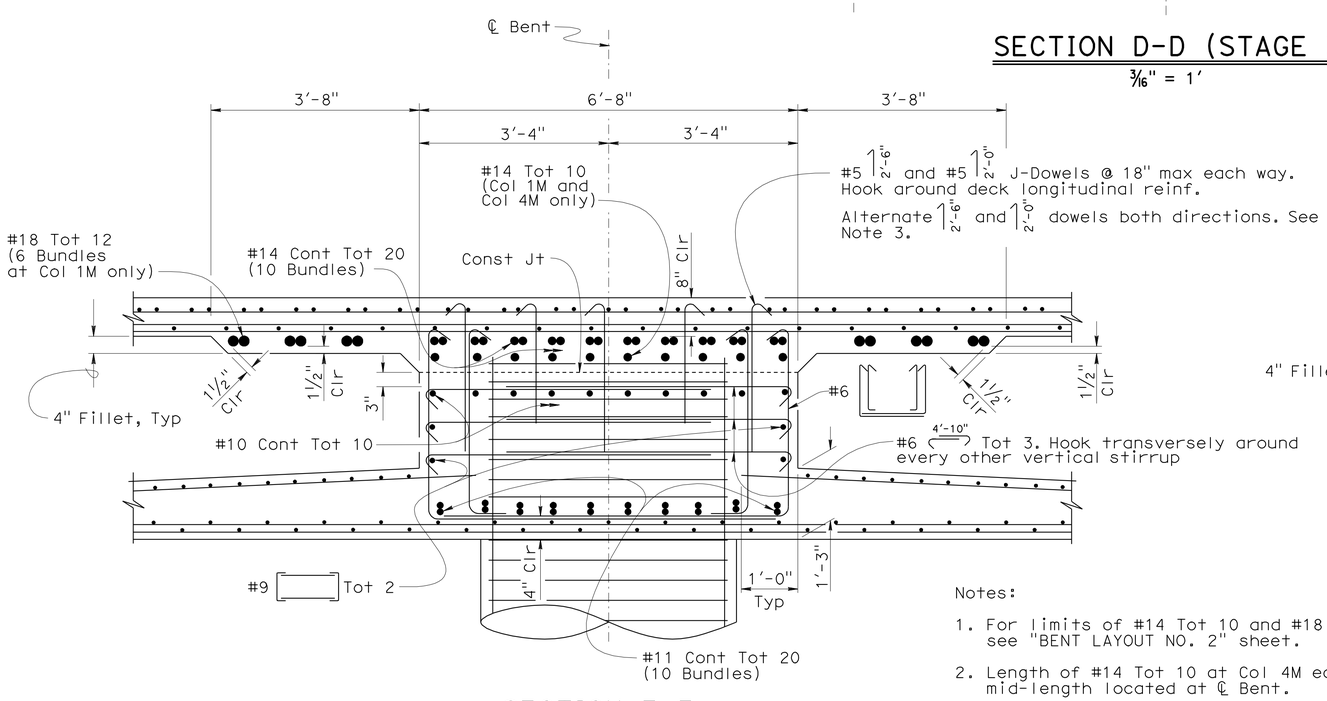

SECTION E-E

3/4" = 1'-0"

Notes:

1. For limits of #14 Tot 10 and #18 Tot 12 at Col 1M, see "BENT LAYOUT NO. 2" sheet.
2. Length of #14 Tot 10 at Col 4M equals to 15 feet, with mid-length located at ℄ Bent.
3. For limits of J-dowels and horizontal stirrups, see "ELEVATION (STAGE 1)" on "BENT LAYOUT NO. 1" sheet.

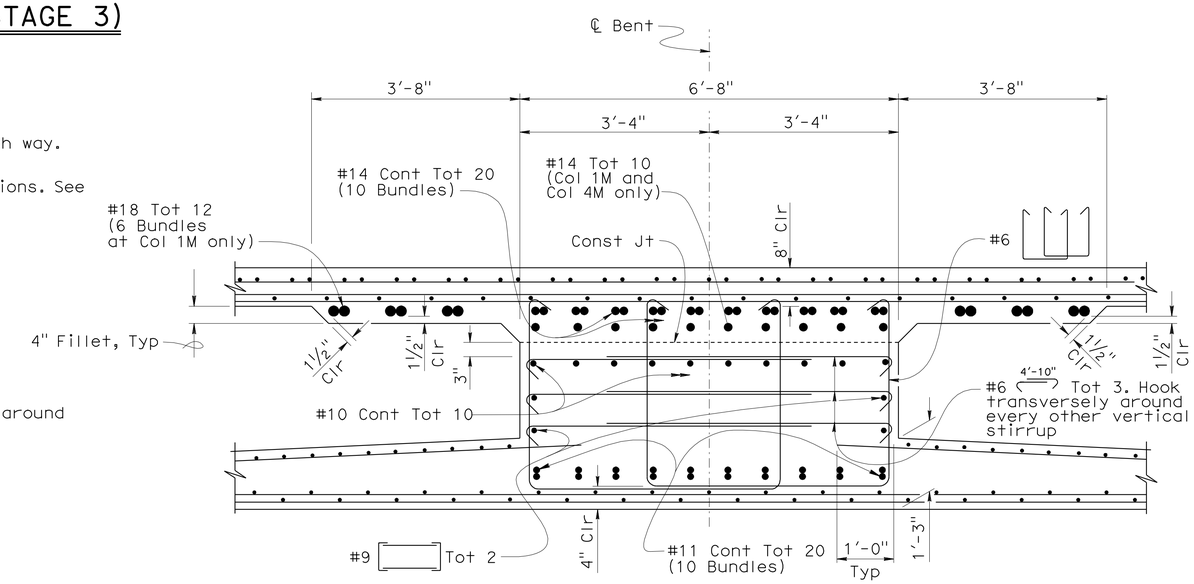

SECTION F-F

3/4" = 1'-0"

DESIGN	BY Fred Feng	CHECKED Shervin Pahlavan	
DETAILS	BY Herman Mauroschadt	CHECKED Shervin Pahlavan	
QUANTITIES	BY Gabriel Galo	CHECKED Ruslan Novik	

STATE OF CALIFORNIA
DEPARTMENT OF TRANSPORTATION

DIVISION OF ENGINEERING SERVICES
STRUCTURE DESIGN
DESIGN BRANCH 15

BRIDGE NO. 53-3041
POST MILE 3.66

BLOOMFIELD AVENUE UC
BENT DETAILS NO. 1

STRUCTURES DESIGN DETAIL SHEET (ENGLISH) (REV. 10/25/05)

ORIGINAL SCALE IN INCHES FOR REDUCED PLANS 0 1 2 3

CU 07
EA 215931

DISREGARD PRINTS BEARING EARLIER REVISION DATES

REVISION DATES: 7-1-10 1-10-11 2-25-11 8-25-11 11-1-11 11-15-11 12-5-11 1-5-12

SHEET 26 OF 80

FILE => 53-3041-k-b21-d1.dgn

USERNAME => s124496 DATE PLOTTED => 28-MAR-2012 TIME PLOTTED => 09:45

DIST	COUNTY	ROUTE	POST MILES TOTAL PROJECT	SHEET No	TOTAL SHEETS
07	LA	5	2.4/4.0	821	1288

Andrew Rittenhouse 12-12-11
REGISTERED CIVIL ENGINEER DATE

3-26-12
PLANS APPROVAL DATE

REGISTERED PROFESSIONAL ENGINEER
Andrew P. Rittenhouse
No. 61006
Exp. 12-31-12
CIVIL
STATE OF CALIFORNIA

The State of California or its officers or agents shall not be responsible for the accuracy or completeness of electronic copies of this plan sheet.

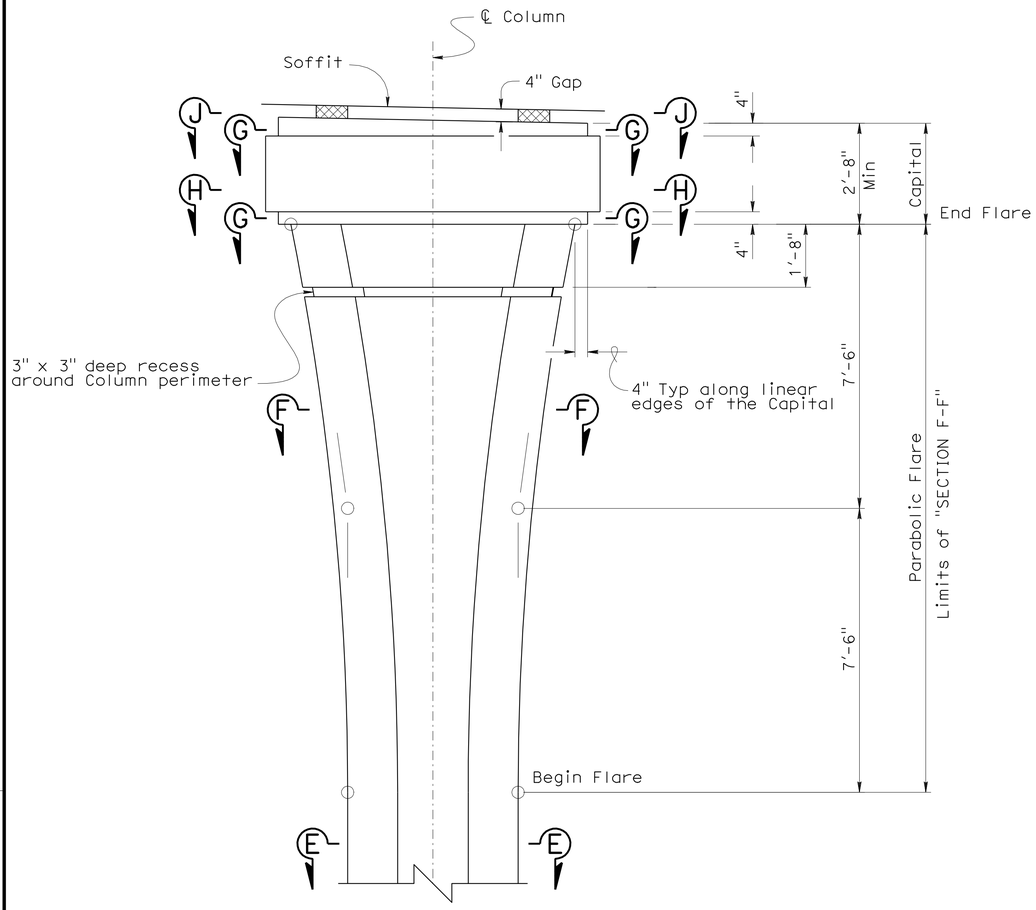

COLUMN GEOMETRY
½" = 1'

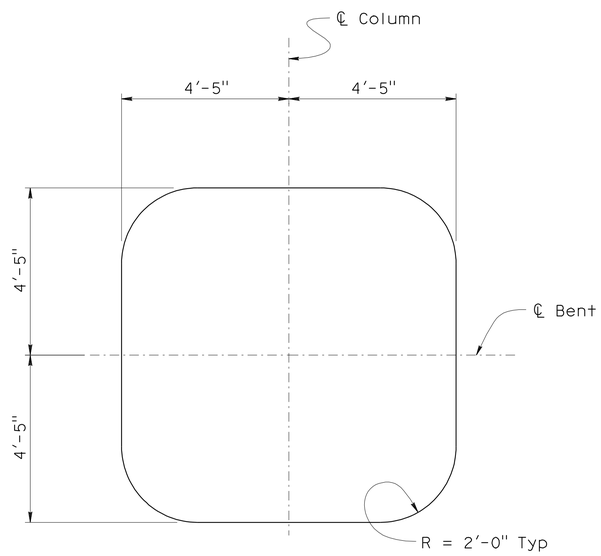

SECTION H-H
½" = 1'

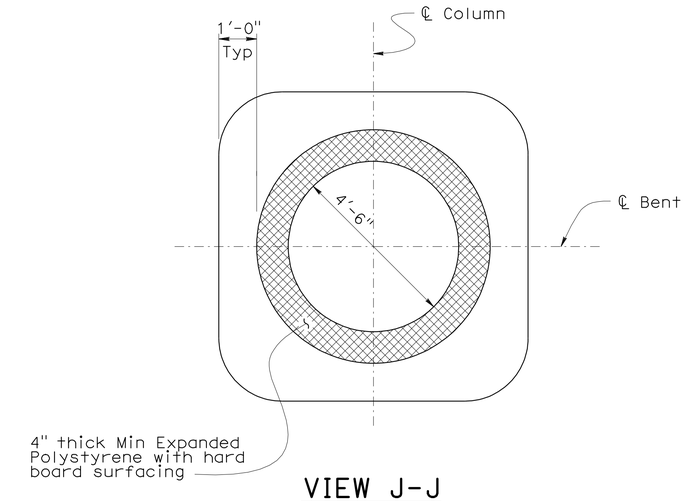

VIEW J-J
½" = 1'

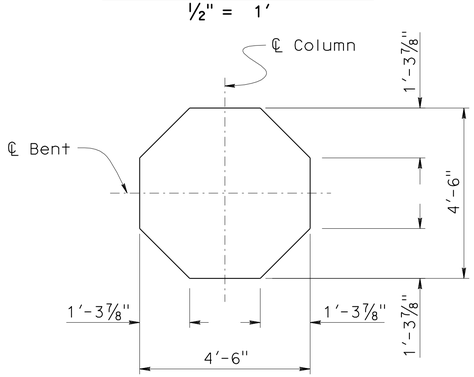

SECTION E-E
½" = 1'

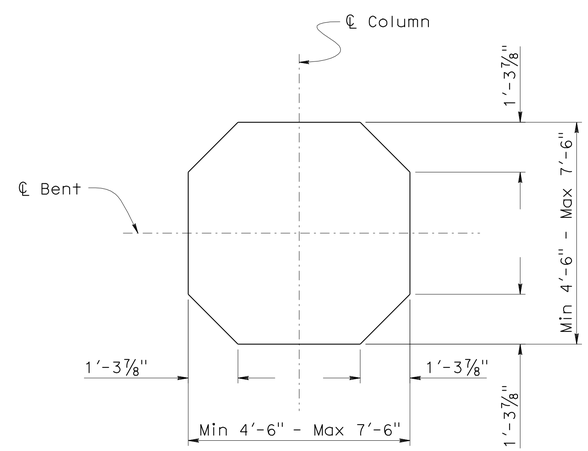

SECTION F-F
½" = 1'

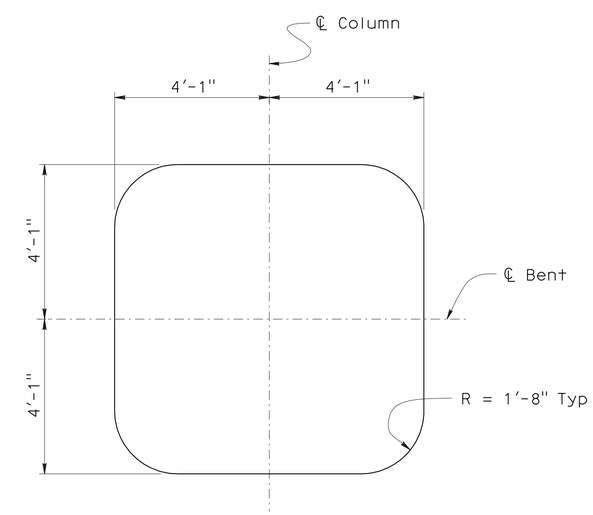

SECTION G-G
½" = 1'

DESIGN	BY Fred Feng	CHECKED Sara Yip	
DETAILS	BY Herman Mauroschadt	CHECKED Shervin Pahlavan / Sara Yip	
QUANTITIES	BY Gabriel Galo	CHECKED Ruslan Novik	

STATE OF CALIFORNIA
DEPARTMENT OF TRANSPORTATION

DIVISION OF ENGINEERING SERVICES
STRUCTURE DESIGN
DESIGN BRANCH 15

BRIDGE NO. 53-3041
POST MILE 3.66

BLOOMFIELD AVENUE UC
BENT DETAILS NO. 2

STRUCTURES DESIGN DETAIL SHEET (ENGLISH) (REV. 10/25/05)

ORIGINAL SCALE IN INCHES FOR REDUCED PLANS 0 1 2 3

CU 07
EA 215931

DISREGARD PRINTS BEARING EARLIER REVISION DATES

REVISION DATES: 11-05-09, 6-25-10, 7-15-11, 10-25-11, 12-5-11, 1-5-12

SHEET 27 OF 80

FILE => 53-3041-K-b21-d2.dgn

USERNAME => s124436 DATE PLOTTED => 28-MAR-2012 TIME PLOTTED => 09:45

DIST	COUNTY	ROUTE	POST MILES TOTAL PROJECT	SHEET No	TOTAL SHEETS
07	LA	5	2.4/4.0	822	1288

Andrew Rittenhouse 12-12-11
REGISTERED CIVIL ENGINEER DATE

3-26-12
PLANS APPROVAL DATE

REGISTERED PROFESSIONAL ENGINEER
Andrew P. Rittenhouse
No. 61006
Exp. 12-31-12
CIVIL
STATE OF CALIFORNIA

The State of California or its officers or agents shall not be responsible for the accuracy or completeness of electronic copies of this plan sheet.

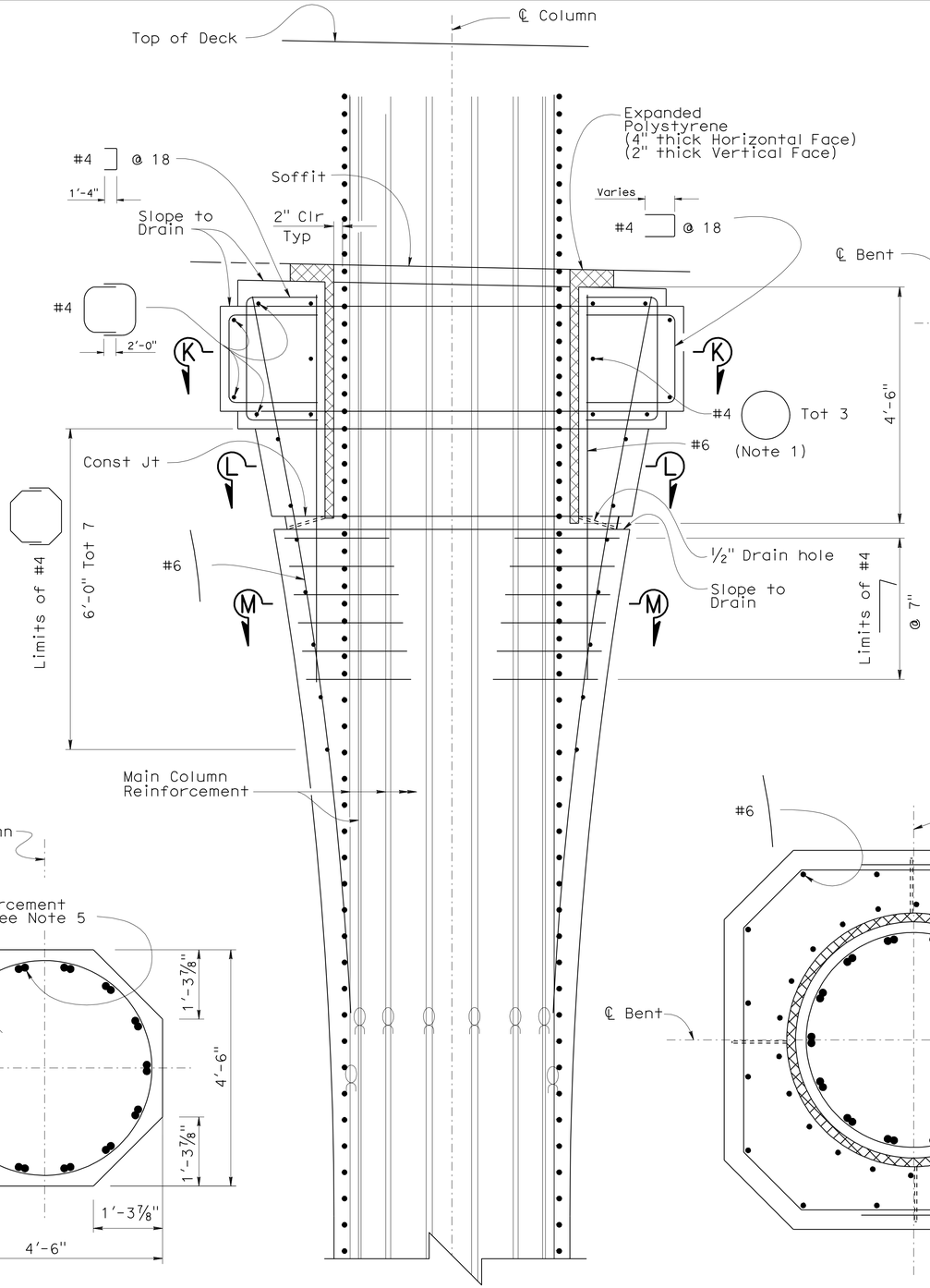

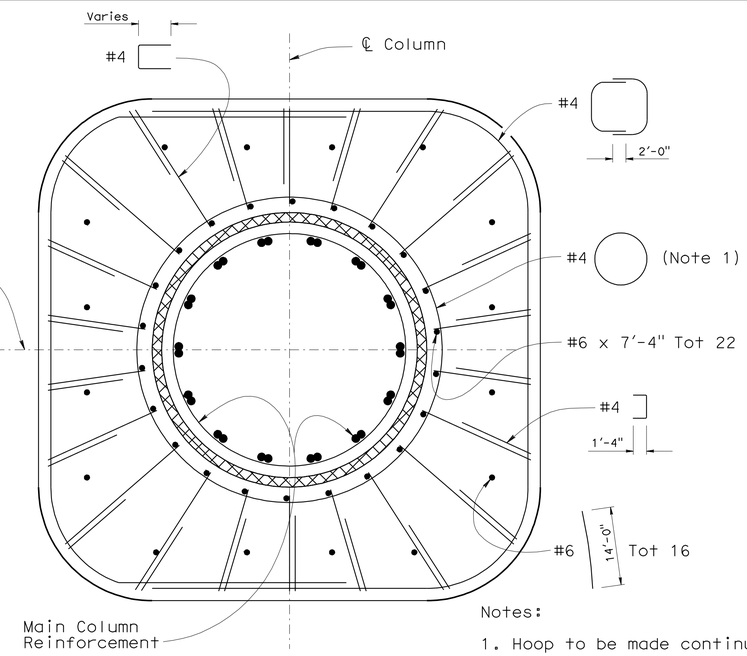

SECTION K-K
¾" = 1'

Notes:

1. Hoop to be made continuous with Service splice (stagger splices).
2. For Footing details see "BENT FOOTING DETAILS NO. 1" sheet.
3. For details of column geometry see "BENT DETAILS NO. 2" sheet.
4. Hoop to be made continuous with Ultimate splice (stagger splices).
5. No splices allowed in vertical Main Column Reinforcement.

Legend:

Indicates Bundled Bars

Indicates Expanded Polystyrene

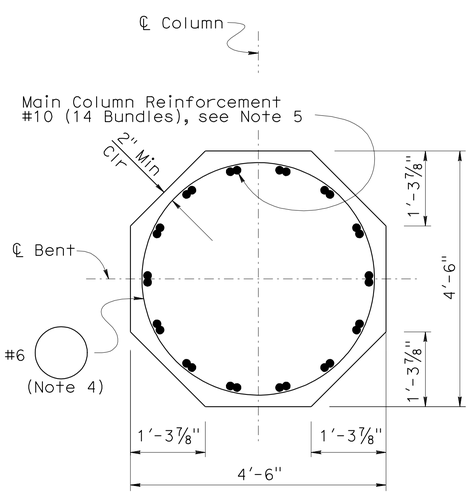

SECTION A-A
¾" = 1'

COLUMN ELEVATION
¾" = 1'

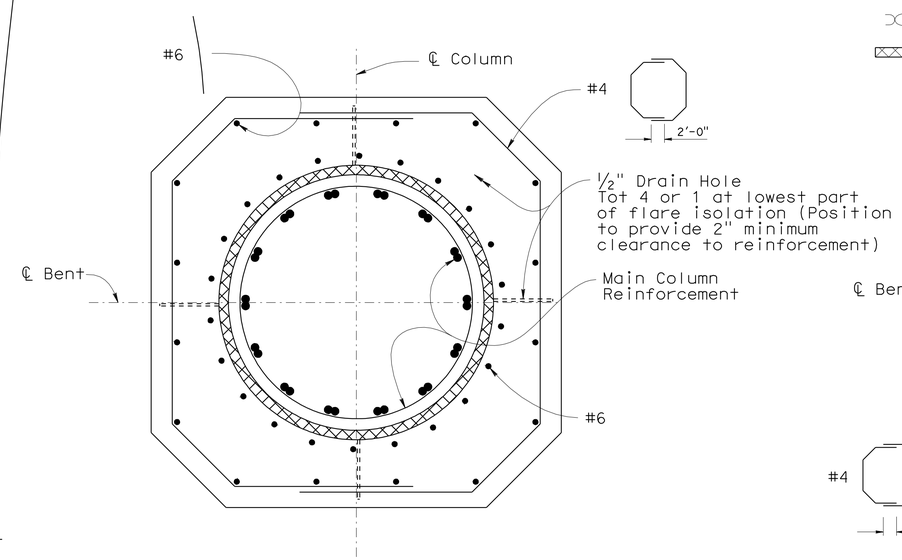

SECTION L-L
¾" = 1'

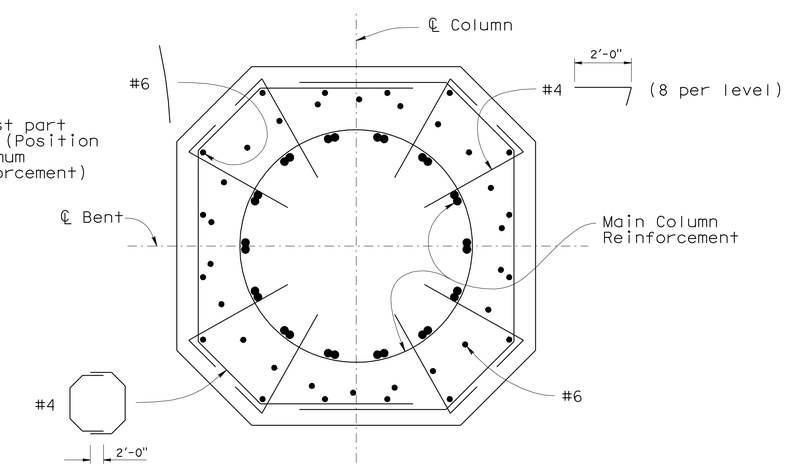

SECTION M-M
¾" = 1'

DESIGN	BY Fred Feng	CHECKED Sara Yip	
DETAILS	BY Herman Mauroschadt	CHECKED Sara Yip	
QUANTITIES	BY Gabriel Galo	CHECKED Ruslan Novik	

STATE OF CALIFORNIA
DEPARTMENT OF TRANSPORTATION

DIVISION OF ENGINEERING SERVICES
STRUCTURE DESIGN
DESIGN BRANCH 15

BRIDGE NO. 53-3041
POST MILE 3.66

BLOOMFIELD AVENUE UC
BENT DETAILS NO. 3

STRUCTURES DESIGN DETAIL SHEET (ENGLISH) (REV. 10/25/05)

ORIGINAL SCALE IN INCHES FOR REDUCED PLANS 0 1 2 3

CU 07
EA 215931

DISREGARD PRINTS BEARING EARLIER REVISION DATES

REVISION DATES: 9-29-10 7-15-11 10-5-11 10-7-11 1-5-12

SHEET 28 OF 80

FILE => 53-3041-k-b21-d3.dgn

USERNAME => s124496 DATE PLOTTED => 28-MAR-2012 TIME PLOTTED => 09:45

DIST	COUNTY	ROUTE	POST MILES TOTAL PROJECT	SHEET No	TOTAL SHEETS
07	LA	5	2.4/4.0	823	1288

Andrew Rittenhouse 12-12-11
REGISTERED CIVIL ENGINEER DATE

3-26-12
PLANS APPROVAL DATE

REGISTERED PROFESSIONAL ENGINEER
Andrew P. Rittenhouse
No. 61006
Exp. 12-31-12
CIVIL
STATE OF CALIFORNIA

The State of California or its officers or agents shall not be responsible for the accuracy or completeness of electronic copies of this plan sheet.

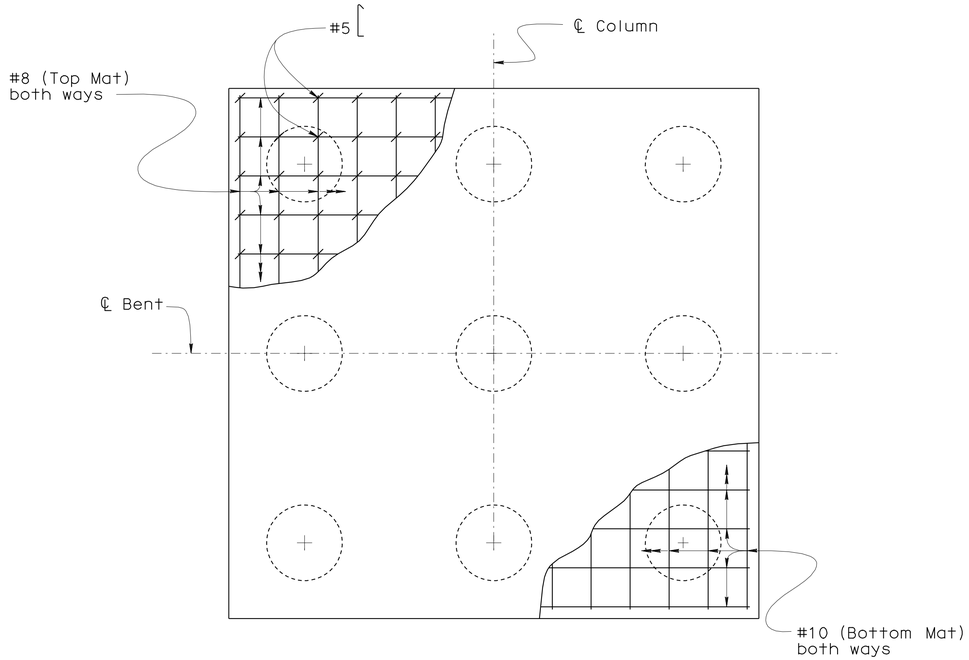

FOOTING PLAN - REINFORCEMENT

½" = 1'-0"

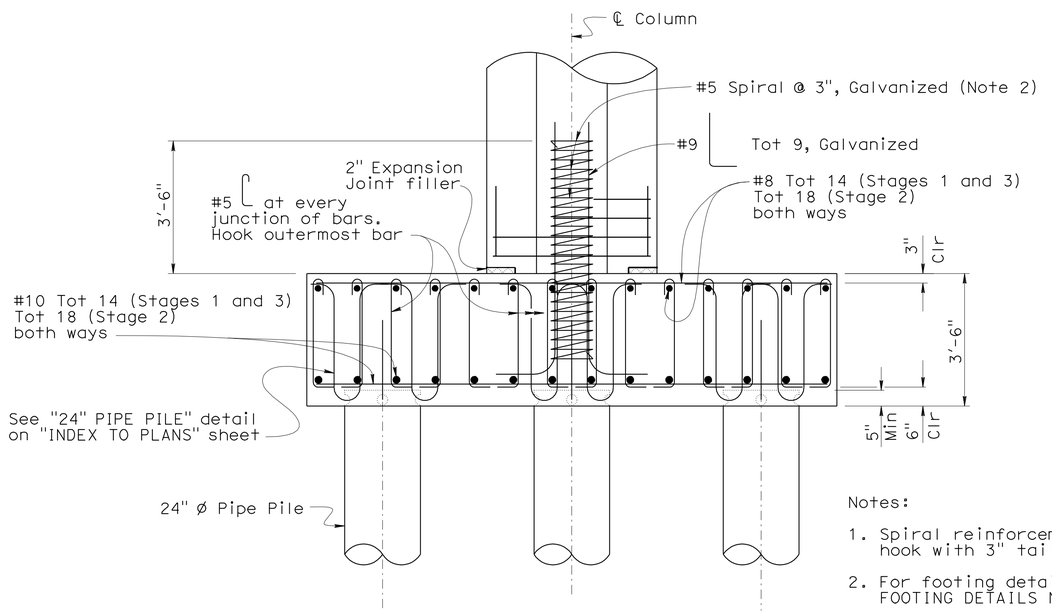

Notes:

1. Spiral reinforcement at column shall be terminated by a 135° hook with 3" tail hook around longitudinal bar
2. For footing details of Column 1M see "BENT FOOTING DETAILS NO. 2" sheet

Note: Stages 1 & 3 shown, Stage 2 similar.

ELEVATION

½" = 1'-0"

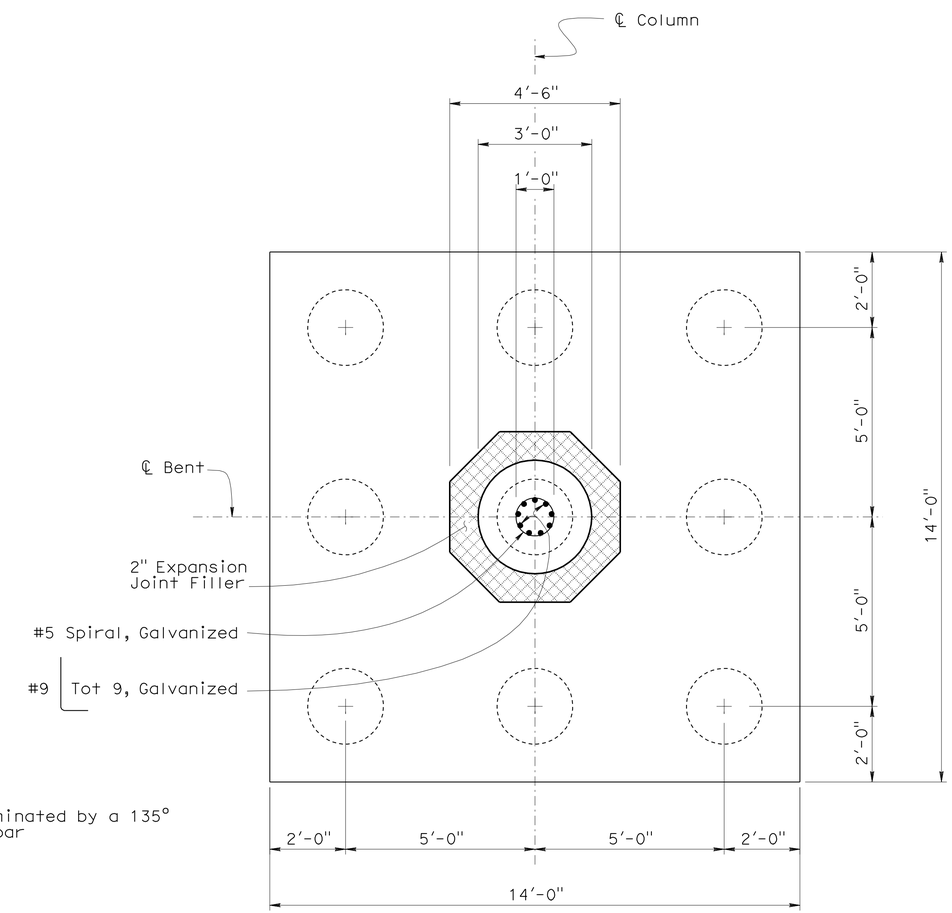

PLAN

½" = 1'-0"

DESIGN	BY Fred Feng	CHECKED Shervin Pahlavan	
DETAILS	BY Herman Mauroschadt	Shervin Pahlavan Shervin Pahlavan	
QUANTITIES	BY Gabriel Galo	CHECKED Ruslan Novik	

STATE OF CALIFORNIA
DEPARTMENT OF TRANSPORTATION

DIVISION OF ENGINEERING SERVICES
STRUCTURE DESIGN
DESIGN BRANCH 15

BRIDGE NO. 53-3041
POST MILE 3.66

BLOOMFIELD AVENUE UC
BENT FOOTING DETAILS NO. 1

STRUCTURES DESIGN DETAIL SHEET (ENGLISH) (REV. 10/25/05)

ORIGINAL SCALE IN INCHES FOR REDUCED PLANS 0 1 2 3

CU 07
EA 215931

DISREGARD PRINTS BEARING EARLIER REVISION DATES

REVISION DATES: 2-4-11 2-11-11 7-15-11 7-15-11 10-28-11 12-5-11 1-5-12

SHEET 29 OF 80

FILE => 53-3041-1-fd01.dgn

USERNAME => s124496 DATE PLOTTED => 28-MAR-2012 TIME PLOTTED => 09:46

DIST	COUNTY	ROUTE	POST MILES TOTAL PROJECT	SHEET No	TOTAL SHEETS
07	LA	5	2.4/4.0	824	1288

Andrew Rittenhouse 12-12-11
REGISTERED CIVIL ENGINEER DATE

3-26-12
PLANS APPROVAL DATE

REGISTERED PROFESSIONAL ENGINEER
Andrew P. Rittenhouse
No. 61006
Exp. 12-31-12
CIVIL
STATE OF CALIFORNIA

The State of California or its officers or agents shall not be responsible for the accuracy or completeness of electronic copies of this plan sheet.

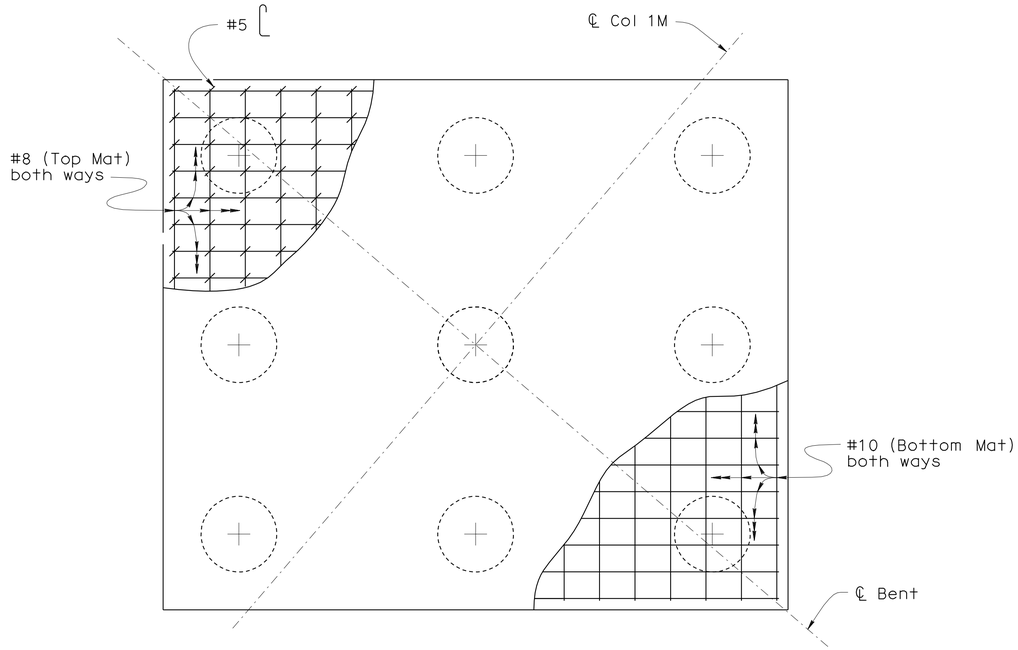

PLAN - FOOTING 1M REINFORCEMENT

½" = 1'-0"

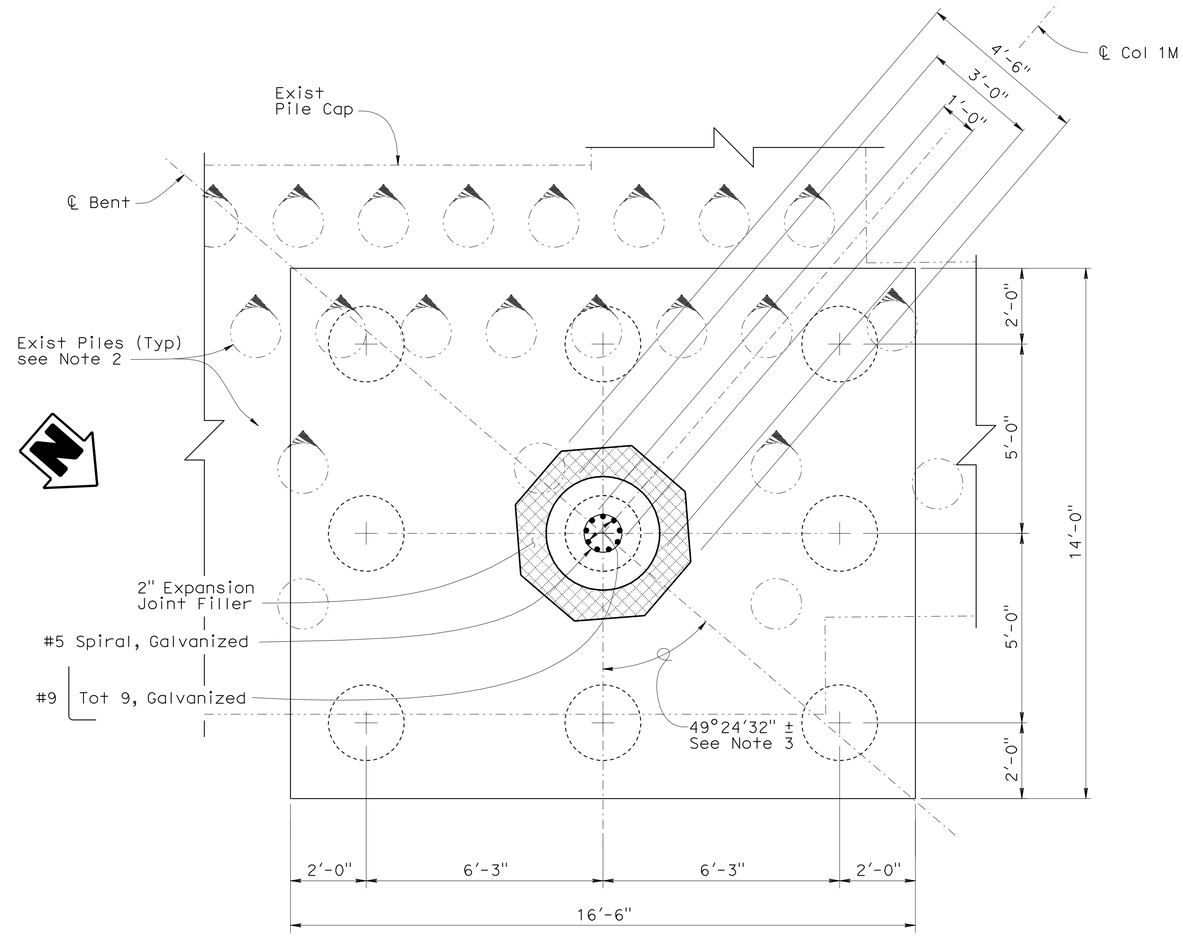

PLAN - FOOTING 1M

½" = 1'-0"

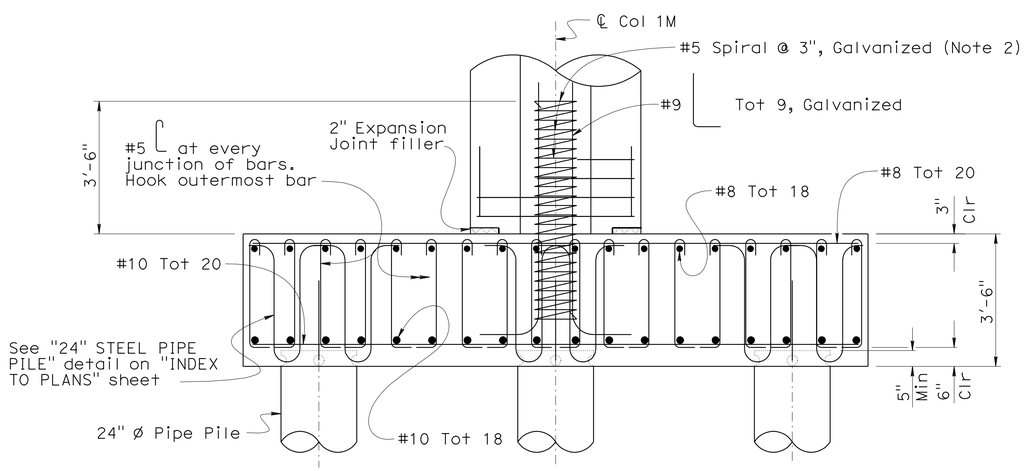

ELEVATION - FOOTING 1M

½" = 1'-0"

Notes:

1. Spiral reinforcement at column shall be terminated by a 135° hook with 3" tail hook around longitudinal bar
2. Existing Piles to be exposed. Conflicting battered pile tops shall be removed to a sufficient depth to clear new piles. Locations of new piles to be adjusted to clear existing piles at direction of the Engineer. Upon completion of pile installation remaining existing piles shall be removed to 1'-0" below bottom of pile cap.
3. Pile Cap to be constructed orthoganal to existing foundation.

	BY	CHECKED
DESIGN	Fred Feng	Shervin Pahlavan
DETAILS	Herman Mauroschadt	Shervin Pahlavan
QUANTITIES	Gabriel Galo	Rustan Novik

STATE OF CALIFORNIA
DEPARTMENT OF TRANSPORTATION

DIVISION OF ENGINEERING SERVICES
STRUCTURE DESIGN
DESIGN BRANCH 15

BRIDGE NO. 53-3041
POST MILE 3.66

BLOOMFIELD AVENUE UC
BENT FOOTING DETAILS NO. 2

STRUCTURES DESIGN DETAIL SHEET (ENGLISH) (REV. 10/25/05)

ORIGINAL SCALE IN INCHES FOR REDUCED PLANS 0 1 2 3

CU 07
EA 215931

DISREGARD PRINTS BEARING EARLIER REVISION DATES

REVISION DATES: 7-13-10, 2-4-11, 7-11-11, 7-14-11, 10-25-11, 12-5-11, 12-15-11, 1-5-12

SHEET 30 OF 80

FILE => 53-3041-1-fd02.dgn

USERNAME => s124496 DATE PLOTTED => 28-MAR-2012 TIME PLOTTED => 09:46

DIST	COUNTY	ROUTE	POST MILES TOTAL PROJECT	SHEET No	TOTAL SHEETS
07	LA	5	2.4/4.0	825	1288

Andrew Rittenhouse 12-12-11
REGISTERED CIVIL ENGINEER DATE

3-26-12
PLANS APPROVAL DATE

REGISTERED PROFESSIONAL ENGINEER
Andrew P. Rittenhouse
No. 61006
Exp. 12-31-12
CIVIL
STATE OF CALIFORNIA

The State of California or its officers or agents shall not be responsible for the accuracy or completeness of electronic copies of this plan sheet.

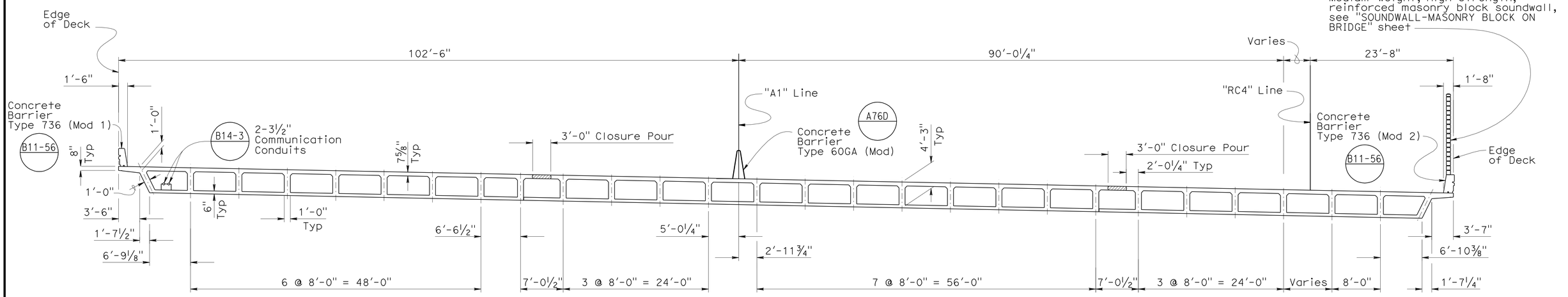

TYPICAL SECTION

⅛" = 1'

Notes:

1. For additional Top and Bottom slab reinforcement, see "Girder Reinforcement" sheets.
2. Bundle addional #5 transverse bar to every top transverse bar in the overhang for a distance of 5 feet after BB and before EB.

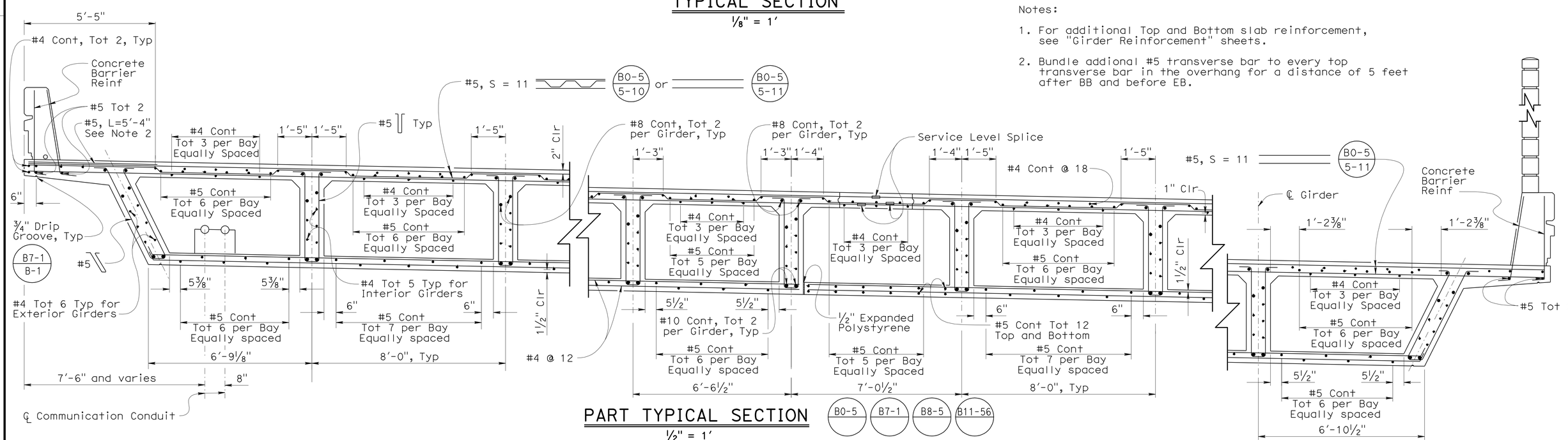

PART TYPICAL SECTION

½" = 1'

DESIGN	BY Fred Feng	CHECKED Sara Yip	
DETAILS	BY Herman Mauroschadt	CHECKED Sara Yip	
QUANTITIES	BY Gabriel Galo	CHECKED Ruslan Novik	

STATE OF CALIFORNIA
DEPARTMENT OF TRANSPORTATION

DIVISION OF ENGINEERING SERVICES
STRUCTURE DESIGN
DESIGN BRANCH 15

BRIDGE NO. 53-3041
POST MILE 3.66

BLOOMFIELD AVENUE UC
TYPICAL SECTION

STRUCTURES DESIGN DETAIL SHEET (ENGLISH) (REV. 10/25/05)

ORIGINAL SCALE IN INCHES FOR REDUCED PLANS 0 1 2 3

CU 07
EA 215931

DISREGARD PRINTS BEARING EARLIER REVISION DATES

REVISION DATES: 1-5-12 | 1-13-12 | 2-28-12 | 4-13-12 | 5-2-12 | 7-13-12 | 7-13-12 | 10-25-12 | 12-5-12

SHEET 31 OF 80

FILE => 53-3041-m-ts01.dgn

USERNAME => s124196 DATE PLOTTED => 28-MAR-2012 TIME PLOTTED => 09:46

DIST	COUNTY	ROUTE	POST MILES TOTAL PROJECT	SHEET No	TOTAL SHEETS
07	LA	5	2.4/4.0	826	1288

Andrew Rittenhouse 12-12-11
REGISTERED CIVIL ENGINEER DATE

3-26-12
PLANS APPROVAL DATE

REGISTERED PROFESSIONAL ENGINEER Andrew P. Rittenhouse No. 61006 Exp. 12-31-12 CIVIL STATE OF CALIFORNIA

The State of California or its officers or agents shall not be responsible for the accuracy or completeness of electronic copies of this plan sheet.

Notes:

1. For Stage 2 Girder layout see "GIRDER LAYOUT NO. 2" sheet.
2. For Stage 3 Girder layout see "GIRDER LAYOUT NO. 3" sheet.
3. For "DETAIL A" and "DETAIL B" see "MISCELLANEOUS DETAILS" sheet.
4. For additional Soffit Flare dimensions, see "BENT LAYOUT NO. 3" sheet and "MISCELLANEOUS DETAILS" sheet.

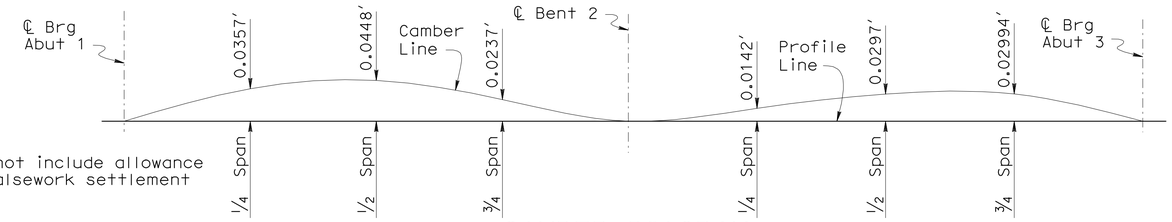

Note:

Does not include allowance for falsework settlement

CAMBER DIAGRAM

No Scale

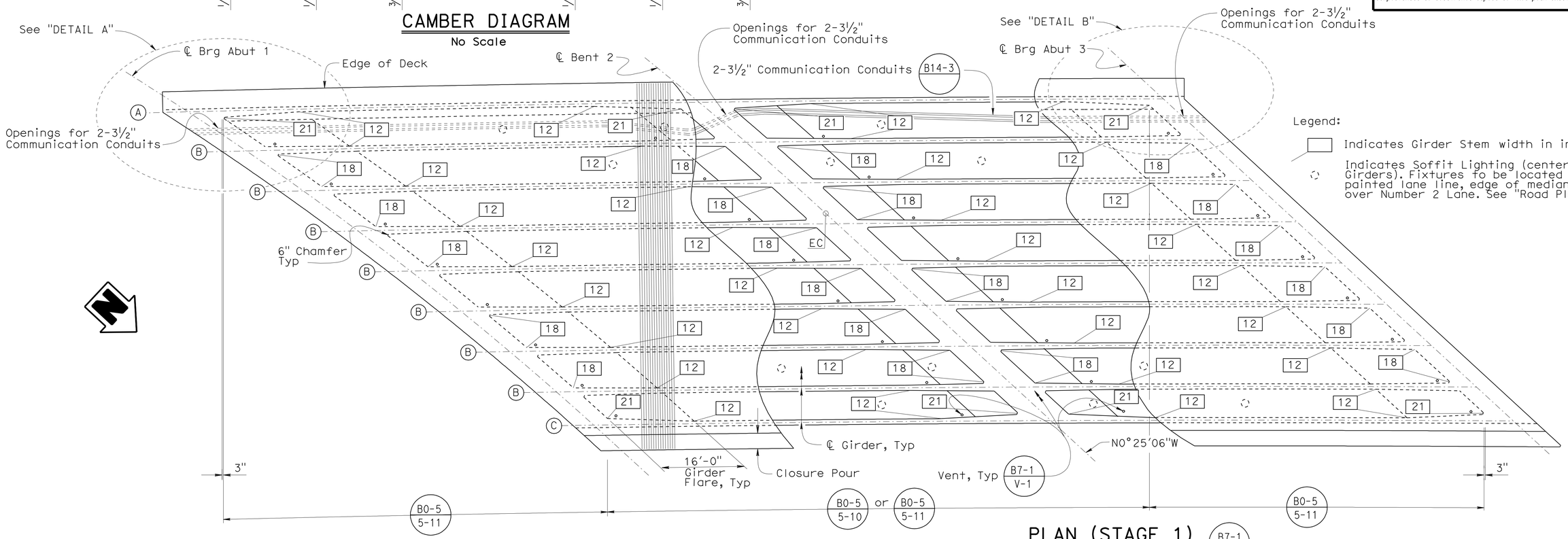

Legend:

Indicates Girder Stem width in inches

Indicates Soffit Lighting (centered between Girders). Fixtures to be located over each painted lane line, edge of median and centered over Number 2 Lane. See "Road Plans".

PLAN (STAGE 1)

1" = 10'-0"

B7-1 S-3

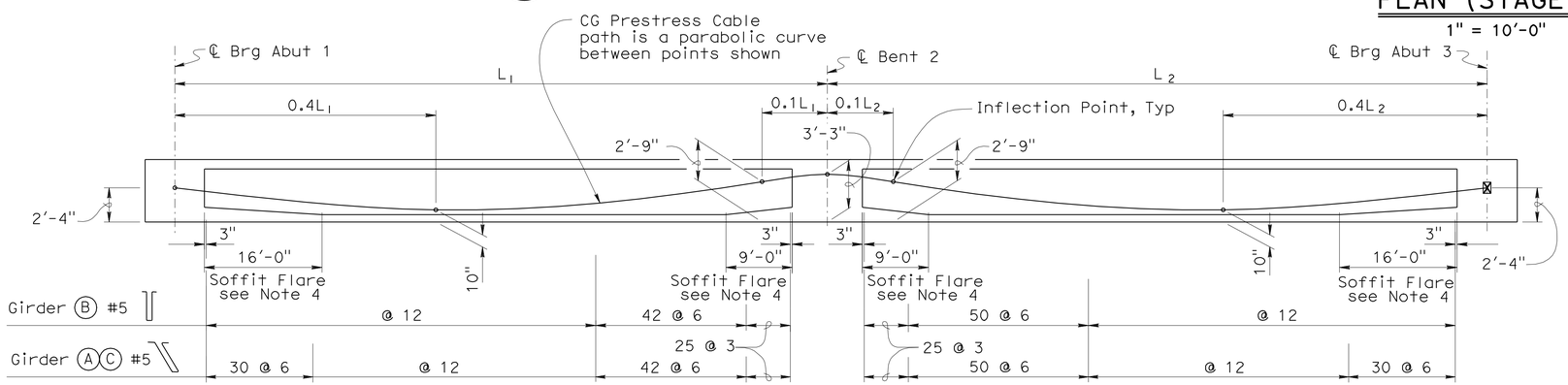

LONGITUDINAL SECTION

No Scale

PRESTRESSING NOTES

270 KSI Low Relaxation Strand:

P_{jack} = 7666 kips

Anchor Set = 3/8 in

Total Number of Girders = 9

Distribution of prestress force (Pjack) between girders shall not exceed the ratio of 3:2. Maximum final force variation between girders shall not exceed 725 kips.

Concrete: f'_c = 4500 psi @ 28 days

f'_{ci} = 3500 psi @ time of stressing

Contractor shall submit elongation calculations based on initial stress at

⊠ = 0.8945 times jacking stress.

One end stressing shall be performed from the long-span end only.

	BY	CHECKED
DESIGN	Fred Feng	Sara Yip
DETAILS	Herman Mauroschadt	Sara Yip
QUANTITIES	Gabriel Galo	Ruslan Novik

STATE OF CALIFORNIA
DEPARTMENT OF TRANSPORTATION

DIVISION OF ENGINEERING SERVICES
STRUCTURE DESIGN
DESIGN BRANCH 15

BRIDGE NO. 53-3041
POST MILE 3.66

BLOOMFIELD AVENUE UC
GIRDER LAYOUT NO. 1

STRUCTURES DESIGN DETAIL SHEET (ENGLISH) (REV. 10/25/05)

ORIGINAL SCALE IN INCHES FOR REDUCED PLANS 0 1 2 3

CU 07
EA 215931

DISREGARD PRINTS BEARING EARLIER REVISION DATES

REVISION DATES: 10-29-09 2-12-10 3-25-10 9-29-10 3-4-11 7-15-11 10-25-11 12-1-11 1-5-12 3-8-12

SHEET 32 OF 80

FILE => 53-3041-n-g-lo1.dgn

USERNAME => s124436 DATE PLOTTED => 28-MAR-2012 TIME PLOTTED => 09:46

DIST	COUNTY	ROUTE	POST MILES TOTAL PROJECT	SHEET No	TOTAL SHEETS
07	LA	5	2.4/4.0	827	1288

Andrew Rittenhouse 12-12-11
REGISTERED CIVIL ENGINEER DATE

3-26-12
PLANS APPROVAL DATE

REGISTERED PROFESSIONAL ENGINEER Andrew P. Rittenhouse No. 61006 Exp. 12-31-12 CIVIL STATE OF CALIFORNIA

The State of California or its officers or agents shall not be responsible for the accuracy or completeness of electronic copies of this plan sheet.

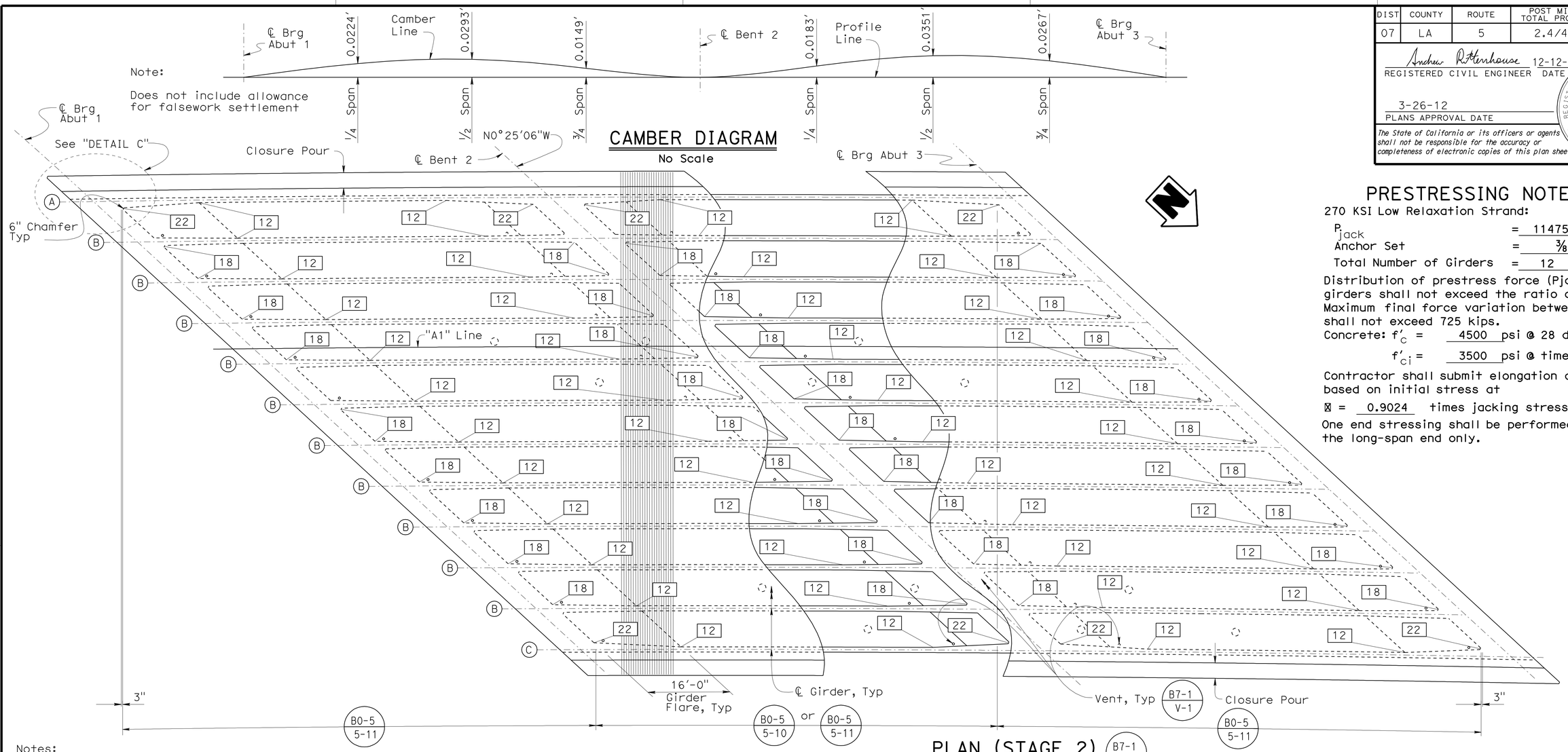

PRESTRESSING NOTES

270 KSI Low Relaxation Strand:

P_{jack} = 11475 kips
Anchor Set = 3/8 in
Total Number of Girders = 12

Distribution of prestress force (Pjack) between girders shall not exceed the ratio of 3:2. Maximum final force variation between girders shall not exceed 725 kips.

Concrete: f'_c = 4500 psi @ 28 days

f'_{ci} = 3500 psi @ time of stressing

Contractor shall submit elongation calculations based on initial stress at

⊠ = 0.9024 times jacking stress.

One end stressing shall be performed from the long-span end only.

Notes:

1. For Stage 1 Girder layout see "GIRDER LAYOUT NO. 1" sheet.
2. For Stage 3 Girder layout see "GIRDER LAYOUT NO. 3" sheet.
3. For "DETAIL C" see "MISCELLANEOUS DETAILS" sheet.
4. Soffit Flare - for additional dimensions, see "BENT LAYOUT NO. 3" sheet and "MISCELLANEOUS DETAILS" sheet.

Legend:

Indicates Girder Stem width in inches

Indicates Soffit Lighting (centered between Girders). Fixtures to be located over each painted lane line, edge of median and centered over Number 2 Lane. See "Road Plans"

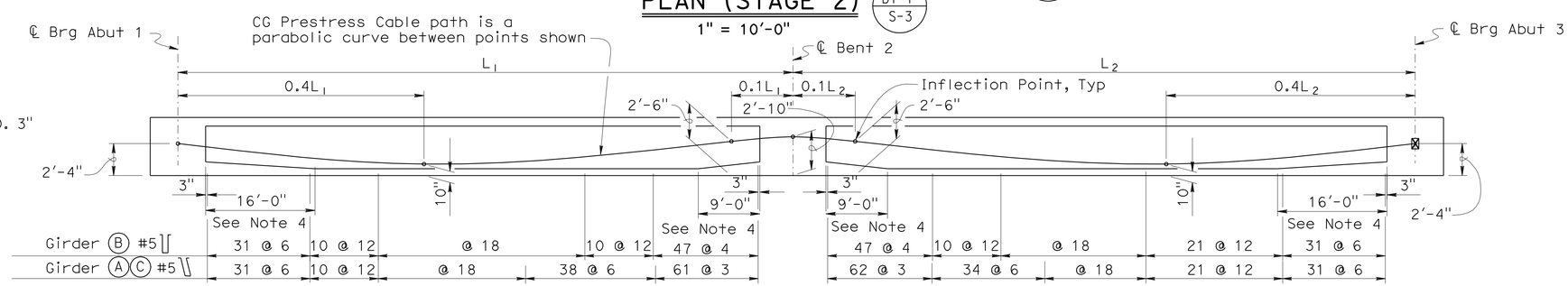

LONGITUDINAL SECTION
No Scale

DESIGN	BY Fred Feng	CHECKED Sara Yip	
DETAILS	BY Herman Mauroschadt	CHECKED Sara Yip	
QUANTITIES	BY Gabriel Galo	CHECKED Ruslan Novik	

STATE OF CALIFORNIA
DEPARTMENT OF TRANSPORTATION

DIVISION OF ENGINEERING SERVICES
STRUCTURE DESIGN
DESIGN BRANCH 15

BRIDGE NO. 53-3041
POST MILE 3.66

BLOOMFIELD AVENUE UC
GIRDER LAYOUT NO. 2

STRUCTURES DESIGN DETAIL SHEET (ENGLISH) (REV. 10/25/05)

ORIGINAL SCALE IN INCHES FOR REDUCED PLANS 0 1 2 3

CU 07
EA 215931

DISREGARD PRINTS BEARING EARLIER REVISION DATES

REVISION DATES: 10-9-09 3-15-10 5-5-10 8-2-10 2-2-11 7-15-11 10-28-11 12-2-11 1-4-12

SHEET 33 OF 80

FILE => 53-3041-n-g-lo2.dgn

USERNAME => s124496 DATE PLOTTED => 28-MAR-2012 TIME PLOTTED => 09:46

DIST	COUNTY	ROUTE	POST MILES TOTAL PROJECT	SHEET No	TOTAL SHEETS
07	LA	5	2.4/4.0	828	1288

Andrew Rittenhouse 12-12-11
REGISTERED CIVIL ENGINEER DATE

3-26-12
PLANS APPROVAL DATE

REGISTERED PROFESSIONAL ENGINEER Andrew P. Rittenhouse No. 61006 Exp. 12-31-12 CIVIL STATE OF CALIFORNIA

The State of California or its officers or agents shall not be responsible for the accuracy or completeness of electronic copies of this plan sheet.

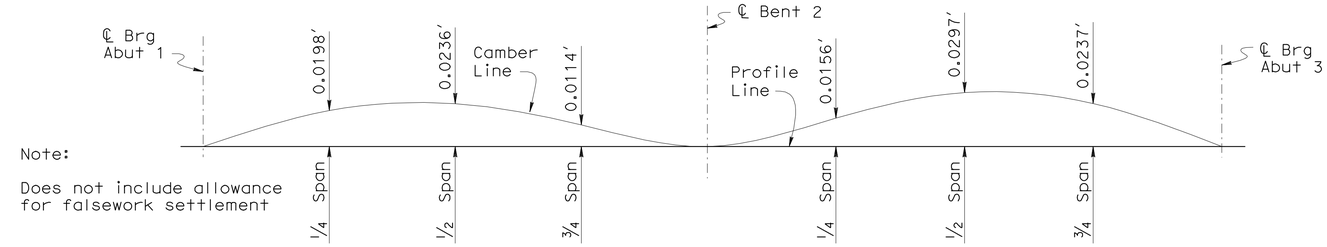

Note:

Does not include allowance for falsework settlement

CAMBER DIAGRAM

No Scale

Notes:

1. For Stage 1 Girder layout see "GIRDER LAYOUT NO. 1" sheet.
2. For Stage 2 Girder layout see "GIRDER LAYOUT NO. 2" sheet.
3. All Girders are concentric with "A1" Line except as noted.
4. For "DETAIL D" see "MISCELLANEOUS DETAILS" sheet.
5. For additional Soffit Flare dimensions see "BENT LAYOUT NO. 3" sheet and "MISCELLANEOUS DETAILS" sheet.

Legend:

- ▭ Indicates Girder Stem width in inches
- * Girder is parallel to "RC4" Line.
- ◌ Indicates Soffit Lighting (centered between Girders). Fixtures to be located over each painted lane line, edge of median and centered over Number 2 Lane. See "Road Plans"

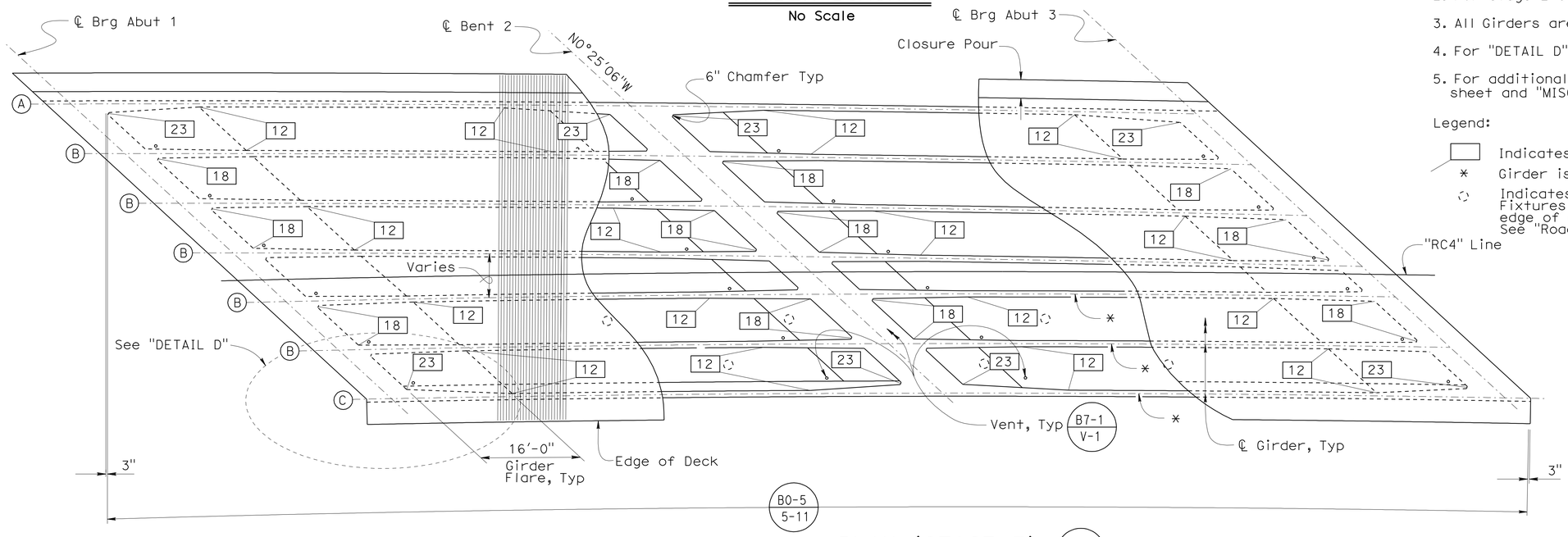

PLAN (STAGE 3)

B7-1 / S-3

1" = 10'-0"

PRESTRESSING NOTES

270 KSI Low Relaxation Strand:

P_{jack} = 6182 kips

Anchor Set = 3/8 in

Total Number of Girders = 7

Distribution of prestress force (Pjack) between girders shall not exceed the ratio of 3:2. Maximum final force variation between girders shall not exceed 725 kips.

Concrete: f'_c = 4500 psi @ 28 days

f'_{ci} = 3500 psi @ time of stressing

Contractor shall submit elongation calculations based on initial stress at

⊠ = 0.8927 times jacking stress.

One end stressing shall be performed from the long-span end only.

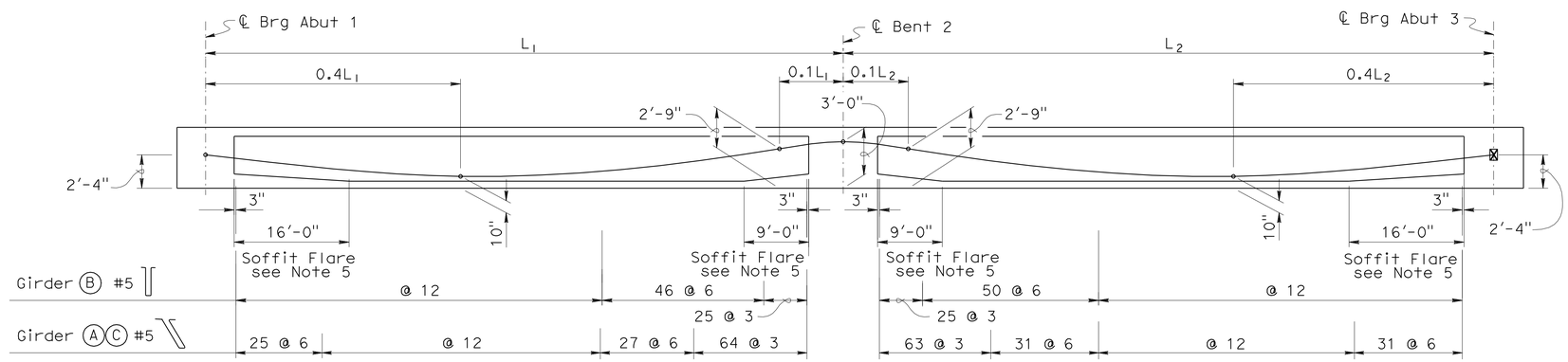

LONGITUDINAL SECTION

No Scale

DESIGN	BY Fred Feng	CHECKED Sara Yip	
DETAILS	BY Herman Mauroschadt	CHECKED Sara Yip	
QUANTITIES	BY Gabriel Galo	CHECKED Ruslan Novik	

STATE OF CALIFORNIA
DEPARTMENT OF TRANSPORTATION

DIVISION OF ENGINEERING SERVICES
STRUCTURE DESIGN
DESIGN BRANCH 15

BRIDGE NO. 53-3041
POST MILE 3.66

BLOOMFIELD AVENUE UC
GIRDER LAYOUT NO. 3

STRUCTURES DESIGN DETAIL SHEET (ENGLISH) (REV. 10/25/05)

ORIGINAL SCALE IN INCHES FOR REDUCED PLANS 0 1 2 3

CU 07
EA 215931

DISREGARD PRINTS BEARING EARLIER REVISION DATES

REVISION DATES: 10-28-09 2-24-10 3-15-10 9-29-10 2-5-11 7-14-11 10-25-11 12-5-11 1-5-12

SHEET 34 OF 80

FILE => 53-3041-n-g-1o3.dgn

USERNAME => s124496 DATE PLOTTED => 28-MAR-2012 TIME PLOTTED => 09:46

DIST	COUNTY	ROUTE	POST MILES TOTAL PROJECT	SHEET No	TOTAL SHEETS
07	LA	5	2.4/4.0	829	1288

Andrew Rittenhouse 12-12-11
REGISTERED CIVIL ENGINEER DATE

3-26-12
PLANS APPROVAL DATE

The State of California or its officers or agents shall not be responsible for the accuracy or completeness of electronic copies of this plan sheet.

REGISTERED PROFESSIONAL ENGINEER
Andrew P. Rittenhouse
No. 61006
Exp. 12-31-12
CIVIL
STATE OF CALIFORNIA

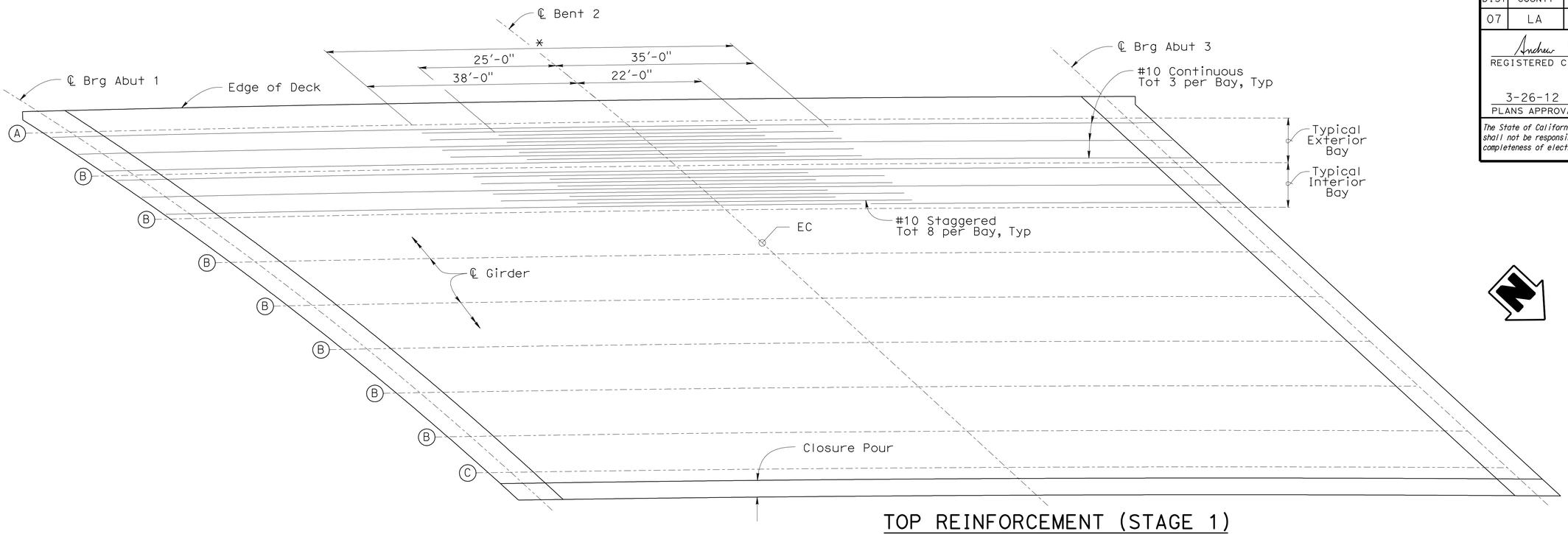

TOP REINFORCEMENT (STAGE 1)

1" = 10'

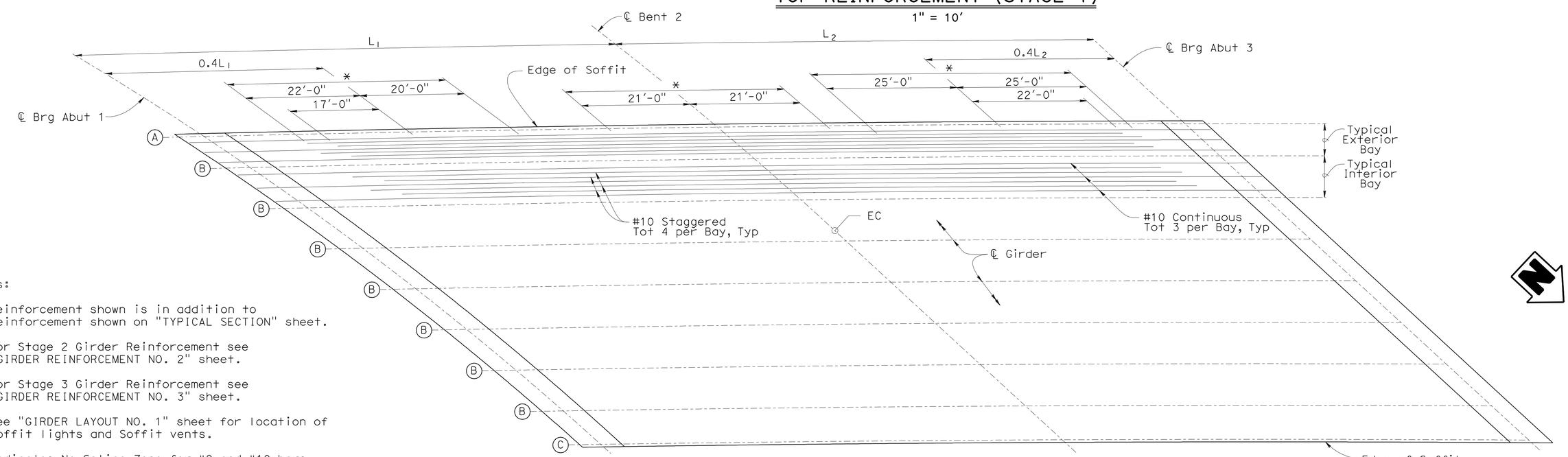

BOTTOM REINFORCEMENT (STAGE 1)

1" = 10'

Notes:

1. Reinforcement shown is in addition to reinforcement shown on "TYPICAL SECTION" sheet.
2. For Stage 2 Girder Reinforcement see "GIRDER REINFORCEMENT NO. 2" sheet.
3. For Stage 3 Girder Reinforcement see "GIRDER REINFORCEMENT NO. 3" sheet.
4. See "GIRDER LAYOUT NO. 1" sheet for location of Soffit lights and Soffit vents.

* Indicates No Splice Zone for #9 and #10 bars.

	BY	CHECKED
DESIGN	Fred Feng	Sara Yip
DETAILS	Herman Mauroschadt	Sara Yip
QUANTITIES	Gabriel Galo	Ruslan Novik

STATE OF CALIFORNIA
DEPARTMENT OF TRANSPORTATION

DIVISION OF ENGINEERING SERVICES
STRUCTURE DESIGN
DESIGN BRANCH 15

BRIDGE NO. 53-3041
POST MILE 3.66

BLOOMFIELD AVENUE UC
GIRDER REINFORCEMENT NO. 1

STRUCTURES DESIGN DETAIL SHEET (ENGLISH) (REV. 10/25/05)

ORIGINAL SCALE IN INCHES FOR REDUCED PLANS 0 1 2 3

CU 07
EA 215931

DISREGARD PRINTS BEARING EARLIER REVISION DATES

REVISION DATES: 1-11-10 1-15-10 2-5-10 1-14-11 11-14-11 12-9-11 12-23-11 1-5-12 3-7-12

SHEET 35 OF 80

FILE => 53-3041-o-g-rf01.dgn

USERNAME => s124196 DATE PLOTTED => 28-MAR-2012 TIME PLOTTED => 09:46

DIST	COUNTY	ROUTE	POST MILES TOTAL PROJECT	SHEET No	TOTAL SHEETS
07	LA	5	2.4/4.0	830	1288

Andrew Rittenhouse 12-12-11
REGISTERED CIVIL ENGINEER DATE

3-26-12
PLANS APPROVAL DATE

REGISTERED PROFESSIONAL ENGINEER
Andrew P. Rittenhouse
No. 61006
Exp. 12-31-12
CIVIL
STATE OF CALIFORNIA

The State of California or its officers or agents shall not be responsible for the accuracy or completeness of electronic copies of this plan sheet.

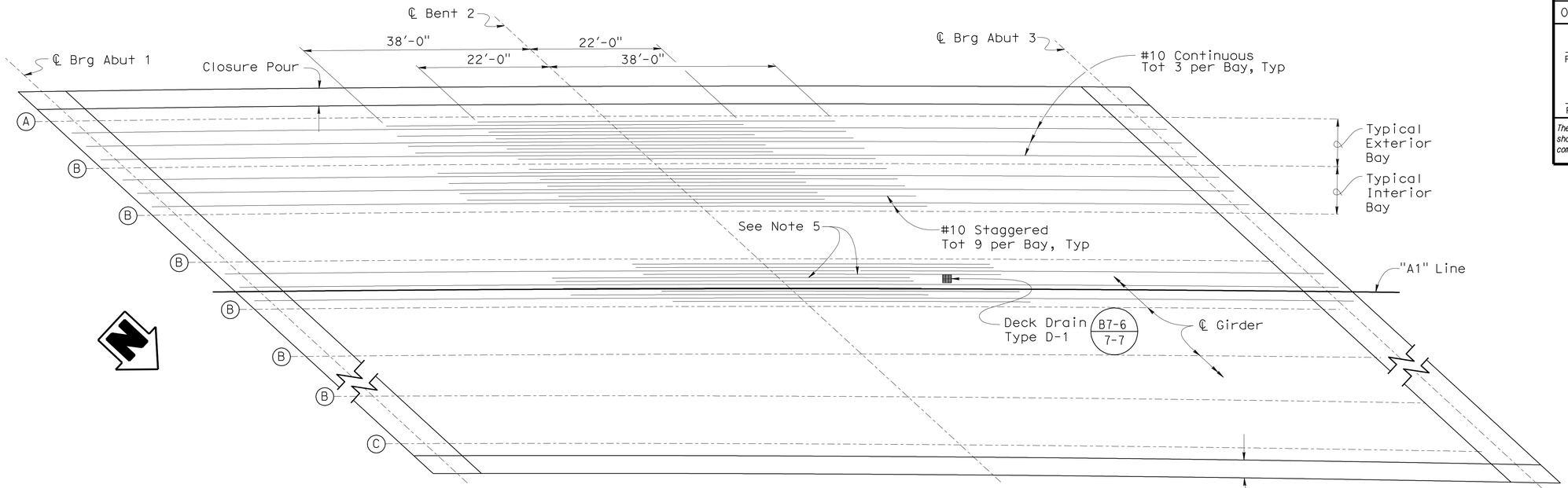

TOP REINFORCEMENT (STAGE 2)

1" = 10'

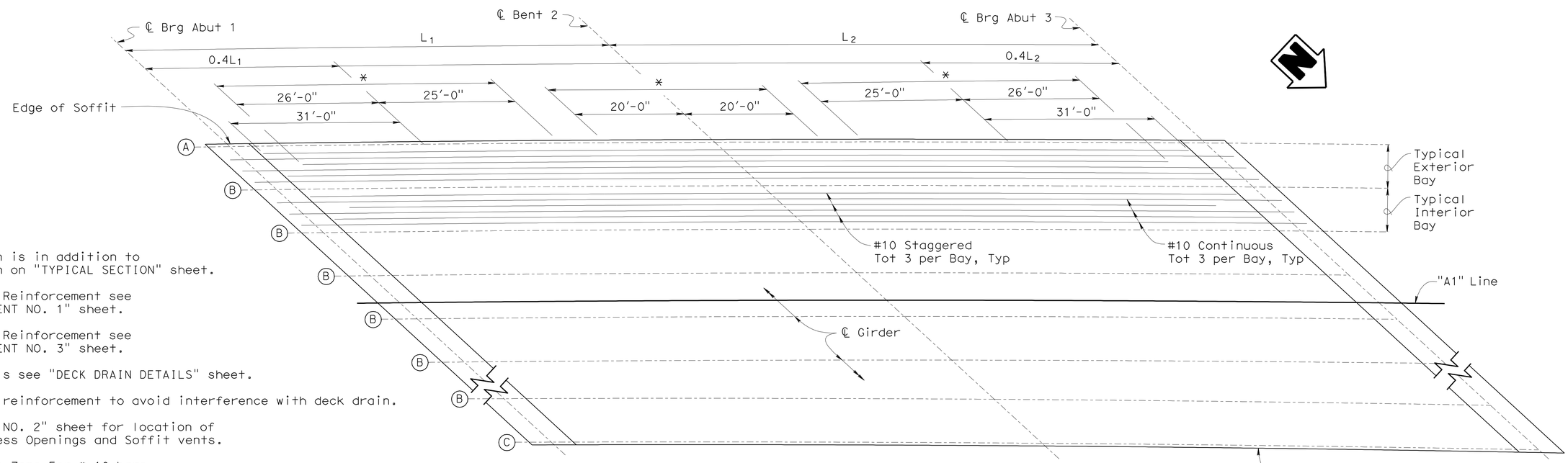

BOTTOM REINFORCEMENT (STAGE 2)

1" = 10'

Notes:

1. Reinforcement shown is in addition to reinforcement shown on "TYPICAL SECTION" sheet.
2. For Stage 1 Girder Reinforcement see "GIRDER REINFORCEMENT NO. 1" sheet.
3. For Stage 3 Girder Reinforcement see "GIRDER REINFORCEMENT NO. 3" sheet.
4. For Drainage Details see "DECK DRAIN DETAILS" sheet.
5. Adjust position of reinforcement to avoid interference with deck drain.
6. See "GIRDER LAYOUT NO. 2" sheet for location of Soffit lights, Access Openings and Soffit vents.

* Indicates No Splice Zone For # 10 bars.

	BY	CHECKED
DESIGN	Fred Feng	Sara Yip
DETAILS	Herman Mauroschadt	Sara Yip
QUANTITIES	Gabriel Galo	Rustan Novik

STATE OF CALIFORNIA
DEPARTMENT OF TRANSPORTATION

DIVISION OF ENGINEERING SERVICES
STRUCTURE DESIGN
DESIGN BRANCH 15

BRIDGE NO. 53-3041
POST MILE 3.66

BLOOMFIELD AVENUE UC
GIRDER REINFORCEMENT NO. 2

STRUCTURES DESIGN DETAIL SHEET (ENGLISH) (REV. 10/25/05)

ORIGINAL SCALE IN INCHES FOR REDUCED PLANS 0 1 2 3

CU 07
EA 215931

DISREGARD PRINTS BEARING EARLIER REVISION DATES

REVISION DATES: 1-5-12 | 1-14-10 | 7-15-10 | 9-13-10 | 3-18-11 | 7-14-11 | 10-26-11 | 11-16-11 | 12-6-11

SHEET 36 OF 80

FILE => 53-3041-o-g-rf02.dgn

USERNAME => s124496 DATE PLOTTED => 28-MAR-2012 TIME PLOTTED => 10:22

DIST	COUNTY	ROUTE	POST MILES TOTAL PROJECT	SHEET No	TOTAL SHEETS
07	LA	5	2.4/4.0	831	1288

Andrew Rittenhouse 12-12-11
REGISTERED CIVIL ENGINEER DATE

3-26-12
PLANS APPROVAL DATE

REGISTERED PROFESSIONAL ENGINEER
Andrew P. Rittenhouse
No. 61006
Exp. 12-31-12
CIVIL
STATE OF CALIFORNIA

The State of California or its officers or agents shall not be responsible for the accuracy or completeness of electronic copies of this plan sheet.

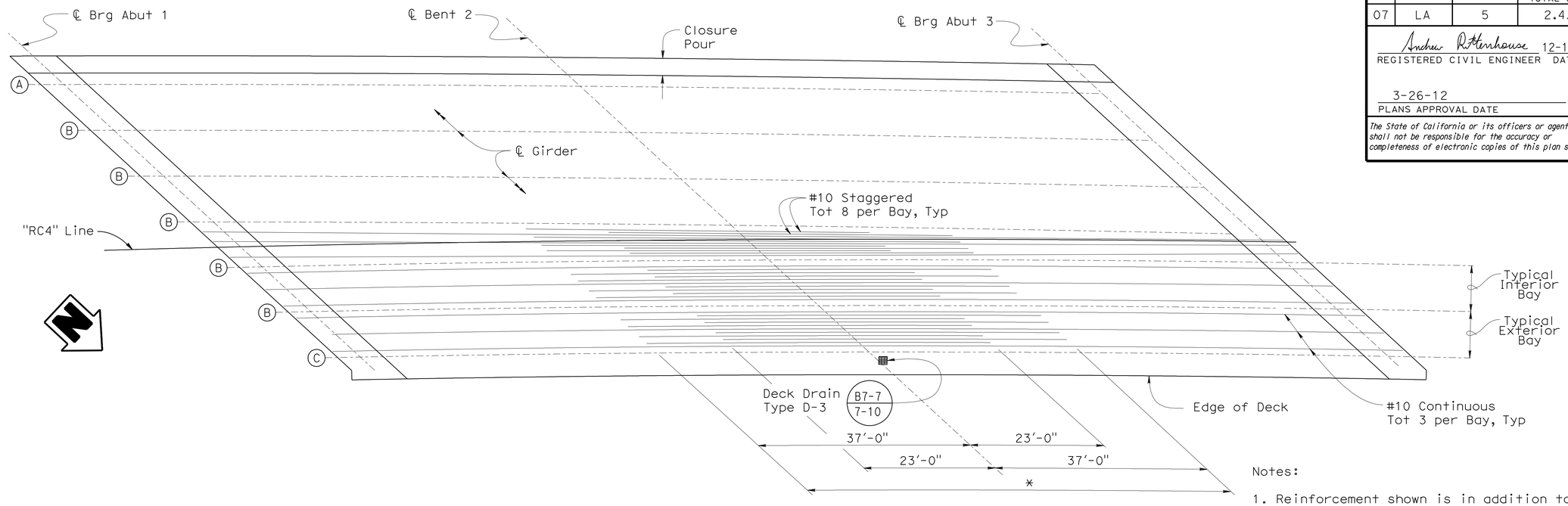

TOP REINFORCEMENT (STAGE 3)

1" = 10'

Notes:

1. Reinforcement shown is in addition to reinforcement shown on "TYPICAL SECTION" sheet.
2. For Stage 1 Girder Reinforcement see "GIRDER REINFORCEMENT NO. 1" sheet.
3. For Stage 2 Girder Reinforcement see "GIRDER REINFORCEMENT NO. 2" sheet.
4. See "GIRDER LAYOUT NO. 3" sheet for location of Soffit lights, Access Openings and Soffit vents.
5. For Drainage Details see "DECK DRAIN DETAILS" sheet.

* Indicates No Splice Zone for #9 and #10 bars.

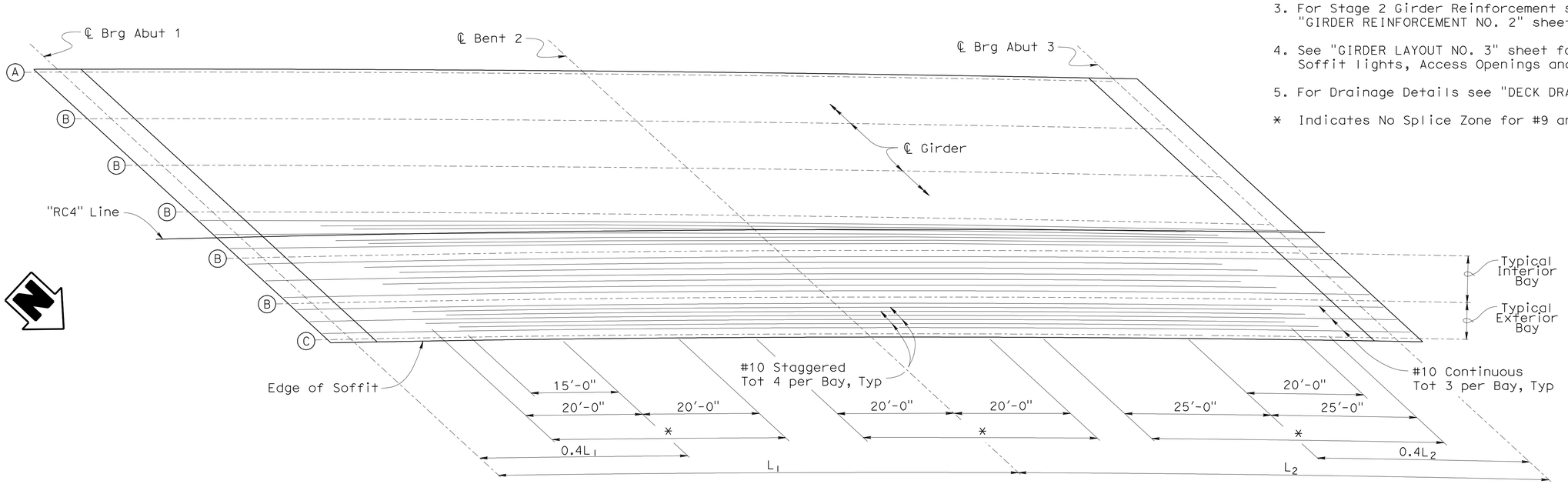

BOTTOM REINFORCEMENT (STAGE 3)

1" = 10'

DESIGN	BY Fred Feng	CHECKED Sara Yip	
DETAILS	BY Herman Mauroschadt	CHECKED Sara Yip	
QUANTITIES	BY Gabriel Galo	CHECKED Ruslan Novik	

STATE OF CALIFORNIA
DEPARTMENT OF TRANSPORTATION

DIVISION OF ENGINEERING SERVICES
STRUCTURE DESIGN
DESIGN BRANCH 15

BRIDGE NO. 53-3041
POST MILE 3.66

BLOOMFIELD AVENUE UC
GIRDER REINFORCEMENT NO. 3

STRUCTURES DESIGN DETAIL SHEET (ENGLISH) (REV. 10/25/05)

ORIGINAL SCALE IN INCHES FOR REDUCED PLANS 0 1 2 3

CU 07
EA 215931

DISREGARD PRINTS BEARING EARLIER REVISION DATES

REVISION DATES: 1-14-10 3-4-10 3-4-10 3-23-11 3-24-11 11-4-11 12-9-11 12-12-11 1-5-12

SHEET 37 OF 80

FILE => 53-3041-o-g-rf03.dgn

USERNAME => s121614 DATE PLOTTED => 28-MAR-2012 TIME PLOTTED => 11:42

DIST	COUNTY	ROUTE	POST MILES TOTAL PROJECT	SHEET No	TOTAL SHEETS
07	LA	5	2.4/4.0	832	1288

Andrew Rittenhouse 12-12-11
REGISTERED CIVIL ENGINEER DATE

3-26-12
PLANS APPROVAL DATE

The State of California or its officers or agents shall not be responsible for the accuracy or completeness of electronic copies of this plan sheet.

REGISTERED PROFESSIONAL ENGINEER
Andrew P. Rittenhouse
No. 61006
Exp. 12-31-12
CIVIL
STATE OF CALIFORNIA

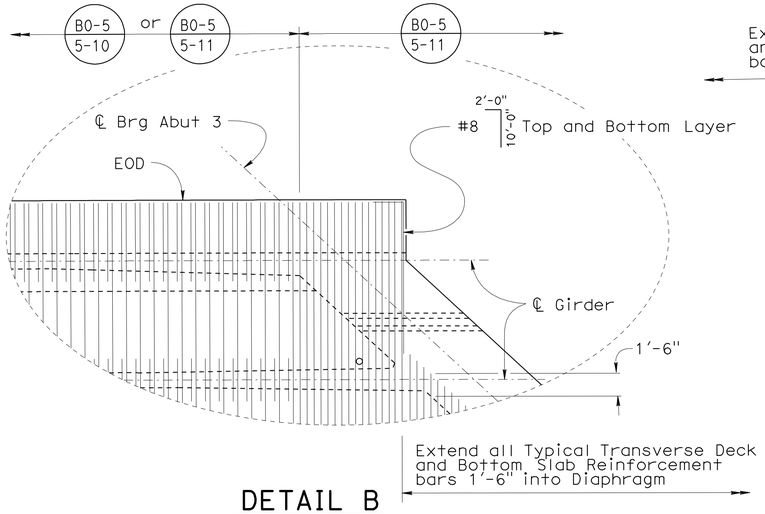

DETAIL B
1" = 5'-0"

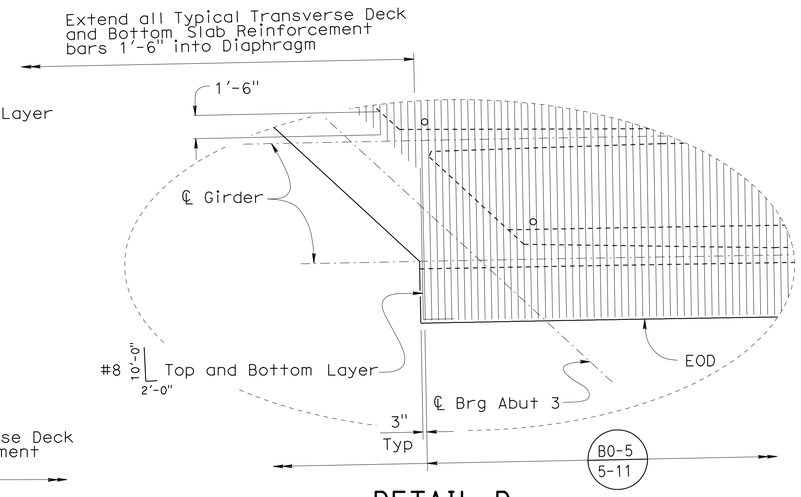

DETAIL D
1" = 5'-0"

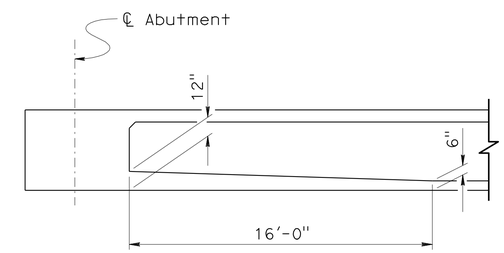

BOTTOM SLAB FLARE
¼" = 1'-0"

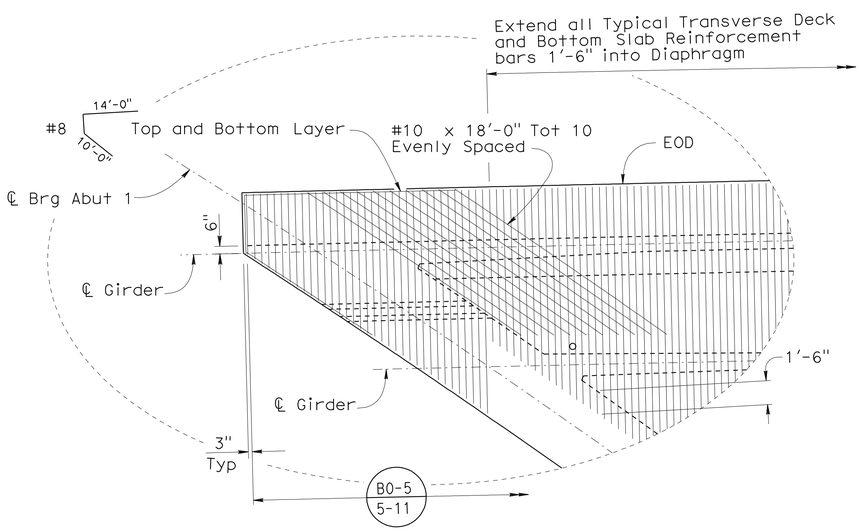

Note:
Acute Corner at Abutment 1 shown,
Acute corner at Abutment 3 similar.

DETAIL A
1" = 5'-0"

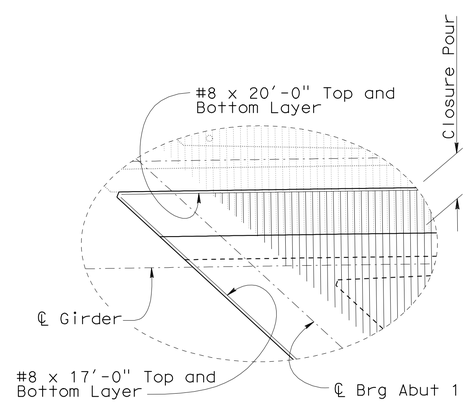

Note:

Acute Corner at Abutment 1 Stage 2 Construction shown.
Other corners at Stage 2 Construction similar.

DETAIL C
1" = 5'-0"

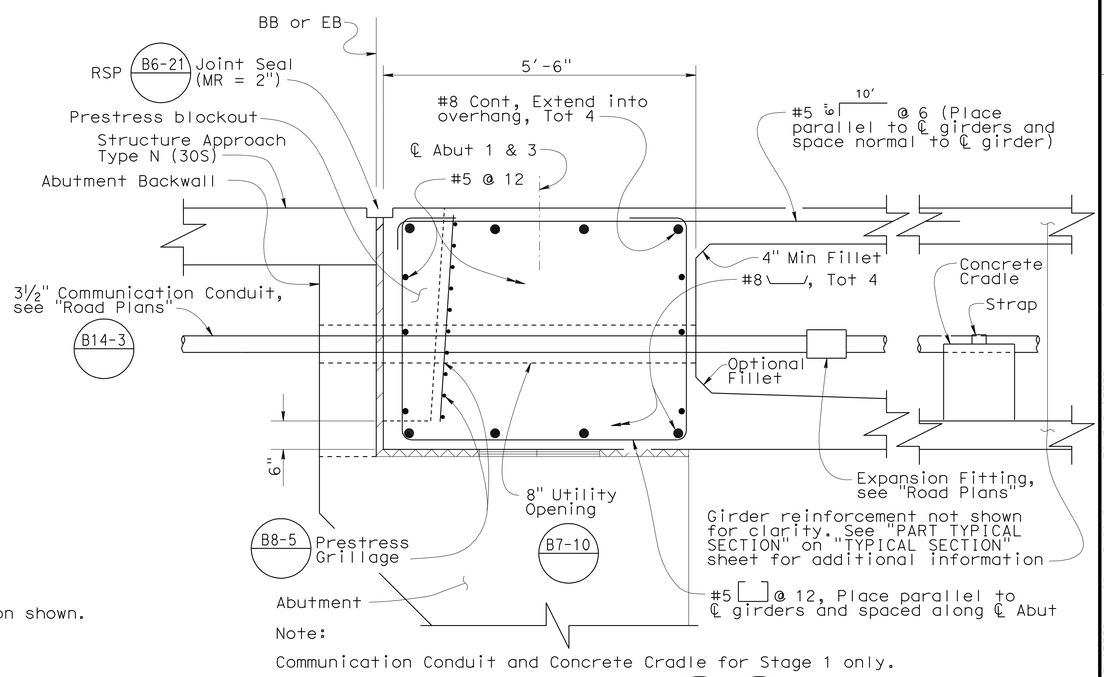

Note:
Communication Conduit and Concrete Cradle for Stage 1 only.

END DIAPHRAGM
¾" = 1'-0"

B8-5 B6-21

DESIGN	BY Fred Feng	CHECKED Traci Menard	
DETAILS	BY Herman Mauroschadt	CHECKED Shervin Pahlavan / Traci Menard	
QUANTITIES	BY Gabriel Galo	CHECKED Ruslan Novik	

STATE OF CALIFORNIA
DEPARTMENT OF TRANSPORTATION

DIVISION OF ENGINEERING SERVICES
STRUCTURE DESIGN
DESIGN BRANCH 15

BRIDGE NO. 53-3041
POST MILE 3.66

BLOOMFIELD AVENUE UC
MISCELLANEOUS DETAILS

STRUCTURES DESIGN DETAIL SHEET (ENGLISH) (REV. 10/25/05)

ORIGINAL SCALE IN INCHES FOR REDUCED PLANS 0 1 2 3

CU 07
EA 215931

DISREGARD PRINTS BEARING EARLIER REVISION DATES

REVISION DATES: 6-22-10 1-7-11 7-15-11 7-14-11 10-25-11 12-5-11 1-5-12 3-8-12

SHEET 38 OF 80

FILE => 53-3041-p-miscdet.dgn

USERNAME => s121614 DATE PLOTTED => 28-MAR-2012 TIME PLOTTED => 11:42

DIST	COUNTY	ROUTE	POST MILES TOTAL PROJECT	SHEET No	TOTAL SHEETS
07	LA	5	2.4/4.0	833	1288

Andrew Rittenhouse 12-12-11
REGISTERED CIVIL ENGINEER DATE

3-26-12
PLANS APPROVAL DATE

REGISTERED PROFESSIONAL ENGINEER
Andrew P. Rittenhouse
No. 61006
Exp. 12-31-12
CIVIL
STATE OF CALIFORNIA

The State of California or its officers or agents shall not be responsible for the accuracy or completeness of electronic copies of this plan sheet.

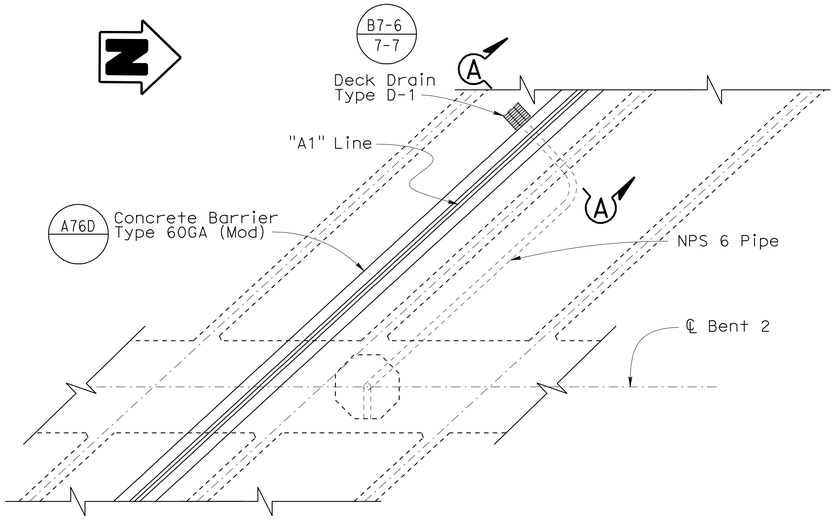

PLAN

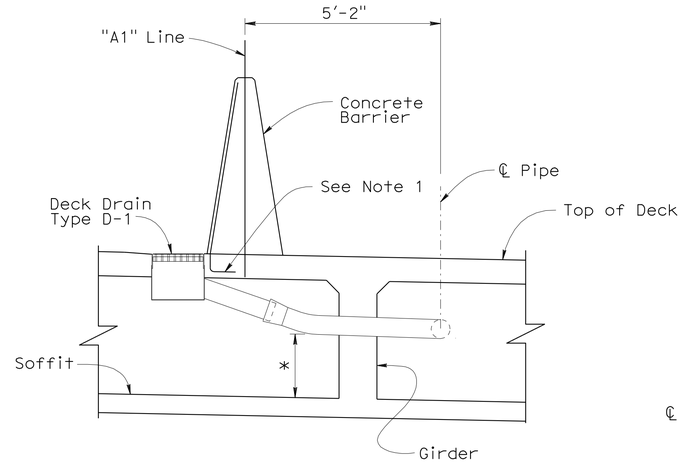

* - Adjust as required to provide 2" clearance from P/S Ducts.

SECTION A-A

½" = 1'-0"

Notes:

1. Reverse bar tails as needed to clear drain inlet.
2. Piles not shown.

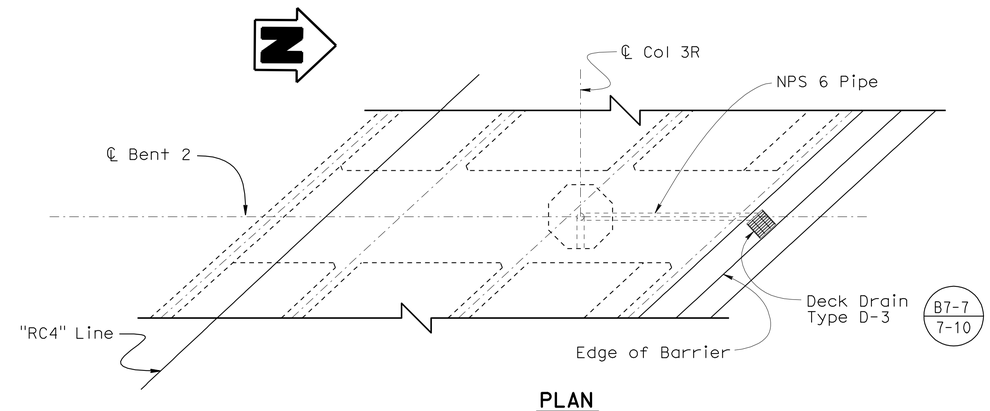

PLAN

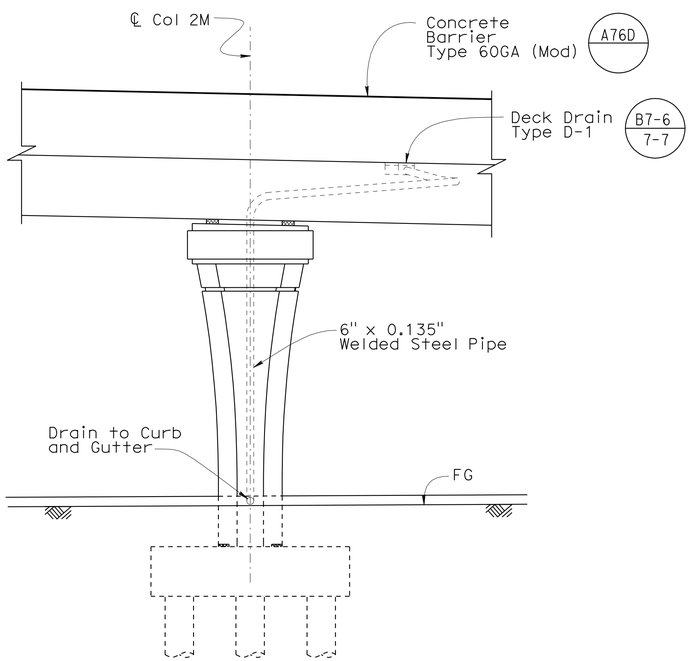

ELEVATION

DRAINAGE LAYOUT @ MEDIAN (STAGE 2)

3/16" = 1'-0"

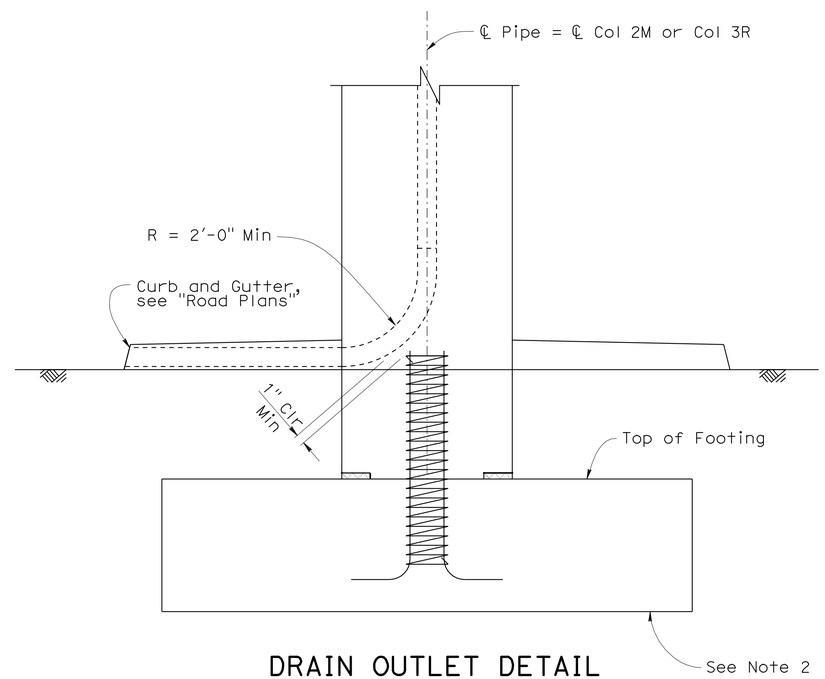

DRAIN OUTLET DETAIL

No Scale

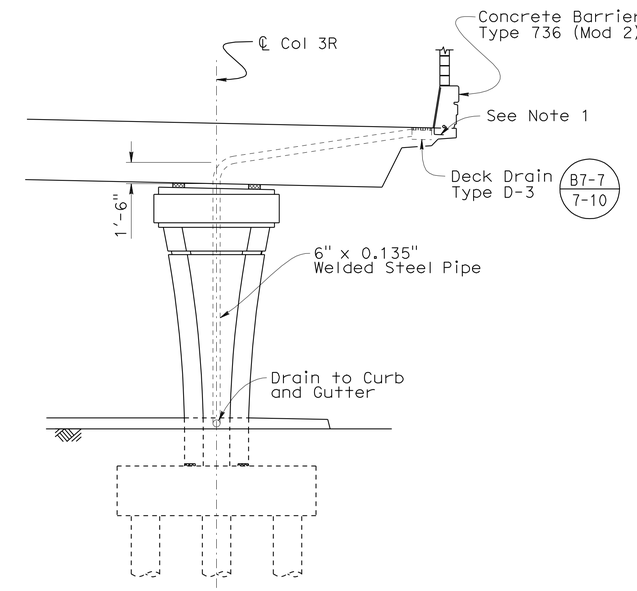

ELEVATION

DRAINAGE LAYOUT @ EDGE OF DECK (STAGE 3)

3/16" = 1'-0"

DESIGN	BY Oleg Kreydich	CHECKED Sara Yip	
DETAILS	BY Herman Mauroschadt	CHECKED Sara Yip	
QUANTITIES	BY Gabriel Galo	CHECKED Traci Menard	

STATE OF CALIFORNIA
DEPARTMENT OF TRANSPORTATION

DIVISION OF ENGINEERING SERVICES
STRUCTURE DESIGN
DESIGN BRANCH 15

BRIDGE NO. 53-3041
POST MILE 3.66

BLOOMFIELD AVENUE UC
DECK DRAIN DETAILS

STRUCTURES DESIGN DETAIL SHEET (ENGLISH) (REV. 10/25/05)

ORIGINAL SCALE IN INCHES FOR REDUCED PLANS 0 1 2 3

CU 07
EA 215931

DISREGARD PRINTS BEARING EARLIER REVISION DATES

REVISION DATES: 4-4-11 5-3-11 7-15-11 9-9-11 10-7-11 11-4-11 12-9-11 1-5-12

SHEET 39 OF 80

FILE => 53-3041-q-dd01.dgn

USERNAME => s12614 DATE PLOTTED => 28-MAR-2012 TIME PLOTTED => 11:42

DIST	COUNTY	ROUTE	POST MILES TOTAL PROJECT	SHEET No	TOTAL SHEETS
07	LA	5	2.4/4.0	834	1288

Andrew Rittenhouse 12-12-11
REGISTERED CIVIL ENGINEER DATE

3-26-12
PLANS APPROVAL DATE

The State of California or its officers or agents shall not be responsible for the accuracy or completeness of electronic copies of this plan sheet.

REGISTERED PROFESSIONAL ENGINEER
Andrew P. Rittenhouse
No. 61006
Exp. 12-31-12
CIVIL
STATE OF CALIFORNIA

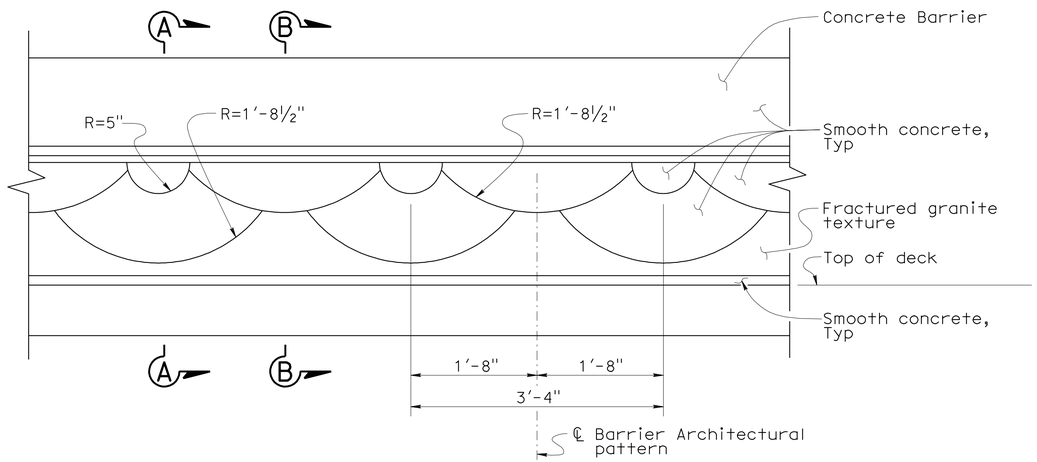

CONCRETE BARRIER TYPE 736 (MOD 1)
1" = 1'-0"

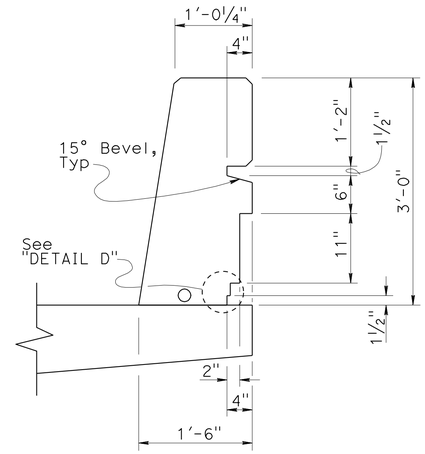

SECTION A-A
1" = 1'-0"

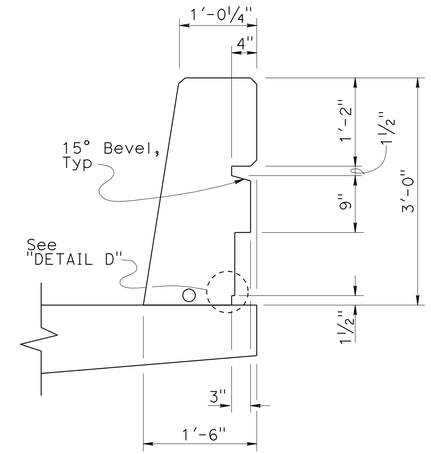

SECTION B-B
1" = 1'-0"

For details not shown see B11-56

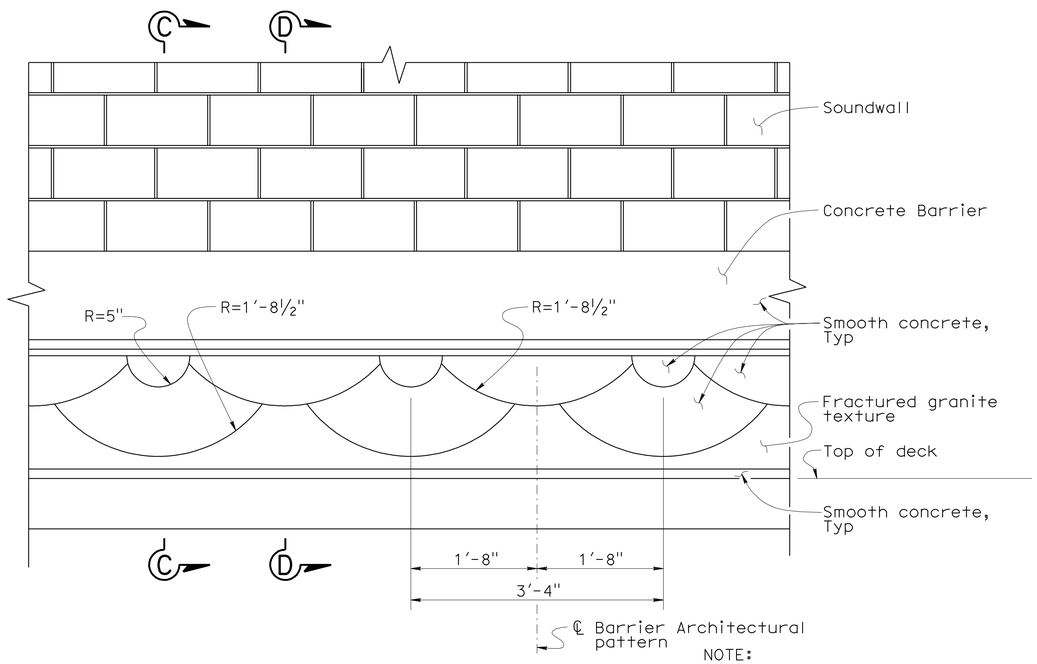

NOTE:
Concrete Barrier Type 736 (Mod 2) shown,
Concrete Barrier Type 736A Mod 2) similar.

CONCRETE BARRIER TYPE 736 (MOD 2)
1" = 1'-0"

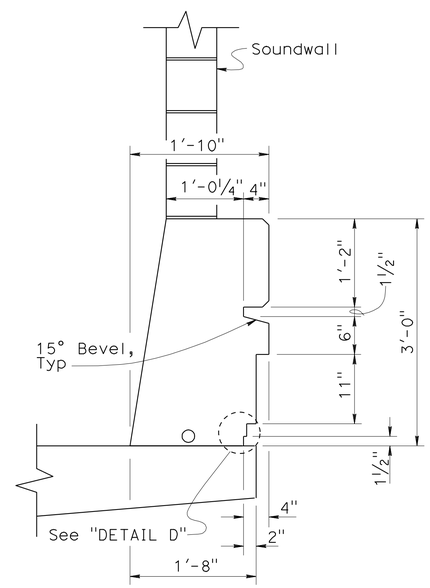

SECTION C-C
1" = 1'-0"

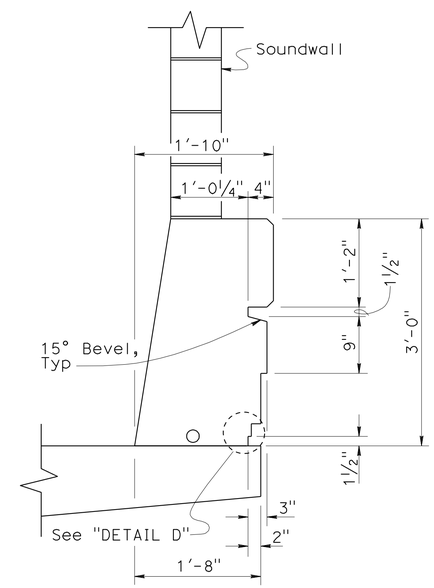

SECTION D-D
1" = 1'-0"

For details not shown see B11-56

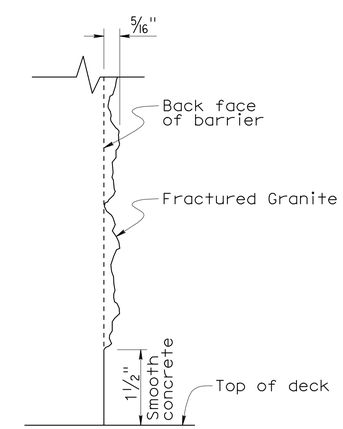

DETAIL D
NO SCALE

DESIGN	BY Fred Feng	CHECKED Andrew Rittenhouse	
DETAILS	BY Tim Trefz	CHECKED Andrew Rittenhouse	
QUANTITIES	BY Gabriel Galo	CHECKED Traci Menard	

STATE OF CALIFORNIA
DEPARTMENT OF TRANSPORTATION

DIVISION OF ENGINEERING SERVICES
STRUCTURE DESIGN
DESIGN BRANCH 15

BRIDGE NO. 53-3041
POST MILE 3.66

BLOOMFIELD AVENUE UC
BARRIER ARCHITECTURAL DETAILS NO. 1

STRUCTURES DESIGN DETAIL SHEET (ENGLISH) (REV. 10/25/05)

ORIGINAL SCALE IN INCHES FOR REDUCED PLANS 0 1 2 3

CU 07
EA 215931

DISREGARD PRINTS BEARING EARLIER REVISION DATES

REVISION DATES: 07-29-10 09-20-10 2-28-11 7-14-11 10-28-11 12-5-11 1-5-12 2-14-12 3-10-12

SHEET 40 OF 80

FILE => 53-3041-r-brdt01.dgn

USERNAME => s121614 DATE PLOTTED => 28-MAR-2012 TIME PLOTTED => 11:42

Dist	COUNTY	ROUTE	POST MILES TOTAL PROJECT	SHEET No.	TOTAL SHEETS
07	LA	5	2.4/4.0	835	1288

George Olguin
LICENSED LANDSCAPE ARCHITECT

3-26-12
PLANS APPROVAL DATE

LICENSED LANDSCAPE ARCHITECT
GEORGE OLGUIN
No. 4333
George Olguin
Signature
08-31-12
Renewal Date
10-10-10
Date
STATE OF CALIFORNIA

THE STATE OF CALIFORNIA OR ITS OFFICERS OR AGENTS SHALL NOT BE RESPONSIBLE FOR THE ACCURACY OR COMPLETENESS OF SCANNED COPIES OF THIS PLAN SHEET.

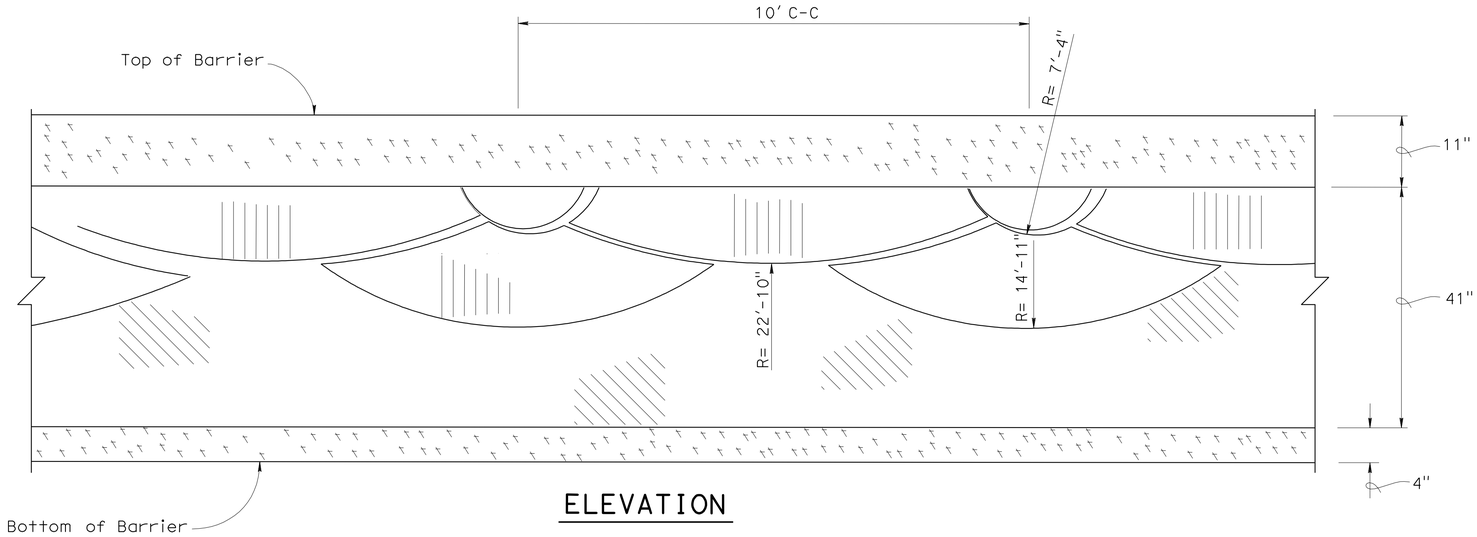

ELEVATION

CONCRETE BARRIER TYPE 60GA (MOD) ARCHITECTURAL SURFACE TREATMENT (SCALLOP WALL PATTERN)

No Scale

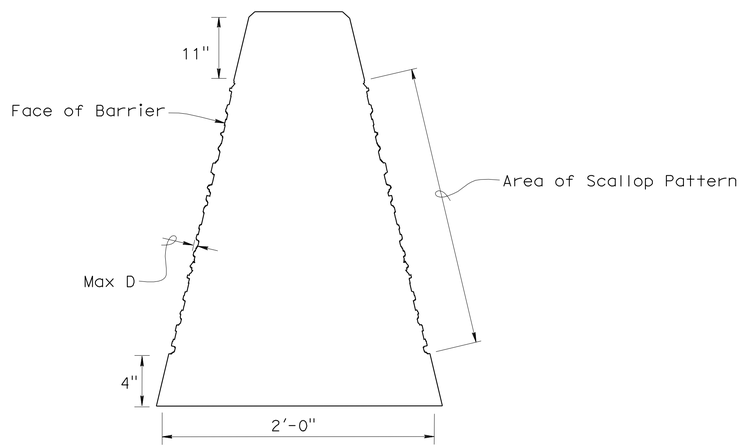

Note:
For details not shown see A76D

TYPICAL SECTION

CONCRETE BARRIER TYPE 60GA (MOD) (SCALLOP PATTERN DIFFERENTIAL)

No Scale

Legend:

- Smooth Finish
- Light Fractured Granite Finish Max D 1/4"-1/2"
- Heavy Fractured Granite Finish Max D 3/4"-1"

DESIGN	BY George Olguin	CHECKED Jennifer Taira	
DETAILS	BY George Olguin	CHECKED Jennifer Taira	
QUANTITIES	BY Suzan Moradi	CHECKED Gabriel Galo	

STATE OF CALIFORNIA
DEPARTMENT OF TRANSPORTATION

DIVISION OF ENGINEERING SERVICES
STRUCTURE DESIGN
DESIGN BRANCH 15

BRIDGE NO. 53-3041
POST MILE 3.66

BLOOMFIELD AVENUE UC
BARRIER ARCHITECTURAL DETAILS NO. 2

STRUCTURES DESIGN DETAIL SHEET (ENGLISH) (REV. 10/25/05)

ORIGINAL SCALE IN INCHES FOR REDUCED PLANS 0 1 2 3

CU 07
EA 215931

DISREGARD PRINTS BEARING EARLIER REVISION DATES 2-3-12

REVISION DATES

SHEET 41 OF 80

FILE => 53-3041-r-brdt02.dgn

USERNAME => s121614 DATE PLOTTED => 28-MAR-2012 TIME PLOTTED => 11:43

ARCHITECTURAL ABBREVIATIONS

&	AND
∟	ANGLE
℄	CENTER LINE
Ø	DIAMETER OR ROUND
□	SQUARE
d	PENNY
°	DEGREE
AB	ANCHOR BOLT
ABUT	ABUTMENT
ABV	ABOVE
AC	ASPHALT CONCRETE
ACOUS	ACOUSTICAL
ADJ	ADJUSTABLE
ALT	ALTERNATE
ALUM	ALUMINUM
APA	AMERICAN PLYWOOD ASSOCIATION
ARCH	ARCHITECTURAL, ARCHITECT
ASPH	ASPHALT
BD	BOARD
BIT	BITUMINOUS
BLDG	BUILDING
BLK	BLOCK
BLKG	BLOCKING
BM	BEAM
BN	BOUNDARY NAILING
BOT	BOTTOM
BR	BRIDGE
BTM	BOTTOM
BTWN	BETWEEN
BUR	BUILT-UP-ROOFING
CJ	CONTROL JOINT
CL	CHAIN LINK
CAB	CABINET
CB	CATCH BASIN
CEM	CEMENT
CER	CERAMIC
CH	CLOTHES HOOK
CIDH	CAST IN DRILLED HOLE
CIP	CAST IN PLACE
CKBD	CHALKBOARD
CLG	CEILING
CMU	CONCRETE MASONRY UNIT
CLO	CLOSET
CLR	CLEAR
COL	COLUMN
CONC	CONCRETE
CONN	CONNECTION
CONST	CONSTRUCTION
CONT	CONTINUOUS
CORR	CORRIDOR
CPT	CARPET
CT	CERAMIC TILE
CTR	CENTER
CTSK	COUNTERSUNK
CY	CUBIC YARD
DBL	DOUBLE
DEPT	DEPARTMENT
DET	DETAIL
DF	DOUGLAS FIR
DIA	DIAMETER
DIM	DIMENSION
DN	DOWN
DP	DEEP
DR	DOOR
DS	DOWNSPOUT
DWG	DRAWING
DWR	DRAWER
(E)	EXISTING
E	EAST
EA	EACH
EF	EXHAUST FAN
EHD	ELECTRIC HAND DRYER
EJ	EXPANSION JOINT
EL	ELEVATION (HEIGHT)
ELEC	ELECTRICAL
ELEV	ELEVATION (VIEW)
ELVR	ELEVATOR
EMER	EMERGENCY
ENCL	ENCLOSURE
EP	EDGE OF PAVEMENT
EQ	EQUAL
EPB	ELECTRICAL PANELBOARD
EQUIP	EQUIPMENT
ESCL	ESCALATOR
ETW	EDGE OF TRAVEL WAY
EWC	ELECTRIC WATER COOLER
EXP	EXPANSION
EXPO	EXPOSED, EXPOSURE
EXT	EXTERIOR
FD	FLOOR DRAIN
FDN	FOUNDATION
FE	FIRE EXTINGUISHER
FEC	FIRE EXTINGUISHER CABINET
FF	FINISH FLOOR
FG	FINISH GRADE
FH	FIRE HYDRANT
FHC	FIRE HOSE CABINET
FHMS	FLATHEAD METAL SCREW
FHWS	FLATHEAD WOOD SCREW
FIN	FINISH
FJ	FLOOR JOIST
FLASH	FLASHING
FLR	FLOOR
FLUOR	FLUORESCENT
FOC	FACE OF CONCRETE
FOF	FACE OF FINISH
FOM	FACE OF MASONRY
FOS	FACE OF STUD
FRMG	FRAMING
FRPP	FIBERGLASS REINFORCED PLASTIC PANEL
FT	FEET, FOOT
FTG	FOOTING
FURR	FURRING
FWY	FREEWAY
GA	GAUGE
GAL	GALLON
GALV	GALVANIZED
GB	GRAB BAR
GI	GALVANIZED IRON
GL	GLASS
GLM	GLUE LAMINATED MEMBER
GLZ	GLAZING
GR	GRADE
GSM	GALVANIZED SHEET METAL
GYP	GYPSUM
GYP SHTG	GYPSUM SHEATHING
HB	HOSE BIB
HC	HOLLOW CORE
HD	HEAD, HOLD DOWN
HDR	HEADER
HDWD	HARDWOOD
HDWR	HARDWARE
HEX	HEXAGONAL
HF	HEMLOCK-FIR
HGR	HANGER
HM	HOLLOW METAL
HORIZ	HORIZONTAL
HP	HIGH POINT
HR	HOUR
HSB	HIGH STRENGTH BOLT
HT	HEIGHT
HVAC	HEATING, VENTILATING, AIR CONDITIONING
HWY	HIGHWAY
ID	INSIDE DIAMETER
IN	INCH
INFO	INFORMATION
INSUL	INSULATION
INT	INTERIOR
JAN	JANITOR
JB	JUNCTION BOX
JH	JOIST HANGER
JST	JOIST
JT	JOINT
KIT	KITCHEN
LAB	LABORATORY
LAV	LAVATORY
LBS	POUNDS
LF	LINEAR FEET
LKR	LOCKER
LLV	LONG LEG VERTICAL
LOL	LAYOUT LINE
LPG	LIQUIFIED PETROLEUM GAS
LS	LAG SCREW
M	METER
MAT	MATERIAL
MAX	MAXIMUM
MB	MACHINE BOLT
MBR	MEMBER
MECH	MECHANICAL
MEMB	MEMBRANE
MET	METAL
MFR	MANUFACTURER
MH	MAN HOLE
MIN	MINIMUM
MIR	MIRROR
MISC	MISCELLANEOUS
mm	MILLIMETER
MO	MASONRY OPENING
MOD	MODIFIED
MTD	MOUNTED
MUL	MULLION
N	NORTH
ND	NAPKIN DISPOSAL
NIC	NOT IN CONTRACT
NO	NUMBER
NOM	NOMINAL
NTS	NOT TO SCALE
OBSC	OBSCURE
OC	OVERCROSSING
OD	OUTSIDE DIAMETER
OFF	OFFICE
OFD	OVERFLOW DRAIN
OG	ORIGINAL GROUND
OH	OVERHEAD
OHWS	OVALHEAD WOOD SCREW
OP	OPERATIONS
OPNG	OPENING
OPP	OPPOSITE
OPT	OPTION, OPTIONAL
P	PITCH
PB	POST BASE
PC	POST CAP
PCC	PORTLAND CEMENT CONCRETE
PDF	POWDER DRIVEN FASTENERS
PH	PHILLIPS HEAD
PL	PLATE
PLAM	PLASTIC LAMINATE
PLAS	PLASTER
PLYWD	PLYWOOD
PMF	PRESSED METAL FRAME
PR	PAIR
PRTN	PARTITION
PT	POINT
PTD	PAPER TOWEL DISPENSER
PTD/R	PAPER TOWEL DISPENSER /RECEPTACLE
PVC	POLYVINYL CHLORIDE
PWB	PREFABRICATED WOOD I BEAM
QT	QUARRY TILE
(R)	RELOCATED
R	RADIUS, RISER
R/W	RIGHT OF WAY
RD	ROOF DRAIN
RDWD	REDWOOD
REF	REFERENCE
REFG	REFRIGERATOR
REINF	REINFORCED(ING)
REQ	REQUIRED
RFG	ROOFING
RFSWN	ROUGHSAWN
RH	ROUND HEAD
RHWS	ROUND HEAD WOOD SCREWS
RJ	ROOF JOIST
RM	ROOM
RO	ROUGH OPENING
RSWN	RESAWN
RTE	ROUTE
RW	RETAINING WALL
S	SOUTH
SC	SOLID CORE
SCHED	SCHEDULE
SD	SOAP DISPENSER
SDST	SELF DRILLING SELF TAPPING
SF	SQUARE FEET
SH	SHELF
SHWR	SHOWER
SHT	SHEET
SHTG	SHEATHING
SIM	SIMILAR
SL	SCORE LINE
SMS	SHEET METAL SCREW
SOHD	SECTIONAL OVERHEAD DOOR
SPEC	SPECIFICATION
SPS	STRUCTURAL PLYWOOD SHEATHING
SQ	SQUARE
SRRA	SAFETY ROADSIDE REST AREA
SS	SERVICE SINK
SST	STAINLESS STEEL
STA	STATION
STAG	STAGGER
STD	STANDARD
STL	STEEL
STOR	STORAGE
STRUC	STRUCTURAL
SUSP	SUSPENDED
T	TREAD
T&G	TONGUE & GROOVE
TB	TOLL BOOTH
TEL	TELEPHONE
TEMP	TEMPERED
TER	TERRAZZO
THK	THICK
THLD	THRESHOLD
TJ	TOOLED JOINT
TKBD	TACKBOARD
TN	TOE NAIL
TNVM	TAMPON/NAPKIN VENDING MACHINE
TOC	TOP OF CURB OR CONCRETE
TOP	TOP OF PAVEMENT
TOS	TOE OF SLOPE
TOT	TOTAL
TOW	TOP OF WALL
TS	TUBE STEEL
TSCD	TOILET SEAT COVER DISPENSER
TTD	TOILET TISSUE DISPENSER
TTY	TELETYPEWRITER
TYP	TYPICAL
UNF	UNFINISHED
UON	UNLESS OTHERWISE NOTED
UR	URINAL
VAR	VARIES
VCT	VINYL COMPOSITION TILE
VERT	VERTICAL
VEST	VESTIBULE
VR	VENT RISER
VTR	VENT THRU ROOF
W	WEST
W/	WITH
W/O	WITHOUT
WC	WATER CLOSET
WD	WOOD
WDW	WINDOW
WH	WATER HEATER
WP	WORKING POINT
WR	WATER RESISTANT
WSCT	WAINSCOT
WT	WEIGHT
WTPR	WATERPROOFING
WWF	WELDED WIRE FABRIC
YD	YARD

ARCHITECTURAL GENERAL NOTES

1. THE CONTRACTOR SHALL VERIFY ALL CONTROLLING DIMENSIONS AND FIELD CONDITIONS PRIOR TO ORDERING OR FABRICATING ANY MATERIALS OR ASSEMBLIES FOR CONSTRUCTION
2. THE CONTRACTOR SHALL NOTIFY THE ENGINEER IN WRITING OF ANY DISCREPANCIES BETWEEN THESE PLANS AND ACTUAL MEASUREMENTS OR FIELD CONDITIONS PRIOR TO ORDERING OR FABRICATING ANY MATERIALS OR ASSEMBLIES FOR CONSTRUCTION.

DIST	COUNTY	ROUTE	POST MILES TOTAL PROJECT	SHEET No	TOTAL SHEETS
07	LA	5	2.4/4.0	836	1288

LICENSED ARCHITECT — DATE 12/12/11

3-26-12
PLANS APPROVAL DATE

LICENSED ARCHITECT H. Javier Chavez 14073 03-31-13 Renewal Date STATE OF CALIFORNIA

The State of California or its officers or agents shall not be responsible for the accuracy or completeness of electronic copies of this plan sheet.

SYMBOLS FOR ARCHITECTURAL SHEETS

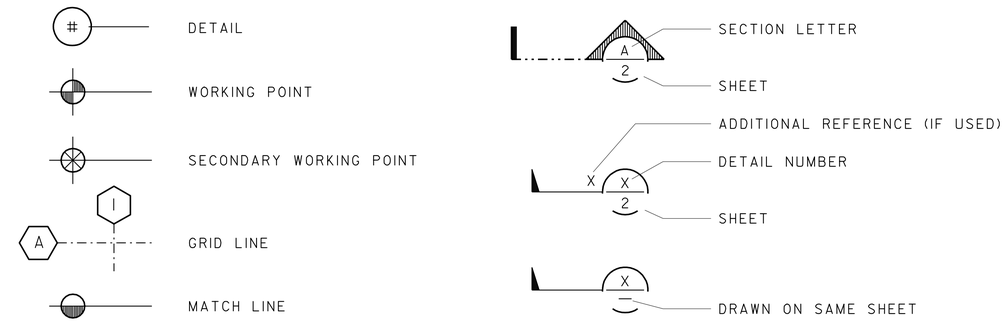

INDEX FOR ARCHITECTURAL SHEETS

A0 ARCHITECTURAL ABBREVIATIONS, SYMBOLS & INDEX
A1 SITE PLAN
A2 ELEVATION AND ARCHITECTURAL MOTIF AT ABUTMENT 1
A3 ELEVATION AND ARCHITECTURAL MOTIF AT ABUTMENT 1
A4 ELEVATION AND ARCHITECTURAL MOTIF AT ABUTMENT 1
A5 ELEVATION AND ARCHITECTURAL MOTIF AT ABUTMENT 3
A6 ELEVATION AND ARCHITECTURAL MOTIF AT ABUTMENT 3
A7 ELEVATION AND ARCHITECTURAL MOTIF AT ABUTMENT 3
A8 SECTIONS AT ABUTMENTS 1 AND 3
A9 ARCHITECTURAL MOTIF DETAILS AT ABUTMENT 1
A10 ARCHITECTURAL MOTIF DETAILS AT ABUTMENT 3
A11 ARCHITECTURAL TILE MOTIF DETAILS
A12 ELEVATION AND ARCHITECTURAL MOTIF AT ABUTMENT 1
A13 ELEVATION AND ARCHITECTURAL MOTIF AT ABUTMENT 1
A14 ELEVATION AND ARCHITECTURAL MOTIF AT ABUTMENT 3
A15 ELEVATION AND ARCHITECTURAL MOTIF AT ABUTMENT 3
A16 ARCHITECTURAL TILE FINISH SCHEDULE AT ABUTMENT 1
A17 ARCHITECTURAL TILE FINISH SCHEDULE AT ABUTMENT 3

	BY	CHECKED
DESIGN	H. CHAVEZ	S. HEATH
DETAILS	S. HEATH	H. CHAVEZ
QUANTITIES	A. RITTENHOUSE	S. MORADI

STATE OF CALIFORNIA
DEPARTMENT OF TRANSPORTATION

DIVISION OF ENGINEERING SERVICES
BRIDGE ARCHITECTURE AND AESTHETICS

BRIDGE NO. 53-3041
POST MILE 3.66

BLOOMFIELD AVENUE UC
ARCHITECTURAL ABBREVIATIONS, SYMBOLS & INDEX

SHEET A0

STRUCTURES DESIGN DETAIL SHEET (ENGLISH) (REV. 09-01-10)

ORIGINAL SCALE IN INCHES FOR REDUCED PLANS 0 1 2 3

CU 07
EA 215931

DISREGARD PRINTS BEARING EARLIER REVISION DATES

REVISION DATES 1-19-12

SHEET 42 OF 80

FILE => 53-3041-s-b-a0.dgn

USERNAME => s121614 DATE PLOTTED => 28-MAR-2012 TIME PLOTTED => 11:43

DIST	COUNTY	ROUTE	POST MILES TOTAL PROJECT	SHEET No	TOTAL SHEETS
07	LA	5	2.4/4.0	837	1288

LICENSED ARCHITECT — DATE 12/12/11

3-26-12
PLANS APPROVAL DATE

LICENSED ARCHITECT H. Javier Chavez 14073 03-31-13 Renewal Date STATE OF CALIFORNIA

The State of California or its officers or agents shall not be responsible for the accuracy or completeness of electronic copies of this plan sheet.

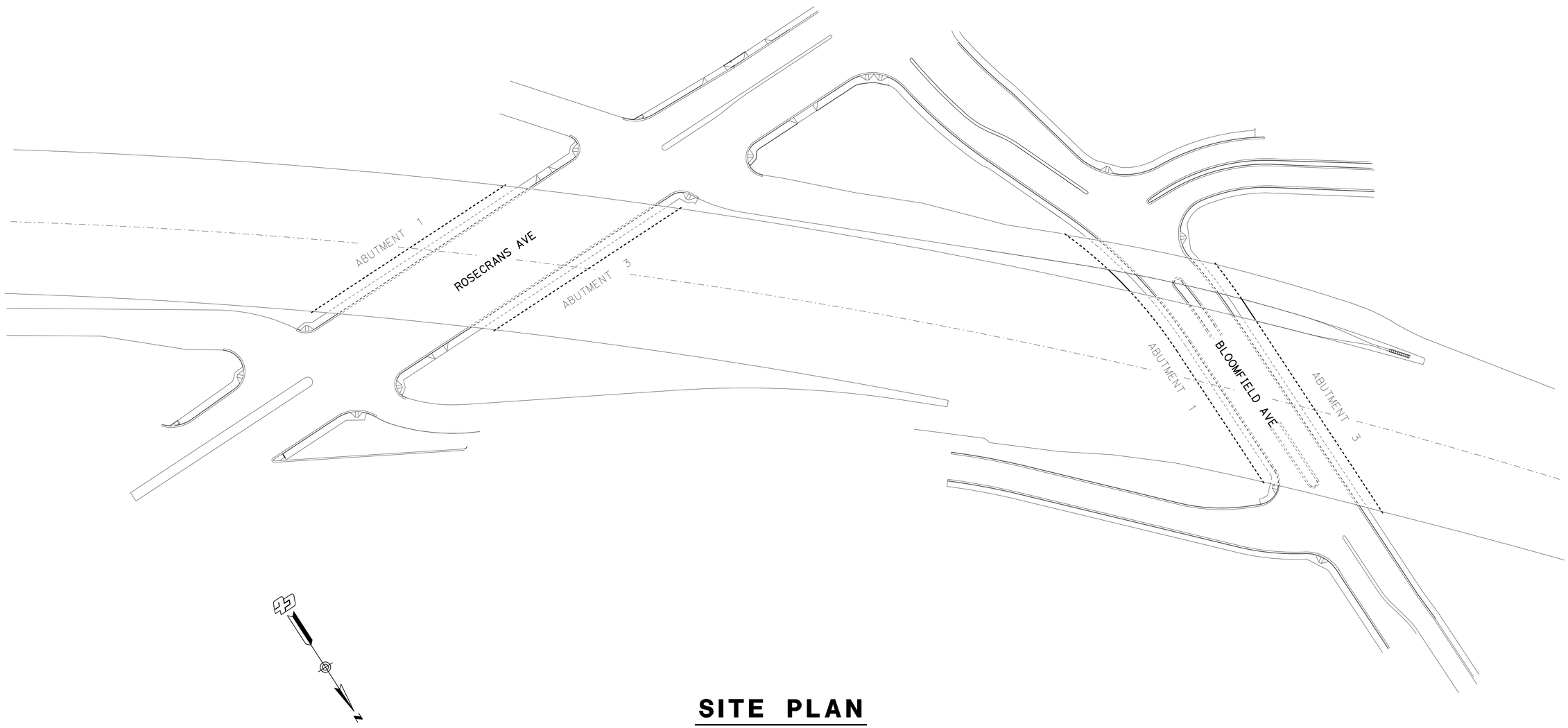

SITE PLAN

NO SCALE

DESIGN	BY H. CHAVEZ	CHECKED S. HEATH	
DETAILS	BY S. HEATH	CHECKED H. CHAVEZ	
QUANTITIES	BY A. RITTENHOUSE	CHECKED S. MORADI	

STATE OF CALIFORNIA
DEPARTMENT OF TRANSPORTATION

DIVISION OF ENGINEERING SERVICES
BRIDGE ARCHITECTURE AND AESTHETICS

BRIDGE NO. 53-3041
POST MILE 3.66

BLOOMFIELD AVENUE UC
SITE PLAN

SHEET A1

STRUCTURES DESIGN DETAIL SHEET (ENGLISH) (REV. 09-01-10)

ORIGINAL SCALE IN INCHES FOR REDUCED PLANS 0 1 2 3

CU 07
EA 215931

DISREGARD PRINTS BEARING EARLIER REVISION DATES

REVISION DATES 1-19-12

SHEET 43 OF 80

FILE => 53-3041-s-b-a1.dgn

USERNAME => s127614 DATE PLOTTED => 28-MAR-2012 TIME PLOTTED => 11:43

DIST	COUNTY	ROUTE	POST MILES TOTAL PROJECT	SHEET No	TOTAL SHEETS
07	LA	5	2.4/4.0	838	1288

LICENSED ARCHITECT — DATE 12/12/11

3-26-12
PLANS APPROVAL DATE

LICENSED ARCHITECT H. Javier Chavez 14073 03-31-13 Renewal Date STATE OF CALIFORNIA

The State of California or its officers or agents shall not be responsible for the accuracy or completeness of electronic copies of this plan sheet.

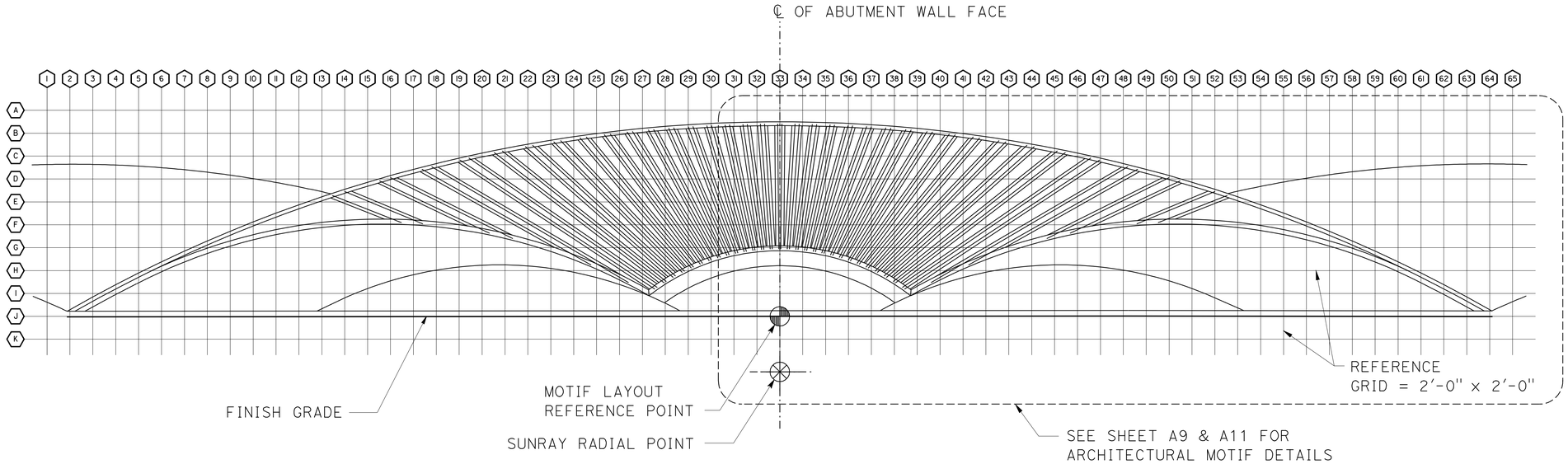

PARTIAL ARCHITECTURAL MOTIF AT EAST ABUTMENT 1

NO SCALE

LEGEND:

- TILE-SEE SHT A16 FOR PATTERN LAYOUT
- TEXTURED CONCRETE SURFACE = SPLIT SLATE TEXTURE. SEE DETAIL 1/A8
- SMOOTH CONCRETE SURFACE

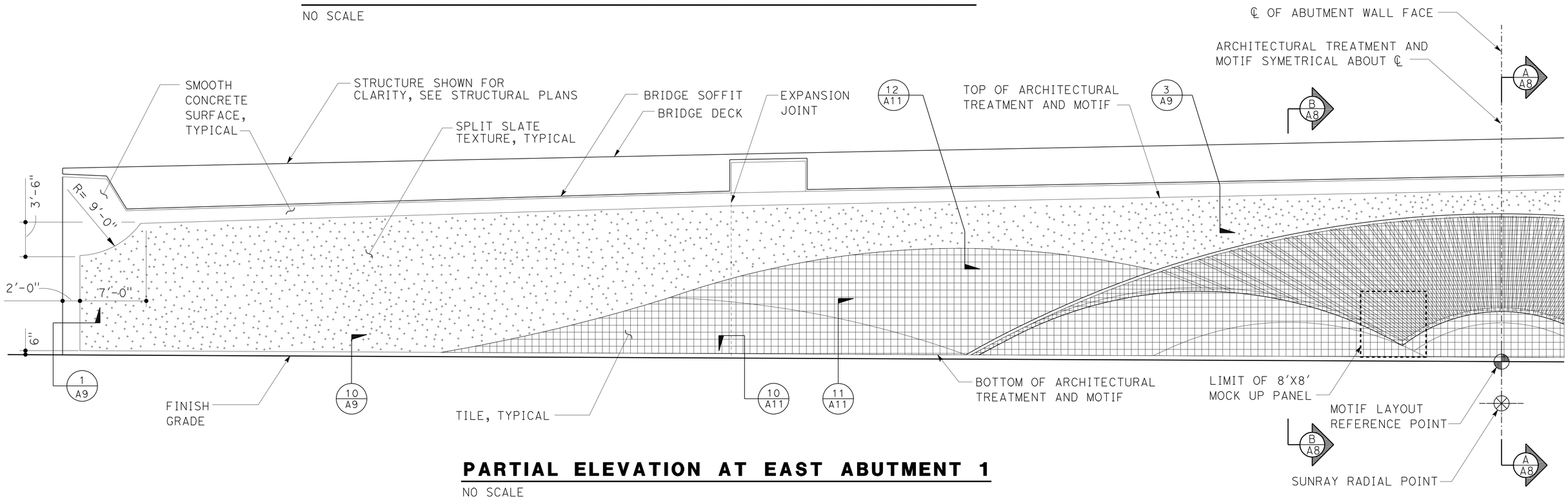

PARTIAL ELEVATION AT EAST ABUTMENT 1

NO SCALE

DESIGN	BY H. CHAVEZ	CHECKED S. HEATH	
DETAILS	BY S. HEATH	CHECKED H. CHAVEZ	
QUANTITIES	BY	CHECKED	

STATE OF CALIFORNIA DEPARTMENT OF TRANSPORTATION

DIVISION OF ENGINEERING SERVICES BRIDGE ARCHITECTURE AND AESTHETICS

BRIDGE NO. 53-3041 POST MILE 3.66

BLOOMFIELD AVENUE UC

ELEVATION AND ARCHITECTURAL MOTIF ABUTMENT 1

SHEET A2

STRUCTURES DESIGN DETAIL SHEET (ENGLISH) (REV. 09-01-10)

ORIGINAL SCALE IN INCHES FOR REDUCED PLANS 0 1 2 3

CU 07
EA 215931

DISREGARD PRINTS BEARING EARLIER REVISION DATES

REVISION DATES 1-19-12

SHEET 44 OF 80

FILE => 53-3041-s-b-a2.dgn

USERNAME => s121614 DATE PLOTTED => 28-MAR-2012 TIME PLOTTED => 11:43

DIST	COUNTY	ROUTE	POST MILES TOTAL PROJECT	SHEET No	TOTAL SHEETS
07	LA	5	2.4/4.0	839	1288

LICENSED ARCHITECT — DATE 12/12/11

3-26-12
PLANS APPROVAL DATE

LICENSED ARCHITECT H. Javier Chavez 14073 03-31-13 Renewal Date STATE OF CALIFORNIA

The State of California or its officers or agents shall not be responsible for the accuracy or completeness of electronic copies of this plan sheet.

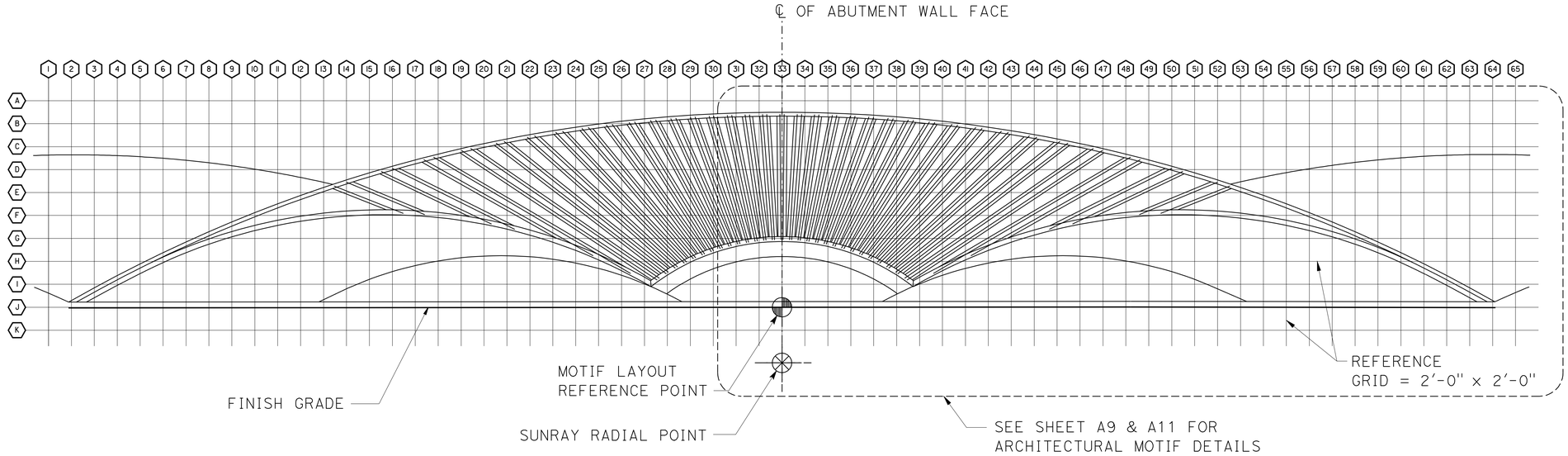

PARTIAL ARCHITECTURAL MOTIF AT EAST ABUTMENT 1

NO SCALE

LEGEND:

- TILE-SEE SHT A16 FOR PATTERN LAYOUT
- TEXTURED CONCRETE SURFACE = SPLIT SLATE TEXTURE. SEE DETAIL 1/A8
- SMOOTH CONCRETE SURFACE

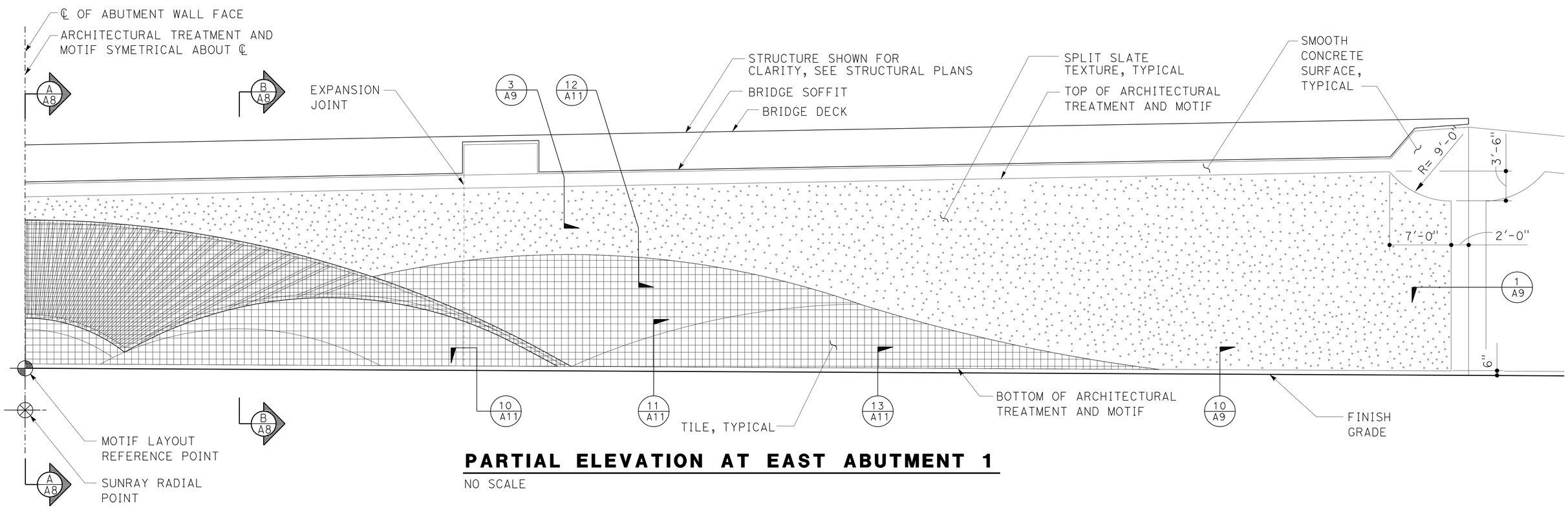

PARTIAL ELEVATION AT EAST ABUTMENT 1

NO SCALE

DESIGN	BY H. CHAVEZ	CHECKED S. HEATH	
DETAILS	BY S. HEATH	CHECKED H. CHAVEZ	
QUANTITIES	BY A. RITTENHOUSE	CHECKED S. MORADI	

STATE OF CALIFORNIA DEPARTMENT OF TRANSPORTATION

DIVISION OF ENGINEERING SERVICES BRIDGE ARCHITECTURE AND AESTHETICS

BRIDGE NO. 53-3041 POST MILE 3.66

BLOOMFIELD AVENUE UC

ELEVATION AND ARCHITECTURAL MOTIF ABUTMENT 1

SHEET A3

STRUCTURES DESIGN DETAIL SHEET (ENGLISH) (REV. 09-01-10)

ORIGINAL SCALE IN INCHES FOR REDUCED PLANS 0 1 2 3

CU 07
EA 215931

DISREGARD PRINTS BEARING EARLIER REVISION DATES — REVISION DATES 1-19-12

SHEET 45 OF 80

FILE => 53-3041-s-b-a3.dgn

USERNAME => s121614 DATE PLOTTED => 28-MAR-2012 TIME PLOTTED => 11:43

DIST	COUNTY	ROUTE	POST MILES TOTAL PROJECT	SHEET No	TOTAL SHEETS
07	LA	5	2.4/4.0	840	1288

LICENSED ARCHITECT — DATE 12/12/11

3-26-12
PLANS APPROVAL DATE

LICENSED ARCHITECT H. Javier Chavez 14073 03-31-13 Renewal Date STATE OF CALIFORNIA

The State of California or its officers or agents shall not be responsible for the accuracy or completeness of electronic copies of this plan sheet.

LEGEND:

- TILE-SEE SHT A16 FOR PATTERN LAYOUT
- TEXTURED CONCRETE SURFACE = SPLIT SLATE TEXTURE. SEE DETAIL 1/A8
- SMOOTH CONCRETE SURFACE

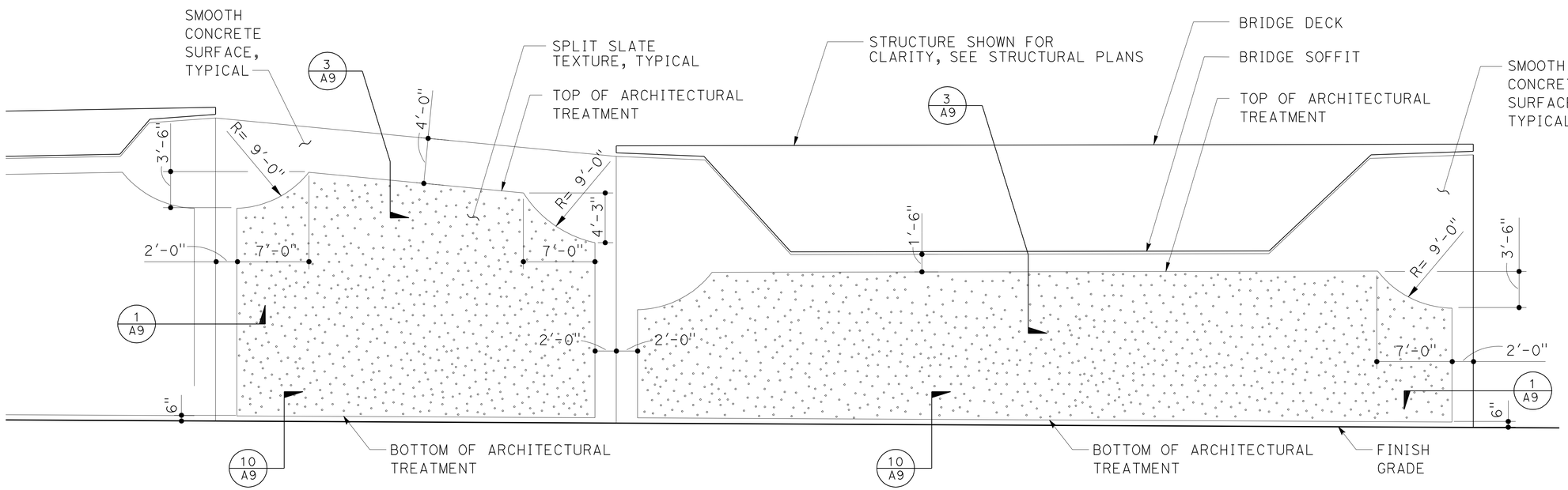

PARTIAL ELEVATION AT EAST ABUTMENT 1

NO SCALE

DESIGN	BY H. CHAVEZ	CHECKED S. HEATH	
DETAILS	BY S. HEATH	CHECKED H. CHAVEZ	
QUANTITIES	BY A. RITTENHOUSE	CHECKED S. MORADI	

STATE OF CALIFORNIA
DEPARTMENT OF TRANSPORTATION

DIVISION OF ENGINEERING SERVICES
BRIDGE ARCHITECTURE AND AESTHETICS

BRIDGE NO. 53-3041
POST MILE 3.66

BLOOMFIELD AVENUE UC
ELEVATION AND ARCHITECTURAL MOTIF ABUTMENT 1

SHEET A4

STRUCTURES DESIGN DETAIL SHEET (ENGLISH) (REV. 09-01-10)

ORIGINAL SCALE IN INCHES FOR REDUCED PLANS 0 1 2 3

CU 07
EA 215931

DISREGARD PRINTS BEARING EARLIER REVISION DATES → 1-19-12

REVISION DATES

SHEET 46 OF 80

FILE => 53-3041-s-b-a4.dgn

USERNAME => s121614 DATE PLOTTED => 28-MAR-2012 TIME PLOTTED => 11:43

DIST	COUNTY	ROUTE	POST MILES TOTAL PROJECT	SHEET No	TOTAL SHEETS
07	LA	5	2.4/4.0	841	1288

LICENSED ARCHITECT — DATE 12/12/11

3-26-12
PLANS APPROVAL DATE

LICENSED ARCHITECT H. Javier Chavez 14073 03-31-13 Renewal Date STATE OF CALIFORNIA

The State of California or its officers or agents shall not be responsible for the accuracy or completeness of electronic copies of this plan sheet.

LEGEND:

- TILE-SEE SHT A17 FOR PATTERN LAYOUT
- TEXTURED CONCRETE SURFACE = SPLIT SLATE TEXTURE. SEE DETAIL 1/A8
- SMOOTH CONCRETE SURFACE

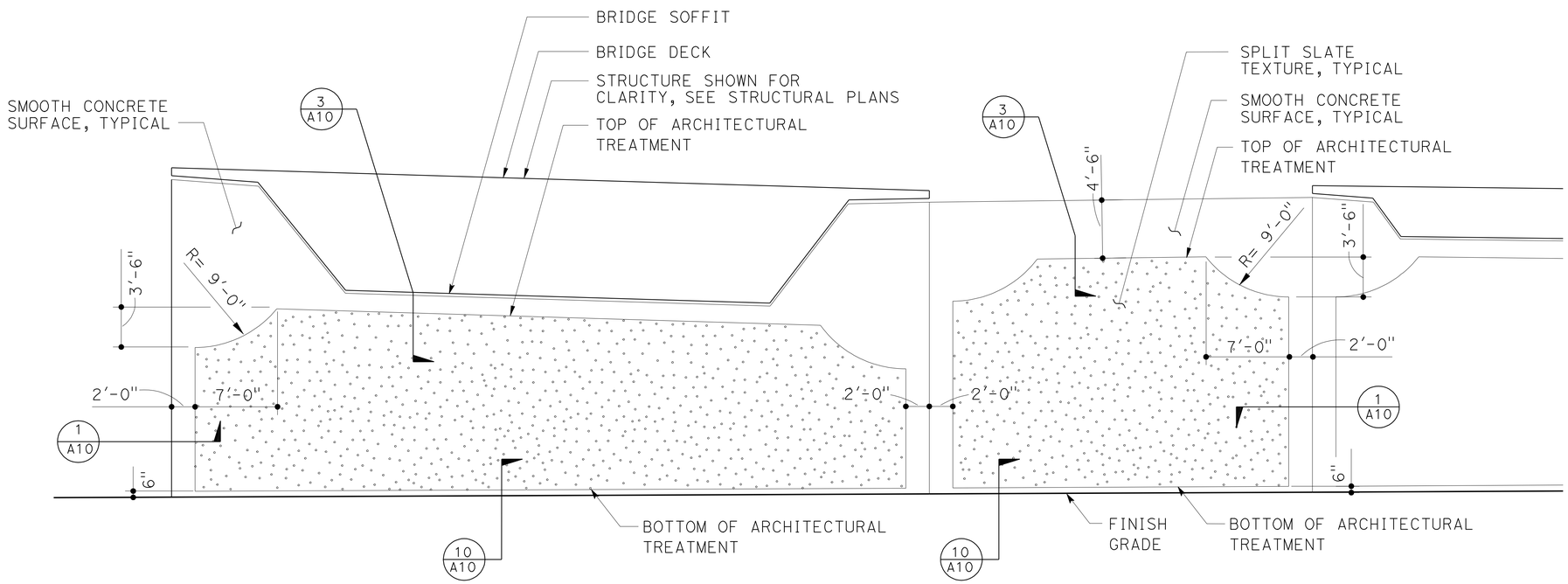

PARTIAL ELEVATION AT WEST ABUTMENT 3

NO SCALE

DESIGN	BY H. CHAVEZ	CHECKED S. HEATH	
DETAILS	BY S. HEATH	CHECKED H. CHAVEZ	
QUANTITIES	BY A. RITTENHOUSE	CHECKED S. MORADI	

STATE OF CALIFORNIA DEPARTMENT OF TRANSPORTATION

DIVISION OF ENGINEERING SERVICES
BRIDGE ARCHITECTURE AND AESTHETICS

BRIDGE NO. 53-3041
POST MILE 3.66

BLOOMFIELD AVENUE UC
ELEVATION AND ARCHITECTURAL MOTIF ABUTMENT 3

SHEET A5

STRUCTURES DESIGN DETAIL SHEET (ENGLISH) (REV. 09-01-10)

ORIGINAL SCALE IN INCHES FOR REDUCED PLANS 0 1 2 3

CU 07
EA 215931

DISREGARD PRINTS BEARING EARLIER REVISION DATES

REVISION DATES 1-19-12

SHEET 47 OF 80

FILE => 53-3041-s-b-a5.dgn

USERNAME => s121614 DATE PLOTTED => 28-MAR-2012 TIME PLOTTED => 11:43

DIST	COUNTY	ROUTE	POST MILES TOTAL PROJECT	SHEET No	TOTAL SHEETS
07	LA	5	2.4/4.0	842	1288

LICENSED ARCHITECT — DATE 12/12/11

3-26-12
PLANS APPROVAL DATE

LICENSED ARCHITECT H. Javier Chavez 14073 03-31-13 Renewal Date STATE OF CALIFORNIA

The State of California or its officers or agents shall not be responsible for the accuracy or completeness of electronic copies of this plan sheet.

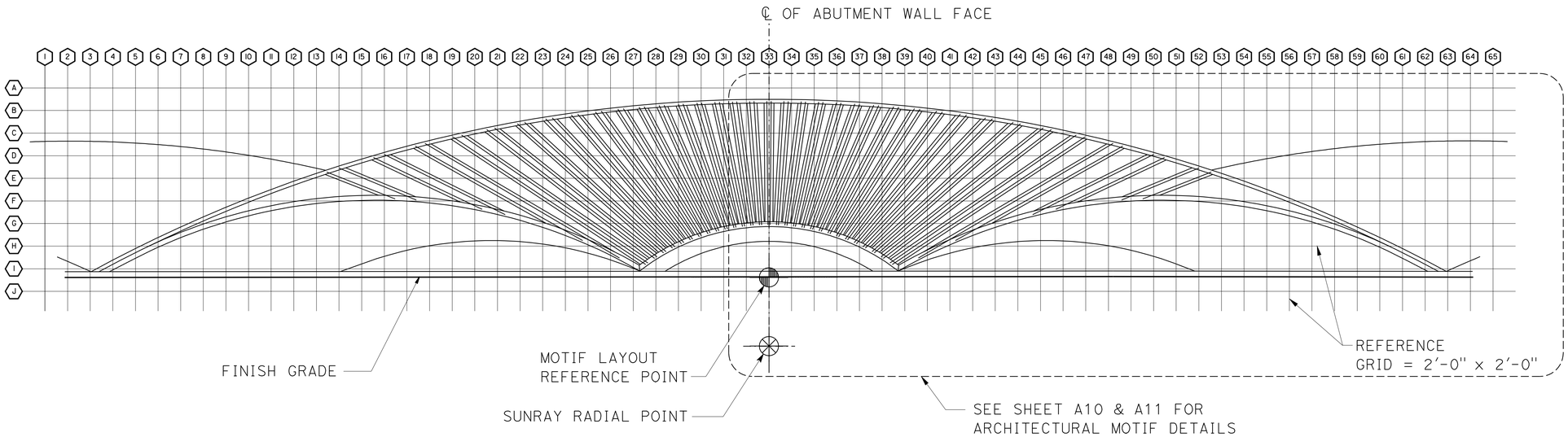

PARTIAL ARCHITECTURAL MOTIF AT WEST ABUTMENT 3

NO SCALE

LEGEND:

- TILE-SEE SHT A17 FOR PATTERN LAYOUT
- TEXTURED CONCRETE SURFACE = SPLIT SLATE TEXTURE. SEE DETAIL 1/A8
- SMOOTH CONCRETE SURFACE

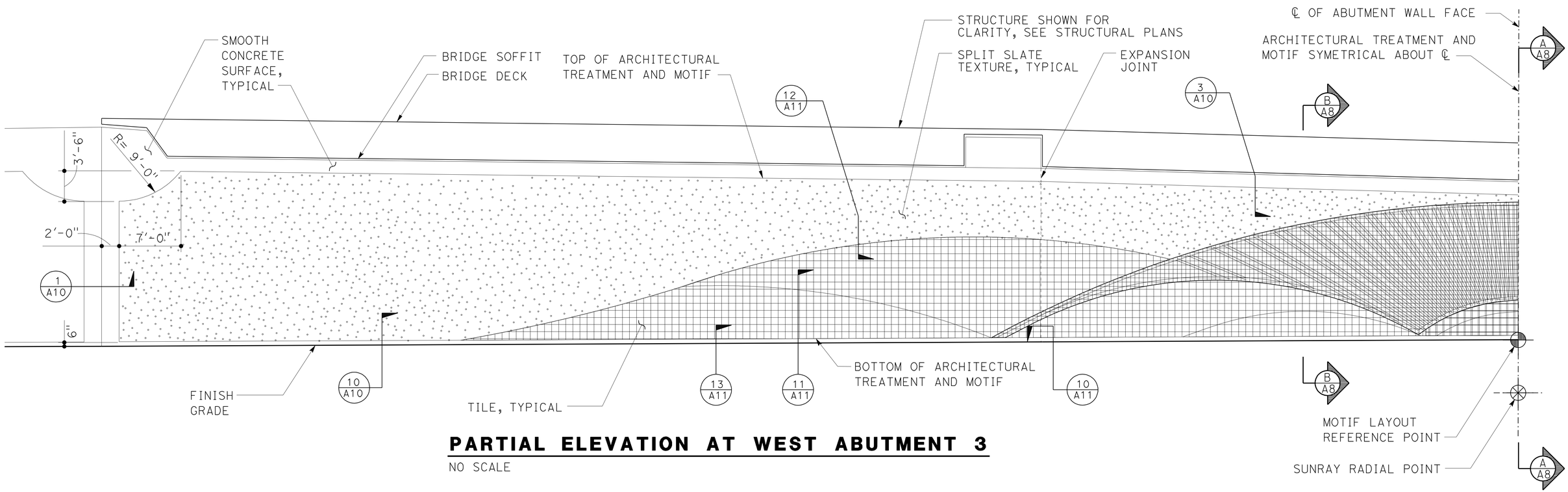

PARTIAL ELEVATION AT WEST ABUTMENT 3

NO SCALE

DESIGN	BY H. CHAVEZ	CHECKED S. HEATH	
DETAILS	BY S. HEATH	CHECKED H. CHAVEZ	
QUANTITIES	BY A. RITTENHOUSE	CHECKED S. MORADI	

STATE OF CALIFORNIA DEPARTMENT OF TRANSPORTATION

DIVISION OF ENGINEERING SERVICES BRIDGE ARCHITECTURE AND AESTHETICS

BRIDGE NO. 53-3041 POST MILE 3.66

BLOOMFIELD AVENUE UC

ELEVATION AND ARCHITECTURAL MOTIF ABUTMENT 3

SHEET A6

STRUCTURES DESIGN DETAIL SHEET (ENGLISH) (REV. 09-01-10)

ORIGINAL SCALE IN INCHES FOR REDUCED PLANS 0 1 2 3

CU 07
EA 215931

DISREGARD PRINTS BEARING EARLIER REVISION DATES

REVISION DATES 1-19-12

SHEET 48 OF 80

FILE => 53-3041-s-b-a6.dgn

USERNAME => s121614 DATE PLOTTED => 28-MAR-2012 TIME PLOTTED => 11:43

DIST	COUNTY	ROUTE	POST MILES TOTAL PROJECT	SHEET No	TOTAL SHEETS
07	LA	5	2.4/4.0	843	1288

LICENSED ARCHITECT — DATE 12/12/11

3-26-12
PLANS APPROVAL DATE

LICENSED ARCHITECT H. Javier Chavez 14073 03-31-13 Renewal Date STATE OF CALIFORNIA

The State of California or its officers or agents shall not be responsible for the accuracy or completeness of electronic copies of this plan sheet.

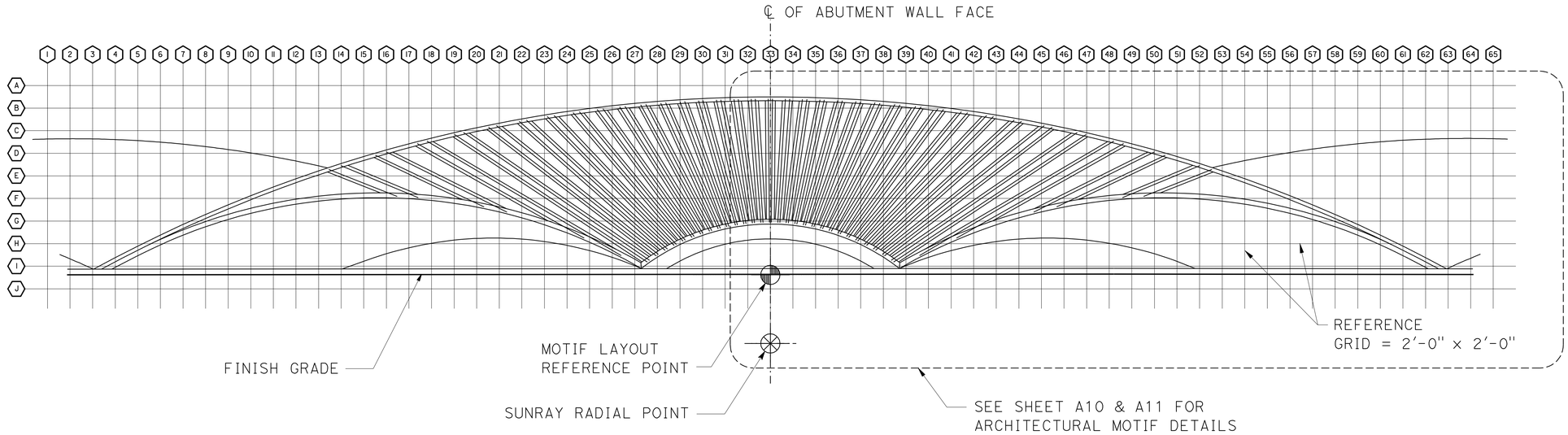

PARTIAL ARCHITECTURAL MOTIF AT WEST ABUTMENT 3

NO SCALE

LEGEND:

- TILE-SEE SHT A17 FOR PATTERN LAYOUT
- TEXTURED CONCRETE SURFACE = SPLIT SLATE TEXTURE. SEE DETAIL 1/A8
- SMOOTH CONCRETE SURFACE

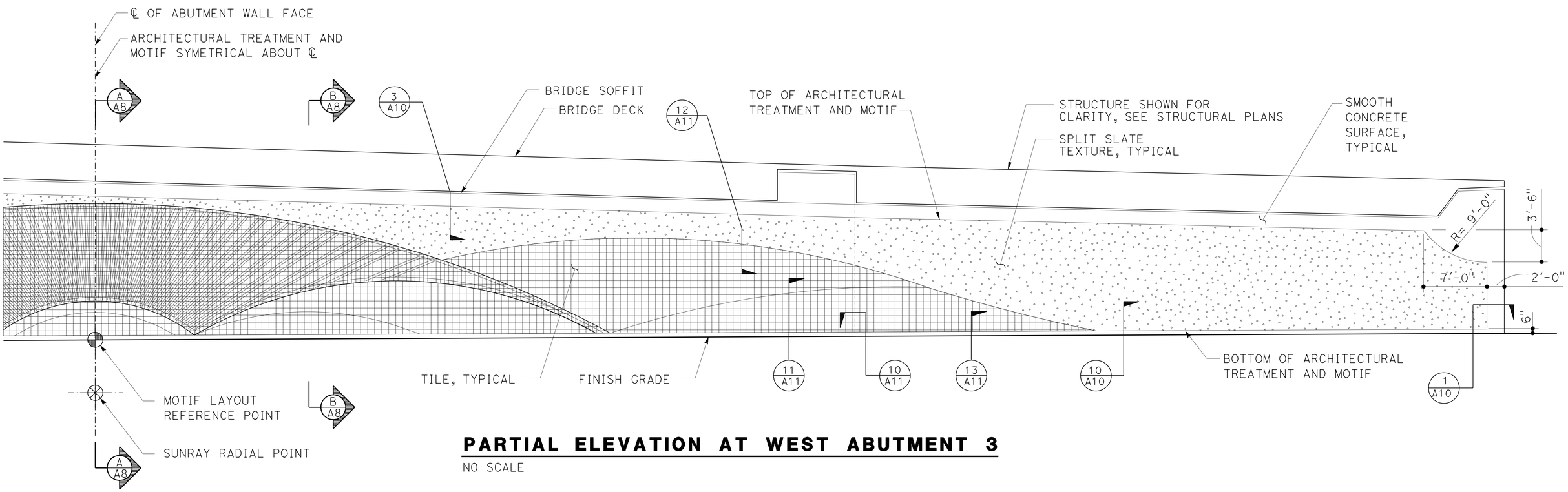

PARTIAL ELEVATION AT WEST ABUTMENT 3

NO SCALE

DESIGN	BY H. CHAVEZ	CHECKED S. HEATH	
DETAILS	BY S. HEATH	CHECKED H. CHAVEZ	
QUANTITIES	BY A. RITTENHOUSE	CHECKED S. MORADI	

STATE OF CALIFORNIA DEPARTMENT OF TRANSPORTATION

DIVISION OF ENGINEERING SERVICES BRIDGE ARCHITECTURE AND AESTHETICS

BRIDGE NO. 53-3041 POST MILE 3.66

BLOOMFIELD AVENUE UC

ELEVATION AND ARCHITECTURAL MOTIF ABUTMENT 3

SHEET A7

STRUCTURES DESIGN DETAIL SHEET (ENGLISH) (REV. 09-01-10)

ORIGINAL SCALE IN INCHES FOR REDUCED PLANS 0 1 2 3

CU 07
EA 215931

DISREGARD PRINTS BEARING EARLIER REVISION DATES

REVISION DATES 1-19-12

SHEET 49 OF 80

FILE => 53-3041-s-b-a7.dgn

USERNAME => DATE PLOTTED => 28-MAR-2012 TIME PLOTTED => 11:44

NOTE: ALL REFERENCE TO SURFACE DIMENSIONS OF WALL & TILE DETAILS ARE FROM DATUM 0 = FACE OF ABUTMENT WALL, TYPICAL

DIST	COUNTY	ROUTE	POST MILES TOTAL PROJECT	SHEET No	TOTAL SHEETS
07	LA	5	2.4/4.0	844	1288

LICENSED ARCHITECT — DATE 12/12/11

3-26-12
PLANS APPROVAL DATE

LICENSED ARCHITECT H. Javier Chavez 14073 03-31-13 Renewal Date STATE OF CALIFORNIA

The State of California or its officers or agents shall not be responsible for the accuracy or completeness of electronic copies of this plan sheet.

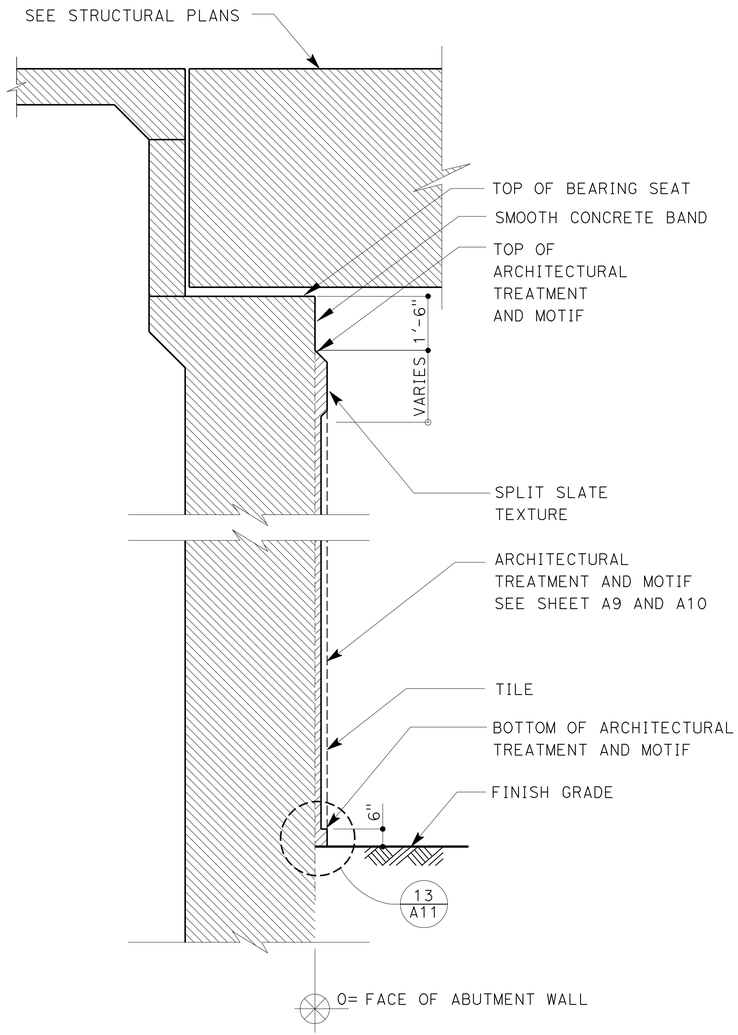

SECTION A-A

NO SCALE

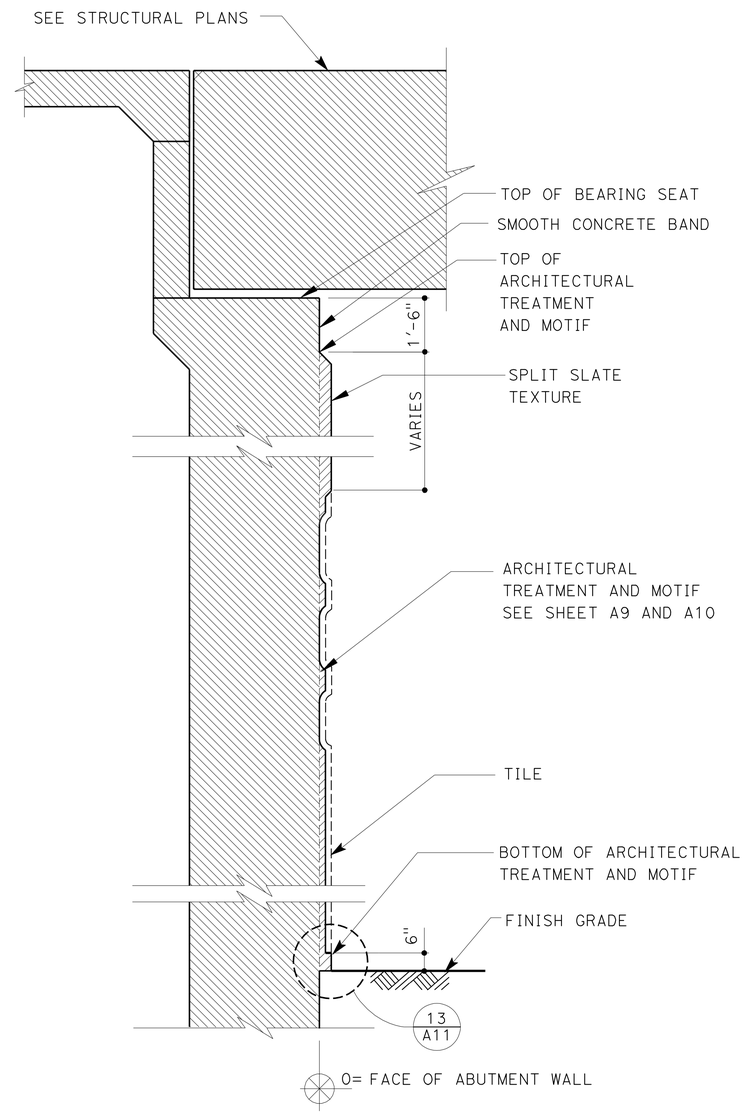

SECTION B-B

NO SCALE

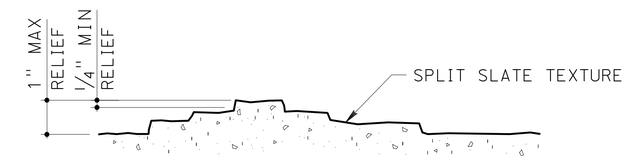

C DETAIL
NO SCALE

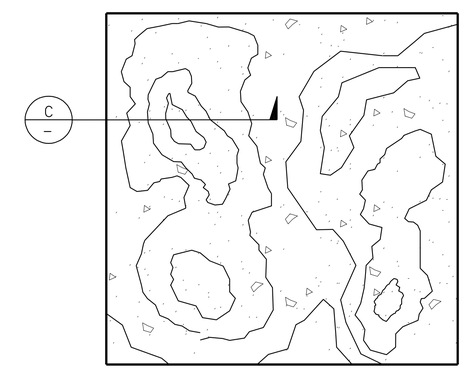

1 **SPLIT SLATE TEXTURE**

NO SCALE

DESIGN	BY H. CHAVEZ	CHECKED S. HEATH	
DETAILS	BY S. HEATH	CHECKED H. CHAVEZ	
QUANTITIES	BY A. RITTENHOUSE	CHECKED S. MORADI	

STATE OF CALIFORNIA DEPARTMENT OF TRANSPORTATION

DIVISION OF ENGINEERING SERVICES BRIDGE ARCHITECTURE AND AESTHETICS

BRIDGE NO. 53-3041
POST MILE 3.66

BLOOMFIELD AVENUE UC
SECTIONS AT ABUTMENTS 1 AND 3

SHEET A8

STRUCTURES DESIGN DETAIL SHEET (ENGLISH) (REV. 09-01-10)

ORIGINAL SCALE IN INCHES FOR REDUCED PLANS 0 1 2 3

CU 07
EA 215931

DISREGARD PRINTS BEARING EARLIER REVISION DATES

REVISION DATES 1-19-12

SHEET 50 OF 80

FILE => 53-3041-s-b-a8.dgn

USERNAME => s121614 DATE PLOTTED => 28-MAR-2012 TIME PLOTTED => 11:44

DIST	COUNTY	ROUTE	POST MILES TOTAL PROJECT	SHEET No	TOTAL SHEETS
07	LA	5	2.4/4.0	845	1288

LICENSED ARCHITECT — DATE 12/12/11

3-26-12
PLANS APPROVAL DATE

LICENSED ARCHITECT H. Javier Chavez 14073 03-31-13 Renewal Date STATE OF CALIFORNIA

The State of California or its officers or agents shall not be responsible for the accuracy or completeness of electronic copies of this plan sheet.

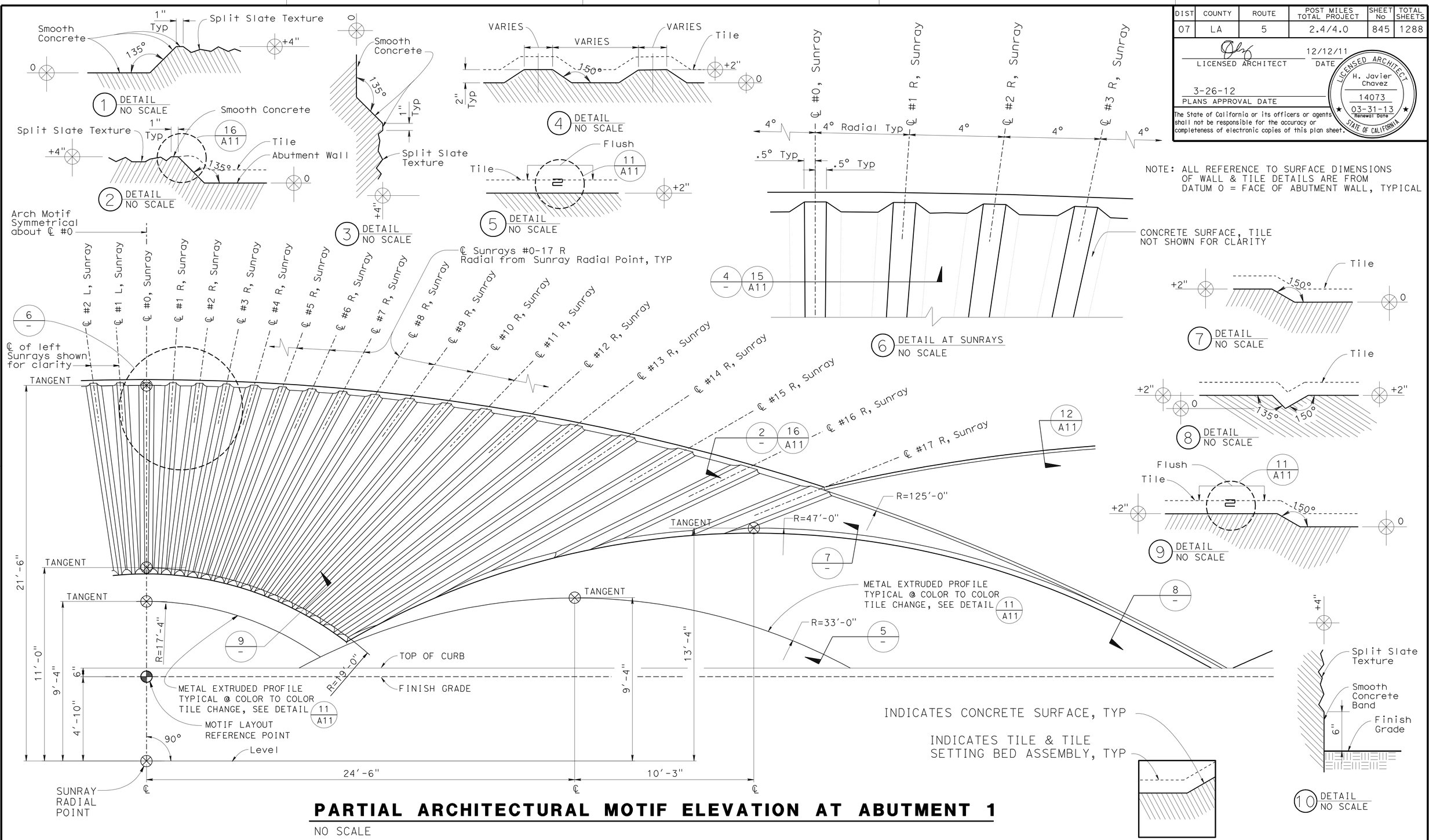

PARTIAL ARCHITECTURAL MOTIF ELEVATION AT ABUTMENT 1

NO SCALE

	BY	CHECKED
DESIGN	H. CHAVEZ	S. HEATH
DETAILS	S. HEATH	H. CHAVEZ
QUANTITIES	A. RITTENHOUSE	S. MORADI

STATE OF CALIFORNIA DEPARTMENT OF TRANSPORTATION

DIVISION OF ENGINEERING SERVICES BRIDGE ARCHITECTURE AND AESTHETICS

BRIDGE NO. 53-3041
POST MILE 3.66

BLOOMFIELD AVENUE UC

ARCHITECTURAL MOTIF DETAILS AT ABUTMENT 1

SHEET A9

STRUCTURES DESIGN DETAIL SHEET (ENGLISH) (REV. 09-01-10)

ORIGINAL SCALE IN INCHES FOR REDUCED PLANS 0 1 2 3

CU 07
EA 215931

DISREGARD PRINTS BEARING EARLIER REVISION DATES

REVISION DATES 1-19-12

SHEET 51 OF 80

FILE => 53-3041-s-b-a9.dgn

USERNAME => s121614 DATE PLOTTED => 28-MAR-2012 TIME PLOTTED => 11:44

DIST	COUNTY	ROUTE	POST MILES TOTAL PROJECT	SHEET No	TOTAL SHEETS
07	LA	5	2.4/4.0	846	1288

LICENSED ARCHITECT — DATE 12/12/11

3-26-12
PLANS APPROVAL DATE

LICENSED ARCHITECT H. Javier Chavez 14073 03-31-13 Renewal Date STATE OF CALIFORNIA

The State of California or its officers or agents shall not be responsible for the accuracy or completeness of electronic copies of this plan sheet.

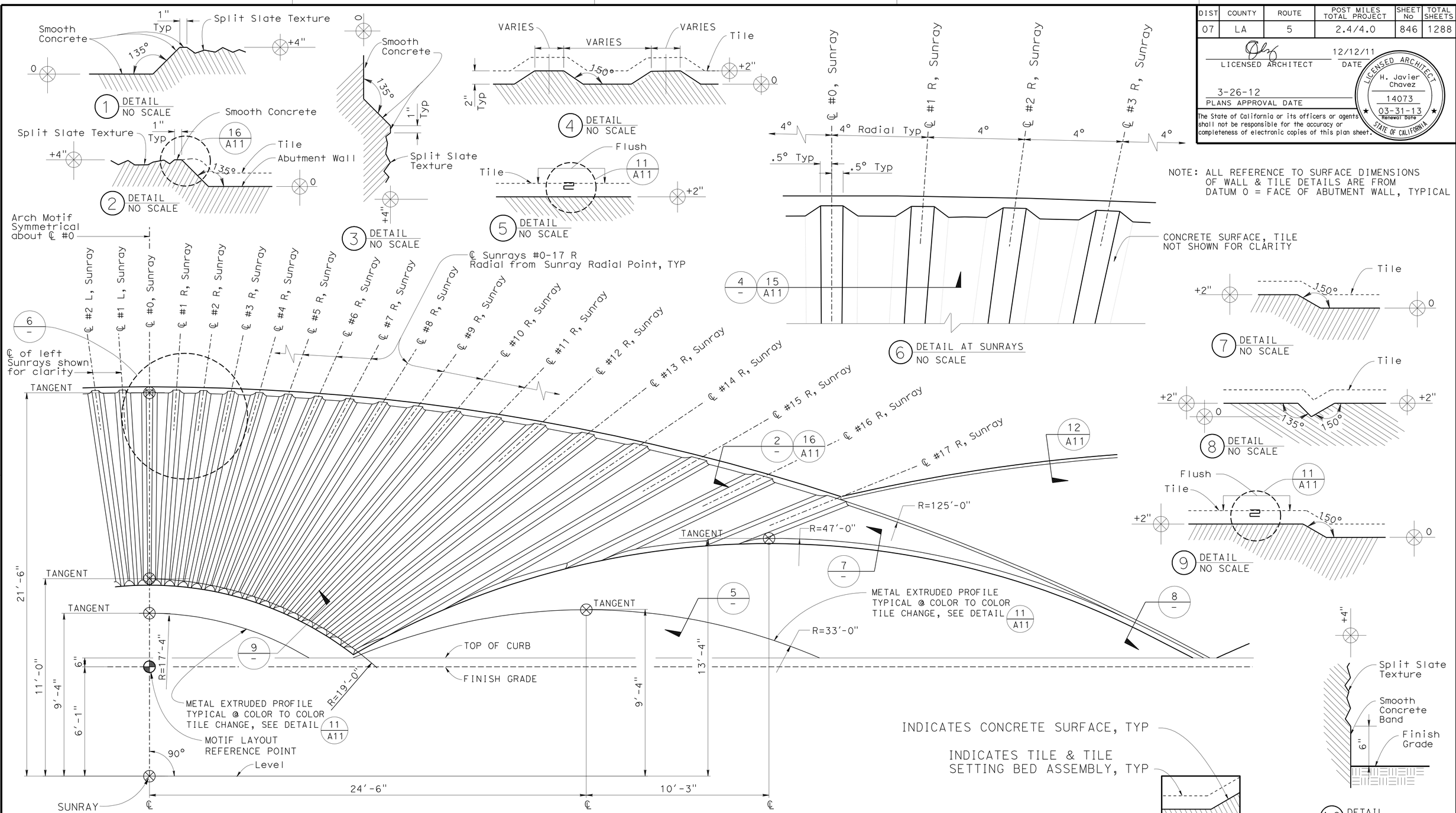

PARTIAL ARCHITECTURAL MOTIF ELEVATION AT ABUTMENT 3

NO SCALE

	BY	CHECKED
DESIGN	H. CHAVEZ	S. HEATH
DETAILS	S. HEATH	H. CHAVEZ
QUANTITIES	A. RITTENHOUSE	S. MORADI

STATE OF CALIFORNIA
DEPARTMENT OF TRANSPORTATION

DIVISION OF ENGINEERING SERVICES
BRIDGE ARCHITECTURE AND AESTHETICS

BRIDGE NO. 53-3041
POST MILE 3.66

BLOOMFIELD AVENUE UC
ARCHITECTURAL MOTIF DETAILS AT ABUTMENT 3

SHEET A10

STRUCTURES DESIGN DETAIL SHEET (ENGLISH) (REV. 09-01-10)

ORIGINAL SCALE IN INCHES FOR REDUCED PLANS 0 1 2 3

CU 07
EA 215931

DISREGARD PRINTS BEARING EARLIER REVISION DATES

REVISION DATES 1-19-12

SHEET 52 OF 80

FILE => 53-3041-s-b-ab10.dgn

USERNAME => s121614 DATE PLOTTED => 28-MAR-2012 TIME PLOTTED => 11:44

DIST	COUNTY	ROUTE	POST MILES TOTAL PROJECT	SHEET No	TOTAL SHEETS
07	LA	5	2.4/4.0	847	1288

LICENSED ARCHITECT — DATE 12/12/11

3-26-12
PLANS APPROVAL DATE

LICENSED ARCHITECT H. Javier Chavez 14073 03-31-13 Renewal Date STATE OF CALIFORNIA

The State of California or its officers or agents shall not be responsible for the accuracy or completeness of electronic copies of this plan sheet.

NOTE: ALL REFERENCE TO SURFACE DIMENSIONS OF WALL DETAILS ARE FROM DATUM 0 = FACE OF ABUTMENT TYPICAL

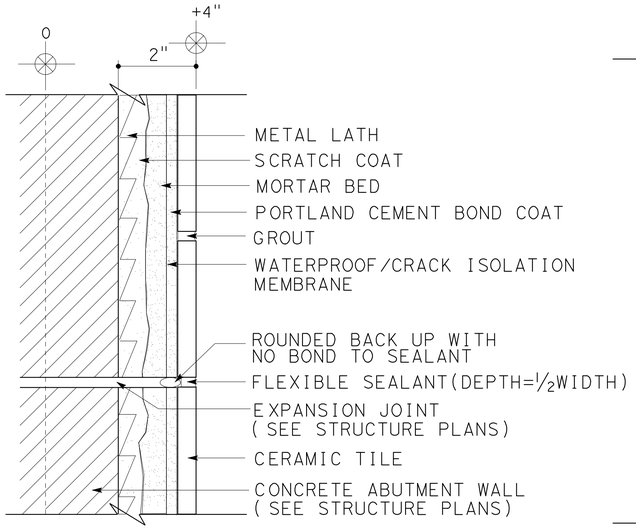

10 EXPANSION JOINT DETAIL
NO SCALE

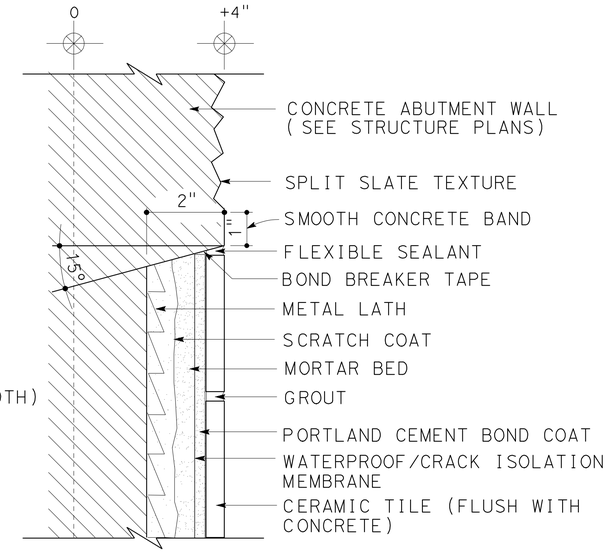

12 TEXTURE/TILE DETAIL
NO SCALE

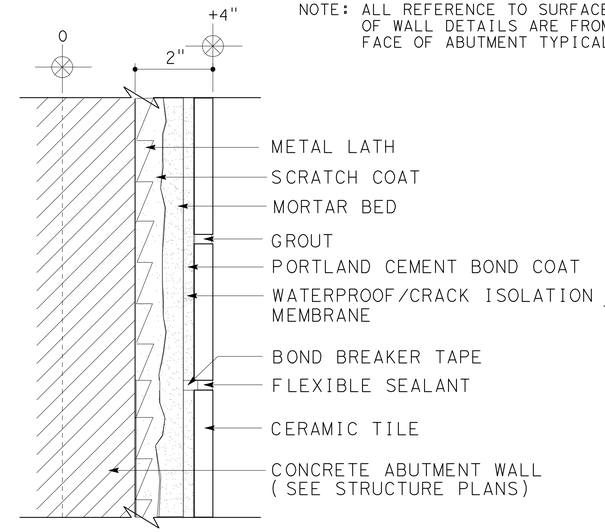

14 MOVEMENT JOINT DETAIL
NO SCALE

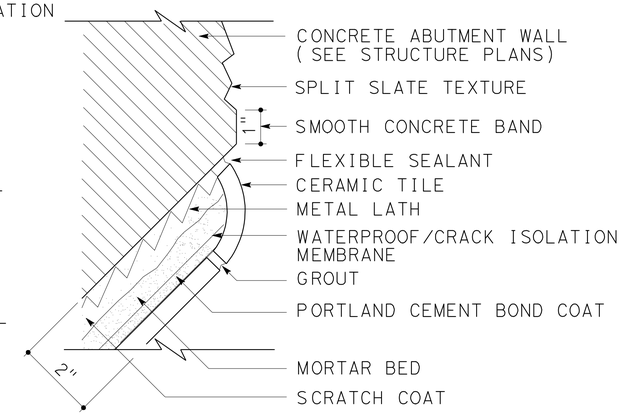

16 TEXTURE/TILE DETAIL
NO SCALE

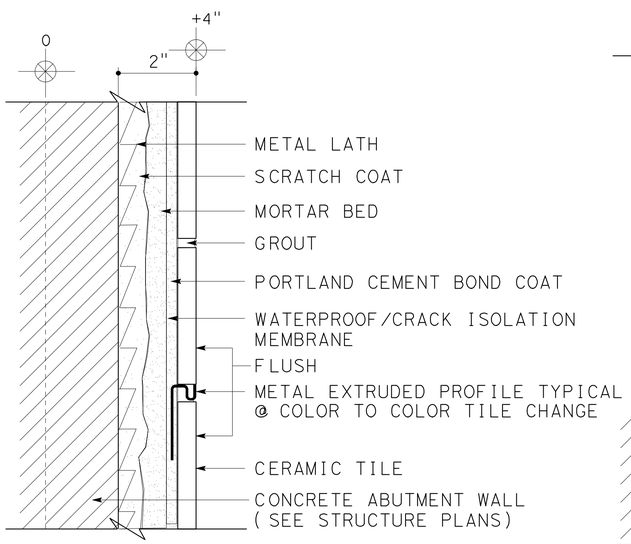

11 COLOR TO COLOR TILE TRIM DETAIL
NO SCALE

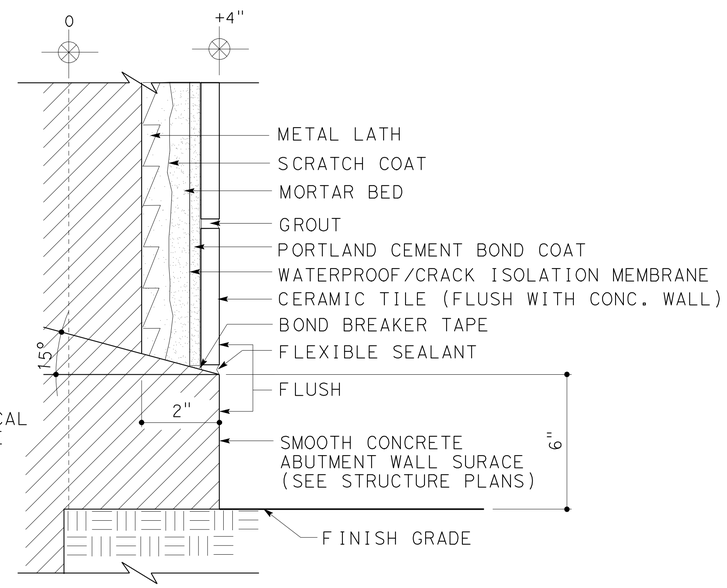

13 SMOOTH CONCRETE/TILE DETAIL
NO SCALE

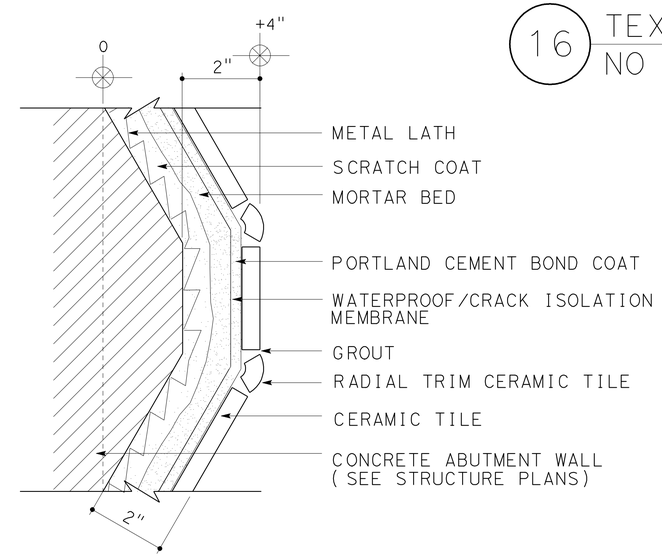

15 TILE DETAIL
NO SCALE

DESIGN	BY H. CHAVEZ	CHECKED S. HEATH	STATE OF CALIFORNIA DEPARTMENT OF TRANSPORTATION	DIVISION OF ENGINEERING SERVICES BRIDGE ARCHITECTURE AND AESTHETICS	BRIDGE NO. 53-3041	BLOOMFIELD AVENUE UC
DETAILS	BY S. HEATH	CHECKED H. CHAVEZ			POST MILE 3.66	ARCHITECTURAL TILE MOTIF DETAILS
QUANTITIES	BY A. RITTENHOUSE	CHECKED S. MORADI				

SHEET A11

STRUCTURES DESIGN DETAIL SHEET (ENGLISH) (REV. 09-01-10)

ORIGINAL SCALE IN INCHES FOR REDUCED PLANS 0 1 2 3

CU 07
EA 215931

DISREGARD PRINTS BEARING EARLIER REVISION DATES

REVISION DATES 1-19-12

SHEET 53 OF 80

FILE => 53-3041-s-b-ab11.dgn

USERNAME => s121614 DATE PLOTTED => 28-MAR-2012 TIME PLOTTED => 11:44

DIST	COUNTY	ROUTE	POST MILES TOTAL PROJECT	SHEET No	TOTAL SHEETS
07	LA	5	2.4/4.0	848	1288

LICENSED ARCHITECT — DATE 12/12/11

3-26-12
PLANS APPROVAL DATE

LICENSED ARCHITECT H. Javier Chavez 14073 03-31-13 Renewal Date STATE OF CALIFORNIA

The State of California or its officers or agents shall not be responsible for the accuracy or completeness of electronic copies of this plan sheet.

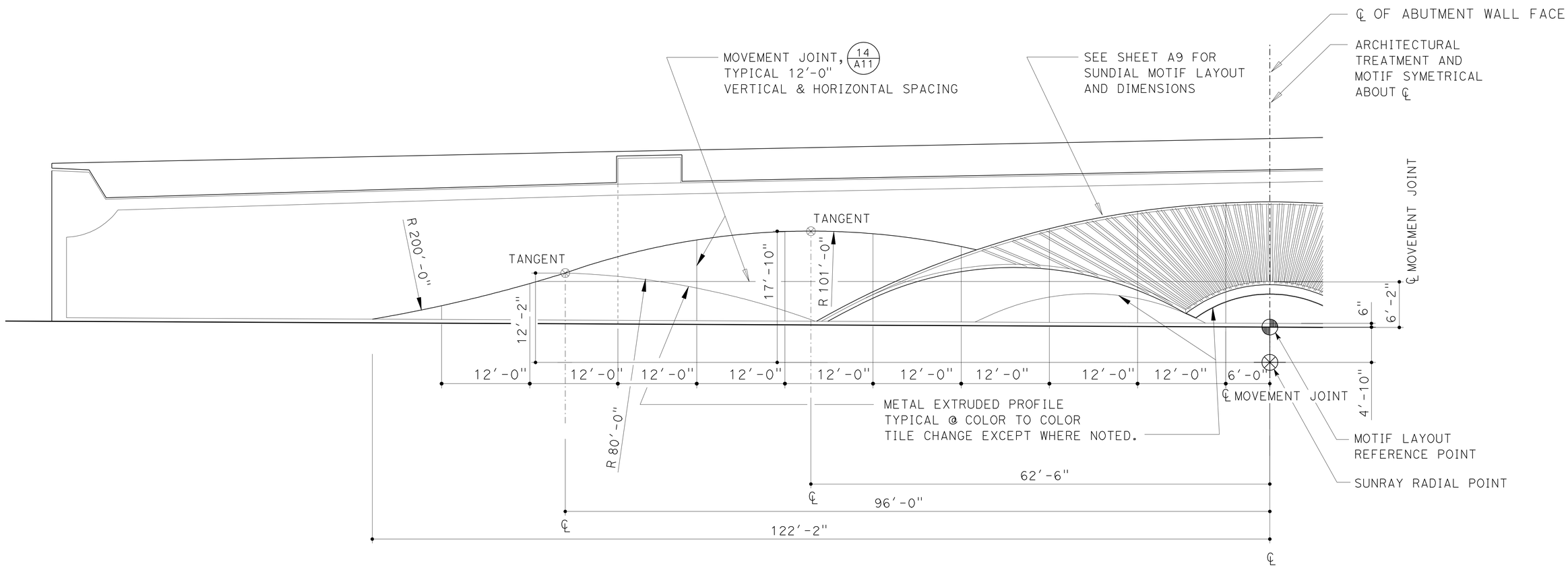

PARTIAL ELEVATION AT EAST ABUTMENT 1

NO SCALE

DESIGN	BY H. CHAVEZ	CHECKED S. HEATH	
DETAILS	BY S. HEATH	CHECKED H. CHAVEZ	
QUANTITIES	BY A. RITTENHOUSE	CHECKED S. MORADI	

STATE OF CALIFORNIA
DEPARTMENT OF TRANSPORTATION

DIVISION OF ENGINEERING SERVICES
BRIDGE ARCHITECTURE AND AESTHETICS

BRIDGE NO. 53-3041
POST MILE 3.66

BLOOMFIELD AVENUE UC
ELEVATION AND ARCHITECTURAL MOTIF ABUTMENT 1

SHEET A12

STRUCTURES DESIGN DETAIL SHEET (ENGLISH) (REV. 09-01-10)

ORIGINAL SCALE IN INCHES FOR REDUCED PLANS 0 1 2 3

CU 07
EA 215931

DISREGARD PRINTS BEARING EARLIER REVISION DATES

REVISION DATES 1-19-12

SHEET 54 OF 80

FILE => 53-3041-s-b-ab12.dgn

USERNAME => s127614 DATE PLOTTED => 28-MAR-2012 TIME PLOTTED => 11:44

DIST	COUNTY	ROUTE	POST MILES TOTAL PROJECT	SHEET No	TOTAL SHEETS
07	LA	5	2.4/4.0	849	1288

LICENSED ARCHITECT — DATE 12/12/11

3-26-12
PLANS APPROVAL DATE

LICENSED ARCHITECT H. Javier Chavez 14073 03-31-13 Renewal Date STATE OF CALIFORNIA

The State of California or its officers or agents shall not be responsible for the accuracy or completeness of electronic copies of this plan sheet.

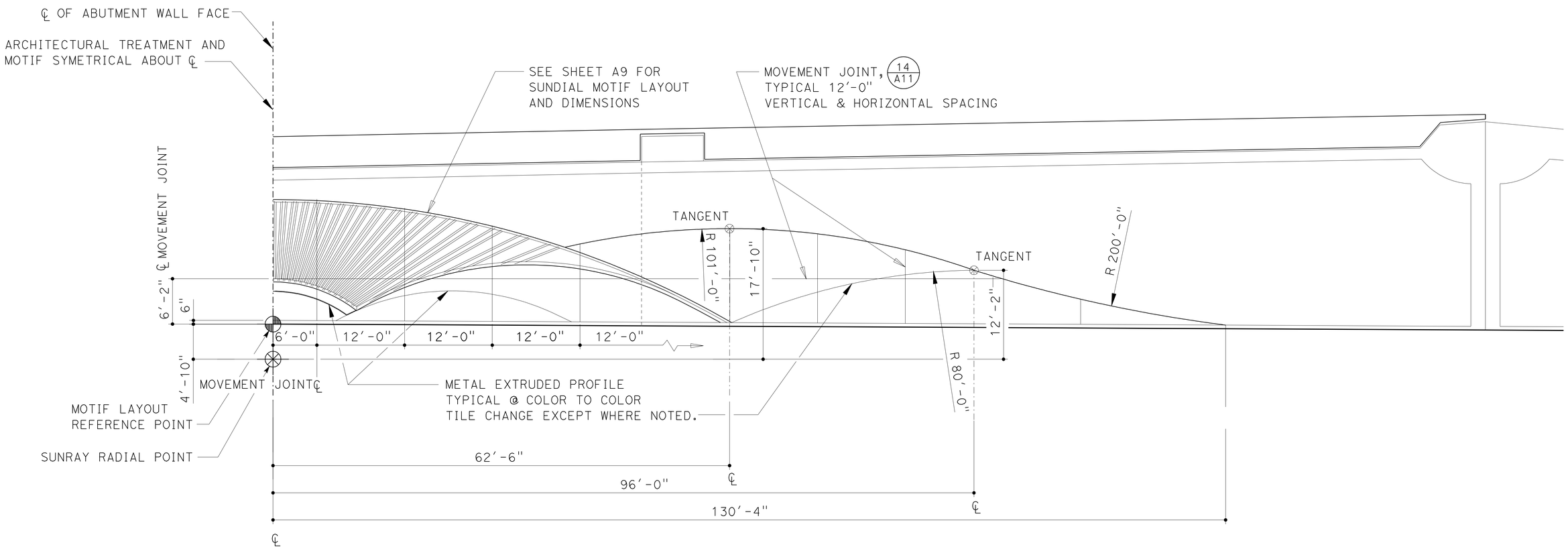

PARTIAL ELEVATION AT EAST ABUTMENT 1

NO SCALE

DESIGN	BY H. CHAVEZ	CHECKED S. HEATH	
DETAILS	BY S. HEATH	CHECKED H. CHAVEZ	
QUANTITIES	BY A. RITTENHOUSE	CHECKED S. MORADI	

STATE OF CALIFORNIA
DEPARTMENT OF TRANSPORTATION

DIVISION OF ENGINEERING SERVICES
BRIDGE ARCHITECTURE AND AESTHETICS

BRIDGE NO. 53-3041
POST MILE 3.66

BLOOMFIELD AVENUE UC
ELEVATION AND ARCHITECTURAL MOTIF ABUTMENT 1

SHEET A13

STRUCTURES DESIGN DETAIL SHEET (ENGLISH) (REV. 09-01-10)

ORIGINAL SCALE IN INCHES FOR REDUCED PLANS 0 1 2 3

CU 07
EA 215931

DISREGARD PRINTS BEARING EARLIER REVISION DATES

REVISION DATES 1-19-12

SHEET 55 OF 80

FILE => 53-3041-s-b-ab13.dgn

USERNAME => s121614 DATE PLOTTED => 28-MAR-2012 TIME PLOTTED => 11:44

DIST	COUNTY	ROUTE	POST MILES TOTAL PROJECT	SHEET No	TOTAL SHEETS
07	LA	5	2.4/4.0	850	1288

LICENSED ARCHITECT — DATE 12/12/11

3-26-12
PLANS APPROVAL DATE

LICENSED ARCHITECT H. Javier Chavez 14073 03-31-13 Renewal Date STATE OF CALIFORNIA

The State of California or its officers or agents shall not be responsible for the accuracy or completeness of electronic copies of this plan sheet.

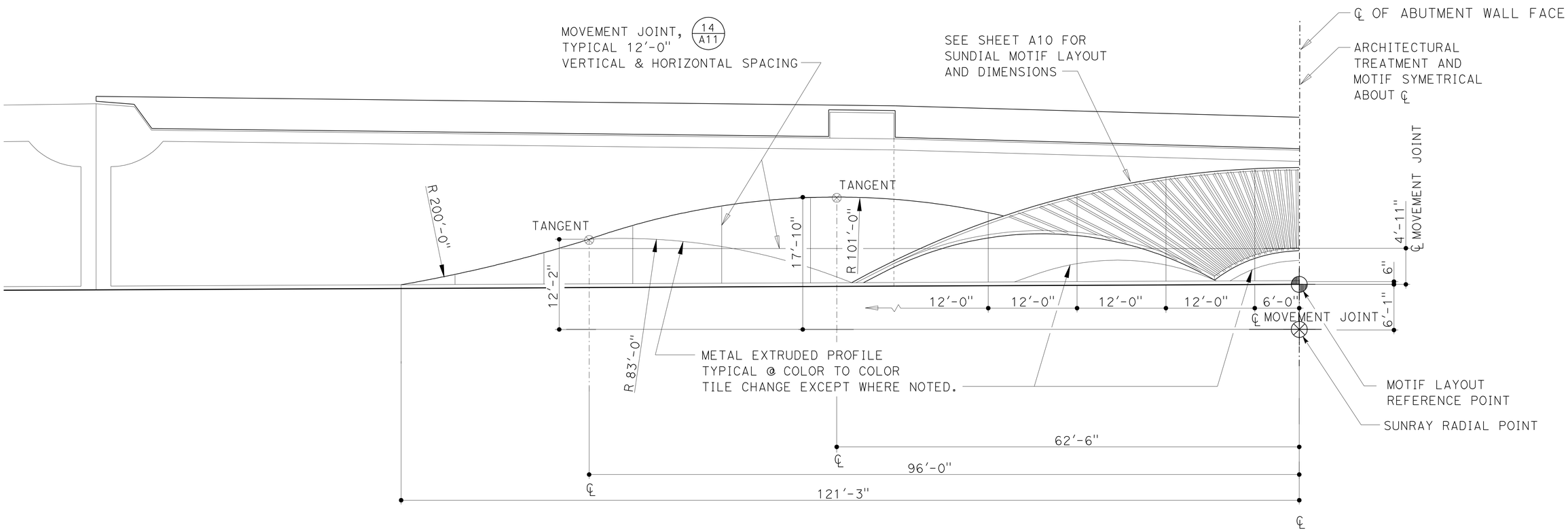

PARTIAL ELEVATION AT WEST ABUTMENT 3

NO SCALE

DESIGN	BY H. CHAVEZ	CHECKED S. HEATH	
DETAILS	BY S. HEATH	CHECKED H. CHAVEZ	
QUANTITIES	BY A. RITTENHOUSE	CHECKED S. MORADI	

STATE OF CALIFORNIA DEPARTMENT OF TRANSPORTATION

DIVISION OF ENGINEERING SERVICES BRIDGE ARCHITECTURE AND AESTHETICS

BRIDGE NO. 53-3041
POST MILE 3.66

BLOOMFIELD AVENUE UC
ELEVATION AND ARCHITECTURAL MOTIF ABUTMENT 3

SHEET A14

STRUCTURES DESIGN DETAIL SHEET (ENGLISH) (REV. 09-01-10)

ORIGINAL SCALE IN INCHES FOR REDUCED PLANS 0 1 2 3

CU 07
EA 215931

DISREGARD PRINTS BEARING EARLIER REVISION DATES

REVISION DATES 1-19-12

SHEET 56 OF 80

FILE => 53-3041-s-b-ab14.dgn

USERNAME => s121614 DATE PLOTTED => 28-MAR-2012 TIME PLOTTED => 11:44

DIST	COUNTY	ROUTE	POST MILES TOTAL PROJECT	SHEET No	TOTAL SHEETS
07	LA	5	2.4/4.0	851	1288

LICENSED ARCHITECT — DATE 12/12/11

PLANS APPROVAL DATE 3-26-12

LICENSED ARCHITECT H. Javier Chavez 14073 03-31-13 Renewal Date STATE OF CALIFORNIA

The State of California or its officers or agents shall not be responsible for the accuracy or completeness of electronic copies of this plan sheet.

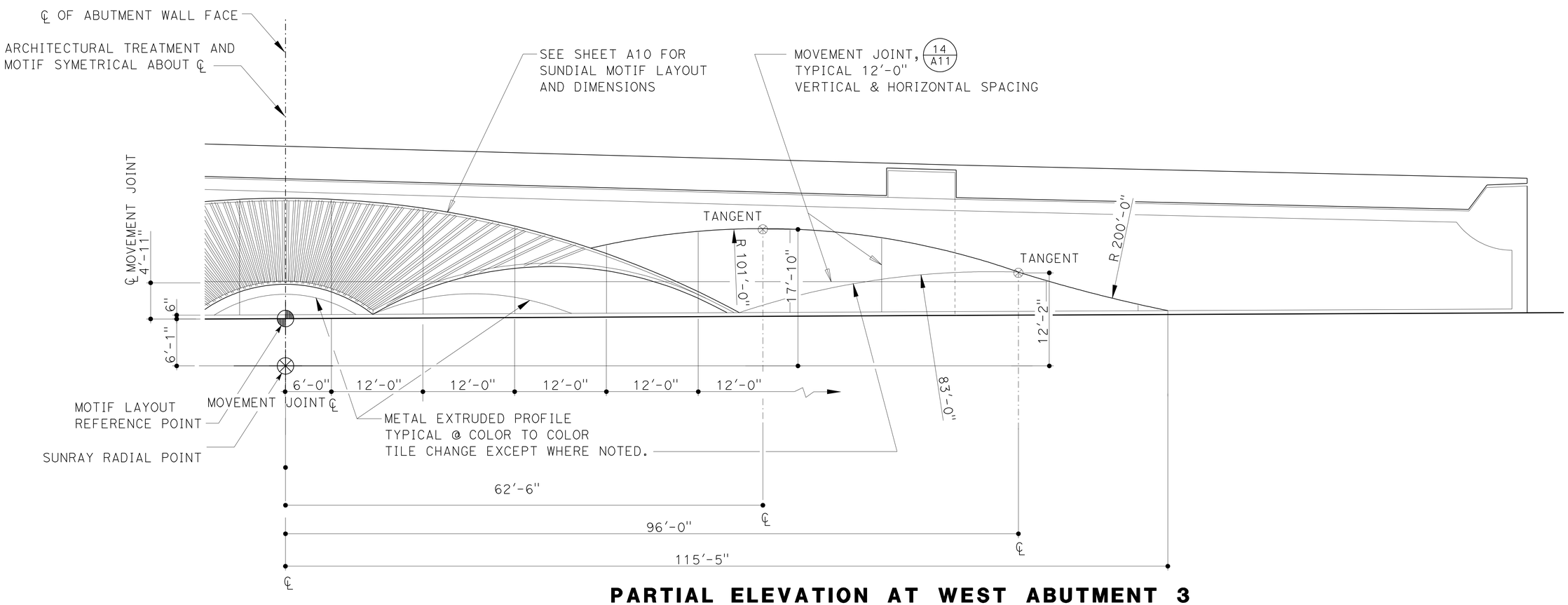

PARTIAL ELEVATION AT WEST ABUTMENT 3

NO SCALE

DESIGN	BY H. CHAVEZ	CHECKED S. HEATH	
DETAILS	BY S. HEATH	CHECKED H. CHAVEZ	
QUANTITIES	BY A. RITTENHOUSE	CHECKED S. MORADI	

STATE OF CALIFORNIA DEPARTMENT OF TRANSPORTATION

DIVISION OF ENGINEERING SERVICES BRIDGE ARCHITECTURE AND AESTHETICS

BRIDGE NO. 53-3041 POST MILE 3.66

BLOOMFIELD AVENUE UC

ELEVATION AND ARCHITECTURAL MOTIF ABUTMENT 3

SHEET A15

STRUCTURES DESIGN DETAIL SHEET (ENGLISH) (REV. 09-01-10)

ORIGINAL SCALE IN INCHES FOR REDUCED PLANS 0 1 2 3

CU 07 EA 215931

DISREGARD PRINTS BEARING EARLIER REVISION DATES 1-19-12

SHEET 57 OF 80

FILE => 53-3041-s-b-ab15.dgn

USERNAME => s121614 DATE PLOTTED => 28-MAR-2012 TIME PLOTTED => 11:45

DIST	COUNTY	ROUTE	POST MILES TOTAL PROJECT	SHEET No	TOTAL SHEETS
07	LA	5	2.4/4.0	852	1288

LICENSED ARCHITECT — DATE 12/12/11

3-26-12
PLANS APPROVAL DATE

LICENSED ARCHITECT H. Javier Chavez 14073 03-31-13 Renewal Date STATE OF CALIFORNIA

The State of California or its officers or agents shall not be responsible for the accuracy or completeness of electronic copies of this plan sheet.

COLOR SCHEDULE

ITEM	FINISH	MANUFACTURER	COLOR	SIZE	NOTES
1	MFR	MARAZZI SISTEM A TILE	ROSSO	12"x12"	MATTE FINISH
2	MFR	MARAZZI SISTEM A TILE	VERDE	12"x12"	MATTE FINISH
3	MFR	MARAZZI SISTEM A TILE	BLU	12"x12"	MATTE FINISH
4	MFR	MARAZZI SISTEM A TILE	ROSSO	12"x12"	MATTE FINISH
5	MFR	MARAZZI SISTEM A TILE	GIALLO	12"x12"	MATTE FINISH
6	MFR	MARAZZI SISTEM A TILE	ARANCIO	12"x12"	MATTE FINISH
7	MFR	AGROB BUCHTAL - CHROMA II TILE	5505-YELLOW 5	12"X24"	SILKY MATT FINISH
8	MFR	AGROB BUCHTAL - CHROMA II TILE	5505-YELLOW 5	30x1.6 cm	RADIAL CORNER #37111 - SEE DETAIL 16/A11
9	MFR	AGROB BUCHTAL - CHROMA II TILE	77-KONTRASTROT	12"X24"	SILKY MATT FINISH
10	MFR	AGROB BUCHTAL - CHROMA II TILE	77-KONTRASTROT	30x1.6 cm	RADIAL CORNER #37111 - SEE DETAIL 15/A11
A	MFR	SCHLUTER - METAL EXTRUDED PROFILE	EB 80D		SATIN ANODIZED ALUMINUM

COLOR SCHEDULE NOTES

1. THE CONTRACTOR SHALL VERIFY ALL CONTROLLING DIMENSIONS AND FIELD CONDITIONS PRIOR TO ORDERING OR FABRICATING ANY MATERIALS OR ASSEMBLIES FOR CONSTRUCTION
2. MANUFACTURER'S PRODUCTS LISTED HAVE BEEN INCLUDED AS EXAMPLES OF COLOR AND FINISH ONLY. MATCHING PRODUCTS BY OTHER MANUFACTURER'S MAY BE SUBMITTED FOR APPROVAL.
3. SEE THE SPECIAL PROVISIONS FOR THE APPROPRIATE COATING SYSTEM FOR EACH MATERIAL TO BE COATED.
4. ALL MATERIALS SHALL RECEIVE A JOB FINISH, UNLESS NOTED "NJF" = NO JOB FINISH.
5. ITEMS 1-8 ARE COLOR BODY PORCELAIN TILES (THROUGH - BODY COLOR TILE OPTIONAL)
6. THE COLOR AND FINISH OF ANY MATERIAL NOT LISTED WILL BE SELECTED BY THE ENGINEER.
7. TILE JOINTS 1/16" IN TILE AREAS 1 THROUGH 6
8. TILE JOINTS 1/8" IN TILE AREAS 7 THROUGH 10

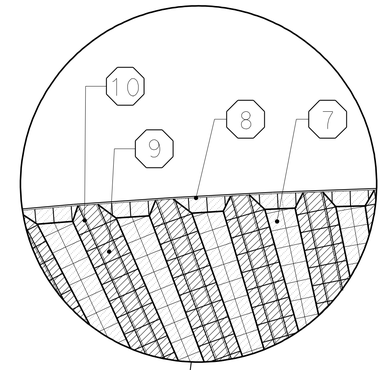

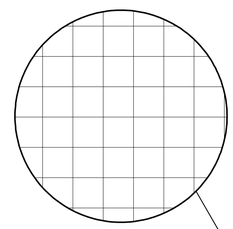

NOTE:
TYPICAL PATTERN FOR
ITEMS 1-6

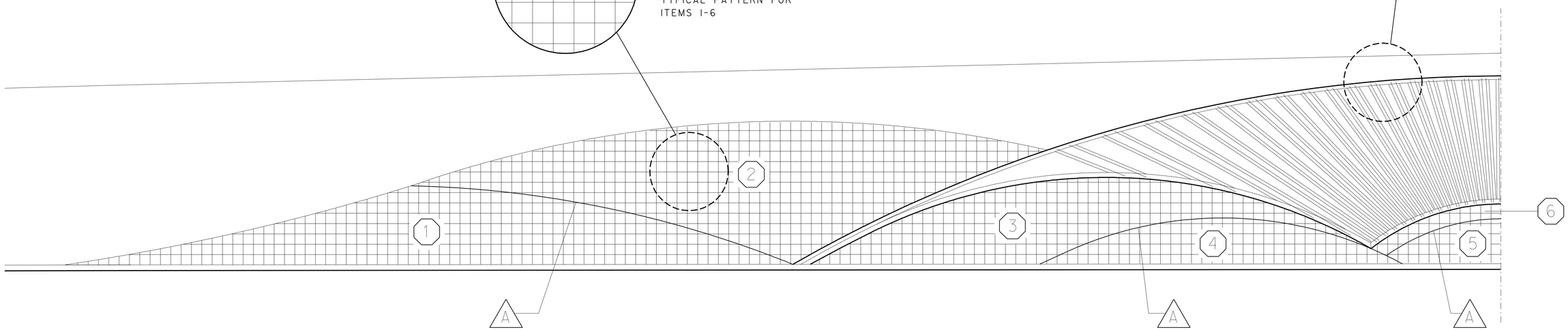

PARTIAL ELEVATION AT EAST ABUTMENT 1

NO SCALE

NOTE:
COLORS AND FINISHES TYPICAL FOR MOTIF
SYMETRICAL ABOUT ℄ OF ABUTMENT WALL FACE

	BY	CHECKED
DESIGN	H. CHAVEZ	S. HEATH
DETAILS	S. HEATH	H. CHAVEZ
QUANTITIES	A. RITTENHOUSE	S. MORADI

STATE OF CALIFORNIA
DEPARTMENT OF TRANSPORTATION

DIVISION OF ENGINEERING SERVICES
BRIDGE ARCHITECTURE AND AESTHETICS

BRIDGE NO. 53-3041
POST MILE 3.66

BLOOMFIELD AVENUE UC
ARCHITECTURAL TILE FINISH SCHEDULE AT ABUTMENT 1

SHEET A16

STRUCTURES DESIGN DETAIL SHEET (ENGLISH) (REV. 09-01-10)

ORIGINAL SCALE IN INCHES FOR REDUCED PLANS 0 1 2 3

CU 07
EA 215931

DISREGARD PRINTS BEARING EARLIER REVISION DATES

REVISION DATES 1-19-12

SHEET 58 OF 80

FILE => 53-3041-s-b-ab16.dgn

USERNAME => s121614 DATE PLOTTED => 28-MAR-2012 TIME PLOTTED => 11:45

DIST	COUNTY	ROUTE	POST MILES TOTAL PROJECT	SHEET No	TOTAL SHEETS
07	LA	5	2.4/4.0	853	1288

LICENSED ARCHITECT — DATE 12/12/11

3-26-12
PLANS APPROVAL DATE

LICENSED ARCHITECT H. Javier Chavez 14073 03-31-13 Renewal Date STATE OF CALIFORNIA

The State of California or its officers or agents shall not be responsible for the accuracy or completeness of electronic copies of this plan sheet.

COLOR SCHEDULE

ITEM	FINISH	MANUFACTURER	COLOR	SIZE	NOTES
1	MFR	MARAZZI SISTEM A TILE	ROSSO	12"x12"	MATTE FINISH
2	MFR	MARAZZI SISTEM A TILE	VERDE	12"x12"	MATTE FINISH
3	MFR	MARAZZI SISTEM A TILE	BLU	12"x12"	MATTE FINISH
4	MFR	MARAZZI SISTEM A TILE	ROSSO	12"x12"	MATTE FINISH
5	MFR	MARAZZI SISTEM A TILE	GIALLO	12"x12"	MATTE FINISH
6	MFR	MARAZZI SISTEM A TILE	ARANCIO	12"x12"	MATTE FINISH
7	MFR	AGROB BUCHTAL - CHROMA II TILE	5505-YELLOW 5	12"X24"	SILKY MATT FINISH
8	MFR	AGROB BUCHTAL - CHROMA II TILE	5505-YELLOW 5	30x1.6 cm	RADIAL CORNER #37111 - SEE DETAIL 16/A11
9	MFR	AGROB BUCHTAL - CHROMA II TILE	77-KONTRASTROT	12"X24"	SILKY MATT FINISH
10	MFR	AGROB BUCHTAL - CHROMA II TILE	77-KONTRASTROT	30x1.6 cm	RADIAL CORNER #37111 - SEE DETAIL 15/A11
A	MFR	SCHLUTER - METAL EXTRUDED PROFILE	EB 80D		SATIN ANODIZED ALUMINUM

COLOR SCHEDULE NOTES

1. THE CONTRACTOR SHALL VERIFY ALL CONTROLLING DIMENSIONS AND FIELD CONDITIONS PRIOR TO ORDERING OR FABRICATING ANY MATERIALS OR ASSEMBLIES FOR CONSTRUCTION
2. MANUFACTURER'S PRODUCTS LISTED HAVE BEEN INCLUDED AS EXAMPLES OF COLOR AND FINISH ONLY. MATCHING PRODUCTS BY OTHER MANUFACTURER'S MAY BE SUBMITTED FOR APPROVAL.
3. SEE THE SPECIAL PROVISIONS FOR THE APPROPRIATE COATING SYSTEM FOR EACH MATERIAL TO BE COATED.
4. ALL MATERIALS SHALL RECEIVE A JOB FINISH, UNLESS NOTED "NJF" = NO JOB FINISH.
5. ITEMS 1-8 ARE COLOR BODY PORCELAIN TILES (THROUGH - BODY COLOR TILE OPTIONAL)
6. THE COLOR AND FINISH OF ANY MATERIAL NOT LISTED WILL BE SELECTED BY THE ENGINEER.
7. TILE JOINTS 1/16" IN TILE AREAS 1 THROUGH 6
8. TILE JOINTS 1/8" IN TILE AREAS 7 THROUGH 10

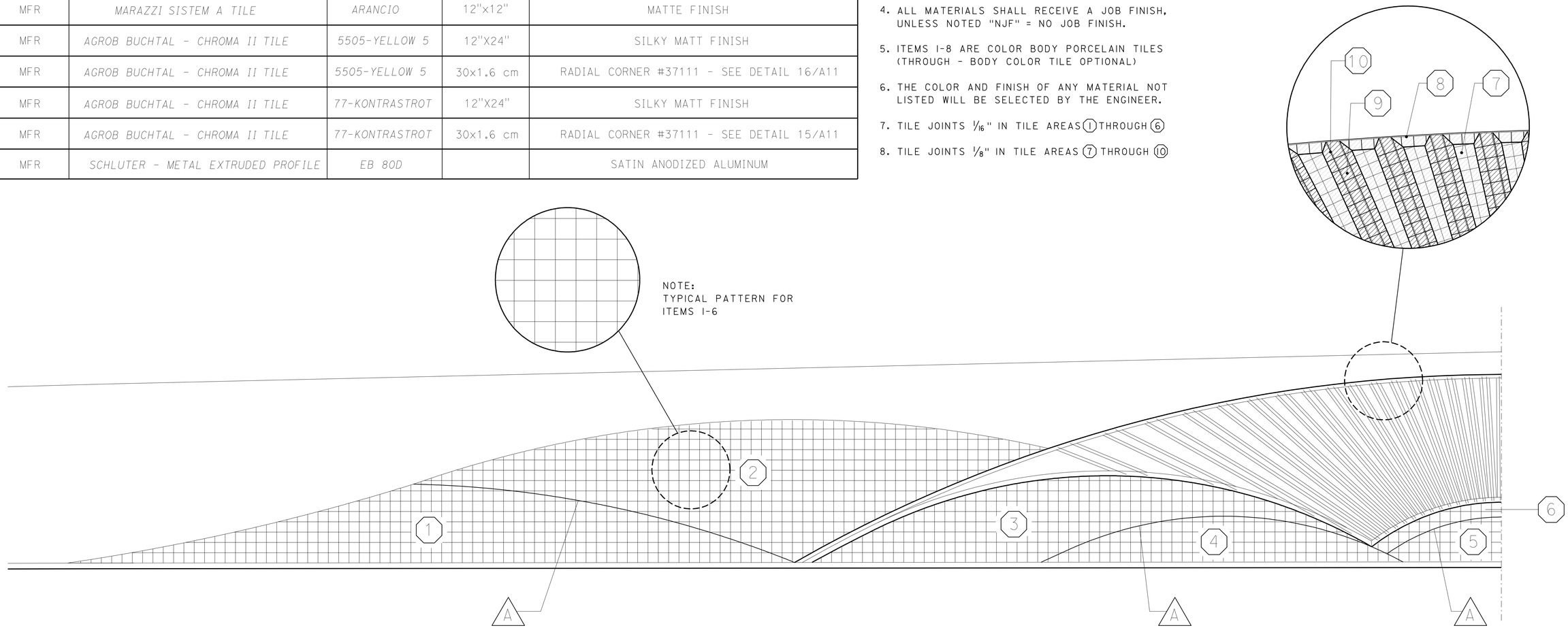

PARTIAL ELEVATION AT WEST ABUTMENT 3

NO SCALE

NOTE:
COLORS AND FINISHES TYPICAL FOR MOTIF
SYMETRICAL ABOUT ℄ OF ABUTMENT WALL FACE

	BY	CHECKED
DESIGN	H. CHAVEZ	S. HEATH
DETAILS	S. HEATH	H. CHAVEZ
QUANTITIES	A. RITTENHOUSE	S. MORADI

STATE OF CALIFORNIA
DEPARTMENT OF TRANSPORTATION

DIVISION OF ENGINEERING SERVICES
BRIDGE ARCHITECTURE AND AESTHETICS

BRIDGE NO. 53-3041
POST MILE 3.66

BLOOMFIELD AVENUE UC
ARCHITECTURAL TILE FINISH SCHEDULE AT ABUTMENT 3

SHEET A17

STRUCTURES DESIGN DETAIL SHEET (ENGLISH) (REV. 09-01-10)

ORIGINAL SCALE IN INCHES FOR REDUCED PLANS 0 1 2 3

CU 07
EA 215931

DISREGARD PRINTS BEARING EARLIER REVISION DATES

REVISION DATES 1-19-12

SHEET 59 OF 80

FILE => 53-3041-s-b-ab17.dgn

USERNAME => s121614 DATE PLOTTED => 28-MAR-2012 TIME PLOTTED => 11:45

DIST.	COUNTY	ROUTE	POST MILES TOTAL PROJECT	SHEET NO.	TOTAL SHEETS
07	LA	5	2.4/4.0	854	1288

Andrew Rittenhouse 12-12-11
REGISTERED ENGINEER - CIVIL

3-26-12
PLANS APPROVAL DATE

The State of California or its officers or agents shall not be responsible for the accuracy or completeness of electronic copies of this plan sheet.

REGISTERED PROFESSIONAL ENGINEER — Andrew P. Rittenhouse No. 61006 Exp. 12-31-12 CIVIL — STATE OF CALIFORNIA

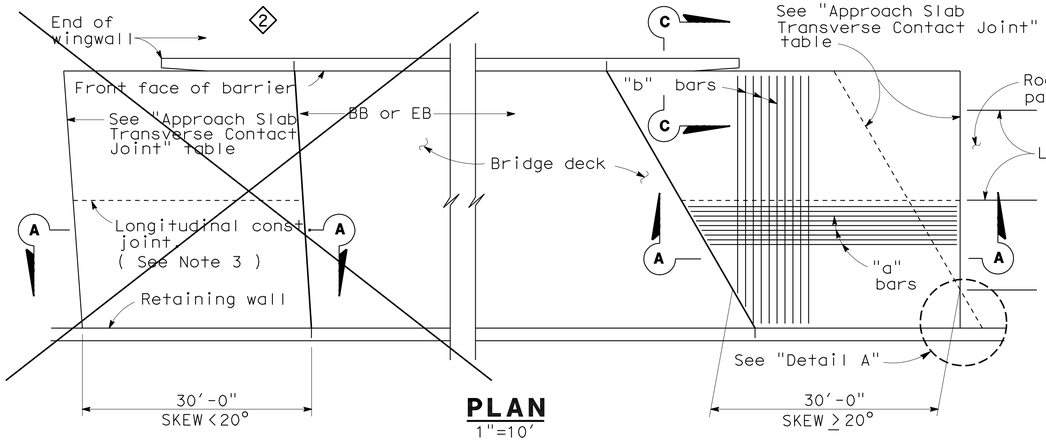

PLAN
1"=10'

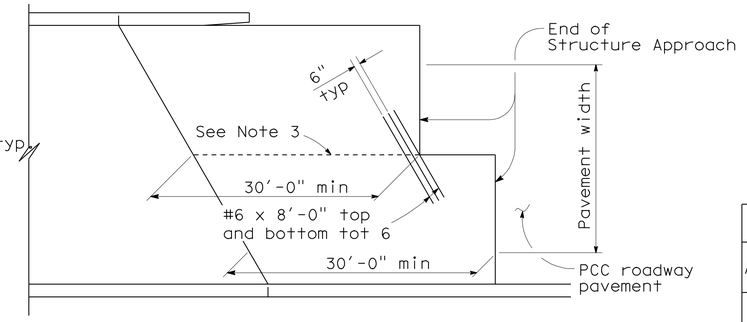

STRUCTURE APPROACH - END STAGGER DETAIL
No Scale

APPROACH SLAB TRANSVERSE CONTACT JOINT		
APPROACH SKEW	WITH AC ROADWAY PAVEMENT	WITH PCC ROADWAY PAVEMENT
< 20°	Parallel to face of paving notch	Parallel to face of paving notch
20° - 45°	Parallel to face of PN use (Detail A)	Stagger lines 24' to 36' apart.
> 45°	Parallel to face of PN use (Detail A)	Stagger at each lane line.

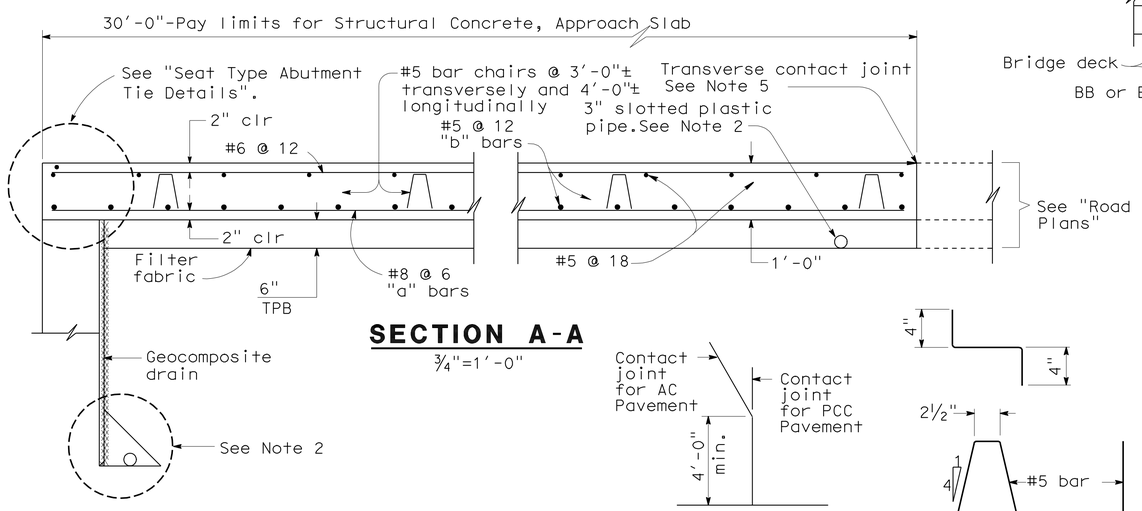

SECTION A-A
¾"=1'-0"

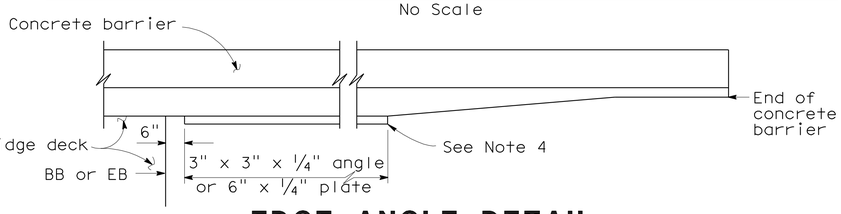

EDGE ANGLE DETAIL
½"=1'-0"

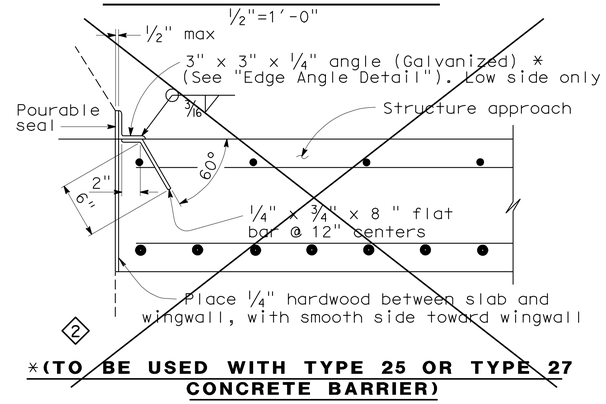

*(TO BE USED WITH TYPE 25 OR TYPE 27 CONCRETE BARRIER)

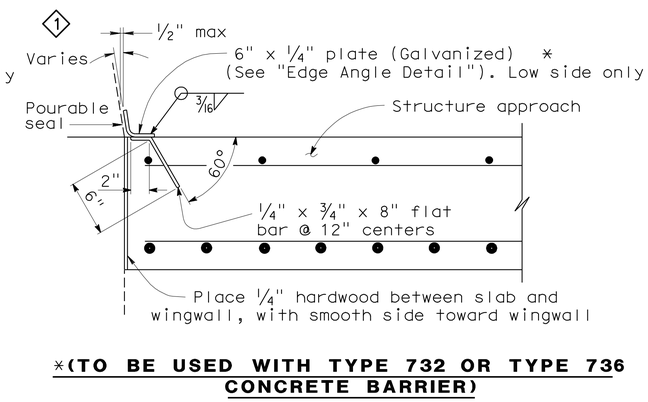

*(TO BE USED WITH TYPE 732 OR TYPE 736 CONCRETE BARRIER)

DETAIL A
No Scale

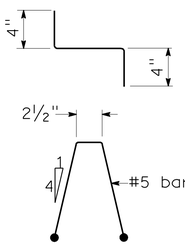

BAR CHAIR DETAIL
1½"=1'-0"

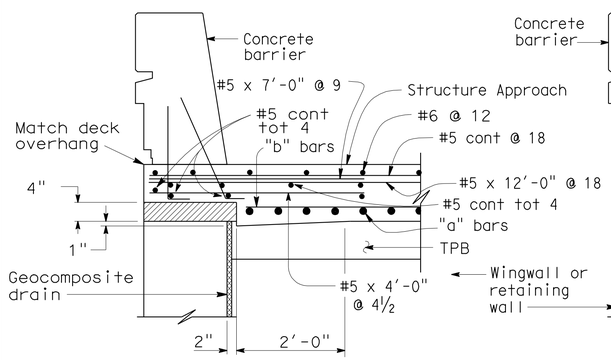

TYPE E-1

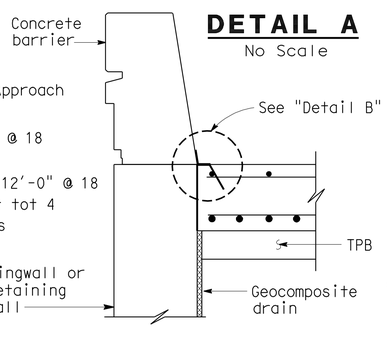

TYPE E-2

SECTION C-C
1
¾"=1'-0"

(Type E-1 to be used,unless otherwise shown on plans)

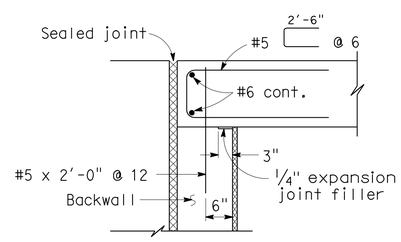

MR ≤ 2"

DETAIL B
1½"=1'-0"

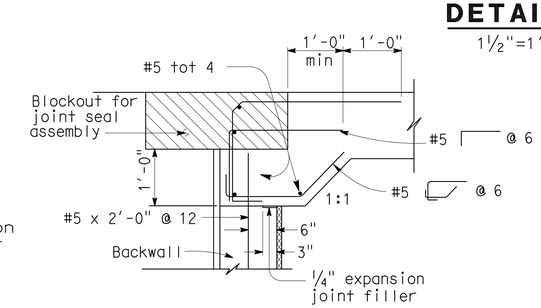

MR > 2"

SEAT TYPE ABUTMENT TIE DETAILS (SEE NOTE 1)
¾"=1'-0"

NOTES:

1. For details not shown, see Structure Plans. For MR ≤ 2", adjust bar reinforcement to clear a sawcut for sealed joint, when required.
2. For drainage details, see "Structure Approach Drainage Details" sheet.
3. Longitudinal construction joints, when permitted by the Engineer, shall be located on lane lines.
4. End angle or plate at beginning of barrier transition, end of wingwall or end of structure approach as applicable.
5. For transverse contact joint with new PCC paving, refer to Standard Plan P10.
6. At the contractor's option, approach slab transverse reinforcement may be placed parallel to paving notch. Spacing of transverse reinforcement is measured along ℄ roadway.

Remove all polystyrene.

SPECIAL DETAILS

REVISED STANDARD DRAWING

RELEASE DATE 3/14/05	DESIGN	BY M.TRAFFALIS	CHECKED E.THORKILDSEN	RELEASED BY
FILE NO. xs3-120e	DETAILS	BY R.YEE	CHECKED E.THORKILDSEN	OFFICE CHIEF
	SUBMITTED	BY M.HA	DRAWING DATE 4/98	

1 Modified Detail
2 Removed Detail

STATE OF CALIFORNIA
DEPARTMENT OF TRANSPORTATION

DIVISION OF ENGINEERING SERVICES

BRIDGE NO. 53-3041
MILE POST 3.66

BLOOMFIELD AVENUE UC
STRUCTURE APPROACH TYPE N(30S)

DS OSD 2147A (ENGLISH) (REV. X/XX/XX)

ORIGINAL SCALE IN INCHES FOR REDUCED PLANS 0 1 2 3

CU 07
EA 215931

DISREGARD PRINTS BEARING EARLIER REVISION DATES — REVISION DATES (PRELIMINARY STAGE ONLY): 5-18-11 7-15-11 12-5-11 1-5-12

SHEET 60 OF 80

USERNAME => s121614

53-3041-s-xs3-120e

DATE PLOTTED => 28-MAR-2012 TIME PLOTTED => 11:45

DIST.	COUNTY	ROUTE	POST MILES TOTAL PROJECT	SHEET NO.	TOTAL SHEETS
07	LA	5	2.4/4.0	855	1288

Andrew Rittenhouse 12-12-11
REGISTERED ENGINEER - CIVIL

3-26-12
PLANS APPROVAL DATE

REGISTERED PROFESSIONAL ENGINEER
Andrew P. Rittenhouse
No. 61006
Exp. 12-31-12
CIVIL
STATE OF CALIFORNIA

The State of California or its officers or agents shall not be responsible for the accuracy or completeness of electronic copies of this plan sheet.

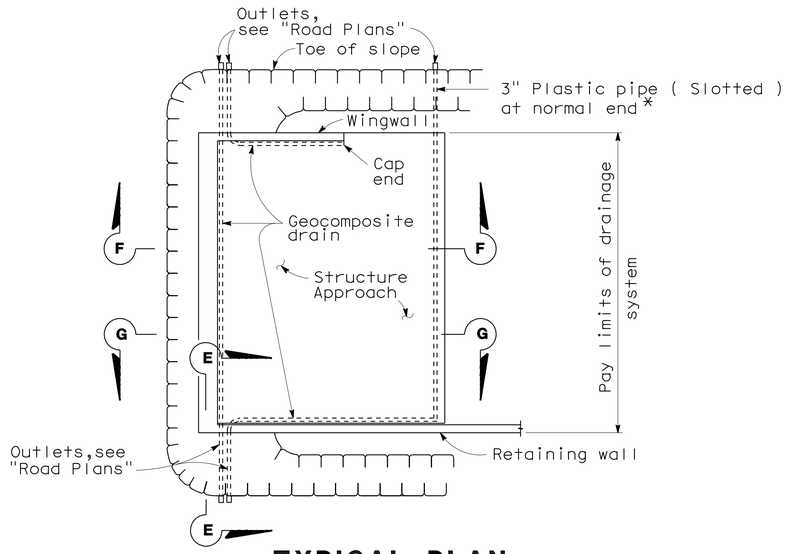

TYPICAL PLAN
1"=10'
*For pipe layout at staggered end, see "Detail B".

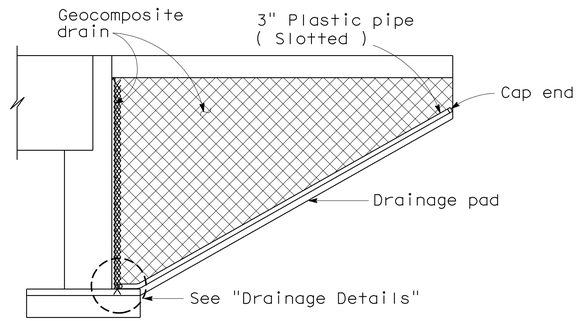

CANTILEVER WINGWALL
SECTION F-F
1/4"=1'-0"

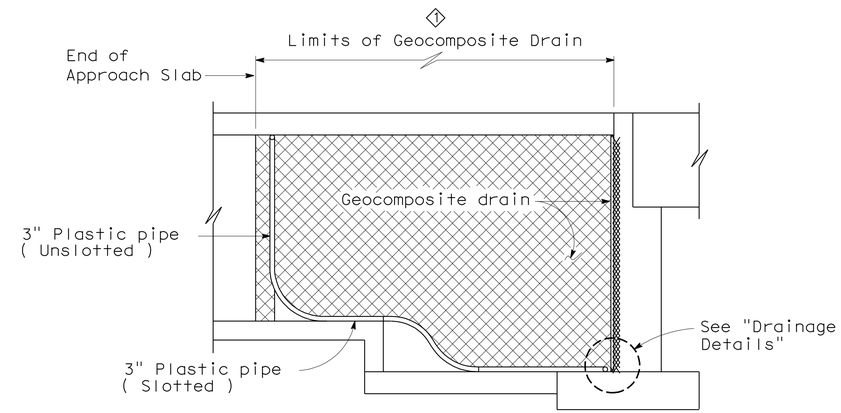

RETAINING WALL WINGWALL
SECTION G-G
1/4"=1'-0"

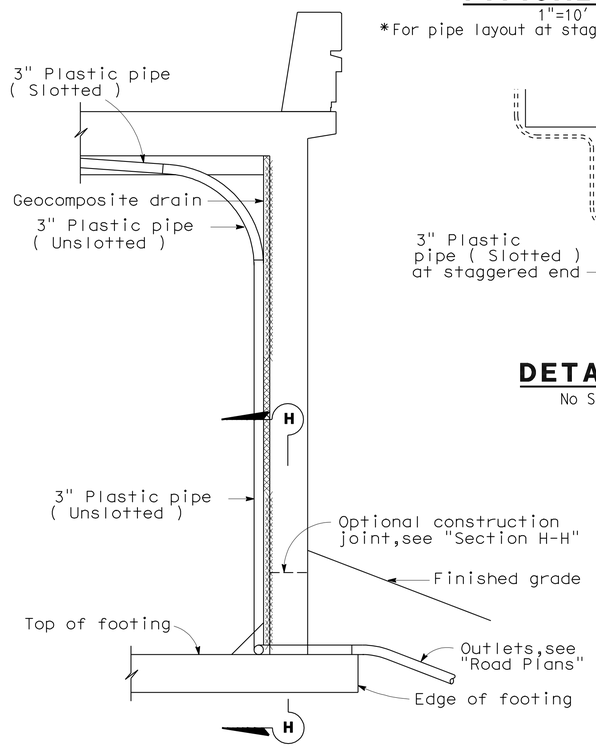

SECTION E-E
1/2"=1'-0"

NOTE: Bends and junctions in 3" plastic pipe are 30" radius min.

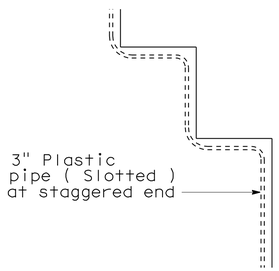

DETAIL B
No Scale

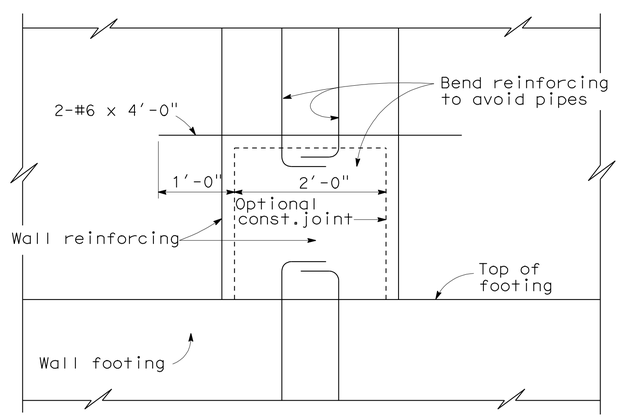

SECTION H-H
1"=1'-0"

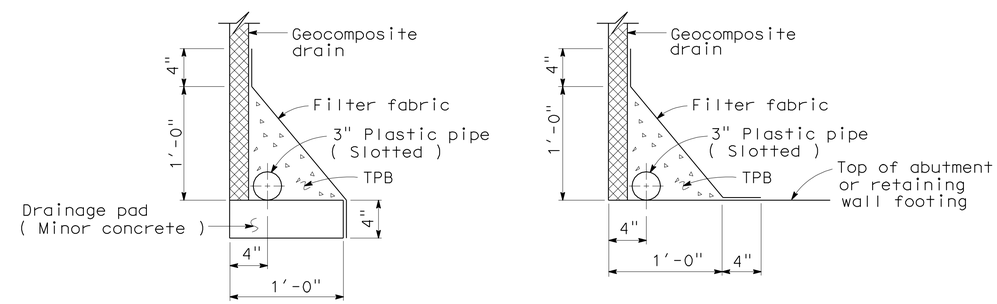

WITHOUT FOOTING **WITH FOOTING**

DRAINAGE DETAILS
1 1/2"=1'-0"

SPECIAL DETAILS

REVISED STANDARD DRAWING				
RELEASE DATE 4/23/98	DESIGN	BY M.TRAFFALIS	CHECKED E.THORKILDSEN	RELEASED BY
FILE NO. xs3-110e	DETAILS	BY R.YEE	CHECKED E.THORKILDSEN	
	SUBMITTED	BY M.HA	DRAWING DATE 4/98	OFFICE CHIEF

1 Removed dimension

STATE OF CALIFORNIA
DEPARTMENT OF TRANSPORTATION

DIVISION OF ENGINEERING SERVICES

BRIDGE NO. 53-3041
MILE POST 3.66

BLOOMFIELD AVENUE UC
STRUCTURE APPROACH DRAINAGE DETAILS

DS OSD 2147A (ENGLISH) (REV. X/XX/XX)

ORIGINAL SCALE IN INCHES FOR REDUCED PLANS 0 1 2 3

CU 07
EA 215931

DISREGARD PRINTS BEARING EARLIER REVISION DATES

REVISION DATES (PRELIMINARY STAGE ONLY) 6-18-10 7-14-11 12-5-11 12-29-11 1-5-12

SHEET 61 OF 80

USERNAME => s121614

53-3041-t-xs3-110e

DATE PLOTTED => 28-MAR-2012 TIME PLOTTED => 11:45

DIST	COUNTY	ROUTE	POST MILES TOTAL PROJECT	SHEET No	TOTAL SHEETS
07	LA	5	2.4/4.0	856	1288

Andrew Rittenhouse 12-12-11
REGISTERED CIVIL ENGINEER DATE

3-26-12
PLANS APPROVAL DATE

REGISTERED PROFESSIONAL ENGINEER Andrew P. Rittenhouse No. 61006 Exp. 12-31-12 CIVIL STATE OF CALIFORNIA

The State of California or its officers or agents shall not be responsible for the accuracy or completeness of electronic copies of this plan sheet.

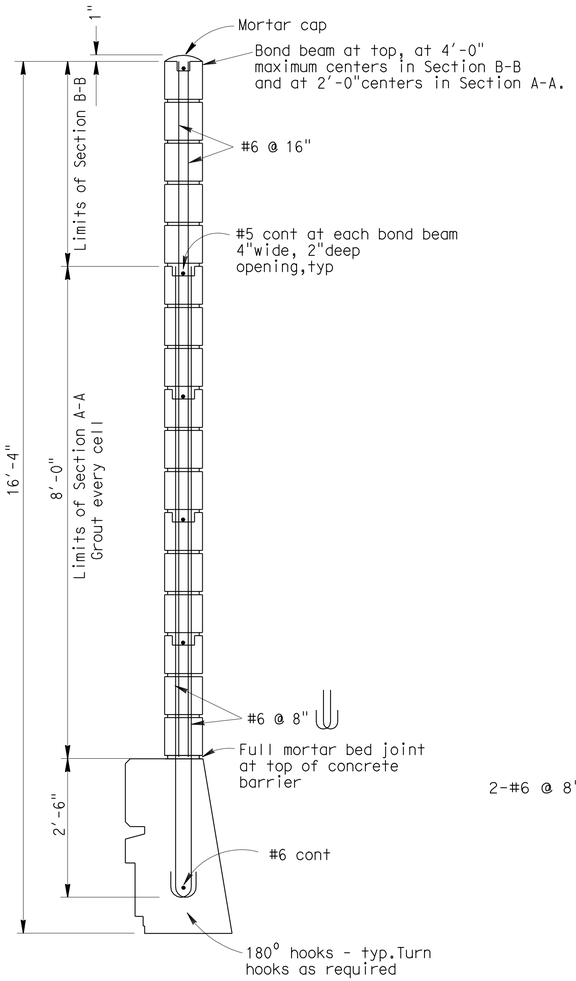

SOUND WALL SECTION
No Scale

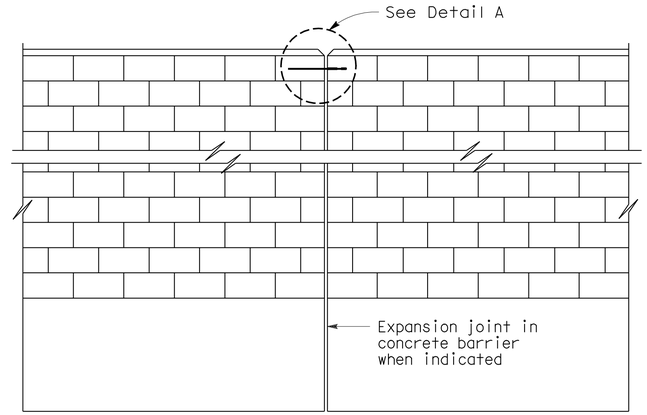

ALIGNMENT KEY DETAIL
No Scale

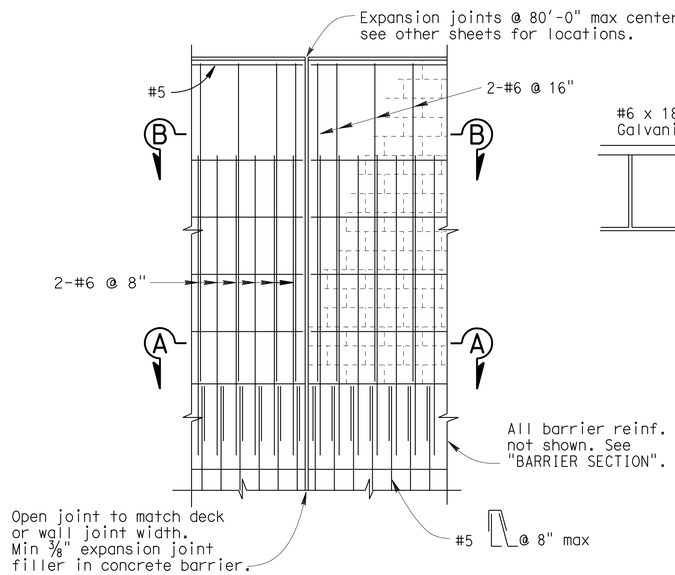

DECK AND WALL JOINT ELEVATION
No Scale

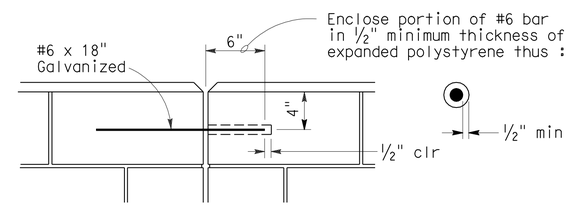

DETAIL A
No Scale

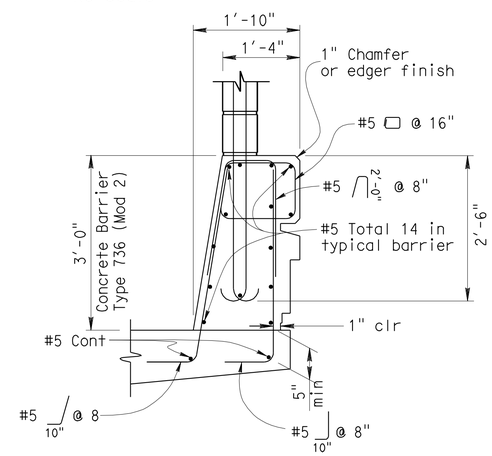

BARRIER SECTION
No Scale

NOTE:

For dimensions and reinforcement not shown, see Standard Plan B11-56 and "BARRIER ARCHITECTURAL DETAILS" sheet.

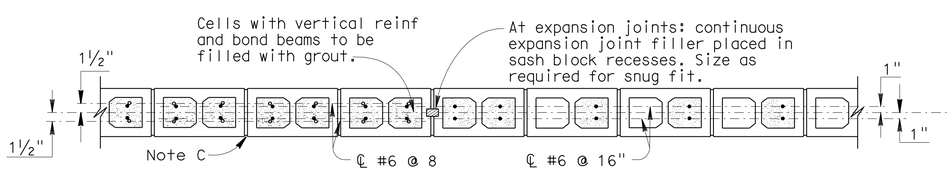

SECTION A-A
No Scale

SECTION B-B
No Scale

GENERAL NOTES

Note A: For type of block, type of block bond and joint finish, see "Road Plans".

Note B: When blocks are laid in stacked bond, ladder type, galvanized joint reinforcement shall be provided. A minimum of 2 - 12 gauge wires continuous at 4'-0" maximum to be used. Locate reinforcement in joints that are at the approximate midpoint between bond beams.

Note C: Horizontal joints shall be tooled concave or may be weathered. Vertical joints shall be tooled concave or may be raked.

Note D: All masonry to be high strength unless otherwise noted.

Note E: Class 2 concrete to be used for barrier.

Note F: Expansion joints in concrete barrier and masonry block to match deck joints and at ends of wing walls.

Note G: Expansion joints in Sound Wall (Masonry Block) shall be at each support, center of span, and at ends of each wingwall.

Note H: For dimensions and reinforcement not shown see "Typical Section" sheet.

DESIGN NOTES

DESIGN

Uniform Building Code,1997 Edition and the Bridge Design Specifications.

DESIGN WIND LOAD

37 psf

DESIGN SEISMIC LOAD

2.0 Dead load

REINFORCED CONCRETE

f'c = 3.6 ksi
fy = 60 ksi

CONCRETE MASONRY HIGH STRENGTH

f'm = 2500 psi
fy = 60 ksi

LOAD FACTORS AND LOAD COMBINATIONS

Load Factor Design (LFD)

Group A: βD +1.7 E + 1.7 SC
Group B: βD +1.7 E + 1.3 W
Group C: βD +1.3 E + 1.0 EQE
Group D: βD +1.3 E + 1.0 EQD
Group E: βD +1.1 E + 0.85 (EQE + EQD)

Where : β = 0.9 or 1.2, whichever controls in design
D = Dead load
E = Lateral earth pressure
SC = Live load surcharge
W = Wind load
EQD = Seismic dead load
EQE = Seismic earth load

STRENGTH REDUCTION FACTORS, Ø

Reinforced Concrete :

For flexure ..... Ø = 0.90
For shear ..... Ø = 0.85

Concrete masonry:

For flexure ..... Ø = 0.80
For shear ..... Ø = 0.60

Note 1:

Barrier, Deck and Concrete Masonry are designed by the Strength Design Method.

DESIGN	BY A. Rittenhouse	CHECKED Traci Menard
DETAILS	BY H. Mauroschadt	CHECKED Traci Menard
QUANTITIES	BY Gabriel Galo	CHECKED Traci Menard

STATE OF CALIFORNIA
DEPARTMENT OF TRANSPORTATION

DIVISION OF ENGINEERING SERVICES
STRUCTURE DESIGN
DESIGN BRANCH 15

BRIDGE NO. 53-3041
POST MILE 3.66

BLOOMFIELD AVENUE UC
SOUNDWALL - MASONRY BLOCK ON BRIDGE

STRUCTURES DESIGN DETAIL SHEET (ENGLISH) (REV. 10/25/05)

ORIGINAL SCALE IN INCHES FOR REDUCED PLANS 0 1 2 3

CU 07
EA 215931

DISREGARD PRINTS BEARING EARLIER REVISION DATES

REVISION DATES: 5-18-11 7-14-11 10-26-11 12-8-11 1-5-12

SHEET 62 OF 80

FILE => 53-3041-v-swb.dgn

USERNAME => s12614 DATE PLOTTED => 28-MAR-2012 TIME PLOTTED => 11:45

DIST.	COUNTY	ROUTE	POST MILES TOTAL PROJECT	SHEET NO.	TOTAL SHEETS
07	LA	5	2.4/4.0	857	1288

Andrew Rittenhouse 12-12-11
REGISTERED ENGINEER - CIVIL

3-26-12
PLANS APPROVAL DATE

REGISTERED PROFESSIONAL ENGINEER Andrew P. Rittenhouse No. 61006 Exp. 12-31-12 CIVIL STATE OF CALIFORNIA

The State of California or its officers or agents shall not be responsible for the accuracy or completeness of electronic copies of this plan sheet.

TABLE OF PILE SPACING: CLASS 45 - CONCRETE PILES

DESIGN H	6′	8′	10′	12′	14′	16′	18′	20′	22′	24′	26′	28′	30′	32′
W	6′-9"	7′-0"	7′-6"	8′-3"	9′-3"	10′-3"	11′-0"	12′-0"	13′-0"	14′-3"	16′-3"	16′-9"	18′-0"	20′-6"
C	2′-9"	2′-9"	3′-0"	3′-3"	3′-6"	4′-0"	4′-3"	4′-9"	5′-0"	5′-6"	6′-3"	6′-9"	7′-3"	7′-9"
B	4′-0"	4′-3"	4′-6"	5′-0"	5′-9"	6′-3"	6′-9"	7′-3"	8′-0"	8′-9"	10′-0"	10′-0"	10′-9"	12′-9"
F	1′-6"	1′-6"	1′-6"	1′-9"	1′-9"	2′-0"	2′-6"	2′-9"	3′-0"	3′-0"	3′-3"	3′-6"	3′-9"	4′-0"
M	1′-3"	1′-3"	1′-6"	1′-9"	2′-0"	2′-6"	2′-9"	3′-3"	3′-6"	4′-0"	4′-9"	5′-3"	5′-9"	6′-3"
N	2′-6"	2′-9"	3′-0"	3′-6"	4′-3"	4′-9"	5′-3"	5′-9"	6′-6"	7′-3"	8′-6"	8′-6"	9′-3"	11′-3"
ROW 1	16′-0"	14′-0"	12′-0"	10′-0"	8′-0"	6′-6"	5′-6"	4′-6"	4′-0"	4′-0"	4′-0"	4′-0"	4′-0"	4′-0"
ROW 2	24′-0"	21′-0"	18′-0"	15′-0"	14′-0"	13′-0"	11′-0"	9′-0"	8′-0"	12′-0"	10′-0"	6′-0"	4′-0"	4′-0"
ROW 3										8′-0"	5′-0"	4′-0"	4′-0"	6′-0"
ROW 4														6′-0"
CONFIGURATION	I	I	I	I	I	I	I	I	I	II	II	II	II	III

TABLE 1: TABLE OF REINFORCING STEEL DIMENSIONS AND DATA

	STEM WITH HAUNCH													
DESIGN H	6′	8′	10′	12′	14′	16′	18′	20′	22′	24′ ①	26′ ①	28′	30′	32′
STEM BATTER	0	½:12	½:12	½:12	½:12	½:12	½:12	½:12	½:12	⅝:12	¾:12	⅞:12	1:12	1:12
STEM THICKNESS @ TOP	1′-6"	1′-6"	1′-6"	1′-6"	1′-6"	1′-6"	1′-6"	1′-6"	1′-6"	1′-8"	1′-8"	1′-6"	1′-6"	1′-6"
STEM THICKNESS @ HAUNCH	1′-0"	1′-0"	1′-0"	1′-0"	1′-0"	1′-0"	1′-0"	1′-0"	1′-0"	1′-0"	1′-0"	1′-0"	1′-0"	1′-0"
ⓐ BARS				#6@18**	#7@18**	#8@18**	#9@18**	#10@18**	#8 @ 9*	#8 @ 9*	#7 @ 6*	#10@12**	#9 @ 9*	#11@12**
X				CONT	CONT	CONT	CONT	CONT	CONT	CONT	CONT	CONT	CONT	CONT
Y				8′-0"	6′-6"	7′-6"	8′-6"	9-6"	9′-6"	11′-0"	11′-6"	13′-0"	14′-0"	15′-6"
ⓑ BARS	#5 @ 12	#5 @ 12	#5 @ 9	#6@18**	#7@18**	#8@18**	#9@18**	#10@18**	#8 @ 9*	#8 @ 9*	#7 @ 6*	#10@12**	#9 @ 9*	#11@12**
X	CONT	CONT	CONT	CONT	CONT	CONT	CONT	CONT	CONT	CONT	CONT	CONT	CONT	CONT
Y	CONT	CONT	CONT	CONT	10′-6"	13′-0"	15′-0"	17′-6"	19′-6"	21′-0"	18′-6"	19′-0"	25′-6"	23′-6"
ⓒ BARS					#6 @ 18	#6 @ 18	#6 @ 18	#6 @ 18	#6 @ 18	#6 @ 18	#6 @ 12	#7 @ 12	#7 @ 18	#7 @ 12
ⓓ BARS	#5 @ 12	#5 @ 12	#5 @ 12	#5 @ 12	#5 @ 12	#5 @ 12	#5 @ 9	#5 @ 9	#6 @ 9	#5 @ 6	#7 @ 9	#7 @ 9	#6 @ 6	#7 @ 6
TOTAL ⓔ BARS	6 #5	6 #5	6 #5	6 #5	8 #5	8 #5	10 #5	10 #5	10 #5	10 #5	12 #5	12 #5	12 #5	14 #5
TOTAL ⓕ BARS	6 #5	6 #5	6 #5	6 #5	6 #5	8 #5	8 #5	8 #5	8 #5	10 #5	10 #5	10 #5	12 #5	12 #5

TABLE 2: TABLE OF REINFORCING STEEL DIMENSIONS AND DATA

	STEM WITH HAUNCH							STEM WITHOUT HAUNCH						
DESIGN H	6′	8′	10′	12′	14′	16′	18′	20′	22′	24′	26′	28′	30′	32′
BATTER	0	0	0	0	0	0	0	0	0	0	¼:12	½:12	½:12	½:12
STEM THICKNESS @ TOP	1′-6"	1′-6"	1′-6"	1′-6"	1′-6"	1′-6"	1′-6"	1′-6"	2′-0"	2′-0"	2′-0"	2′-0"	2′-0"	2′-0"
STEM THICKNESS @ HAUNCH	1′-0"	1′-0"	1′-0"	1′-0"	1′-0"	1′-3"	1′-3"							
ⓐ BARS				#6@12**	#5 @ 6*	#9@18**	#9@12**	#9@12**	#9@12**	#7 @ 6*	#7 @ 6*	#7 @ 6*	#9 @ 9*	#11@12**
X				CONT	CONT	CONT	CONT	CONT	CONT	CONT	CONT	CONT	CONT	CONT
Y				5′-6"	5′-6"	8′-6"	8′-6"	8′-6"	8′-6"	9′-6"	11′-0"	12′-6"	13′-6"	14′-6"
ⓑ BARS	#5 @ 12	#5 @ 9	#6 @ 9	#6@12**	#5 @ 6*	#9@18**	#9@12**	#9@12**	#9@12**	#7 @ 6*	#7 @ 6*	#7 @ 6*	#9 @ 9*	#11@12**
X	CONT	CONT	CONT	CONT	CONT	CONT	CONT	CONT	CONT	CONT	CONT	CONT	CONT	CONT
Y	CONT	CONT	CONT	CONT	CONT	11′-6"	11′-6"	12′-0"	12′-0"	17′-6"	20′-0"	21′-6"	24′-0"	24′-0"
ⓒ BARS						#7 @ 18	#7 @ 12	#7 @ 12	#7 @ 12	#6 @ 12	#6 @ 12	#6 @ 12	#7 @ 18	#7 @ 12
ⓓ BARS	#5 @ 12	#5 @ 12	#5 @ 12	#5 @ 12	#5 @ 12	#5 @ 12	#5 @ 9	#5 @ 9	#6 @ 9	#5 @ 6	#7 @ 9	#7 @ 9	#6 @ 6	#7 @ 6
TOTAL ⓔ BARS	6 #5	6 #5	6 #5	6 #5	8 #5	8 #5	10 #5	10 #5	10 #5	10 #5	12 #5	12 #5	12 #5	14 #5
TOTAL ⓕ BARS	6 #5	6 #5	6 #5	6 #5	6 #5	8 #5	8 #5	8 #5	8 #5	10 #5	10 #5	10 #5	12 #5	12 #5

CONT = CONTINUOUS

* = ⓐ AND ⓑ BARS ARE BUNDLED TOGETHER.

** = ALTERNATE ⓐ AND ⓑ BARS AS SHOWN IN DETAIL A.

DESIGN DATA

DESIGN: LOAD FACTOR DESIGN (LFD)

CONCRETE: REINFORCED CONCRETE, f′c = 3600 psi
fy = 60000 psi

LOADING CASE:

LEVEL GROUND WITH 240 psf LIVE LOAD SURCHARGE AND 16′ SOUNDWALL.
SEISMIC LOAD = 0.3 DEAD LOAD
WIND LOAD = 30 psf
DEAD LOAD OF SOUNDWALL = 1414 lb/lf
DEAD LOAD OF BARRIER = 372 lb/lf

SEISMIC LOAD: SOIL

Kh = 0.3g
Kv = 0.0
Kae : MONONOBE-OKABE METHOD

SOIL: Ø = 34° γ = 120 pcf

EQUIVALENT FLUID PRESSURE:
= 36 pcf FOR DETERMINATION OF TOE PRESSURE
= 27 pcf FOR DETERMINATION OF HEEL PRESSURE

LOAD COMBINATIONS:

GROUP A : βD+1.7E+1.7SC
GROUP B : βD+1.7E+1.3W
GROUP C :
STEM : 1.0D+1.0E+1.0EQD+1.0EQE
FOOTING : D+PYM
WHERE : β = 1.0 OR 1.3 WHICHEVER CONTROLS DESIGN
D = DEAD LOAD
E = LATERAL EARTH PRESSURE
SC = SURCHARGE
W = WIND LOAD
EQD = SEISMIC DEAD LOAD
EQE = SEISMIC LATERAL EARTH PRESSURE
PYM = PROBABLE YIELD MOMENT (1.3* NOMINAL YIELD MOMENT OF STEM)

② GENERAL NOTES

1. CLASS 90-CONCRETE PILES WERE USED FOR THE DESIGN.
2. PILE BATTER SHOWN IS 1:3.
3. MINIMUM DISTANCE BETWEEN CENTER PILE AND EDGE OF FOOTING IS 1′-6".
4. REDUCTION FACTORS:
   GROUPS A & B : Ø = 0.75
   GROUP C : Ø = 1.0
5. LATERAL RESISTANCE OF EACH PILE:
   GROUPS A & B : = 30 kip
   GROUP C : = 40 kip
6. MAXIMUM SPACING BETWEEN PILES IS SHOWN IN THE TABLE. REDUCE TO SUIT THE LENGHTH OF FOOTING.
7. MINIMUM DISTANCE BETWEEN ANY TWO PILES IS 3′-0".
8. LIMIT OF NO SPLICING FOR REBARS = 3 TIMES THE BOTTOM THICKNESS OF STEM.

STANDARD DRAWING

FILE NO. xs14-320-1e

APPROVED BY G. WANG
RESPONSIBLE TECHNICAL SPECIALIST
APPROVAL DATE 5-29-09

RELEASED BY ROBERTO LACALLE
RESPONSIBLE OFFICE CHIEF
RELEASE DATE 5-29-09

① Changed Stem Thickness at Top
② Modified Notes

STATE OF CALIFORNIA
DEPARTMENT OF TRANSPORTATION

DIVISION OF ENGINEERING SERVICES

BRIDGE NO. 53-3041
POST MILE 3.66

BLOOMFIELD AVENUE UC
RETAINING WALL TYPE 1SWBP - DETAILS NO. 1

DS OSD 2147A (ENGLISH STANDARD DRAWING "XS" BORDER REV. 01/11/08)

ORIGINAL SCALE IN INCHES FOR REDUCED PLANS 0 1 2 3

CU 07
EA 215931

DISREGARD PRINTS BEARING EARLIER REVISION DATES

REVISION DATES (PRELIMINARY STAGE ONLY) 5-31-11 7-15-11 12-9-11 1-5-12

SHEET 63 OF 80

USERNAME => s121614

53-3041-w-14-320-1e.dgn

DATE PLOTTED => 28-MAR-2012 TIME PLOTTED => 11:46

DIST.	COUNTY	ROUTE	POST MILES TOTAL PROJECT	SHEET NO.	TOTAL SHEETS
07	LA	5	2.4/4.0	858	1288

Andrew Rittenhouse 12-12-11
REGISTERED ENGINEER - CIVIL

3-26-12
PLANS APPROVAL DATE

REGISTERED PROFESSIONAL ENGINEER Andrew P. Rittenhouse No. 61006 Exp. 12-31-12 CIVIL STATE OF CALIFORNIA

The State of California or its officers or agents shall not be responsible for the accuracy or completeness of electronic copies of this plan sheet.

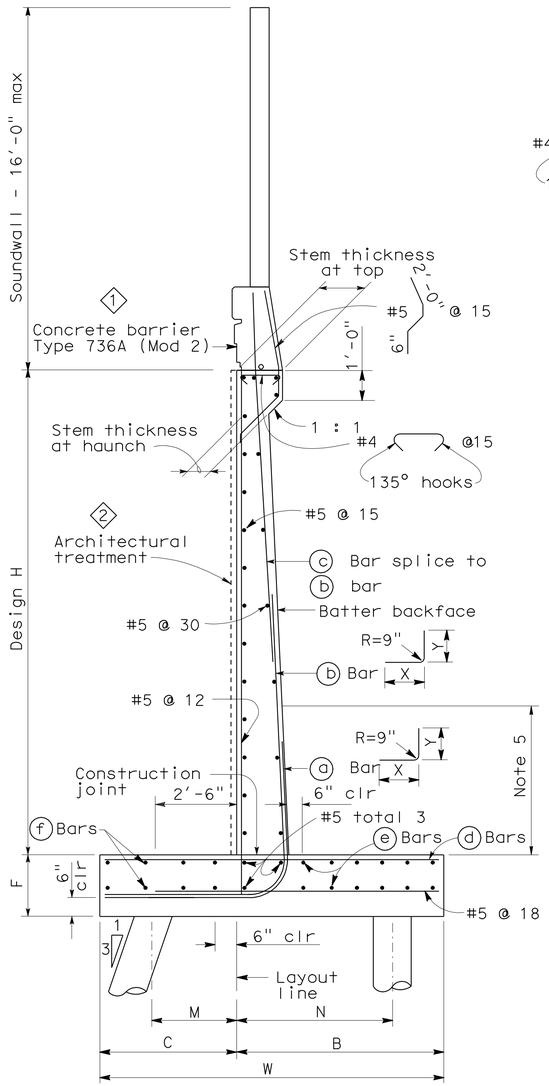

45T PILE FOOTING SECTION

NO SCALE

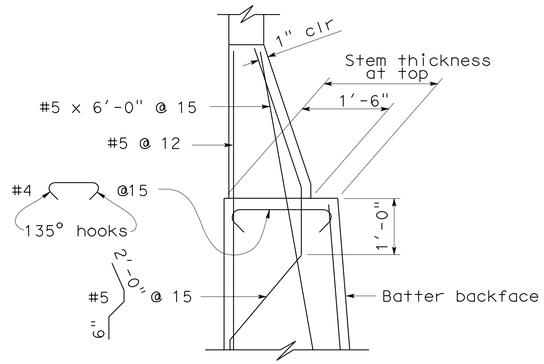

SPREAD FOOTING SECTION WITHOUT HAUNCH

NO SCALE

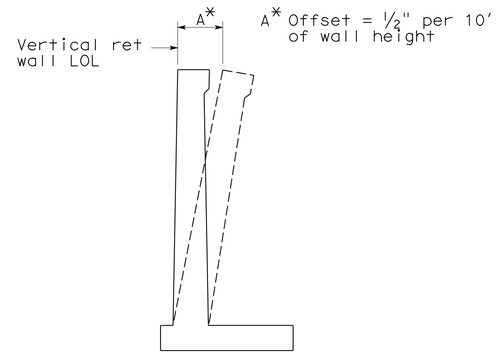

WALL OFFSET

NO SCALE

Values for offsetting forms to be determined by the engineer

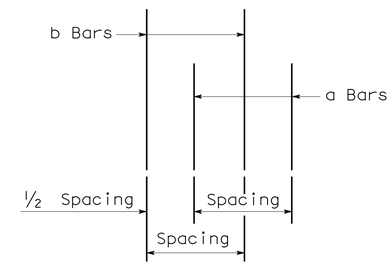

DETAIL A

NO SCALE

NOTES (3)

1. For soundwall and retaining wall architectural treatment see details elsewhere in project plans.
2. For details not shown and drainage notes, see (B3-8).
3. Footing cover, 1'-6" minimum.
4. For soundwall and barrier reinforcement, see (B15-6).
5. Limit of no splicing for rebars = H/3

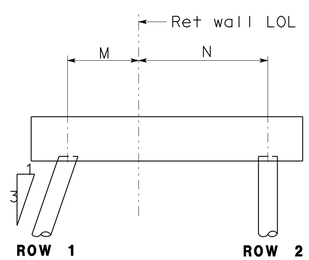

CONFIGURATION I

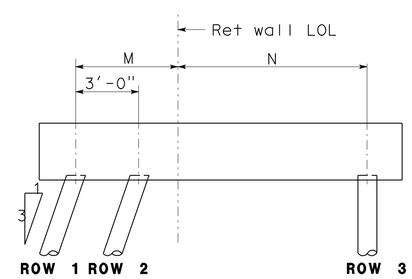

CONFIGURATION II

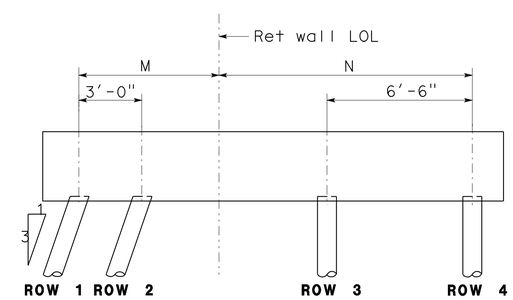

CONFIGURATION III

SPECIAL DETAILS

STANDARD DRAWING			
FILE NO. xs14-320-2e	APPROVED BY G. WANG (RESPONSIBLE TECHNICAL SPECIALIST)	RELEASED BY ROBERTO LACALLE (RESPONSIBLE OFFICE CHIEF)	
	APPROVAL DATE 5-13-08	RELEASE DATE 5-13-08	

(1) Modified Barrier
(2) Modified Detail
(3) Modified Notes

STATE OF CALIFORNIA
DEPARTMENT OF TRANSPORTATION

DIVISION OF ENGINEERING SERVICES

CU 07
EA 215931

BRIDGE NO. 53-3041
POST MILE 3.66

BLOOMFIELD AVENUE UC
RETAINING WALL TYPE 1SWBP - DETAILS NO. 2

DS OSD 2147A (ENGLISH STANDARD DRAWING "XS" BORDER REV. 01/11/08)

ORIGINAL SCALE IN INCHES FOR REDUCED PLANS 0 1 2 3

DISREGARD PRINTS BEARING EARLIER REVISION DATES

REVISION DATES (PRELIMINARY STAGE ONLY): 5-5-11 11-4-11 12-5-11 1-5-12 3-10-12

SHEET 64 OF 80

USERNAME => s121614

DATE PLOTTED => 28-MAR-2012 TIME PLOTTED => 11:46

53-3041-w-14-320-2e.dgn

DIST	COUNTY	ROUTE	POST MILES TOTAL PROJECT	SHEET No	TOTAL SHEETS
07	LA	5	2.4/4.0	859	1288

LICENSED ARCHITECT — DATE 1/31/12

3-26-12
PLANS APPROVAL DATE

LICENSED ARCHITECT H. Javier Chavez 14073 03-31-13 Renewal Date STATE OF CALIFORNIA

The State of California or its officers or agents shall not be responsible for the accuracy or completeness of electronic copies of this plan sheet.

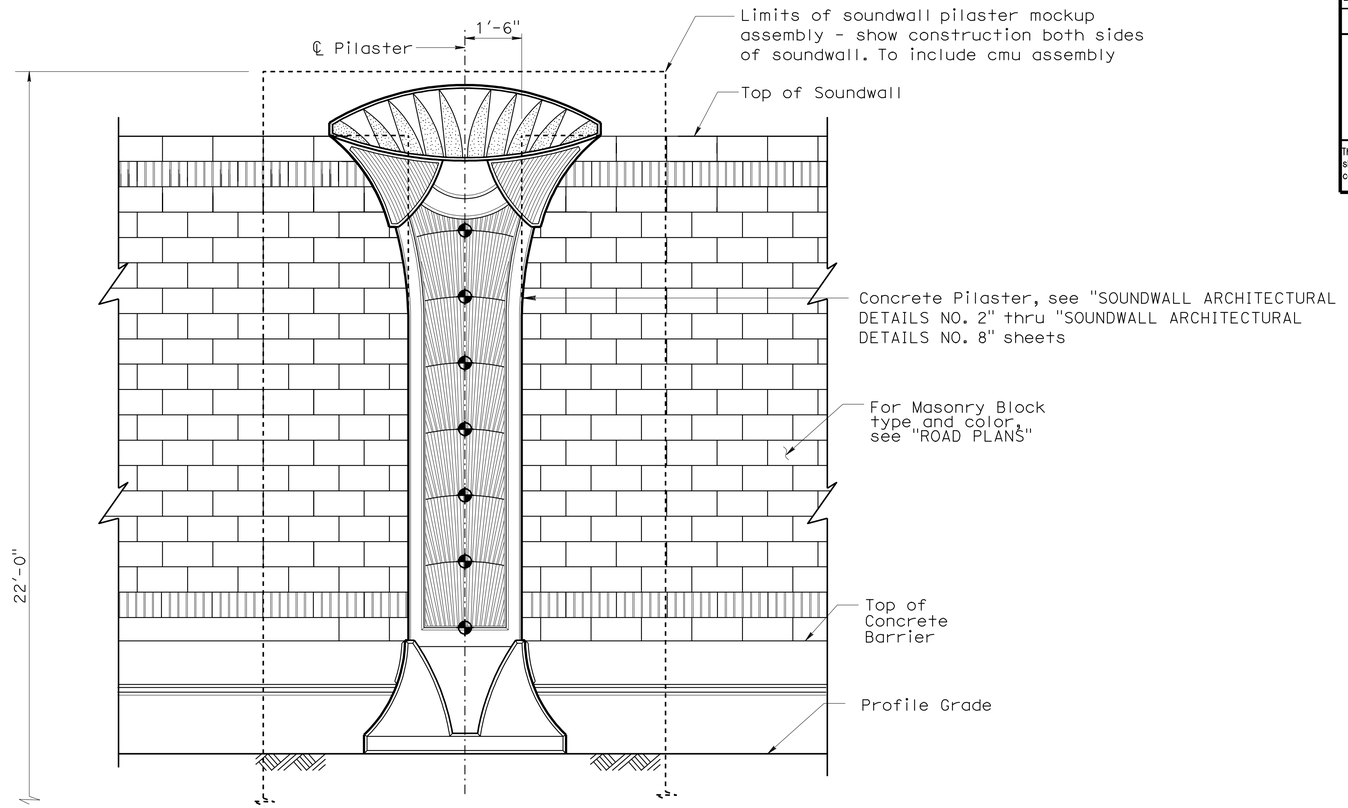

PART SOUNDWALL ELEVATION - FREEWAY SIDE

½" = 1'-0"

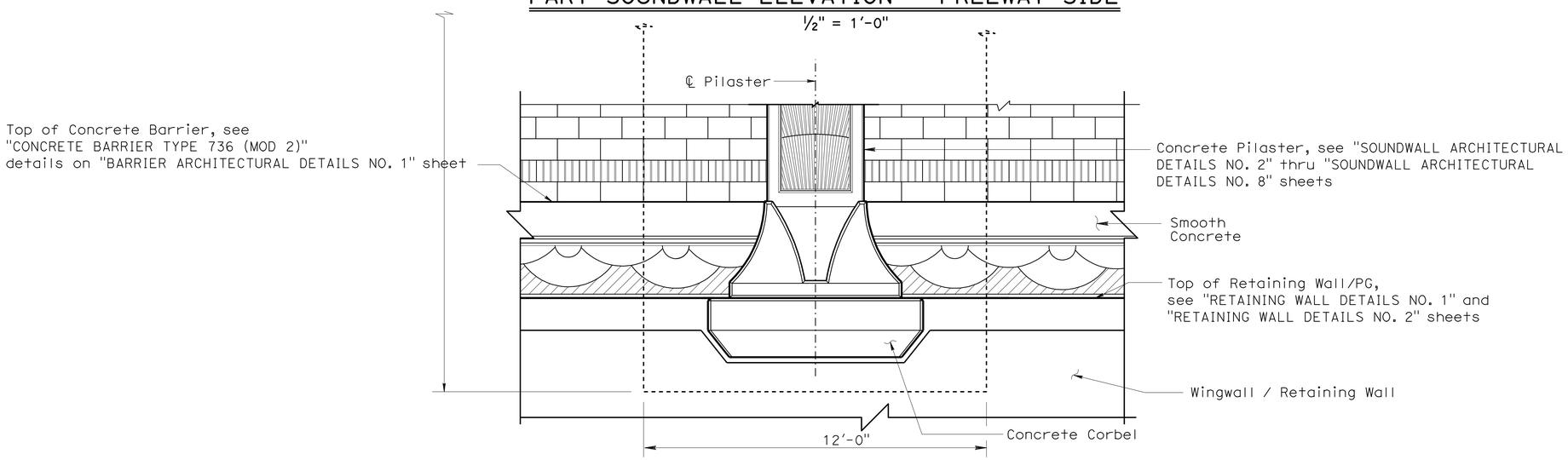

PART SOUNDWALL ELEVATION - BACK SIDE

½" = 1'-0"

	BY	CHECKED
DESIGN	Isaac Tasabia	Javier Chavez
DETAILS	Herman Mauroschadt	Javier Chavez
QUANTITIES	Suzan Moradi	Gabriel Galo

STATE OF CALIFORNIA
DEPARTMENT OF TRANSPORTATION

DIVISION OF ENGINEERING SERVICES
BRIDGE ARCHITECTURE AND AESTHETICS

BRIDGE NO. 53-3041
POST MILE 3.66

BLOOMFIELD AVENUE UC
SOUNDWALL ARCHITECTURAL DETAILS NO. 1

STRUCTURES DESIGN DETAIL SHEET (ENGLISH) (REV. 10/25/05)

ORIGINAL SCALE IN INCHES FOR REDUCED PLANS 0 1 2 3

CU 07
EA 215931

DISREGARD PRINTS BEARING EARLIER REVISION DATES 1-23-12

REVISION DATES

SHEET 65 OF 80

FILE => 53-3041-x-swadet01.dgn

USERNAME => s121614 DATE PLOTTED => 28-MAR-2012 TIME PLOTTED => 11:46

DIST	COUNTY	ROUTE	POST MILES TOTAL PROJECT	SHEET No	TOTAL SHEETS
07	LA	5	2.4/4.0	860	1288

LICENSED ARCHITECT — 1/31/12 DATE

3-26-12
PLANS APPROVAL DATE

LICENSED ARCHITECT H. Javier Chavez 14073 03-31-13 Renewal Date STATE OF CALIFORNIA

The State of California or its officers or agents shall not be responsible for the accuracy or completeness of electronic copies of this plan sheet.

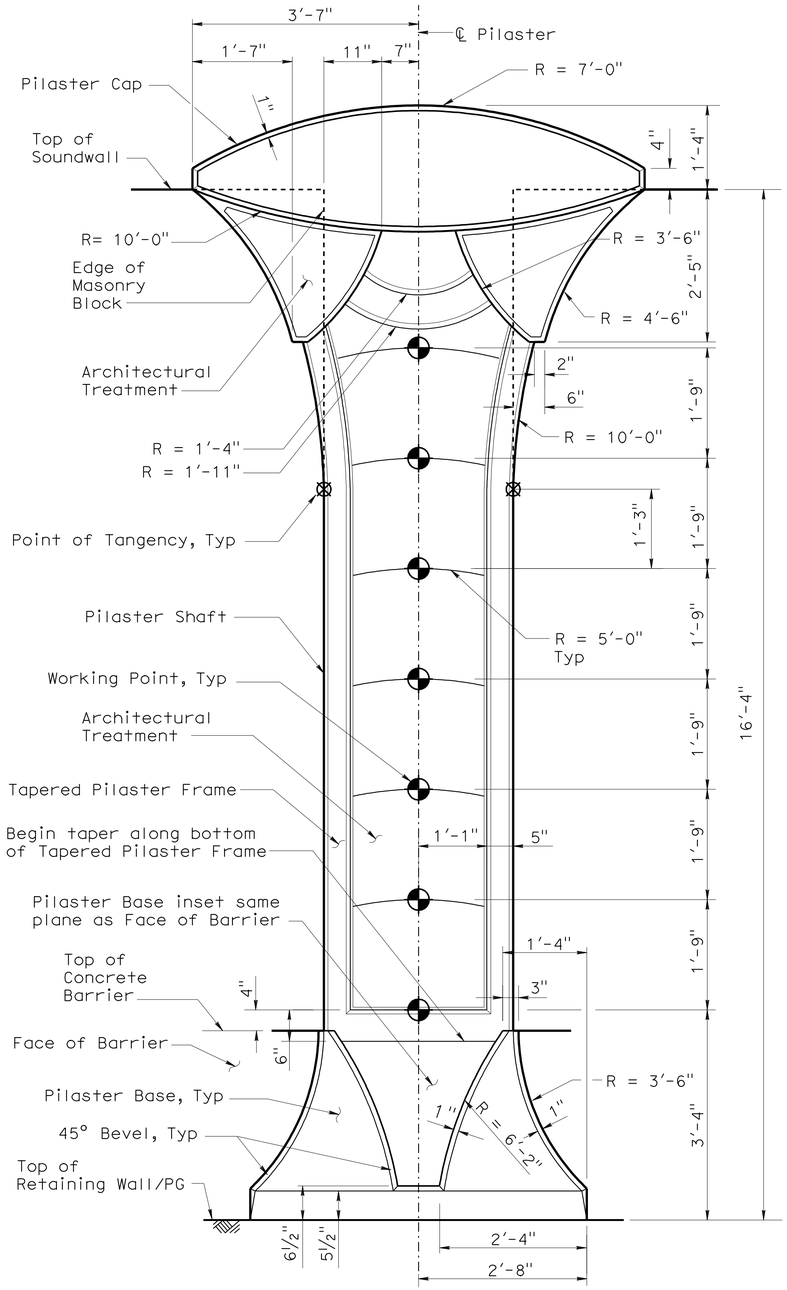

PILASTER ELEVATION - FREEWAY SIDE

NO SCALE

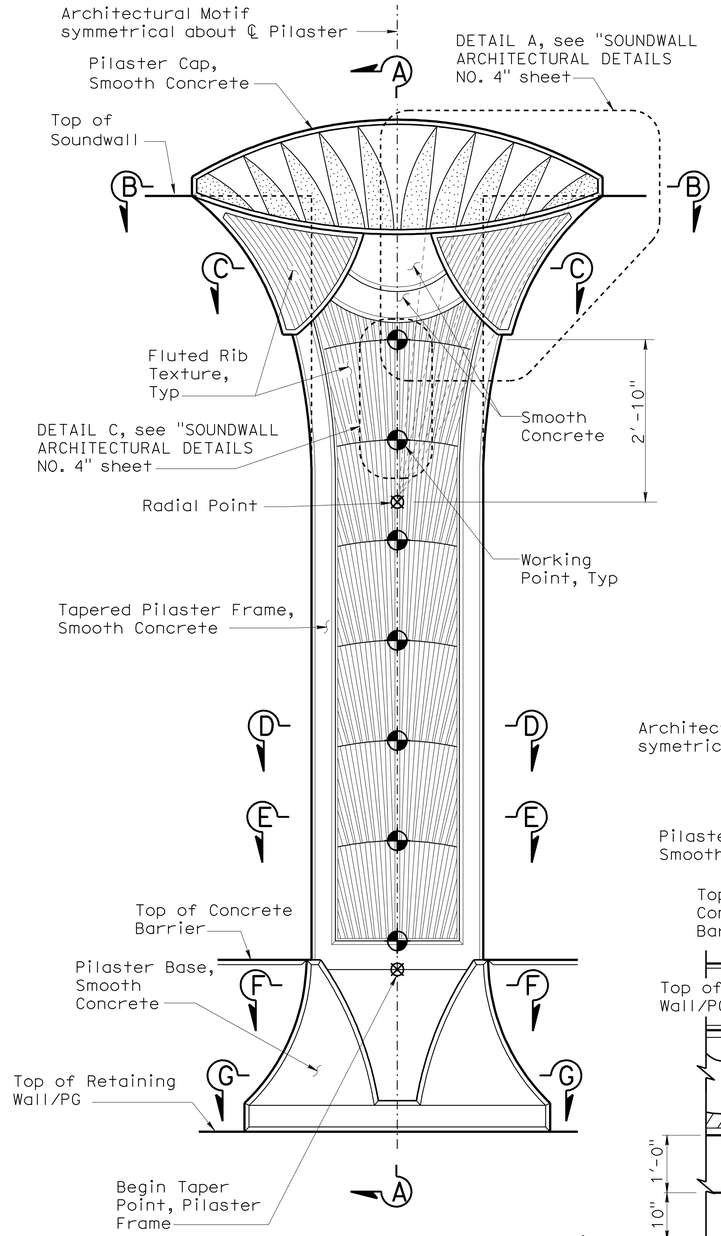

Note: For additional details not shown, see "PILASTER ELEVATION - FREEWAY SIDE"

FREEWAY SIDE

Notes:

1. For SECTION A-A", "SECTION B-B", "SECTION C-C", "SECTION D-D", "SECTION E-E", "SECTION F-F", SECTION G-G" and "SECTION H-H" see "SOUNDWALL ARCHITECTURAL DETAILS NO. 3" sheet.
2. All dimensions symmetrical about ℄ Pilaster.
3. Beveled edges are 45° unless otherwise noted.
4. All vertical dimension are measured along the ℄ Pilaster (Pilaster shall be vertical).

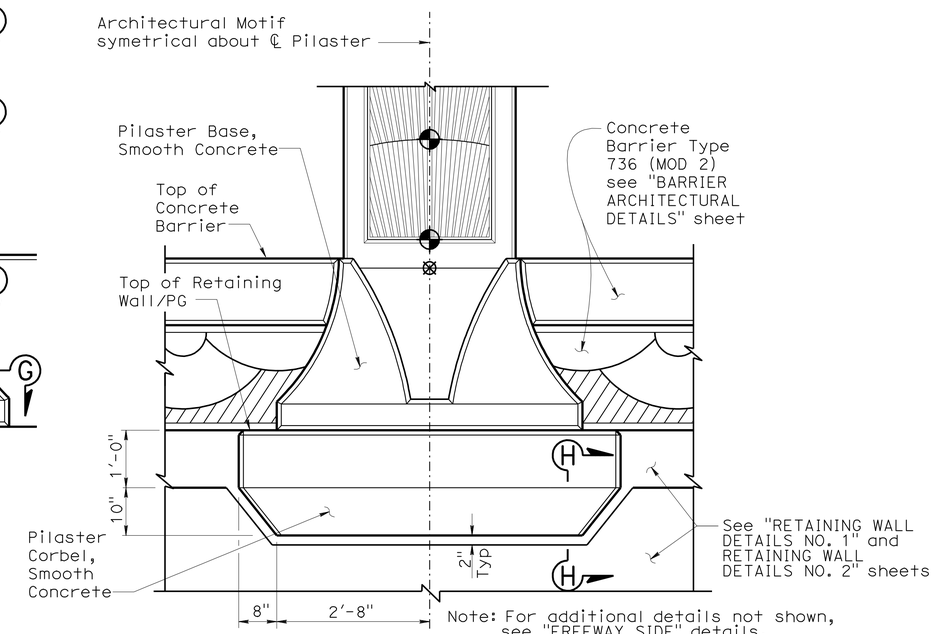

Note: For additional details not shown, see "FREEWAY SIDE" details.

BACK SIDE

PILASTER ARCHITECTURAL MOTIF

¾" = 1'-0"

DESIGN	BY Isaac Tasabia	CHECKED Javier Chavez	
DETAILS	BY Herman Mauroschadt	CHECKED Javier Chavez	
QUANTITIES	BY Suzan Moradi	CHECKED Gabriel Galo	

STATE OF CALIFORNIA DEPARTMENT OF TRANSPORTATION

DIVISION OF ENGINEERING SERVICES BRIDGE ARCHITECTURE AND AESTHETICS

BRIDGE NO. 53-3041
POST MILE 3.66

BLOOMFIELD AVENUE UC

SOUNDWALL ARCHITECTURAL DETAILS NO. 2

STRUCTURES DESIGN DETAIL SHEET (ENGLISH) (REV. 10/25/05)

ORIGINAL SCALE IN INCHES FOR REDUCED PLANS 0 1 2 3

CU 07
EA 215931

DISREGARD PRINTS BEARING EARLIER REVISION DATES 1-23-12

REVISION DATES

SHEET 66 OF 80

FILE => 53-3041-x-swadet02.dgn

USERNAME => s12614 DATE PLOTTED => 28-MAR-2012 TIME PLOTTED => 11:46

DIST	COUNTY	ROUTE	POST MILES TOTAL PROJECT	SHEET No	TOTAL SHEETS
07	LA	5	2.4/4.0	861	1288

LICENSED ARCHITECT — DATE 1/31/12

3-26-12
PLANS APPROVAL DATE

LICENSED ARCHITECT H. Javier Chavez 14073 03-31-13 Renewal Date STATE OF CALIFORNIA

The State of California or its officers or agents shall not be responsible for the accuracy or completeness of electronic copies of this plan sheet.

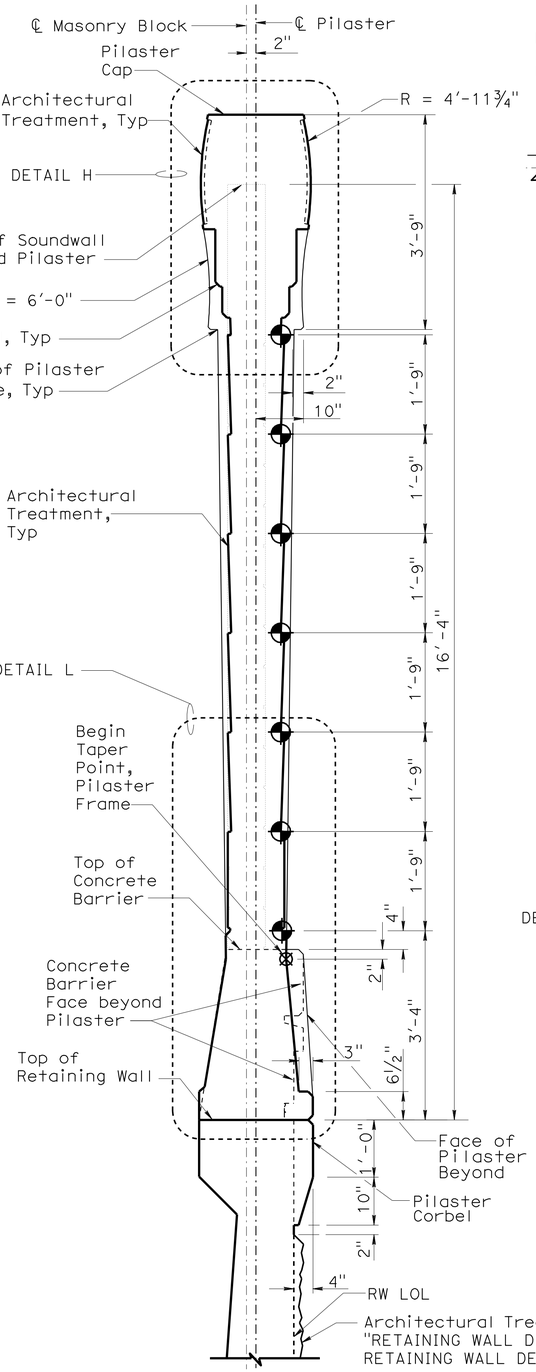

SECTION A-A
¾" = 1'-0"

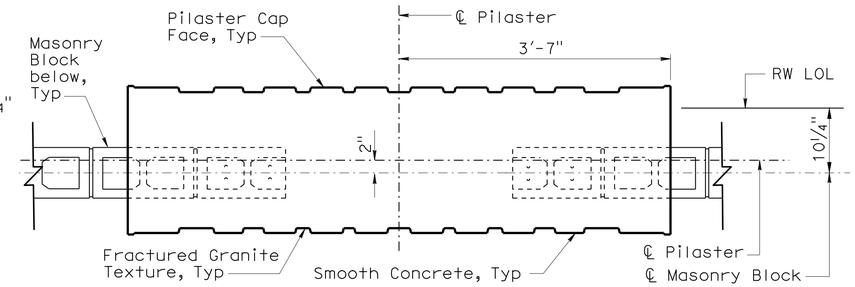

SECTION B-B
1" = 1'-0"

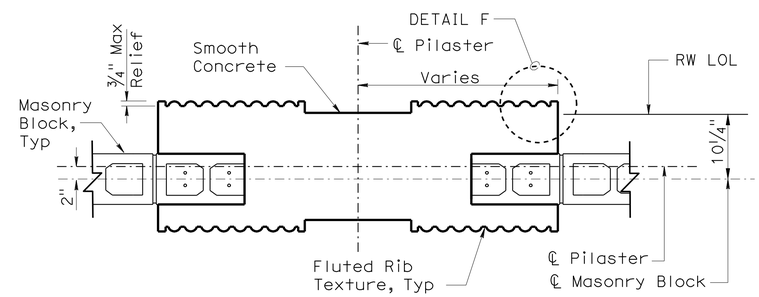

SECTION C-C
1" = 1'-0"

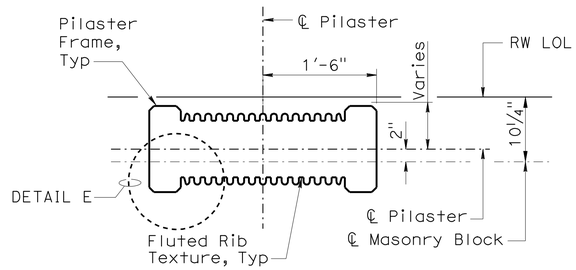

SECTION D-D
1" = 1'-0"

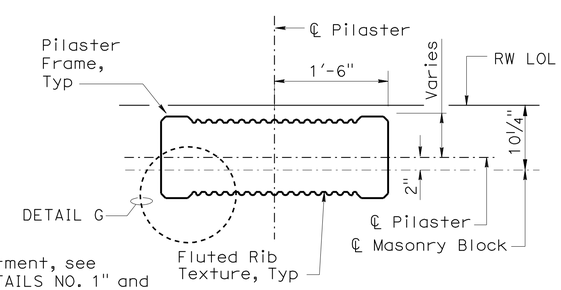

SECTION E-E
1" = 1'-0"

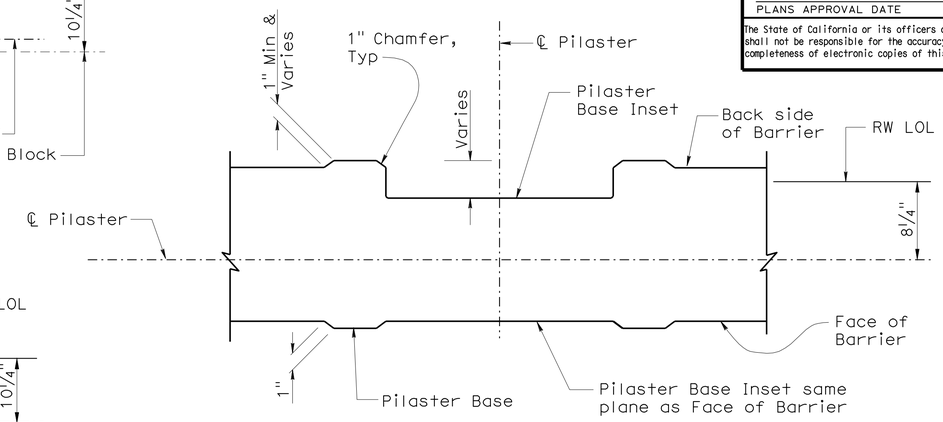

SECTION F-F
1½" = 1'-0"

Notes:

1. All dimensions symmetrical about ℄ Pilaster.
2. All vertical dimension are measured along the ℄ Pilaster (Pilaster shall be vertical).
3. For "DETAIL E", "DETAIL F" and "DETAIL G" see "SOUNDWALL ARCHITECTURAL DETAILS NO. 4" sheet.
4. For "DETAIL H" and "DETAIL L" see "SOUNDWALL ARCHITECTURAL DETAILS NO. 5" sheet.

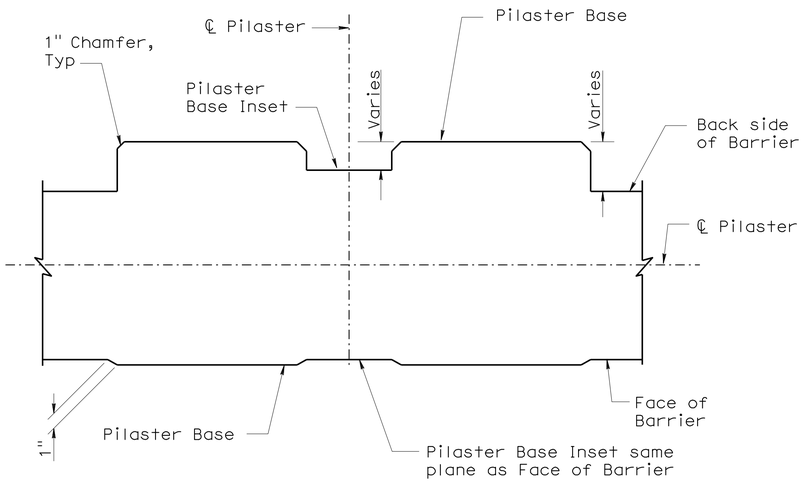

SECTION G-G
1½" = 1'-0"

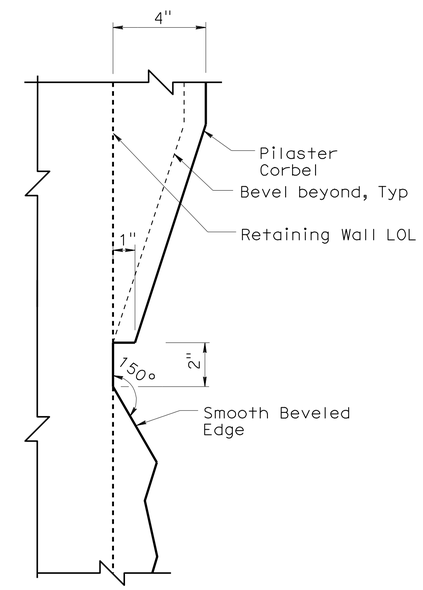

SECTION H-H
NO SCALE

DESIGN	BY Isaac Tasabia	CHECKED Javier Chavez	
DETAILS	BY Herman Mauroschadt	CHECKED Javier Chavez	
QUANTITIES	BY Suzan Moradi	CHECKED Gabriel Galo	

STATE OF CALIFORNIA
DEPARTMENT OF TRANSPORTATION

DIVISION OF ENGINEERING SERVICES
BRIDGE ARCHITECTURE AND AESTHETICS

BRIDGE NO. 53-3041
POST MILE 3.66

BLOOMFIELD AVENUE UC
SOUNDWALL ARCHITECTURAL DETAILS NO. 3

STRUCTURES DESIGN DETAIL SHEET (ENGLISH) (REV. 10/25/05)

ORIGINAL SCALE IN INCHES FOR REDUCED PLANS 0 1 2 3

CU 07
EA 215931

DISREGARD PRINTS BEARING EARLIER REVISION DATES 1-23-12

REVISION DATES

SHEET 67 OF 80

FILE => 53-3041-x-swadet03.dgn

USERNAME => s121614 DATE PLOTTED => 28-MAR-2012 TIME PLOTTED => 11:46

DIST	COUNTY	ROUTE	POST MILES TOTAL PROJECT	SHEET No	TOTAL SHEETS
07	LA	5	2.4/4.0	862	1288

LICENSED ARCHITECT — 1/31/12 DATE

3-26-12
PLANS APPROVAL DATE

LICENSED ARCHITECT H. Javier Chavez 14073 03-31-13 Renewal Date STATE OF CALIFORNIA

The State of California or its officers or agents shall not be responsible for the accuracy or completeness of electronic copies of this plan sheet.

Notes:

1. All notes and dimensions symetrical about ℄ Pilaster.
2. Beveled edges are 45° unless otherwise noted.
3. For Retaining Wall split slate texture, see "RETAINING WALL ARCHITECTURAL DETAILS" sheet.
4. For Type 736SV (MOD) Barrier fractured granite texture, see "CONCRETE BARRIER TYPE 736A (MOD 2) DETAILS" sheet if applicable.

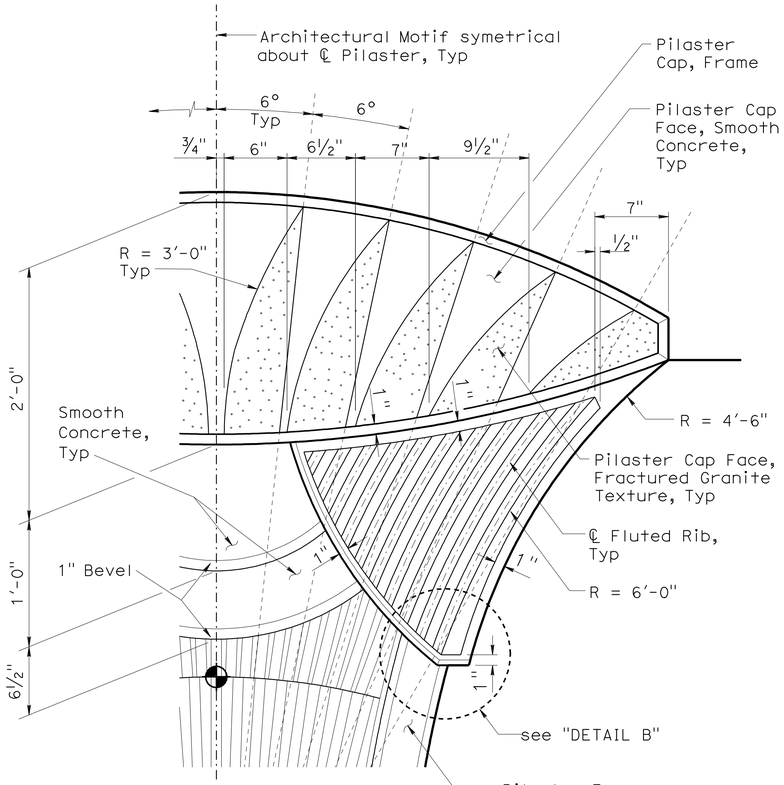

DETAIL A
NO SCALE

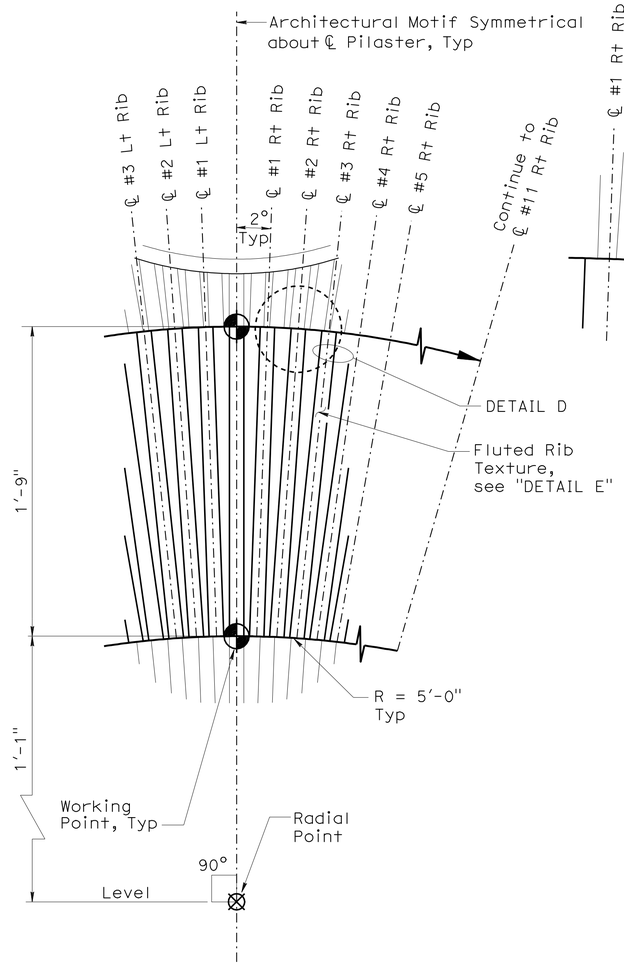

DETAIL C
NO SCALE

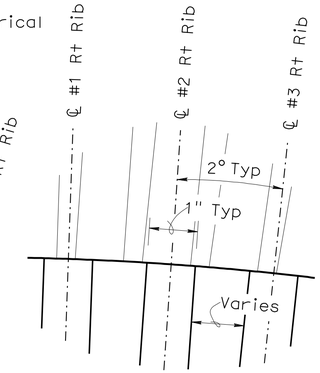

DETAIL D
NO SCALE

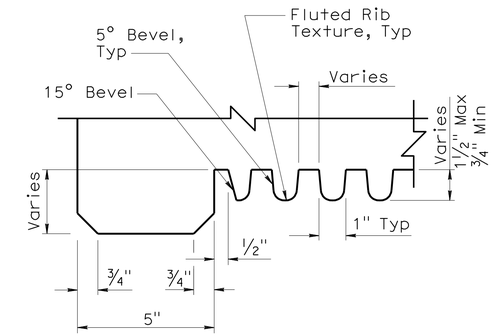

DETAIL E
NO SCALE

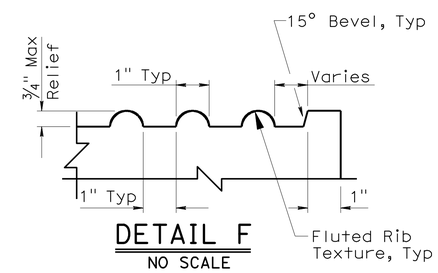

DETAIL F
NO SCALE

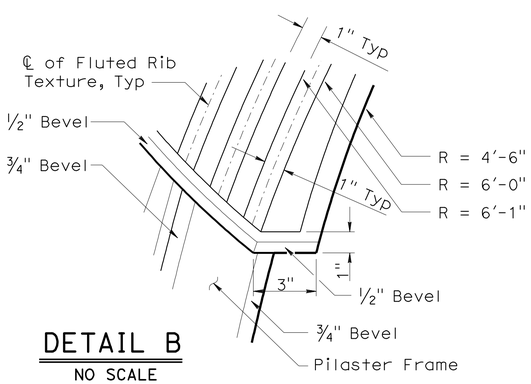

DETAIL B
NO SCALE

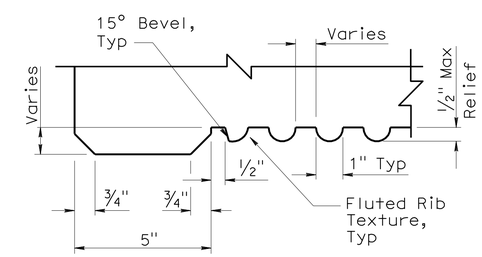

DETAIL G
NO SCALE

DESIGN	BY Isaac Tasabia	CHECKED Javier Chavez	
DETAILS	BY Herman Mauroschadt	CHECKED Javier Chavez	
QUANTITIES	BY Suzan Moradi	CHECKED Gabriel Galo	

STATE OF CALIFORNIA
DEPARTMENT OF TRANSPORTATION

DIVISION OF ENGINEERING SERVICES
BRIDGE ARCHITECTURE AND AESTHETICS

BRIDGE NO. 53-3041
POST MILE 3.66

BLOOMFIELD AVENUE UC
SOUNDWALL ARCHITECTURAL DETAILS NO. 4

STRUCTURES DESIGN DETAIL SHEET (ENGLISH) (REV. 10/25/05)

ORIGINAL SCALE IN INCHES FOR REDUCED PLANS 0 1 2 3

CU 07
EA 215931

DISREGARD PRINTS BEARING EARLIER REVISION DATES → 1-23-12

REVISION DATES

SHEET 68 OF 80

FILE => 53-3041-x-swadet04.dgn

USERNAME => s121614 DATE PLOTTED => 28-MAR-2012 TIME PLOTTED => 11:46

DIST	COUNTY	ROUTE	POST MILES TOTAL PROJECT	SHEET No	TOTAL SHEETS
07	LA	5	2.4/4.0	863	1288

LICENSED ARCHITECT 1/31/12 DATE

3-26-12
PLANS APPROVAL DATE

LICENSED ARCHITECT H. Javier Chavez 14073 03-31-13 Renewal Date STATE OF CALIFORNIA

The State of California or its officers or agents shall not be responsible for the accuracy or completeness of electronic copies of this plan sheet.

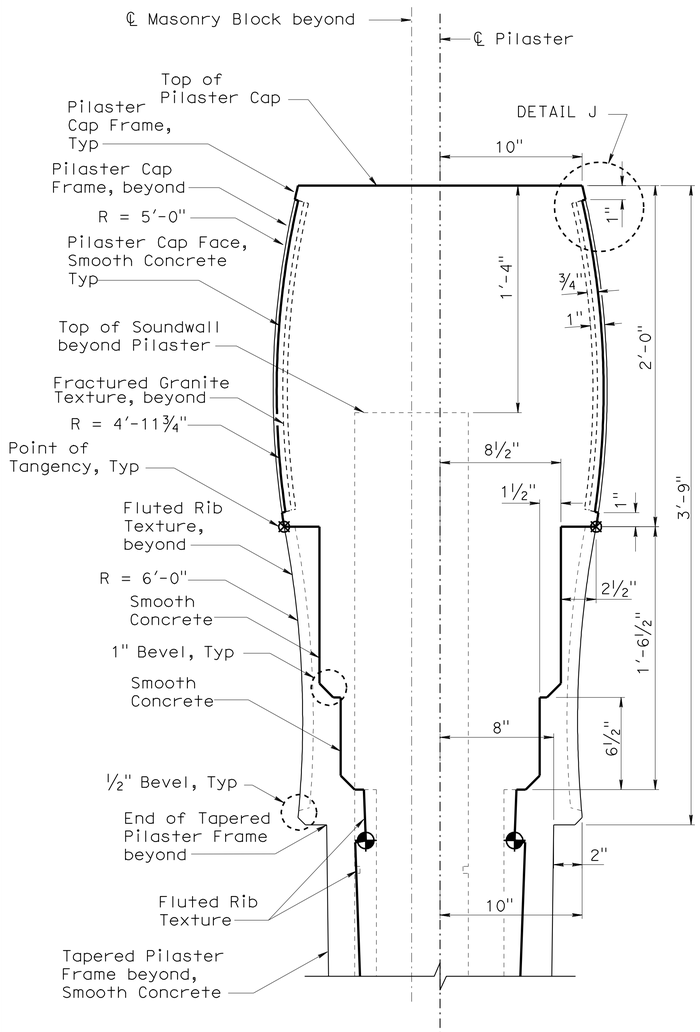

DETAIL H
NO SCALE

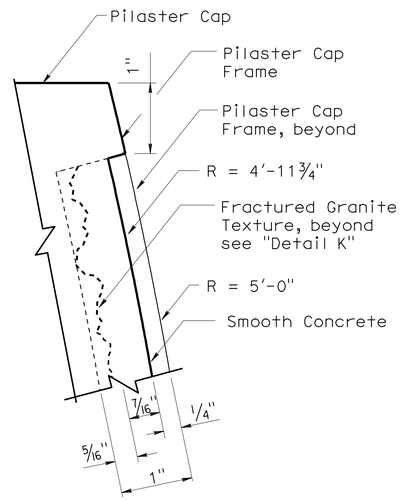

DETAIL J
NO SCALE

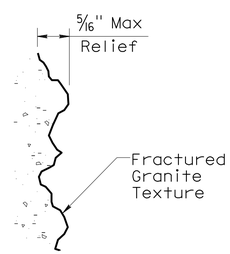

DETAIL K
NO SCALE

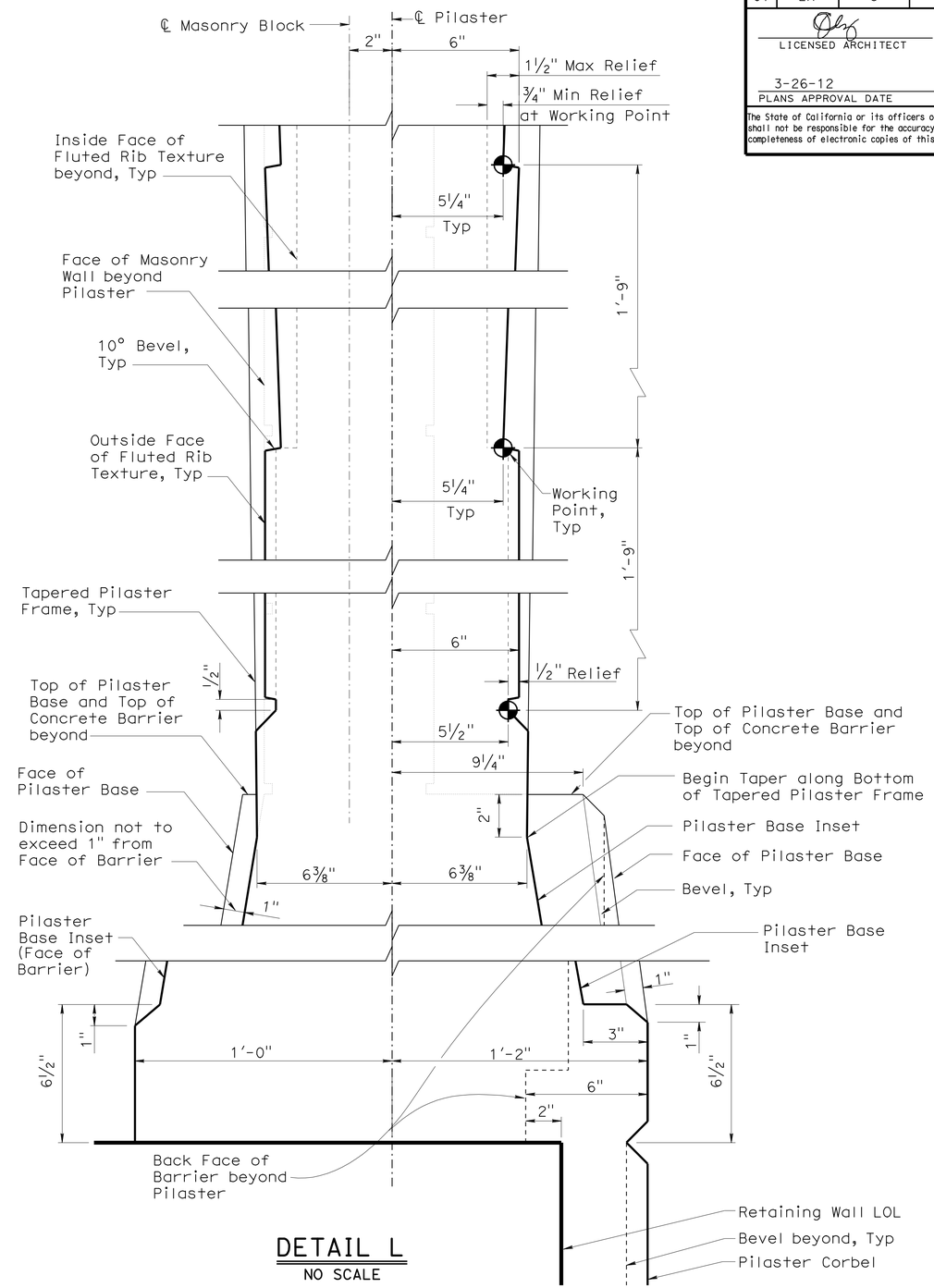

DETAIL L
NO SCALE

	BY	CHECKED
DESIGN	Isaac Tasabia	Javier Chavez
DETAILS	Herman Mauroschadt	Javier Chavez
QUANTITIES	Suzan Moradi	Gabriel Galo

STATE OF CALIFORNIA
DEPARTMENT OF TRANSPORTATION

DIVISION OF ENGINEERING SERVICES
BRIDGE ARCHITECTURE AND AESTHETICS

BRIDGE NO. 53-3041
POST MILE 3.66

BLOOMFIELD AVENUE UC
SOUNDWALL ARCHITECTURAL DETAILS NO. 5

STRUCTURES DESIGN DETAIL SHEET (ENGLISH) (REV. 10/25/05)

ORIGINAL SCALE IN INCHES FOR REDUCED PLANS 0 1 2 3

CU 07
EA 215931

DISREGARD PRINTS BEARING EARLIER REVISION DATES 1-23-12

REVISION DATES

SHEET 69 OF 80

FILE => 53-3041-x-swadet05.dgn

USERNAME => s121614 DATE PLOTTED => 28-MAR-2012 TIME PLOTTED => 11:47

DIST	COUNTY	ROUTE	POST MILES TOTAL PROJECT	SHEET No	TOTAL SHEETS
07	LA	5	2.4/4.0	864	1288

Andrew Rittenhouse 12-12-11
REGISTERED CIVIL ENGINEER DATE

3-26-12
PLANS APPROVAL DATE

The State of California or its officers or agents shall not be responsible for the accuracy or completeness of electronic copies of this plan sheet.

REGISTERED PROFESSIONAL ENGINEER
Andrew P. Rittenhouse
No. 61006
Exp. 12-31-12
CIVIL
STATE OF CALIFORNIA

Note:
For "SECTION K-K", "SECTION L-L", "SECTION M-M" and "SECTION N-N", see "SOUNDWALL ARCHITECTURAL DETAILS NO. 7" sheet.

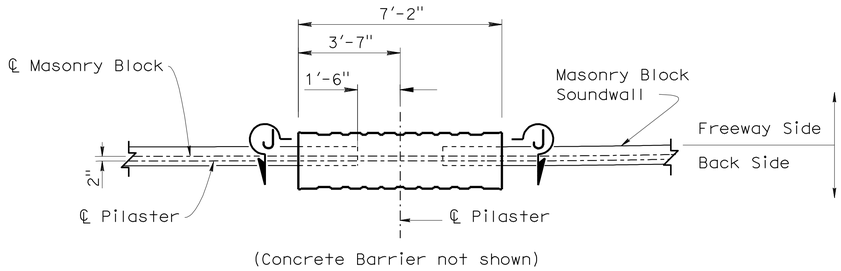

PART SOUND WALL PLAN

3/8" = 1'-0"

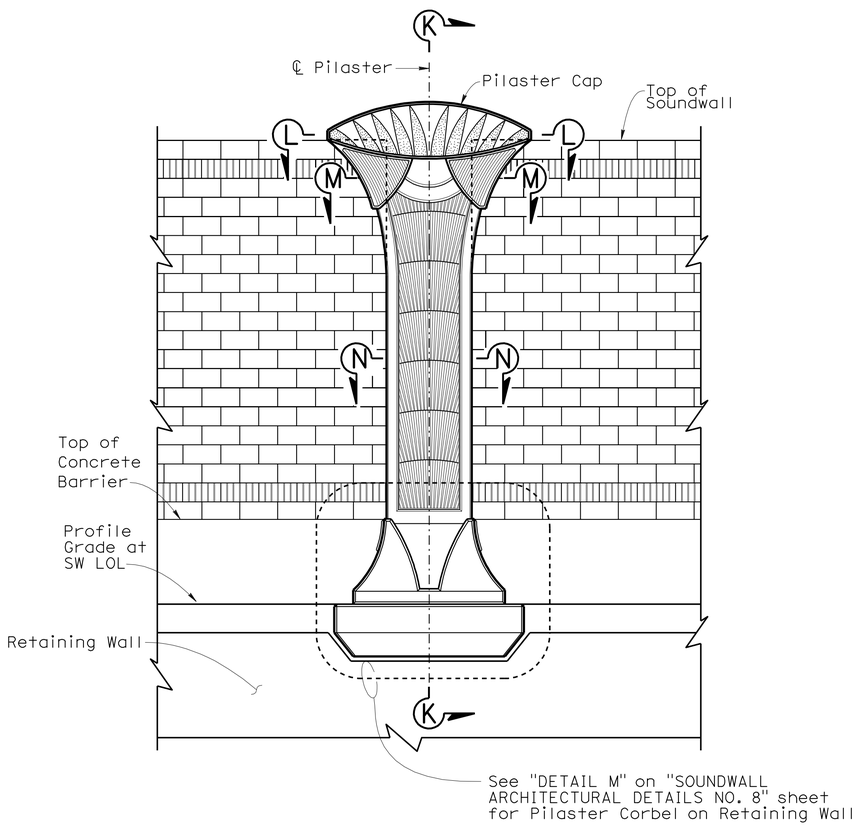

PART SOUNDWALL ELEVATION

3/8" = 1'-0"

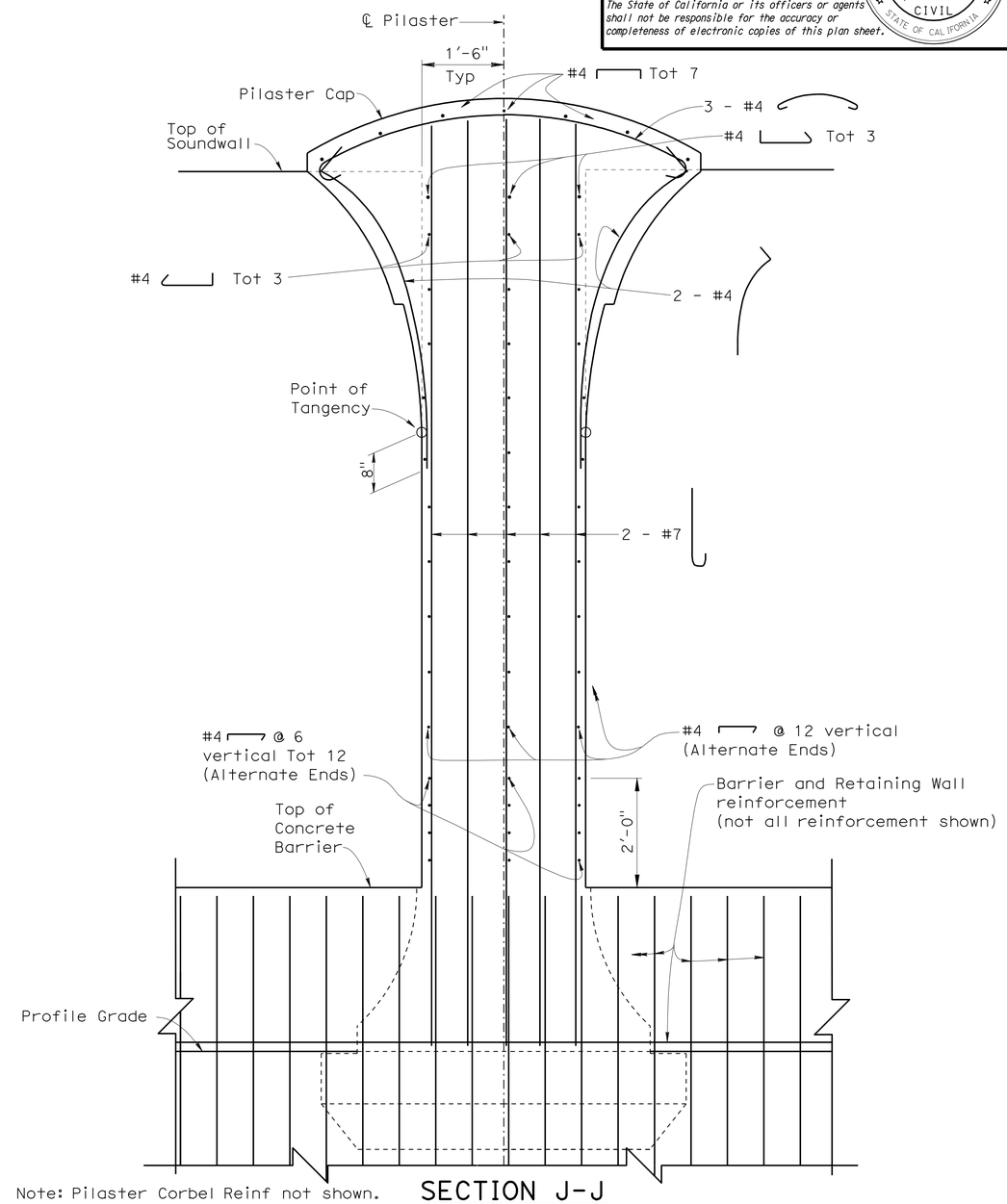

Note: Pilaster Corbel Reinf not shown.

SECTION J-J

3/4" = 1'-0"

DESIGN	BY Isaac Tasabia	CHECKED Javier Chavez	
DETAILS	BY Herman Mauroschadt	CHECKED Javier Chavez	
QUANTITIES	BY Suzan Moradi	CHECKED Gabriel Galo	

STATE OF CALIFORNIA
DEPARTMENT OF TRANSPORTATION

DIVISION OF ENGINEERING SERVICES
STRUCTURE DESIGN
DESIGN BRANCH 15

BRIDGE NO. 53-3041
POST MILE 3.66

BLOOMFIELD AVENUE UC
SOUNDWALL ARCHITECTURAL DETAILS NO. 6

STRUCTURES DESIGN DETAIL SHEET (ENGLISH) (REV. 10/25/05)

ORIGINAL SCALE IN INCHES FOR REDUCED PLANS 0 1 2 3

CU 07
EA 215931

DISREGARD PRINTS BEARING EARLIER REVISION DATES

REVISION DATES: 2-2-12

SHEET 70 OF 80

FILE => 53-3041-x-swadet06.dgn

USERNAME => s12161d DATE PLOTTED => 28-MAR-2012 TIME PLOTTED => 11:47

DIST	COUNTY	ROUTE	POST MILES TOTAL PROJECT	SHEET No	TOTAL SHEETS
07	LA	5	2.4/4.0	865	1288

Andrew Rittenhouse 12-12-11
REGISTERED CIVIL ENGINEER DATE

3-26-12
PLANS APPROVAL DATE

REGISTERED PROFESSIONAL ENGINEER
Andrew P. Rittenhouse
No. 61006
Exp. 12-31-12
CIVIL
STATE OF CALIFORNIA

The State of California or its officers or agents shall not be responsible for the accuracy or completeness of electronic copies of this plan sheet.

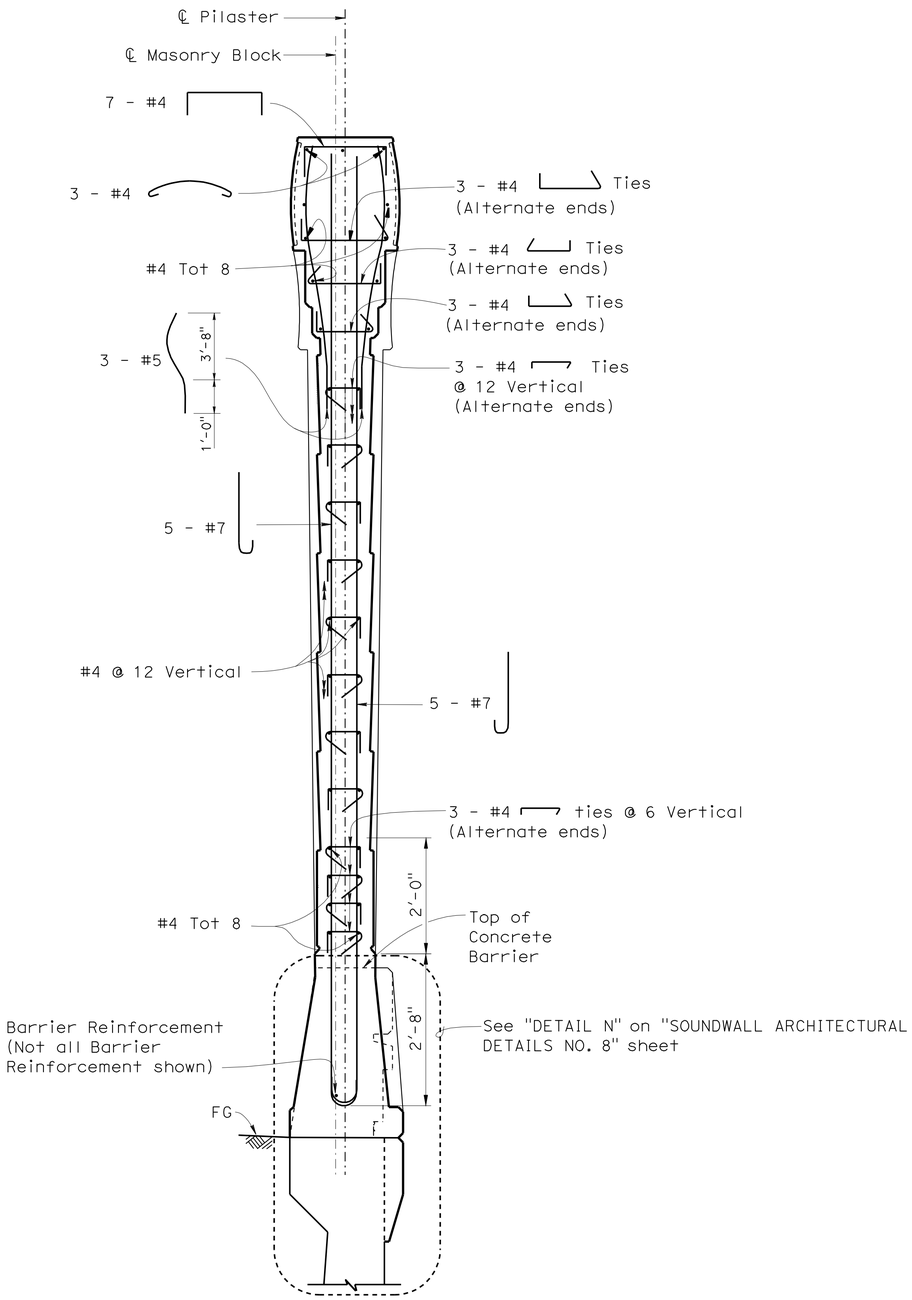

SECTION K-K
¾" = 1'-0"

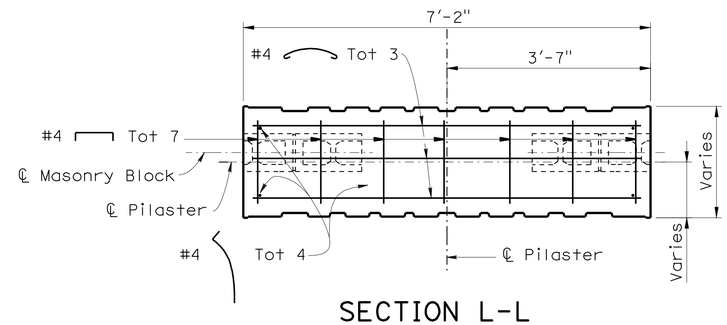

SECTION L-L
¾" = 1'-0"

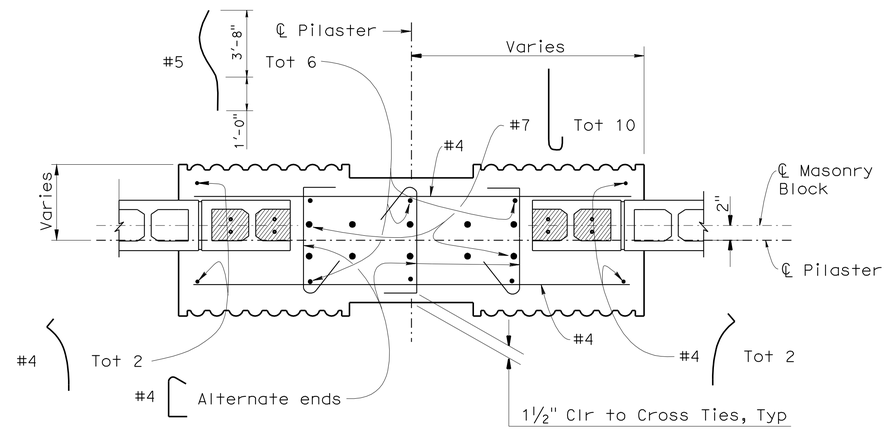

SECTION M-M
1" = 1'-0"

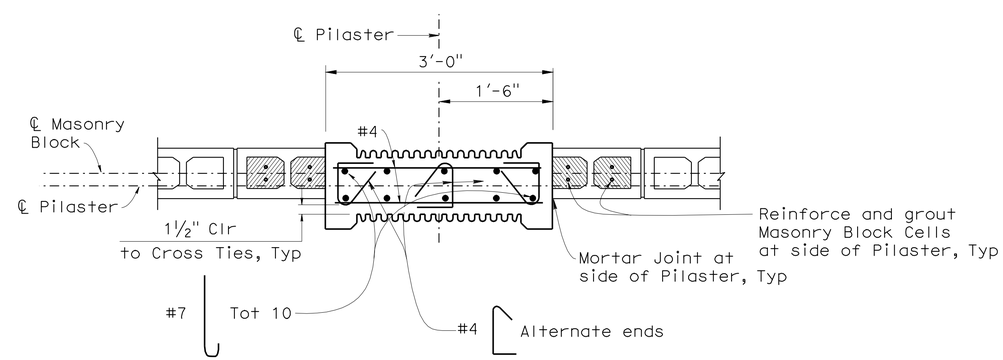

SECTION N-N
1" = 1'-0"

	BY	CHECKED
DESIGN	Isaac Tasabia	Javier Chavez
DETAILS	Herman Mauroschadt	Javier Chavez
QUANTITIES	Suzan Moradi	Gabriel Galo

STATE OF CALIFORNIA
DEPARTMENT OF TRANSPORTATION

DIVISION OF ENGINEERING SERVICES
STRUCTURE DESIGN
DESIGN BRANCH 15

BRIDGE NO. 53-3041
POST MILE 3.66

BLOOMFIELD AVENUE UC
SOUNDWALL ARCHITECTURAL DETAILS NO. 7

STRUCTURES DESIGN DETAIL SHEET (ENGLISH) (REV. 10/25/05)

ORIGINAL SCALE IN INCHES FOR REDUCED PLANS 0 1 2 3

CU 07
EA 215931

DISREGARD PRINTS BEARING EARLIER REVISION DATES 2-2-12

REVISION DATES

SHEET 71 OF 80

FILE => 53-3041-x-swadet07.dgn

USERNAME => s121614 DATE PLOTTED => 28-MAR-2012 TIME PLOTTED => 11:47

DIST	COUNTY	ROUTE	POST MILES TOTAL PROJECT	SHEET No	TOTAL SHEETS
07	LA	5	2.4/4.0	866	1288

Andrew Rittenhouse 12-12-11
REGISTERED CIVIL ENGINEER DATE

3-26-12
PLANS APPROVAL DATE

REGISTERED PROFESSIONAL ENGINEER
Andrew P. Rittenhouse
No. 61006
Exp. 12-31-12
CIVIL
STATE OF CALIFORNIA

The State of California or its officers or agents shall not be responsible for the accuracy or completeness of electronic copies of this plan sheet.

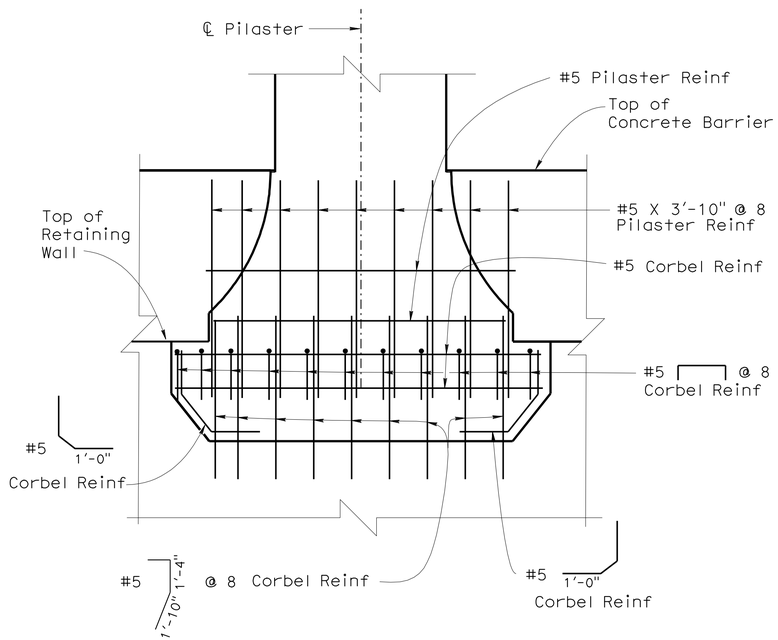

Note: Concrete Barrier/Retaining Wall reinf not shown.

DETAIL M
¾" = 1'-0"

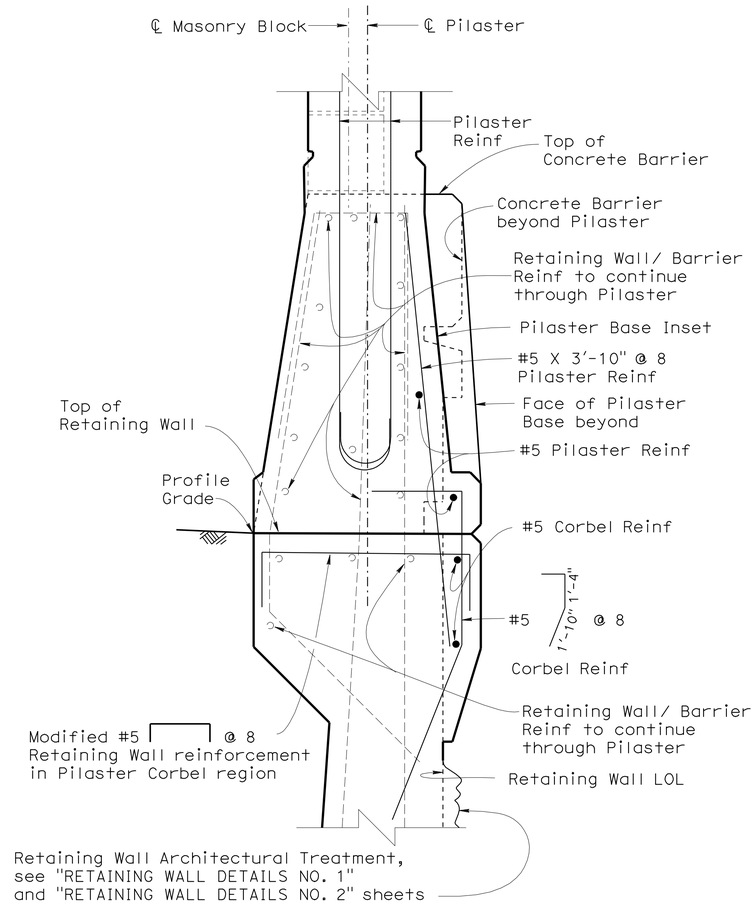

PILASTER CORBEL
ON RETAINING WALL

DETAIL N
1½" = 1'-0"

DESIGN	BY Isaac Tasabia	CHECKED Javier Chavez	
DETAILS	BY Herman Mauroschadt	CHECKED Javier Chavez	
QUANTITIES	BY Suzan Moradi	CHECKED Gabriel Galo	

STATE OF CALIFORNIA
DEPARTMENT OF TRANSPORTATION

DIVISION OF ENGINEERING SERVICES
STRUCTURE DESIGN
DESIGN BRANCH 15

BRIDGE NO. 53-3041
POST MILE 3.66

BLOOMFIELD AVENUE UC
SOUNDWALL ARCHITECTURAL DETAILS NO. 8

STRUCTURES DESIGN DETAIL SHEET (ENGLISH) (REV. 10/25/05)

ORIGINAL SCALE IN INCHES FOR REDUCED PLANS 0 1 2 3

CU 07
EA 215931

DISREGARD PRINTS BEARING EARLIER REVISION DATES 1-23-12

REVISION DATES

SHEET 72 OF 80

FILE => 53-3041-x-swadet08.dgn

USERNAME => s121614 DATE PLOTTED => 28-MAR-2012 TIME PLOTTED => 11:47

DIST	COUNTY	ROUTE	POST MILES TOTAL PROJECT	SHEET No.	TOTAL SHEETS
07	LA	5	2.4/4.0	867	1288

GEOTECHNICAL PROFESSIONAL — DATE 06/2011

3-26-12
PLANS APPROVAL DATE

REGISTERED PROFESSIONAL ENGINEER — MICHAEL G. SMITH No. 2229 Exp. 3-31-2012 GEOTECHNICAL — STATE OF CALIFORNIA

The State of California or its officers or agents shall not be responsible for the accuracy or completeness of electronic copies of this plan sheet.

BENCH MARK

PRHV 104 Elev 94.31′
FOUND CHISLED "X" ON S′LY TC @+/- 250′ W/O NB 1-5 TO WB
FIRESTONE BLVD OFF-RAMP TUNNEL PER SR 09-033-000011
NAVD 88

PRHV 105 Elev 96.88′
FOUND CHISLED "X" ON W′LY CURB BCR@ EB FIRESTONE BL
TO SB 1-5 ON-RAMP & FIRESTONE BL INTERSECTION PER
SR 09-033-000011 NAVD 88

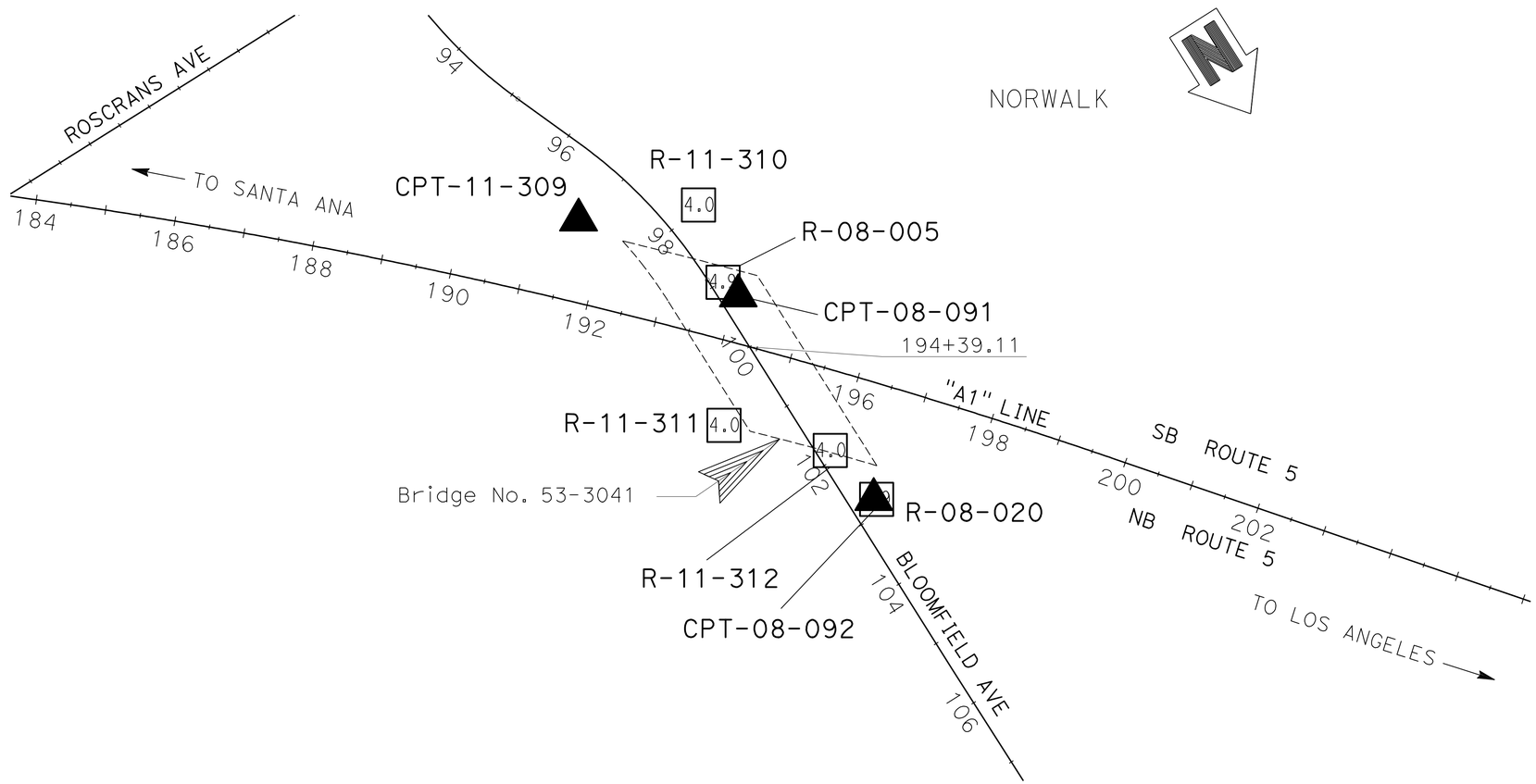

PLAN
SCALE 1"=100′

Notes

1. This LOTB sheet was prepared in accordance with the Caltrans Soil & Rock Logging, Classification, and Presentation Manual (2010) except three digit sequence number in boring identification starting with the segment number per exception request approved on April 08, 2009.

2. For protection of underground utility lines, hand-auger was used to remove top 5 to 10 feet of subsurface material for exploratory borings and cone penetration testings.

ENGINEERING SERVICES	MATERIALS AND GEOTECHNICAL SERVICES	STATE OF CALIFORNIA DEPARTMENT OF TRANSPORTATION	DIVISION OF ENGINEERING SERVICES STRUCTURE DESIGN DESIGN BRANCH 15	BRIDGE NO. 53-3041 POST MILE 3.66	BLOOMFIELD AVENUE UC LOG OF TEST BORINGS SHEET 1 OF 8
FUNCTIONAL SUPERVISOR NAME: M. SMITH	DRAWN BY: P.QUACH CHECKED BY: D.ORRIS	FIELD INVESTIGATION BY: D.LUCAS/T.PANAH/C.CARBINO/P.CHAU/L.ROEBUCK			

OGS CIVIL LOG OF TEST BORINGS SHEET — ORIGINAL SCALE IN INCHES FOR REDUCED PLANS 0 1 2 3 — CU 07 EA 215931 — DISREGARD PRINTS BEARING EARLIER REVISION DATES — REVISION DATES 06-14-11 10-7-11 1-5-12 — SHEET 73 OF 80

FILE => 53-3041-z-lotb01.dgn

USERNAME => s126614 DATE PLOTTED => 28-MAR-2012 TIME PLOTTED => 11:47

DIST	COUNTY	ROUTE	POST MILES TOTAL PROJECT	SHEET No.	TOTAL SHEETS
07	LA	5	2.4/4.0	868	1288

GEOTECHNICAL PROFESSIONAL — DATE 06/2011

3-26-12
PLANS APPROVAL DATE

REGISTERED PROFESSIONAL ENGINEER — MICHAEL G. SMITH No. 2229 Exp. 3-31-2012 GEOTECHNICAL — STATE OF CALIFORNIA

The State of California or its officers or agents shall not be responsible for the accuracy or completeness of electronic copies of this plan sheet.

FOR PLAN VIEW, SEE
"LOG OF TEST BORINGS" 1 OF 8

Notes

1. This LOTB sheet was prepared in accordance with the Caltrans Soil & Rock Logging, Classification, and Presentation Manual (2010) except three digit sequence number in boring identification starting with the segment number per exception request approved on April 08, 2009.

2. For protection of underground utility lines, hand-auger was used to remove top 5 to 10 feet of subsurface material for exploratory borings and cone penetration testings.

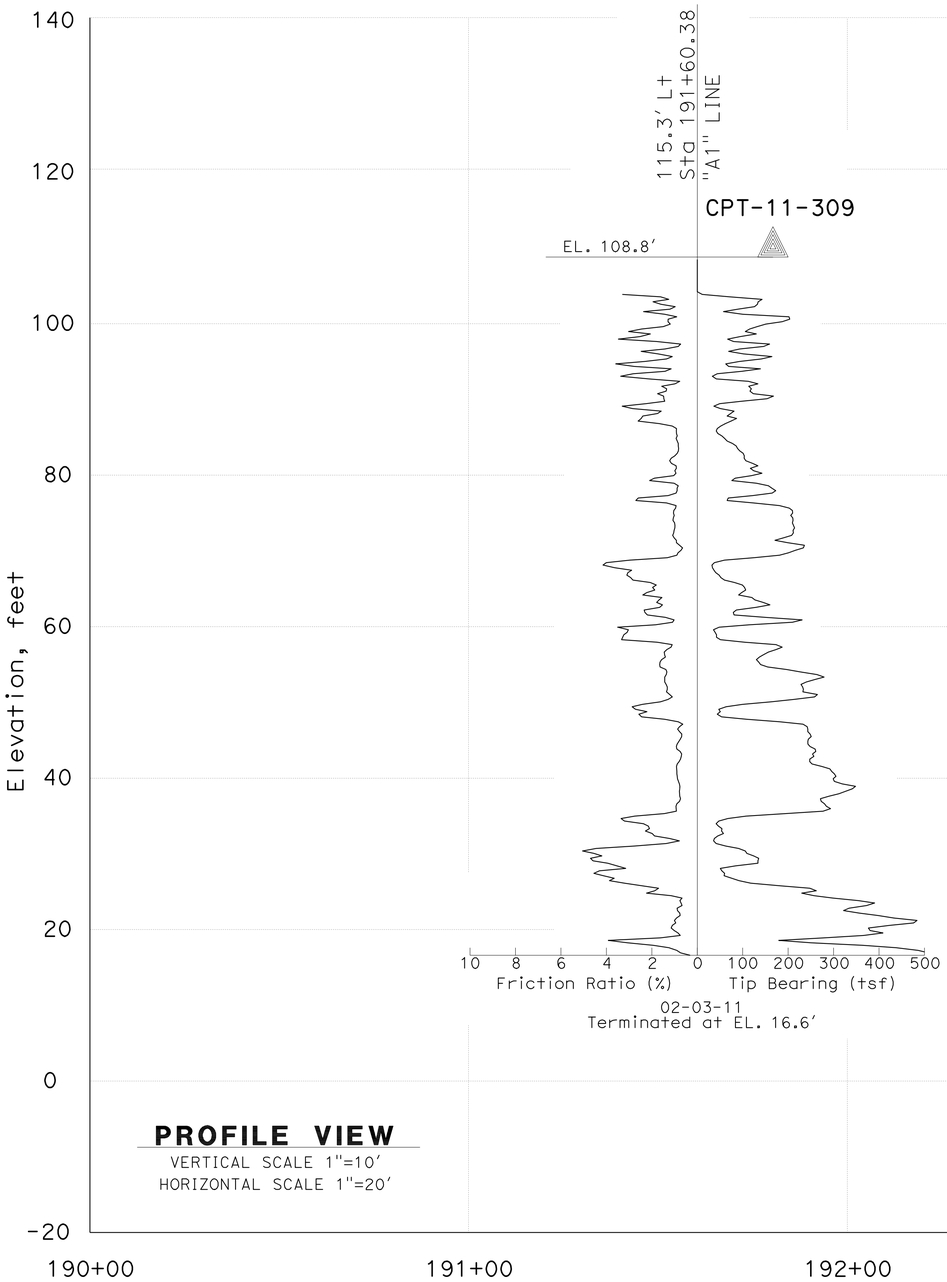

PROFILE VIEW
VERTICAL SCALE 1"=10'
HORIZONTAL SCALE 1"=20'

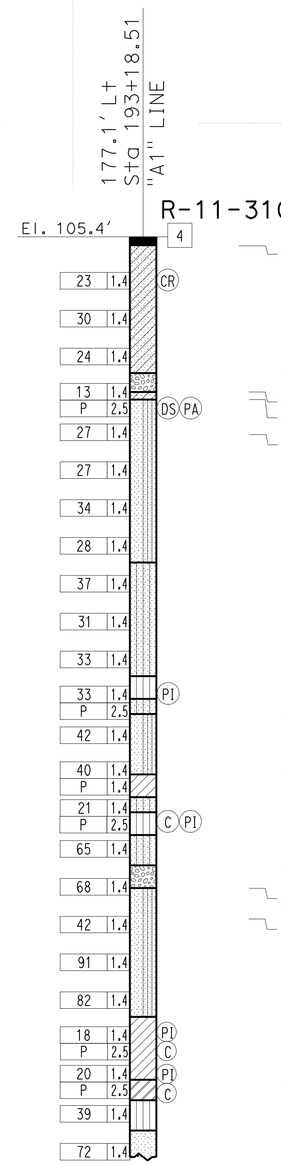

ASPHALT CONCRETE PAVEMENT (14")
CLAYEY SAND (SC); medium dense; dark brown; moist; (FILL).
-dense; mostly SAND, from coarse to fine; some fines; little GRAVEL.

-pale brown.

-dark grayish brown.

Poorly-graded GRAVEL with SAND (GP); medium dense; light brownish gray; moist; mostly fine GRAVEL; some SAND, from coarse to fine; trace fines; (ALLUVIUM).
CLAYEY SAND (SC); medium dense; dark brown; moist; mostly fine SAND; some fines.
Poorly-graded SAND with SILT (SP-SM); medium dense; brown; moist; mostly fine SAND; few fines.
-dense; light gray.
-grayish brown; slightly moist.

SILTY SAND (SM); very dense; grayish brown; moist; mostly fine SAND; little fines.

-dense; olive brown.

-dark gray; some fines.

SILT (ML); very stiff; dark olive gray; wet; mostly fines; few fine SAND; PP=3.0 tsf.

SILTY SAND (SM); very dense; black; wet; mostly fine SAND; some fines.
Poorly-graded SAND with SILT (SP-SM); dense; dark gray; moist; mostly fine SAND; few fines.

Lean CLAY (CL); very stiff; very dark gray; wet; mostly fines; PP=2.0 to 3.0 tsf

SILTY SAND (SM); dense; dark gray; wet; mostly fine SAND; some fines.
SANDY SILT (ML); very stiff; dark gray; wet; mostly fines; some fine SAND.

SILTY SAND (SM); very dense; dark yellowish brown; moist; mostly fine to coarse SAND; little fines.

Poorly-graded GRAVEL with SAND (GP); very dense; dark yellowish brown; moist; mostly fine GRAVEL; little fine to coarse SAND.

Poorly-graded SAND with SILT (SP-SM); very dense; brown; moist; mostly fine and medium SAND; few fines.
-dark brown.

-brown; wet.

-olive; moist.

SANDY lean CLAY (CL); medium stiff to stiff; gray; wet; some fine SAND; PP=0.75 to 1.25 tsf.
-very stiff; moist; PP=3.5 tsf.

-stiff to very stiff; mottled olive and gray; wet; PP=1.5 to 2.5 tsf.
Fat CLAY with SAND (CH); very stiff to hard; mottled olive and gray; little SAND.

SILT with SAND (ML); very stiff; light olive brown; moist; mostly fines; little fine SAND; PP=3.0 tsf.

SILTY SAND (SM); very dense; light olive brown; moist; mostly fine SAND; little fines.

02-09-11
Terminated at Elev -16.1 ft
Hammer Energy Ratio (ERi) = 87%
Groundwater was encountered, but elevation was not measured.

ENGINEERING SERVICES	MATERIALS AND GEOTECHNICAL SERVICES	STATE OF CALIFORNIA DEPARTMENT OF TRANSPORTATION	DIVISION OF ENGINEERING SERVICES STRUCTURE DESIGN DESIGN BRANCH 15	BRIDGE NO. 53-3041 / POST MILE 3.66	BLOOMFIELD AVENUE UC
FUNCTIONAL SUPERVISOR NAME: M. SMITH	DRAWN BY: P.QUACH / CHECKED BY: D.ORRIS	FIELD INVESTIGATION BY: D.LUCAS/T.PANAH/C.CARBINO/P.CHAU/L.ROEBUCK			LOG OF TEST BORINGS SHEET 2 OF 8

OGS CIVIL LOG OF TEST BORINGS SHEET — ORIGINAL SCALE IN INCHES FOR REDUCED PLANS 0 1 2 3 — CU 07 EA 215931 — DISREGARD PRINTS BEARING EARLIER REVISION DATES — REVISION DATES 06-27-11 12-9-11 1-5-12 — SHEET 74 OF 80

FILE => 53-3041-z-lotb02.dgn

USERNAME => s121614 DATE PLOTTED => 28-MAR-2012 TIME PLOTTED => 11:47

DIST	COUNTY	ROUTE	POST MILES TOTAL PROJECT	SHEET No.	TOTAL SHEETS
07	LA	5	2.4/4.0	869	1288

GEOTECHNICAL PROFESSIONAL — DATE 06/2011

3-26-12
PLANS APPROVAL DATE

REGISTERED PROFESSIONAL ENGINEER — MICHAEL G. SMITH No. 2229 Exp. 3-31-2012 GEOTECHNICAL — STATE OF CALIFORNIA

The State of California or its officers or agents shall not be responsible for the accuracy or completeness of electronic copies of this plan sheet.

FOR PLAN VIEW, SEE
"LOG OF TEST BORINGS" 1 OF 8

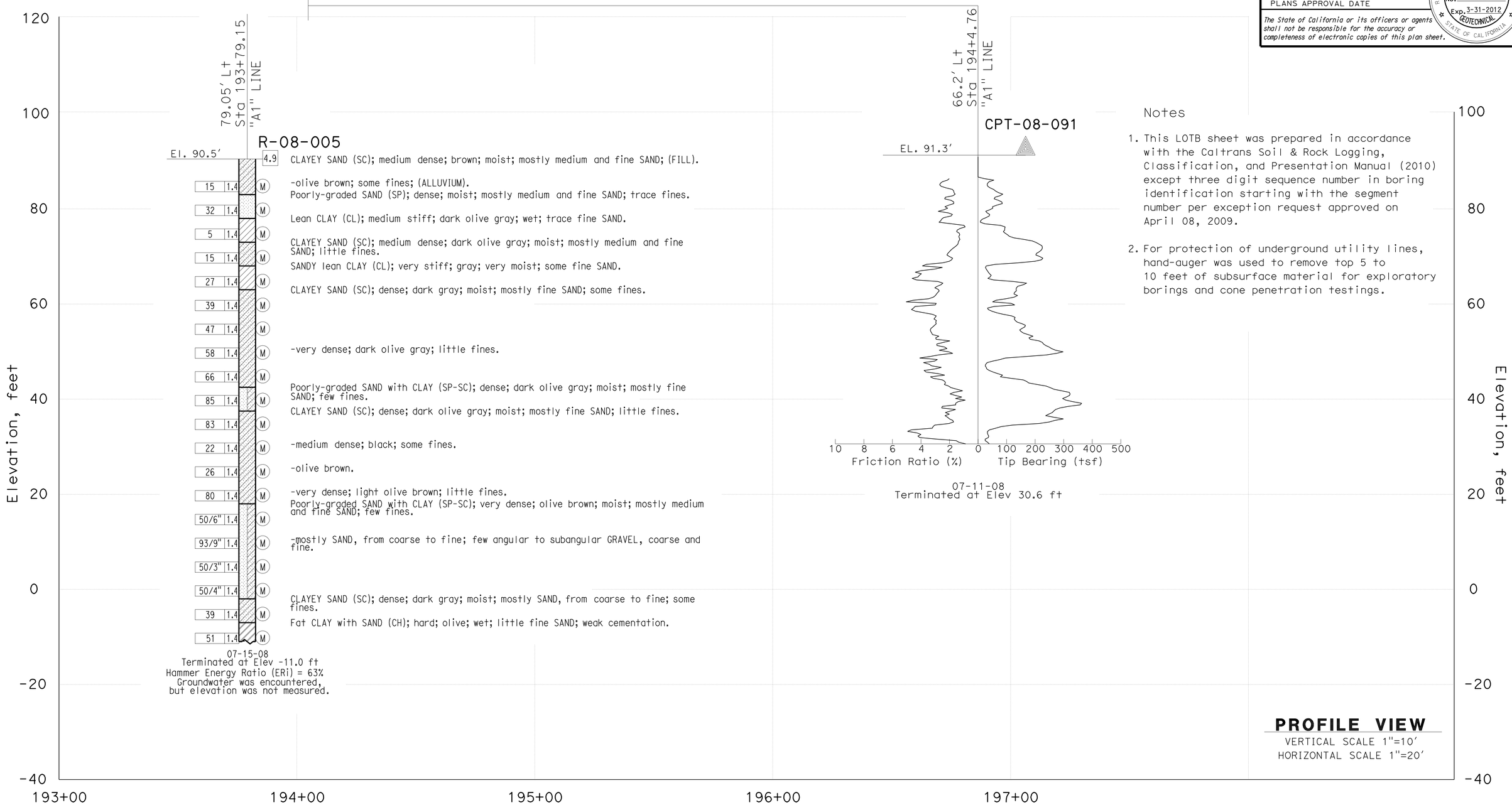

Notes

1. This LOTB sheet was prepared in accordance with the Caltrans Soil & Rock Logging, Classification, and Presentation Manual (2010) except three digit sequence number in boring identification starting with the segment number per exception request approved on April 08, 2009.

2. For protection of underground utility lines, hand-auger was used to remove top 5 to 10 feet of subsurface material for exploratory borings and cone penetration testings.

ENGINEERING SERVICES	MATERIALS AND GEOTECHNICAL SERVICES	STATE OF CALIFORNIA DEPARTMENT OF TRANSPORTATION	DIVISION OF ENGINEERING SERVICES STRUCTURE DESIGN DESIGN BRANCH 15	BRIDGE NO. 53-3041 / POST MILE 3.66	BLOOMFIELD AVENUE UC
FUNCTIONAL SUPERVISOR	DRAWN BY: P.QUACH	FIELD INVESTIGATION BY:			LOG OF TEST BORINGS SHEET 3 OF 8
NAME: M. SMITH	CHECKED BY: D.ORRIS	D.LUCAS/T.PANAH/C.CARBINO/P.CHAU/L.ROEBUCK			

OGS CIVIL LOG OF TEST BORINGS SHEET

ORIGINAL SCALE IN INCHES FOR REDUCED PLANS 0 1 2 3

CU 07
EA 215931

DISREGARD PRINTS BEARING EARLIER REVISION DATES

REVISION DATES: 06-27-11 12-2-11 1-5-12

SHEET 75 OF 80

FILE => 53-3041-z-lotb03.dgn

USERNAME => s126614 DATE PLOTTED => 28-MAR-2012 TIME PLOTTED => 11:47

DIST	COUNTY	ROUTE	POST MILES TOTAL PROJECT	SHEET No.	TOTAL SHEETS
07	LA	5	2.4/4.0	870	1288

GEOTECHNICAL PROFESSIONAL — DATE 06/2011

3-26-12
PLANS APPROVAL DATE

REGISTERED PROFESSIONAL ENGINEER — MICHAEL G. SMITH No. 2229 Exp. 3-31-2012 GEOTECHNICAL — STATE OF CALIFORNIA

The State of California or its officers or agents shall not be responsible for the accuracy or completeness of electronic copies of this plan sheet.

FOR PLAN VIEW, SEE
"LOG OF TEST BORINGS" 1 OF 8

Notes

1. This LOTB sheet was prepared in accordance with the Caltrans Soil & Rock Logging, Classification, and Presentation Manual (2010) except three digit sequence number in boring identification starting with the segment number per exception request approved on April 08, 2009.

2. For protection of underground utility lines, hand-auger was used to remove top 5 to 10 feet of subsurface material for exploratory borings and cone penetration testings.

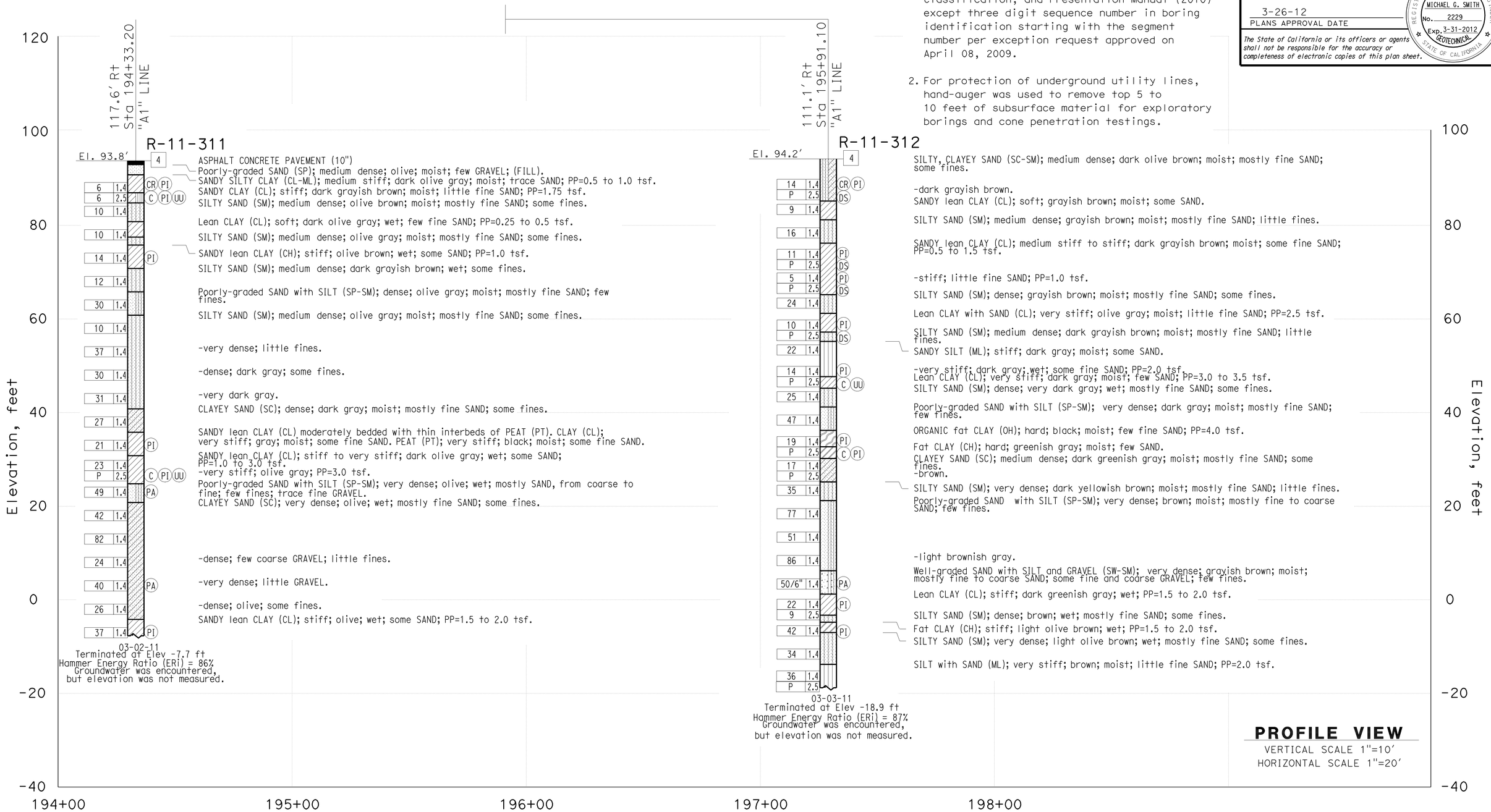

ENGINEERING SERVICES	MATERIALS AND GEOTECHNICAL SERVICES	STATE OF CALIFORNIA DEPARTMENT OF TRANSPORTATION	DIVISION OF ENGINEERING SERVICES STRUCTURE DESIGN DESIGN BRANCH 15	BRIDGE NO. 53-3041 POST MILE 3.66	BLOOMFIELD AVENUE UC
FUNCTIONAL SUPERVISOR NAME: M. SMITH	DRAWN BY: P.QUACH CHECKED BY: D.ORRIS	FIELD INVESTIGATION BY: D.LUCAS/T.PANAH/C.CARBINO/P.CHAU/L.ROEBUCK			LOG OF TEST BORINGS SHEET 4 OF 8

OGS CIVIL LOG OF TEST BORINGS SHEET

ORIGINAL SCALE IN INCHES FOR REDUCED PLANS 0 1 2 3

CU 07
EA 215931

DISREGARD PRINTS BEARING EARLIER REVISION DATES

REVISION DATES: 06-17-11 12-5-11 1-5-12

SHEET 76 OF 80

FILE => 53-3041-z-lotb04.dgn

USERNAME => s121614 DATE PLOTTED => 28-MAR-2012 TIME PLOTTED => 11:48

DIST	COUNTY	ROUTE	POST MILES TOTAL PROJECT	SHEET No.	TOTAL SHEETS
07	LA	5	2.4/4.0	871	1288

GEOTECHNICAL PROFESSIONAL — DATE 06/2011

3-26-12
PLANS APPROVAL DATE

REGISTERED PROFESSIONAL ENGINEER — MICHAEL G. SMITH No. 2229 Exp. 3-31-2012 GEOTECHNICAL — STATE OF CALIFORNIA

The State of California or its officers or agents shall not be responsible for the accuracy or completeness of electronic copies of this plan sheet.

FOR PLAN VIEW, SEE
"LOG OF TEST BORINGS" 1 OF 8

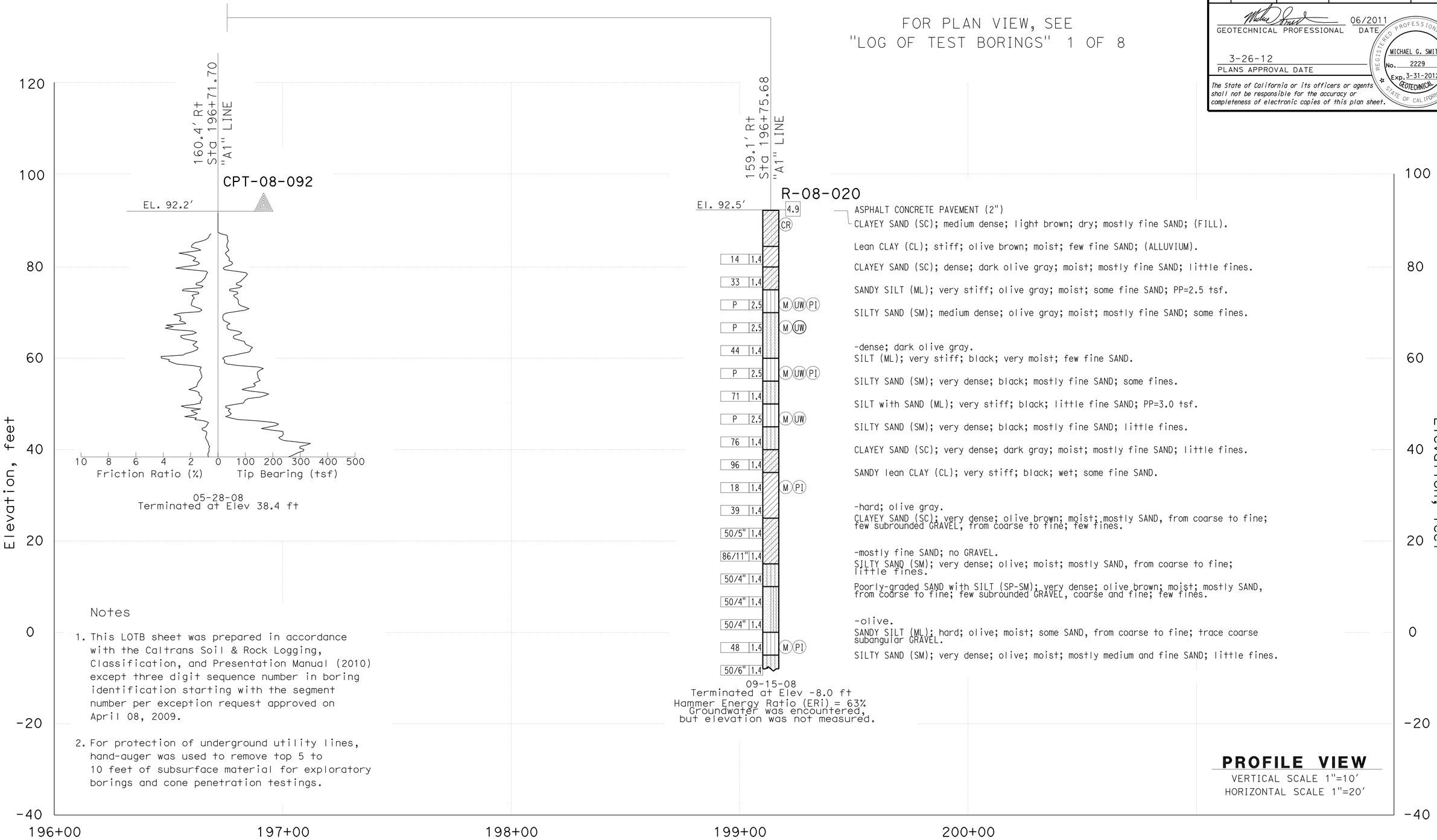

Notes

1. This LOTB sheet was prepared in accordance with the Caltrans Soil & Rock Logging, Classification, and Presentation Manual (2010) except three digit sequence number in boring identification starting with the segment number per exception request approved on April 08, 2009.

2. For protection of underground utility lines, hand-auger was used to remove top 5 to 10 feet of subsurface material for exploratory borings and cone penetration testings.

PROFILE VIEW
VERTICAL SCALE 1"=10'
HORIZONTAL SCALE 1"=20'

ENGINEERING SERVICES	MATERIALS AND GEOTECHNICAL SERVICES	STATE OF CALIFORNIA DEPARTMENT OF TRANSPORTATION	DIVISION OF ENGINEERING SERVICES STRUCTURE DESIGN DESIGN BRANCH 15	BRIDGE NO. 53-3041 POST MILE 3.66	BLOOMFIELD AVENUE UC
FUNCTIONAL SUPERVISOR NAME: M. SMITH	DRAWN BY: P.QUACH CHECKED BY: D.ORRIS	FIELD INVESTIGATION BY: D.LUCAS/T.PANAH/C.CARBINO/P.CHAU/L.ROEBUCK			LOG OF TEST BORINGS SHEET 5 OF 8

OGS CIVIL LOG OF TEST BORINGS SHEET

ORIGINAL SCALE IN INCHES FOR REDUCED PLANS 0 1 2 3

CU 07
EA 215931

DISREGARD PRINTS BEARING EARLIER REVISION DATES → 06/27/11 12-5-11 1-5-12

SHEET 77 OF 80

FILE => 53-3041-z-lotb05.dgn

USERNAME => s121614 DATE PLOTTED => 28-MAR-2012 TIME PLOTTED => 11:48

REFERENCE: CALTRANS SOIL & ROCK LOGGING, CLASSIFICATION, AND PRESENTATION MANUAL (2010)

DIST	COUNTY	ROUTE	POST MILES TOTAL PROJECT	SHEET No.	TOTAL SHEETS
07	LA	5	2.4/4.0	872	1288

GEOTECHNICAL PROFESSIONAL — DATE 06/2011

3-26-12
PLANS APPROVAL DATE

REGISTERED PROFESSIONAL ENGINEER — MICHAEL G. SMITH No. 2229 Exp. 3-31-2012 GEOTECHNICAL — STATE OF CALIFORNIA

The State of California or its officers or agents shall not be responsible for the accuracy or completeness of electronic copies of this plan sheet.

CEMENTATION

Description	Criteria
Weak	Crumbles or breaks with handling or little finger pressure.
Moderate	Crumbles or breaks with considerable finger pressure.
Strong	Will not crumble or break with finger pressure.

BOREHOLE IDENTIFICATION

Symbol	Hole Type	Description
Size	A	Auger Boring (hollow or solid stem bucket)
Size	R RW RC P	Rotary drilled boring (conventional) Rotary drilled with self-casing wire-line Rotary core with continuously-sampled, self-casing wire-line Rotary percussion boring (air)
Size	R	Rotary drilled diamond core
Size	HD HA	Hand driven (1-inch soil tube) Hand Auger
●	D	Dynamic Cone Penetration Boring
▲	CPT	Cone Penetration Test (ASTM D 5778)
⬚	O	Other (note on LOTB)

Note: Size in inches.

CONSISTENCY OF COHESIVE SOILS

Description	Shear Strength (tsf)	Pocket Penetrometer Measurement, PP, (tsf)	Torvane Measurement, TV, (tsf)	Vane Shear Measurement, VS, (tsf)
Very Soft	Less than 0.12	Less than 0.25	Less than 0.12	Less than 0.12
Soft	0.12 - 0.25	0.25 - 0.5	0.12 - 0.25	0.12 - 0.25
Medium Stiff	0.25 - 0.5	0.5 - 1	0.25 - 0.5	0.25 - 0.5
Stiff	0.5 - 1	1 - 2	0.5 - 1	0.5 - 1
Very Stiff	1 - 2	2 - 4	1 - 2	1 - 2
Hard	Greater than 2	Greater than 4	Greater than 2	Greater than 2

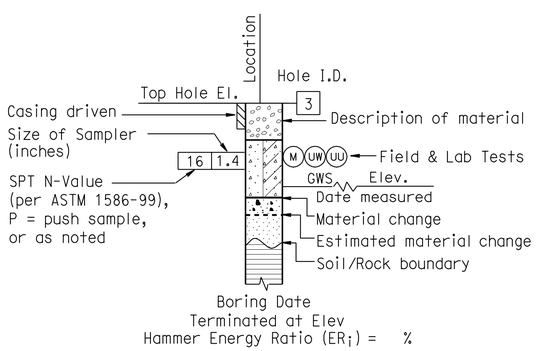

ROTARY BORING

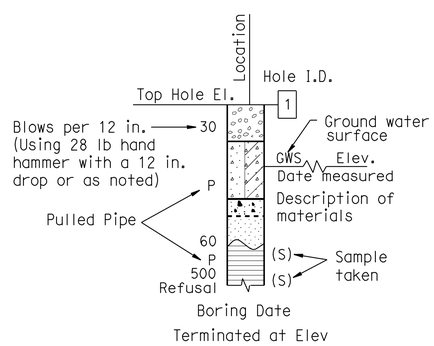

HAND BORING

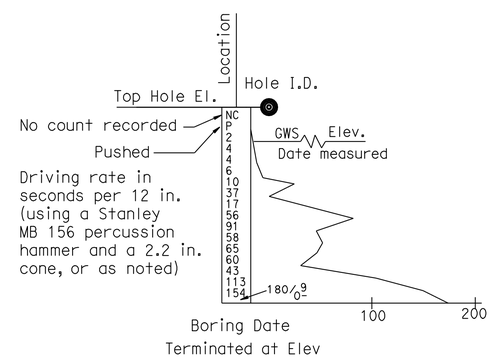

DYNAMIC CONE PENETRATION BORING

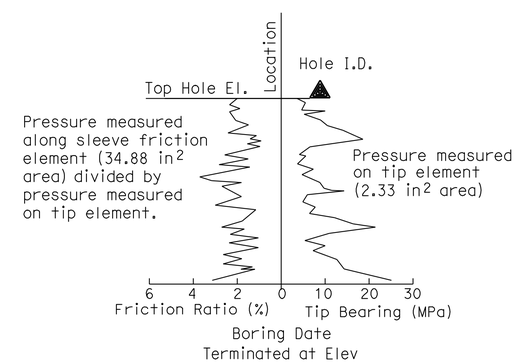

CONE PENETRATION TEST (CPT) BORING

ENGINEERING SERVICES	MATERIALS AND GEOTECHNICAL SERVICES	STATE OF CALIFORNIA DEPARTMENT OF TRANSPORTATION	DIVISION OF ENGINEERING SERVICES STRUCTURE DESIGN DESIGN BRANCH 15	BRIDGE NO. 53-3041 POST MILE 3.66	BLOOMFIELD AVENUE UC
FUNCTIONAL SUPERVISOR	DRAWN BY: P.QUACH	FIELD INVESTIGATION BY:			LOG OF TEST BORINGS SHEET 6 OF 8
NAME: M. SMITH	CHECKED BY: D.ORRIS	D.LUCAS/T.PANAH/C.CARBINO/P.CHAU/L.ROEBUCK			

OGS CIVIL LOG OF TEST BORINGS SHEET

ORIGINAL SCALE IN INCHES FOR REDUCED PLANS 0 1 2 3

CU 07
EA 215931

DISREGARD PRINTS BEARING EARLIER REVISION DATES

REVISION DATES: 06/27/11 12-7-11 1-5-12

SHEET 78 OF 80

FILE => 53-3041-z-lotb06.dgn

USERNAME => s121614 DATE PLOTTED => 28-MAR-2012 TIME PLOTTED => 11:48

REFERENCE: CALTRANS SOIL & ROCK LOGGING, CLASSIFICATION, AND PRESENTATION MANUAL (2010)

DIST	COUNTY	ROUTE	POST MILES TOTAL PROJECT	SHEET No.	TOTAL SHEETS
07	LA	5	2.4/4.0	873	1288

GEOTECHNICAL PROFESSIONAL — DATE 06/2011

3-26-12
PLANS APPROVAL DATE

REGISTERED PROFESSIONAL ENGINEER — MICHAEL G. SMITH No. 2229 Exp. 3-31-2012 GEOTECHNICAL — STATE OF CALIFORNIA

The State of California or its officers or agents shall not be responsible for the accuracy or completeness of electronic copies of this plan sheet.

GROUP SYMBOLS AND NAMES

Graphic/Symbol	Group Names	Graphic/Symbol	Group Names
GW	Well-graded GRAVEL Well-graded GRAVEL with SAND	CL	Lean CLAY Lean CLAY with SAND Lean CLAY with GRAVEL SANDY lean CLAY SANDY lean CLAY with GRAVEL GRAVELLY lean CLAY GRAVELLY lean CLAY with SAND
GP	Poorly-graded GRAVEL Poorly-graded GRAVEL with SAND		
GW-GM	Well-graded GRAVEL with SILT Well-graded GRAVEL with SILT and SAND	CL-ML	SILTY CLAY SILTY CLAY with SAND SILTY CLAY with GRAVEL SANDY SILTY CLAY SANDY SILTY CLAY with GRAVEL GRAVELLY SILTY CLAY GRAVELLY SILTY CLAY with SAND
GW-GC	Well-graded GRAVEL with CLAY (or SILTY CLAY) Well-graded GRAVEL with CLAY and SAND (or SILTY CLAY and SAND)		
GP-GM	Poorly-graded GRAVEL with SILT Poorly-graded GRAVEL with SILT and SAND	ML	SILT SILT with SAND SILT with GRAVEL SANDY SILT SANDY SILT with GRAVEL GRAVELLY SILT GRAVELLY SILT with SAND
GP-GC	Poorly-graded GRAVEL with CLAY (or SILTY CLAY) Poorly-graded GRAVEL with CLAY and SAND (or SILTY CLAY and SAND)		
GM	SILTY GRAVEL SILTY GRAVEL with SAND	OL	ORGANIC lean CLAY ORGANIC lean CLAY with SAND ORGANIC lean CLAY with GRAVEL SANDY ORGANIC lean CLAY SANDY ORGANIC lean CLAY with GRAVEL GRAVELLY ORGANIC lean CLAY GRAVELLY ORGANIC lean CLAY with SAND
GC	CLAYEY GRAVEL CLAYEY GRAVEL with SAND		
GC-GM	SILTY, CLAYEY GRAVEL SILTY, CLAYEY GRAVEL with SAND	OL	ORGANIC SILT ORGANIC SILT with SAND ORGANIC SILT with GRAVEL SANDY ORGANIC SILT SANDY ORGANIC SILT with GRAVEL GRAVELLY ORGANIC SILT GRAVELLY ORGANIC SILT with SAND
SW	Well-graded SAND Well-graded SAND with GRAVEL		
SP	Poorly-graded SAND Poorly-graded SAND with GRAVEL	CH	Fat CLAY Fat CLAY with SAND Fat CLAY with GRAVEL SANDY fat CLAY SANDY fat CLAY with GRAVEL GRAVELLY fat CLAY GRAVELLY fat CLAY with SAND
SW-SM	Well-graded SAND with SILT Well-graded SAND with SILT and GRAVEL		
SW-SC	Well-graded SAND with CLAY (or SILTY CLAY) Well-graded SAND with CLAY and GRAVEL (or SILTY CLAY and GRAVEL)	MH	Elastic SILT Elastic SILT with SAND Elastic SILT with GRAVEL SANDY elastic SILT SANDY elastic SILT with GRAVEL GRAVELLY elastic SILT GRAVELLY elastic SILT with SAND
SP-SM	Poorly-graded SAND with SILT Poorly-graded SAND with SILT and GRAVEL		
SP-SC	Poorly-graded SAND with CLAY (or SILTY CLAY) Poorly-graded SAND with CLAY and GRAVEL (or SILTY CLAY and GRAVEL)	OH	ORGANIC fat CLAY ORGANIC fat CLAY with SAND ORGANIC fat CLAY with GRAVEL SANDY ORGANIC fat CLAY SANDY ORGANIC fat CLAY with GRAVEL GRAVELLY ORGANIC fat CLAY GRAVELLY ORGANIC fat CLAY with SAND
SM	SILTY SAND SILTY SAND with GRAVEL		
SC	CLAYEY SAND CLAYEY SAND with GRAVEL	OH	ORGANIC elastic SILT ORGANIC elastic SILT with SAND ORGANIC elastic SILT with GRAVEL SANDY ORGANIC elastic SILT SANDY ORGANIC elastic SILT with GRAVEL GRAVELLY ORGANIC elastic SILT GRAVELLY ORGANIC elastic SILT with SAND
SC-SM	SILTY, CLAYEY SAND SILTY, CLAYEY SAND with GRAVEL		
PT	PEAT	OL/OH	ORGANIC SOIL ORGANIC SOIL with SAND ORGANIC SOIL with GRAVEL SANDY ORGANIC SOIL SANDY ORGANIC SOIL with GRAVEL GRAVELLY ORGANIC SOIL GRAVELLY ORGANIC SOIL with SAND
	COBBLES COBBLES and BOULDERS BOULDERS		

FIELD AND LABORATORY TESTING

- (C) Consolidation (ASTM D 2435)
- (CL) Collapse Potential (ASTM D 5333)
- (CP) Compaction Curve (CTM 216)
- (CR) Corrosivity Testing (CTM 643, CTM 422, CTM 417)
- (CU) Consolidated Undrained Triaxial (ASTM D 4767)
- (DS) Direct Shear (ASTM D 3080)
- (EI) Expansion Index (ASTM D 4829)
- (M) Moisture Content (ASTM D 2216)
- (OC) Organic Content-% (ASTM D 2974)
- (P) Permeability (CTM 220)
- (PA) Particle Size Analysis (ASTM D 422)
- (PI) Plasticity Index (AASHTO T 90) Liquid Limit (AASHTO T 89)
- (PL) Point Load Index (ASTM D 5731)
- (PM) Pressure Meter
- (R) R-Value (CTM 301)
- (SE) Sand Equivalent (CTM 217)
- (SG) Specific Gravity (AASHTO T 100)
- (SL) Shrinkage Limit (ASTM D 427)
- (SW) Swell Potential (ASTM D 4546)
- (UC) Unconfined Compression-Soil (ASTM D 2166) Unconfined Compression-Rock (ASTM D 2938)
- (UU) Unconsolidated Undrained Triaxial (ASTM D 2850)
- (UW) Unit Weight (ASTM D 4767)

APPARENT DENSITY OF COHESIONLESS SOILS

Description	SPT N_{60} (Blows / 12 in.)
Very Loose	0 - 5
Loose	5 - 10
Medium Dense	10 - 30
Dense	30 - 50
Very Dense	Greater than 50

MOISTURE

Description	Criteria
Dry	No discernable moisture
Moist	Moisture present, but no free water
Wet	Visible free water

PERCENT OR PROPORTION OF SOILS

Description	Criteria
Trace	Particles are present but estimated to be less than 5%
Few	5% - 10%
Little	15% - 25%
Some	30% - 45%
Mostly	50% - 100%

PARTICLE SIZE

Description		Size (in.)
Boulder		Greater than 12
Cobble		3 - 12
Gravel	Coarse	3/4 - 3
	Fine	1/5 - 3/4
Sand	Coarse	1/16 - 1/5
	Medium	1/64 - 1/16
	Fine	1/300 - 1/64
Silt and Clay		Less than 1/300

ENGINEERING SERVICES	MATERIALS AND GEOTECHNICAL SERVICES	STATE OF CALIFORNIA DEPARTMENT OF TRANSPORTATION	DIVISION OF ENGINEERING SERVICES STRUCTURE DESIGN DESIGN BRANCH 15	BRIDGE NO. 53-3041 POST MILE 3.66	BLOOMFIELD AVENUE UC
FUNCTIONAL SUPERVISOR NAME: M. SMITH	DRAWN BY: P.QUACH CHECKED BY: D.ORRIS	FIELD INVESTIGATION BY: D.LUCAS/T.PANAH/C.CARBINO/P.CHAU/L.ROEBUCK			LOG OF TEST BORINGS SHEET 7 OF 8

OGS CIVIL LOG OF TEST BORINGS SHEET

ORIGINAL SCALE IN INCHES FOR REDUCED PLANS 0 1 2 3

CU 07
EA 215931

DISREGARD PRINTS BEARING EARLIER REVISION DATES — REVISION DATES 06-27-11 12-2-11 1-5-12

SHEET 79 OF 80

FILE => 53-3041-z-lotb07.dgn

USERNAME => s121614 DATE PLOTTED => 28-MAR-2012 TIME PLOTTED => 11:48

DIST	COUNTY	ROUTE	SECTION	SHEET	TOTAL SHEETS
VII	LA	~~TYPE~~	A	18	19

OCTOBER 2, 1951

TO ACCOMPANY PLANS DATED 3-26-12

DIVISION OF ENGINEERING SERVICES - MATERIALS AND GEOTECHNICAL SERVICES

As-Built Log of Test Borings sheet is considered an informational document only. As such, the State of California registration seal with signature, license number and registration certificate expiration date confirm that this is a true and accurate copy of the original document. It does not attest to the accuracy or validity of the information contained in the original document. This drawing is available and presented only for the convenience of any bidder, contractor or other interested party.

DIST.	COUNTY	ROUTE	POST MILE-TOTAL PROJECT	Sheet No.	Total Sheets
07	LA	5	2.4/4.0	874	1288

REGISTERED CIVIL ENGINEER — DATE 06/2011

REGISTERED PROFESSIONAL ENGINEER CHUNGKEUN LEE No. C69450 Exp. 6/30/12 CIVIL STATE OF CALIFORNIA

BLOOMFIELD AVENUE UC
LOG OF TEST BORINGS 8 OF 8

UNIT: ENGLISH — CONTRACT No. CU 59A0590 — BRIDGE No. 53-3041

PROJECT NUMBER & PHASE: EA 215931

NOTE: A COPY OF THIS LOG OF TEST BORINGS IS AVAILABLE AT OFFICE OF STRUCTURE MAINTENANCE AND INVESTIGATIONS, SACRAMENTO, CALIFORNIA — Sheet 80 of 80

Notes

1. As-Built Vertical Datum = NGVD29
2. Datum Conversion
   NAVD88 = NGVD29+2.408 ft
3. Groundwater locations in TH-3 and TH-4 are not reliable.

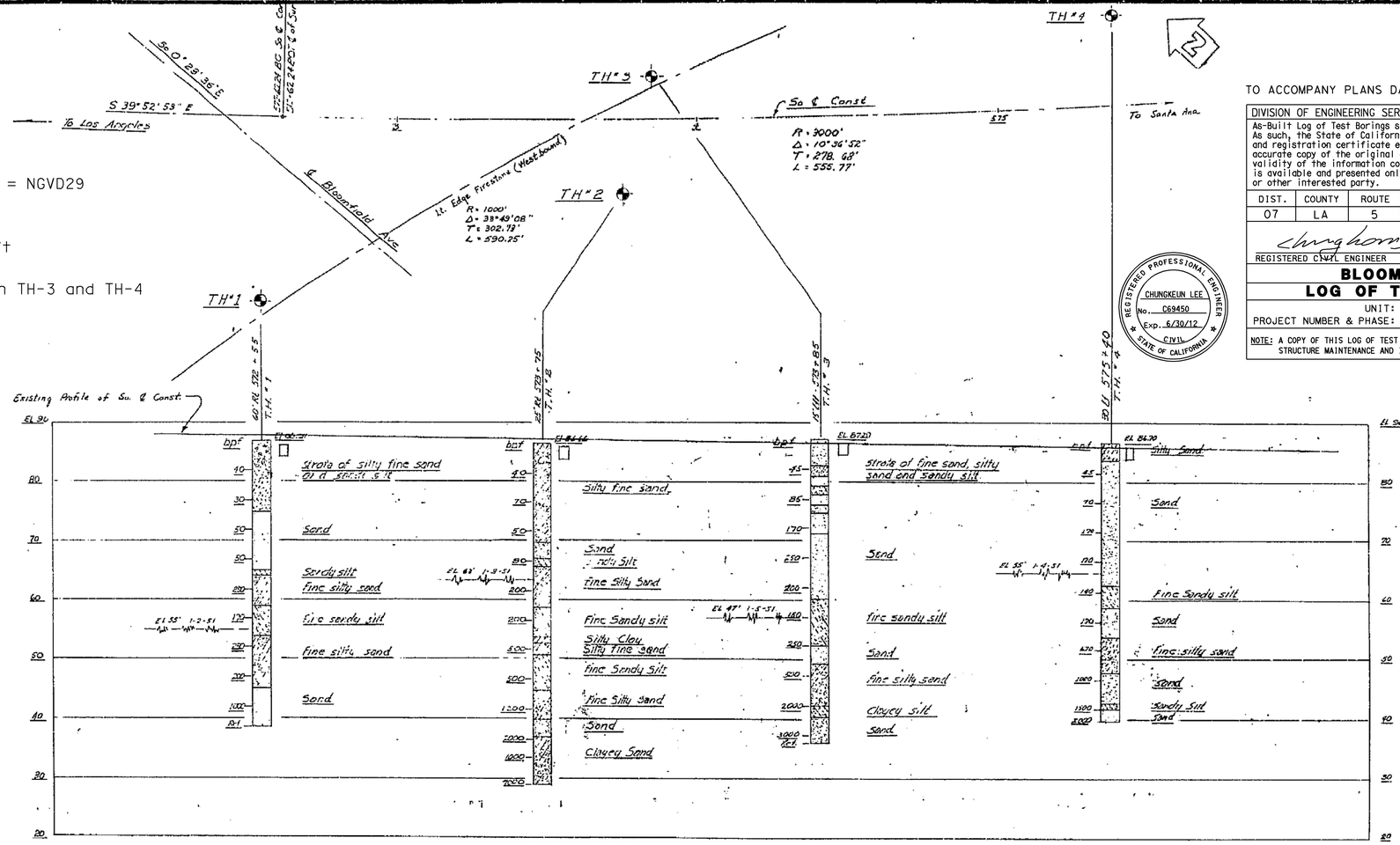

Note:
T.B.M - Chiseled square on S.W. corner of Culvert Headwall on East bd. Firestone Blvd - 0.2 miles S.E. of intn. of Firestone & Fosdick
Elev. 85.18

Test Holes by Bridge Dept. - Jan. 1951
All holes made with one inch Soil Sampler

NOTE: Blows per foot are blows required to drive a one inch test pipe one foot with a 32# hand drop hammer falling free one foot.

AS BUILT PLANS
Contract No. 53-7vc38
Date Completed
Document No. 70002208

THE STRUCTURE CONFORMS TO THE DETAILS ON THIS SHEET

AS BUILT
CORRECTIONS BY
DATE 4-29-54

CLASSIFICATION OF MATERIAL BASED ON STANDARD GRADE SIZE LIMITS

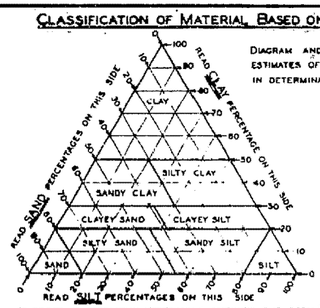

DIAGRAM AND TABLE SHOWING THE BASIS FOR ESTIMATES OF GRADE SIZE DISTRIBUTION USED IN DETERMINATION OF CLASS NAMES.

GROUPING USED IN TRIANGULAR CLASSIFICATION			
CLASS NAME	PERCENTAGE OF SIZES PRESENT		
	SAND	SILT	CLAY
SAND	80-100	0-20	0-20
SILTY SAND	45-80	0-55	0-20
SANDY SILT	0-45	35-80	0-20
SILT	0-20	80-100	0-20
CLAYEY SAND	35-80	0-42	20-30
CLAYEY SILT	0-38	32-80	20-30
SANDY CLAY	30-70	0-40	30-50
SILTY CLAY	0-30	20-70	30-50
CLAY	0-30	0-30	50-100

IF GRAVEL IS PRESENT IN APPRECIABLE AMOUNTS THE TERM "GRAVELLY" MAY BE ADDED TO THE CLASS NAME, VIS. "GRAVELLY SAND". THE TERMS "COARSE," "MEDIUM" AND "FINE" WHEN USED TO DESCRIBE GRAVEL, SAND AND SILT REFER TO STANDARD GRADE SIZE LIMITS.

LEGEND OF BORING OPERATIONS

- PLAN OF ANY BORING
- 1" SAMPLER BORING
- ROTARY WASH BORING
- 1" CLOSED SAMPLER DRIVEN
- CORE BORING
- 2½" PENETROMETER DRIVEN
- 2" SAMPLER BORING
- 2" TO 5" AUGER BORING
- 8" TO 20" AUGER BORING
- CASING DRIVEN
- JET BORING
- (S) SAMPLE TAKEN

THE APPROPRIATE BORING SYMBOLS DESIGNATING THE METHOD OF OPERATION ARE SHOWN AT THE UPPER RIGHT-HAND CORNER OF THE RESPECTIVE BORING. WHERE TOOL CHANGES WERE MADE DURING THE BORING OPERATION SYMBOLS ARE SHOWN AT THE POINT OF CHANGE.

LEGEND OF EARTH MATERIALS

- GRAVEL - G
- SAND - S
- SILT - SI
- CLAY - C
- SILTY SAND - SI S
- CLAYEY SAND - C S
- SANDY SILT - S SI
- CLAYEY SILT - C SI
- SANDY CLAY - SC
- SILTY CLAY - SI C
- PEAT AND/OR ORGANIC CLAY - O
- SANDSTONE - SS
- SHALE - SH
- BROKEN ROCK (FRAGMENTS) - BR
- ROCK - R

ABBREVIATIONS

EL. 69.4	ELEVATION OF GROUND AT TEST HOLE
bpf	BLOWS PER FOOT - (SEE NOTE ABOVE)
P	PULLED PIPE
M	MOISTURE AS % DRY WEIGHT
EL. 64.3 8-12-49	ELEVATION OF GROUND WATER AND DATE

NOTES

THE CONTRACTOR'S ATTENTION IS DIRECTED TO SECTION 2, ARTICLE (c) OF THE STANDARD SPECIFICATIONS AND TO THE SPECIAL PROVISIONS ACCOMPANYING THIS SET OF PLANS.

CLASSIFICATION OF EARTH MATERIAL AS SHOWN ON THIS SHEET IS BASED UPON FIELD INSPECTION AND IS NOT TO BE CONSTRUED TO IMPLY MECHANICAL ANALYSIS.

FIRESTONE BLVD OFF-RAMP UNDERCROSSING
LOG OF TEST BORINGS
SCALE Horiz. 1"=20' Vert. 1"=10'
FILE NO. E-53
IDENTIFICATION NO. 53-814
DRAWING NO. C-2621-18

PREL. DRAWING NO. P-2621 #2

I HEREBY CERTIFY THAT THIS IS A TRUE AND ACCURATE COPY OF THE ABOVE DOCUMENT TAKEN UNDER MY DIRECTION AND CONTROL ON THIS DATE IN SACRAMENTO, CALIFORNIA PURSUANT TO AUTHORIZATION BY THE DIRECTOR OF PUBLIC WORKS.

DATE 9/24/71 SIGNATURE TITLE HAE II

FILENAME => 53-3041-z-lotb08.tif

MICROFILM - STATE OF CALIFORNIA - DEPARTMENT OF PUBLIC WORKS - MICROFILM
SCALE 1" = 50' SCALE 1" = 20' SCALE 1" = 10' or 1" = 100' SCALE 1" = 40'

DIST	COUNTY	ROUTE	POST MILES TOTAL PROJECT	SHEET No	TOTAL SHEETS
07	LA	5	2.4/4.0	875	1288

Andrew Rittenhouse 12-12-11
REGISTERED CIVIL ENGINEER DATE

3-26-12
PLANS APPROVAL DATE

The State of California or its officers or agents shall not be responsible for the accuracy or completeness of electronic copies of this plan sheet.

REGISTERED PROFESSIONAL ENGINEER Andrew P. Rittenhouse No. 61006 Exp. 12-31-12 CIVIL STATE OF CALIFORNIA

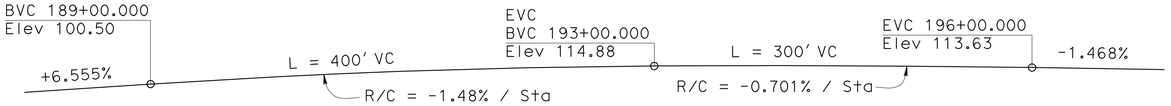

PROFILE GRADE

No Scale

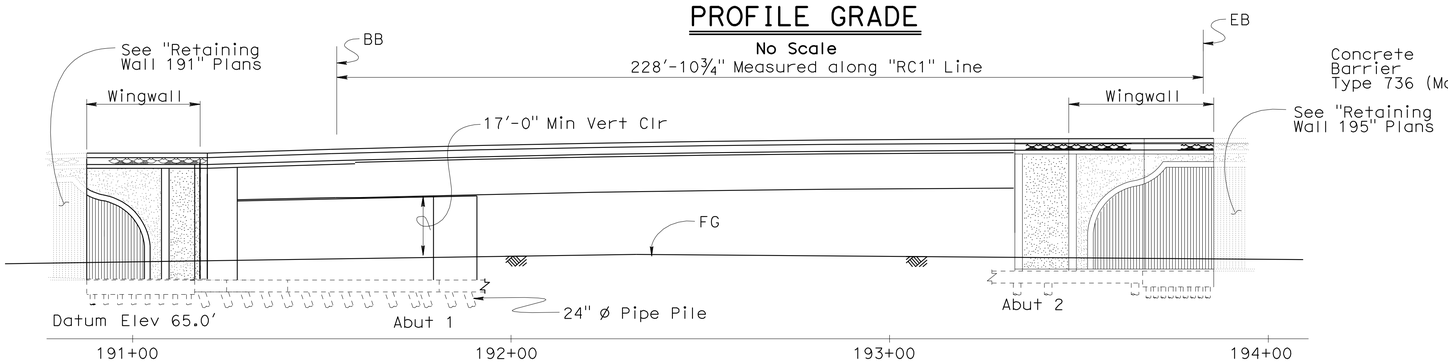

MIRRORED ELEVATION

1" = 20'

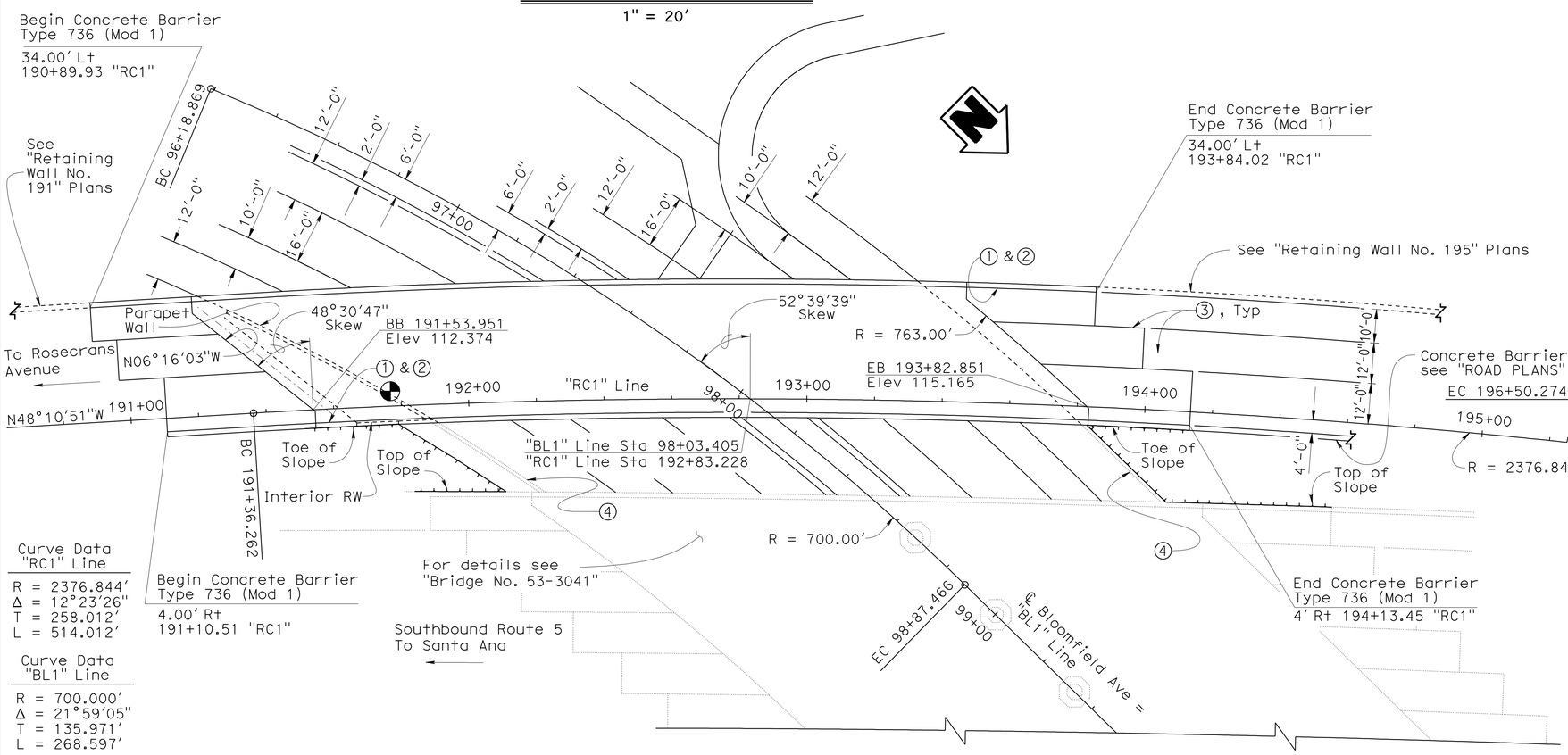

Curve Data "RC1" Line

R = 2376.844'
Δ = 12°23'26"
T = 258.012'
L = 514.012'

Curve Data "BL1" Line

R = 700.000'
Δ = 21°59'05"
T = 135.971'
L = 268.597'

NOTE:
THE CONTRACTOR SHALL VERIFY ALL CONTROLLING FIELD DIMENSIONS BEFORE ORDERING OR FABRICATING ANY MATERIAL.

PLAN

1" = 20'

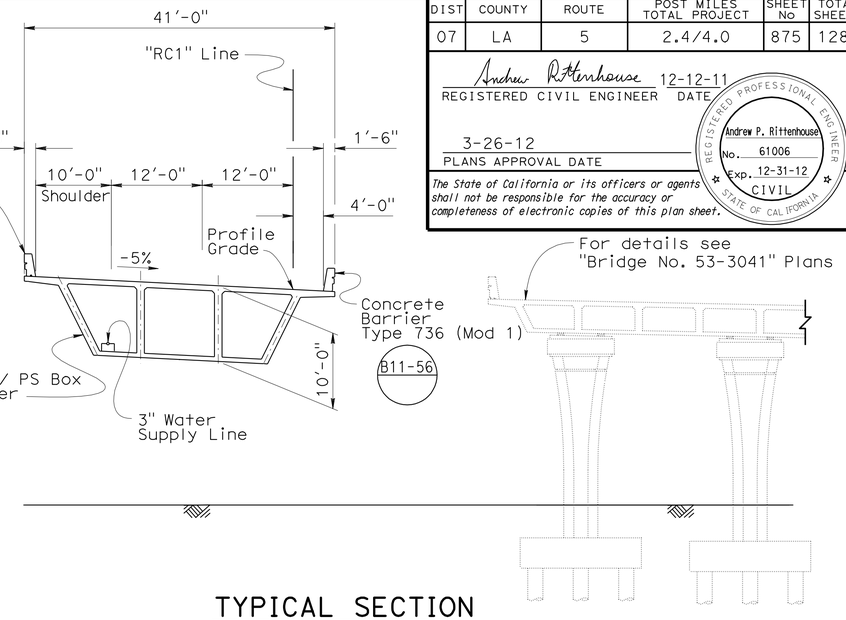

TYPICAL SECTION

1" = 10'

Notes:

① Paint "Southbound Rosecrans Ave Off-Ramp"
② Paint "Bridge No. 53-3042K"
③ Structure Approach Type N (30S)
④ Extended Abutment, see Bridge No. 53-3041 Plans

Legend:

◐ Denotes location of minimum vertical clearance

QUANTITIES

STRUCTURE EXCAVATION (BRIDGE)	3,300	CY
STRUCTURE EXCAVATION (TYPE Y-2) (AERIALLY DEPOSITED LEAD)	460	CY
STRUCTURE BACKFILL (BRIDGE)	2,460	CY
3" SUPPLY LINE (BRIDGE)	300	LF
FURNISH 24" STEEL PIPE PILING	3,614	LF
DRIVE 24" STEEL PIPE PILE	93	EA
FURNISH PILING (CLASS 90)	1,393	LF
DRIVE PILE (CLASS 90)	44	EA
PRESTRESSING CAST-IN-PLACE CONCRETE	LUMP	SUM
STRUCTURAL CONCRETE, BRIDGE FOOTING	480	CY
STRUCTURAL CONCRETE, BRIDGE	1,650	CY
STRUCTURAL CONCRETE, APPROACH SLAB (TYPE N)	102	CY
ARCHITECTURAL TREATMENT (SPLIT SLATE - FRACTURED RIB)	4,850	SQFT
PTFE SPHERICAL BEARING	6	EA
JOINT SEAL ASSEMBLY (MR 2½")	114	LF
BAR REINFORCING STEEL (BRIDGE)	364,000	LB
MISCELLANEOUS METAL (BRIDGE)	147	LB
CONCRETE BARRIER (TYPE 736 MODIFIED 1)	599	LF

Traci Menard
DESIGN ENGINEER

	BY	CHECKED			
DESIGN	Suzan Moradi	Ruslan Novik / Traci Menard	LOAD & RESISTANCE FACTOR DESIGN	LIVE LOADING: HL93 W/"LOW-BOY"; PERMIT DESIGN VEHICLE	
DETAILS	Herman Mauroschadt	Ruslan Novik	LAYOUT	Suzan Moradi	Traci Menard
QUANTITIES	Sara Yip	O. Kreydich / U. Smpardos	SPECIFICATIONS	Theresa Nedwick	PLANS AND SPECS COMPARED Theresa Nedwick

ORIGINAL SCALE IN INCHES FOR REDUCED PLANS 0 1 2 3

STATE OF CALIFORNIA
DEPARTMENT OF TRANSPORTATION

DIVISION OF ENGINEERING SERVICES
STRUCTURE DESIGN
DESIGN BRANCH 15

CU 07
EA 215931

BRIDGE NO. 53-3042K
POST MILE 3.66

SOUTHBOUND ROSECRANS AVENUE OFF-RAMP
GENERAL PLAN

DISREGARD PRINTS BEARING EARLIER REVISION DATES

REVISION DATES: 2-2-12 3-10-12 5-12-11 7-12-11 7-14-11 3-18-10 12-5-11 12-21-11 1-30-12

SHEET 1 OF 28

STRUCTURES DESIGN GENERAL PLAN SHEET (ENGLISH) (REV.07-24-06)

FILE => 53-3042k-a-gp.dgn

USERNAME => s121614 DATE PLOTTED => 28-MAR-2012 TIME PLOTTED => 11:49

DIST	COUNTY	ROUTE	POST MILES TOTAL PROJECT	SHEET No	TOTAL SHEETS
07	LA	5	2.4/4.0	876	1288

Andrew Rittenhouse 12-12-11
REGISTERED CIVIL ENGINEER DATE

3-26-12
PLANS APPROVAL DATE

REGISTERED PROFESSIONAL ENGINEER
Andrew P. Rittenhouse
No. 61006
Exp. 12-31-12
CIVIL
STATE OF CALIFORNIA

The State of California or its officers or agents shall not be responsible for the accuracy or completeness of electronic copies of this plan sheet.

INDEX TO PLANS

SHEET NO.	TITLE
1	GENERAL PLAN
2	INDEX TO PLANS
3	DECK CONTOURS
4	FOUNDATION PLAN
5	ABUTMENT 1 LAYOUT
6	ABUTMENT 2 LAYOUT
7	ABUTMENT DETAILS NO. 1
8	ABUTMENT DETAILS NO. 2
9	ABUTMENT DETAILS NO. 3
10	ABUTMENT DETAILS NO. 4
11	ABUTMENT DETAILS NO. 5
12	ABUTMENT DETAILS NO. 6
13	ABUTMENT DETAILS NO. 7
14	TYPICAL SECTION
15	GIRDER LAYOUT
16	GIRDER DETAILS
17	GIRDER REINFORCEMENT
18	CONCRETE BARRIER TYPE 736 (MOD 1)
19	PTFE/SPHERICAL EXPANSION BEARING DETAILS No. 1
20	PTFE/SPHERICAL EXPANSION BEARING DETAILS No. 2
21	JOINT SEAL ASSEMBLY (MAXIMUM MOVEMENT RATING = 4")
22	STRUCTURE APPROACH TYPE N(30S)
23	STRUCTURE APPROACH DRAINAGE DETAILS
24	LOG OF TEST BORINGS SHEET 1 OF 5
25	LOG OF TEST BORINGS SHEET 2 OF 5
26	LOG OF TEST BORINGS SHEET 3 OF 5
27	LOG OF TEST BORINGS SHEET 4 OF 5
28	LOG OF TEST BORINGS SHEET 5 OF 5

STANDARD PLANS DATED MAY 2006

A10A	ACRONYMS AND ABBREVIATIONS (SHEET 1 OF 2)
A10B	ACRONYMS AND ABBREVIATIONS (SHEET 2 OF 2)
A62B	LIMITS OF PAYMENT FOR EXCAVATION AND BACKFILL BRIDGE SURCHARGE AND WALL
A62C	LIMITS OF PAYMENT FOR EXCAVATION AND BACKFILL BRIDGE
B0-1	BRIDGE DETAILS
B0-3	BRIDGE DETAILS
B0-5	BRIDGE DETAILS
B0-13	BRIDGE DETAILS
B3-2	RETAINING WALL TYPE 1 H=32' THROUGH 36'
B7-1	BOX GIRDER DETAILS
B7-10	UTILITY OPENING BOX GIRDER
B8-5	CAST-IN-PLACE PRESTRESSED GIRDER DETAILS
B11-56	CONCRETE BARRIER TYPE 736
B14-4	WATER SUPPLY LINE (BRIDGE) (PIPE SIZES LESS THAN 4")
B14-5	WATER SUPPLY LINE (DETAILS) (PIPE SIZES LESS THAN 4")

STANDARD PLAN SHEET NO.

DETAIL NO.

GENERAL NOTES
LOAD AND RESISTANCE FACTOR DESIGN

DESIGN:

AASHTO LRFD BRIDGE DESIGN PECIFICATIONS, 4TH edition and California Amendments, dated December 2008

SEISMIC DESIGN:

CALTRANS SEISMIC DESIGN CRITERIA (SDC), Version 1.6 dated November 2010

DEAD LOAD:

Includes 35 psf for future wearing surface.

LIVE LOADING:

HL93 and permit design load.

SEISMIC LOADING:

Soil Profile: V_{S30} = 951 ft/sec
Moment Magnitude: M_{MAX} =7.3
Peak Ground Acceleration: 0.62 g

CONCRETE:

fy = 60 ksi
f'c = 3.6 ksi, unless otherwise shown
n = 8, unless otherwise shown

PRESTRESSED CONCRETE

See "Prestressing Notes" on "GIRDER LAYOUT" sheet

PILE DATA TABLE

LOCATION	PILE TYPE	NOMINAL RESISTANCE(kips)		DESIGN TIP ELEVATIONS (ft)	SPECIFIED TIP ELEVATIONS (ft)	NOMINAL DRIVING RESISTANCE (kips)
		Compression	Tension			
Abut 1	24"ø Pipe Pile	360	0	40.3 (a) 60.7 (c) 58.2 (d)	40.3	360
Abut 1 Lt WW	Class 90	180	0	48.0 (a)	48.0	180
Abut 2	24"ø Pipe Pile	360	0	43.5 (a) 59.6 (c) 59.1 (d)	43.5	360
Abut 2 Lt WW	Class 90	180	0	48.0 (a)	48.0	180

Note: Design tip elevations are controlled by: (a) Compression, (b) Tension, (c) Settlement, (d) Lateral Load, respectively.

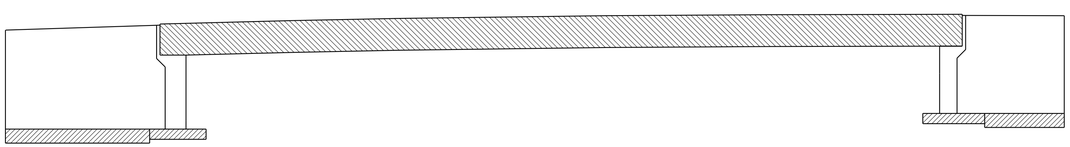

Legend:

- Structural Concrete, Bridge
- Structural Concrete, Bridge Footing
- Structural Concrete, Bridge (6 ksi at 28 days, n = 6.4)

CONCRETE STRENGTH AND TYPE LIMITS

No Scale

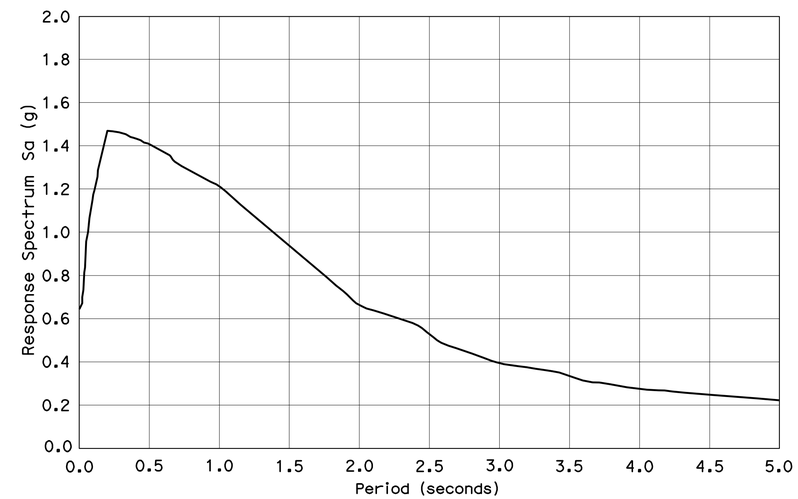

SITE SPECIFIC ACCELERATION RESPONSE SPECTRA

Note:

ARS Curve for information only. Not used in design.

	BY	CHECKED
DESIGN	Ruslan Novik	Suzan Moradi / Traci Menard
DETAILS	Herman Mauroschadt	Suzan Moradi
QUANTITIES	Sara Yip	Oleg Kreydich

STATE OF CALIFORNIA
DEPARTMENT OF TRANSPORTATION

DIVISION OF ENGINEERING SERVICES
STRUCTURE DESIGN
DESIGN BRANCH 15

BRIDGE NO. 53-3042K
POST MILE 3.66

SOUTHBOUND ROSECRANS AVENUE OFF-RAMP
INDEX TO PLANS

STRUCTURES DESIGN DETAIL SHEET (ENGLISH) (REV. 10/25/05)

ORIGINAL SCALE IN INCHES FOR REDUCED PLANS 0 1 2 3

CU 07
EA 215931

DISREGARD PRINTS BEARING EARLIER REVISION DATES

REVISION DATES: 10-20-11, 11-28-11, 3-1-11, 12-5-11, 12-21-11, 2-2-12, 5-18-11, 5-17-11, 7-14-11

SHEET 2 OF 28

FILE => 53-3042k-b-itp.dgn

USERNAME => s121614 DATE PLOTTED => 28-MAR-2012 TIME PLOTTED => 11:49

DIST	COUNTY	ROUTE	POST MILES TOTAL PROJECT	SHEET No	TOTAL SHEETS
07	LA	5	2.4/4.0	877	1288

Andrew Rittenhouse 12-12-11
REGISTERED CIVIL ENGINEER DATE

3-26-12
PLANS APPROVAL DATE

The State of California or its officers or agents shall not be responsible for the accuracy or completeness of electronic copies of this plan sheet.

REGISTERED PROFESSIONAL ENGINEER
Andrew P. Rittenhouse
No. 61006
Exp. 12-31-12
CIVIL
STATE OF CALIFORNIA

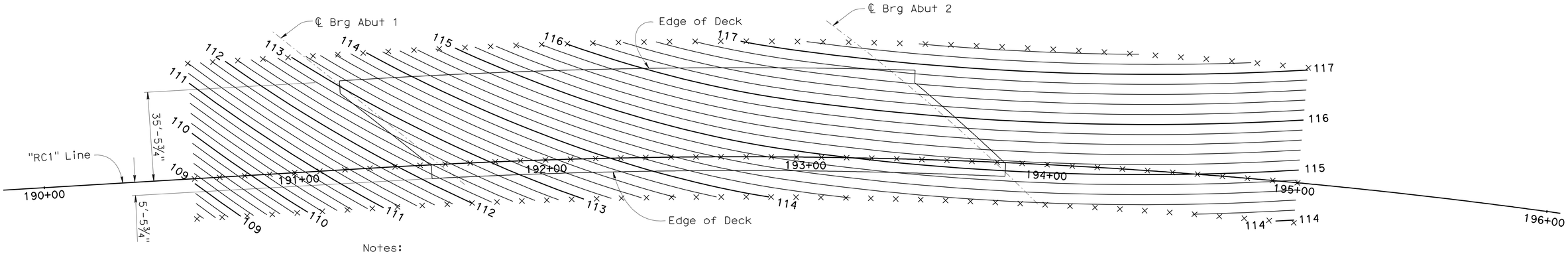

Notes:

0.20' Contour Interval

Legend:

X - 10' Station Interval.
Contours do not include camber.

PLAN

1" = 20'

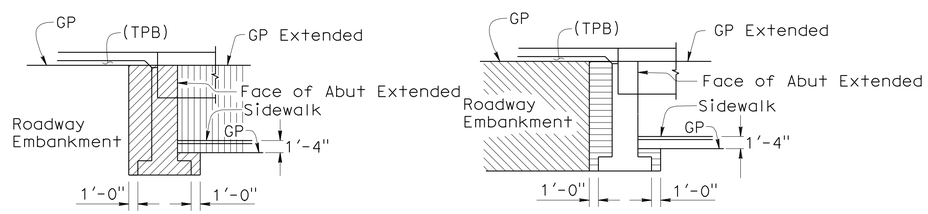

Legend:

- Structure Excavation *
- Structure Backfill
- Roadway Excavation (See "Road Plans")
- Roadway Embankment (See "Road Plans")

EXCAVATION & BACKFILL

No Scale

* Upper 3 ft of Structure Excavation in unpaved areas is to be considered as Structure Excavation (Type Y-2) (Aerially Deposited Lead)

DESIGN	BY Ruslan Novik	CHECKED Suzan Moradi / Traci Menard	
DETAILS	BY Herman Mauroschadt	CHECKED Suzan Moradi	
QUANTITIES	BY Sara Yip	CHECKED Oleg Kreydich	

STATE OF CALIFORNIA
DEPARTMENT OF TRANSPORTATION

DIVISION OF ENGINEERING SERVICES
STRUCTURE DESIGN
DESIGN BRANCH 15

BRIDGE NO. 53-3042K
POST MILE 3.66

SOUTHBOUND ROSECRANS AVENUE OFF-RAMP
DECK CONTOURS

STRUCTURES DESIGN DETAIL SHEET (ENGLISH) (REV. 10/25/05)

ORIGINAL SCALE IN INCHES FOR REDUCED PLANS 0 1 2 3

CU 07
EA 215931

DISREGARD PRINTS BEARING EARLIER REVISION DATES

REVISION DATES: 12-21-11 2-2-12 11-19-09 1-4-11 4-26-11 5-2-11 5-13-11 7-14-11 12-5-11

SHEET 3 OF 28

FILE => 53-3042k-d-dc01.dgn

USERNAME => s121614 DATE PLOTTED => 28-MAR-2012 TIME PLOTTED => 11:49

DIST	COUNTY	ROUTE	POST MILES TOTAL PROJECT	SHEET No	TOTAL SHEETS
07	LA	5	2.4/4.0	878	1288

Andrew P. Rittenhouse 12-12-11
REGISTERED CIVIL ENGINEER DATE

3-26-12
PLANS APPROVAL DATE

The State of California or its officers or agents shall not be responsible for the accuracy or completeness of electronic copies of this plan sheet.

REGISTERED PROFESSIONAL ENGINEER — Andrew P. Rittenhouse — No. 61006 — Exp. 12-31-12 — CIVIL — STATE OF CALIFORNIA

(1) Sta 92+88.74, "KC27" LINE, EB ON-RAMP =
Sta 192+33.15, "RC1" LINE, SB OFF-RAMP

(2) Sta 97+76.23,"BL1" LINE, ℄ BLOOMFIELD AVE =
Sta 93+21.42, "KC27" LINE, EB ON-RAMP

(3) Sta 98+03.40,"BL1" LINE, ℄ BLOOMFIELD AVE =
Sta 192+83.23, "RC1" LINE, SB OFF-RAMP

(4) Sta 193+32.07, "A1" LINE, ℄ ROUTE 5 =
Sta 93+52.98, "FWBF1" LINE, WB OFF-RAMP

(5) Sta 99+46.19,"BL1" LINE, ℄ BLOOMFIELD AVE =
Sta 94+29.99, "FWBF1" LINE, WB OFF-RAMP

(6) Sta 100+00.00,"BL1" LINE,℄ BLOOMFIELD AVE =
Sta 194+39.11, "A1" LINE, ℄ ROUTE 5

(7) Sta 195+15.50, "RC1" LINE, SB OFF-RAMP =
Sta 95+82.01, "FWBF1" LINE, WB OFF-RAMP

CURVE DATA				
No.	R	Δ	T	L
(E)	2376.84	12°23′26"	258.01	514.01
(F)	800.00	22°24′51"	158.51	312.96
(G)	700.00	21°59′06"	135.97	268.60
(H)	8357.25	17°36′01"	1293.80	2567.22
(I)	1000.00	33°49′08"	304.00	590.25

BRIDGE LOCATION (Exist Br.No 53-0814L)

(A) 24.59 Ft Lt "A1" Line, ℄ Route 5, Sta 193+02.47, Elev= 117.68±
(B) 20.99 Ft Lt "A1" Line, ℄ Route 5, Sta 193+95.08, Elev= 117.32±
(C) 13.90 Ft Rt "A1" Line, ℄ Route 5, Sta 192+16.63, Elev= 115.87±
(D) 16.31 Ft Rt "A1" Line, ℄ Route 5, Sta 193+27.12, Elev= 117.68±

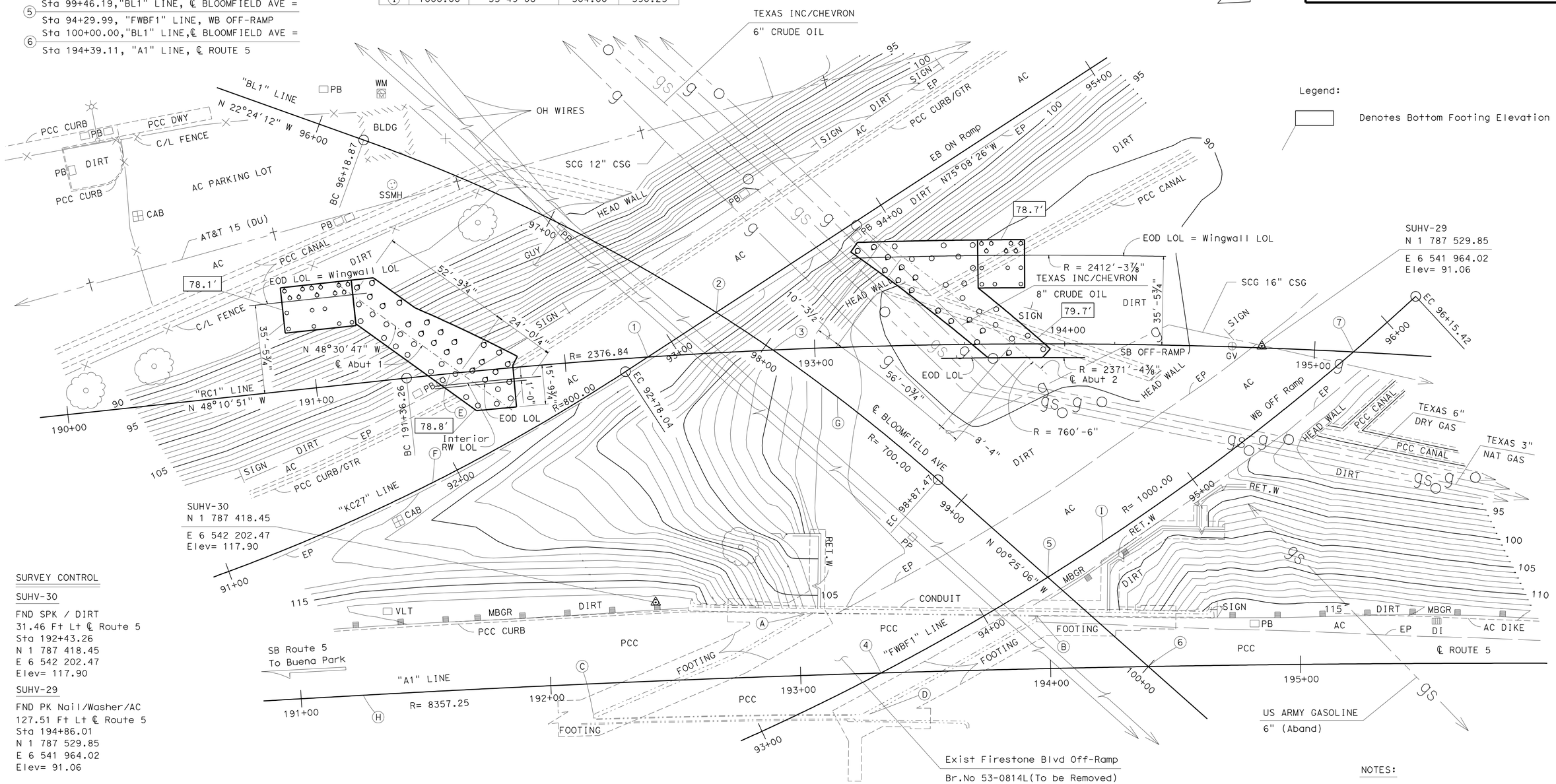

Legend:

Denotes Bottom Footing Elevation

SURVEY CONTROL

SUHV-30

FND SPK / DIRT
31.46 Ft Lt ℄ Route 5
Sta 192+43.26
N 1 787 418.45
E 6 542 202.47
Elev= 117.90

SUHV-29

FND PK Nail/Washer/AC
127.51 Ft Lt ℄ Route 5
Sta 194+86.01
N 1 787 529.85
E 6 541 964.02
Elev= 91.06

NOTES:

UNDERGROUND UTILITIES AS SHOWN ARE APPROXIMATE

PRELIMINARY INVESTIGATION SECTION

SCALE	VERT.DATUM NAVD88	PHOTOGRAMMETRY AS OF: X		
1"=20′	HORZ.DATUM NAD83 (1991.35)	SURVEYED	BY DISTRICT 07	CHECKED BY T.PHUNG 02/2010
ALIGNMENT TIES DIST.TRAVERSE SHEETS		DRAFTED	BY V.PHAM 02/2010	CHECKED BY S.ALIVIO 02/2010

	BY	CHECKED
DESIGN	Ruslan Novik	Suzan Moradi / Traci Menard
DETAILS	Herman Mauroschadt	Suzan Moradi
QUANTITIES	Sara Yip	O. Kreydich / U. Smpardos

STATE OF CALIFORNIA
DEPARTMENT OF TRANSPORTATION

DIVISION OF ENGINEERING SERVICES
STRUCTURE DESIGN
DESIGN BRANCH 15

BRIDGE NO. 53-3042K
POST MILE 3.66

SOUTHBOUND ROSECRANS AVENUE OFF-RAMP
FOUNDATION PLAN

STRUCTURES FOUNDATION PLAN SHEET (ENGLISH) (REV. 10/25/05)

ORIGINAL SCALE IN INCHES FOR REDUCED PLANS 0 1 2 3

CU 07-225
EA 215931

DISREGARD PRINTS BEARING EARLIER REVISION DATES

REVISION DATES: 12-9-11 2-2-12 2-26-10 3-1-11 4-27-11 5-1-11 7-1-11 10-31-11 12-9-11

SHEET 4 OF 28

FILE => 53-3042k-e-fp01.dgn

USERNAME => s121614 DATE PLOTTED => 28-MAR-2012 TIME PLOTTED => 11:49

DIST	COUNTY	ROUTE	POST MILES TOTAL PROJECT	SHEET No	TOTAL SHEETS
07	LA	5	2.4/4.0	879	1288

Andrew Rittenhouse 12-12-11
REGISTERED CIVIL ENGINEER DATE

3-26-12
PLANS APPROVAL DATE

The State of California or its officers or agents shall not be responsible for the accuracy or completeness of electronic copies of this plan sheet.

REGISTERED PROFESSIONAL ENGINEER
Andrew P. Rittenhouse
No. 61006
Exp. 12-31-12
CIVIL
STATE OF CALIFORNIA

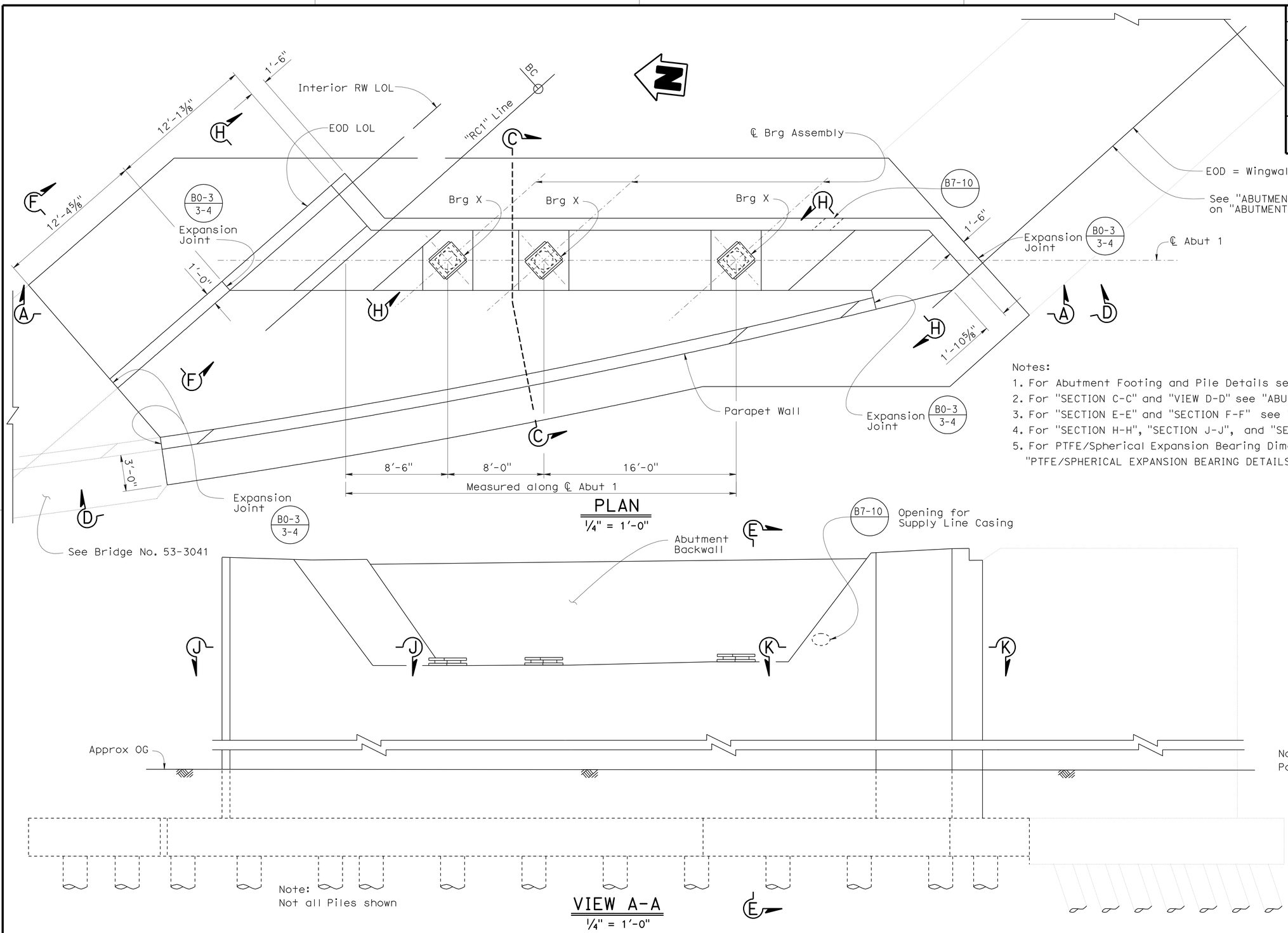

PLAN
1/4" = 1'-0"

VIEW A-A
1/4" = 1'-0"

Notes:
1. For Abutment Footing and Pile Details see "ABUTMENT DETAILS NO. 1" sheet.
2. For "SECTION C-C" and "VIEW D-D" see "ABUTMENT DETAILS NO. 3" sheet.
3. For "SECTION E-E" and "SECTION F-F" see "ABUTMENT DETAILS NO. 4" sheet.
4. For "SECTION H-H", "SECTION J-J", and "SECTION K-K" see "ABUTMENT DETAILS NO. 6"
5. For PTFE/Spherical Expansion Bearing Dimensions & Details see "PTFE/SPHERICAL EXPANSION BEARING DETAILS No. 1" sheet.

	BY	CHECKED
DESIGN	Ruslan Novik	Shervin Pahlavan
DETAILS	Herman Mauroschadt	Shervin Pahlavan
QUANTITIES	Sara Yip	O. Kreydich / U. Smpardos

STATE OF CALIFORNIA
DEPARTMENT OF TRANSPORTATION

DIVISION OF ENGINEERING SERVICES
STRUCTURE DESIGN
DESIGN BRANCH 15

BRIDGE NO. 53-3042K
POST MILE 3.66

SOUTHBOUND ROSECRANS AVENUE OFF-RAMP
ABUTMENT 1 LAYOUT

STRUCTURES DESIGN DETAIL SHEET (ENGLISH) (REV. 10/25/05)

ORIGINAL SCALE IN INCHES FOR REDUCED PLANS 0 1 2 3

CU 07
EA 215931

DISREGARD PRINTS BEARING EARLIER REVISION DATES

REVISION DATES: 10-25-11 11-30-12 2-2-12 2-1-10 4-15-11 5-5-11 7-15-11 10-15-11 12-12-11

SHEET 5 OF 28

FILE => 53-3042k-g-a1-lo01.dgn

USERNAME => s121614 DATE PLOTTED => 28-MAR-2012 TIME PLOTTED => 11:49

DIST	COUNTY	ROUTE	POST MILES TOTAL PROJECT	SHEET No	TOTAL SHEETS
07	LA	5	2.4/4.0	880	1288

Andrew Rittenhouse 12-12-11
REGISTERED CIVIL ENGINEER DATE

3-26-12
PLANS APPROVAL DATE

REGISTERED PROFESSIONAL ENGINEER Andrew P. Rittenhouse No. 61006 Exp. 12-31-12 CIVIL STATE OF CALIFORNIA

The State of California or its officers or agents shall not be responsible for the accuracy or completeness of electronic copies of this plan sheet.

Notes:

1. For Footing and Pile details see "ABUTMENT DETAILS NO. 1" sheet.
2. For "SECTION E-E" see "ABUTMENT DETAILS NO. 4" sheet.
3. For PTFE/Spherical Expansion Bearing Dimensions & Details see "PTFE/SPHERICAL EXPANSION BEARING DETAILS NO. 1" sheet.

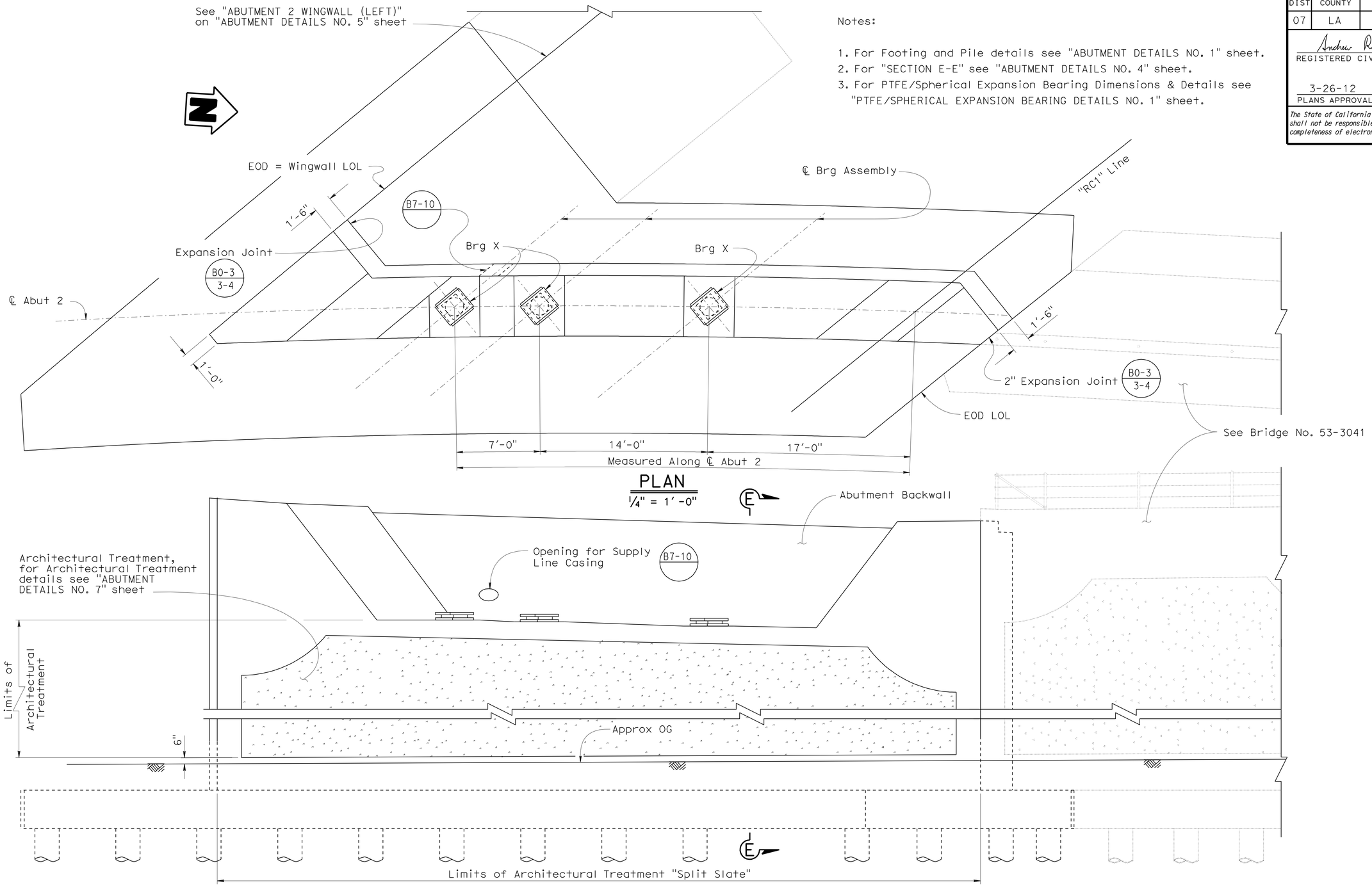

PLAN
1/4" = 1'-0"

Note:
Not all Piles shown

ELEVATION
1/4" = 1'-0"

DESIGN	BY Ruslan Novik	CHECKED Shervin Pahlavan	
DETAILS	BY Herman Mauroschadt	CHECKED Shervin Pahlavan	
QUANTITIES	BY Sara Yip	CHECKED Oleg Kreydich	

STATE OF CALIFORNIA
DEPARTMENT OF TRANSPORTATION

DIVISION OF ENGINEERING SERVICES
STRUCTURE DESIGN
DESIGN BRANCH 15

BRIDGE NO. 53-3042K
POST MILE 3.66

SOUTHBOUND ROSECRANS AVENUE OFF-RAMP
ABUTMENT 2 LAYOUT

STRUCTURES DESIGN DETAIL SHEET (ENGLISH) (REV. 10/25/05)

ORIGINAL SCALE IN INCHES FOR REDUCED PLANS 0 1 2 3

CU 07
EA 215931

DISREGARD PRINTS BEARING EARLIER REVISION DATES

REVISION DATES: 3-16-10 12-9-11 12-22-11 1-30-12 2-2-12 2-24-11 5-9-11 7-14-11 10-19-11

SHEET 6 OF 28

FILE => 53-3042k-g-a2-lo01.dgn

USERNAME => s121614 DATE PLOTTED => 28-MAR-2012 TIME PLOTTED => 11:49

DIST	COUNTY	ROUTE	POST MILES TOTAL PROJECT	SHEET No	TOTAL SHEETS
07	LA	5	2.4/4.0	881	1288

Andrew Rittenhouse 12-12-11
REGISTERED CIVIL ENGINEER DATE

3-26-12
PLANS APPROVAL DATE

REGISTERED PROFESSIONAL ENGINEER Andrew P. Rittenhouse No. 61006 Exp. 12-31-12 CIVIL STATE OF CALIFORNIA

The State of California or its officers or agents shall not be responsible for the accuracy or completeness of electronic copies of this plan sheet.

Legend:

- Indicates Vertical Pile
- Indicates Battered Pile
- ✱ Measured along ℄ Abut

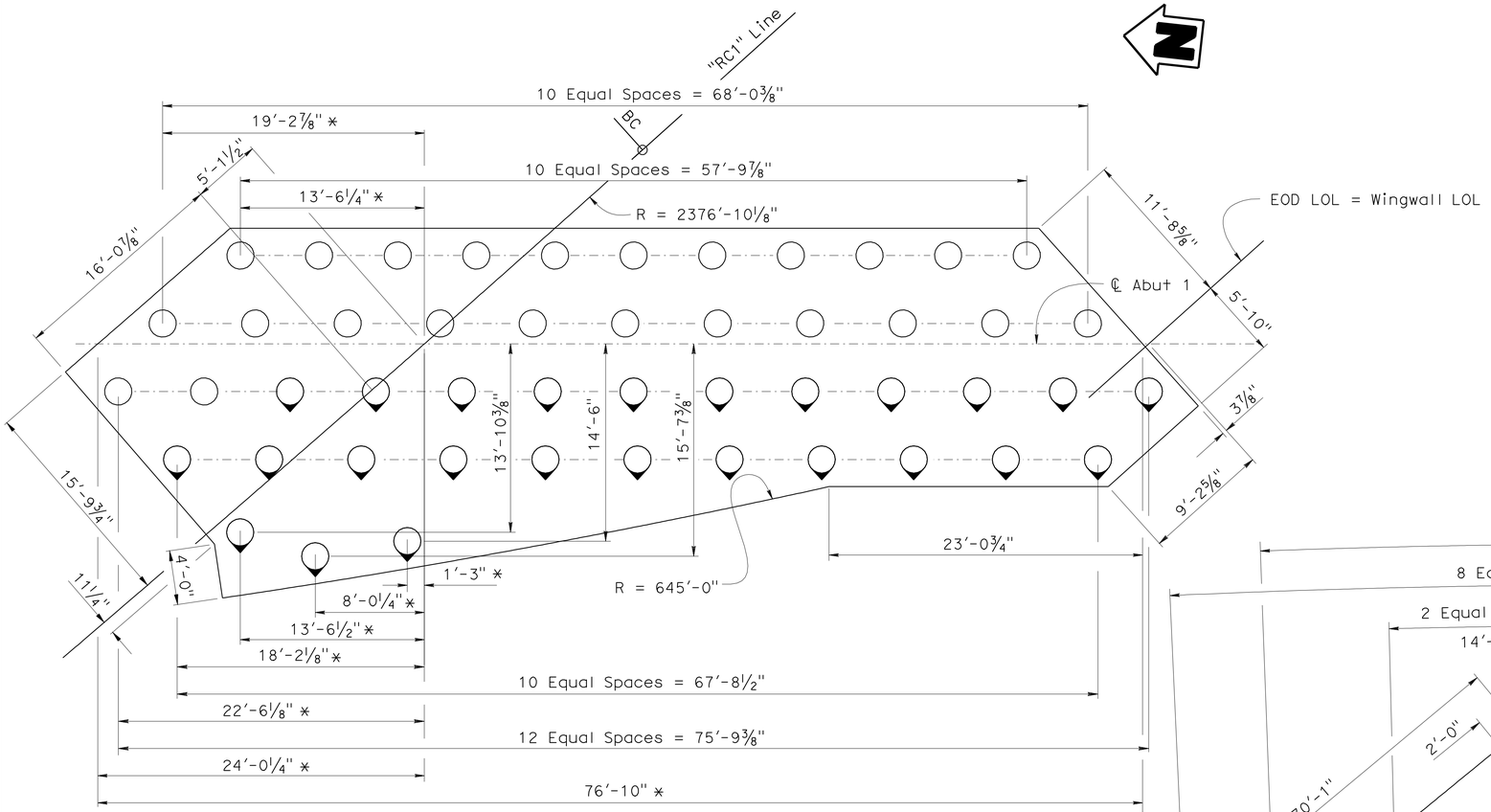

ABUTMENT 1 FOOTING PLAN

3/16" = 1'-0"

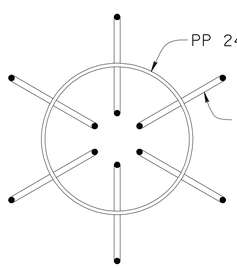

VIEW B-B

1" = 1'-0"

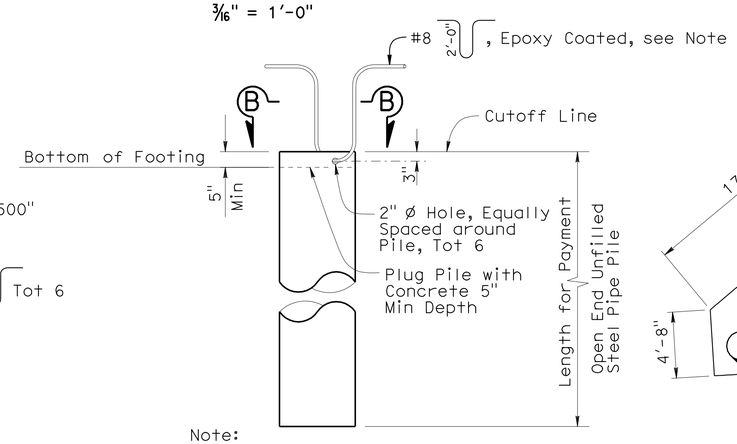

Note:

For Piles at Edge of Footing, position bars to maintain proper clearance.

24 INCH STEEL PIPE PILE

1/2" = 1'-0"

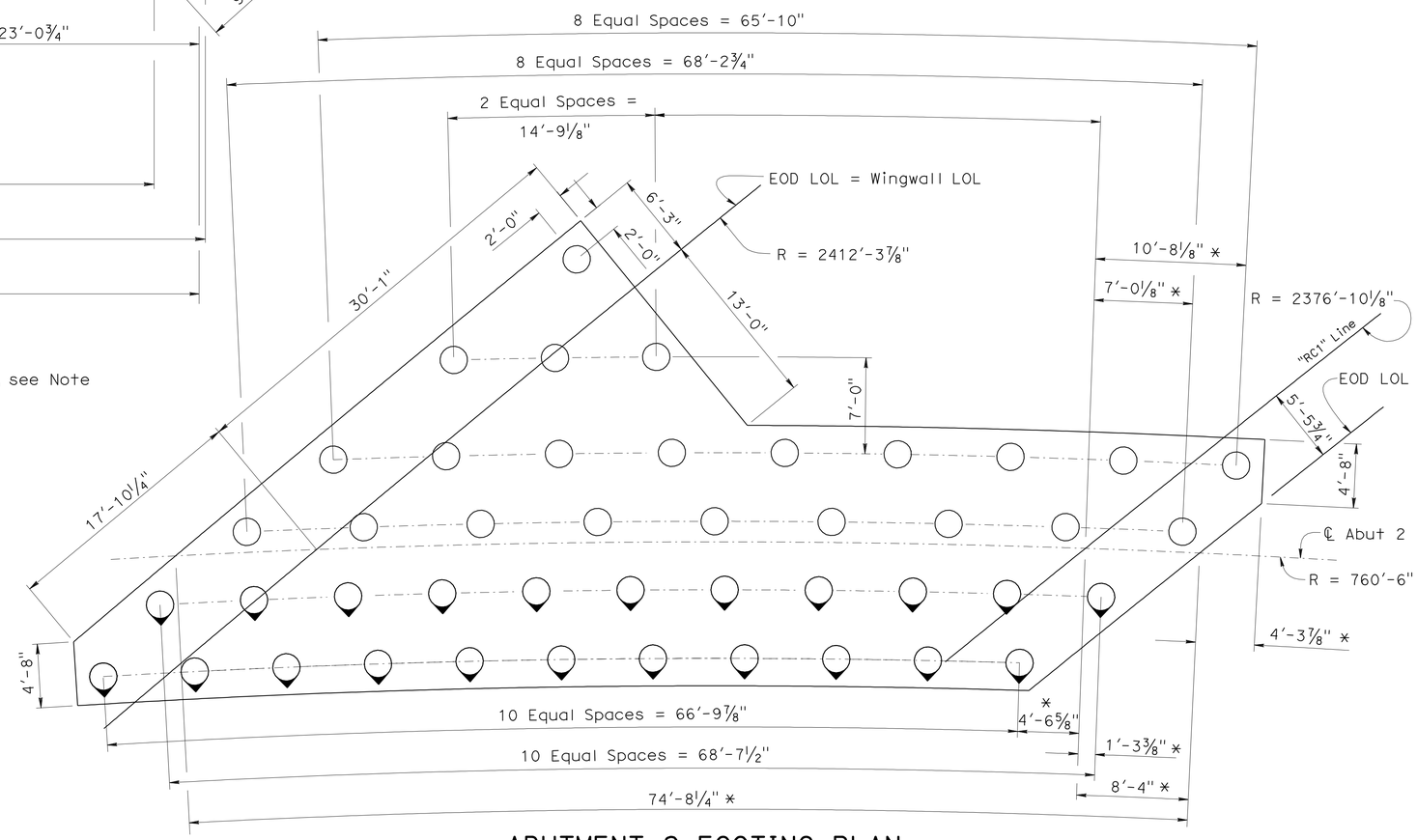

ABUTMENT 2 FOOTING PLAN

3/16" = 1'-0"

DESIGN	BY Suzan Moradi	CHECKED Ruslan Novik / Fred Feng	
DETAILS	BY Herman Mauroschadt	CHECKED Ruslan Novik	
QUANTITIES	BY Sara Yip	CHECKED Ulysses Smpardos	

STATE OF CALIFORNIA
DEPARTMENT OF TRANSPORTATION

DIVISION OF ENGINEERING SERVICES
STRUCTURE DESIGN
DESIGN BRANCH 15

BRIDGE NO. 53-3042K
POST MILE 3.66

SOUTHBOUND ROSECRANS AVENUE OFF-RAMP
ABUTMENT DETAILS NO. 1

STRUCTURES DESIGN DETAIL SHEET (ENGLISH) (REV. 10/25/05)

ORIGINAL SCALE IN INCHES FOR REDUCED PLANS 0 1 2 3

CU 07
EA 215931

DISREGARD PRINTS BEARING EARLIER REVISION DATES

REVISION DATES: 2-2-12 | 1-25-10 | 3-4-11 | 4-1-11 | 5-1-11 | 7-1-11 | 10-1-11 | 12-1-11 | 12-9-11

SHEET 7 OF 28

FILE => 53-3042k-h-ab01.dgn

USERNAME => s126614 DATE PLOTTED => 28-MAR-2012 TIME PLOTTED => 11:50

DIST	COUNTY	ROUTE	POST MILES TOTAL PROJECT	SHEET No	TOTAL SHEETS
07	LA	5	2.4/4.0	882	1288

Andrew Rittenhouse 12-12-11
REGISTERED CIVIL ENGINEER DATE

3-26-12
PLANS APPROVAL DATE

The State of California or its officers or agents shall not be responsible for the accuracy or completeness of electronic copies of this plan sheet.

REGISTERED PROFESSIONAL ENGINEER
Andrew P. Rittenhouse
No. 61006
Exp. 12-31-12
CIVIL
STATE OF CALIFORNIA

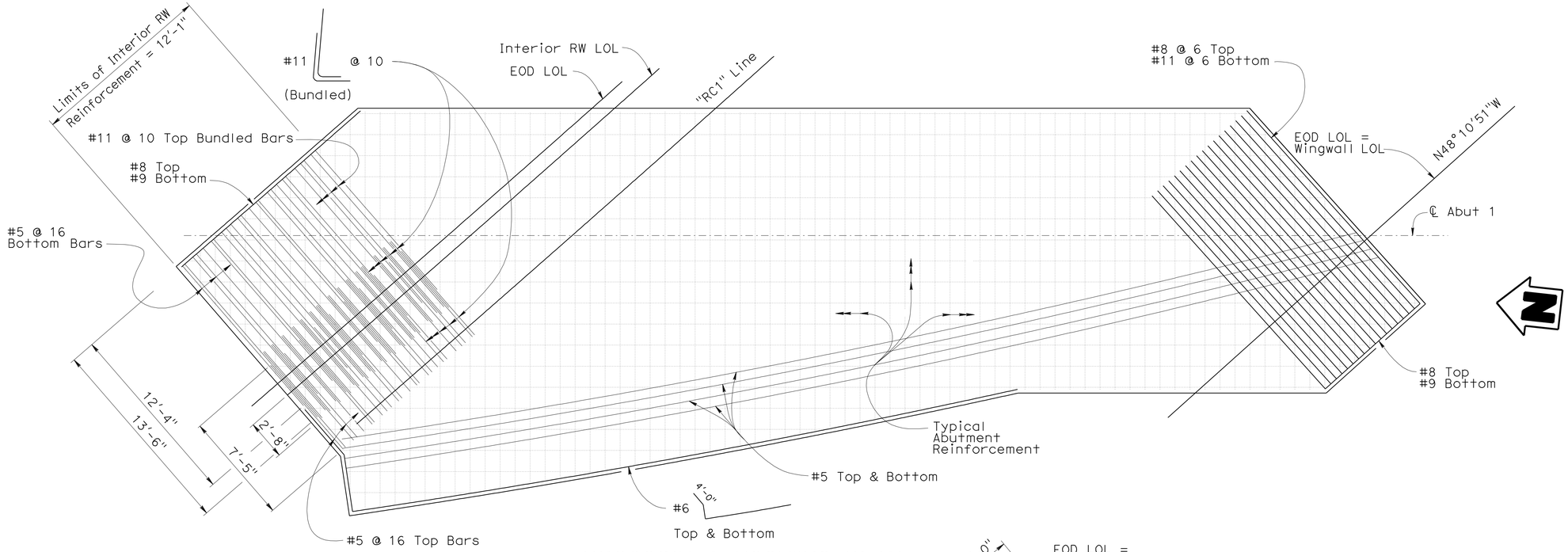

ABUTMENT 1 FOOTING PLAN

1/4" = 1'-0"

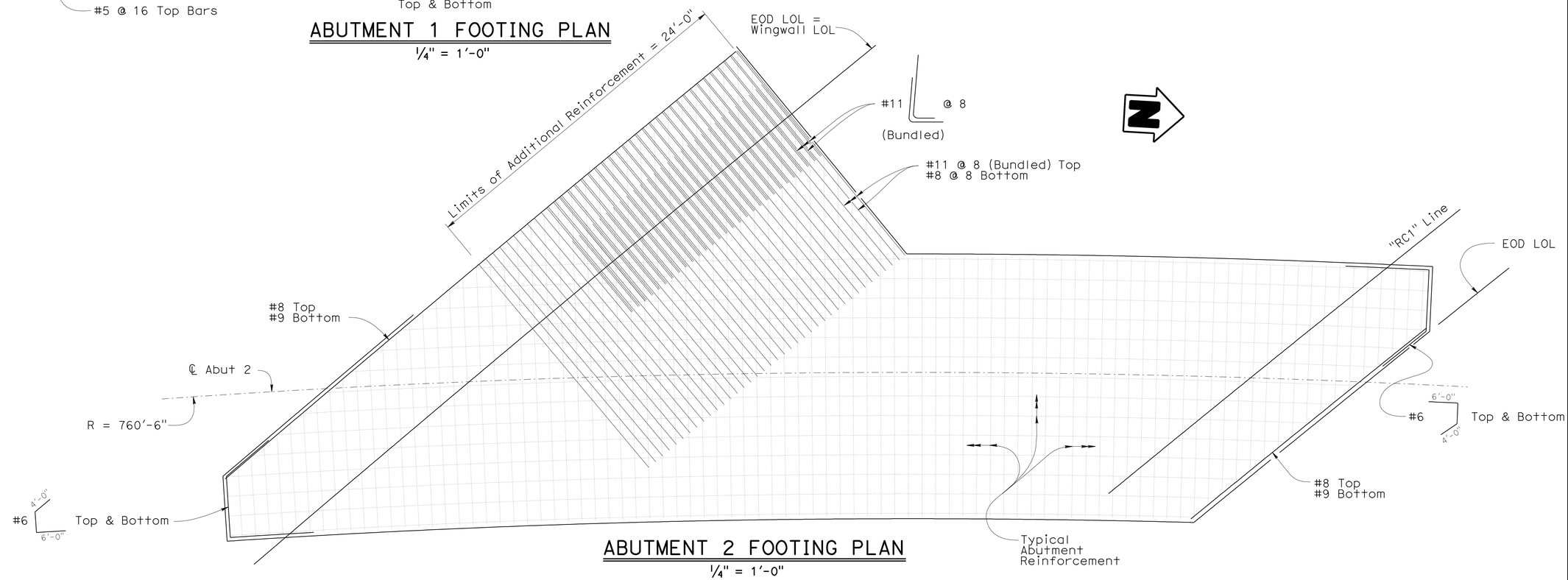

ABUTMENT 2 FOOTING PLAN

1/4" = 1'-0"

DESIGN	BY Suzan Moradi	CHECKED Ruslan Novik / Fred Feng	
DETAILS	BY Herman Mauroschadt	CHECKED Ruslan Novik	
QUANTITIES	BY Sara Yip	CHECKED Oleg Kreydich	

STATE OF CALIFORNIA
DEPARTMENT OF TRANSPORTATION

DIVISION OF ENGINEERING SERVICES
STRUCTURE DESIGN
DESIGN BRANCH 15

BRIDGE NO. 53-3042K
POST MILE 3.66

SOUTHBOUND ROSECRANS AVENUE OFF-RAMP
ABUTMENT DETAILS NO. 2

STRUCTURES DESIGN DETAIL SHEET (ENGLISH) (REV. 10/25/05)

ORIGINAL SCALE IN INCHES FOR REDUCED PLANS 0 1 2 3

CU 07
EA 215931

DISREGARD PRINTS BEARING EARLIER REVISION DATES

REVISION DATES: 2-15-11 4-15-11 5-11-11 7-1-11 10-14-11 12-5-11 12-12-11 2-2-12

SHEET 8 OF 28

FILE => 53-3042k-h-ab02.dgn

USERNAME => s121614 DATE PLOTTED => 28-MAR-2012 TIME PLOTTED => 11:50

DIST	COUNTY	ROUTE	POST MILES TOTAL PROJECT	SHEET No	TOTAL SHEETS
07	LA	5	2.4/4.0	883	1288

Andrew Rittenhouse 12-12-11
REGISTERED CIVIL ENGINEER DATE

3-26-12
PLANS APPROVAL DATE

REGISTERED PROFESSIONAL ENGINEER Andrew P. Rittenhouse No. 61006 Exp. 12-31-12 CIVIL STATE OF CALIFORNIA

The State of California or its officers or agents shall not be responsible for the accuracy or completeness of electronic copies of this plan sheet.

Notes:

1. Construct Abutment Backwall, Retaining Wall / Wingwall after prestressing operation is complete.
2. For PTFE / Spherical Expansion Bearing see "PTFE / SPHERICAL EXPANSION BEARING DETAILS NO. 1" sheet.
3. Surfaces of expanded polystyrene against which concrete is to be placed shall be faced with Hardboard and as directed by the Engineer.
4. For Additional Footing Reinforcement see "ABUTMENT DETAILS NO. 2" sheet.
5. For additional Pile details see "24 INCH STEEL PIPE PILE" detail on "ABUTMENT DETAILS NO. 1" sheet.
6. To be placed normal to Parapet Wall alignment.

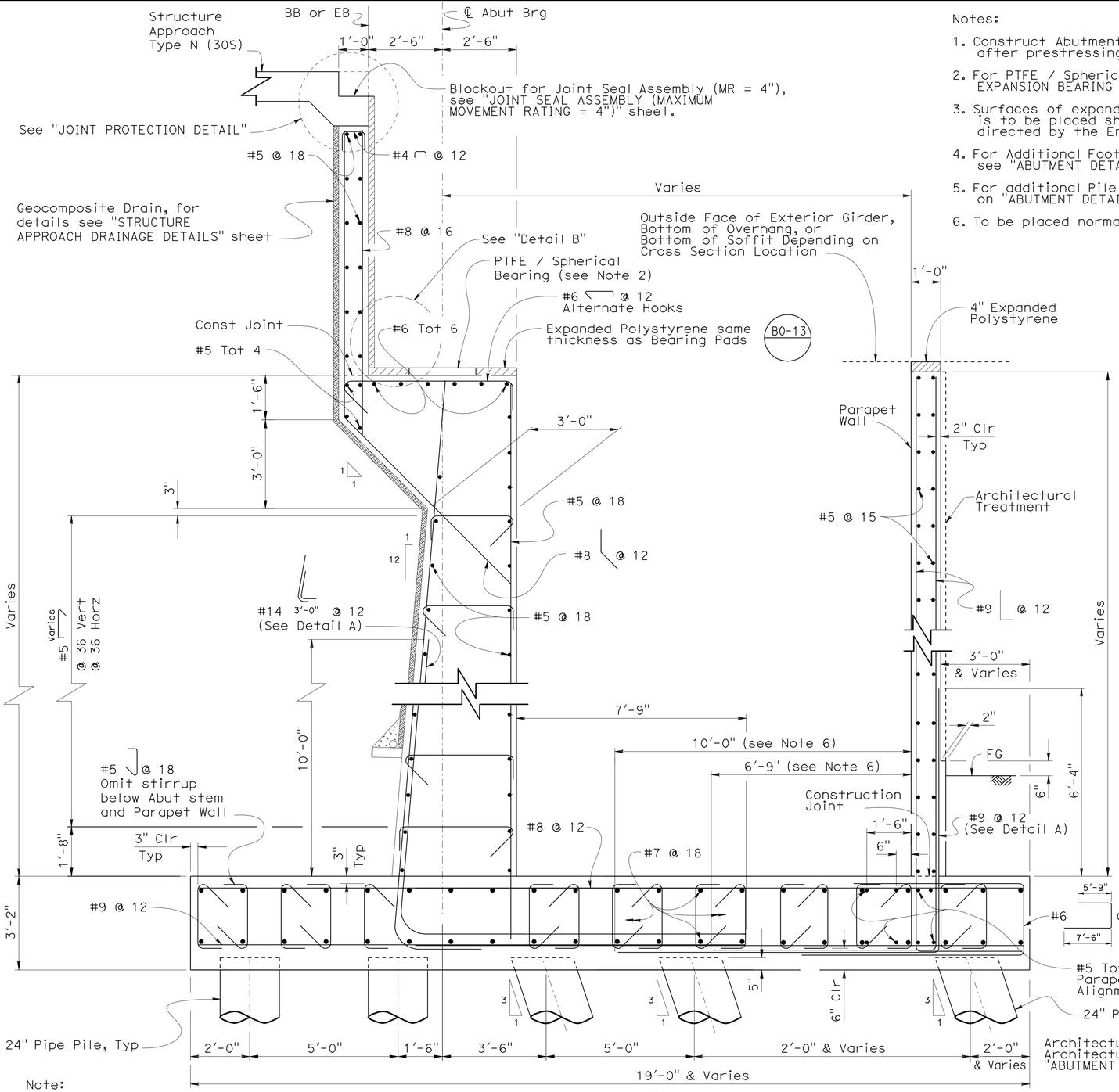

Note:
Abutment 1 shown

SECTION C-C (B0-13)
½" = 1'-0"

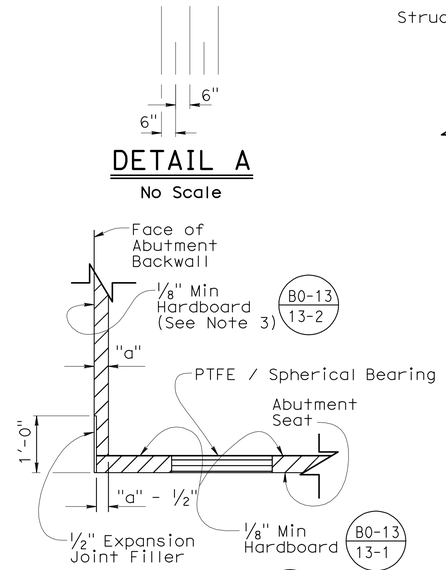

DETAIL A
No Scale

DETAIL B (B0-13)
¾" = 1'-0"

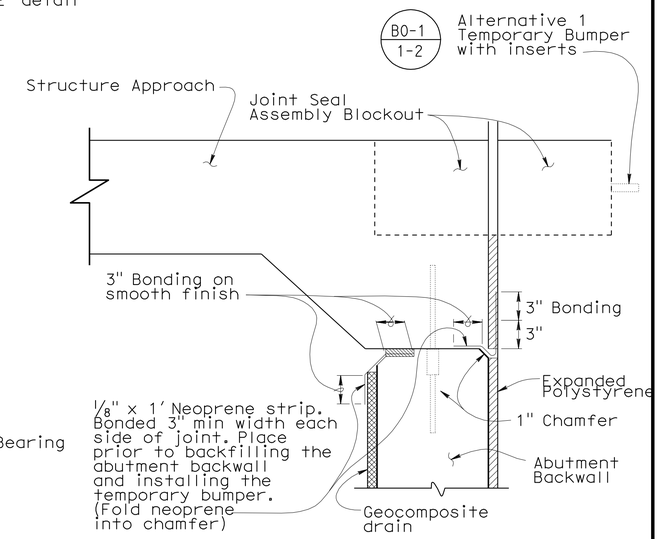

JOINT PROTECTION DETAIL (B0-1)
No Scale

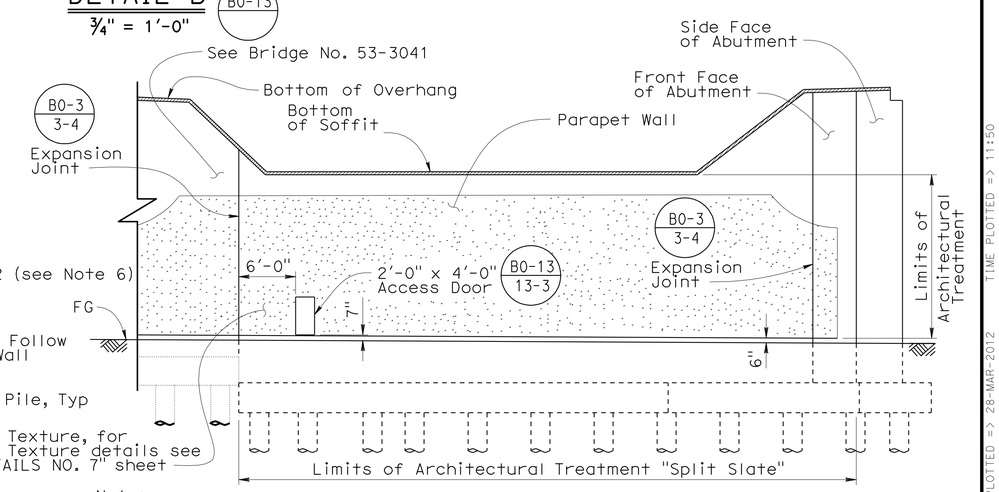

Note:
Bridge not shown for clarity.

VIEW D-D (B0-3 / B0-13)
⅛" = 1'-0"

DESIGN	BY Ruslan Novik	CHECKED Suzan Moradi / Fred Feng	
DETAILS	BY Herman Mauroschadt	CHECKED Suzan Moradi	
QUANTITIES	BY Sara Yip	CHECKED O. Kreydich / U. Smpardos	

STATE OF CALIFORNIA
DEPARTMENT OF TRANSPORTATION

DIVISION OF ENGINEERING SERVICES
STRUCTURE DESIGN
DESIGN BRANCH 15

BRIDGE NO. 53-3042K
POST MILE 3.66

SOUTHBOUND ROSECRANS AVENUE OFF-RAMP
ABUTMENT DETAILS NO. 3

STRUCTURES DESIGN DETAIL SHEET (ENGLISH) (REV. 10/25/05)

ORIGINAL SCALE IN INCHES FOR REDUCED PLANS 0 1 2 3

CU 07
EA 215931

DISREGARD PRINTS BEARING EARLIER REVISION DATES

REVISION DATES: 4-8-11 5-11-11 7-11-11 10-11-11 12-12-11 12-21-11 2-2-12

SHEET 9 OF 28

FILE => 53-3042k-h-ab03.dgn

USERNAME => s121614 DATE PLOTTED => 28-MAR-2012 TIME PLOTTED => 11:50

DIST	COUNTY	ROUTE	POST MILES TOTAL PROJECT	SHEET No	TOTAL SHEETS
07	LA	5	2.4/4.0	884	1288

Andrew Rittenhouse 12-12-11
REGISTERED CIVIL ENGINEER DATE

3-26-12
PLANS APPROVAL DATE

The State of California or its officers or agents shall not be responsible for the accuracy or completeness of electronic copies of this plan sheet.

REGISTERED PROFESSIONAL ENGINEER
Andrew P. Rittenhouse
No. 61006
Exp. 12-31-12
CIVIL
STATE OF CALIFORNIA

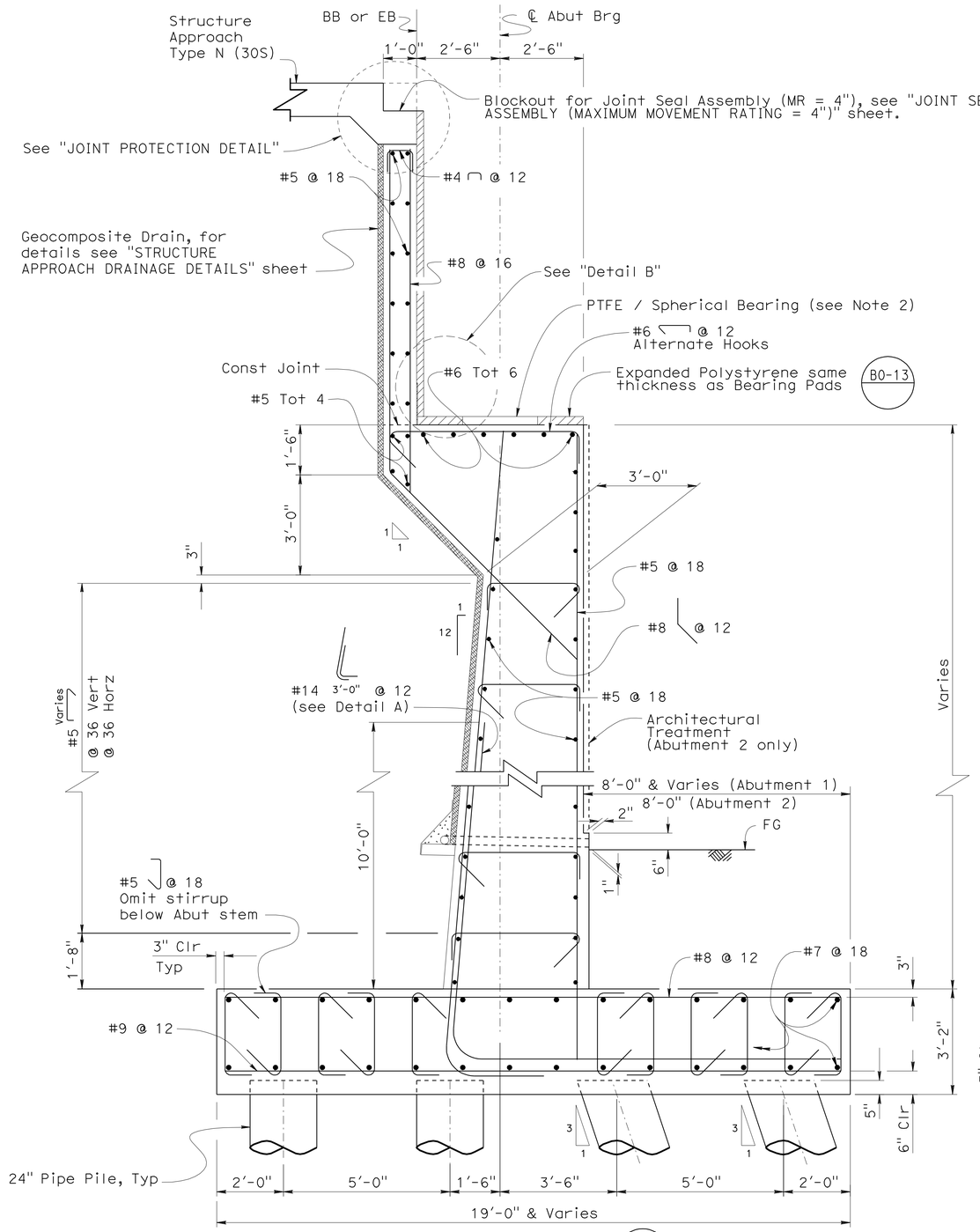

Note:
Abutment 2 shown, Abutment 1 similar (see Note 3)

SECTION E-E
½" = 1'-0"
B0-13

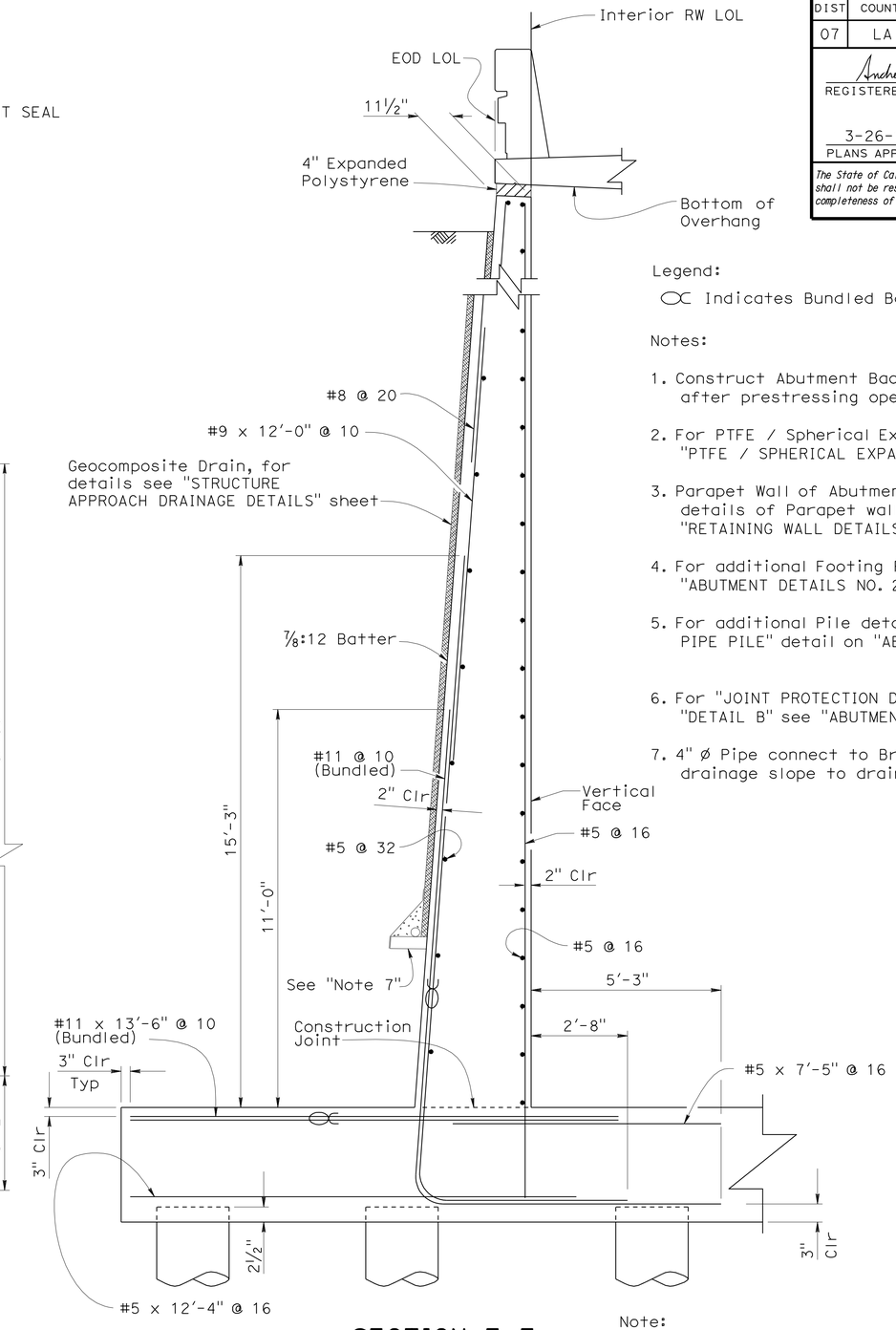

SECTION F-F
½" = 1'-0"

Legend:

Indicates Bundled Bars

Notes:

1. Construct Abutment Backwall, Retaining Wall / Wingwall after prestressing operation is complete.
2. For PTFE / Spherical Expansion Bearing see "PTFE / SPHERICAL EXPANSION BEARING DETAILS NO. 1" sheet
3. Parapet Wall of Abutment 1 not shown for clarity, for details of Parapet wall see "SECTION J-J" on "RETAINING WALL DETAILS No. 2" sheet.
4. For additional Footing Reinforcement see "ABUTMENT DETAILS NO. 2" sheet.
5. For additional Pile details see "24 INCH STEEL PIPE PILE" detail on "ABUTMENT DETAILS NO. 1" sheet.
6. For "JOINT PROTECTION DETAIL", "DETAIL A", and "DETAIL B" see "ABUTMENT DETAILS No. 3" sheet.
7. 4" Ø Pipe connect to Bridge No. 53-3041 drainage slope to drain. See Bridge No. 53-3041.

Note:
Typical Abutment Footing Reinforcement not shown for clarity. For length and limit of bars in footing see "ABUTMENT 1 FOOTING PLAN" on "ABUTMENT DETAILS No. 5" sheet.

	BY	CHECKED
DESIGN	Suzan Moradi	Ruslan Novik / Fred Feng
DETAILS	Herman Mauroschadt	Ruslan Novik
QUANTITIES	Sara Yip	Oleg Kreydich

STATE OF CALIFORNIA
DEPARTMENT OF TRANSPORTATION

DIVISION OF ENGINEERING SERVICES
STRUCTURE DESIGN
DESIGN BRANCH 15

BRIDGE NO. 53-3042K
POST MILE 3.66

SOUTHBOUND ROSECRANS AVENUE OFF-RAMP
ABUTMENT DETAILS NO. 4

STRUCTURES DESIGN DETAIL SHEET (ENGLISH) (REV. 10/25/05)

ORIGINAL SCALE IN INCHES FOR REDUCED PLANS 0 1 2 3

CU 07
EA 215931

DISREGARD PRINTS BEARING EARLIER REVISION DATES

REVISION DATES: 2-2-12 1-3-10 3-3-11 11-10-11 3-3-11 3-3-11 10-3-11 12-3-11 12-3-11

SHEET 10 OF 28

FILE => 53-3042k-h-ab04.dgn

USERNAME => s12614 DATE PLOTTED => 28-MAR-2012 TIME PLOTTED => 11:50

DIST	COUNTY	ROUTE	POST MILES TOTAL PROJECT	SHEET No	TOTAL SHEETS
07	LA	5	2.4/4.0	885	1288

Andrew Rittenhouse 12-12-11
REGISTERED CIVIL ENGINEER DATE

3-26-12
PLANS APPROVAL DATE

REGISTERED PROFESSIONAL ENGINEER Andrew P. Rittenhouse No. 61006 Exp. 12-31-12 CIVIL STATE OF CALIFORNIA

The State of California or its officers or agents shall not be responsible for the accuracy or completeness of electronic copies of this plan sheet.

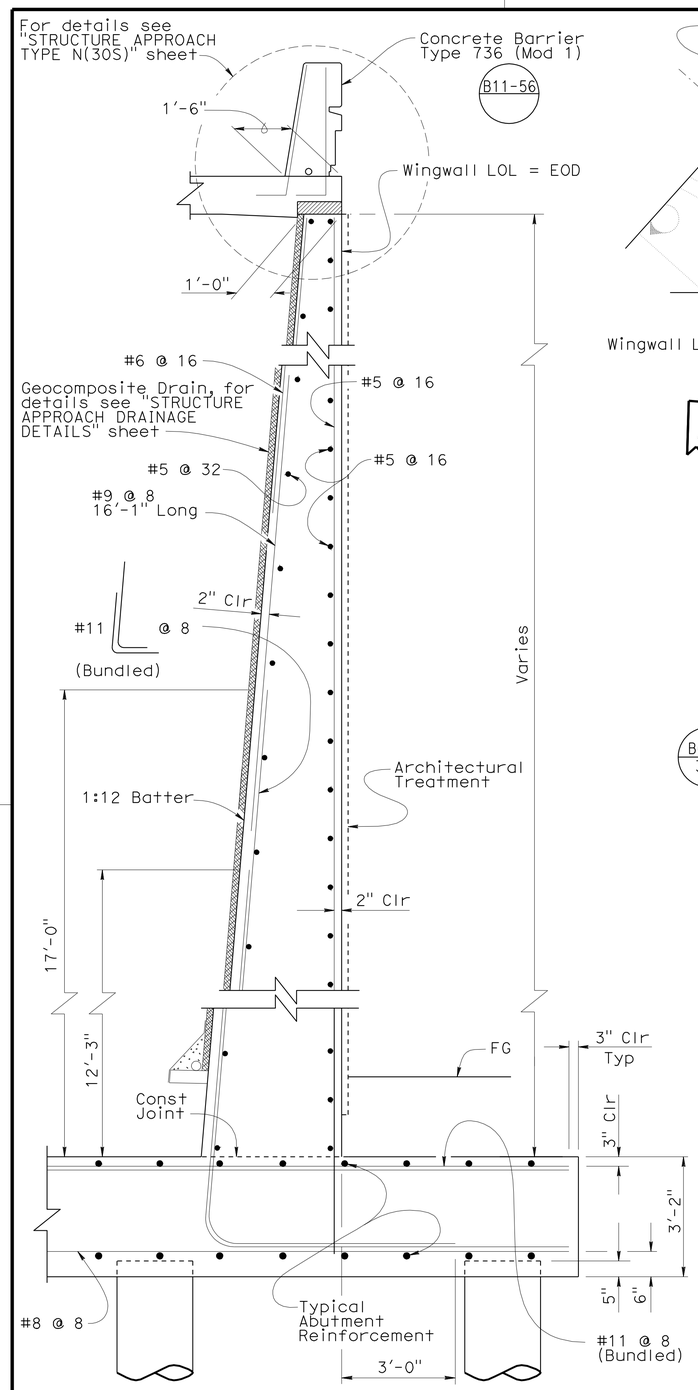

SECTION G-G

B11-56

1/2" = 1'-0"

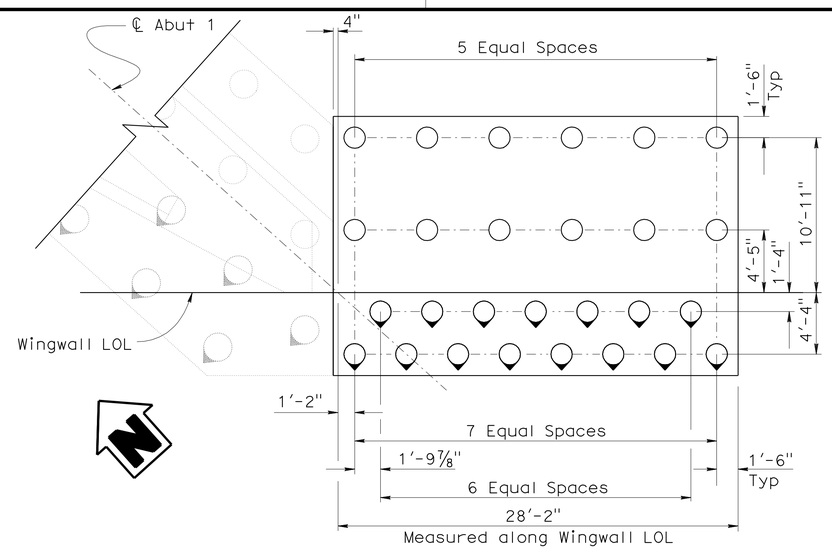

PLAN

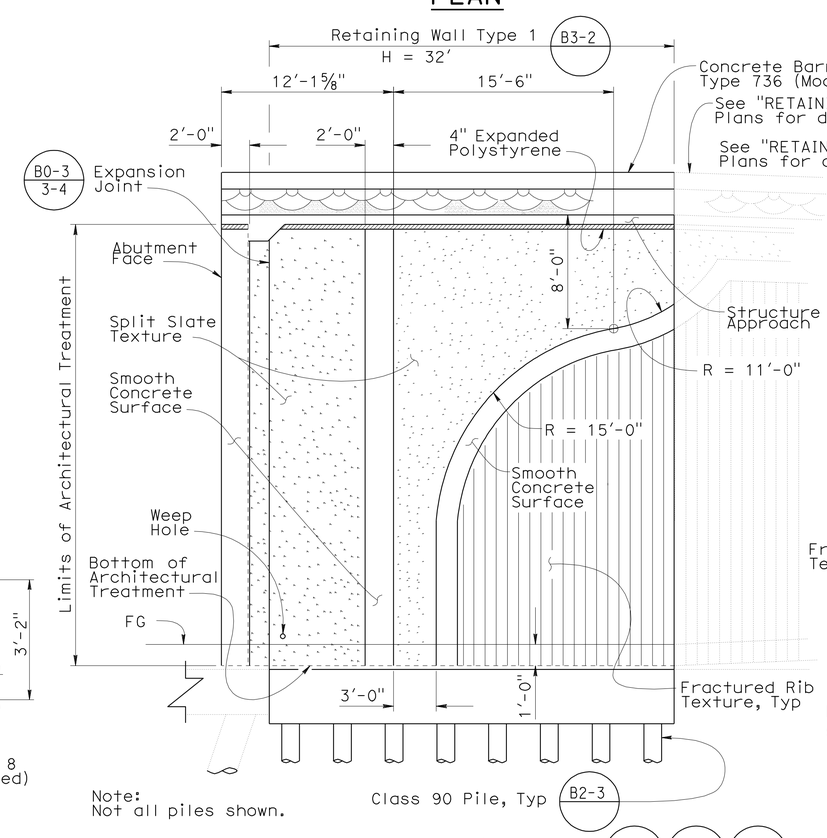

ABUTMENT 1 WINGWALL (LEFT)

B0-3 B2-3 B3-2

3/16" = 1'-0"

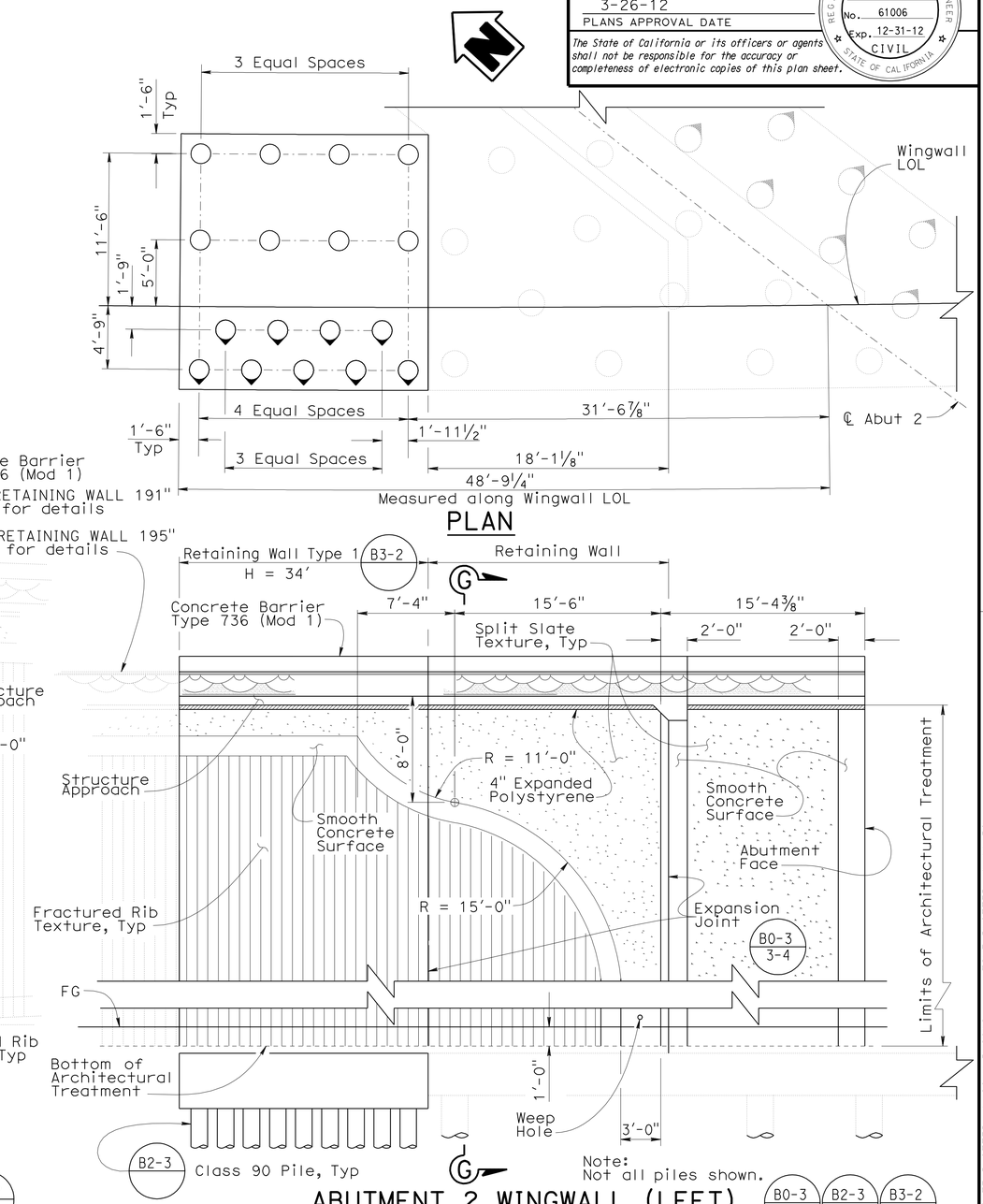

PLAN

ABUTMENT 2 WINGWALL (LEFT)

B0-3 B2-3 B3-2

3/16" = 1'-0"

DESIGN	BY Suzan Moradi	CHECKED Ruslan Novik / Fred Feng	
DETAILS	BY Herman Mauroschadt	CHECKED Ruslan Novik	
QUANTITIES	BY Sara Yip	CHECKED Ulysses Smpardos	

STATE OF CALIFORNIA
DEPARTMENT OF TRANSPORTATION

DIVISION OF ENGINEERING SERVICES
STRUCTURE DESIGN
DESIGN BRANCH 15

BRIDGE NO. 53-3042K
POST MILE 3.66

SOUTHBOUND ROSECRANS AVENUE OFF-RAMP
ABUTMENT DETAILS NO. 5

STRUCTURES DESIGN DETAIL SHEET (ENGLISH) (REV. 10/25/05)

ORIGINAL SCALE IN INCHES FOR REDUCED PLANS 0 1 2 3

CU 07
EA 215931

DISREGARD PRINTS BEARING EARLIER REVISION DATES

REVISION DATES: 2-18-11 3-4-11 4-18-11 5-11-11 7-14-11 10-18-11 12-5-11 2-2-12

SHEET 11 OF 28

FILE => 53-3042k-h-ab05.dgn

USERNAME => s126614 DATE PLOTTED => 28-MAR-2012 TIME PLOTTED => 11:50

DIST	COUNTY	ROUTE	POST MILES TOTAL PROJECT	SHEET No	TOTAL SHEETS
07	LA	5	2.4/4.0	886	1288

Andrew Rittenhouse 12-12-11
REGISTERED CIVIL ENGINEER DATE

3-26-12
PLANS APPROVAL DATE

The State of California or its officers or agents shall not be responsible for the accuracy or completeness of electronic copies of this plan sheet.

REGISTERED PROFESSIONAL ENGINEER
Andrew P. Rittenhouse
No. 61006
Exp. 12-31-12
CIVIL
STATE OF CALIFORNIA

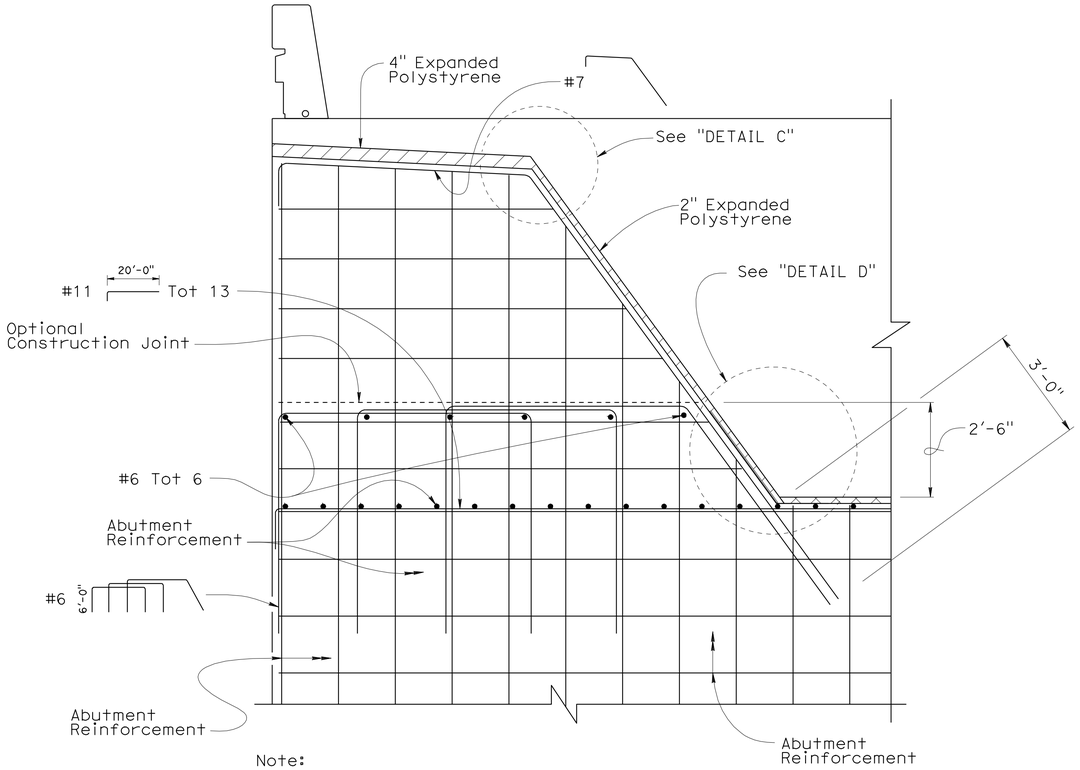

Note:
Abutment 1 shown (Abutment 2 Shear Key reinforcement similar)

SECTION H-H
½" = 1'-0"

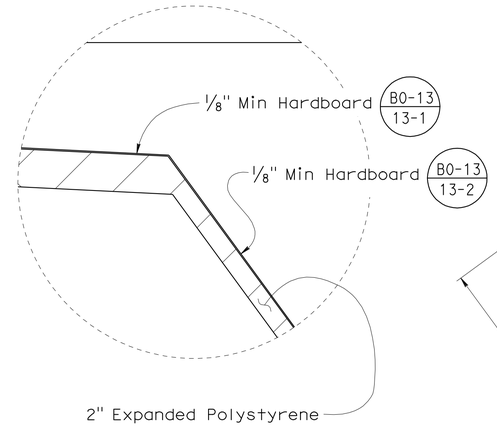

Note:
Reinforcement not shown for clarity

DETAIL C
1½" = 1'-0"
B0-13

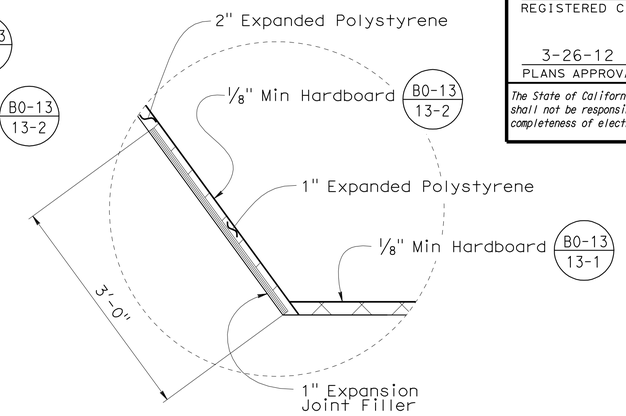

Note:
Reinforcement and Bearing Pad not shown for clarity

DETAIL D
B0-13

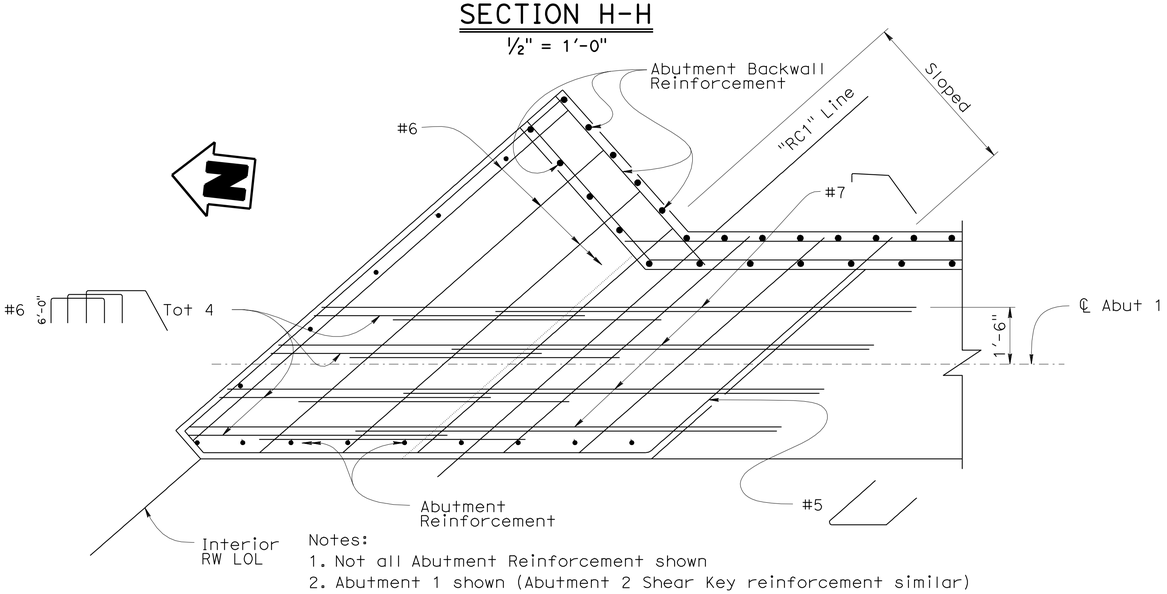

Notes:
1. Not all Abutment Reinforcement shown
2. Abutment 1 shown (Abutment 2 Shear Key reinforcement similar)

SECTION J-J
½" = 1'-0"

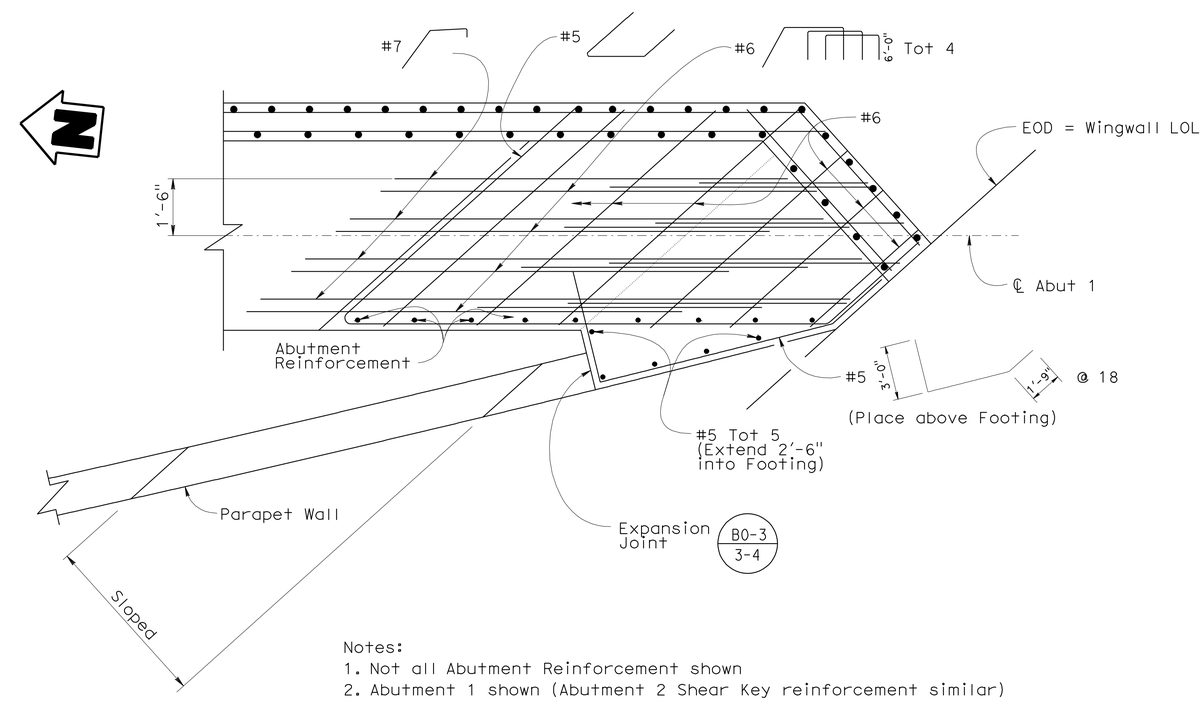

Notes:
1. Not all Abutment Reinforcement shown
2. Abutment 1 shown (Abutment 2 Shear Key reinforcement similar)

SECTION K-K
½" = 1'-0"

	BY	CHECKED
DESIGN	Ruslan Novik	Suzan Moradi / Fred Feng
DETAILS	Herman Mauroschadt	Suzan Moradi
QUANTITIES	Sara Yip	Oleg Kreydich

STATE OF CALIFORNIA
DEPARTMENT OF TRANSPORTATION

DIVISION OF ENGINEERING SERVICES
STRUCTURE DESIGN
DESIGN BRANCH 15

BRIDGE NO. 53-3042K
POST MILE 3.66

SOUTHBOUND ROSECRANS AVENUE OFF-RAMP
ABUTMENT DETAILS NO. 6

STRUCTURES DESIGN DETAIL SHEET (ENGLISH) (REV. 10/25/05)

ORIGINAL SCALE IN INCHES FOR REDUCED PLANS 0 1 2 3

CU 07
EA 215931

DISREGARD PRINTS BEARING EARLIER REVISION DATES

REVISION DATES: 2-14-11 3-4-11 4-28-11 5-11-11 7-14-11 10-18-11 12-8-11 12-28-11 2-2-12

SHEET 12 OF 28

FILE => 53-3042k-h-ab06.dgn

USERNAME => s12614 DATE PLOTTED => 28-MAR-2012 TIME PLOTTED => 11:50

DIST	COUNTY	ROUTE	POST MILES TOTAL PROJECT	SHEET No	TOTAL SHEETS
07	LA	5	2.4/4.0	887	1288

REGISTERED CIVIL ENGINEER 12-12-11 DATE

3-26-12
PLANS APPROVAL DATE

REGISTERED PROFESSIONAL ENGINEER H. Javier Chavez No. 14073 Exp. 03-31-13 CIVIL STATE OF CALIFORNIA

The State of California or its officers or agents shall not be responsible for the accuracy or completeness of electronic copies of this plan sheet.

Legend:

- Split Slate Texture
- Smooth Concrete Surface

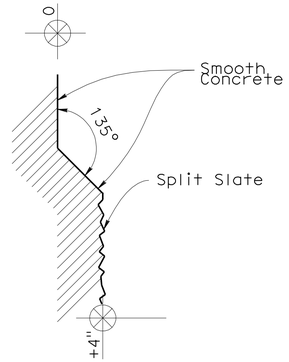

SECTION L-L

No Scale

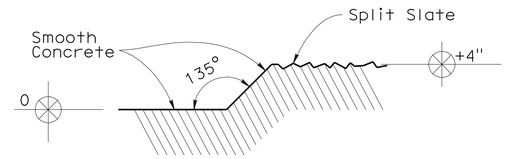

Note:
Corner Abutment 2 shown other Corner and Parapet Wall similar.

SECTION M-M

No Scale

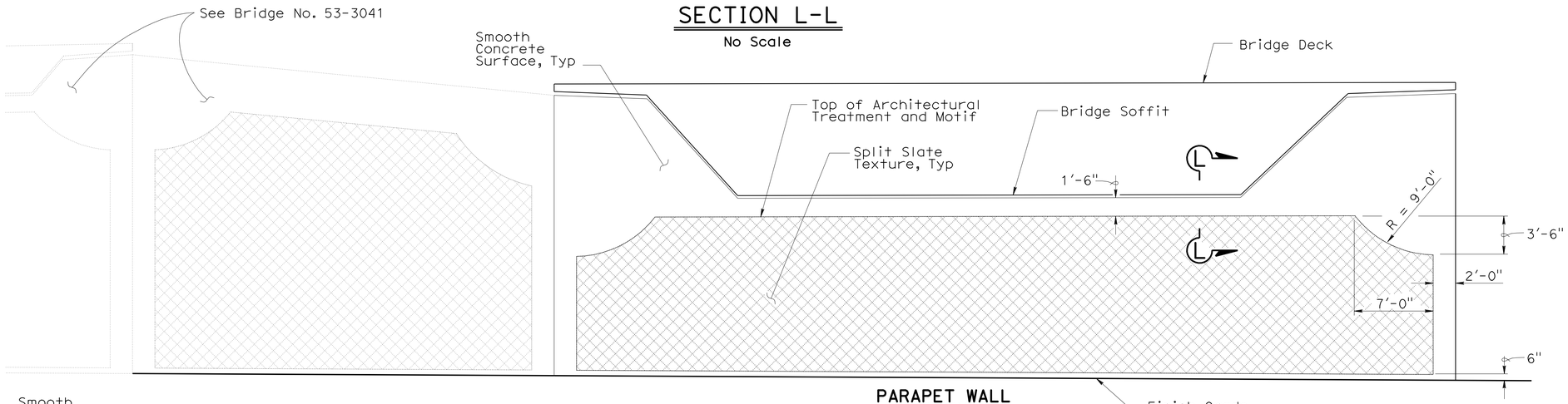

PARAPET WALL ABUTMENT 1 ELEVATION

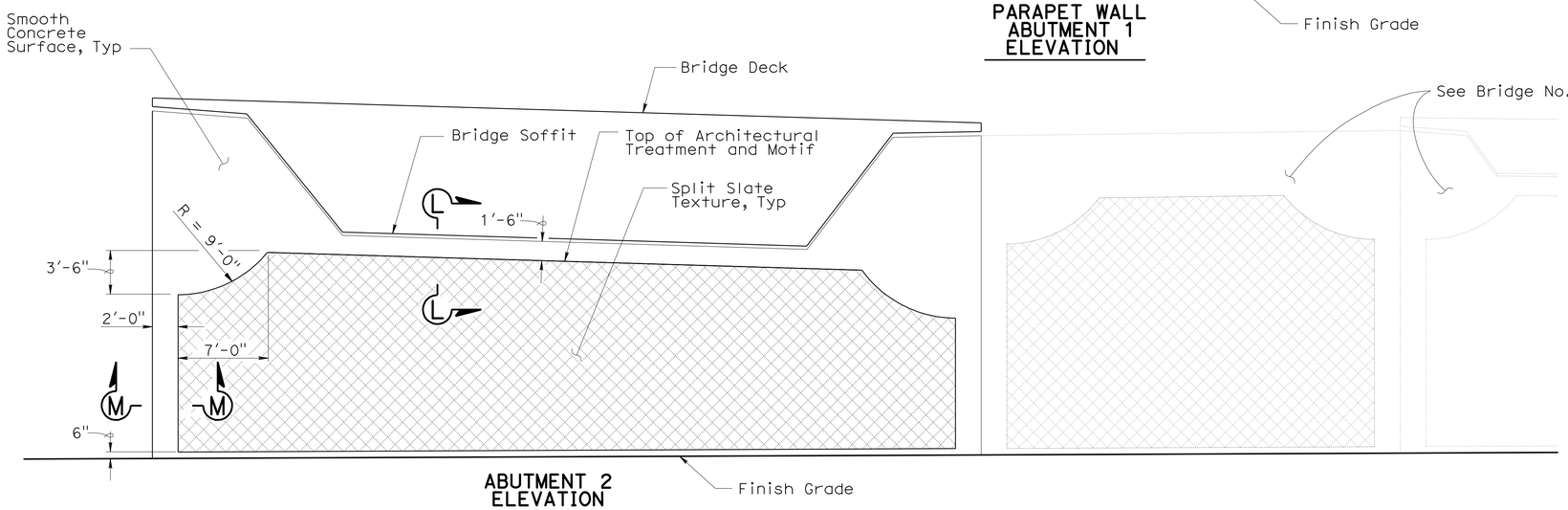

ABUTMENT 2 ELEVATION

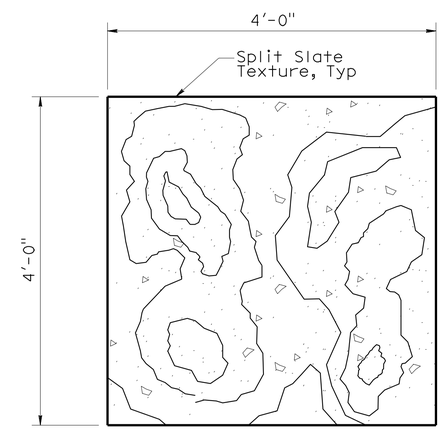

SPLIT SLATE TEXTURE TEST PANEL DETAIL

No Scale

ABUTMENT ARCHITECTURAL TREATMENT DETAILS

No Scale

	BY	CHECKED
DESIGN	H. Chavez	S. Heath
DETAILS	S. Heath	H. Chavez
QUANTITIES	Sara Yip	Oleg Kreydich

STATE OF CALIFORNIA
DEPARTMENT OF TRANSPORTATION

DIVISION OF ENGINEERING SERVICES
STRUCTURE DESIGN
DESIGN BRANCH 15

BRIDGE NO. 53-3042K
POST MILE 3.66

SOUTHBOUND ROSECRANS AVENUE OFF-RAMP
ABUTMENT DETAILS NO. 7

STRUCTURES DESIGN DETAIL SHEET (ENGLISH) (REV. 10/25/05)

ORIGINAL SCALE IN INCHES FOR REDUCED PLANS 0 1 2 3

CU 07
EA 215931

DISREGARD PRINTS BEARING EARLIER REVISION DATES

REVISION DATES: 2-1-12

SHEET 13 OF 28

FILE => 53-3042k-h-ab07.dgn

USERNAME => s121614 DATE PLOTTED => 28-MAR-2012 TIME PLOTTED => 11:51

DIST	COUNTY	ROUTE	POST MILES TOTAL PROJECT	SHEET No	TOTAL SHEETS
07	LA	5	2.4/4.0	888	1288

Andrew Rittenhouse 12-12-11
REGISTERED CIVIL ENGINEER DATE

3-26-12
PLANS APPROVAL DATE

REGISTERED PROFESSIONAL ENGINEER
Andrew P. Rittenhouse
No. 61006
Exp. 12-31-12
CIVIL
STATE OF CALIFORNIA

The State of California or its officers or agents shall not be responsible for the accuracy or completeness of electronic copies of this plan sheet.

Notes:

1. Splices for continuous Girder reinforcement #8 Top and #8 Bottom shall be service splices. Extend 6'-0" Min into End Diaphragm
2. Barrier Reinforcement to be in place before deck concrete.
3. Place normal to ℄ Girders and measure spacing along ℄ Girders
4. For additional reinforcement see "GIRDER REINFORCEMENT" sheet
5. For additional information see "GIRDER LAYOUT" sheet.

Legend:

○ Indicates additional reinforcement, see "GIRDER REINFORCEMENT" sheet.

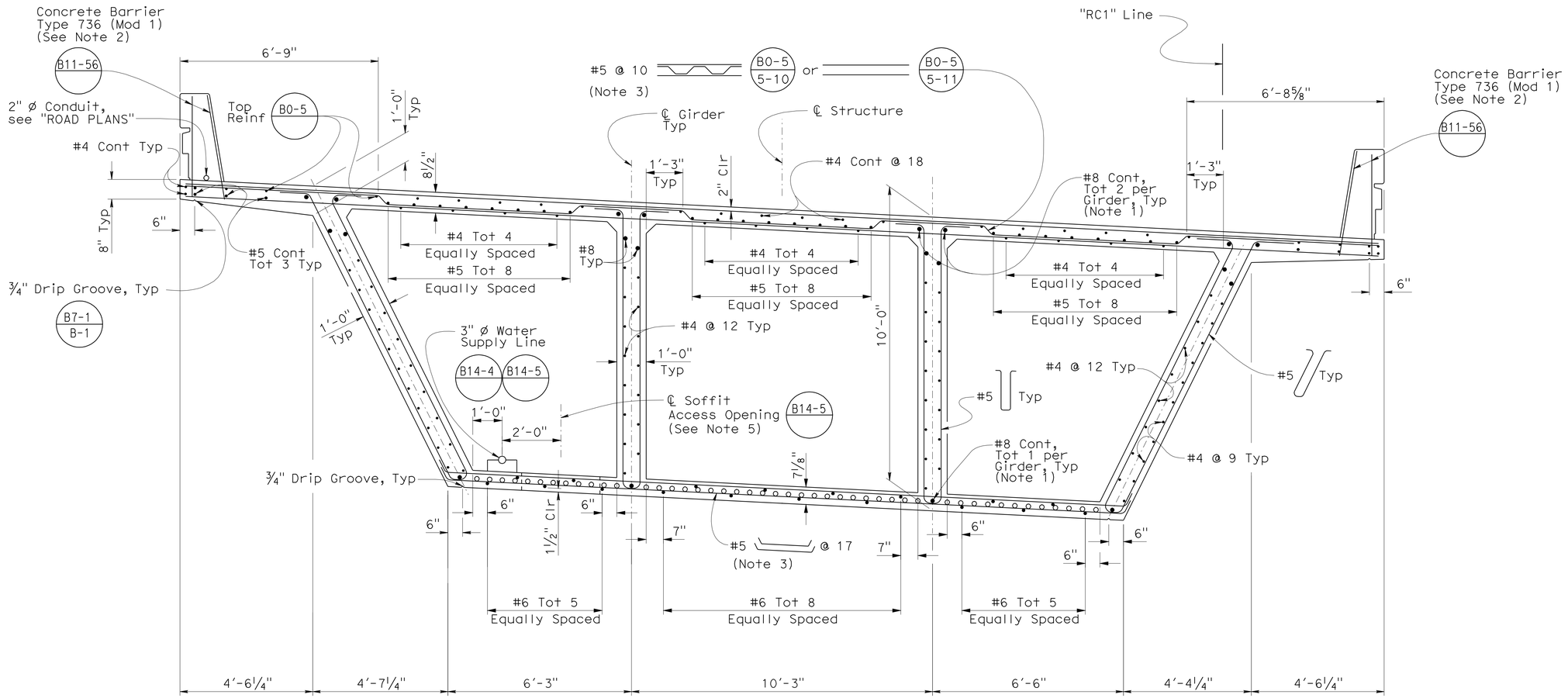

TYPICAL SECTION

½" = 1'

B0-5 B7-1 B8-5 B11-56 B14-4 B14-5

DESIGN	BY Ruslan Novik	CHECKED Suzan Moradi / Traci Menard	
DETAILS	BY Herman Mauroschadt	CHECKED Suzan Moradi	
QUANTITIES	BY Sara Yip	CHECKED Oleg Kreydich	

STATE OF CALIFORNIA
DEPARTMENT OF TRANSPORTATION

DIVISION OF ENGINEERING SERVICES
STRUCTURE DESIGN
DESIGN BRANCH 15

BRIDGE NO. 53-3042K
POST MILE 3.66

SOUTHBOUND ROSECRANS AVENUE OFF-RAMP
TYPICAL SECTION

STRUCTURES DESIGN DETAIL SHEET (ENGLISH) (REV. 10/25/05)

ORIGINAL SCALE IN INCHES FOR REDUCED PLANS 0 1 2 3

CU 07
EA 215931

DISREGARD PRINTS BEARING EARLIER REVISION DATES

REVISION DATES: 6-16-10 1-28-11 5-11-11 7-14-11 10-21-11 12-6-11 12-28-11 2-2-12

SHEET 14 OF 28

FILE => 53-3042k-m-ts1.dgn

USERNAME => s121614 DATE PLOTTED => 28-MAR-2012 TIME PLOTTED => 11:51

DIST	COUNTY	ROUTE	POST MILES TOTAL PROJECT	SHEET No	TOTAL SHEETS
07	LA	5	2.4/4.0	889	1288

REGISTERED CIVIL ENGINEER — DATE 12-12-11

3-26-12
PLANS APPROVAL DATE

The State of California or its officers or agents shall not be responsible for the accuracy or completeness of electronic copies of this plan sheet.

REGISTERED PROFESSIONAL ENGINEER — Andrew P. Rittenhouse — No. 61006 — Exp. 12-31-12 — CIVIL — STATE OF CALIFORNIA

PRESTRESSING NOTES

270 KSI Low Relaxation Strand:

P_{jack}	=	17600 kips
Anchor Set	=	0.37 in
Friction Curvature coefficient	μ =	0.15 (1/rad)
Friction Wobble coefficient	k =	2.0×10^{-4} (1/ft)
Total Number of Girders	=	4

Distribution of prestress force (Pjack) between girders shall not exceed the ratio of 3:2.

Maximum final force variation between girders shall not exceed 725 kips.

Concrete: f'_c = 6000 psi @ 28 days

f'_{ci} = 3500 psi @ time of stressing

Contractor shall submit elongation calculations based on initial stress at
⊠ = 0.9346 times jacking stress.

One end stressing can be performed from either end.

Legend:

Indicates Girder Stem width in inches

Indicates High / Low Inflection Points

Note:

1. For "DETAIL F" and "DETAIL E" see "GIRDER DETAILS" sheet.

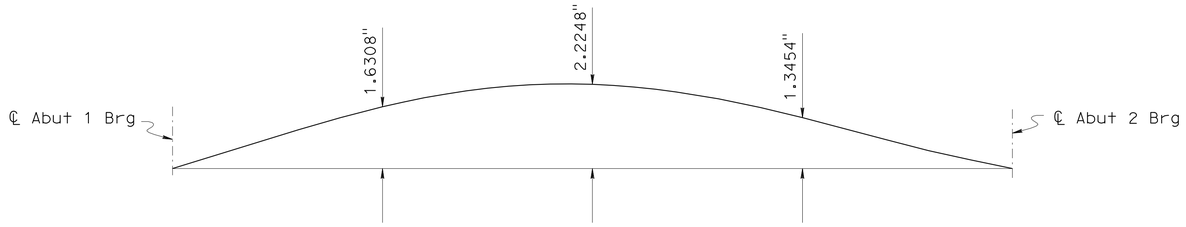

Does not include allowance for falsework settlement

CAMBER DIAGRAM

No Scale

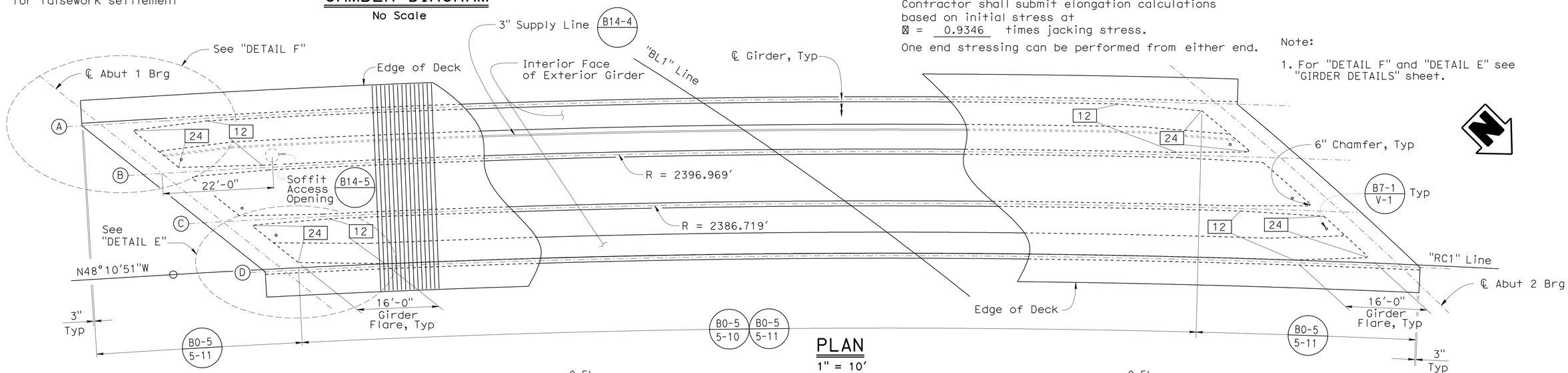

PLAN

1" = 10'

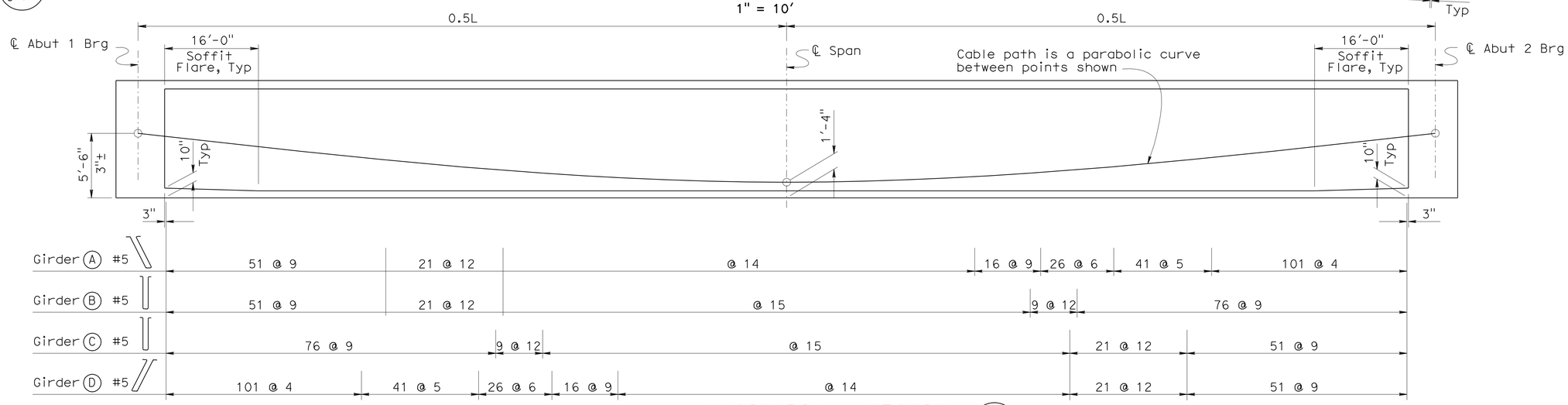

LONGITUDINAL SECTION

B8-5

No Scale

DESIGN	BY Ruslan Novik	CHECKED Suzan Moradi / Traci Menard	
DETAILS	BY Herman Mauroschadt	CHECKED Suzan Moradi	
QUANTITIES	BY Sara Yip	CHECKED Oleg Kreydich	

STATE OF CALIFORNIA
DEPARTMENT OF TRANSPORTATION

DIVISION OF ENGINEERING SERVICES
STRUCTURE DESIGN
DESIGN BRANCH 15

BRIDGE NO. 53-3042K
POST MILE 3.66

SOUTHBOUND ROSECRANS AVENUE OFF-RAMP
GIRDER LAYOUT

STRUCTURES DESIGN DETAIL SHEET (ENGLISH) (REV. 10/25/05)

ORIGINAL SCALE IN INCHES FOR REDUCED PLANS 0 1 2 3

CU 07
EA 215931

DISREGARD PRINTS BEARING EARLIER REVISION DATES

REVISION DATES: 1-13-10 12-30-11 12-30-11 2-2-12 6-8-10 3-4-11 5-13-11 7-15-11 10-31-11

SHEET 15 OF 28

FILE => 53-3042k-n-g-lo01.dgn

USERNAME => s121614 DATE PLOTTED => 28-MAR-2012 TIME PLOTTED => 11:51

DIST	COUNTY	ROUTE	POST MILES TOTAL PROJECT	SHEET No	TOTAL SHEETS
07	LA	5	2.4/4.0	890	1288

REGISTERED CIVIL ENGINEER 12-12-11 DATE

3-26-12
PLANS APPROVAL DATE

The State of California or its officers or agents shall not be responsible for the accuracy or completeness of electronic copies of this plan sheet.

REGISTERED PROFESSIONAL ENGINEER Andrew P. Rittenhouse No. 61006 Exp. 12-31-12 CIVIL STATE OF CALIFORNIA

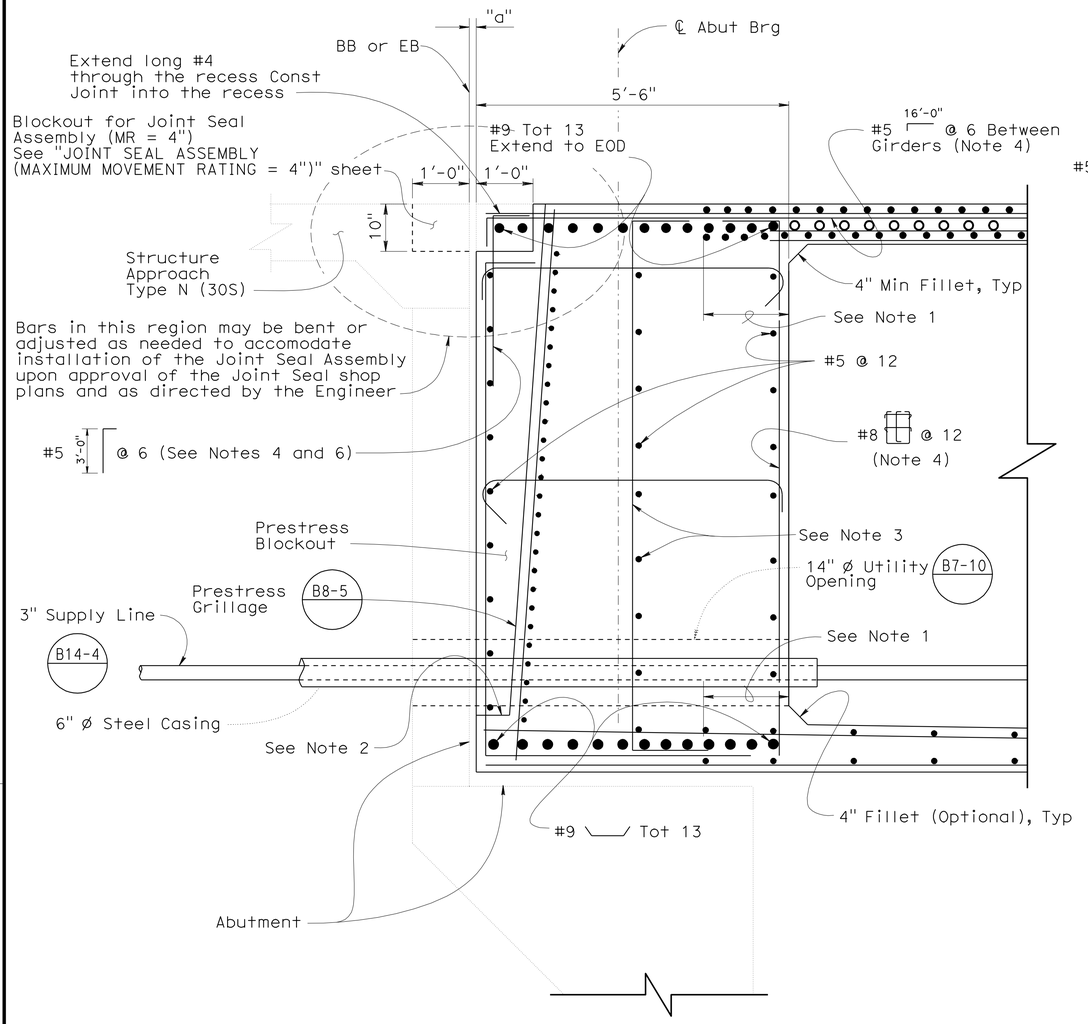

END DIAPHRAGM

B8-5

¾" = 1'

Notes:

1. Extend Transverse Reinforcement of Deck and Soffit Slabs 1'-6" Min into End Diaphragm.
2. Bottom of Blockout should be located at or above the top surface of the Soffit.
3. Bars may be bent or adjusted to avoid Prestressing Anchorage. Subject to approval by the Engineer.
4. Place parallel to ℄ girders and space normal to ℄ girder.
5. For additional Reinforcement see "DETAIL F".
6. Reinforcement extending into the joint seal blockout maybe adjusted as necessary to accommodate installation of joint seal assembly upon approval of joint seal shop plans and as directed by the engineer.

Legend:

o Indicates additional Reinforcement

ɣ Indicates Bundled Bars

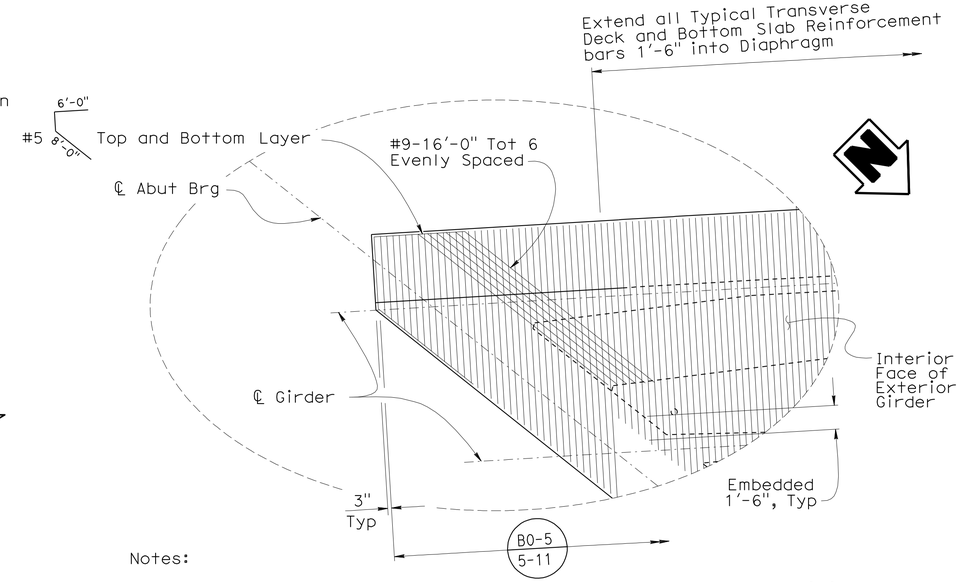

Notes:

1. Acute Corner at Abutment 1 shown, Acute corner at Abutment 2 similar.
2. End Diaphragm Reinforcement not shown.

DETAIL F

1" = 5'-0"

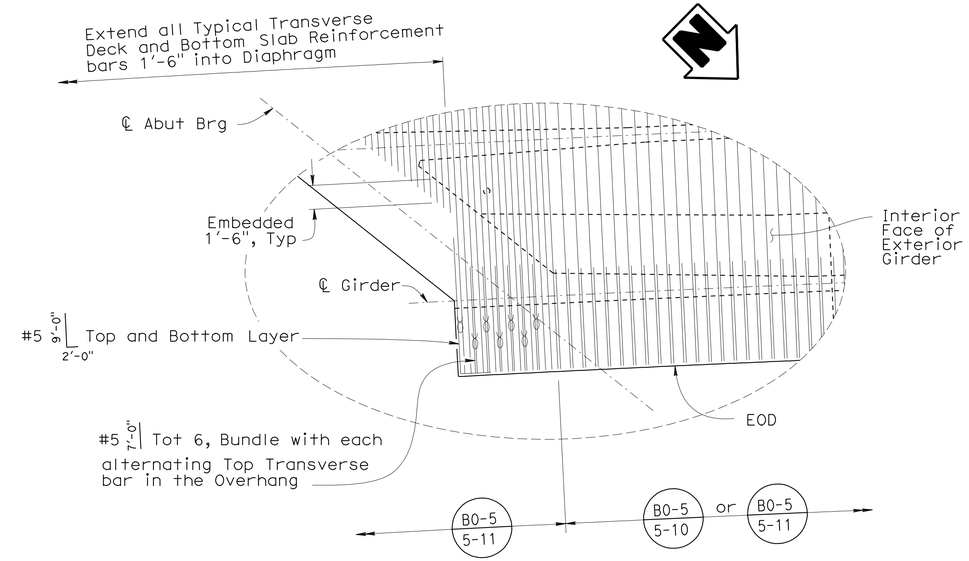

Notes:

1. Obtuse Corner at Abutment 1 shown, Obtuse corner at Abutment 2 similar.
2. End Diaphragm Reinforcement not shown.

DETAIL E

1" = 5'-0"

DESIGN	BY Ruslan Novik	CHECKED S. Moradi / T. Menard / S. Pahlavan	
DETAILS	BY Herman Mauroschadt	CHECKED Suzan Moradi	
QUANTITIES	BY Sara Yip	CHECKED Oleg Kreydich	

STATE OF CALIFORNIA DEPARTMENT OF TRANSPORTATION

DIVISION OF ENGINEERING SERVICES STRUCTURE DESIGN DESIGN BRANCH 15

BRIDGE NO. 53-3042K

POST MILE 3.66

SOUTHBOUND ROSECRANS AVENUE OFF-RAMP

GIRDER DETAILS

STRUCTURES DESIGN DETAIL SHEET (ENGLISH) (REV. 10/25/05)

ORIGINAL SCALE IN INCHES FOR REDUCED PLANS 0 1 2 3

CU 07
EA 215931

DISREGARD PRINTS BEARING EARLIER REVISION DATES

REVISION DATES: 4-26-10 4-26-11 5-11-11 7-1-11 10-26-11 12-2-11 12-23-11 1-16-12 2-2-12

SHEET 16 OF 28

FILE => 53-3042k-n-g-lo02.dgn

USERNAME => s121614 DATE PLOTTED => 28-MAR-2012 TIME PLOTTED => 11:51

DIST	COUNTY	ROUTE	POST MILES TOTAL PROJECT	SHEET No	TOTAL SHEETS
07	LA	5	2.4/4.0	891	1288

Andrew Rittenhouse 12-12-11
REGISTERED CIVIL ENGINEER DATE

3-26-12
PLANS APPROVAL DATE

REGISTERED PROFESSIONAL ENGINEER
Andrew P. Rittenhouse
No. 61006
Exp. 12-31-12
CIVIL
STATE OF CALIFORNIA

The State of California or its officers or agents shall not be responsible for the accuracy or completeness of electronic copies of this plan sheet.

Notes:

1. Reinforcement shown is in addition to reinforcement shown on "TYPICAL SECTION" sheet.
2. All required bar splices shall be service splices.

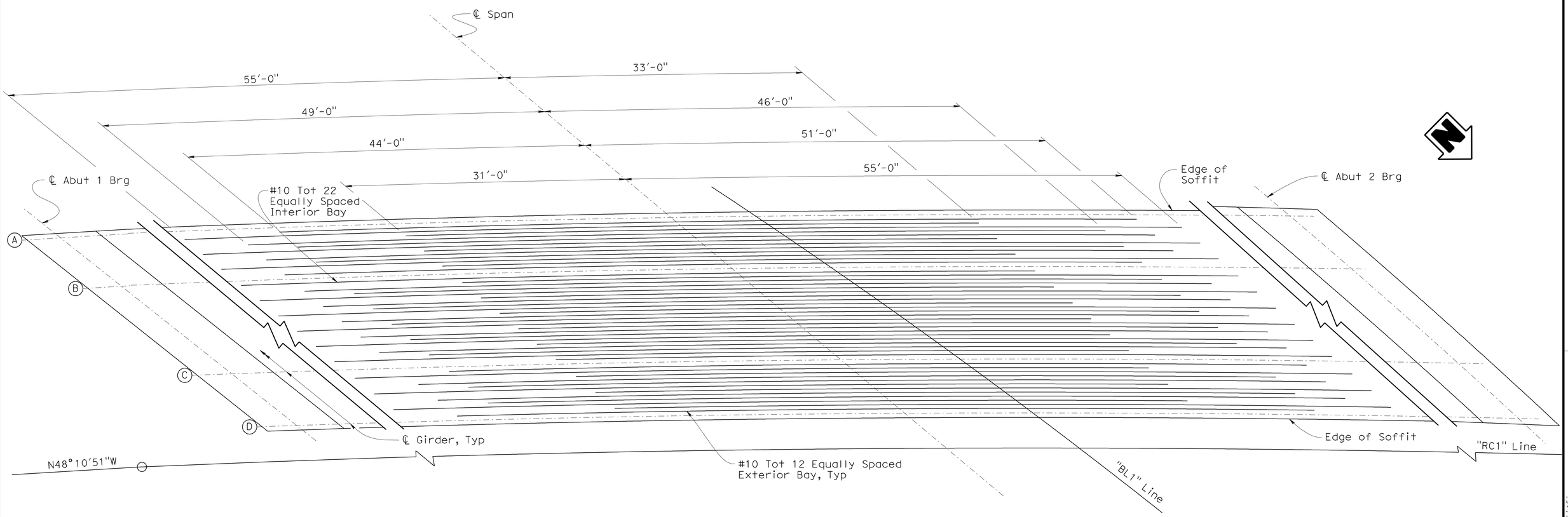

BOTTOM REINFORCEMENT

No Scale

DESIGN	BY Ruslan Novik	CHECKED Suzan Moradi / Traci Menard	
DETAILS	BY Herman Mauroschadt	CHECKED Suzan Moradi	
QUANTITIES	BY Sara Yip	CHECKED Oleg Kreydich	

STATE OF CALIFORNIA
DEPARTMENT OF TRANSPORTATION

DIVISION OF ENGINEERING SERVICES
STRUCTURE DESIGN
DESIGN BRANCH 15

BRIDGE NO. 53-3042K
POST MILE 3.66

SOUTHBOUND ROSECRANS AVENUE OFF-RAMP
GIRDER REINFORCEMENT

STRUCTURES DESIGN DETAIL SHEET (ENGLISH) (REV. 10/25/05)

ORIGINAL SCALE IN INCHES FOR REDUCED PLANS 0 1 2 3

CU 07
EA 215931

DISREGARD PRINTS BEARING EARLIER REVISION DATES

REVISION DATES: 6-16-10, 1-28-11, 5-11-11, 7-14-11, 10-28-11, 12-5-11, 12-28-11, 2-2-12

SHEET 17 OF 28

FILE => 53-3042k-o-g-rf01.dgn

USERNAME => s126614 DATE PLOTTED => 28-MAR-2012 TIME PLOTTED => 11:51

DIST	COUNTY	ROUTE	POST MILES TOTAL PROJECT	SHEET No	TOTAL SHEETS
07	LA	5	2.4/4.0	892	1288

Andrew Rittenhouse 12-12-11
REGISTERED CIVIL ENGINEER DATE

3-26-12
PLANS APPROVAL DATE

REGISTERED PROFESSIONAL ENGINEER
Andrew P. Rittenhouse
No. 61006
Exp. 12-31-12
CIVIL
STATE OF CALIFORNIA

The State of California or its officers or agents shall not be responsible for the accuracy or completeness of electronic copies of this plan sheet.

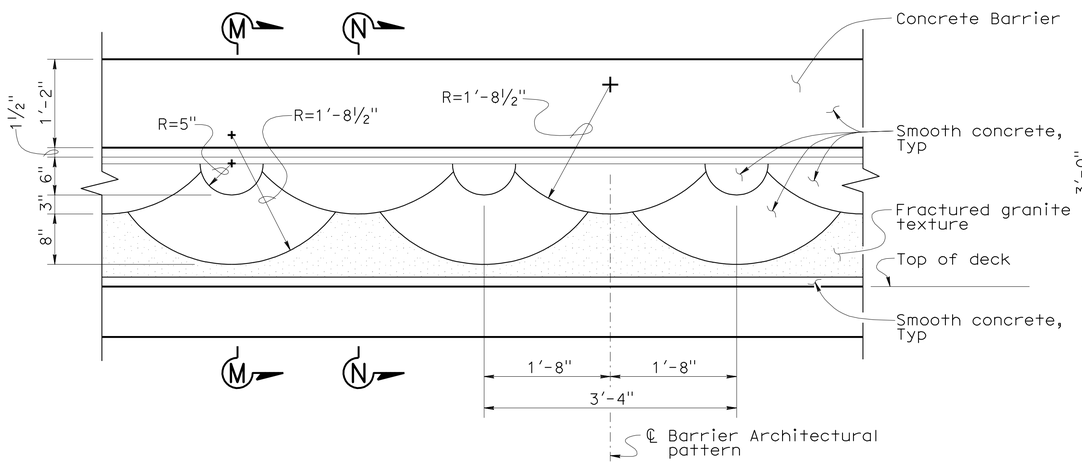

ELEVATION
1" = 1'-0"

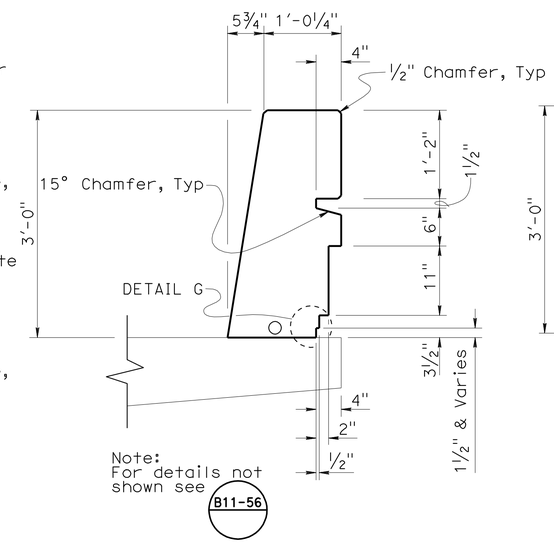

SECTION M-M
1" = 1'-0"

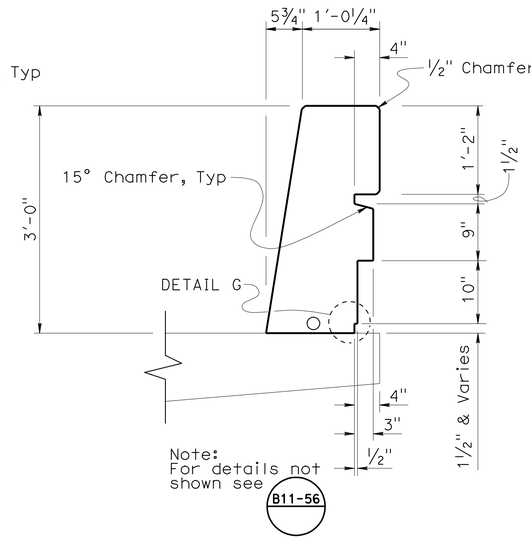

SECTION N-N
1" = 1'-0"

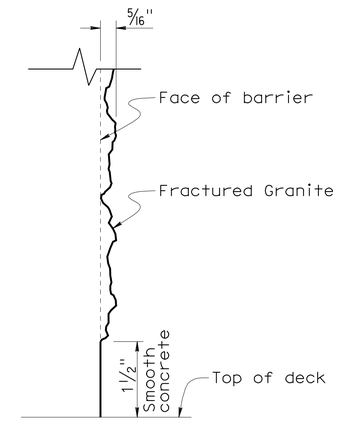

DETAIL G
NO SCALE

DESIGN	BY I. Tasabia	CHECKED H. Chavez	
DETAILS	BY Tim Trefz	CHECKED H. Chavez	
QUANTITIES	BY Sara Yip	CHECKED Ulysses Smpardos	

STATE OF CALIFORNIA
DEPARTMENT OF TRANSPORTATION

DIVISION OF ENGINEERING SERVICES
STRUCTURE DESIGN
DESIGN BRANCH 15

BRIDGE NO. 53-3042K
POST MILE 3.66

SOUTHBOUND ROSECRANS AVENUE OFF-RAMP
CONCRETE BARRIER TYPE 736 (MOD 1)

STRUCTURES DESIGN DETAIL SHEET (ENGLISH) (REV. 10/25/05)

ORIGINAL SCALE IN INCHES FOR REDUCED PLANS 0 1 2 3

CU 07
EA 215931

DISREGARD PRINTS BEARING EARLIER REVISION DATES

REVISION DATES: 07-30-10, 2-2-11, 5-3-11, 7-1-11, 10-31-11, 12-1-11, 1-3-12, 2-2-12

SHEET 18 OF 28

FILE => 53-3042k-p-brdt01.dgn

USERNAME => s121614 DATE PLOTTED => 28-MAR-2012 TIME PLOTTED => 11:51

DIST	COUNTY	ROUTE	POST MILES TOTAL PROJECT	SHEET No.	TOTAL SHEETS
07	LA	5	2.4/4.0	893	1288

Andrew Rittenhouse 12-12-11
REGISTERED CIVIL ENGINEER DATE

3-26-12
PLANS APPROVAL DATE

REGISTERED PROFESSIONAL ENGINEER
Andrew P. Rittenhouse
No. 61006
Exp. 12-31-12
CIVIL
STATE OF CALIFORNIA

The State of California or its officers or agents shall not be responsible for the accuracy or completeness of electronic copies of this plan sheet.

② EXPANSION BEARING TABLE

LOCATION	MAXIMUM VERTICAL LOAD (kips)	MINIMUM DEAD LOAD (kips)	DESIGN ROTATION (Radians)	CONCAVE PLATE						CONVEX PLATE		MASONRY PLATE			SOLE PLATE			ASSEMBLY HEIGHT
				WIDTH / LENGTH	FLAT PTFE AREA (in^2)	DIAMETER	SPHERICAL RADIUS	MINIMUM THICKNESS	MAXIMUM THICKNESS	DIAMETER	MAXIMUM THICKNESS	WIDTH	LENGTH	THICKNESS	WIDTH	LENGTH	THICKNESS	
				L_{cp} (in)	A_{PTFE} (in)	D_m (in)	R_{act} (in)	T_{Min} (in)	T_{Max} (in)	C_m (in)	H_{act} (in)	W_{mp} (in)	L_{mp} (in)	T_{mp} (in)	W_{sp} (in)	L_{sp} (in)	T_{sp} (in)	A_h (in)
W	1010	807	2.00	18.00	225.00	16.00	35.00	0.75	2.00	18.50	2.25	26.50	26.50	2.75	22.00	30.00	2.00	7.75
X	606	484	2.00	18.00	225.00	16.00	35.00	0.75	2.00	18.50	2.25	26.50	26.50	2.75	22.00	30.00	2.00	7.75
Y	404	323	2.00	11.50	72.25	10.00	22.00	0.75	1.75	11.50	1.75	17.00	17.00	2.00	15.50	23.50	2.00	6.30
Z	202	161	2.00	11.50	72.25	10.00	22.00	0.75	1.75	11.50	1.75	17.00	17.00	2.00	15.50	23.50	2.00	6.30

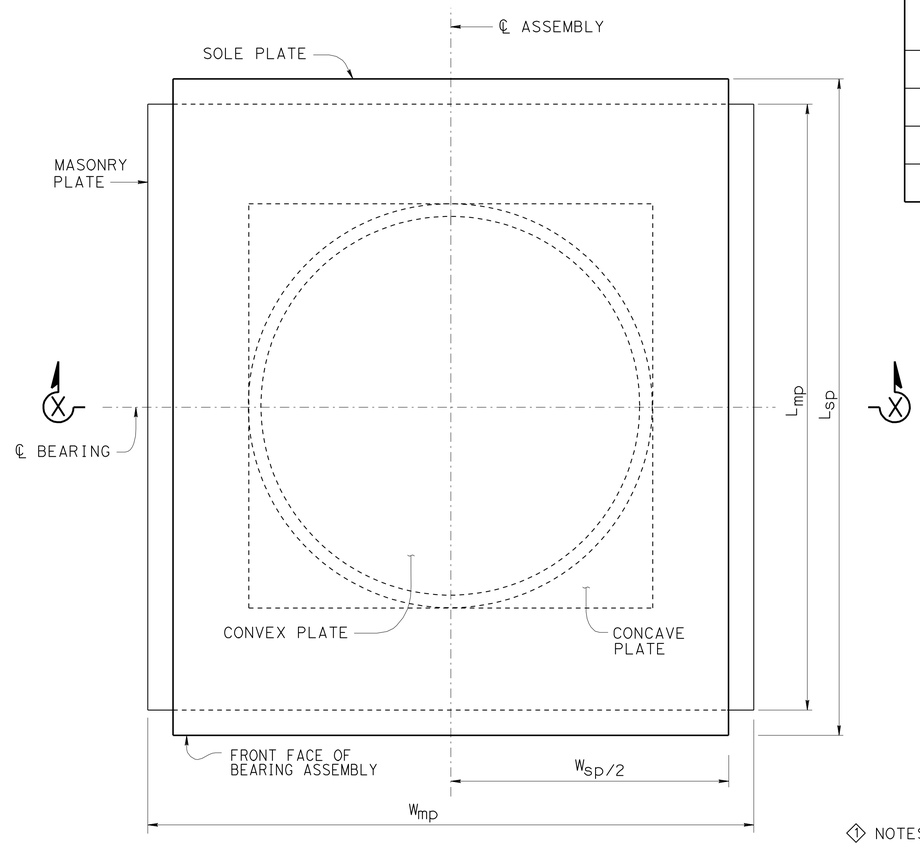

PLAN
NO SCALE

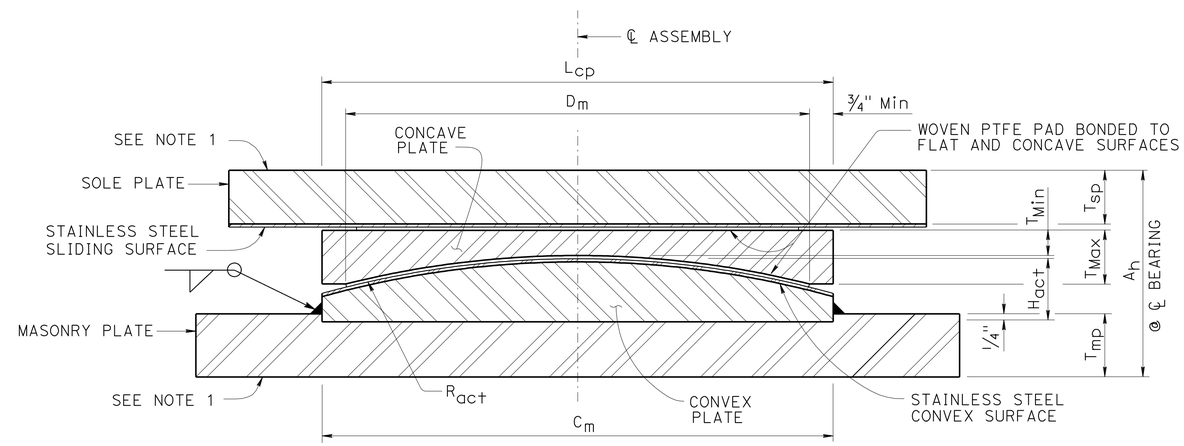

SECTION X-X
NO SCALE

① NOTES:

1. Anchorage method not shown, for Anchorage Details see "PTFE/SPHERICAL EXPANSION BEARING DETAILS No. 2" sheet.
2. All units in inches unless otherwise noted
3. All dimensions shown are steel only unless otherwise noted
4. H_{act} includes stainless steel
5. A_h includes PTFE, substratum and stainless steel, (varies)
6. R_{act} is to sliding surface

③

STANDARD DRAWING
FILE NO. xs9-010
APPROVAL DATE July 2011

① Modified Notes
② Modified Table
③ Modified Title

STATE OF CALIFORNIA
DEPARTMENT OF TRANSPORTATION

DIVISION OF ENGINEERING SERVICES

BRIDGE NO. 53-3042K
POST MILE 3.66

SOUTHBOUND ROSECRANS AVENUE OFF-RAMP
PTFE/SPHERICAL EXPANSION BEARING DETAILS No. 1

DS OSD 2147A (ENGLISH STANDARD DRAWING "XS" BORDER REV. (02-02-11)

ORIGINAL SCALE IN INCHES FOR REDUCED PLANS 0 1 2 3

UNIT: 3604
PROJECT NUMBER & PHASE: 0700001833
CONTRACT NO.: 07-215931

DISREGARD PRINTS BEARING EARLIER REVISION DATES
REVISION DATES 10-24-11 12-6-11
SHEET 18 OF 27

FILE => 53-3042k-q1-xs9-010.dgn

USERNAME => s121614 DATE PLOTTED => 28-MAR-2012 TIME PLOTTED => 11:51

DIST	COUNTY	ROUTE	POST MILES TOTAL PROJECT	SHEET No	TOTAL SHEETS
07	LA	5	2.4/4.0	894	1288

Andrew Rittenhouse 12-12-11
REGISTERED CIVIL ENGINEER DATE

3-26-12
PLANS APPROVAL DATE

REGISTERED PROFESSIONAL ENGINEER
Andrew P. Rittenhouse
No. 61006
Exp. 12-31-12
CIVIL
STATE OF CALIFORNIA

The State of California or its officers or agents shall not be responsible for the accuracy or completeness of electronic copies of this plan sheet.

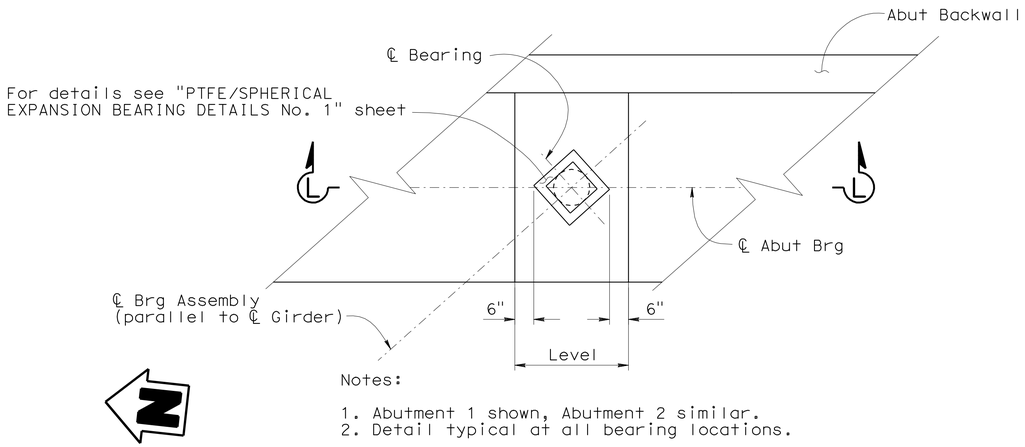

Notes:

1. Abutment 1 shown, Abutment 2 similar.
2. Detail typical at all bearing locations.

PTFE SPHERICAL BEARING LAYOUT DETAIL

No Scale

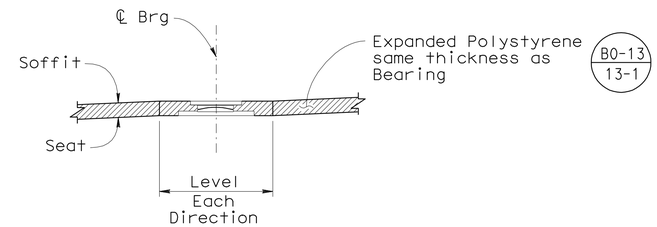

SECTION L-L

B0-13

No Scale

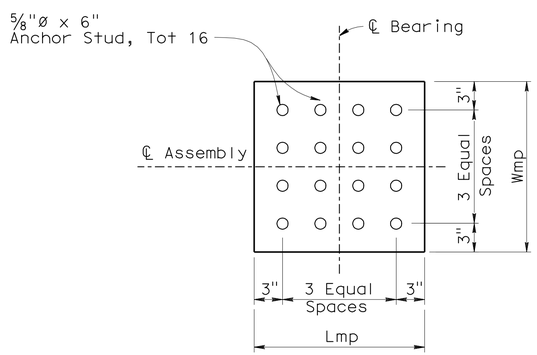

PLAN-MASONRY PLATE OR SOLE PLATE

No Scale

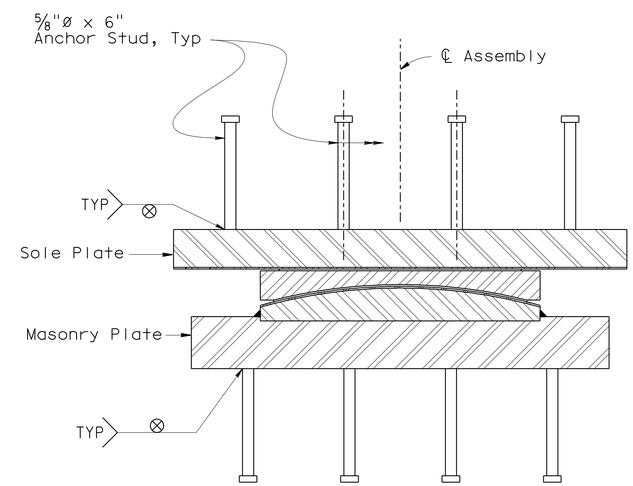

ANCHORAGE DETAIL

No Scale

DESIGN	BY Ruslan Novik	CHECKED Shervin Pahlavan	
DETAILS	BY Herman Mauroschadt	CHECKED Shervin Pahlavan	
QUANTITIES	BY Sara Yip	CHECKED Ulysses Smpardos	

STATE OF CALIFORNIA
DEPARTMENT OF TRANSPORTATION

DIVISION OF ENGINEERING SERVICES
STRUCTURE DESIGN
DESIGN BRANCH 15

BRIDGE NO. 53-3042K
POST MILE 3.66

SOUTHBOUND ROSECRANS AVENUE OFF-RAMP
PTFE/SPHERICAL EXPANSION BEARING DETAILS NO. 2

STRUCTURES DESIGN DETAIL SHEET (ENGLISH) (REV. 10/25/05)

ORIGINAL SCALE IN INCHES FOR REDUCED PLANS 0 1 2 3

CU 07
EA 215931

DISREGARD PRINTS BEARING EARLIER REVISION DATES

REVISION DATES: 10-28-11 12-2-11 12-12-11 1-3-12 2-2-12

SHEET 20 OF 28

FILE => 53-3042k-q2-ptfebrgdt02.dgn

USERNAME => s121614 DATE PLOTTED => 28-MAR-2012 TIME PLOTTED => 11:51

DIST	COUNTY	ROUTE	POST MILES TOTAL PROJECT	SHEET No.	TOTAL SHEETS
07	LA	5	2.4/4.0	895	1288

REGISTERED CIVIL ENGINEER — 12-12-11 DATE

3-26-12
PLANS APPROVAL DATE

REGISTERED PROFESSIONAL ENGINEER — Andrew P. Rittenhouse — No. 61006 — Exp. 12-31-12 — CIVIL — STATE OF CALIFORNIA

The State of California or its officers or agents shall not be responsible for the accuracy or completeness of electronic copies of this plan sheet.

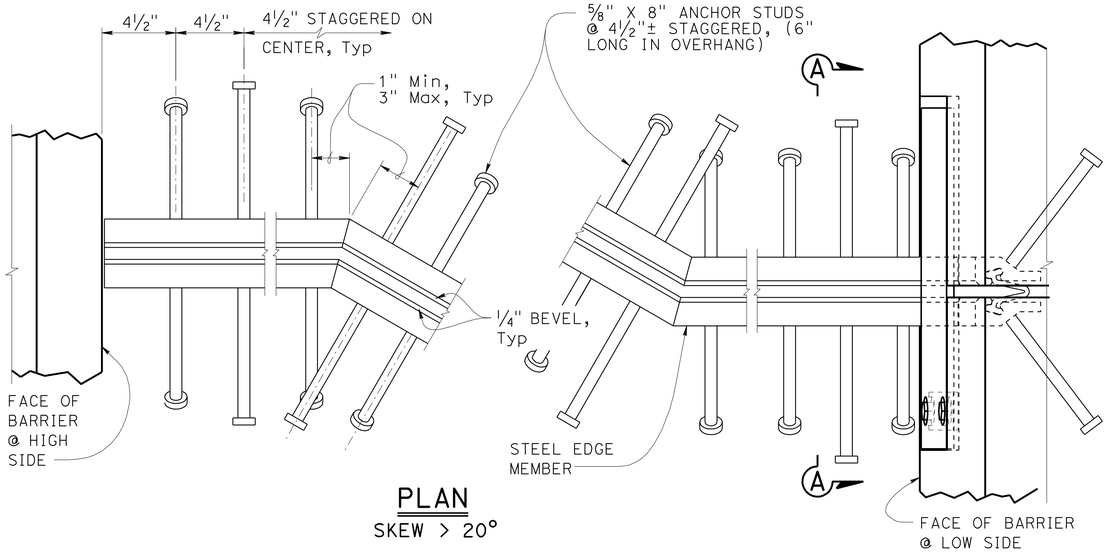

PLAN
SKEW > 20°

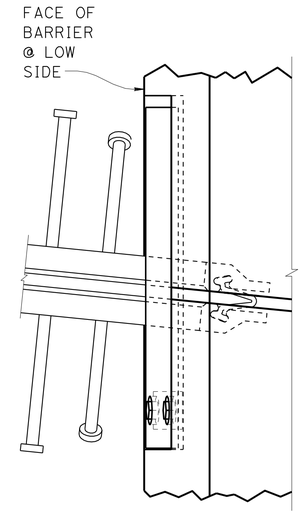

PLAN
SKEW ≤ 20°

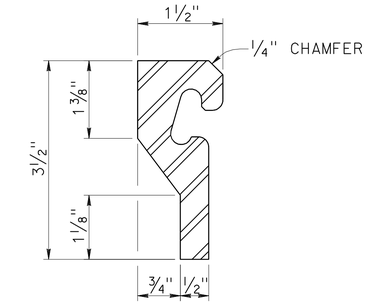

STEEL EDGE MEMBER

NOTES:

1. Full penetration butt welds may be substituted for fillet welds on all anchor studs
2. Alternate types of anchor studs may be permitted subject to the approval by the Engineer
3. Joint seal assembly to be used in conjunction with closure pour. (See other sheets for limits). Closure pour shall not be placed until final deck surface is within the tolerances specified
4. Use joint at crown of roadway, at any change in traverse slope in deck and at changes in horizontal direction. Place other joints at or near lanes. All metal parts to be painted or galvanized after fabrication
5. Sheet Neoprene shall be fabricated in one continuous piece and shall be fabricated to bend around corners
6. Insert assembly or expansion anchorage for ⅝" x 1¾" bolts. Use installation bolts extended ½" minimum past nut and coat with bond breaker, after concrete has cured, remove installation bolts, install A325 bolts and sheet neoprene
7. Sidewalk Detail similar to Barrier Detail on low side at both sides if the roadway is crowned or if the difference in elevation between the ends of the seal is 0.5′ or less

JOINT INFORMATION			"a" DIMENSIONS		
LOCATION	MOVEMENT RATING (MR)	SKEW	WINTER	SPRING & FALL	SUMMER

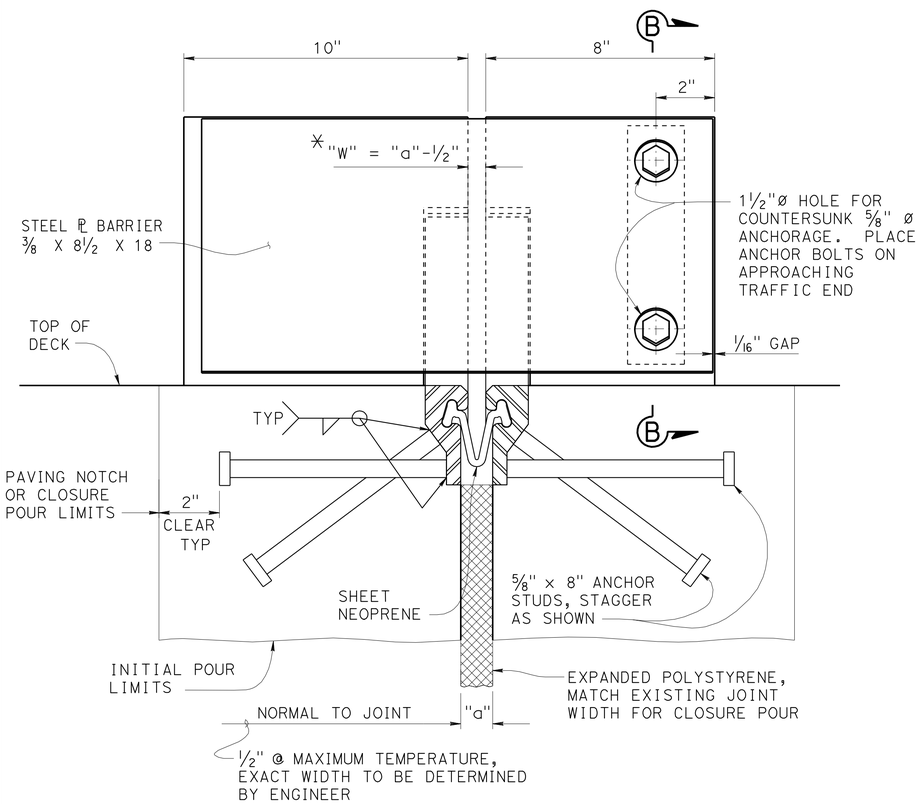

SECTION A-A

* TO SET MINIMUM JOINT OPENING "W"

"W" = { ½" + [(maximum structure temperature in F°) - (actual structure temperature in F°)] (0.000006)(1200)(contributory lenght in feet)(0.01)
; ½" Minimum }

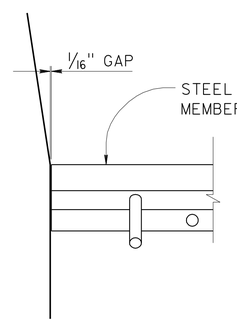

BARRIER DETAIL
HIGH SIDE

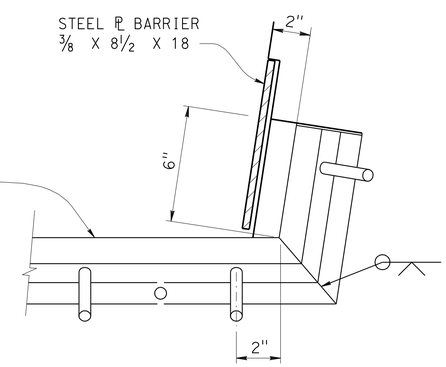

BARRIER DETAIL
LOW SIDE

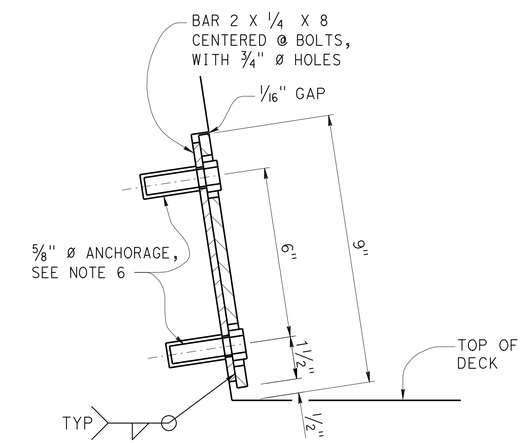

SECTION B-B

NO SCALE

SOUTHBOUND ROSECRANS AVENUE OFF-RAMP

JOINT SEAL ASSEMBLY

MAXIMUM MOVEMENT RATING = 4"

STANDARD DRAWING

FILE NO. **xs8-010**

APPROVAL DATE July 2011

STATE OF **CALIFORNIA** DEPARTMENT OF TRANSPORTATION

DIVISION OF ENGINEERING SERVICES

BRIDGE NO. 53-3042K

POST MILE 3.66

UNIT: 3604
PROJECT NUMBER & PHASE: 0700001833
CONTRACT NO.: 07-215931

DISREGARD PRINTS BEARING EARLIER REVISION DATES

REVISION DATES: 10-25-11, 12-6-11

SHEET 20 OF 27

DS OSD 2147A (ENGLISH STANDARD DRAWING "XS" BORDER REV. (02-02-11)

ORIGINAL SCALE IN INCHES FOR REDUCED PLANS 0 1 2 3

FILE => 53-3042k-q3-xs8-010.dgn

USERNAME => s12614 DATE PLOTTED => 28-MAR-2012 TIME PLOTTED => 11:52

DIST.	COUNTY	ROUTE	POST MILES TOTAL PROJECT	SHEET NO.	TOTAL SHEETS
07	LA	5	2.4/4.0	896	1288

Andrew Rittenhouse 12-12-11
REGISTERED ENGINEER - CIVIL

3-26-12
PLANS APPROVAL DATE

The State of California or its officers or agents shall not be responsible for the accuracy or completeness of electronic copies of this plan sheet.

REGISTERED PROFESSIONAL ENGINEER — Andrew P. Rittenhouse No. 61006 Exp. 12-31-12 CIVIL — STATE OF CALIFORNIA

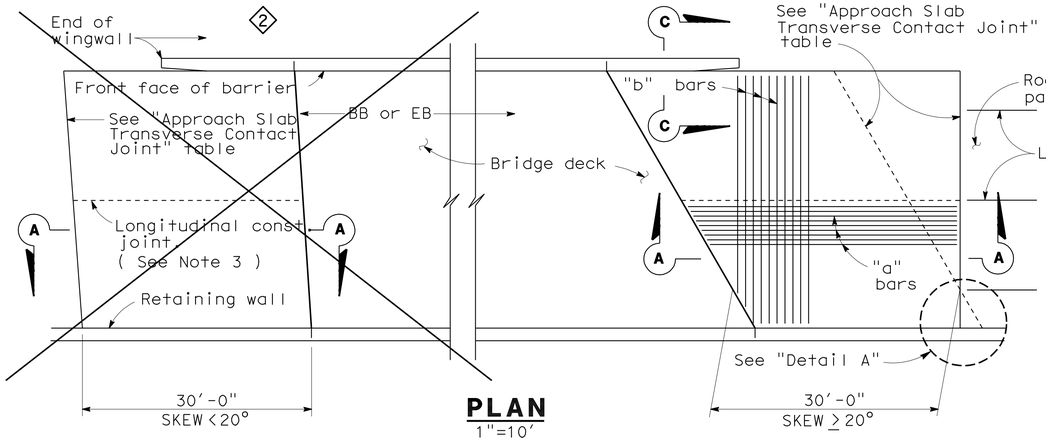

PLAN
1"=10'

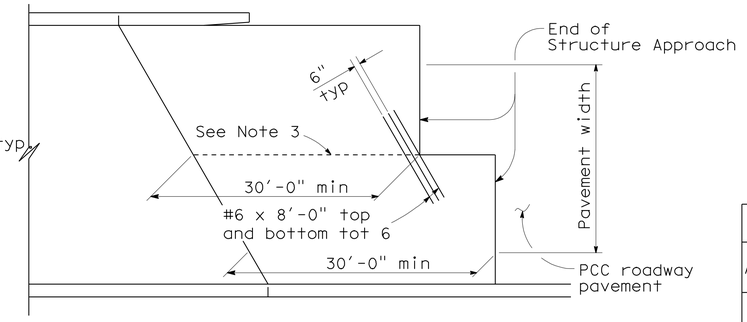

STRUCTURE APPROACH - END STAGGER DETAIL
No Scale

APPROACH SLAB TRANSVERSE CONTACT JOINT		
APPROACH SKEW	WITH AC ROADWAY PAVEMENT	WITH PCC ROADWAY PAVEMENT
< 20°	Parallel to face of paving notch	Parallel to face of paving notch
20° - 45°	Parallel to face of PN use (Detail A)	Stagger lines 24' to 36' apart.
> 45°	Parallel to face of PN use (Detail A)	Stagger at each lane line.

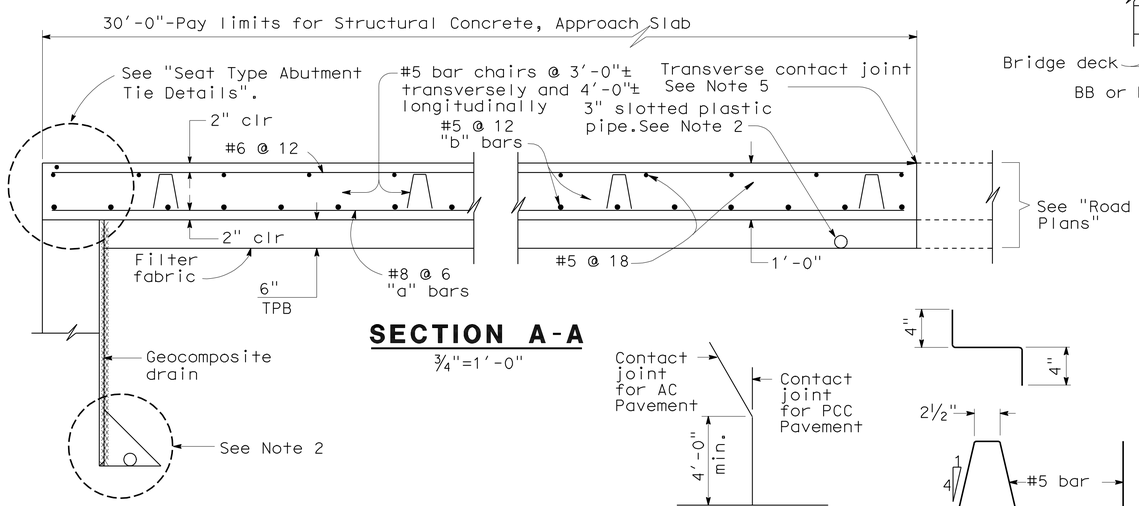

SECTION A-A
¾"=1'-0"

DETAIL A
No Scale

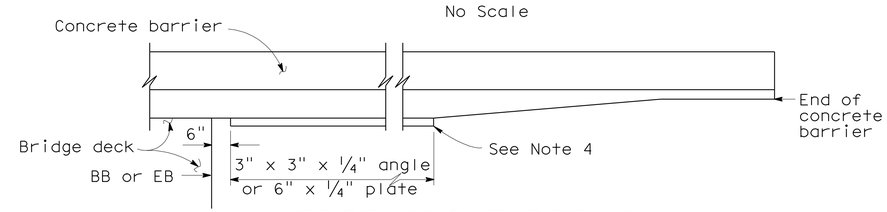

EDGE ANGLE DETAIL
½"=1'-0"

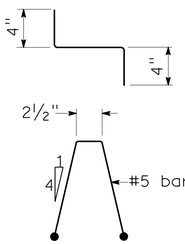

BAR CHAIR DETAIL
1½"=1'-0"

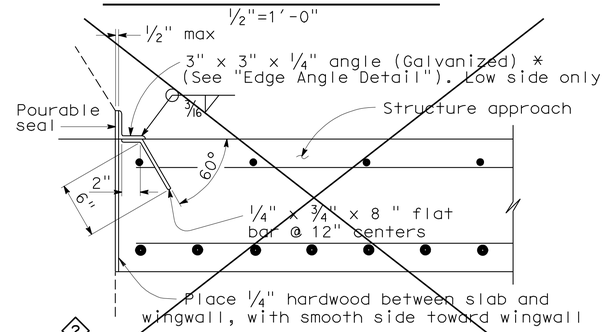

*(TO BE USED WITH TYPE 25 OR TYPE 27 CONCRETE BARRIER)

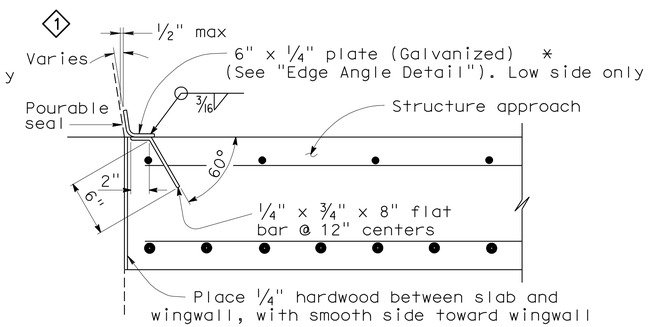

*(TO BE USED WITH TYPE 732 OR TYPE 736 CONCRETE BARRIER)

DETAIL B
1½"=1'-0"

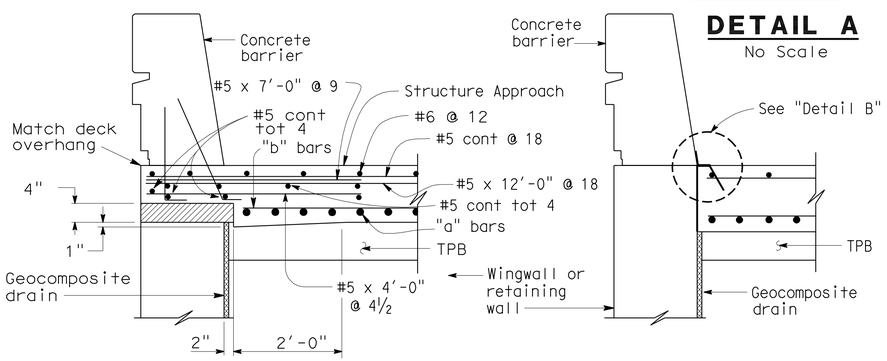

TYPE E-1 — 1 — TYPE E-2

SECTION C-C
¾"=1'-0"

(Type E-1 to be used,unless otherwise shown on plans)

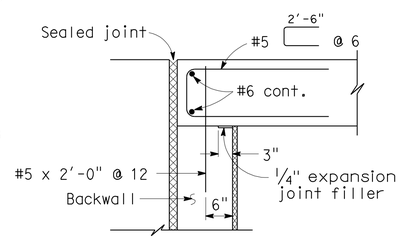

MR ≤ 2"

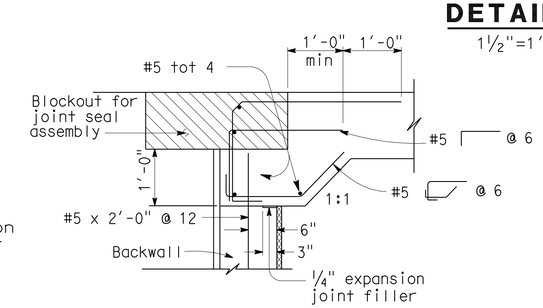

MR > 2"

SEAT TYPE ABUTMENT TIE DETAILS (SEE NOTE 1)
¾"=1'-0"

NOTES:

1. For details not shown, see Structure Plans. For MR ≤ 2", adjust bar reinforcement to clear a sawcut for sealed joint, when required.
2. For drainage details, see "Structure Approach Drainage Details" sheet.
3. Longitudinal construction joints, when permitted by the Engineer, shall be located on lane lines.
4. End angle or plate at beginning of barrier transition, end of wingwall or end of structure approach as applicable.
5. For transverse contact joint with new PCC paving, refer to Standard Plan P10.
6. At the contractor's option, approach slab transverse reinforcement may be placed parallel to paving notch. Spacing of transverse reinforcement is measured along ℄ roadway.

Remove all polystyrene.

SPECIAL DETAILS

REVISED STANDARD DRAWING

RELEASE DATE 3/14/05	DESIGN	BY M.TRAFFALIS	CHECKED E.THORKILDSEN	RELEASED BY
FILE NO. xs3-120e	DETAILS	BY R.YEE	CHECKED E.THORKILDSEN	OFFICE CHIEF
	SUBMITTED	BY M.HA	DRAWING DATE 4/98	

1 Modified Detail
2 Removed Detail

STATE OF CALIFORNIA
DEPARTMENT OF TRANSPORTATION

DIVISION OF ENGINEERING SERVICES

BRIDGE NO. 53-3042K
MILE POST 3.66

SOUTHBOUND ROSECRANS AVENUE OFF-RAMP
STRUCTURE APPROACH TYPE N(30S)

DS OSD 2147A (ENGLISH) (REV. X/XX/XX)

ORIGINAL SCALE IN INCHES FOR REDUCED PLANS 0 1 2 3

CU 07
EA 215931

DISREGARD PRINTS BEARING EARLIER REVISION DATES

REVISION DATES (PRELIMINARY STAGE ONLY) 5-15-11 12-5-11 12-15-11 12-21-12

SHEET 22 OF 28

FILE => 53-3042k-r-xs3-120e.dgn

USERNAME => s121614 DATE PLOTTED => 28-MAR-2012 TIME PLOTTED => 11:52

DIST	COUNTY	ROUTE	POST MILES TOTAL PROJECT	SHEET No	TOTAL SHEETS
07	LA	5	2.4/4.0	897	1288

Andrew Rittenhouse 12-12-11
REGISTERED CIVIL ENGINEER DATE

3-26-12
PLANS APPROVAL DATE

REGISTERED PROFESSIONAL ENGINEER Andrew P. Rittenhouse No. 61006 Exp. 12-31-12 CIVIL STATE OF CALIFORNIA

The State of California or its officers or agents shall not be responsible for the accuracy or completeness of electronic copies of this plan sheet.

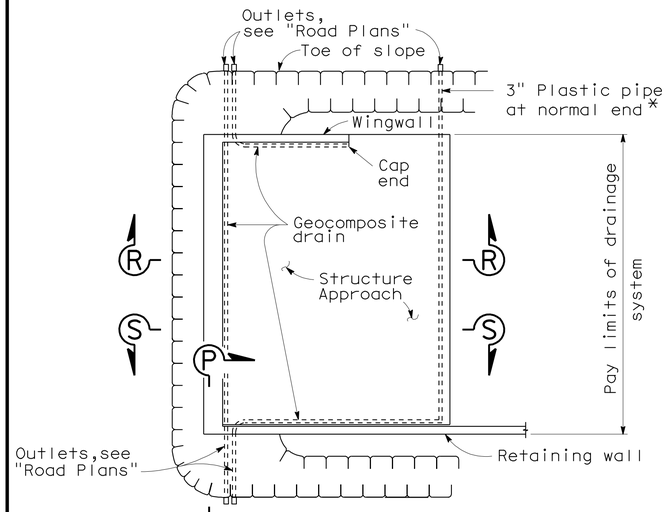

TYPICAL PLAN

No Scale

*For pipe layout at staggered end, see "Detail H".

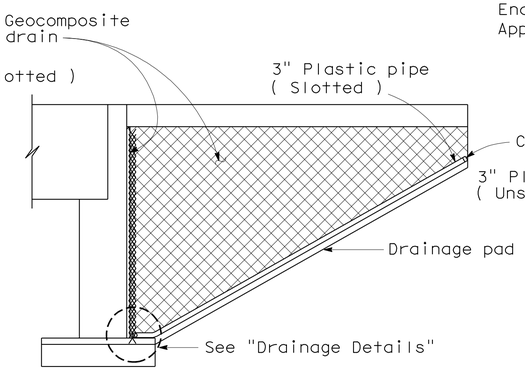

CANTILEVER WINGWALL SECTION R-R

No Scale

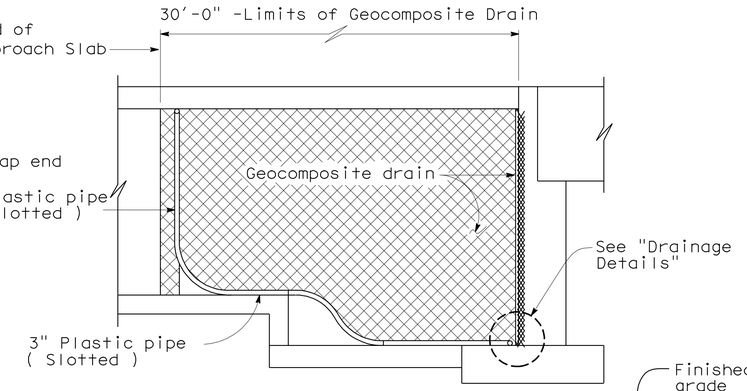

RETAINING WALL WINGWALL SECTION S-S

No Scale

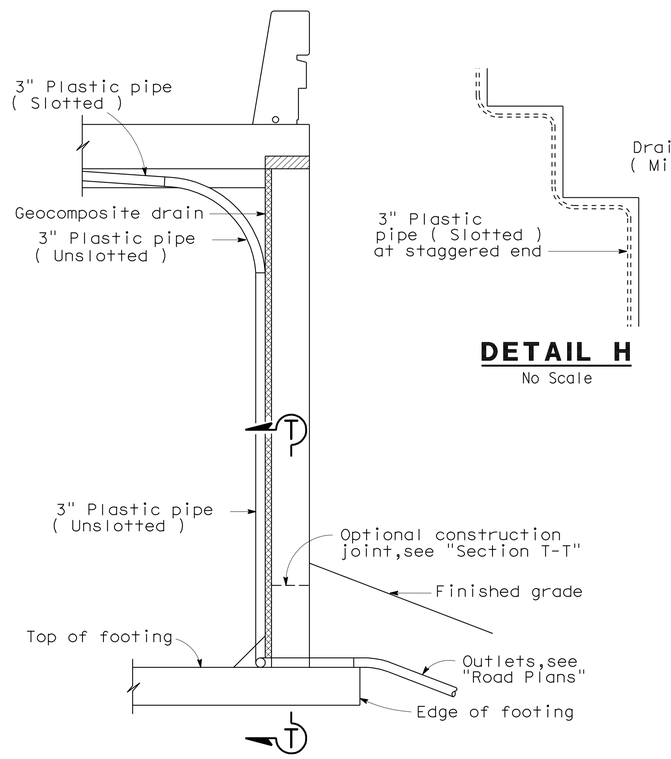

SECTION P-P

No Scale

NOTE: Bends and junctions in 3" plastic pipe are 30" radius min.

DETAIL H

No Scale

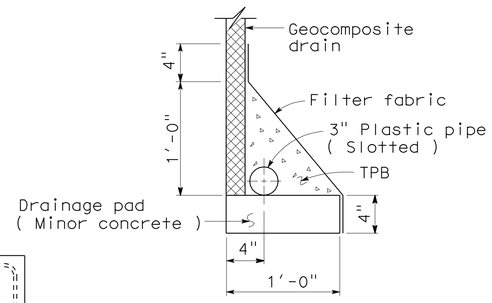

WITHOUT FOOTING

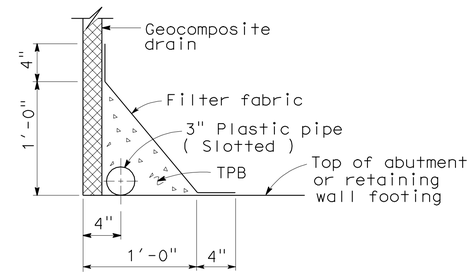

WITH FOOTING

DRAINAGE DETAILS

No Scale

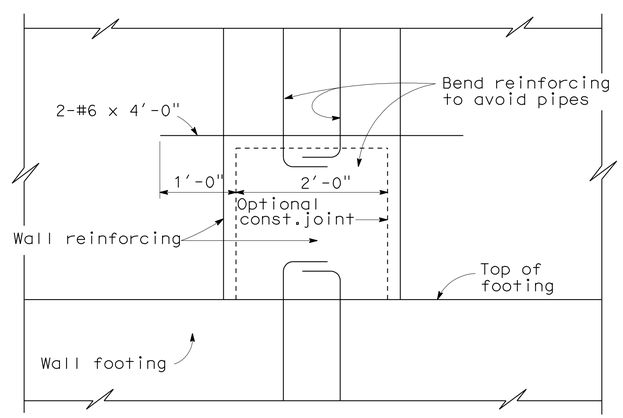

SECTION T-T

No Scale

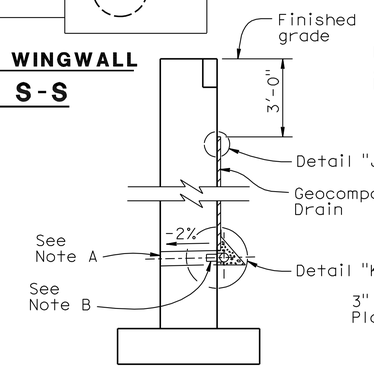

WALL SECTION

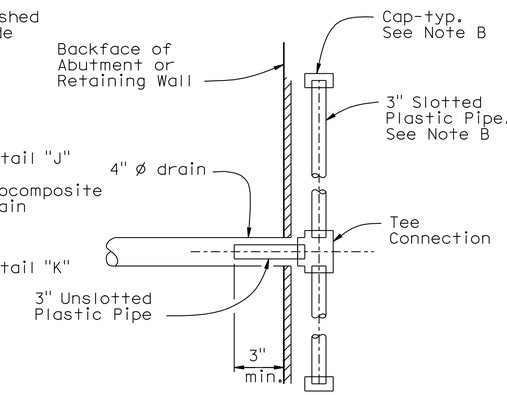

SECTION U-U

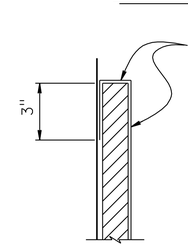

DETAIL "J"

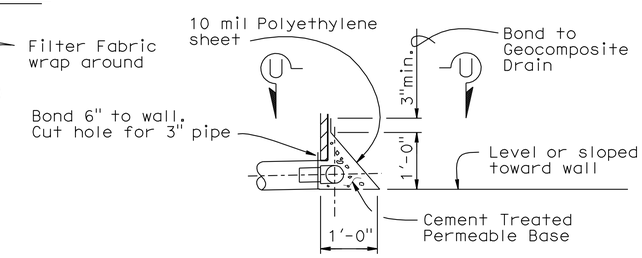

DETAIL "K"

WEEP HOLE AND GEOCOMPOSITE DRAIN

ALTERNATIVE TO BRIDGE DETAIL BO-3 / 3-1

Notes:

A. 4" ø drains at intermediate sag points and at 25' max center to center (9' c-c for Type 3 and 9'-3" c-c for Type 4 retaining walls).
For walls adjacent to sidewalks or curbs, provide 4" cast iron or asbestos cement pipe under the sidewalk to discharge through curb face.
Exposed wall drains shall be located 3"± above finished grade.

B. Geocomposite drain, cement treated permeable base, and 3"ø slotted plastic pipe continuous behind retaining wall or abutment. Cap ends of pipe. Provide "Tee" connection at each 4" ø drain.

C. Connect the low end of plastic pipe to the main outlet pipe as applicable.

	BY	CHECKED
DESIGN	Suzan Moradi	Ruslan Novik
DETAILS	Herman Mauroschadt	Ruslan Novik
QUANTITIES	Sara Yip	Ulysses Smpardos

STATE OF CALIFORNIA
DEPARTMENT OF TRANSPORTATION

DIVISION OF ENGINEERING SERVICES
STRUCTURE DESIGN
DESIGN BRANCH 15

BRIDGE NO. 53-3042K
POST MILE 3.66

SOUTHBOUND ROSECRANS AVENUE OFF-RAMP
STRUCTURE APPROACH DRAINAGE DETAILS

STRUCTURES DESIGN DETAIL SHEET (ENGLISH) (REV. 10/25/05)

ORIGINAL SCALE IN INCHES FOR REDUCED PLANS 0 1 2 3

CU 07
EA 215931

DISREGARD PRINTS BEARING EARLIER REVISION DATES

REVISION DATES: 10-14-11 12-5-11 12-12-11 1-11-12 2-2-12

SHEET 23 OF 28

FILE => 53-3042k-s-sadd.dgn

USERNAME => s121614 DATE PLOTTED => 28-MAR-2012 TIME PLOTTED => 11:52

DIST	COUNTY	ROUTE	POST MILES TOTAL PROJECT	SHEET No.	TOTAL SHEETS
07	LA	5	2.4/4.0	898	1288

GEOTECHNICAL PROFESSIONAL — DATE 06/2011

3-26-12
PLANS APPROVAL DATE

REGISTERED PROFESSIONAL ENGINEER — MICHAEL G. SMITH — No. 2229 — Exp. 3-31-2012 — GEOTECHNICAL — STATE OF CALIFORNIA

The State of California or its officers or agents shall not be responsible for the accuracy or completeness of electronic copies of this plan sheet.

BENCH MARK

PRHV 104 Elev 94.31′
FOUND CHISLED "X" ON S′LY TC @+/- 250′ W/O NB 1-5 TO WB
FIRESTONE BLVD OFF-RAMP TUNNEL PER SR 09-033-000011
NAVD 88

PRHV 105 Elev 96.88′
FOUND CHISLED "X" ON W′LY CURB BCR@ EB FIRESTONE BL
TO SB 1-5 ON-RAMP & FIRESTONE BL INTERSECTION PER
SR 09-033-000011 NAVD 88

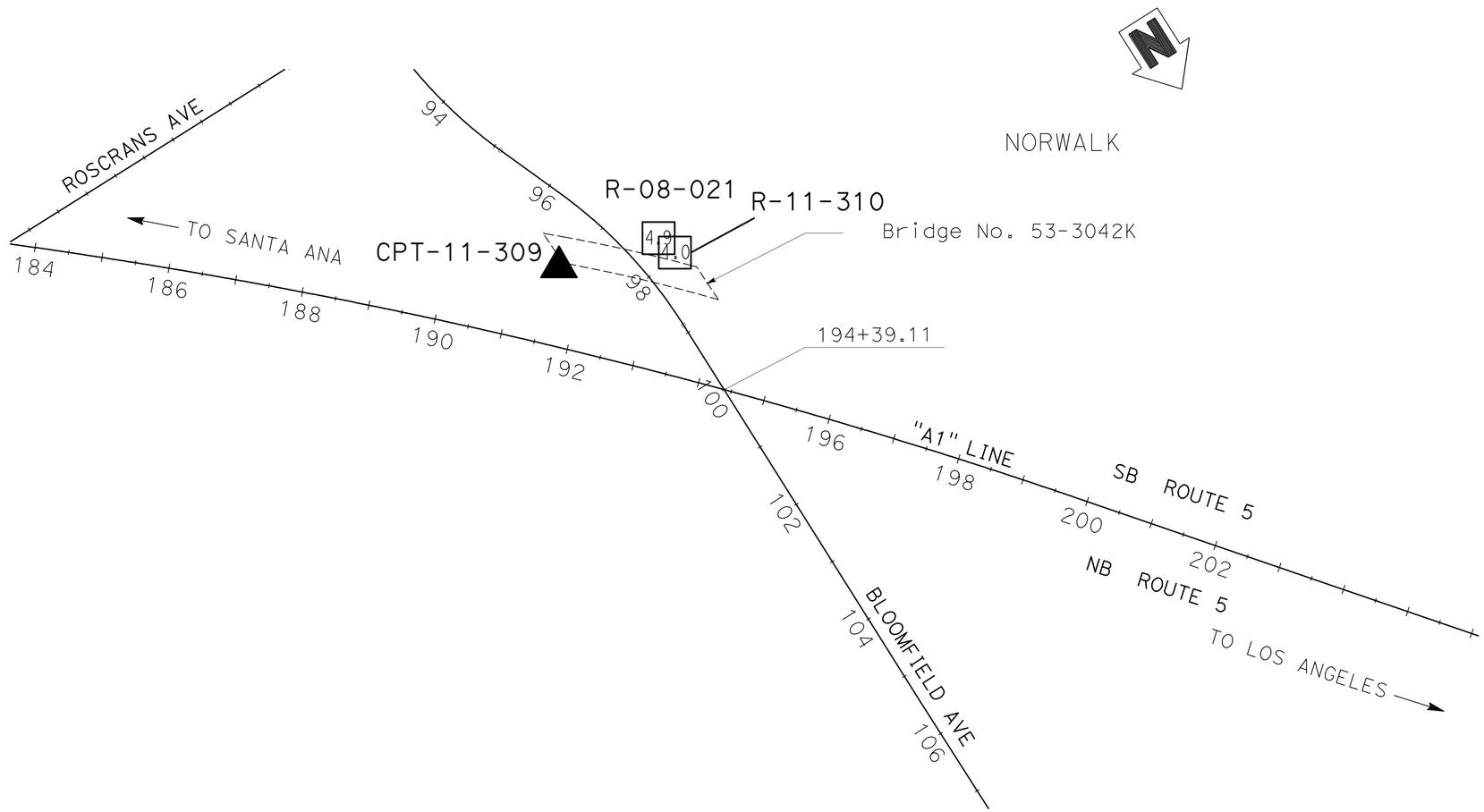

PLAN
SCALE 1"=100′

Notes

1. This LOTB sheet was prepared in accordance with the Caltrans Soil & Rock Logging, Classification, and Presentation Manual (2010) except three digit sequence number in boring identification starting with the segment number per exception request approved on April 08, 2009.

2. For protection of underground utility lines, hand-auger was used to remove top 5 to 10 feet of subsurface material for exploratory borings and cone penetration testings.

ENGINEERING SERVICES	MATERIALS AND GEOTECHNICAL SERVICES	STATE OF CALIFORNIA DEPARTMENT OF TRANSPORTATION	DIVISION OF ENGINEERING SERVICES STRUCTURE DESIGN DESIGN BRANCH 15	BRIDGE NO. 53-3042K POST MILE 3.66	SOUTHBOUND ROSECRANS AVENUE OFF-RAMP LOG OF TEST BORINGS SHEET 1 OF 5
FUNCTIONAL SUPERVISOR NAME: M. SMITH	DRAWN BY: P.QUACH CHECKED BY: D.ORRIS	FIELD INVESTIGATION BY: P.CHAU/L.ROEBUCK/D.ORRIS			

OGS CIVIL LOG OF TEST BORINGS SHEET — ORIGINAL SCALE IN INCHES FOR REDUCED PLANS 0 1 2 3 — CU 07 EA 215931 — DISREGARD PRINTS BEARING EARLIER REVISION DATES — REVISION DATES 06/27/11 12-29-11 2-2-12 — SHEET 24 OF 28

FILE => 53-3042k-z-lotb01.dgn

USERNAME => s12614 DATE PLOTTED => 28-MAR-2012 TIME PLOTTED => 11:52

DIST	COUNTY	ROUTE	POST MILES TOTAL PROJECT	SHEET No.	TOTAL SHEETS
07	LA	5	2.4/4.0	899	1288

GEOTECHNICAL PROFESSIONAL — DATE 06/2011

3-26-12
PLANS APPROVAL DATE

REGISTERED PROFESSIONAL ENGINEER — MICHAEL G. SMITH No. 2229 Exp. 3-31-2012 GEOTECHNICAL — STATE OF CALIFORNIA

The State of California or its officers or agents shall not be responsible for the accuracy or completeness of electronic copies of this plan sheet.

FOR PLAN VIEW, SEE
"LOG OF TEST BORINGS" 1 OF 5

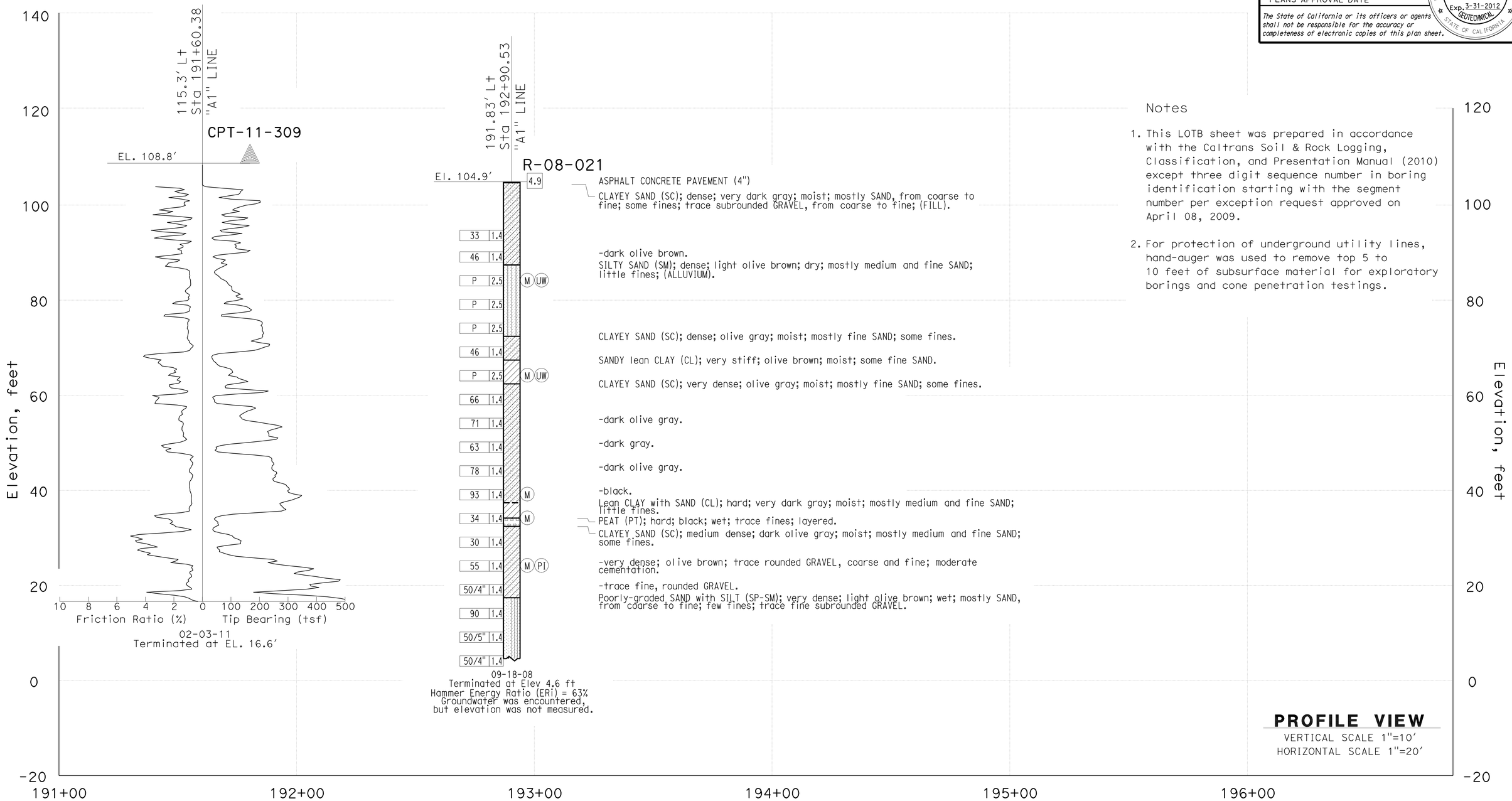

Notes

1. This LOTB sheet was prepared in accordance with the Caltrans Soil & Rock Logging, Classification, and Presentation Manual (2010) except three digit sequence number in boring identification starting with the segment number per exception request approved on April 08, 2009.

2. For protection of underground utility lines, hand-auger was used to remove top 5 to 10 feet of subsurface material for exploratory borings and cone penetration testings.

ENGINEERING SERVICES	MATERIALS AND GEOTECHNICAL SERVICES	STATE OF CALIFORNIA DEPARTMENT OF TRANSPORTATION	DIVISION OF ENGINEERING SERVICES STRUCTURE DESIGN DESIGN BRANCH 15	BRIDGE NO. 53-3042K POST MILE 3.66	SOUTHBOUND ROSECRANS AVENUE OFF-RAMP
FUNCTIONAL SUPERVISOR NAME: M. SMITH	DRAWN BY: P.QUACH CHECKED BY: D.ORRIS	FIELD INVESTIGATION BY: P.CHAU/L.ROEBUCK/D.ORRIS			LOG OF TEST BORINGS SHEET 2 OF 5

OGS CIVIL LOG OF TEST BORINGS SHEET

ORIGINAL SCALE IN INCHES FOR REDUCED PLANS 0 1 2 3

CU 07
EA 215931

DISREGARD PRINTS BEARING EARLIER REVISION DATES

REVISION DATES: 06-27-11 12-29-11 2-2-12

SHEET 25 OF 28

FILE => 53-3042k-z-lotb02.dgn

USERNAME => s126614 DATE PLOTTED => 28-MAR-2012 TIME PLOTTED => 11:52

DIST	COUNTY	ROUTE	POST MILES TOTAL PROJECT	SHEET No.	TOTAL SHEETS
07	LA	5	2.4/4.0	900	1288

GEOTECHNICAL PROFESSIONAL — DATE 06/2011

3-26-12
PLANS APPROVAL DATE

REGISTERED PROFESSIONAL ENGINEER — MICHAEL G. SMITH No. 2229 Exp. 3-31-2012 GEOTECHNICAL — STATE OF CALIFORNIA

The State of California or its officers or agents shall not be responsible for the accuracy or completeness of electronic copies of this plan sheet.

FOR PLAN VIEW, SEE
"LOG OF TEST BORINGS" 1 OF 5

Notes

1. This LOTB sheet was prepared in accordance with the Caltrans Soil & Rock Logging, Classification, and Presentation Manual (2010) except three digit sequence number in boring identification starting with the segment number per exception request approved on April 08, 2009.

2. For protection of underground utility lines, hand-auger was used to remove top 5 to 10 feet of subsurface material for exploratory borings and cone penetration testings.

ENGINEERING SERVICES	MATERIALS AND GEOTECHNICAL SERVICES	STATE OF CALIFORNIA DEPARTMENT OF TRANSPORTATION	DIVISION OF ENGINEERING SERVICES STRUCTURE DESIGN DESIGN BRANCH 15	BRIDGE NO. 53-3042K POST MILE 3.66	SOUTHBOUND ROSECRANS AVENUE OFF-RAMP LOG OF TEST BORINGS SHEET 3 OF 5
FUNCTIONAL SUPERVISOR NAME: M. SMITH	DRAWN BY: P.QUACH CHECKED BY: D.ORRIS	FIELD INVESTIGATION BY: P.CHAU/L.ROEBUCK/D.ORRIS			

OGS CIVIL LOG OF TEST BORINGS SHEET

ORIGINAL SCALE IN INCHES FOR REDUCED PLANS 0 1 2 3

CU 07
EA 215931

DISREGARD PRINTS BEARING EARLIER REVISION DATES → REVISION DATES 06/07/11 12-29-11 2-2-12

SHEET 26 OF 28

FILE => 53-3042k-z-lotb03.dgn

USERNAME => s121614 DATE PLOTTED => 28-MAR-2012 TIME PLOTTED => 11:52