DIST	COUNTY	ROUTE	POST MILES TOTAL PROJECT	SHEET No.	TOTAL SHEETS
07	LA	5	2.4/4.0	1201	1288

REGISTERED CIVIL ENGINEER 12-8-11 DATE

3-26-12
PLANS APPROVAL DATE

REGISTERED PROFESSIONAL ENGINEER Kevin Harper No. 42221 Exp. 3-31-12 CIVIL STATE OF CALIFORNIA

The State of California or its officers or agents shall not be responsible for the accuracy or completeness of electronic copies of this plan sheet.

No.	R	Δ	T	L
A	8357.25'	17°36'01"	1298.80'	2567.22'

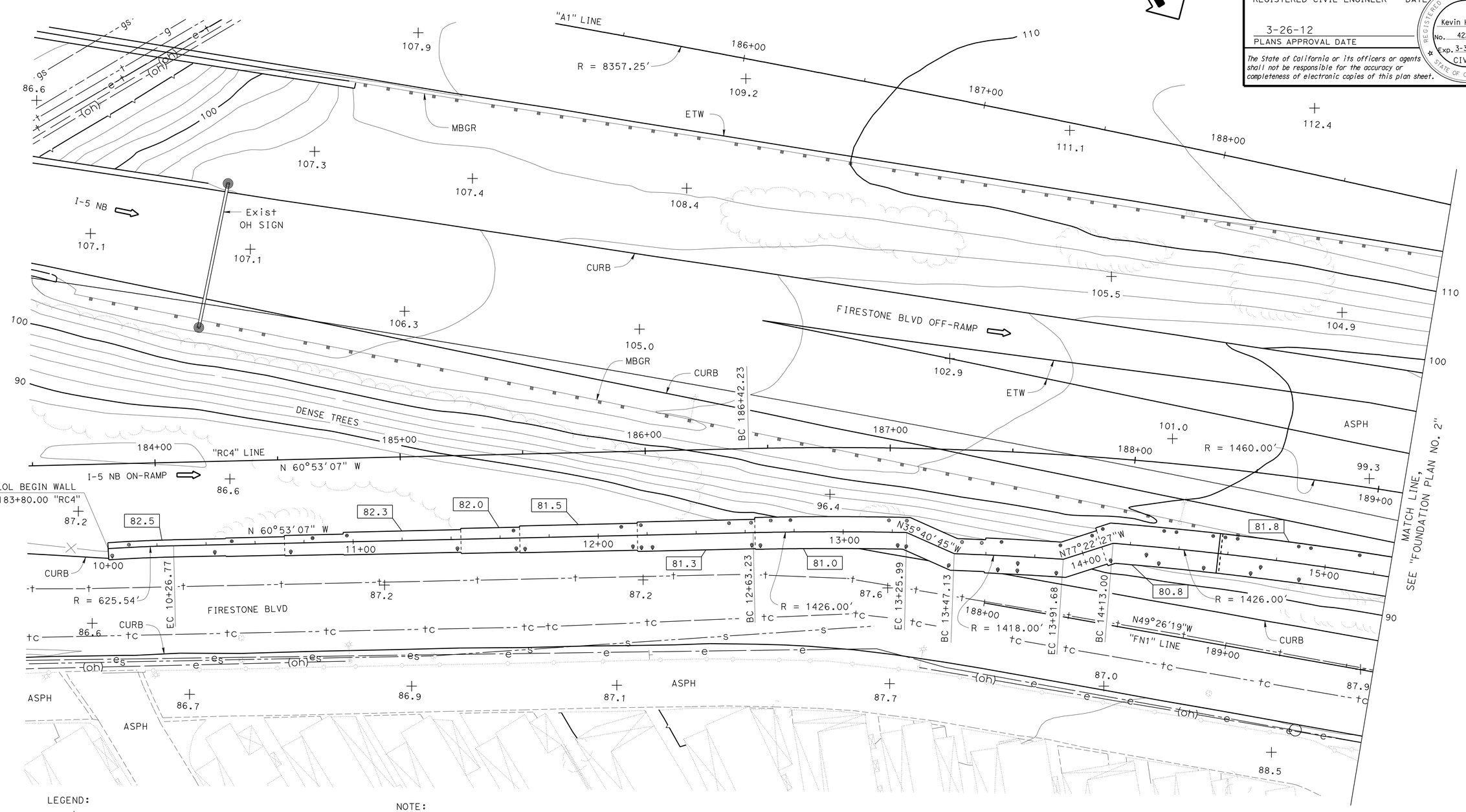

LEGEND:

- + - Denotes spot elevation
- ⊗ - Indicates pile, not all shown
- XX.X - Indicates bottom of footing elevation

NOTE:
Underground utilities as shown are approximate

SCALE 1" = 20'			
DESIGN	BY Greg Jones	CHECKED Daniel Sessions	
DETAILS	BY Bob Huddleston	CHECKED Daniel Sessions	
QUANTITIES	BY Vadim Shostak	CHECKED Kyoung Lee	

STATE OF CALIFORNIA
DEPARTMENT OF TRANSPORTATION

DIVISION OF ENGINEERING SERVICES
STRUCTURE DESIGN
DESIGN BRANCH 1

BRIDGE NO. 53-E0182
POST MILE 3.47

SOUND WALL NO. 190
FOUNDATION PLAN NO. 1

STRUCTURES DESIGN DETAIL SHEET (ENGLISH) (REV. 09-01-10)

ORIGINAL SCALE IN INCHES FOR REDUCED PLANS 0 1 2 3

UNIT: 3576
PROJECT NUMBER & PHASE: 07000018331
CONTRACT NO.: 07-215934

DISREGARD PRINTS BEARING EARLIER REVISION DATES

REVISION DATES 4-14-11 11/23/11 11/28/11

SHEET 8 OF 35

FILE => sw190-e-fpl01.dgn

USERNAME => s124496 DATE PLOTTED => 28-MAR-2012 TIME PLOTTED => 11:53

DIST	COUNTY	ROUTE	POST MILES TOTAL PROJECT	SHEET No.	TOTAL SHEETS
07	LA	5	2.4/4.0	1202	1288

Kevin J. Harper 12-8-11
REGISTERED CIVIL ENGINEER DATE

3-26-12
PLANS APPROVAL DATE

REGISTERED PROFESSIONAL ENGINEER
Kevin Harper
No. 42221
Exp. 3-31-12
CIVIL
STATE OF CALIFORNIA

The State of California or its officers or agents shall not be responsible for the accuracy or completeness of electronic copies of this plan sheet.

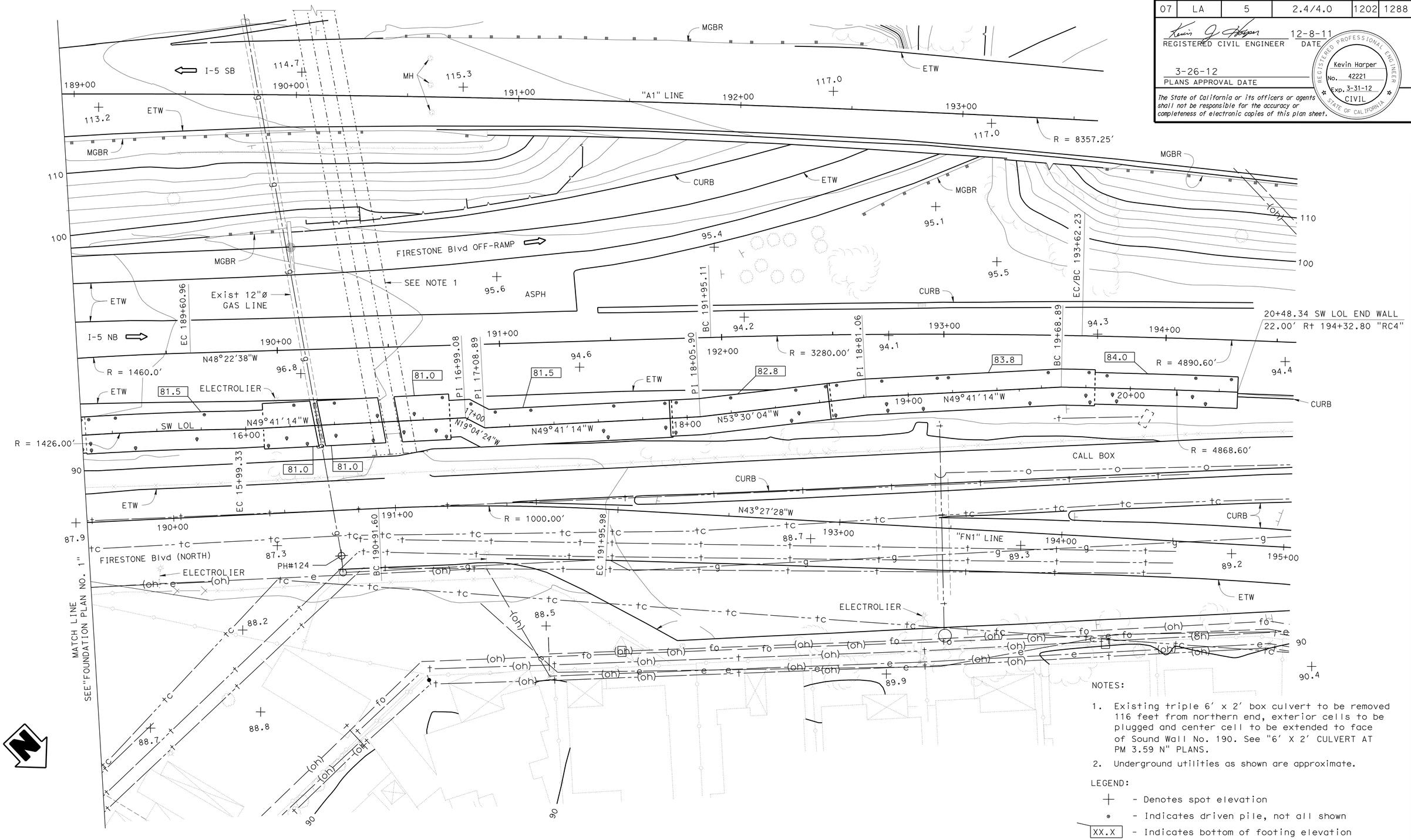

NOTES:

1. Existing triple 6' x 2' box culvert to be removed 116 feet from northern end, exterior cells to be plugged and center cell to be extended to face of Sound Wall No. 190. See "6' X 2' CULVERT AT PM 3.59 N" PLANS.
2. Underground utilities as shown are approximate.

LEGEND:

+ - Denotes spot elevation

⊗ - Indicates driven pile, not all shown

XX.X - Indicates bottom of footing elevation

SCALE 1" = 20'			
DESIGN	BY Greg Jones	CHECKED Daniel Sessions	
DETAILS	BY Bob Huddleston	CHECKED Daniel Sessions	
QUANTITIES	BY Vadim Shostak	CHECKED Kyoung Lee	

STATE OF CALIFORNIA
DEPARTMENT OF TRANSPORTATION

DIVISION OF ENGINEERING SERVICES
STRUCTURE DESIGN
DESIGN BRANCH 1

BRIDGE NO. 53-E0182
POST MILE 3.47

SOUND WALL NO. 190
FOUNDATION PLAN NO. 2

STRUCTURES DESIGN DETAIL SHEET (ENGLISH) (REV. 09-01-10)

ORIGINAL SCALE IN INCHES FOR REDUCED PLANS 0 1 2 3

UNIT: 3576
PROJECT NUMBER & PHASE: 07000018331
CONTRACT NO.: 07-215934

DISREGARD PRINTS BEARING EARLIER REVISION DATES

REVISION DATES: 4-18-11 11/23/11 11/15/11

SHEET 9 OF 35

FILE => sw190-e-fpl02.dgn

USERNAME => s124496 DATE PLOTTED => 28-MAR-2012 TIME PLOTTED => 11:53

DIST	COUNTY	ROUTE	POST MILES TOTAL PROJECT	SHEET No.	TOTAL SHEETS
07	LA	5	2.4/4.0	1203	1288

REGISTERED CIVIL ENGINEER 12-8-11 DATE

3-26-12
PLANS APPROVAL DATE

REGISTERED PROFESSIONAL ENGINEER Kevin Harper No. 42221 Exp. 3-31-12 CIVIL STATE OF CALIFORNIA

The State of California or its officers or agents shall not be responsible for the accuracy or completeness of electronic copies of this plan sheet.

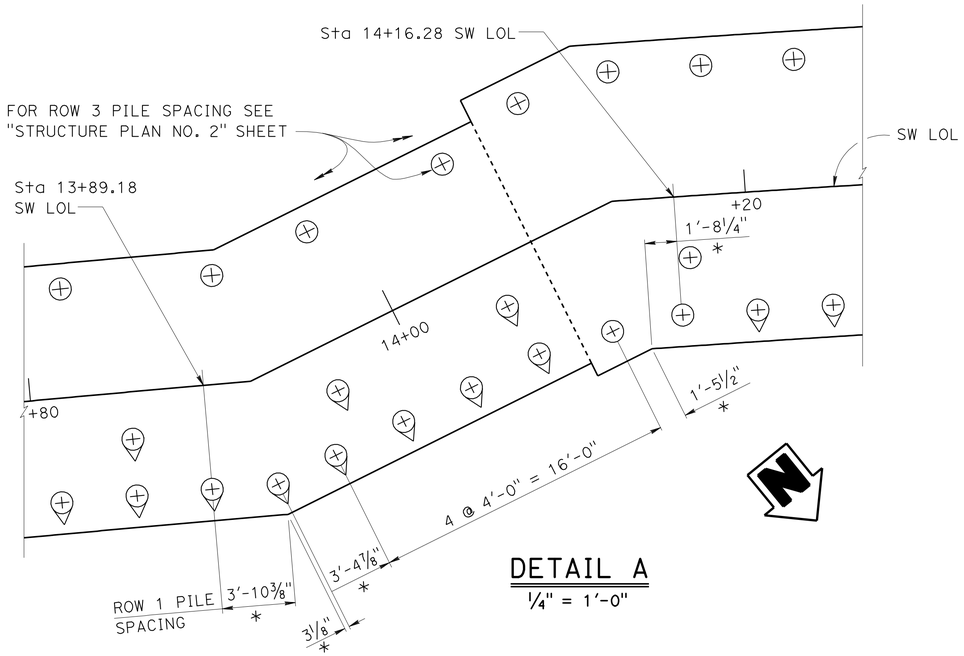

DETAIL A

¼" = 1'-0"

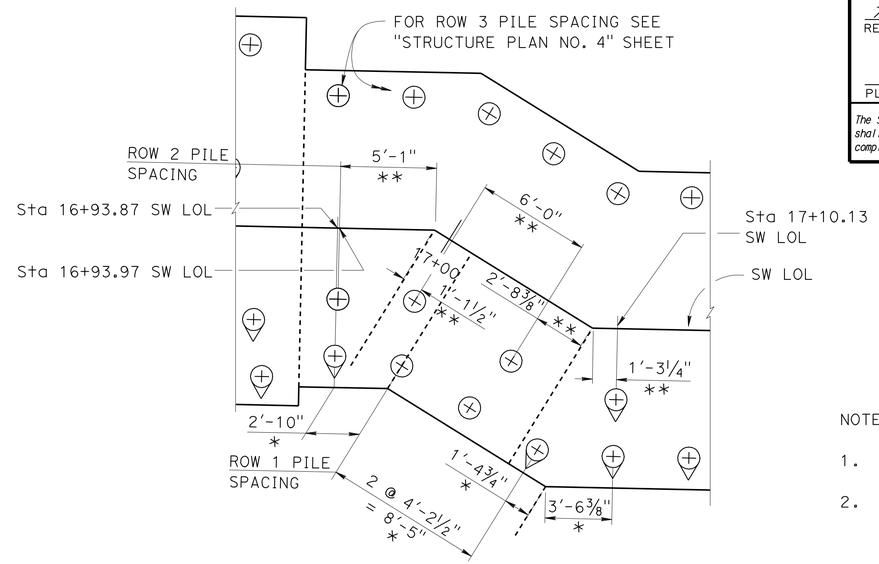

DETAIL C

¼" = 1'-0"

NOTES:

1. For location of "DETAIL A" see "STRUCTURE PLAN NO. 2" sheet.
2. For location of "DETAIL B" see "STRUCTURE PLAN NO. 3 and NO.4" sheets.

LEGEND:

* - Indicate dimension measured along front edge of footing

** - Indicates dimension measured along SW LOL

⊕ - Indicates Vertical Class 90 Pile

⊕ - Indicates 1:3 Battered Class 90 Pile

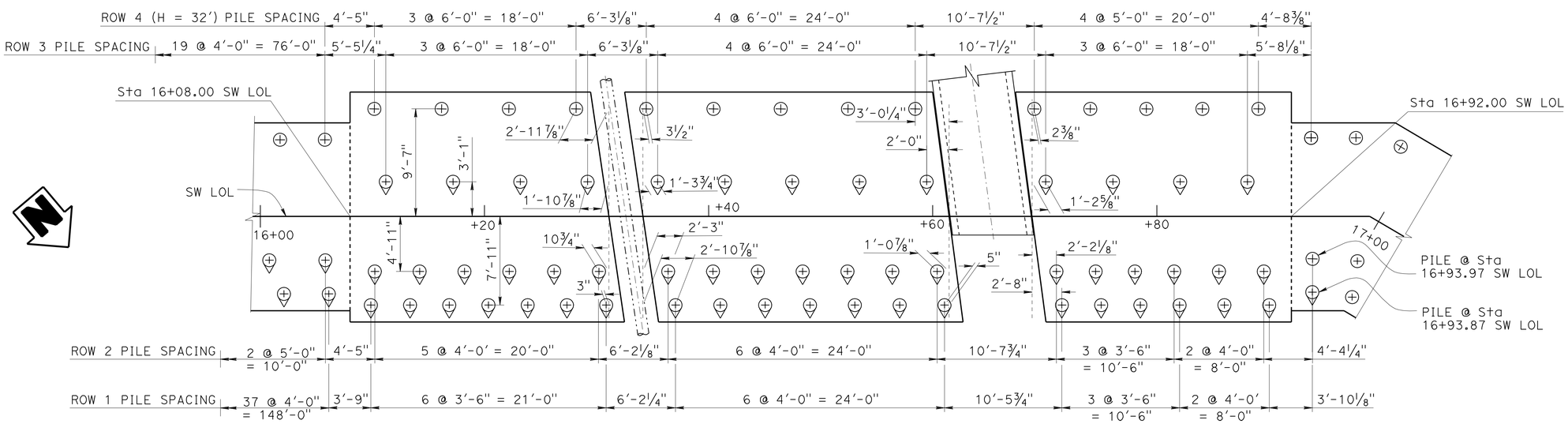

DETAIL B

3/16" = 1'-0"

DESIGN	BY Greg Jones	CHECKED Daniel Sessions	
DETAILS	BY S.Jiang / B.Huddleston	CHECKED Daniel Sessions	
QUANTITIES	BY Vadim Shostak	CHECKED Kyoung Lee	

STATE OF CALIFORNIA
DEPARTMENT OF TRANSPORTATION

DIVISION OF ENGINEERING SERVICES
STRUCTURE DESIGN
DESIGN BRANCH 1

BRIDGE NO. 53-E0182
POST MILE 3.47

SOUND WALL NO. 190
FOOTING DETAILS

STRUCTURES DESIGN DETAIL SHEET (ENGLISH) (REV. 09-01-10)

ORIGINAL SCALE IN INCHES FOR REDUCED PLANS 0 1 2 3

UNIT: 3576
PROJECT NUMBER & PHASE: 07000018331
CONTRACT NO.: 07-215934

DISREGARD PRINTS BEARING EARLIER REVISION DATES

REVISION DATES 1-26-11 11/14/11 1-26-11

SHEET 10 OF 35

FILE => sw190-f-bftg.dgn

USERNAME => s124496 DATE PLOTTED => 28-MAR-2012 TIME PLOTTED => 11:53

DIST	COUNTY	ROUTE	POST MILES TOTAL PROJECT	SHEET No.	TOTAL SHEETS
07	LA	5	2.4/4.0	1204	1288

REGISTERED CIVIL ENGINEER 12-8-11 DATE

3-26-12
PLANS APPROVAL DATE

REGISTERED PROFESSIONAL ENGINEER Kevin Harper No. 42221 Exp. 3-31-12 CIVIL STATE OF CALIFORNIA

The State of California or its officers or agents shall not be responsible for the accuracy or completeness of electronic copies of this plan sheet.

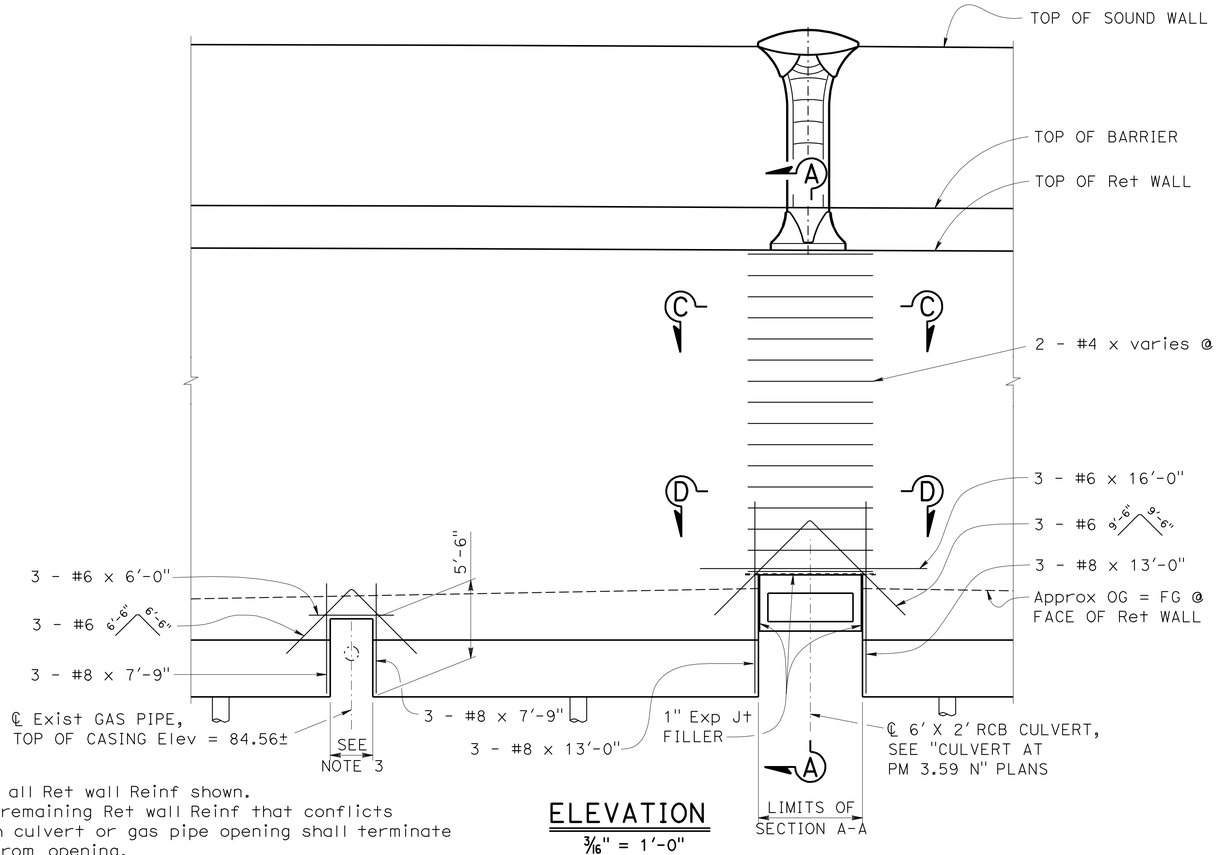

ELEVATION

3/16" = 1'-0"

NOTES:
1. Not all Ret wall Reinf shown.
2. All remaining Ret wall Reinf that conflicts with culvert or gas pipe opening shall terminate 3" from opening.
3. Omit ⓐ and ⓑ bars for Ret Wall Type 1SWBP. Extend ⓒ bars to within 2" of top of opening.

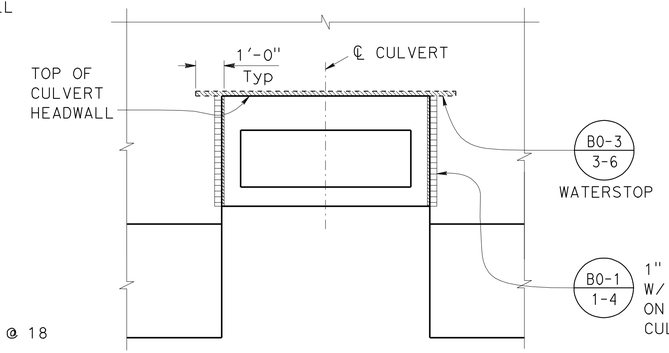

NOTE: Drop inlet not shown for clarity.

VIEW B-B

3/8" = 1'-0"

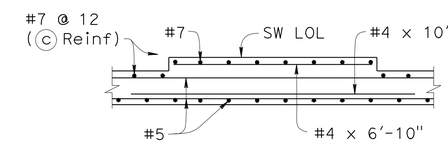

SECTION C-C

3/8" = 1'-0"

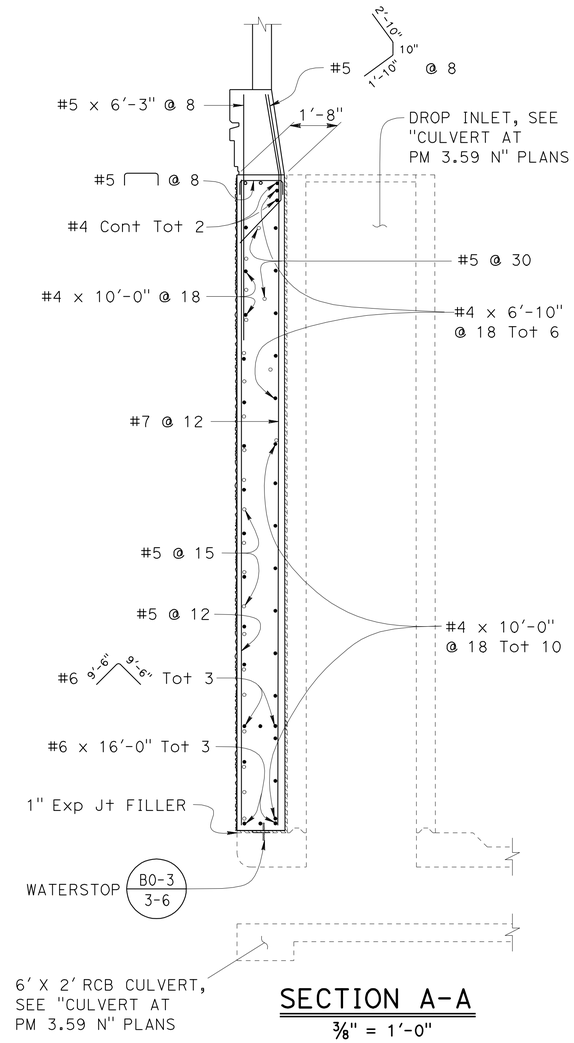

SECTION A-A

3/8" = 1'-0"

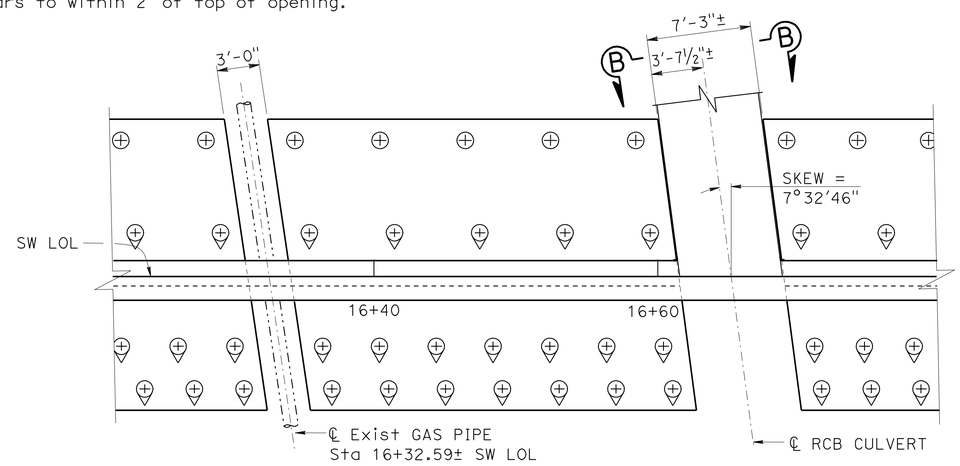

PLAN

3/16" = 1'-0"

NOTE: Drop inlet not shown.

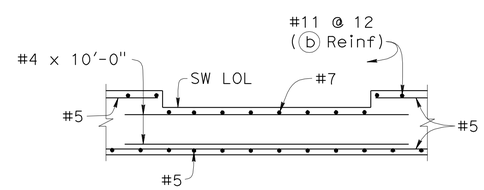

SECTION D-D

3/8" = 1'-0"

NOTE:
THE CONTRACTOR SHALL VERIFY ALL CONTROLLING FIELD DIMENSIONS BEFORE ORDERING OR FABRICATING ANY MATERIAL.

	BY	CHECKED
DESIGN	Greg Jones	Daniel Sessions
DETAILS	Bob Huddleston	Daniel Sessions
QUANTITIES	Vadim Shostak	Kyoung Lee

STATE OF CALIFORNIA DEPARTMENT OF TRANSPORTATION

DIVISION OF ENGINEERING SERVICES STRUCTURE DESIGN DESIGN BRANCH 1

BRIDGE NO. 53-E0182
POST MILE 3.47

SOUND WALL NO. 190
UTILITY OPENING DETAILS

STRUCTURES DESIGN DETAIL SHEET (ENGLISH) (REV. 09-01-10)

ORIGINAL SCALE IN INCHES FOR REDUCED PLANS 0 1 2 3

UNIT: 3576
PROJECT NUMBER & PHASE: 07000018331
CONTRACT NO.: 07-215934

DISREGARD PRINTS BEARING EARLIER REVISION DATES

REVISION DATES 12-21-10 7-28-11 11/14/11

SHEET 11 OF 35

FILE => sw190-f-cfrwdt01.dgn

USERNAME => s124496 DATE PLOTTED => 28-MAR-2012 TIME PLOTTED => 11:53

DIST	COUNTY	ROUTE	POST MILES TOTAL PROJECT	SHEET No.	TOTAL SHEETS
07	LA	5	2.4/4.0	1205	1288

REGISTERED CIVIL ENGINEER 12-8-11 DATE

3-26-12
PLANS APPROVAL DATE

REGISTERED PROFESSIONAL ENGINEER Kevin Harper No. 42221 Exp. 3-31-12 CIVIL STATE OF CALIFORNIA

The State of California or its officers or agents shall not be responsible for the accuracy or completeness of electronic copies of this plan sheet.

NOTES:

1. For "SECTION A-A", "SECTION B-B", "SECTION C-C" and other retaining wall architectural details, see "RETAINING WALL ARCHITECTURAL DETAILS NO. 1 and NO. 2" sheets.
2. For barrier architectural treatment, see "CONCRETE BARRIER TYPE 736A (Mod 2) DETAILS" sheet.
3. For sound wall architectural treatment, see "SOUND WALL ARCHITECTURAL DETAILS" sheet.
4. For pilaster and corbel details, see "PILASTER ARCHITECTURAL DETAILS" and "PILASTER STRUCTURAL DETAILS" sheets.
5. Retaining wall architectural treatment pay limits shall include all split slate and fractured rib texture shown in "DEVELOPED ELEVATION".
6. All longitudinal dimensions are measured along SW LOL.

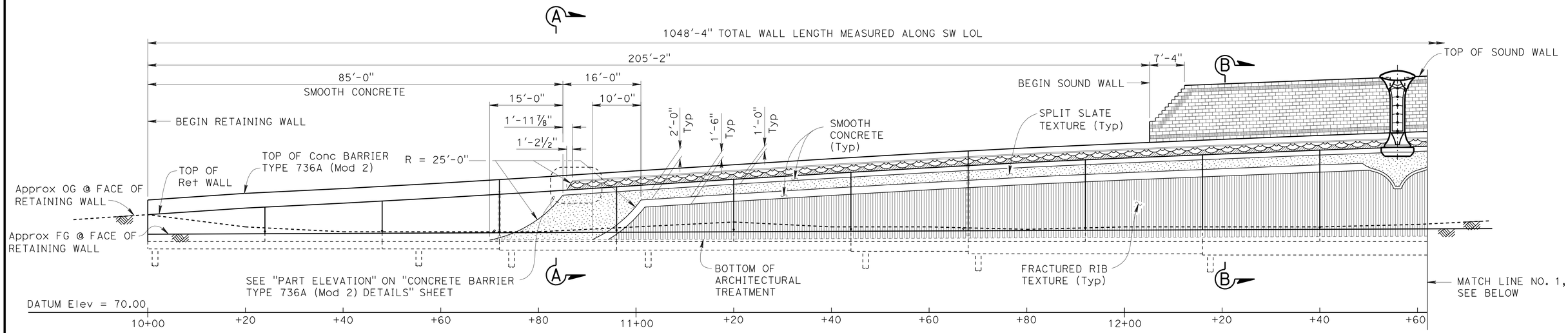

DEVELOPED ELEVATION

1" = 10'

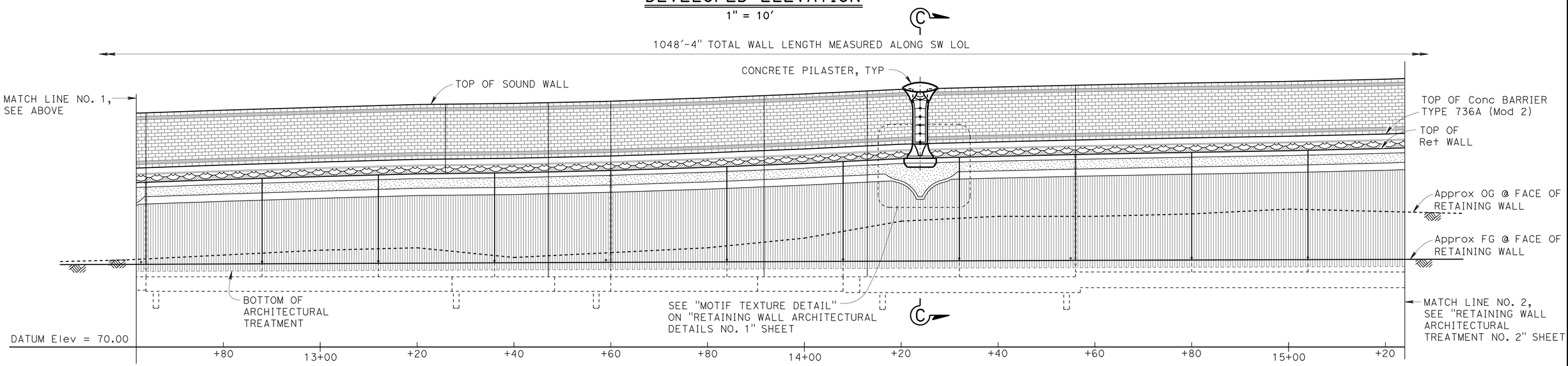

DEVELOPED ELEVATION

1" = 10'

DESIGN	BY Isaac Tasabia	CHECKED Javier Chavez	
DETAILS	BY Jie Tang	CHECKED Daniel Sessions	
QUANTITIES	BY V. Shostak / K. Lee	CHECKED K. Lee / G. Thornton	

STATE OF CALIFORNIA
DEPARTMENT OF TRANSPORTATION

DIVISION OF ENGINEERING SERVICES
STRUCTURE DESIGN
DESIGN BRANCH 1

BRIDGE NO. 53-E0182
POST MILE 3.47

SOUND WALL NO. 190

RETAINING WALL ARCHITECTURAL TREATMENT NO. 1

STRUCTURES DESIGN DETAIL SHEET (ENGLISH) (REV. 09-01-10)

ORIGINAL SCALE IN INCHES FOR REDUCED PLANS 0 1 2 3

UNIT: 3576
PROJECT NUMBER & PHASE: 0700001833-1
CONTRACT NO.: 07-215934

DISREGARD PRINTS BEARING EARLIER REVISION DATES

REVISION DATES 11/15/11 11/23/11

SHEET 12 OF 35

FILE => sw190-f-rwatrt01.dgn

USERNAME => s124496 DATE PLOTTED => 28-MAR-2012 TIME PLOTTED => 11:53

DIST	COUNTY	ROUTE	POST MILES TOTAL PROJECT	SHEET No.	TOTAL SHEETS
07	LA	5	2.4/4.0	1206	1288

REGISTERED CIVIL ENGINEER 12-8-11 DATE

3-26-12
PLANS APPROVAL DATE

REGISTERED PROFESSIONAL ENGINEER Kevin Harper No. 42221 Exp. 3-31-12 CIVIL STATE OF CALIFORNIA

The State of California or its officers or agents shall not be responsible for the accuracy or completeness of electronic copies of this plan sheet.

For "NOTES", see "RETAINING WALL ARCHITECTURAL TREATMENT NO. 1" sheet.

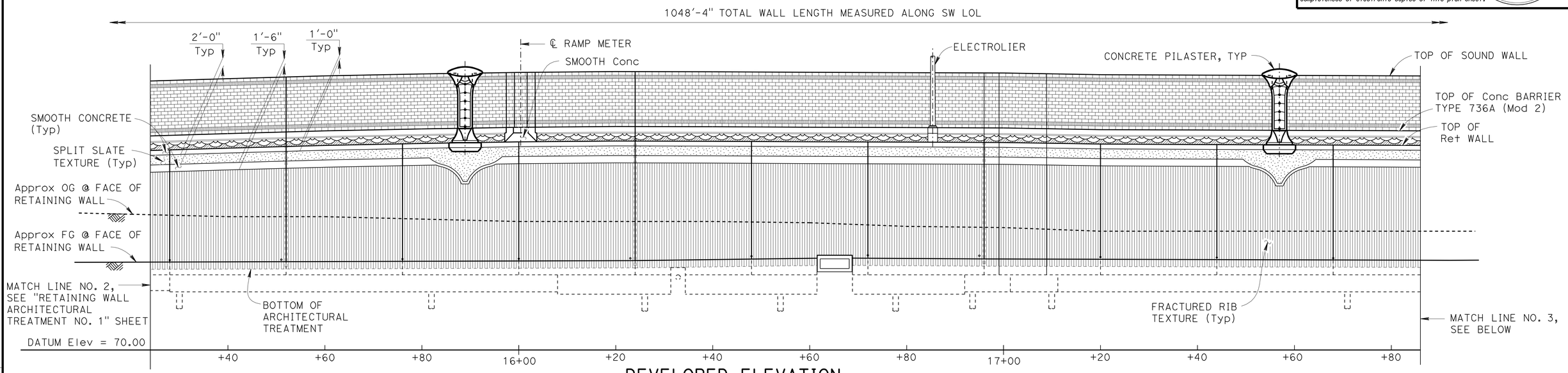

DEVELOPED ELEVATION

1" = 10'

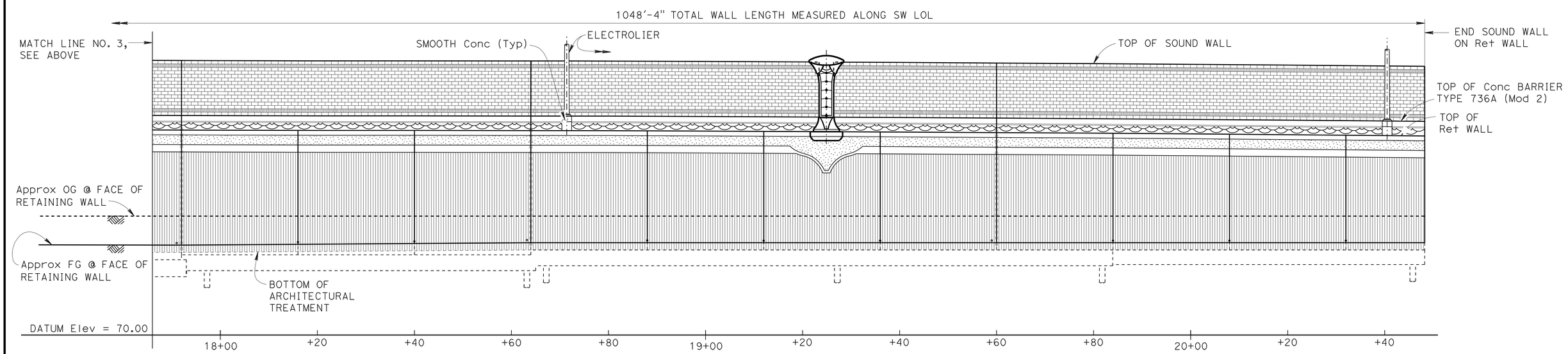

DEVELOPED ELEVATION

1" = 10'

DESIGN	BY Isaac Tasabia	CHECKED Javier Chavez	
DETAILS	BY Jie Tang	CHECKED Daniel Sessions	
QUANTITIES	BY V. Shostak / K. Lee	CHECKED K. Lee / G. Thornton	

STATE OF CALIFORNIA
DEPARTMENT OF TRANSPORTATION

DIVISION OF ENGINEERING SERVICES
STRUCTURE DESIGN
DESIGN BRANCH 1

BRIDGE NO. 53-E0182
POST MILE 3.47

SOUND WALL NO. 190

RETAINING WALL ARCHITECTURAL TREATMENT NO. 2

STRUCTURES DESIGN DETAIL SHEET (ENGLISH) (REV. 09-01-10)

ORIGINAL SCALE IN INCHES FOR REDUCED PLANS 0 1 2 3

UNIT: 3576
PROJECT NUMBER & PHASE: 0700001833-1
CONTRACT NO.: 07-215934

DISREGARD PRINTS BEARING EARLIER REVISION DATES

REVISION DATES 11/16/11 11/23/11

SHEET 13 OF 35

FILE => sw190-f-rwatrt02.dgn

USERNAME => s124496 DATE PLOTTED => 28-MAR-2012 TIME PLOTTED => 11:53

DIST	COUNTY	ROUTE	POST MILES TOTAL PROJECT	SHEET No.	TOTAL SHEETS
07	LA	5	2.4/4.0	1207	1288

REGISTERED CIVIL ENGINEER 12-8-11 DATE

3-26-12
PLANS APPROVAL DATE

REGISTERED PROFESSIONAL ENGINEER Kevin Harper No. 42221 Exp. 3-31-12 CIVIL STATE OF CALIFORNIA

The State of California or its officers or agents shall not be responsible for the accuracy or completeness of electronic copies of this plan sheet.

NOTES:

1. For locations of "MOTIF TEXTURE DETAIL", see "RETAINING WALL ARCHITECTURAL TREATMENT NO. 1 and NO. 2" sheets.
2. For sound wall architectural treatment, see "SOUND WALL ARCHITECTURAL DETAILS" sheet.
3. For barrier architectural treatment, see "CONCRETE BARRIER TYPE 736A (Mod 2) DETAILS" sheet.
4. For pilaster and corbel details, see "PILASTER ARCHITECTURAL DETAILS" and "PILASTER STRUCTURAL DETAILS" sheets.

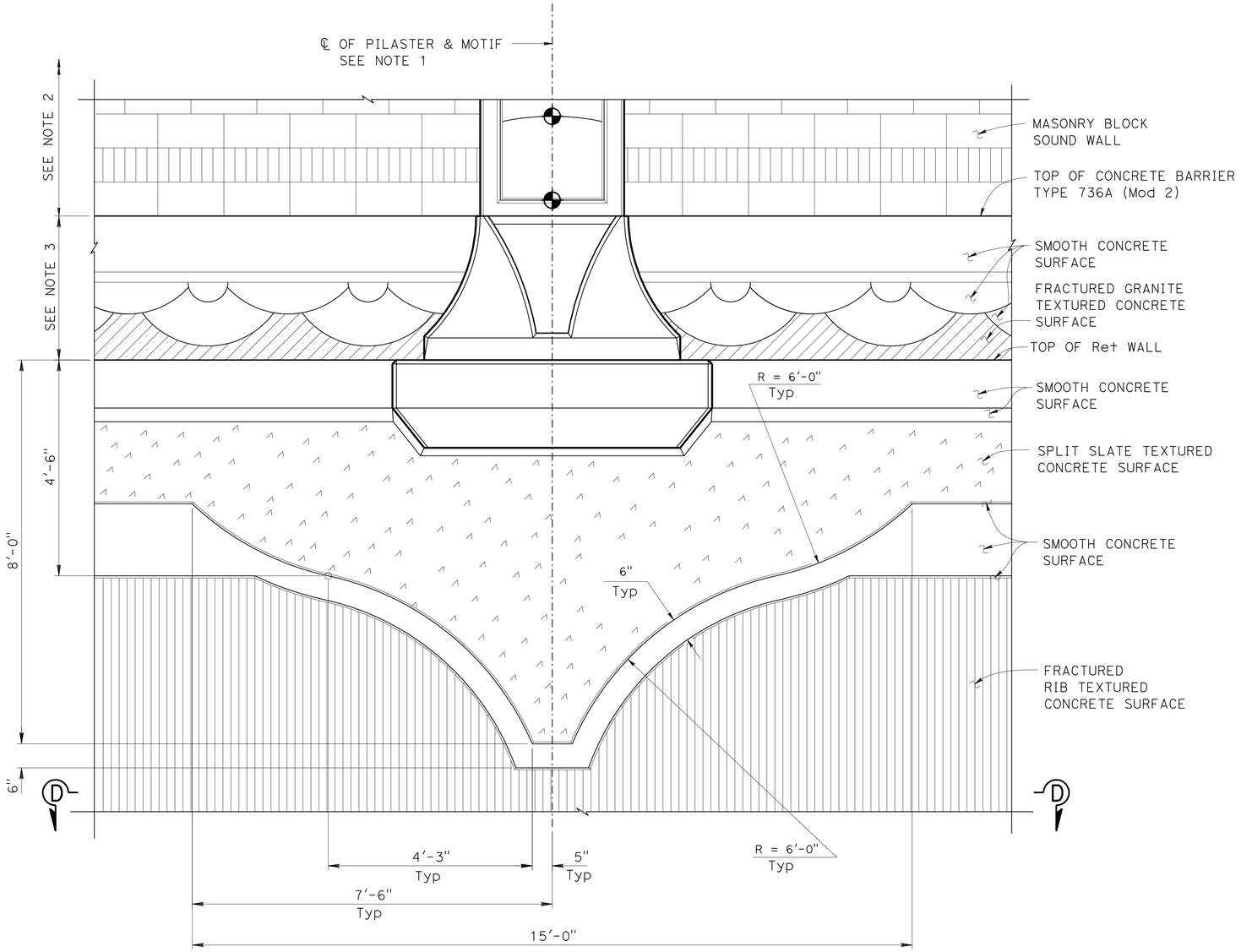

PARTIAL ELEVATION

MOTIF TEXTURE DETAIL

3/4" = 1'-0"

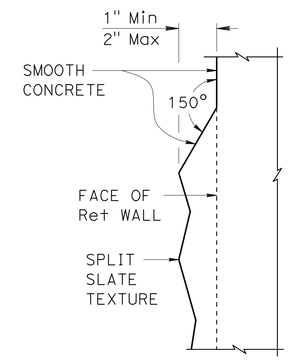

DETAIL A

3" = 1'-0"

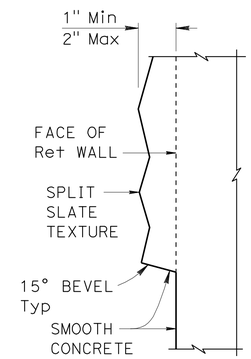

DETAIL B

3" = 1'-0"

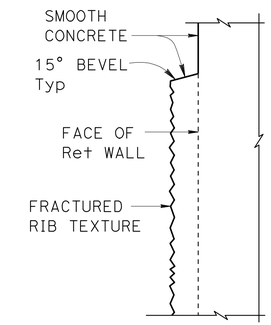

DETAIL C

3" = 1'-0"

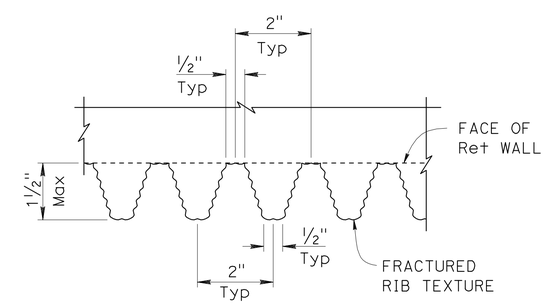

SECTION D-D

6" = 1'-0"

DESIGN	BY Isaac Tasabia	CHECKED Javier Chavez	
DETAILS	BY Jie Tang	CHECKED Daniel Sessions	
QUANTITIES	BY V. Shostak / K. Lee	CHECKED K. Lee / G. Thornton	

STATE OF CALIFORNIA
DEPARTMENT OF TRANSPORTATION

DIVISION OF ENGINEERING SERVICES
STRUCTURE DESIGN
DESIGN BRANCH 1

BRIDGE NO. 53-E0182
POST MILE 3.47

SOUND WALL NO. 190

RETAINING WALL ARCHITECTURAL DETAILS NO. 1

STRUCTURES DESIGN DETAIL SHEET (ENGLISH) (REV. 09-01-10)

ORIGINAL SCALE IN INCHES FOR REDUCED PLANS 0 1 2 3

UNIT: 3576
PROJECT NUMBER & PHASE: 0700001833-1
CONTRACT NO.: 07-215934

DISREGARD PRINTS BEARING EARLIER REVISION DATES

REVISION DATES 11/18/11 11/28/11

SHEET 14 OF 35

FILE => sw190-f-rwdet01.dgn

USERNAME => s124496 DATE PLOTTED => 28-MAR-2012 TIME PLOTTED => 11:53

DIST	COUNTY	ROUTE	POST MILES TOTAL PROJECT	SHEET No.	TOTAL SHEETS
07	LA	5	2.4/4.0	1208	1288

REGISTERED CIVIL ENGINEER 12-8-11 DATE

3-26-12
PLANS APPROVAL DATE

REGISTERED PROFESSIONAL ENGINEER Kevin Harper No. 42221 Exp. 3-31-12 CIVIL STATE OF CALIFORNIA

The State of California or its officers or agents shall not be responsible for the accuracy or completeness of electronic copies of this plan sheet.

NOTES:

1. For locations of "SECTION A-A", "SECTION B-B" AND "SECTION C-C", see "RETAINING WALL ARCHITECTURAL TREATMENT NO. 1" sheet.
2. For "DETAIL A", "DETAIL B" and "DETAIL C", see "RETAINING WALL ARCHITECTURAL DETAILS NO. 1" sheet.

(A) Pay limits of architectural treatment.

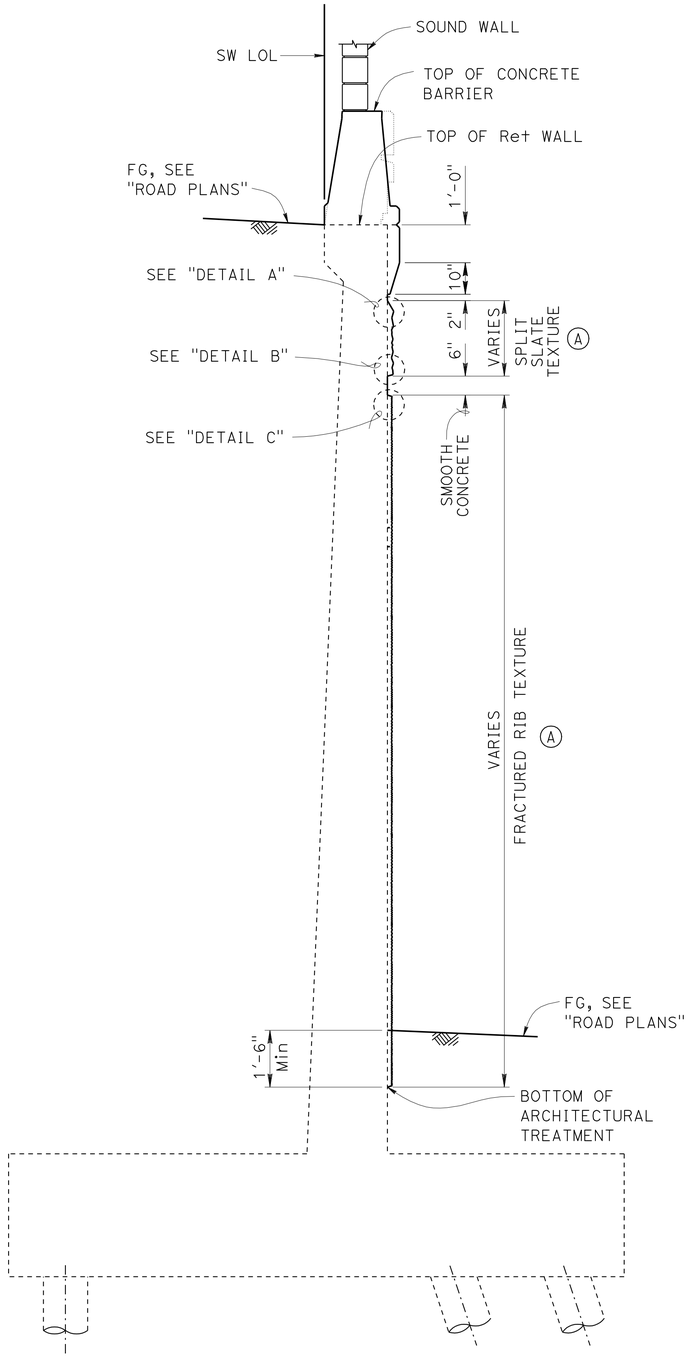

SECTION C-C

½" = 1'-0"

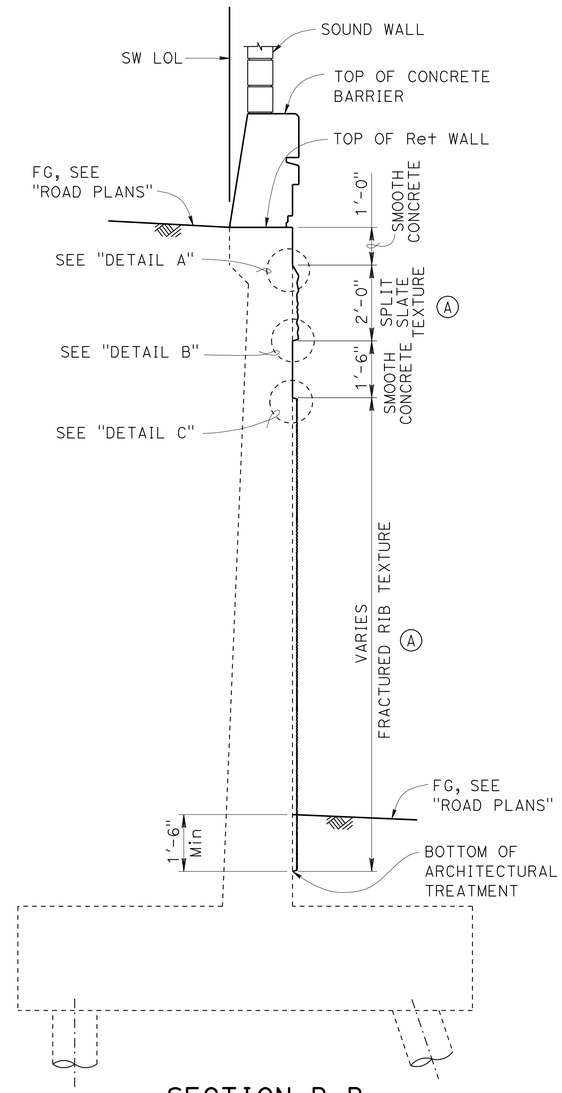

SECTION B-B

½" = 1'-0"

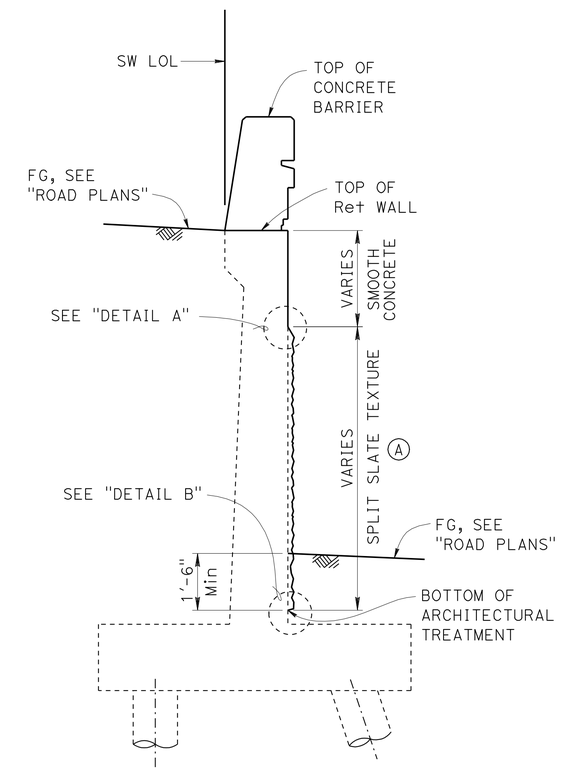

SECTION A-A

½" = 1'-0"

DESIGN	BY Isaac Tasabia	CHECKED Javier Chavez	
DETAILS	BY Jie Tang	CHECKED Daniel Sessions	
QUANTITIES	BY V. Shostak / K. Lee	CHECKED K. Lee / G. Thornton	

STATE OF CALIFORNIA
DEPARTMENT OF TRANSPORTATION

DIVISION OF ENGINEERING SERVICES
STRUCTURE DESIGN
DESIGN BRANCH 1

BRIDGE NO. 53-E0182
POST MILE 3.47

SOUND WALL NO. 190

RETAINING WALL ARCHITECTURAL DETAILS NO. 2

STRUCTURES DESIGN DETAIL SHEET (ENGLISH) (REV. 09-01-10)

ORIGINAL SCALE IN INCHES FOR REDUCED PLANS 0 1 2 3

UNIT: 3576
PROJECT NUMBER & PHASE: 0700001833-1
CONTRACT NO.: 07-215934

DISREGARD PRINTS BEARING EARLIER REVISION DATES

REVISION DATES 11/18/11 11/28/11

SHEET 15 OF 35

FILE => sw190-f-rwdet02.dgn

USERNAME => s124496 DATE PLOTTED => 28-MAR-2012 TIME PLOTTED => 11:53

DIST	COUNTY	ROUTE	POST MILES TOTAL PROJECT	SHEET No.	TOTAL SHEETS
07	LA	5	2.4/4.0	1209	1288

REGISTERED CIVIL ENGINEER 12-8-11 DATE

3-26-12
PLANS APPROVAL DATE

REGISTERED PROFESSIONAL ENGINEER Kevin Harper No. 42221 Exp. 3-31-12 CIVIL STATE OF CALIFORNIA

The State of California or its officers or agents shall not be responsible for the accuracy or completeness of electronic copies of this plan sheet.

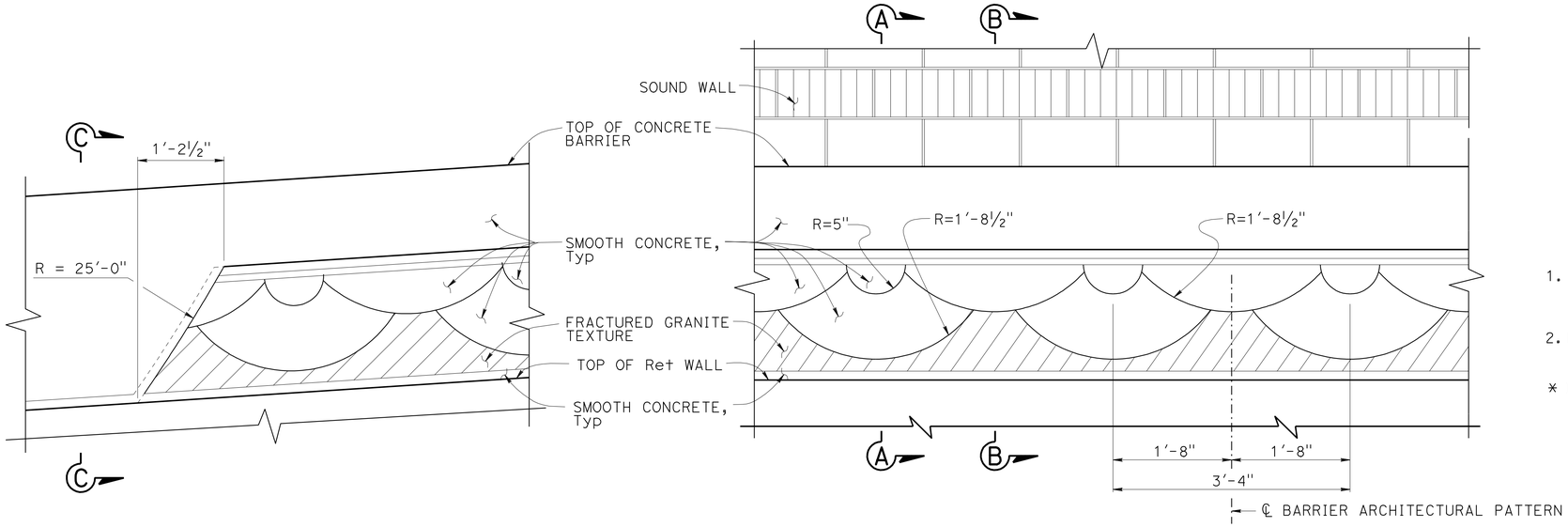

PART ELEVATION CONCRETE BARRIER TYPE 736A (MOD 2)

1" = 1'-0"

NOTES:

1. For concrete barrier type 736A (Mod 2) details not shown, see "SOUND WALL-MASONRY BLOCK WITH BARRIER ON RETAINING WALL DETAILS NO. 2" sheet.
2. For sound wall architectural details, see "SOUND WALL ARCHITECTURAL DETAILS" sheet.

* Indicates Reinf is additional to typical barrier Reinf.

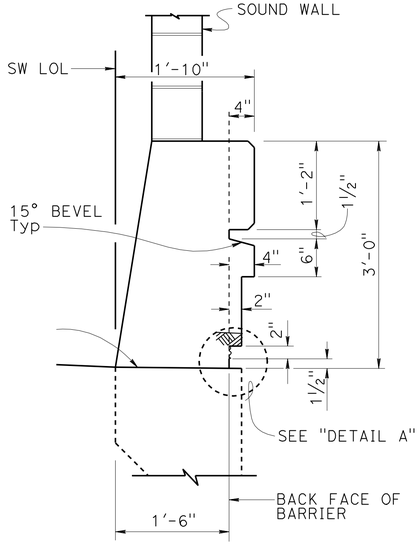

SECTION A-A

1" = 1'-0"

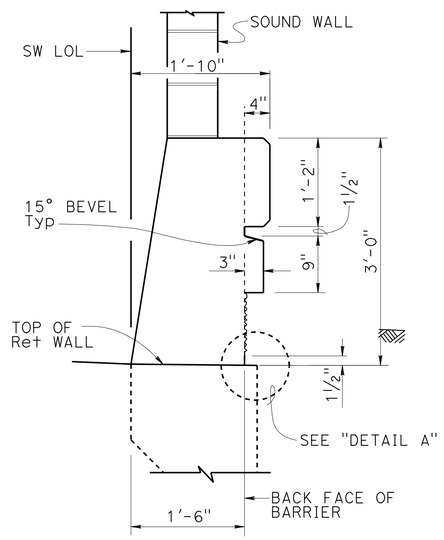

SECTION B-B

1" = 1'-0"

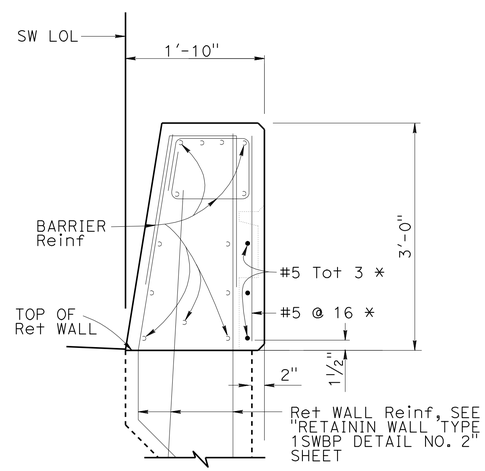

SECTION C-C

1" = 1'-0"

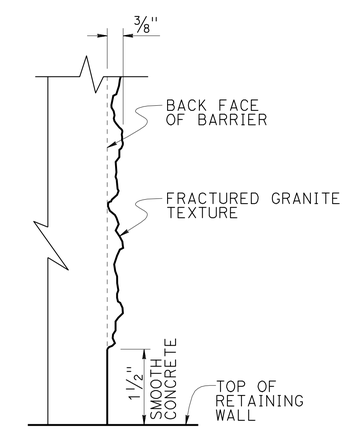

NOTES: Detail at "SECTION B-B" shown, "SECTION A-A" similar.

DETAIL A

NO SCALE

DESIGN	BY Isaac Tasabia	CHECKED Javier Chavez	
DETAILS	BY Jin Zhou/J. Tang	CHECKED G. Jones/D. Sessions	
QUANTITIES	BY Vadim Shostak	CHECKED Kyoung Lee	

STATE OF CALIFORNIA
DEPARTMENT OF TRANSPORTATION

DIVISION OF ENGINEERING SERVICES
STRUCTURE DESIGN
DESIGN BRANCH 1

BRIDGE NO. 53-E0182
POST MILE 3.47

SOUND WALL NO. 190
CONCRETE BARRIER TYPE 736A (Mod 2) DETAILS

STRUCTURES DESIGN DETAIL SHEET (ENGLISH) (REV. 09-01-10)

ORIGINAL SCALE IN INCHES FOR REDUCED PLANS 0 1 2 3

UNIT: 3576
PROJECT NUMBER & PHASE: 0700001833-1
CONTRACT NO.: 07-215934

DISREGARD PRINTS BEARING EARLIER REVISION DATES

REVISION DATES 11/29/10 11/29/11 11/28/11

SHEET 16 OF 35

FILE => sw190-g-barr01.dgn

USERNAME => s124496 DATE PLOTTED => 28-MAR-2012 TIME PLOTTED => 11:53

NOTE:
1. All Masonry Block shall be Precision units, unless otherwise noted.

DIST	COUNTY	ROUTE	POST MILES TOTAL PROJECT	SHEET No.	TOTAL SHEETS
07	LA	5	2.4/4.0	1210	1288

REGISTERED CIVIL ENGINEER 12-8-11 DATE

3-26-12
PLANS APPROVAL DATE

REGISTERED PROFESSIONAL ENGINEER Kevin Harper No. 42221 Exp. 3-31-12 CIVIL STATE OF CALIFORNIA

The State of California or its officers or agents shall not be responsible for the accuracy or completeness of electronic copies of this plan sheet.

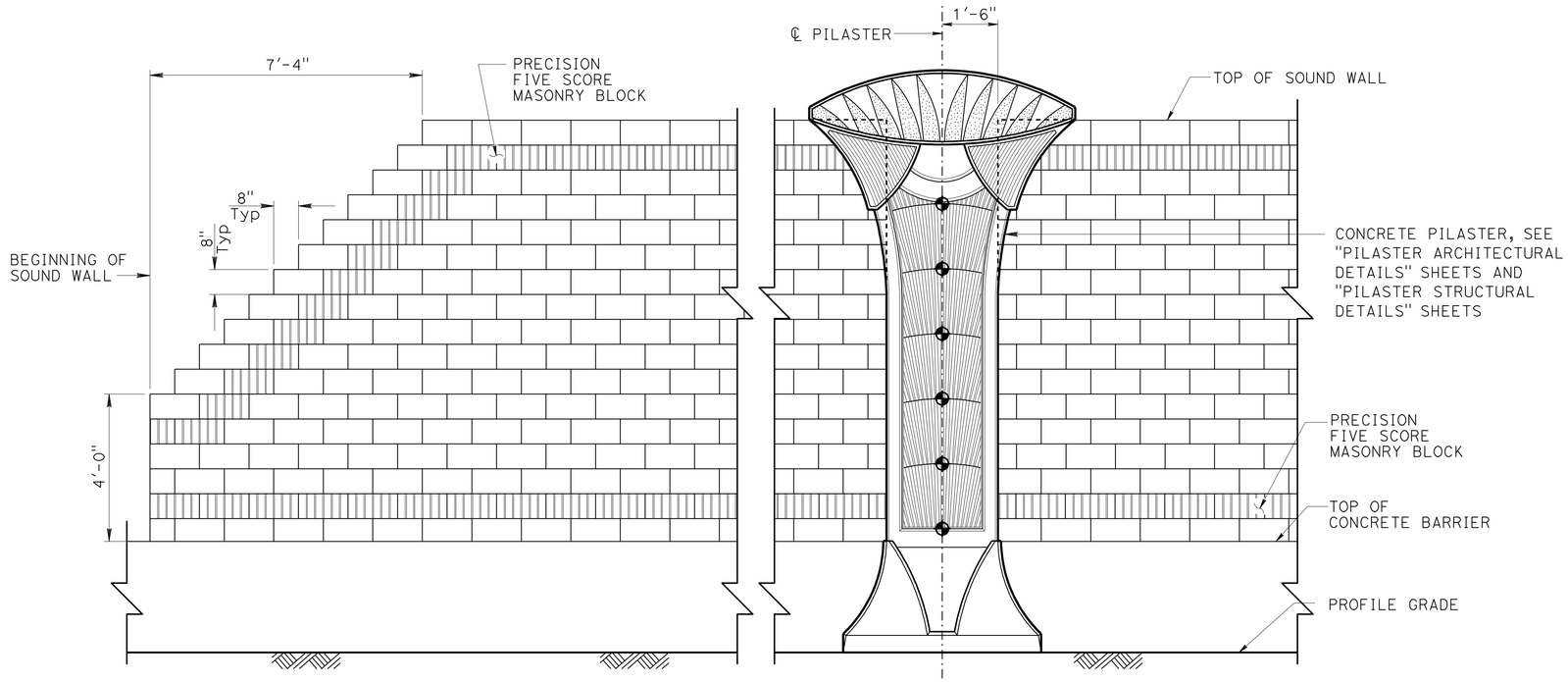

PART SOUND WALL ELEVATION - FREEWAY SIDE

½" = 1'-0"

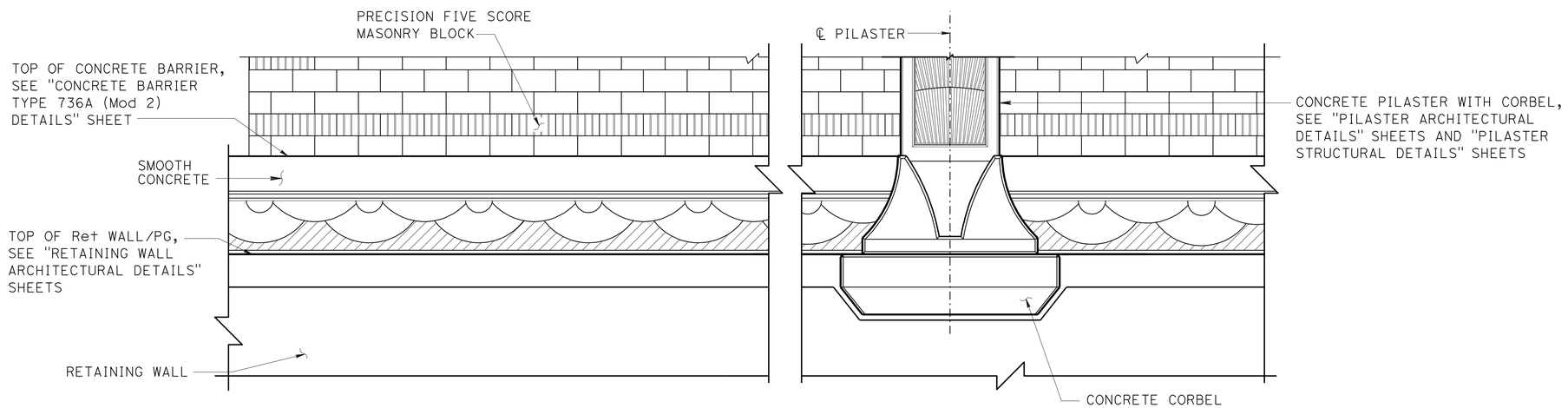

PART SOUND WALL ELEVATION - BACK SIDE

½" = 1'-0"

DESIGN	BY Isaac Tasabia	CHECKED Javier Chavez	
DETAILS	BY Jie Tang	CHECKED G. Jones/D. Sessions	
QUANTITIES	BY April Pearson	CHECKED Kyoung Lee	

STATE OF CALIFORNIA DEPARTMENT OF TRANSPORTATION

DIVISION OF ENGINEERING SERVICES STRUCTURE DESIGN DESIGN BRANCH 1

BRIDGE NO. 53-E0182
POST MILE 3.47

SOUND WALL NO. 190
SOUND WALL ARCHITECTURAL DETAILS

STRUCTURES DESIGN DETAIL SHEET (ENGLISH) (REV. 09-01-10)

ORIGINAL SCALE IN INCHES FOR REDUCED PLANS 0 1 2 3

UNIT: 3576
PROJECT NUMBER & PHASE: 07000018331
CONTRACT NO.: 07-215934

DISREGARD PRINTS BEARING EARLIER REVISION DATES

REVISION DATES 12/10/10 11/21/11 07/02/12

SHEET 17 OF 35

FILE => sw190-g-detswa01.dgn

USERNAME => s124496 DATE PLOTTED => 28-MAR-2012 TIME PLOTTED => 11:53

DIST	COUNTY	ROUTE	POST MILES TOTAL PROJECT	SHEET No.	TOTAL SHEETS
07	LA	5	2.4/4.0	1211	1288

REGISTERED CIVIL ENGINEER 12-8-11 DATE

3-26-12
PLANS APPROVAL DATE

REGISTERED PROFESSIONAL ENGINEER Kevin Harper No. 42221 Exp. 3-31-12 CIVIL STATE OF CALIFORNIA

The State of California or its officers or agents shall not be responsible for the accuracy or completeness of electronic copies of this plan sheet.

NOTES:

1. All dimensions symmetrical about ℄ Pilaster.
2. For location of "DETAIL E", see "PILASTER ARCHITECTURAL DETAILS NO. 2" sheet.
3. Beveled edges are 45° unless otherwise noted.
4. All vertical dimensions are measured along the ℄ Pilaster (Pilaster shall be vertical).

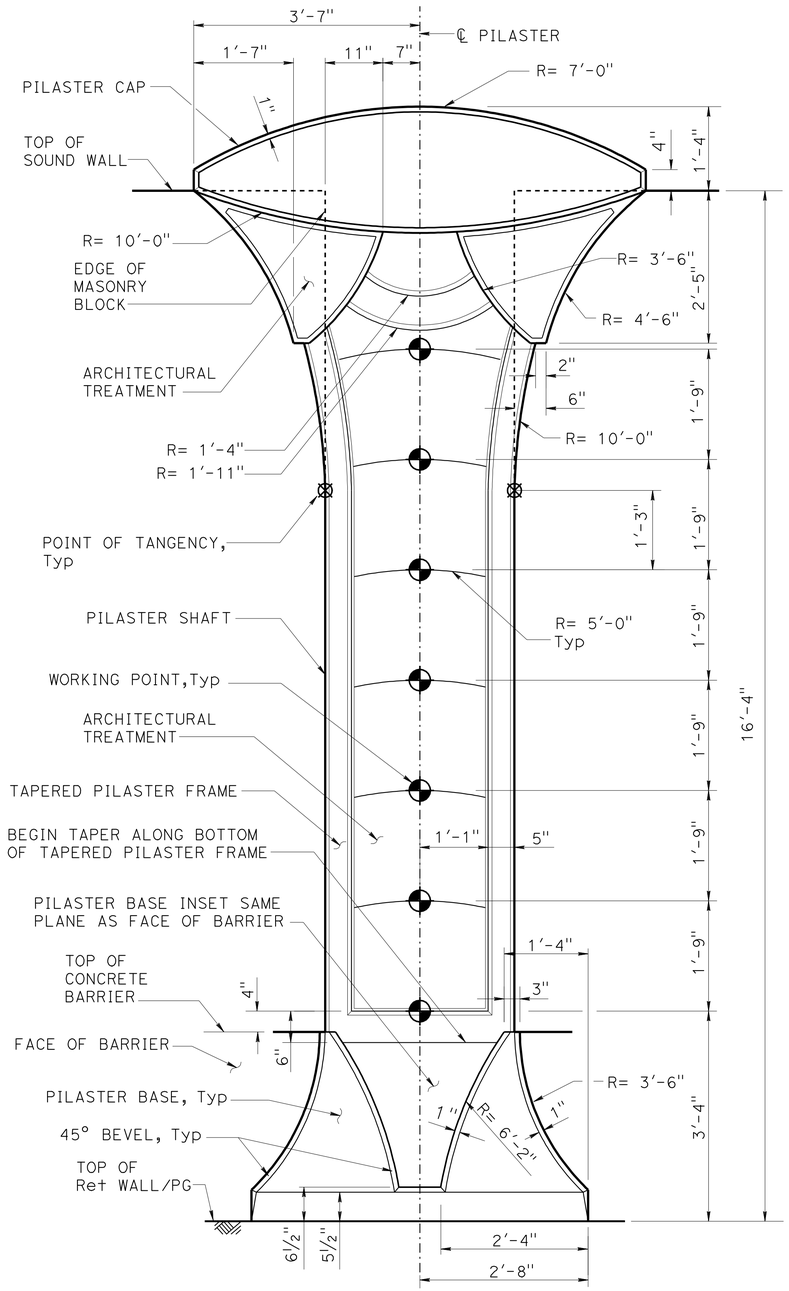

16'-4" SOUND WALL

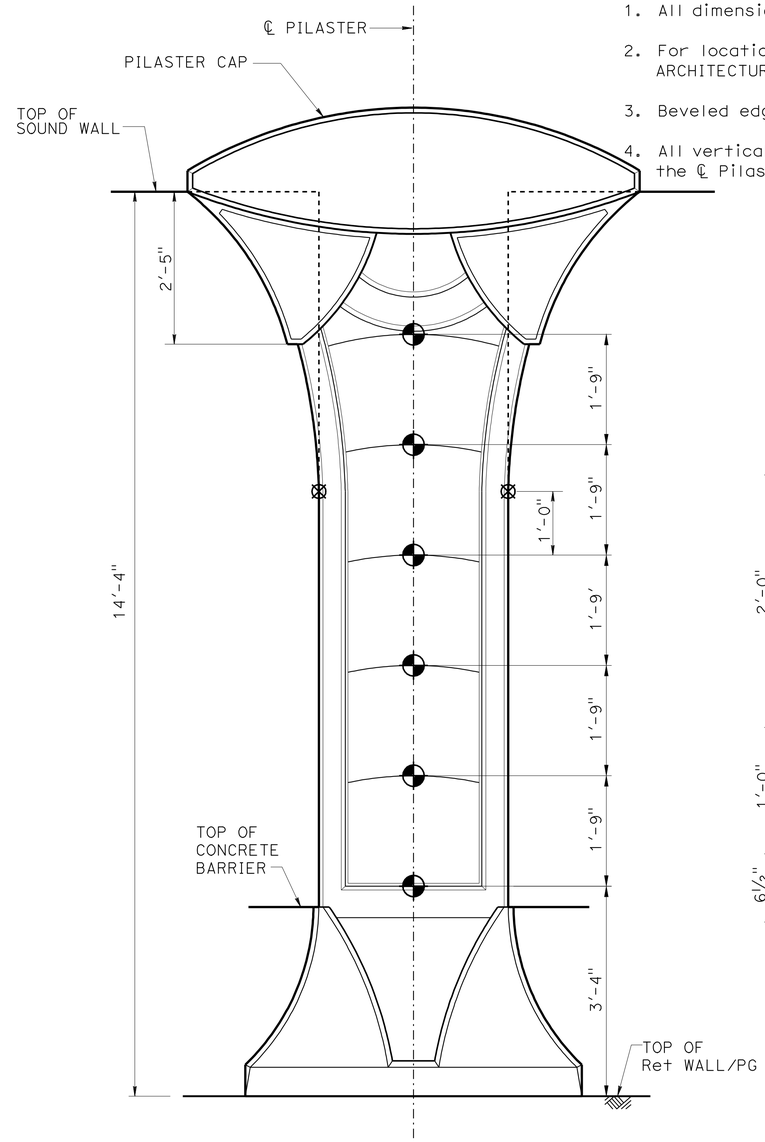

NOTE: For dimensions and details not shown, see "16'-4" SOUND WALL" details.

14'-4" SOUND WALL

PILASTER ELEVATION - FREEWAY SIDE

NO SCALE

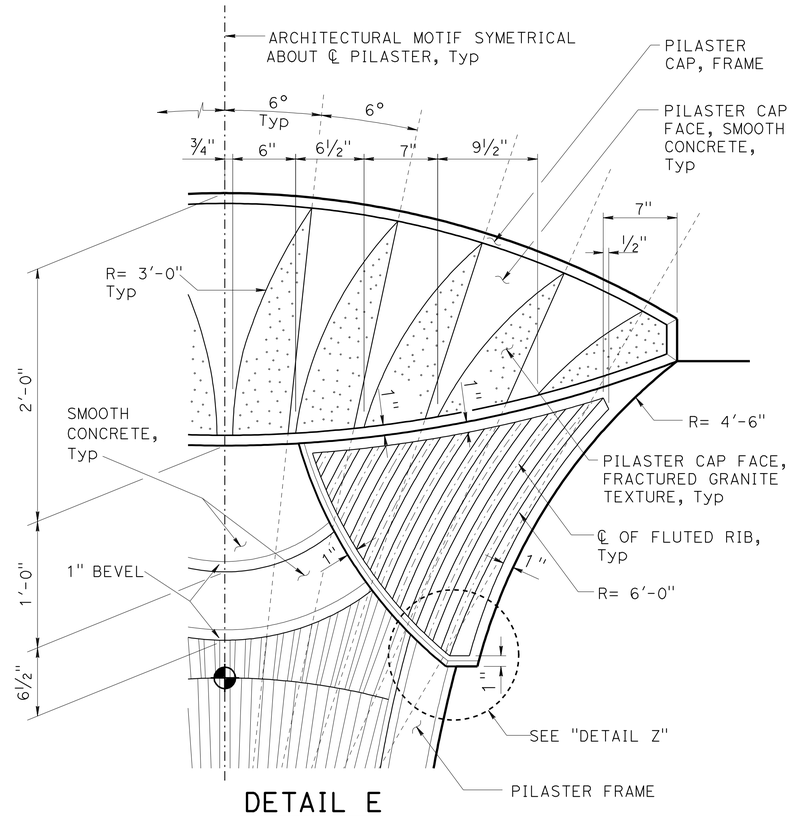

DETAIL E

NO SCALE

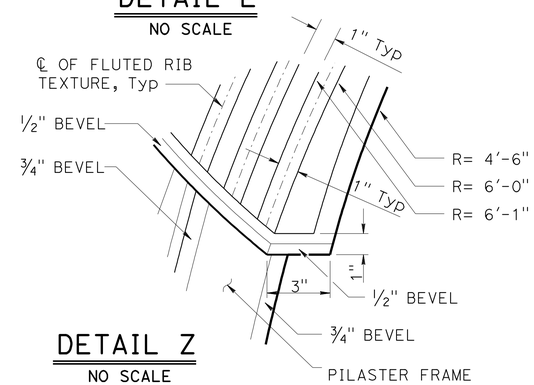

DETAIL Z

NO SCALE

DESIGN	BY Isaac Tasabia	CHECKED Javier Chavez	
DETAILS	BY Jin Zhou	CHECKED K. Harper / D. Sessions	
QUANTITIES	BY April Pearson	CHECKED Kyoung Lee	

STATE OF CALIFORNIA
DEPARTMENT OF TRANSPORTATION

DIVISION OF ENGINEERING SERVICES
STRUCTURE DESIGN
DESIGN BRANCH 1

BRIDGE NO. 53-E0182
POST MILE 3.47

SOUND WALL NO. 190
PILASTER ARCHITECTURAL DETAILS NO. 1

STRUCTURES DESIGN DETAIL SHEET (ENGLISH) (REV. 09-01-10)

ORIGINAL SCALE IN INCHES FOR REDUCED PLANS 0 1 2 3

UNIT: 3576
PROJECT NUMBER & PHASE: 07000018331
CONTRACT NO. 07-215934

DISREGARD PRINTS BEARING EARLIER REVISION DATES

REVISION DATES 12/08/10 11/28/11 11/29/11

SHEET 18 OF 35

FILE => sw190-g-pilaster01.dgn

USERNAME => s124496 DATE PLOTTED => 28-MAR-2012 TIME PLOTTED => 11:54

DIST	COUNTY	ROUTE	POST MILES TOTAL PROJECT	SHEET No.	TOTAL SHEETS
07	LA	5	2.4/4.0	1212	1288

REGISTERED CIVIL ENGINEER 12-8-11 DATE

3-26-12
PLANS APPROVAL DATE

REGISTERED PROFESSIONAL ENGINEER Kevin Harper No. 42221 Exp. 3-31-12 CIVIL STATE OF CALIFORNIA

The State of California or its officers or agents shall not be responsible for the accuracy or completeness of electronic copies of this plan sheet.

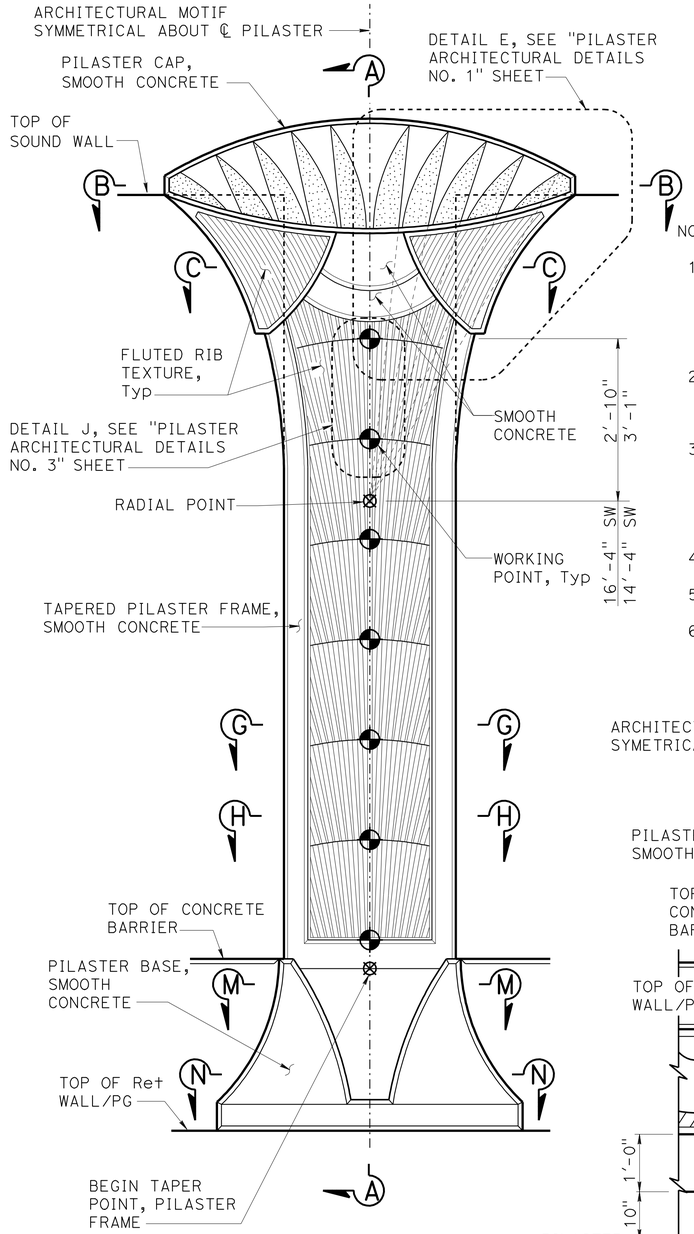

NOTES:

1. For "SECTION B-B", "SECTION C-C", "SECTION G-G","SECTION H-H" and "SECTION L-L", see "PILASTER ARCHITECTURAL DETAILS NO. 3" sheet.
2. For "SECTION M-M" and "SECTION N-N"' see "PILASTER ARCHITECTURAL DETAIL NO. 4" sheet.
3. Pilaster Sections on Retaining Wall shown, for Pilaster on Barrier Type 736SV (Mod), see "PILASTER SECTION ON TYPE 736SV (Mod) BARRIER" on "PILASTER ARCHITECTURAL DETAILS NO. 4" sheet.
4. All dimensions symmetrical about ℄ pilaster.
5. Beveled edges are 45° unless otherwise noted.
6. All vertical dimension are measured along the ℄ Pilaster (Pilaster shall be vertical).

NOTE: For additional details not shown, see "16'-4" SOUND WALL - PILASTER ELEVATION" on "PILASTER ARCHITECTURAL DETAILS NO. 1" sheet.

FREEWAY SIDE

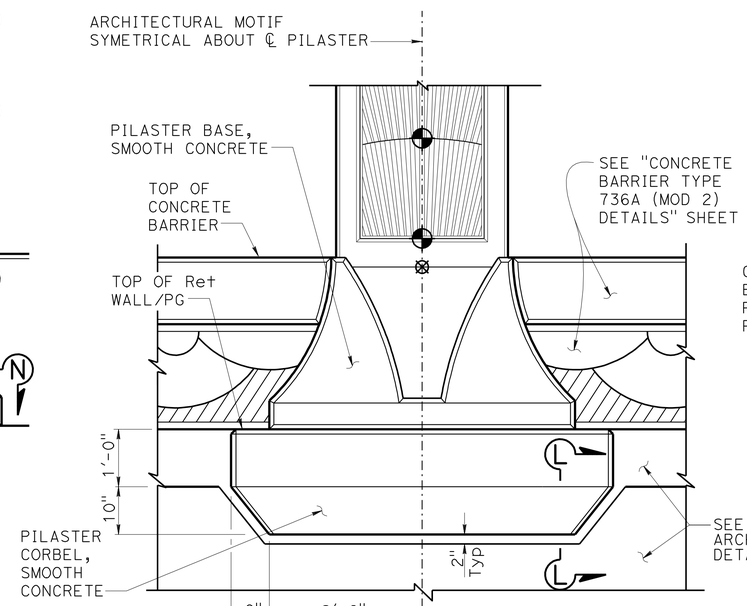

NOTE: For additional details not shown, see "FREEWAY SIDE" details.

BACK SIDE

PILASTER ARCHITECTURAL MOTIF

3/4" = 1'-0"

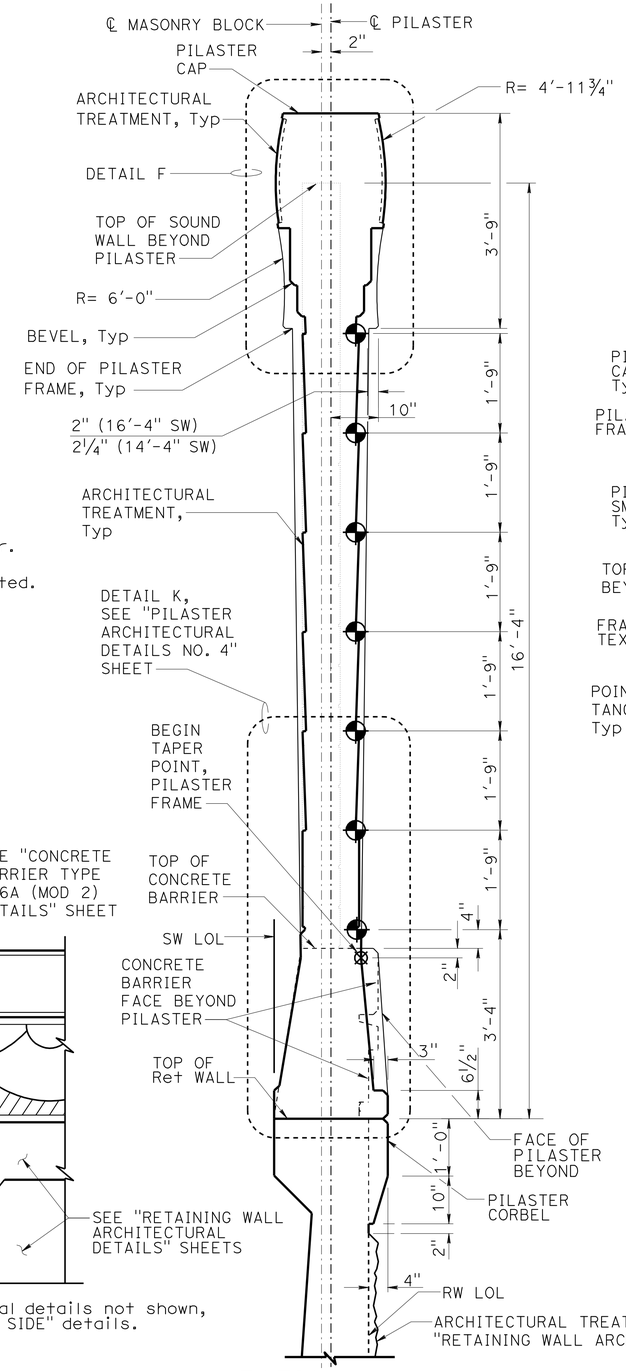

SECTION A-A

3/4" = 1'-0"

NOTE: Pilaster for 16'-4" Sound Wall shown, Pilaster at 14'-4" Sound Wall similar.

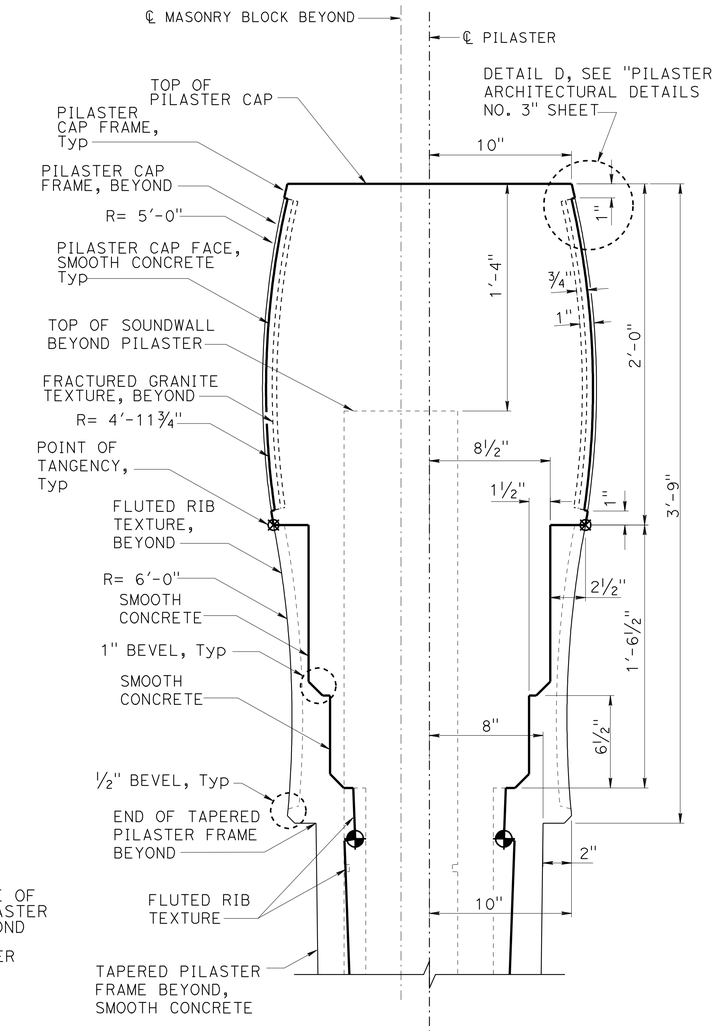

DETAIL F

NO SCALE

DESIGN	BY Isaac Tasabia	CHECKED Javier Chavez	
DETAILS	BY Jin Zhou	CHECKED K. Harper / D. Sessions	
QUANTITIES	BY April Pearson	CHECKED Kyoung Lee	

STATE OF CALIFORNIA
DEPARTMENT OF TRANSPORTATION

DIVISION OF ENGINEERING SERVICES
STRUCTURE DESIGN
DESIGN BRANCH 1

BRIDGE NO. 53-E0182
POST MILE 3.47

SOUND WALL NO. 190

PILASTER ARCHITECTURAL DETAILS NO. 2

STRUCTURES DESIGN DETAIL SHEET (ENGLISH) (REV. 09-01-10)

ORIGINAL SCALE IN INCHES FOR REDUCED PLANS 0 1 2 3

UNIT: 3576
PROJECT NUMBER & PHASE: 07000018331
CONTRACT NO.: 07-215934

DISREGARD PRINTS BEARING EARLIER REVISION DATES

REVISION DATES 12/08/10 11/29/11 11/28/11

SHEET 19 OF 35

USERNAME => s124496 DATE PLOTTED => 28-MAR-2012 TIME PLOTTED => 11:54

FILE => sw190-g-pilaster02.dgn

DIST	COUNTY	ROUTE	POST MILES TOTAL PROJECT	SHEET No.	TOTAL SHEETS
07	LA	5	2.4/4.0	1213	1288

REGISTERED CIVIL ENGINEER — DATE 12-8-11

3-26-12
PLANS APPROVAL DATE

REGISTERED PROFESSIONAL ENGINEER — Kevin Harper — No. 42221 — Exp. 3-31-12 — CIVIL — STATE OF CALIFORNIA

The State of California or its officers or agents shall not be responsible for the accuracy or completeness of electronic copies of this plan sheet.

NOTES:

1. All notes and dimensions symetrical about ℄ pilaster.
2. Beveled edges are 45° unless otherwise noted.
3. For location of "DETAIL J", "DETAIL D" and "SECTION B-B", "SECTION C-C", "SECTION G-G", "SECTION H-H" and "SECTION L-L", see "PILASTER ARCHITECTURAL DETAILS NO. 2" sheet.
4. For Retaining Wall split slate texture, see "RETAINING WALL ARCHITECTURAL DETAILS" sheet.
5. For Type 736SV (Mod) Barrier fractured granite texture, see "CONCRETE BARRIER TYPE 736A (MOD 2) DETAILS" sheet if applicable.

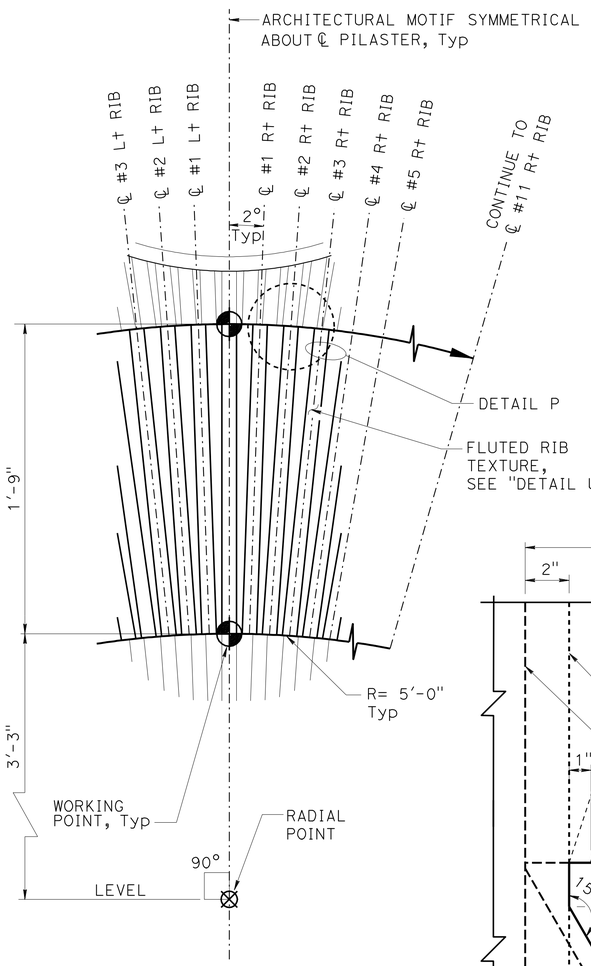

DETAIL J
NO SCALE

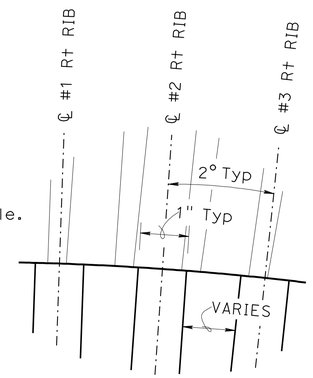

DETAIL P
NO SCALE

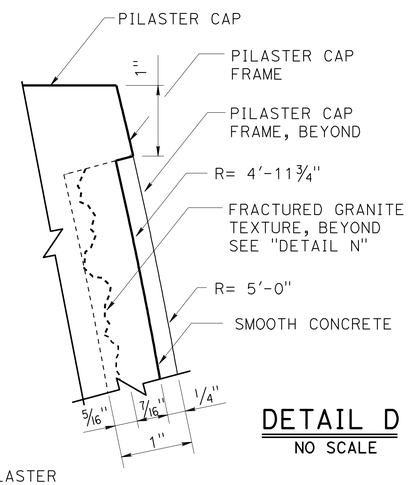

DETAIL D
NO SCALE

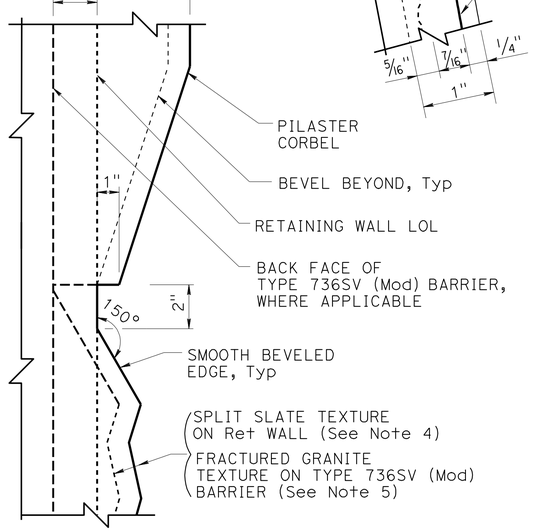

SECTION L-L
NO SCALE

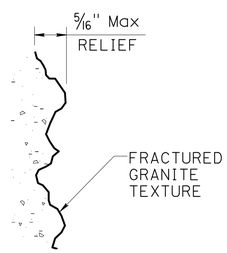

DETAIL N
NO SCALE

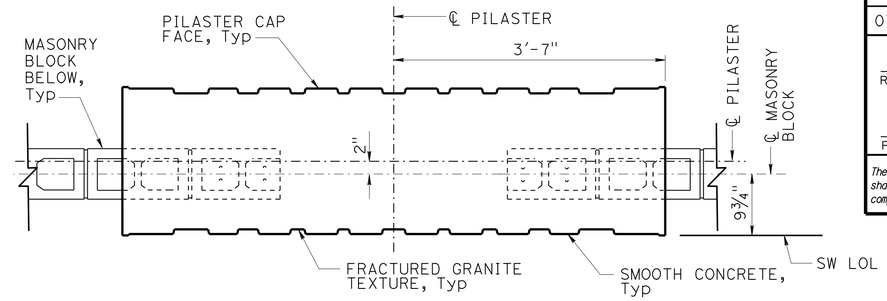

SECTION B-B
1" = 1'-0"

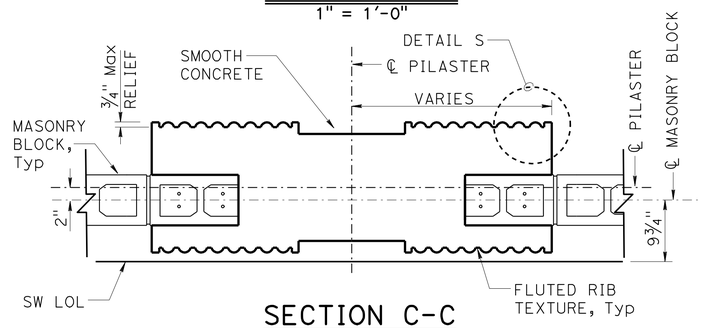

SECTION C-C
1" = 1'-0"

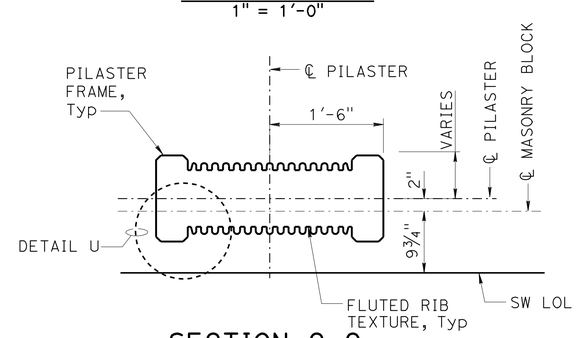

SECTION G-G
1" = 1'-0"

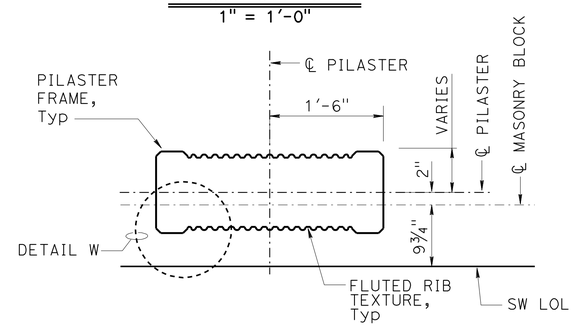

SECTION H-H
1" = 1'-0"

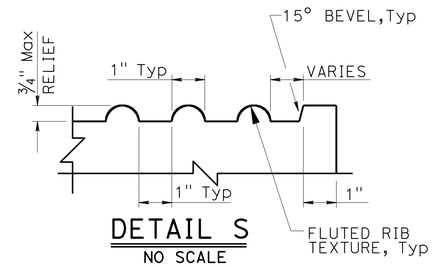

DETAIL S
NO SCALE

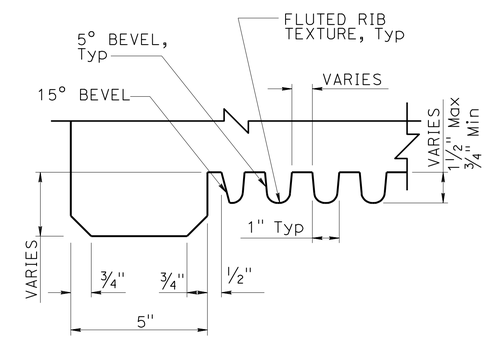

DETAIL U
NO SCALE

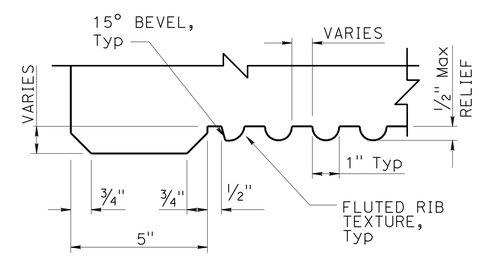

DETAIL W
NO SCALE

DESIGN	BY Isaac Tasabia	CHECKED Javier Chavez	
DETAILS	BY Jin Zhou	CHECKED K. Harper / D. Sessions	
QUANTITIES	BY April Pearson	CHECKED Kyoung Lee	

STATE OF CALIFORNIA
DEPARTMENT OF TRANSPORTATION

DIVISION OF ENGINEERING SERVICES
STRUCTURE DESIGN
DESIGN BRANCH 1

BRIDGE NO. 53-E0182
POST MILE 3.47

SOUND WALL NO. 190
PILASTER ARCHITECTURAL DETAILS NO. 3

STRUCTURES DESIGN DETAIL SHEET (ENGLISH) (REV. 09-01-10)

ORIGINAL SCALE IN INCHES FOR REDUCED PLANS 0 1 2 3

UNIT: 3576
PROJECT NUMBER & PHASE: 07000018331
CONTRACT NO.: 07-215934

DISREGARD PRINTS BEARING EARLIER REVISION DATES

REVISION DATES 12/09/10 04/28/11 07/21/11

SHEET 20 OF 35

FILE => sw190-g-pilaster03.dgn

USERNAME => s124496 DATE PLOTTED => 28-MAR-2012 TIME PLOTTED => 11:54

DIST	COUNTY	ROUTE	POST MILES TOTAL PROJECT	SHEET No.	TOTAL SHEETS
07	LA	5	2.4/4.0	1214	1288

REGISTERED CIVIL ENGINEER 12-8-11 DATE

3-26-12
PLANS APPROVAL DATE

REGISTERED PROFESSIONAL ENGINEER Kevin Harper No. 42221 Exp. 3-31-12 CIVIL STATE OF CALIFORNIA

The State of California or its officers or agents shall not be responsible for the accuracy or completeness of electronic copies of this plan sheet.

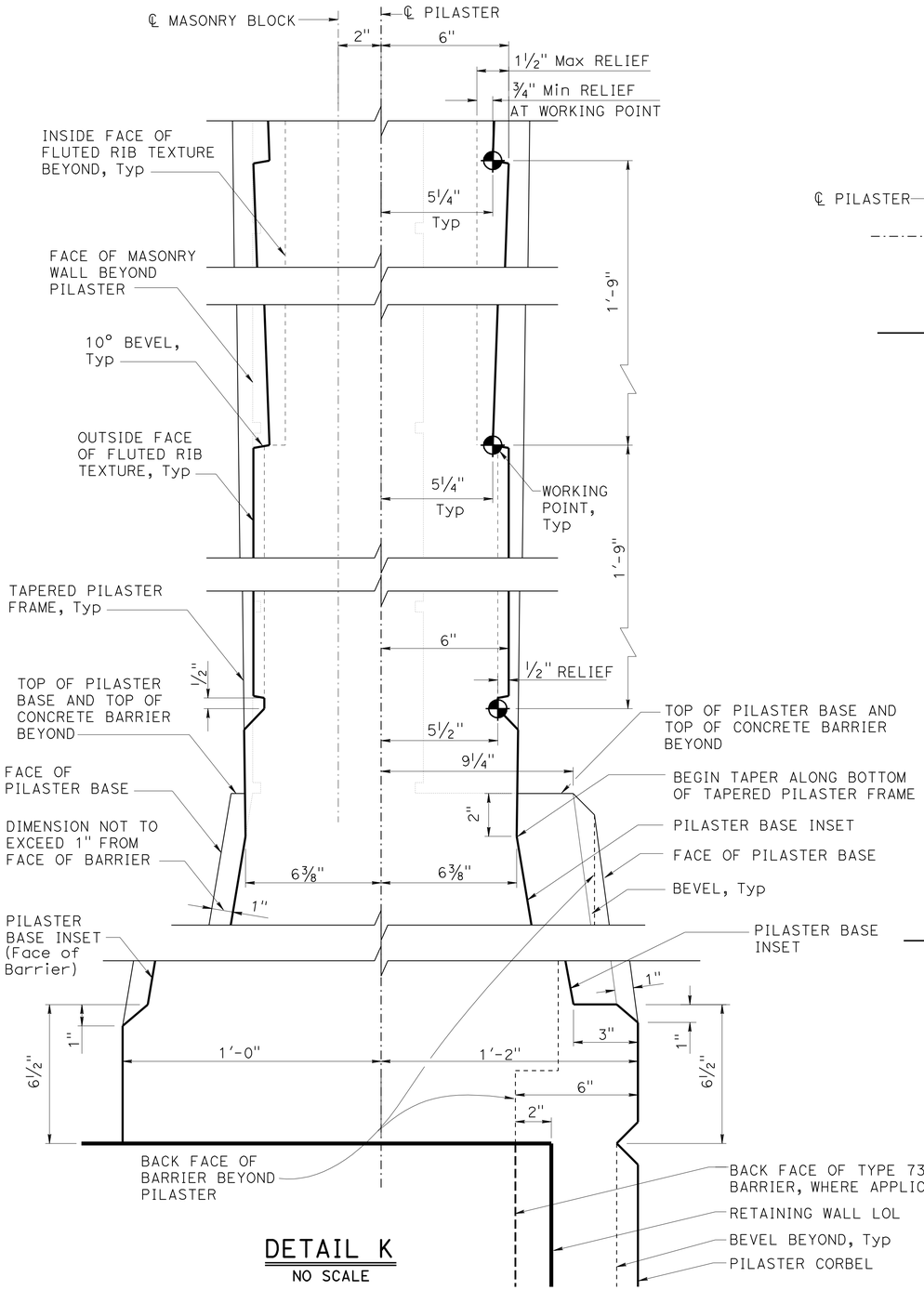

DETAIL K
NO SCALE

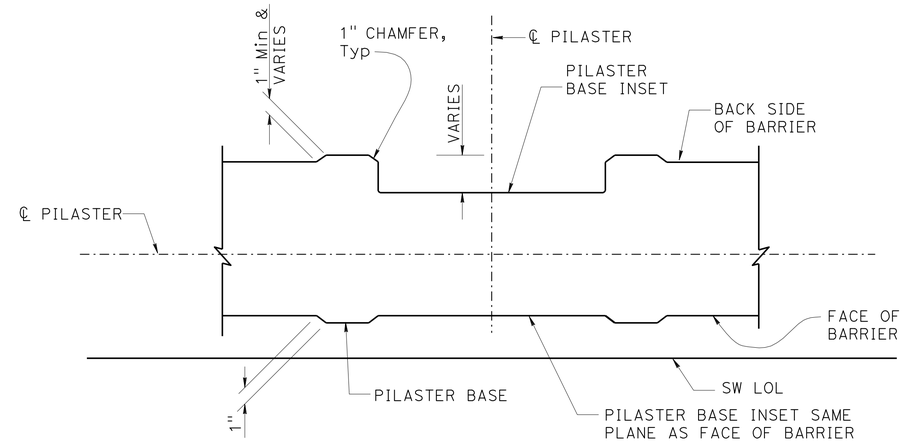

SECTION M-M
1½" = 1'-0"

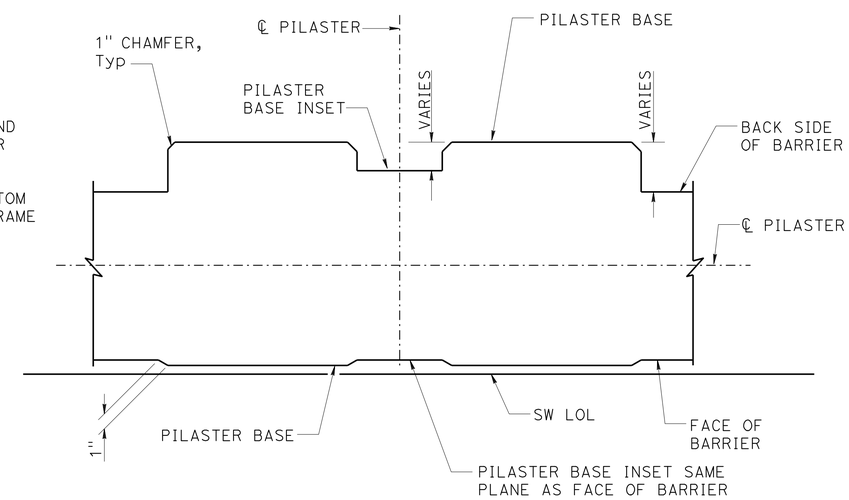

SECTION N-N
1½" = 1'-0"

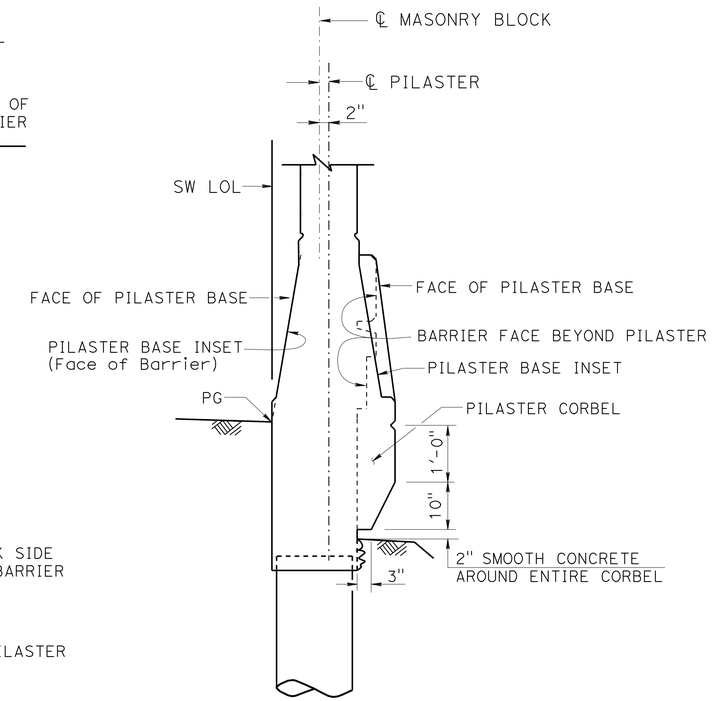

NOTE: For Pilaster details not shown, see "SECTION A-A" on "PILASTER ARCHITECTURAL DETAILS NO. 2" sheet.

PILASTER SECTION ON TYPE 736SV (MOD) BARRIER
¾" = 1'-0"

NOTES:

1. For location of "SECTION M-M", "SECTION N-N" and "DETAIL K", see "PILASTER ARCHITECTURAL DETAILS NO. 2" sheet.
2. All dimensions symmetrical about ℄ Pilaster.
3. All vertical dimension are measured along the ℄ Pilaster (Pilaster shall be vertical).

	BY	CHECKED
DESIGN	Isaac Tasabia	Javier Chavez
DETAILS	Jin Zhou	K. Harper / D. Sessions
QUANTITIES	April Pearson	Kyoung Lee

STATE OF CALIFORNIA
DEPARTMENT OF TRANSPORTATION

DIVISION OF ENGINEERING SERVICES
STRUCTURE DESIGN
DESIGN BRANCH 1

BRIDGE NO. 53-E0182
POST MILE 3.47

SOUND WALL NO. 190
PILASTER ARCHITECTURAL DETAILS NO. 4

STRUCTURES DESIGN DETAIL SHEET (ENGLISH) (REV. 09-01-10)

ORIGINAL SCALE IN INCHES FOR REDUCED PLANS 0 1 2 3

UNIT: 3576
PROJECT NUMBER & PHASE: 07000018331
CONTRACT NO.: 07-215934

DISREGARD PRINTS BEARING EARLIER REVISION DATES

REVISION DATES 12/9/10 11/28/11 11/29/11

SHEET 21 OF 35

FILE => sw190-g-pilaster04.dgn

USERNAME => s124496 DATE PLOTTED => 28-MAR-2012 TIME PLOTTED => 11:54

DIST	COUNTY	ROUTE	POST MILES TOTAL PROJECT	SHEET No.	TOTAL SHEETS
07	LA	5	2.4/4.0	1215	1288

REGISTERED CIVIL ENGINEER 12-8-11 DATE

3-26-12
PLANS APPROVAL DATE

REGISTERED PROFESSIONAL ENGINEER Kevin Harper No. 42221 Exp. 3-31-12 CIVIL STATE OF CALIFORNIA

The State of California or its officers or agents shall not be responsible for the accuracy or completeness of electronic copies of this plan sheet.

NOTE:
For "SECTION B-B", "SECTION C-C", "SECTION D-D" and "SECTION G-G", see "PILASTER STRUCTURAL DETAILS NO. 2" sheet.

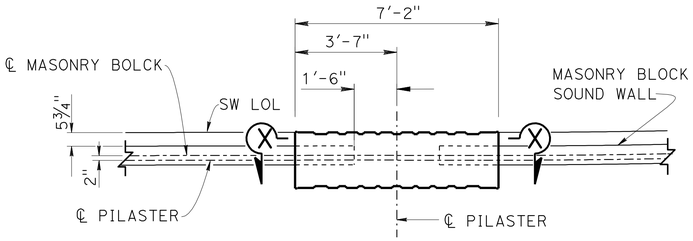

PART SOUND WALL PLAN

3/8" = 1'-0"

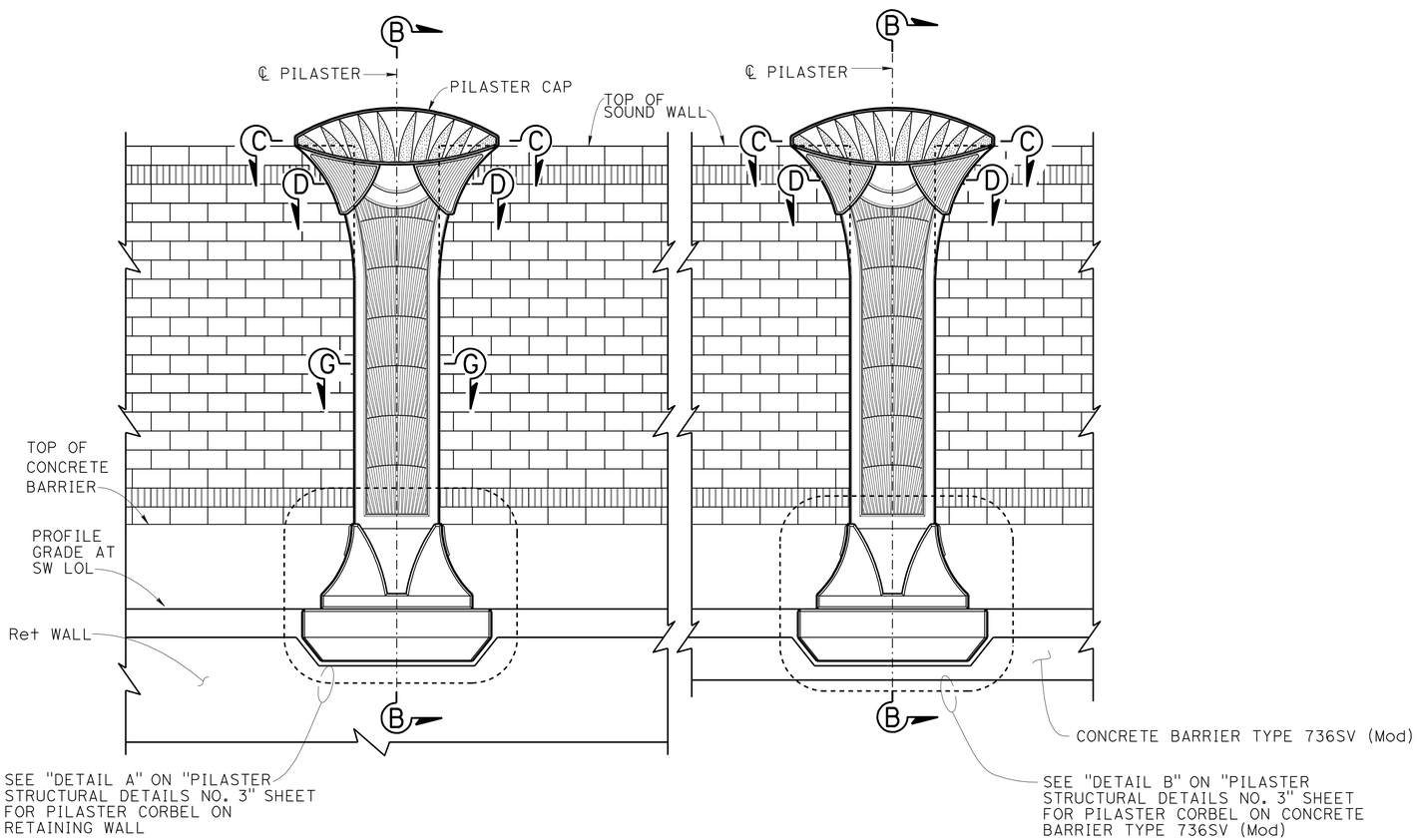

PART SOUND WALL ELEVATION

3/8" = 1'-0"

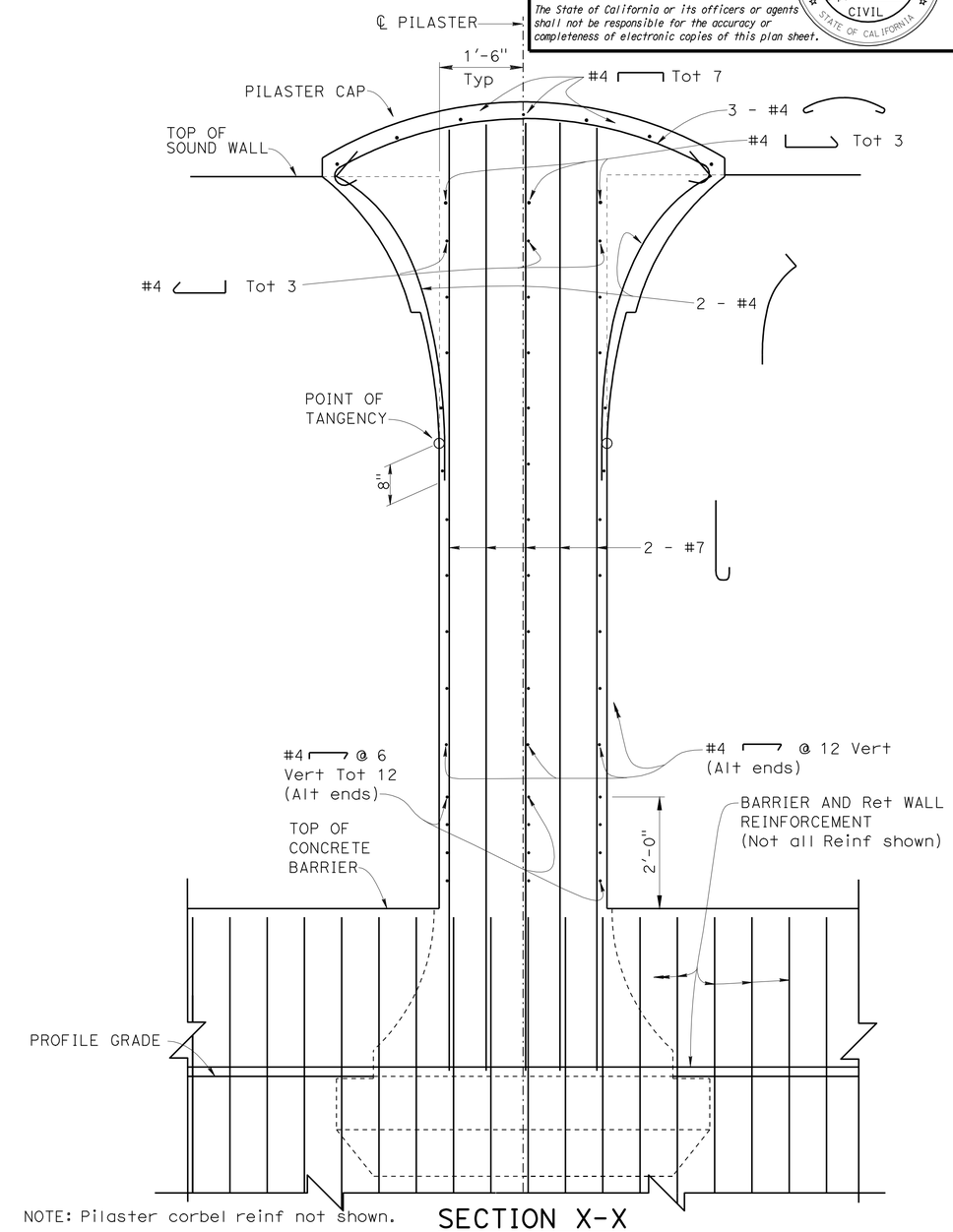

NOTE: Pilaster corbel reinf not shown.

SECTION X-X

3/4" = 1'-0"

DESIGN	BY Kevin Harper	CHECKED Daniel Sessions	
DETAILS	BY Jin Zhou	CHECKED Daniel Sessions	
QUANTITIES	BY April Pearson	CHECKED Kyoung Lee	

STATE OF CALIFORNIA
DEPARTMENT OF TRANSPORTATION

DIVISION OF ENGINEERING SERVICES
STRUCTURE DESIGN
DESIGN BRANCH 1

BRIDGE NO. 53-E0182
POST MILE 3.47

SOUND WALL NO. 190
PILASTER STRUCTURAL DETAILS NO. 1

STRUCTURES DESIGN DETAIL SHEET (ENGLISH) (REV. 09-01-10)

ORIGINAL SCALE IN INCHES FOR REDUCED PLANS 0 1 2 3

UNIT: 3576
PROJECT NUMBER & PHASE: 07000018331
CONTRACT NO.: 07-215934

DISREGARD PRINTS BEARING EARLIER REVISION DATES

REVISION DATES 12/23/10 04/29/11 11/21/11

SHEET 22 OF 35

FILE => sw190-h-pilaster01.dgn

USERNAME => s124496 DATE PLOTTED => 28-MAR-2012 TIME PLOTTED => 11:54

DIST	COUNTY	ROUTE	POST MILES TOTAL PROJECT	SHEET No.	TOTAL SHEETS
07	LA	5	2.4/4.0	1216	1288

REGISTERED CIVIL ENGINEER 12-8-11 DATE

3-26-12
PLANS APPROVAL DATE

REGISTERED PROFESSIONAL ENGINEER Kevin Harper No. 42221 Exp. 3-31-12 CIVIL STATE OF CALIFORNIA

The State of California or its officers or agents shall not be responsible for the accuracy or completeness of electronic copies of this plan sheet.

NOTES:

1. For location of "SECTION B-B", "SECTION C-C", "SECTION D-D" and "SECTION G-G", see "PILASTER STRUCTURAL DETAILS NO. 1" sheet.
2. For Pilaster geometry, dimensions and architectural treatments, see "PILASTER ARCHITECTURAL DETAILS" sheets.

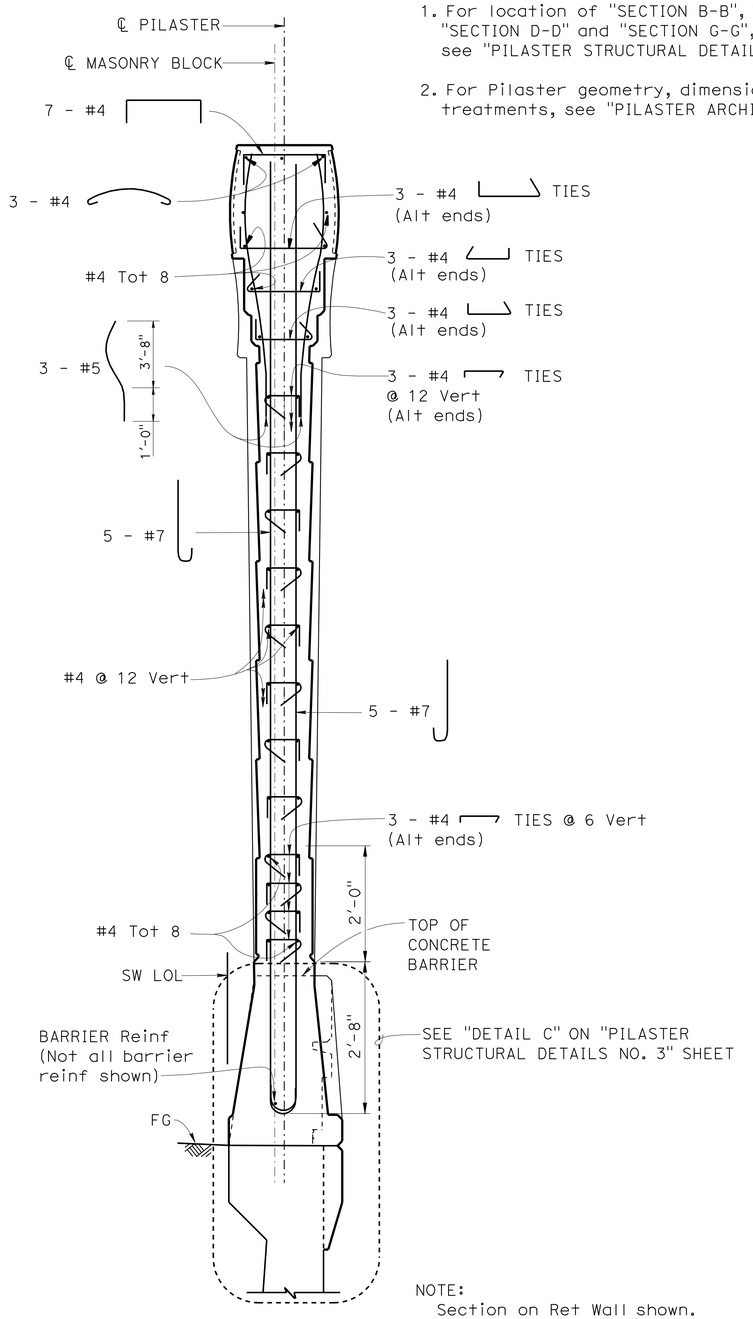

NOTE:
Section on Ret Wall shown.
Pilaster on Type 736SV (Mod) Barrier similar.

SECTION B-B
¾" = 1'-0"

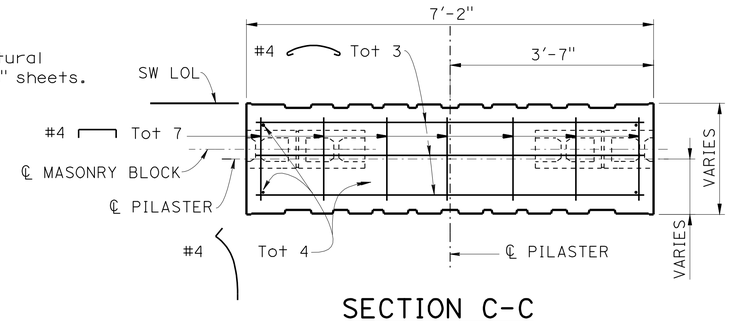

SECTION C-C
¾" = 1'-0"

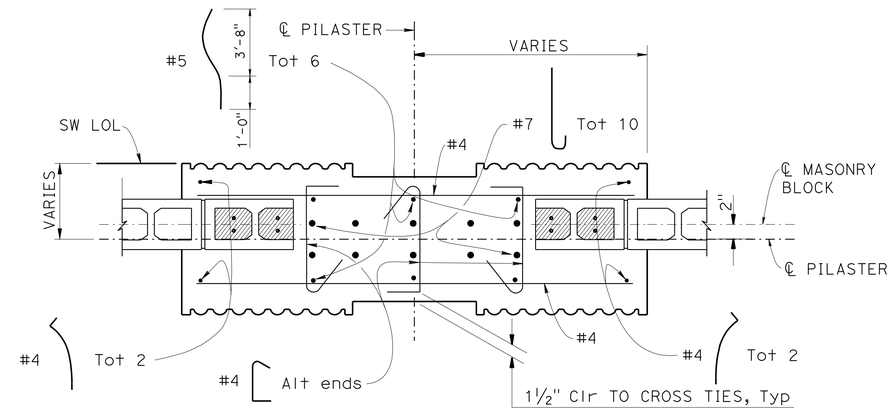

SECTION D-D
1" = 1'-0"

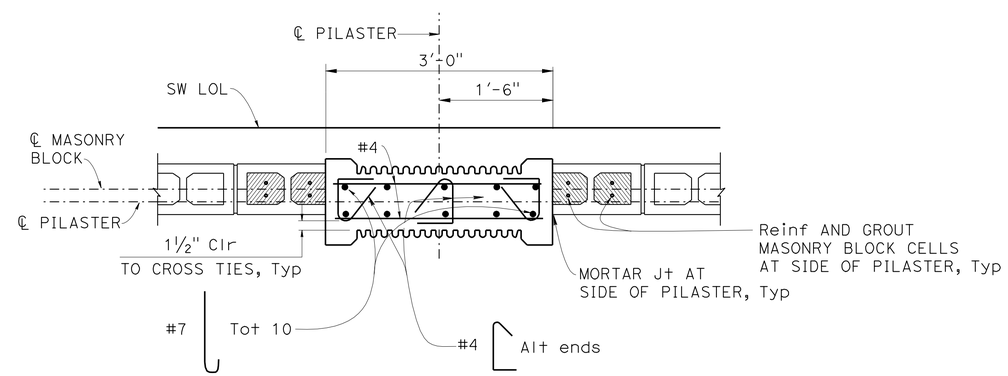

SECTION G-G
1" = 1'-0"

	BY	CHECKED
DESIGN	Kevin Harper	Daniel Sessions
DETAILS	Jin Zhou	Daniel Sessions
QUANTITIES	April Pearson	Kyoung Lee

STATE OF CALIFORNIA
DEPARTMENT OF TRANSPORTATION

DIVISION OF ENGINEERING SERVICES
STRUCTURE DESIGN
DESIGN BRANCH 1

BRIDGE NO. 53-E0182
POST MILE 3.47

SOUND WALL NO. 190
PILASTER STRUCTURAL DETAILS NO. 2

STRUCTURES DESIGN DETAIL SHEET (ENGLISH) (REV. 09-01-10)

ORIGINAL SCALE IN INCHES FOR REDUCED PLANS 0 1 2 3

UNIT: 3576
PROJECT NUMBER & PHASE: 07000018331
CONTRACT NO.: 07-215934

DISREGARD PRINTS BEARING EARLIER REVISION DATES
REVISION DATES 12/30/10 11/21/11 1/26/12

SHEET 23 OF 35

FILE => sw190-h-pilaster02.dgn

USERNAME => s124436 DATE PLOTTED => 28-MAR-2012 TIME PLOTTED => 11:54

DIST	COUNTY	ROUTE	POST MILES TOTAL PROJECT	SHEET No.	TOTAL SHEETS
07	LA	5	2.4/4.0	1217	1288

REGISTERED CIVIL ENGINEER 12-8-11 DATE

3-26-12
PLANS APPROVAL DATE

REGISTERED PROFESSIONAL ENGINEER Kevin Harper No. 42221 Exp. 3-31-12 CIVIL STATE OF CALIFORNIA

The State of California or its officers or agents shall not be responsible for the accuracy or completeness of electronic copies of this plan sheet.

NOTES:

1. For location of "DETAIL A" and "DETAIL B", see "PILASTER STRUCTURAL DETAILS NO. 1" sheet.
2. For location of "DETAIL C", see "PILASTER STRUCTURAL DETAILS NO. 2" sheet.

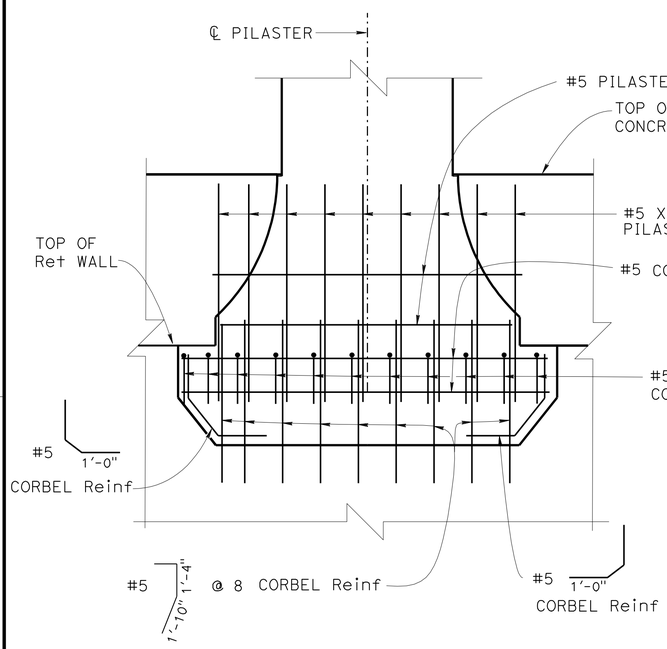

NOTE: Concrete Barrier/Ret Wall reinf not shown.

DETAIL A
¾" = 1'-0"

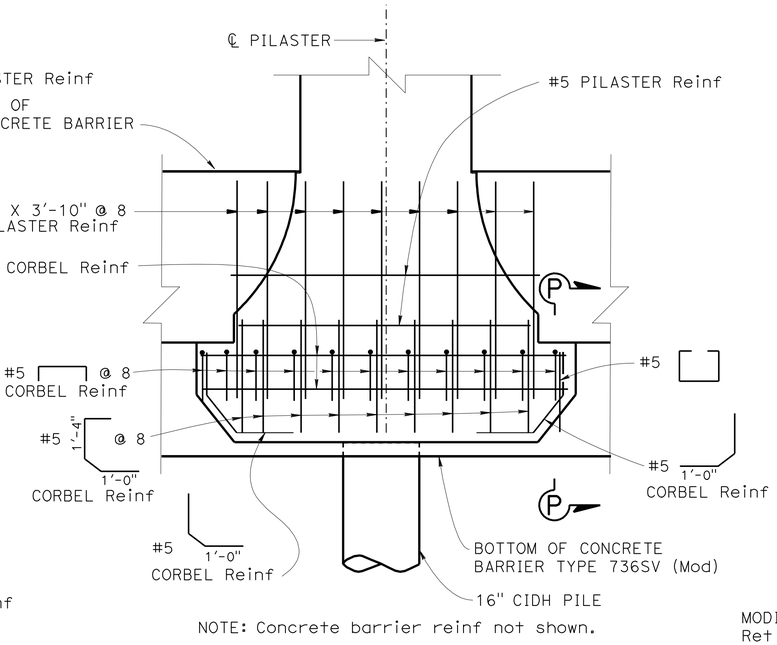

NOTE: Concrete barrier reinf not shown.

DETAIL B
¾" = 1'-0"

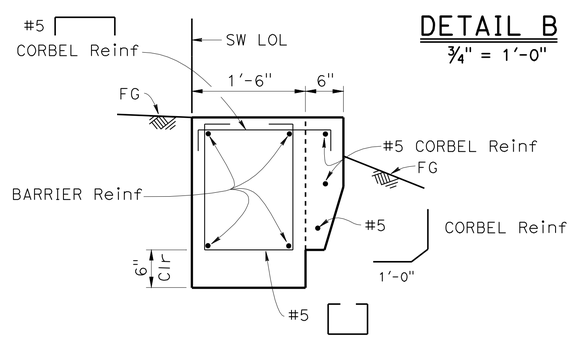

SECTION P-P
1" = 1'-0"

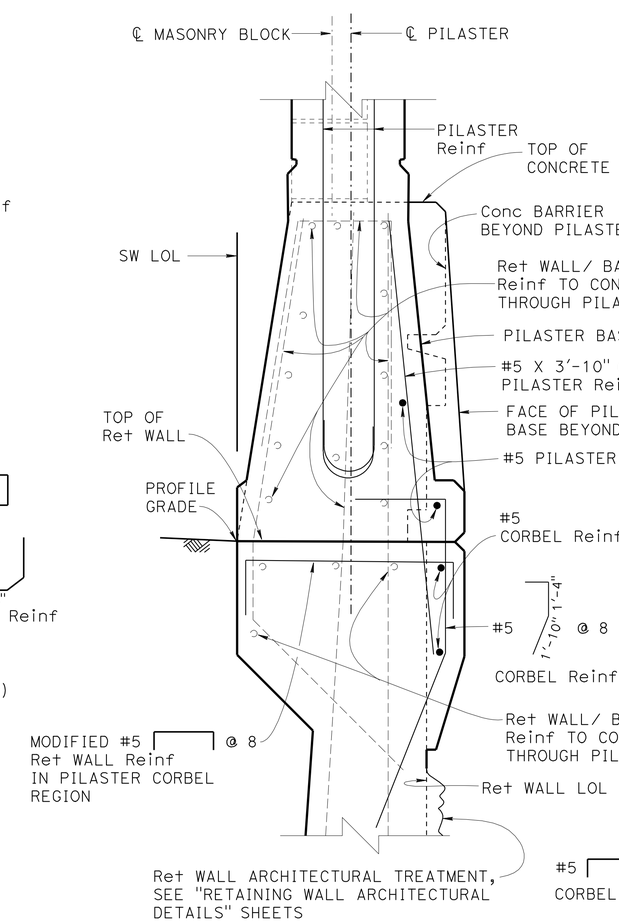

PILASTER CORBEL ON RETAINING WALL

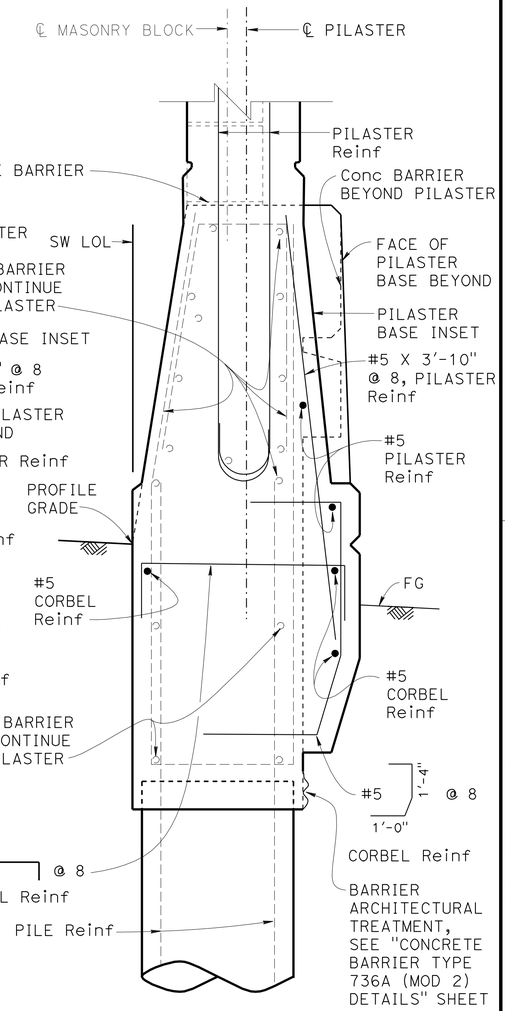

PILASTER CORBEL ON CONCRETE BARRIER TYPE 736SV (MOD)

DETAIL C
1½" = 1'-0"

DESIGN	BY Kevin Harper	CHECKED Daniel Sessions	
DETAILS	BY Jin Zhou	CHECKED Daniel Sessions	
QUANTITIES	BY April Pearson	CHECKED Kyoung Lee	

STATE OF CALIFORNIA
DEPARTMENT OF TRANSPORTATION

DIVISION OF ENGINEERING SERVICES
STRUCTURE DESIGN
DESIGN BRANCH 1

BRIDGE NO. 53-E0182
POST MILE 3.47

SOUND WALL NO. 190
PILASTER STRUCTURAL DETAILS NO. 3

STRUCTURES DESIGN DETAIL SHEET (ENGLISH) (REV. 09-01-10)

ORIGINAL SCALE IN INCHES FOR REDUCED PLANS 0 1 2 3

UNIT: 3576
PROJECT NUMBER & PHASE: 07000018331
CONTRACT NO.: 07-215934

DISREGARD PRINTS BEARING EARLIER REVISION DATES

REVISION DATES 12/30/10 11/21/11 7/24/11

SHEET 24 OF 35

USERNAME => s124496 DATE PLOTTED => 28-MAR-2012 TIME PLOTTED => 11:54

FILE => sw190-h-pilaster03.dgn

DIST	COUNTY	ROUTE	POST MILES TOTAL PROJECT	SHEET No.	TOTAL SHEETS
07	LA	5	2.4/4.0	1218	1288

REGISTERED CIVIL ENGINEER 12-8-11 DATE

3-26-12
PLANS APPROVAL DATE

REGISTERED PROFESSIONAL ENGINEER Kevin Harper No. 42221 Exp. 3-31-12 CIVIL STATE OF CALIFORNIA

The State of California or its officers or agents shall not be responsible for the accuracy or completeness of electronic copies of this plan sheet.

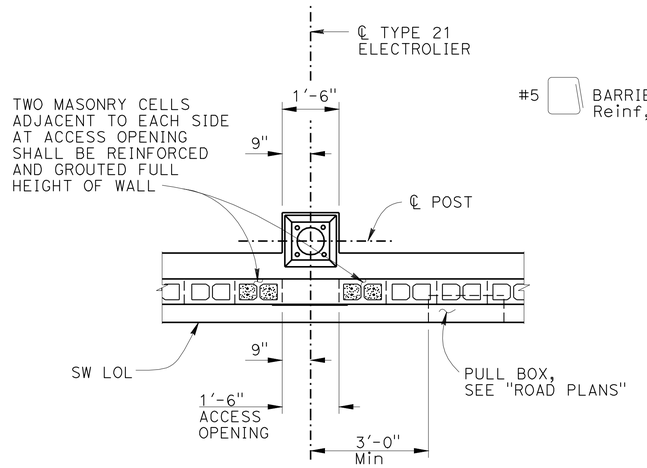

PLAN
½" = 1'-0"

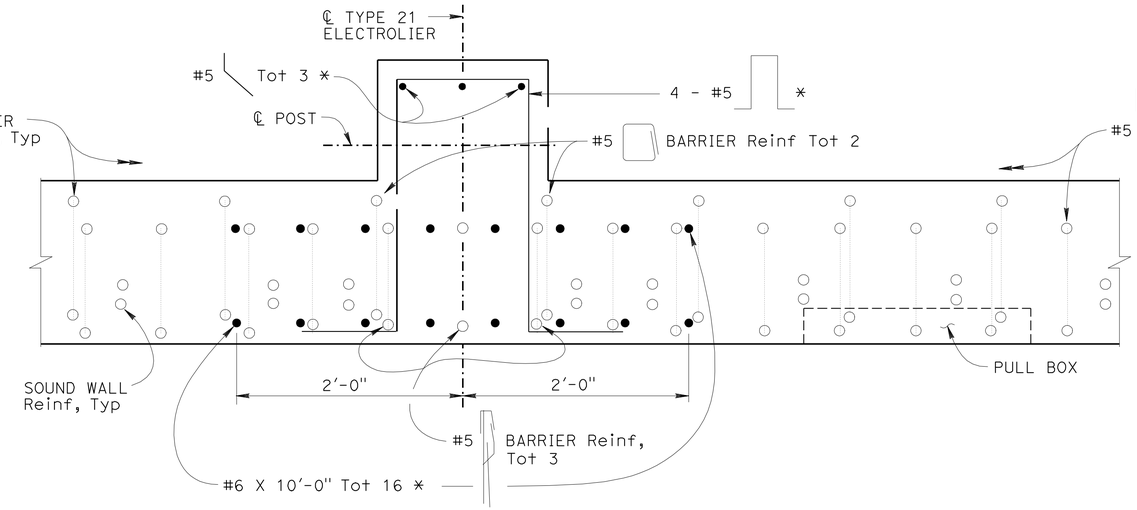

SECTION C-C
1½" = 1'-0"

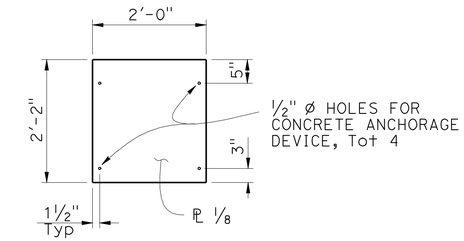

NOTE: PAINT COVER ℗ TO MATCH COLOR OF MASONRY BLOCKS

COVER PLATE
¾" = 1'-0"

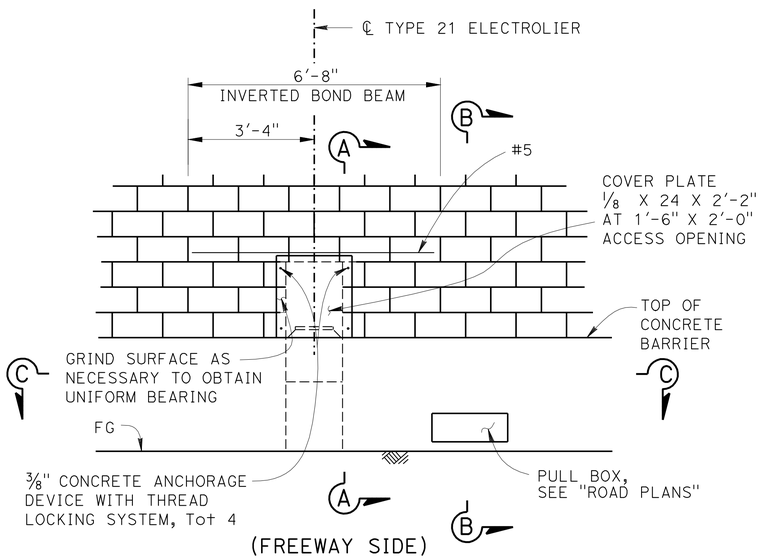

ELEVATION
½" = 1'-0"

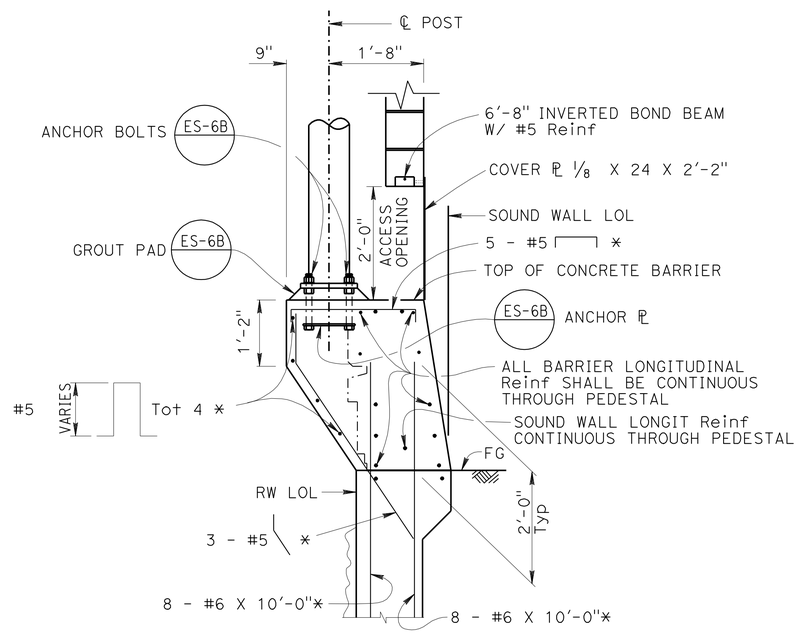

SECTION A-A
¾" = 1'-0"

NOTE: * - Indicates Reinf is additional to typical barrier and retaining wall Reinf.

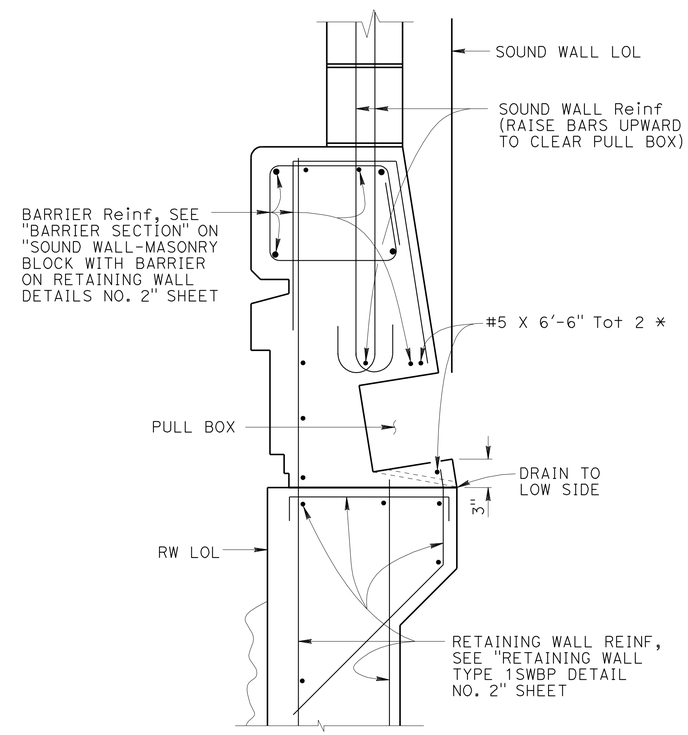

SECTION B-B
1½" = 1'-0"

NOTES:

1. For locations of electroliers, see "STRUCTURE PLAN" sheets.
2. For electrolier and electrical details, see "ROAD PLANS".
3. The maximum number of conduits in the barrier is limited to (2) 2" conduits along with (1) 3" conduits.

	BY	CHECKED
DESIGN	Kevin Harper	Daniel Sessions
DETAILS	Jin Zhou/ Y. Feng	Daniel Sessions
QUANTITIES	April Pearson	Rizia Da Cruz Ferreira

STATE OF CALIFORNIA
DEPARTMENT OF TRANSPORTATION

DIVISION OF ENGINEERING SERVICES
STRUCTURE DESIGN
DESIGN BRANCH 1

BRIDGE NO. 53-E0182
POST MILE 3.47

SOUND WALL NO. 190
ELECTROLIER PEDESTAL DETAILS

STRUCTURES DESIGN DETAIL SHEET (ENGLISH) (REV. 09-01-10)

ORIGINAL SCALE IN INCHES FOR REDUCED PLANS 0 1 2 3

UNIT: 3576
PROJECT NUMBER & PHASE: 07000018331
CONTRACT NO.: 07-215934

DISREGARD PRINTS BEARING EARLIER REVISION DATES

REVISION DATES 7/8/11 11/03/11 11/28/11

SHEET 25 OF 35

FILE => sw190-1-epd.dgn

USERNAME => s124496 DATE PLOTTED => 28-MAR-2012 TIME PLOTTED => 11:54

DIST	COUNTY	ROUTE	POST MILES TOTAL PROJECT	SHEET No.	TOTAL SHEETS
07	LA	5	2.4/4.0	1219	1288

REGISTERED CIVIL ENGINEER 12-8-11 DATE

3-26-12
PLANS APPROVAL DATE

REGISTERED PROFESSIONAL ENGINEER Kevin Harper No. 42221 Exp. 3-31-12 CIVIL STATE OF CALIFORNIA

The State of California or its officers or agents shall not be responsible for the accuracy or completeness of electronic copies of this plan sheet.

NOTES:

1. For locations of ramp meter, see "STRUCTURE PLAN" sheets.
2. For ramp meter and electrical details, see "ROAD PLANS".
3. For Reinf details not shown at pull box, see "SECTION B-B" on "ELECTROLIER PEDESTAL DETAILS" sheet.
4. The maximum number of conduits in the barrier is limited to (2) 2" conduits aoing with (1) 3" conduit.

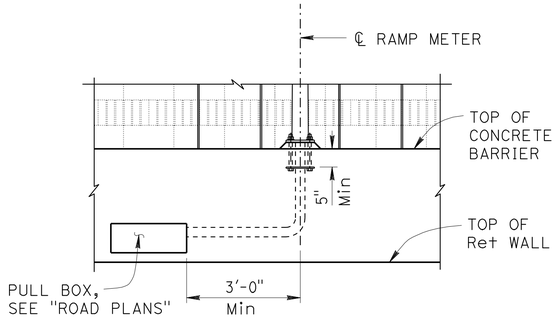

MIRRORED ELEVATION
½" = 1'-0"

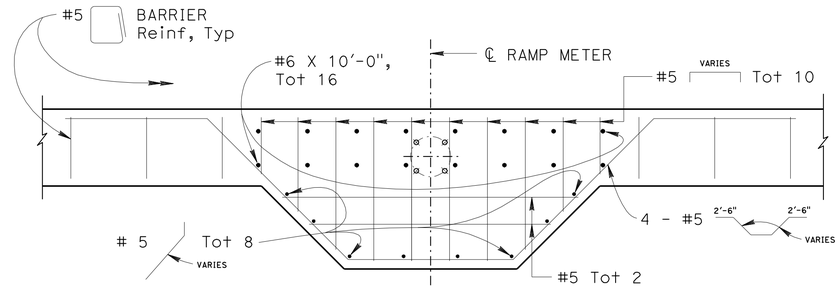

SECTION B-B
¾" = 1'-0"

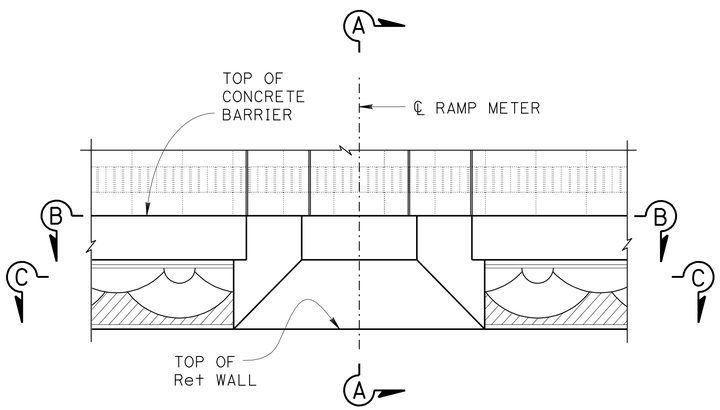

ELEVATION
½" = 1'-0"

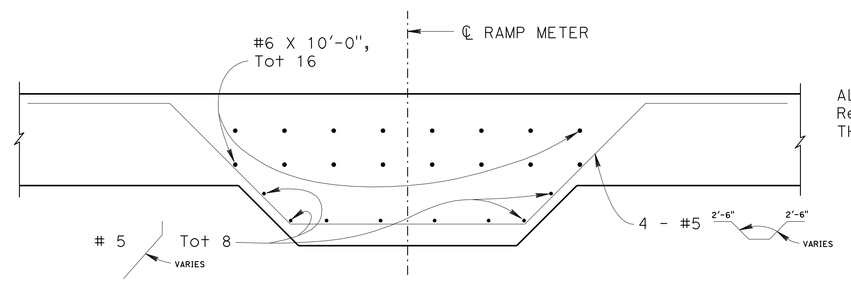

SECTION C-C
¾" = 1'-0"

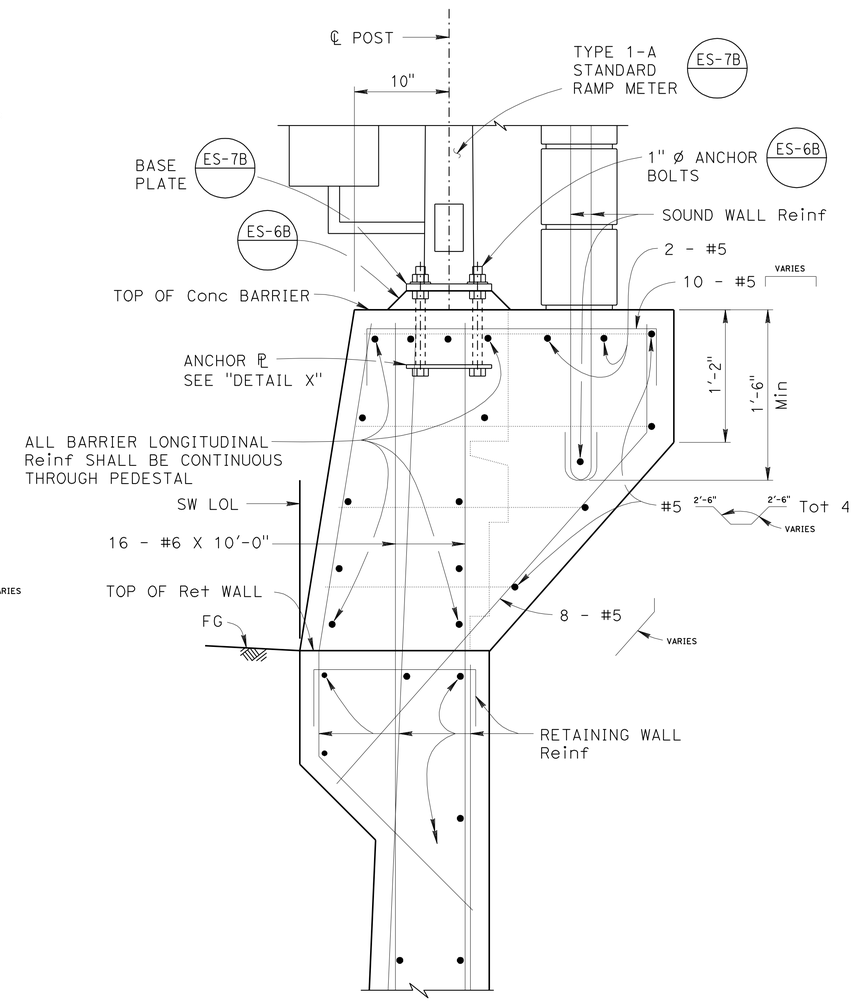

SECTION A-A
1½" = 1'-0"

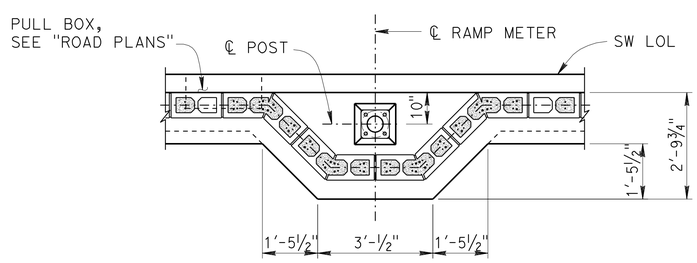

PLAN
½" = 1'-0"

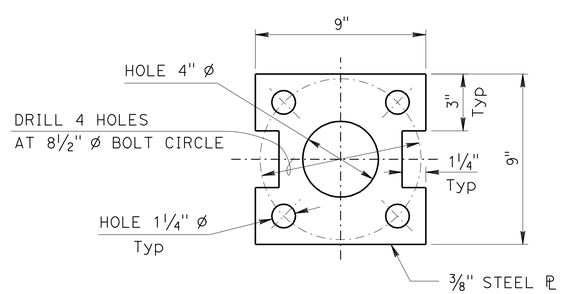

DETAIL X
3" = 1'-0"

DESIGN	BY Eric Watson	CHECKED X	
DETAILS	BY Jie Tang	CHECKED X	
QUANTITIES	BY X	CHECKED X	

STATE OF CALIFORNIA
DEPARTMENT OF TRANSPORTATION

DIVISION OF ENGINEERING SERVICES
STRUCTURE DESIGN
DESIGN BRANCH 1

BRIDGE NO. 53-E0182
POST MILE 3.47

SOUND WALL NO. 190
RAMP METER PEDESTAL DETAILS

STRUCTURES DESIGN DETAIL SHEET (ENGLISH) (REV. 09-01-10)

ORIGINAL SCALE IN INCHES FOR REDUCED PLANS 0 1 2 3

UNIT: 3576
PROJECT NUMBER & PHASE: 07000018331
CONTRACT NO.: 07-215934

DISREGARD PRINTS BEARING EARLIER REVISION DATES

REVISION DATES 11/08/11 11/28/11

SHEET 26 OF 35

FILE => sw190-1-rmpd.dgn

USERNAME => DATE PLOTTED =>

DIST.	COUNTY	ROUTE	POST MILES TOTAL PROJECT	SHEET NO.	TOTAL SHEETS
07	LA	5	2.4/4.0	1220	1288

Kevin J. Harper 12-8-11
REGISTERED ENGINEER - CIVIL

3-26-12
PLANS APPROVAL DATE

REGISTERED PROFESSIONAL ENGINEER Kevin Harper No. 42221 Exp. 3-31-12 CIVIL STATE OF CALIFORNIA

The State of California or its officers or agents shall not be responsible for the accuracy or completeness of electronic copies of this plan sheet.

TABLE OF PILE SPACING: CLASS 90 CONCRETE PILES ◇1

DESIGN H	6′	8′	10′	12′	14′	16′	18′	20′	22′	24′	26′	28′	30′	32′
W	6′-9"	7′-0"	7′-6"	8′-3"	9′-3"	10′-3"	11′-0"	12′-0"	13′-0"	14′-3"	16′-3"	16′-9"	18′-0"	20′-6"
C	2′-9"	2′-9"	3′-0"	3′-3"	3′-6"	4′-0"	4′-3"	4′-9"	5′-0"	5′-6"	6′-3"	6′-9"	7′-3"	7′-9"
B	4′-0"	4′-3"	4′-6"	5′-0"	5′-9"	6′-3"	6′-9"	7′-3"	8′-0"	8′-9"	10′-0"	10′-0"	10′-9"	12′-9"
F	1′-6"	1′-6"	1′-6"	1′-9"	1′-9"	2′-0"	2′-6"	2′-9"	3′-0"	3′-0"	3′-3"	3′-6"	3′-9"	4′-0"
M	1′-3"	1′-3"	1′-6"	1′-9"	2′-0"	2′-6"	2′-9"	3′-3"	3′-6"	4′-0"	4′-9"	5′-3"	5′-9"	6′-3"
N	2′-6"	2′-9"	3′-0"	3′-6"	4′-3"	4′-9"	5′-3"	5′-9"	6′-6"	7′-3"	8′-6"	8′-6"	9′-3"	11′-3"
ROW 1	16′-0"	14′-0"	12′-0"	10′-0"	8′-0"	6′-6"	5′-6"	4′-6"	4′-0"	4′-0"	4′-0"	4′-0"	4′-0"	4′-0"
ROW 2	24′-0"	21′-0"	18′-0"	15′-0"	14′-0"	13′-0"	11′-0"	9′-0"	8′-0"	12′-0"	10′-0"	6′-0"	4′-0"	4′-0"
ROW 3										8′-0"	5′-0"	4′-0"	4′-0"	6′-0"
ROW 4														6′-0"
CONFIGURATION	I	I	I	I	I	I	I	I	I	II	II	II	II	III

TABLE 1: TABLE OF REINFORCING STEEL DIMENSIONS AND DATA

	STEM WITH HAUNCH													
DESIGN H	6′	8′	10′	12′	14′	16′	18′	20′	22′	24′	26′	28′	30′	32′
STEM BATTER	0	1/2:12	1/2:12	1/2:12	1/2:12	1/2:12	1/2:12	1/2:12	1/2:12	5/8:12	3/4:12	7/8:12	1:12	1:12
◇2 ~~STEM THICKNESS @ TOP~~	~~1′-6"~~	~~1′-6"~~	~~1′-6"~~	~~1′-6"~~	~~1′-6"~~	~~1′-6"~~	~~1′-6"~~	~~1′-6"~~	~~1′-6"~~	~~1′-6"~~	~~1′-6"~~	~~1′-6"~~	~~1′-6"~~	~~1′-6"~~
STEM THICKNESS @ HAUNCH	1′-0"	1′-0"	1′-0"	1′-0"	1′-0"	1′-0"	1′-0"	1′-0"	1′-0"	1′-0"	1′-0"	1′-0"	1′-0"	1′-0"
ⓐ BARS				#6@18**	#7@18**	#8@18**	#9@18**	#10@18**	#8 @ 9*	#8 @ 9*	#7 @ 6*	#10@12**	#9 @ 9*	#11@12**
X				CONT	CONT	CONT	CONT	CONT	CONT	CONT	CONT	CONT	CONT	CONT
Y				8′-0"	6′-6"	7′-6"	8′-6"	9-6"	9′-6"	11′-0"	11′-6"	13′-0"	14′-0"	15′-6"
ⓑ BARS	#5 @ 12	#5 @ 12	#5 @ 9	#6@18**	#7@18**	#8@18**	#9@18**	#10@18**	#8 @ 9*	#8 @ 9*	#7 @ 6*	#10@12**	#9 @ 9*	#11@12**
X	CONT	CONT	CONT	CONT	CONT	CONT	CONT	CONT	CONT	CONT	CONT	CONT	CONT	CONT
Y	CONT	CONT	CONT	CONT	10′-6"	13′-0"	15′-0"	17′-6"	19′-6"	21′-0"	18′-6"	19′-0"	25′-6"	23′-6"
ⓒ BARS					#6 @ 18	#6 @ 18	#6 @ 18	#6 @ 18	#6 @ 18	#6 @ 18	#6 @ 12	#7 @ 12	#7 @ 18	#7 @ 12
ⓓ BARS	#5 @ 12	#5 @ 12	#5 @ 12	#5 @ 12	#5 @ 12	#5 @ 12	#5 @ 9	#5 @ 9	#6 @ 9	#5 @ 6	#7 @ 9	#7 @ 9	#6 @ 6	#7 @ 6
TOTAL ⓔ BARS	6 #5	6 #5	6 #5	6 #5	8 #5	8 #5	10 #5	10 #5	10 #5	10 #5	12 #5	12 #5	12 #5	14 #5
TOTAL ⓕ BARS	6 #5	6 #5	6 #5	6 #5	6 #5	8 #5	8 #5	8 #5	8 #5	10 #5	10 #5	10 #5	12 #5	12 #5

TABLE 2: TABLE OF REINFORCING STEEL DIMENSIONS AND DATA

	STEM WITH HAUNCH							STEM WITHOUT HAUNCH						
DESIGN H	6′	8′	10′	12′	14′	16′	18′	20′	22′	24′	26′	28′	30′	32′
BATTER	0	0	0	0	0	0	0	0	0	0	1/4:12	1/2:12	1/2:12	1/2:12
◇2 STEM THICKNESS @ TOP	~~1′-6"~~	~~1′-6"~~	~~1′-6"~~	~~1′-6"~~	~~1′-6"~~	~~1′-6"~~	~~1′-6"~~	1′-6"	2′-0"	2′-0"	2′-0"	2′-0"	2′-0"	2′-0"
STEM THICKNESS @ HAUNCH	1′-0"	1′-0"	1′-0"	1′-0"	1′-0"	1′-3"	1′-3"							
ⓐ BARS				#6@12**	#5 @ 6*	#9@18**	#9@12**	#9@12**	#9@12**	#7 @ 6*	#7 @ 6*	#7 @ 6*	#9 @ 9*	#11@12**
X				CONT	CONT	CONT	CONT	CONT	CONT	CONT	CONT	CONT	CONT	CONT
Y				5′-6"	5′-6"	8′-6"	8′-6"	8′-6"	8′-6"	9′-6"	11′-0"	12′-6"	13′-6"	14′-6"
ⓑ BARS	#5 @ 12	#5 @ 9	#6 @ 9	#6@12**	#5 @ 6*	#9@18**	#9@12**	#9@12**	#9@12**	#7 @ 6*	#7 @ 6*	#7 @ 6*	#9 @ 9*	#11@12**
X	CONT	CONT	CONT	CONT	CONT	CONT	CONT	CONT	CONT	CONT	CONT	CONT	CONT	CONT
Y	CONT	CONT	CONT	CONT	CONT	11′-6"	11′-6"	12′-0"	12′-0"	17′-6"	20′-0"	21′-6"	24′-0"	24′-0"
ⓒ BARS						#7 @ 18	#7 @ 12	#7 @ 12	#7 @ 12	#6 @ 12	#6 @ 12	#6 @ 12	#7 @ 18	#7 @ 12
ⓓ BARS	#5 @ 12	#5 @ 12	#5 @ 12	#5 @ 12	#5 @ 12	#5 @ 12	#5 @ 9	#5 @ 9	#6 @ 9	#5 @ 6	#7 @ 9	#7 @ 9	#6 @ 6	#7 @ 6
TOTAL ⓔ BARS	6 #5	6 #5	6 #5	6 #5	8 #5	8 #5	10 #5	10 #5	10 #5	10 #5	12 #5	12 #5	12 #5	14 #5
TOTAL ⓕ BARS	6 #5	6 #5	6 #5	6 #5	6 #5	8 #5	8 #5	8 #5	8 #5	10 #5	10 #5	10 #5	12 #5	12 #5

CONT = CONTINUOUS

* = ⓐ AND ⓑ BARS ARE BUNDLED TOGETHER.

** = ALTERNATE ⓐ AND ⓑ BARS AS SHOWN IN DETAIL A.

DESIGN DATA

DESIGN: LOAD FACTOR DESIGN (LFD)

CONCRETE: REINFORCED CONCRETE, f′c = 3600 psi
fy = 60000 psi

LOADING CASE:

LEVEL GROUND WITH 240 psf LIVE LOAD SURCHARGE AND 16′ SOUNDWALL.
SEISMIC LOAD = 0.3 DEAD LOAD
WIND LOAD = 30 psf
DEAD LOAD OF SOUNDWALL = 1414 lb/lf
DEAD LOAD OF BARRIER = 372 lb/lf

SEISMIC LOAD: SOIL

Kh = 0.3g
Kv = 0.0
Kae : MONONOBE-OKABE METHOD

SOIL: Ø = 34° γ = 120 pcf

EQUIVALENT FLUID PRESSURE:
= 36 pcf FOR DETERMINATION OF TOE PRESSURE
= 27 pcf FOR DETERMINATION OF HEEL PRESSURE

LOAD COMBINATIONS:

GROUP A : βD+1.7E+1.7SC
GROUP B : βD+1.7E+1.3W
GROUP C :
STEM : 1.0D+1.0E+1.0EQD+1.0EQE
FOOTING : D+PYM
WHERE : β = 1.0 OR 1.3 WHICHEVER CONTROLS DESIGN
D = DEAD LOAD
E = LATERAL EARTH PRESSURE
SC = SURCHARGE
W = WIND LOAD
EQD = SEISMIC DEAD LOAD
EQE = SEISMIC LATERAL EARTH PRESSURE
PYM = PROBABLE YIELD MOMENT (1.3* NOMINAL YIELD MOMENT OF STEM)

GENERAL NOTES

◇1
1. CLASS 90 CONCRETE PILES WERE USED FOR THE DESIGN.
2. PILE BATTER SHOWN ARE 1:3.
3. MINIMUM DISTANCE BETWEEN CENTER PILE AND EDGE OF FOOTING IS 1′-6".
4. REDUCTION FACTORS:
   GROUPS A & B : Ø = 0.75
   GROUP C : Ø = 1.0
5. LATERAL RESISTANCE OF EACH PILE:
   GROUPS A & B : = 30 kip
   GROUP C : = 40 kip
6. MAXIMUM SPACING BETWEEN PILES IS SHOWN IN THE TABLE. REDUCE TO SUIT THE LENGHTH OF FOOTING.
7. MINIMUM DISTANCE BETWEEN ANY TWO PILES IS 3′-0".
8. LIMIT OF NO SPLICING FOR REBARS = 3 TIMES THE BOTTOM THICKNESS OF STEM.

SPECIAL DETAILS

REVISED STANDARD DRAWING

FILE NO. xs14-320-1e

APPROVED BY G. WANG
RESPONSIBLE TECHNICAL SPECIALIST
APPROVAL DATE 5-29-09

RELEASED BY ROBERTO LACALLE
RESPONSIBLE OFFICE CHIEF
RELEASE DATE 5-29-09

◇1 Revise Note to indicate Class 90 piles
◇2 Stem thickness @ top shown on Detail No. 2 sheet

STATE OF CALIFORNIA
DEPARTMENT OF TRANSPORTATION

DIVISION OF ENGINEERING SERVICES
STRUCTURE DESIGN
DESIGN BRANCH 1

BRIDGE NO. 53-E0182
POST MILE 3.47

SOUND WALL NO. 190
RETAINING WALL TYPE 1SWBP - DETAIL NO. 1

DIST.	COUNTY	ROUTE	POST MILES TOTAL PROJECT	SHEET NO.	TOTAL SHEETS
07	LA	5	2.4/4.0	1221	1288

Kevin J. Harper 12-8-11
REGISTERED ENGINEER - CIVIL

3-26-12
PLANS APPROVAL DATE

REGISTERED PROFESSIONAL ENGINEER Kevin Harper No. 42221 Exp. 3-31-12 CIVIL STATE OF CALIFORNIA

The State of California or its officers or agents shall not be responsible for the accuracy or completeness of electronic copies of this plan sheet.

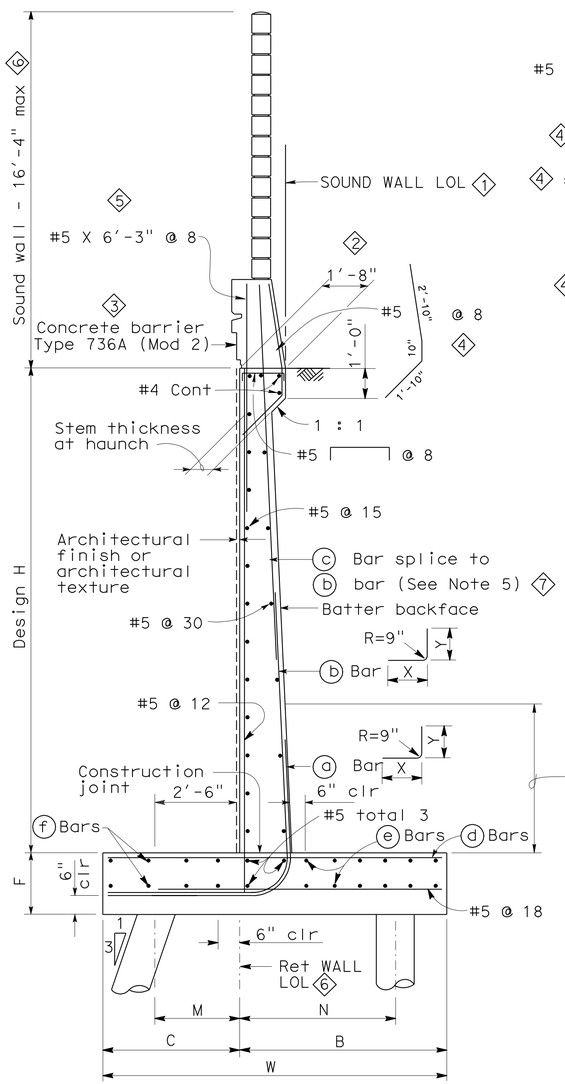

TYPICAL SECTION

NO SCALE

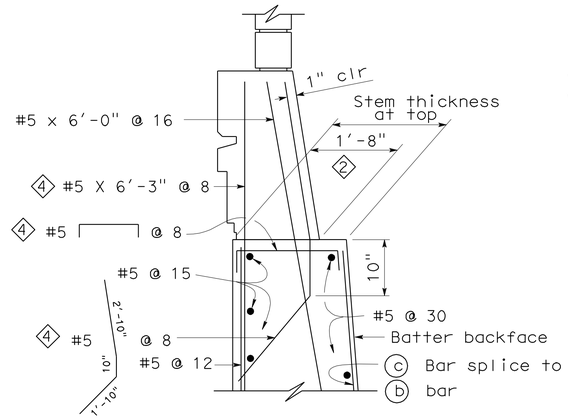

SECTION WITHOUT HAUNCH

NO SCALE

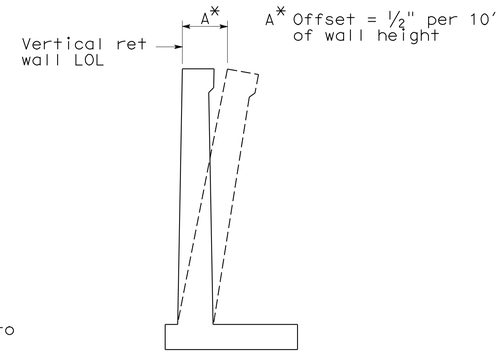

WALL OFFSET

NO SCALE

Values for offsetting forms to be determined by the engineer

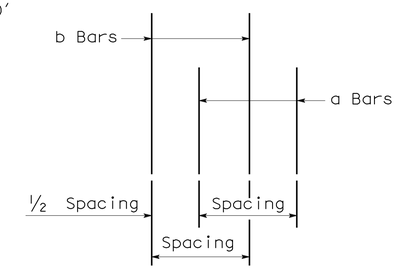

DETAIL A

NO SCALE

NOTES

1. For soundwall and retaining wall architectural finish or texture, see details elsewhere in project plans.
2. For details not shown and drainage notes, see B3-8
3. Footing cover, 1'-6" minimum.
4. For sound wall and barrier details, see "SOUND WALL - MASONARY BLOCK WITH BARRIER ON RETAINING WALL DETAILS NO. 1" and No. 2 sheets 6
5. Extend (b) bars into barrier for "DESIGN H" 12' or less. 7

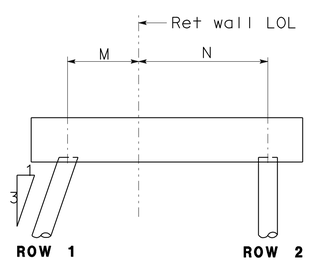

CONFIGURATION I

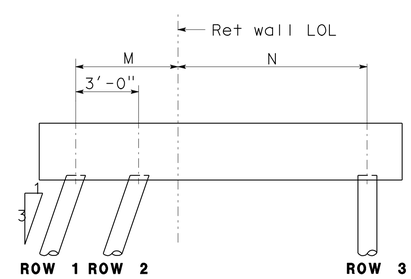

CONFIGURATION II

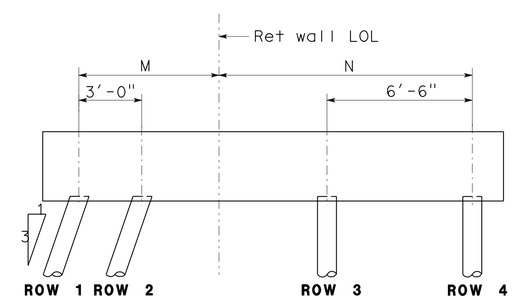

CONFIGURATION III

SPECIAL DETAILS

REVISED STANDARD DRAWING

FILE NO. xs14-320-2e

APPROVED BY G. WANG RESPONSIBLE TECHNICAL SPECIALIST
APPROVAL DATE 5-13-08

RELEASED BY ROBERTO LACALLE RESPONSIBLE OFFICE CHIEF
RELEASE DATE 5-13-08

1 Sound Wall LOL added
2 Stem thickness at top modified
3 Changed concrete barrier dimensions
4 Reinforcement modified
5 Added reinforcement
6 Notes Modified
7 Added note

STATE OF CALIFORNIA DEPARTMENT OF TRANSPORTATION

DIVISION OF ENGINEERING SERVICES STRUCTURE DESIGN
DESIGN BRANCH 1

BRIDGE NO. 53-E0182
POST MILE 3.47

SOUND WALL NO. 190
RETAINING WALL TYPE 1SWBP - DETAIL NO. 2

DS OSD 2147A (ENGLISH STANDARD DRAWING "XS" BORDER REV. 01/11/08)

ORIGINAL SCALE IN INCHES FOR REDUCED PLANS 0 1 2 3

UNIT: 3576
PROJECT NUMBER & PHASE: 0700001833-1
CONTRACT NO.: 07-215934

DISREGARD PRINTS BEARING EARLIER REVISION DATES

REVISION DATES 10/29/10 8-8-11 11/21/11

SHEET 28 OF 35

USERNAME => s124496

sw190-i-rwdt02.dgn

DATE PLOTTED => 28-MAR-2012 TIME PLOTTED => 12:05

DIST.	COUNTY	ROUTE	POST MILES TOTAL PROJECT	SHEET NO.	TOTAL SHEETS
07	LA	5	2.4/4.0	1222	1288

REGISTERED ENGINEER - CIVIL 12-8-11

PLANS APPROVAL DATE 3-26-12

REGISTERED PROFESSIONAL ENGINEER Kevin Harper No. 42221 Exp. 3-31-12 CIVIL STATE OF CALIFORNIA

The State of California or its officers or agents shall not be responsible for the accuracy or completeness of electronic copies of this plan sheet.

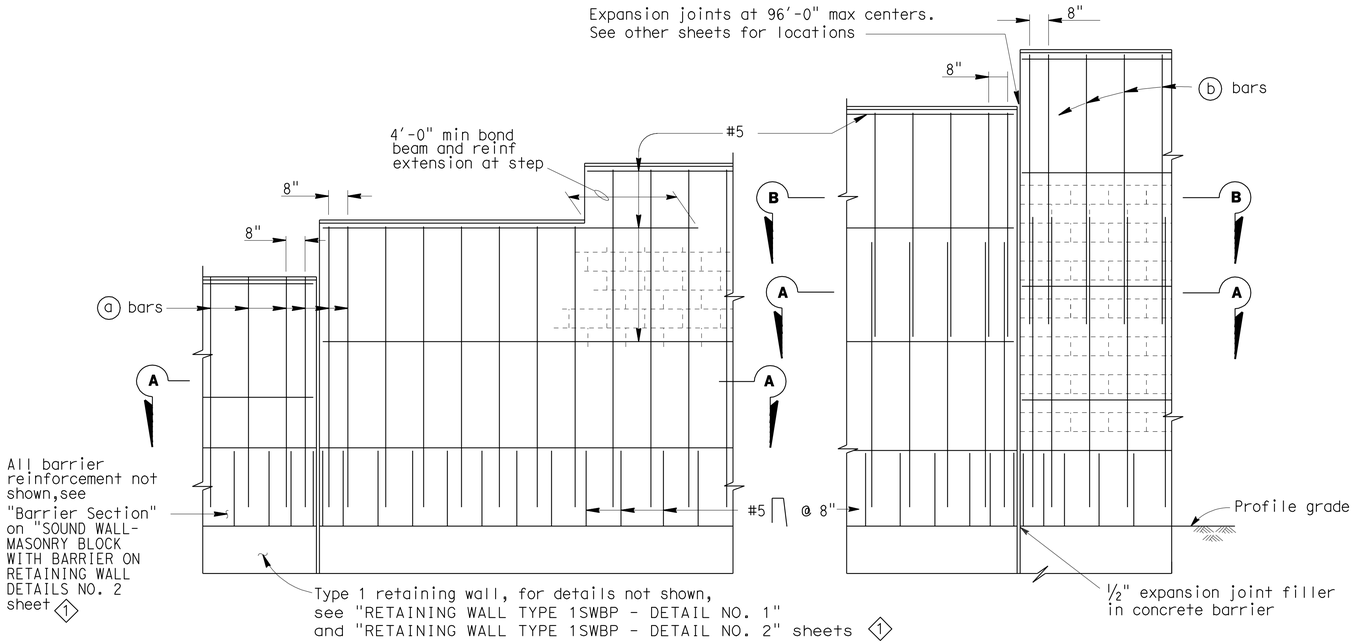

PART ELEVATIONS

SOUNDWALL REINFORCEMENT TABLE

Maximum H	(a) bars @ 1'-4" max	(b) bars @ 1'-4" max	"y"	f'm (KSI)	Compressive Strength of CMU (KSI)	Maximum H
6'-4"	# 4	———	———	1.5	1.9	6'-4"
8'-4"	# 4	———	———	1.5	1.9	8'-4"
10'-4"	# 4	———	———	1.5	1.9	10'-4"
12'-4"	# 5	# 4	5'-0"	1.5	1.9	12'-4"
14'-4"	# 6	# 4	7'-0"	1.5	1.9	14'-4"
16'-4"	# 6	# 4	9'-0"	2.5	3.7	16'-4"

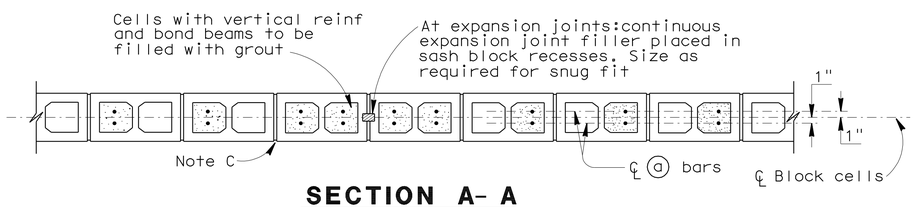

SECTION A- A

For details not shown,see other details

H=6'-4" THRU H= 10'-4"

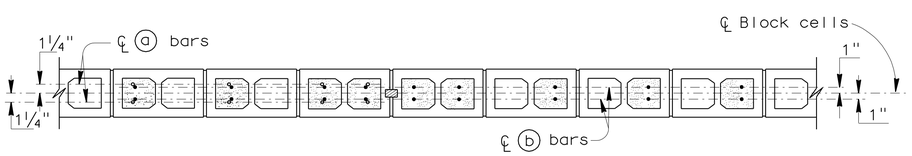

SECTION A- A

SECTION B- B

For details not shown,see other details

H=12'-4" THRU H= 16'-4"

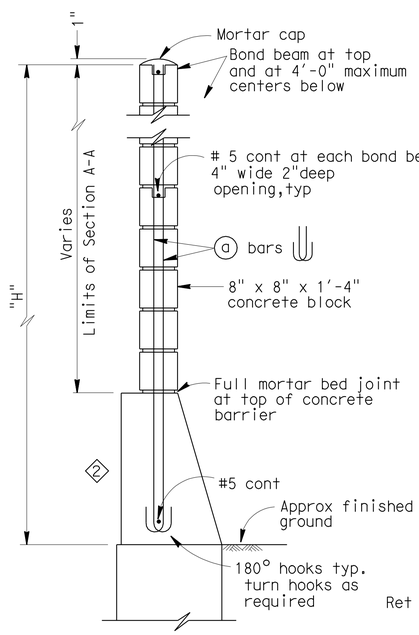

H=6'-4" THRU H=10'-4"

For details not shown,see H=12'-4" thru H=16'-4"

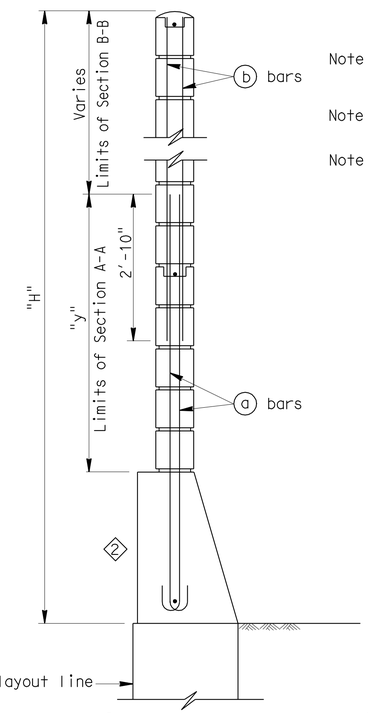

H=12'-4" THRU H=16'-4"

For details not shown,see H=6'-4" thru H=10'-4"

TYPICAL SECTIONS

Note I : For details not shown, see "SOUND WALL - MASONRY BLOCK WITH BARRIER ON RETAINING WALL DETAILS NO. 2" sheet 1

Note II : Slope ground at traffic side of barrier to drain. Maximum slope ±10%.

Note III: See Standard Plan B15-9 "SOUND WALL MASONRY BLOCK - MISCELLANEOUS DETAILS" sheet for other details. 1

GENERAL NOTES

Note A: For type of block and joint finish, see other sheets.

Note B: When blocks are laid in stacked bond, ladder type, galvanized joint reinforcement shall be provided. A minimum of 0.07"-0.14" wire continuous at 4'-0" maximum to be used. Locate reinforcement in joints that are at the approximate midpoint between bond beams.

Note C: Horizontal joints shall be tooled concave or may be weathered.
Vertical joints shall be tooled concave or may be raked.

Note D: For intermediate wall heights that are between the "H's" given. Use the tabular information for the next higher "H".

Note E: Masonry strengths are listed in "SOUNDWALL REINFORCEMENT TABLE".

Note F: Concrete to be used for the barrier shall contain not less than 590 pounds of cementitious material per cubic yard.

SPECIAL DETAILS

REVISED STANDARD DRAWING

FILE NO. xs15-130-1e

APPROVED BY T SATTER — RESPONSIBLE TECHNICAL SPECIALIST
APPROVAL DATE 10/22/09

RELEASED BY ROBERTO LACALLE — RESPONSIBLE OFFICE CHIEF
RELEASE DATE 10/22/09

1 Sheet reference notes corrected
2 Changed Conc barrier dimensions

STATE OF CALIFORNIA DEPARTMENT OF TRANSPORTATION

DIVISION OF ENGINEERING SERVICES STRUCTURE DESIGN
DESIGN BRANCH 1

BRIDGE NO. 53-E0182
POST MILE 3.47

SOUND WALL NO. 190
SOUND WALL - MASONRY BLOCK WITH BARRIER ON RETAINING WALL DETAILS NO. 1

DS OSD 2147A (ENGLISH STANDARD DRAWING "XS" BORDER REV. 10/22/09)

ORIGINAL SCALE IN INCHES FOR REDUCED PLANS 0 1 2 3

UNIT: 3576
PROJECT NUMBER & PHASE: 0700001833-1
CONTRACT NO.: 07-215934

DISREGARD PRINTS BEARING EARLIER REVISION DATES

REVISION DATES 10/28/10 07/28/11 11/21/11

SHEET 29 OF 35

USERNAME => s124496

sw190-k-swdt01.dgn

DATE PLOTTED => 28-MAR-2012 TIME PLOTTED => 12:05

DIST.	COUNTY	ROUTE	POST MILES TOTAL PROJECT	SHEET NO.	TOTAL SHEETS
07	LA	5	2.4/4.0	1223	1288

Kevin J. Harper 12-8-11
REGISTERED ENGINEER - CIVIL

3-26-12
PLANS APPROVAL DATE

REGISTERED PROFESSIONAL ENGINEER Kevin Harper No. 42221 Exp. 3-31-12 CIVIL STATE OF CALIFORNIA

The State of California or its officers or agents shall not be responsible for the accuracy or completeness of electronic copies of this plan sheet.

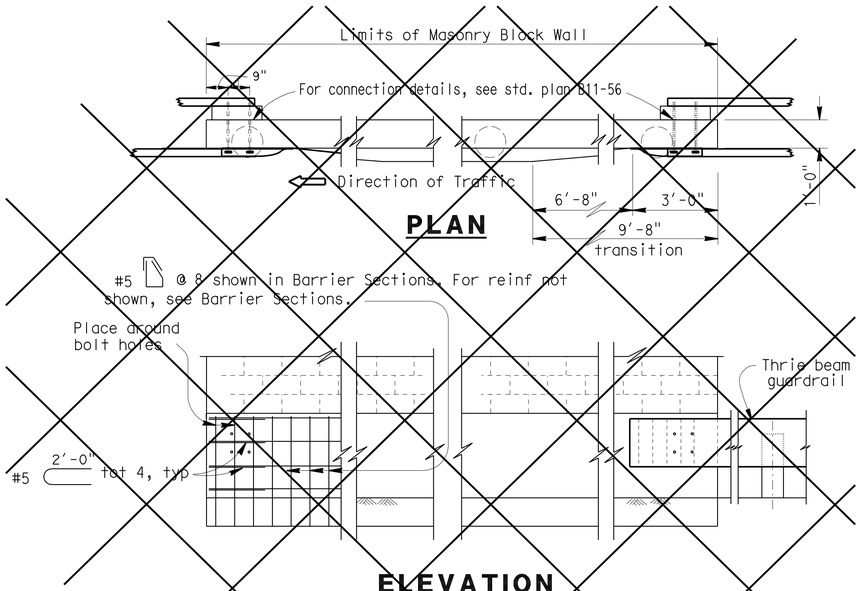

5 **METAL BEAM GUARDRAIL ANCHORAGE**

For details not shown, see std. plan B11-56.

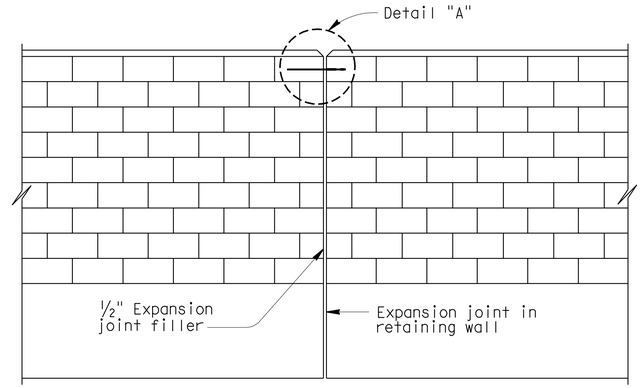

ALIGNMENT KEY DETAIL

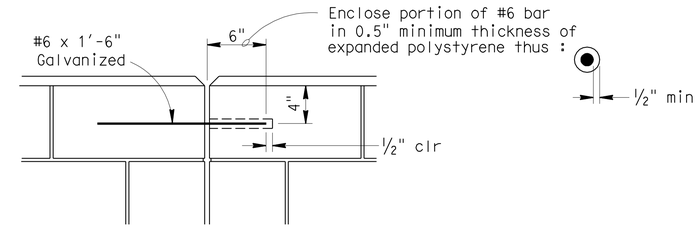

DETAIL A

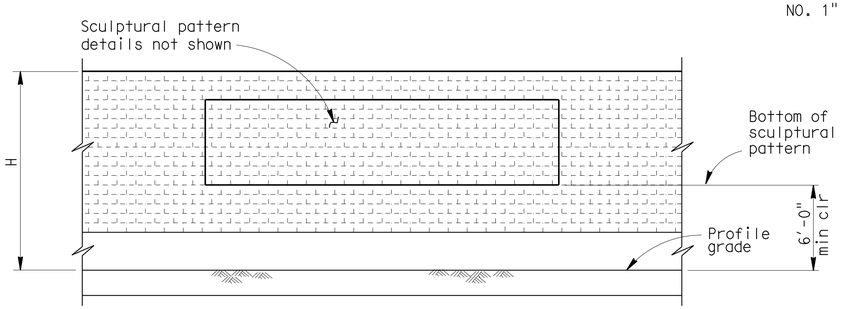

CLEARANCE DETAIL

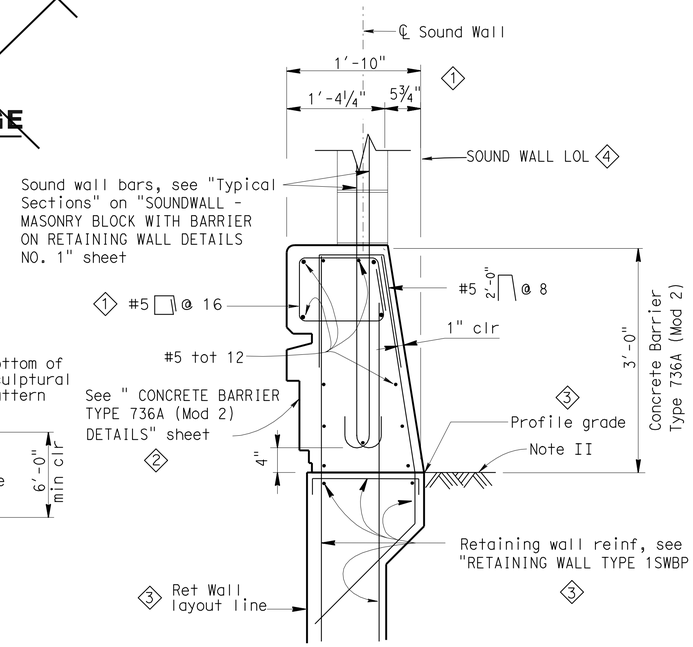

BARRIER SECTION

DESIGN NOTES

DESIGN

Uniform Building Code,1997 Edition and the Bridge Design Specifications.

DESIGN WIND LOAD

33 PSF

DESIGN SEISMIC LOAD

0.57 Dead load

REINFORCED CONCRETE

f'c = 3250 PSI
fy = 60 KSI

CONCRETE MASONRY

REGULAR STRENGTH	HIGH STRENGTH	
f'm = 1500 PSI	f'm = 2000 PSI	f'm = 2500 PSI
f_b = 1500 PSI	f_b = 660 PSI	f_b = 830 PSI
fs = 24.0 KSI	fs = 24.0 KSI	fs = 24000 PSI
n = 25.8	n = 19.3	n = 15.5

LOAD FACTORS AND LOAD COMBINATIONS

Working Stress Design (WSD) Percentage of unit stress

3 Group 1: D + E + SC 100%
Group 2: D + W + SC + E 100%
Group 3: D + 0.71 EQD + E 100%

Where:

D = Dead load
E = Lateral earth pressure
SC = Live load surcharge
W = Wind load
EQD = Seismic dead load

Load Factor Design (LFD)

Group A: βD +1.7 E + 1.7 SC
Group B: βD +1.7 E + 1.3 W
Group C: βD +1.3 E + 1.0 EQE
Group D: βD +1.3 E + 1.0 EQD
Group E: βD +1.1 E + 0.85 (EQE + EQD)

Where : β = 0.9 or 1.2, whichever controls in design
D = Dead load
E = Lateral earth pressure
SC = Live load surcharge
W = Wind load
EQD = Seismic dead load
EQE = Seismic earth load

STRENGTH REDUCTION FACTORS, Ø

Reinforced concrete:
For flexure _____ Ø=0.90
For shear _____ Ø=0.85

Concrete masonry:
For flexure _____ Ø=0.80
For shear _____ Ø=0.60

Foundations :

See "RETAINING WALL TYPE 1SWBP - DETAIL NO. 1" sheet. 3

NOTES:

3 I : For details not shown, see "RETAINING WALL TYPE 1SWBP - DETAIL NO. 1 and NO. 2" sheets.

II : Slope ground at traffic side of barrier to drain. Maximum slope ±10%. See Standard Plan B11-56, Note D.

SPECIAL DETAILS

REVISED STANDARD DRAWING

FILE NO. xs15-130-2e

APPROVED BY T SATTER — RESPONSIBLE TECHNICAL SPECIALIST
APPROVAL DATE 10/22/09

RELEASED BY ROBERTO LACALLE — RESPONSIBLE OFFICE CHIEF
RELEASE DATE 10/22/09

1 Barrier dimensions and reinf changed
2 Added note for barrier aesthetics
3 Sheet reference notes corrected
4 Sound Wall LOL added
5 Delete obsolete detail

STATE OF CALIFORNIA DEPARTMENT OF TRANSPORTATION

DIVISION OF ENGINEERING SERVICES STRUCTURE DESIGN
DESIGN BRANCH 1

BRIDGE NO. 53-E0182
POST MILE 3.47

SOUND WALL NO. 190
SOUND WALL - MASONRY BLOCK WITH BARRIER ON RETAINING WALL DETAILS NO. 2

DS OSD 2147A (ENGLISH STANDARD DRAWING "XS" BORDER REV. 01/11/08)

ORIGINAL SCALE IN INCHES FOR REDUCED PLANS 0 1 2 3

UNIT: 3576
PROJECT NUMBER & PHASE: 0700001833-1 CONTRACT NO.: 07-215934

DISREGARD PRINTS BEARING EARLIER REVISION DATES

REVISION DATES 11/30/10 11/21/11 07/22/11 SHEET 30 OF 35

DATE PLOTTED => 28-MAR-2012 TIME PLOTTED => 1122:23:06

USERNAME => s124496 sw190-k-swdt02.dgn

DIST	COUNTY	ROUTE	POST MILES TOTAL PROJECT	SHEET No.	TOTAL SHEETS
07	LA	5	2.4/4.0	1224	1288

GEOTECHNICAL PROFESSIONAL — DATE 06/2011

3-26-12
PLANS APPROVAL DATE

REGISTERED PROFESSIONAL ENGINEER — MICHAEL G. SMITH No. 2229 Exp. 3-31-2012 GEOTECHNICAL — STATE OF CALIFORNIA

The State of California or its officers or agents shall not be responsible for the accuracy or completeness of electronic copies of this plan sheet.

BENCH MARK

PRHV 102 Elev 86.67′
FOUND PK NAIL & TIN SET BY OTHERS ON ISLAND @ THE BEGINNING OF SB 1-5 ON-RAMP AND ROSECRANS AVE PER SR 09-037-000010
NAVD 88

PRHV 103 Elev 84.50′
FOUND CHISELED "X" ON BACK WALK @ INLET AT SE CORNER OF ROSECRANS AVE AND FIRESTONE BLVD PER SR 09-037-000010
NAVD 88

PRHV 104 Elev 94.31′
FOUND CHISLED "X" ON S′LY TC @+/- 250′ W/O NB 1-5 TO WB FIRESTONE BLVD OFF-RAMP TUNNEL PER SR 09-033-000011
NAVD 88

PRHV 105 Elev 96.88′
FOUND CHISLED "X" ON W′LY CURB BCR@ EB FIRESTONE BL TO SB 1-5 ON-RAMP & FIRESTONE BL INTERSECTION PER SR 09-033-000011
NAVD 88

Notes

1. This LOTB sheet was prepared in accordance with the Caltrans Soil & Rock Logging, Classification, and Presentation Manual (2010) except three digit sequence number in boring identification starting with the segment number per exception request approved on April 08, 2009.

2. For protection of underground utility lines, hand-auger was used to remove top 5 to 10 feet of subsurface material for exploratory borings and cone penetration testings.

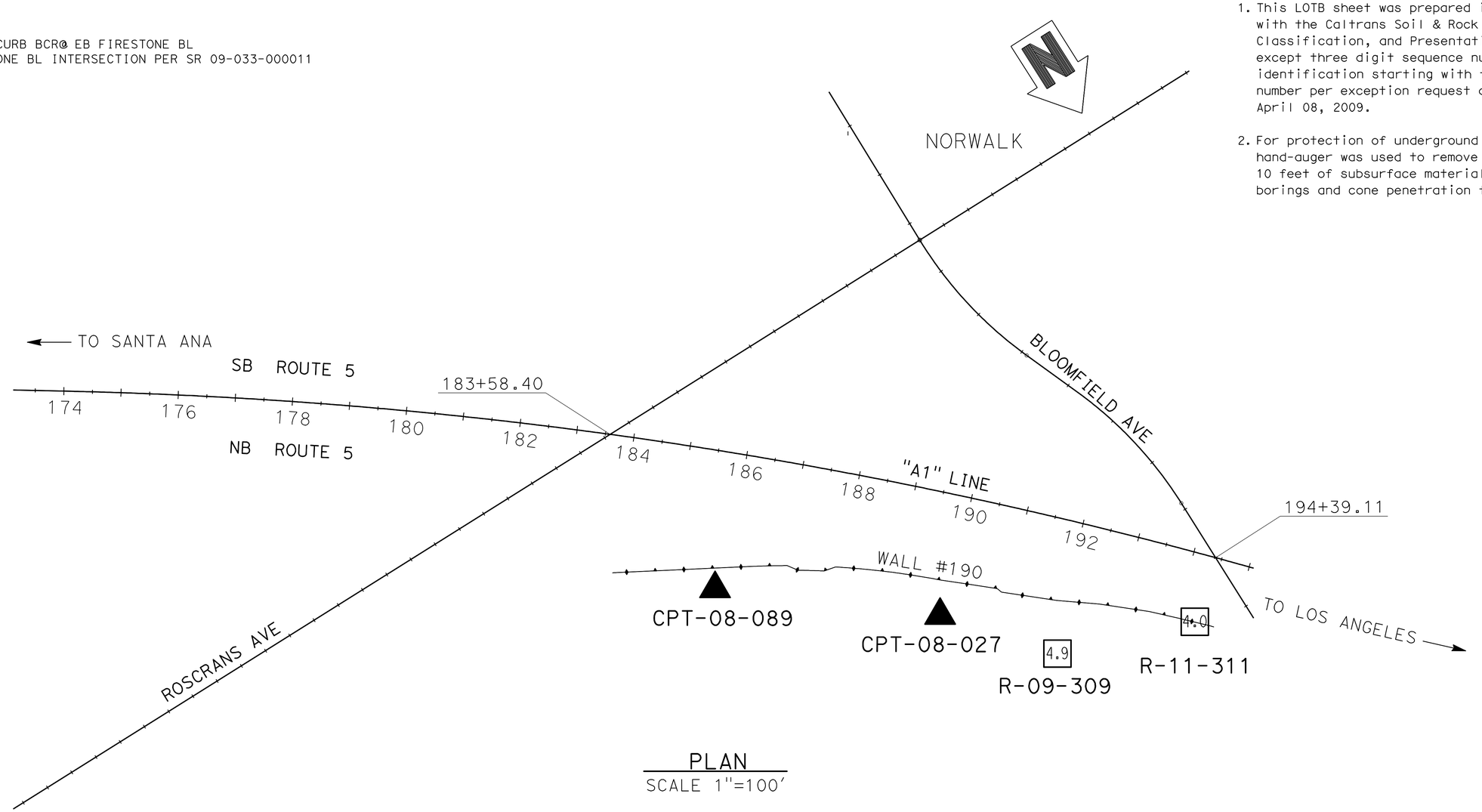

PLAN
SCALE 1"=100′

ENGINEERING SERVICES	MATERIALS AND GEOTECHNICAL SERVICES	STATE OF CALIFORNIA DEPARTMENT OF TRANSPORTATION	DIVISION OF ENGINEERING SERVICES STRUCTURE DESIGN DESIGN BRANCH 1	BRIDGE NO. 53-E0182 POST MILE 3.47	SOUND WALL NO. 190
FUNCTIONAL SUPERVISOR NAME: M. SMITH	DRAWN BY: P.QUACH CHECKED BY: D.ORRIS	FIELD INVESTIGATION BY: D.LUCAS/T.PANAH/P.MCDONALD/EJ.JEON			LOG OF TEST BORINGS SHEET 1 OF 5

OGS CIVIL LOG OF TEST BORINGS SHEET

ORIGINAL SCALE IN INCHES FOR REDUCED PLANS 0 1 2 3

UNIT: 3576
PROJECT NUMBER & PHASE: 07000018331 CONTRACT NO.: 07-215934

DISREGARD PRINTS BEARING EARLIER REVISION DATES → REVISION DATES 06/22/11 11/21/11

SHEET 31 OF 35

FILE => sw190-z-ltb01.dgn

USERNAME => s124496 DATE PLOTTED => 28-MAR-2012 TIME PLOTTED => 12:06

DIST	COUNTY	ROUTE	POST MILES TOTAL PROJECT	SHEET No.	TOTAL SHEETS
07	LA	5	2.4/4.0	1225	1288

GEOTECHNICAL PROFESSIONAL — DATE 06/2011

3-26-12
PLANS APPROVAL DATE

REGISTERED PROFESSIONAL ENGINEER — MICHAEL G. SMITH No. 2229 Exp. 3-31-2012 GEOTECHNICAL — STATE OF CALIFORNIA

The State of California or its officers or agents shall not be responsible for the accuracy or completeness of electronic copies of this plan sheet.

FOR PLAN VIEW, SEE
"LOG OF TEST BORINGS" 1 OF 5

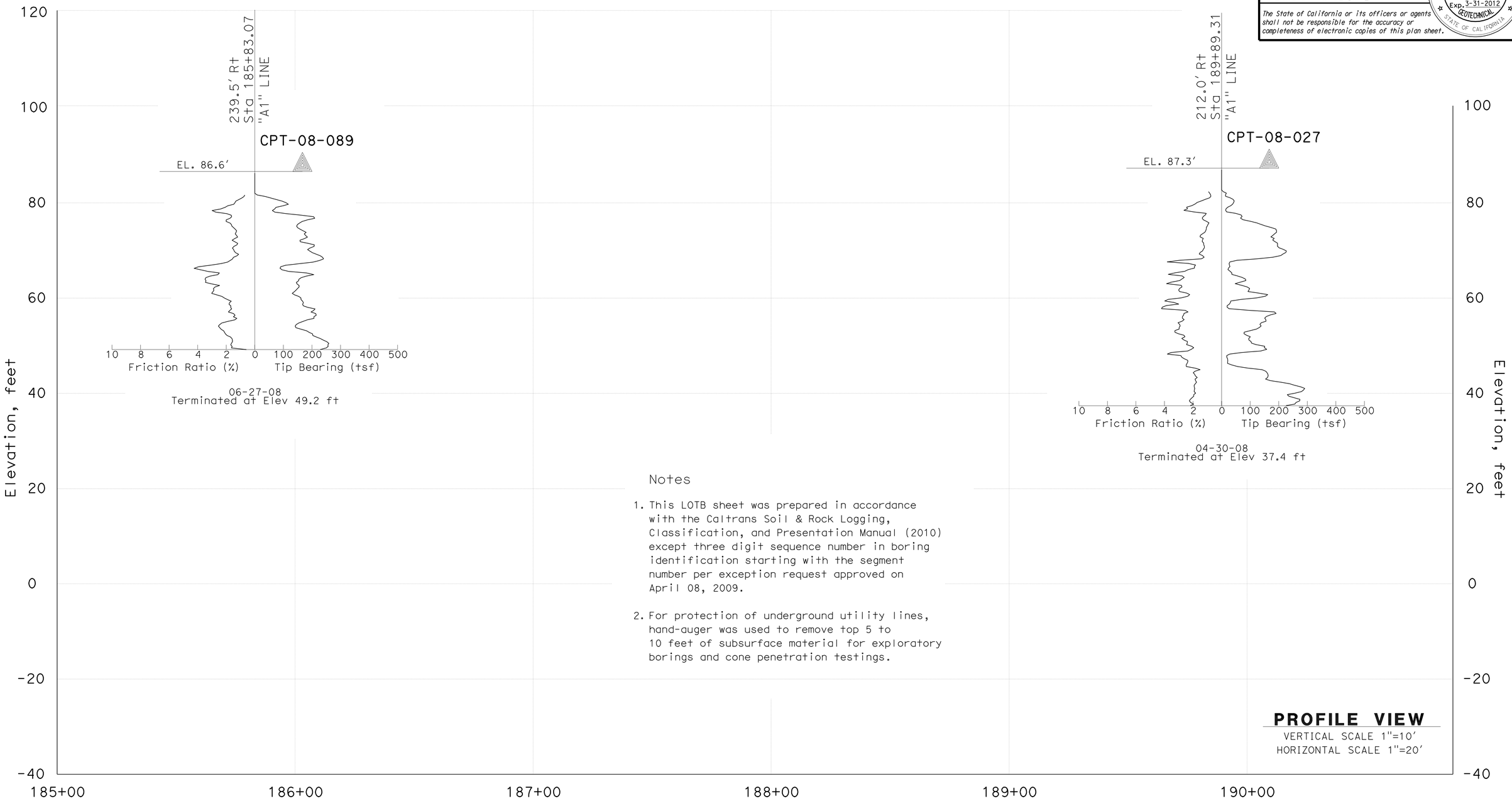

Notes

1. This LOTB sheet was prepared in accordance with the Caltrans Soil & Rock Logging, Classification, and Presentation Manual (2010) except three digit sequence number in boring identification starting with the segment number per exception request approved on April 08, 2009.

2. For protection of underground utility lines, hand-auger was used to remove top 5 to 10 feet of subsurface material for exploratory borings and cone penetration testings.

ENGINEERING SERVICES	MATERIALS AND GEOTECHNICAL SERVICES	STATE OF CALIFORNIA DEPARTMENT OF TRANSPORTATION	DIVISION OF ENGINEERING SERVICES STRUCTURE DESIGN DESIGN BRANCH 1	BRIDGE NO. 53-E0182 POST MILE 3.47	SOUND WALL NO. 190 LOG OF TEST BORINGS SHEET 2 OF 5
FUNCTIONAL SUPERVISOR NAME: M. SMITH	DRAWN BY: P.QUACH CHECKED BY: D.ORRIS	FIELD INVESTIGATION BY: D.LUCAS/T.PANAH/P.MCDONALD/EJ.JEON			

OGS CIVIL LOG OF TEST BORINGS SHEET

ORIGINAL SCALE IN INCHES FOR REDUCED PLANS 0 1 2 3

UNIT: 3576
PROJECT NUMBER & PHASE: 07000018331 CONTRACT NO.: 07-215934

DISREGARD PRINTS BEARING EARLIER REVISION DATES → REVISION DATES 06/22/11 11/21/11 SHEET 32 OF 35

FILE => sw190-z-ltb02.dgn

USERNAME => s124496 DATE PLOTTED => 28-MAR-2012 TIME PLOTTED => 12:06

DIST	COUNTY	ROUTE	POST MILES TOTAL PROJECT	SHEET No.	TOTAL SHEETS
07	LA	5	2.4/4.0	1226	1288

GEOTECHNICAL PROFESSIONAL — DATE 06/2011

3-26-12
PLANS APPROVAL DATE

REGISTERED PROFESSIONAL ENGINEER — MICHAEL G. SMITH No. 2229 Exp. 3-31-2012 GEOTECHNICAL — STATE OF CALIFORNIA

The State of California or its officers or agents shall not be responsible for the accuracy or completeness of electronic copies of this plan sheet.

FOR PLAN VIEW, SEE
"LOG OF TEST BORINGS" 1 OF 5

Notes

1. This LOTB sheet was prepared in accordance with the Caltrans Soil & Rock Logging, Classification, and Presentation Manual (2010) except three digit sequence number in boring identification starting with the segment number per exception request approved on April 08, 2009.

2. For protection of underground utility lines, hand-auger was used to remove top 5 to 10 feet of subsurface material for exploratory borings and cone penetration testings.

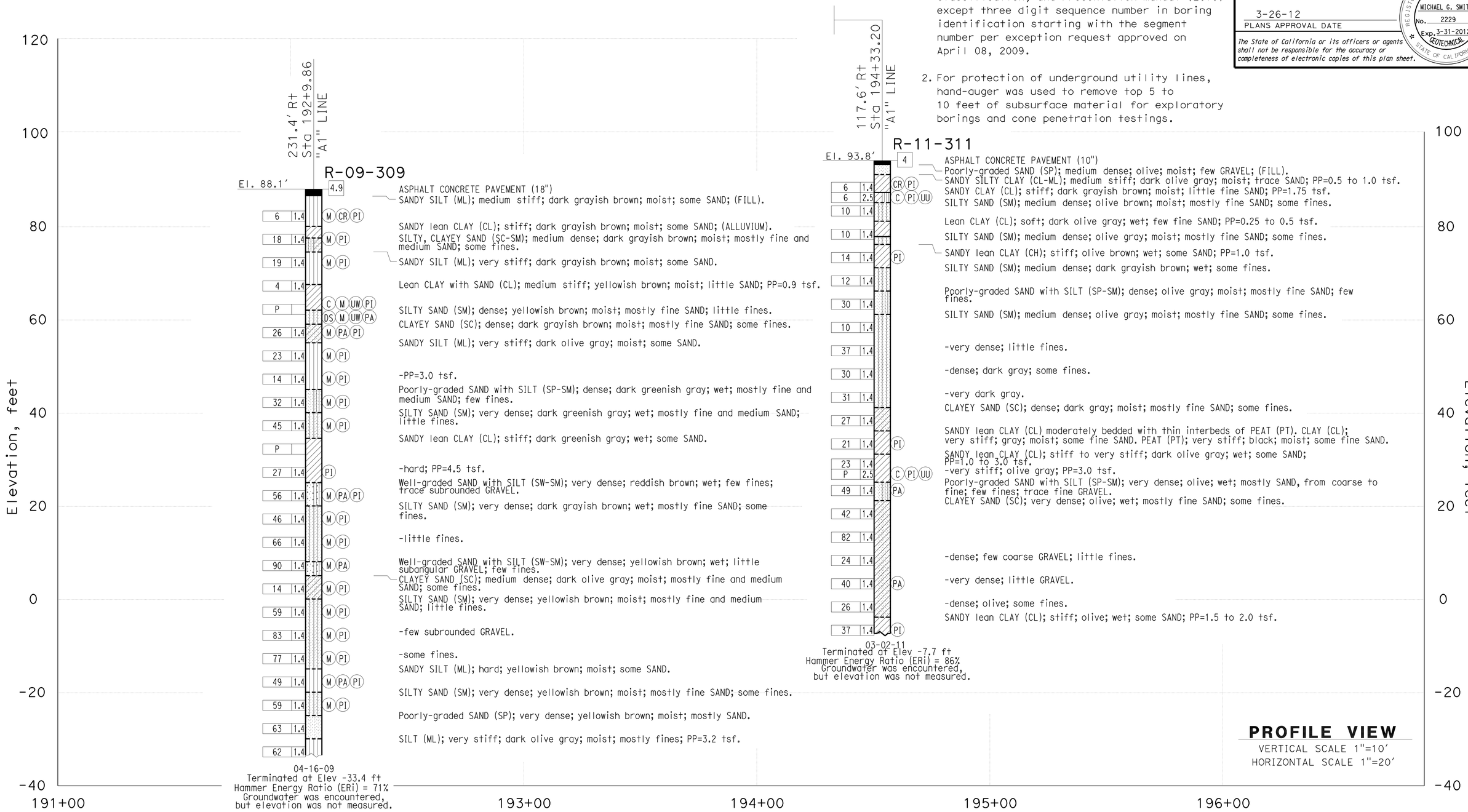

ENGINEERING SERVICES	MATERIALS AND GEOTECHNICAL SERVICES	STATE OF CALIFORNIA DEPARTMENT OF TRANSPORTATION	DIVISION OF ENGINEERING SERVICES STRUCTURE DESIGN DESIGN BRANCH 1	BRIDGE NO. 53-E0182 POST MILE 3.47	SOUND WALL NO. 190
FUNCTIONAL SUPERVISOR NAME: M. SMITH	DRAWN BY: P.QUACH CHECKED BY: D.ORRIS	FIELD INVESTIGATION BY: D.LUCAS/T.PANAH/P.MCDONALD/EJ.JEON			LOG OF TEST BORINGS SHEET 3 OF 5

OGS CIVIL LOG OF TEST BORINGS SHEET

ORIGINAL SCALE IN INCHES FOR REDUCED PLANS 0 1 2 3

UNIT: 3576
PROJECT NUMBER & PHASE: 07000018331 CONTRACT NO.: 07-215934

DISREGARD PRINTS BEARING EARLIER REVISION DATES

REVISION DATES 06/12/11 11/21/11 — SHEET 33 OF 35

FILE => sw190-z-ltb03.dgn

USERNAME => s124496 DATE PLOTTED => 28-MAR-2012 TIME PLOTTED => 12:06

DIST	COUNTY	ROUTE	POST MILES TOTAL PROJECT	SHEET No.	TOTAL SHEETS
07	LA	5	2.4/4.0	1227	1288

GEOTECHNICAL PROFESSIONAL — DATE 06/2011

3-26-12
PLANS APPROVAL DATE

REGISTERED PROFESSIONAL ENGINEER — MICHAEL G. SMITH No. 2229 Exp. 3-31-2012 GEOTECHNICAL — STATE OF CALIFORNIA

The State of California or its officers or agents shall not be responsible for the accuracy or completeness of electronic copies of this plan sheet.

REFERENCE: CALTRANS SOIL & ROCK LOGGING, CLASSIFICATION, AND PRESENTATION MANUAL (2010)

CEMENTATION

Description	Criteria
Weak	Crumbles or breaks with handling or little finger pressure.
Moderate	Crumbles or breaks with considerable finger pressure.
Strong	Will not crumble or break with finger pressure.

BOREHOLE IDENTIFICATION

Symbol	Hole Type	Description
Size	A	Auger Boring (hollow or solid stem bucket)
Size	R RW RC P	Rotary drilled boring (conventional) Rotary drilled with self-casing wire-line Rotary core with continuously-sampled, self-casing wire-line Rotary percussion boring (air)
Size	R	Rotary drilled diamond core
Size	HD HA	Hand driven (1-inch soil tube) Hand Auger
●	D	Dynamic Cone Penetration Boring
▲	CPT	Cone Penetration Test (ASTM D 5778)
⬚	O	Other (note on LOTB)

Note: Size in inches.

CONSISTENCY OF COHESIVE SOILS

Description	Shear Strength (tsf)	Pocket Penetrometer Measurement, PP, (tsf)	Torvane Measurement, TV, (tsf)	Vane Shear Measurement, VS, (tsf)
Very Soft	Less than 0.12	Less than 0.25	Less than 0.12	Less than 0.12
Soft	0.12 - 0.25	0.25 - 0.5	0.12 - 0.25	0.12 - 0.25
Medium Stiff	0.25 - 0.5	0.5 - 1	0.25 - 0.5	0.25 - 0.5
Stiff	0.5 - 1	1 - 2	0.5 - 1	0.5 - 1
Very Stiff	1 - 2	2 - 4	1 - 2	1 - 2
Hard	Greater than 2	Greater than 4	Greater than 2	Greater than 2

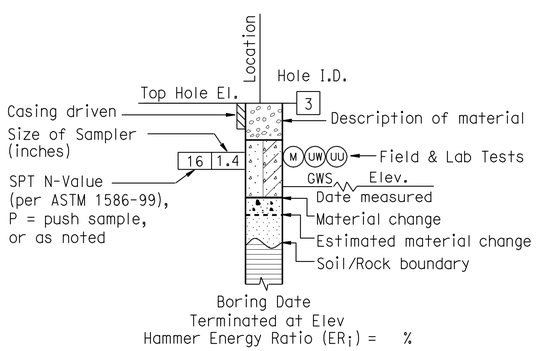

ROTARY BORING

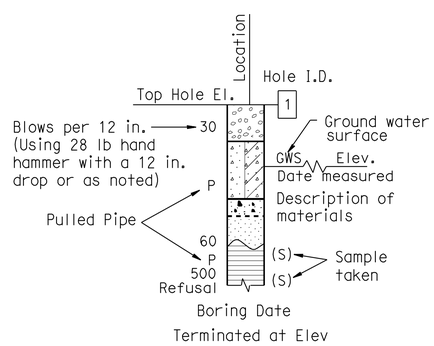

HAND BORING

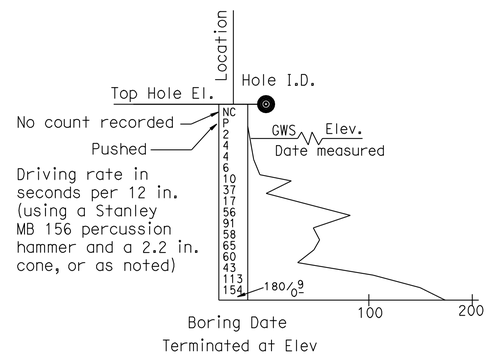

DYNAMIC CONE PENETRATION BORING

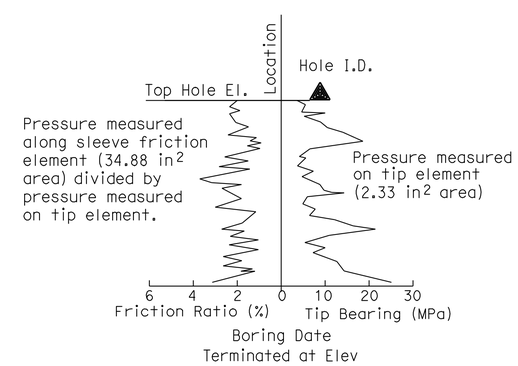

CONE PENETRATION TEST (CPT) BORING

ENGINEERING SERVICES	MATERIALS AND GEOTECHNICAL SERVICES	STATE OF CALIFORNIA DEPARTMENT OF TRANSPORTATION	DIVISION OF ENGINEERING SERVICES STRUCTURE DESIGN DESIGN BRANCH 1	BRIDGE NO. 53-E0182 POST MILE 3.47	SOUND WALL NO. 190
FUNCTIONAL SUPERVISOR NAME: M. SMITH	DRAWN BY: P.QUACH CHECKED BY: D.ORRIS	FIELD INVESTIGATION BY: D.LUCAS/T.PANAH/P.MCDONALD/EJ.JEON			LOG OF TEST BORINGS SHEET 4 OF 5

OGS CIVIL LOG OF TEST BORINGS SHEET

ORIGINAL SCALE IN INCHES FOR REDUCED PLANS 0 1 2 3

UNIT: 3576
PROJECT NUMBER & PHASE: 07000018331 CONTRACT NO.: 07-215934

DISREGARD PRINTS BEARING EARLIER REVISION DATES → REVISION DATES 06/22/11 11/21/11 SHEET 34 OF 35

FILE => sw190-z-ltb04.dgn

USERNAME => s124496 DATE PLOTTED => 28-MAR-2012 TIME PLOTTED => 12:06

REFERENCE: CALTRANS SOIL & ROCK LOGGING, CLASSIFICATION, AND PRESENTATION MANUAL (2010)

DIST	COUNTY	ROUTE	POST MILES TOTAL PROJECT	SHEET No.	TOTAL SHEETS
07	LA	5	2.4/4.0	1228	1288

GEOTECHNICAL PROFESSIONAL — DATE 06/2011

3-26-12
PLANS APPROVAL DATE

REGISTERED PROFESSIONAL ENGINEER — MICHAEL G. SMITH No. 2229 Exp. 3-31-2012 GEOTECHNICAL — STATE OF CALIFORNIA

The State of California or its officers or agents shall not be responsible for the accuracy or completeness of electronic copies of this plan sheet.

GROUP SYMBOLS AND NAMES

Graphic/Symbol	Group Names	Graphic/Symbol	Group Names
GW	Well-graded GRAVEL Well-graded GRAVEL with SAND	CL	Lean CLAY Lean CLAY with SAND Lean CLAY with GRAVEL SANDY lean CLAY SANDY lean CLAY with GRAVEL GRAVELLY lean CLAY GRAVELLY lean CLAY with SAND
GP	Poorly-graded GRAVEL Poorly-graded GRAVEL with SAND		
GW-GM	Well-graded GRAVEL with SILT Well-graded GRAVEL with SILT and SAND	CL-ML	SILTY CLAY SILTY CLAY with SAND SILTY CLAY with GRAVEL SANDY SILTY CLAY SANDY SILTY CLAY with GRAVEL GRAVELLY SILTY CLAY GRAVELLY SILTY CLAY with SAND
GW-GC	Well-graded GRAVEL with CLAY (or SILTY CLAY) Well-graded GRAVEL with CLAY and SAND (or SILTY CLAY and SAND)		
GP-GM	Poorly-graded GRAVEL with SILT Poorly-graded GRAVEL with SILT and SAND	ML	SILT SILT with SAND SILT with GRAVEL SANDY SILT SANDY SILT with GRAVEL GRAVELLY SILT GRAVELLY SILT with SAND
GP-GC	Poorly-graded GRAVEL with CLAY (or SILTY CLAY) Poorly-graded GRAVEL with CLAY and SAND (or SILTY CLAY and SAND)		
GM	SILTY GRAVEL SILTY GRAVEL with SAND	OL	ORGANIC lean CLAY ORGANIC lean CLAY with SAND ORGANIC lean CLAY with GRAVEL SANDY ORGANIC lean CLAY SANDY ORGANIC lean CLAY with GRAVEL GRAVELLY ORGANIC lean CLAY GRAVELLY ORGANIC lean CLAY with SAND
GC	CLAYEY GRAVEL CLAYEY GRAVEL with SAND		
GC-GM	SILTY, CLAYEY GRAVEL SILTY, CLAYEY GRAVEL with SAND	OL	ORGANIC SILT ORGANIC SILT with SAND ORGANIC SILT with GRAVEL SANDY ORGANIC SILT SANDY ORGANIC SILT with GRAVEL GRAVELLY ORGANIC SILT GRAVELLY ORGANIC SILT with SAND
SW	Well-graded SAND Well-graded SAND with GRAVEL		
SP	Poorly-graded SAND Poorly-graded SAND with GRAVEL	CH	Fat CLAY Fat CLAY with SAND Fat CLAY with GRAVEL SANDY fat CLAY SANDY fat CLAY with GRAVEL GRAVELLY fat CLAY GRAVELLY fat CLAY with SAND
SW-SM	Well-graded SAND with SILT Well-graded SAND with SILT and GRAVEL		
SW-SC	Well-graded SAND with CLAY (or SILTY CLAY) Well-graded SAND with CLAY and GRAVEL (or SILTY CLAY and GRAVEL)	MH	Elastic SILT Elastic SILT with SAND Elastic SILT with GRAVEL SANDY elastic SILT SANDY elastic SILT with GRAVEL GRAVELLY elastic SILT GRAVELLY elastic SILT with SAND
SP-SM	Poorly-graded SAND with SILT Poorly-graded SAND with SILT and GRAVEL		
SP-SC	Poorly-graded SAND with CLAY (or SILTY CLAY) Poorly-graded SAND with CLAY and GRAVEL (or SILTY CLAY and GRAVEL)	OH	ORGANIC fat CLAY ORGANIC fat CLAY with SAND ORGANIC fat CLAY with GRAVEL SANDY ORGANIC fat CLAY SANDY ORGANIC fat CLAY with GRAVEL GRAVELLY ORGANIC fat CLAY GRAVELLY ORGANIC fat CLAY with SAND
SM	SILTY SAND SILTY SAND with GRAVEL		
SC	CLAYEY SAND CLAYEY SAND with GRAVEL	OH	ORGANIC elastic SILT ORGANIC elastic SILT with SAND ORGANIC elastic SILT with GRAVEL SANDY ORGANIC elastic SILT SANDY ORGANIC elastic SILT with GRAVEL GRAVELLY ORGANIC elastic SILT GRAVELLY ORGANIC elastic SILT with SAND
SC-SM	SILTY, CLAYEY SAND SILTY, CLAYEY SAND with GRAVEL		
PT	PEAT	OL/OH	ORGANIC SOIL ORGANIC SOIL with SAND ORGANIC SOIL with GRAVEL SANDY ORGANIC SOIL SANDY ORGANIC SOIL with GRAVEL GRAVELLY ORGANIC SOIL GRAVELLY ORGANIC SOIL with SAND
	COBBLES COBBLES and BOULDERS BOULDERS		

FIELD AND LABORATORY TESTING

- (C) Consolidation (ASTM D 2435)
- (CL) Collapse Potential (ASTM D 5333)
- (CP) Compaction Curve (CTM 216)
- (CR) Corrosivity Testing (CTM 643, CTM 422, CTM 417)
- (CU) Consolidated Undrained Triaxial (ASTM D 4767)
- (DS) Direct Shear (ASTM D 3080)
- (EI) Expansion Index (ASTM D 4829)
- (M) Moisture Content (ASTM D 2216)
- (OC) Organic Content-% (ASTM D 2974)
- (P) Permeability (CTM 220)
- (PA) Particle Size Analysis (ASTM D 422)
- (PI) Plasticity Index (AASHTO T 90) Liquid Limit (AASHTO T 89)
- (PL) Point Load Index (ASTM D 5731)
- (PM) Pressure Meter
- (R) R-Value (CTM 301)
- (SE) Sand Equivalent (CTM 217)
- (SG) Specific Gravity (AASHTO T 100)
- (SL) Shrinkage Limit (ASTM D 427)
- (SW) Swell Potential (ASTM D 4546)
- (UC) Unconfined Compression-Soil (ASTM D 2166) Unconfined Compression-Rock (ASTM D 2938)
- (UU) Unconsolidated Undrained Triaxial (ASTM D 2850)
- (UW) Unit Weight (ASTM D 4767)

APPARENT DENSITY OF COHESIONLESS SOILS

Description	SPT N_{60} (Blows / 12 in.)
Very Loose	0 - 5
Loose	5 - 10
Medium Dense	10 - 30
Dense	30 - 50
Very Dense	Greater than 50

MOISTURE

Description	Criteria
Dry	No discernable moisture
Moist	Moisture present, but no free water
Wet	Visible free water

PERCENT OR PROPORTION OF SOILS

Description	Criteria
Trace	Particles are present but estimated to be less than 5%
Few	5% - 10%
Little	15% - 25%
Some	30% - 45%
Mostly	50% - 100%

PARTICLE SIZE

Description		Size (in.)
Boulder		Greater than 12
Cobble		3 - 12
Gravel	Coarse	3/4 - 3
	Fine	1/5 - 3/4
Sand	Coarse	1/16 - 1/5
	Medium	1/64 - 1/16
	Fine	1/300 - 1/64
Silt and Clay		Less than 1/300

ENGINEERING SERVICES — MATERIALS AND GEOTECHNICAL SERVICES

FUNCTIONAL SUPERVISOR
NAME: M. SMITH
DRAWN BY: P.QUACH
CHECKED BY: D.ORRIS
FIELD INVESTIGATION BY: D.LUCAS/T.PANAH/P.MCDONALD/EJ.JEON

STATE OF CALIFORNIA DEPARTMENT OF TRANSPORTATION

DIVISION OF ENGINEERING SERVICES STRUCTURE DESIGN — DESIGN BRANCH 1

BRIDGE NO. 53-E0182
POST MILE 3.47

SOUND WALL NO. 190
LOG OF TEST BORINGS SHEET 5 OF 5

OGS CIVIL LOG OF TEST BORINGS SHEET

ORIGINAL SCALE IN INCHES FOR REDUCED PLANS 0 1 2 3

UNIT: 3576
PROJECT NUMBER & PHASE: 07000018331
CONTRACT NO.: 07-215934

DISREGARD PRINTS BEARING EARLIER REVISION DATES — REVISION DATES 06/22/11 11/21/11

SHEET 35 OF 35

FILE => sw190-z-ltb05.dgn

USERNAME => s124396 DATE PLOTTED => 28-MAR-2012 TIME PLOTTED => 12:06

DIST	COUNTY	ROUTE	POST MILES TOTAL PROJECT	SHEET No.	TOTAL SHEETS
07	LA	5	2.4/4.0	1229	1288

REGISTERED CIVIL ENGINEER 12-07-11 DATE

3-26-12
PLANS APPROVAL DATE

REGISTERED PROFESSIONAL ENGINEER Kevin Harper No. 42221 Exp. 3-31-12 CIVIL STATE OF CALIFORNIA

The State of California or its officers or agents shall not be responsible for the accuracy or completeness of electronic copies of this plan sheet.

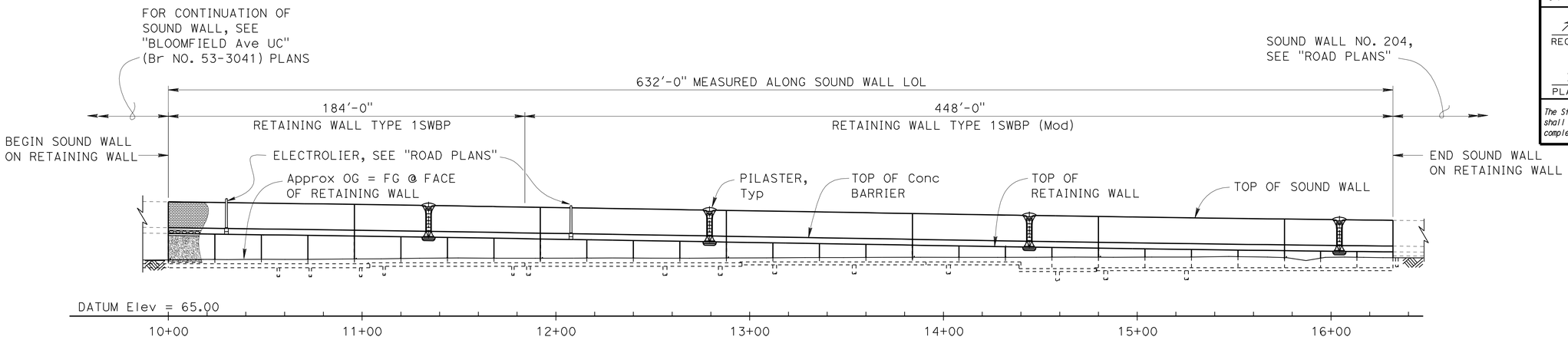

DEVELOPED ELEVATION

1" = 30'

QUANTITIES

STRUCTURE EXCAVATION (RETAINING WALL)	450	CY
STRUCTURE EXCAVATION (TYPE Y-2) (AERIALLY DEPOSITED LEAD)	770	CY
STRUCTURE BACKFILL (RETAINING WALL)	1,430	CY
PERVIOUS BACKFILL MATERIAL (RETAINING WALL)	130	CY
24" CAST-IN-DRILLED-HOLE CONCRETE PILING	3,366	LF
FURNISH PILING (CLASS 90)	1,544	LF
DRIVE PILE (CLASS 90)	42	EA
STRUCTURAL CONCRETE, RETAINING WALL	683	CY
PILASTER, SOUND WALL	9	CY
ARCHITECTURAL TREATMENT (SPLIT SLATE - FRACTURED RIB)	3,900	SQFT
SOUND WALL (MASONRY BLOCK)	8,265	SQFT
BAR REINFORCING STEEL (RETAINING WALL)	164,100	LB
CONCRETE BARRIER (TYPE 736A MODIFIED 2)	632	LF

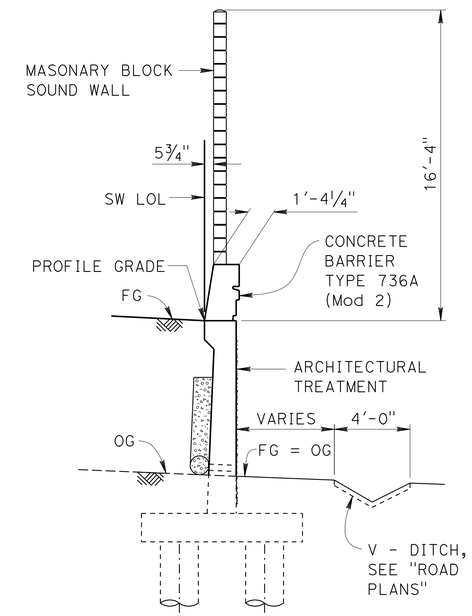

TYPICAL SECTION

¼" = 1'-0"

NOTES:

1. For Design Notes, see "RETAINING WALL TYPE 1SWBP - DETAIL NO. 1" sheet and "SOUND WALL - MASONRY BLOCK WITH BARRIER ON RETAINING WALL DETAILS NO. 2" sheet.
2. All piles are not shown in "DEVELOPED ELEVATION".

(A) Angle Point @ EC: Curve Subtangent Brg = N39°09'38.6"W

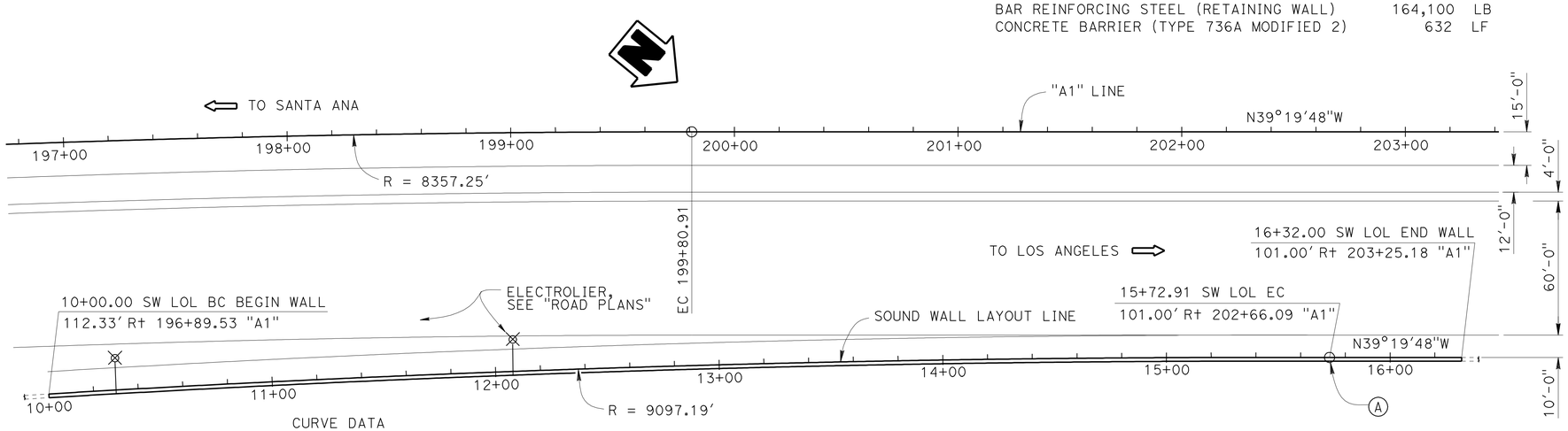

CURVE DATA

SW LOL	A1 LINE
R = 9097.19	R = 8357.25
D = 3°36'30"	D = 17°36'01"
T = 286.55	T = 1293.80
L = 572.91	L = 2567.22

PLAN

1" = 30'

Jeff Sims
DESIGN ENGINEER

	BY	CHECKED			
DESIGN	V. Shostak / G. Thornton	G. Thornton / E. Watson	LOAD FACTOR DESIGN		
DETAILS	Jie Tang / B. Jenko/GS	Greg Thornton	LAYOUT	Vadim Shostak	Greg Thornton
QUANTITIES	Bruce Hagy	April Pearson	SPECIFICATIONS	Theresa Nedwick	PLANS AND SPECS COMPARED Theresa Nedwick

ORIGINAL SCALE IN INCHES FOR REDUCED PLANS 0 1 2 3

STATE OF CALIFORNIA
DEPARTMENT OF TRANSPORTATION

DIVISION OF ENGINEERING SERVICES
STRUCTURE DESIGN
DESIGN BRANCH 1

BRIDGE NO. 53-E0183
POST MILE 3.67

SOUND WALL NO. 202
GENERAL PLAN

UNIT: 3576
PROJECT NUMBER & PHASE: 07000018331
CONTRACT NO.: 07-215934

DISREGARD PRINTS BEARING EARLIER REVISION DATES

REVISION DATES 12/22/10 11/16/11 07/29/11 08/30/11

SHEET 1 OF 28

USERNAME => s124496 DATE PLOTTED => 28-MAR-2012 TIME PLOTTED => 12:06

FILE => sw202-a-gp.dgn

STRUCTURES DESIGN GENERAL PLAN SHEET (ENGLISH) (REV.09-01-10)

DIST	COUNTY	ROUTE	POST MILES TOTAL PROJECT	SHEET No.	TOTAL SHEETS
07	LA	5	2.4/4.0	1230	1288

REGISTERED CIVIL ENGINEER 12-07-11 DATE

3-26-12
PLANS APPROVAL DATE

REGISTERED PROFESSIONAL ENGINEER Kevin Harper No. 42221 Exp. 3-31-12 CIVIL STATE OF CALIFORNIA

The State of California or its officers or agents shall not be responsible for the accuracy or completeness of electronic copies of this plan sheet.

INDEX TO PLANS

SHEET NO.	TITLE
1.	GENERAL PLAN
2.	INDEX TO PLANS
3.	STRUCTURE PLAN NO. 1
4.	STRUCTURE PLAN NO. 2
5.	STRUCTURE PLAN NO. 3
6.	FOUNDATION PLAN NO. 1
7.	FOUNDATION PLAN NO. 2
8.	RETAINING WALL ARCHITECTURAL TREATMENT
9.	RETAINING WALL ARCHITECTURAL DETAILS NO. 1
10.	RETAINING WALL ARCHITECTURAL DETAILS NO. 2
11.	CONCRETE BARRIER TYPE 736A (Mod 2) DETAILS
12.	SOUND WALL ARCHITECTURAL DETAILS
13.	PILASTER ARCHITECTURAL DETAILS NO. 1
14.	PILASTER ARCHITECTURAL DETAILS NO. 2
15.	PILASTER ARCHITECTURAL DETAILS NO. 3
16.	PILASTER ARCHITECTURAL DETAILS NO. 4
17.	PILASTER STRUCTURAL DETAILS NO. 1
18.	PILASTER STRUCTURAL DETAILS NO. 2
19.	PILASTER STRUCTURAL DETAILS NO. 3
20.	ELECTROLIER PEDESTAL DETAILS
21.	RETAINING WALL TYPE 1SWBP - DETAIL NO. 1
22.	RETAINING WALL TYPE 1SWBP - DETAIL NO. 2
23.	SOUND WALL - MASONRY BLOCK WITH BARRIER ON RETAINING WALL DETAILS NO. 1
24.	SOUND WALL - MASONRY BLOCK WITH BARRIER ON RETAINING WALL DETAILS NO. 2
25.	LOG OF TEST BORINGS 1 OF 4
26.	LOG OF TEST BORINGS 2 OF 4
27.	LOG OF TEST BORINGS 3 OF 4
28.	LOG OF TEST BORINGS 4 OF 4

STANDARD PLANS DATED MAY 2006

A10A	ACRONYMS AND ABBREVIATIONS (SHEET 1 OF 2)
A10B	ACRONYMS AND ABBREVIATIONS (SHEET 2 OF 2)
A10C	SYMBOLS (SHEET 1 OF 2)
A10D	SYMBOLS (SHEET 2 OF 2)
A62B	LIMITS OF PAYMENT FOR EXCAVATION AND BACKFILL BRIDGE SURCHARGE AND WALL
B0-1	BRIDGE DETAILS
B0-3	BRIDGE DETAILS
B2-3	16" AND 24" CAST-IN-DRILLED-HOLE CONCRETE PILE
B2-5	PILE DETAILS CLASS 90 AND CLASS 140
B3-8	RETAINING WALL DETAILS No. 1
B3-9	RETAINING WALL DETAILS No. 2
B11-56	CONCRETE BARRIER TYPE 736
B15-9	SOUND WALL MASONRY BLOCK MISCELLANEOUS DETAILS
ES-6B	ELECTRICAL SYSTEMS (LIGHTING STANDARD TYPES 15 AND 21 BARRIER RAIL MOUNTED DETAILS)

STANDARD PLAN SHEET NO.

DETAIL NO.

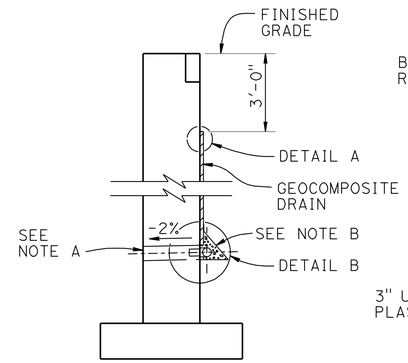

WALL SECTION

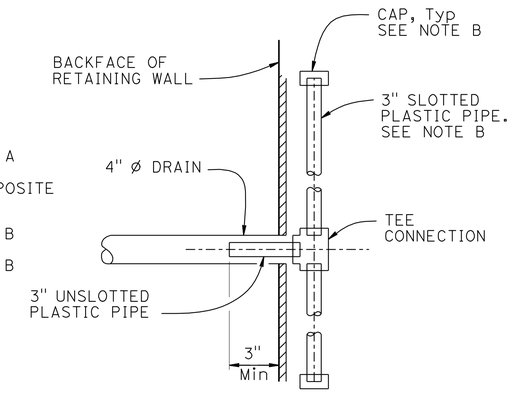

SECTION A-A

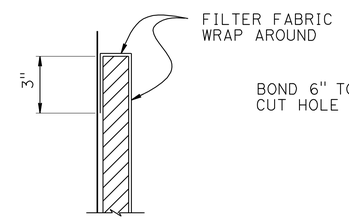

DETAIL A

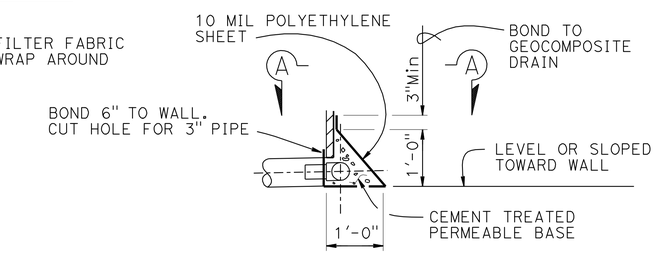

DETAIL B

WEEP HOLE AND GEOCOMPOSITE DRAIN

ALTERNATIVE TO BRIDGE DETAIL B0-3 / 3-1

NOTES:

A. 4" ø drains at 25' max center to center. For walls adjacent to sidewalks or curbs, provide 4" cast iron or asbestos cement pipe under the sidewalk to discharge through curb face. Exposed wall drains shall be located 3"± above finished grade.

B. Geocomposite drain, cement treated permeable base, and 3"ø slotted plastic pipe continuous behind retaining wall. Cap ends of pipe. Provide "Tee" connection at each 4" ø drain.

PILE DATA

LOCATION	PILE TYPE	NOMINAL RESISTANCE (KIP)		SPECIFIED TIP ELEVATION	NOMINAL DRIVING RESISTANCE (KIPS)
		COMPRESSIONS	TENSION		
Ret WALL TYPE 1SWBP SW LOL 10+00.00 to 11+84.00	CLASS 90	180	0	55.0	180
Ret WALL TYPE 1SWBP (Mod) SW LOL 11+84.00 to 13+91.00	24" CIDH	90	0	68.8	90
Ret WALL TYPE 1SWBP (Mod) SW LOL 13+91.00 to 14+39.00	24" CIDH	150	0	62.5	150
Ret WALL TYPE 1SWBP (Mod) SW LOL 14+39.00 to 16+32.00	24" CIDH	150	0	59.0	150

NOTES:
1. Class 90 Alternative "X" Piles shall have a dimension "T" not less than 14 inches.
2. All Design Tips are controlled by compression.

	BY	CHECKED
DESIGN	V. Shostak / G. Thornton	G. Thornton / E. Watson
DETAILS	Jie Tang / B. Jenko/GS	Greg Thornton
QUANTITIES	Bruce Hagy	A. Pearson / E. Watson

STATE OF CALIFORNIA DEPARTMENT OF TRANSPORTATION

DIVISION OF ENGINEERING SERVICES STRUCTURE DESIGN DESIGN BRANCH 1

BRIDGE NO. 53-E0183 POST MILE 3.67

SOUND WALL NO. 202

INDEX TO PLANS

STRUCTURES DESIGN DETAIL SHEET (ENGLISH) (REV. 09-01-10)

ORIGINAL SCALE IN INCHES FOR REDUCED PLANS 0 1 2 3

UNIT: 3576
PROJECT NUMBER & PHASE: 07000018331 CONTRACT NO.: 07-215934

DISREGARD PRINTS BEARING EARLIER REVISION DATES

REVISION DATES 12/31/10 08/16/11 08/16/11 11/15/11

SHEET 2 OF 28

FILE => sw202-a-ltp.dgn

USERNAME => s124496 DATE PLOTTED => 28-MAR-2012 TIME PLOTTED => 12:06

DIST	COUNTY	ROUTE	POST MILES TOTAL PROJECT	SHEET No.	TOTAL SHEETS
07	LA	5	2.4/4.0	1231	1288

REGISTERED CIVIL ENGINEER 12-07-11 DATE

3-26-12
PLANS APPROVAL DATE

REGISTERED PROFESSIONAL ENGINEER Kevin Harper No. 42221 Exp. 3-31-12 CIVIL STATE OF CALIFORNIA

The State of California or its officers or agents shall not be responsible for the accuracy or completeness of electronic copies of this plan sheet.

Notes:

1. For barrier details, see "CONCRETE BARRIER TYPE 736A (Mod 2) DETAILS" sheet.
2. For sound wall details, see "SOUND WALL - MASONRY BLOCK WITH BARRIER ON RETAINING WALL DETAILS NO. 1" and NO. 2 sheets.
3. For RW Type 1SWBP details, see "RETAINING WALL TYPE 1SWBP - DETAIL NO. 1" and NO. 2 sheets. For RW Type 1SWBP(Mod) details, see "STRUCTURE PLAN NO. 3" sheet.
4. Retaining wall expansion joints, weakened planes, and weep holes shall be placed per B0-3/3-3
5. For expansion joint details in the masonry block sound wall, see "Sound Wall Masonry Block with Barrier on Retaining wall Details No. 1 and No 2" sheets.
6. All longitudinal dimensions are measured along the SW LOL.
7. Not all piles shown in "DEVELOPED ELEVATION".
8. Contractor shall locate all utilities prior to footing excavation and driving piles.
9. Between limits shown, (e) and (f) Reinf changed to 8 bundles of 2 #6 bars.
10. For "WEEPHOLE AND GEOCOMPOSITE DRAIN", see "INDEX TO PLANS" sheet.

LEGEND:

- Indicates Vertical Class 90 Pile
- Indicates 1:3 Battered Class 90 Pile
- Indicates 2'-0" ø CIDH Pile

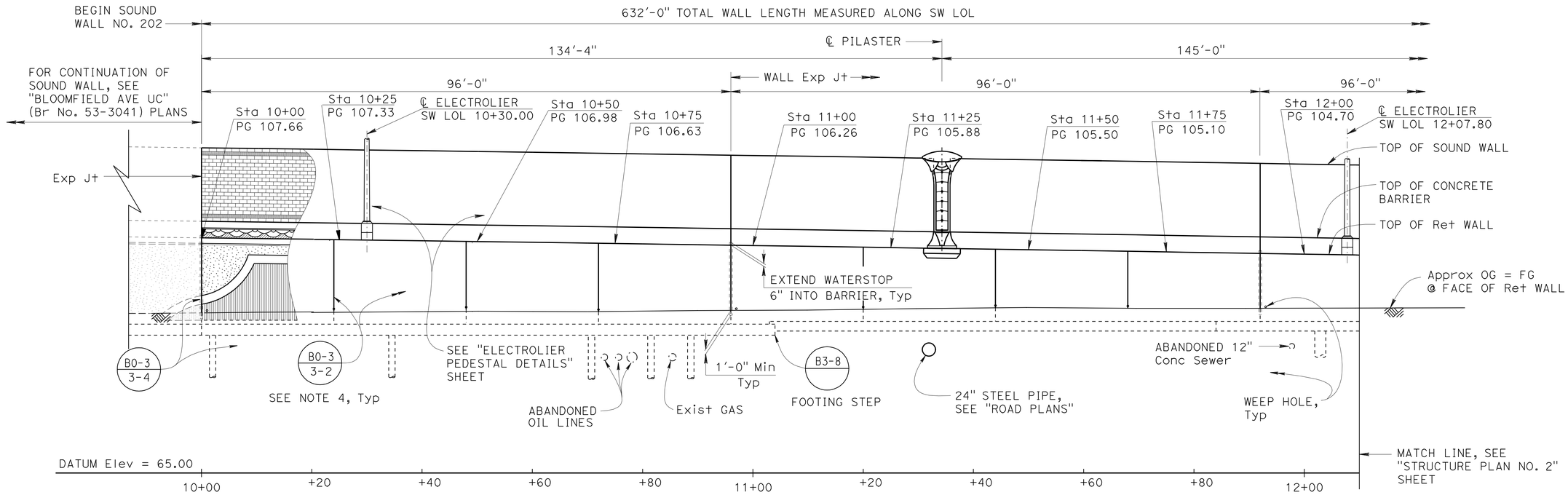

DEVELOPED ELEVATION

1" = 10'

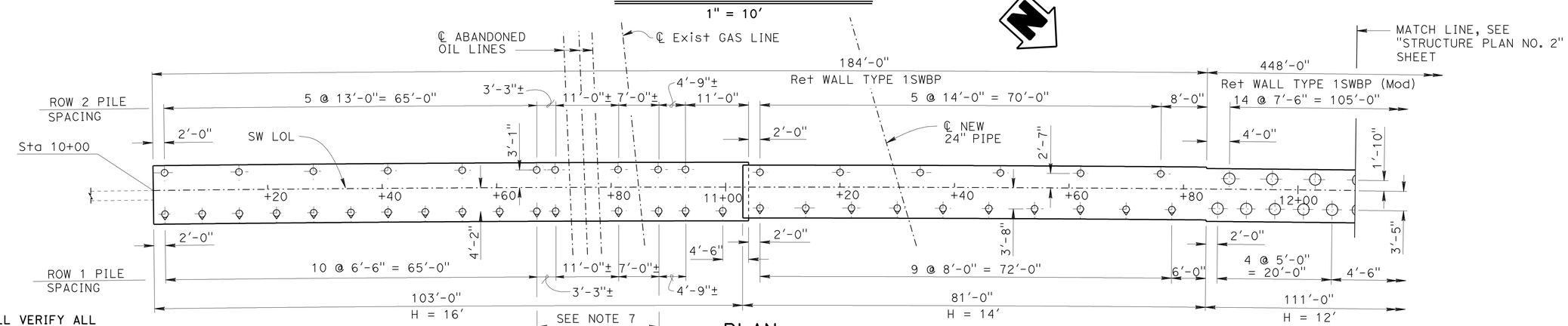

PLAN

1" = 10'

NOTE:
THE CONTRACTOR SHALL VERIFY ALL CONTROLLING FIELD DIMENSIONS BEFORE ORDERING OR FABRICATING ANY MATERIAL.

	BY	CHECKED
DESIGN	Vadim Shostak	Greg Thornton
DETAILS	Jie Tang / B. Jenko/GS	Greg Thornton
QUANTITIES	Bruce Hagy	A. Pearson / E. Watson

STATE OF CALIFORNIA
DEPARTMENT OF TRANSPORTATION

DIVISION OF ENGINEERING SERVICES
STRUCTURE DESIGN
DESIGN BRANCH 1

BRIDGE NO. 53-E0183
POST MILE 3.67

SOUND WALL NO. 202
STRUCTURE PLAN NO. 1

STRUCTURES DESIGN DETAIL SHEET (ENGLISH) (REV. 09-01-10)

ORIGINAL SCALE IN INCHES FOR REDUCED PLANS 0 1 2 3

UNIT: 3576
PROJECT NUMBER & PHASE: 07000018331
CONTRACT NO.: 07-215934

DISREGARD PRINTS BEARING EARLIER REVISION DATES

REVISION DATES 12/23/10 07/29/11 08/12/11 11/15/11

SHEET 3 OF 28

FILE => sw202-c-sp01.dgn

USERNAME => s124496 DATE PLOTTED => 28-MAR-2012 TIME PLOTTED => 12:06

DIST	COUNTY	ROUTE	POST MILES TOTAL PROJECT	SHEET No.	TOTAL SHEETS
07	LA	5	2.4/4.0	1232	1288

REGISTERED CIVIL ENGINEER 12-07-11 DATE

3-26-12
PLANS APPROVAL DATE

REGISTERED PROFESSIONAL ENGINEER Kevin Harper No. 42221 Exp. 3-31-12 CIVIL STATE OF CALIFORNIA

The State of California or its officers or agents shall not be responsible for the accuracy or completeness of electronic copies of this plan sheet.

For "NOTES", see "STRUCTURE PLAN NO. 1" sheet.

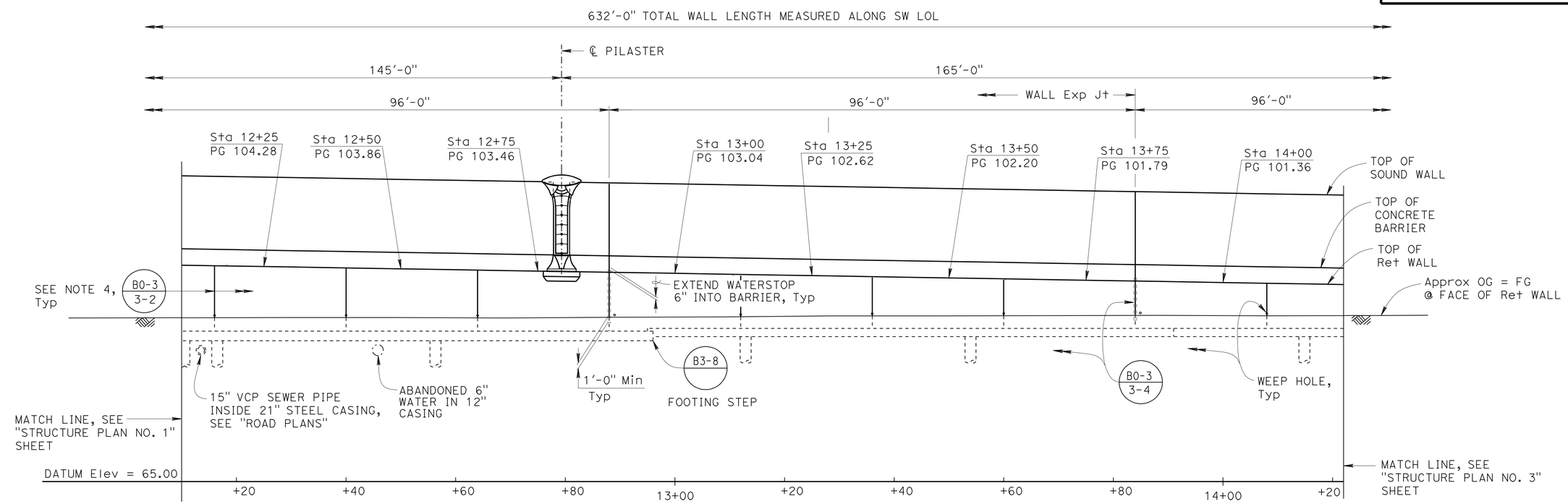

DEVELOPED ELEVATION

1" = 10'

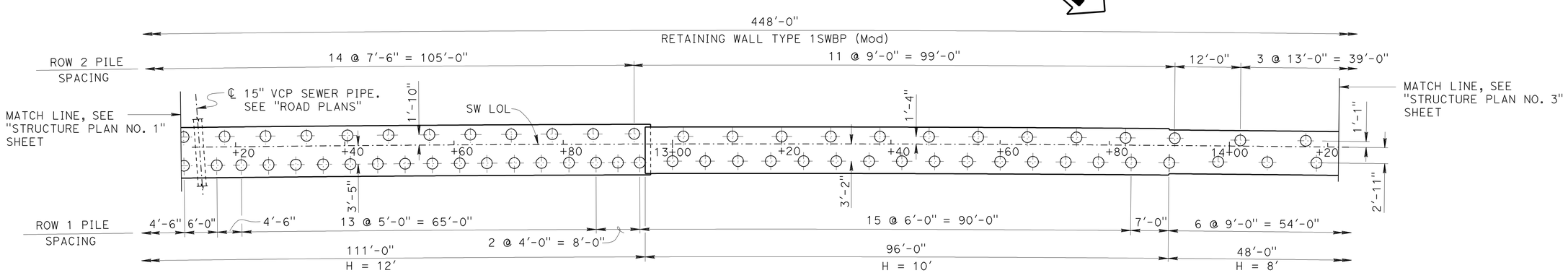

PLAN

1" = 10'

DESIGN	BY V. Shostak / G. Thornton	CHECKED G. Thornton / E. Watson	
DETAILS	BY Jie Tang / B. Jenko/GS	CHECKED Greg Thornton	
QUANTITIES	BY Bruce Hagy	CHECKED A. Pearson / E. Watson	

STATE OF CALIFORNIA
DEPARTMENT OF TRANSPORTATION

DIVISION OF ENGINEERING SERVICES
STRUCTURE DESIGN
DESIGN BRANCH 1

BRIDGE NO. 53-E0183
POST MILE 3.67

SOUND WALL NO. 202
STRUCTURE PLAN NO. 2

STRUCTURES DESIGN DETAIL SHEET (ENGLISH) (REV. 09-01-10)

ORIGINAL SCALE IN INCHES FOR REDUCED PLANS 0 1 2 3

UNIT: 3576
PROJECT NUMBER & PHASE: 07000018331
CONTRACT NO.: 07-215934

DISREGARD PRINTS BEARING EARLIER REVISION DATES
REVISION DATES 12/29/10 08/24/11 11/15/11 06/21/11

SHEET 4 OF 28

FILE => sw202-c-sp02.dgn

USERNAME => s124496 DATE PLOTTED => 28-MAR-2012 TIME PLOTTED => 12:07

DIST	COUNTY	ROUTE	POST MILES TOTAL PROJECT	SHEET No.	TOTAL SHEETS
07	LA	5	2.4/4.0	1233	1288

REGISTERED CIVIL ENGINEER 12-07-11 DATE

3-26-12
PLANS APPROVAL DATE

REGISTERED PROFESSIONAL ENGINEER Kevin Harper No. 42221 Exp. 3-31-12 CIVIL STATE OF CALIFORNIA

The State of California or its officers or agents shall not be responsible for the accuracy or completeness of electronic copies of this plan sheet.

For "NOTES", see "STRUCTURE PLAN NO. 1" sheet.

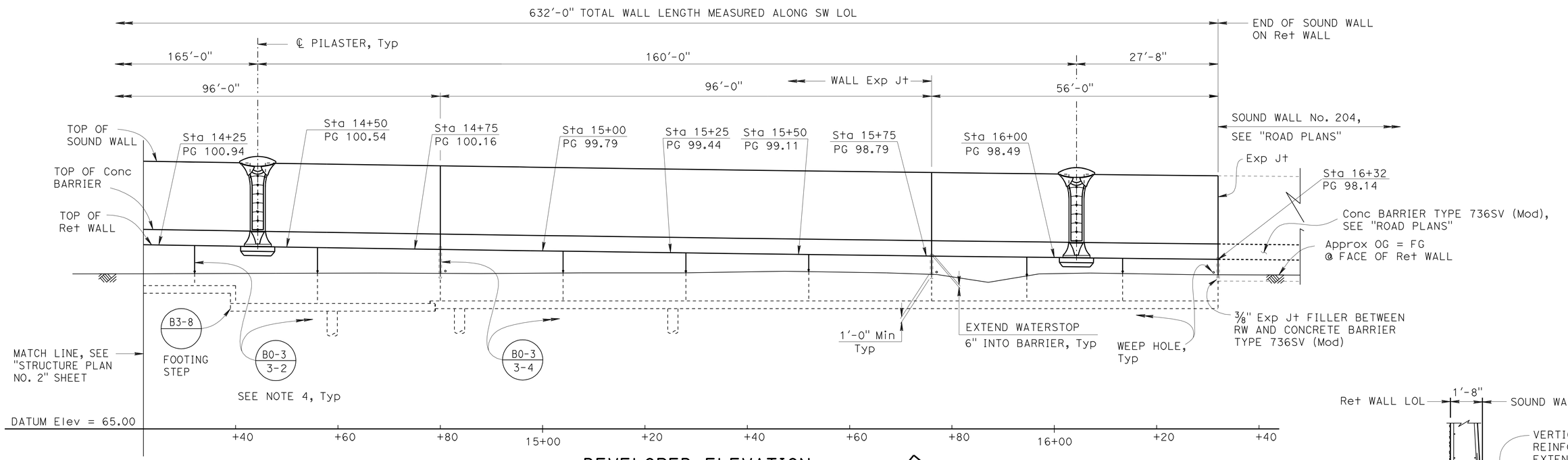

DEVELOPED ELEVATION

1" = 10'

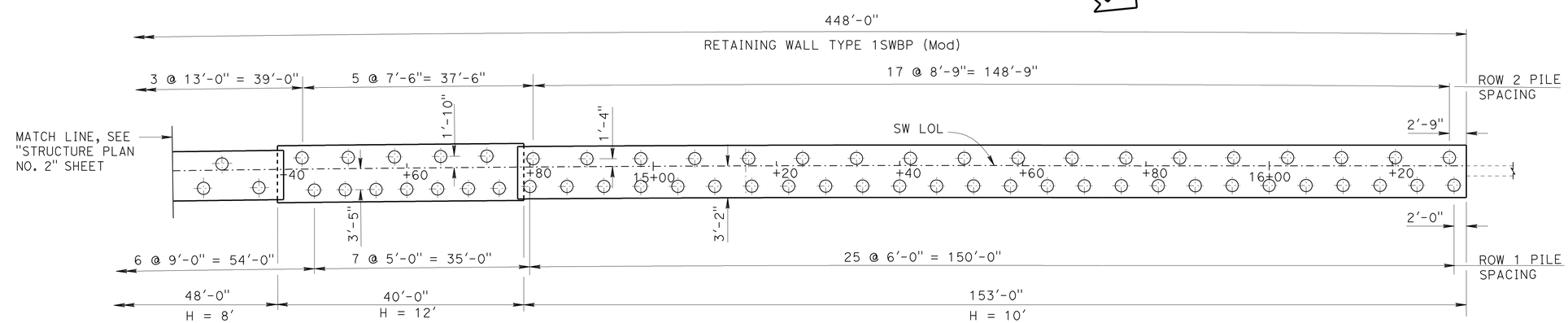

PLAN

1" = 10'

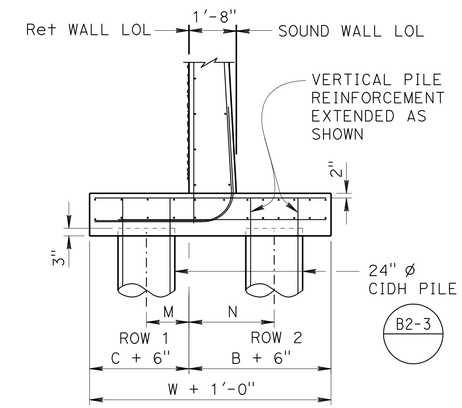

NOTE:

For reinforcement and dimensions not shown, see "RETAINING WALL TYPE 1SWBP DETAIL NO. 1" AND NO. 2 sheets.

PART TYPICAL SECTION
RET WALL TYPE 1SWBP (Mod)

3/8" = 1'-0"

	BY	CHECKED
DESIGN	V. Shostak / G. Thornton	G. Thornton / E. Watson
DETAILS	Jie Tang / B. Jenko/GS	Greg Thornton
QUANTITIES	Bruce Hagy	A. Pearson / E. Watson

STATE OF CALIFORNIA
DEPARTMENT OF TRANSPORTATION

DIVISION OF ENGINEERING SERVICES
STRUCTURE DESIGN
DESIGN BRANCH 1

BRIDGE NO. 53-E0183
POST MILE 3.67

SOUND WALL NO. 202
STRUCTURE PLAN NO. 3

STRUCTURES DESIGN DETAIL SHEET (ENGLISH) (REV. 09-01-10)

ORIGINAL SCALE IN INCHES FOR REDUCED PLANS 0 1 2 3

UNIT: 3576
PROJECT NUMBER & PHASE: 07000018331
CONTRACT NO.: 07-215934

DISREGARD PRINTS BEARING EARLIER REVISION DATES

REVISION DATES 12/30/10 08/31/11 11/15/11 06/08/11

SHEET 5 OF 28

FILE => sw202-c-sp03.dgn

USERNAME => s124496 DATE PLOTTED => 28-MAR-2012 TIME PLOTTED => 12:07

DIST	COUNTY	ROUTE	POST MILES TOTAL PROJECT	SHEET No.	TOTAL SHEETS
07	LA	5	2.4/4.0	1234	1288

REGISTERED CIVIL ENGINEER 12-08-11 DATE

3-26-12
PLANS APPROVAL DATE

REGISTERED PROFESSIONAL ENGINEER Kevin Harper No. 42221 Exp. 3-31-12 CIVIL STATE OF CALIFORNIA

The State of California or its officers or agents shall not be responsible for the accuracy or completeness of electronic copies of this plan sheet.

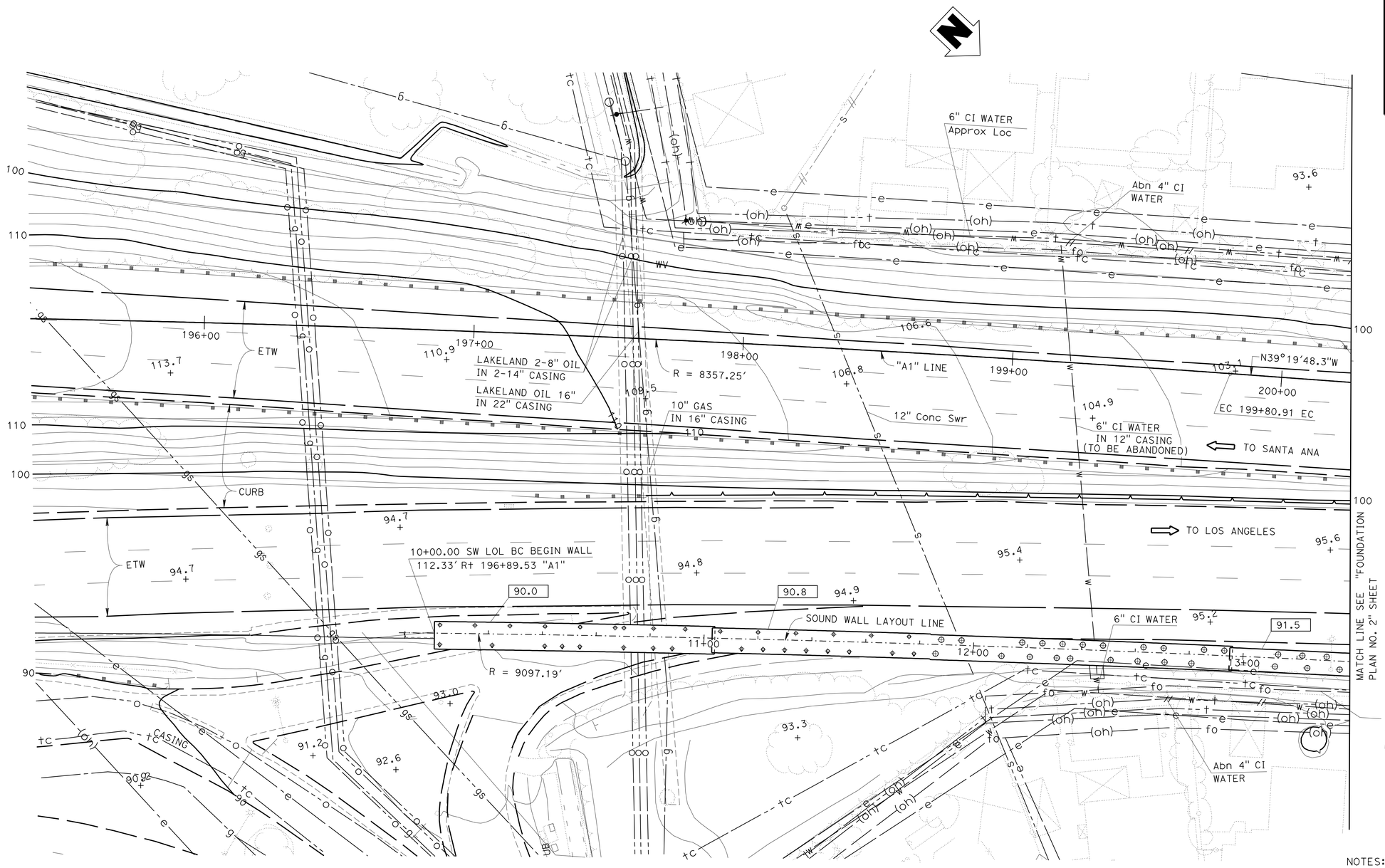

NOTES:

Underground utilities as shown are approximate

+ - Denotes spot elevation

⊕ - Denotes Class 90 piles (not all piles shown)

⊕ - Denotes vertical 24" ø CIDH piles (not all piles shown)

XX.X - Indicates bottom of Ftg elevation

SCALE 1" = 20'			
DESIGN	BY Vadim Shostak	CHECKED Greg Thornton	
DETAILS	BY Jie Tang / Gary Souza	CHECKED Greg Thornton	
QUANTITIES	BY Bruce Hagy	CHECKED A. Pearson / E. Watson	

STATE OF CALIFORNIA
DEPARTMENT OF TRANSPORTATION

DIVISION OF ENGINEERING SERVICES
STRUCTURE DESIGN
DESIGN BRANCH 1

BRIDGE NO. 53-E0183
POST MILE 3.67

SOUND WALL NO. 202
FOUNDATION PLAN NO. 1

STRUCTURES DESIGN DETAIL SHEET (ENGLISH) (REV. 09-01-10)

ORIGINAL SCALE IN INCHES FOR REDUCED PLANS 0 1 2 3

UNIT: 3576
PROJECT NUMBER & PHASE: 07000018331
CONTRACT NO.: 07-215934

DISREGARD PRINTS BEARING EARLIER REVISION DATES

REVISION DATES 03/18/11 11/16/11 08/12/11 08/31/11

SHEET 6 OF 28

FILE => sw202-e-fp101.dgn

USERNAME => s124496 DATE PLOTTED => 28-MAR-2012 TIME PLOTTED => 12:07

DIST	COUNTY	ROUTE	POST MILES TOTAL PROJECT	SHEET No.	TOTAL SHEETS
07	LA	5	2.4/4.0	1235	1288

REGISTERED CIVIL ENGINEER — DATE 12-08-11

3-26-12
PLANS APPROVAL DATE

REGISTERED PROFESSIONAL ENGINEER — Kevin Harper — No. 42221 — Exp. 3-31-12 — CIVIL — STATE OF CALIFORNIA

The State of California or its officers or agents shall not be responsible for the accuracy or completeness of electronic copies of this plan sheet.

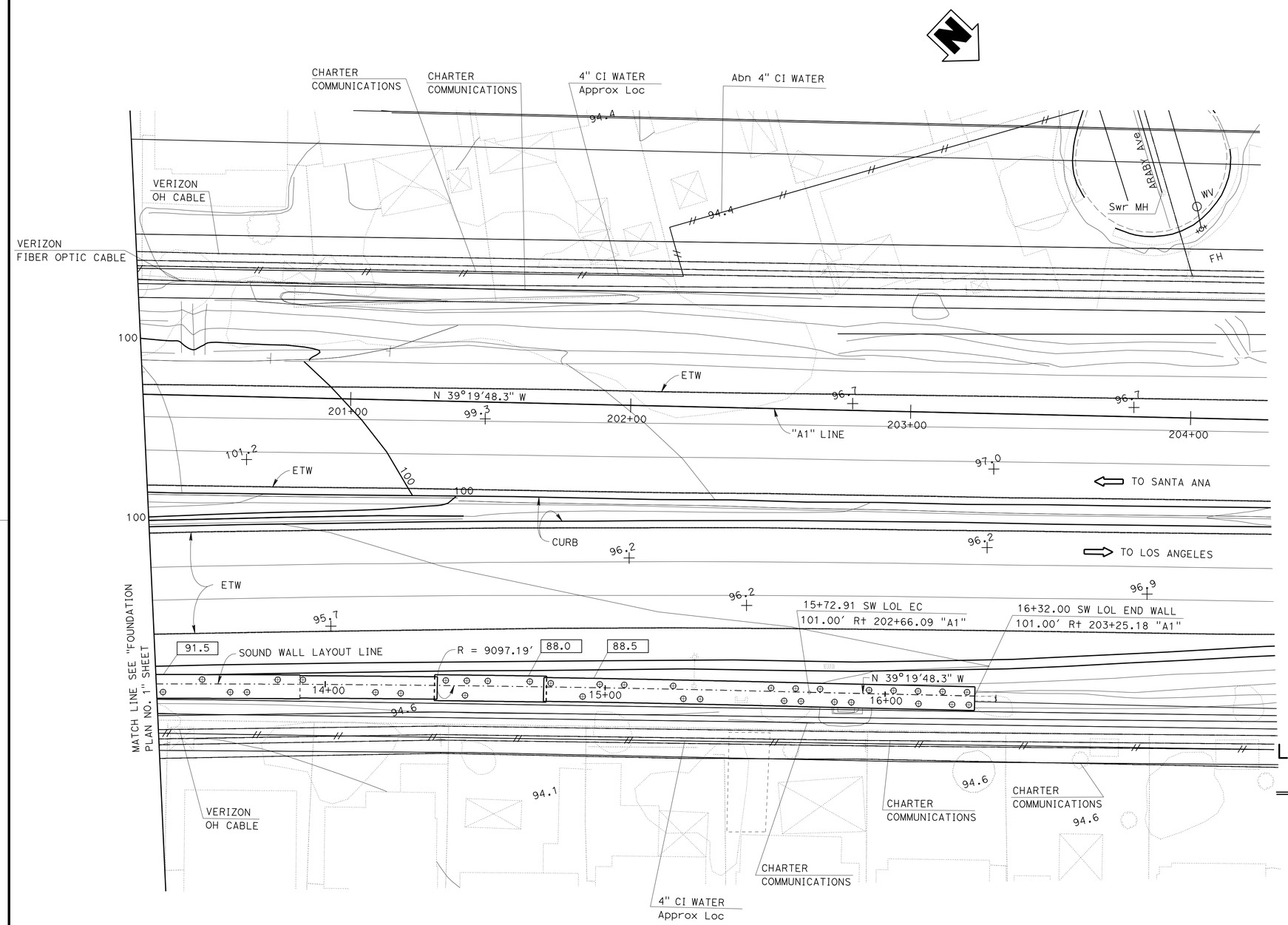

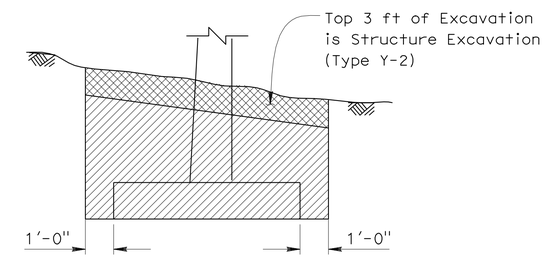

SW LOL Sta 12+00 to 16+32

LEGEND:

- Structure Exc (Type Y-2)
- Structure Exc

LIMITS OF PAYMENT FOR STRUCTURE EXCAVATION (TYPE Y-2) (AERIALLY DEPOSITED LEAD)

NO SCALE

NOTES:

Underground utilities as shown are approximate

+ - Denotes spot elevation

⊕ - Denotes vertical 24" ø CIDH piles (not all piles shown)

XX.X - Indicates bottom of Ftg elevation

SCALE 1" = 20'				
DESIGN	BY V. Shostak / G. Thornton	CHECKED G. Thornton / E. Watson	STATE OF CALIFORNIA DEPARTMENT OF TRANSPORTATION	DIVISION OF ENGINEERING SERVICES STRUCTURE DESIGN DESIGN BRANCH 1
DETAILS	BY Jie Tang / B. Jenko/GS	CHECKED Greg Thornton		
QUANTITIES	BY Bruce Hagy	CHECKED A. Pearson / E. Watson		

BRIDGE NO. 53-E0183
POST MILE 3.67

SOUND WALL NO. 202
FOUNDATION PLAN NO. 2

STRUCTURES DESIGN DETAIL SHEET (ENGLISH) (REV. 09-01-10)

ORIGINAL SCALE IN INCHES FOR REDUCED PLANS 0 1 2 3

UNIT: 3576
PROJECT NUMBER & PHASE: 07000018331
CONTRACT NO.: 07-215934

DISREGARD PRINTS BEARING EARLIER REVISION DATES

REVISION DATES: 03/31/11 08/31/11 08/31/11 08/31/11

SHEET 7 OF 28

FILE => sw202-e-fp102.dgn

USERNAME => s124496 DATE PLOTTED => 28-MAR-2012 TIME PLOTTED => 12:07

DIST	COUNTY	ROUTE	POST MILES TOTAL PROJECT	SHEET No.	TOTAL SHEETS
07	LA	5	2.4/4.0	1236	1288

REGISTERED CIVIL ENGINEER 12-07-11 DATE

3-26-12
PLANS APPROVAL DATE

REGISTERED PROFESSIONAL ENGINEER Kevin Harper No. 42221 Exp. 3-31-12 CIVIL STATE OF CALIFORNIA

The State of California or its officers or agents shall not be responsible for the accuracy or completeness of electronic copies of this plan sheet.

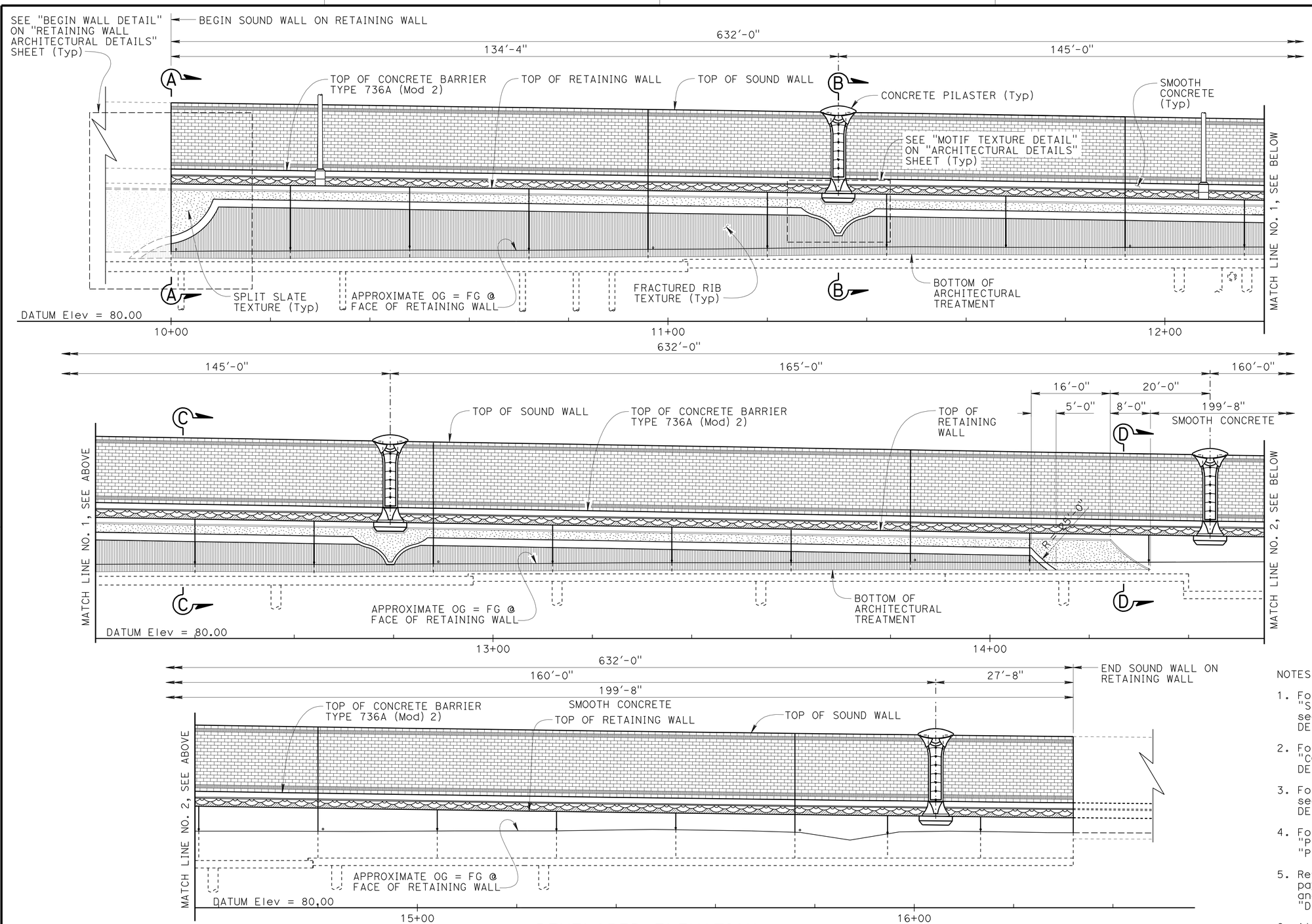

DEVELOPED ELEVATION

1" = 10'

NOTES:

1. For "SECTION A-A", "SECTION B-B", "SECTION C-C" and "SECTION D-D", see "RETAINING WALL ARCHITECTURAL DETAILS NO. 2" sheet.
2. For barrier architectural details, see "CONCRETE BARRIER TYPE 736A (Mod 2) DETAILS" sheet.
3. For sound wall architectural details, see "SOUND WALL ARCHITECTURAL DETAILS" sheet.
4. For pilaster and corbel details, see "PILASTER ARCHITECTURAL DETAILS" and "PILASTER STRUCTURAL DETAILS" sheets.
5. Retaining wall architectural treatment pay limits shall include all split slate and fractured rib texture shown in "DEVELOPED ELEVATION".
6. All longitudinal dimensions are measured along SW LOL.

	BY	CHECKED
DESIGN	Isaac Tasabia	Javier Chavez
DETAILS	Gary Souza	Daniel Sessions
QUANTITIES	Bruce Hagy	April Pearson

STATE OF CALIFORNIA
DEPARTMENT OF TRANSPORTATION

DIVISION OF ENGINEERING SERVICES
STRUCTURE DESIGN
DESIGN BRANCH 1

BRIDGE NO. 53-E0183
POST MILE 3.67

SOUND WALL NO. 202
RETAINING WALL ARCHITECTURAL TREATMENT

STRUCTURES DESIGN DETAIL SHEET (ENGLISH) (REV. 09-01-10)

ORIGINAL SCALE IN INCHES FOR REDUCED PLANS 0 1 2 3

UNIT: 3576
PROJECT NUMBER & PHASE: 07000018331
CONTRACT NO.: 07-215934

DISREGARD PRINTS BEARING EARLIER REVISION DATES

REVISION DATES 11/28/11 12/06/11

SHEET 8 OF 28

FILE => sw202-e-ret-arch_treat.dgn

USERNAME => s124496 DATE PLOTTED => 28-MAR-2012 TIME PLOTTED => 12:07

DIST	COUNTY	ROUTE	POST MILES TOTAL PROJECT	SHEET No.	TOTAL SHEETS
07	LA	5	2.4/4.0	1237	1288

REGISTERED CIVIL ENGINEER 12-07-11 DATE

3-26-12
PLANS APPROVAL DATE

REGISTERED PROFESSIONAL ENGINEER Kevin Harper No. 42221 Exp. 3-31-12 CIVIL STATE OF CALIFORNIA

The State of California or its officers or agents shall not be responsible for the accuracy or completeness of electronic copies of this plan sheet.

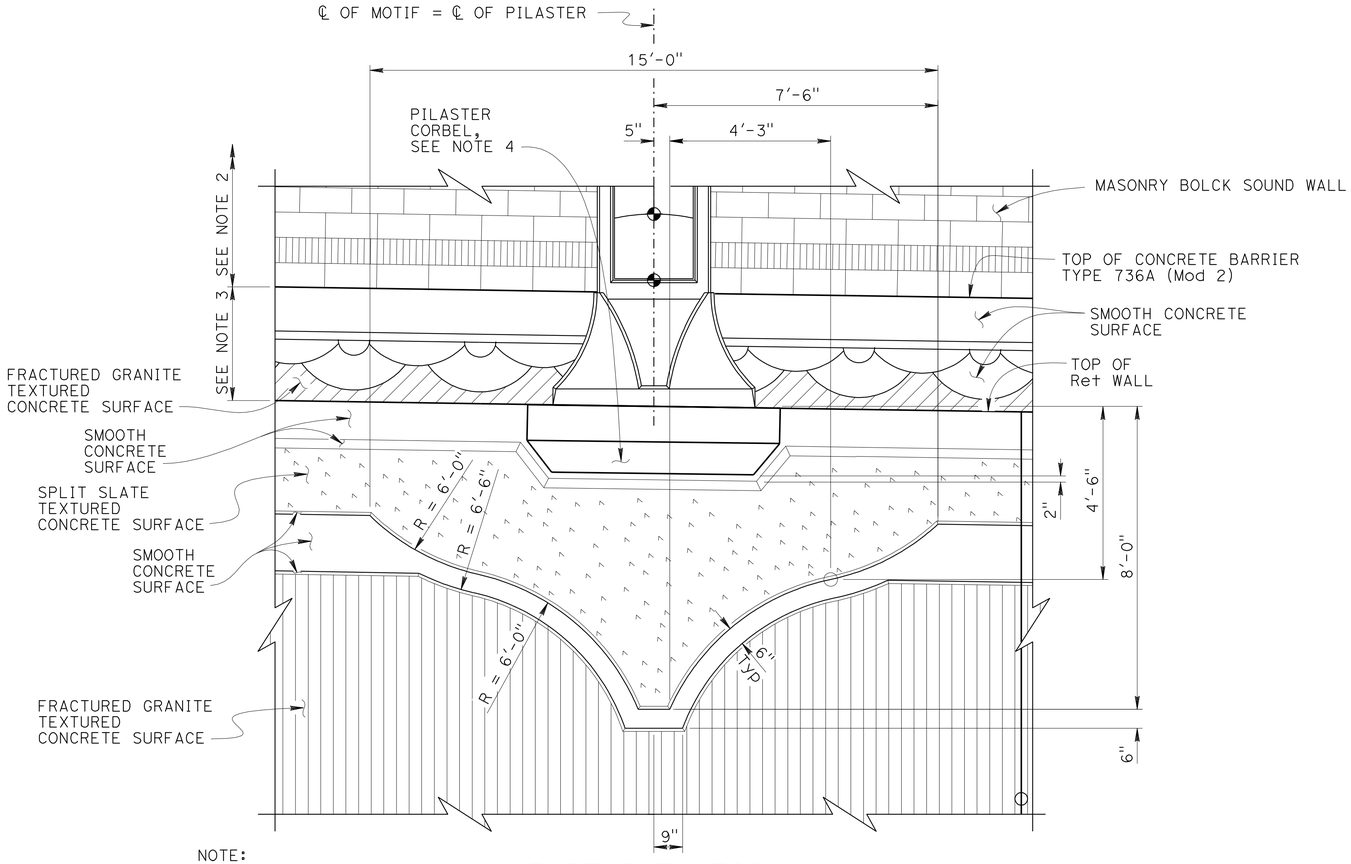

NOTE:
All dimensions symmetrical about ℄ of motif

PART ELEVATION
MOTIF TEXTURE DETAIL

½" = 1'-0"

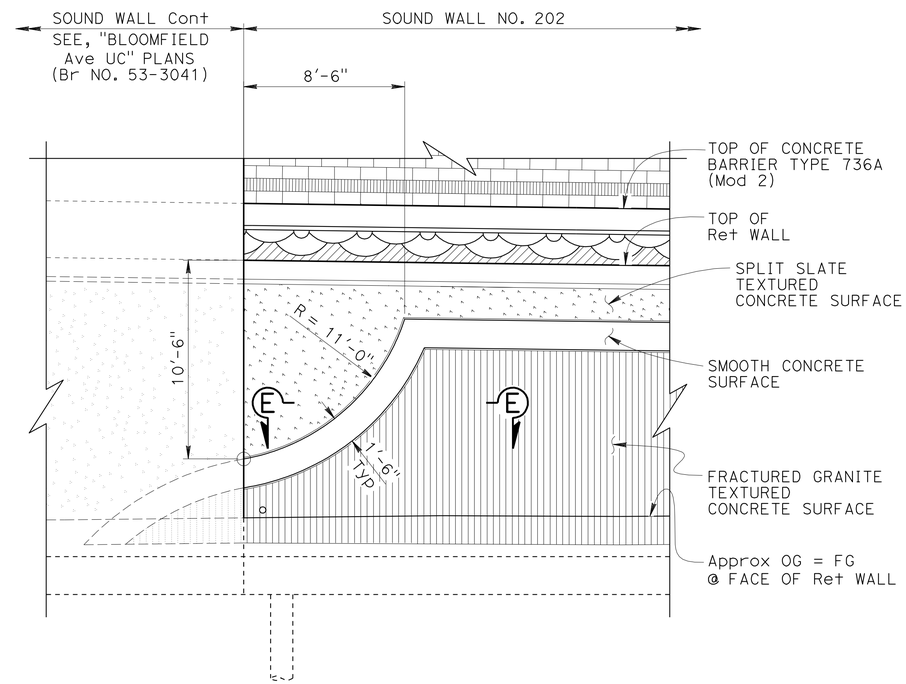

PART ELEVATION
BEGIN WALL TEXTURE DETAIL

¼" = 1'-0"

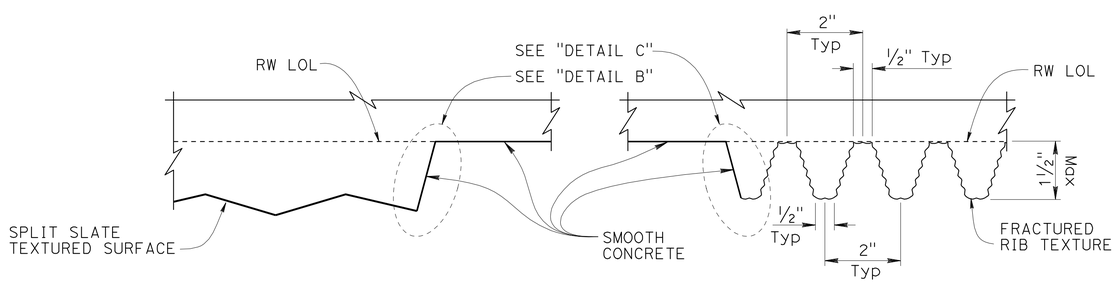

SECTION E-E

6" = 1'-0"

NOTES:

1. For locations of "MOTIF TEXTURE DETAIL" and "BEGIN WALL TEXTURE DETAIL", see "RETAINING WALL ARCHITECTURAL TREATMENT" sheet.
2. For other retaining wall architectural details not shown see, "RETAINING WALL ARCHITECTURAL DETAILS NO. 2" sheet.
3. For sound wall architectural treatment, see "SOUND WALL ARCHITECTURAL DETAILS" sheet.
4. For barrier architectural details, see "CONCRETE BARRIER TYPE 736A (Mod 2) DETAILS" sheet.
5. For pilaster and corbel details, see "PILASTER ARCHITECTURAL DETAILS" and "PILASTER STRUCTURAL DETAILS" sheets.

	BY	CHECKED
DESIGN	Isaac Tasabia	Javier Chavez
DETAILS	Gary Souza	Daniel Sessions
QUANTITIES	Bruce Hagy	April Pearson

STATE OF CALIFORNIA
DEPARTMENT OF TRANSPORTATION

DIVISION OF ENGINEERING SERVICES
STRUCTURE DESIGN
DESIGN BRANCH 1

BRIDGE NO. 53-E0183
POST MILE 3.67

SOUND WALL NO. 202
RETAINING WALL ARCHITECTURAL DETAILS NO. 1

STRUCTURES DESIGN DETAIL SHEET (ENGLISH) (REV. 09-01-10)

ORIGINAL SCALE IN INCHES FOR REDUCED PLANS 0 1 2 3

UNIT: 3576
PROJECT NUMBER & PHASE: 07000018331
CONTRACT NO.: 07-215934

DISREGARD PRINTS BEARING EARLIER REVISION DATES

REVISION DATES 11/17/11 11/28/11

SHEET 9 OF 28

FILE => sw202-e-ret-arch-dt01.dgn

USERNAME => s124496 DATE PLOTTED => 28-MAR-2012 TIME PLOTTED => 12:07

DIST	COUNTY	ROUTE	POST MILES TOTAL PROJECT	SHEET No.	TOTAL SHEETS
07	LA	5	2.4/4.0	1238	1288

REGISTERED CIVIL ENGINEER 12-07-11 DATE

3-26-12
PLANS APPROVAL DATE

REGISTERED PROFESSIONAL ENGINEER Kevin Harper No. 42221 Exp. 3-31-12 CIVIL STATE OF CALIFORNIA

The State of California or its officers or agents shall not be responsible for the accuracy or completeness of electronic copies of this plan sheet.

NOTES:

1. For locations of "SECTION A-A", "SECTION B-B", "SECTION C-C" and "SECTION D-D", see "RETAINING WALL ARCHITECTURAL TREATMENT" sheet.
2. For architectural details not shown, see "RETAINING WALL ARCHITECTURAL DETAILS NO. 1" sheet.
3. For sound wall architectural details, see "SOUND WALL ARCHITECTURAL DETAILS" sheet.
4. For barrier architectural details, see "CONCRETE BARRIER TYPE 736A (Mod 2) DETAILS" sheet.
5. For pilaster and corbel details, see "PILASTER ARCHITECTURAL DETAILS" and "PILASTER STRUCTURAL DETAILS" sheets.

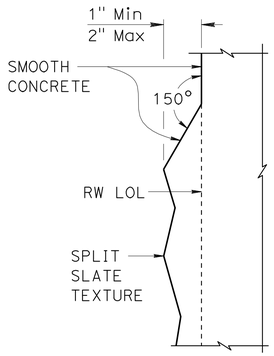

DETAIL A
3" = 1'-0"

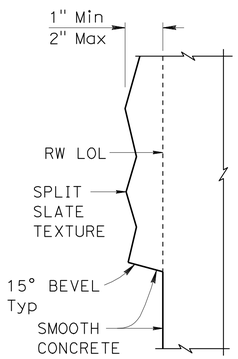

DETAIL B
3" = 1'-0"

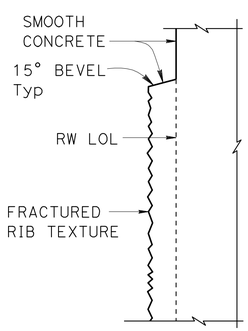

DETAIL C
3" = 1'-0"

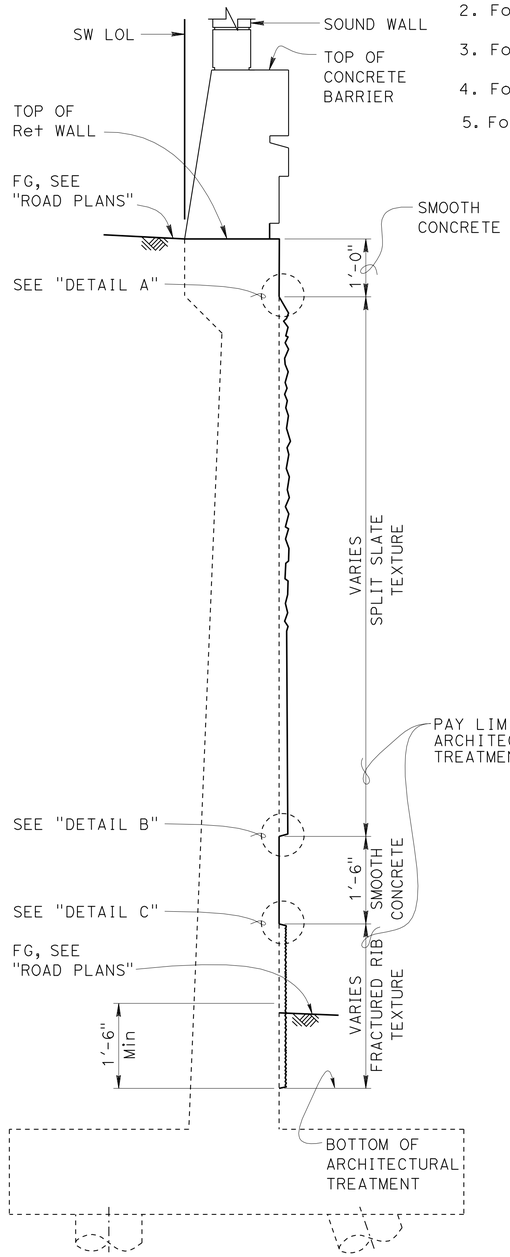

SECTION A-A
¾" = 1'-0"

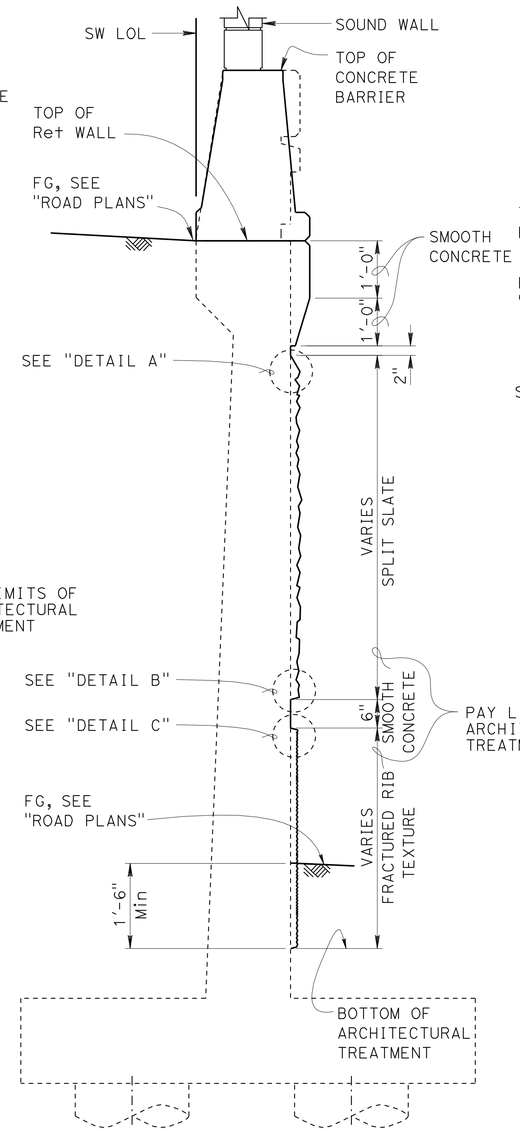

SECTION B-B
¾" = 1'-0"

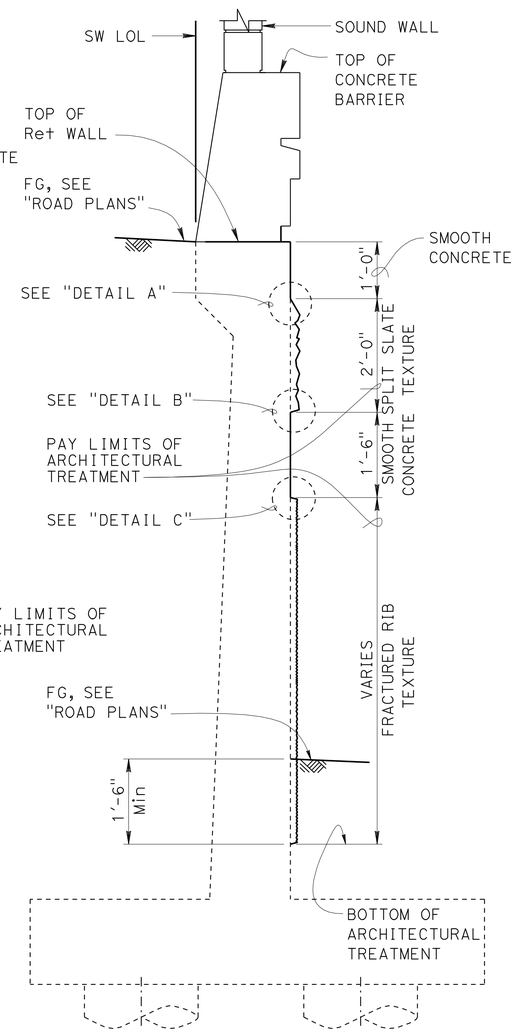

SECTION C-C
¾" = 1'-0"

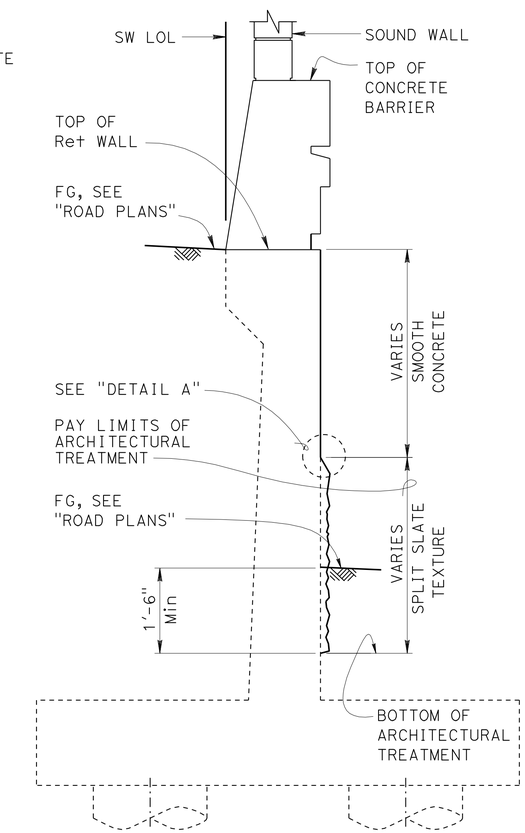

SECTION D-D
¾" = 1'-0"

DESIGN	BY Isaac Tasabia	CHECKED Javier Chavez	
DETAILS	BY Gary Souza	CHECKED Daniel Sessions	
QUANTITIES	BY Bruce Hagy	CHECKED April Pearson	

STATE OF CALIFORNIA
DEPARTMENT OF TRANSPORTATION

DIVISION OF ENGINEERING SERVICES
STRUCTURE DESIGN
DESIGN BRANCH 1

BRIDGE NO. 53-E0183
POST MILE 3.67

SOUND WALL NO. 202
RETAINING WALL ARCHITECTURAL DETAILS NO. 2

STRUCTURES DESIGN DETAIL SHEET (ENGLISH) (REV. 09-01-10)

ORIGINAL SCALE IN INCHES FOR REDUCED PLANS 0 1 2 3

UNIT: 3576
PROJECT NUMBER & PHASE: 07000018331
CONTRACT NO.: 07-215934

DISREGARD PRINTS BEARING EARLIER REVISION DATES

REVISION DATES: 11/12/11 11/28/11

SHEET 10 OF 28

USERNAME => s124496 DATE PLOTTED => 28-MAR-2012 TIME PLOTTED => 12:07

FILE => sw202-e-ret-arch-dt02.dgn

DIST	COUNTY	ROUTE	POST MILES TOTAL PROJECT	SHEET No.	TOTAL SHEETS
07	LA	5	2.4/4.0	1239	1288

REGISTERED CIVIL ENGINEER 12-07-11 DATE

3-26-12
PLANS APPROVAL DATE

REGISTERED PROFESSIONAL ENGINEER Kevin Harper No. 42221 Exp. 3-31-12 CIVIL STATE OF CALIFORNIA

The State of California or its officers or agents shall not be responsible for the accuracy or completeness of electronic copies of this plan sheet.

Notes:

1. For concrete Barrier Type 736A (Mod 2) details not shown, see "BARRIER SECTION" on "SOUND WALL - MASONRY BLOCK WITH BARRIER ON RETAINING WALL DETAILS NO. 2" sheet.
2. For sound wall architectural details, see "SOUND WALL ARCHITECTURAL DETAILS" sheet.

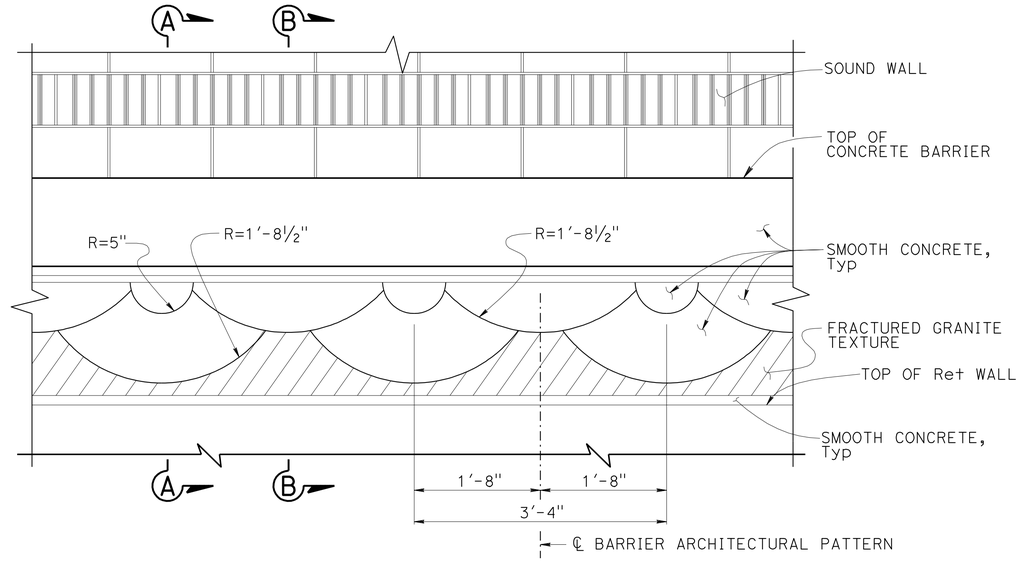

ELEVATION CONCRETE BARRIER TYPE 736A (MOD 2)

1" = 1'-0"

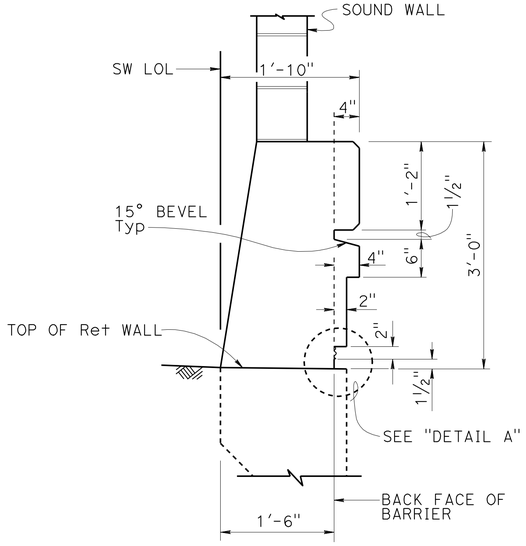

SECTION A-A

1" = 1'-0"

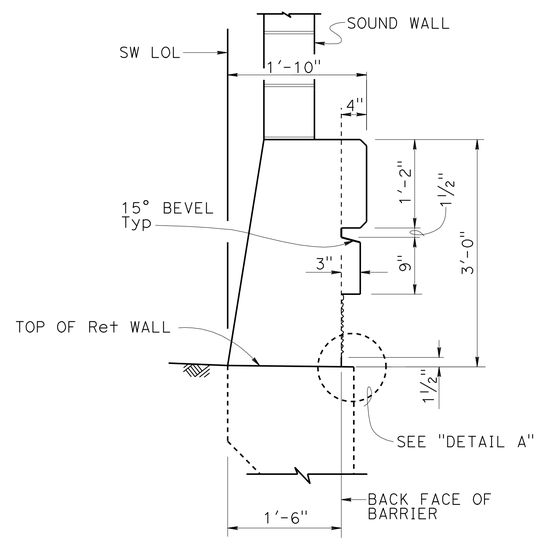

SECTION B-B

1" = 1'-0"

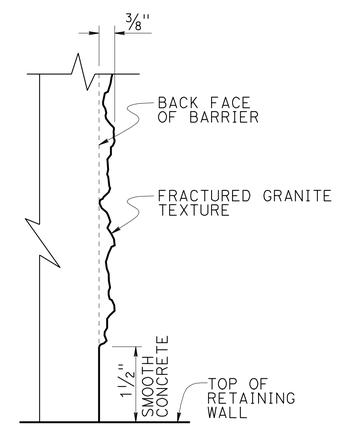

Note: Detail at "SECTION B-B" shown, "SECTION A-A" similar.

DETAIL A

NO SCALE

	BY	CHECKED
DESIGN	Kevin Harper	Vadim Shostak
DETAILS	Jin Zhou	V. Shostak / D. Sessions
QUANTITIES	Bruce Hagy	April Pearson

STATE OF CALIFORNIA DEPARTMENT OF TRANSPORTATION

DIVISION OF ENGINEERING SERVICES STRUCTURE DESIGN DESIGN BRANCH 1

BRIDGE NO. 53-E0183
POST MILE 3.67

SOUND WALL NO. 202

CONCRETE BARRIER TYPE 736A (MOD 2) DETAILS

STRUCTURES DESIGN DETAIL SHEET (ENGLISH) (REV. 09-01-10)

ORIGINAL SCALE IN INCHES FOR REDUCED PLANS 0 1 2 3

UNIT: 3576
PROJECT NUMBER & PHASE: 07000018331
CONTRACT NO.: 07-215934

DISREGARD PRINTS BEARING EARLIER REVISION DATES

REVISION DATES 11/29/10 11/16/11 03/29/11 04/04/11

SHEET 11 OF 28

FILE => sw202-f-barr01.dgn

USERNAME => s124436 DATE PLOTTED => 28-MAR-2012 TIME PLOTTED => 12:07

DIST	COUNTY	ROUTE	POST MILES TOTAL PROJECT	SHEET No.	TOTAL SHEETS
07	LA	5	2.4/4.0	1240	1288

REGISTERED CIVIL ENGINEER 12-07-11 DATE

3-26-12
PLANS APPROVAL DATE

REGISTERED PROFESSIONAL ENGINEER Kevin Harper No. 42221 Exp. 3-31-12 CIVIL STATE OF CALIFORNIA

The State of California or its officers or agents shall not be responsible for the accuracy or completeness of electronic copies of this plan sheet.

NOTE:
1. All Masonry Block shall be Precision units sides, unless otherwise noted.

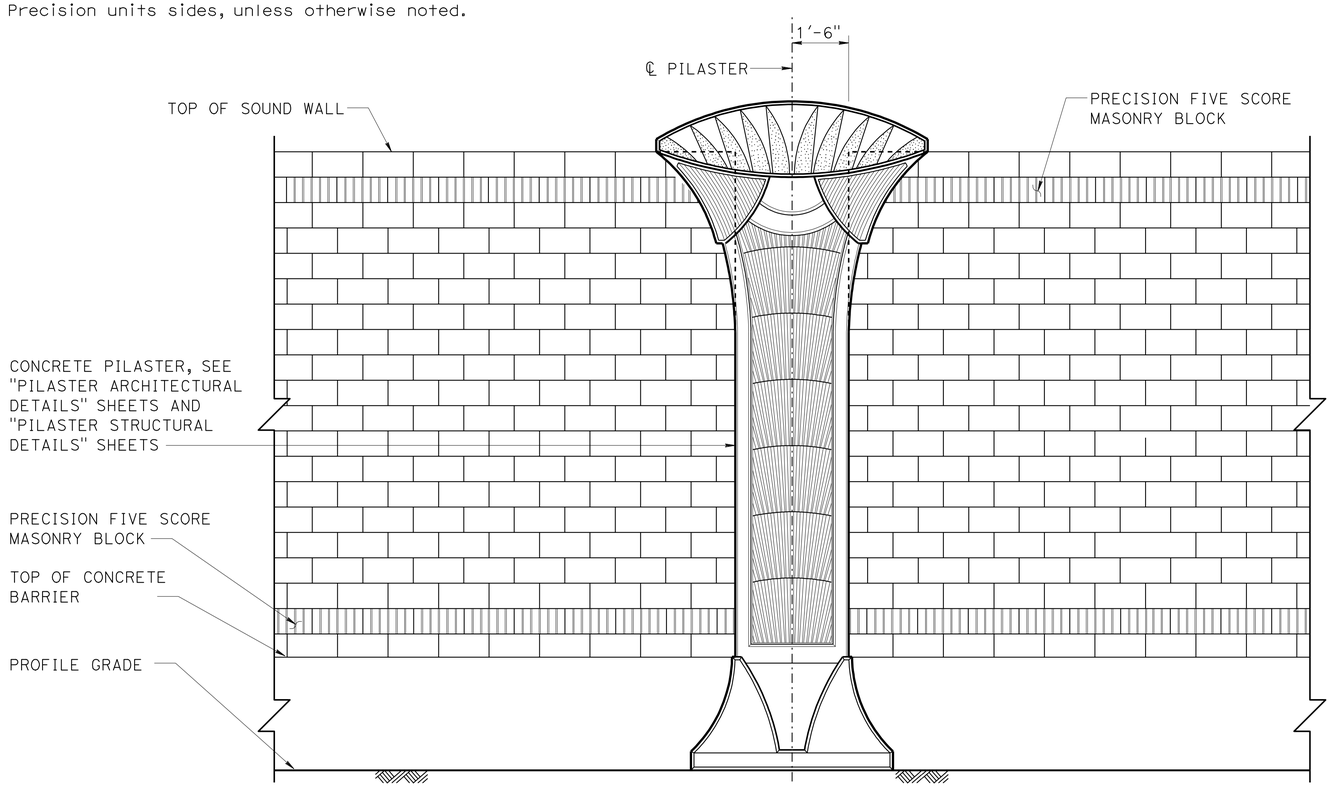

PART SOUND WALL ELEVATION - FREEWAY SIDE

½" = 1'-0"

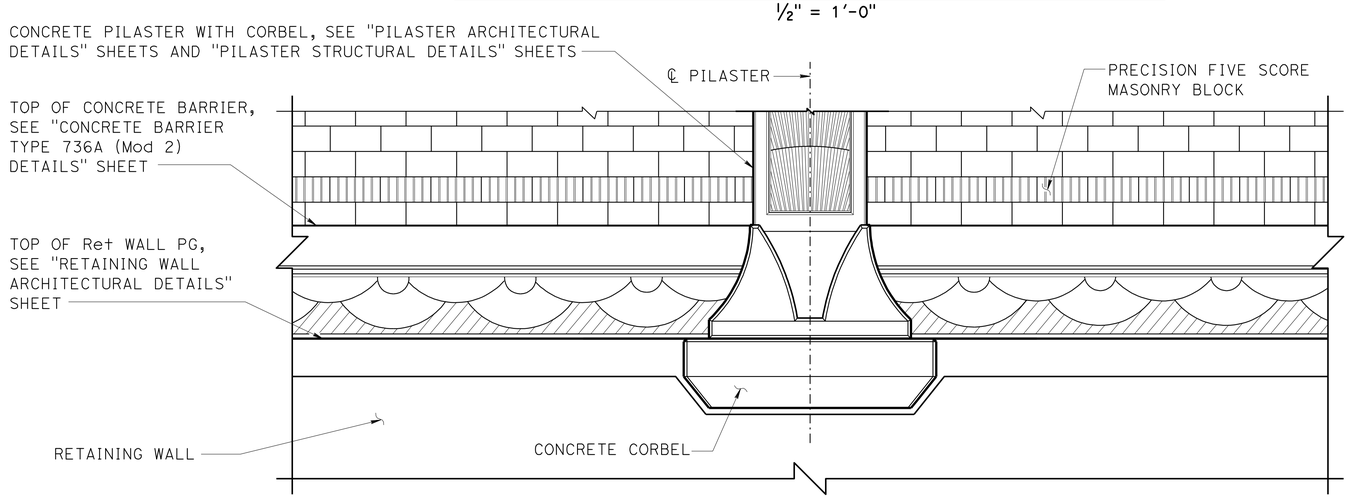

PART SOUND WALL ELEVATION - BACK SIDE

½" = 1'-0"

DESIGN	BY Issac Tasabia	CHECKED Javier Chavez	
DETAILS	BY Jin Zhou / G. Souza	CHECKED V. Shostak / G. Thornton	
QUANTITIES	BY April Pearson	CHECKED Kyoung Lee	

STATE OF CALIFORNIA
DEPARTMENT OF TRANSPORTATION

DIVISION OF ENGINEERING SERVICES
STRUCTURE DESIGN
DESIGN BRANCH 1

BRIDGE NO. 53-E0183
POST MILE 3.67

SOUND WALL NO. 202
SOUND WALL ARCHITECTURAL DETAILS

STRUCTURES DESIGN DETAIL SHEET (ENGLISH) (REV. 09-01-10)

ORIGINAL SCALE IN INCHES FOR REDUCED PLANS 0 1 2 3

UNIT: 3576
PROJECT NUMBER & PHASE: 07000018331
CONTRACT NO.: 07-215934

DISREGARD PRINTS BEARING EARLIER REVISION DATES

REVISION DATES: 12/10/10 11/14/11 12/06/11

SHEET 12 OF 28

FILE => sw202-f-sou01.dgn

USERNAME => s124496 DATE PLOTTED => 28-MAR-2012 TIME PLOTTED => 12:07

DIST	COUNTY	ROUTE	POST MILES TOTAL PROJECT	SHEET No.	TOTAL SHEETS
07	LA	5	2.4/4.0	1241	1288

REGISTERED CIVIL ENGINEER 12-07-11 DATE

3-26-12
PLANS APPROVAL DATE

REGISTERED PROFESSIONAL ENGINEER Kevin Harper No. 42221 Exp. 3-31-12 CIVIL STATE OF CALIFORNIA

The State of California or its officers or agents shall not be responsible for the accuracy or completeness of electronic copies of this plan sheet.

NOTES:

1. All dimensions symmetrical about ℄ Pilaster.
2. For location of "DETAIL E", see "PILASTER ARCHITECTURAL DETAILS NO. 2" sheet.
3. Beveled edges are 45° unless otherwise noted.
4. All vertical dimensions are measured along the ℄ Pilaster (Pilaster shall be vertical).

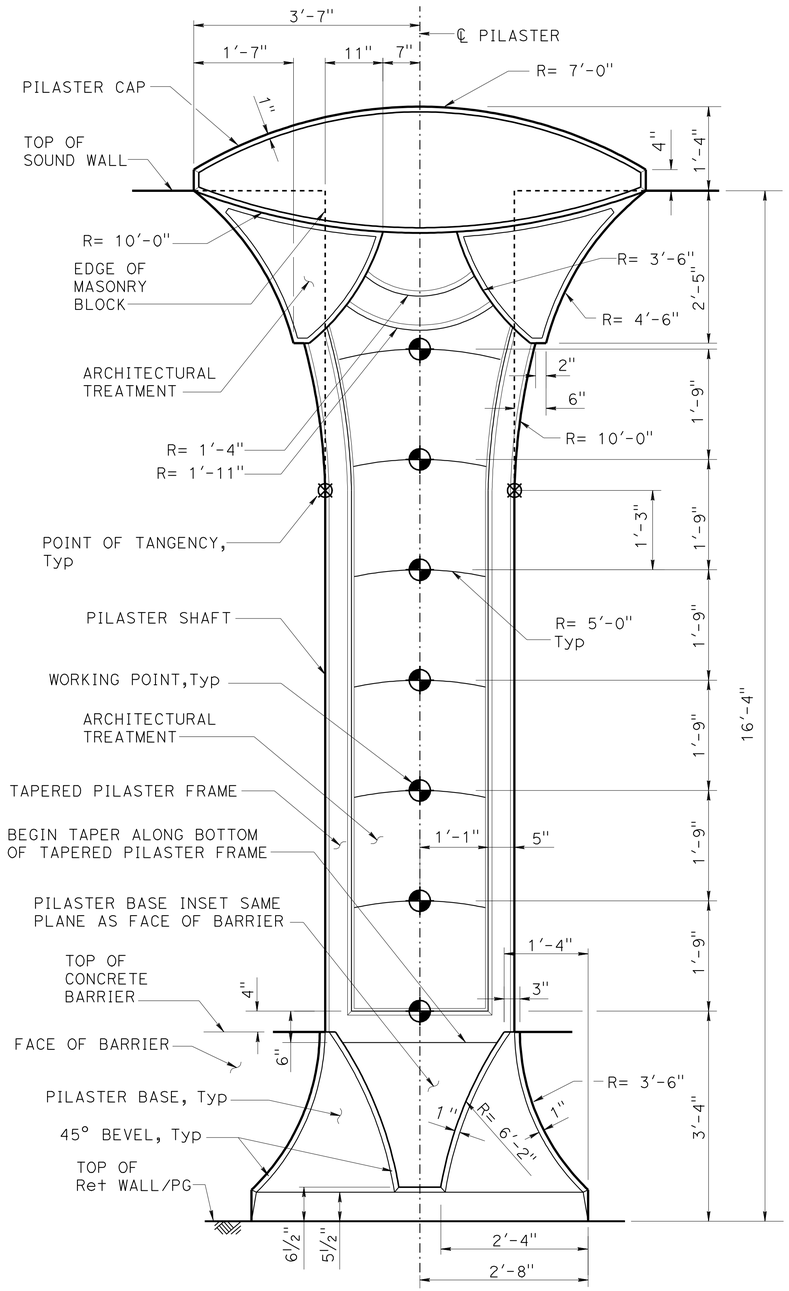

16'-4" SOUND WALL

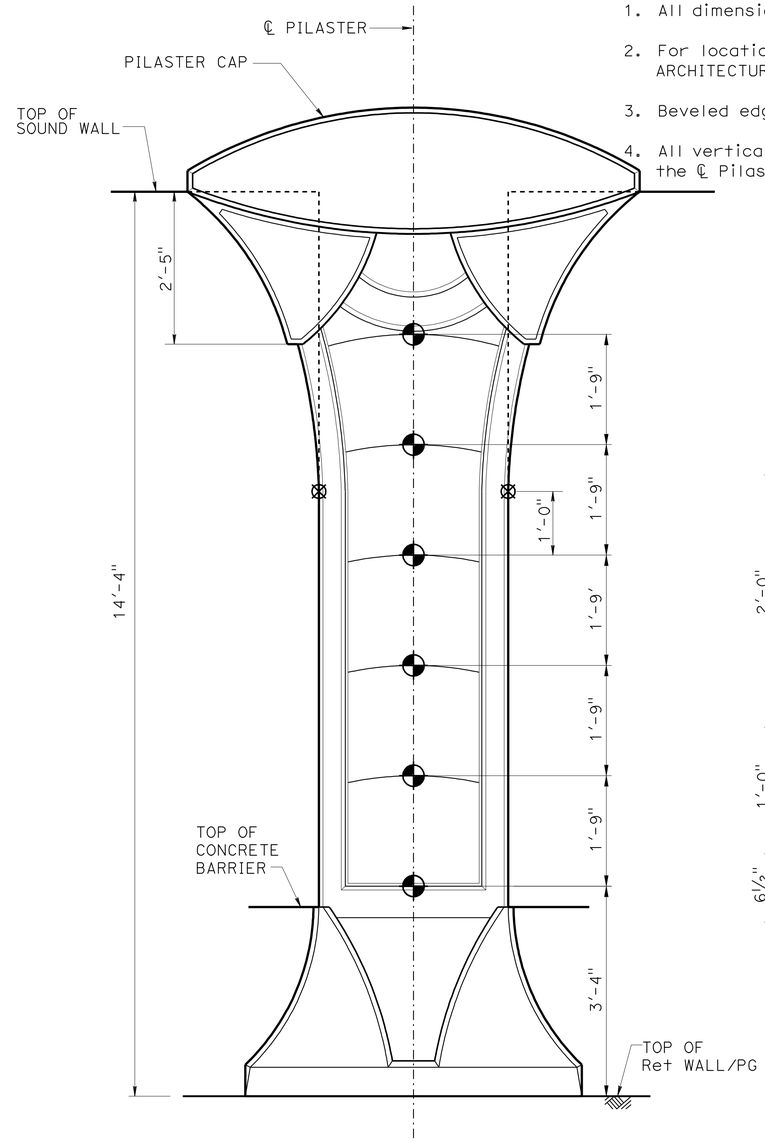

NOTE: For dimensions and details not shown, see "16'-4" SOUND WALL" details.

14'-4" SOUND WALL

PILASTER ELEVATION - FREEWAY SIDE

NO SCALE

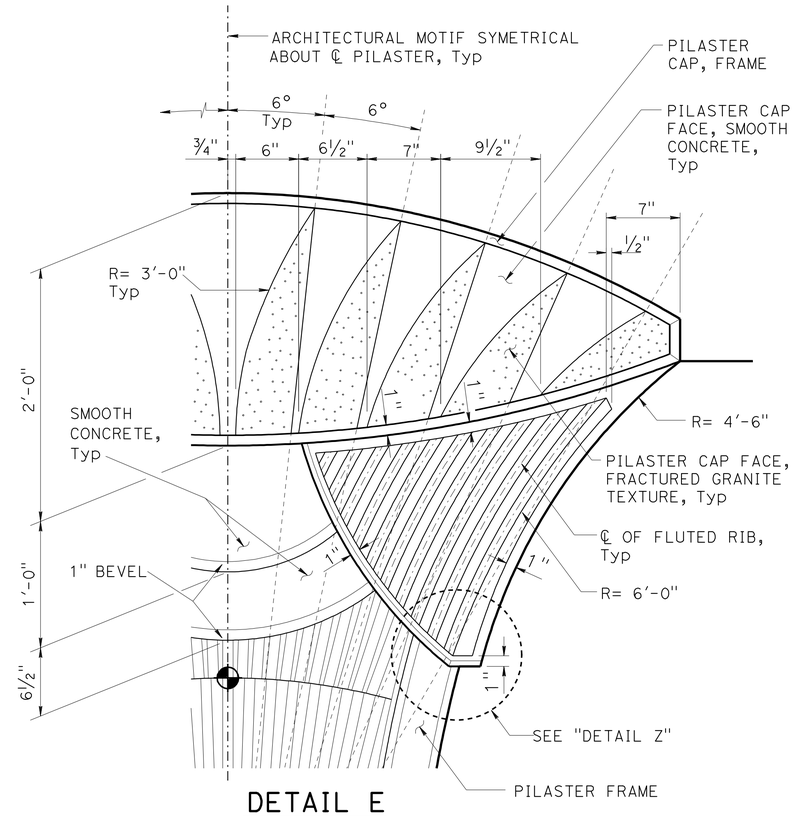

DETAIL E

NO SCALE

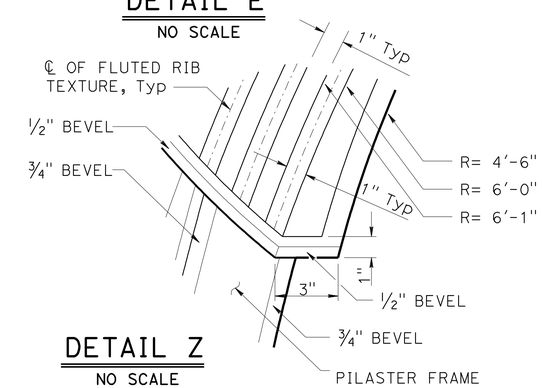

DETAIL Z

NO SCALE

	BY	CHECKED
DESIGN	Isaac Tasabia	Javier Chavez
DETAILS	Jin Zhou	K. Harper / D. Sessions
QUANTITIES	April Pearson	Kyoung Lee

STATE OF CALIFORNIA
DEPARTMENT OF TRANSPORTATION

DIVISION OF ENGINEERING SERVICES
STRUCTURE DESIGN
DESIGN BRANCH 1

BRIDGE NO. 53-E0183
POST MILE 3.67

SOUND WALL NO. 202
PILASTER ARCHITECTURAL DETAILS NO. 1

STRUCTURES DESIGN DETAIL SHEET (ENGLISH) (REV. 09-01-10)

ORIGINAL SCALE IN INCHES FOR REDUCED PLANS 0 1 2 3

UNIT: 3576
PROJECT NUMBER & PHASE: 07000018331
CONTRACT NO. 07-215934

DISREGARD PRINTS BEARING EARLIER REVISION DATES

REVISION DATES 12/08/10 11/16/11 04/19/11 04/29/11

SHEET 13 OF 28

FILE => sw202-g-pilaster01.dgn

USERNAME => s124496 DATE PLOTTED => 28-MAR-2012 TIME PLOTTED => 12:11:3

DIST	COUNTY	ROUTE	POST MILES TOTAL PROJECT	SHEET No.	TOTAL SHEETS
07	LA	5	2.4/4.0	1242	1288

REGISTERED CIVIL ENGINEER — DATE 12-07-11

PLANS APPROVAL DATE 3-26-12

REGISTERED PROFESSIONAL ENGINEER — Kevin Harper — No. 42221 — Exp. 3-31-12 — CIVIL — STATE OF CALIFORNIA

The State of California or its officers or agents shall not be responsible for the accuracy or completeness of electronic copies of this plan sheet.

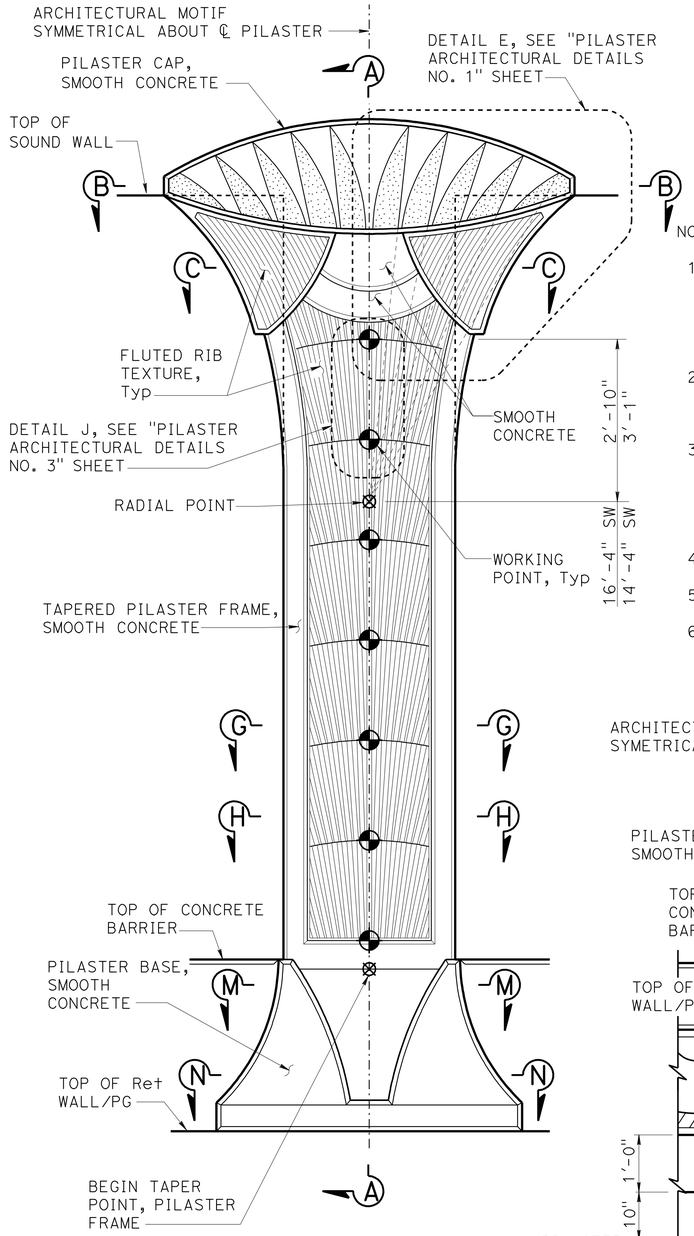

NOTES:

1. For "SECTION B-B", "SECTION C-C", "SECTION G-G","SECTION H-H" and "SECTION L-L", see "PILASTER ARCHITECTURAL DETAILS NO. 3" sheet.
2. For "SECTION M-M" and "SECTION N-N"' see "PILASTER ARCHITECTURAL DETAIL NO. 4" sheet.
3. Pilaster Sections on Retaining Wall shown, for Pilaster on Barrier Type 736SV (Mod), see "PILASTER SECTION ON TYPE 736SV (Mod) BARRIER" on "PILASTER ARCHITECTURAL DETAILS NO. 4" sheet.
4. All dimensions symmetrical about ℄ pilaster.
5. Beveled edges are 45° unless otherwise noted.
6. All vertical dimension are measured along the ℄ Pilaster (Pilaster shall be vertical).

NOTE: For additional details not shown, see "16'-4" SOUND WALL - PILASTER ELEVATION" on "PILASTER ARCHITECTURAL DETAILS NO. 1" sheet.

FREEWAY SIDE

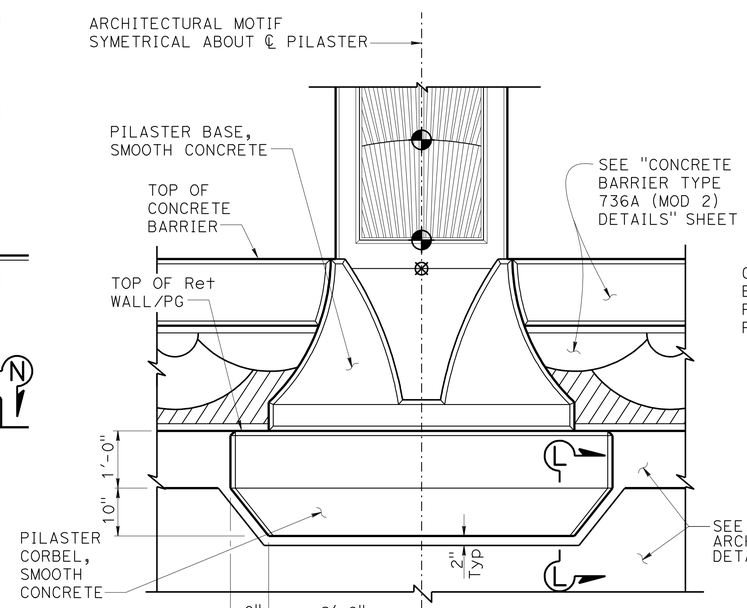

NOTE: For additional details not shown, see "FREEWAY SIDE" details.

BACK SIDE

PILASTER ARCHITECTURAL MOTIF

¾" = 1'-0"

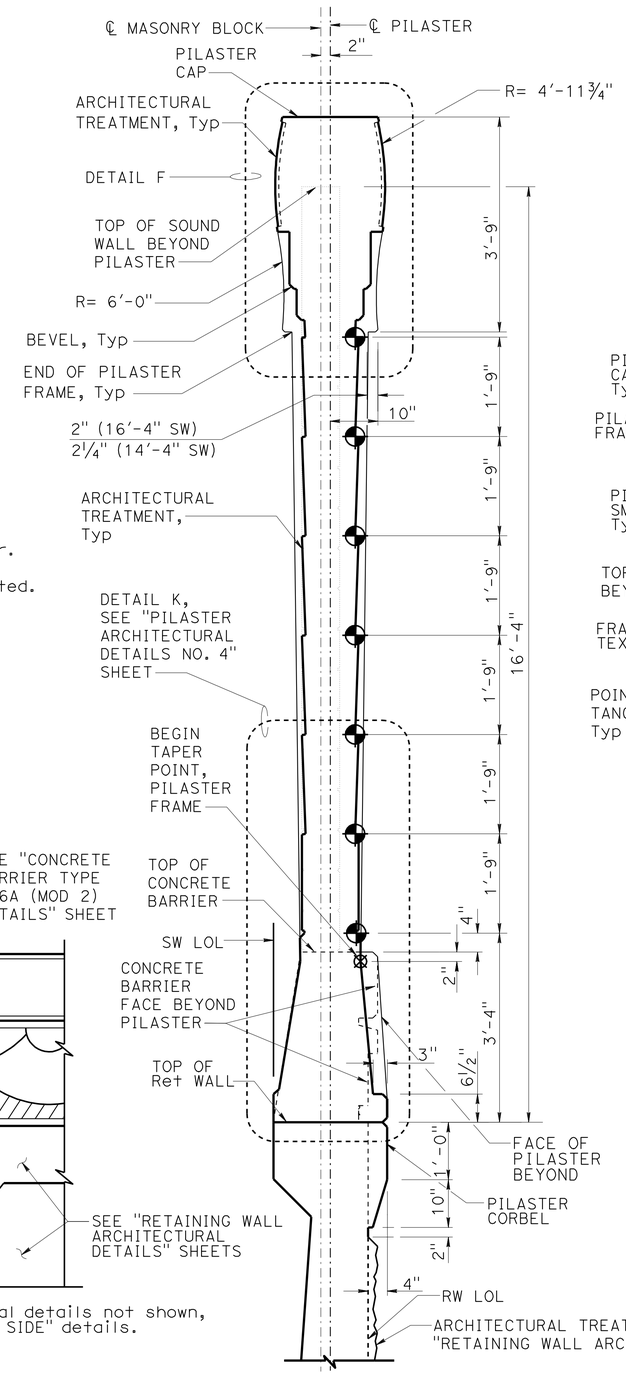

SECTION A-A

¾" = 1'-0"

NOTE: Pilaster for 16'-4" Sound Wall shown, Pilaster at 14'-4" Sound Wall similar.

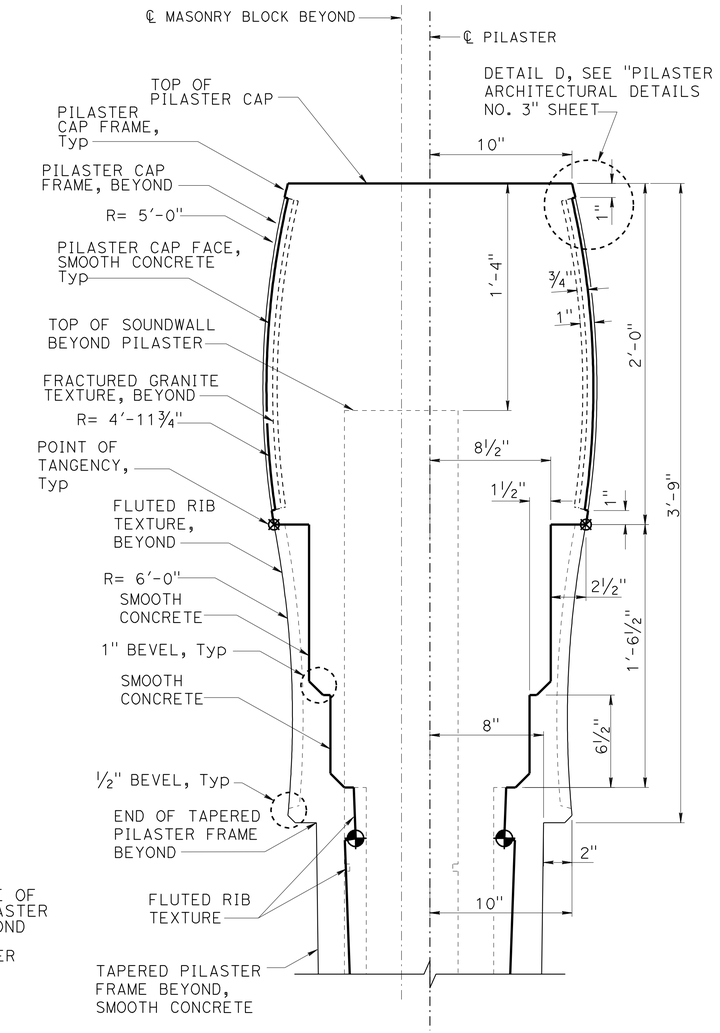

DETAIL F

NO SCALE

DESIGN	BY Isaac Tasabia	CHECKED Javier Chavez	
DETAILS	BY Jin Zhou	CHECKED K. Harper / D. Sessions	
QUANTITIES	BY April Pearson	CHECKED Kyoung Lee	

STATE OF CALIFORNIA — DEPARTMENT OF TRANSPORTATION

DIVISION OF ENGINEERING SERVICES — STRUCTURE DESIGN — DESIGN BRANCH 1

BRIDGE NO. 53-E0183 — POST MILE 3.67

SOUND WALL NO. 202

PILASTER ARCHITECTURAL DETAILS NO. 2

STRUCTURES DESIGN DETAIL SHEET (ENGLISH) (REV. 09-01-10)

ORIGINAL SCALE IN INCHES FOR REDUCED PLANS 0 1 2 3

UNIT: 3576

PROJECT NUMBER & PHASE: 07000018331

CONTRACT NO.: 07-215934

DISREGARD PRINTS BEARING EARLIER REVISION DATES

REVISION DATES 12/04/10 11/14/11 12/06/11

SHEET 14 OF 28

FILE => sw202-g-pilaster02.dgn

USERNAME => s124496 DATE PLOTTED => 28-MAR-2012 TIME PLOTTED => 12:13

DIST	COUNTY	ROUTE	POST MILES TOTAL PROJECT	SHEET No.	TOTAL SHEETS
07	LA	5	2.4/4.0	1243	1288

REGISTERED CIVIL ENGINEER 12-07-11 DATE

3-26-12
PLANS APPROVAL DATE

REGISTERED PROFESSIONAL ENGINEER Kevin Harper No. 42221 Exp. 3-31-12 CIVIL STATE OF CALIFORNIA

The State of California or its officers or agents shall not be responsible for the accuracy or completeness of electronic copies of this plan sheet.

NOTES:

1. All notes and dimensions symetrical about ℄ pilaster.
2. Beveled edges are 45° unless otherwise noted.
3. For location of "DETAIL J", "DETAIL D" and "SECTION B-B", "SECTION C-C", "SECTION G-G", "SECTION H-H" and "SECTION L-L", see "PILASTER ARCHITECTURAL DETAILS NO. 2" sheet.
4. For Retaining Wall split slate texture, see "RETAINING WALL ARCHITECTURAL DETAILS" sheet.
5. For Type 736SV (Mod) Barrier fractured granite texture, see "CONCRETE BARRIER TYPE 736A (MOD 2) DETAILS" sheet if applicable.

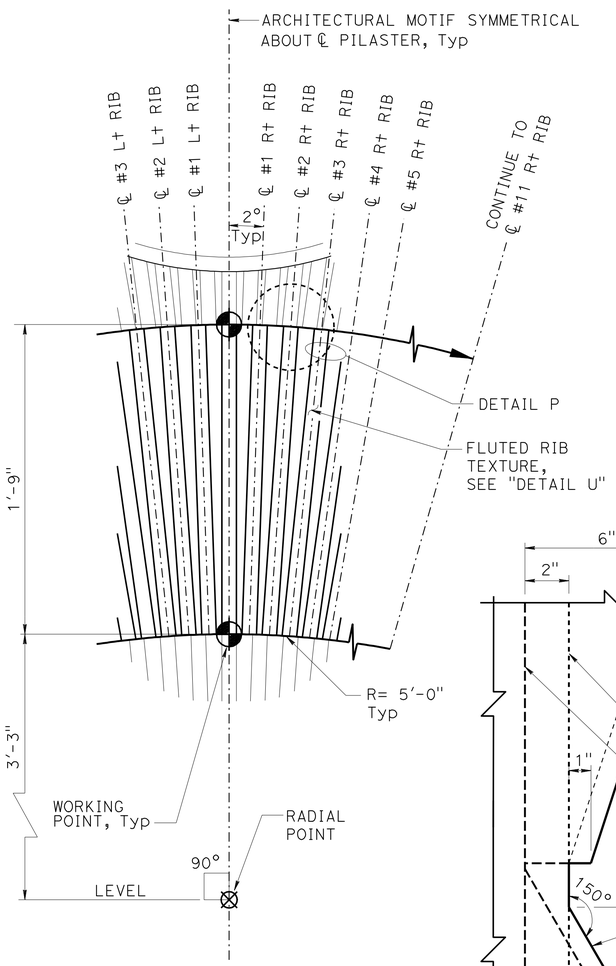

DETAIL J
NO SCALE

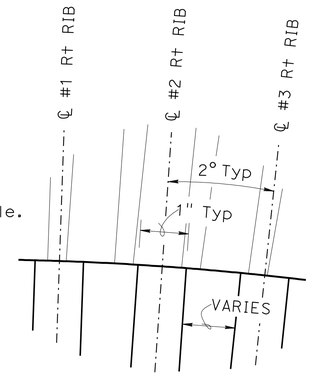

DETAIL P
NO SCALE

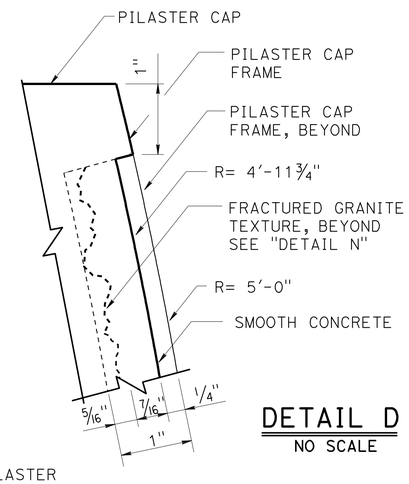

DETAIL D
NO SCALE

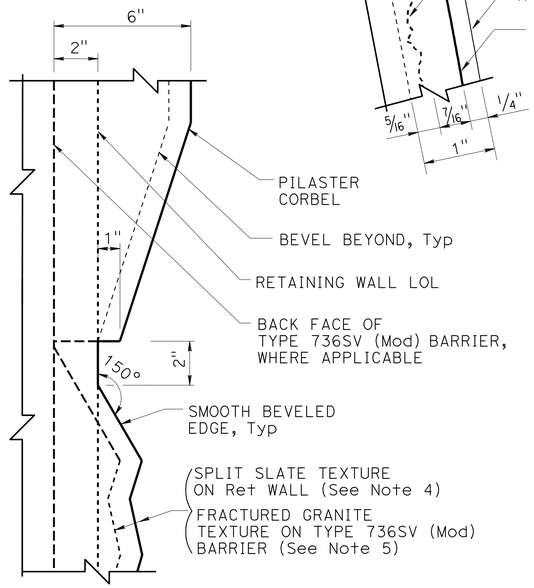

SECTION L-L
NO SCALE

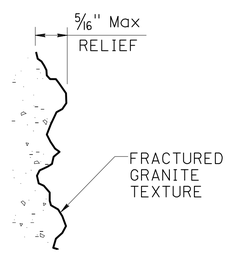

DETAIL N
NO SCALE

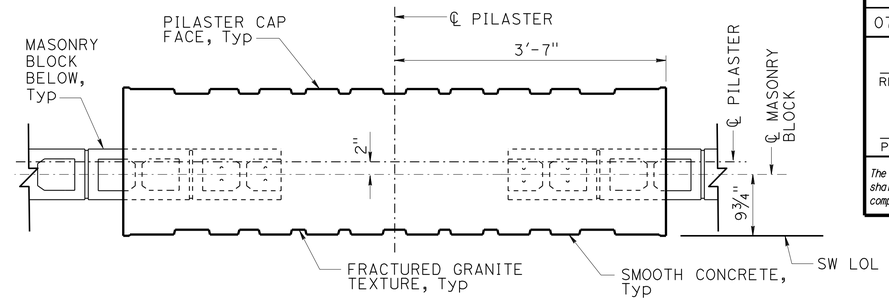

SECTION B-B
1" = 1'-0"

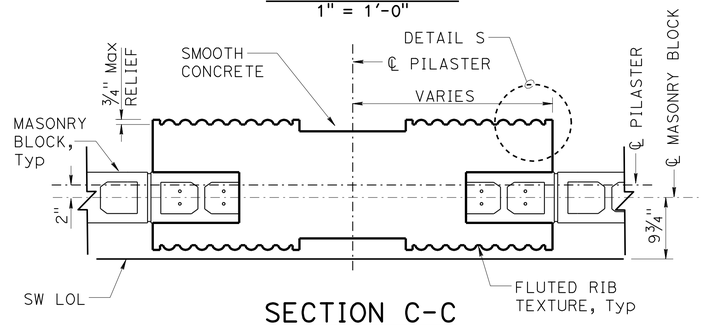

SECTION C-C
1" = 1'-0"

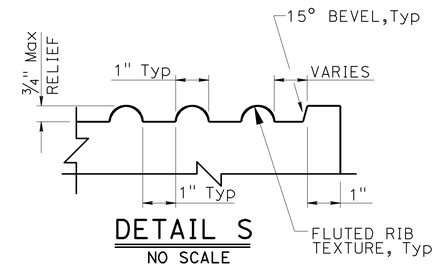

DETAIL S
NO SCALE

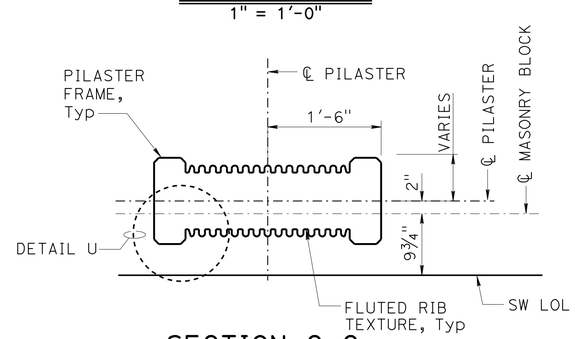

SECTION G-G
1" = 1'-0"

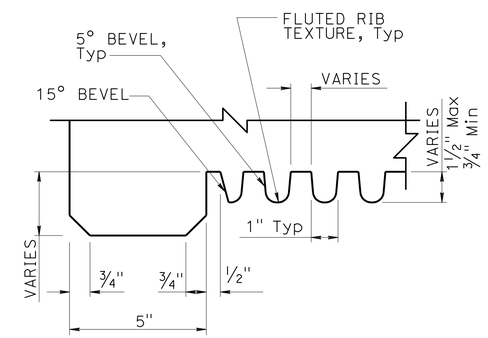

DETAIL U
NO SCALE

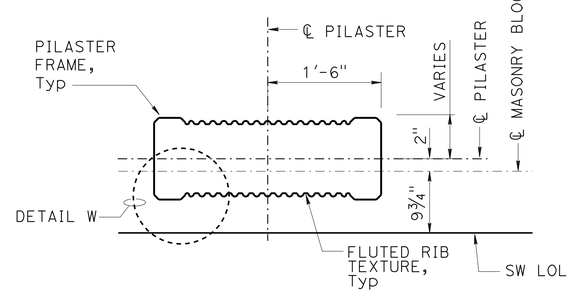

SECTION H-H
1" = 1'-0"

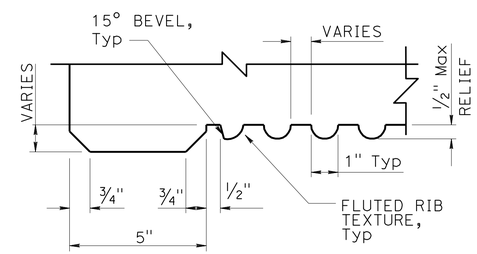

DETAIL W
NO SCALE

DESIGN	BY Isaac Tasabia	CHECKED Javier Chavez	
DETAILS	BY Jin Zhou	CHECKED K. Harper / D. Sessions	
QUANTITIES	BY April Pearson	CHECKED Kyoung Lee	

STATE OF CALIFORNIA
DEPARTMENT OF TRANSPORTATION

DIVISION OF ENGINEERING SERVICES
STRUCTURE DESIGN
DESIGN BRANCH 1

BRIDGE NO. 53-E0183
POST MILE 3.67

SOUND WALL NO. 202
PILASTER ARCHITECTURAL DETAILS NO. 3

STRUCTURES DESIGN DETAIL SHEET (ENGLISH) (REV. 09-01-10)

ORIGINAL SCALE IN INCHES FOR REDUCED PLANS 0 1 2 3

UNIT: 3576
PROJECT NUMBER & PHASE: 07000018331
CONTRACT NO.: 07-215934

DISREGARD PRINTS BEARING EARLIER REVISION DATES

REVISION DATES 12/09/10 11/16/11 12/06/11

SHEET 15 OF 28

FILE => sw202-g-pilaster03.dgn

USERNAME => s124496 DATE PLOTTED => 28-MAR-2012 TIME PLOTTED => 12:13

DIST	COUNTY	ROUTE	POST MILES TOTAL PROJECT	SHEET No.	TOTAL SHEETS
07	LA	5	2.4/4.0	1244	1288

REGISTERED CIVIL ENGINEER 12-07-11 DATE

3-26-12
PLANS APPROVAL DATE

REGISTERED PROFESSIONAL ENGINEER Kevin Harper No. 42221 Exp. 3-31-12 CIVIL STATE OF CALIFORNIA

The State of California or its officers or agents shall not be responsible for the accuracy or completeness of electronic copies of this plan sheet.

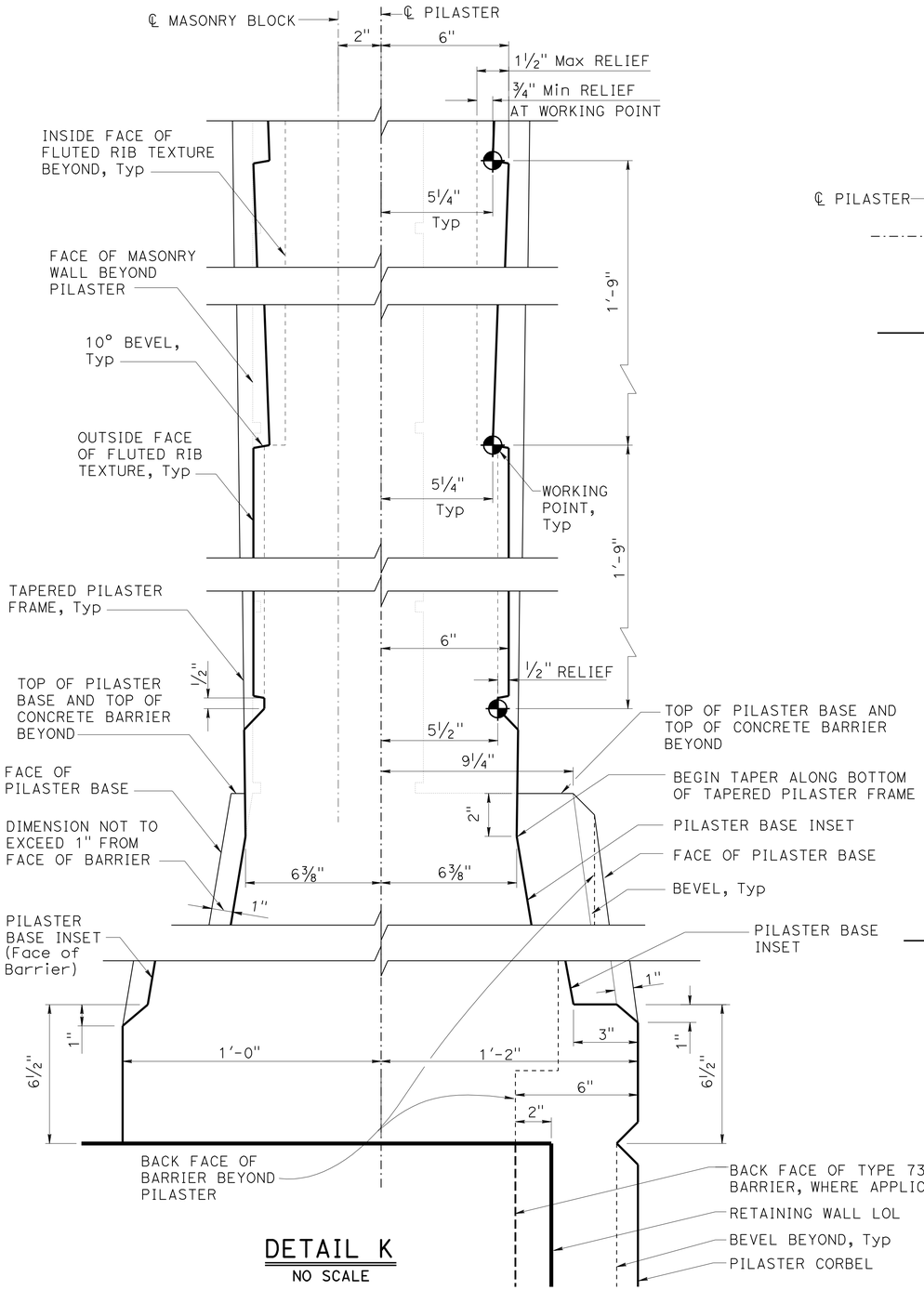

DETAIL K
NO SCALE

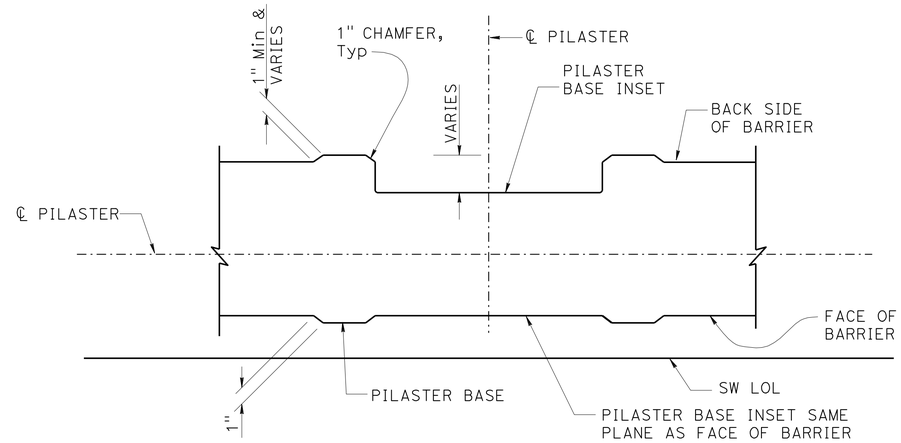

SECTION M-M
1½" = 1'-0"

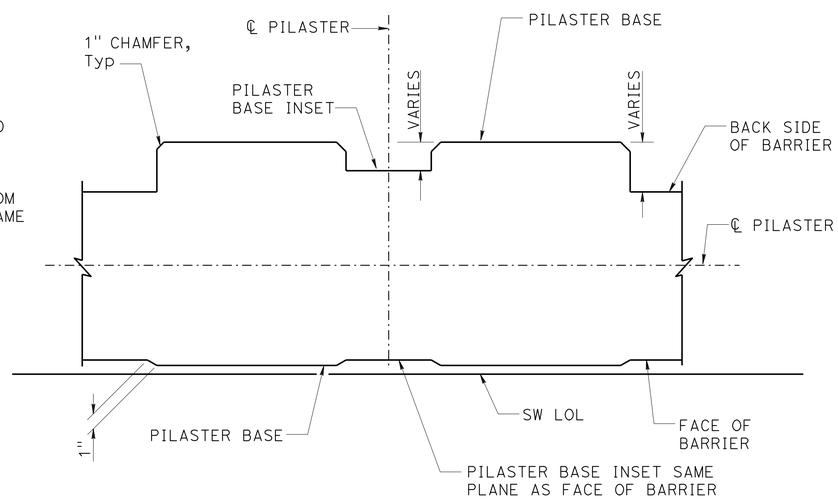

SECTION N-N
1½" = 1'-0"

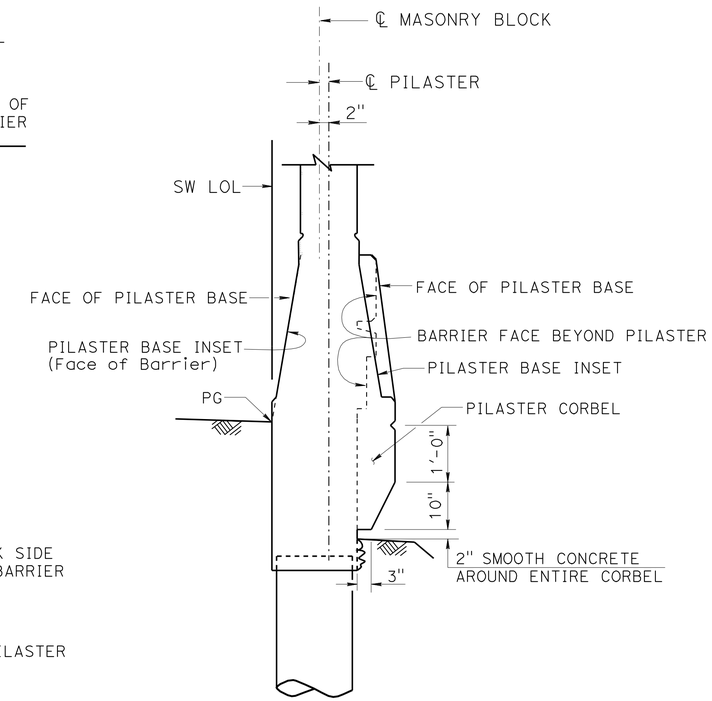

NOTE: For Pilaster details not shown, see "SECTION A-A" on "PILASTER ARCHITECTURAL DETAILS NO. 2" sheet.

PILASTER SECTION ON TYPE 736SV (MOD) BARRIER
¾" = 1'-0"

NOTES:

1. For location of "SECTION M-M", "SECTION N-N" and "DETAIL K", see "PILASTER ARCHITECTURAL DETAILS NO. 2" sheet.
2. All dimensions symmetrical about ℄ Pilaster.
3. All vertical dimension are measured along the ℄ Pilaster (Pilaster shall be vertical).

	BY	CHECKED
DESIGN	Isaac Tasabia	Javier Chavez
DETAILS	Jin Zhou	K. Harper / D. Sessions
QUANTITIES	April Pearson	Kyoung Lee

STATE OF CALIFORNIA
DEPARTMENT OF TRANSPORTATION

DIVISION OF ENGINEERING SERVICES
STRUCTURE DESIGN
DESIGN BRANCH 1

BRIDGE NO. 53-E0183
POST MILE 3.67

SOUND WALL NO. 202
PILASTER ARCHITECTURAL DETAILS NO. 4

STRUCTURES DESIGN DETAIL SHEET (ENGLISH) (REV. 09-01-10)

ORIGINAL SCALE IN INCHES FOR REDUCED PLANS 0 1 2 3

UNIT: 3576
PROJECT NUMBER & PHASE: 07000018331
CONTRACT NO.: 07-215934

DISREGARD PRINTS BEARING EARLIER REVISION DATES

REVISION DATES 12/29/10 11/16/11 12/06/11

SHEET 16 OF 28

FILE => sw202-g-pilaster04.dgn

USERNAME => s124496 DATE PLOTTED => 28-MAR-2012 TIME PLOTTED => 12:13

DIST	COUNTY	ROUTE	POST MILES TOTAL PROJECT	SHEET No.	TOTAL SHEETS
07	LA	5	2.4/4.0	1245	1288

REGISTERED CIVIL ENGINEER 12-07-11 DATE

3-26-12
PLANS APPROVAL DATE

REGISTERED PROFESSIONAL ENGINEER Kevin Harper No. 42221 Exp. 3-31-12 CIVIL STATE OF CALIFORNIA

The State of California or its officers or agents shall not be responsible for the accuracy or completeness of electronic copies of this plan sheet.

NOTE:
For "SECTION B-B", "SECTION C-C", "SECTION D-D" and "SECTION G-G", see "PILASTER STRUCTURAL DETAILS NO. 2" sheet.

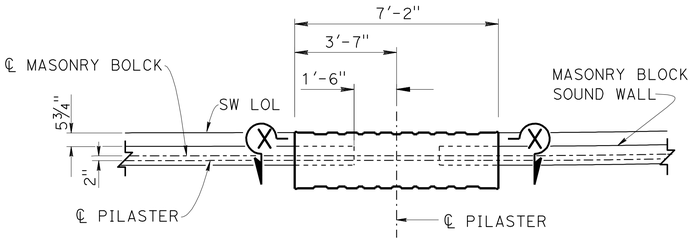

PART SOUND WALL PLAN

⅜" = 1'-0"

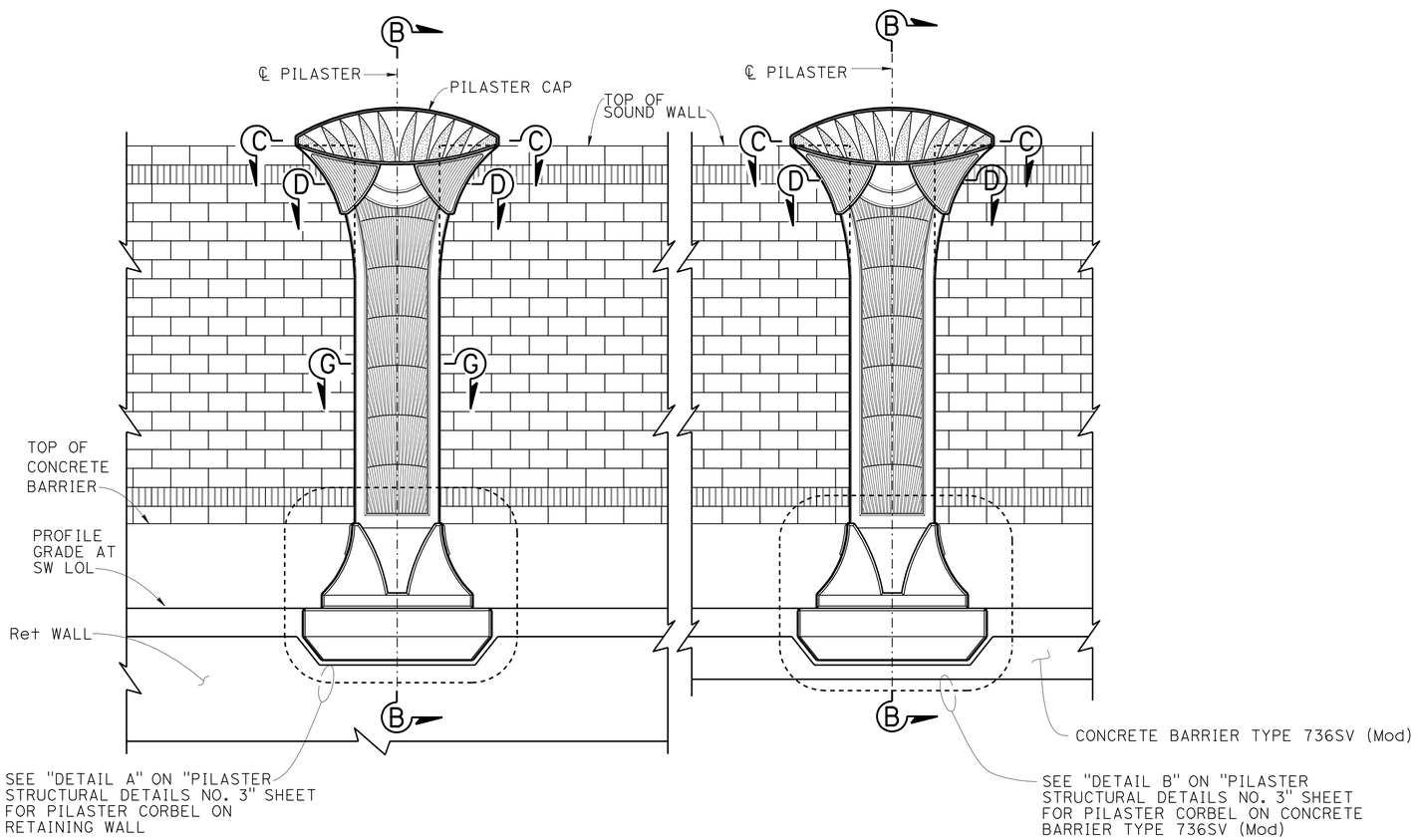

PART SOUND WALL ELEVATION

⅜" = 1'-0"

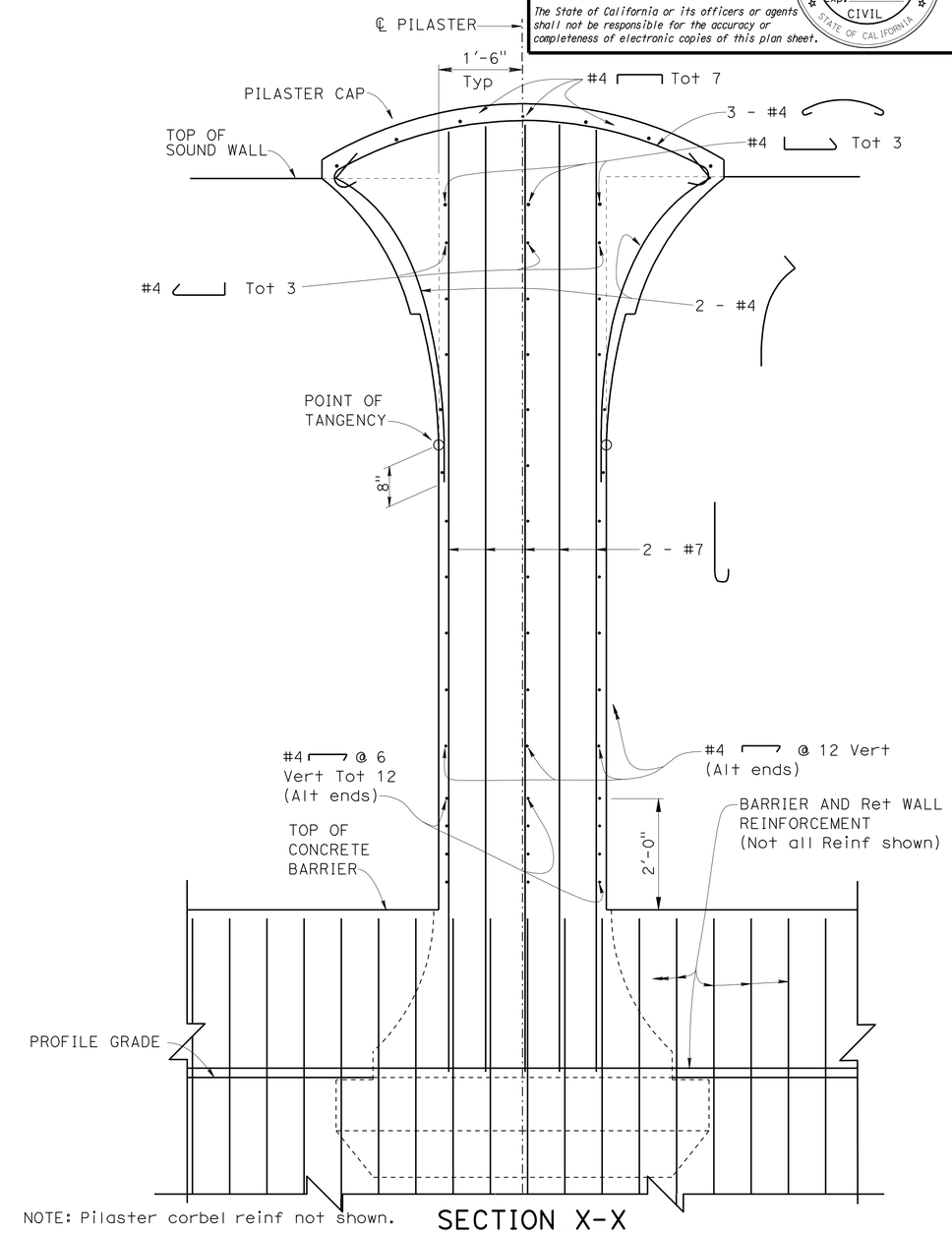

NOTE: Pilaster corbel reinf not shown.

SECTION X-X

¾" = 1'-0"

DESIGN	BY Kevin Harper	CHECKED Daniel Sessions	
DETAILS	BY Jin Zhou	CHECKED Daniel Sessions	
QUANTITIES	BY April Pearson	CHECKED Kyoung Lee	

STATE OF CALIFORNIA
DEPARTMENT OF TRANSPORTATION

DIVISION OF ENGINEERING SERVICES
STRUCTURE DESIGN
DESIGN BRANCH 1

BRIDGE NO. 53-E0183
POST MILE 3.67

SOUND WALL NO. 202
PILASTER STRUCTURAL DETAILS NO. 1

STRUCTURES DESIGN DETAIL SHEET (ENGLISH) (REV. 09-01-10)

ORIGINAL SCALE IN INCHES FOR REDUCED PLANS 0 1 2 3

UNIT: 3576
PROJECT NUMBER & PHASE: 07000018331
CONTRACT NO.: 07-215934

DISREGARD PRINTS BEARING EARLIER REVISION DATES

REVISION DATES 12/23/10 11/14/11 12/06/11

SHEET 17 OF 28

FILE => sw202-h-pilaster01.dgn

USERNAME => s124496 DATE PLOTTED => 28-MAR-2012 TIME PLOTTED => 12:13

DIST	COUNTY	ROUTE	POST MILES TOTAL PROJECT	SHEET No.	TOTAL SHEETS
07	LA	5	2.4/4.0	1246	1288

REGISTERED CIVIL ENGINEER 12-07-11 DATE

3-26-12
PLANS APPROVAL DATE

REGISTERED PROFESSIONAL ENGINEER Kevin Harper No. 42221 Exp. 3-31-12 CIVIL STATE OF CALIFORNIA

The State of California or its officers or agents shall not be responsible for the accuracy or completeness of electronic copies of this plan sheet.

NOTES:

1. For location of "SECTION B-B", "SECTION C-C", "SECTION D-D" and "SECTION G-G", see "PILASTER STRUCTURAL DETAILS NO. 1" sheet.
2. For Pilaster geometry, dimensions and architectural treatments, see "PILASTER ARCHITECTURAL DETAILS" sheets.

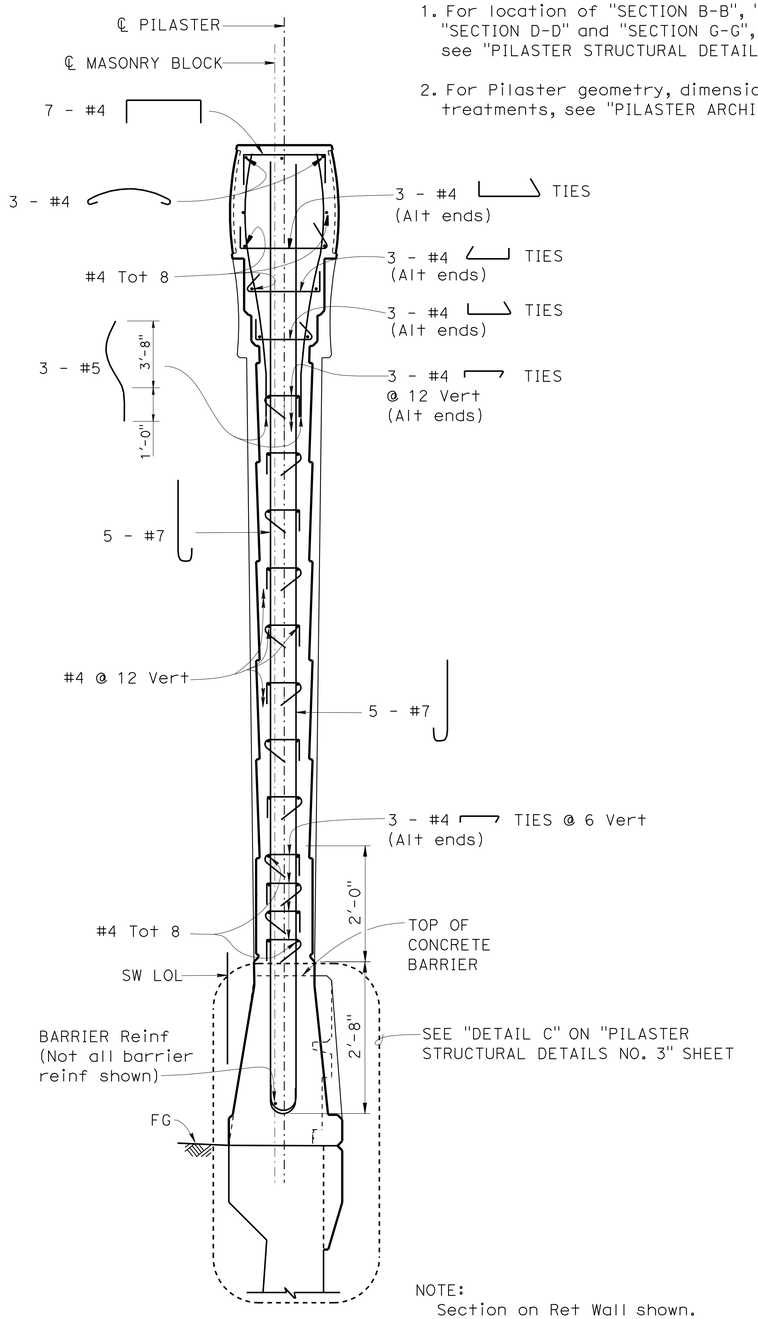

SECTION B-B

¾" = 1'-0"

NOTE:
Section on Ret Wall shown.
Pilaster on Type 736SV (Mod) Barrier similar.

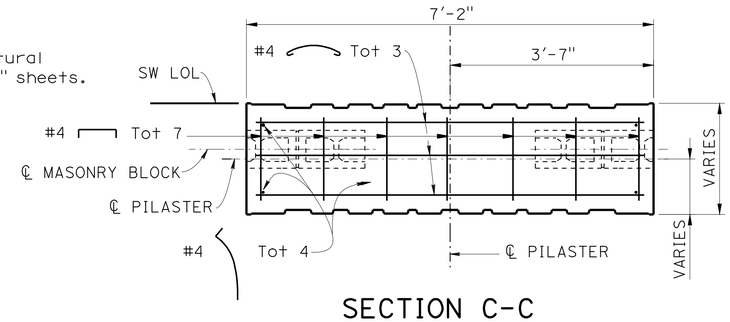

SECTION C-C

¾" = 1'-0"

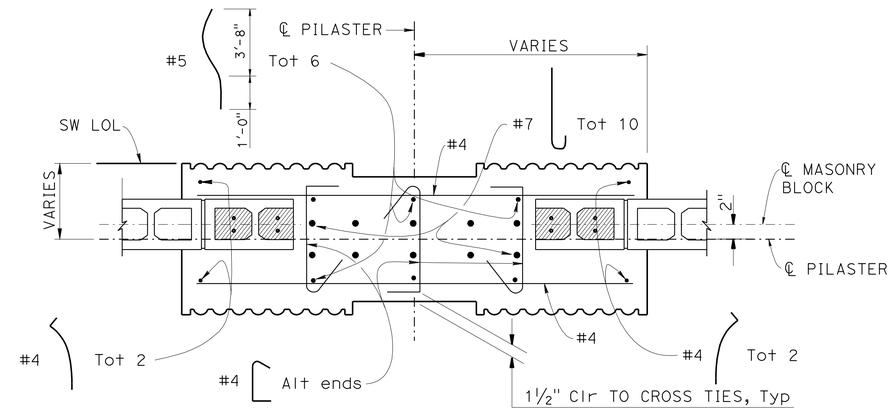

SECTION D-D

1" = 1'-0"

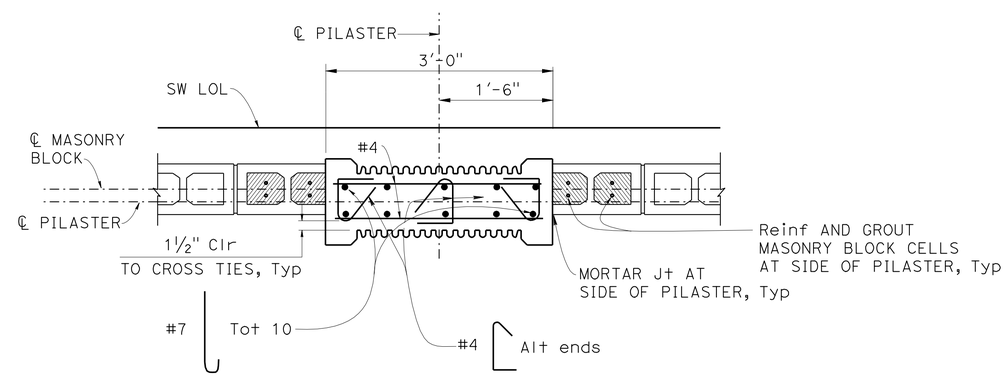

SECTION G-G

1" = 1'-0"

DESIGN	BY Kevin Harper	CHECKED Daniel Sessions	
DETAILS	BY Jin Zhou	CHECKED Daniel Sessions	
QUANTITIES	BY April Pearson	CHECKED Kyoung Lee	

STATE OF CALIFORNIA
DEPARTMENT OF TRANSPORTATION

DIVISION OF ENGINEERING SERVICES
STRUCTURE DESIGN
DESIGN BRANCH 1

BRIDGE NO. 53-E0183
POST MILE 3.67

SOUND WALL NO. 202
PILASTER STRUCTURAL DETAILS NO. 2

STRUCTURES DESIGN DETAIL SHEET (ENGLISH) (REV. 09-01-10)

ORIGINAL SCALE IN INCHES FOR REDUCED PLANS 0 1 2 3

UNIT: 3576
PROJECT NUMBER & PHASE: 07000018331
CONTRACT NO.: 07-215934

DISREGARD PRINTS BEARING EARLIER REVISION DATES

REVISION DATES 12/30/10 05/02/11 5/16/11 12/06/11

SHEET 18 OF 28

FILE => sw202-h-pilaster02.dgn

USERNAME => s124436 DATE PLOTTED => 28-MAR-2012 TIME PLOTTED => 12:13

DIST	COUNTY	ROUTE	POST MILES TOTAL PROJECT	SHEET No.	TOTAL SHEETS
07	LA	5	2.4/4.0	1247	1288

REGISTERED CIVIL ENGINEER 12-07-11 DATE

3-26-12
PLANS APPROVAL DATE

REGISTERED PROFESSIONAL ENGINEER Kevin Harper No. 42221 Exp. 3-31-12 CIVIL STATE OF CALIFORNIA

The State of California or its officers or agents shall not be responsible for the accuracy or completeness of electronic copies of this plan sheet.

NOTES:

1. For location of "DETAIL A" and "DETAIL B", see "PILASTER STRUCTURAL DETAILS NO. 1" sheet.
2. For location of "DETAIL C", see "PILASTER STRUCTURAL DETAILS NO. 2" sheet.

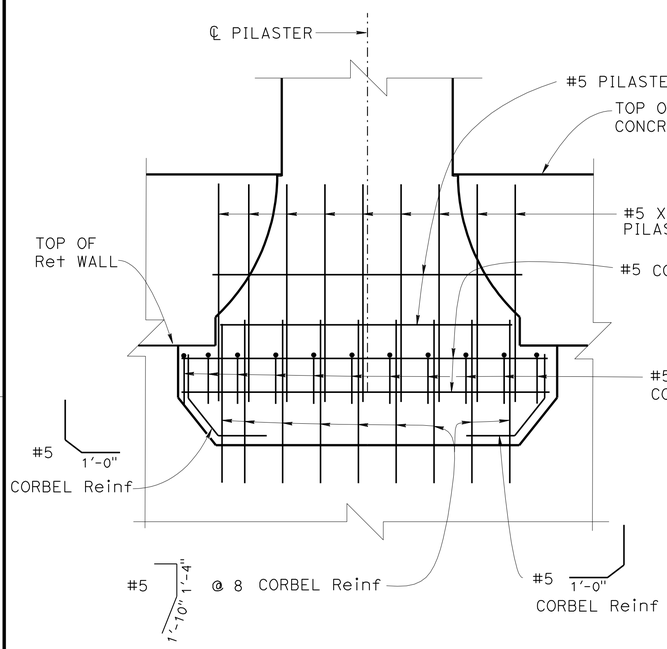

NOTE: Concrete Barrier/Ret Wall reinf not shown.

DETAIL A
¾" = 1'-0"

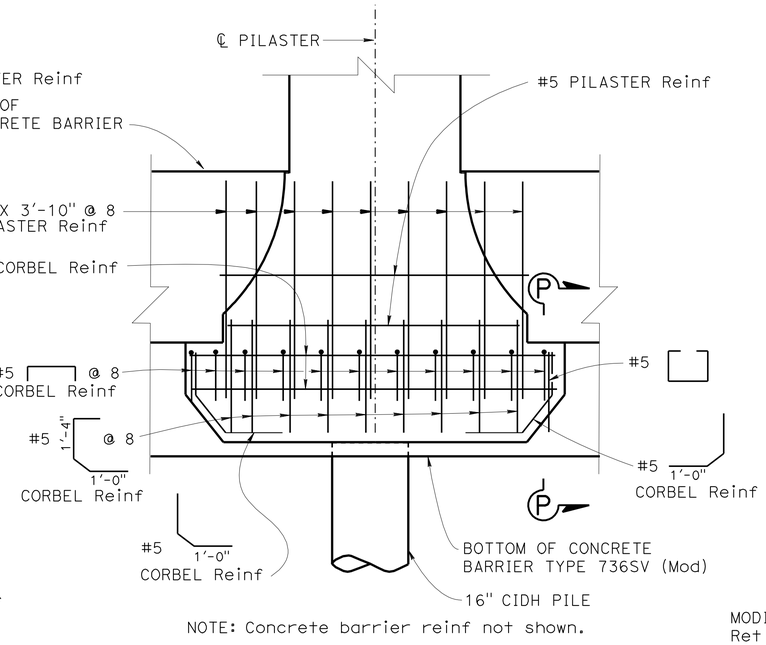

NOTE: Concrete barrier reinf not shown.

DETAIL B
¾" = 1'-0"

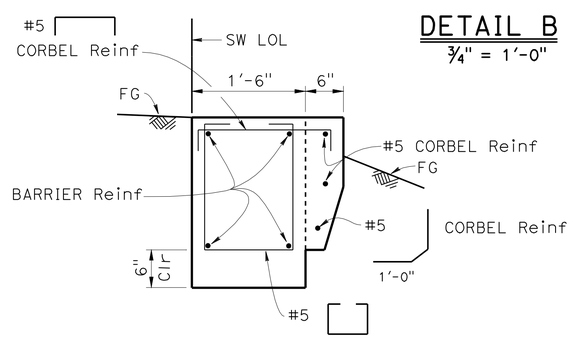

SECTION P-P
1" = 1'-0"

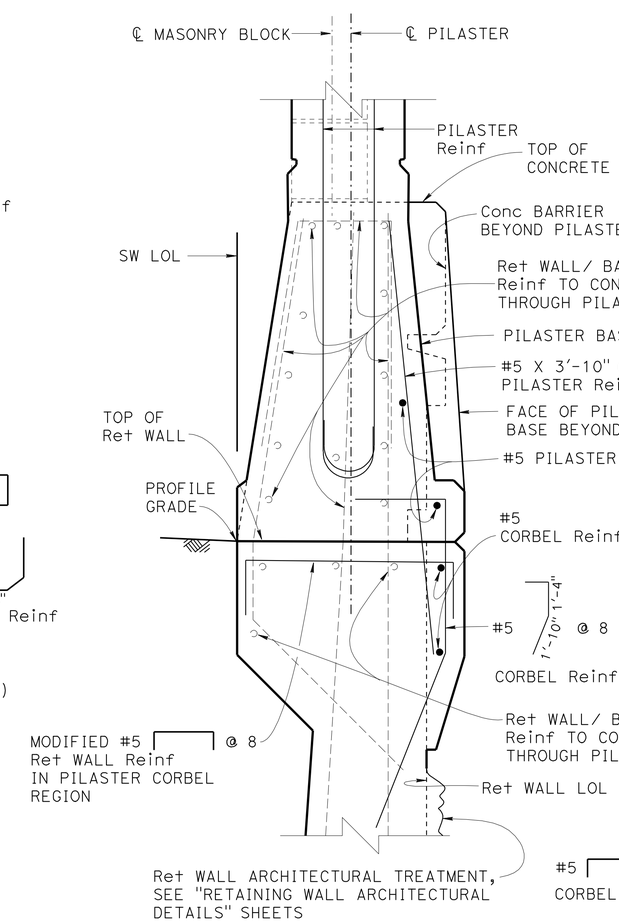

PILASTER CORBEL ON RETAINING WALL

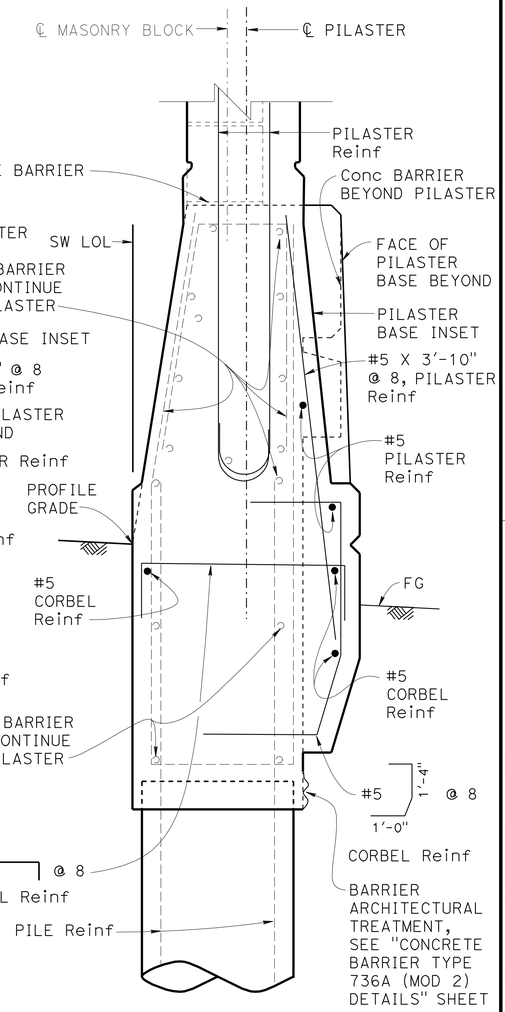

PILASTER CORBEL ON CONCRETE BARRIER TYPE 736SV (MOD)

DETAIL C
1½" = 1'-0"

DESIGN	BY Kevin Harper	CHECKED Daniel Sessions	
DETAILS	BY Jin Zhou	CHECKED Daniel Sessions	
QUANTITIES	BY April Pearson	CHECKED Kyoung Lee	

STATE OF CALIFORNIA
DEPARTMENT OF TRANSPORTATION

DIVISION OF ENGINEERING SERVICES
STRUCTURE DESIGN
DESIGN BRANCH 1

BRIDGE NO. 53-E0183
POST MILE 3.67

SOUND WALL NO. 202
PILASTER STRUCTURAL DETAILS NO. 3

STRUCTURES DESIGN DETAIL SHEET (ENGLISH) (REV. 09-01-10)

ORIGINAL SCALE IN INCHES FOR REDUCED PLANS 0 1 2 3

UNIT: 3576
PROJECT NUMBER & PHASE: 07000018331
CONTRACT NO.: 07-215934

DISREGARD PRINTS BEARING EARLIER REVISION DATES

REVISION DATES 12/30/10 05/03/11 12/06/11

SHEET 19 OF 28

FILE => sw202-h-pilaster03.dgn

USERNAME => s124496 DATE PLOTTED => 28-MAR-2012 TIME PLOTTED => 12:13

DIST	COUNTY	ROUTE	POST MILES TOTAL PROJECT	SHEET No.	TOTAL SHEETS
07	LA	5	2.4/4.0	1248	1288

REGISTERED CIVIL ENGINEER 12-07-11 DATE

3-26-12
PLANS APPROVAL DATE

REGISTERED PROFESSIONAL ENGINEER Kevin Harper No. 42221 Exp. 3-31-12 CIVIL STATE OF CALIFORNIA

The State of California or its officers or agents shall not be responsible for the accuracy or completeness of electronic copies of this plan sheet.

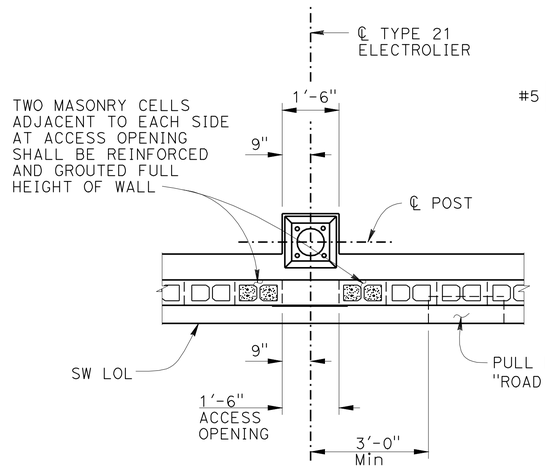

PLAN
½" = 1'-0"

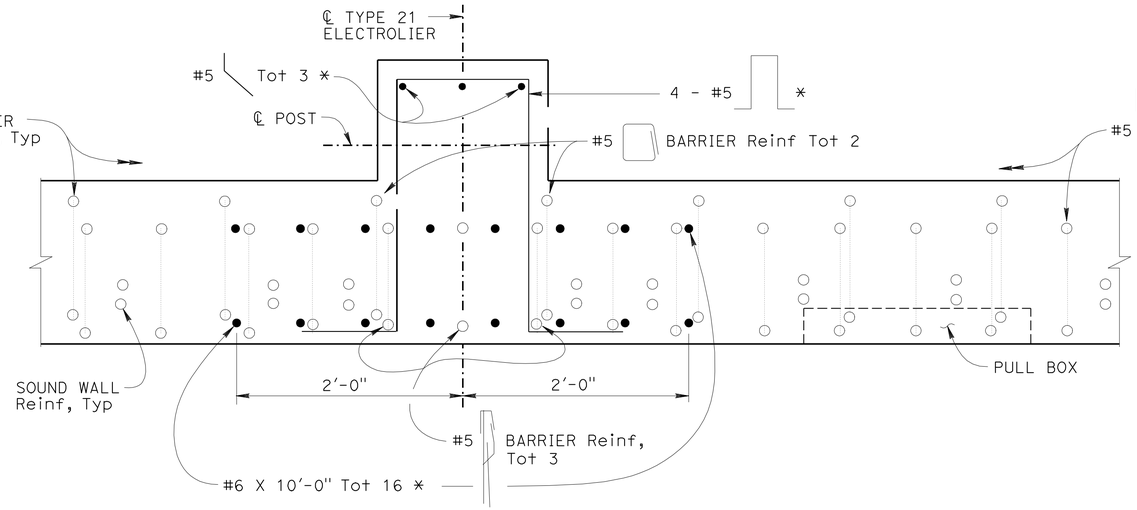

SECTION C-C
1½" = 1'-0"

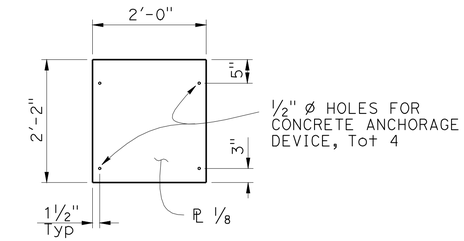

NOTE: PAINT COVER ℗ TO MATCH COLOR OF MASONRY BLOCKS

COVER PLATE
¾" = 1'-0"

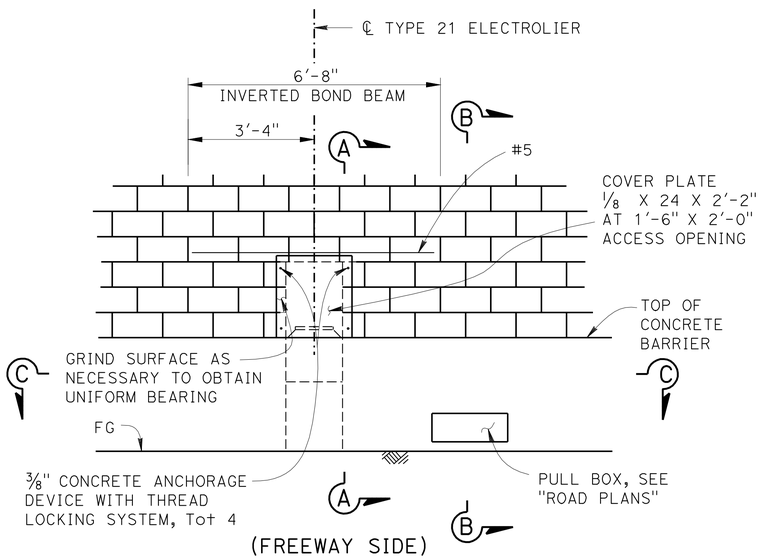

ELEVATION
½" = 1'-0"

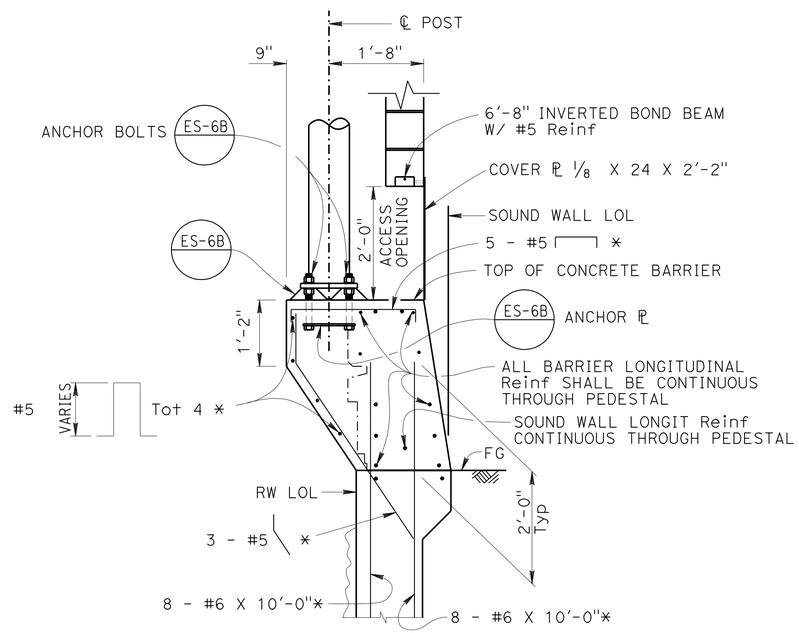

SECTION A-A
¾" = 1'-0"

NOTE: * - Indicates Reinf is additional to typical barrier and retaining wall Reinf.

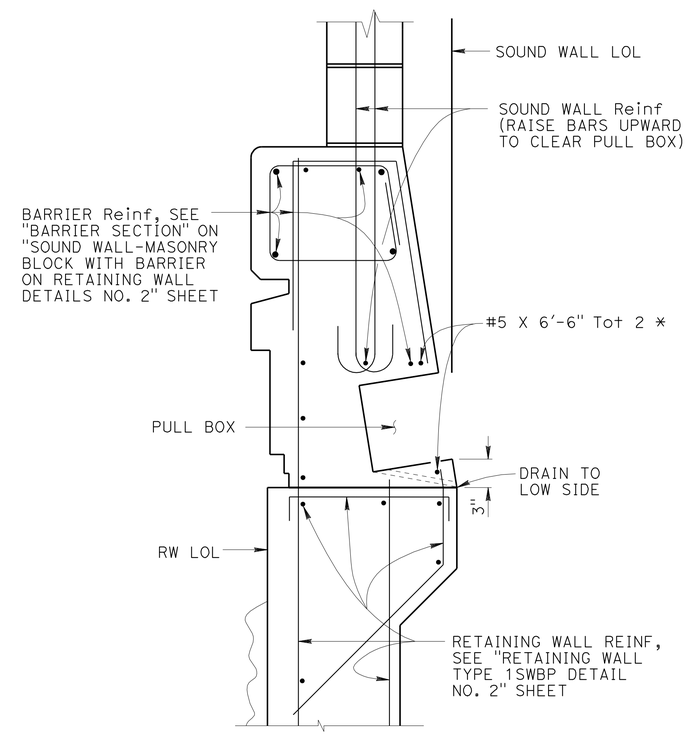

SECTION B-B
1½" = 1'-0"

NOTES:

1. For locations of electroliers, see "STRUCTURE PLAN" sheets.
2. For electrolier and electrical details, see "ROAD PLANS".
3. The maximum number of conduits in the barrier is limited to (2) 2" conduits along with (1) 3" conduit.

	BY	CHECKED
DESIGN	Kevin Harper	Daniel Sessions
DETAILS	Jin Zhou/ Y. Feng	Daniel Sessions
QUANTITIES	Bruce Hagy	April Pearson

STATE OF CALIFORNIA
DEPARTMENT OF TRANSPORTATION

DIVISION OF ENGINEERING SERVICES
STRUCTURE DESIGN
DESIGN BRANCH 1

BRIDGE NO. 53-E0183
POST MILE 3.67

SOUND WALL NO. 202
ELECTROLIER PEDESTAL DETAILS

STRUCTURES DESIGN DETAIL SHEET (ENGLISH) (REV. 09-01-10)

ORIGINAL SCALE IN INCHES FOR REDUCED PLANS 0 1 2 3

UNIT: 3576
PROJECT NUMBER & PHASE: 07000018331
CONTRACT NO.: 07-215934

DISREGARD PRINTS BEARING EARLIER REVISION DATES

REVISION DATES 7/8/11 11/03/11 08/29/11 08/31/11

SHEET 20 OF 28

FILE => sw202-1-epd.dgn

USERNAME => s124496 DATE PLOTTED => 28-MAR-2012 TIME PLOTTED => 12:14

DIST.	COUNTY	ROUTE	POST MILES TOTAL PROJECT	SHEET NO.	TOTAL SHEETS
07	LA	5	2.4/4.0	1249	1288

REGISTERED ENGINEER - CIVIL 12-07-11

3-26-12
PLANS APPROVAL DATE

REGISTERED PROFESSIONAL ENGINEER Kevin Harper No. 42221 Exp. 3-31-12 CIVIL STATE OF CALIFORNIA

The State of California or its officers or agents shall not be responsible for the accuracy or completeness of electronic copies of this plan sheet.

TABLE OF PILE SPACING: CLASS 90 CONCRETE PILES ①

DESIGN H	6′	8′	10′	12′	14′	16′	18′	20′	22′	24′	26′	28′	30′	32′
W	6′-9"	7′-0"	7′-6"	8′-3"	9′-3"	10′-3"	11′-0"	12′-0"	13′-0"	14′-3"	16′-3"	16′-9"	18′-0"	20′-6"
C	2′-9"	2′-9"	3′-0"	3′-3"	3′-6"	4′-0"	4′-3"	4′-9"	5′-0"	5′-6"	6′-3"	6′-9"	7′-3"	7′-9"
B	4′-0"	4′-3"	4′-6"	5′-0"	5′-9"	6′-3"	6′-9"	7′-3"	8′-0"	8′-9"	10′-0"	10′-0"	10′-9"	12′-9"
F	1′-6"	1′-6"	1′-6"	1′-9"	1′-9"	2′-0"	2′-6"	2′-9"	3′-0"	3′-0"	3′-3"	3′-6"	3′-9"	4′-0"
M	1′-3"	1′-3"	1′-6"	1′-9"	2′-0"	2′-6"	2′-9"	3′-3"	3′-6"	4′-0"	4′-9"	5′-3"	5′-9"	6′-3"
N	2′-6"	2′-9"	3′-0"	3′-6"	4′-3"	4′-9"	5′-3"	5′-9"	6′-6"	7′-3"	8′-6"	8′-6"	9′-3"	11′-3"
ROW 1	16′-0"	14′-0"	12′-0"	10′-0"	8′-0"	6′-6"	5′-6"	4′-6"	4′-0"	4′-0"	4′-0"	4′-0"	4′-0"	4′-0"
ROW 2	24′-0"	21′-0"	18′-0"	15′-0"	14′-0"	13′-0"	11′-0"	9′-0"	8′-0"	12′-0"	10′-0"	6′-0"	4′-0"	4′-0"
ROW 3										8′-0"	5′-0"	4′-0"	4′-0"	6′-0"
ROW 4														6′-0"
CONFIGURATION	I	I	I	I	I	I	I	I	I	II	II	II	II	III

TABLE 1: TABLE OF REINFORCING STEEL DIMENSIONS AND DATA

	STEM WITH HAUNCH													
DESIGN H	6′	8′	10′	12′	14′	16′	18′	20′	22′	24′	26′	28′	30′	32′
STEM BATTER	0	1/2:12	1/2:12	1/2:12	1/2:12	1/2:12	1/2:12	1/2:12	1/2:12	5/8:12	3/4:12	7/8:12	1:12	1:12
② ~~STEM THICKNESS @ TOP~~	~~1′ 6"~~	~~1′ 6"~~	~~1′ 6"~~	~~1′ 6"~~	~~1′ 6"~~	~~1′ 6"~~	~~1′ 6"~~	~~1′ 6"~~	~~1′ 6"~~	~~1′ 6"~~	~~1′ 6"~~	~~1′ 6"~~	~~1′ 6"~~	~~1′ 6"~~
STEM THICKNESS @ HAUNCH	1′-0"	1′-0"	1′-0"	1′-0"	1′-0"	1′-0"	1′-0"	1′-0"	1′-0"	1′-0"	1′-0"	1′-0"	1′-0"	1′-0"
ⓐ BARS				#6@18**	#7@18**	#8@18**	#9@18**	#10@18**	#8 @ 9*	#8 @ 9*	#7 @ 6*	#10@12**	#9 @ 9*	#11@12**
X				CONT	CONT	CONT	CONT	CONT	CONT	CONT	CONT	CONT	CONT	CONT
Y				8′-0"	6′-6"	7′-6"	8′-6"	9-6"	9′-6"	11′-0"	11′-6"	13′-0"	14′-0"	15′-6"
ⓑ BARS	#5 @ 12	#5 @ 12	#5 @ 9	#6@18**	#7@18**	#8@18**	#9@18**	#10@18**	#8 @ 9*	#8 @ 9*	#7 @ 6*	#10@12**	#9 @ 9*	#11@12**
X	CONT	CONT	CONT	CONT	CONT	CONT	CONT	CONT	CONT	CONT	CONT	CONT	CONT	CONT
Y	CONT	CONT	CONT	CONT	10′-6"	13′-0"	15′-0"	17′-6"	19′-6"	21′-0"	18′-6"	19′-0"	25′-6"	23′-6"
ⓒ BARS					#6 @ 18	#6 @ 18	#6 @ 18	#6 @ 18	#6 @ 18	#6 @ 18	#6 @ 12	#7 @ 12	#7 @ 18	#7 @ 12
ⓓ BARS	#5 @ 12	#5 @ 12	#5 @ 12	#5 @ 12	#5 @ 12	#5 @ 12	#5 @ 9	#5 @ 9	#6 @ 9	#5 @ 6	#7 @ 9	#7 @ 9	#6 @ 6	#7 @ 6
TOTAL ⓔ BARS	6 #5	6 #5	6 #5	6 #5	8 #5	8 #5	10 #5	10 #5	10 #5	10 #5	12 #5	12 #5	12 #5	14 #5
TOTAL ⓕ BARS	6 #5	6 #5	6 #5	6 #5	6 #5	8 #5	8 #5	8 #5	8 #5	10 #5	10 #5	10 #5	12 #5	12 #5

TABLE 2: TABLE OF REINFORCING STEEL DIMENSIONS AND DATA

	STEM WITH HAUNCH							STEM WITHOUT HAUNCH						
DESIGN H	6′	8′	10′	12′	14′	16′	18′	20′	22′	24′	26′	28′	30′	32′
BATTER	0	0	0	0	0	0	0	0	0	0	1/4:12	1/2:12	1/2:12	1/2:12
② STEM THICKNESS @ TOP	~~1′ 6"~~	~~1′ 6"~~	~~1′ 6"~~	~~1′ 6"~~	~~1′ 6"~~	~~1′ 6"~~	~~1′ 6"~~	~~1′ 6"~~	2′-0"	2′-0"	2′-0"	2′-0"	2′-0"	2′-0"
STEM THICKNESS @ HAUNCH	1′-0"	1′-0"	1′-0"	1′-0"	1′-0"	1′-3"	1′-3"							
ⓐ BARS				#6@12**	#5 @ 6*	#9@18**	#9@12**	#9@12**	#9@12**	#7 @ 6*	#7 @ 6*	#7 @ 6*	#9 @ 9*	#11@12**
X				CONT	CONT	CONT	CONT	CONT	CONT	CONT	CONT	CONT	CONT	CONT
Y				5′-6"	5′-6"	8′-6"	8′-6"	8′-6"	8′-6"	9′-6"	11′-0"	12′-6"	13′-6"	14′-6"
ⓑ BARS	#5 @ 12	#5 @ 9	#6 @ 9	#6@12**	#5 @ 6*	#9@18**	#9@12**	#9@12**	#9@12**	#7 @ 6*	#7 @ 6*	#7 @ 6*	#9 @ 9*	#11@12**
X	CONT	CONT	CONT	CONT	CONT	CONT	CONT	CONT	CONT	CONT	CONT	CONT	CONT	CONT
Y	CONT	CONT	CONT	CONT	CONT	11′-6"	11′-6"	12′-0"	12′-0"	17′-6"	20′-0"	21′-6"	24′-0"	24′-0"
ⓒ BARS						#7 @ 18	#7 @ 12	#7 @ 12	#7 @ 12	#6 @ 12	#6 @ 12	#6 @ 12	#7 @ 18	#7 @ 12
ⓓ BARS	#5 @ 12	#5 @ 12	#5 @ 12	#5 @ 12	#5 @ 12	#5 @ 12	#5 @ 9	#5 @ 9	#6 @ 9	#5 @ 6	#7 @ 9	#7 @ 9	#6 @ 6	#7 @ 6
TOTAL ⓔ BARS	6 #5	6 #5	6 #5	6 #5	8 #5	8 #5	10 #5	10 #5	10 #5	10 #5	12 #5	12 #5	12 #5	14 #5
TOTAL ⓕ BARS	6 #5	6 #5	6 #5	6 #5	6 #5	8 #5	8 #5	8 #5	8 #5	10 #5	10 #5	10 #5	12 #5	12 #5

CONT = CONTINUOUS

* = ⓐ AND ⓑ BARS ARE BUNDLED TOGETHER.

** = ALTERNATE ⓐ AND ⓑ BARS AS SHOWN IN DETAIL A.

DESIGN DATA

DESIGN: LOAD FACTOR DESIGN (LFD)

CONCRETE: REINFORCED CONCRETE, f′c = 3600 psi
fy = 60000 psi

LOADING CASE:

LEVEL GROUND WITH 240 psf LIVE LOAD SURCHARGE AND 16′ SOUNDWALL.
SEISMIC LOAD = 0.3 DEAD LOAD
WIND LOAD = 30 psf
DEAD LOAD OF SOUNDWALL = 1414 lb/lf
DEAD LOAD OF BARRIER = 372 lb/lf

SEISMIC LOAD: SOIL

Kh = 0.3g
Kv = 0.0
Kae : MONONOBE-OKABE METHOD

SOIL: Ø = 34° γ = 120 pcf

EQUIVALENT FLUID PRESSURE:
= 36 pcf FOR DETERMINATION OF TOE PRESSURE
= 27 pcf FOR DETERMINATION OF HEEL PRESSURE

LOAD COMBINATIONS:

GROUP A : βD+1.7E+1.7SC
GROUP B : βD+1.7E+1.3W
GROUP C :
STEM : 1.0D+1.0E+1.0EQD+1.0EQE
FOOTING : D+PYM
WHERE : β = 1.0 OR 1.3 WHICHEVER CONTROLS DESIGN
D = DEAD LOAD
E = LATERAL EARTH PRESSURE
SC = SURCHARGE
W = WIND LOAD
EQD = SEISMIC DEAD LOAD
EQE = SEISMIC LATERAL EARTH PRESSURE
PYM = PROBABLE YIELD MOMENT (1.3* NOMINAL YIELD MOMENT OF STEM)

GENERAL NOTES

① 1. CLASS 90 CONCRETE PILES WERE USED FOR THE DESIGN.
2. PILE BATTER SHOWN ARE 1:3.
3. MINIMUM DISTANCE BETWEEN CENTER PILE AND EDGE OF FOOTING IS 1′-6".
4. REDUCTION FACTORS:
GROUPS A & B : Ø = 0.75
GROUP C : Ø = 1.0
5. LATERAL RESISTANCE OF EACH PILE:
GROUPS A & B : = 30 kip
GROUP C : = 40 kip
6. MAXIMUM SPACING BETWEEN PILES IS SHOWN IN THE TABLE. REDUCE TO SUIT THE LENGHTH OF FOOTING.
7. MINIMUM DISTANCE BETWEEN ANY TWO PILES IS 3′-0".
8. LIMIT OF NO SPLICING FOR REBARS = 3 TIMES THE BOTTOM THICKNESS OF STEM.

SPECIAL DETAILS

REVISED STANDARD DRAWING

FILE NO. xs14-320-1e

APPROVED BY G. WANG
RESPONSIBLE TECHNICAL SPECIALIST
APPROVAL DATE 5-29-09

RELEASED BY ROBERTO LACALLE
RESPONSIBLE OFFICE CHIEF
RELEASE DATE 5-29-09

① Revise Note to indicate Class 90 piles
② Stem thickness @ top shown on Detail No. 2 sheet

STATE OF CALIFORNIA
DEPARTMENT OF TRANSPORTATION

DIVISION OF ENGINEERING SERVICES
STRUCTURE DESIGN
DESIGN BRANCH 1

BRIDGE NO. 53-E0183
POST MILE 3.67

SOUND WALL NO. 202
RETAINING WALL TYPE 1SWBP - DETAIL NO. 1

DIST.	COUNTY	ROUTE	POST MILES TOTAL PROJECT	SHEET NO.	TOTAL SHEETS
07	LA	5	2.4/4.0	1250	1288

REGISTERED ENGINEER - CIVIL 12-07-11

3-26-12
PLANS APPROVAL DATE

REGISTERED PROFESSIONAL ENGINEER Kevin Harper No. 42221 Exp. 3-31-12 CIVIL STATE OF CALIFORNIA

The State of California or its officers or agents shall not be responsible for the accuracy or completeness of electronic copies of this plan sheet.

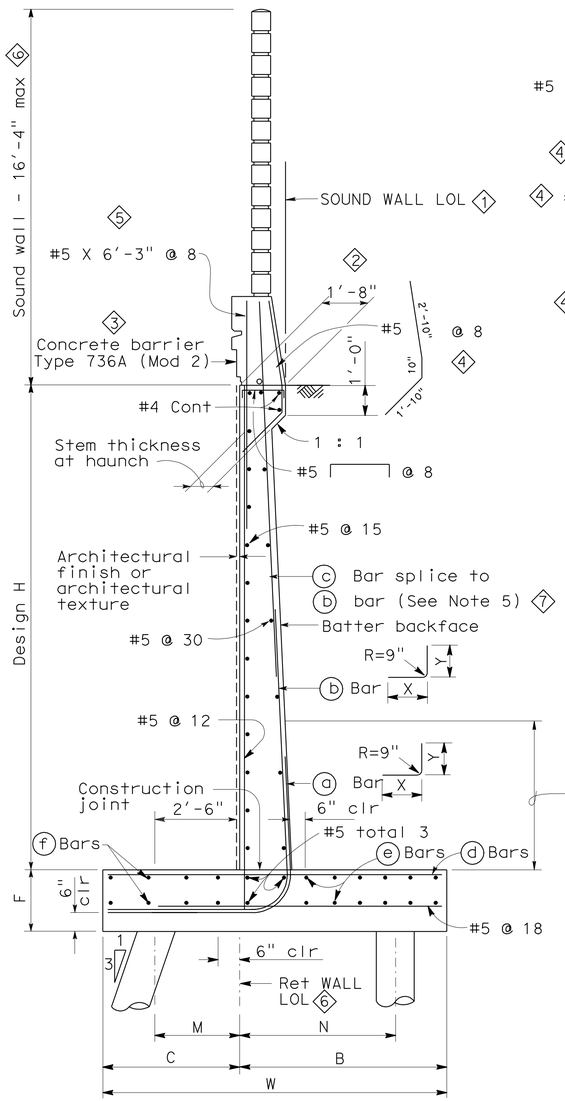

TYPICAL SECTION

NO SCALE

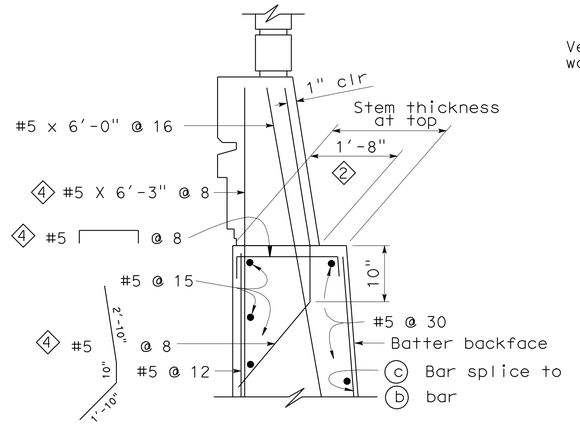

SECTION WITHOUT HAUNCH

NO SCALE

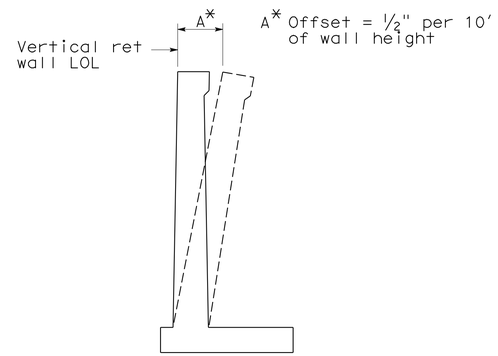

WALL OFFSET

NO SCALE

Values for offsetting forms to be determined by the engineer

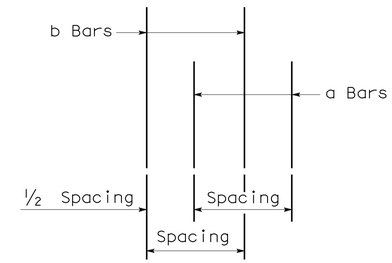

DETAIL A

NO SCALE

NOTES

1. For soundwall and retaining wall architectural finish or texture, see details elsewhere in project plans.
2. For details not shown and drainage notes, see B3-8
3. Footing cover, 1'-6" minimum.
4. For sound wall and barrier details, see "SOUND WALL - MASONARY BLOCK WITH BARRIER ON RETAINING WALL DETAILS NO. 1" and No. 2 sheets 6
5. Extend b bars into barrier for "DESIGN H" 12' or less. 7

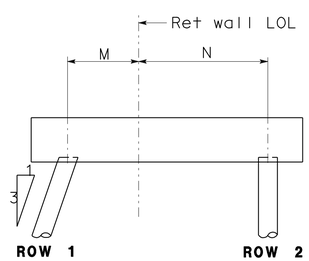

CONFIGURATION I

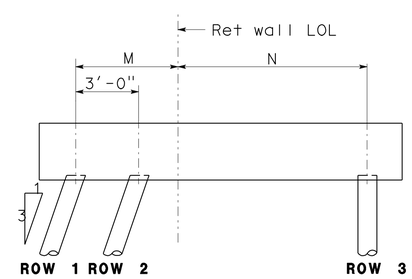

CONFIGURATION II

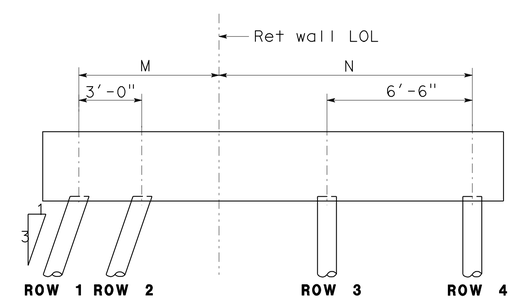

CONFIGURATION III

SPECIAL DETAILS

REVISED STANDARD DRAWING		
FILE NO. xs14-320-2e	APPROVED BY G. WANG (RESPONSIBLE TECHNICAL SPECIALIST)	RELEASED BY ROBERTO LACALLE (RESPONSIBLE OFFICE CHIEF)
	APPROVAL DATE 5-13-08	RELEASE DATE 5-13-08

1 Sound Wall LOL added
2 Stem thickness at top modified
3 Changed concrete barrier dimensions
4 Reinforcement modified
5 Added reinforcement
6 Notes Modified
7 Added note

STATE OF CALIFORNIA DEPARTMENT OF TRANSPORTATION

DIVISION OF ENGINEERING SERVICES STRUCTURE DESIGN DESIGN BRANCH 1

BRIDGE NO. 53-E0183
POST MILE 3.67

SOUND WALL NO. 202
RETAINING WALL TYPE 1SWBP - DETAIL NO. 2

DS OSD 2147A (ENGLISH STANDARD DRAWING "XS" BORDER REV. 01/11/08)

ORIGINAL SCALE IN INCHES FOR REDUCED PLANS 0 1 2 3

UNIT: 3576
PROJECT NUMBER & PHASE: 07000018331
CONTRACT NO.: 07-215934

DISREGARD PRINTS BEARING EARLIER REVISION DATES

REVISION DATES 10/29/10 08/11/11 03/30/12 04/04/12 SHEET 22 OF 28

USERNAME => s124496
sw202-i-rwdt02.dgn

DATE PLOTTED => 28-MAR-2012 TIME PLOTTED => 12:14

DIST.	COUNTY	ROUTE	POST MILES TOTAL PROJECT	SHEET NO.	TOTAL SHEETS
07	LA	5	2.4/4.0	1251	1288

REGISTERED ENGINEER - CIVIL 12-07-11

3-26-12
PLANS APPROVAL DATE

REGISTERED PROFESSIONAL ENGINEER Kevin Harper No. 42221 Exp. 3-31-12 CIVIL STATE OF CALIFORNIA

The State of California or its officers or agents shall not be responsible for the accuracy or completeness of electronic copies of this plan sheet.

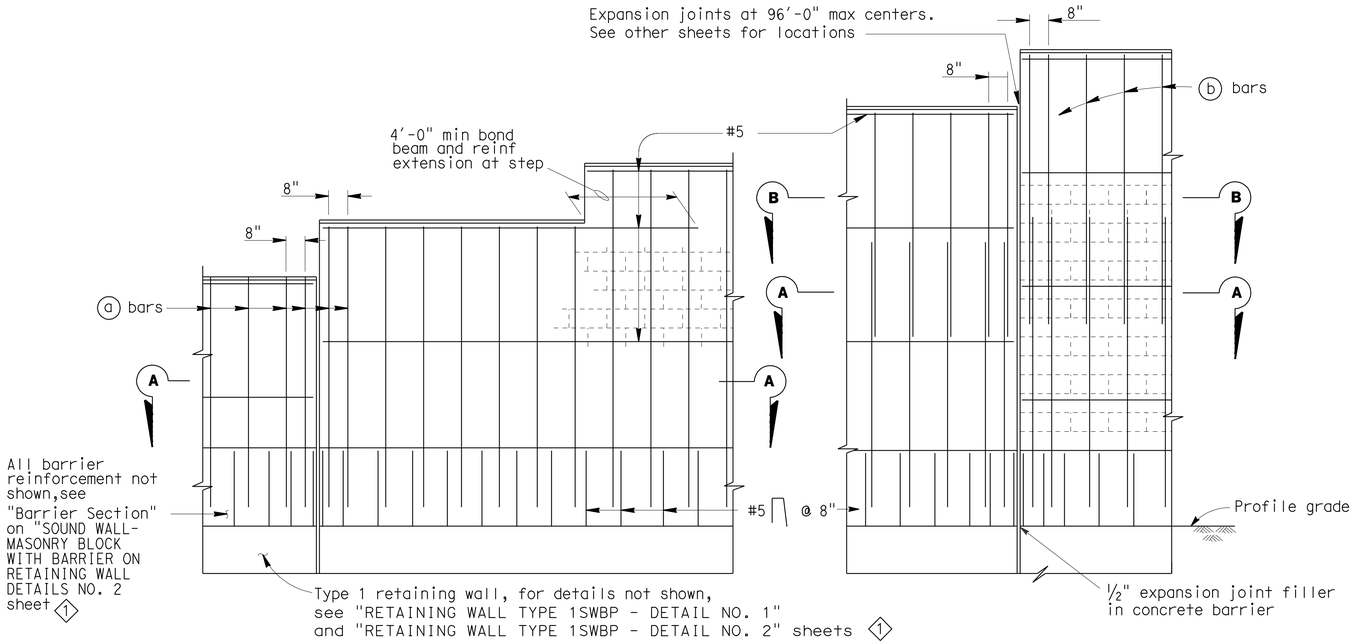

PART ELEVATIONS

SOUNDWALL REINFORCEMENT TABLE

Maximum H	ⓐ bars @ 1'-4" max	ⓑ bars @ 1'-4" max	"y"	f'm (KSI)	Compressive Strength of CMU (KSI)	Maximum H
6'-4"	# 4	———	———	1.5	1.9	6'-4"
8'-4"	# 4	———	———	1.5	1.9	8'-4"
10'-4"	# 4	———	———	1.5	1.9	10'-4"
12'-4"	# 5	# 4	5'-0"	1.5	1.9	12'-4"
14'-4"	# 6	# 4	7'-0"	1.5	1.9	14'-4"
16'-4"	# 6	# 4	9'-0"	2.5	3.7	16'-4"

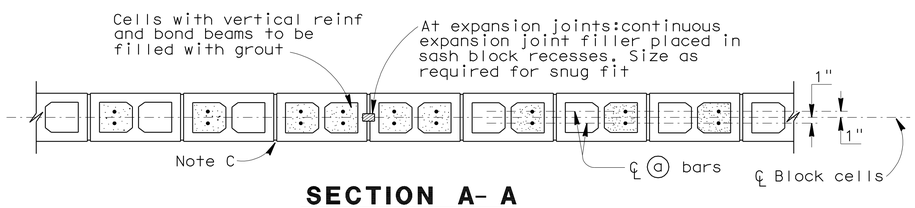

SECTION A- A

For details not shown,see other details

H=6'-4" THRU H= 10'-4"

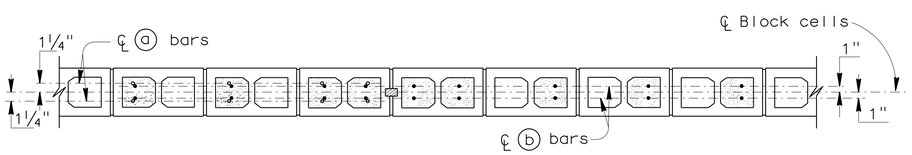

SECTION A- A

SECTION B- B

For details not shown,see other details

H=12'-4" THRU H= 16'-4"

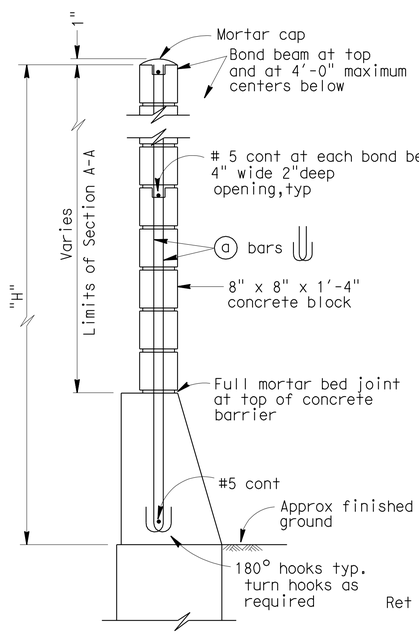

H=6'-4" THRU H=10'-4"

For details not shown,see H=12'-4" thru H=16'-4"

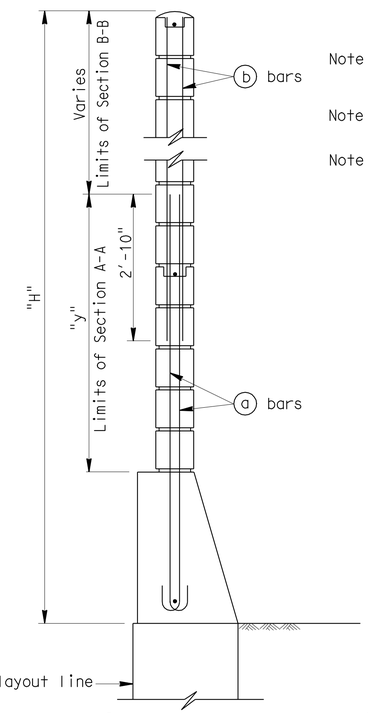

H=12'-4" THRU H=16'-4"

For details not shown,see H=6'-4" thru H=10'-4"

TYPICAL SECTIONS

Note I : For details not shown, see "SOUND WALL - MASONRY BLOCK WITH BARRIER ON RETAINING WALL DETAILS NO. 2" sheet 1

Note II : Slope ground at traffic side of barrier to drain. Maximum slope ±10%.

Note III: See Standard Plan B15-9 "SOUND WALL MASONRY BLOCK - MISCELLANEOUS DETAILS" sheet for other details. 1

GENERAL NOTES

Note A: For type of block and joint finish, see other sheets.

Note B: When blocks are laid in stacked bond, ladder type, galvanized joint reinforcement shall be provided. A minimum of 0.07"-0.14" wire continuous at 4'-0" maximum to be used. Locate reinforcement in joints that are at the approximate midpoint between bond beams.

Note C: Horizontal joints shall be tooled concave or may be weathered.
Vertical joints shall be tooled concave or may be raked.

Note D: For intermediate wall heights that are between the "H's" given. Use the tabular information for the next higher "H".

Note E: Masonry strengths are listed in "SOUNDWALL REINFORCEMENT TABLE".

Note F: Concrete to be used for the barrier shall contain not less than 590 pounds of cementitious material per cubic yard.

SPECIAL DETAILS

REVISED STANDARD DRAWING

FILE NO. xs15-130-1e

APPROVED BY T SATTER — RESPONSIBLE TECHNICAL SPECIALIST
APPROVAL DATE 10/22/09

RELEASED BY ROBERTO LACALLE — RESPONSIBLE OFFICE CHIEF
RELEASE DATE 10/22/09

1 Sheet reference notes corrected

STATE OF CALIFORNIA DEPARTMENT OF TRANSPORTATION

DIVISION OF ENGINEERING SERVICES STRUCTURE DESIGN
DESIGN BRANCH 1

BRIDGE NO. 53-E0183
POST MILE 3.67

SOUND WALL NO. 202
SOUND WALL - MASONRY BLOCK WITH BARRIER ON RETAINING WALL DETAILS NO. 1

DS OSD 2147A (ENGLISH STANDARD DRAWING "XS" BORDER REV. 10/22/09)

ORIGINAL SCALE IN INCHES FOR REDUCED PLANS 0 1 2 3

UNIT: 3576
PROJECT NUMBER & PHASE: 07000018331
CONTRACT NO.: 07-215934

DISREGARD PRINTS BEARING EARLIER REVISION DATES

REVISION DATES 04/01/10 04/01/11 03/01/12

SHEET 23 OF 28

USERNAME => s124496

sw202-k-swdt01.dgn

DATE PLOTTED => 28-MAR-2012 TIME PLOTTED => 12:14

DIST.	COUNTY	ROUTE	POST MILES TOTAL PROJECT	SHEET NO.	TOTAL SHEETS
07	LA	5	2.4/4.0	1252	1288

REGISTERED ENGINEER - CIVIL 12-07-11

3-26-12
PLANS APPROVAL DATE

REGISTERED PROFESSIONAL ENGINEER Kevin Harper No. 42221 Exp. 3-31-12 CIVIL STATE OF CALIFORNIA

The State of California or its officers or agents shall not be responsible for the accuracy or completeness of electronic copies of this plan sheet.

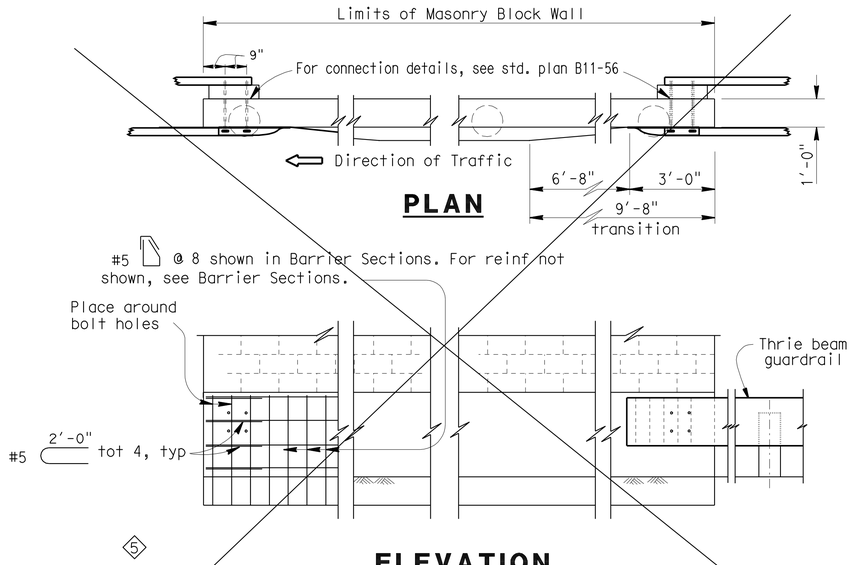

ELEVATION

METAL BEAM GUARDRAIL ANCHORAGE

For details not shown, see std. plan B11-56.

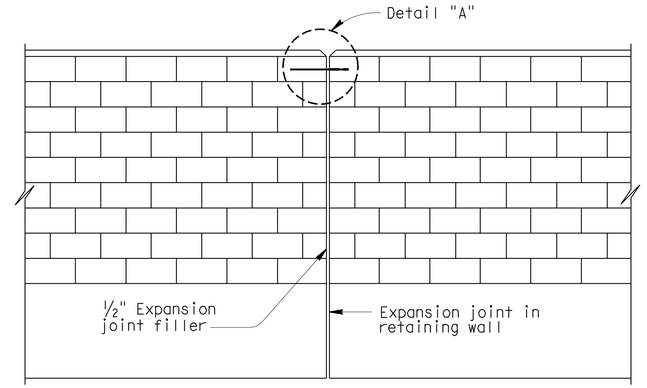

ALIGNMENT KEY DETAIL

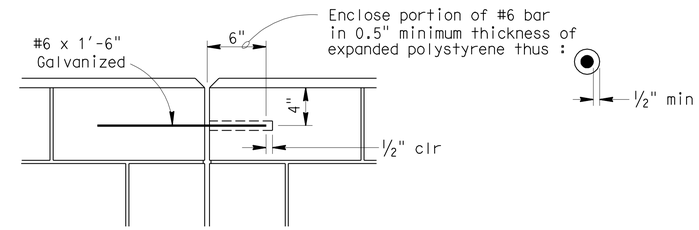

DETAIL A

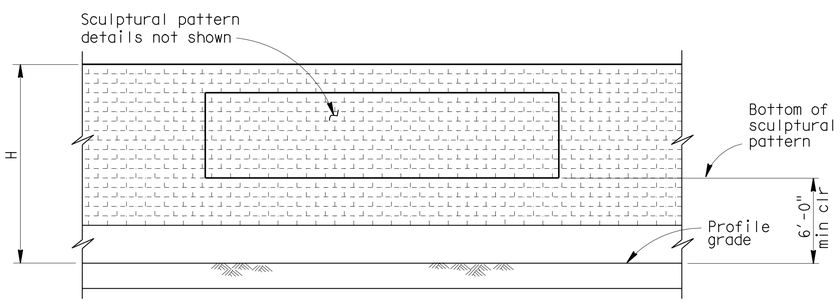

CLEARANCE DETAIL

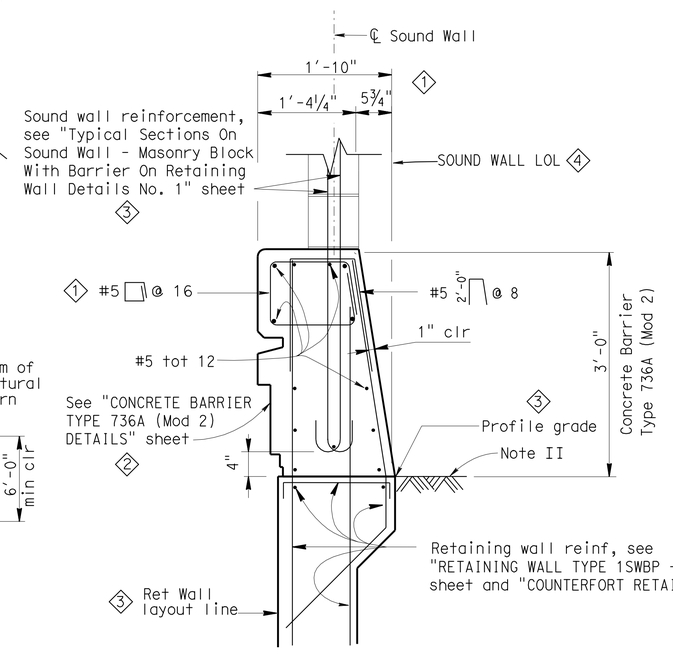

BARRIER SECTION

DESIGN NOTES

DESIGN

Uniform Building Code,1997 Edition and the Bridge Design Specifications.

DESIGN WIND LOAD

33 PSF

DESIGN SEISMIC LOAD

0.57 Dead load

CONCRETE MASONRY

REINFORCED CONCRETE

f'c = 3250 PSI
fy = 60 KSI

REGULAR STRENGTH	HIGH STRENGTH	
f'm = 1500 PSI	f'm = 2000 PSI	f'm = 2500 PSI
f_b = 1500 PSI	f_b = 660 PSI	f_b = 830 PSI
fs = 24.0 KSI	fs = 24.0 KSI	fs = 24000 PSI
n = 25.8	n = 19.3	n = 15.5

LOAD FACTORS AND LOAD COMBINATIONS

Working Stress Design (WSD) Percentage of unit stress

Group 1: D + E + SC 100%
Group 2: D + W + SC + E 100%
Group 3: D + 0.71 EQD + E 100%

Where:

D = Dead load
E = Lateral earth pressure
SC = Live load surcharge
W = Wind load
EQD = Seismic dead load

Load Factor Design (LFD)

Group A: β D +1.7 E + 1.7 SC
Group B: β D +1.7 E + 1.3 W
Group C: β D +1.3 E + 1.0 EQE
Group D: β D +1.3 E + 1.0 EQD
Group E: β D +1.1 E + 0.85 (EQE + EQD)

Where : β = 0.9 or 1.2, whichever controls in design
D = Dead load
E = Lateral earth pressure
SC = Live load surcharge
W = Wind load
EQD = Seismic dead load
EQE = Seismic earth load

STRENGTH REDUCTION FACTORS, Ø

Reinforced concrete:
For flexure ---------- Ø=0.90
For shear ---------- Ø=0.85

Concrete masonry:
For flexure ---------- Ø=0.80
For shear ---------- Ø=0.60

Foundations :

See "RETAINING WALL TYPE 1SWBP - DETAIL NO. 1" sheet. 3

NOTES:

3 I : For details not shown, see "RETAINING WALL TYPE 1SWBP - DETAIL NO. 1" and No. 2 sheets

II : Slope ground at traffic side of barrier to drain. Maximum slope ±10%. See Standard Plan B11-56, Note D.

SPECIAL DETAILS

REVISED STANDARD DRAWING

FILE NO. xs15-130-2e

APPROVED BY T SATTER — RESPONSIBLE TECHNICAL SPECIALIST
APPROVAL DATE 10/22/09

RELEASED BY ROBERTO LACALLE — RESPONSIBLE OFFICE CHIEF
RELEASE DATE 10/22/09

1 Barrier dimensions and reinf changed
2 Added note for barrier aesthetics
3 Sheet reference notes corrected
4 Sound Wall LOL added
5 Delete obsolete detail

STATE OF CALIFORNIA DEPARTMENT OF TRANSPORTATION

DIVISION OF ENGINEERING SERVICES STRUCTURE DESIGN
DESIGN BRANCH 1

BRIDGE NO. 53-E0183
POST MILE 3.67

SOUND WALL NO. 202
SOUND WALL - MASONRY BLOCK WITH BARRIER ON RETAINING WALL DETAILS NO. 2

DS OSD 2147A (ENGLISH STANDARD DRAWING "XS" BORDER REV. 01/11/08)

ORIGINAL SCALE IN INCHES FOR REDUCED PLANS 0 1 2 3

UNIT: 3576
PROJECT NUMBER & PHASE: 07000018331 CONTRACT NO.: 07-215934

DISREGARD PRINTS BEARING EARLIER REVISION DATES

REVISION DATES 11/30/10 04/01/11 03/30/12 SHEET 24 OF 28

USERNAME => s124496

sw202-k-swdt02.dgn

DATE PLOTTED => 28-MAR-2012 TIME PLOTTED => 12:14

DIST	COUNTY	ROUTE	POST MILES TOTAL PROJECT	SHEET No.	TOTAL SHEETS
07	LA	5	2.4/4.0	1253	1288

GEOTECHNICAL PROFESSIONAL — DATE 06/2011

3-26-12
PLANS APPROVAL DATE

REGISTERED PROFESSIONAL ENGINEER — MICHAEL G. SMITH — No. 2229 — Exp. 3-31-2012 — GEOTECHNICAL — STATE OF CALIFORNIA

The State of California or its officers or agents shall not be responsible for the accuracy or completeness of electronic copies of this plan sheet.

BENCH MARK

PRHV 104 Elev 94.31′
FOUND CHISLED "X" ON S′LY TC @+/- 250′ W/O NB 1-5 TO WB FIRESTONE BLVD OFF-RAMP
TUNNEL PER SR 09-033-000011
NAVD 88

PRHV 105 Elev 96.88′
FOUND CHISLED "X" ON W′LY CURB BCR@ EB FIRESTONE BL
TO SB 1-5 ON-RAMP & FIRESTONE BL INTERSECTION PER SR 09-033-000011
NAVD 88

PRHV 119 Elev 99.46′
FOUND PK NAIL & TIN @ NB 1-5 SHOULDER, +/-120′ N/O SILVERBOW PEDESTRIAN OVERCROSSING
NAVD 88

PRHV 122 Elev 99.50′
FOUND PK NAIL & TIN @ SB 1-5 SHOULDER, +/-210′ N/O SILVERBOW PEDESTRIAN OVERCROSSING
NAVD 88

Notes

1. This LOTB sheet was prepared in accordance with the Caltrans Soil & Rock Logging, Classification, and Presentation Manual (2010) except three digit sequence number in boring identification starting with the segment number per exception request approved on April 08, 2009

2. For protection of underground utility lines, hand-auger was used to remove top 5 to 10 feet of subsurface material for exploratory borings and cone penetration testings.

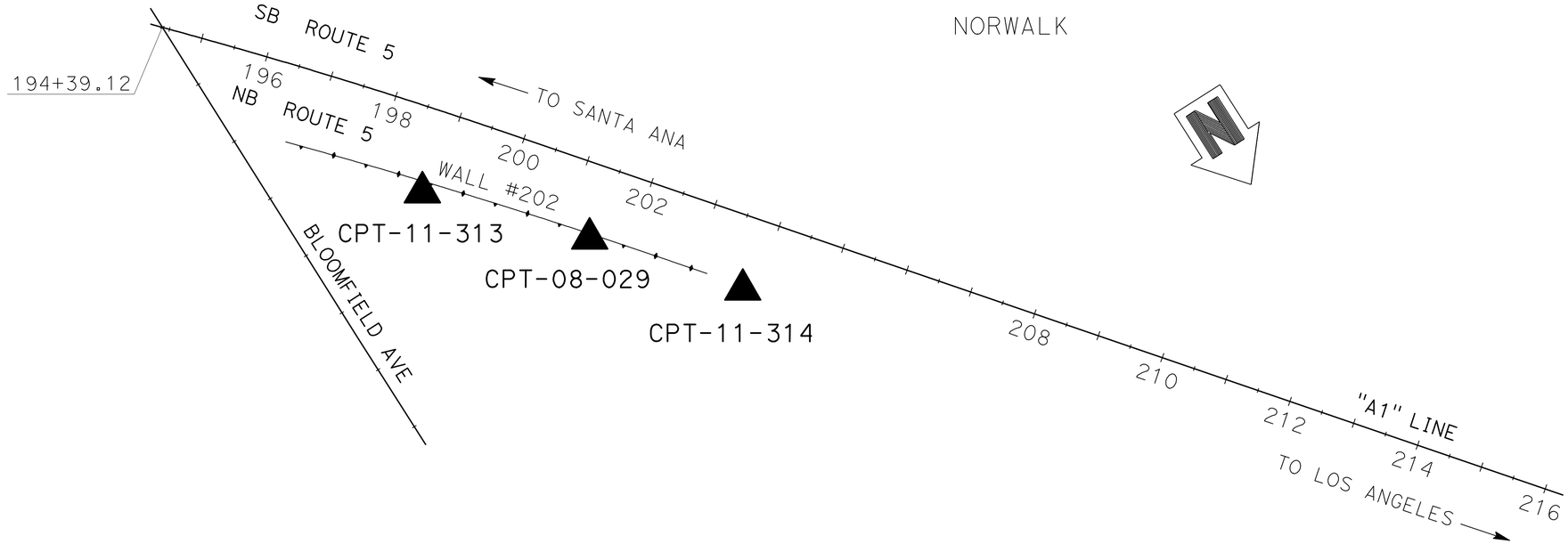

PLAN
SCALE 1"=100′

ENGINEERING SERVICES	MATERIALS AND GEOTECHNICAL SERVICES	STATE OF CALIFORNIA DEPARTMENT OF TRANSPORTATION	DIVISION OF ENGINEERING SERVICES STRUCTURE DESIGN DESIGN BRANCH 1	BRIDGE NO. 53-E0183 POST MILE 3.67	SOUND WALL NO. 202 LOG OF TEST BORINGS SHEET 1 OF 4
FUNCTIONAL SUPERVISOR NAME: M. SMITH	DRAWN BY: P.QUACH CHECKED BY: D.ORRIS	FIELD INVESTIGATION BY: P.MCDONALD/D.ORRIS			

OGS CIVIL LOG OF TEST BORINGS SHEET — ORIGINAL SCALE IN INCHES FOR REDUCED PLANS 0 1 2 3

UNIT: 3576
PROJECT NUMBER & PHASE: 07000018331 — CONTRACT NO.: 07-215934

DISREGARD PRINTS BEARING EARLIER REVISION DATES → REVISION DATES 06/17/11 — SHEET 25 OF 28

FILE => sw202-z-1tb01.dgn

USERNAME => s124496 DATE PLOTTED => 28-MAR-2012 TIME PLOTTED => 12:16

DIST	COUNTY	ROUTE	POST MILES TOTAL PROJECT	SHEET No.	TOTAL SHEETS
07	LA	5	2.4/4.0	1254	1288

GEOTECHNICAL PROFESSIONAL — DATE 06/2011

3-26-12
PLANS APPROVAL DATE

REGISTERED PROFESSIONAL ENGINEER — MICHAEL G. SMITH No. 2229 Exp. 3-31-2012 GEOTECHNICAL — STATE OF CALIFORNIA

The State of California or its officers or agents shall not be responsible for the accuracy or completeness of electronic copies of this plan sheet.

FOR PLAN VIEW, SEE
"LOG OF TEST BORINGS" 1 OF 4

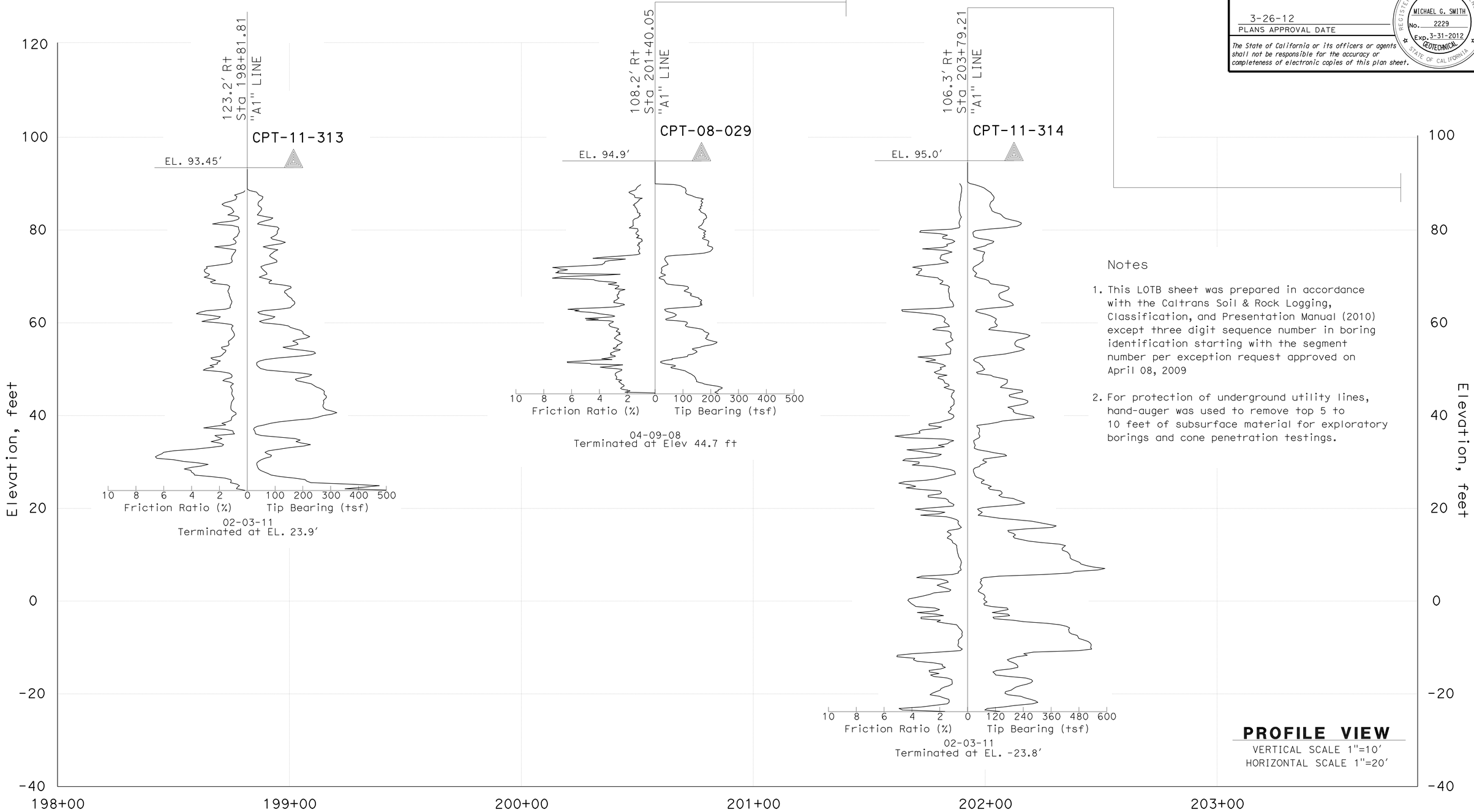

Notes

1. This LOTB sheet was prepared in accordance with the Caltrans Soil & Rock Logging, Classification, and Presentation Manual (2010) except three digit sequence number in boring identification starting with the segment number per exception request approved on April 08, 2009

2. For protection of underground utility lines, hand-auger was used to remove top 5 to 10 feet of subsurface material for exploratory borings and cone penetration testings.

PROFILE VIEW
VERTICAL SCALE 1"=10'
HORIZONTAL SCALE 1"=20'

ENGINEERING SERVICES	MATERIALS AND GEOTECHNICAL SERVICES	STATE OF CALIFORNIA DEPARTMENT OF TRANSPORTATION	DIVISION OF ENGINEERING SERVICES STRUCTURE DESIGN DESIGN BRANCH 1	BRIDGE NO. 53-E0183 POST MILE 3.67	SOUND WALL NO. 202
FUNCTIONAL SUPERVISOR NAME: M. SMITH	DRAWN BY: P.QUACH CHECKED BY: D.ORRIS	FIELD INVESTIGATION BY: P.MCDONALD/D.ORRIS/M.ISLAM			LOG OF TEST BORINGS SHEET 2 OF 4

OGS CIVIL LOG OF TEST BORINGS SHEET

ORIGINAL SCALE IN INCHES FOR REDUCED PLANS 0 1 2 3

UNIT: 3576
PROJECT NUMBER & PHASE: 07000018331 CONTRACT NO.: 07-215934

DISREGARD PRINTS BEARING EARLIER REVISION DATES → REVISION DATES 06/17/11 SHEET 26 OF 28

FILE => sw202-z-lltb2.dgn

USERNAME => s124496 DATE PLOTTED => 28-MAR-2012 TIME PLOTTED => 12:16

DIST	COUNTY	ROUTE	POST MILES TOTAL PROJECT	SHEET No.	TOTAL SHEETS
07	LA	5	2.4/4.0	1255	1288

GEOTECHNICAL PROFESSIONAL — DATE 06/2011

3-26-12
PLANS APPROVAL DATE

REGISTERED PROFESSIONAL ENGINEER — MICHAEL G. SMITH No. 2229 Exp. 3-31-2012 GEOTECHNICAL — STATE OF CALIFORNIA

The State of California or its officers or agents shall not be responsible for the accuracy or completeness of electronic copies of this plan sheet.

REFERENCE: CALTRANS SOIL & ROCK LOGGING, CLASSIFICATION, AND PRESENTATION MANUAL (2010)

CEMENTATION

Description	Criteria
Weak	Crumbles or breaks with handling or little finger pressure.
Moderate	Crumbles or breaks with considerable finger pressure.
Strong	Will not crumble or break with finger pressure.

BOREHOLE IDENTIFICATION

Symbol	Hole Type	Description
Size	A	Auger Boring (hollow or solid stem bucket)
Size	R RW RC P	Rotary drilled boring (conventional) Rotary drilled with self-casing wire-line Rotary core with continuously-sampled, self-casing wire-line Rotary percussion boring (air)
Size	R	Rotary drilled diamond core
Size	HD HA	Hand driven (1-inch soil tube) Hand Auger
●	D	Dynamic Cone Penetration Boring
▲	CPT	Cone Penetration Test (ASTM D 5778)
⬚	O	Other (note on LOTB)

Note: Size in inches.

CONSISTENCY OF COHESIVE SOILS

Description	Shear Strength (tsf)	Pocket Penetrometer Measurement, PP, (tsf)	Torvane Measurement, TV, (tsf)	Vane Shear Measurement, VS, (tsf)
Very Soft	Less than 0.12	Less than 0.25	Less than 0.12	Less than 0.12
Soft	0.12 - 0.25	0.25 - 0.5	0.12 - 0.25	0.12 - 0.25
Medium Stiff	0.25 - 0.5	0.5 - 1	0.25 - 0.5	0.25 - 0.5
Stiff	0.5 - 1	1 - 2	0.5 - 1	0.5 - 1
Very Stiff	1 - 2	2 - 4	1 - 2	1 - 2
Hard	Greater than 2	Greater than 4	Greater than 2	Greater than 2

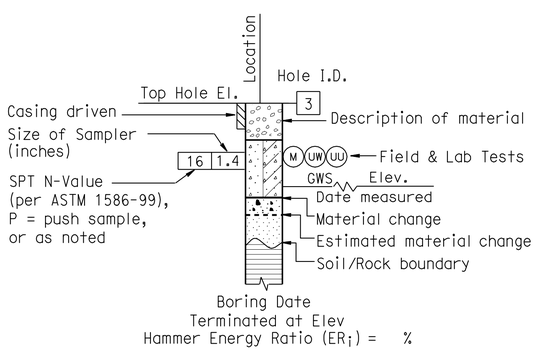

ROTARY BORING

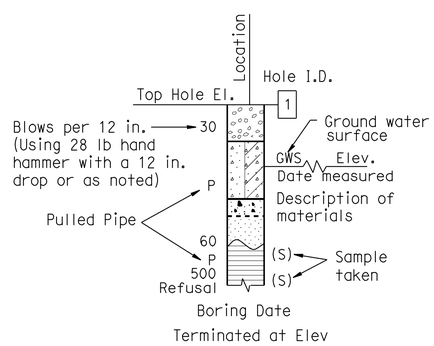

HAND BORING

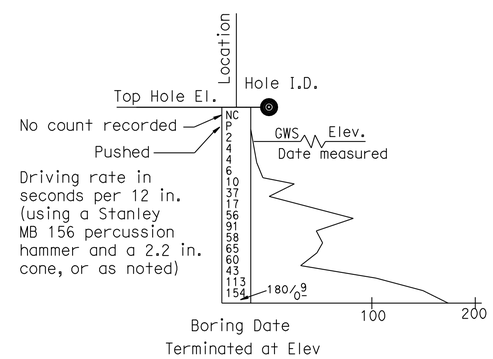

DYNAMIC CONE PENETRATION BORING

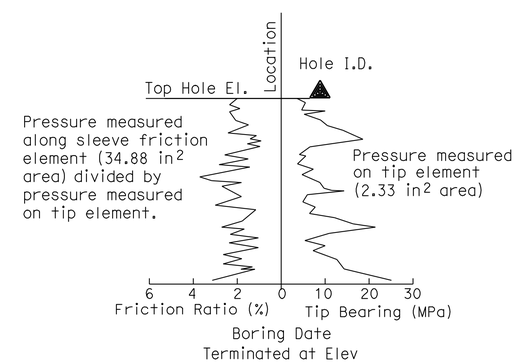

CONE PENETRATION TEST (CPT) BORING

ENGINEERING SERVICES	MATERIALS AND GEOTECHNICAL SERVICES	STATE OF CALIFORNIA DEPARTMENT OF TRANSPORTATION	DIVISION OF ENGINEERING SERVICES STRUCTURE DESIGN DESIGN BRANCH 1	BRIDGE NO. 53-E0183 / POST MILE 3.67	SOUND WALL NO. 202
FUNCTIONAL SUPERVISOR NAME: M. SMITH	DRAWN BY: P.QUACH CHECKED BY: D.ORRIS	FIELD INVESTIGATION BY: P.MCDONALD/D.ORRIS/M.ISLAM			LOG OF TEST BORINGS SHEET 3 OF 4

OGS CIVIL LOG OF TEST BORINGS SHEET — ORIGINAL SCALE IN INCHES FOR REDUCED PLANS 0 1 2 3

UNIT: 3576
PROJECT NUMBER & PHASE: 07000018331 — CONTRACT NO.: 07-215934

DISREGARD PRINTS BEARING EARLIER REVISION DATES → REVISION DATES 06/17/11 — SHEET 27 OF 28

FILE => sw202-z-ltb3.dgn

USERNAME => s124496 DATE PLOTTED => 28-MAR-2012 TIME PLOTTED => 12:16

REFERENCE: CALTRANS SOIL & ROCK LOGGING, CLASSIFICATION, AND PRESENTATION MANUAL (2010)

DIST	COUNTY	ROUTE	POST MILES TOTAL PROJECT	SHEET No.	TOTAL SHEETS
07	LA	5	2.4/4.0	1256	1288

GEOTECHNICAL PROFESSIONAL — DATE 06/2011

3-26-12
PLANS APPROVAL DATE

REGISTERED PROFESSIONAL ENGINEER — MICHAEL G. SMITH No. 2229 Exp. 3-31-2012 GEOTECHNICAL — STATE OF CALIFORNIA

The State of California or its officers or agents shall not be responsible for the accuracy or completeness of electronic copies of this plan sheet.

GROUP SYMBOLS AND NAMES

Graphic/Symbol	Group Names	Graphic/Symbol	Group Names
GW	Well-graded GRAVEL Well-graded GRAVEL with SAND	CL	Lean CLAY Lean CLAY with SAND Lean CLAY with GRAVEL SANDY lean CLAY SANDY lean CLAY with GRAVEL GRAVELLY lean CLAY GRAVELLY lean CLAY with SAND
GP	Poorly-graded GRAVEL Poorly-graded GRAVEL with SAND		
GW-GM	Well-graded GRAVEL with SILT Well-graded GRAVEL with SILT and SAND	CL-ML	SILTY CLAY SILTY CLAY with SAND SILTY CLAY with GRAVEL SANDY SILTY CLAY SANDY SILTY CLAY with GRAVEL GRAVELLY SILTY CLAY GRAVELLY SILTY CLAY with SAND
GW-GC	Well-graded GRAVEL with CLAY (or SILTY CLAY) Well-graded GRAVEL with CLAY and SAND (or SILTY CLAY and SAND)		
GP-GM	Poorly-graded GRAVEL with SILT Poorly-graded GRAVEL with SILT and SAND	ML	SILT SILT with SAND SILT with GRAVEL SANDY SILT SANDY SILT with GRAVEL GRAVELLY SILT GRAVELLY SILT with SAND
GP-GC	Poorly-graded GRAVEL with CLAY (or SILTY CLAY) Poorly-graded GRAVEL with CLAY and SAND (or SILTY CLAY and SAND)		
GM	SILTY GRAVEL SILTY GRAVEL with SAND	OL	ORGANIC lean CLAY ORGANIC lean CLAY with SAND ORGANIC lean CLAY with GRAVEL SANDY ORGANIC lean CLAY SANDY ORGANIC lean CLAY with GRAVEL GRAVELLY ORGANIC lean CLAY GRAVELLY ORGANIC lean CLAY with SAND
GC	CLAYEY GRAVEL CLAYEY GRAVEL with SAND		
GC-GM	SILTY, CLAYEY GRAVEL SILTY, CLAYEY GRAVEL with SAND	OL	ORGANIC SILT ORGANIC SILT with SAND ORGANIC SILT with GRAVEL SANDY ORGANIC SILT SANDY ORGANIC SILT with GRAVEL GRAVELLY ORGANIC SILT GRAVELLY ORGANIC SILT with SAND
SW	Well-graded SAND Well-graded SAND with GRAVEL		
SP	Poorly-graded SAND Poorly-graded SAND with GRAVEL	CH	Fat CLAY Fat CLAY with SAND Fat CLAY with GRAVEL SANDY fat CLAY SANDY fat CLAY with GRAVEL GRAVELLY fat CLAY GRAVELLY fat CLAY with SAND
SW-SM	Well-graded SAND with SILT Well-graded SAND with SILT and GRAVEL		
SW-SC	Well-graded SAND with CLAY (or SILTY CLAY) Well-graded SAND with CLAY and GRAVEL (or SILTY CLAY and GRAVEL)	MH	Elastic SILT Elastic SILT with SAND Elastic SILT with GRAVEL SANDY elastic SILT SANDY elastic SILT with GRAVEL GRAVELLY elastic SILT GRAVELLY elastic SILT with SAND
SP-SM	Poorly-graded SAND with SILT Poorly-graded SAND with SILT and GRAVEL		
SP-SC	Poorly-graded SAND with CLAY (or SILTY CLAY) Poorly-graded SAND with CLAY and GRAVEL (or SILTY CLAY and GRAVEL)	OH	ORGANIC fat CLAY ORGANIC fat CLAY with SAND ORGANIC fat CLAY with GRAVEL SANDY ORGANIC fat CLAY SANDY ORGANIC fat CLAY with GRAVEL GRAVELLY ORGANIC fat CLAY GRAVELLY ORGANIC fat CLAY with SAND
SM	SILTY SAND SILTY SAND with GRAVEL		
SC	CLAYEY SAND CLAYEY SAND with GRAVEL	OH	ORGANIC elastic SILT ORGANIC elastic SILT with SAND ORGANIC elastic SILT with GRAVEL SANDY ORGANIC elastic SILT SANDY ORGANIC elastic SILT with GRAVEL GRAVELLY ORGANIC elastic SILT GRAVELLY ORGANIC elastic SILT with SAND
SC-SM	SILTY, CLAYEY SAND SILTY, CLAYEY SAND with GRAVEL		
PT	PEAT	OL/OH	ORGANIC SOIL ORGANIC SOIL with SAND ORGANIC SOIL with GRAVEL SANDY ORGANIC SOIL SANDY ORGANIC SOIL with GRAVEL GRAVELLY ORGANIC SOIL GRAVELLY ORGANIC SOIL with SAND
	COBBLES COBBLES and BOULDERS BOULDERS		

FIELD AND LABORATORY TESTING

- (C) Consolidation (ASTM D 2435)
- (CL) Collapse Potential (ASTM D 5333)
- (CP) Compaction Curve (CTM 216)
- (CR) Corrosivity Testing (CTM 643, CTM 422, CTM 417)
- (CU) Consolidated Undrained Triaxial (ASTM D 4767)
- (DS) Direct Shear (ASTM D 3080)
- (EI) Expansion Index (ASTM D 4829)
- (M) Moisture Content (ASTM D 2216)
- (OC) Organic Content-% (ASTM D 2974)
- (P) Permeability (CTM 220)
- (PA) Particle Size Analysis (ASTM D 422)
- (PI) Plasticity Index (AASHTO T 90) Liquid Limit (AASHTO T 89)
- (PL) Point Load Index (ASTM D 5731)
- (PM) Pressure Meter
- (R) R-Value (CTM 301)
- (SE) Sand Equivalent (CTM 217)
- (SG) Specific Gravity (AASHTO T 100)
- (SL) Shrinkage Limit (ASTM D 427)
- (SW) Swell Potential (ASTM D 4546)
- (UC) Unconfined Compression-Soil (ASTM D 2166) Unconfined Compression-Rock (ASTM D 2938)
- (UU) Unconsolidated Undrained Triaxial (ASTM D 2850)
- (UW) Unit Weight (ASTM D 4767)

APPARENT DENSITY OF COHESIONLESS SOILS

Description	SPT N_{60} (Blows / 12 in.)
Very Loose	0 - 5
Loose	5 - 10
Medium Dense	10 - 30
Dense	30 - 50
Very Dense	Greater than 50

MOISTURE

Description	Criteria
Dry	No discernable moisture
Moist	Moisture present, but no free water
Wet	Visible free water

PERCENT OR PROPORTION OF SOILS

Description	Criteria
Trace	Particles are present but estimated to be less than 5%
Few	5% - 10%
Little	15% - 25%
Some	30% - 45%
Mostly	50% - 100%

PARTICLE SIZE

Description		Size (in.)
Boulder		Greater than 12
Cobble		3 - 12
Gravel	Coarse	3/4 - 3
	Fine	1/5 - 3/4
Sand	Coarse	1/16 - 1/5
	Medium	1/64 - 1/16
	Fine	1/300 - 1/64
Silt and Clay		Less than 1/300

ENGINEERING SERVICES — MATERIALS AND GEOTECHNICAL SERVICES

FUNCTIONAL SUPERVISOR
NAME: M. SMITH
DRAWN BY: P.QUACH
CHECKED BY: D.ORRIS
FIELD INVESTIGATION BY: P.MCDONALD/D.ORRIS/M.ISLAM

STATE OF CALIFORNIA DEPARTMENT OF TRANSPORTATION

DIVISION OF ENGINEERING SERVICES STRUCTURE DESIGN — DESIGN BRANCH 1

BRIDGE NO. 53-E0183
POST MILE 3.67

SOUND WALL NO. 202
LOG OF TEST BORINGS SHEET 4 OF 4

OGS CIVIL LOG OF TEST BORINGS SHEET

ORIGINAL SCALE IN INCHES FOR REDUCED PLANS 0 1 2 3

UNIT: 3576
PROJECT NUMBER & PHASE: 07000018331
CONTRACT NO.: 07-215934

DISREGARD PRINTS BEARING EARLIER REVISION DATES — REVISION DATES 06/17/11

SHEET 28 OF 28

FILE => sw202-z-ltb4.dgn

USERNAME => s124496 DATE PLOTTED => 28-MAR-2012 TIME PLOTTED => 12:17

DIST	COUNTY	ROUTE	POST MILES TOTAL PROJECT	SHEET No.	TOTAL SHEETS
07	LA	5	2.4/4.0	1257	1288

REGISTERED CIVIL ENGINEER 12-08-11 DATE

3-26-12
PLANS APPROVAL DATE

REGISTERED PROFESSIONAL ENGINEER Kevin Harper No. 42221 Exp. 3-31-12 CIVIL STATE OF CALIFORNIA

The State of California or its officers or agents shall not be responsible for the accuracy or completeness of electronic copies of this plan sheet.

NOTES:

1. For Design Notes, see "RETAINING WALL TYPE 1SWBP - DETAIL NO. 1", "RETAINING WALL TYPE 5SWBP - DETAIL NO. 1" and "SOUND WALL - MASONRY BLOCK WITH BARRIER ON RETAINING WALL DETAILS NO. 2" sheets.
2. All piles are not shown in "DEVELOPED MIRRORED ELEVATION".

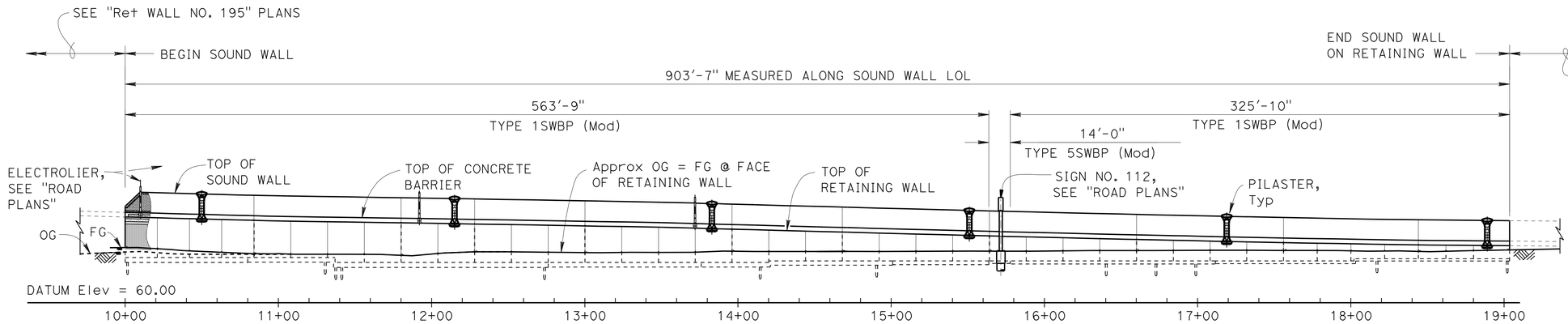

DEVELOPED MIRRORED ELEVATION

1" = 40'

QUANTITIES

STRUCTURE EXCAVATION (RETAINING WALL)	3,700	CY
STRUCTURE EXCAVATION (TYPE Y-2) (AERIALLY DEPOSITED LEAD)	417	CY
STRUCTURE BACKFILL (RETAINING WALL)	5,800	CY
PERVIOUS BACKFILL MATERIAL (RETAINING WALL)	356	CY
24" CAST-IN-DRILLED-HOLE CONCRETE PILING	13,915	LF
STRUCTURAL CONCRETE, RETAINING WALL	2,145	CY
PILASTER, SOUND WALL	14	CY
ARCHITECTURAL TREATMENT (SPLIT SLATE - FRACTURED RIB)	10,400	SQFT
SOUND WALL (MASONRY BLOCK)	11,700	SQFT
BAR REINFORCING STEEL (RETAINING WALL)	626,000	LB
CONCRETE BARRIER (TYPE 736A MODIFIED 2)	904	LF

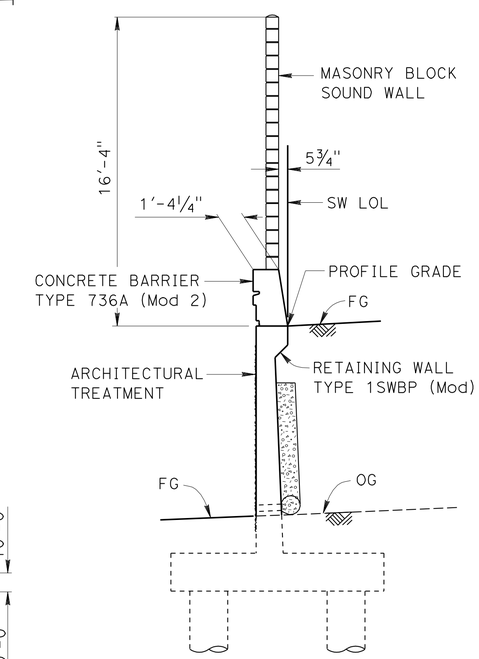

TYPICAL SECTION

¼" = 1'-0"

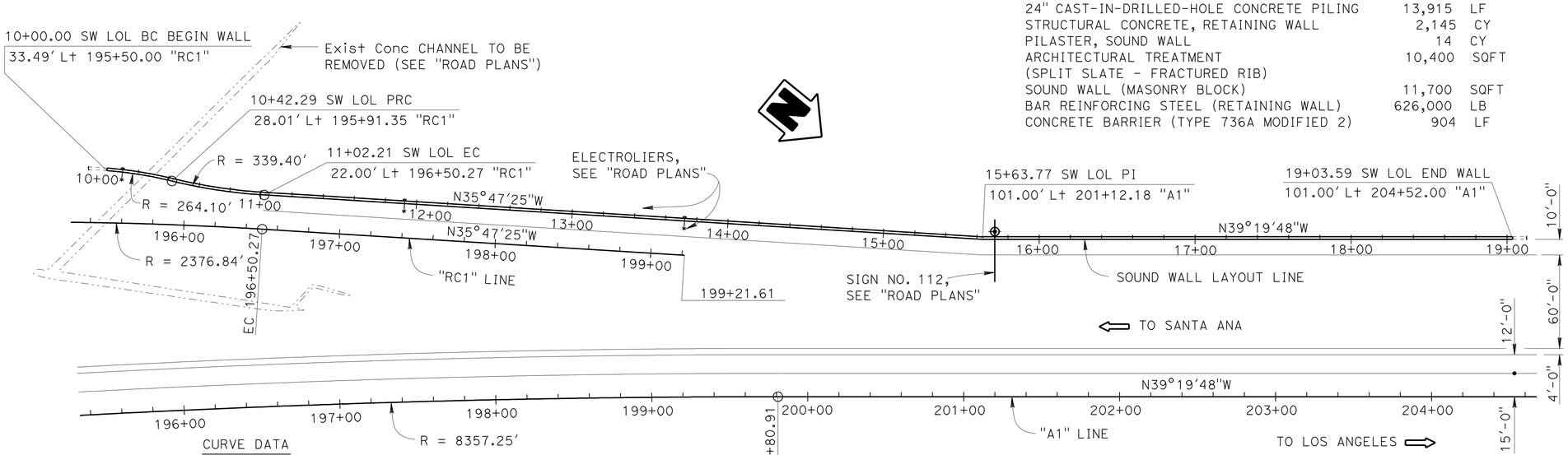

CURVE DATA

SW LOL		"RC1" LINE	A1 LINE
R = 264.10	R = 339.40	R = 2376.84	R = 8357.25
Δ = 9°10'25"	Δ = 10°06'57"	Δ = 12°23'27"	Δ = 17°36'01"
T = 21.19	T = 30.04	T = 258.01	T = 1293.80
L = 42.28	L = 59.92	L = 514.01	L = 2567.22

PLAN

1" = 40'

Jeff Sims
DESIGN ENGINEER

	BY	CHECKED			
DESIGN	V.Shostak / E.Watson	Daniel Sessions	LOAD FACTOR DESIGN		
DETAILS	Jie Tang	Daniel Sessions	LAYOUT	Vadim Shostak	Daniel Sessions
QUANTITIES	Bruce Hagy	Eric Watson	SPECIFICATIONS	Theresa Nedwick	PLANS AND SPECS COMPARED Theresa Nedwick

ORIGINAL SCALE IN INCHES FOR REDUCED PLANS 0 1 2 3

STATE OF CALIFORNIA
DEPARTMENT OF TRANSPORTATION

DIVISION OF ENGINEERING SERVICES
STRUCTURE DESIGN
DESIGN BRANCH 1

BRIDGE NO. X
POST MILE 3.64

SOUND WALL NO. 203
GENERAL PLAN

UNIT: 3576
PROJECT NUMBER & PHASE: 07000018331
CONTRACT NO.: 07-215934

DISREGARD PRINTS BEARING EARLIER REVISION DATES

REVISION DATES 12-08-10 11/29/11 11-08-11

SHEET 1 OF 32

STRUCTURES DESIGN GENERAL PLAN SHEET (ENGLISH) (REV.09-01-10)

FILE => sw203-a-gp.dgn

USERNAME => s124936 DATE PLOTTED => 28-MAR-2012 TIME PLOTTED => 12:15

DIST	COUNTY	ROUTE	POST MILES TOTAL PROJECT	SHEET No.	TOTAL SHEETS
07	LA	5	2.4/4.0	1258	1288

REGISTERED CIVIL ENGINEER 12-08-11 DATE

3-26-12
PLANS APPROVAL DATE

REGISTERED PROFESSIONAL ENGINEER Kevin Harper No. 42221 Exp. 3-31-12 CIVIL STATE OF CALIFORNIA

The State of California or its officers or agents shall not be responsible for the accuracy or completeness of electronic copies of this plan sheet.

INDEX TO PLANS

SHEET NO.	TITLE
1.	GENERAL PLAN
2.	INDEX TO PLANS
3.	STRUCTURE PLAN NO. 1
4.	STRUCTURE PLAN NO. 2
5.	STRUCTURE PLAN NO. 3
6.	STRUCTURE PLAN NO. 4
7.	FOUNDATION PLAN NO. 1
8.	FOUNDATION PLAN NO. 2
9.	RETAINING WALL ARCHITECTURAL TREATMENT NO. 1
10.	RETAINING WALL ARCHITECTURAL TREATMENT NO. 2
11.	RETAINING WALL ARCHITECTURAL DETAILS
12.	CONCRETE BARRIER TYPE 736A (Mod 2) DETAILS
13.	SOUND WALL ARCHITECTURAL DETAILS
14.	PILASTER ARCHITECTURAL DETAILS NO. 1
15.	PILASTER ARCHITECTURAL DETAILS NO. 2
16.	PILASTER ARCHITECTURAL DETAILS NO. 3
17.	PILASTER ARCHITECTURAL DETAILS NO. 4
18.	PILASTER STRUCTURAL DETAILS NO. 1
19.	PILASTER STRUCTURAL DETAILS NO. 2
20.	PILASTER STRUCTURAL DETAILS NO. 3
21.	ELECTROLIER PEDESTAL DETAILS
22.	RETAINING WALL TYPE 1SWBP - DETAIL NO. 1
23.	RETAINING WALL TYPE 1SWBP - DETAIL NO. 2
24.	RETAINING WALL TYPE 5SWBP - DETAIL NO. 1
25.	RETAINING WALL TYPE 5SWBP - DETAIL NO. 2
26.	SOUND WALL - MASONRY BLOCK WITH BARRIER ON RETAINING WALL DETAILS NO. 1
27.	SOUND WALL - MASONRY BLOCK WITH BARRIER ON RETAINING WALL DETAILS NO. 2
28.	LOG OF TEST BORINGS 1 OF 5
29.	LOG OF TEST BORINGS 2 OF 5
30.	LOG OF TEST BORINGS 3 OF 5
31.	LOG OF TEST BORINGS 4 OF 5
32.	LOG OF TEST BORINGS 5 OF 5

STANDARD PLANS DATED MAY 2006

A10A	ACRONYMS AND ABBREVIATIONS (SHEET 1 OF 2)
A10B	ACRONYMS AND ABBREVIATIONS (SHEET 2 OF 2)
A10C	SYMBOLS (SHEET 1 OF 2)
A10D	SYMBOLS (SHEET 2 OF 2)
A62B	LIMITS OF PAYMENT FOR EXCAVATION AND BACKFILL BRIDGE SURCHARGE AND WALL
B0-1	BRIDGE DETAILS
B0-3	BRIDGE DETAILS
B2-3	16" AND 24" CAST-IN-DRILLED-HOLE CONCRETE PILE
B3-8	RETAINING WALL DETAILS No. 1
B3-9	RETAINING WALL DETAILS No. 2
B11-56	CONCRETE BARRIER TYPE 736
B15-9	SOUND WALL MASONRY BLOCK MISCELLANEOUS DETAILS
ES-6B	ELECTRICAL SYSTEMS (LIGHTING STANDARD TYPES 15 AND 21 BARRIER RAIL MOUNTED DETAILS)

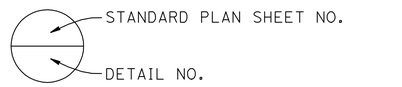

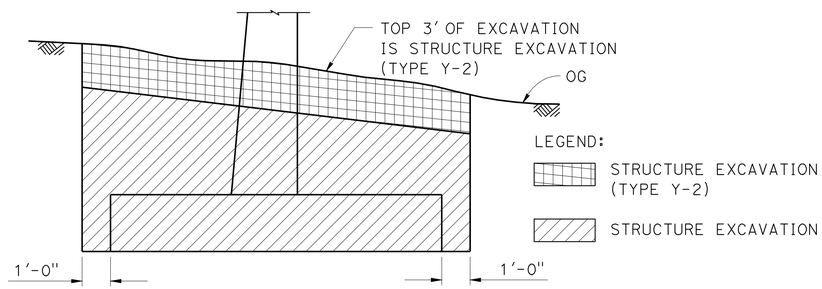

SW LOL 10+00 TO 12+00

LIMITS OF PAYMENT FOR STRUCTURE EXCAVATION (TYPE Y-2) (AERIALLY DEPOSITED LEAD)

NO SCALE

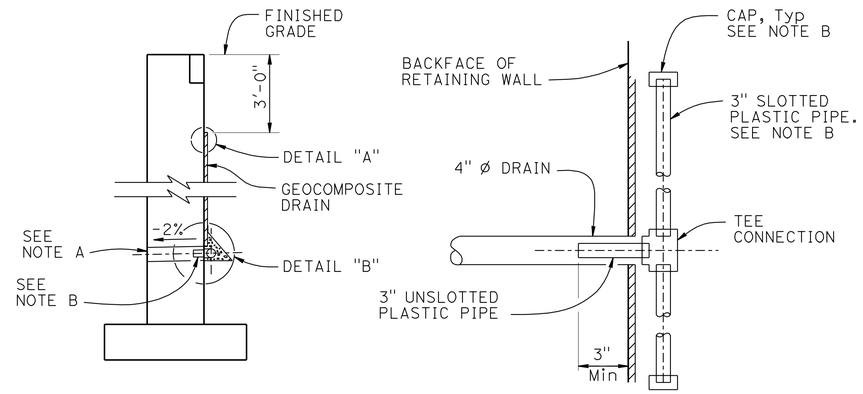

WALL SECTION

SECTION A-A

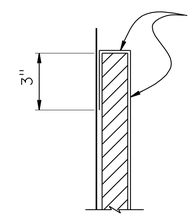

DETAIL "A"

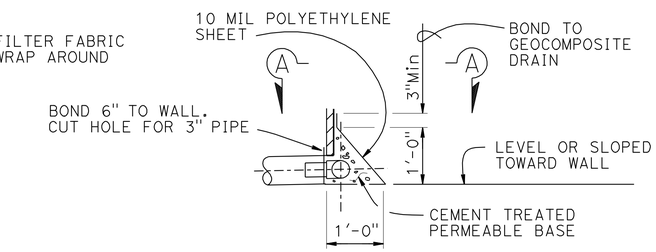

DETAIL "B"

WEEP HOLE AND GEOCOMPOSITE DRAIN

ALTERNATIVE TO BRIDGE DETAIL BO-3 / 3-1

NOTES:

A. 4" Ø drains at 25' max center to center. For walls adjacent to sidewalks or curbs, provide 4" cast iron or asbestos cement pipe under the sidewalk to discharge through curb face. Exposed wall drains shall be located 3"± above finished grade.

B. Geocomposite drain, cement treated permeable base, and 3"Ø slotted plastic pipe continuous behind retaining wall Cap ends of pipe. Provide "Tee" connection at each 4" Ø drain.

PILE DATA

LOCATION	PILE TYPE	NOMINAL RESISTANCE (KIP)		SPECIFIED TIP ELEVATION
		COMPRESSION	TENSION	
Ret WALL TYPE 1SWBP(Mod) SW LOL 10+00.00 to 11+36.00	24" Ø CIDH	180	0	52.3
Ret WALL TYPE 1SWBP(Mod) SW LOL 11+36.00 to 14+21.13	24" Ø CIDH	180	0	49.0
Ret WALL TYPE 1SWBP (Mod) SW LOL 14+21.13 to 15+63.75	24" Ø CIDH	180	0	50.5
Ret WALL TYPE 1SWBP(Mod) SW LOL 15+63.75 to 18+31.58	24" Ø CIDH	180	0	51.3
Ret WALL TYPE 1SWBP(Mod) SW LOL 18+31.58 to 19+03.59	24" Ø CIDH	180	0	53.2

	BY	CHECKED
DESIGN	V. Shostak / E. Watson	Daniel Sessions
DETAILS	Jie Tang	Daniel Sessions
QUANTITIES	Bruce Hagy	Eric Watson

STATE OF CALIFORNIA DEPARTMENT OF TRANSPORTATION

DIVISION OF ENGINEERING SERVICES STRUCTURE DESIGN DESIGN BRANCH 1

BRIDGE NO. X
POST MILE 3.64

SOUND WALL NO. 203
INDEX TO PLANS

STRUCTURES DESIGN DETAIL SHEET (ENGLISH) (REV. 09-01-10)

ORIGINAL SCALE IN INCHES FOR REDUCED PLANS 0 1 2 3

UNIT: 3576
PROJECT NUMBER & PHASE: 0700001833-1 CONTRACT NO.: 07-215934

DISREGARD PRINTS BEARING EARLIER REVISION DATES

REVISION DATES 12/17/10 12/07/11 11/29/11

SHEET 2 OF 32

FILE => sw203-a-ltp.dgn

USERNAME => s124496 DATE PLOTTED => 28-MAR-2012 TIME PLOTTED => 12:15

DIST	COUNTY	ROUTE	POST MILES TOTAL PROJECT	SHEET No.	TOTAL SHEETS
07	LA	5	2.4/4.0	1259	1288

REGISTERED CIVIL ENGINEER 12-08-11 DATE

3-26-12
PLANS APPROVAL DATE

REGISTERED PROFESSIONAL ENGINEER Kevin Harper No. 42221 Exp. 3-31-12 CIVIL STATE OF CALIFORNIA

The State of California or its officers or agents shall not be responsible for the accuracy or completeness of electronic copies of this plan sheet.

NOTES:

1. For barrier details, see "CONCRETE BARRIER TYPE 736A (Mod 2) DETAILS" sheet.
2. For sound wall details, see "SOUND WALL - MASONRY BLOCK WITH BARRIER ON RETAINING WALL DETAILS NO. 1 and NO. 2" sheets.
3. For retaining wall details, see "RETAINING WALL TYPE 1SWBP - DETAIL NO. 1 and NO. 2" and "RETAINING WALL TYPE 5SWBP - DETAILS NO. 1 and NO. 2" sheets.
4. Ret Wall No. 195 details, see "RETAINING WALL NO. 195" plans.
5. Retaining wall expansion joints, weakened planes, and weep holes shall be placed per B0-3/3-3.
6. Not all piles shown in "DEVELOPED MIRRORED ELEVATION".
7. All longitudinal dimensions are measured along the SW LOL.
8. Contractor shall locate all utilities prior to footing excavation and driving piles.
9. Adjust pile locations and spacings where necessary to avoid utilities as approved by the Engineer.

LEGEND:

⊕ - Indicates vertical 24" ø CIDH Pile

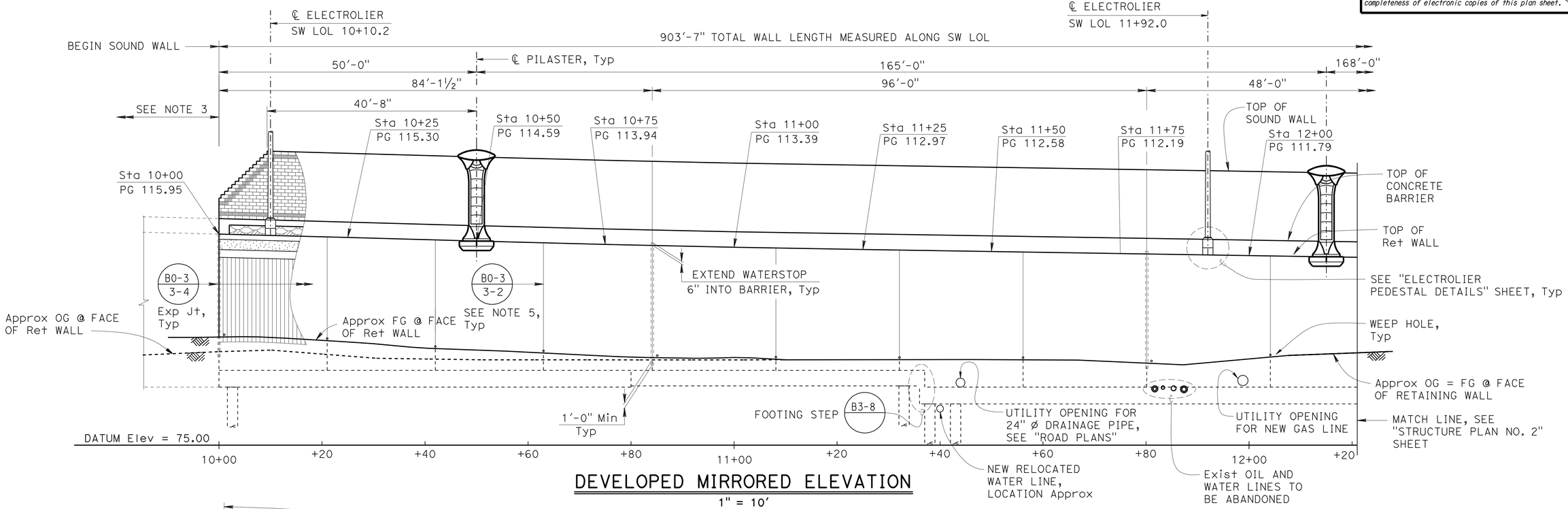

DEVELOPED MIRRORED ELEVATION

1" = 10'

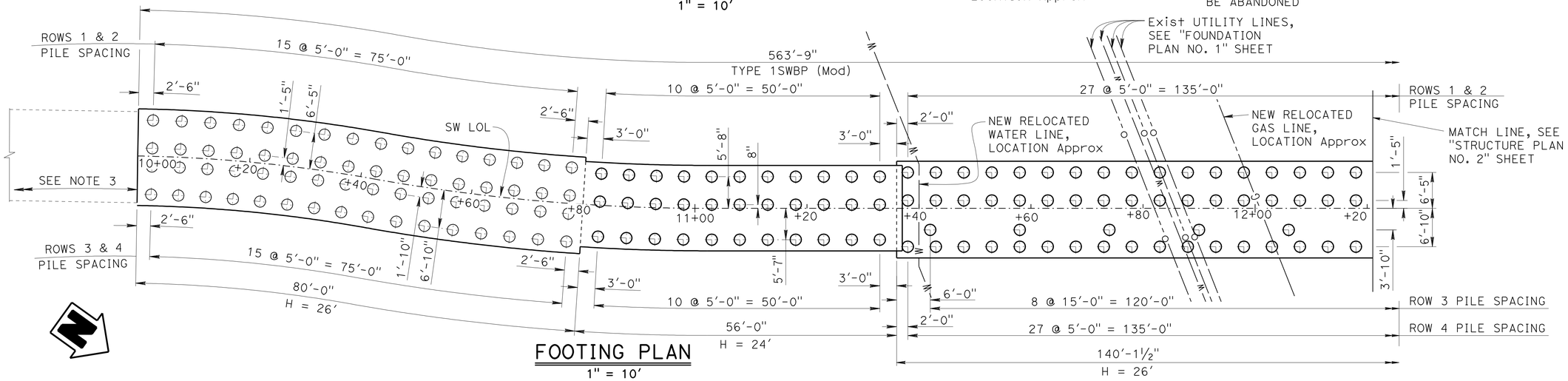

FOOTING PLAN

1" = 10'

DESIGN	BY V.Shostak / E.Watson	CHECKED Daniel Sessions	
DETAILS	BY J. Tang/G. Dickerson	CHECKED Daniel Sessions	
QUANTITIES	BY Bruce Hagy	CHECKED Eric Watson	

STATE OF CALIFORNIA
DEPARTMENT OF TRANSPORTATION

DIVISION OF ENGINEERING SERVICES
STRUCTURE DESIGN
DESIGN BRANCH 1

BRIDGE NO. X
POST MILE 3.64

SOUND WALL NO. 203
STRUCTURE PLAN NO. 1

STRUCTURES DESIGN DETAIL SHEET (ENGLISH) (REV. 09-01-10)

ORIGINAL SCALE IN INCHES FOR REDUCED PLANS 0 1 2 3

UNIT: 3576
PROJECT NUMBER & PHASE: 07000018331
CONTRACT NO.: 07-215934

DISREGARD PRINTS BEARING EARLIER REVISION DATES

REVISION DATES 12/12/10 11/10/11 11/23/11 11/29/11

SHEET 3 OF 32

FILE => sw203-c-sp01.dgn

USERNAME => s124496 DATE PLOTTED => 28-MAR-2012 TIME PLOTTED => 12:15

DIST	COUNTY	ROUTE	POST MILES TOTAL PROJECT	SHEET No.	TOTAL SHEETS
07	LA	5	2.4/4.0	1260	1288

REGISTERED CIVIL ENGINEER 12-08-11 DATE

3-26-12
PLANS APPROVAL DATE

REGISTERED PROFESSIONAL ENGINEER Kevin Harper No. 42221 Exp. 3-31-12 CIVIL STATE OF CALIFORNIA

The State of California or its officers or agents shall not be responsible for the accuracy or completeness of electronic copies of this plan sheet.

For "NOTES", see "STRUCTURE PLAN NO. 1" sheet.

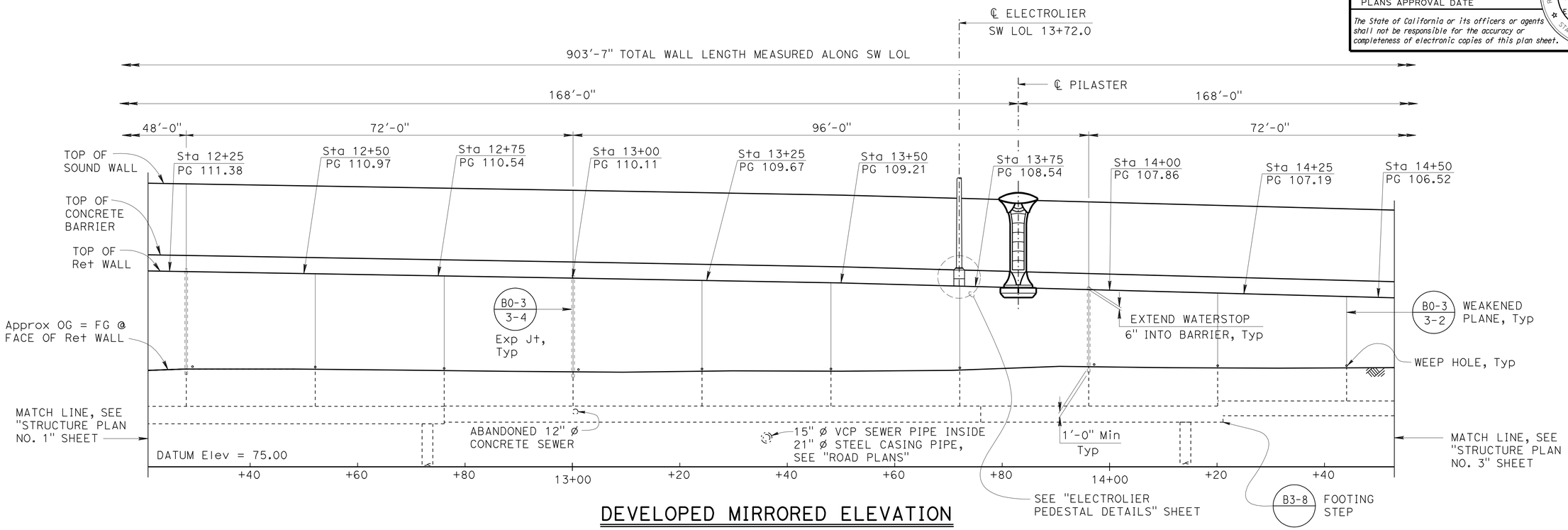

DEVELOPED MIRRORED ELEVATION

1" = 10'

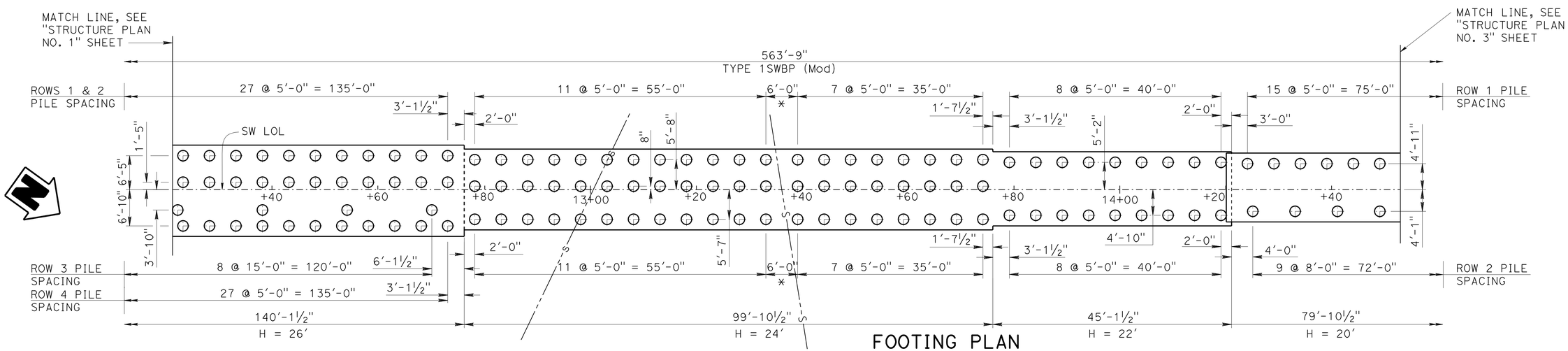

* SEE NOTE 9 ON "STRUCTURE PLAN NO.1" SHEET

FOOTING PLAN

1" = 10'

	BY	CHECKED
DESIGN	V.Shostak / E.Watson	Daniel Sessions
DETAILS	J.Tang / G.Dickerson	Daniel Sessions
QUANTITIES	Bruce Hagy	Eric Watson

STATE OF CALIFORNIA
DEPARTMENT OF TRANSPORTATION

DIVISION OF ENGINEERING SERVICES
STRUCTURE DESIGN
DESIGN BRANCH 1

BRIDGE NO. X
POST MILE 3.64

SOUND WALL NO. 203
STRUCTURE PLAN NO. 2

STRUCTURES DESIGN DETAIL SHEET (ENGLISH) (REV. 09-01-10)

ORIGINAL SCALE IN INCHES FOR REDUCED PLANS 0 1 2 3

UNIT: 3576
PROJECT NUMBER & PHASE: 07000018331
CONTRACT NO.: 07-215934

DISREGARD PRINTS BEARING EARLIER REVISION DATES

REVISION DATES 12/14/10 11-8-11 11/29/11

SHEET 4 OF 32

FILE => sw203-c-sp02.dgn

USERNAME => s124496 DATE PLOTTED => 28-MAR-2012 TIME PLOTTED => 12:15

DIST	COUNTY	ROUTE	POST MILES TOTAL PROJECT	SHEET No.	TOTAL SHEETS
07	LA	5	2.4/4.0	1261	1288

REGISTERED CIVIL ENGINEER 12-08-11 DATE

3-26-12
PLANS APPROVAL DATE

REGISTERED PROFESSIONAL ENGINEER Kevin Harper No. 42221 Exp. 3-31-12 CIVIL STATE OF CALIFORNIA

The State of California or its officers or agents shall not be responsible for the accuracy or completeness of electronic copies of this plan sheet.

For "NOTES", see "STRUCTURE PLAN NO. 1" sheet.

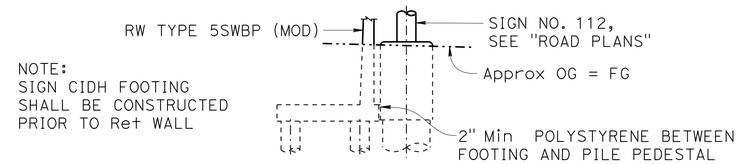

NOTE:
SIGN CIDH FOOTING SHALL BE CONSTRUCTED PRIOR TO Ret WALL

SECTION A-A
1/8" = 1'-0"

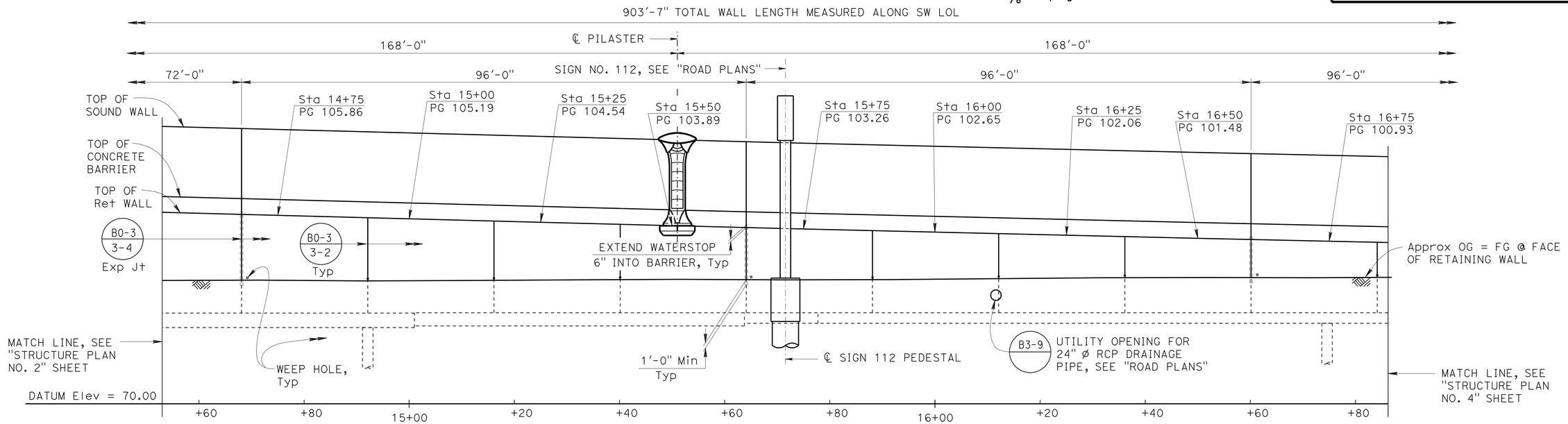

DEVELOPED MIRRORED ELEVATION
1" = 10'

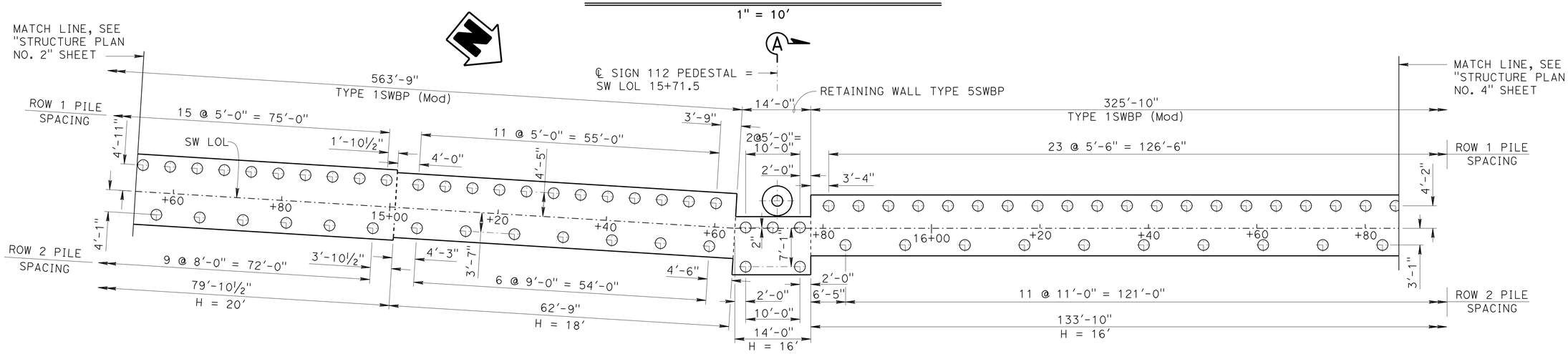

FOOTING PLAN
1" = 10'

DESIGN	BY Vadim Shostak/Eric Watson	CHECKED Daniel Sessions	
DETAILS	BY J.Tang / G.Dickerson	CHECKED Daniel Sessions	
QUANTITIES	BY Bruce Hagy	CHECKED Eric Watson	

STATE OF CALIFORNIA
DEPARTMENT OF TRANSPORTATION

DIVISION OF ENGINEERING SERVICES
STRUCTURE DESIGN
DESIGN BRANCH 1

BRIDGE NO. X
POST MILE 3.64

SOUND WALL NO. 203
STRUCTURE PLAN NO. 3

STRUCTURES DESIGN DETAIL SHEET (ENGLISH) (REV. 09-01-10)

ORIGINAL SCALE IN INCHES FOR REDUCED PLANS 0 1 2 3

UNIT: 3576
PROJECT NUMBER & PHASE: 0700001833-1
CONTRACT NO.: 07-215934

DISREGARD PRINTS BEARING EARLIER REVISION DATES

REVISION DATES 12/16/10 11/29/11 11/29/11

SHEET 5 OF 32

FILE => sw203-c-sp03.dgn

USERNAME => s124496 DATE PLOTTED => 28-MAR-2012 TIME PLOTTED => 12:15

DIST	COUNTY	ROUTE	POST MILES TOTAL PROJECT	SHEET No.	TOTAL SHEETS
07	LA	5	2.4/4.0	1262	1288

REGISTERED CIVIL ENGINEER 12-08-11 DATE

3-26-12
PLANS APPROVAL DATE

REGISTERED PROFESSIONAL ENGINEER Kevin Harper No. 42221 Exp. 3-31-12 CIVIL STATE OF CALIFORNIA

The State of California or its officers or agents shall not be responsible for the accuracy or completeness of electronic copies of this plan sheet.

For "NOTES", see "STRUCTURE PLAN NO. 1" sheet.

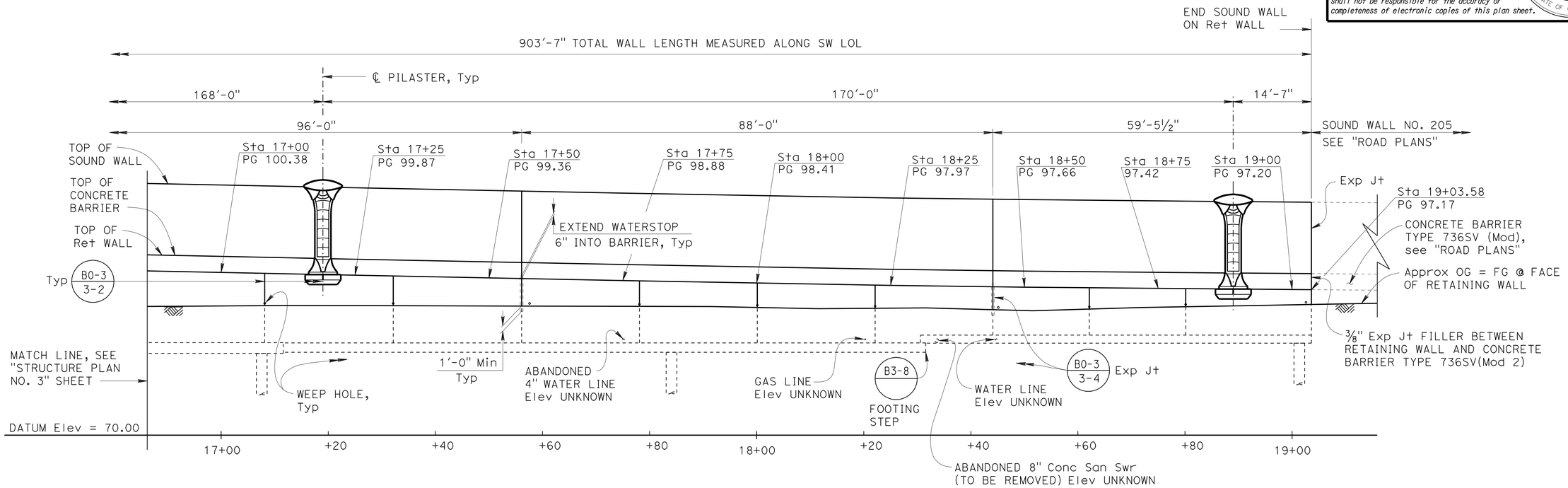

DEVELOPED MIRRORED ELEVATION

1" = 10'

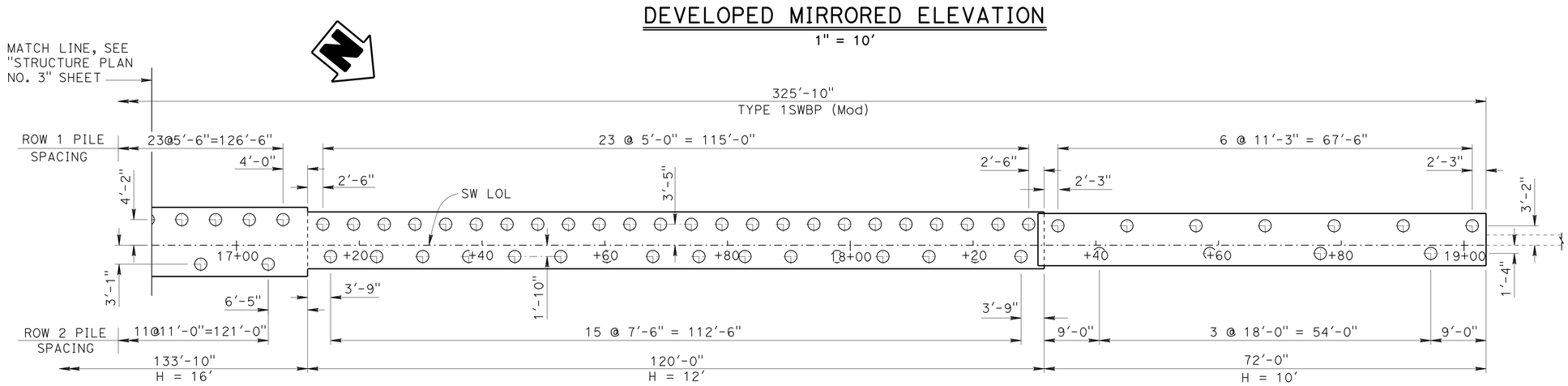

FOOTING PLAN

1" = 10'

	BY	CHECKED
DESIGN	Vadim Shostak/Eric Watson	Daniel Sessions
DETAILS	J.Tang / G.Dickerson	Daniel Sessions
QUANTITIES	Bruce Hagy	Eric Watson

STATE OF CALIFORNIA
DEPARTMENT OF TRANSPORTATION

DIVISION OF ENGINEERING SERVICES
STRUCTURE DESIGN
DESIGN BRANCH 1

BRIDGE NO. X
POST MILE 3.64

SOUND WALL NO. 203
STRUCTURE PLAN NO. 4

STRUCTURES DESIGN DETAIL SHEET (ENGLISH) (REV. 09-01-10)

ORIGINAL SCALE IN INCHES FOR REDUCED PLANS 0 1 2 3

UNIT: 3576
PROJECT NUMBER & PHASE: 0700001833-1
CONTRACT NO.: 07-215934

DISREGARD PRINTS BEARING EARLIER REVISION DATES

REVISION DATES 12/16/10 11/29/11 12/07/11

SHEET 6 OF 32

FILE => sw203-c-sp04.dgn

USERNAME => s124496 DATE PLOTTED => 28-MAR-2012 TIME PLOTTED => 12:15

NOTES:

Underground utilities as shown are approximate

+ - Denotes spot elevation

⊕ - Denotes piles (not all piles shown)

XX.X - Indicates bottom of Ftg elevation

DIST	COUNTY	ROUTE	POST MILES TOTAL PROJECT	SHEET No.	TOTAL SHEETS
07	LA	5	2.4/4.0	1263	1288

REGISTERED CIVIL ENGINEER 12-08-11 DATE

3-26-12
PLANS APPROVAL DATE

REGISTERED PROFESSIONAL ENGINEER Kevin Harper No. 42221 Exp. 3-31-12 CIVIL STATE OF CALIFORNIA

The State of California or its officers or agents shall not be responsible for the accuracy or completeness of electronic copies of this plan sheet.

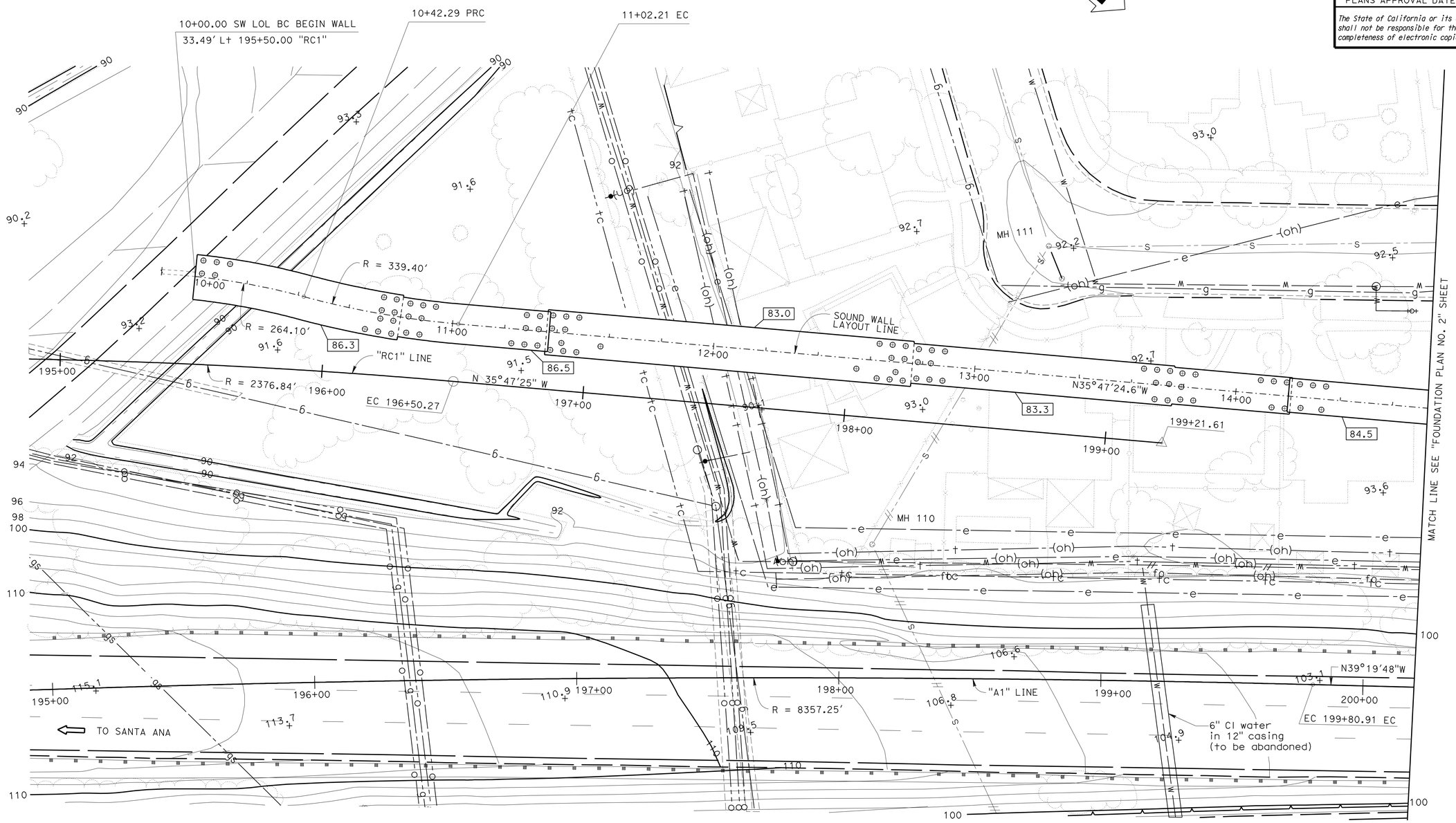

SCALE 1" = 20'					
DESIGN	BY V.Shostak / E.Watson	CHECKED Daniel Sessions	STATE OF CALIFORNIA DEPARTMENT OF TRANSPORTATION	DIVISION OF ENGINEERING SERVICES STRUCTURE DESIGN DESIGN BRANCH 1	BRIDGE NO. X
DETAILS	BY Jie Tang	CHECKED Daniel Sessions			POST MILE 3.64
QUANTITIES	BY Bruce Hagy	CHECKED Eric Watson			

SOUND WALL NO. 203

FOUNDATION PLAN NO. 1

STRUCTURES DESIGN DETAIL SHEET (ENGLISH) (REV. 09-01-10)

ORIGINAL SCALE IN INCHES FOR REDUCED PLANS 0 1 2 3

UNIT: 3576
PROJECT NUMBER & PHASE: 07000018331
CONTRACT NO.: 07-215934

DISREGARD PRINTS BEARING EARLIER REVISION DATES

REVISION DATES 07/02/11 11/29/11 11-14-11

SHEET 7 OF 32

FILE => sw203-e-0fp101.dgn

USERNAME => s124496 DATE PLOTTED => 28-MAR-2012 TIME PLOTTED => 12:15

DIST	COUNTY	ROUTE	POST MILES TOTAL PROJECT	SHEET No.	TOTAL SHEETS
07	LA	5	2.4/4.0	1264	1288

REGISTERED CIVIL ENGINEER 12-08-11 DATE

3-26-12
PLANS APPROVAL DATE

REGISTERED PROFESSIONAL ENGINEER Kevin Harper No. 42221 Exp. 3-31-12 CIVIL STATE OF CALIFORNIA

The State of California or its officers or agents shall not be responsible for the accuracy or completeness of electronic copies of this plan sheet.

NOTES:

Underground utilities as shown are approximate

+ - Denotes spot elevation

⊙ - Denotes piles (not all piles shown)

XX.X - Indicates bottom of Ftg elevation

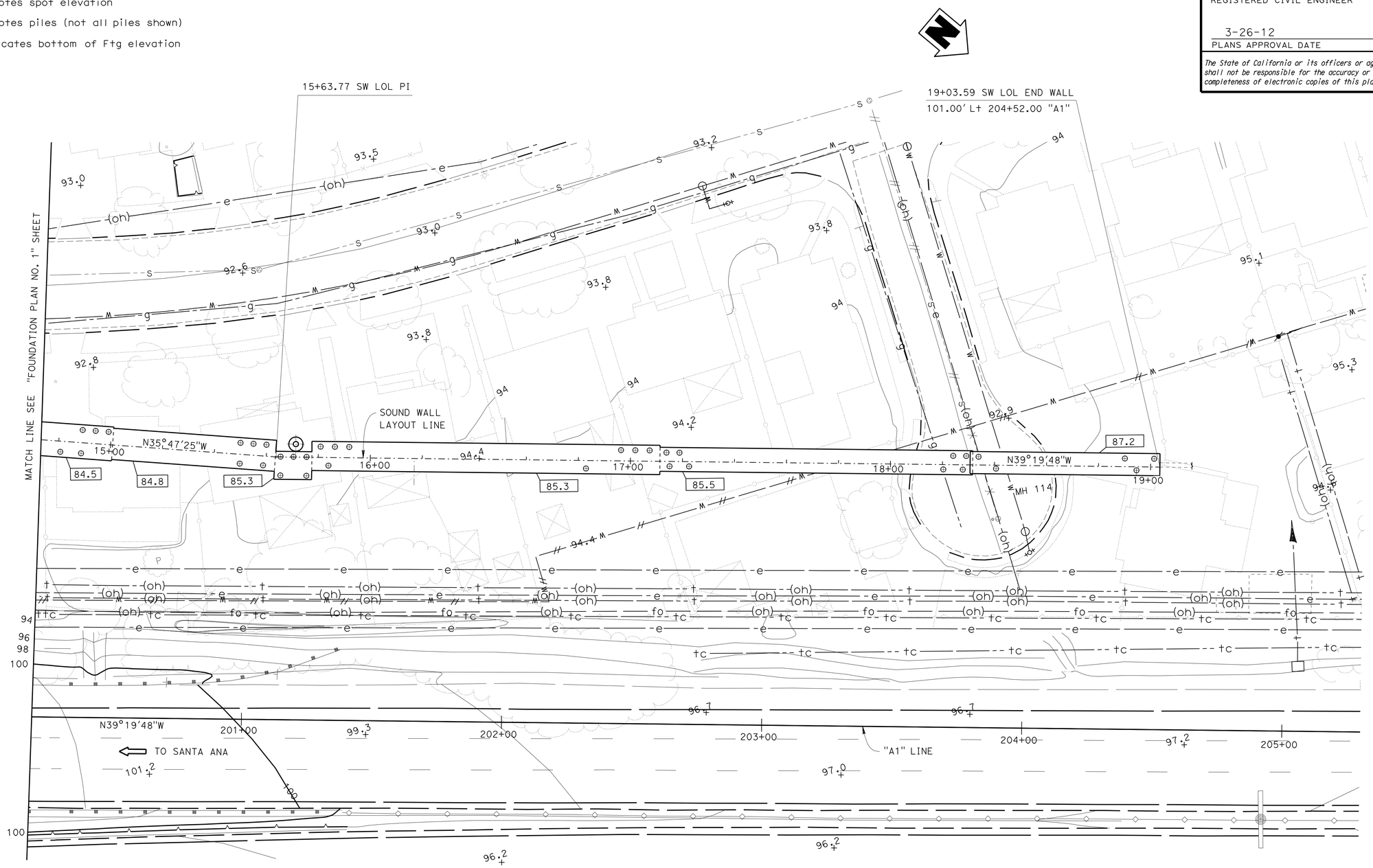

SCALE 1" = 20'			
DESIGN	BY V.Shostak / E.Watson	CHECKED Daniel Sessions	
DETAILS	BY Jie Tang	CHECKED Daniel Sessions	
QUANTITIES	BY Bruce Hagy	CHECKED Eric Watson	

STATE OF CALIFORNIA DEPARTMENT OF TRANSPORTATION

DIVISION OF ENGINEERING SERVICES STRUCTURE DESIGN DESIGN BRANCH 1

BRIDGE NO. X

POST MILE 3.64

SOUND WALL NO. 203

FOUNDATION PLAN NO. 2

STRUCTURES DESIGN DETAIL SHEET (ENGLISH) (REV. 09-01-10)

ORIGINAL SCALE IN INCHES FOR REDUCED PLANS 0 1 2 3

UNIT: 3576

PROJECT NUMBER & PHASE: 07000018331

CONTRACT NO.: 07-215934

DISREGARD PRINTS BEARING EARLIER REVISION DATES

REVISION DATES 07/23/11 11/29/11 11-10-11

SHEET 8 OF 32

FILE => sw203-e-0fp102.dgn

USERNAME => s124496 DATE PLOTTED => 28-MAR-2012 TIME PLOTTED => 12:15

DIST	COUNTY	ROUTE	POST MILES TOTAL PROJECT	SHEET No.	TOTAL SHEETS
07	LA	5	2.4/4.0	1265	1288

REGISTERED CIVIL ENGINEER 12-08-11 DATE

3-26-12
PLANS APPROVAL DATE

REGISTERED PROFESSIONAL ENGINEER Kevin Harper No. 42221 Exp. 3-31-12 CIVIL STATE OF CALIFORNIA

The State of California or its officers or agents shall not be responsible for the accuracy or completeness of electronic copies of this plan sheet.

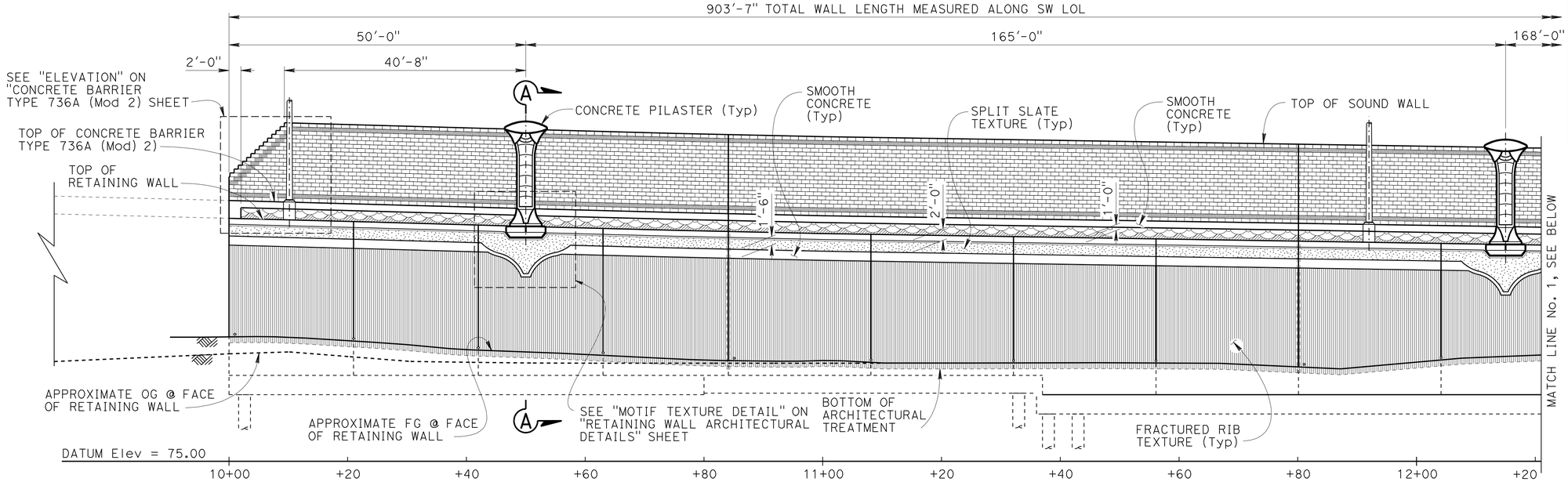

DEVELOPED MIRRORED ELEVATION

1" = 10'

NOTES:

1. For "SECTION A-A", "SECTION B-B" and "MOTIF TEXTURE DETAIL", see "RETAINING WALL ARCHITECTURAL DETAILS" sheet.
2. For barrier architectural details, see "CONCRETE BARRIER TYPE 736A (Mod 2) DETAILS" sheet.
3. For sound wall architectural details, see "SOUND WALL ARCHITECTURAL DETAILS" sheet.
4. For pilaster and corbel details, see "PILASTER ARCHITECTURAL DETAILS" and "PILASTER STRUCTURAL DETAILS" sheets.
5. Retaining wall architectural treatment pay limits shall include all split slate and fractured rib texture shown in "DEVELOPED MIRRORED ELEVATION".
6. All longitudinal dimensions are measured along SW LOL.

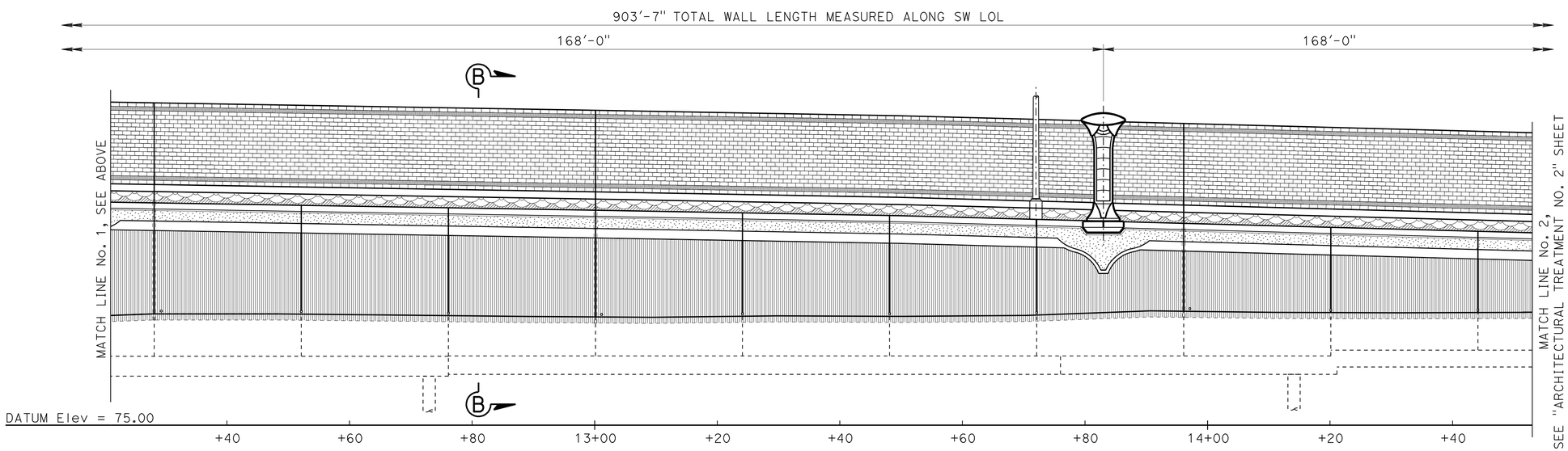

DEVELOPED MIRRORED ELEVATION

1" = 10'

DESIGN	BY Isaac Tasabia	CHECKED Javier Chavez	
DETAILS	BY Gerald Dickerson	CHECKED Daniel Sessions	
QUANTITIES	BY Bruce Hagy	CHECKED Eric Watson	

STATE OF CALIFORNIA
DEPARTMENT OF TRANSPORTATION

DIVISION OF ENGINEERING SERVICES
STRUCTURE DESIGN
DESIGN BRANCH 1

BRIDGE NO. X
POST MILE 3.64

SOUND WALL NO. 203

RETAINING WALL ARCHITECTURAL TREATMENT NO. 1

STRUCTURES DESIGN DETAIL SHEET (ENGLISH) (REV. 09-01-10)

ORIGINAL SCALE IN INCHES FOR REDUCED PLANS 0 1 2 3

UNIT: 3576
PROJECT NUMBER & PHASE: 0700001833-1
CONTRACT NO.: 07-215934

DISREGARD PRINTS BEARING EARLIER REVISION DATES

REVISION DATES: 1/13/10 12/07/11 11/29/11

SHEET 9 OF 32

FILE => sw203-e-rat01.dgn

USERNAME => s124496 DATE PLOTTED => 28-MAR-2012 TIME PLOTTED => 12:15

DIST	COUNTY	ROUTE	POST MILES TOTAL PROJECT	SHEET No.	TOTAL SHEETS
07	LA	5	2.4/4.0	1266	1288

REGISTERED CIVIL ENGINEER 12-08-11 DATE

3-26-12
PLANS APPROVAL DATE

REGISTERED PROFESSIONAL ENGINEER Kevin Harper No. 42221 Exp. 3-31-12 CIVIL STATE OF CALIFORNIA

The State of California or its officers or agents shall not be responsible for the accuracy or completeness of electronic copies of this plan sheet.

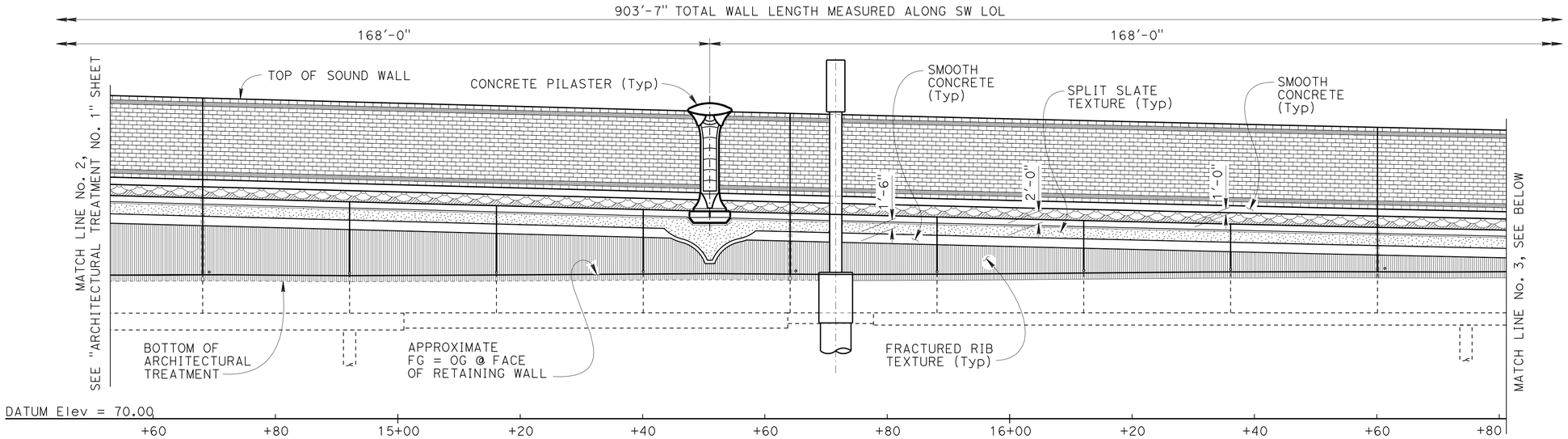

DEVELOPED MIRRORED ELEVATION

1" = 10'

NOTES:

1. For "SECTION C-C", see "RETAINING WALL ARCHITECTURAL DETAILS" sheet.
2. For all other "NOTES", see "RETAINING WALL ARCHITECTURAL TREATMENT NO. 1" sheet.

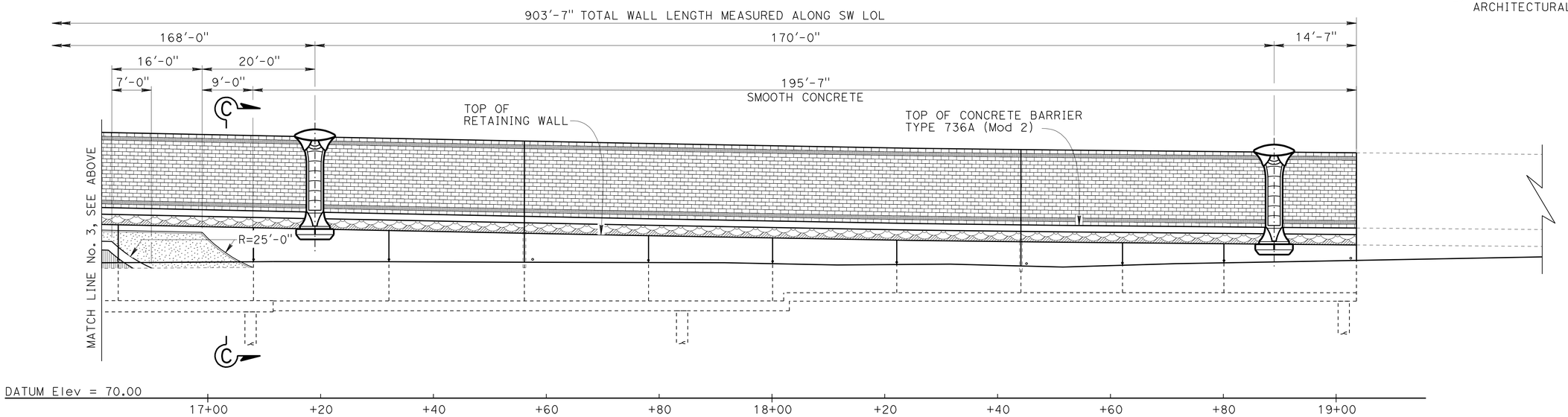

DEVELOPED MIRRORED ELEVATION

1" = 10'

	BY	CHECKED
DESIGN	Isaac Tasabia	Javier Chavez
DETAILS	Gerald Dickerson	Daniel Sessions
QUANTITIES	Bruce Hagy	Eric Watson

STATE OF CALIFORNIA DEPARTMENT OF TRANSPORTATION

DIVISION OF ENGINEERING SERVICES STRUCTURE DESIGN DESIGN BRANCH 1

BRIDGE NO. X
POST MILE 3.64

SOUND WALL NO. 203

RETAINING WALL ARCHITECTURAL TREATMENT NO. 2

STRUCTURES DESIGN DETAIL SHEET (ENGLISH) (REV. 09-01-10)

ORIGINAL SCALE IN INCHES FOR REDUCED PLANS 0 1 2 3

UNIT: 3576
PROJECT NUMBER & PHASE: 0700001833-1
CONTRACT NO.: 07-215934

DISREGARD PRINTS BEARING EARLIER REVISION DATES

REVISION DATES 11/16/11 11/29/11 12/07/11

SHEET 10 OF 32

FILE => sw203-e-rat02.dgn

USERNAME => s124496 DATE PLOTTED => 28-MAR-2012 TIME PLOTTED => 12:27

DIST	COUNTY	ROUTE	POST MILES TOTAL PROJECT	SHEET No.	TOTAL SHEETS
07	LA	5	2.4/4.0	1267	1288

REGISTERED CIVIL ENGINEER 12-08-11 DATE

3-26-12
PLANS APPROVAL DATE

REGISTERED PROFESSIONAL ENGINEER Kevin Harper No. 42221 Exp. 3-31-12 CIVIL STATE OF CALIFORNIA

The State of California or its officers or agents shall not be responsible for the accuracy or completeness of electronic copies of this plan sheet.

NOTES:

1. For location of "SECTION A-A", SECTION B-B", SECTION C-C" and "MOTIF TEXTURE DETAIL", see "RETAINING WALL ARCHITECTURAL TREATMENT NO. 1 and NO. 2" sheets
2. For sound wall architectural details, see "SOUND WALL ARCHITECTURAL DETAILS" sheet.
3. For barrier architectural details, see "CONCRETE BARRIER TYPE 736A (Mod 2) DETAILS" sheet.
4. For pilaster corbel details, see "PILASTER ARCHITECTURAL DETAILS" and "PILASTER STRUCTURAL DETAILS" sheets.

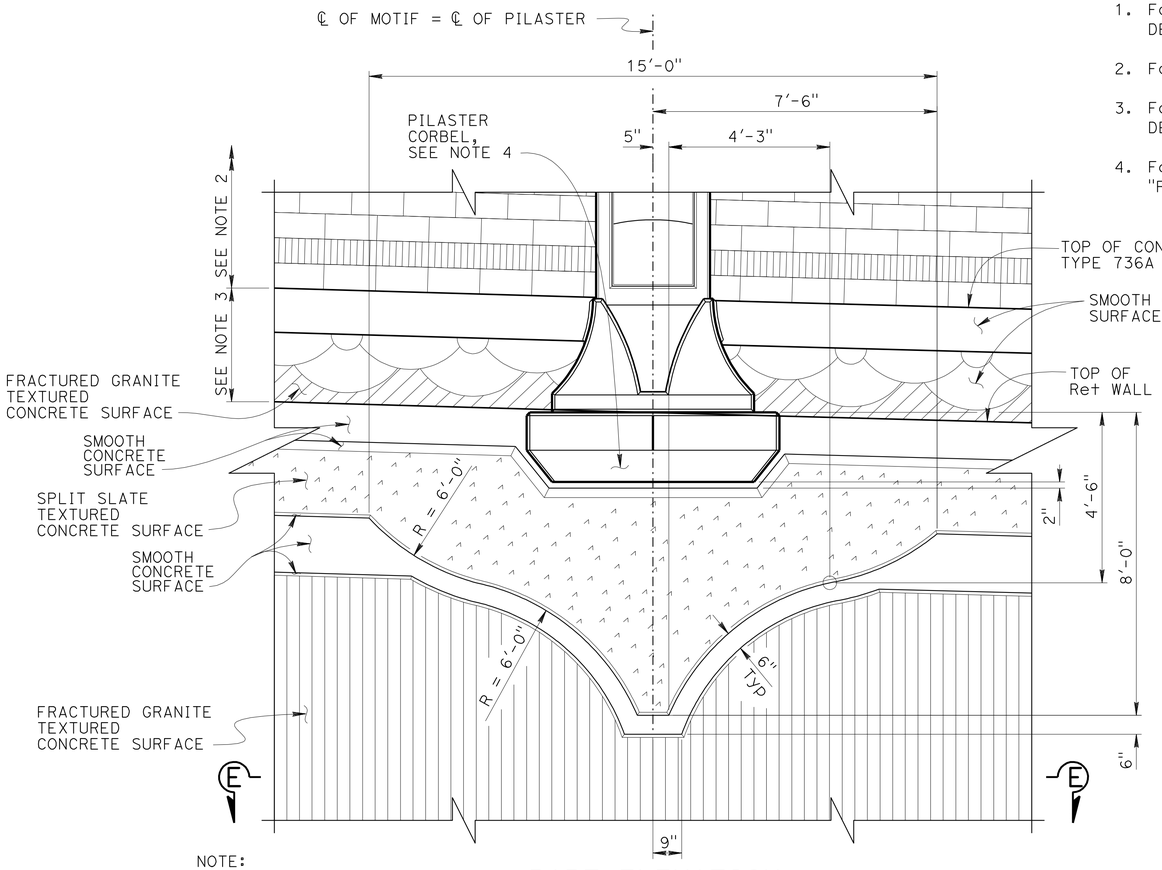

NOTE:
All dimensions symmetrical about ℄ of motif

PART ELEVATION MOTIF TEXTURE DETAIL

½" = 1'-0"

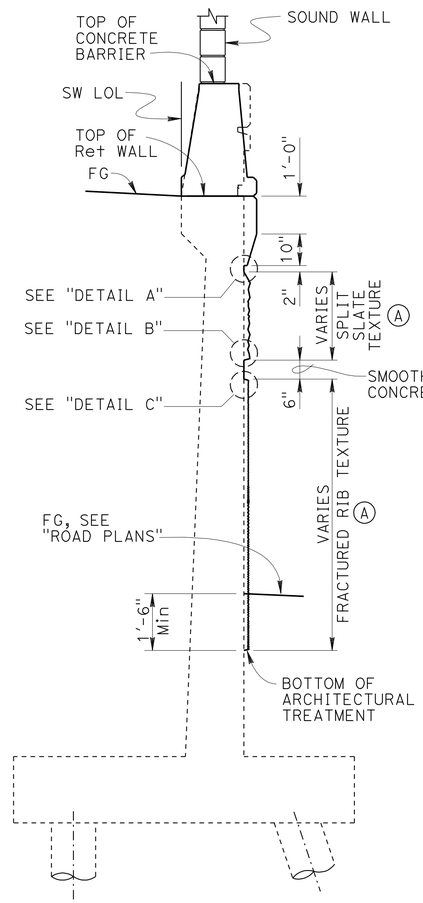

SECTION A-A

½" = 1'-0"

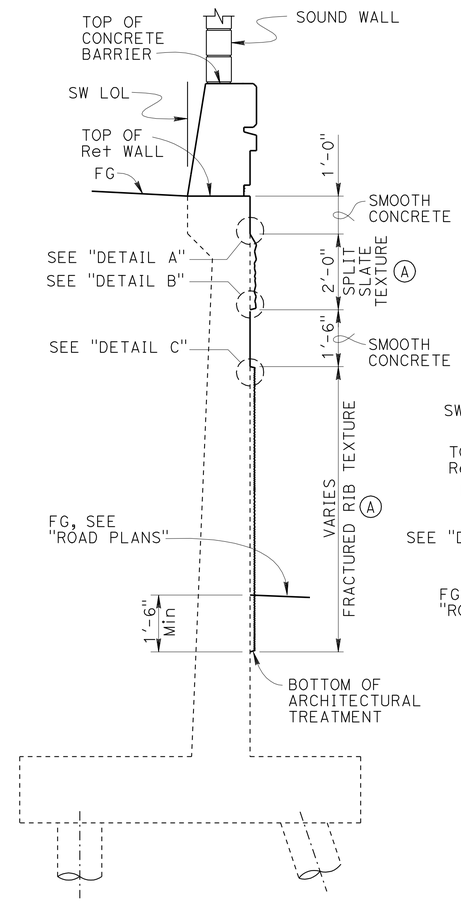

SECTION B-B

½" = 1'-0"

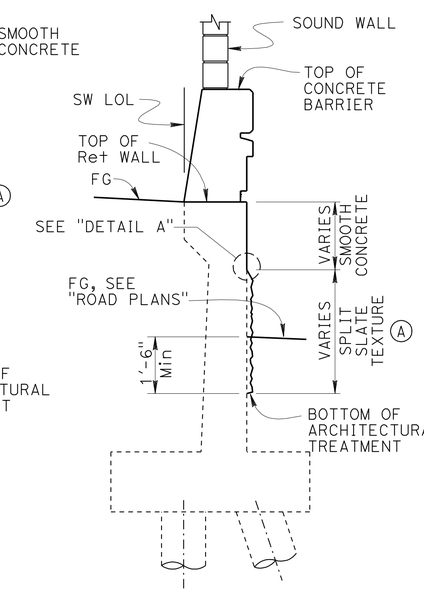

SECTION C-C

½" = 1'-0"

(A) Pay limits of architectural treatment

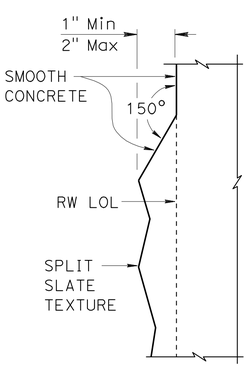

DETAIL A

3" = 1'-0"

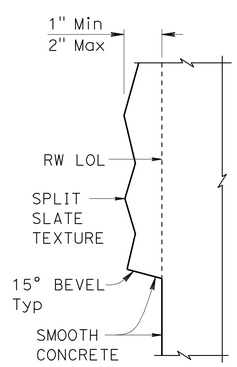

DETAIL B

3" = 1'-0"

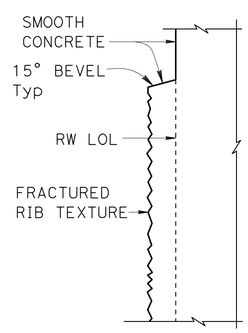

DETAIL C

3" = 1'-0"

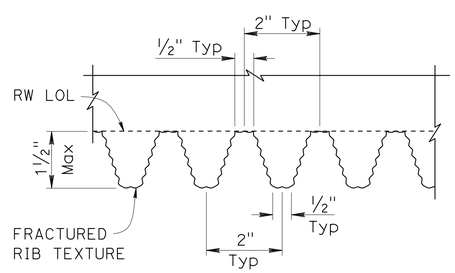

SECTION E-E

6" = 1'-0"

DESIGN	BY Isaac Tasabia	CHECKED Javier Chavez	
DETAILS	BY Gerald Dickerson	CHECKED Daniel Sessions	
QUANTITIES	BY Bruce Hagy	CHECKED Eric Watson	

STATE OF CALIFORNIA
DEPARTMENT OF TRANSPORTATION

DIVISION OF ENGINEERING SERVICES
STRUCTURE DESIGN
DESIGN BRANCH 1

BRIDGE NO. X
POST MILE 3.64

SOUND WALL NO. 203
RETAINING WALL ARCHITECTURAL DETAILS

STRUCTURES DESIGN DETAIL SHEET (ENGLISH) (REV. 09-01-10)

ORIGINAL SCALE IN INCHES FOR REDUCED PLANS 0 1 2 3

UNIT: 3576
PROJECT NUMBER & PHASE: 0700001833-1
CONTRACT NO.: 07-215934

DISREGARD PRINTS BEARING EARLIER REVISION DATES

REVISION DATES 1/19/10 12/07/11 11/29/11

SHEET 11 OF 32

FILE => sw203-e-ret01.dgn

USERNAME => s124496 DATE PLOTTED => 28-MAR-2012 TIME PLOTTED => 12:27

DIST	COUNTY	ROUTE	POST MILES TOTAL PROJECT	SHEET No.	TOTAL SHEETS
07	LA	5	2.4/4.0	1268	1288

REGISTERED CIVIL ENGINEER 12-08-11 DATE

3-26-12
PLANS APPROVAL DATE

REGISTERED PROFESSIONAL ENGINEER Kevin Harper No. 42221 Exp. 3-31-12 CIVIL STATE OF CALIFORNIA

The State of California or its officers or agents shall not be responsible for the accuracy or completeness of electronic copies of this plan sheet.

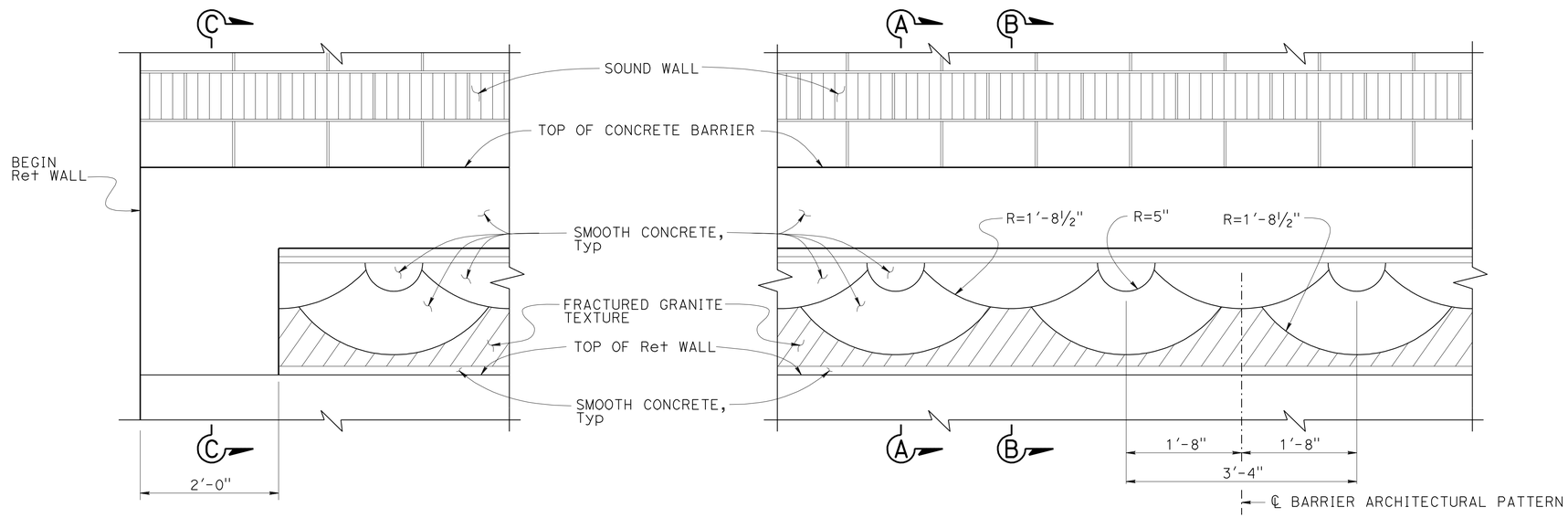

NOTES:

1. For concrete barrier type 736A (Mod 2) details not shown, see "BARRIER SECTION" on "SOUND WALL - MASONRY BLOCK WITH BARRIER ON RETAINING WALL DETAILS NO. 2" sheet.
2. For sound wall archetectural details, see "SOUND WALL ARCHITECTURAL DETAILS" sheet.

* Indicates reinforcement is additional to typical barrier reinforcement.

PART ELEVATION CONCRETE BARRIER TYPE 736A (MOD 2)

1" = 1'-0"

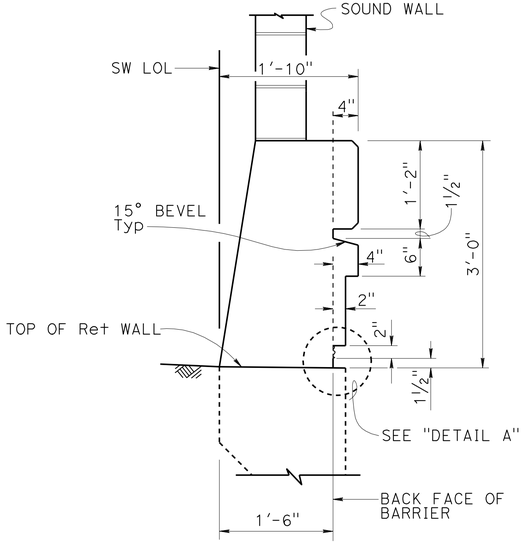

SECTION A-A

1" = 1'-0"

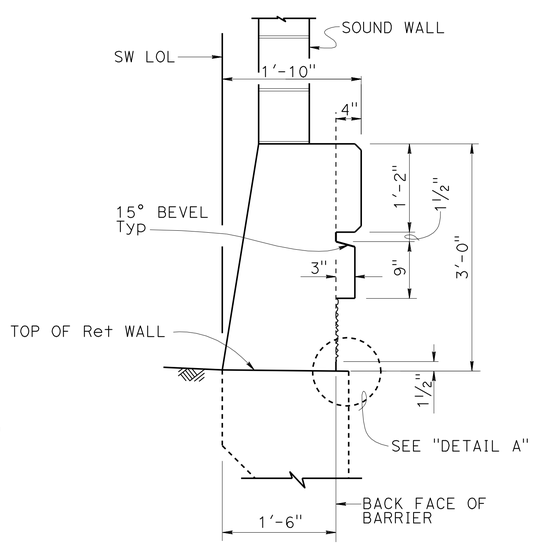

SECTION B-B

1" = 1'-0"

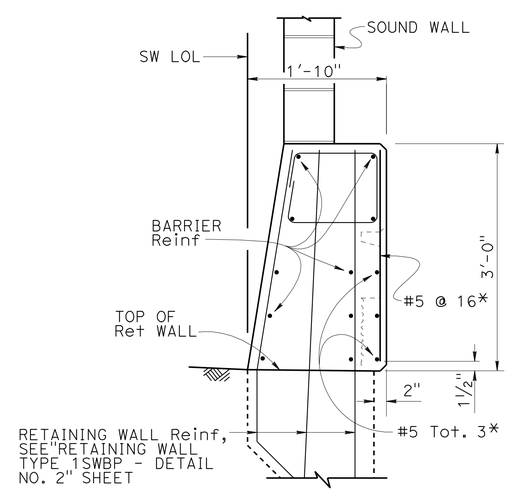

SECTION C-C

1" = 1'-0"

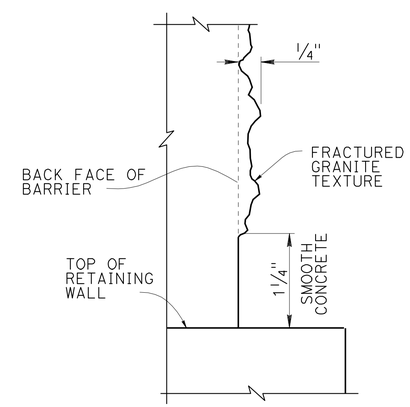

NOTE: Detail at "SECTION B-B" shown, "SECTION A-A" similar.

DETAIL A

NO SCALE

DESIGN	BY Kevin Harper	CHECKED Eric Watson	
DETAILS	BY J.Zhou / G.Dickerson	CHECKED Eric Watson	
QUANTITIES	BY Bruce Hagy	CHECKED Eric Watson	

STATE OF CALIFORNIA
DEPARTMENT OF TRANSPORTATION

DIVISION OF ENGINEERING SERVICES
STRUCTURE DESIGN
DESIGN BRANCH 1

BRIDGE NO. X
POST MILE 3.64

SOUND WALL NO. 203
CONCRETE BARRIER TYPE 736A (Mod 2) DETAILS

STRUCTURES DESIGN DETAIL SHEET (ENGLISH) (REV. 09-01-10)

ORIGINAL SCALE IN INCHES FOR REDUCED PLANS 0 1 2 3

UNIT: 3576
PROJECT NUMBER & PHASE: 0700001833-1
CONTRACT NO.: 07-215934

DISREGARD PRINTS BEARING EARLIER REVISION DATES

REVISION DATES 11/29/10 11/29/11 11/29/11

SHEET 12 OF 32

FILE => sw203-f-barr01.dgn

USERNAME => s124496 DATE PLOTTED => 28-MAR-2012 TIME PLOTTED => 12:27

DIST	COUNTY	ROUTE	POST MILES TOTAL PROJECT	SHEET No.	TOTAL SHEETS
07	LA	5	2.4/4.0	1269	1288

REGISTERED CIVIL ENGINEER 12-08-11 DATE

3-26-12
PLANS APPROVAL DATE

REGISTERED PROFESSIONAL ENGINEER Kevin Harper No. 42221 Exp. 3-31-12 CIVIL STATE OF CALIFORNIA

The State of California or its officers or agents shall not be responsible for the accuracy or completeness of electronic copies of this plan sheet.

NOTES:
1. All Masonry Block shall be Precision units, unless otherwise noted.

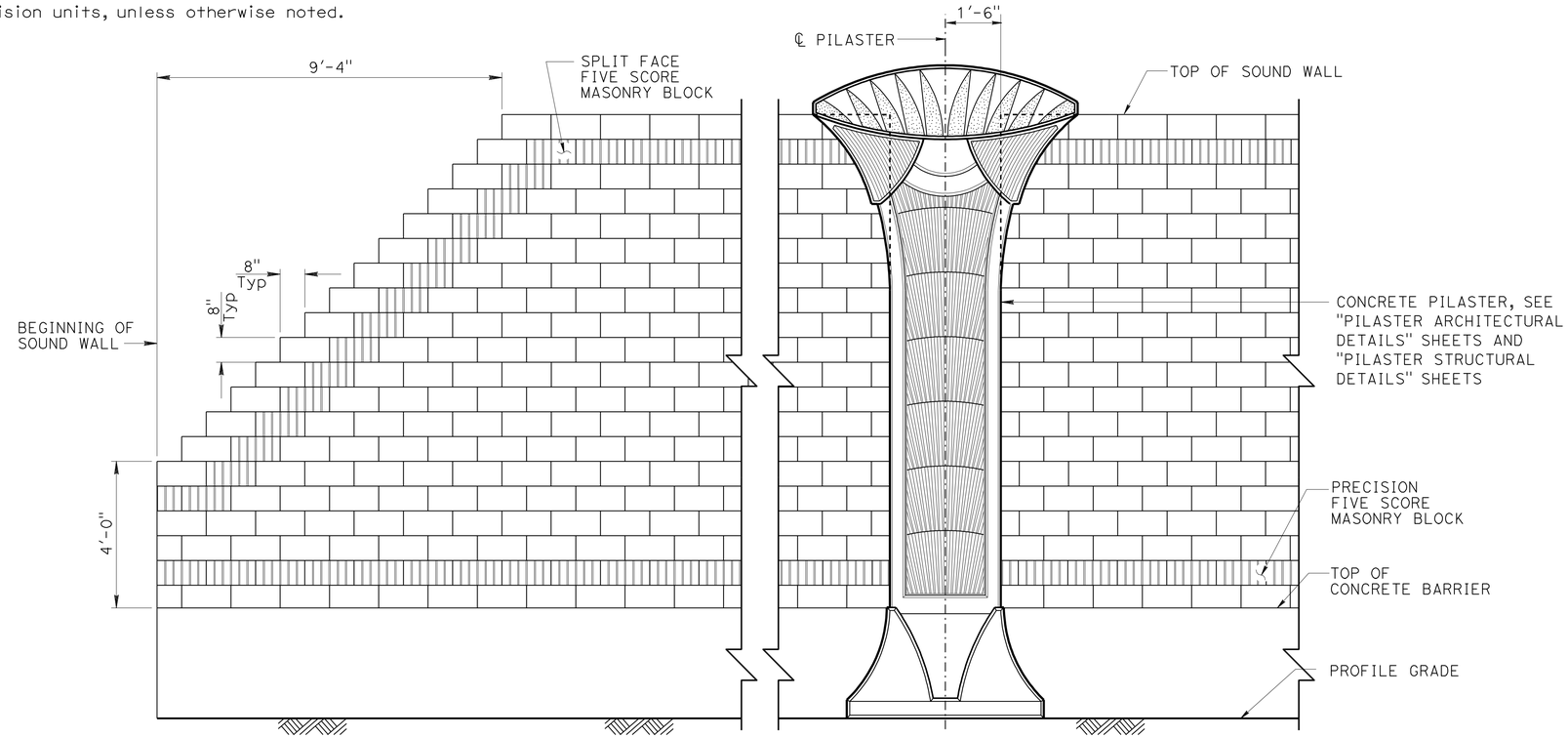

PART SOUND WALL ELEVATION - FREEWAY SIDE

½" = 1'-0"

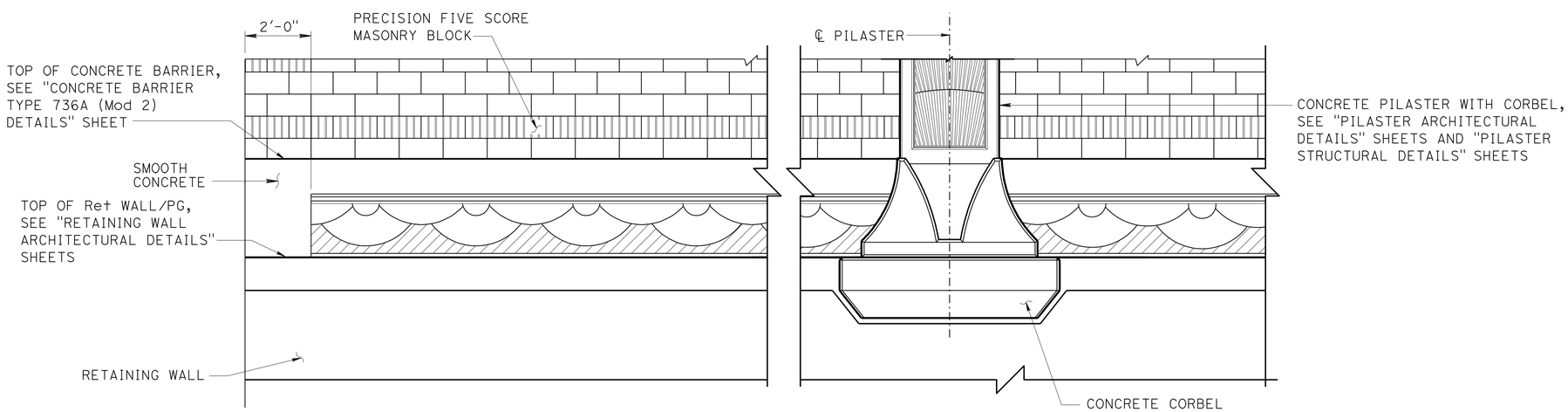

PART SOUND WALL ELEVATION - BACK SIDE

½" = 1'-0"

DESIGN	BY Isaac Tasabia	CHECKED Javier Chavez	
DETAILS	BY J.Zhou / G.Dickerson	CHECKED Daniel Sessions	
QUANTITIES	BY April Pearson	CHECKED Kyoung Lee	

STATE OF CALIFORNIA
DEPARTMENT OF TRANSPORTATION

DIVISION OF ENGINEERING SERVICES
STRUCTURE DESIGN
DESIGN BRANCH 1

BRIDGE NO. X
POST MILE 3.64

SOUND WALL NO. 203
SOUND WALL ARCHITECTURAL DETAILS

STRUCTURES DESIGN DETAIL SHEET (ENGLISH) (REV. 09-01-10)

ORIGINAL SCALE IN INCHES FOR REDUCED PLANS 0 1 2 3

UNIT: 3576
PROJECT NUMBER & PHASE: 07000018331
CONTRACT NO.: 07-215934

DISREGARD PRINTS BEARING EARLIER REVISION DATES

REVISION DATES 12/10/10 12/07/11 11/29/12

SHEET 13 OF 32

FILE => sw203-f-sou01.dgn

USERNAME => s124496 DATE PLOTTED => 28-MAR-2012 TIME PLOTTED => 12:27

DIST	COUNTY	ROUTE	POST MILES TOTAL PROJECT	SHEET No.	TOTAL SHEETS
07	LA	5	2.4/4.0	1270	1288

REGISTERED CIVIL ENGINEER 12-08-11 DATE

3-26-12
PLANS APPROVAL DATE

REGISTERED PROFESSIONAL ENGINEER Kevin Harper No. 42221 Exp. 3-31-12 CIVIL STATE OF CALIFORNIA

The State of California or its officers or agents shall not be responsible for the accuracy or completeness of electronic copies of this plan sheet.

NOTES:

1. All dimensions symmetrical about ℄ Pilaster.
2. For location of "DETAIL E", see "PILASTER ARCHITECTURAL DETAILS NO. 2" sheet.
3. Beveled edges are 45° unless otherwise noted.
4. All vertical dimensions are measured along the ℄ Pilaster (Pilaster shall be vertical).

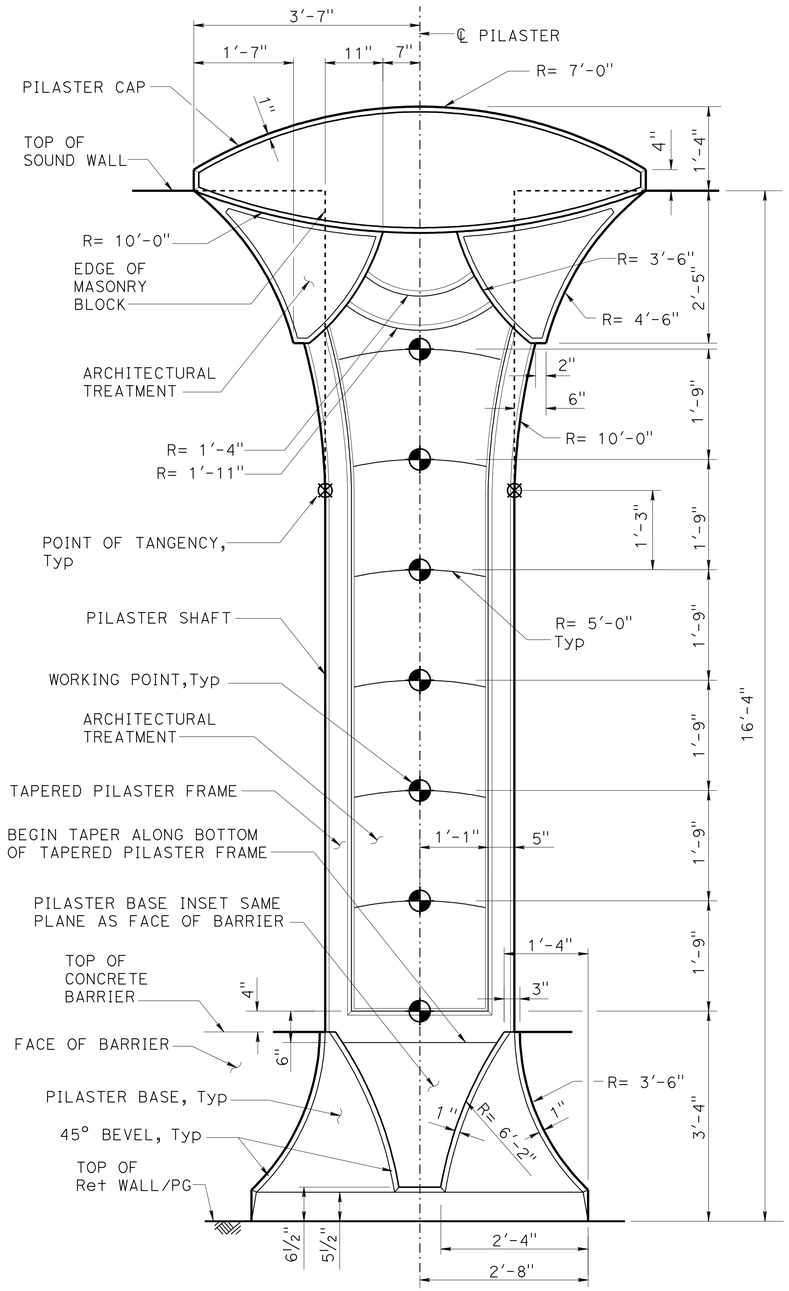

16'-4" SOUND WALL

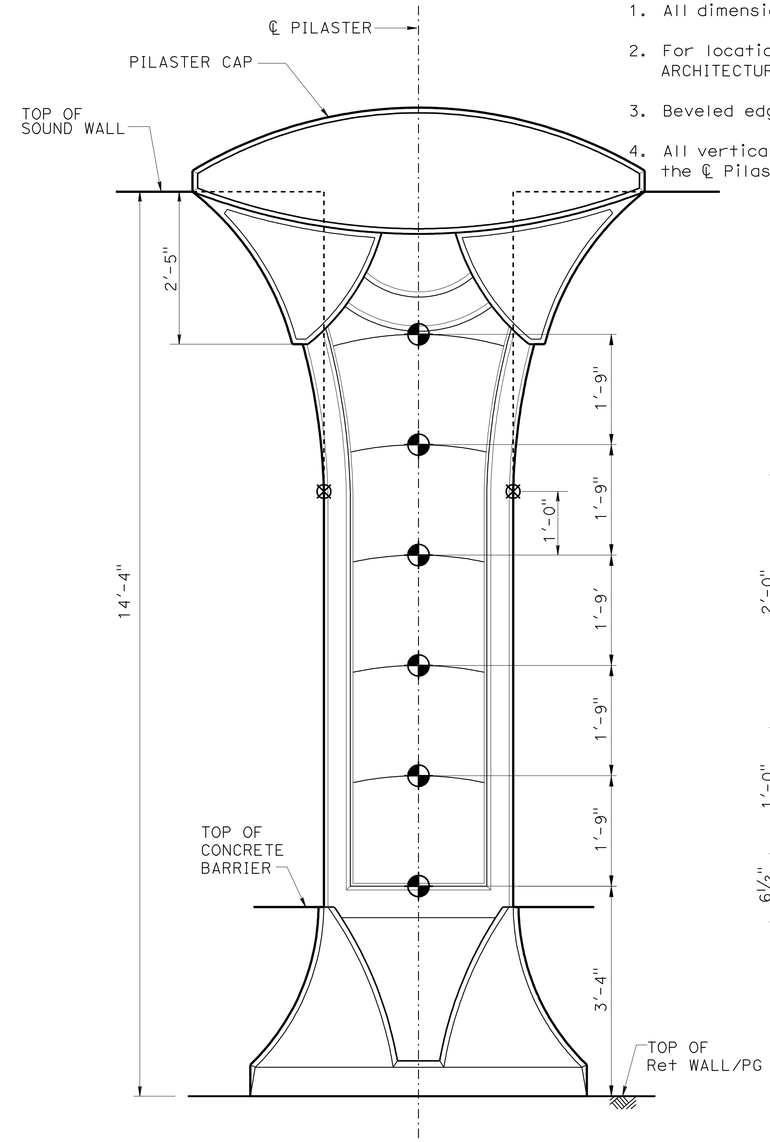

NOTE: For dimensions and details not shown, see "16'-4" SOUND WALL" details.

14'-4" SOUND WALL

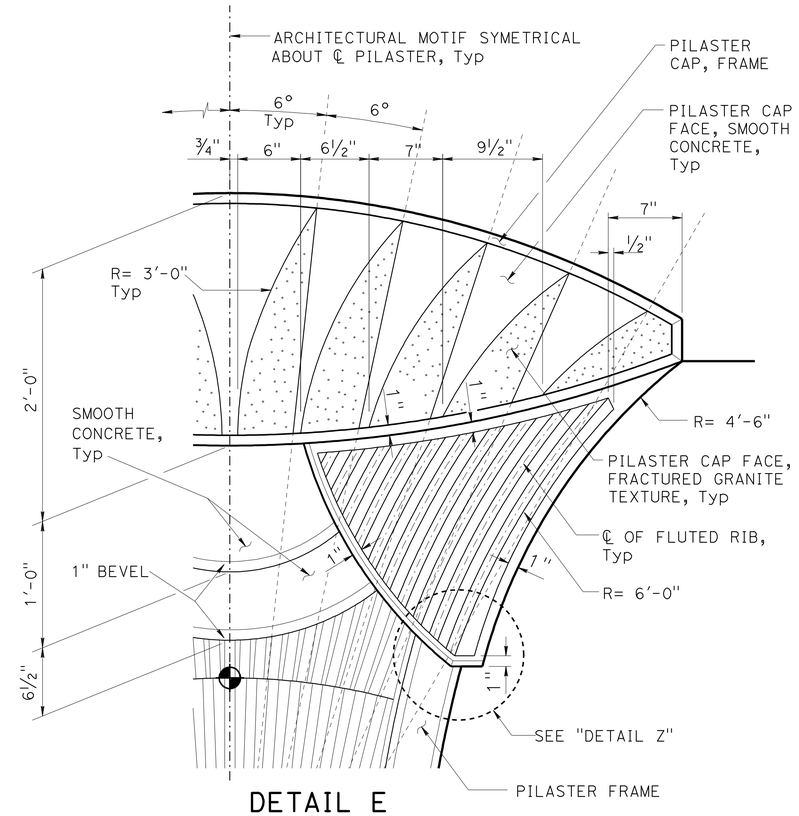

DETAIL E
NO SCALE

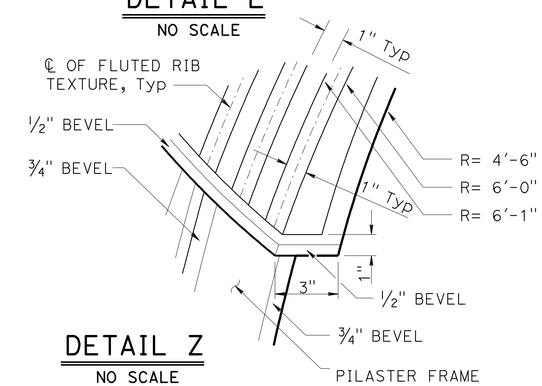

DETAIL Z
NO SCALE

PILASTER ELEVATION - FREEWAY SIDE
NO SCALE

DESIGN	BY Isaac Tasabia	CHECKED Javier Chavez	
DETAILS	BY Jin Zhou	CHECKED K. Harper / D. Sessions	
QUANTITIES	BY April Pearson	CHECKED Kyoung Lee	

STATE OF CALIFORNIA
DEPARTMENT OF TRANSPORTATION

DIVISION OF ENGINEERING SERVICES
STRUCTURE DESIGN
DESIGN BRANCH 1

BRIDGE NO. X
POST MILE 3.64

SOUND WALL NO. 203
PILASTER ARCHITECTURAL DETAILS NO. 1

STRUCTURES DESIGN DETAIL SHEET (ENGLISH) (REV. 09-01-10)

ORIGINAL SCALE IN INCHES FOR REDUCED PLANS 0 1 2 3

UNIT: 3576
PROJECT NUMBER & PHASE: 07000018331
CONTRACT NO. 07-215934

DISREGARD PRINTS BEARING EARLIER REVISION DATES
REVISION DATES 12/08/10 12/07/11 11/29/11

SHEET 14 OF 32

FILE => sw203-g-pilaster01.dgn

USERNAME => s124496 DATE PLOTTED => 28-MAR-2012 TIME PLOTTED => 12:27

DIST	COUNTY	ROUTE	POST MILES TOTAL PROJECT	SHEET No.	TOTAL SHEETS
07	LA	5	2.4/4.0	1271	1288

REGISTERED CIVIL ENGINEER 12-08-11 DATE

3-26-12
PLANS APPROVAL DATE

REGISTERED PROFESSIONAL ENGINEER Kevin Harper No. 42221 Exp. 3-31-12 CIVIL STATE OF CALIFORNIA

The State of California or its officers or agents shall not be responsible for the accuracy or completeness of electronic copies of this plan sheet.

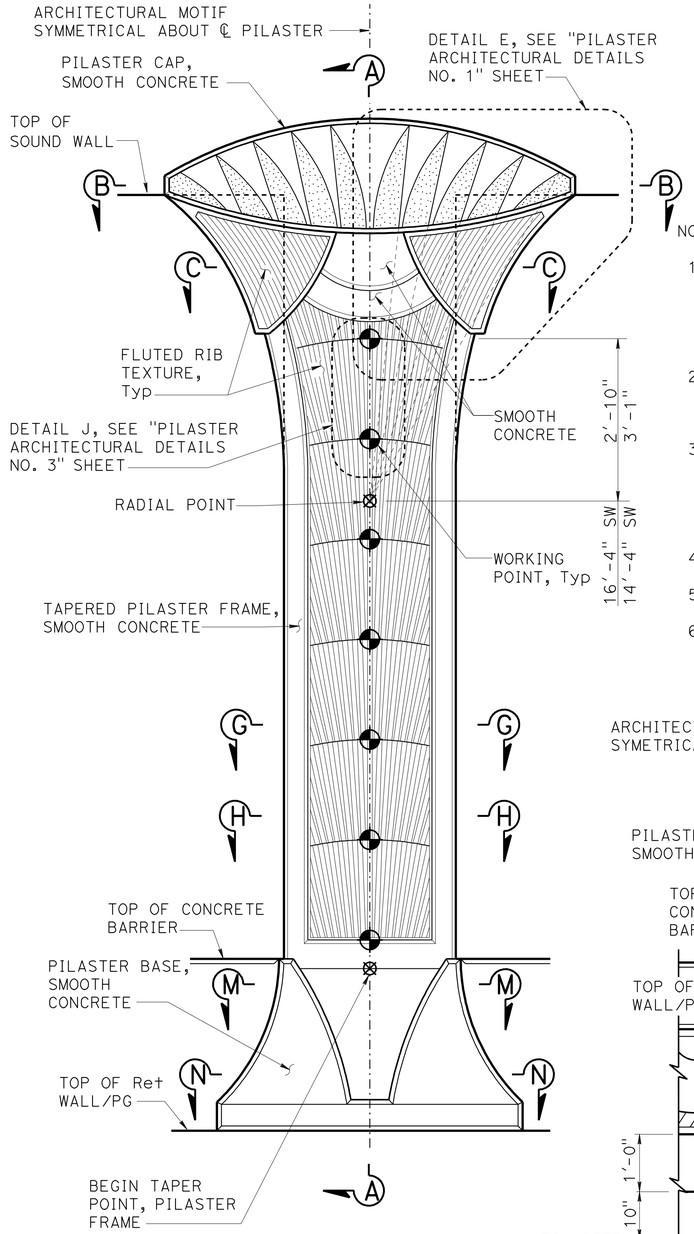

NOTE: For additional details not shown, see "16'-4" SOUND WALL - PILASTER ELEVATION" on "PILASTER ARCHITECTURAL DETAILS NO. 1" sheet.

FREEWAY SIDE

NOTES:

1. For "SECTION B-B", "SECTION C-C", "SECTION G-G","SECTION H-H" and "SECTION L-L", see "PILASTER ARCHITECTURAL DETAILS NO. 3" sheet.
2. For "SECTION M-M" and "SECTION N-N"' see "PILASTER ARCHITECTURAL DETAIL NO. 4" sheet.
3. Pilaster Sections on Retaining Wall shown, for Pilaster on Barrier Type 736SV (Mod), see "PILASTER SECTION ON TYPE 736SV (Mod) BARRIER" on "PILASTER ARCHITECTURAL DETAILS NO. 4" sheet.
4. All dimensions symmetrical about ℄ pilaster.
5. Beveled edges are 45° unless otherwise noted.
6. All vertical dimension are measured along the ℄ Pilaster (Pilaster shall be vertical).

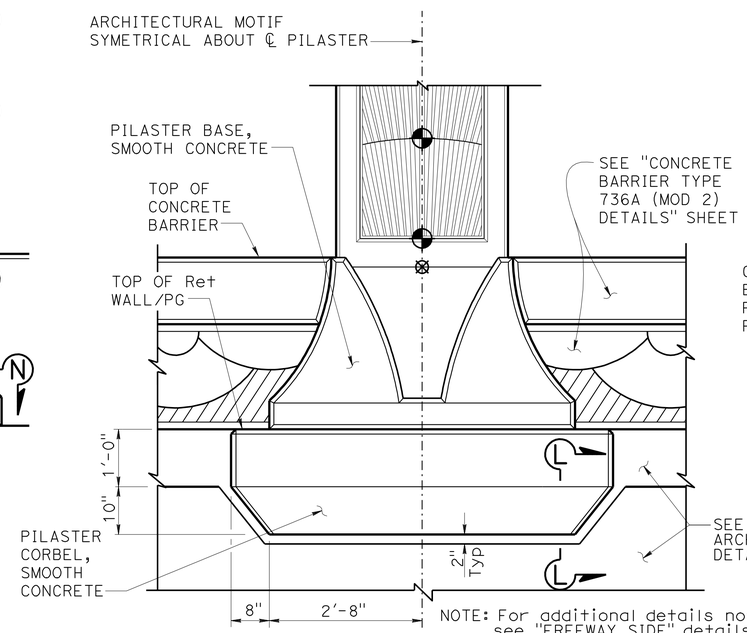

NOTE: For additional details not shown, see "FREEWAY SIDE" details.

BACK SIDE

PILASTER ARCHITECTURAL MOTIF

3/4" = 1'-0"

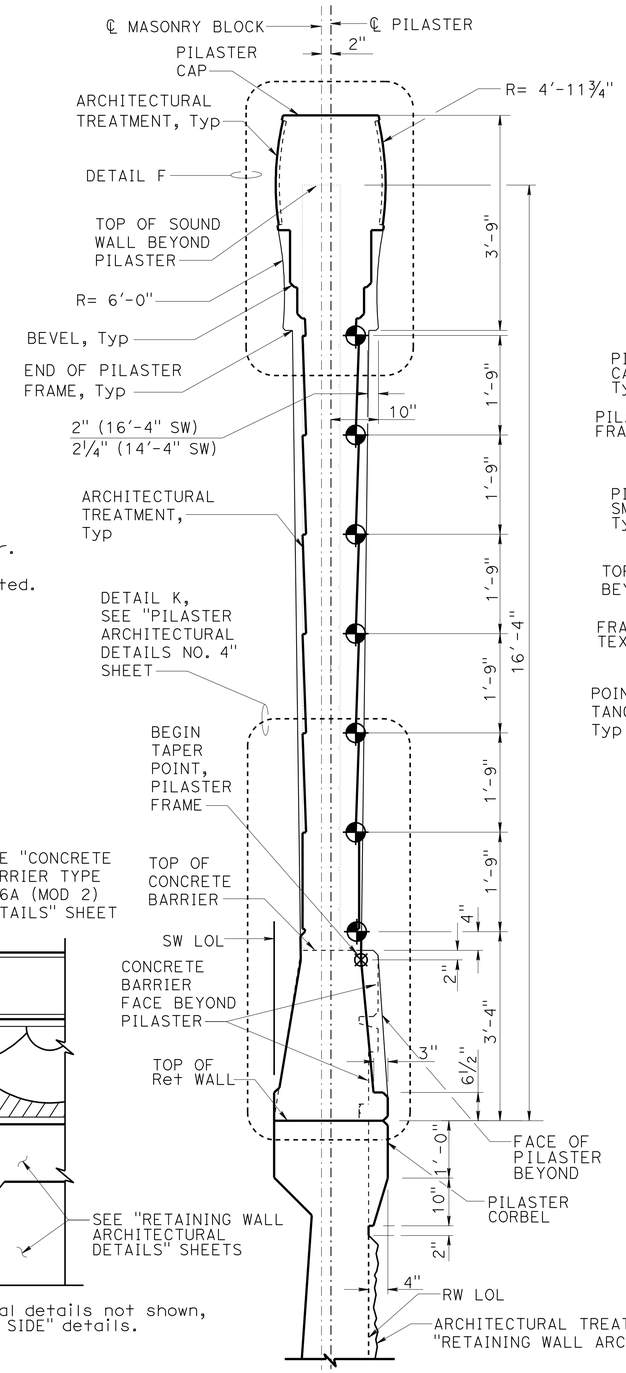

SECTION A-A

3/4" = 1'-0"

NOTE: Pilaster for 16'-4" Sound Wall shown, Pilaster at 14'-4" Sound Wall similar.

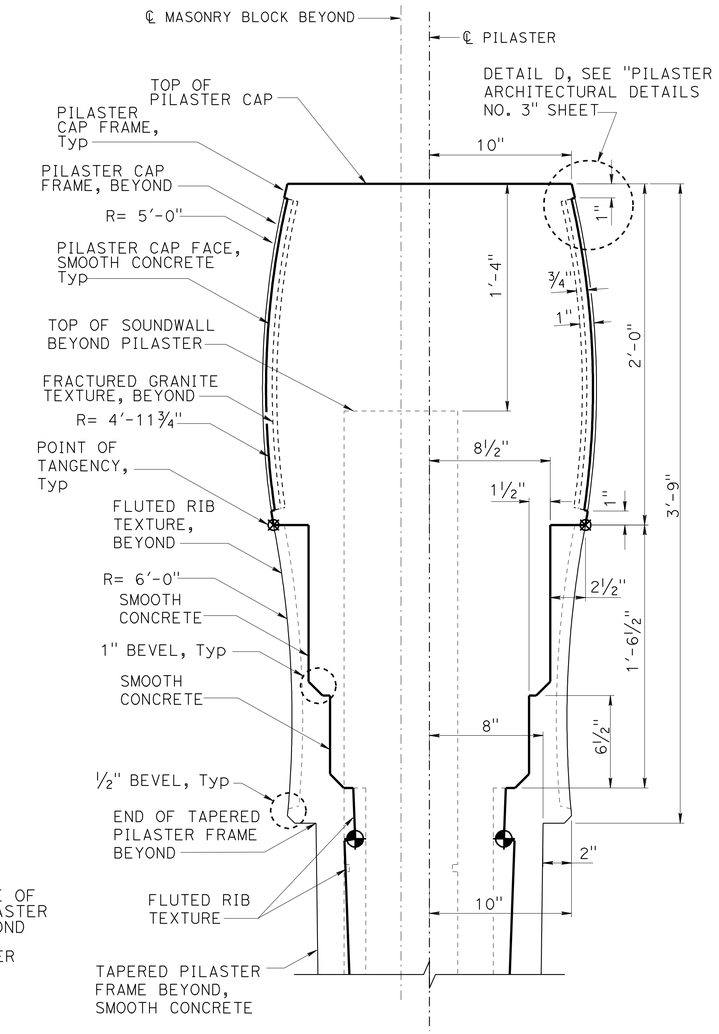

DETAIL F

NO SCALE

DESIGN	BY Isaac Tasabia	CHECKED Javier Chavez	
DETAILS	BY Jin Zhou	CHECKED K. Harper / D. Sessions	
QUANTITIES	BY April Pearson	CHECKED Kyoung Lee	

STATE OF CALIFORNIA DEPARTMENT OF TRANSPORTATION

DIVISION OF ENGINEERING SERVICES STRUCTURE DESIGN DESIGN BRANCH 1

BRIDGE NO. X

POST MILE 3.64

SOUND WALL NO. 203

PILASTER ARCHITECTURAL DETAILS NO. 2

STRUCTURES DESIGN DETAIL SHEET (ENGLISH) (REV. 09-01-10)

ORIGINAL SCALE IN INCHES FOR REDUCED PLANS 0 1 2 3

UNIT: 3576
PROJECT NUMBER & PHASE: 07000018331

CONTRACT NO.: 07-215934

DISREGARD PRINTS BEARING EARLIER REVISION DATES

REVISION DATES 12/08/10 12/07/11 7/09/11

SHEET 15 OF 32

FILE => sw203-g-pilaster02.dgn

USERNAME => s124496 DATE PLOTTED => 28-MAR-2012 TIME PLOTTED => 12:27

DIST	COUNTY	ROUTE	POST MILES TOTAL PROJECT	SHEET No.	TOTAL SHEETS
07	LA	5	2.4/4.0	1272	1288

REGISTERED CIVIL ENGINEER 12-08-11 DATE

3-26-12
PLANS APPROVAL DATE

REGISTERED PROFESSIONAL ENGINEER Kevin Harper No. 42221 Exp. 3-31-12 CIVIL STATE OF CALIFORNIA

The State of California or its officers or agents shall not be responsible for the accuracy or completeness of electronic copies of this plan sheet.

NOTES:

1. All notes and dimensions symetrical about ℄ pilaster.
2. Beveled edges are 45° unless otherwise noted.
3. For location of "DETAIL J", "DETAIL D" and "SECTION B-B", "SECTION C-C", "SECTION G-G", "SECTION H-H" and "SECTION L-L", see "PILASTER ARCHITECTURAL DETAILS NO. 2" sheet.
4. For Retaining Wall split slate texture, see "RETAINING WALL ARCHITECTURAL DETAILS" sheet.
5. For Type 736SV (Mod) Barrier fractured granite texture, see "CONCRETE BARRIER TYPE 736A (MOD 2) DETAILS" sheet if applicable.

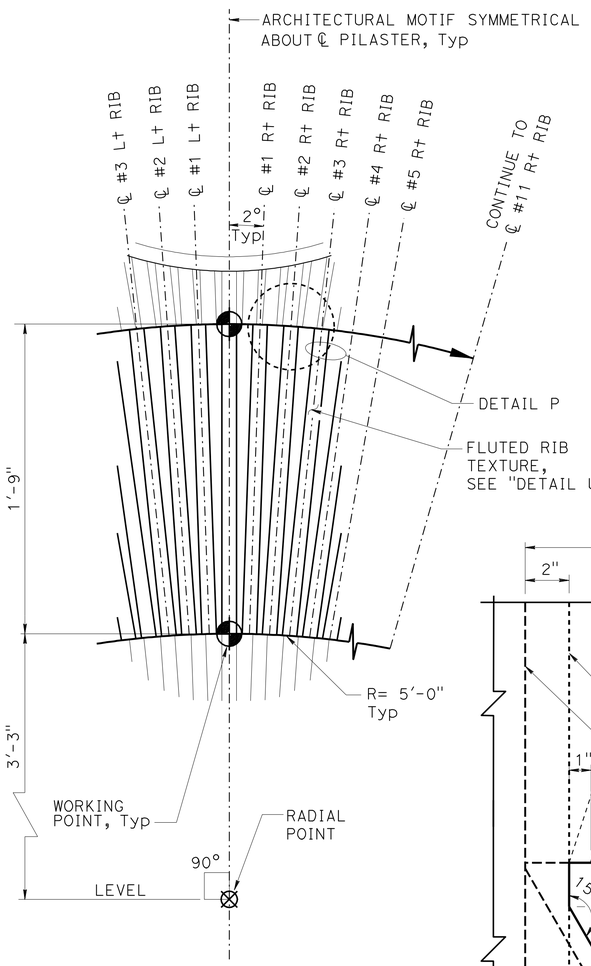

DETAIL J
NO SCALE

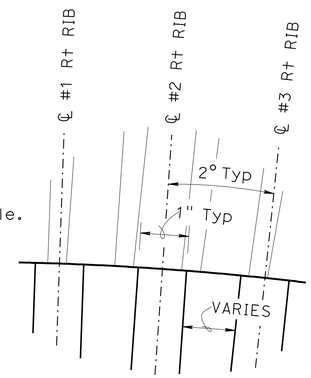

DETAIL P
NO SCALE

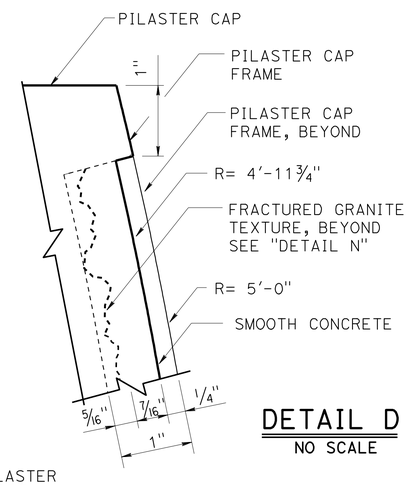

DETAIL D
NO SCALE

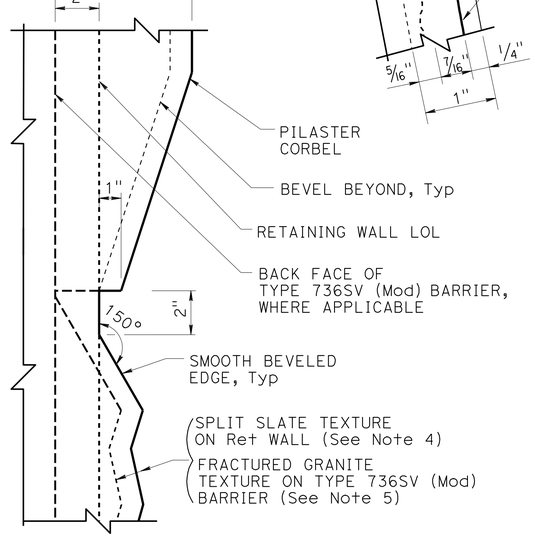

SECTION L-L
NO SCALE

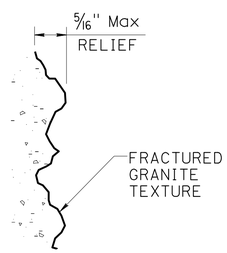

DETAIL N
NO SCALE

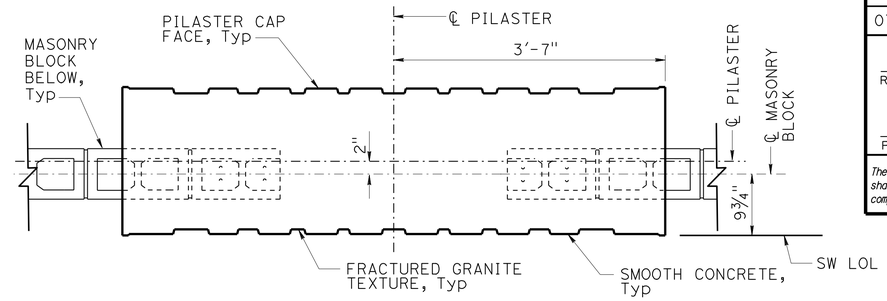

SECTION B-B
1" = 1'-0"

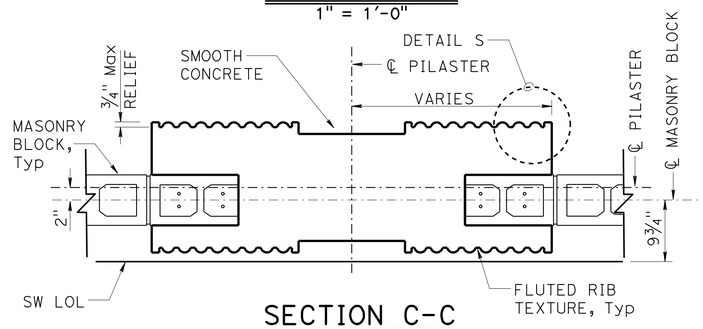

SECTION C-C
1" = 1'-0"

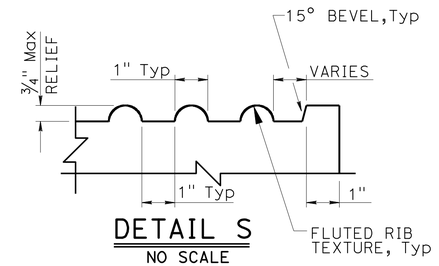

DETAIL S
NO SCALE

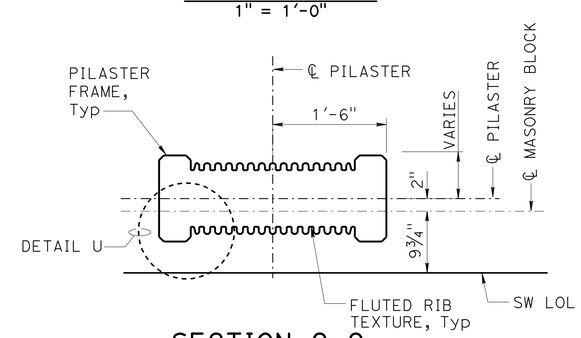

SECTION G-G
1" = 1'-0"

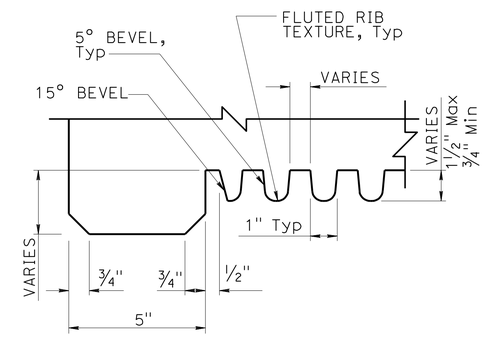

DETAIL U
NO SCALE

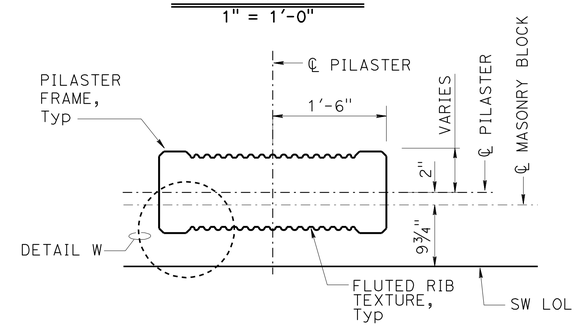

SECTION H-H
1" = 1'-0"

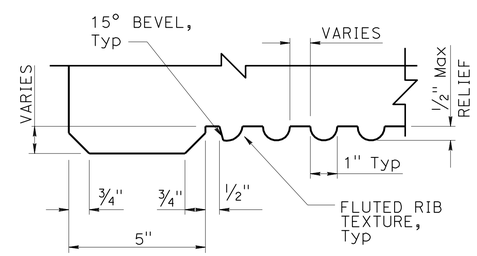

DETAIL W
NO SCALE

DESIGN	BY Isaac Tasabia	CHECKED Javier Chavez	
DETAILS	BY Jin Zhou	CHECKED K. Harper / D. Sessions	
QUANTITIES	BY April Pearson	CHECKED Kyoung Lee	

STATE OF CALIFORNIA
DEPARTMENT OF TRANSPORTATION

DIVISION OF ENGINEERING SERVICES
STRUCTURE DESIGN
DESIGN BRANCH 1

BRIDGE NO. X
POST MILE 3.64

SOUND WALL NO. 203
PILASTER ARCHITECTURAL DETAILS NO. 3

STRUCTURES DESIGN DETAIL SHEET (ENGLISH) (REV. 09-01-10)

ORIGINAL SCALE IN INCHES FOR REDUCED PLANS 0 1 2 3

UNIT: 3576
PROJECT NUMBER & PHASE: 07000018331
CONTRACT NO.: 07-215934

DISREGARD PRINTS BEARING EARLIER REVISION DATES

REVISION DATES 12/09/10 04/28/11 12/07/11

SHEET 16 OF 32

FILE => sw203-g-pilaster03.dgn

USERNAME => s124496 DATE PLOTTED => 28-MAR-2012 TIME PLOTTED => 12:27

DIST	COUNTY	ROUTE	POST MILES TOTAL PROJECT	SHEET No.	TOTAL SHEETS
07	LA	5	2.4/4.0	1273	1288

REGISTERED CIVIL ENGINEER 12-08-11 DATE

3-26-12
PLANS APPROVAL DATE

REGISTERED PROFESSIONAL ENGINEER Kevin Harper No. 42221 Exp. 3-31-12 CIVIL STATE OF CALIFORNIA

The State of California or its officers or agents shall not be responsible for the accuracy or completeness of electronic copies of this plan sheet.

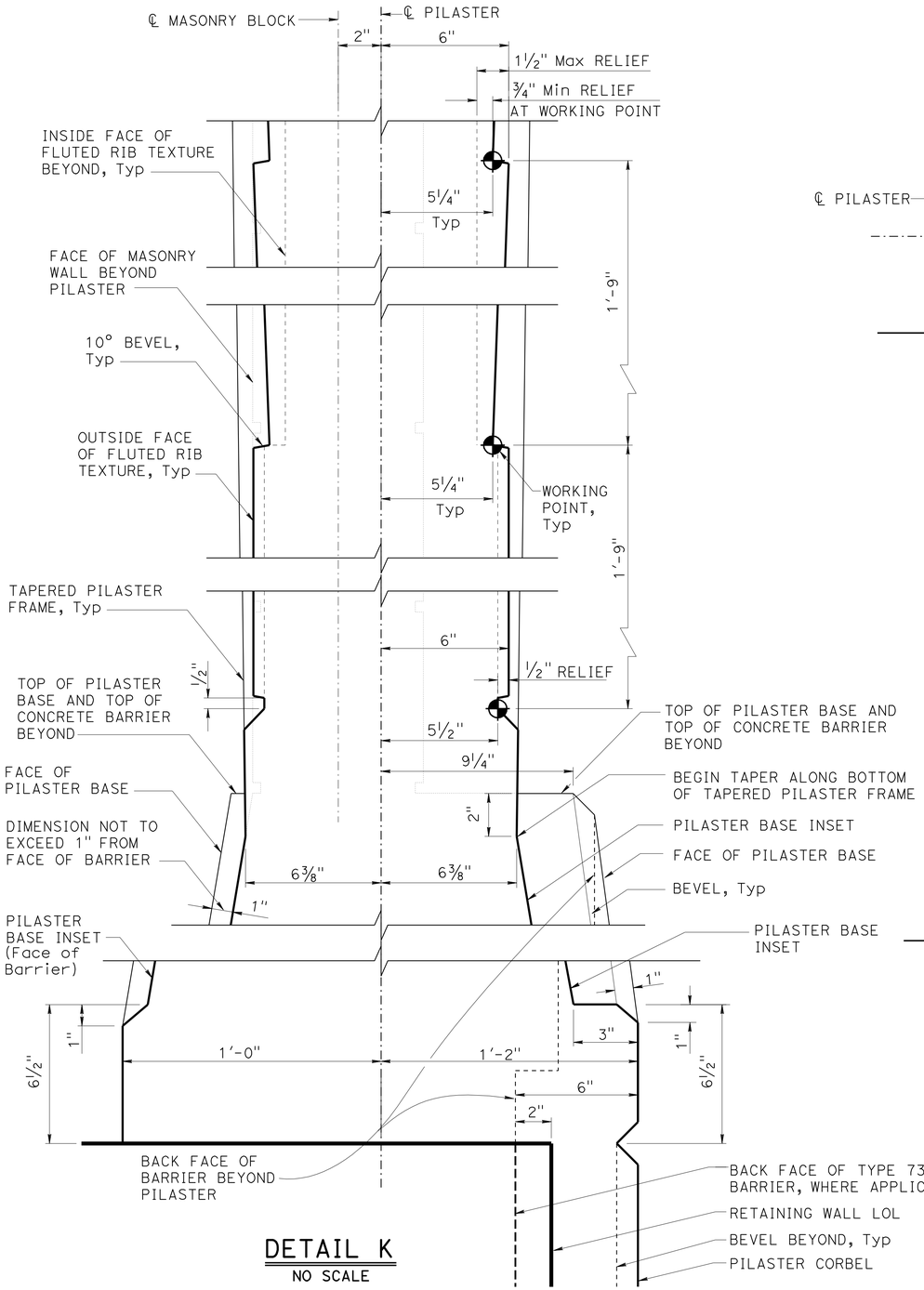

DETAIL K
NO SCALE

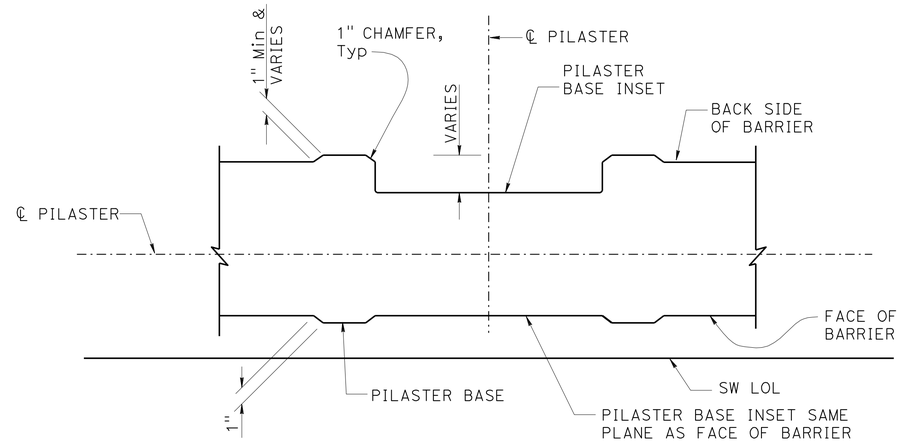

SECTION M-M
1½" = 1'-0"

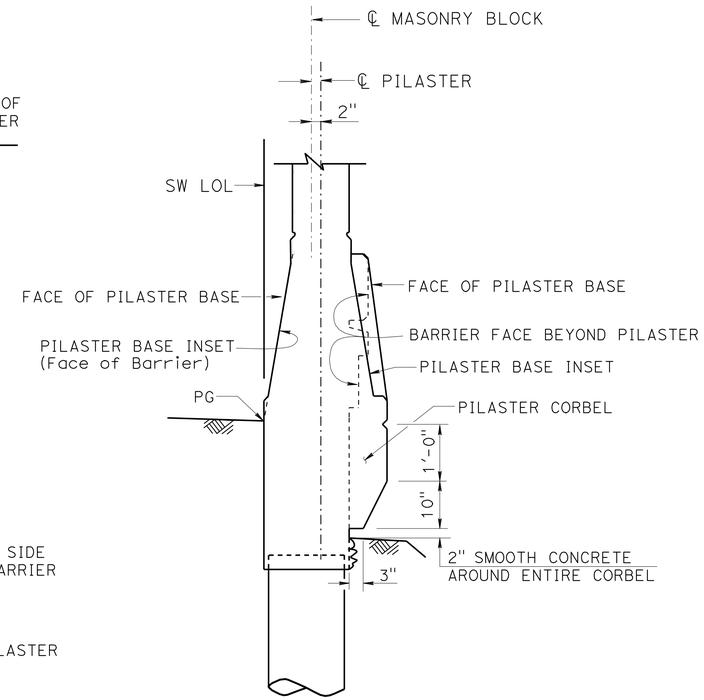

NOTE: For Pilaster details not shown, see "SECTION A-A" on "PILASTER ARCHITECTURAL DETAILS NO. 2" sheet.

PILASTER SECTION ON TYPE 736SV (MOD) BARRIER
¾" = 1'-0"

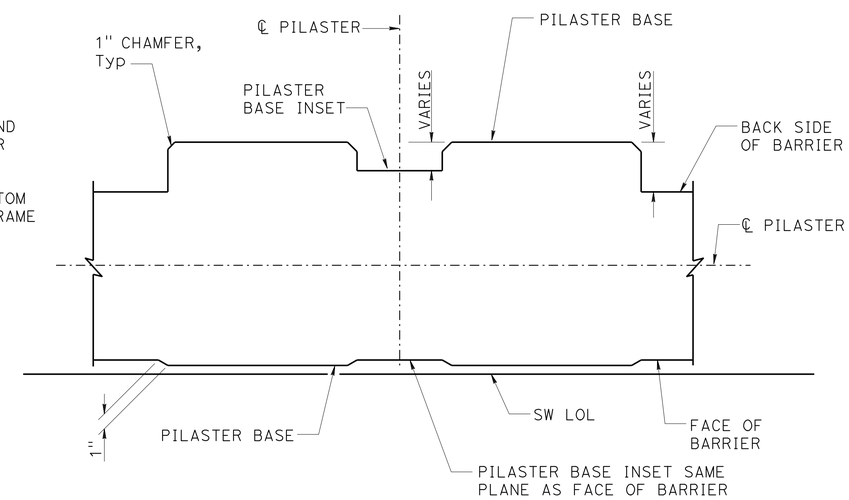

SECTION N-N
1½" = 1'-0"

NOTES:

1. For location of "SECTION M-M", "SECTION N-N" and "DETAIL K", see "PILASTER ARCHITECTURAL DETAILS NO. 2" sheet.
2. All dimensions symmetrical about ℄ Pilaster.
3. All vertical dimension are measured along the ℄ Pilaster (Pilaster shall be vertical).

DESIGN	BY Isaac Tasabia	CHECKED Javier Chavez	
DETAILS	BY Jin Zhou	CHECKED K. Harper / D. Sessions	
QUANTITIES	BY April Pearson	CHECKED Kyoung Lee	

STATE OF CALIFORNIA
DEPARTMENT OF TRANSPORTATION

DIVISION OF ENGINEERING SERVICES
STRUCTURE DESIGN
DESIGN BRANCH 1

BRIDGE NO. X
POST MILE 3.64

SOUND WALL NO. 203
PILASTER ARCHITECTURAL DETAILS NO. 4

STRUCTURES DESIGN DETAIL SHEET (ENGLISH) (REV. 09-01-10)

ORIGINAL SCALE IN INCHES FOR REDUCED PLANS 0 1 2 3

UNIT: 3576
PROJECT NUMBER & PHASE: 07000018331
CONTRACT NO.: 07-215934

DISREGARD PRINTS BEARING EARLIER REVISION DATES

REVISION DATES 12/29/10 12/07/11 1-26-11

SHEET 17 OF 32

FILE => sw203-g-pilaster04.dgn

USERNAME => s124496 DATE PLOTTED => 28-MAR-2012 TIME PLOTTED => 12:27

DIST	COUNTY	ROUTE	POST MILES TOTAL PROJECT	SHEET No.	TOTAL SHEETS
07	LA	5	2.4/4.0	1274	1288

REGISTERED CIVIL ENGINEER 12-08-11 DATE

3-26-12
PLANS APPROVAL DATE

REGISTERED PROFESSIONAL ENGINEER Kevin Harper No. 42221 Exp. 3-31-12 CIVIL STATE OF CALIFORNIA

The State of California or its officers or agents shall not be responsible for the accuracy or completeness of electronic copies of this plan sheet.

NOTE:
For "SECTION B-B", "SECTION C-C", "SECTION D-D" and "SECTION G-G", see "PILASTER STRUCTURAL DETAILS NO. 2" sheet.

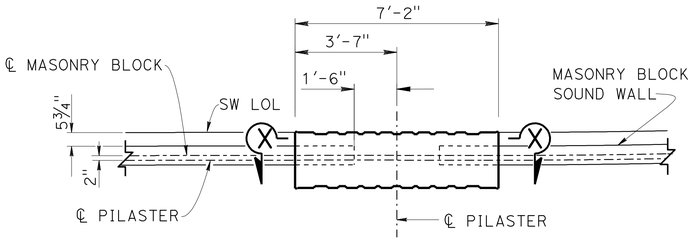

PART SOUND WALL PLAN

3/8" = 1'-0"

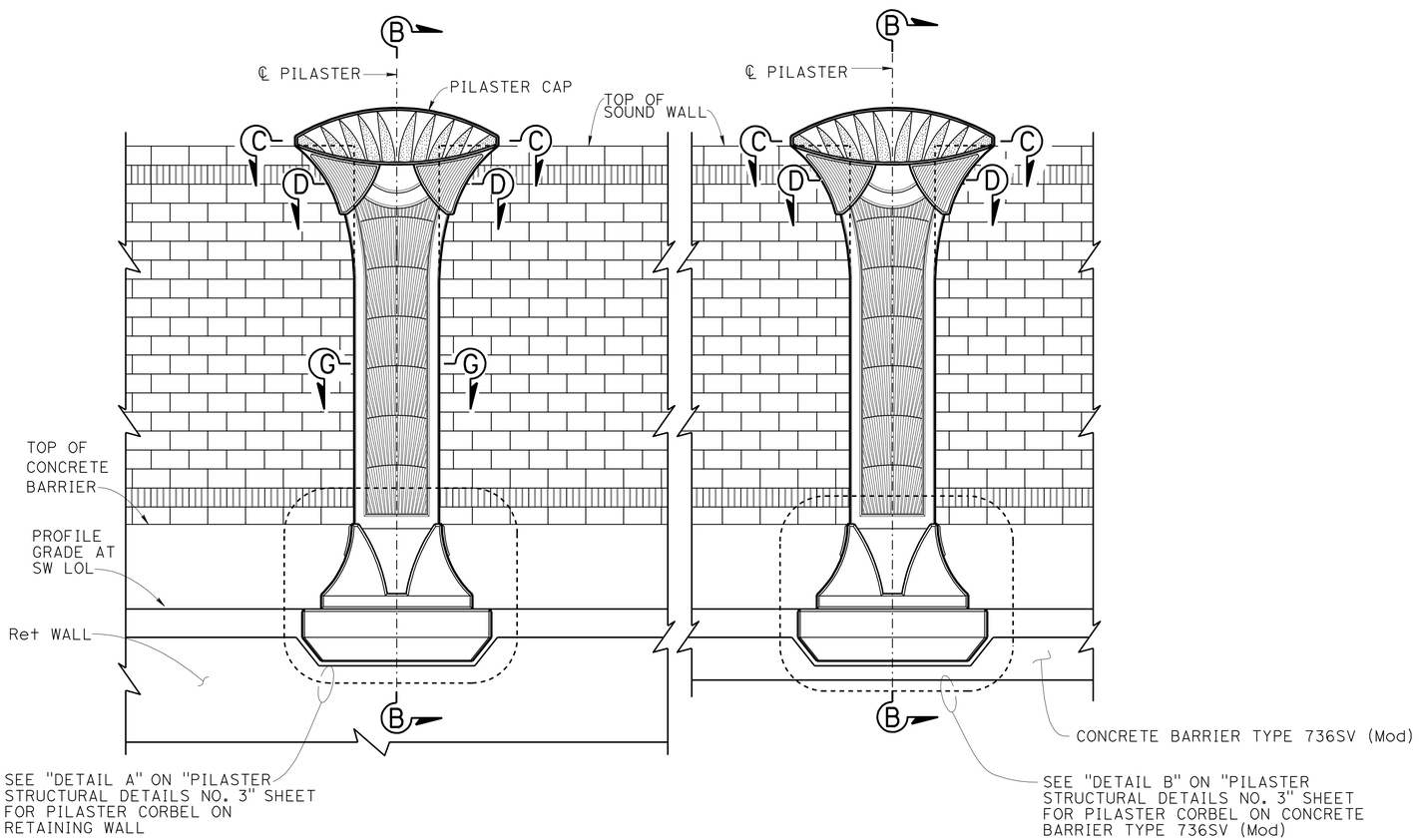

PART SOUND WALL ELEVATION

3/8" = 1'-0"

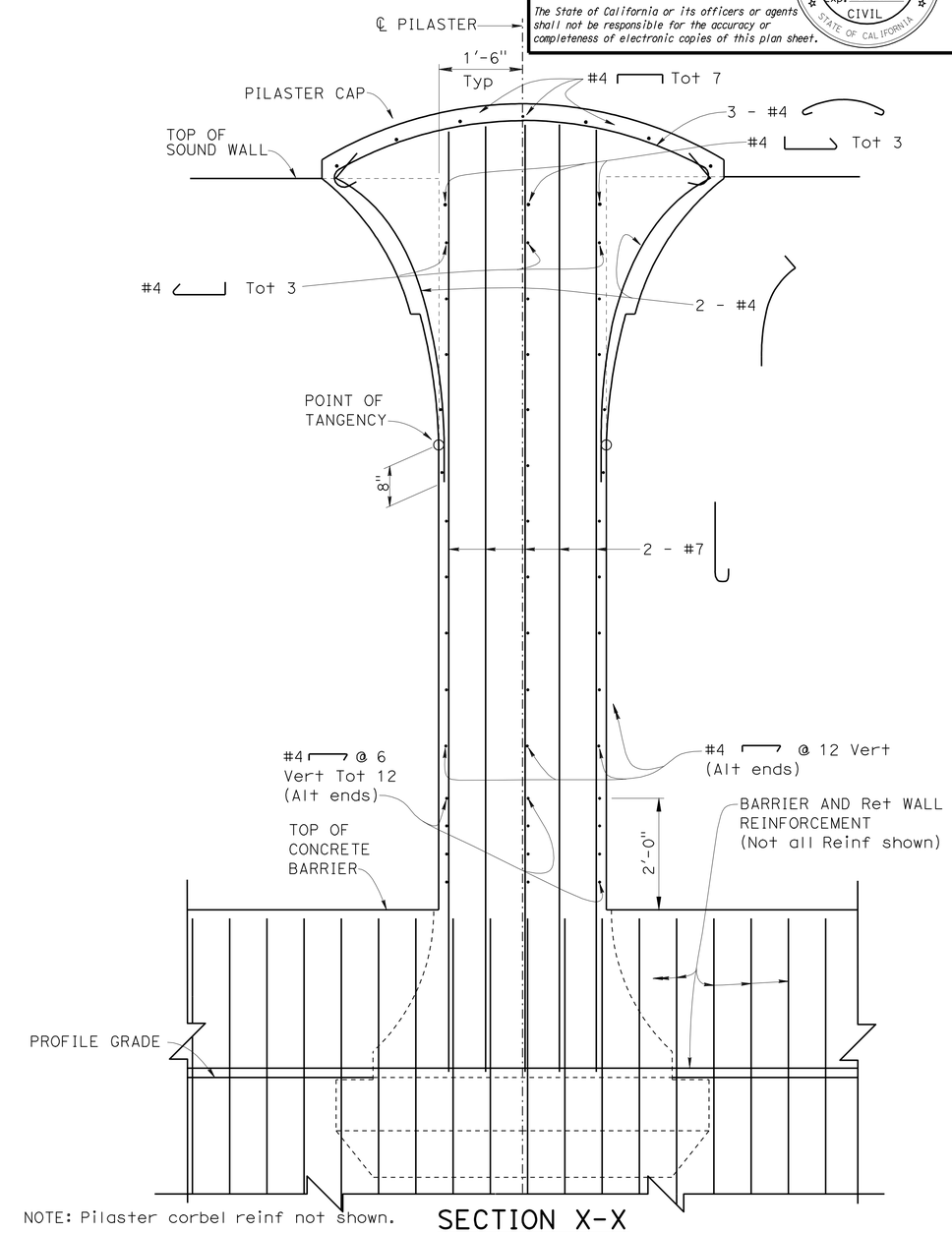

NOTE: Pilaster corbel reinf not shown.

SECTION X-X

3/4" = 1'-0"

DESIGN	BY Kevin Harper	CHECKED Daniel Sessions	
DETAILS	BY Jin Zhou	CHECKED Daniel Sessions	
QUANTITIES	BY April Pearson	CHECKED Kyoung Lee	

STATE OF CALIFORNIA
DEPARTMENT OF TRANSPORTATION

DIVISION OF ENGINEERING SERVICES
STRUCTURE DESIGN
DESIGN BRANCH 1

BRIDGE NO. X
POST MILE 3.64

SOUND WALL NO. 203
PILASTER STRUCTURAL DETAILS NO. 1

STRUCTURES DESIGN DETAIL SHEET (ENGLISH) (REV. 09-01-10)

ORIGINAL SCALE IN INCHES FOR REDUCED PLANS 0 1 2 3

UNIT: 3576
PROJECT NUMBER & PHASE: 07000018331
CONTRACT NO.: 07-215934

DISREGARD PRINTS BEARING EARLIER REVISION DATES

REVISION DATES 12/23/10 04/29/11 12/07/11

SHEET 18 OF 32

FILE => sw203-h-pilaster01.dgn

USERNAME => s124496 DATE PLOTTED => 28-MAR-2012 TIME PLOTTED => 12:27

DIST	COUNTY	ROUTE	POST MILES TOTAL PROJECT	SHEET No.	TOTAL SHEETS
07	LA	5	2.4/4.0	1275	1288

REGISTERED CIVIL ENGINEER 12-08-11 DATE

3-26-12
PLANS APPROVAL DATE

REGISTERED PROFESSIONAL ENGINEER Kevin Harper No. 42221 Exp. 3-31-12 CIVIL STATE OF CALIFORNIA

The State of California or its officers or agents shall not be responsible for the accuracy or completeness of electronic copies of this plan sheet.

NOTES:

1. For location of "SECTION B-B", "SECTION C-C", "SECTION D-D" and "SECTION G-G", see "PILASTER STRUCTURAL DETAILS NO. 1" sheet.
2. For Pilaster geometry, dimensions and architectural treatments, see "PILASTER ARCHITECTURAL DETAILS" sheets.

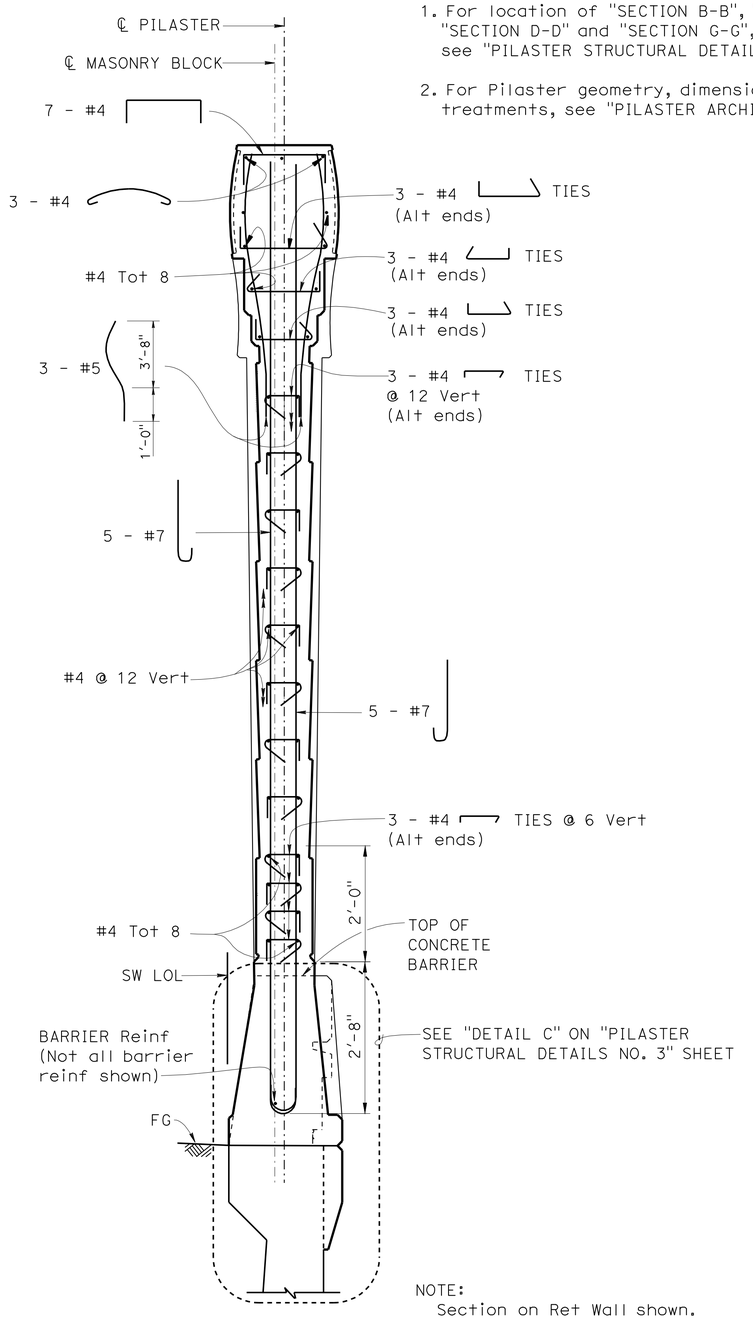

SECTION B-B
¾" = 1'-0"

NOTE:
Section on Ret Wall shown.
Pilaster on Type 736SV (Mod) Barrier similar.

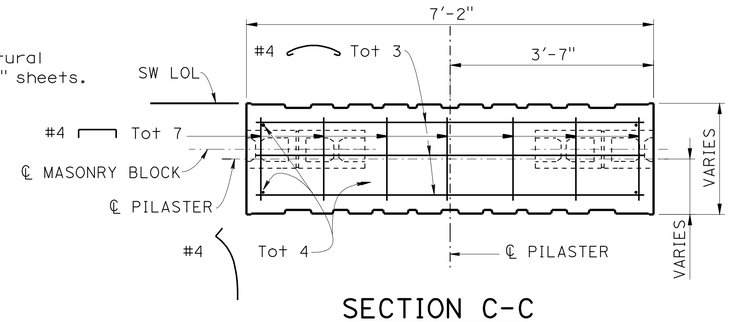

SECTION C-C
¾" = 1'-0"

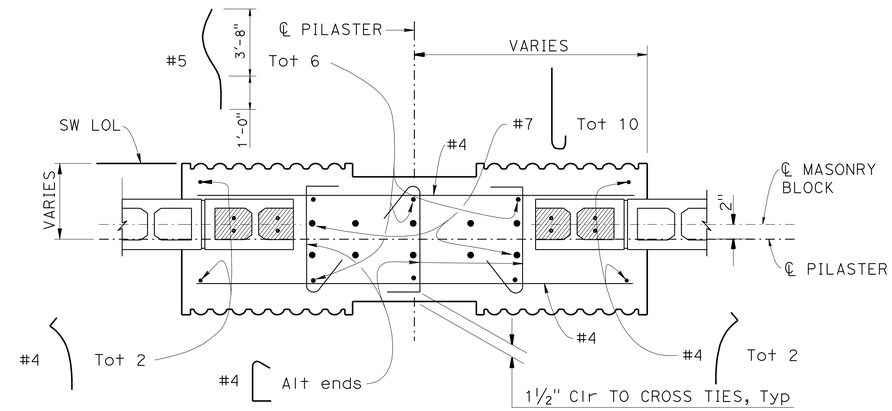

SECTION D-D
1" = 1'-0"

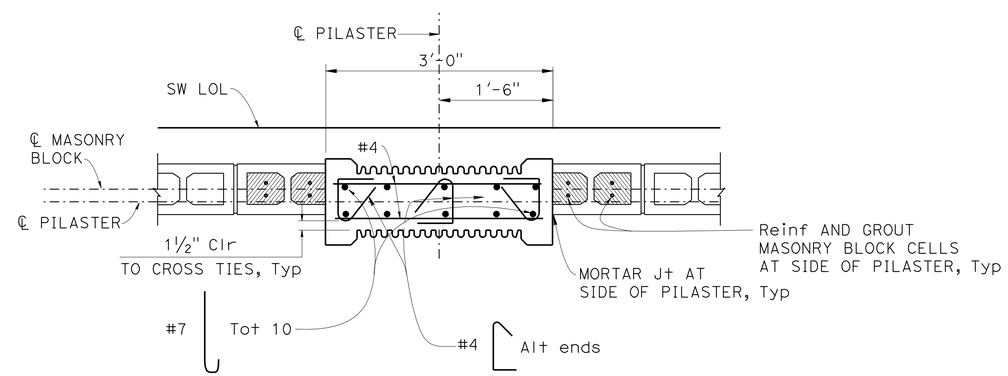

SECTION G-G
1" = 1'-0"

	BY	CHECKED
DESIGN	Kevin Harper	Daniel Sessions
DETAILS	Jin Zhou	Daniel Sessions
QUANTITIES	April Pearson	Kyoung Lee

STATE OF CALIFORNIA
DEPARTMENT OF TRANSPORTATION

DIVISION OF ENGINEERING SERVICES
STRUCTURE DESIGN
DESIGN BRANCH 1

BRIDGE NO. X
POST MILE 3.64

SOUND WALL NO. 203
PILASTER STRUCTURAL DETAILS NO. 2

STRUCTURES DESIGN DETAIL SHEET (ENGLISH) (REV. 09-01-10)

ORIGINAL SCALE IN INCHES FOR REDUCED PLANS 0 1 2 3

UNIT: 3576
PROJECT NUMBER & PHASE: 07000018331
CONTRACT NO.: 07-215934

DISREGARD PRINTS BEARING EARLIER REVISION DATES → 11/18/11 12/07/11

SHEET 19 OF 32

FILE => sw203-h-pilaster02.dgn

USERNAME => s124436 DATE PLOTTED => 28-MAR-2012 TIME PLOTTED => 12:28

DIST	COUNTY	ROUTE	POST MILES TOTAL PROJECT	SHEET No.	TOTAL SHEETS
07	LA	5	2.4/4.0	1276	1288

REGISTERED CIVIL ENGINEER 12-08-11 DATE

3-26-12
PLANS APPROVAL DATE

REGISTERED PROFESSIONAL ENGINEER Kevin Harper No. 42221 Exp. 3-31-12 CIVIL STATE OF CALIFORNIA

The State of California or its officers or agents shall not be responsible for the accuracy or completeness of electronic copies of this plan sheet.

NOTES:

1. For location of "DETAIL A" and "DETAIL B", see "PILASTER STRUCTURAL DETAILS NO. 1" sheet.
2. For location of "DETAIL C", see "PILASTER STRUCTURAL DETAILS NO. 2" sheet.

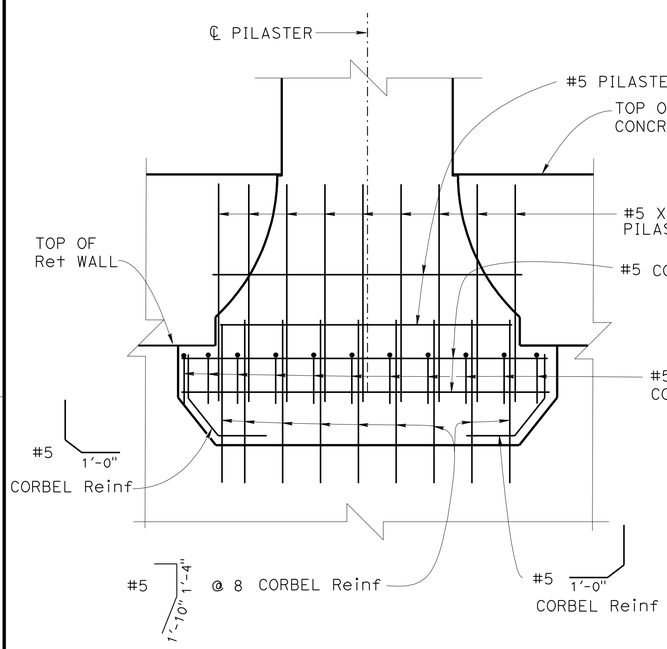

NOTE: Concrete Barrier/Ret Wall reinf not shown.

DETAIL A
¾" = 1'-0"

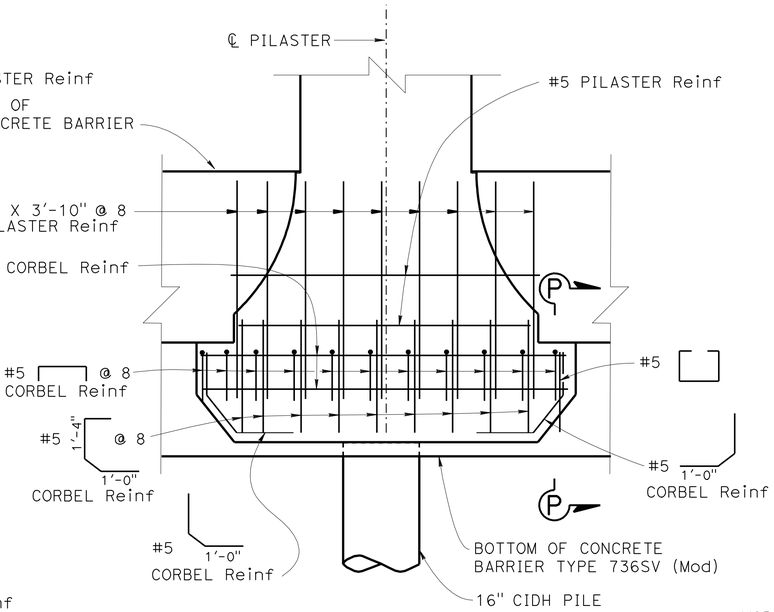

NOTE: Concrete barrier reinf not shown.

DETAIL B
¾" = 1'-0"

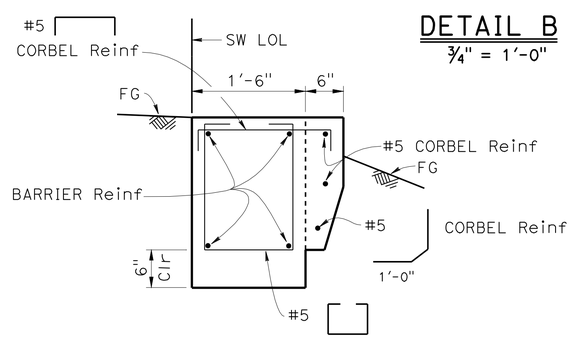

SECTION P-P
1" = 1'-0"

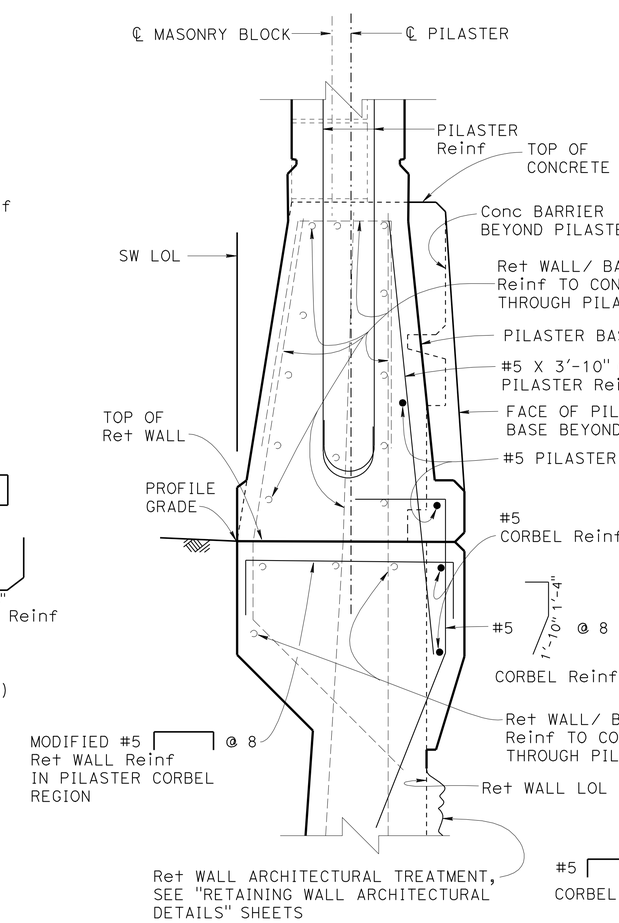

PILASTER CORBEL ON RETAINING WALL

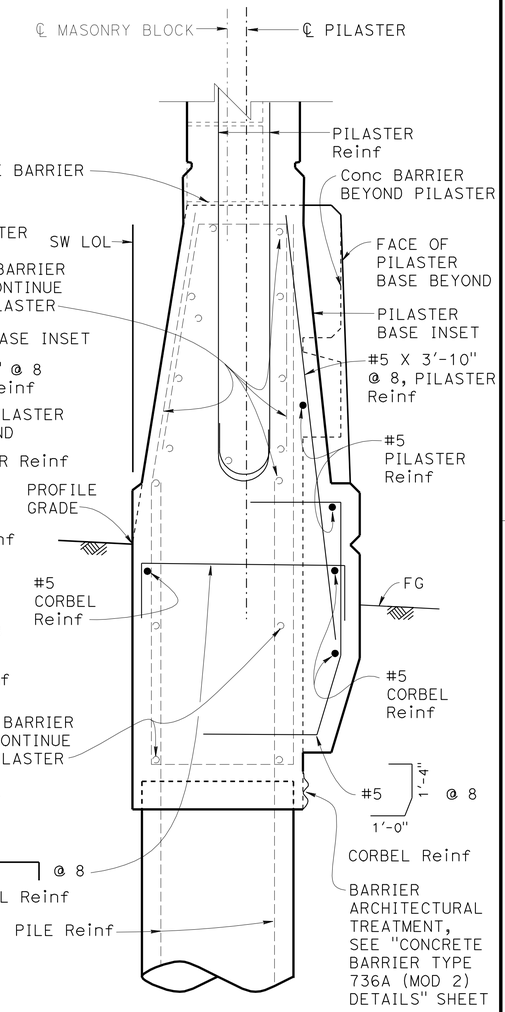

PILASTER CORBEL ON CONCRETE BARRIER TYPE 736SV (MOD)

DETAIL C
1½" = 1'-0"

DESIGN	BY Kevin Harper	CHECKED Daniel Sessions	
DETAILS	BY Jin Zhou	CHECKED Daniel Sessions	
QUANTITIES	BY April Pearson	CHECKED Kyoung Lee	

STATE OF CALIFORNIA
DEPARTMENT OF TRANSPORTATION

DIVISION OF ENGINEERING SERVICES
STRUCTURE DESIGN
DESIGN BRANCH 1

BRIDGE NO. X
POST MILE 3.64

SOUND WALL NO. 203
PILASTER STRUCTURAL DETAILS NO. 3

STRUCTURES DESIGN DETAIL SHEET (ENGLISH) (REV. 09-01-10)

ORIGINAL SCALE IN INCHES FOR REDUCED PLANS 0 1 2 3

UNIT: 3576
PROJECT NUMBER & PHASE: 07000018331
CONTRACT NO.: 07-215934

DISREGARD PRINTS BEARING EARLIER REVISION DATES

REVISION DATES 12/30/10 12/01/11 7/24/11

SHEET 20 OF 32

FILE => sw203-h-pilaster03.dgn

USERNAME => s124496 DATE PLOTTED => 28-MAR-2012 TIME PLOTTED => 12:28

DIST	COUNTY	ROUTE	POST MILES TOTAL PROJECT	SHEET No.	TOTAL SHEETS
07	LA	5	2.4/4.0	1277	1288

REGISTERED CIVIL ENGINEER 12-08-11 DATE

3-26-12
PLANS APPROVAL DATE

REGISTERED PROFESSIONAL ENGINEER Kevin Harper No. 42221 Exp. 3-31-12 CIVIL STATE OF CALIFORNIA

The State of California or its officers or agents shall not be responsible for the accuracy or completeness of electronic copies of this plan sheet.

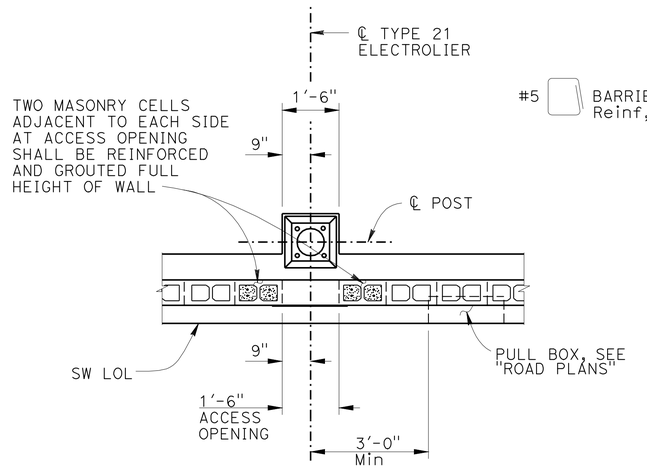

PLAN
½" = 1'-0"

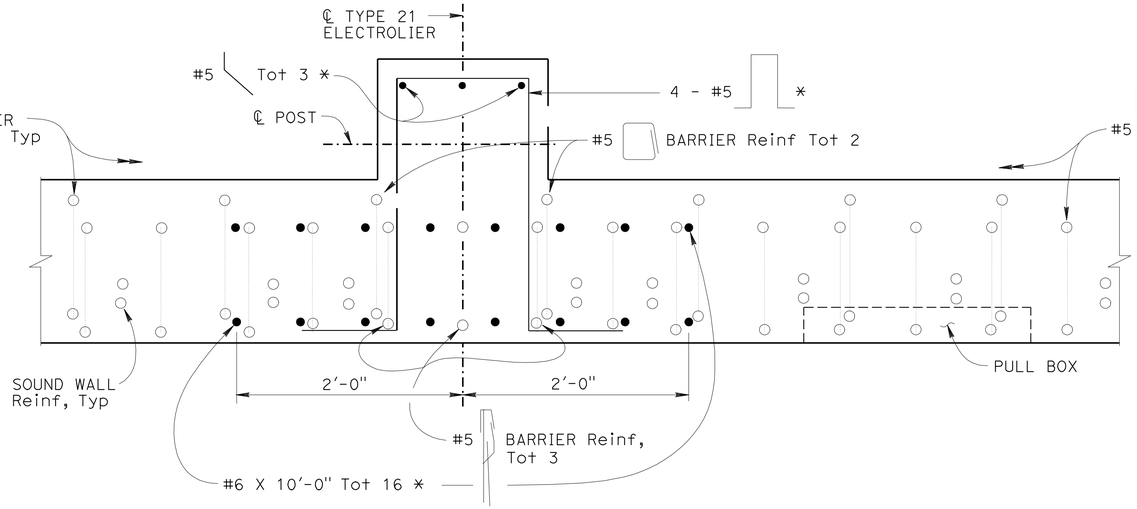

SECTION C-C
1½" = 1'-0"

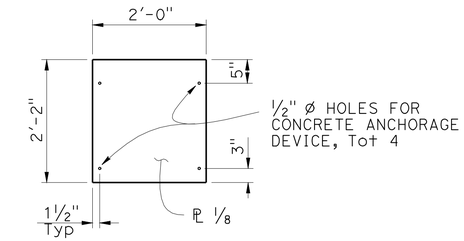

NOTE: PAINT COVER ℗ TO MATCH COLOR OF MASONRY BLOCKS

COVER PLATE
¾" = 1'-0"

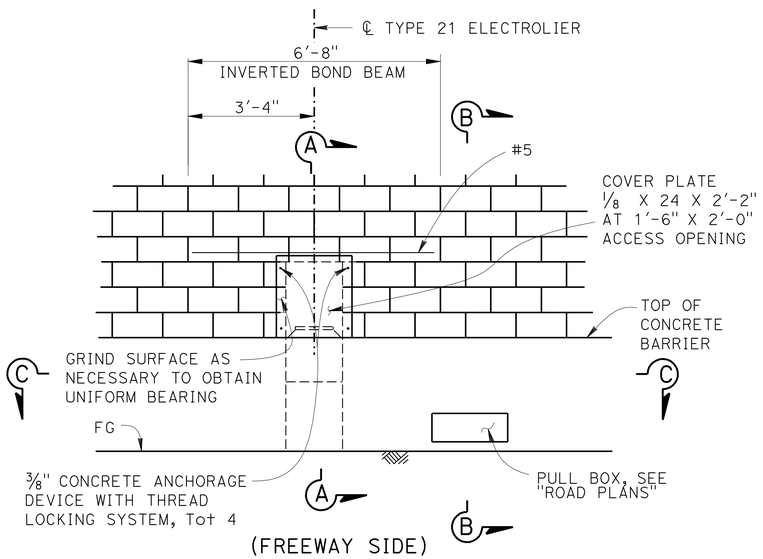

ELEVATION
½" = 1'-0"

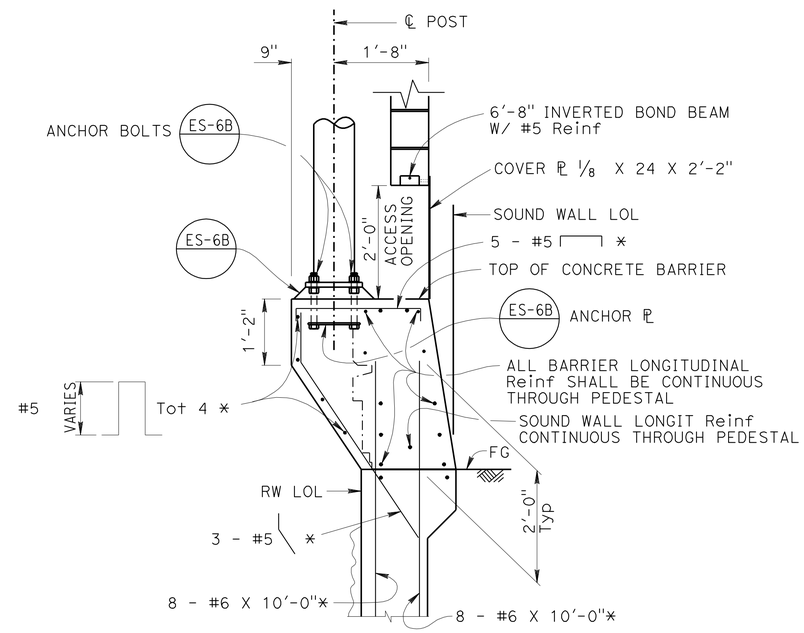

SECTION A-A
¾" = 1'-0"

NOTE: * - Indicates Reinf is additional to typical barrier and retaining wall Reinf.

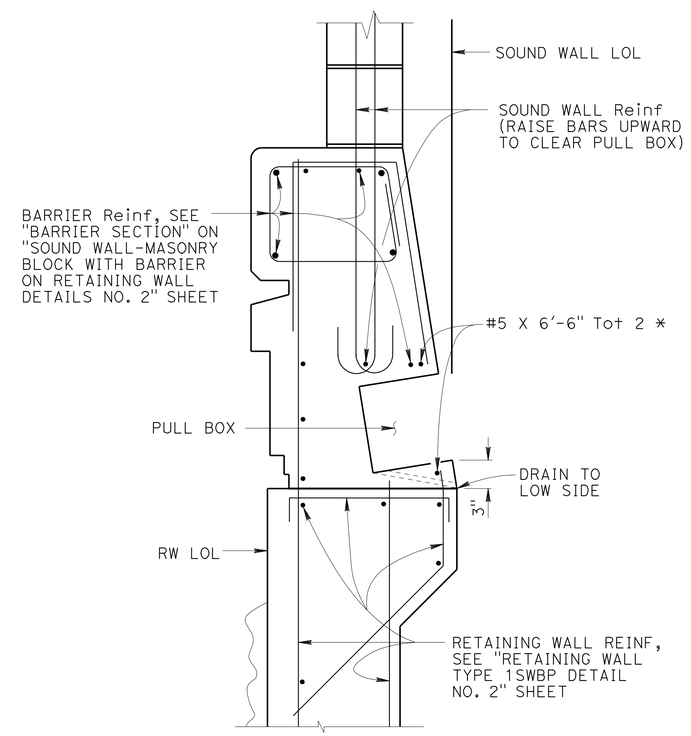

SECTION B-B
1½" = 1'-0"

NOTES:

1. For locations of electroliers, see "STRUCTURE PLAN" sheets.
2. For electrolier and electrical details, see "ROAD PLANS".
3. The maximum number of conduits in the barrier is limited to (2) 2" conduits along with (1) 3" conduit.

	BY	CHECKED
DESIGN	Kevin Harper	Daniel Sessions
DETAILS	Jin Zhou/ Y. Feng	Daniel Sessions
QUANTITIES	Bruce Hagy	Eric Watson

STATE OF CALIFORNIA
DEPARTMENT OF TRANSPORTATION

DIVISION OF ENGINEERING SERVICES
STRUCTURE DESIGN
DESIGN BRANCH 1

BRIDGE NO. X
POST MILE 3.64

SOUND WALL NO. 203
ELECTROLIER PEDESTAL DETAILS

STRUCTURES DESIGN DETAIL SHEET (ENGLISH) (REV. 09-01-10)

ORIGINAL SCALE IN INCHES FOR REDUCED PLANS 0 1 2 3

UNIT: 3576
PROJECT NUMBER & PHASE: 07000018331
CONTRACT NO.: 07-215934

DISREGARD PRINTS BEARING EARLIER REVISION DATES

REVISION DATES 7/8/11 11/28/11 11/28/11

SHEET 21 OF 32

FILE => sw203-1-epd.dgn

USERNAME => s124496 DATE PLOTTED => 28-MAR-2012 TIME PLOTTED => 12:28

DIST.	COUNTY	ROUTE	POST MILES TOTAL PROJECT	SHEET NO.	TOTAL SHEETS
07	LA	5	2.4/4.0	1278	1288

REGISTERED ENGINEER - CIVIL 12-08-11

3-26-12
PLANS APPROVAL DATE

REGISTERED PROFESSIONAL ENGINEER Kevin Harper No. 42221 Exp. 3-31-12 CIVIL STATE OF CALIFORNIA

The State of California or its officers or agents shall not be responsible for the accuracy or completeness of electronic copies of this plan sheet.

TABLE OF PILE SPACING: CIDH CONCRETE PILES ①

DESIGN H	6′	8′	10′	12′	14′	16′	18′	20′	22′	24′	26′	28′	30′	32′
W	6′-9"	7′-0"	7′-6"	8′-3"	9′-3"	10′-3"	11′-0"	12′-0"	13′-0"	14′-3"	16′-3"	16′-9"	18′-0"	20′-6"
C	2′-9"	2′-9"	3′-0"	3′-3"	3′-6"	4′-0"	4′-3"	4′-9"	5′-0"	5′-6"	6′-3"	6′-9"	7′-3"	7′-9"
B	4′-0"	4′-3"	4′-6"	5′-0"	5′-9"	6′-3"	6′-9"	7′-3"	8′-0"	8′-9"	10′-0"	10′-0"	10′-9"	12′-9"
F	1′-6"	1′-6"	1′-6"	1′-9"	1′-9"	2′-0"	2′-6"	2′-9"	3′-0"	3′-0"	3′-3"	3′-6"	3′-9"	4′-0"
M	1′-3"	1′-3"	1′-6"	1′-9"	2′-0"	2′-6"	2′-9"	3′-3"	3′-6"	4′-0"	4′-9"	5′-3"	5′-9"	6′-3"
N	2′-6"	2′-9"	3′-0"	3′-6"	4′-3"	4′-9"	5′-3"	5′-9"	6′-6"	7′-3"	8′-6"	8′-6"	9′-3"	11′-3"
ROW 1	~~16′-0"~~	~~14′-0"~~	~~12′-0"~~	~~10′-0"~~	~~8′-0"~~	~~6′-6"~~	~~5′-6"~~	~~4′-6"~~	~~4′-0"~~	~~4′-0"~~	~~4′-0"~~	~~4′-0"~~	~~4′-0"~~	~~4′-0"~~
ROW 2	~~24′-0"~~	~~21′-0"~~	~~18′-0"~~	~~15′-0"~~	~~14′-0"~~	~~13′-0"~~	~~11′-0"~~	~~9′-0"~~	~~8′-0"~~	~~12′-0"~~	~~10′-0"~~	~~6′-0"~~	~~4′-0"~~	~~4′-0"~~
ROW 3										~~8′-0"~~	~~5′-0"~~	~~4′-0"~~	~~4′-0"~~	~~6′-0"~~
ROW 4														6′-0"
CONFIGURATION	I	I	I	I	I	I	I	I	I	II	II	II	II	III

TABLE 1: TABLE OF REINFORCING STEEL DIMENSIONS AND DATA

	STEM WITH HAUNCH													
DESIGN H	6′	8′	10′	12′	14′	16′	18′	20′	22′	24′	26′	28′	30′	32′
STEM BATTER	0	1/2:12	1/2:12	1/2:12	1/2:12	1/2:12	1/2:12	1/2:12	1/2:12	5/8:12	3/4:12	7/8:12	1:12	1:12
② ~~STEM THICKNESS @ TOP~~	~~1′ 6"~~	~~1′ 6"~~	~~1′ 6"~~	~~1′ 6"~~	~~1′ 6"~~	~~1′ 6"~~	~~1′ 6"~~	~~1′ 6"~~	~~1′ 6"~~	~~1′ 6"~~	~~1′ 6"~~	~~1′ 6"~~	~~1′ 6"~~	~~1′ 6"~~
STEM THICKNESS @ HAUNCH	1′-0"	1′-0"	1′-0"	1′-0"	1′-0"	1′-0"	1′-0"	1′-0"	1′-0"	1′-0"	1′-0"	1′-0"	1′-0"	1′-0"
ⓐ BARS				#6@18**	#7@18**	#8@18**	#9@18**	#10@18**	#8 @ 9*	#8 @ 9*	#7 @ 6*	#10@12**	#9 @ 9*	#11@12**
X				CONT	CONT	CONT	CONT	CONT	CONT	CONT	CONT	CONT	CONT	CONT
Y				8′-0"	6′-6"	7′-6"	8′-6"	9-6"	9′-6"	11′-0"	11′-6"	13′-0"	14′-0"	15′-6"
ⓑ BARS	#5 @ 12	#5 @ 12	#5 @ 9	#6@18**	#7@18**	#8@18**	#9@18**	#10@18**	#8 @ 9*	#8 @ 9*	#7 @ 6*	#10@12**	#9 @ 9*	#11@12**
X	CONT	CONT	CONT	CONT	CONT	CONT	CONT	CONT	CONT	CONT	CONT	CONT	CONT	CONT
Y	CONT	CONT	CONT	CONT	10′-6"	13′-0"	15′-0"	17′-6"	19′-6"	21′-0"	18′-6"	19′-0"	25′-6"	23′-6"
ⓒ BARS					#6 @ 18	#6 @ 18	#6 @ 18	#6 @ 18	#6 @ 18	#6 @ 18	#6 @ 12	#7 @ 12	#7 @ 18	#7 @ 12
ⓓ BARS	#5 @ 12	#5 @ 12	#5 @ 12	#5 @ 12	#5 @ 12	#5 @ 12	#5 @ 9	#5 @ 9	#6 @ 9	#5 @ 6	#7 @ 9	#7 @ 9	#6 @ 6	#7 @ 6
TOTAL ⓔ BARS	6 #5	6 #5	6 #5	6 #5	8 #5	8 #5	10 #5	10 #5	10 #5	10 #5	12 #5	12 #5	12 #5	14 #5
TOTAL ⓕ BARS	6 #5	6 #5	6 #5	6 #5	6 #5	8 #5	8 #5	8 #5	8 #5	10 #5	10 #5	10 #5	12 #5	12 #5

TABLE 2: TABLE OF REINFORCING STEEL DIMENSIONS AND DATA

	STEM WITH HAUNCH							STEM WITHOUT HAUNCH						
DESIGN H	6′	8′	10′	12′	14′	16′	18′	20′	22′	24′	26′	28′	30′	32′
BATTER	0	0	0	0	0	0	0	0	0	0	1/4:12	1/2:12	1/2:12	1/2:12
② STEM THICKNESS @ TOP	~~1′ 6"~~	~~1′ 6"~~	~~1′ 6"~~	~~1′ 6"~~	~~1′ 6"~~	~~1′ 6"~~	~~1′ 6"~~	~~1′ 6"~~	2′-0"	2′-0"	2′-0"	2′-0"	2′-0"	2′-0"
STEM THICKNESS @ HAUNCH	1′-0"	1′-0"	1′-0"	1′-0"	1′-0"	1′-3"	1′-3"							
ⓐ BARS				#6@12**	#5 @ 6*	#9@18**	#9@12**	#9@12**	#9@12**	#7 @ 6*	#7 @ 6*	#7 @ 6*	#9 @ 9*	#11@12**
X				CONT	CONT	CONT	CONT	CONT	CONT	CONT	CONT	CONT	CONT	CONT
Y				5′-6"	5′-6"	8′-6"	8′-6"	8′-6"	8′-6"	9′-6"	11′-0"	12′-6"	13′-6"	14′-6"
ⓑ BARS	#5 @ 12	#5 @ 9	#6 @ 9	#6@12**	#5 @ 6*	#9@18**	#9@12**	#9@12**	#9@12**	#7 @ 6*	#7 @ 6*	#7 @ 6*	#9 @ 9*	#11@12**
X	CONT	CONT	CONT	CONT	CONT	CONT	CONT	CONT	CONT	CONT	CONT	CONT	CONT	CONT
Y	CONT	CONT	CONT	CONT	CONT	11′-6"	11′-6"	12′-0"	12′-0"	17′-6"	20′-0"	21′-6"	24′-0"	24′-0"
ⓒ BARS						#7 @ 18	#7 @ 12	#7 @ 12	#7 @ 12	#6 @ 12	#6 @ 12	#6 @ 12	#7 @ 18	#7 @ 12
ⓓ BARS	#5 @ 12	#5 @ 12	#5 @ 12	#5 @ 12	#5 @ 12	#5 @ 12	#5 @ 9	#5 @ 9	#6 @ 9	#5 @ 6	#7 @ 9	#7 @ 9	#6 @ 6	#7 @ 6
TOTAL ⓔ BARS	6 #5	6 #5	6 #5	6 #5	8 #5	8 #5	10 #5	10 #5	10 #5	10 #5	12 #5	12 #5	12 #5	14 #5
TOTAL ⓕ BARS	6 #5	6 #5	6 #5	6 #5	6 #5	8 #5	8 #5	8 #5	8 #5	10 #5	10 #5	10 #5	12 #5	12 #5

CONT = CONTINUOUS

* = ⓐ AND ⓑ BARS ARE BUNDLED TOGETHER.

** = ALTERNATE ⓐ AND ⓑ BARS AS SHOWN IN DETAIL A.

DESIGN DATA

DESIGN: LOAD FACTOR DESIGN (LFD)

CONCRETE: REINFORCED CONCRETE, f′c = 3600 psi
fy = 60000 psi

LOADING CASE:

LEVEL GROUND WITH 240 psf LIVE LOAD SURCHARGE AND 16′ SOUNDWALL.
SEISMIC LOAD = 0.3 DEAD LOAD
WIND LOAD = 30 psf
DEAD LOAD OF SOUNDWALL = 1414 lb/lf
DEAD LOAD OF BARRIER = 372 lb/lf

SEISMIC LOAD: SOIL

Kh = 0.3g
Kv = 0.0
Kae : MONONOBE-OKABE METHOD

SOIL: Ø = 34° γ = 120 pcf

EQUIVALENT FLUID PRESSURE:
= 36 pcf FOR DETERMINATION OF TOE PRESSURE
= 27 pcf FOR DETERMINATION OF HEEL PRESSURE

LOAD COMBINATIONS:

GROUP A : βD+1.7E+1.7SC
GROUP B : βD+1.7E+1.3W
GROUP C :
STEM : 1.0D+1.0E+1.0EQD+1.0EQE
FOOTING : D+PYM
WHERE : β = 1.0 OR 1.3 WHICHEVER CONTROLS DESIGN
D = DEAD LOAD
E = LATERAL EARTH PRESSURE
SC = SURCHARGE
W = WIND LOAD
EQD = SEISMIC DEAD LOAD
EQE = SEISMIC LATERAL EARTH PRESSURE
PYM = PROBABLE YIELD MOMENT (1.3* NOMINAL YIELD MOMENT OF STEM)

GENERAL NOTES

① 1. CIDH CONCRETE PILES WERE USED FOR THE DESIGN.
2. PILE BATTER SHOWN ARE 1:3.
3. MINIMUM DISTANCE BETWEEN CENTER PILE AND EDGE OF FOOTING IS 1′-6".
4. REDUCTION FACTORS:
GROUPS A & B : Ø = 0.75
GROUP C : Ø = 1.0
5. LATERAL RESISTANCE OF EACH PILE:
GROUPS A & B : = 30 kip
GROUP C : = 40 kip
6. MAXIMUM SPACING BETWEEN PILES IS SHOWN IN THE TABLE. REDUCE TO SUIT THE LENGHTH OF FOOTING.
7. MINIMUM DISTANCE BETWEEN ANY TWO PILES IS 3′-0".
8. LIMIT OF NO SPLICING FOR REBARS = 3 TIMES THE BOTTOM THICKNESS OF STEM.

SPECIAL DETAILS

REVISED STANDARD DRAWING

FILE NO. xs14-320-1e

APPROVED BY G. WANG
RESPONSIBLE TECHNICAL SPECIALIST
APPROVAL DATE 5-29-09

RELEASED BY ROBERTO LACALLE
RESPONSIBLE OFFICE CHIEF
RELEASE DATE 5-29-09

① Revise Note to indicate CIDH piles
② Stem thickness @ top shown on Detail No. 2 sheet

STATE OF CALIFORNIA
DEPARTMENT OF TRANSPORTATION

DIVISION OF ENGINEERING SERVICES
STRUCTURE DESIGN
DESIGN BRANCH 1

BRIDGE NO. X
POST MILE 3.64

SOUND WALL NO. 203
RETAINING WALL TYPE 1SWBP - DETAIL NO. 1

DIST.	COUNTY	ROUTE	POST MILES TOTAL PROJECT	SHEET NO.	TOTAL SHEETS
07	LA	5	2.4/4.0	1279	1288

REGISTERED ENGINEER - CIVIL 12-08-11

3-26-12
PLANS APPROVAL DATE

REGISTERED PROFESSIONAL ENGINEER Kevin Harper No. 42221 Exp. 3-31-12 CIVIL STATE OF CALIFORNIA

The State of California or its officers or agents shall not be responsible for the accuracy or completeness of electronic copies of this plan sheet.

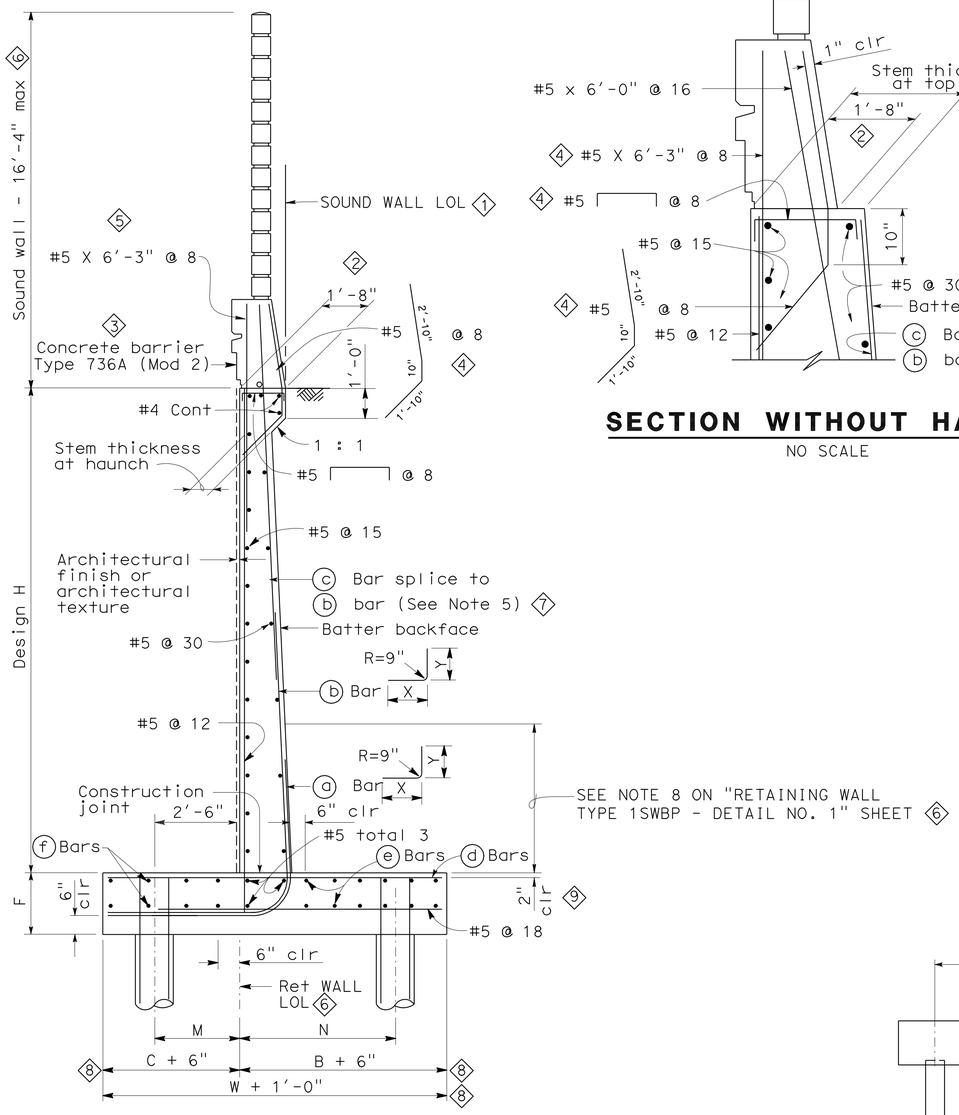

TYPICAL SECTION

NO SCALE

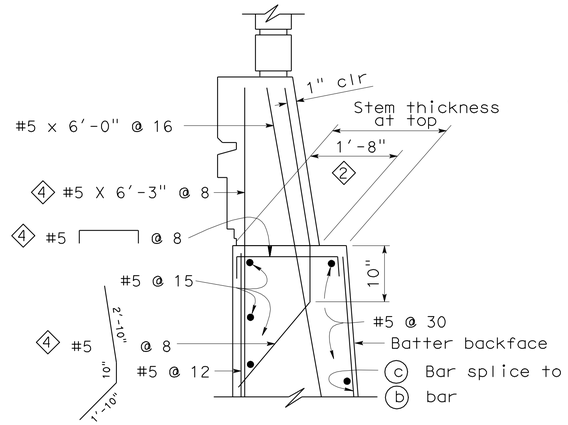

SECTION WITHOUT HAUNCH

NO SCALE

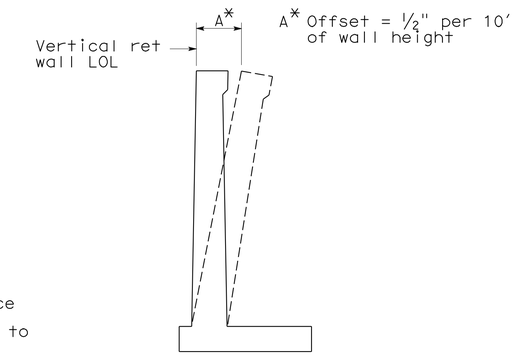

WALL OFFSET

NO SCALE

Values for offsetting forms to be determined by the engineer

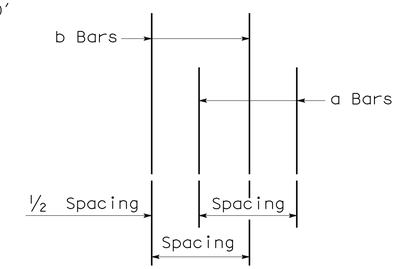

DETAIL A

NO SCALE

NOTES

1. For soundwall and retaining wall architectural finish or texture, see details elsewhere in project plans.
2. For details not shown and drainage notes, see B3-8
3. Footing cover, 1'-6" minimum.
4. For sound wall and barrier details, see "SOUND WALL - MASONARY BLOCK WITH BARRIER ON RETAINING WALL DETAILS NO. 1" and No. 2 sheets
5. Extend (b) bars onto barrier for "DESIGN H" 12' or less.

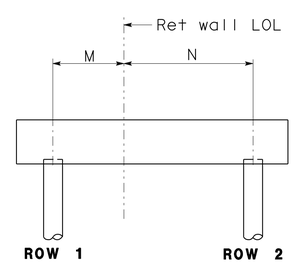

CONFIGURATION I

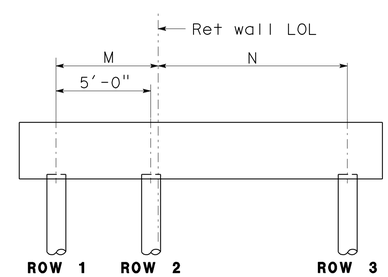

CONFIGURATION II

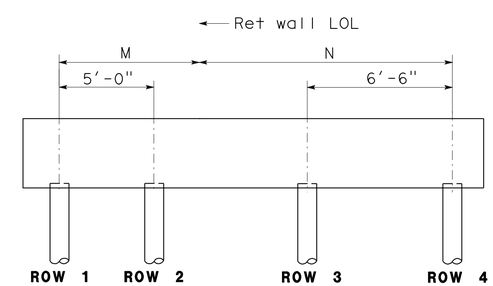

CONFIGURATION III

1. Sound Wall LOL added
2. Stem thickness at top modified
3. Changed Conc barrier dimensions
4. Reinforcement modified
5. Added reinforcement
6. Notes Modified
7. Added note
8. Modified footing Dims.
9. Added dimension

REVISED STANDARD DRAWING

FILE NO. xs14-320-2e

APPROVED BY G. WANG — RESPONSIBLE TECHNICAL SPECIALIST
APPROVAL DATE 5-13-08

RELEASED BY ROBERTO LACALLE — RESPONSIBLE OFFICE CHIEF
RELEASE DATE 5-13-08

STATE OF CALIFORNIA DEPARTMENT OF TRANSPORTATION

DIVISION OF ENGINEERING SERVICES STRUCTURE DESIGN
DESIGN BRANCH 1

BRIDGE NO. X
POST MILE 3.64

SPECIAL DETAILS

SOUND WALL NO. 203

RETAINING WALL TYPE 1SWBP - DETAIL NO. 2

DS OSD 2147A (ENGLISH STANDARD DRAWING "XS" BORDER REV. 01/11/08)

ORIGINAL SCALE IN INCHES FOR REDUCED PLANS 0 1 2 3

UNIT: 3576
PROJECT NUMBER & PHASE: 0700001833-1
CONTRACT NO.: 07-215934

DISREGARD PRINTS BEARING EARLIER REVISION DATES

REVISION DATES 10/29/10 07/25/11 11/28/11 11/29/11

SHEET 23 OF 32

USERNAME => s124496

sw203-i-rwdt02.dgn

DATE PLOTTED => 28-MAR-2012 TIME PLOTTED => 12:28

DIST.	COUNTY	ROUTE	POST MILES TOTAL PROJECT	SHEET NO.	TOTAL SHEETS
07	LA	5	2.4/4.0	1280	1288

REGISTERED ENGINEER - CIVIL 12-08-11

3-26-12
PLANS APPROVAL DATE

REGISTERED PROFESSIONAL ENGINEER Kevin Harper No. 42221 Exp. 3-31-12 CIVIL STATE OF CALIFORNIA

The State of California or its officers or agents shall not be responsible for the accuracy or completeness of electronic copies of this plan sheet.

TABLE OF PILE SPACING: CIDH CONCRETE PILES (3)

DESIGN H	6'	8'	10'	12'	14'	16'	18'	20'	22'	24'	26'	28'	30'	32'
W	7'-3"	7'-6"	8'-0"	8'-6"	9'-6"	(1) 10'-9"	11'-0"	12'-3"	14'-0"	14'-9"	17'-3"	19'-0"	21'-3"	22'-9"
F	1'-6"	1'-6"	1'-6"	1'-6"	1'-6"	(1) 2'-0"	2'-0"	2'-3"	2'-9"	3'-0"	3'-3"	3'-9"	4'-0"	4'-6"
M	1'-0"	1'-0"	1'-0"	1'-0"	1'-0"	(1) 1'-6"	1'-0"	1'-0"	1'-0"	1'-0"	1'-0"	1'-0"	1'-0"	1'-0"
N	5'-3"	5'-6"	6'-0"	6'-6"	7'-6"	(1) 8'-9"	9'-0"	10'-3"	12'-0"	12'-9"	15'-3"	17'-0"	19'-3"	20'-9"
ROW 1	8'-0"	8'-0"	8'-0"	7'-0"	6'-0"	4'-6"	4'-0"	4'-0"	4'-0"	4'-0"	4'-0"	4'-0"	4'-0"	4'-0"
ROW 2	16'-0"	16'-0"	16'-0"	14'-0"	15'-0"	11'-3"	10'-0"	12'-0"	6'-0"	4'-0"	4'-0"	4'-0"	4'-0"	4'-0"
ROW 3								8'-0"	8'-0"	6'-0"	6'-0"	4'-0"	4'-0"	4'-0"
ROW 4											6'-0"	6'-0"	4'-0"	4'-0"
ROW 5													6'-0"	6'-0"
CONFIGURATION	I	I	I	I	I	I	I	II	II	II	III	III	IIII	IIII

TABLE 1: TABLE OF REINFORCING STEEL DIMENSIONS AND DATA

	STEM WITH HAUNCH													
DESIGN H	6'	8'	10'	12'	14'	16'	18'	20'	22'	24'	26'	28'	30'	32'
STEM BATTER	0	½:12	½:12	½:12	½:12	½:12	½:12	½:12	½:12	⅝:12	¾:12	⅞:12	1:12	1:12
(2) STEM THICKNESS @ HAUNCH	1'-0"	1'-0"	1'-0"	1'-0"	1'-0"	1'-0"	1'-0"	1'-0"	1'-0"	1'-0"	1'-0"	1'-0"	1'-0"	1'-0"
a BARS				#6@18**	#7@18**	#8@18**	#9@18**	#10@18**	#8 @ 9*	#8 @ 9*	#7 @ 6*	#10@12**	#9 @ 9*	#11@12**
Y				8'-0"	6'-6"	7'-6"	8'-0"	9'-0"	9'-6"	11'-0"	11'-6"	13'-0"	14'-0"	15'-6"
b BARS	#5 @ 12	#5 @ 12	#5 @ 9	#6@18**	#7@18**	#8@18**	#9@18**	#10@18**	#8 @ 9*	#8 @ 9*	#7 @ 6*	#10@12**	#9 @ 9*	#11@12**
Y	CONT	CONT	CONT	CONT	10'-6"	13'-0"	15'-0"	17'-6"	19'-6"	21'-0"	18'-6"	19'-0"	25'-6"	23'-6"
c BARS					#6 @ 18	#6 @ 18	#6 @ 18	#6 @ 18	#6 @ 18	#6 @ 18	#6 @ 12	#7 @ 12	#7 @ 18	#7 @ 12
SHORT d BARS					#8@18**	#8@18**	#9@18**	#8@12**	#8@12**	#6 @ 6*	#8 @ 9*	#7 @ 6*	#9 @ 9*	#9 @ 9*
X					5'-6"	6'-6"	6'-6"	7'-6"	9'-6"	10'-0"	12'-0"	13'-0"	15'-0"	16'-0"
d BARS	#5 @ 12	#5 @ 9	#6 @ 9	#7 @ 9	#8@18**	#8@18**	#9@18**	#8 @ 12*	#8@12**	#6 @ 6*	#8 @ 9*	#7 @ 6*	#9 @ 9*	#9 @ 9*
X	CONT	CONT	CONT	CONT	CONT	CONT	CONT	CONT	CONT	CONT	CONT	CONT	CONT	CONT
TOTAL e BARS	12 #6	12 #6	10 #5	12 #5	12 #5	14 #5	14 #5	16 #5	18 #5	18 #5	20 #5	22 #5	26 #5	26 #5

CONT = CONTINUOUS
* = a AND b [SHORT d & d] BARS ARE BUNDLED TOGETHER.
** = ALTERNATE a AND b BARS AS SHOWN IN DETAIL A.
ALTERNATE SHORT d AND d BARS.

TABLE 2: TABLE OF REINFORCING STEEL DIMENSIONS AND DATA

	STEM WITH HAUNCH						STEM WITHOUT HAUNCH						
DESIGN H	8'	10'	12'	14'	16'	18'	20'	22'	24'	26'	28'	30'	32'
BATTER	0	0	0	0	0	0	0	0	0	¼:12	½:12	½:12	½:12
STEM THICKNESS @ HAUNCH	1'-0"	1'-0"	1'-0"	1'-0"	1'-3"	1'-3"							
STEM THICKNESS @ TOP							1'-6"	2'-0"	2'-0"	2'-0"	2'-0"	2'-0"	2'-0"
a BARS			#6@12**	#5 @ 6*	#9@18**	#9 @ 12*	#9@12**	#9@12**	#7 @ 6*	#7 @ 6*	#7 @ 6*	#9 @ 9*	#11@12**
Y			5'-6"	5'-6"	7'-0"	7'-0"	8'-0"	8'-6"	9'-6"	11'-0"	12'-6"	13'-6"	14'-6"
b BARS	#5 @ 9	#6 @ 9	#6@12**	#5 @ 6*	#9@18**	#9 @ 12*	#9@12**	#9 @ 12*	#7 @ 6*	#7 @ 6*	#7 @ 6*	#9 @ 9*	#11@12**
Y	CONT	CONT	CONT	CONT	9'-6"	9'-6"	11'-0"	11'-6"	17'-0"	19'-6"	21'-6"	24'-0"	24'-0"
c BARS					#7 @ 18	#7 @ 12	#7 @ 12	#7 @ 12	#6 @ 12	#6 @ 12	#6 @ 12	#7 @ 18	#7 @ 12
SHORT d BARS				#8@18**	#8@18**	#9@18**	#8@12**	#8@12**	#6 @ 6*	#8 @ 9*	#7 @ 6*	#9 @ 9*	#9 @ 9*
X				5'-6"	6'-6"	6'-6"	7'-6"	9'-6"	10'-0"	12'-0"	13'-0"	15'-0"	16'-0"
d BARS	#5 @ 9	#6 @ 9	#7 @ 9	#8@18**	#8@18**	#9@18**	#8@12**	#8@12**	#6 @ 6*	#8 @ 9*	#7 @ 6*	#9 @ 9*	#9 @ 9*
X	CONT	CONT	CONT	CONT	CONT	CONT	CONT	CONT	CONT	CONT	CONT	CONT	CONT
TOTAL e BARS	12 #6	10 #5	12 #5	12 #5	14 #5	14 #5	16 #5	18 #5	18 #5	20 #5	22 #5	26 #5	26 #5

DESIGN DATA

DESIGN: LOAD FACTOR DESIGN (LFD)

CONCRETE: REINFORCED CONCRETE, fc = 3600 psi
fy = 60000 psi

LOADING CASE:

LEVEL GROUND WITH 240 psf LIVE LOAD SURCHARGE AND 16' SOUNDWALL.

SEISMIC LOAD DEAD LOAD = 0.3 DEAD LOAD
WIND LOAD = 30 psf
DEAD LOAD OF SOUNDWALL = 1414 lb/lf
DEAD LOAD OF BARRIER = 372 lb/lf

SEISMIC LOAD: SOIL

K_h = 0.3g
K_v = 0.0
K_{ae} : MONOBE-OKABE METHOD

SOIL: $\emptyset = 34°$ $\gamma = 120$ pcf

EQUIVALENT FLUID PRESSURE:
= 36 pcf MAX. FOR DETERMINATION OF TOE PRESSURE
= 27 pcf MAX. FOR DETERMINATION OF HEEL PRESSURE

LOAD COMBINATIONS:

GROUP A : βD + 1.7E + 1.7SC
GROUP B : βD + 1.7E + 1.3W
GROUP C :
STEM : 1.0D + 1.0E + 1.0EQD + 1.0EQE
FOOTING : D + PYM

WHERE : β = 1.0 OR 1.3 WHICHEVER CONTROLS DESIGN
D = DEAD LOAD
E = LATERAL EARTH PRESSURE
SC = LIVE LOAD SURCHARGE
W = WIND LOAD
EQD = SEISMIC DEAD LOAD
EQE = SEISMIC LATERAL EARTH PRESSURE

GENERAL NOTES

(3) 1. CIDH CONCRETE PILES.
(4) 2. ALL PILES ARE VERTICAL
3. MINIMUM DISTANCE BETWEEN CENTER PILE AND EDGE OF FOOTING IS 1'-6".
4. REDUCTION FACTORS:
GROUPS A & B : $\emptyset$ = 0.75
GROUP C : $\emptyset$ = 1.0
5. LATERAL RESISTANCE OF EACH PILE:
GROUPS A & B : = 30 kip
GROUP C : = 40 kip
(1) 6. FOR PILE LAYOUT, SEE "FOOTING PLAN" ON "STRUCTURE PLAN NO. 2" SHEET.
7. MINIMUM DISTANCE BETWEEN ANY TWO PILES IS 3'-0".
REDUCE TO SUIT THE LENGTH OF FOOTING.

SPECIAL DETAILS

REVISED STANDARD DRAWING

FILE NO. xs14-370-1e

APPROVED BY G. WANG
RESPONSIBLE TECHNICAL SPECIALIST
APPROVAL DATE 5-13-08

RELEASED BY ROBERTO LACALLE
RESPONSIBLE OFFICE CHIEF
RELEASE DATE 5-13-08

(1) Revised footing dimensions
(2) Stem thickness at top shown on "DETAIL NO. 2" Sht
(3) Revised note to indicate CIDH piles.
(4) Revised notes to indicate vertical piles

STATE OF CALIFORNIA
DEPARTMENT OF TRANSPORTATION

DIVISION OF ENGINEERING SERVICES
STRUCTURE DESIGN
DESIGN BRANCH 1

BRIDGE NO. X
POST MILE 3.64

SOUND WALL NO. 203
RETAINING WALL TYPE 5SWBP - DETAIL NO. 1

DS OSD 2147A (ENGLISH STANDARD DRAWING "XS" BORDER REV. 01/11/08)

ORIGINAL SCALE IN INCHES FOR REDUCED PLANS 0 1 2 3

UNIT: 3576
PROJECT NUMBER & PHASE: 07000018331
CONTRACT NO.: 07-215934

DISREGARD PRINTS BEARING EARLIER REVISION DATES

REVISION DATES 08-08-11 8-16-11 11-18-11

SHEET 24 OF 32

DIST.	COUNTY	ROUTE	POST MILES TOTAL PROJECT	SHEET NO.	TOTAL SHEETS
07	LA	5	2.4/4.0	1281	1288

REGISTERED ENGINEER - CIVIL 12-08-11

3-26-12
PLANS APPROVAL DATE

REGISTERED PROFESSIONAL ENGINEER Kevin Harper No. 42221 Exp. 3-31-12 CIVIL STATE OF CALIFORNIA

The State of California or its officers or agents shall not be responsible for the accuracy or completeness of electronic copies of this plan sheet.

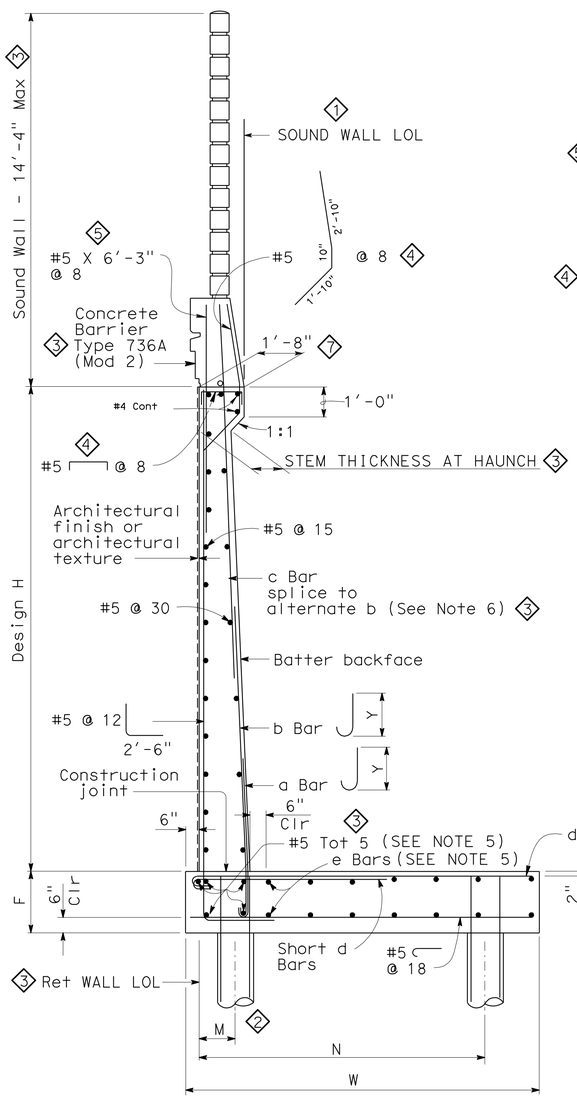

TYPICAL SECTION

NO SCALE

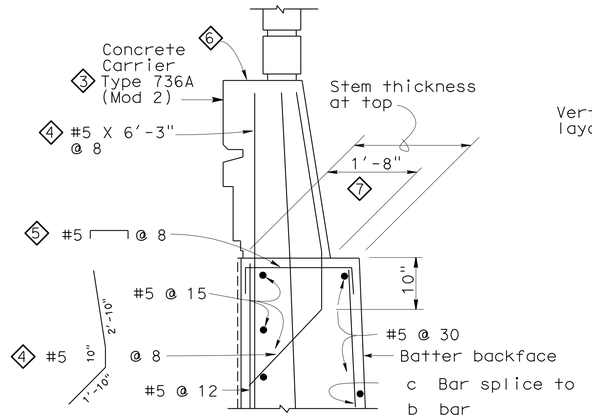

SECTION WITHOUT HAUNCH

NO SCALE

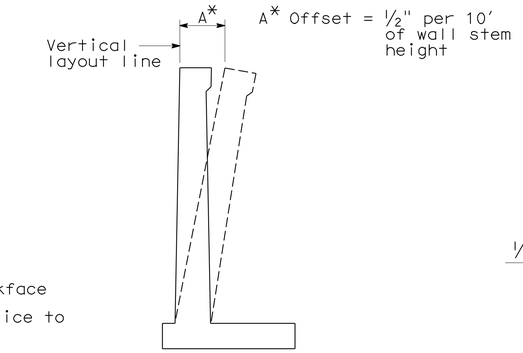

WALL OFFSET

NO SCALE

Values for offsetting forms to be determined by the engineer

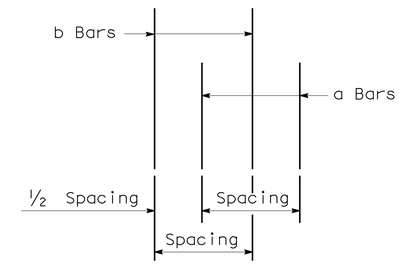

DETAIL A

NO SCALE

GENERAL NOTES

1. For soundwall and retaining wall architectural finish or texture, see details elsewhere in project plans.
2. For details not shown and drainage notes, see B3-8
3. Footing cover, 1'-6" minimum
4. For Sound Wall and Barrier Details, see "SOUND WALL - MASONRY BLOCK WITH BARRIER ON RETAINING WALL DETAILS NO. 1" and No. 2 sheets
5. Continue Reinforcement 4'-0" onto adjacent retaining wall type 1SWBP footings.
6. Extend "b" bars onto barrier for "DESIGN H" 12' or less.

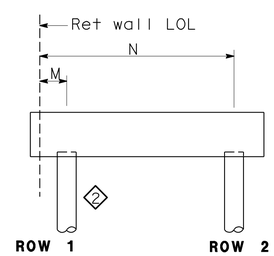

CONFIGURATION 1

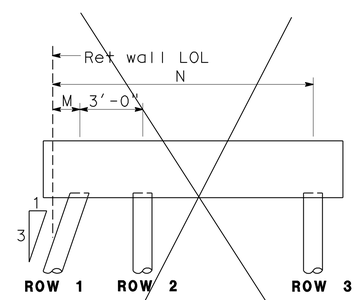

CONFIGURATION 2

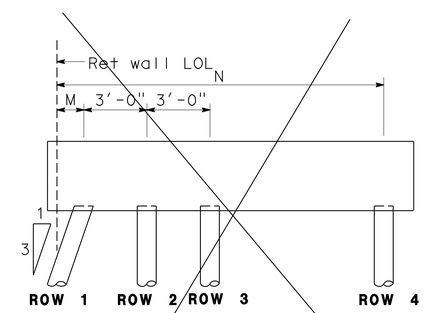

CONFIGURATION 3

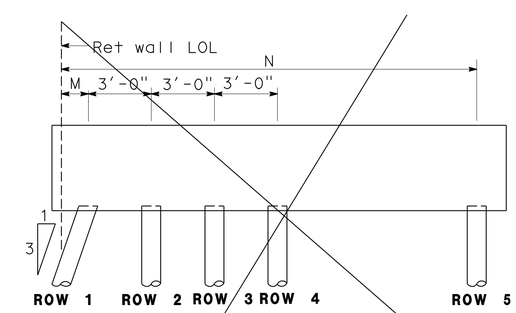

CONFIGURATION 4

SPECIAL DETAILS

REVISED STANDARD DRAWING		
FILE NO. xs14-370-2e	APPROVED BY G. WANG (RESPONSIBLE TECHNICAL SPECIALIST)	RELEASED BY ROBERTO LACALLE (RESPONSIBLE OFFICE CHIEF)
	APPROVAL DATE 5-13-08	RELEASE DATE 5-13-08

1. Sound Wall LOL added
2. Toe piles to be vertical
3. Notes modified/added
4. Reinforcement modified
5. Reinforcement added
6. Change Conc Barrier dimensions
7. Stem thickness at top modified
8. Added dimension

STATE OF CALIFORNIA DEPARTMENT OF TRANSPORTATION

DIVISION OF ENGINEERING SERVICES STRUCTURE DESIGN DESIGN BRANCH 1

BRIDGE NO. X
POST MILE 3.64

SOUND WALL NO. 203
RETAINING WALL TYPE 5SWBP - DETAIL NO. 2

DS OSD 2147A (ENGLISH STANDARD DRAWING "XS" BORDER REV. 01/11/08)

ORIGINAL SCALE IN INCHES FOR REDUCED PLANS 0 1 2 3

UNIT: 3576
PROJECT NUMBER & PHASE: 07000018331
CONTRACT NO.: 07-215934

DISREGARD PRINTS BEARING EARLIER REVISION DATES 08/08/11 11/28/11 11/29/11

SHEET 25 OF 32

DIST.	COUNTY	ROUTE	POST MILES TOTAL PROJECT	SHEET NO.	TOTAL SHEETS
07	LA	5	2.4/4.0	1282	1288

Kevin J. Harper 12-08-11
REGISTERED ENGINEER - CIVIL

3-26-12
PLANS APPROVAL DATE

REGISTERED PROFESSIONAL ENGINEER Kevin Harper No. 42221 Exp. 3-31-12 CIVIL STATE OF CALIFORNIA

The State of California or its officers or agents shall not be responsible for the accuracy or completeness of electronic copies of this plan sheet.

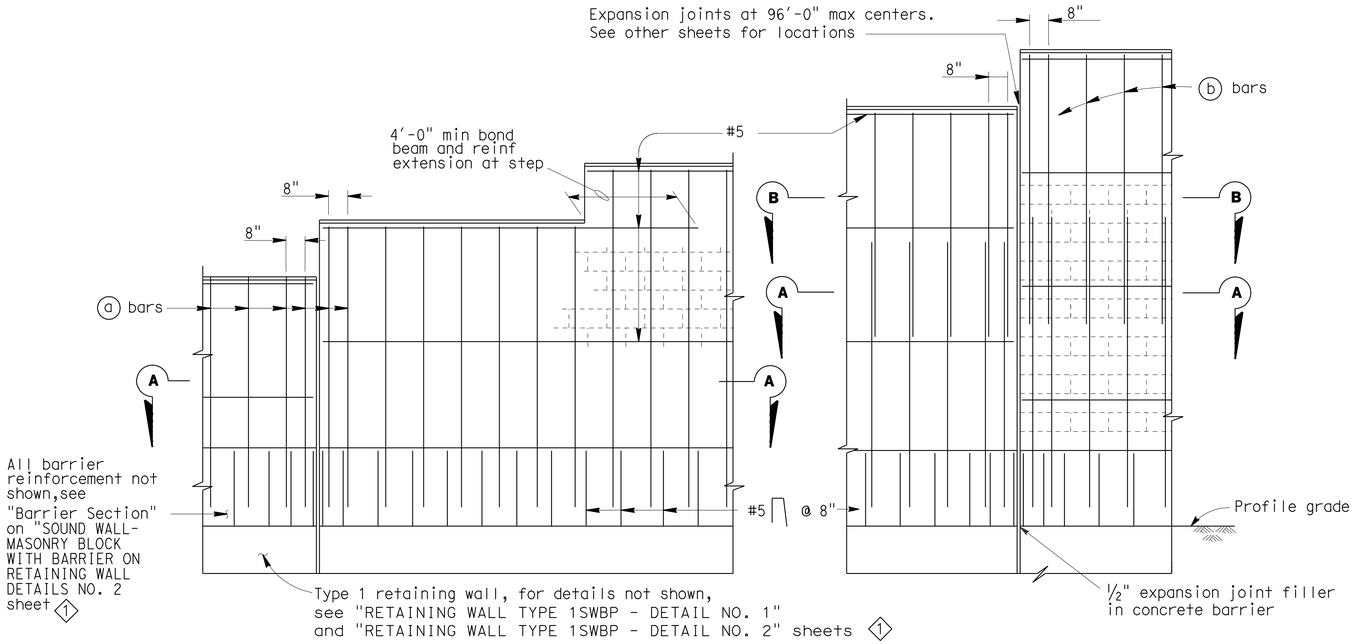

PART ELEVATIONS

SOUNDWALL REINFORCEMENT TABLE

Maximum H	(a) bars @ 1'-4" max	(b) bars @ 1'-4" max	"y"	f'm (KSI)	Compressive Strength of CMU (KSI)	Maximum H
6'-4"	# 4	———	———	1.5	1.9	6'-4"
8'-4"	# 4	———	———	1.5	1.9	8'-4"
10'-4"	# 4	———	———	1.5	1.9	10'-4"
12'-4"	# 5	# 4	5'-0"	1.5	1.9	12'-4"
14'-4"	# 6	# 4	7'-0"	1.5	1.9	14'-4"
16'-4"	# 6	# 4	9'-0"	2.5	3.7	16'-4"

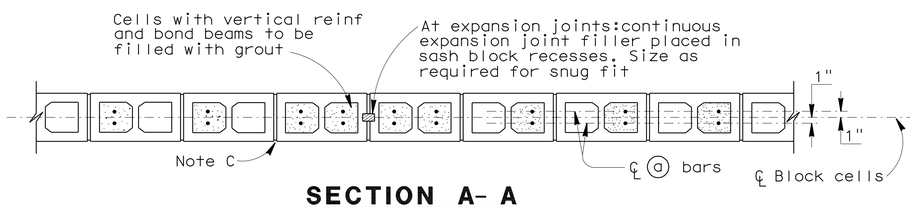

SECTION A- A

For details not shown,see other details

H=6'-4" THRU H= 10'-4"

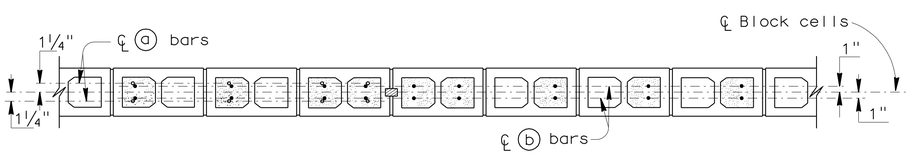

SECTION A- A

SECTION B- B

For details not shown,see other details

H=12'-4" THRU H= 16'-4"

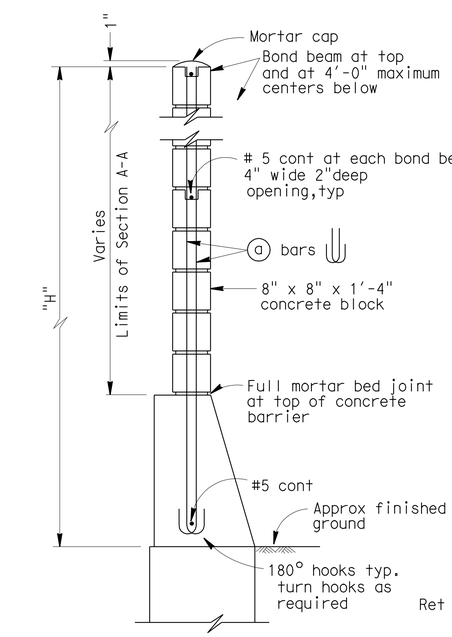

H=6'-4" THRU H=10'-4"

For details not shown,see H=12'-4" thru H=16'-4"

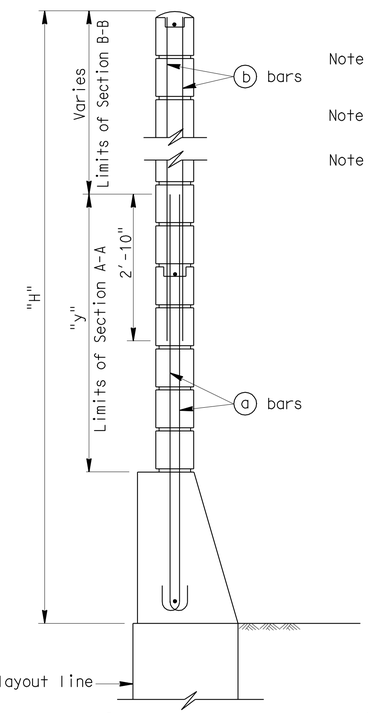

H=12'-4" THRU H=16'-4"

For details not shown,see H=6'-4" thru H=10'-4"

TYPICAL SECTIONS

Note I : For details not shown, see "SOUND WALL - MASONRY BLOCK WITH BARRIER ON RETAINING WALL DETAILS NO. 2" sheet 1

Note II : Slope ground at traffic side of barrier to drain. Maximum slope ±10%.

Note III: See Standard Plan B15-9 "SOUND WALL MASONRY BLOCK - MISCELLANEOUS DETAILS" sheet for other details. 1

GENERAL NOTES

Note A: For type of block and joint finish, see other sheets.

Note B: When blocks are laid in stacked bond, ladder type, galvanized joint reinforcement shall be provided. A minimum of 0.07"-0.14" wire continuous at 4'-0" maximum to be used. Locate reinforcement in joints that are at the approximate midpoint between bond beams.

Note C: Horizontal joints shall be tooled concave or may be weathered.
Vertical joints shall be tooled concave or may be raked.

Note D: For intermediate wall heights that are between the "H's" given. Use the tabular information for the next higher "H".

Note E: Masonry strengths are listed in "SOUNDWALL REINFORCEMENT TABLE".

Note F: Concrete to be used for the barrier shall contain not less than 590 pounds of cementitious material per cubic yard.

SPECIAL DETAILS

REVISED STANDARD DRAWING

FILE NO. xs15-130-1e

APPROVED BY T SATTER — RESPONSIBLE TECHNICAL SPECIALIST
APPROVAL DATE 10/22/09

RELEASED BY ROBERTO LACALLE — RESPONSIBLE OFFICE CHIEF
RELEASE DATE 10/22/09

1 Sheet reference notes corrected

STATE OF CALIFORNIA DEPARTMENT OF TRANSPORTATION

DIVISION OF ENGINEERING SERVICES STRUCTURE DESIGN
DESIGN BRANCH 1

BRIDGE NO. X
POST MILE 3.20

SOUND WALL NO. 203
SOUND WALL - MASONRY BLOCK WITH BARRIER ON RETAINING WALL DETAILS NO. 1

DS OSD 2147A (ENGLISH STANDARD DRAWING "XS" BORDER REV. 10/22/09)

ORIGINAL SCALE IN INCHES FOR REDUCED PLANS 0 1 2 3

UNIT: 3576
PROJECT NUMBER & PHASE: 0700001833-1
CONTRACT NO.: 07-215934

DISREGARD PRINTS BEARING EARLIER REVISION DATES

REVISION DATES 11/18/1

SHEET 26 OF 32

USERNAME => s124496

sw203-k-swdt01.dgn

DATE PLOTTED => 28-MAR-2012 TIME PLOTTED => 12:28

DIST.	COUNTY	ROUTE	POST MILES TOTAL PROJECT	SHEET NO.	TOTAL SHEETS
07	LA	5	2.4/4.0	1283	1288

REGISTERED ENGINEER - CIVIL 12-08-11

3-26-12
PLANS APPROVAL DATE

REGISTERED PROFESSIONAL ENGINEER Kevin Harper No. 42221 Exp. 3-31-12 CIVIL STATE OF CALIFORNIA

The State of California or its officers or agents shall not be responsible for the accuracy or completeness of electronic copies of this plan sheet.

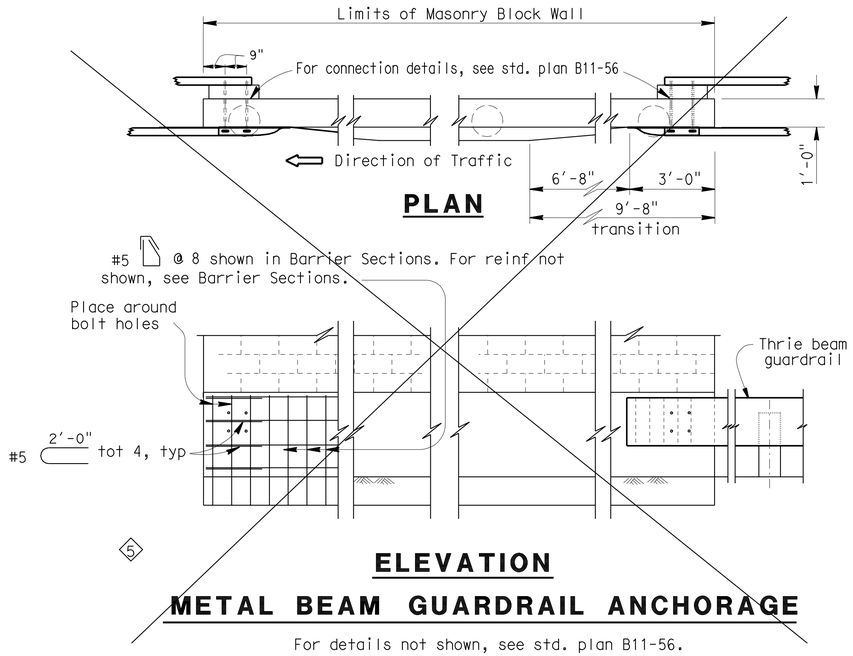

ELEVATION

METAL BEAM GUARDRAIL ANCHORAGE

For details not shown, see std. plan B11-56.

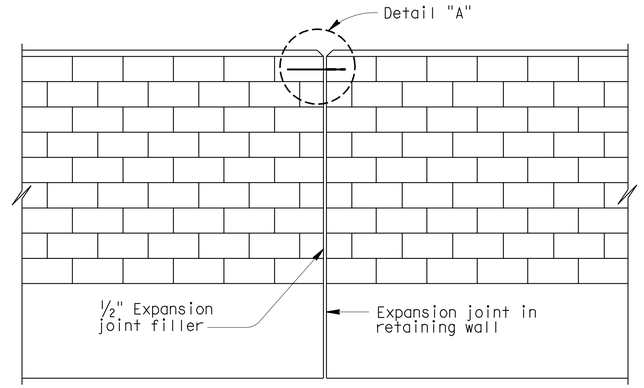

ALIGNMENT KEY DETAIL

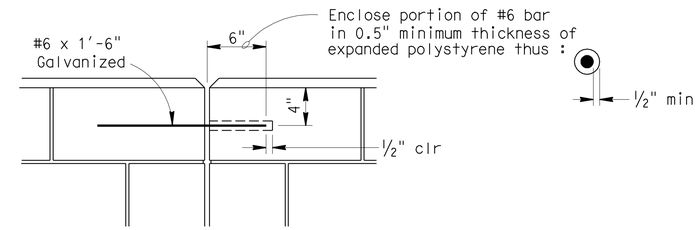

DETAIL A

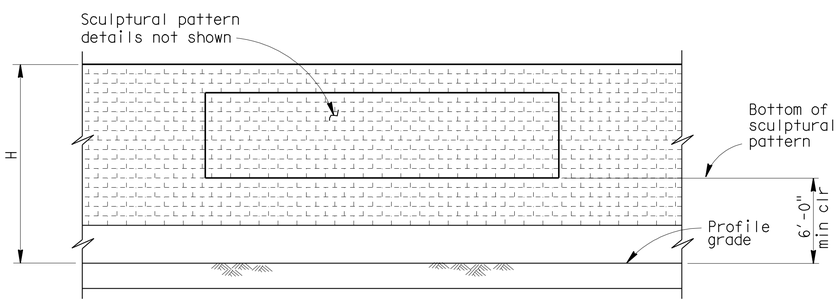

CLEARANCE DETAIL

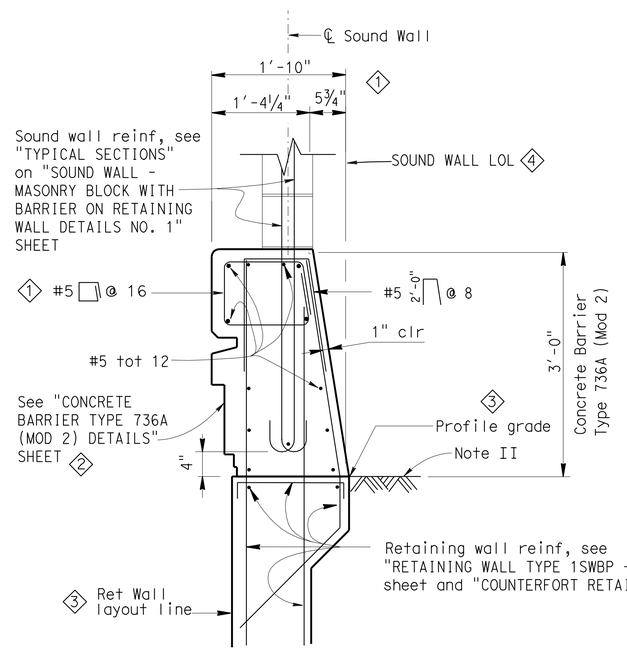

BARRIER SECTION

DESIGN NOTES

DESIGN

Uniform Building Code,1997 Edition and the Bridge Design Specifications.

DESIGN WIND LOAD

33 PSF

DESIGN SEISMIC LOAD

0.57 Dead load

REINFORCED CONCRETE

f'c = 3250 PSI
fy = 60 KSI

CONCRETE MASONRY

REGULAR STRENGTH	HIGH STRENGTH	
f'm = 1500 PSI	f'm = 2000 PSI	f'm = 2500 PSI
f_b = 1500 PSI	f_b = 660 PSI	f_b = 830 PSI
fs = 24.0 KSI	fs = 24.0 KSI	fs = 24000 PSI
n = 25.8	n = 19.3	n = 15.5

LOAD FACTORS AND LOAD COMBINATIONS

Working Stress Design (WSD) Percentage of unit stress

Group 1: D + E + SC 100%
Group 2: D + W + SC + E 100%
Group 3: D + 0.71 EQD + E 100%

Where:

D = Dead load
E = Lateral earth pressure
SC = Live load surcharge
W = Wind load
EQD = Seismic dead load

Load Factor Design (LFD)

Group A: βD +1.7 E + 1.7 SC
Group B: βD +1.7 E + 1.3 W
Group C: βD +1.3 E + 1.0 EQE
Group D: βD +1.3 E + 1.0 EQD
Group E: βD +1.1 E + 0.85 (EQE + EQD)

Where : β = 0.9 or 1.2, whichever controls in design
D = Dead load
E = Lateral earth pressure
SC = Live load surcharge
W = Wind load
EQD = Seismic dead load
EQE = Seismic earth load

STRENGTH REDUCTION FACTORS, Ø

Reinforced concrete:
For flexure ---------- Ø=0.90
For shear ---------- Ø=0.85

Concrete masonry:
For flexure ---------- Ø=0.80
For shear ---------- Ø=0.60

Foundations :

See "RETAINING WALL TYPE 1SWBP - DETAIL NO. 1" sheet. 3

NOTES:

3 I : For details not shown, see "RETAINING WALL TYPE 1SWBP - DETAIL NO. 1" and No. 2 sheets.

II : Slope ground at traffic side of barrier to drain. Maximum slope ±10%. See Standard Plan B11-56, Note D.

SPECIAL DETAILS

REVISED STANDARD DRAWING

FILE NO. xs15-130-2e

APPROVED BY T SATTER
RESPONSIBLE TECHNICAL SPECIALIST
APPROVAL DATE 10/22/09

RELEASED BY ROBERTO LACALLE
RESPONSIBLE OFFICE CHIEF
RELEASE DATE 10/22/09

1 Barrier dimensions and Reinf changed
2 Added note for barrier aesthetics
3 Sheet reference notes corrected
4 Sound Wall LOL added
5 Deleted obsolete detail

STATE OF CALIFORNIA
DEPARTMENT OF TRANSPORTATION

DIVISION OF ENGINEERING SERVICES
STRUCTURE DESIGN
DESIGN BRANCH 1

BRIDGE NO. X
POST MILE 3.20

SOUND WALL NO. 203
SOUND WALL - MASONRY BLOCK WITH BARRIER ON RETAINING WALL DETAILS NO. 2

DS OSD 2147A (ENGLISH STANDARD DRAWING "XS" BORDER REV. 01/11/08)

ORIGINAL SCALE IN INCHES FOR REDUCED PLANS 0 1 2 3

UNIT: 3576
PROJECT NUMBER & PHASE: 0700001833-1 CONTRACT NO.: 07-215934

DISREGARD PRINTS BEARING EARLIER REVISION DATES 11/18/11

REVISION DATES | SHEET 27 | OF 32

USERNAME => s124496

sw203-k-swdt02.dgn

DATE PLOTTED => 28-MAR-2012 TIME PLOTTED => 11:22:23

DIST	COUNTY	ROUTE	POST MILES TOTAL PROJECT	SHEET No.	TOTAL SHEETS
07	LA	5	2.4/4.0	1284	1288

GEOTECHNICAL PROFESSIONAL — DATE 06/2011

3-26-12
PLANS APPROVAL DATE

REGISTERED PROFESSIONAL ENGINEER — MICHAEL G. SMITH — No. 2229 — Exp. 3-31-2012 — GEOTECHNICAL — STATE OF CALIFORNIA

The State of California or its officers or agents shall not be responsible for the accuracy or completeness of electronic copies of this plan sheet.

BENCH MARK

PRHV 104 Elev 94.31′
FOUND CHISLED "X" ON S′LY TC @+/- 250′ W/O NB 1-5 TO WB FIRESTONE BLVD OFF-RAMP
TUNNEL PER SR 09-033-000011
NAVD 88

PRHV 105 Elev 96.88′
FOUND CHISLED "X" ON W′LY CURB BCR@ EB FIRESTONE BL
TO SB 1-5 ON-RAMP & FIRESTONE BL INTERSECTION PER SR 09-033-000011
NAVD 88

PRHV 119 Elev 99.46′
FOUND PK NAIL & TIN @ NB 1-5 SHOULDER, +/-120′ N/O SILVERBOW PEDESTRIAN OVERCROSSING
NAVD 88

PRHV 122 Elev 99.50′
FOUND PK NAIL & TIN @ SB 1-5 SHOULDER, +/-210′ N/O SILVERBOW PEDESTRIAN OVERCROSSING
NAVD 88

Notes

1. This LOTB sheet was prepared in accordance with the Caltrans Soil & Rock Logging, Classification, and Presentation Manual (2010) except three digit sequence number in boring identification starting with the segment number per exception request approved on April 08, 2009

2. For protection of underground utility lines, hand-auger was used to remove top 5 to 10 feet of subsurface material for exploratory borings and cone penetration testings.

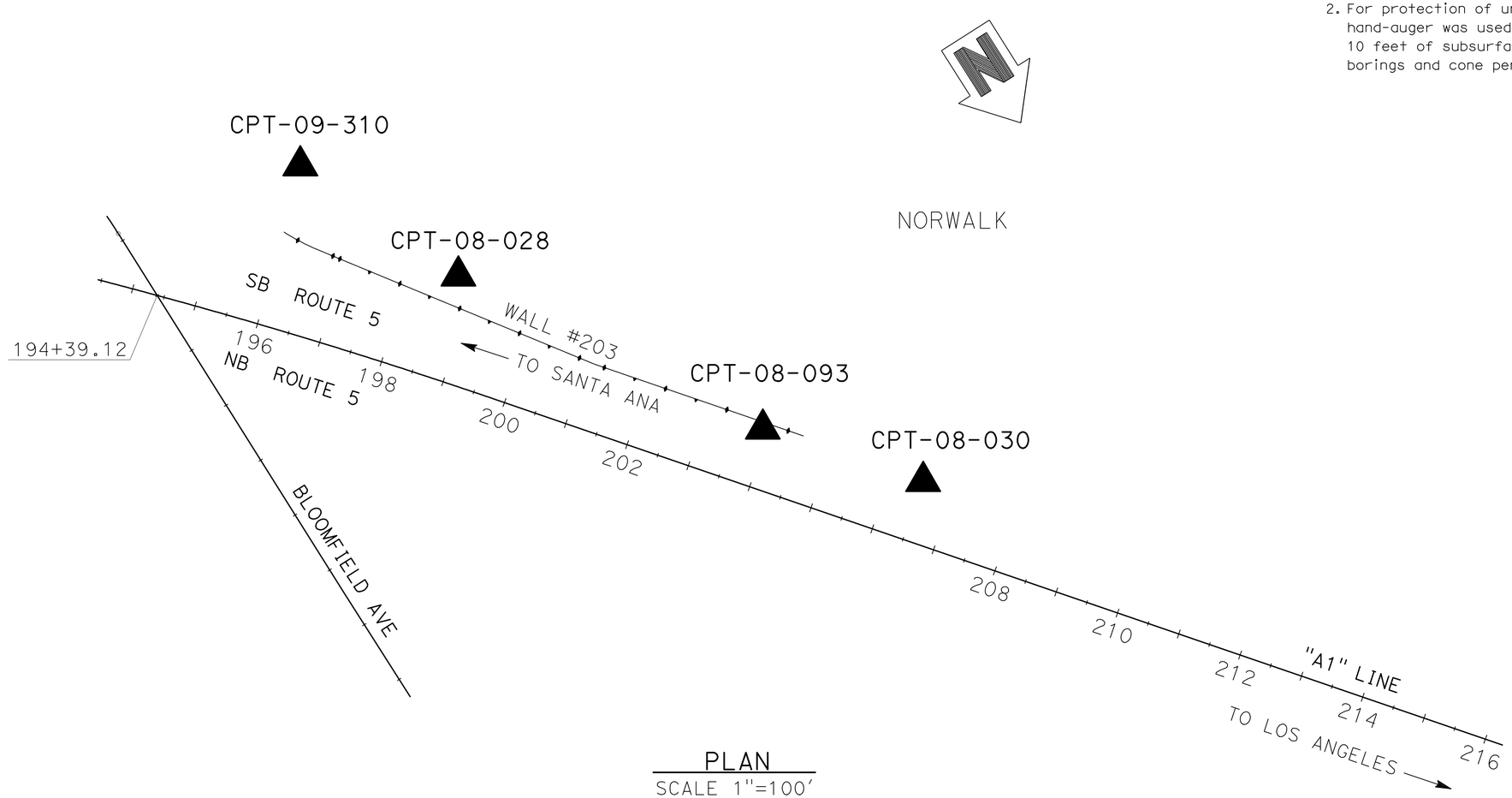

PLAN
SCALE 1"=100′

ENGINEERING SERVICES	MATERIALS AND GEOTECHNICAL SERVICES	STATE OF CALIFORNIA DEPARTMENT OF TRANSPORTATION	DIVISION OF ENGINEERING SERVICES STRUCTURE DESIGN DESIGN BRANCH 1	BRIDGE NO. X / POST MILE 3.64	SOUND WALL NO. 203
FUNCTIONAL SUPERVISOR NAME: M. SMITH	DRAWN BY: P.QUACH / CHECKED BY: D.ORRIS	FIELD INVESTIGATION BY: P.MCDONALD			LOG OF TEST BORINGS 1 OF 5

OGS CIVIL LOG OF TEST BORINGS SHEET — ORIGINAL SCALE IN INCHES FOR REDUCED PLANS 0 1 2 3

UNIT: 3576
PROJECT NUMBER & PHASE: 07000018331 — CONTRACT NO.: 07-215934

DISREGARD PRINTS BEARING EARLIER REVISION DATES → REVISION DATES 06/17/11 — SHEET 28 OF 32

FILE => sw203-z-1tb01.dgn

USERNAME => s124496 DATE PLOTTED => 28-MAR-2012 TIME PLOTTED => 12:29

DIST	COUNTY	ROUTE	POST MILES TOTAL PROJECT	SHEET No.	TOTAL SHEETS
07	LA	5	2.4/4.0	1285	1288

GEOTECHNICAL PROFESSIONAL — DATE 06/2011

3-26-12
PLANS APPROVAL DATE

REGISTERED PROFESSIONAL ENGINEER — MICHAEL G. SMITH — No. 2229 — Exp. 3-31-2012 — GEOTECHNICAL — STATE OF CALIFORNIA

The State of California or its officers or agents shall not be responsible for the accuracy or completeness of electronic copies of this plan sheet.

FOR PLAN VIEW, SEE
"LOG OF TEST BORINGS" 1 OF 5

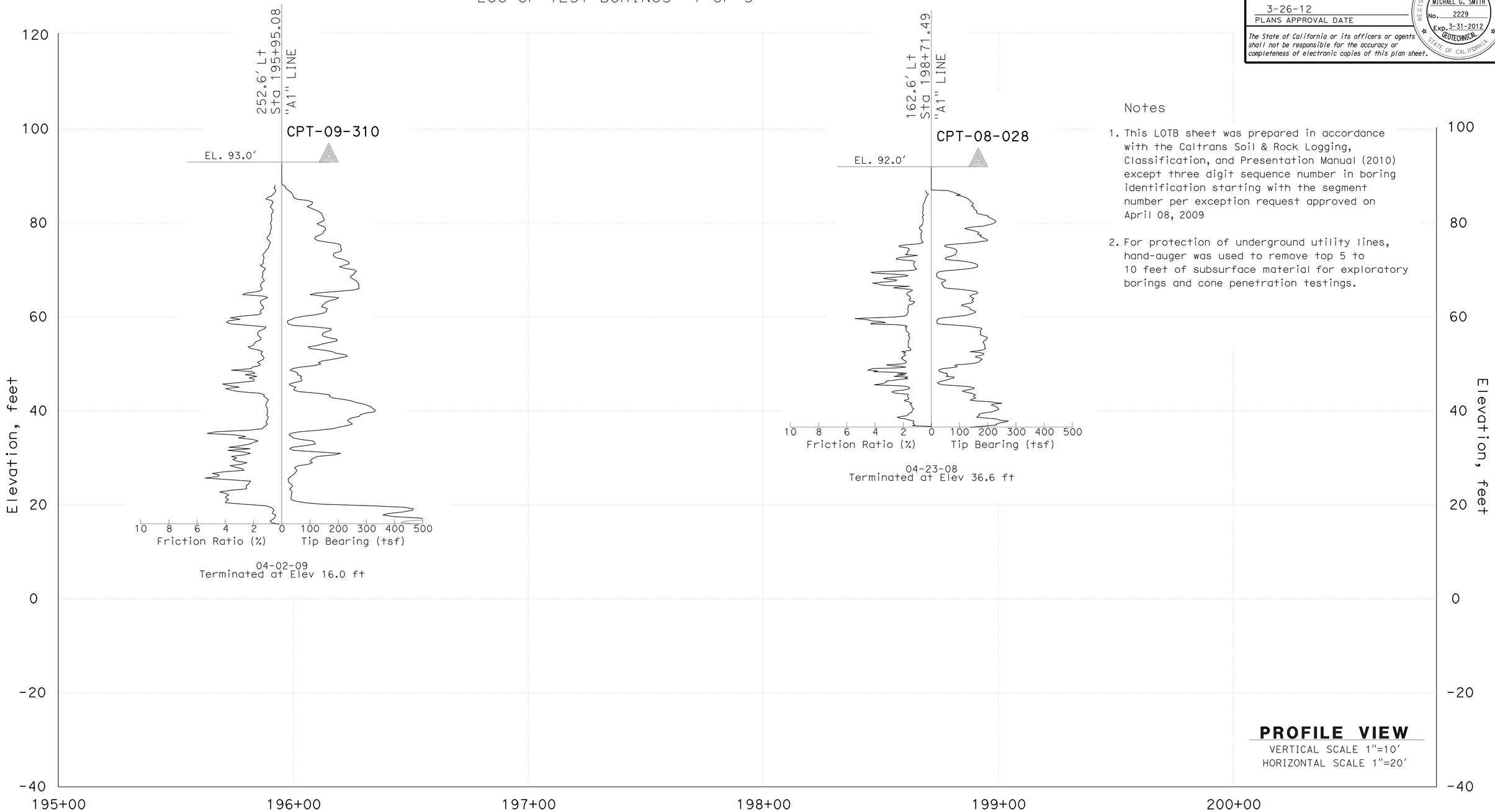

Notes

1. This LOTB sheet was prepared in accordance with the Caltrans Soil & Rock Logging, Classification, and Presentation Manual (2010) except three digit sequence number in boring identification starting with the segment number per exception request approved on April 08, 2009

2. For protection of underground utility lines, hand-auger was used to remove top 5 to 10 feet of subsurface material for exploratory borings and cone penetration testings.

ENGINEERING SERVICES	MATERIALS AND GEOTECHNICAL SERVICES	STATE OF CALIFORNIA DEPARTMENT OF TRANSPORTATION	DIVISION OF ENGINEERING SERVICES STRUCTURE DESIGN DESIGN BRANCH 1	BRIDGE NO. X / POST MILE 3.64	SOUND WALL NO. 203
FUNCTIONAL SUPERVISOR NAME: M. SMITH	DRAWN BY: P.QUACH / CHECKED BY: D.ORRIS	FIELD INVESTIGATION BY: P.MCDONALD			LOG OF TEST BORINGS 2 OF 5

OGS CIVIL LOG OF TEST BORINGS SHEET

ORIGINAL SCALE IN INCHES FOR REDUCED PLANS 0 1 2 3

UNIT: 3576
PROJECT NUMBER & PHASE: 07000018331 CONTRACT NO.: 07-215934

DISREGARD PRINTS BEARING EARLIER REVISION DATES → REVISION DATES 06/17/11 SHEET 29 OF 32

FILE => sw203-z-1tb02.dgn

USERNAME => s124936 DATE PLOTTED => 28-MAR-2012 TIME PLOTTED => 12:29

DIST	COUNTY	ROUTE	POST MILES TOTAL PROJECT	SHEET No.	TOTAL SHEETS
07	LA	5	2.4/4.0	1286	1288

GEOTECHNICAL PROFESSIONAL — DATE 06/2011

3-26-12
PLANS APPROVAL DATE

REGISTERED PROFESSIONAL ENGINEER — MICHAEL G. SMITH — No. 2229 — Exp. 3-31-2012 — GEOTECHNICAL — STATE OF CALIFORNIA

The State of California or its officers or agents shall not be responsible for the accuracy or completeness of electronic copies of this plan sheet.

FOR PLAN VIEW, SEE
"LOG OF TEST BORINGS" 1 OF 5

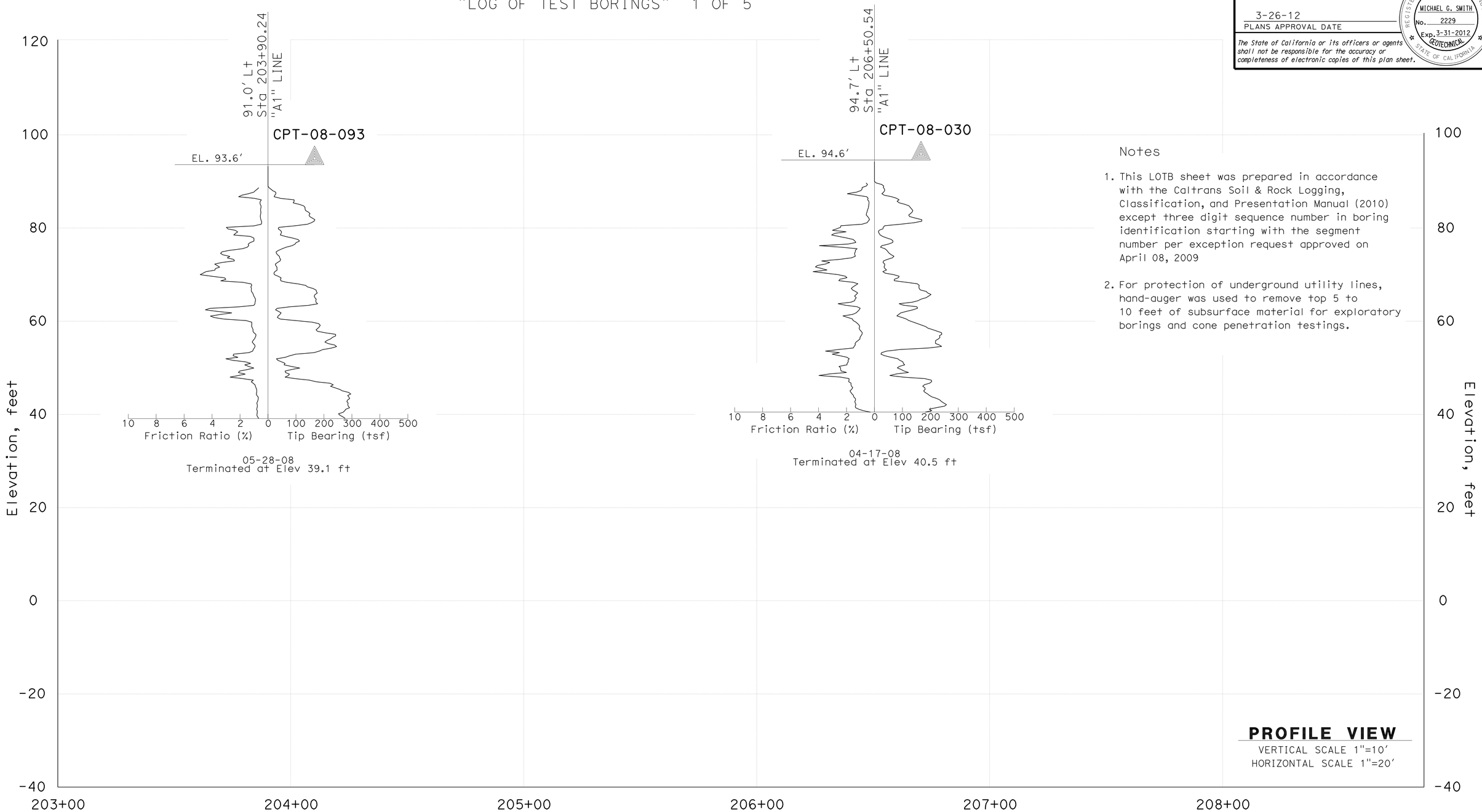

Notes

1. This LOTB sheet was prepared in accordance with the Caltrans Soil & Rock Logging, Classification, and Presentation Manual (2010) except three digit sequence number in boring identification starting with the segment number per exception request approved on April 08, 2009

2. For protection of underground utility lines, hand-auger was used to remove top 5 to 10 feet of subsurface material for exploratory borings and cone penetration testings.

ENGINEERING SERVICES	MATERIALS AND GEOTECHNICAL SERVICES	STATE OF CALIFORNIA DEPARTMENT OF TRANSPORTATION	DIVISION OF ENGINEERING SERVICES STRUCTURE DESIGN DESIGN BRANCH 1	BRIDGE NO. X / POST MILE 3.64	SOUND WALL NO. 203
FUNCTIONAL SUPERVISOR NAME: M. SMITH	DRAWN BY: P.QUACH / CHECKED BY: D.ORRIS	FIELD INVESTIGATION BY: P.MCDONALD			LOG OF TEST BORINGS 3 OF 5

OGS CIVIL LOG OF TEST BORINGS SHEET — ORIGINAL SCALE IN INCHES FOR REDUCED PLANS 0 1 2 3

UNIT: 3576
PROJECT NUMBER & PHASE: 07000018331 — CONTRACT NO.: 07-215934

DISREGARD PRINTS BEARING EARLIER REVISION DATES → REVISION DATES 06/17/11 — SHEET 30 OF 32

FILE => sw203-z-1tb03.dgn

USERNAME => s124496 DATE PLOTTED => 28-MAR-2012 TIME PLOTTED => 12:29

DIST	COUNTY	ROUTE	POST MILES TOTAL PROJECT	SHEET No.	TOTAL SHEETS
07	LA	5	2.4/4.0	1287	1288

GEOTECHNICAL PROFESSIONAL — DATE 06/2011

3-26-12
PLANS APPROVAL DATE

REGISTERED PROFESSIONAL ENGINEER — MICHAEL G. SMITH No. 2229 Exp. 3-31-2012 GEOTECHNICAL — STATE OF CALIFORNIA

The State of California or its officers or agents shall not be responsible for the accuracy or completeness of electronic copies of this plan sheet.

REFERENCE: CALTRANS SOIL & ROCK LOGGING, CLASSIFICATION, AND PRESENTATION MANUAL (2010)

CEMENTATION

Description	Criteria
Weak	Crumbles or breaks with handling or little finger pressure.
Moderate	Crumbles or breaks with considerable finger pressure.
Strong	Will not crumble or break with finger pressure.

BOREHOLE IDENTIFICATION

Symbol	Hole Type	Description
Size	A	Auger Boring (hollow or solid stem bucket)
Size	R RW RC P	Rotary drilled boring (conventional) Rotary drilled with self-casing wire-line Rotary core with continuously-sampled, self-casing wire-line Rotary percussion boring (air)
Size	R	Rotary drilled diamond core
Size	HD HA	Hand driven (1-inch soil tube) Hand Auger
●	D	Dynamic Cone Penetration Boring
▲	CPT	Cone Penetration Test (ASTM D 5778)
⬚	O	Other (note on LOTB)

Note: Size in inches.

CONSISTENCY OF COHESIVE SOILS

Description	Shear Strength (tsf)	Pocket Penetrometer Measurement, PP, (tsf)	Torvane Measurement, TV, (tsf)	Vane Shear Measurement, VS, (tsf)
Very Soft	Less than 0.12	Less than 0.25	Less than 0.12	Less than 0.12
Soft	0.12 - 0.25	0.25 - 0.5	0.12 - 0.25	0.12 - 0.25
Medium Stiff	0.25 - 0.5	0.5 - 1	0.25 - 0.5	0.25 - 0.5
Stiff	0.5 - 1	1 - 2	0.5 - 1	0.5 - 1
Very Stiff	1 - 2	2 - 4	1 - 2	1 - 2
Hard	Greater than 2	Greater than 4	Greater than 2	Greater than 2

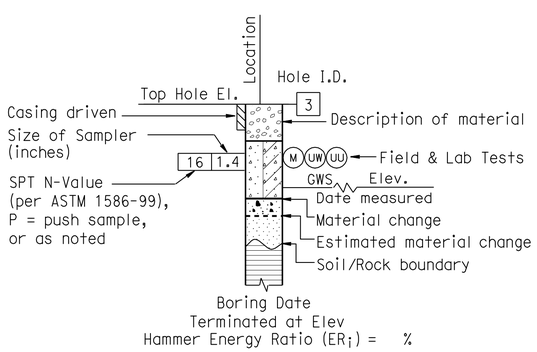

ROTARY BORING

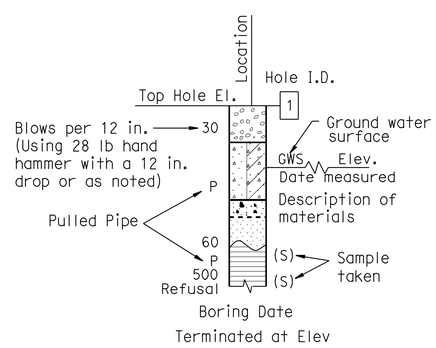

HAND BORING

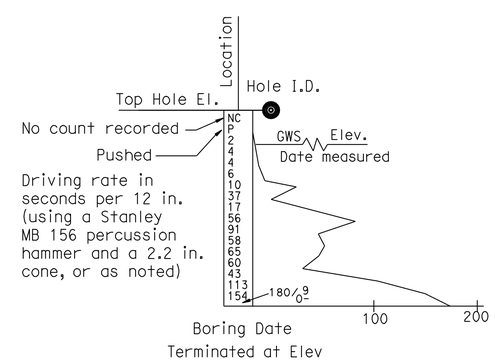

DYNAMIC CONE PENETRATION BORING

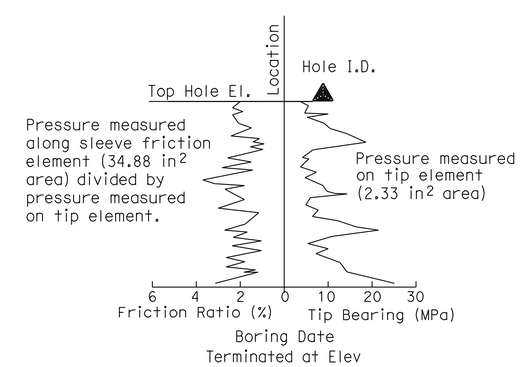

CONE PENETRATION TEST (CPT) BORING

ENGINEERING SERVICES	MATERIALS AND GEOTECHNICAL SERVICES	STATE OF CALIFORNIA DEPARTMENT OF TRANSPORTATION	DIVISION OF ENGINEERING SERVICES STRUCTURE DESIGN DESIGN BRANCH 1	BRIDGE NO. X / POST MILE 3.64	SOUND WALL NO. 203
FUNCTIONAL SUPERVISOR NAME: M. SMITH	DRAWN BY: P.QUACH CHECKED BY: D.ORRIS	FIELD INVESTIGATION BY: P.MCDONALD			LOG OF TEST BORINGS 4 OF 5

OGS CIVIL LOG OF TEST BORINGS SHEET — ORIGINAL SCALE IN INCHES FOR REDUCED PLANS 0 1 2 3

UNIT: 3576
PROJECT NUMBER & PHASE: 07000018331 — CONTRACT NO.: 07-215934

DISREGARD PRINTS BEARING EARLIER REVISION DATES → REVISION DATES 06/17/11 — SHEET 31 OF 32

FILE => sw203-z-ltb04.dgn

USERNAME => s124496 DATE PLOTTED => 28-MAR-2012 TIME PLOTTED => 12:29

REFERENCE: CALTRANS SOIL & ROCK LOGGING, CLASSIFICATION, AND PRESENTATION MANUAL (2010)

DIST	COUNTY	ROUTE	POST MILES TOTAL PROJECT	SHEET No.	TOTAL SHEETS
07	LA	5	2.4/4.0	1288	1288

GEOTECHNICAL PROFESSIONAL — 06/2011 DATE

3-26-12
PLANS APPROVAL DATE

REGISTERED PROFESSIONAL ENGINEER — MICHAEL G. SMITH No. 2229 Exp. 3-31-2012 GEOTECHNICAL — STATE OF CALIFORNIA

The State of California or its officers or agents shall not be responsible for the accuracy or completeness of electronic copies of this plan sheet.

GROUP SYMBOLS AND NAMES

Graphic/Symbol	Group Names
GW	Well-graded GRAVEL Well-graded GRAVEL with SAND
GP	Poorly-graded GRAVEL Poorly-graded GRAVEL with SAND
GW-GM	Well-graded GRAVEL with SILT Well-graded GRAVEL with SILT and SAND
GW-GC	Well-graded GRAVEL with CLAY (or SILTY CLAY) Well-graded GRAVEL with CLAY and SAND (or SILTY CLAY and SAND)
GP-GM	Poorly-graded GRAVEL with SILT Poorly-graded GRAVEL with SILT and SAND
GP-GC	Poorly-graded GRAVEL with CLAY (or SILTY CLAY) Poorly-graded GRAVEL with CLAY and SAND (or SILTY CLAY and SAND)
GM	SILTY GRAVEL SILTY GRAVEL with SAND
GC	CLAYEY GRAVEL CLAYEY GRAVEL with SAND
GC-GM	SILTY, CLAYEY GRAVEL SILTY, CLAYEY GRAVEL with SAND
SW	Well-graded SAND Well-graded SAND with GRAVEL
SP	Poorly-graded SAND Poorly-graded SAND with GRAVEL
SW-SM	Well-graded SAND with SILT Well-graded SAND with SILT and GRAVEL
SW-SC	Well-graded SAND with CLAY (or SILTY CLAY) Well-graded SAND with CLAY and GRAVEL (or SILTY CLAY and GRAVEL)
SP-SM	Poorly-graded SAND with SILT Poorly-graded SAND with SILT and GRAVEL
SP-SC	Poorly-graded SAND with CLAY (or SILTY CLAY) Poorly-graded SAND with CLAY and GRAVEL (or SILTY CLAY and GRAVEL)
SM	SILTY SAND SILTY SAND with GRAVEL
SC	CLAYEY SAND CLAYEY SAND with GRAVEL
SC-SM	SILTY, CLAYEY SAND SILTY, CLAYEY SAND with GRAVEL
PT	PEAT
	COBBLES COBBLES and BOULDERS BOULDERS

Graphic/Symbol	Group Names
CL	Lean CLAY Lean CLAY with SAND Lean CLAY with GRAVEL SANDY lean CLAY SANDY lean CLAY with GRAVEL GRAVELLY lean CLAY GRAVELLY lean CLAY with SAND
CL-ML	SILTY CLAY SILTY CLAY with SAND SILTY CLAY with GRAVEL SANDY SILTY CLAY SANDY SILTY CLAY with GRAVEL GRAVELLY SILTY CLAY GRAVELLY SILTY CLAY with SAND
ML	SILT SILT with SAND SILT with GRAVEL SANDY SILT SANDY SILT with GRAVEL GRAVELLY SILT GRAVELLY SILT with SAND
OL	ORGANIC lean CLAY ORGANIC lean CLAY with SAND ORGANIC lean CLAY with GRAVEL SANDY ORGANIC lean CLAY SANDY ORGANIC lean CLAY with GRAVEL GRAVELLY ORGANIC lean CLAY GRAVELLY ORGANIC lean CLAY with SAND
OL	ORGANIC SILT ORGANIC SILT with SAND ORGANIC SILT with GRAVEL SANDY ORGANIC SILT SANDY ORGANIC SILT with GRAVEL GRAVELLY ORGANIC SILT GRAVELLY ORGANIC SILT with SAND
CH	Fat CLAY Fat CLAY with SAND Fat CLAY with GRAVEL SANDY fat CLAY SANDY fat CLAY with GRAVEL GRAVELLY fat CLAY GRAVELLY fat CLAY with SAND
MH	Elastic SILT Elastic SILT with SAND Elastic SILT with GRAVEL SANDY elastic SILT SANDY elastic SILT with GRAVEL GRAVELLY elastic SILT GRAVELLY elastic SILT with SAND
OH	ORGANIC fat CLAY ORGANIC fat CLAY with SAND ORGANIC fat CLAY with GRAVEL SANDY ORGANIC fat CLAY SANDY ORGANIC fat CLAY with GRAVEL GRAVELLY ORGANIC fat CLAY GRAVELLY ORGANIC fat CLAY with SAND
OH	ORGANIC elastic SILT ORGANIC elastic SILT with SAND ORGANIC elastic SILT with GRAVEL SANDY ORGANIC elastic SILT SANDY ORGANIC elastic SILT with GRAVEL GRAVELLY ORGANIC elastic SILT GRAVELLY ORGANIC elastic SILT with SAND
OL/OH	ORGANIC SOIL ORGANIC SOIL with SAND ORGANIC SOIL with GRAVEL SANDY ORGANIC SOIL SANDY ORGANIC SOIL with GRAVEL GRAVELLY ORGANIC SOIL GRAVELLY ORGANIC SOIL with SAND

FIELD AND LABORATORY TESTING

- (C) Consolidation (ASTM D 2435)
- (CL) Collapse Potential (ASTM D 5333)
- (CP) Compaction Curve (CTM 216)
- (CR) Corrosivity Testing (CTM 643, CTM 422, CTM 417)
- (CU) Consolidated Undrained Triaxial (ASTM D 4767)
- (DS) Direct Shear (ASTM D 3080)
- (EI) Expansion Index (ASTM D 4829)
- (M) Moisture Content (ASTM D 2216)
- (OC) Organic Content-% (ASTM D 2974)
- (P) Permeability (CTM 220)
- (PA) Particle Size Analysis (ASTM D 422)
- (PI) Plasticity Index (AASHTO T 90) Liquid Limit (AASHTO T 89)
- (PL) Point Load Index (ASTM D 5731)
- (PM) Pressure Meter
- (R) R-Value (CTM 301)
- (SE) Sand Equivalent (CTM 217)
- (SG) Specific Gravity (AASHTO T 100)
- (SL) Shrinkage Limit (ASTM D 427)
- (SW) Swell Potential (ASTM D 4546)
- (UC) Unconfined Compression-Soil (ASTM D 2166) Unconfined Compression-Rock (ASTM D 2938)
- (UU) Unconsolidated Undrained Triaxial (ASTM D 2850)
- (UW) Unit Weight (ASTM D 4767)

APPARENT DENSITY OF COHESIONLESS SOILS

Description	SPT N_{60} (Blows / 12 in.)
Very Loose	0 - 5
Loose	5 - 10
Medium Dense	10 - 30
Dense	30 - 50
Very Dense	Greater than 50

MOISTURE

Description	Criteria
Dry	No discernable moisture
Moist	Moisture present, but no free water
Wet	Visible free water

PERCENT OR PROPORTION OF SOILS

Description	Criteria
Trace	Particles are present but estimated to be less than 5%
Few	5% - 10%
Little	15% - 25%
Some	30% - 45%
Mostly	50% - 100%

PARTICLE SIZE

Description		Size (in.)
Boulder		Greater than 12
Cobble		3 - 12
Gravel	Coarse	3/4 - 3
	Fine	1/5 - 3/4
Sand	Coarse	1/16 - 1/5
	Medium	1/64 - 1/16
	Fine	1/300 - 1/64
Silt and Clay		Less than 1/300

ENGINEERING SERVICES — MATERIALS AND GEOTECHNICAL SERVICES

FUNCTIONAL SUPERVISOR
NAME: M. SMITH
DRAWN BY: P.QUACH
CHECKED BY: D.ORRIS
FIELD INVESTIGATION BY: P.MCDONALD

STATE OF CALIFORNIA DEPARTMENT OF TRANSPORTATION

DIVISION OF ENGINEERING SERVICES STRUCTURE DESIGN — DESIGN BRANCH 1

BRIDGE NO. X
POST MILE 3.64

SOUND WALL NO. 203
LOG OF TEST BORINGS 5 OF 5

OGS CIVIL LOG OF TEST BORINGS SHEET

ORIGINAL SCALE IN INCHES FOR REDUCED PLANS 0 1 2 3

UNIT: 3576
PROJECT NUMBER & PHASE: 07000018331
CONTRACT NO.: 07-215934

DISREGARD PRINTS BEARING EARLIER REVISION DATES — REVISION DATES 06/17/11

SHEET 32 OF 32

FILE => sw203-z-ltb05.dgn

USERNAME => s124496 DATE PLOTTED => 28-MAR-2012 TIME PLOTTED => 12:29