Dist	COUNTY	ROUTE	POST MILES TOTAL PROJECT	SHEET No.	TOTAL SHEETS
11	SD	5	R29.1/R30.5	116	1012

REGISTERED CIVIL ENGINEER DATE 05-23-14

PLANS APPROVAL DATE 07-21-14

REGISTERED PROFESSIONAL ENGINEER MICHAEL S. ROSS No. C66637 Exp. 06/30/16 CIVIL STATE OF CALIFORNIA

THE STATE OF CALIFORNIA OR ITS OFFICERS OR AGENTS SHALL NOT BE RESPONSIBLE FOR THE ACCURACY OR COMPLETENESS OF SCANNED COPIES OF THIS PLAN SHEET.

CITY OF SAN DIEGO
525 B STREET
SUITE 7
SAN DIEGO, CA 92101

KIMLEY-HORN AND ASSOCIATES, INC.
401 B STREET, SUITE 600
SAN DIEGO, CA 92101

NOTES:

1. FOR ACCURATE RIGHT OF WAY DATA, CONTACT RIGHT OF WAY ENGINEERING AT THE DISTRICT OFFICE.
2. FOR SLOPE RATIO INFORMATION SEE CONTOUR GRADING SHEETS
3. WHEN A TEMPORARY WATER POLLUTION CONTROL MEASURE WAS PLACED ON A PREVIOUS STAGE AND IS REPEATED ON ANOTHER SHEET. IT IS ASSUMED TO BE AN EXISTING CONDITION.
4. NEW INLETS SHALL REMAIN COVERED TO PREVENT WATER ENTRY UNTIL THE DOWNSTREAM DISCHARGE HAS BEEN COMPLETED. TEMPORARY DRAINAGE INLET PROTECTION SHALL BE INSTALLED SOON AS THE INLETS ARE UNCOVERED TO ACCEPT STORMWATER FLOW.

LEGEND:

- DIRECTION OF FLOW
- TSBB — TEMPORARY STRAW BALE BARRIER (LENGTH OF EACH BARRIER = 3 LF) 1
- TEMPORARY HYDRAULIC MULCH (BONDED FIBER MATRIX)
- 3B — TEMPORARY DRAINAGE INLET PROTECTION (TYPE 3B)
- 4A — TEMPORARY DRAINAGE INLET PROTECTION (TYPE 4A)
- 4B — TEMPORARY DRAINAGE INLET PROTECTION (TYPE 4B)
- 5 — TEMPORARY DRAINAGE INLET PROTECTION (TYPE 5)
- 6B — TEMPORARY DRAINAGE INLET PROTECTION (TYPE 6B)

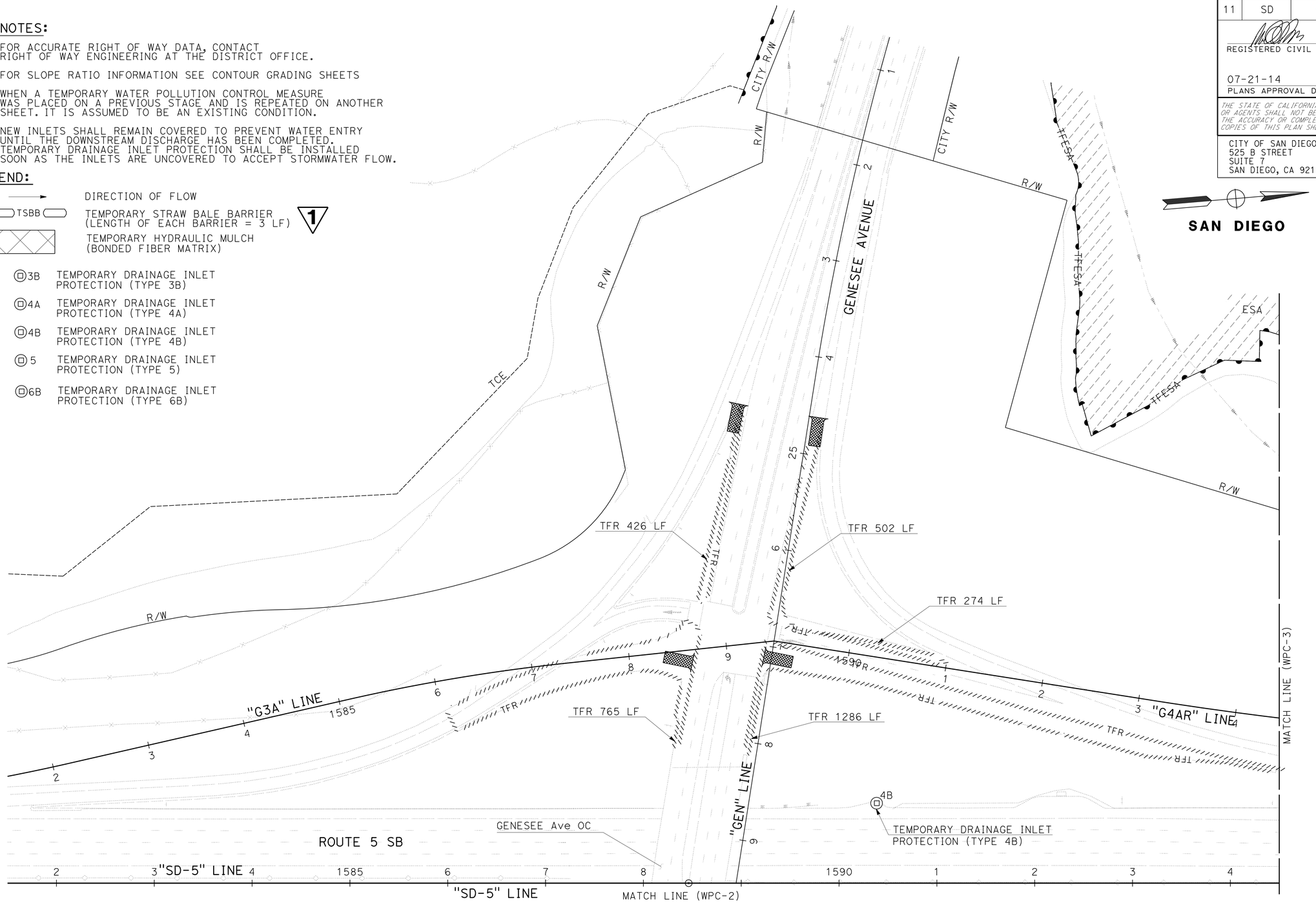

1 REPLACED PER ADDENDUM No. 1 DATED SEPTEMBER 25, 2014

APPROVED FOR TEMPORARY WATER POLLUTION CONTROL WORK ONLY

TEMPORARY WATER POLLUTION CONTROL

STAGE 1

SCALE 1"=50'

WPC-1

STATE OF CALIFORNIA - DEPARTMENT OF TRANSPORTATION

Caltrans

CONSULTANT FUNCTIONAL SUPERVISOR: MICHAEL S. ROSS

CALCULATED-DESIGNED BY: WERNER PIETERS

CHECKED BY: MICHAEL S. ROSS

REVISED BY / DATE REVISED

LAST REVISION 04-10-14

DATE PLOTTED => 22-SEP-2014
TIME PLOTTED => 13:39

Dist	COUNTY	ROUTE	POST MILES TOTAL PROJECT	SHEET No.	TOTAL SHEETS
11	SD	5	R29.1/R30.5	589	1012

REGISTERED CIVIL ENGINEER 05-23-14 DATE

07-21-14
PLANS APPROVAL DATE

REGISTERED PROFESSIONAL ENGINEER MICHAEL S. ROSS No. C66637 Exp. 06/30/16 CIVIL STATE OF CALIFORNIA

THE STATE OF CALIFORNIA OR ITS OFFICERS OR AGENTS SHALL NOT BE RESPONSIBLE FOR THE ACCURACY OR COMPLETENESS OF SCANNED COPIES OF THIS PLAN SHEET.

CITY OF SAN DIEGO
525 B STREET
SUITE 7
SAN DIEGO, CA 92101

KIMLEY-HORN AND ASSOCIATES, INC.
401 B STREET, SUITE 600
SAN DIEGO, CA 92101

SUMMARY OF RETAINING WALL QUANTITIES

1

RW No.	STRUCTURAL CONCRETE, RETAINING WALL *1	BAR Reinf STEEL (RETAINING WALL) *1	STRUCTURE EXCAVATION (RETAINING WALL) *1	STRUCTURE BACKFILL (RETAINING WALL) *1	PERVIOUS BACKFILL MATERIAL (RETAINING WALL)	ARCHITECTURAL TREATMENT (RANDOM FLUTE) *1	PIPE HAND-RAILING (TYPE 1)	Conc BARRIER (TYPE 26A Mod)	CABLE RAILING *1 *2	GEOSYNTHETIC REINFORCED EMBANKMENT	SHOTCRETE FACING (TYPE 1)	SHOTCRETE FACING (TYPE 2)
	CY	LB	CY	CY	CY	SQFT	LF	LF	LF	SQFT	SQFT	SQFT
5	75	6570	282	218	9.9		83	86				
12	225	19,240	616	525	12.9	642	360	363				
13									370	8,755	8,755	
14									490	10,080	10,080	
15									1793	44,550		44,550
TOTAL	300	25,810	898	743	22.8	642	443	449	2653	63,385	18,835	44,550

*1 FOR ADDITIONAL QUANTITIES, SEE STRUCTURE PLANS.
*2 FOR ADDITIONAL QUANTITIES, SEE DRAINAGE QUANTITIES.

1 REPLACED PER ADDENDUM No. 1 DATED SEPTEMBER 25, 2014

SUMMARY OF QUANTITIES
Q-12

STATE OF CALIFORNIA - DEPARTMENT OF TRANSPORTATION
Caltrans
CONSULTANT FUNCTIONAL SUPERVISOR: MICHAEL S. ROSS
CALCULATED-DESIGNED BY: DAVID HICKS
CHECKED BY: MICHAEL S. ROSS
REVISED BY
DATE REVISED

LAST REVISION 07-11-14
DATE PLOTTED => 22-SEP-2014
TIME PLOTTED => 13:39

Dist	COUNTY	ROUTE	POST MILES TOTAL PROJECT	SHEET No.	TOTAL SHEETS
11	SD	5	R29.1/R30.5	602	1012

Michael M. Fordham 05-23-14
REGISTERED CIVIL ENGINEER DATE

07-21-14
PLANS APPROVAL DATE

REGISTERED PROFESSIONAL ENGINEER Michael M. Fordham No. C61341 Exp. 6-30-15 CIVIL STATE OF CALIFORNIA

THE STATE OF CALIFORNIA OR ITS OFFICERS OR AGENTS SHALL NOT BE RESPONSIBLE FOR THE ACCURACY OR COMPLETENESS OF SCANNED COPIES OF THIS PLAN SHEET.

GENERAL NOTES

DESIGN OF REINFORCED SOIL STRUCTURE IS BASED ON THE FOLLOWING PARAMETERS:

SOIL PARAMETERS:	SOIL UNIT WEIGHT, γ_S=	121 pcf
	SOIL FRICTION ANGLE, ϕ=	33°
	SOIL COHESION, C =	120 psf
SEISMIC LOADING:	PGA =	0.45 g
	Kh =	0.15

GEOTECHNICAL PARAMETERS USED FOR DESIGN SHALL BE CONFIRMED BY GEOTECHNICAL ENGINEER PRIOR TO WALL CONSTRUCTION.

INTERNAL STABILITY OF WALLS:

MINIMUM FACTOR OF SAFETY ON GEOGRID STRENGTH =	1.5
MINIMUM FACTOR OF SAFETY ON GEOGRID PULLOUT =	1.5
PERCENT COVERAGE OF GEOGRID =	100%

EXTERNAL STABILITY:

MINIMUM FACTOR OF SAFETY AGAINST BASE SLIDING =	1.5
MINIMUM FACTOR OF SAFETY AGAINST OVERTURNING =	2.0
MINIMUM FACTOR OF SAFETY AGAINST SOIL BEARING OVERSTRESS =	2.0
BACKFILL SLOPE =	AS SHOWN ON SITE PLAN

GLOBAL STABILITY (CONFIRMED BY GEOTECHNICAL ENGINEER):

MINIMUM FACTOR OF SAFETY AGAINST STATIC GLOBAL STABILITY =	1.5
MINIMUM FACTOR OF SAFETY AGAINST SEISMIC GLOBAL STABILITY =	1.1

1

REINFORCED CONCRETE / SHOTCRETE:	fy = 60 ksi f'c = 3.0 ksi n = 8
STRUCTURAL STEEL:	BEARING PLATES: ASTM A36, fy = 36 ksi HEADED STUDS: ASTM A449 TYPE 1, fu = 120 ksi
ANCHOR BAR:	ASTM A615 OR A706, GRADE 60 (EPOXY COATED)
ANCHOR CONCRETE:	f'c = 3.0 ksi

INDEX TO RETAINING WALL PLANS

SHEET NUMBER	DESCRIPTION
1	RETAINING WALL GENERAL PLAN
2	RETAINING WALL INDEX TO PLANS
3	RETAINING WALL FOUNDATION PLAN
4	RETAINING WALL STRUCTURE ELEVATION
5	RETAINING WALL DETAILS No. 1
6	RETAINING WALL DETAILS No. 2
7	RETAINING WALL DETAILS No. 3
1 7A	RETAINING WALL DETAILS NO. 4
7B	RETAINING WALL ARCHITECTURAL DETAILS
8	RETAINING WALL LOG OF TEST BORINGS

STANDARD PLANS DATED JUNE 2010

	A10A	ABBREVIATIONS (SHEET 1 OF 2)
RSP	A10B	ABBREVIATIONS (SHEET 2 OF 2)
	A10C	LINES AND SYMBOLS (SHEET 1 OF 3)
	A10D	LINES AND SYMBOLS (SHEET 2 OF 3)
	A10E	LINES AND SYMBOLS (SHEET 3 OF 3)
1	B0-3	BRIDGE DETAILS
	B3-6	RETAINING WALL DETAILS No. 2
RSP	B11-47	CABLE RAILING

PLAN SYMBOLS

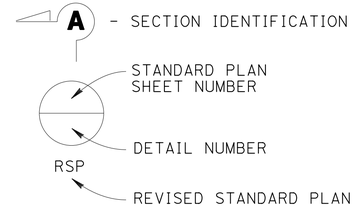

LEGEND

GRE	GEOSYNTHETIC REINFORCED EMBANKMENT

1 **REPLACED PER ADDENDUM No. 1 DATED SEPTEMBER 25, 2014**

RETAINING WALL INDEX TO PLANS
(GRE WALL) **("RW13")**

APPROVED FOR RETAINING WALL WORK ONLY

SCALE AS SHOWN

R3-2

REVISED BY | DATE REVISED
MIKE FORDHAM
CALCULATED-DESIGNED BY | CHECKED BY
FUNCTIONAL SUPERVISOR
BRIAN HINMAN

STATE OF CALIFORNIA - DEPARTMENT OF TRANSPORTATION
Caltrans ENGINEERING SERVICES

LAST REVISION 07-12-14 | DATE PLOTTED => 22-SEP-2014 | TIME PLOTTED => 13:39

Dist	COUNTY	ROUTE	POST MILES TOTAL PROJECT	SHEET No.	TOTAL SHEETS
11	SD	5	R29.1/R30.5	604	1012

REGISTERED CIVIL ENGINEER 05-23-14 DATE

07-21-14
PLANS APPROVAL DATE

REGISTERED PROFESSIONAL ENGINEER Michael M. Fordham No. C61341 Exp. 6-30-15 CIVIL STATE OF CALIFORNIA

THE STATE OF CALIFORNIA OR ITS OFFICERS OR AGENTS SHALL NOT BE RESPONSIBLE FOR THE ACCURACY OR COMPLETENESS OF SCANNED COPIES OF THIS PLAN SHEET.

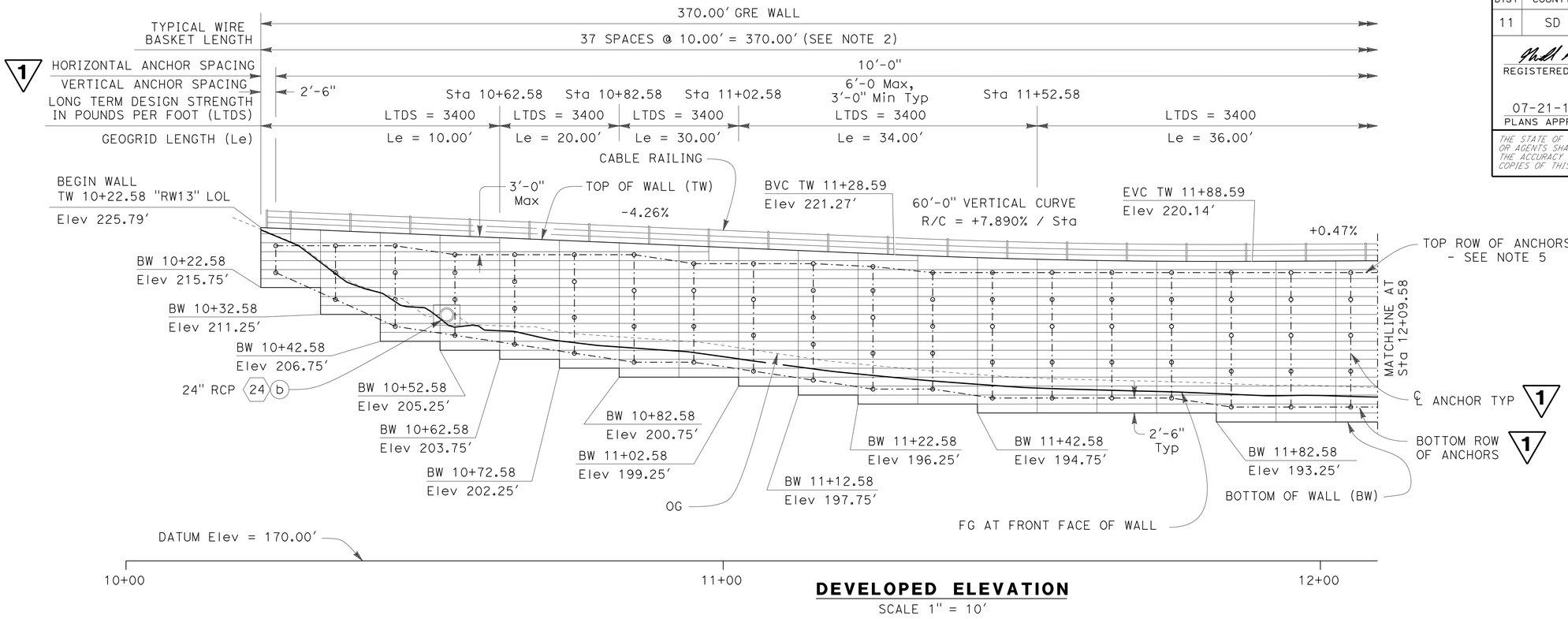

DEVELOPED ELEVATION
SCALE 1" = 10'

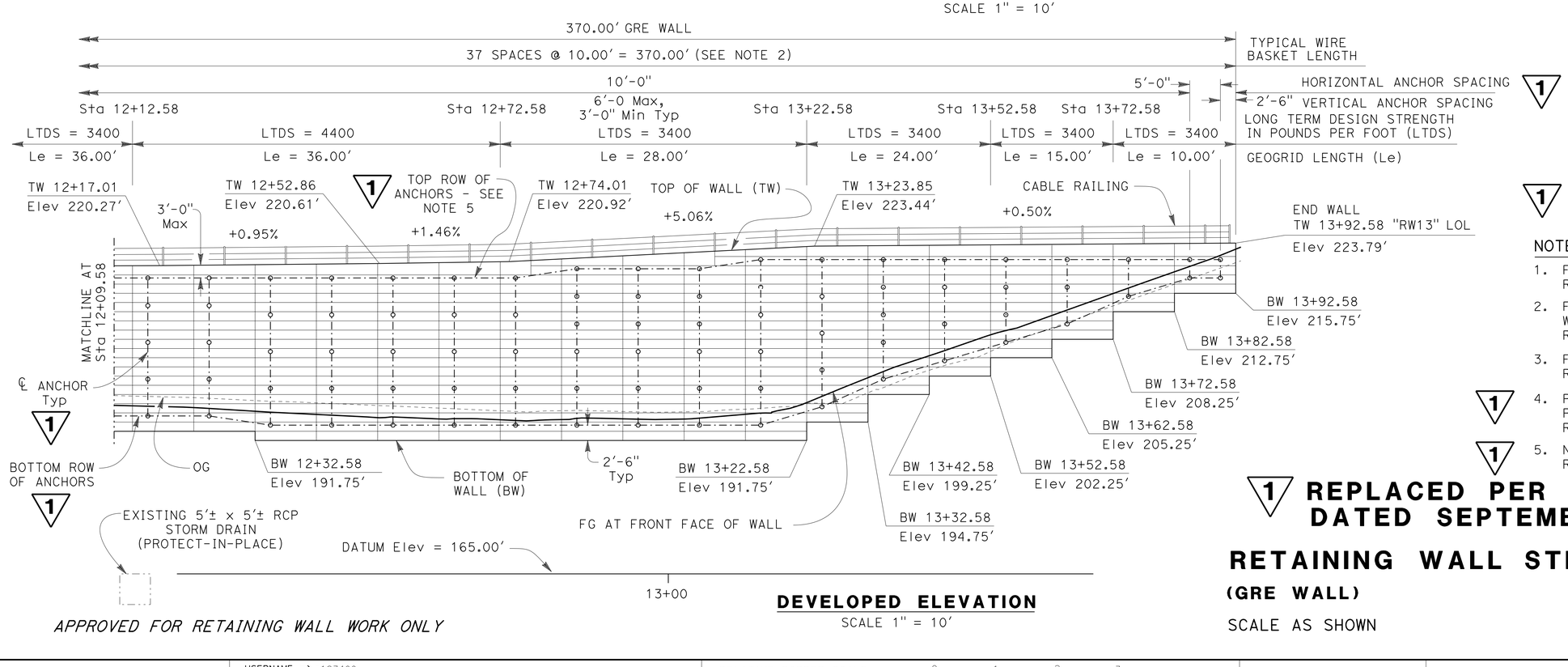

DEVELOPED ELEVATION
SCALE 1" = 10'

APPROVED FOR RETAINING WALL WORK ONLY

LEGEND:

∘ - INDICATES ANCHOR ASSEMBLY

NOTES:

1. FOR BASKET VERTICAL SPACING, SEE RETAINING WALL DETAILS NO. 1 SHEET.
2. FOR TOP ROWS OF WIRE BASKET DETAILS, SEE WIRE BASKET INSTALLATION DETAIL ON RETAINING WALL DETAILS NO. 3 SHEET.
3. FOR UTILITY OPENING DETAILS, SEE RETAINING WALL DETAILS NO. 3 SHEET.
4. PLACE WEAKENED PLANES AT 20'-0" Max PER WEAKENED PLANE DETAIL ON RETAINING WALL DETAILS NO. 4 SHEET.
5. NO ANCHORS ALLOWED IN THE FIRST TOP ROW OF WIRE BASKETS.

REPLACED PER ADDENDUM No. 1 DATED SEPTEMBER 25, 2014

RETAINING WALL STRUCTURE ELEVATION

(GRE WALL) **("RW13")**

SCALE AS SHOWN

R3-4

STATE OF CALIFORNIA - DEPARTMENT OF TRANSPORTATION
Caltrans® ENGINEERING SERVICES

FUNCTIONAL SUPERVISOR: BRIAN HINMAN
CALCULATED-DESIGNED BY: MIKE FORDHAM
CHECKED BY
REVISED BY
DATE REVISED

LAST REVISION 07-12-14
DATE PLOTTED => 22-SEP-2014
TIME PLOTTED => 13:39

Dist	COUNTY	ROUTE	POST MILES TOTAL PROJECT	SHEET No.	TOTAL SHEETS
11	SD	5	R29.1/R30.5	605	1012

REGISTERED CIVIL ENGINEER 05-23-14 DATE

07-21-14
PLANS APPROVAL DATE

REGISTERED PROFESSIONAL ENGINEER Michael M. Fordham No. C61341 Exp. 6-30-15 CIVIL STATE OF CALIFORNIA

THE STATE OF CALIFORNIA OR ITS OFFICERS OR AGENTS SHALL NOT BE RESPONSIBLE FOR THE ACCURACY OR COMPLETENESS OF SCANNED COPIES OF THIS PLAN SHEET.

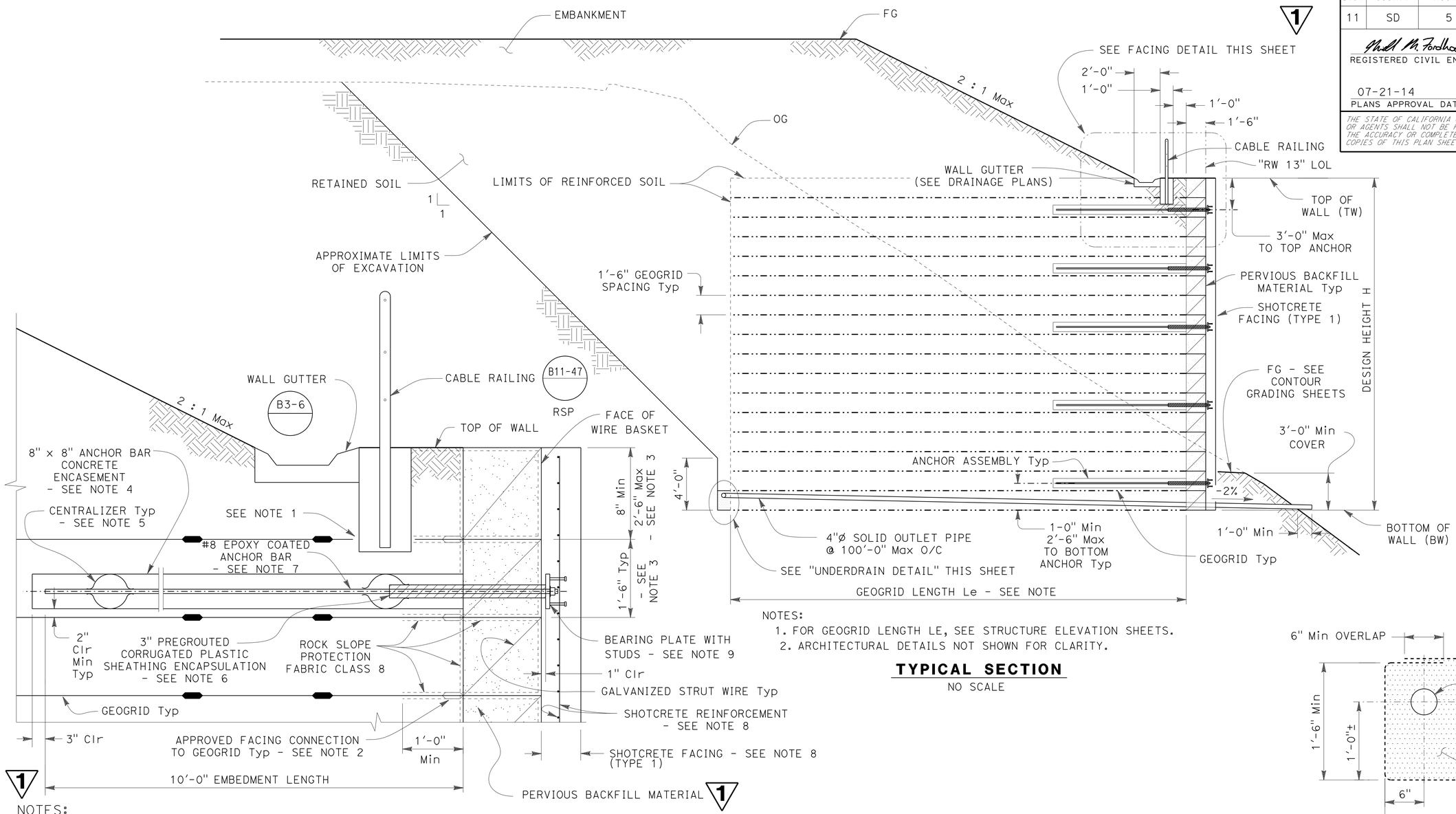

NOTES:
1. FOR GEOGRID LENGTH LE, SEE STRUCTURE ELEVATION SHEETS.
2. ARCHITECTURAL DETAILS NOT SHOWN FOR CLARITY.

TYPICAL SECTION
NO SCALE

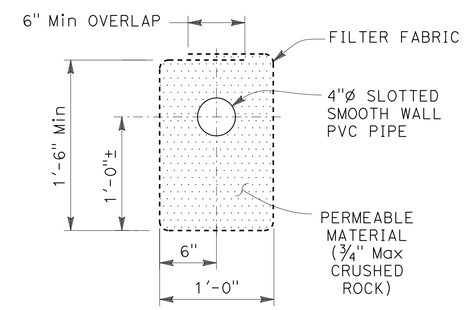

UNDERDRAIN DETAIL
SCALE 1½" = 1'

NOTES:

1. WHERE RAILING POST FOUNDATIONS INTERFERE WITH GEOGRIDS, PRECUT AFFECTED LAYER OF REINFORCEMENT. THE PRECUT DIMENSIONS MUST NOT EXCEED RAILING POST FOUNDATION DIMENSIONS BY MORE THAN 1'-0". PROVIDE 2" CLR MIN BETWEEN RAILING POST FOUNDATION AND ANCHOR CONCRETE.
2. CONNECTION SHALL BE CORROSION RESISTANT.
3. FOR TOP ROWS OF WIRE BASKET DETAILS, SEE WIRE BASKET INSTALLATION DETAIL ON RETAINING WALL DETAILS NO. 3 SHEET.
4. CONCRETE USED TO ENCASE BARS MUST BE CURED PRIOR TO PLACING ANY EXTERNAL LOADS INCLUDING COMPACTION OF ADDITIONAL REINFORCEMENT LIFTS. ANCHOR CONCRETE ENCASEMENT MUST BE CAST-IN-PLACE OR PRECAST WITH A ROUGH TEXTURE FINISH.
5. CENTRALIZERS SHALL BE PLACED 1'-6" FROM THE BACK FACE OF WIRE BASKET AND 1'-6" FROM THE END OF THE ANCHOR BAR. CENTRALIZERS SHALL BE MADE FROM A PLASTIC MATERIAL AND ATTACHED TO THE BAR IN SUCH A MANNER THAT SUPPORTS THE BAR IN THE CENTER OF THE ENCASEMENT AND DOES NOT IMPEDE CONCRETE FLOW.
6. EMBED BAR ENCAPSULATION 1" INTO SHOTCRETE FACING.
7. FOR HORIZONTAL AND VERTICAL SPACING OF ANCHORS, SEE RETAINING WALL STRUCTURE ELEVATION SHEETS.
8. FOR SHOTCRETE REINFORCEMENT AND SHOTCRETE FACING THICKNESS, SEE "RETAINING WALL DETAILS No. 4" SHEET. FOR ARCHITECTURAL DETAILS, SEE "RETAINING WALL ARCHITECTURAL DETAILS" SHEET.
9. FOR BEARING PLATE AND STUD DETAILS, SEE "RETAINING WALL DETAILS No. 4" SHEET.

FACING DETAIL
SCALE 1" = 1'

1 **REPLACED PER ADDENDUM No. 1 DATED SEPTEMBER 25, 2014**

APPROVED FOR RETAINING WALL WORK ONLY

RETAINING WALL DETAILS No. 1
(GRE WALL) **("RW13")**

SCALE AS SHOWN

R3-5

STATE OF CALIFORNIA - DEPARTMENT OF TRANSPORTATION
Caltrans® ENGINEERING SERVICES

FUNCTIONAL SUPERVISOR: BRIAN HINMAN
CALCULATED-DESIGNED BY: MIKE FORDHAM
CHECKED BY
REVISED BY
DATE REVISED

LAST REVISION 07-12-14
DATE PLOTTED => 22-SEP-2014
TIME PLOTTED => 13:39

Dist	COUNTY	ROUTE	POST MILES TOTAL PROJECT	SHEET No.	TOTAL SHEETS
11	SD	5	R29.1/R30.5	606	1012

Michael M. Fordham 05-23-14
REGISTERED CIVIL ENGINEER DATE

07-21-14
PLANS APPROVAL DATE

REGISTERED PROFESSIONAL ENGINEER
Michael M. Fordham
No. C61341
Exp. 6-30-15
CIVIL
STATE OF CALIFORNIA

THE STATE OF CALIFORNIA OR ITS OFFICERS OR AGENTS SHALL NOT BE RESPONSIBLE FOR THE ACCURACY OR COMPLETENESS OF SCANNED COPIES OF THIS PLAN SHEET.

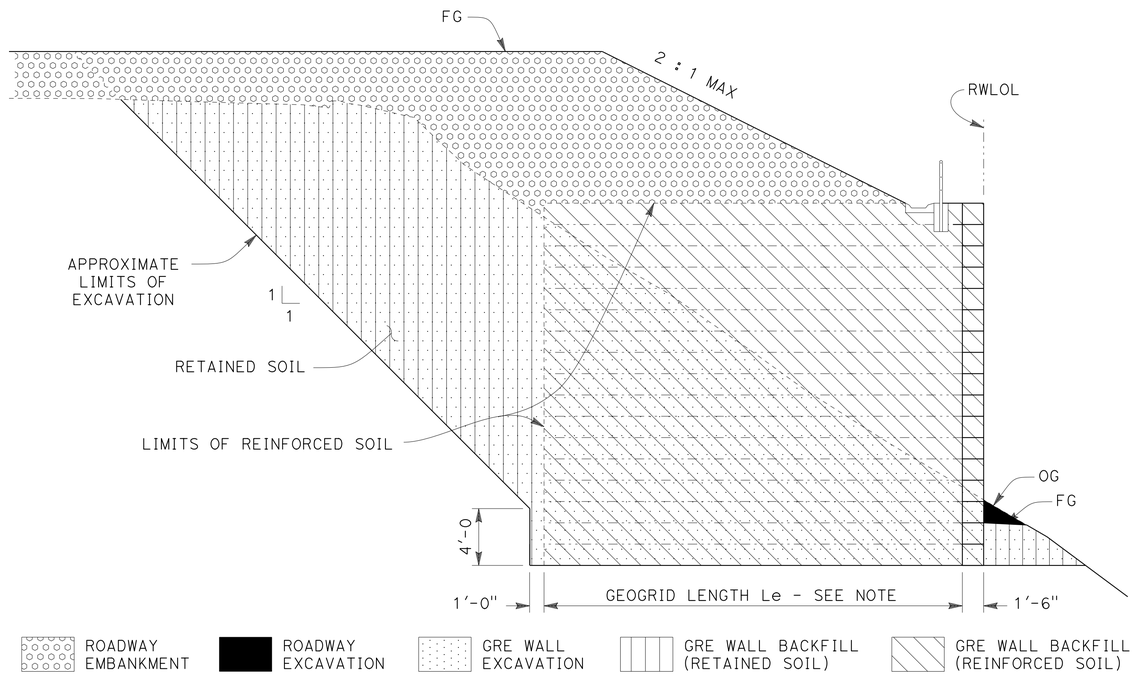

1

NOTES:

1. FOR GEOGRID LENGTH Le SEE STRUCTURE ELEVATION SHEETS.
2. SHOTCRETE FACING AND ANCHOR ASSEMBLIES NOT SHOWN FOR CLARITY.

LIMITS OF PAYMENT FOR EXCAVATION AND BACKFILL - IN FILL AND CUT

NO SCALE

1 **REPLACED PER ADDENDUM No. 1 DATED SEPTEMBER 25, 2014**

RETAINING WALL DETAILS No. 2

("RW13")

(GRE WALL)

R3-6

APPROVED FOR RETAINING WALL WORK ONLY

SCALE AS SHOWN

STATE OF CALIFORNIA - DEPARTMENT OF TRANSPORTATION
Caltrans® ENGINEERING SERVICES

FUNCTIONAL SUPERVISOR: BRIAN HINMAN
CALCULATED-DESIGNED BY: MIKE FORDHAM
CHECKED BY
REVISED BY
DATE REVISED

LAST REVISION 07-12-14
DATE PLOTTED => 22-SEP-2014
TIME PLOTTED => 13:39

Dist	COUNTY	ROUTE	POST MILES TOTAL PROJECT	SHEET No.	TOTAL SHEETS
11	SD	5	R29.1/R30.5	607	1012

Michael M. Fordham 05-23-14
REGISTERED CIVIL ENGINEER DATE

07-21-14
PLANS APPROVAL DATE

REGISTERED PROFESSIONAL ENGINEER Michael M. Fordham No. C61341 Exp. 6-30-15 CIVIL STATE OF CALIFORNIA

THE STATE OF CALIFORNIA OR ITS OFFICERS OR AGENTS SHALL NOT BE RESPONSIBLE FOR THE ACCURACY OR COMPLETENESS OF SCANNED COPIES OF THIS PLAN SHEET.

1 REPLACED PER ADDENDUM No. 1 DATED SEPTEMBER 25, 2014

RETAINING WALL QUANTITIES (GRE WALL)

WALL	LINE	STATION RANGE		LENGTH	GRE WALL	CABLE RAILING	SHOTCRETE FACING (TYPE 1)	REMARKS
		BEGIN	END	LF	SQ FT	LF	SQ FT	
13	"RW13"	10+22.58	13+92.58	370.0	8755.0	370.0	8755.0	

1

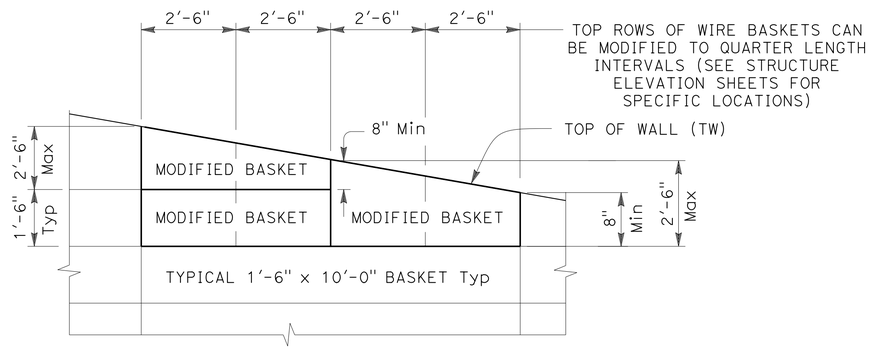

NOTE: TOP ROW OF WIRE BASKETS SHALL BE NO TALLER THAN 2'-6", AND NO SHORTER THAN 8".

WIRE BASKET INSTALLATION DETAIL

NO SCALE

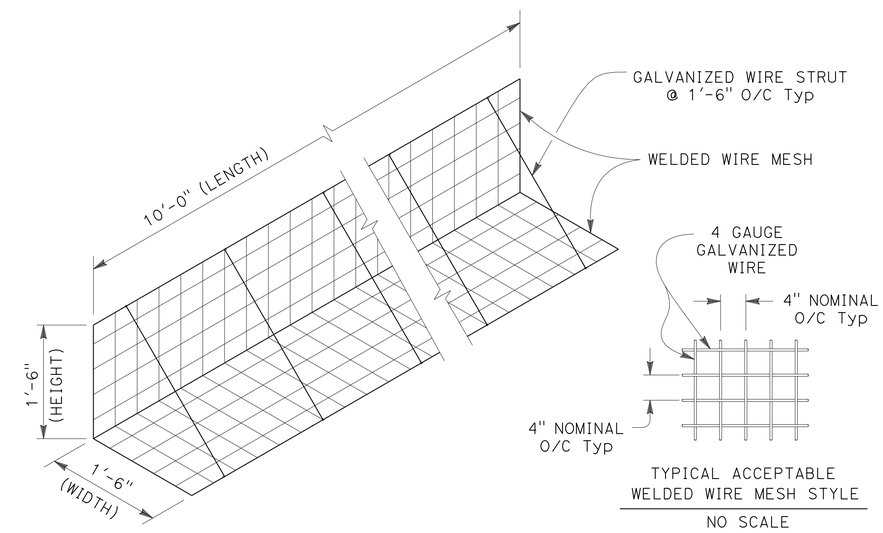

NO SCALE

TYPICAL WIRE BASKET DETAIL

SCALE 3/4" = 1'

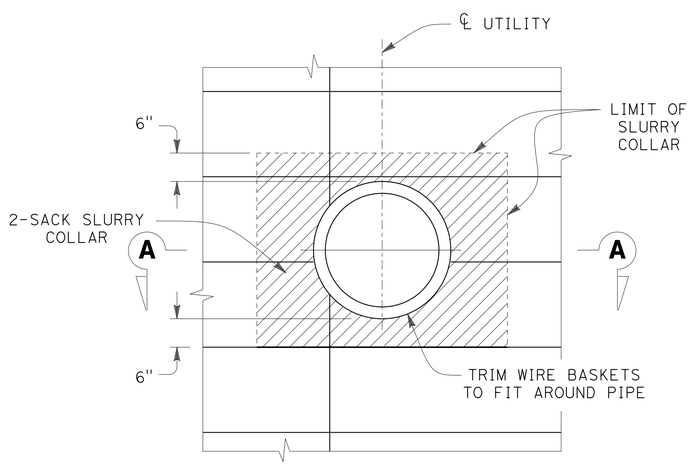

ELEVATION

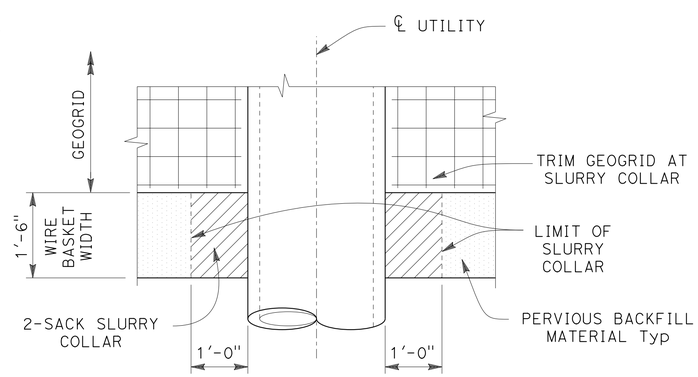

1 NOTE: SHOTCRETE FACING NOT SHOWN.

SECTION A-A

UTILITY OPENING DETAILS

SCALE 3/4" = 1'

APPROVED FOR RETAINING WALL WORK ONLY.

RETAINING WALL DETAILS No. 3
(GRE WALL) **("RW13")**

SCALE AS SHOWN

R3-7

STATE OF CALIFORNIA - DEPARTMENT OF TRANSPORTATION
Caltrans® ENGINEERING SERVICES

FUNCTIONAL SUPERVISOR: BRIAN HINMAN
CALCULATED-DESIGNED BY: MIKE FORDHAM
CHECKED BY
REVISED BY
DATE REVISED

LAST REVISION 07-12-14
DATE PLOTTED => 22-SEP-2014
TIME PLOTTED => 13:39

Dist	COUNTY	ROUTE	POST MILES TOTAL PROJECT	SHEET No.	TOTAL SHEETS
11	SD	5	R29.1/R30.5	607A	1012

Craig Shannon 9-10-14
REGISTERED CIVIL ENGINEER DATE

07-21-14
PLANS APPROVAL DATE

REGISTERED PROFESSIONAL ENGINEER Craig Shannon No. 66998 Exp. 9-30-16 CIVIL STATE OF CALIFORNIA

THE STATE OF CALIFORNIA OR ITS OFFICERS OR AGENTS SHALL NOT BE RESPONSIBLE FOR THE ACCURACY OR COMPLETENESS OF SCANNED COPIES OF THIS PLAN SHEET.

1 **ADDED PER ADDENDUM No. 1 DATED SEPTEMBER 25, 2014** 1

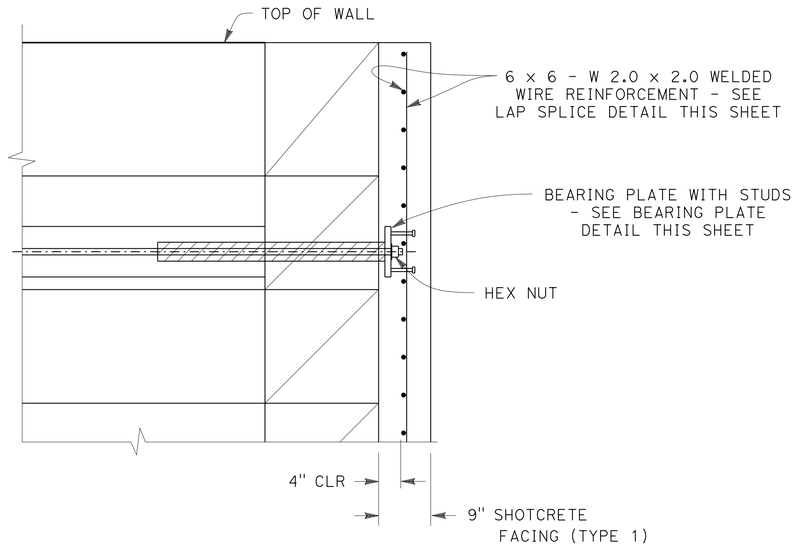

NOTES:

1. FOR ALL OTHER INFORMATION NOT SHOWN, SEE RETAINING WALL DETAILS NO. 1 SHEET.
2. FOR ARCHITECTURAL DETAILS, SEE "RETAINING WALL ARCHITECTURAL DETAILS" SHEET.

FACING REINFORCEMENT DETAIL
SCALE 1" = 1'

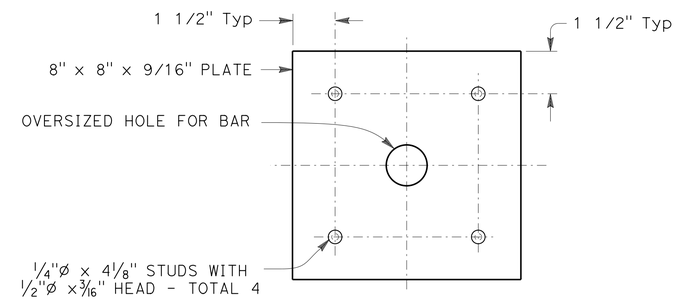

BEARING PLATE DETAIL
SCALE: 3" = 1'

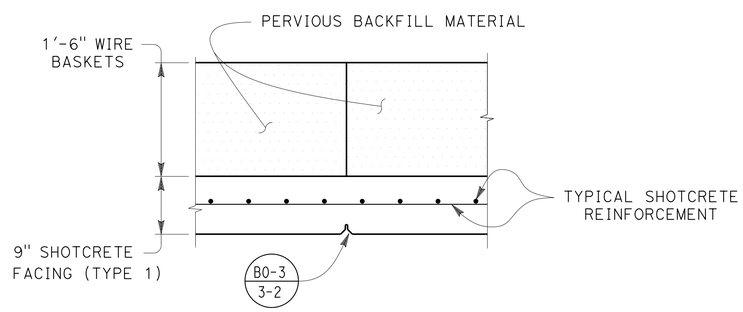

WEAKENED PLANE DETAIL
SCALE 1" = 1'

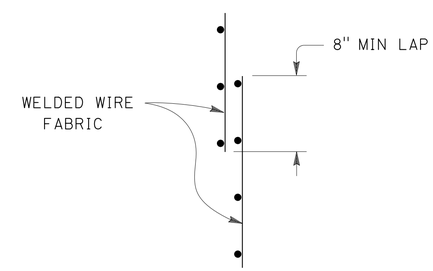

LAP SPLICE DETAIL
NO SCALE

APPROVED FOR RETAINING WALL WORK ONLY

RETAINING WALL DETAILS No. 4
(GRE WALL) **("RW13")**

SCALE AS SHOWN

R3-7A

STATE OF CALIFORNIA - DEPARTMENT OF TRANSPORTATION
Caltrans® ENGINEERING SERVICES

FUNCTIONAL SUPERVISOR: BRIAN HINMAN
CALCULATED-DESIGNED BY: MIKE FORDHAM
CHECKED BY
REVISED BY
DATE REVISED

LAST REVISION 07-12-14
DATE PLOTTED => 22-SEP-2014
TIME PLOTTED => 13:39

1 ADDED PER ADDENDUM No. 1 DATED SEPTEMBER 25, 2014 1

Dist	COUNTY	ROUTE	POST MILES TOTAL PROJECT	SHEET No.	TOTAL SHEETS
11	SD	5	R29.1/R30.5	607B	1012

Craig Shannon 9-10-14
REGISTERED CIVIL ENGINEER DATE

07-21-14
PLANS APPROVAL DATE

REGISTERED PROFESSIONAL ENGINEER Craig Shannon No. 66998 Exp. 9-30-16 CIVIL STATE OF CALIFORNIA

THE STATE OF CALIFORNIA OR ITS OFFICERS OR AGENTS SHALL NOT BE RESPONSIBLE FOR THE ACCURACY OR COMPLETENESS OF SCANNED COPIES OF THIS PLAN SHEET.

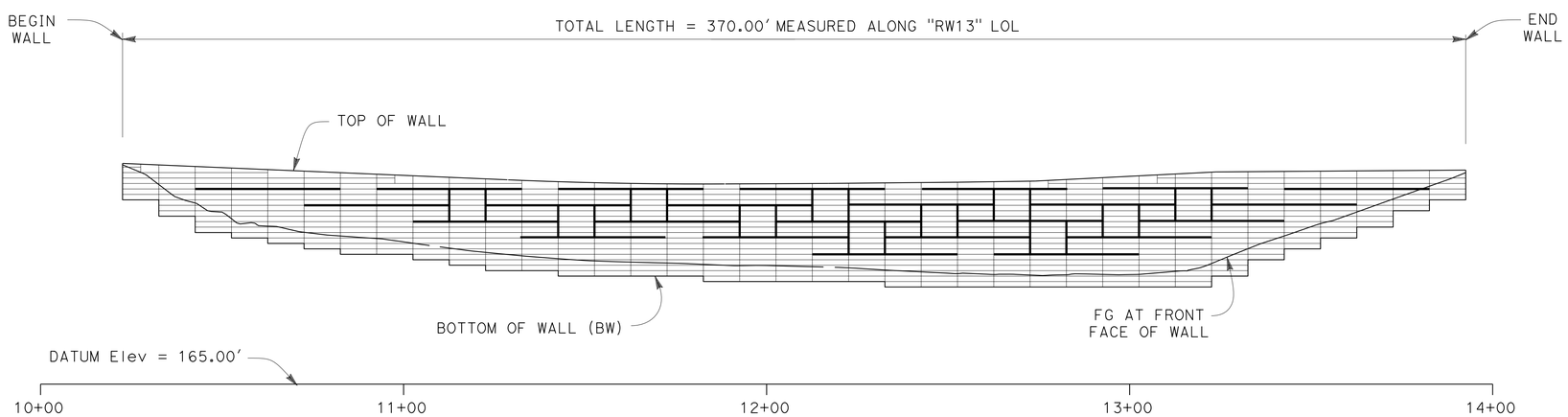

NOTE: CABLE RAILING NOT SHOWN FOR CLARITY.

DEVELOPED ELEVATION
SCALE 1" = 20'

LEGEND:

INDICATES WIRE BASKET EDGE

INDICATES ARCHITECTURAL TREATMENT

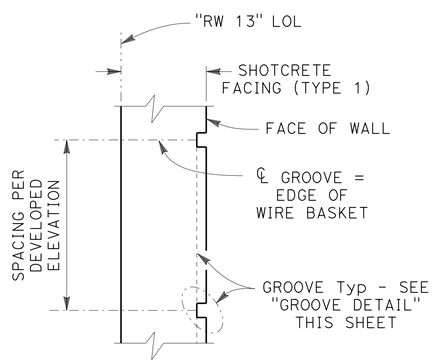

ELEVATION

ARCHITECTURAL TREATMENT DETAIL
SCALE 1 1/2"= 1'-0"

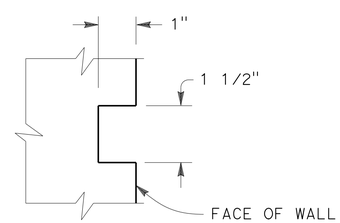

GROOVE DETAIL
SCALE 6"= 1'-0"

APPROVED FOR RETAINING WALL WORK ONLY

RETAINING WALL ARCHITECTURAL DETAILS
(GRE WALL) **("RW13")**

SCALE AS SHOWN **R3-7B**

STATE OF CALIFORNIA - DEPARTMENT OF TRANSPORTATION
Caltrans® ENGINEERING SERVICES

FUNCTIONAL SUPERVISOR: BRIAN HINMAN
CALCULATED-DESIGNED BY: MIKE FORDHAM
CHECKED BY
REVISED BY
DATE REVISED

LAST REVISION 07-12-14
DATE PLOTTED => 22-SEP-2014
TIME PLOTTED => 13:39

Dist	COUNTY	ROUTE	POST MILES TOTAL PROJECT	SHEET No.	TOTAL SHEETS
11	SD	5	R29.1/R30.5	610	1012

Michael M. Fordham 05-23-14
REGISTERED CIVIL ENGINEER DATE

07-21-14
PLANS APPROVAL DATE

REGISTERED PROFESSIONAL ENGINEER Michael M. Fordham No. C61341 Exp. 6-30-15 CIVIL STATE OF CALIFORNIA

THE STATE OF CALIFORNIA OR ITS OFFICERS OR AGENTS SHALL NOT BE RESPONSIBLE FOR THE ACCURACY OR COMPLETENESS OF SCANNED COPIES OF THIS PLAN SHEET.

GENERAL NOTES

DESIGN OF REINFORCED SOIL STRUCTURE IS BASED ON THE FOLLOWING PARAMETERS:

SOIL PARAMETERS:	SOIL UNIT WEIGHT, γ_S=	121 pcf
	SOIL FRICTION ANGLE, ϕ =	33°
	SOIL COHESION, C =	120 psf
SEISMIC LOADING:	PGA =	0.45 g
	Kh =	0.15

GEOTECHNICAL PARAMETERS USED FOR DESIGN SHALL BE CONFIRMED BY GEOTECHNICAL ENGINEER PRIOR TO WALL CONSTRUCTION.

INTERNAL STABILITY OF WALLS:

MINIMUM FACTOR OF SAFETY ON GEOGRID STRENGTH =	1.5
MINIMUM FACTOR OF SAFETY ON GEOGRID PULLOUT =	1.5
PERCENT COVERAGE OF GEOGRID =	100%

EXTERNAL STABILITY:

MINIMUM FACTOR OF SAFETY AGAINST BASE SLIDING =	1.5
MINIMUM FACTOR OF SAFETY AGAINST OVERTURNING =	2.0
MINIMUM FACTOR OF SAFETY AGAINST SOIL BEARING OVERSTRESS =	2.0
BACKFILL SLOPE =	AS SHOWN ON SITE PLAN

GLOBAL STABILITY (CONFIRMED BY GEOTECHNICAL ENGINEER):

MINIMUM FACTOR OF SAFETY AGAINST STATIC GLOBAL STABILITY =	1.5
MINIMUM FACTOR OF SAFETY AGAINST SEISMIC GLOBAL STABILITY =	1.1

1

REINFORCED CONCRETE / SHOTCRETE:	fy = 60 ksi f'c = 3.0 ksi n = 8
STRUCTURAL STEEL:	BEARING PLATES: ASTM A36, fy = 36 ksi HEADED STUDS: ASTM A449 TYPE 1, fu = 120 ksi
ANCHOR BAR:	ASTM A615 OR A706, GRADE 60 (EPOXY COATED)
ANCHOR CONCRETE:	f'c = 3.0 ksi

INDEX TO RETAINING WALL PLANS

SHEET NUMBER	DESCRIPTION
1	RETAINING WALL GENERAL PLAN
2	RETAINING WALL INDEX TO PLANS
3	RETAINING WALL FOUNDATION PLAN
4	RETAINING WALL STRUCTURE ELEVATION No. 1
5	RETAINING WALL STRUCTURE ELEVATION No. 2
6	RETAINING WALL DETAILS No. 1
7	RETAINING WALL DETAILS No. 2
8	RETAINING WALL DETAILS No. 3
1 8A	RETAINING WALL DETAILS No. 4
8B	RETAINING WALL ARCHITECTURAL DETAILS
9	RETAINING WALL LOG OF TEST BORINGS

STANDARD PLANS DATED JUNE 2010

	A10A	ABBREVIATIONS (SHEET 1 OF 2)
RSP	A10B	ABBREVIATIONS (SHEET 2 OF 2)
	A10C	LINES AND SYMBOLS (SHEET 1 OF 3)
	A10D	LINES AND SYMBOLS (SHEET 2 OF 3)
	A10E	LINES AND SYMBOLS (SHEET 3 OF 3)
1	B0-3	BRIDGE DETAILS
	B3-6	RETAINING WALL DETAILS No. 2
RSP	B11-47	CABLE RAILING

PLAN SYMBOLS

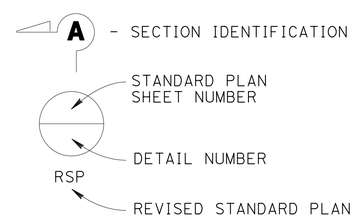

LEGEND

GRE	GEOSYNTHETIC REINFORCED EMBANKMENT

1 **REPLACED PER ADDENDUM No. 1 DATED SEPTEMBER 25, 2014**

APPROVED FOR RETAINING WALL WORK ONLY

RETAINING WALL INDEX TO PLANS
(GRE WALL) **("RW14")**

SCALE AS SHOWN

R4-2

STATE OF CALIFORNIA - DEPARTMENT OF TRANSPORTATION
Caltrans® ENGINEERING SERVICES

FUNCTIONAL SUPERVISOR: BRIAN HINMAN
CALCULATED-DESIGNED BY: MIKE FORDHAM
CHECKED BY
REVISED BY
DATE REVISED

LAST REVISION 07-12-14
DATE PLOTTED => 22-SEP-2014
TIME PLOTTED => 13:39

Dist	COUNTY	ROUTE	POST MILES TOTAL PROJECT	SHEET No.	TOTAL SHEETS
11	SD	5	R29.1/R30.5	612	1012

REGISTERED CIVIL ENGINEER DATE 05-23-14

07-21-14
PLANS APPROVAL DATE

REGISTERED PROFESSIONAL ENGINEER Michael M. Fordham No. C61341 Exp. 6-30-15 CIVIL STATE OF CALIFORNIA

THE STATE OF CALIFORNIA OR ITS OFFICERS OR AGENTS SHALL NOT BE RESPONSIBLE FOR THE ACCURACY OR COMPLETENESS OF SCANNED COPIES OF THIS PLAN SHEET.

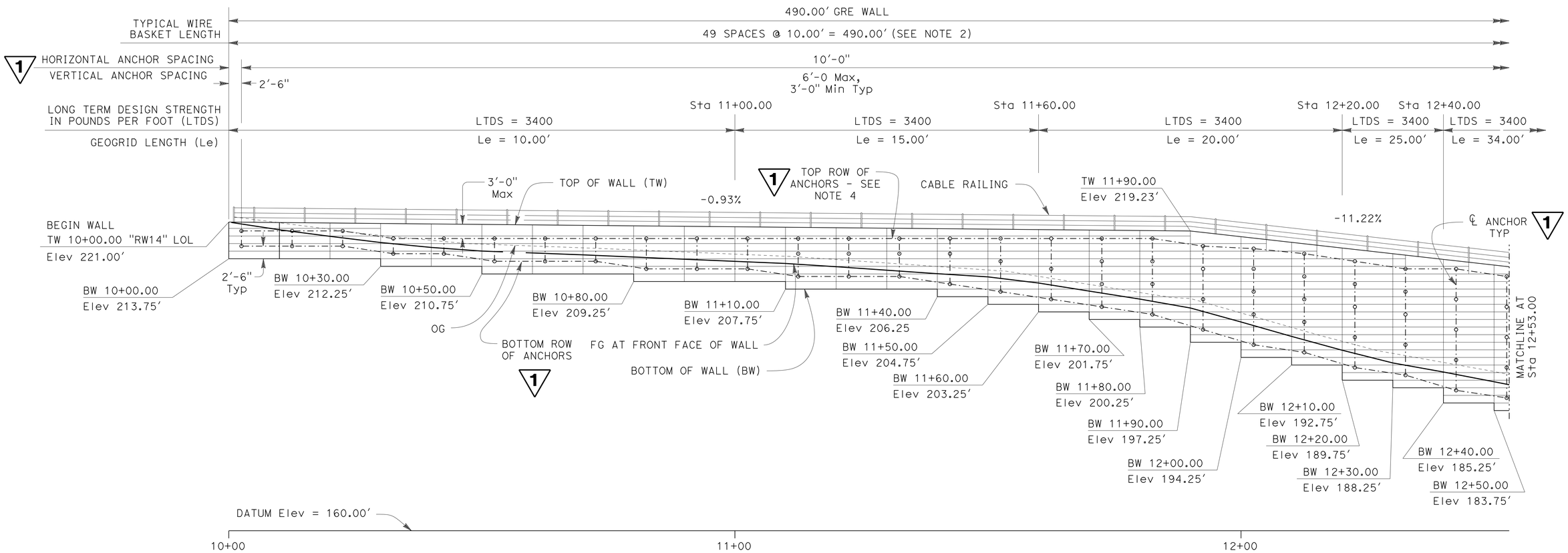

MIRRORED DEVELOPED ELEVATION

SCALE 1" = 10'

NOTES:

1. FOR BASKET VERTICAL SPACING, SEE RETAINING WALL DETAILS NO. 1 SHEET.
2. FOR TOP ROWS OF WIRE BASKET DETAILS, SEE WIRE BASKET INSTALLATION DETAIL ON RETAINING WALL DETAILS NO. 3 SHEET.
3. 1 PLACE WEAKENED PLANES AT 20'-0" Max PER WEAKENED PLANE DETAIL ON RETAINING WALL DETAILS NO. 4 SHEET.
4. 1 NO ANCHORS ALLOWED IN THE FIRST TOP ROW OF WIRE BASKETS.

1 LEGEND:

∘ - INDICATES ANCHOR ASSEMBLY

1 REPLACED PER ADDENDUM No. 1 DATED SEPTEMBER 25, 2014

APPROVED FOR RETAINING WALL WORK ONLY

RETAINING WALL STRUCTURE ELEVATION No. 1 ("RW14")

(GRE WALL)

SCALE AS SHOWN

R4-4

REVISED BY | DATE REVISED

MIKE FORDHAM

CALCULATED-DESIGNED BY | CHECKED BY

FUNCTIONAL SUPERVISOR: BRIAN HINMAN

STATE OF CALIFORNIA - DEPARTMENT OF TRANSPORTATION

Caltrans® ENGINEERING SERVICES

LAST REVISION 07-12-14 | DATE PLOTTED => 22-SEP-2014 | TIME PLOTTED => 13:39

Dist	COUNTY	ROUTE	POST MILES TOTAL PROJECT	SHEET No.	TOTAL SHEETS
11	SD	5	R29.1/R30.5	613	1012

Michael M. Fordham 05-23-14
REGISTERED CIVIL ENGINEER DATE

07-21-14
PLANS APPROVAL DATE

REGISTERED PROFESSIONAL ENGINEER Michael M. Fordham No. C61341 Exp. 6-30-15 CIVIL STATE OF CALIFORNIA

THE STATE OF CALIFORNIA OR ITS OFFICERS OR AGENTS SHALL NOT BE RESPONSIBLE FOR THE ACCURACY OR COMPLETENESS OF SCANNED COPIES OF THIS PLAN SHEET.

1 **REPLACED PER ADDENDUM No. 1 DATED SEPTEMBER 25, 2014**

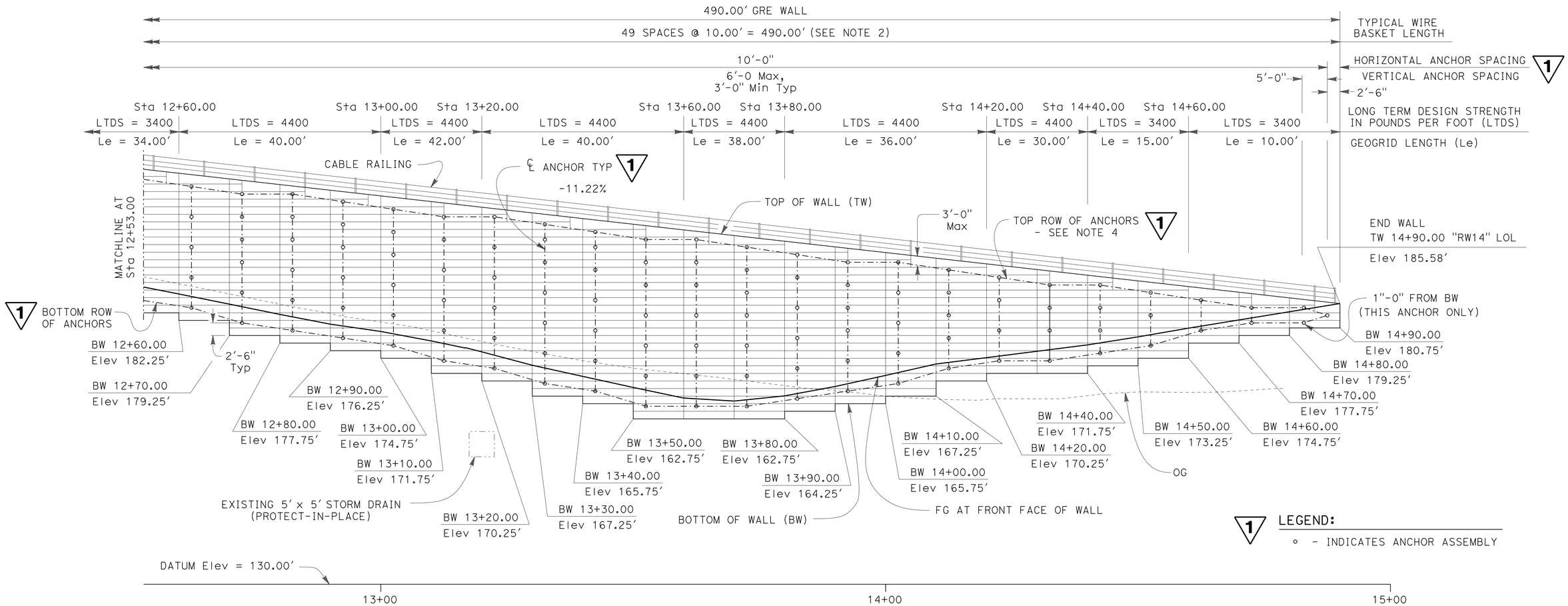

1 LEGEND:
∘ - INDICATES ANCHOR ASSEMBLY

MIRRORED DEVELOPED ELEVATION

SCALE 1" = 10'

NOTES:

1. FOR BASKET VERTICAL SPACING, SEE RETAINING WALL NO. 1 SHEET.
2. FOR TOP ROWS OF WIRE BASKET DETAILS, SEE WIRE BASKET INSTALLATION DETAIL ON RETAINING WALL DETAILS NO. 3 SHEET.
3. (1) PLACE WEAKENED PLANES AT 20'-0" Max PER WEAKENED PLANE DETAIL ON RETAINING WALL DETAILS NO. 4 SHEET.
4. (1) NO ANCHORS ALLOWED IN THE FIRST TOP ROW OF WIRE BASKETS.

APPROVED FOR RETAINING WALL WORK ONLY

RETAINING WALL STRUCTURE ELEVATION No. 2
(GRE WALL) **("RW14")**

SCALE AS SHOWN

R4-5

STATE OF CALIFORNIA - DEPARTMENT OF TRANSPORTATION
Caltrans® ENGINEERING SERVICES

FUNCTIONAL SUPERVISOR: BRIAN HINMAN
CALCULATED-DESIGNED BY: MIKE FORDHAM
CHECKED BY
REVISED BY
DATE REVISED

LAST REVISION
DATE PLOTTED => 22-SEP-2014
TIME PLOTTED => 13:39
07-12-14

Dist	COUNTY	ROUTE	POST MILES TOTAL PROJECT	SHEET No.	TOTAL SHEETS
11	SD	5	R29.1/R30.5	614	1012

REGISTERED CIVIL ENGINEER 05-23-14 DATE

07-21-14
PLANS APPROVAL DATE

REGISTERED PROFESSIONAL ENGINEER Michael M. Fordham No. C61341 Exp. 6-30-15 CIVIL STATE OF CALIFORNIA

THE STATE OF CALIFORNIA OR ITS OFFICERS OR AGENTS SHALL NOT BE RESPONSIBLE FOR THE ACCURACY OR COMPLETENESS OF SCANNED COPIES OF THIS PLAN SHEET.

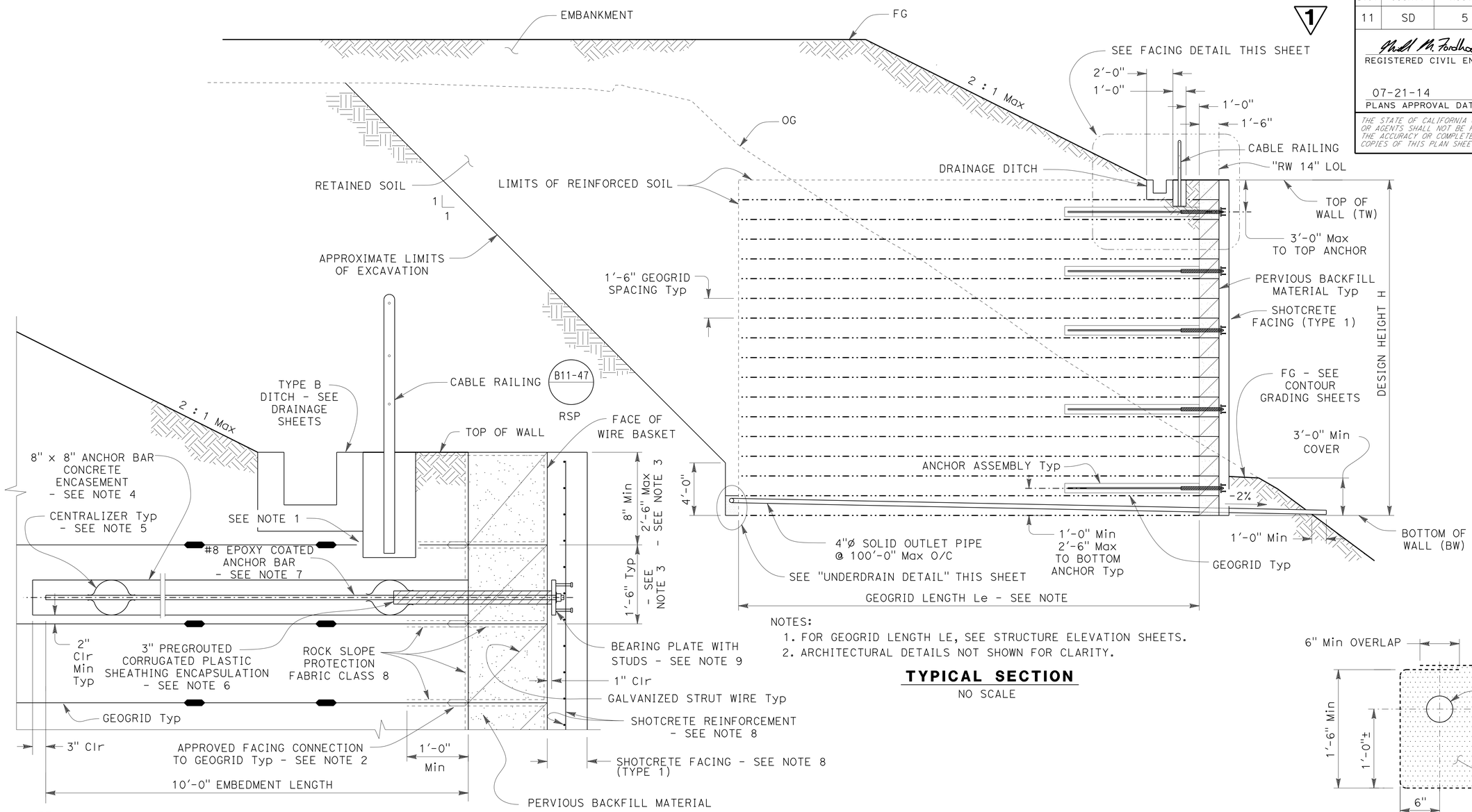

NOTES:
1. FOR GEOGRID LENGTH LE, SEE STRUCTURE ELEVATION SHEETS.
2. ARCHITECTURAL DETAILS NOT SHOWN FOR CLARITY.

TYPICAL SECTION
NO SCALE

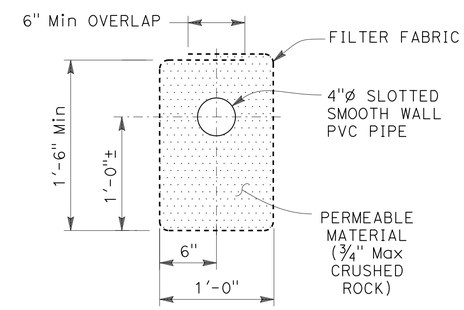

UNDERDRAIN DETAIL
SCALE 1½" = 1'

NOTES:

1. WHERE RAILING POST FOUNDATIONS INTERFERE WITH GEOGRIDS, PRECUT AFFECTED LAYER OF REINFORCEMENT. THE PRECUT DIMENSIONS MUST NOT EXCEED RAILING POST FOUNDATION DIMENSIONS BY MORE THAN 1'-0". PROVIDE 2" CLR MIN BETWEEN RAILING POST FOUNDATION AND ANCHOR CONCRETE.
2. CONNECTION SHALL BE CORROSION RESISTANT.
3. FOR TOP ROWS OF WIRE BASKET DETAILS, SEE WIRE BASKET INSTALLATION DETAIL ON RETAINING WALL DETAILS NO. 3 SHEET.
4. CONCRETE USED TO ENCASE BARS MUST BE CURED PRIOR TO PLACING ANY EXTERNAL LOADS INCLUDING COMPACTION OF ADDITIONAL REINFORCEMENT LIFTS. ANCHOR CONCRETE ENCASEMENT MUST BE CAST-IN-PLACE OR PRECAST WITH A ROUGH TEXTURE FINISH.
5. CENTRALIZERS SHALL BE PLACED 1'-6" FROM THE BACK FACE OF WIRE BASKET AND 1'-6" FROM THE END OF THE ANCHOR BAR. CENTRALIZERS SHALL BE MADE FROM A PLASTIC MATERIAL AND ATTACHED TO THE BAR IN SUCH A MANNER THAT SUPPORTS THE BAR IN THE CENTER OF THE ENCASEMENT AND DOES NOT IMPEDE CONCRETE FLOW.
6. EMBED BAR ENCAPSULATION 1" INTO SHOTCRETE FACING.
7. FOR HORIZONTAL AND VERTICAL SPACING OF ANCHORS, SEE RETAINING WALL STRUCTURE ELEVATION SHEETS.
8. FOR SHOTCRETE REINFORCEMENT AND SHOTCRETE FACING THICKNESS, SEE "RETAINING WALL DETAILS No. 4" SHEET. FOR ARCHITECTURAL DETAILS, SEE "RETAINING WALL ARCHITECTURAL DETAILS" SHEET.
9. FOR BEARING PLATE AND STUD DETAILS, SEE "RETAINING WALL DETAILS No. 4" SHEET.

FACING DETAIL
SCALE 1" = 1'

1 **REPLACED PER ADDENDUM No. 1 DATED SEPTEMBER 25, 2014**

APPROVED FOR RETAINING WALL WORK ONLY

RETAINING WALL DETAILS No. 1
(GRE WALL) **("RW14")**

SCALE AS SHOWN

R4-6

STATE OF CALIFORNIA - DEPARTMENT OF TRANSPORTATION
Caltrans® ENGINEERING SERVICES

FUNCTIONAL SUPERVISOR: BRIAN HINMAN
CALCULATED-DESIGNED BY: MIKE FORDHAM
CHECKED BY
REVISED BY
DATE REVISED

LAST REVISION 07-12-14
DATE PLOTTED => 22-SEP-2014
TIME PLOTTED => 13:39

Dist	COUNTY	ROUTE	POST MILES TOTAL PROJECT	SHEET No.	TOTAL SHEETS
11	SD	5	R29.1/R30.5	615	1012

REGISTERED CIVIL ENGINEER 05-23-14 DATE

07-21-14
PLANS APPROVAL DATE

REGISTERED PROFESSIONAL ENGINEER Michael M. Fordham No. C61341 Exp. 6-30-15 CIVIL STATE OF CALIFORNIA

THE STATE OF CALIFORNIA OR ITS OFFICERS OR AGENTS SHALL NOT BE RESPONSIBLE FOR THE ACCURACY OR COMPLETENESS OF SCANNED COPIES OF THIS PLAN SHEET.

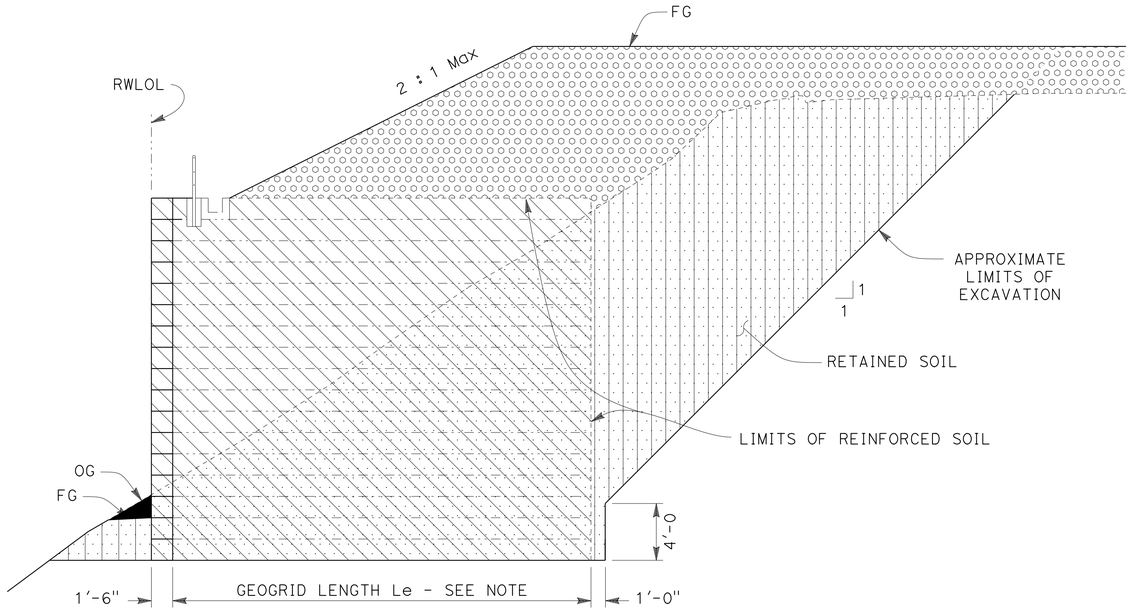

ROADWAY EMBANKMENT | ROADWAY EXCAVATION | GRE WALL EXCAVATION | GRE WALL BACKFILL (RETAINED SOIL) | GRE WALL BACKFILL (REINFORCED SOIL)

1

NOTES:

1. FOR GEOGRID LENGTH Le SEE STRUCTURE ELEVATION SHEETS.
2. SHOTCRETE FACING AND ANCHOR ASSEMBLIES NOT SHOWN FOR CLARITY.

LIMITS OF PAYMENT FOR EXCAVATION AND BACKFILL - IN FILL AND CUT

NO SCALE

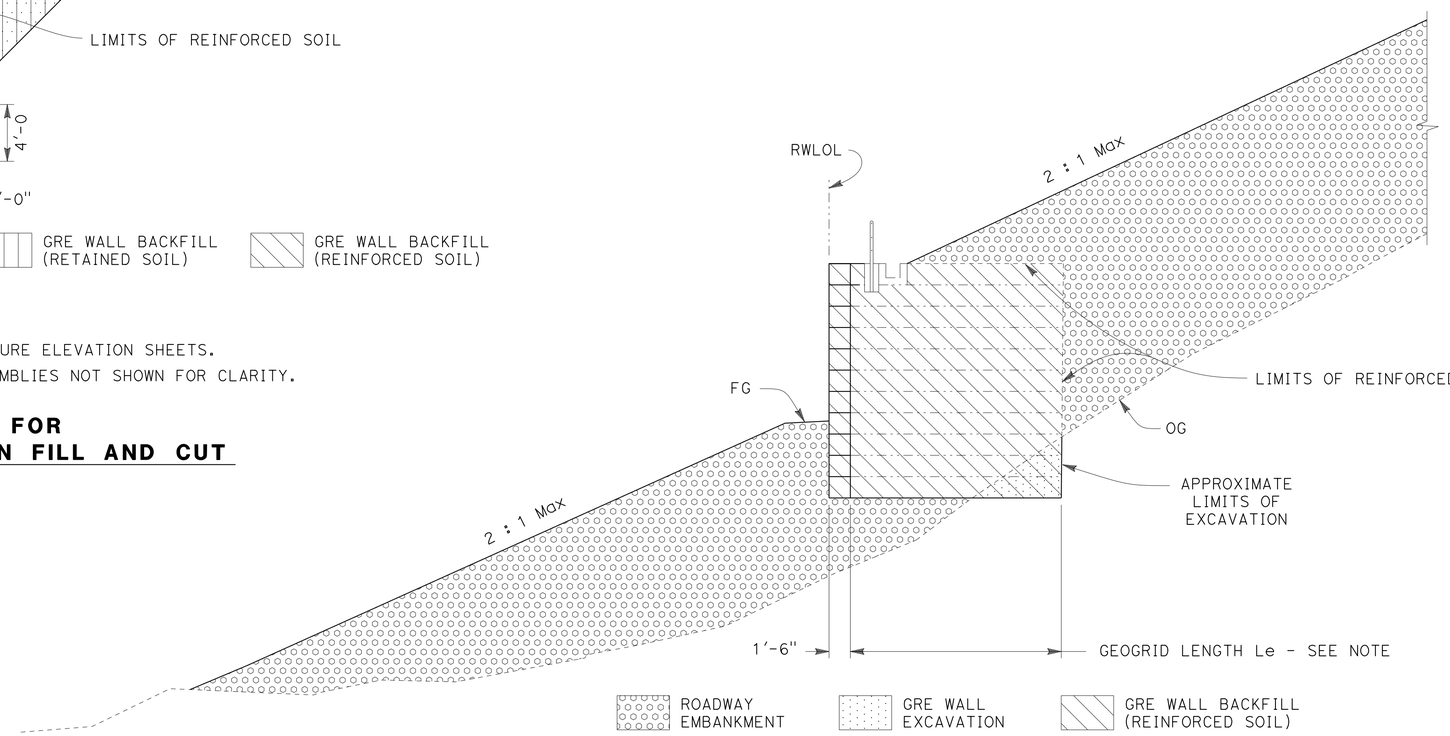

ROADWAY EMBANKMENT | GRE WALL EXCAVATION | GRE WALL BACKFILL (REINFORCED SOIL)

1

NOTES:

1. FOR GEOGRID LENGTH Le SEE STRUCTURE ELEVATION SHEETS.
2. SHOTCRETE FACING AND ANCHOR ASSEMBLIES NOT SHOWN FOR CLARITY.

LIMITS OF PAYMENT FOR EXCAVATION AND BACKFILL - IN FILL

NO SCALE

1 **REPLACED PER ADDENDUM No. 1 DATED SEPTEMBER 25, 2014**

APPROVED FOR RETAINING WALL WORK ONLY

RETAINING WALL DETAILS No. 2
(GRE WALL) **("RW14")**

SCALE AS SHOWN

R4-7

STATE OF CALIFORNIA - DEPARTMENT OF TRANSPORTATION
Caltrans® ENGINEERING SERVICES

FUNCTIONAL SUPERVISOR: BRIAN HINMAN
CALCULATED-DESIGNED BY: MIKE FORDHAM
CHECKED BY
REVISED BY
DATE REVISED

LAST REVISION 07-12-14
DATE PLOTTED => 22-SEP-2014
TIME PLOTTED => 13:39

Dist	COUNTY	ROUTE	POST MILES TOTAL PROJECT	SHEET No.	TOTAL SHEETS
11	SD	5	R29.1/R30.5	616	1012

Michael M. Fordham 05-23-14
REGISTERED CIVIL ENGINEER DATE

07-21-14
PLANS APPROVAL DATE

REGISTERED PROFESSIONAL ENGINEER
Michael M. Fordham
No. C61341
Exp. 6-30-15
CIVIL
STATE OF CALIFORNIA

THE STATE OF CALIFORNIA OR ITS OFFICERS OR AGENTS SHALL NOT BE RESPONSIBLE FOR THE ACCURACY OR COMPLETENESS OF SCANNED COPIES OF THIS PLAN SHEET.

RETAINING WALL QUANTITIES (GRE WALL)

WALL	LINE	STATION RANGE		LENGTH	GRE WALL	CABLE RAILING	SHOTCRETE FACING (TYPE 1)	REMARKS
		BEGIN	END	LF	SQ FT	LF	SQ FT	
14	"RW14"	10+00.00	14+90.00	490.0	10,080.0	490.0	10,080.0	

1

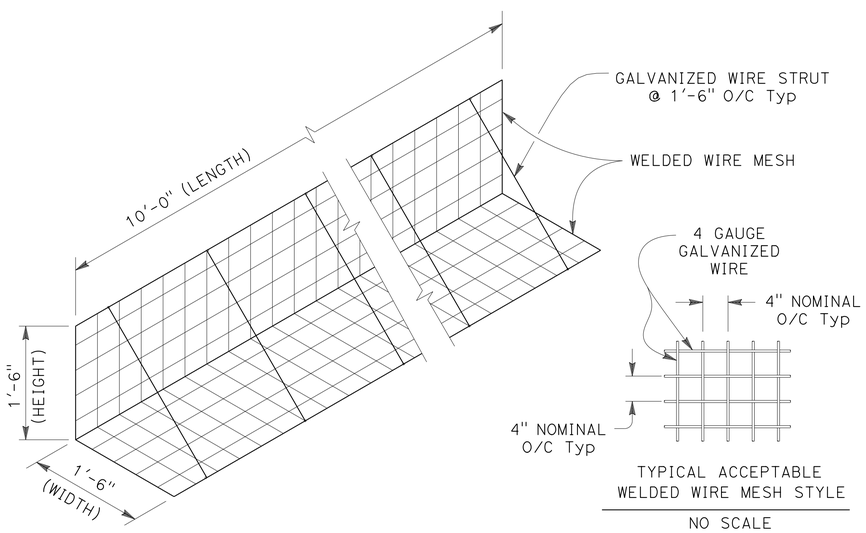

NO SCALE

TYPICAL WIRE BASKET DETAIL

SCALE ¾" = 1'

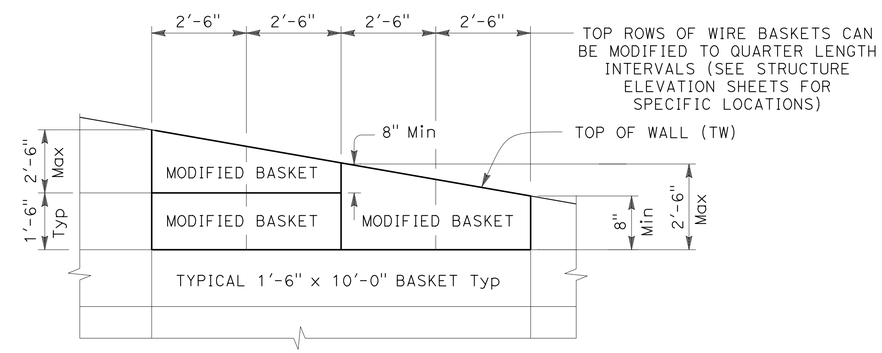

NOTE: TOP ROW OF WIRE BASKETS SHALL BE NO TALLER THAN 2'-6", AND NO SHORTER THAN 8".

WIRE BASKET INSTALLATION DETAIL

NO SCALE

1 **REPLACED PER ADDENDUM No. 1 DATED SEPTEMBER 25, 2014**

APPROVED FOR RETAINING WALL WORK ONLY

RETAINING WALL DETAILS No. 3
(GRE WALL) **("RW14")**

SCALE AS SHOWN

R4-8

STATE OF CALIFORNIA - DEPARTMENT OF TRANSPORTATION
Caltrans® ENGINEERING SERVICES
FUNCTIONAL SUPERVISOR: BRIAN HINMAN
CALCULATED-DESIGNED BY: MIKE FORDHAM
CHECKED BY
REVISED BY
DATE REVISED

LAST REVISION 07-12-14
DATE PLOTTED => 22-SEP-2014
TIME PLOTTED => 13:39

Dist	COUNTY	ROUTE	POST MILES TOTAL PROJECT	SHEET No.	TOTAL SHEETS
11	SD	5	R29.1/R30.5	616A	1012

Craig Shannon 9-10-14
REGISTERED CIVIL ENGINEER DATE

07-21-14
PLANS APPROVAL DATE

REGISTERED PROFESSIONAL ENGINEER Craig Shannon No. 66998 Exp. 9-30-16 CIVIL STATE OF CALIFORNIA

THE STATE OF CALIFORNIA OR ITS OFFICERS OR AGENTS SHALL NOT BE RESPONSIBLE FOR THE ACCURACY OR COMPLETENESS OF SCANNED COPIES OF THIS PLAN SHEET.

1 **ADDED PER ADDENDUM No. 1 DATED SEPTEMBER 25, 2014** 1

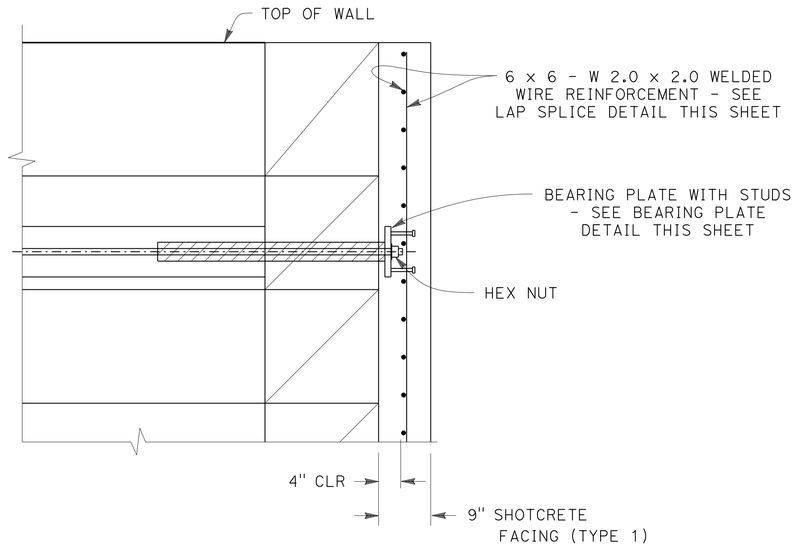

NOTES:

1. FOR ALL OTHER INFORMATION NOT SHOWN, SEE RETAINING WALL DETAILS NO. 1 SHEET.
2. FOR ARCHITECTURAL DETAILS, SEE "RETAINING WALL ARCHITECTURAL DETAILS" SHEET.

FACING REINFORCEMENT DETAIL
SCALE 1" = 1'

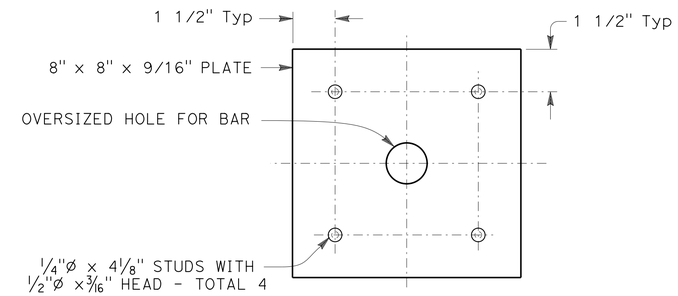

BEARING PLATE DETAIL
SCALE: 3" = 1'

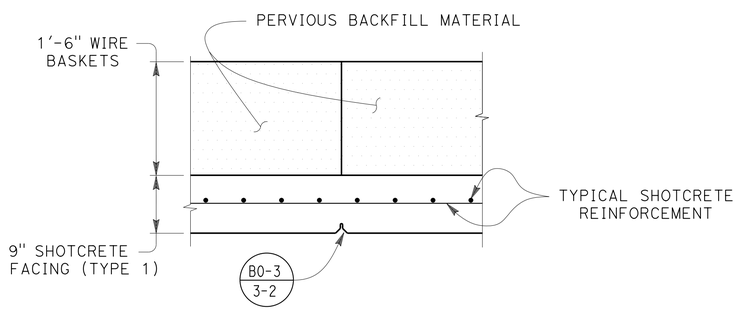

WEAKENED PLANE DETAIL
SCALE 1" = 1'

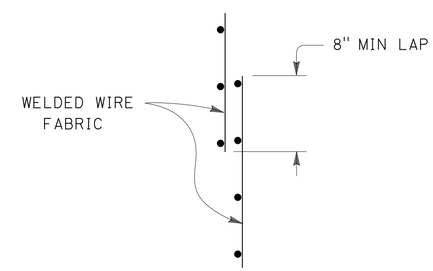

LAP SPLICE DETAIL
NO SCALE

APPROVED FOR RETAINING WALL WORK ONLY

RETAINING WALL DETAILS No. 4
(GRE WALL) **("RW14")**

SCALE AS SHOWN

R4-8A

STATE OF CALIFORNIA - DEPARTMENT OF TRANSPORTATION
Caltrans® ENGINEERING SERVICES

FUNCTIONAL SUPERVISOR: BRIAN HINMAN
CALCULATED-DESIGNED BY: MIKE FORDHAM
CHECKED BY
REVISED BY
DATE REVISED

LAST REVISION 07-12-14
DATE PLOTTED => 22-SEP-2014
TIME PLOTTED => 13:39

1 ADDED PER ADDENDUM No. 1 DATED SEPTEMBER 25, 2014 1

Dist	COUNTY	ROUTE	POST MILES TOTAL PROJECT	SHEET No.	TOTAL SHEETS
11	SD	5	R29.1/R30.5	616B	1012

Craig Shannon 9-10-14
REGISTERED CIVIL ENGINEER DATE

07-21-14
PLANS APPROVAL DATE

REGISTERED PROFESSIONAL ENGINEER Craig Shannon No. 66998 Exp. 9-30-16 CIVIL STATE OF CALIFORNIA

THE STATE OF CALIFORNIA OR ITS OFFICERS OR AGENTS SHALL NOT BE RESPONSIBLE FOR THE ACCURACY OR COMPLETENESS OF SCANNED COPIES OF THIS PLAN SHEET.

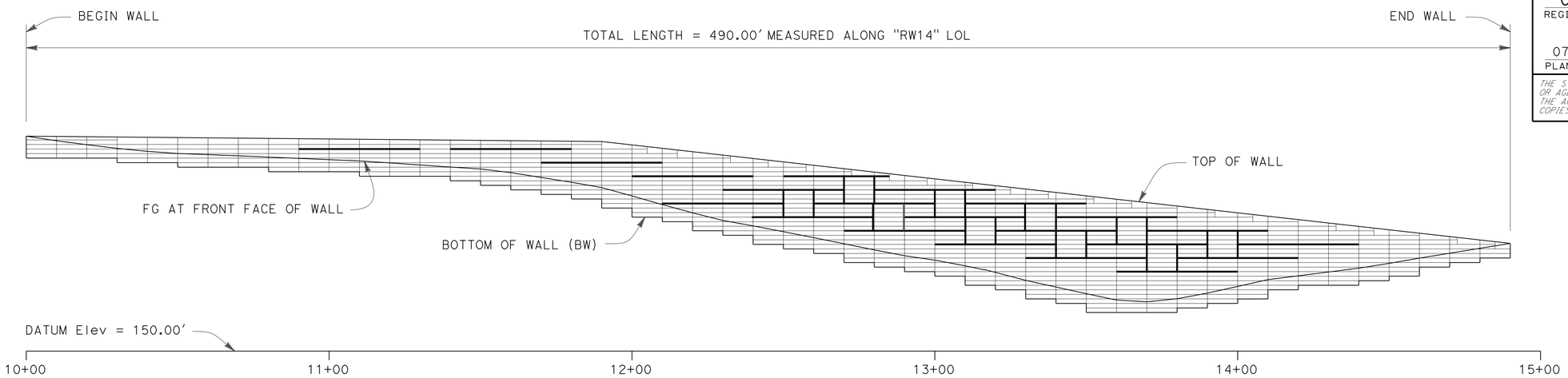

NOTE: CABLE RAILING NOT SHOWN FOR CLARITY.

MIRRORED DEVELOPED ELEVATION
SCALE 1" = 20'

LEGEND:

INDICATES WIRE BASKET EDGE

INDICATES ARCHITECTURAL TREATMENT

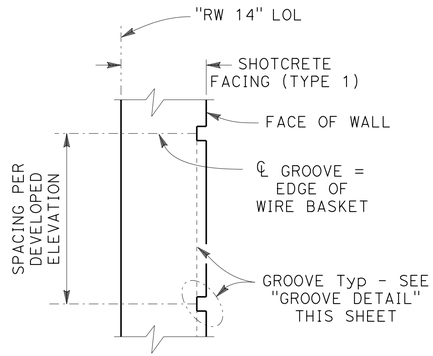

ELEVATION

ARCHITECTURAL TREATMENT DETAIL
SCALE 1 1/2"= 1'-0"

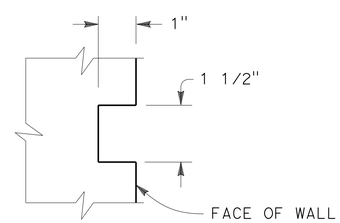

GROOVE DETAIL
SCALE 6"= 1'-0"

NOTE: FOR GENERAL NOTES, INDEX TO PLANS, AND STANDARD PLANS, SEE INDEX TO PLANS SHEET

APPROVED FOR RETAINING WALL WORK ONLY

RETAINING WALL ARCHITECTURAL DETAILS
(GRE WALL) **("RW14")**

SCALE AS SHOWN

R4-8B

STATE OF CALIFORNIA - DEPARTMENT OF TRANSPORTATION
Caltrans® ENGINEERING SERVICES

FUNCTIONAL SUPERVISOR: BRIAN HINMAN
CALCULATED-DESIGNED BY: MIKE FORDHAM
CHECKED BY
REVISED BY
DATE REVISED

LAST REVISION 07-12-14
DATE PLOTTED => 22-SEP-2014
TIME PLOTTED => 13:39

Dist	COUNTY	ROUTE	POST MILES TOTAL PROJECT	SHEET No.	TOTAL SHEETS
11	SD	5	R29.1/R30.5	619	1012

REGISTERED CIVIL ENGINEER 05-23-14 DATE

07-21-14
PLANS APPROVAL DATE

REGISTERED PROFESSIONAL ENGINEER Michael M. Fordham No. C61341 Exp. 6-30-15 CIVIL STATE OF CALIFORNIA

THE STATE OF CALIFORNIA OR ITS OFFICERS OR AGENTS SHALL NOT BE RESPONSIBLE FOR THE ACCURACY OR COMPLETENESS OF SCANNED COPIES OF THIS PLAN SHEET.

GENERAL NOTES

DESIGN OF REINFORCED SOIL STRUCTURE IS BASED ON THE FOLLOWING PARAMETERS:

SOIL PARAMETERS:	SOIL UNIT WEIGHT, γ_S=	121 pcf
	SOIL FRICTION ANGLE, ϕ =	33°
	SOIL COHESION, C =	120 psf
SEISMIC LOADING:	PGA =	0.45 g
	Kh =	0.15

GEOTECHNICAL PARAMETERS USED FOR DESIGN SHALL BE CONFIRMED BY GEOTECHNICAL ENGINEER PRIOR TO WALL CONSTRUCTION.

INTERNAL STABILITY OF WALLS:

MINIMUM FACTOR OF SAFETY ON GEOGRID STRENGTH =	1.5
MINIMUM FACTOR OF SAFETY ON GEOGRID PULLOUT =	1.5
PERCENT COVERAGE OF GEOGRID =	100%

EXTERNAL STABILITY:

MINIMUM FACTOR OF SAFETY AGAINST BASE SLIDING =	1.5
MINIMUM FACTOR OF SAFETY AGAINST OVERTURNING =	2.0
MINIMUM FACTOR OF SAFETY AGAINST SOIL BEARING OVERSTRESS =	2.0
BACKFILL SLOPE =	AS SHOWN ON SITE PLAN

GLOBAL STABILITY (CONFIRMED BY GEOTECHNICAL ENGINEER):

MINIMUM FACTOR OF SAFETY AGAINST STATIC GLOBAL STABILITY =	1.5
MINIMUM FACTOR OF SAFETY AGAINST SEISMIC GLOBAL STABILITY =	1.1

1 REINFORCED CONCRETE / SHOTCRETE: fy = 60 ksi, f'c = 3.0 ksi, n = 8

STRUCTURAL STEEL: BEARING PLATES: ASTM A36, fy = 36 ksi
HEADED STUDS: ASTM A449 TYPE 1, fu = 120 ksi

INDEX TO RETAINING WALL PLANS

SHEET NUMBER	DESCRIPTION
1	RETAINING WALL GENERAL PLAN
2	RETAINING WALL INDEX TO PLANS
3	RETAINING WALL FOUNDATION PLAN
4	RETAINING WALL STRUCTURE ELEVATION No. 1
5	RETAINING WALL STRUCTURE ELEVATION No. 2
6	RETAINING WALL STRUCTURE ELEVATION No. 3
7	RETAINING WALL STRUCTURE ELEVATION No. 4
8	RETAINING WALL DETAILS No. 1
9	RETAINING WALL DETAILS No. 2
10	RETAINING WALL DETAILS No. 3
1 10A	RETAINING WALL ARCHITECTURAL DETAILS
11	RETAINING WALL LOG OF TEST BORINGS

STANDARD PLANS DATED JUNE 2010

	A10A	ABBREVIATIONS (SHEET 1 OF 2)
RSP	A10B	ABBREVIATIONS (SHEET 2 OF 2)
	A10C	LINES AND SYMBOLS (SHEET 1 OF 3)
	A10D	LINES AND SYMBOLS (SHEET 2 OF 3)
	A10E	LINES AND SYMBOLS (SHEET 3 OF 3)
1	B0-3	BRIDGE DETAILS
	B3-6	RETAINING WALL DETAILS No. 2
RSP	B11-47	CABLE RAILING

PLAN SYMBOLS

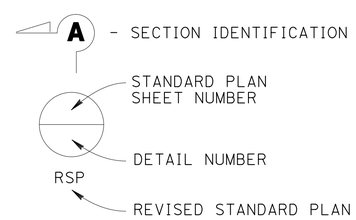

LEGEND

GRE GEOSYNTHETIC REINFORCED EMBANKMENT

1 **REPLACED PER ADDENDUM No. 1 DATED SEPTEMBER 25, 2014**

APPROVED FOR RETAINING WALL WORK ONLY

RETAINING WALL INDEX TO PLANS
(GRE WALL) **("RW15")**

SCALE AS SHOWN

R5-2

STATE OF CALIFORNIA - DEPARTMENT OF TRANSPORTATION
Caltrans® ENGINEERING SERVICES

FUNCTIONAL SUPERVISOR: BRIAN HINMAN
CALCULATED-DESIGNED BY: MIKE FORDHAM
CHECKED BY
REVISED BY
DATE REVISED

LAST REVISION 07-12-14
DATE PLOTTED => 22-SEP-2014
TIME PLOTTED => 13:39

Dist	COUNTY	ROUTE	POST MILES TOTAL PROJECT	SHEET No.	TOTAL SHEETS
11	SD	5	R29.1/R30.5	621	1012

Michael M. Fordham 05-23-14
REGISTERED CIVIL ENGINEER DATE

07-21-14
PLANS APPROVAL DATE

REGISTERED PROFESSIONAL ENGINEER Michael M. Fordham No. C61341 Exp. 6-30-15 CIVIL STATE OF CALIFORNIA

THE STATE OF CALIFORNIA OR ITS OFFICERS OR AGENTS SHALL NOT BE RESPONSIBLE FOR THE ACCURACY OR COMPLETENESS OF SCANNED COPIES OF THIS PLAN SHEET.

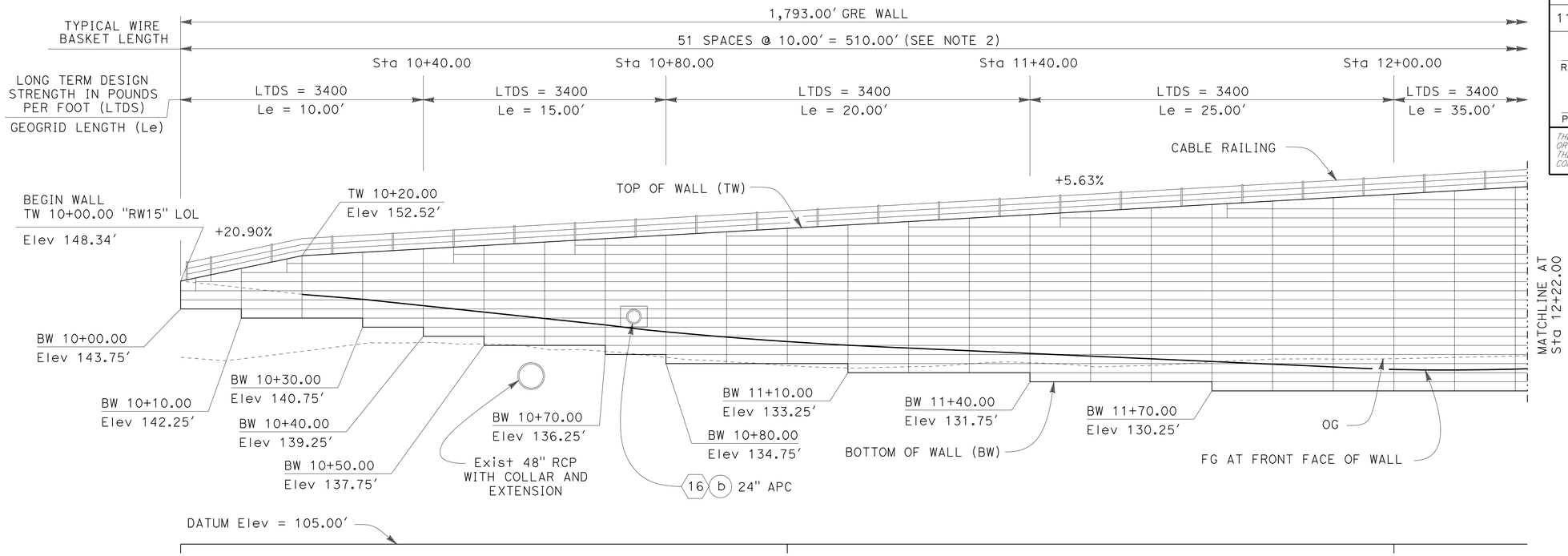

MIRRORED DEVELOPED ELEVATION
SCALE 1" = 10'

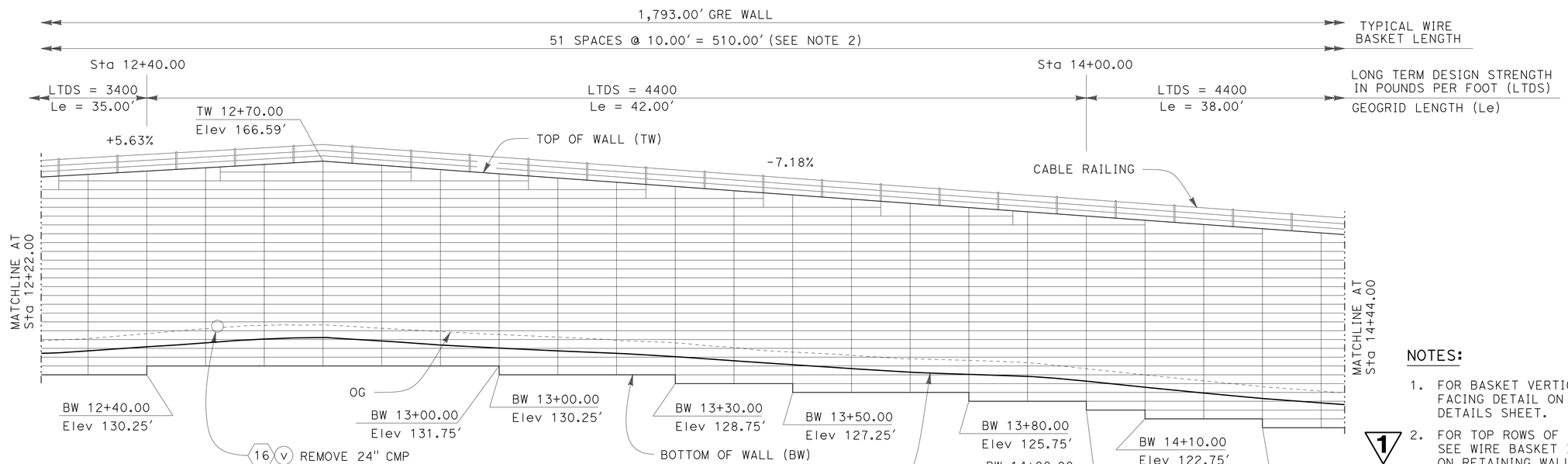

MIRRORED DEVELOPED ELEVATION
SCALE 1" = 10'

NOTES:

1. FOR BASKET VERTICAL SPACING, SEE FACING DETAIL ON RETAINING WALL DETAILS SHEET.
2. FOR TOP ROWS OF WIRE BASKET DETAILS, SEE WIRE BASKET INSTALLATION DETAIL ON RETAINING WALL DETAILS SHEET.
3. FOR UTILITY OPENING DETAILS, SEE INDEX TO PLANS SHEET.

1 **REPLACED PER ADDENDUM No. 1 DATED SEPTEMBER 25, 2014**

APPROVED FOR RETAINING WALL WORK ONLY

RETAINING WALL STRUCTURE ELEVATION No. 1
(GRE WALL) **("RW15")**

SCALE AS SHOWN

R5-4

STATE OF CALIFORNIA - DEPARTMENT OF TRANSPORTATION
Caltrans® ENGINEERING SERVICES

FUNCTIONAL SUPERVISOR: BRIAN HINMAN
CALCULATED-DESIGNED BY: MIKE FORDHAM
CHECKED BY
REVISED BY
DATE REVISED

LAST REVISION 07-12-14
DATE PLOTTED => 22-SEP-2014
TIME PLOTTED => 13:39

Dist	COUNTY	ROUTE	POST MILES TOTAL PROJECT	SHEET No.	TOTAL SHEETS
11	SD	5	R29.1/R30.5	624	1012

Michael M. Fordham 05-23-14
REGISTERED CIVIL ENGINEER DATE

07-21-14
PLANS APPROVAL DATE

REGISTERED PROFESSIONAL ENGINEER Michael M. Fordham No. C61341 Exp. 6-30-15 CIVIL STATE OF CALIFORNIA

THE STATE OF CALIFORNIA OR ITS OFFICERS OR AGENTS SHALL NOT BE RESPONSIBLE FOR THE ACCURACY OR COMPLETENESS OF SCANNED COPIES OF THIS PLAN SHEET.

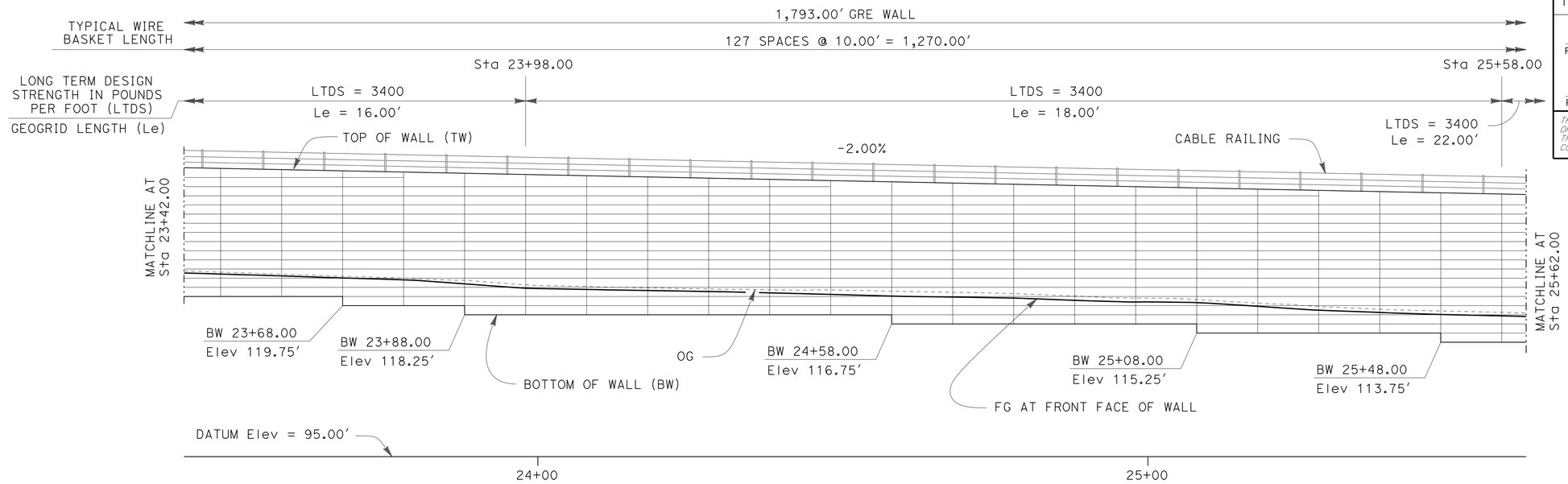

MIRRORED DEVELOPED ELEVATION

SCALE 1" = 10'

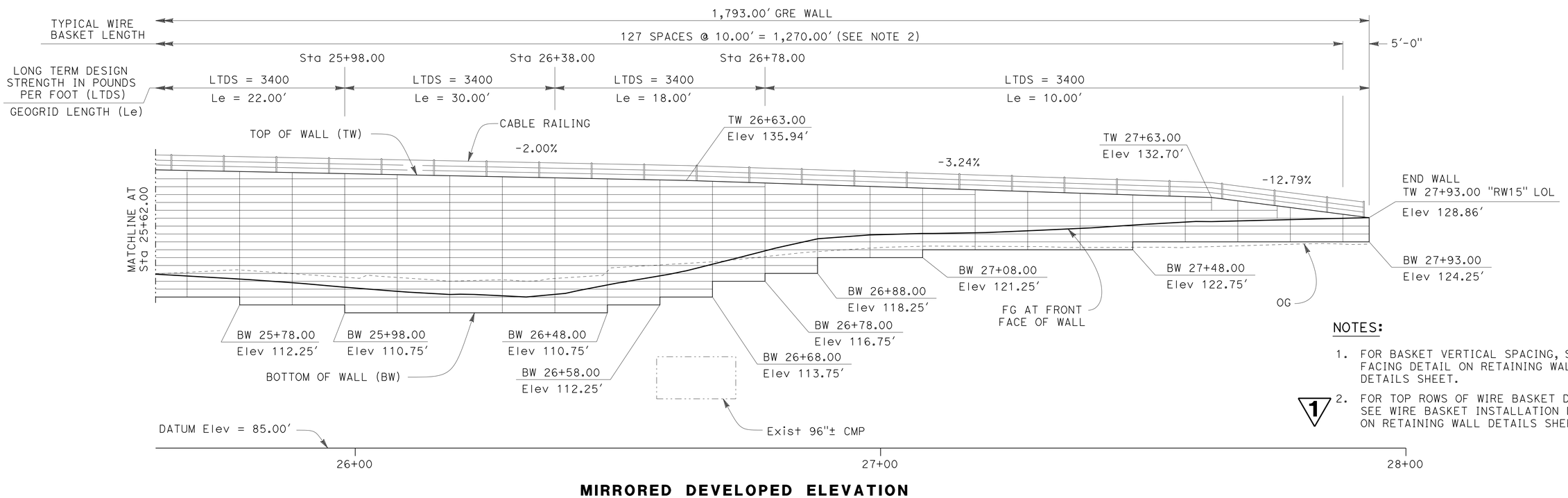

MIRRORED DEVELOPED ELEVATION

SCALE 1" = 10'

NOTES:

1. FOR BASKET VERTICAL SPACING, SEE FACING DETAIL ON RETAINING WALL DETAILS SHEET.
2. FOR TOP ROWS OF WIRE BASKET DETAILS, SEE WIRE BASKET INSTALLATION DETAIL ON RETAINING WALL DETAILS SHEET.

1 **REPLACED PER ADDENDUM No. 1 DATED SEPTEMBER 25, 2014**

APPROVED FOR RETAINING WALL WORK ONLY

RETAINING WALL STRUCTURE ELEVATION NO. 4 ("RW15")

(GRE WALL)

SCALE AS SHOWN

R5-7

REVISED BY | DATE REVISED
MIKE FORDHAM
CALCULATED-DESIGNED BY | CHECKED BY
FUNCTIONAL SUPERVISOR
BRIAN HINMAN

STATE OF CALIFORNIA - DEPARTMENT OF TRANSPORTATION
Caltrans ENGINEERING SERVICES

LAST REVISION 07-12-14 | DATE PLOTTED => 22-SEP-2014 | TIME PLOTTED => 13:39

Dist	COUNTY	ROUTE	POST MILES TOTAL PROJECT	SHEET No.	TOTAL SHEETS
11	SD	5	R29.1/R30.5	625	1012

REGISTERED CIVIL ENGINEER 05-23-14 DATE

07-21-14
PLANS APPROVAL DATE

REGISTERED PROFESSIONAL ENGINEER Michael M. Fordham No. C61341 Exp. 6-30-15 CIVIL STATE OF CALIFORNIA

THE STATE OF CALIFORNIA OR ITS OFFICERS OR AGENTS SHALL NOT BE RESPONSIBLE FOR THE ACCURACY OR COMPLETENESS OF SCANNED COPIES OF THIS PLAN SHEET.

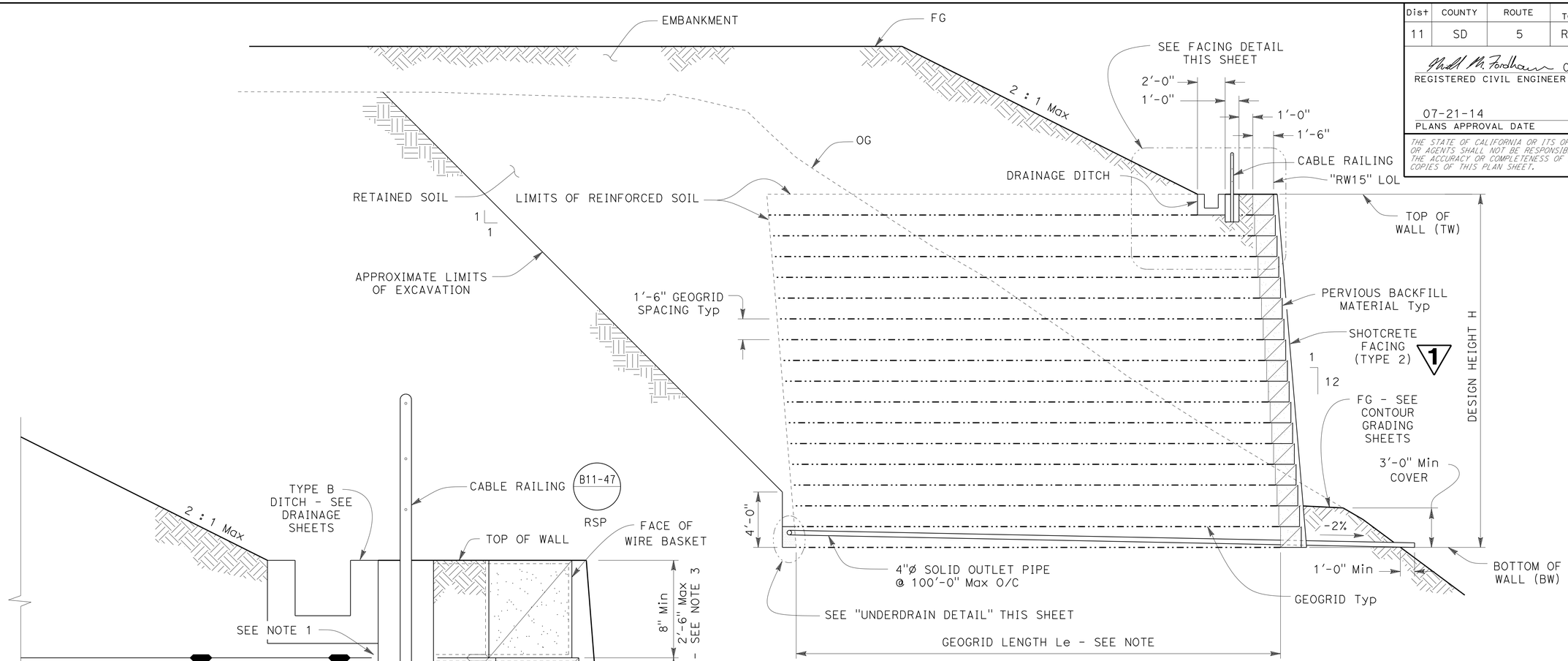

NOTES:
1. FOR GEOGRID LENGTH LE, SEE STRUCTURE ELEVATION SHEETS.
2. ARCHITECTURAL DETAILS NOT SHOWN FOR CLARITY.

TYPICAL SECTION
NO SCALE

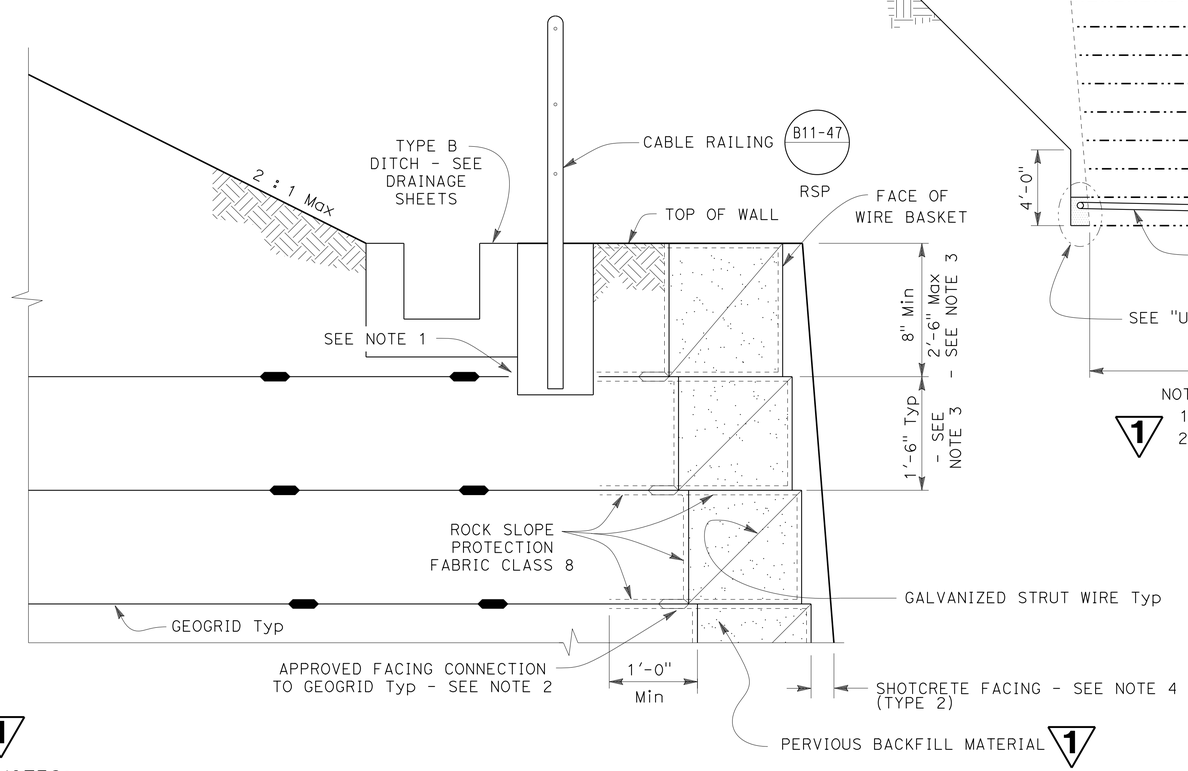

NOTES:
1. WHERE RAILING POST FOUNDATIONS INTERFERE WITH GEOGRIDS, PRECUT AFFECTED LAYER OF REINFORCEMENT. THE PRECUT DIMENSIONS MUST NOT EXCEED RAILING POST FOUNDATION DIMENSIONS BY MORE THAN 1'-0".
2. CONNECTION SHALL BE CORROSION RESISTANT.
3. FOR TOP ROWS OF WIRE BASKET DETAILS, SEE WIRE BASKET INSTALLATION DETAIL ON RETAINING WALL DETAILS NO. 3 SHEET.
4. FOR SHOTCRETE FACING THICKNESS AND ARCHITECTURAL DETAILS, SEE "RETAINING WALL ARCHITECTURAL DETAILS" SHEET.

FACING DETAIL
SCALE 1" = 1'

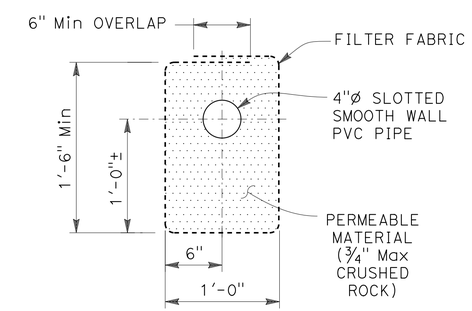

UNDERDRAIN DETAIL
SCALE 1½" = 1'

REPLACED PER ADDENDUM No. 1 DATED SEPTEMBER 25, 2014

APPROVED FOR RETAINING WALL WORK ONLY

RETAINING WALL DETAILS No. 1
(GRE WALL) **("RW15")**

SCALE AS SHOWN

R5-8

STATE OF CALIFORNIA - DEPARTMENT OF TRANSPORTATION
Caltrans® ENGINEERING SERVICES

FUNCTIONAL SUPERVISOR: BRIAN HINMAN
CALCULATED-DESIGNED BY: MIKE FORDHAM
CHECKED BY
REVISED BY
DATE REVISED

LAST REVISION 07-12-14
DATE PLOTTED => 22-SEP-2014
TIME PLOTTED => 13:39

Dist	COUNTY	ROUTE	POST MILES TOTAL PROJECT	SHEET No.	TOTAL SHEETS
11	SD	5	R29.1/R30.5	626	1012

Michael M. Fordham 05-23-14
REGISTERED CIVIL ENGINEER DATE

07-21-14
PLANS APPROVAL DATE

REGISTERED PROFESSIONAL ENGINEER Michael M. Fordham No. C61341 Exp. 6-30-15 CIVIL STATE OF CALIFORNIA

THE STATE OF CALIFORNIA OR ITS OFFICERS OR AGENTS SHALL NOT BE RESPONSIBLE FOR THE ACCURACY OR COMPLETENESS OF SCANNED COPIES OF THIS PLAN SHEET.

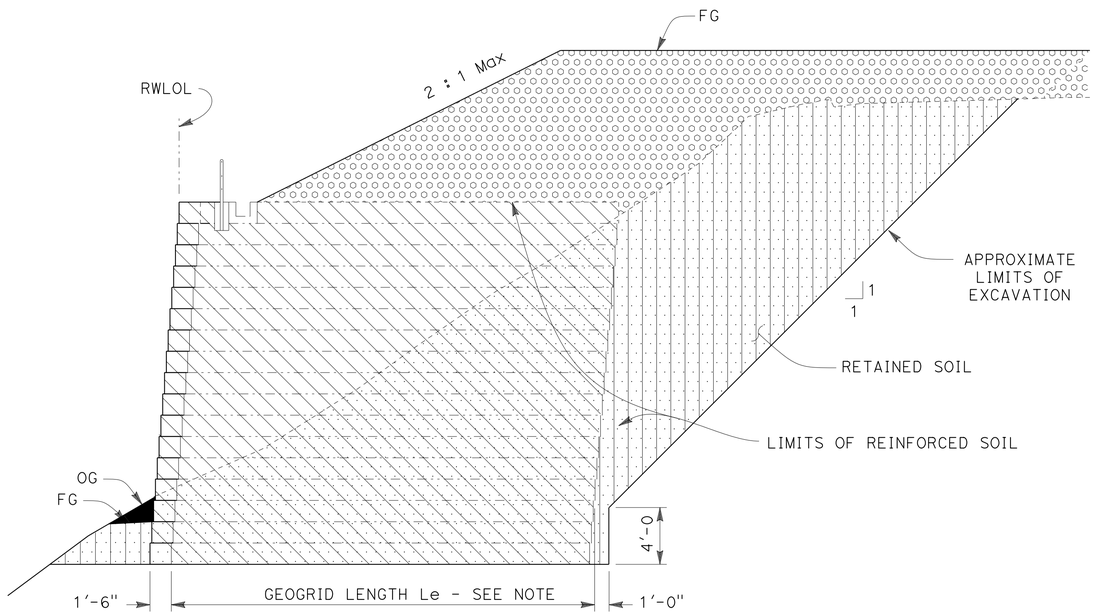

ROADWAY EMBANKMENT | ROADWAY EXCAVATION | GRE WALL EXCAVATION | GRE WALL BACKFILL (RETAINED SOIL) | GRE WALL BACKFILL (REINFORCED SOIL)

1

NOTES:

1. FOR GEOGRID LENGTH Le SEE STRUCTURE ELEVATION SHEETS.
2. SHOTCRETE FACING NOT SHOWN FOR CLARITY.

LIMITS OF PAYMENT FOR EXCAVATION AND BACKFILL - IN FILL AND CUT

NO SCALE

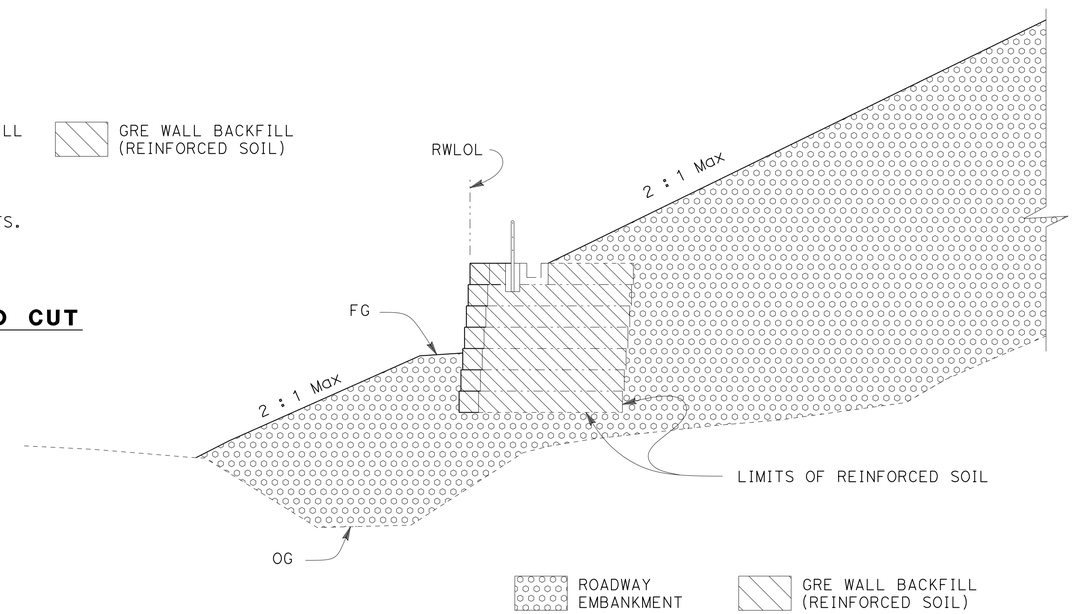

1

NOTES:

1. FOR GEOGRID LENGTH Le SEE STRUCTURE ELEVATION SHEETS.
2. SHOTCRETE FACING NOT SHOWN FOR CLARITY.

LIMITS OF PAYMENT FOR EXCAVATION AND BACKFILL - IN FILL

NO SCALE

1 REPLACED PER ADDENDUM No. 1 DATED SEPTEMBER 25, 2014

APPROVED FOR RETAINING WALL WORK ONLY

RETAINING WALL DETAILS No. 2

(GRE WALL) **("RW15")**

SCALE AS SHOWN

R5-9

STATE OF CALIFORNIA - DEPARTMENT OF TRANSPORTATION
Caltrans® ENGINEERING SERVICES

FUNCTIONAL SUPERVISOR: BRIAN HINMAN
CALCULATED-DESIGNED BY: MIKE FORDHAM
CHECKED BY
REVISED BY
DATE REVISED

LAST REVISION 07-12-14 | DATE PLOTTED => 22-SEP-2014 | TIME PLOTTED => 13:39

Dist	COUNTY	ROUTE	POST MILES TOTAL PROJECT	SHEET No.	TOTAL SHEETS
11	SD	5	R29.1/R30.5	627	1012

Michael M. Fordham 05-23-14
REGISTERED CIVIL ENGINEER DATE

07-21-14
PLANS APPROVAL DATE

REGISTERED PROFESSIONAL ENGINEER Michael M. Fordham No. C61341 Exp. 6-30-15 CIVIL STATE OF CALIFORNIA

THE STATE OF CALIFORNIA OR ITS OFFICERS OR AGENTS SHALL NOT BE RESPONSIBLE FOR THE ACCURACY OR COMPLETENESS OF SCANNED COPIES OF THIS PLAN SHEET.

1 REPLACED PER ADDENDUM No. 1 DATED SEPTEMBER 25, 2014

RETAINING WALL QUANTITIES (GRE WALL)

WALL	LINE	STATION RANGE		LENGTH	GRE WALL	CABLE RAILING	SHOTCRETE FACING (TYPE 2)	REMARKS
		BEGIN	END	LF	SQ FT	LF	SQ FT	
15	"RW15"	10+00.00	27+93.00	1793.0	44,550.0	1793.0	44,550.0	

1

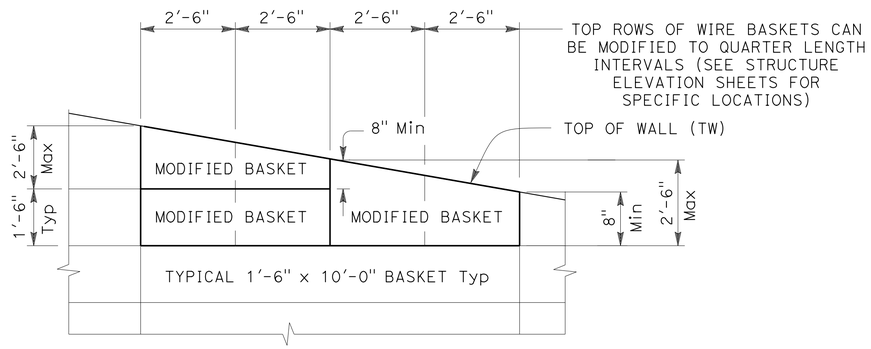

NOTE: TOP ROW OF WIRE BASKETS SHALL BE NO TALLER THAN 2'-6", AND NO SHORTER THAN 8".

WIRE BASKET INSTALLATION DETAIL

NO SCALE

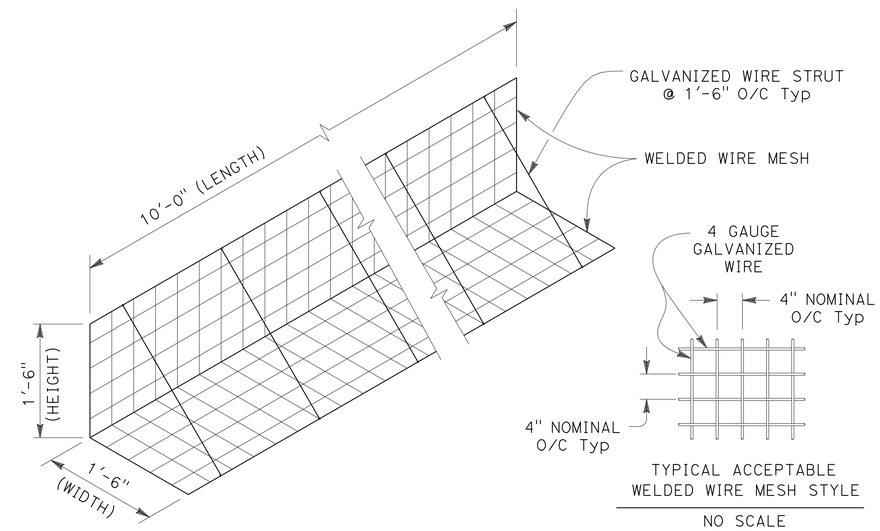

NO SCALE

TYPICAL WIRE BASKET DETAIL

SCALE 3/4" = 1'

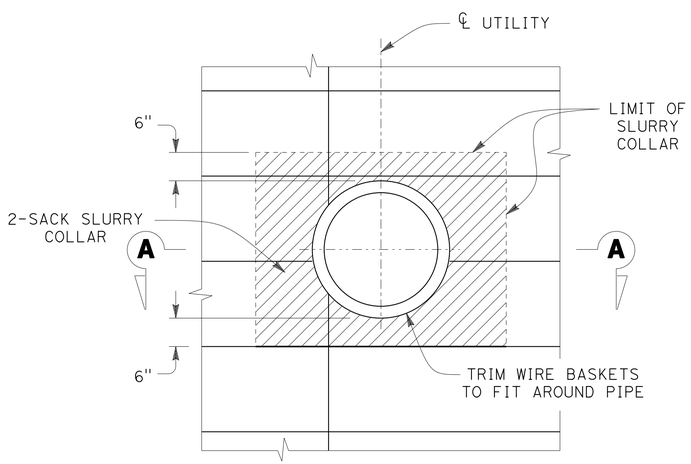

ELEVATION

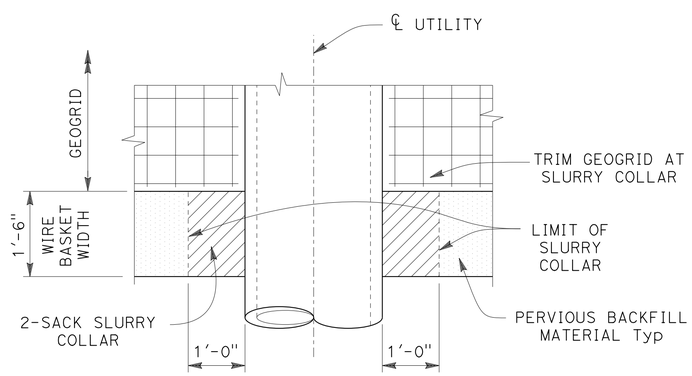

1 NOTE: SHOTCRETE FACING NOT SHOWN.

SECTION A-A

UTILITY OPENING DETAILS

SCALE 3/4" = 1'

APPROVED FOR RETAINING WALL WORK ONLY

RETAINING WALL DETAILS No. 3
(GRE WALL) **("RW15")**

SCALE AS SHOWN

R5-10

REVISED BY | DATE REVISED
MIKE FORDHAM
CALCULATED-DESIGNED BY | CHECKED BY
FUNCTIONAL SUPERVISOR
BRIAN HINMAN

STATE OF CALIFORNIA - DEPARTMENT OF TRANSPORTATION
Caltrans ENGINEERING SERVICES

LAST REVISION 07-12-14 | DATE PLOTTED => 22-SEP-2014 | TIME PLOTTED => 13:39

Dist	COUNTY	ROUTE	POST MILES TOTAL PROJECT	SHEET No.	TOTAL SHEETS
11	SD	5	R29.1/R30.5	627A	1012

Craig Shannon 9-10-14
REGISTERED CIVIL ENGINEER DATE

07-21-14
PLANS APPROVAL DATE

REGISTERED PROFESSIONAL ENGINEER Craig Shannon No. 66998 Exp. 9-30-16 CIVIL STATE OF CALIFORNIA

THE STATE OF CALIFORNIA OR ITS OFFICERS OR AGENTS SHALL NOT BE RESPONSIBLE FOR THE ACCURACY OR COMPLETENESS OF SCANNED COPIES OF THIS PLAN SHEET.

1 ADDED PER ADDENDUM No. 1 DATED SEPTEMBER 25, 2014 1

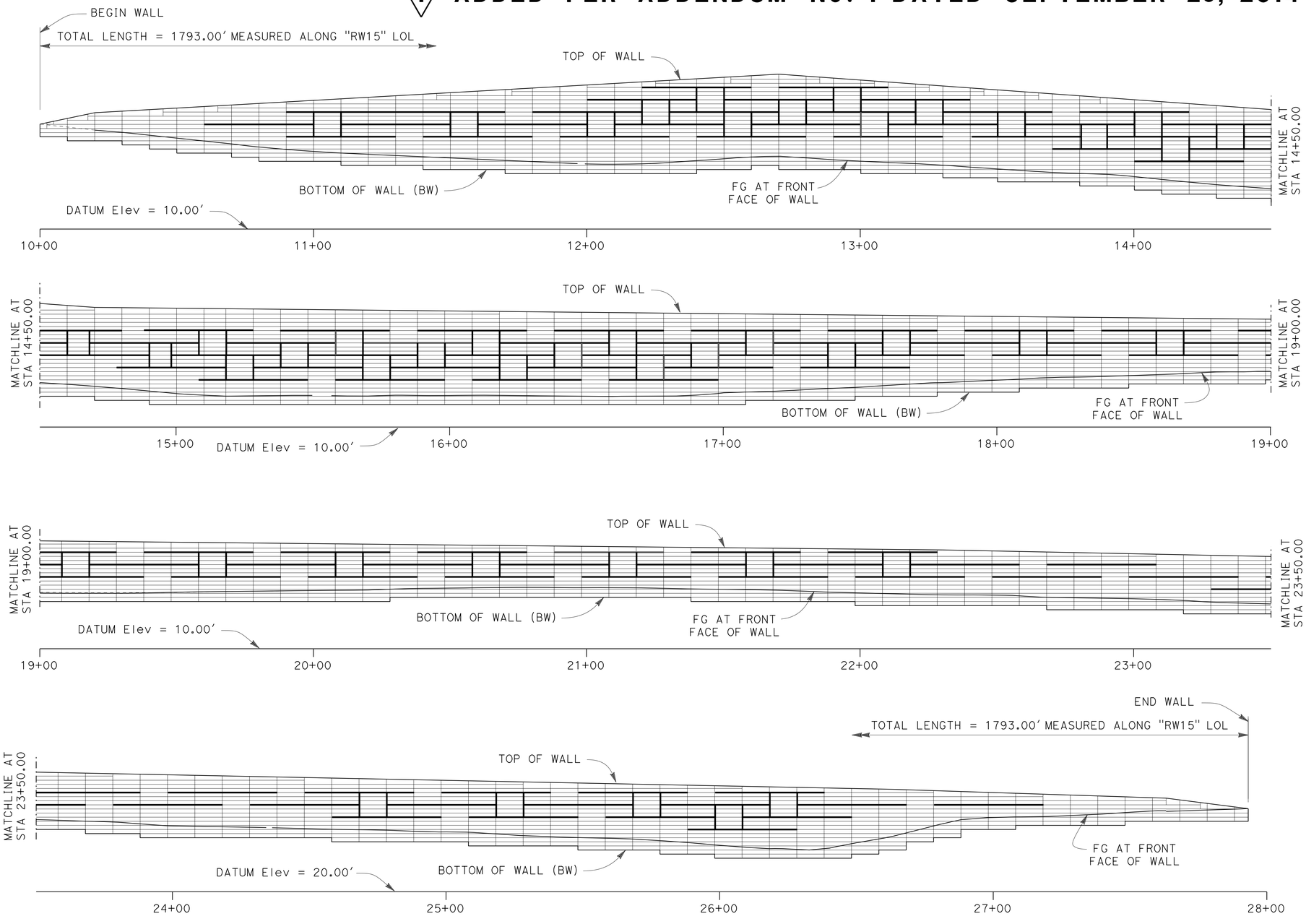

NOTE: CABLE RAILING NOT SHOWN FOR CLARITY.

MIRRORED DEVELOPED ELEVATION

SCALE 1" = 20'

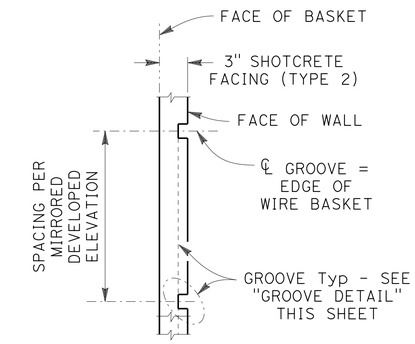

ELEVATION

ARCHITECTURAL TREATMENT DETAIL

SCALE 1 1/2"= 1'-0"

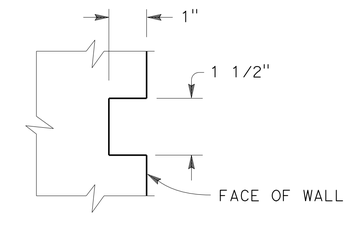

GROOVE DETAIL

SCALE 6"= 1'-0"

LEGEND:

INDICATES WIRE BASKET EDGE

INDICATES ARCHITECTURAL TREATMENT

APPROVED FOR RETAINING WALL WORK ONLY

RETAINING WALL ARCHITECTURAL DETAILS
(GRE WALL) ("RW15")

SCALE AS SHOWN

R5-10A

STATE OF CALIFORNIA - DEPARTMENT OF TRANSPORTATION
Caltrans® ENGINEERING SERVICES

FUNCTIONAL SUPERVISOR: BRIAN HINMAN
CALCULATED-DESIGNED BY: MIKE FORDHAM
CHECKED BY
REVISED BY
DATE REVISED

LAST REVISION 07-12-14
DATE PLOTTED => 22-SEP-2014
TIME PLOTTED => 13:39

Dist	COUNTY	ROUTE	POST MILES TOTAL PROJECT	SHEET No.	TOTAL SHEETS
11	SD	5	R29.1/R30.5	630	1012

Stephen P. Warren
LICENSED LANDSCAPE ARCHITECT

07-21-14
PLANS APPROVAL DATE

LICENSED LANDSCAPE ARCHITECT STEPHEN P. WARREN No. 3442 STATE OF CALIFORNIA
Stephen P. Warren
Signature
10-31-14
Renewal Date
05-23-14
Date

THE STATE OF CALIFORNIA OR ITS OFFICERS OR AGENTS SHALL NOT BE RESPONSIBLE FOR THE ACCURACY OR COMPLETENESS OF SCANNED COPIES OF THIS PLAN SHEET.

NOTES:

1. FOR ACCURATE RIGHT OF WAY DATA, CONTACT RIGHT OF WAY ENGINEERING AT THE DISTRICT OFFICE.
2. Exist Irr Conds are:
   8" CHDPE
   3" WATER
   2" Elect Cond
3. ALL OTHER Exist Irr Conds ARE PVC PIPE SIZE AS SHOWN

UNIVERSITY OF CALIFORNIA SAN DIEGO REMOVE IRRIGATION FACILITY (QUANTITIES ARE APPROXIMATE)

DESCRIPTION	EA *
REMOTE CONTROL VALVE	7
VALVE ASSEMBLY UNIT	7
GATE VALVE	5
GARDEN VALVE	14
QUICK COUPLER VALVE	1
DRIPPERLINE	2,000 LF

* FOR INFORMATION ONLY

1

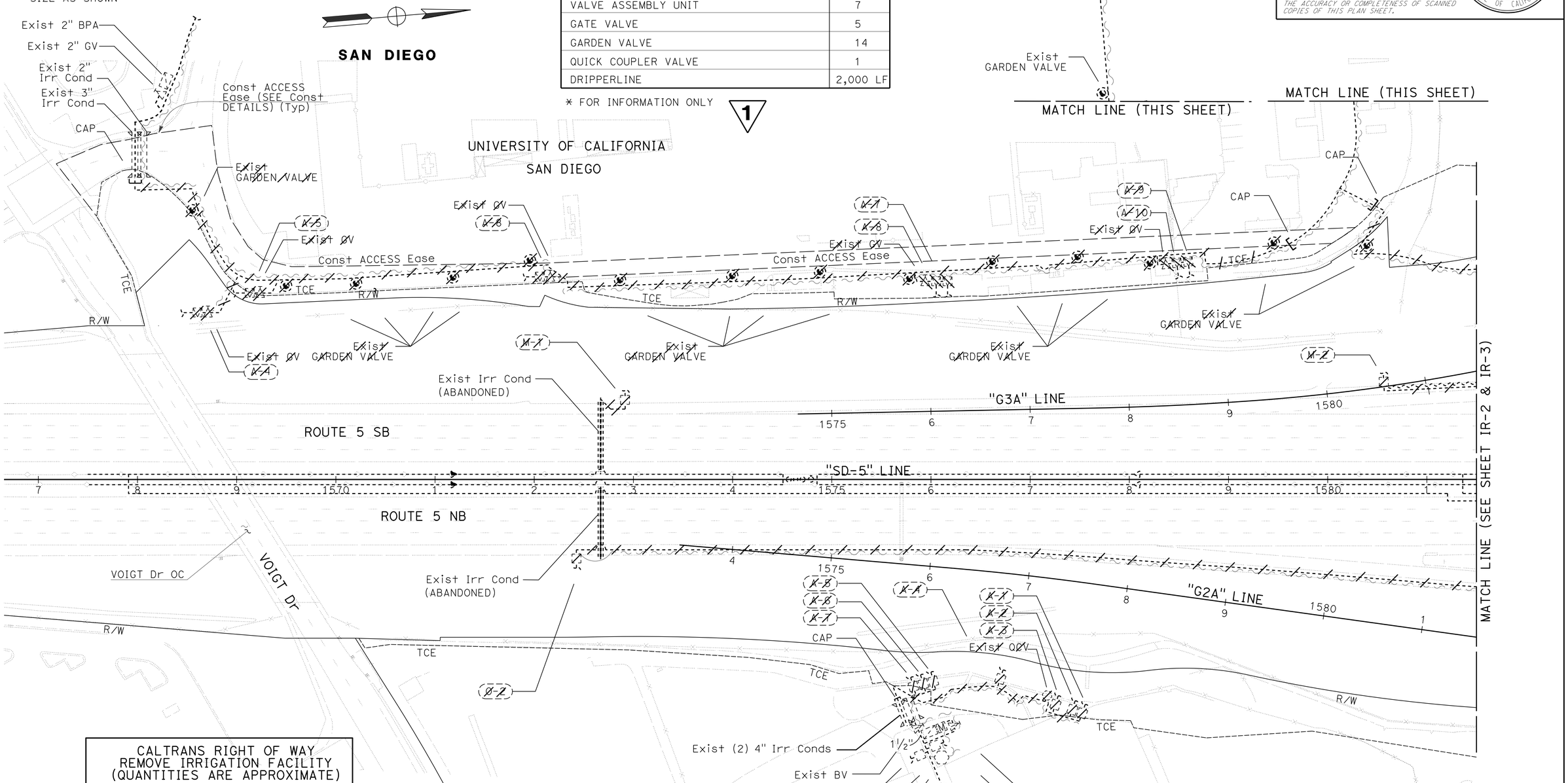

CALTRANS RIGHT OF WAY REMOVE IRRIGATION FACILITY (QUANTITIES ARE APPROXIMATE)

DESCRIPTION	EA *
SPRINKLERS	-
EMITTERS	140

1 * FOR INFORMATION ONLY

1 **REPLACED PER ADDENDUM No. 1 DATED SEPTEMBER 25, 2014**

APPROVED FOR IRRIGATION REMOVAL WORK ONLY

IRRIGATION REMOVAL PLAN

SCALE: 1"=50'

IR-1

REVISED BY	DATE REVISED

CALCULATED-DESIGNED BY: JOEL HORTIZUELA
CHECKED BY: STEVE WARREN
SENIOR LANDSCAPE ARCHITECT: STEPHEN ALVAREZ

STATE OF CALIFORNIA - DEPARTMENT OF TRANSPORTATION
Caltrans LANDSCAPE ARCHITECTURE

LAST REVISION 07-14-14
DATE PLOTTED => 22-SEP-2014
TIME PLOTTED => 13:39

Dist	COUNTY	ROUTE	POST MILES TOTAL PROJECT	SHEET No.	TOTAL SHEETS
11	SD	5	R29.1/R30.5	631	1012

Stephen P. Warren
LICENSED LANDSCAPE ARCHITECT

07-21-14
PLANS APPROVAL DATE

LICENSED LANDSCAPE ARCHITECT STEPHEN P. WARREN No. 3442 Stephen P. Warren REGISTERED PROFESSIONAL ENGINEER 10-31-14 Date REGISTERED PROFESSIONAL ENGINEER 05-23-14 Date STATE OF CALIFORNIA

THE STATE OF CALIFORNIA OR ITS OFFICERS OR AGENTS SHALL NOT BE RESPONSIBLE FOR THE ACCURACY OR COMPLETENESS OF SCANNED COPIES OF THIS PLAN SHEET.

NOTE:
FOR ACCURATE RIGHT OF WAY DATA, CONTACT RIGHT OF WAY ENGINEERING AT THE DISTRICT OFFICE.

1 **REPLACED PER ADDENDUM No. 1 DATED SEPTEMBER 25, 2014**

UNIVERSITY OF CALIFORNIA SAN DIEGO REMOVE IRRIGATION FACILITY (QUANTITIES ARE APPROXIMATE)	
DESCRIPTION	EA *
REMOTE CONTROL VALVE	3
GATE VALVE	2
VALVE ASSEMBLY UNIT	3
GARDEN VALVE	2
DRIPPERLINE	1,750 LF

* FOR INFORMATION ONLY

1

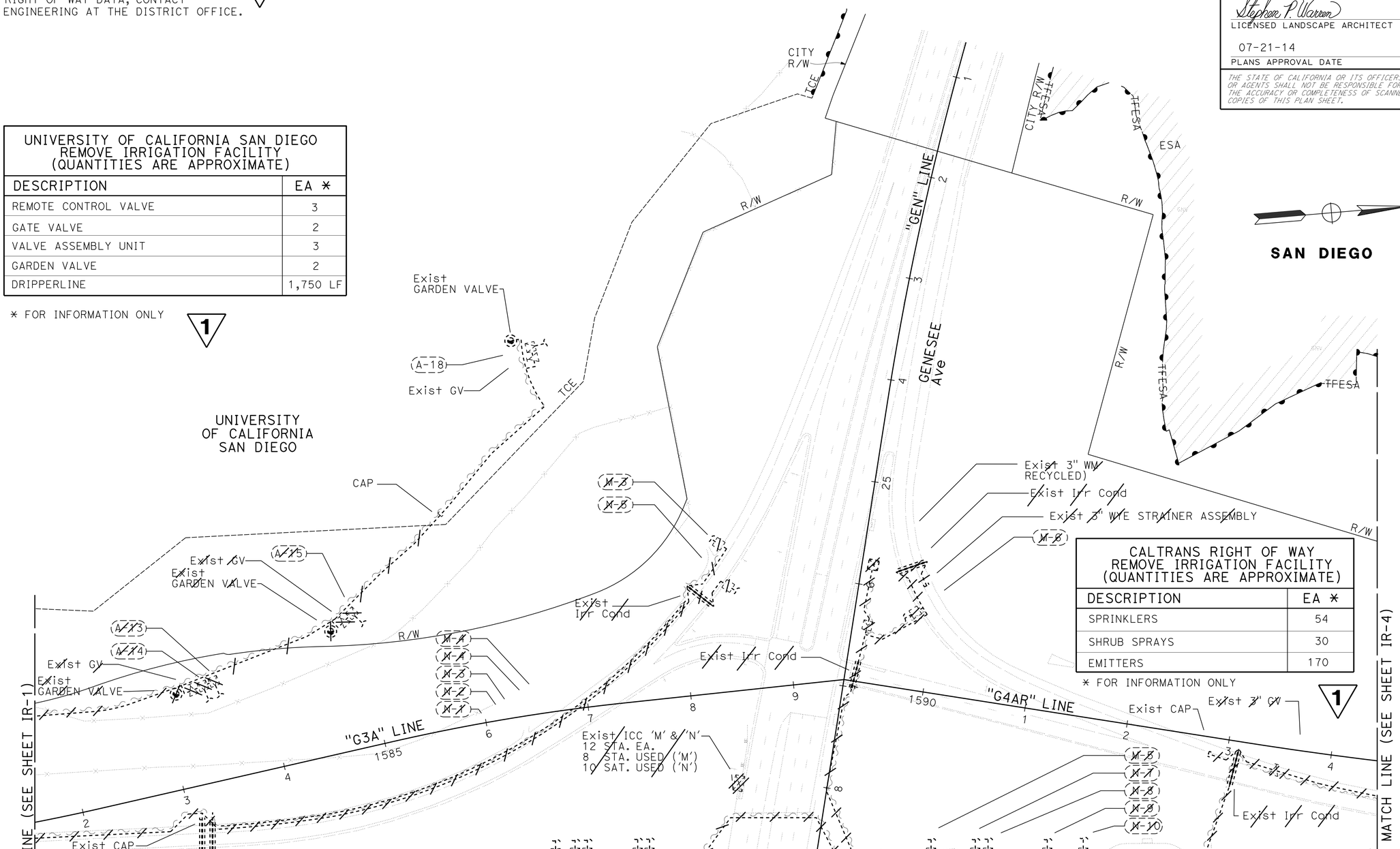

CALTRANS RIGHT OF WAY REMOVE IRRIGATION FACILITY (QUANTITIES ARE APPROXIMATE)	
DESCRIPTION	EA *
SPRINKLERS	54
SHRUB SPRAYS	30
EMITTERS	170

* FOR INFORMATION ONLY

1

IRRIGATION REMOVAL PLAN

APPROVED FOR IRRIGATION REMOVAL WORK ONLY

SCALE: 1"=50'

IR-2

STATE OF CALIFORNIA - DEPARTMENT OF TRANSPORTATION
Caltrans® LANDSCAPE ARCHITECTURE

SENIOR LANDSCAPE ARCHITECT: STEPHEN ALVAREZ
CALCULATED-DESIGNED BY: JOEL HORTIZUELA
CHECKED BY: STEVE WARREN
REVISED BY
DATE REVISED

LAST REVISION 07-14-14
DATE PLOTTED => 22-SEP-2014
TIME PLOTTED => 13:39

NOTE:

FOR ACCURATE RIGHT OF WAY DATA, CONTACT RIGHT OF WAY ENGINEERING AT THE DISTRICT OFFICE.

1 REPLACED PER ADDENDUM No. 1 DATED SEPTEMBER 25, 2014

Dist	COUNTY	ROUTE	POST MILES TOTAL PROJECT	SHEET No.	TOTAL SHEETS
11	SD	5	R29.1/R30.5	632	1012

Stephen P. Warren
LICENSED LANDSCAPE ARCHITECT

07-21-14
PLANS APPROVAL DATE

LICENSED LANDSCAPE ARCHITECT STEPHEN P. WARREN No. 3442 STATE OF CALIFORNIA
Stephen P. Warren
10-31-14 Expiration Date
05-23-14 Date

THE STATE OF CALIFORNIA OR ITS OFFICERS OR AGENTS SHALL NOT BE RESPONSIBLE FOR THE ACCURACY OR COMPLETENESS OF SCANNED COPIES OF THIS PLAN SHEET.

SAN DIEGO

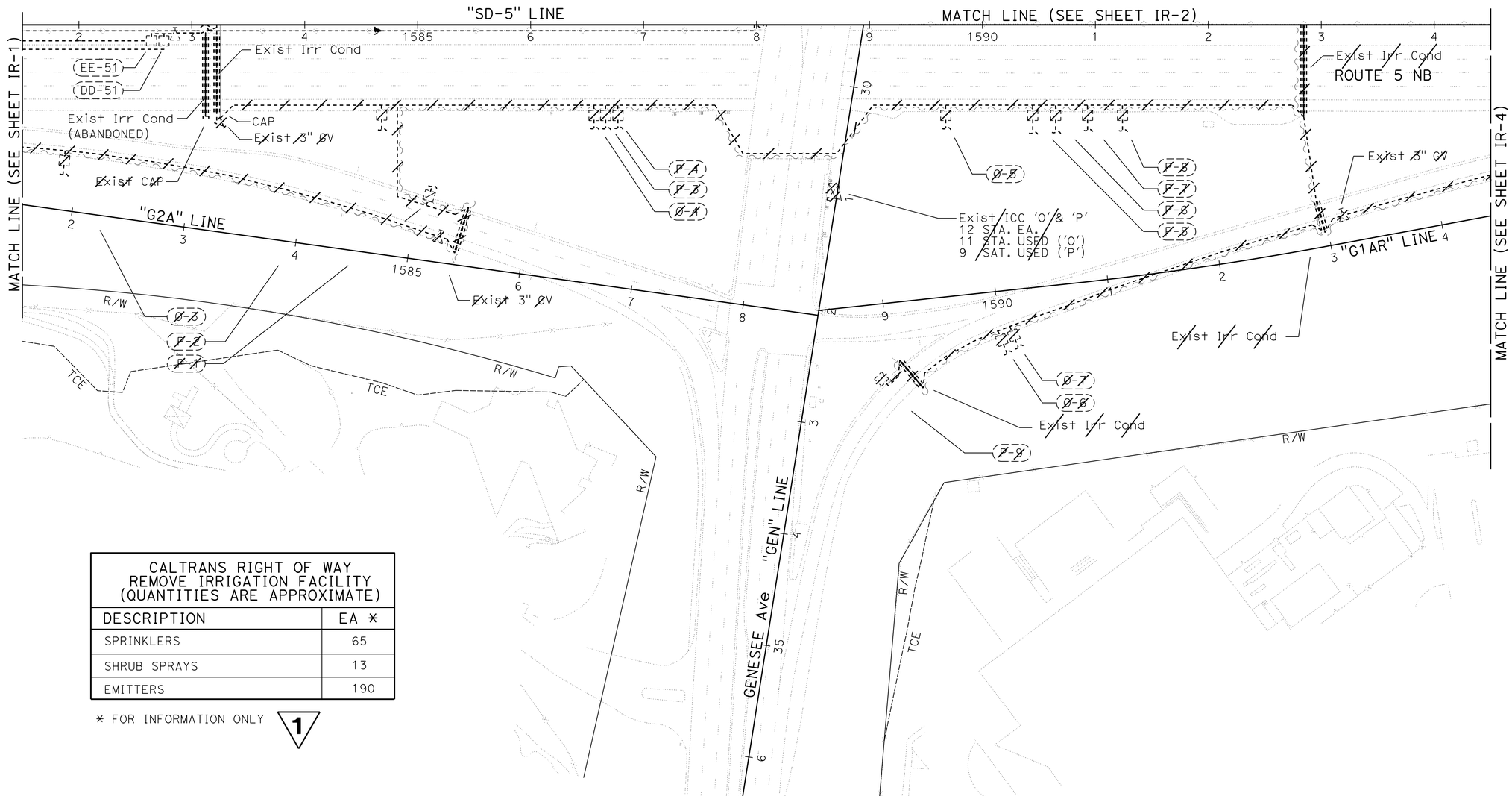

CALTRANS RIGHT OF WAY REMOVE IRRIGATION FACILITY (QUANTITIES ARE APPROXIMATE)	
DESCRIPTION	EA *
SPRINKLERS	65
SHRUB SPRAYS	13
EMITTERS	190

* FOR INFORMATION ONLY 1

APPROVED FOR IRRIGATION REMOVAL WORK ONLY

IRRIGATION REMOVAL PLAN

SCALE: 1"=50'

IR-3

STATE OF CALIFORNIA - DEPARTMENT OF TRANSPORTATION
Caltrans LANDSCAPE ARCHITECTURE

SENIOR LANDSCAPE ARCHITECT: STEPHEN ALVAREZ
CALCULATED-DESIGNED BY: JOEL HORTIZUELA
CHECKED BY: STEVE WARREN
REVISED BY
DATE REVISED

LAST REVISION 07-14-14
DATE PLOTTED => 22-SEP-2014
TIME PLOTTED => 13:39

Dist	COUNTY	ROUTE	POST MILES TOTAL PROJECT	SHEET No.	TOTAL SHEETS
11	SD	5	R29.1/R30.5	633	1012

Stephen P. Warren
LICENSED LANDSCAPE ARCHITECT

07-21-14
PLANS APPROVAL DATE

LICENSED LANDSCAPE ARCHITECT
STEPHEN P. WARREN No. 3442
Stephen P. Warren
10-31-14
05-23-14
STATE OF CALIFORNIA

THE STATE OF CALIFORNIA OR ITS OFFICERS OR AGENTS SHALL NOT BE RESPONSIBLE FOR THE ACCURACY OR COMPLETENESS OF SCANNED COPIES OF THIS PLAN SHEET.

NOTE:

FOR ACCURATE RIGHT OF WAY DATA, CONTACT RIGHT OF WAY ENGINEERING AT THE DISTRICT OFFICE.

1 REPLACED PER ADDENDUM No. 1 DATED SEPTEMBER 25, 2014

CALTRANS RIGHT OF WAY REMOVE IRRIGATION FACILITY (QUANTITIES ARE APPROXIMATE)	
DESCRIPTION	EA *
SPRINKLERS	50
BUBBLERS	30
EMITTERS	143

* FOR INFORMATION ONLY 1

SAN DIEGO

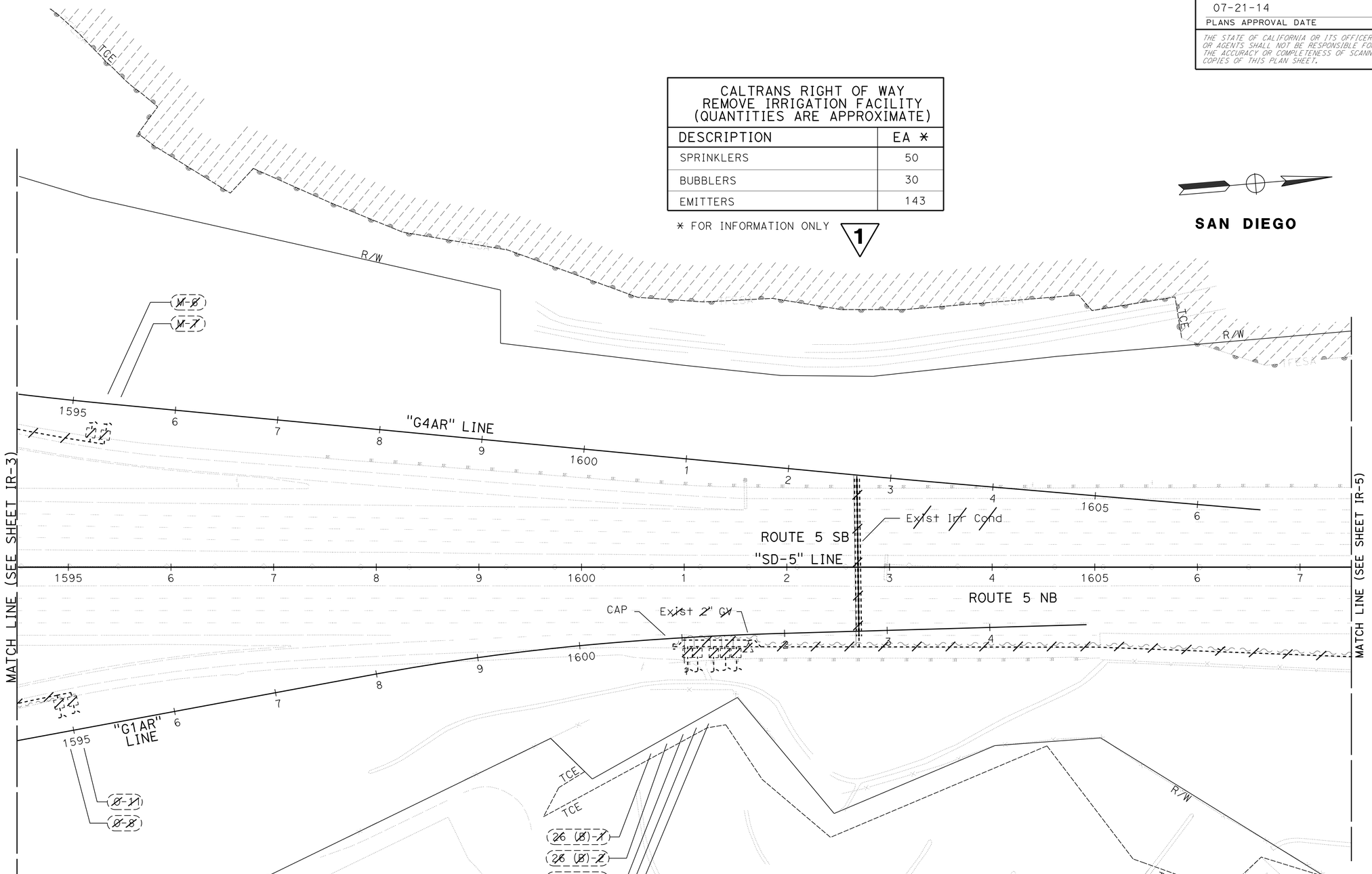

APPROVED FOR IRRIGATION REMOVAL WORK ONLY

IRRIGATION REMOVAL PLAN

SCALE: 1"=50'

IR-4

STATE OF CALIFORNIA - DEPARTMENT OF TRANSPORTATION
Caltrans® LANDSCAPE ARCHITECTURE

SENIOR LANDSCAPE ARCHITECT: STEPHEN ALVAREZ
CALCULATED-DESIGNED BY: JOEL HORTIZUELA
CHECKED BY: STEVE WARREN
REVISED BY
DATE REVISED

LAST REVISION 07-15-14
DATE PLOTTED => 22-SEP-2014
TIME PLOTTED => 13:39

Dist	COUNTY	ROUTE	POST MILES TOTAL PROJECT	SHEET No.	TOTAL SHEETS
11	SD	5	R29.1/R30.5	634	1012

Stephen P. Warren
LICENSED LANDSCAPE ARCHITECT

07-21-14
PLANS APPROVAL DATE

LICENSED LANDSCAPE ARCHITECT
STEPHEN P. WARREN No. 3442
Stephen P. Warren
10-31-14 Renewal Date
05-23-14 Date
STATE OF CALIFORNIA

THE STATE OF CALIFORNIA OR ITS OFFICERS OR AGENTS SHALL NOT BE RESPONSIBLE FOR THE ACCURACY OR COMPLETENESS OF SCANNED COPIES OF THIS PLAN SHEET.

NOTE:

FOR ACCURATE RIGHT OF WAY DATA, CONTACT RIGHT OF WAY ENGINEERING AT THE DISTRICT OFFICE.

1 REPLACED PER ADDENDUM No. 1 DATED SEPTEMBER 25, 2014

SAN DIEGO

CALTRANS RIGHT OF WAY REMOVE IRRIGATION FACILITY (QUANTITIES ARE APPROXIMATE)	
DESCRIPTION	EA *
SPRINKLERS	84
EMITTERS	14

* FOR INFORMATION ONLY

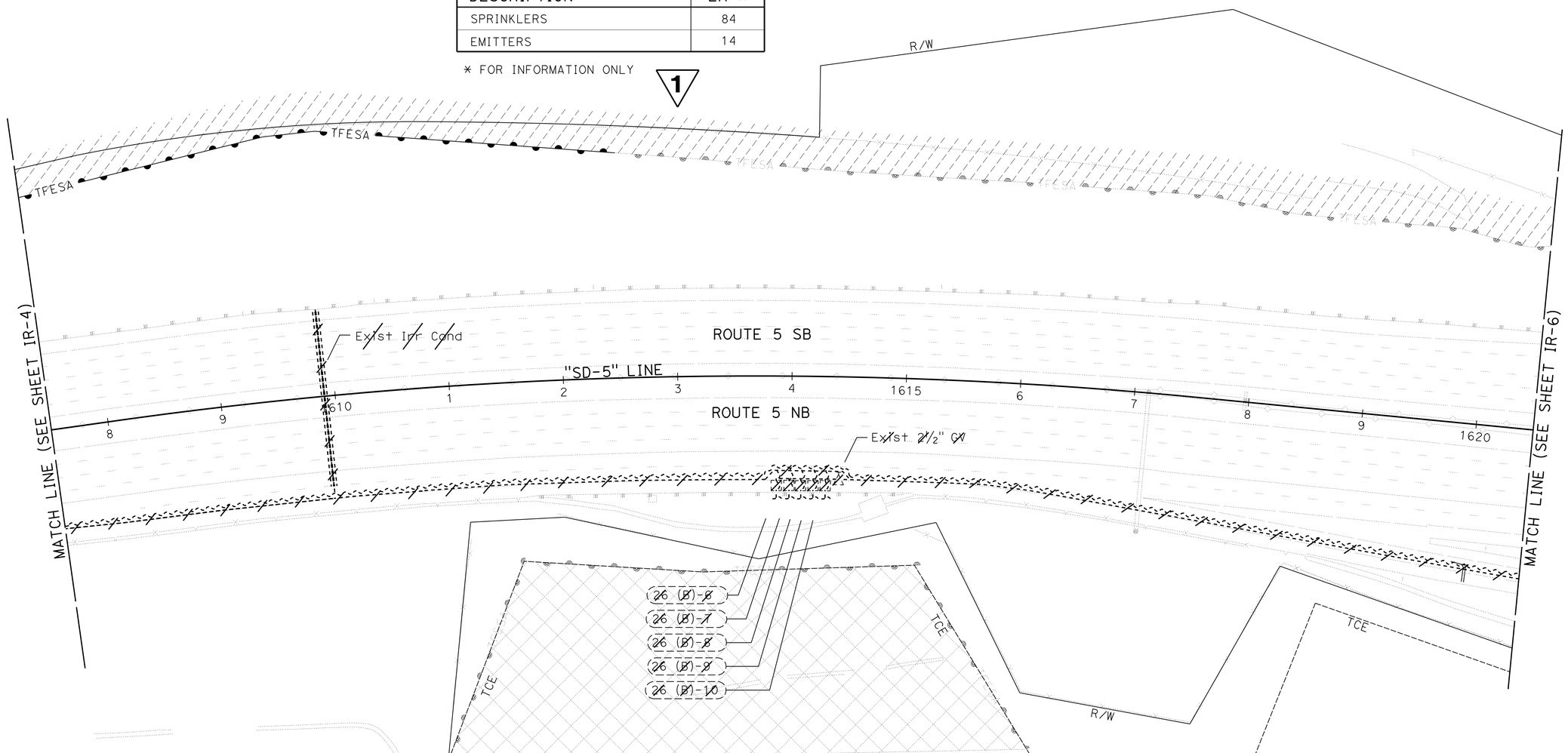

APPROVED FOR IRRIGATION REMOVAL WORK ONLY

IRRIGATION REMOVAL PLAN

SCALE: 1"=50'

IR-5

STATE OF CALIFORNIA - DEPARTMENT OF TRANSPORTATION
Caltrans® LANDSCAPE ARCHITECTURE

SENIOR LANDSCAPE ARCHITECT: STEPHEN ALVAREZ

CALCULATED-DESIGNED BY: JOEL HORTIZUELA
CHECKED BY: STEVE WARREN

REVISED BY
DATE REVISED

LAST REVISION 07-15-14
DATE PLOTTED => 22-SEP-2014
TIME PLOTTED => 13:39

Dist	COUNTY	ROUTE	POST MILES TOTAL PROJECT	SHEET No.	TOTAL SHEETS
11	SD	5	R29.1/R30.5	635	1012

Stephen P. Warren
LICENSED LANDSCAPE ARCHITECT

07-21-14
PLANS APPROVAL DATE

LICENSED LANDSCAPE ARCHITECT
STEPHEN P. WARREN No. 3442
Stephen P. Warren
10-31-14
05-23-14
STATE OF CALIFORNIA

THE STATE OF CALIFORNIA OR ITS OFFICERS OR AGENTS SHALL NOT BE RESPONSIBLE FOR THE ACCURACY OR COMPLETENESS OF SCANNED COPIES OF THIS PLAN SHEET.

NOTE:

FOR ACCURATE RIGHT OF WAY DATA, CONTACT RIGHT OF WAY ENGINEERING AT THE DISTRICT OFFICE.

1 **REPLACED PER ADDENDUM No. 1 DATED SEPTEMBER 25, 2014**

SAN DIEGO

CALTRANS RIGHT OF WAY REMOVE IRRIGATION FACILITY (QUANTITIES ARE APPROXIMATE)	
DESCRIPTION	EA *
SPRINKLERS	43
BUBBLERS	197

NOTE: QUANTITIES ARE IN ADDITION TO SPRINKLERS SHOWN

* FOR INFORMATION ONLY

1

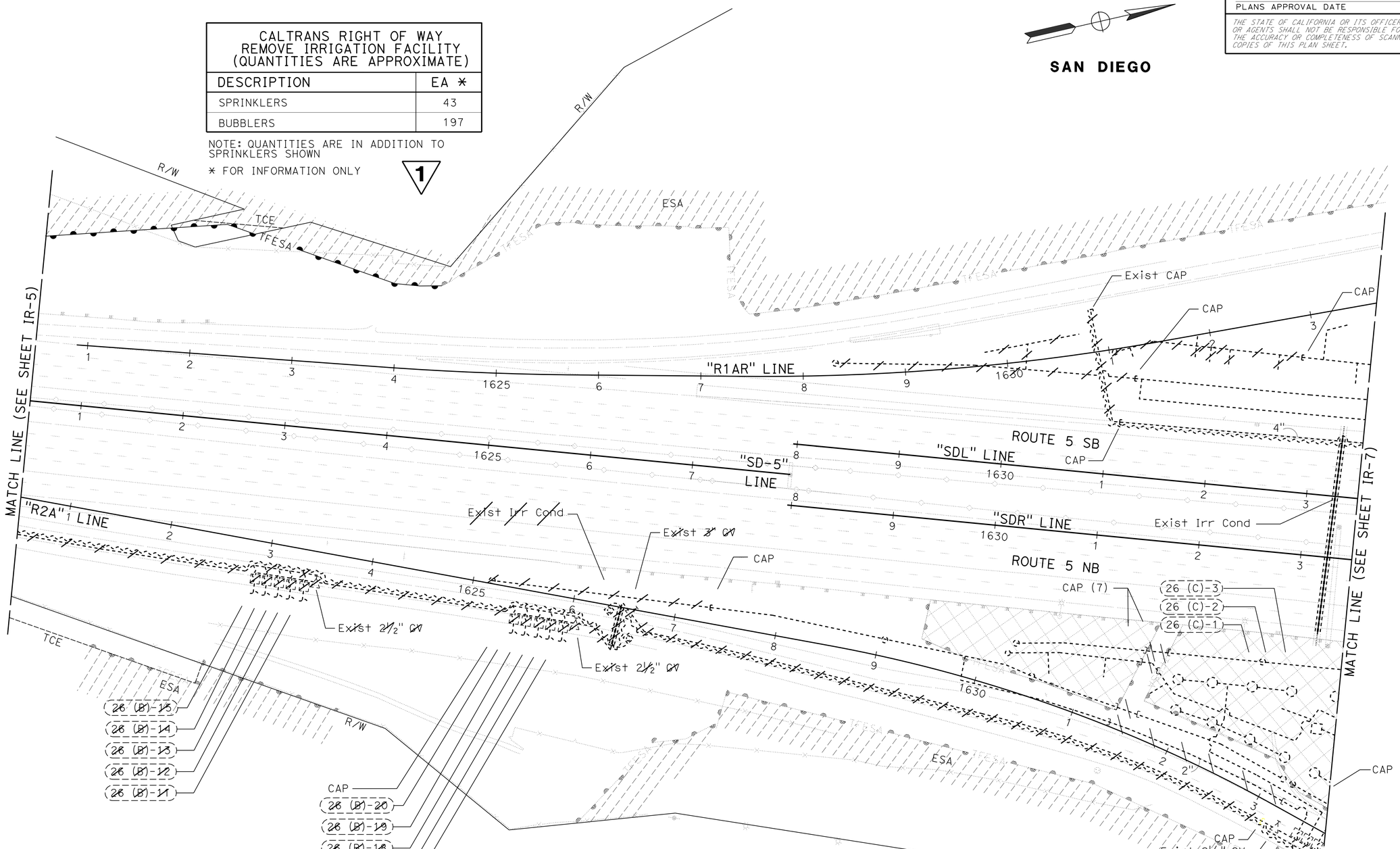

APPROVED FOR IRRIGATION REMOVAL WORK ONLY

IRRIGATION REMOVAL PLAN

SCALE: 1"=50'

IR-6

STATE OF CALIFORNIA - DEPARTMENT OF TRANSPORTATION
Caltrans LANDSCAPE ARCHITECTURE

SENIOR LANDSCAPE ARCHITECT: STEPHEN ALVAREZ

CALCULATED-DESIGNED BY: JOEL HORTIZUELA
CHECKED BY: STEVE WARREN

REVISED BY
DATE REVISED

LAST REVISION 07-15-14
DATE PLOTTED => 22-SEP-2014
TIME PLOTTED => 13:39

1 REPLACED PER ADDENDUM No. 1 DATED SEPTEMBER 25, 2014

Dist	COUNTY	ROUTE	POST MILES TOTAL PROJECT	SHEET No.	TOTAL SHEETS
11	SD	5	R29.1/R30.5	756	1012

Randell D. Hiatt
REGISTERED CIVIL ENGINEER

November 15, 2013
PLANS APPROVAL DATE

REGISTERED PROFESSIONAL ENGINEER
Randell D. Hiatt
No. C50200
Exp. 6-30-15
CIVIL
STATE OF CALIFORNIA

1

THE STATE OF CALIFORNIA OR ITS OFFICERS OR AGENTS SHALL NOT BE RESPONSIBLE FOR THE ACCURACY OR COMPLETENESS OF SCANNED COPIES OF THIS PLAN SHEET.

TO ACCOMPANY PLANS DATED 07-21-14

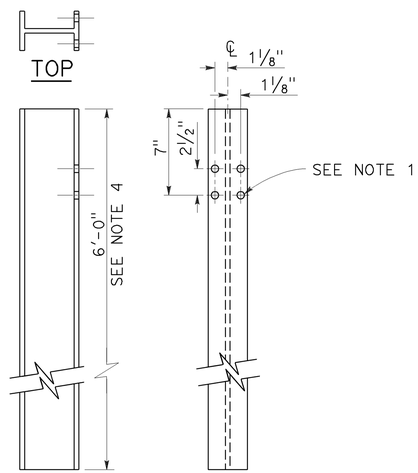

SIDE FRONT

W6 x 9 OR W6 x 8.5
STEEL POST
See Note 4

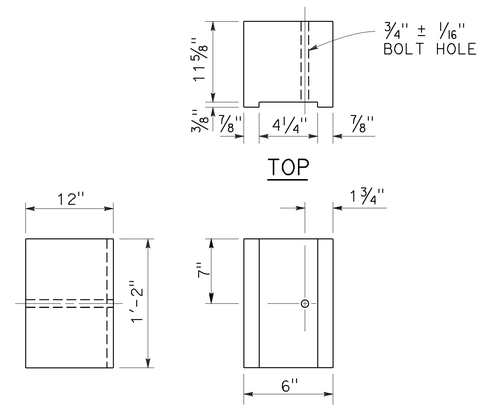

SIDE FRONT

6" x 12"
NOTCHED WOOD BLOCK
See Notes 2 and 3

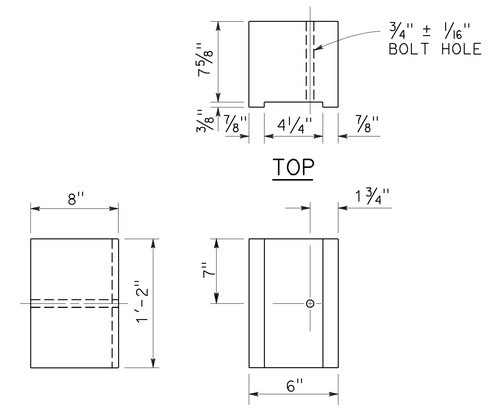

SIDE FRONT

6" x 8"
NOTCHED WOOD BLOCK
Only for use with metal beam guard railing. See Note 5

NOTES:

1. All holes in steel post shall be 13/16" Dia maximum.
2. Dimensions shown for wood block are nominal.
3. Notched face of block faces steel post.
4. 6'-0" length posts to be used for typical roadway installation. See Revised Standard Plan RSP A77N3.
5. See Revised Standard Plan RSP A77L3 for use of 6" x 8" and 8" x 8" notched wood blocks.
6. This post and 8" x 12" block combination to be used for line post sections of MGS on narrow roadways and where strengthened line post sections of MGS are warranted to shield fixed objects.

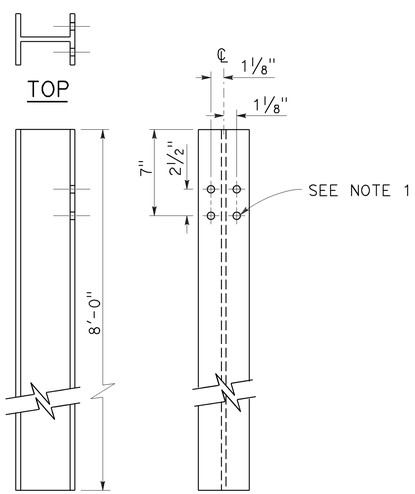

SIDE FRONT

W6 x 15
STEEL POST
See Note 6

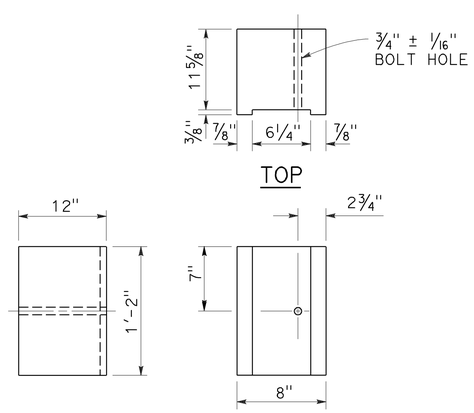

SIDE FRONT

8" x 12"
NOTCHED WOOD BLOCK
See Notes 2 and 3

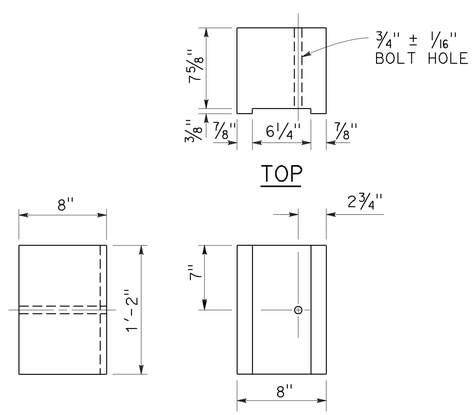

SIDE FRONT

8" x 8"
NOTCHED WOOD BLOCK
Only for use with metal beam guard railing. See Note 5

STATE OF CALIFORNIA
DEPARTMENT OF TRANSPORTATION

MIDWEST GUARDRAIL SYSTEM STEEL POST AND NOTCHED WOOD BLOCK DETAILS

NO SCALE

RSP A77N2 DATED NOVEMBER 15, 2013 SUPERSEDES RSP A77N2
DATED JULY 19, 2013 THAT SUPPLEMENTS THE STANDARD PLANS BOOK DATED 2010.

REVISED STANDARD PLAN RSP A77N2

2010 REVISED STANDARD PLAN RSP A77N2

10-29-13

1 REPLACED PER ADDENDUM No. 1 DATED SEPTEMBER 25, 2014

Dist	COUNTY	ROUTE	POST MILES TOTAL PROJECT	SHEET No.	TOTAL SHEETS
11	SD	5	R29.1/R30.5	757	1012

Randell D. Hiatt
REGISTERED CIVIL ENGINEER

November 15, 2013
PLANS APPROVAL DATE

REGISTERED PROFESSIONAL ENGINEER
Randell D. Hiatt
No. C50200
Exp. 6-30-15
CIVIL
STATE OF CALIFORNIA

1

THE STATE OF CALIFORNIA OR ITS OFFICERS OR AGENTS SHALL NOT BE RESPONSIBLE FOR THE ACCURACY OR COMPLETENESS OF SCANNED COPIES OF THIS PLAN SHEET.

TO ACCOMPANY PLANS DATED 07-21-14

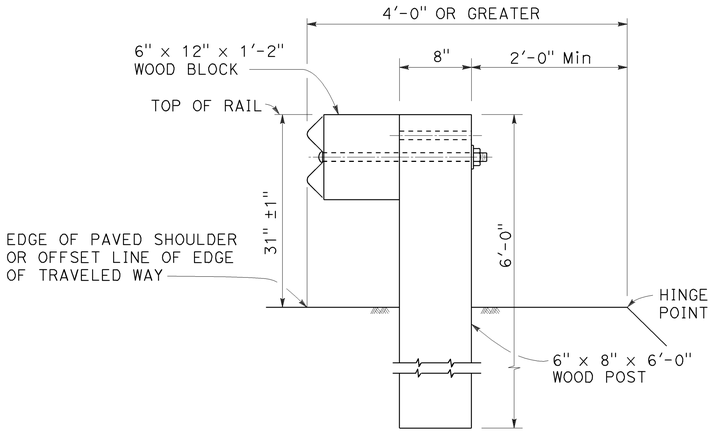

DETAIL A

TYPICAL ROADWAY INSTALLATION

See Note 1

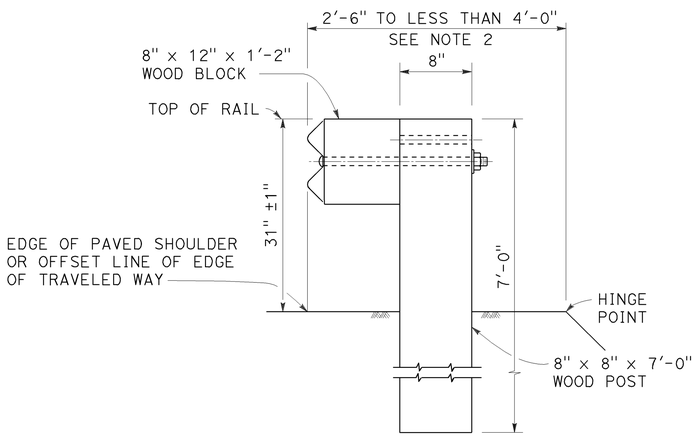

DETAIL B

NARROW ROADWAY INSTALLATION

See Note 1

POST EMBEDMENT

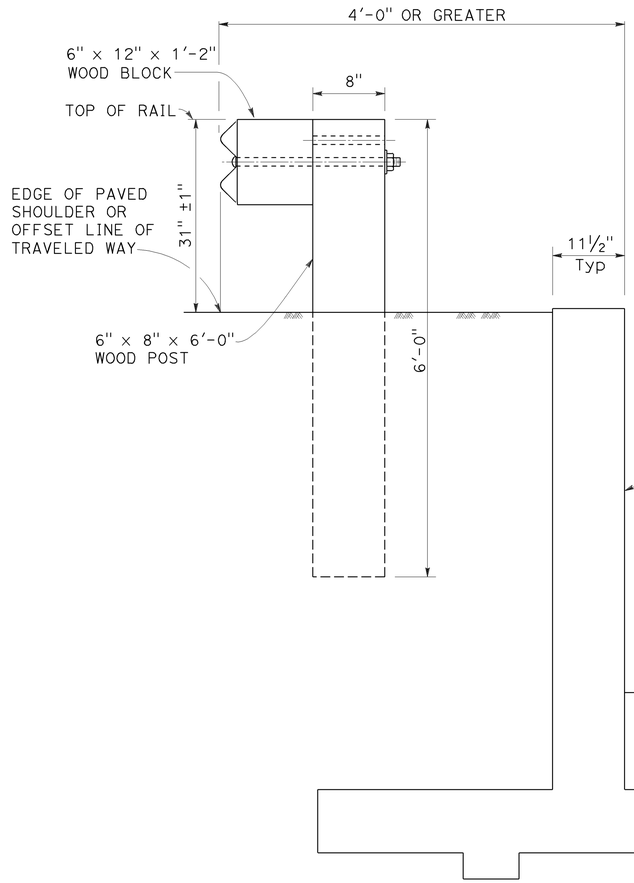

DETAIL C

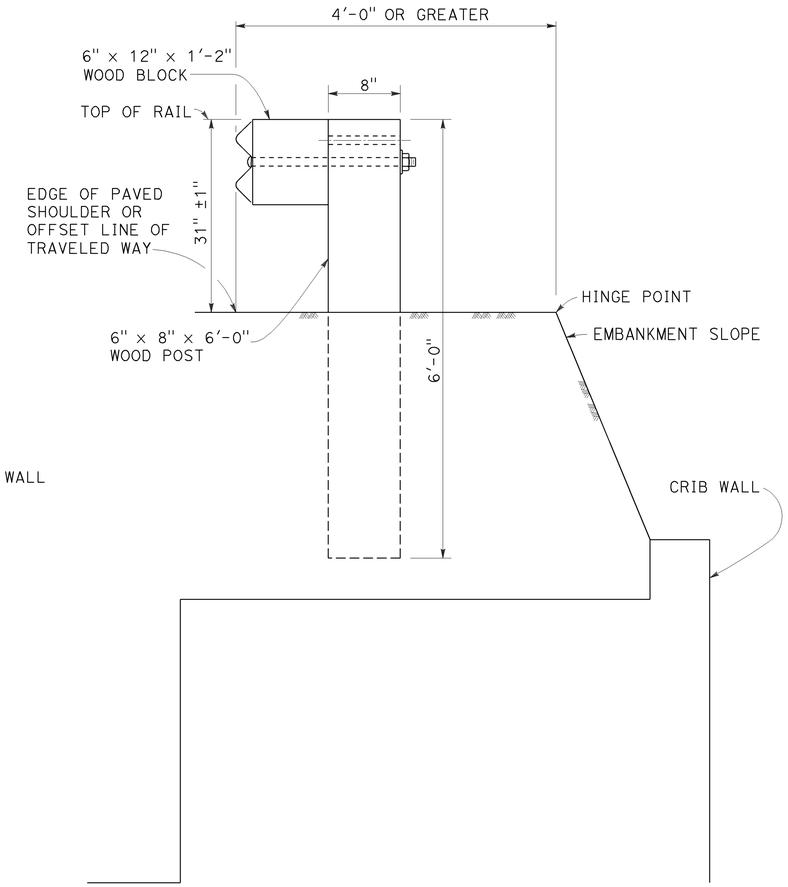

DETAIL D

INSTALLATION AT EARTH RETAINING WALLS

NOTES:

1. These installation details also applicable to steel line post installations. For Detail A, C, and D, where steel line post installations are constructed, W6 x 8.5 or W6 x 9 steel post, 6'-0" in length, with 6" x 12" x 1'-2" notched wood blocks or notched recycled plastic blocks are to be used in place of the size of wood post and wood block shown. For Detail B, where steel line post installations are constructed, W6 x 15 steel post, 8'-0" in length, with 8" x 12" x 1'-2" notched wood blocks or notched recycled plastic blocks are to be used in place of the size of wood post and wood block shown. For additional installation details, see Revised Standard Plan RSP A77L1 and RSP A77L2.
2. Where the distance between the face of the rail and the hinge point is less than 2'-6", see the Project Plans for special details.
3. For dike positioning with MGS installations, see Revised Standard Plan RSP A77N4.

STATE OF CALIFORNIA
DEPARTMENT OF TRANSPORTATION

MIDWEST GUARDRAIL SYSTEM TYPICAL LINE POST EMBEDMENT AND HINGE POINT OFFSET DETAILS

NO SCALE

RSP A77N3 DATED NOVEMBER 15, 2013 SUPERSEDES RSP A77N3 DATED JULY 19, 2013 THAT SUPPLEMENTS THE STANDARD PLANS BOOK DATED 2010.

REVISED STANDARD PLAN RSP A77N3

2010 REVISED STANDARD PLAN RSP A77N3

Dist	COUNTY	ROUTE	POST MILES TOTAL PROJECT	SHEET No.	TOTAL SHEETS
11	SD	5	R29.1/R30.5	763	1012

Randell D. Hiatt
REGISTERED CIVIL ENGINEER

November 15, 2013
PLANS APPROVAL DATE

REGISTERED PROFESSIONAL ENGINEER
Randell D. Hiatt
No. C50200
Exp. 6-30-15
CIVIL
STATE OF CALIFORNIA

THE STATE OF CALIFORNIA OR ITS OFFICERS OR AGENTS SHALL NOT BE RESPONSIBLE FOR THE ACCURACY OR COMPLETENESS OF SCANNED COPIES OF THIS PLAN SHEET.

1

TO ACCOMPANY PLANS DATED 07-21-14

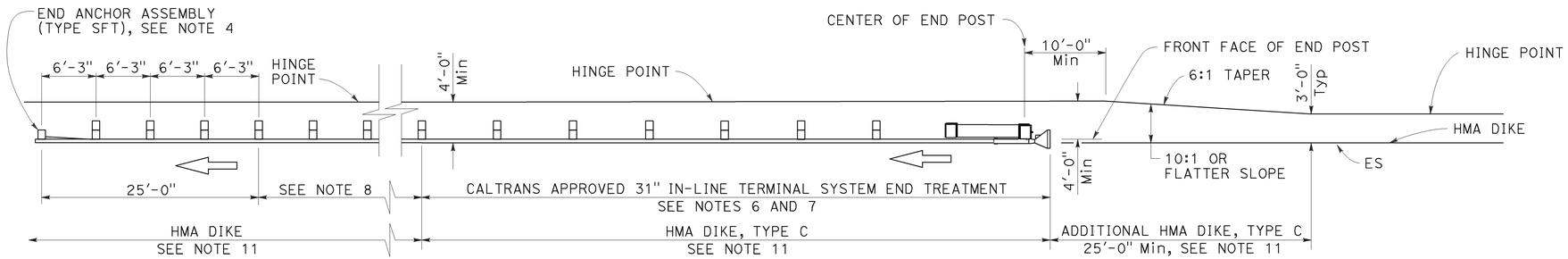

TYPE 11A LAYOUT

(Embankment MGS installation with 31" in-line end treatment at traffic approach end of railing) see Note 5

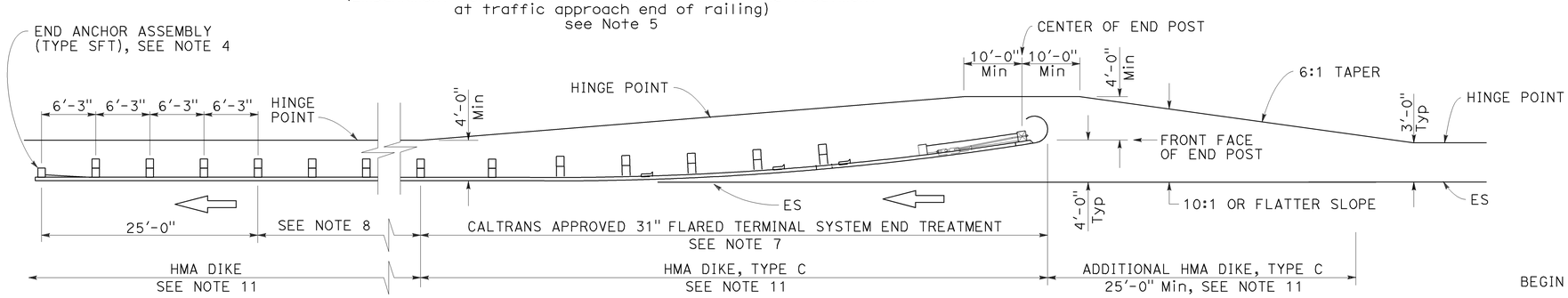

TYPE 11B LAYOUT

(Embankment MGS installation with 31" flared end treatment at traffic approach end of railing) see Note 5

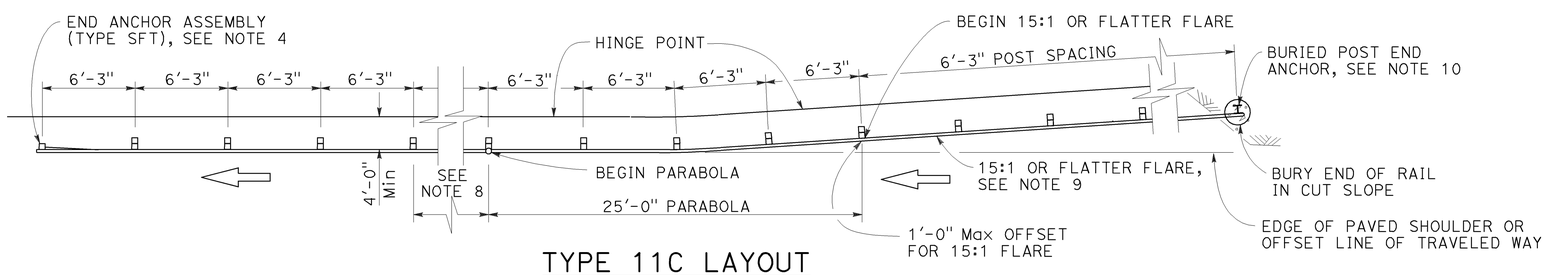

TYPE 11C LAYOUT

(Embankment MGS installation with buried end anchor treatment at traffic approach end of railing) see Notes 5 and 11

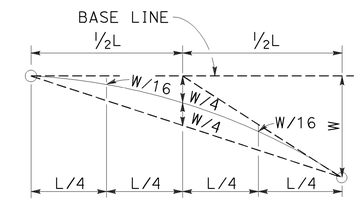

TYPICAL PARABOLIC LAYOUT

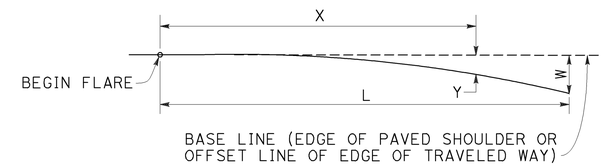

$$Y = \frac{WX^2}{L^2}$$

Y = OFFSET FROM BASE LINE
W = MAXIMUM OFFSET
X = DISTANCE ALONG BASE LINE
L = LENGTH OF FLARE

PARABOLIC FLARE OFFSETS

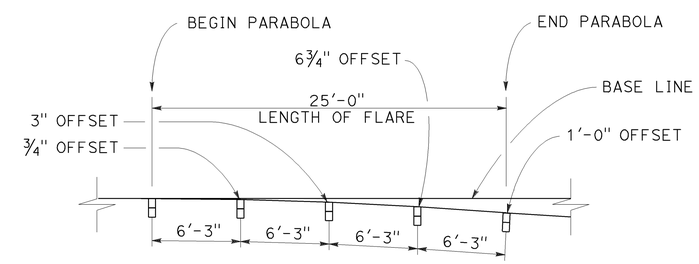

TYPICAL FLARE OFFSETS FOR 1 FOOT Max END OFFSET

NOTES:

1. Line post, blocks and hardware to be used are shown on Revised Standard Plans RSP A77L1, RSP A77L2, RSP A77M1, RSP A77N1 and RSP A77N2.
2. MGS post spacing to be 6'-3" center to center, except as otherwise noted.
3. Except as noted, line posts are 6" x 8" x 6'-0" wood with 6" x 12" x 1'-2" wood blocks. W6 x 8.5 or W6 x 9 steel posts, 6'-0" in length, with 6" x 12" x 1'-2" notched wood blocks or recycled plastic blocks may be used for 6" x 8" x 6'-0" wood post with 6" x 12" x 1'-2" wood blocks where applicable and when specified.
4. For End Anchor Assembly (Type SFT) details, see Revised Standard Plan RSP A77S1.
5. Layout Types 11A, 11B or 11C are typically used where MGS is recommended to shield embankment slopes and a crashworthy end treatment is required for only one direction of traffic.
6. 31" in-line terminal system end treatments are used where site conditions will not accommodate a flared end treatment.
7. The type of 31" terminal system end treatment to be used will be shown on the Project Plans.
8. Dependent on site conditions (embankment height and side slope), construction of additional MGS (length equal to multiples of 12'-6" with 6'-3" post spacing) may be advisable.
9. The 15:1 or flatter flare used with buried end anchors is based on the edge of the paved shoulder or offset line of edge of the traveled way. The length of MGS within the 15:1 or flatter flare is based on site conditions and should be a length equal to multiples of 12'-6".
10. For details of the buried post end anchor used with Type 11C Layout, see Revised Standard Plan RSP A77T2.
11. Where placement of dike is required with MGS installations, see Revised Standard Plan RSP A77N4 for dike positioning details.

STATE OF CALIFORNIA
DEPARTMENT OF TRANSPORTATION

MIDWEST GUARDRAIL SYSTEM TYPICAL LAYOUTS FOR EMBANKMENTS

NO SCALE

RSP A77P1 DATED NOVEMBER 15, 2013 SUPERSEDES RSP A77P1 DATED JULY 19, 2013 THAT SUPPLEMENTS THE STANDARD PLANS BOOK DATED 2010.

1 REPLACED PER ADDENDUM No. 1 DATED SEPTEMBER 25, 2014

REVISED STANDARD PLAN RSP A77P1

2010 REVISED STANDARD PLAN RSP A77P1

10-4-13

1 REPLACED PER ADDENDUM No. 1 DATED SEPTEMBER 25, 2014

Dist	COUNTY	ROUTE	POST MILES TOTAL PROJECT	SHEET No.	TOTAL SHEETS
11	SD	5	R29.1/R30.5	767	1012

Randell D. Hiatt
REGISTERED CIVIL ENGINEER

November 15, 2013
PLANS APPROVAL DATE

REGISTERED PROFESSIONAL ENGINEER
Randell D. Hiatt
No. C50200
Exp. 6-30-15
CIVIL
STATE OF CALIFORNIA

THE STATE OF CALIFORNIA OR ITS OFFICERS OR AGENTS SHALL NOT BE RESPONSIBLE FOR THE ACCURACY OR COMPLETENESS OF SCANNED COPIES OF THIS PLAN SHEET.

TO ACCOMPANY PLANS DATED 07-21-14

2010 REVISED STANDARD PLAN RSP A77S1

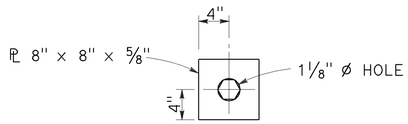

DETAIL "A"
CABLE CONNECTION END PLATE

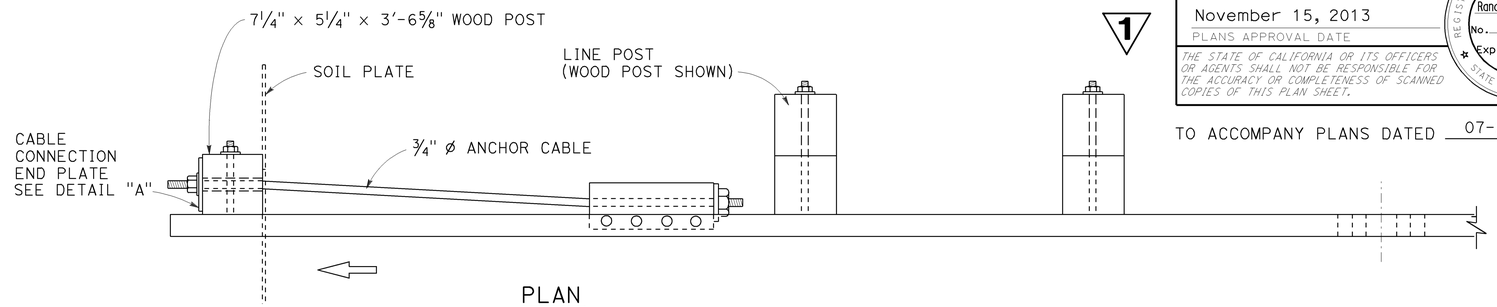

PLAN

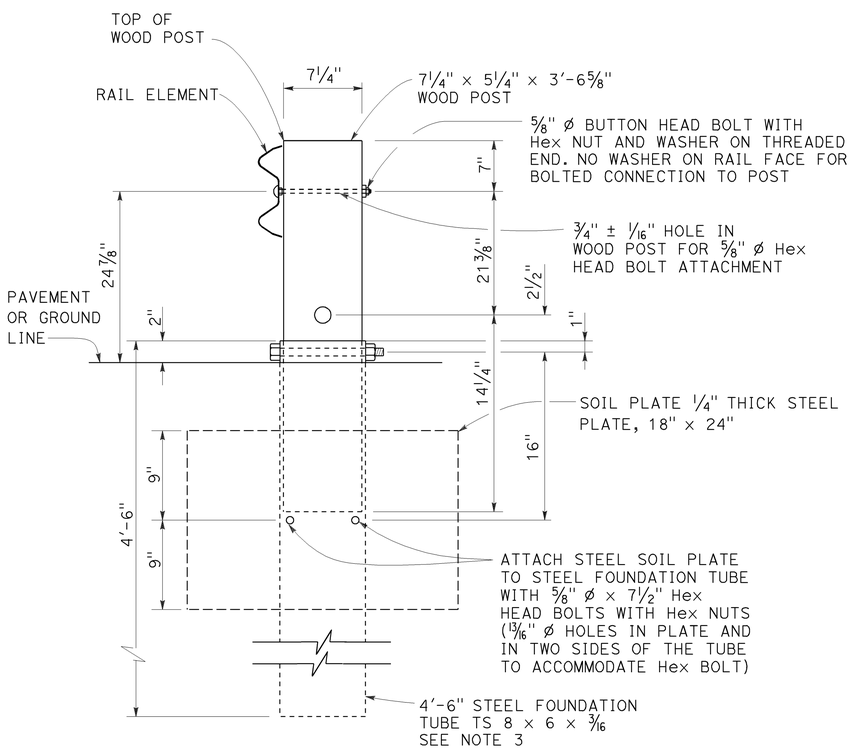

SECTION A-A

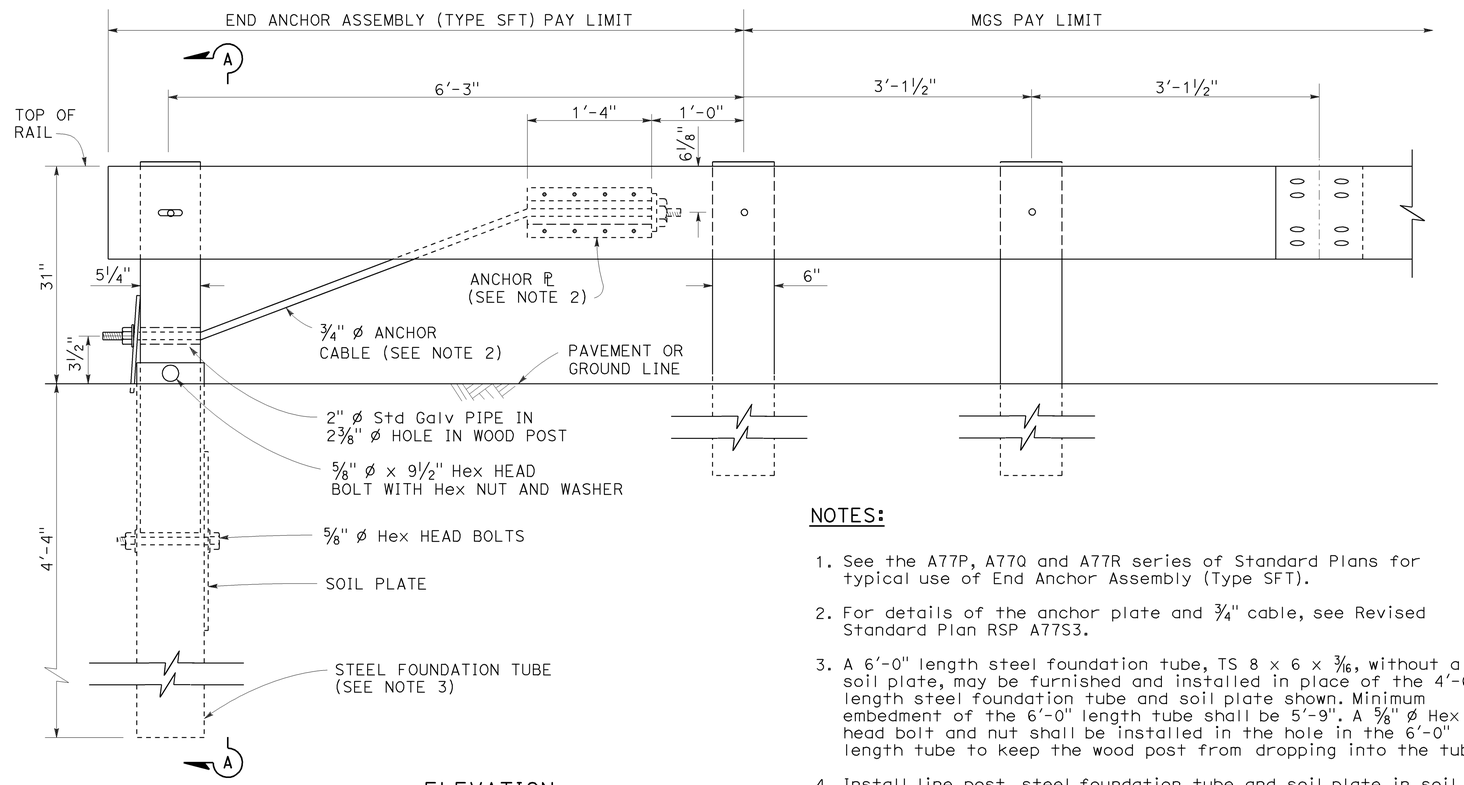

ELEVATION

END ANCHOR ASSEMBLY (TYPE SFT)
See Note 1

NOTES:

1. See the A77P, A77Q and A77R series of Standard Plans for typical use of End Anchor Assembly (Type SFT).
2. For details of the anchor plate and 3/4" cable, see Revised Standard Plan RSP A77S3.
3. A 6'-0" length steel foundation tube, TS 8 x 6 x 3/16, without a soil plate, may be furnished and installed in place of the 4'-6" length steel foundation tube and soil plate shown. Minimum embedment of the 6'-0" length tube shall be 5'-9". A 5/8" ø Hex head bolt and nut shall be installed in the hole in the 6'-0" length tube to keep the wood post from dropping into the tube.
4. Install line post, steel foundation tube and soil plate in soil.

STATE OF CALIFORNIA
DEPARTMENT OF TRANSPORTATION

MIDWEST GUARDRAIL SYSTEM END ANCHOR ASSEMBLY (TYPE SFT)

NO SCALE

RSP A77S1 DATED NOVEMBER 15, 2013 SUPERSEDES RSP A77S1 DATED JULY 19, 2013 THAT SUPPLEMENTS THE STANDARD PLANS BOOK DATED 2010.

REVISED STANDARD PLAN RSP A77S1

10-4-13

1 REPLACED PER ADDENDUM No. 1 DATED SEPTEMBER 25, 2014

Dist	COUNTY	ROUTE	POST MILES TOTAL PROJECT	SHEET No.	TOTAL SHEETS
11	SD	5	R29.1/R30.5	768	1012

Randell D. Hiatt
REGISTERED CIVIL ENGINEER

November 15, 2013
PLANS APPROVAL DATE

REGISTERED PROFESSIONAL ENGINEER
Randell D. Hiatt
No. C50200
Exp. 6-30-15
CIVIL
STATE OF CALIFORNIA

1

THE STATE OF CALIFORNIA OR ITS OFFICERS OR AGENTS SHALL NOT BE RESPONSIBLE FOR THE ACCURACY OR COMPLETENESS OF SCANNED COPIES OF THIS PLAN SHEET.

TO ACCOMPANY PLANS DATED 07-21-14

NOTE:

See Revised Standard Plans RSP A77S1, RSP A77S2 and RSP A77T1 for typical use of anchor cable and anchor plate.

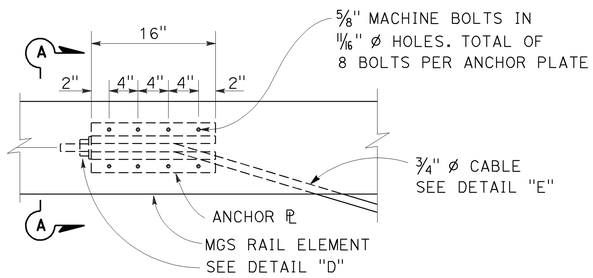

ANCHOR PLATE DETAIL
(MGS shown, TBB similar)

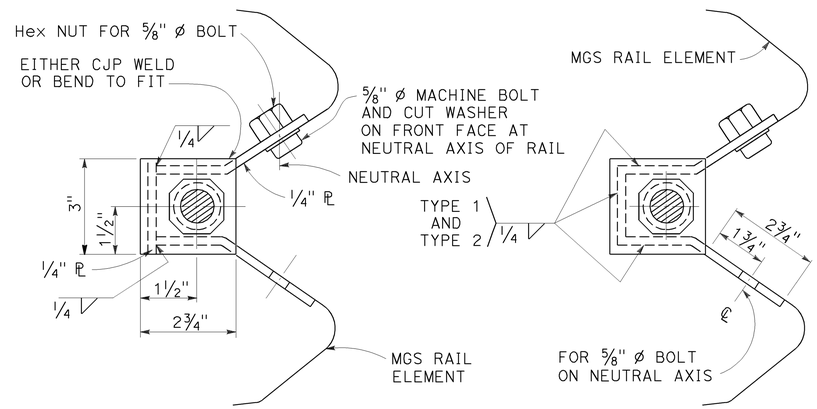

NOTE:
Dimensioning applies to both types.

SECTION A-A
(ALTERNATIVE TYPE 1)

SECTION A-A
(ALTERNATIVE TYPE 2)

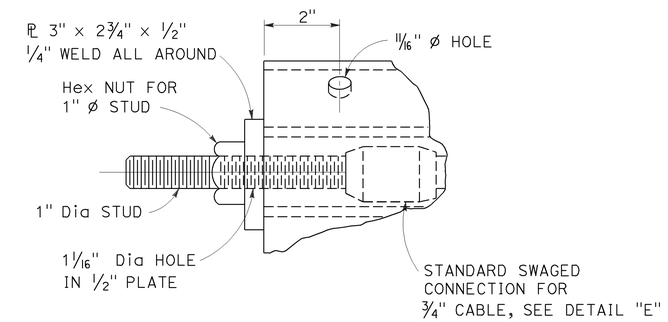

DETAIL "D"

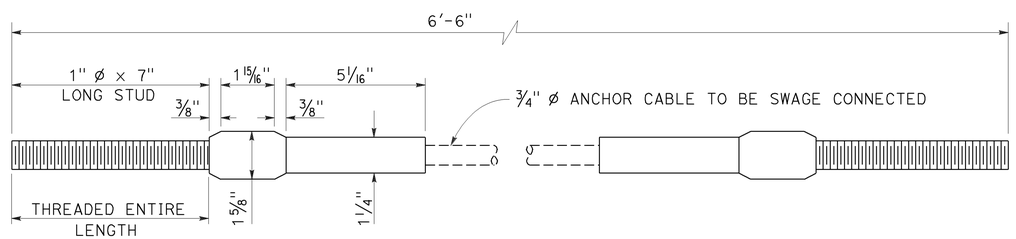

ANCHOR CABLE WITH
SWAGED FITTING AND STUD
DETAIL "E"

STATE OF CALIFORNIA
DEPARTMENT OF TRANSPORTATION

METAL RAILING ANCHOR CABLE AND ANCHOR PLATE DETAILS

NO SCALE

RSP A77S3 DATED NOVEMBER 15, 2013 SUPERSEDES RSP A77S3
DATED JULY 19, 2013 THAT SUPPLEMENTS THE STANDARD PLANS BOOK DATED 2010.

REVISED STANDARD PLAN RSP A77S3

2010 REVISED STANDARD PLAN RSP A77S3

10-4-13

1 REPLACED PER ADDENDUM No. 1 DATED SEPTEMBER 25, 2014

Dist	COUNTY	ROUTE	POST MILES TOTAL PROJECT	SHEET No.	TOTAL SHEETS
11	SD	5	R29.1/R30.5	769	1012

Randell D. Hiatt
REGISTERED CIVIL ENGINEER

November 15, 2013
PLANS APPROVAL DATE

REGISTERED PROFESSIONAL ENGINEER
Randell D. Hiatt
No. C50200
Exp. 6-30-15
CIVIL
STATE OF CALIFORNIA

1

THE STATE OF CALIFORNIA OR ITS OFFICERS OR AGENTS SHALL NOT BE RESPONSIBLE FOR THE ACCURACY OR COMPLETENESS OF SCANNED COPIES OF THIS PLAN SHEET.

TO ACCOMPANY PLANS DATED 07-21-14

2010 REVISED STANDARD PLAN RSP A77T2

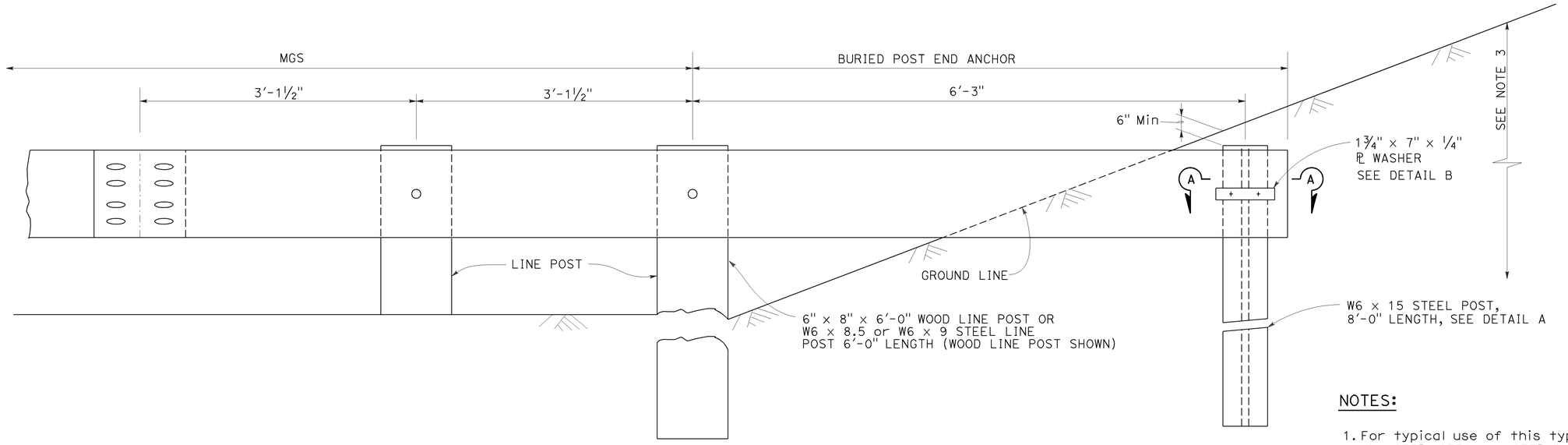

BURIED POST END ANCHOR

See Note 3

NOTES:

1. For typical use of this type of end anchor with MGS see the A77P, A77Q and A77R Series of the Standard Plans.
2. Holes excavation in the slope to construct the buried post end anchor shall be backfilled with selected earth, placed in layers approximately 1'-0" thick. Each layer shall be moistened and thoroughly compacted.
3. The buried post end anchor shall only be constructed at those locations where the slope perpendicular to the roadway is non-traversable.

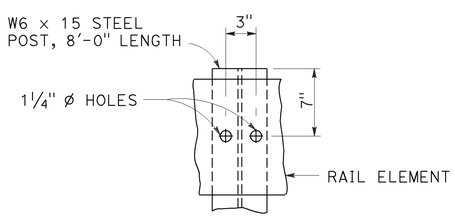

DETAIL A

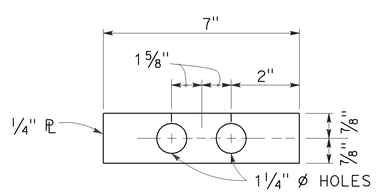

DETAIL B

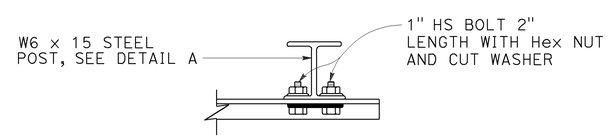

SECTION A-A

STATE OF CALIFORNIA
DEPARTMENT OF TRANSPORTATION

MIDWEST GUARDRAIL SYSTEM BURIED POST END ANCHOR

NO SCALE

RSP A77T2 DATED NOVEMBER 15, 2013 SUPERSEDES RSP A77T2
DATED JULY 19, 2013 THAT SUPPLEMENTS THE STANDARD PLANS BOOK DATED 2010.

REVISED STANDARD PLAN RSP A77T2

10-4-13

1 REPLACED PER ADDENDUM No. 1 DATED SEPTEMBER 25, 2014 1

Dist	COUNTY	ROUTE	POST MILES TOTAL PROJECT	SHEET No.	TOTAL SHEETS
11	SD	5	R29.1/R30.5	771	1012

Randell D. Hiatt
REGISTERED CIVIL ENGINEER

November 15, 2013
PLANS APPROVAL DATE

REGISTERED PROFESSIONAL ENGINEER Randell D. Hiatt No. C50200 Exp. 6-30-15 CIVIL STATE OF CALIFORNIA

THE STATE OF CALIFORNIA OR ITS OFFICERS OR AGENTS SHALL NOT BE RESPONSIBLE FOR THE ACCURACY OR COMPLETENESS OF SCANNED COPIES OF THIS PLAN SHEET.

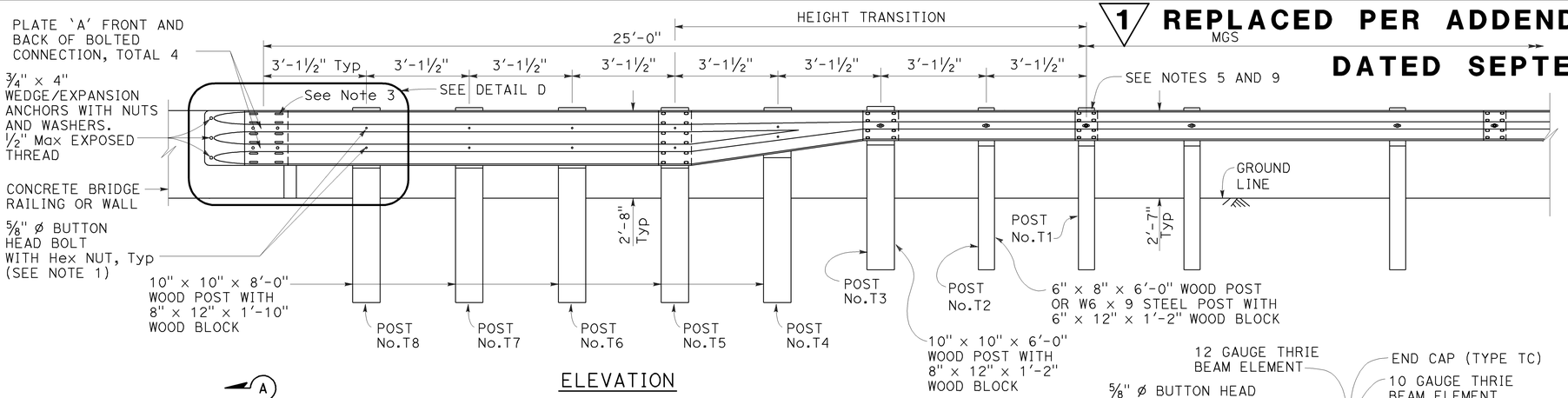

ELEVATION

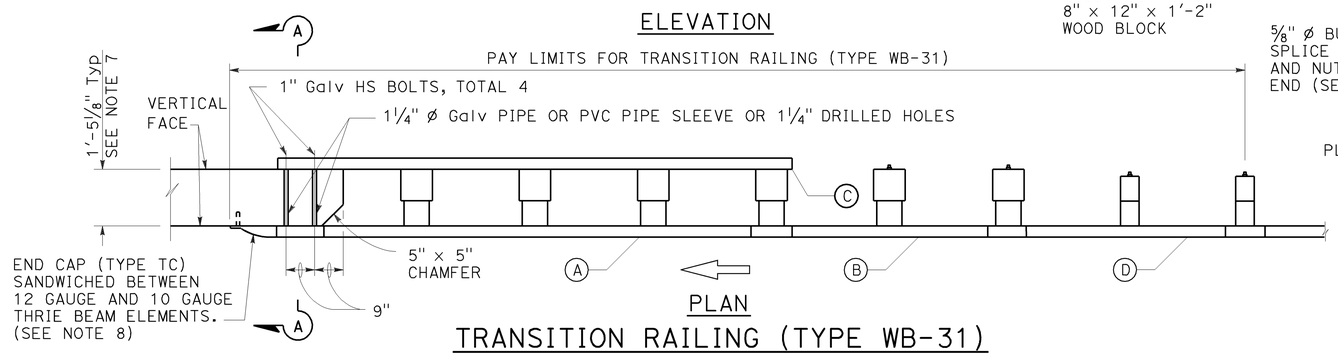

PLAN

TRANSITION RAILING (TYPE WB-31)

(No Blockout Attachment)

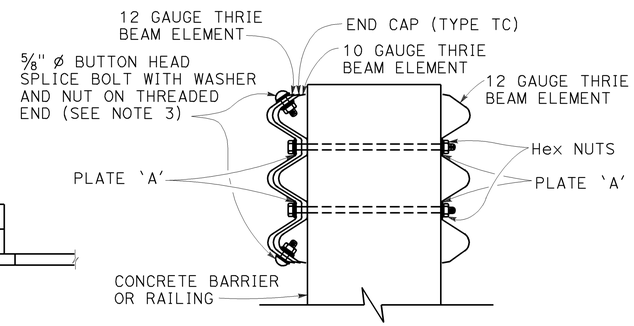

SECTION A-A

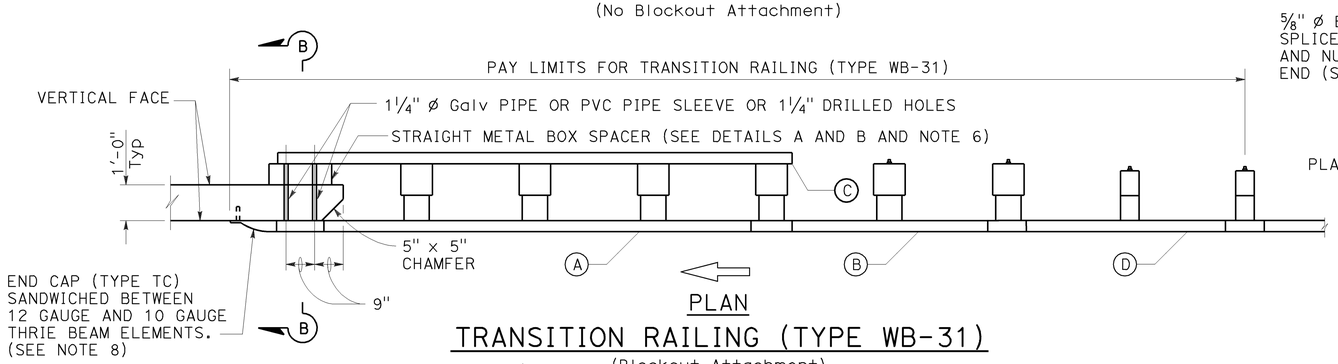

PLAN

TRANSITION RAILING (TYPE WB-31)

(Blockout Attachment)

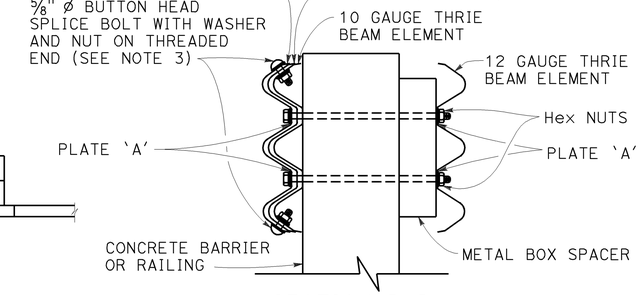

SECTION B-B

LEGEND:

- (A) NESTED THRIE BEAM ELEMENTS (ONE 12 GAUGE ELEMENT NESTED OVER ONE 10 GAUGE ELEMENT).
- (B) ONE ASYMMETRICAL 10 GAUGE "W" BEAM TO THRIE BEAM ELEMENT.
- (C) ONE 12 GAUGE THRIE BEAM ELEMENT.
- (D) ONE 10 GAUGE "W" BEAM RAIL ELEMENT (7'-3 1/2"LENGTH)

10 GAUGE = 0.138" THICK
12 GAUGE = 0.108" THICK

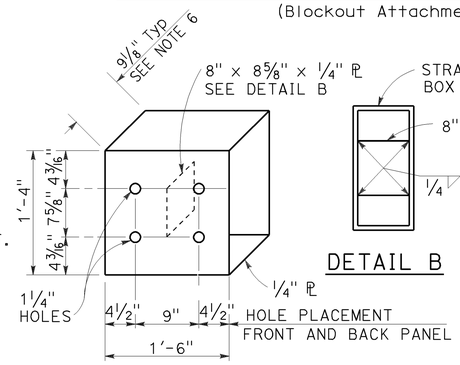

DETAIL A

STRAIGHT METAL BOX SPACER

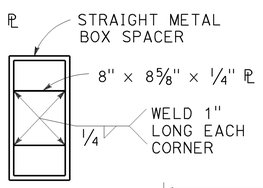

DETAIL B

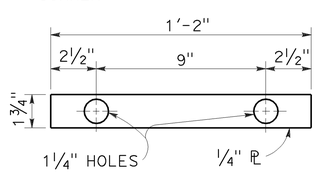

DETAIL C

PLATE 'A'

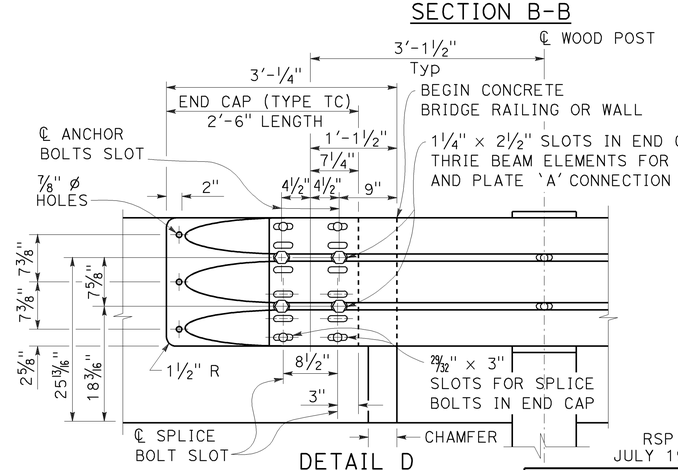

DETAIL D

NOTES:

TO ACCOMPANY PLANS DATED 07-21-14

1. Use 5/8" ø Button head bolts and hex nuts for connections to posts. No washer on rail face for bolted connections to post.
2. The nested rail elements, end cap, and 'W' beam to thrie beam element may be spliced together prior to bolting the elements to the wood post and concrete barrier or railing.
3. Exterior splice bolt holes for rail element splices at Post No. T5 and the connection to the concrete barrier or railing shall be the standard 29/32" x 1 1/8" slot size. Interior splice bolt holes at these locations may be increased up to 1 1/4" ø. Only the top 4 and the bottom 4 splice bolts with washers and nuts are required for rail splices at Post No. T5 and the connection to the concrete barrier or railing.
4. The top elevation of Posts No. T2 through No. T7 shall not project more than 1" above the top elevation of the rail element.
5. Typically, the railing connected to Transition Railing (Type WB-31) will be either standard railing section of MGS with height transition ratio of 150:1 or a Caltrans approved 31" end treatment attached to Post No. T1.
6. The depth of the metal box spacer varies from the 9 1/8" to 1 1/2" and is dependent on the width of the concrete railing or wall. The combined dimension for the depth of the metal box spacer plus the width of railing or wall is typically 21 1/8". Where the space between the backside of the concrete railing or wall and the rear thrie beam element is less than 1 1/2", metal plates similar to Plate 'A' are to be used as spacers.
7. Where the width of the concrete railing or wall is greater than 17 1/8", wood blocks are to be used to fill the space created between the backside of Posts No. T5 through No. T8 and the rear thrie beam element. These wood blocks shall be 8" in width and 1'-2" in length. The dimension between the front thrie beam element and the rear thrie beam element is to match the width of the concrete railing or wall.
8. End cap may be installed over 12 gauge and 10 gauge thrie beam elements where transition railing is installed on the departure end of bridge railing.
9. Conform standard railing section height to 31" at Post No. T1 using height transition ratio of 150:1.

STATE OF CALIFORNIA
DEPARTMENT OF TRANSPORTATION

MIDWEST GUARDRAIL SYSTEM TRANSITION RAILING (TYPE WB-31)

NO SCALE

RSP A77U4 DATED NOVEMBER 15, 2013 SUPERSEDES RSP A77U4 DATED JULY 19, 2013 THAT SUPPLEMENTS THE STANDARD PLANS BOOK DATED 2010.

REVISED STANDARD PLAN RSP A77U4

2010 REVISED STANDARD PLAN RSP A77U4

10-4-13

Dist	COUNTY	ROUTE	POST MILES TOTAL PROJECT	SHEET No.	TOTAL SHEETS
11	SD	5	R29.1/R30.5	792	1012

LICENSED LANDSCAPE ARCHITECT

November 15, 2013
PLANS APPROVAL DATE

THE STATE OF CALIFORNIA OR ITS OFFICERS OR AGENTS SHALL NOT BE RESPONSIBLE FOR THE ACCURACY OR COMPLETENESS OF SCANNED COPIES OF THIS PLAN SHEET.

LICENSED LANDSCAPE ARCHITECT — Gregory A. Balzer — 2516 — Renewal Date 2-28-15 — Renewal Date 11-15-13 — Date — STATE OF CALIFORNIA

TO ACCOMPANY PLANS DATED 07-21-14

1

EXISTING	NEW	ITEM DESCRIPTION
		WATER METER (WM)
		BACKFLOW PREVENTER ASSEMBLY (BPA)
		BACKFLOW PREVENTER ENCLOSURE (BPE)
		BOOSTER PUMP (BP)
		TRUCK LOADING STANDPIPE (TLS)
	FS	FLOW SENSOR (FS)
X	X	MASTER IRRIGATION CONTROLLER (MIC)
		AUXILIARY IRRIGATION CONTROLLER (AIC)
		IRRIGATION CONTROLLER (IC) IRRIGATION CONTROLLER (IC) (BATTERY) IRRIGATION CONTROLLER (IC) (SOLAR) IRRIGATION CONTROLLER (IC) (TWO WIRE)
		IRRIGATION CONTROLLER(S) IN CONTROLLER ENCLOSURE CABINET (ICC)
acc	ACC	ARMOR-CLAD CONDUCTORS (ACC)
cnc	CNC	CONTROL AND NEUTRAL CONDUCTORS (CNC)
		IRRIGATION CONDUIT
		EXTEND IRRIGATION CONDUIT
dip	DIP	DUCTILE IRON PIPE (SUPPLY LINE) (MAIN) (DIP)
		GALVANIZED STEEL PIPE (SUPPLY LINE) (MAIN) (GSP)
		GALVANIZED STEEL PIPE (SUPPLY LINE) (LATERAL) (GSP)
		PLASTIC PIPE (SUPPLY LINE) (MAIN)
		PLASTIC PIPE (SUPPLY LINE) (LATERAL)
cp	CP	COPPER PIPE (SUPPLY LINE)
dit	DIT	DRIP IRRIGATION TUBING
		REMOTE CONTROL VALVE (RCV) REMOTE CONTROL VALVE (MASTER) (RCVM) REMOTE CONTROL VALVE (MASTER) W/FLOW METER (RCVMF)
P	P	REMOTE CONTROL VALVE W/PRESSURE REGULATOR (RCVP)
		EXISTING MANUAL CONTROL VALVE (MCV)
	V	DRIP VALVE ASSEMBLY (DVA)
	Y	WYE STRAINER ASSEMBLY (WSA)

EXISTING	NEW	ITEM DESCRIPTION
		GATE VALVE (GV)
		BALL VALVE (BV)
		QUICK COUPLING VALVE (QCV)
		CAM COUPLER ASSEMBLY (CCA)
		GARDEN VALVE ASSEMBLY (GARVA)
		PRESSURE REGULATING VALVE (PRV)
		PRESSURE RELIEF VALVE (PRLV)
		FLOW CONTROL VALVE (FCV)
		COMBINATION AIR RELEASE VALVE (CARV)
		CHECK VALVE (CV)
		FLUSH VALVE (FV)
		EXISTING NOZZLE LINE W/TURNING UNION
		EXISTING IRRIGATION SYSTEM
		EXISTING IRRIGATION SYSTEM TO BE REMOVED
		CHAIN LINK GATE
		QUICK COUPLING VALVE W/SPRINKLER PROTECTOR
3	3	SPRINKLER W/SPRINKLER PROTECTOR
	C	CONNECT TO EXISTING SYSTEM
		CAP
		CAP EXISTING
	\\\FR\\\	FIBER ROLL
	\\\CS\\\	COMPOST SOCK

RCV SIZE
IRRIGATION CONTROLLER
CONTROLLER STATION
VALVE IN PARALLEL (IF APPLICABLE)
GPM
QUANTITY OF SPRINKLERS (WHEN SHOWN)

* 2½"-A-2b-40-60

VALVE CODE

* VALVE CODES FOR EXISTING VALVES ARE SHOWN IN A DASHED ENCLOSURE.

STATE OF CALIFORNIA
DEPARTMENT OF TRANSPORTATION

LANDSCAPE AND EROSION CONTROL SYMBOLS

NO SCALE

RSP H2 DATED NOVEMBER 15, 2013 SUPERSEDES RSP H2 DATED JULY 19, 2013 AND STANDARD PLAN H2 DATED MAY 20, 2011 - PAGE 219 OF THE STANDARD PLANS BOOK DATED 2010.

REVISED STANDARD PLAN RSP H2

2010 REVISED STANDARD PLAN RSP H2

1 **REPLACED PER ADDENDUM No. 1 DATED SEPTEMBER 25, 2014**

10-9-13

Dist	COUNTY	ROUTE	POST MILES TOTAL PROJECT	SHEET No.	TOTAL SHEETS
11	SD	5	R29.1/R30.5	811	1012

REGISTERED CIVIL ENGINEER

November 15, 2013
PLANS APPROVAL DATE

REGISTERED PROFESSIONAL ENGINEER
Tillat Satter
No. C42892
Exp. 3-31-14
CIVIL
STATE OF CALIFORNIA

THE STATE OF CALIFORNIA OR ITS OFFICERS OR AGENTS SHALL NOT BE RESPONSIBLE FOR THE ACCURACY OR COMPLETENESS OF SCANNED COPIES OF THIS PLAN SHEET.

TO ACCOMPANY PLANS DATED 07-21-14

2010 REVISED STANDARD PLAN RSP B11-54

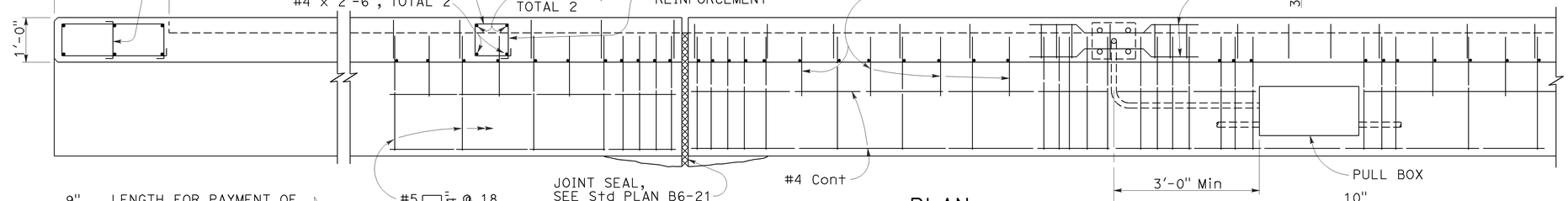

PLAN

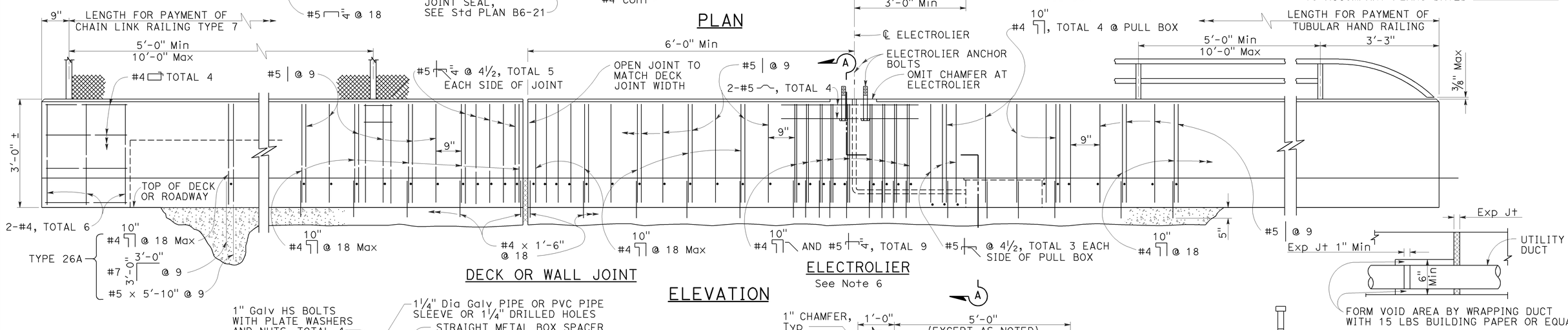

DECK OR WALL JOINT

ELECTROLIER
See Note 6

ELEVATION

UTILITY DUCT EXPANSION JOINT

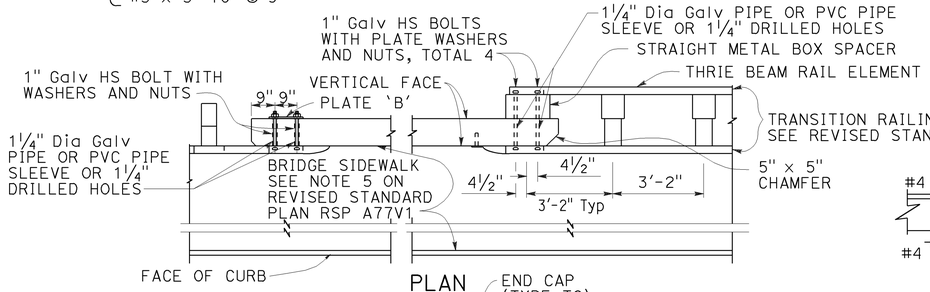

PLAN

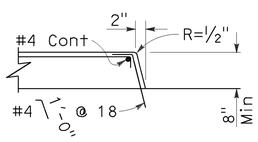

TYPE H
To be used unless otherwise shown on plans.

CURB DETAIL

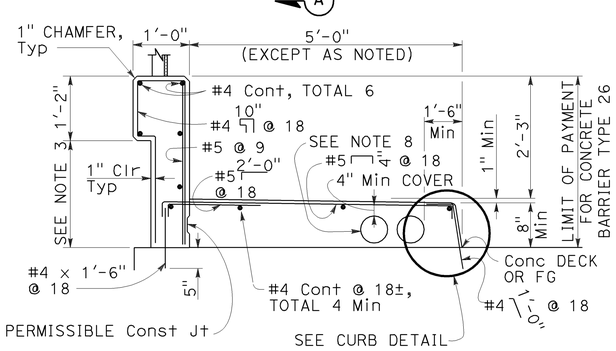

TYPE 26
On bridge deck

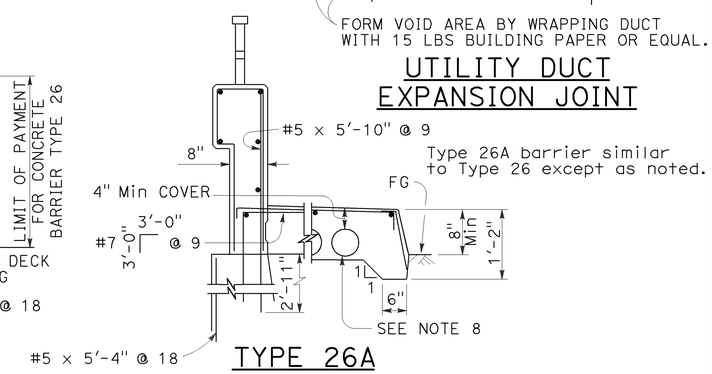

TYPE 26A
Off bridge deck

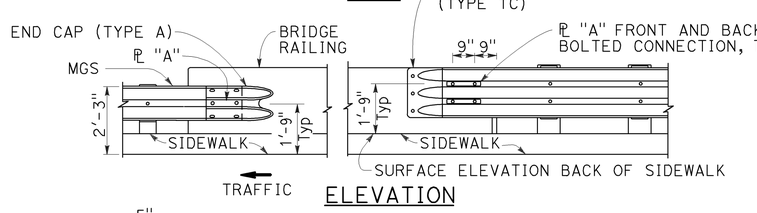

ELEVATION

METAL RAILING CONNECTION TO BRIDGE RAILING
See Note 9

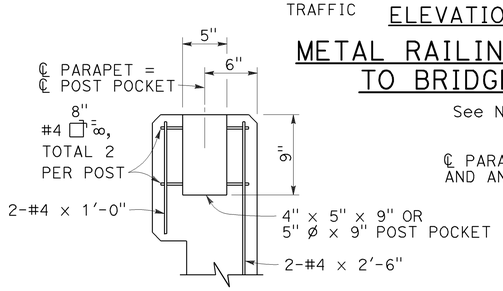

POST ANCHORAGE DETAIL
Applies to Chain Link Railing Type 7 and Tubular Hand Railing. See respective Standard Plans for additional details.

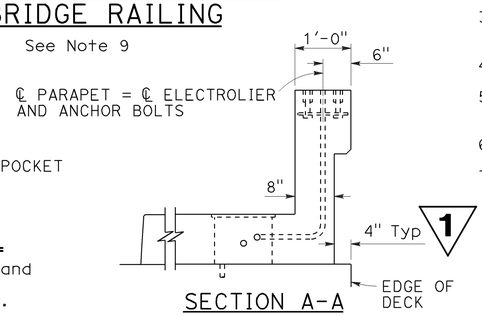

SECTION A-A

NOTES:

1. For Chain Link Railing notes and details not shown, see Standard Plan B11-52.
2. For Hand Railing notes and details not shown, see Standard Plan B11-51.
3. Dimensions will vary with cross slope and with certain thicknesses of surfacing. See Project Plans.
4. Walls are to be backfilled before railing is placed.
5. Clearance to reinforcing steel in curb and railing to be 1" except as noted. Longitudinal reinforcement to stop at all expansion joints.
6. See Project Plans for electrolier locations and pull box type.
7. For electrical details, see Standard Plans ES-9A, ES-9B, ES-9C, ES-9D, and ES-9E.
8. A maximum of five - 4" and a minimum of two - 4" round openings for future utilities. Openings are to be sealed at ends and extended 8" minimum past end of sidewalk if not used. Duct forms are to be tied down. Minimum of 6" from face of rail to utility opening.
9. For typical metal railing connection details not shown, see Revised Standard Plans RSP A77V1 and RSP A77V2.
10. This barrier is to be used only for speeds of 45 MPH or less. For speeds greater than 45 MPH, pedestrians should be protected by a separation traffic barrier.

1 REPLACED PER ADDENDUM No. 1 DATED SEPTEMBER 25, 2014

RSP B11-54 DATED NOVEMBER 15, 2013 SUPERSEDES RSP B11-54 DATED JULY 19, 2013 AND STANDARD PLAN B11-54 DATED MAY 20, 2011 - PAGE 296 OF THE STANDARD PLANS BOOK DATED 2010.

STATE OF CALIFORNIA
DEPARTMENT OF TRANSPORTATION

CONCRETE BARRIER TYPE 26

NO SCALE

REVISED STANDARD PLAN RSP B11-54

10-4-13

1 REPLACED PER ADDENDUM No. 1 DATED SEPTEMBER 25, 2014

Dist	COUNTY	ROUTE	POST MILES TOTAL PROJECT	SHEET No.	TOTAL SHEETS
11	SD	5	R29.1/R30.5	812	1012

REGISTERED CIVIL ENGINEER

November 15, 2013
PLANS APPROVAL DATE

REGISTERED PROFESSIONAL ENGINEER Tillat Satter No. C42892 Exp. 3-31-14 CIVIL STATE OF CALIFORNIA

THE STATE OF CALIFORNIA OR ITS OFFICERS OR AGENTS SHALL NOT BE RESPONSIBLE FOR THE ACCURACY OR COMPLETENESS OF SCANNED COPIES OF THIS PLAN SHEET.

1

TO ACCOMPANY PLANS DATED 07-21-14

2010 REVISED STANDARD PLAN RSP B11-56

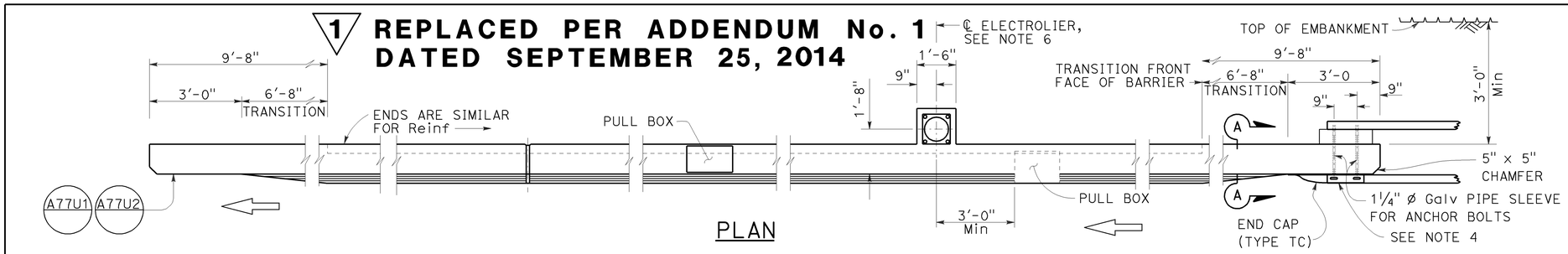

PLAN

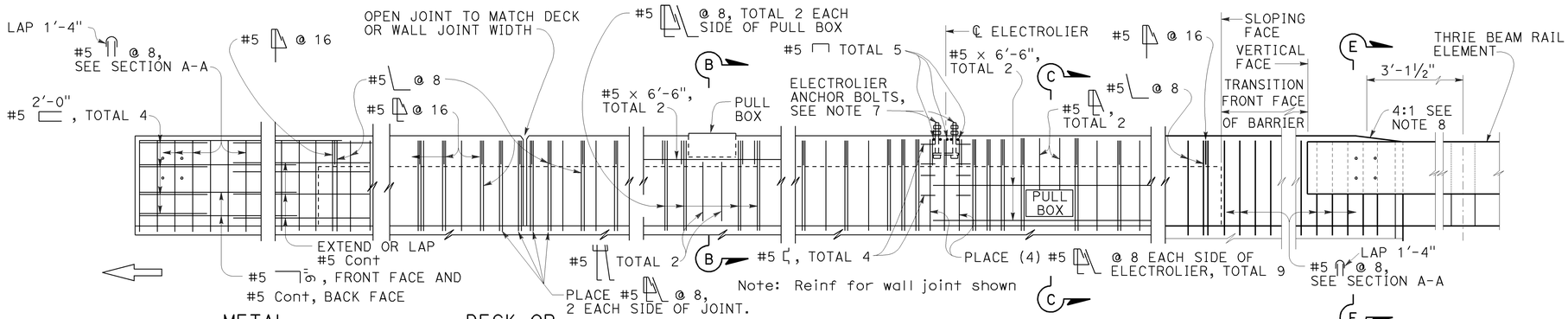

ELEVATION

NOTES:

1. Walls are to be backfilled before barrier is placed.
2. Clearance to reinforcing steel in barrier to be 1", except as noted. Longitudinal reinforcement to stop at all expansion joints.
3. Dimensions may vary with roadway cross slope and with certain thickness of surfacing. See Project Plans.
4. For typical metal railing connection details not shown, see Revised Standard Plans RSP A77U1 and RSP A77U2.
5. See Standard Plans ES-9A, ES-9B, ES-9C, ES-9D and ES-9E for electrical details. The maximum number of conduits in the barrier is limited to two 2" conduits along with one 3" conduit. When a 3" conduit is used, it is restricted to the base of the barrier.
6. For electrolier mounting details, See Standard Plans ES-6A and ES-6B.
7. Minimum concrete edge distance, to the reinforcing shown, shall be maintained. Edge distance may be adjusted to accommodate increase in concrete cover for architectual treatment.
8. Taper the top of the end of the bridge railing at 4:1 to match the top elevation of the thrie beam rail element.

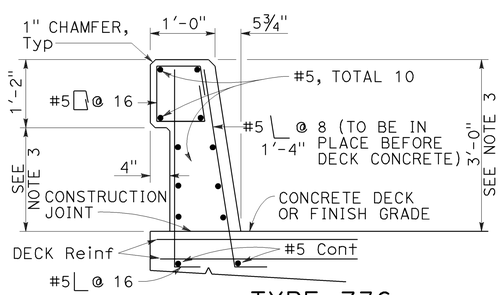

TYPE 736

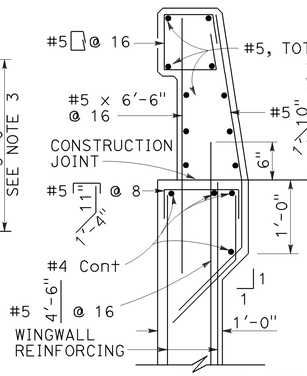

TYPE 736A

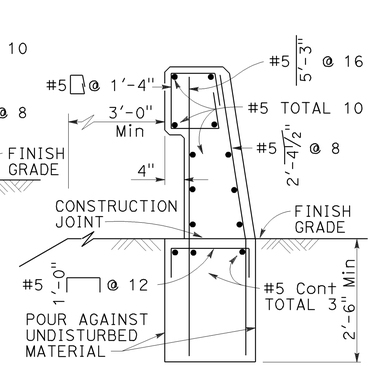

TYPE 736B

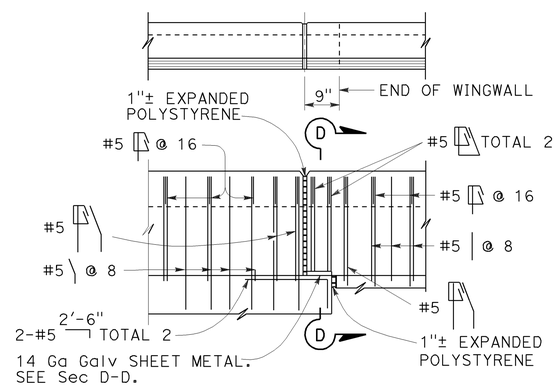

TYPE 736A TYPE 736B

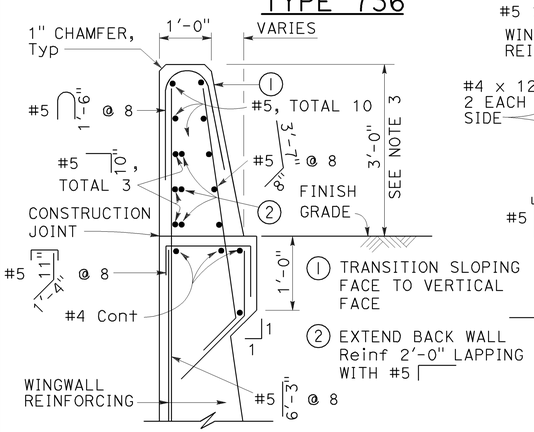

SECTION A-A

Details shown for barrier anchorage to Type 736A. Anchorgae for barrier Types 736 and 736B are similar to their respective details.

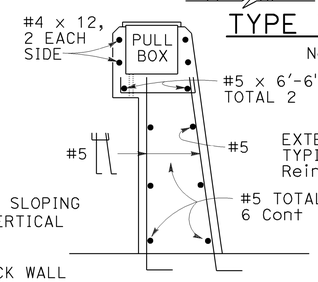

SECTION B-B

Note: Types 736A & 736B are similar to Type 736 except as noted

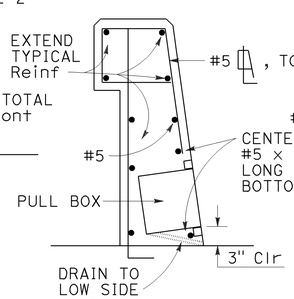

SECTION C-C

See Notes

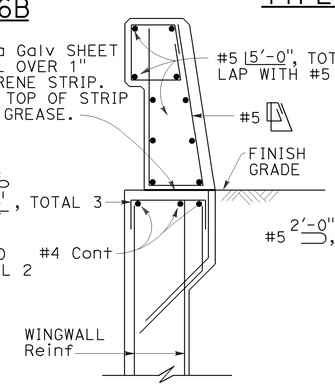

SECTION D-D

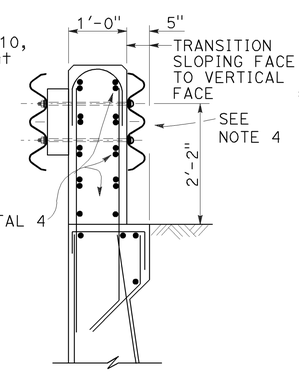

SECTION E-E

See Notes

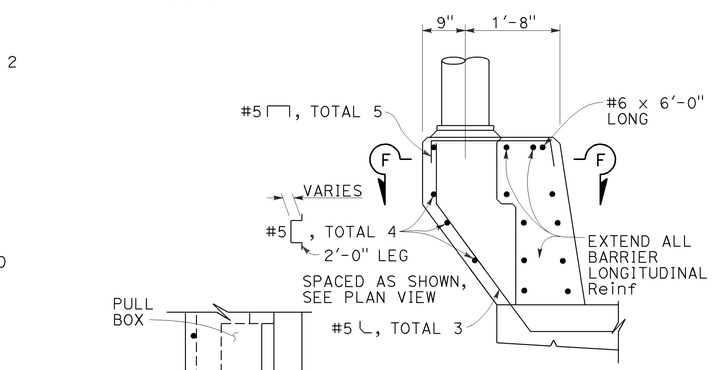

PEDESTAL ELEVATION

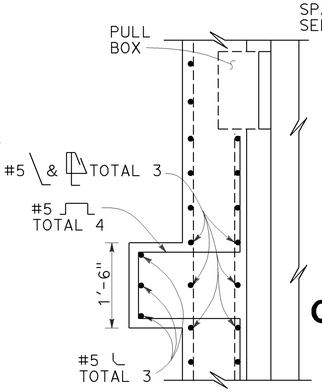

SECTION F-F

STATE OF CALIFORNIA
DEPARTMENT OF TRANSPORTATION

CONCRETE BARRIER TYPE 736

NO SCALE

RSP B11-56 DATED NOVEMBER 15, 2013 SUPERSEDES RSP B11-56 DATED JULY 19, 2013 AND STANDARD PLAN B11-56 DATED MAY 20, 2011 - PAGE 298 OF THE STANDARD PLANS BOOK DATED 2010.

REVISED STANDARD PLAN RSP B11-56

10-4-13