Dist	COUNTY	ROUTE	POST MILES TOTAL PROJECT	SHEET No.	TOTAL SHEETS
11	SD	11, 905	0.0/1.6, R9.9/R10.7	81	622

REGISTERED CIVIL ENGINEER DATE

08-14-13

PLANS APPROVAL DATE

REGISTERED PROFESSIONAL ENGINEER BROOKE V. EMERY No. 77620 Exp. 06-30-15 CIVIL STATE OF CALIFORNIA

THE STATE OF CALIFORNIA OR ITS OFFICERS OR AGENTS SHALL NOT BE RESPONSIBLE FOR THE ACCURACY OR COMPLETENESS OF SCANNED COPIES OF THIS PLAN SHEET.

NOTES:

1. IN FILL AREA, REMOVE THE UPPER 24" OF NEAR SURFACE SOILS. SCARIFY AND RECOMPACT THE NEXT LOWER 12" TO 90%.
2. THESE TYPICALS APPLY TO ALL HIGHWAY ALIGNMENTS, INCLUDING RAMPS.
3. WHERE FOUNDATION TREATMENT IS PART OF THE STRUCTURAL SECTION, THE DEPTH IS EQUAL TO 5' MINUS THE FOUNDATION TREATMENT.

LEGEND:

- ROADWAY EXCAVATION
- CLASS V AGGREGATE SUB BASE
- EMBANKMENT
- SCARIFY AND RECOMPACT

2 **REPLACED PER ADDENDUM No. 2 DATED AUGUST 23, 2013**

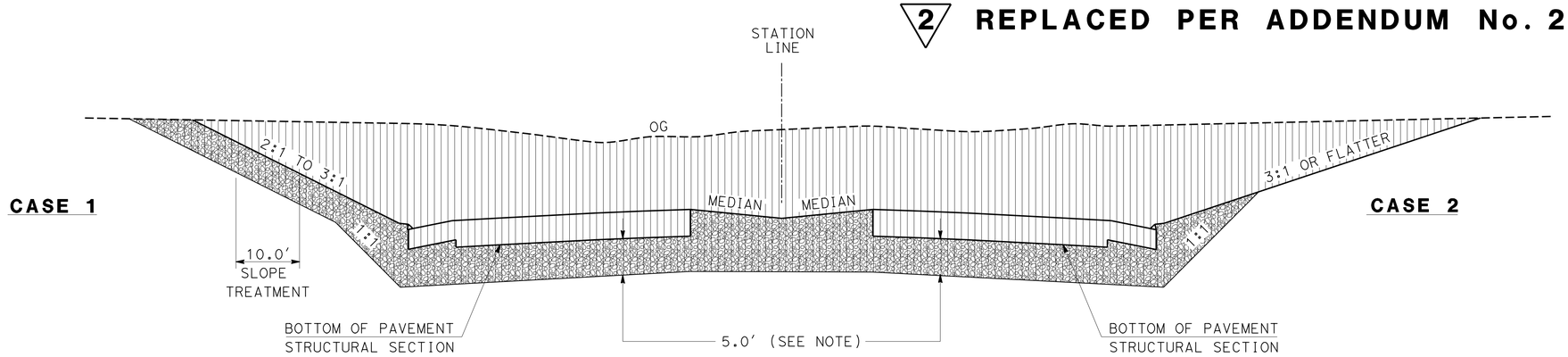

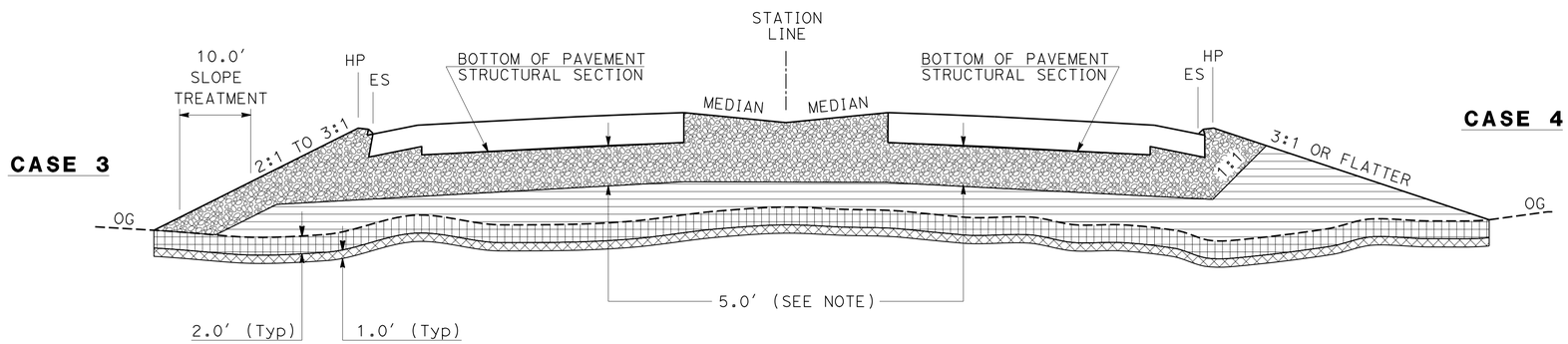

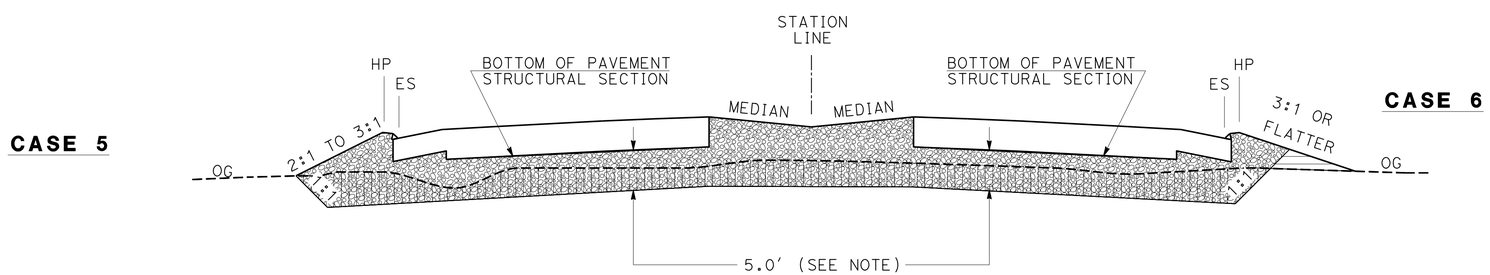

EARTHWORK DETAILS

PRELIMINARY FOR BIDDING PURPOSES ONLY

CONSTRUCTION DETAILS

NO SCALE

C-9

STATE OF CALIFORNIA - DEPARTMENT OF TRANSPORTATION

Caltrans

DESIGN

FUNCTIONAL SUPERVISOR: MICHAEL J. WEBSTER

CALCULATED-DESIGNED BY: JOHN HANSON

CHECKED BY: BROOKE EMERY

REVISED BY

DATE REVISED

LAST REVISION 08-20-13

DATE PLOTTED => 21-AUG-2013

TIME PLOTTED => 11:26

2 REPLACED PER ADDENDUM No. 2 DATED AUGUST 23, 2013

Dist	COUNTY	ROUTE	POST MILES TOTAL PROJECT	SHEET No.	TOTAL SHEETS
11	SD	11, 905	0.0/1.6, R9.9/R10.7	264	622

REGISTERED CIVIL ENGINEER 03-19-13 DATE

04-22-13
PLANS APPROVAL DATE

REGISTERED PROFESSIONAL ENGINEER FARDAD BEHBOODY No. 61478 Exp. 06-30-15 CIVIL STATE OF CALIFORNIA

THE STATE OF CALIFORNIA OR ITS OFFICERS OR AGENTS SHALL NOT BE RESPONSIBLE FOR THE ACCURACY OR COMPLETENESS OF SCANNED COPIES OF THIS PLAN SHEET.

2

DRAINAGE QUANTITIES

DRAINAGE SHEET No.	DRAINAGE SYSTEM No. ⬡	DRAINAGE UNIT ○	6" Alt PIPE Culv LF	18" Alt PIPE Culv LF	24" Alt PIPE Culv LF	24" REINFORCED Conc PIPE LF	36" Alt PIPE Culv LF	36" REINFORCED Conc PIPE LF	36" RCP DOWNDRAIN LF	48" REINFORCED Conc PIPE LF	54" REINFORCED Conc PIPE LF	66" REINFORCED Conc PIPE LF	84" MODIFIED RCP LF	24" CONCRETE FES EA	36" CONCRETE FES EA	STRUCTURAL Conc, BOX CULVERT CY	MINOR CONCRETE (MINOR STRUCTURE) CY	CONCRETE (CONCRETE APRON) CY	CONCRETE (DITCH LINING) CY	CONCRETE (CHANNEL LINING) CY	MISCELLANEOUS IRON AND STEEL LB	RSP FABRIC (CLASS 8) SQYD	RSP (FACING, METHOD B) CY	RSP (1/4 TON, METHOD B) CY	BAR REINFORCING STEEL (BOX CULVERT) LB	DITCH EXCAVATION CY	PLACE HOT MIX ASPHALT (MISCELLANEOUS AREA) SQYD	3" PLASTIC PIPE (APPROACH SLAB DRAIN) LF	REMOVE CULVERT LF	REMOVE CONCRETE (CY) * CY	REMOVE RSP CY	DESCRIPTION	STATION	DRAINAGE SYSTEM No. ⬡	DRAINAGE UNIT ○
D-2	2	cc																														REMOVE INLET	"E4"		
D-2	2	cd																											196			REMOVE CULVERT	"E4" 619+00.00	2	cd
D-2	2	ce																												2		REMOVE INLET	"E4" 620+06.83	2	ce
D-2	2	cf																											130			REMOVE CULVERT	"E4" 621+00.00	2	cf
D-2	2	cg																												2		REMOVE INLET	"E4" 621+50.00	2	cg
D-2	3	a															7.69	3.31			622											GD2 W/APRON	"LMD1A" 24+88.67	3	a
D-2	3	b																	83.75							364.0						DRAINAGE DITCH	"LMD1A" 35+00.00	3	b
D-2	3	c																	81.00							279.0						DRAINAGE DITCH	"LMD1A" 25+00.00	3	c
D-3	4	a																3.31														GCP INLET W/APRON	"EB" 625+80.00	4	a
D-3	4	b																				31.3	12.0									RSP AT FES	"EB" 626+87.50	4	b
D-3	4	c												1																		24" FES	"EB" 626+87.50	4	c
D-3	4	d				62.8																										24" RCP	"EB" 627+05.00	4	d
D-3	4	e															1.60				329											G1 INLET	"EB" 627+05.00	4	e
D-3	4	f																				31.3	12.0									RSP AT FES	"EB" 631+57.25	4	f
D-3	4	g												1																		24" FES	"EB" 631+51.23	4	g
D-3	4	h				78.1																										24" RCP W/COLLAR	"EB" 631+75.00	4	h
D-3	4	i															1.97				329											G2 INLET	"EB" 631+75.00	4	i
D-3	4	j			126.5																											24" APC	"EB" 632+00.00	4	j
D-3	4	k															1.68				329											G2 INLET	"EB" 633+05.00	4	k
D-3	4	l			153.3																											24" APC	"EB" 634+00.00	4	l
D-3	4	m	10.0														1.63				329											G2 INLET	"EB" 634+62.00	4	m
D-3	4	n																	80.22							297.0						DRAINAGE DITCH	"EB" 634+60.00	4	n
D-3	4	o																												64		REMOVE Conc DITCH	"EB" 625+00.00	4	o
D-2	5	a																				174.8	61.8	113.4								RSP AT HEADWALL	"EB" 624+60.89	5	a
D-2	5	b															41.88															RCB WINGWALLS	"EB" 624+60.89	5	b
D-2	5	c														84.42									14,253							7X5 DOUBLE RCB	"EB" 624+80.00	5	c
D-2	5	d																1.87			239											OCP RISER W/APRON	"EB" 624+60.89	5	d
D-2	5	e															0.88															CAP RCB	"EB" 625+32.00	5	e
D-3	5	f														48.92									6,585							TRANSITION RCB	"RCB1" 10+10.00	5	f
D-3	5	g														82.33									11,327							14X5 RCB	"RCB1" 10+25.00	5	g
D-3	5	h														75.88									10,975							TRANSITION RCB	"RCB1" 10+54.00	5	h
D-3	5	i															5.57				864											36" RISER W/MH	"RCB1" 10+53.26	5	i
D-3	5	j														1699.40									421,894							12X5 RCB	"RCB1" 14+70.00	5	j
D-3	5	k															5.57				864											36" RISER W/MH	"RCB1" 17+20.00	5	k
D-4	5	l														2,940.37									447,100							12X5 RCB	"RCB1" 22+00.00	5	l
D-4	5	m															5.57				864											36" RISER W/MH	"RCB1" 25+90.00	5	m
D-4	5	n														1278.88									317,500							12X5 RCB	"RCB1" 28+00.00	5	n
D-5	5	o														75.75									17,348							12X5 RCB	"RCB1" 31+00.00	5	o
D-5	5	p														38.40									10,017							TRANSITION RCB	"RCB1" 31+40.65	5	p
SHEET TOTAL			10.0		279.8	140.9								2		6,324.35	74.04	8.49	244.97		4,769	237.4	85.8	113.4	1,256,999	940.0			326	68		SHEET TOTAL			

(N) - NOT A SEPARATE PAY ITEM, FOR INFORMATION ONLY
* - SEE ROADWAY QUANTITIES FOR ADDITIONAL QUANTITIES

DRAINAGE QUANTITIES
DQ-5

STATE OF CALIFORNIA - DEPARTMENT OF TRANSPORTATION
Caltrans DESIGN

FUNCTIONAL SUPERVISOR: MICHAEL J. WEBSTER
CALCULATED-DESIGNED BY: MICHAEL OREIRO
CHECKED BY: FARDAD BEHBOODY
REVISED BY
DATE REVISED

LAST REVISION 08-20-13
DATE PLOTTED => 21-AUG-2013
TIME PLOTTED => 11:26

2 REPLACED PER ADDENDUM No. 2 DATED AUGUST 23, 2013

Dist	COUNTY	ROUTE	POST MILES TOTAL PROJECT	SHEET No.	TOTAL SHEETS
11	SD	11, 905	0.0/1.6, R9.9/R10.7	266	622

REGISTERED CIVIL ENGINEER 03-19-13 DATE

04-22-13
PLANS APPROVAL DATE

REGISTERED PROFESSIONAL ENGINEER FARDAD BEHBOODY No. 61478 Exp. 06-30-15 CIVIL STATE OF CALIFORNIA

THE STATE OF CALIFORNIA OR ITS OFFICERS OR AGENTS SHALL NOT BE RESPONSIBLE FOR THE ACCURACY OR COMPLETENESS OF SCANNED COPIES OF THIS PLAN SHEET.

DRAINAGE QUANTITIES

2

DRAINAGE SHEET No.	DRAINAGE SYSTEM No. ⬡	DRAINAGE UNIT ○	6" Alt PIPE Culv LF	18" Alt PIPE Culv LF	24" Alt PIPE Culv LF	24" REINFORCED Conc PIPE LF	36" Alt PIPE Culv LF	36" REINFORCED Conc PIPE LF	36" RCP DOWNDRAIN LF	48" REINFORCED Conc PIPE LF	54" REINFORCED Conc PIPE LF	66" REINFORCED Conc PIPE LF	84" MODIFIED RCP LF	24" CONCRETE FES EA	36" CONCRETE FES EA	STRUCTURAL Conc, BOX CULVERT CY	MINOR CONCRETE (MINOR STRUCTURE) CY	CONCRETE (CONCRETE APRON) CY	CONCRETE (DITCH LINING) CY	CONCRETE (CHANNEL LINING) CY	MISCELLANEOUS IRON AND STEEL LB	RSP FABRIC (CLASS 8) SQYD	RSP (FACING, METHOD B) CY	RSP (1/4 TON, METHOD B) CY	BAR REINFORCING STEEL (BOX CULVERT) LB	DITCH EXCAVATION CY	PLACE HOT MIX ASPHALT (MISCELLANEOUS AREA) SQYD	3" PLASTIC PIPE (APPROACH SLAB DRAIN) LF	REMOVE CULVERT LF	REMOVE CONCRETE (CY) * CY	REMOVE RSP CY	DESCRIPTION	STATION	DRAINAGE SYSTEM No. ⬡	DRAINAGE UNIT ○
D-5	5	q																1.87			239											36" GCP W/APRON	"RCB1" 31+40.26	5	q
D-5	5	r														94.72									26,845							9X5 RCB	"RCB1" 32+00.00	5	r
D-5	5	s														15.47									4,384							TRANSITION RCB	"RCB1" 32+52.07	5	s
D-5	5	t																1.87			239											36" GCP W/APRON	"RCB1" 32+52.07	5	t
D-5	5	u						117.3																								36" RCP	"A" 27+00.00	5	u
D-5	5	v															6.27															Conc DETENTION RISER	"A" 27+49.00	5	v
D-5	5	w																		915.97												Conc DETENTION BASIN	"A" 31+00.00	5	w
D-5	5	x														66.19									13,890							7X5 RCB	"RCB1" 33+00.00	5	x
D-5	5	y															6.97															BOX Culv WARPED WW	"RCB1" 33+42.27	5	y
D-5	5	z																	107.90							700.0						DRAINAGE DITCH	"RCB1" 35+00.00	5	z
D-5	5	aa																	46.06							166.0						DRAINAGE DITCH	"RCB1" 40+00.00	5	aa
D-2	5	ab																													145	REMOVE RSP	"EB" 624+80.00	5	ab
D-3	5	ac																												45		REMOVE WINGWALLS	"RCB1" 10+00.00	5	ac
D-3	5	ad																													1,300	REMOVE RSP	"RCB1" 10+60.00	5	ad
D-3	5	ae																													398	REMOVE RSP	"RCB1" 17+10.00	5	ae
D-2	6	a					142.2																									36" APC W/COLLAR	"LMD1A" 38+29.50	6	a
D-2	6	b															1.95	4.25														HW WITH APRON	"LMD1A" 38+29.50	6	b
D-2	6	c																	27.90							122.0						CONCRETE DITCH	"LMD1A" 38+26.64	6	c
D-3	7	a																				90.9	25.8	47.4								RSP AT FES	"LMR" 50+80.00	7	a
D-3	7	b													1																	36" FES	"LMR" 50+80.00	7	b
D-3	7	c						110.3																								36" RCP	"LMR" 51+00.00	7	c
D-3	7	d															6.37				329											G2 INLET	"LMR" 51+00.00	7	d
D-3	7	e				20.1																										24" RCP	"LMR" 51+00.00	7	e
D-3	7	f															2.33				329											G2 INLET	"LMR" 51+04.00	7	f
D-3	7	g			63.3																											24" APC	"WB" 637+75.00	7	g
D-3	7	h															4.47				329											G2 INLET	"WB" 637+75.00	7	h
D-4	7	i				35.8																										24" RCP	"WB" 640+00.00	7	i
D-4	7	j															2.08				329											G2 INLET	"WB" 637+75.00	7	j
D-4	7	k															1.82				329											G2 INLET	"LMR" 49+80.00	7	k
D-4	7	l			117.4																											24" APC	"LMR" 50+80.00	7	l
D-4	7	m			198.2																											24" APC	"WB" 642+00.00	7	m
D-4	7	n															2.08				329											G2 INLET	"LMR" 53+00.00	7	n
D-4	7	o			147.1																											24" APC	"LMR" 642+00.00	7	o
D-4	7	p															2.08				329											G2 INLET	"LMR" 54+50.00	7	p
D-4	7	q			217.1																											24" APC	"LMR" 54+50.00	7	q
D-4	7	r															2.08				329											G2 INLET	"LMR" 56+70.00	7	r
D-4	7	s			18.0																											24" APC	"LMR" 642+00.00	7	s
D-4	7	t															1.82				329											G2 INLET	"LMR" 642+00.00	7	t
SHEET TOTAL					761.1	55.9	142.2	227.6							1	176.38	40.32	7.99	181.86	915.97	3,439	90.9	25.8	47.4	45,119	988.0				45	1,843	SHEET TOTAL			

(N) - NOT A SEPARATE PAY ITEM, FOR INFORMATION ONLY
* - SEE ROADWAY QUANTITIES FOR ADDITIONAL QUANTITIES

DRAINAGE QUANTITIES
DQ-7

STATE OF CALIFORNIA - DEPARTMENT OF TRANSPORTATION
Caltrans DESIGN
FUNCTIONAL SUPERVISOR MICHAEL J. WEBSTER
CALCULATED-DESIGNED BY MICHAEL OREIRO
CHECKED BY FARDAD BEHBOODY
REVISED BY
DATE REVISED

LAST REVISION 08-20-13
DATE PLOTTED => 21-AUG-2013
TIME PLOTTED => 11:26

2 REPLACED PER ADDENDUM No. 2 DATED AUGUST 23, 2013

Dist	COUNTY	ROUTE	POST MILES TOTAL PROJECT	SHEET No.	TOTAL SHEETS
11	SD	11, 905	0.0/1.6, R9.9/R10.7	268	622

REGISTERED CIVIL ENGINEER 03-19-13 DATE

04-22-13
PLANS APPROVAL DATE

REGISTERED PROFESSIONAL ENGINEER FARDAD BEHBOODY No. 61478 Exp. 06-30-15 CIVIL STATE OF CALIFORNIA

THE STATE OF CALIFORNIA OR ITS OFFICERS OR AGENTS SHALL NOT BE RESPONSIBLE FOR THE ACCURACY OR COMPLETENESS OF SCANNED COPIES OF THIS PLAN SHEET.

DRAINAGE QUANTITIES

2

DRAINAGE SHEET No.	DRAINAGE SYSTEM No. ⬡	DRAINAGE UNIT ○	6" Alt PIPE Culv LF	18" Alt PIPE Culv LF	24" Alt PIPE Culv LF	24" REINFORCED Conc PIPE LF	36" Alt PIPE Culv LF	36" REINFORCED Conc PIPE LF	36" RCP DOWNDRAIN LF	48" REINFORCED Conc PIPE LF	54" REINFORCED Conc PIPE LF	66" REINFORCED Conc PIPE LF	84" MODIFIED RCP LF	24" CONCRETE FES EA	36" CONCRETE FES EA	STRUCTURAL Conc, BOX CULVERT CY	MINOR CONCRETE (MINOR STRUCTURE) CY	CONCRETE (CONCRETE APRON) CY	CONCRETE (DITCH LINING) CY	CONCRETE (CHANNEL LINING) CY	MISCELLANEOUS IRON AND STEEL LB	RSP FABRIC (CLASS 8) SQYD	RSP (FACING, METHOD B) CY	RSP (1/4 TON, METHOD B) CY	BAR REINFORCING STEEL (BOX CULVERT) LB	DITCH EXCAVATION CY	PLACE HOT MIX ASPHALT (MISCELLANEOUS AREA) SQYD	3" PLASTIC PIPE (APPROACH SLAB DRAIN) LF	REMOVE CULVERT LF	REMOVE CONCRETE (CY) * CY	REMOVE RSP CY	DESCRIPTION	STATION	DRAINAGE SYSTEM No. ⬡	DRAINAGE UNIT ○
D-4	7	u			275.4																											24" APC	"WB" 637+75.00	7	u
D-4	7	v															1.82				329											G2 INLET	"WB" 640+52.50	7	v
D-4	7	w			34.6																											24" APC	"WB" 640+52.50	7	w
D-4	7	x															1.82				329											G2 INLET	"WB" 640+90.00	7	x
D-4	7	y			34.6																											24" APC	"WB" 640+90.00	7	y
D-4	7	z															1.82				329											G2 INLET	"WB" 641+27.50	7	z
D-4	7	aa			34.6																											24" APC	"WB" 641+27.50	7	aa
D-4	7	ab															1.82				329											G2 INLET	"WB" 641+65.00	7	ab
D-4	7	ac			32.1																											24" APC	"WB" 641+65.00	7	ac
D-4	7	ad															1.82				329											G2 INLET	"WB" 642+00.00	7	ad
D-4	7	ae			45.7																											24" APC	"WB" 637+75.00	7	ae
D-4	7	af															2.95				658											GT4 INLET	"WB" 638+27.50	7	af
D-3	8	a			85.5																											24" APC W/COLLAR	"LMD1A" 41+60.00	8	a
D-3	8	b															1.59	1.87			329											G2 INLET W/APRON	"LMD1A" 41+70.00	8	b
D-3	8	c																				7.3	1.8									RSP	"LMD1A" 44+86.00	8	c
D-3	8	d																														OVERSIDE DRAIN Mod	"LMD1A" 44+86.00	8	d
																												15.0							
D-3	9	a							405.4																							DbI 48" RCP W/COLLARS	"LMR" 45+18.43	9	a
D-3	9	b							204.0																							DbI 48" RCP W/COLLARS	"LMR" 45+18.43	9	b
D-3	9	c															3.64	6.67														DbI HW W/APRON	"LMR" 45+93.89	9	c
D-3	9	d																														EARTHEN DITCH	"LMR" 47+67.94	9	d
D-3	9	e																														EARTHEN DITCH	"LMR" 49+25.39	9	e
D-3	9	f																														EARTHEN DITCH	"LMR" 53+32.41	9	f
D-3	9	g				7.7																										24" RCP W/J-1 COLLAR	"LMR" 45+03.00	9	g
D-3	9	h															1.24	3.31			329											G1 DI W/APRON	"LMR" 45+03.00	9	h
D-3	9	i																				17.8	6.0									RSP AT FES	"LMR" 46+46.18	9	i
D-3	9	j												1																		24" FES	"LMR" 46+48.16	9	j
D-3	9	k				52.5																										24" RCP	"LMR" 46+50.00	9	k
D-3	9	l															1.24				329											G1 INLET	"LMR" 46+60.50	9	l
D-3	9	m																		41.4		100.0	60.0	110.0								SPILLWAY & RSP	"LMR" 46+14.63	9	m
D-3	10	a																				81.5	22.7	41.6								RSP AT FES	"LMR" 50+40.00	10	a
D-3	10	b													1																	36" FES	"LMR" 50+40.00	10	b
D-3	10	c						220.5																								36" RCP	"LMR" 50+40.00	10	c
D-3	10	d															4.82				329											G2 INLET	"LMD1A" 49+66.25	10	d
D-3	10	e						30.0																								36" RCP	"LMD1A" 49+66.25	10	e
D-3	10	f															4.03				329											G2 INLET	"LMD1A" 49+75.00	10	f
D-3	10	g			71.5																											24" APC	"LMD1A" 49+75.00	10	g
D-3	10	h															1.57				329											G2 INLET	"LMD1A" 50+50.00	10	h
D-4	10	i			297.0																											24" APC	"LMD1A" 50+50.00	10	i
D-4	10	j															2.36				329											G2 INLET	"LMD1A" 53+50.00	10	j
D-4	10	k			247.0																											24" APC	"LMD1A" 53+50.00	10	k
D-4	10	l															2.29				329											G2 INLET	"LMD1A" 56+00.00	10	l
SHEET TOTAL					1,158.0	60.2		250.5		609.4				1	1		34.83	11.85		41.4	4,935	206.6	90.5	151.6			15.0					SHEET TOTAL			

(N) - NOT A SEPARATE PAY ITEM, FOR INFORMATION ONLY
* - SEE ROADWAY QUANTITIES FOR ADDITIONAL QUANTITIES

DRAINAGE QUANTITIES
DQ-9

STATE OF CALIFORNIA - DEPARTMENT OF TRANSPORTATION
Caltrans® DESIGN
FUNCTIONAL SUPERVISOR MICHAEL J. WEBSTER
CALCULATED-DESIGNED BY MICHAEL OREIRO
CHECKED BY FARDAD BEHBOODY
REVISED BY
DATE REVISED

LAST REVISION 08-20-13
DATE PLOTTED => 21-AUG-2013
TIME PLOTTED => 11:26

Dist	COUNTY	ROUTE	POST MILES TOTAL PROJECT	SHEET No.	TOTAL SHEETS
11	SD	11, 905	0.0/1.6, R9.9/R10.7	272	622

REGISTERED CIVIL ENGINEER 03-19-13 DATE

04-22-13
PLANS APPROVAL DATE

REGISTERED PROFESSIONAL ENGINEER FARDAD BEHBOODY No. 61478 Exp. 06-30-15 CIVIL STATE OF CALIFORNIA

THE STATE OF CALIFORNIA OR ITS OFFICERS OR AGENTS SHALL NOT BE RESPONSIBLE FOR THE ACCURACY OR COMPLETENESS OF SCANNED COPIES OF THIS PLAN SHEET.

2 REPLACED PER ADDENDUM No. 2 DATED AUGUST 23, 2013

DRAINAGE QUANTITIES

2

DRAINAGE SHEET No.	DRAINAGE SYSTEM No. ⬡	DRAINAGE UNIT ○	6" Alt PIPE Culv LF	18" Alt PIPE Culv LF	24" Alt PIPE Culv LF	24" REINFORCED Conc PIPE LF	36" Alt PIPE Culv LF	36" REINFORCED Conc PIPE LF	36" RCP DOWNDRAIN LF	48" REINFORCED Conc PIPE LF	54" REINFORCED Conc PIPE LF	66" REINFORCED Conc PIPE LF	84" MODIFIED RCP LF	24" CONCRETE FES EA	36" CONCRETE FES EA	STRUCTURAL Conc, BOX CULVERT CY	MINOR CONCRETE (MINOR STRUCTURE) CY	CONCRETE (CONCRETE APRON) CY	CONCRETE (DITCH LINING) CY	CONCRETE (CHANNEL LINING) CY	MISCELLANEOUS IRON AND STEEL LB	RSP FABRIC (CLASS 8) SQYD	RSP (FACING, METHOD B) CY	RSP (1/4 TON, METHOD B) CY	BAR REINFORCING STEEL (BOX CULVERT) LB	DITCH EXCAVATION CY	PLACE HOT MIX ASPHALT (MISCELLANEOUS AREA) SQYD	3" PLASTIC PIPE (APPROACH SLAB DRAIN) LF	REMOVE CULVERT LF	REMOVE CONCRETE (CY) * CY	REMOVE RSP CY	DESCRIPTION	STATION	DRAINAGE SYSTEM No. ⬡	DRAINAGE UNIT ○
D-3	10	bc															4.79				864											JUNCTION STRUCTURE	"E6" 637+75.00	10	bc
D-3	10	bd				136.3																										24" RCP	"E6" 638+00.00	10	bd
D-3	10	be															4.79				864											JUNCTION STRUCTURE	"E6" 639+10.00	10	be
D-3	10	bf				18.5																										24" RCP W/ COLLAR	"E6" 639+10.00	10	bf
D-3	10	bg																												1		REMOVE FES	"E6" 639+10.00	10	bg
D-3	10	bh																													5	REMOVE RSP	"E6" 639+10.00	10	bh
D-3	10	bi																											138			REMOVE CULVERT	"E6" 639+10.00	10	bi
D-3	10	bj																	14.57							23.2						DRAINAGE DITCH	"LMR" 47+56.00	10	bj
D-3	10	bk															2.89	36.35			980											Mod G2 DI W/ APRON	"LMR" 47+56.98	10	bk
D-3	10	bl			77.2																											24" APC	"LMR" 47+56.00	10	bl
D-3	10	bm															4.40				864											JUNCTION STRUCTURE	"LMR" 46+91.76	10	bm
D-3	10	bn			184.2																											24" APC W/ COLLAR	"LMR" 45+11.07	10	bn
D-4	10	bo																	26.53							98.3						DRAINAGE DITCH	"EB" 632+00.00	10	bo
D-11	11	a																				96.2	28.3	51.9								RSP AT FES	"WB" 647+78.38	11	a
D-11	11	b													1																	36" CONCRETE FES	"WB" 647+78.38	11	b
D-4	11	c					174.4																									36" RCP	"WB" 647+65.00	11	c
D-4	11	d															4.40				864											JUNCTION STRUCTURE	"WB" 647+91.29	11	d
D-4	11	e						86.4																								36" RCP DD	"WB" 647+91.29	11	e
D-4	11	f															11.38				622											GD2 INLET	"WB" 647+97.38	11	f
D-4	11	g					41.4																									36" APC	"WB" 647+97.38	11	g
D-4	11	h															4.40				864											JUNCTION STRUCTURE	"WB" 648+00.00	11	h
D-4	11	i															2.46				329											G2 INLET	"WB" 645+80.48	11	i
D-4	11	j			215.3																											24" APC	"WB" 646+89.00	11	j
D-4	11	k					356.2																									36" APC	"WB" 649+50.00	11	k
D-5	11	l															4.40				864											JUNCTION STRUCTURE	"A" 25+50.00	11	l
D-5	11	m					345.0																									36" APC	"A" 25+50.00	11	m
D-5	11	n															4.40				864											JUNCTION STRUCTURE	"A" 29+00.00	11	n
D-5	11	o					345.0																									36" APC	"A" 29+00.00	11	o
D-5	11	p															4.40				864											JUNCTION STRUCTURE	"A" 32+50.00	11	p
D-5	11	q			295.0																											24" APC	"A" 34+00.00	11	q
D-5	11	r															4.40				864											JUNCTION STRUCTURE	"A" 35+50.00	11	r
D-5	11	s			220.0																											24" APC	"A" 36+50.00	11	s
D-6	11	t															4.40				864											JUNCTION STRUCTURE	"A" 37+75.00	11	t
D-4	11	u															2.18				622											GD1 INLET	"WB" 645+50.00	11	u
D-4	11	v			79.1																											24" APC	"WB" 645+50.00	11	v
D-4	11	w															2.18				622											GD1 INLET	"WB" 646+00.00	11	w
D-4	11	x			47.9																											24" APC	"WB" 646+00.00	11	x
D-4	11	y															2.18				622											GD1 INLET	"WB" 648+04.00	11	y
D-4	11	z			40.7																											24" APC	"WB" 648+04.00	11	z
D-5	11	aa															1.39				329											G1 INLET	"A" 25+50.00	11	aa
D-5	11	ab			36.9																											24" APC	"A" 25+50.00	11	ab
D-5	11	ac															1.39				329											G1 INLET	"A" 25+50.00	11	ac
D-5	11	ad			46.8																											24" APC	"A" 25+50.00	11	ad
D-5	11	ae															4.22				622											GD2 INLET	"A" 29+00.00	11	ae
D-5	11	af					71.0																									36" APC	"A" 29+00.00	11	af
SHEET TOTAL					1,243.1	154.8	1,117.2	215.8	86.4						1		75.05	36.35	41.10		13,717	96.2	28.3	51.9		121.5			138	1	5	SHEET TOTAL			

(N) - NOT A SEPARATE PAY ITEM, FOR INFORMATION ONLY
* - SEE ROADWAY QUANTITIES FOR ADDITIONAL QUANTITIES

DRAINAGE QUANTITIES
DQ-13

REVISED BY | DATE REVISED
MICHAEL OREIRO | FARDAD BEHBOODY
CALCULATED-DESIGNED BY | CHECKED BY
FUNCTIONAL SUPERVISOR | MICHAEL J. WEBSTER
STATE OF CALIFORNIA - DEPARTMENT OF TRANSPORTATION
Caltrans DESIGN

LAST REVISION 08-20-13 | DATE PLOTTED => 21-AUG-2013 | TIME PLOTTED => 11:27

Dist	COUNTY	ROUTE	POST MILES TOTAL PROJECT	SHEET No.	TOTAL SHEETS
11	SD	11, 905	0.0/1.6, R9.9/R10.7	274	622

REGISTERED CIVIL ENGINEER 03-19-13 DATE

04-22-13
PLANS APPROVAL DATE

REGISTERED PROFESSIONAL ENGINEER FARDAD BEHBOODY No. 61478 Exp. 06-30-15 CIVIL STATE OF CALIFORNIA

THE STATE OF CALIFORNIA OR ITS OFFICERS OR AGENTS SHALL NOT BE RESPONSIBLE FOR THE ACCURACY OR COMPLETENESS OF SCANNED COPIES OF THIS PLAN SHEET.

2 REPLACED PER ADDENDUM No. 2 DATED AUGUST 23, 2013

DRAINAGE QUANTITIES

2

DRAINAGE SHEET No.	DRAINAGE SYSTEM No. ⬡	DRAINAGE UNIT ○	6" Alt PIPE Culv LF	18" Alt PIPE Culv LF	24" Alt PIPE Culv LF	24" REINFORCED Conc PIPE LF	36" Alt PIPE Culv LF	36" REINFORCED Conc PIPE LF	36" RCP DOWNDRAIN LF	48" REINFORCED Conc PIPE LF	54" REINFORCED Conc PIPE LF	66" REINFORCED Conc PIPE LF	84" MODIFIED RCP LF	24" CONCRETE FES EA	36" CONCRETE FES EA	STRUCTURAL Conc, BOX CULVERT CY	MINOR CONCRETE (MINOR STRUCTURE) CY	CONCRETE (CONCRETE APRON) CY	CONCRETE (DITCH LINING) CY	CONCRETE (CHANNEL LINING) CY	MISCELLANEOUS IRON AND STEEL LB	RSP FABRIC (CLASS 8) SQYD	RSP (FACING, METHOD B) CY	RSP (1/4 TON, METHOD B) CY	BAR REINFORCING STEEL (BOX CULVERT) LB	DITCH EXCAVATION CY	PLACE HOT MIX ASPHALT (MISCELLANEOUS AREA) SQYD	3" PLASTIC PIPE (APPROACH SLAB DRAIN) LF	REMOVE CULVERT LF	REMOVE CONCRETE (CY) * CY	REMOVE RSP CY	DESCRIPTION	STATION	DRAINAGE SYSTEM No. ⬡	DRAINAGE UNIT ○
D-5	11	ag															1.39				329											G1 INLET	"A" 29+00.00	11	ag
D-5	11	ah			46.5																											24" APC	"A" 29+00.00	11	ah
D-5	11	ai															2.18				622											GD1 INLET	"A" 32+50.00	11	ai
D-5	11	aj			46.3																											24" APC	"A" 32+50.00	11	aj
D-5	11	ak															4.22				622											GD2 INLET	"A" 32+50.00	11	ak
D-5	11	al					80.5																									36" APC	"A" 32+50.00	11	al
D-5	11	am															1.28				329											G1 INLET	"A" 35+50.00	11	am
D-5	11	an			48.3																											24" APC	"A" 35+50.00	11	an
D-5	11	ao															2.03				622											GD1 INLET	"A" 35+50.00	11	ao
D-5	11	ap			61.3																											24" APC	"A" 35+50.00	11	ap
D-6	11	aq															1.28				329											G1 INLET	"A" 37+75.00	11	aq
D-6	11	ar			48.3																											24" APC	"A" 37+75.00	11	ar
D-6	11	as															1.28				329											G1 INLET	"A" 37+75.00	11	as
D-6	11	at			58.3																											24" APC	"A" 37+75.00	11	at
D-4	11	au																														REMOVE RSP	"A" 24+40.00	11	au
D-5	11	av																												151		REMOVE BOX CULVERT	"A" 25+00.00	11	av
D-5	11	aw																											31			REMOVE CULVERT X 2	"A" 24+70.00	11	aw
D-5	11	ax																												2		REMOVE HEADWALL	"A" 26+00.00	11	ax
D-5	11	ay																														ABANDON CULVERT	"A" 25+00.00	11	ay
D-4	12	a			86.6																											24" APC W/COLLAR	"WB" 648+11.98	12	a
D-4	12	b															4.21				329											G2 INLET	"WB" 648+11.98	12	b
D-4	12	c						477.8																								36" RCP W/COLLAR	"EB" 647+13.00	12	c
D-5	13	a									462.8																					54" RCP W/COLLAR	"A" 25+25.65	13	a
D-5	13	b															3.31															HEADWALL	"A" 27+53.80	13	b
D-5	13	c																				184.5	65.0	119.2								RSP AT HW	"A" 27+53.80	13	c
D-5	13	d																								275.6						DRAINAGE DITCH	"A" 32+00.00	13	d
D-11	14	a																				96.2	28.3	51.9								RSP AT FES	"WB" 648+45.19	14	a
D-11	14	b													1																	36" FES	"WB" 648+49.16	14	b
D-11	14	c						297.0																								36" RCP	"WB" 649+50.00	14	c
D-5	14	d															5.63				864											JUNCTION STRUCTURE	"A" 24+63.78	14	d
D-5	14	e						298.1																								36" RCP	"A" 32+00.00	14	e
D-5	14	f															4.55				864											JUNCTION STRUCTURE	"A" 27+67.88	14	f
D-5	14	g															4.98				864											JUNCTION STRUCTURE	"A" 31+60.00	14	g
D-5	14	h															4.55				864											JUNCTION STRUCTURE	"A" 34+62.16	14	h
D-5	14	i						356.6																								36" RCP	"A" 36+50.00	14	i
D-6	14	j															4.98				864											JUNCTION STRUCTURE	"A" 38+20.00	14	j
D-6	14	k						234.7																								36" RCP	"A" 39+50.00	14	k
D-6	14	l															4.98				864											JUNCTION STRUCTURE	"A" 40+59.66	14	l
D-6	14	m						74.4																								36" RCP	"A" 40+59.66	14	m
SHEET TOTAL					395.6		80.5	1,738.6			462.8				1		50.85				8,695	280.7	93.3	171.1		275.6			31	153		SHEET TOTAL			

(N) - NOT A SEPARATE PAY ITEM, FOR INFORMATION ONLY
* - SEE ROADWAY QUANTITIES FOR ADDITIONAL QUANTITIES

DRAINAGE QUANTITIES
DQ-15

REVISED BY | DATE REVISED
MICHAEL OREIRO | FARDAD BEHBOODY
CALCULATED-DESIGNED BY | CHECKED BY
FUNCTIONAL SUPERVISOR | MICHAEL J. WEBSTER
STATE OF CALIFORNIA - DEPARTMENT OF TRANSPORTATION
Caltrans DESIGN

LAST REVISION 08-20-13 | DATE PLOTTED => 21-AUG-2013 | TIME PLOTTED => 11:27

Dist	COUNTY	ROUTE	POST MILES TOTAL PROJECT	SHEET No.	TOTAL SHEETS
11	SD	11, 905	0.0/1.6, R9.9/R10.7	278	622

REGISTERED CIVIL ENGINEER 03-19-13 DATE

04-22-13
PLANS APPROVAL DATE

REGISTERED PROFESSIONAL ENGINEER FARDAD BEHBOODY No. 61478 Exp. 06-30-15 CIVIL STATE OF CALIFORNIA

THE STATE OF CALIFORNIA OR ITS OFFICERS OR AGENTS SHALL NOT BE RESPONSIBLE FOR THE ACCURACY OR COMPLETENESS OF SCANNED COPIES OF THIS PLAN SHEET.

2 REPLACED PER ADDENDUM No. 2 DATED AUGUST 23, 2013

DRAINAGE QUANTITIES

2

DRAINAGE SHEET No.	DRAINAGE SYSTEM No. ⬡	DRAINAGE UNIT ○	6" Alt PIPE Culv LF	18" Alt PIPE Culv LF	24" Alt PIPE Culv LF	24" REINFORCED Conc PIPE LF	36" Alt PIPE Culv LF	36" REINFORCED Conc PIPE LF	36" RCP DOWNDRAIN LF	48" REINFORCED Conc PIPE LF	54" REINFORCED Conc PIPE LF	66" REINFORCED Conc PIPE LF	84" MODIFIED RCP LF	24" CONCRETE FES EA	36" CONCRETE FES EA	STRUCTURAL Conc, BOX CULVERT CY	MINOR CONCRETE (MINOR STRUCTURE) CY	CONCRETE (CONCRETE APRON) CY	CONCRETE (DITCH LINING) CY	CONCRETE (CHANNEL LINING) CY	MISCELLANEOUS IRON AND STEEL LB	RSP FABRIC (CLASS 8) SQYD	RSP (FACING, METHOD B) CY	RSP (1/4 TON, METHOD B) CY	BAR REINFORCING STEEL (BOX CULVERT) LB	DITCH EXCAVATION CY	PLACE HOT MIX ASPHALT (MISCELLANEOUS AREA) SQYD	3" PLASTIC PIPE (APPROACH SLAB DRAIN) LF	REMOVE CULVERT LF	REMOVE CONCRETE (CY) * CY	REMOVE RSP CY	DESCRIPTION	STATION	DRAINAGE SYSTEM No. ⬡	DRAINAGE UNIT ○
D-7	14	bd				48.3																										24" RCP	"A" 52+54.66	14	bd
D-7	14	be															1.39				329											G1 INLET	"A" 55+00.00	14	be
D-7	14	bf			48.3																											24" APC	"A" 55+00.00	14	bf
D-7	14	bg															1.39				329											G1 INLET	"A" 55+00.00	14	bg
D-7	14	bh			58.3																											24" APC	"A" 55+00.00	14	bh
D-7	14	bi															1.39				329											G1 INLET	"A" 58+00.00	14	bi
D-7	14	bj			55.8																											24" APC	"A" 58+00.00	14	bj
D-7	14	bk															1.39				329											G1 INLET	"A" 58+00.00	14	bk
D-7	14	bl			64.8																											24" APC	"A" 58+00.00	14	bl
D-7	14	bm															1.39				329											G1 INLET	"A" 60+00.00	14	bm
D-7	14	bn			59.1																											24" APC	"A" 60+00.00	14	bn
D-7	14	bo															1.39				329											G1 INLET	"A" 60+00.00	14	bo
D-7	14	bp			68.1																											24" APC	"A" 60+00.00	14	bp
D-7	14	bq															1.39				329											G1 INLET	"A" 63+00.00	14	bq
D-7	14	br			64.1																											24" APC	"A" 63+00.00	14	br
D-7	14	bs															1.39				329											G1 INLET	"A" 63+00.00	14	bs
D-7	14	bt			73.1																											24" APC	"A" 63+00.00	14	bt
D-8	14	bu															2.18				622											GD1 INLET	"A" 66+00.00	14	bu
D-8	14	bv			67.0																											24" APC	"A" 66+00.00	14	bv
D-8	14	bw															2.18				622											GD1 INLET	"A" 66+00.00	14	bw
D-8	14	bx			76.0																											24" APC	"A" 66+00.00	14	bx
D-7	14	by																	36.40							136.0						DRAINAGE DITCH	"A" 55+00.00	14	by
D-7	14	bz																	31.20							117.0						DRAINAGE DITCH	"A" 55+00.00	14	bz
D-5	14	ca						382.2																								36" RCP	"A" 32+00.00	14	ca
D-5	14	cb						295.1																								36" RCP	"A" 32+00.00	14	cb
D-6	14	cc															11.74				864											Mod JS	"A" 40+59.66	14	cc
D-6	14	cd				95.4																										24" RCP	"A" 40+59.66	14	cd
																										86.0						DRAINAGE DITCH	"A" 58 TO 72+70	14	ce
D-4	15	a								184.4																						48" RCP W/COLLAR	"WB" 644+91.81	15	a
D-11	15	b															10.00				239											JUNCTION STRUCTURE	"LMR" 59+89.56	15	b
D-11	15	c								220.8																						48" RCP	"WB" 645+00.00	15	c
D-11	15	d															7.36				980											Mod G2 INLET	"LMR" 58+27.07	15	d
D-11	15	e						73.6																								36" RCP	"WB" 645+56.23	15	e
D-11	15	f															6.32	36.35			980											Mod G2 DI W/ APRON	"LMR" 58+75.20	15	f
D-11	15	g																	13.00							19.0						DRAINAGE DITCH		15	g
D-11	15	h																	4.16							9.0						DRAINAGE DITCH		15	h
SHEET TOTAL					634.6	143.7		750.9		405.2							50.90	36.35	84.76		6,939					367.0						SHEET TOTAL			

(N) - NOT A SEPARATE PAY ITEM, FOR INFORMATION ONLY
* - SEE ROADWAY QUANTITIES FOR ADDITIONAL QUANTITIES

DRAINAGE QUANTITIES

DQ-19

STATE OF CALIFORNIA - DEPARTMENT OF TRANSPORTATION
Caltrans® DESIGN
FUNCTIONAL SUPERVISOR: MICHAEL J. WEBSTER
CALCULATED-DESIGNED BY: MICHAEL OREIRO
CHECKED BY: FARDAD BEHBOODY
REVISED BY / DATE REVISED

LAST REVISION 08-20-13 | DATE PLOTTED => 21-AUG-2013 | TIME PLOTTED => 11:27

Dist	COUNTY	ROUTE	POST MILES TOTAL PROJECT	SHEET No.	TOTAL SHEETS
11	SD	11, 905	0.0/1.6, R9.9/R10.7	282	622

REGISTERED CIVIL ENGINEER 03-19-13 DATE

04-22-13
PLANS APPROVAL DATE

REGISTERED PROFESSIONAL ENGINEER FARDAD BEHBOODY No. 61478 Exp. 06-30-15 CIVIL STATE OF CALIFORNIA

THE STATE OF CALIFORNIA OR ITS OFFICERS OR AGENTS SHALL NOT BE RESPONSIBLE FOR THE ACCURACY OR COMPLETENESS OF SCANNED COPIES OF THIS PLAN SHEET.

2 REPLACED PER ADDENDUM No. 2 DATED AUGUST 23, 2013

DRAINAGE QUANTITIES 2

DRAINAGE SHEET No.	DRAINAGE SYSTEM No. ⬡	DRAINAGE UNIT ○	6" Alt PIPE Culv LF	18" Alt PIPE Culv LF	24" Alt PIPE Culv LF	24" REINFORCED Conc PIPE LF	36" Alt PIPE Culv LF	36" REINFORCED Conc PIPE LF	36" RCP DOWNDRAIN LF	48" REINFORCED Conc PIPE LF	54" REINFORCED Conc PIPE LF	66" REINFORCED Conc PIPE LF	84" MODIFIED RCP LF	24" CONCRETE FES EA	36" CONCRETE FES EA	STRUCTURAL Conc, BOX CULVERT CY	MINOR CONCRETE (MINOR STRUCTURE) CY	CONCRETE (CONCRETE APRON) CY	CONCRETE (DITCH LINING) CY	CONCRETE (CHANNEL LINING) CY	MISCELLANEOUS IRON AND STEEL LB	RSP FABRIC (CLASS 8) SQYD	RSP (FACING, METHOD B) CY	RSP (1/4 TON, METHOD B) CY	BAR REINFORCING STEEL (BOX CULVERT) LB	DITCH EXCAVATION CY	PLACE HOT MIX ASPHALT (MISCELLANEOUS AREA) SQYD	3" PLASTIC PIPE (APPROACH SLAB DRAIN) LF	REMOVE CULVERT LF	REMOVE CONCRETE (CY) * CY	REMOVE RSP CY	DESCRIPTION	STATION	DRAINAGE SYSTEM No. ⬡	DRAINAGE UNIT ○
D-6	16	aj																											61			REMOVE CULVERT	"A" 39+80.00	16	aj
D-6	16	ak																											17			REMOVE CULVERT	"A" 40+62.00	16	ak
D-6	16	al																												3		REMOVE INLET	"A" 40+62.00	16	al
D-6	16	am																											31			REMOVE CULVERT	"A" 40+62.00	16	am
D-6	16	an																												3		REMOVE INLET	"A" 45+40.00	16	an
D-6	16	ao																											23			REMOVE CULVERT	"A" 45+50.00	16	ao
D-6	16	ap																											64			REMOVE CULVERT	"A" 45+57.00	16	ap
D-6	16	aq																												3		REMOVE INLET	"A" 47+10.00	16	aq
D-6	16	ar																											22			REMOVE CULVERT	"A" 47+10.00	16	ar
D-6	16	as																											26			REMOVE CULVERT	"A" 49+60.00	16	as
D-6	16	at																												3		REMOVE INLET	"A" 49+60.00	16	at
D-6	16	au																											21			REMOVE CULVERT	"A" 50+01.00	16	au
D-6	16	av																												3		REMOVE INLET	"A" 50+01.00	16	av
D-6	16	aw																											66			REMOVE CULVERT	"A" 50+20.00	16	aw
D-7	16	ax																												3		REMOVE INLET	"A" 50+67.00	16	ax
D-7	16	ay																											42			REMOVE CULVERT	"A" 50+67.00	16	ay
D-7	16	az																											41			REMOVE CULVERT	"A" 50+67.00	16	az
D-7	16	ba																											113			REMOVE CULVERT	"A" 51+50.00	16	ba
D-7	16	bb																												3		REMOVE INLET	"A" 52+20.00	16	bb
D-7	16	bc																											83			REMOVE CULVERT	"A" 52+20.00	16	bc
D-7	16	bd																											22			REMOVE CULVERT	"A" 52+20.00	16	bd
D-7	16	be																												3		REMOVE INLET	"A" 52+51.00	16	be
D-3	4																									200.0						BIOSWALES DRAINAGE	SYSTEM 4		
D-3	8																									104.0						BIOSWALES DRAINAGE	SYSTEM 8		
D-10 &3	9																									210.0						BIOSWALES DRAINAGE	SYSTEM 9		
D-8&9	19																									600.0						BIOSWALES DRAINAGE	SYSTEM 19		
SHEET TOTAL																										1114			632	24		SHEET TOTAL			

(N) - NOT A SEPARATE PAY ITEM, FOR INFORMATION ONLY
* - SEE ROADWAY QUANTITIES FOR ADDITIONAL QUANTITIES

DRAINAGE QUANTITIES
DQ-23

STATE OF CALIFORNIA - DEPARTMENT OF TRANSPORTATION
Caltrans DESIGN

FUNCTIONAL SUPERVISOR: MICHAEL J. WEBSTER
CALCULATED-DESIGNED BY: MICHAEL OREIRO
CHECKED BY: FARDAD BEHBOODY
REVISED BY
DATE REVISED

LAST REVISION 08-20-13
DATE PLOTTED => 21-AUG-2013
TIME PLOTTED => 11:27

Dist	COUNTY	ROUTE	POST MILES TOTAL PROJECT	SHEET No.	TOTAL SHEETS
11	SD	11, 905	0.0/1.6, R9.9/R10.7	286	622

REGISTERED CIVIL ENGINEER 03-19-13 DATE

04-22-13
PLANS APPROVAL DATE

REGISTERED PROFESSIONAL ENGINEER FARDAD BEHBOODY No. 61478 Exp. 06-30-15 CIVIL STATE OF CALIFORNIA

THE STATE OF CALIFORNIA OR ITS OFFICERS OR AGENTS SHALL NOT BE RESPONSIBLE FOR THE ACCURACY OR COMPLETENESS OF SCANNED COPIES OF THIS PLAN SHEET.

2 **REPLACED PER ADDENDUM No. 2 DATED AUGUST 23, 2013**

DRAINAGE QUANTITIES

DRAINAGE QUANTITY SHEET No.	6" Alt PIPE Culv	18" Alt PIPE Culv	24" Alt PIPE Culv	24" REINFORCED Conc PIPE	36" Alt PIPE Culv	36" REINFORCED Conc PIPE	36" RCP DOWNDRAIN	48" REINFORCED Conc PIPE	54" REINFORCED Conc PIPE	66" REINFORCED Conc PIPE	84" MODIFIED RCP	24" CONCRETE FES	36" CONCRETE FES	STRUCTURAL CONCRETE, BOX CULVERT	MINOR CONCRETE ** (MINOR STRUCTURE)	CONCRETE (CONCRETE APRON)	CONCRETE (DITCH LINING)	CONCRETE (CHANNEL LINING)	MISCELLANEOUS IRON AND STEEL	RSP FABRIC (CLASS 8)	RSP (FACING, METHOD B)	RSP (1/4 TON, METHOD B)	BAR REINFORCING STEEL (BOX CULVERT)	DITCH EXCAVATION	PLACE HOT MIX ASPHALT (MISCELLANEOUS AREA)	3" PLASTIC PIPE (APPROACH SLAB DRAIN)	REMOVE CULVERT	REMOVE CONCRETE (CY) *	REMOVE RSP
	LF	LF	LF	LF	LF	LF	LF	LF	LF	LF	LF	EA	EA	CY	CY	CY	CY	CY	LB	SQYD	CY	CY	LB	CY	SQYD	LF	LF	EA	CY
DQ-1		925.2	7.4	15.0	38.8										33.33				7,716										
DQ-3		1,167.5	665.8	46.5											28.01				7,629								51.0	2.0	
DQ-5	10.0		279.8	140.9								2		6,324.35	74.04	8.49	244.97		4,769	237.4	85.8	113.4	1,256,999	940.0			326.0	68.0	
DQ-7			761.1	55.9	142.2	227.6							1	176.38	40.32	7.99	181.86	915.97	3,439	90.9	25.8	47.4	45,119	988.0				45.0	1843.0
DQ-9			1,158.0	60.2		250.5		609.4				1	1		34.83	11.85		41.40	4,935	206.6	90.5	151.6			15.0				
DQ-11		54.7	865.2	153.5	64.2										37.89	3.74			6,483								139.0	13.0	
DQ-13			1,243.1	154.8	1,117.2	215.8	86.4						1		75.05	36.35	41.10		13,717	96.2	28.3	51.9		121.50			138.0	1.0	5.0
DQ-15			395.6		80.5	1,738.6			462.8				1		50.85				8,695	280.7	93.3	171.1		275.6			31.0	153.0	
DQ-17			1,083.3	589.3		1,414.5									61.26	9.93			11,363										
DQ-19			634.6	143.7		750.9		405.2							50.90	36.35	84.76		6,939					367.0					
DQ-21				781.2		201.3			662.7	149.6	1,157.3				177.17	3.74		7.20	11,221										
DQ-23																								1,114.0			632.0	24.0	
DQ-25			181.1	68.4		344.3		468.0				1	1		28.15	6.62			2,766	637.0	390.4	653.2		931.52		100.0	91.8	20.7	622.0
PROJECT TOTAL	10.0	2,147.4	7,275.0	2,209.4	1,442.9	5,143.5	86.4	1,482.6	1,125.5	149.6	1,157.3	4	5	6,500.73	691.8	125.06	552.69	964.57	89,672	1,548.8	714.1	1,188.6	1,302,118	4,737.62	15.0	100.0	1,408.8	326.7	2,470.0

2

(N) - NOT A SEPARATE PAY ITEM, FOR INFORMATION ONLY
* - SEE ROADWAY QUANTITIES FOR ADDITIONAL QUANTITIES
** - SEE SANITARY SEWER QUANTITIES FOR ADDITIONAL QUANTITIES

DRAINAGE QUANTITIES

DQ-27

REVISED BY | DATE REVISED
MICHAEL OREIRO | FARDAD BEHBOODY
CALCULATED-DESIGNED BY | CHECKED BY
FUNCTIONAL SUPERVISOR | MICHAEL J. WEBSTER
STATE OF CALIFORNIA - DEPARTMENT OF TRANSPORTATION
Caltrans DESIGN

LAST REVISION 08-20-13 | DATE PLOTTED => 21-AUG-2013 | TIME PLOTTED => 11:27

2 **REPLACED PER ADDENDUM No. 2 DATED AUGUST 23, 2013**

Dist	COUNTY	ROUTE	POST MILES TOTAL PROJECT	SHEET No.	TOTAL SHEETS
11	SD	11, 905	0.0/1.6, R9.9/R10.7	288	622

REGISTERED CIVIL ENGINEER 03-19-13 DATE

04-22-13
PLANS APPROVAL DATE

REGISTERED PROFESSIONAL ENGINEER ARTURO A. REYES No. C75491 Exp. 06-30-14 CIVIL STATE OF CALIFORNIA

THE STATE OF CALIFORNIA OR ITS OFFICERS OR AGENTS SHALL NOT BE RESPONSIBLE FOR THE ACCURACY OR COMPLETENESS OF SCANNED COPIES OF THIS PLAN SHEET.

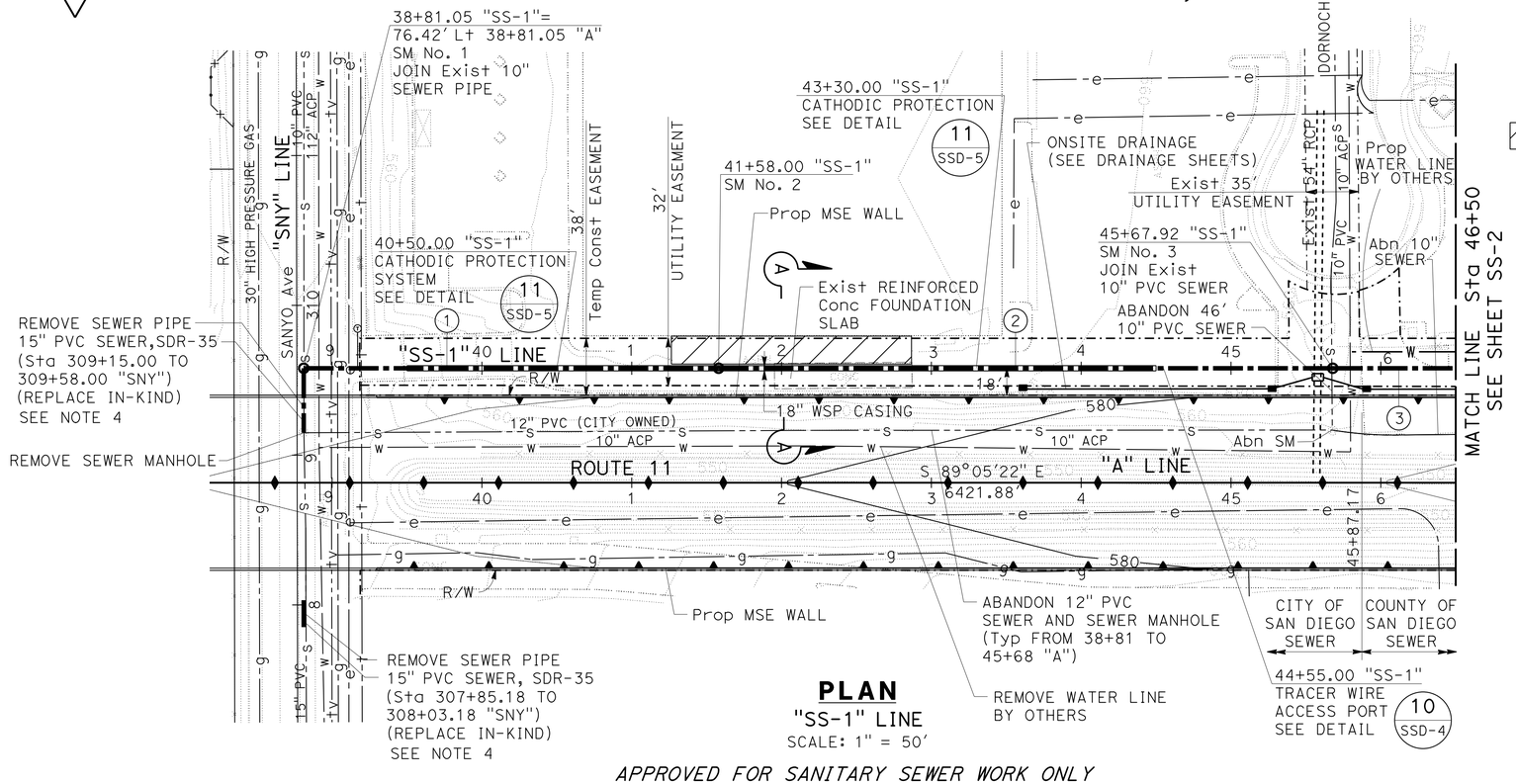

PLAN
"SS-1" LINE
SCALE: 1" = 50'

APPROVED FOR SANITARY SEWER WORK ONLY

LEGEND:

PVC = POLYVINYL CHLORIDE
SM = SANITARY SEWER MANHOLE
Prop = PROPOSED
SD = SAN DIEGO
= RAISED CONCRETE SLABS (PROTECT IN PLACE)

PIPELINE CENTERLINE DATA

No.	CHORD BEARING	LENGTH	REMARKS
1	S 89°05'22" E	276.95'	12" PVC, SDR-26
2	S 89°05'22" E	409.92'	12" PVC, SDR-26, SEE NOTE 3
3	S 89°05'22" E	327.08'	10" PVC, SDR-35

NOTES:

1. MANHOLE MUST BE PVC LINED AND CONSTRUCTED PER DETAIL 1, SHEET SSD-1.
2. MANHOLE FRAME COVER MATERIAL FOR MANHOLE No. 1, 2, & 3 IS CAST IRON PER DETAIL 3, SHEET SSD-2. FOR MANHOLE No. 4, 5, 6, 7, 8 AND 9 IS COMPOSITE (FIBER REINFORCED POLYMER).
3. CONSTRUCT SINGLE ANODE TEST STATION AT LOCATIONS SHOWN (2 REQUIRED) PER DETAIL 11, SHEET SSD-5.
4. SEE DRAINAGE PROFILES FOR FURTHER INFORMATION ON UTILITY LOCATIONS AT SANYO Ave.
5. SEE LOG OF TEST BORING SHEETS FOR ADDITIONAL SUB-SURFACE INFORMATION.
6. A 6' PEDESTRIAN ACCESS SHALL BE PROVIDED SOUTH OF AND ADJACENT TO BUILDING FROM STA 41+90 TO STA 43+80 "A".

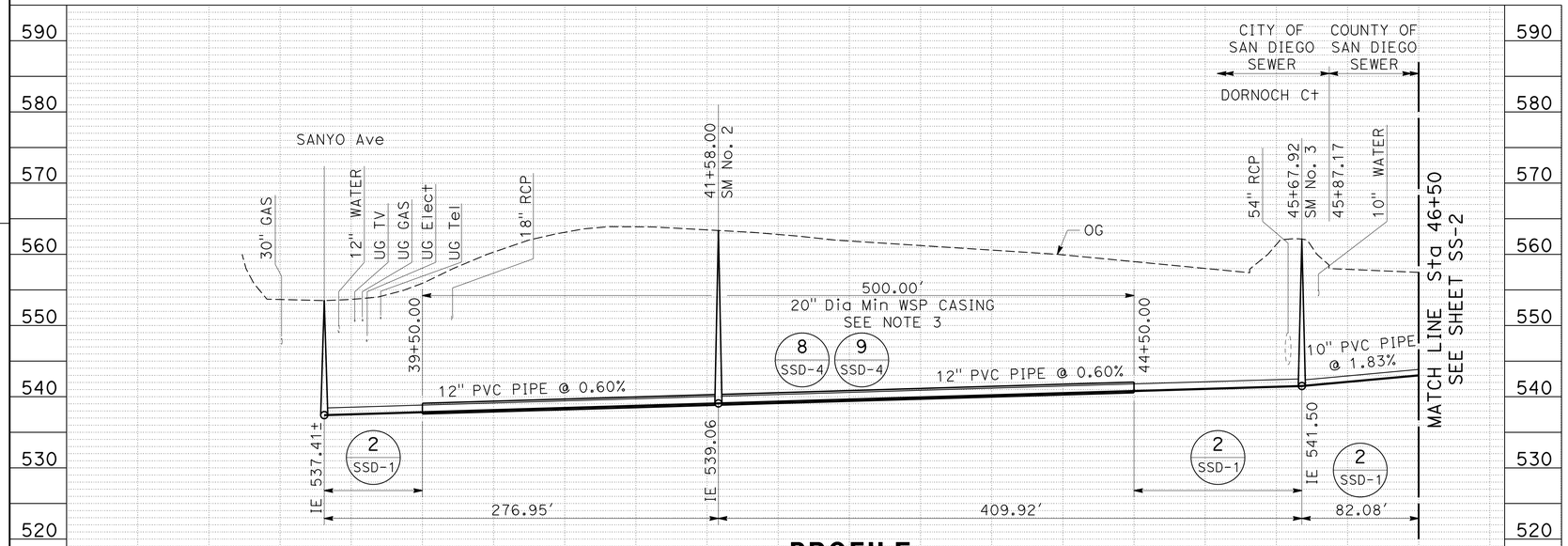

PROFILE
"SS-1" LINE
SCALE: Horiz 1"=50'
Vert 1"=10'

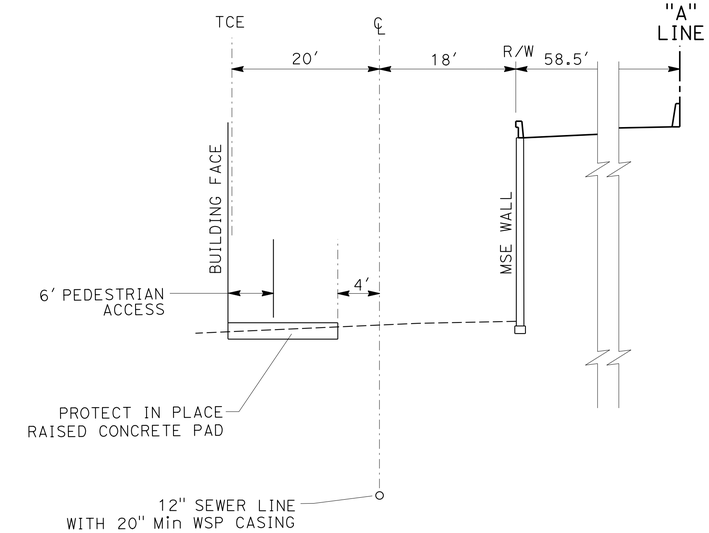

SECTION A-A
SCALE: 1"=10'

SANITARY SEWER PLAN
SCALE AS SHOWN

SS-1

STATE OF CALIFORNIA - DEPARTMENT OF TRANSPORTATION
DESIGN
FUNCTIONAL SUPERVISOR: ABU-BAKR AL-JAFRI
CALCULATED-DESIGNED BY: JOEL SIMS
CHECKED BY: ARTURO REYES
REVISED BY / DATE REVISED

LAST REVISION 08-20-13 | DATE PLOTTED => 21-AUG-2013 | TIME PLOTTED => 11:27

Dist	COUNTY	ROUTE	POST MILES TOTAL PROJECT	SHEET No.	TOTAL SHEETS
11	SD	11, 905	0.0/1.6, R9.9/R10.7	314	622

Joel P. Sims 03-19-13
REGISTERED CIVIL ENGINEER DATE

04-22-13
PLANS APPROVAL DATE

REGISTERED PROFESSIONAL ENGINEER JOEL P. SIMS No. 49715 Exp. 11-30-14 CIVIL STATE OF CALIFORNIA

THE STATE OF CALIFORNIA OR ITS OFFICERS OR AGENTS SHALL NOT BE RESPONSIBLE FOR THE ACCURACY OR COMPLETENESS OF SCANNED COPIES OF THIS PLAN SHEET.

2 **REPLACED PER ADDENDUM No. 2 DATED AUGUST 23, 2013**

NOTE:

FOR ACCURATE RIGHT OF WAY DATA, CONTACT RIGHT OF WAY ENGINEERING AT THE DISTRICT OFFICE.

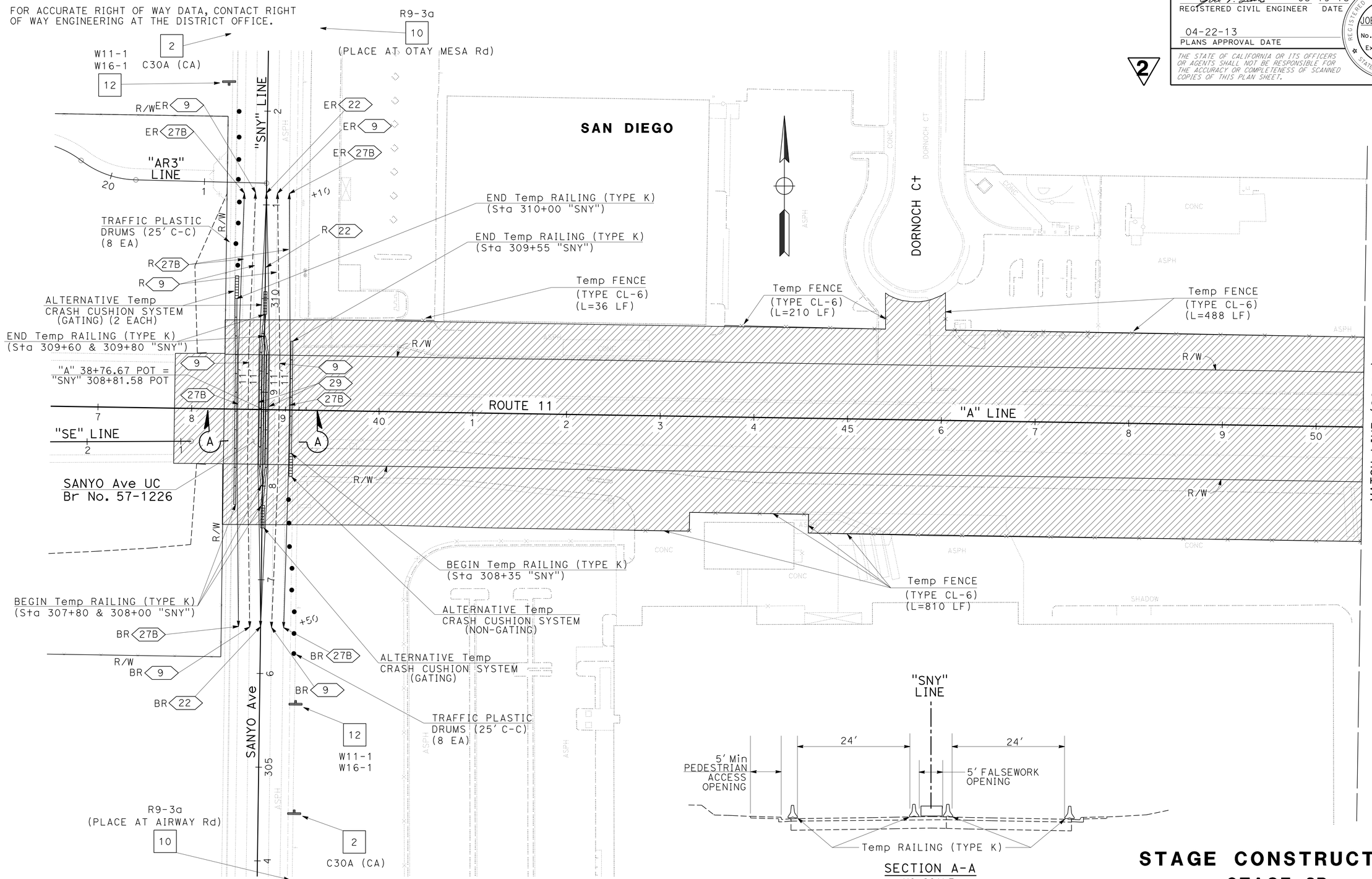

SECTION A-A
NO SCALE
(FOR BRIDGE Const WORK ONLY)

APPROVED FOR STAGE CONSTRUCTION WORK ONLY

STAGE CONSTRUCTION
STAGE 2B

SCALE: 1" = 50'

SC-11

STATE OF CALIFORNIA - DEPARTMENT OF TRANSPORTATION
DESIGN
FUNCTIONAL SUPERVISOR: MICHAEL J. WEBSTER
CALCULATED-DESIGNED BY: SIRAJUL RONI
CHECKED BY: JOEL SIMS
REVISED BY / DATE REVISED

LAST REVISION 08-20-13
DATE PLOTTED => 21-AUG-2013
TIME PLOTTED => 11:27

Dist	COUNTY	ROUTE	POST MILES TOTAL PROJECT	SHEET No.	TOTAL SHEETS
11	SD	11, 905	0.0/1.6, R9.9/R10.7	322	622

REGISTERED CIVIL ENGINEER 03-19-13 DATE

04-22-13
PLANS APPROVAL DATE

REGISTERED PROFESSIONAL ENGINEER FARDAD BEHBOODY No. 61478 Exp. 06-30-15 CIVIL STATE OF CALIFORNIA

THE STATE OF CALIFORNIA OR ITS OFFICERS OR AGENTS SHALL NOT BE RESPONSIBLE FOR THE ACCURACY OR COMPLETENESS OF SCANNED COPIES OF THIS PLAN SHEET.

2

NOTES:

1. FOR ACCURATE RIGHT OF WAY DATA, CONTACT RIGHT OF WAY ENGINEERING AT THE DISTRICT OFFICE.
2. SEE DRAINAGE QUANTITY SHEETS FOR QUANTITIES.

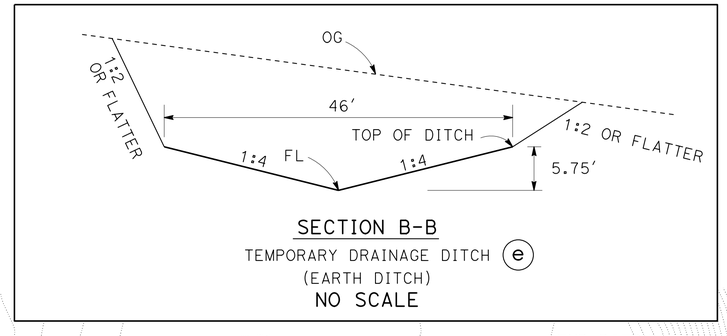

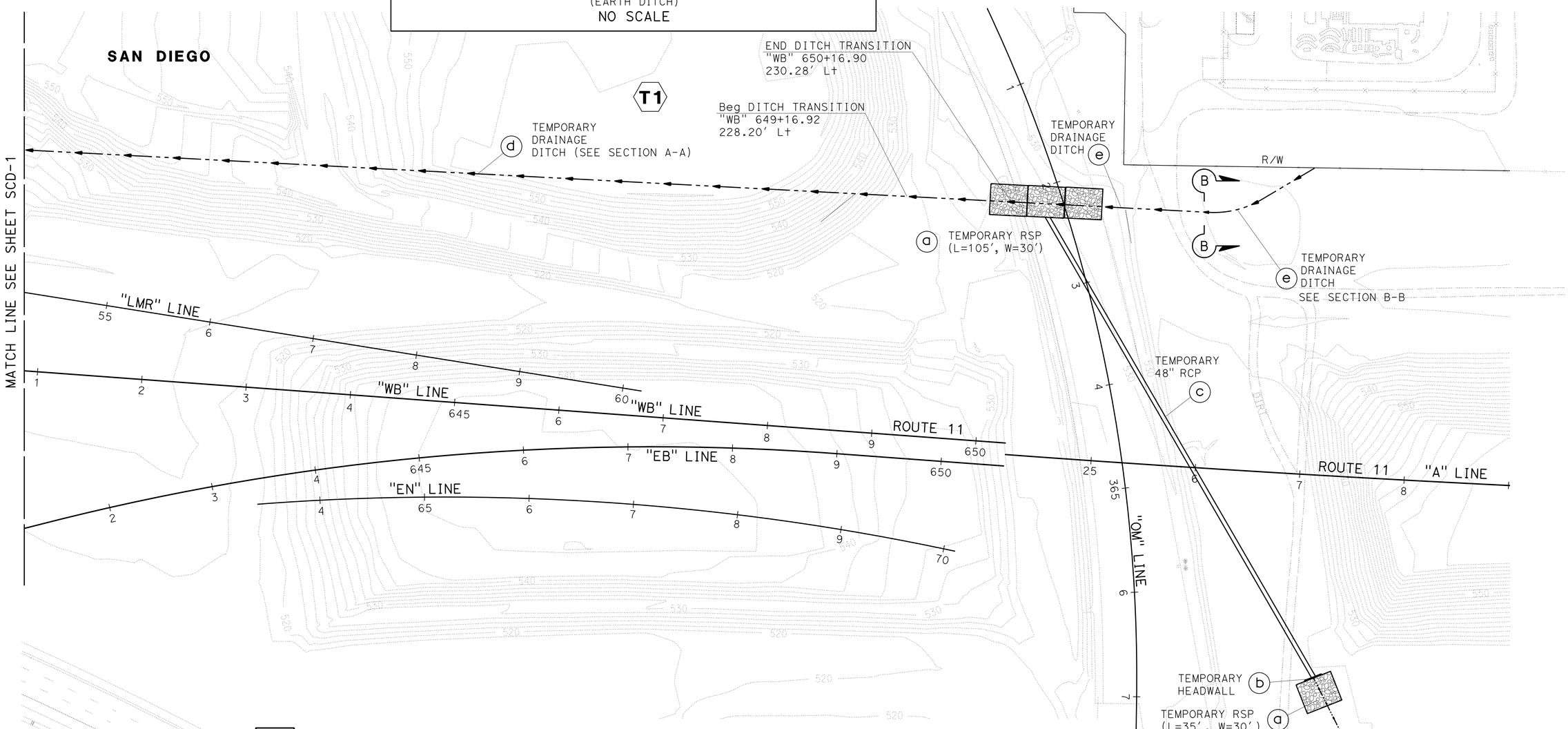

2 **REPLACED PER ADDENDUM No. 2 DATED AUGUST 23, 2013**

TEMPORARY DRAINAGE & ROCK SLOPE PROTECTION

APPROVED FOR STAGE CONSTRUCTION WORK ONLY

STAGE CONSTRUCTION DETAILS

STAGE 1 - TEMPORARY DRAINAGE

SCALE: 1" = 50'

SCD-2

STATE OF CALIFORNIA - DEPARTMENT OF TRANSPORTATION
Caltrans DESIGN

FUNCTIONAL SUPERVISOR: MICHAEL J. WEBSTER
CALCULATED-DESIGNED BY: FARDAD BEHBOODY
CHECKED BY: MICHAEL OREIRO
REVISED BY
DATE REVISED

LAST REVISION 08-20-13
DATE PLOTTED => 21-AUG-2013
TIME PLOTTED => 11:27

Dist	COUNTY	ROUTE	POST MILES TOTAL PROJECT	SHEET No.	TOTAL SHEETS
11	SD	11, 905	0.0/1.6, R9.9/R10.7	325	622

REGISTERED CIVIL ENGINEER 03-19-13 DATE

04-22-13
PLANS APPROVAL DATE

REGISTERED PROFESSIONAL ENGINEER FARDAD BEHBOODY No. 61478 Exp. 06-30-15 CIVIL STATE OF CALIFORNIA

THE STATE OF CALIFORNIA OR ITS OFFICERS OR AGENTS SHALL NOT BE RESPONSIBLE FOR THE ACCURACY OR COMPLETENESS OF SCANNED COPIES OF THIS PLAN SHEET.

DRAINAGE SYSTEM No. T1

(a) RSP 1/4 TON

(d) TEMPORARY DRAINAGE DITCH (EARTH DITCH) (SEE SECTION A-A, SHEET SCD-1)

(e) TEMPORARY DRAINAGE DITCH (EARTH DITCH) (SEE SECTION B-B, SHEET SCD-2)

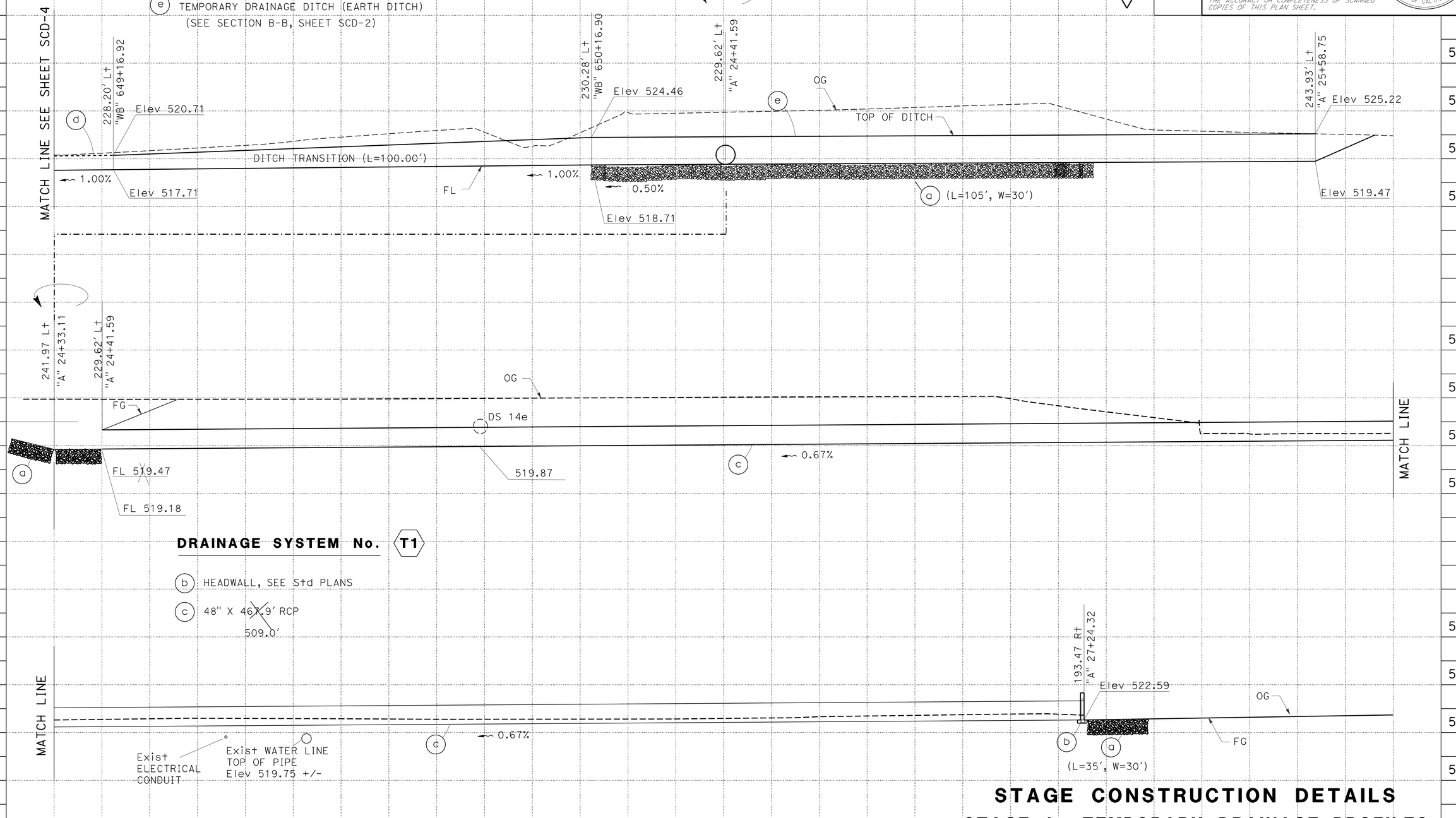

2 REPLACED PER ADDENDUM No. 2 DATED AUGUST 23, 2013

STAGE CONSTRUCTION DETAILS

STAGE 1 - TEMPORARY DRAINAGE PROFILES

SCALE: Horiz 1"=10'
Vert 1"=10'

SCD-5

STATE OF CALIFORNIA - DEPARTMENT OF TRANSPORTATION
Caltrans DESIGN

FUNCTIONAL SUPERVISOR: MICHAEL J. WEBSTER
CALCULATED-DESIGNED BY: MICHAEL OREIRO
CHECKED BY: FARDAD BEHBOODY
REVISED BY / DATE REVISED

LAST REVISION 08-20-13
DATE PLOTTED => 21-AUG-2013
TIME PLOTTED => 11:27

Dist	COUNTY	ROUTE	POST MILES TOTAL PROJECT	SHEET No.	TOTAL SHEETS
11	SD	11, 905	0.0/1.6, R9.9/R10.7	326	622

Joel P. Sims 03-19-13
REGISTERED CIVIL ENGINEER DATE

04-22-13
PLANS APPROVAL DATE

REGISTERED PROFESSIONAL ENGINEER JOEL P. SIMS No. 49715 Exp. 09-30-14 CIVIL STATE OF CALIFORNIA

THE STATE OF CALIFORNIA OR ITS OFFICERS OR AGENTS SHALL NOT BE RESPONSIBLE FOR THE ACCURACY OR COMPLETENESS OF SCANNED COPIES OF THIS PLAN SHEET.

2 **REPLACED PER ADDENDUM No. 2 DATED AUGUST 23, 2013**

TRAFFIC PLASTIC DRUM

STAGE	SHEET No.	LINE	EA
1	SC-5	"E6"	10
1	SC-5	"E6"	6
1	SC-6	"E6"	6
1	SC-7	"E6"	8
2B	SC-11	"SNY"	16
2B	SC-14	"EF"	10
3	SC-15	"E4"	5
3	SC-16	"E4"	5
3	SC-16	"LMD1A"	6
3	SC-17	"E6"	6
		TOTAL	78

TYPE III BARRICADE

STAGE	SHEET	EACH
2A	SC-10	** 63
	TOTAL	63

** ITEM QUANTITIES TRIPLED, AS THEY WILL BE USED FOR THREE SEPARATE ONE-MONTH ROAD CLOSURES.

Temp FENCE (TYPE CL-6)

STAGE	SHEET	LF
2B	SC-11 & 12	1,848
	TOTAL	1,848

2

CONSTRUCTION AREA SIGNS

SHEET No.	SIGN No.	CODE	PANEL SIZE (In)	No. OF POST AND SIZE (In)	No. OF SIGNS
SC-5, 6 & 14	1	C24 (CA)	36 X 36	1 - 4 X 6 (S)	3
SC-5, 7, 11, 15, 16 & 17	2	C30A (CA)	36 X 36	1 - 4 X 6 (S)	7
SC-10	3	N-2 (CA) MARKER	18 X 18	PORTABLE	** 24
SC-10	4	C2 (CA) (ROAD)	48 X 30	PORTABLE	** 9
SC-10	5	W31A (CA)(500)	36 X 36	1 - 4 X 6 (S)	** 6
SC-10	6	W14-1	36 X 36	1 - 4 X 6 (S)	** 3
SC-10	7	R3-1	30 X 30	PORTABLE	** 3
SC-10	8	R3-2	30 X 30	PORTABLE	** 6
SC-10	9	R9-3a	24 X 24	PORTABLE	** 9
SC-10 & 11	10	R9-3a	24 X 24	1 - 4 X 4 (S)	5
SC-10	11	W14-2	36 X 36	1 - 4 X 6 (S)	1
SC-11	12	W11-1	36 X 36	1 - 6 X 6 (S)	2
		W16-1	24 X 30	1 - 6 X 6 (S)	
				TOTAL	78

NOTES:

1. SEE CONSTRUCTION AREA SIGN AND TRAFFIC HANDLING SHEETS FOR ADDITIONAL CONSTRUCTION AREA SIGN QUANTITIES.
2. QUANTITIES FOR SIGNS 3 THROUGH 9 HAVE BEEN TRIPLED AS THEY WILL BE USED FOR THREE SEPARATE ONE-MONTH ROAD CLOSURES.
3. (S) DENOTES STATIONARY MOUNTED SIGN.

** ITEM QUANTITIES TRIPLED, AS THEY WILL BE USED FOR THREE SEPARATE ONE-MONTH ROAD CLOSURES.

ALTERNATIVE TEMPORARY CRASH CUSHION SYSTEM

STAGE	LOCATION		GATING	NON-GATING
	LINE	STATION	EA	EA
2B	"SNY"	307+80	1	
2B	"SNY"	308+00		1
2B	"SNY"	310+00	1	
2B	"SNY"	310+10	1	
2B	"EF"	34+30	1	
		SUB-TOTAL	4	1
		TOTAL	5	

TEMPORARY CRASH CUSHION MODULE

STAGE	LOCATION		TYPE	EA
	LINE	STATION		
1	"E6"	632+75	TU-14	14
1	"E6"	634+00	TS-14	14
1	"E6"	643+00	TU-14	14
1	"E6"	651+00	TU-14	14
3	"E6"	632+740	TU-14	14
3	"E4"	613+30	TU-14	14
3	"LMD1A"	31+20	TU-14	14
			TOTAL	98

STAGE CONSTRUCTION PAVEMENT DELINEATION (180 DAYS OR MORE)

STAGE	DETAIL No.	PAVEMENT MARKER (EA) *				PAINT * TRAFFIC STRIPE (2 COAT)	REMOVE PAINTED TRAFFIC STRIPE*		REMOVE PAVEMENT MARKER (N)	REMARKS
		NON-REFLECTIVE	RETROREFLECTIVE							
		TYPE A	TYPE G	TYPE H	TYPE D		Exist	STAGE Const		
		WHITE	CLEAR	YELLOW	YELLOW	LF	LF	LF	EA	
1	11/13	396	68			3,200	800	800	928	WESTBOUND 905
	25			34		1,600	1,600	1,600	68	
	27B					1,600	1,600	1,600		
2A	9		10			426				SANYO Ave
	22				20	213				
2B	9		20			920	270	270	40	
	22						920		40	
	27B					920	920	920		
	29				80	920		1,840	80	
3	11/13	816	138			6,480	1,620	1,620	1,908	WESTBOUND 905
	25			68		3,240	3,237	3,237	136	
	27B					3,240	3,237	3,237		
	11/13	348	60			2,788	647	647	900	EASTBOUND 905
	27B					1,677	1,068	1,068		
SUB-TOTAL		1,560	296	102	100	27,224	15,919	16,839		
TOTAL		1,560	498			27,224	32,758		4,100	

NOTES:

1. SEE PDQ SHEETS FOR ADDITIONAL PAVEMENT DELINEATION AND REMOVAL QUANTITIES.
2. (N) NOT A SEPARATE PAY ITEM. FOR INFORMATION ONLY.
3. * SEE PAVEMENT DELINEATION QUANTITIES FOR ADDITIONAL QUANTITIES.

TEMPORARY RAILING (TYPE K)

STAGE	SHEET No.	LOCATION	LENGTH (LF)
1	SC-5	EB ROUTE 905	580
	SC-5 TO SC-6	EB ROUTE 905	780
	SC-5 TO SC-6	WB ROUTE 905	780
	SC-5 TO SC-7	WB ROUTE 905	1,400
2A	SC-10	NORTH OF ROUTE 11 ON SANYO Ave	** 180
	SC-10	SOUTH OF ROUTE 11 ON SANYO Ave	** 180
2B	SC-11	NB SANYO Ave	300
	SC-11	SB SANYO Ave	400
	SC-14	SB ENRICO FERMI Dr	680
3	SC-15 TO SC-17	WB ROUTE 905	3,040
	SC-16 TO SC-17	EB ROUTE 905	2,100
	SC-15 TO SC-16	WB OFF RAMP ("LMD1A") TO LA MEDIA	1,000
		TOTAL	11,420

** ITEM QUANTITIES TRIPLED, AS THEY WILL BE USED FOR THREE SEPARATE ONE-MONTH ROAD CLOSURES.

STAGE CONSTRUCTION QUANTITIES

SCQ-1

REVISED BY | DATE REVISED
SIRAJUL RONI | JOEL SIMS
CALCULATED-DESIGNED BY | CHECKED BY
FUNCTIONAL SUPERVISOR: MICHAEL J. WEBSTER
STATE OF CALIFORNIA - DEPARTMENT OF TRANSPORTATION
Caltrans DESIGN

LAST REVISION 08-20-13 | DATE PLOTTED => 21-AUG-2013 | TIME PLOTTED => 11:27

Dist	COUNTY	ROUTE	POST MILES TOTAL PROJECT	SHEET No.	TOTAL SHEETS
11	SD	11, 905	0.0/1.6, R9.9/R10.7	385	622

Brooke V. Emery 04-15-13
REGISTERED CIVIL ENGINEER DATE

08-08-13
PLANS APPROVAL DATE

REGISTERED PROFESSIONAL ENGINEER
BROOKE V. EMERY
No. 77620
Exp. 06-30-15
CIVIL
STATE OF CALIFORNIA

THE STATE OF CALIFORNIA OR ITS OFFICERS OR AGENTS SHALL NOT BE RESPONSIBLE FOR THE ACCURACY OR COMPLETENESS OF SCANNED COPIES OF THIS PLAN SHEET.

2 REPLACED PER ADDENDUM No. 2 DATED AUGUST 23, 2013

EARTHWORK QUANTITIES SUMMARY 2

LOCATION			ROADWAY EXCAVATION	EMBANKMENT	[N] SCARIFY AND RECOMPACT
LINE	STATION LIMITS BEGIN	STATION LIMITS END	CY	CY	CY
"E4"	603+00.00	625+00.00	9,076.7	4,164.2	2,010.1
"E6"	641+85.82	646+00.00	859.9	1,013.4	332.7
"WB" *	625+00.00	650+28.53	28,795.8	185,321.6	7,889.0
"LMD1A"	25+84.00	56+12.13	35,752.6	63,053.4	13,032.1
"LMR"*	43+26.09	60+18.06	11,209.4	68,965.7	3,723.5
"EB" *	615+68.92	650+60.32	69,309.9	184,341.5	11,045.2
"SE"	20+88.96	56+59.23	12,808.1	26,056.6	1,969.4
"WN"	68+00.00	70+70.98	2,949.2	16,184.4	1,483.6
"A" *	24+17.30	39+23.66	39,613.9	150,737.1	11,616.4
"A"	24+17.30	72+73.00	225,198.6	113,566.2	5,968.9
"AR1"	10+00.00	23+76.34	25,122.1	8,577.8	0.0
"AR2"	10+00.00	12+39.15	4,081.4	0.0	0.0
"EFR3"	70+80.98	78+50.00	91,053.0	44.1	0.0
"EFR4"	71+45.71	78+75.00	34,140.0	0.0	0.0
"AR3"	8+00.00	21+62.38	644.5	624.8	0.0
"AR4"	10+00.00	19+31.72	355.8	1,480.0	0.0
"AR5"	10+00.00	21+12.45	1,029.0	19.8	0.0
TEMPORARY DRAINAGE			96,163.0	0.0	0.0
DETENTION BASIN B			16,044.2	20.4	0.0
DETENTION BASIN Y			134,085.8	0.0	0.0
DETENTION BASIN BETWEEN "AR3" & "AR4" LINES			19,961.5	152.3	0.0
INTERCEPTOR DITCH NORTH OF "AR3" LINE			742.1	0.0	0.0
EARTHEN DITCH NORTH OF "LMR" LINE			5,940.2	1,001.0	0.0
STOCK PILE LOCATION 1 **			49,600.0	0.0	0.0
STOCK PILE LOCATION 2 **			172,000.0	0.0	0.0
SUBTOTAL			1,086,536.7	825,324.3	59,070.9
ADJUSTMENT FOR SUBSIDENCE OF EMBANKMENTS				98,881.2	
GRADING FACTOR ADJUSTMENT ROADWAY EXCAVATION				119,304.4	
TOTAL			1,086,536.7	1,043,509.9	59,070.9

(N) - NOT A SEPARATE PAY ITEM, FOR INFORMATION ONLY
* - INCLUDES REMOVAL OF EXISTING 90% COMPACTED MATERIAL WITHIN 150 FEET OF PROPOSED ABUTMENT
** - SEE CONTRUCTION DETAILS FOR AREA OF WORK

SEAL PAVEMENT JOINT

LINE	STATION	SIDE L†	SIDE R†	LF
TRANSVERSE JOINTS				
"E4"	603+00.00 TO 625+00.00	X		1,995.0
"EB"	615+68.92 TO 650+60.32	X	X	6,163.0
"WB"	625+00.00 TO 650+28.53	X	X	5,115.0
"A"	24+17.37 TO 72+73.00	X	X	33,068.0
"EFR3"	70+80.98 TO 77+85.00	X	X	1,861.0
"EFR4"	71+45.71 TO 77+50.00	X	X	1,282.0
SUBTOTAL				49,484.0
LONGITUDINAL JOINTS				
"E4"	619+00.00 TO 625+00.00	X		600.0
"EB"	617+00.00 TO 650+60.32	X	X	5,092.0
"WB"	625+00.00 TO 650+28.53	X	X	4,422.0
"A"	24+17.37 TO 72+73.00	X	X	27,159.0
"EFR3"	70+80.98 TO 77+85.00		X	1,380.0
"EFR4"	71+45.71 TO 77+50.00	X		954.0
SUBTOTAL				39,607.0
TOTAL				89,091.0

SEAL LONGITUDINAL ISOLATION JOINT

LINE	STATION LIMITS BEGIN	STATION LIMITS END	SIDE L†	SIDE R†	REMARKS	LF
"E4"	603+00.00	625+00.00	X			2,200.0
"E6"	644+48.19	646+00.00		X		155.0
"EB"	615+68+92	622+06.43	X	X		650.0
"WB"	625+00.00	630+39.90		X		540.5
"LMD1A"	56+13.11	58+84.04		X		270.0
"A"	39+29.66	52+74.66		X		1,345.0
"A"	39+29.66	52+74.66	X			1,345.0
TOTAL						6,505.5

MINOR CONCRETE (TEXTURED PAVING)

No.	LINE	SIDE L†	SIDE R†	AREA (SQYD)
1	"EB"	X		485.6
2	"WB"		X	341.8
3	"LMD1A"		X	262.7
4	"LMD1A"		X	397.0
5	"LMR"		X	465.7
6	"EFR3"		X	398.8
7	"EFR4"	X		238.2
TOTAL				2,589.8

SUMMARY OF QUANTITIES

Q-6

REVISED BY | DATE REVISED
ROSITA SISSON | BROOKE EMERY
CALCULATED-DESIGNED BY | CHECKED BY
FUNCTIONAL SUPERVISOR: MICHAEL J. WEBSTER
STATE OF CALIFORNIA - DEPARTMENT OF TRANSPORTATION
Caltrans
DESIGN

LAST REVISION 08-20-13 | DATE PLOTTED => 21-AUG-2013 | TIME PLOTTED => 11:27

Dist	COUNTY	ROUTE	POST MILES TOTAL PROJECT	SHEET No.	TOTAL SHEETS
11	SD	11,905	0.0/1.6, R9.9/R10.7	444	622

REGISTERED ELECTRICAL ENGINEER DATE

04-22-13
PLANS APPROVAL DATE

HECTOR A. SANTAMARIA No. 18207 Exp. 12-31-13 ELECTRICAL — REGISTERED PROFESSIONAL ENGINEER — STATE OF CALIFORNIA

THE STATE OF CALIFORNIA OR ITS OFFICERS OR AGENTS SHALL NOT BE RESPONSIBLE FOR THE ACCURACY OR COMPLETENESS OF SCANNED COPIES OF THIS PLAN SHEET.

2 **REPLACED PER ADDENDUM No. 2 DATED AUGUST 23, 2013**

LEGENDS (THIS SHEET):

SPLICE CABLES SEE FO SPLICE DETAILS

CUT END OF FO CABLE

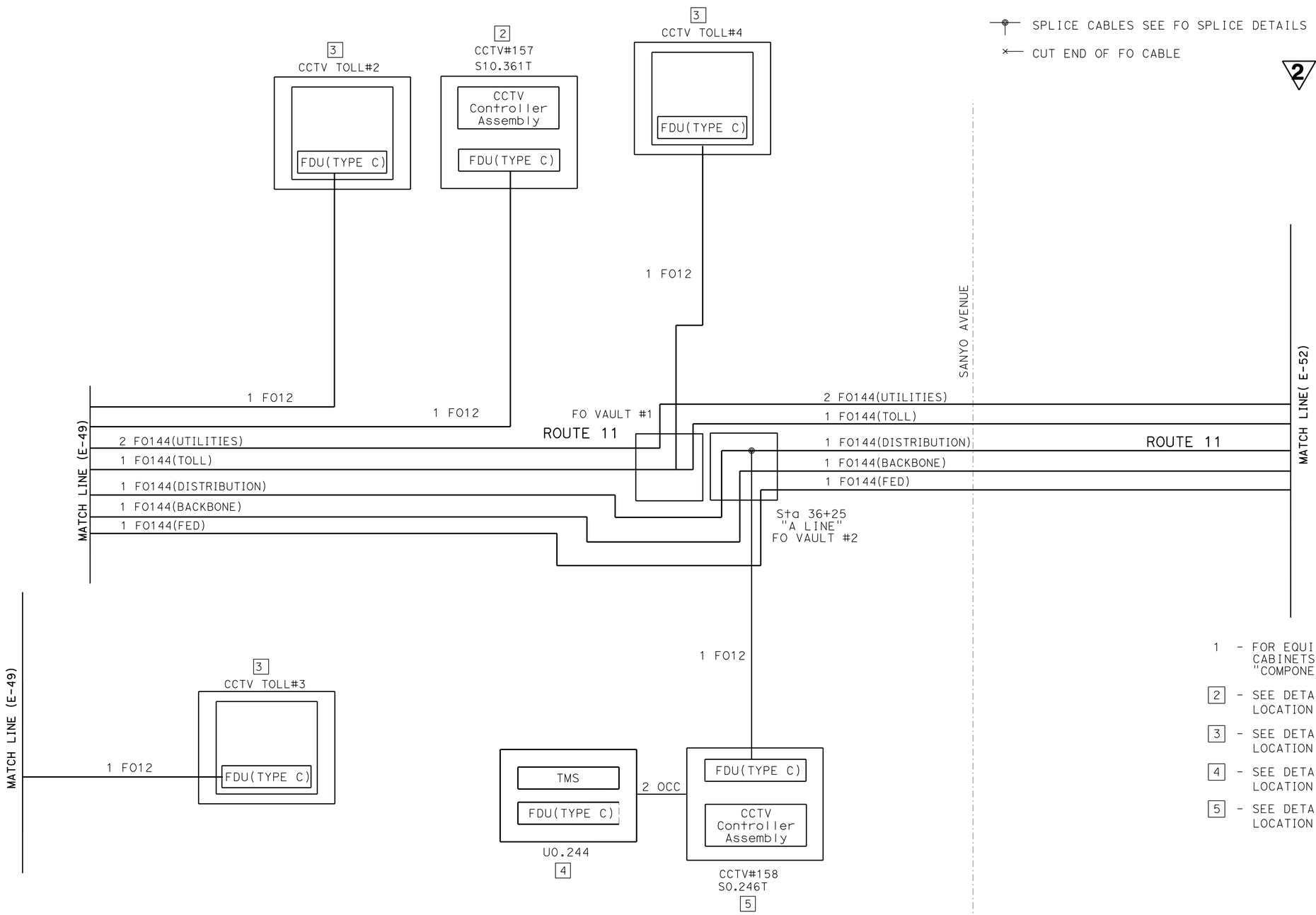

COMMUNICATION DIAGRAM

PRELIMINARY FOR BIDDING PURPOSES ONLY

APPROVED FOR ELECTRICAL WORK ONLY

NOTES(TSO):

1 - FOR EQUIPMENT CONNECTIVITY IN MODEL 334 CABINETS SEE ELECTRICAL DETAILS "COMPONENT DIAGRAM".

2 - SEE DETAIL "CCTV" FOR THE EQUIPMENT LOCATION IN CCTV CABINET, E-62.

3 - SEE DETAIL "CCTV-TOLL" FOR THE EQUIPMENT LOCATION IN CCTV CABINET, E-63.

4 - SEE DETAIL "TMS-CCTV" FOR THE EQUIPMENT LOCATION IN TMS CABINET, E-64.

5 - SEE DETAIL "CCTV-TMS" FOR THE EQUIPMENT LOCATION IN CCTV CABINET, E-64.

CLOSED CIRCUIT TELEVISION CIRCUIT
(ELECTRICAL DETAILS)

NO SCALE

E-51

STATE OF CALIFORNIA - DEPARTMENT OF TRANSPORTATION
Caltrans® TRAFFIC ELECTRICAL

FUNCTIONAL SUPERVISOR: BRIAN PECUS
CALCULATED-DESIGNED BY: HECTOR SANTAMARIA
CHECKED BY: ENRIQUE BERNAL
REVISED BY
DATE REVISED

LAST REVISION 08-20-13
DATE PLOTTED => 21-AUG-2013
TIME PLOTTED => 11:27

Dist	COUNTY	ROUTE	POST MILES TOTAL PROJECT	SHEET No.	TOTAL SHEETS
11	SD	11,905	0.0/1.6, R9.9/R10.7	445	622

REGISTERED ELECTRICAL ENGINEER DATE

04-22-13
PLANS APPROVAL DATE

REGISTERED PROFESSIONAL ENGINEER HECTOR A. SANTAMARIA No. 18207 Exp. 12-31-13 ELECTRICAL STATE OF CALIFORNIA

THE STATE OF CALIFORNIA OR ITS OFFICERS OR AGENTS SHALL NOT BE RESPONSIBLE FOR THE ACCURACY OR COMPLETENESS OF SCANNED COPIES OF THIS PLAN SHEET.

2 **REPLACED PER ADDENDUM No. 2 DATED AUGUST 23, 2013**

LEGENDS (THIS SHEET):

SPLICE CABLES SEE FO SPLICE DETAILS

CUT END OF FO CABLE

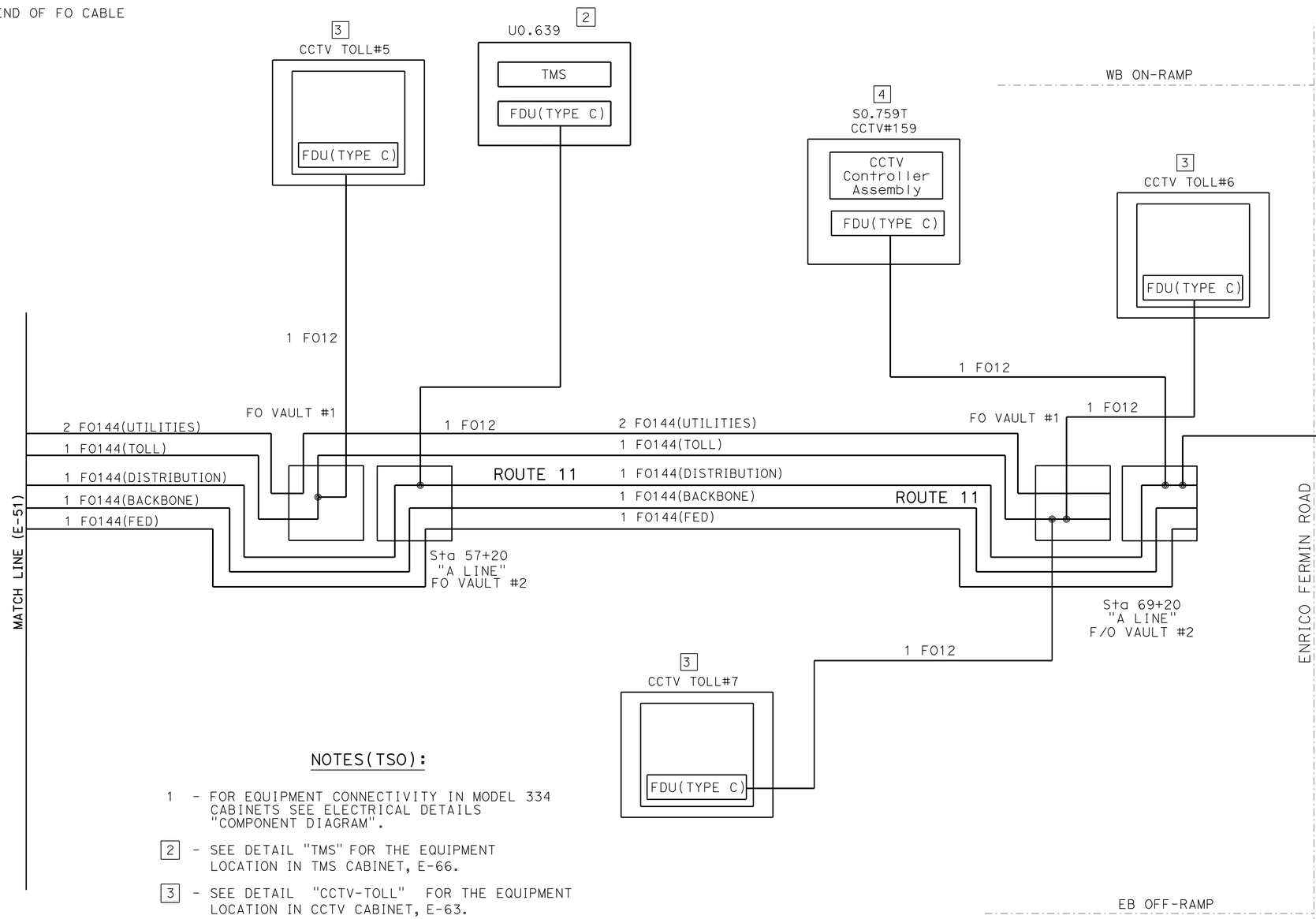

NOTES(TSO):

1 - FOR EQUIPMENT CONNECTIVITY IN MODEL 334 CABINETS SEE ELECTRICAL DETAILS "COMPONENT DIAGRAM".

2 - SEE DETAIL "TMS" FOR THE EQUIPMENT LOCATION IN TMS CABINET, E-66.

3 - SEE DETAIL "CCTV-TOLL" FOR THE EQUIPMENT LOCATION IN CCTV CABINET, E-63.

4 - SEE DETAIL "CCTV" FOR THE EQUIPMENT LOCATION IN CCTV CABINET, E-62.

5 - SEE DETAIL "RM" FOR THE EQUIPMENT LOCATION IN RM CABINET, E-65.

COMMUNICATION DIAGRAM

PRELIMINARY FOR BIDDING PURPOSES ONLY

APPROVED FOR ELECTRICAL WORK ONLY

CLOSED CIRCUIT TELEVISION CIRCUIT
(ELECTRICAL DETAILS)

E-52

STATE OF CALIFORNIA - DEPARTMENT OF TRANSPORTATION
Caltrans® TRAFFIC ELECTRICAL

FUNCTIONAL SUPERVISOR: BRIAN PECUS
CALCULATED-DESIGNED BY: HECTOR SANTAMARIA
CHECKED BY: ENRIQUE BERNAL
REVISED BY
DATE REVISED

LAST REVISION 08-20-13
DATE PLOTTED => 21-AUG-2013
TIME PLOTTED => 11:27

2 REPLACED PER ADDENDUM No. 2 DATED AUGUST 23, 2013

NOTE:
For location of 'UTILITY SUPPORT DATAIL', see " ABUTMENT 2 LAYOUT" sheet.

DIST	COUNTY	ROUTE	POST MILES TOTAL PROJECT	SHEET No.	TOTAL SHEETS
11	SD	11,905	0.0/1.6, R9.9/R10.7	503	622

REGISTERED CIVIL ENGINEER 10-25-12 DATE

04-22-13
PLANS APPROVAL DATE

REGISTERED PROFESSIONAL ENGINEER JOHN M. PETERSON No. C56837 Exp. 06-30-13 CIVIL STATE OF CALIFORNIA

The State of California or its officers or agents shall not be responsible for the accuracy or completeness of electronic copies of this plan sheet.

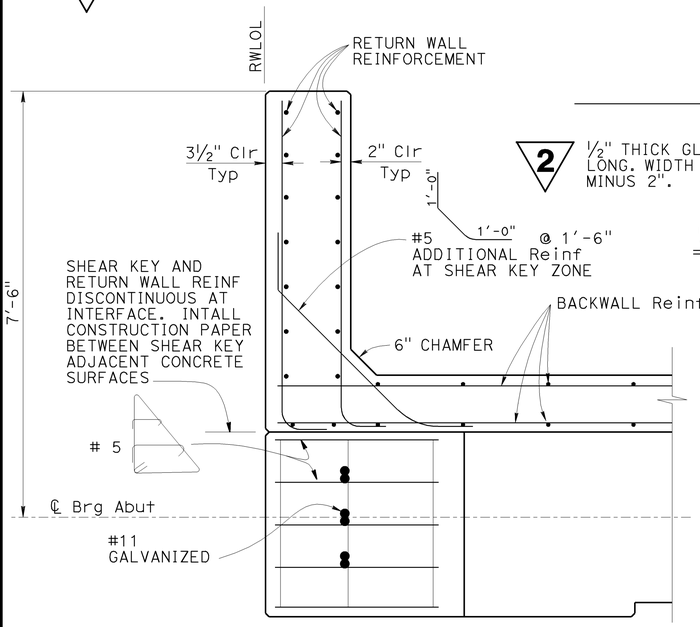

SECTION A-A
¾" = 1'-0"

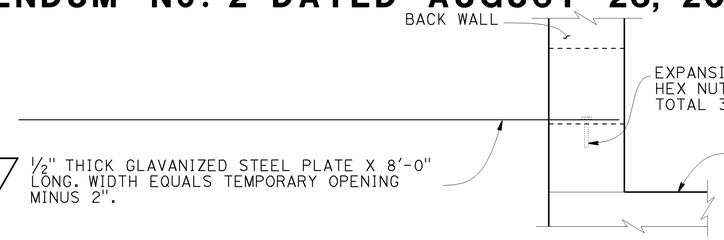

UTILITY SUPPORT DETAIL
¾"=1'-0"

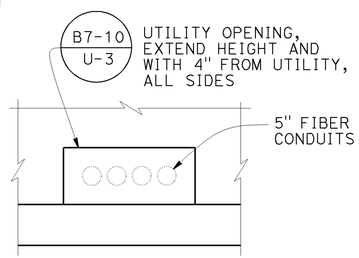

VIEW C-C
¾"=1'-0"

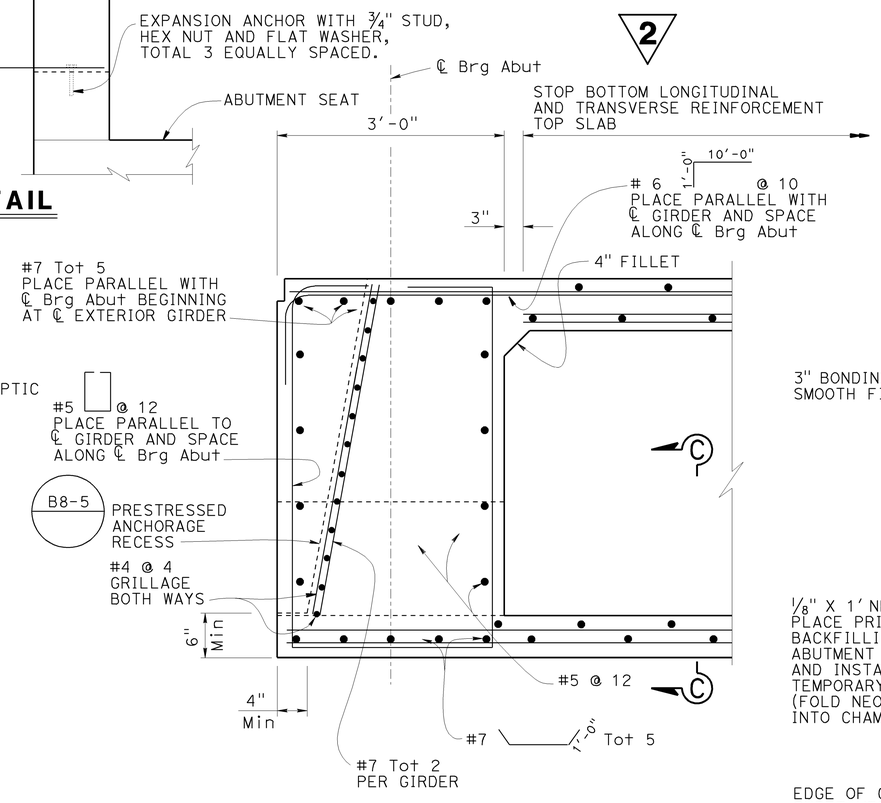

END DIAPHRAGM SECTION
1" = 1'-0"

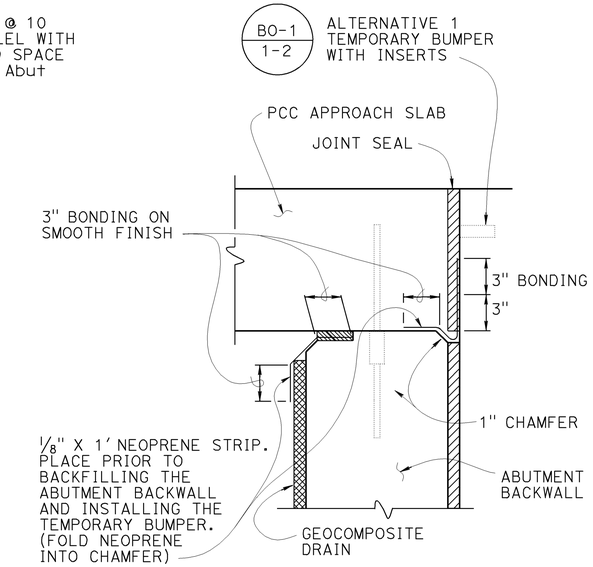

JOINT PROTECTION DETAIL
NO SCALE

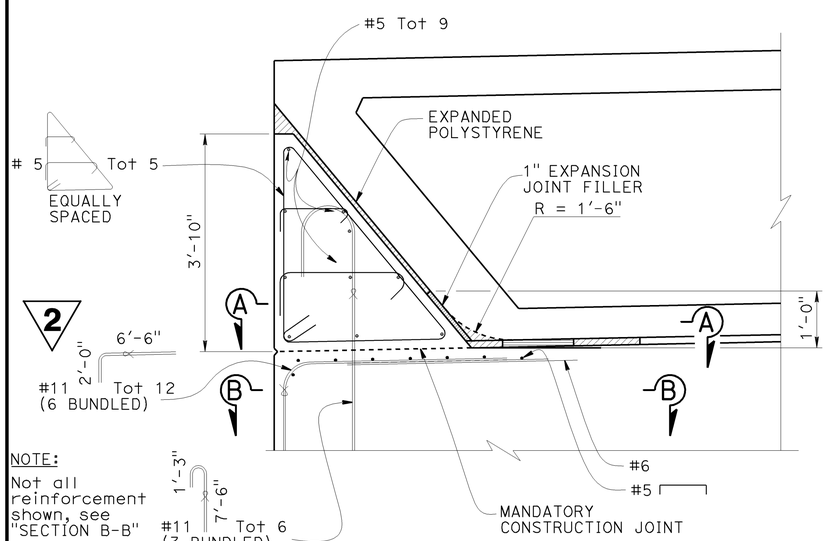

EXTERNAL SHEAR KEY DETAILS
¾" = 1'-0"

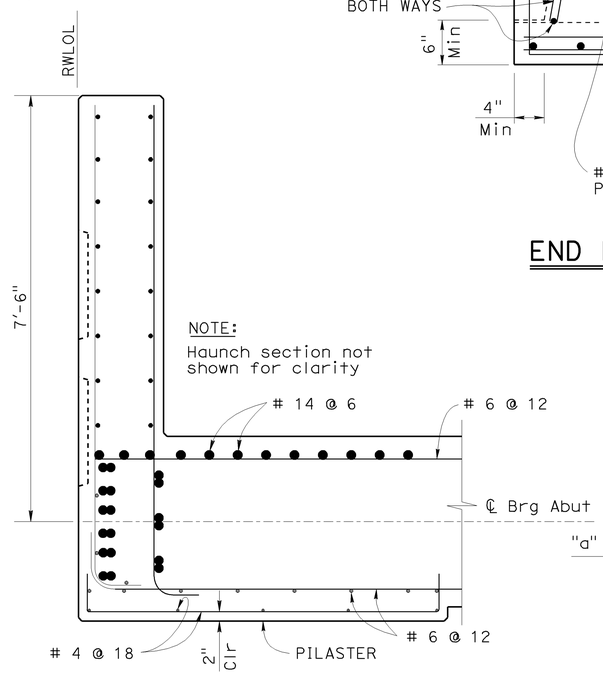

SECTION B-B
¾" = 1'-0"

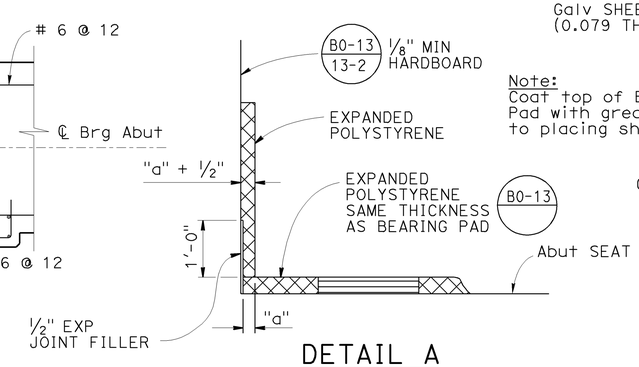

DETAIL A
¾" = 1'-0"

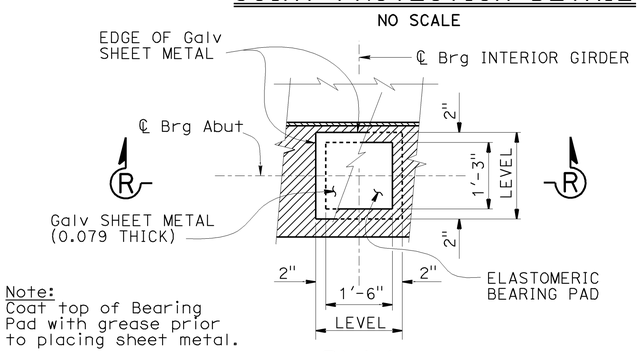

Note:
Coat top of Bearing Pad with grease prior to placing sheet metal.

PLAN

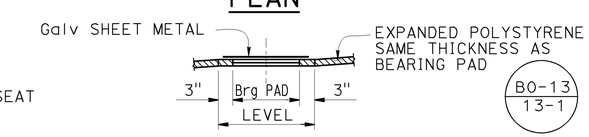

SECTION R-R

BEARING PAD DETAIL
NO SCALE
DETAILS TYPICAL AT ALL BEARING PADS

DESIGN	BY J. M. Peterson	CHECKED P. A. Peterson	
DETAILS	BY J. M. Peterson	CHECKED P. A. Peterson	
QUANTITIES	BY P. A. Peterson	CHECKED J. M. Peterson	

STATE OF CALIFORNIA
DEPARTMENT OF TRANSPORTATION

DIVISION OF ENGINEERING SERVICES
STRUCTURE DESIGN
DESIGN BRANCH 14

BRIDGE NO. 57-1226
POST MILE 0.80

SANYO AVENUE UNDERCROSSING
ABUTMENT DETAILS NO. 3

STRUCTURES DESIGN DETAIL SHEET (ENGLISH) (REV. 09-01-10)

ORIGINAL SCALE IN INCHES FOR REDUCED PLANS 0 1 2 3

UNIT: 3613
PROJECT NUMBER & PHASE: 11000205191
CONTRACT NO.: 11-056321

DISREGARD PRINTS BEARING EARLIER REVISION DATES

REVISION DATES: 11-30-11 05-06-13

SHEET 9 OF 18

FILE => 57-1226-f-a02dt02.dgn

USERNAME => s122751 DATE PLOTTED => 07-AUG-2013 TIME PLOTTED => 11:09

DIST	COUNTY	ROUTE	POST MILES TOTAL PROJECT	SHEET No.	TOTAL SHEETS
11	SD	11,905	0.0/1.6, R9.9/R10.7	519	622

Tony Skreslet 11-01-12
REGISTERED CIVIL ENGINEER DATE

04-22-13
PLANS APPROVAL DATE

REGISTERED PROFESSIONAL ENGINEER TONY SKRESLET No. C50676 Exp. 09-30-13 CIVIL STATE OF CALIFORNIA

The State of California or its officers or agents shall not be responsible for the accuracy or completeness of electronic copies of this plan sheet.

2 REPLACED PER ADDENDUM No. 2 DATED AUGUST 23, 2013

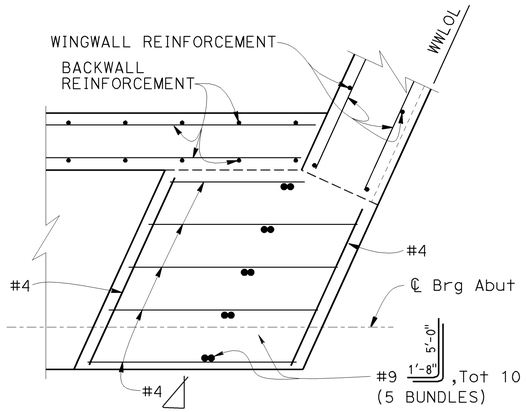

SECTION A-A

3/4"=1'-0"

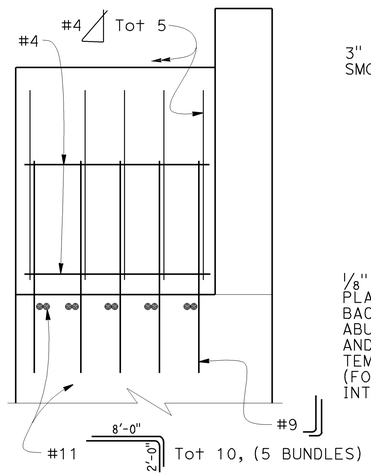

SECTION B-B

3/4"=1'-0"

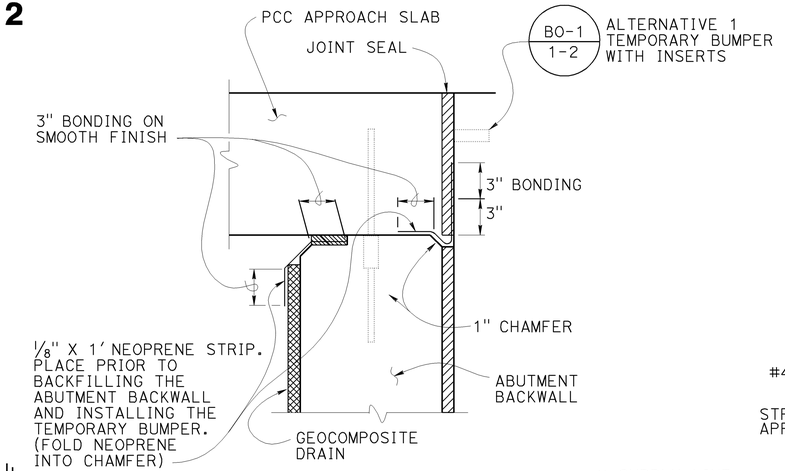

JOINT PROTECTION DETAIL

No Scale

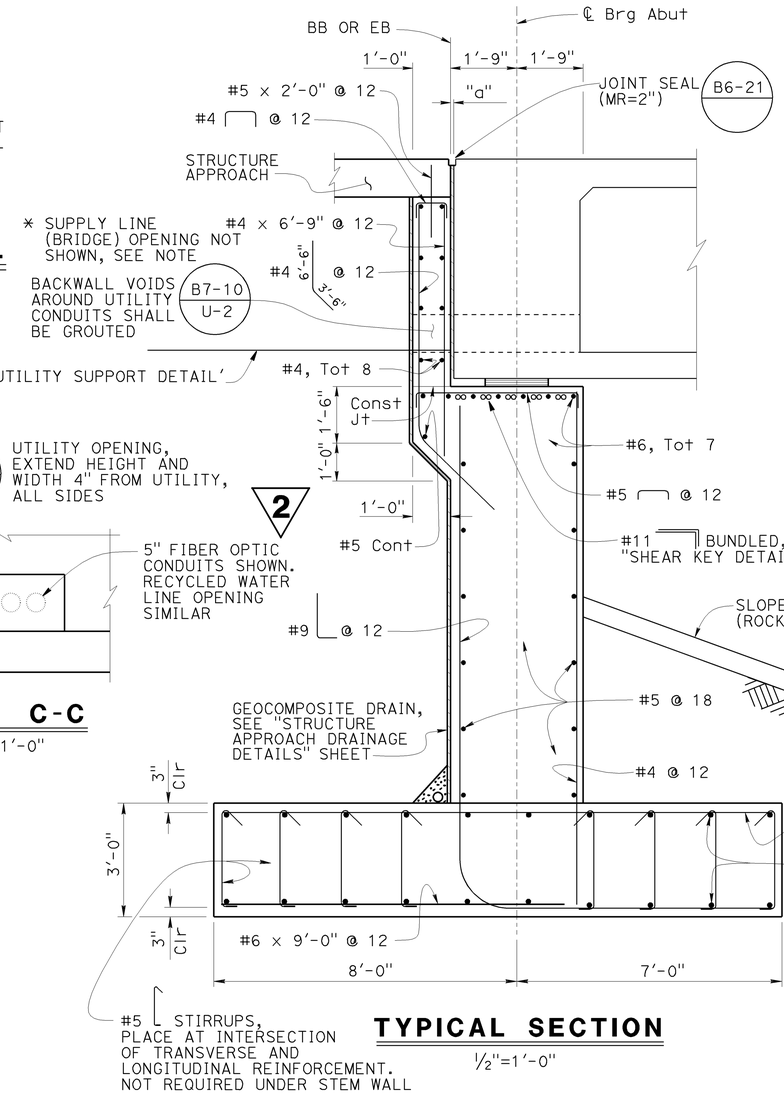

TYPICAL SECTION

1/2"=1'-0"

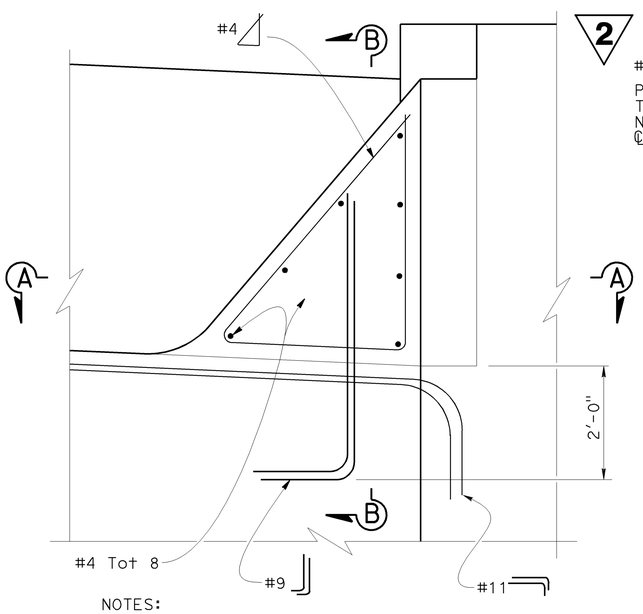

NOTES:

1. Superstructure not shown
2. See "TYPICAL SECTION" for additional Abutment reinforcement

SHEAR KEY DETAIL

3/4"=1'-0"

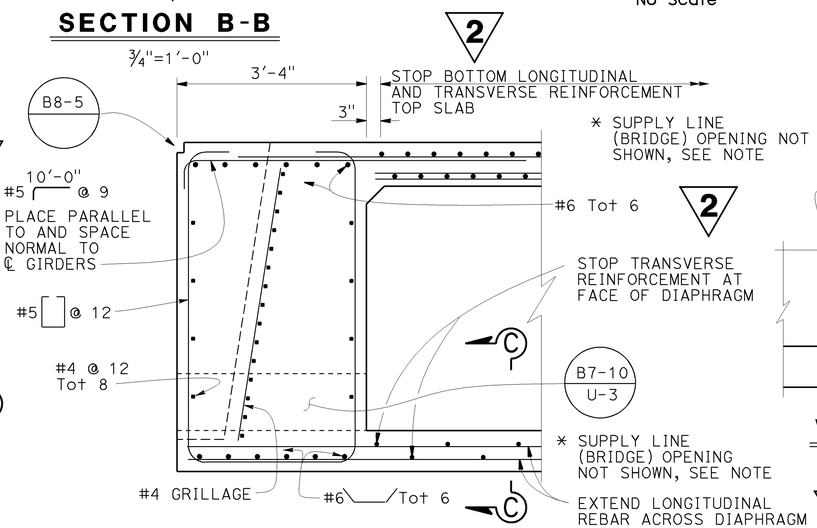

END DIAPHRAGM DETAIL

3/4"=1'-0"

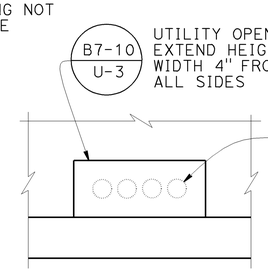

VIEW C-C

3/4"=1'-0"

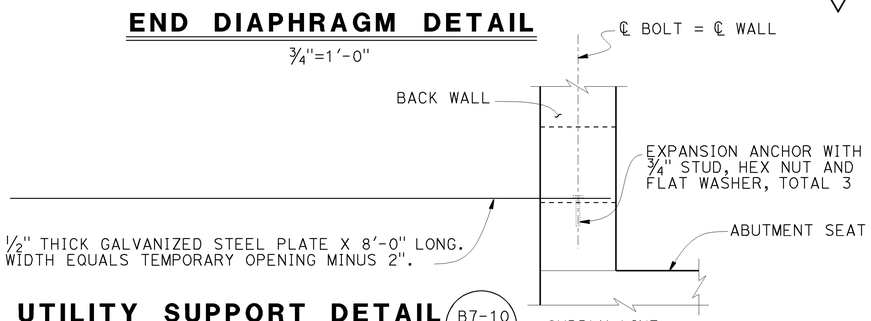

1/2" THICK GALVANIZED STEEL PLATE X 8'-0" LONG. WIDTH EQUALS TEMPORARY OPENING MINUS 2".

UTILITY SUPPORT DETAIL

3/4"=1'-0"

NOTE:

UTILITY DETAILS SHOWN APPLY ONLY TO THE FIBER OPTICS CONDUITS OPENINGS. DETAILS FOR THE SUPPLY LINE (BRIDGE) SHOWN ON "SUPPLY LINE (BRIDGE) DETAILS" SHEET

	BY	CHECKED
DESIGN	T. Skreslet	V. Ramakrishnan
DETAILS	K. Kubo / W. Zhang	V. Ramakrishnan
QUANTITIES	T. Skreslet	V. Ramakrishnan

STATE OF CALIFORNIA
DEPARTMENT OF TRANSPORTATION

DIVISION OF ENGINEERING SERVICES
STRUCTURE DESIGN
DESIGN BRANCH 14

BRIDGE NO. 57-1227R/L
POST MILE 0.43

ROUTE 11/125 SEPARATION
ABUTMENT DETAILS NO. 1

STRUCTURES DESIGN DETAIL SHEET (ENGLISH) (REV. 09-01-10)

ORIGINAL SCALE IN INCHES FOR REDUCED PLANS 0 1 2 3

UNIT: 3613
PROJECT NUMBER & PHASE: 11000205191
CONTRACT NO.: 11-056321

DISREGARD PRINTS BEARING EARLIER REVISION DATES

REVISION DATES 01-24-13 02-08-13 05-06-13 01-28-13

SHEET 7 OF 23

FILE => 57-1227rl-f-abut_det01.dgn

USERNAME => s122751 DATE PLOTTED => 07-AUG-2013 TIME PLOTTED => 11:09

DIST	COUNTY	ROUTE	POST MILES TOTAL PROJECT	SHEET No.	TOTAL SHEETS
11	SD	11,905	0.0/1.6, R9.9/R10.7	522	622

Tony Skreslet 11-01-12
REGISTERED CIVIL ENGINEER DATE

04-22-13
PLANS APPROVAL DATE

REGISTERED PROFESSIONAL ENGINEER TONY SKRESLET No. C50676 Exp. 09-30-13 CIVIL STATE OF CALIFORNIA

The State of California or its officers or agents shall not be responsible for the accuracy or completeness of electronic copies of this plan sheet.

2 REPLACED PER ADDENDUM No. 2 DATED AUGUST 23, 2013

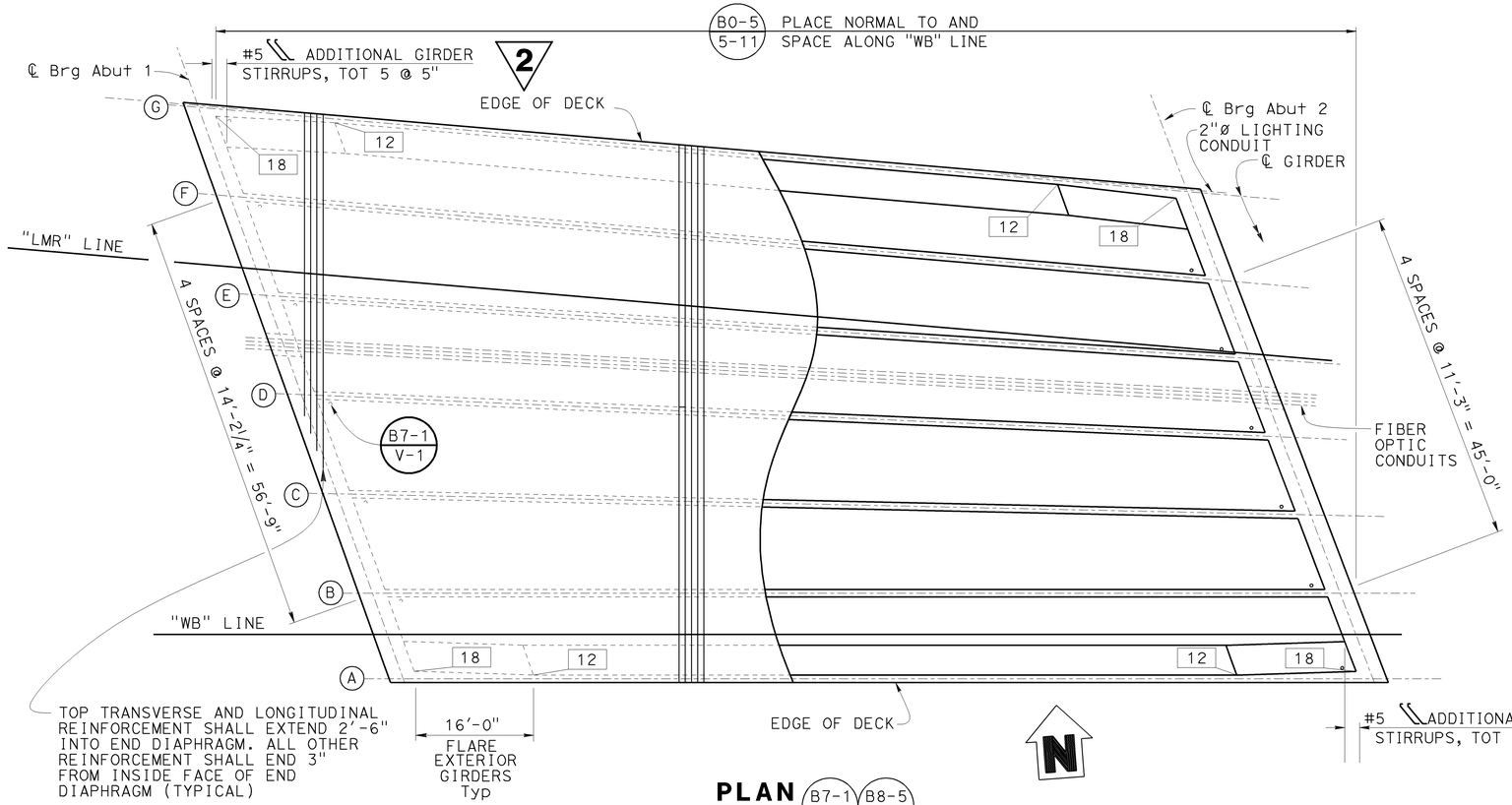

PLAN B7-1 B8-5
1"=10'-0"

PRESTRESSING NOTES

270 KSI Low Relaxation Strand:

P_{jack}	=	16100 kips
Anchor Set	=	⅜ in
Friction curvature coefficient, μ	=	0.15 / rad
Friction wobble coefficient, K	=	0.0002 / ft
Total Number of Girders	=	7

The final force ratio (larger divided by smaller) between any two girders shall not exceed the ratio of 10 to 9.

Concrete: f'_c = 5.0 ksi @ 28 days

f'_{ci} = 3.5 ksi @ time of stressing

Contractor shall submit elongation calculations based on initial stress at

☒ = 0.951 times jacking stress

One end stressing shall be performed from either end

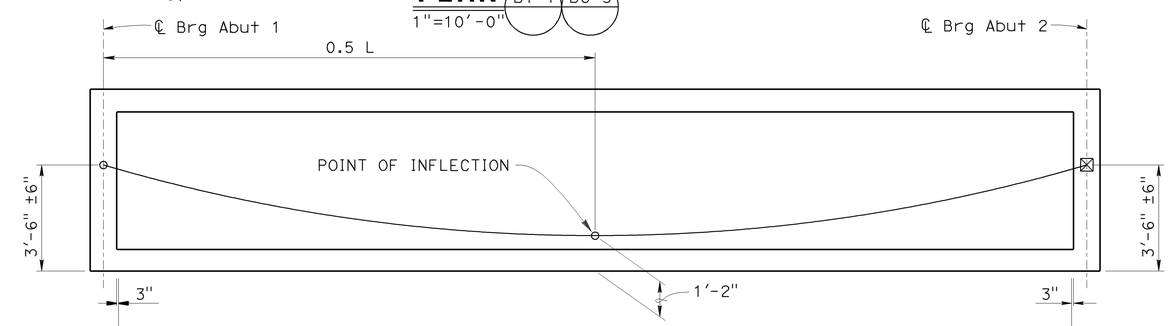

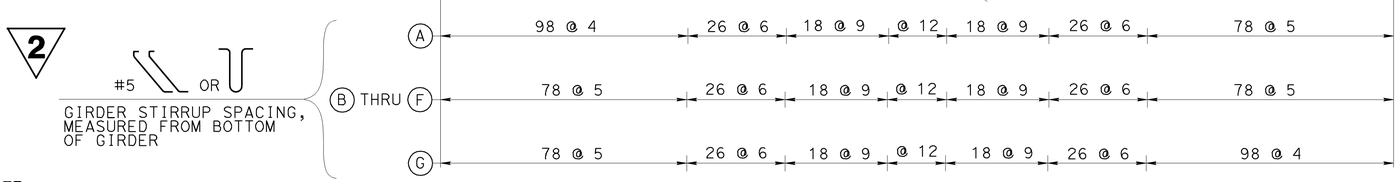

LONGITUDINAL SECTION
No Scale

NOTE:
THE CONTRACTOR SHALL VERIFY ALL CONTROLLING FIELD DIMENSIONS BEFORE ORDERING OR FABRICATING ANY MATERIAL.

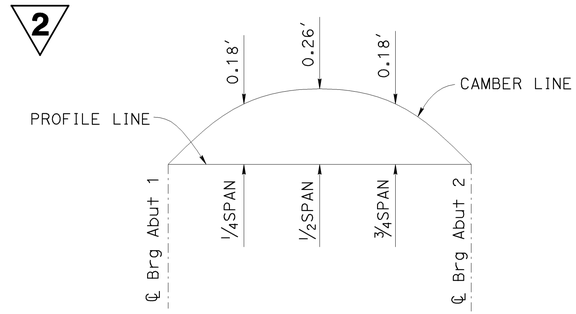

NOTE: Does not include allowance for falsework settlement

CAMBER DIAGRAM
NO SCALE

NOTES:
1. Cable path is parabolic between points shown
2. Barrier Rails not shown

LEGEND:

Indicates stem width in inches measured normal to outside face of Girder

L Indicates Girder length

	BY	CHECKED
DESIGN	T. Skreslet	V. Ramakrishnan
DETAILS	T. Doan / W. Zhang	V. Ramakrishnan
QUANTITIES	T. Skreslet	V. Ramakrishnan

STATE OF CALIFORNIA
DEPARTMENT OF TRANSPORTATION

DIVISION OF ENGINEERING SERVICES
STRUCTURE DESIGN
DESIGN BRANCH 14

BRIDGE NO. 57-1227R/L
POST MILE 0.43

ROUTE 11/125 SEPARATION
GIRDER LAYOUT-LEFT BRIDGE

STRUCTURES DESIGN DETAIL SHEET (ENGLISH) (REV. 09-01-10)

ORIGINAL SCALE IN INCHES FOR REDUCED PLANS 0 1 2 3

UNIT: 3613
PROJECT NUMBER & PHASE: 11000205191
CONTRACT NO.: 11-056321

DISREGARD PRINTS BEARING EARLIER REVISION DATES

REVISION DATES: 05-06-13 12-7-12 01-11-13 02-07-13

SHEET 10 OF 23

FILE => 57-1227rl-l-g_l001.dgn

USERNAME => s122751 DATE PLOTTED => 07-AUG-2013 TIME PLOTTED => 11:09

DIST	COUNTY	ROUTE	POST MILES TOTAL PROJECT	SHEET No.	TOTAL SHEETS
11	SD	11,905	0.0/1.6, R9.9/R10.7	557	622

REGISTERED CIVIL ENGINEER 11-01-12 DATE

04-22-13
PLANS APPROVAL DATE

REGISTERED PROFESSIONAL ENGINEER PAUL A. PETERSON No. C66764 Exp. 09-30-14 CIVIL STATE OF CALIFORNIA

The State of California or its officers or agents shall not be responsible for the accuracy or completeness of electronic copies of this plan sheet.

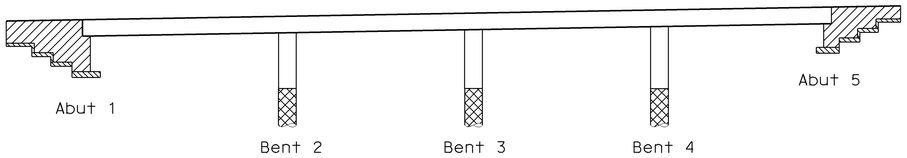

Legend:

- Structural Concrete, Bridge (5 ksi at 28 days)
- Structural Concrete, Bridge (3.6 ksi at 28 days)
- Structural Concrete, Bridge Footing (3.6 ksi at 28 days)
- Cast-in-Drilled-Hole Concrete Pile (5.0 ksi at 28 days)

CONCRETE STRENGTH AND TYPE LIMITS

NO SCALE

INDEX TO PLANS

SHEET NO.	TITLE
1	GENERAL PLAN
2	INDEX TO PLANS
3	DECK CONTOURS
4	FOUNDATION PLAN No. 1
5	FOUNDATION PLAN No. 2
6	ABUTMENT 1 LAYOUT
7	ABUTMENT 5 LAYOUT
8	ABUTMENT DETAILS No. 1
9	ABUTMENT DETAILS No. 2
10	ABUTMENT DETAILS No. 3
11	RETAINING WALL TYPE 1
12	BENT DETAILS NO. 1
13	BENT DETAILS NO. 2
14	COLUMN ISOLATION CASING DETAILS
15	TYPICAL SECTION
16	GIRDER LAYOUT NO. 1
17	GIRDER LAYOUT NO. 2
18	ADDITIONAL GIRDER REINFORCEMENT
19	ABUTMENT JOINT SEAL DETAILS
20	STRUTURE APPROACH TYPE N(30S)
21	STRUCTURE APPROACH DRAINAGE DETAILS
22	SLOPE PAVING (ROCK COBBLE)
23	LOG OF TEST BORINGS 1 OF 6
24	LOG OF TEST BORINGS 2 OF 6
25	LOG OF TEST BORINGS 3 OF 6
26	LOG OF TEST BORINGS 4 OF 6
27	LOG OF TEST BORINGS 5 OF 6
28	LOG OF TEST BORINGS 6 OF 6

STANDARD PLANS DATED MAY 2010

	A10A	ABBREVIATIONS (SHEET 1 OF 2)
	A10B	ABBREVIATIONS (SHEET 2 OF 2)
	A10C	LINES AND SYMBOLS (SHEET 1 OF 3)
	A10D	LINES AND SYMBOLS (SHEET 2 OF 3)
	A10E	LINES AND SYMBOLS (SHEET 3 OF 3)
	A62C	LIMITS OF PAYMENT FOR EXCAVATION AND BACKFILL - BRIDGE
	BO-1	BRIDGE DETAILS
	BO-3	BRIDGE DETAILS
	BO-5	BRIDGE DETAILS
	BO-13	BRIDGE DETAILS
RSP	B3-5	RETAINING WALL DETAILS NO. 1
	B7-1	BOX GIRDER DETAILS
	B7-6	DECK DRAINS TYPES D-1 AND D-2
	B7-8	DECK DRAINAGE DETAILS
	B7-10	UTILITY OPENING BOX GIRDER
	B8-5	CAST-IN-PLACE PRESTRESSED GIRDER DETAILS
	B11-57	CONCRETE BARRIER TYPE 742

STANDARD PLAN SHEET NO.

DETAIL NO.

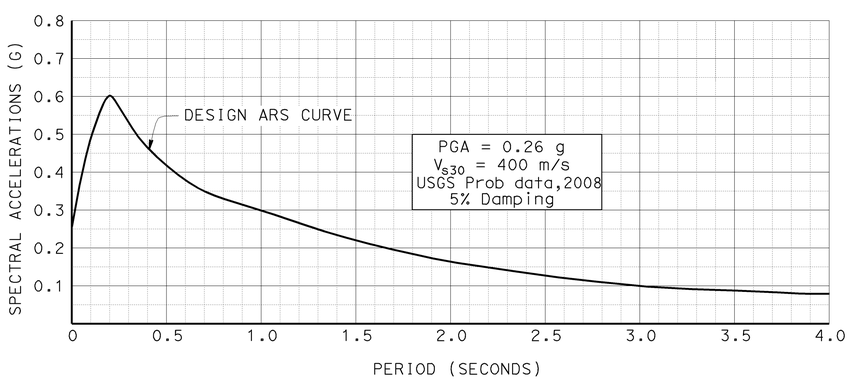

SITE SPECIFIC ACCELERATION RESPONSE SPECTRA

NO SCALE

SPREAD FOOTING DATA TABLE

SUPPORT LOCATION	WORKING STRESS DESIGN (WSD)	
	Permissible Gross Contact Stress (Settlement) (Ksf)	Allowable Gross Bearing Capacity (Ksf)
Abutment 1	N/A	5.9
Abutment 5	5.9	4.6

QUANTITIES

STRUCTURE EXCAVATION (BRIDGE)	1,156	CY
STRUCTURE BACKFILL (BRIDGE)	874	CY
90" CAST-IN-DRILLED-HOLE CONCRETE PILING	249	LF
PRESTRESSING CAST-IN-PLACE CONCRETE	LUMP	SUM
STRUCTURAL CONCRETE, BRIDGE FOOTING	220	CY
STRUCTURAL CONCRETE, BRIDGE	2,600	CY
STRUCTURAL CONCRETE, APPROACH SLAB (TYPE N)	96	CY
FRACTURED RIB TEXTURE	1,537	SQFT
JOINT SEAL ASSEMBLY (MR 5")	80	LF
2 BAR REINFORCING STEEL (BRIDGE)	778,207	LB
HEADED BAR REINFORCEMENT	80	EA
SLOPE PAVING (ROCK COBBLE)	3,054	SQFT
ISOLATION CASING	13,670	LB
BRIDGE DECK DRAINAGE SYSTEM	9,751	LB
CONCRETE BARRIER (TYPE 742)	1,411	LF

BENT PILE DATA TABLE

LOCATION	PILE TYPE	NOMINAL RESISTANCE (Kips)		DESIGN TIP CONTROL	SPECIFIED TIP ELEVATION (ft)	NOMINAL DRIVING RESISTANCE (Kips)
		Compression	Tension			
Bent 2	90" CIDH	7840	0	(a)	411	N/A
Bent 3	90" CIDH	6790	0	(a)	424	N/A
Bent 4	90" CIDH	7222	0	(a)	416	N/A

NOTE: Design Tip controlled by (a) Compression, (b) Tension, (c) Settlement, (d) Lateral Load

2 REPLACED PER ADDENDUM No. 2 DATED AUGUST 23, 2013

	BY	CHECKED
DESIGN	P.A. Peterson	J.M. Peterson
DETAILS	PAP / T. Nguyen	J.M. Peterson
QUANTITIES	J.M. Peterson	P.A. Peterson

STATE OF CALIFORNIA DEPARTMENT OF TRANSPORTATION

DIVISION OF ENGINEERING SERVICES STRUCTURE DESIGN DESIGN BRANCH 14

BRIDGE NO. 57-1229G POST MILE 0.24

E905-E11 / RTE 905 CONNECTOR SEPARATION

INDEX TO PLANS

STRUCTURES DESIGN DETAIL SHEET (ENGLISH) (REV. 09-01-10)

ORIGINAL SCALE IN INCHES FOR REDUCED PLANS 0 1 2 3

UNIT: 3613
PROJECT NUMBER & PHASE: 11000205191 CONTRACT NO.: 11-056321

DISREGARD PRINTS BEARING EARLIER REVISION DATES 12-20-12 01-14-13 05-06-13 12-13-13

SHEET 2 OF 28

FILE => 57-1229g-b-itp.dgn

USERNAME => s122751 DATE PLOTTED => 07-AUG-2013 TIME PLOTTED => 11:09

DIST	COUNTY	ROUTE	POST MILES TOTAL PROJECT	SHEET No.	TOTAL SHEETS
11	SD	11,905	0.0/1.6, R9.9/R10.7	564	622

REGISTERED CIVIL ENGINEER 11-01-12 DATE

04-22-13
PLANS APPROVAL DATE

REGISTERED PROFESSIONAL ENGINEER PAUL A. PETERSON No. C66764 Exp. 09-30-14 CIVIL STATE OF CALIFORNIA

The State of California or its officers or agents shall not be responsible for the accuracy or completeness of electronic copies of this plan sheet.

2 REPLACED PER ADDENDUM No. 2 DATED AUGUST 23, 2013

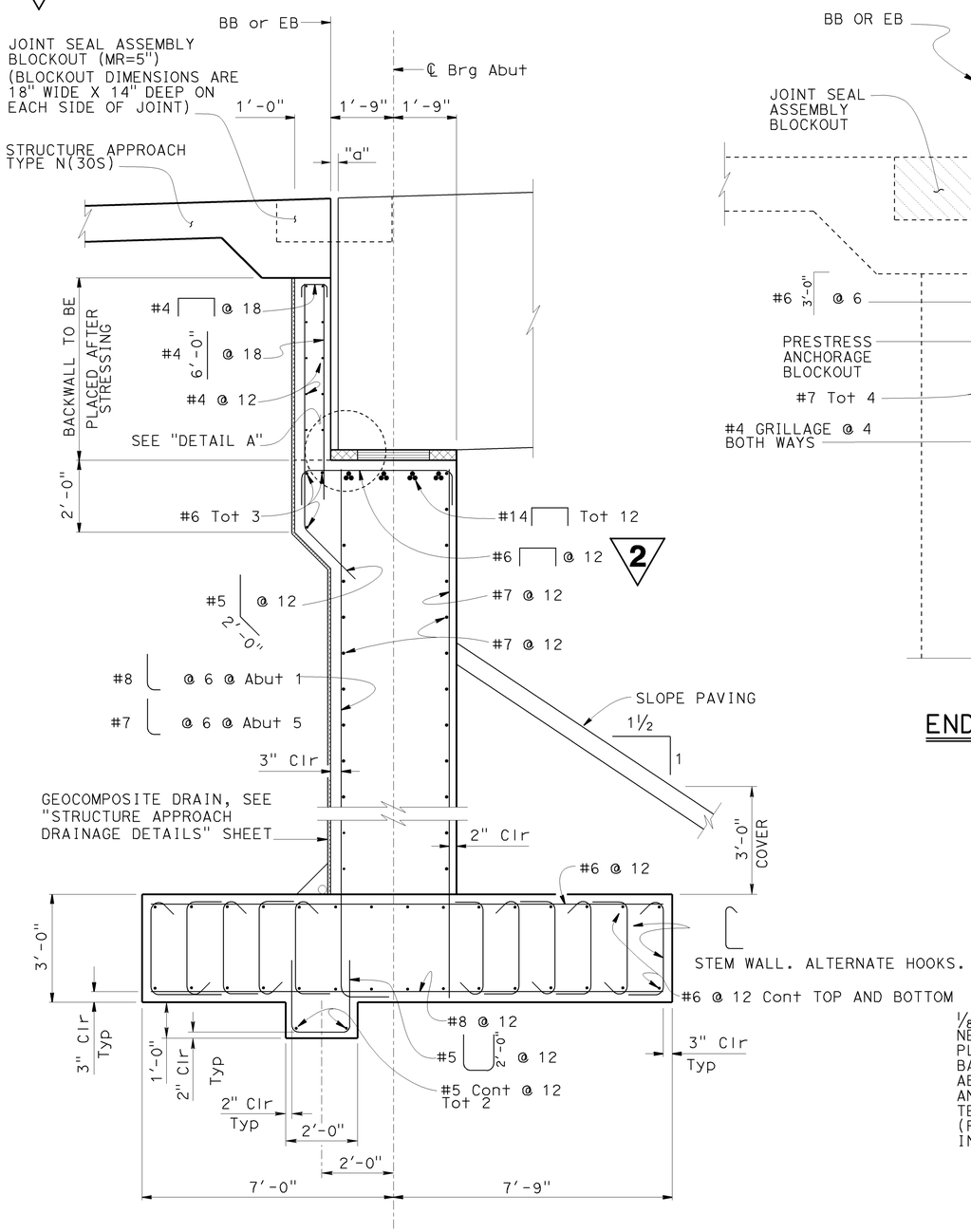

ABUTMENT TYPICAL SECTION

½" = 1'-0"

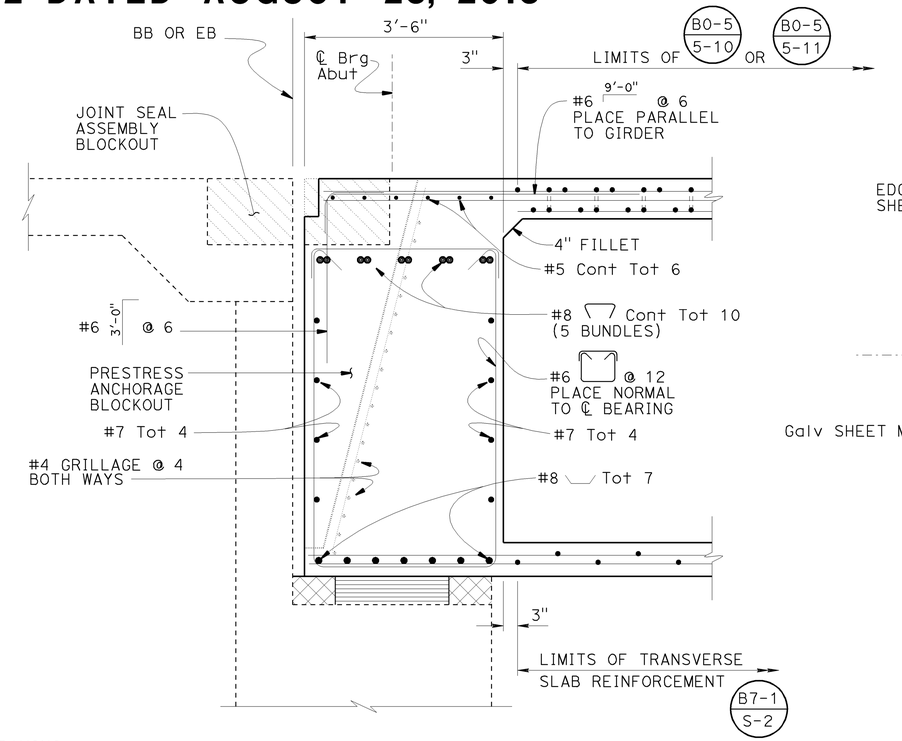

END DIAPHRAGM B8-5

¾" = 1'-0"

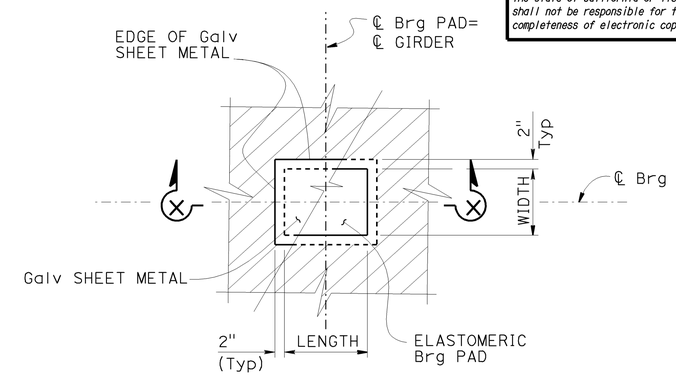

BEARING PAD DETAIL

No Scale

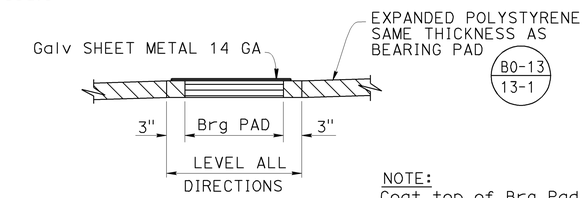

SECTION X-X

No Scale

NOTE:
Coat top of Brg Pad with grease prior to placing sheet metal

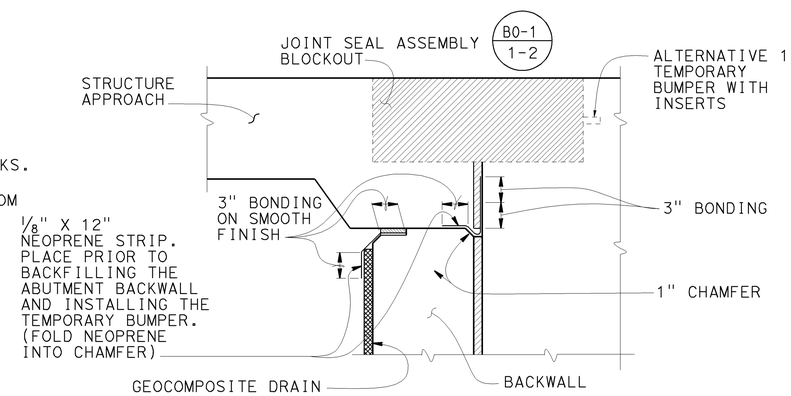

JOINT PROTECTION DETAIL

No Scale

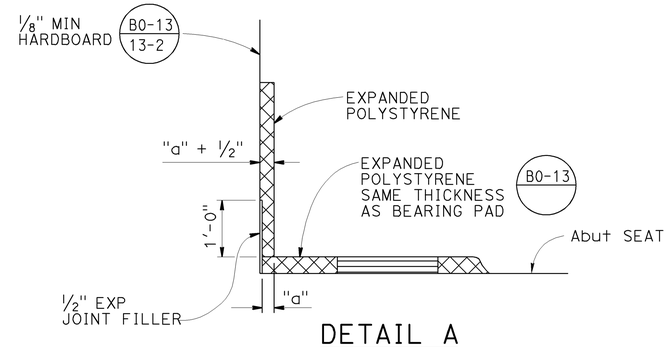

DETAIL A

No Scale

DESIGN	BY P. A. Peterson	CHECKED J. M. Peteson	
DETAILS	BY PAP/ T. Nguyen	CHECKED J. M. Peteson	
QUANTITIES	BY J. M. Peteson	CHECKED P. A. Peterson	

STATE OF CALIFORNIA
DEPARTMENT OF TRANSPORTATION

DIVISION OF ENGINEERING SERVICES
STRUCTURE DESIGN
DESIGN BRANCH 14

BRIDGE NO. 57-1229G
POST MILE 0.24

E905-E11 / RTE 905 CONNECTOR SEPARATION
ABUTMENT DETAILS NO. 2

STRUCTURES DESIGN DETAIL SHEET (ENGLISH) (REV. 09-01-10)

ORIGINAL SCALE IN INCHES FOR REDUCED PLANS 0 1 2 3

UNIT: 3613
PROJECT NUMBER & PHASE: 11000205191
CONTRACT NO.: 11-056321

DISREGARD PRINTS BEARING EARLIER REVISION DATES

REVISION DATES 2-8-12 2-9-12 9-10-12 05-06-13

SHEET 9 OF 28

FILE => 57-1229g-f-abtdet02.dgn

USERNAME => s122751 DATE PLOTTED => 07-AUG-2013 TIME PLOTTED => 11:09

DIST	COUNTY	ROUTE	POST MILES TOTAL PROJECT	SHEET No.	TOTAL SHEETS
11	SD	11,905	0.0/1.6, R9.9/R10.7	567	622

REGISTERED CIVIL ENGINEER — DATE 11-01-12

04-22-13
PLANS APPROVAL DATE

REGISTERED PROFESSIONAL ENGINEER — PAUL A. PETERSON — No. C66764 — Exp. 09-30-14 — CIVIL — STATE OF CALIFORNIA

The State of California or its officers or agents shall not be responsible for the accuracy or completeness of electronic copies of this plan sheet.

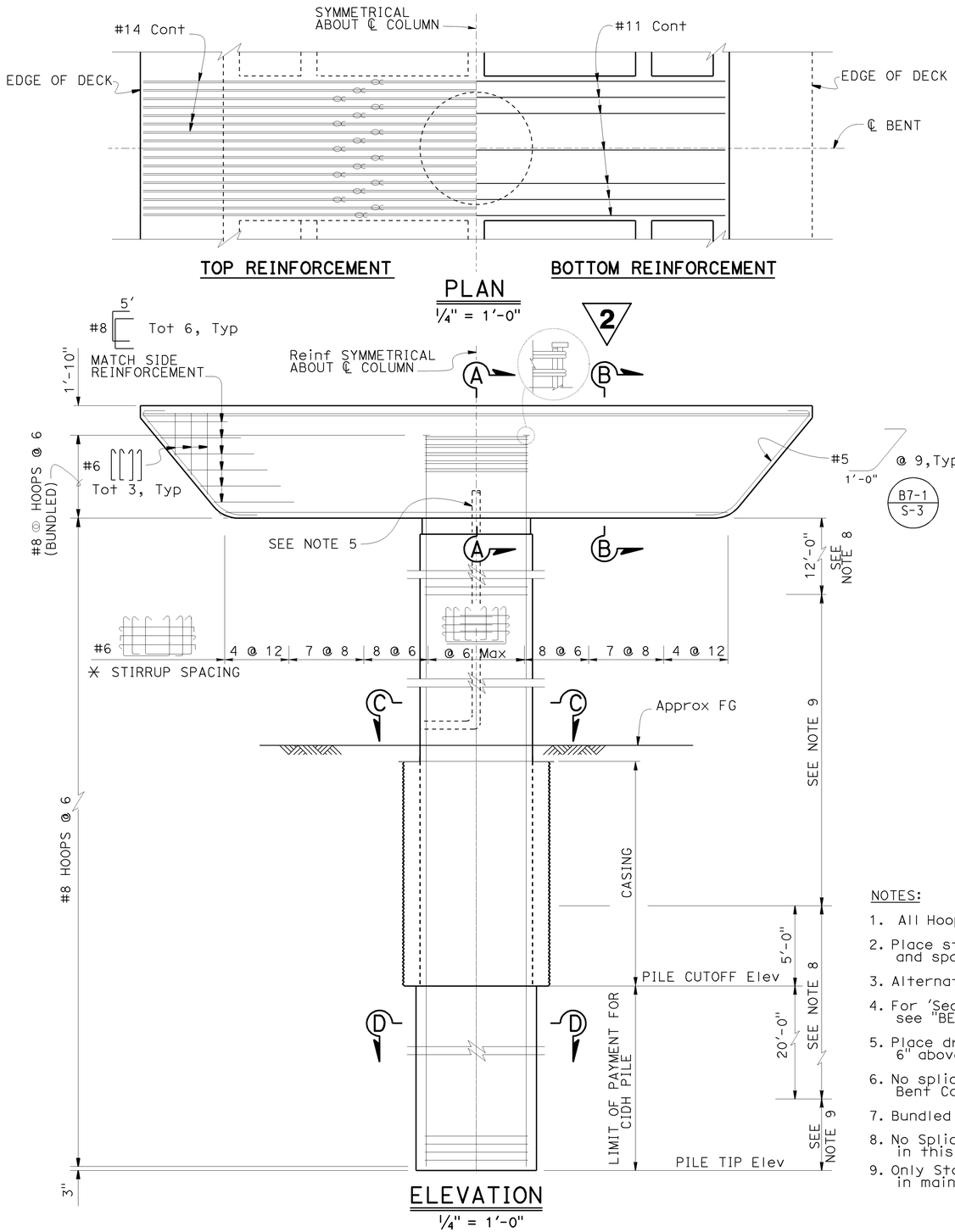

2 REPLACED PER ADDENDUM No. 2 DATED AUGUST 23, 2013

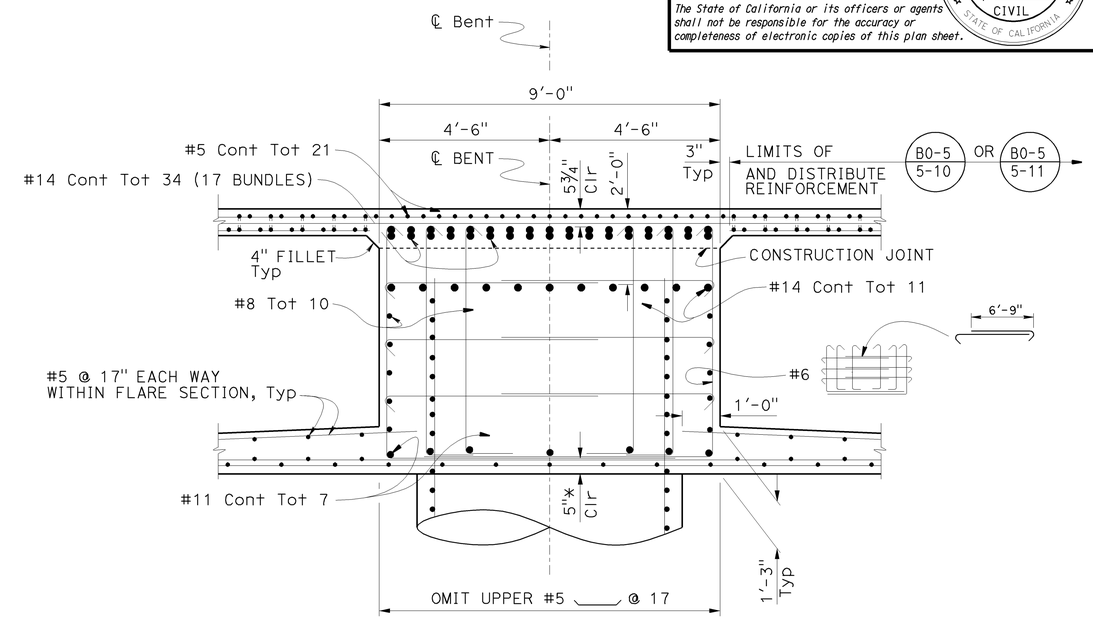

SECTION A-A
1/2" = 1'-0"

NOTES:

1. All Hoops are "Ultimate" butt splices continous.
2. Place stirrups perpendicular ℄ Bent and space along ℄ Bent.
3. Alternate 135 Hook ends.
4. For 'Section C-C' and 'Section D-D', see "BENT DETAILS NO. 2" sheet.
5. Place drain outlet at Bents 2, 3 and 4, 6" above ground.
6. No splices allowed in main Bent Cap reinforcement
7. Bundled bars shown thus:
8. No Splice allowed in Column main reinforcement in this area
9. Only Staggered "Ultimate" Butt Spices are allowed in main Column reinforcement in this area.

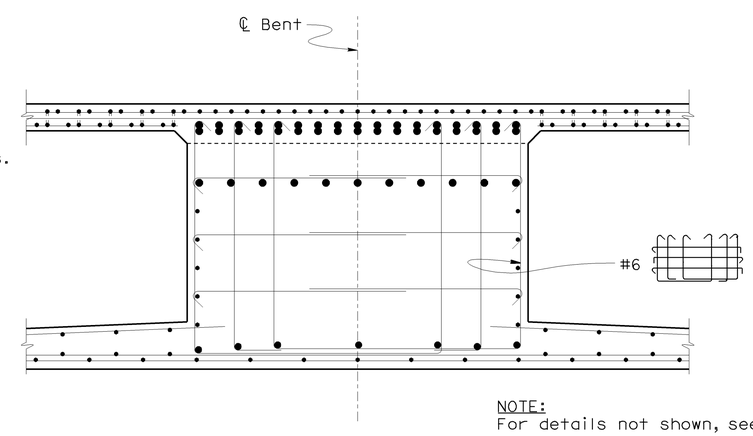

NOTE:
For details not shown, see 'Section A-A'

SECTION B-B
1/2" = 1'-0"

DESIGN	BY P. A. Peterson	CHECKED J. M. Peterson	
DETAILS	BY PAP/ T. Nguyen	CHECKED J. M. Peterson	
QUANTITIES	BY J. M. Peterson	CHECKED P. A. Peterson	

STATE OF CALIFORNIA
DEPARTMENT OF TRANSPORTATION

DIVISION OF ENGINEERING SERVICES
STRUCTURE DESIGN
DESIGN BRANCH 14

BRIDGE NO. 57-1229G
POST MILE 0.24

E905-E11 / RTE 905 CONNECTOR SEPARATION
BENT DETAILS NO. 1

STRUCTURES DESIGN DETAIL SHEET (ENGLISH) (REV. 09-01-10)

ORIGINAL SCALE IN INCHES FOR REDUCED PLANS 0 1 2 3

UNIT: 3613
PROJECT NUMBER & PHASE: 11000205191
CONTRACT NO.: 11-056321

DISREGARD PRINTS BEARING EARLIER REVISION DATES

REVISION DATES: 5-4-12 12-6-12 05-06-13

SHEET 12 OF 28

FILE => 57-1229g-1-btdt1.dgn

USERNAME => s122251 DATE PLOTTED => 07-AUG-2013 TIME PLOTTED => 11:09

DIST	COUNTY	ROUTE	POST MILES TOTAL PROJECT	SHEET No.	TOTAL SHEETS
11	SD	11,905	0.0/1.6, R9.9/R10.7	568	622

REGISTERED CIVIL ENGINEER 11-01-12 DATE

04-22-13
PLANS APPROVAL DATE

REGISTERED PROFESSIONAL ENGINEER PAUL A. PETERSON No. C66764 Exp. 09-30-14 CIVIL STATE OF CALIFORNIA

The State of California or its officers or agents shall not be responsible for the accuracy or completeness of electronic copies of this plan sheet.

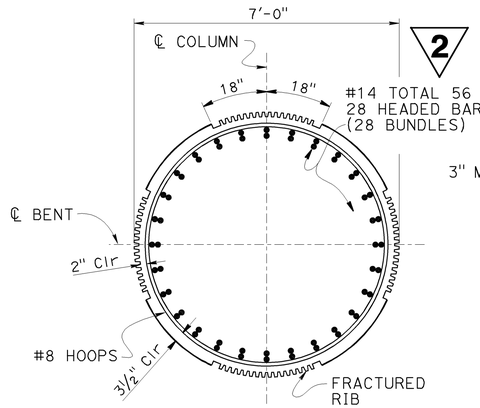

NOTE: Drain Outlet not shown

SECTION C-C @ BENT 2

½" = 1'-0"

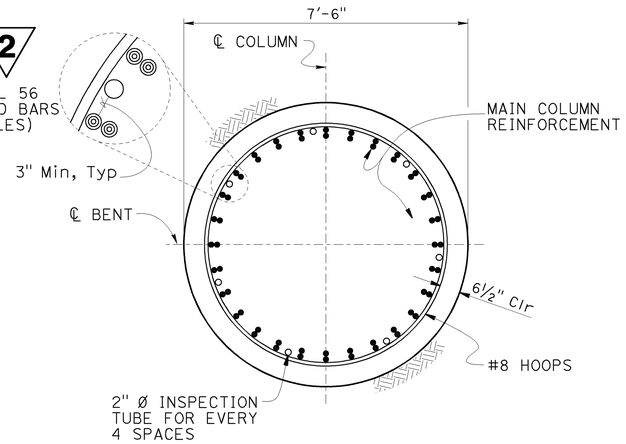

SECTION D-D @ BENT 2

½" = 1'-0"

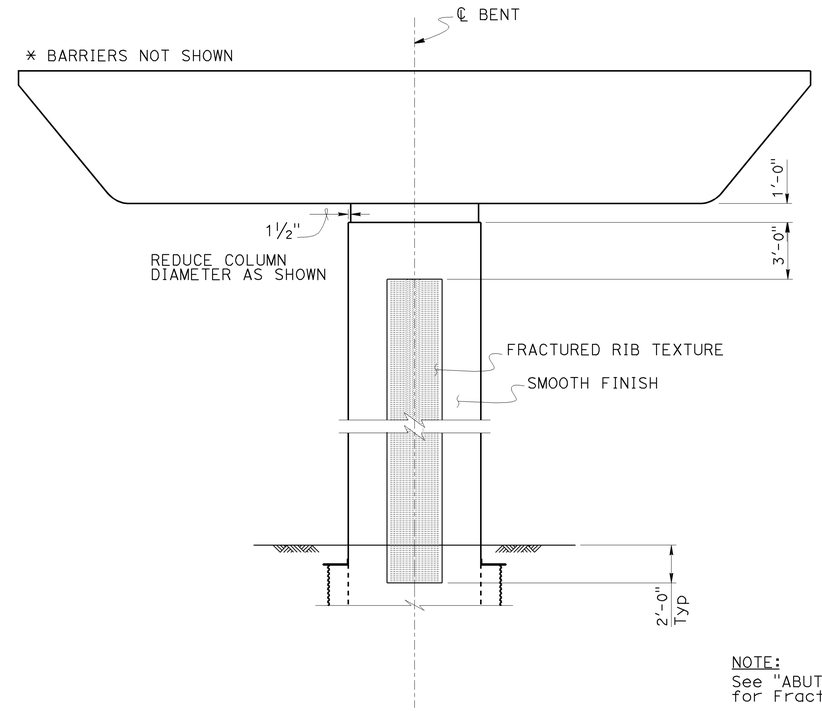

NOTE:
See "ABUTMENT DETAILS NO. 3" sheet for Fracture Rib Detail

ARCHITECTURAL TREATMENT @ BENTS 2, 3 AND 4

¼" = 1'-0"

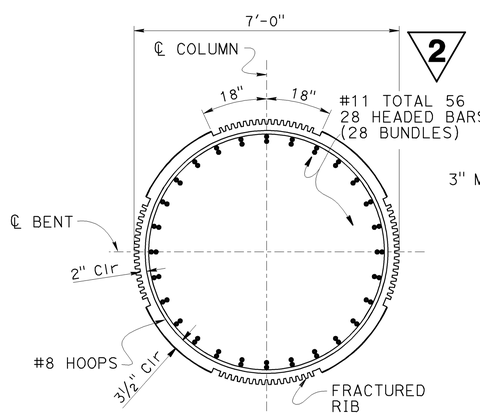

SECTION C-C @ BENT 3

½" = 1'-0"

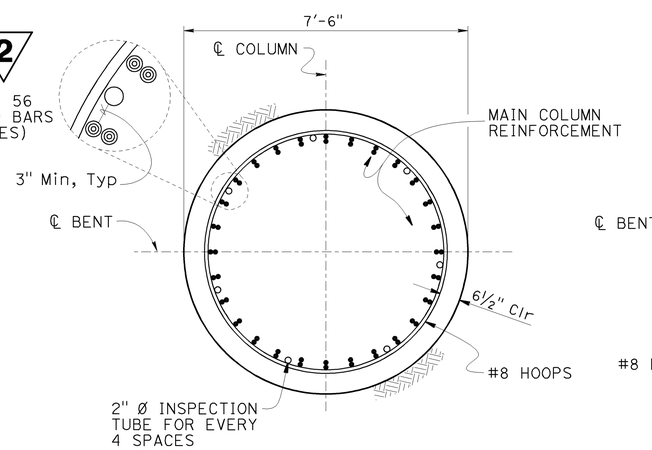

SECTION D-D @ BENT 3

½" = 1'-0"

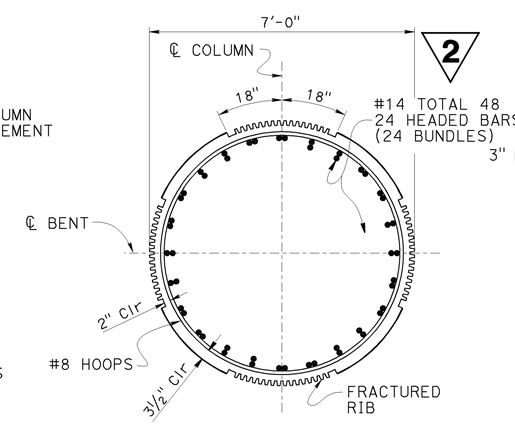

SECTION C-C @ BENT 4

½" = 1'-0"

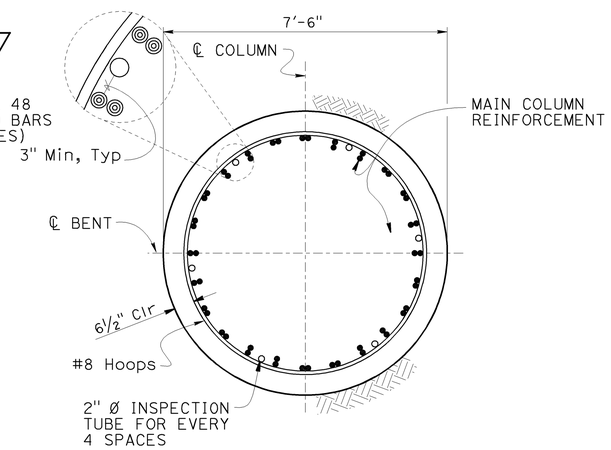

SECTION D-D @ BENT 4

½" = 1'-0"

2 REPLACED PER ADDENDUM No. 2 DATED AUGUST 23, 2013

	BY	CHECKED
DESIGN	P. A. Peterson	J. M. Peterson
DETAILS	PAP / T. NGUYEN	J. M. Peterson
QUANTITIES	J. M. Peterson	P. A. Peterson

STATE OF CALIFORNIA
DEPARTMENT OF TRANSPORTATION

DIVISION OF ENGINEERING SERVICES
STRUCTURE DESIGN
DESIGN BRANCH 14

BRIDGE NO. 57-1229G
POST MILE 0.24

E905-E11 / RTE 905 CONNECTOR SEPARATION
BENT DETAILS NO.2

STRUCTURES DESIGN DETAIL SHEET (ENGLISH) (REV. 09-01-10)

ORIGINAL SCALE IN INCHES FOR REDUCED PLANS 0 1 2 3

UNIT: 3613
PROJECT NUMBER & PHASE: 11000205191
CONTRACT NO.: 11-056321

DISREGARD PRINTS BEARING EARLIER REVISION DATES

REVISION DATES: 05-06-13 5-28-13 8-23-13 10-08-13

SHEET 13 OF 28

FILE => 57-1229g-i-btdt2.dgn

USERNAME => s122751 DATE PLOTTED => 07-AUG-2013 TIME PLOTTED => 11:10

DIST	COUNTY	ROUTE	POST MILES TOTAL PROJECT	SHEET No.	TOTAL SHEETS
11	SD	11,905	0.0/1.6, R9.9/R10.7	598	622

V. Ramakrishnan 11-1-12
REGISTERED CIVIL ENGINEER DATE

04-22-13
PLANS APPROVAL DATE

REGISTERED PROFESSIONAL ENGINEER VIJAYARANI RAMAKRISHNAN No. C63091 Exp. 06-30-14 CIVIL STATE OF CALIFORNIA

The State of California or its officers or agents shall not be responsible for the accuracy or completeness of electronic copies of this plan sheet.

2 REPLACED PER ADDENDUM No. 2 DATED AUGUST 23, 2013

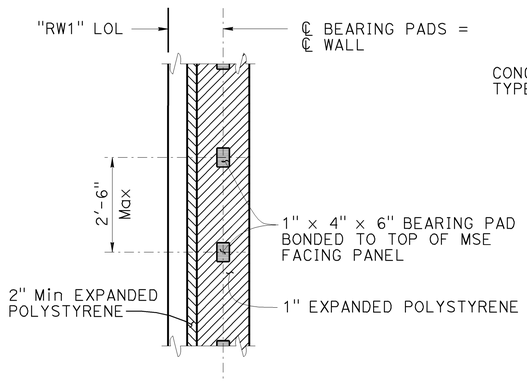

SECTION A-A
No Scale

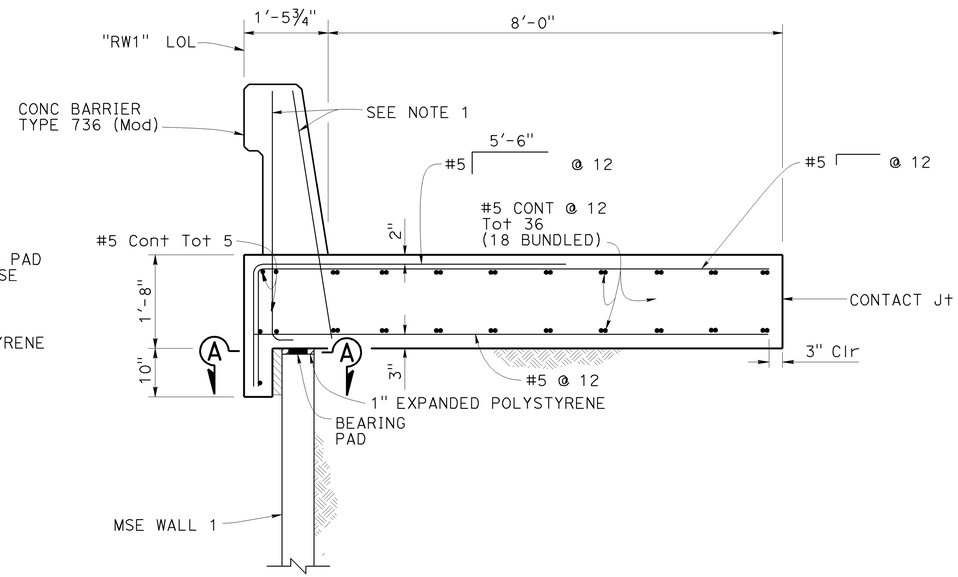

2 CONCRETE BARRIER SLAB B11-56
¾" = 1'-0"

NOTES:

1. Not all Barrier reinforcement shown
2. At acute corners of Approach Slab, bend reinforcement as required to clear Expansion Joint
3. Reinforcement shown at drains is to be placed in addition to Concrete Barrier Slab reinforcement.
4. Not all soil reinforcement mats shown for more details see "STRUCTURE PLANS NO.1 thru NO. 6"
5. Align ℄ DRAIN INLET with ℄ 10'-0" Wall Panels.
   For more details see "PANEL DETAILS NO.1" sheet
6. For more details see "PANEL DETAILS NO. 2" sheet

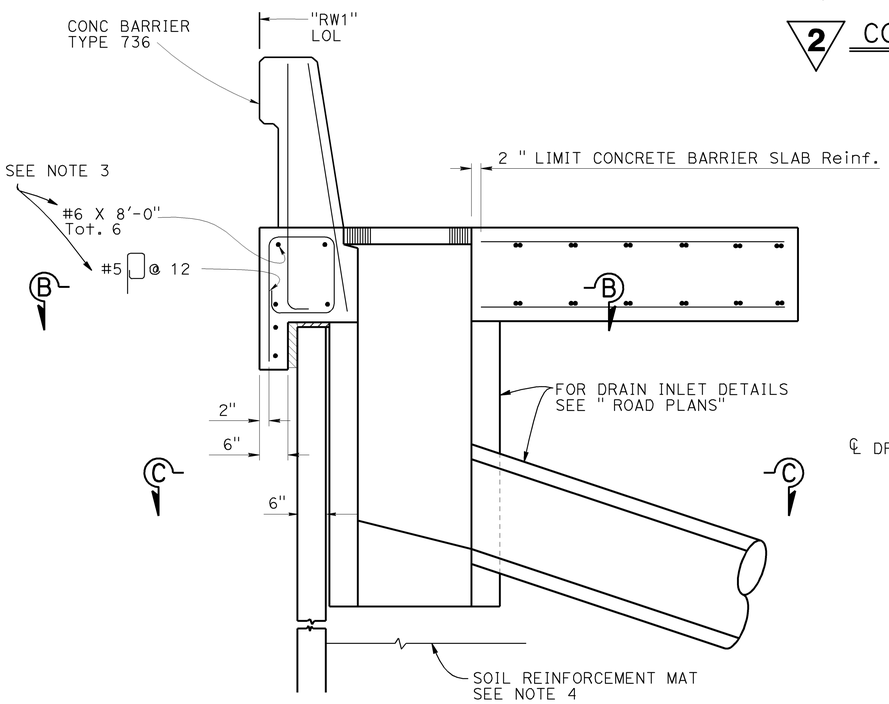

2 DRAINAGE INLET DETAIL
¾" = 1'-0"

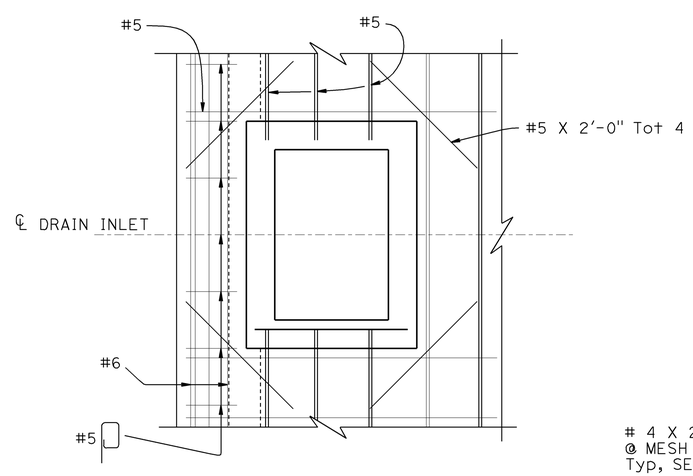

2 SECTION B-B
¾" = 1'-0"

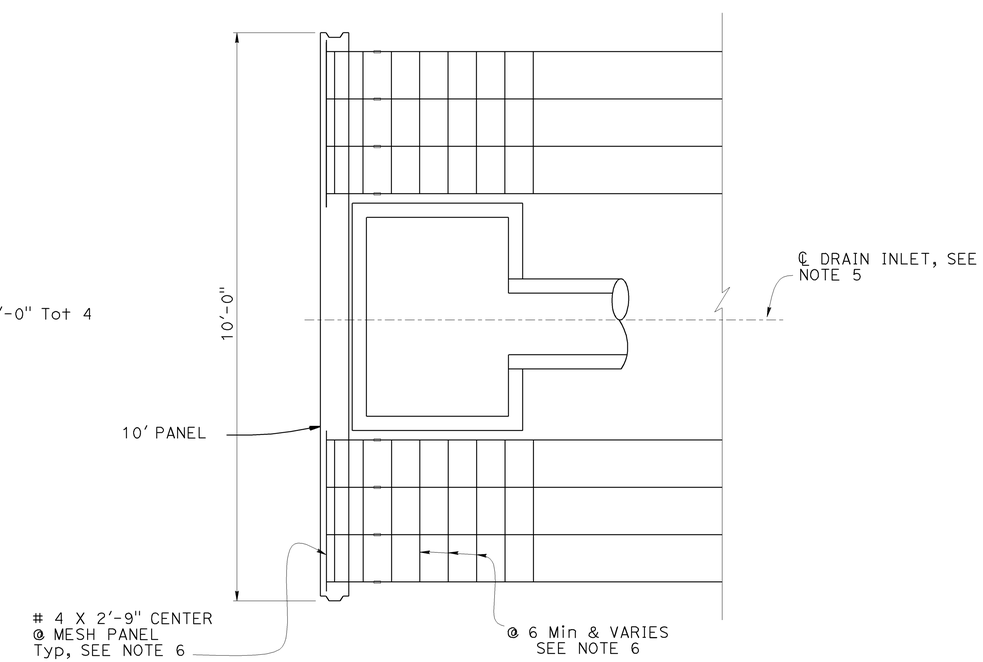

SECTION C-C
¾" = 1'-0"

	BY	CHECKED
DESIGN	V. Ramakrishnan	T. Skreslet
DETAILS	K. Kubo	T. Skreslet
QUANTITIES	V. Ramakrishnan	T. Skreslet

STATE OF CALIFORNIA
DEPARTMENT OF TRANSPORTATION

DIVISION OF ENGINEERING SERVICES
STRUCTURE DESIGN
DESIGN BRANCH 14

BRIDGE NO. 57E0128
POST MILE 0.83

MSE WALL 1
CONCRETE BARRIER SLAB DETAILS

STRUCTURES DESIGN DETAIL SHEET (ENGLISH) (REV. 09-01-10)

ORIGINAL SCALE IN INCHES FOR REDUCED PLANS 0 1 2 3

UNIT: 3613
PROJECT NUMBER & PHASE: 11000205191
CONTRACT NO.: 11-056310

DISREGARD PRINTS BEARING EARLIER REVISION DATES

REVISION DATES: 8-7-13 12-18-12 05-06-13 8-6-13

SHEET 15 OF 20

FILE => 57e0128-k-cbsd.dgn

USERNAME => s122751 DATE PLOTTED => 07-AUG-2013 TIME PLOTTED => 11:10

2 REPLACED PER ADDENDUM No. 2 DATED AUGUST 23, 2013

DIST	COUNTY	ROUTE	POST MILES TOTAL PROJECT	SHEET No.	TOTAL SHEETS
11	SD	11,905	0.0/1.6, R9.9/R10.7	618	622

V. Ramakrishnan 11-1-12
REGISTERED CIVIL ENGINEER DATE

04-22-13
PLANS APPROVAL DATE

REGISTERED PROFESSIONAL ENGINEER VIJAYARANI RAMAKRISHNAN No. C63091 Exp. 06-30-14 CIVIL STATE OF CALIFORNIA

The State of California or its officers or agents shall not be responsible for the accuracy or completeness of electronic copies of this plan sheet.

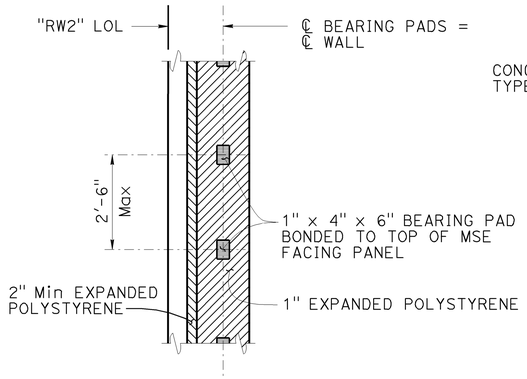

SECTION A-A
No Scale

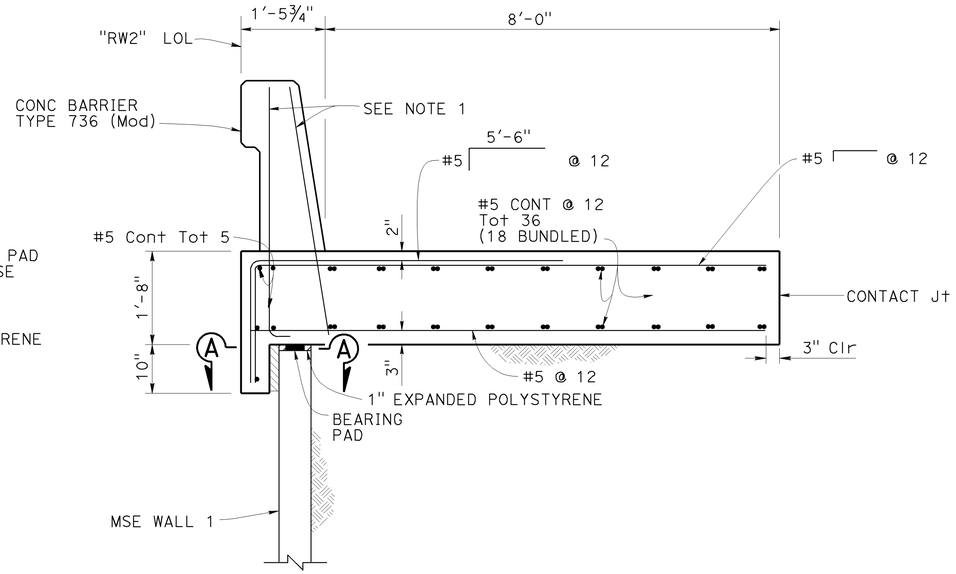

2 CONCRETE BARRIER SLAB B11-56
¾" = 1'-0"

NOTES:

1. Not all Barrier reinforcement shown
2. At acute corners of Approach Slab, bend reinforcement as required to clear Expansion Joint
3. Reinforcement shown at drains is to be placed in addition to Concrete Barrier Slab reinforcement.
4. Not all soil reinforcement mats shown for more details see "STRUCTURE PLANS NO.1 thru NO. 6"
5. Align ℄ DRAIN INLET with ℄ 10'-0" Wall Panels.
   For more details see "PANEL DETAILS NO.1" sheet
6. For more details see "PANEL DETAILS NO. 2" sheet

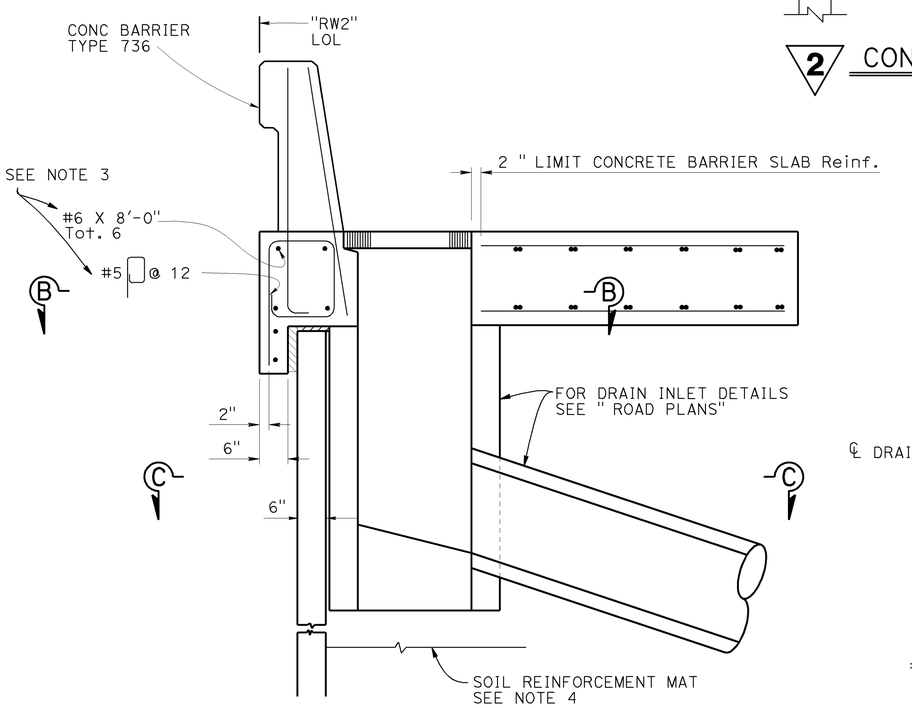

2 DRAINAGE INLET DETAIL
¾" = 1'-0"

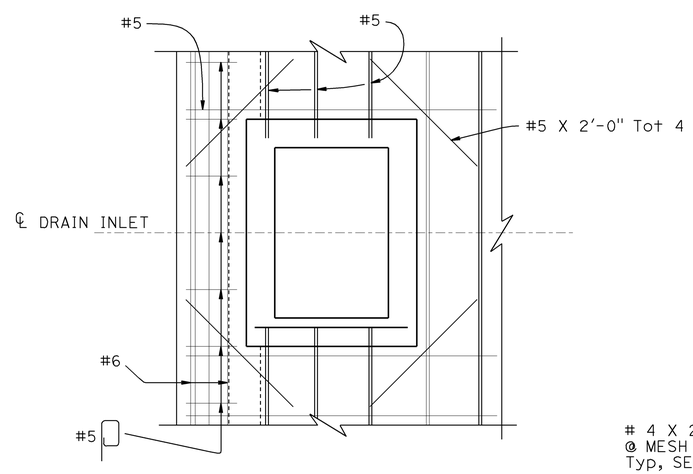

2 SECTION B-B
¾" = 1'-0"

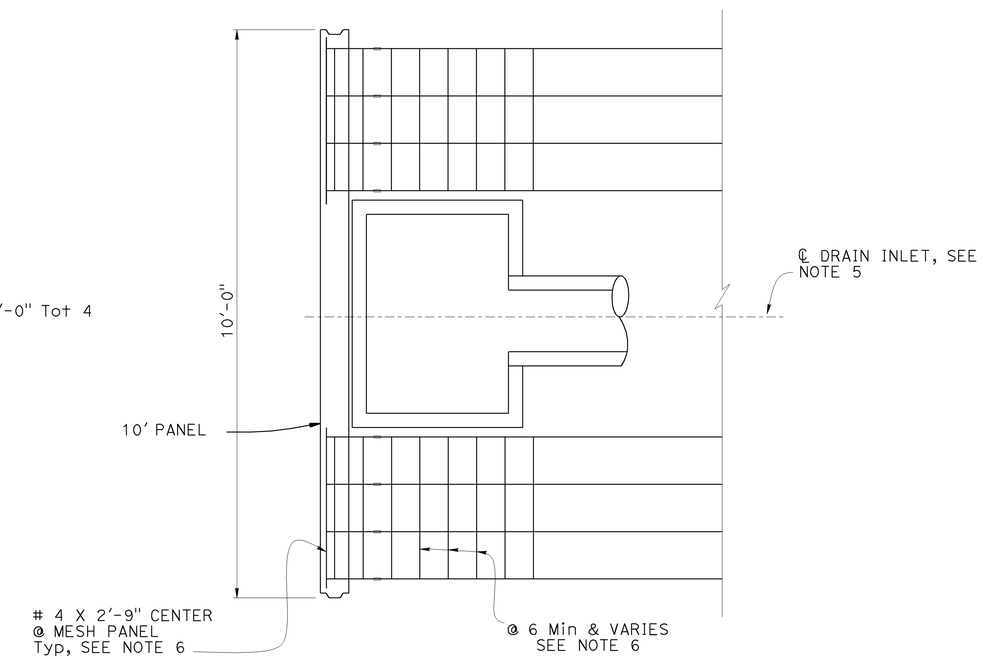

SECTION C-C
¾" = 1'-0"

	BY	CHECKED
DESIGN	V. Ramakrishnan	T. Skreslet
DETAILS	K. Kubo	T. Skreslet
QUANTITIES	V. Ramakrishnan	T. Skreslet

STATE OF CALIFORNIA
DEPARTMENT OF TRANSPORTATION

DIVISION OF ENGINEERING SERVICES
STRUCTURE DESIGN
DESIGN BRANCH 14

BRIDGE NO. 57E0129
POST MILE 0.83

MSE WALL 2
CONCRETE BARRIER SLAB DETAILS

STRUCTURES DESIGN DETAIL SHEET (ENGLISH) (REV. 09-01-10)

ORIGINAL SCALE IN INCHES FOR REDUCED PLANS 0 1 2 3

UNIT: 3613
PROJECT NUMBER & PHASE: 11000205191
CONTRACT NO.: 11-056310

DISREGARD PRINTS BEARING EARLIER REVISION DATES

REVISION DATES: 8-7-13 12-18-12 05-06-13 8-6-13

SHEET 15 OF 19

FILE => 57e0129-k-cbsd.dgn

USERNAME => s122751 DATE PLOTTED => 07-AUG-2013 TIME PLOTTED => 11:10