Dist	COUNTY	ROUTE	POST MILES TOTAL PROJECT	SHEET No.	TOTAL SHEETS
11	SD	11, 905	0.0/1.6, R9.9/R10.7	201	622

REGISTERED CIVIL ENGINEER 03-25-13 DATE

04-22-13
PLANS APPROVAL DATE

REGISTERED PROFESSIONAL ENGINEER
FARDAD BEHBOODY
No. C-61478
Exp. 06-30-13
CIVIL
STATE OF CALIFORNIA

THE STATE OF CALIFORNIA OR ITS OFFICERS OR AGENTS SHALL NOT BE RESPONSIBLE FOR THE ACCURACY OR COMPLETENESS OF SCANNED COPIES OF THIS PLAN SHEET.

DRAINAGE SYSTEM No. 14

(u) 36" X 295.03' RCP

(v) Jct Str (L=6' SPAN=3.5' Hb=5.5'), WITH 36" RCP RISER (H=2.3') AND MANHOLE F & C

(w) 36" X 295.03' RCP

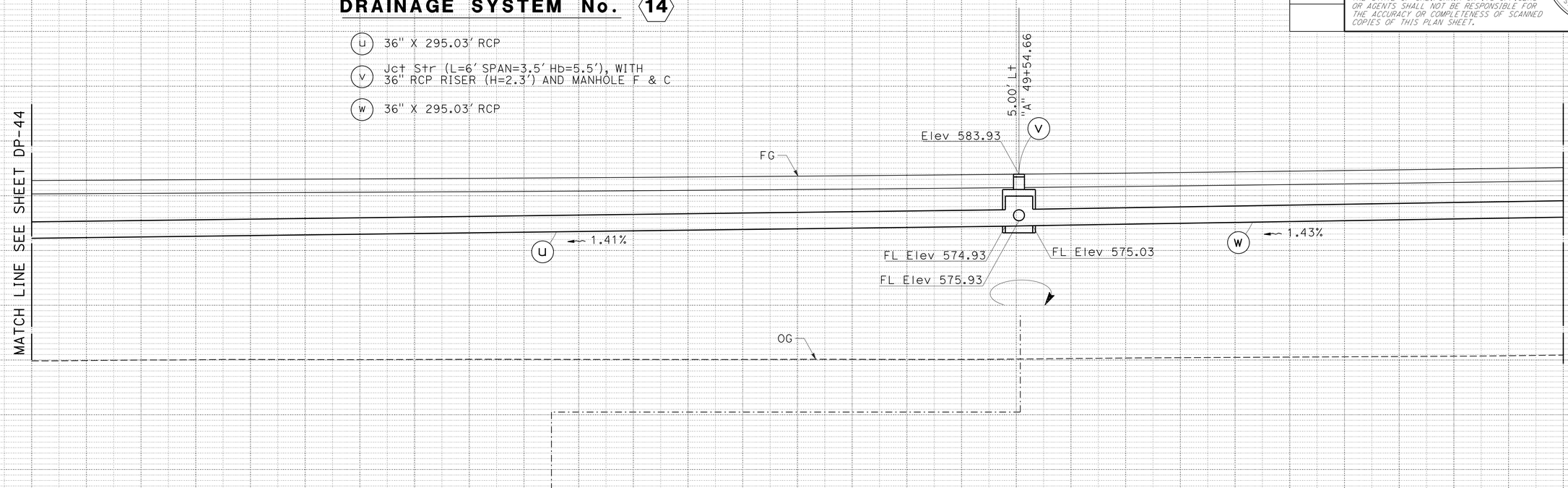

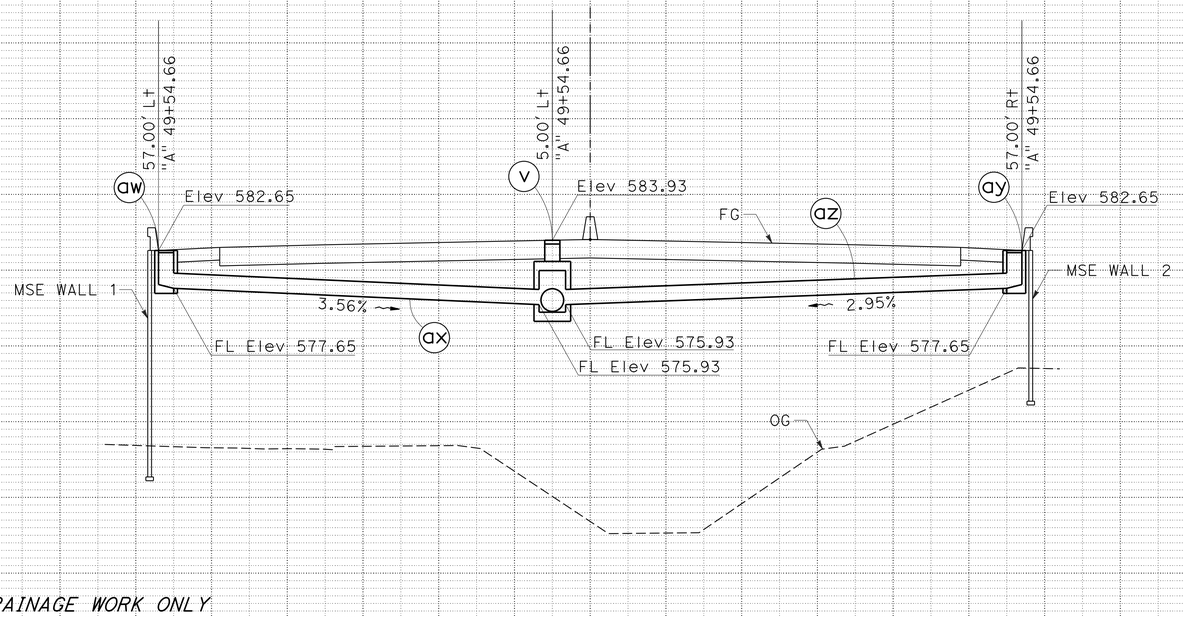

DRAINAGE SYSTEM No. 14

(aw) G1 DI (H=5.0'), WITH TYPE 24-12 GRATE

(ax) 24" X 48.28' RCP

(v) Jct Str (L=6' SPAN=3.5' Hb=5.5'), WITH 36" RCP RISER (H=2.3') AND MANHOLE F & C

(az) 24" X 58.28' RCP

(ay) G1 DI (H=5.0'), WITH TYPE 24-12 GRATE

14

DRAINAGE PROFILES

SCALE: Horiz 1" = 10'
Vert 1" = 10'

DP-45

APPROVED FOR DRAINAGE WORK ONLY

REVISED BY | DATE REVISED
MICHAEL OREIRO | FARDAD BEHBOODY
CALCULATED-DESIGNED BY | CHECKED BY
FUNCTIONAL SUPERVISOR
MICHAEL J. WEBSTER

STATE OF CALIFORNIA - DEPARTMENT OF TRANSPORTATION
Caltrans
DESIGN

LAST REVISION 05-02-13 | DATE PLOTTED => 13-MAY-2013 | TIME PLOTTED => 20:17

Dist	COUNTY	ROUTE	POST MILES TOTAL PROJECT	SHEET No.	TOTAL SHEETS
11	SD	11, 905	0.0/1.6, R9.9/R10.7	202	622

REGISTERED CIVIL ENGINEER 03-25-13 DATE

04-22-13
PLANS APPROVAL DATE

REGISTERED PROFESSIONAL ENGINEER FARDAD BEHBOODY No. C-61478 Exp. 06-30-13 CIVIL STATE OF CALIFORNIA

THE STATE OF CALIFORNIA OR ITS OFFICERS OR AGENTS SHALL NOT BE RESPONSIBLE FOR THE ACCURACY OR COMPLETENESS OF SCANNED COPIES OF THIS PLAN SHEET.

DRAINAGE SYSTEM No. 14

- (w) 36" X 295.03' RCP
- (x) Jct Str (L=6' SPAN=3.5' Hb=5.5'), WITH 36" RCP RISER (H=2.8') AND MANHOLE F & C
- (y) 36" X 240.40' RCP

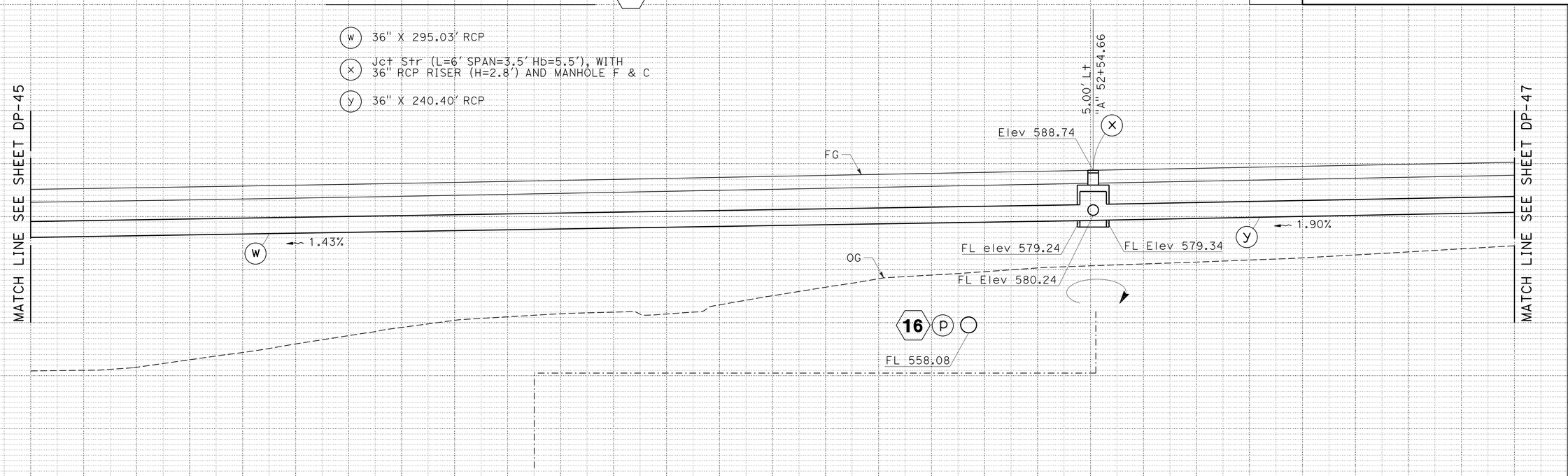

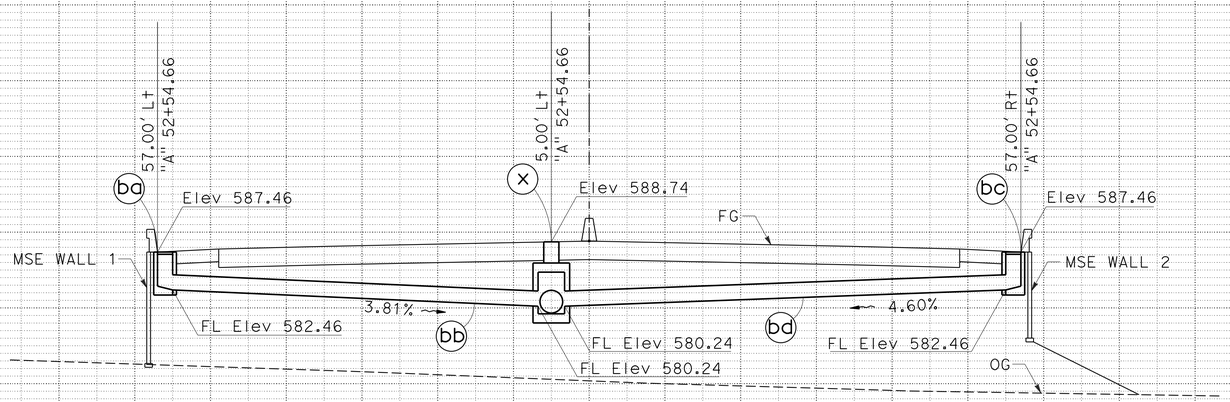

DRAINAGE SYSTEM No. 14

- (ba) G1 DI (H=5.0'), WITH TYPE 24-12 GRATE
- (bb) 24" X 58.29' RCP
- (x) Jct Str (L=6' SPAN=3.5' Hb=5.5'), WITH 36" RCP RISER (H=2.8') AND MANHOLE F & C
- (bd) 24" X 48.30' RCP
- (bc) G1 DI (H=5.0'), WITH TYPE 24-12 GRATE

14

DRAINAGE PROFILES

SCALE: Horiz 1" = 10'
Vert 1" = 10'

DP-46

APPROVED FOR DRAINAGE WORK ONLY

STATE OF CALIFORNIA - DEPARTMENT OF TRANSPORTATION
Caltrans
DESIGN
FUNCTIONAL SUPERVISOR: MICHAEL J. WEBSTER
CALCULATED-DESIGNED BY: MICHAEL OREIRO
CHECKED BY: FARDAD BEHBOODY
REVISED BY
DATE REVISED

LAST REVISION 05-02-13
DATE PLOTTED => 13-MAY-2013
TIME PLOTTED => 20:17

Dist	COUNTY	ROUTE	POST MILES TOTAL PROJECT	SHEET No.	TOTAL SHEETS
11	SD	11, 905	0.0/1.6, R9.9/R10.7	203	622

REGISTERED CIVIL ENGINEER 03-25-13 DATE

04-22-13
PLANS APPROVAL DATE

REGISTERED PROFESSIONAL ENGINEER FARDAD BEHBOODY No. C-61478 Exp. 06-30-13 CIVIL STATE OF CALIFORNIA

THE STATE OF CALIFORNIA OR ITS OFFICERS OR AGENTS SHALL NOT BE RESPONSIBLE FOR THE ACCURACY OR COMPLETENESS OF SCANNED COPIES OF THIS PLAN SHEET.

DRAINAGE SYSTEM No. 14

(y) 36" X 240.40' RCP

(z) Jct Str (L=6' SPAN=3.5' Hb=5.5'), WITH 36" RCP RISER (H=2.8') AND MANHOLE F & C

(aa) 24" X 294.33' APC

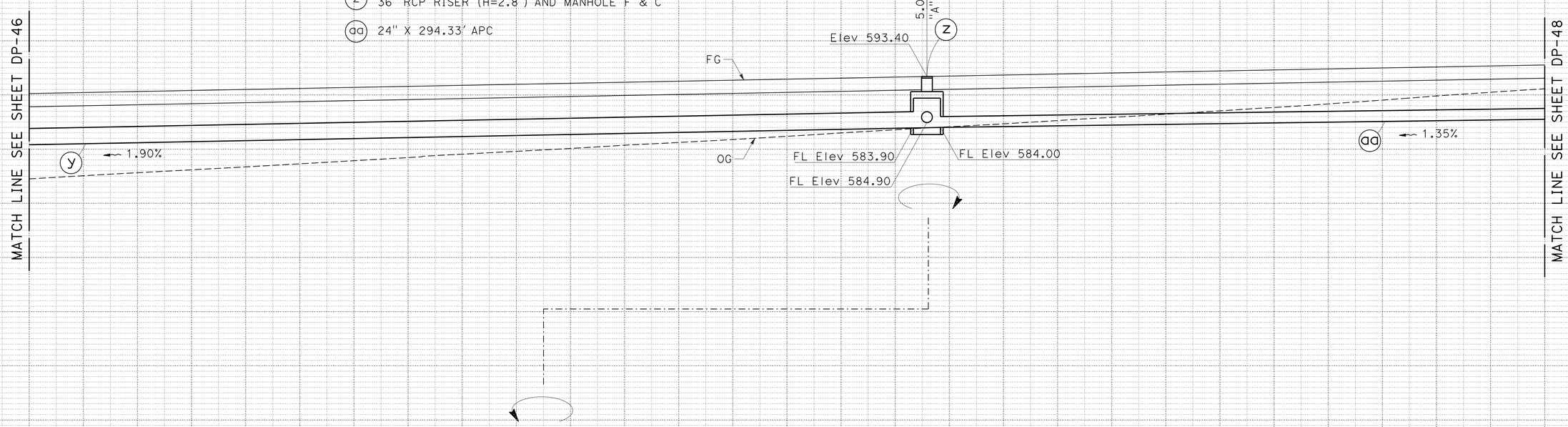

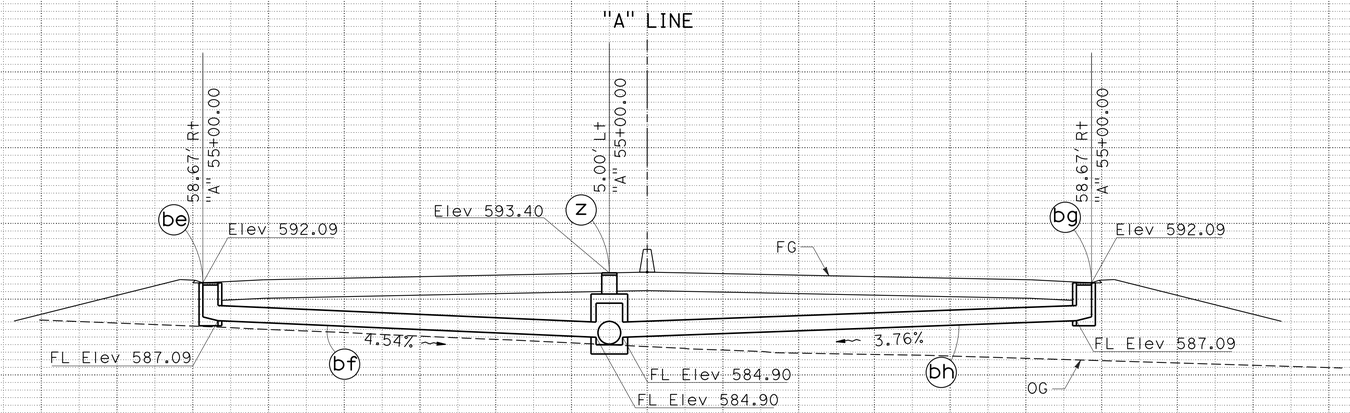

DRAINAGE SYSTEM No. 14

(be) G1 DI (H=5.0'), WITH TYPE 24-12 GRATE

(bf) 24" X 48.30' APC

(z) Jct Str (L=6' SPAN=3.5' Hb=5.5'), WITH 36" RCP RISER (H=2.8') AND MANHOLE F & C

(bh) 24" X 58.29' APC

(bg) G1 DI (H=5.0'), WITH TYPE 24-12 GRATE

(by) DRAINAGE DITCH (TYPE A) L=520', SEE D-7

(bz) DRAINAGE DITCH (TYPE A) L=447', SEE D-7

14

DRAINAGE PROFILES

SCALE: Horiz 1" = 10'
Vert 1" = 10'

DP-47

APPROVED FOR DRAINAGE WORK ONLY

REVISED BY | DATE REVISED
MICHAEL OREIRO | FARDAD BEHBOODY
CALCULATED-DESIGNED BY | CHECKED BY
FUNCTIONAL SUPERVISOR | MICHAEL J. WEBSTER
STATE OF CALIFORNIA - DEPARTMENT OF TRANSPORTATION
Caltrans
DESIGN

LAST REVISION 05-02-13 | DATE PLOTTED => 13-MAY-2013 | TIME PLOTTED => 20:17

Dist	COUNTY	ROUTE	POST MILES TOTAL PROJECT	SHEET No.	TOTAL SHEETS
11	SD	11, 905	0.0/1.6, R9.9/R10.7	204	622

REGISTERED CIVIL ENGINEER 03-25-13 DATE

04-22-13
PLANS APPROVAL DATE

REGISTERED PROFESSIONAL ENGINEER FARDAD BEHBOODY No. C-61478 Exp. 06-30-13 CIVIL STATE OF CALIFORNIA

THE STATE OF CALIFORNIA OR ITS OFFICERS OR AGENTS SHALL NOT BE RESPONSIBLE FOR THE ACCURACY OR COMPLETENESS OF SCANNED COPIES OF THIS PLAN SHEET.

DRAINAGE SYSTEM No. 14

(aa) 24" X 294.33' APC

(ab) GT4 DI (H=10.0') WITH TWO TYPE 24-12 GRATES

(ac) 24" X 194.81' APC

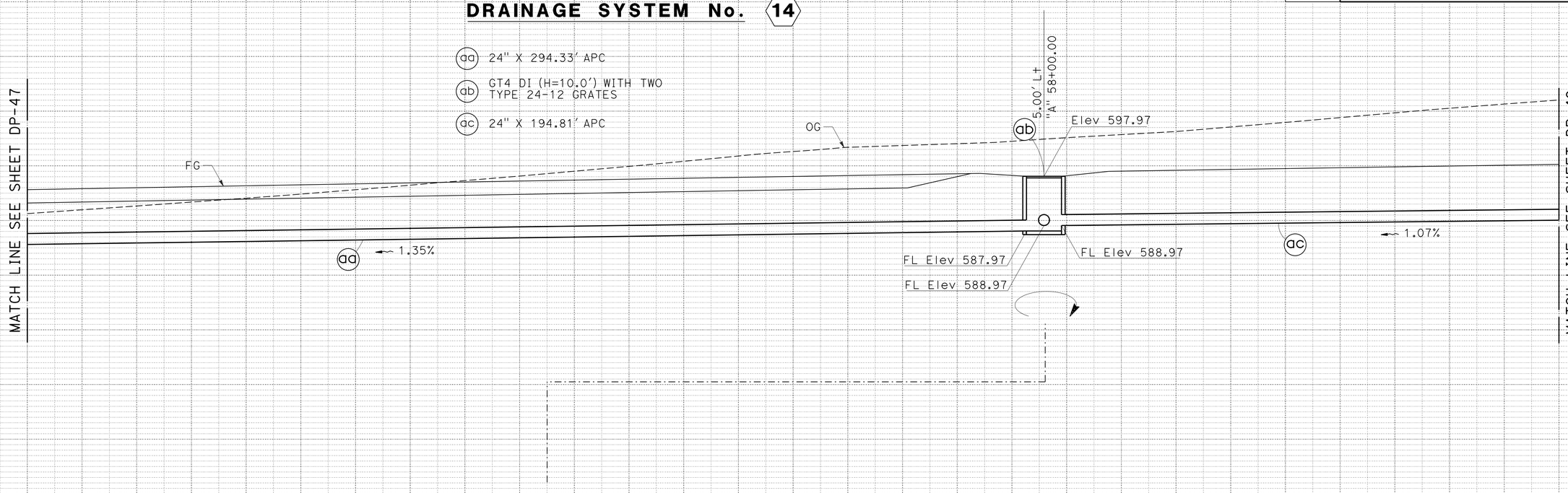

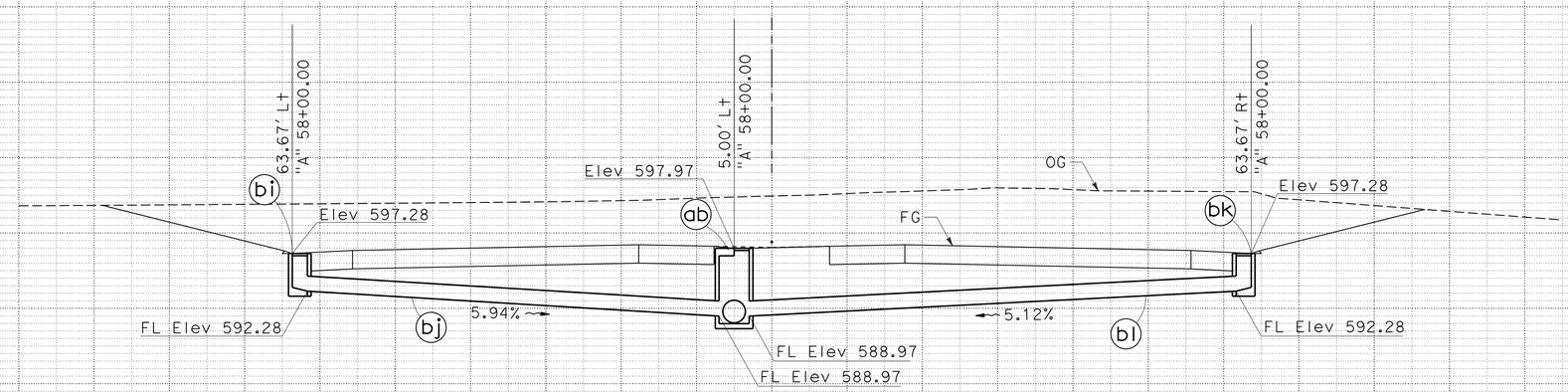

DRAINAGE SYSTEM No. 14

(bi) G1 DI (H=5.0'), WITH TYPE 24-12 GRATE

(bj) 24" X 55.82' APC

(ab) GT4 DI (H=10.0'), WITH TWO TYPE 24-12 GRATES

(bl) 24" X 64.75' APC

(bk) G1 DI (H=5.0'), WITH TYPE 24-12 GRATE

14

DRAINAGE PROFILES

SCALE: Horiz 1" = 10'
Vert 1" = 10'

DP-48

APPROVED FOR DRAINAGE WORK ONLY

REVISED BY | DATE REVISED
MICHAEL OREIRO | FARDAD BEHBOODY
CALCULATED-DESIGNED BY | CHECKED BY
FUNCTIONAL SUPERVISOR: MICHAEL J. WEBSTER

STATE OF CALIFORNIA - DEPARTMENT OF TRANSPORTATION
Caltrans
DESIGN

LAST REVISION 05-02-13 | DATE PLOTTED => 13-MAY-2013 | TIME PLOTTED => 20:17

Dist	COUNTY	ROUTE	POST MILES TOTAL PROJECT	SHEET No.	TOTAL SHEETS
11	SD	11, 905	0.0/1.6, R9.9/R10.7	205	622

REGISTERED CIVIL ENGINEER 03-25-13 DATE

04-22-13
PLANS APPROVAL DATE

REGISTERED PROFESSIONAL ENGINEER
FARDAD BEHBOODY
No. C-61478
Exp. 06-30-13
CIVIL
STATE OF CALIFORNIA

THE STATE OF CALIFORNIA OR ITS OFFICERS OR AGENTS SHALL NOT BE RESPONSIBLE FOR THE ACCURACY OR COMPLETENESS OF SCANNED COPIES OF THIS PLAN SHEET.

DRAINAGE SYSTEM No. 14

(ac) 24" X 194.81' APC

(ad) G2 DI(H=9.5'), WITH TYPE 24-12 GRATE AND Conc APRON (TYPE 3)

(ae) 24" X 297.07' APC

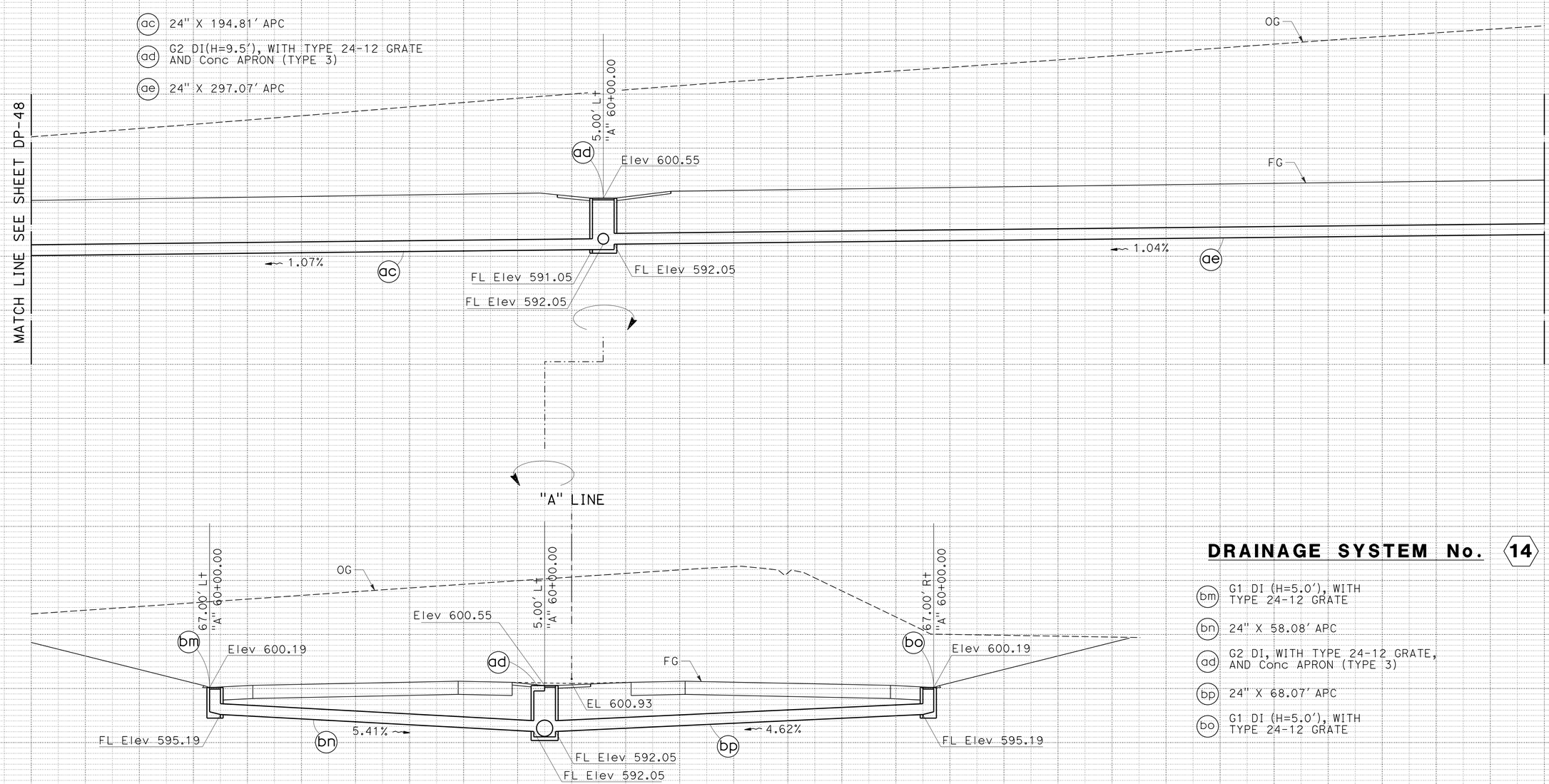

DRAINAGE SYSTEM No. 14

(bm) G1 DI (H=5.0'), WITH TYPE 24-12 GRATE

(bn) 24" X 58.08' APC

(ad) G2 DI, WITH TYPE 24-12 GRATE, AND Conc APRON (TYPE 3)

(bp) 24" X 68.07' APC

(bo) G1 DI (H=5.0'), WITH TYPE 24-12 GRATE

14

DRAINAGE PROFILES

APPROVED FOR DRAINAGE WORK ONLY

SCALE: Horiz 1" = 10'
Vert 1" = 10'

DP-49

REVISED BY | DATE REVISED
MICHAEL OREIRO | FARDAD BEHBOODY
CALCULATED-DESIGNED BY | CHECKED BY
FUNCTIONAL SUPERVISOR | MICHAEL J. WEBSTER
STATE OF CALIFORNIA - DEPARTMENT OF TRANSPORTATION
Caltrans
DESIGN

LAST REVISION 05-02-13 | DATE PLOTTED => 13-MAY-2013 | TIME PLOTTED => 20:17

Dist	COUNTY	ROUTE	POST MILES TOTAL PROJECT	SHEET No.	TOTAL SHEETS
11	SD	11, 905	0.0/1.6, R9.9/R10.7	206	622

REGISTERED CIVIL ENGINEER 03-25-13 DATE

04-22-13
PLANS APPROVAL DATE

REGISTERED PROFESSIONAL ENGINEER FARDAD BEHBOODY No. C-61478 Exp. 06-30-13 CIVIL STATE OF CALIFORNIA

THE STATE OF CALIFORNIA OR ITS OFFICERS OR AGENTS SHALL NOT BE RESPONSIBLE FOR THE ACCURACY OR COMPLETENESS OF SCANNED COPIES OF THIS PLAN SHEET.

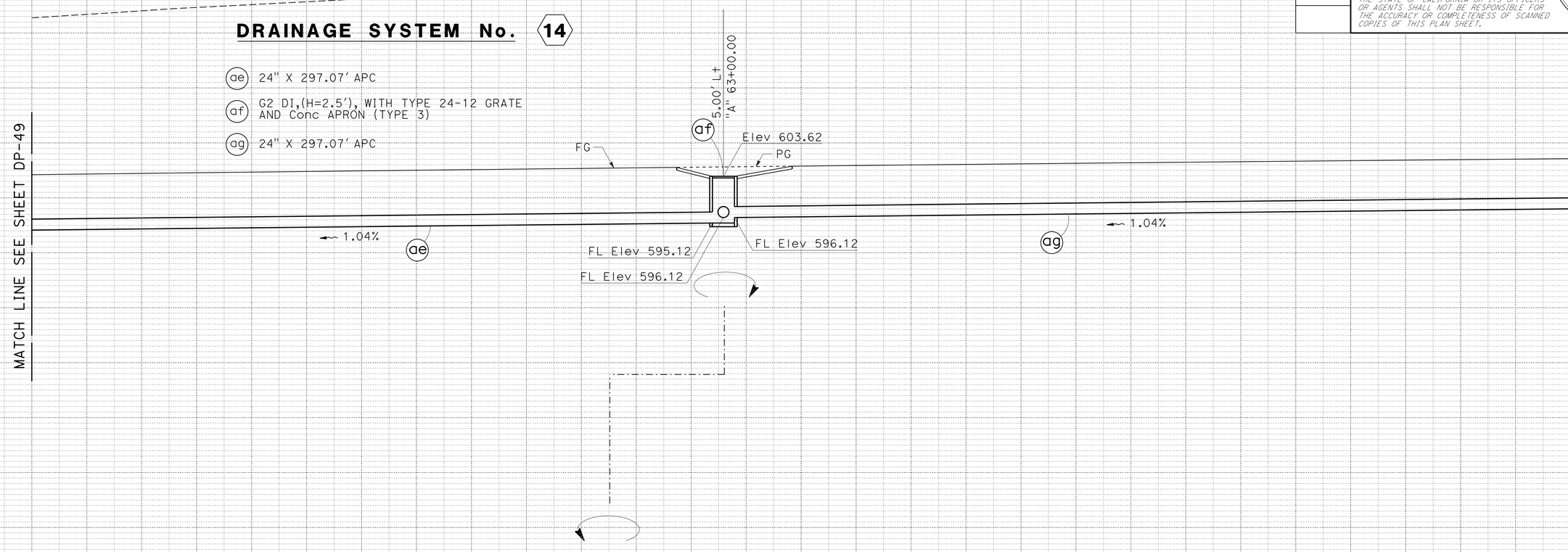

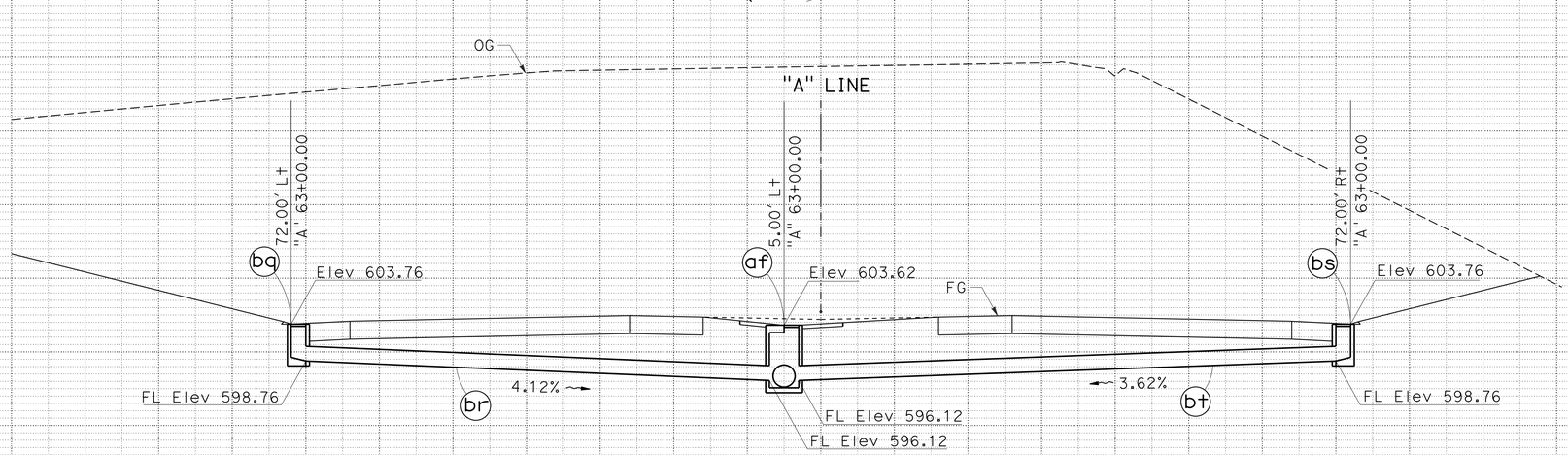

DRAINAGE SYSTEM No. 14

- bq G1 DI (H=5.0'), WITH TYPE 24-12 GRATE
- br 24" X 64.11' APC
- af G2 DI (H=8.5'), WITH TYPE 24-12 GRATE AND Conc APRON (TYPE 3)
- bt 24" X 73.05' APC
- bs G1 DI (H=5.0'), WITH TYPE 24-12 GRATE

14

DRAINAGE PROFILES

SCALE: Horiz 1" = 10'
Vert 1" = 10'

DP-50

APPROVED FOR DRAINAGE WORK ONLY

REVISED BY | DATE REVISED
MICHAEL OREIRO | FARDAD BEHBOODY
CALCULATED-DESIGNED BY | CHECKED BY
FUNCTIONAL SUPERVISOR: MICHAEL J. WEBSTER

STATE OF CALIFORNIA - DEPARTMENT OF TRANSPORTATION
Caltrans
DESIGN

LAST REVISION 05-02-13 | DATE PLOTTED => 13-MAY-2013 | TIME PLOTTED => 20:17

Dist	COUNTY	ROUTE	POST MILES TOTAL PROJECT	SHEET No.	TOTAL SHEETS
11	SD	11, 905	0.0/1.6, R9.9/R10.7	207	622

REGISTERED CIVIL ENGINEER 03-25-13 DATE

04-22-13
PLANS APPROVAL DATE

REGISTERED PROFESSIONAL ENGINEER FARDAD BEHBOODY No. C-61478 Exp. 06-30-13 CIVIL STATE OF CALIFORNIA

THE STATE OF CALIFORNIA OR ITS OFFICERS OR AGENTS SHALL NOT BE RESPONSIBLE FOR THE ACCURACY OR COMPLETENESS OF SCANNED COPIES OF THIS PLAN SHEET.

DRAINAGE SYSTEM No. 14

(ag) 24" X 297.07' APC

(ah) G2 DI (H=6.5'), WITH TYPE 24-12 GRATE AND Conc APRON (TYPE 3)

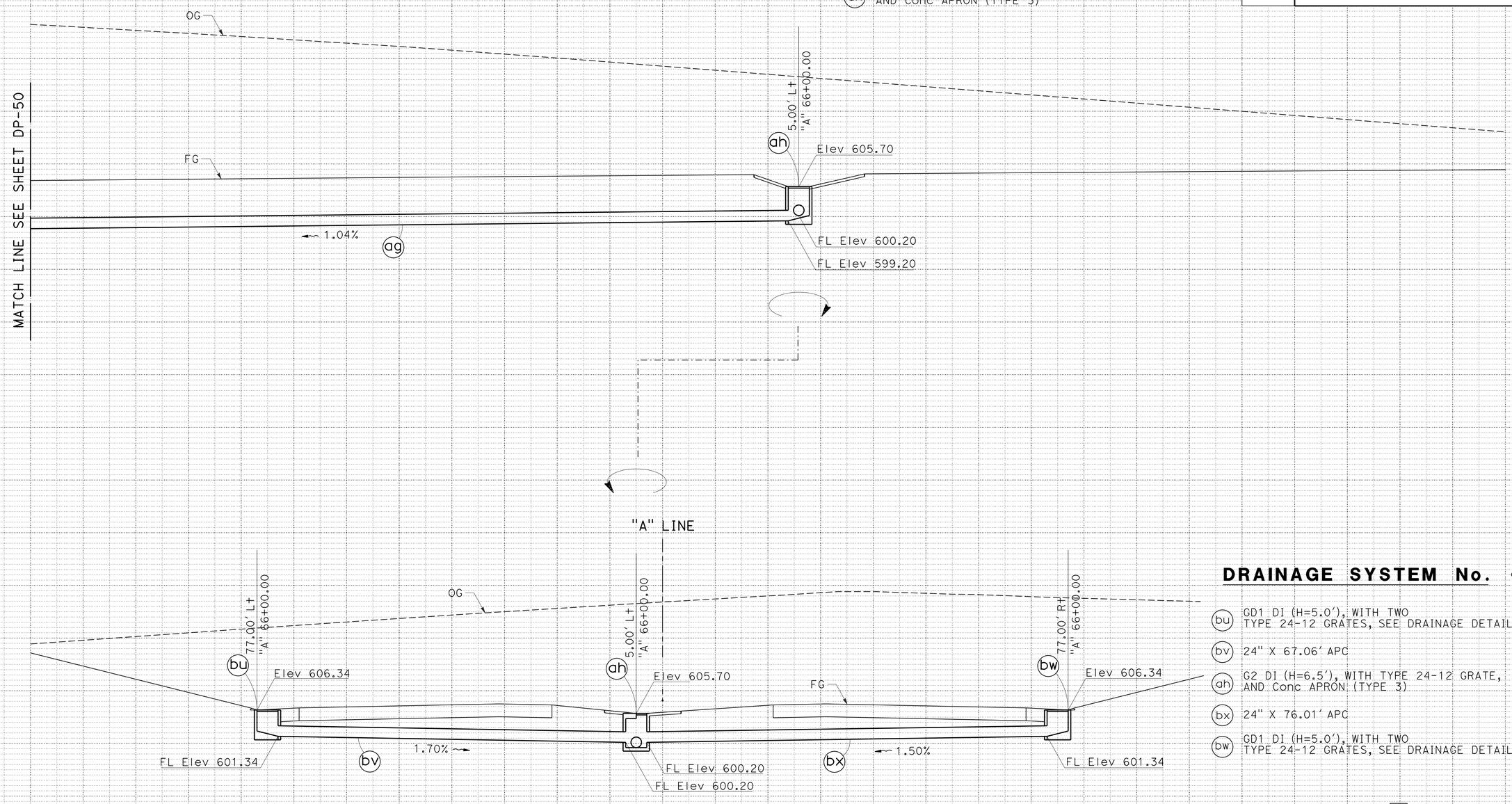

DRAINAGE SYSTEM No. 14

(bu) GD1 DI (H=5.0'), WITH TWO TYPE 24-12 GRATES, SEE DRAINAGE DETAILS

(bv) 24" X 67.06' APC

(ah) G2 DI (H=6.5'), WITH TYPE 24-12 GRATE, AND Conc APRON (TYPE 3)

(bx) 24" X 76.01' APC

(bw) GD1 DI (H=5.0'), WITH TWO TYPE 24-12 GRATES, SEE DRAINAGE DETAILS

14

DRAINAGE PROFILES

APPROVED FOR DRAINAGE WORK ONLY

SCALE: Horiz 1" = 10'
Vert 1" = 10'

DP-51

REVISED BY | DATE REVISED
MICHAEL OREIRO | FARDAD BEHBOODY
CALCULATED-DESIGNED BY | CHECKED BY
FUNCTIONAL SUPERVISOR | MICHAEL J. WEBSTER
STATE OF CALIFORNIA - DEPARTMENT OF TRANSPORTATION
Caltrans
DESIGN

LAST REVISION 05-02-13 | DATE PLOTTED => 13-MAY-2013 | TIME PLOTTED => 20:17

Dist	COUNTY	ROUTE	POST MILES TOTAL PROJECT	SHEET No.	TOTAL SHEETS
11	SD	11, 905	0.0/1.6, R9.9/R10.7	208	622

REGISTERED CIVIL ENGINEER 03-25-13 DATE

04-22-13
PLANS APPROVAL DATE

REGISTERED PROFESSIONAL ENGINEER FARDAD BEHBOODY No. C-61478 Exp. 06-30-13 CIVIL STATE OF CALIFORNIA

THE STATE OF CALIFORNIA OR ITS OFFICERS OR AGENTS SHALL NOT BE RESPONSIBLE FOR THE ACCURACY OR COMPLETENESS OF SCANNED COPIES OF THIS PLAN SHEET.

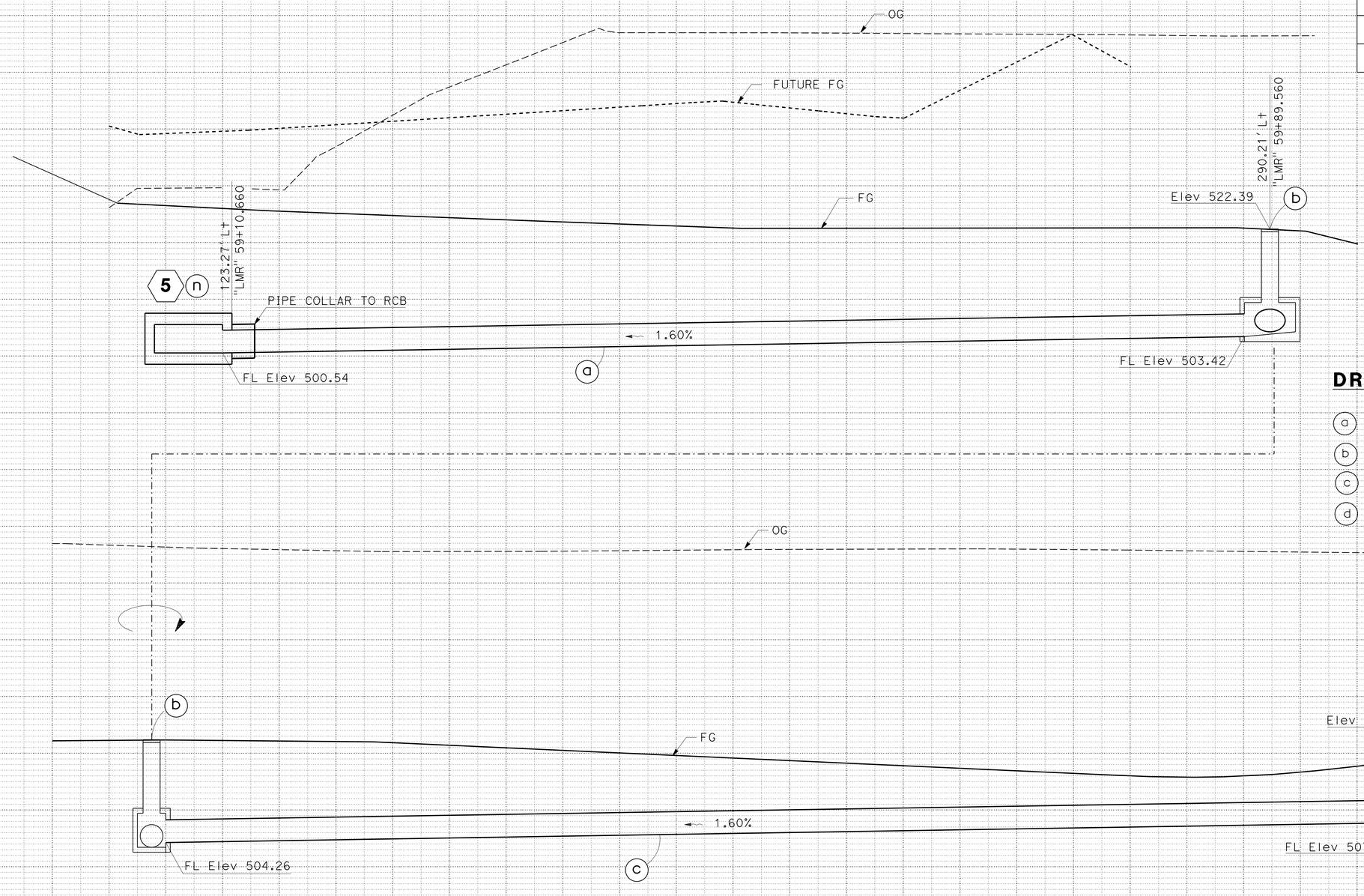

DRAINAGE SYSTEM No. 15

- (a) 48" X 184.4' RCP WITH PIPE COLLAR TO RCB SEE DRAINAGE DETAILS
- (b) Jct Str (L=9.0' SPAN=5.0' Hb=6.0'), WITH 36" RCP RISER (H=9.67') AND 36R GRATE
- (c) 48" x 220.8' RCP
- (d) Mod G2 INLET (H=13.22'), WITH DEBRIS RACK CAGE,SEE DRAINAGE DETAILS

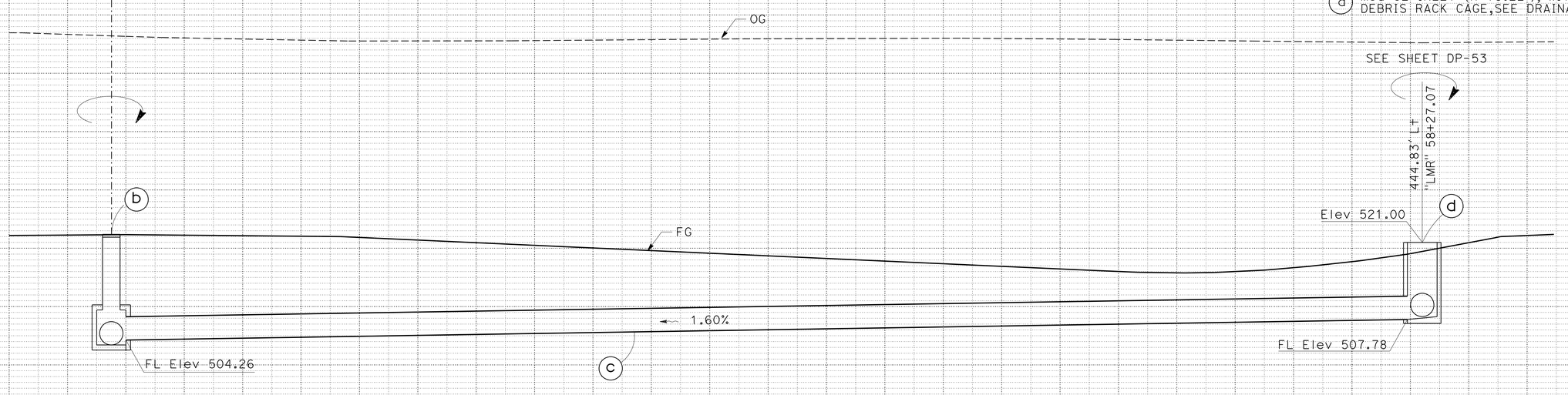

15

DRAINAGE PROFILES

APPROVED FOR DRAINAGE WORK ONLY

SCALE: Horiz 1" = 10'
Vert 1" = 10'

DP-52

STATE OF CALIFORNIA - DEPARTMENT OF TRANSPORTATION
Caltrans
DESIGN
FUNCTIONAL SUPERVISOR MICHAEL J. WEBSTER
CALCULATED-DESIGNED BY
CHECKED BY
REVISED BY
DATE REVISED
TULLY
FARDAD BEHBOODY

LAST REVISION 05-02-13 | DATE PLOTTED => 13-MAY-2013 TIME PLOTTED => 20:17

Dist	COUNTY	ROUTE	POST MILES TOTAL PROJECT	SHEET No.	TOTAL SHEETS
11	SD	11, 905	0.0/1.6, R9.9/R10.7	209	622

REGISTERED CIVIL ENGINEER 03-25-13 DATE

04-22-13
PLANS APPROVAL DATE

REGISTERED PROFESSIONAL ENGINEER
FARDAD BEHBOODY
No. C-61478
Exp. 06-30-13
CIVIL
STATE OF CALIFORNIA

THE STATE OF CALIFORNIA OR ITS OFFICERS OR AGENTS SHALL NOT BE RESPONSIBLE FOR THE ACCURACY OR COMPLETENESS OF SCANNED COPIES OF THIS PLAN SHEET.

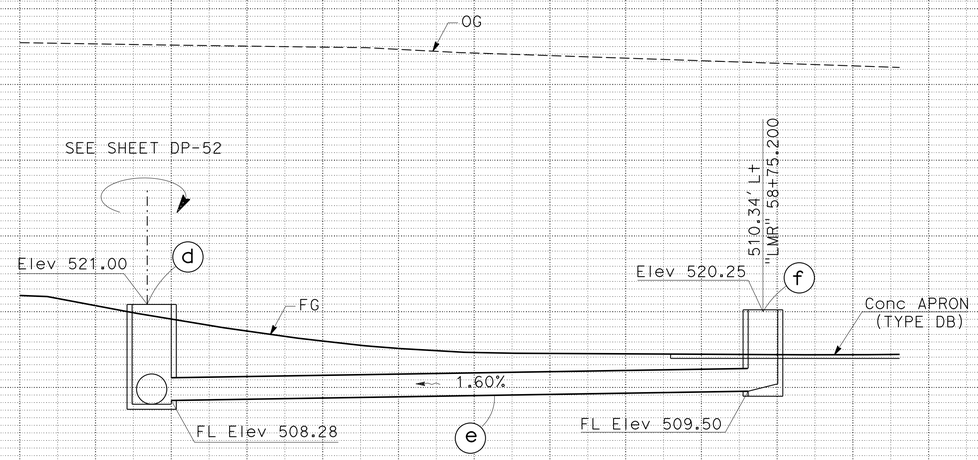

DRAINAGE SYSTEM No. 15

(e) 36" X 73.60' RCP

(f) Mod G2 INLET (H=10.75'), WITH DEBRIS RACK CAGE AND Conc APRON (TYPE DB) SEE DRAINAGE DETAILS

APPROVED FOR DRAINAGE WORK ONLY

15

DRAINAGE PROFILES

SCALE: Horiz 1" = 10'
Vert 1" = 10'

DP-53

STATE OF CALIFORNIA - DEPARTMENT OF TRANSPORTATION
Caltrans
DESIGN

FUNCTIONAL SUPERVISOR: MICHAEL J. WEBSTER

CALCULATED-DESIGNED BY: MICHAEL OREIRO
CHECKED BY: FARDAD BEHBOODY

REVISED BY
DATE REVISED

LAST REVISION 05-02-13
DATE PLOTTED => 13-MAY-2013
TIME PLOTTED => 20:17

Dist	COUNTY	ROUTE	POST MILES TOTAL PROJECT	SHEET No.	TOTAL SHEETS
11	SD	11, 905	0.0/1.6, R9.9/R10.7	210	622

REGISTERED CIVIL ENGINEER 03-25-13 DATE

04-22-13
PLANS APPROVAL DATE

REGISTERED PROFESSIONAL ENGINEER FARDAD BEHBOODY No. C-61478 Exp. 06-30-13 CIVIL STATE OF CALIFORNIA

THE STATE OF CALIFORNIA OR ITS OFFICERS OR AGENTS SHALL NOT BE RESPONSIBLE FOR THE ACCURACY OR COMPLETENESS OF SCANNED COPIES OF THIS PLAN SHEET.

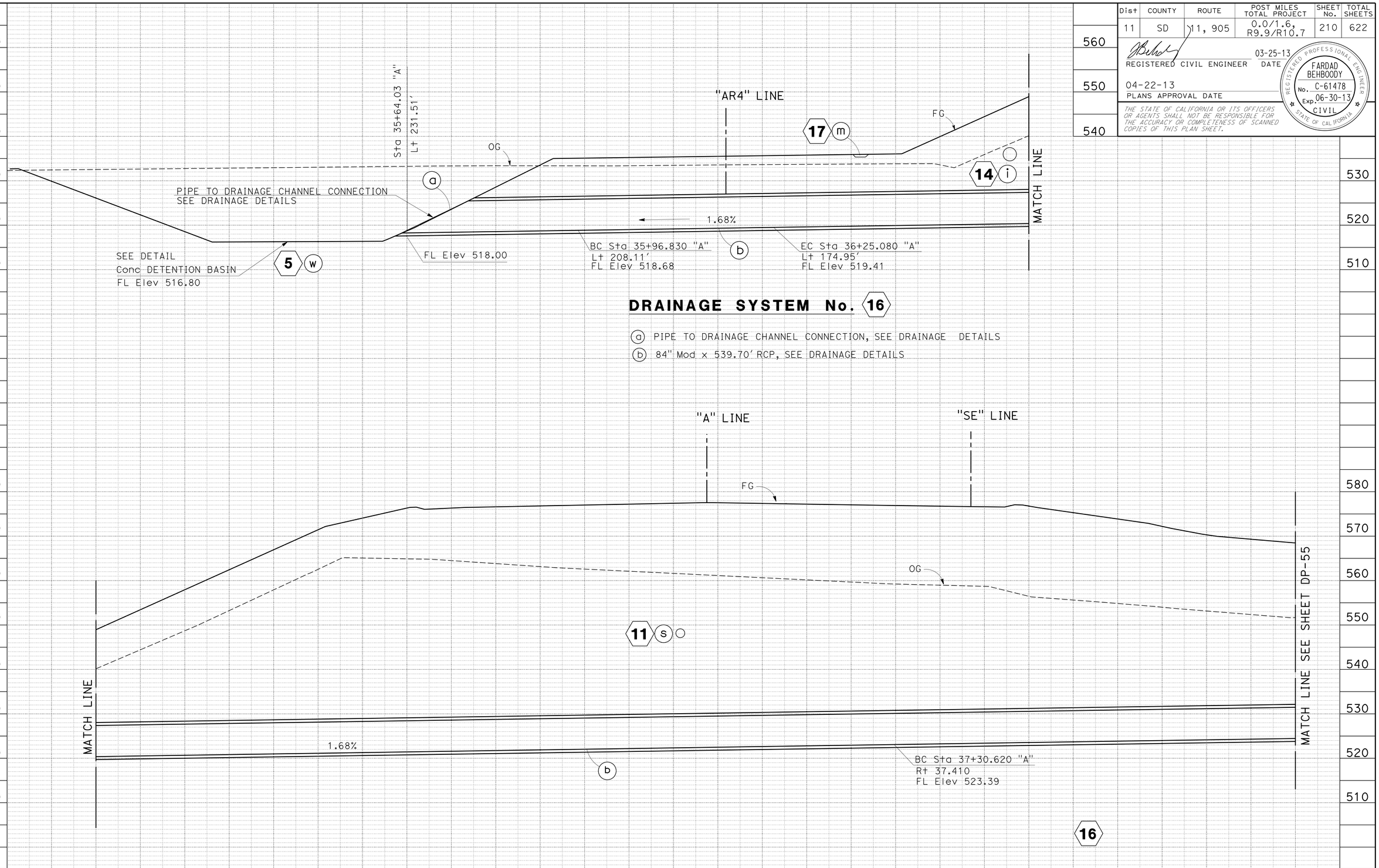

APPROVED FOR DRAINAGE WORK ONLY

SCALE: Horiz 1"=10'
Vert 1"=10'

DRAINAGE PROFILES
DP-54

STATE OF CALIFORNIA - DEPARTMENT OF TRANSPORTATION
Caltrans
DESIGN
FUNCTIONAL SUPERVISOR: MICHAEL J. WEBSTER
CALCULATED-DESIGNED BY: FARDAD BEHBOODY
CHECKED BY: MICHAEL OREIRO
REVISED BY
DATE REVISED

LAST REVISION 05-02-13
DATE PLOTTED => 13-MAY-2013
TIME PLOTTED => 20:17

Dist	COUNTY	ROUTE	POST MILES TOTAL PROJECT	SHEET No.	TOTAL SHEETS
11	SD	11, 905	0.0/1.6, R9.9/R10.7	211	622

REGISTERED CIVIL ENGINEER 03-25-13 DATE

04-22-13
PLANS APPROVAL DATE

REGISTERED PROFESSIONAL ENGINEER FARDAD BEHBOODY No. C-61478 Exp. 06-30-13 CIVIL STATE OF CALIFORNIA

THE STATE OF CALIFORNIA OR ITS OFFICERS OR AGENTS SHALL NOT BE RESPONSIBLE FOR THE ACCURACY OR COMPLETENESS OF SCANNED COPIES OF THIS PLAN SHEET.

DRAINAGE SYSTEM No. 16

- (c) Mod JUNCTION STRUCTURE, SEE DRAINAGE DETAILS
- (d) 84" MOD X 128.00' RCP, SEE DRAINAGE DETAILS
- (e) Mod JUNCTION STRUCTURE, SEE DRAINAGE DETAILS
- (f) 84" MOD X 489.60' RCP, SEE DRAINAGE DETAILS
- (t) 24" X 13.57' RCP
- (u) OL DI (H=8.33', L=10.0') WITH STEEL PLATE COVER AND FRAME
- (ak) REMOVE CULVERT
- (al) REMOVE INLET
- (am) REMOVE CULVERT

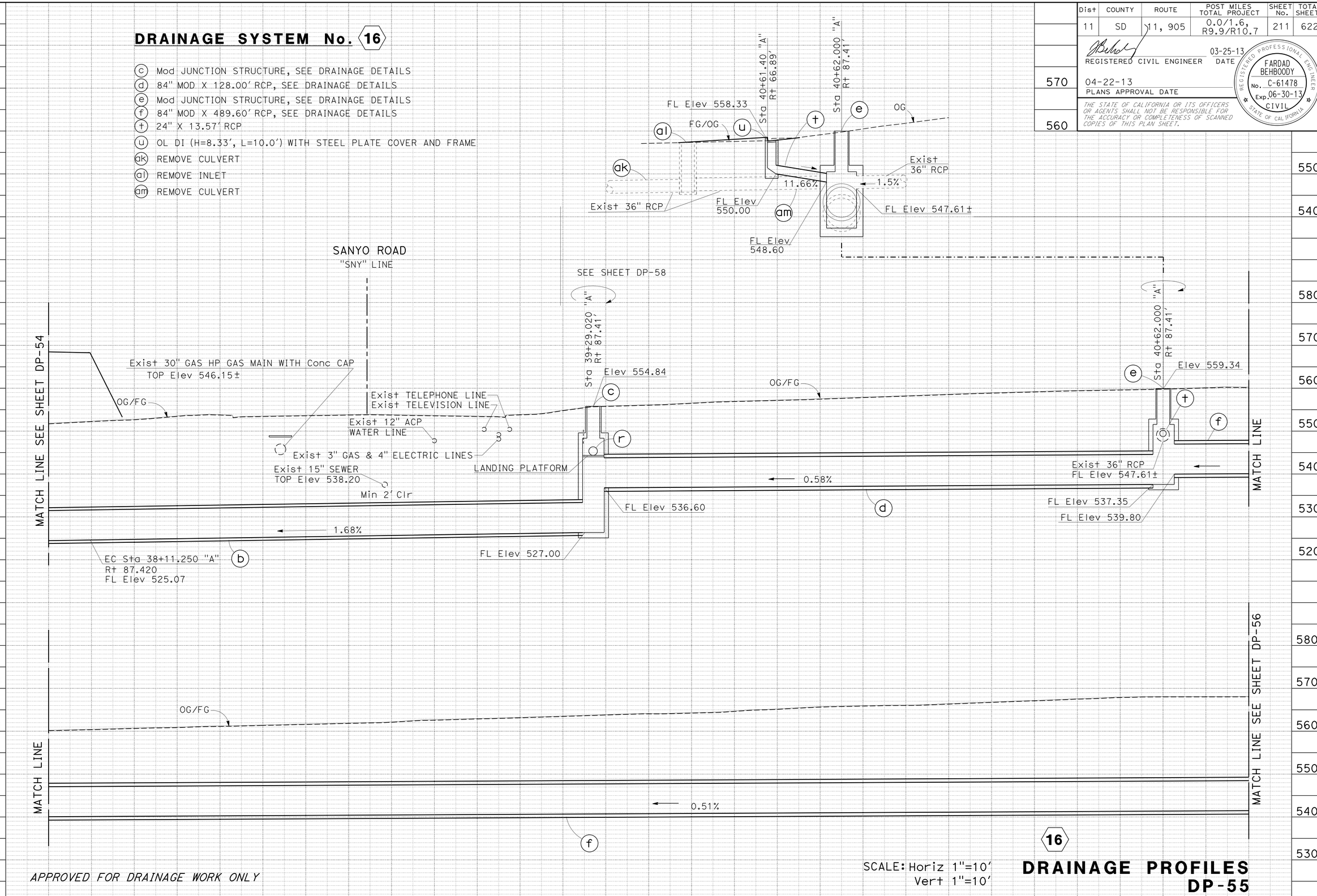

APPROVED FOR DRAINAGE WORK ONLY

SCALE: Horiz 1"=10'
Vert 1"=10'

16

DRAINAGE PROFILES
DP-55

STATE OF CALIFORNIA - DEPARTMENT OF TRANSPORTATION
Caltrans DESIGN
FUNCTIONAL SUPERVISOR MICHAEL J. WEBSTER
CALCULATED-DESIGNED BY FARDAD BEHBOODY
CHECKED BY MICHAEL OREIRO
REVISED BY
DATE REVISED

LAST REVISION 05-02-13
DATE PLOTTED => 13-MAY-2013
TIME PLOTTED => 20:17

Dist	COUNTY	ROUTE	POST MILES TOTAL PROJECT	SHEET No.	TOTAL SHEETS
11	SD	11, 905	0.0/1.6, R9.9/R10.7	212	622

REGISTERED CIVIL ENGINEER 03-25-13 DATE

04-22-13
PLANS APPROVAL DATE

REGISTERED PROFESSIONAL ENGINEER FARDAD BEHBOODY No. C-61478 Exp. 06-30-13 CIVIL STATE OF CALIFORNIA

THE STATE OF CALIFORNIA OR ITS OFFICERS OR AGENTS SHALL NOT BE RESPONSIBLE FOR THE ACCURACY OR COMPLETENESS OF SCANNED COPIES OF THIS PLAN SHEET.

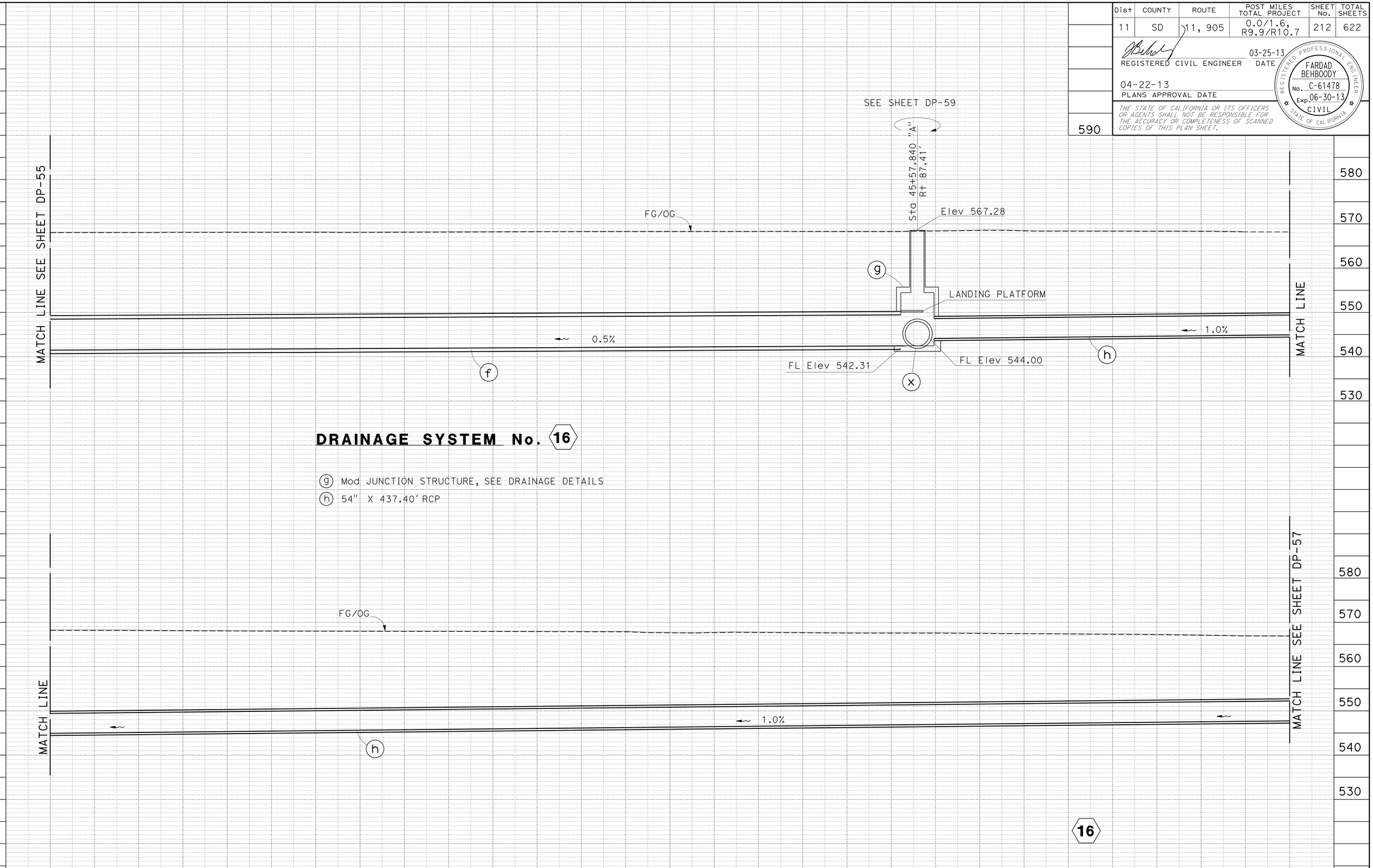

DRAINAGE SYSTEM No. 16

(g) Mod JUNCTION STRUCTURE, SEE DRAINAGE DETAILS
(h) 54" X 437.40' RCP

APPROVED FOR DRAINAGE WORK ONLY

SCALE: Horiz 1"=10'
Vert 1"=10'

DRAINAGE PROFILES
DP-56

REVISED BY | DATE REVISED
FARDAD BEHBOODY | MICHAEL OREIRO
CALCULATED-DESIGNED BY | CHECKED BY
FUNCTIONAL SUPERVISOR | MICHAEL J. WEBSTER
STATE OF CALIFORNIA - DEPARTMENT OF TRANSPORTATION
Caltrans
DESIGN

LAST REVISION 05-02-13 | DATE PLOTTED => 13-MAY-2013 | TIME PLOTTED => 20:17

Dist	COUNTY	ROUTE	POST MILES TOTAL PROJECT	SHEET No.	TOTAL SHEETS
11	SD	11, 905	0.0/1.6, R9.9/R10.7	213	622

REGISTERED CIVIL ENGINEER 03-25-13 DATE

04-22-13
PLANS APPROVAL DATE

REGISTERED PROFESSIONAL ENGINEER FARDAD BEHBOODY No. C-61478 Exp. 06-30-13 CIVIL STATE OF CALIFORNIA

THE STATE OF CALIFORNIA OR ITS OFFICERS OR AGENTS SHALL NOT BE RESPONSIBLE FOR THE ACCURACY OR COMPLETENESS OF SCANNED COPIES OF THIS PLAN SHEET.

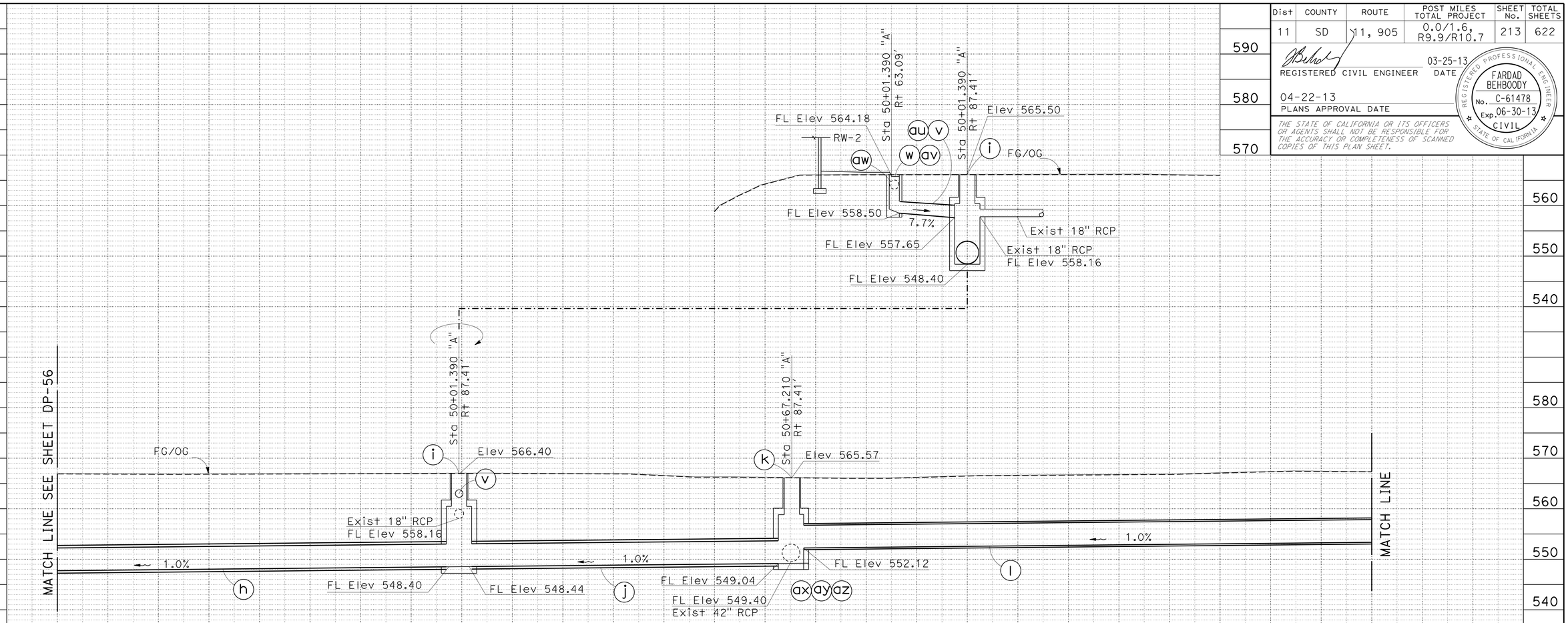

DRAINAGE SYSTEM No. 16

- (i) Mod JUNCTION STRUCTURE, SEE DRAINAGE DETAILS
- (j) 54" X 60.82' RCP
- (k) Mod JUNCTION STRUCTURE, SEE DRAINAGE DETAILS
- (l) 54" X 159.56.12 RCP
- (m) Mod JUNCTION STRUCTURE, SEE DRAINAGE DETAILS
- (n) 24" X 12.80' RCP
- (o) OCP INLET (H=7.25') WITH TYPE 36R GRATE AND Conc APRON AT GCP/OCP RISER, SEE DRAINAGE DETAILS
- (v) 24" X 12.50' RCP
- (w) OL DI (H=5.68', L=10.0') WITH STEEL PLATE COVER AND FRAME
- (au) REMOVE CULVERT
- (av) REMOVE INLET
- (aw) REMOVE CULVERT
- (ax) REMOVE INLET
- (ay) REMOVE CULVERT
- (az) REMOVE CULVERT

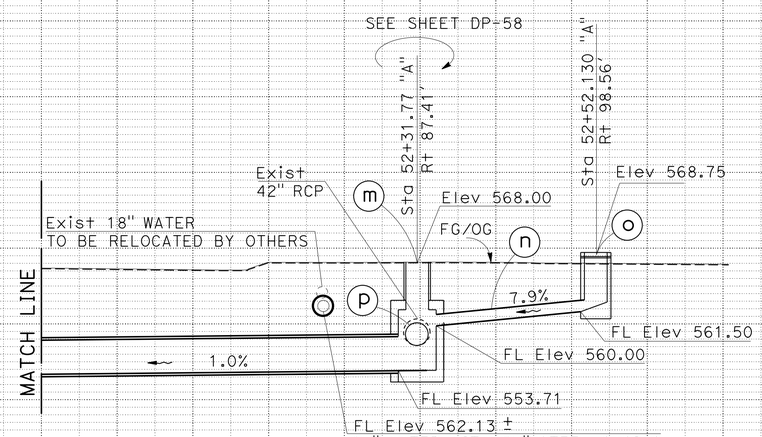

16

SCALE: Horiz 1"=10'
Vert 1"=10'

DRAINAGE PROFILES
DP-57

APPROVED FOR DRAINAGE WORK ONLY

FARDAD BEHBOODY
MICHAEL OREIRO
CALCULATED-DESIGNED BY
CHECKED BY
REVISED BY
DATE REVISED
FUNCTIONAL SUPERVISOR
MICHAEL J. WEBSTER

STATE OF CALIFORNIA - DEPARTMENT OF TRANSPORTATION
Caltrans
DESIGN

LAST REVISION 05-02-13
DATE PLOTTED => 13-MAY-2013
TIME PLOTTED => 20:18

Dist	COUNTY	ROUTE	POST MILES TOTAL PROJECT	SHEET No.	TOTAL SHEETS
11	SD	11, 905	0.0/1.6, R9.9/R10.7	214	622

REGISTERED CIVIL ENGINEER 03-25-13 DATE

04-22-13
PLANS APPROVAL DATE

REGISTERED PROFESSIONAL ENGINEER FARDAD BEHBOODY No. C-61478 Exp. 06-30-13 CIVIL STATE OF CALIFORNIA

THE STATE OF CALIFORNIA OR ITS OFFICERS OR AGENTS SHALL NOT BE RESPONSIBLE FOR THE ACCURACY OR COMPLETENESS OF SCANNED COPIES OF THIS PLAN SHEET.

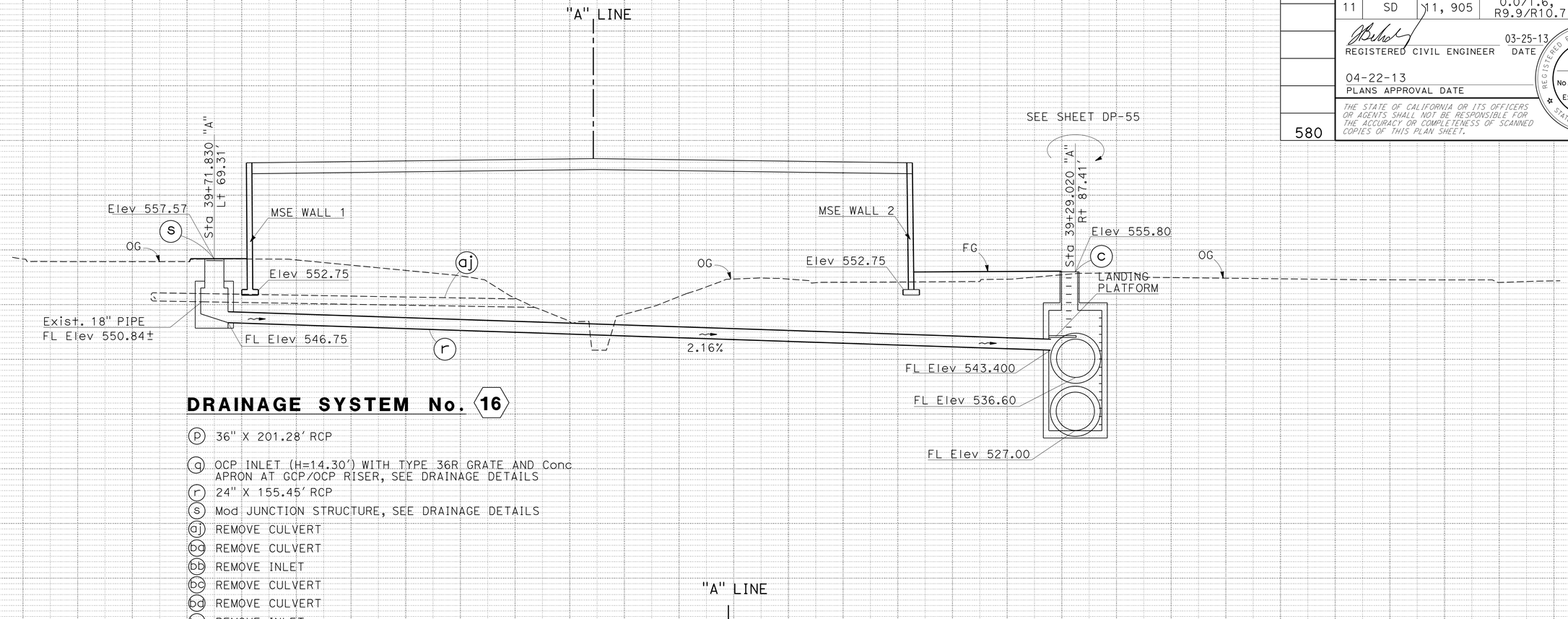

DRAINAGE SYSTEM No. 16

- (p) 36" X 201.28' RCP
- (q) OCP INLET (H=14.30') WITH TYPE 36R GRATE AND Conc APRON AT GCP/OCP RISER, SEE DRAINAGE DETAILS
- (r) 24" X 155.45' RCP
- (s) Mod JUNCTION STRUCTURE, SEE DRAINAGE DETAILS
- (aj) REMOVE CULVERT
- (bg) REMOVE CULVERT
- (bb) REMOVE INLET
- (bc) REMOVE CULVERT
- (bd) REMOVE CULVERT
- (be) REMOVE INLET

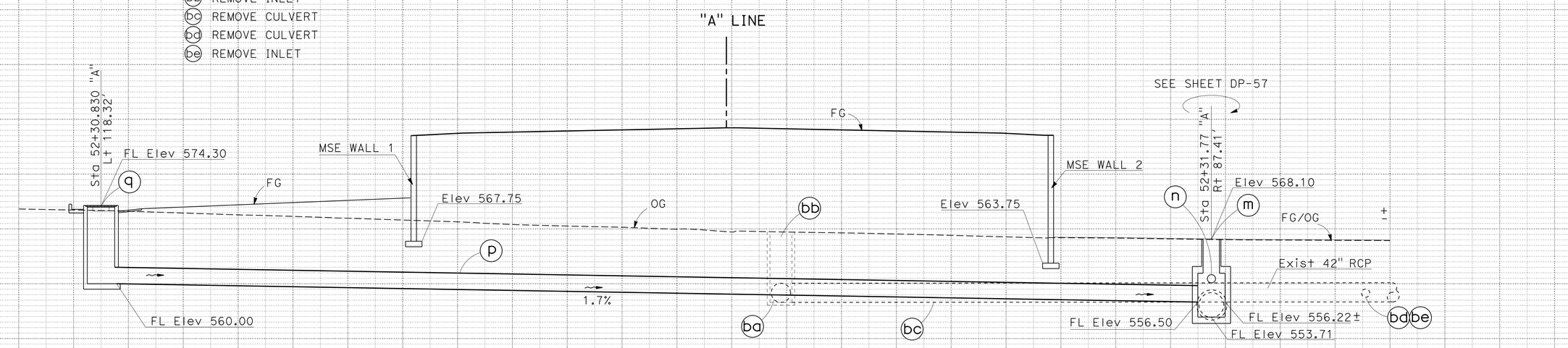

16

DRAINAGE PROFILES
DP-58

SCALE: Horiz 1"=10'
Vert 1"=10'

APPROVED FOR DRAINAGE WORK ONLY

REVISED BY | DATE REVISED
FARDAD BEHBOODY | MICHAEL OREIRO
CALCULATED-DESIGNED BY | CHECKED BY
FUNCTIONAL SUPERVISOR: MICHAEL J. WEBSTER
STATE OF CALIFORNIA - DEPARTMENT OF TRANSPORTATION
DESIGN
Caltrans

LAST REVISION | DATE PLOTTED => 13-MAY-2013 | TIME PLOTTED => 20:18
05-02-13

Dist	COUNTY	ROUTE	POST MILES TOTAL PROJECT	SHEET No.	TOTAL SHEETS
11	SD	11, 905	0.0/1.6, R9.9/R10.7	215	622

REGISTERED CIVIL ENGINEER 03-25-13 DATE

04-22-13
PLANS APPROVAL DATE

REGISTERED PROFESSIONAL ENGINEER FARDAD BEHBOODY No. C-61478 Exp. 06-30-13 CIVIL STATE OF CALIFORNIA

THE STATE OF CALIFORNIA OR ITS OFFICERS OR AGENTS SHALL NOT BE RESPONSIBLE FOR THE ACCURACY OR COMPLETENESS OF SCANNED COPIES OF THIS PLAN SHEET.

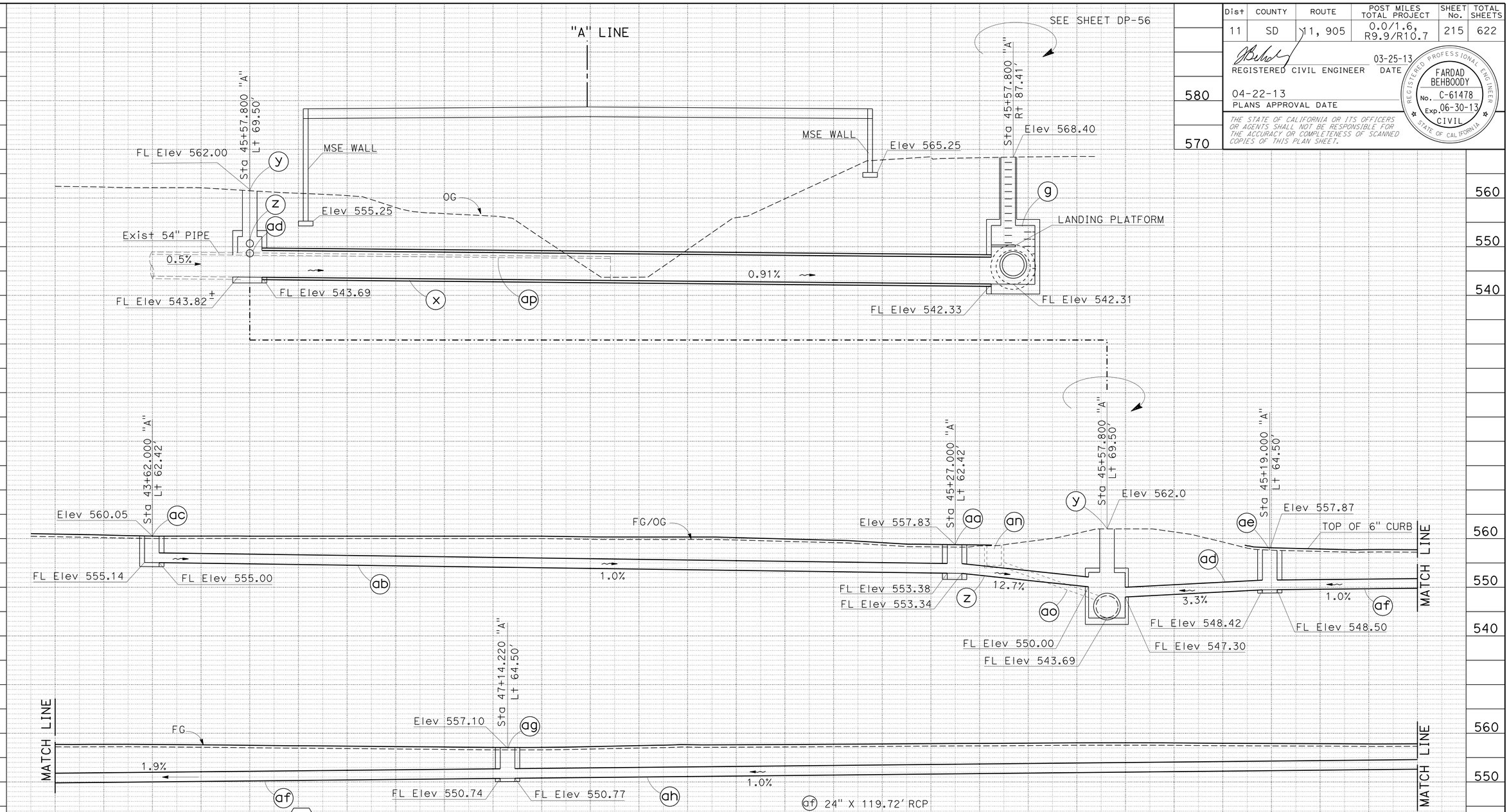

DRAINAGE SYSTEM No. 16

- (g) Mod JUNCTION STRUCTURE, SEE DRAINAGE DETAILS
- (x) 66" X 149.57' RCP
- (y) Mod JUNCTION STRUCTURE, SEE DRAINAGE DETAILS
- (z) 24" X 26.10' RCP
- (ad) OS DI (H= 4.49'), WITH STEEL PLATE COVER AND FRAME
- (ab) 24" X 161.50' RCP'
- (ac) OS DI (H= 4.91')
- (ad) 24" X 27.92' RCP
- (ae) OS DI (H= 9.37'), WITH STEEL PLATE COVER AND FRAME
- (af) 24" X 119.72' RCP
- (ag) OS DI (H= 6.36'), WITH STEEL PLATE COVER AND FRAME
- (ah) 24" X 245.70' RCP
- (ai) OS DI (H= 4.27'), WITH STEEL PLATE COVER AND FRAME
- (an) REMOVE INLET
- (ao) REMOVE CULVERT
- (ap) REMOVE CULVERT

APPROVED FOR DRAINAGE WORK ONLY

16

SCALE: Horiz 1"=10'
Vert 1"=10'

DRAINAGE PROFILES
DP-59

REVISED BY | DATE REVISED
FARDAD BEHBOODY | MICHAEL OREIRO
CALCULATED-DESIGNED BY | CHECKED BY
FUNCTIONAL SUPERVISOR: MICHAEL J. WEBSTER
STATE OF CALIFORNIA - DEPARTMENT OF TRANSPORTATION
Caltrans DESIGN

LAST REVISION 01-30-13 | DATE PLOTTED => 13-MAY-2013 | TIME PLOTTED => 20:18

Dist	COUNTY	ROUTE	POST MILES TOTAL PROJECT	SHEET No.	TOTAL SHEETS
11	SD	11, 905	0.0/1.6, R9.9/R10.7	216	622

REGISTERED CIVIL ENGINEER 03-25-13 DATE

04-22-13
PLANS APPROVAL DATE

REGISTERED PROFESSIONAL ENGINEER FARDAD BEHBOODY No. C-61478 Exp. 06-30-13 CIVIL STATE OF CALIFORNIA

THE STATE OF CALIFORNIA OR ITS OFFICERS OR AGENTS SHALL NOT BE RESPONSIBLE FOR THE ACCURACY OR COMPLETENESS OF SCANNED COPIES OF THIS PLAN SHEET.

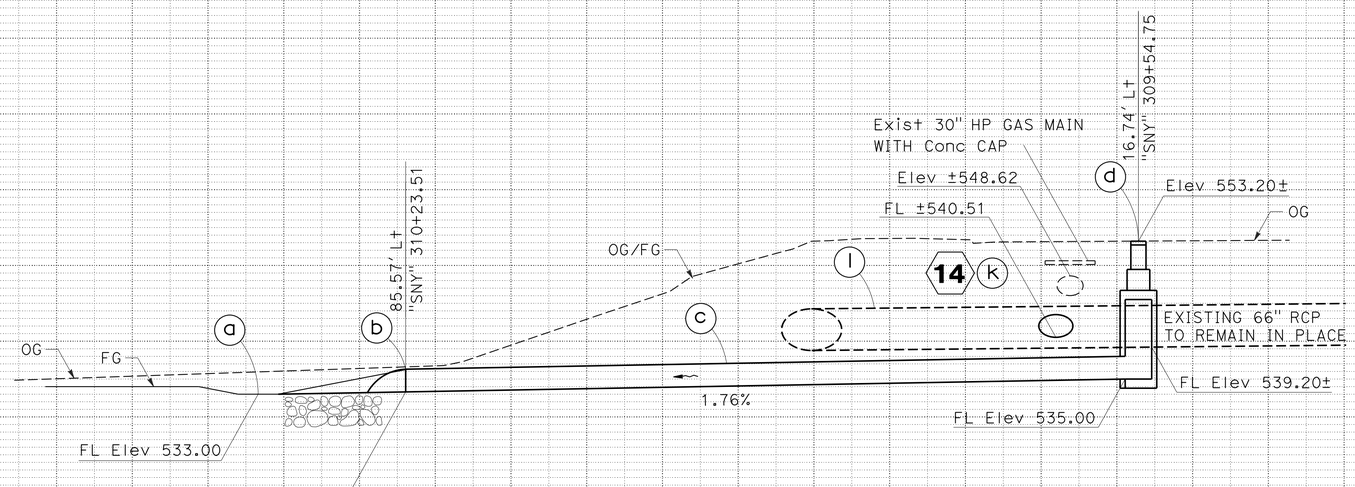

DRAINAGE SYSTEM No. 17

- (a) RSP AT FES, SEE DRAINAGE DETAILS
- (b) 36" CONCRETE FLARED END SECTION
- (c) 36" X 95.6' RCP
- (d) Jct Str (L=5.0' SPAN=5.5' Hb=10.5'), WITH 36" RCP RISER (H=6.8') AND MANHOLE F & C
- (e) PLUG CULVERT, SEE DRAINAGE DETAILS
- (f) REMOVE CULVERT, (L=18.3')
- (g) REMOVE INLET
- (h) REMOVE Mod HEADWALL
- (i) REMOVE HEADWALL
- (j) REMOVE CULVERT, (L=30.9')
- (k) REMOVE MANHOLE
- (l) REMOVE CULVERT, (L=42.6')
- (m) DRAINAGE DITCH (TYPE B), L=1,163'

APPROVED FOR DRAINAGE WORK ONLY

17

DRAINAGE PROFILES

SCALE: Horiz 1" = 10'
Vert 1" = 10'

DP-60

REVISED BY | DATE REVISED
MICHAEL OREIRO | FARDAD BEHBOODY
CALCULATED-DESIGNED BY | CHECKED BY
FUNCTIONAL SUPERVISOR: MICHAEL J. WEBSTER
STATE OF CALIFORNIA - DEPARTMENT OF TRANSPORTATION
Caltrans
DESIGN

LAST REVISION 05-02-13 | DATE PLOTTED => 13-MAY-2013 | TIME PLOTTED => 20:18

Dist	COUNTY	ROUTE	POST MILES TOTAL PROJECT	SHEET No.	TOTAL SHEETS
11	SD	11, 905	0.0/1.6, R9.9/R10.7	217	622

REGISTERED CIVIL ENGINEER 03-25-13 DATE

04-22-13
PLANS APPROVAL DATE

REGISTERED PROFESSIONAL ENGINEER FARDAD BEHBOODY No. C-61478 Exp. 06-30-13 CIVIL STATE OF CALIFORNIA

THE STATE OF CALIFORNIA OR ITS OFFICERS OR AGENTS SHALL NOT BE RESPONSIBLE FOR THE ACCURACY OR COMPLETENESS OF SCANNED COPIES OF THIS PLAN SHEET.

DRAINAGE SYSTEM No. 18

(a) RSP AT HW, SEE DRAINAGE DETAILS

(b) HEADWALL

(c) 36" X 248.72' RCP

(d) HEADWALL

(e) RSP AT HW, SEE DRAINAGE DETAILS

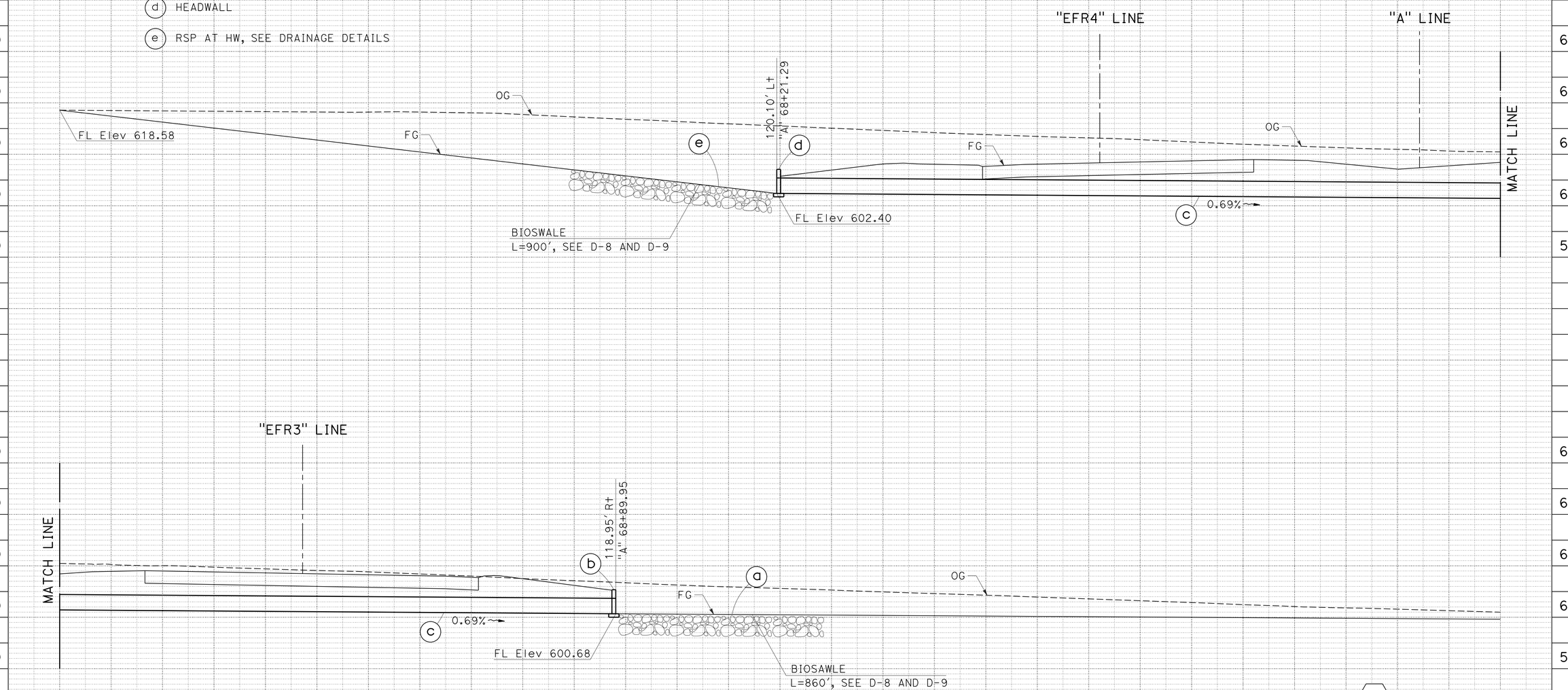

18

DRAINAGE PROFILES

APPROVED FOR DRAINAGE WORK ONLY

SCALE: Horiz 1" = 10'
Vert 1" = 10'

DP-61

REVISED BY | DATE REVISED
MICHAEL OREIRO | FARDAD BEHBOODY
CALCULATED-DESIGNED BY | CHECKED BY
FUNCTIONAL SUPERVISOR | MICHAEL J. WEBSTER
STATE OF CALIFORNIA - DEPARTMENT OF TRANSPORTATION
Caltrans
DESIGN

LAST REVISION 05-02-13 | DATE PLOTTED => 13-MAY-2013 | TIME PLOTTED => 20:18

Dist	COUNTY	ROUTE	POST MILES TOTAL PROJECT	SHEET No.	TOTAL SHEETS
11	SD	11, 905	0.0/1.6, R9.9/R10.7	218	622

REGISTERED CIVIL ENGINEER 03-25-13 DATE

04-22-13
PLANS APPROVAL DATE

REGISTERED PROFESSIONAL ENGINEER FARDAD BEHBOODY No. C-61478 Exp. 06-30-13 CIVIL STATE OF CALIFORNIA

THE STATE OF CALIFORNIA OR ITS OFFICERS OR AGENTS SHALL NOT BE RESPONSIBLE FOR THE ACCURACY OR COMPLETENESS OF SCANNED COPIES OF THIS PLAN SHEET.

DRAINAGE SYSTEM No. 19

(i) 24" X 55.06' APC

(j) GD1 DI (H=4.5'), WITH TWO TYPE 24-12 GRATES, SEE DRAINAGE DETAILS

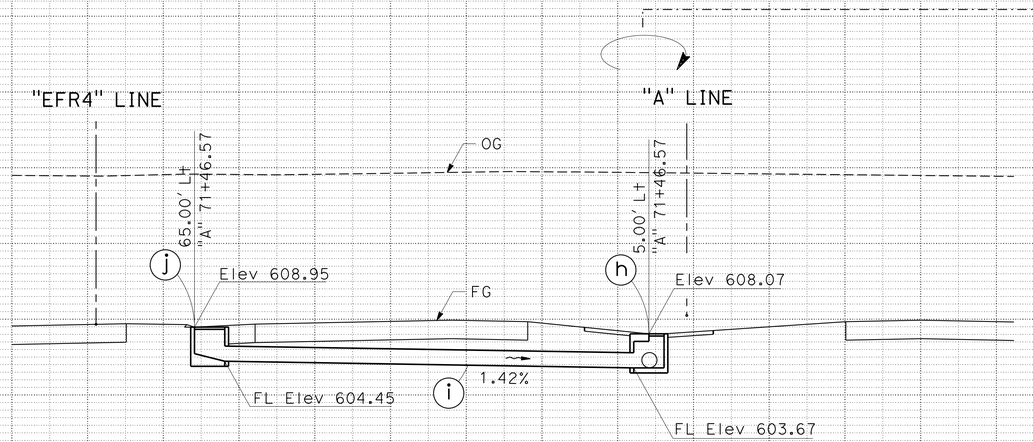

DRAINAGE SYSTEM No. 19

(g) 24" X 61.96' APC

(h) G2 DI (H=4.5'), WITH TYPE 24-12 GRATE, AND Conc APRON (TYPE 3)

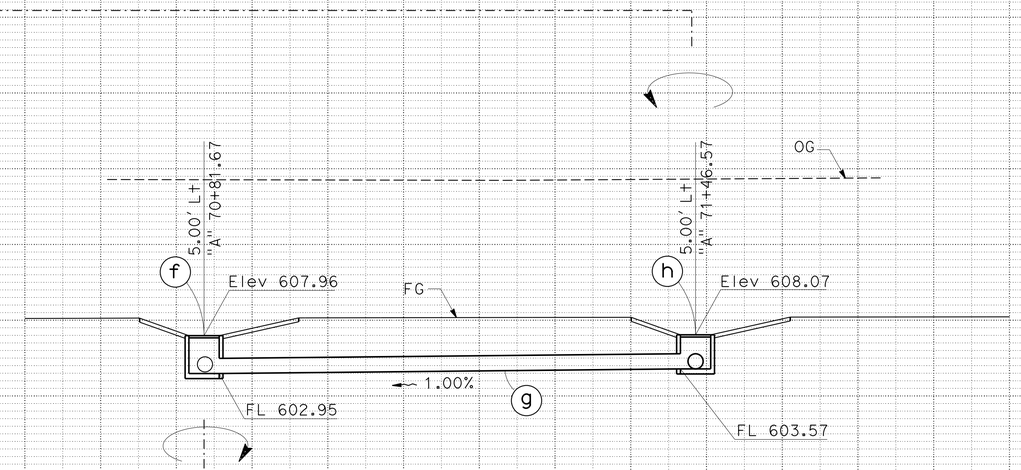

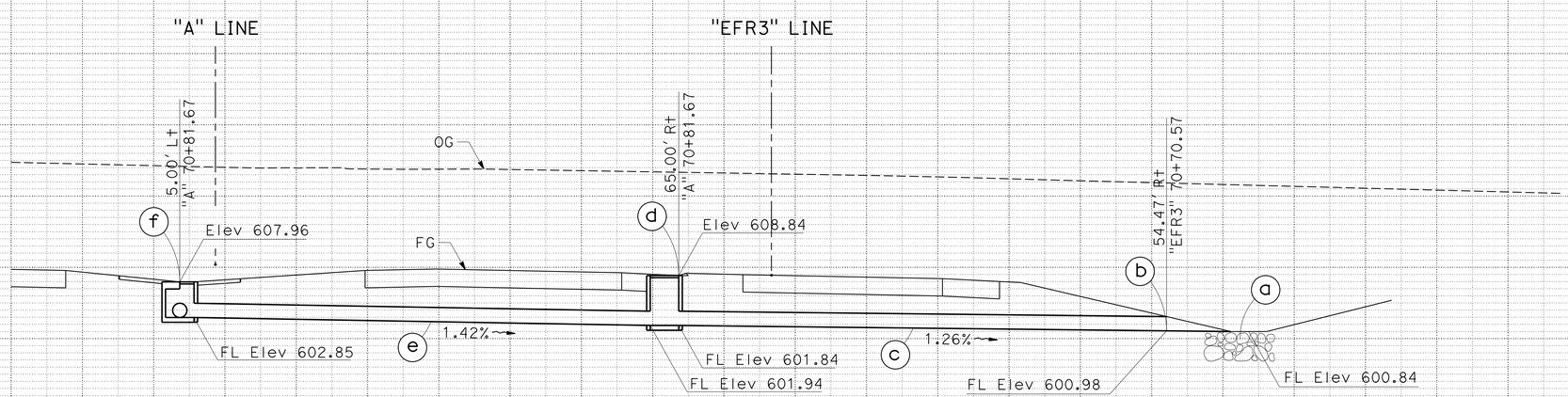

DRAINAGE SYSTEM No. 19

(a) RSP AT FES, SEE DRAINAGE DETAILS

(b) 24" Conc FLARED END SECTION

(c) 24" X 68.45' RCP

(d) GD1 DI (H=7.0'), WITH TWO TYPE 24-12 GRATES, SEE DRAINAGE DETAILS

(e) 24" X 64.01' APC

(f) G2 DI (H=5.11'), WITH TYPE 24-12 GRATE AND Conc APRON (TYPE 3)

19

DRAINAGE PROFILES

SCALE: Horiz 1" = 10'
Vert 1" = 10'

DP-62

APPROVED FOR DRAINAGE WORK ONLY

STATE OF CALIFORNIA - DEPARTMENT OF TRANSPORTATION
Caltrans
DESIGN

FUNCTIONAL SUPERVISOR: MICHAEL J. WEBSTER

CALCULATED-DESIGNED BY: MICHAEL OREIRO
CHECKED BY: FARDAD BEHBOODY

REVISED BY
DATE REVISED

LAST REVISION 05-02-13
DATE PLOTTED => 13-MAY-2013
TIME PLOTTED => 20:18

Dist	COUNTY	ROUTE	POST MILES TOTAL PROJECT	SHEET No.	TOTAL SHEETS
11	SD	11, 905	0.0/1.6, R9.9/R10.7	219	622

REGISTERED CIVIL ENGINEER 03-25-13 DATE

04-22-13
PLANS APPROVAL DATE

REGISTERED PROFESSIONAL ENGINEER FARDAD BEHBOODY No. C-61478 Exp. 06-30-13 CIVIL STATE OF CALIFORNIA

THE STATE OF CALIFORNIA OR ITS OFFICERS OR AGENTS SHALL NOT BE RESPONSIBLE FOR THE ACCURACY OR COMPLETENESS OF SCANNED COPIES OF THIS PLAN SHEET.

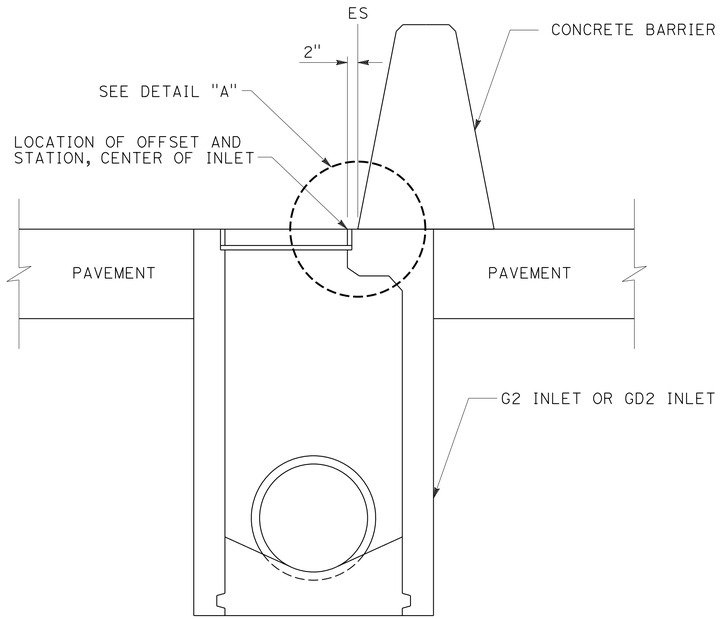

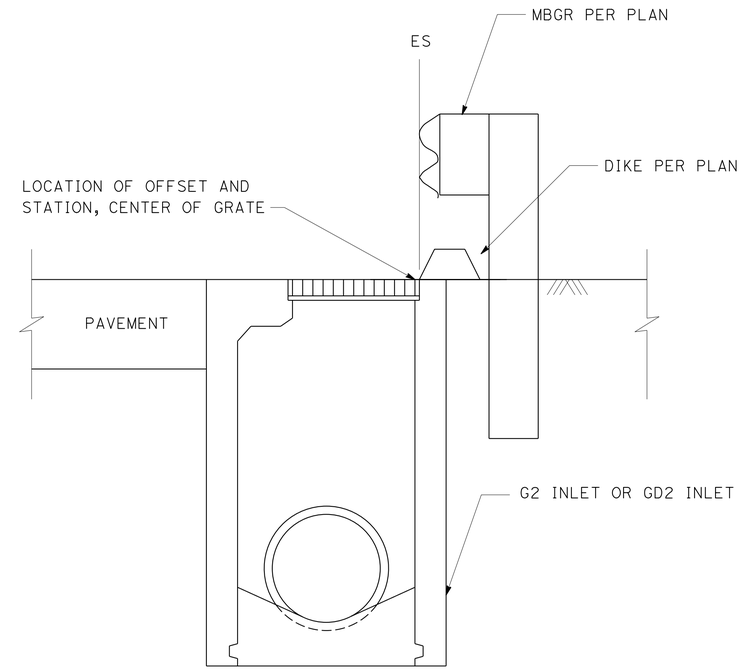

INLET AT MBGR

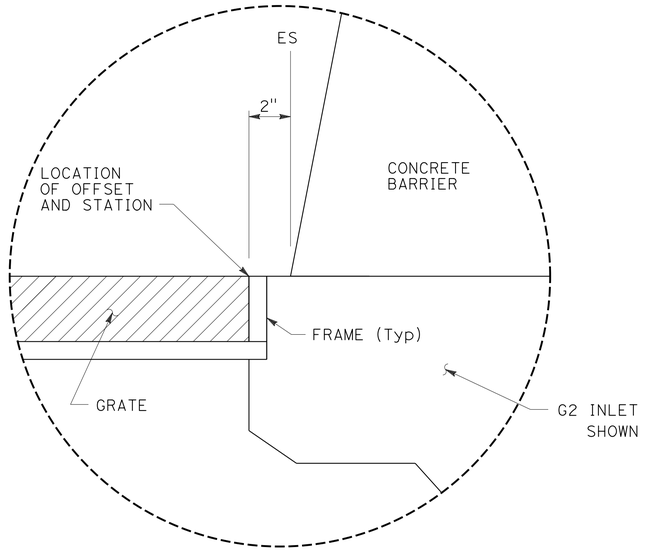

INLET AT CONCRETE BARRIER

DETAIL A

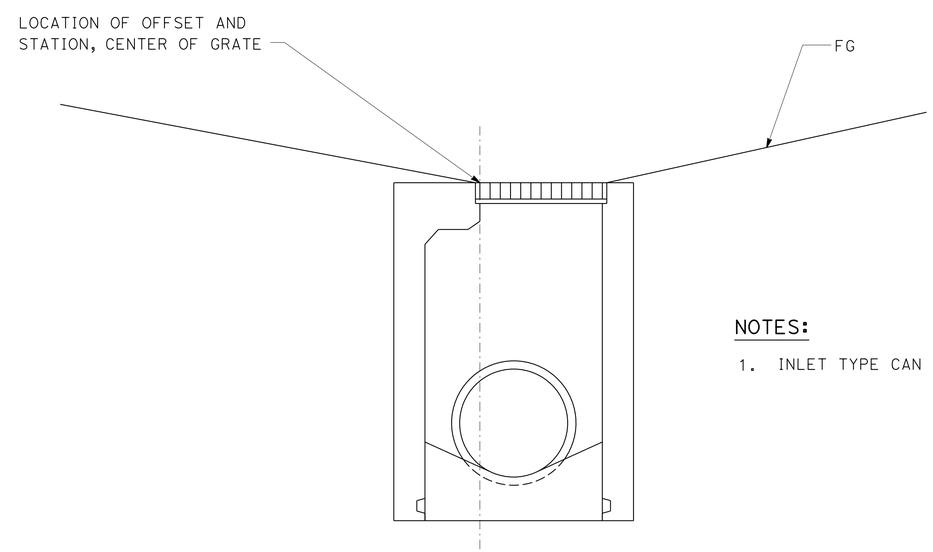

INLET AT SUMP/SWALE

NOTES:

1. INLET TYPE CAN BE GD1, GD2, G1, G2

DRAINAGE INLET LAYOUTS

DRAINAGE DETAILS
NO SCALE
DD-1

STATE OF CALIFORNIA - DEPARTMENT OF TRANSPORTATION
Caltrans
DESIGN
FUNCTIONAL SUPERVISOR: MICHAEL J. WEBSTER
CALCULATED-DESIGNED BY: MICHAEL OREIRO
CHECKED BY: FARDAD BEHBOODY
REVISED BY
DATE REVISED

LAST REVISION 05-03-13
DATE PLOTTED => 13-MAY-2013
TIME PLOTTED => 20:18

Dist	COUNTY	ROUTE	POST MILES TOTAL PROJECT	SHEET No.	TOTAL SHEETS
11	SD	11, 905	0.0/1.6, R9.9/R10.7	220	622

REGISTERED CIVIL ENGINEER 03-25-13 DATE

04-22-13
PLANS APPROVAL DATE

REGISTERED PROFESSIONAL ENGINEER FARDAD BEHBOODY No. C-61478 Exp. 06-30-13 CIVIL STATE OF CALIFORNIA

THE STATE OF CALIFORNIA OR ITS OFFICERS OR AGENTS SHALL NOT BE RESPONSIBLE FOR THE ACCURACY OR COMPLETENESS OF SCANNED COPIES OF THIS PLAN SHEET.

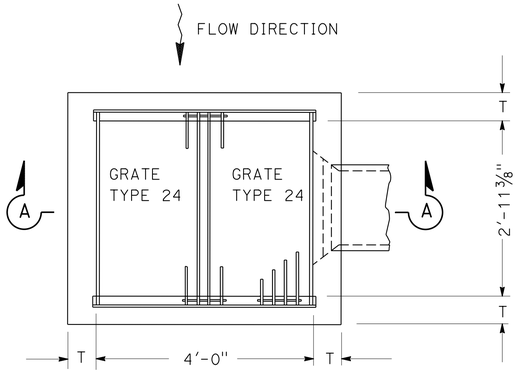

PLAN

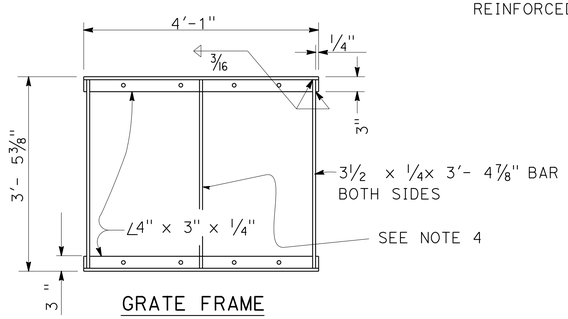

GRATE FRAME

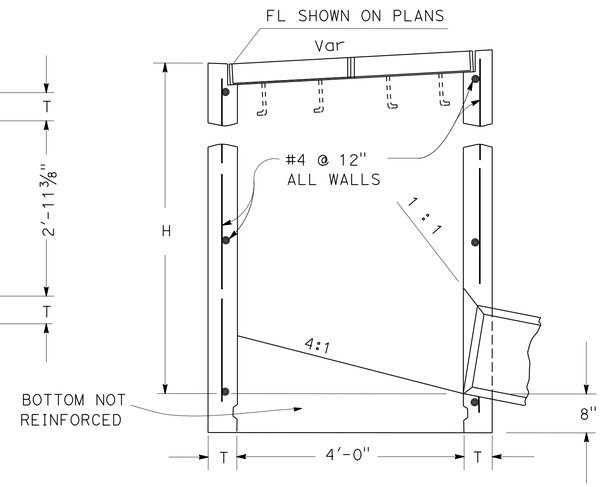

TYPE GD1 INLET

SECTION A-A

TABLE A

CONCRETE QUANTITIES		
TYPE	H=3'-0" TO 8'-0" (T= 6")	
	H=3'-0" (CY)	ADDITIONAL PCC PER FOOT (CY)
GD1	1.59	0.294
	H=8'-1" TO 20'-0" (T=8")	
	H=8'-1" (CY)	ADDITIONAL PCC PER FOOT (CY)
	3.90	0.394

TABLE BASED ON 8" FLOOR SLAB. NO DEDUCTIONS OR ADJUSTMENTS ARE TO BE MADE TO THESE QUANTITIES BECAUSE OF PIPE OPENINGS, DIFFERENT FLOOR ALTERNATIVES OR DIFFERENT CURB TYPES.

MISCELLANEOUS IRON & STEEL			
INLET TYPE	GRATE TYPE	No. OF GRATES	WEIGHT
GD1, GD2	24 - 12	2	616 lbs
GD1, GD2	24 - 10C	2	373 lbs
GD1, GD2	24 - 10S	2	438 lbs
GD1, GD2	24 - 12X	2	455 lbs
GD1, GD2	24 - 13	2	356 lbs

FOR DETAILS NOT SHOWN, SEE REVISED STANDARD PLAN D77A 1/2 " FRAME ANCHOR MAY BE BENT AS NECESSARY TO CLEAR Reinf

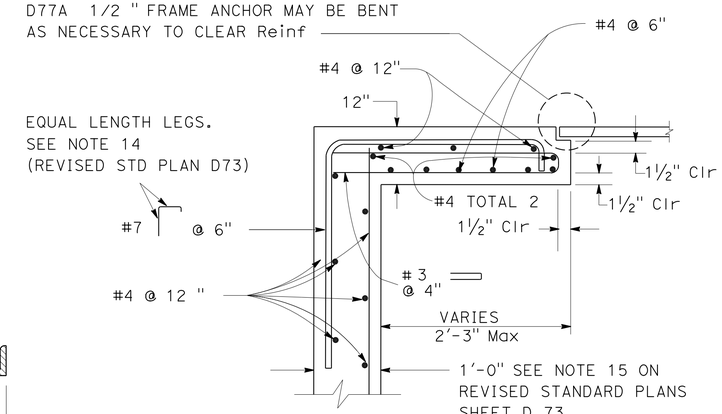

SECTION C-C

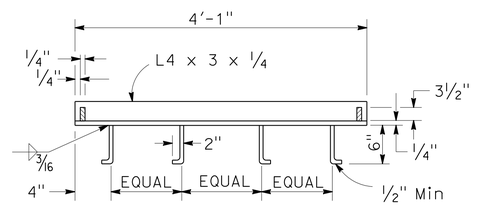

ANCHOR PLACEMENT

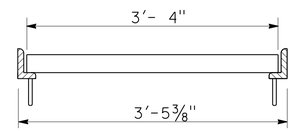

LONGITUDINAL SECTION

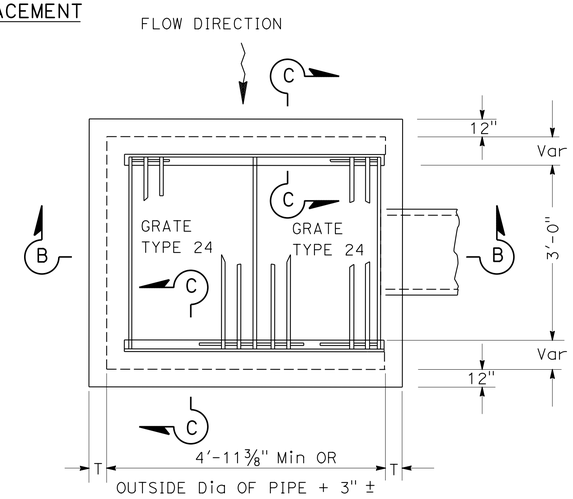

PLAN

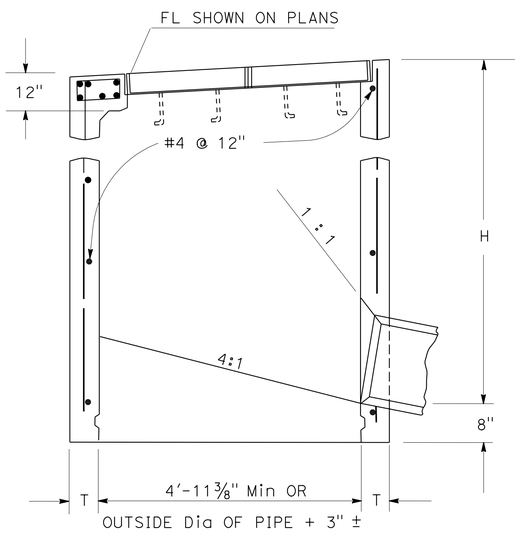

TYPE GD2 INLET

SECTION B-B

NOTES:

1. SEE REVISED STANDARD PLAN D77A AND D77B FOR ADDITIONAL FRAME AND GRATE DETAILS.
2. SEE NOTES FOR REVISED STANDARD PLAN D73 AND STANDARD PLAN D74B.
3. FOR "T" WALL THICKNESS, SEE TABLE A, B.
4. WHEN TYPE 24-10S, 24-12X OR 24-13 GRATES ARE USED WITH GD1 OR GD2 INLETS, A 1/4" X 3 1/2" X 3'-4 7/8"STEEL BAR SHALL BE WELDED ACROSS THE CENTER OF INLET FRAME TO SEPARATE THE INDIVIDUAL GRATES.

TABLE B

CONCRETE QUANTITIES				
TYPE	H=3'-0" TO 8'-0" (T= 6")		H=8'-1"TO 20'-0" (T= 8")	
	H=3'-0" (CY)	ADDITIONAL PCC PER FOOT (CY)	H=8'-1" (CY)	ADDITIONAL PCC PER FOOT (CY)
GD2	2.84	0.552	6.15	0.615

TABLE BASED ON 8" FLOOR SLAB. NO DEDUCTIONS OR ADJUSTMENTS ARE TO BE MADE TO THESE QUANTITIES BECAUSE OF PIPE OPENINGS, DIFFERENT FLOOR ALTERNATIVES OR DIFFERENT CURB TYPES.

QUANTITIES FOR INLETS BASED ON Min INTERIOR DIMENSIONS.

GD1 AND GD2 INLET

DRAINAGE DETAILS

NO SCALE

DD-2

REVISED BY | DATE REVISED
MICHAEL OREIRO | JOHN HANSON
CALCULATED-DESIGNED BY | CHECKED BY
FUNCTIONAL SUPERVISOR: MICHAEL J. WEBSTER
STATE OF CALIFORNIA - DEPARTMENT OF TRANSPORTATION
Caltrans® DESIGN

LAST REVISION 05-03-13 | DATE PLOTTED => 13-MAY-2013 | TIME PLOTTED => 20:18

Dist	COUNTY	ROUTE	POST MILES TOTAL PROJECT	SHEET No.	TOTAL SHEETS
11	SD	11, 905	0.0/1.6, R9.9/R10.7	221	622

REGISTERED CIVIL ENGINEER 03-19-13 DATE

04-22-13
PLANS APPROVAL DATE

REGISTERED PROFESSIONAL ENGINEER FARDAD BEHBOODY No. 61478 Exp. 06-30-13 CIVIL STATE OF CALIFORNIA

THE STATE OF CALIFORNIA OR ITS OFFICERS OR AGENTS SHALL NOT BE RESPONSIBLE FOR THE ACCURACY OR COMPLETENESS OF SCANNED COPIES OF THIS PLAN SHEET.

MODIFIED G2 INLET TABLE

		RISER DIMENSIONS			ORIFICE DIMENSIONS							
DETENTION BASIN	DRAINAGE SYSTEM	INVERT Elev	RISER Elev	H	# ORIFICE / ROW	# ROWS	SPACING	DIAMETER	ORIFICE ELEVATION	OUTLET PIPE Dia	TRASH SCREEN	Conc APRON
"Y"	15 d	507.78	521.00	13.22′	NONE	NONE	NONE	NONE	NONE	4′	NO	NO
"Y"	15 f	509.5	520.25	10.75′	5	2	6"	1¼"	513.5	3′	YES	YES
"B"	10 bk	496.00	502.33	6.33′	6	2	6"	1"	496.6	2′	YES	YES

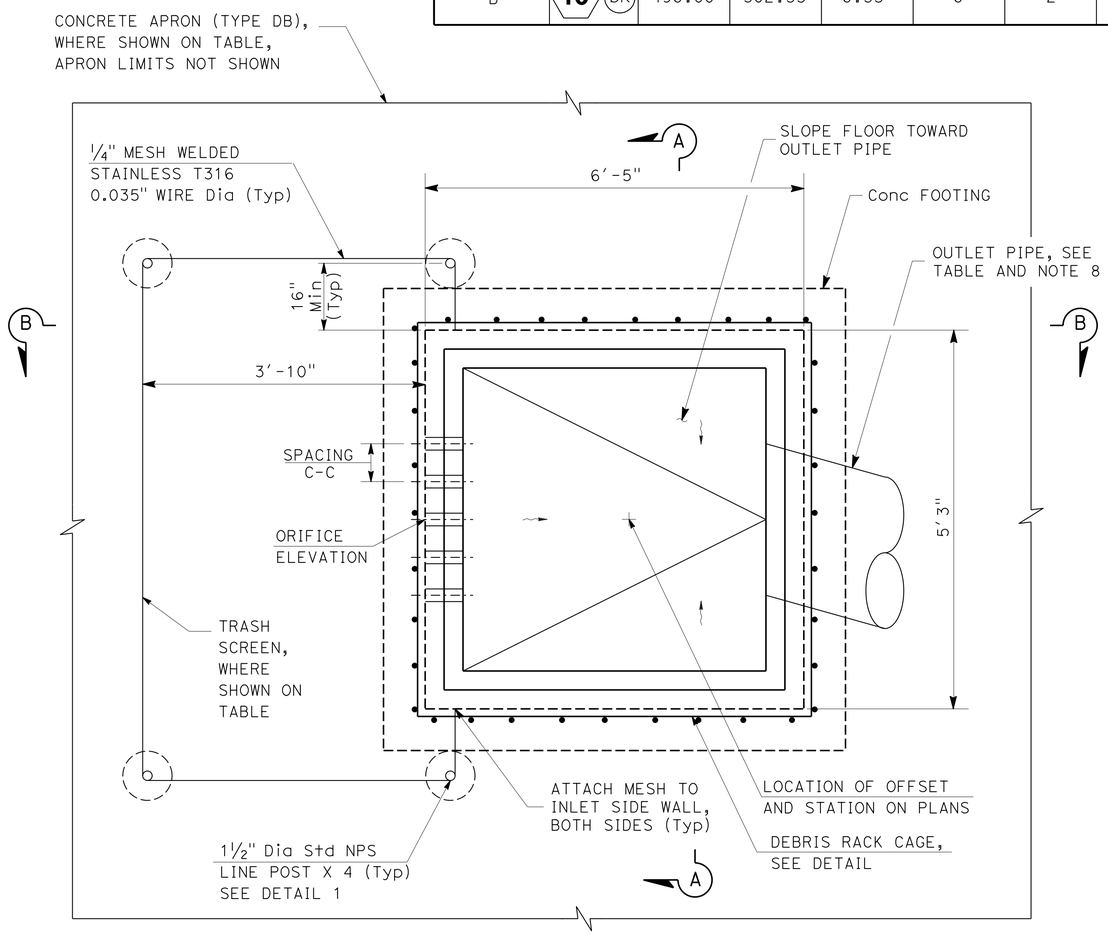

PLAN

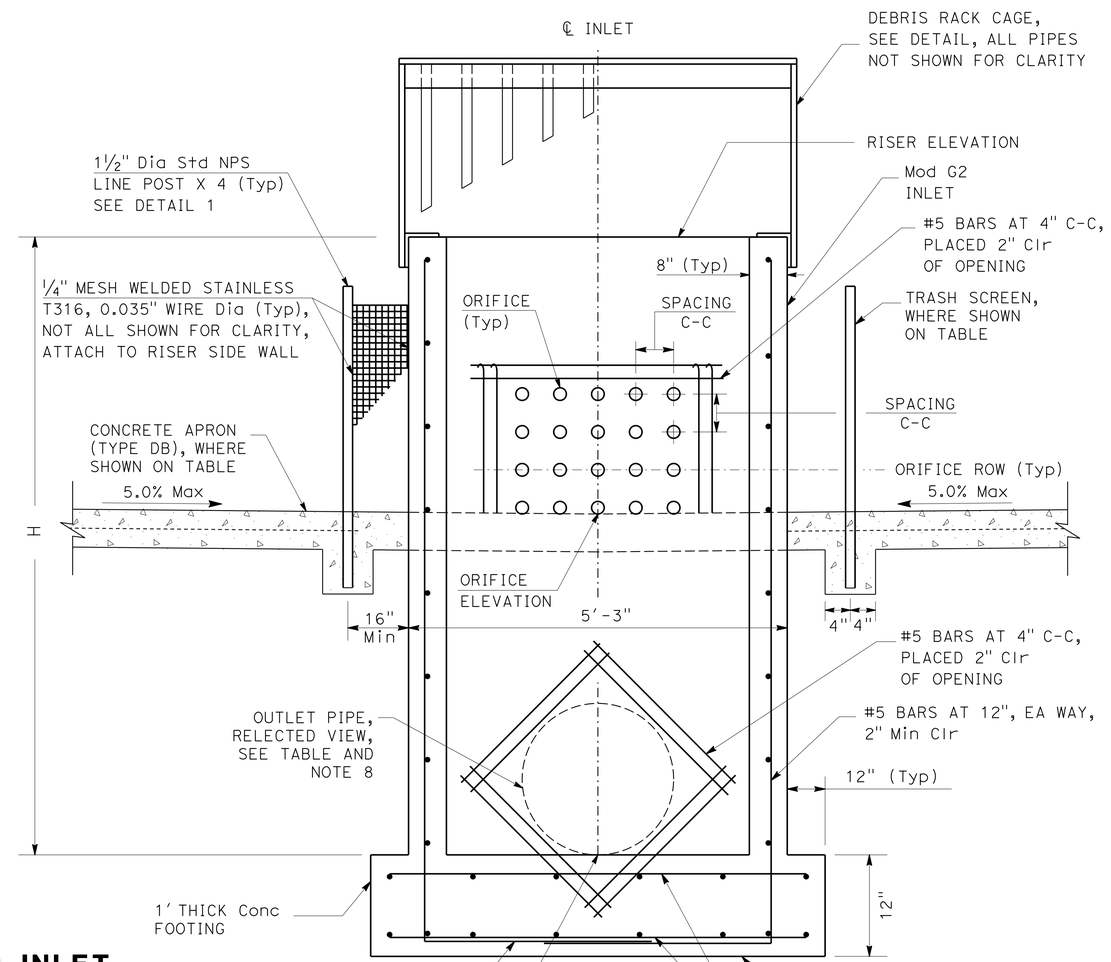

SECTION A-A

NOTES:

1. ORIFICE SPACING ON CENTER VERTICALLY AND HORIZONTALLY
2. ADDITIONAL DETAILS FOR TRASH SCREEN
3. ADDITIONAL DETAILS FOR CONCRETE APRON
4. BOTTOM ORIFICE ROW SHALL BE DRILLED FLUSH WITH CONCRETE APRON
5. SEE RSP D73 FOR ADDITIONAL NOTES AND DETAILS
6. ADDITIONAL DETAILS FOR DEBRIS RACK CAGE
7. PROVIDE STEPS PER Std PLAN D74C
8. OUTLET PIPE MAY BE PLACED IN ANY WALL EXCEPT WALL WITH ORIFICE ROWS.

MODIFIED G2 INLET

15 d 15 f 10 bk

(SHEET 1 OF 2)

DRAINAGE DETAILS

NO SCALE

DD-3

STATE OF CALIFORNIA - DEPARTMENT OF TRANSPORTATION
Caltrans
DESIGN

FUNCTIONAL SUPERVISOR: MICHAEL J. WEBSTER
CALCULATED-DESIGNED BY: JOHN HANSON
CHECKED BY
REVISED BY
DATE REVISED

LAST REVISION 05-06-13
DATE PLOTTED => 13-MAY-2013
TIME PLOTTED => 20:18

Dist	COUNTY	ROUTE	POST MILES TOTAL PROJECT	SHEET No.	TOTAL SHEETS
11	SD	11, 905	0.0/1.6, R9.9/R10.7	222	622

REGISTERED CIVIL ENGINEER 03-19-13 DATE

04-22-13
PLANS APPROVAL DATE

REGISTERED PROFESSIONAL ENGINEER FARDAD BEHBOODY No. 61478 Exp. 06-30-13 CIVIL STATE OF CALIFORNIA

THE STATE OF CALIFORNIA OR ITS OFFICERS OR AGENTS SHALL NOT BE RESPONSIBLE FOR THE ACCURACY OR COMPLETENESS OF SCANNED COPIES OF THIS PLAN SHEET.

NOTES:

1. DEBRIS RACK CAGE SHALL BE HOT DIP GALVANIZED AFTER FABRICATION.
2. PROVIDE GRATE CHAIN FROM DEBRIS RACK CAGE TO INLET AT ONE SIDE.

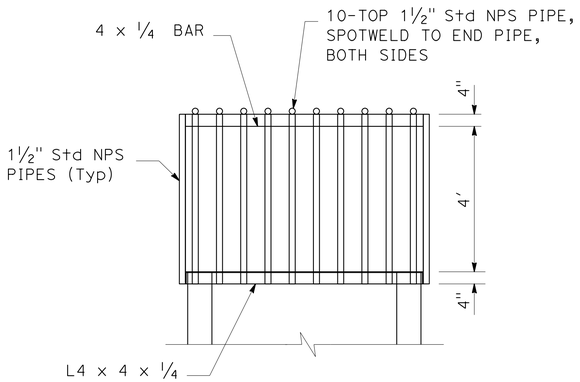

ELEVATION

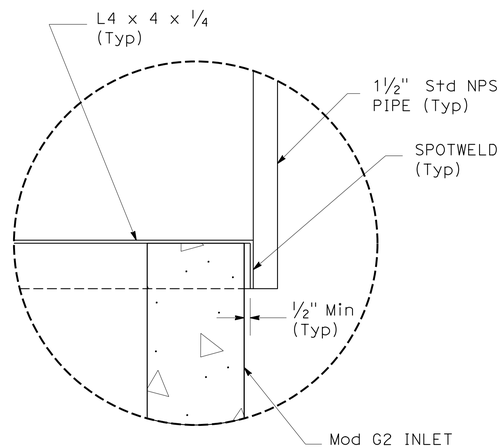

DETAIL "A"

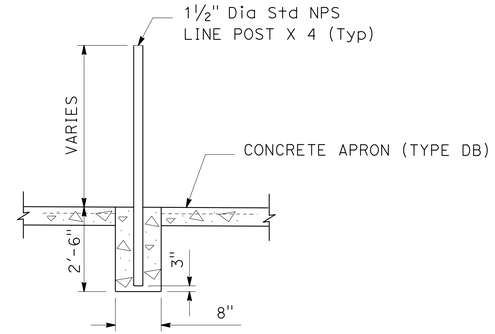

METAL POST INSTALLATION

DETAIL 1

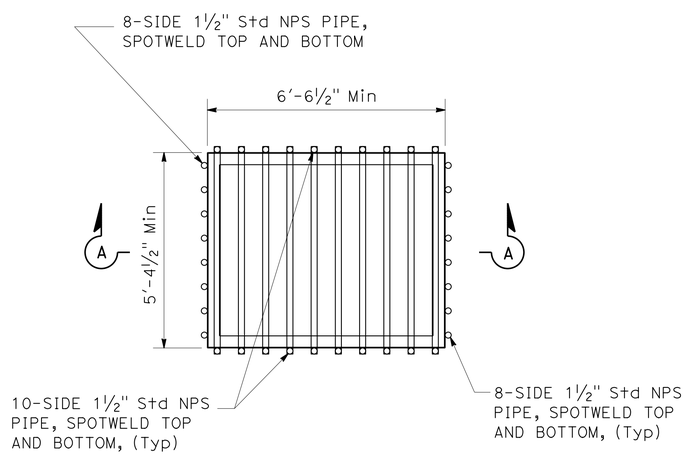

PLAN

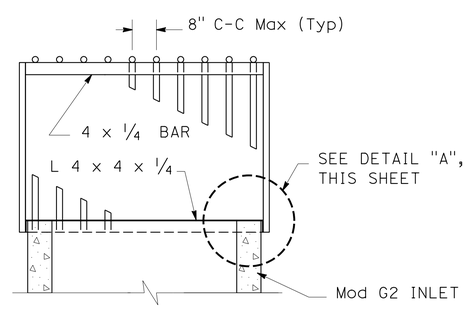

SECTION A-A

DEBRIS RACK CAGE

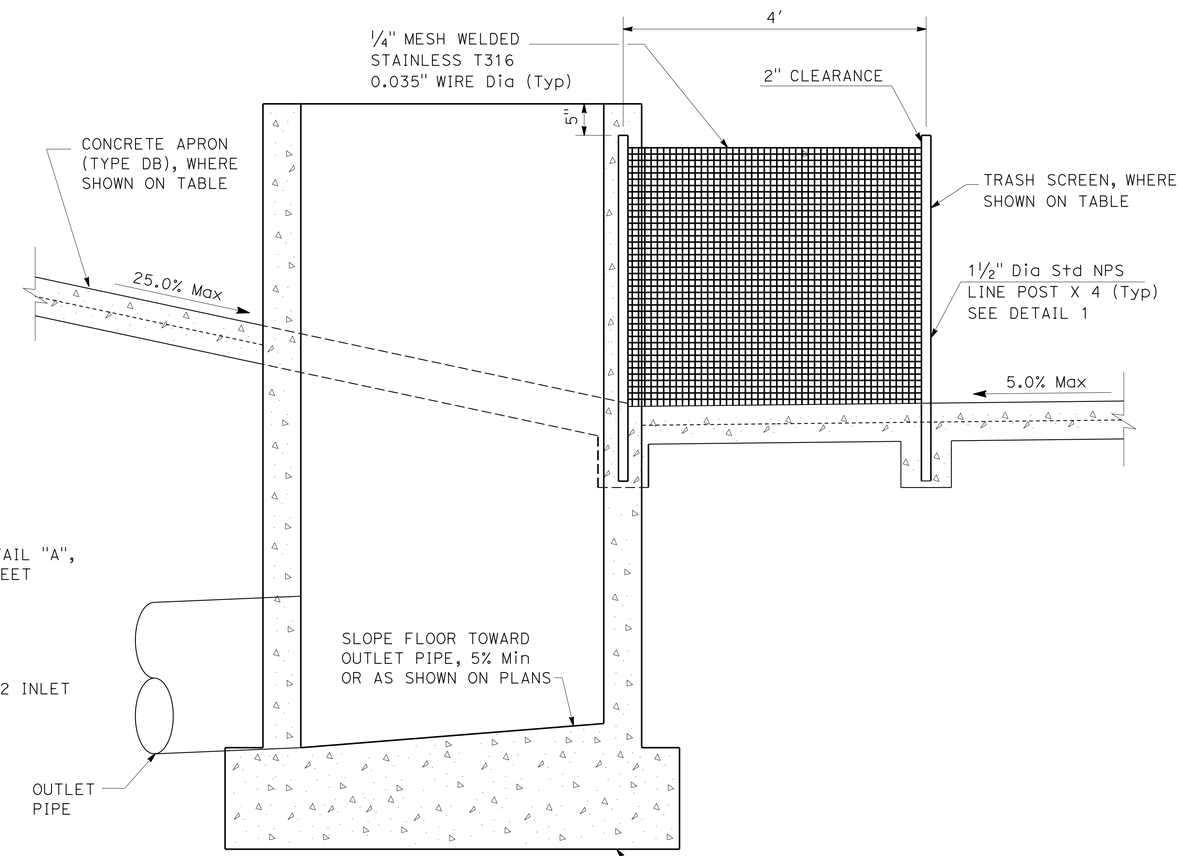

SECTION B-B

MODIFIED G2 INLET

15 d 15 f 10 bk

(SHEET 2 OF 2)

DRAINAGE DETAILS

NO SCALE

DD-4

STATE OF CALIFORNIA - DEPARTMENT OF TRANSPORTATION

DESIGN

FUNCTIONAL SUPERVISOR: MICHAEL J. WEBSTER

CALCULATED-DESIGNED BY: MICHAEL OREIRO

CHECKED BY: JOHN HANSON

REVISED BY

DATE REVISED

LAST REVISION 05-06-13

DATE PLOTTED => 13-MAY-2013

TIME PLOTTED => 20:18

Dist	COUNTY	ROUTE	POST MILES TOTAL PROJECT	SHEET No.	TOTAL SHEETS
11	SD	11, 905	0.0/1.6, R9.9/R10.7	223	622

REGISTERED CIVIL ENGINEER 03-25-13 DATE

04-22-13
PLANS APPROVAL DATE

REGISTERED PROFESSIONAL ENGINEER FARDAD BEHBOODY No. C-61478 Exp. 06-30-13 CIVIL STATE OF CALIFORNIA

THE STATE OF CALIFORNIA OR ITS OFFICERS OR AGENTS SHALL NOT BE RESPONSIBLE FOR THE ACCURACY OR COMPLETENESS OF SCANNED COPIES OF THIS PLAN SHEET.

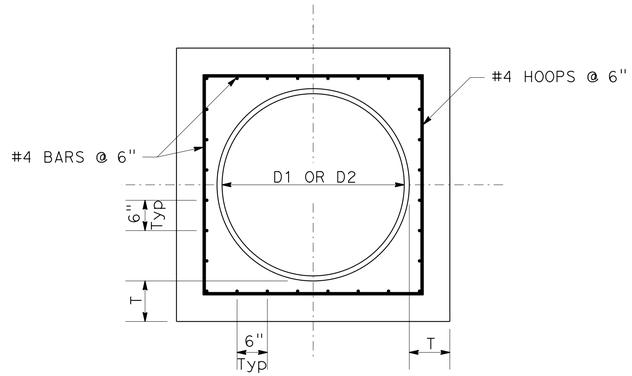

SECTION B-B

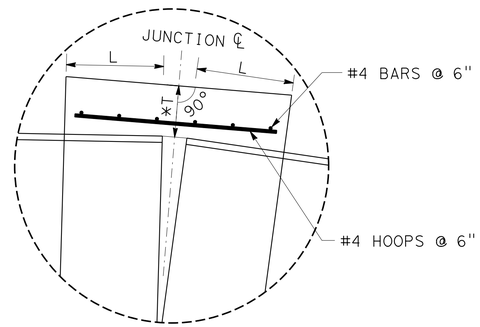

DETAIL C

*MEASURED ALONG JUNCTION ℄

CONCRETE QUANTITIES

D	L (Min)	T (Min)	Conc (cy)
1'-6"	1'-0"	6"	0.17
2'-0"	1'-0"	6"	0.22
3'-0"	1'-6"	9"	0.65
4'-0"	1'-6"	10"	0.89
4'-6"	1'-6"	10"	1.12
5'-0"	2'-0"	1'-0"	2.18
5'-6"	2'-0"	1'-0"	2.41
6'-0"	2'-0"	1'-0"	2.65

* CONCRETE QUANTITIES FOR INFORMATIONAL PURPOSES ONLY

NOTES:

1. WHERE PIPES OF DIFFERENT DIAMETERS ARE JOINED WITH A CONC COLLAR, L & T SHALL CORRESPOND WITH THE LARGER OF THE TWO PIPE DIAMETERS.
2. JOIN PIPES AT INVERTS
3. CONCRETE TYPE SHALL BE MINOR CONCRETE (MINOR STRUCTURE)

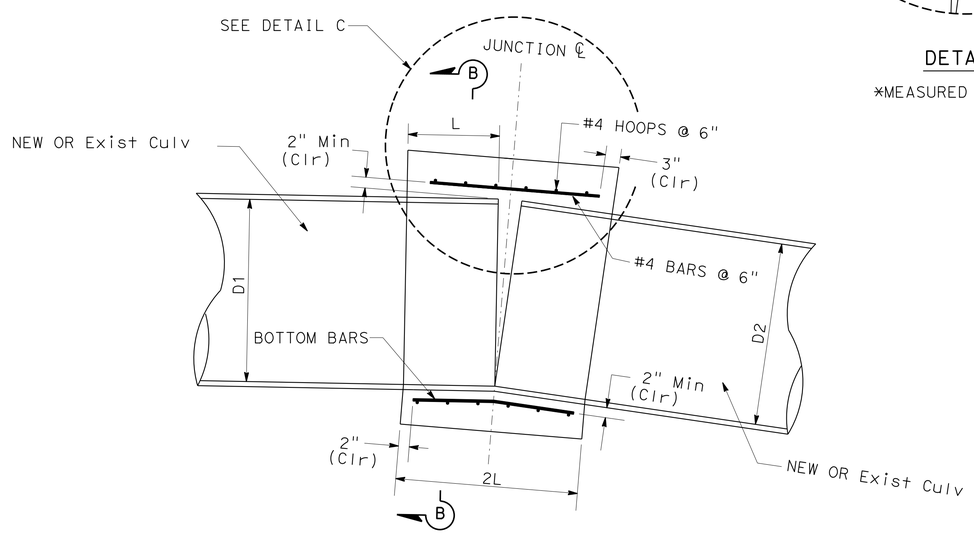

SECTION A-A

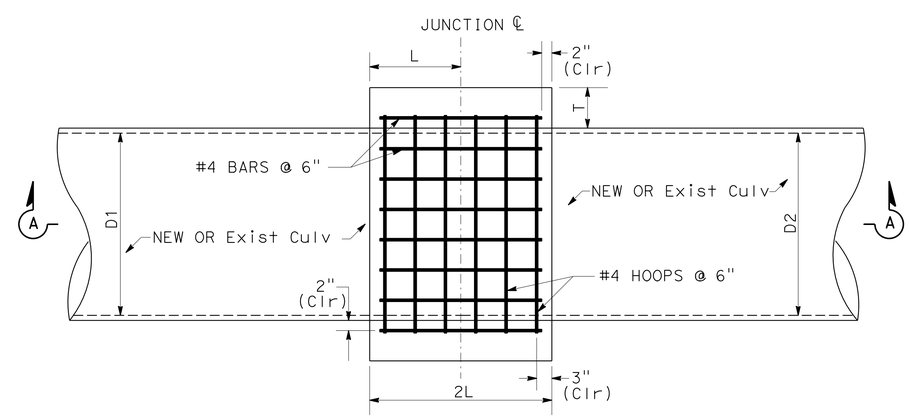

PLAN

NOTE:
BEND BOTTOM BARS AS NECESSARY TO MAINTAIN 2" CLEARANCE

TYPE L-2 COLLAR

1 a 2 a 2 ac 2 ah 6 a 4 h 9 a

DRAINAGE DETAILS
NO SCALE
DD-5

STATE OF CALIFORNIA - DEPARTMENT OF TRANSPORTATION
Caltrans DESIGN
FUNCTIONAL SUPERVISOR MICHAEL J. WEBSTER
CALCULATED-DESIGNED BY MICHAEL OREIRO
CHECKED BY FARDAD BEHBOODY
REVISED BY
DATE REVISED

LAST REVISION 03-22-13
DATE PLOTTED => 13-MAY-2013
TIME PLOTTED => 20:18

Dist	COUNTY	ROUTE	POST MILES TOTAL PROJECT	SHEET No.	TOTAL SHEETS
11	SD	11, 905	0.0/1.6, R9.9/R10.7	224	622

REGISTERED CIVIL ENGINEER 03-25-13 DATE

04-22-13
PLANS APPROVAL DATE

REGISTERED PROFESSIONAL ENGINEER FARDAD BEHBOODY No. C-61478 Exp. 06-30-13 CIVIL STATE OF CALIFORNIA

THE STATE OF CALIFORNIA OR ITS OFFICERS OR AGENTS SHALL NOT BE RESPONSIBLE FOR THE ACCURACY OR COMPLETENESS OF SCANNED COPIES OF THIS PLAN SHEET.

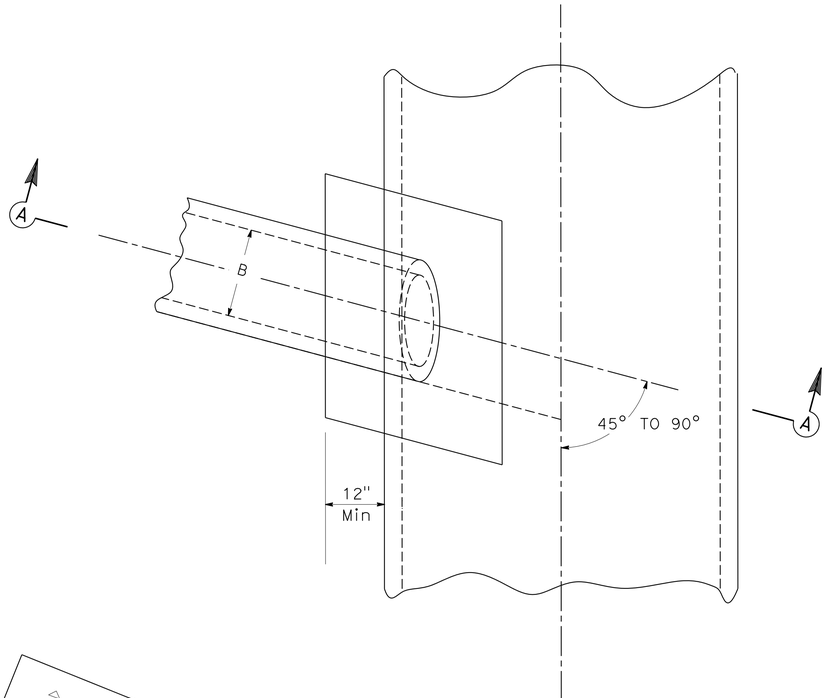

PLAN

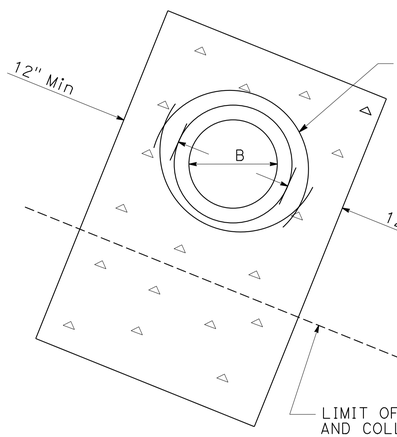

SECTION B-B

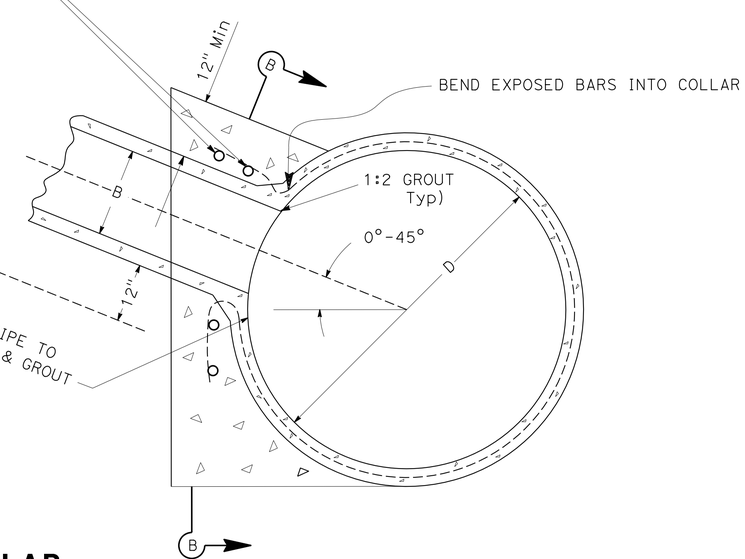

SECTION A-A

NOTE:

1. CONCRETE SHALL EXTEND TO MINIMUM OF 12" BELOW INLET PIPE

TYPE J-1 COLLAR

9 g 10 bn 16 e 16 i

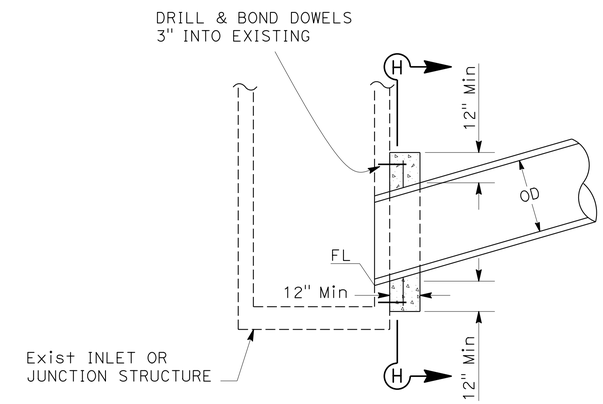

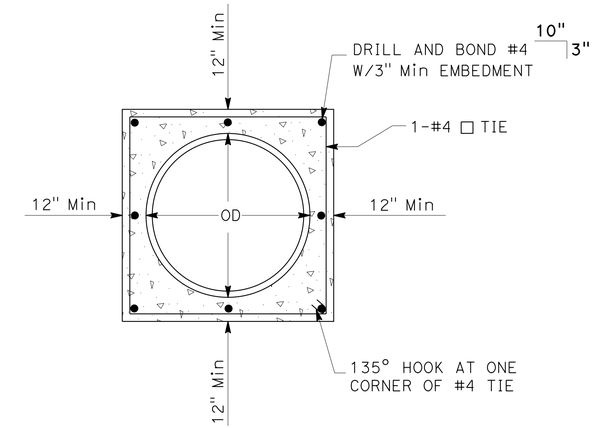

SECTION H-H

NOTE: BEND EXPOSED REBAR, IF PRESENT IN Exist STRUCTURE, INTO CONCRETE COLLAR.

TYPE L-3 COLLAR

2 ad 12 a

DRAINAGE DETAILS

NO SCALE

DD-6

STATE OF CALIFORNIA - DEPARTMENT OF TRANSPORTATION
Caltrans®
DESIGN

FUNCTIONAL SUPERVISOR: MICHAEL J. WEBSTER
CALCULATED-DESIGNED BY: MICHAEL OREIRO
CHECKED BY: JOHN HANSON
REVISED BY
DATE REVISED

LAST REVISION 05-03-13
DATE PLOTTED => 13-MAY-2013
TIME PLOTTED => 20:18

Dist	COUNTY	ROUTE	POST MILES TOTAL PROJECT	SHEET No.	TOTAL SHEETS
11	SD	11, 905	0.0/1.6, R9.9/R10.7	225	622

REGISTERED CIVIL ENGINEER 03-25-13 DATE

04-22-13
PLANS APPROVAL DATE

REGISTERED PROFESSIONAL ENGINEER FARDAD BEHBOODY No. C-61478 Exp. 06-30-13 CIVIL STATE OF CALIFORNIA

THE STATE OF CALIFORNIA OR ITS OFFICERS OR AGENTS SHALL NOT BE RESPONSIBLE FOR THE ACCURACY OR COMPLETENESS OF SCANNED COPIES OF THIS PLAN SHEET.

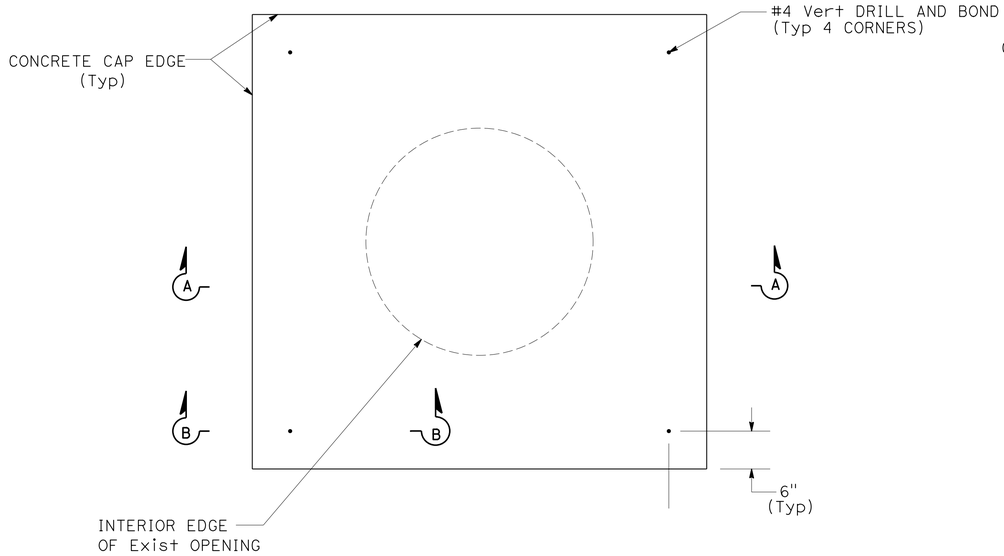

CONCRETE CAP (Exist RCB)

PLAN

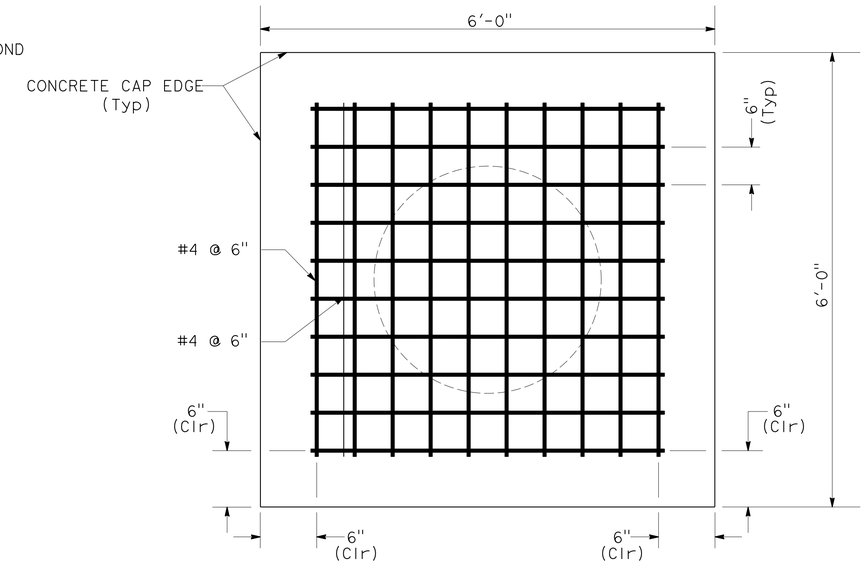

CONCRETE CAP REINFORCEMENT

PLAN

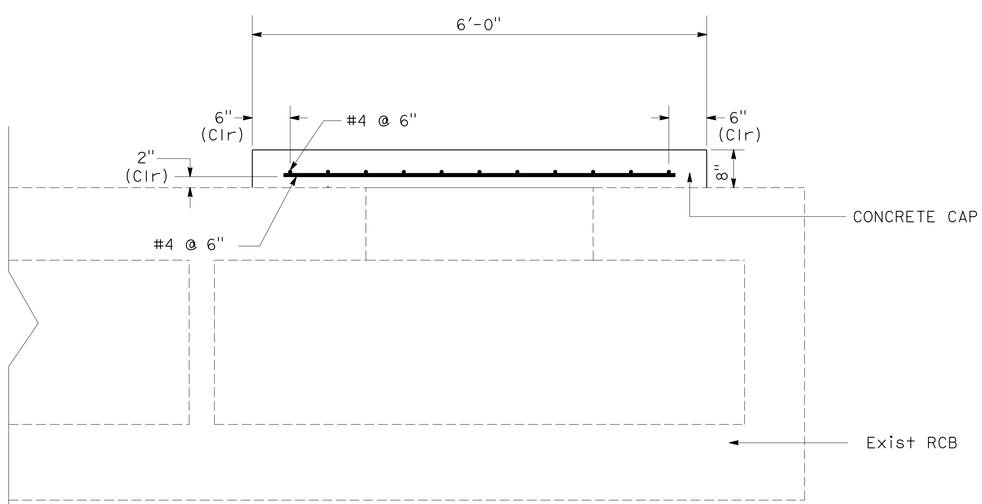

SECTION A-A

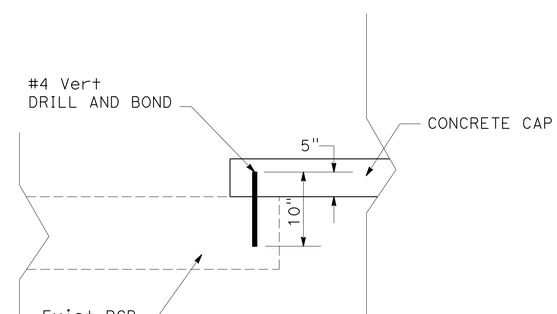

SECTION B-B

NOTES:

1. CONCRETE SHALL BE MINOR CONCRETE (MINOR STRUCTURE).
2. DRILL & BOND VERT DOWELS INTO EXISTING RCB ROOF AT LOCATIONS SHOWN

CAP RCB

5 e

DRAINAGE DETAILS

NO SCALE

DD-7

STATE OF CALIFORNIA - DEPARTMENT OF TRANSPORTATION
Caltrans DESIGN

FUNCTIONAL SUPERVISOR: MICHAEL J. WEBSTER
CALCULATED-DESIGNED BY: MICHAEL OREIRO
CHECKED BY: FARDAD BEHBOODY
REVISED BY
DATE REVISED

LAST REVISION 04-05-13 | DATE PLOTTED => 13-MAY-2013 | TIME PLOTTED => 20:19

Dist	COUNTY	ROUTE	POST MILES TOTAL PROJECT	SHEET No.	TOTAL SHEETS
11	SD	11, 905	0.0/1.6, R9.9/R10.7	226	622

REGISTERED CIVIL ENGINEER 03-25-13 DATE

04-22-13
PLANS APPROVAL DATE

REGISTERED PROFESSIONAL ENGINEER FARDAD BEHBOODY No. C-61478 Exp. 06-30-13 CIVIL STATE OF CALIFORNIA

THE STATE OF CALIFORNIA OR ITS OFFICERS OR AGENTS SHALL NOT BE RESPONSIBLE FOR THE ACCURACY OR COMPLETENESS OF SCANNED COPIES OF THIS PLAN SHEET.

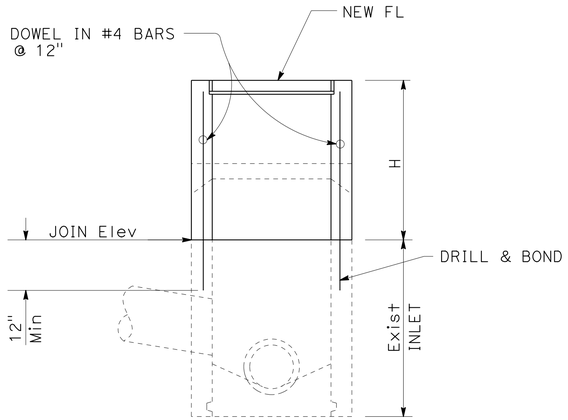

ADJUST INLET

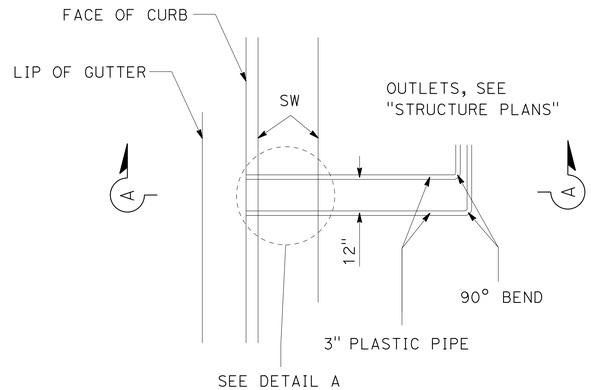

PLAN

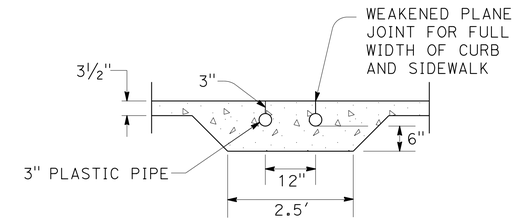

SECTION B-B

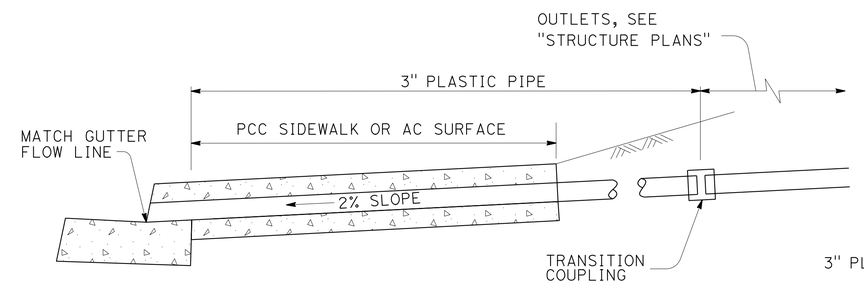

SECTION A-A

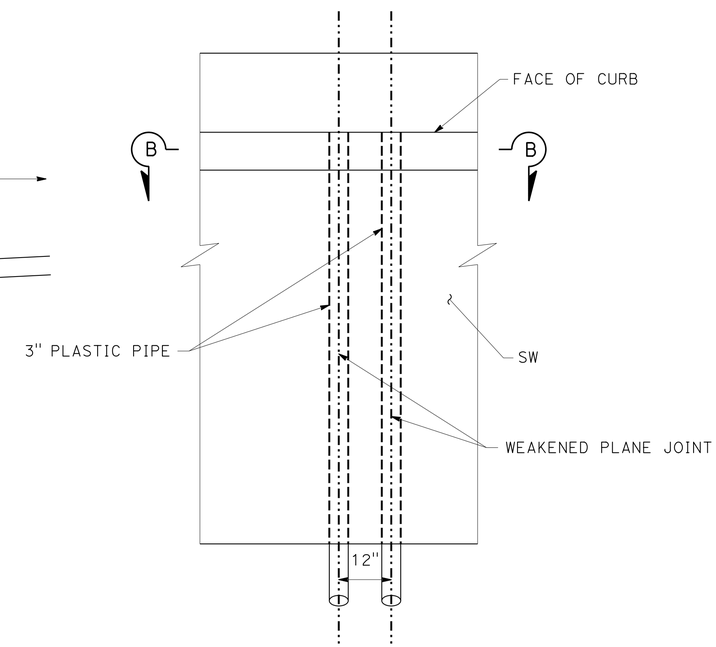

DETAIL A

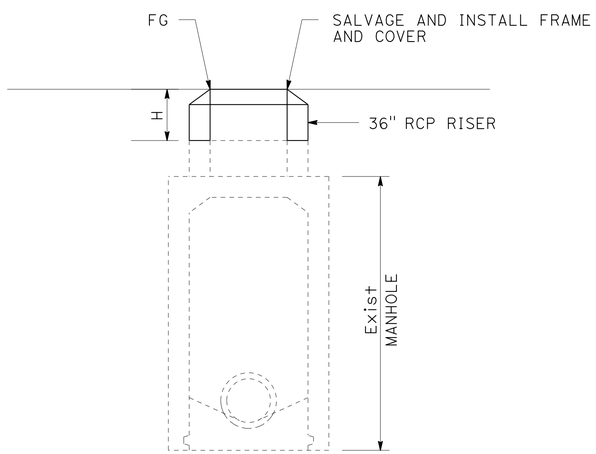

NOTES:

1. FOR CASE OF LOWERING MH WHERE FG IS LOWER THAN OG, REMOVE RISER SECTIONS AND SALVAGE AND INSTALL FRAME AND COVER

ADJUST MANHOLE

NOTES:

1. DETAIL TYPICAL OF ALL OUTLET DRAINS FROM SANYO AVE BENT 1 STRUCTURE
2. TRIM PIPE FLUSH WITH CURB FACE
3. THE PIPE SHALL BE SUPPORTED TO PREVENT DISTORTION DURING PLACEMENT OF CONCRETE

STRUCTURE DRAIN OUTLET PIPE

DRAINAGE DETAILS

NO SCALE

DD-8

STATE OF CALIFORNIA - DEPARTMENT OF TRANSPORTATION
Caltrans® DESIGN

FUNCTIONAL SUPERVISOR: MICHAEL J. WEBSTER
CALCULATED-DESIGNED BY: MICHAEL OREIRO
CHECKED BY: JOHN HANSON
REVISED BY
DATE REVISED

LAST REVISION 05-03-13
DATE PLOTTED => 13-MAY-2013
TIME PLOTTED => 20:19

Dist	COUNTY	ROUTE	POST MILES TOTAL PROJECT	SHEET No.	TOTAL SHEETS
11	SD	11, 905	0.0/1.6, R9.9/R10.7	227	622

REGISTERED CIVIL ENGINEER 03-25-13 DATE

04-22-13
PLANS APPROVAL DATE

REGISTERED PROFESSIONAL ENGINEER FARDAD BEHBOODY No. C-61478 Exp. 06-30-13 CIVIL STATE OF CALIFORNIA

THE STATE OF CALIFORNIA OR ITS OFFICERS OR AGENTS SHALL NOT BE RESPONSIBLE FOR THE ACCURACY OR COMPLETENESS OF SCANNED COPIES OF THIS PLAN SHEET.

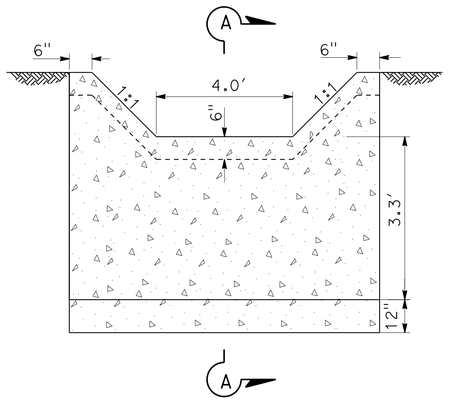

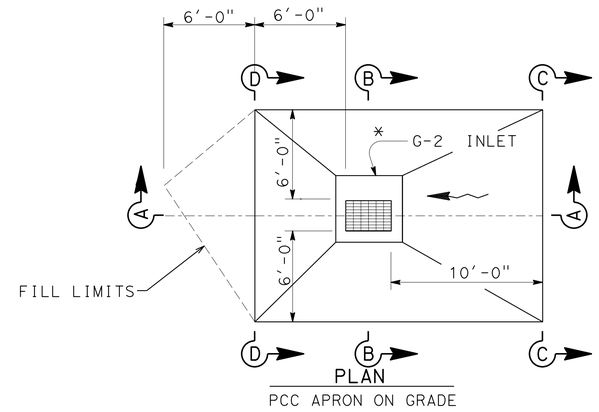

PLAN
PCC APRON ON GRADE

* G-2 INLET IS SHOWN. HOWEVER THIS Conc APRON DETAIL COULD ALSO, BE USED WITH G-1, GD-1 ,GD-2 AND GCP INLETS.

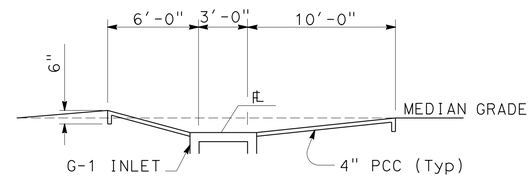

SECTION A-A (PROFILE)

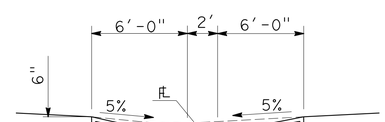

SECTION B-B

SECTION C-C

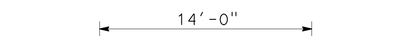

SECTION D-D

CONCRETE APRON TYPE 3

SECTION A-A

DITCH CUTOFF WALL

4 a 8 b 9 b 14 ad 14 af 14 ah 19 f 19 h

DRAINAGE DETAILS

NO SCALE

DD-9

STATE OF CALIFORNIA - DEPARTMENT OF TRANSPORTATION
Caltrans
DESIGN

FUNCTIONAL SUPERVISOR: MICHAEL J. WEBSTER
CALCULATED-DESIGNED BY: MICHAEL OREIRO
CHECKED BY: FARDAD BEHBOODY
REVISED BY
DATE REVISED

LAST REVISION 04-03-13
DATE PLOTTED => 13-MAY-2013
TIME PLOTTED => 20:19

Dist	COUNTY	ROUTE	POST MILES TOTAL PROJECT	SHEET No.	TOTAL SHEETS
11	SD	11, 905	0.0/1.6, R9.9/R10.7	228	622

REGISTERED CIVIL ENGINEER 03-25-13 DATE

04-22-13
PLANS APPROVAL DATE

REGISTERED PROFESSIONAL ENGINEER
FARDAD BEHBOODY
No. C-61478
Exp. 06-30-13
CIVIL
STATE OF CALIFORNIA

THE STATE OF CALIFORNIA OR ITS OFFICERS OR AGENTS SHALL NOT BE RESPONSIBLE FOR THE ACCURACY OR COMPLETENESS OF SCANNED COPIES OF THIS PLAN SHEET.

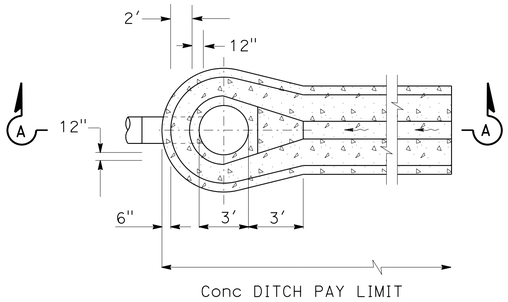

PLAN

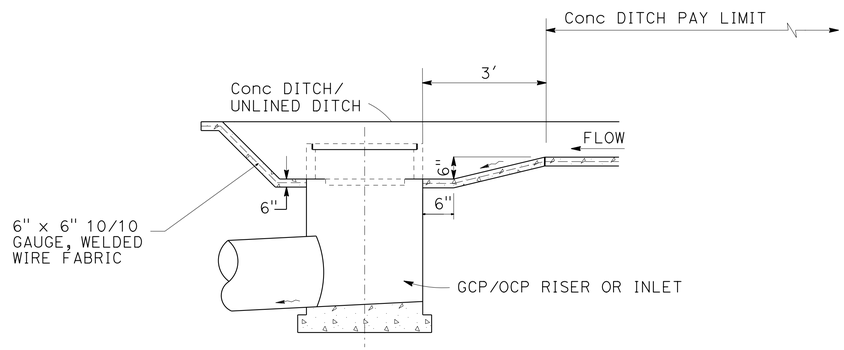

SECTION A-A

NOTES:

1. APRON CONCRETE TO BE 6" THICK MINOR CONCRETE (DITCH LINING)
2. FOR DOUBLE SIDED APRON MIRROR OPPOSITE ENDS

CONCRETE APRON AT GCP/OCP RISER

4 a

PLUG THICKNESS "A" = 1/3 PIPE DIAMETER

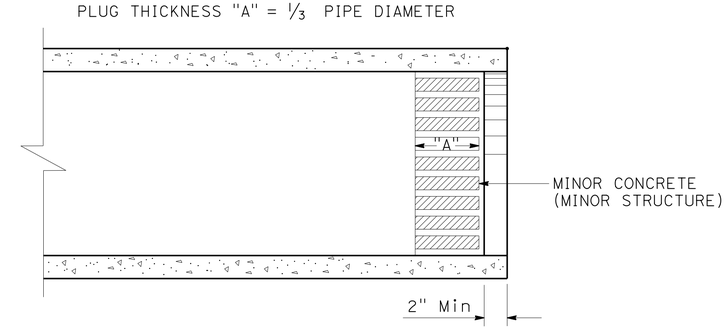

STORM DRAIN PLUG

17 e

DRAINAGE DETAILS

NO SCALE

DD-10

STATE OF CALIFORNIA - DEPARTMENT OF TRANSPORTATION
Caltrans®
DESIGN

FUNCTIONAL SUPERVISOR: MICHAEL J. WEBSTER
CALCULATED-DESIGNED BY: MICHAEL OREIRO
CHECKED BY: JOHN HANSON
REVISED BY
DATE REVISED

LAST REVISION 05-03-13
DATE PLOTTED => 13-MAY-2013
TIME PLOTTED => 20:19

Dist	COUNTY	ROUTE	POST MILES TOTAL PROJECT	SHEET No.	TOTAL SHEETS
11	SD	11, 905	0.0/1.6, R9.9/R10.7	229	622

REGISTERED CIVIL ENGINEER 03-25-13 DATE

04-22-13
PLANS APPROVAL DATE

REGISTERED PROFESSIONAL ENGINEER FARDAD BEHBOODY No. C-61478 Exp. 06-30-13 CIVIL STATE OF CALIFORNIA

THE STATE OF CALIFORNIA OR ITS OFFICERS OR AGENTS SHALL NOT BE RESPONSIBLE FOR THE ACCURACY OR COMPLETENESS OF SCANNED COPIES OF THIS PLAN SHEET.

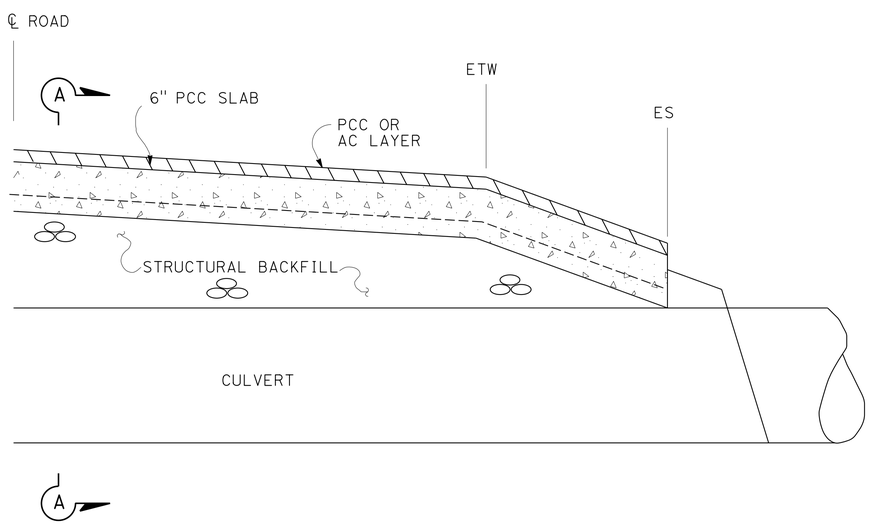

CULVERT PROTECTION (TYPE 1)

NO SCALE

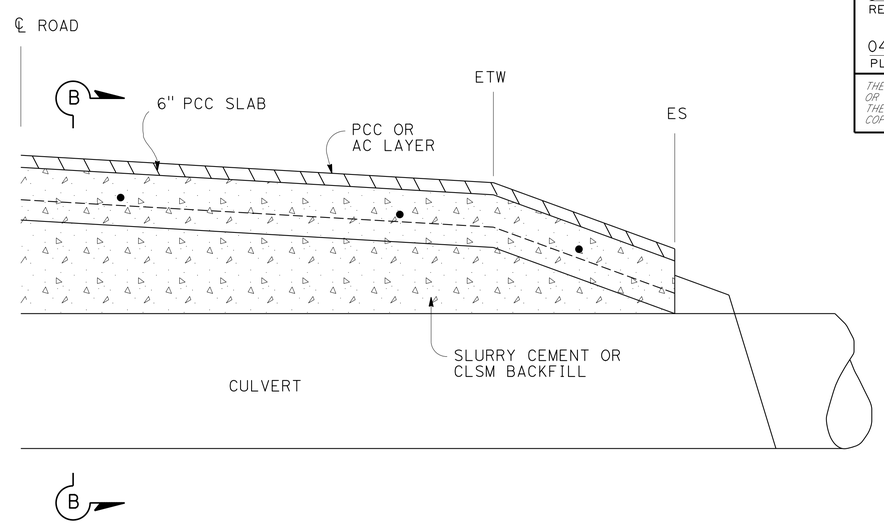

CULVERT PROTECTION (TYPE 2)

NO SCALE

NOTES:

1. MAXIMUM APC DIAMETER 4 FEET
2. CLSM = CONTROLLED LOW STRENGTH MATERIAL

LEGEND:

ASPHALT CONCRETE

MINOR CONCRETE

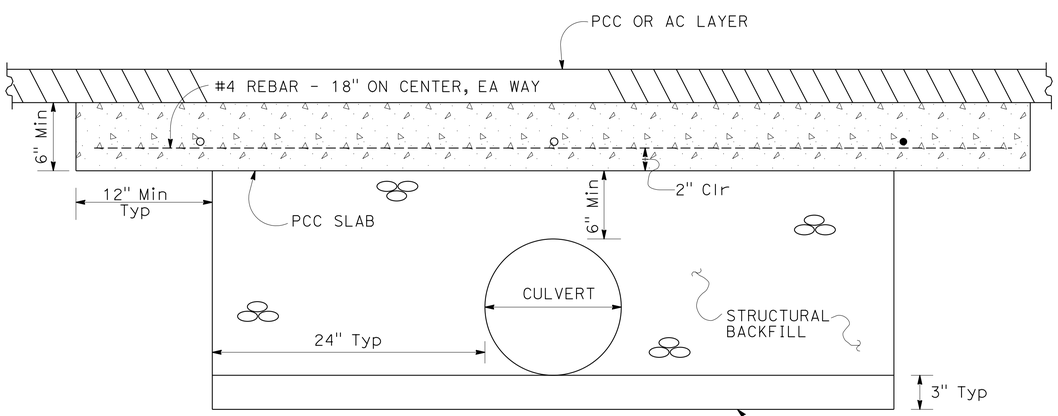

SECTION A-A

NO SCALE

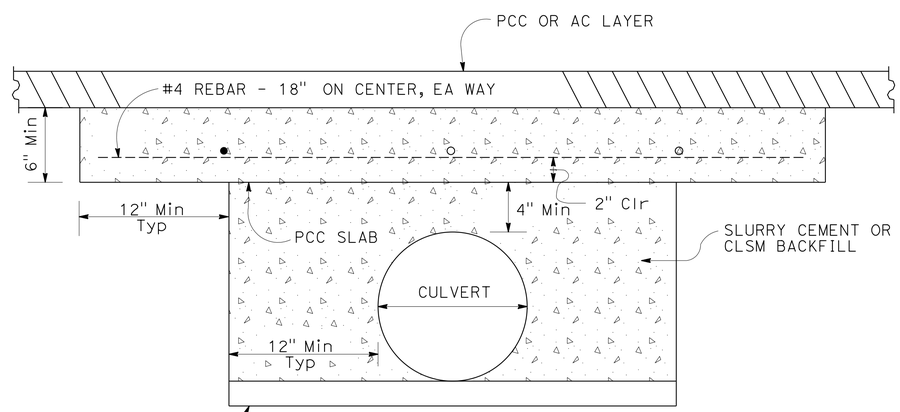

BEDDING FOR RCP ONLY

SECTION B-B

NO SCALE

LOW CLEARANCE ALTERNATIVE PIPE CULVERT

DRAINAGE DETAILS

NO SCALE

DD-11

STATE OF CALIFORNIA - DEPARTMENT OF TRANSPORTATION

Caltrans

DESIGN

FUNCTIONAL SUPERVISOR: MICHAEL J. WEBSTER

CALCULATED-DESIGNED BY: MICHAEL OREIRO

CHECKED BY: FARDAD BEHBOODY

REVISED BY

DATE REVISED

LAST REVISION 05-03-13

DATE PLOTTED => 13-MAY-2013

TIME PLOTTED => 20:19

Dist	COUNTY	ROUTE	POST MILES TOTAL PROJECT	SHEET No.	TOTAL SHEETS
11	SD	11, 905	0.0/1.6, R9.9/R10.7	230	622

REGISTERED CIVIL ENGINEER 03-25-13 DATE

04-22-13
PLANS APPROVAL DATE

REGISTERED PROFESSIONAL ENGINEER
FARDAD BEHBOODY
No. C-61478
Exp. 06-30-13
CIVIL
STATE OF CALIFORNIA

THE STATE OF CALIFORNIA OR ITS OFFICERS OR AGENTS SHALL NOT BE RESPONSIBLE FOR THE ACCURACY OR COMPLETENESS OF SCANNED COPIES OF THIS PLAN SHEET.

NOTE:

1. FOR DETAILS NOT SHOWN REFER TO Std PLANS D79 & D79A.

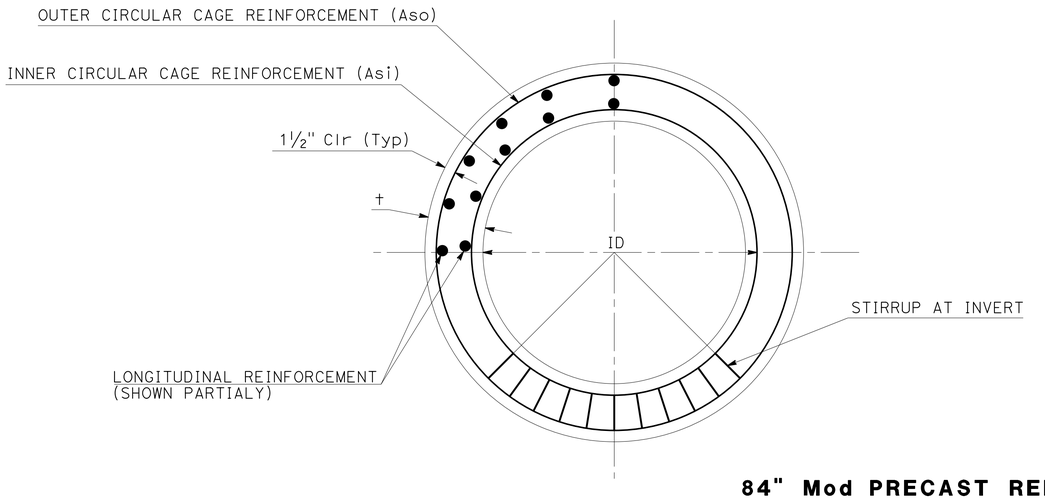

ID	t	Asi, in²/ft	Aso, in²/ft	f'c, ksi
84"	13"	1.20	0.48	6

Asi W20 @ 2" C-C, 1.2 in²/ft
Aso W8 @ 2" C-C, 0.48 in²/ft
STIRRUP W6 @ 7.5" C-C, 10 @ 7.5" C-C, 0.184 in²/ft/LINE
LONGITUDINAL WIRES W6 @ 4.0" C-C, 0.18 in²/ft

84" Mod PRECAST REINFORCED CONCRETE PIPE
DOUBLE CAGE REINFORCEMENTS

16 b 16 d 16 f

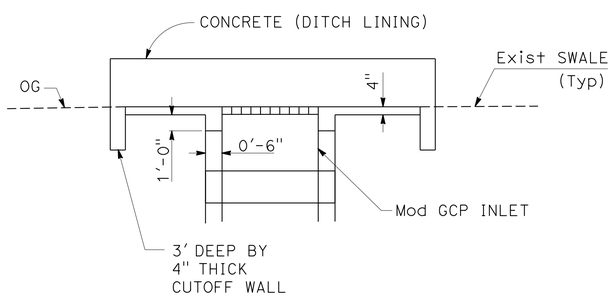

SECTION A-A

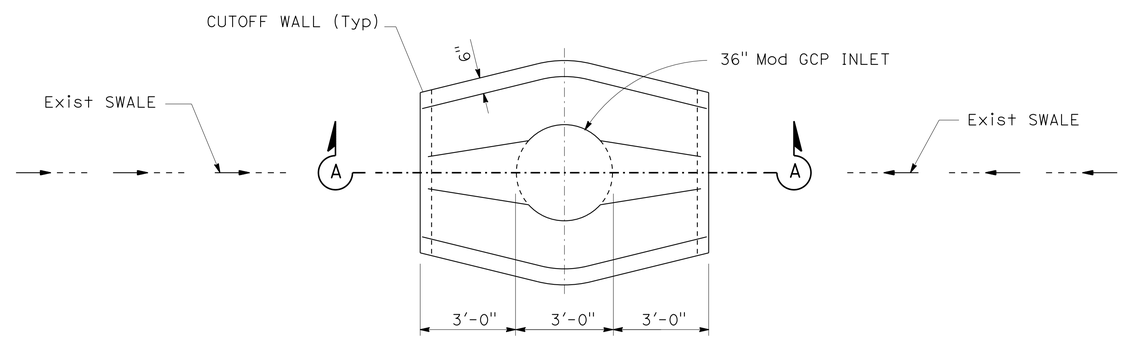

DOUBLE SIDED CONCRETE (DITCH LINING) TO Mod GCP INLET TRANSITION

5 †

DRAINAGE DETAILS
NO SCALE
DD-12

REVISED BY | DATE REVISED
MICHAEL OREIRO | FARDAD BEHBOODY
CALCULATED-DESIGNED BY | CHECKED BY
FUNCTIONAL SUPERVISOR | MICHAEL J. WEBSTER
STATE OF CALIFORNIA - DEPARTMENT OF TRANSPORTATION
Caltrans
DESIGN

LAST REVISION 03-22-13 | DATE PLOTTED => 13-MAY-2013 | TIME PLOTTED => 20:19

Dist	COUNTY	ROUTE	POST MILES TOTAL PROJECT	SHEET No.	TOTAL SHEETS
11	SD	11, 905	0.0/1.6, R9.9/R10.7	231	622

REGISTERED CIVIL ENGINEER 03-25-13 DATE

04-22-13
PLANS APPROVAL DATE

REGISTERED PROFESSIONAL ENGINEER FARDAD BEHBOODY No. C-61478 Exp. 06-30-13 CIVIL STATE OF CALIFORNIA

THE STATE OF CALIFORNIA OR ITS OFFICERS OR AGENTS SHALL NOT BE RESPONSIBLE FOR THE ACCURACY OR COMPLETENESS OF SCANNED COPIES OF THIS PLAN SHEET.

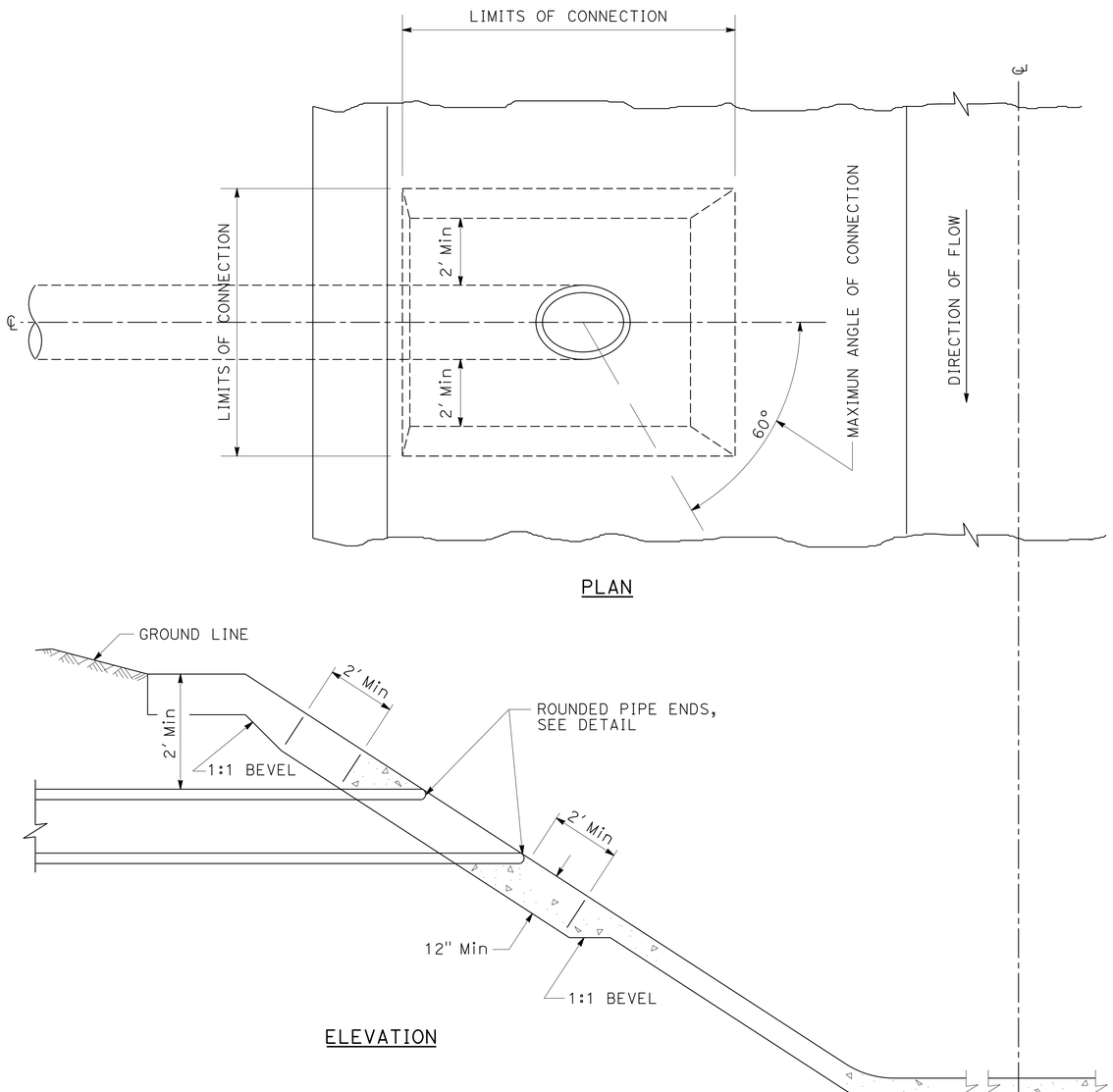

PIPE TO DRAINAGE CHANNEL CONNECTION

16 a

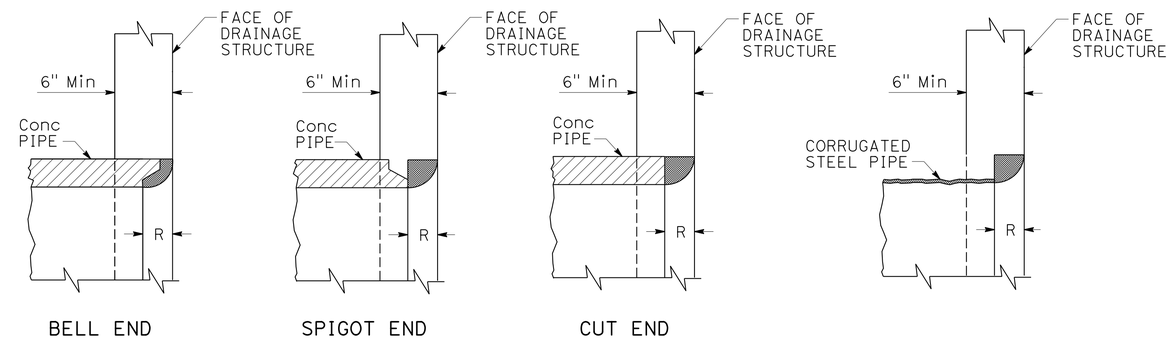

R = THICKNESS OF PIPE = $\frac{\text{INSIDE DIAMETER OF PIPE}}{10}$

ROUNDED PIPE ENDS DETAIL

DRAINAGE DETAILS

NO SCALE

DD-13

STATE OF CALIFORNIA - DEPARTMENT OF TRANSPORTATION
Caltrans®
DESIGN

FUNCTIONAL SUPERVISOR: MICHAEL J. WEBSTER
CALCULATED-DESIGNED BY: SIRAJUL RONI
CHECKED BY: TULLY McCARTHY
REVISED BY
DATE REVISED

LAST REVISION 05-06-13
DATE PLOTTED => 13-MAY-2013
TIME PLOTTED => 20:19

Dist	COUNTY	ROUTE	POST MILES TOTAL PROJECT	SHEET No.	TOTAL SHEETS
11	SD	11, 905	0.0/1.6, R9.9/R10.7	232	622

REGISTERED CIVIL ENGINEER 03-25-13 DATE

04-22-13
PLANS APPROVAL DATE

REGISTERED PROFESSIONAL ENGINEER FARDAD BEHBOODY No. C-61478 Exp. 06-30-13 CIVIL STATE OF CALIFORNIA

THE STATE OF CALIFORNIA OR ITS OFFICERS OR AGENTS SHALL NOT BE RESPONSIBLE FOR THE ACCURACY OR COMPLETENESS OF SCANNED COPIES OF THIS PLAN SHEET.

NOTE:

PLACEMENT OF ALL RSP SHALL BE METHOD B

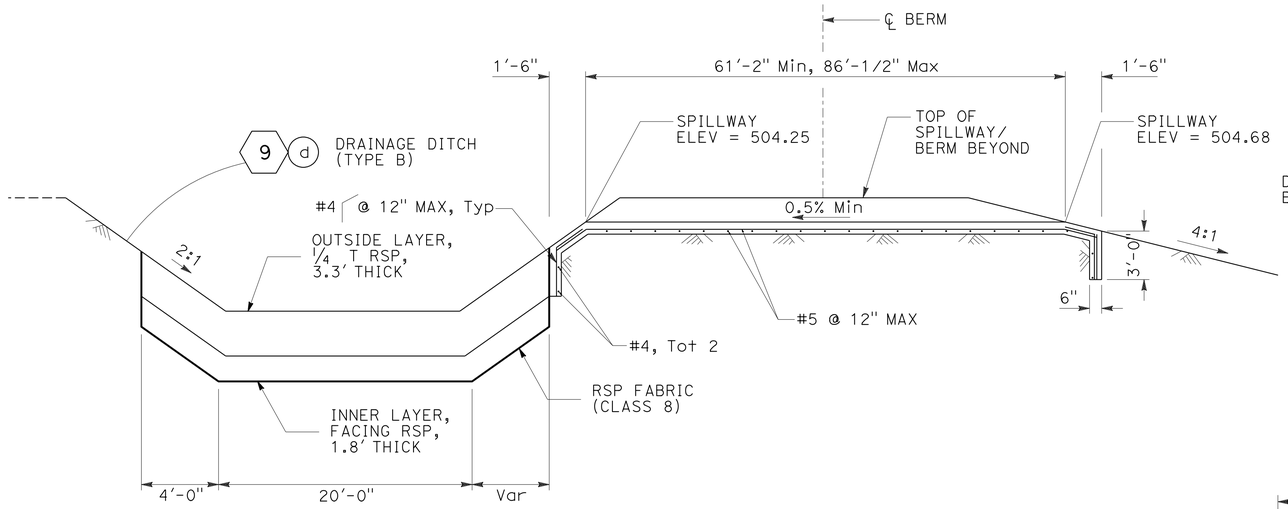

SECTION B-B

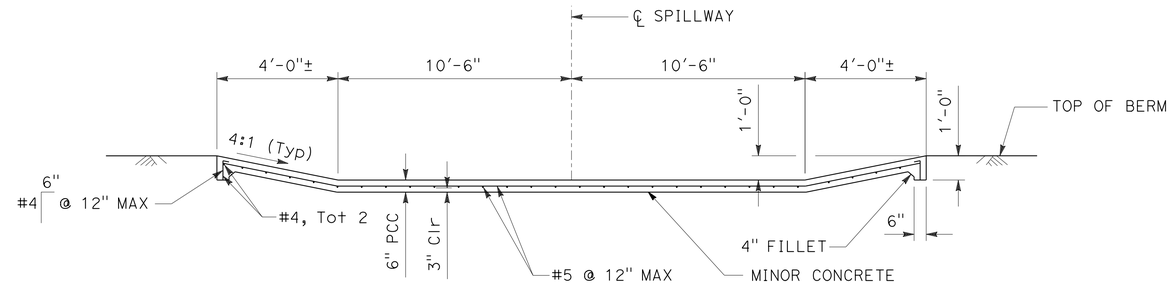

SECTION A-A

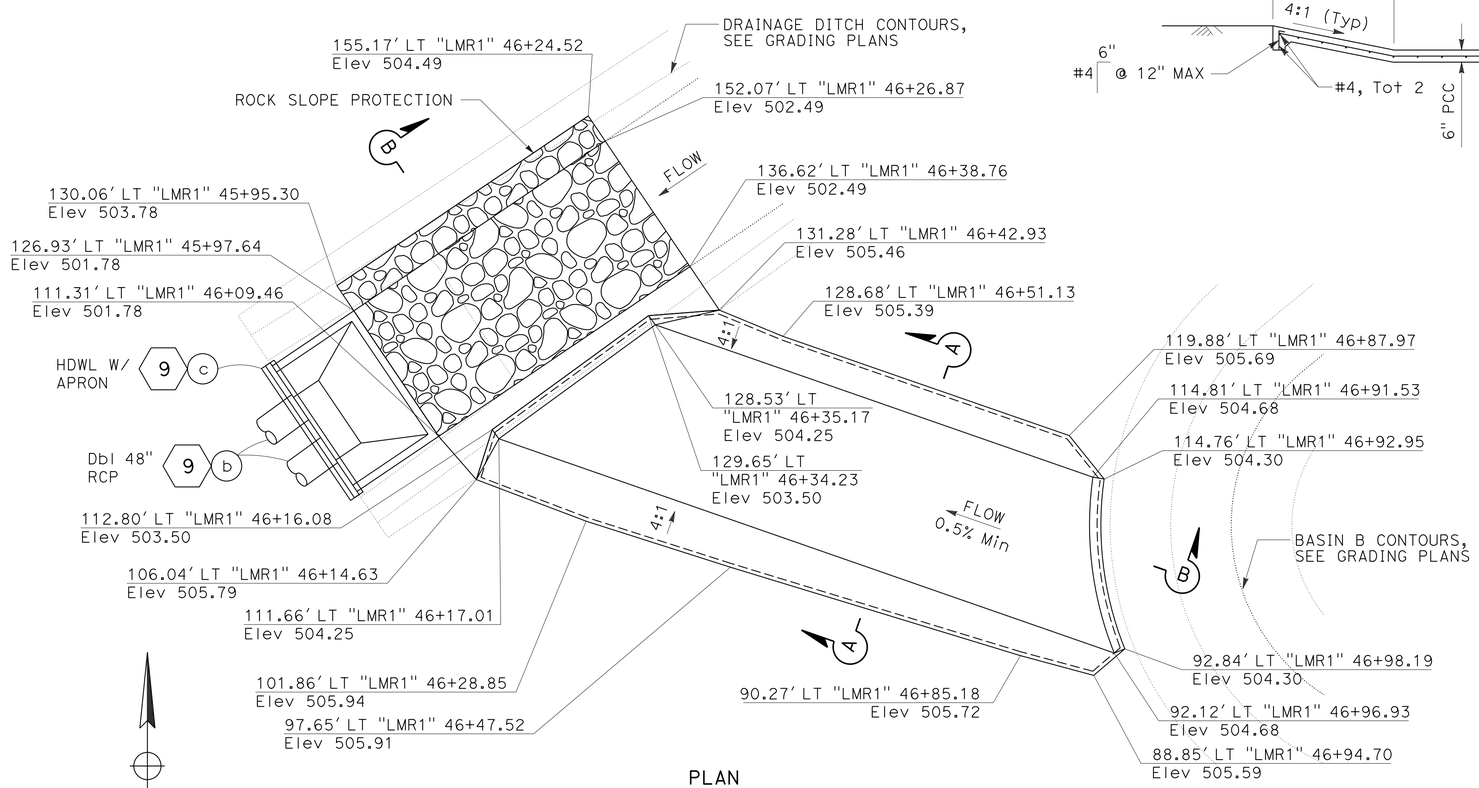

PLAN

OVERFLOW SPILLWAY AND RSP

9 m

DRAINAGE DETAILS

NO SCALE

DD-14

STATE OF CALIFORNIA - DEPARTMENT OF TRANSPORTATION
Caltrans® DESIGN

FUNCTIONAL SUPERVISOR: MICHAEL J. WEBSTER

CALCULATED-DESIGNED BY: SYDNEY T TRAN
CHECKED BY: FARDAD BEHBOODY

REVISED BY / DATE REVISED

LAST REVISION 05-09-13 | DATE PLOTTED => 17-MAY-2013 | TIME PLOTTED => 10:51

Dist	COUNTY	ROUTE	POST MILES TOTAL PROJECT	SHEET No.	TOTAL SHEETS
11	SD	11, 905	0.0/1.6, R9.9/R10.7	233	622

REGISTERED CIVIL ENGINEER 03-25-13 DATE

04-22-13
PLANS APPROVAL DATE

REGISTERED PROFESSIONAL ENGINEER FARDAD BEHBOODY No. C-61478 Exp. 06-30-13 CIVIL STATE OF CALIFORNIA

THE STATE OF CALIFORNIA OR ITS OFFICERS OR AGENTS SHALL NOT BE RESPONSIBLE FOR THE ACCURACY OR COMPLETENESS OF SCANNED COPIES OF THIS PLAN SHEET.

NOTES:

1. ALL REINFORCING SHALL RECEIVE 2" CLEAR COVER, UNLESS SHOWN OTHERWISE

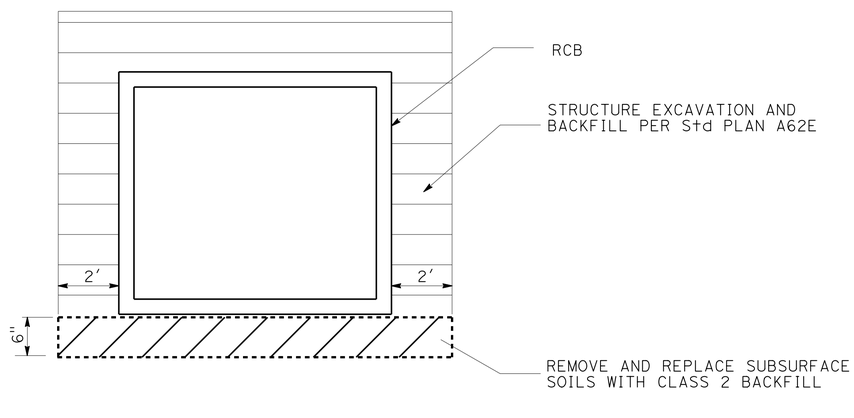

RCB FOUNDATION PREPARATION

5 c 5 f 5 g 5 h 5 j 5 l 5 n 5 o 5 p 5 r 5 s 5 x

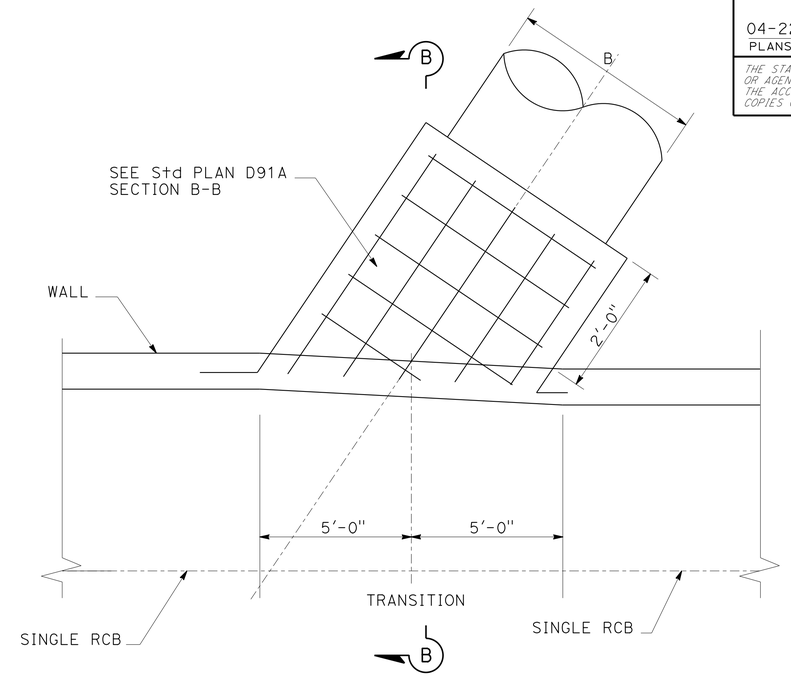

PLAN

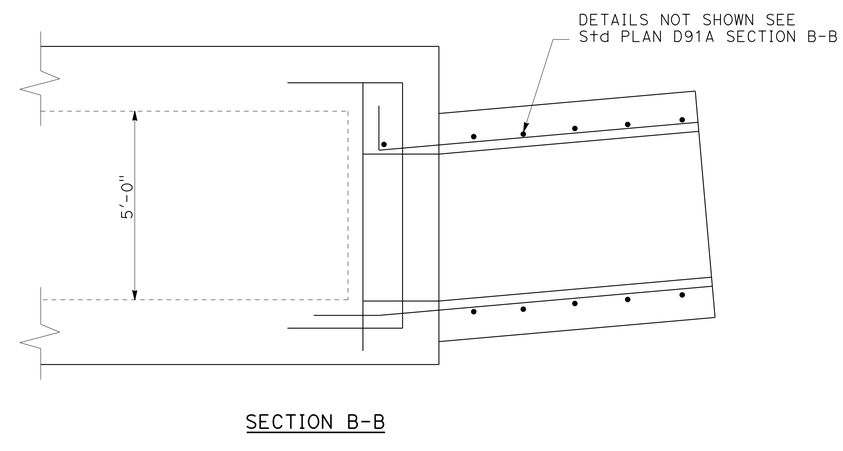

SECTION B-B

TYPE B-26 COLLAR TO RCB

5 u 8 a 9 a 10 cb 12 c 13 a 15 a

DRAINAGE DETAILS
NO SCALE

DD-15

STATE OF CALIFORNIA - DEPARTMENT OF TRANSPORTATION
Caltrans® DESIGN

FUNCTIONAL SUPERVISOR: MICHAEL J. WEBSTER
CALCULATED-DESIGNED BY: MICHAEL OREIRO
CHECKED BY: JOHN HANSON
REVISED BY
DATE REVISED

LAST REVISION 05-09-13 | DATE PLOTTED => 17-MAY-2013 | TIME PLOTTED => 10:51

Dist	COUNTY	ROUTE	POST MILES TOTAL PROJECT	SHEET No.	TOTAL SHEETS
11	SD	11, 905	0.0/1.6, R9.9/R10.7	234	622

REGISTERED CIVIL ENGINEER 03-25-13 DATE

04-22-13
PLANS APPROVAL DATE

REGISTERED PROFESSIONAL ENGINEER FARDAD BEHBOODY No. C-61478 Exp. 06-30-13 CIVIL STATE OF CALIFORNIA

THE STATE OF CALIFORNIA OR ITS OFFICERS OR AGENTS SHALL NOT BE RESPONSIBLE FOR THE ACCURACY OR COMPLETENESS OF SCANNED COPIES OF THIS PLAN SHEET.

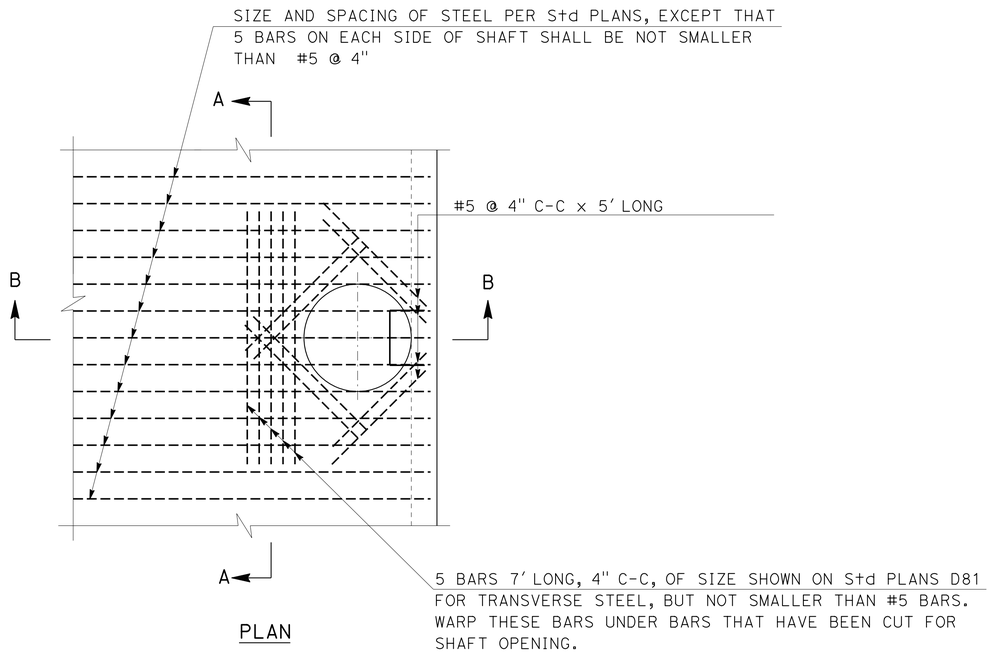

PLAN

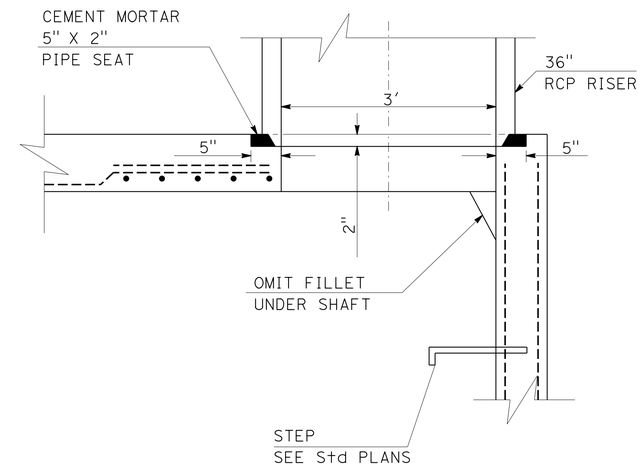

SECTION B-B

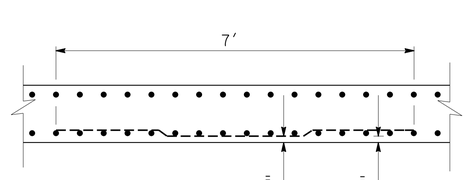

SECTION A-A

PRECAST CONCRETE PIPE RISER TO RCB CONNECTION DETAIL

4 a 5 i 5 k 5 m 5 g 5 t

DRAINAGE DETAILS

NO SCALE

DD-16

STATE OF CALIFORNIA - DEPARTMENT OF TRANSPORTATION
Caltrans® DESIGN

FUNCTIONAL SUPERVISOR: MICHAEL J. WEBSTER

CALCULATED-DESIGNED BY: MICHAEL OREIRO
CHECKED BY: FARDAD BEHBOODY

REVISED BY
DATE REVISED

LAST REVISION 04-05-13 | DATE PLOTTED => 13-MAY-2013 | TIME PLOTTED => 20:19

Dist	COUNTY	ROUTE	POST MILES TOTAL PROJECT	SHEET No.	TOTAL SHEETS
11	SD	11, 905	0.0/1.6, R9.9/R10.7	235	622

REGISTERED CIVIL ENGINEER 03-25-13 DATE

04-22-13
PLANS APPROVAL DATE

REGISTERED PROFESSIONAL ENGINEER FARDAD BEHBOODY No. C-61478 Exp. 06-30-13 CIVIL STATE OF CALIFORNIA

THE STATE OF CALIFORNIA OR ITS OFFICERS OR AGENTS SHALL NOT BE RESPONSIBLE FOR THE ACCURACY OR COMPLETENESS OF SCANNED COPIES OF THIS PLAN SHEET.

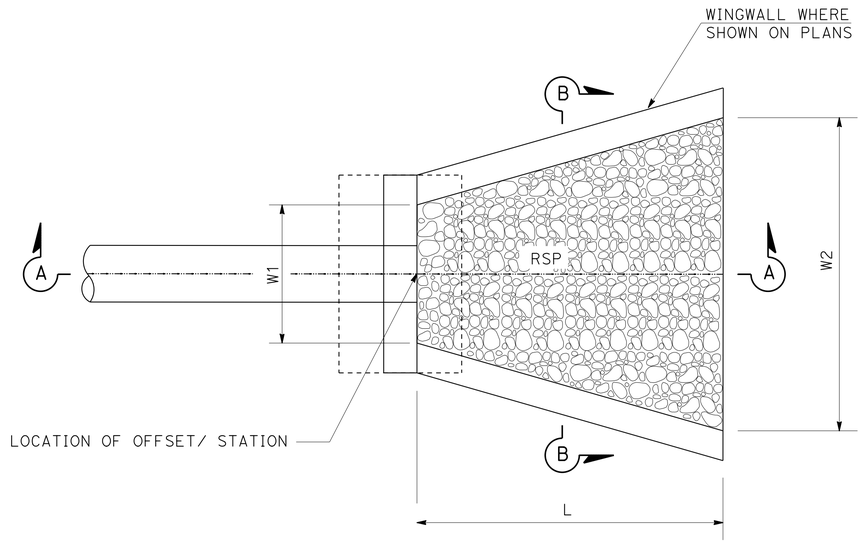

PLAN

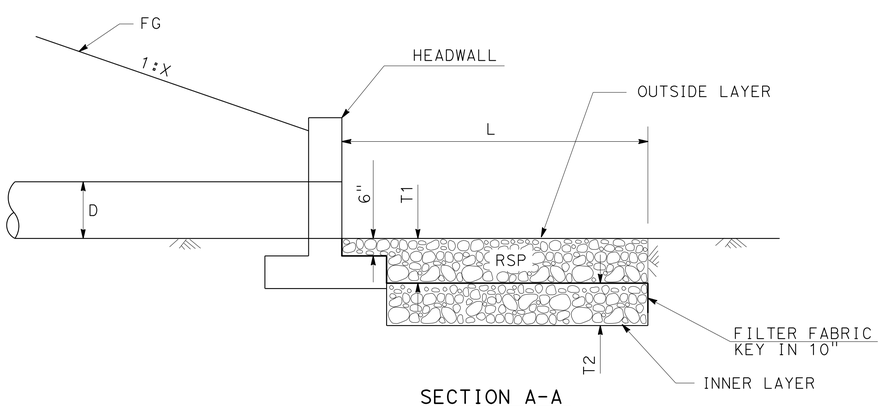

SECTION A-A
RSP AT HEADWALL

ROCK SLOPE PROTECTION

DRAINAGE SYSTEM UNIT No.	STATION/OFFSET	D	L	W1	W2	OUTSIDE LAYER		INNER LAYER	
						CLASS	T1	CLASS	T2
5 a	624+50.00 "EB" 83.50′ R†	5.0′	35′	15′	38′	¼T	3.3′	FACING	1.8
9 m	45+95.30 "LMR1" 130.06′ L†	4.0′	30′	30′	30′	¼T	3.3′	FACING	1.8
13 c	27+30.00 "A" 172.00′ R†	4.0′	30′	15′	50′	¼T	3.3′	FACING	1.8
18 a	69+18.83 "EFR3" 97.10′ R†	3.0′	15′	9′	20′	FACING	1.8	NONE	NONE
18 e	68+32.00 "EFR4" 75.93′ L†	3.0′	15′	9′	20′	FACING	1.8	NONE	NONE

NOTE:

PLACEMENT OF ALL RSP SHALL BE METHOD B

RSP AT HEADWALL

DRAINAGE DETAILS
NO SCALE
DD-17

STATE OF CALIFORNIA - DEPARTMENT OF TRANSPORTATION
Caltrans® DESIGN
FUNCTIONAL SUPERVISOR: MICHAEL J. WEBSTER
CALCULATED-DESIGNED BY: MICHAEL OREIRO
CHECKED BY: FARDAD BEHBOODY
REVISED BY / DATE REVISED

LAST REVISION 05-03-13 | DATE PLOTTED => 13-MAY-2013 | TIME PLOTTED => 20:19

Dist	COUNTY	ROUTE	POST MILES TOTAL PROJECT	SHEET No.	TOTAL SHEETS
11	SD	11, 905	0.0/1.6, R9.9/R10.7	236	622

REGISTERED CIVIL ENGINEER 03-25-13 DATE

04-22-13
PLANS APPROVAL DATE

REGISTERED PROFESSIONAL ENGINEER FARDAD BEHBOODY No. C-61478 Exp. 06-30-13 CIVIL STATE OF CALIFORNIA

THE STATE OF CALIFORNIA OR ITS OFFICERS OR AGENTS SHALL NOT BE RESPONSIBLE FOR THE ACCURACY OR COMPLETENESS OF SCANNED COPIES OF THIS PLAN SHEET.

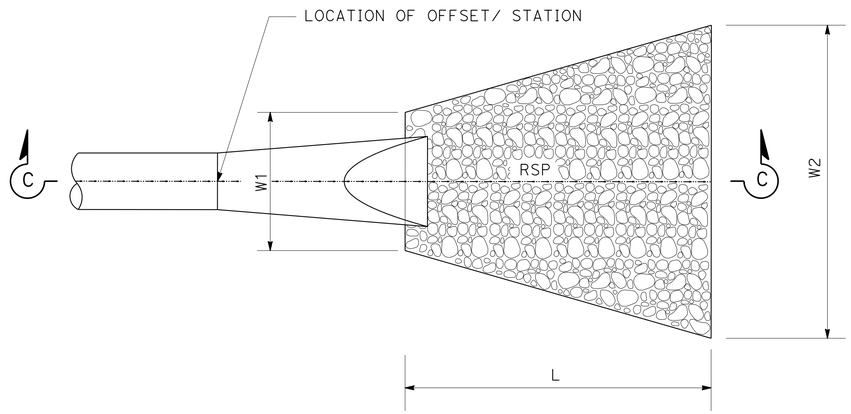

PLAN
RSP AT FES

NOTE:
FOR "E" SEE Std PLAN D94B

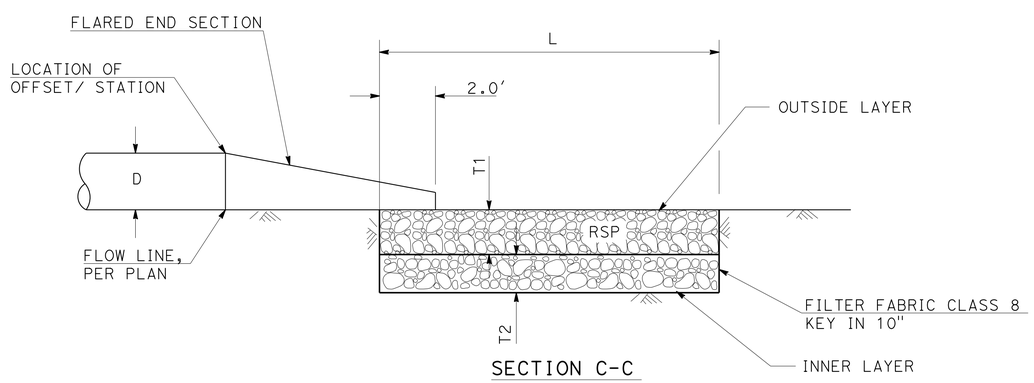

SECTION C-C

ROCK SLOPE PROTECTION

DRAINAGE SYSTEM UNIT No.	STATION/OFFSET	D	L	W1	W2	OUTSIDE LAYER		INNER LAYER	
						CLASS	T1	CLASS	T2
4 b	626+87.50 "EB" 28.20' Lt	2.0'	15.0'	6.0'	18.0'	FACING	1.8'	N/A	N/A
4 f	631+50.33 "EB" 81.35' Lt	2.0'	15.0'	6.0'	19.0'	FACING	1.8'	N/A	N/A
7 a	50+80.000 "LMR" 143.40' Lt	2.0'	25.0'	6.0'	25.0'	1/4T	3.3'	FACING	1.8'
8 c	46+60.50 "LMR1" 42.57' Lt	2.0'	10.0'	6.0'	12.0'	FACING	1.8'	N/A	N/A
9 h	46+60.50 "LMR1" 42.57' Lt	2.0'	10.0'	6.0'	12.0'	FACING	1.8'	N/A	N/A
11 a	647+78.990 "WB" 285.62 Lt	3.0'	25.0'	9.0'	25.0'	1/4T	3.3'	FACING	1.8'
14 a	648+55.030 "WB" 324.51' Lt	3.0'	25.0'	9.0'	25.0'	1/4T	3.3'	FACING	1.8'
10 a	50+15.000 "LMR" 137.00' Lt	3.0'	20.0'	9.0'	25.0'	1/4T	3.3'	FACING	1.8'
17 a	310+23.510 "SNY" 85.57' Lt	3.0'	15.0'	9.0'	25.0'	1/4T	3.3'	FACING	1.8'
19 a	70+68.720 "EFR3" 65.84' Rt	2.0'	12.0'	6.0'	15.0'	FACING	1.8'	N/A	N/A
Temp DRAINAGE	5 SEGMENTS SEE SHEETS SC-1 & SC-3	12.0'	35.0'	30.0'	30.0'	1/4T	3.3'	FACING	1.8'

NOTE:
PLACEMENT OF ALL RSP SHALL BE METHOD B

RSP AT FES

DRAINAGE DETAILS
NO SCALE
DD-18

REVISED BY | DATE REVISED
MICHAEL OREIRO | FARDAD BEHBOODY
CALCULATED-DESIGNED BY | CHECKED BY
FUNCTIONAL SUPERVISOR: MICHAEL J. WEBSTER
STATE OF CALIFORNIA - DEPARTMENT OF TRANSPORTATION
Caltrans
DESIGN

LAST REVISION 03-22-13 | DATE PLOTTED => 13-MAY-2013 | TIME PLOTTED => 20:19

Dist	COUNTY	ROUTE	POST MILES TOTAL PROJECT	SHEET No.	TOTAL SHEETS
11	SD	11, 905	0.0/1.6, R9.9/R10.7	237	622

REGISTERED CIVIL ENGINEER 03-25-13 DATE

04-22-13
PLANS APPROVAL DATE

REGISTERED PROFESSIONAL ENGINEER FARDAD BEHBOODY No. C-61478 Exp. 06-30-13 CIVIL STATE OF CALIFORNIA

THE STATE OF CALIFORNIA OR ITS OFFICERS OR AGENTS SHALL NOT BE RESPONSIBLE FOR THE ACCURACY OR COMPLETENESS OF SCANNED COPIES OF THIS PLAN SHEET.

DRAINAGE AND BIOSWALE DITCH TABLE

DRAINAGE SYSTEM UNIT No.	DITCH TYPE	LOCATION (STATION)	CHANNEL SIZE b (LF)	d (LF)	t (LF)	z	MATERIAL	CONCRETE	REMARKS
3 c	A	"LMD1A" 27+00	3	1.0	0.25	1:1	CONCRETE	0.06 cy/ft	TOE OF SLOPE
3 b	A	"LMD1A" 35+00	2	1.0	0.25	2:1	CONCRETE	0.05 cy/ft	BETWEEN MAINLINE & "LMD1A"
4 n	A	"EB" 625+00	2	1.50	0.25	1:1	CONCRETE	0.07 cy/ft	TOE OF SLOPE
5 z	A	"A" 27+00	5	4.33	0.33	1:1	CONCRETE	0.26 cy/ft	W/ CUTOFF WALL
5 aa	A	"A" 31+00	2	1.50	0.25	1:1	CONCRETE	0.07 cy/ft	INTERCEPT DITCH
6 d	A	"LMD1A" 38+00	2	1.50	0.25	1:1	CONCRETE	0.06 cy/ft	TOE OF SLOPE
9 d	B	"LMR" 46+00	20	3.00		2:1	EARTH		REPLACES EXISTING
9 e	B	"LMR" 47+00	20	3.00		2:1	EARTH		REPLACES EXISTING
9 f	B	"LMR" 48+00	16	3.00		2:1	EARTH		REPLACES EXISTING
9 g	B	"LMR" 50+00	10	3.00		2:1	EARTH		REPLACES EXISTING
10 bo	A	"EB" 632+00	2	1.5	0.25	1:1	CONCRETE	0.07 cy/ft	EB/WB INFIELD
10 bj	A	"LMR" 48+00	0	0.33	0.33	6:1	CONCRETE	0.04 cy/ft	OMIT CUTOFF WALL
13 d	B	"A" 33+00	3	1.0		4:1	EARTH		NEAR EDGE OF R/W
14 by	A	"A" 53+00	2	1.50	0.25	1:1	CONCRETE	0.07 cy/ft	EAST OF MSE WALL (SOUTH)
14 bz	A	"A" 53+00	2	1.50	0.25	1:1	CONCRETE	0.07 cy/ft	EAST OF MSE WALL (NORTH)
15 h	A	"WB1" 647+77.99	0	0.33	0.33	6:1	CONCRETE	0.04 cy/ft	OMIT CUTOFF WALL
15 g	A	"WB1" 648+45.19	0	0.33	0.33	6:1	CONCRETE	0.04 cy/ft	OMIT CUTOFF WALL
17 m	B	"A" 30+00	3	1.0		4:1	EARTH		TOE OF SLOPE
4	C	"EB" 630+00	5	1.00		4:1	NATIVE GRASS SOD		NEW BIOSWALE
8	C	"LMD1A" 43+50	5	1.00		4:1	NATIVE GRASS SOD		NEW BIOSWALE
9	C	"LMR" 48+47	8	2.00		4:1	NATIVE GRASS SOD		REPLACE Exist BIOSWALE
9	C	"LMR" 45+00	5	1.00		4:1	NATIVE GRASS SOD		NEW BIOSWALE
19	C	"EFR3" 69+49.00	5	1.00		4:1	NATIVE GRASS SOD		NEW BIOSWALE
19	C	"EFR4" 68+49.14	5	1.00		4:1	NATIVE GRASS SOD		NEW BIOSWALE

DRAINAGE AND BIOSWALE DITCHES

NOTES:

1. ALL DITCH STATIONS IN THE THE TABLE ARE ONLY FOR REFERENCE PURPOSES. FOR ACTUAL DITCH LOCATIONS AND LIMITS SEE DRAINAGE PLANS.
2. DEEPENED TOOL JOINTS AT 20' SPACING FOR TYPE A Conc DITCHES WHERE b>3'.
3. EXPANSION JOINTS AT 100' SPACING.
4. ADDITIONAL DETAILS FOR DITCH TRANSITIONS

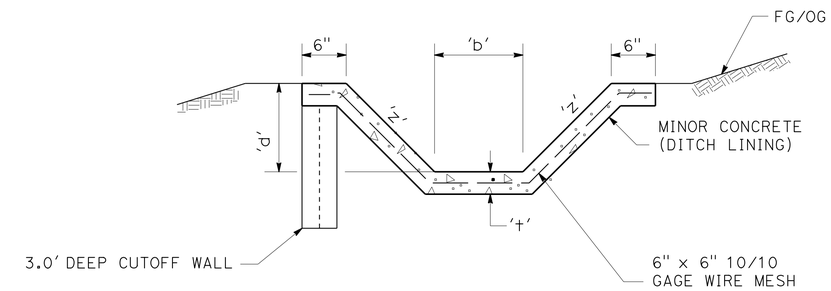

DRAINAGE DITCH (TYPE A)

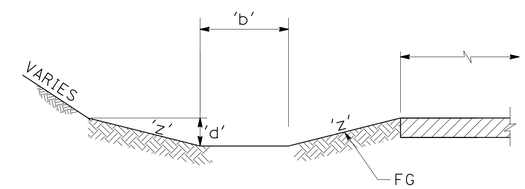

DRAINAGE DITCH (TYPE B)

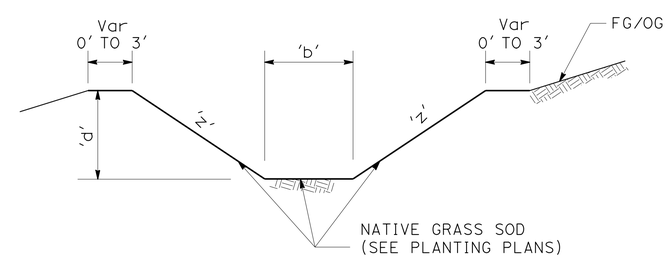

BIOSWALE

DRAINAGE DITCH (TYPE C)

DRAINAGE DETAILS
NO SCALE

DD-19

STATE OF CALIFORNIA - DEPARTMENT OF TRANSPORTATION
Caltrans®
DESIGN
FUNCTIONAL SUPERVISOR: MICHAEL J. WEBSTER
CALCULATED-DESIGNED BY: MICHAEL OREIRO
CHECKED BY: JOHN HANSON
REVISED BY
DATE REVISED

LAST REVISION 05-03-13
DATE PLOTTED => 05-JUN-2013
TIME PLOTTED => 09:26

Dist	COUNTY	ROUTE	POST MILES TOTAL PROJECT	SHEET No.	TOTAL SHEETS
11	SD	11, 905	0.0/1.6, R9.9/R10.7	238	622

REGISTERED CIVIL ENGINEER 03-25-13 DATE

04-22-13
PLANS APPROVAL DATE

REGISTERED PROFESSIONAL ENGINEER FARDAD BEHBOODY No. C-61478 Exp. 06-30-13 CIVIL STATE OF CALIFORNIA

THE STATE OF CALIFORNIA OR ITS OFFICERS OR AGENTS SHALL NOT BE RESPONSIBLE FOR THE ACCURACY OR COMPLETENESS OF SCANNED COPIES OF THIS PLAN SHEET.

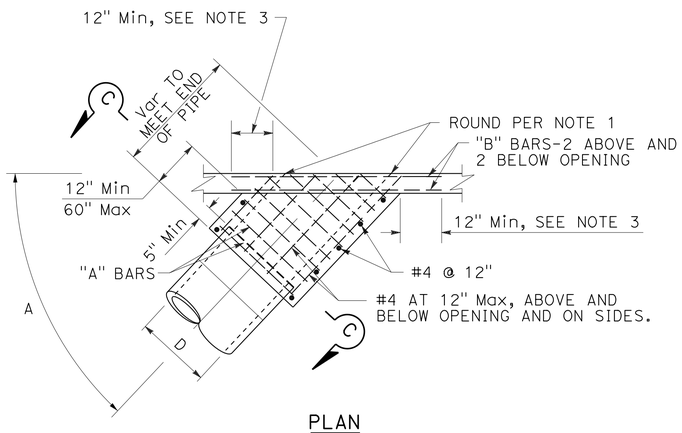

PLAN

TYPE L-4 COLLAR

COLLAR REINFORCEMENT

D (in)	T (in)	"A"	"B"	"C"
12	4	#4 @ 6"	#5	#5
15	4¼			
18	4½			
21	5			
24	5¼			
27	5½			
30	6			
33	6¼			
36	6½			
39	7			
42	7½	#5 @ 6"	#6	#6
45	7¾			
48	8			
51	8½			
54	9			
57	9¼			
60	9½			
63	10			
66	10¼			
69	10¾			
72	11			

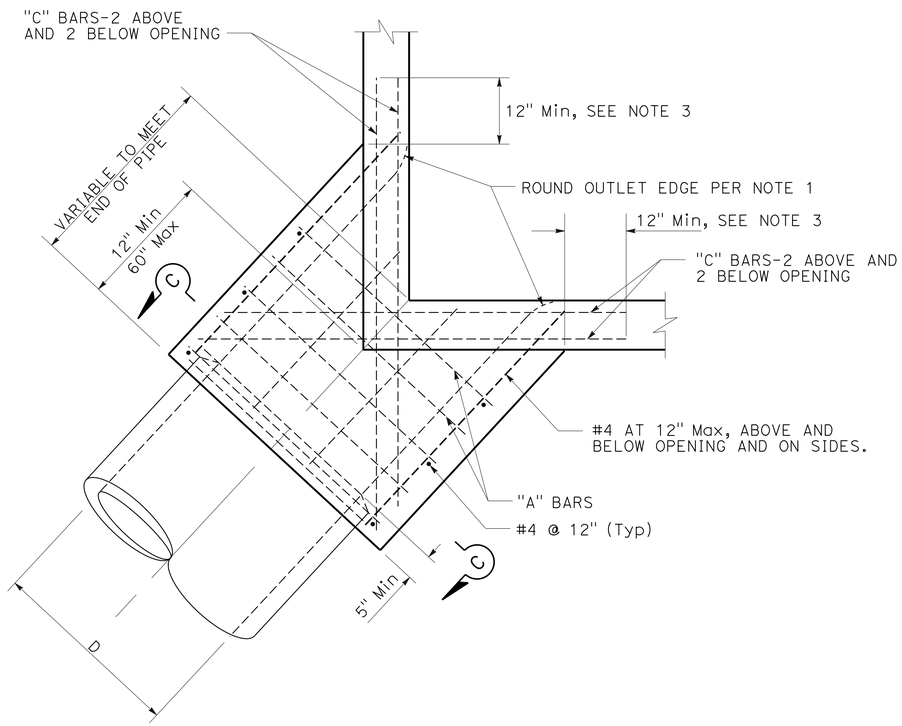

PLAN

TYPE M-42 COLLAR

NOTES:

1. ROUND EDGE OF OUTLET TO 3" RADIUS.
2. REINFORCEMENT SHALL BE 1½" CLEAR FROM THE FACE OF CONCRETE AND 2" CLEAR FROM OUTSIDE DIAMETER OF PIPE.
3. IN CONNECTING TO AN EXISTING STRUCTURE, BREAK OUT PORTIONS OF THE EXISTING STRUCTURE 12" OUTSIDE ITS INTERSECTION WITH THE NEW CONNECTION. BEND ENDS OF #4 BARS OVER COLLAR OPENING AS REQUIRED.
4. REINFORCING STEEL FOR INSIDE FACE OF STRUCTURE SHALL BE CUT AT CENTER OF OPENING AND BENT INTO WALLS OF COLLAR. REINFORCING STEEL FOR OUTSIDE FACE OF STRUCTURE SHALL BE CUT 2" CLEAR OF OPENING.
5. IN CONNECTING WITH A NEW STRUCTURE, COLLAR SHALL BE PLACED MONOLITHIC WITH STRUCTURE. THE ROUNDED EDGE OF OUTLET SHALL BE CONSTRUCTED BY PLACING CONCRETE WITH THE SAME CLASS OF CONCRETE AS THE STRUCTURE AGAINST A CURVED FORM WITH A RADIUS OF 3".

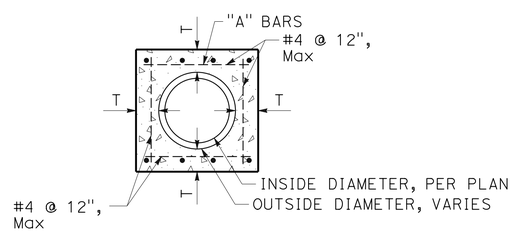

SECTION C-C

DRAINAGE DETAILS

NO SCALE

DD-20

STATE OF CALIFORNIA - DEPARTMENT OF TRANSPORTATION
Caltrans®
DESIGN

FUNCTIONAL SUPERVISOR: MICHAEL J. WEBSTER
CALCULATED-DESIGNED BY: MICHAEL OREIRO
CHECKED BY: JOHN HANSON
REVISED BY
DATE REVISED

LAST REVISION 05-03-13
DATE PLOTTED => 13-MAY-2013
TIME PLOTTED => 20:20

Dist	COUNTY	ROUTE	POST MILES TOTAL PROJECT	SHEET No.	TOTAL SHEETS
11	SD	11, 905	0.0/1.6, R9.9/R10.7	239	622

REGISTERED CIVIL ENGINEER 03-25-13 DATE

04-22-13
PLANS APPROVAL DATE

REGISTERED PROFESSIONAL ENGINEER FARDAD BEHBOODY No. C-61478 Exp. 06-30-13 CIVIL STATE OF CALIFORNIA

THE STATE OF CALIFORNIA OR ITS OFFICERS OR AGENTS SHALL NOT BE RESPONSIBLE FOR THE ACCURACY OR COMPLETENESS OF SCANNED COPIES OF THIS PLAN SHEET.

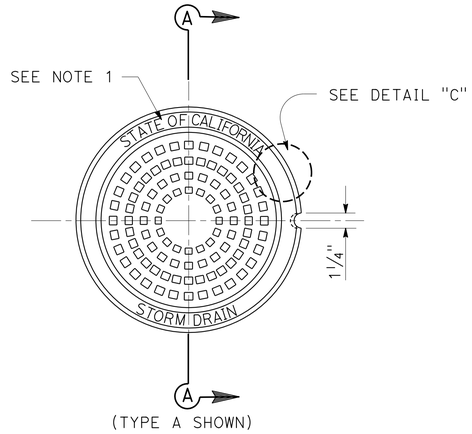

(TYPE A SHOWN)

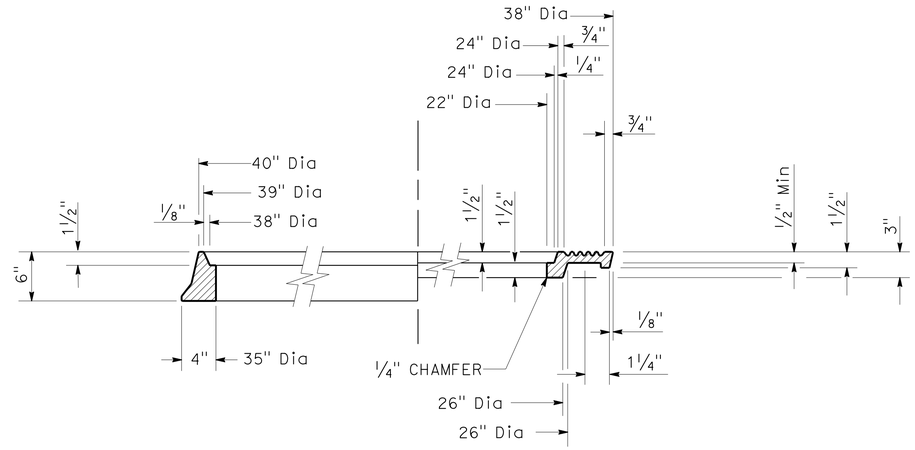

HALF SECTION FRAME AND COVER

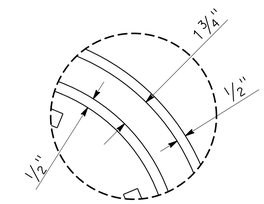

DETAIL "C"

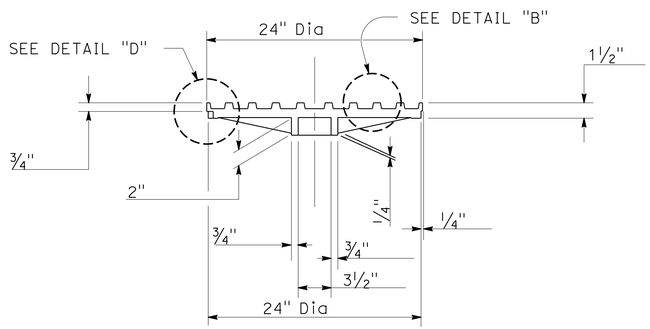

SECTION A-A

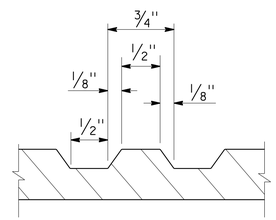

DETAIL "B"

NOTES:

1. FOR FRAME AND COVERS FURNISHED WITHIN THE STATE'S RIGHT OF WAY, COVERS SHALL BE MARKED "STATE OF CALIFORNIA" AND "STORM DRAIN". FOR FRAME AND COVERS FURNISHED WITHIN LOCAL CITY'S RIGHT OF WAY, COVERS SHALL BE MARKED WITH THE JURISDICTIONAL CITY NAME AND "STORM DRAIN".
2. WEIGHTS:

FRAME	314 - 363 LB
OUTER COVER	285 - 330 LB
INNER COVER	147 - 171 LB

3. MACHINE ALL MATCHING SURFACES AND SEATS OF FRAME AND COVER TO PREVENT ROCKING.
4. IMPORTED FRAMES AND COVERS SHALL HAVE THE COUNTRY OF ORIGIN MARKED IN COMPLIANCE WITH FEDERAL REGULATIONS.
5. COVERS FOR MANHOLES SHALL BE SUPPLIED WITH MANHOLE COVER LOCK, SEE MANHOLE COVER LOCK DETAIL.

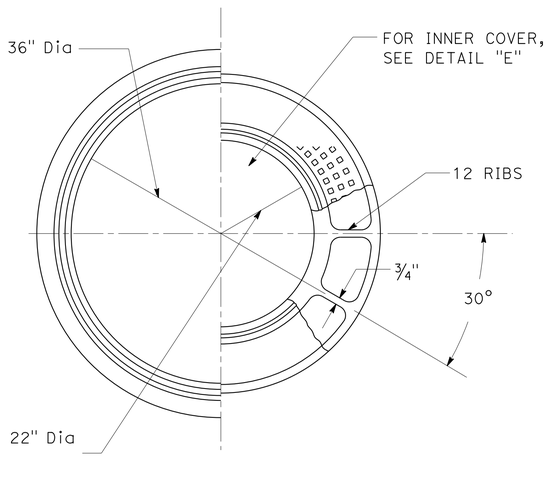

HALF PLAN FRAME AND COVER

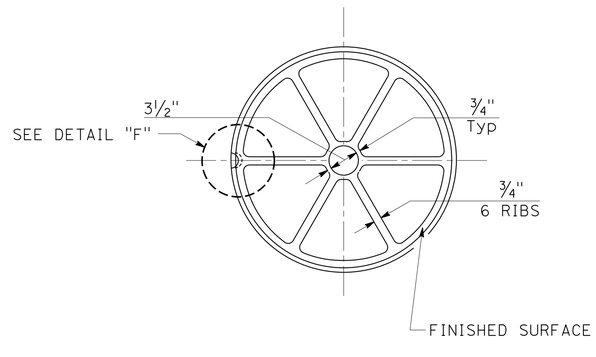

DETAIL "E"

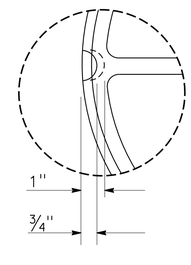

DETAIL "F"

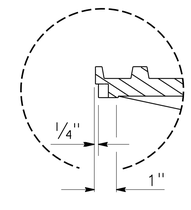

DETAIL "D"

36" MANHOLE FRAME AND TWO CONCENTRIC COVERS HEAVY DUTY

DRAINAGE DETAILS

NO SCALE

DD-21

REVISED BY	DATE REVISED
MICHAEL OREIRO	JOHN HANSON
CALCULATED-DESIGNED BY	CHECKED BY
FUNCTIONAL SUPERVISOR	MICHAEL J. WEBSTER

STATE OF CALIFORNIA - DEPARTMENT OF TRANSPORTATION
Caltrans
DESIGN

LAST REVISION 05-03-13 | DATE PLOTTED => 13-MAY-2013 | TIME PLOTTED => 20:20

Dist	COUNTY	ROUTE	POST MILES TOTAL PROJECT	SHEET No.	TOTAL SHEETS
11	SD	11, 905	0.0/1.6, R9.9/R10.7	240	622

REGISTERED CIVIL ENGINEER 03-25-13 DATE

04-22-13
PLANS APPROVAL DATE

REGISTERED PROFESSIONAL ENGINEER FARDAD BEHBOODY No. C-61478 Exp. 06-30-13 CIVIL STATE OF CALIFORNIA

THE STATE OF CALIFORNIA OR ITS OFFICERS OR AGENTS SHALL NOT BE RESPONSIBLE FOR THE ACCURACY OR COMPLETENESS OF SCANNED COPIES OF THIS PLAN SHEET.

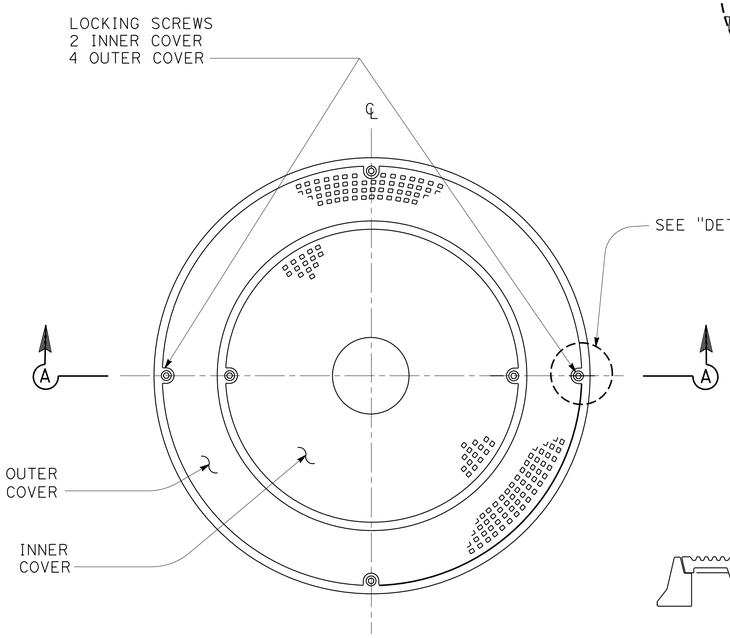

PLAN

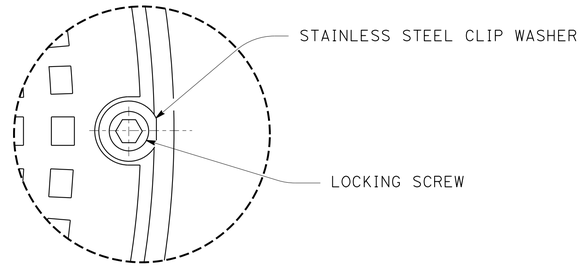

DETAIL "A"

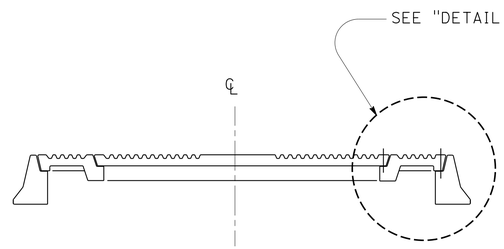

SECTION A-A

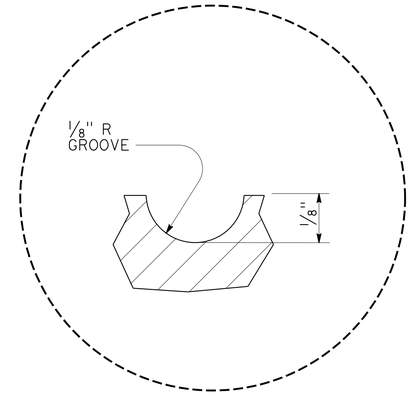

DETAIL "C"

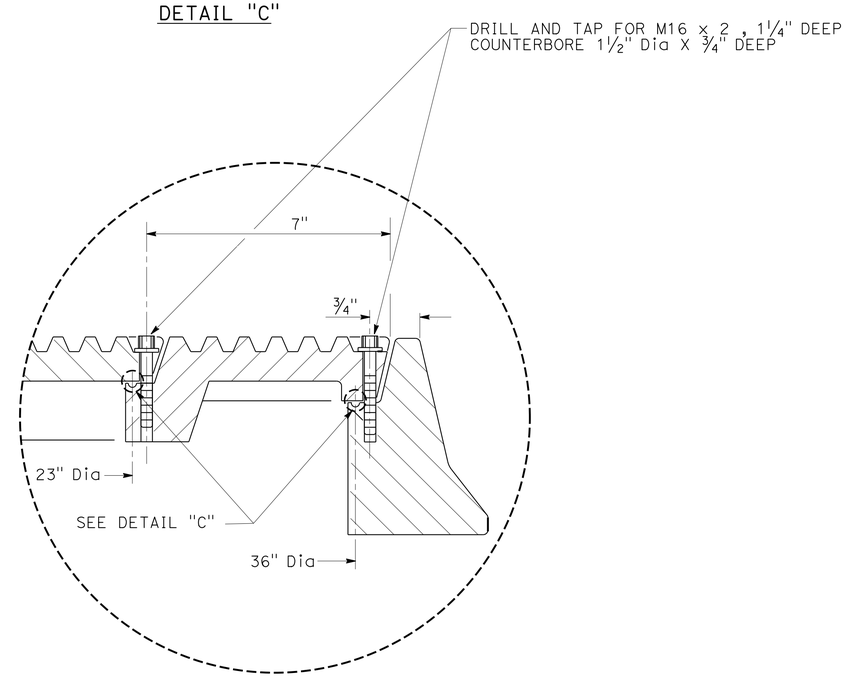

DETAIL "B"

NOTES:

1. M16 x 2 , 316 STAINLESS STEEL SOCKET HEAD CAP SCREW AND 1 1/2" OD X 3/4" ID X 1/16" THICK 316 STAINLESS STEEL WASHER.
2. 1/4" NEOPRENE O-RING GASKET SHALL BE GLUED INTO MACHINED GROOVE. GLUE SHALL MEET THE REQUIREMENTS OFMIL-M-81288
3. BOLTDOWN PATTERNS:
   a. BETWEEN INNER AND OUTER COVERS INSTALL TWO BOLTS AT 180°
   b. BETWEEN OUTER COVER AND FRAME INSTALL FOUR BOLTS AT 90°.

MANHOLE COVER LOCK

DRAINAGE DETAILS
NO SCALE **DD-22**

REVISED BY	DATE REVISED

CALCULATED-DESIGNED BY: MICHAEL OREIRO
CHECKED BY: JOHN HANSON
FUNCTIONAL SUPERVISOR: MICHAEL J. WEBSTER

STATE OF CALIFORNIA - DEPARTMENT OF TRANSPORTATION
Caltrans
DESIGN

LAST REVISION 01-30-13
DATE PLOTTED => 13-MAY-2013
TIME PLOTTED => 20:20

Dist	COUNTY	ROUTE	POST MILES TOTAL PROJECT	SHEET No.	TOTAL SHEETS
11	SD	11, 905	0.0/1.6, R9.9/R10.7	241	622

REGISTERED CIVIL ENGINEER 03-25-13 DATE

04-22-13
PLANS APPROVAL DATE

REGISTERED PROFESSIONAL ENGINEER FARDAD BEHBOODY No. C-61478 Exp. 06-30-13 CIVIL STATE OF CALIFORNIA

THE STATE OF CALIFORNIA OR ITS OFFICERS OR AGENTS SHALL NOT BE RESPONSIBLE FOR THE ACCURACY OR COMPLETENESS OF SCANNED COPIES OF THIS PLAN SHEET.

NOTES:

1. FOR ADDITIONAL INFORMATION SEE DRAINAGE PROFILE AND Std PLANS S18, D75C, D91A AND D91B
2. FOR LANDING PLATFORM SEE DRAINAGE DETAIL DD-24
3. QUANTITIES OF LANDING PLATFORMS AND RAILINGS ARE INCLUDED IN MISCELLANEOUS IRON AND STEEL

TABLE

SYSTEM	UNIT	H	L	W	D1	D2	D3	D4	H1	H2	H3	LANDING PLATFORM	SAFETY RAILING
		ft	ft	ft	in	in	in	in	ft	ft	ft	SQFT	ft
16	c	22.0	5.0	9.7	84	84	24	—	16.4	5.6	—	5x5	3
	e	14.0	5.0	9.7	84	84	24	36	11.3	7.3	10.3	N/A	
	g	12.0	7.5	9.7	54	84	66	—	—	12.8	—	5x5	3
	i	12.0	5.0	6.0	54	54	24	18	9.3	4.8	9.8	N/A	
	k	9.7	5.0	6.0	54	54	42	—	0.4	6.3	—	N/A	
	m	6.8	5.0	6.0	24	54	36	42	2.8	6.3	4.5	N/A	
	s	6.3	5.0	3.5	18	24	—	—	—	4.1	—	N/A	
	y	9.4	5.0	7.5	54	66	24	24	4.3	7.7	6.3	N/A	
14	cc	9.0	6.0	3.5	36	36	24	24	5.5	9.8	5.5	N/A	

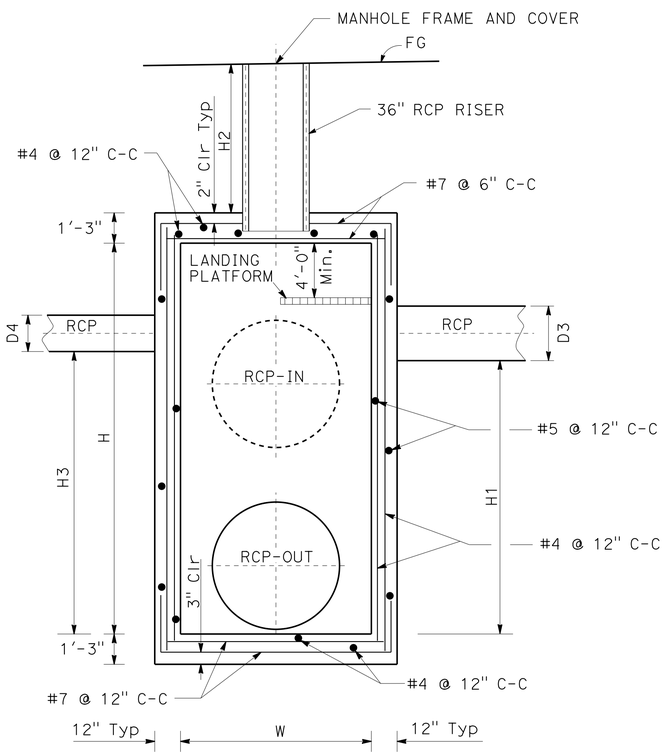

SECTION A-A

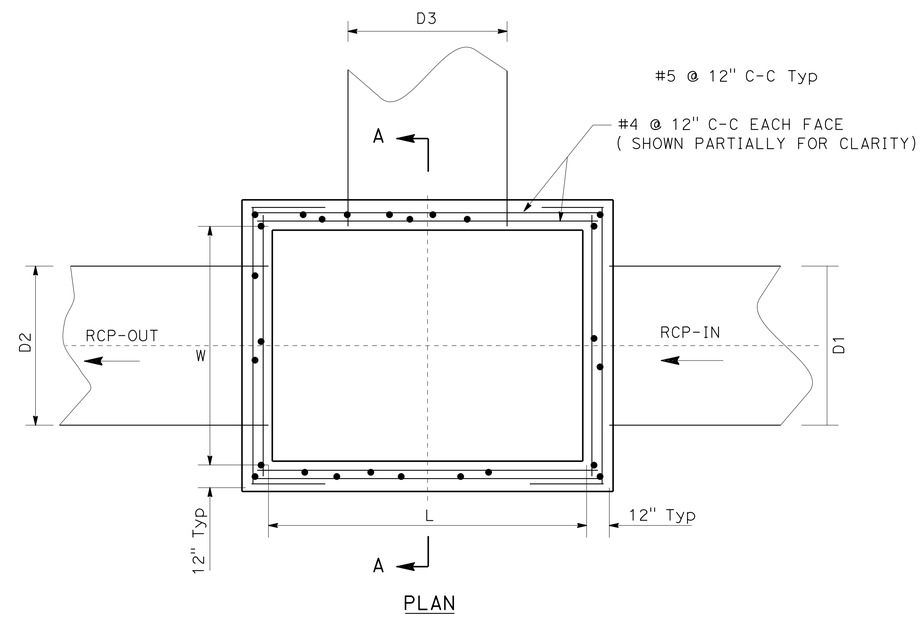

PLAN

REINFORCEMENT DETAIL

Mod JUNCTION STRUCTURE

16 c 16 e 16 g 16 i 16 k 16 m 16 s 16 y 14 cc

DRAINAGE DETAILS
NO SCALE

DD-23

STATE OF CALIFORNIA - DEPARTMENT OF TRANSPORTATION
Caltrans® DESIGN

FUNCTIONAL SUPERVISOR: MICHAEL J. WEBSTER
CALCULATED-DESIGNED BY: FARDAD BEHBOODY
CHECKED BY: TULLY McCARTHY
REVISED BY
DATE REVISED

LAST REVISION 05-03-13
DATE PLOTTED => 13-MAY-2013
TIME PLOTTED => 20:20

Dist	COUNTY	ROUTE	POST MILES TOTAL PROJECT	SHEET No.	TOTAL SHEETS
11	SD	11, 905	0.0/1.6, R9.9/R10.7	242	622

REGISTERED CIVIL ENGINEER 03-25-13 DATE

04-22-13
PLANS APPROVAL DATE

REGISTERED PROFESSIONAL ENGINEER FARDAD BEHBOODY No. C-61478 Exp. 06-30-13 CIVIL STATE OF CALIFORNIA

THE STATE OF CALIFORNIA OR ITS OFFICERS OR AGENTS SHALL NOT BE RESPONSIBLE FOR THE ACCURACY OR COMPLETENESS OF SCANNED COPIES OF THIS PLAN SHEET.

NOTES:

FOR ADDITIONAL INFORMATION SEE DRAINAGE PROFILE AND Std PLAN S18, D75C

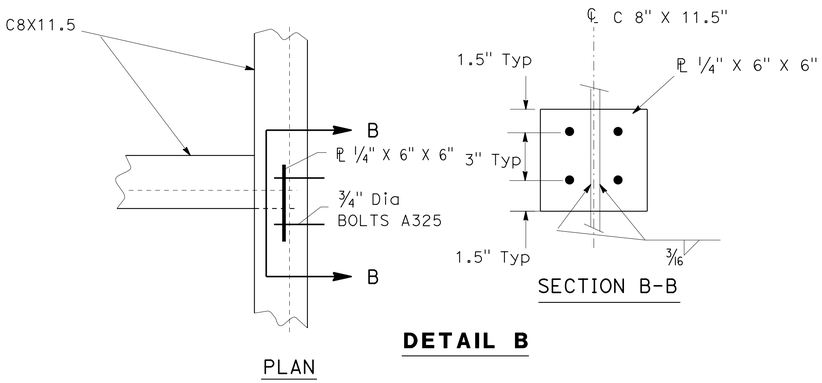

DETAIL B

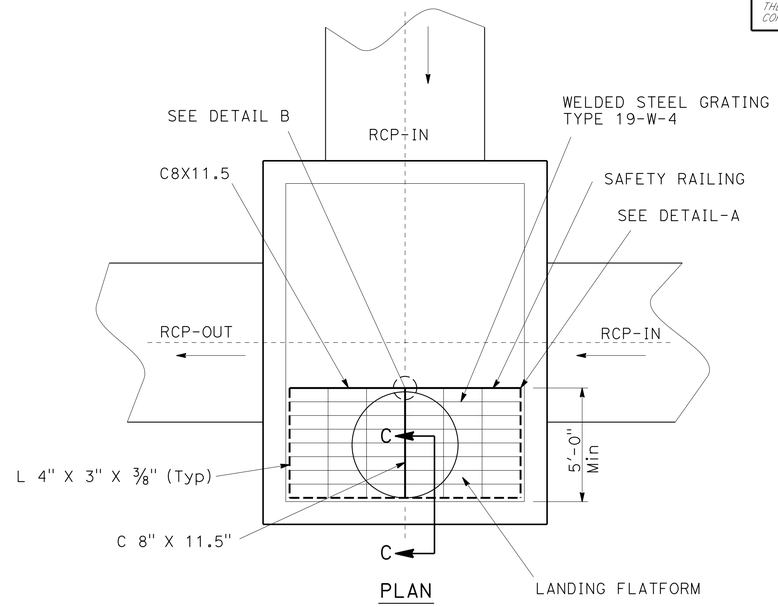

LANDING PLATFORM

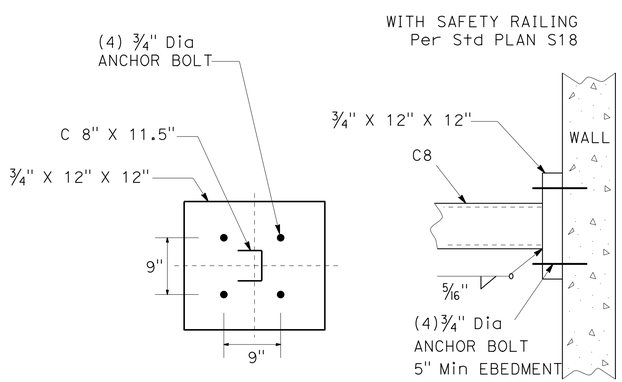

DETAIL A

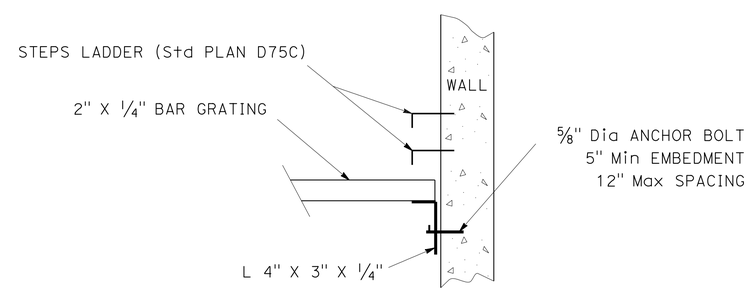

LANDING PLATFORM DETAILS
WITH SAFETY RAILINGS Per Std PLAN S18

Mod JUNCTION STRUCTURE

16 c 16 e 16 g 16 i 16 k 16 m 16 s 16 y

DRAINAGE DETAILS
NO SCALE

DD-24

STATE OF CALIFORNIA - DEPARTMENT OF TRANSPORTATION
Caltrans® DESIGN
FUNCTIONAL SUPERVISOR MICHAEL J. WEBSTER
CALCULATED-DESIGNED BY FARDAD BEHBOODY
CHECKED BY MICHAEL OREIRO
REVISED BY
DATE REVISED

LAST REVISION 05-03-13 | DATE PLOTTED => 13-MAY-2013 | TIME PLOTTED => 20:20

Dist	COUNTY	ROUTE	POST MILES TOTAL PROJECT	SHEET No.	TOTAL SHEETS
11	SD	11, 905	0.0/1.6, R9.9/R10.7	243	622

REGISTERED CIVIL ENGINEER 03-25-13 DATE

04-22-13
PLANS APPROVAL DATE

REGISTERED PROFESSIONAL ENGINEER FARDAD BEHBOODY No. C-61478 Exp. 06-30-13 CIVIL STATE OF CALIFORNIA

THE STATE OF CALIFORNIA OR ITS OFFICERS OR AGENTS SHALL NOT BE RESPONSIBLE FOR THE ACCURACY OR COMPLETENESS OF SCANNED COPIES OF THIS PLAN SHEET.

NOTE:

*SEE DD-26 FOR CROSS SECTION A-A AND DETAIL.

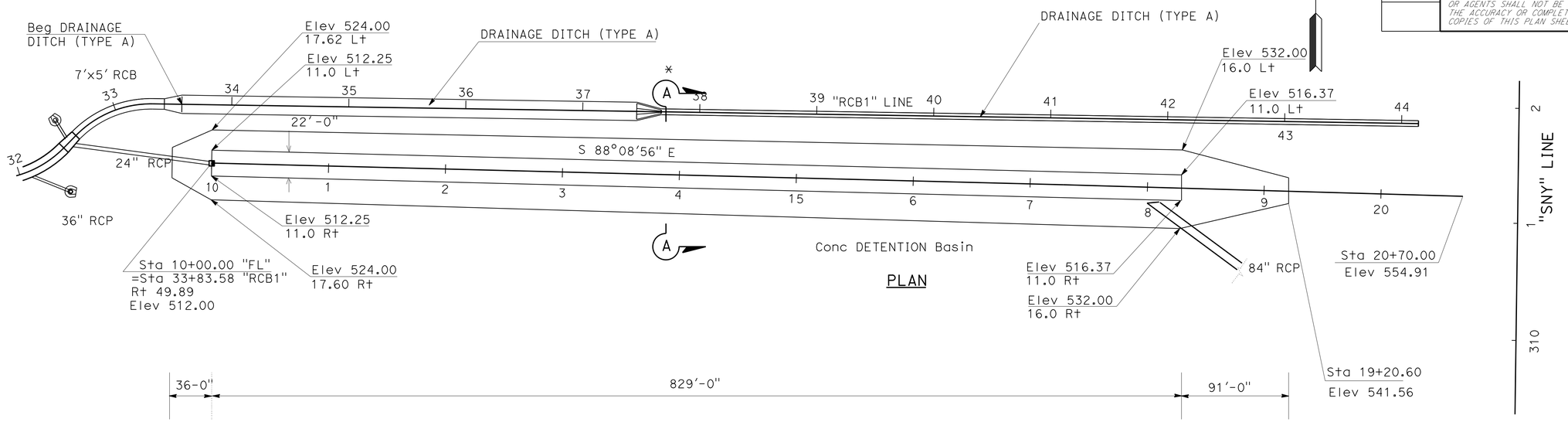

PLAN

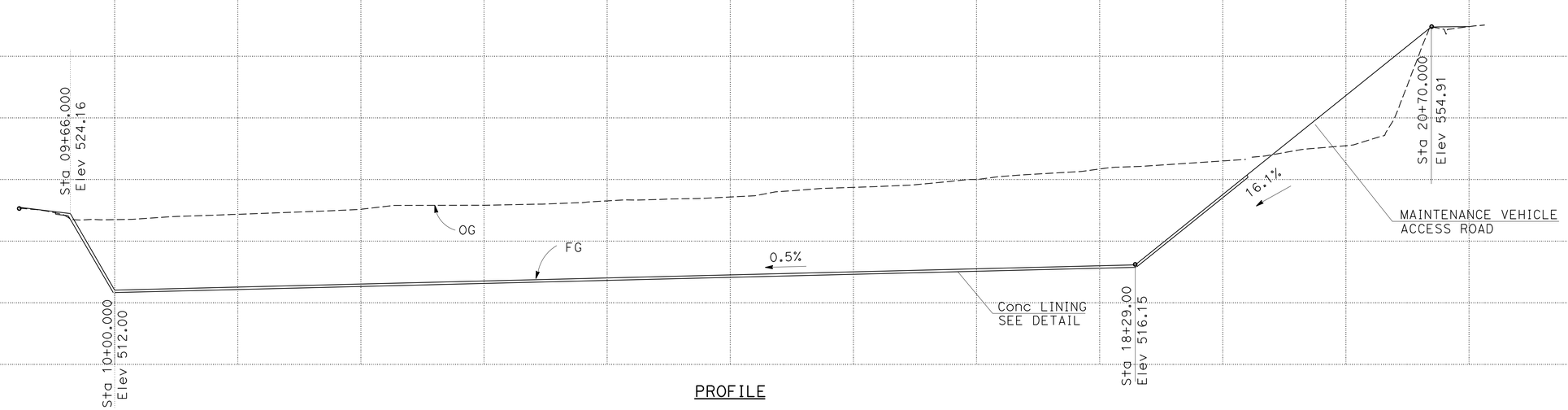

PROFILE

SANYO CONCRETE DETENTION BASIN 5 W

DRAINAGE DETAILS

NO SCALE

DD-25

STATE OF CALIFORNIA - DEPARTMENT OF TRANSPORTATION
Caltrans
DESIGN
FUNCTIONAL SUPERVISOR: MICHAEL J. WEBSTER
CALCULATED-DESIGNED BY: SIRAJUL RONI
CHECKED BY: FARDAD BEHBOODY
REVISED BY
DATE REVISED

LAST REVISION 05-03-13 | DATE PLOTTED => 13-MAY-2013 | TIME PLOTTED => 20:20

Dist	COUNTY	ROUTE	POST MILES TOTAL PROJECT	SHEET No.	TOTAL SHEETS
11	SD	11, 905	0.0/1.6, R9.9/R10.7	244	622

REGISTERED CIVIL ENGINEER 03-25-13 DATE

04-22-13
PLANS APPROVAL DATE

REGISTERED PROFESSIONAL ENGINEER FARDAD BEHBOODY No. C-61478 Exp. 06-30-13 CIVIL STATE OF CALIFORNIA

THE STATE OF CALIFORNIA OR ITS OFFICERS OR AGENTS SHALL NOT BE RESPONSIBLE FOR THE ACCURACY OR COMPLETENESS OF SCANNED COPIES OF THIS PLAN SHEET.

NOTES:

1. WEAKENED PLANE JOINTS SHALL BE PLACED EVERY 12′ TO 15′. EXPANSION JOINTS SHALL BE PLACED AT ALL CHANGES OF SECTION AND AT END OF CURVES.
2. REINFORCEMENT SHOWN IS MINIMUM.

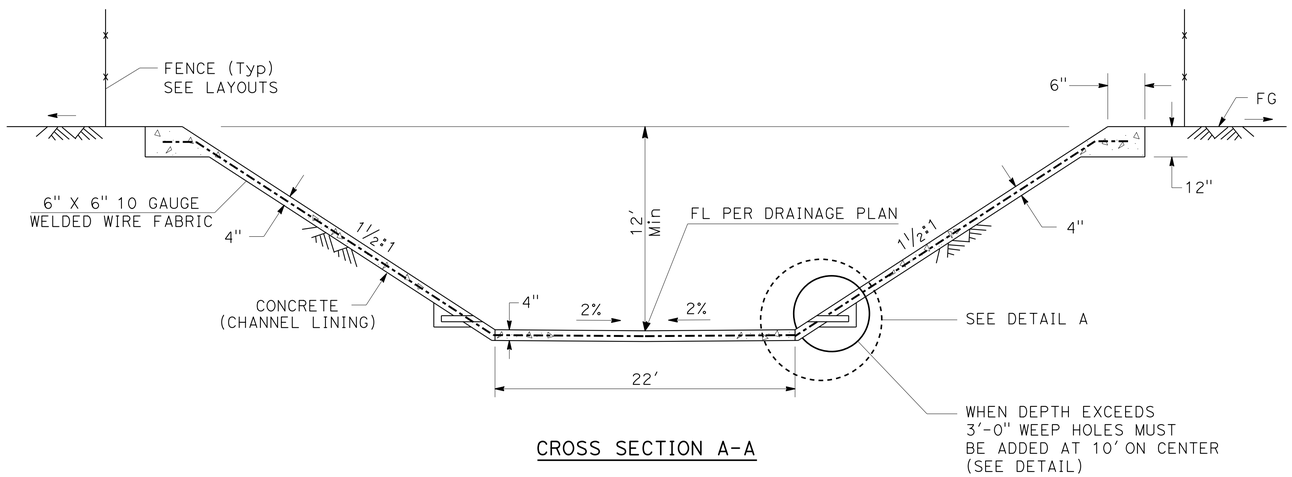

CROSS SECTION A-A

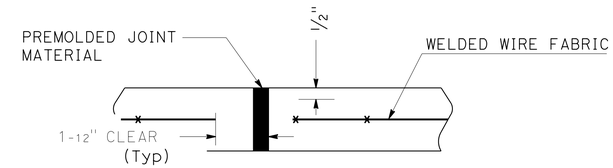

EXPANSION JOINT

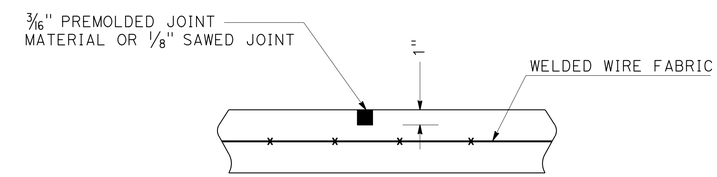

WEAKENED PLANE JOINT

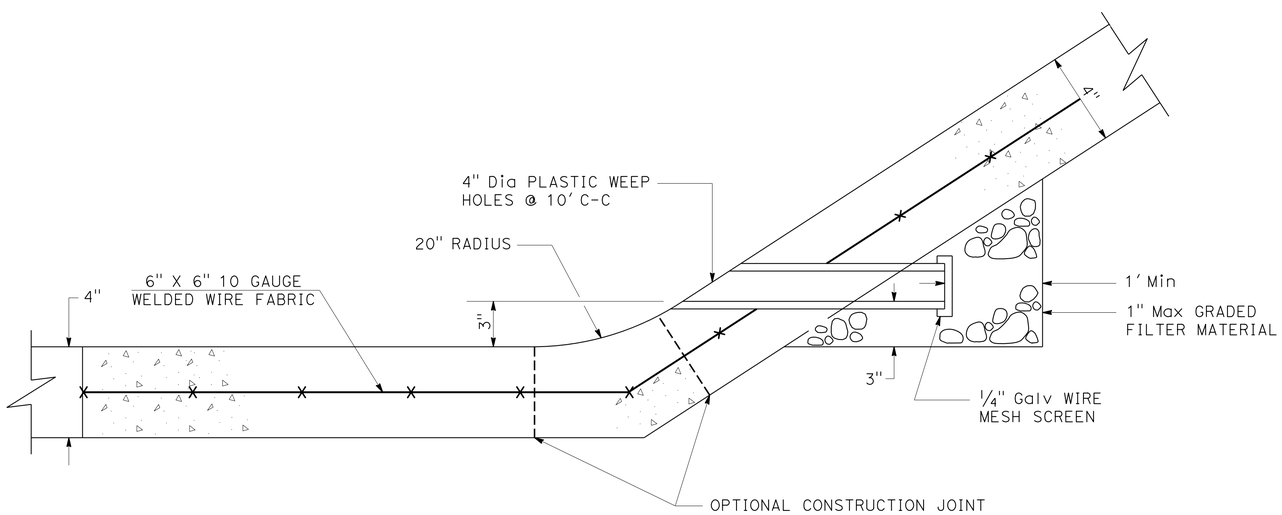

DETAIL A

SANYO CONCRETE DETENTION BASIN 5 W

DRAINAGE DETAILS
NO SCALE **DD-26**

STATE OF CALIFORNIA - DEPARTMENT OF TRANSPORTATION
Caltrans
DESIGN
FUNCTIONAL SUPERVISOR: MICHAEL J. WEBSTER
CALCULATED-DESIGNED BY: SIRAJUL RONI
CHECKED BY: MICHAEL OREIRO
REVISED BY
DATE REVISED

LAST REVISION 05-03-13
DATE PLOTTED => 13-MAY-2013
TIME PLOTTED => 20:20

Dist	COUNTY	ROUTE	POST MILES TOTAL PROJECT	SHEET No.	TOTAL SHEETS
11	SD	11, 905	0.0/1.6, R9.9/R10.7	245	622

REGISTERED CIVIL ENGINEER 03-25-13 DATE

04-22-13
PLANS APPROVAL DATE

REGISTERED PROFESSIONAL ENGINEER FARDAD BEHBOODY No. C-61478 Exp. 06-30-13 CIVIL STATE OF CALIFORNIA

THE STATE OF CALIFORNIA OR ITS OFFICERS OR AGENTS SHALL NOT BE RESPONSIBLE FOR THE ACCURACY OR COMPLETENESS OF SCANNED COPIES OF THIS PLAN SHEET.

NOTES:

1. SEE D87D FOR ADDITIONAL DETAILS

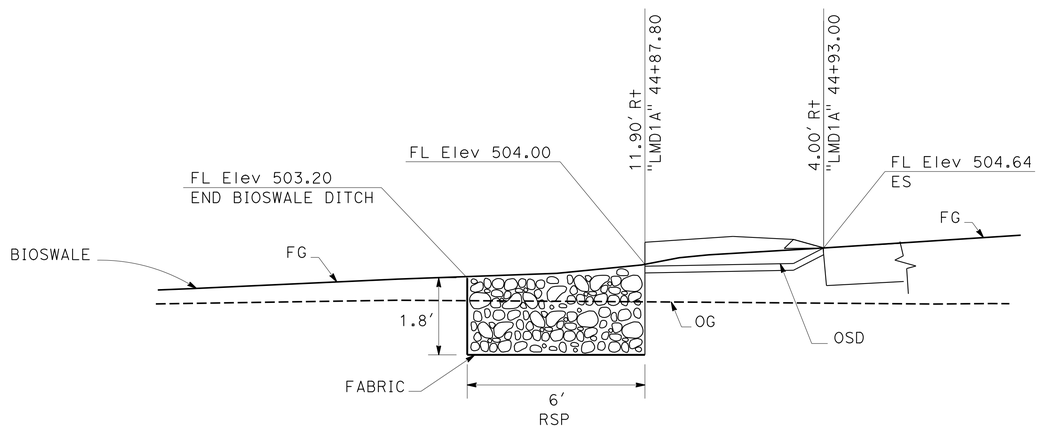

SECTION G-G

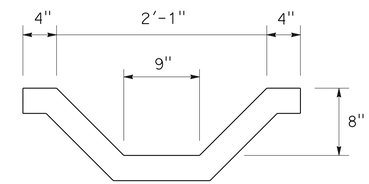

SECTION C-C

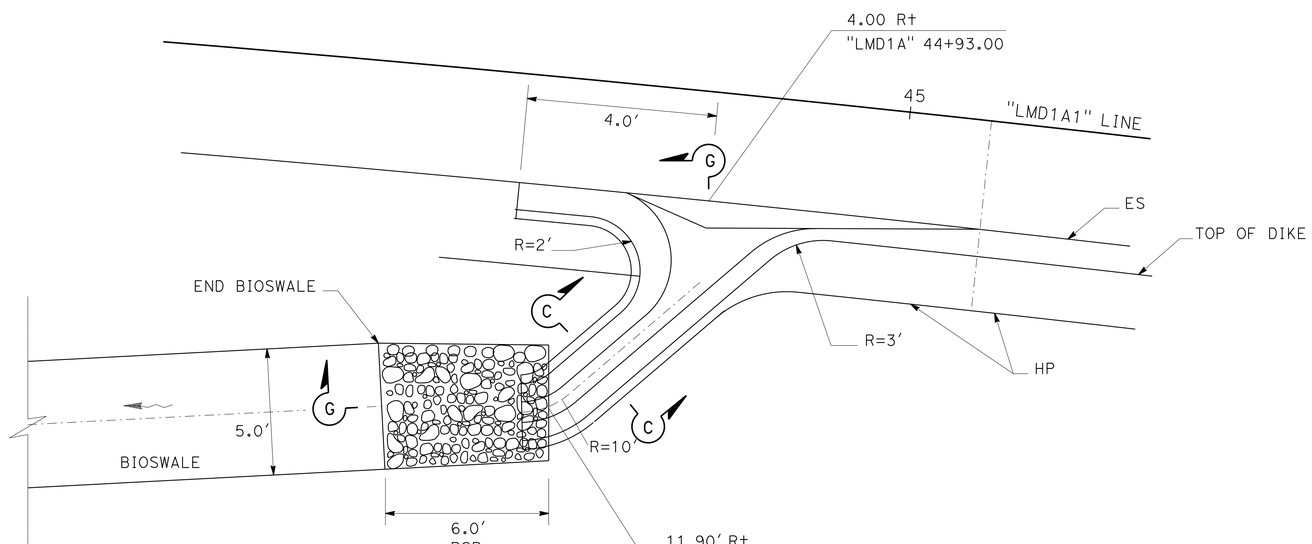

PLAN

OVERSIDE DRAIN (MOD)

8 d

DRAINAGE DETAILS

NO SCALE

DD-27

STATE OF CALIFORNIA - DEPARTMENT OF TRANSPORTATION
Caltrans®
DESIGN

FUNCTIONAL SUPERVISOR: MICHAEL J. WEBSTER
CALCULATED-DESIGNED BY: SYDNEY T TRAN
CHECKED BY: FARDAD BEHBOODY
REVISED BY
DATE REVISED

LAST REVISION 05-03-13
DATE PLOTTED => 13-MAY-2013
TIME PLOTTED => 20:20

Dist	COUNTY	ROUTE	POST MILES TOTAL PROJECT	SHEET No.	TOTAL SHEETS
11	SD	11, 905	0.0/1.6, R9.9/R10.7	246	622

REGISTERED CIVIL ENGINEER 03-25-13 DATE

04-22-13
PLANS APPROVAL DATE

REGISTERED PROFESSIONAL ENGINEER FARDAD BEHBOODY No. C-61478 Exp. 06-30-13 CIVIL STATE OF CALIFORNIA

THE STATE OF CALIFORNIA OR ITS OFFICERS OR AGENTS SHALL NOT BE RESPONSIBLE FOR THE ACCURACY OR COMPLETENESS OF SCANNED COPIES OF THIS PLAN SHEET.

CURVE DATA

No. (X)	R	Δ	T	L
1	1,824.7′	1°34′12"	25.0′	50.0′

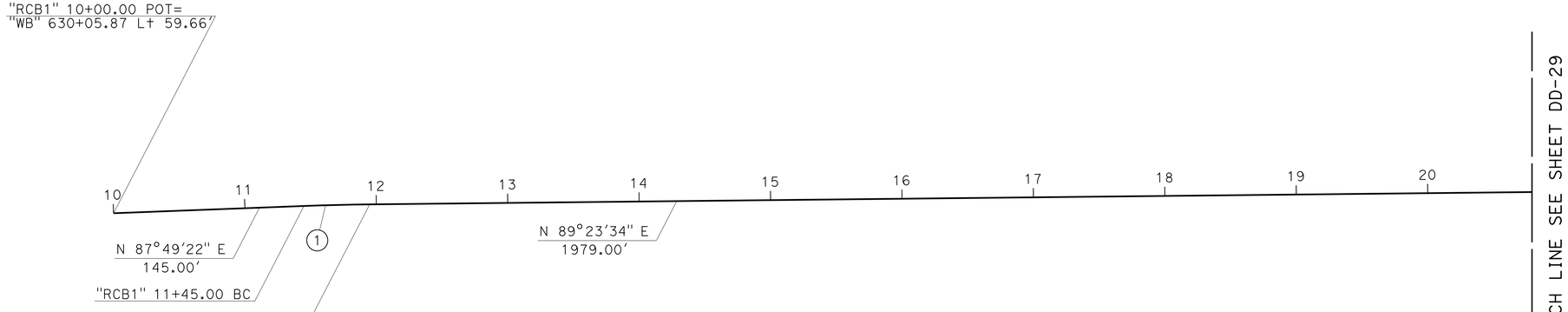

"RCB1" ALIGNMENT

5 f 5 g 5 h 5 j 5 l

DRAINAGE DETAILS

NO SCALE

DD-28

REVISED BY | DATE REVISED
FARDAD BEHBOODY | MICHAEL OREIRO
CALCULATED-DESIGNED BY | CHECKED BY
FUNCTIONAL SUPERVISOR: MICHAEL J. WEBSTER
STATE OF CALIFORNIA - DEPARTMENT OF TRANSPORTATION
Caltrans
DESIGN

LAST REVISION 05-03-13 | DATE PLOTTED => 13-MAY-2013 | TIME PLOTTED => 20:20

Dist	COUNTY	ROUTE	POST MILES TOTAL PROJECT	SHEET No.	TOTAL SHEETS
11	SD	11, 905	0.0/1.6, R9.9/R10.7	247	622

REGISTERED CIVIL ENGINEER 03-25-13 DATE

04-22-13
PLANS APPROVAL DATE

REGISTERED PROFESSIONAL ENGINEER
FARDAD BEHBOODY
No. C-61478
Exp. 06-30-13
CIVIL
STATE OF CALIFORNIA

THE STATE OF CALIFORNIA OR ITS OFFICERS OR AGENTS SHALL NOT BE RESPONSIBLE FOR THE ACCURACY OR COMPLETENESS OF SCANNED COPIES OF THIS PLAN SHEET.

CURVE DATA

No. (X)	R	Δ	T	L
2	90.0′	44°59′59″	37.28′	70.69′
3	90.0′	46°30′02″	38.67′	73.04′

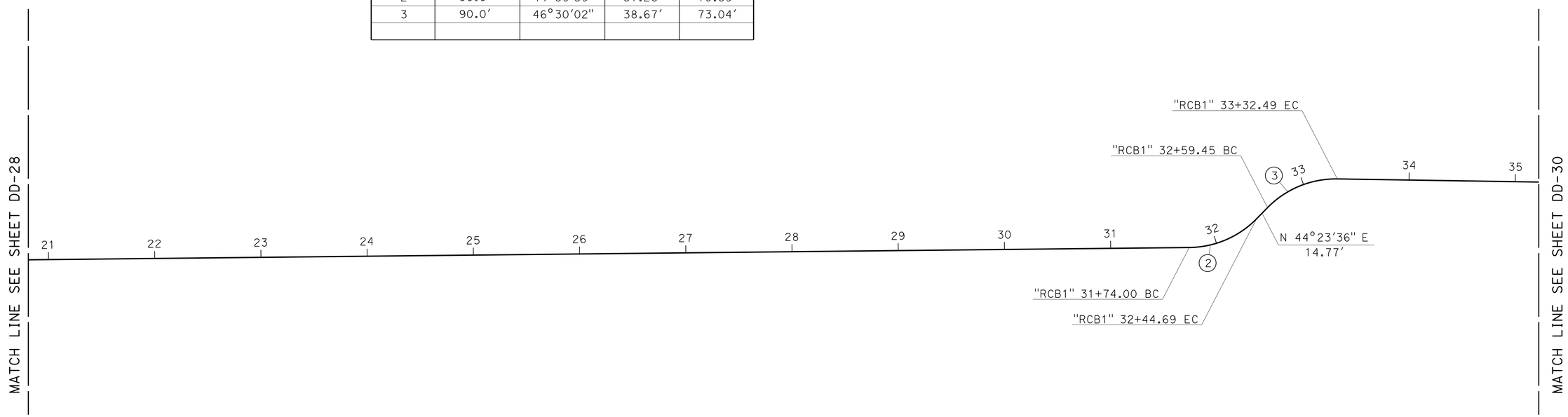

"RCB1" ALIGNMENT

5 n 5 o 5 p 5 r 5 s 5 x 5 y 5 z

DRAINAGE DETAILS

NO SCALE

DD-29

STATE OF CALIFORNIA - DEPARTMENT OF TRANSPORTATION
Caltrans
DESIGN

FUNCTIONAL SUPERVISOR: MICHAEL J. WEBSTER
CALCULATED-DESIGNED BY: FARDAD BEHBOODY
CHECKED BY: MICHAEL OREIRO
REVISED BY
DATE REVISED

LAST REVISION 05-03-13 | DATE PLOTTED => 13-MAY-2013 | TIME PLOTTED => 20:20

Dist	COUNTY	ROUTE	POST MILES TOTAL PROJECT	SHEET No.	TOTAL SHEETS
11	SD	11, 905	0.0/1.6, R9.9/R10.7	248	622

REGISTERED CIVIL ENGINEER 03-25-13 DATE

04-22-13
PLANS APPROVAL DATE

REGISTERED PROFESSIONAL ENGINEER
FARDAD BEHBOODY
No. C-61478
Exp. 06-30-13
CIVIL
STATE OF CALIFORNIA

THE STATE OF CALIFORNIA OR ITS OFFICERS OR AGENTS SHALL NOT BE RESPONSIBLE FOR THE ACCURACY OR COMPLETENESS OF SCANNED COPIES OF THIS PLAN SHEET.

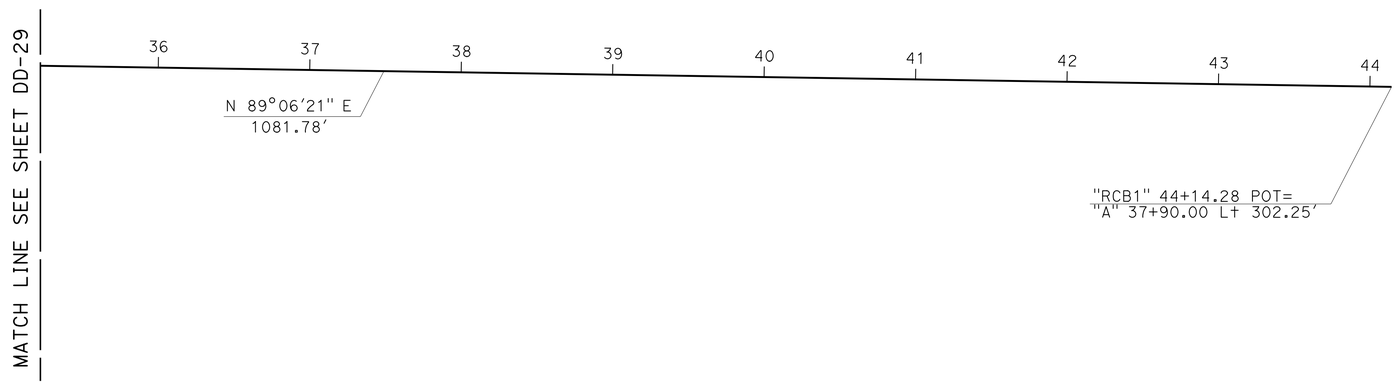

"RCB1" ALIGNMENT

5 Z 5 aa

DRAINAGE DETAILS

NO SCALE

DD-30

STATE OF CALIFORNIA - DEPARTMENT OF TRANSPORTATION
Caltrans
DESIGN

FUNCTIONAL SUPERVISOR: MICHAEL J. WEBSTER
CALCULATED-DESIGNED BY: FARDAD BEHBOODY
CHECKED BY: MICHAEL ORETRO
REVISED BY
DATE REVISED

LAST REVISION DATE PLOTTED => 13-MAY-2013
05-03-13 TIME PLOTTED => 20:20

Dist	COUNTY	ROUTE	POST MILES TOTAL PROJECT	SHEET No.	TOTAL SHEETS
11	SD	11, 905	0.0/1.6, R9.9/R10.7	249	622

REGISTERED CIVIL ENGINEER 03-25-13 DATE

04-22-13
PLANS APPROVAL DATE

REGISTERED PROFESSIONAL ENGINEER FARDAD BEHBOODY No. C-61478 Exp. 06-30-13 CIVIL STATE OF CALIFORNIA

THE STATE OF CALIFORNIA OR ITS OFFICERS OR AGENTS SHALL NOT BE RESPONSIBLE FOR THE ACCURACY OR COMPLETENESS OF SCANNED COPIES OF THIS PLAN SHEET.

NOTES:

1. QUANTITIES ARE APPROXIMATE AND FOR DESIGN PURPOSES ONLY.
2. FOR DETAILS AND DESIGN NOT SHOWN REFER TO Std PLAN D82.
3. FOR REINFORCING BAR LAP SPLICES, USE CLASS B SPLICE. SPLICE LENGTHS FOR #7 BARS, 30 INCHES, AND SPLICE LENGTHS FOR #8 BARS, 39 INCHES.
4. ALL CONCRETE COVERS FOR REBARS SHALL BE TWO INCHES CLEAR TYPICAL.

REINFORCING STEEL WEIGHTS (LBS/FT)

Mod RCB 12' X 5' 526 LBS/FT (DRAINAGE SYSTEM UNIT 5l)
Mod RCB 12' X 5' 635 LBS/FT (DRAINAGE SYSTEM UNITS 5j & 5n)

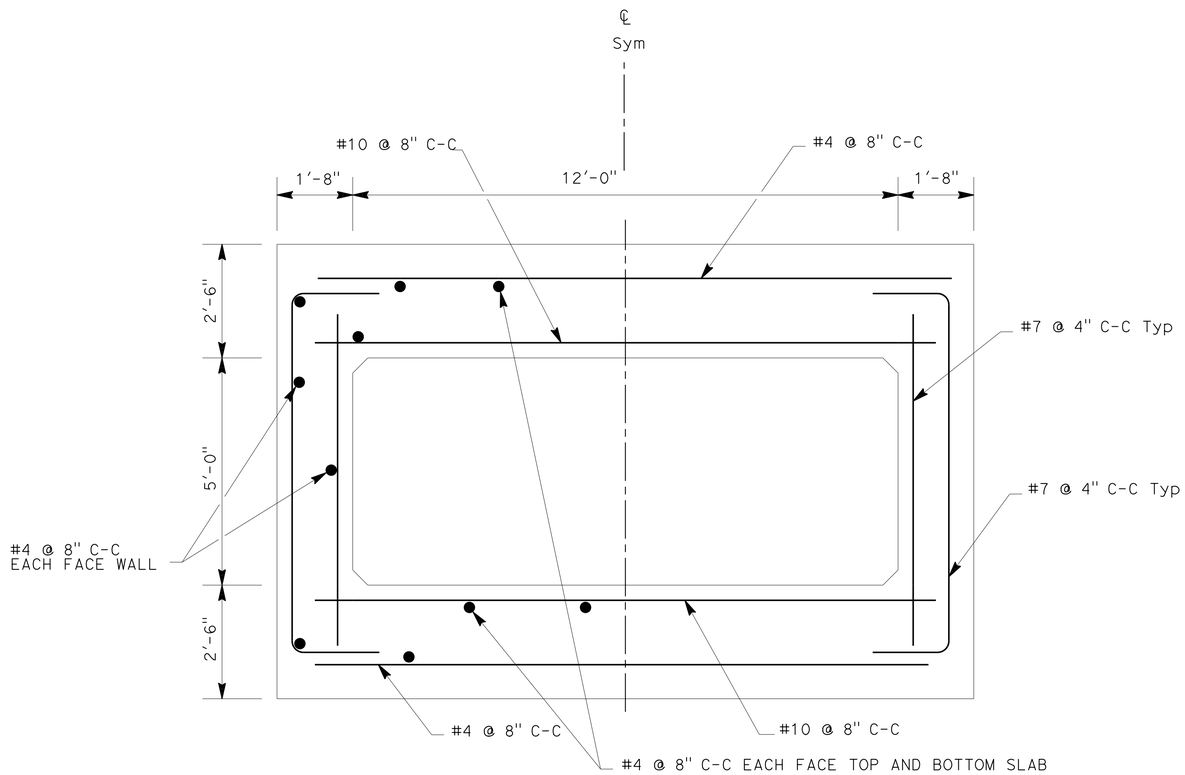

Mod CAST-IN-PLACE REINFORCED CONCRETE SINGLE BOX CULVERT 12' X5'

5 l

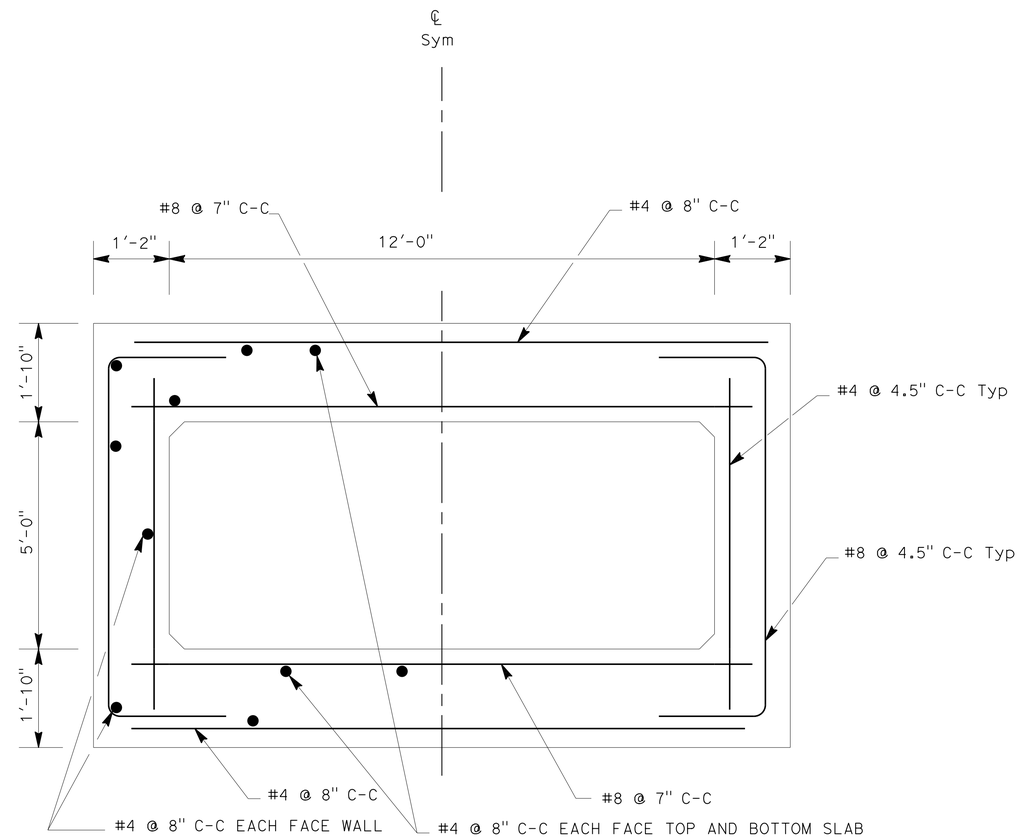

Mod CAST-IN-PLACE REINFORCED CONCRETE SINGLE BOX CULVERT 12' X5'

5 j 5 n

DRAINAGE DETAILS

NO SCALE

DD-31

STATE OF CALIFORNIA - DEPARTMENT OF TRANSPORTATION
Caltrans
DESIGN
FUNCTIONAL SUPERVISOR: MICHAEL J. WEBSTER
CALCULATED-DESIGNED BY: SIRAJUL RONI
CHECKED BY: FARDAD BEHBOODY
REVISED BY
DATE REVISED

LAST REVISION 05-03-13
DATE PLOTTED => 13-MAY-2013
TIME PLOTTED => 20:20

Dist	COUNTY	ROUTE	POST MILES TOTAL PROJECT	SHEET No.	TOTAL SHEETS
11	SD	11, 905	0.0/1.6, R9.9/R10.7	250	622

REGISTERED CIVIL ENGINEER 03-25-13 DATE

04-22-13
PLANS APPROVAL DATE

REGISTERED PROFESSIONAL ENGINEER FARDAD BEHBOODY No. C-61478 Exp. 06-30-13 CIVIL STATE OF CALIFORNIA

THE STATE OF CALIFORNIA OR ITS OFFICERS OR AGENTS SHALL NOT BE RESPONSIBLE FOR THE ACCURACY OR COMPLETENESS OF SCANNED COPIES OF THIS PLAN SHEET.

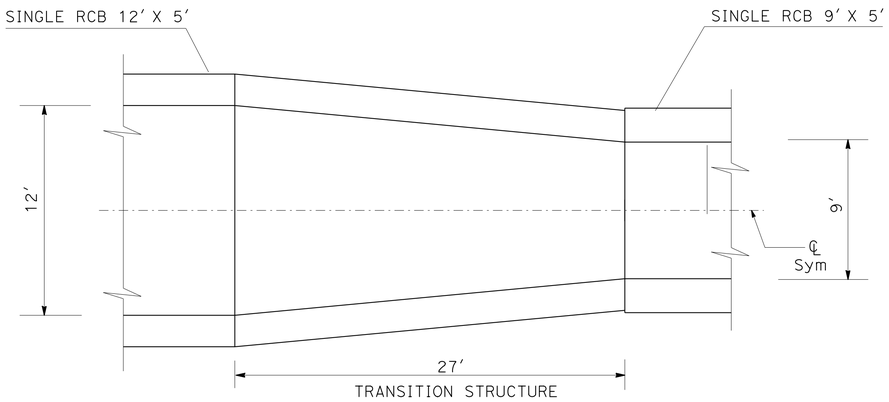

PLAN

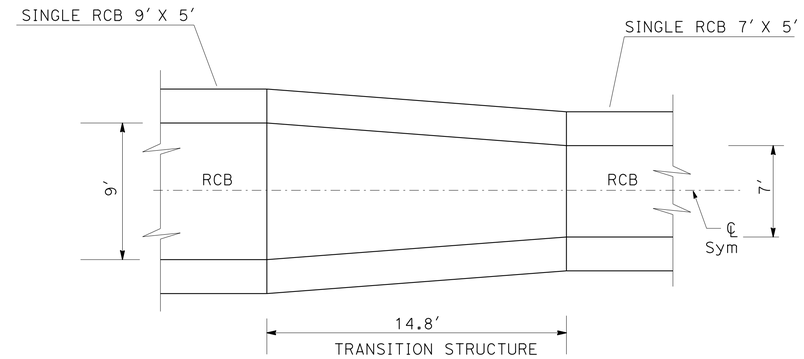

PLAN

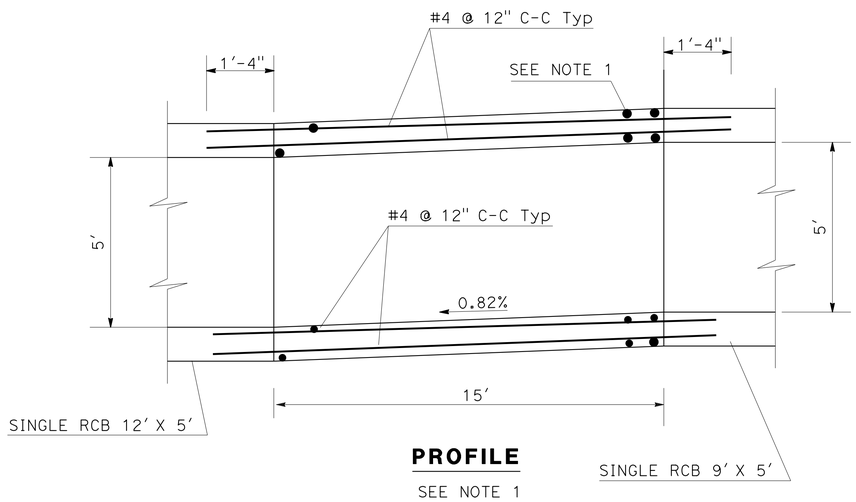

PROFILE

SEE NOTE 1

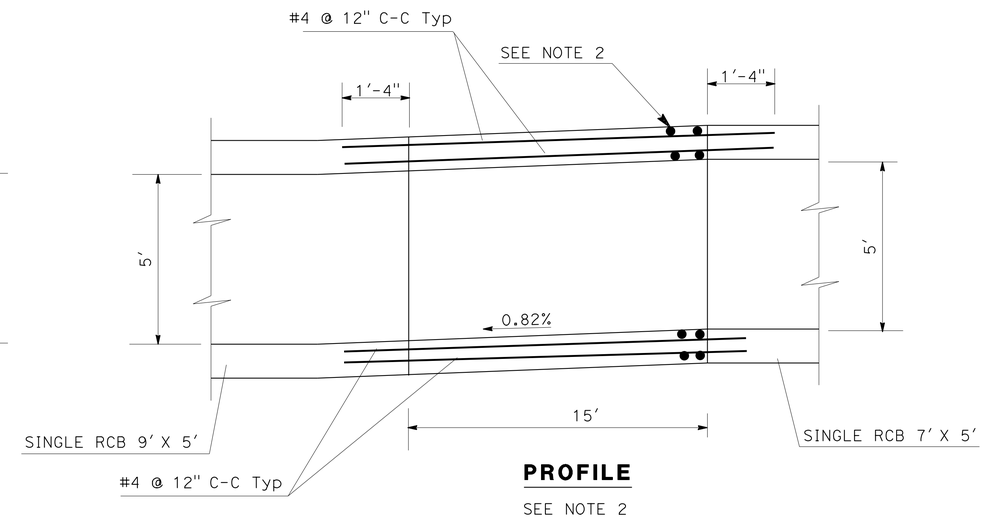

PROFILE

SEE NOTE 2

NOTES:

1. SLABS AND WALLS THICKNESSES AND TRANSVERS BARS AND L-BARS IN TOP AND BOTTOM CORNERS OF THE TOP SLAB, BOTTOM SLAB, AND WALLS SHALL BE AS SHOWN ON Std PLAN D80 FOR 12X6 RCB WITH 20' FILL HEIGHT.

2. SLABS AND WALLS THICKNESSES AND TRANSVERS BARS AND L-BARS IN TOP AND BOTTOM CORNERS OF THE TOP SLAB, BOTTOM SLAB, AND WALLS SHALL BE AS SHOWN ON Std PLAN D80 FOR 10X5 RCB WITH 20' FILL HEIGHT.

RCB TRANSITION STRUCTURES

5 p 5 s

DRAINAGE DETAILS

NO SCALE

DD-32

STATE OF CALIFORNIA - DEPARTMENT OF TRANSPORTATION
Caltrans® DESIGN

FUNCTIONAL SUPERVISOR: MICHAEL J. WEBSTER
CALCULATED-DESIGNED BY: SIRAJUL RONI
CHECKED BY: FARDAD BEHBOODY
REVISED BY
DATE REVISED

LAST REVISION 05-03-13
DATE PLOTTED => 13-MAY-2013
TIME PLOTTED => 20:20

Dist	COUNTY	ROUTE	POST MILES TOTAL PROJECT	SHEET No.	TOTAL SHEETS
11	SD	11, 905	0.0/1.6, R9.9/R10.7	251	622

REGISTERED CIVIL ENGINEER 03-25-13 DATE

04-22-13
PLANS APPROVAL DATE

REGISTERED PROFESSIONAL ENGINEER FARDAD BEHBOODY No. C-61478 Exp. 06-30-13 CIVIL STATE OF CALIFORNIA

THE STATE OF CALIFORNIA OR ITS OFFICERS OR AGENTS SHALL NOT BE RESPONSIBLE FOR THE ACCURACY OR COMPLETENESS OF SCANNED COPIES OF THIS PLAN SHEET.

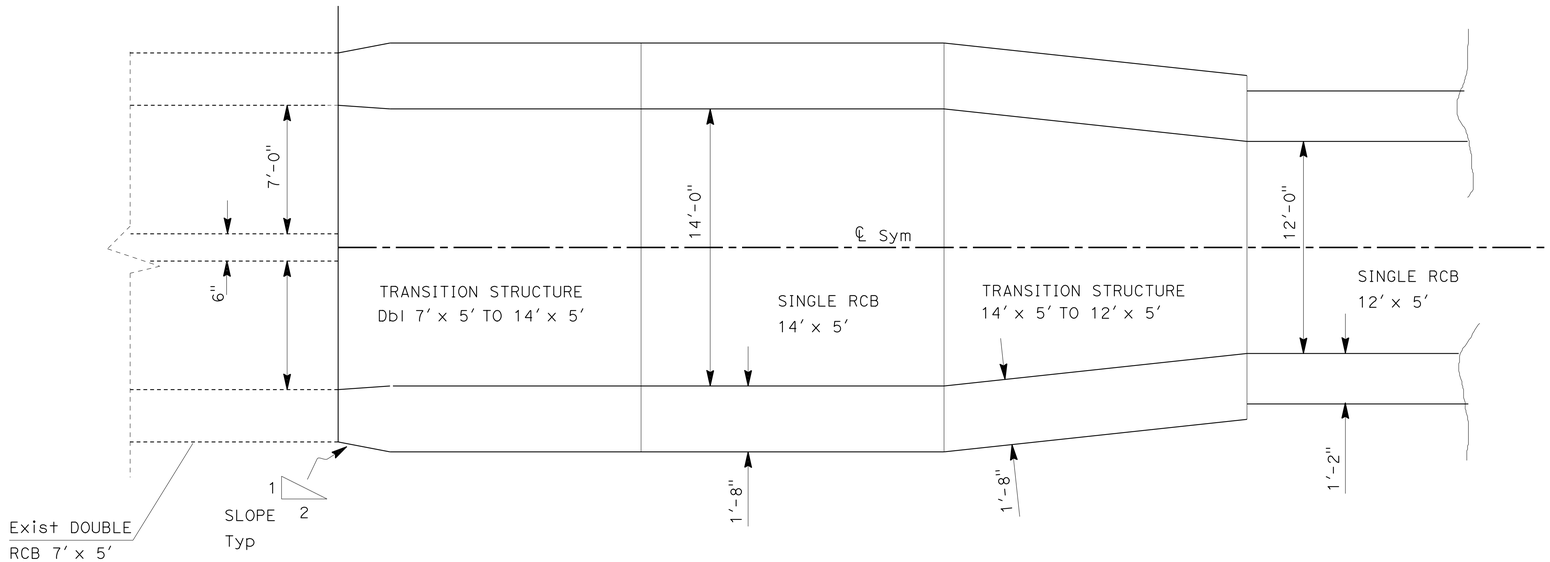

RCB TRANSITION STRUCTURE
PLAN

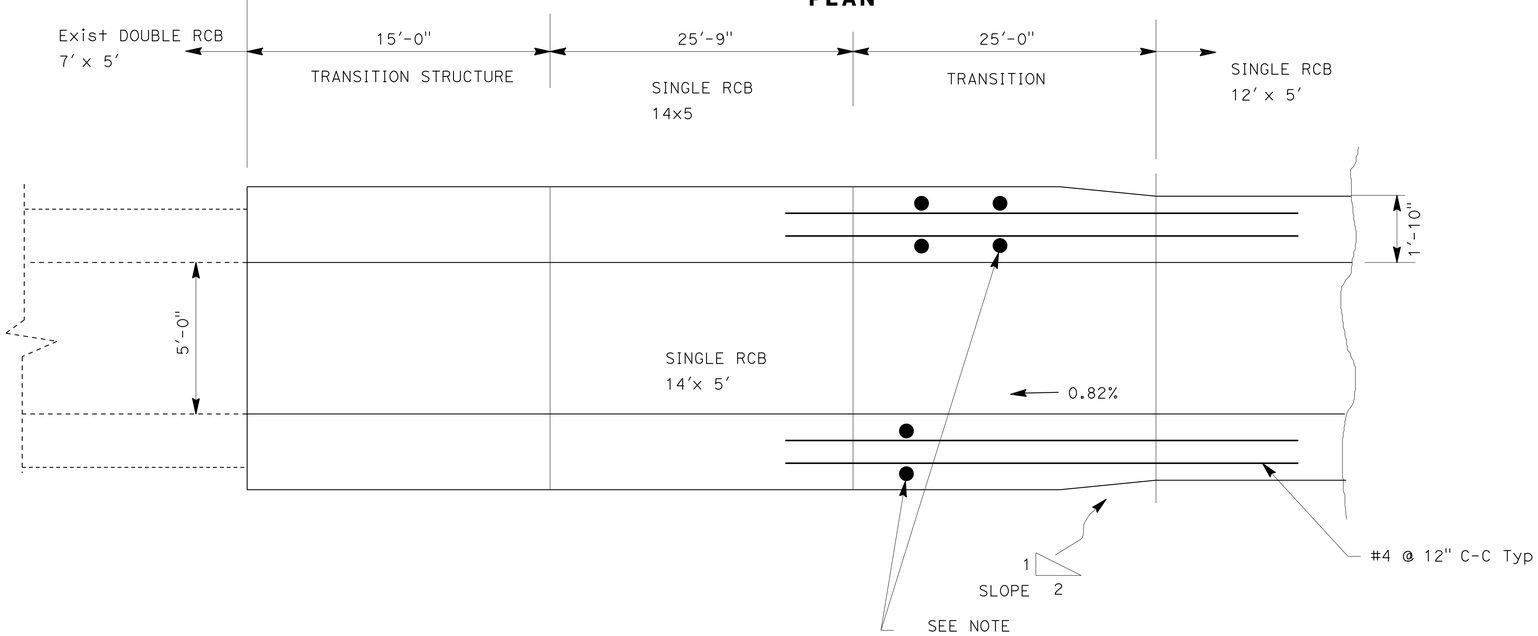

RCB TRANSITION STRUCTURE
PROFILE

5 f 5 g 5 h 5 j

NOTE:

THE REINFORCING STEEL BAR SIZE, SPACING AND COVER OVER THE STEEL OF THE STRAIGHT TRANSVERSE BARS IN TOP AND BOTTOM SLABS, OF L-BARS IN TOP AND BOTTOM CORNERS, OF STRAIGHT VERTICAL BARS IN SIDEWALLS AND/OR LONGITUDINAL DISTRIBUTION BARS IN TOP AND BOTTOM SLABS OF SIDEWALLS SHALL BE THOSE OF THE ADJOINING RCB SECTION 14' x 5'. THE BAR LENGTHS SHALL VARY UNIFORMLY THROUGHOUT AND TRANSITION.

DRAINAGE DETAILS
NO SCALE

DD-33

STATE OF CALIFORNIA - DEPARTMENT OF TRANSPORTATION
Caltrans DESIGN

FUNCTIONAL SUPERVISOR: MICHAEL J. WEBSTER
CALCULATED-DESIGNED BY: FARDAD BEHBOODY
CHECKED BY:
REVISED BY:
DATE REVISED:

LAST REVISION 05-03-13 | DATE PLOTTED => 13-MAY-2013 | TIME PLOTTED => 20:21

Dist	COUNTY	ROUTE	POST MILES TOTAL PROJECT	SHEET No.	TOTAL SHEETS
11	SD	11, 905	0.0/1.6, R9.9/R10.7	252	622

REGISTERED CIVIL ENGINEER 03-25-13 DATE

04-22-13
PLANS APPROVAL DATE

REGISTERED PROFESSIONAL ENGINEER FARDAD BEHBOODY No. C-61478 Exp. 06-30-13 CIVIL STATE OF CALIFORNIA

THE STATE OF CALIFORNIA OR ITS OFFICERS OR AGENTS SHALL NOT BE RESPONSIBLE FOR THE ACCURACY OR COMPLETENESS OF SCANNED COPIES OF THIS PLAN SHEET.

NOTES:

1. QUANTITIES ARE APPROXIMATE AND FOR DESIGN PURPOSES ONLY.
2. FOR DETAILS AND DESIGN NOT SHOWN REFER TO Std PLAN D82.
3. FOR REINFORCING BAR LAP SPLICES, USE CLASS B SPLICE. SPLICE LENGTHS FOR #7 BARS, 30 INCHES, AND SPLICE LENGTHS FOR #8 BARS, 39 INCHES.
4. ALL Conc. COVERS FOR REBARS SHALL BE TWO INCHES CLEAR TYPICAL.

REINFORCING STEEL WEIGHTS (LBS/FT)

Mod RCB 14'X5' 439 LBS/FT (DRAINAGE SYSTEM UNIT 5g)

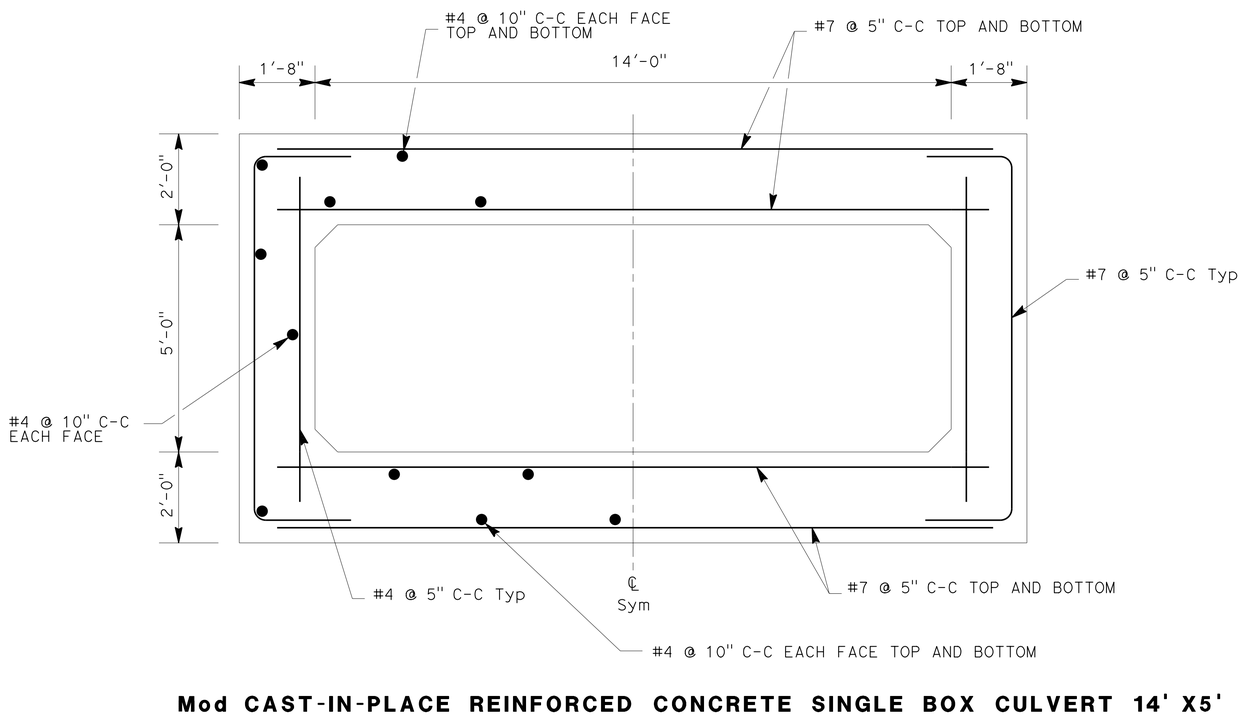

Mod CAST-IN-PLACE REINFORCED CONCRETE SINGLE BOX CULVERT 14' X5'

5 g

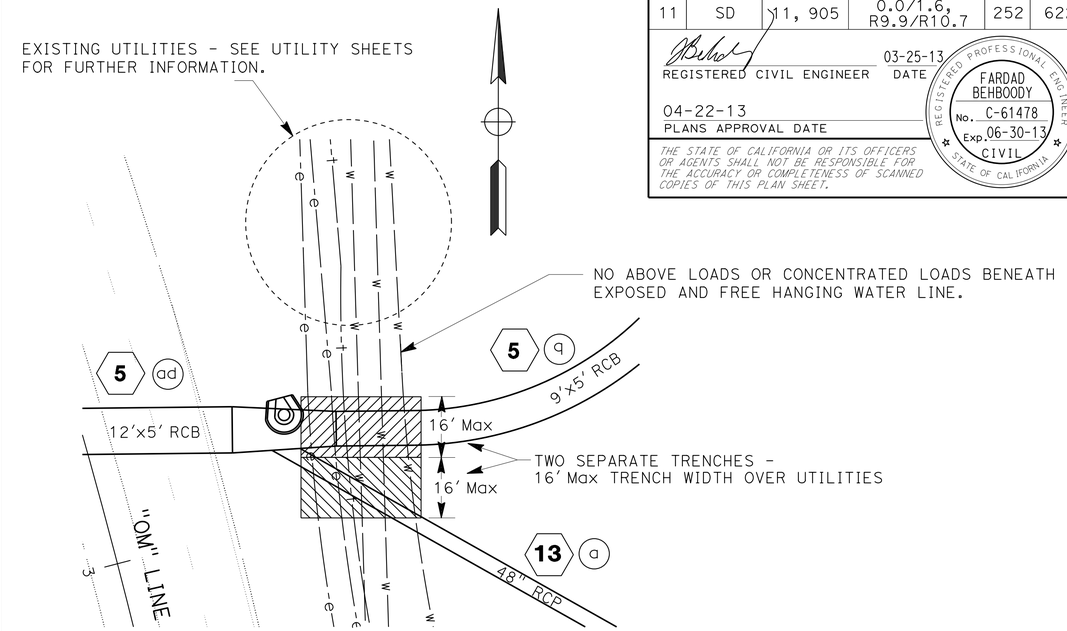

TRENCH PLAN AT HARVEST Rd UTILITY CORRIDOR

250' Lt "A" 26+50

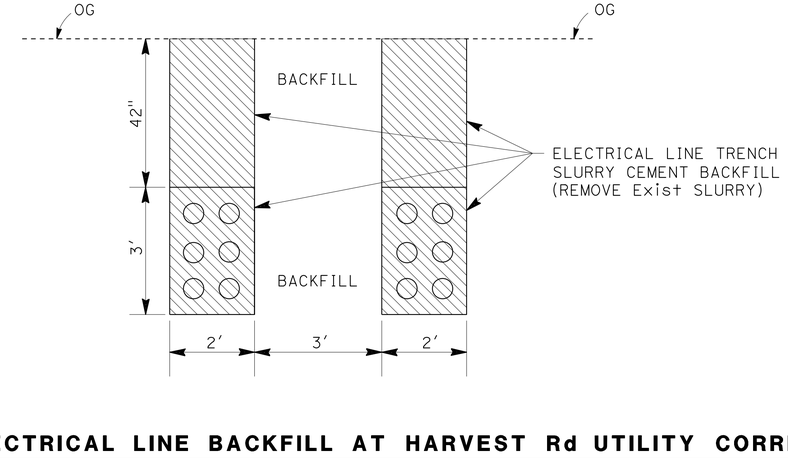

ELECTRICAL LINE BACKFILL AT HARVEST Rd UTILITY CORRIDOR

250' Lt "A" 26+50

NO SCALE

DRAINAGE DETAILS
DD-34

STATE OF CALIFORNIA - DEPARTMENT OF TRANSPORTATION
Caltrans
DESIGN
FUNCTIONAL SUPERVISOR: MICHAEL J. WEBSTER
CALCULATED-DESIGNED BY: JOEL SIMS
CHECKED BY: ARTURO REYES
REVISED BY
DATE REVISED

LAST REVISION 05-06-13
DATE PLOTTED => 13-MAY-2013
TIME PLOTTED => 20:21

Dist	COUNTY	ROUTE	POST MILES TOTAL PROJECT	SHEET No.	TOTAL SHEETS
11	SD	11, 905	0.0/1.6, R9.9/R10.7	253	622

REGISTERED CIVIL ENGINEER 03-25-13 DATE

04-22-13
PLANS APPROVAL DATE

REGISTERED PROFESSIONAL ENGINEER FARDAD BEHBOODY No. C-61478 Exp. 06-30-13 CIVIL STATE OF CALIFORNIA

THE STATE OF CALIFORNIA OR ITS OFFICERS OR AGENTS SHALL NOT BE RESPONSIBLE FOR THE ACCURACY OR COMPLETENESS OF SCANNED COPIES OF THIS PLAN SHEET.

NOTES:

1. PLACE 2 STRIPS OF "CAUTION" TAPE OVER SLAB WITH BACKFILL (EQUALLY SPACED).
2. GAS TRANSMISSION STANDBY REQUIRED WHEN EXCAVATING AT HIGH PRESSURE GAS LINE.
3. PLACE COLOR ADDITIVE TO TOP OF SLAB FOR CURING. (YELLOW)
4. HAND DIG AND USE HAND DIRECTED MECHANICAL TAMPERS FOR COMPACTION WHEN WITHIN THREE FEET TO A PUBLIC FACILITY.
5. PROTECTIVE SLEEVES TO BE INSTALLED BY OTHERS AT 30" GAS LINE.

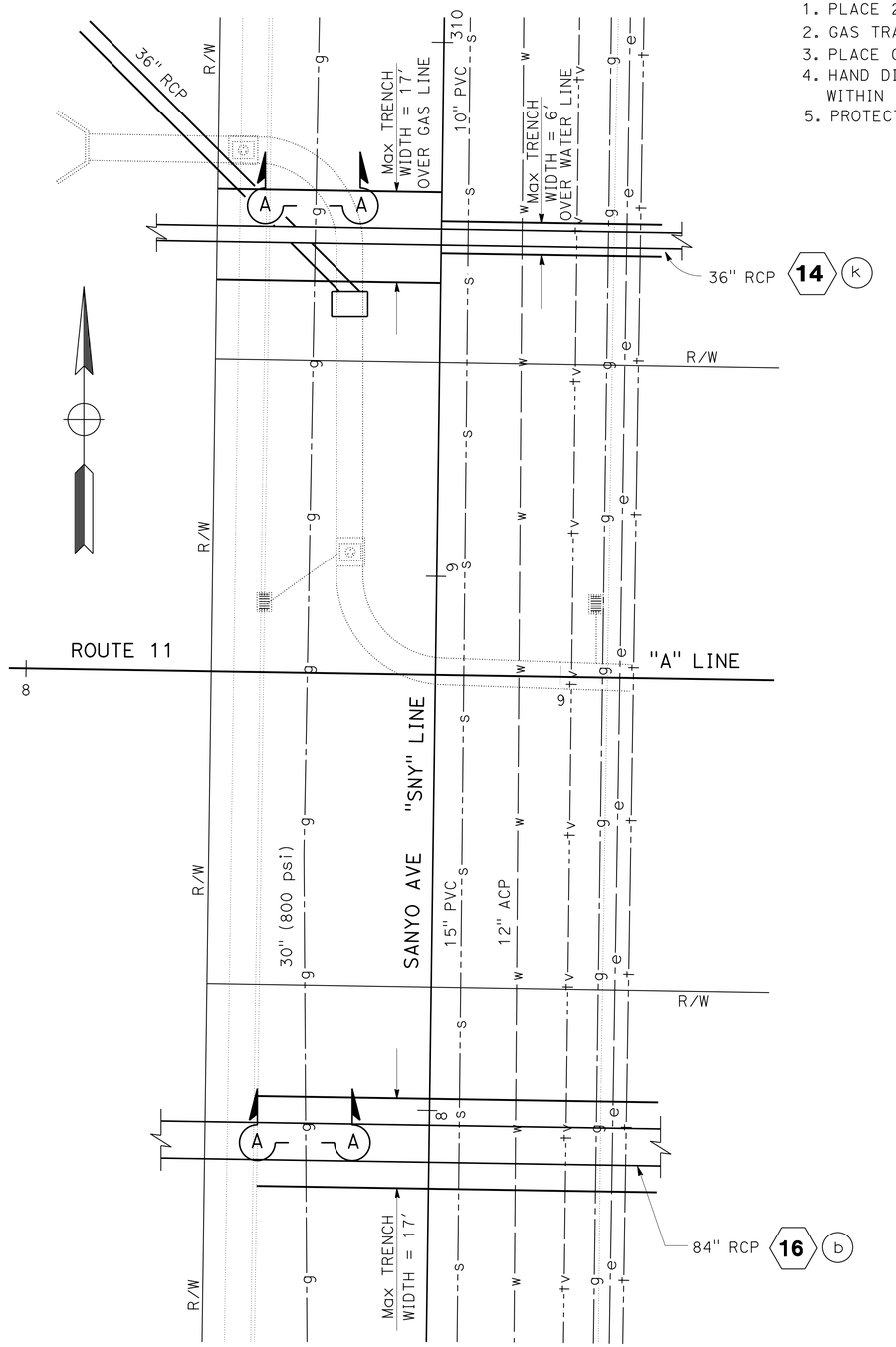

TRENCH PLAN AT SANYO Ave

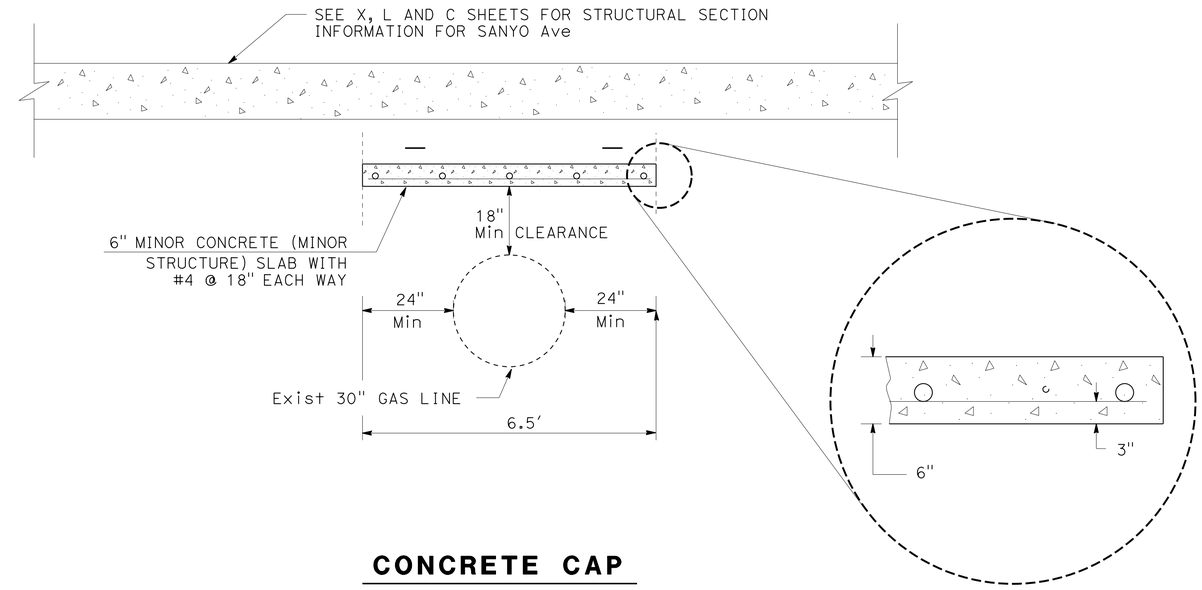

CONCRETE CAP

Sta "SNY" 307+85.5 TO Sta 308+02.5
Sta "SNY" 309+72.1 TO Sta 309+55.1

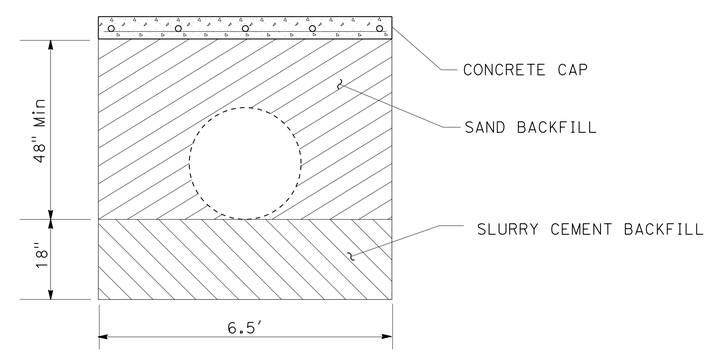

30" GAS LINE BACKFILL

SECTION A-A

DRAINAGE DETAILS

NO SCALE

DD-35

STATE OF CALIFORNIA - DEPARTMENT OF TRANSPORTATION
Caltrans®
DESIGN
FUNCTIONAL SUPERVISOR: MICHAEL J. WEBSTER
CALCULATED-DESIGNED BY: JOEL SIMS
CHECKED BY: ARTURO REYES
REVISED BY
DATE REVISED

LAST REVISION 05-06-13
DATE PLOTTED => 13-MAY-2013
TIME PLOTTED => 20:21

Dist	COUNTY	ROUTE	POST MILES TOTAL PROJECT	SHEET No.	TOTAL SHEETS
11	SD	11, 905	0.0/1.6, R9.9/R10.7	254	622

REGISTERED CIVIL ENGINEER 03-25-13 DATE

04-22-13
PLANS APPROVAL DATE

REGISTERED PROFESSIONAL ENGINEER FARDAD BEHBOODY No. C-61478 Exp. 06-30-13 CIVIL STATE OF CALIFORNIA

THE STATE OF CALIFORNIA OR ITS OFFICERS OR AGENTS SHALL NOT BE RESPONSIBLE FOR THE ACCURACY OR COMPLETENESS OF SCANNED COPIES OF THIS PLAN SHEET.

NOTES:

1. #4 BARS AT THE TOP OF ENCASEMENT SHALL BE BENT INTO RISER WITH 24" Min LAP.
2. #4 BARS AT THE BOTTOM OF ENCASEMENT SHALL CONTINUE ACROSS THE FULL WIDTH OF FOOTING, AS SHOWN.

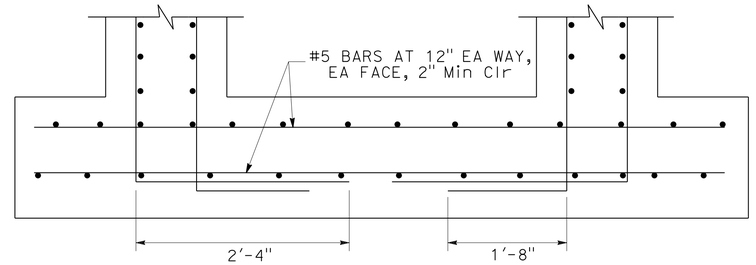

DETAIL A

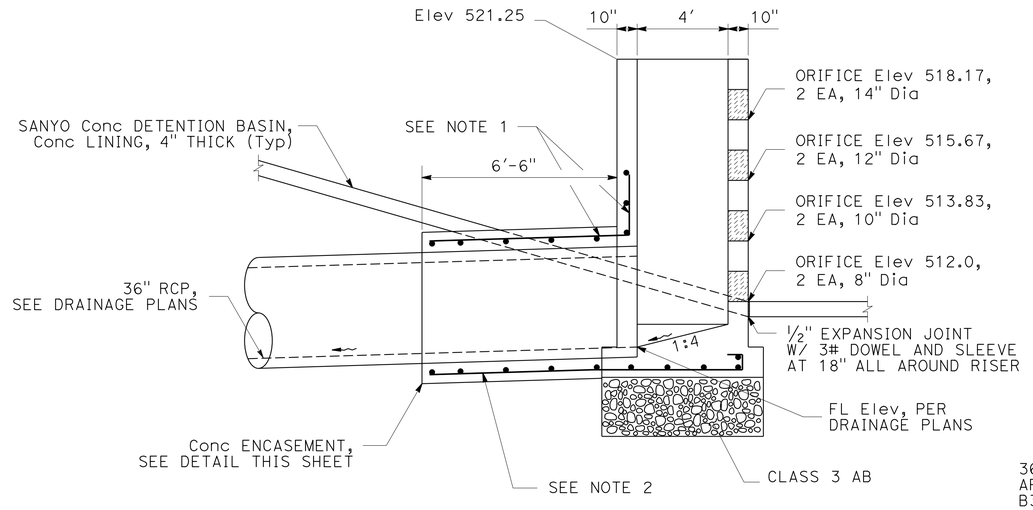

SECTION B-B

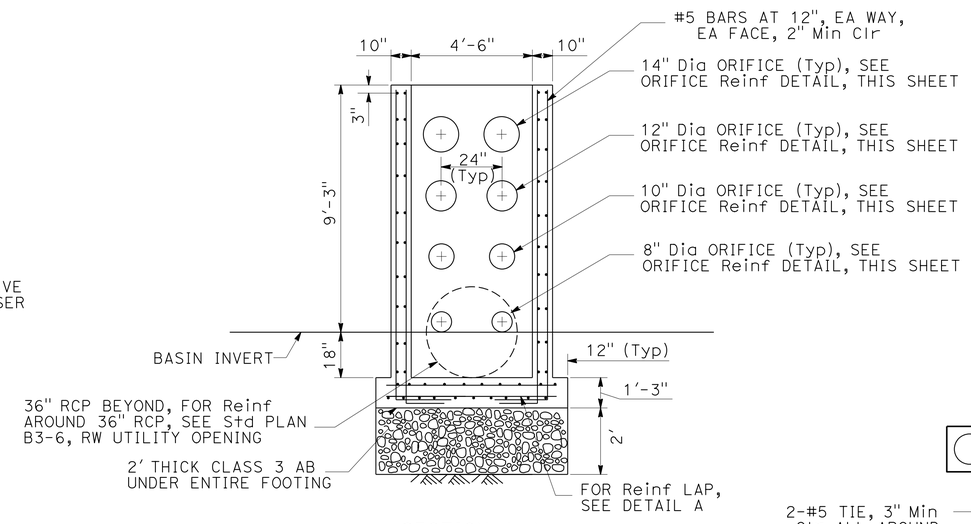

SECTION A-A

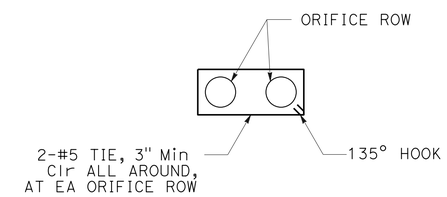

ORIFICE REINFORCEMENT

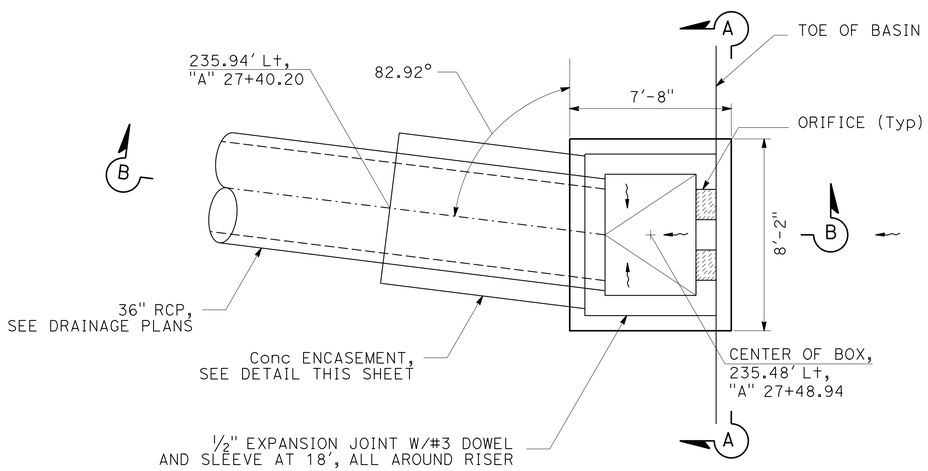

PLAN

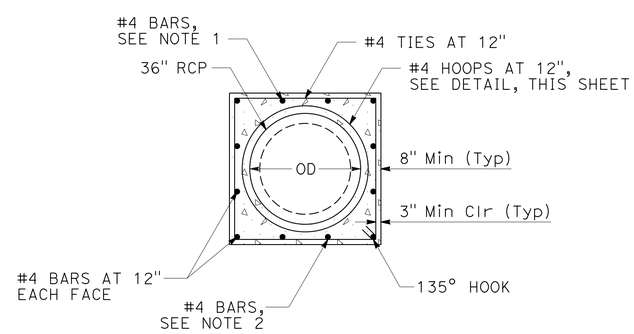

Conc ENCASEMENT

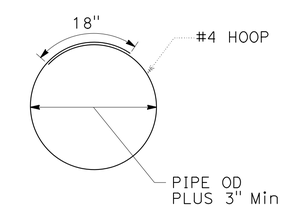

HOOP DETAIL

CONCRETE DETENTION RISER

DRAINAGE SYSTEM 5 V

DRAINAGE DETAILS

NO SCALE

DD-36

STATE OF CALIFORNIA - DEPARTMENT OF TRANSPORTATION
Caltrans DESIGN
FUNCTIONAL SUPERVISOR MICHAEL J. WEBSTER
CALCULATED-DESIGNED BY SIRAJUL RONI
CHECKED BY JOHN HANSON
REVISED BY
DATE REVISED

LAST REVISION 04-04-13
DATE PLOTTED => 13-MAY-2013
TIME PLOTTED => 20:21

Dist	COUNTY	ROUTE	POST MILES TOTAL PROJECT	SHEET No.	TOTAL SHEETS
11	SD	11, 905	0.0/1.6, R9.9/R10.7	255	622

REGISTERED CIVIL ENGINEER 03-25-13 DATE

04-22-13
PLANS APPROVAL DATE

REGISTERED PROFESSIONAL ENGINEER FARDAD BEHBOODY No. C-61478 Exp. 06-30-13 CIVIL STATE OF CALIFORNIA

THE STATE OF CALIFORNIA OR ITS OFFICERS OR AGENTS SHALL NOT BE RESPONSIBLE FOR THE ACCURACY OR COMPLETENESS OF SCANNED COPIES OF THIS PLAN SHEET.

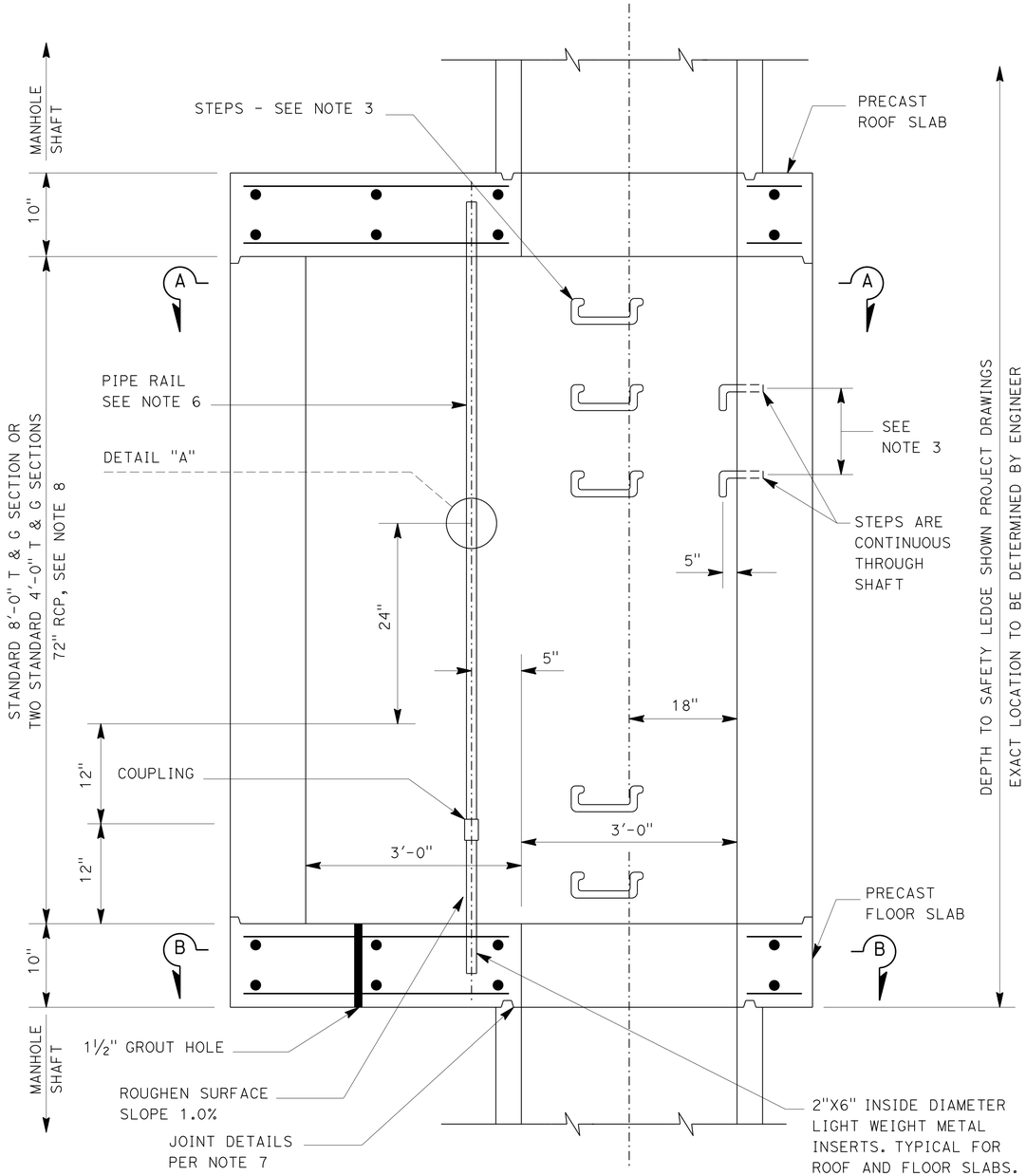

VERTICAL SECTION

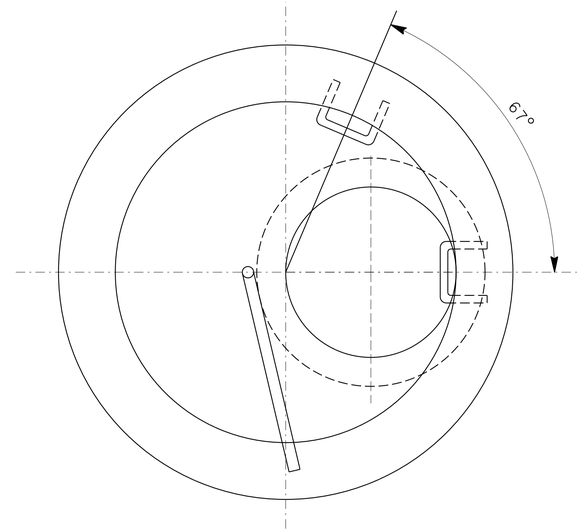

SECTION A-A

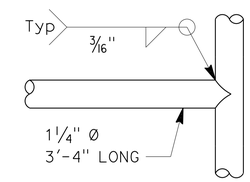

DETAIL "A"
ROTATED 90°

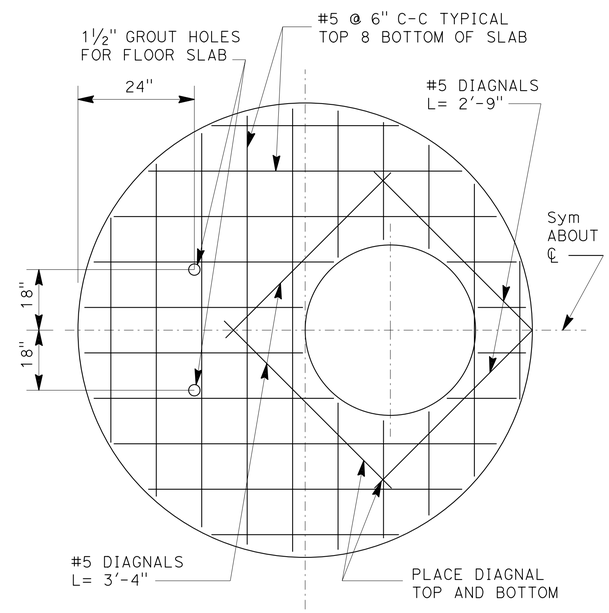

SECTION B-B

REINFORCEMENT DETAILS
FOR FLOOR AND ROOF SLABS

NOTES:

1. MANHOLE SHAFT SAFETY LEDGE IS TO BE CONSTRUCTED WHEN DEPTH OF MANHOLE TO INVERT IS GREATER THAN 20' AND MANHOLE SHAFT IS GREATER THAN 10'.
2. A SAFETY LEDGE SHALL NOT BE USED IF A PRESSURE MANHOLE IS REQUIRED.
3. STEPS SHALL CONFORM TO STANDARD PLAN D74C. STEPS SHALL BE PLACED TO MATCH THE SPACING OF THE MANHOLE SHAFT.
4. REINFORCEMENT SHALL BE PER ASTM A615 GRADE 40 AND SHALL TERMINATE 2" CLEAR OF CONCRETE SURFACE UNLESS OTHERWISE SHOWN.
5. GROUT HOLES. PIPE AND FITTINGS SHALL BE PROVIDED IN THE FLOOR SLAB. PRESSURE GROUTING SHALL BE USED TO FILL VOIDS AND TO SECURE UNIFORM BEARING. THE GROUT SHALL BE CEMENT GROUT AND GROUTING PRESSURES SHALL BE AS DETERMINED IN THE FIELD BY THE ENGINEER.
6. PIPE RAIL SHALL BE FABRICATED OF 1¼" STANDARD GALVANIZED PIPE COMPOSED OF TWO SECTIONS 7'-6" 8 18" IN LENGTH JOINED BY A GALVANIZED COUPLING. THE COUPLING SHALL BE THREADED A MINIMUM OF 2" ON EACH PIPE LENGTH.
7. ROOF AND FLOOR SLABS SHALL BE PRECAST AND KEYED FOR REINFORCED CONCRETE PIPE SECTIONS AS SHOWN. ALL JOINTS SHALL BE FILLED WITH CLASS C MORTAR AND NEATLY POINTED OR WIPED ON THE INSIDE.
8. 72" RCP SHALL BE OF TYPE B WALL AND PROVIDED WITH TWO CIRCULAR CAGES OF REINFORCEMENT PER STANDARD PLAN D79A.

MANHOLE SAFETY LEDGE

5 i 5 k 5 m

DRAINAGE DETAILS

NO SCALE

DD-37

STATE OF CALIFORNIA - DEPARTMENT OF TRANSPORTATION
Caltrans®
DESIGN

FUNCTIONAL SUPERVISOR: MICHAEL J. WEBSTER
CALCULATED-DESIGNED BY: SIRAJUL RONI
CHECKED BY: JOHN HANSON
REVISED BY
DATE REVISED

LAST REVISION 05-06-13
DATE PLOTTED => 13-MAY-2013
TIME PLOTTED => 20:21

Dist	COUNTY	ROUTE	POST MILES TOTAL PROJECT	SHEET No.	TOTAL SHEETS
11	SD	11, 905	0.0/1.6, R9.9/R10.7	256	622

REGISTERED CIVIL ENGINEER 03-25-13 DATE

04-22-13
PLANS APPROVAL DATE

REGISTERED PROFESSIONAL ENGINEER FARDAD BEHBOODY No. C-61478 Exp. 06-30-13 CIVIL STATE OF CALIFORNIA

THE STATE OF CALIFORNIA OR ITS OFFICERS OR AGENTS SHALL NOT BE RESPONSIBLE FOR THE ACCURACY OR COMPLETENESS OF SCANNED COPIES OF THIS PLAN SHEET.

NOTE:

1. REINFORCEMENT IN CUTOFF WALL SHALL BE THE SAME AS SHOWN IN APRON.

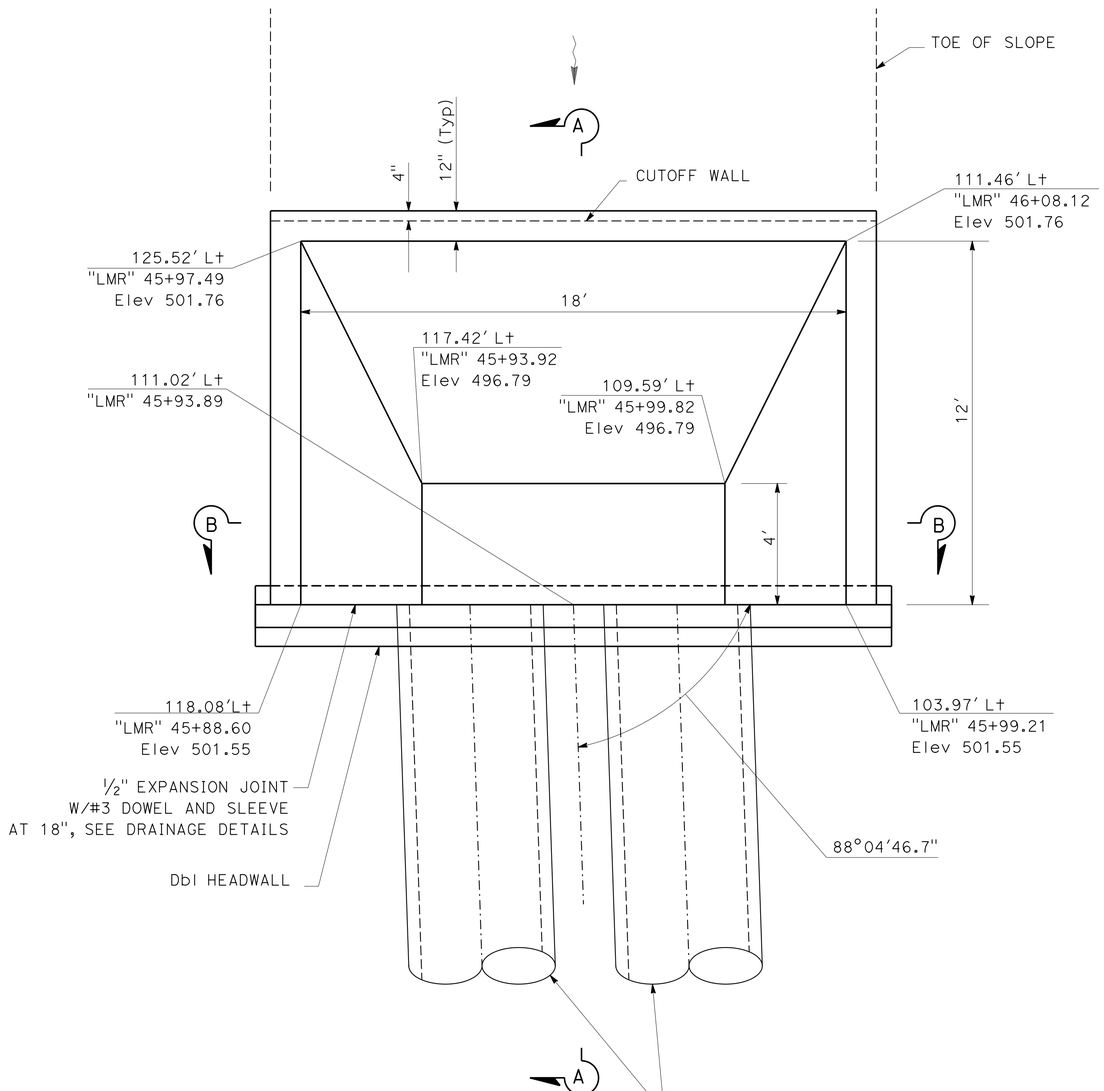

PLAN

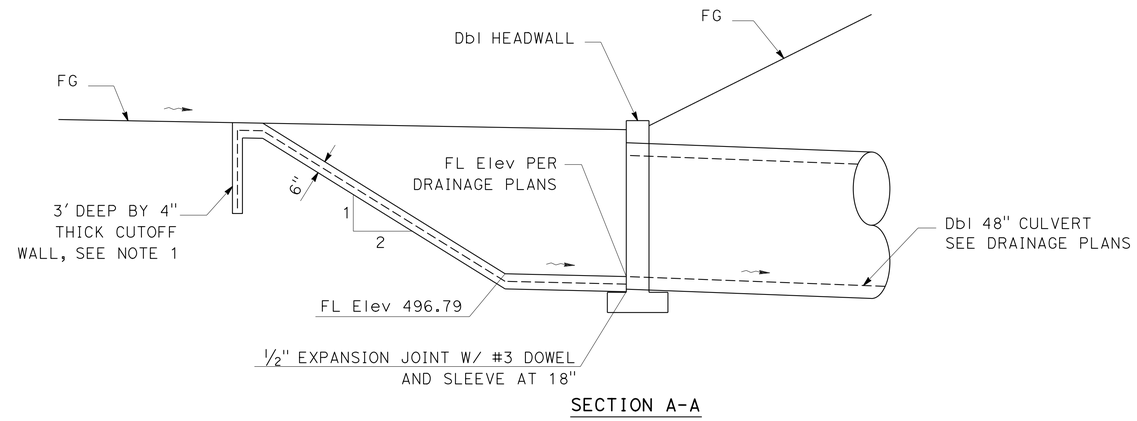

SECTION A-A

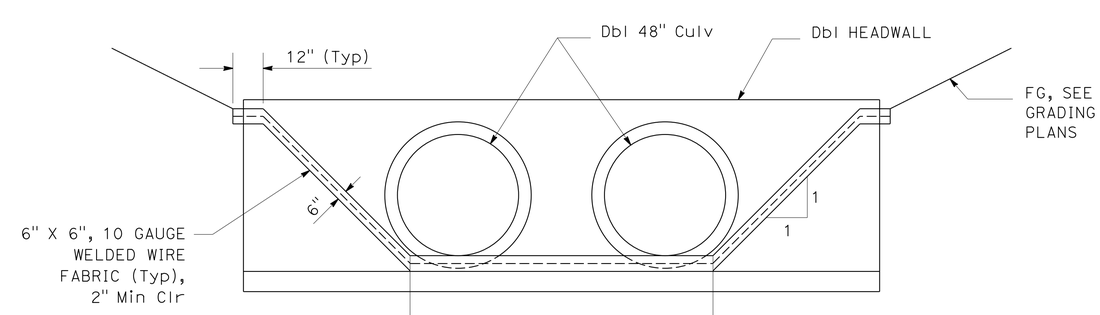

SECTION B-B

CONCRETE APRON (TYPE HW)

9 d

DRAINAGE DETAILS

NO SCALE

DD-38

STATE OF CALIFORNIA - DEPARTMENT OF TRANSPORTATION
Caltrans®
DESIGN

FUNCTIONAL SUPERVISOR: MICHAEL J. WEBSTER
CALCULATED-DESIGNED BY: SYDNEY T TRAN
CHECKED BY: TULLY McCARTHY
REVISED BY
DATE REVISED

LAST REVISION 05-06-13
DATE PLOTTED => 13-MAY-2013
TIME PLOTTED => 20:21

Dist	COUNTY	ROUTE	POST MILES TOTAL PROJECT	SHEET No.	TOTAL SHEETS
11	SD	11, 905	0.0/1.6, R9.9/R10.7	257	622

REGISTERED CIVIL ENGINEER 03-25-13 DATE

04-22-13
PLANS APPROVAL DATE

REGISTERED PROFESSIONAL ENGINEER FARDAD BEHBOODY No. C-61478 Exp. 06-30-13 CIVIL STATE OF CALIFORNIA

THE STATE OF CALIFORNIA OR ITS OFFICERS OR AGENTS SHALL NOT BE RESPONSIBLE FOR THE ACCURACY OR COMPLETENESS OF SCANNED COPIES OF THIS PLAN SHEET.

NOTE:

1. REINFORCEMENT IN CUTOFF WALL SHALL BE THE SAME AS SHOWN IN APRON.

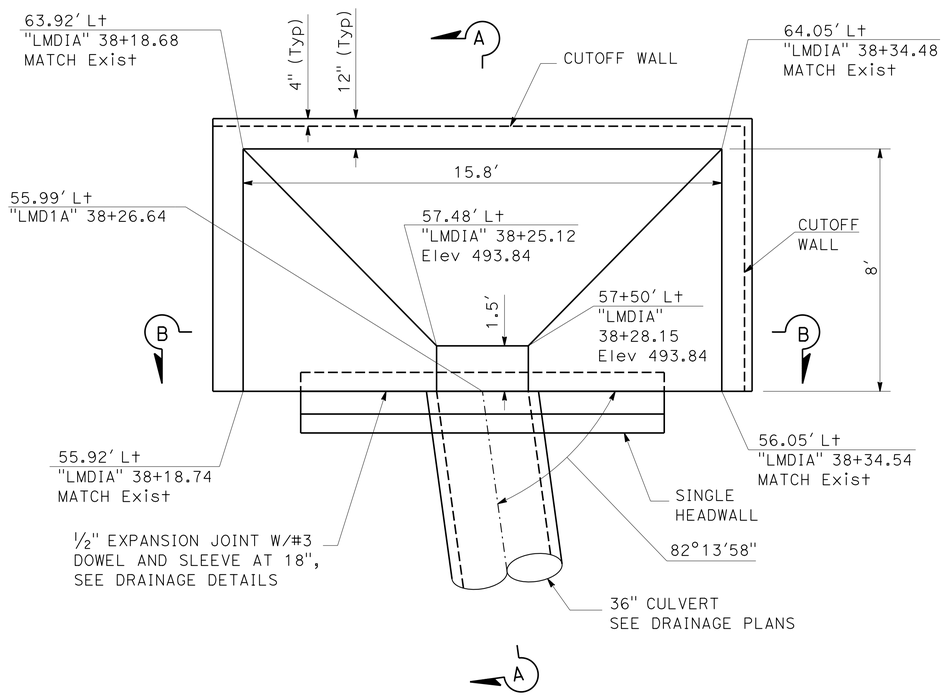

PLAN

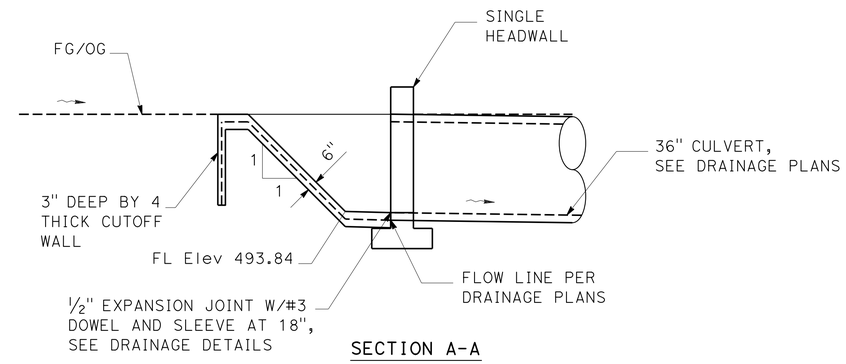

SECTION A-A

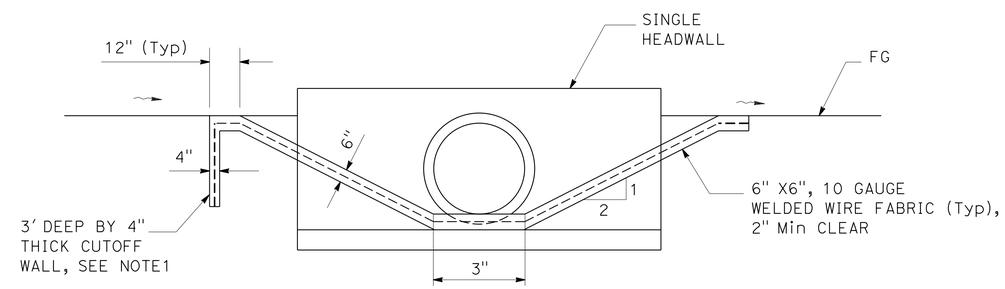

SECTION B-B

CONCRETE APRON (TYPE HW)

6 b

DRAINAGE DETAILS

NO SCALE

DD-39

STATE OF CALIFORNIA - DEPARTMENT OF TRANSPORTATION
Caltrans®
DESIGN

FUNCTIONAL SUPERVISOR: MICHAEL J. WEBSTER
CALCULATED-DESIGNED BY: SYDNEY T TRAN
CHECKED BY: TULLY McCARTHY
REVISED BY
DATE REVISED

LAST REVISION 05-06-13
DATE PLOTTED => 13-MAY-2013
TIME PLOTTED => 20:21

Dist	COUNTY	ROUTE	POST MILES TOTAL PROJECT	SHEET No.	TOTAL SHEETS
11	SD	11, 905	0.0/1.6, R9.9/R10.7	258	622

REGISTERED CIVIL ENGINEER 03-25-13 DATE

04-22-13
PLANS APPROVAL DATE

REGISTERED PROFESSIONAL ENGINEER FARDAD BEHBOODY No. C-61478 Exp. 06-30-13 CIVIL STATE OF CALIFORNIA

THE STATE OF CALIFORNIA OR ITS OFFICERS OR AGENTS SHALL NOT BE RESPONSIBLE FOR THE ACCURACY OR COMPLETENESS OF SCANNED COPIES OF THIS PLAN SHEET.

NOTES:

1. APRON MATERIAL SHALL BE CONCRETE (CONCRETE APRON).
2. CONTRACTOR SHALL PLACE EXPANSION JOINTS IN APRON AT 20' SPACING AND ALL AROUND Mod G2 INLET.
3. APRON REINFORCEMENT SHALL BE 6" X 6", 10 GAUGE, WELDED WIRE FABRIC, 2" Min CLEAR FROM EACH FACE.

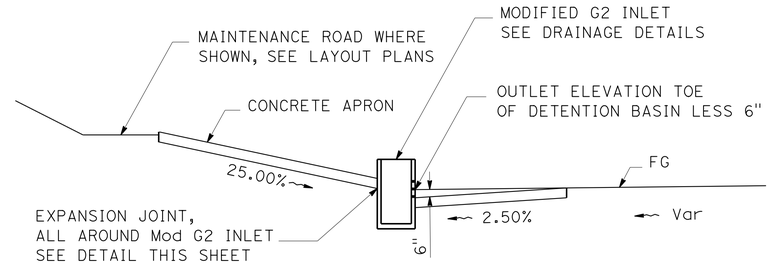

SECTION A-A

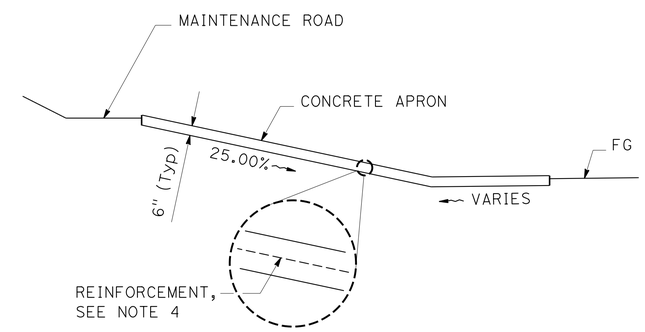

SECTION B-B

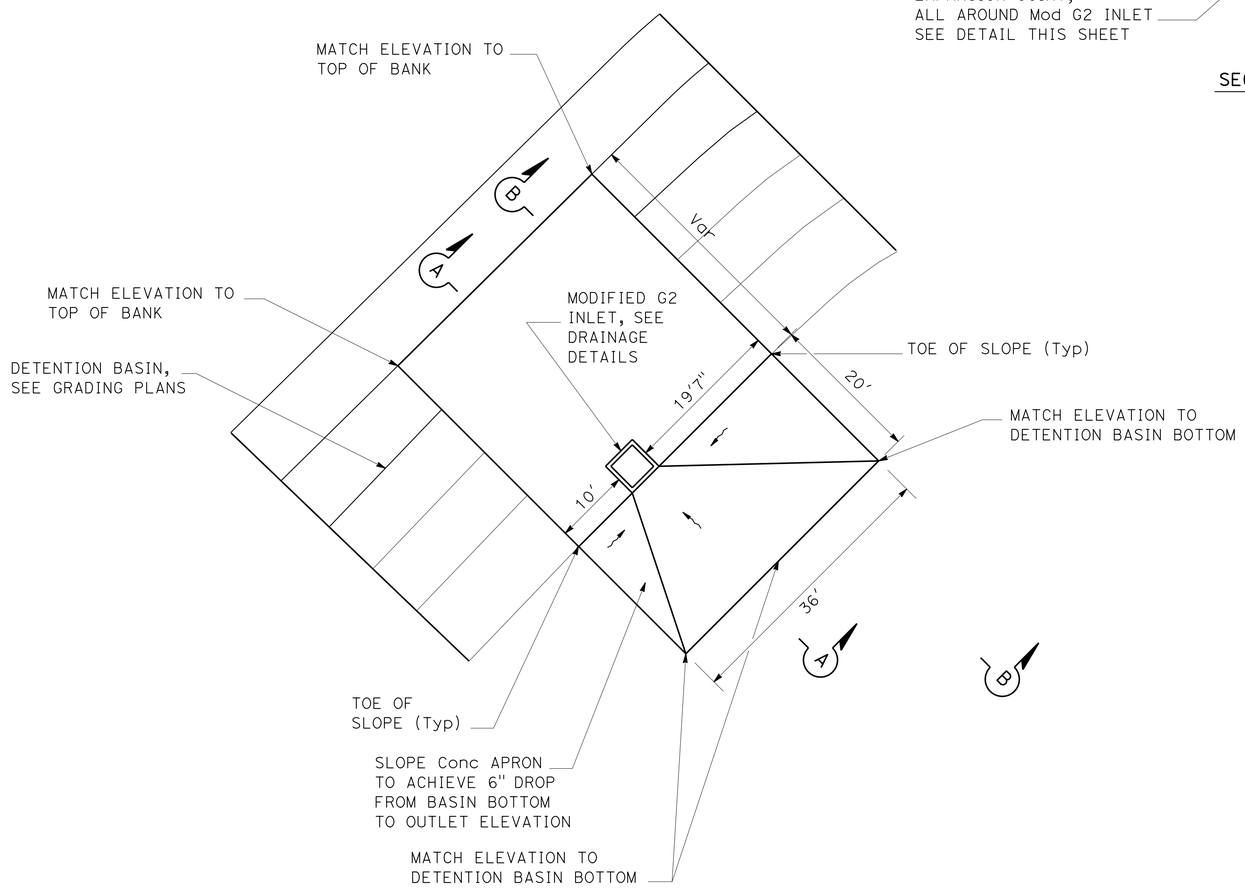

PLAN

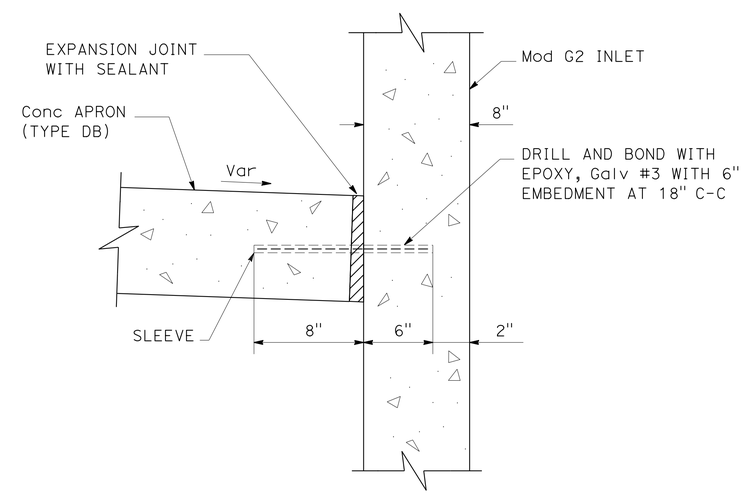

EXPANSION JOINT AT Mod G2 INLET

CONCRETE APRON (TYPE DB)

10 bk 15 f

DRAINAGE DETAILS

NO SCALE

DD-40

STATE OF CALIFORNIA - DEPARTMENT OF TRANSPORTATION
Caltrans
DESIGN
FUNCTIONAL SUPERVISOR: MICHAEL J. WEBSTER
CALCULATED-DESIGNED BY: MICHAEL OREIRO
CHECKED BY: JOHN HANSON
REVISED BY
DATE REVISED

LAST REVISION 05-06-13
DATE PLOTTED => 13-MAY-2013
TIME PLOTTED => 20:21

Dist	COUNTY	ROUTE	POST MILES TOTAL PROJECT	SHEET No.	TOTAL SHEETS
11	SD	11, 905	0.0/1.6, R9.9/R10.7	259	622

REGISTERED CIVIL ENGINEER 03-25-13 DATE

04-22-13
PLANS APPROVAL DATE

REGISTERED PROFESSIONAL ENGINEER
FARDAD BEHBOODY
No. C-61478
Exp. 06-30-13
CIVIL
STATE OF CALIFORNIA

THE STATE OF CALIFORNIA OR ITS OFFICERS OR AGENTS SHALL NOT BE RESPONSIBLE FOR THE ACCURACY OR COMPLETENESS OF SCANNED COPIES OF THIS PLAN SHEET.

NOTES:

1. SEE Std PLAN D86A FOR ADDITIONAL NOTES AND DETAILS.
2. FOR BOX CULVERT WARPED WINGWALLS "D"= 7" Max, "H"= 7′ Max, "L"=15.03, "W"= 2.5′
3. REINFORCEMENT SHALL BE PLACED TO PROVIDE A MINIMUM Of 2" CLEAR.

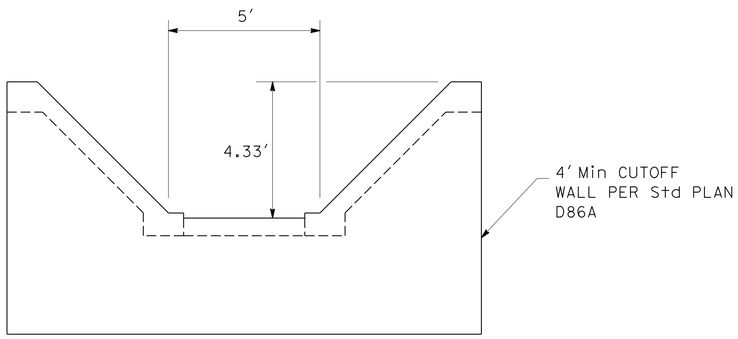

SECTION B-B

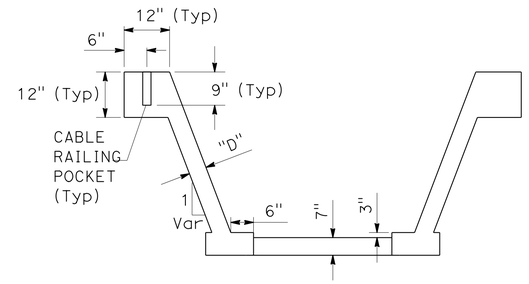

SECTION C-C

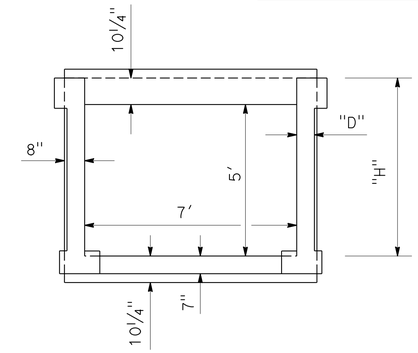

SECTION D-D

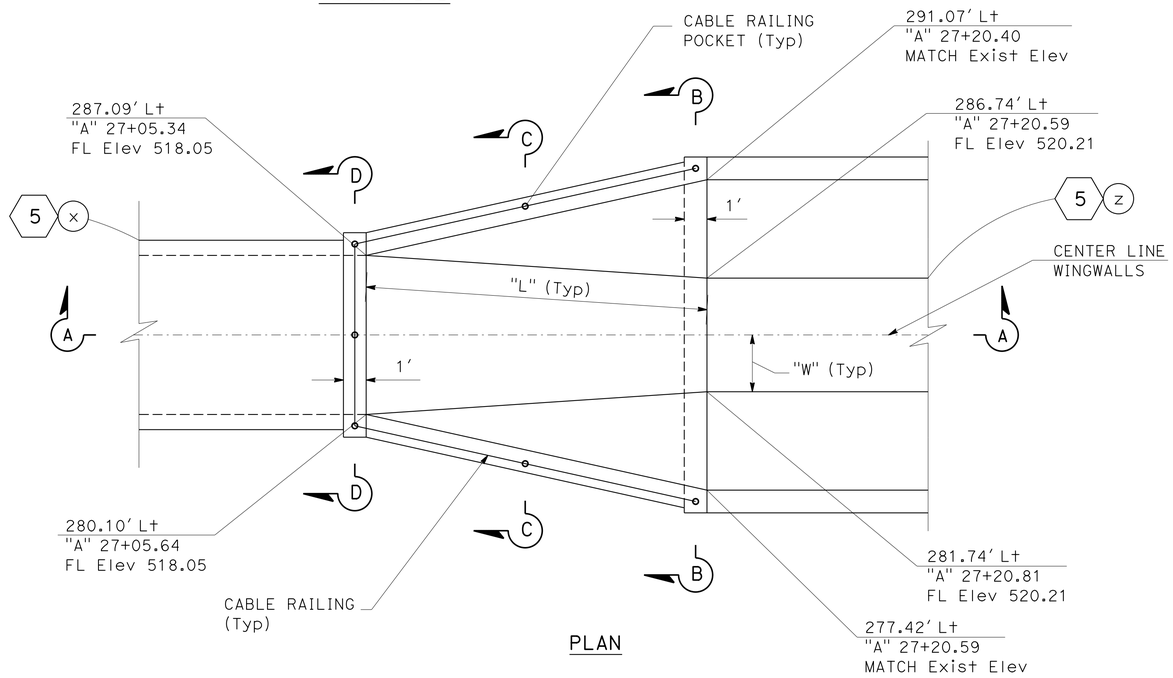

PLAN

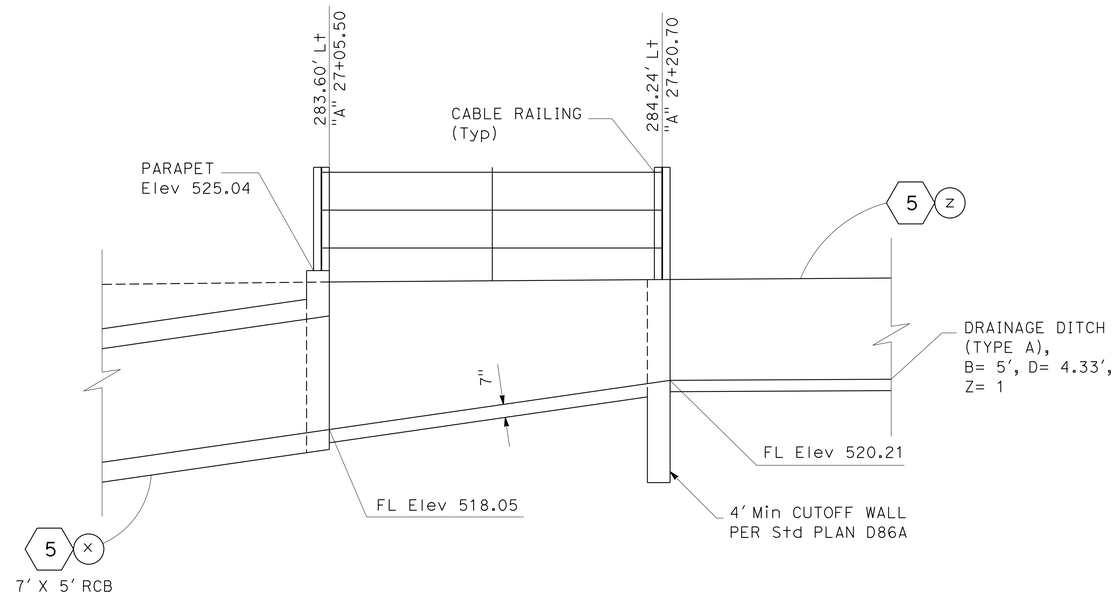

SECTION A-A

BOX CULVERT WARPED WINGWALLS

DRAINAGE SYSTEM 5 y

DRAINAGE DETAILS

NO SCALE

DD-41

STATE OF CALIFORNIA - DEPARTMENT OF TRANSPORTATION
Caltrans® DESIGN
FUNCTIONAL SUPERVISOR MICHAEL J. WEBSTER
CALCULATED-DESIGNED BY SYDNEY T TRAN
CHECKED BY TULLY McCARTHY
REVISED BY
DATE REVISED

LAST REVISION 05-06-13
DATE PLOTTED => 13-MAY-2013
TIME PLOTTED => 20:21

Dist	COUNTY	ROUTE	POST MILES TOTAL PROJECT	SHEET No.	TOTAL SHEETS
11	SD	11, 905	0.0/1.6, R9.9/R10.7	260	622

REGISTERED CIVIL ENGINEER 03-19-13 DATE

04-22-13
PLANS APPROVAL DATE

REGISTERED PROFESSIONAL ENGINEER FARDAD BEHBOODY No. 61478 Exp. 06-30-13 CIVIL STATE OF CALIFORNIA

THE STATE OF CALIFORNIA OR ITS OFFICERS OR AGENTS SHALL NOT BE RESPONSIBLE FOR THE ACCURACY OR COMPLETENESS OF SCANNED COPIES OF THIS PLAN SHEET.

APC ALLOWABLE PIPE MATERIAL (6", 18, 24", 36" DIAMETER)

GALVANIZED STEEL-METAL PIPE	COMPOSITE STEEL SPIRAL RIBBED PIPE	HIGH DENSITY POLYETHYLENE PIPE	PVC PIPE	RCP
11/64" (8 GAUGE) WITH APPROVED OUTSIDE COATING	(CSSRP)	SMOOTH INSIDE RIBBED PROFILE WALL OR CORRUGATED TYPE S OR TYPE C	SMOOTH INSIDE RIBBED	SPECIAL CASE FOR ALL CHLORIDE RESISTANT RCP

DRAINAGE QUANTITIES

DRAINAGE SHEET No.	DRAINAGE SYSTEM No. ⬡	DRAINAGE UNIT ○	6" Alt PIPE Culv LF	18" Alt PIPE Culv LF	24" Alt PIPE Culv LF	24" REINFORCED Conc PIPE LF	36" Alt PIPE Culv LF	36" REINFORCED Conc PIPE LF	36" RCP DOWNDRAIN LF	48" REINFORCED Conc PIPE LF	54" REINFORCED Conc PIPE LF	66" REINFORCED Conc PIPE LF	84" MODIFIED RCP LF	24" CONCRETE FES EA	36" CONCRETE FES EA	STRUCTURAL Conc, BOX CULVERT CY	MINOR CONCRETE (MINOR STRUCTURE) CY	CONCRETE (CONCRETE APRON) CY	CONCRETE (DITCH LINING) CY	CONCRETE (CHANNEL LINING) CY	MISCELLANEOUS IRON AND STEEL LB	RSP FABRIC (CLASS 8) SQYD	RSP (FACING, METHOD B) CY	RSP (1/4 TON, METHOD B) CY	BAR REINFORCING STEEL (BOX CULVERT) LB	DITCH EXCAVATION CY	PLACE HOT MIX ASPHALT (MISCELLANEOUS AREA) SQYD	3" PLASTIC PIPE (APPROACH SLAB DRAIN) LF	REMOVE CULVERT LF	REMOVE CONCRETE (CY) * CY	REMOVE RSP CY	DESCRIPTION	STATION	DRAINAGE SYSTEM No. ⬡	DRAINAGE UNIT ○
D-1	1	a			1.4																											24" APC W/COLLAR	"E4" 603+68.23	1	a
D-1	1	b															1.59				329											G2 INLET	"E4" 603+68.23	1	b
D-1	1	c																														REMOVE CULVERT	"E4" 603+68.23	1	c
D-1	1	d																														REMOVE INLET	"E4" 603+68.23	1	d
D-2	2	a			6.0																											24" APC W/COLLAR	"EB" 616+38.28	2	a
D-2	2	b															2.04				622											GD1 INLET	"EB" 616+38.28	2	b
D-2	2	c		23.7																												18" APC	"EB" 616+50.00	2	c
D-2	2	d															1.24				329											G1 INLET	"EB" 616+65.00	2	d
D-2	2	e		32.0																												18" APC	"EB" 616+80.00	2	e
D-2	2	f															1.93				622											GD1 INLET	"EB" 617+00.00	2	f
D-2	2	g		32.0																												18" APC	"EB" 617+20.00	2	g
D-2	2	h															1.15				329											G1 INLET	"EB" 617+35.00	2	h
D-2	2	i		35.0																												18" APC	"EB" 617+50.00	2	i
D-2	2	j															1.83				622											GD1 INLET	"EB" 617+73.28	2	j
D-2	2	k		97.0																												18" APC	"EB" 618+00.00	2	k
D-2	2	l															1.10				329											G1 INLET	"EB" 618+73.00	2	l
D-2	2	m		97.0																												18" APC	"EB" 619+00.00	2	m
D-2	2	n															1.10				329											G1 INLET	"EB" 619+73.00	2	n
D-2	2	o		68.0																												18" APC	"EB" 620+00.00	2	o
D-2	2	p															1.10				329											G1 INLET	"EB" 620+44.00	2	p
D-2	2	q		68.0																												18" APC	"EB" 621+00.00	2	q
D-2	2	r															1.10				329											G1 INLET	"EB" 621+15.00	2	r
D-2	2	s		91.5																												18" APC	"EB" 622+00.00	2	s
D-2	2	t															1.10				329											G1 INLET	"EB" 622+09.00	2	t
D-2	2	u		41.5													6.0															18" APC W/Conc ENC.	"EB" 622+09.00	2	u
D-2	2	v															2.15				622											GD1 INLET	"EB" 622+09.00	2	v
D-2	2	w		74.5																												18" APC	"EB" 622+50.00	2	w
D-2	2	x															1.17				329											G1 INLET	"EB" 622+87.00	2	x
D-2	2	y		74.5																												18" APC	"EB" 623+00.00	2	y
D-2	2	z															1.17				329											G1 INLET	"EB" 623+65.00	2	z
D-2	2	aa		76.5																												18" APC	"EB" 624+00.00	2	aa
D-2	2	ab															1.28				329											G1 INLET	"EB" 624+45.00	2	ab
D-2	2	ac				15.0																										24" RCP W/COLLAR	"E4" 614+04.27	2	ac
D-2	2	ad															1.54				329											G1 INLET	"E4" 614+04.27	2	ad
D-2	2	ae															1.15				329											G1 INLET	"E4" 615+76.75	2	ae
D-2	2	af		57.0																												18" APC	"E4" 616+50.00	2	af
D-2	2	ag															2.44				622											GD1 INLET	"E4" 616+36.75	2	ag
D-2	2	ah		57.0																												18" APC	"E4" 616+60.00	2	ah
D-2	2	ai															1.15				329											G1 INLET	"E4" 616+96.75	2	ai
D-2	2	ak					38.8																									36" APC W/COLLAR	"E4" 618+10.27	2	ak
SHEET TOTAL				925.2	7.4	15.0	38.8										33.33				7,716											SHEET TOTAL			

(N) - NOT A SEPARATE PAY ITEM, FOR INFORMATION ONLY
* - SEE ROADWAY QUANTITIES FOR ADDITIONAL QUANTITIES

DRAINAGE QUANTITIES
DQ-1

STATE OF CALIFORNIA - DEPARTMENT OF TRANSPORTATION
Caltrans® DESIGN

FUNCTIONAL SUPERVISOR: MICHAEL J. WEBSTER
CALCULATED-DESIGNED BY: MICHAEL OREIRO
CHECKED BY: FARDAD BEHBOODY
REVISED BY / DATE REVISED

LAST REVISION 04-30-13
DATE PLOTTED => 04-JUN-2013
TIME PLOTTED => 14:20

Dist	COUNTY	ROUTE	POST MILES TOTAL PROJECT	SHEET No.	TOTAL SHEETS
11	SD	11, 905	0.0/1.6, R9.9/R10.7	261	622

REGISTERED CIVIL ENGINEER 03-19-13 DATE

04-22-13
PLANS APPROVAL DATE

REGISTERED PROFESSIONAL ENGINEER FARDAD BEHBOODY No. 61478 Exp. 06-30-13 CIVIL STATE OF CALIFORNIA

THE STATE OF CALIFORNIA OR ITS OFFICERS OR AGENTS SHALL NOT BE RESPONSIBLE FOR THE ACCURACY OR COMPLETENESS OF SCANNED COPIES OF THIS PLAN SHEET.

DRAINAGE QUANTITIES

DRAINAGE SHEET No.	DRAINAGE SYSTEM No. ⬡	DRAINAGE UNIT ○	PIPE JOINT TYPE (N)	HEIGHT OF COVER (N) LF	HEIGHT OF STRUCTURE (N) LF	MANHOLE CONE (N) EA	MANHOLE FRAME AND COVER (N) EA	DI GRATE TYPE 24-12 (N) EA	DI GRATE TYPE 36R (N) EA	CONCRETE PIPE COLLAR (N) EA	GRATE CHAIN (N) EA	REMOVE CULVERT (N) LF	REMOVE CONCRETE (N) CY	REMOVE RSP (N) CY	BACKFILL DITCH (N) CY	36" RCP RISER LF	ABANDON CULVERT LF	ABANDON INLET EA	SAND BACKFILL CY	SLURRY CEMENT BACKFILL CY	REMOVE CONCRETE (LF) LF	STEEL PLATE COVER AND FRAME (N) EA	DESCRIPTION	STATION	DRAINAGE SYSTEM No. ⬡	DRAINAGE UNIT ○
D-1	1	a	STD	2.0						1													24" APC W/COLLAR	"E4" 603+68.23	1	a
D-1	1	b			4.1			1			1												G2 INLET	"E4" 603+68.23	1	b
D-1	1	c										2											REMOVE CULVERT	"E4" 603+68.23	1	c
D-1	1	d											2										REMOVE INLET	"E4" 603+68.23	1	d
D-2	2	a	STD	2.5						1													24" APC W/COLLAR	"EB" 616+38.28	2	a
D-2	2	b			4.5			2			2												GD1 INLET	"EB" 616+38.28	2	b
D-2	2	c	WTJ	3.0																			18" APC	"EB" 616+50.00	2	c
D-2	2	d			4.3			1			1												G1 INLET	"EB" 616+65.00	2	d
D-2	2	e	WTJ	2.8																			18" APC	"EB" 616+80.00	2	e
D-2	2	f			4.1			2			2												GD1 INLET	"EB" 617+00.00	2	f
D-2	2	g	WTJ	2.6																			18" APC	"EB" 617+20.00	2	g
D-2	2	h			3.9			1			1												G1 INLET	"EB" 617+35.00	2	h
D-2	2	i	WTJ	2.4																			18" APC	"EB" 617+50.00	2	i
D-2	2	j			3.7			2			2												GD1 INLET	"EB" 617+73.28	2	j
D-2	2	k	WTJ	2.2																			18" APC	"EB" 618+00.00	2	k
D-2	2	l			3.6			1			1												G1 INLET	"EB" 618+73.00	2	l
D-2	2	m	WTJ	2.1																			18" APC	"EB" 619+00.00	2	m
D-2	2	n			3.7			1			1												G1 INLET	"EB" 619+73.00	2	n
D-2	2	o	WTJ	2.2																			18" APC	"EB" 620+00.00	2	o
D-2	2	p			3.7			1			1												G1 INLET	"EB" 620+44.00	2	p
D-2	2	q	WTJ	2.2																			18" APC	"EB" 621+00.00	2	q
D-2	2	r			3.7			1			1												G1 INLET	"EB" 621+15.00	2	r
D-2	2	s	WTJ	2.2																			18" APC	"EB" 622+00.00	2	s
D-2	2	t			3.7			1			1												G1 INLET	"EB" 622+09.00	2	t
D-2	2	u	WTJ	2.2																			18" APC W/Conc ENC.	"EB" 622+09.00	2	u
D-2	2	v			4.9			2			2												GD1 INLET	"EB" 622+09.00	2	v
D-2	2	w	WTJ	3.4																			18" APC	"EB" 622+50.00	2	w
D-2	2	x			4.0			1			1												G1 INLET	"EB" 622+87.00	2	x
D-2	2	y	WTJ	2.0																			18" APC	"EB" 623+00.00	2	y
D-2	2	z			4.0			1			1												G1 INLET	"EB" 623+65.00	2	z
D-2	2	aa	WTJ	2.0																			18" APC	"EB" 624+00.00	2	aa
D-2	2	ab			4.5			1			1												G1 INLET	"EB" 624+45.00	2	ab
D-2	2	ac	STD	3.0						1													24" RCP W/COLLAR	"E4" 614+04.27	2	ac
D-2	2	ad			5.7			1			1												G1 INLET	"E4" 614+04.27	2	ad
D-2	2	ae			3.9			1			1												G1 INLET	"E4" 615+76.75	2	ae
D-2	2	af	STD	2.9																			18" APC	"E4" 616+50.00	2	af
D-2	2	ag			5.8			2			2												GD1 INLET	"E4" 616+36.75	2	ag
D-2	2	ah	STD	2.9																			18" APC	"E4" 616+60.00	2	ah
D-2	2	ai			3.9			1			1												G1 INLET	"E4" 616+96.75	2	ai
D-2	2	ak	STD							1													36" APC W/COLLAR	"E4" 618+10.27	2	ak
SHEET TOTAL								24		4	24	2	2										SHEET TOTAL			

(N) - NOT A SEPARATE PAY ITEM, FOR INFORMATION ONLY
* - SEE ROADWAY QUANTITIES FOR ADDITIONAL QUANTITIES

DRAINAGE QUANTITIES
DQ-2

STATE OF CALIFORNIA - DEPARTMENT OF TRANSPORTATION
Caltrans® DESIGN
FUNCTIONAL SUPERVISOR: MICHAEL J. WEBSTER
CALCULATED-DESIGNED BY: MICHAEL OREIRO
CHECKED BY: FARDAD BEHBOODY
REVISED BY / DATE REVISED

LAST REVISION 04-30-13 | DATE PLOTTED => 04-JUN-2013 | TIME PLOTTED => 14:20

Dist	COUNTY	ROUTE	POST MILES TOTAL PROJECT	SHEET No.	TOTAL SHEETS
11	SD	11, 905	0.0/1.6, R9.9/R10.7	262	622

REGISTERED CIVIL ENGINEER 03-19-13 DATE

04-22-13
PLANS APPROVAL DATE

REGISTERED PROFESSIONAL ENGINEER FARDAD BEHBOODY No. 61478 Exp. 06-30-13 CIVIL STATE OF CALIFORNIA

THE STATE OF CALIFORNIA OR ITS OFFICERS OR AGENTS SHALL NOT BE RESPONSIBLE FOR THE ACCURACY OR COMPLETENESS OF SCANNED COPIES OF THIS PLAN SHEET.

DRAINAGE QUANTITIES

DRAINAGE SHEET No.	DRAINAGE SYSTEM No. ⬡	DRAINAGE UNIT ○	6" Alt PIPE Culv LF	18" Alt PIPE Culv LF	24" Alt PIPE Culv LF	24" REINFORCED Conc PIPE LF	36" Alt PIPE Culv LF	36" REINFORCED Conc PIPE LF	36" RCP DOWNDRAIN LF	48" REINFORCED Conc PIPE LF	54" REINFORCED Conc PIPE LF	66" REINFORCED Conc PIPE LF	84" MODIFIED RCP LF	24" CONCRETE FES EA	36" CONCRETE FES EA	STRUCTURAL Conc, BOX CULVERT CY	MINOR CONCRETE (MINOR STRUCTURE) CY	CONCRETE (CONCRETE APRON) CY	CONCRETE (DITCH LINING) CY	CONCRETE (CHANNEL LINING) CY	MISCELLANEOUS IRON AND STEEL LB	RSP FABRIC (CLASS 8) SQYD	RSP (FACING, METHOD B) CY	RSP (1/4 TON, METHOD B) CY	BAR REINFORCING STEEL (BOX CULVERT) LB	DITCH EXCAVATION CY	PLACE HOT MIX ASPHALT (MISCELLANEOUS AREA) SQYD	3" PLASTIC PIPE (APPROACH SLAB DRAIN) LF	REMOVE CULVERT LF	REMOVE CONCRETE (CY) * CY	REMOVE RSP CY	DESCRIPTION	STATION	DRAINAGE SYSTEM No. ⬡	DRAINAGE UNIT ○
D-2	2	al															4.94				622											GD2 INLET	"E4" 618+10.27	2	al
D-2	2	am			192.6																											24" APC	"E4" 619+00.00	2	am
D-2	2	an															2.53				622											GD1 INLET	"E4" 620+06.83	2	an
D-2	2	ao			16.2																											24" APC W/COLLAR	"E4" 620+06.83	2	ao
D-2	2	ap			160.0																											24" APC	"E4" 621+00.00	2	ap
D-2	2	aq															2.55				622											GD1 INLET	"E4" 621+70.82	2	aq
D-2	2	ar			297.0																											24" APC	"E4" 623+00.00	2	ar
D-2	2	as															2.03				622											GD1 INLET	"E4" 624+70.76	2	as
D-2	2	at															0.20															CAP INLET	"E4" 620+05.00	2	at
D-2	2	au															2.00				864											JUNCTION STRUCTURE	"LMD1A" 25+86.00	2	au
D-2	2	av				46.5																										24" RCP	"LMD1A" 25+86.00	2	av
D-2	2	aw															1.04				329											G1 INLET	"LMD1A" 25+86.00	2	aw
D-2	2	ax		100.0																												18" APC	"LMD1A" 26+20.00	2	ax
D-2	2	ay															1.06				329											G1 INLET	"LMD1A" 26+90.00	2	ay
D-2	2	az		97.0																												18" APC	"LMD1A" 27+00.00	2	az
D-2	2	ba															1.06				329											G1 INLET	"LMD1A" 27+90.00	2	ba
D-2	2	bb		97.0																												18" APC	"LMD1A" 28+54.00	2	bb
D-2	2	bc															1.06				329											G1 INLET	"LMD1A" 28+90.00	2	bc
D-2	2	bd		97.0																												18" APC	"LMD1A" 29+00.00	2	bd
D-2	2	be															1.06				329											G1 INLET	"LMD1A" 29+90.00	2	be
D-2	2	bf		97.0																												18" APC	"LMD1A" 30+20.00	2	bf
D-2	2	bg															1.06				329											G1 INLET	"LMD1A" 30+90.00	2	bg
D-2	2	bh		96.7																												18" APC	"LMD1A" 31+20.00	2	bh
D-2	2	bi															1.06				329											G1 INLET	"LMD1A" 31+90.00	2	bi
D-2	2	bj		96.7																												18" APC	"LMD1A" 32+20.00	2	bj
D-2	2	bk															1.06				329											G1 INLET	"LMD1A" 32+90.00	2	bk
D-2	2	bl		97.7																												18" APC	"LMD1A" 33+20.00	2	bl
D-2	2	bm															1.06				329											G1 INLET	"LMD1A" 33+91.00	2	bm
D-2	2	bn		97.0																												18" APC	"LMD1A" 34+20.00	2	bn
D-2	2	bo															1.06				329											G1 INLET	"LMD1A" 34+91.00	2	bo
D-2	2	bp		97.5																												18" APC	"LMD1A" 35+20.00	2	bp
D-2	2	bq															1.06				329											G1 INLET	"LMD1A" 35+91.50	2	bq
D-2	2	br		97.0																												18" APC	"LMD1A" 36+20.00	2	br
D-2	2	bs															1.06				329											G1 INLET	"LMD1A" 36+91.50	2	bs
D-2	2	bt		97.0																												18" APC	"LMD1A" 37+20.00	2	bt
D-2	2	bu															1.06				329									2		G1 INLET	"LMD1A" 37+91.50	2	bu
D-2	2	bv																														REMOVE INLET	"EB" 616+38.28	2	bv
D-2	2	bw																											40			REMOVE CULVERT	"EB" 616+38.28	2	bw
D-2	2	bx																														REMOVE INLET	"EB" 616+38.28	2	bx
D-2	2	by																														REMOVE INLET	"E4" 614+04.27	2	by
D-2	2	bz																														REMOVE CULVERT	"E4" 614+04.27	2	bz
D-2	2	ca																														REMOVE CULVERT	"E4" 618+10.27	2	ca
D-2	2	cb																											11			REMOVE CULVERT	"E4" 618+10.27	2	cb
SHEET TOTAL				1,167.6	665.8	46.5											28.01				7,629								51	2		SHEET TOTAL			

(N) - NOT A SEPARATE PAY ITEM, FOR INFORMATION ONLY
* - SEE ROADWAY QUANTITIES FOR ADDITIONAL QUANTITIES

DRAINAGE QUANTITIES
DQ-3

STATE OF CALIFORNIA - DEPARTMENT OF TRANSPORTATION
Caltrans® DESIGN

FUNCTIONAL SUPERVISOR: MICHAEL J. WEBSTER
CALCULATED-DESIGNED BY: FARDAD BEHBOODY
CHECKED BY: MICHAEL OREIRO
REVISED BY / DATE REVISED

LAST REVISION 04-30-13 | DATE PLOTTED => 04-JUN-2013 | TIME PLOTTED => 14:20

Dist	COUNTY	ROUTE	POST MILES TOTAL PROJECT	SHEET No.	TOTAL SHEETS
11	SD	11, 905	0.0/1.6, R9.9/R10.7	263	622

REGISTERED CIVIL ENGINEER 03-19-13 DATE

04-22-13
PLANS APPROVAL DATE

REGISTERED PROFESSIONAL ENGINEER FARDAD BEHBOODY No. 61478 Exp. 06-30-13 CIVIL STATE OF CALIFORNIA

THE STATE OF CALIFORNIA OR ITS OFFICERS OR AGENTS SHALL NOT BE RESPONSIBLE FOR THE ACCURACY OR COMPLETENESS OF SCANNED COPIES OF THIS PLAN SHEET.

DRAINAGE QUANTITIES

DRAINAGE SHEET No.	DRAINAGE SYSTEM No. ⬡	DRAINAGE UNIT ○	PIPE JOINT TYPE (N)	HEIGHT OF COVER (N) LF	HEIGHT OF STRUCTURE (N) LF	MANHOLE CONE (N) EA	MANHOLE FRAME AND COVER (N) EA	DI GRATE TYPE 24-12 (N) EA	DI GRATE TYPE 36R (N) EA	CONCRETE PIPE COLLAR (N) EA	GRATE CHAIN (N) EA	REMOVE CULVERT (N) LF	REMOVE CONCRETE (N) CY	REMOVE RSP (N) CY	BACKFILL DITCH (N) CY	36" RCP RISER LF	ABANDON CULVERT LF	ABANDON INLET EA	SAND BACKFILL CY	SLURRY CEMENT BACKFILL CY	REMOVE CONCRETE (LF) LF	STEEL PLATE COVER AND FRAME (N) EA	DESCRIPTION	STATION	DRAINAGE SYSTEM No. ⬡	DRAINAGE UNIT ○
D-2	2	al			6.8			2			2												GD2 INLET	"E4" 618+10.27	2	al
D-2	2	am	STD	4.2																			24" APC	"E4" 619+00.00	2	am
D-2	2	an			6.2			2			2												GD1 INLET	"E4" 620+06.83	2	an
D-2	2	ao	STD	4.2																			24" APC W/COLLAR	"E4" 620+06.83	2	ao
D-2	2	ap	STD	4.2																			24" APC	"E4" 621+00.00	2	ap
D-2	2	aq			6.3			2			2												GD1 INLET	"E4" 621+70.82	2	aq
D-2	2	ar	STD	4.3																			24" APC	"E4" 623+00.00	2	ar
D-2	2	as			4.5			2			2												GD1 INLET	"E4" 624+70.76	2	as
D-2	2	at																					CAP INLET	"E4" 620+05.00	2	at
D-2	2	au			6.7		1				1												JUNCTION STRUCTURE	"LMD1A" 25+86.00	2	au
D-2	2	av	STD	1.4																			24" RCP	"LMD1A" 25+86.00	2	av
D-2	2	aw			3.4			1			1												G1 INLET	"LMD1A" 25+86.00	2	aw
D-2	2	ax	WTJ	2.0																			18" APC	"LMD1A" 26+20.00	2	ax
D-2	2	ay			3.5			1			1												G1 INLET	"LMD1A" 26+90.00	2	ay
D-2	2	az	WTJ	2.0																			18" APC	"LMD1A" 27+00.00	2	az
D-2	2	ba			3.5			1			1												G1 INLET	"LMD1A" 27+90.00	2	ba
D-2	2	bb	WTJ	2.0																			18" APC	"LMD1A" 28+54.00	2	bb
D-2	2	bc			3.5			1			1												G1 INLET	"LMD1A" 28+90.00	2	bc
D-2	2	bd	WTJ	2.0																			18" APC	"LMD1A" 29+00.00	2	bd
D-2	2	be			3.5			1			1												G1 INLET	"LMD1A" 29+90.00	2	be
D-2	2	bf	WTJ	2.0																			18" APC	"LMD1A" 30+20.00	2	bf
D-2	2	bg			3.5			1			1												G1 INLET	"LMD1A" 30+90.00	2	bg
D-2	2	bh	WTJ	2.0																			18" APC	"LMD1A" 31+20.00	2	bh
D-2	2	bi			3.5			1			1												G1 INLET	"LMD1A" 30+90.00	2	bi
D-2	2	bj	WTJ	2.0																			18" APC	"LMD1A" 32+20.00	2	bj
D-2	2	bk			3.5			1			1												G1 INLET	"LMD1A" 32+90.00	2	bk
D-2	2	bl	WTJ	2.0																			18" APC	"LMD1A" 33+20.00	2	bl
D-2	2	bm			3.5			1			1												G1 INLET	"LMD1A" 33+91.00	2	bm
D-2	2	bn	WTJ	2.0																			18" APC	"LMD1A" 34+20.00	2	bn
D-2	2	bo			3.5			1			1												G1 INLET	"LMD1A" 34+91.00	2	bo
D-2	2	bp	WTJ	2.0																			18" APC	"LMD1A" 35+20.00	2	bp
D-2	2	bq			3.5			1			1												G1 INLET	"LMD1A" 35+91.50	2	bq
D-2	2	br	WTJ	2.0																			18" APC	"LMD1A" 36+20.00	2	br
D-2	2	bs			3.5			1			1												G1 INLET	"LMD1A" 36+91.50	2	bs
D-2	2	bt	WTJ	2.0																			18" APC	"LMD1A" 37+20.00	2	bt
D-2	2	bu			3.5			1			1												G1 INLET	"LMD1A" 37+91.50	2	bu
D-2	2	bv																					REMOVE INLET	"EB" 616+38.28	2	bv
D-2	2	bw																					REMOVE CULVERT	"EB" 616+38.28	2	bw
D-2	2	bx											2										REMOVE INLET	"EB" 616+38.28	2	bx
D-2	2	by											1										REMOVE INLET	"E4" 614+04.27	2	by
D-2	2	bz										18											REMOVE CULVERT	"E4" 614+04.27	2	bz
D-2	2	ca										39											REMOVE CULVERT	"E4" 618+10.27	2	ca
D-2	2	cb																					REMOVE CULVERT	"E4" 618+10.27	2	cb
SHEET TOTAL							1	21			22	57	3										SHEET TOTAL			

(N) - NOT A SEPARATE PAY ITEM, FOR INFORMATION ONLY
* - SEE ROADWAY QUANTITIES FOR ADDITIONAL QUANTITIES

DRAINAGE QUANTITIES
DQ-4

STATE OF CALIFORNIA - DEPARTMENT OF TRANSPORTATION
Caltrans® DESIGN

FUNCTIONAL SUPERVISOR: MICHAEL J. WEBSTER
CALCULATED-DESIGNED BY: MICHAEL OREIRO
CHECKED BY: FARDAD BEHBOODY
REVISED BY / DATE REVISED

LAST REVISION 04-30-13 | DATE PLOTTED => 04-JUN-2013 | TIME PLOTTED => 14:20

Dist	COUNTY	ROUTE	POST MILES TOTAL PROJECT	SHEET No.	TOTAL SHEETS
11	SD	11, 905	0.0/1.6, R9.9/R10.7	264	622

REGISTERED CIVIL ENGINEER 03-19-13 DATE

04-22-13
PLANS APPROVAL DATE

REGISTERED PROFESSIONAL ENGINEER FARDAD BEHBOODY No. 61478 Exp. 06-30-13 CIVIL STATE OF CALIFORNIA

THE STATE OF CALIFORNIA OR ITS OFFICERS OR AGENTS SHALL NOT BE RESPONSIBLE FOR THE ACCURACY OR COMPLETENESS OF SCANNED COPIES OF THIS PLAN SHEET.

DRAINAGE QUANTITIES

DRAINAGE SHEET No.	DRAINAGE SYSTEM No. ⬡	DRAINAGE UNIT ○	6" Alt PIPE Culv LF	18" Alt PIPE Culv LF	24" Alt PIPE Culv LF	24" REINFORCED Conc PIPE LF	36" Alt PIPE Culv LF	36" REINFORCED Conc PIPE LF	36" RCP DOWNDRAIN LF	48" REINFORCED Conc PIPE LF	54" REINFORCED Conc PIPE LF	66" REINFORCED Conc PIPE LF	84" MODIFIED RCP LF	24" CONCRETE FES EA	36" CONCRETE FES EA	STRUCTURAL Conc, BOX CULVERT CY	MINOR CONCRETE (MINOR STRUCTURE) CY	CONCRETE (CONCRETE APRON) CY	CONCRETE (DITCH LINING) CY	CONCRETE (CHANNEL LINING) CY	MISCELLANEOUS IRON AND STEEL LB	RSP FABRIC (CLASS 8) SQYD	RSP (FACING, METHOD B) CY	RSP (1/4 TON, METHOD B) CY	BAR REINFORCING STEEL (BOX CULVERT) LB	DITCH EXCAVATION CY	PLACE HOT MIX ASPHALT (MISCELLANEOUS AREA) SQYD	3" PLASTIC PIPE (APPROACH SLAB DRAIN) LF	REMOVE CULVERT LF	REMOVE CONCRETE (CY) * CY	REMOVE RSP CY	DESCRIPTION	STATION	DRAINAGE SYSTEM No. ⬡	DRAINAGE UNIT ○
D-2	2	cc																														REMOVE INLET	"E4"		
D-2	2	cd																											196			REMOVE CULVERT	"E4" 619+00.00	2	cd
D-2	2	ce																												2		REMOVE INLET	"E4" 620+06.83	2	ce
D-2	2	cf																											130			REMOVE CULVERT	"E4" 621+00.00	2	cf
D-2	2	cg																												2		REMOVE INLET	"E4" 621+50.00	2	cg
D-2	3	a															7.69	3.31			622											GD2 W/APRON	"LMD1A" 24+88.67	3	a
D-2	3	b																	83.75													DRAINAGE DITCH	"LMD1A" 35+00.00	3	b
D-2	3	c																	81.00													DRAINAGE DITCH	"LMD1A" 25+00.00	3	c
D-3	4	a																3.31														GCP INLET W/APRON	"EB" 625+80.00	4	a
D-3	4	b																				31.3	12.0									RSP AT FES	"EB" 626+87.50	4	b
D-3	4	c												1																		24" FES	"EB" 626+87.50	4	c
D-3	4	d				62.8																										24" RCP	"EB" 627+05.00	4	d
D-3	4	e															1.60				329											G1 INLET	"EB" 627+05.00	4	e
D-3	4	f																				31.3	12.0									RSP AT FES	"EB" 631+57.25	4	f
D-3	4	g												1																		24" FES	"EB" 631+51.23	4	g
D-3	4	h				78.1																										24" RCP W/COLLAR	"EB" 631+75.00	4	h
D-3	4	i															1.97				329											G2 INLET	"EB" 631+75.00	4	i
D-3	4	j			126.5																											24" APC	"EB" 632+00.00	4	j
D-3	4	k															1.68				329											G2 INLET	"EB" 633+05.00	4	k
D-3	4	l			153.3																											24" APC	"EB" 634+00.00	4	l
D-3	4	m	10.0														1.63				329											G2 INLET	"EB" 634+62.00	4	m
D-3	4	n																	80.22													DRAINAGE DITCH	"EB" 634+60.00	4	n
D-3	4	o																												64		REMOVE Conc DITCH	"EB" 625+00.00	4	o
D-2	5	a																				174.8	61.8	113.4								RSP AT HEADWALL	"EB" 624+60.89	5	a
D-2	5	b															41.88															RCB WINGWALLS	"EB" 624+60.89	5	b
D-2	5	c														84.42									14,253							7X5 DOUBLE RCB	"EB" 624+80.00	5	c
D-2	5	d																1.87			239											OCP RISER W/APRON	"EB" 624+60.89	5	d
D-2	5	e															0.88															CAP RCB	"EB" 625+32.00	5	e
D-3	5	f														48.92									6,585							TRANSITION RCB	"RCB1" 10+10.00	5	f
D-3	5	g														82.33									11,327							14X5 RCB	"RCB1" 10+25.00	5	g
D-3	5	h														75.88									10,975							TRANSITION RCB	"RCB1" 10+54.00	5	h
D-3	5	i															5.57				864											36" RISER W/MH	"RCB1" 10+53.26	5	i
D-3	5	j														1699.40									421,894							12X5 RCB	"RCB1" 14+70.00	5	j
D-3	5	k															5.57				864											36" RISER W/MH	"RCB1" 17+20.00	5	k
D-4	5	l														2,940.37									447,100							12X5 RCB	"RCB1" 22+00.00	5	l
D-4	5	m															5.57				864											36" RISER W/MH	"RCB1" 25+90.00	5	m
D-4	5	n														1278.88									317,500							12X5 RCB	"RCB1" 28+00.00	5	n
D-5	5	o														75.75									17,348							12X5 RCB	"RCB1" 31+00.00	5	o
D-5	5	p														38.40									10,017							TRANSITION RCB	"RCB1" 31+40.65	5	p
SHEET TOTAL			10.0		279.8	140.9								2		6,324.35	74.04	8.49	244.97		4,769	237.4	85.8	113.4	1,256,999				326	68		SHEET TOTAL			

(N) - NOT A SEPARATE PAY ITEM, FOR INFORMATION ONLY
* - SEE ROADWAY QUANTITIES FOR ADDITIONAL QUANTITIES

DRAINAGE QUANTITIES
DQ-5

STATE OF CALIFORNIA - DEPARTMENT OF TRANSPORTATION
Caltrans® DESIGN

FUNCTIONAL SUPERVISOR: MICHAEL J. WEBSTER
CALCULATED-DESIGNED BY: MICHAEL OREIRO
CHECKED BY: FARDAD BEHBOODY
REVISED BY / DATE REVISED

LAST REVISION 04-30-13
DATE PLOTTED => 04-JUN-2013
TIME PLOTTED => 14:20

Dist	COUNTY	ROUTE	POST MILES TOTAL PROJECT	SHEET No.	TOTAL SHEETS
11	SD	11, 905	0.0/1.6, R9.9/R10.7	265	622

REGISTERED CIVIL ENGINEER 03-19-13 DATE

04-22-13
PLANS APPROVAL DATE

REGISTERED PROFESSIONAL ENGINEER FARDAD BEHBOODY No. 61478 Exp. 06-30-13 CIVIL STATE OF CALIFORNIA

THE STATE OF CALIFORNIA OR ITS OFFICERS OR AGENTS SHALL NOT BE RESPONSIBLE FOR THE ACCURACY OR COMPLETENESS OF SCANNED COPIES OF THIS PLAN SHEET.

DRAINAGE QUANTITIES

DRAINAGE SHEET No.	DRAINAGE SYSTEM No. ⬡	DRAINAGE UNIT ○	PIPE JOINT TYPE (N)	HEIGHT OF COVER (N) LF	HEIGHT OF STRUCTURE (N) LF	MANHOLE CONE (N) EA	MANHOLE FRAME AND COVER (N) EA	DI GRATE TYPE 24-12 (N) EA	DI GRATE TYPE 36R (N) EA	CONCRETE PIPE COLLAR (N) EA	GRATE CHAIN (N) EA	REMOVE CULVERT (N) LF	REMOVE CONCRETE (N) CY	REMOVE RSP (N) CY	BACKFILL DITCH (N) CY	36" RCP RISER LF	ABANDON CULVERT LF	ABANDON INLET EA	SAND BACKFILL CY	SLURRY CEMENT BACKFILL CY	REMOVE CONCRETE (LF) LF	STEEL PLATE COVER AND FRAME (N) EA	DESCRIPTION	STATION	DRAINAGE SYSTEM No. ⬡	DRAINAGE UNIT ○
D-2	2	cc																					REMOVE INLET	"E4" 618+10.27	2	cc
D-2	2	cd																					REMOVE CULVERT	"E4" 619+00.00	2	cd
D-2	2	ce																					REMOVE INLET	"E4" 620+06.83	2	ce
D-2	2	cf																					REMOVE CULVERT	"E4" 621+00.00	2	cf
D-2	2	cg																					REMOVE INLET	"E4" 621+50.00	2	cg
D-2	3	a			10.5			2			2												GD2 W/APRON	"LMD1A" 24+88.67	3	a
D-2	3	b																					DRAINAGE DITCH	"LMD1A" 35+00.00	3	b
D-2	3	c																					DRAINAGE DITCH	"LMD1A" 25+00.00	3	c
D-3	4	a			12.8				1							12.8							GCP INLET W/APRON	"EB" 625+80.00	4	a
D-3	4	b																					RSP AT FES	"EB" 626+87.50	4	b
D-3	4	c																					24" FES	"EB" 626+87.50	4	c
D-3	4	d	STD	3.8																			24" RCP	"EB" 627+05.00	4	d
D-3	4	e			5.9			1															G1 INLET	"EB" 627+05.00	4	e
D-3	4	f																					RSP AT FES	"EB" 631+57.23	4	f
D-3	4	g																					24" FES	"EB" 631+57.23	4	g
D-3	4	h	POS	3.5						1													24" RCP W/COLLAR	"EB" 631+75.00	4	h
D-3	4	i			5.6			1															G2 INLET	"EB" 631+75.00	4	i
D-3	4	j	STD	2.9																			24" APC	"EB" 632+00.00	4	j
D-3	4	k			4.5			1															G2 INLET	"EB" 633+05.00	4	k
D-3	4	l	STD	2.5																			24" APC	"EB" 634+00.00	4	l
D-3	4	m			4.3			1															G2 INLET	"EB" 634+62.00	4	m
D-3	4	n																					DRAINAGE DITCH	"EB" 634+60.00	4	n
D-3	4	o																			64.3		REMOVE Conc DITCH	"EB" 625+00.00	4	o
D-2	5	a																					RSP AT HEADWALL	"EB" 624+60.89	5	a
D-2	5	b																					RCB WINGWALLS	"EB" 624+60.89	5	b
D-2	5	c		16.0																			7X5 DOUBLE RCB	"EB" 624+80.00	5	c
D-2	5	d			7.0				1							7.0							OCP RISER W/APRON	"EB" 624+60.89	5	d
D-2	5	e																					CAP RCB	"EB" 625+32.00	5	e
D-3	5	f																					TRANSITION RCB	"RCB1" 10+10.00	5	f
D-3	5	g		30.0																			14X5 RCB	"RCB1" 10+25.00	5	g
D-3	5	h		31.0																			TRANSITION RCB	"RCB1" 10+54.00	5	h
D-3	5	i			15.4		1				1					5.8							36" RISER W/MH	"RCB1" 10+53.26	5	i
D-3	5	j		35.0																			12X5 RCB	"RCB1" 14+70.00	5	j
D-3	5	k			27.6		1				1					17.9							36" RISER W/MH	"RCB1" 17+20.00	5	k
D-4	5	l		60.0																			12X5 RCB	"RCB1" 22+00.00	5	l
D-4	5	m			18.7		1				1					9.0							36" RISER W/MH	"RCB1" 25+90.00	5	m
D-4	5	n		35.0																			12X5 RCB	"RCB1" 28+00.00	5	n
D-5	5	o		20.0																			12X5 RCB	"RCB1" 31+00.00	5	o
D-5	5	p																					TRANSITION RCB	"RCB1" 31+40.65	5	p
SHEET TOTAL							3	6	2	1	5					52.5					64.3		SHEET TOTAL			

(N) - NOT A SEPARATE PAY ITEM, FOR INFOMATION ONLY
* - SEE ROADWAY QUANTITIES FOR ADDITIONAL QUANTITIES

DRAINAGE QUANTITIES
DQ-6

STATE OF CALIFORNIA - DEPARTMENT OF TRANSPORTATION
Caltrans® DESIGN

FUNCTIONAL SUPERVISOR: MICHAEL J. WEBSTER
CALCULATED-DESIGNED BY: MICHAEL OREIRO
CHECKED BY: FARDAD BEHBOODY
REVISED BY
DATE REVISED

LAST REVISION 04-30-13
DATE PLOTTED => 04-JUN-2013
TIME PLOTTED => 14:20

Dist	COUNTY	ROUTE	POST MILES TOTAL PROJECT	SHEET No.	TOTAL SHEETS
11	SD	11, 905	0.0/1.6, R9.9/R10.7	266	622

REGISTERED CIVIL ENGINEER 03-19-13 DATE

04-22-13
PLANS APPROVAL DATE

REGISTERED PROFESSIONAL ENGINEER FARDAD BEHBOODY No. 61478 Exp. 06-30-13 CIVIL STATE OF CALIFORNIA

THE STATE OF CALIFORNIA OR ITS OFFICERS OR AGENTS SHALL NOT BE RESPONSIBLE FOR THE ACCURACY OR COMPLETENESS OF SCANNED COPIES OF THIS PLAN SHEET.

DRAINAGE QUANTITIES

DRAINAGE SHEET No.	DRAINAGE SYSTEM No. ⬡	DRAINAGE UNIT ○	6" Alt PIPE Culv LF	18" Alt PIPE Culv LF	24" Alt PIPE Culv LF	24" REINFORCED Conc PIPE LF	36" Alt PIPE Culv LF	36" REINFORCED Conc PIPE LF	36" RCP DOWNDRAIN LF	48" REINFORCED Conc PIPE LF	54" REINFORCED Conc PIPE LF	66" REINFORCED Conc PIPE LF	84" MODIFIED RCP LF	24" CONCRETE FES EA	36" CONCRETE FES EA	STRUCTURAL Conc, BOX CULVERT CY	MINOR CONCRETE (MINOR STRUCTURE) CY	CONCRETE (CONCRETE APRON) CY	CONCRETE (DITCH LINING) CY	CONCRETE (CHANNEL LINING) CY	MISCELLANEOUS IRON AND STEEL LB	RSP FABRIC (CLASS 8) SQYD	RSP (FACING, METHOD B) CY	RSP (1/4 TON, METHOD B) CY	BAR REINFORCING STEEL (BOX CULVERT) LB	DITCH EXCAVATION CY	PLACE HOT MIX ASPHALT (MISCELLANEOUS AREA) SQYD	3" PLASTIC PIPE (APPROACH SLAB DRAIN) LF	REMOVE CULVERT LF	REMOVE CONCRETE (CY) * CY	REMOVE RSP CY	DESCRIPTION	STATION	DRAINAGE SYSTEM No. ⬡	DRAINAGE UNIT ○
D-5	5	q																1.87			239											36" GCP W/APRON	"RCB1" 31+40.26	5	q
D-5	5	r														94.72									26,845							9X5 RCB	"RCB1" 32+00.00	5	r
D-5	5	s														15.47									4,384							TRANSITION RCB	"RCB1" 32+52.07	5	s
D-5	5	t																1.87			239											36" GCP W/APRON	"RCB1" 32+52.07	5	t
D-5	5	u						117.3																								36" RCP	"A" 27+00.00	5	u
D-5	5	v															6.27															Conc DETENTION RISER	"A" 27+49.00	5	v
D-5	5	w																		915.97												Conc DETENTION BASIN	"A" 31+00.00	5	w
D-5	5	x														66.19									13,890							7X5 RCB	"RCB1" 33+00.00	5	x
D-5	5	y															6.97															BOX Culv WARPED WW	"RCB1" 33+42.27	5	y
D-5	5	z																	107.90													DRAINAGE DITCH	"RCB1" 35+00.00	5	z
D-5	5	aa																	46.06													DRAINAGE DITCH	"RCB1" 40+00.00	5	aa
D-2	5	ab																													145	REMOVE RSP	"EB" 624+80.00	5	ab
D-3	5	ac																												45		REMOVE WINGWALLS	"RCB1" 10+00.00	5	ac
D-3	5	ad																													1,300	REMOVE RSP	"RCB1" 10+60.00	5	ad
D-3	5	ae																													398	REMOVE RSP	"RCB1" 17+10.00	5	ae
D-2	6	a					142.2																									36" APC W/COLLAR	"LMD1A" 38+29.50	6	a
D-2	6	b															1.95	4.25														HW WITH APRON	"LMD1A" 38+29.50	6	b
D-2	6	c																	27.90													CONCRETE DITCH	"LMD1A" 38+26.64	6	c
D-3	7	a																				90.9	25.8	47.4								RSP AT FES	"LMR" 50+80.00	7	a
D-3	7	b													1																	36" FES	"LMR" 50+80.00	7	b
D-3	7	c						110.3																								36" RCP	"LMR" 51+00.00	7	c
D-3	7	d															6.37				329											G2 INLET	"LMR" 51+00.00	7	d
D-3	7	e				20.1																										24" RCP	"LMR" 51+00.00	7	e
D-3	7	f															2.33				329											G2 INLET	"LMR" 51+04.00	7	f
D-3	7	g			63.3																											24" APC	"WB" 637+75.00	7	g
D-3	7	h															4.47				329											G2 INLET	"WB" 637+75.00	7	h
D-4	7	i				35.8																										24" RCP	"WB" 640+00.00	7	i
D-4	7	j															2.08				329											G2 INLET	"WB" 637+75.00	7	j
D-4	7	k															1.82				329											G2 INLET	"LMR" 49+80.00	7	k
D-4	7	l			117.4																											24" APC	"LMR" 50+80.00	7	l
D-4	7	m			198.2																											24" APC	"WB" 642+00.00	7	m
D-4	7	n															2.08				329											G2 INLET	"LMR" 53+00.00	7	n
D-4	7	o			147.1																											24" APC	"LMR" 642+00.00	7	o
D-4	7	p															2.08				329											G2 INLET	"LMR" 54+50.00	7	p
D-4	7	q			217.1																											24" APC	"LMR" 54+50.00	7	q
D-4	7	r															2.08				329											G2 INLET	"LMR" 56+70.00	7	r
D-4	7	s			18.0																											24" APC	"LMR" 642+00.00	7	s
D-4	7	t															1.82				329											G2 INLET	"LMR" 642+00.00	7	t
SHEET TOTAL					761.1	55.9	142.2	227.6							1	176.38	40.32	7.99	181.86	915.97	3,439	90.9	25.8	47.4	45,119					45	1,843	SHEET TOTAL			

(N) - NOT A SEPARATE PAY ITEM, FOR INFORMATION ONLY
* - SEE ROADWAY QUANTITIES FOR ADDITIONAL QUANTITIES

DRAINAGE QUANTITIES
DQ-7

STATE OF CALIFORNIA - DEPARTMENT OF TRANSPORTATION
Caltrans® DESIGN

FUNCTIONAL SUPERVISOR: MICHAEL J. WEBSTER
CALCULATED-DESIGNED BY: MICHAEL OREIRO
CHECKED BY: FARDAD BEHBOODY
REVISED BY / DATE REVISED

LAST REVISION 04-30-13 | DATE PLOTTED => 04-JUN-2013 | TIME PLOTTED => 14:20

Dist	COUNTY	ROUTE	POST MILES TOTAL PROJECT	SHEET No.	TOTAL SHEETS
11	SD	11, 905	0.0/1.6, R9.9/R10.7	267	622

REGISTERED CIVIL ENGINEER 03-19-13 DATE

04-22-13
PLANS APPROVAL DATE

REGISTERED PROFESSIONAL ENGINEER FARDAD BEHBOODY No. 61478 Exp. 06-30-13 CIVIL STATE OF CALIFORNIA

THE STATE OF CALIFORNIA OR ITS OFFICERS OR AGENTS SHALL NOT BE RESPONSIBLE FOR THE ACCURACY OR COMPLETENESS OF SCANNED COPIES OF THIS PLAN SHEET.

DRAINAGE QUANTITIES

DRAINAGE SHEET No.	DRAINAGE SYSTEM No. ⬡	DRAINAGE UNIT ○	PIPE JOINT TYPE (N)	HEIGHT OF COVER (N) LF	HEIGHT OF STRUCTURE (N) LF	MANHOLE CONE (N) EA	MANHOLE FRAME AND COVER (N) EA	DI GRATE TYPE 24-12 (N) EA	DI GRATE TYPE 36R (N) EA	CONCRETE PIPE COLLAR (N) EA	GRATE CHAIN (N) EA	REMOVE CULVERT (N) LF	REMOVE CONCRETE (N) CY	REMOVE RSP (N) CY	BACKFILL DITCH (N) CY	36" RCP RISER LF	ABANDON CULVERT LF	ABANDON INLET EA	SAND BACKFILL CY	SLURRY CEMENT BACKFILL CY	REMOVE CONCRETE (LF) LF	STEEL PLATE COVER AND FRAME (N) EA	DESCRIPTION	STATION	DRAINAGE SYSTEM No. ⬡	DRAINAGE UNIT ○
D-5	5	q							1		1					15.7							36" GCP W/APRON	"RCB1" 31+40.62	5	q
D-5	5	r		20.0																			9X5 RCB	"RCB1" 32+00.00	5	r
D-5	5	s																					TRANSITION RCB	"RCB1" 32+52.07	5	s
D-5	5	t	STD	10.0					1		1					10.3							36" GCP W/APRON	"RCB1" 32+52.07	5	t
D-5	5	u	STD	13.0						1													36" RCP	"A" 27+00.00	5	u
D-5	5	v			10.8																		Conc DETENTION RISER	"A" 27+49.00	5	v
D-5	5	w																					Conc DETENTION BASIN	"A" 31+00.00	5	w
D-5	5	x		20.0																			7X5 RCB	"RCB1" 33+00.00	5	x
D-5	5	y																					BOX Culv WARPED WW	"RCB1" 33+42.27	5	y
D-5	5	z																					DRAINAGE DITCH	"RCB1" 35+00.00	5	z
D-5	5	aa																					DRAINAGE DITCH	"RCB1" 40+00.00	5	aa
D-2	5	ab																					REMOVE RSP	"EB" 624+80.00	5	ab
D-3	5	ac																					REMOVE WINGWALLS	"RCB1" 10+00.00	5	ac
D-3	5	ad																					REMOVE RSP	"RCB1" 10+60.00	5	ad
D-3	5	ae																					REMOVE RSP	"RCB1" 17+10.00	5	ae
D-2	6	a	STD	4.0						1													36" APC W/COLLAR	"LMD1A" 38+29.50	6	a
D-2	6	b																					HW WITH APRON	"LMD1A" 38+29.50	6	b
D-2	6	c																					CONCRETE DITCH	"LMD1A" 38+26.64	6	c
D-3	7	a																					RSP AT FES	"LMR" 50+80.00	7	a
D-3	7	b																					36" FES	"LMR" 50+80.00	7	b
D-3	7	c	WTJ	13.0																			36" RCP	"LMR" 51+00.00	7	c
D-3	7	d			16.0			1			1												G2 INLET	"LMR" 51+00.00	7	d
D-3	7	e	STD	5.0																			24" RCP	"LMR" 51+00.00	7	e
D-3	7	f			7.0			1			1												G2 INLET	"LMR" 51+04.00	7	f
D-3	7	g	STD	8.0																			24" APC	"WB" 637+75.00	7	g
D-3	7	h			10.7			1			1												G2 INLET	"WB" 637+75.00	7	h
D-4	7	i	STD	8.0																			24" RCP	"WB" 640+00.00	7	i
D-4	7	j			6.0			1			1												G2 INLET	"WB" 637+75.00	7	j
D-4	7	k			5.0			1			1												G2 INLET	"LMR" 49+80.00	7	k
D-4	7	l	STD	13.0																			24" APC	"LMR" 50+80.00	7	l
D-4	7	m	STD	13.0																			24" APC	"WB" 642+00.00	7	m
D-4	7	n			6.0			1			1												G2 INLET	"LMR" 53+00.00	7	n
D-4	7	o	STD	3.0																			24" APC	"LMR" 642+00.00	7	o
D-4	7	p			6.0			1			1												G2 INLET	"LMR" 54+50.00	7	p
D-4	7	q	STD	3.0																			24" APC	"LMR" 54+50.00	7	q
D-4	7	r			6.0			1			1												G2 INLET	"LMR" 56+70.00	7	r
D-4	7	s	STD	3.0																			24" APC	"LMR" 642+00.00	7	s
D-4	7	t			5.0			1			1												G2 INLET	"LMR" 642+00.00	7	t
SHEET TOTAL								9	2	2	11					26.0							SHEET TOTAL			

(N) - NOT PAY ITEM, FOR INFORMATION ONLY
* - SEE ROADWAY QUANTITIES FOR ADDITIONAL QUANTITIES

DRAINAGE QUANTITIES
DQ-8

REVISED BY | DATE REVISED
MICHAEL OREIRO | FARDAD BEHBOODY
CALCULATED-DESIGNED BY | CHECKED BY
FUNCTIONAL SUPERVISOR: MICHAEL J. WEBSTER
STATE OF CALIFORNIA - DEPARTMENT OF TRANSPORTATION
Caltrans
DESIGN

LAST REVISION 04-30-13 | DATE PLOTTED => 04-JUN-2013 | TIME PLOTTED => 14:20

Dist	COUNTY	ROUTE	POST MILES TOTAL PROJECT	SHEET No.	TOTAL SHEETS
11	SD	11, 905	0.0/1.6, R9.9/R10.7	268	622

REGISTERED CIVIL ENGINEER 03-19-13 DATE

04-22-13
PLANS APPROVAL DATE

REGISTERED PROFESSIONAL ENGINEER FARDAD BEHBOODY No. 61478 Exp. 06-30-13 CIVIL STATE OF CALIFORNIA

THE STATE OF CALIFORNIA OR ITS OFFICERS OR AGENTS SHALL NOT BE RESPONSIBLE FOR THE ACCURACY OR COMPLETENESS OF SCANNED COPIES OF THIS PLAN SHEET.

DRAINAGE QUANTITIES

DRAINAGE SHEET No.	DRAINAGE SYSTEM No. ⬡	DRAINAGE UNIT ○	6" Alt PIPE Culv LF	18" Alt PIPE Culv LF	24" Alt PIPE Culv LF	24" REINFORCED Conc PIPE LF	36" Alt PIPE Culv LF	36" REINFORCED Conc PIPE LF	36" RCP DOWNDRAIN LF	48" REINFORCED Conc PIPE LF	54" REINFORCED Conc PIPE LF	66" REINFORCED Conc PIPE LF	84" MODIFIED RCP LF	24" CONCRETE FES EA	36" CONCRETE FES EA	STRUCTURAL Conc, BOX CULVERT CY	MINOR CONCRETE (MINOR STRUCTURE) CY	CONCRETE (CONCRETE APRON) CY	CONCRETE (DITCH LINING) CY	CONCRETE (CHANNEL LINING) CY	MISCELLANEOUS IRON AND STEEL LB	RSP FABRIC (CLASS 8) SQYD	RSP (FACING, METHOD B) CY	RSP (1/4 TON, METHOD B) CY	BAR REINFORCING STEEL (BOX CULVERT) LB	DITCH EXCAVATION CY	PLACE HOT MIX ASPHALT (MISCELLANEOUS AREA) SQYD	3" PLASTIC PIPE (APPROACH SLAB DRAIN) LF	REMOVE CULVERT LF	REMOVE CONCRETE (CY) * CY	REMOVE RSP CY	DESCRIPTION	STATION	DRAINAGE SYSTEM No. ⬡	DRAINAGE UNIT ○
D-4	7	u			275.4																											24" APC	"WB" 637+75.00	7	u
D-4	7	v															1.82				329											G2 INLET	"WB" 640+52.50	7	v
D-4	7	w			34.6																											24" APC	"WB" 640+52.50	7	w
D-4	7	x															1.82				329											G2 INLET	"WB" 640+90.00	7	x
D-4	7	y			34.6																											24" APC	"WB" 640+90.00	7	y
D-4	7	z															1.82				329											G2 INLET	"WB" 641+27.50	7	z
D-4	7	aa			34.6																											24" APC	"WB" 641+27.50	7	aa
D-4	7	ab															1.82				329											G2 INLET	"WB" 641+65.00	7	ab
D-4	7	ac			32.1																											24" APC	"WB" 641+65.00	7	ac
D-4	7	ad															1.82				329											G2 INLET	"WB" 642+00.00	7	ad
D-4	7	ae			45.7																											24" APC	"WB" 637+75.00	7	ae
D-4	7	af															2.95				658											GT4 INLET	"WB" 638+27.50	7	af
D-3	8	a			85.5																											24" APC W/COLLAR	"LMD1A" 41+60.00	8	a
D-3	8	b															1.59	1.87			329											G2 INLET W/APRON	"LMD1A" 41+70.00	8	b
D-3	8	c																				7.3	1.8									RSP	"LMD1A" 44+86.00	8	c
D-3	8	d																														OVERSIDE DRAIN Mod	"LMD1A" 44+86.00	8	d
																												15.0							
D-3	9	a								405.4																						Dbl 48" RCP W/COLLARS	"LMR" 45+18.43	9	a
D-3	9	b								204.0																						Dbl 48" RCP W/COLLARS	"LMR" 45+18.43	9	b
D-3	9	c															3.64	6.67														Dbl HW W/APRON	"LMR" 45+93.89	9	c
D-3	9	d																								782.89						EARTHEN DITCH	"LMR" 47+67.94	9	d
D-3	9	e																								1,167.12						EARTHEN DITCH	"LMR" 49+25.39	9	e
D-3	9	f																								937.71						EARTHEN DITCH	"LMR" 53+32.41	9	f
D-3	9	g				7.7																										24" RCP W/J-1 COLLAR	"LMR" 45+03.00	9	g
D-3	9	h															1.24	3.31			329											G1 DI W/APRON	"LMR" 45+03.00	9	h
D-3	9	i																				17.8	6.0									RSP AT FES	"LMR" 46+46.18	9	i
D-3	9	j												1																		24" FES	"LMR" 46+48.16	9	j
D-3	9	k				52.5																										24" RCP	"LMR" 46+50.00	9	k
D-3	9	l															1.24				329											G1 INLET	"LMR" 46+60.50	9	l
D-3	9	m																		41.4		100.0	60.0	110.0								SPILLWAY & RSP	"LMR" 46+14.63	9	m
D-3	10	a																				81.5	22.7	41.6								RSP AT FES	"LMR" 50+40.00	10	a
D-3	10	b													1																	36" FES	"LMR" 50+40.00	10	b
D-3	10	c						220.5																								36" RCP	"LMR" 50+40.00	10	c
D-3	10	d															4.82				329											G2 INLET	"LMD1A" 49+66.25	10	d
D-3	10	e						30.0																								36" RCP	"LMD1A" 49+66.25	10	e
D-3	10	f															4.03				329											G2 INLET	"LMD1A" 49+75.00	10	f
D-3	10	g			71.5																											24" APC	"LMD1A" 49+75.00	10	g
D-3	10	h															1.57				329											G2 INLET	"LMD1A" 50+50.00	10	h
D-4	10	i			297.0																											24" APC	"LMD1A" 50+50.00	10	i
D-4	10	j															2.36				329											G2 INLET	"LMD1A" 53+50.00	10	j
D-4	10	k			247.0																											24" APC	"LMD1A" 53+50.00	10	k
D-4	10	l															2.29				329											G2 INLET	"LMD1A" 56+00.00	10	l
SHEET TOTAL					1,158.0	60.2		250.5		609.4				1	1		34.83	11.85		41.4	4,935	206.6	90.5	151.6		2,887.72	15.0					SHEET TOTAL			

(N) - NOT A SEPARATE PAY ITEM, FOR INFORMATION ONLY
* - SEE ROADWAY QUANTITIES FOR ADDITIONAL QUANTITIES

DRAINAGE QUANTITIES

DQ-9

REVISED BY | DATE REVISED
MICHAEL OREIRO | FARDAD BEHBOODY
CALCULATED-DESIGNED BY | CHECKED BY
FUNCTIONAL SUPERVISOR: MICHAEL J. WEBSTER
STATE OF CALIFORNIA - DEPARTMENT OF TRANSPORTATION
Caltrans DESIGN

LAST REVISION 04-30-13 | DATE PLOTTED => 04-JUN-2013 | TIME PLOTTED => 14:20

Dist	COUNTY	ROUTE	POST MILES TOTAL PROJECT	SHEET No.	TOTAL SHEETS
11	SD	11, 905	0.0/1.6, R9.9/R10.7	269	622

REGISTERED CIVIL ENGINEER 03-19-13 DATE

04-22-13
PLANS APPROVAL DATE

REGISTERED PROFESSIONAL ENGINEER FARDAD BEHBOODY No. 61478 Exp. 06-30-13 CIVIL STATE OF CALIFORNIA

THE STATE OF CALIFORNIA OR ITS OFFICERS OR AGENTS SHALL NOT BE RESPONSIBLE FOR THE ACCURACY OR COMPLETENESS OF SCANNED COPIES OF THIS PLAN SHEET.

DRAINAGE QUANTITIES

DRAINAGE SHEET No.	DRAINAGE SYSTEM No. ⬡	DRAINAGE UNIT ○	PIPE JOINT TYPE (N)	HEIGHT OF COVER (N) LF	HEIGHT OF STRUCTURE (N) LF	MANHOLE CONE (N) EA	MANHOLE FRAME AND COVER (N) EA	DI GRATE TYPE 24-12 (N) EA	DI GRATE TYPE 36R (N) EA	CONCRETE PIPE COLLAR (N) EA	GRATE CHAIN (N) EA	REMOVE CULVERT (N) LF	REMOVE CONCRETE (N) CY	REMOVE RSP (N) CY	BACKFILL DITCH (N) CY	36" RCP RISER LF	ABANDON CULVERT LF	ABANDON INLET EA	SAND BACKFILL CY	SLURRY CEMENT BACKFILL CY	REMOVE CONCRETE (LF) LF	STEEL PLATE COVER AND FRAME (N) EA	DESCRIPTION	STATION	DRAINAGE SYSTEM No. ⬡	DRAINAGE UNIT ○
D-4	7	u	STD	3.0																			24" APC	"WB" 637+75.00	7	u
D-4	7	v			5.0			1			1												G2 INLET	"WB" 640+52.50	7	v
D-4	7	w	STD	3.0																			24" APC	"WB" 640+52.50	7	w
D-4	7	x			5.0			1			1												G2 INLET	"WB" 640+90.00	7	x
D-4	7	y	STD	3.0																			24" APC	"WB" 640+90.00	7	y
D-4	7	z			5.0			1			1												G2 INLET	"WB" 641+27.50	7	z
D-4	7	aa	STD	3.0																			24" APC	"WB" 640+27.50	7	aa
D-4	7	ab			5.0			1			1												G2 INLET	"WB" 641+65.00	7	ab
D-4	7	ac	STD	3.0																			24" APC	"WB" 641+65.00	7	ac
D-4	7	ad			5.0			1			1												G2 INLET	"WB" 642+00.00	7	ad
D-4	7	ae	STD	3.0																			24" APC	"WB" 637+75.00	7	ae
D-4	7	af			5.0			2			2												GT4 INLET	"WB" 638+27.50	7	af
D-3	8	a	WTJ	18.0						1													24" APC W/COLLAR	"LMD1A" 41+60.00	8	a
D-3	8	b			4.1			1			1												G2 INLET W/APRON	"LMD1A" 41+70.00	8	b
D-3	8	c																					RSP	"LMD1A" 44+86.00	8	c
D-3	8	d																					OVERSIDE DRAIN (Mod)	"LMD1A" 44+86.00	8	d
D-3	9	a	STD	18.0						2													DbI 48" RCP W/COLLARS	"LMR" 45+18.43	9	a
D-3	9	b	STD	6.0						2													DbI 48" RCP W/COLLARS	"LMR" 45+18.43	9	b
D-3	9	c																					DbI HW W/APRON	"LMR" 45+93.89	9	c
D-3	9	d																					EARTHEN DITCH	"LMR" 47+67.94	9	d
D-3	9	e																					EARTHEN DITCH	"LMR" 49+25.39	9	e
D-3	9	f																					EARTHEN DITCH	"LMR" 53+32.41	9	f
D-3	9	g	STD	5.4						1													24" RCP W/J-1 COLLAR	"LMR" 45+03.00	9	g
D-3	9	h			4.3			1			1												G1 DI W/APRON	"LMR" 45+03.00	9	h
D-3	9	i																					RSP AT FES	"LMR" 46+46.18	9	i
D-3	9	j																					24" FES	"LMR" 46+48.16	9	j
D-3	9	k	STD	1.9																			24" RCP	"LMR" 46+50.00	9	k
D-3	9	l			4.3			1			1												G1 INLET	"LMR" 46+60.50	9	l
D-3	9	m																					SPILLWAY & RSP	"LMR" 46+14.63	9	m
D-3	10	a																					RSP	"LMR" 50+40.00	10	a
D-3	10	b																					36" FES	"LMR" 50+40.00	10	b
D-3	10	c	WTJ	24.0																			36" RCP	"LMR" 50+40.00	10	c
D-3	10	d			11.7			1			1												G2 INLET	"LMD1A" 49+66.25	10	d
D-3	10	e	STD	8.7																			36" RCP	"LMD1A" 49+66.25	10	e
D-3	10	f			9.7			1			1												G2 INLET	"LMD1A" 49+75.00	10	f
D-3	10	g	STD	5.1																			24" APC	"LMD1A" 49+75.00	10	g
D-3	10	h			4.0			1			1												G2 INLET	"LMD1A" 50+50.00	10	h
D-4	10	i	STD	5.0																			24" APC	"LMD1A" 50+50.00	10	i
D-4	10	j			7.1			1			1												G2 INLET	"LMD1A" 53+50.00	10	j
D-4	10	k	STD	4.9																			24" APC	"LMD1A" 53+50.00	10	k
D-4	10	l			6.9			1			1												G2 INLET	"LMD1A" 56+00.00	10	l
SHEET TOTAL								15		6	15												SHEET TOTAL			

(N) - NOT A SEPARATE PAY ITEM, FOR INFORMATION ONLY
* - SEE ROADWAY QUANTITIES FOR ADDITIONAL QUANTITIES

DRAINAGE QUANTITIES

DQ-10

STATE OF CALIFORNIA - DEPARTMENT OF TRANSPORTATION
Caltrans® DESIGN

FUNCTIONAL SUPERVISOR: MICHAEL J. WEBSTER
CALCULATED-DESIGNED BY: MICHAEL OREIRO
CHECKED BY: FARDAD BEHBOODY
REVISED BY
DATE REVISED

LAST REVISION 04-30-13
DATE PLOTTED => 04-JUN-2013
TIME PLOTTED => 14:20

Dist	COUNTY	ROUTE	POST MILES TOTAL PROJECT	SHEET No.	TOTAL SHEETS
11	SD	11, 905	0.0/1.6, R9.9/R10.7	270	622

REGISTERED CIVIL ENGINEER 03-19-13 DATE

04-22-13
PLANS APPROVAL DATE

REGISTERED PROFESSIONAL ENGINEER FARDAD BEHBOODY No. 61478 Exp. 06-30-13 CIVIL STATE OF CALIFORNIA

THE STATE OF CALIFORNIA OR ITS OFFICERS OR AGENTS SHALL NOT BE RESPONSIBLE FOR THE ACCURACY OR COMPLETENESS OF SCANNED COPIES OF THIS PLAN SHEET.

DRAINAGE QUANTITIES

DRAINAGE SHEET No.	DRAINAGE SYSTEM No. ⬡	DRAINAGE UNIT ○	6" Alt PIPE Culv LF	18" Alt PIPE Culv LF	24" Alt PIPE Culv LF	24" REINFORCED Conc PIPE LF	36" Alt PIPE Culv LF	36" REINFORCED Conc PIPE LF	36" RCP DOWNDRAIN LF	48" REINFORCED Conc PIPE LF	54" REINFORCED Conc PIPE LF	66" REINFORCED Conc PIPE LF	84" MODIFIED RCP LF	24" CONCRETE FES EA	36" CONCRETE FES EA	STRUCTURAL Conc, BOX CULVERT CY	MINOR CONCRETE (MINOR STRUCTURE) CY	CONCRETE (CONCRETE APRON) CY	CONCRETE (DITCH LINING) CY	CONCRETE (CHANNEL LINING) CY	MISCELLANEOUS IRON AND STEEL LB	RSP FABRIC (CLASS 8) SQYD	RSP (FACING, METHOD B) CY	RSP (1/4 TON, METHOD B) CY	BAR REINFORCING STEEL (BOX CULVERT) LB	DITCH EXCAVATION CY	PLACE HOT MIX ASPHALT (MISCELLANEOUS AREA) SQYD	3" PLASTIC PIPE (APPROACH SLAB DRAIN) LF	REMOVE CULVERT LF	REMOVE CONCRETE (CY) * CY	REMOVE RSP CY	DESCRIPTION	STATION	DRAINAGE SYSTEM No. ⬡	DRAINAGE UNIT ○
D-4	10	m				24.0																										24" RCP	"LMD1A" 56+00.00	10	m
D-4	10	n															3.68				864											JUNCTION STRUCTURE	"LMD1A" 56+00.00	10	n
D-4	10	o			99.5																											24" APC	"LMD1A" 56+00.00	10	o
D-4	10	p															2.47				329											G2 INLET	"EB" 642+05.00	10	p
D-4	10	q			20.0																											24" APC	"EB" 642+15.00	10	q
D-3	10	r															3.34				658											GT4 INLET	"EB" 642+25.15	10	r
D-3	10	s			193.0																											24" APC	"EB" 643+00.00	10	s
D-3	10	t															1.82				329											G2 INLET	"EB" 644+25.00	10	t
D-3	10	u			169.8																											24" APC	"LMD1A" 49+00.00	10	u
D-3	10	v															1.59				329											G2 INLET	"LMD1A" 48+00.00	10	v
D-3	10	w				25.5																										24" RCP	"LMD1A" 48+00.00	10	w
D-4	10	x															1.82				329											G2 INLET	"LMD1A" 48+00.00	10	x
D-4	10	y			30.9																											24" APC	"LMD1A" 48+00.00	10	y
D-3	10	z															2.08				329											G2 INLET	"LMD1A" 48+00.00	10	z
D-3	10	aa			17.0																											24" APC	"LMR" 48+20.00	10	aa
D-3	10	ab															2.08				329											G2 INLET	"LMR" 48+20.00	10	ab
D-3	10	ac					64.2																									36" APC	"LMR" 50+40.00	10	ac
D-4	10	ad															0.67	1.87			239											OCP DI W/APRON	"LMR" 50+40.00	10	ad
D-4	10	ae			146.2																											24" APC	"WB" 632+10.00	10	ae
D-4	10	af															2.41				329											G2 INLET	"WB" 632+10.00	10	af
D-4	10	ag			55.0																											24" APC	"WB" 632+10.00	10	ag
D-4	10	ah															2.08				329											G2 INLET	"WB" 634+80.00	10	ah
D-4	10	ai		20.0																												18" APC	"WB" 634+70.00	10	ai
D-4	10	aj															6.00				329											G2 INLET	"WB" 634+60.00	10	aj
D-3	10	ak			133.8																											24" APC	"WB" 633+60.00	10	ak
D-3	10	al															2.10				329											G2 INLET	"WB" 633+23.25	10	al
D-3	10	am		34.7																												18" APC	"WB" 632+50.00	10	am
D-3	10	an															1.49				329											G2 INLET	"WB" 632+85.61	10	an
D-3	10	ao															0.67	1.87			239											OCP DI W/APRON	"WB" 632+10.00	10	ao
D-3	10	ap				84.0																										24" RCP	"WB" 632+10.00	10	ap
D-4	10	aq																														ABANDON CULVERT	"E6" 647+00.00	10	aq
D-4	10	ar																														ABANDON INLET	"E6" 646+10.00	10	ar
D+4	10	as																														ABANDON CULVERT	"E6" 643+00.00	10	as
D+4	10	at																												6		REMOVE INLET	"E6" 641+10.00	10	at
D+4	10	au																														ABANDON CULVERT	"E6" 638+00.00	10	au
D-3	10	av																														ABANDON INLET	"E6" 636+80.00	10	av
D-3	10	aw																														ABANDON CULVERT	"E6" 636+10.00	10	aw
D-3	10	ax																												6		REMOVE INLET	"E6" 635+90.00	10	ax
D-3	10	ay																											139			REMOVE CULVERT	"E6" 635+80.00	10	ay
D-3	10	az																												1		REMOVE FES	"E6" 635+00.00	10	az
D-3	10	ba															3.59				864											JUNCTION STRUCTURE	"E6" 637+75.00	10	ba
D-3	10	bb				20.0																										24" RCP	"E6" 637+75.00	10	bb
SHEET TOTAL				54.7	865.2	153.5	64.2										37.89	3.74			6,483								139	13		SHEET TOTAL			

(N) - NOT A SEPARATE PAY ITEM, FOR INFORMATION ONLY
* - SEE ROADWAY QUANTITIES FOR ADDITIONAL QUANTITIES

DRAINAGE QUANTITIES
DQ-11

REVISED BY | DATE REVISED
MICHAEL OREIRO | FARDAD BEHBOODY
CALCULATED-DESIGNED BY | CHECKED BY
FUNCTIONAL SUPERVISOR: MICHAEL J. WEBSTER
STATE OF CALIFORNIA - DEPARTMENT OF TRANSPORTATION
Caltrans® DESIGN

LAST REVISION 04-30-13 | DATE PLOTTED => 04-JUN-2013 | TIME PLOTTED => 14:20

Dist	COUNTY	ROUTE	POST MILES TOTAL PROJECT	SHEET No.	TOTAL SHEETS
11	SD	11, 905	0.0/1.6, R9.9/R10.7	271	622

REGISTERED CIVIL ENGINEER 03-19-13 DATE

04-22-13
PLANS APPROVAL DATE

REGISTERED PROFESSIONAL ENGINEER FARDAD BEHBOODY No. 61478 Exp. 06-30-13 CIVIL STATE OF CALIFORNIA

THE STATE OF CALIFORNIA OR ITS OFFICERS OR AGENTS SHALL NOT BE RESPONSIBLE FOR THE ACCURACY OR COMPLETENESS OF SCANNED COPIES OF THIS PLAN SHEET.

DRAINAGE QUANTITIES

DRAINAGE SHEET No.	DRAINAGE SYSTEM No. ⬡	DRAINAGE UNIT ○	PIPE JOINT TYPE (N)	HEIGHT OF COVER (N) LF	HEIGHT OF STRUCTURE (N) LF	MANHOLE CONE (N) EA	MANHOLE FRAME AND COVER (N) EA	DI GRATE TYPE 24-12 (N) EA	DI GRATE TYPE 36R (N) EA	CONCRETE PIPE COLLAR (N) EA	GRATE CHAIN (N) EA	REMOVE CULVERT (N) LF	REMOVE CONCRETE (N) CY	REMOVE RSP (N) CY	BACKFILL DITCH (N) CY	36" RCP RISER LF	ABANDON CULVERT LF	ABANDON INLET EA	SAND BACKFILL CY	SLURRY CEMENT BACKFILL CY	REMOVE CONCRETE (LF) LF	STEEL PLATE COVER AND FRAME (N) EA	DESCRIPTION	STATION	DRAINAGE SYSTEM No. ⬡	DRAINAGE UNIT ○
D-4	10	m	STD	4.2								1											24" RCP	"LMD1A" 56+00.00	10	m
D-4	10	n			6.0		1				1					1.0							JUNCTION STRUCTURE	"LMD1A" 56+00.00	10	n
D-4	10	o	POS	8.0																			24" APC	"LMD1A" 56+00.00	10	o
D-4	10	p			7.6			1			1												G2 INLET	"EB" 642+05.00	10	p
D-4	10	q	STD	5.0																			24" APC	"EB" 642+15.00	10	q
D-3	10	r			6.0			2			2												GT4 INLET	"EB" 642+25.15	10	r
D-3	10	s	STD	3.0																			24" APC	"EB" 643+00.00	10	s
D-3	10	t			5.0			1			1												G2 INLET	"EB" 644+25.00	10	t
D-3	10	u	STD	7.5																			24" APC	"LMD1A" 49+00.00	10	u
D-3	10	v			4.1			1			1												G2 INLET	"LMD1A" 48+00.00	10	v
D-3	10	w	STD	3.0																			24" RCP	"LMD1A" 48+00.00	10	w
D-4	10	x			5.0			1			1												G2 INLET	"LMD1A" 48+00.00	10	x
D-4	10	y	STD	3.0																			24" APC	"LMD1A" 48+00.00	10	y
D-3	10	z			6.0			1			1												G2 INLET	"LMD1A" 48+00.00	10	z
D-3	10	aa	STD	3.0																			24" APC	"LMR" 48+20.00	10	aa
D-3	10	ab			6.0			1			1												G2 INLET	"LMR" 48+20.00	10	ab
D-3	10	ac	STD	6.5																			36" APC	"LMR" 50+40.00	10	ac
D-4	10	ad							1		1					4.71							OCP DI W/APRON	"LMR" 50+40.00	10	ad
D-4	10	ae	STD	9.0																			24" APC	"WB" 632+10.00	10	ae
D-4	10	af			7.33			1			1												G2 INLET	"WB" 632+10.00	10	af
D-4	10	ag	POS	13.0																			24" APC	"WB" 632+10.00	10	ag
D-4	10	ah			6.0			1			1												G2 INLET	"WB" 634+80.00	10	ah
D-4	10	ai	STD	5.7																			18" APC	"WB" 634+70.00	10	ai
D-4	10	aj			15.0			1			1												G2 INLET	"WB" 634+60.00	10	aj
D-3	10	ak	STD	12.3																			24" APC	"WB" 633+60.00	10	ak
D-3	10	al			6.1			1			1												G2 INLET	"WB" 633+23.25	10	al
D-3	10	am	STD	4.4																			18" APC	"WB" 632+50.00	10	am
D-3	10	an			3.7			1			1												G2 INLET	"WB" 632+85.61	10	an
D-3	10	ao			3.1				1		1					3.60							OCP DI W/APRON	"WB" 632+10.00	10	ao
D-3	10	ap	STD	5.0																			24" RCP	"WB" 632+10.00	10	ap
D-4	10	aq															184		21.41				ABANDON CULVERT	"E6" 647+00.00	10	aq
D-4	10	ar																1	3.35				ABANDON INLET	"E6" 646+10.00	10	ar
D+4	10	as															552		64.23				ABANDON CULVERT	"E6" 643+00.00	10	as
D+4	10	at																					REMOVE INLET	"E6" 641+10.00	10	at
D+4	10	au															441		51.31				ABANDON CULVERT	"E6" 638+00.00	10	au
D-3	10	av																1	2.37				ABANDON INLET	"E6" 636+80.00	10	av
D-3	10	aw															118		13.73				ABANDON CULVERT	"E6" 636+10.00	10	aw
D-3	10	ax																					REMOVE INLET	"E6" 635+90.00	10	ax
D-3	10	ay																					REMOVE CULVERT	"E6" 635+80.00	10	ay
D-3	10	az																					REMOVE FES	"E6" 635+00.00	10	az
D-3	10	ba			9.0		1				1					3.5							JUNCTION STRUCTURE	"E6" 637+75.00	10	ba
D-3	10	bb	STD	8.9																			24" RCP	"E6" 637+75.00	10	bb
SHEET TOTAL							2	13	2		17	1				12.81	1,295	2	156.40				SHEET TOTAL			

(N) - NOT A SEPARATE PAY ITEM, FOR INFORMATION ONLY
* - SEE ROADWAY QUANTITIES FOR ADDITIONAL QUANTITIES

DRAINAGE QUANTITIES
DQ-12

STATE OF CALIFORNIA - DEPARTMENT OF TRANSPORTATION
Caltrans® DESIGN

FUNCTIONAL SUPERVISOR: MICHAEL J. WEBSTER
CALCULATED-DESIGNED BY: MICHAEL OREIRO
CHECKED BY: FARDAD BEHBOODY
REVISED BY / DATE REVISED

LAST REVISION 04-30-13
DATE PLOTTED => 04-JUN-2013
TIME PLOTTED => 14:20

Dist	COUNTY	ROUTE	POST MILES TOTAL PROJECT	SHEET No.	TOTAL SHEETS
11	SD	11, 905	0.0/1.6, R9.9/R10.7	272	622

REGISTERED CIVIL ENGINEER 03-19-13 DATE

04-22-13
PLANS APPROVAL DATE

REGISTERED PROFESSIONAL ENGINEER FARDAD BEHBOODY No. 61478 Exp. 06-30-13 CIVIL STATE OF CALIFORNIA

THE STATE OF CALIFORNIA OR ITS OFFICERS OR AGENTS SHALL NOT BE RESPONSIBLE FOR THE ACCURACY OR COMPLETENESS OF SCANNED COPIES OF THIS PLAN SHEET.

DRAINAGE QUANTITIES

DRAINAGE SHEET No.	DRAINAGE SYSTEM No. ⬡	DRAINAGE UNIT ○	6" Alt PIPE Culv LF	18" Alt PIPE Culv LF	24" Alt PIPE Culv LF	24" REINFORCED Conc PIPE LF	36" Alt PIPE Culv LF	36" REINFORCED Conc PIPE LF	36" RCP DOWNDRAIN LF	48" REINFORCED Conc PIPE LF	54" REINFORCED Conc PIPE LF	66" REINFORCED Conc PIPE LF	84" MODIFIED RCP LF	24" CONCRETE FES EA	36" CONCRETE FES EA	STRUCTURAL Conc, BOX CULVERT CY	MINOR CONCRETE (MINOR STRUCTURE) CY	CONCRETE (CONCRETE APRON) CY	CONCRETE (DITCH LINING) CY	CONCRETE (CHANNEL LINING) CY	MISCELLANEOUS IRON AND STEEL LB	RSP FABRIC (CLASS 8) SQYD	RSP (FACING, METHOD B) CY	RSP (1/4 TON, METHOD B) CY	BAR REINFORCING STEEL (BOX CULVERT) LB	DITCH EXCAVATION CY	PLACE HOT MIX ASPHALT (MISCELLANEOUS AREA) SQYD	3" PLASTIC PIPE (APPROACH SLAB DRAIN) LF	REMOVE CULVERT LF	REMOVE CONCRETE (CY) * CY	REMOVE RSP CY	DESCRIPTION	STATION	DRAINAGE SYSTEM No. ⬡	DRAINAGE UNIT ○
D-3	10	bc															4.79				864											JUNCTION STRUCTURE	"E6" 637+75.00	10	bc
D-3	10	bd				136.3																										24" RCP	"E6" 638+00.00	10	bd
D-3	10	be															4.79				864											JUNCTION STRUCTURE	"E6" 639+10.00	10	be
D-3	10	bf				18.5																										24" RCP W/ COLLAR	"E6" 639+10.00	10	bf
D-3	10	bg																												1		REMOVE FES	"E6" 639+10.00	10	bg
D-3	10	bh																													5	REMOVE RSP	"E6" 639+10.00	10	bh
D-3	10	bi																											138			REMOVE CULVERT	"E6" 639+10.00	10	bi
D-3	10	bj																	14.57													DRAINAGE DITCH	"LMR" 47+56.00	10	bj
D-3	10	bk															2.89	36.35			980											Mod G2 DI W/ APRON	"LMR" 47+56.98	10	bk
D-3	10	bl			77.2																											24" APC	"LMR" 47+56.00	10	bl
D-3	10	bm															4.40				864											JUNCTION STRUCTURE	"LMR" 46+91.76	10	bm
D-3	10	bn			184.2																											24" APC W/ COLLAR	"LMR" 45+11.07	10	bn
D-4	10	bo																	26.53													DRAINAGE DITCH	"EB" 632+00.00	10	bo
D-11	11	a																				96.2	28.3	51.9								RSP AT FES	"WB" 647+78.38	11	a
D-11	11	b													1																	36" CONCRETE FES	"WB" 647+78.38	11	b
D-4	11	c						174.4																								36" RCP	"WB" 647+65.00	11	c
D-4	11	d															4.40				864											JUNCTION STRUCTURE	"WB" 647+91.29	11	d
D-4	11	e							86.4																							36" RCP DD	"WB" 647+91.29	11	e
D-4	11	f															11.38				622											GD2 INLET	"WB" 647+97.38	11	f
D-4	11	g						41.4																								36" APC	"WB" 647+97.38	11	g
D-4	11	h															4.40				864											JUNCTION STRUCTURE	"WB" 648+00.00	11	h
D-4	11	i															2.46				329											G2 INLET	"WB" 645+80.48	11	i
D-4	11	j			215.3																											24" APC	"WB" 646+89.00	11	j
D-4	11	k					356.2																									36" APC	"WB" 649+50.00	11	k
D-5	11	l															4.40				864											JUNCTION STRUCTURE	"A" 25+50.00	11	l
D-5	11	m					345.0																									36" APC	"A" 25+50.00	11	m
D-5	11	n															4.40				864											JUNCTION STRUCTURE	"A" 29+00.00	11	n
D-5	11	o					345.0																									36" APC	"A" 29+00.00	11	o
D-5	11	p															4.40				864											JUNCTION STRUCTURE	"A" 32+50.00	11	p
D-5	11	q			295.0																											24" APC	"A" 34+00.00	11	q
D-5	11	r															4.40				864											JUNCTION STRUCTURE	"A" 35+50.00	11	r
D-5	11	s			220.0																											24" APC	"A" 36+50.00	11	s
D-6	11	t															4.40				864											JUNCTION STRUCTURE	"A" 37+75.00	11	t
D-4	11	u															2.18				622											GD1 INLET	"WB" 645+50.00	11	u
D-4	11	v			79.1																											24" APC	"WB" 645+50.00	11	v
D-4	11	w															2.18				622											GD1 INLET	"WB" 646+00.00	11	w
D-4	11	x			47.9																											24" APC	"WB" 646+00.00	11	x
D-4	11	y															2.18				622											GD1 INLET	"WB" 648+04.00	11	y
D-4	11	z			40.7																											24" APC	"WB" 648+04.00	11	z
D-5	11	aa															1.39				329											G1 INLET	"A" 25+50.00	11	aa
D-5	11	ab			36.9																											24" APC	"A" 25+50.00	11	ab
D-5	11	ac															1.39				329											G1 INLET	"A" 25+50.00	11	ac
D-5	11	ad			46.8																											24" APC	"A" 25+50.00	11	ad
D-5	11	ae															4.22				622											GD2 INLET	"A" 29+00.00	11	ae
D-5	11	af					71.0																									36" APC	"A" 29+00.00	11	af
SHEET TOTAL					1,243.1	154.8	1,117.2	215.8	86.4						1		75.05	36.35	41.10		13,717	96.2	28.3	51.9					138	1	5	SHEET TOTAL			

(N) - NOT A SEPARATE PAY ITEM, FOR INFORMATION ONLY
* - SEE ROADWAY QUANTITIES FOR ADDITIONAL QUANTITIES

DRAINAGE QUANTITIES
DQ-13

STATE OF CALIFORNIA - DEPARTMENT OF TRANSPORTATION
Caltrans® DESIGN

FUNCTIONAL SUPERVISOR: MICHAEL J. WEBSTER
CALCULATED-DESIGNED BY: MICHAEL OREIRO
CHECKED BY: FARDAD BEHBOODY
REVISED BY / DATE REVISED

LAST REVISION 04-30-13
DATE PLOTTED => 04-JUN-2013
TIME PLOTTED => 14:20

Dist	COUNTY	ROUTE	POST MILES TOTAL PROJECT	SHEET No.	TOTAL SHEETS
11	SD	11, 905	0.0/1.6, R9.9/R10.7	273	622

REGISTERED CIVIL ENGINEER 03-19-13 DATE

04-22-13
PLANS APPROVAL DATE

REGISTERED PROFESSIONAL ENGINEER FARDAD BEHBOODY No. 61478 Exp. 06-30-13 CIVIL STATE OF CALIFORNIA

THE STATE OF CALIFORNIA OR ITS OFFICERS OR AGENTS SHALL NOT BE RESPONSIBLE FOR THE ACCURACY OR COMPLETENESS OF SCANNED COPIES OF THIS PLAN SHEET.

DRAINAGE QUANTITIES

DRAINAGE SHEET No.	DRAINAGE SYSTEM No. ⬡	DRAINAGE UNIT ○	PIPE JOINT TYPE (N)	HEIGHT OF COVER (N) LF	HEIGHT OF STRUCTURE (N) LF	MANHOLE CONE (N) EA	MANHOLE FRAME AND COVER (N) EA	DI GRATE TYPE 24-12 (N) EA	DI GRATE TYPE 36R (N) EA	CONCRETE PIPE COLLAR (N) EA	GRATE CHAIN (N) EA	REMOVE CULVERT (N) LF	REMOVE CONCRETE (N) CY	REMOVE RSP (N) CY	BACKFILL DITCH (N) CY	36" RCP RISER LF	ABANDON CULVERT LF	ABANDON INLET EA	SAND BACKFILL CY	SLURRY CEMENT BACKFILL CY	REMOVE CONCRETE (LF) LF	STEEL PLATE COVER AND FRAME (N) EA	DESCRIPTION	STATION	DRAINAGE SYSTEM No. ⬡	DRAINAGE UNIT ○
D-3	10	bc			10.9		1				1					4.2							JUNCTION STRUCTURE	"E6" 637+75.00	10	bc
D-3	10	bd	STD	10.13																			24" RCP	"E6" 638+00.00	10	bd
D-3	10	be			12.13		1				1					5.4							JUNCTION STRUCTURE	"E6" 639+10.00	10	be
D-3	10	bf	STD	10.0						1													24" RCP W/COLLAR	"E6" 639+10.00	10	bf
D-3	10	bg																					REMOVE FES	"E6" 639+10.00	10	bg
D-3	10	bh																					REMOVE RSP	"E6" 639+10.00	10	bh
D-3	10	bi																					REMOVE CULVERT	"E6" 639+10.00	10	bi
D-3	10	bj																					DRAINAGE DTICH	"LMR" 47+56.00	10	bj
D-3	10	bk			6.0																		Mod G2 DI W/ APRON	"LMR" 47+56.98	10	bk
D-3	10	bl	WTJ	10.0																			24" APC	"LMR" 47+56.00	10	bl
D-3	10	bm			10.66		1				1					4.0							JUNCTION STRUCTURE	"LMR" 46+91.76	10	bm
D-3	10	bn	WTJ	10.0						1													24" APC W/ COLLAR	"LMR" 45+11.07	10	bn
D-4	10	bo																					DRAINAGE DTICH	"EB" 632+00.00	10	bo
D-11	11	a																					RSP AT FES	"WB" 647+78.38	11	a
D-11	11	b																					36" CONCRETE FES	"WB" 647+78.38	11	b
D-4	11	c	WTJ	4.5																			36" RCP	"WB" 649+65.00	11	c
D-4	11	d			7.5		1				1					0.8							JUNCTION STRUCTURE	"WB" 647+91.29	11	d
D-4	11	e	DD	13.5																			36" RCP DD	"WB" 647+91.29	11	e
D-4	11	f			16.5			2			2												GD2 INLET	"WB" 647+97.38	11	f
D-4	11	g	WTJ	12.4																			36" APC	"WB" 647+97.38	11	g
D-4	11	h			16.0	1	1				1					9.3							JUNCTION STRUCTURE	"WB" 648+00.00	11	h
D-4	11	i			7.5			1			1												G2 INLET	"WB" 645+80.48	11	i
D-4	11	j	STD	13.4																			24" APC	"WB" 646+89.00	11	j
D-4	11	k	STD	12.0																			36" APC	"WB" 649+50.00	11	k
D-5	11	l			14.0	1	1				1					7.3							JUNCTION STRUCTURE	"A" 25+50.00	11	l
D-5	11	m	STD	12.0																			36" APC	"A" 25+50.00	11	m
D-5	11	n			12.0	1	1				1					4.3							JUNCTION STRUCTURE	"A" 29+00.00	11	n
D-5	11	o	STD	12.0																			36" APC	"A" 29+00.00	11	o
D-5	11	p			10.0		1				1					3.3							JUNCTION STRUCTURE	"A" 32+50.00	11	p
D-5	11	q	STD	10.0																			24" APC	"A" 34+00.00	11	q
D-5	11	r			8.0		1				1					1.3							JUNCTION STRUCTURE	"A" 35+50.00	11	r
D-5	11	s	STD	6.0																			24" APC	"A" 36+50.00	11	s
D-6	11	t			7.0		1				1					0.3							JUNCTION STRUCTURE	"A" 37+75.00	11	t
D-4	11	u			5.0			2			2												GD1 INLET	"WB" 645+50.00	11	u
D-4	11	v	STD	5.5																			24" APC	"WB" 645+50.00	11	v
D-4	11	w			5.0			2			2												GD1 INLET	"WB" 646+00.00	11	w
D-4	11	x	STD	5.5																			24" APC	"WB" 646+00.00	11	x
D-4	11	y			5.0			2			2												GD1 INLET	"WB" 648+04.00	11	y
D-4	11	z	POS	13.4																			24" APC	"WB" 648+04.00	11	z
D-5	11	aa			5.0			1			1												G1 INLET	"A" 25+50.00	11	aa
D-5	11	ab	POS	12.0																			24" APC	"A" 25+50.00	11	ab
D-5	11	ac			5.0			1			1												G1 INLET	"A" 25+50.00	11	ac
D-5	11	ad	POS	12.0																			24" APC	"A" 25+50.00	11	ad
D-5	11	ae			5.5			2			2												GD2 INLET	"A" 29+00.00	11	ae
D-5	11	af	STD	10.0																			36" APC	"A" 29+00.00	11	af
SHEET TOTAL						3	10	13		2	23					40.2							SHEET TOTAL			

(N) - NOT A SEPARATE PAY ITEM, FOR INFORMATION ONLY
* - SEE ROADWAY QUANTITIES FOR ADDITIONAL QUANTITIES

DRAINAGE QUANTITIES
DQ-14

STATE OF CALIFORNIA - DEPARTMENT OF TRANSPORTATION
Caltrans® DESIGN

FUNCTIONAL SUPERVISOR: MICHAEL J. WEBSTER
CALCULATED-DESIGNED BY: FARDAD BEHBOODY
CHECKED BY: MICHAEL OREIRO
REVISED BY
DATE REVISED

LAST REVISION 04-30-13
DATE PLOTTED => 04-JUN-2013
TIME PLOTTED => 14:20

Dist	COUNTY	ROUTE	POST MILES TOTAL PROJECT	SHEET No.	TOTAL SHEETS
11	SD	11, 905	0.0/1.6, R9.9/R10.7	274	622

REGISTERED CIVIL ENGINEER 03-19-13 DATE

04-22-13
PLANS APPROVAL DATE

REGISTERED PROFESSIONAL ENGINEER FARDAD BEHBOODY No. 61478 Exp. 06-30-13 CIVIL STATE OF CALIFORNIA

THE STATE OF CALIFORNIA OR ITS OFFICERS OR AGENTS SHALL NOT BE RESPONSIBLE FOR THE ACCURACY OR COMPLETENESS OF SCANNED COPIES OF THIS PLAN SHEET.

DRAINAGE QUANTITIES

DRAINAGE SHEET No.	DRAINAGE SYSTEM No. ⬡	DRAINAGE UNIT ○	6" Alt PIPE Culv LF	18" Alt PIPE Culv LF	24" Alt PIPE Culv LF	24" REINFORCED Conc PIPE LF	36" Alt PIPE Culv LF	36" REINFORCED Conc PIPE LF	36" RCP DOWNDRAIN LF	48" REINFORCED Conc PIPE LF	54" REINFORCED Conc PIPE LF	66" REINFORCED Conc PIPE LF	84" MODIFIED RCP LF	24" CONCRETE FES EA	36" CONCRETE FES EA	STRUCTURAL Conc, BOX CULVERT CY	MINOR CONCRETE (MINOR STRUCTURE) CY	CONCRETE (CONCRETE APRON) CY	CONCRETE (DITCH LINING) CY	CONCRETE (CHANNEL LINING) CY	MISCELLANEOUS IRON AND STEEL LB	RSP FABRIC (CLASS 8) SQYD	RSP (FACING, METHOD B) CY	RSP (1/4 TON, METHOD B) CY	BAR REINFORCING STEEL (BOX CULVERT) LB	DITCH EXCAVATION CY	PLACE HOT MIX ASPHALT (MISCELLANEOUS AREA) SQYD	3" PLASTIC PIPE (APPROACH SLAB DRAIN) LF	REMOVE CULVERT LF	REMOVE CONCRETE (CY) * CY	REMOVE RSP CY	DESCRIPTION	STATION	DRAINAGE SYSTEM No. ⬡	DRAINAGE UNIT ○
D-5	11	ag															1.39				329											G1 INLET	"A" 29+00.00	11	ag
D-5	11	ah			46.5																											24" APC	"A" 29+00.00	11	ah
D-5	11	ai															2.18				622											GD1 INLET	"A" 32+50.00	11	ai
D-5	11	aj			46.3																											24" APC	"A" 32+50.00	11	aj
D-5	11	ak															4.22				622											GD2 INLET	"A" 32+50.00	11	ak
D-5	11	al					80.5																									36" APC	"A" 32+50.00	11	al
D-5	11	am															1.28				329											G1 INLET	"A" 35+50.00	11	am
D-5	11	an			48.3																											24" APC	"A" 35+50.00	11	an
D-5	11	ao															2.03				622											GD1 INLET	"A" 35+50.00	11	ao
D-5	11	ap			61.3																											24" APC	"A" 35+50.00	11	ap
D-6	11	aq															1.28				329											G1 INLET	"A" 37+75.00	11	aq
D-6	11	ar			48.3																											24" APC	"A" 37+75.00	11	ar
D-6	11	as															1.28				329											G1 INLET	"A" 37+75.00	11	as
D-6	11	at			58.3																											24" APC	"A" 37+75.00	11	at
D-4	11	au																														REMOVE RSP	"A" 24+40.00	11	au
D-5	11	av																													151	REMOVE BOX CULVERT	"A" 25+00.00	11	av
D-5	11	aw																												31		REMOVE CULVERT X 2	"A" 24+70.00	11	aw
D-5	11	ax																													2	REMOVE HEADWALL	"A" 26+00.00	11	ax
D-5	11	ay																														ABANDON CULVERT	"A" 25+00.00	11	ay
D-4	12	a			86.6																											24" APC W/COLLAR	"WB" 648+11.98	12	a
D-4	12	b															4.21				329											G2 INLET	"WB" 648+11.98	12	b
D-4	12	c						477.8																								36" RCP W/COLLAR	"EB" 647+13.00	12	c
D-5	13	a									462.8																					54" RCP W/COLLAR	"A" 25+25.65	13	a
D-5	13	b															3.31															HEADWALL	"A" 27+53.80	13	b
D-5	13	c																				184.5	65.0	119.2								RSP AT HW	"A" 27+53.80	13	c
D-5	13	d																								120.00						DRAINAGE DITCH	"A" 32+00.00	13	d
D-11	14	a																				96.2	28.3	51.9								RSP AT FES	"WB" 648+45.19	14	a
D-11	14	b													1																	36" FES	"WB" 648+49.16	14	b
D-11	14	c						297.0																								36" RCP	"WB" 649+50.00	14	c
D-5	14	d															5.63				864											JUNCTION STRUCTURE	"A" 24+63.78	14	d
D-5	14	e						298.1																								36" RCP	"A" 32+00.00	14	e
D-5	14	f															4.55				864											JUNCTION STRUCTURE	"A" 27+67.88	14	f
D-5	14	g															4.98				864											JUNCTION STRUCTURE	"A" 31+60.00	14	g
D-5	14	h															4.55				864											JUNCTION STRUCTURE	"A" 34+62.16	14	h
D-5	14	i						356.6																								36" RCP	"A" 36+50.00	14	i
D-6	14	j															4.98				864											JUNCTION STRUCTURE	"A" 38+20.00	14	j
D-6	14	k						234.7																								36" RCP	"A" 39+50.00	14	k
D-6	14	l															4.98				864											JUNCTION STRUCTURE	"A" 40+59.66	14	l
D-6	14	m						74.4																								36" RCP	"A" 40+59.66	14	m
SHEET TOTAL					395.6		80.5	1,738.6			462.8				1		50.85				8,695	280.7	93.3	171.1		120.00			31	153		SHEET TOTAL			

(N) - NOT A SEPARATE PAY ITEM, FOR INFORMATION ONLY
* - SEE ROADWAY QUANTITIES FOR ADDITIONAL QUANTITIES

DRAINAGE QUANTITIES
DQ-15

REVISED BY | DATE REVISED
MICHAEL OREIRO | FARDAD BEHBOODY
CALCULATED-DESIGNED BY | CHECKED BY
FUNCTIONAL SUPERVISOR: MICHAEL J. WEBSTER
STATE OF CALIFORNIA - DEPARTMENT OF TRANSPORTATION
Caltrans® DESIGN

LAST REVISION 05-06-13 | DATE PLOTTED => 04-JUN-2013 | TIME PLOTTED => 14:20

Dist	COUNTY	ROUTE	POST MILES TOTAL PROJECT	SHEET No.	TOTAL SHEETS
11	SD	11, 905	0.0/1.6, R9.9/R10.7	275	622

REGISTERED CIVIL ENGINEER 03-19-13 DATE

04-22-13
PLANS APPROVAL DATE

REGISTERED PROFESSIONAL ENGINEER FARDAD BEHBOODY No. 61478 Exp. 06-30-13 CIVIL STATE OF CALIFORNIA

THE STATE OF CALIFORNIA OR ITS OFFICERS OR AGENTS SHALL NOT BE RESPONSIBLE FOR THE ACCURACY OR COMPLETENESS OF SCANNED COPIES OF THIS PLAN SHEET.

DRAINAGE QUANTITIES

DRAINAGE SHEET No.	DRAINAGE SYSTEM No. ⬡	DRAINAGE UNIT ○	PIPE JOINT TYPE (N)	HEIGHT OF COVER (N) LF	HEIGHT OF STRUCTURE (N) LF	MANHOLE CONE (N) EA	MANHOLE FRAME AND COVER (N) EA	DI GRATE TYPE 24-12 (N) EA	DI GRATE TYPE 36R (N) EA	CONCRETE PIPE COLLAR (N) EA	GRATE CHAIN (N) EA	REMOVE CULVERT (N) LF	REMOVE CONCRETE (N) CY	REMOVE RSP (N) CY	BACKFILL DITCH (N) CY	36" RCP RISER LF	ABANDON CULVERT LF	ABANDON INLET EA	SAND BACKFILL CY	SLURRY CEMENT BACKFILL CY	REMOVE CONCRETE (LF) LF	STEEL PLATE COVER AND FRAME (N) EA	DESCRIPTION	STATION	DRAINAGE SYSTEM No. ⬡	DRAINAGE UNIT ○
D-5	11	ag			5.0			1			1												G1 INLET	"A" 29+00.00	11	ag
D-5	11	ah	STD	10.0																			24" APC	"A" 29+00.00	11	ah
D-5	11	ai			5.0			2			2												GD1 INLET	"A" 32+50.00	11	ai
D-5	11	aj	STD	8.0																			24" APC	"A" 32+50.00	11	aj
D-5	11	ak			5.5			2			2												GD2 INLET	"A" 32+50.00	11	ak
D-5	11	al	STD	8.0																			36" APC	"A" 32+50.00	11	al
D-5	11	am			4.5			1			1												G1 INLET	"A" 35+50.00	11	am
D-5	11	an	STD	6.0																			24" APC	"A" 35+50.00	11	an
D-5	11	ao			4.5			2			2												GD1 INLET	"A" 35+50.00	11	ao
D-5	11	ap	STD	6.0																			24" APC	"A" 35+50.00	11	ap
D-6	11	aq			4.5			1			1												G1 INLET	"A" 37+75.00	11	aq
D-6	11	ar	STD	5.0																			24" APC	"A" 37+75.00	11	ar
D-6	11	as			4.5			1			1												G1 INLET	"A" 37+75.00	11	as
D-6	11	at	STD	5.0																			24" APC	"A" 37+75.00	11	at
D-4	11	au												97									REMOVE RSP	"A" 24+40.00	11	au
D-5	11	av																					REMOVE BOX CULVERT	"A" 25+00.00	11	av
D-5	11	aw																					REMOVE CULVERT X 2	"A" 24+70.00	11	aw
D-5	11	ax																					REMOVE HEADWALL	"A" 26+00.00	11	ax
D-5	11	ay															12		0.8				ABANDON CULVERT	"A" 25+00.00	11	ay
D-4	12	a	STD	5.0						1													24" APC W/COLLAR	"WB" 648+11.98	12	a
D-4	12	b			9.9			1			1												G2 INLET	"WB" 648+11.98	12	b
D-4	12	c	STD	60.0						1													36" RCP W/COLLAR	"EB" 647+13.00	12	c
D-5	13	a	STD	60.0																			54" RCP W/COLLAR	"A" 25+25.65	13	a
D-5	13	b																					HEADWALL	"A" 27+53.80	13	b
D-5	13	c																					RSP AT HW	"A" 27+53.80	13	c
D-5	13	d																					DRAINAGE DITCH	"A" 32+00.00	13	d
D-11	14	a																					RSP AT FES	"WB" 648+45.19	14	a
D-11	14	b																					36" FES	"WB" 648+49.16	14	b
D-11	14	c	WTJ	5.0																			36" RCP	"WB" 649+50.00	14	c
D-5	14	d			8.0		1				1					1.3							JUNCTION STRUCTURE	"A" 24+63.78	14	d
D-5	14	e	WTJ	4.0																			36" RCP	"A" 32+00.00	14	e
D-5	14	f			8.1		1				1					1.4							JUNCTION STRUCTURE	"A" 27+67.88	14	f
D-5	14	g			14.5	1	1				1					7.9							JUNCTION STRUCTURE	"A" 31+60.00	14	g
D-5	14	h			7.0		1				1					0.4							JUNCTION STRUCTURE	"A" 34+62.16	14	h
D-5	14	i	WTJ	11.0																			36" RCP	"A" 36+50.00	14	i
D-6	14	j			14.0	1	1				1					7.4							JUNCTION STRUCTURE	"A" 38+20.00	14	j
D-6	14	k	WTJ	17.0																			36" RCP	"A" 39+50.00	14	k
D-6	14	l			20.0	1	1				1					13.4							JUNCTION STRUCTURE	"A" 40+59.66	14	l
D-6	14	m	POS	25.0																			36" RCP	"A" 40+59.66	14	m
SHEET TOTAL						3	6	11		2	17			97		31.8	12		0.8				SHEET TOTAL			

(N) - NOT A SEPARATE PAY ITEM, FOR INFORMATION ONLY
* - SEE ROADWAY QUANTITIES FOR ADDITIONAL QUANTITIES

DRAINAGE QUANTITIES
DQ-16

STATE OF CALIFORNIA - DEPARTMENT OF TRANSPORTATION
Caltrans® DESIGN

FUNCTIONAL SUPERVISOR: MICHAEL J. WEBSTER
CALCULATED-DESIGNED BY: FARDAD BEHBOODY
CHECKED BY: MICHAEL OREIRO
REVISED BY / DATE REVISED

LAST REVISION 05-06-13
DATE PLOTTED => 04-JUN-2013
TIME PLOTTED => 14:20

Dist	COUNTY	ROUTE	POST MILES TOTAL PROJECT	SHEET No.	TOTAL SHEETS
11	SD	11, 905	0.0/1.6, R9.9/R10.7	276	622

REGISTERED CIVIL ENGINEER 03-19-13 DATE

04-22-13
PLANS APPROVAL DATE

REGISTERED PROFESSIONAL ENGINEER FARDAD BEHBOODY No. 61478 Exp. 06-30-13 CIVIL STATE OF CALIFORNIA

THE STATE OF CALIFORNIA OR ITS OFFICERS OR AGENTS SHALL NOT BE RESPONSIBLE FOR THE ACCURACY OR COMPLETENESS OF SCANNED COPIES OF THIS PLAN SHEET.

DRAINAGE QUANTITIES

DRAINAGE SHEET No.	DRAINAGE SYSTEM No. ⬡	DRAINAGE UNIT ○	6" Alt PIPE Culv LF	18" Alt PIPE Culv LF	24" Alt PIPE Culv LF	24" REINFORCED Conc PIPE LF	36" Alt PIPE Culv LF	36" REINFORCED Conc PIPE LF	36" RCP DOWNDRAIN LF	48" REINFORCED Conc PIPE LF	54" REINFORCED Conc PIPE LF	66" REINFORCED Conc PIPE LF	84" MODIFIED RCP LF	24" CONCRETE FES EA	36" CONCRETE FES EA	STRUCTURAL Conc, BOX CULVERT CY	MINOR CONCRETE (MINOR STRUCTURE) CY	CONCRETE (CONCRETE APRON) CY	CONCRETE (DITCH LINING) CY	CONCRETE (CHANNEL LINING) CY	MISCELLANEOUS IRON AND STEEL LB	RSP FABRIC (CLASS 8) SQYD	RSP (FACING, METHOD B) CY	RSP (1/4 TON, METHOD B) CY	BAR REINFORCING STEEL (BOX CULVERT) LB	DITCH EXCAVATION CY	PLACE HOT MIX ASPHALT (MISCELLANEOUS AREA) SQYD	3" PLASTIC PIPE (APPROACH SLAB DRAIN) LF	REMOVE CULVERT LF	REMOVE CONCRETE (CY) * CY	REMOVE RSP CY	DESCRIPTION	STATION	DRAINAGE SYSTEM No. ⬡	DRAINAGE UNIT ○
D-6	14	n															2.18				622											GD1 INLET	"A" 39+59.66	14	n
D-6	14	o				46.3																										24" RCP	"A" 39+59.66	14	o
D-6	14	p															4.43				864											JUNCTION STRUCTURE	"A" 39+59.66	14	p
D-6	14	q						289.1																								36" RCP	"A" 42+00.00	14	q
D-6	14	r															4.67				864											JUNCTION STRUCTURE	"A" 43+54.66	14	r
D-6	14	s						295.0																								36" RCP	"A" 45+00.00	14	s
D-6	14	t															4.67				864											JUNCTION STRUCTURE	"A" 46+54.66	14	t
D-6	14	u						295.0																								36" RCP	"A" 48+50.00	14	u
D-6	14	v															4.26				864											JUNCTION STRUCTURE	"A" 49+54.66	14	v
D-7	14	w						295.0																								36" RCP	"A" 51+50.00	14	w
D-7	14	x															4.26				864											JUNCTION STRUCTURE	"A" 52+54.66	14	x
D-7	14	y						240.4																								36" RCP	"A" 54+00.00	14	y
D-7	14	z															4.33				864											JUNCTION STRUCTURE	"A" 55+00.00	14	z
D-7	14	aa			294.3																											24" APC	"A" 56+50.00	14	aa
D-7	14	ab															6.47				658											GT4 INLET	"A" 58+00.00	14	ab
D-7	14	ac			194.8																											24" APC	"A" 59+00.00	14	ac
D-7	14	ad															4.03	3.31			329											G2 INLET WITH APRON	"A" 60+00.00	14	ad
D-7	14	ae			297.1																											24" APC	"A" 61+50.00	14	ae
D-7	14	af															3.68	3.31			329											G2 INLET WITH APRON	"A" 63+00.00	14	af
D-8	14	ag			297.1																											24" APC	"A" 64+50.00	14	ag
D-8	14	ah															2.20	3.31			329											G2 INLET WITH APRON	"A" 66+00.00	14	ah
D-6	14	ai															1.39				329											G1 INLET	"A" 40+59.66	14	ai
D-6	14	aj				48.9																										24" RCP	"A" 40+59.66	14	aj
D-6	14	ak															2.18				622											GD1 INLET	"A" 39+59.66	14	ak
D-6	14	al				56.3																										24" RCP	"A" 39+59.66	14	al
D-6	14	am															1.39				329											G1 INLET	"A" 40+59.66	14	am
D-6	14	an				58.8																										24" RCP	"A" 40+59.66	14	an
D-6	14	ao															1.39				329											G1 INLET	"A" 43+54.66	14	ao
D-6	14	ap				48.7																										24" RCP	"A" 43+54.66	14	ap
D-6	14	aq															1.39				329											G1 INLET	"A" 43+54.66	14	aq
D-6	14	ar				58.6																										24" RCP	"A" 43+54.66	14	ar
D-6	14	as															1.39				329											G1 INLET	"A" 46+54.66	14	as
D-6	14	at				48.4																										24" RCP	"A" 46+54.66	14	at
D-6	14	au															1.39				329											G1 INLET	"A" 46+54.66	14	au
D-6	14	av				58.4																										24" RCP	"A" 46+54.66	14	av
D-6	14	aw															1.39				329											G1 INLET	"A" 49+54.66	14	aw
D-6	14	ax				48.3																										24" RCP	"A" 49+54.66	14	ax
D-6	14	ay															1.39				329											G1 INLET	"A" 49+54.66	14	ay
D-6	14	az				58.3																										24" RCP	"A" 49+54.66	14	az
D-7	14	ba															1.39				329											G1 INLET	"A" 52+54.66	14	ba
D-7	14	bb				58.3																										24" RCP	"A" 52+54.66	14	bb
D-7	14	bc															1.39				329											G1 INLET	"A" 52+54.66	14	bc
SHEET TOTAL					1,083.3	589.3		1,414.5									61.26	9.93			11,363											SHEET TOTAL			

(N) - NOT A SEPARATE PAY ITEM, FOR INFORMATION ONLY
* - SEE ROADWAY QUANTITIES FOR ADDITIONAL QUANTITIES

DRAINAGE QUANTITIES
DQ-17

STATE OF CALIFORNIA - DEPARTMENT OF TRANSPORTATION
Caltrans® DESIGN

FUNCTIONAL SUPERVISOR: MICHAEL J. WEBSTER
CALCULATED-DESIGNED BY: MICHAEL OREIRO
CHECKED BY: FARDAD BEHBOODY
REVISED BY / DATE REVISED

LAST REVISION 04-30-13
DATE PLOTTED => 04-JUN-2013
TIME PLOTTED => 14:20

Dist	COUNTY	ROUTE	POST MILES TOTAL PROJECT	SHEET No.	TOTAL SHEETS
11	SD	11, 905	0.0/1.6, R9.9/R10.7	277	622

REGISTERED CIVIL ENGINEER 03-19-13 DATE

04-22-13
PLANS APPROVAL DATE

REGISTERED PROFESSIONAL ENGINEER FARDAD BEHBOODY No. 61478 Exp. 06-30-13 CIVIL STATE OF CALIFORNIA

THE STATE OF CALIFORNIA OR ITS OFFICERS OR AGENTS SHALL NOT BE RESPONSIBLE FOR THE ACCURACY OR COMPLETENESS OF SCANNED COPIES OF THIS PLAN SHEET.

DRAINAGE QUANTITIES

DRAINAGE SHEET No.	DRAINAGE SYSTEM No. ⬡	DRAINAGE UNIT ○	PIPE JOINT TYPE (N)	HEIGHT OF COVER (N) LF	HEIGHT OF STRUCTURE (N) LF	MANHOLE CONE (N) EA	MANHOLE FRAME AND COVER (N) EA	DI GRATE TYPE 24-12 (N) EA	DI GRATE TYPE 36R (N) EA	CONCRETE PIPE COLLAR (N) EA	GRATE CHAIN (N) EA	REMOVE CULVERT (N) LF	REMOVE CONCRETE (N) CY	REMOVE RSP (N) CY	BACKFILL DITCH (N) CY	36" RCP RISER LF	ABANDON CULVERT LF	ABANDON INLET EA	SAND BACKFILL CY	SLURRY CEMENT BACKFILL CY	REMOVE CONCRETE (LF) LF	STEEL PLATE COVER AND FRAME (N) EA	DESCRIPTION	STATION	DRAINAGE SYSTEM No. ⬡	DRAINAGE UNIT ○
D-6	14	n			5.0			2			2												GD1 INLET	"A" 39+59.66	14	n
D-6	14	o	WTJ	6.5																			24" RCP	"A" 39+59.66	14	o
D-6	14	p			9.5	1	1				1					1.8							JUNCTION STRUCTURE	"A" 39+59.66	14	p
D-6	14	q	WTJ	6.5																			36" RCP	"A" 42+00.00	14	q
D-6	14	r			13.5	1	1				1					6.8							JUNCTION STRUCTURE	"A" 43+54.66	14	r
D-6	14	s	WTJ	10.5																			36" RCP	"A" 45+00.00	14	s
D-6	14	t			11.5	1	1				1					4.8							JUNCTION STRUCTURE	"A" 46+54.66	14	t
D-6	14	u	WTJ	8.5																			36" RCP	"A" 48+50.00	14	u
D-6	14	v			9.0		1				1					2.3							JUNCTION STRUCTURE	"A" 49+54.66	14	v
D-7	14	w	WTJ	6.0																			36" RCP	"A" 51+50.00	14	w
D-7	14	x			9.5		1				1					2.8							JUNCTION STRUCTURE	"A" 52+54.66	14	x
D-7	14	y	WTJ	6.5																			36" RCP	"A" 54+00.00	14	y
D-7	14	z			9.5		1				1					2.8							JUNCTION STRUCTURE	"A" 55+00.00	14	z
D-7	14	aa	STD	8.0																			24" APC	"A" 56+50.00	14	aa
D-7	14	ab			10.0			2			2												GT4 INLET	"A" 58+00.00	14	ab
D-7	14	ac	STD	8.0																			24" APC	"A" 59+00.00	14	ac
D-7	14	ad			9.5			1			1												G2 INLET WITH APRON	"A" 60+00.00	14	ad
D-7	14	ae	STD	7.5																			24" APC	"A" 61+50.00	14	ae
D-7	14	af			8.5			1			1												G2 INLET WITH APRON	"A" 63+00.00	14	af
D-8	14	ag	STD	6.5																			24" APC	"A" 64+50.00	14	ag
D-8	14	ah			6.5			1			1												G2 INLET WITH APRON	"A" 66+00.00	14	ah
D-6	14	ai			5.0			1			1												G1 INLET	"A" 40+59.66	14	ai
D-6	14	aj	POS	12.0																			24" RCP	"A" 40+59.66	14	aj
D-6	14	ak			5.0			2			2												GD1 INLET	"A" 39+59.66	14	ak
D-6	14	al	WTJ	6.5																			24" RCP	"A" 39+59.66	14	al
D-6	14	am			5.0			1			1												G1 INLET	"A" 40+59.66	14	am
D-6	14	an	WTJ	3.0																			24" RCP	"A" 40+59.66	14	an
D-6	14	ao			5.0			1			1												G1 INLET	"A" 43+54.66	14	ao
D-6	14	ap	WTJ	11.5																			24" RCP	"A" 43+54.66	14	ap
D-6	14	aq			5.0			1			1												G1 INLET	"A" 43+54.66	14	aq
D-6	14	ar	WTJ	11.5																			24" RCP	"A" 43+54.66	14	ar
D-6	14	as			5.0			1			1												G1 INLET	"A" 46+54.66	14	as
D-6	14	at	WTJ	9.5																			24" RCP	"A" 46+54.66	14	at
D-6	14	au			5.0			1			1												G1 INLET	"A" 46+54.66	14	au
D-6	14	av	WTJ	9.5																			24" RCP	"A" 46+54.66	14	av
D-6	14	aw			5.0			1			1												G1 INLET	"A" 49+54.66	14	aw
D-6	14	ax	WTJ	7.0																			24" RCP	"A" 49+54.66	14	ax
D-6	14	ay			5.0			1			1												G1 INLET	"A" 49+54.66	14	ay
D-6	14	az	WTJ	7.0																			24" RCP	"A" 49+54.66	14	az
D-7	14	ba			5.0			1			1												G1 INLET	"A" 52+54.66	14	ba
D-7	14	bb	WTJ	7.5																			24" RCP	"A" 52+54.66	14	bb
D-7	14	bc			5.0			1			1												G1 INLET	"A" 52+54.66	14	bc
SHEET TOTAL						3	6	19			25					21.3							SHEET TOTAL			

(N) - NOT A SEPARATE PAY ITEM, FOR INFORMATION ONLY
* - SEE ROADWAY QUANTITIES FOR ADDITIONAL QUANTITIES

DRAINAGE QUANTITIES

DQ-18

STATE OF CALIFORNIA - DEPARTMENT OF TRANSPORTATION
Caltrans® DESIGN

FUNCTIONAL SUPERVISOR: MICHAEL J. WEBSTER
CALCULATED-DESIGNED BY: MICHAEL OREIRO
CHECKED BY: FARDAD BEHBOODY
REVISED BY / DATE REVISED

LAST REVISION 04-30-13
DATE PLOTTED => 04-JUN-2013
TIME PLOTTED => 14:20

Dist	COUNTY	ROUTE	POST MILES TOTAL PROJECT	SHEET No.	TOTAL SHEETS
11	SD	11, 905	0.0/1.6, R9.9/R10.7	278	622

REGISTERED CIVIL ENGINEER 03-19-13 DATE

04-22-13
PLANS APPROVAL DATE

REGISTERED PROFESSIONAL ENGINEER FARDAD BEHBOODY No. 61478 Exp. 06-30-13 CIVIL STATE OF CALIFORNIA

THE STATE OF CALIFORNIA OR ITS OFFICERS OR AGENTS SHALL NOT BE RESPONSIBLE FOR THE ACCURACY OR COMPLETENESS OF SCANNED COPIES OF THIS PLAN SHEET.

DRAINAGE QUANTITIES

DRAINAGE SHEET No.	DRAINAGE SYSTEM No. ⬡	DRAINAGE UNIT ○	6" Alt PIPE Culv LF	18" Alt PIPE Culv LF	24" Alt PIPE Culv LF	24" REINFORCED Conc PIPE LF	36" Alt PIPE Culv LF	36" REINFORCED Conc PIPE LF	36" RCP DOWNDRAIN LF	48" REINFORCED Conc PIPE LF	54" REINFORCED Conc PIPE LF	66" REINFORCED Conc PIPE LF	84" MODIFIED RCP LF	24" CONCRETE FES EA	36" CONCRETE FES EA	STRUCTURAL Conc, BOX CULVERT CY	MINOR CONCRETE (MINOR STRUCTURE) CY	CONCRETE (CONCRETE APRON) CY	CONCRETE (DITCH LINING) CY	CONCRETE (CHANNEL LINING) CY	MISCELLANEOUS IRON AND STEEL LB	RSP FABRIC (CLASS 8) SQYD	RSP (FACING, METHOD B) CY	RSP (1/4 TON, METHOD B) CY	BAR REINFORCING STEEL (BOX CULVERT) LB	DITCH EXCAVATION CY	PLACE HOT MIX ASPHALT (MISCELLANEOUS AREA) SQYD	3" PLASTIC PIPE (APPROACH SLAB DRAIN) LF	REMOVE CULVERT LF	REMOVE CONCRETE (CY) * CY	REMOVE RSP CY	DESCRIPTION	STATION	DRAINAGE SYSTEM No. ⬡	DRAINAGE UNIT ○
D-7	14	bd				48.3																										24" RCP	"A" 52+54.66	14	bd
D-7	14	be															1.39				329											G1 INLET	"A" 55+00.00	14	be
D-7	14	bf			48.3																											24" APC	"A" 55+00.00	14	bf
D-7	14	bg															1.39				329											G1 INLET	"A" 55+00.00	14	bg
D-7	14	bh			58.3																											24" APC	"A" 55+00.00	14	bh
D-7	14	bi															1.39				329											G1 INLET	"A" 58+00.00	14	bi
D-7	14	bj			55.8																											24" APC	"A" 58+00.00	14	bj
D-7	14	bk															1.39				329											G1 INLET	"A" 58+00.00	14	bk
D-7	14	bl			64.8																											24" APC	"A" 58+00.00	14	bl
D-7	14	bm															1.39				329											G1 INLET	"A" 60+00.00	14	bm
D-7	14	bn			59.1																											24" APC	"A" 60+00.00	14	bn
D-7	14	bo															1.39				329											G1 INLET	"A" 60+00.00	14	bo
D-7	14	bp			68.1																											24" APC	"A" 60+00.00	14	bp
D-7	14	bq															1.39				329											G1 INLET	"A" 63+00.00	14	bq
D-7	14	br			64.1																											24" APC	"A" 63+00.00	14	br
D-7	14	bs															1.39				329											G1 INLET	"A" 63+00.00	14	bs
D-7	14	bt			73.1																											24" APC	"A" 63+00.00	14	bt
D-8	14	bu															2.18				622											GD1 INLET	"A" 66+00.00	14	bu
D-8	14	bv			67.0																											24" APC	"A" 66+00.00	14	bv
D-8	14	bw															2.18				622											GD1 INLET	"A" 66+00.00	14	bw
D-8	14	bx			76.0																											24" APC	"A" 66+00.00	14	bx
D-7	14	by																	36.40													DRAINAGE DITCH	"A" 55+00.00	14	by
D-7	14	bz																	31.20													DRAINAGE DITCH	"A" 55+00.00	14	bz
D-5	14	ca						382.2																								36" RCP	"A" 32+00.00	14	ca
D-5	14	cb						295.1																								36" RCP	"A" 32+00.00	14	cb
D-6	14	cc															11.74				864											Mod JS	"A" 40+59.66	14	cc
D-6	14	cd				95.4																										24" RCP	"A" 40+59.66	14	cd
D-4	15	a								184.4																						48" RCP W/COLLAR	"WB" 644+91.81	15	a
D-11	15	b															10.00				239											JUNCTION STRUCTURE	"LMR" 59+89.56	15	b
D-11	15	c								220.8																						48" RCP	"WB" 645+00.00	15	c
D-11	15	d															7.36				980											Mod G2 INLET	"LMR" 58+27.07	15	d
D-11	15	e						73.6																								36" RCP	"WB" 645+56.23	15	e
D-11	15	f															6.32	36.35			980											Mod G2 DI W/ APRON	"LMR" 58+75.20	15	f
D-11	15	g																	13.00													DRAINAGE DITCH		15	g
D-11	15	h																	4.16													DRAINAGE DITCH		15	h
SHEET TOTAL					634.6	143.7		750.9		405.2							50.90	36.35	84.76		6,939											SHEET TOTAL			

(N) - NOT A SEPARATE PAY ITEM, FOR INFORMATION ONLY
* - SEE ROADWAY QUANTITIES FOR ADDITIONAL QUANTITIES

DRAINAGE QUANTITIES

DQ-19

REVISED BY | DATE REVISED
MICHAEL OREIRO | FARDAD BEHBOODY
CALCULATED-DESIGNED BY | CHECKED BY
FUNCTIONAL SUPERVISOR: MICHAEL J. WEBSTER
STATE OF CALIFORNIA - DEPARTMENT OF TRANSPORTATION
Caltrans DESIGN

LAST REVISION 04-30-13 | DATE PLOTTED => 04-JUN-2013 | TIME PLOTTED => 14:20

Dist	COUNTY	ROUTE	POST MILES TOTAL PROJECT	SHEET No.	TOTAL SHEETS
11	SD	11, 905	0.0/1.6, R9.9/R10.7	279	622

REGISTERED CIVIL ENGINEER 03-19-13 DATE

04-22-13
PLANS APPROVAL DATE

REGISTERED PROFESSIONAL ENGINEER FARDAD BEHBOODY No. 61478 Exp. 06-30-13 CIVIL STATE OF CALIFORNIA

THE STATE OF CALIFORNIA OR ITS OFFICERS OR AGENTS SHALL NOT BE RESPONSIBLE FOR THE ACCURACY OR COMPLETENESS OF SCANNED COPIES OF THIS PLAN SHEET.

DRAINAGE QUANTITIES

DRAINAGE SHEET No.	DRAINAGE SYSTEM No. ⬡	DRAINAGE UNIT ○	PIPE JOINT TYPE (N)	HEIGHT OF COVER (N) LF	HEIGHT OF STRUCTURE (N) LF	MANHOLE CONE (N) EA	MANHOLE FRAME AND COVER (N) EA	DI GRATE TYPE 24-12 (N) EA	DI GRATE TYPE 36R (N) EA	CONCRETE PIPE COLLAR (N) EA	GRATE CHAIN (N) EA	REMOVE CULVERT (N) LF	REMOVE CONCRETE (N) CY	REMOVE RSP (N) CY	BACKFILL DITCH (N) CY	36" RCP RISER LF	ABANDON CULVERT LF	ABANDON INLET EA	SAND BACKFILL CY	SLURRY CEMENT BACKFILL CY	REMOVE CONCRETE (LF) LF	STEEL PLATE COVER AND FRAME (N) EA	DESCRIPTION	STATION	DRAINAGE SYSTEM No. ⬡	DRAINAGE UNIT ○
D-7	14	bd	WTJ	7.5																			24" RCP	"A" 52+54.66	14	bd
D-7	14	be			5.0			1			1												G1 INLET	"A" 55+00.00	14	be
D-7	14	bf	STD	7.5																			24" APC	"A" 55+00.00	14	bf
D-7	14	bg			5.0			1			1												G1 INLET	"A" 55+00.00	14	bg
D-7	14	bh	STD	7.5																			24" APC	"A" 55+00.00	14	bh
D-7	14	bi			5.0			1			1												G1 INLET	"A" 58+00.00	14	bi
D-7	14	bj	STD	8.0																			24" APC	"A" 58+00.00	14	bj
D-7	14	bk			5.0			1			1												G1 INLET	"A" 58+00.00	14	bk
D-7	14	bl	STD	8.0																			24" APC	"A" 58+00.00	14	bl
D-7	14	bm			5.0			1			1												G1 INLET	"A" 60+00.00	14	bm
D-7	14	bn	STD	7.5																			24" APC	"A" 60+00.00	14	bn
D-7	14	bo			5.0			1			1												G1 INLET	"A" 60+00.00	14	bo
D-7	14	bp	STD	7.5																			24" APC	"A" 60+00.00	14	bp
D-7	14	bq			5.0			1			1												G1 INLET	"A" 63+00.00	14	bq
D-7	14	br	STD	6.5																			24" APC	"A" 63+00.00	14	br
D-7	14	bs			5.0			1			1												G1 INLET	"A" 63+00.00	14	bs
D-7	14	bt	STD	6.5																			24" APC	"A" 63+00.00	14	bt
D-8	14	bu			5.0			2			2												GD1 INLET	"A" 66+00.00	14	bu
D-8	14	bv	STD	4.5																			24" APC	"A" 66+00.00	14	bv
D-8	14	bw			5.0			2			2												GD1 INLET	"A" 66+00.00	14	bw
D-8	14	bx	STD	4.5																			24" APC	"A" 66+00.00	14	bx
D-7	14	by																					DRAINAGE DITCH	"A" 55+00.00	14	by
D-7	14	bz																					DRAINAGE DITCH	"A" 55+00.00	14	bz
D-5	14	ca	WTJ	4.0																			36" RCP	"A" 32+00.00	14	ca
D-5	14	cb	WTJ	4.0																			36" RCP	"A" 32+00.00	14	cb
D-6	14	cc			20.0		1				1					9.8							Mod JS	"A" 40+59.66	14	cc
D-6	14	cd	STD	17.0																			24" RCP	"A" 40+59.66	14	cd
D-4	15	a	WTJ	21.0																			48" RCP W/COLLAR	"WB" 644+91.81	15	a
D-11	15	b			19.0				1		1					12.1							JUNCTION STRUCTURE	"LMR" 59+89.56	15	b
D-11	15	c	WTJ	14.1																			48" RCP	"WB" 645+00.00	15	c
D-11	15	d			13.2						1												G2 INLET	"LMR" 58+27.07	15	d
D-11	15	e	WTJ	6.8																			48" RCP	"WB" 645+56.23	15	e
D-11	15	f			10.8						1												Mod G2 DI W/ APRON	"LMR" 58+75.20	15	f
D-11	15	g																					DRAINAGE DITCH		15	g
D-11	15	h																					DRAINAGE DITCH		15	h
SHEET TOTAL							1	12	1		16					21.9							SHEET TOTAL			

(N) - NOT A SEPARATE PAY ITEM, FOR INFORMATION ONLY
* - SEE ROADWAY QUANTITIES FOR ADDITIONAL QUANTITIES

DRAINAGE QUANTITIES

DQ-20

STATE OF CALIFORNIA - DEPARTMENT OF TRANSPORTATION
Caltrans® DESIGN

FUNCTIONAL SUPERVISOR: MICHAEL J. WEBSTER
CALCULATED-DESIGNED BY: MICHAEL OREIRO
CHECKED BY: FARDAD BEHBOODY
REVISED BY / DATE REVISED

LAST REVISION 04-30-13
DATE PLOTTED => 04-JUN-2013
TIME PLOTTED => 14:20

Dist	COUNTY	ROUTE	POST MILES TOTAL PROJECT	SHEET No.	TOTAL SHEETS
11	SD	11, 905	0.0/1.6, R9.9/R10.7	280	622

REGISTERED CIVIL ENGINEER 03-19-13 DATE

04-22-13
PLANS APPROVAL DATE

REGISTERED PROFESSIONAL ENGINEER FARDAD BEHBOODY No. 61478 Exp. 06-30-13 CIVIL STATE OF CALIFORNIA

THE STATE OF CALIFORNIA OR ITS OFFICERS OR AGENTS SHALL NOT BE RESPONSIBLE FOR THE ACCURACY OR COMPLETENESS OF SCANNED COPIES OF THIS PLAN SHEET.

DRAINAGE QUANTITIES

DRAINAGE SHEET No.	DRAINAGE SYSTEM No. ⬡	DRAINAGE UNIT ○	6" Alt PIPE Culv LF	18" Alt PIPE Culv LF	24" Alt PIPE Culv LF	24" REINFORCED Conc PIPE LF	36" Alt PIPE Culv LF	36" REINFORCED Conc PIPE LF	36" RCP DOWNDRAIN LF	48" REINFORCED Conc PIPE LF	54" REINFORCED Conc PIPE LF	66" REINFORCED Conc PIPE LF	84" MODIFIED RCP LF	24" CONCRETE FES EA	36" CONCRETE FES EA	STRUCTURAL Conc, BOX CULVERT CY	MINOR CONCRETE (MINOR STRUCTURE) CY	CONCRETE (CONCRETE APRON) CY	CONCRETE (DITCH LINING) CY	CONCRETE (CHANNEL LINING) CY	MISCELLANEOUS IRON AND STEEL LB	RSP FABRIC (CLASS 8) SQYD	RSP (FACING, METHOD B) CY	RSP (1/4 TON, METHOD B) CY	BAR REINFORCING STEEL (BOX CULVERT) LB	DITCH EXCAVATION CY	PLACE HOT MIX ASPHALT (MISCELLANEOUS AREA) SQYD	3" PLASTIC PIPE (APPROACH SLAB DRAIN) LF	REMOVE CULVERT LF	REMOVE CONCRETE (CY) * CY	REMOVE RSP CY	DESCRIPTION	STATION	DRAINAGE SYSTEM No. ⬡	DRAINAGE UNIT ○
D-5	16	a																		7.2												CHANNEL CONNECTION	"A" 35+64.03	16	a
D-5	16	b											539.7																			84" MODIFIED RCP	"A" 35+65.00	16	b
D-6	16	c															34.80				2164											Mod JS	"A" 39+29.02	16	c
D-6	16	d											128.0																			84" MODIFIED RCP	"A" 40+00.00	16	d
D-6	16	e															24.90				2164											Mod JS	"A" 40+62.00	16	e
D-6	16	f											489.6																			84" MODIFIED RCP	"A" 43+00.00	16	f
D-6	16	g															27.36				864											Mod JS	"A" 45+57.00	16	g
D-6	16	h									437.8																					54" RCP	"A" 48+00.00	16	h
D-6	16	i															16.74				864											Mod JS	"A" 50+01.00	16	i
D-6	16	j									61.8																					54" RCP	"A" 50+50.00	16	j
D-7	16	k															14.53				864											Mod JS	"A" 50+67.20	16	k
D-7	16	l									163.1																					54" RCP	"A" 51+50.00	16	l
D-7	16	m															11.73				864											Mod JS	"A" 52+35.33	16	m
D-7	16	n				19.0																										24" RCP	"A" 52+35.33	16	n
D-7	16	o															0.67	1.87			239											OCP INLET W/APRON	"A" 52+51.00	16	o
D-7	16	p						201.3																								36" RCP	"A" 52+35.33	16	p
D-7	16	q															0.67	1.87			239											OCP INLET W/APRON	"A" 52+35.33	16	q
D-6	16	r				155.2																										24" RCP	"A" 39+50.00	16	r
D-6	16	s															8.46				864											24" RCP	"A" 39+71.83	16	s
D-6	16	t				13.6																										Mod JS	"A" 40+62.00	16	t
D-6	16	u															3.54				173											OL INLET (L=10.0')	"A" 40+62.00	16	u
D-7	16	v				12.5																										24" RCP	"A" 50+67.27	16	v
D-7	16	w															3.41				173											OL INLET (L=10.0')	"A" 50+67.27	16	w
D-6	16	x										149.6																				66" RCP	"A" 45+57.80	16	x
D-6	16	y															16.25				864											Mod JS	"A" 45+57.80	16	y
D-6	16	z				26.1																										24" RCP	"A" 45+50.00	16	z
D-6	16	aa															2.07				177											OS INLET	"A" 45+27.00	16	aa
D-6	16	ab				161.5																										24" RCP	"A" 44+00.00	16	ab
D-6	16	ac															2.07				177											OS INLET	"A" 43+62.00	16	ac
D-6	16	ad				27.9																										24" RCP	"A" 45+70.00	16	ad
D-6	16	ae															5.87				177											OS INLET	"A" 45+91.00	16	ae
D-6	16	af				119.7																										24" RCP	"A" 46+00.00	16	af
D-6	16	ag															2.34				177											OS INLET	"A" 49+60.00	16	ag
D-6	16	ah				245.7																										24" RCP	"A" 48+50.00	16	ah
D-6	16	ai															1.76				177											OS INLET	"A" 49+63.40	16	ai
SHEET TOTAL						781.2		201.3			662.7	149.6	1,157.3				177.17	3.74		7.2	11,221											SHEET TOTAL			

(N) - NOT A SEPARATE PAY ITEM, FOR INFORMATION ONLY
* - SEE ROADWAY QUANTITIES FOR ADDITIONAL QUANTITIES

DRAINAGE QUANTITIES

DQ-21

REVISED BY | DATE REVISED
MICHAEL OREIRO | FARDAD BEHBOODY
CALCULATED-DESIGNED BY | CHECKED BY
FUNCTIONAL SUPERVISOR: MICHAEL J. WEBSTER
STATE OF CALIFORNIA - DEPARTMENT OF TRANSPORTATION
Caltrans® DESIGN

LAST REVISION 04-30-13 | DATE PLOTTED => 04-JUN-2013 | TIME PLOTTED => 14:20

Dist	COUNTY	ROUTE	POST MILES TOTAL PROJECT	SHEET No.	TOTAL SHEETS
11	SD	11, 905	0.0/1.6, R9.9/R10.7	281	622

REGISTERED CIVIL ENGINEER 03-19-13 DATE

04-22-13
PLANS APPROVAL DATE

REGISTERED PROFESSIONAL ENGINEER FARDAD BEHBOODY No. 61478 Exp. 06-30-13 CIVIL STATE OF CALIFORNIA

THE STATE OF CALIFORNIA OR ITS OFFICERS OR AGENTS SHALL NOT BE RESPONSIBLE FOR THE ACCURACY OR COMPLETENESS OF SCANNED COPIES OF THIS PLAN SHEET.

DRAINAGE QUANTITIES

DRAINAGE SHEET No.	DRAINAGE SYSTEM No. ⬡	DRAINAGE UNIT ○	PIPE JOINT TYPE (N)	HEIGHT OF COVER (N) LF	HEIGHT OF STRUCTURE (N) LF	MANHOLE CONE (N) EA	MANHOLE FRAME AND COVER (N) EA	DI GRATE TYPE 24-12 (N) EA	DI GRATE TYPE 36R (N) EA	CONCRETE PIPE COLLAR (N) EA	GRATE CHAIN (N) EA	REMOVE CULVERT (N) LF	REMOVE CONCRETE (N) CY	REMOVE RSP (N) CY	BACKFILL DITCH (N) CY	36" RCP RISER LF	ABANDON CULVERT LF	ABANDON INLET EA	SAND BACKFILL CY	SLURRY CEMENT BACKFILL CY	REMOVE CONCRETE (LF) LF	STEEL PLATE COVER AND FRAME (N) EA	DESCRIPTION	STATION	DRAINAGE SYSTEM No. ⬡	DRAINAGE UNIT ○
D-5	16	a																					CHANNEL CONNECTION	"A" 35+78.99	16	a
D-5	16	b	WTJ	50.0																			84" MODIFIED RCP	"A" 35+65.00	16	b
D-6	16	c			28.8		1				1					5.6							Mod JS	"A" 39+29.02	16	c
D-6	16	d	WTJ	1.5																			84" MODIFIED RCP	"A" 40+00.00	16	d
D-6	16	e			22.6		1				1					7.3							Mod JS	"A" 40+62.00	16	e
D-6	16	f	WTJ	7.4																			84" MODIFIED RCP	"A" 43+00.00	16	f
D-6	16	g			26.1		1				1					12.8							Mod JS	"A" 45+57.00	16	g
D-6	16	h	WTJ	12.6																			54" RCP	"A" 48+00.00	16	h
D-6	16	i			18.6		1				1					4.8							Mod JS	"A" 50+01.00	16	i
D-6	16	j	WTJ	5.1																			54" RCP	"A" 50+50.00	16	j
D-7	16	k			17.2		1				1					6.3							Mod JS	"A" 50+67.20	16	k
D-7	16	l	WTJ	6.1																			54" RCP	"A" 51+50.00	16	l
D-7	16	m			14.3		1				1					6.3							Mod JS	"A" 52+35.33	16	m
D-7	16	n	STD	5.0																			24" RCP	"A" 52+35.33	16	n
D-7	16	o			7.3				1		1					7.8							OCP INLET W/APRON	"A" 52+51.00	16	o
D-7	16	p	STD	13.0																			36" RCP	"A" 52+35.33	16	p
D-7	16	q			14.0				1		1					14.3							OCP INLET W/APRON	"A" 52+35.33	16	q
D-6	16	r	WTJ	30.0																			24" RCP	"A" 39+50.00	16	r
D-6	16	s			11.6		1				1					4.1							Mod JS	"A" 39+71.83	16	s
D-6	16	t	STD	30.0																			24" RCP	"A" 40+62.00	16	t
D-6	16	u			8.3						1											1	OL INLET (L=10.0')	"A" 40+62.00	16	u
D-7	16	v	STD	7.8																			24" RCP	"A" 50+67.27	16	v
D-7	16	w			5.6						1											1	OL INLET (L=10.0')	"A" 50+67.27	16	w
D-6	16	x	STD	12.6																			66" RCP	"A" 45+57.80	16	x
D-6	16	y			18.3		1				1					7.7							Mod JS	"A" 45+57.80	16	y
D-6	16	z	STD	30.0																			24" RCP	"A" 45+50.00	16	z
D-6	16	aa			5.4						1											1	OS INLET	"A" 45+27.00	16	aa
D-6	16	ab	STD	30.0																			24" RCP	"A" 44+00.00	16	ab
D-6	16	ac			5.4						1											1	OS INLET	"A" 43+62.00	16	ac
D-6	16	ad	STD	30.0																			24" RCP	"A" 45+70.00	16	ad
D-6	16	ae			9.4						1											1	OS INLET	"A" 45+91.00	16	ae
D-6	16	af																					24" RCP	"A" 46+00.00	16	af
D-6	16	ag			6.4						1											1	OS INLET	"A" 49+60.00	16	ag
D-6	16	ah	STD	30.0																			24" RCP	"A" 48+50.00	16	ah
D-6	16	ai			4.3						1											1	OS INLET	"A" 49+63.40	16	ai
SHEET TOTAL							8		2		17					77.0						7	SHEET TOTAL			

(N) - NOT A SEPARATE PAY ITEM, FOR INFORMATION ONLY
* - SEE ROADWAY QUANTITIES FOR ADDITIONAL QUANTITIES

DRAINAGE QUANTITIES

DQ-22

STATE OF CALIFORNIA - DEPARTMENT OF TRANSPORTATION
Caltrans® DESIGN

FUNCTIONAL SUPERVISOR: MICHAEL J. WEBSTER
CALCULATED-DESIGNED BY: MICHAEL OREIRO
CHECKED BY: FARDAD BEHBOODY
REVISED BY
DATE REVISED

LAST REVISION 04-30-13
DATE PLOTTED => 04-JUN-2013
TIME PLOTTED => 14:20

Dist	COUNTY	ROUTE	POST MILES TOTAL PROJECT	SHEET No.	TOTAL SHEETS
11	SD	11, 905	0.0/1.6, R9.9/R10.7	282	622

REGISTERED CIVIL ENGINEER 03-19-13 DATE

04-22-13
PLANS APPROVAL DATE

REGISTERED PROFESSIONAL ENGINEER FARDAD BEHBOODY No. 61478 Exp. 06-30-13 CIVIL STATE OF CALIFORNIA

THE STATE OF CALIFORNIA OR ITS OFFICERS OR AGENTS SHALL NOT BE RESPONSIBLE FOR THE ACCURACY OR COMPLETENESS OF SCANNED COPIES OF THIS PLAN SHEET.

DRAINAGE QUANTITIES

DRAINAGE SHEET No.	DRAINAGE SYSTEM No. ⬡	DRAINAGE UNIT ○	6" Alt PIPE Culv LF	18" Alt PIPE Culv LF	24" Alt PIPE Culv LF	24" REINFORCED Conc PIPE LF	36" Alt PIPE Culv LF	36" REINFORCED Conc PIPE LF	36" RCP DOWNDRAIN LF	48" REINFORCED Conc PIPE LF	54" REINFORCED Conc PIPE LF	66" REINFORCED Conc PIPE LF	84" MODIFIED RCP LF	24" CONCRETE FES EA	36" CONCRETE FES EA	STRUCTURAL Conc, BOX CULVERT CY	MINOR CONCRETE (MINOR STRUCTURE) CY	CONCRETE (CONCRETE APRON) CY	CONCRETE (DITCH LINING) CY	CONCRETE (CHANNEL LINING) CY	MISCELLANEOUS IRON AND STEEL LB	RSP FABRIC (CLASS 8) SQYD	RSP (FACING, METHOD B) CY	RSP (1/4 TON, METHOD B) CY	BAR REINFORCING STEEL (BOX CULVERT) LB	DITCH EXCAVATION CY	PLACE HOT MIX ASPHALT (MISCELLANEOUS AREA) SQYD	3" PLASTIC PIPE (APPROACH SLAB DRAIN) LF	REMOVE CULVERT LF	REMOVE CONCRETE (CY) * CY	REMOVE RSP CY	DESCRIPTION	STATION	DRAINAGE SYSTEM No. ⬡	DRAINAGE UNIT ○
D-6	16	aj																											61			REMOVE CULVERT	"A" 39+80.00	16	aj
D-6	16	ak																											17			REMOVE CULVERT	"A" 40+62.00	16	ak
D-6	16	al																												3		REMOVE INLET	"A" 40+62.00	16	al
D-6	16	am																											31			REMOVE CULVERT	"A" 40+62.00	16	am
D-6	16	an																												3		REMOVE INLET	"A" 45+40.00	16	an
D-6	16	ao																											23			REMOVE CULVERT	"A" 45+50.00	16	ao
D-6	16	ap																											64			REMOVE CULVERT	"A" 45+57.00	16	ap
D-6	16	aq																												3		REMOVE INLET	"A" 47+10.00	16	aq
D-6	16	ar																											22			REMOVE CULVERT	"A" 47+10.00	16	ar
D-6	16	as																											26			REMOVE CULVERT	"A" 49+60.00	16	as
D-6	16	at																												3		REMOVE INLET	"A" 49+60.00	16	at
D-6	16	au																											21			REMOVE CULVERT	"A" 50+01.00	16	au
D-6	16	av																												3		REMOVE INLET	"A" 50+01.00	16	av
D-6	16	aw																											66			REMOVE CULVERT	"A" 50+20.00	16	aw
D-7	16	ax																												3		REMOVE INLET	"A" 50+67.00	16	ax
D-7	16	ay																											42			REMOVE CULVERT	"A" 50+67.00	16	ay
D-7	16	az																											41			REMOVE CULVERT	"A" 50+67.00	16	az
D-7	16	ba																											113			REMOVE CULVERT	"A" 51+50.00	16	ba
D-7	16	bb																												3		REMOVE INLET	"A" 52+20.00	16	bb
D-7	16	bc																											83			REMOVE CULVERT	"A" 52+20.00	16	bc
D-7	16	bd																											22			REMOVE CULVERT	"A" 52+20.00	16	bd
D-7	16	be																												3		REMOVE INLET	"A" 52+51.00	16	be
SHEET TOTAL																													632	24		SHEET TOTAL			

(N) - NOT A SEPARATE PAY ITEM, FOR INFORMATION ONLY
* - SEE ROADWAY QUANTITIES FOR ADDITIONAL QUANTITIES

DRAINAGE QUANTITIES

DQ-23

REVISED BY | DATE REVISED
MICHAEL OREIRO | FARDAD BEHBOODY
CALCULATED-DESIGNED BY | CHECKED BY
FUNCTIONAL SUPERVISOR: MICHAEL J. WEBSTER
STATE OF CALIFORNIA - DEPARTMENT OF TRANSPORTATION
Caltrans® DESIGN

LAST REVISION 04-30-13 | DATE PLOTTED => 04-JUN-2013 | TIME PLOTTED => 14:20

Dist	COUNTY	ROUTE	POST MILES TOTAL PROJECT	SHEET No.	TOTAL SHEETS
11	SD	11, 905	0.0/1.6, R9.9/R10.7	283	622

REGISTERED CIVIL ENGINEER 03-19-13 DATE

04-22-13
PLANS APPROVAL DATE

REGISTERED PROFESSIONAL ENGINEER FARDAD BEHBOODY No. 61478 Exp. 06-30-13 CIVIL STATE OF CALIFORNIA

THE STATE OF CALIFORNIA OR ITS OFFICERS OR AGENTS SHALL NOT BE RESPONSIBLE FOR THE ACCURACY OR COMPLETENESS OF SCANNED COPIES OF THIS PLAN SHEET.

DRAINAGE QUANTITIES

DRAINAGE SHEET No.	DRAINAGE SYSTEM No. ⬡	DRAINAGE UNIT ○	PIPE JOINT TYPE (N)	HEIGHT OF COVER (N) LF	HEIGHT OF STRUCTURE (N) LF	MANHOLE CONE (N) EA	MANHOLE FRAME AND COVER (N) EA	DI GRATE TYPE 24-12 (N) EA	DI GRATE TYPE 36R (N) EA	CONCRETE PIPE COLLAR (N) EA	GRATE CHAIN (N) EA	REMOVE CULVERT (N) LF	REMOVE CONCRETE (N) CY	REMOVE RSP (N) CY	BACKFILL DITCH (N) CY	36" RCP RISER LF	ABANDON CULVERT LF	ABANDON INLET EA	SAND BACKFILL CY	SLURRY CEMENT BACKFILL CY	REMOVE CONCRETE (LF) LF	STEEL PLATE COVER AND FRAME (N) EA	DESCRIPTION	STATION	DRAINAGE SYSTEM No. ⬡	DRAINAGE UNIT ○
D-6	16	aj																					REMOVE CULVERT	"A" 39+80.00	16	aj
D-6	16	ak																					REMOVE CULVERT	"A" 40+62.00	16	ak
D-6	16	al																					REMOVE INLET	"A" 40+62.00	16	al
D-6	16	am																					REMOVE CULVERT	"A" 40+62.00	16	am
D-6	16	an																					REMOVE INLET	"A" 45+40.00	16	an
D-6	16	ao																					REMOVE CULVERT	"A" 45+50.00	16	ao
D-6	16	ap																					REMOVE CULVERT	"A" 45+57.00	16	ap
D-6	16	aq																					REMOVE INLET	"A" 47+10.00	16	aq
D-6	16	ar																					REMOVE CULVERT	"A" 47+10.00	16	ar
D-6	16	as																					REMOVE CULVERT	"A" 49+60.00	16	as
D-6	16	at																					REMOVE INLET	"A" 49+60.00	16	at
D-6	16	au																					REMOVE CULVERT	"A" 50+01.00	16	au
D-6	16	av																					REMOVE INLET	"A" 50+01.00	16	av
D-6	16	aw																					REMOVE CULVERT	"A" 50+20.00	16	aw
D-7	16	ax																					REMOVE INLET	"A" 50+67.00	16	ax
D-7	16	ay																					REMOVE CULVERT	"A" 50+67.00	16	ay
D-7	16	az																					REMOVE CULVERT	"A" 50+67.00	16	az
D-7	16	ba																					REMOVE CULVERT	"A" 51+50.00	16	ba
D-7	16	bb																					REMOVE INLET	"A" 52+20.00	16	bb
D-7	16	bc																					REMOVE CULVERT	"A" 52+20.00	16	bc
D-7	16	bd																					REMOVE CULVERT	"A" 52+20.00	16	bd
D-7	16	be																					REMOVE INLET	"A" 52+51.00	16	be
SHEET TOTAL																							SHEET TOTAL			

(N) - NOT A SEPARATE PAY ITEM, FOR INFORMATION ONLY
* - SEE ROADWAY QUANTITIES FOR ADDITIONAL QUANTITIES

DRAINAGE QUANTITIES
DQ-24

REVISED BY | DATE REVISED
MICHAEL OREIRO | FARDAD BEHBOODY
CALCULATED-DESIGNED BY | CHECKED BY
FUNCTIONAL SUPERVISOR: MICHAEL J. WEBSTER

STATE OF CALIFORNIA - DEPARTMENT OF TRANSPORTATION
Caltrans® DESIGN

LAST REVISION 04-30-13 | DATE PLOTTED => 04-JUN-2013 | TIME PLOTTED => 14:20

Dist	COUNTY	ROUTE	POST MILES TOTAL PROJECT	SHEET No.	TOTAL SHEETS
11	SD	11, 905	0.0/1.6, R9.9/R10.7	284	622

REGISTERED CIVIL ENGINEER 03-19-13 DATE

04-22-13
PLANS APPROVAL DATE

REGISTERED PROFESSIONAL ENGINEER FARDAD BEHBOODY No. 61478 Exp. 06-30-13 CIVIL STATE OF CALIFORNIA

THE STATE OF CALIFORNIA OR ITS OFFICERS OR AGENTS SHALL NOT BE RESPONSIBLE FOR THE ACCURACY OR COMPLETENESS OF SCANNED COPIES OF THIS PLAN SHEET.

DRAINAGE QUANTITIES

DRAINAGE SHEET No.	DRAINAGE SYSTEM No. ⬡	DRAINAGE UNIT ○	6" Alt PIPE Culv LF	18" Alt PIPE Culv LF	24" Alt PIPE Culv LF	24" REINFORCED Conc PIPE LF	36" Alt PIPE Culv LF	36" REINFORCED Conc PIPE LF	36" RCP DOWNDRAIN LF	48" REINFORCED Conc PIPE LF	54" REINFORCED Conc PIPE LF	66" REINFORCED Conc PIPE LF	84" MODIFIED RCP LF	24" CONCRETE FES EA	36" CONCRETE FES EA	STRUCTURAL Conc, BOX CULVERT CY	MINOR CONCRETE (MINOR STRUCTURE) CY	CONCRETE (CONCRETE APRON) CY	CONCRETE (DITCH LINING) CY	CONCRETE (CHANNEL LINING) CY	MISCELLANEOUS IRON AND STEEL LB	RSP FABRIC (CLASS 8) SQYD	RSP (FACING, METHOD B) CY	RSP (1/4 TON, METHOD B) CY	BAR REINFORCING STEEL (BOX CULVERT) LB	DITCH EXCAVATION CY	PLACE HOT MIX ASPHALT (MISCELLANEOUS AREA) SQYD	3" PLASTIC PIPE (APPROACH SLAB DRAIN) LF	REMOVE CULVERT LF	REMOVE CONCRETE (CY) * CY	REMOVE RSP CY	DESCRIPTION	STATION	DRAINAGE SYSTEM No. ⬡	DRAINAGE UNIT ○
D-6	17	a																				66.9	17.0	31.2								RSP AT FES	"SNY" 310+23.51	17	a
D-6	17	b													1																	36" FES	"SNY" 310+23.51	17	b
D-6	17	c						95.6																								36" RCP	"SNY" 310+23.51	17	c
D-6	17	d															7.45				864							100.0				JUNCTION STRUCTURE	"SNY" 309+55.00	17	d
D-6	17	e															1.61															PLUG CULVERT	"SNY" 308+78.00	17	e
D-6	17	f																											18.3			REMOVE CULVERT	"SNY" 308+78.00	17	f
D-6	17	g																												4		REMOVE INLET	"SNY" 308+78.00	17	g
D-6	17	h																												5		REMOVE Mod HW	"SNY" 308+78.00	17	h
D-6	17	i																												5		REMOVE HEADWALL	"SNY" 309+87.12	17	i
D-6	17	j																											30.9			REMOVE CULVERT	"SNY" 309+86.88	17	j
D-6	17	k																												4		REMOVE INLET	"SNY" 309+86.88	17	k
D-6	17	l																											42.6			REMOVE CULVERT	"SNY" 309+90.00	17	l
D-6	17	m																									301.52					DRAINAGE DITCH	"SNY" 310+23.51	17	m
D-8	18	a																				36.4	14.5									RSP AT HW	"A" 68+89.95	18	a
D-8	18	b															1.95															HEADWALL	"A" 68+89.95	18	b
D-8	18	c						248.7																								36" RCP	"A" 68+60.00	18	c
D-8	18	d															1.95															HEADWALL	"A" 68+21.29	18	d
D-8	18	e																				36.4	14.5									RSP AT HW	"A" 68+21.29	18	e
D-8	19	a																				23.3	8.4									RSP AT FES	"EFR4" 70+68.00	19	a
D-8	19	b												1																		24" CONCRETE FES	"EFR3" 70+70.57	19	b
D-8	19	c				68.4																										24" RCP	"EFR3" 70+70.57	19	c
D-8	19	d															2.77				622											GD1 INLET	"A" 70+81.67	19	d
D-8	19	e			64.0																											24" APC	"A" 70+81.67	19	e
D-8	19	f															1.85	3.31			329											G2 INLET W/APRON	"A" 70+81.67	19	f
D-8	19	g			62.0																											24" APC	"A" 71+46.57	19	g
D-8	19	h															1.69	3.31			329											G2 INLET W/APRON	"A" 71+46.57	19	h
D-8	19	i			55.1																											24" APC	"A" 71+46.57	19	i
D-8	19	j															2.03				622											GD1 INLET	"A" 71+46.57	19	j
SCD-2	T1	a																				474.0	336.0	622.0							622.0	TEMPORARY RSP	"A" VARIOUS	T1	a
SCD-2	T1	b															2.75													2.7		HEADWALL	"A" 27+30.00	T1	b
SCD-2	T1	c								468.0																						48" RCP	"A" 26+50.00	T1	c
SCD-1	T1	d																														TEMPORARY DITCH	"WB" VARIOUS	T1	d
SCD-2	T1	e																									630.00					TEMPORARY DITCH	"WB" VARIOUS	T1	e
DD-35	5	q																														SDG&E BACKFILL	"A" 26+50.00	5	q
DD-35	13	a																														SDG&E BACKFILL	"A" 26+50.00	13	a
DD-36	14	k															2.05															CONCRETE CAP	"A" 35+52.56	14	k
DD-36	16	b															2.05															CONCRETE CAP	"A" 35+52.56	16	b
SHEET TOTAL					181.1	68.4		344.3		468.0				1	1		28.15	6.62			2,766	637.0	390.4	653.2		931.52		100.0	91.8	20.7	622.0	SHEET TOTAL			

(N) - NOT A SEPARATE PAY ITEM, FOR INFORMATION ONLY
* - SEE ROADWAY QUANTITIES FOR ADDITIONAL QUANTITIES

DRAINAGE QUANTITIES
DQ-25

STATE OF CALIFORNIA - DEPARTMENT OF TRANSPORTATION
Caltrans® DESIGN

FUNCTIONAL SUPERVISOR: MICHAEL J. WEBSTER
CALCULATED-DESIGNED BY: MICHAEL OREIRO
CHECKED BY: FARDAD BEHBOODY
REVISED BY / DATE REVISED

LAST REVISION 04-30-13 | DATE PLOTTED => 04-JUN-2013 | TIME PLOTTED => 14:20

Dist	COUNTY	ROUTE	POST MILES TOTAL PROJECT	SHEET No.	TOTAL SHEETS
11	SD	11, 905	0.0/1.6, R9.9/R10.7	285	622

REGISTERED CIVIL ENGINEER 03-19-13 DATE

04-22-13
PLANS APPROVAL DATE

REGISTERED PROFESSIONAL ENGINEER FARDAD BEHBOODY No. 61478 Exp. 06-30-13 CIVIL STATE OF CALIFORNIA

THE STATE OF CALIFORNIA OR ITS OFFICERS OR AGENTS SHALL NOT BE RESPONSIBLE FOR THE ACCURACY OR COMPLETENESS OF SCANNED COPIES OF THIS PLAN SHEET.

DRAINAGE QUANTITIES

DRAINAGE SHEET No.	DRAINAGE SYSTEM No. ⬡	DRAINAGE UNIT ○	PIPE JOINT TYPE (N)	HEIGHT OF COVER (N) LF	HEIGHT OF STRUCTURE (N) LF	MANHOLE CONE (N) EA	MANHOLE FRAME AND COVER (N) EA	DI GRATE TYPE 24-12 (N) EA	DI GRATE TYPE 36R (N) EA	CONCRETE PIPE COLLAR (N) EA	GRATE CHAIN (N) EA	REMOVE CULVERT (N) LF	REMOVE CONCRETE (N) CY	REMOVE RSP (N) CY	BACKFILL DITCH (N) CY	36" RCP RISER LF	ABANDON CULVERT LF	ABANDON INLET EA	SAND BACKFILL CY	SLURRY CEMENT BACKFILL CY	REMOVE CONCRETE (LF) LF	STEEL PLATE COVER AND FRAME (N) EA	DESCRIPTION	STATION	DRAINAGE SYSTEM No. ⬡	DRAINAGE UNIT ○
D-6	17	a																					RSP AT FES	"SNY" 310+23.51	17	a
D-6	17	b																					36" FES	"SNY" 310+23.51	17	b
D-6	17	c	WTJ	15.0																			36" RCP	"SNY" 310+23.51	17	c
D-6	17	d			18.2		1				1					6.8							JUNCTION STRUCTURE	"SNY" 309+55.00	17	d
D-6	17	e																					PLUG CULVERT	"SNY" 308+78.00	17	e
D-6	17	f																					REMOVE CULVERT	"SNY" 308+78.00	17	f
D-6	17	g																					REMOVE INLET	"SNY" 308+78.00	17	g
D-6	17	h																					REMOVE Mod HW	"SNY" 308+78.00	17	h
D-6	17	i																					REMOVE HEADWALL	"SNY" 309+87.12	17	i
D-6	17	j																					REMOVE CULVERT	"SNY" 309+86.88	17	j
D-6	17	k																					REMOVE MH	"SNY" 309+86.88	17	k
D-6	17	l																					REMOVE CULVERT	"SNY" 309+90.00	17	l
D-6	17	m																					DRAINAGE DITCH	"SNY" 310+23.51	17	m
D-8	18	a																					RSP AT HW	"A" 68+89.95	18	a
D-8	18	b																					HEADWALL	"A" 68+89.95	18	b
D-8	18	c																					36" RCP	"A" 68+60.00	18	c
D-8	18	d																					HEADWALL	"A" 68+21.29	18	d
D-8	18	e																					RSP AT HW	"A" 68+21.29	18	e
D-8	19	a																					RSP AT FES	"EFR4" 70+68.00	19	a
D-8	19	b																					24" CONCRETE FES	"EFR3" 70+70.57	19	b
D-8	19	c	WTJ	5.0																			24" RCP	"EFR3" 70+70.57	19	c
D-8	19	d			7.0			2			2												GD1 INLET	"A" 70+81.67	19	d
D-8	19	e	WTJ	5.0																			24" APC	"A" 70+81.67	19	e
D-8	19	f			5.1			1			1												G2 INLET W/APRON	"A" 70+81.67	19	f
D-8	19	g	S+d	3.0																			24" APC	"A" 71+46.57	19	g
D-8	19	h			4.5			1			1												G2 INLET W/APRON	"A" 71+46.57	19	h
D-8	19	i	S+d	2.5																			24" APC	"A" 71+46.57	19	i
D-8	19	j			4.5			2			2												GD1 INLET	"A" 71+46.57	19	j
SCD-2	T1	a																					TEMPORARY RSP	"A" VARIOUS	T1	a
SCD-2	T1	b																					HEADWALL	"A" 27+30.00	T1	b
SCD-2	T1	c															468.0						48" RCP	"A" 26+50.00	T1	c
SCD-1	T1	d												2.8	5600.0								TEMPORARY DITCH	"WB" VARIOUS	T1	d
SCD-2	T1	e												2.8	625.0								TEMPORARY DITCH	"WB" VARIOUS	T1	e
DD-35	5	q																	15.4				SDG&E BACKFILL	"A" 26+50.00	5	q
DD-35	13	a																	15.4				SDG&E BACKFILL	"A" 26+50.00	13	a
DD-36	14	k																8.20	6.2				CONCRETE CAP	"A" 35+52.56	14	k
DD-36	16	b																8.20	6.2				CONCRETE CAP	"A" 35+52.56	16	b
SHEET TOTAL							1	6			7			5.6	6225.0	6.8	468.0		16.40	43.2			SHEET TOTAL			

(N) - NOT A SEPARATE PAY ITEM, FOR INFORMATION ONLY
* - SEE ROADWAY QUANTITIES FOR ADDITIONAL INFORMATION

DRAINAGE QUANTITIES

DQ-26

STATE OF CALIFORNIA - DEPARTMENT OF TRANSPORTATION
Caltrans® DESIGN

FUNCTIONAL SUPERVISOR: MICHAEL J. WEBSTER
CALCULATED-DESIGNED BY: MICHAEL OREIRO
CHECKED BY: FARDAD BEHBOODY
REVISED BY
DATE REVISED

LAST REVISION 04-30-13
DATE PLOTTED => 04-JUN-2013
TIME PLOTTED => 14:20

Dist	COUNTY	ROUTE	POST MILES TOTAL PROJECT	SHEET No.	TOTAL SHEETS
11	SD	11, 905	0.0/1.6, R9.9/R10.7	286	622

REGISTERED CIVIL ENGINEER 03-19-13 DATE

04-22-13
PLANS APPROVAL DATE

REGISTERED PROFESSIONAL ENGINEER FARDAD BEHBOODY No. 61478 Exp. 06-30-13 CIVIL STATE OF CALIFORNIA

THE STATE OF CALIFORNIA OR ITS OFFICERS OR AGENTS SHALL NOT BE RESPONSIBLE FOR THE ACCURACY OR COMPLETENESS OF SCANNED COPIES OF THIS PLAN SHEET.

DRAINAGE QUANTITIES

DRAINAGE QUANTITY SHEET No.	6" Alt PIPE Culv	18" Alt PIPE Culv	24" Alt PIPE Culv	24" REINFORCED Conc PIPE	36" Alt PIPE Culv	36" REINFORCED Conc PIPE	36" RCP DOWNDRAIN	48" REINFORCED Conc PIPE	54" REINFORCED Conc PIPE	66" REINFORCED Conc PIPE	84" MODIFIED RCP	24" CONCRETE FES	36" CONCRETE FES	STRUCTURAL CONCRETE, BOX CULVERT	MINOR CONCRETE ** (MINOR STRUCTURE)	CONCRETE (CONCRETE APRON)	CONCRETE (DITCH LINING)	CONCRETE (CHANNEL LINING)	MISCELLANEOUS IRON AND STEEL	RSP FABRIC (CLASS 8)	RSP (FACING, METHOD B)	RSP (1/4 TON, METHOD B)	BAR REINFORCING STEEL (BOX CULVERT)	DITCH EXCAVATION	PLACE HOT MIX ASPHALT (MISCELLANEOUS AREA)	3" PLASTIC PIPE (APPROACH SLAB DRAIN)	REMOVE CULVERT	REMOVE CONCRETE (CY) *	REMOVE RSP
	LF	LF	LF	LF	LF	LF	LF	LF	LF	LF	LF	EA	EA	CY	CY	CY	CY	CY	LB	SQYD	CY	CY	LB	CY	SQYD	LF	LF	EA	CY
DQ-1		925.2	7.4	15.0	38.8										33.33				7,716										
DQ-3		1,167.5	665.8	46.5											28.01				7,629								51.0	2.0	
DQ-5	10.0		279.8	140.9								2		6,324.35	74.04	8.49	244.97		4,769	237.4	85.8	113.4	1,256,999				326.0	68.0	
DQ-7			761.1	55.9	142.2	227.6							1	176.38	40.32	7.99	181.86	915.97	3,439	90.9	25.8	47.4	45,119					45.0	1843.0
DQ-9			1,158.0	60.2		250.5		609.4				1	1		34.83	11.85		41.40	4,935	206.6	90.5	151.6		2,887.72	15.0				
DQ-11		54.7	865.2	153.5	64.2										37.89	3.74			6,483								139.0	13.0	
DQ-13			1,243.1	154.8	1,117.2	215.8	86.4						1		75.05	36.35	41.10		13,717	96.2	28.3	51.9					138.0	1.0	5.0
DQ-15			395.6		80.5	1,738.6			462.8				1		50.85				8,695	280.7	93.3	171.1		120.00			31.0	153.0	
DQ-17			1,083.3	589.3		1,414.5									61.26	9.93			11,363										
DQ-19			634.6	143.7		750.9		405.2							50.90	36.35	84.76		6,939										
DQ-21				781.2		201.3			662.7	149.6	1,157.3				177.17	3.74		7.20	11,221										
DQ-23																											632.0	24.0	
DQ-25			181.1	68.4		344.3		468.0				1	1		28.15	6.62			2,766	637.0	390.4	653.2		931.52		100.0	91.8	20.7	622.0
PROJECT TOTAL	10.0	2,147.4	7,275.0	2,209.4	1,442.9	5,143.5	86.4	1,482.6	1,125.5	149.6	1,157.3	4	5	6,500.73	691.8	125.06	552.69	964.57	89,672	1,548.8	714.1	1,188.6	1,302,118	3,939.24	15.0	100.0	1,408.8	326.7	2,470.0

(N) - NOT A SEPARATE PAY ITEM, FOR INFORMATION ONLY
* - SEE ROADWAY QUANTITIES FOR ADDITIONAL QUANTITIES
** - SEE SANITARY SEWER QUANTITIES FOR ADDITIONAL QUANTITIES

DRAINAGE QUANTITIES

DQ-27

REVISED BY | DATE REVISED
MICHAEL OREIRO | FARDAD BEHBOODY
CALCULATED-DESIGNED BY | CHECKED BY
FUNCTIONAL SUPERVISOR: MICHAEL J. WEBSTER
STATE OF CALIFORNIA - DEPARTMENT OF TRANSPORTATION
Caltrans DESIGN

LAST REVISION 05-06-13 | DATE PLOTTED => 04-JUN-2013 | TIME PLOTTED => 14:20

Dist	COUNTY	ROUTE	POST MILES TOTAL PROJECT	SHEET No.	TOTAL SHEETS
11	SD	11, 905	0.0/1.6, R9.9/R10.7	287	622

REGISTERED CIVIL ENGINEER 03-19-13 DATE

04-22-13
PLANS APPROVAL DATE

REGISTERED PROFESSIONAL ENGINEER FARDAD BEHBOODY No. 61478 Exp. 06-30-13 CIVIL STATE OF CALIFORNIA

THE STATE OF CALIFORNIA OR ITS OFFICERS OR AGENTS SHALL NOT BE RESPONSIBLE FOR THE ACCURACY OR COMPLETENESS OF SCANNED COPIES OF THIS PLAN SHEET.

DRAINAGE QUANTITIES

DRAINAGE QUANTITY SHEET No.	PIPE JOINT TYPE (N)	HEIGHT OF COVER (N)	HEIGHT OF STRUCTURE (N)	MANHOLE CONE (N)	MANHOLE FRAME AND COVER (N)	DI GRATE TYPE 24-12 (N)	DI GRATE TYPE 36R (N)	CONCRETE PIPE COLLAR (N)	GRATE CHAIN (N)	REMOVE CULVERT (N)	REMOVE CONCRETE (N)	REMOVE RSP (N)	BACKFILL DITCH (N)	36" RCP RISER	ABANDON CULVERT	ABANDON INLET	SAND BACKFILL	SLURRY CEMENT BACKFILL	REMOVE CONCRETE (LF)	STEEL PLATE COVER AND FRAME (N)	REMARKS
		LF	LF	EA	EA	EA	EA	EA	EA	LF	CY	CY	CY	LF	LF	EA	CY	CY	LF	EA	
DQ-2						24		4	24	2.0	2.0										
DQ-4					1	21			22	57.0	3.0										
DQ-6					3	6	2	1	5					52.5					64.3		
DQ-8						9	2	2	11					26.0							
DQ-10						15		6	15												
DQ-12					2	13	2		17	1.0				12.81	1,295.0	2	156.4				
DQ-14				3	10	13		2	23					40.2							
DQ-16				3	6	11		2	17			97.0		31.8	12.0		0.8				
DQ-18				3	6	19			25					21.3							
DQ-20					1	12	1		16					21.9							
DQ-22					8		2		17					77.0						7	
DQ-24																					
DQ-26					1	6			7			5.6	6225.0	6.8	468.0		16.4	43.2			
PROJECT TOTAL				9	38	149	9	17	199	60.0	5.0	102.6	6225.0	290.3	1,775.0	2	173.6	43.2	64.3	7	

(N) - NOT A SEPARATE PAY ITEM, FOR INFORMATION ONLY
* - SEE ROADWAY QUANTITIES FOR ADDITIONAL QUANTITIES

DRAINAGE QUANTITIES
DQ-28

REVISED BY | DATE REVISED
MICHAEL OREIRO | FARDAD BEHBOODY
CALCULATED-DESIGNED BY | CHECKED BY
FUNCTIONAL SUPERVISOR: MICHAEL J. WEBSTER
STATE OF CALIFORNIA - DEPARTMENT OF TRANSPORTATION
Caltrans DESIGN

LAST REVISION 04-30-13 | DATE PLOTTED => 04-JUN-2013 | TIME PLOTTED => 14:20

Dist	COUNTY	ROUTE	POST MILES TOTAL PROJECT	SHEET No.	TOTAL SHEETS
11	SD	11, 905	0.0/1.6, R9.9/R10.7	288	622

03-19-13
REGISTERED CIVIL ENGINEER DATE

04-22-13
PLANS APPROVAL DATE

REGISTERED PROFESSIONAL ENGINEER
ARTURO A. REYES
No. C75491
Exp. 06-30-14
CIVIL
STATE OF CALIFORNIA

THE STATE OF CALIFORNIA OR ITS OFFICERS OR AGENTS SHALL NOT BE RESPONSIBLE FOR THE ACCURACY OR COMPLETENESS OF SCANNED COPIES OF THIS PLAN SHEET.

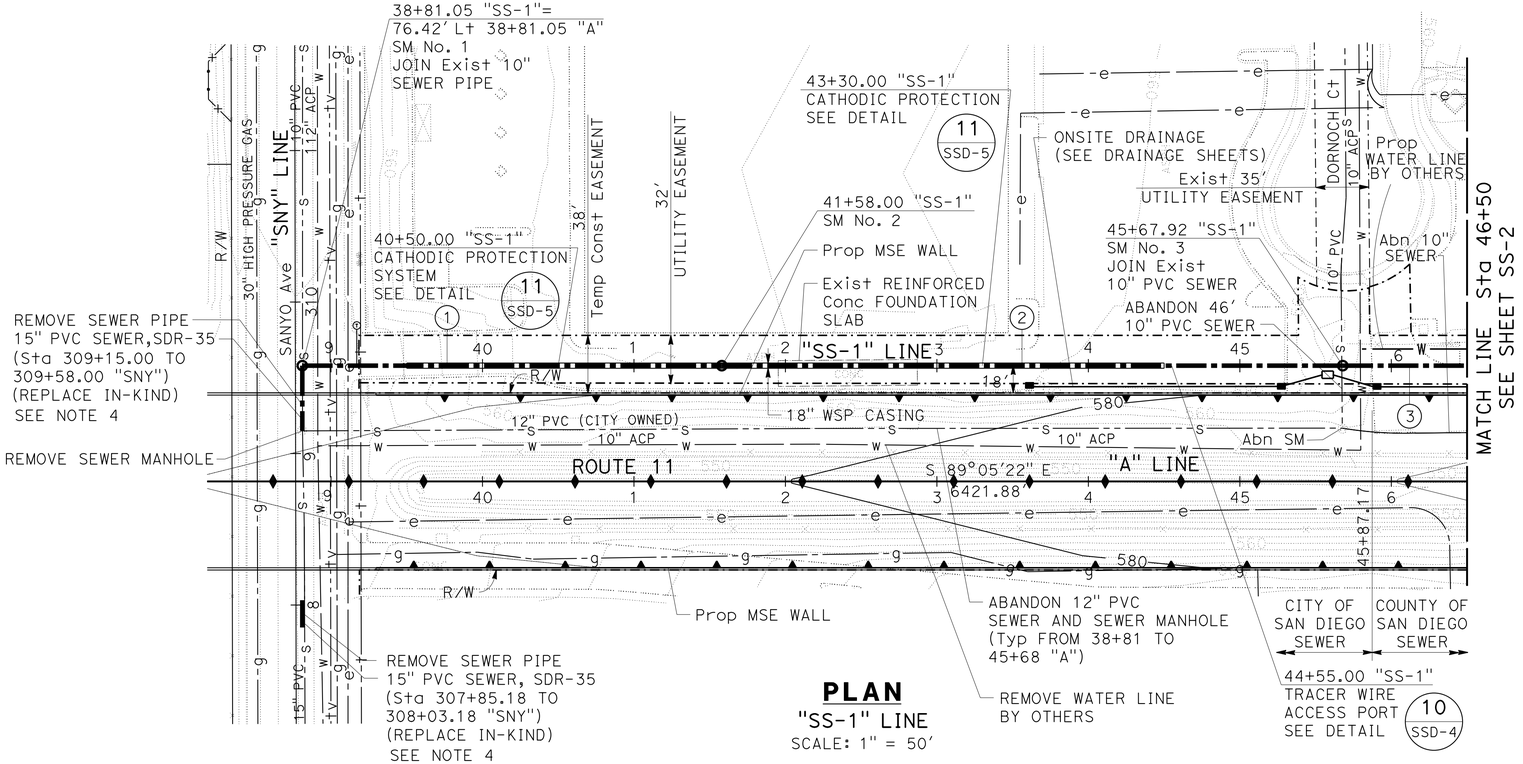

PLAN
"SS-1" LINE
SCALE: 1" = 50'

APPROVED FOR SANITARY SEWER WORK ONLY

PIPELINE CENTERLINE DATA

No.	CHORD BEARING	LENGTH	REMARKS
1	S 89°05'22" E	276.95'	12" PVC, SDR-26
2	S 89°05'22" E	409.92'	12" PVC, SDR-26, SEE NOTE 3
3	S 89°05'22" E	327.08'	10" PVC, SDR-35

NOTES:

1. MANHOLE MUST BE PVC LINED AND CONSTRUCTED PER DETAIL 1, SHEET SSD-1.
2. MANHOLE FRAME COVER MATERIAL FOR MANHOLE No. 1, 2, AND 3 IS CAST IRON PER DETAIL 3, SHEET SSD-2. FOR MANHOLE No. 4, 5, 6, 7, 8 AND 9 IS COMPOSITE (FIBER REINFORCED POLYMER).
3. CONSTRUCT SINGLE ANODE TEST STATION AT LOCATIONS SHOWN (2 REQUIRED) PER DETAIL 11, SHEET SSD-5.
4. SEE DRAINAGE PROFILES FOR FURTHER INFORMATION ON UTILITY LOCATIONS AT SANYO Ave.
5. SEE LOG OF TEST BORING SHEETS FOR ADDITIONAL SUB-SURFACE INFORMATION.

LEGEND:

PVC = POLYVINYL CHLORIDE
SM = SANITARY SEWER MANHOLE
Prop = PROPOSED
SD = SAN DIEGO

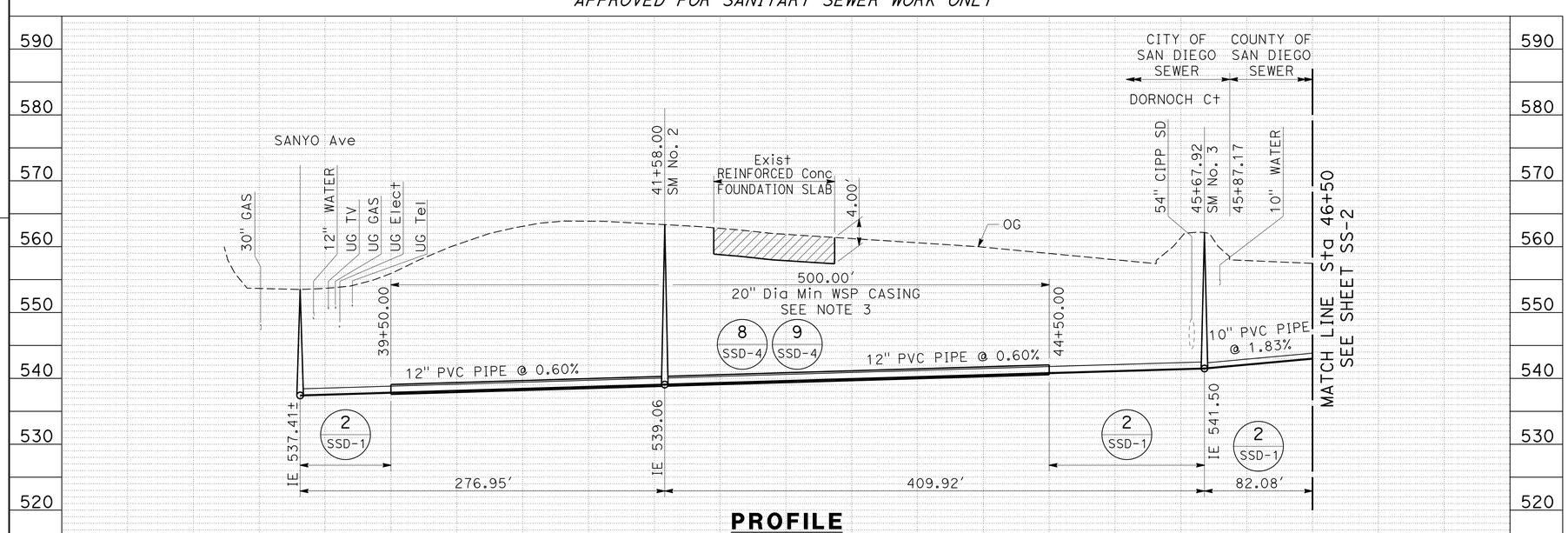

PROFILE
"SS-1" LINE
SCALE: Horiz 1"=50'
Vert 1"=10'

SANITARY SEWER PLAN
SCALE AS SHOWN

SS-1

STATE OF CALIFORNIA - DEPARTMENT OF TRANSPORTATION
Caltrans
DESIGN
FUNCTIONAL SUPERVISOR: ABU-BAKR AL-JAFRI
CALCULATED-DESIGNED BY: JOEL SIMS
CHECKED BY: ARTURO REYES
REVISED BY
DATE REVISED

LAST REVISION 04-30-13
DATE PLOTTED => 13-MAY-2013
TIME PLOTTED => 20:24

Dist	COUNTY	ROUTE	POST MILES TOTAL PROJECT	SHEET No.	TOTAL SHEETS
11	SD	11, 905	0.0/1.6, R9.9/R10.7	289	622

REGISTERED CIVIL ENGINEER 03-19-13 DATE

04-22-13
PLANS APPROVAL DATE

REGISTERED PROFESSIONAL ENGINEER ARTURO A. REYES No. C75491 Exp. 06-30-14 CIVIL STATE OF CALIFORNIA

THE STATE OF CALIFORNIA OR ITS OFFICERS OR AGENTS SHALL NOT BE RESPONSIBLE FOR THE ACCURACY OR COMPLETENESS OF SCANNED COPIES OF THIS PLAN SHEET.

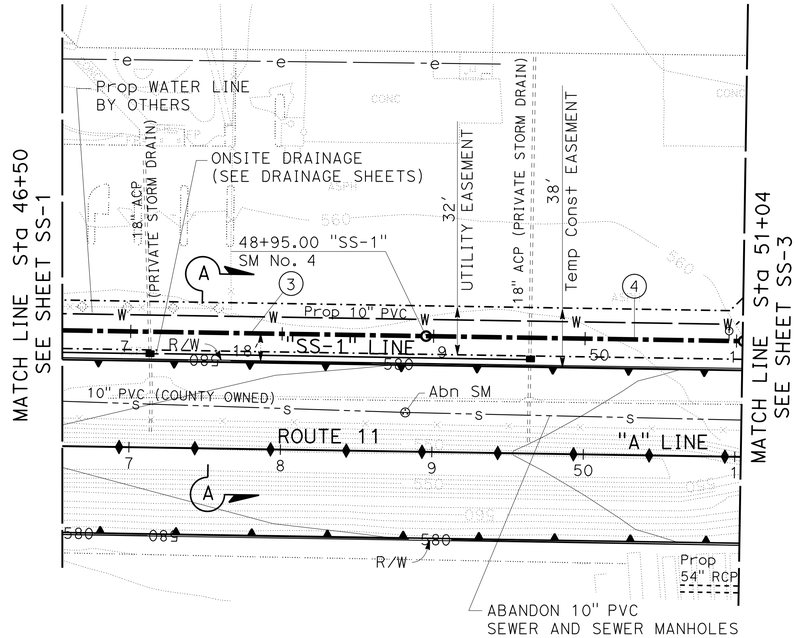

PLAN
"SS-1" LINE
SCALE: 1" = 50'

PIPELINE CENTERLINE DATA			
No.	CHORD BEARING	LENGTH	REMARKS
3	S 89°05'22" E	327.08'	10" PVC, SDR-35
4	S 89°05'22" E	209.63'	10" PVC, SDR-35
5	SEE SHEET SS-3		
6	SEE SHEET SS-3		
7	SEE SHEET SS-3		
8	SEE SHEET SS-3		

NOTES:

1. MANHOLE MUST BE PVC LINED AND CONSTRUCTED PER DETAIL 1, SHEET SSD-1.
2. MANHOLE FRAME COVER MATERIAL FOR MANHOLE No. 1, 2, AND 3 IS CAST IRON PER DETAIL 3, SHEET SSD-2. FOR MANHOLE No. 4, 5, 6, 7, 8 AND 9 IS COMPOSITE (FIBER REINFORCED POLYMER).

APPROVED FOR SANITARY SEWER WORK ONLY

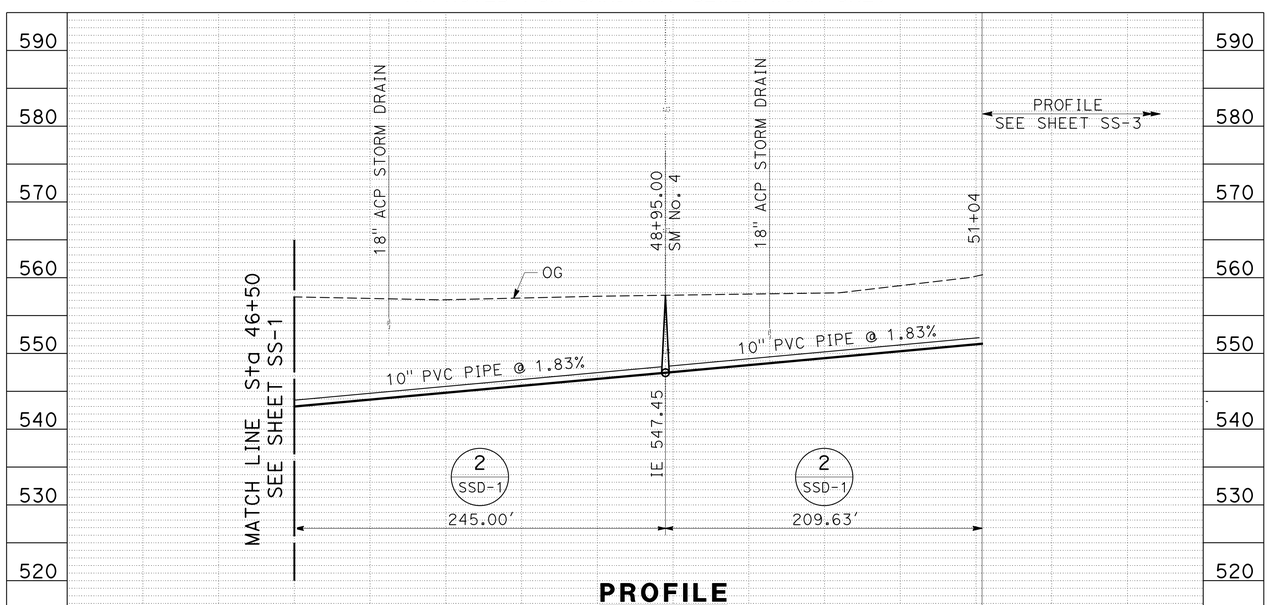

PROFILE
"SS-1" LINE
SCALE: Horiz 1"=50'
Vert 1"=10'

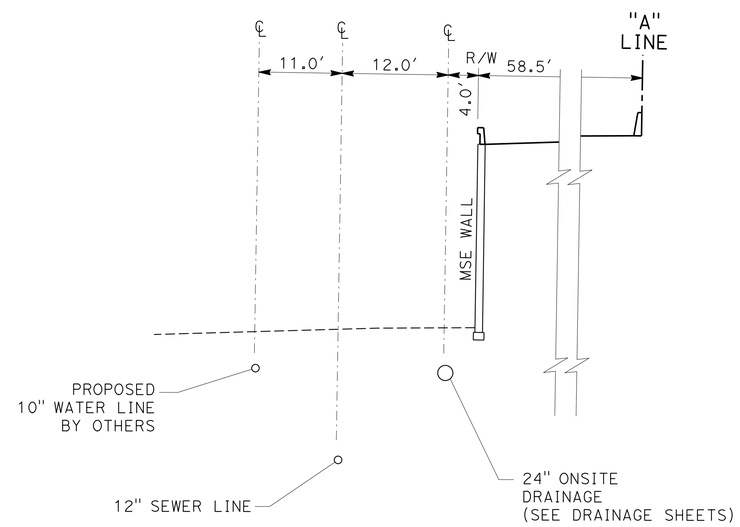

SECTION A-A
SCALE: 1"=10'

SANITARY SEWER PLAN
SCALE AS SHOWN

SS-2

STATE OF CALIFORNIA - DEPARTMENT OF TRANSPORTATION
Caltrans
DESIGN
FUNCTIONAL SUPERVISOR: ABU-BAKR AL-JAFRI
CALCULATED-DESIGNED BY: JOEL SIMS
CHECKED BY: ARTURO REYES
REVISED BY
DATE REVISED

LAST REVISION 04-30-13 | DATE PLOTTED => 13-MAY-2013 | TIME PLOTTED => 20:24

Dist	COUNTY	ROUTE	POST MILES TOTAL PROJECT	SHEET No.	TOTAL SHEETS
11	SD	11, 905	0.0/1.6, R9.9/R10.7	290	622

REGISTERED CIVIL ENGINEER 03-19-13 DATE

04-22-13
PLANS APPROVAL DATE

REGISTERED PROFESSIONAL ENGINEER ARTURO A. REYES No. C75491 Exp. 06-30-14 CIVIL STATE OF CALIFORNIA

THE STATE OF CALIFORNIA OR ITS OFFICERS OR AGENTS SHALL NOT BE RESPONSIBLE FOR THE ACCURACY OR COMPLETENESS OF SCANNED COPIES OF THIS PLAN SHEET.

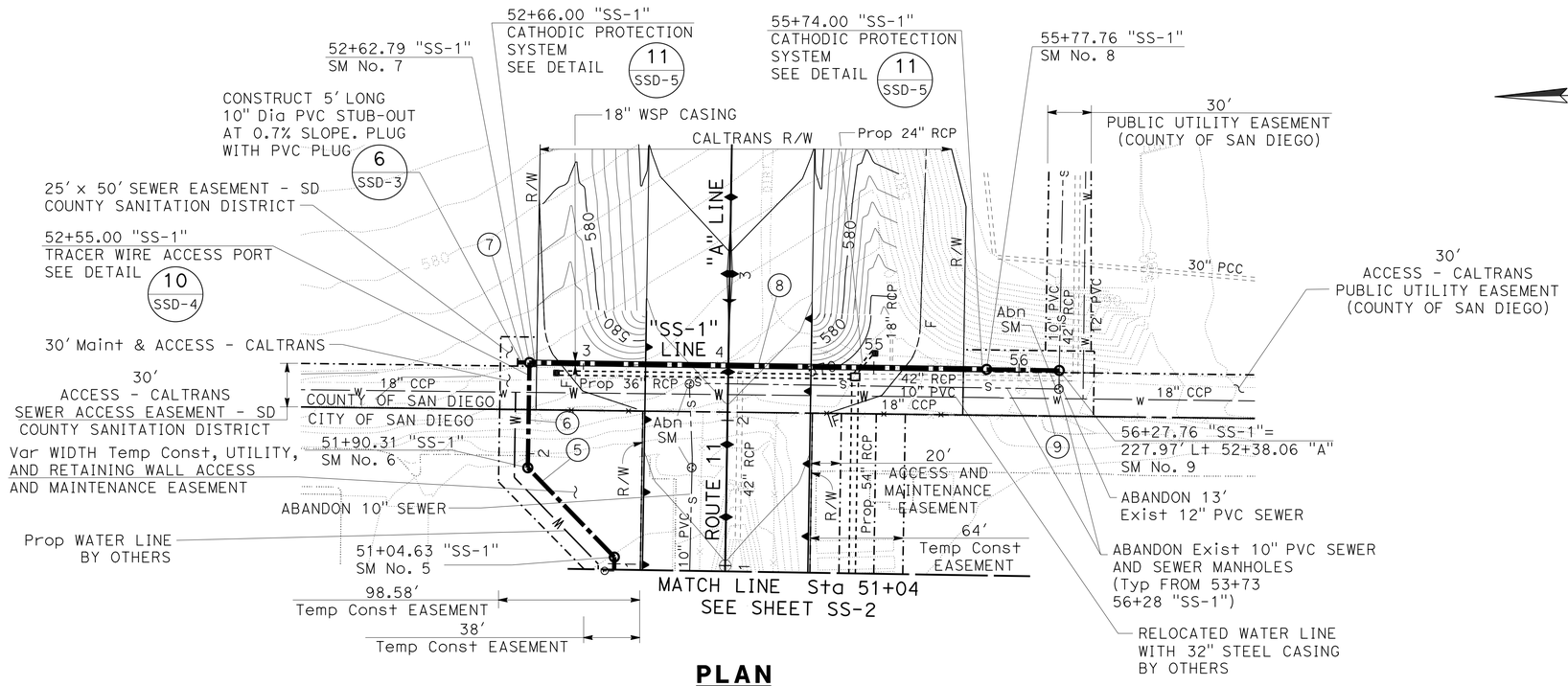

PLAN

"SS-1" LINE

SCALE: 1" = 50'

APPROVED FOR SANITARY SEWER WORK ONLY

PIPELINE CENTERLINE DATA			
No.	CHORD BEARING	LENGTH	REMARKS
4	SEE SHEET SS-2		
5	N 45°54'38" E	85.68'	10" PVC, SDR-35
6	S 89°05'22" E	72.48'	10" PVC, SDR-35
7	N 00°51'09" E	5.00'	10" PVC, SDR-35
8	S 00°51'09" W	314.97'	10" PVC, SDR-35 WITHIN 18" WSP CASING, SEE NOTES 3 AND 4
9	S 00°51'09" W	50.00'	10" PVC, SDR-35

NOTES:

1. MANHOLE MUST BE PVC LINED AND CONSTRUCTED PER DETAIL 1, SHEET SSD-1.
2. MANHOLE FRAME COVER MATERIAL FOR MANHOLE No. 1, 2, AND 3 IS CAST IRON PER DETAIL 3, SHEET SSD-2. FOR MANHOLE No. 4, 5, 6, 7, 8 AND 9 IS COMPOSITE (FIBER REINFORCED POLYMER).
3. CONSTRUCT SINGLE ANODE TEST STATION ON BOTH ENDS OF CASING (2 REQUIRED) PER DETAIL 11, SHEET SSD-5.
4. PVC PIPE WITHIN WSP CASING ON THIS SHEET MUST HAVE FUSIBLE JOINTS.

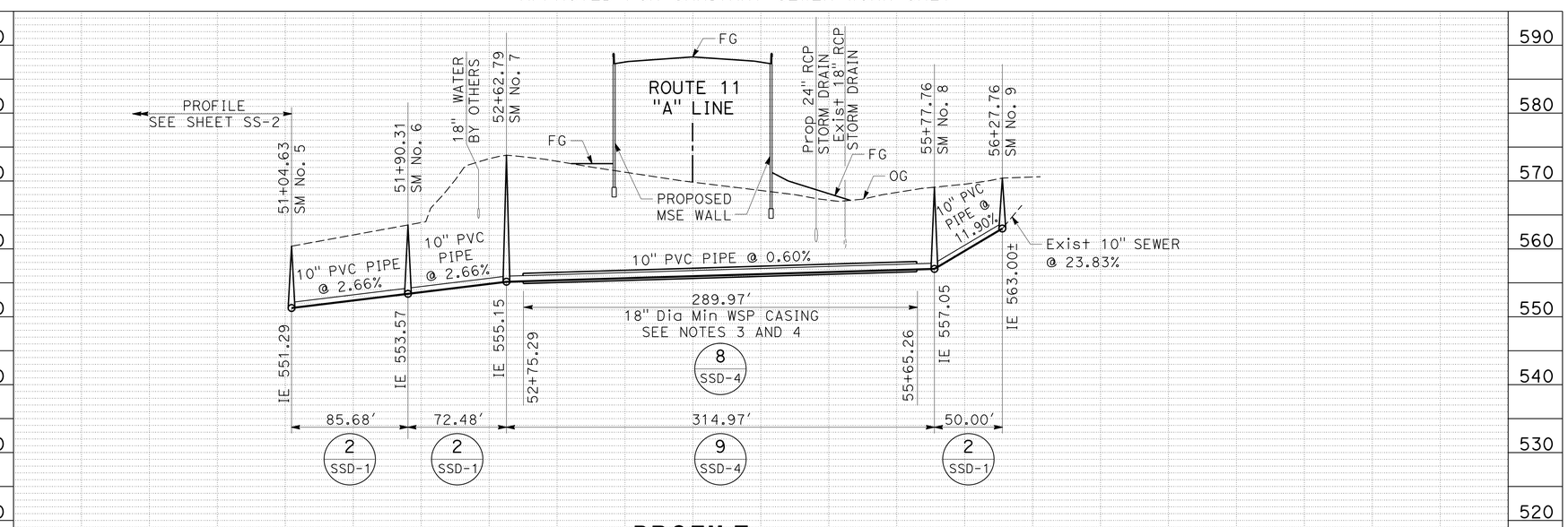

PROFILE

"SS-1" LINE

SCALE: Horiz 1"=50'
Vert 1"=10'

SANITARY SEWER PLAN

SCALE AS SHOWN

SS-3

STATE OF CALIFORNIA - DEPARTMENT OF TRANSPORTATION
Caltrans
DESIGN
FUNCTIONAL SUPERVISOR: ABU-BAKR AL-JAFRI
CALCULATED-DESIGNED BY: JOEL SIMS
CHECKED BY: ARTURO REYES
REVISED BY
DATE REVISED

LAST REVISION 04-30-13
DATE PLOTTED => 13-MAY-2013
TIME PLOTTED => 20:24

Dist	COUNTY	ROUTE	POST MILES TOTAL PROJECT	SHEET No.	TOTAL SHEETS
11	SD	11, 905	0.0/1.6, R9.9/R10.7	291	622

REGISTERED CIVIL ENGINEER 03-19-13 DATE

04-22-13
PLANS APPROVAL DATE

REGISTERED PROFESSIONAL ENGINEER ARTURO A. REYES No. C75491 Exp. 06-30-14 CIVIL STATE OF CALIFORNIA

THE STATE OF CALIFORNIA OR ITS OFFICERS OR AGENTS SHALL NOT BE RESPONSIBLE FOR THE ACCURACY OR COMPLETENESS OF SCANNED COPIES OF THIS PLAN SHEET.

ITEM No.	SIZE AND DESCRIPTION
1	36" MANHOLE FRAME AND TWO CONCENTRIC COVERS, SEE NOTE 6 AND SHEET SSD-2
2	36" Dia GRADE RINGS 6" TO 18" HIGH
3	ECCENTRIC CONE, SEE NOTE 1
4	60" Dia RING(S) VARIABLE HEIGHT
5	WATER TIGHT JOINTS, SEE SHEET SSD-3
6	SEWER MAIN
7	MANHOLE PIPE CONNECTOR, SEE SHEET SSD-3
8	FIELD INSTALLED INVERT, SEE SHEET SSD-3
9	PRECAST CONCRETE BASE
10	6" OF ¾" CRUSHED ROCK
11	RUBBER GASKET

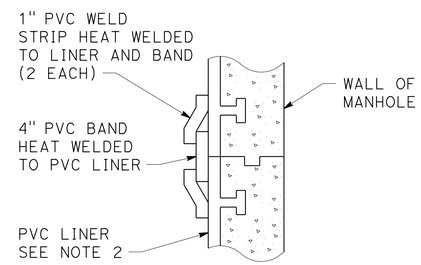

DETAIL C

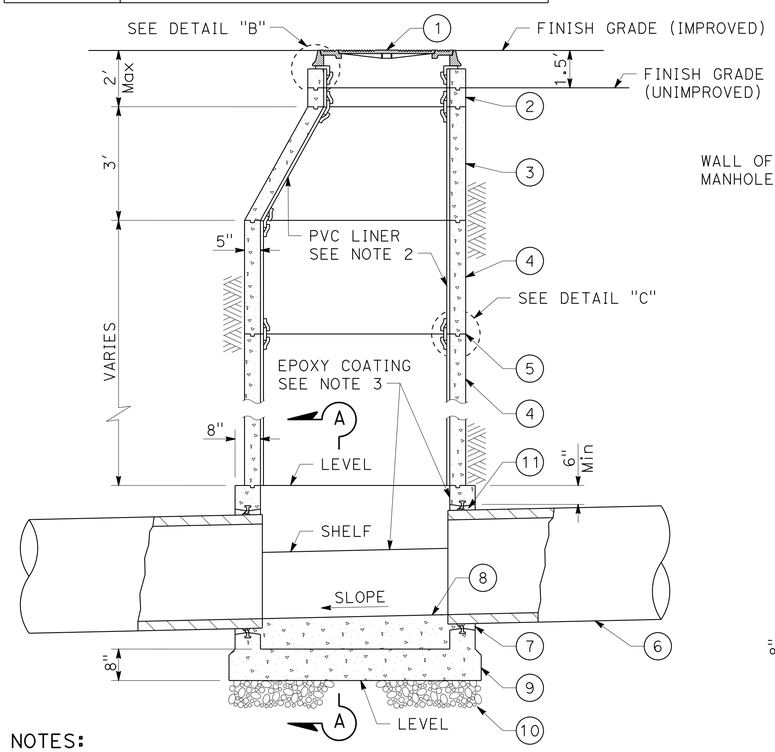

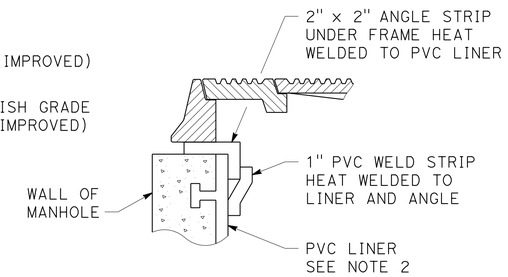

DETAIL B

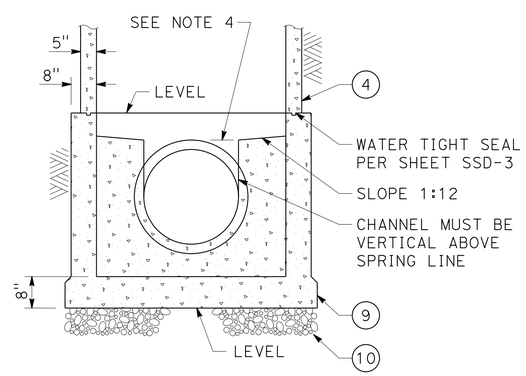

SECTION A-A

NOTES:

1. VERTICAL WALL OF CONE TO BE ON THE UPSTREAM SIDE OF MANHOLE.
2. MANHOLE SHAFT AND CONE SECTIONS, AND GRADE RINGS MUST HAVE A PVC LINER PLACED WITH T-SHAPED SUPPORTS INTEGRALLY CAST INTO THE CONCRETE AS SPECIFIED.
3. EPOXY COATING MUST BE APPLIED TO THE INTERIOR OF MANHOLE BASES TO THE EDGE OF THE SHELF (NOT INTO THE TROUGH). IN ADDITION AT THIS LOCATION MANHOLE No.1, 2 AND 3 MUST HAVE POLYURETHANE LINING.
4. LOWEST POINT ON SHELF MUST BE EVEN WITH TOP OF PIPE.
5. MATERIALS MUST BE SELECTED FROM THE AGENCY'S APPROVED MATERIALS LIST.

60" DIAMETER PRECAST MANHOLE INSTALLATION

1 / -

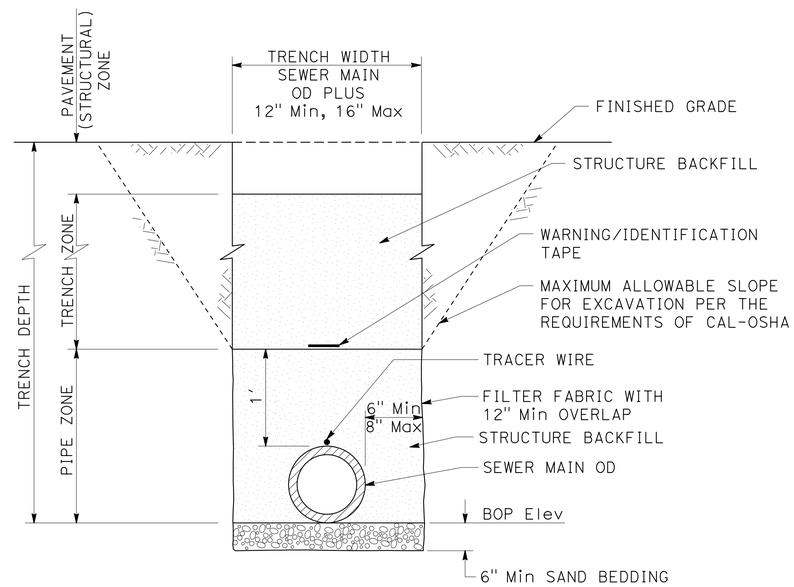

NOTE:

1. EXCAVATE BELL HOLES AT EACH JOINT TO PERMIT PROPER ASSEMBLY AND INSPECTION OF THE ENTIRE JOINT.

PIPE BEDDING AND TRENCH BACKFILL FOR SEWER FACILITIES

2 / -

SANITARY SEWER DETAILS

NO SCALE

SSD-1

STATE OF CALIFORNIA - DEPARTMENT OF TRANSPORTATION
Caltrans® DESIGN
FUNCTIONAL SUPERVISOR: ABU-BAKR AL-JAFRI
CALCULATED-DESIGNED BY / CHECKED BY
ARTURO REYES
JOEL SIMS
REVISED BY / DATE REVISED

LAST REVISION 04-30-13 | DATE PLOTTED => 13-MAY-2013 | TIME PLOTTED => 20:24

Dist	COUNTY	ROUTE	POST MILES TOTAL PROJECT	SHEET No.	TOTAL SHEETS
11	SD	11, 905	0.0/1.6, R9.9/R10.7	292	622

REGISTERED CIVIL ENGINEER 03-19-13 DATE

04-22-13
PLANS APPROVAL DATE

REGISTERED PROFESSIONAL ENGINEER ARTURO A. REYES No. C75491 Exp. 06-30-14 CIVIL STATE OF CALIFORNIA

THE STATE OF CALIFORNIA OR ITS OFFICERS OR AGENTS SHALL NOT BE RESPONSIBLE FOR THE ACCURACY OR COMPLETENESS OF SCANNED COPIES OF THIS PLAN SHEET.

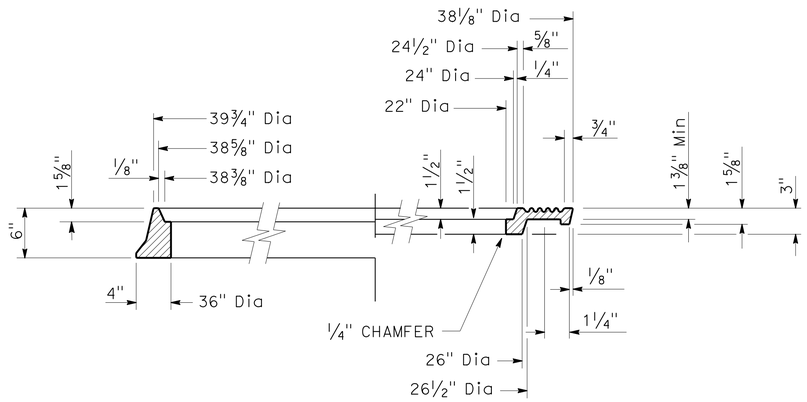

HALF SECTION FRAME AND COVER

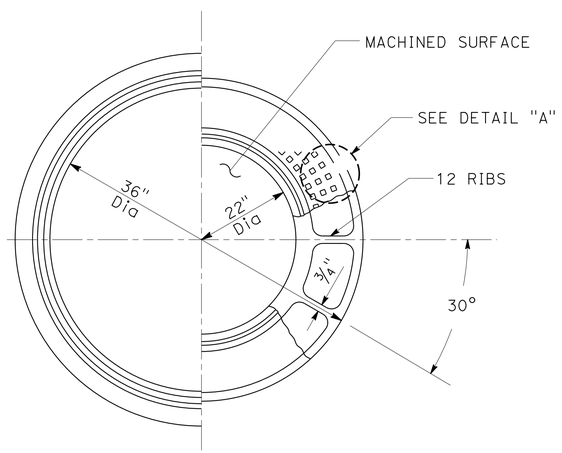

HALF PLAN FRAME AND COVER

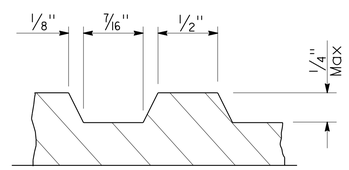

DETAIL A

NOTES:

1. FRAME AND COVER MUST BE CAST IRON UNLESS OTHERWISE SHOWN ON PLANS. CAST IRON MUST CONFORM TO ASTM 48, CLASS 35B.
2. WEIGHTS: FRAME 341-363 lbs; OUTER COVER 285-330 lbs; INNER COVER 147-171 lbs
3. MACHINE ALL MATCHING SURFACES AND SEATS OF FRAME AND COVER TO PREVENT ROCKING.
4. IMPORTED FRAMES AND COVERS MUST HAVE THE COUNTRY OF ORIGIN MARKED IN COMPLIANCE WITH FEDERAL REGULATIONS.
5. COVER MUST BE MARKED "CITY OF SAN DIEGO" AND "SEWER" FOR MANHOLE No. 1, 2 AND 3. LETTERS ARE TO BE 1" HIGH WITH NO OTHER INSCRIPTION APPEARING ON EXPOSED SURFACES.

36" CAST IRON MANHOLE FRAME AND TWO CONCENTRIC COVERS (3 / -)
HEAVY DUTY

NOTES:

1. 0.625" x 20 PENTA BOLT S/S UNC THREAD, 316 STAINLESS STEEL SOCKET HEAD CAP SCREW AND 1.50" OD x 0.687" ID x 0.078" THICK 316 STAINLESS STEEL WASHER.
2. 0.25" NEOPRENE O-RING GASKET MUST BE GLUED INTO MACHINED GROOVE. GLUE MUST MEET THE REQUIREMENTS AS SPECIFIED.
3. BOLTDOWN PATTERNS:
   a. BETWEEN INNER AND OUTER COVERS INSTALL TWO (2) BOLTS AT 180°.
   b. BETWEEN OUTER COVER AND FRAME INSTALL FOUR (4) BOLTS AT 90°.
4. FOR OUTER FRAME, DRILL 4 HOLES FOR 0.375" x 16 STAINLESS STEEL WEDGE ANCHORS 3.25" IN LENGTH AT 90°.
5. LOCKING DEVICE MUST BE A QUARTER TURN PADDLE LOCK MECHANISM FOR MANHOLES 4 THROUGH 9.

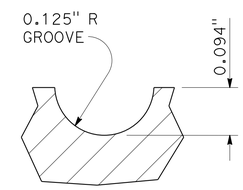

NEOPRENE O-RING GROOVE DETAIL

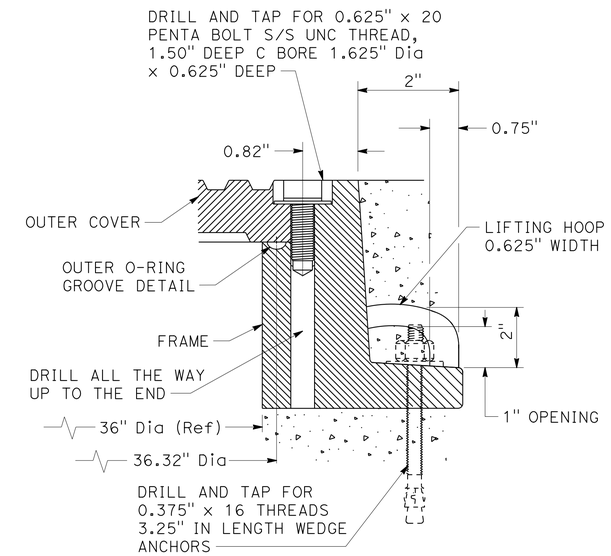

OUTER COVER TO FRAME DETAIL

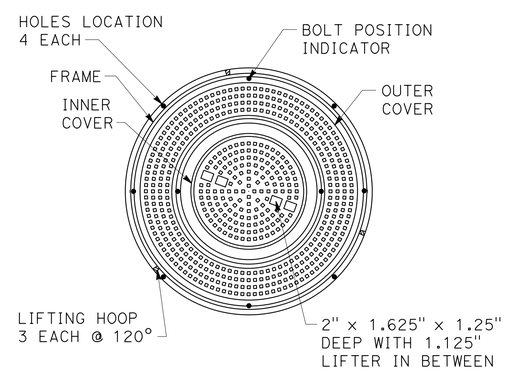

PLAN

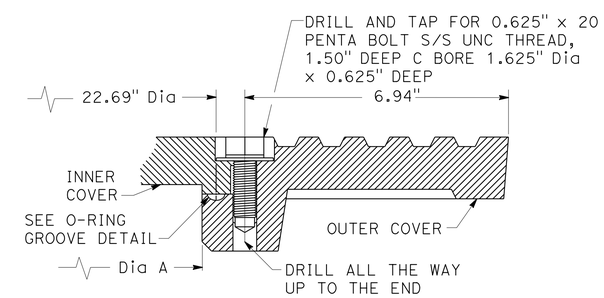

INNER COVER TO OUTER COVER DETAIL

MANHOLE COVER - LOCKING DEVICE (4 / -)

SANITARY SEWER DETAILS
NO SCALE
SSD-2

STATE OF CALIFORNIA - DEPARTMENT OF TRANSPORTATION
Caltrans® DESIGN
FUNCTIONAL SUPERVISOR: ABU-BAKR AL-JAFRI
CALCULATED-DESIGNED BY: ARTURO REYES
CHECKED BY: JOEL SIMS
REVISED BY / DATE REVISED

LAST REVISION 04-30-13 | DATE PLOTTED => 13-MAY-2013 | TIME PLOTTED => 20:24

Dist	COUNTY	ROUTE	POST MILES TOTAL PROJECT	SHEET No.	TOTAL SHEETS
11	SD	11, 905	0.0/1.6, R9.9/R10.7	293	622

REGISTERED CIVIL ENGINEER 03-19-13 DATE

04-22-13
PLANS APPROVAL DATE

REGISTERED PROFESSIONAL ENGINEER ARTURO A. REYES No. C75491 Exp. 06-30-14 CIVIL STATE OF CALIFORNIA

THE STATE OF CALIFORNIA OR ITS OFFICERS OR AGENTS SHALL NOT BE RESPONSIBLE FOR THE ACCURACY OR COMPLETENESS OF SCANNED COPIES OF THIS PLAN SHEET.

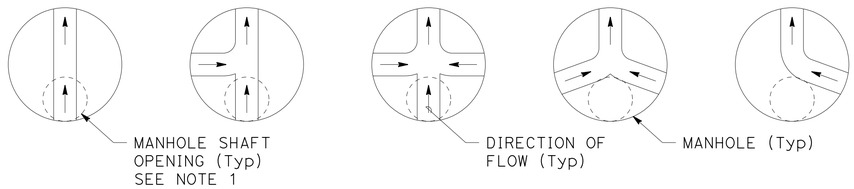

MANHOLE ACCESS LOCATION PLAN VIEW

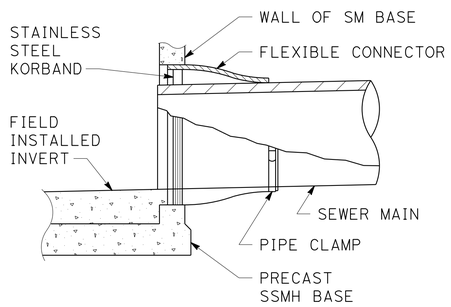

PRECAST MANHOLE BASE TYPE "B"

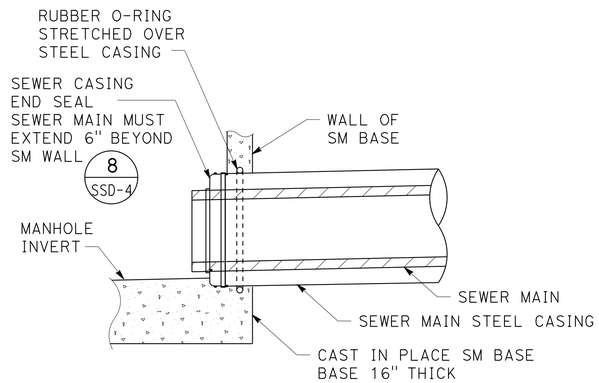

CAST IN PLACE MANHOLE BASE AT SEWER MAIN CASING

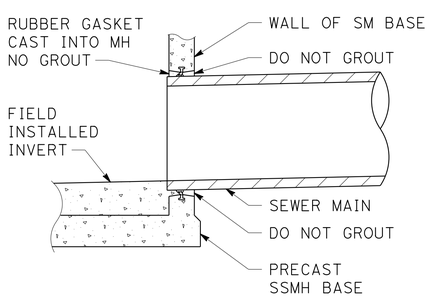

PRECAST MANHOLE BASE TYPE "A"

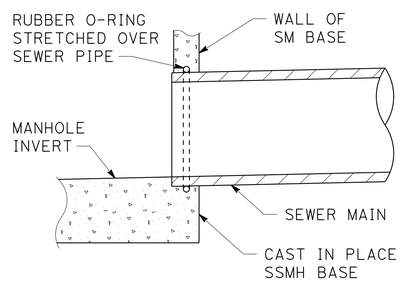

CAST IN PLACE MANHOLE BASE

MANHOLE PIPE CONNECTOR DETAILS 5 / -

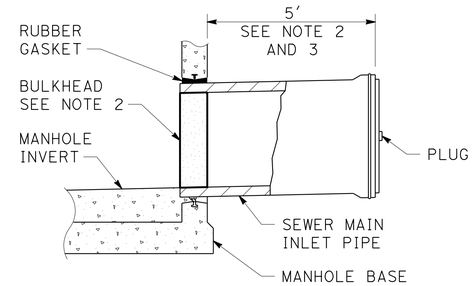

MANHOLE STUB OUT FOR FUTURE CONNECTION

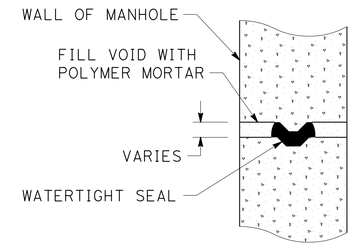

WATERTIGHT MANHOLE JOINT

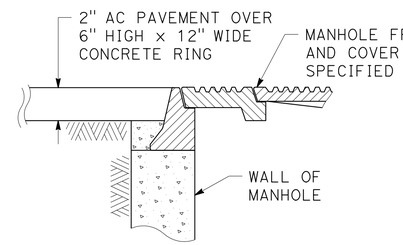

PAVED AND TRAVELLED AREAS
TYPE B

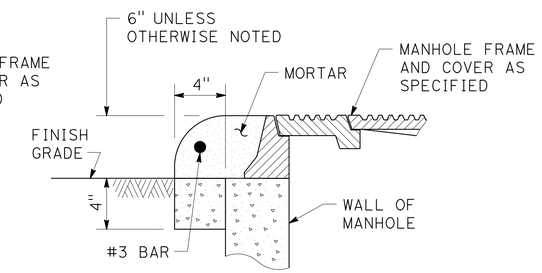

UNPAVED, UNTRAVELLED, SHOULDER AREAS, ARES IN EASEMENTS
TYPE C

NOTES:

1. VERTICAL WALL OF CONE TO BE ON THE UPSTREAM SIDE OF MANHOLE.
2. STUBS MUST BE BULKHEADED AT THE MANHOLE END. BULKHEAD WILL BE BUILT WITH NON-SHRINK GROUT. BULKHEAD SHALL PROVIDE A WATER TIGHT SEAL.
3. SEWER MAIN TO BE LAID WITH BELLS UP-GRADE.
4. MATERIALS MUST BE SELECTED FROM THE AGENCY'S APPROVED MATERIALS LIST.

MISCELLANEOUS MANHOLE DETAILS 6 / -

SANITARY SEWER DETAILS

NO SCALE

SSD-3

STATE OF CALIFORNIA - DEPARTMENT OF TRANSPORTATION
Caltrans DESIGN
FUNCTIONAL SUPERVISOR: ABU-BAKR AL-JAFRI
JOEL SIMS / ARTURO REYES
CALCULATED-DESIGNED BY / CHECKED BY
REVISED BY / DATE REVISED

LAST REVISION 04-30-13 | DATE PLOTTED => 13-MAY-2013 | TIME PLOTTED => 20:24

Dist	COUNTY	ROUTE	POST MILES TOTAL PROJECT	SHEET No.	TOTAL SHEETS
11	SD	11, 905	0.0/1.6, R9.9/R10.7	294	622

REGISTERED CIVIL ENGINEER 03-19-13 DATE

04-22-13
PLANS APPROVAL DATE

REGISTERED PROFESSIONAL ENGINEER ARTURO A. REYES No. C75491 Exp. 06-30-14 CIVIL STATE OF CALIFORNIA

THE STATE OF CALIFORNIA OR ITS OFFICERS OR AGENTS SHALL NOT BE RESPONSIBLE FOR THE ACCURACY OR COMPLETENESS OF SCANNED COPIES OF THIS PLAN SHEET.

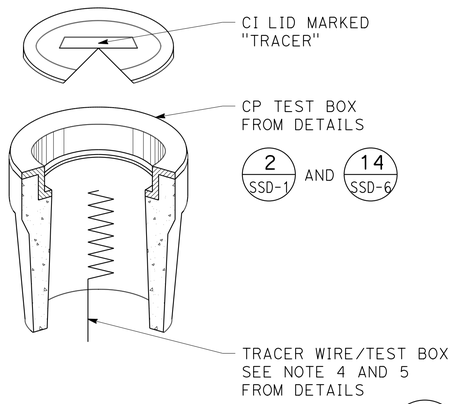

TRACER WIRE ACCESS PORT TEST BOX DETAIL 10 / -

NOTES:

1. CASING SPACERS MUST BE BOLTED AROUND THE PIPE SO THAT THE PLASTIC RUNNERS ARE LOCATED SYMMETRICALLY ABOUT THE VERTICAL AXIS OF THE PIPE.
2. INNER DIAMETER OF THE STEEL CASING MUST BE AT LEAST 8" LARGER THAN THE OUTER DIAMETER OF THE CARRIER PIPE.
3. CASING MUST BE SMOOTH STEEL PIPE LIQUID EPOXY LINED AND COATED.
4. PROVIDE STAINLESS STEEL (304 GRADE MINIMUM) BAND STRAPS ON END SEALS.

PLATE THICKNESS OF CASING PIPE	
Dia	16" TO 27"
Min THICKNESS	½"

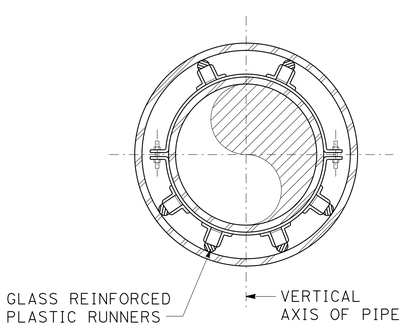

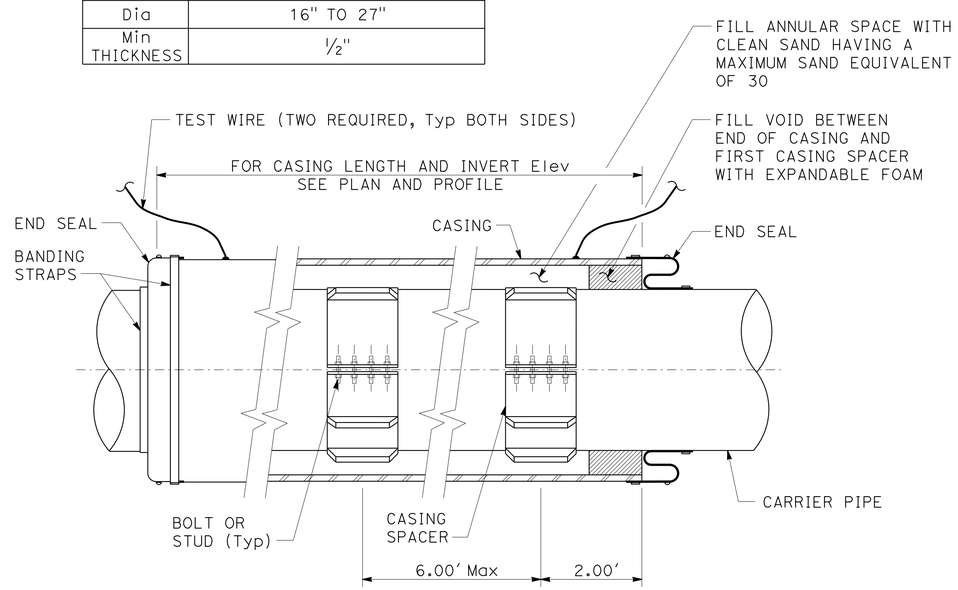

STEEL CASING FOR SEWER PIPE DETAIL 8 / -

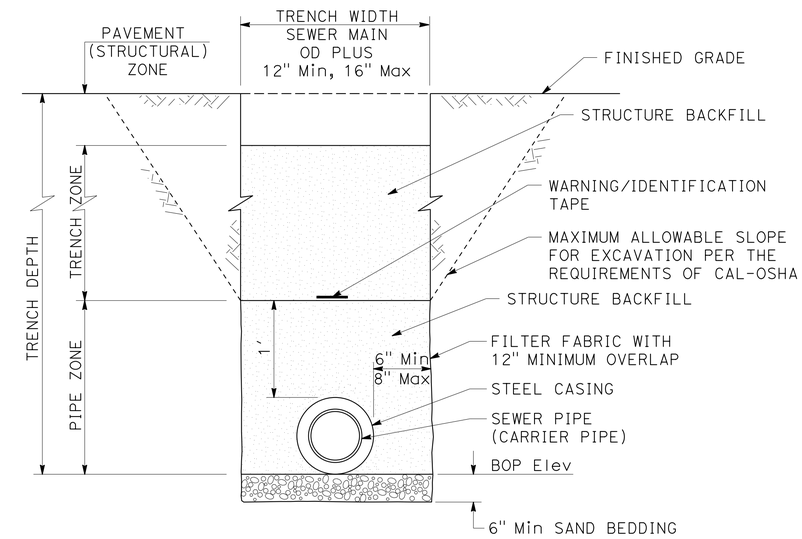

NOTE:

1. EXCAVATE BELL HOLES AT EACH JOINT TO PERMIT PROPER ASSEMBLY AND INSPECTION OF THE ENTIRE JOINT.

PIPE BEDDING AND TRENCH BACKFILL FOR PIPE CASING 9 / -

SANITARY SEWER DETAILS

NO SCALE

SSD-4

STATE OF CALIFORNIA - DEPARTMENT OF TRANSPORTATION
Caltrans® DESIGN
FUNCTIONAL SUPERVISOR: ABU-BAKR AL-JAFRI
CALCULATED-DESIGNED BY: JOEL SIMS
CHECKED BY: ARTURO REYES
REVISED BY
DATE REVISED

LAST REVISION 04-30-13
DATE PLOTTED => 13-MAY-2013
TIME PLOTTED => 20:24

Dist	COUNTY	ROUTE	POST MILES TOTAL PROJECT	SHEET No.	TOTAL SHEETS
11	SD	11, 905	0.0/1.6, R9.9/R10.7	295	622

03-19-13
REGISTERED CIVIL ENGINEER DATE

04-22-13
PLANS APPROVAL DATE

REGISTERED PROFESSIONAL ENGINEER
ARTURO A. REYES
No. C75491
Exp. 06-30-14
CIVIL
STATE OF CALIFORNIA

THE STATE OF CALIFORNIA OR ITS OFFICERS OR AGENTS SHALL NOT BE RESPONSIBLE FOR THE ACCURACY OR COMPLETENESS OF SCANNED COPIES OF THIS PLAN SHEET.

EXOTHERMIC WELD NOTES:

1. ONE WELD MUST BE USED FOR EACH.
2. CLEAN OILY OR GREASY CABLE WITH A RAPID-DRYING SOLVENT. REMOVE INSULATION FROM THE CABLE FOR THE EXOTHERMIC WELD CONNECTION.
3. REMOVE ALL COATING, DIRT, GRIME, AND GREASE FROM THE METAL STRUCTURE AT WELD LOCATIONS BY WIRE BRUSHING AND/OR USE OF SUITABLE SAFE SOLVENTS. CLEAN THE STRUCTURE TO A BRIGHT, SHINY SURFACE FREE OF ALL SERIOUS PITS AND FLAWS. THE AREA OF THE ATTACHMENT MUST BE DRY.
4. OPEN WELD MOLD AND PLACE METAL DISC INSIDE AT BOTTOM OF MOLD. POUR METAL WELDING POWDER INTO MOLD AND ON TOP OF METAL DISC. STARTING POWDER IS CAKED AT THE BOTTOM OF THE WELD CHARGE CONTAINER. TAP WELD CHARGE CONTAINER AND POUR HALF OF STARTING POWDER INTO WELD MOLD. CLOSE THE TOP OF WELD MOLD AND POUR THE REMAINING STARTING POWDER IN STRIKING HOLE. THE WELD MOLD IS LOADED AND READY FOR USE.
5. THE LEAD WIRE MUST BE HELD AT AN ANGLE TO THE SURFACE WHEN WELDING. ONLY ONE WIRE MUST BE ATTACHED WITH EACH WELD. HOLD LOADED WELD MOLD FIRMLY ON PIPE AND WIRE. IGNITE STARTING POWDER IN STRIKING HOLE USING A STRIKER. HOLD WELD MOLD FIRMLY AGAINST PIPE FOR 5 SECONDS FOR WELD PROCESS.
6. WELDS MUST BE TESTED BY STRIKING THE WELD NUGGET WITH A TWO POUND HAMMER WHILE PULLING FIRMLY ON THE WIRE. ALL UNSOUND WELDS MUST BE REMOVED, THE SURFACES RECLEANED, REWELDED, AND RETESTED. WELD SLAG MUST BE REMOVED.
7. APPLY PRIMER AND ELASTOMERIC WELD CAP TO THE WELD AND A BITUMASTIC COATING MATERIAL TO ALL EXPOSED AREAS AROUND THE CAP AND WIRES IN ACCORDANCE WITH THE MANUFACTURER'S RECOMMENDATIONS. THE COATING MUST OVERLAP THE STRUCTURE COATING A MINIMUM OF 3 INCHES.

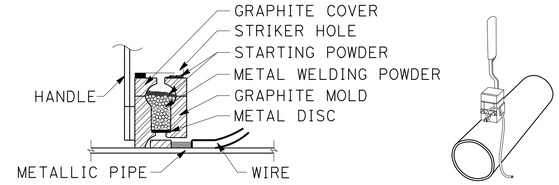

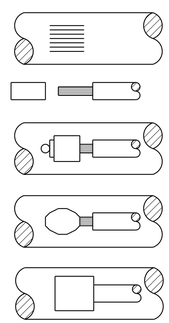

STEP 1. FILE STRUCTURE CONNECTION AREA (3" x 3") TO BARE SHINY METAL AND CLEAN.

STEP 2. STRIP INSULATION FROM WIRE.

STEP 3. HOLD MOLD FIRMLY WITH OPENING AWAY FROM OPERATOR AND IGNITE WITH STRIKER.

STEP 4. REMOVE SLAG FROM CONNECTION AND PEEN WELD FOR SOUNDNESS.

STEP 5. COVER CONNECTION AND EXPOSED STRUCTURE SURFACE WITH A BITUMINOUS COATING COMPOUND. PLACE PLASTIC SHIELD CAP FIRMLY OVER CONNECTION.

EXOTHERMIC WELD 13

GENERAL CATHODIC PROTECTION NOTES:

1. ALL MATERIALS AND INSTALLATION MUST BE IN ACCORDANCE WITH THESE DRAWINGS.
2. UNLESS OTHERWISE NOTED DRAWINGS ARE NOT SHOWN TO SCALE.
3. ALL TEST STATIONS MUST BE THE CIRCULAR, CONCRETE, AT-GRADE TYPE WITH A METAL LID AND H-20 TRAFFIC RATED.
   A. PROVIDE 18" SLACK WIRE AT WELD TO PIPE AND COILED IN TEST BOX.
   B. BOTTOM OF TEST BOX MUST BE NATIVE SOIL.
   C. A REINFORCED CONCRETE PAD (24" SQUARE x 4" THICK) IS REQUIRED AROUND TEST BOXES LOCATED IN UNPAVED AREAS.
   D. IDENTIFY ALL WIRES AS SHOWN ON DETAIL 16 SHEET SSD-6 OR BRASS TAGS WITH APPROVAL FROM THE ENGINEER.
4. NO WIRE OR CABLE SPLICES ARE PERMITTED EXCEPT AS INDICATED IN THE DRAWINGS OR AS SPECIFICALLY APPROVED BY THE ENGINEER.

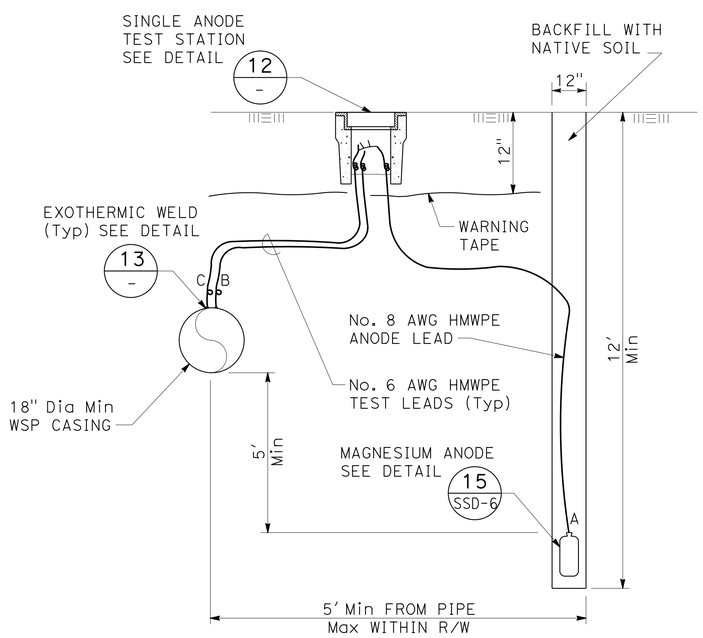

CATHODIC PROTECTION SYSTEM 11

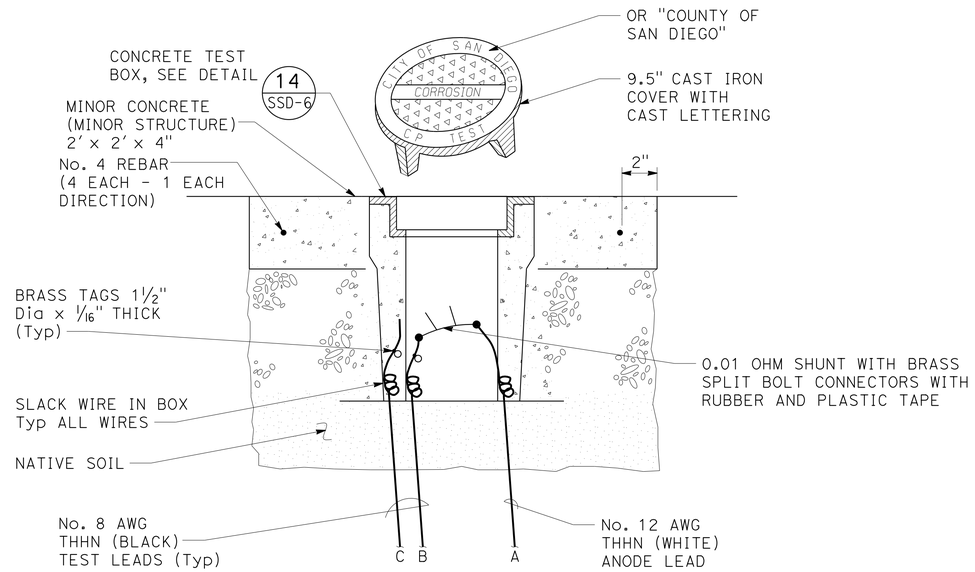

BRASS TAG LEGEND

WIRE	SIZE	IDENTIFICATION STAMP
A	No. 8	NO TAG REQUIRED
B	No. 6	"AGENCY, SIZE, SERVICE TYPE, SOUTH OR WEST"
C	No. 6	"AGENCY, SIZE, SERVICE TYPE, SOUTH OR WEST"

SINGLE ANODE TEST STATION WIRING DIAGRAM 12

SANITARY SEWER DETAILS

NO SCALE

SSD-5

REVISED BY	DATE REVISED
JOEL SIMS	ARTURO REYES

CALCULATED-DESIGNED BY
CHECKED BY

FUNCTIONAL SUPERVISOR: ABU-BAKR AL-JAFRI

STATE OF CALIFORNIA - DEPARTMENT OF TRANSPORTATION
Caltrans
DESIGN

LAST REVISION 04-30-13 | DATE PLOTTED => 13-MAY-2013 | TIME PLOTTED => 20:24

Dist	COUNTY	ROUTE	POST MILES TOTAL PROJECT	SHEET No.	TOTAL SHEETS
11	SD	11, 905	0.0/1.6, R9.9/R10.7	296	622

REGISTERED CIVIL ENGINEER 03-19-13 DATE

04-22-13
PLANS APPROVAL DATE

REGISTERED PROFESSIONAL ENGINEER ARTURO A. REYES No. C75491 Exp. 06-30-14 CIVIL STATE OF CALIFORNIA

THE STATE OF CALIFORNIA OR ITS OFFICERS OR AGENTS SHALL NOT BE RESPONSIBLE FOR THE ACCURACY OR COMPLETENESS OF SCANNED COPIES OF THIS PLAN SHEET.

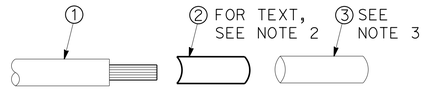

WIRE LABEL DETAIL STATION

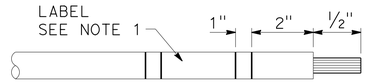

WIRE LABEL

CPTS# (CATHODIC PROTECTION TEST STATION NUMBERING)
CPTS#1, 2, 3, ...N

NOTES:

1. CABLES MUST BE TAGGED USING TIMES ROMAN 10 POINT FONT. TEXT MUST BE PRESENTED IN
2. THE FOLLOWING ORDER:
   - TYPE OF INSTALLATION
   - STATIONING
   - PIPE DIAMETER
   - PIPE MATERIAL
   - WIRE DIRECTIONAL ORIENTATION
     - NORTH
     - SOUTH
     - EAST
     - WEST
3. PLACE SLEEVE AFTER ATTACHMENT OF LABEL TO CABLE.
4. BRASS TAGS MAY BE USED WITH APPROVAL FROM THE ENGINEER.

MATERIALS:

① CABLE: AWG ASTM B8 & B3.

② LABEL: FILE FOLDER, SELF ADHESIVE WHITE 2/3" x 3 7/16"

③ SLEEVE: HEAT SHRINK, POLYOLEFIN, CLEAR THIN WALL TUBING.

WIRE IDENTIFICATION 16

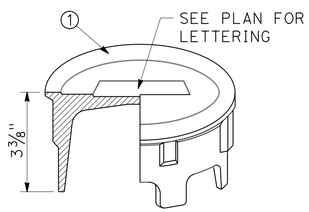

TEST BOX COVER ISOMETRIC

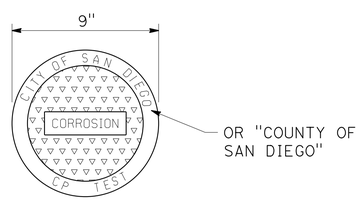

TEST BOX COVER PLAN

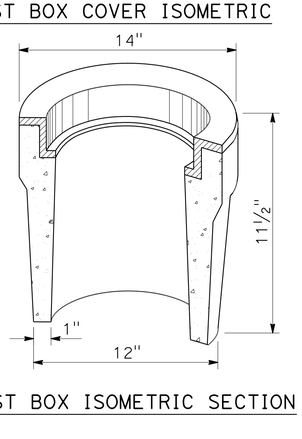

TEST BOX ISOMETRIC SECTION

MATERIALS:

9.5" CAST IRON

1. COVER MUST HAVE CASTED MARKING IN 1/2" HIGH RAISED LETTERS.
2. RING AND COVER MUST BE H-20 TRAFFIC RATED.

CATHODIC PROTECTION TEST BOX 14

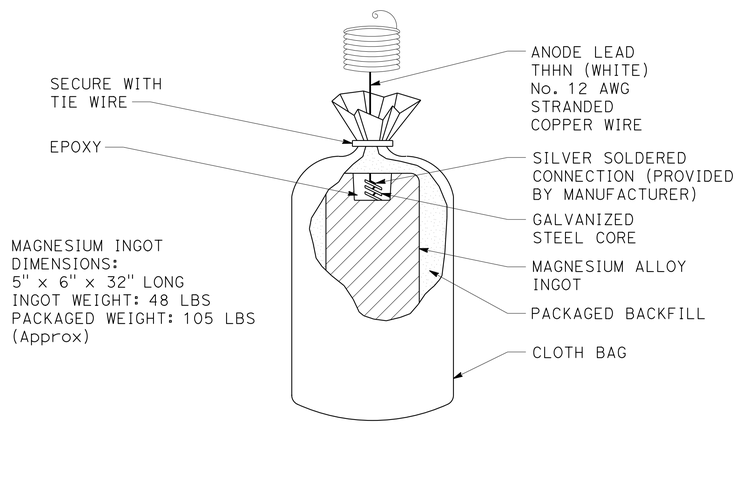

CHEMICAL COMPOSITION

HIGH POTENTIAL MAGNESIUM ANODE

ELEMENT	CONTENT %
ALUMINUM	0.010
ZINC	-
MANGANESE	0.50 TO 1.30
SILICONE	0.05
COPPER	0.02
NICKEL	0.001
IRON	0.03
CALCIUM	-
OTHER METALLIC	0.05
OTHERS,TOTAL	0.30
MAGNESIUM	REMAINDER

PACKAGED BACKFILL

75% GYPSUM
20% BENTONITE
5% SODIUM SULPHATE

MAGNESIUM ANODE 15

SANITARY SEWER DETAILS

NO SCALE

SSD-6

STATE OF CALIFORNIA - DEPARTMENT OF TRANSPORTATION
Caltrans DESIGN

FUNCTIONAL SUPERVISOR: ABU-BAKR AL-JAFRI
CALCULATED-DESIGNED BY: JOEL SIMS
CHECKED BY: ARTURO REYES
REVISED BY
DATE REVISED

LAST REVISION 04-30-13
DATE PLOTTED => 13-MAY-2013
TIME PLOTTED => 20:24

Dist	COUNTY	ROUTE	POST MILES TOTAL PROJECT	SHEET No.	TOTAL SHEETS
11	SD	11, 905	0.0/1.6, R9.9/R10.7	297	622

REGISTERED CIVIL ENGINEER 03-19-13 DATE

04-22-13
PLANS APPROVAL DATE

REGISTERED PROFESSIONAL ENGINEER
ARTURO A. REYES
No. C75491
Exp. 06-30-14
CIVIL
STATE OF CALIFORNIA

THE STATE OF CALIFORNIA OR ITS OFFICERS OR AGENTS SHALL NOT BE RESPONSIBLE FOR THE ACCURACY OR COMPLETENESS OF SCANNED COPIES OF THIS PLAN SHEET.

SEWER RELOCATION QUANTITIES

UTILITY PLAN SHEET No.	ABANDON 10" SEWER	ABANDON 12" SEWER	ABANDON SEWER MANHOLE	REMOVE SEWER MANHOLE	REMOVE SEWER PIPE	18" WELDED STEEL PIPE CASING	20" WELDED STEEL PIPE CASING	15" POLYVINYL CHLORIDE SEWER PIPE	12" POLYVINYL CHLORIDE SEWER PIPE	10" POLYVINYL CHLORIDE SEWER PIPE	10" POLYVINYL CHLORIDE SEWER PIPE (FUSION)	SEWER MANHOLE (DEPTH <15')	SEWER MANHOLE (DEPTH >15')	LOCKING MANHOLE COVER (CAST IRON)	LOCKING MANHOLE COVER (COMPOSITE)	CATHODIC PROTECTION SYSTEM	MINOR CONCRETE (MINOR STRUCTURE) *	TRACER ACCESS PORT (N)	SAND (ABANDON SEWER) (N)
	(LF)	(LF)	(EA)	(EA)	(LF)	(LF)	(LF)	(LF)	(LF)	(LF)	(LF)	(EA)	(EA)	(EA)	(EA)	(EA)	(CY)	(EA)	(CY)
SS-1	128.0	687.0	1	1	61.00		500.00	61.00	686.87	82.08			3	3		2	4.70	1	23.0
SS-2	454.0		1							454.63		1			1		1.50		10.0
SS-3	376.0	13.0	3			289.97				213.16	314.97	4	1		5	2	7.60	1	8.0
TOTAL	958.0	700.0	5	1	61.00	289.97	500.00	61.00	686.87	749.87	314.97	5	4	3	6	4	13.80	2	41.0

NOTES:

1) (N) NOT A SEPARATE PAY ITEM, FOR INFORMATION ONLY.
2) * - SEE DRAINAGE QUANTITIY SHEETS FOR ADDITIONAL QUANTITIES.

SANITARY SEWER QUANTITIES
SSQ-1

STATE OF CALIFORNIA - DEPARTMENT OF TRANSPORTATION
Caltrans® DESIGN

FUNCTIONAL SUPERVISOR: ABU-BAKR AL-JAFRI
CALCULATED-DESIGNED BY: JOEL SIMS
CHECKED BY: ARTURO REYES
REVISED BY
DATE REVISED

LAST REVISION 04-30-13
DATE PLOTTED => 13-MAY-2013
TIME PLOTTED => 20:25

Dist	COUNTY	ROUTE	POST MILES TOTAL PROJECT	SHEET No.	TOTAL SHEETS
11	SD	11, 905	0.0/1.6, R9.9/R10.7	298	622

REGISTERED CIVIL ENGINEER 03-19-13 DATE

04-22-13
PLANS APPROVAL DATE

REGISTERED PROFESSIONAL ENGINEER
ARTURO A. REYES
No. C75491
Exp. 06-30-14
CIVIL
STATE OF CALIFORNIA

THE STATE OF CALIFORNIA OR ITS OFFICERS OR AGENTS SHALL NOT BE RESPONSIBLE FOR THE ACCURACY OR COMPLETENESS OF SCANNED COPIES OF THIS PLAN SHEET.

NOTE:

FOR ACCURATE RIGHT OF WAY DATA, CONTACT RIGHT OF WAY ENGINEERING AT THE DISTRICT OFFICE.

EXISTING UTILITY:	OWNERS:
UNDERGROUND GAS	SAN DIEGO GAS & ELECTRIC (SDGE)
UNDERGROUND ELECTRICAL	SAN DIEGO GAS & ELECTRIC (SDGE)
OVERHEAD ELECTRICAL	CALPEAK
UNDERGROUND TELEPHONE	AMERICAN TELEPHONE & TELEGRAPH (AT&T)
UNDERGROUND TELEVISION	COX COMMUNICATIONS
WATER	OTAY WATER DISTRICT
SEWER	CITY/COUNTY OF SAN DIEGO

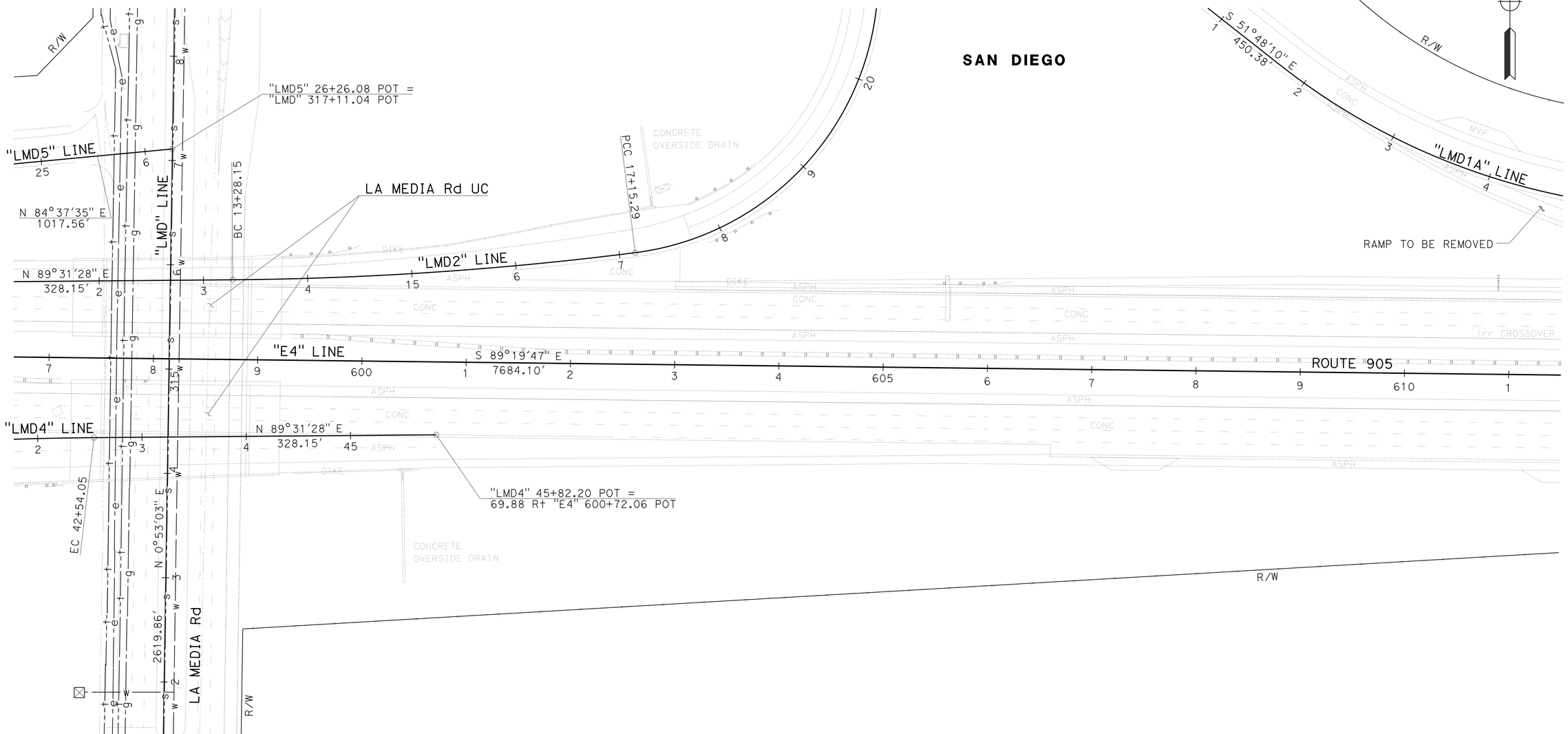

UTILITY PLAN

APPROVED FOR UTILITY WORK ONLY

SCALE: 1" = 50'

U-1

STATE OF CALIFORNIA - DEPARTMENT OF TRANSPORTATION
Caltrans
DESIGN

FUNCTIONAL SUPERVISOR: ABU-BAKR AL-JAFRI
CALCULATED-DESIGNED BY: JOEL SIMS
CHECKED BY: ARTURO REYES
REVISED BY
DATE REVISED

LAST REVISION 04-30-13
DATE PLOTTED => 13-MAY-2013
TIME PLOTTED => 20:25

Dist	COUNTY	ROUTE	POST MILES TOTAL PROJECT	SHEET No.	TOTAL SHEETS
11	SD	11, 905	0.0/1.6, R9.9/R10.7	299	622

03-19-13
REGISTERED CIVIL ENGINEER DATE

04-22-13
PLANS APPROVAL DATE

REGISTERED PROFESSIONAL ENGINEER
ARTURO A. REYES
No. C75491
Exp. 06-30-14
CIVIL
STATE OF CALIFORNIA

THE STATE OF CALIFORNIA OR ITS OFFICERS OR AGENTS SHALL NOT BE RESPONSIBLE FOR THE ACCURACY OR COMPLETENESS OF SCANNED COPIES OF THIS PLAN SHEET.

NOTE:

FOR ACCURATE RIGHT OF WAY DATA, CONTACT RIGHT OF WAY ENGINEERING AT THE DISTRICT OFFICE.

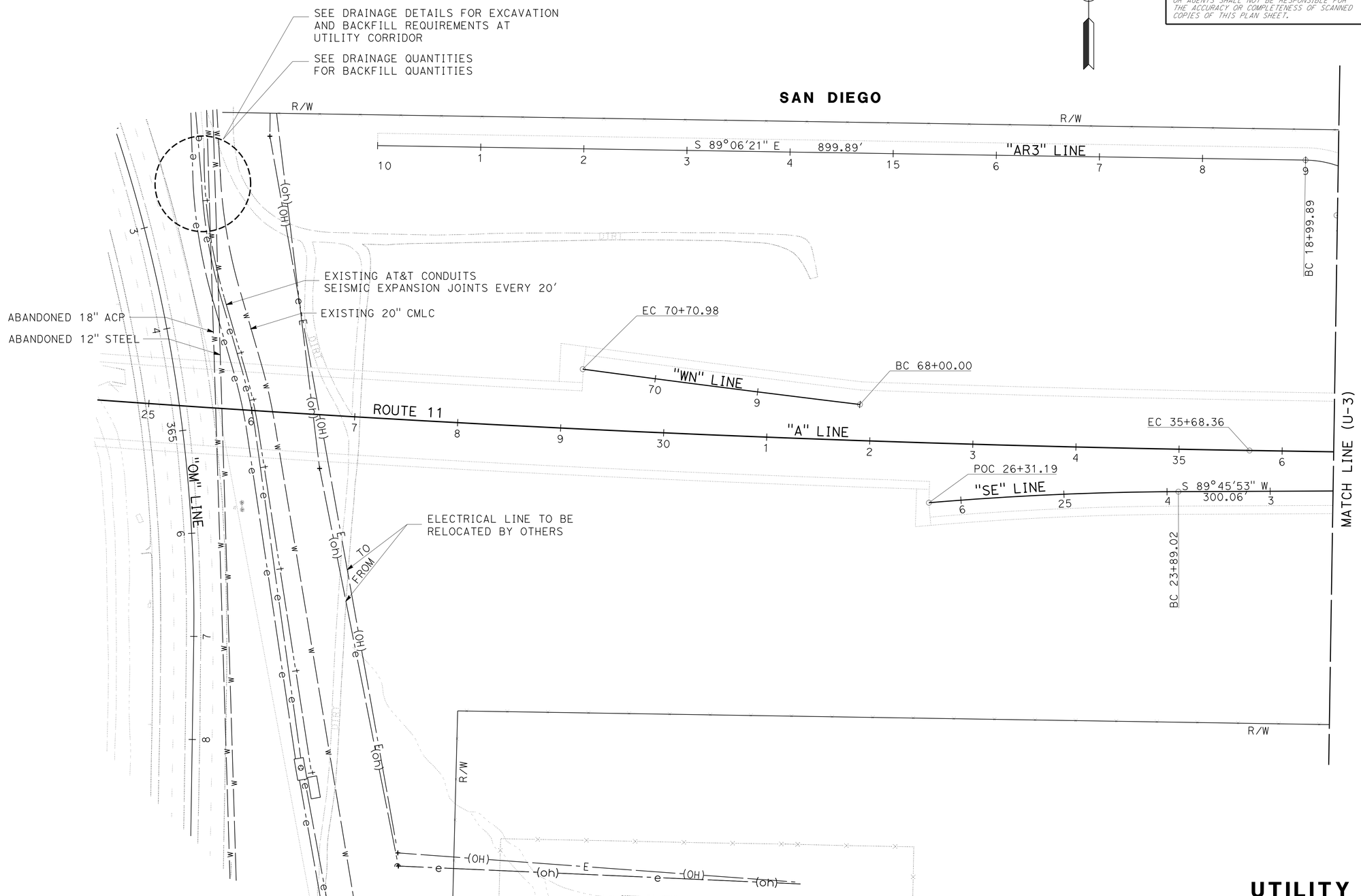

APPROVED FOR UTILITY WORK ONLY

UTILITY PLAN
U-2

SCALE: 1" = 50'

STATE OF CALIFORNIA - DEPARTMENT OF TRANSPORTATION
Caltrans
DESIGN

FUNCTIONAL SUPERVISOR: ABU-BAKR AL-JAFRI
CALCULATED-DESIGNED BY: JOEL SIMS
CHECKED BY: ARTURO REYES
REVISED BY
DATE REVISED

LAST REVISION 04-30-13
DATE PLOTTED => 13-MAY-2013
TIME PLOTTED => 20:25

Dist	COUNTY	ROUTE	POST MILES TOTAL PROJECT	SHEET No.	TOTAL SHEETS
11	SD	11, 905	0.0/1.6, R9.9/R10.7	300	622

REGISTERED CIVIL ENGINEER 03-19-13 DATE

04-22-13
PLANS APPROVAL DATE

REGISTERED PROFESSIONAL ENGINEER ARTURO A. REYES No. C75491 Exp. 06-30-14 CIVIL STATE OF CALIFORNIA

THE STATE OF CALIFORNIA OR ITS OFFICERS OR AGENTS SHALL NOT BE RESPONSIBLE FOR THE ACCURACY OR COMPLETENESS OF SCANNED COPIES OF THIS PLAN SHEET.

NOTE:

FOR ACCURATE RIGHT OF WAY DATA, CONTACT RIGHT OF WAY ENGINEERING AT THE DISTRICT OFFICE.

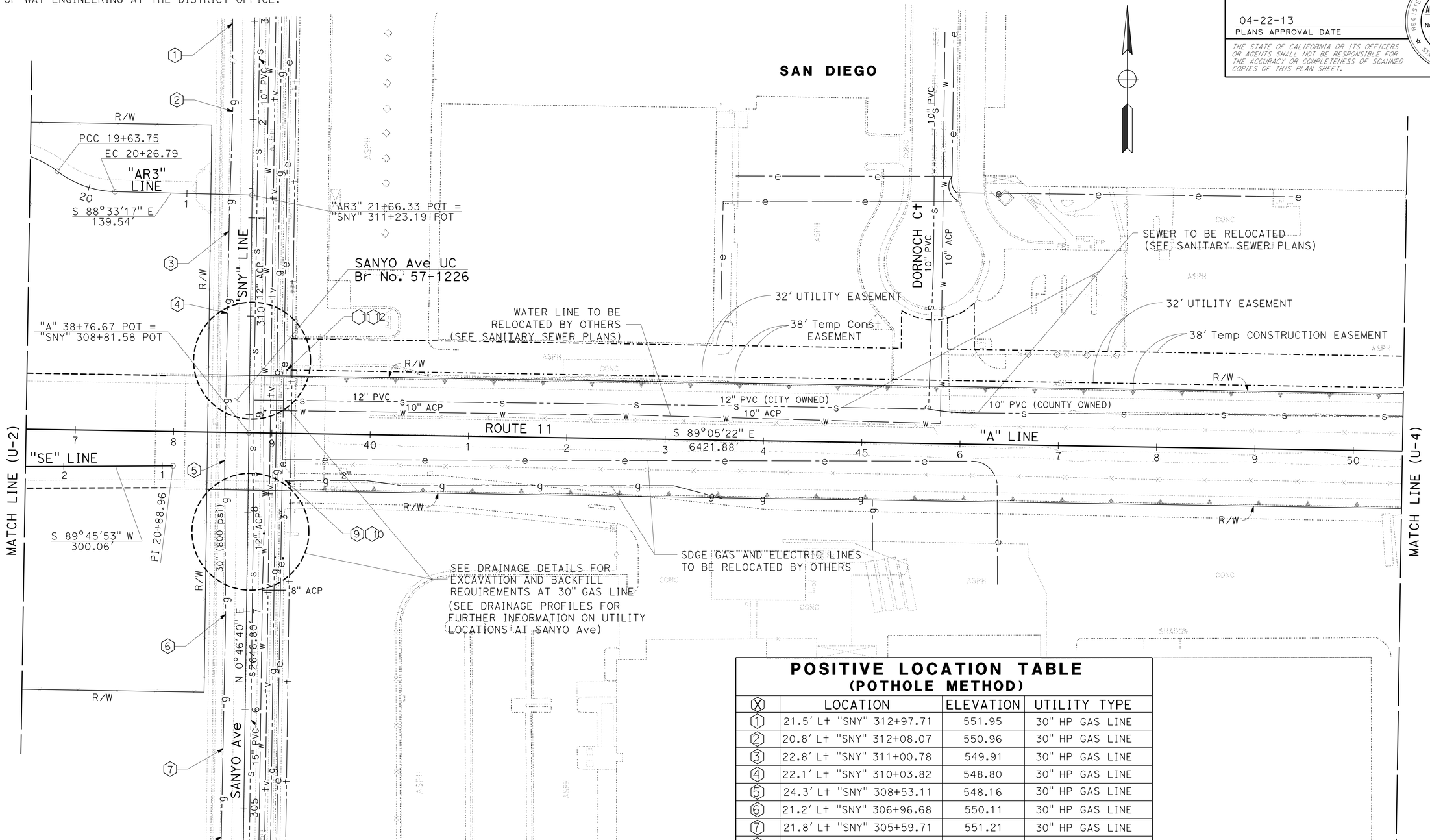

POSITIVE LOCATION TABLE
(POTHOLE METHOD)

X	LOCATION	ELEVATION	UTILITY TYPE
1	21.5' Lt "SNY" 312+97.71	551.95	30" HP GAS LINE
2	20.8' Lt "SNY" 312+08.07	550.96	30" HP GAS LINE
3	22.8' Lt "SNY" 311+00.78	549.91	30" HP GAS LINE
4	22.1' Lt "SNY" 310+03.82	548.80	30" HP GAS LINE
5	24.3' Lt "SNY" 308+53.11	548.16	30" HP GAS LINE
6	21.2' Lt "SNY" 306+96.68	550.11	30" HP GAS LINE
7	21.8' Lt "SNY" 305+59.71	551.21	30" HP GAS LINE
8	22.6' Lt "SNY" 304+69.98	551.74	30" HP GAS LINE
9	127.02 Rt "A" 39+13.28	548.65	ELECTRIC U/G
10	127.02 Rt "A" 39+13.28	547.90	3" GAS LINE
11	64.65 Lt "A" 39+14.65	550.87	3" GAS LINE
12	64.65 Lt "A" 39+14.65	547.70	ELECTRIC U/G

APPROVED FOR UTILITY WORK ONLY

UTILITY PLAN

SCALE: 1" = 50'

U-3

STATE OF CALIFORNIA - DEPARTMENT OF TRANSPORTATION
Caltrans®
DESIGN

FUNCTIONAL SUPERVISOR: ABU-BAKR AL-JAFRI
CALCULATED-DESIGNED BY: JOEL SIMS
CHECKED BY: ARTURO REYES
REVISED BY
DATE REVISED

LAST REVISION 04-30-13
DATE PLOTTED => 13-MAY-2013
TIME PLOTTED => 20:25