DIST	COUNTY	ROUTE	POST MILES TOTAL PROJECT	SHEET No.	TOTAL SHEETS
11	SD	11,905	0.0/1.6, R9.9/R10.7	601	622

V. Ramakrishnan 11-1-12
REGISTERED CIVIL ENGINEER DATE

04-22-13
PLANS APPROVAL DATE

REGISTERED PROFESSIONAL ENGINEER VIJAYARANI RAMAKRISHNAN No. C63091 Exp 06-30-14 CIVIL STATE OF CALIFORNIA

The State of California or its officers or agents shall not be responsible for the accuracy or completeness of electronic copies of this plan sheet.

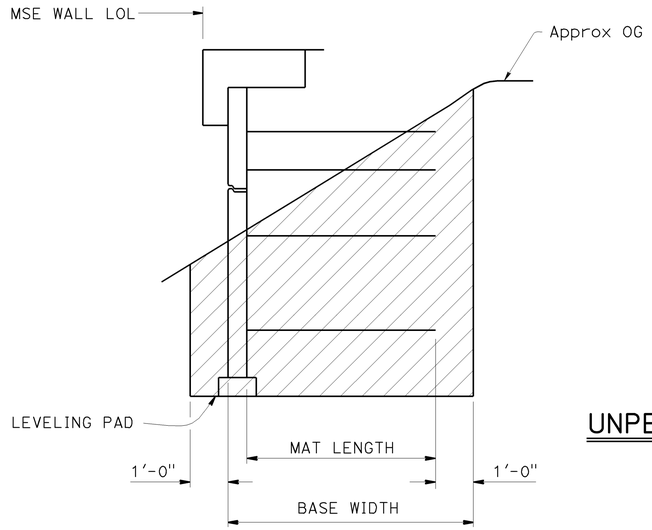

LIMITS OF EXCAVTION

½" = 1'-0"

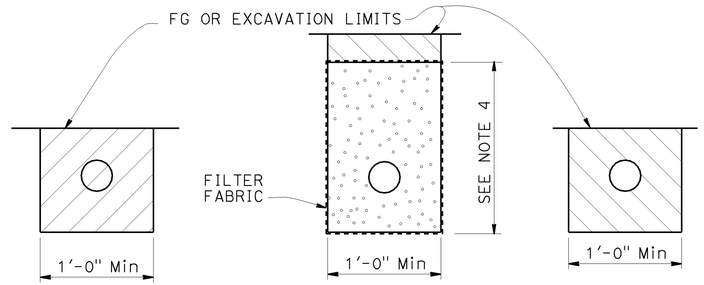

OUTLET PIPE CLEANOUT PIPE

EXCAVATION BACKFILL

UNPERFORATED OUTLET OR CLEAN OUT PIPE FOR UNDERDRAIN

NO SCALE

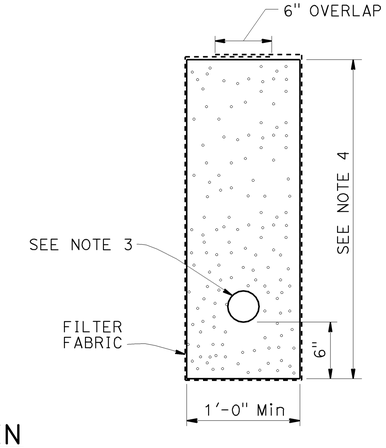

UNDERDRAIN DETAIL

LEGEND:

- Limits of Structure Excavation
- Limits of Structure Backfill
- Limits of Permeable Material

NOTES:

1. Limits to FG except to GP when in roadway section
2. For locations of Outlet & Clean Out Pipes, see "STRUCTURE PLAN NO.1 THRU NO.6"
3. Place 4" ø perforated smoothed wall PVC
4. Place top of pervious material to top reinforcement mat elevation or above

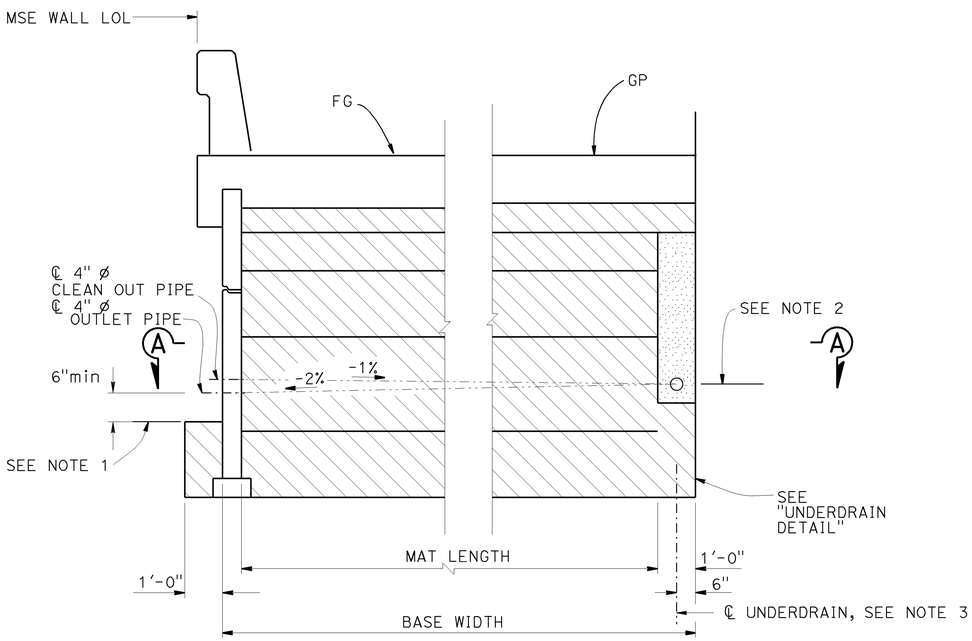

ROADWAY SECTION

½" = 1'-0"

LIMITS OF BACKFILL

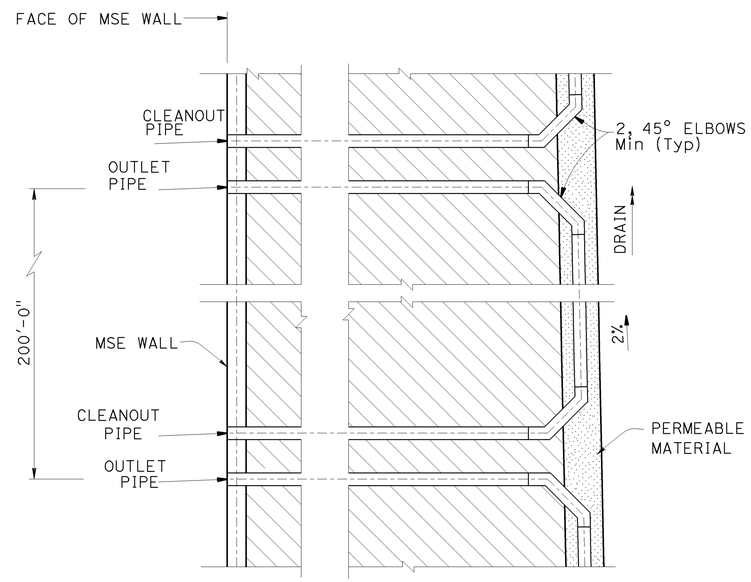

SECTION A-A

NO SCALE

TABLE 1. BASE WIDTH DIMENSIONS

Design Height,H	Base Width
14'-2"	11'-6"
16'-8"	13'-6"
19'-2"	15'-6"
21'-8"	17'-6"
24'-2"	18'-6"
26'-8"	20'-6"
29'-2"	21'-6"
31'-8"	23'-6"
34'-2"	25'-6"

	BY	CHECKED
DESIGN	V. Ramakrishnan	T. Skreslet
DETAILS	K. Kubo	T. Skreslet
QUANTITIES	V. Ramakrishnan	T. Skreslet

STATE OF CALIFORNIA
DEPARTMENT OF TRANSPORTATION

DIVISION OF ENGINEERING SERVICES
STRUCTURE DESIGN
DESIGN BRANCH 14

BRIDGE NO. 57E0128
POST MILE 0.83

MSE WALL 1
MISCELLANEOUS DETAILS

STRUCTURES DESIGN DETAIL SHEET (ENGLISH) (REV. 09-01-10)

ORIGINAL SCALE IN INCHES FOR REDUCED PLANS 0 1 2 3

UNIT: 3613
PROJECT NUMBER & PHASE: 11000205191
CONTRACT NO.: 11-056321

DISREGARD PRINTS BEARING EARLIER REVISION DATES

REVISION DATES 11-15-12 12-05-12 12-18-12 05-06-13

SHEET 18 OF 20

FILE => 57e0128-o-miscdt.dgn

USERNAME => s122751 DATE PLOTTED => 06-MAY-2013 TIME PLOTTED => 13:54

DIST	COUNTY	ROUTE	POST MILES TOTAL PROJECT	SHEET No	TOTAL SHEETS
11	SD	11,905	0.0/1.6, R9.9/R10.7	602	622

GEOTECHNICAL PROFESSIONAL 11-13-12

04-22-13
PLANS APPROVAL DATE

REGISTERED PROFESSIONAL ENGINEER
Zia Yazdani
No. 2119
Exp. 3-31-15
GEOTECHNICAL
STATE OF CALIFORNIA

The State of California or its officers or agents shall not be responsible for the accuracy or completeness of electronic copies of this plan sheet.

This LOTB sheet was prepared in accordance with the Caltrans Soil & Rock Logging, Classification, & Presentation Manual (2010 Edition), with the exception of the Boring designation numbers.

See 2010 Standard Plans A10F and A10G for Soil Legend, and A10H for Rock Legend.

BENCH MARKS

SANYO-N
Fnd 2¼" CADT Disk in SW
N 1 786 710.76
E 6 348 815.78
Elev = 553.62

ALTA
Fnd 2¼" CADT Disk in Boulder
N 1 785 489.17
E 6 360 188.82
Elev = 713.22
Vertical Datum: NAVD88

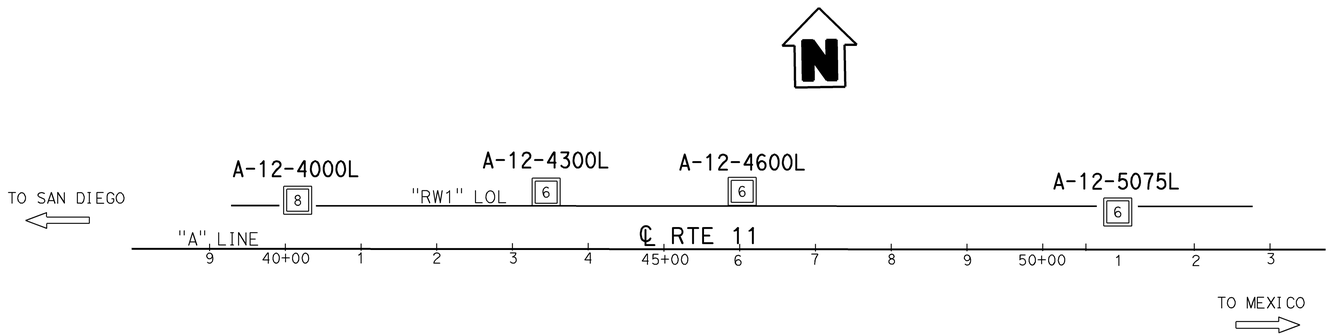

PLAN
1" = 100'

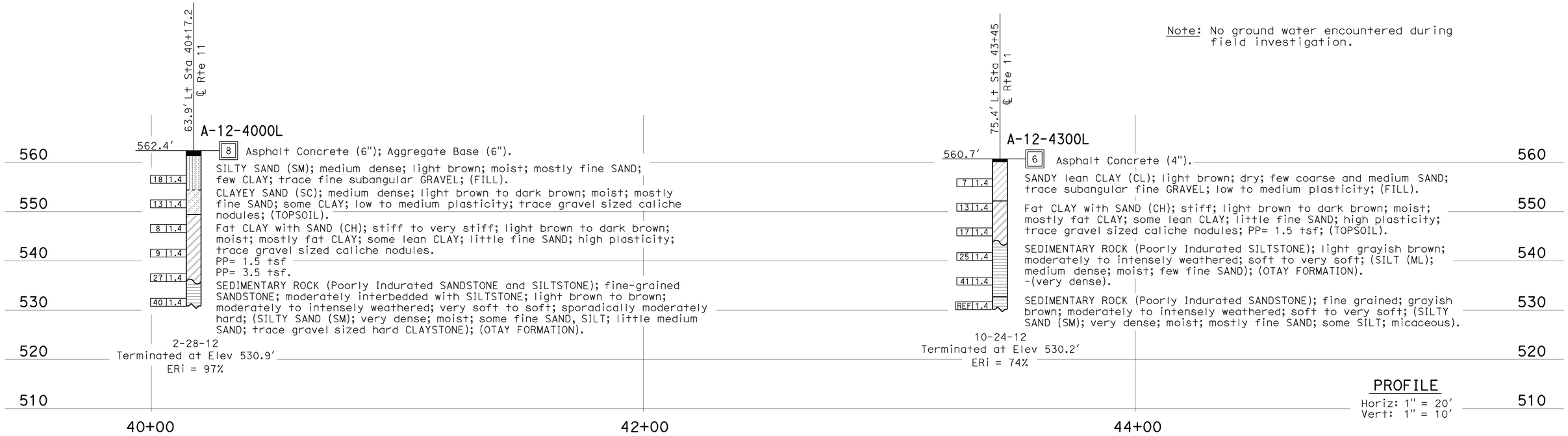

Note: No ground water encountered during field investigation.

PROFILE
Horiz: 1" = 20'
Vert: 1" = 10'

ENGINEERING SERVICES	MATERIALS AND GEOTECHNICAL SERVICES	STATE OF CALIFORNIA DEPARTMENT OF TRANSPORTATION	DIVISION OF ENGINEERING SERVICES STRUCTURE DESIGN DESIGN BRANCH 14	BRIDGE NO. 57E0128 POST MILE 0.83	MSE WALL 1
FUNCTIONAL SUPERVISOR NAME: B. Hinman	DRAWN BY: I.G-Remmen CHECKED BY: M. Fordham	FIELD INVESTIGATION BY: J. Kermode, E. Galleta			LOG OF TEST BORINGS 1 OF 2

OGS CIVIL LOG OF TEST BORINGS SHEET

ORIGINAL SCALE IN INCHES FOR REDUCED PLANS 0 1 2 3

UNIT: 3643
PROJECT NUMBER & PHASE: 11000205191
CONTRACT NO.: 11-056321

DISREGARD PRINTS BEARING EARLIER REVISION DATES

REVISION DATES: 11-05-12 11-08-12 05-06-13

SHEET 19 OF 20

FILE => 57e0128-z-lotb_1of2.dgn

USERNAME => s122751 DATE PLOTTED => 06-MAY-2013 TIME PLOTTED => 13:54

DIST	COUNTY	ROUTE	POST MILES TOTAL PROJECT	SHEET No	TOTAL SHEETS
11	SD	11,905	0.0/1.6, R9.9/R10.7	603	622

11-13-12
GEOTECHNICAL PROFESSIONAL

04-22-13
PLANS APPROVAL DATE

REGISTERED PROFESSIONAL ENGINEER
Zia Yazdani
No. 2119
Exp. 3-31-15
GEOTECHNICAL
STATE OF CALIFORNIA

The State of California or its officers or agents shall not be responsible for the accuracy or completeness of electronic copies of this plan sheet.

This LOTB sheet was prepared in accordance with the Caltrans Soil & Rock Logging, Classification, & Presentation Manual (2010 Edition), with the exception of the Boring designation numbers.

See 2010 Standard Plans A10F and A10G for Soil Legend, and A10H for Rock Legend.

FOR PLAN VIEW, SEE
"LOG OF TEST BORINGS 1 OF 2"

Note: No ground water encountered during field investigation.

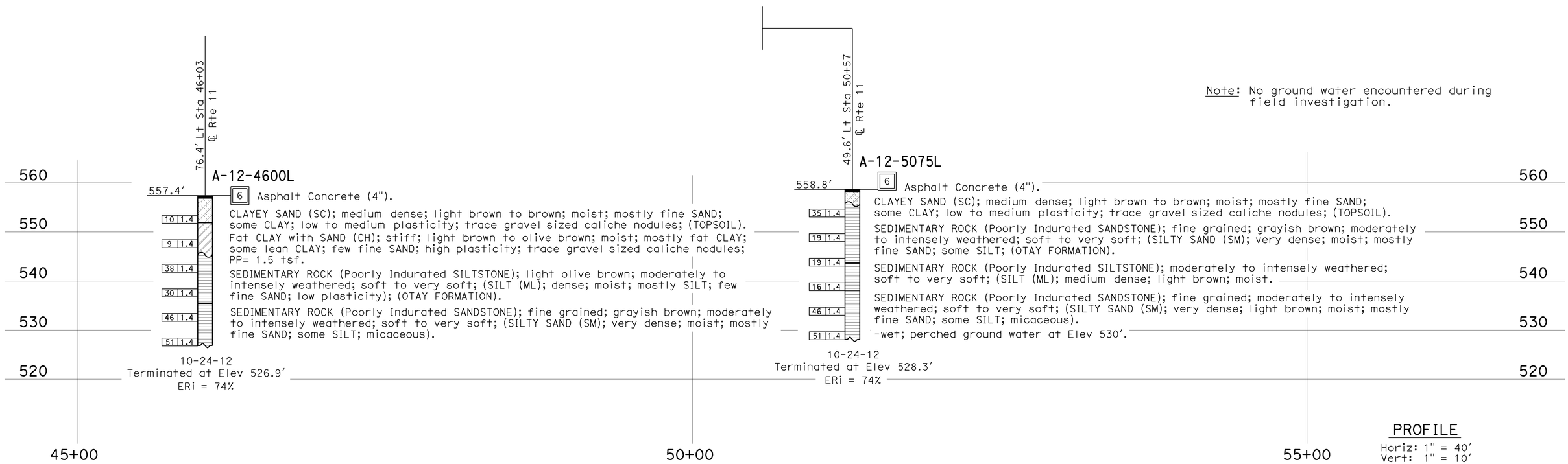

PROFILE
Horiz: 1" = 40'
Vert: 1" = 10'

ENGINEERING SERVICES	MATERIALS AND GEOTECHNICAL SERVICES	STATE OF CALIFORNIA DEPARTMENT OF TRANSPORTATION	DIVISION OF ENGINEERING SERVICES STRUCTURE DESIGN DESIGN BRANCH 14	BRIDGE NO. 57E0128 POST MILE 0.83	MSE WALL 1
FUNCTIONAL SUPERVISOR NAME: B. Hinman	DRAWN BY: I.G-Remmen CHECKED BY:	FIELD INVESTIGATION BY: J. Kermode, E. Galleta			LOG OF TEST BORINGS 2 OF 2

OGS CIVIL LOG OF TEST BORINGS SHEET

ORIGINAL SCALE IN INCHES FOR REDUCED PLANS 0 1 2 3

UNIT: 3643
PROJECT NUMBER & PHASE: 11000205191
CONTRACT NO.: 11-056321

DISREGARD PRINTS BEARING EARLIER REVISION DATES

REVISION DATES: 11-05-12 11-08-12 05-06-13

SHEET 20 OF 20

FILE => 57e0128-z-lotb_2of2.dgn

USERNAME => s122251 DATE PLOTTED => 06-MAY-2013 TIME PLOTTED => 13:54

DIST	COUNTY	ROUTE	POST MILES TOTAL PROJECT	SHEET No.	TOTAL SHEETS
11	SD	11,905	0.0/1.6, R9.9/R10.7	604	622

V. Ramakrishnan 11-1-12
REGISTERED CIVIL ENGINEER DATE

04-22-13
PLANS APPROVAL DATE

REGISTERED PROFESSIONAL ENGINEER VIJAYARANI RAMAKRISHNAN No. C63091 Exp. 06-30-14 CIVIL STATE OF CALIFORNIA

The State of California or its officers or agents shall not be responsible for the accuracy or completeness of electronic copies of this plan sheet.

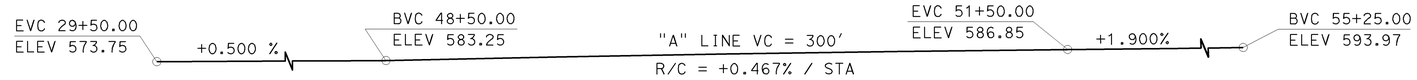

PROFILE GRADE

No Scale

NOTES:

① Concrete Barrier Slab

② 24" Dia. Reinforced Concrete Storm Drain Pipe, see "Road Plans"

③ 36" DIA. Reinforced Concrete Storm Drain Pipe, see "Road Plans"

④ Architectural Details not shown, see "ARCHITECTURAL DETAILS NO. 1 AND NO. 2" sheets

□ Drain Inlets, see "Road Plans". For details see, "CONCRETE BARRIER SLAB DETAILS" sheet

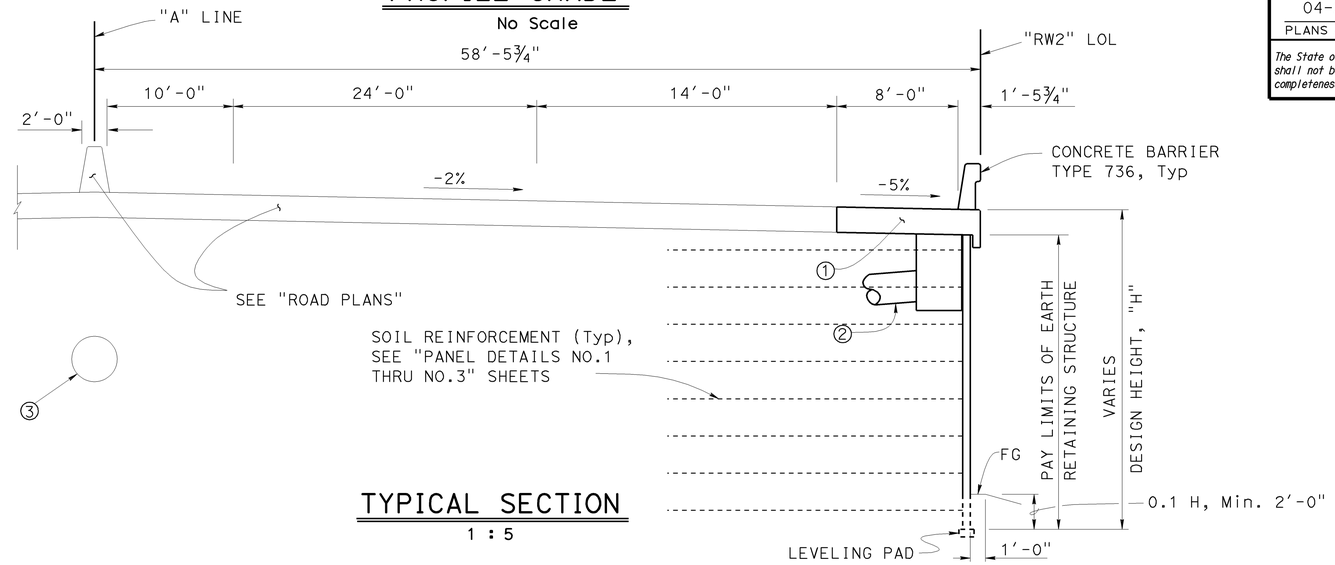

TYPICAL SECTION

1 : 5

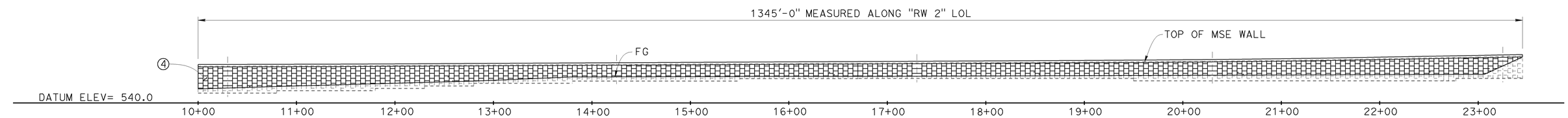

ELEVATION

1" = 50'

QUANTITIES

MECHANICALLY STABILIZED EMBANKMENT, LOCATION B	23,763	SQFT
STRUCTURAL CONCRETE, BARRIER SLAB	770	CY
CONCRETE BARRIER (TYPE 736)	1,345	LF

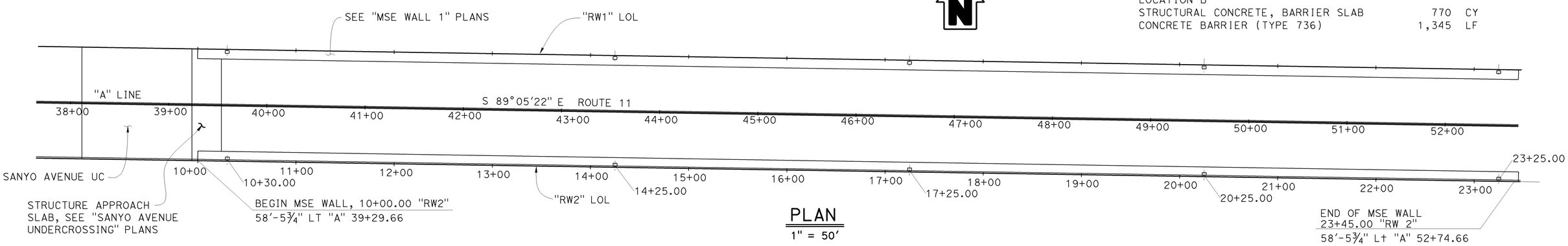

PLAN

1" = 50'

X Douglas J. Dunnel
DESIGN ENGINEER

	BY	CHECKED			
DESIGN	V. Ramakrishnan	T. Skreslet	LOAD & RESISTANCE FACTOR DESIGN	LIVE LOADING: HL93 W/"LOW-BOY"; PERMIT DESIGN VEHICLE	
DETAILS	C. Paclibar / W. Zhang	T. Skreslet	LAYOUT	V. Ramakrishnan	T. Skreslet
QUANTITIES	V. Ramakrishnan	T. Skreslet	SPECIFICATIONS	X	PLANS AND SPECS COMPARED X

ORIGINAL SCALE IN INCHES FOR REDUCED PLANS 0 1 2 3

STATE OF CALIFORNIA
DEPARTMENT OF TRANSPORTATION

DIVISION OF ENGINEERING SERVICES
STRUCTURE DESIGN
DESIGN BRANCH 14

BRIDGE NO. 57E0129
POST MILE 0.83

MSE WALL 2
GENERAL PLAN

UNIT: 11
PROJECT NUMBER & PHASE: 1100020519
CONTRACT NO.: 056321

DISREGARD PRINTS BEARING EARLIER REVISION DATES

REVISION DATES 05-06-13 10-25-12 12-20-12 01-11-13

SHEET 1 OF 19

USERNAME => s122751 DATE PLOTTED => 06-MAY-2013 TIME PLOTTED => 14:13

STRUCTURES DESIGN GENERAL PLAN SHEET (ENGLISH) (REV.09-01-10)

FILE => 57e0129-a-gp.dgn

DIST	COUNTY	ROUTE	POST MILES TOTAL PROJECT	SHEET No.	TOTAL SHEETS
11	SD	11,905	0.0/1.6, R9.9/R10.7	605	622

V. Ramakrishnan 11-1-12
REGISTERED CIVIL ENGINEER DATE

04-22-13
PLANS APPROVAL DATE

REGISTERED PROFESSIONAL ENGINEER VIJAYARANI RAMAKRISHNAN No. C63091 Exp. 06-30-14 CIVIL STATE OF CALIFORNIA

The State of California or its officers or agents shall not be responsible for the accuracy or completeness of electronic copies of this plan sheet.

INDEX TO PLANS

SHEET NO.	TITLE
1	GENERAL PLAN
2	INDEX TO PLANS
3	STRUCTURE PLAN NO. 1
4	STRUCTURE PLAN NO. 2
5	STRUCTURE PLAN NO. 3
6	STRUCTURE PLAN NO. 4
7	STRUCTURE PLAN NO. 5
8	STRUCTURE PLAN NO. 6
9	FOUNDATION PLAN NO.1
10	FOUNDATION PLAN NO.2
11	FOUNDATION PLAN NO.3
12	PANEL DETAILS NO. 1
13	PANEL DETAILS NO. 2
14	PANEL DETAILS NO. 3
15	CONCRETE BARRIER SLAB DETAILS
16	ARCHITECTURAL DETAILS NO. 1
17	ARCHITECTURAL DETAILS NO. 2
18	MISCELLANEOUS DETAILS
19	LOG OF TEST BORINGS 1 OF 1

STANDARD PLANS DATED 2010

A10A	ABREVIATIONS (SHEET 1 OF 2)
A10B	ABREVIATIONS (SHEET 2 OF 2)
A10C	LINES AND SYMBOLS (SHEET 1 OF 3)
A10D	LINES AND SYMBOLS (SHEET 2 OF 3)
A10E	LINES AND SYMBOLS (SHEET 3 OF 3)
B11-56	CONCRETE BARRIER 736

STANDARD PLAN SHEET NO.

DETAIL NO.

GENERAL NOTES
LOAD & RESISTANCE FACTOR DESIGN

DESIGN: AASHTO LRFD Bridge Design Specifications, 4th Edition with California Amendments

LIVE LOAD: Surcharge = 240 lb/ft^2

SOIL PARAMETERS:

Internal design ϕ = 34°, γ = 120 lb/ft^3

External design ϕ(Retained Backfill) = 30°, γ = 120 lb/ft^3

ϕ(Foundation) = 30°

K_h = 0.2

PRECAST CONCRETE PANELS:

f'c = 4,000 psi (Concrete compressive strength at 28 days)

fy = 60,000 psi (Yield strength of reinforcement)

SOIL REINFORCEMENT:

Welded wire mats: fy = 65,000 psi (Yield strength)

Coupler: fy = 36,000 psi (Yield strength)

Corrosion rate = 1.1 mils/year

REINFORCED CONCRETE:

f'c = 3,600 psi, except as noted
(Concrete compressive strength at 28 days)

fy = 60,000 psi (Yield strength of reinforcement)

n = 8

MSE = Mechanically Stabilized Embankment

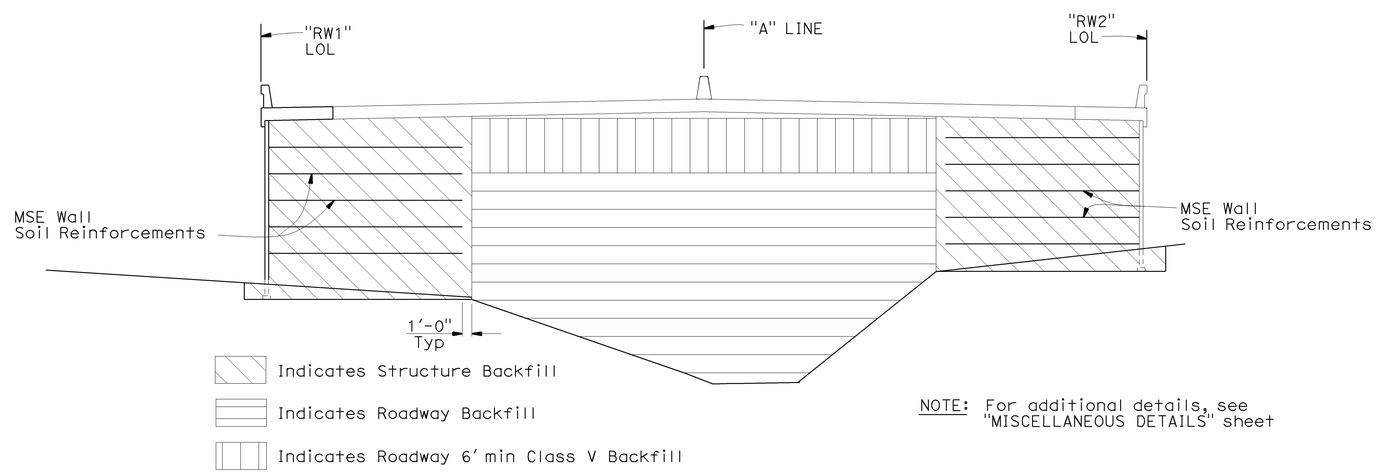

NOTE: For additional details, see "MISCELLANEOUS DETAILS" sheet

BACKFILL LIMITS

NO SCALE

	BY	CHECKED
DESIGN	V. Ramakrishnan	T. Skreslet
DETAILS	K. Kubo	T. Skreslet
QUANTITIES	V. Ramakrishnan	T. Skreslet

STATE OF CALIFORNIA
DEPARTMENT OF TRANSPORTATION

DIVISION OF ENGINEERING SERVICES
STRUCTURE DESIGN
DESIGN BRANCH 14

BRIDGE NO. 57E0128
POST MILE 0.83

MSE WALL 2
INDEX TO PLANS

STRUCTURES DESIGN DETAIL SHEET (ENGLISH) (REV. 09-01-10)

ORIGINAL SCALE IN INCHES FOR REDUCED PLANS 0 1 2 3

UNIT: 3613
PROJECT NUMBER & PHASE: 11000205191
CONTRACT NO.: 11-056321

DISREGARD PRINTS BEARING EARLIER REVISION DATES

REVISION DATES 01-14-13 05-06-13 11-18-13 12-4-13

SHEET 2 OF 19

FILE => 57e0129-b-itp.dgn

USERNAME => s122751 DATE PLOTTED => 06-MAY-2013 TIME PLOTTED => 14:13

DIST	COUNTY	ROUTE	POST MILES TOTAL PROJECT	SHEET No.	TOTAL SHEETS
11	SD	11,905	0.0/1.6, R9.9/R10.7	606	622

V. Ramakrishnan 11-1-12
REGISTERED CIVIL ENGINEER DATE

04-22-13
PLANS APPROVAL DATE

REGISTERED PROFESSIONAL ENGINEER VIJAYARANI RAMKRISHNAN No. C63091 Exp. 06-30-14 CIVIL STATE OF CALIFORNIA

The State of California or its officers or agents shall not be responsible for the accuracy or completeness of electronic copies of this plan sheet.

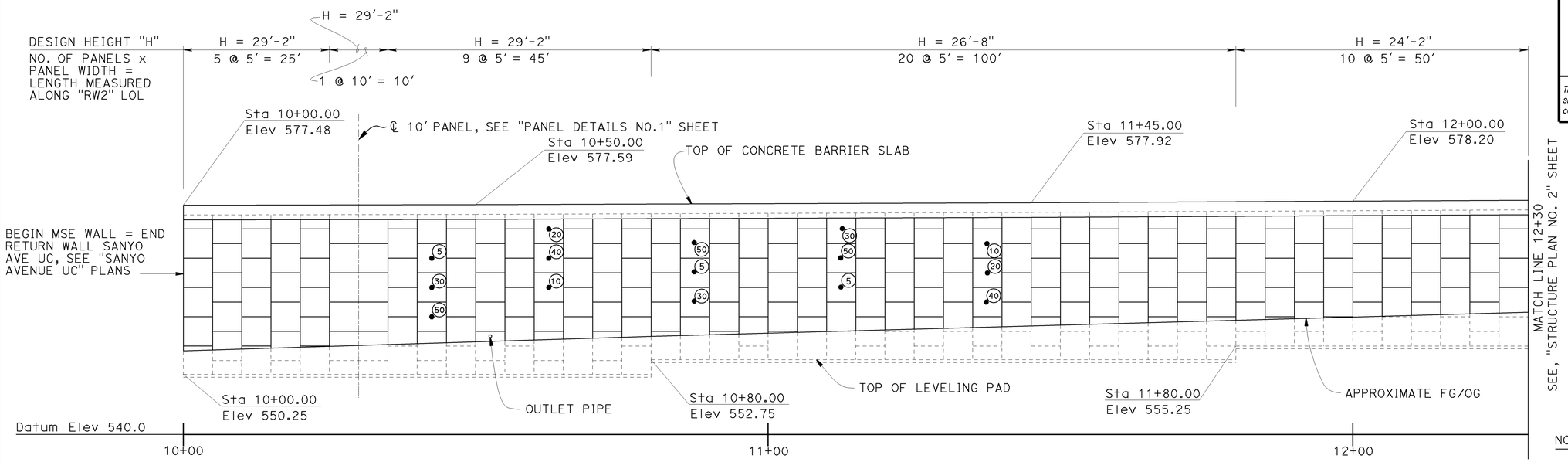

DEVELOPED ELEVATION

1" = 10'-0"

NOTES:

1. For Clean Out and Outlet Pipe details, see "MISCELLANEOUS DETAILS" sheet.
2. Architectural Details not shown.
3. Barrier Rail not shown.

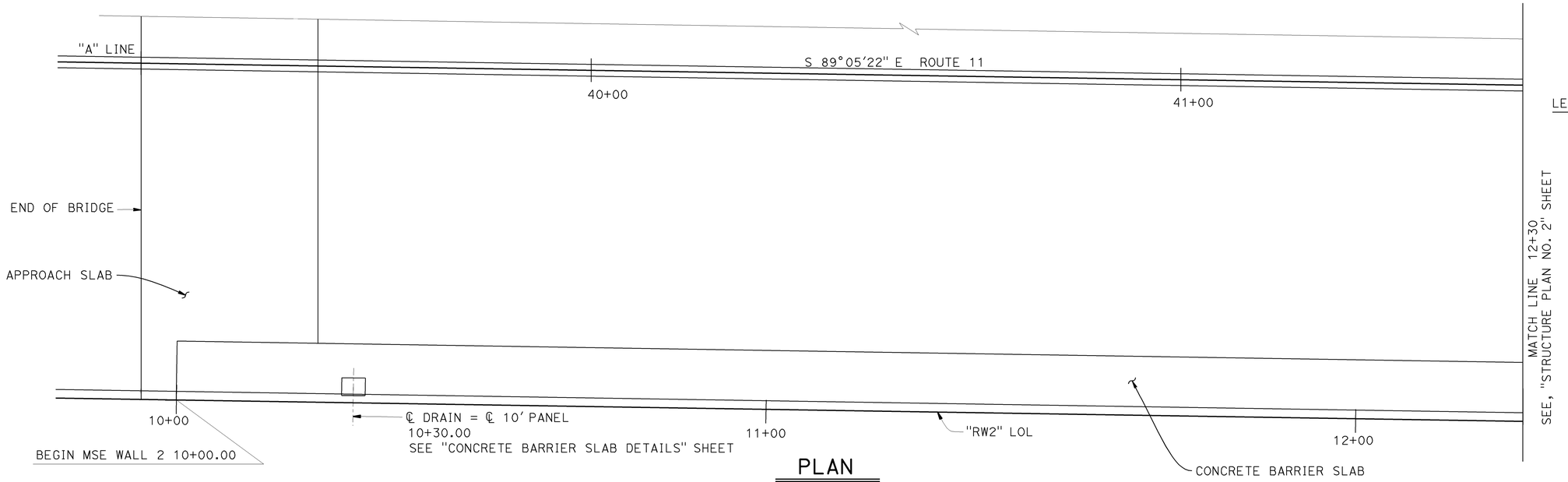

PLAN

1" = 10'-0"

LEGEND:

- ▭ Indicates Drains
- ⑤ Indicates interval in years from time of construction to time of removal of inspection wire
- Inspection Wire, total 18 as shown. For more details see, "PANEL DETAILS NO.3" sheet

DESIGN	BY V. Ramakrishnan	CHECKED T. Skreslet	
DETAILS	BY C. Paclibar / W. Zhang	CHECKED T. Skreslet	
QUANTITIES	BY V. Ramakrishnan	CHECKED T. Skreslet	

STATE OF CALIFORNIA
DEPARTMENT OF TRANSPORTATION

DIVISION OF ENGINEERING SERVICES
STRUCTURE DESIGN
DESIGN BRANCH 14

BRIDGE NO. 57E0129
POST MILE 0.83

MSE WALL 2
STRUCTURE PLAN NO. 1

STRUCTURES DESIGN DETAIL SHEET (ENGLISH) (REV. 09-01-10)

ORIGINAL SCALE IN INCHES FOR REDUCED PLANS 0 1 2 3

UNIT: 3613
PROJECT NUMBER & PHASE: 11000205191
CONTRACT NO.: 11-056310

DISREGARD PRINTS BEARING EARLIER REVISION DATES

REVISION DATES: 12-6-12 12-18-12 01-14-13 05-06-13

SHEET 3 OF 19

FILE => 57e0129-g-sp1.dgn

USERNAME => s122751 DATE PLOTTED => 06-MAY-2013 TIME PLOTTED => 14:13

DIST	COUNTY	ROUTE	POST MILES TOTAL PROJECT	SHEET No.	TOTAL SHEETS
11	SD	11,905	0.0/1.6, R9.9/R10.7	607	622

V. Ramakrishnan 11-1-12
REGISTERED CIVIL ENGINEER DATE

04-22-13
PLANS APPROVAL DATE

REGISTERED PROFESSIONAL ENGINEER VIJAYARANI RAMAKRISHNAN No. C63091 Exp. 06-30-14 CIVIL STATE OF CALIFORNIA

The State of California or its officers or agents shall not be responsible for the accuracy or completeness of electronic copies of this plan sheet.

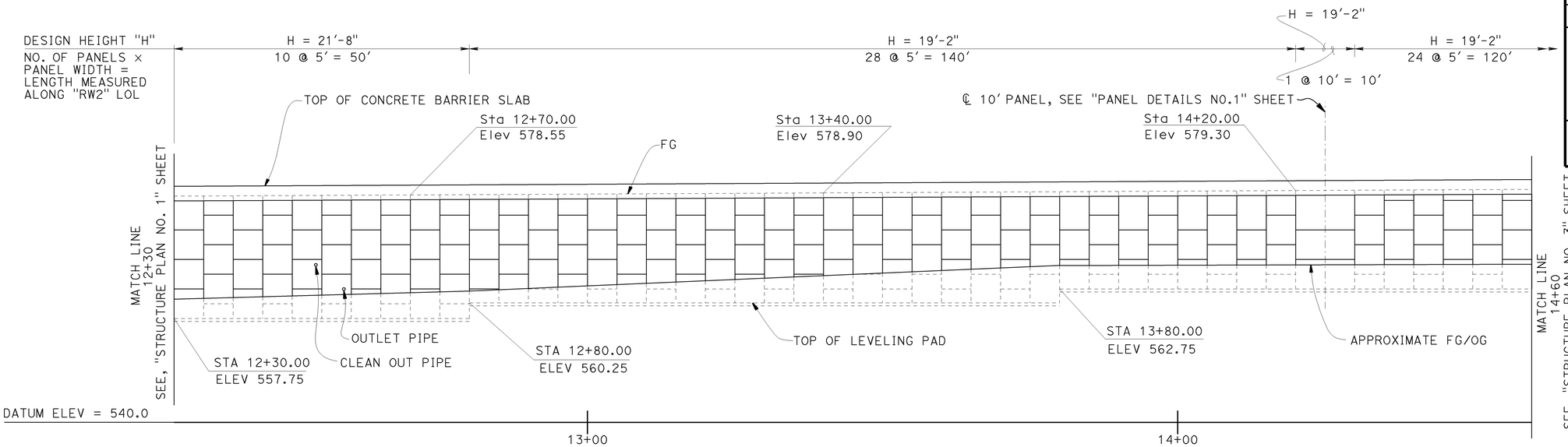

DEVELOPED ELEVATION

1" = 10'-0"

NOTES:

1. For Clean Out and Outlet Pipe details, see "MISCELLANEOUS DETAILS" sheet.
2. Architectural Details not shown.
3. Barrier Rail not shown.

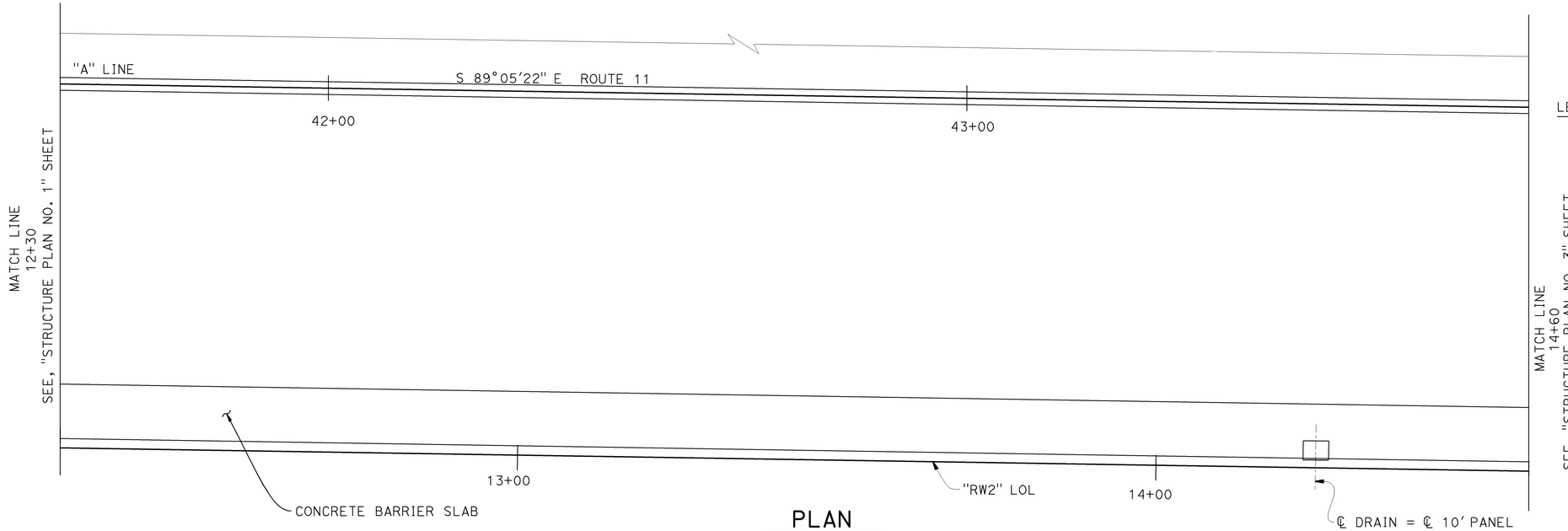

LEGEND:

□ Indicates Drains

PLAN

1" = 10'-0"

DESIGN	BY V. Ramakrishnan	CHECKED T. Skreslet	
DETAILS	BY C. Paclibar / W. Zhang	CHECKED T. Skreslet	
QUANTITIES	BY V. Ramakrishnan	CHECKED T. Skreslet	

STATE OF CALIFORNIA
DEPARTMENT OF TRANSPORTATION

DIVISION OF ENGINEERING SERVICES
STRUCTURE DESIGN
DESIGN BRANCH 14

BRIDGE NO. 57E0129
POST MILE 0.83

MSE WALL 2
STRUCTURE PLAN NO. 2

STRUCTURES DESIGN DETAIL SHEET (ENGLISH) (REV. 09-01-10)

ORIGINAL SCALE IN INCHES FOR REDUCED PLANS 0 1 2 3

UNIT: 3613
PROJECT NUMBER & PHASE: 11000205191
CONTRACT NO.: 11-056310

DISREGARD PRINTS BEARING EARLIER REVISION DATES

REVISION DATES 12-6-12 05-06-13 11-21-12 11-29-12

SHEET 4 OF 19

FILE => 57e0129-g-sp2.dgn

USERNAME => s122751 DATE PLOTTED => 06-MAY-2013 TIME PLOTTED => 14:13

DIST	COUNTY	ROUTE	POST MILES TOTAL PROJECT	SHEET No.	TOTAL SHEETS
11	SD	11,905	0.0/1.6, R9.9/R10.7	608	622

V. Ramakrishnan 11-1-12
REGISTERED CIVIL ENGINEER DATE

04-22-13
PLANS APPROVAL DATE

REGISTERED PROFESSIONAL ENGINEER VIJAYARANI RAMAKRISHNAN No. C63091 Exp. 06-30-14 CIVIL STATE OF CALIFORNIA

The State of California or its officers or agents shall not be responsible for the accuracy or completeness of electronic copies of this plan sheet.

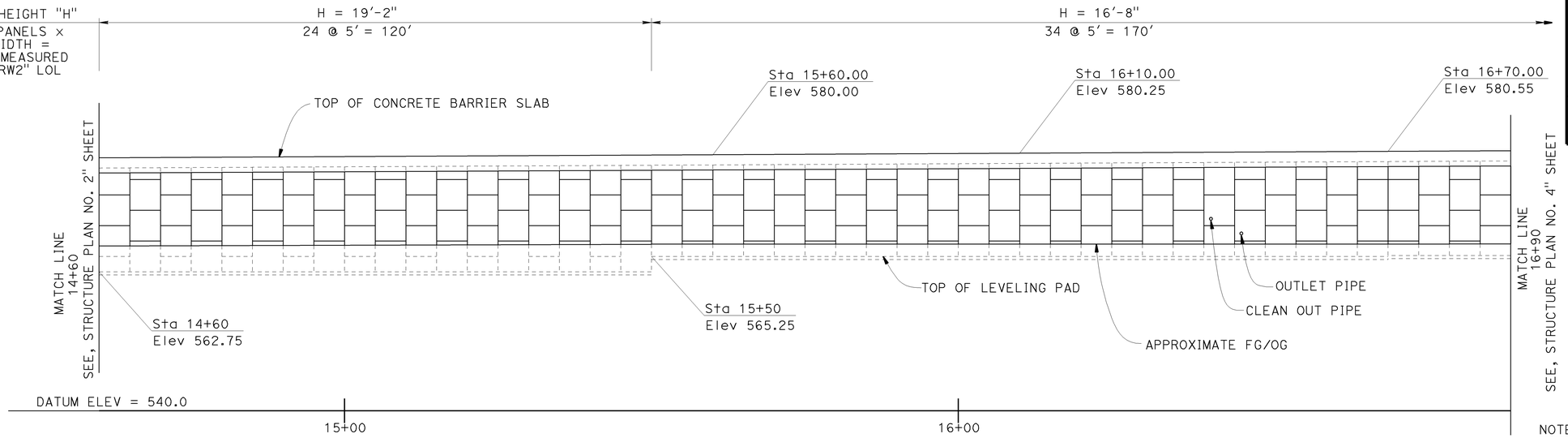

DEVELOPED ELEVATION

1" = 10'-0"

NOTES:

1. For Clean Out and Outlet Pipe details, see, "MISCELLANEOUS DETAILS" sheet.
2. Architectural Details not shown.
3. Barrier Rail not shown.

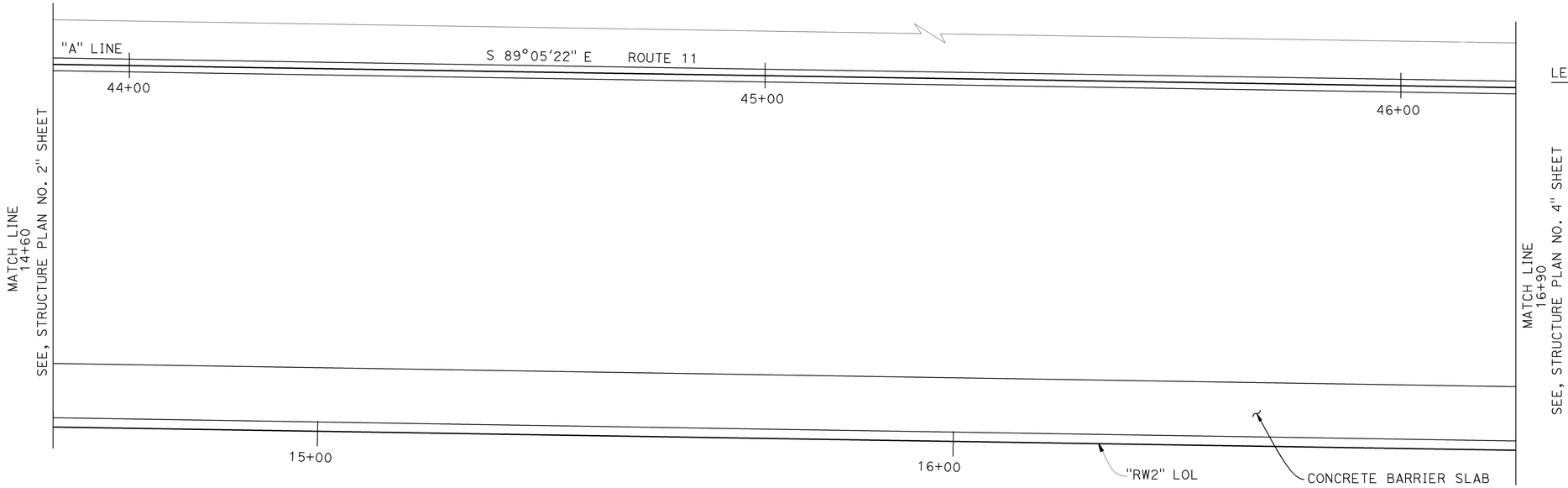

LEGEND:

□ Indicates Drains

PLAN

1" = 10'-0"

DESIGN	BY V. Ramakrishnan	CHECKED T. Skreslet	
DETAILS	BY C. Paclibar / W. Zhang	CHECKED T. Skreslet	
QUANTITIES	BY V. Ramakrishnan	CHECKED T. Skreslet	

STATE OF CALIFORNIA
DEPARTMENT OF TRANSPORTATION

DIVISION OF ENGINEERING SERVICES
STRUCTURE DESIGN
DESIGN BRANCH 14

BRIDGE NO. 57E0129
POST MILE 0.83

MSE WALL 2
STRUCTURE PLAN NO. 3

STRUCTURES DESIGN DETAIL SHEET (ENGLISH) (REV. 09-01-10)

ORIGINAL SCALE IN INCHES FOR REDUCED PLANS 0 1 2 3

UNIT: 3613
PROJECT NUMBER & PHASE: 11000205191
CONTRACT NO.: 11-056310

DISREGARD PRINTS BEARING EARLIER REVISION DATES

REVISION DATES: 12-4-12 05-06-13 11-21-12 11-28-12

SHEET 5 OF 19

FILE => 57e0129-g-sp3.dgn

USERNAME => s122751 DATE PLOTTED => 06-MAY-2013 TIME PLOTTED => 14:13

DIST	COUNTY	ROUTE	POST MILES TOTAL PROJECT	SHEET No.	TOTAL SHEETS
11	SD	11,905	0.0/1.6, R9.9/R10.7	609	622

V. Ramakrishnan 11-1-12
REGISTERED CIVIL ENGINEER DATE

04-22-13
PLANS APPROVAL DATE

REGISTERED PROFESSIONAL ENGINEER VIJAYARANI RAMAKRISHNAN No. C63091 Exp. 06-30-14 CIVIL STATE OF CALIFORNIA

The State of California or its officers or agents shall not be responsible for the accuracy or completeness of electronic copies of this plan sheet.

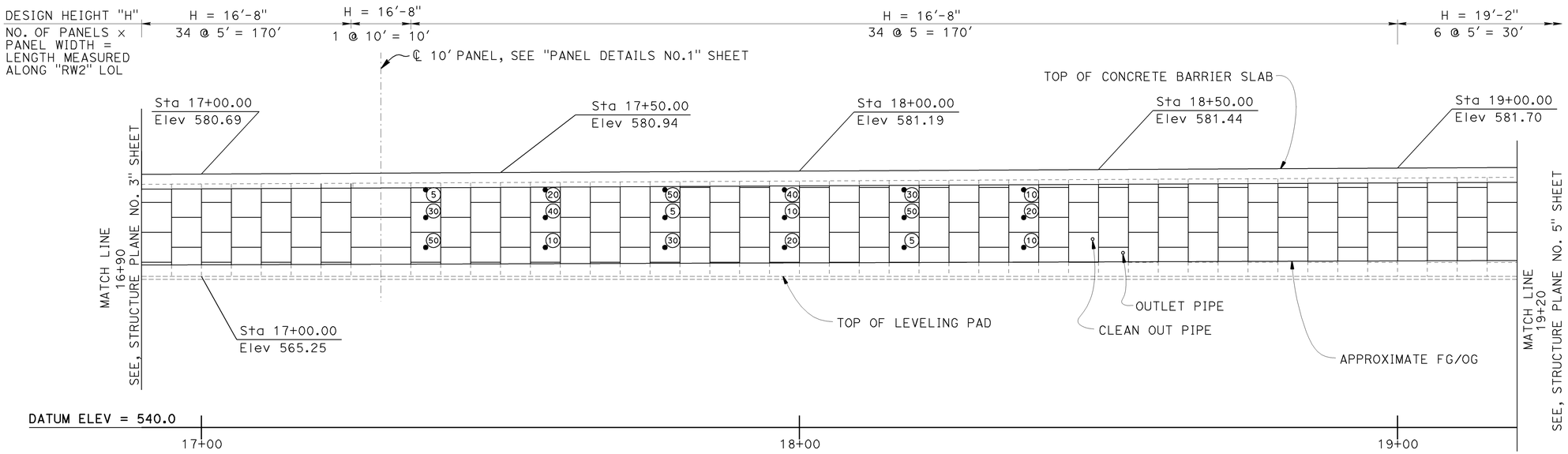

DEVELOPED ELEVATION

1" = 10'-0"

NOTES:

1. For Clean Out and Outlet Pipe details, see "MISCELLANEOUS DETAILS" sheet.
2. Architectural Details not shown.
3. Barrier Rail not shown.

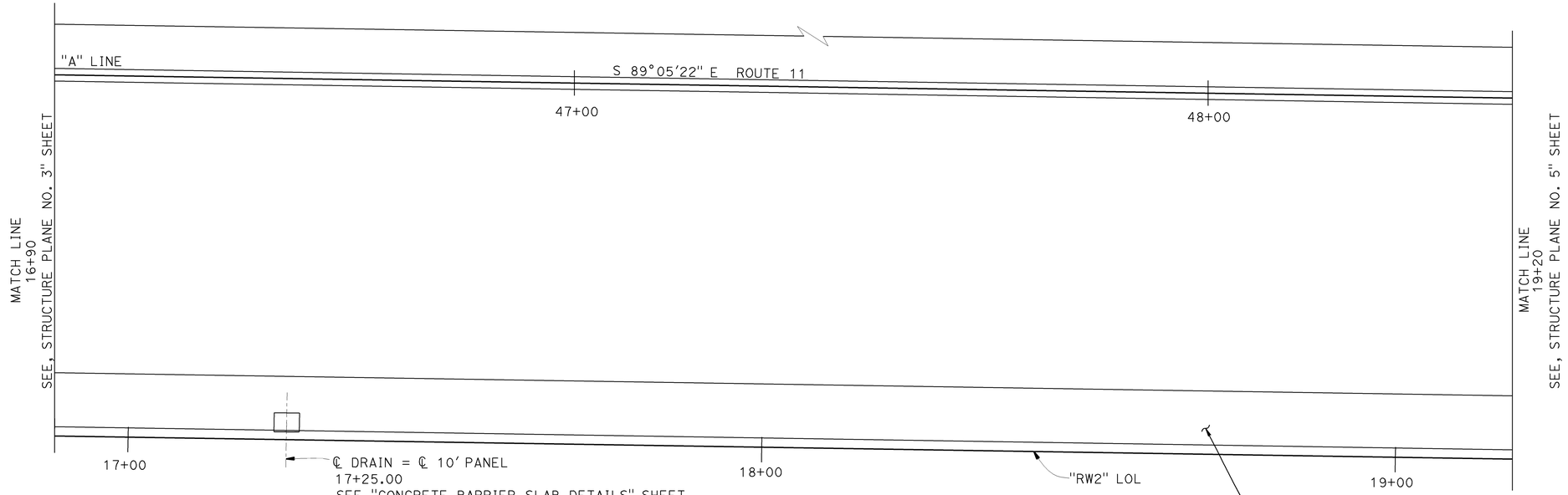

PLAN

1" = 10'-0"

LEGEND:

- ▭ Indicates Drains
- ⑤ Indicates interval in years from time of construction to time of removal of inspection wire
- Inspection Wire, total 18 as shown. For more details see, "PANEL DETAILS NO.3" sheet

DESIGN	BY V. Ramakrishnan	CHECKED T. Skreslet	
DETAILS	BY C. Paclibar / W. Zhang	CHECKED T. Skreslet	
QUANTITIES	BY V. Ramakrishnan	CHECKED T. Skreslet	

STATE OF CALIFORNIA
DEPARTMENT OF TRANSPORTATION

DIVISION OF ENGINEERING SERVICES
STRUCTURE DESIGN
DESIGN BRANCH 14

BRIDGE NO. 57E0129
POST MILE 0.83

MSE WALL 2
STRUCTURE PLAN NO. 4

STRUCTURES DESIGN DETAIL SHEET (ENGLISH) (REV. 09-01-10)

ORIGINAL SCALE IN INCHES FOR REDUCED PLANS 0 1 2 3

UNIT: 3613
PROJECT NUMBER & PHASE: 11000205191
CONTRACT NO.: 11-056310

DISREGARD PRINTS BEARING EARLIER REVISION DATES

REVISION DATES: 12-6-12 12-28-12 05-06-13 11-28-12

SHEET 6 OF 19

FILE => 57e0129-g-sp4.dgn

USERNAME => s122751 DATE PLOTTED => 06-MAY-2013 TIME PLOTTED => 14:13

DIST	COUNTY	ROUTE	POST MILES TOTAL PROJECT	SHEET No.	TOTAL SHEETS
11	SD	11,905	0.0/1.6, R9.9/R10.7	610	622

V. Ramakrishnan 11-1-12
REGISTERED CIVIL ENGINEER DATE

04-22-13
PLANS APPROVAL DATE

REGISTERED PROFESSIONAL ENGINEER VIJAYARANI RAMAKRISHNAN No. C63091 Exp. 06-30-14 CIVIL STATE OF CALIFORNIA

The State of California or its officers or agents shall not be responsible for the accuracy or completeness of electronic copies of this plan sheet.

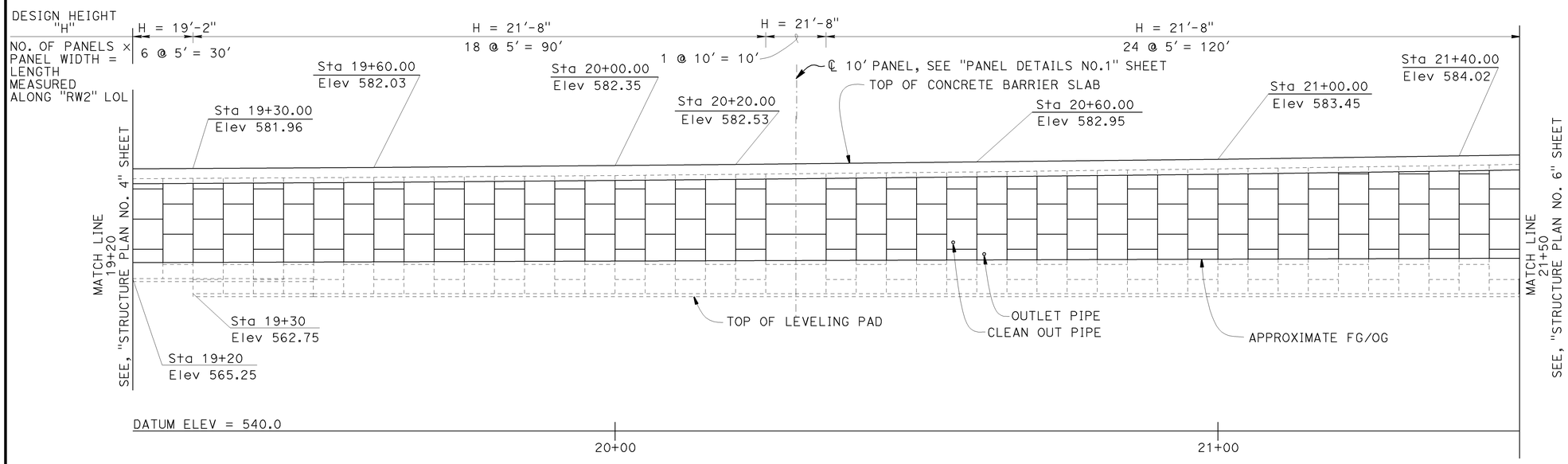

DEVELOPED ELEVATION

1" = 10'-0"

NOTES:

1. For Clean Out and Outlet Pipe details, see "MISCELLANEOUS DETAILS" sheet.
2. Architectural Details not shown.
3. Barrier Rail not shown.

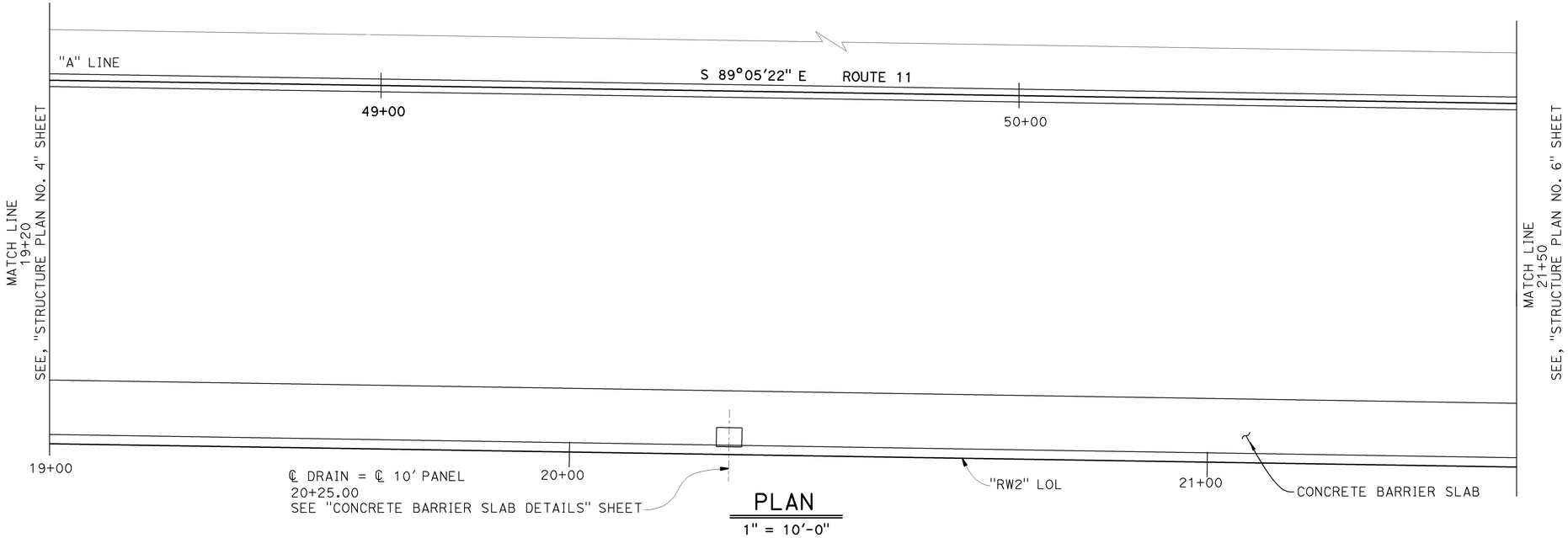

PLAN

1" = 10'-0"

LEGEND:

▭ Indicates Drains

DESIGN	BY V. Ramakrishnan	CHECKED T. Skreslet	
DETAILS	BY C. Paclibar / W. Zhang	CHECKED T. Skreslet	
QUANTITIES	BY V. Ramakrishnan	CHECKED T. Skreslet	

STATE OF CALIFORNIA
DEPARTMENT OF TRANSPORTATION

DIVISION OF ENGINEERING SERVICES
STRUCTURE DESIGN
DESIGN BRANCH 14

BRIDGE NO. 57E0129
POST MILE 0.83

MSE WALL 2
STRUCTURE PLAN NO. 5

STRUCTURES DESIGN DETAIL SHEET (ENGLISH) (REV. 09-01-10)

ORIGINAL SCALE IN INCHES FOR REDUCED PLANS 0 1 2 3

UNIT: 3613
PROJECT NUMBER & PHASE: 11000205191
CONTRACT NO.: 11-056310

DISREGARD PRINTS BEARING EARLIER REVISION DATES

REVISION DATES 12-24-12 05-06-13 11-28-12 12-6-12

SHEET 7 OF 19

FILE => 57e0129-g-sp5.dgn

USERNAME => s122751 DATE PLOTTED => 06-MAY-2013 TIME PLOTTED => 14:13

DIST	COUNTY	ROUTE	POST MILES TOTAL PROJECT	SHEET No.	TOTAL SHEETS
11	SD	11,905	0.0/1.6, R9.9/R10.7	611	622

V. Ramakrishnan 11-1-12
REGISTERED CIVIL ENGINEER DATE

04-22-13
PLANS APPROVAL DATE

REGISTERED PROFESSIONAL ENGINEER VIJAYARANI RAMAKRISHNAN No. C63091 Exp. 06-30-14 CIVIL STATE OF CALIFORNIA

The State of California or its officers or agents shall not be responsible for the accuracy or completeness of electronic copies of this plan sheet.

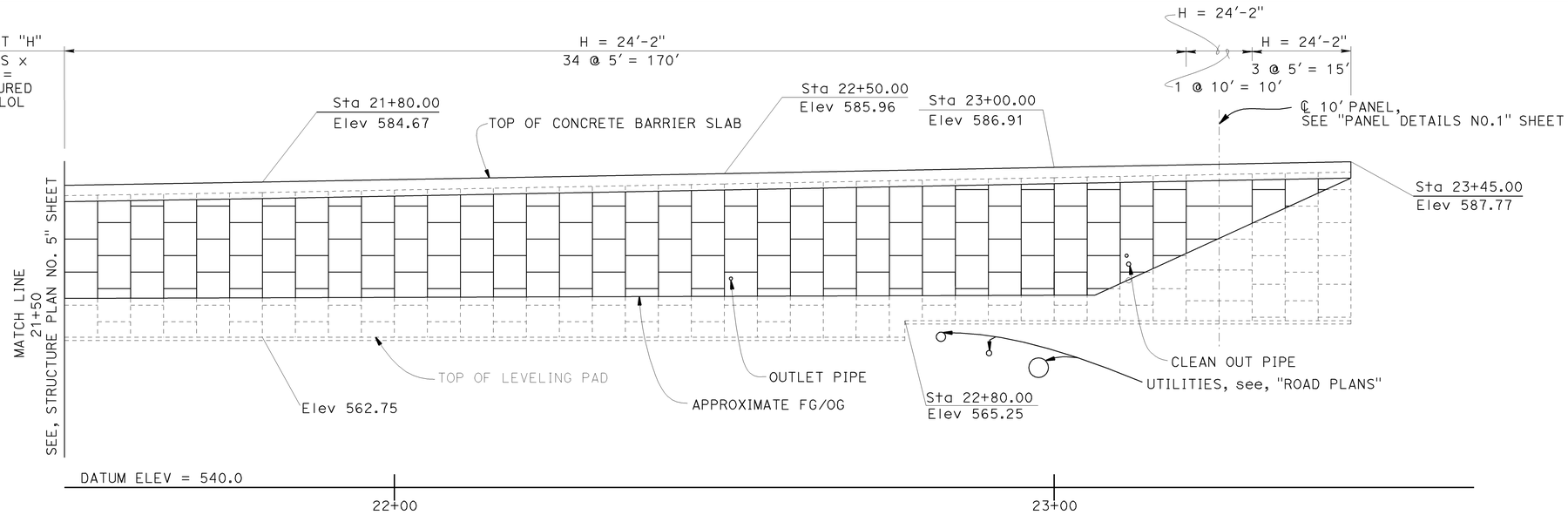

DEVELOPED ELEVATION

1" = 10'-0"

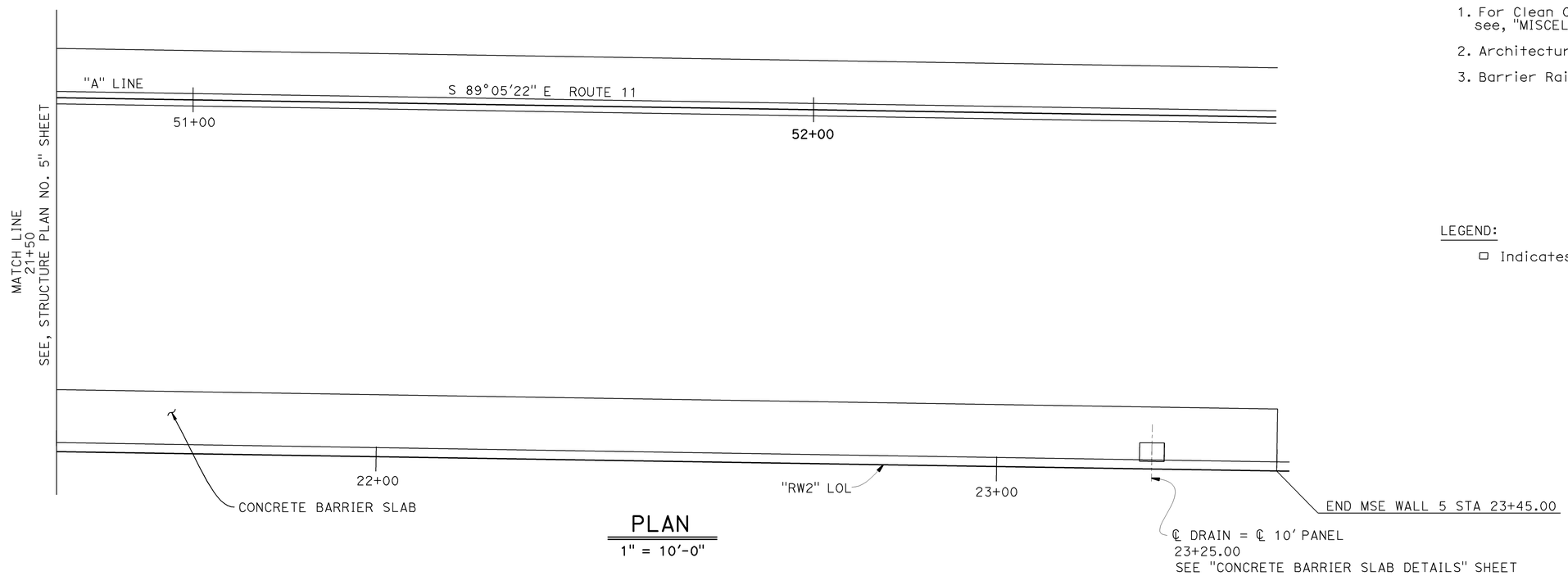

PLAN

1" = 10'-0"

NOTES:

1. For Clean Out and Outlet Pipe details, see, "MISCELLANEOUS DETAILS" sheet.
2. Architectural Details not shown.
3. Barrier Rail not shown.

LEGEND:

▭ Indicates Drains

DESIGN	BY V. Ramakrishnan	CHECKED T. Skreslet	
DETAILS	BY C. Paclibar / W. Zhang	CHECKED T. Skreslet	
QUANTITIES	BY V. Ramakrishnan	CHECKED T. Skreslet	

STATE OF CALIFORNIA
DEPARTMENT OF TRANSPORTATION

DIVISION OF ENGINEERING SERVICES
STRUCTURE DESIGN
DESIGN BRANCH 14

BRIDGE NO. 57E0129
POST MILE 0.83

MSE WALL 2
STRUCTURE PLAN NO. 6

STRUCTURES DESIGN DETAIL SHEET (ENGLISH) (REV. 09-01-10)

ORIGINAL SCALE IN INCHES FOR REDUCED PLANS 0 1 2 3

UNIT: 3613
PROJECT NUMBER & PHASE: 11000205191
CONTRACT NO.: 11-056310

DISREGARD PRINTS BEARING EARLIER REVISION DATES

REVISION DATES: 11-15-12 11-29-12 12-6-12 05-06-13

SHEET 8 OF 19

FILE => 57e0129-g-sp6.dgn

USERNAME => s122751 DATE PLOTTED => 06-MAY-2013 TIME PLOTTED => 14:13

DIST	COUNTY	ROUTE	POST MILES TOTAL PROJECT	SHEET No.	TOTAL SHEETS
11	SD	11,905	0.0/1.6, R9.9/R10.7	612	622

V. Ramakrishnan 11-1-12
REGISTERED CIVIL ENGINEER DATE

04-22-13
PLANS APPROVAL DATE

REGISTERED PROFESSIONAL ENGINEER VIJAYARANI RAMAKRISHNAN No. C63091 Exp. 06-30-14 CIVIL STATE OF CALIFORNIA

The State of California or its officers or agents shall not be responsible for the accuracy or completeness of electronic copies of this plan sheet.

① Sta 38+76.67, "A" Line =
Sta 308+81.58, "SNY1" Line

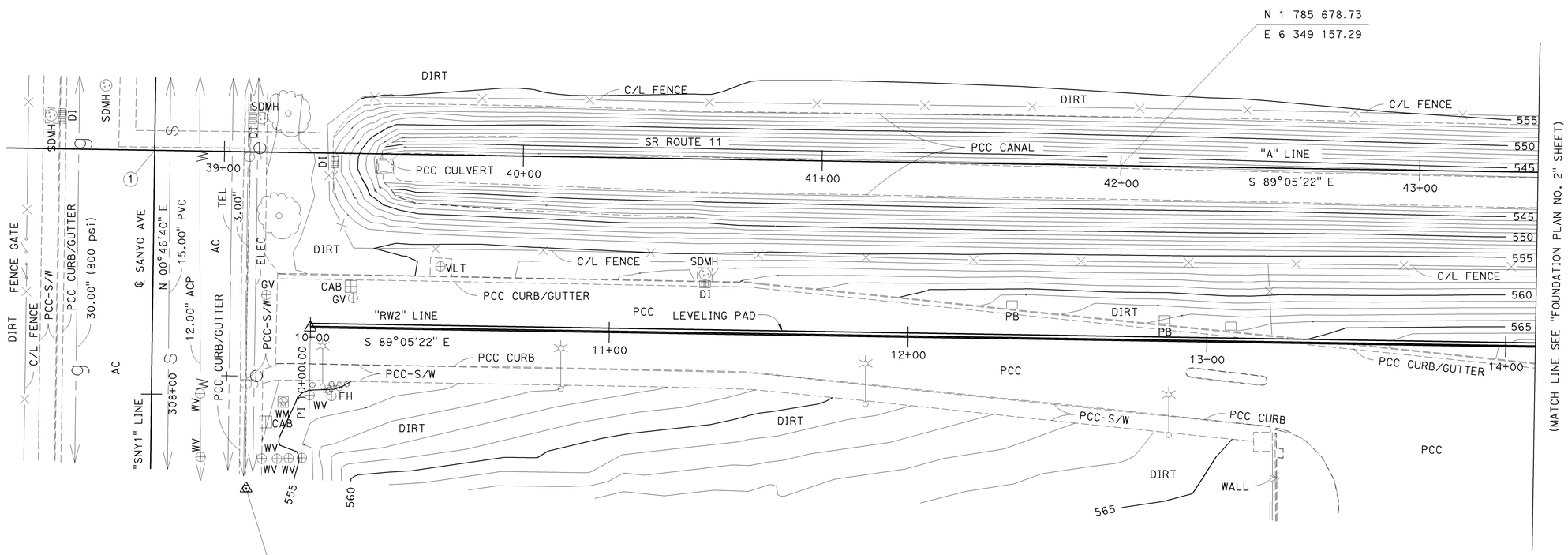

SANYO1
N 1 785 570.73
E 6 348 864.52
Elev = 553.98

SURVEY CONTROL

SANYO1

Fnd 2¼" Brass Disk On Top Of Curb
112.64 Ft Rt "A1" LINE
Sta 39+08.98
N 1 785 570.73
E 6 348 864.52
Elev = 553.98

WP-71

Fnd Chsld "x" On PCC Slab
82.60 Ft Lt "A1" LINE
Sta 42+38.29
N 1 785 760.71
E 6 349 196.89
Elev = 563.33

NOTE:

Underground utilities as shown are approximate

PRELIMINARY INVESTIGATION SECTION

SCALE 1"=20'	VERT.DATUM NAVD 88	PHOTOGRAMMETRY AS OF: X		
	HORZ.DATUM NAD83 (1991.35)	SURVEYED	BY DISTRICT 11	CHECKED BY T.PHUNG 4/2012
	ALIGNMENT TIES Dist. Traverse Sheet	DRAFTED	BY V.PHAM 5/2012	CHECKED BY S.ALIVIO 5/2012

DESIGN	BY V. Ramakrishnan	CHECKED T. Skreslet
DETAILS	BY L. Xiong	CHECKED T. Skreslet
QUANTITIES	BY V. Ramakrishnan	CHECKED T. Skreslet

STATE OF CALIFORNIA
DEPARTMENT OF TRANSPORTATION

DIVISION OF ENGINEERING SERVICES
STRUCTURE DESIGN
DESIGN BRANCH 14

BRIDGE NO. 57E0129
POST MILE 0.83

MSE WALL 2
FOUNDATION PLAN NO. 1

STRUCTURES FOUNDATION PLAN SHEET (ENGLISH) (REV. 09-01-10)

ORIGINAL SCALE IN INCHES FOR REDUCED PLANS 0 1 2 3

UNIT: 3613
PROJECT NUMBER & PHASE: 11000205191
CONTRACT NO.: 00-056321

DISREGARD PRINTS BEARING EARLIER REVISION DATES

REVISION DATES 9-4-12 10-17-12 05-06-13

SHEET 9 OF 19

FILE => 57e0129-h-fp_01.dgn

DIST	COUNTY	ROUTE	POST MILES TOTAL PROJECT	SHEET No.	TOTAL SHEETS
11	SD	11,905	0.0/1.6, R9.9/R10.7	613	622

V. Ramakrishnan 11-1-12
REGISTERED CIVIL ENGINEER DATE

04-22-13
PLANS APPROVAL DATE

REGISTERED PROFESSIONAL ENGINEER VIJAYARANI RAMAKRISHNAN No. C63091 Exp. 06-30-14 CIVIL STATE OF CALIFORNIA

The State of California or its officers or agents shall not be responsible for the accuracy or completeness of electronic copies of this plan sheet.

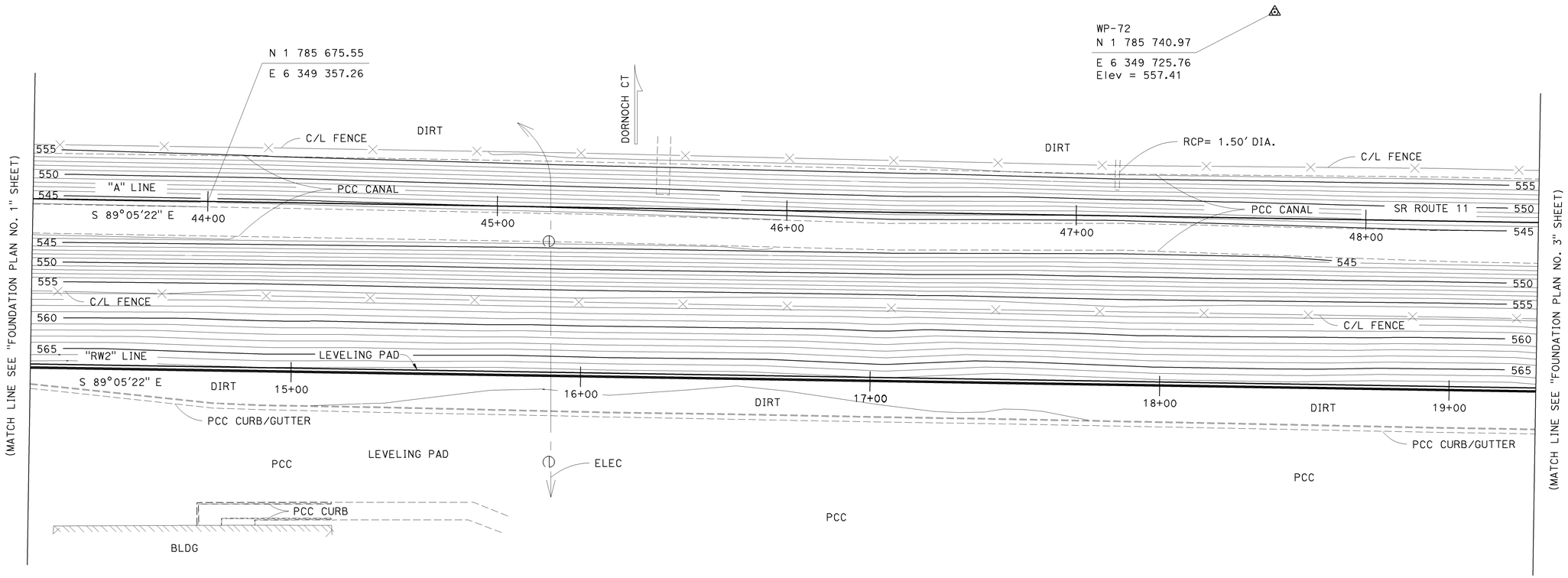

SURVEY CONTROL

SANY01 (See Foundation Plan 1)

Fnd 2¼" Brass Disk On Top Of Curb
112.64 Ft Rt "A1" LINE
Sta 39+08.98
N 1 785 570.73
E 6 348 864.52
Elev = 553.98

WP-72

Fnd PN in AC Parking Lot
71.26 Ft Lt "A1" LINE
Sta 47+67.41
N 1 785 740.97
E 6 349 725.76
Elev = 557.41

NOTE:

Underground utilities as shown are approximate

PRELIMINARY INVESTIGATION SECTION

SCALE 1"=20'	VERT.DATUM NAVD 88	PHOTOGRAMMETRY AS OF: X		
	HORZ.DATUM NAD83 (1991.35)	SURVEYED	BY DISTRICT 11	CHECKED BY T.PHUNG 4/2012
ALIGNMENT TIES Dist. Traverse Sheet		DRAFTED	BY V.PHAM 5/2012	CHECKED BY S.ALIVIO 5/2012

DESIGN	BY V. Ramakrishnan	CHECKED T. Skreslet
DETAILS	BY L. Xiong	CHECKED T. Skreslet
QUANTITIES	BY V. Ramakrishnan	CHECKED T. Skreslet

STATE OF CALIFORNIA
DEPARTMENT OF TRANSPORTATION

DIVISION OF ENGINEERING SERVICES
STRUCTURE DESIGN
DESIGN BRANCH 14

BRIDGE NO. 57E0129
POST MILE 0.83

MSE WALL 2
FOUNDATION PLAN NO. 2

STRUCTURES FOUNDATION PLAN SHEET (ENGLISH) (REV. 09-01-10)

ORIGINAL SCALE IN INCHES FOR REDUCED PLANS 0 1 2 3

UNIT: 3613
PROJECT NUMBER & PHASE: 11000205191
CONTRACT NO.: 11-056321

DISREGARD PRINTS BEARING EARLIER REVISION DATES

REVISION DATES 9-4-12 10-15-12 05-06-13

SHEET 10 OF 19

FILE => 57e0129-h-fp_02.dgn

DIST	COUNTY	ROUTE	POST MILES TOTAL PROJECT	SHEET No.	TOTAL SHEETS
11	SD	11,905	0.0/1.6, R9.9/R10.7	614	622

V. Ramakrishnan 11-1-12
REGISTERED CIVIL ENGINEER DATE

04-22-13
PLANS APPROVAL DATE

REGISTERED PROFESSIONAL ENGINEER
VIJAYARANI RAMAKRISHNAN
No. C63091
Exp. 06-30-14
CIVIL
STATE OF CALIFORNIA

The State of California or its officers or agents shall not be responsible for the accuracy or completeness of electronic copies of this plan sheet.

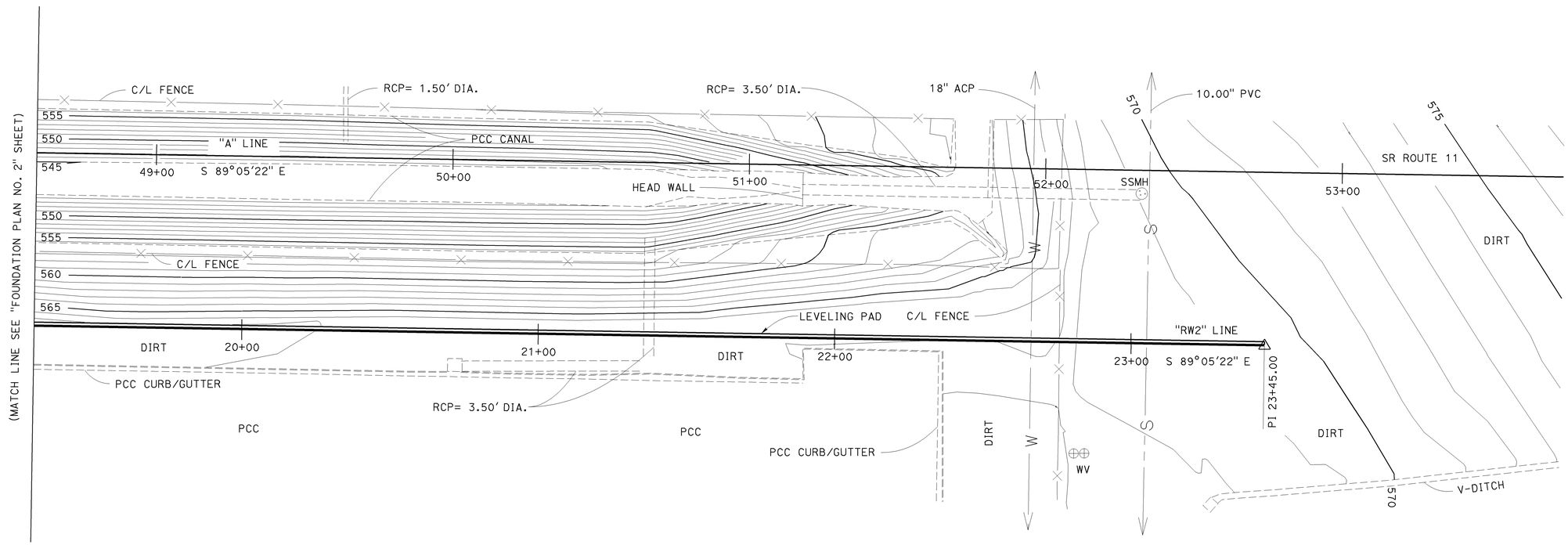

SURVEY CONTROL

(See On Sheet 1 & 2)

NOTE:

Underground utilities as shown are approximate

PRELIMINARY INVESTIGATION SECTION					
SCALE 1"=20'	VERT.DATUM NAVD 88	PHOTOGRAMMETRY AS OF: X			
	HORZ.DATUM NAD83 (1991.35)	SURVEYED	BY DISTRICT 11	CHECKED	BY T.PHUNG 4/2012
ALIGNMENT TIES Dist. Traverse Sheet		DRAFTED	BY V.PHAM 5/2012	CHECKED	BY S.ALIVIO 5/2012

DESIGN	BY V. Ramakrishnan	CHECKED T. Skreslet
DETAILS	BY L. Xiong	CHECKED T. Skreslet
QUANTITIES	BY V. Ramakrishnan	CHECKED T. Skreslet

STATE OF CALIFORNIA
DEPARTMENT OF TRANSPORTATION

DIVISION OF ENGINEERING SERVICES
STRUCTURE DESIGN
DESIGN BRANCH 14

BRIDGE NO. 57E0129
POST MILE 0.83

MSE WALL 2
FOUNDATION PLAN NO. 3

STRUCTURES FOUNDATION PLAN SHEET (ENGLISH) (REV. 09-01-10)

ORIGINAL SCALE IN INCHES FOR REDUCED PLANS 0 1 2 3

UNIT: 3613
PROJECT NUMBER & PHASE: 11000205191
CONTRACT NO.: 11-056321

DISREGARD PRINTS BEARING EARLIER REVISION DATES

REVISION DATES: 6-4-12 9-13-12 10-15-12 05-06-13

SHEET 11 OF 19

FILE => 57e0129-h-fp_03.dgn

DIST	COUNTY	ROUTE	POST MILES TOTAL PROJECT	SHEET No.	TOTAL SHEETS
11	SD	11,905	0.0/1.6, R9.9/R10.7	615	622

V. Ramakrishnan 11-1-12
REGISTERED CIVIL ENGINEER DATE

04-22-13
PLANS APPROVAL DATE

REGISTERED PROFESSIONAL ENGINEER VIJAYARANI RAMAKRISHNAN No. C63091 Exp. 06-30-14 CIVIL STATE OF CALIFORNIA

The State of California or its officers or agents shall not be responsible for the accuracy or completeness of electronic copies of this plan sheet.

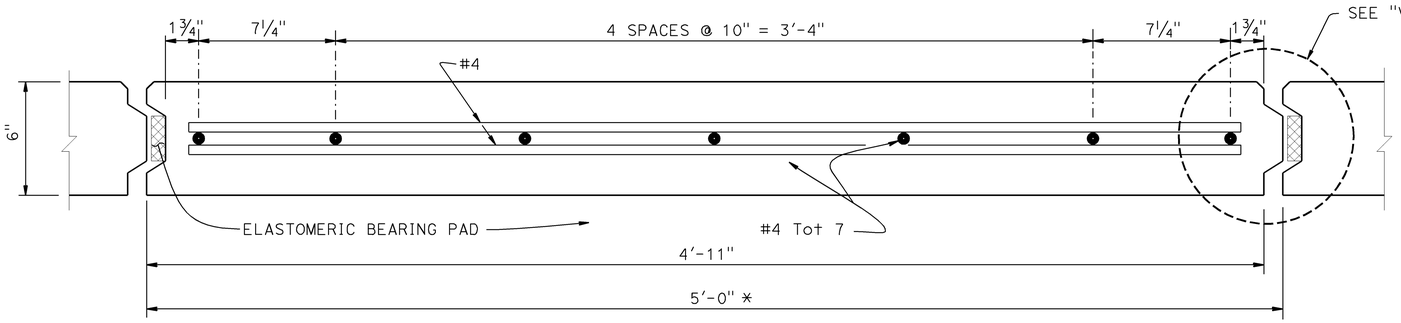

PLAN - 5' x 5' PANEL

3" = 1'-0"

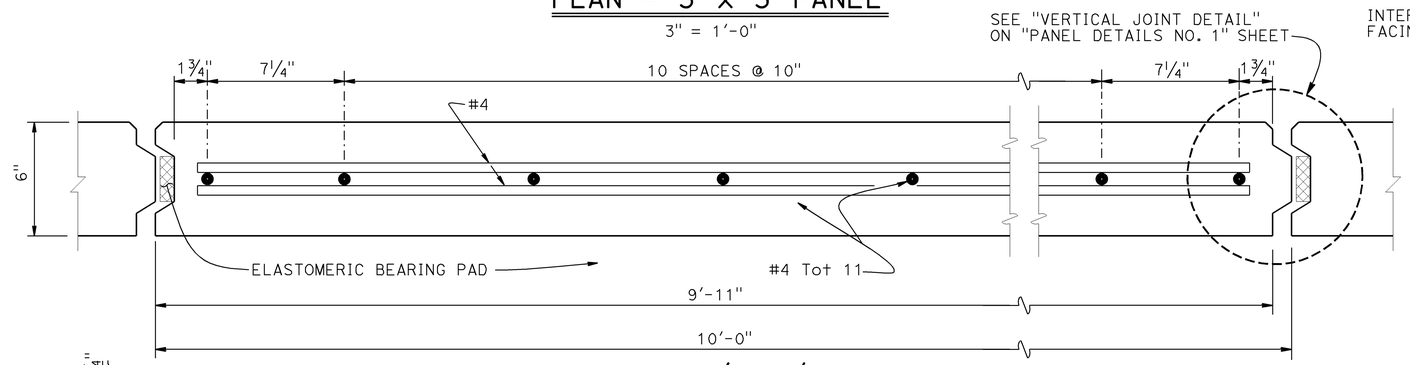

PLAN - 10' x 5' PANEL

3" = 1'-0"

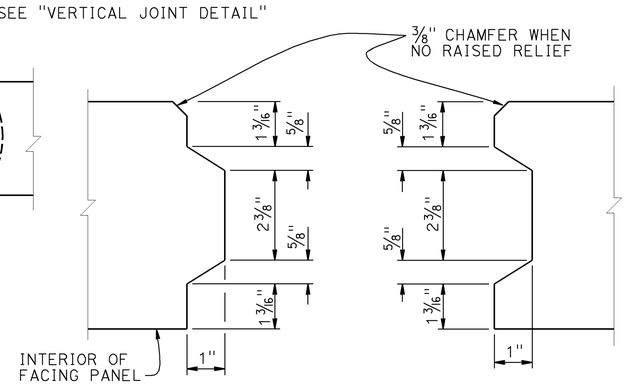

VERTICAL JOINT DETAIL

6" = 1'-0"

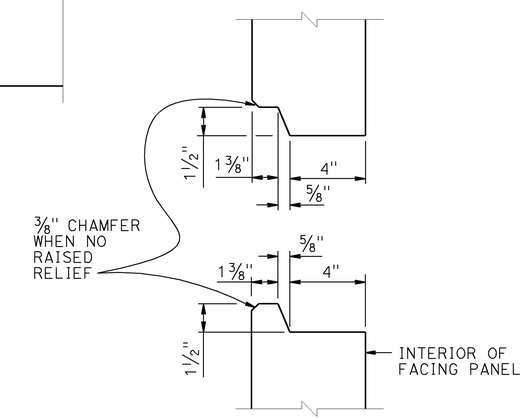

HORIZONTAL JOINT DETAIL

3" = 1'-0"

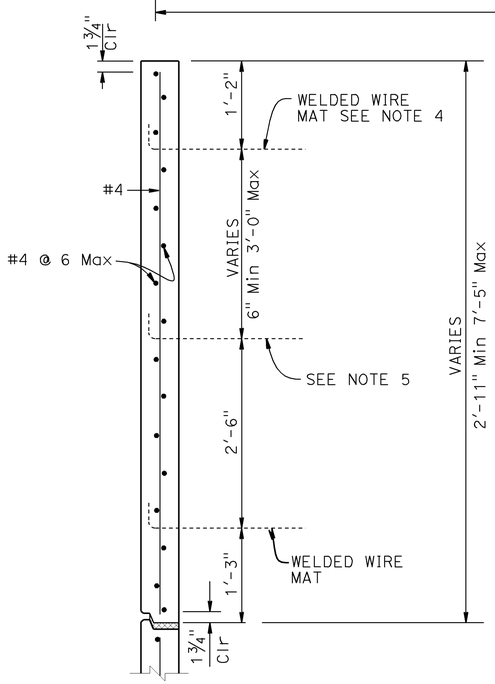

TOP PANEL WITH MULTIPLE MATS

1" = 1'-0"

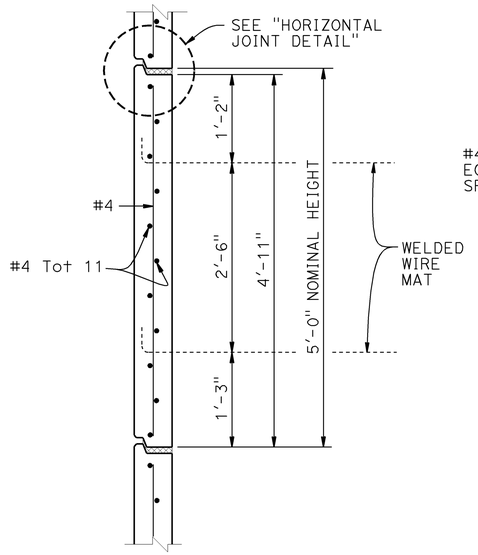

INTERMEDIATE PANEL

1" = 1'-0"

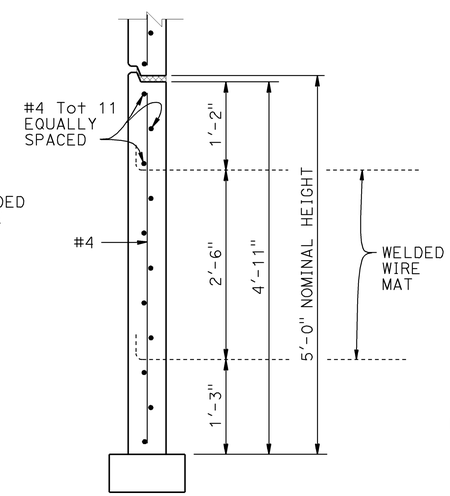

BOTTOM PANEL

1" = 1'-0"

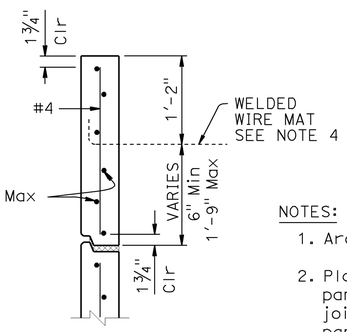

TOP HALF PANEL

1" = 1'-0"

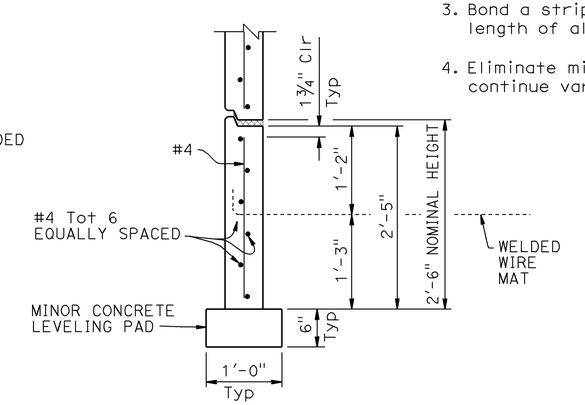

BOTTOM HALF PANEL

1" = 1'-0"

NOTES:

1. Architectural treatment not shown
2. Place reinforced elastomeric bearing pads in all of the panel joints between the panels. Place one in each vertical joint where the horizontal joints intersect. Place two per panel in each horizontal joint:
   3/4" x 2 3/8" x 6" for vertical joints
   3/4" x 4" x 6" for horizontal joints
3. Bond a strip of filter fabric, 1'-0" wide, over the full length of all panel joints
4. Eliminate mid level mat when closer than 6" to top mat, continue variable dimension between remaining mats

	BY	CHECKED
DESIGN	V. Ramakrishnan	T. Skreslet
DETAILS	K. Kubo	T. Skreslet
QUANTITIES	V. Ramakrishnan	T. Skreslet

STATE OF CALIFORNIA
DEPARTMENT OF TRANSPORTATION

DIVISION OF ENGINEERING SERVICES
STRUCTURE DESIGN
DESIGN BRANCH 14

BRIDGE NO. 57E0129
POST MILE 0.83

MSE WALL 2
PANEL DETAILS NO. 1

STRUCTURES DESIGN DETAIL SHEET (ENGLISH) (REV. 09-01-10)

ORIGINAL SCALE IN INCHES FOR REDUCED PLANS 0 1 2 3

UNIT: 3613
PROJECT NUMBER & PHASE: 11000205191
CONTRACT NO.: 11-056321

DISREGARD PRINTS BEARING EARLIER REVISION DATES
REVISION DATES 05-06-12 07-27-12 05-06-13

SHEET 12 OF 19

FILE => 57e0129-i-pd1.dgn

USERNAME => s122751 DATE PLOTTED => 06-MAY-2013 TIME PLOTTED => 14:13

DIST	COUNTY	ROUTE	POST MILES TOTAL PROJECT	SHEET No.	TOTAL SHEETS
11	SD	11,905	0.0/1.6, R9.9/R10.7	616	622

V. Ramakrishnan 11-1-12
REGISTERED CIVIL ENGINEER DATE

04-22-13
PLANS APPROVAL DATE

REGISTERED PROFESSIONAL ENGINEER VIJAYARANI RAMAKRISHNAN No. C63091 Exp. 06-30-14 CIVIL STATE OF CALIFORNIA

The State of California or its officers or agents shall not be responsible for the accuracy or completeness of electronic copies of this plan sheet.

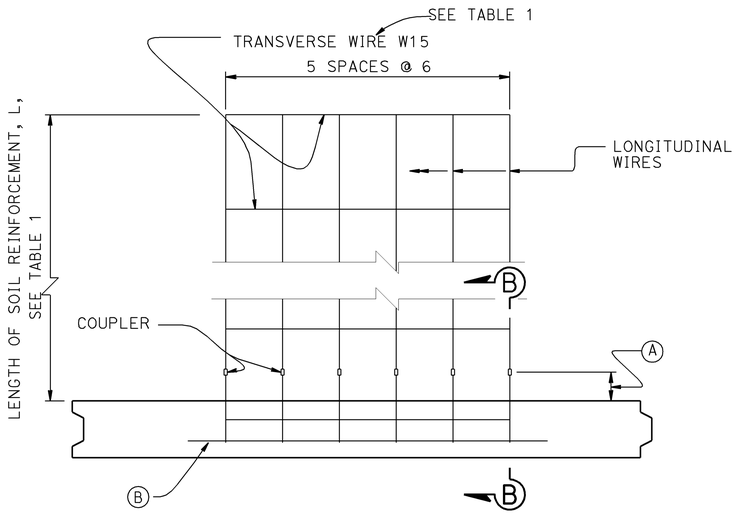

PLAN - PANEL WITH SIX WIRE MAT

1½" = 1'-0"

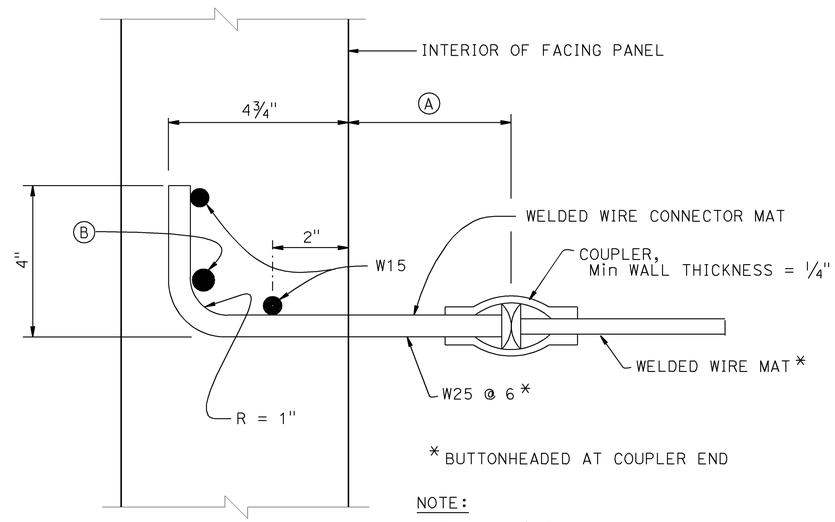

* BUTTONHEADED AT COUPLER END

NOTE:
Panel reinforcement not shown

SECTION B-B

6" = 1'-0"

NOTES:

(A) Distance as required to permit coupler to be swaged

(B) Place #4 x 3'-2", centered on connector mat, but not welded to it

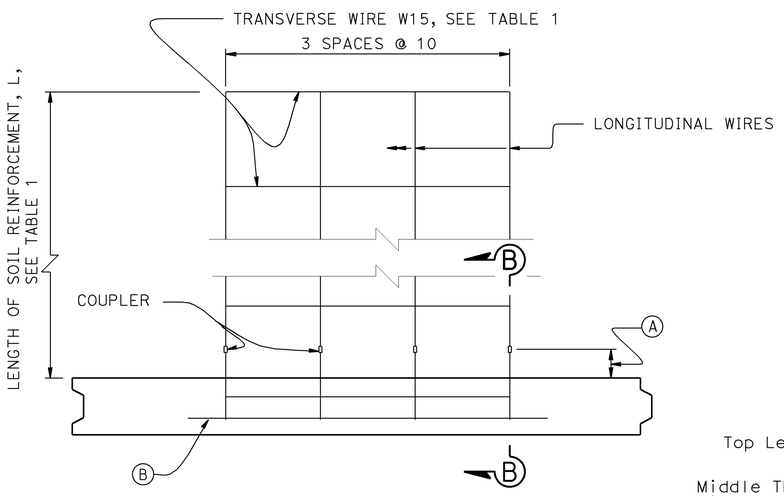

PLAN - PANEL WITH FOUR WIRE MAT

1½" = 1'-0"

WIRE CONFIGURATION: See " PANEL DETAILS NO. 1" sheet for more details

Wire Mat with 4 longitudinal wires — Longitudinal wire — Transverse wire — Transverse wire spacing

Top Level Wire Mat → Top 4- W15xW15 @ 6

Middle Three Level Wire Mats → 3 of 4- W15XW15 @ 6

Bottom Level Wire Mat → Bot. 4- W15xW15 @ 9

TABLE 1. WIRE MAT DETAILS

Design Height, H	Length of Soil Reinforcement, L	WIREMAT CONFIGURATION
14'-2"	10'-0"	Top 4- W15xW15 @ 6 3 of 4- W15xW15 @ 6 Bot. 4- W15xW15 @ 9
16'-8"	12'-0"	Top 4- W15xW15 @ 6 3 of 4- W15xW15 @ 6 1 of 4- W20xW15 @ 9 Bot. 4- W20xW15 @ 9
19'-2"	14'-0"	Top 4- W15xW15 @ 6 4 of 4- W15xW15 @ 6 1 of 4- W20xW15 @ 9 Bot. 4- W20xW15 @ 9
21'-8"	16'-0"	Top 4- W15xW15 @ 6 4 of 4- W15xW15 @ 18 2 of 4- W20xW15 @ 24 Bot. 4- W20xW15 @ 24
24'-2"	17'-0"	Top 4- W15xW15 @ 6 4 of 4- W15xW15 @ 18 3 of 4- W20xW15 @ 24 Bot. 4- W20xW15 @ 24
26'-8"	19'-0"	Top 4- W15xW15 @ 6 4 of 4- W15xW15 @ 18 3 of 4- W20xW15 @ 24 1 of 6- W25xW15 @ 24 Bot. 6- W25xW15 @ 24
29'-2"	20'-0"	Top 4- W15xW15 @ 6 4 of 4- W15xW15 @ 18 3 of 4- W20xW15 @ 24 2 of 6- W25xW15 @ 24 Bot. 6- W25xW15 @ 24
31'-8"	22'-0"	Top 4- W15xW15 @ 6 4 of 4- W15xW15 @ 18 4 of 4- W20xW15 @ 24 2 of 6- W25xW15 @ 30 Bot. 6- W25xW15 @ 30
34'-2"	24'-0"	Top 4- W15xW15 @ 18 4 of 4- W15xW15 @ 18 4 of 4- W20xW15 @ 24 3 of 6- W25xW15 @ 30 Bot. 6- W25xW15 @ 30

	BY	CHECKED
DESIGN	V. Ramakrishnan	T. Skreslet
DETAILS	K. Kubo	T. Skreslet
QUANTITIES	V. Ramakrishnan	T. Skreslet

STATE OF CALIFORNIA
DEPARTMENT OF TRANSPORTATION

DIVISION OF ENGINEERING SERVICES
STRUCTURE DESIGN
DESIGN BRANCH 14

BRIDGE NO. 57E0129
POST MILE 0.83

MSE WALL 2
PANEL DETAILS NO. 2

STRUCTURES DESIGN DETAIL SHEET (ENGLISH) (REV. 09-01-10)

ORIGINAL SCALE IN INCHES FOR REDUCED PLANS 0 1 2 3

UNIT: 3613
PROJECT NUMBER & PHASE: 11000205191
CONTRACT NO.: 11-056321

DISREGARD PRINTS BEARING EARLIER REVISION DATES

REVISION DATES 12-14-12 05-06-13 10-17-13 11-14-13

SHEET 13 OF 19

FILE => 57e0129-1-pd2.dgn

USERNAME => s122751 DATE PLOTTED => 06-MAY-2013 TIME PLOTTED => 14:14

DIST	COUNTY	ROUTE	POST MILES TOTAL PROJECT	SHEET No.	TOTAL SHEETS
11	SD	11,905	0.0/1.6, R9.9/R10.7	617	622

V. Ramakrishnan 11-1-12
REGISTERED CIVIL ENGINEER DATE

04-22-13
PLANS APPROVAL DATE

REGISTERED PROFESSIONAL ENGINEER VIJAYARANI RAMAKRISHNAN No. C63091 Exp. 06-30-14 CIVIL STATE OF CALIFORNIA

The State of California or its officers or agents shall not be responsible for the accuracy or completeness of electronic copies of this plan sheet.

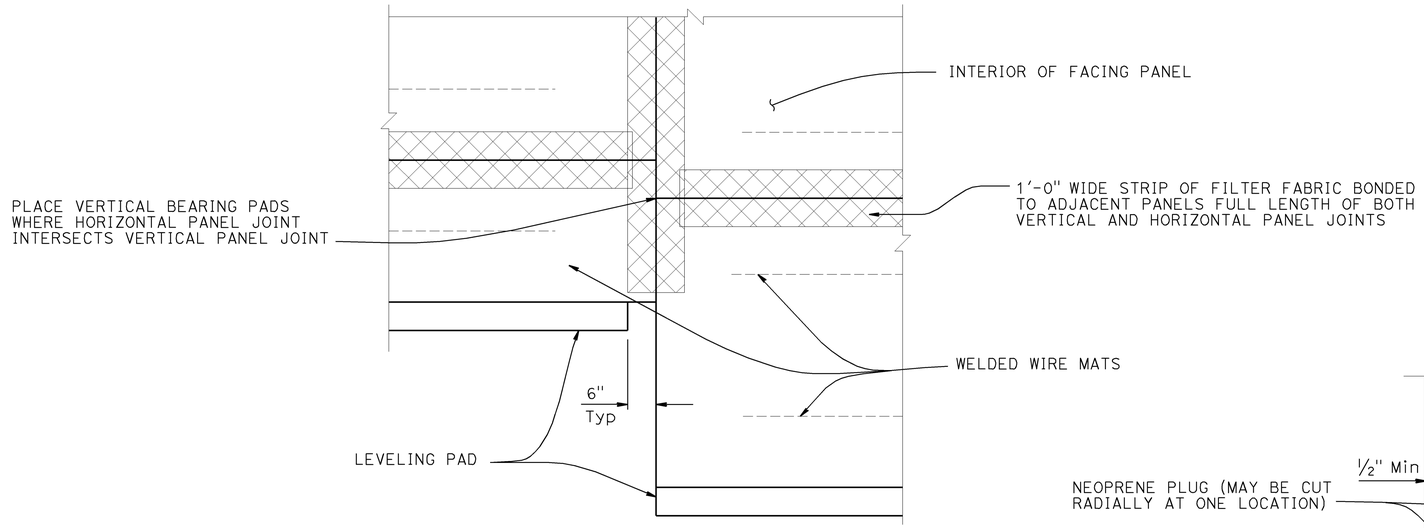

PART ELEVATION

3/4" = 1'-0"

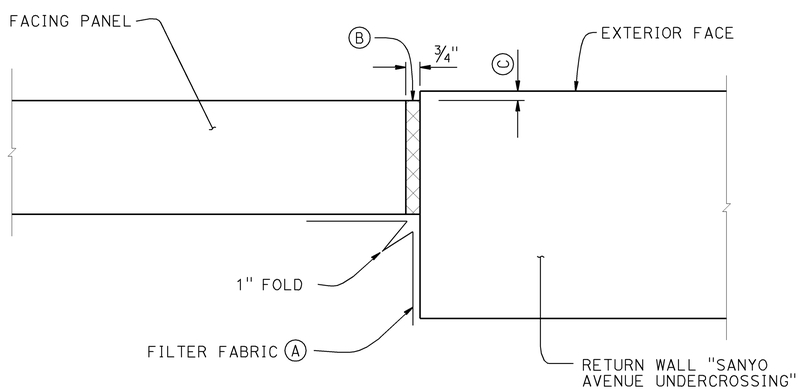

MSE FACING PANEL-TO-CONCRETE WALL JOINT DETAIL

3" = 1'-0"

NOTES:

(A) Bond a strip of filter fabric, 1'-6" wide, to back of MSE panels and the adjacent concrete wall for entire length of vertical joint

(B) Bond expansion joint material to the concrete wall

(C) Offset between face of MSE facing panel and face of return wall "SANYO AVENUE UNDERCROSSING", see "CONCRETE BARRIER SLAB DETAILS" for more details

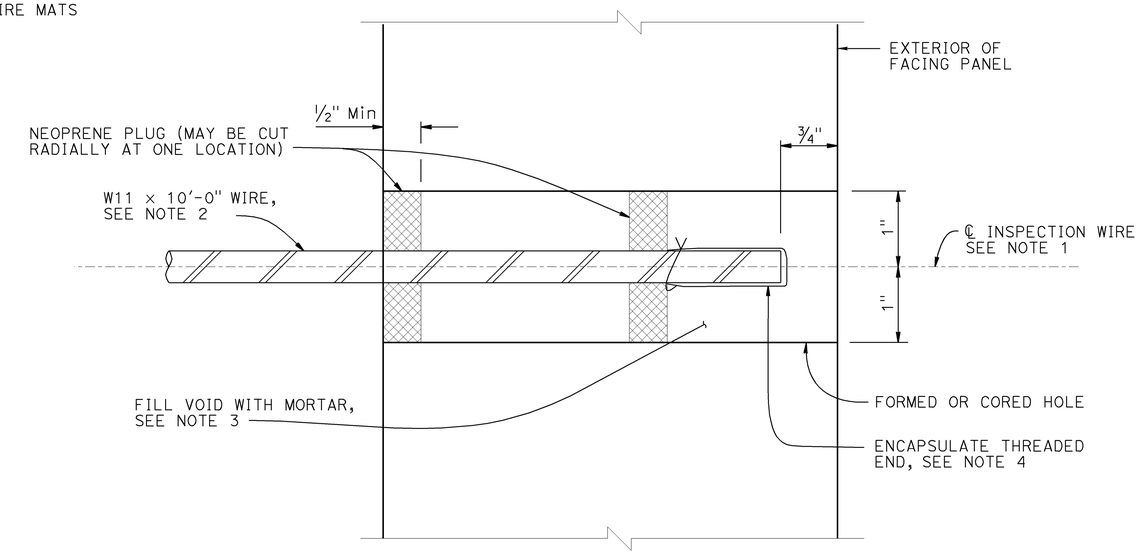

SECTION THRU INSPECTION WIRE

No Scale

NOTES:

1. Center inspection wire in facing panel.
2. Fabricated inspection wire from W11 wire representative of the welded wire mats, with 3/8" ø 16 UNC threads for at least 1 1/2" of one end.
3. Place inspection wire horizontal and perpendicular to the wall panel prior to backfilling.
4. Encapsulate threaded end with corrosion inhibiting mastic, vinyl covering, and secure with plastic tie.

UNC = Unified Coarse Threads

	BY	CHECKED
DESIGN	V. Ramakrishnan	T. Skreslet
DETAILS	K. Kubo / W. Zhang	T. Skreslet
QUANTITIES	V. Ramakrishnan	T. Skreslet

STATE OF CALIFORNIA
DEPARTMENT OF TRANSPORTATION

DIVISION OF ENGINEERING SERVICES
STRUCTURE DESIGN
DESIGN BRANCH 14

BRIDGE NO. 57E0129
POST MILE 0.83

MSE WALL 2
PANEL DETAILS NO. 3

STRUCTURES DESIGN DETAIL SHEET (ENGLISH) (REV. 09-01-10)

ORIGINAL SCALE IN INCHES FOR REDUCED PLANS 0 1 2 3

UNIT: 3613
PROJECT NUMBER & PHASE: 11000205191
CONTRACT NO.: 11-056321

DISREGARD PRINTS BEARING EARLIER REVISION DATES

REVISION DATES 05-06-13 05-06-13 05-06-13 05-06-13

SHEET 14 OF 19

FILE => 57e0129-1-pd3.dgn

USERNAME => s122751 DATE PLOTTED => 06-MAY-2013 TIME PLOTTED => 14:14

DIST	COUNTY	ROUTE	POST MILES TOTAL PROJECT	SHEET No.	TOTAL SHEETS
11	SD	11,905	0.0/1.6, R9.9/R10.7	618	622

V. Ramakrishnan 11-1-12
REGISTERED CIVIL ENGINEER DATE

04-22-13
PLANS APPROVAL DATE

REGISTERED PROFESSIONAL ENGINEER VIJAYARANI RAMAKRISHNAN No. C63091 Exp. 06-30-14 CIVIL STATE OF CALIFORNIA

The State of California or its officers or agents shall not be responsible for the accuracy or completeness of electronic copies of this plan sheet.

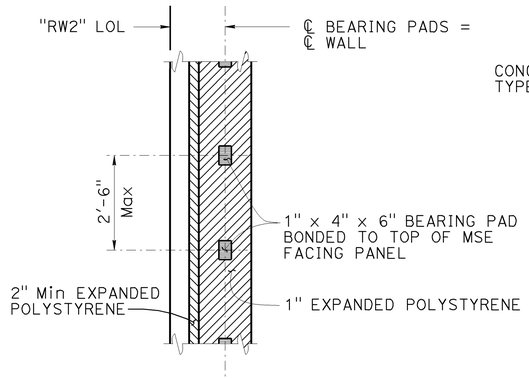

SECTION A-A
No Scale

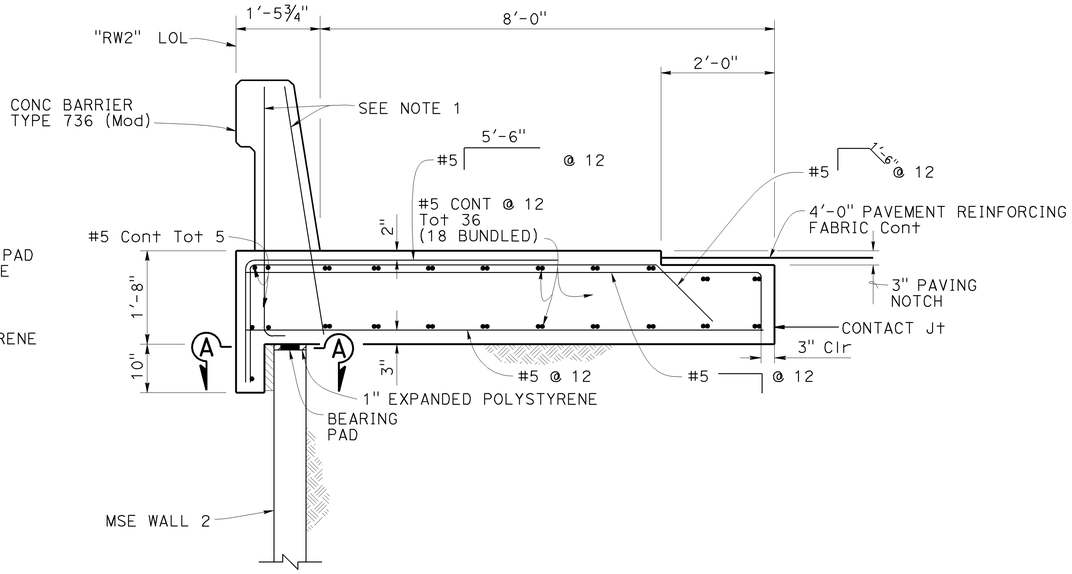

CONCRETE BARRIER SLAB WITH PAVING NOTCH B11-56
¾" = 1'-0"

NOTES:

1. Not all barrier reinforcement shown
2. At acute corners of Approach Slab, bend reinforcement as required to clear Expansion Joint
3. Reinforcement shown at drains is to be placed in addition to typical slab reinforcement.
4. Not all soil reinforcement mats shown for more details see "STRUCTURE PLANS NO.1 thru NO. 6"
5. Align ℄ DRAIN INLET with ℄ 10'-0" Wall Panels.
   For more details see "PANEL DETAILS NO.1" sheet
6. For more details see "PANEL DETAILS NO. 2" sheet

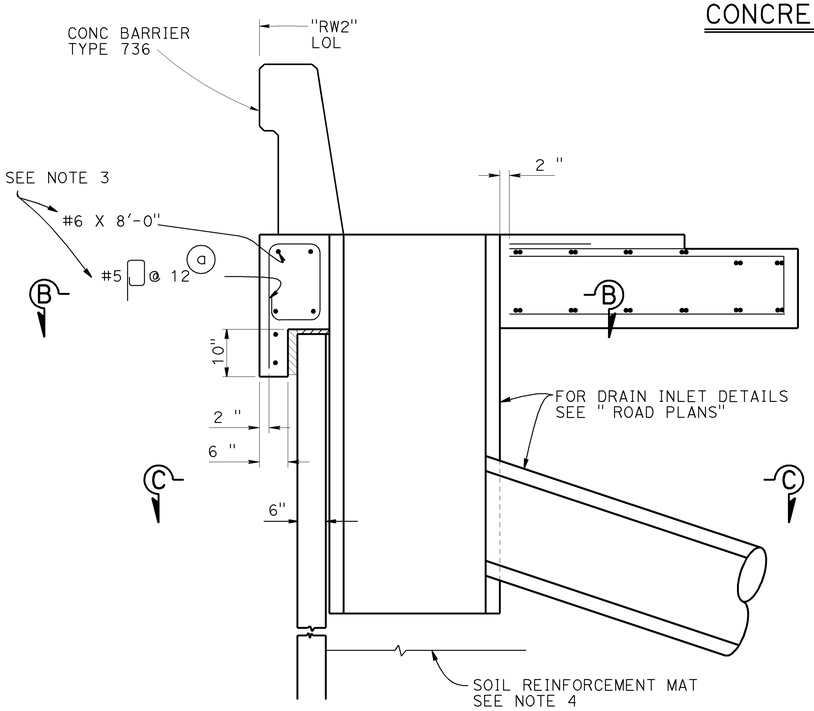

DRAINAGE INLET DETAIL
¾" = 1'-0"

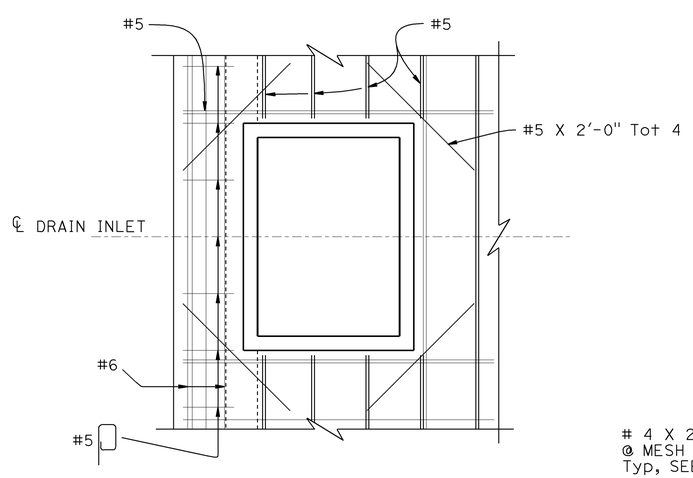

SECTION B-B
¾" = 1'-0"

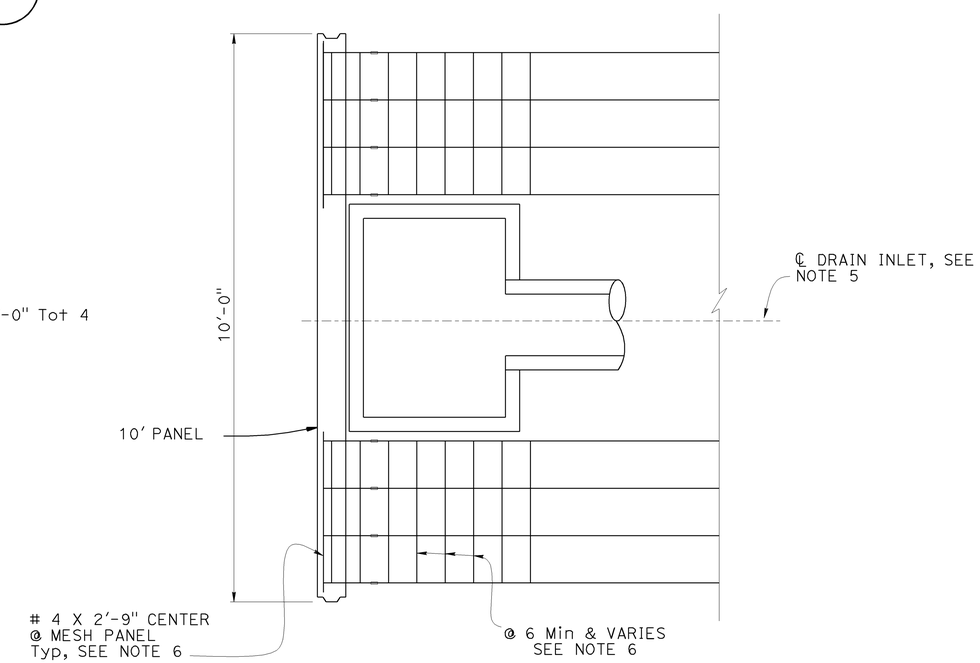

SECTION C-C
¾" = 1'-0"

	BY	CHECKED
DESIGN	V. Ramakrishnan	T. Skreslet
DETAILS	K. Kubo	T. Skreslet
QUANTITIES	V. Ramakrishnan	T. Skreslet

STATE OF CALIFORNIA
DEPARTMENT OF TRANSPORTATION

DIVISION OF ENGINEERING SERVICES
STRUCTURE DESIGN
DESIGN BRANCH 14

BRIDGE NO. 57E0129
POST MILE 0.83

MSE WALL 2
CONCRETE BARRIER SLAB DETAILS

STRUCTURES DESIGN DETAIL SHEET (ENGLISH) (REV. 09-01-10)

ORIGINAL SCALE IN INCHES FOR REDUCED PLANS 0 1 2 3

UNIT: 3613
PROJECT NUMBER & PHASE: 11000205191
CONTRACT NO.: 11-056310

DISREGARD PRINTS BEARING EARLIER REVISION DATES

REVISION DATES 12-05-12 12-18-12 12-24-12 05-06-13

SHEET 15 OF 19

FILE => 57e0129-k-cbsd.dgn

USERNAME => s122751 DATE PLOTTED => 06-MAY-2013 TIME PLOTTED => 14:14

DIST	COUNTY	ROUTE	POST MILES TOTAL PROJECT	SHEET No.	TOTAL SHEETS
11	SD	11,905	0.0/1.6, R9.9/R10.7	619	622

V. Ramakrishnan 11-1-12
REGISTERED CIVIL ENGINEER DATE

04-22-13
PLANS APPROVAL DATE

REGISTERED PROFESSIONAL ENGINEER VIJAYARANI RAMAKRISHNAN No. C63091 Exp. 06-30-14 CIVIL STATE OF CALIFORNIA

The State of California or its officers or agents shall not be responsible for the accuracy or completeness of scanned copies of this plan sheet.

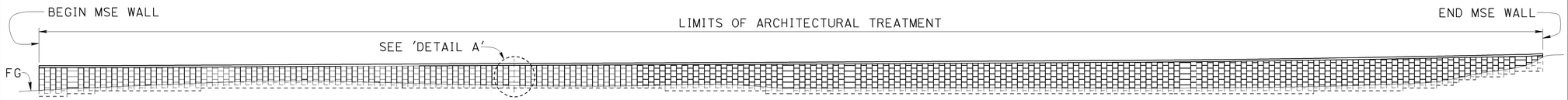

ELEVATION
1" = 50'-0"

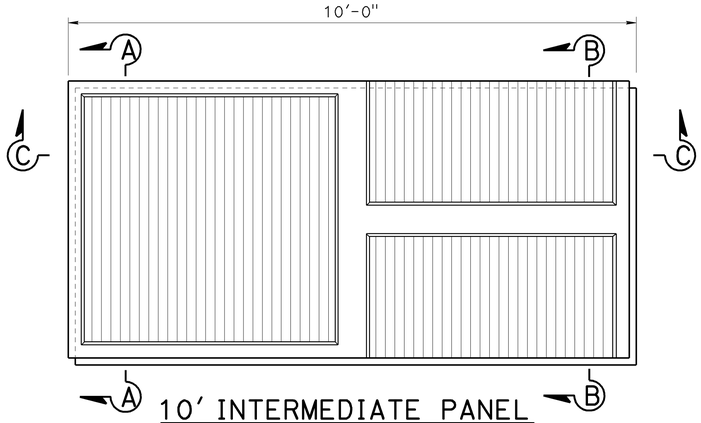

10' INTERMEDIATE PANEL
¾" = 1'-0"

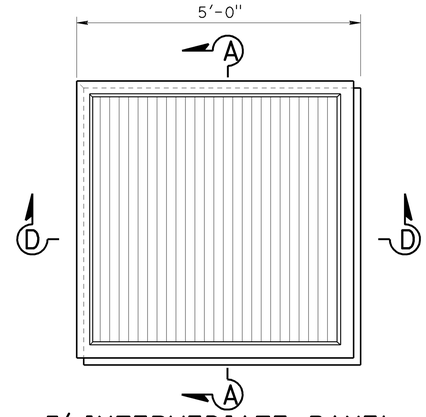

5' INTERMEDIATE PANEL
¾" = 1'-0"

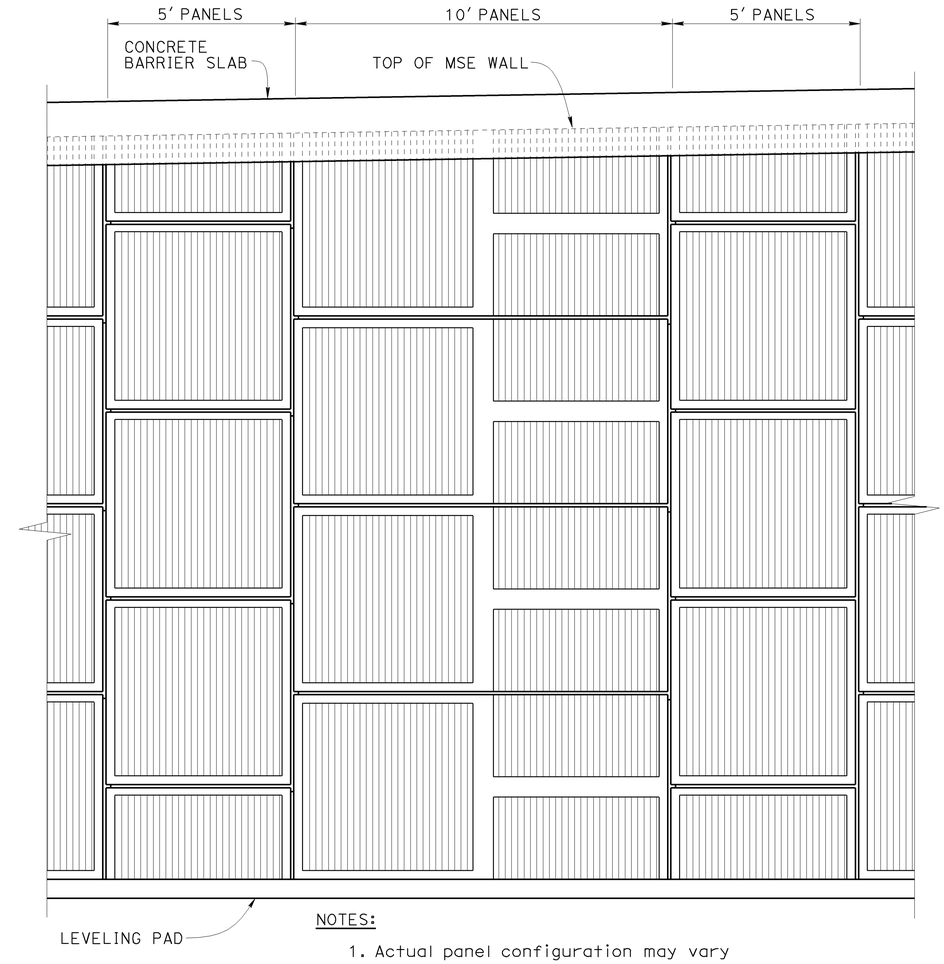

NOTES:
1. Actual panel configuration may vary
2. Concrete Barrier not shown

DETAIL A
No Scale

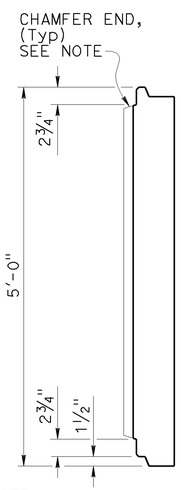

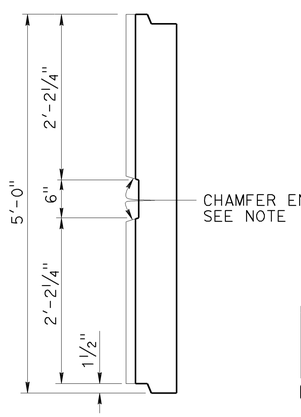

NOTE:
Chamfer angle shall match the fractrued rib angle shown on 'SECTION C-C & SECTION D-D'

SECTION A-A
1" = 1'-0"

SECTION B-B
1" = 1'-0"

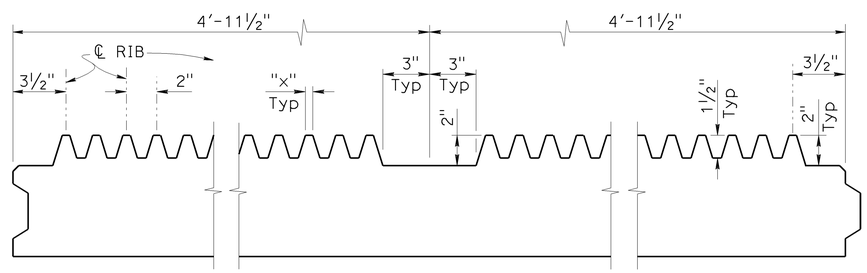

SECTION C-C

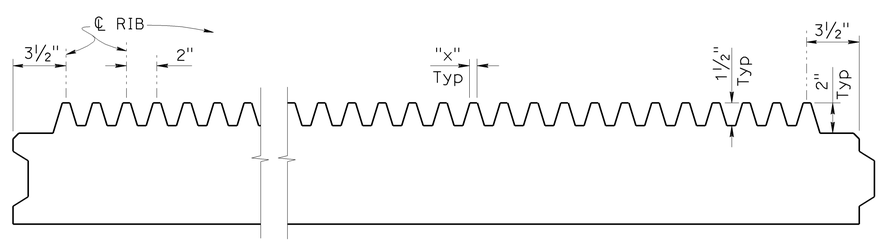

SECTION D-D

FRACTURED RIB ARCHITECTURAL DETAILS
No Scale

DESIGN	BY V. Ramakrishnan	CHECKED T. Skreslet	
DETAILS	BY K. Kubo	CHECKED T. Skreslet	
QUANTITIES	BY V. Ramakrishnan	CHECKED T. Skreslet	

STATE OF CALIFORNIA
DEPARTMENT OF TRANSPORTATION

DIVISION OF ENGINEERING SERVICES
STRUCTURE DESIGN
DESIGN BRANCH 14

BRIDGE NO. 57E0129
POST MILE 0.83

MSE WALL 2
ARCHITECTURAL DETAILS NO. 1

STRUCTURES DESIGN DETAIL SHEET (ENGLISH) (REV. 09-01-10)

ORIGINAL SCALE IN INCHES FOR REDUCED PLANS 0 1 2 3

UNIT: 3613
PROJECT NUMBER & PHASE: 11000205191
CONTRACT NO.: 11-056321

DISREGARD PRINTS BEARING EARLIER REVISION DATES

REVISION DATES: 10-24-12 10-28-12 11-29-12 05-06-13

SHEET 16 OF 19

FILE => 57e0129-n-archdt_01.dgn

USERNAME => s122751 DATE PLOTTED => 06-MAY-2013 TIME PLOTTED => 14:14

DIST	COUNTY	ROUTE	POST MILES TOTAL PROJECT	SHEET No.	TOTAL SHEETS
11	SD	11,905	0.0/1.6, R9.9/R10.7	620	622

V. Ramakrishnan 11-1-12
REGISTERED CIVIL ENGINEER DATE

04-22-13
PLANS APPROVAL DATE

REGISTERED PROFESSIONAL ENGINEER VIJAYARANI RAMAKRISHNAN No. C63091 Exp. 06-30-14 CIVIL STATE OF CALIFORNIA

The State of California or its officers or agents shall not be responsible for the accuracy or completeness of scanned copies of this plan sheet.

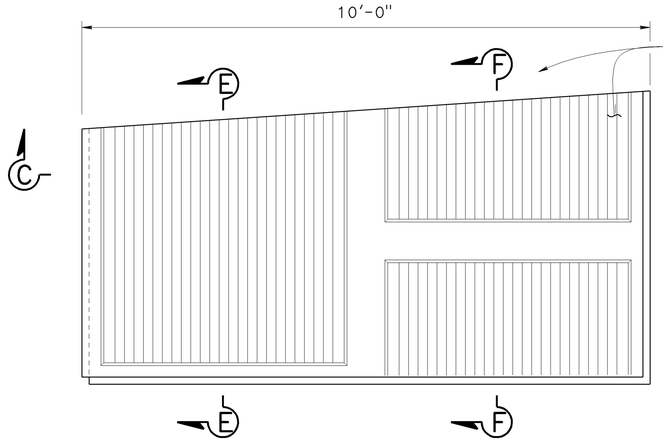

10' TOP PANEL
3/4" = 1'-0"

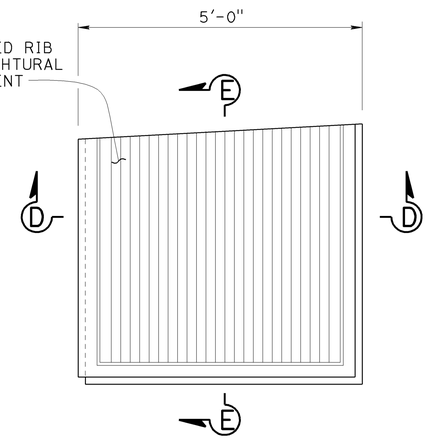

5' TOP PANEL
3/4" = 1'-0"

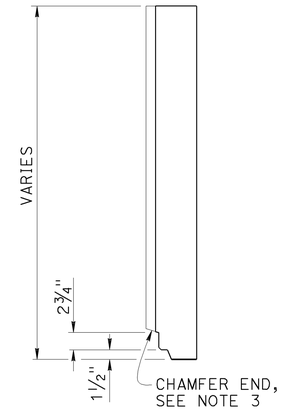

SECTION E-E
1" = 1'-0"

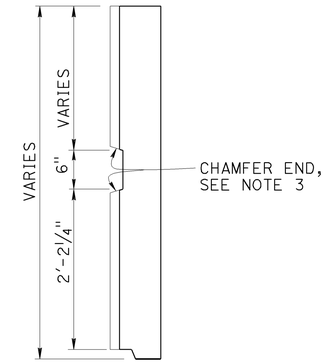

SECTION F-F
1" = 1'-0"

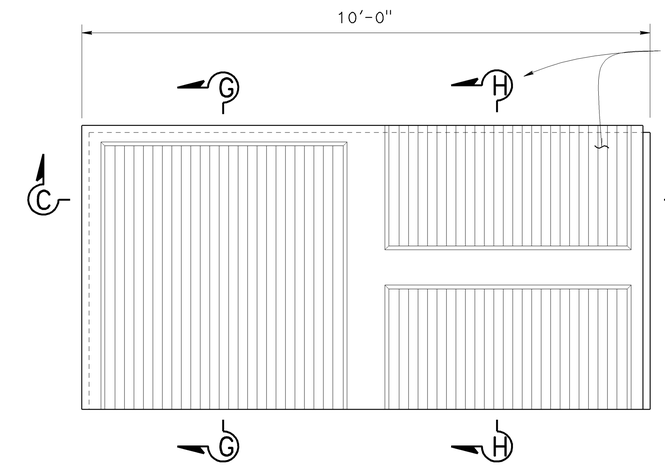

10' BOTTOM PANEL
3/4" = 1'-0"

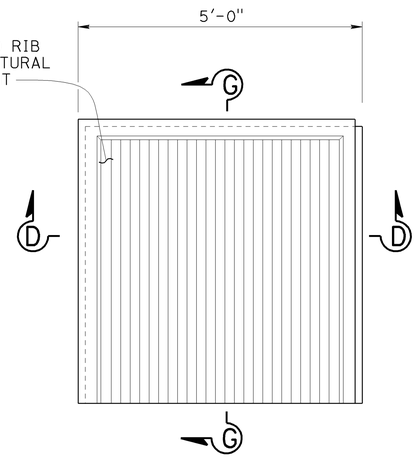

5' BOTTOM PANEL
3/4" = 1'-0"

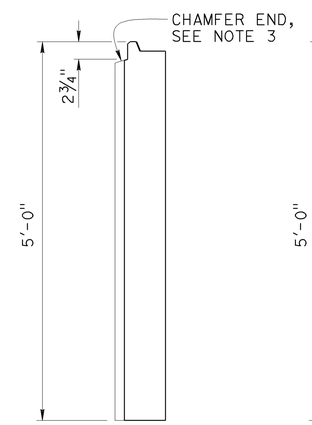

SECTION G-G
1" = 1'-0"

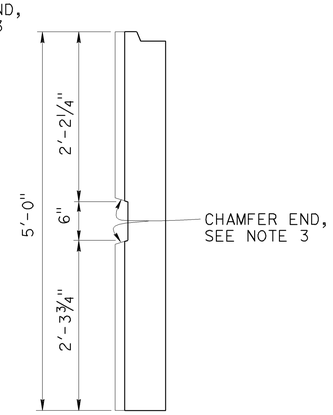

SECTION H-H
1" = 1'-0"

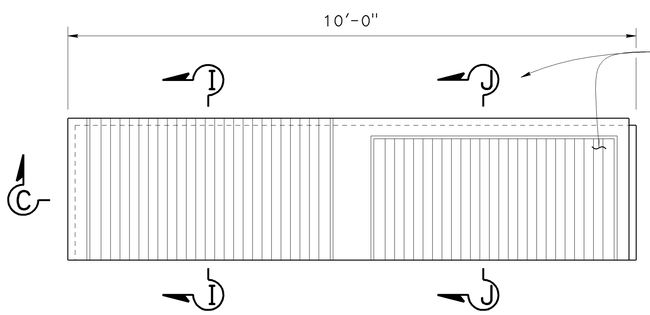

10' BOTTOM HALF PANEL
3/4" = 1'-0"

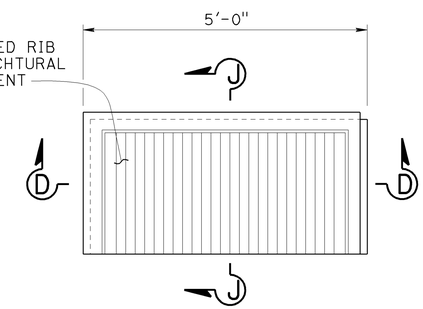

5' BOTTOM HALF PANEL
3/4" = 1'-0"

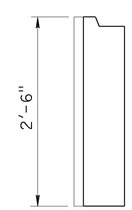

SECTION I-I
1" = 1'-0"

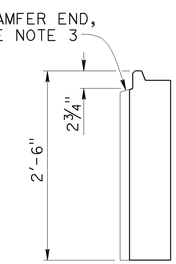

SECTION J-J
1" = 1'-0"

NOTES:

1. For 'SECTION C-C' and 'SECTION D-D', see "ARCHITECTURAL DETAILS NO. 1" sheet
2. For additional Panel Details, see "PANEL DETAILS NO. 1, 2 & 3" sheets
3. Chamfer angle shall match the Fractured Rib angle shown on 'SECTION C-C' and 'SECTION D-D', see "ARCHITECTURAL DETAILS NO. 1" sheet

	BY	CHECKED
DESIGN	V. Ramakrishnan	T. Skreslet
DETAILS	K. Kubo/ W. Zhang	T. Skreslet
QUANTITIES	V. Ramakrishnan	T. Skreslet

STATE OF CALIFORNIA
DEPARTMENT OF TRANSPORTATION

DIVISION OF ENGINEERING SERVICES
STRUCTURE DESIGN
DESIGN BRANCH 14

BRIDGE NO. 57E0129
POST MILE 0.83

MSE WALL 2
ARCHITECTURAL DETAILS NO.2

STRUCTURES DESIGN DETAIL SHEET (ENGLISH) (REV. 09-01-10)

ORIGINAL SCALE IN INCHES FOR REDUCED PLANS 0 1 2 3

UNIT: 3613
PROJECT NUMBER & PHASE: 11000205191
CONTRACT NO.: 11-056310

DISREGARD PRINTS BEARING EARLIER REVISION DATES

REVISION DATES 10-25-12 11-29-12 05-06-13 10-25-13

SHEET 17 OF 19

FILE => 57e0129-n-archdt_02.dgn

USERNAME => s122751 DATE PLOTTED => 06-MAY-2013 TIME PLOTTED => 14:14

DIST	COUNTY	ROUTE	POST MILES TOTAL PROJECT	SHEET No.	TOTAL SHEETS
11	SD	11,905	0.0/1.6, R9.9/R10.7	621	622

V. Ramakrishnan 11-1-12
REGISTERED CIVIL ENGINEER DATE

04-22-13
PLANS APPROVAL DATE

REGISTERED PROFESSIONAL ENGINEER VIJAYARANI RAMAKRISHNAN No. C63091 Exp 06-30-14 CIVIL STATE OF CALIFORNIA

The State of California or its officers or agents shall not be responsible for the accuracy or completeness of electronic copies of this plan sheet.

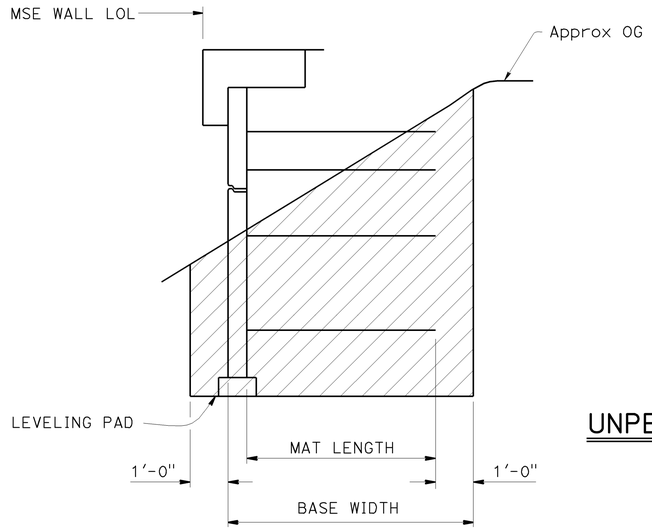

LIMITS OF EXCAVTION

½" = 1'-0"

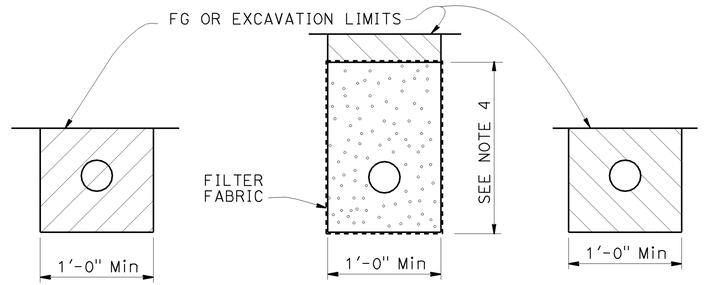

OUTLET PIPE CLEANOUT PIPE

EXCAVATION BACKFILL

UNPERFORATED OUTLET OR CLEAN OUT PIPE FOR UNDERDRAIN

NO SCALE

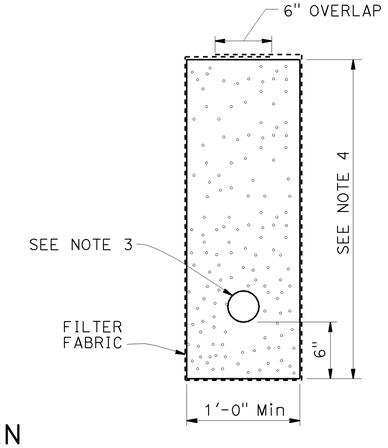

UNDERDRAIN DETAIL

LEGEND:

- Limits of Structure Excavation
- Limits of Structure Backfill
- Limits of Permeable Material

NOTES:

1. Limits to FG except to GP when in roadway section
2. For locations of Outlet & Clean Out Pipes, see "STRUCTURE PLAN NO.1 THRU NO.6"
3. Place 4" ø perforated smoothed wall PVC
4. Place top of pervious material to top reinforcement mat elevation or above

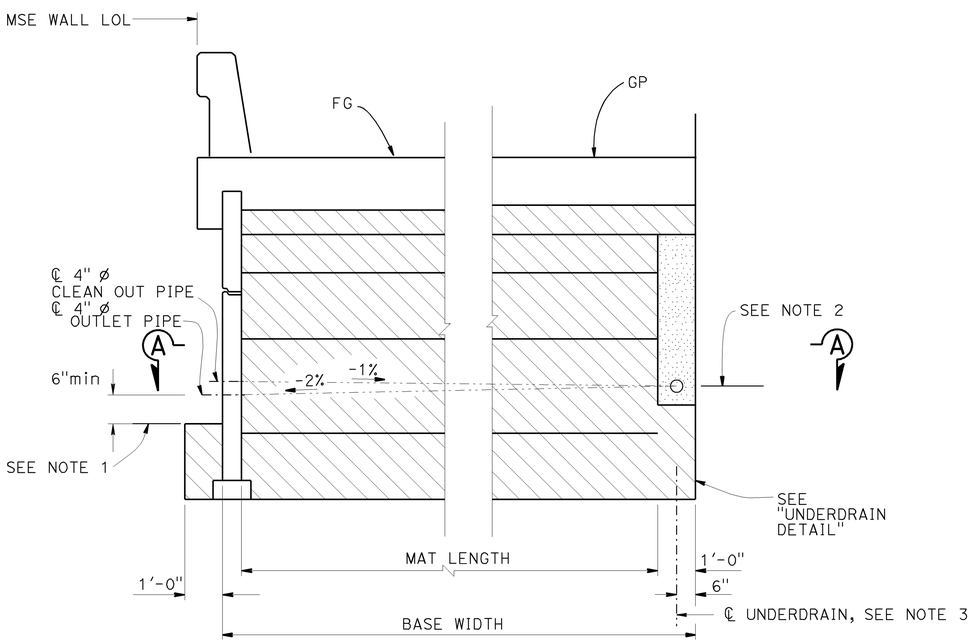

ROADWAY SECTION

½" = 1'-0"

LIMITS OF BACKFILL

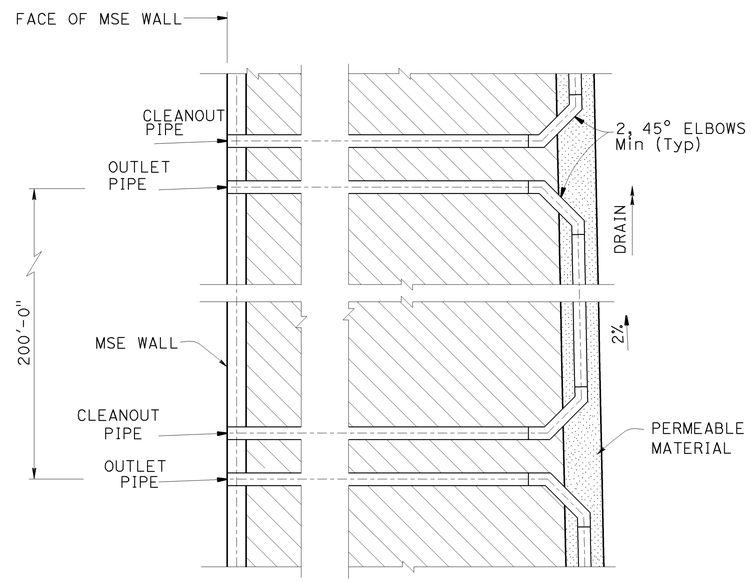

SECTION A-A

NO SCALE

TABLE 1. BASE WIDTH DIMENSIONS

Design Height,H	Base Width
14'-2"	11'-6"
16'-8"	13'-6"
19'-2"	15'-6"
21'-8"	17'-6"
24'-2"	18'-6"
26'-8"	20'-6"
29'-2"	21'-6"
31'-8"	23'-6"
34'-2"	25'-6"

DESIGN	BY V. Ramakrishnan	CHECKED T. Skreslet	
DETAILS	BY K. Kubo	CHECKED T. Skreslet	
QUANTITIES	BY V. Ramakrishnan	CHECKED T. Skreslet	

STATE OF CALIFORNIA
DEPARTMENT OF TRANSPORTATION

DIVISION OF ENGINEERING SERVICES
STRUCTURE DESIGN
DESIGN BRANCH 14

BRIDGE NO. 57E0129
POST MILE 0.83

MSE WALL 2
MISCELLANEOUS DETAILS

STRUCTURES DESIGN DETAIL SHEET (ENGLISH) (REV. 09-01-10)

ORIGINAL SCALE IN INCHES FOR REDUCED PLANS 0 1 2 3

UNIT: 3613
PROJECT NUMBER & PHASE: 11000205191
CONTRACT NO.: 11-056321

DISREGARD PRINTS BEARING EARLIER REVISION DATES

REVISION DATES 11-15-12 12-05-12 12-18-12 05-06-13

SHEET 18 OF 19

FILE => 57e0129-o-miscdt.dgn

USERNAME => s122751 DATE PLOTTED => 06-MAY-2013 TIME PLOTTED => 14:14

DIST	COUNTY	ROUTE	POST MILES TOTAL PROJECT	SHEET No	TOTAL SHEETS
11	SD	11,905	0.0/1.6, R9.9/R10.7	622	622

GEOTECHNICAL PROFESSIONAL 11-13-12

04-22-13
PLANS APPROVAL DATE

REGISTERED PROFESSIONAL ENGINEER Zia Yazdani No. 2119 Exp. 3-31-15 GEOTECHNICAL STATE OF CALIFORNIA

The State of California or its officers or agents shall not be responsible for the accuracy or completeness of electronic copies of this plan sheet.

This LOTB sheet was prepared in accordance with the Caltrans Soil & Rock Logging, Classification, & Presentation Manual (2010 Edition), with the exception of the Boring designation numbers.

See 2010 Standard Plans A10F and A10G for Soil Legend, and A10H for Rock Legend.

BENCH MARKS

SANYO-N
Fnd 2¼" CADT Disk in SW
N 1 786 710.76
E 6 348 815.78
Elev = 553.62

ALTA
Fnd 2¼" CADT Disk in Boulder
N 1 785 489.17
E 6 360 188.82
Elev = 713.22
Vertical Datum: NAVD88

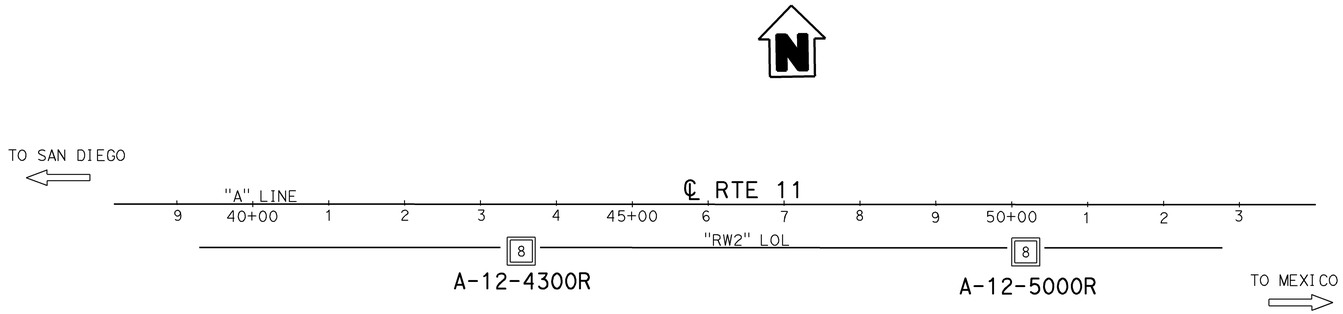

PLAN
1" = 100'

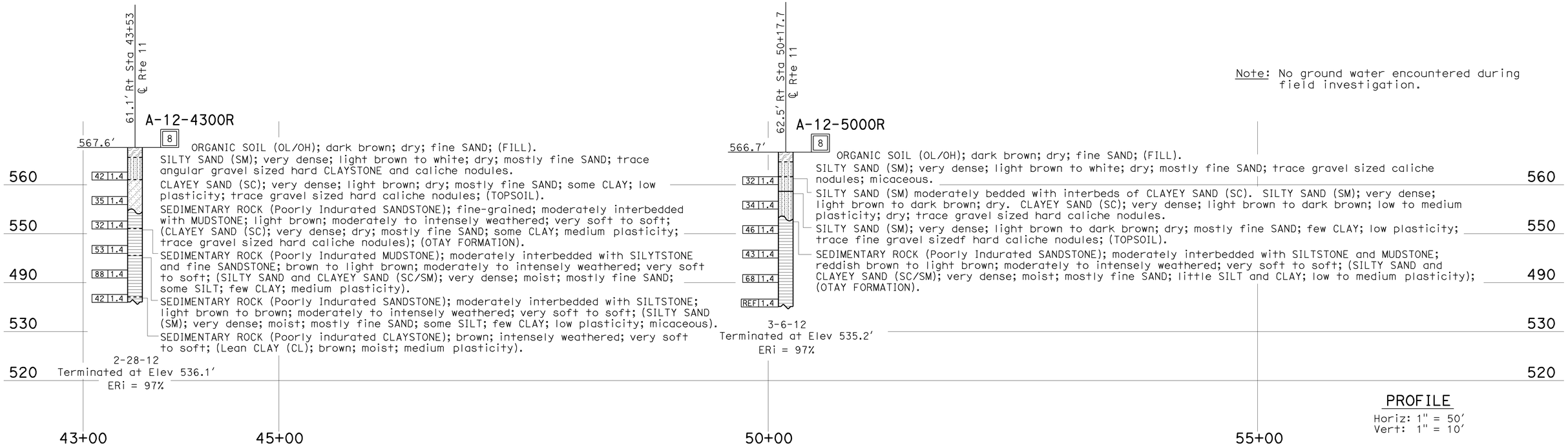

Note: No ground water encountered during field investigation.

PROFILE
Horiz: 1" = 50'
Vert: 1" = 10'

ENGINEERING SERVICES	MATERIALS AND GEOTECHNICAL SERVICES	STATE OF CALIFORNIA DEPARTMENT OF TRANSPORTATION	DIVISION OF ENGINEERING SERVICES STRUCTURE DESIGN DESIGN BRANCH 14	BRIDGE NO. 57E0129 POST MILE 0.83	MSE WALL 2 LOG OF TEST BORINGS
FUNCTIONAL SUPERVISOR NAME: B. Hinman	DRAWN BY: I.G-Remmen CHECKED BY: M. Fordham	FIELD INVESTIGATION BY: J. Kermode, E. Galleta			

OGS CIVIL LOG OF TEST BORINGS SHEET

ORIGINAL SCALE IN INCHES FOR REDUCED PLANS 0 1 2 3

UNIT: 3643
PROJECT NUMBER & PHASE: 11000205191 CONTRACT NO.: 11-056321

DISREGARD PRINTS BEARING EARLIER REVISION DATES

REVISION DATES 11-05-12 11-08-12 05-06-13

SHEET 19 OF 19

FILE => 57e0129-z-lotb_1of1.dgn

USERNAME => s122751 DATE PLOTTED => 06-MAY-2013 TIME PLOTTED => 14:14