Dist	COUNTY	LOCATION CODE	POST MILES TOTAL PROJECT	SHEET No.	TOTAL SHEETS
11	Imp	5708		1	354

STATE OF CALIFORNIA

DEPARTMENT OF TRANSPORTATION

PROJECT PLANS FOR BUILDING CONSTRUCTION

IN IMPERIAL COUNTY
IN EL CENTRO
AT THE EL CENTRO MAINTENANCE STATION
AT 1102 MONTENEGRO WAY

TO BE SUPPLEMENTED BY STANDARD PLANS DATED MAY 2006

INDEX OF PLANS

SHEET No.	DESCRIPTION
1	TITLE AND LOCATION MAP
2	PROJECT CONTROL
3	LAYOUT
4-19	CONSTRUCTION DETAILS
20	TEMPORARY WATER POLLUTION CONTROL PLAN
21	CONTOUR GRADING
22	SUMMARY OF QUANTITIES
23-24	RETAINING WALL DETAILS AND QUANTITIES
25-36	PLANT LIST, PLANTING PLANS, IRRIGATION PLANS AND LANDSCAPE DETAILS
37	MISCELLANEOUS ELECTRICAL
38-61	REVISED AND NEW STANDARD PLANS

BUILDING PLANS

62-141	ARCHITECTURAL PLANS
142-269	STRUCTURAL PLANS
270-301	MECHANICAL PLANS
302-345	ELECTRICAL PLANS
346-354	WATER/WASTEWATER PLANS

THE STANDARD PLANS LIST APPLICABLE TO THIS CONTRACT IS INCLUDED IN THE NOTICE TO BIDDERS AND SPECIAL PROVISIONS BOOK.

LOCATION MAP

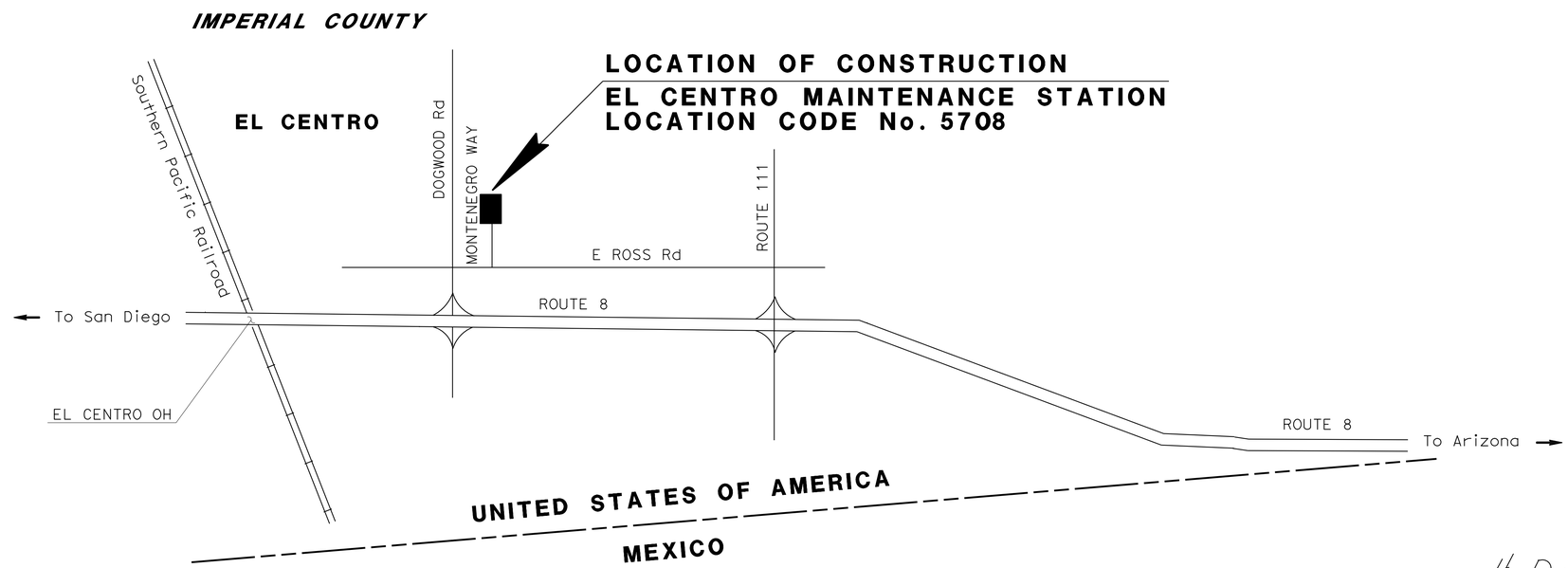

PROJECT MANAGER HASAN DAABAS

DESIGN ENGINEER HASAN DAABAS

H. Daabas 08-05-11
PROJECT ENGINEER REGISTERED CIVIL ENGINEER — DATE

January 6, 2014
PLANS APPROVAL DATE

REGISTERED PROFESSIONAL ENGINEER HASAN DAABAS No. 48962 Exp. 9/30/14 CIVIL STATE OF CALIFORNIA

THE STATE OF CALIFORNIA OR ITS OFFICERS OR AGENTS SHALL NOT BE RESPONSIBLE FOR THE ACCURACY OR COMPLETENESS OF SCANNED COPIES OF THIS PLAN SHEET.

THE CONTRACTOR SHALL POSSESS THE CLASS (OR CLASSES) OF LICENSE AS SPECIFIED IN THE "NOTICE TO BIDDERS."

NO SCALE

CONTRACT No.	11-076704
PROJECT ID	1100000035

LAST REVISION 01-06-14 DATE PLOTTED => 21-JAN-2014 TIME PLOTTED => 09:11

Dist	COUNTY	LOCATION CODE	POST MILES TOTAL PROJECT	SHEET No.	TOTAL SHEETS
11	Imp	5708		2	354

08-09-11
PROFESSIONAL LAND SURVEYOR DATE

01-06-14
PLANS APPROVAL DATE

PROFESSIONAL LAND SURVEYOR MARK D. PHELAN L.S.7111 EXP:12-31-14 STATE OF CALIFORNIA

THE STATE OF CALIFORNIA OR ITS OFFICERS OR AGENTS SHALL NOT BE RESPONSIBLE FOR THE ACCURACY OR COMPLETENESS OF SCANNED COPIES OF THIS PLAN SHEET.

NOTES:

1. CONTACT DISTRICT 11'S LAND SURVEY DIVISION, PHONE (858)467-4305, FOR ADDITIONAL INFORMATION OR QUERIES REGARDING THIS SURVEY PROJECT CONTROL.
2. **BASIS OF BEARINGS AND COORDINATES**
   FOR THIS PROJECT IS THE CALIFORNIA COORDINATE SYSTEM OF 1983, HPGN EPOCH ADJUSTMENT [CCS 83 (1991.35)], ZONE 6. 3RD ORDER PROJECT CONTROL STATIONS WERE ESTABLISHED ACCORDING TO CRITERIA SET FORTH IN THE FEDERAL GEODETIC CONTROL SUBCOMMITTEE'S "GEOMETRIC GEODETIC ACCURACY STANDARDS AND SPECIFICATIONS FOR USING GPS RELATIVE POSITIONING TECHNIQUES" REPRINTED AUGUST 1, 1989.

   THIS GPS SURVEY WAS CONSTRAINED TO 1ST ORDER CONTROL STATION "IVPN 23" AND "CHANGE", PER THE ABOVE-REFERENCED STANDARDS.
3. **BASIS OF ELEVATIONS**
   FOR THIS PROJECT IS THE USC&GS VERTICAL DATUM OF 1988 (NAVD88) ELEVATIONS +328.08 FEET (100 METERS) AND WERE CONSTRAINED TO STATION "IVPN 23".
4. IN THE EVENT GPS MACHINE CONTROL/GUIDANCE IS USED FOR THIS PROJECT, THE CONTRACTOR SHALL CONTACT OR MEET WITH DISTRICT 11'S LAND SURVEY DIVISION TO OBTAIN THE CONTROL NECESSARY TO ESTABLISH A PROJECT CALIBRATION COMPATIBLE FOR ALL USERS.

ABBREVIATIONS:

CADT CALIFORNIA DEPARTMENT OF TRANSPORTATION

LEGEND:

1ST ORDER STATION

3RD ORDER STATION

CONTROL FOR DESIGN AND CONSTRUCTION

STATION DESIGNATION	ORDER	NORTHING	EASTING	ELEVATION	DESCRIPTION
CHANGE	1ST	1,862,144.22	6,791,639.56	317.84	3½" CADT BRASS DISK
IVPN 23	1ST	1,862,532.46	6,779,451.20	291.90	2½" BRASS DISK
WP DA2	3RD	1,863,582.22	6,781,406.34	291.32	CHISELED "+" ON Conc HEADWALL
WP DA3	3RD	1,864,941.67	6,781,374.52	289.85	CHISELED "+" ON Conc HEADWALL

IMPERIAL COUNTY

LOCATION OF CONSTRUCTION

EL CENTRO MAINTENANCE STATION
LOCATION CODE No. 5708

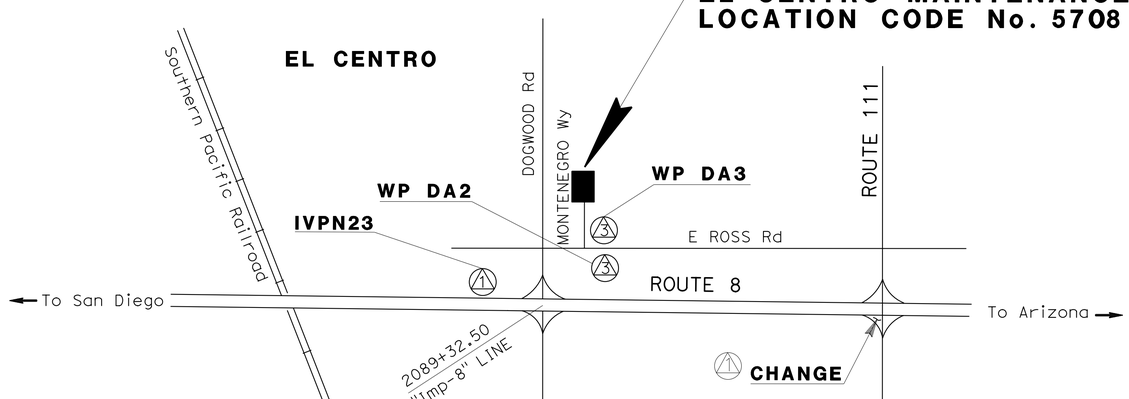

APPROVED FOR PROJECT CONTROL INFORMATION ONLY

PROJECT CONTROL

NO SCALE

PC-1

STATE OF CALIFORNIA - DEPARTMENT OF TRANSPORTATION
Caltrans LAND SURVEYS DIVISION

FUNCTIONAL SUPERVISOR: BRUCE URQUHART
CALCULATED-DESIGNED BY: MARK PHELAN
CHECKED BY: NED SALMAN
REVISED BY
DATE REVISED

LAST REVISION 08-11-11
DATE PLOTTED => 21-JAN-2014
TIME PLOTTED => 09:11

Dist	COUNTY	LOCATION CODE	POST MILES TOTAL PROJECT	SHEET No.	TOTAL SHEETS
11	Imp	5708		3	354

H. Daabas 08-05-11
REGISTERED CIVIL ENGINEER DATE

01-06-14
PLANS APPROVAL DATE

REGISTERED PROFESSIONAL ENGINEER HASAN DAABAS No. 48962 Exp. 9/30/14 CIVIL STATE OF CALIFORNIA

THE STATE OF CALIFORNIA OR ITS OFFICERS OR AGENTS SHALL NOT BE RESPONSIBLE FOR THE ACCURACY OR COMPLETENESS OF SCANNED COPIES OF THIS PLAN SHEET.

NOTES:

1. FOR ACCURATE RIGHT OF WAY DATA, CONTACT RIGHT OF WAY ENGINEERING AT THE DISTRICT OFFICE.
2. SEE CONSTRUCTION DETAILS FOR SECTION VIEWS AND PAVEMENT ELEVATIONS.
3. SEE CONSTRUCTION DETAILS FOR DITCH, RETENTION BASIN, 16′ ORNAMENTAL STEEL ROLLING GATE, CONCRETE ENTRANCE SIGN AND DRIVEWAY DETAILS.
4. FOR LOCATIONS OF IRRIGATION CROSSOVER AND IRRIGATION SLEEVE WORK, SEE CONSTRUCTION DETAILS.
5. FOR LOCATIONS OF ADDITIONAL PLANTING AREAS, SEE PLANTING PLANS.
6. FOR CL FENCE EXTENSION ARM DETAILS, SEE SHEET C-5.

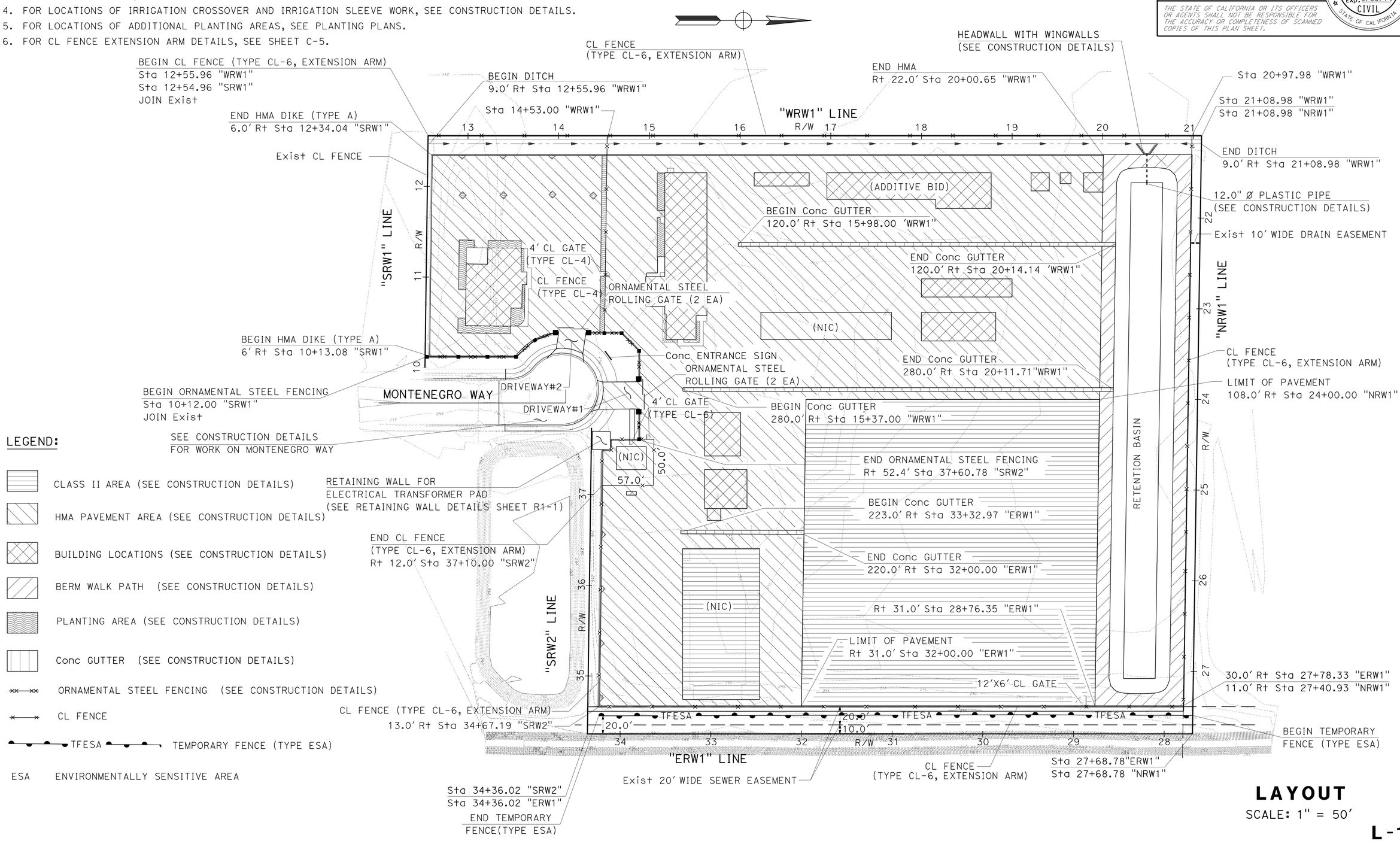

LEGEND:

- CLASS II AREA (SEE CONSTRUCTION DETAILS)
- HMA PAVEMENT AREA (SEE CONSTRUCTION DETAILS)
- BUILDING LOCATIONS (SEE CONSTRUCTION DETAILS)
- BERM WALK PATH (SEE CONSTRUCTION DETAILS)
- PLANTING AREA (SEE CONSTRUCTION DETAILS)
- Conc GUTTER (SEE CONSTRUCTION DETAILS)
- ORNAMENTAL STEEL FENCING (SEE CONSTRUCTION DETAILS)
- CL FENCE
- TFESA — TEMPORARY FENCE (TYPE ESA)
- ESA — ENVIRONMENTALLY SENSITIVE AREA

LAYOUT

SCALE: 1" = 50′

L-1

STATE OF CALIFORNIA - DEPARTMENT OF TRANSPORTATION
Caltrans LANDS & BUILDINGS

REVISED BY	DATE REVISED	KEVIN VO	ALEX GARCIA	FUNCTIONAL SUPERVISOR	HASAN DAABAS	CALCULATED-DESIGNED BY	CHECKED BY

LAST REVISION 11-22-13 | DATE PLOTTED => 21-JAN-2014 | TIME PLOTTED => 09:11

Dist	COUNTY	LOCATION CODE	POST MILES TOTAL PROJECT	SHEET No.	TOTAL SHEETS
11	Imp	5708		4	354

H. Daabas 08-05-11
REGISTERED CIVIL ENGINEER DATE

01-06-14
PLANS APPROVAL DATE

REGISTERED PROFESSIONAL ENGINEER HASAN DAABAS No. 48962 Exp. 9/30/14 CIVIL STATE OF CALIFORNIA

THE STATE OF CALIFORNIA OR ITS OFFICERS OR AGENTS SHALL NOT BE RESPONSIBLE FOR THE ACCURACY OR COMPLETENESS OF SCANNED COPIES OF THIS PLAN SHEET.

LEGEND:

DIRECTION OF WATER FLOW

BUILDING LOCATIONS (SEE BUILDING PLANS FOR SLAB ELEVATIONS)

ABBREVIATIONS:

CPt	CATCH POINT
IID	IMPERIAL IRRIGATION DISTRICT
NIC	NOT INCLUDED IN CONTRACT PLANS

NOTE:
SEE CONSTRUCTION DETAILS SHEET C-2 FOR ADDITIONAL BUILDING LOCATION TABLES.

BUILDING LOCATION TABLE

LOCATION	No.	LINE	Sta	OFFSET (Rt)
(A) REGIONAL OFFICE	1	"SRW1"	11+15.00	44.00
	2		11+15.00	67.50
	3		11+33.00	67.50
	4		11+33.00	104.50
	5		11+07.00	104.50
	6		11+07.00	111.00
	7		10+93.00	111.00
	8		10+93.00	106.00
	9		10+67.00	106.00
	10		10+67.00	94.000
	11		10+47.00	94.000
	12		10+47.00	44.00
(B) MAINTENANCE OFFICE/EQUIPMENT	1	"WRW1"	14+96.00	155.50
	2		15+17.00	155.50
	3		15+17.00	41.00
	4		15+63.50	41.00
	5		15+63.50	198.50
	6		15+51.50	198.50
	7		15+51.50	225.00
	8		15+18.50	225.00
	9		15+18.50	196.75
	10		15+17.00	196.75
	11		15+17.00	188.50
	12		14+96.00	188.50
(C) COVERED STORAGE	1	"WRW1"	16+15.00	41.00
	2		16+75.67	41.00
	3		16+75.67	55.67
	4		16+15.00	55.67
(D) COVERED TRASH/MATERIAL BINS	1	"WRW1"	16+96.00	41.00
(ADDITIVE BID)	2		18+77.17	41.00
	3		18+77.17	80.42
	4		18+16.00	80.42
	5		18+16.00	70.42
	6		16+96.00	70.42
(E) HERBICIDE/FERTILIZER STORAGE	1	"WRW1"	19+21.00	41.00
	2		19+41.00	41.00
	3		19+41.00	61.00
	4		19+21.00	61.00

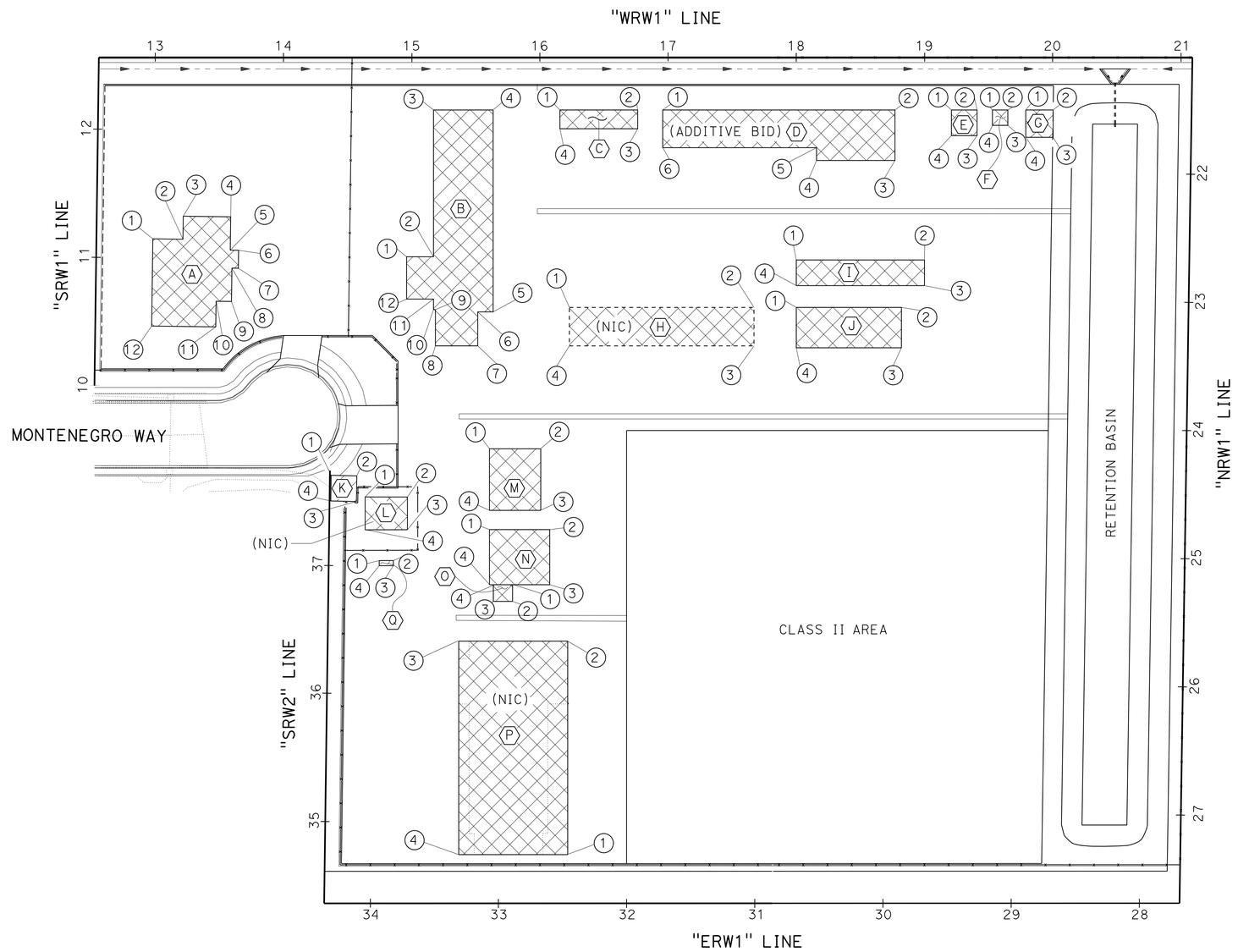

CONSTRUCTION DETAILS

NO SCALE

C-1

STATE OF CALIFORNIA - DEPARTMENT OF TRANSPORTATION
Caltrans LANDS & BUILDINGS

FUNCTIONAL SUPERVISOR: HASAN DAABAS
CALCULATED-DESIGNED BY: KEVIN VO
CHECKED BY: ALEX GARCIA
REVISED BY
DATE REVISED

LAST REVISION 11-22-13
DATE PLOTTED => 21-JAN-2014
TIME PLOTTED => 09:11

Dist	COUNTY	LOCATION CODE	POST MILES TOTAL PROJECT	SHEET No.	TOTAL SHEETS
11	Imp	5708		5	354

H. Daabas 08-05-11
REGISTERED CIVIL ENGINEER DATE

01-06-14
PLANS APPROVAL DATE

REGISTERED PROFESSIONAL ENGINEER
HASAN DAABAS
No. 48962
Exp. 9/30/14
CIVIL
STATE OF CALIFORNIA

THE STATE OF CALIFORNIA OR ITS OFFICERS OR AGENTS SHALL NOT BE RESPONSIBLE FOR THE ACCURACY OR COMPLETENESS OF SCANNED COPIES OF THIS PLAN SHEET.

BUILDING LOCATION TABLE

STRUCTURE	No.	LINE	Sta	OFFSET (Rt)
(F) HAZARDOUS MATERIAL CONTAINER PAD	1	"WRW1"	19+53.00	41.00
	2		19+65.00	41.00
	3		19+65.00	53.00
	4		19+53.00	53.00
(G) EMULSION TANK PAD	1	"WRW1"	19+79.00	41.00
	2		20+00.33	41.00
	3		20+00.33	62.33
	4		19+79.00	62.33
(H) COVERED EQUIPMENT PARKING	1	"WRW1"	16+21.17	195.00
(NIC)	2		17+67.00	195.00
	3		17+67.00	225.00
	4		16+21.17	225.00
(I) STORAGE CONCRETE PADS	1	"WRW1"	18+00.00	158.00
	2		19+00.00	158.00
	3		19+00.00	178.00
	4		18+00.00	178.00
(J) WAREHOUSE	1	"WRW1"	18+00.00	195.00
	2		18+82.00	195.00
	3		18+82.00	226.50
	4		18+00.00	226.50
(K) ELECTRICAL TRANSFORMER PAD	1	"SRW2"	37+69.75	1.00
	2		37+69.75	21.00
	3		37+49.75	21.00
	4		37+49.75	1.00
(L) SPECIAL PROGRAMS	1	"ERW1"	34+04.00	316.92
(NIC)	2		33+71.00	316.92
	3		33+71.00	291.42
	4		34+04.00	291.42

BUILDING LOCATION TABLE

STRUCTURE	No.	LINE	Sta	OFFSET (Rt)
(M) FUEL ISLAND	1	"ERW1"	33+07.50	352.00
	2		32+67.50	352.00
	3		32+67.50	307.00
	4		33+07.50	307.50
(N) WASH RACK	1	"ERW1"	33+07.50	291.50
	2		32+60.50	291.50
	3		32+60.50	248.50
	4		33+07.50	248.50
(O) WASH RACK	1	"ERW1"	32+88.50	248.50
	2		32+88.50	240.50
	3		33+03.50	240.50
	4		33+03.50	248.50
(P) SUBSHOP	1	"ERW1"	32+46.00	38.00
(NIC)	2		32+46.00	204.50
	3		33+31.00	204.50
	4		33+31.00	38.00
(Q) LIQUEFIED PETROLEUM GAS TANK PAD	1	"ERW1"	33+93.00	267.33
	2		33+82.00	267.33
	3		33+82.00	263.33
	4		33+93.00	263.33

CONSTRUCTION DETAILS

NO SCALE

C-2

STATE OF CALIFORNIA - DEPARTMENT OF TRANSPORTATION
Caltrans LANDS & BUILDINGS

FUNCTIONAL SUPERVISOR: HASAN DAABAS
CALCULATED-DESIGNED BY: KEVIN VO
CHECKED BY: ALEX GARCIA
REVISED BY / DATE REVISED

LAST REVISION 11-22-13 | DATE PLOTTED => 21-JAN-2014 | TIME PLOTTED => 09:11

Dist	COUNTY	LOCATION CODE	POST MILES TOTAL PROJECT	SHEET No.	TOTAL SHEETS
11	Imp	5708		6	354

H. Daabas 08-05-11
REGISTERED CIVIL ENGINEER DATE

01-06-14
PLANS APPROVAL DATE

REGISTERED PROFESSIONAL ENGINEER HASAN DAABAS No. 48962 Exp. 9/30/14 CIVIL STATE OF CALIFORNIA

THE STATE OF CALIFORNIA OR ITS OFFICERS OR AGENTS SHALL NOT BE RESPONSIBLE FOR THE ACCURACY OR COMPLETENESS OF SCANNED COPIES OF THIS PLAN SHEET.

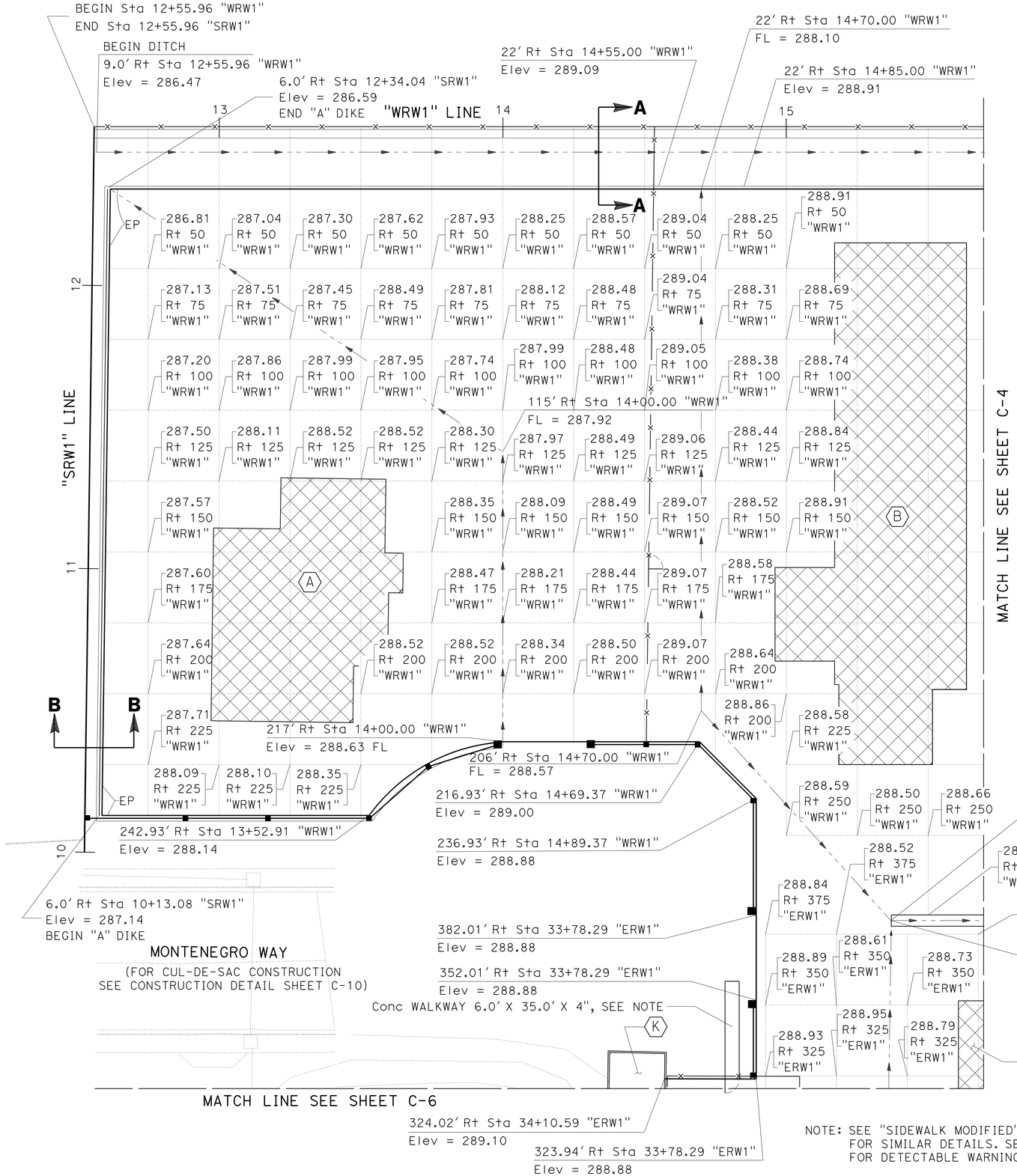

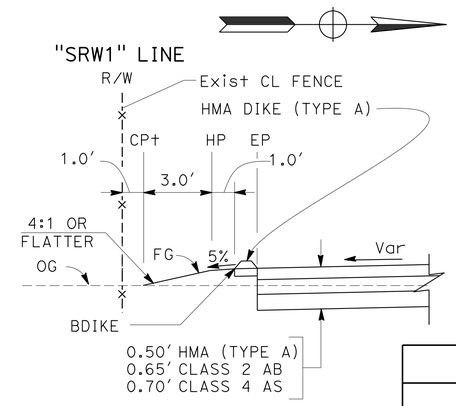

SECTION B-B

NO SCALE

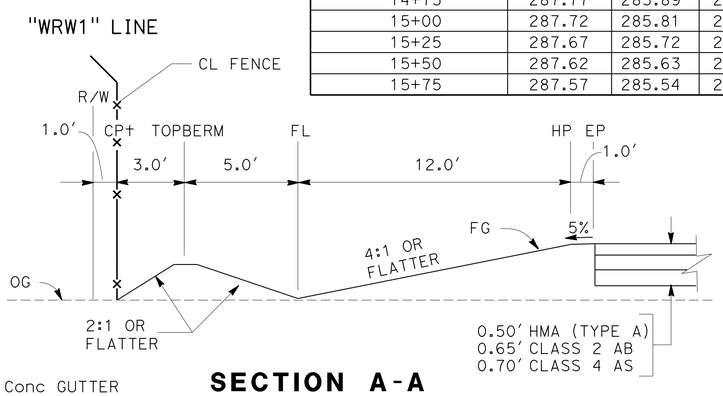

SECTION A-A

NO SCALE

DITCH ELEVATION TABLE

Sta "WRW1"	TOPBERM	FL	HP	EP
12+75	288.17	286.61	286.76	286.81
13+00	288.12	286.52	287.07	287.12
13+25	288.07	286.43	287.39	287.44
13+50	288.02	286.34	287.71	287.76
13+75	287.97	286.25	288.03	288.08
14+00	287.92	286.16	288.34	288.39
14+25	287.87	286.07	288.66	288.71
14+50	287.82	285.98	288.98	289.03
14+75	287.77	285.89	288.32	288.37
15+00	287.72	285.81	288.70	288.75
15+25	287.67	285.72	288.43	288.48
15+50	287.62	285.63	288.16	288.21
15+75	287.57	285.54	287.90	287.95

SECTION B-B ELEVATION TABLE

Sta "SRW1"	HP	BDIKE	EP
10+13.08	287.09	287.14	287.14
10+25.00	287.06	287.11	287.11
10+50.00	287.01	287.06	287.06
10+75.00	286.95	287.00	287.00
11+00.00	286.89	286.94	286.94
11+25.00	286.84	286.89	286.89
11+50.00	286.78	286.83	286.83
11+75.00	286.72	286.77	286.77
12+00.00	286.67	286.72	286.72
12+25.00	286.61	286.66	286.66
12+34.04	286.59	286.64	286.64

NOTE: SEE "SIDEWALK MODIFIED", SHEET C-11 FOR SIMILAR DETAILS. SEE BUILDING PLANS FOR DETECTABLE WARNING BAND DETAILS.

CONSTRUCTION DETAILS
(PAVEMENT ELEVATIONS)

SCALE: 1" = 20'

C-3

STATE OF CALIFORNIA - DEPARTMENT OF TRANSPORTATION
Caltrans LANDS & BUILDINGS

FUNCTIONAL SUPERVISOR: HASAN DAABAS
CALCULATED-DESIGNED BY: KEVIN VO
CHECKED BY: ALEX GARCIA
REVISED BY
DATE REVISED

LAST REVISION DATE PLOTTED => 21-JAN-2014
09-27-13 TIME PLOTTED => 09:11

Dist	COUNTY	LOCATION CODE	POST MILES TOTAL PROJECT	SHEET No.	TOTAL SHEETS
11	Imp	5708		7	354

H. Daabas 08-05-11
REGISTERED CIVIL ENGINEER DATE

01-06-14
PLANS APPROVAL DATE

REGISTERED PROFESSIONAL ENGINEER HASAN DAABAS No. 48962 Exp. 9/30/14 CIVIL STATE OF CALIFORNIA

THE STATE OF CALIFORNIA OR ITS OFFICERS OR AGENTS SHALL NOT BE RESPONSIBLE FOR THE ACCURACY OR COMPLETENESS OF SCANNED COPIES OF THIS PLAN SHEET.

DITCH ELEVATION TABLE

Sta "WRW1"	TOPBERM	FL	HP	EP
16+75	287.37	285.18	287.62	287.67
17+00	287.32	285.09	287.54	287.59
17+25	287.27	285.01	287.38	287.43
17+50	287.22	284.92	287.23	287.28
17+75	287.17	284.83	287.08	287.13
18+00	287.12	284.74	286.93	286.98
18+25	287.07	284.65	286.78	286.83
18+50	287.02	284.56	286.63	286.68
18+75	286.97	284.47	286.47	286.52

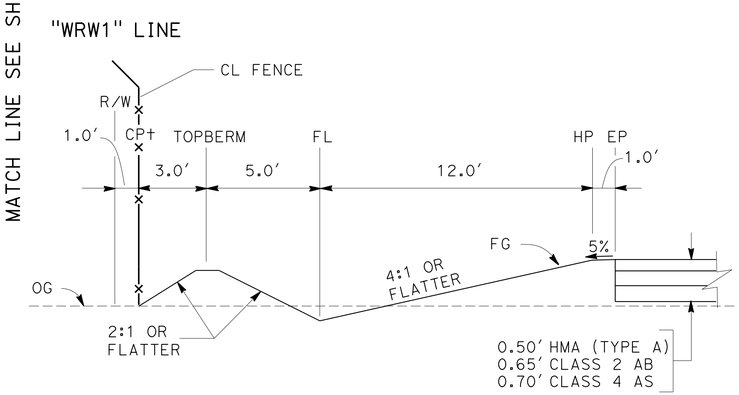

SECTION A-A

NO SCALE

CONSTRUCTION DETAILS
(PAVEMENT ELEVATIONS)

SCALE: 1" = 20'

C-4

STATE OF CALIFORNIA - DEPARTMENT OF TRANSPORTATION
Caltrans LANDS & BUILDINGS

FUNCTIONAL SUPERVISOR: HASAN DAABAS
CALCULATED-DESIGNED BY: KEVIN VO
CHECKED BY: ALEX GARCIA
REVISED BY
DATE REVISED

LAST REVISION 09-27-13
DATE PLOTTED => 21-JAN-2014
TIME PLOTTED => 09:11

Dist	COUNTY	LOCATION CODE	POST MILES TOTAL PROJECT	SHEET No.	TOTAL SHEETS
11	Imp	5708		8	354

H. Daabas 08-05-11
REGISTERED CIVIL ENGINEER DATE

01-06-14
PLANS APPROVAL DATE

REGISTERED PROFESSIONAL ENGINEER HASAN DAABAS No. 48962 Exp. 9/30/14 CIVIL STATE OF CALIFORNIA

THE STATE OF CALIFORNIA OR ITS OFFICERS OR AGENTS SHALL NOT BE RESPONSIBLE FOR THE ACCURACY OR COMPLETENESS OF SCANNED COPIES OF THIS PLAN SHEET.

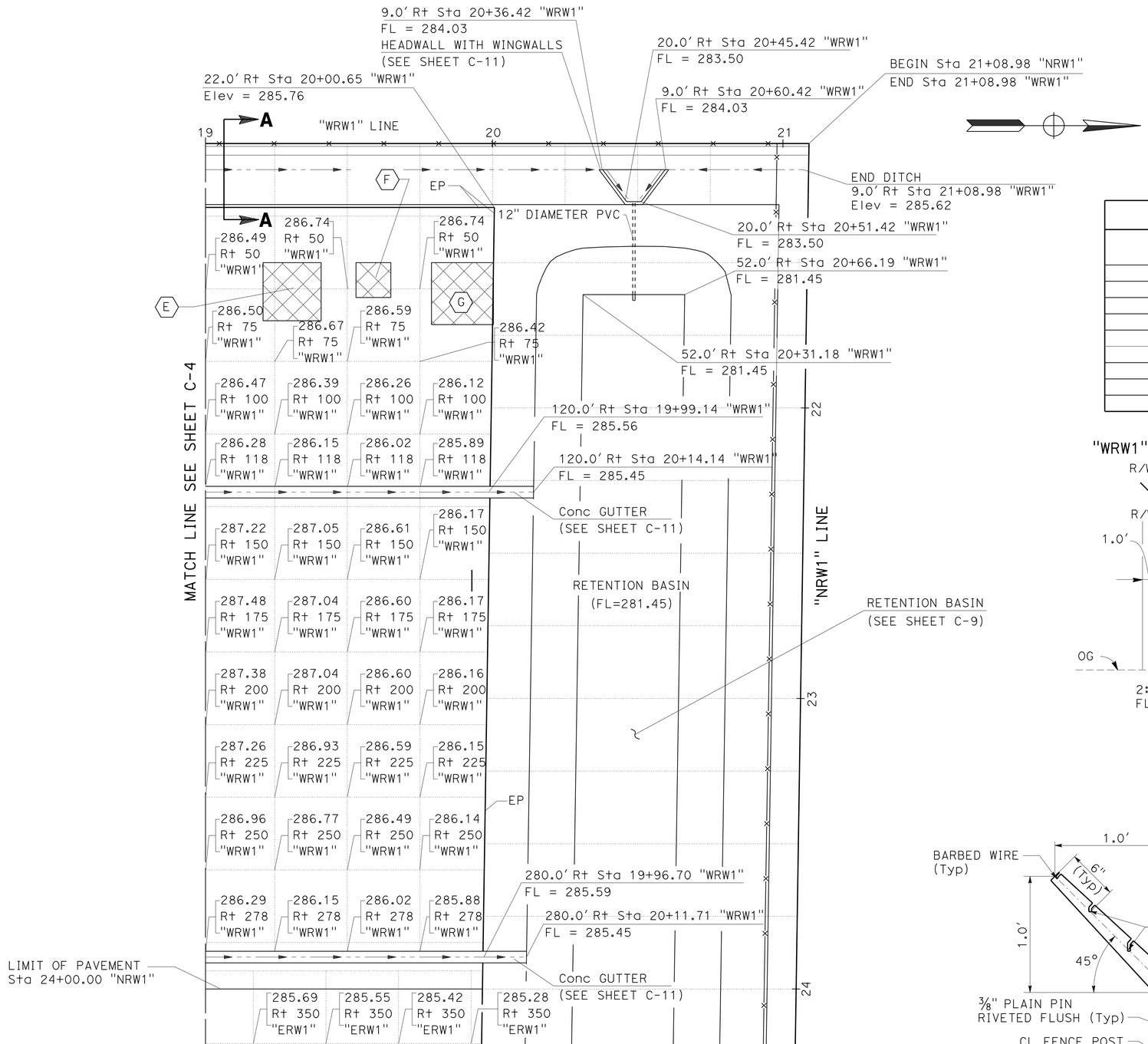

DITCH ELEVATION TABLE

Sta "WRW1"	TOPBERM	FL	HP	EP
19+00	286.92	284.38	286.02	286.07
19+25	286.87	284.30	286.16	286.21
19+50	286.82	284.21	286.01	286.06
19+75	286.77	284.12	285.86	285.91
20+00	286.72	284.03	285.75	285.76
20+25	286.67	283.94	285.75	-
20+50	286.62	284.04	283.53	-
20+75	286.57	284.55	285.75	-
21+00	286.52	285.23	285.62	-

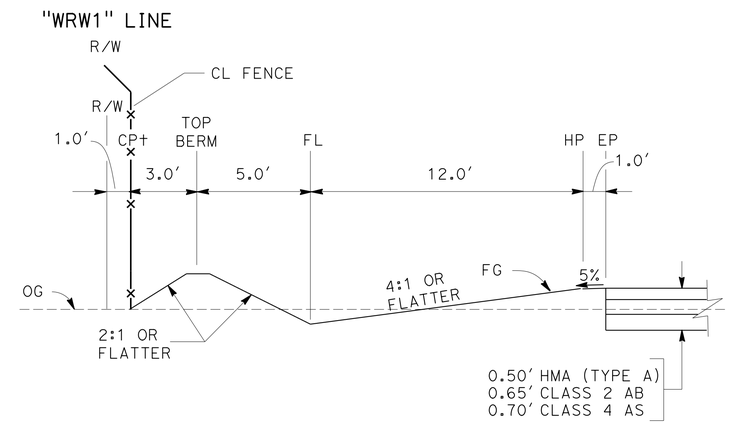

SECTION A-A

NO SCALE

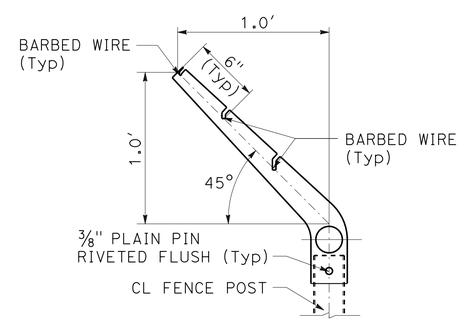

THREE WIRE 45 DEGREES BARBED WIRE EXTENSION ARM

NO SCALE

CONSTRUCTION DETAILS (PAVEMENT ELEVATIONS)

SCALE: 1" = 20'

C-5

STATE OF CALIFORNIA - DEPARTMENT OF TRANSPORTATION
Caltrans LANDS & BUILDINGS

FUNCTIONAL SUPERVISOR: HASAN DAABAS
CALCULATED-DESIGNED BY: ALEX GARCIA
CHECKED BY: KEVIN VO
REVISED BY
DATE REVISED

LAST REVISION 10-01-13
DATE PLOTTED => 21-JAN-2014
TIME PLOTTED => 09:12

Dist	COUNTY	LOCATION CODE	POST MILES TOTAL PROJECT	SHEET No.	TOTAL SHEETS
11	Imp	5708		9	354

H. Daabas 08-05-11
REGISTERED CIVIL ENGINEER DATE

01-06-14
PLANS APPROVAL DATE

REGISTERED PROFESSIONAL ENGINEER HASAN DAABAS No. 48962 Exp. 9/30/14 CIVIL STATE OF CALIFORNIA

THE STATE OF CALIFORNIA OR ITS OFFICERS OR AGENTS SHALL NOT BE RESPONSIBLE FOR THE ACCURACY OR COMPLETENESS OF SCANNED COPIES OF THIS PLAN SHEET.

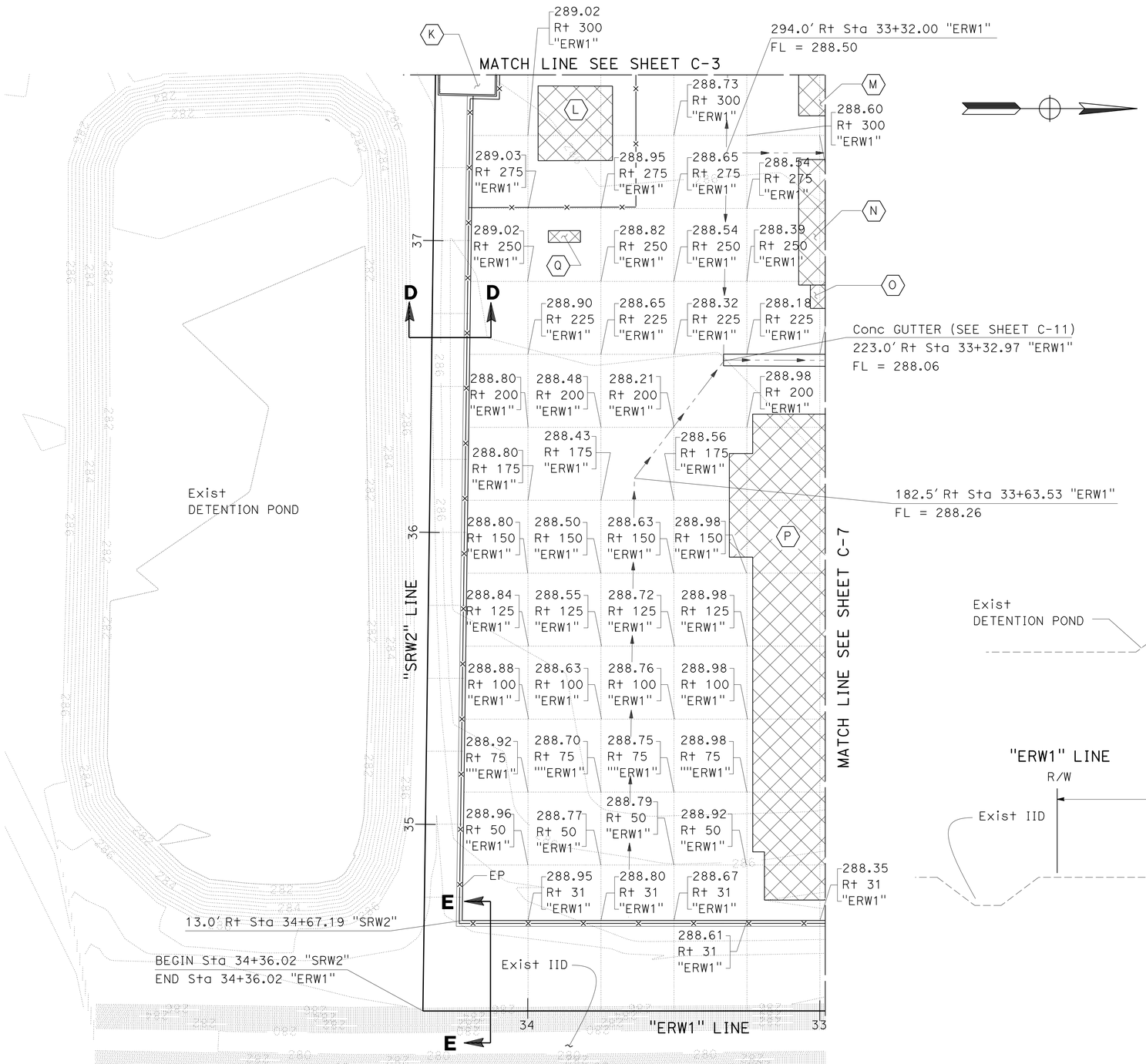

SECTION E-E ELEVATION TABLE

Sta "ERW1"	HP	EP
33+00.00	288.24	288.35
33+25.00	288.39	288.50
33+50.00	288.54	288.66
33+75.00	288.70	288.81
34+00.00	288.85	288.96
34+22.55	288.89	289.10

SECTION D-D ELEVATION TABLE

Sta "SRW2"	CP	HP	EP
34+67.19 TO 37+49.91	OG	289.00	289.10

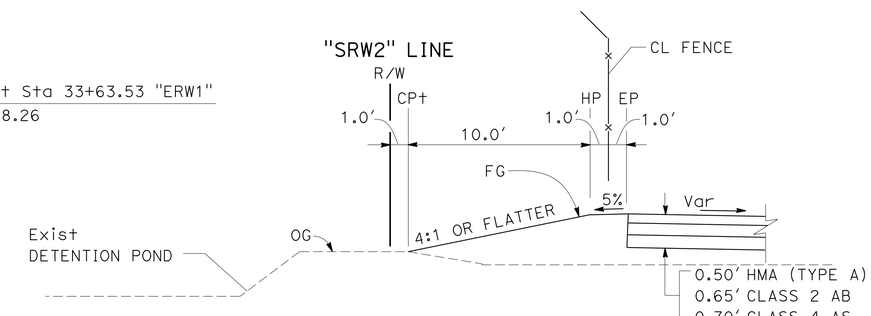

SECTION D-D

NO SCALE

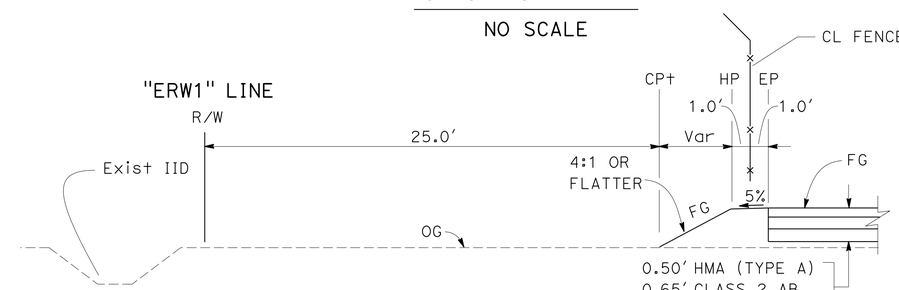

SECTION E-E

NO SCALE

CONSTRUCTION DETAILS
(PAVEMENT ELEVATIONS)

SCALE: 1" = 20'

C-6

STATE OF CALIFORNIA - DEPARTMENT OF TRANSPORTATION
Caltrans LANDS & BUILDINGS

FUNCTIONAL SUPERVISOR: HASAN DAABAS
CALCULATED-DESIGNED BY: KEVIN VO
CHECKED BY: ALEX GARCIA
REVISED BY
DATE REVISED

LAST REVISION 09-27-13
DATE PLOTTED => 21-JAN-2014
TIME PLOTTED => 09:12

Dist	COUNTY	LOCATION CODE	POST MILES TOTAL PROJECT	SHEET No.	TOTAL SHEETS
11	Imp	5708		10	354

H. Daabas 08-05-11
REGISTERED CIVIL ENGINEER DATE

01-06-14
PLANS APPROVAL DATE

REGISTERED PROFESSIONAL ENGINEER HASAN DAABAS No. 48962 Exp. 9/30/14 CIVIL STATE OF CALIFORNIA

THE STATE OF CALIFORNIA OR ITS OFFICERS OR AGENTS SHALL NOT BE RESPONSIBLE FOR THE ACCURACY OR COMPLETENESS OF SCANNED COPIES OF THIS PLAN SHEET.

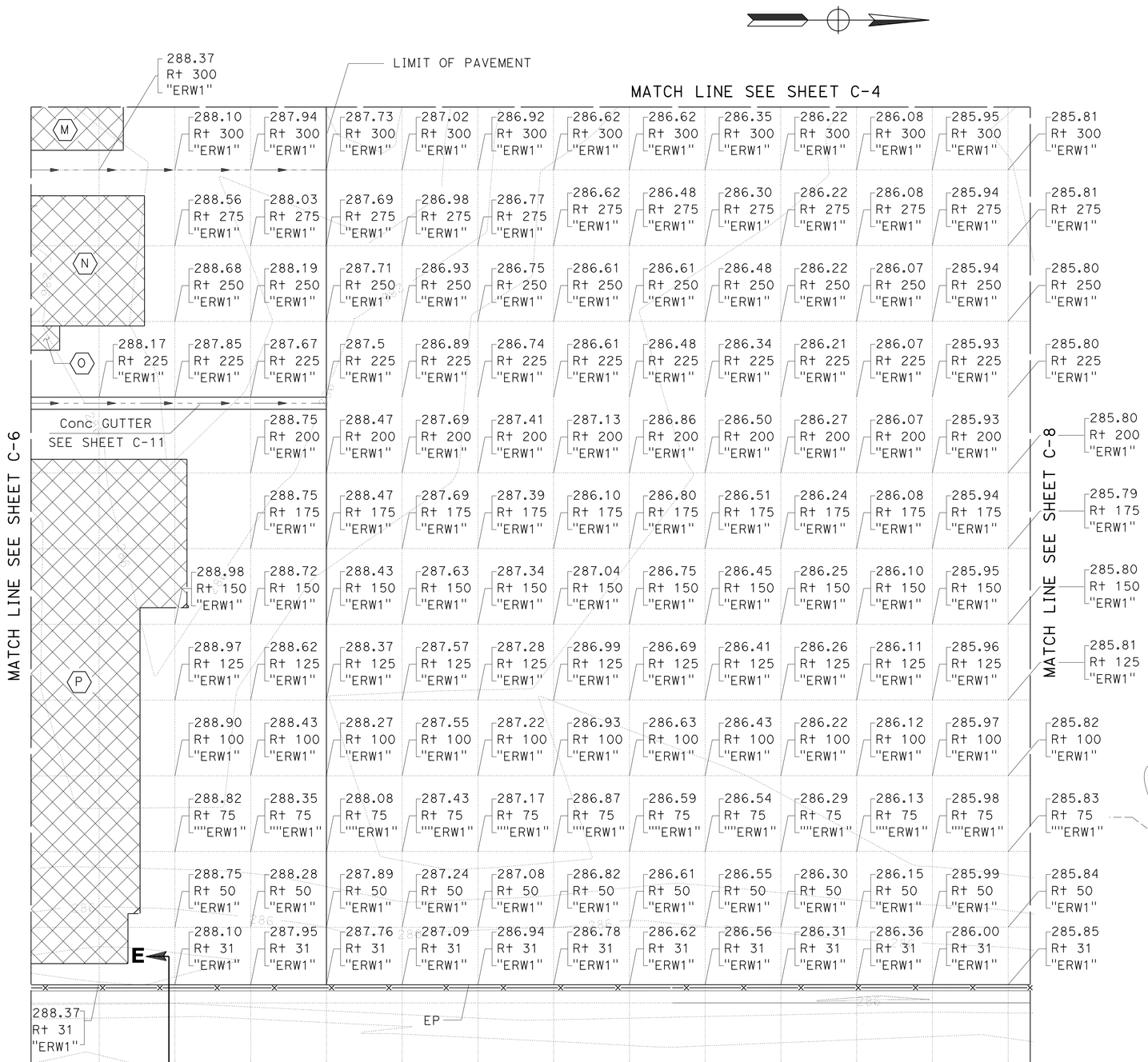

SECTION E-E ELEVATION TABLE

Sta "ERW1"	HP	EP
29+75.00	286.25	286.36
30+00.00	286.41	286.51
30+25.00	286.56	286.66
30+50.00	286.71	286.82
30+75.00	286.86	286.97
31+00.00	287.02	287.12
31+25.00	287.17	287.28
31+50.00	287.32	287.43
31+75.00	287.47	287.58
32+00.00	287.63	287.74
32+25.00	287.78	287.89
32+50.00	287.93	288.04
32+75.00	288.09	288.20

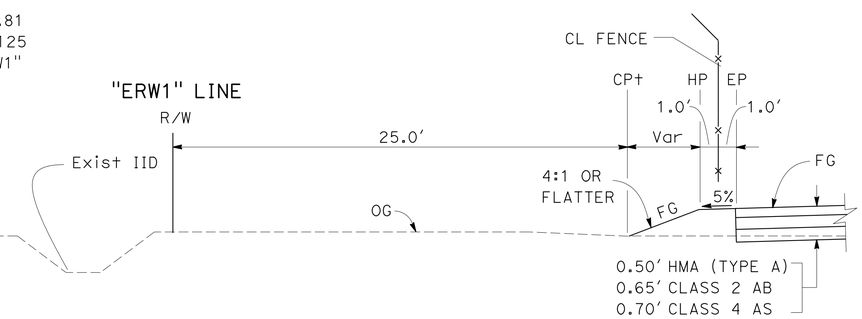

SECTION E-E

NO SCALE

CONSTRUCTION DETAILS
(PAVEMENT ELEVATIONS)

SCALE: 1" = 20'

C-7

STATE OF CALIFORNIA - DEPARTMENT OF TRANSPORTATION
Caltrans LANDS & BUILDINGS
FUNCTIONAL SUPERVISOR: HASAN DAABAS
CALCULATED-DESIGNED BY: KEVIN VO
CHECKED BY: ALEX GARCIA
REVISED BY
DATE REVISED

LAST REVISION 10-01-13
DATE PLOTTED => 21-JAN-2014
TIME PLOTTED => 09:12

Dist	COUNTY	LOCATION CODE	POST MILES TOTAL PROJECT	SHEET No.	TOTAL SHEETS
11	Imp	5708		11	354

H. Daabas 08-05-11
REGISTERED CIVIL ENGINEER DATE

01-06-14
PLANS APPROVAL DATE

REGISTERED PROFESSIONAL ENGINEER HASAN DAABAS No. 48962 Exp. 9/30/14 CIVIL STATE OF CALIFORNIA

THE STATE OF CALIFORNIA OR ITS OFFICERS OR AGENTS SHALL NOT BE RESPONSIBLE FOR THE ACCURACY OR COMPLETENESS OF SCANNED COPIES OF THIS PLAN SHEET.

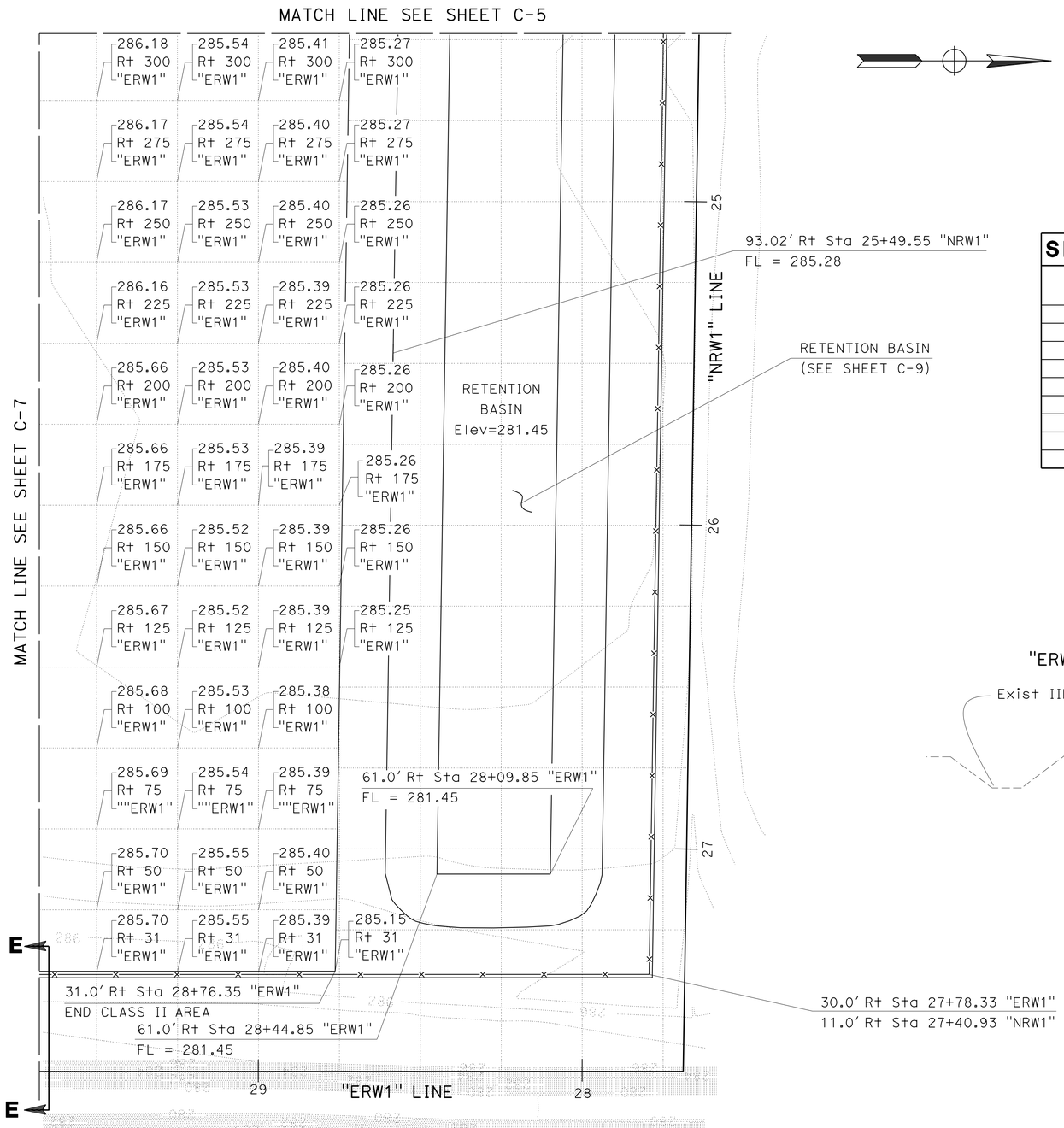

SECTION E-E ELEVATION TABLE

Sta "ERW1"	HP	EP
28+76.35	285.65	285.75
29+00.00	285.80	285.89
29+25.00	285.95	286.05
29+50.00	286.10	286.20
27+78.33	285.65	-
28+00.00	285.65	-
28+25.00	285.65	-
28+50.00	285.65	-
28+76.35	285.65	-

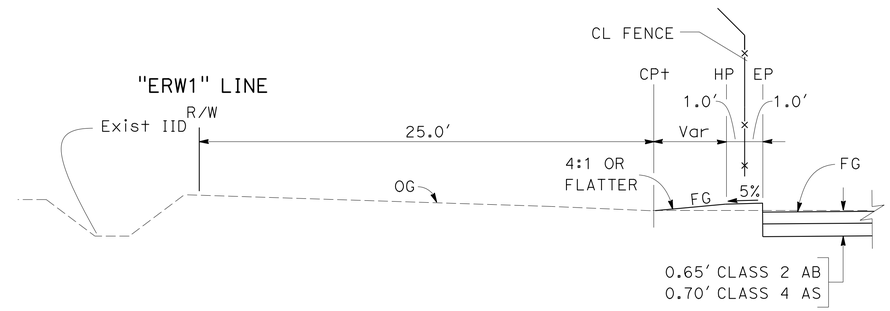

SECTION E-E

NO SCALE

CONSTRUCTION DETAILS
(PAVEMENT ELEVATIONS)

SCALE: 1" = 20'

C-8

STATE OF CALIFORNIA - DEPARTMENT OF TRANSPORTATION
Caltrans LANDS & BUILDINGS

FUNCTIONAL SUPERVISOR: HASAN DAABAS
CALCULATED-DESIGNED BY: KEVIN VO
CHECKED BY: ALEX GARCIA
REVISED BY
DATE REVISED

LAST REVISION 10-01-13
DATE PLOTTED => 21-JAN-2014
TIME PLOTTED => 09:12

Dist	COUNTY	LOCATION CODE	POST MILES TOTAL PROJECT	SHEET No.	TOTAL SHEETS
11	Imp	5708		12	354

H. Daabas 08-05-11
REGISTERED CIVIL ENGINEER DATE

01-06-14
PLANS APPROVAL DATE

REGISTERED PROFESSIONAL ENGINEER HASAN DAABAS No. 48962 Exp. 9/30/14 CIVIL STATE OF CALIFORNIA

THE STATE OF CALIFORNIA OR ITS OFFICERS OR AGENTS SHALL NOT BE RESPONSIBLE FOR THE ACCURACY OR COMPLETENESS OF SCANNED COPIES OF THIS PLAN SHEET.

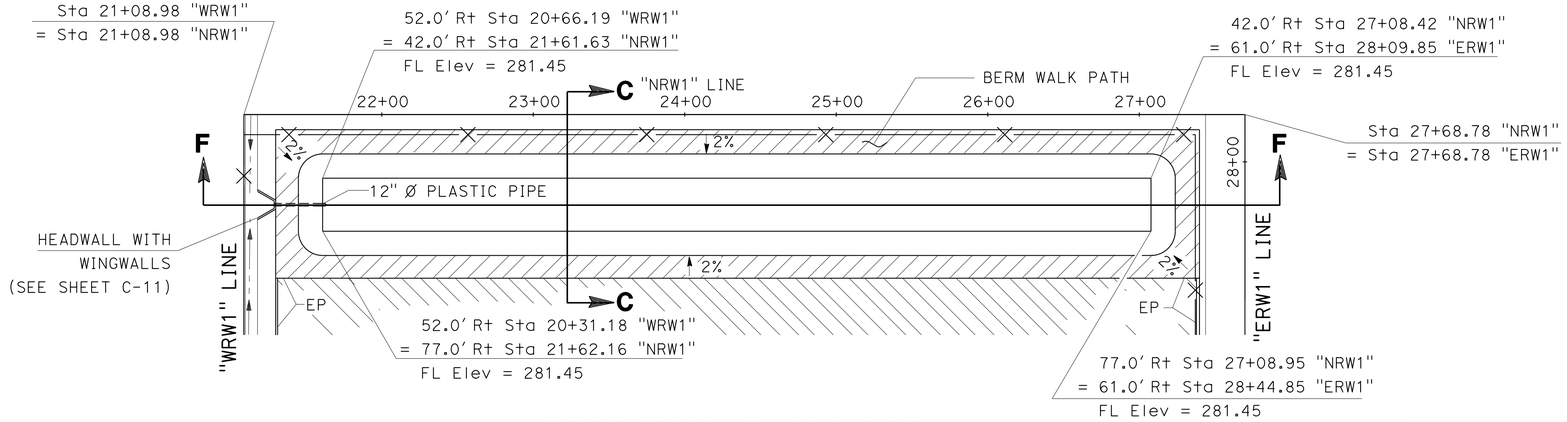

RETENTION BASIN DETAIL

SECTION C-C ELEVATION TABLE							
Sta "NRW1"	CP†	HP	HP	FL	FL	HP	EP
21+50	OG	285.75	285.49	284.36	284.46	285.51	285.75
21+61.63 TO 27+08.42	OG	285.75	285.45	281.45	281.45	285.45	285.75
27+25	OG	285.75	285.54	285.46	285.45	285.52	285.75

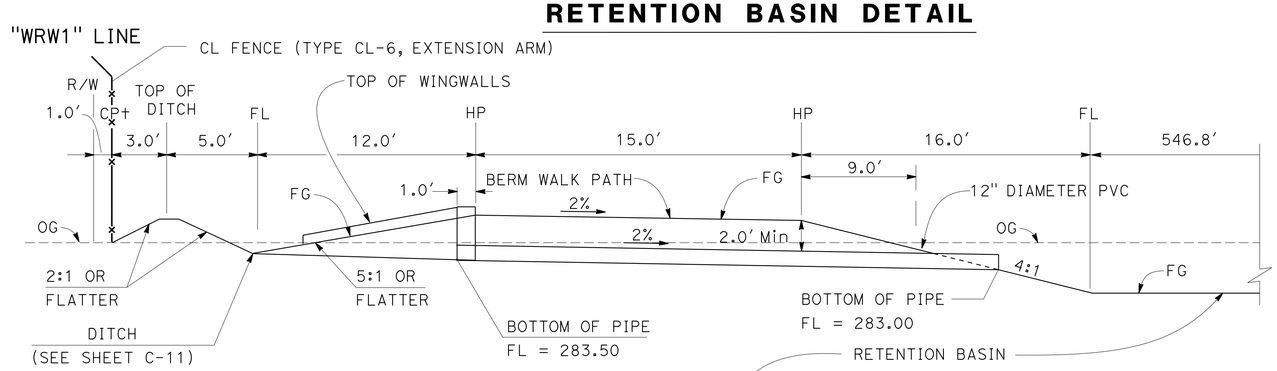

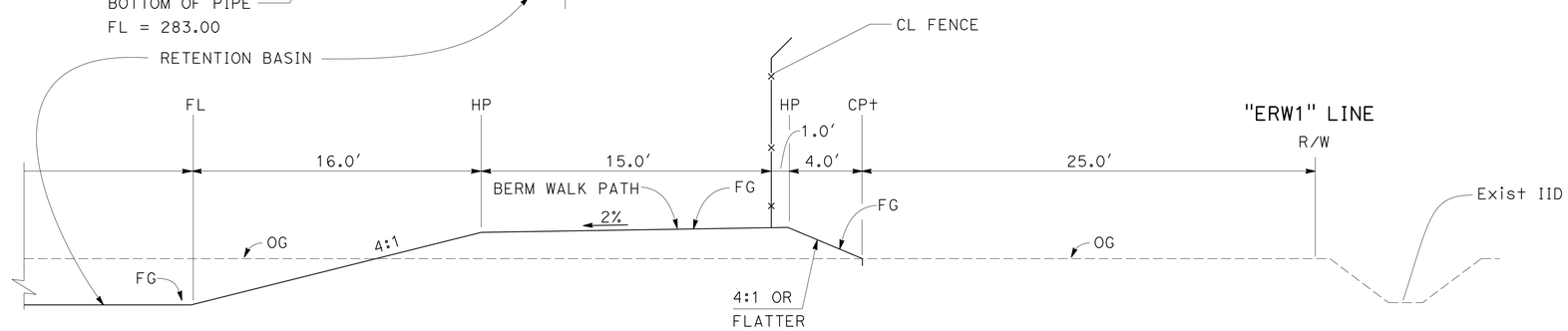

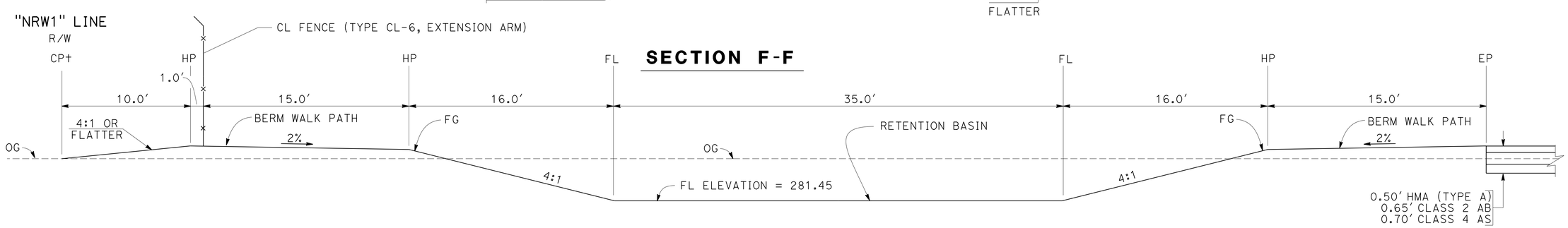

SECTION F-F

SECTION C-C

CONSTRUCTION DETAILS
(PAVEMENT ELEVATIONS)

NO SCALE

C-9

STATE OF CALIFORNIA - DEPARTMENT OF TRANSPORTATION
Caltrans LANDS & BUILDINGS

FUNCTIONAL SUPERVISOR: HASAN DAABAS
CALCULATED-DESIGNED BY: KEVIN VO
CHECKED BY: ALEX GARCIA
REVISED BY
DATE REVISED

LAST REVISION 08-11-11
DATE PLOTTED => 21-JAN-2014
TIME PLOTTED => 09:12

Dist	COUNTY	LOCATION CODE	POST MILES TOTAL PROJECT	SHEET No.	TOTAL SHEETS
11	Imp	5708		13	354

H. Daabas 08-05-11
REGISTERED CIVIL ENGINEER DATE

01-06-14
PLANS APPROVAL DATE

REGISTERED PROFESSIONAL ENGINEER HASAN DAABAS No. 48962 Exp. 9/30/14 CIVIL STATE OF CALIFORNIA

THE STATE OF CALIFORNIA OR ITS OFFICERS OR AGENTS SHALL NOT BE RESPONSIBLE FOR THE ACCURACY OR COMPLETENESS OF SCANNED COPIES OF THIS PLAN SHEET.

ACRONYMS AND ABBREVIATIONS:

BSW = BACK OF SIDEWALK
Ctr = CENTER
TOC = TOP OF CURB

NOTES:

1. SEE REVISED STANDARD PLAN RSP A87A FOR CURBS AND DRIVEWAYS.
2. FOR DRIVEWAYS #1 & #2 STRUCTURAL SECTION SHALL BE AS SHOWN IN SECTION G-G OF THIS SHEET.

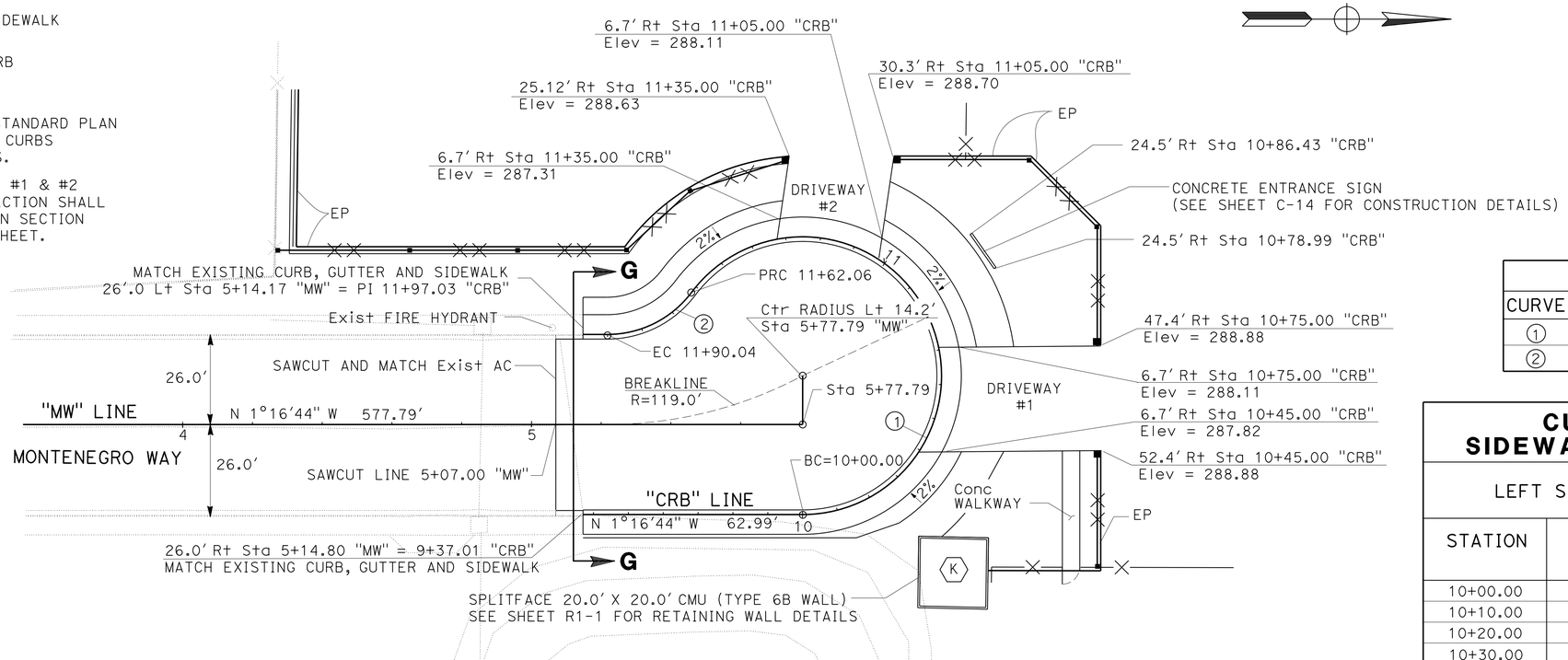

CURVE DATA

CURVE	R	Δ	T	L
1	39.83'	233°07'48"	79.66'	162.06'
2	30.17'	53°07'48"	15.09'	27.98'

CURB, GUTTER AND SIDEWALK ELEVATION TABLE

LEFT SIDE		"CRB" LINE	RIGHT SIDE		
STATION	LIP -1.33	FL 0.0	TOC .017	BSW 6.5	HP Var
10+00.00	286.47	286.35	286.85	286.95	286.99
10+10.00	286.63	286.51	287.01	287.11	287.18
10+20.00	286.83	286.71	287.21	287.31	287.40
10+30.00	287.08	286.95	287.45	287.55	287.65
10+40.00	287.34	287.22	287.72	287.82	287.92
10+50.00	287.58	287.45	287.95	288.05	-
10+60.00	287.76	287.63	288.13	288.23	-
10+70.00	287.86	287.74	288.24	288.34	-
10+80.00	287.92	287.79	288.29	288.39	288.49
10+90.00	287.90	287.78	288.28	288.38	288.48
11+00.00	287.81	287.68	288.18	288.28	288.38
11+10.00	287.66	287.53	288.03	288.13	-
11+20.00	287.43	287.31	287.81	287.91	-
11+30.00	287.16	287.03	287.53	287.63	-
11+40.00	286.89	286.76	287.26	287.36	287.46
11+50.00	286.61	286.49	286.99	287.09	287.19
11+60.00	286.34	286.22	286.72	286.82	286.92
11+70.00	286.11	285.99	286.49	286.59	286.69
11+80.00	285.93	285.81	286.31	286.41	286.51
11+90.04	285.77	285.65	286.15	286.25	286.35

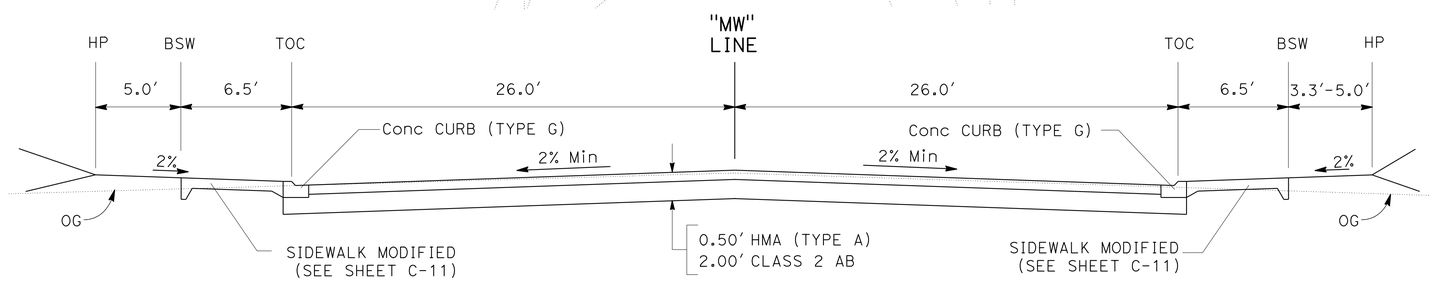

SECTION G-G

NO SCALE

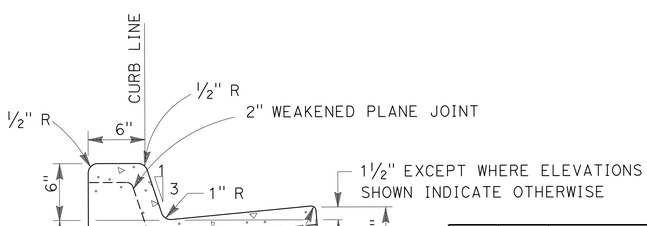

TYPE	W	AREA (SQFT)
G	24"	1.34
H	30"	1.61

CURB AND GUTTER (TYPE G)

NO SCALE

CURB, GUTTER AND SIDEWALK ELEVATION TABLE

	LEFT SIDE					"MW" LINE	RIGHT SIDE				
STATION	HP	BSW	TOC	FL	LIP	HMA	LIP	FL	TOC	BSW	HP
5+07.00	-	-	-	-	285.59	286.24	285.77	-	-	-	-
5+14.90	286.35	286.25	286.13	285.63	285.75	286.27	285.85	285.73	286.23	286.35	286.42
5+21.79	286.42	286.32	286.20	285.70	285.82	286.31	285.90	285.78	286.28	286.40	286.47
5+21.90	-	-	-	-	-	286.31	285.89	285.76	286.26	286.38	286.45
5+25.00	-	-	-	-	-	286.33	285.92	285.79	286.29	286.41	286.48
5+50.00	-	-	-	-	-	286.60	286.15	286.03	286.53	286.65	286.72
5+75.00	-	-	-	-	-	287.08	286.44	286.31	286.81	286.93	287.00
5+77.79	-	-	-	-	-	287.14	286.47	286.35	286.85	286.97	287.04

CONSTRUCTION DETAILS
(PAVEMENT ELEVATIONS)

SCALE: 1" = 20'

C-10

REVISED BY | DATE REVISED
KEVIN VO | ALEX GARCIA
CALCULATED-DESIGNED BY | CHECKED BY
FUNCTIONAL SUPERVISOR: HASAN DAABAS
STATE OF CALIFORNIA - DEPARTMENT OF TRANSPORTATION
Caltrans LANDS & BUILDINGS

LAST REVISION 08-11-11 | DATE PLOTTED => 21-JAN-2014 TIME PLOTTED => 09:12

Dist	COUNTY	LOCATION CODE	POST MILES TOTAL PROJECT	SHEET No.	TOTAL SHEETS
11	Imp	5708		14	354

H. Daabas 08-05-11
REGISTERED CIVIL ENGINEER DATE

01-06-14
PLANS APPROVAL DATE

REGISTERED PROFESSIONAL ENGINEER HASAN DAABAS No. 48962 Exp. 9/30/14 CIVIL STATE OF CALIFORNIA

THE STATE OF CALIFORNIA OR ITS OFFICERS OR AGENTS SHALL NOT BE RESPONSIBLE FOR THE ACCURACY OR COMPLETENESS OF SCANNED COPIES OF THIS PLAN SHEET.

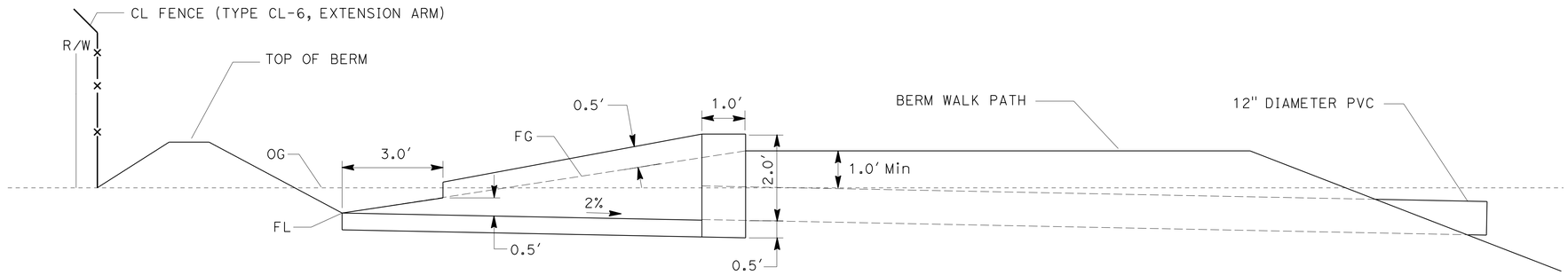

SECTION B-B

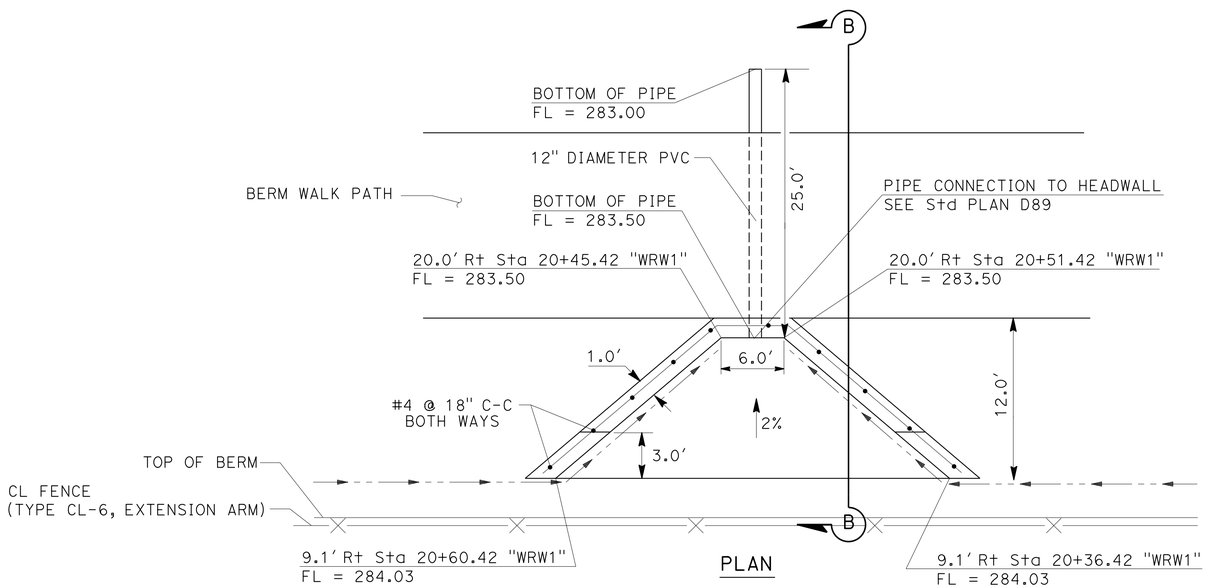

PLAN

HEADWALL WITH WINGWALLS

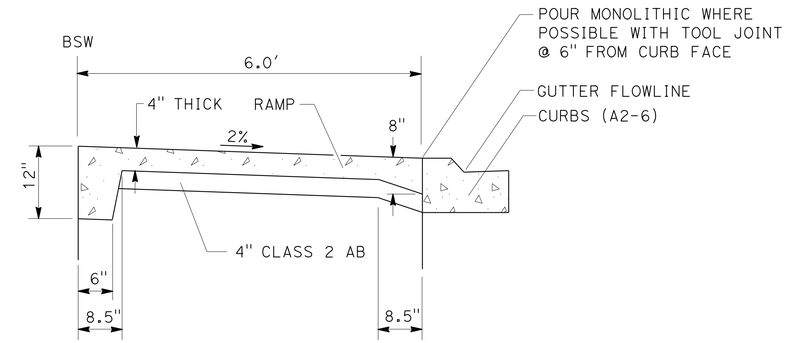

SECTION A-A

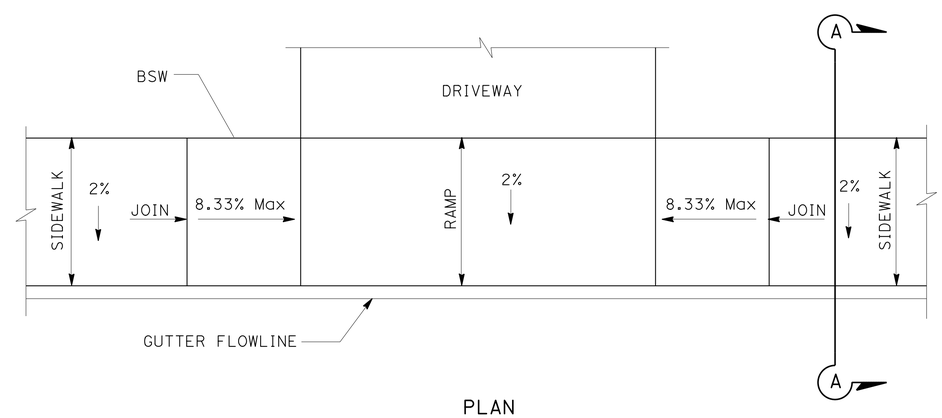

PLAN

SIDEWALK MODIFIED

WEAKENED JOINTS AT 5.0' C-C AND EXPANSION JOINTS AT 40.0' C-C

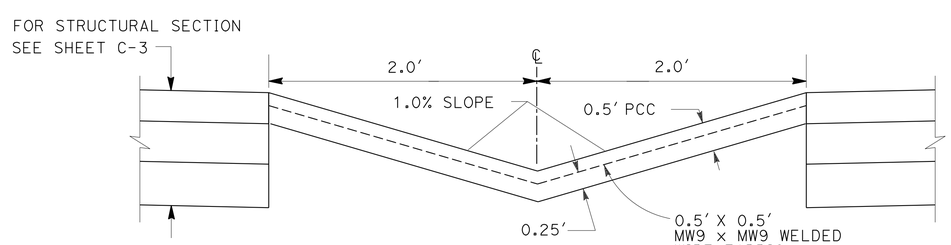

CONCRETE GUTTER

CONSTRUCTION DETAILS

NO SCALE

C-11

STATE OF CALIFORNIA - DEPARTMENT OF TRANSPORTATION
Caltrans® LANDS & BUILDINGS

FUNCTIONAL SUPERVISOR: HASAN DAABAS
CALCULATED-DESIGNED BY: KEVIN VO
CHECKED BY: ALEX GARCIA
REVISED BY
DATE REVISED

LAST REVISION 08-12-11
DATE PLOTTED => 21-JAN-2014
TIME PLOTTED => 09:12

Dist	COUNTY	LOCATION CODE	POST MILES TOTAL PROJECT	SHEET No.	TOTAL SHEETS
11	Imp	5708		15	354

H. Daabas 08-05-11
REGISTERED CIVIL ENGINEER DATE

01-06-14
PLANS APPROVAL DATE

REGISTERED PROFESSIONAL ENGINEER HASAN DAABAS No. 48962 Exp. 9/30/14 CIVIL STATE OF CALIFORNIA

THE STATE OF CALIFORNIA OR ITS OFFICERS OR AGENTS SHALL NOT BE RESPONSIBLE FOR THE ACCURACY OR COMPLETENESS OF SCANNED COPIES OF THIS PLAN SHEET.

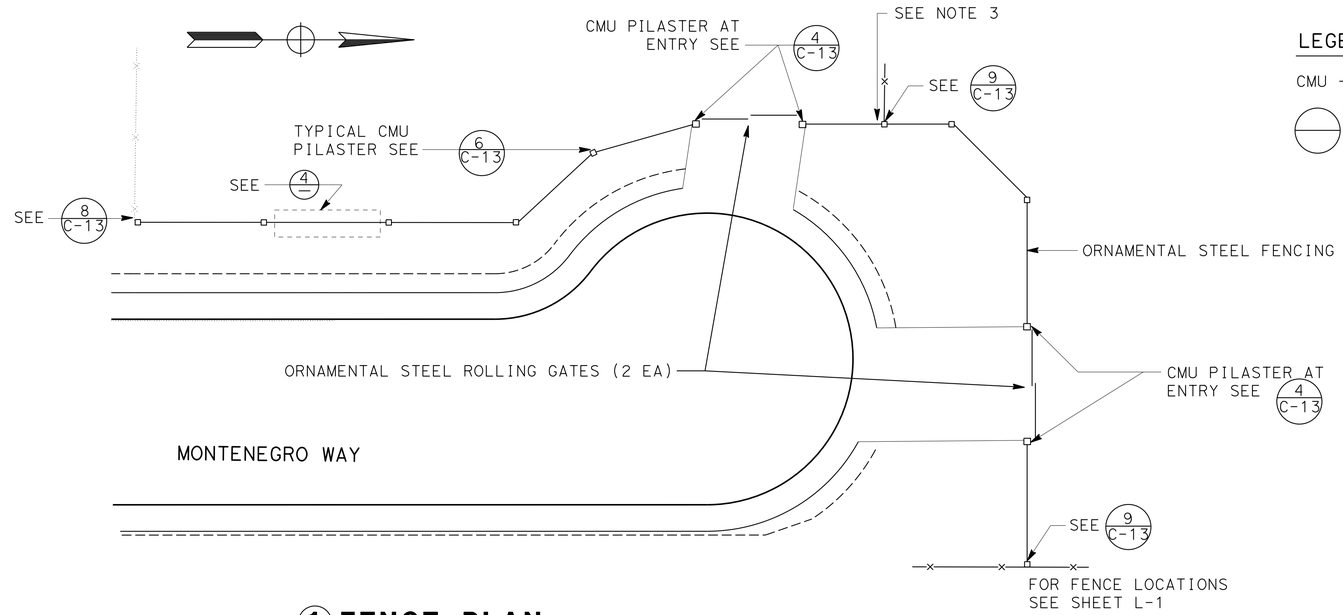

1 FENCE PLAN

LEGEND:

CMU - CONCRETE MASONRY UNIT

DETAIL NUMBER

PLAN SHEET NUMBER

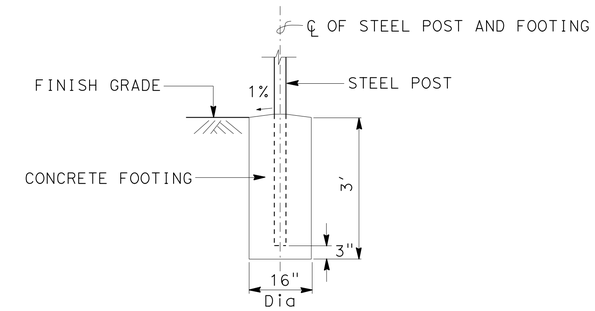

2 TYPICAL STEEL POST EMBEDMENT DETAIL

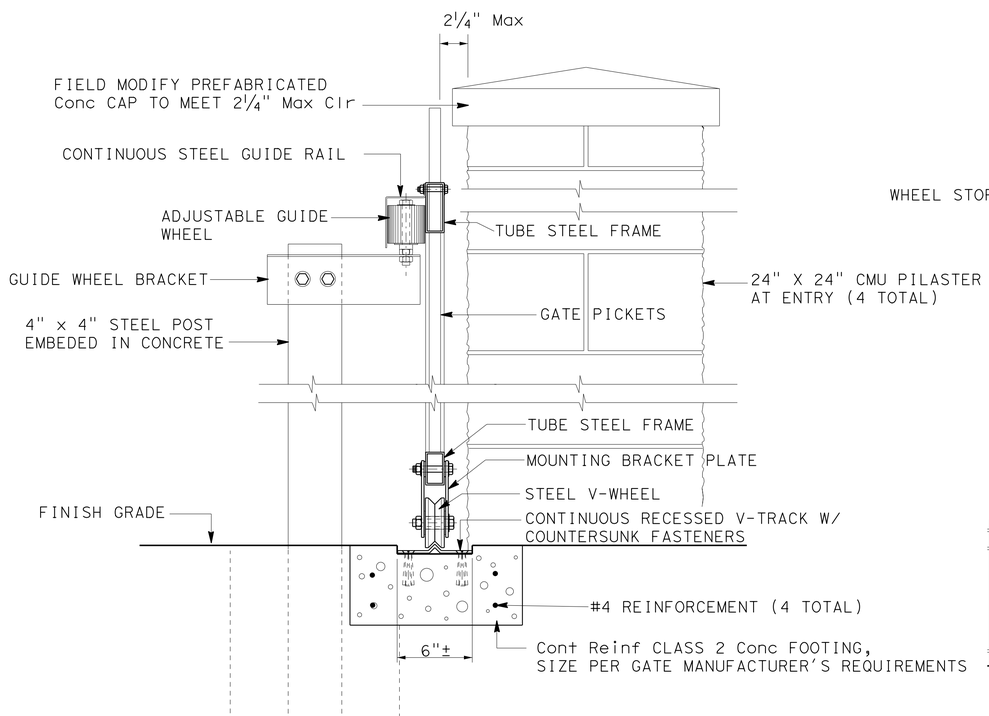

3 GATE SECTION

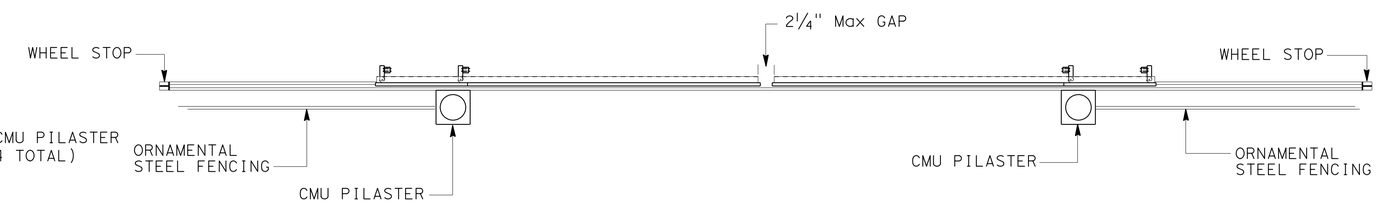

ORNAMENTAL STEEL ROLLING GATES PLAN

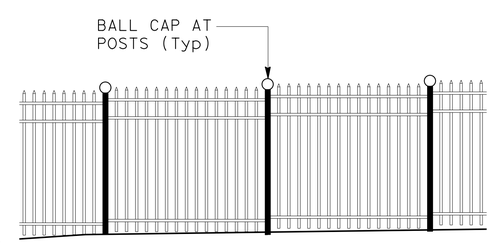

4 PARTIAL FENCE ELEVATION

SEE NOTE 2

NOTES:

1. ORNAMENTAL STEEL FENCING AND GATES SHALL HAVE COATING COLOR TAN.
2. STEP ORNAMENTAL STEEL FENCING AS REQUIRED BY FENCING MANUFACTURER TO MEET FIELD CONDITIONS.
3. WHEN GATE IS FULLY OPEN PROVIDE Min 2" CLEARANCE FROM TRAILING EDGE TO CHAIN LINK FENCE (TYPICAL).

CONSTRUCTION DETAILS

NO SCALE

C-12

STATE OF CALIFORNIA - DEPARTMENT OF TRANSPORTATION
Caltrans LANDS & BUILDINGS

FUNCTIONAL SUPERVISOR: HASAN DAABAS
CALCULATED-DESIGNED BY: JODI NELMARK
CHECKED BY: ALEX GARCIA
REVISED BY
DATE REVISED

LAST REVISION 08-12-11
DATE PLOTTED => 21-JAN-2014
TIME PLOTTED => 09:12

Dist	COUNTY	LOCATION CODE	POST MILES TOTAL PROJECT	SHEET No.	TOTAL SHEETS
11	Imp	5708		16	354

H. Daabas 08-05-11
REGISTERED CIVIL ENGINEER DATE

01-06-14
PLANS APPROVAL DATE

REGISTERED PROFESSIONAL ENGINEER HASAN DAABAS No. 48962 Exp. 9/30/14 CIVIL STATE OF CALIFORNIA

THE STATE OF CALIFORNIA OR ITS OFFICERS OR AGENTS SHALL NOT BE RESPONSIBLE FOR THE ACCURACY OR COMPLETENESS OF SCANNED COPIES OF THIS PLAN SHEET.

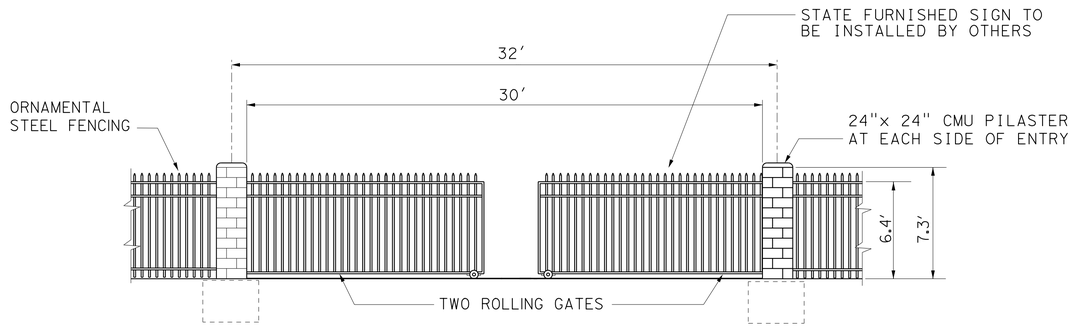

① ENTRY GATE (TYPICAL)

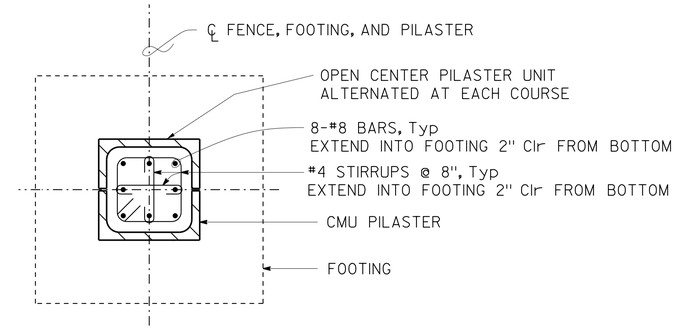

② PILASTER DETAIL (TYPICAL)

LEGEND:

CMU - CONCRETE MASONRY UNIT

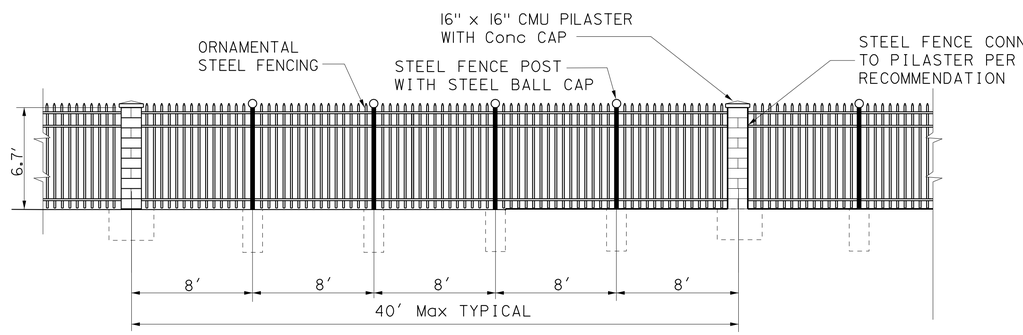

③ FENCE ELEVATION

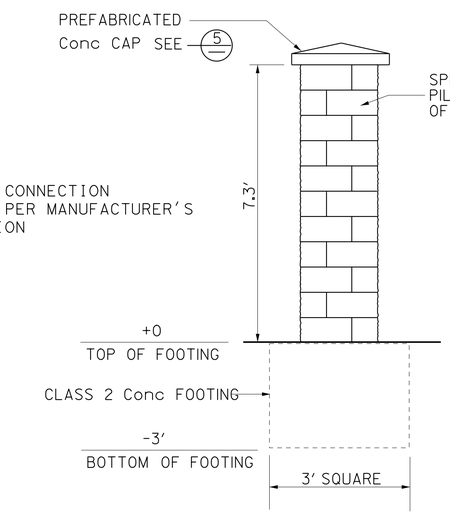

④ CMU PILASTER AT ENTRY

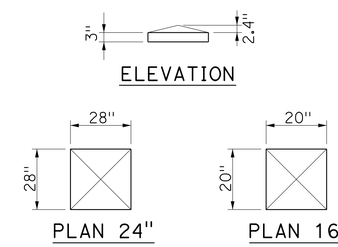

⑤ PILASTER CAP

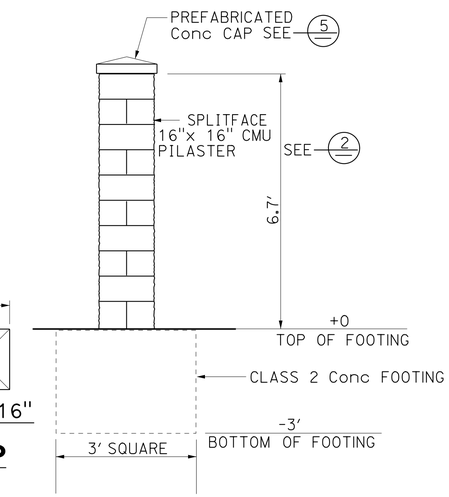

⑥ TYPICAL CMU PILASTER

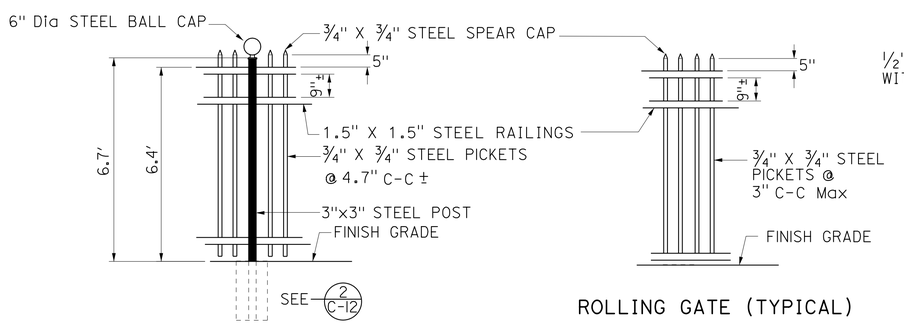

⑦ STEEL FENCE & GATE ELEVATIONS

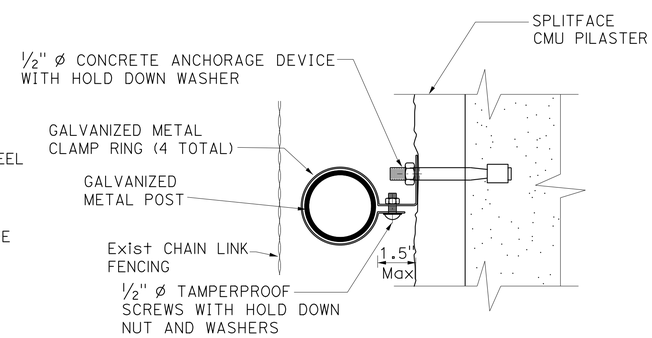

⑧ Exist CHAIN LINK FENCE AT CMU PILASTER

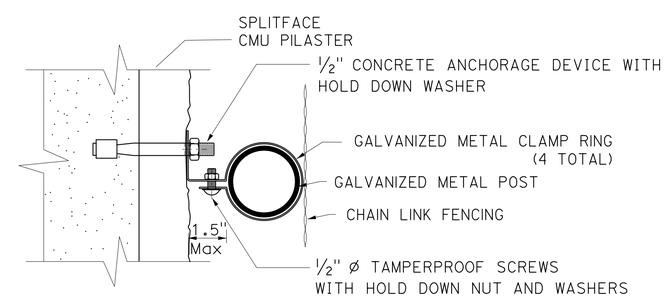

⑨ CHAIN LINK FENCE AT CMU PILASTER

ORNAMENTAL STEEL FENCING

CONSTRUCTION DETAILS

NO SCALE

C-13

REVISED BY	DATE REVISED	JODI NELMARK	ALEX GARCIA	CALCULATED-DESIGNED BY	CHECKED BY	FUNCTIONAL SUPERVISOR	HASAN DAABAS

STATE OF CALIFORNIA - DEPARTMENT OF TRANSPORTATION
Caltrans LANDS & BUILDINGS

LAST REVISION 08-05-11 | DATE PLOTTED => 21-JAN-2014 | TIME PLOTTED => 09:12

Dist	COUNTY	LOCATION CODE	POST MILES TOTAL PROJECT	SHEET No.	TOTAL SHEETS
11	Imp	5708		17	354

H. Daabas 08-05-11
REGISTERED CIVIL ENGINEER DATE

01-06-14
PLANS APPROVAL DATE

REGISTERED PROFESSIONAL ENGINEER
HASAN DAABAS
No. 48962
Exp. 9/30/14
CIVIL
STATE OF CALIFORNIA

THE STATE OF CALIFORNIA OR ITS OFFICERS OR AGENTS SHALL NOT BE RESPONSIBLE FOR THE ACCURACY OR COMPLETENESS OF SCANNED COPIES OF THIS PLAN SHEET.

NOTE:

1. SEE SHEETS L-1 AND C-10 FOR LOCATION OF ENTRANCE SIGN.

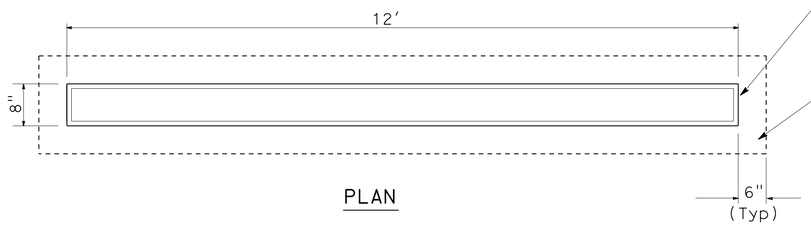

PLAN

FRONT ELEVATION

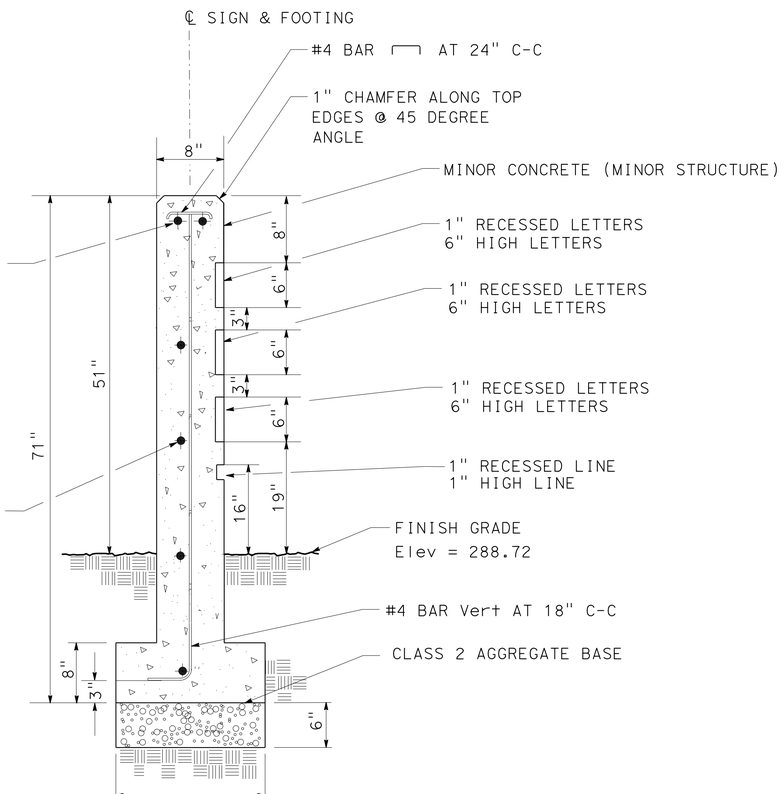

SECTION

CONCRETE ENTRANCE SIGN

CONSTRUCTION DETAILS

NO SCALE

C-14

STATE OF CALIFORNIA - DEPARTMENT OF TRANSPORTATION
Caltrans LANDS & BUILDINGS

FUNCTIONAL SUPERVISOR: HASAN DAABAS
CALCULATED-DESIGNED BY: KEVIN VO
CHECKED BY: ALEX GARCIA
REVISED BY
DATE REVISED

LAST REVISION 11-15-11
DATE PLOTTED => 21-JAN-2014
TIME PLOTTED => 09:12

Dist	COUNTY	LOCATION CODE	POST MILES TOTAL PROJECT	SHEET No.	TOTAL SHEETS
11	Imp	5708		18	354

H. Daabas 08-05-11
REGISTERED CIVIL ENGINEER DATE

01-06-14
PLANS APPROVAL DATE

REGISTERED PROFESSIONAL ENGINEER HASAN DAABAS No. 48962 Exp. 9/30/14 CIVIL STATE OF CALIFORNIA

THE STATE OF CALIFORNIA OR ITS OFFICERS OR AGENTS SHALL NOT BE RESPONSIBLE FOR THE ACCURACY OR COMPLETENESS OF SCANNED COPIES OF THIS PLAN SHEET.

INTERSECTION POINT SCHEDULE

No.	STATION	OFFSET (FT)	ELEVATION
IP-1	10+39.00 "SRW1"	93.50	288.41
IP-2	10+47.00 "SRW1"	93.50	288.52
IP-3	10+39.00 "SRW1"	36.00	288.21
IP-4	10+55.00 "SRW1"	36.00	288.20
IP-5	10+55.00 "SRW1"	44.00	288.52
IP-6	10+86.92 "SRW1"	36.00	288.20
IP-7	10+86.92 "SRW1"	44.00	288.52
IP-8	11+33.00 "SRW1"	52.00	288.26
IP-9	11+41.00 "SRW1"	36.00	287.81
IP-10	11+41.00 "SRW1"	52.00	288.09
IP-11	11+33.00 "SRW1"	68.00	288.52
IP-12	11+41.00 "SRW1"	68.00	288.44
IP-13	11+41.00 "SRW1"	104.00	288.45
IP-14	11+33.00 "SRW1"	104.00	288.52
IP-15	11+94.20 "SRW1"	38.97	287.81
IP-16	11+90.55 "SRW1"	35.48	287.79
IP-17	11+87.13 "SRW1"	39.07	287.89
IP-18	11+90.65 "SRW1"	42.55	287.91
IP-19	11+94.89 "SRW1"	84.01	288.55
IP-20	11+91.30 "SRW1"	80.53	288.57
IP-21	11+87.82 "SRW1"	84.11	288.60
IP-22	11+91.41 "SRW1"	87.60	288.57
IP-23	11+96.41 "SRW1"	138.06	288.62
IP-24	11+92.75 "SRW1"	134.57	288.55
IP-25	11+89.34 "SRW1"	138.16	288.58
IP-26	11+92.85 "SRW1"	141.64	288.66
IP-27	11+95.84 "SRW1"	183.00	289.37
IP-28	11+92.18 "SRW1"	179.51	289.30
IP-29	11+88.77 "SRW1"	183.10	289.33
IP-30	11+92.28 "SRW1"	186.58	289.42
IP-31	12+34.42 "SRW1"	34.17	287.51
IP-32	12+34.51 "SRW1"	41.24	287.61
IP-33	12+30.79 "SRW1"	37.79	287.56
IP-34	12+35.02 "SRW1"	79.30	288.10
IP-35	12+35.12 "SRW1"	86.37	288.20
IP-36	12+31.43 "SRW1"	82.90	288.16
IP-37	12+37.75 "SRW1"	133.36	288.78
IP-38	12+35.84 "SRW1"	140.43	288.89
IP-39	12+32.31 "SRW1"	136.89	288.81
IP-40	12+36.35 "SRW1"	178.32	289.34
IP-41	12+36.45 "SRW1"	185.39	289.43
IP-42	12+32.78 "SRW1"	181.88	289.38
IP-43	10+86.33 "CRB"	24.50	288.72
IP-44	10+78.99 "CRB"	24.50	288.72
IP-45	15+17.00 "WRW1"	41.50	288.91
IP-46	15+09.00 "WRW1"	41.50	288.83
IP-47	15+09.00 "WRW1"	82.57	288.85
IP-48	15+17.00 "WRW1"	82.57	288.91
IP-49	15+17.00 "WRW1"	90.59	288.91
IP-50	15+09.00 "WRW1"	90.59	288.86
IP-51	15+09.00 "WRW1"	133.50	288.91

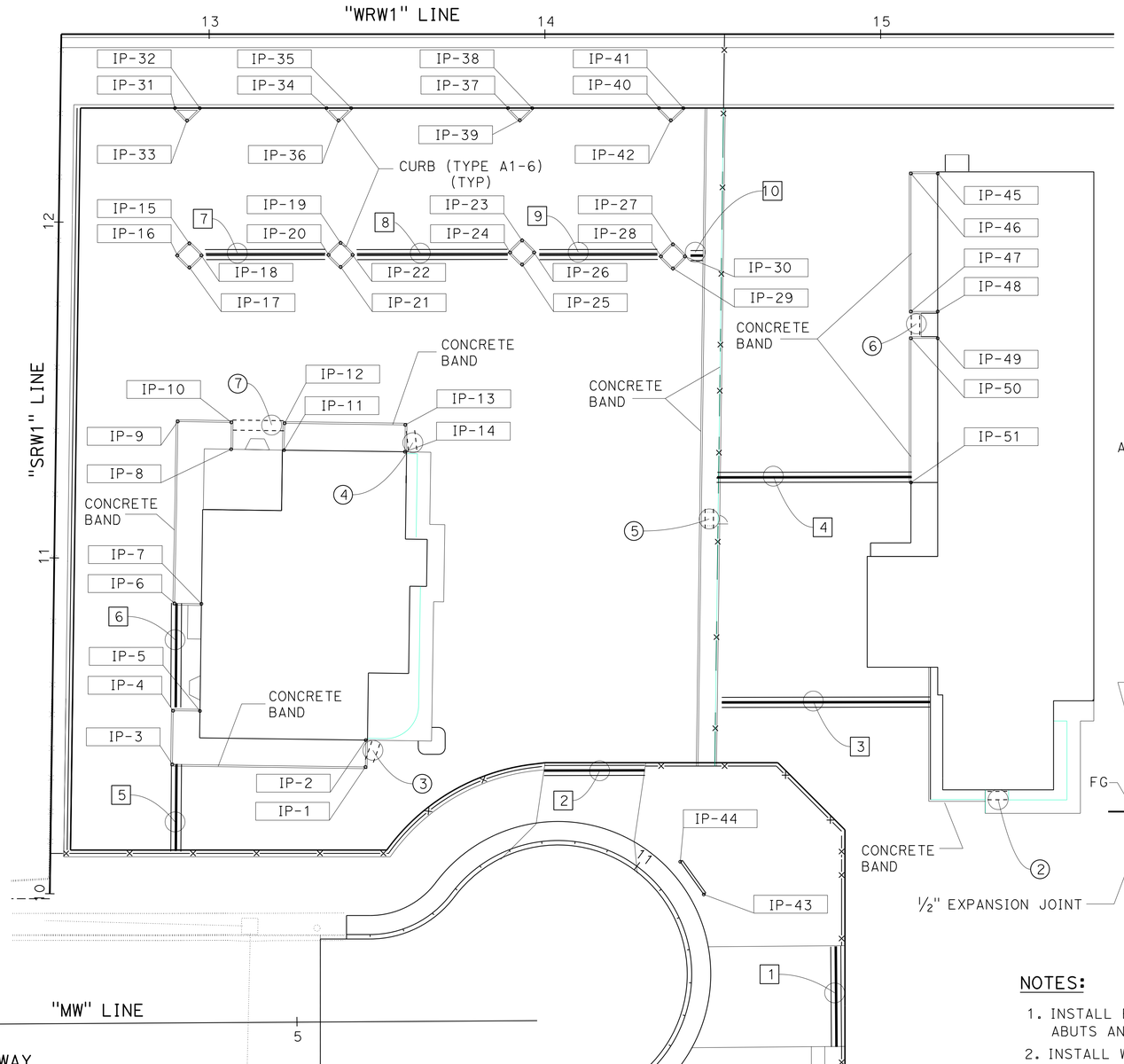

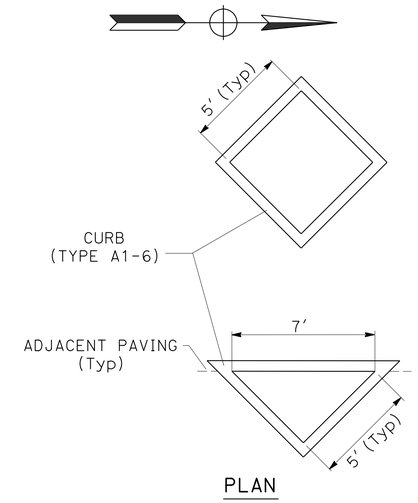

CURB (TYPE A1-6)

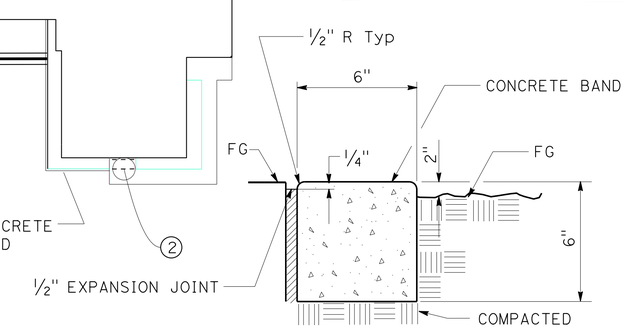

NOTES:

1. INSTALL EXPANSION JOINTS WHERE THE CONCRETE BAND ABUTS ANY CONCRETE OR AC AND AT Max 100' C-C.
2. INSTALL WEAKENED PLANE JOINTS AT Max 20' C-C.

CONCRETE BAND

LEGEND:

- 6" SCHEDULE 80 CONDUIT Irr CROSSOVER
  1½" WATER
  2" SCC
- Irr SLEEVE
- [X] - Irr CROSSOVER (SEE QUANTITY TABLE)
- (X) - Irr SLEEVE (SEE QUANTITY TABLE)

CONSTRUCTION DETAILS (PLANTING AREA)

SCALE: 1" = 20'

C-15

STATE OF CALIFORNIA - DEPARTMENT OF TRANSPORTATION
Caltrans LANDS & BUILDINGS

FUNCTIONAL SUPERVISOR: HASAN DAABAS
CALCULATED-DESIGNED BY: KEVIN VO
CHECKED BY: ALEX GARCIA
REVISED BY
DATE REVISED

LAST REVISION 08-12-11
DATE PLOTTED => 21-JAN-2014
TIME PLOTTED => 09:12

Dist	COUNTY	LOCATION CODE	POST MILES TOTAL PROJECT	SHEET No.	TOTAL SHEETS
11	Imp	5708		19	354

H. Daabas 08-05-11
REGISTERED CIVIL ENGINEER DATE

01-06-14
PLANS APPROVAL DATE

REGISTERED PROFESSIONAL ENGINEER HASAN DAABAS No. 48962 Exp. 9/30/14 CIVIL STATE OF CALIFORNIA

THE STATE OF CALIFORNIA OR ITS OFFICERS OR AGENTS SHALL NOT BE RESPONSIBLE FOR THE ACCURACY OR COMPLETENESS OF SCANNED COPIES OF THIS PLAN SHEET.

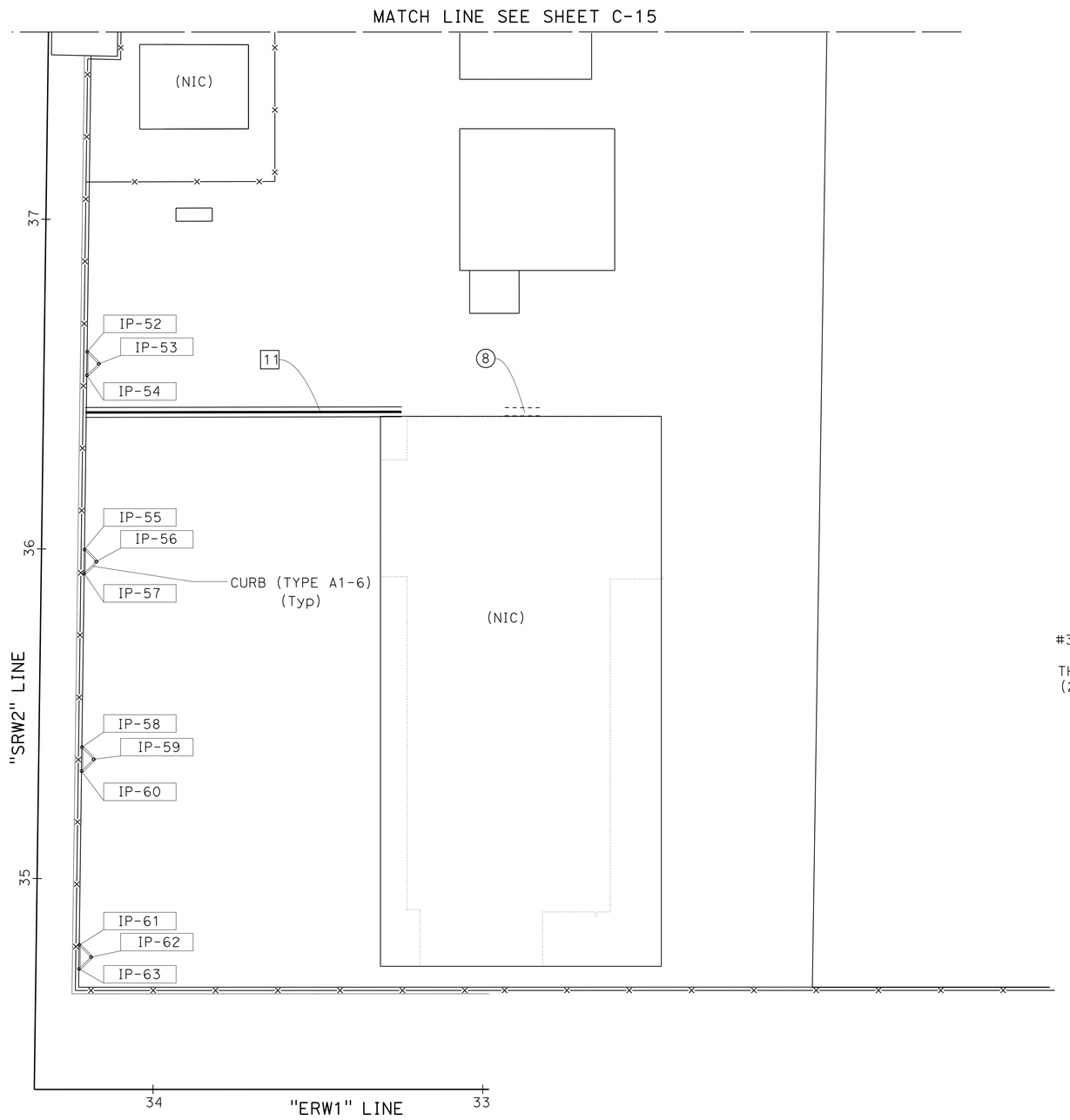

INTERSECTION POINT SCHEDULE

No.	STATION	OFFSET (FT)	ELEVATION
IP-52	36+59.54 "SRW2"	13.01	289.10
IP-53	36+56.39 "SRW2"	16.56	289.06
IP-54	36+52.87 "SRW2"	13.02	289.10
IP-55	35+99.97 "SRW2"	13.02	289.10
IP-56	35+96.38 "SRW2"	16.61	289.05
IP-57	35+92.90 "SRW2"	13.02	289.10
IP-58	35+40.01 "SRW2"	13.03	289.10
IP-59	35+36.40 "SRW2"	16.64	289.06
IP-60	35+32.94 "SRW2"	13.03	289.10
IP-61	34+79.98 "SRW2"	13.04	289.10
IP-62	34+76.37 "SRW2"	16.65	289.08
IP-63	34+72.91 "SRW2"	13.04	289.10

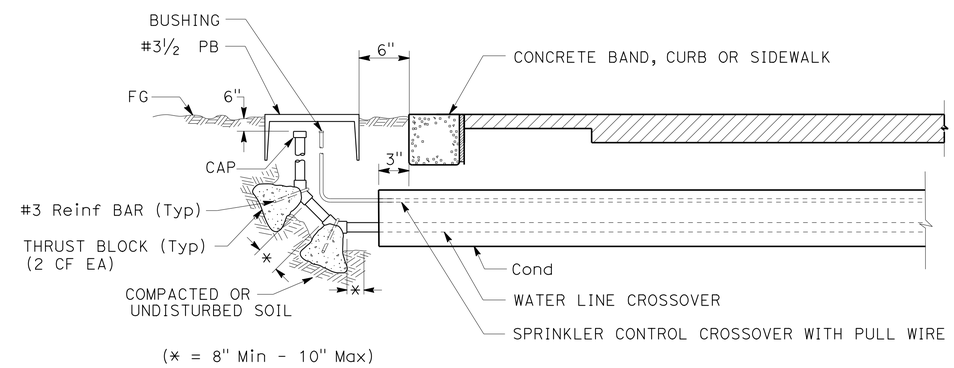

SECTION
IRRIGATION CROSSOVER
(MODIFIED)

CONSTRUCTION DETAILS
(PLANTING AREA)

SCALE: 1" = 20'

C-16

STATE OF CALIFORNIA - DEPARTMENT OF TRANSPORTATION
Caltrans® LANDS & BUILDINGS
FUNCTIONAL SUPERVISOR: HASAN DAABAS
CALCULATED-DESIGNED BY: KEVIN VO
CHECKED BY: ALEX GARCIA
REVISED BY / DATE REVISED

LAST REVISION 11-22-13 | DATE PLOTTED => 21-JAN-2014 | TIME PLOTTED => 09:12

Dist	COUNTY	LOCATION CODE	POST MILES TOTAL PROJECT	SHEET No.	TOTAL SHEETS
11	Imp	5708		20	354

H. Daabas 08-05-11
REGISTERED CIVIL ENGINEER DATE

01-06-14
PLANS APPROVAL DATE

REGISTERED PROFESSIONAL ENGINEER HASAN DAABAS No. 48962 Exp. 9/30/14 CIVIL STATE OF CALIFORNIA

THE STATE OF CALIFORNIA OR ITS OFFICERS OR AGENTS SHALL NOT BE RESPONSIBLE FOR THE ACCURACY OR COMPLETENESS OF SCANNED COPIES OF THIS PLAN SHEET.

LEGENDS:

= DIRECTION OF WATER FLOW

= TEMPORARY CONSTRUCTION ENTRANCE

= TEMPORARY DRAINAGE INLET PROTECTION

= TEMPORARY CONCRETE WASHOUT

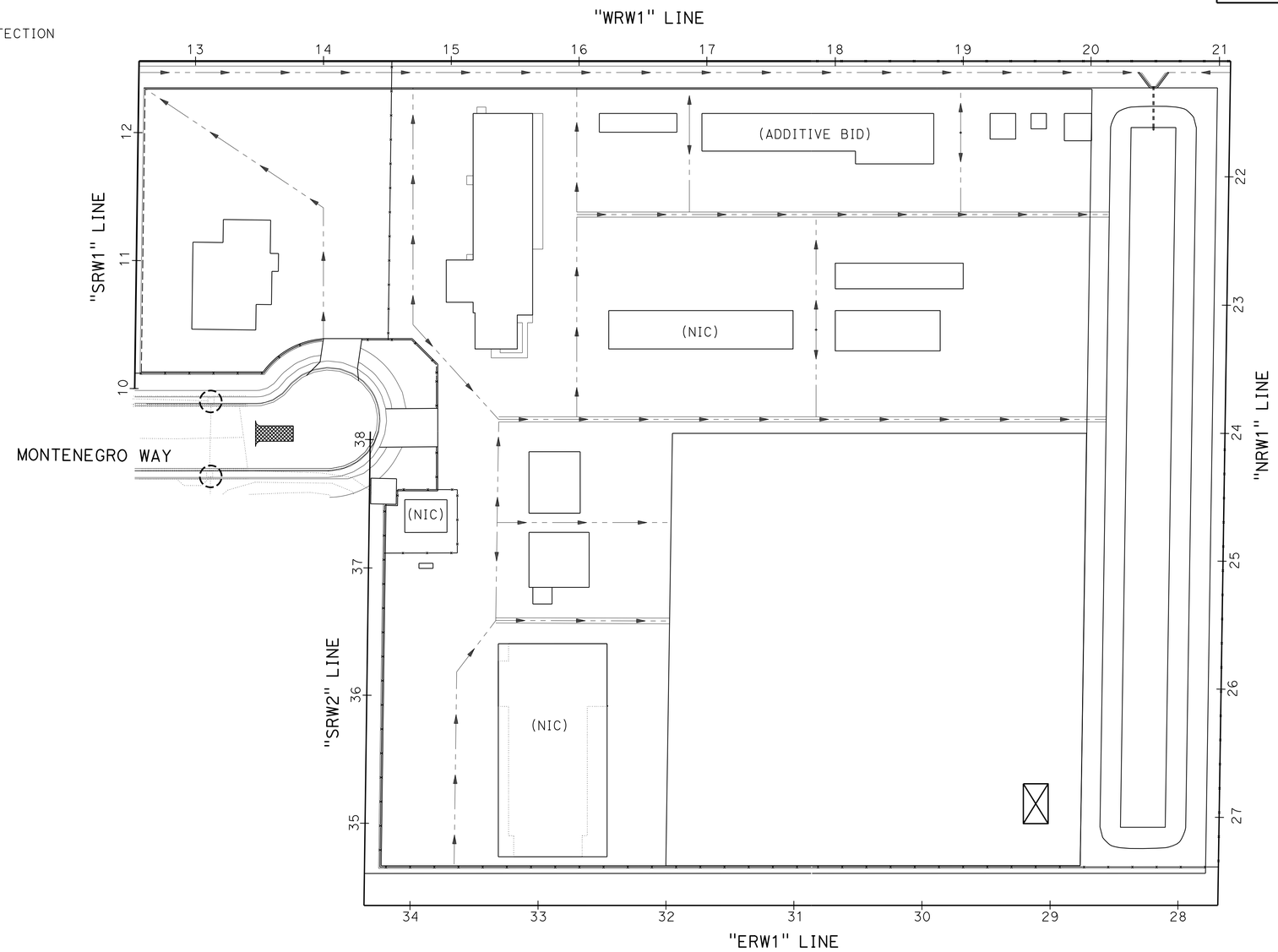

APPROVED FOR TEMPORARY WATER POLLUTION CONTROL WORK ONLY

TEMPORARY WATER POLLUTION CONTROL PLAN

SCALE: 1" = 50'

WPC-1

STATE OF CALIFORNIA - DEPARTMENT OF TRANSPORTATION
Caltrans LANDS & BUILDINGS

FUNCTIONAL SUPERVISOR: HASAN DAABAS
CALCULATED-DESIGNED BY: KEVIN VO
CHECKED BY: ALEX GARCIA
REVISED BY
DATE REVISED

LAST REVISION 11-22-13
DATE PLOTTED => 21-JAN-2014
TIME PLOTTED => 09:12

Dist	COUNTY	LOCATION CODE	POST MILES TOTAL PROJECT	SHEET No.	TOTAL SHEETS
11	Imp	5708		21	354

H. Daabas 08-05-11
REGISTERED CIVIL ENGINEER DATE

01-06-14
PLANS APPROVAL DATE

REGISTERED PROFESSIONAL ENGINEER
HASAN DAABAS
No. 48962
Exp. 9/30/14
CIVIL
STATE OF CALIFORNIA

THE STATE OF CALIFORNIA OR ITS OFFICERS OR AGENTS SHALL NOT BE RESPONSIBLE FOR THE ACCURACY OR COMPLETENESS OF SCANNED COPIES OF THIS PLAN SHEET.

LEGEND:

BUILDING LOCATIONS (SEE CONSTRUCTION DETAIL PLANS FOR SLAB ELEVATIONS)

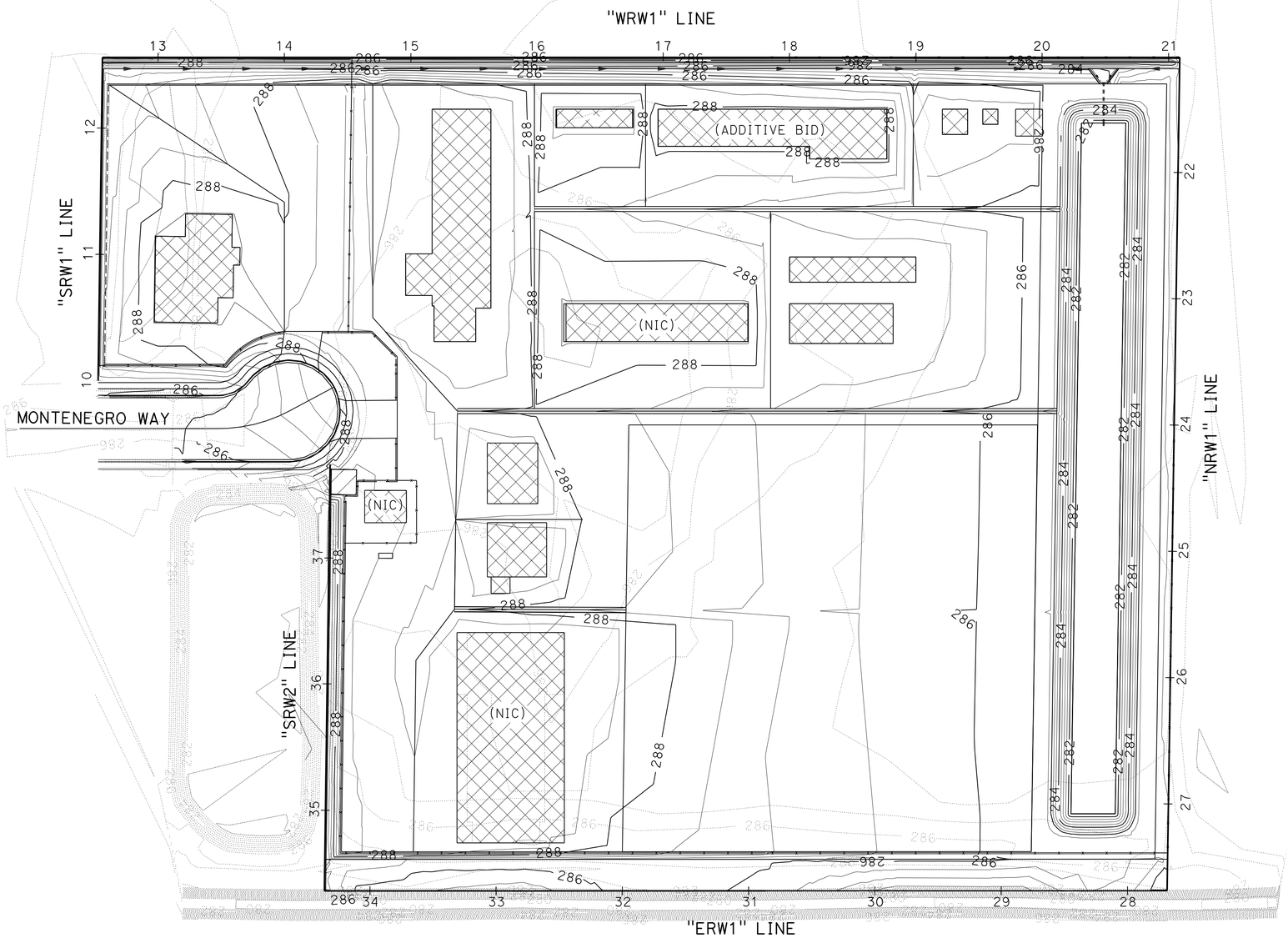

APPROVED FOR CONTOUR GRADING WORK ONLY

CONTOUR GRADING

SCALE: 1" = 50'

G-1

STATE OF CALIFORNIA - DEPARTMENT OF TRANSPORTATION
Caltrans® LANDS & BUILDINGS

FUNCTIONAL SUPERVISOR: HASAN DAABAS
CALCULATED-DESIGNED BY: KEVIN VO
CHECKED BY: ALEX GARCIA
REVISED BY
DATE REVISED

LAST REVISION 11-22-13
DATE PLOTTED => 21-JAN-2014
TIME PLOTTED => 09:12

Dist	COUNTY	LOCATION CODE	POST MILES TOTAL PROJECT	SHEET No.	TOTAL SHEETS
11	Imp	5708		22	354

H. Daabas 08-05-11
REGISTERED CIVIL ENGINEER DATE

01-06-14
PLANS APPROVAL DATE

REGISTERED PROFESSIONAL ENGINEER HASAN DAABAS No. 48962 Exp. 9/30/14 CIVIL STATE OF CALIFORNIA

THE STATE OF CALIFORNIA OR ITS OFFICERS OR AGENTS SHALL NOT BE RESPONSIBLE FOR THE ACCURACY OR COMPLETENESS OF SCANNED COPIES OF THIS PLAN SHEET.

IRRIGATION CROSSOVERS

SHEET	LOCATION	SCHEDULE 80 Cond LENGTH (LF) SIZE (In) 6"		(N) WATER LINE CROSSOVER SIZE (In)	(N) SPRINKLER CONTROL CROSSOVER SIZE (In)
C-15	1	31	-	1½"	2"
C-15	2	31		1½"	2"
C-15	3	65		1½"	2"
C-15	4	58		1½"	2"
C-15	5	26		1½"	2"
C-15	6	33		1½"	2"
C-15	7	39		1½"	2"
C-15	8	48		1½"	2"
C-15	9	39		1½"	2"
C-15	10	7		1½"	2"
	TOTAL	377			

(N) - NOT A SEPARATE PAY ITEM, FOR INFORMATION ONLY

IRRIGATION SLEEVE

SHEET	LOCATION	SIZE 4" LENGTH (LF)
C-15	1	5
C-15	2	8
C-15	3	6
C-15	4	6
C-15	5	5
C-15	6	9
C-15	7	17
	TOTAL	56

TEMPORARY WATER POLLUTION CONTROL

PROTECTION	QUANTITY (EA)
TEMPORARY DRAINAGE INLET PROTECTION	2
TEMPORARY CONCRETE WASHOUT	4 *
TEMPORARY CONSTRUCTION ENTRANCE	1

* QUANTITIES ARE FOR INFORMATION ONLY

STRUCTURAL SECTION

LOCATION	HMA (TYPE A) (TON)	TACK COAT (TON)	CLASS 2 AGGREGATE BASE (CY)	CLASS 4 AGGREGATE SUBBASE (CY)
YARD	7,535	8.93	7,686*	8,277
CUL-DE-SAC	235	0.18	484	-
TOTAL	7,770	9.11	8,170	8,277

* INCLUDES QUANTITY FOR CONCRETE ENTRANCE SIGN

MINOR HMA

LOCATION	MINOR HMA (TON)	PLACE HMA DIKE (TYPE A) (LF)
DIKE (TYPE A)	5.79	221

MINOR CONCRETE (Misc CONSTRUCTION)

LOCATION	AREA (SQFT) (N)	DEPTH (FT) (N)	LENGTH (FT) (N)	VOLUME (CY)
SIDEWALK/WALKWAY	1,410	0.33	-	17.24
CONCRETE GUTTER	4,052	0.50	-	75.04
CURBS (A1-6)	-	1.00	216	4.00
CURBS (G)	1.34	-	260	12.90
CONCRETE BAND	383	0.50	787	7.29
TOTAL				116.47

(N) NOT A SEPARATE PAY ITEM, FOR INFORMATION ONLY.

PIPE QUANTITIES

DESCRIPTION	QUANTITY (LF)
12" PLASTIC PIPE	25

FENCE QUANTITIES

DESCRIPTION	UNIT	QUANTITY
CHAIN LINK FENCE (TYPE CL-6, EXTENSION ARM)	LF	2556
CHAIN LINK FENCE (TYPE CL-4)	LF	217
12' CHAIN LINK GATE (TYPE CL-6)	EA	1
4' CHAIN LINK GATE (TYPE CL-6)	EA	2
4' CHAIN LINK GATE (TYPE CL-4)	EA	1
ORNAMENTAL STEEL FENCING	LF	300
ORNAMENTAL STEEL ROLLING GATE	EA	4
PILASTER (N)	EA	13
TEMPORARY FENCE (TYPE ESA)	LF	655

(N) NOT A SEPARATE PAY ITEM, FOR INFORMATION ONLY.

EARTHWORK

LOCATION	ROADWAY EXCAVATION (CY)	EMBANKMENT (CY) (N)
RETENTION BASIN	3,258	680
DITCH	22	613
YARD	3,563	5,129
CUL-DE-SAC	405	530
TOTAL	7,248	6,952

(N) NOT A SEPARATE PAY ITEM, FOR INFORMATION ONLY.

MINOR CONCRETE (MINOR STRUCTURE)

LOCATION	AREA (SQFT) (N)	LENGTH (LF) (N)	DEPTH (FT) (N)	VOLUME (CY)
HEADWALL AND WINGWALLS	228	-	1.00	8.44
CONCRETE ENTRANCE SIGN	-	12	6.67	2.96
TOTAL				11.40

(N) NOT A SEPARATE PAY ITEM, FOR INFORMATION ONLY.

SUMMARY OF QUANTITIES

Q-1

REVISED BY | DATE REVISED
KEVIN VO | ALEX GARCIA
CALCULATED-DESIGNED BY | CHECKED BY
FUNCTIONAL SUPERVISOR: HASAN DAABAS
STATE OF CALIFORNIA - DEPARTMENT OF TRANSPORTATION
Caltrans LANDS & BUILDINGS

LAST REVISION 08-12-11 | DATE PLOTTED => 21-JAN-2014 | TIME PLOTTED => 09:12

Dist	COUNTY	LOCATION CODE	POST MILES TOTAL PROJECT	SHEET No.	TOTAL SHEETS
11	Imp	5708		23	354

H. Daabas 08-05-11
REGISTERED CIVIL ENGINEER DATE

01-06-14
PLANS APPROVAL DATE

REGISTERED PROFESSIONAL ENGINEER HASAN DAABAS No. 48962 Exp. 9/30/14 CIVIL STATE OF CALIFORNIA

THE STATE OF CALIFORNIA OR ITS OFFICERS OR AGENTS SHALL NOT BE RESPONSIBLE FOR THE ACCURACY OR COMPLETENESS OF SCANNED COPIES OF THIS PLAN SHEET.

NOTES:

1. FOR DETAILS NOT SHOWN SEE STANDARD PLAN B3-11.
2. FOR LOCATION INFORMATION OF RETAINING WALL, SEE SHEET C-2.

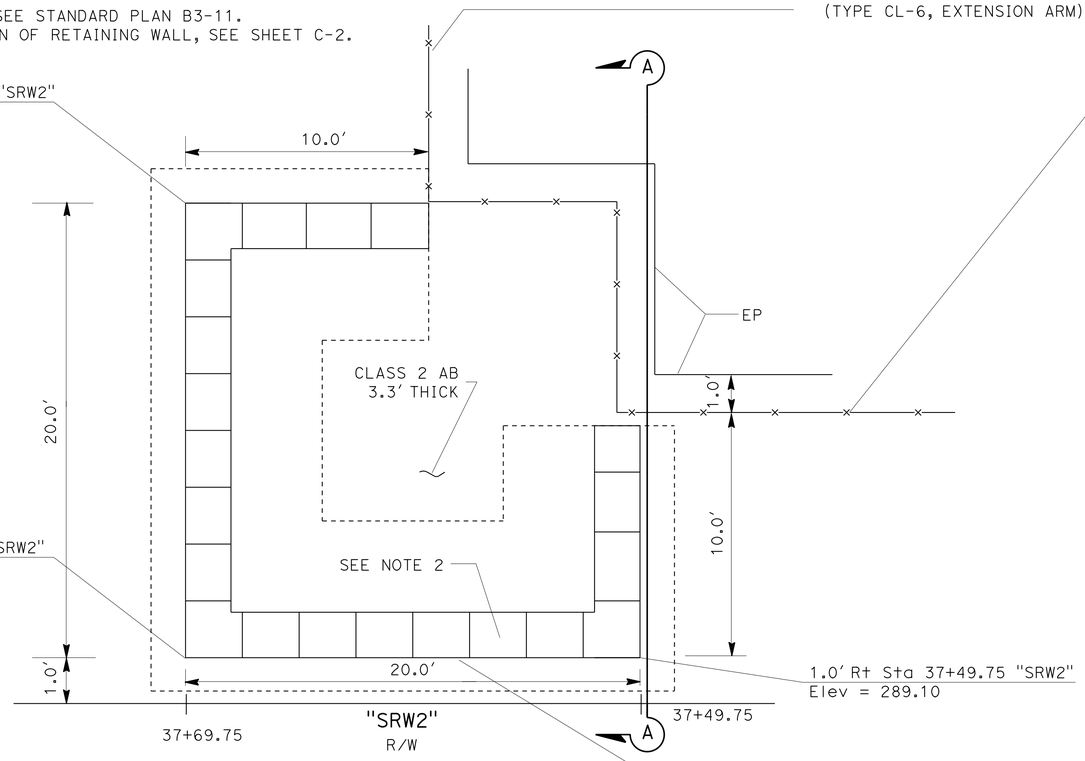

PLAN

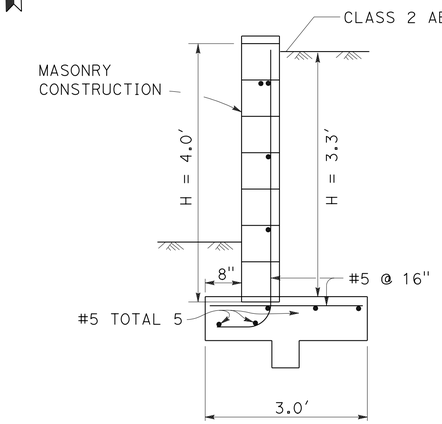

SECTION
SEE NOTE 1

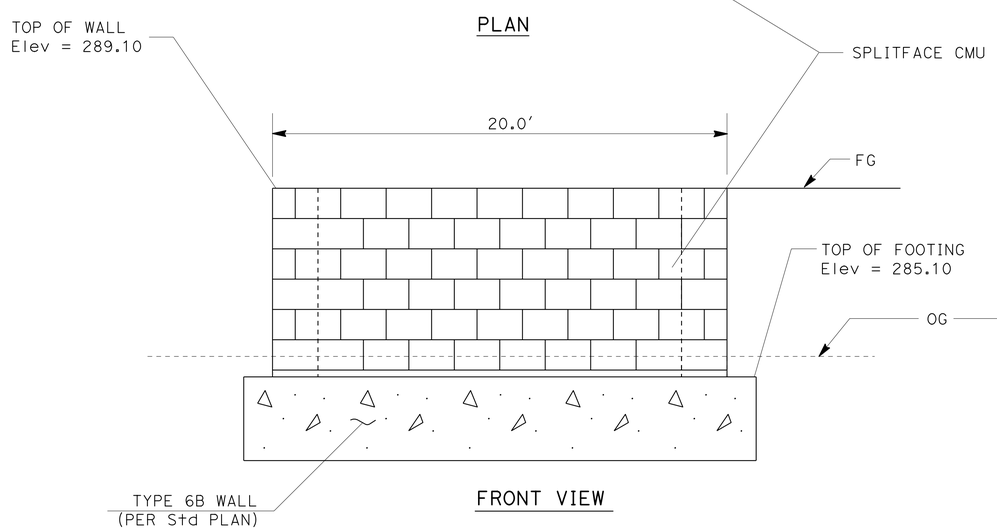

FRONT VIEW

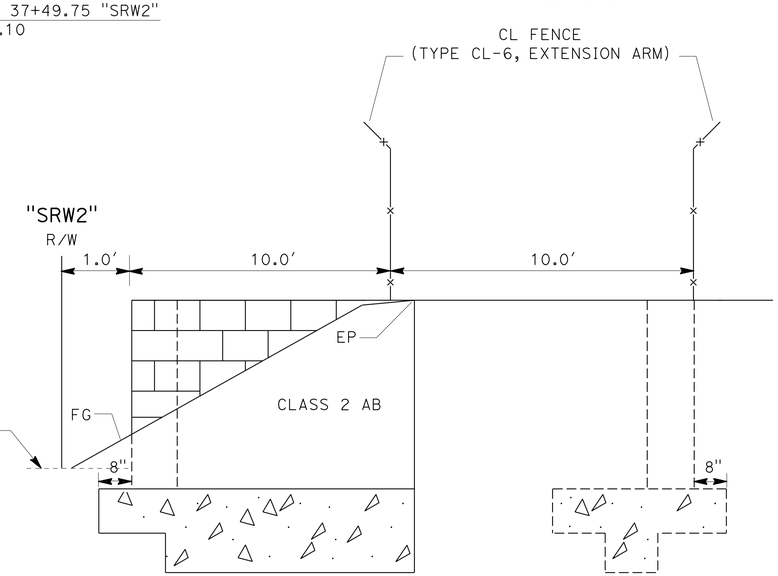

SECTION A-A

ELECTRICAL TRANSFORMER PAD

RETAINING WALL DETAILS

NO SCALE

R1-1

REVISED BY	DATE REVISED
KEVIN VO	ALEX GARCIA
CALCULATED-DESIGNED BY	CHECKED BY
FUNCTIONAL SUPERVISOR	HASAN DAABAS

STATE OF CALIFORNIA - DEPARTMENT OF TRANSPORTATION
Caltrans® LANDS & BUILDINGS

LAST REVISION 08-12-11
DATE PLOTTED => 21-JAN-2014
TIME PLOTTED => 09:12

Dist	COUNTY	LOCATION CODE	POST MILES TOTAL PROJECT	SHEET No.	TOTAL SHEETS
11	Imp	5708		24	354

H. Daabas 08-05-11
REGISTERED CIVIL ENGINEER DATE

01-06-14
PLANS APPROVAL DATE

REGISTERED PROFESSIONAL ENGINEER
HASAN DAABAS
No. 48962
Exp. 9/30/14
CIVIL
STATE OF CALIFORNIA

THE STATE OF CALIFORNIA OR ITS OFFICERS OR AGENTS SHALL NOT BE RESPONSIBLE FOR THE ACCURACY OR COMPLETENESS OF SCANNED COPIES OF THIS PLAN SHEET.

RETAINING WALL

LOCATION	DESCRIPTION	QUANTITIES
L-1	STRUCTURE EXCAVATION (RETAINING WALL)	18 CY
	STRUCTURE BACKFILL (RETAINING WALL)	50 CY
	STRUCTURAL CONCRETE, RETAINING WALL	11 CY
	RETAINING WALL STEM (TYPE 6B)	240 SQFT
	BAR REINFORCING STEEL (RETAINING WALL)	820 LB

RETAINING WALL QUANTITES

R1-2

REVISED BY: KEVIN VO
DATE REVISED:
CALCULATED-DESIGNED BY: ALEX GARCIA
CHECKED BY:
FUNCTIONAL SUPERVISOR: HASAN DAABAS

STATE OF CALIFORNIA - DEPARTMENT OF TRANSPORTATION
Caltrans LANDS & BUILDINGS

LAST REVISION 08-12-11
DATE PLOTTED => 21-JAN-2014
TIME PLOTTED => 09:12

Dist	COUNTY	LOCATION CODE	POST MILES TOTAL PROJECT	SHEET No.	TOTAL SHEETS
11	Imp	5708		25	354

LICENSED LANDSCAPE ARCHITECT

01-06-14
PLANS APPROVAL DATE

LICENSED LANDSCAPE ARCHITECT — HENRY D. BARNES — No. 3054 — Registration Expiration Date 12/31/15 — Renewal Date 08/09/11 — STATE OF CALIFORNIA

THE STATE OF CALIFORNIA OR ITS OFFICERS OR AGENTS SHALL NOT BE RESPONSIBLE FOR THE ACCURACY OR COMPLETENESS OF SCANNED COPIES OF THIS PLAN SHEET.

NOTE:

1. UNDERLINED PORTIONS OF BOTANICAL NAMES INDICATE ABBREVIATIONS USED ON PLANTING PLANS.

ABBREVIATIONS:

AMEND — AMENDMENT
B&B — BALLED AND BURLAPPED
Dia — DIAMETER
EA — EACH
Oz — OUNCE
lb — POUND
yd — YARD
SQYD — SQUARE YARD
CY — CUBIC YARD
Max — MAXIMUM
Min — MINIMUM
CF — CUBIC FOOT
No. — NUMBER
Pkt — PACKET(S)
PLT ESTB — PLANT ESTABLISHMENT
Pvmt — PAVEMENT
R/W — RIGHT OF WAY
SQFT — SQUARE FEET
TAB — TABLET(S)
TRVD — TRAVELED
BTH — BROWN TRUNK HEIGHT
" — INCH
' — FOOT

APPLICABLE WHEN CIRCLED:

1 - QUANTITIES SHOWN ARE 'PER PLANT' UNLESS SHOWN AS SQFT APPLICATION RATES.
2 - SUFFICIENT TO RECEIVE ROOT BALL.
3 - DOUBLE THE SIZE OF THE ROOT BALL.
4 - AS SHOWN ON PLANS.
5 - UNLESS OTHERWISE SHOWN ON PLANS.
6 - SEE STANDARD PLAN DETAIL.
7 - SEE BASIN DETAIL
8 - ALTERNATE PLANTING OF EACH VINE TYPE.

PLANT LIST AND PLANTING SPECIFICATIONS

PLANT GROUP	PLANT No.	SYMBOL	BOTANICAL NAME	COMMON NAME	SIZE	QUANTITY EACH	HOLE SIZE (INCH) Dia	HOLE SIZE (INCH) DEPTH	BASIN TYPE	IRON SULFATE 1	SOIL AMEND 1 (CF)	COMMERCIAL FERTILIZER 1 PLANTING	COMMERCIAL FERTILIZER 1 PLT ESTB	BASIN MULCH (CY)	STAKING	PLANTING LIMITS MINIMUM DISTANCE (Ft) FROM TRVD WAY	Pvmt	FENCE	WALL	PAVED DITCH	EARTH DITCH	ON CENTER (Ft)	REMARKS
A	1		AGAVE PARRYI VAR. TRUNCATA	ARTICHOKE AGAVE	1 GAL	14	3	3	7	1/4 lb	1/2	3 Pkt	1/2 lb	—	—	—	—	—	—	—	—	4	SHRUB
	2		ATRIPLEX POLYCARPA	DESERT SALTBRUSH	1 GAL	32	3	3	7	1/4 lb	1/2	3 Pkt	1/2 lb	—	—	—	—	—	—	—	—	4	SHRUB
	3		BACCHARIS 'STARN'	BACCHARIS	1 GAL	47	3	3	7	1/4 lb	1/2	3 Pkt	1/2 lb	—	—	—	—	—	—	—	—	4	GROUND COVER
	4		CALLIANDRA ERIOPHYLLA	FAIRY DUSTER	1 GAL	51	3	3	7	1/4 lb	1/2	3 Pkt	1/2 lb	—	—	—	—	—	—	—	—	4	SHRUB
	5		ENCELIA FARINOSA	BRITTLE BRUSH	1 GAL	53	3	3	7	1/4 lb	1/2	3 Pkt	1/2 lb	—	—	—	—	—	—	—	—	4	SHRUB
	6		HESPERALOE PARVIFLORA	RED YUCCA	1 GAL	20	3	3	7	1/4 lb	1/2	3 Pkt	1/2 lb	—	—	—	—	—	—	—	—	4	SHRUB
	7		LEUCOPHYLLUM FRUTESCENS	TEXAS RANGER	1 GAL	74	3	3	7	1/4 lb	1/2	3 Pkt	1/2 lb	—	—	—	—	—	—	—	—	4	SHRUB
	8		PORTULACARIA AFRA	ELEPHANT'S FOOD	1 GAL	49	3	3	7	1/4 lb	1/2	3 Pkt	1/2 lb	—	—	—	—	—	—	—	—	4	SHRUB
	9		SALVIA DORRII V. DORRII	DESERT SAGE	1 GAL	16	3	3	7	1/4 lb	1/2	3 Pkt	1/2 lb	—	—	—	—	—	—	—	—	4	SHRUB
B	10		CAESALPINIA GILLIESII	MEXICAN BIRD OF PARADISE	5 GAL	48	3	3	7	1/4 lb	1	5 Pkt	1/2 lb	—	—	—	—	—	—	—	—	4	SHRUB
G	11		SENECIO MANDRALISCAE	KLEINIA	ROOTED CUTTING	1340	—	—	—	—	—	8 lb/ 1000 SQFT	4 lb/ 1000 SQFT	—	—	—	—	—	—	—	—	1	GROUND COVER
K	12		ACACIA FARNESIANA	SWEET ACACIA	24" BOX	6	2	2	7	1/2 lb	3	20 Pkt	1/2 lb	—	6	—	—	—	—	—	—	4	TREE
	13		DALBERGIA SISSOO	SISSOO TREE	24" BOX	22	2	2	7	1/2 lb	3	20 Pkt	1/2 lb	—	6	—	—	—	—	—	—	4	TREE (ROOT BARRIER REQUIRED)
	14		PARKINSONIA ACULEATA	MEXICAN PALO VERDE	24" BOX	6	2	2	7	1/2 lb	3	20 Pkt	1/2 lb	—	6	—	—	—	—	—	—	4	TREE
	15		VITEX AGNUS-CASTUS	CHASTE TREE	24" BOX	1	2	2	7	1/2 lb	3	20 Pkt	1/2 lb	—	6	—	—	—	—	—	—	4	TREE (ROOT BARRIER REQUIRED)
U	16		FOUQUIERIA MACDOUGALII	MEXICAN TREE OCOTILLO	15 GAL	28	2	2	7	1/2 lb	2	5 Pkt	1/2 lb	—	—	—	—	—	—	—	—	4	TREE

LEGEND:

- DECOMPOSED GRANITE (Misc AREAS)(DG) (3" DEEP)
- EROSION CONTROL (BFM)
- ROOT BARRIER

DECOMPOSED GRANITE (Misc AREAS) (N)

SHEET	SQFT
PP-1	10,802
PP-4	52
TOTAL	10,854

ROOT BARRIER (N)

SHEET	LF
PP-1	585
PP-4	40
TOTAL	625

EROSION CONTROL (BFM)

SHEET NUMBER	SQFT
PP-1	6,507
PP-2	6,880
PP-3	34,805
PP-4	5,445
PP-5	30,040
TOTAL	83,677

(N) NOT A SEPARATE PAY ITEM, FOR INFORMATION ONLY.

PLANT LIST

PL-1

REVISED BY | DATE REVISED
HENRY BARNES | CAROL CALLEJON
CALCULATED-DESIGNED BY | CHECKED BY
FUNCTIONAL SUPERVISOR | STEPHEN ALVAREZ
STATE OF CALIFORNIA - DEPARTMENT OF TRANSPORTATION
Caltrans LANDSCAPE ARCHITECTURE

LAST REVISION 02-10-11 | DATE PLOTTED => 21-JAN-2014 | TIME PLOTTED => 16:02

Dist	COUNTY	LOCATION CODE	POST MILES TOTAL PROJECT	SHEET No.	TOTAL SHEETS
11	Imp	5708		26	354

LICENSED LANDSCAPE ARCHITECT

01-06-14
PLANS APPROVAL DATE

THE STATE OF CALIFORNIA OR ITS OFFICERS OR AGENTS SHALL NOT BE RESPONSIBLE FOR THE ACCURACY OR COMPLETENESS OF SCANNED COPIES OF THIS PLAN SHEET.

LICENSED LANDSCAPE ARCHITECT
HENRY D. BARNES No. 3653
Registration Expiration Date
12/31/15
Renewal Date
08/09/11
Date
STATE OF CALIFORNIA

NOTE:

FOR ACCURATE RIGHT OF WAY DATA, CONTACT RIGHT OF WAY ENGINEERING AT THE DISTRICT OFFICE.

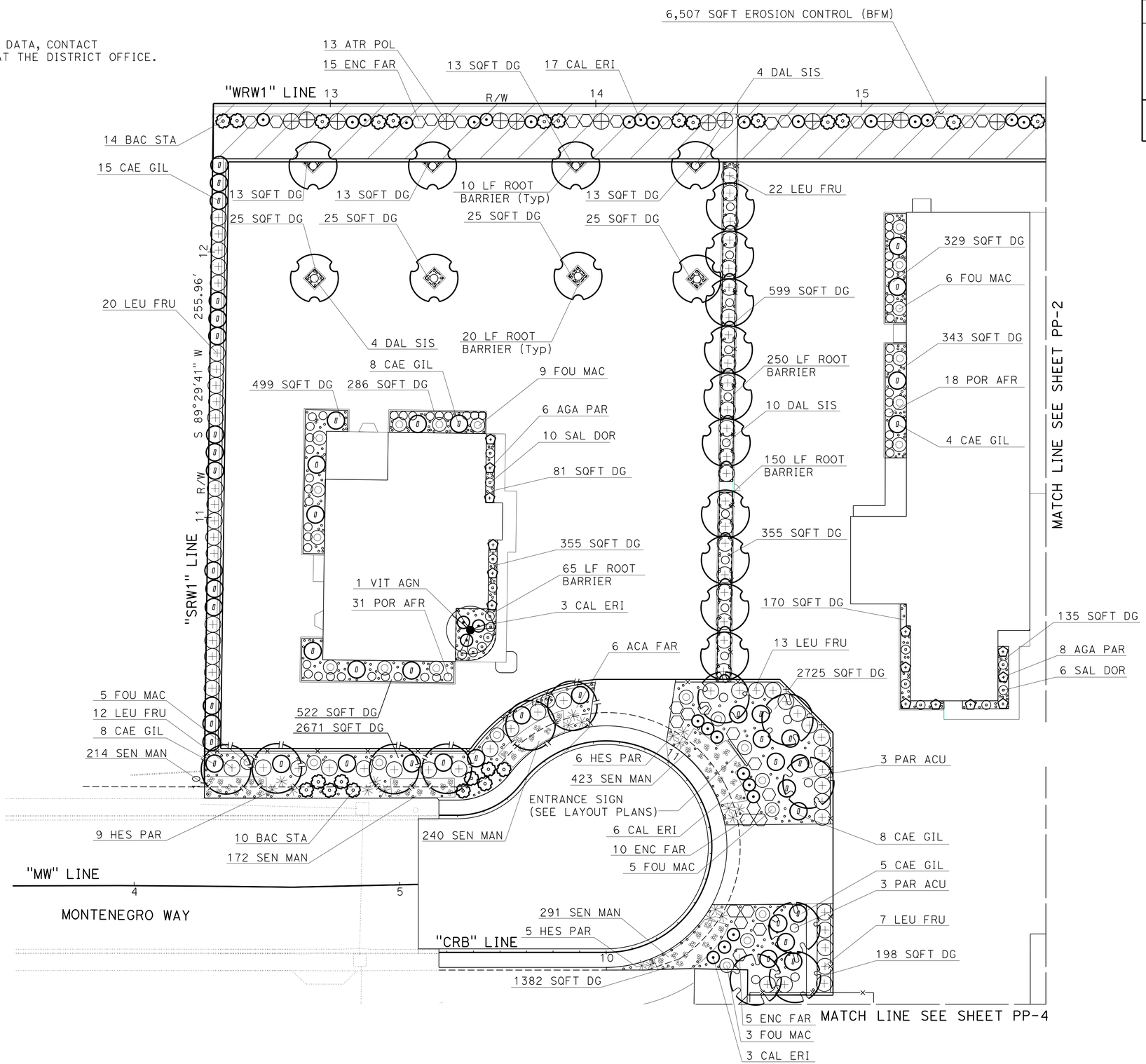

APPROVED FOR PLANTING WORK ONLY

PLANTING PLAN

SCALE: 1" = 20' **PP-1**

REVISED BY	DATE REVISED
HENRY BARNES	CAROL CALLEJON
CALCULATED-DESIGNED BY	CHECKED BY
FUNCTIONAL SUPERVISOR	STEPHEN ALVAREZ

STATE OF CALIFORNIA - DEPARTMENT OF TRANSPORTATION
Caltrans® LANDSCAPE ARCHITECTURE

LAST REVISION 08-15-11 | DATE PLOTTED => 21-JAN-2014 TIME PLOTTED => 16:02

Dist	COUNTY	LOCATION CODE	POST MILES TOTAL PROJECT	SHEET No.	TOTAL SHEETS
11	Imp	5708		27	354

LICENSED LANDSCAPE ARCHITECT

01-06-14
PLANS APPROVAL DATE

THE STATE OF CALIFORNIA OR ITS OFFICERS OR AGENTS SHALL NOT BE RESPONSIBLE FOR THE ACCURACY OR COMPLETENESS OF SCANNED COPIES OF THIS PLAN SHEET.

LICENSED LANDSCAPE ARCHITECT
HENRY D. BARNES No. 3454
Registration Expiration Date
12/31/15
Date
08/09/11
STATE OF CALIFORNIA

NOTE:

FOR ACCURATE RIGHT OF WAY DATA, CONTACT RIGHT OF WAY ENGINEERING AT THE DISTRICT OFFICE.

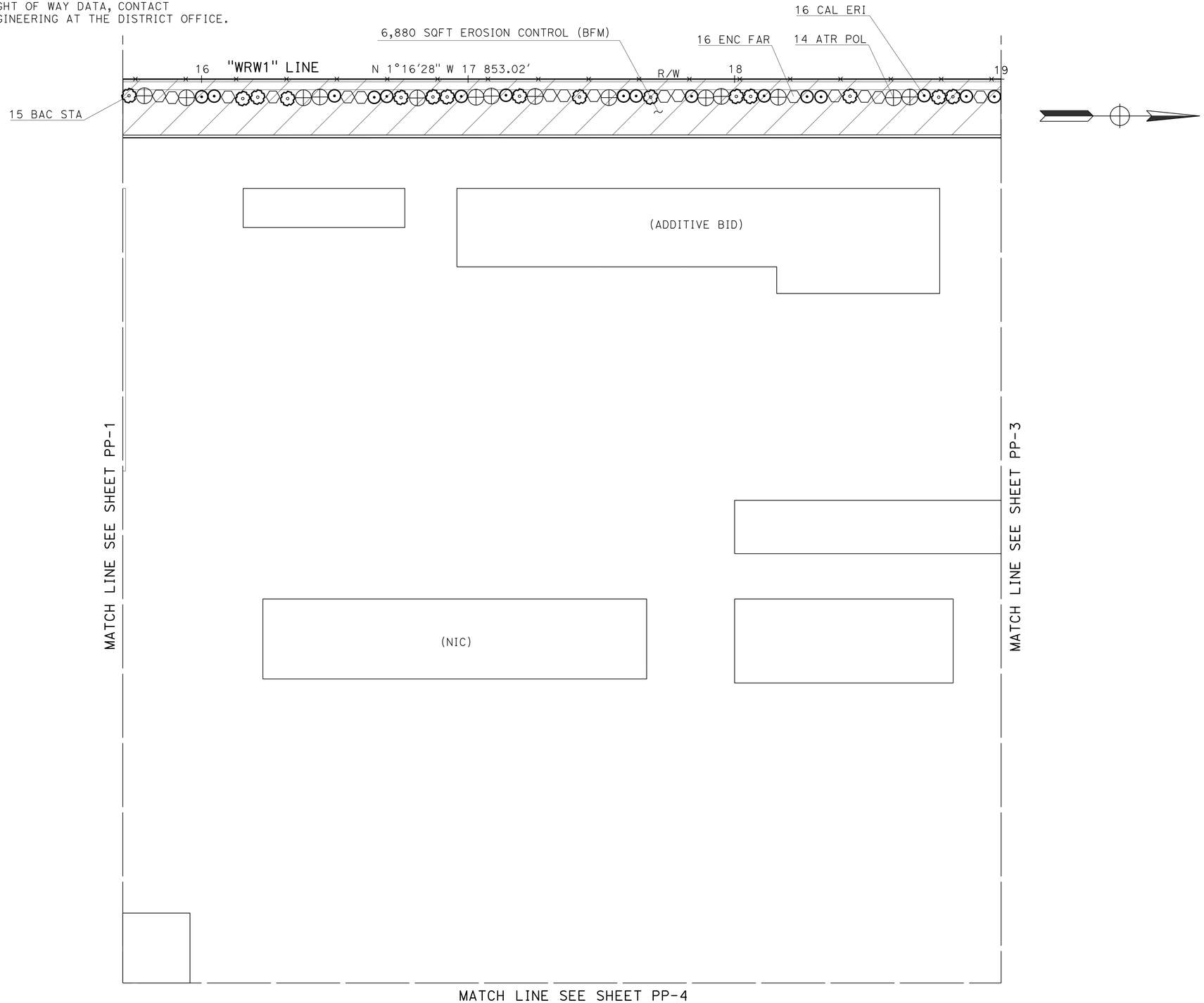

APPROVED FOR PLANTING WORK ONLY

PLANTING PLAN

SCALE: 1" = 20'

PP-2

STATE OF CALIFORNIA - DEPARTMENT OF TRANSPORTATION
Caltrans LANDSCAPE ARCHITECTURE

FUNCTIONAL SUPERVISOR: STEPHEN ALVAREZ
CALCULATED-DESIGNED BY: HENRY BARNES
CHECKED BY: CAROL CALLEJON
REVISED BY
DATE REVISED

LAST REVISION 08-15-11
DATE PLOTTED => 21-JAN-2014
TIME PLOTTED => 16:02

Dist	COUNTY	LOCATION CODE	POST MILES TOTAL PROJECT	SHEET No.	TOTAL SHEETS
11	Imp	5708		28	354

LICENSED LANDSCAPE ARCHITECT

01-06-14
PLANS APPROVAL DATE

THE STATE OF CALIFORNIA OR ITS OFFICERS OR AGENTS SHALL NOT BE RESPONSIBLE FOR THE ACCURACY OR COMPLETENESS OF SCANNED COPIES OF THIS PLAN SHEET.

LICENSED LANDSCAPE ARCHITECT
HENRY D. BARNES No. 3654
REGISTERED
12/31/15
Renewal Date
08/09/11
Date
STATE OF CALIFORNIA

NOTE:

FOR ACCURATE RIGHT OF WAY DATA, CONTACT RIGHT OF WAY ENGINEERING AT THE DISTRICT OFFICE.

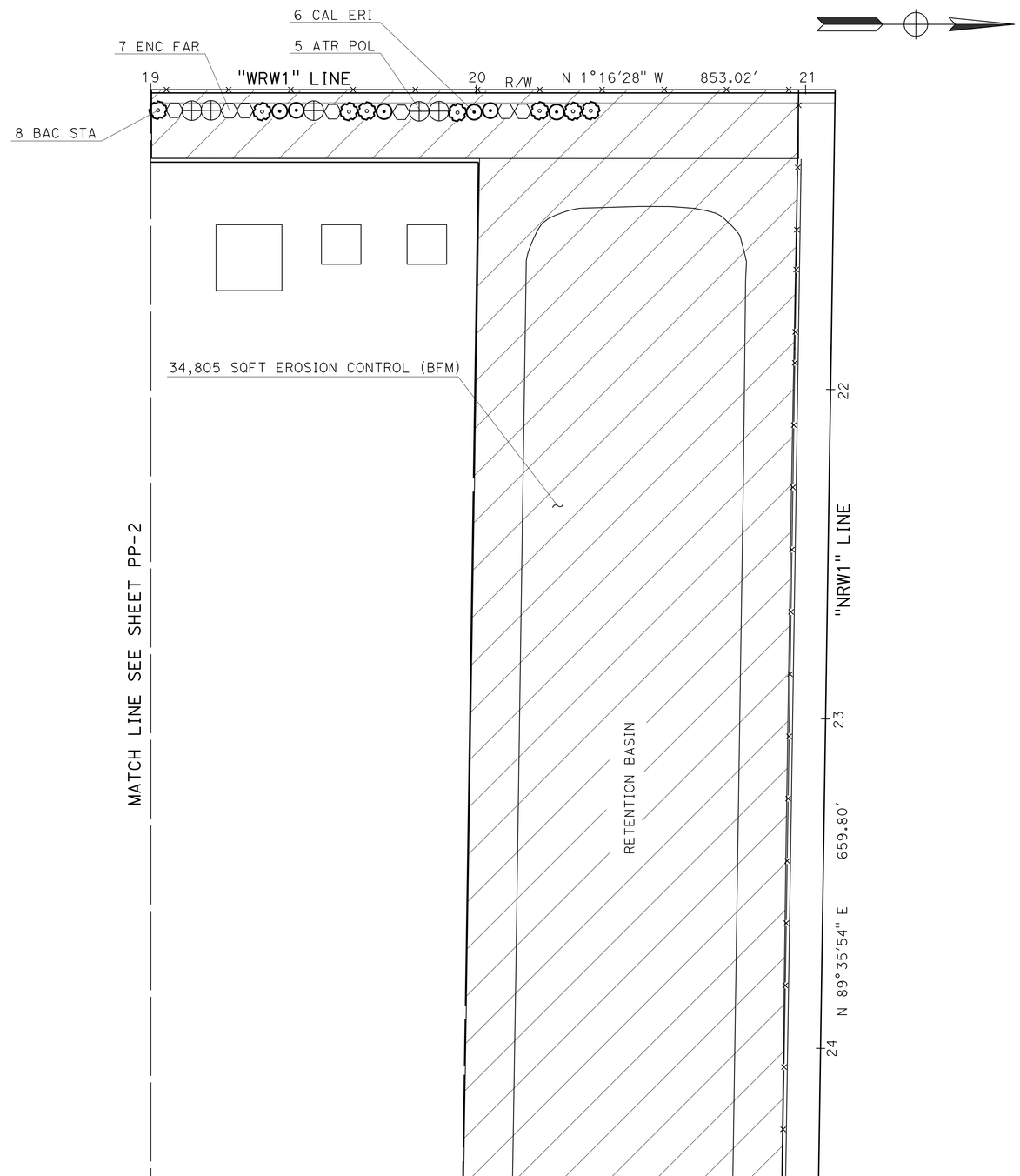

APPROVED FOR PLANTING WORK ONLY

PLANTING PLAN

SCALE: 1" = 20'

PP-3

STATE OF CALIFORNIA - DEPARTMENT OF TRANSPORTATION
Caltrans LANDSCAPE ARCHITECTURE

FUNCTIONAL SUPERVISOR: STEPHEN ALVAREZ

CALCULATED-DESIGNED BY: HENRY BARNES
CHECKED BY: CAROL CALLEJON

REVISED BY
DATE REVISED

LAST REVISION 08-15-11
DATE PLOTTED => 21-JAN-2014
TIME PLOTTED => 16:02

Dist	COUNTY	LOCATION CODE	POST MILES TOTAL PROJECT	SHEET No.	TOTAL SHEETS
11	Imp	5708		29	354

LICENSED LANDSCAPE ARCHITECT

01-06-14
PLANS APPROVAL DATE

HENRY D. BARNES No. 5054 LICENSED LANDSCAPE ARCHITECT STATE OF CALIFORNIA
Registered Expires 12/31/15
Renewal Date 08/09/11
Date

THE STATE OF CALIFORNIA OR ITS OFFICERS OR AGENTS SHALL NOT BE RESPONSIBLE FOR THE ACCURACY OR COMPLETENESS OF SCANNED COPIES OF THIS PLAN SHEET.

NOTE:

FOR ACCURATE RIGHT OF WAY DATA, CONTACT RIGHT OF WAY ENGINEERING AT THE DISTRICT OFFICE.

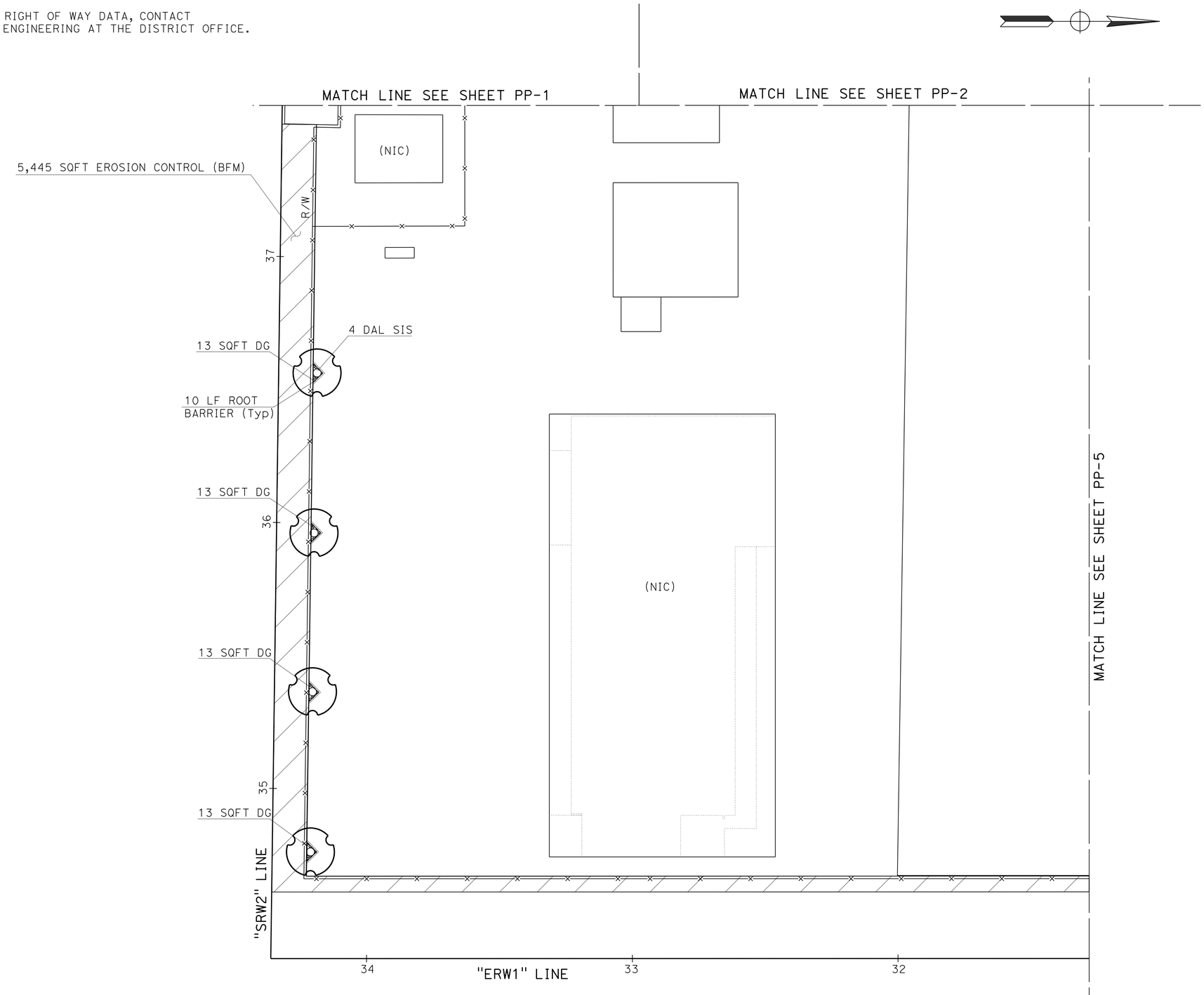

APPROVED FOR PLANTING WORK ONLY

PLANTING PLAN

SCALE: 1" = 20'

PP-4

STATE OF CALIFORNIA - DEPARTMENT OF TRANSPORTATION
Caltrans LANDSCAPE ARCHITECTURE

FUNCTIONAL SUPERVISOR: STEPHEN ALVAREZ
CALCULATED-DESIGNED BY: HENRY BARNES
CHECKED BY: CAROL CALLEJON
REVISED BY
DATE REVISED

LAST REVISION 11-22-13
DATE PLOTTED => 21-JAN-2014
TIME PLOTTED => 16:02

Dist	COUNTY	LOCATION CODE	POST MILES TOTAL PROJECT	SHEET No.	TOTAL SHEETS
11	Imp	5708		30	354

LICENSED LANDSCAPE ARCHITECT

01-06-14
PLANS APPROVAL DATE

LICENSED LANDSCAPE ARCHITECT
HENRY D. BARNES No. 5054
Registered
12/31/15
Expiration Date
08/09/11
Date
STATE OF CALIFORNIA

THE STATE OF CALIFORNIA OR ITS OFFICERS OR AGENTS SHALL NOT BE RESPONSIBLE FOR THE ACCURACY OR COMPLETENESS OF SCANNED COPIES OF THIS PLAN SHEET.

NOTE:

FOR ACCURATE RIGHT OF WAY DATA, CONTACT RIGHT OF WAY ENGINEERING AT THE DISTRICT OFFICE.

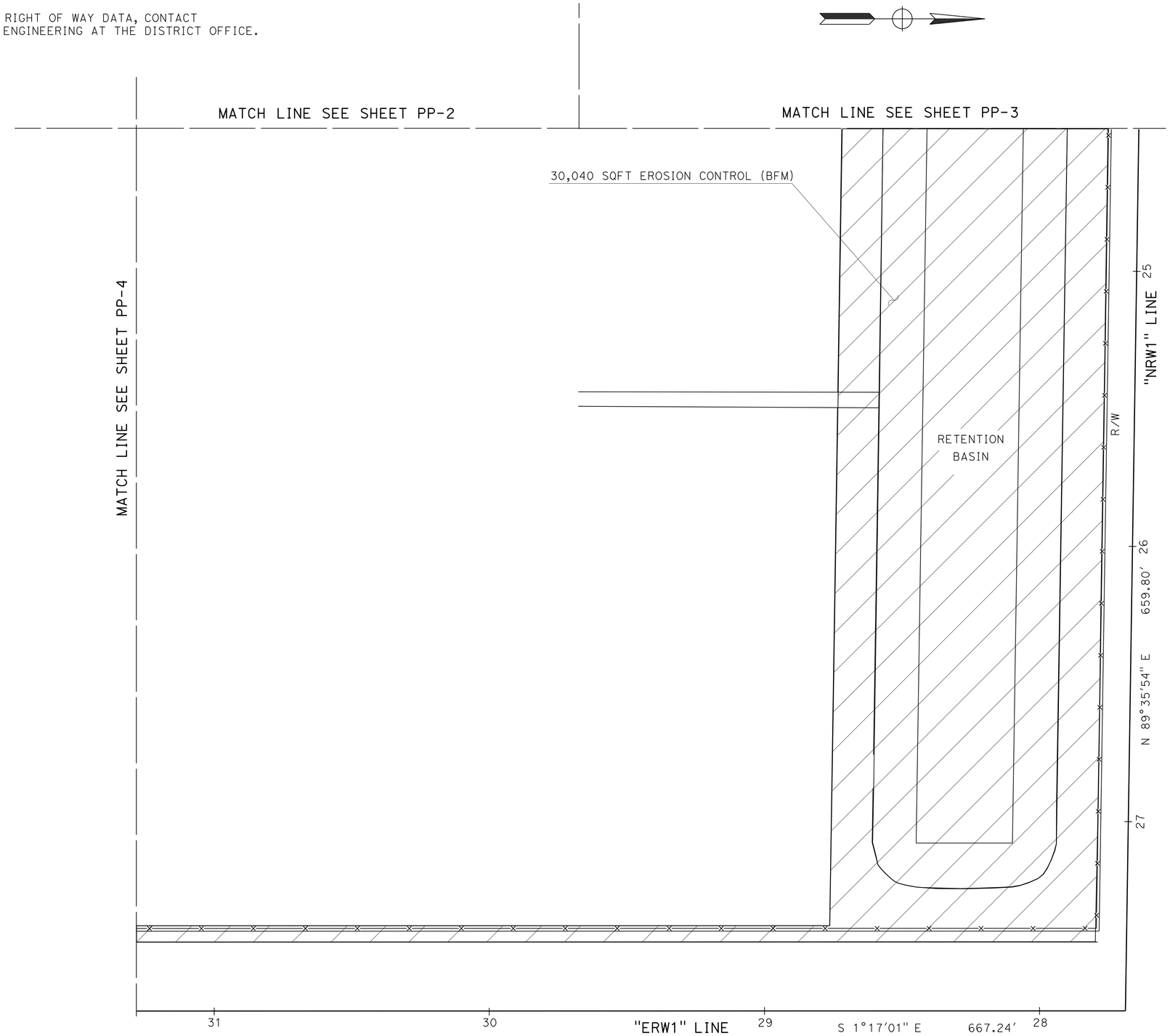

APPROVED FOR PLANTING WORK ONLY

PLANTING PLAN

SCALE: 1" = 20'

PP-5

STATE OF CALIFORNIA - DEPARTMENT OF TRANSPORTATION
Caltrans® LANDSCAPE ARCHITECTURE

FUNCTIONAL SUPERVISOR: STEPHEN ALVAREZ
CALCULATED-DESIGNED BY: HENRY BARNES
CHECKED BY: CAROL CALLEJON
REVISED BY
DATE REVISED

LAST REVISION 08-15-11
DATE PLOTTED => 21-JAN-2014
TIME PLOTTED => 16:02

Dist	COUNTY	LOCATION CODE	POST MILES TOTAL PROJECT	SHEET No.	TOTAL SHEETS
11	Imp	5708		31	354

LICENSED LANDSCAPE ARCHITECT

01-06-14
PLANS APPROVAL DATE

THE STATE OF CALIFORNIA OR ITS OFFICERS OR AGENTS SHALL NOT BE RESPONSIBLE FOR THE ACCURACY OR COMPLETENESS OF SCANNED COPIES OF THIS PLAN SHEET.

LICENSED LANDSCAPE ARCHITECT
HENRY D. BARNES No. 3654
Registered Expires
12/31/15
Renewal Date
08/09/11
Date
STATE OF CALIFORNIA

NOTE:

FOR ACCURATE RIGHT OF WAY DATA, CONTACT RIGHT OF WAY ENGINEERING AT THE DISTRICT OFFICE.

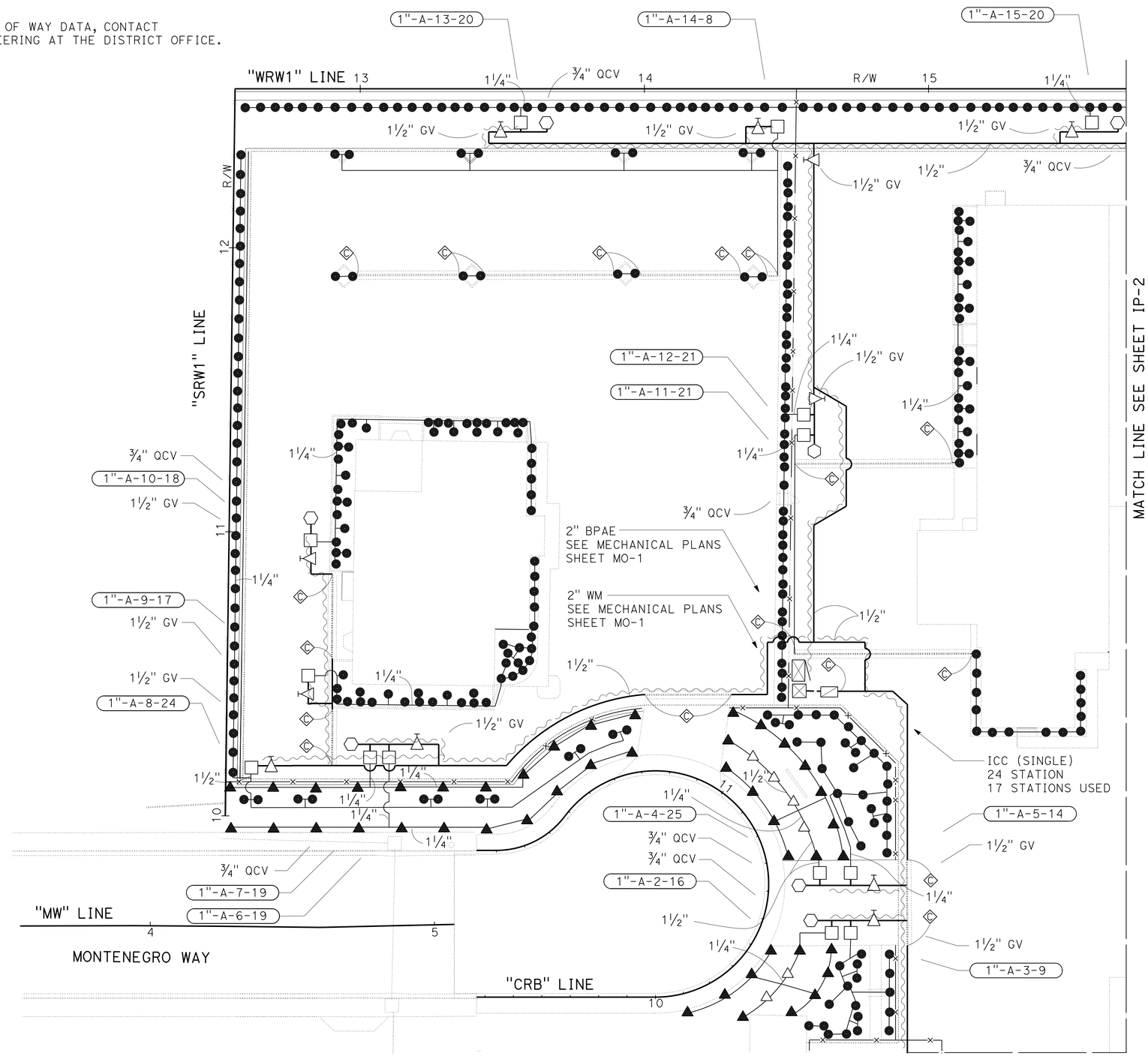

APPROVED FOR IRRIGATION WORK ONLY

IRRIGATION PLAN

SCALE: 1" = 20'

IP-1

STATE OF CALIFORNIA - DEPARTMENT OF TRANSPORTATION
Caltrans LANDSCAPE ARCHITECTURE

FUNCTIONAL SUPERVISOR: STEPHEN ALVAREZ

CALCULATED-DESIGNED BY: HENRY BARNES
CHECKED BY: CAROL CALLEJON

REVISED BY
DATE REVISED

LAST REVISION 08-15-11
DATE PLOTTED => 21-JAN-2014
TIME PLOTTED => 16:02

Dist	COUNTY	LOCATION CODE	POST MILES TOTAL PROJECT	SHEET No.	TOTAL SHEETS
11	Imp	5708		32	354

LICENSED LANDSCAPE ARCHITECT

01-06-14
PLANS APPROVAL DATE

LICENSED LANDSCAPE ARCHITECT
HENRY D. BARNES No. 3654
Registered
12/31/15
Renewal Date
08/09/11
Date
STATE OF CALIFORNIA

THE STATE OF CALIFORNIA OR ITS OFFICERS OR AGENTS SHALL NOT BE RESPONSIBLE FOR THE ACCURACY OR COMPLETENESS OF SCANNED COPIES OF THIS PLAN SHEET.

NOTE:

FOR ACCURATE RIGHT OF WAY DATA, CONTACT RIGHT OF WAY ENGINEERING AT THE DISTRICT OFFICE.

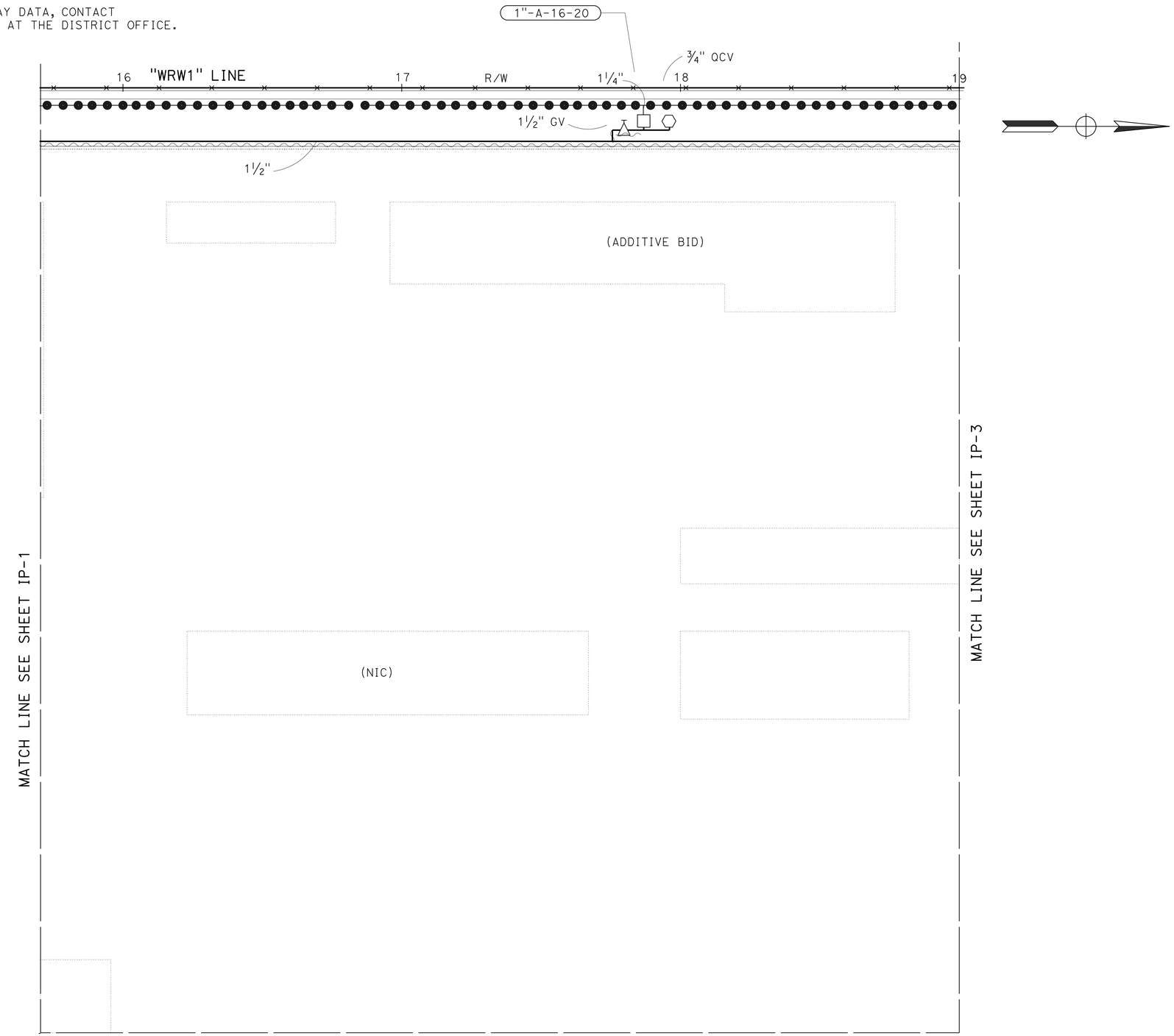

APPROVED FOR IRRIGATION WORK ONLY

IRRIGATION PLAN

SCALE: 1" = 20'

IP-2

STATE OF CALIFORNIA - DEPARTMENT OF TRANSPORTATION
Caltrans® LANDSCAPE ARCHITECTURE

FUNCTIONAL SUPERVISOR: STEPHEN ALVAREZ

CALCULATED-DESIGNED BY: HENRY BARNES
CHECKED BY: CAROL CALLEJON

REVISED BY
DATE REVISED

LAST REVISION 08-15-11
DATE PLOTTED => 21-JAN-2014
TIME PLOTTED => 16:02

Dist	COUNTY	LOCATION CODE	POST MILES TOTAL PROJECT	SHEET No.	TOTAL SHEETS
11	Imp	5708		33	354

LICENSED LANDSCAPE ARCHITECT

01-06-14
PLANS APPROVAL DATE

LICENSED LANDSCAPE ARCHITECT
HENRY D. BARNES No. 5054
Expiration Date
12/31/15
Renewal Date
08/09/11
Date
STATE OF CALIFORNIA

THE STATE OF CALIFORNIA OR ITS OFFICERS OR AGENTS SHALL NOT BE RESPONSIBLE FOR THE ACCURACY OR COMPLETENESS OF SCANNED COPIES OF THIS PLAN SHEET.

NOTE:

FOR ACCURATE RIGHT OF WAY DATA, CONTACT RIGHT OF WAY ENGINEERING AT THE DISTRICT OFFICE.

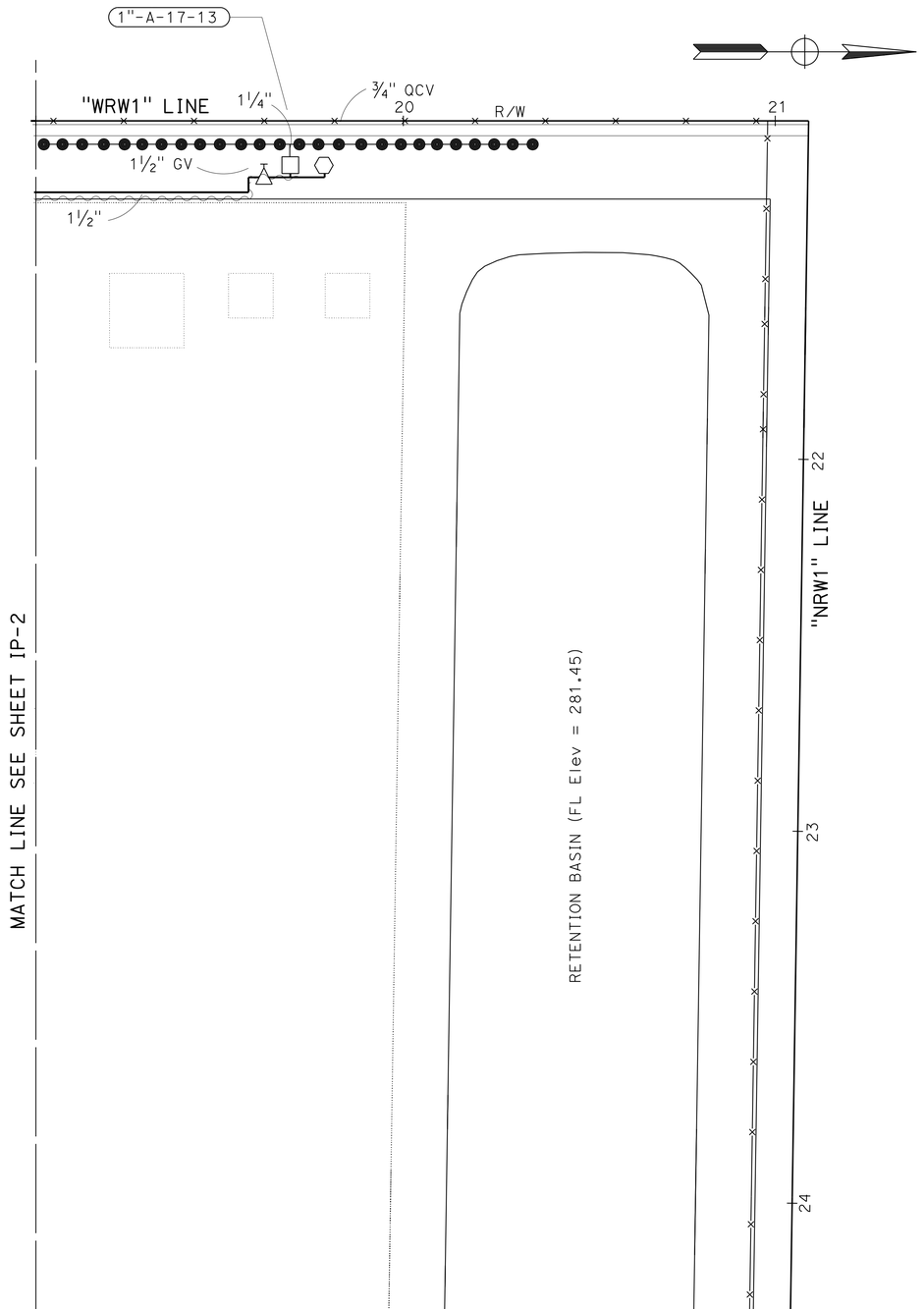

APPROVED FOR IRRIGATION WORK ONLY

IRRIGATION PLAN

SCALE: 1" = 20'

IP-3

STATE OF CALIFORNIA - DEPARTMENT OF TRANSPORTATION
Caltrans LANDSCAPE ARCHITECTURE

FUNCTIONAL SUPERVISOR: STEPHEN ALVAREZ
CALCULATED-DESIGNED BY: HENRY BARNES
CHECKED BY: CAROL CALLEJON
REVISED BY
DATE REVISED

LAST REVISION 08-15-11
DATE PLOTTED => 21-JAN-2014
TIME PLOTTED => 16:02

Dist	COUNTY	LOCATION CODE	POST MILES TOTAL PROJECT	SHEET No.	TOTAL SHEETS
11	Imp	5708		34	354

LICENSED LANDSCAPE ARCHITECT

01-06-14
PLANS APPROVAL DATE

LICENSED LANDSCAPE ARCHITECT
HENRY D. BARNES No. 3654
Registered Expiration Date
12/31/15
Renewal Date
08/09/11
Date
STATE OF CALIFORNIA

THE STATE OF CALIFORNIA OR ITS OFFICERS OR AGENTS SHALL NOT BE RESPONSIBLE FOR THE ACCURACY OR COMPLETENESS OF SCANNED COPIES OF THIS PLAN SHEET.

NOTE:

FOR ACCURATE RIGHT OF WAY DATA, CONTACT RIGHT OF WAY ENGINEERING AT THE DISTRICT OFFICE.

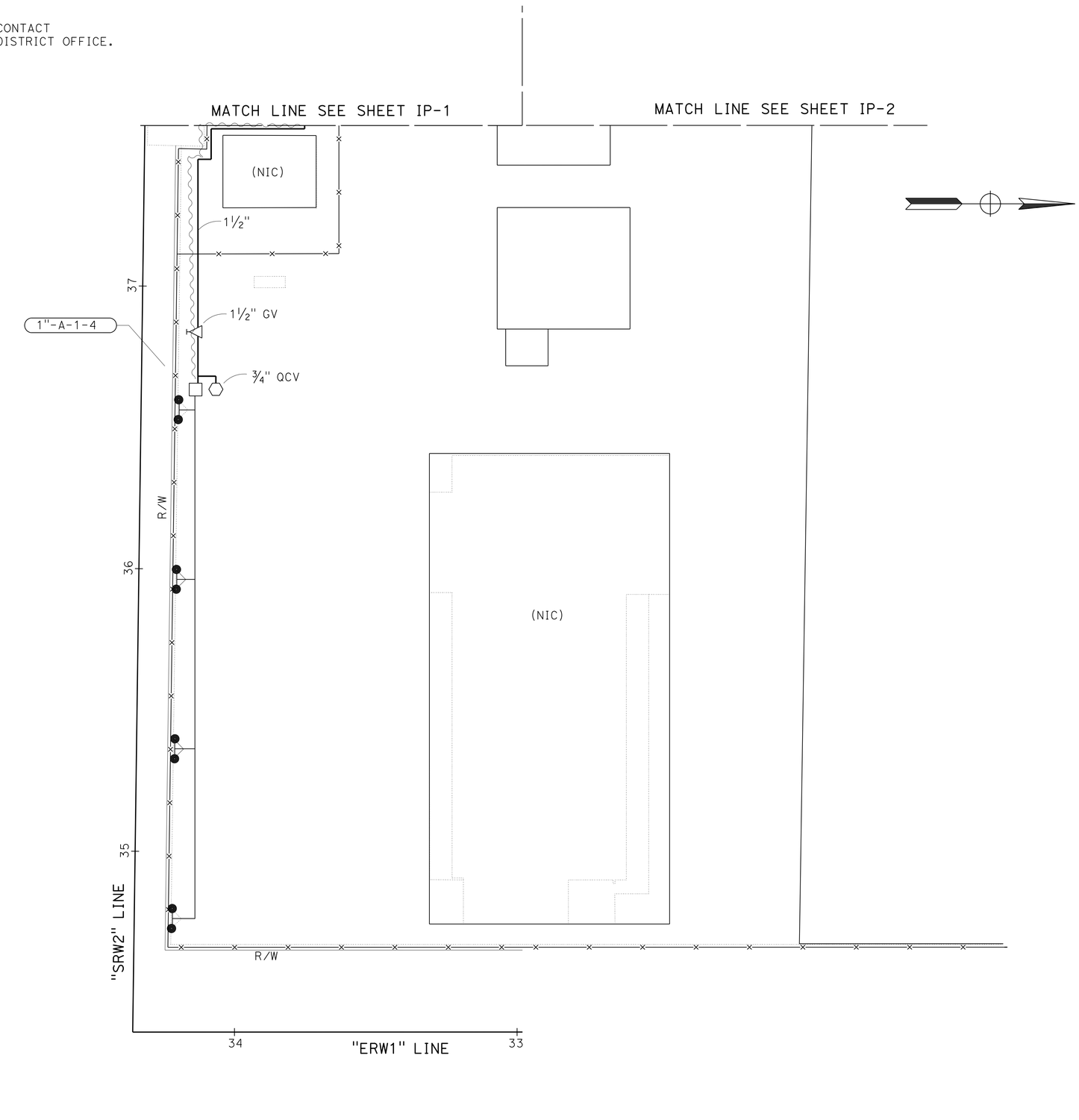

APPROVED FOR IRRIGATION WORK ONLY

IRRIGATION PLAN

SCALE: 1" = 20'

IP-4

STATE OF CALIFORNIA - DEPARTMENT OF TRANSPORTATION
Caltrans® LANDSCAPE ARCHITECTURE

FUNCTIONAL SUPERVISOR: STEPHEN ALVAREZ
CALCULATED-DESIGNED BY: HENRY BARNES
CHECKED BY: CAROL CALLEJON
REVISED BY
DATE REVISED

LAST REVISION 08-15-11
DATE PLOTTED => 21-JAN-2014
TIME PLOTTED => 16:02

Dist	COUNTY	LOCATION CODE	POST MILES TOTAL PROJECT	SHEET No.	TOTAL SHEETS
11	Imp	5708		35	354

LICENSED LANDSCAPE ARCHITECT

01-06-14
PLANS APPROVAL DATE

LICENSED LANDSCAPE ARCHITECT — HENRY D. BARNES — No. 5054 — Registered Professional — 12/31/15 Expiration Date — 08/09/11 Date — STATE OF CALIFORNIA

THE STATE OF CALIFORNIA OR ITS OFFICERS OR AGENTS SHALL NOT BE RESPONSIBLE FOR THE ACCURACY OR COMPLETENESS OF SCANNED COPIES OF THIS PLAN SHEET.

SPRINKLER SCHEDULE

SYMBOL	TYPE	DESCRIPTION	SPRAY PATTERN	OPERATING PRESSURE (PSI)	PRESSURE COMPENSATING	PLUS / MINUS 5% ② DISCHARGE: GALLONS PER SECOND (GPS)	GALLONS PER MINUTE (GPM)	GALLONS PER HOUR (GPH)	RADIUS (F†)	WIDTH x LENGTH (F†)	MATERIAL	NOZZLE SIZE (INCH)	INLET CONNECTION (NPT) (DN IN INCHES)(INCH)	POSITIVE-LOCKING ADJ ARC STOP	BACKSPLASH PREVENTER	DIFFUSER PIN	DISTANCE CONTROL FLAP	ADJ DISCHARGE	RISER: TYPE	RISER MATERIAL: PLASTIC	RISER MATERIAL: GALVANIZED	RISER: SIZE (IPS) (INCH)	RISER: HEIGHT (INCH)	RISER: FLOW SHUTOFF DEVICE	SWING JOINT (TYPE)	RISER SUPPORT	SPRINKLER PROTECTOR (TYPE)	REMARKS
△	B-2	SPRAY HEAD	F	30	-	-	2.60	-	12	-	PL	-	½	-	-	X	-	X	-	-	-	-	-	-	1	-	-	⑧⑨ 12" POP-UP
▲	B-2	SPRAY HEAD	H	30	-	-	1.30	-	12	-	PL	-	½	-	-	X	-	X	-	-	-	-	-	-	1	-	1	⑧⑨ 12" POP-UP
▲	B-2	SPRAY HEAD	Q	30	-	-	0.65	-	12	-	PL	-	½	-	-	X	-	X	-	-	-	-	-	-	1	-	1	⑧⑨ 12" POP-UP
▲	B-2	SPRAY HEAD	H	30	-	-	1.85	-	15	-	PL	-	½	-	-	X	-	X	-	-	-	-	-	-	1	-	1	⑧⑨ 12" POP-UP
▲	B-2	SPRAY HEAD	Q	30	-	-	0.92	-	15	-	PL	-	½	-	-	X	-	X	-	-	-	-	-	-	1	-	1	⑧⑨ 12" POP-UP
●	C-2	FLOOD BUBBLER	-	30	X	-	0.5	-	-	-	PL	-	½	-	-	-	-	-	II	X	-	½	6	-	1	-	-	④⑨⑩⑪⑫

X IN BOX DENOTES REQUIREMENT

APPLICABLE WHEN CIRCLED BELOW:

1 - SEE SPECIAL PROVISIONS.
② - IF A PRESSURE COMPENSATING DEVICE IS SPECIFIED, THE DISCHARGE AND RADII SHOWN REFLECT ITS USE.
3 - SHALL HAVE AN INTERNAL OR EXTERNAL CHECK VALVE.
④ - NON-ADJUSTABLE DISCHARGE RATE.
5 - REQUIRED ADJACENT TO SHOULDERS, CURBS, SIDEWALKS, AND DIKES.
6 - UNLESS OTHERWISE SHOWN ON PLANS.
7 - ADJUSTABLE ARC.
⑧ - MATCHED PRECIPITATION RATE NOZZLES.
⑨ - REFER TO PIPE SIZING CHARTS.
⑩ - PROVIDE 2 BUBBLERS PER TREE.
⑪ - INSTALL SPRINKLER (TYPE C-2) ON UPHILL SIDE OF PLANT WHEN ON SLOPE.
⑫ - INSTALL SPRINKLER WITHIN TREE BASIN.

ABBREVIATIONS:

Adj — ADJUSTABLE
B/B — BRASS/BRONZE
B/B/PL — BRASS/BRONZE/PLASTIC
B/PL — BRASS/PLASTIC
CST — CENTER STRIP
DN — DIAMETER NOMINAL
EST — END STRIP
F† — FEET
F — FULL CIRCLE
F/P — FULL/PART CIRCLE
GPM — GALLONS PER MINUTE
H — HALF CIRCLE
IPS — IRON PIPE SIZE
NPT — NATIONAL PIPE THREAD
P — PART CIRCLE
PL — PLASTIC
PSI — POUNDS PER SQUARE INCH
Q — QUARTER CIRCLE
SST — SIDE STRIP
T — THIRD CIRCLE
TQ — THREE QUARTER CIRCLE
TT — TWO THIRDS CIRCLE

NOTES:

1. ALL NEW LATERAL PIPE NOT LABELED SHALL BE 1 INCH.
2. ALL NEW MAINLINE PIPE WHICH HAS A CHANGE IN DIRECTION OF 90 DEGREES OR MORE SHALL HAVE (2)-45 DEGREE ELBOWS.
3. PULL ONE ADDITIONAL CNC WIRE FROM EACH CONTROLLER TO THE LAST VALVE BOX AT EACH VALVE MANIFOLD (FOR FUTURE USE).

LEGEND:

- 6" SCHEDULE 80 Irr CROSSOVER (SEE CONSTRUCTION DETAILS SHEETS)
  1½" WATER
  2" SCC

- 4" PVC Irr SLEEVE (SEE CONSTRUCTION DETAILS SHEETS)

LANDSCAPE DETAILS
LD-1

REVISED BY | DATE REVISED
HENRY BARNES | CAROL CALLEJON
CALCULATED-DESIGNED BY | CHECKED BY
FUNCTIONAL SUPERVISOR | STEPHEN ALVAREZ

STATE OF CALIFORNIA - DEPARTMENT OF TRANSPORTATION
Caltrans LANDSCAPE ARCHITECTURE

LAST REVISION 08-15-11 | DATE PLOTTED => 21-JAN-2014 | TIME PLOTTED => 16:02

Dist	COUNTY	LOCATION CODE	POST MILES TOTAL PROJECT	SHEET No.	TOTAL SHEETS
11	Imp	5708		36	354

LICENSED LANDSCAPE ARCHITECT

01-06-14
PLANS APPROVAL DATE

LICENSED LANDSCAPE ARCHITECT
HENRY D. BARNES No. 3054
REGISTRATION EXPIRATION DATE 12/31/15
08/09/11
DATE
STATE OF CALIFORNIA

THE STATE OF CALIFORNIA OR ITS OFFICERS OR AGENTS SHALL NOT BE RESPONSIBLE FOR THE ACCURACY OR COMPLETENESS OF SCANNED COPIES OF THIS PLAN SHEET.

THRUST BLOCK DETAIL

INSTALLATION	TYPE FITTING	INSTALLATION	TYPE FITTING
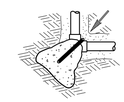	90° ELL	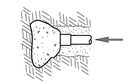	DEAD END
	BEND 45° 22.5° 11.25°		GATE VALVE
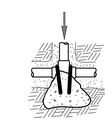	TEE		VERTICAL BEND (TYPE I) 45° 22.5° 11.25°
			OR
		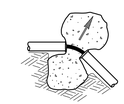	VERTICAL BEND (TYPE II) 45° 22.5° 11.25°

NOTES:
Min 1 CF PCC FOR PIPE 1½" AND SMALLER.
Min 2 CF PCC FOR PIPE 2" AND LARGER.
USE #3 REINFORCING BAR WHERE SHOWN (Ω).

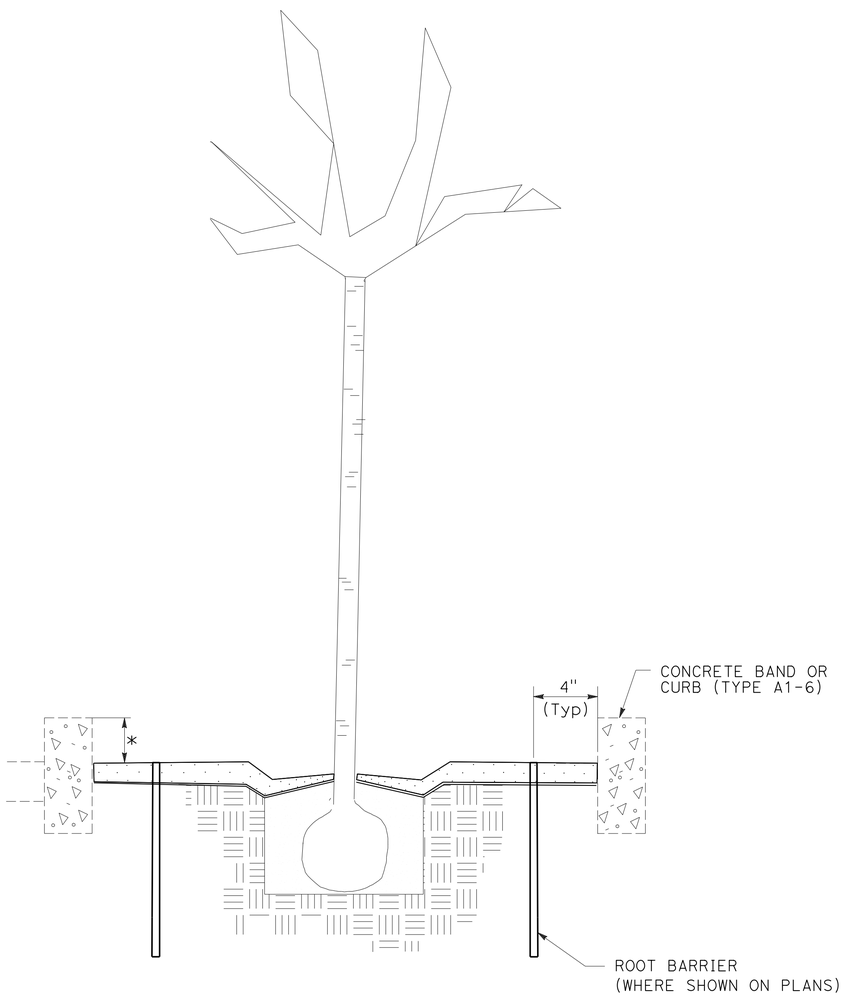

ROOT BARRIER DETAIL

* 6" AT CURB (TYPE A1-6)
½" AT CONCRETE BAND

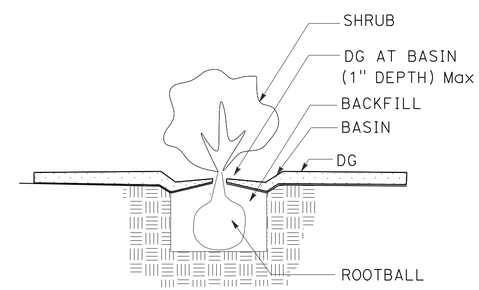

PLANT BASIN
(MODIFIED)

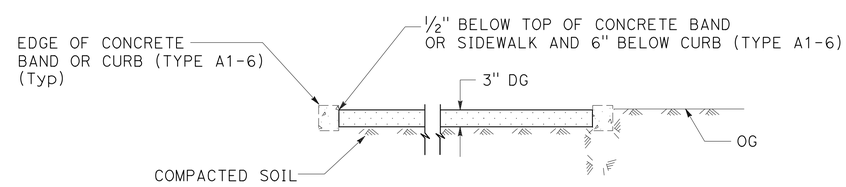

SECTION

DECOMPOSED GRANITE
(Misc AREA) (DG)

LANDSCAPE DETAILS

NO SCALE

LD-2

STATE OF CALIFORNIA - DEPARTMENT OF TRANSPORTATION
Caltrans® LANDSCAPE ARCHITECTURE

FUNCTIONAL SUPERVISOR: STEPHEN ALVAREZ
CALCULATED-DESIGNED BY: HENRY BARNES
CHECKED BY: CAROL CALLEJON
REVISED BY
DATE REVISED

LAST REVISION 08-15-11
DATE PLOTTED => 21-JAN-2014
TIME PLOTTED => 16:02

Dist	COUNTY	LOCATION CODE	POST MILES TOTAL PROJECT	SHEET No.	TOTAL SHEETS
11	Imp	5708		37	354

Alejandro F. Garcia 08-08-11
REGISTERED ELECTRICAL ENGINEER DATE

01-06-14
PLANS APPROVAL DATE

REGISTERED PROFESSIONAL ENGINEER ALEJANDRO F. GARCIA No. 16586 Exp. 06-30-14 ELECTRICAL STATE OF CALIFORNIA

THE STATE OF CALIFORNIA OR ITS OFFICERS OR AGENTS SHALL NOT BE RESPONSIBLE FOR THE ACCURACY OR COMPLETENESS OF SCANNED COPIES OF THIS PLAN SHEET.

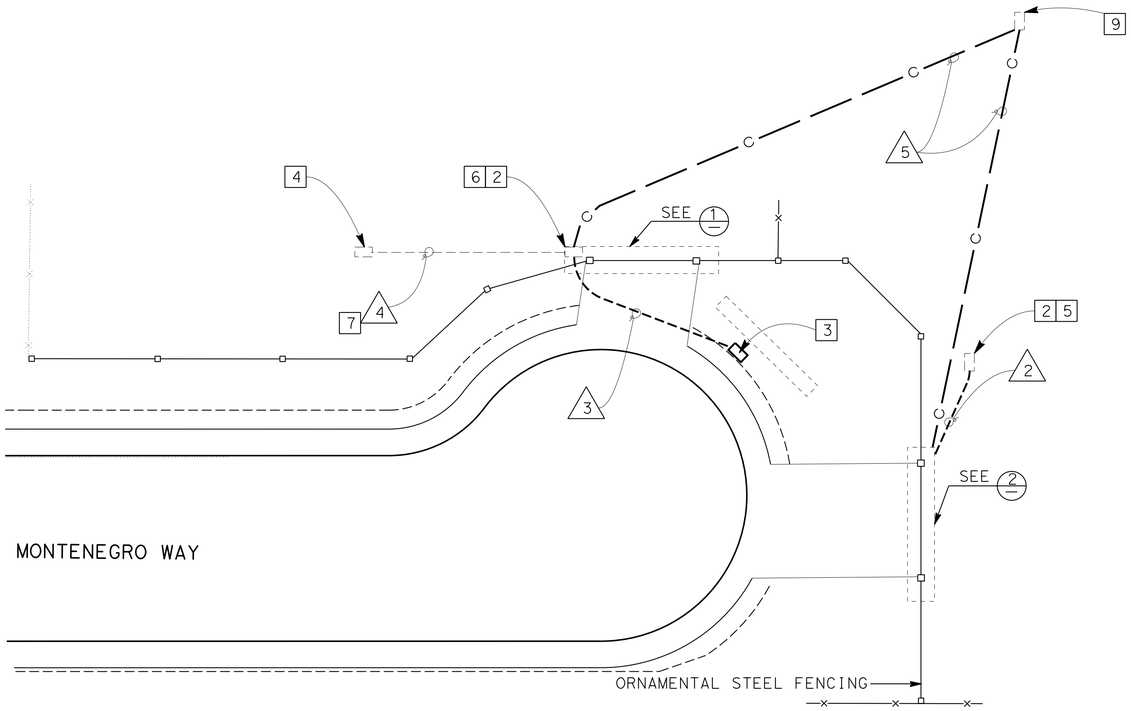

GATE AND SIGN PLAN

SCALE: 1" = 20'

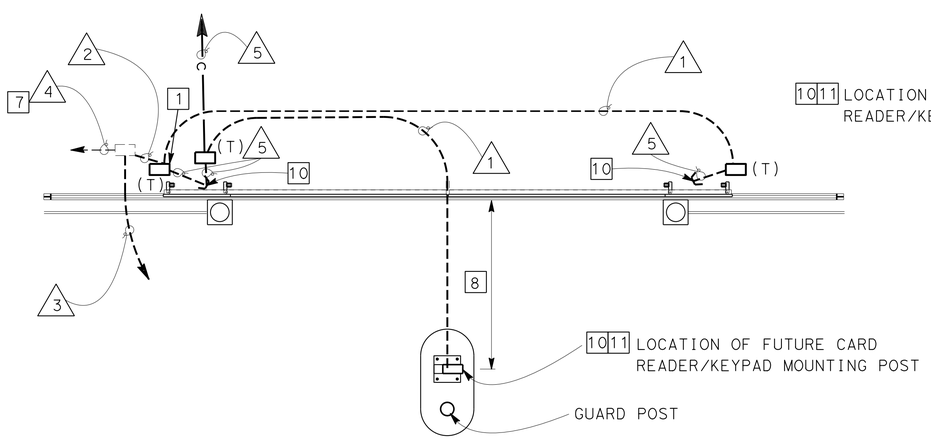

1 PLAN AT ROLLING GATE

NO SCALE

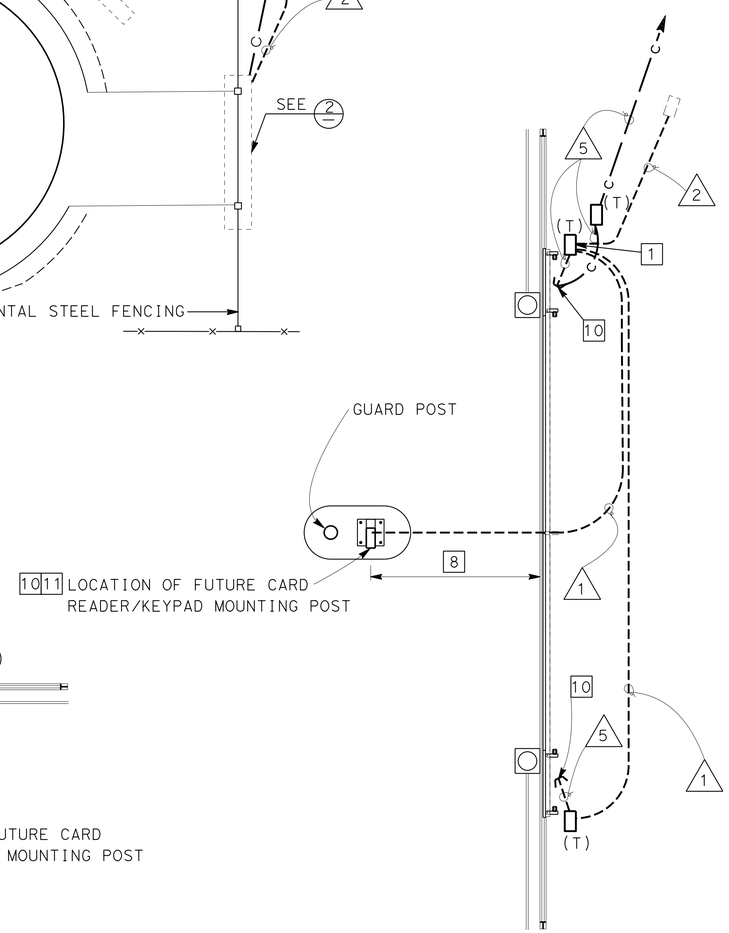

2 PLAN AT ROLLING GATE

NO SCALE

LEGEND:

X — DETAIL NUMBER

NOTES:

1. COIL 15 FEET OF EACH TYPE OF CONDUCTOR AND TAPE ENDS.
2. PULL BOX INSTALLED PER EE0-1.
3. COIL 12 FEET OF CONDUCTORS AND TAPE ENDS.
4. SPLICE 2#10 CONDUCTORS TO WIRE #15, EMM-N15. AND 1#12 GROUND TO 1#12 GROUND CONDUCTORS.
5. SPLICE 3#10 CONDUCTORS TO 3 SPARE CONDUCTORS. INSTALL 2 POLE 20 AMPERE CIRCUIT BREAKER OR CIRCUIT BREAKER AS RECOMMENDED BY THE MANUFACTURER IN PANEL EM-M IN SHEET EE1-9.
6. SPLICE 3#10 CONDUCTORS TO 3 SPARE CONDUCTORS. INSTALL 2 POLE 20 AMPERE CIRCUIT BREAKER OR CIRCUIT BREAKER AS RECOMMENDED BY THE MANUFACTURER IN PANEL EM-R IN SHEET EE9-4.
7. CONDUIT INSTALLED EE0-1.
8. LOCATION OF FUTURE CARD READER/KEYPAD MOUNTING POST TO BE DETERMINED BY THE ENGINEER. SEE SHEET A0-5 FOR ADDITIONAL DETAILS.
9. TELEPHONE COMMUNICATIONS PULL BOX, INSTALLED PER SEE SHEET EE0-5.
10. CONDUIT STUB OUTS LOCATION TO BE DETERMINED BY THE ENGINEER.

CONDUIT NOTES:

1. 1½"C, MT
2. 1"C, 3#10 AND 1#12 GROUND
3. ½"C, 2#12 AND 1#12 GROUND
4. 1"C
5. 2"C, MT

ELECTRICAL SYSTEMS

SCALE AS SHOWN

E-1

STATE OF CALIFORNIA - DEPARTMENT OF TRANSPORTATION
Caltrans® LANDS & BUILDINGS

FUNCTIONAL SUPERVISOR: HASAN DAABAS
CALCULATED-DESIGNED BY: ALEX GARCIA
CHECKED BY: JODI NELMARK
REVISED BY
DATE REVISED

LAST REVISION 12-11-13
DATE PLOTTED => 21-JAN-2014
TIME PLOTTED => 09:12

DIST	COUNTY	ROUTE	POST MILES TOTAL PROJECT	SHEET NO.	TOTAL SHEETS
11	Imp	5708		38	354

Glenn DeCou
REGISTERED CIVIL ENGINEER

June 5, 2009
PLANS APPROVAL DATE

REGISTERED PROFESSIONAL ENGINEER Glenn DeCou No. C34547 Exp. 9-30-09 CIVIL STATE OF CALIFORNIA

The State of California or its officers or agents shall not be responsible for the accuracy or completeness of electronic copies of this plan sheet.

To accompany plans dated 01-06-14

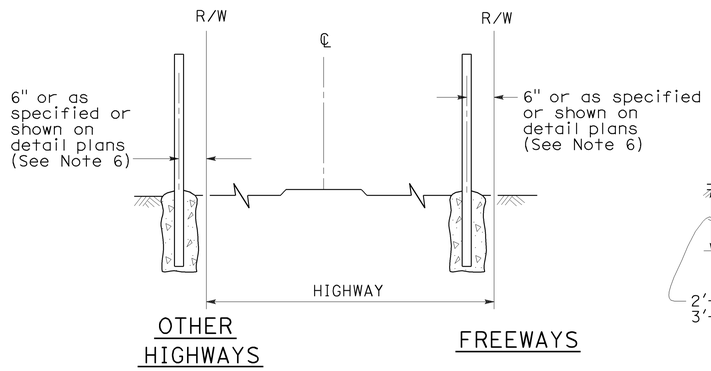

FENCE LOCATION

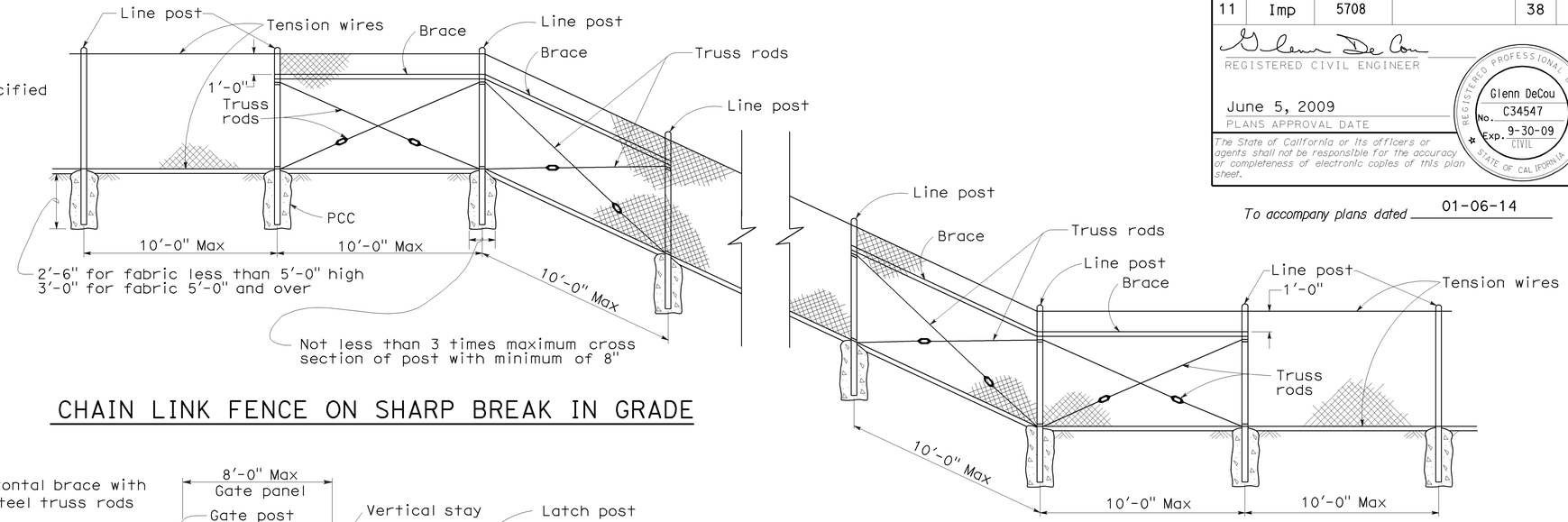

CHAIN LINK FENCE ON SHARP BREAK IN GRADE

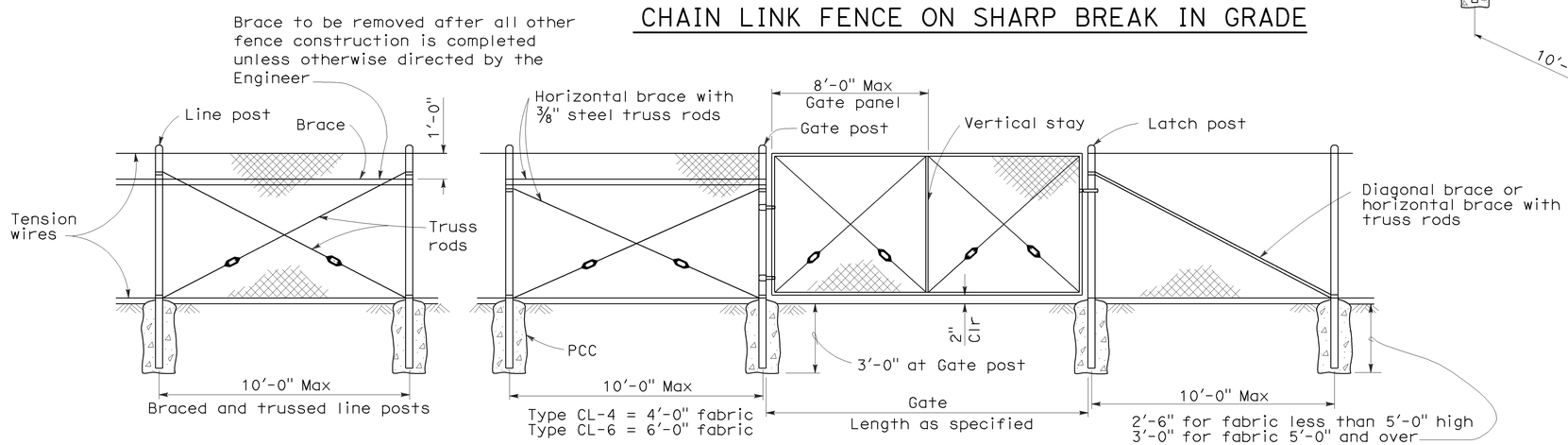

CHAIN LINK GATE INSTALLATION

GATE POST			
FENCE HEIGHT	GATE WIDTHS	NOMINAL ID	WEIGHT PER FOOT
6'-0" and Less	Up thru 6'-0"	2½"	4.95 LB
	Over 6'-0" thru 12'-0"	4"	10.79 LB
	Over 12'-0" thru 18'-0"	5"	14.62 LB
	Over 18'-0" to 24'-0" Max	6"	18.97 LB
Over 6'-0"	Up thru 6'-0"	3"	7.58 LB
	Over 6'-0" thru 12'-0"	5"	14.62 LB
	Over 12'-0" thru 18'-0"	6"	18.97 LB
	Over 18'-0" to 24'-0" Max	8"	28.55 LB

Above post dimensions and weights are minimums. Larger sizes may be used on approval of the Engineer.

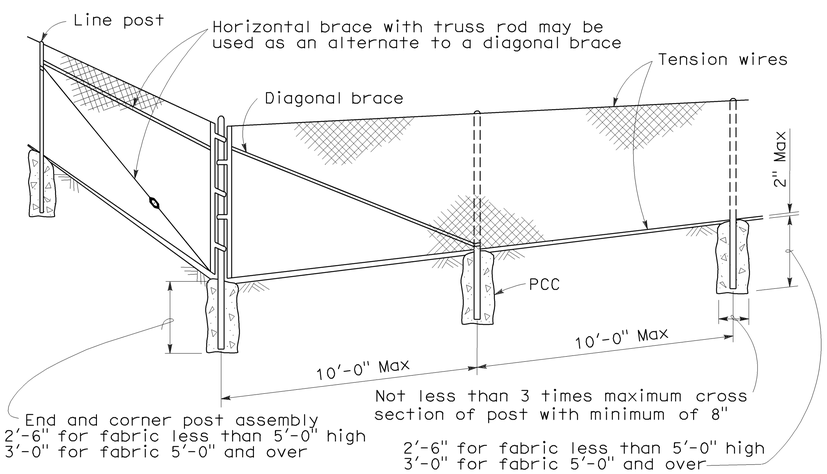

CORNER POST

NOTES:

1. The below table shows examples of post and brace sections which may comply with the Specifications.
2. Sections shown in the tables must also comply with the strength requirements and other provisions of the Specifications.
3. Other sections which comply with the strength requirements and other provisions of the Specifications may be used on approval of the Engineer.
4. Options exercised shall be uniform on any one project.
5. Dimensions shown are nominal.
6. Offset to be 2'-0" at monument locations, measured at right angles to R/W lines. Taper to achieve offset to be at least 20'-0" long.

TYPICAL MEMBER DIMENSIONS (See Notes)											
FENCE HEIGHT	LINE POSTS			END, LATCH & CORNER POSTS				BRACES			
	ROUND ID	H	ROLL FORMED	ROUND ID	ROLL FORMED			ROUND ID	H	ROLL FORMED	
6' & less	1½"	1⅞" × 1⅝"	1⅞" × 1⅝"	2"	3½" × 3½"	2" × 1¾"		1¼"	1½" × 1 5/16"	1⅝" × 1¼"	1¾" × 1¼"
Over 6'	2"	2¼" × 2"	2" × 1¾"	2½"	3½" × 3½"	2½" × 2½"		1¼"	1½" × 1 5/16"	1⅝" × 1¼"	1¾" × 1¼"

STATE OF CALIFORNIA
DEPARTMENT OF TRANSPORTATION

CHAIN LINK FENCE

NO SCALE

RSP A85 DATED JUNE 5, 2009 SUPERSEDES STANDARD PLAN A85
DATED MAY 1, 2006 - PAGE 111 OF THE STANDARD PLANS BOOK DATED MAY 2006.

REVISED STANDARD PLAN RSP A85

2006 REVISED STANDARD PLAN RSP A85

5-7-09

DIST	COUNTY	ROUTE	POST MILES TOTAL PROJECT	SHEET NO.	TOTAL SHEETS
11	Imp	5708		39	354

REGISTERED CIVIL ENGINEER

June 5, 2009
PLANS APPROVAL DATE

REGISTERED PROFESSIONAL ENGINEER Glenn DeCou No. C34547 Exp. 9-30-09 CIVIL STATE OF CALIFORNIA

The State of California or its officers or agents shall not be responsible for the accuracy or completeness of electronic copies of this plan sheet.

To accompany plans dated 01-06-14

NOTES:

1. H is 2'-6" for fabric less than 5'-0" high.
   H is 3'-0" for fabric 5'-0" and over.
2. T is not less than 3 times maximum cross section of post with minimum of 8".
3. Arms with barbed wire to be used where shown on plans.
4. See Revised Standard Plan RSP A85 for Chain Link Fencing dimensions.
5. Reinforcing must comply with ASTM A 706.
6. See Detail A on New Standard Plan NSP A86B for connection at headwall.

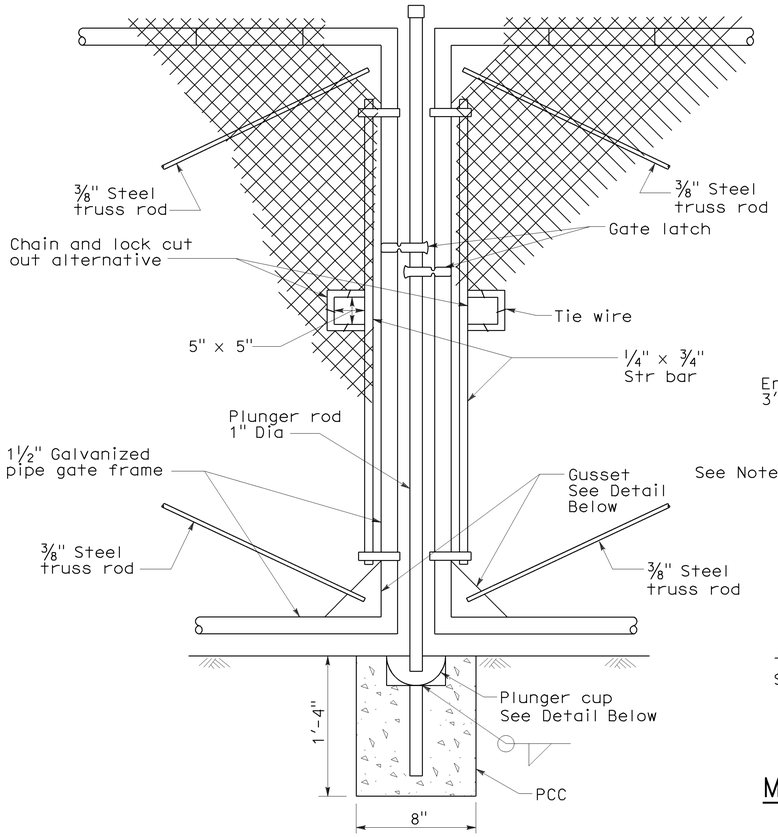

TYPICAL DOUBLE GATE REMOVABLE CENTER POST

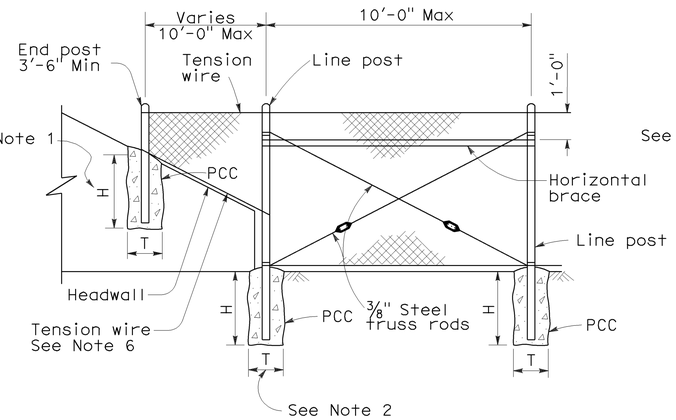

METHOD OF TYING FENCE TO HEADWALL

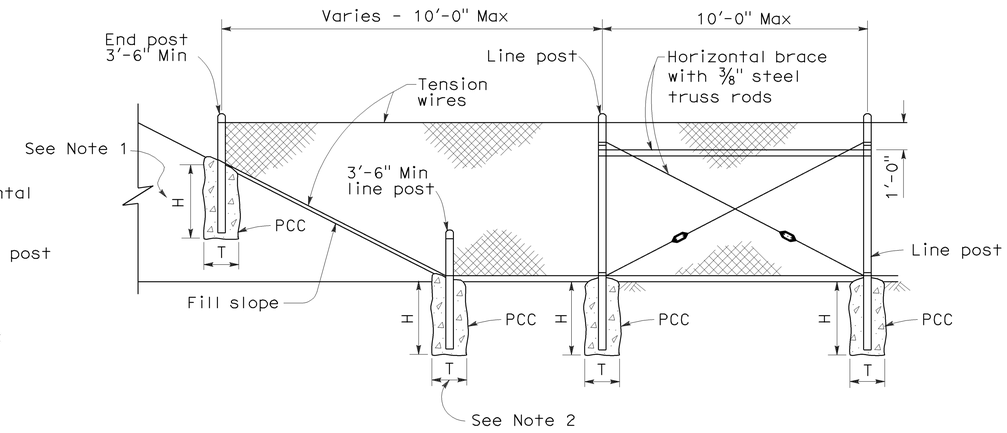

METHOD OF ERECTING FENCE FOR FILL SLOPE

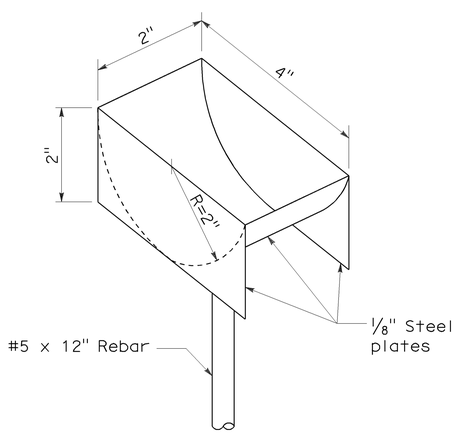

PLUNGER CUP DETAIL

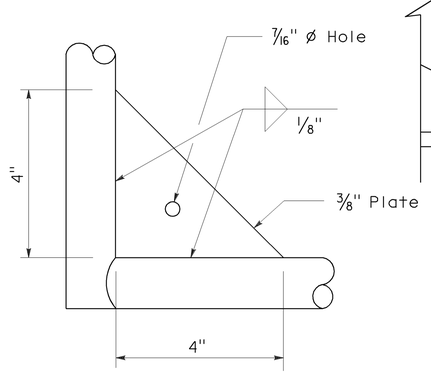

GUSSET DETAIL

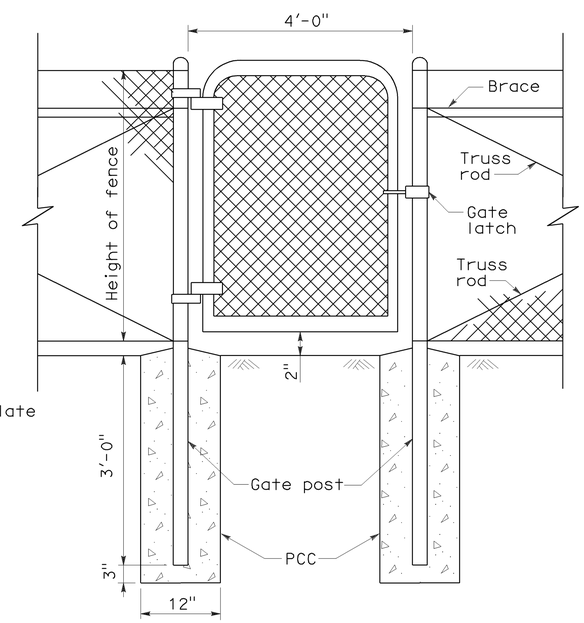

WALK GATE

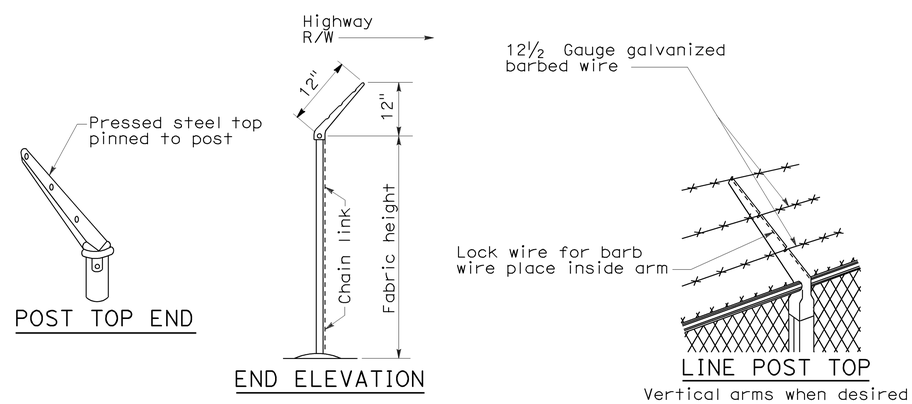

POST TOP END

END ELEVATION

LINE POST TOP
Vertical arms when desired

BARBED WIRE POST TOP
See Note 3

STATE OF CALIFORNIA
DEPARTMENT OF TRANSPORTATION

CHAIN LINK FENCE DETAILS

NO SCALE

NSP A85A DATED JUNE 5, 2009 SUPPLEMENTS THE STANDARD PLANS BOOK DATED MAY 2006.

NEW STANDARD PLAN NSP A85A

2006 NEW STANDARD PLAN NSP A85A

5-7-09

DIST	COUNTY	ROUTE	POST MILES TOTAL PROJECT	SHEET NO.	TOTAL SHEETS
11	Imp	5708		40	354

Glenn DeCou
REGISTERED CIVIL ENGINEER

June 5, 2009
PLANS APPROVAL DATE

REGISTERED PROFESSIONAL ENGINEER Glenn DeCou No. C34547 Exp. 9-30-09 CIVIL STATE OF CALIFORNIA

The State of California or its officers or agents shall not be responsible for the accuracy or completeness of electronic copies of this plan sheet.

To accompany plans dated 01-06-14

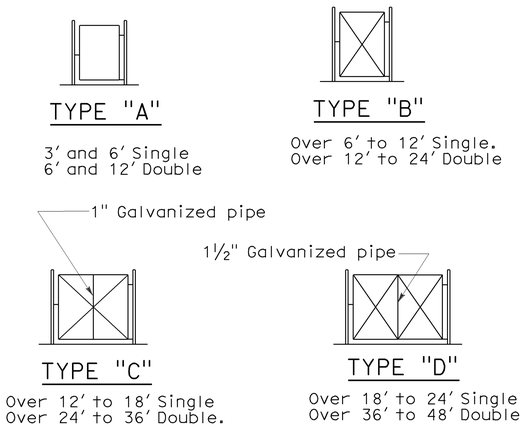

TYPICAL FRAMEWORK SHOWING NUMBER OF BAYS IN GATE

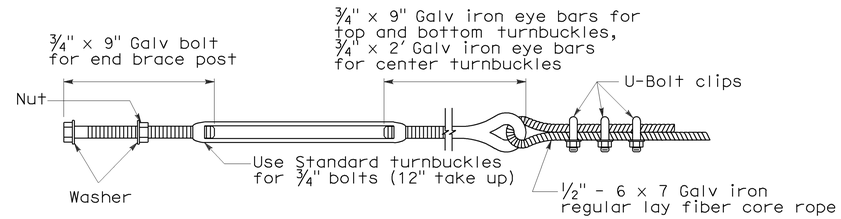

TURNBUCKLE A

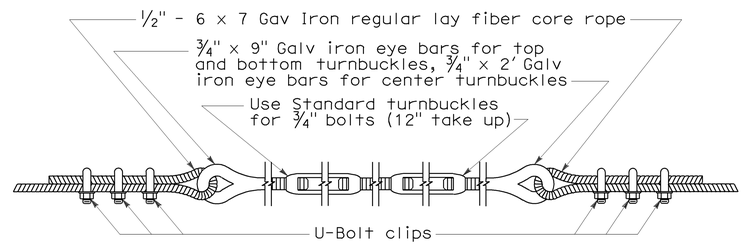

TURNBUCKLE B

NOTES:

1. All material for abutment connection to be galvanized.
2. The chain link fabric shall be replaced by barbed wire strands at 12" maximum centers between the double posts.
3. When the width of the culvert makes it necessary to anchor a post to the top of the culvert, a cast iron shoe or other device approved by the Engineer shall be used.
4. Fencing over stream and around headwall may also use Barbed Wire or Wire Mesh fencing with either wood post or steel post installation.
5. See Revised Standard Plan RSP A85 for Chain Link fence dimensions. See Standard Plan A86 for Barbed Wire and Wire Mesh fence dimensions and for wood post and steel post installation.

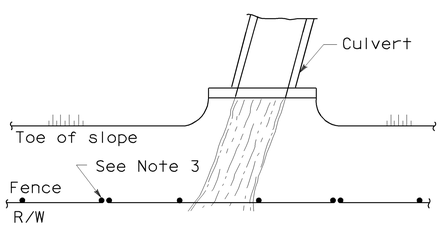

PLAN

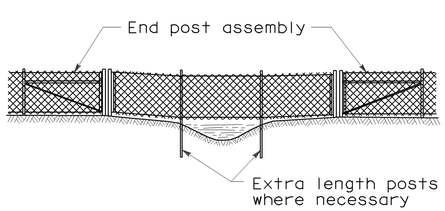

ELEVATION

INSTALLATION OVER STREAM

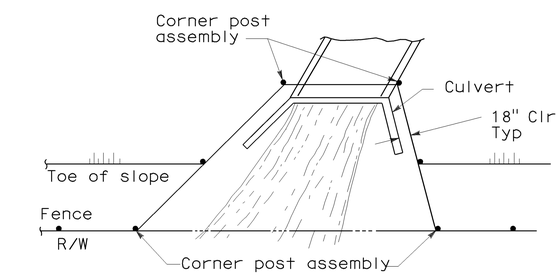

PLAN

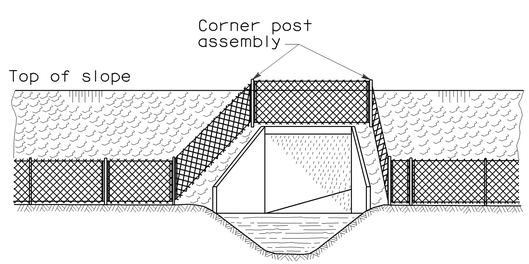

ELEVATION

INSTALLATION AROUND HEADWALL

See Note 4

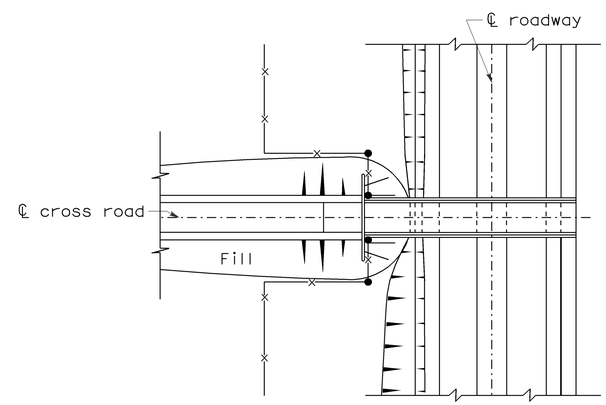

PLAN OF ROADWAY - UNDERPASS

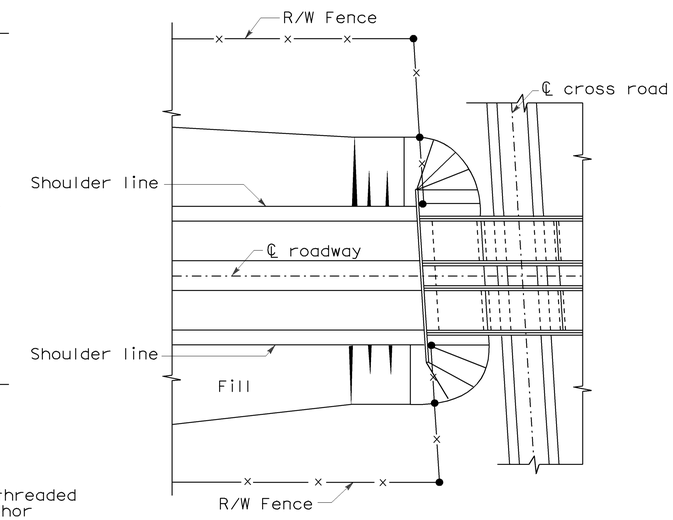

PLAN OF ROADWAY - OVERPASS

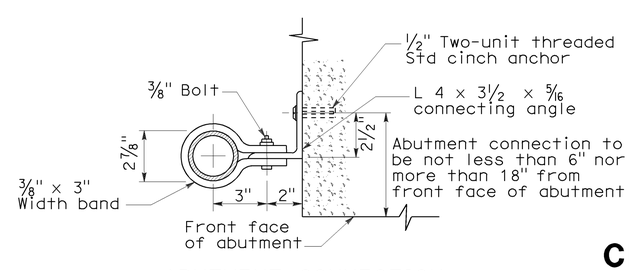

ABUTMENT CONNECTION

TYPICAL INSTALLATION AT BRIDGES

STATE OF CALIFORNIA
DEPARTMENT OF TRANSPORTATION

CHAIN LINK FENCE DETAILS

NO SCALE

NSP A85B DATED JUNE 5, 2009 SUPPLEMENTS THE STANDARD PLANS BOOK DATED MAY 2006.

NEW STANDARD PLAN NSP A85B

2006 NEW STANDARD PLAN NSP A85B

5-12-09

DIST	COUNTY	ROUTE	POST MILES TOTAL PROJECT	SHEET NO.	TOTAL SHEETS
11	Imp	5708		41	354

REGISTERED CIVIL ENGINEER

November 17, 2006
PLANS APPROVAL DATE

REGISTERED PROFESSIONAL ENGINEER Michael Janzen No. 44788 Exp. 03-31-08 CIVIL STATE OF CALIFORNIA

The State of California or its officers or agents shall not be responsible for the accuracy or completeness of electronic copies of this plan sheet.

To accompany plans dated 01-06-14

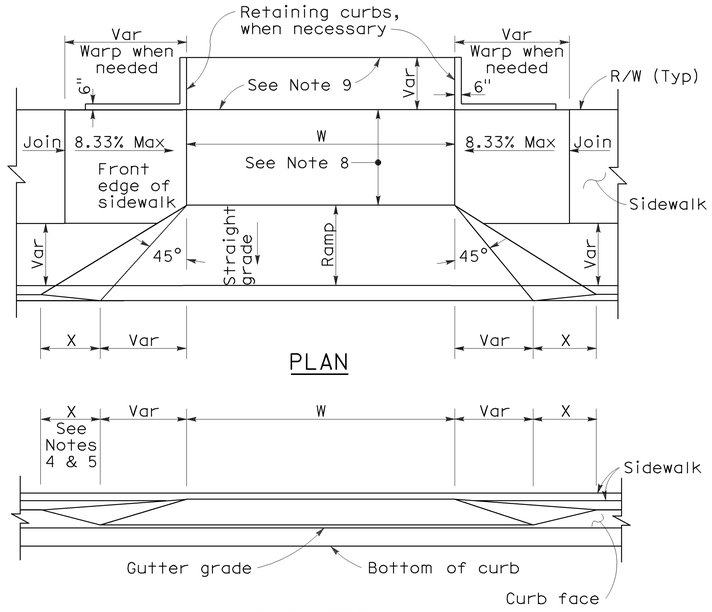

PLAN

ELEVATION

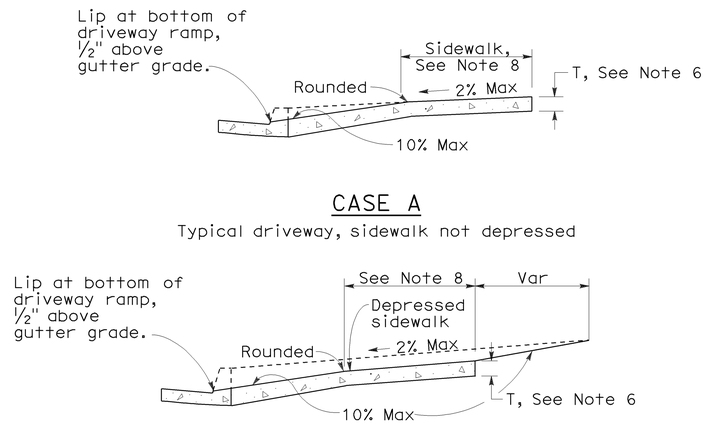

CASE A

Typical driveway, sidewalk not depressed

CASE B

Driveway with depressed sidewalk

SECTIONS

CURB QUANTITIES

TYPE	CUBIC YARDS PER LINEAR FOOT
A1-6	0.02585
A1-8	0.03084
A2-6	0.05903
A2-8	0.06379
A3-6	0.01036
A3-8	0.01435
B1-4	0.02185
B1-6	0.02930
B2-4	0.05515
B2-6	0.06171
B3-4	0.00641
B3-6	0.01074
B4	0.05709
D-4	0.04083
D-6	0.06804
E	0.06661

TABLE A

CURB TYPE	DIMENSIONS "H1"	"H2"	"W1"	"W2"
A1-6	1'-2"	6"	7½"	1½"
A1-8	1'-4"	8"	8"	2"
A2-6	1'-0"	6"	2'-7½"	1½"
A2-8	1'-2"	8"	2'-8"	2"
A3-6	6"	5"	7¼"	1¼"
A3-8	8"	7"	7¾"	1¾"
B1-4	1'-0"	4"	7½"	2½"
B1-6	1'-2"	6"	9"	4"
B2-4	10"	4"	2'-7½"	2½"
B2-6	1'-0"	6"	2'-9"	4"
B3-4	4"	3"	7"	2"
B3-6	6"	5"	8½"	3½"
D-4	10"	4"	1'-6"	1'-1"
D-6	1'-0"	6"	2'-2"	1'-8"

DRIVEWAYS

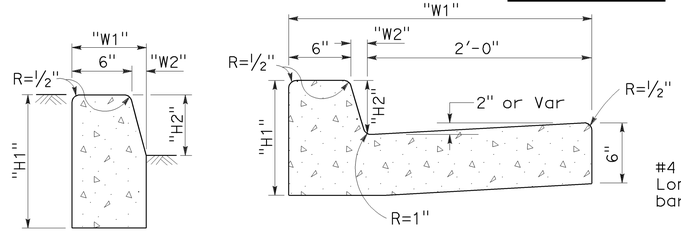

TYPE A1 CURBS
See Table A

TYPE A2 CURBS
See Table A

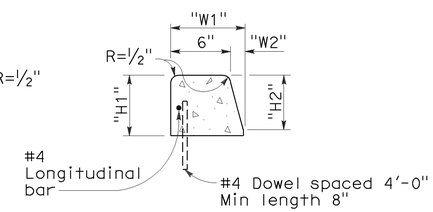

TYPE A3 CURBS
Superimposed on existing pavement
See Table A

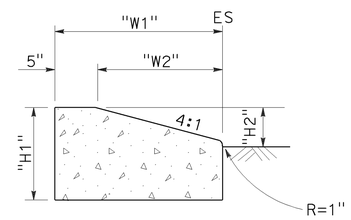

TYPE D CURBS
See Table A

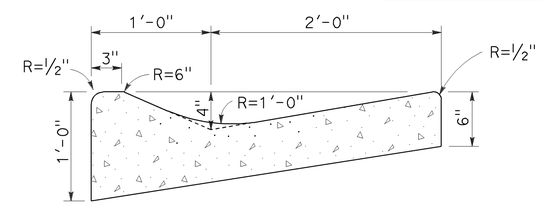

TYPE E CURB

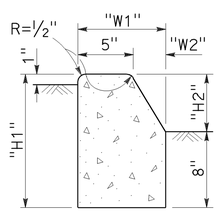

TYPE B1 CURBS
See Table A

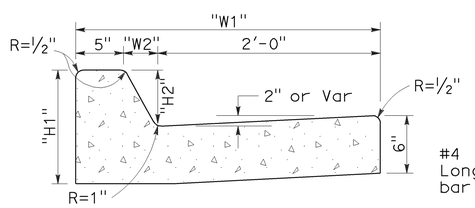

TYPE B2 CURBS
See Table A

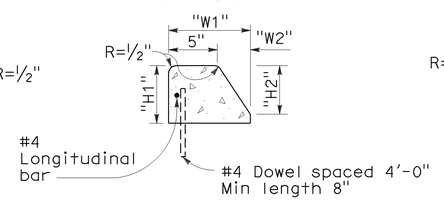

TYPE B3 CURBS
Superimposed on existing pavement
See Table A

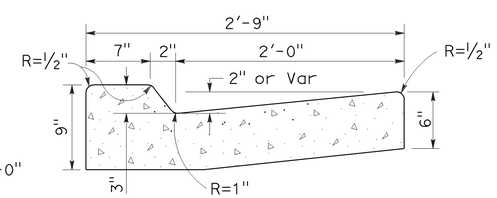

TYPE B4 CURBS

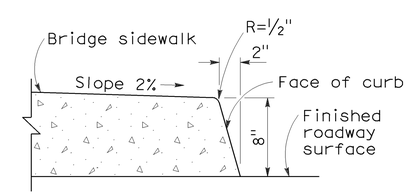

TYPE H CURB
On Bridges

CURBS

NOTES:

1. Case A driveway section typically applies.
2. Use Case B driveway section when ramp slopes would exceed 10% in Case A.
3. Use Case B driveway section when sidewalk cross slope would exceed 2% in Case A.
4. X=3'-0" except for curb heights over 10" where 4:1 slopes shall be used on curb slope.
5. X is a variable when sidewalk is located where wheelchairs may traverse the surface. Slopes shall not exceed 8.33%.
6. Sidewalk and ramp thickness "T" at driveway shall be 4" for residental and 6" for commercial.
7. Difference in slope of the driveway ramp and the slope of a line between the gutter and a point on the roadway 5'-0" from gutter line shall not exceed 15%. Reduce driveway ramp slope, not gutter slope, where required.
8. Minimum width of clear passageway for sidewalk shall be 4'-0".
9. Retaining curbs and acquisition of construction easement may be necessary for narrow sidewalks or curb heights in excess of 6".
10. Across the pedestrian route at curb ramp locations, the gutter pan slope shall not exceed 1" of depth for each 2'-0" of width.

STATE OF CALIFORNIA
DEPARTMENT OF TRANSPORTATION

CURBS AND DRIVEWAYS

NO SCALE

RSP A87A DATED NOVEMBER 17, 2006 SUPERSEDES STANDARD PLAN A87A DATED MAY 1, 2006 - PAGE 113 OF THE STANDARD PLANS BOOK DATED MAY 2006.

REVISED STANDARD PLAN RSP A87A

2006 REVISED STANDARD PLAN RSP A87A

10-25-06

DIST	COUNTY	ROUTE	POST MILES TOTAL PROJECT	SHEET NO.	TOTAL SHEETS
11	Imp	5708		42	354

REGISTERED CIVIL ENGINEER

September 1, 2006
PLANS APPROVAL DATE

REGISTERED PROFESSIONAL ENGINEER Hector David Cordova No. C41957 Exp. 3-31-08 CIVIL STATE OF CALIFORNIA

The State of California or its officers or agents shall not be responsible for the accuracy or completeness of electronic copies of this plan sheet.

To accompany plans dated 01-06-14

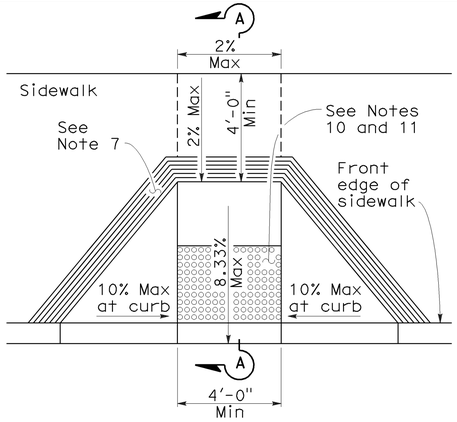

CASE A

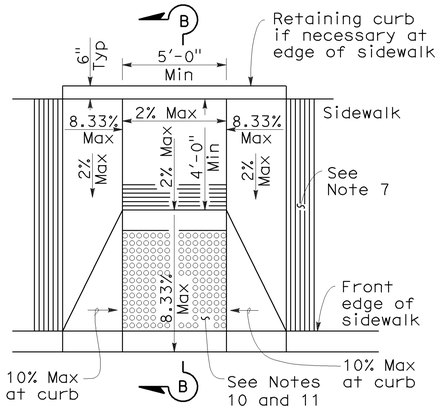

CASE B

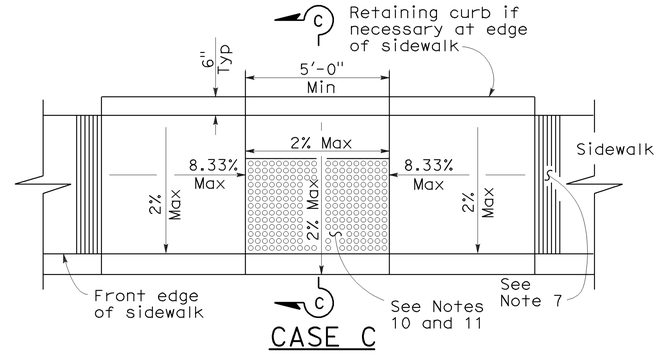

CASE C

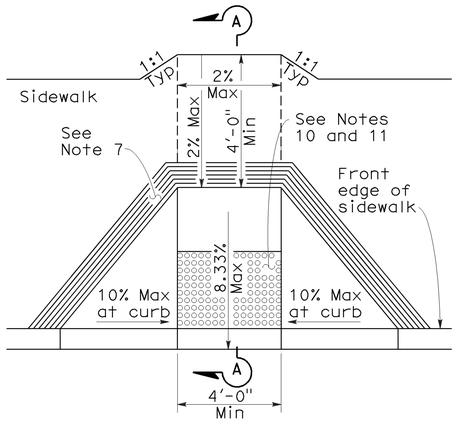

CASE D

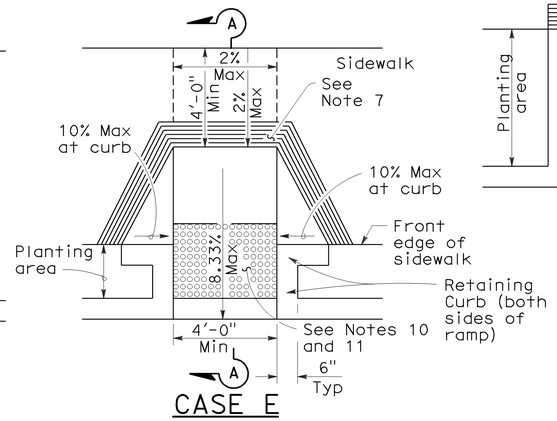

CASE E

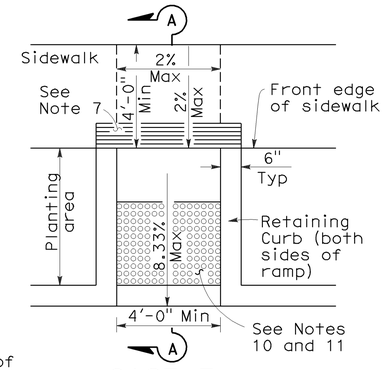

CASE F

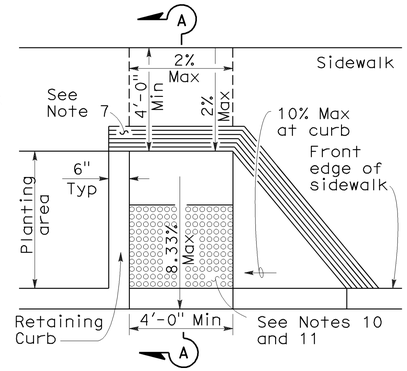

CASE G
See Note 4

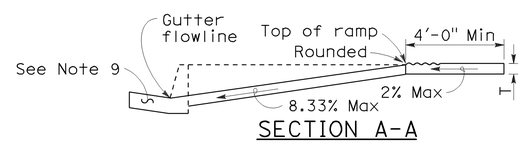

SECTION A-A

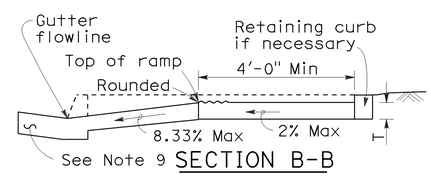

SECTION B-B
Depress entire sidewalk as required

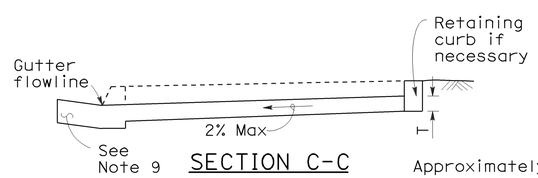

SECTION C-C

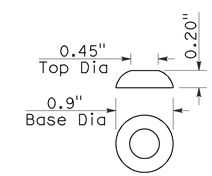

RAISED TRUNCATED DOME

NOTES:

1. As site conditions dictate, Case A through Case G curb ramps may be used for corner installations similar to those shown in Detail A and Detail B. The case of curb ramps used in Detail A do not have to be the same. Case A through Case G curb ramps also may be used at mid block locations, as site conditions dictate.
2. If distance from curb to back of sidewalk is too short to accommodate ramp and 4'-0" platform (landing) as shown in Case A, the sidewalk may be depressed longitudinally as in Case B, or C or may be widened as in Case D.
3. When ramp is located in center of curb return, crosswalk configuration must be similar to that shown for Detail B.
4. As site conditions dictate, the retaining curb side and the flared side of the Case G ramp shall be constructed in reversed position.
5. If located on a curve, the sides of the ramp need not be parallel, but the minimum width of the ramp shall be 4'-0".
6. Side slope of ramp flares vary uniformly from a maximum of 10% at curb to conform with longitudinal sidewalk slope adjacent to top of the ramp, except in Case C and Case F.
7. The curb ramp shall be outlined, as shown, with a 1'-0" wide border with 1/4" grooves approximately 3/4" on center. See grooving detail.
8. Transitions from ramps and landing to walks, gutters or streets shall be flush and free of abrupt changes.
9. Maximum slopes of adjoining gutters, the road surface immediately adjacent to the curb ramp or accessible route shall not exceed 5 percent within 4'-0" of the top and bottom of the curb ramp.
10. Curb ramps shall have a detectable warning surface that extends the full width and 3'-0" depth of the ramp. Detectable Warning Surfaces shall conform to the details on this plan and the requirements in the Special Provisions.
11. The edge of the detectable warning surface nearest the street shall be between 6" and 8" from the gutter flowline.
12. Sidewalk and ramp thickness, "T", shall be 3 1/2" minimum.
13. Utility pull boxes, manholes, vaults and all other utility facilities within the boundaries of the curb ramp will be relocated or adjusted to grade by the owner prior to, or in conjunction with, curb ramp construction.
14. For retrofit conditions, removal and replacement of curb apron will be at the Contractor's option, unless otherwise shown on project plans.

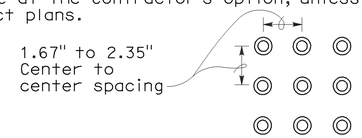

RAISED TRUNCATED DOME PATTERN (IN-LINE)

DETECTABLE WARNING SURFACE
See Note 10

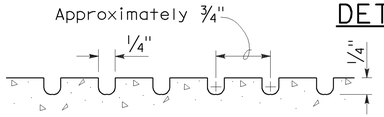

GROOVING DETAIL

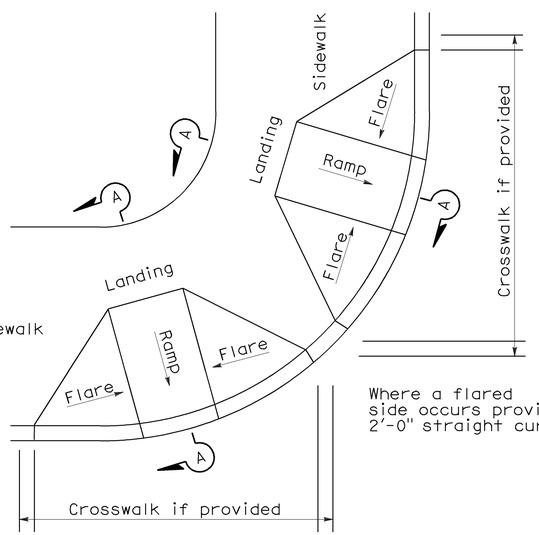

DETAIL A

TYPICAL TWO-RAMP CORNER INSTALLATION
See Note 1

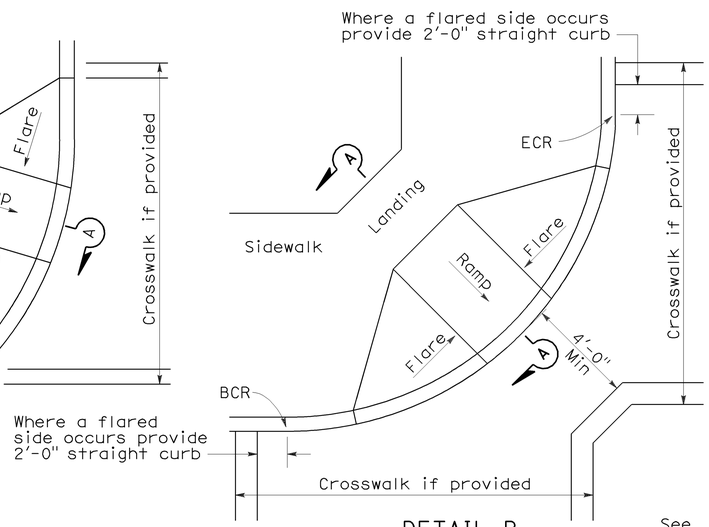

DETAIL B

TYPICAL ONE-RAMP CORNER INSTALLATION
See Notes 1 and 3

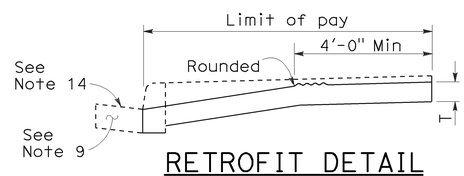

RETROFIT DETAIL
Existing curb and sidewalk

STATE OF CALIFORNIA
DEPARTMENT OF TRANSPORTATION

CURB RAMP DETAILS

NO SCALE

RSP A88A DATED SEPTEMBER 1, 2006 SUPERSEDES STANDARD PLAN A88A DATED MAY 1, 2006 - PAGE 115 OF THE STANDARD PLANS BOOK DATED MAY 2006.

REVISED STANDARD PLAN RSP A88A

2006 REVISED STANDARD PLAN RSP A88A

8-3-06

DIST	COUNTY	ROUTE	POST MILES TOTAL PROJECT	SHEET NO.	TOTAL SHEETS
11	Imp	5708		43	354

Gregory A. Balzer
LICENSED LANDSCAPE ARCHITECT

June 5, 2009
PLANS APPROVAL DATE

LICENSED LANDSCAPE ARCHITECT
Gregory A. Balzer 2576
09 Expires 12-31
2-28-11
Renewal Date
5-14-09
Date
STATE OF CALIFORNIA

The State of California or its officers or agents shall not be responsible for the accuracy or completeness of electronic copies of this plan sheet.

To accompany plans dated 01-06-14

A

AB	aggregate base
ABS	acrylonitrile-butadiene-styrene
AC	asphalt concrete
Adj	adjacent/adjustable
AIC	auxiliary irrigation controller
Alt	alternative
AMEND	amendment
ARV	air release valve
AUTO	automatic
AUX	auxiliary
AVB	atmospheric vacuum breaker

B

B&B	balled and burlapped
B/B	brass/bronze
B/B/PL	brass/bronze/plastic
B/PL	brass/plastic
BFM	bonded fiber matrix
Bit Ctd	bituminous coated
BP	booster pump
BPA	backflow preventer assembly
BPAE	backflow preventer assembly in enclosure
BPE	backflow preventer enclosure
BV	ball valve

C

CAP	corrugated aluminum pipe
CARV	combination air release valve
CCA	cam coupler assembly
CEC	controller enclosure cabinet
CHDPE	corrugated high density polyethylene
CL	chain link
CNC	control and neutral conductors
Conc	concrete
Cond	conduit
CSP	corrugated steel pipe
CST	center strip
CV	check valve

D

Dia	diameter
DIP	ductile iron pipe
DN	diameter nominal

E

EA	each
Elect	electric/electrical
Elev	elevation
ENCL	enclosure
EP	edge of pavement
ES	edge of shoulder
EST	end strip
ESTB	establishment
ETW	edge of traveled way

F

F	full circle
F/P	full/part circle
FAU	filter assembly unit
FCV	flow control valve
FERT	fertilizer
FG	finished grade
FIPT	female iron pipe thread
FIS	fertilizer injector system
FL	flow line
FM	flow monitor
FS	flow sensor
Ft	foot/feet
FV	flush valve

G

GAL	Gallon(s)
Galv	galvanized
GARV	garden valve
GPH	gallons per hour
GPM	gallons per minute
GSP	galvanized steel pipe
GV	gate valve

H

H	half circle
HB	hose bib
HDPE	high density polyethylene
HP	horsepower/hinge point
HPL	high pressure line
Hwy	highway

I

IC	irrigation controller
ICC	irrigation controller(s) in controller enclosure cabinet
ID	inside diameter
In	inches
IFS	irrigation filtration system
IPS	iron pipe size
IPT	iron pipe thread
Irr	irrigation

L

L	length
LF	linear foot

M

Max	maximum
MBGR	metal beam guard railing
MCV	manual control valve
MIC	master irrigation controller
Min	minimum
MIPT	male iron pipe thread
Misc	miscellaneous
Mtl	material
MVP	maintenance vehicle pullout

N

NCN	no common name
NL	nozzle line
No.	number
NPT	national pipe thread

O

O/C	on center
OD	outside diameter
Oz	ounce

P

P	part circle
PB	pull box
PCC	portland cement concrete
PE	polyethylene
Pkt	packet
PL	plastic
PLT	plant/planting
PLT ESTB	plant establishment
PM	post mile
PR	pressure rated
PRLV	pressure relief valve
PSFM	polymer stabilized fiber matrix
PSI	pounds per square inch
PRV	pressure reducing valve
PVC	polyvinyl chloride
Pvmt	pavement

Q

Q	quarter circle
QCV	quick coupling valve

R

R	radius
RCP	reinforced concrete pipe
RCV	remote control valve
RCVM	remote control valve (master)
RCVMF	remote control valve (master) w/ flow meter
RCW	recycled/reclaimed water
RECP	rolled erosion control product
REQ	required
R/W	right of way

S

S	slip
SCC	sprinkler control conduit
SCH	schedule
SF	state-furnished
Shld	shoulder
SQFT	square foot/feet
SQYD	square yard(s)
SST	side strip
Sta	station
Std	standard
SW	sidewalk/sound wall

T

T	third circle/thread
TLS	truck loading standpipe
TQ	three quarter circle
TRM	turf reinforcement mat
TRVD	traveled
TT	two third circle
Typ	typical

U

UG	underground

V

VAU	valve assembly unit

W

W	width
W/	with
WM	water meter
WS	wye strainer
WSP	welded steel pipe
WWM	welded wire mesh

NOTE:

FOR ADDITIONAL ABBREVIATIONS, SEE STANDARD PLANS A10A AND A10B.

STATE OF CALIFORNIA
DEPARTMENT OF TRANSPORTATION

PLANTING AND IRRIGATION ABBREVIATIONS

NO SCALE

RSP H1 DATED JUNE 5, 2009 SUPERSEDES STANDARD PLAN H1
DATED MAY 1, 2006 - PAGE 201 OF THE STANDARD PLANS BOOK DATED MAY 2006.

REVISED STANDARD PLAN RSP H1

2006 REVISED STANDARD PLAN RSP H1

DIST	COUNTY	ROUTE	POST MILES TOTAL PROJECT	SHEET NO.	TOTAL SHEETS
11	Imp	5708		44	354

LICENSED LANDSCAPE ARCHITECT

June 5, 2009
PLANS APPROVAL DATE

The State of California or its officers or agents shall not be responsible for the accuracy or completeness of electronic copies of this plan sheet.

LICENSED LANDSCAPE ARCHITECT — Gregory A. Balzer — 2576 — 10-31-09 Expiration Date — 2-28-11 Renewal Date — 5-14-09 Date — STATE OF CALIFORNIA

To accompany plans dated 01-06-14

EXISTING	PROPOSED	ITEM DESCRIPTION
		WATER METER (WM)
		BACKFLOW PREVENTER ASSEMBLY (BPA)
		BACKFLOW PREVENTER ASSEMBLY IN ENCLOSURE (BPAE)
		BACKFLOW PREVENTER ENCLOSURE (BPE)
		BOOSTER PUMP (BP)
		TRUCK LOADING STANDPIPE (TLS)
FS	FS	FLOW SENSOR (FS)
X	X	MASTER IRRIGATION CONTROLLER (MIC)
		AUXILIARY IRRIGATION CONTROLLER (AIC)
		IRRIGATION CONTROLLER (IC)/ IRRIGATION CONTROLLER (IC) (BATTERY) IRRIGATION CONTROLLER (IC) (SOLAR)
		IRRIGATION CONTROLLER(S) IN CONTROLLER ENCLOSURE CABINET (ICC)
		CONTROL AND NEUTRAL CONDUCTORS (CNC)
SCC	SCC	SPRINKLER CONTROL CONDUIT (SCC)
		IRRIGATION CROSSOVER
		EXTEND IRRIGATION CROSSOVER
		IRRIGATION SLEEVE
dip	DIP	DUCTILE IRON PIPE (SUPPLY LINE) (MAIN) (DIP)
		GALVANIZED STEEL PIPE (SUPPLY LINE) (MAIN) (GSP)
		GALVANIZED STEEL PIPE (SUPPLY LINE) (LATERAL) (GSP)
		PLASTIC PIPE (PR 200) (SUPPLY LINE) (MAIN)
		PLASTIC PIPE (PR 200) (SUPPLY LINE) (LATERAL)
		PLASTIC PIPE (IRRIGATION LINE)
		REMOTE CONTROL VALVE (RCV) REMOTE CONTROL VALVE (MASTER) (RCVM) REMOTE CONTROL VALVE (MASTER) W/FLOW METER (RCVMF)
		MANUAL CONTROL VALVE (MCV)
		VALVE ASSEMBLY UNIT (VAU)
		WYE STRAINER (WS)
		FILTER ASSEMBLY UNIT (FAU)
		GATE VALVE (GV)
		BALL VALVE (BV)

EXISTING	PROPOSED	ITEM DESCRIPTION
		QUICK COUPLING VALVE (QCV)
		CAM COUPLER ASSEMBLY (CCA)
		PRESSURE REDUCING VALVE (PRV)
		PRESSURE RELIEF VALVE (PRLV)
		FLOW CONTROL VALVE (FCV)
		COMBINATION AIR RELEASE VALVE (CARV)
		CHECK VALVE (CV)
		FLUSH VALVE (FV)
		NOZZLE LINE W/TURNING UNION
		IRRIGATION SYSTEM
		IRRIGATION SYSTEM TO BE REMOVED
		CHAIN LINK GATE
		QUICK COUPLING VALVE W/SPRINKLER PROTECTOR
3	3	SPRINKLER W/SPRINKLER PROTECTOR
	C	CONNECT TO EXISTING SYSTEM
		CAP
		CAP EXISTING

VALVE CODE

RCV SIZE
IRRIGATION CONTROLLER
CONTROLLER STATION
VALVE IN PARALLEL (IF APPLICABLE)
GPM
QUANTITY OF SPRINKLERS (WHEN SHOWN)

* 2½"-A-2b-40 -60

MCV SIZE
VALVE NUMBER
GPM
QUANTITY OF TYPE SPRINKLERS (WHEN SHOWN)

* 2"-3-30 -50

* VALVE CODES FOR EXISTING VALVES ARE SHOWN IN A DASHED ENCLOSURE.

STATE OF CALIFORNIA
DEPARTMENT OF TRANSPORTATION

PLANTING AND IRRIGATION SYMBOLS

NO SCALE

RSP H2 DATED JUNE 5, 2009 SUPERSEDES RSP H2 DATED MARCH 7, 2008 AND STANDARD PLAN H2 DATED MAY 1, 2006 - PAGE 202 OF THE STANDARD PLANS BOOK DATED MAY 2006.

REVISED STANDARD PLAN RSP H2

2006 REVISED STANDARD PLAN RSP H2

5-11-09

DIST	COUNTY	ROUTE	POST MILES TOTAL PROJECT	SHEET NO.	TOTAL SHEETS
11	Imp	5708		45	354

LICENSED LANDSCAPE ARCHITECT

June 5, 2009
PLANS APPROVAL DATE

LICENSED LANDSCAPE ARCHITECT
Gregory A. Balzer 2576
10-29-10 Renewal Date
2-28-11 Renewal Date
5-14-09 Date
STATE OF CALIFORNIA

The State of California or its officers or agents shall not be responsible for the accuracy or completeness of electronic copies of this plan sheet.

To accompany plans dated 01-06-14

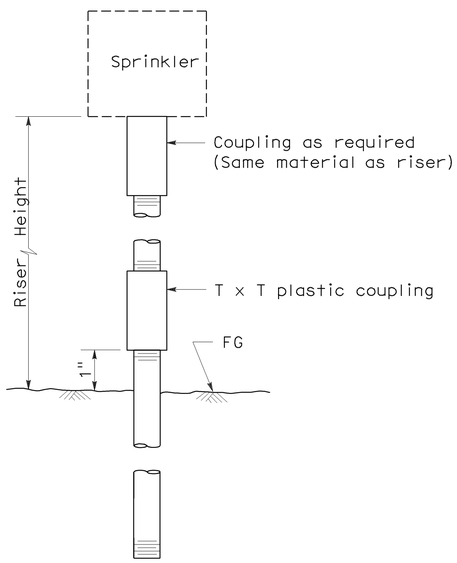

ELEVATION
RISER TYPE I

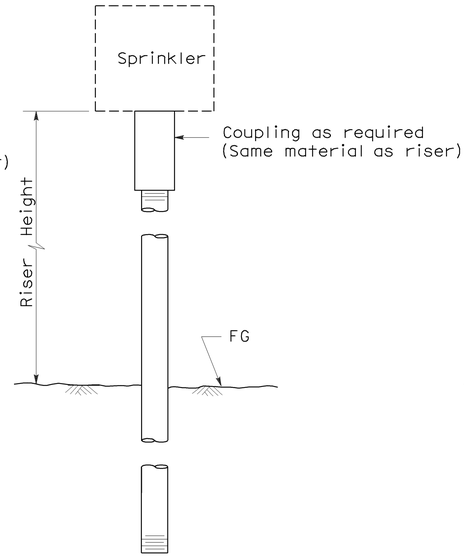

ELEVATION
RISER TYPE II

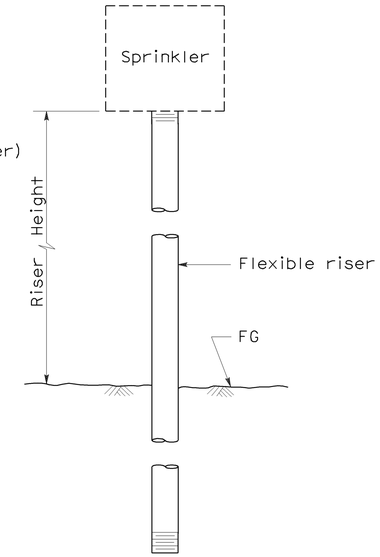

ELEVATION
RISER TYPE III

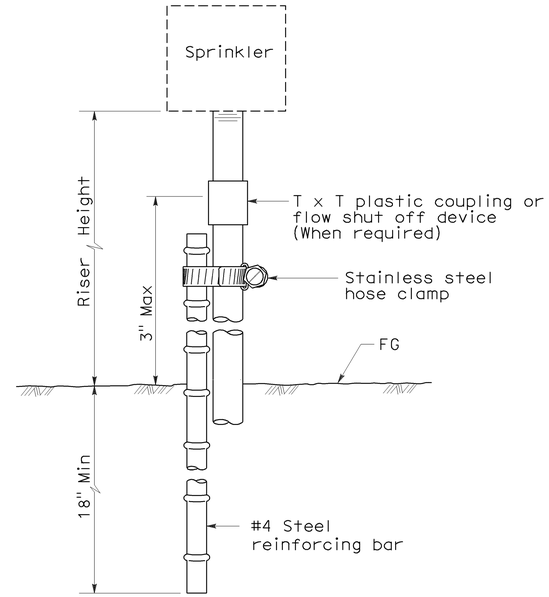

ELEVATION
RISER TYPE IV

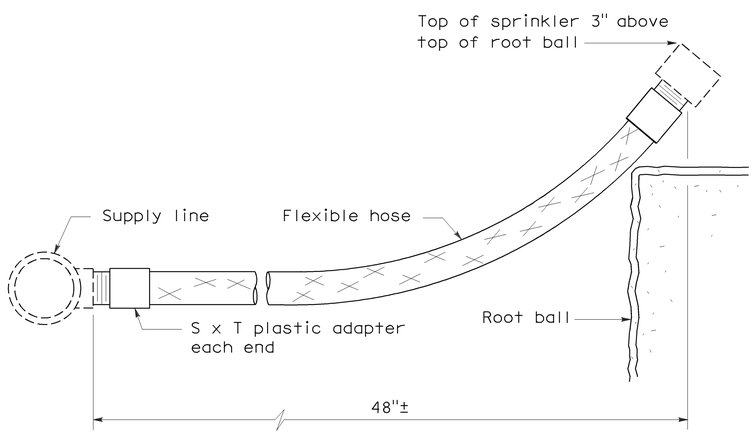

ELEVATION
RISER TYPE V

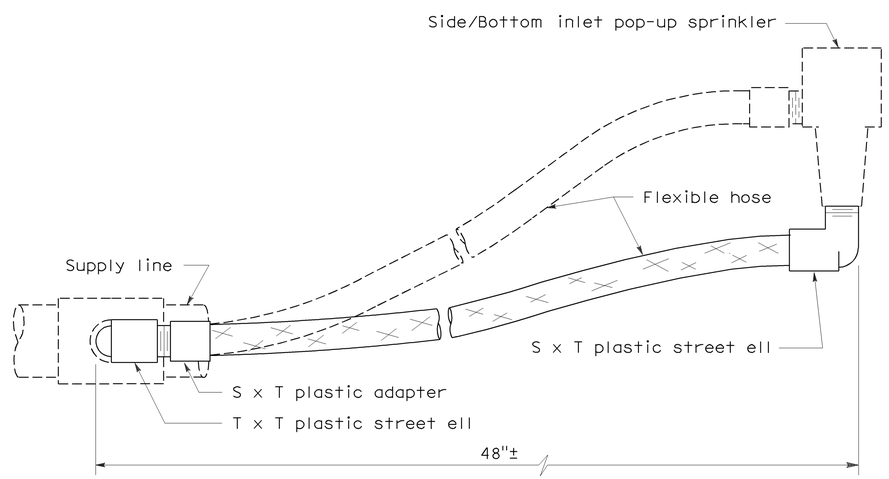

ELEVATION
RISER TYPE VI

STATE OF CALIFORNIA
DEPARTMENT OF TRANSPORTATION

PLANTING AND IRRIGATION DETAILS

NO SCALE

RSP H5 DATED JUNE 5, 2009 SUPERSEDES STANDARD PLAN H5
DATED MAY 1, 2006 - PAGE 205 OF THE STANDARD PLANS BOOK DATED MAY 2006.

REVISED STANDARD PLAN RSP H5

2006 REVISED STANDARD PLAN RSP H5

5-28-09

DIST	COUNTY	ROUTE	POST MILES TOTAL PROJECT	SHEET NO.	TOTAL SHEETS
11	Imp	5708		46	354

LICENSED LANDSCAPE ARCHITECT

June 5, 2009
PLANS APPROVAL DATE

The State of California or its officers or agents shall not be responsible for the accuracy or completeness of electronic copies of this plan sheet.

LICENSED LANDSCAPE ARCHITECT Gregory A. Balzer 2576 STATE OF CALIFORNIA
10-29-10 Renewal Date
2-28-11 Renewal Date
5-14-09 Date

To accompany plans dated 01-06-14

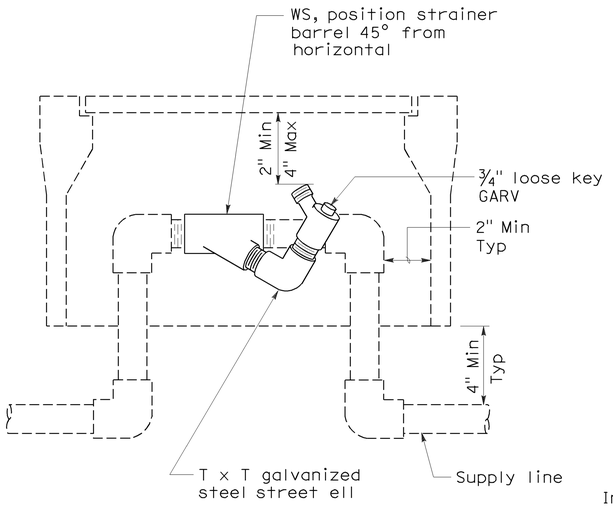

ELEVATION
WYE STRAINER

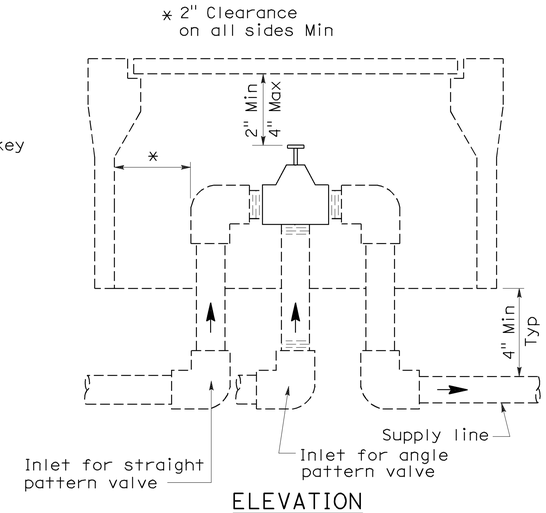

ELEVATION
VALVE

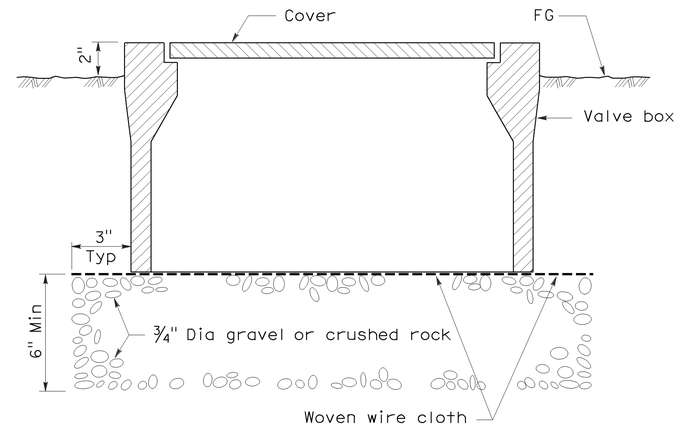

SECTION
VALVE BOX

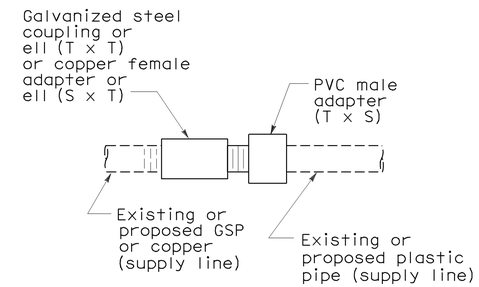

PLAN
GALVANIZED OR COPPER PIPE CONNECTION TO PLASTIC PIPE

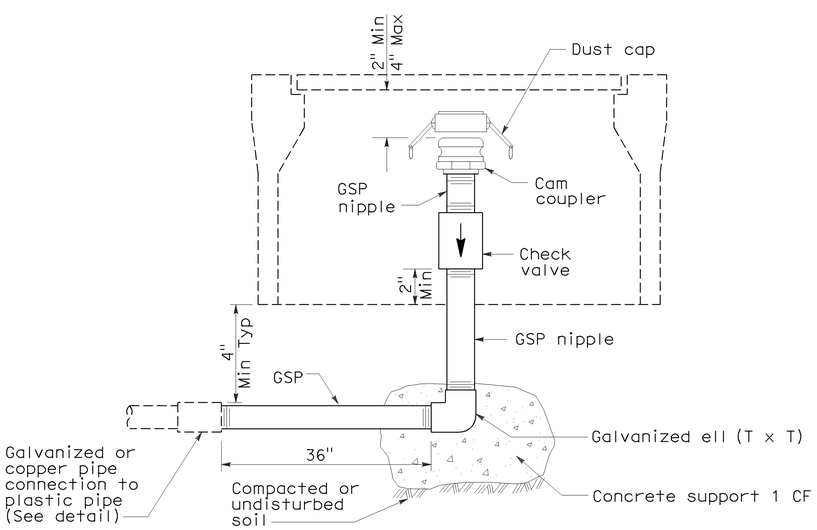

ELEVATION
CAM COUPLER ASSEMBLY

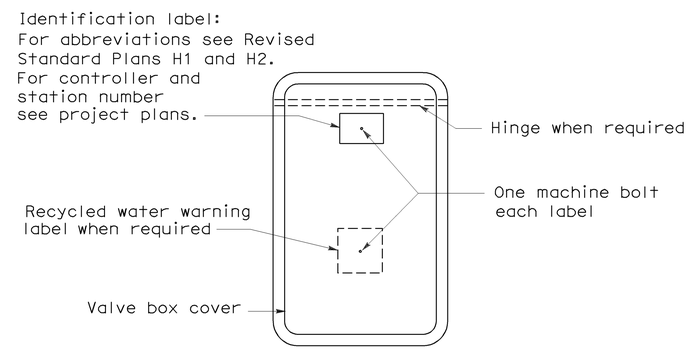

PLAN

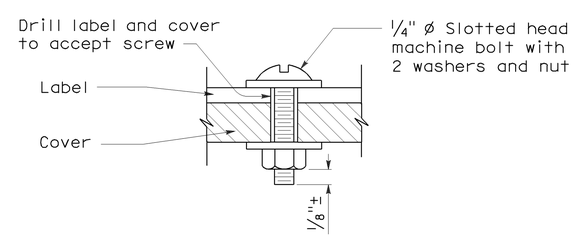

SECTION
VALVE BOX IDENTIFICATION

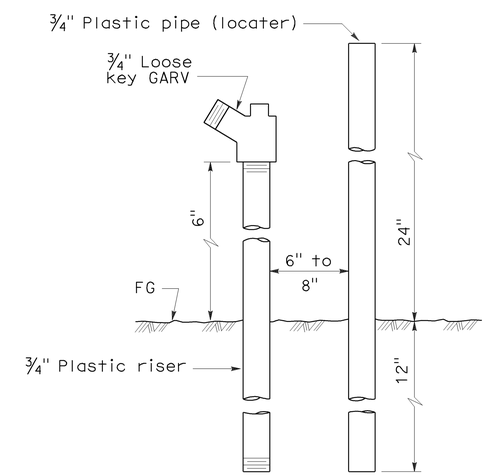

ELEVATION
FLUSH VALVE

STATE OF CALIFORNIA
DEPARTMENT OF TRANSPORTATION

PLANTING AND IRRIGATION DETAILS

NO SCALE

RSP H7 DATED JUNE 5, 2009 SUPERSEDES STANDARD PLAN H7
DATED MAY 1, 2006 - PAGE 207 OF THE STANDARD PLANS BOOK DATED MAY 2006.

REVISED STANDARD PLAN RSP H7

2006 REVISED STANDARD PLAN RSP H7

5-28-09

DIST	COUNTY	ROUTE	POST MILES TOTAL PROJECT	SHEET NO.	TOTAL SHEETS
11	Imp	5708		47	354

Randell D. Hiatt
REGISTERED CIVIL ENGINEER

June 6, 2008
PLANS APPROVAL DATE

REGISTERED PROFESSIONAL ENGINEER
Randell D. Hiatt
No. C50200
Exp. 6-30-09
CIVIL
STATE OF CALIFORNIA

The State of California or its officers or agents shall not be responsible for the accuracy or completeness of electronic copies of this plan sheet.

To accompany plans dated 01-06-14

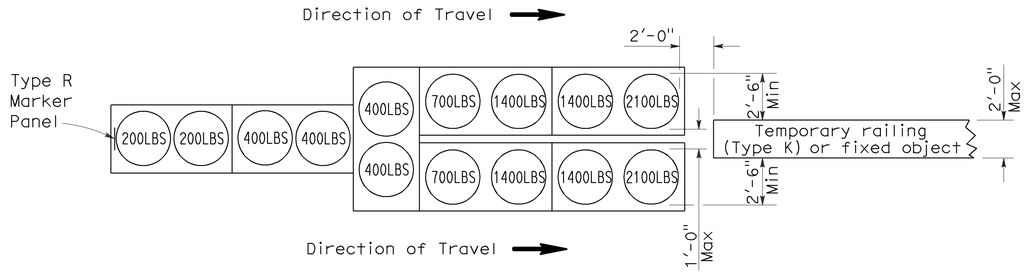

ARRAY 'TU14'

Approach speed 45 mph or more

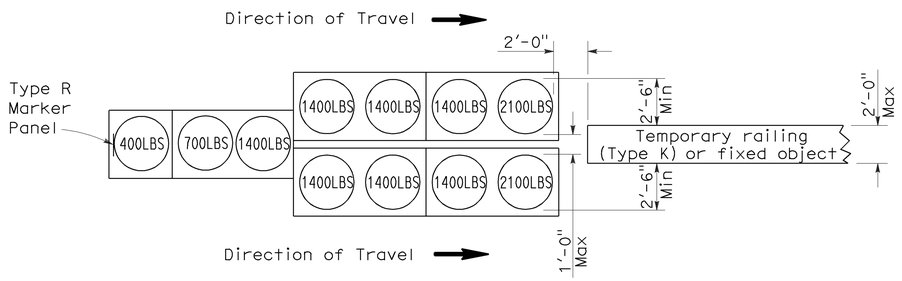

ARRAY 'TU11'

Approach speed less than 45 mph

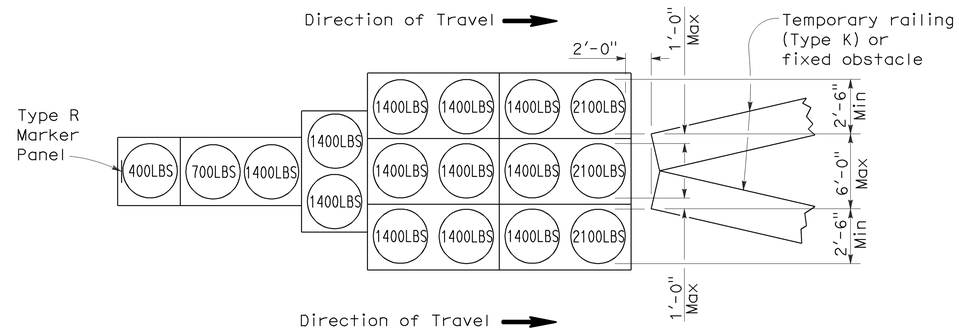

ARRAY 'TU17'

Approach speed less than 45 mph

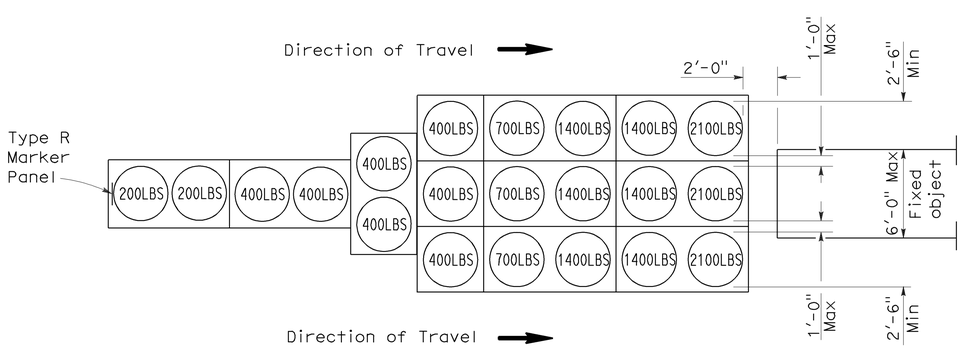

ARRAY 'TU21'

Approach speed 45 mph or more

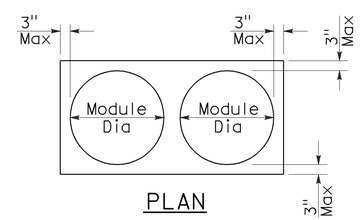

PLAN

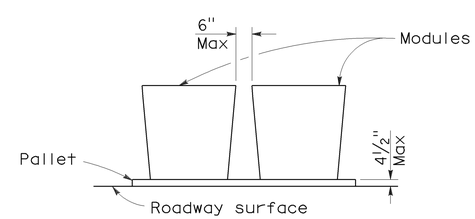

ELEVATION

CRASH CUSHION PALLET DETAIL

See Note 7

NOTES:

1. (XXX) Indicates sand filled module location and weight of sand in pounds for each module. Module spacing is based on the greater diameter of the module.
2. All sand weights are nominal.
3. Temporary crash cushion arrays shall not encroach on the traveled way.
4. Place the top of Type R marker panel 1" below the module lid.
5. Refer to Standard Plan A73B for marker details.
6. Approach speeds indicated conform to NCHRP 350 Report criteria.
7. Use of pallets is optional.

STATE OF CALIFORNIA
DEPARTMENT OF TRANSPORTATION

TEMPORARY CRASH CUSHION, SAND FILLED (UNIDIRECTIONAL)

NO SCALE

RSP T1A DATED JUNE 6, 2008 SUPERSEDES STANDARD PLAN T1A
DATED MAY 1, 2006 - PAGE 211 OF THE STANDARD PLANS BOOK DATED MAY 2006.

REVISED STANDARD PLAN RSP T1A

2006 REVISED STANDARD PLAN RSP T1A

5-15-08

DIST	COUNTY	ROUTE	POST MILES TOTAL PROJECT	SHEET NO.	TOTAL SHEETS
11	Imp	5708		48	354

Randell D. Hiatt
REGISTERED CIVIL ENGINEER

June 6, 2008
PLANS APPROVAL DATE

REGISTERED PROFESSIONAL ENGINEER
Randell D. Hiatt
No. C50200
Exp. 6-30-09
CIVIL
STATE OF CALIFORNIA

The State of California or its officers or agents shall not be responsible for the accuracy or completeness of electronic copies of this plan sheet.

To accompany plans dated 01-06-14

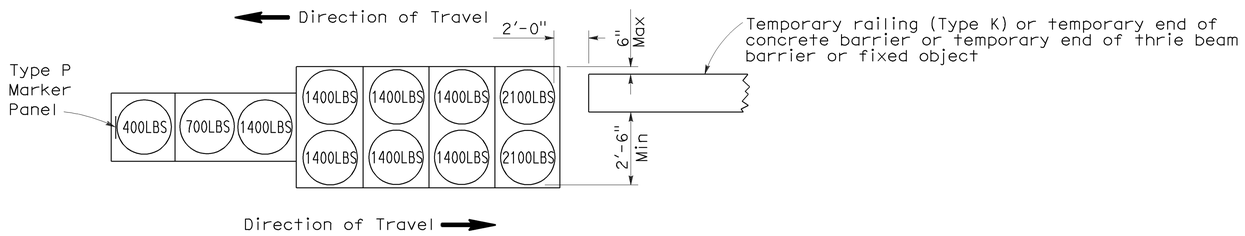

ARRAY 'TB11'

Approach speed less than 45 mph

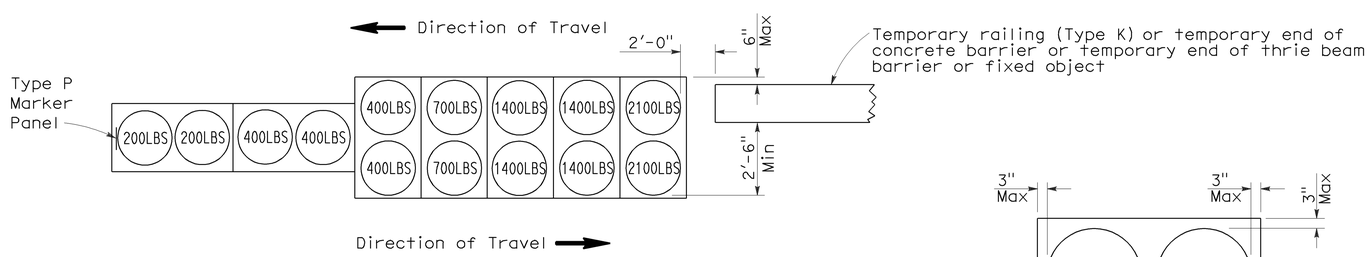

ARRAY 'TB14'

Approach speed 45 mph or more

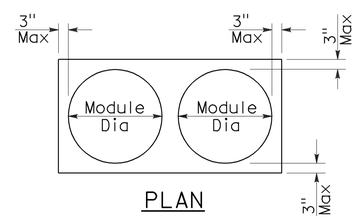

PLAN

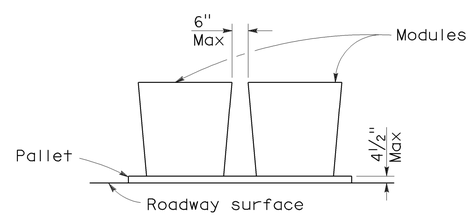

ELEVATION

CRASH CUSHION PALLET DETAIL

See Note 7

NOTES:

1. (XXX) Indicates sand filled module location and weight of sand in pounds for each module. Module spacing is based on the greater diameter of the module.
2. All sand weights are nominal.
3. Temporary crash cushion arrays shall not encroach on the traveled way.
4. Place the Type P marker panel so that the bottom of the panel rests upon the pallet.
5. Refer to Standard Plan A73B for marker details.
6. Approach speeds indicated conform to NCHRP 350 Report criteria.
7. Use of pallets is optional.

STATE OF CALIFORNIA
DEPARTMENT OF TRANSPORTATION

TEMPORARY CRASH CUSHION, SAND FILLED (BIDIRECTIONAL)

NO SCALE

RSP T1B DATED JUNE 6, 2008 SUPERSEDES STANDARD PLAN T1B
DATED MAY 1, 2006 - PAGE 212 OF THE STANDARD PLANS BOOK DATED MAY 2006.

REVISED STANDARD PLAN RSP T1B

2006 REVISED STANDARD PLAN RSP T1B

5-15-08

DIST	COUNTY	ROUTE	POST MILES TOTAL PROJECT	SHEET NO.	TOTAL SHEETS
11	Imp	5708		49	354

Randell D. Hiatt
REGISTERED CIVIL ENGINEER

June 6, 2008
PLANS APPROVAL DATE

REGISTERED PROFESSIONAL ENGINEER
Randell D. Hiatt
No. C50200
Exp. 6-30-09
CIVIL
STATE OF CALIFORNIA

The State of California or its officers or agents shall not be responsible for the accuracy or completeness of electronic copies of this plan sheet.

To accompany plans dated 01-06-14

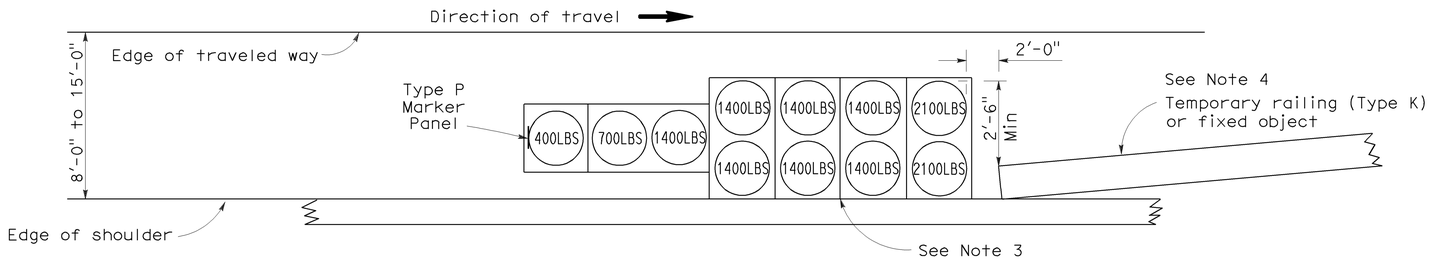

ARRAY 'TS11'

Approach speed less than 45 mph
See Note 9

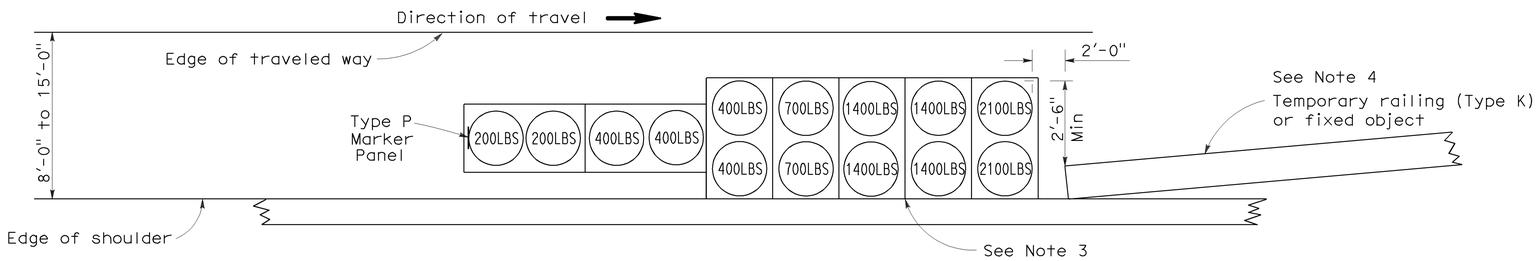

ARRAY 'TS14'

Approach speed 45 mph or more
See Note 9

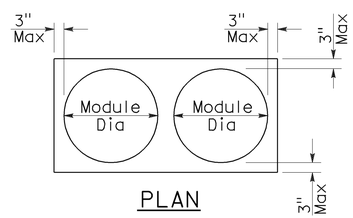

PLAN

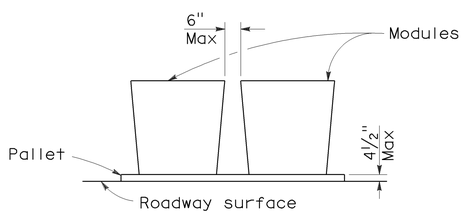

ELEVATION

CRASH CUSHION PALLET DETAIL

See Note 11

NOTES:

1. (XXX) Indicates sand filled module location and weight of sand in pounds for each module. Module spacing is based on the greater diameter of the module.
2. All sand weights are nominal.
3. The temporary crash cushion arrays shown on this plan shall be used only in locations where there will be traffic on one side of the temporary crash cushion array.
4. If the fixed object or approach end of the temporary railing is less than 15'-0" from the edge of traveled way, a temporary crash cushion is required in a construction or work zone.
5. Temporary crash cushion arrays shall not encroach on the traveled way.
6. Arrays for median shoulders shall conform to details shown on this plan for outside shoulders.
7. Place the Type P marker panel so that the bottom of the panel rests upon the pallet and faces traffic.
8. Refer to Standard Plan A73B for marker details.
9. For shoulder widths less than 8'-0", appropriate approved crash cushion protection, other than sand filled modules, shall be provided at fixed objects and at approach ends of temporary railing. The specific type of crash cushion shall be as shown on the project plans or as specified in the Special Provisions, or if not shown on the project plans or specified in the Special Provisions, shall be as approved by the Engineer.
10. Approach speeds indicated conform to NCHRP 350 Report criteria.
11. Use of pallets is optional.

STATE OF CALIFORNIA
DEPARTMENT OF TRANSPORTATION

TEMPORARY CRASH CUSHION, SAND FILLED (SHOULDER INSTALLATIONS)

NO SCALE

RSP T2 DATED JUNE 6, 2008 SUPERSEDES STANDARD PLAN T2
DATED MAY 1, 2006 - PAGE 213 OF THE STANDARD PLANS BOOK DATED MAY 2006.

REVISED STANDARD PLAN RSP T2

2006 REVISED STANDARD PLAN RSP T2

Dist	COUNTY	ROUTE	POST MILES TOTAL PROJECT	SHEET No.	TOTAL SHEETS
11	Imp	5708		50	354

Randell D. Hiatt
REGISTERED CIVIL ENGINEER

May 20, 2011
PLANS APPROVAL DATE

REGISTERED PROFESSIONAL ENGINEER
Randell D. Hiatt
No. C50200
Exp. 6-30-11
CIVIL
STATE OF CALIFORNIA

The State of California or its officers or agents shall not be responsible for the accuracy or completeness of electronic copies of this plan sheet.

To accompany plans dated 01-06-14

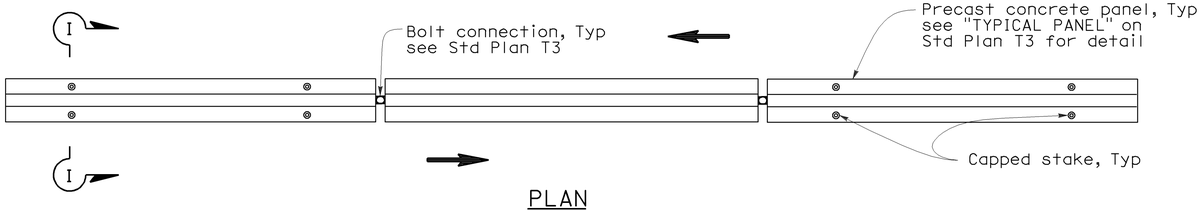

PLAN

RAILING STAKING CONFIGURATION FOR TWO-WAY TRAFFIC

See Note 1

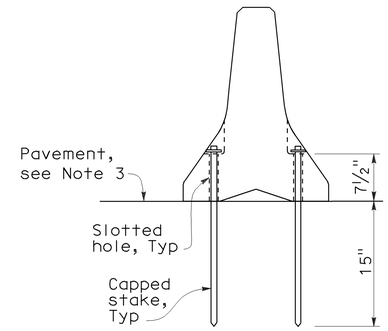

SECTION I-I

NOTES:

1. Where Type K Temporary Railing is placed as a temporary or long term barrier in two-way traffic on highways with less than 24" from the edge of traveled way, use four capped stakes per every other panel with end panels staked.
2. Where Type K Temporary Railing is placed 3" to 24" from the edge of an excavation on highways, use two capped stakes per panel along the traffic side.
3. Staked Type K Temporary Railing must be supported by at least 4" thick concrete, hot mix asphalt or existing asphalt concrete pavement.
4. The minimum yield strength for the washer must be 60,000 psi.
5. Direction of adjacent traffic indicated by ⟹.

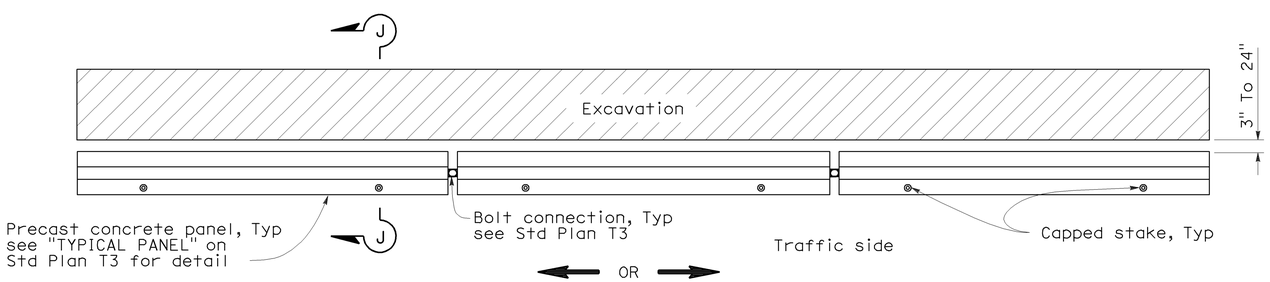

PLAN

RAILING STAKING CONFIGURATION ADJACENT TO AN EXCAVATION

See Note 2

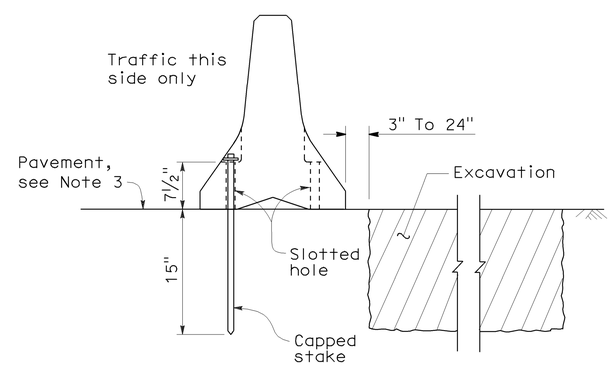

SECTION J-J

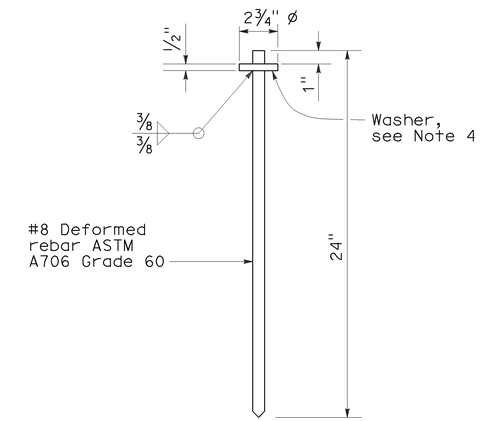

CAPPED STAKE DETAIL

STATE OF CALIFORNIA
DEPARTMENT OF TRANSPORTATION

TEMPORARY RAILING (TYPE K)

NO SCALE

NSP T3A DATED MAY 20, 2011 SUPPLEMENTS
THE STANDARD PLANS BOOK DATED MAY 2006.

NEW STANDARD PLAN NSP T3A

2006 NEW STANDARD PLAN NSP T3A

DIST	COUNTY	ROUTE	POST MILES TOTAL PROJECT	SHEET NO.	TOTAL SHEETS
11	Imp	5708		51	354

LICENSED LANDSCAPE ARCHITECT

August 15, 2008
PLANS Approval DATE

The State of California or its officers or agents shall not be responsible for the accuracy or completeness of electronic copies of this plan sheet.

LICENSED LANDSCAPE ARCHITECT
Robert B. Schott 3635
Signature
11-04-08
Renewal Date
08-11-08
Date
STATE OF CALIFORNIA

To accompany plans dated 01-06-14

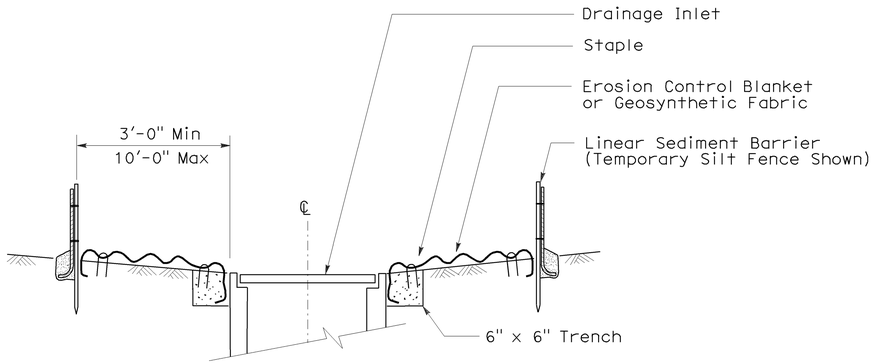

SECTION A-A

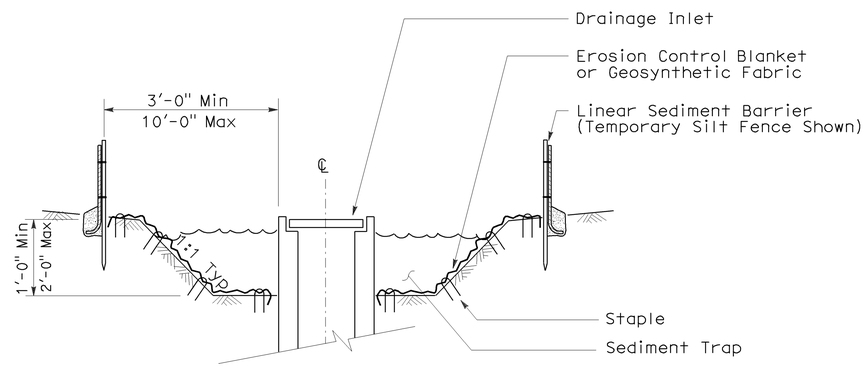

SECTION B-B

NOTES:

1. See Standard Plan T51 for Temporary Silt Fence.
2. Dimensions may vary to fit field conditions.

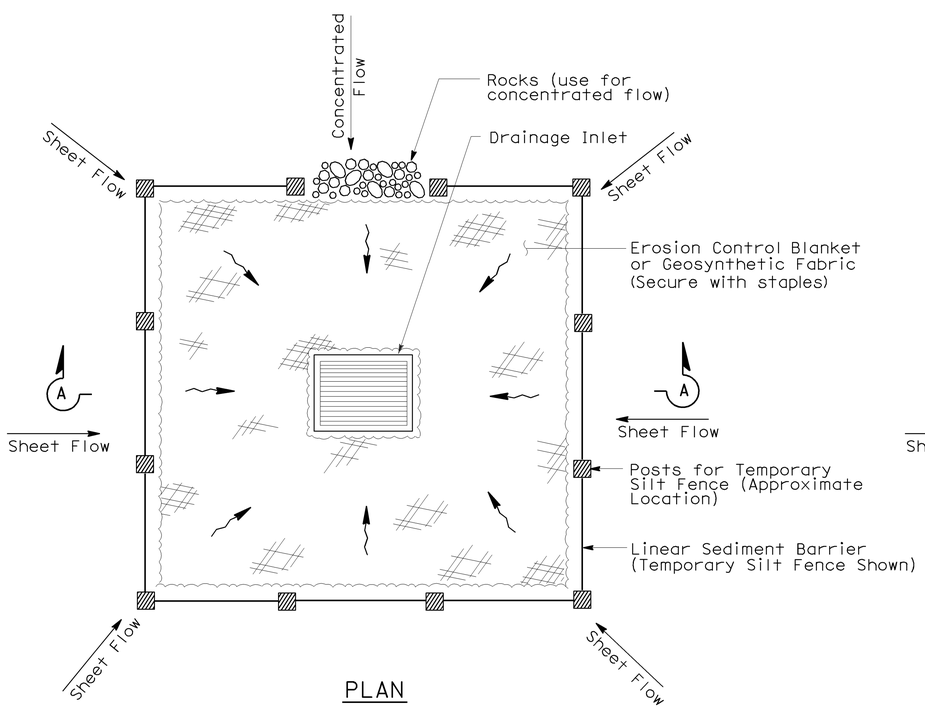

PLAN

TEMPORARY DRAINAGE
INLET PROTECTION (TYPE 1)

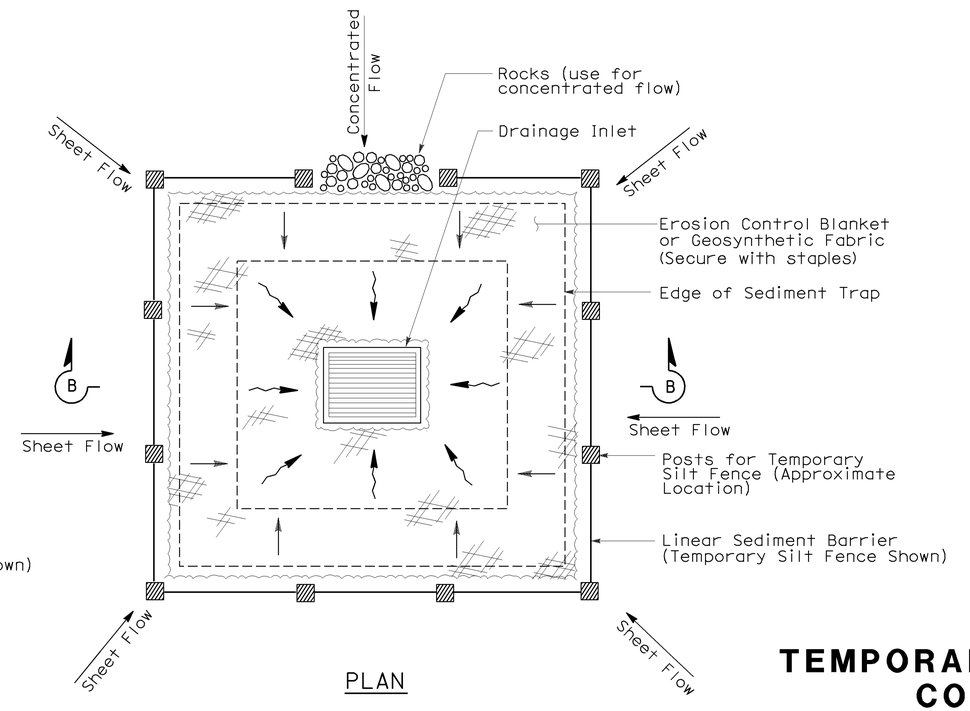

PLAN

TEMPORARY DRAINAGE
INLET PROTECTION (TYPE 2)
(EXCAVATED SEDIMENT TRAP)

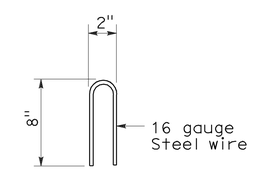

STAPLE DETAIL

STATE OF CALIFORNIA
DEPARTMENT OF TRANSPORTATION

TEMPORARY WATER POLLUTION CONTROL DETAILS (TEMPORARY DRAINAGE INLET PROTECTION)

NO SCALE

NSP T61 DATED AUGUST 15, 2008 SUPPLEMENTS
THE STANDARD PLANS BOOK DATED MAY 2006.

NEW STANDARD PLAN NSP T61

2006 NEW STANDARD PLAN NSP T61

7-11-08

DIST	COUNTY	ROUTE	POST MILES TOTAL PROJECT	SHEET NO.	TOTAL SHEETS
11	Imp	5708		52	354

LICENSED LANDSCAPE ARCHITECT

August 15, 2008
PLANS APPROVAL DATE

The State of California or its officers or agents shall not be responsible for the accuracy or completeness of electronic copies of this plan sheet.

LICENSED LANDSCAPE ARCHITECT — Robert B. Schott 3635 — Signature — 11-04-08 Renewal Date — 08-11-08 Date — STATE OF CALIFORNIA

To accompany plans dated 01-06-14

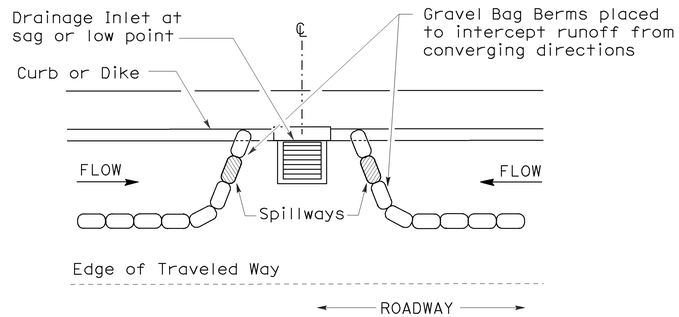

PLAN

CONFIGURATION FOR SAG POINT INLET (GRAVEL BAG BERM)

GRAVEL BAG BERM (TYPE 3A) SPACING TABLE

SLOPE OF ROADWAY (PERCENT)	1 to 3.9	4 to 5.9	6 to 7.9	8 to 10	10+
INTERVAL BETWEEN BERM	100′	75′	50′	25′	12′

For slope of less than 1%, install barriers only if erosion/sediment is prevalent

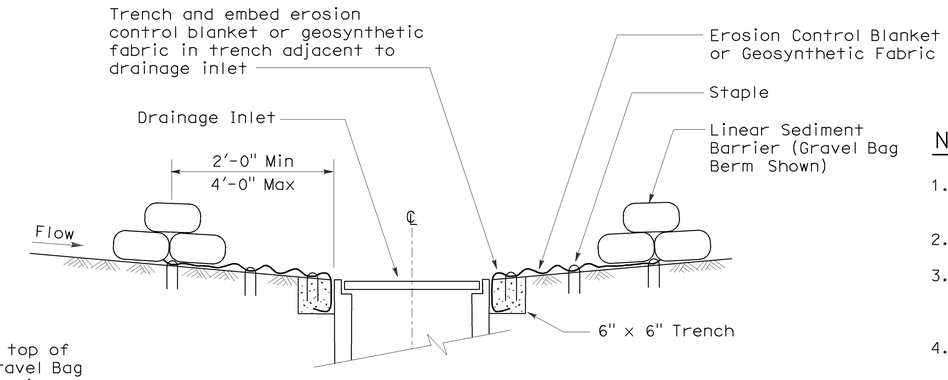

SECTION A-A

NOTES:

1. Place safety cones adjacent to drainage inlet protection.
2. Dimensions may vary to fit field conditions.
3. Install a minimum of 3 gravel bag berms upstream of each drainage inlet to be protected.
4. Position erosion control blanket or geosynthetic fabric at edge of concrete apron and secure in trench.
5. Erosion control blanket or geosynthetic fabric is not required if the area adjacent to the drainage inlet is vegetated or paved.

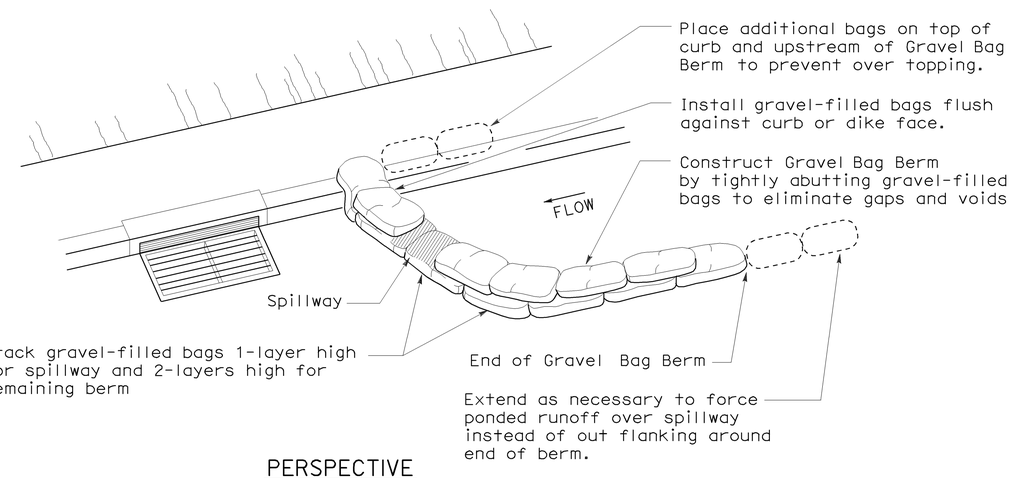

PERSPECTIVE

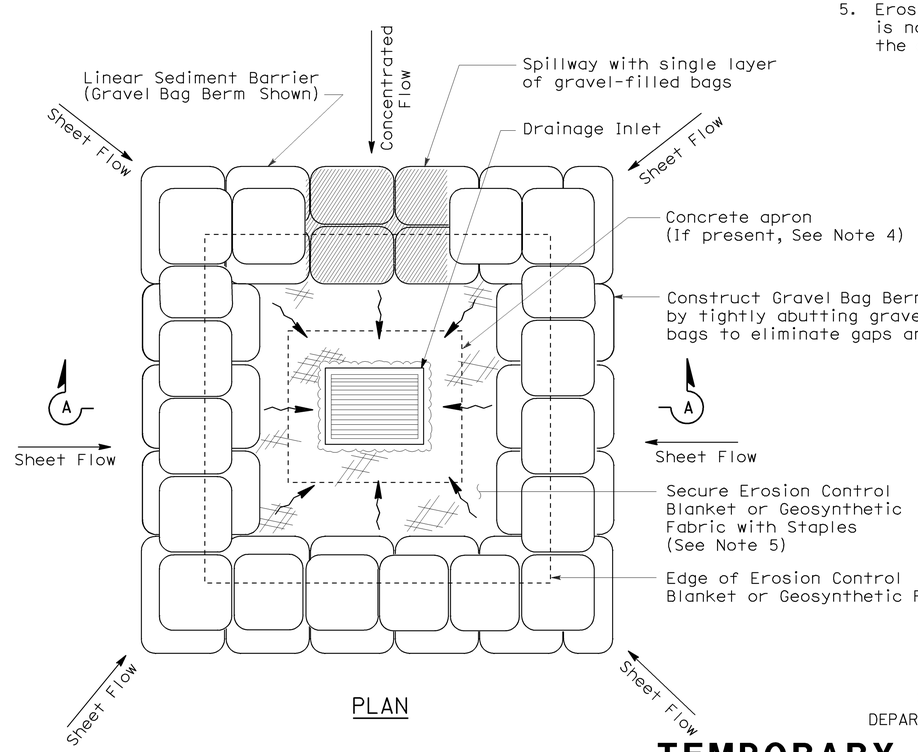

PLAN

TEMPORARY DRAINAGE INLET PROTECTION (TYPE 3B)

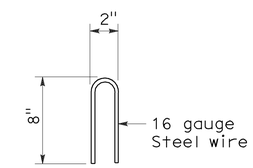

STAPLE DETAIL

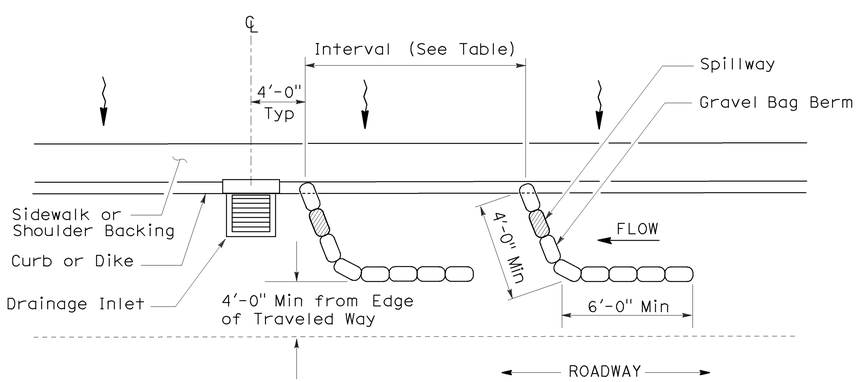

PLAN

TEMPORARY DRAINAGE INLET PROTECTION (TYPE 3A) (GRAVEL BAG BERM)

STATE OF CALIFORNIA
DEPARTMENT OF TRANSPORTATION

TEMPORARY WATER POLLUTION CONTROL DETAILS (TEMPORARY DRAINAGE INLET PROTECTION)

NO SCALE

NSP T62 DATED AUGUST 15, 2008 SUPPLEMENTS THE STANDARD PLANS BOOK DATED MAY 2006.

NEW STANDARD PLAN NSP T62

2006 NEW STANDARD PLAN NSP T62

7-11-08

DIST	COUNTY	ROUTE	POST MILES TOTAL PROJECT	SHEET NO.	TOTAL SHEETS
11	Imp	5708		53	354

Robert B. Schott
LICENSED LANDSCAPE ARCHITECT

August 15, 2008
PLANS APPROVAL DATE

LICENSED LANDSCAPE ARCHITECT — Robert B. Schott 3635 — Signature — 11-04-08 Renewal Date — 08-11-08 Date — STATE OF CALIFORNIA

The State of California or its officers or agents shall not be responsible for the accuracy or completeness of electronic copies of this plan sheet.

To accompany plans dated 01-06-14

2006 NEW STANDARD PLAN NSP T63

FLEXIBLE SEDIMENT BARRIER SPACING TABLE

SLOPE OF ROADWAY (PERCENT)	0 to 0.9	1 to 1.9	2 to 2.9	3 to 4	5+
INTERVAL BETWEEN BARRIERS	50′	35′	30′	25′	20′
ANGLE FROM FACE OF CURB	70°	70°	70°	45°	45°
SUGGESTED BARRIER LENGTH	6′	6′	6′	6′	6′

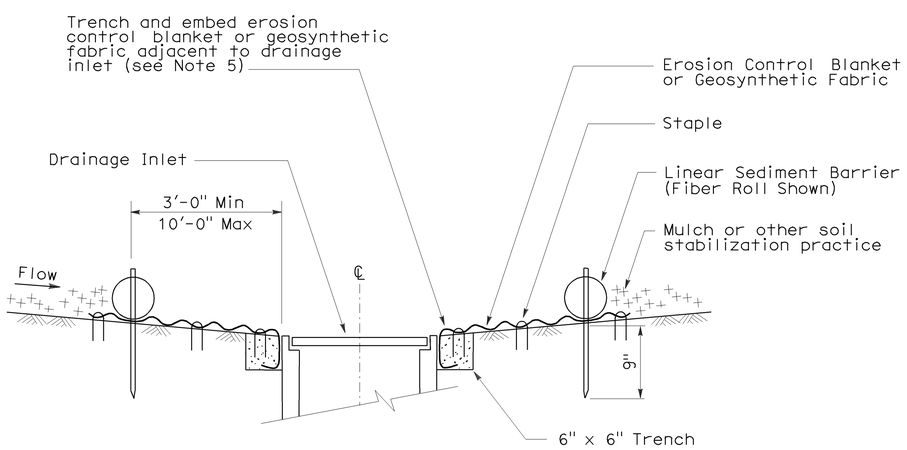

SECTION A-A

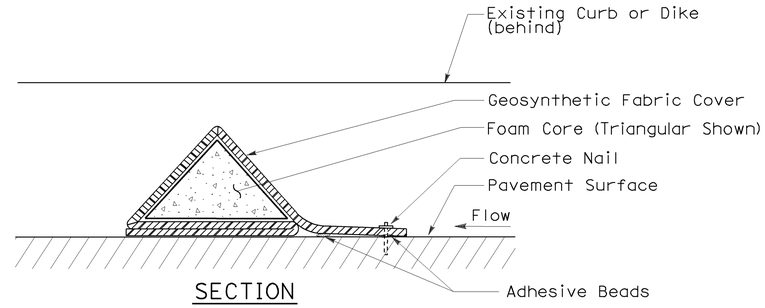

SECTION

FLEXIBLE SEDIMENT BARRIER DETAIL (FOAM BARRIER SHOWN)

NOTES:

1. See Standard Plan T51 for Temporary Silt Fence.
2. Dimensions may vary to fit field conditions.
3. Install a minimum of 3 flexible sediment barriers upstream of each drainage inlet to be protected.
4. Position erosion control blanket or geosynthetic fabric at edge of concrete apron and secure in trench.
5. Erosion control blanket or geosynthetic fabric is not required if the area adjacent to the drainage inlet is vegetated.

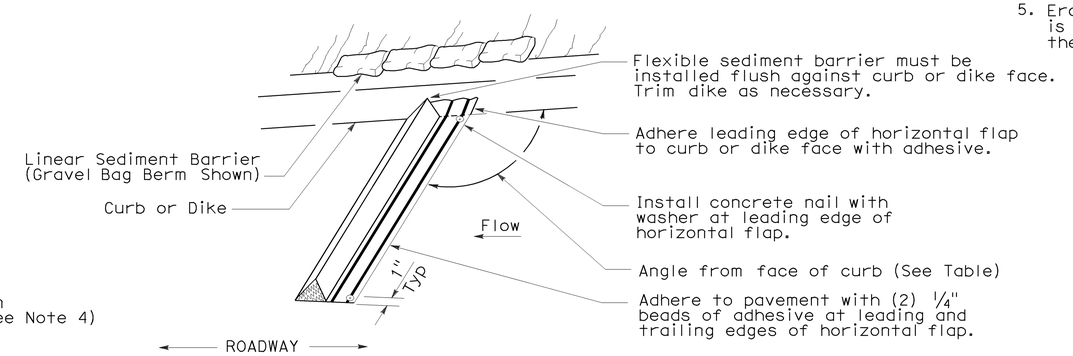

PERSPECTIVE

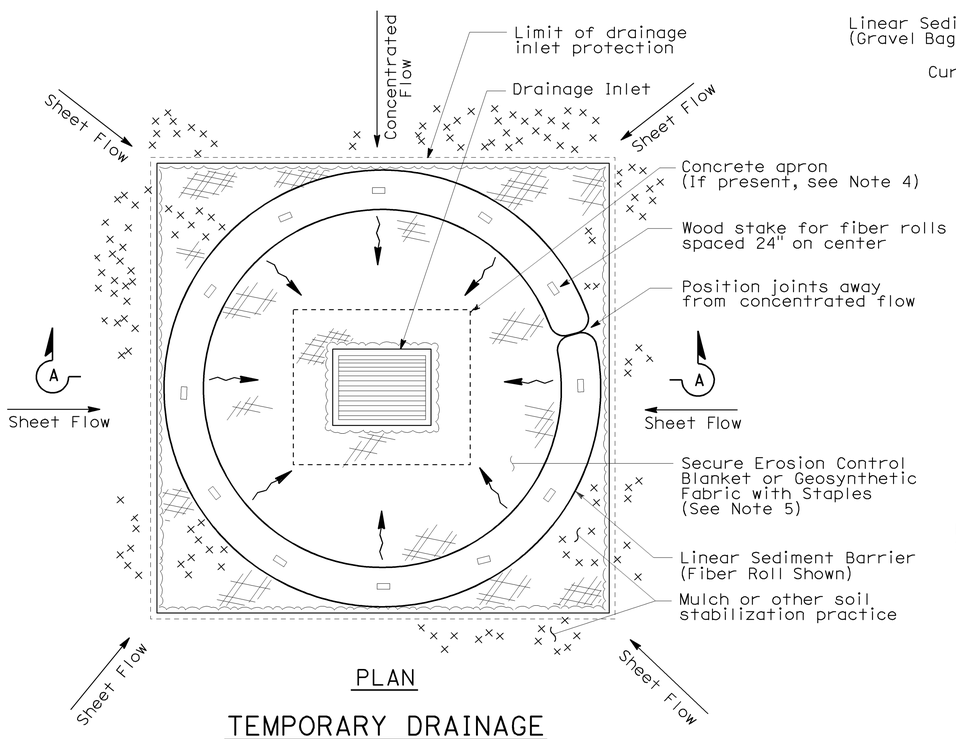

PLAN

TEMPORARY DRAINAGE INLET PROTECTION (TYPE 4A)

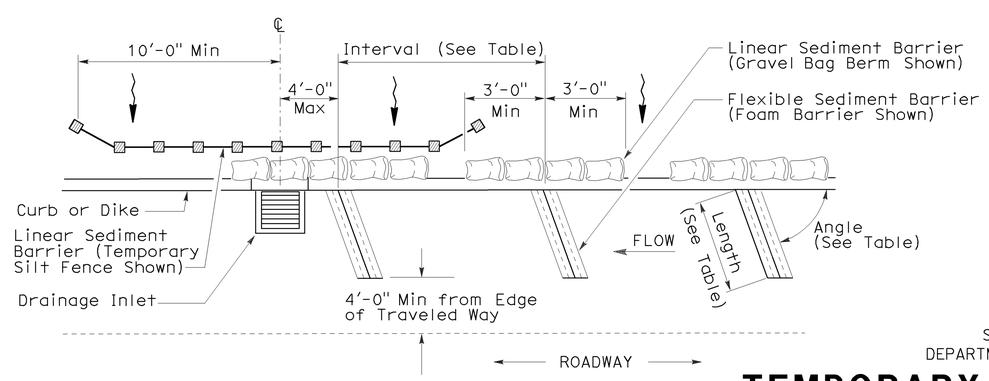

PLAN

TEMPORARY DRAINAGE INLET PROTECTION (TYPE 4B) FLEXIBLE SEDIMENT BARRIER

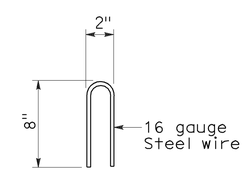

STAPLE DETAIL

STATE OF CALIFORNIA
DEPARTMENT OF TRANSPORTATION

TEMPORARY WATER POLLUTION CONTROL DETAILS (TEMPORARY DRAINAGE INLET PROTECTION)

NO SCALE

NSP T63 DATED AUGUST 15, 2008 SUPPLEMENTS THE STANDARD PLANS BOOK DATED MAY 2006.

NEW STANDARD PLAN NSP T63

7-11-08

DIST	COUNTY	ROUTE	POST MILES TOTAL PROJECT	SHEET NO.	TOTAL SHEETS
11	Imp	5708		54	354

LICENSED LANDSCAPE ARCHITECT

August 15, 2008
PLANS APPROVAL DATE

LICENSED LANDSCAPE ARCHITECT
Robert B. Schott 3635
Signature
11-04-08
Renewal Date
08-11-08
Date
STATE OF CALIFORNIA

The State of California or its officers or agents shall not be responsible for the accuracy or completeness of electronic copies of this plan sheet.

To accompany plans dated 01-06-14

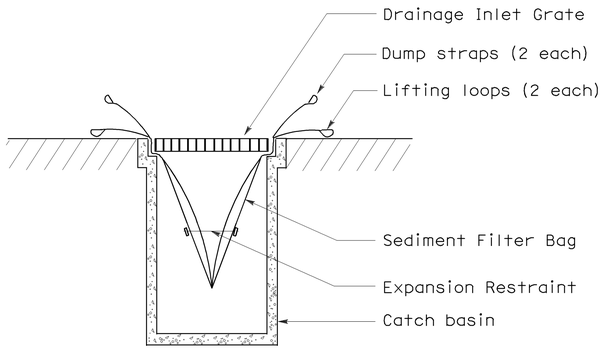

SECTION B-B

SEDIMENT FILTER BAG DETAIL

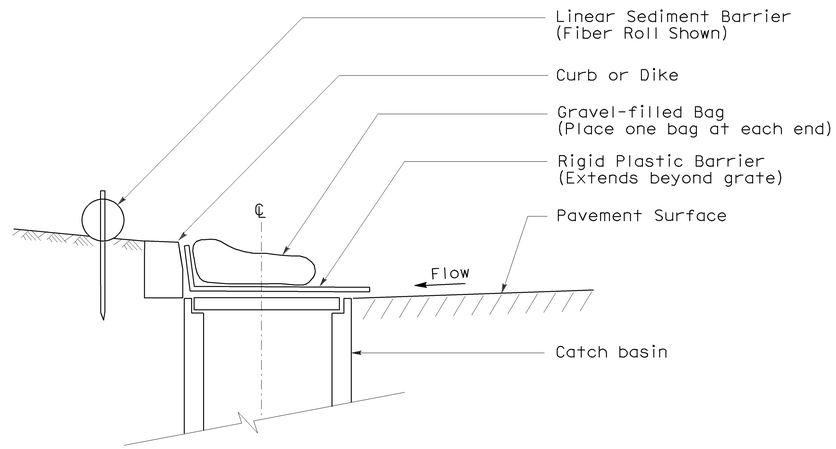

SECTION

TEMPORARY DRAINAGE INLET PROTECTION (TYPE 6A) (CATCH BASIN WITH GRATE)

NOTES:

1. See Standard Plan T51 for Temporary Silt Fence.
2. Dimensions may vary to fit field conditions.

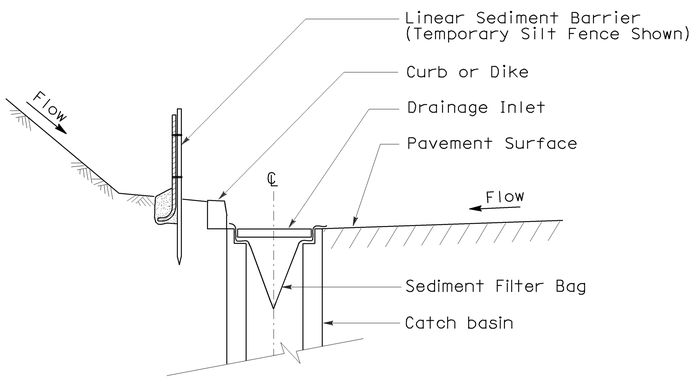

SECTION A-A

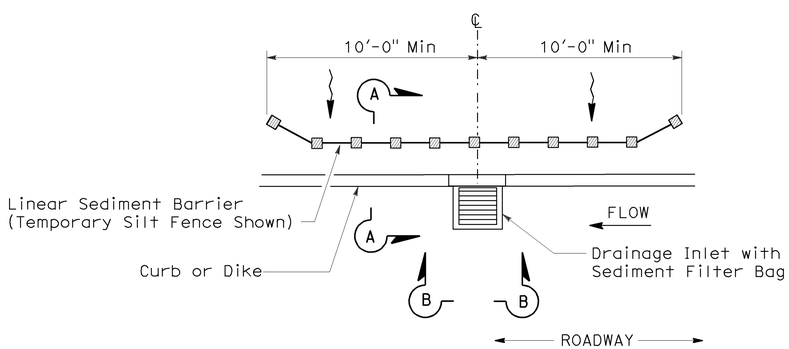

PLAN

TEMPORARY DRAINAGE INLET PROTECTION (TYPE 5) (SEDIMENT FILTER BAG)

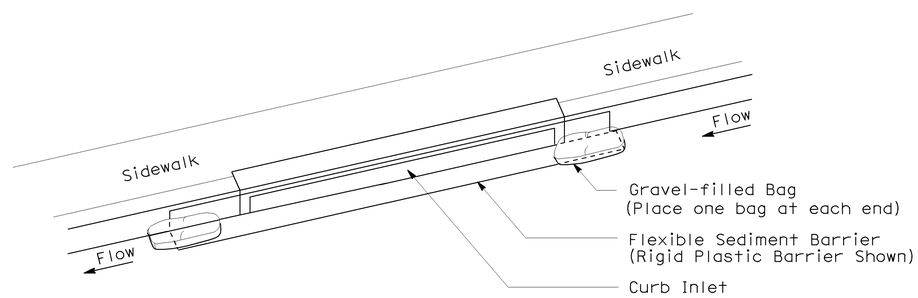

PERSPECTIVE

TEMPORARY DRAINAGE INLET PROTECTION (TYPE 6B) (CURB INLET WITHOUT GRATE)

STATE OF CALIFORNIA
DEPARTMENT OF TRANSPORTATION

TEMPORARY WATER POLLUTION CONTROL DETAILS (TEMPORARY DRAINAGE INLET PROTECTION)

NO SCALE

NSP T64 DATED AUGUST 15, 2008 SUPPLEMENTS
THE STANDARD PLANS BOOK DATED MAY 2006.

NEW STANDARD PLAN NSP T64

2006 NEW STANDARD PLAN NSP T64

7-11-08

DIST	COUNTY	ROUTE	POST MILES TOTAL PROJECT	SHEET NO.	TOTAL SHEETS
11	Imp	5708		55	354

LICENSED LANDSCAPE ARCHITECT

April 3, 2009
PLANS APPROVAL DATE

LICENSED LANDSCAPE ARCHITECT
Robert B. Schott 3635
Signature date 11-30-10
Renewal date 2-25-09
Date
STATE OF CALIFORNIA

The State of California or its officers or agents shall not be responsible for the accuracy or completeness of electronic copies of this plan sheet.

To accompany plans dated 01-06-14

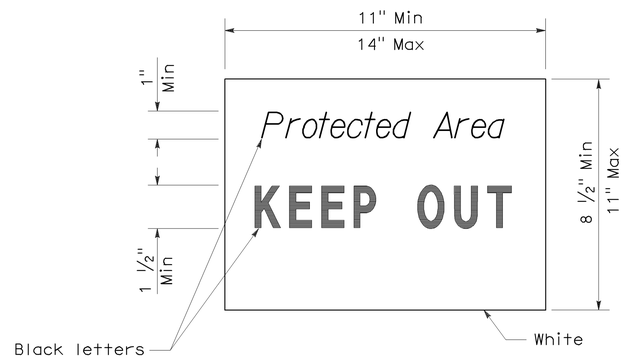

SIGN DETAIL

NOTE:

1. Temporary silt fence and temporary straw bale barrier shown for reference purposes only.

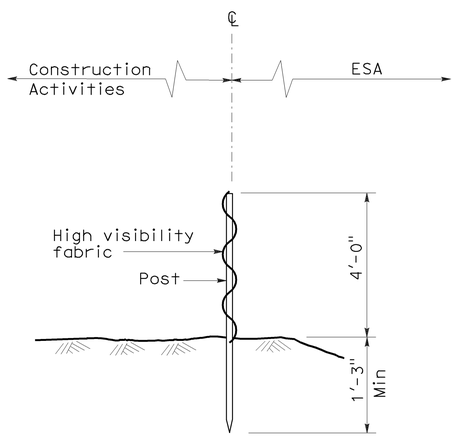

SECTION
TEMPORARY FENCE (TYPE ESA)

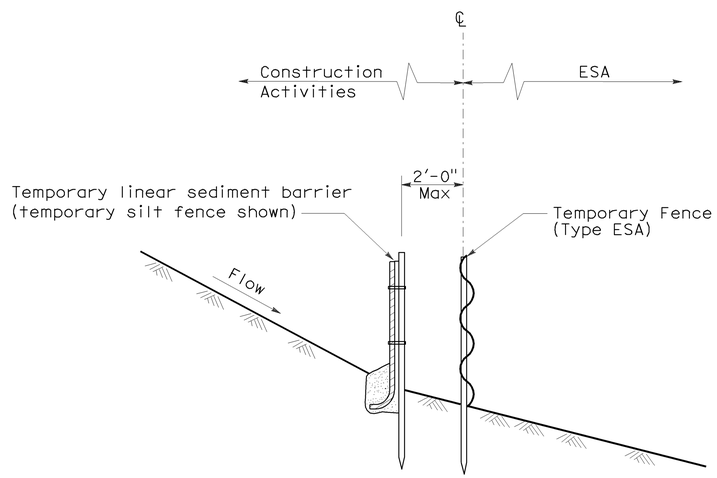

SECTION
PLACEMENT DETAIL
FOR TEMPORARY LINEAR SEDIMENT BARRIER
USED WITH TEMPORARY
FENCE (TYPE ESA)
(See Note 1)

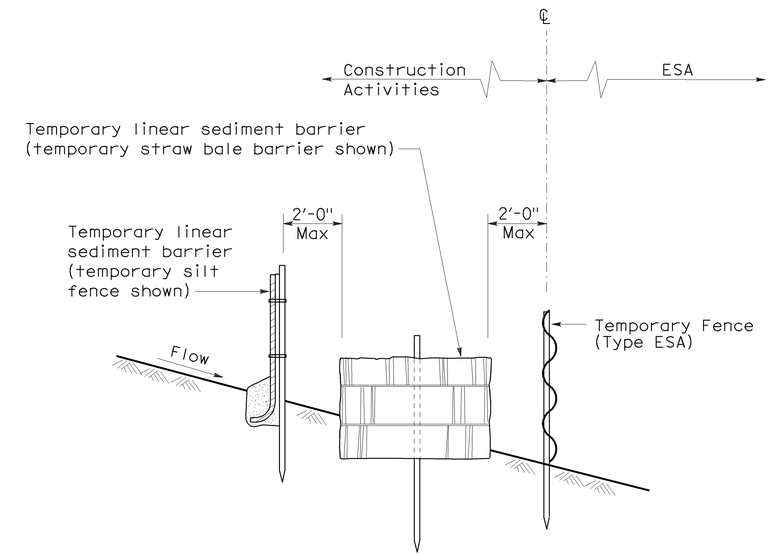

SECTION
PLACEMENT DETAIL
FOR TEMPORARY SILT FENCE
AND TEMPORARY STRAW BALE BARRIER
USED WITH TEMPORARY FENCE (TYPE ESA)
(See Note 1)

STATE OF CALIFORNIA
DEPARTMENT OF TRANSPORTATION

TEMPORARY WATER POLLUTION CONTROL DETAILS [TEMPORARY FENCE (TYPE ESA)]

NO SCALE

NSP T65 DATED APRIL 3, 2009 SUPPLEMENTS
THE STANDARD PLANS BOOK DATED MAY 2006.

NEW STANDARD PLAN NSP T65

2006 NEW STANDARD PLAN NSP T65

DIST	COUNTY	ROUTE	POST MILES TOTAL PROJECT	SHEET NO.	TOTAL SHEETS
11	Imp	5708		56	354

REGISTERED ELECTRICAL ENGINEER

October 5, 2007
PLANS APPROVAL DATE

REGISTERED PROFESSIONAL ENGINEER Jeffery G. McRae No. E14512 Exp. 6-30-08 ELECTRICAL STATE OF CALIFORNIA

The State of California or its officers or agents shall not be responsible for the accuracy or completeness of electronic copies of this plan sheet.

To accompany plans dated 01-06-14

ELECTROLIERS

STANDARD TYPES
15, 15D
15 STRUCTURE
21, 21D STRUCTURE
30
31
32
35
36-20A

High mast light pole

Double Arm lighting standard

Existing electrolier

Electrolier foundation (Future installation)

NOTES:

1. Luminaires shall be 310 W HPS when installed on Type 21, 21D, 30, 31, 32, 35 and 36-20A Standards, unless otherwise specified. Luminaires shall be 200 W HPS when installed on other type standards or poles, unless otherwise specified.
2. Luminaires shall be the cutoff type, ANSI Type III medium cutoff lighting distribution, unless otherwise specified.
3. Variations noted adjacent to symbol on project plans.

Electrolier (see project notes or project plans)

Luminaire on wood pole

STANDARD NOTES:

- AB — Abandon. If applied to conduit, remove conductors.
- BC — Install pull box in existing conduit run.
- BP — Pedestrian barricade, type as indicated on plan.
- CB — Install conduit into existing pull box.
- CC — Connect new and existing conduit. Remove existing conductors and install conductors as indicated.
- CF — Conduit to remain for future use. Remove conductors. Install pull wire or rope.
- DH — Detector handhole.
- FA — Foundation to be abandoned.
- IS — Install sign on signal mast arm.
- NS — No slip base on standard.
- PEC — Photoelectric control.
- PEU — Photoelectric unit.
- RC — Equipment or material to be removed and become the property of the Contractor.
- RE — Remove electrolier, fuses and ballast. Tape ends of conductors.
- RL — Relocate equipment.
- RR — Remove and reuse equipment.
- RS — Remove and salvage equipment.
- SC — Splice new to existing conductors.
- SD — Service disconnect.
- SF — Standard to remain for future use. Remove luminaire, pole conductors, fuses and ballast.
- TSP — Telephone service point.

ABBREVIATIONS AND EQUIPMENT DESIGNATIONS

PROPOSED	EXISTING	
BBS	bbs	Battery backup system
BC	bc	Bolt circle
C	C	Conduit
CCTV	cctv	Closed circuit television
CKT	ckt	Circuit
CMS	cms	Changeable message sign
DLC	dlc	Loop detector lead-in cable
EMS	ems	Extinguishable message sign
EVC	evc	Emergency vehicle cable
EVD	evd	Emergency vehicle detector
FB	fb	Flashing beacon
FBCA	fbca	Flashing beacon control assembly
FBS	fbs	Flashing beacon with slip base
FO	fo	Fiber optic
G	G	Ground (Equipment Grounding Conductor)
GFCI	GFCI	Ground fault circuit interrupt
HAR	har	Highway advisory radio
HEX	hex	Hexagonal
HPS	hps	High pressure sodium
IISNS	iisns	Internally illuminated street name sign
ISL	isl	Induction sign lighting
LED	led	Light emitting diode
LMA	lma	Luminaire mast arm
LPS	lps	Low pressure sodium
LTG	ltg	Lighting
LUM	lum	Luminaire
MAT	mat	Mast arm mounting vehicle signal faces, top attachment
MAS	mas	Mast arm mounting vehicle signal faces, side attachment
MAS-4A	mas-4A	Mast arm mounting vehicle signal faces, side attachment - 4 signal section
MAS-4B	mas-4B	
MAS-4C	mas-4C	
MAS-5A	mas-5A	Mast arm mounting vehicle signal faces, side attachment - 5 signal section
MAS-5B	mas-5B	
MC	mc	Mercury contactor
M/M	m/m	Multiple to multiple transformer
MT	mt	Conduit with pull wire or rope only
MTG	mtg	Mounting
	mv	Mercury vapor lighting fixture
N	N	Neutral (Grounded Conductor)
NC	NC	Normally closed
NO	NO	Normally open
PB	pb	Pull box
PEC	pec	Photoelectric control (Type I, II, III, IV or V as shown)
PED	ped	Pedestrian
PEU	peu	Photoelectric unit
PPB	ppb	Pedestrian push button
RL		Relocated equipment
RM	rm	Ramp metering
SB	sb	Slip base
SIC	sic	Signal interconnect cable
SIG	sig	Signal
SMA	sma	Signal mast arm
SNS	sns	Street name sign
SP	sp	Service point
TDC	tdc	Telephone demarcation cabinet
TMS	tms	Traffic monitoring station
TOS	tos	Traffic Operations System
VEH	veh	Vehicle
XFMR	xfmr	Transformer
COMM	comm	Communication
RWIS	rwis	Roadway weather information system

SOFFIT AND WALL MOUNTED LUMINAIRES

Pendant, 70 W HPS unless otherwise specified.

Flush, 70 W HPS unless otherwise specified.

Wall surface, 70 W HPS unless otherwise specified.

Existing soffit or wall luminaire to remain unmodified.

Existing soffit or wall luminaire to be modified as specified.

NOTE:

Arrow indicates "street side" of luminaire.

STATE OF CALIFORNIA
DEPARTMENT OF TRANSPORTATION

ELECTRICAL SYSTEMS (SYMBOLS AND ABBREVIATIONS)

NO SCALE

RSP ES-1A DATED OCTOBER 5, 2007 SUPERSEDES STANDARD PLAN ES-1A DATED MAY 1, 2006 - PAGE 400 OF THE STANDARD PLANS BOOK DATED MAY 2006.

REVISED STANDARD PLAN RSP ES-1A

2006 REVISED STANDARD PLAN RSP ES-1A

DIST	COUNTY	ROUTE	POST MILES TOTAL PROJECT	SHEET NO.	TOTAL SHEETS
11	Imp	5708		57	354

REGISTERED CIVIL ENGINEER

October 5, 2007
PLANS APPROVAL DATE

REGISTERED PROFESSIONAL ENGINEER
Stanley P. Johnson
No. C57793
Exp. 3-31-08
CIVIL
STATE OF CALIFORNIA

The State of California or its officers or agents shall not be responsible for the accuracy or completeness of electronic copies of this plan sheet.

To accompany plans dated 01-06-14

2006 REVISED STANDARD PLAN RSP ES-6A

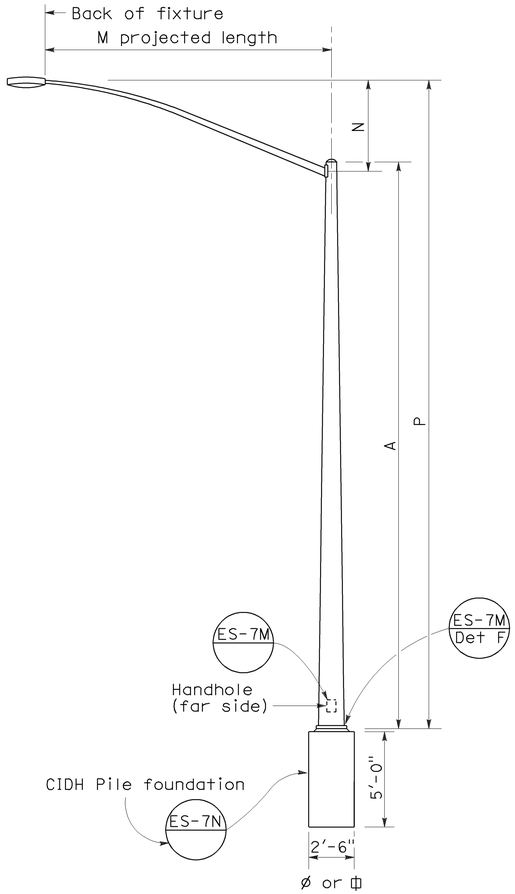

ELEVATION
TYPE 15 AND TYPE 21

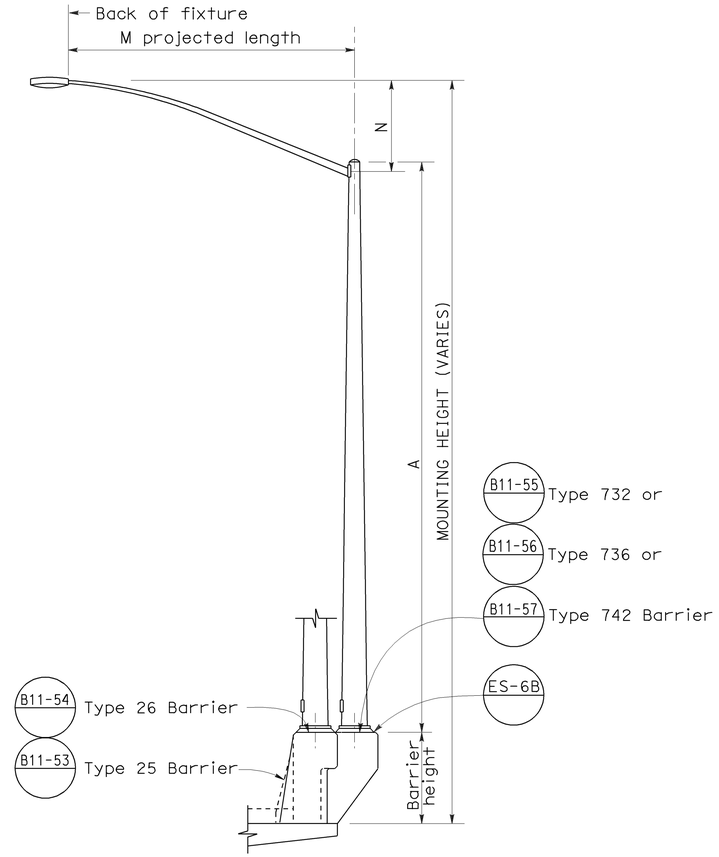

ELEVATION
TYPE 15 AND TYPE 21 BARRIER RAIL MOUNTED

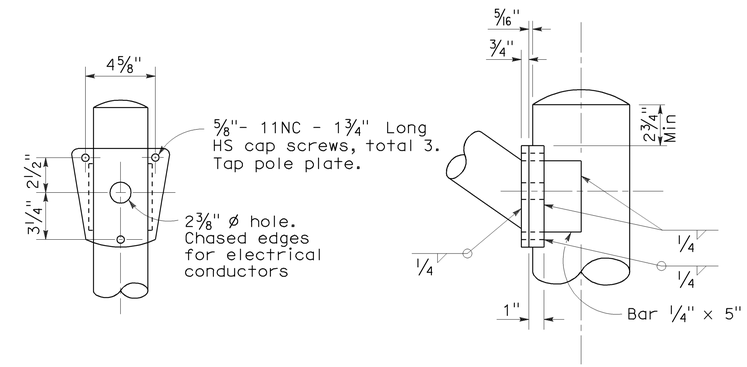

DETAIL R
LUMINAIRE ARM CONNECTION

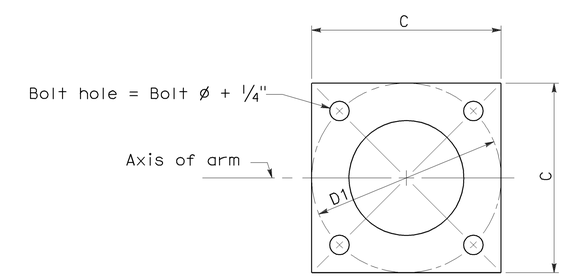

BASE PLATE

POLE TYPE	POLE DATA				BASE PLATE DATA				LUMINAIRE ARM
	A Height	Min OD Base	Min OD Top	Wall Thickness	C	D1 Bolt Circle	Thick-ness	Anchor Bolts Size	
15	30'	8"	3 7/8"	0.1196"	1'-0"	1'-0"	1"	1" ø x 3'-0" x 4"*	6' - 15' [12']
21	35'	8 5/8"	3 7/8"	0.1196"	1'-0"	1'-0"	1"	1 1/4"ø x 3'-0" x 4"*	6' - 15' [12']

* For barrier rail bolts, see Standard Plan ES-6B.

LUMINAIRE ARM DATA					
M Projected Length	N Rise	Min OD At Pole	Nominal Thickness	P Type 15	P Type 21
6'-0"	2'-0"±	3 1/4"	0.1196"	31'-6"±	36'-6"±
8'-0"	2'-6"±	3 1/2"	0.1196"	32'-0"±	37'-0"±
10'-0"	3'-3"±	3 7/8"	0.1196"	32'-9"±	37'-9"±
12'-0"	4'-3"±	3 7/8"	0.1196"	33'-9"±	38'-9"±
15'-0"	4'-9"±	4 1/4"	0.1196"	34'-3"±	39'-3"±

NOTES:

1. ☐ Indicates arm length to be used unless otherwise noted on the plans.
2. For Type 15-SB, use Type 15 standard with Type 30 slip base plate details, see Standard Plan ES-6F.
3. For additional notes, see Standard Plan ES-7M and ES-7N.

STATE OF CALIFORNIA
DEPARTMENT OF TRANSPORTATION

ELECTRICAL SYSTEMS (LIGHTING STANDARD TYPES 15 AND 21)

NO SCALE

RSP ES-6A DATED OCTOBER 5, 2007 SUPERCEDES STANDARD PLAN ES-6A DATED MAY 1, 2006 - PAGE 427 OF THE STANDARD PLANS BOOK DATED MAY 2006.

REVISED STANDARD PLAN RSP ES-6A

DIST	COUNTY	ROUTE	POST MILES TOTAL PROJECT	SHEET NO.	TOTAL SHEETS
11	Imp	5708		58	354

REGISTERED ELECTRICAL ENGINEER

January 20, 2012
PLANS APPROVAL DATE

REGISTERED PROFESSIONAL ENGINEER
Jeffery G. McRae
No. E14512
Exp. 6-30-12
ELECTRICAL
STATE OF CALIFORNIA

The State of California or its officers or agents shall not be responsible for the accuracy or completeness of electronic copies of this plan sheet.

To accompany plans dated 01-06-14

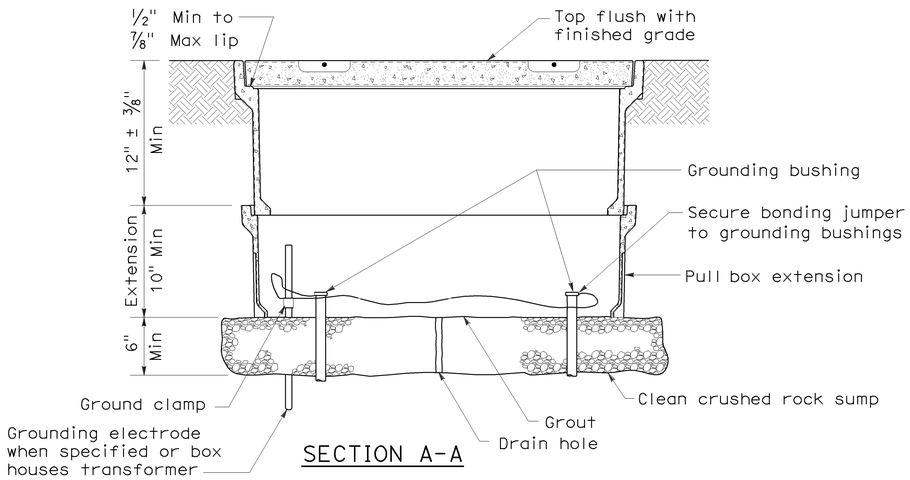

SECTION A-A

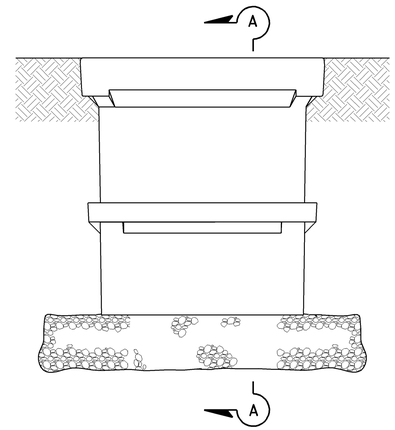

SIDE VIEW

INSTALLATION DETAILS

DETAIL A

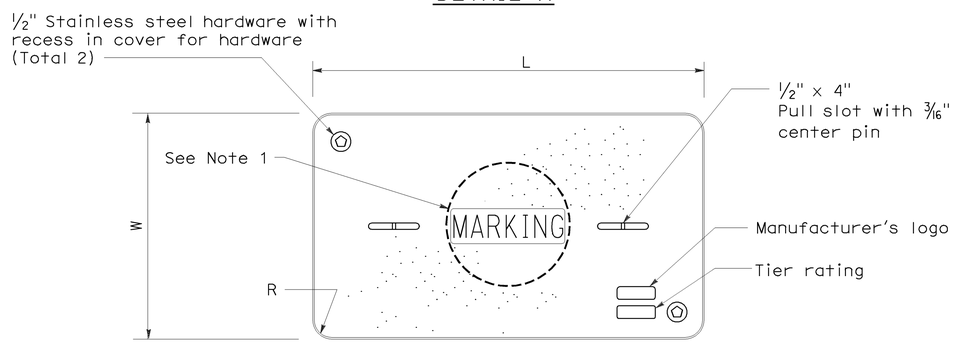

COVER TOP VIEW

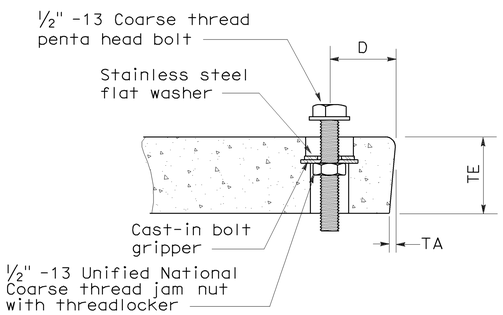

TYPICAL COVER CAPTIVE BOLT
(Or similar)

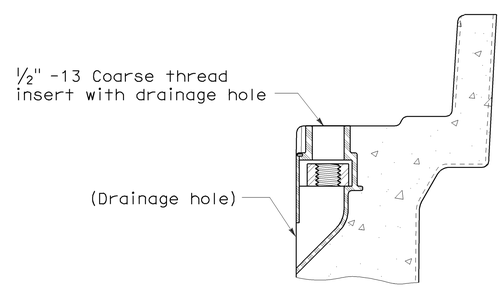

TYPICAL THREADED INSERT
(Or similar)

DIMENSION TABLE										
PULL BOX	PULL BOX			COVER						
	Minimum Depth Box	Minimum Depth Extension	Maximum Weight	L	W	R	TE	TA	D	Maximum Weight
No. 3½	12"	N/A	40 lb	1' - 3⅜"	10⅛"	1⅜"	2"	⅛"	1¾"	30 lb
No. 5	12"	10"	55 lb	1' - 11¼"	1' - 1¾"	1⅜"	2"	⅛"	1¾"	60 lb
No. 6	12"	10"	70 lb	2' - 6½"	1' - 5½"	1⅜"	2"	⅛"	2"	85 lb

NOTES ON PULL BOXES:

1. Pull box covers must be marked as follows: "SERVICE" Service circuits between service point and service disconnect; "SPRINKLER-CONTROL" sprinkler control circuits, 50 V or less; "CALTRANS" on all pull boxes, except pull boxes marked "SPRINKLER-CONTROL"; and "TELEPHONE" Telephone service;

   A) No. 3½ pull box.
      1) "SIGNAL" - Traffic signal circuits with or without street or sign lighting circuits.
      2) "ST LIGHTING" - Street or sign lighting circuits where voltage is under 600 V.

   B) No. 5, 6, 9 or 9A pull box.
      1) "TRAFFIC SIGNAL" - Traffic signal circuits with or without street or sign lighting circuits.
      2) "STREET LIGHTING" - Street or sign lighting circuits where voltage is under 600 V.
      3) "STREET LIGHTING-HIGH VOLTAGE" - Street or sign lighting circuits where voltage is above 600 V.
      4) "IRRIGATION" - Circuits to irrigation controller 120 V or more.
      5) "RAMP METER" - Ramp meter circuits.
      6) "COUNT STATION" - Count or speed monitor circuits.
      7) "COMMUNICATIONS" - Communication circuits.
      8) "TOS COMMUNICATIONS" - TOS communication line.
      9) "TOS POWER" -TOS power.
      10) "TDC POWER" - Telephone demarcation cabinet power.
      11) "CCTV" - Closed circuit television circuits.
      12) "TMS" - Traffic monitoring station circuits.
      13) "CMS" - Changeable message sign circuits.
      14) "HAR" - Highway advisory radio circuits.

2. The nominal dimensions of the opening in which the cover sets must be the same as the cover dimensions (L and W) plus ⅛" or greater.

3. Covers and boxes must be interchangeable with California Standard. When interchanged with a standard, the top surfaces must be flush within ⅛". Top outside radius of covers and pull boxes must have a ⅛" radius.

4. Pull box extension may be another pull box as long as the bottom edge of the pull box can fit into the cover opening.

STATE OF CALIFORNIA
DEPARTMENT OF TRANSPORTATION

ELECTRICAL SYSTEMS (PULL BOX)

NO SCALE

NSP ES-8A DATED JANUARY 20, 2012 SUPPLEMENTS THE STANDARD PLANS BOOK DATED MAY 2006.

NEW STANDARD PLAN NSP ES-8A

2006 NEW STANDARD PLAN NSP ES-8A

9-28-11

DIST	COUNTY	ROUTE	POST MILES TOTAL PROJECT	SHEET NO.	TOTAL SHEETS
11	Imp	5708		59	354

REGISTERED ELECTRICAL ENGINEER

January 20, 2012
PLANS APPROVAL DATE

REGISTERED PROFESSIONAL ENGINEER Jeffery G. McRae No. E14512 Exp. 6-30-12 ELECTRICAL STATE OF CALIFORNIA

The State of California or its officers or agents shall not be responsible for the accuracy or completeness of electronic copies of this plan sheet.

To accompany plans dated 01-06-14

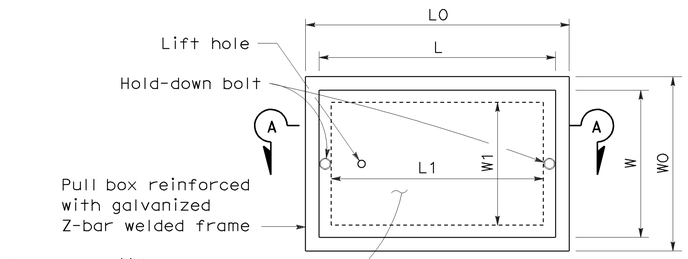

TOP VIEW

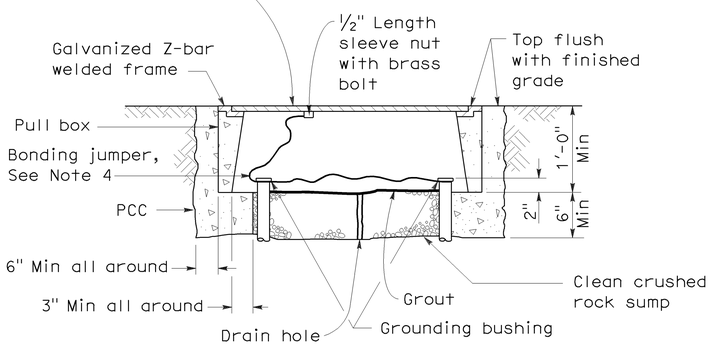

SECTION A-A

No. 3½(T), No. 5(T) AND No. 6(T) TRAFFIC PULL BOX

NOTES ON PULL BOXES:

1. Traffic pull box shall be provided with steel cover and special concrete footing. Steel cover shall have embossed non-skid pattern.
2. Steel reinforcing shall be as regularly used in the standard products of the respective manufacturer.
3. Pull box covers must be marked as follows: "SERVICE" Service circuits between service point and service disconnect; "SPRINKLER-CONTROL" Sprinkler control circuits, 50 V or less; "CALTRANS" On all pull boxes, except pull boxes marked "SPRINKLER-CONTROL"; and "TELEPHONE" Telephone service.
   A) No. 3½(T) pull box.
      1) "SIGNAL" - Traffic signal circuits with or without street or sign lighting circuits.
      2) "ST LIGHTING" - Street or sign lighting circuits where voltage is under 600 V.
   B) No. 5(T) or 6(T) pull box.
      1) "TRAFFIC SIGNAL" - Traffic signal circuits with or without street or sign lighting circuits.
      2) "STREET LIGHTING" - Street or sign lighting circuits where voltage is under 600 V.
      3) "STREET LIGHTING-HIGH VOLTAGE" - Street or sign lighting circuits where voltage is above 600 V.
      4) "IRRIGATION" - Circuits to irrigation controller 120 V or more.
      5) "RAMP METER" - Ramp meter circuits.
      6) "COUNT STATION" - Count or speed monitor circuits.
      7) "COMMUNICATION" - Communication circuits.
      8) "TOS COMMUNICATIONS" - TOS communications line.
      9) "TOS POWER" - TOS power.
      10) "TDC POWER" - Telephone demarcation cabinet power.
      11) "CCTV" - Closed circuit television circuits.
      12) "TMS" - Traffic monitoring station circuits.
      13) "CMS" - Changeable message sign circuits.
      14) "HAR" - Highway advisory radio circuits.
4. Bonding jumper for metal covers shall be 3' long, minimum.
5. The nominal dimensions of the opening in which the cover sets must be the same as the cover dimensions except the length and width dimensions shall be ⅛" greater.
6. Covers and boxes must be interchangeable with California standard male and female gages. When interchanged with a standard male or female gage, the top surfaces must be flush within ⅛".

DIMENSION TABLE

PULL BOX	BOX						COVER				
	Minimum * Thickness	Minimum Depth Box and Extension	WO	LO	L1	W1	L **	W **	R	Edge Thickness	Edge Taper
No. 3½(T)	1½"	1'-0"	1'-5"± 1"	1'-8⅞"±	1'-2½"±	10⅝"± 1"	1'-8"±	1'-1¾"±	0"	½"	None
No. 5(T)	1¾"	1'-0"	1'-11½"± 1"	2'-5½"±	1'-7"±	1'-1"± 1"	2'-3"±	1'-4"±	0"	½"	None
No. 6(T)	2"	1'-0"	2'-6"± 1"	2'-11½"±	1'-11½"±	1'-5"± 1"	2'-9"±	1'-8"±	0"	½"	None

* Excluding conduit web ** Top dimension

STATE OF CALIFORNIA
DEPARTMENT OF TRANSPORTATION

ELECTRICAL SYSTEMS (TRAFFIC RATED PULL BOX)

NO SCALE

NSP ES-8B DATED JANUARY 20, 2012 SUPPLEMENTS THE STANDARD PLANS BOOK DATED MAY 2006.

NEW STANDARD PLAN NSP ES-8B

2006 NEW STANDARD PLAN NSP ES-8B

9-28-11

DIST	COUNTY	ROUTE	POST MILES TOTAL PROJECT	SHEET NO.	TOTAL SHEETS
11	Imp	5708		60	354

REGISTERED ELECTRICAL ENGINEER

July 20, 2012
PLANS APPROVAL DATE

REGISTERED PROFESSIONAL ENGINEER
Jeffery G. McRae
No. E14512
Exp. 6-30-14
ELECTRICAL
STATE OF CALIFORNIA

The State of California or its officers or agents shall not be responsible for the accuracy or completeness of electronic copies of this plan sheet.

To accompany plans dated 01-06-14

ISOFOOTCANDLE CURVE - MINIMUM

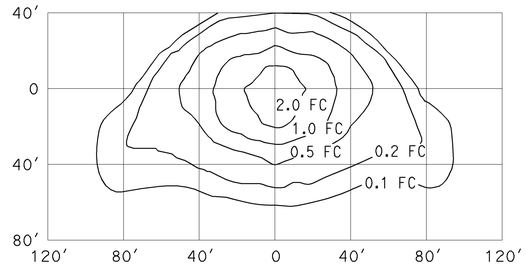

TYPE III MEDIUM CUTOFF

Cutoff Luminaire
34′ Mounting Height
Lamp operated at 22,000 lm
200-W high pressure sodium lamp
ANSI Designation S66

ISOFOOTCANDLE CURVE - MINIMUM

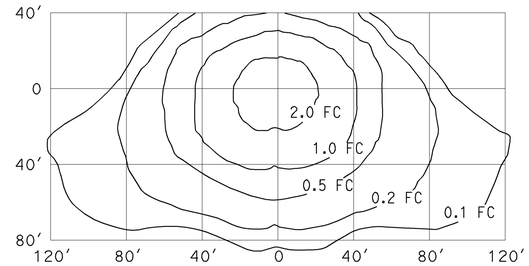

TYPE III MEDIUM CUTOFF

Cutoff Luminaire
40′ Mounting Height
Lamp operated at 37,000 lm
310-W high pressure sodium lamp
ANSI Designation S67

ISOFOOTCANDLE CURVE - MINIMUM

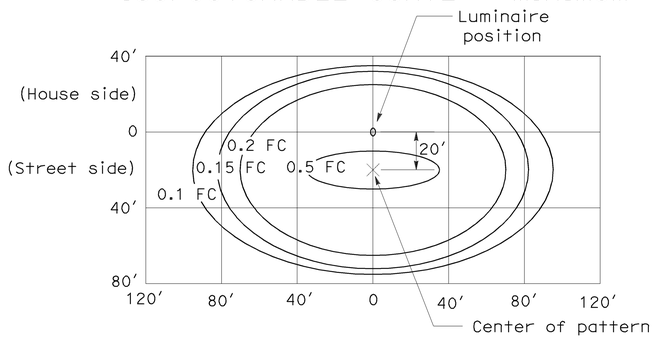

LED LUMINAIRE ROADWAY 1

200-W HPS Equivalent at 34′ Mounting Height

ISOFOOTCANDLE CURVE - MINIMUM

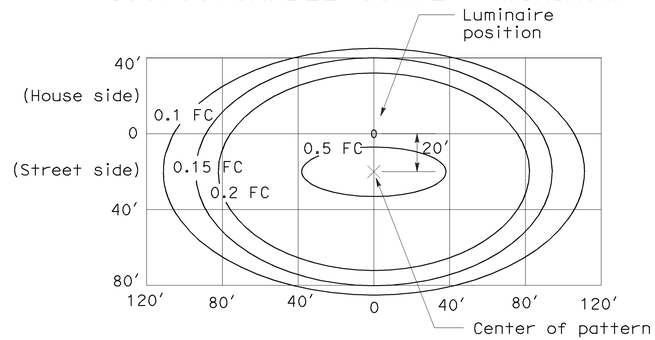

LED LUMINAIRE ROADWAY 2

310-W HPS Equivalent at 40′ Mounting Height

ISOFOOTCANDLE CURVE - MINIMUM

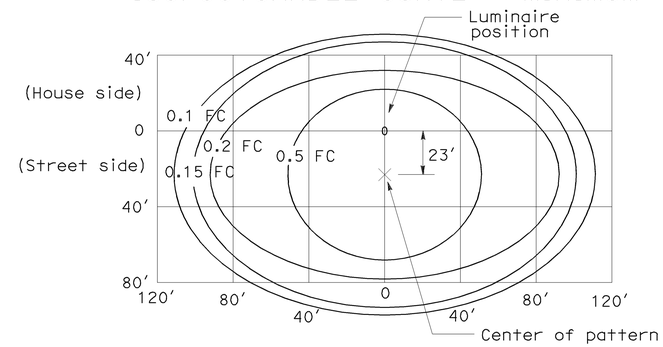

LED LUMINAIRE ROADWAY 4

400-W HPS Equivalent at 40′ Mounting Height

ISOFOOTCANDLE CURVE - MINIMUM

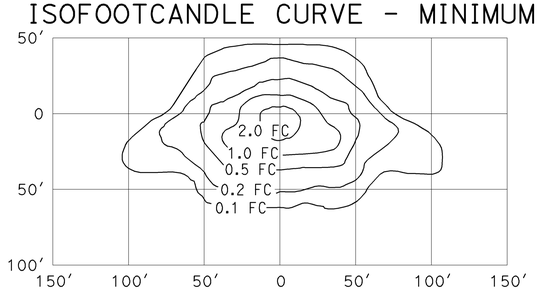

TYPE III MEDIUM CUTOFF

Cutoff Luminaire
30′ Mounting Height
Lamp operated at 16,000 lm
150-W high pressure sodium lamp
ANSI Designation S55

ISOFOOTCANDLE CURVE - MINIMUM

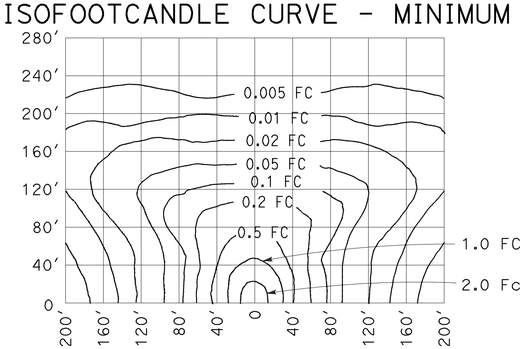

LOW PRESSURE SODIUM LUMINAIRE

40′ Mounting Height
Lamp operated at 33,000 lm
180-W low pressure sodium lamp

STATE OF CALIFORNIA
DEPARTMENT OF TRANSPORTATION

ELECTRICAL SYSTEMS (ISOFOOTCANDLE DIAGRAMS)

NO SCALE

NSP ES-10A DATED JULY 20, 2012 SUPPLEMENTS THE STANDARD PLANS BOOK DATED MAY 2006.

NEW STANDARD PLAN NSP ES-10A

2006 NEW STANDARD PLAN NSP ES-10A

2-16-12

DIST	COUNTY	ROUTE	POST MILES TOTAL PROJECT	SHEET NO.	TOTAL SHEETS
11	Imp	5708		61	354

REGISTERED ELECTRICAL ENGINEER

July 20, 2012
PLANS APPROVAL DATE

REGISTERED PROFESSIONAL ENGINEER
Jeffery G. McRae
No. E14512
Exp. 6-30-14
ELECTRICAL
STATE OF CALIFORNIA

The State of California or its officers or agents shall not be responsible for the accuracy or completeness of electronic copies of this plan sheet.

To accompany plans dated 01-06-14

ISOFOOTCANDLE CURVE - MINIMUM

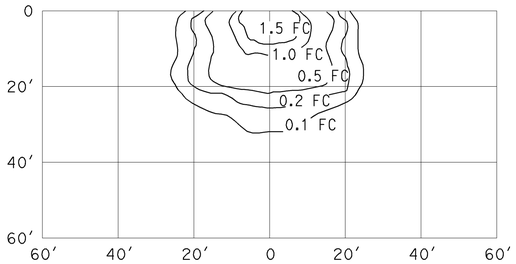

WALL LUMINAIRE
15′ Mounting Height
Lamp operated at 5,800 lm
70-W high pressure sodium lamp
ANSI Designation S62

ISOFOOTCANDLE CURVE - MINIMUM

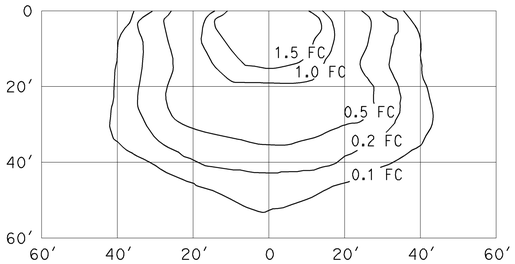

WALL LUMINAIRE
15′ Mounting Height
Lamp operated at 9,500 lm
100-W high pressure sodium lamp
ANSI Designation S54

ISOFOOTCANDLE CURVE - MINIMUM

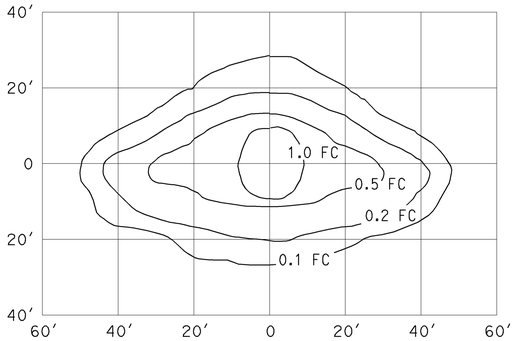

PENDANT SOFFIT LUMINAIRE
TYPE III SHORT
17′ Mounting Height
Lamp operated at 5,800 lm
70-W high pressure sodium lamp
ANSI Designation S62

ISOFOOTCANDLE CURVE - MINIMUM

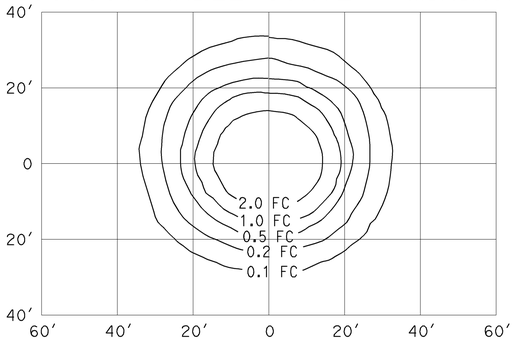

PENDANT SOFFIT LUMINAIRE
17′ Mounting Height
Lamp operated at 5,800 lm
70-W high pressure sodium lamp
ANSI Designation S62

ISOFOOTCANDLE CURVE - MINIMUM

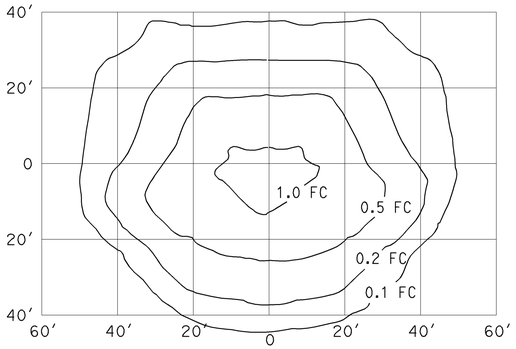

FLUSH SOFFIT LUMINAIRE
17′ Mounting Height
Lamp operated at 5,800 lm
70-W high pressure sodium lamp
ANSI Designation S62

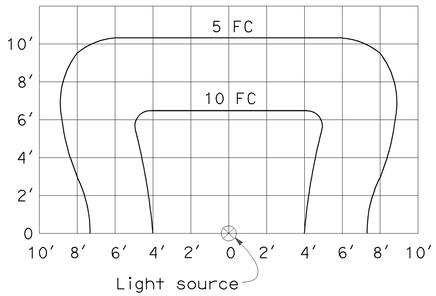

SIGN LIGHTING FIXTURE
ISOFOOTCANDLE DIAGRAM

NOTES:

1. Curves represent the minimum footcandle (FC) of initial illumination on a 10′-0" x 20′-0" panel.
2. The FC shown are with the fixture attached to the light fixture mounting channel which places the center of the source 4′-8" in front of panel and 1′-0" below the bottom edge.
3. Applicable lamp: 85-W fluorescent phosphor coated induction lamp.

STATE OF CALIFORNIA
DEPARTMENT OF TRANSPORTATION

ELECTRICAL SYSTEMS (ISOFOOTCANDLE DIAGRAMS)

NO SCALE

NSP ES-10B DATED JULY 20, 2012 SUPPLEMENTS THE STANDARD PLANS BOOK DATED MAY 2006.

NEW STANDARD PLAN NSP ES-10B

2006 NEW STANDARD PLAN NSP ES-10B

2-15-12

INDEX TO DRAWINGS

DIST.	COUNTY	LOCATION CODE	POST MILES TOTAL PROJECT	SHEET NO.	TOTAL SHEETS
11	Imp	5708		62	354

LICENSED ARCHITECT — 9/12/13 — DATE

LICENSED ARCHITECT ANTHONY V. MANANSALA No. C-32260 Ren. 4/30/15 STATE OF CALIFORNIA

01-06-14
PLANS APPROVAL DATE

The State of California or its officers or agents shall not be responsible for the accuracy or completeness of scanned copies of this plan sheet.

ACCESSIBILITY DESIGN APPROVAL STAMP DOT / DES / OTA
PROJECT ID **1100000035**
Reviewed by:
Date: 10-19-10

CALIFORNIA STATE FIRE MARSHAL APPROVED
Approval of this plan does not authorize or approve any omission or deviation from applicable regulations. Final approval is subject to field inspection. One set of approved plans shall be available on the project site at all times.
Reviewed by: FRANCIS SOLTCH
Approval date: 11-29-2013
CSFM No. 01-13-11-0025

ARCHITECTURAL

GP-1.1 SHEET INDEX
GP-1.2 SHEET INDEX, GENERAL NOTES
GP-2 BUILDING DATA
GP-3 BUILDING DATA - SITE LAYOUT
A0-1 ARCHITECTURAL ABBREVIATIONS AND SYMBOLS
A0-3.1 ACCESSIBILITY STANDARD DETAILS
A0-3.2 ACCESSIBILITY STANDARD DETAILS
A0-3.3 ACCESSIBILITY STANDARD DETAILS
A0-3.4 ACCESSIBILITY STANDARD DETAILS
A0-3.5 ACCESSIBILITY STANDARD DETAILS
A0-4 SITE PLAN
A0-5 SITE DETAILS
A0-6 DOOR SCHEDULE
A0-7 DOOR AND WINDOW TYPES
A0-8 FINISH SCHEDULE
A0-9 COLOR SCHEDULE

MAINTENANCE OFFICE/EQUIPMENT
A1-1 FLOOR PLAN
A1-2 PARTIAL FLOOR PLAN 1
A1-3 PARTIAL FLOOR PLAN 2
A1-4 PARTIAL FLOOR PLAN 3
A1-5 EXTERIOR ELEVATIONS
A1-6 ROOF PLAN
A1-7 BUILDING SECTIONS 1
A1-8 BUILDING SECTIONS 2
A1-9 PARTIAL REFLECTED CEILING PLAN 1
A1-10 PARTIAL REFLECTED CEILING PLAN 2
A1-11 EXTERIOR WALL FINISH DETAIL DIMENSIONS
A1-12 INTERIOR ELEVATIONS 1
A1-13 INTERIOR ELEVATIONS 2
A1-14 INTERIOR ELEVATIONS 3
A1-15 INTERIOR ELEVATIONS 4
A1-16 INTERIOR ELEVATIONS 5
A1-17 INTERIOR ELEVATIONS 6
~~SPECIAL PROGRAMS~~ **OMIT**
A2-1 NOT USED

HERBICIDE/FERTILIZER STORAGE
A3-1 FLOOR PLAN/BUILDING SECTION
A3-2 EXTERIOR ELEVATIONS
A3-3 ROOF PLAN/REFLECTED CEILING PLAN

WASH RACK
A4-1 FLOOR PLAN
A4-2 ROOF PLAN
A4-3 SECTION, ELEVATION
A4-4 ELEVATION, DETAILS, FINISH SCHEDULE
~~COVERED EQUIPMENT PARKING~~ **OMIT**
A5-1 NOT USED

COVERED TRASH/MATERIAL BINS **ADDITIVE BID**
A6-1 FLOOR PLAN/ROOF PLAN
A6-2 ELEVATIONS
A6-3 SECTIONS

COVERED STORAGE
A7-1 FLOOR PLAN
A7-2 ELEVATIONS
A7-3 ROOF PLAN/SECTION

ARCHITECTURAL (CONT)

WAREHOUSE
A8-1 FLOOR PLAN
A8-2 EXTERIOR ELEVATIONS
A8-3 ROOF PLAN
A8-4 BUILDING SECTIONS
A8-5 REFLECTED CEILING PLAN
A8-6 EXTERIOR WALL FINISH DETAIL DIMENSIONS
A8-7 INTERIOR ELEVATIONS

REGIONAL OFFICE
A9-1 FLOOR PLAN
A9-2 ENLARGED FLOOR PLAN
A9-3 EXTERIOR ELEVATIONS
A9-4 ROOF PLAN
A9-5 BUILDING SECTIONS 1
A9-6 BUILDING SECTIONS 2
A9-7 REFLECTED CEILING PLAN 1
A9-8 REFLECTED CEILING PLAN 2
A9-9 EXTERIOR WALL FINISH DETAIL DIMENSIONS
A9-10 INTERIOR ELEVATIONS 1
A9-11 INTERIOR ELEVATIONS 2
A9-12 INTERIOR ELEVATIONS 3
A9-13 INTERIOR ELEVATIONS 4
A9-14 INTERIOR ELEVATIONS 5
~~SUBSHOP OFFICE/ EQUIPMENT~~ **OMIT**
A10-1 NOT USED

DETAILS
A11-1 DOOR DETAILS
A11-2 WINDOW DETAILS
A11-3 WALL, CEILING AND MISC DETAILS
A11-4 ROOF DETAILS
A11-5 ROOF DETAILS
A11-6 ROOF DETAILS
A11-7 EIFS DETAILS
A11-8 LADDER/ BICYCLE RACK DETAILS
A11-9 CANOPY AND SIDING DETAILS
A11-10 INTERIOR DETAILS
A11-11 INTERIOR DETAILS
A11-12 ROOF AND INTERIOR DETAILS -REGIONAL OFFICE-
A11-13 INTERIOR DETAILS -REGIONAL OFFICE-

STRUCTURAL

ST-1 LEGEND
ST-2 CONCRETE STANDARD
ST-3A PRE-ENGINEERED CFS TRUSS NOTES AND DETAILS
ST-3B PRE-ENGINEERED CFS TRUSS DETAILS
ST-4A COLD FORMED STEEL FRAMING AND NOTES
ST-4B COLD FORMED STEEL DETAILS
ST-4C COLD FORMED STEEL DETAILS
ST-4D COLD FORMED STEEL LINTEL DETAILS
ST-4E ROOF DETAILS
ST-5A PLATFORM FOUNDATION AND DECK PLANS
ST-5B PLATFORM SECTIONS
ST-5C PLATFORM DETAILS

MAINTENANCE OFFICE/EQUIPMENT
ST1-0 DESIGN CRITERIA AND DETAIL NOTES
ST1-1 FOUNDATION PLAN
ST1-2 ROOF PLAN
ST1-3 BUILDING SECTION
ST1-4 BUILDING SECTION
ST1-5 BUILDING SECTION
ST1-6 BUILDING SECTION
ST1-7 BUILDING SECTIONS
ST1-8 FOOTING DETAILS NO. 1
ST1-9 FOOTING DETAILS NO. 2
ST1-10 WALL DETAILS
ST1-11 ROOF DETAILS
ST1-12 ROOF OPENING & MISC DETAILS
ST1-13 MISC ROOF & WALL DETAILS
ST1-14 PATIO DETAILS
ST1-15 STEEL FRAMING & MISC DETAILS
ST1-16 OPEN WEB STEEL JOIST
~~SPECIAL PROGRAMS~~ **OMIT**
ST2-0 NOT USED

HERBICIDE/FERTILIZER STORAGE
ST3-0 DESIGN CRITERIA AND DETAIL NOTES
ST3-1 FOUNDATION & ROOF FRAMING PLANS
ST3-2 TYPICAL SECTION
ST3-3 WALL ELEVATIONS
ST3-4 FOUNDATION & ROOF FRAMING DETAILS

WASH RACK
ST4-0 DESIGN CRITERIA AND DETAIL NOTES
ST4-1 FOUNDATION PLAN
ST4-2 ROOF PLAN
ST4-3 TRANSVERSE SECTION
ST4-4 LONGITUDINAL SECTION
ST4-5 BASIN ELEVATION AND SECTIONS
ST4-6 FOUNDATION DETAILS
ST4-7 BASIN OUTLET BOX
ST4-8 FRAMING CONNECTION DETAILS
ST4-9 FRAMING CONNECTION DETAILS
ST4-10 FOUNDATION PLAN
ST4-11 ROOF FRAMING PLAN
ST4-12 BUILDING SECTION
ST4-13 BUILDING SECTION AND DETAILS

STRUCTURAL (CONT)

~~COVERED EQUIPMENT PARKING~~ **OMIT**
ST5-0 NOT USED

COVERED TRASH/MATERIAL BINS **ADDITIVE BID**
ST6-0 DESIGN CRITERIA AND DETAIL NOTES
ST6-1 FOUNDATION PLAN
ST6-2 ROOF FRAMING PLAN
ST6-3 BUILDING SECTIONS
ST6-4 REAR ELEVATIONS
ST6-5 WALL AND SLAB SECTIONS
ST6-6 FOOTING DETAILS
ST6-7 CANOPY DETAILS
ST6-8 CANOPY DETAILS
ST6-9 CANOPY DETAILS
ST6-10 CANOPY DETAILS

COVERED STORAGE
ST7-0 DESIGN CRITERIA AND DETAIL NOTES
ST7-1 FOUNDATION/ROOF FRAMING PLANS
ST7-2 BUILDING ELEVATIONS
ST7-3 FOOTING DETAILS
ST7-4 FRAMING DETAILS
ST7-5 FRAMING DETAILS
ST7-6 FRAMING DETAILS
ST7-7 FRAMING DETAILS

WAREHOUSE
ST8-0 DESIGN CRITERIA AND DETAIL NOTES
ST8-1 FOUNDATION PLAN
ST8-2 ROOF FRAMING PLAN
ST8-3 BUILDING SECTION
ST8-4 BUILDING SECTIONS
ST8-5 BUILDING SECTION
ST8-6 FOUNDATION DETAILS
ST8-7 ROOF FRAMING AND MISCELLANEOUS DETAILS
ST8-8 ROOF FRAMING AND MISCELLANEOUS DETAILS

REGIONAL OFFICE
ST9-0 DESIGN CRITERIA AND DETAIL NOTES
ST9-1 FOUNDATION PLAN
ST9-2 SHEARWALL PLAN
ST9-3 ROOF FRAMING PLAN (LOWER)
ST9-4 ROOF FRAMING PLAN (UPPER)
ST9-5 CEILING FRAMING PLAN
ST9-6 BUILDING SECTIONS
ST9-7 BUILDING SECTION
ST9-8 BUILDING SECTIONS
ST9-9 BUILDING SECTION
ST9-10 WALL FRAMING ELEVATION
ST9-11 WALL FRAMING ELEVATION
ST9-12 WALL FRAMING ELEVATION
ST9-13 WALL FRAMING ELEVATION
ST9-14 FOUNDATION DETAILS
ST9-15 FOUNDATION DETAILS
ST9-16 FRAMING DETAILS
ST9-17 FRAMING DETAILS
ST9-18 FRAMING DETAILS

STRUCTURAL (CONT)

ST9-19 WALL FRAMING DETAILS
ST9-20 WALL FRAMING DETAILS
ST9-21 WALL FRAMING DETAILS
ST9-22 WALL FRAMING DETAILS
ST9-23 ROOF FRAMING DETAILS
ST9-24 CEILING FRAMING DETAILS
ST9-25 NESTED MEMBER DETAILS
~~SUBSHOP OFFICE/ EQUIPMENT~~ **OMIT**
ST10-0 NOT USED

FUEL ISLAND
ST11-0 DESIGN CRITERIA AND DETAIL NOTES
ST11-1 FOUNDATION PLAN AND DETAILS

EMULSION TANK
ST12-0 DESIGN CRITERIA AND DETAIL NOTES
ST12-1 EMULSION TANK PLANS
ST12-2 EMULSION TANK ELEVATION
ST12-3 EMULSION TANK ELEVATIONS
ST12-4 EMULSION TANK ELEVATIONS
ST12-5 EMULSION TANK SECTIONS
ST12-6 HEATER WELL SECTIONS AND DETAILS
ST12-7 EMULSION TANK DETAILS NO. 1
ST12-8 EMULSION TANK DETAILS NO. 2
ST12-9 EMULSION TANK DETAILS NO. 3
ST12-10 EMULSION TANK DETAILS NO. 4
ST12-11 EMULSION TANK DETAILS NO. 5
ST12-12 EMULSION TANK DETAILS NO. 6
ST12-13 EMULSION TANK DETAILS NO. 7

CONCRETE SLABS
ST13-0 DESIGN CRITERIA AND DETAIL NOTES
ST13-1 STORAGE PAD/SIGN STORAGE
ST13-2 HAZ/MAT CONTAINER PAD

SANDER RACKS
ST14-0 DESIGN CRITERIA AND DETAIL NOTES
ST14-1 FOUNDATION PLAN AND ELEVATION
ST14-2 MISCELLANEOUS DETAILS

LOG OF TEST BORINGS 1 OF 4
LOG OF TEST BORINGS 2 OF 4
LOG OF TEST BORINGS 3 OF 4
LOG OF TEST BORINGS 4 OF 4

R E Travis
DESIGN SUPERVISOR
Donald E Clary
DESIGN ARCHITECT

DESIGNER: MICHELE MARSON
DRAWN BY: MICHELE MARSON
CHECKED BY: ANTHONY MANANSALA
STRUCTURAL REVIEW: ANTHONY MANANSALA

SHEET LEGEND
A-1 ARCHITECTURAL ST-1 STRUCTURAL
M-1 MECHANICAL EE-1 ELECTRICAL
W-1 WATER SUPPLY SS-1 SANITARY

STATE OF CALIFORNIA
DEPARTMENT OF TRANSPORTATION

DIVISION OF ENGINEERING SERVICES
ARCHITECTURAL AND STRUCTURAL DESIGN

BRIDGE NO. 58M5708
POST MILE

EL CENTRO MAINTENANCE FACILITY
SHEET INDEX

SHEET **GP-1.1**

gp_1.1.dgn
TAEMWW Imperial Rev. 7/10 21-JAN-2014 09:22

ORIGINAL SCALE IN INCHES FOR REDUCED PLANS 0 1 2 3

UNIT 3595
PROJECT NUMBER & PHASE 11000000351
EA 076701

DISREGARD PRINTS BEARING EARLIER REVISION DATES
REVISION DATES (PRELIMINARY STAGE ONLY) 07/08-23-13 09-13-13
SHEET X OF X

21-JAN-2014 09:22
gp_1.1.dgn

INDEX TO DRAWINGS (CONT)

MECHANICAL

M-1 TITLE 24 ENVELOPE AMD MECHANICAL DESIGN ENERGY COMPLIANCE FORMS
M-2 TITLE 24 ENVELOPE AMD MECHANICAL DESIGN ENERGY COMPLIANCE FORMS
M-3 TITLE 24 ENVELOPE AMD MECHANICAL DESIGN ENERGY COMPLIANCE FORMS
M-4 TITLE 24 ENVELOPE AMD MECHANICAL DESIGN ENERGY COMPLIANCE FORMS
M0-0 MECHANICAL LEGEND
M0-1 SITE PLAN
M0-2 EQUIPMENT SCHEDULE
MAINTENANCE OFFICE/EQUIPMENT
M1-1 PLUMBING PLAN - 1
M1-2 PLUMBING PLAN - 2
M1-3 DOMESTIC WATER
M1-4 SANITARY SEWER
M1-5 MECHANICAL PLAN - 1
M1-6 MECHANICAL PLAN - 2
~~SPECIAL PROGRAMS~~ OMIT
M2-1 NOT USED
HERBICIDE/FERTILIZER STORAGE
M3-1 MECHANICAL PLAN
WASH RACK
M4-1 MECHANICAL PLAN
COVERED EQUIPMENT PARKING - NO MECHANICAL
COVERED TRASH/MATERIAL BINS - NO MECHANICAL
COVERED STORAGE - NO MECHANICAL
WAREHOUSE
M8-1 MECHANICAL PLAN
REGIONAL OFFICE
M9-1 PLUMBING PLAN
M9-2 DOMESTIC WATER
M9-3 SANITARY SEWER
M9-4 MECHANICAL PLAN
~~SUBSHOP OFFICE/ EQUIPMENT~~ OMIT
M10-1 NOT USED

FUEL ISLAND
M11-1 MECHANICAL PLAN
EMULSION TANK
M12-1 6000 GALLON EMULSION TANK
M12-2 EMULSION TANK DETAILS
DETAILS
M13-1 MECHANICAL DETAILS - 1
M13-2 MECHANICAL DETAILS - 2
M13-3 MECHANICAL DETAILS - 3
M13-4 MECHANICAL DETAILS - 4
M13-5 MECHANICAL DETAILS - 5
M13-6 MECHANICAL DETAILS - 6
M13-7 MECHANICAL DETAILS - 7
M13-8 MECHANICAL DETAILS - 8
M13-9 MECHANICAL DETAILS - 9

ELECTRICAL

EE0-0 LEGEND
EE0-1 POWER SITE PLAN
EE0-2 AREA LIGHTING DETAILS
EE0-3 POWER AND CONTROL SCHEMATIC
EE0-4 MISCELLANEOUS DETAILS
EE0-5 COMMUNICATION SITE PLAN
EE0-6 TITLE 24 COMPLIANCE NO. 1
EE0-7 TITLE 24 COMPLIANCE NO. 2
EE0-8 TITLE 24 COMPLIANCE NO. 3
EE0-9 TITLE 24 COMPLIANCE NO. 4
MAINTENANCE OFFICE/EQUIPMENT
EE1-1 POWER PLAN NO. 1
EE1-2 POWER PLAN NO. 2
EE1-3 LIGHTING PLAN NO. 1
EE1-4 LIGHTING PLAN NO. 2
EE1-5 LIGHTING CONTROL STATION LCS1 DETAILS
EE1-6 DECLASSIFICATION FAN CONTROLS AND GENERATOR-SET LAYOUT
EE1-7 PANEL ELEVATIONS
EE1-8 EVAPORATIVE COOLER CONTROLS
EE1-9 PANEL SCHEDULES
EE1-10 COMMUNICATION PLAN
EE1-11 FIRE ALARM PLAN
EE1-12 INTRUSION ALARM PLAN
EE1-13 INTRUSION ALARM ZONING SCHEDULE
~~SPECIAL PROGRAMS~~ OMIT
EE2-1 NOT USED
HERBICIDE/FERTILIZER STORAGE
EE3-1 POWER AND LIGHTING PLAN
WASH RACK
EE4-1 POWER AND LIGHTING PLAN
EE4-2 DETAILS
~~COVERED EQUIPMENT PARKING~~ OMIT
EE5-1 NOT USED
COVERED TRASH/MATERIAL BINS **ADDITIVE BID**
EE6-1 POWER AND LIGHTING PLAN
COVERED STORAGE
EE7-1 POWER AND LIGHTING PLAN
WAREHOUSE
EE8-1 POWER AND LIGHTING PLAN
EE8-2 PANEL DETAILS AND EXHAUST FAN CONTROLS
EE8-3 LIGHTING CONTROL STATION LCS3 DETAILS
EE8-4 INTRUSION ALARM PLAN AND ZONING SCHEDULE
REGIONAL OFFICE
EE9-1 POWER PLAN
EE9-2 LIGHTING PLAN
EE9-3 LIGHTING CONTROL STATION LCS2 DETAILS
EE9-4 PANEL DETAILS AND WIRING DIAGRAM
EE9-5 COMMUNICATION PLAN
EE9-6 FIRE ALARM PLAN
EE9-7 INTRUSION ALARM PLAN
EE9-8 INTRUSION ALARM ZONING SCHEDULE
~~SUBSHOP OFFICE/ EQUIPMENT~~ OMIT
EE10-1 NOT USED

ELECTRICAL (CONT)

FUEL ISLAND
EE11-1 POWER AND LIGHTING PLAN
EMULSION TANK
EE12-1 EMULSION TANK CONTROL PANEL
SANDER RACKS
EE14-1 POWER AND LIGHTING PLAN
LPG DISPENSING SYSTEM
EE15-1 PLAN AND DETAILS

WATER/WASTEWATER

SS-1 NOTES, LEGEND & ABBREVIATION
SS-2 SITE PLAN
SS-3 VEHICLE RINSE FACILITY DETAILS-1
SS-4 VEHICLE RINSE FACILITY DETAILS-2
SS-5 CLARIFIER TANK
SS-6 DETAILS-1
SS-7 DETAILS-2
SS-8 DETAILS-3
SS-9 DETAILS-4

DIST.	COUNTY	LOCATION CODE	POST MILES TOTAL PROJECT	SHEET NO.	TOTAL SHEETS
11	Imp	5708		63	354

A V Manansala 9/12/13
LICENSED ARCHITECT DATE

LICENSED ARCHITECT ANTHONY V. MANANSALA No. C-32260 Ren. 4/30/15 STATE OF CALIFORNIA

01-06-14
PLANS APPROVAL DATE

The State of California or its officers or agents shall not be responsible for the accuracy or completeness of scanned copies of this plan sheet.

ACCESSIBILITY DESIGN APPROVAL STAMP DOT / DES / OTA
PROJECT ID **1100000035**
Reviewed by: W. Doherty
Date: 10-19-10

CALIFORNIA STATE FIRE MARSHAL APPROVED
Approval of this plan does not authorize or approve any omission or deviation from applicable regulations. Final approval is subject to field inspection. One set of approved plans shall be available on the project site at all times.
Reviewed by: FRANCIS SOLICH
Approval date: 11-29-2013
CSFM No. 01-13-11-0025

GENERAL NOTES

1. THE CONTRACTOR SHALL VERIFY ALL CONTROLLING FIELD DIMENSIONS AND CONDITIONS BEFORE ORDERING OR FABRICATING ANY MATERIAL.
2. THE CONTRACTOR SHALL NOTIFY THE ENGINEER IN WRITING OF ANY DISCREPANCIES BETWEEN THESE PLANS AND ACTUAL MEASUREMENTS OR CONDITIONS.

	BY	CHECKED
DESIGN	MICHELE MARSON	ANTHONY MANANSALA
DETAILS	MICHELE MARSON	ANTHONY MANANSALA
QUANTITIES		

STATE OF CALIFORNIA DEPARTMENT OF TRANSPORTATION

DIVISION OF ENGINEERING SERVICES ARCHITECTURAL AND STRUCTURAL DESIGN

BRIDGE NO. 58M5708
POST MILE

EL CENTRO MAINTENANCE FACILITY
SHEET INDEX, GENERAL NOTES

SHEET **GP-1.2**

gp_1.2.dgn
TAEMWW Imperial Rev. 7/10 21-JAN-2014 09:22

ORIGINAL SCALE IN INCHES FOR REDUCED PLANS 0 1 2 3

UNIT 3595
PROJECT NUMBER & PHASE 11000000351
EA 076701

DISREGARD PRINTS BEARING EARLIER REVISION DATES
REVISION DATES (PRELIMINARY STAGE ONLY) 07-08-23-13 09-13-13
SHEET X OF X

21-JAN-2014 09:22
gp_1.2.dgn

DIST.	COUNTY	LOCATION CODE	POST MILES TOTAL PROJECT	SHEET NO.	TOTAL SHEETS
11	Imp	5708		64	354

LICENSED ARCHITECT — ANTHONY V. MANANSALA — No. C-32260 — Ren. 4/30/15 — STATE OF CALIFORNIA

LICENSED ARCHITECT — DATE 9/12/13

01-06-14
PLANS APPROVAL DATE

The State of California or its officers or agents shall not be responsible for the accuracy or completeness of scanned copies of this plan sheet.

ACCESSIBILITY DESIGN APPROVAL STAMP DOT / DES / OTA
PROJECT ID **1100000035**
Reviewed by:
Date: 10-19-10

CALIFORNIA STATE FIRE MARSHAL APPROVED
Approval of this plan does not authorize or approve any omission or deviation from applicable regulations. Final approval is subject to field inspection. One set of approved plans shall be available on the project site at all times.
Reviewed by: FRANCIS SOLICH
Approval date: 11-29-2013
CSFM No. 01-13-11-0025

BUILDING DATA

MAINTENANCE OFFICE/EQUIPMENT

OFFICE
OCCUPANCY - B
ACTUAL BUILDING AREA = 3,093 SF
ALLOWABLE BUILDING AREA = 9,000 SF

EQUIPMENT STORAGE
OCCUPANCY - SI
ACTUAL BUILDING AREA = 3,091 SF
ALLOWABLE BUILDING AREA = 9,000 SF

STORAGE
OCCUPANCY - S2
ACTUAL BUILDING AREA = 910 SF
ALLOWABLE BUILDING AREA = 13,500 SF

SPECIAL CREW SHOP
OCCUPANCY - F2
ACTUAL BUILDING AREA = 902 SF
ALLOWABLE BUILDING AREA = 13,000 SF

BUILDING AREA TOTALS
ACTUAL BUILDING AREA = 7,996 SF
ALLOWABLE BUILDING AREA = 9,000 SF

BUILDING HEIGHT - ONE STORY
ACTUAL BUILDING HEIGHT = 21.6 FT
ALLOWABLE BUILDING HEIGHT = 40 FT
FIRE SPRINKLERS - YES TYPE: WET
FIRE ALARM - YES TYPE: AUDIBLE/VISIBLE
OCCUPANCY LOAD = 72

HERBICIDE/FERTILIZER STORAGE
OCCUPANCY - H4
ACTUAL BUILDING AREA = 361 SF
ALLOWABLE BUILDING AREA = 6,500 SF

BUILDING HEIGHT - ONE STORY
ACTUAL BUILDING HEIGHT = 13.2 FT
ALLOWABLE BUILDING HEIGHT = 40 FT
FIRE SPRINKLERS - YES TYPE: WET
FIRE ALARM - NO
OCCUPANCY LOAD = 1

WASH RACK
OCCUPANCY - SI
ACTUAL BUILDING AREA = 2,189 SF
ALLOWABLE BUILDING AREA = 9,000 SF

BUILDING HEIGHT - ONE STORY
ACTUAL BUILDING HEIGHT = 21.5 FT
ALLOWABLE BUILDING HEIGHT = 40 FT
FIRE SPRINKLERS - NO
FIRE ALARM - NO
OCCUPANCY LOAD = 1

COVERED TRASH/ MATERIAL BINS/ COVERED STORAGE — **ADDITIVE BID**
OCCUPANCY - SI
ACTUAL BUILDING AREA = 6,684 SF
ALLOWABLE BUILDING AREA = 9,000 SF

BUILDING HEIGHT - ONE STORY
ACTUAL BUILDING HEIGHT = 16.5 FT
ALLOWABLE BUILDING HEIGHT = 40 FT
FIRE SPRINKLERS - NO
FIRE ALARM - NO
OCCUPANCY LOAD = NA

WAREHOUSE
OCCUPANCY - SI
ACTUAL BUILDING AREA = 2,433 SF
ALLOWABLE BUILDING AREA = 9,000 SF

BUILDING HEIGHT - ONE STORY
ACTUAL BUILDING HEIGHT = 19.9 FT
ALLOWABLE BUILDING HEIGHT = 40 FT
FIRE SPRINKLERS - YES TYPE: WET
FIRE ALARM - NO
OCCUPANCY LOAD = 5

REGIONAL OFFICE

OFFICE
OCCUPANCY - B
ACTUAL BUILDING AREA = 3,230 SF
ALLOWABLE BUILDING AREA = 9,000 SF

TRAINING/ CONFERENCE
OCCUPANCY - A3
ACTUAL BUILDING AREA = 910 SF
ALLOWABLE BUILDING AREA = 6,000 SF

BUILDING AREA TOTALS
ACTUAL BUILDING AREA = 4,140 SF
ALLOWABLE BUILDING AREA = 6,000 SF

BUILDING HEIGHT - ONE STORY
ACTUAL BUILDING HEIGHT = 19.2 FT
ALLOWABLE BUILDING HEIGHT = 40 FT
FIRE SPRINKLERS - YES TYPE: WET
FIRE ALARM - YES TYPE: AUDIBLE/VISIBLE
OCCUPANCY LOAD = 112

DESIGN CRITERIA

THE BUILDING WORK ON THIS PROJECT HAS BEEN DESIGNED TO CONFORM TO THE
- 2010 TITLE 24 CALIFORNIA BUILDING CODE,
- CURRENT EDITION OF AMERICANS WITH DISABILITIES ACT
- 2010 CALIFORNIA FIRE CODE
- 2010 CALIFORNIA MECHANICAL CODE
- 2010 CALIFORNIA PLUMBING CODE
- 2010 CALIFORNIA ELECTRICAL CODE
- 2010 CALIFORNIA ENERGY CODE/2008 CALIFORNIA BUILDING ENERGY EFFICIENCY STANDARDS

CONSTRUCTION TYPE: CBC CHAPTER 6 _____ VB

OCCUPANCY GROUP:
CBC CHAPTER 3 _____ A3, B, F2, H4, SI, S2

FIRE RESISTANCE OF EXTERIOR WALLS, CBC TABLE 602

DEFFERED APPROVALS (CALIFORNIA STATE FIRE MARSHAL)
FIRE SPRINKLER SYSTEM (WET TYPE)
FIRE ALARM SYSTEM

DESIGN	BY MICHELE MARSON	CHECKED ANTHONY MANANSALA	
DETAILS	BY MICHELE MARSON	CHECKED ANTHONY MANANSALA	
QUANTITIES	BY	CHECKED	

STATE OF CALIFORNIA
DEPARTMENT OF TRANSPORTATION

DIVISION OF ENGINEERING SERVICES
ARCHITECTURAL AND STRUCTURAL DESIGN

BRIDGE NO. 58M5708
POST MILE

EL CENTRO MAINTENANCE FACILITY
BUILDING DATA

SHEET **GP-2**

ORIGINAL SCALE IN INCHES FOR REDUCED PLANS 0 1 2 3

UNIT 3595
PROJECT NUMBER & PHASE 11000000351
EA 076701

DISREGARD PRINTS BEARING EARLIER REVISION DATES
REVISION DATES (PRELIMINARY STAGE ONLY) 07-08-23-13 09-13-13
SHEET X OF X

gp_2.dgn
TAEMWW Imperial Rev. 7/10 21-JAN-2014 09:22

21-JAN-2014 09:22
gp_2.dgn

DIST.	COUNTY	LOCATION CODE	POST MILES TOTAL PROJECT	SHEET NO.	TOTAL SHEETS
11	Imp	5708		65	354

LICENSED ARCHITECT — 9/12/13 — DATE

LICENSED ARCHITECT ANTHONY V. MANANSALA No. C-32260 Ren. 4/30/15 STATE OF CALIFORNIA

01-06-14
PLANS APPROVAL DATE

The State of California or its officers or agents shall not be responsible for the accuracy or completeness of scanned copies of this plan sheet.

ACCESSIBILITY DESIGN APPROVAL STAMP DOT / DES / OTA
PROJECT ID **1100000035**
Reviewed by:
Date: 10-19-10

CALIFORNIA STATE FIRE MARSHAL APPROVED
Approval of this plan does not authorize or approve any omission or deviation from applicable regulations. Final approval is subject to field inspection. One set of approved plans shall be available on the project site at all times.
Reviewed by: FRANCIS SOLICH
Approval date: 11-29-2013
CSFM No. 01-13-11-0025

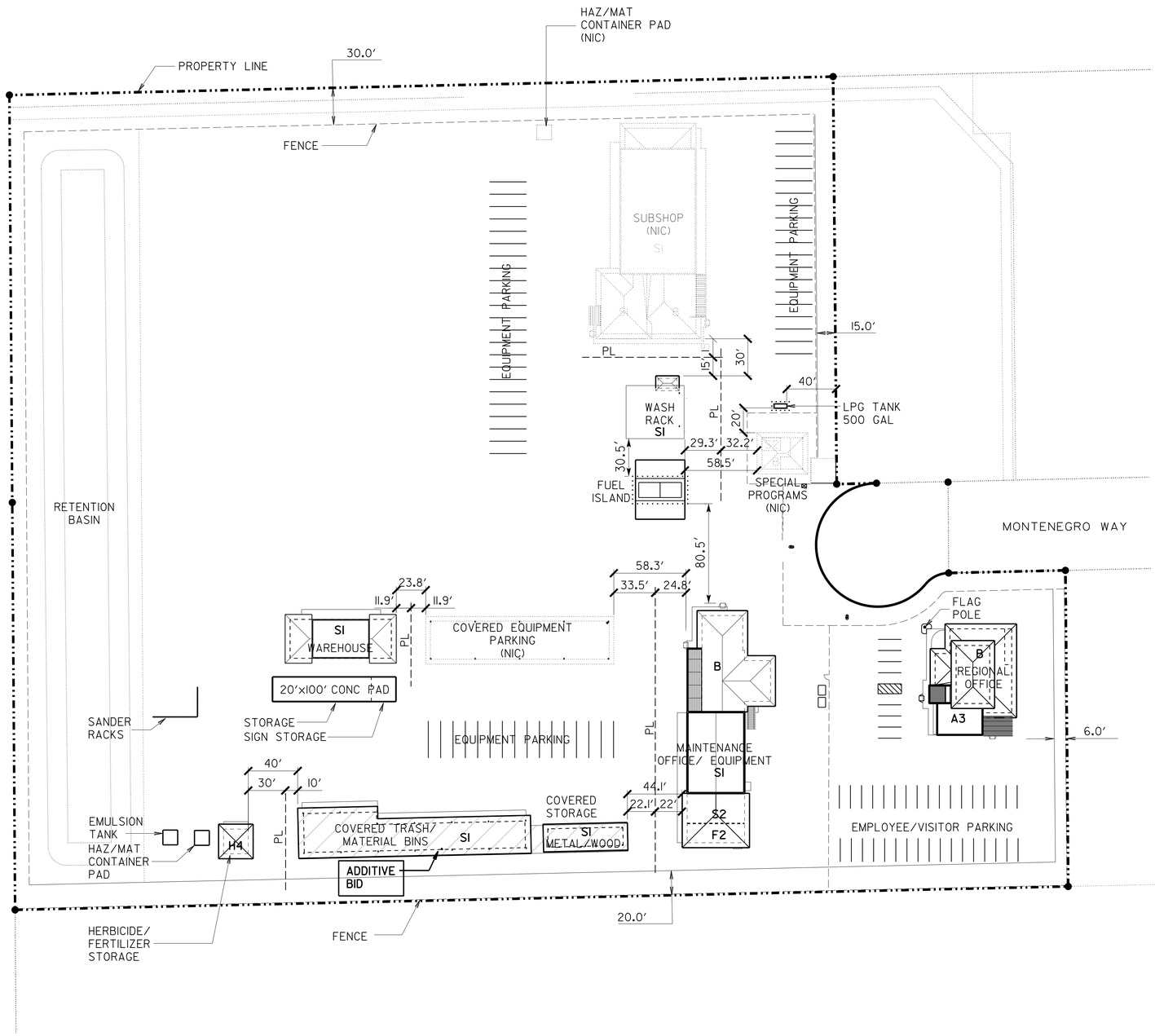

BUILDING DATA-SITE PLAN

SCALE 1"=50'

DESIGN	BY MICHELE MARSON	CHECKED ANTHONY MANANSALA	
DETAILS	BY MICHELE MARSON	CHECKED ANTHONY MANANSALA	
QUANTITIES	BY	CHECKED	

STATE OF CALIFORNIA DEPARTMENT OF TRANSPORTATION

DIVISION OF ENGINEERING SERVICES ARCHITECTURAL AND STRUCTURAL DESIGN

BRIDGE NO. 58M5708
POST MILE

EL CENTRO MAINTENANCE FACILITY

BUILDING DATA - SITE LAYOUT

SHEET **GP-3**

gp_3.dgn
TAEMWW Imperial Rev. 7/10 21-JAN-2014 09:22

ORIGINAL SCALE IN INCHES FOR REDUCED PLANS 0 1 2 3

UNIT 3595
PROJECT NUMBER & PHASE 1100000351
EA 076701

DISREGARD PRINTS BEARING EARLIER REVISION DATES
REVISION DATES (PRELIMINARY STAGE ONLY) 07 08-23-13 09-13-13
SHEET X OF X

21-JAN-2014 09:22
gp_3.dgn

ARCHITECTURAL ABBREVIATIONS

&	AND
∟	ANGLE
℄	CENTER LINE
°	DEGREE
∅	DIAMETER OR ROUND
#	NUMBER
d	PENNY
□	SQUARE
AB	ANCHOR BOLT
ABV	ABOVE
A/C	AIR CONDITIONING
AC	ASPHALT CONCRETE
ACOUS	ACOUSTICAL
ADAAG	ADA ACCESSIBILITY GUIDE-LINES FOR BUILDINGS AND FACILITIES
ADDL	ADDITIONAL
ADJ	ADJUSTABLE
ALT	ALTERNATE
ALUM	ALUMINUM
APA	AMERICAN PLYWOOD ASSOCIATION
ARCH	ARCHITECTURAL, ARCHITECT
ASPH	ASPHALT
BD	BOARD
BITUM	BITUMINOUS
BLDG	BUILDING
BLK	BLOCK
BLKG	BLOCKING
BM	BEAM
BOT	BOTTOM
BR	BRIDGE
BTWN	BETWEEN
BUR	BUILT-UP-ROOFING
CAB	CABINET
CB	CATCH BASIN
CEM	CEMENT
CER	CERAMIC
CIP	CAST IN PLACE
CJ	CONTROL JOINT
CJ	CEILING JOIST
CL	CHAIN LINK
CLG	CEILING
CLO	CLOSET
CLR	CLEAR
CMU	CONCRETE MASONRY UNIT
COL	COLUMN
COMBO	COMBINATION
COMP	COMPOSITION
CONC	CONCRETE
CONN	CONNECTION
CONST	CONSTRUCTION
CONT	CONTINUOUS
CORR	CORRIDOR
CPT	CARPET
CT	CERAMIC TILE
CTR	CENTER
CTSK	COUNTERSUNK
CY	CUBIC YARD
DBL	DOUBLE
DEPT	DEPARTMENT
DET	DETAIL
DF	DRINKING FOUNTAIN
DF	DOUGLAS FIR
DIA	DIAMETER
DIM	DIMENSION
DN	DOWN
DP	DEEP
DR	DOOR
DRS	DOORS
DS	DOWNSPOUT
DWG	DRAWING
DWR	DRAWER
(E)	EXISTING
E	EAST
EA	EACH
EEWS	EMERGENCY EYEWASH AND SHOWER
EF	EXHAUST FAN
EHD	ELECTRIC HAND DRYER
EJ	EXPANSION JOINT
EL	ELEVATION (HEIGHT)
ELEC	ELECTRICAL
ELEV	ELEVATION (VIEW)
EMER	EMERGENCY
ENCL	ENCLOSURE
EP	ELECTRICAL PANEL
EPS	EXPANDED POLYSTYRENE
EQ	EQUAL
EQUIP	EQUIPMENT
EWC	ELECTRIC WATER COOLER
EXP	EXPANSION
EXPO	EXPOSED, EXPOSURE
EXT	EXTERIOR
EIFS	EXTERIOR INSULATION AND FINISH SYSTEM
FD	FLOOR DRAIN
FDN	FOUNDATION
FE	FIRE EXTINGUISHER
FEC	FIRE EXTINGUISHER CABINET
FG	FINISH GRADE
FH	FIRE HYDRANT
FHC	FIRE HOSE CABINET
FHMS	FLAT HEAD METAL SCREW
FHWS	FLAT HEAD WOOD SCREW
FIN	FINISH
FJ	FLOOR JOIST
FLASH	FLASHING
FLR	FLOOR
FLUOR	FLUORESCENT
FOC	FACE OF CONCRETE
FOF	FACE OF FINISH
FOM	FACE OF MASONRY
FOS	FACE OF STUD
FOW	FACE OF WALL
FRP	FIBERGLASS REINFORCED PLASTIC PANEL
FT	FEET, FOOT
FTG	FOOTING
FURR	FURRING
FWY	FREEWAY
GA	GAUGE
GALV	GALVANIZED
GB	GRAB BAR
GI	GALVANIZED IRON
GL	GLASS
GLULAM	GLUE LAMINATED MEMBER
GLZ	GLAZING
GMU	GLASS MASONRY UNITS
GR	GRADE
GSM	GALVANIZED SHEET METAL
GYP	GYPSUM
GYP BD	GYPSUM BOARD
HB	HOSE BIB
HC	HOLLOW CORE
HD	HEAD
HD	HOLD DOWN
HDR	HEADER
HDWD	HARDWOOD
HDWR	HARDWARE
HEX	HEXAGONAL
HF	HEMLOCK-FIR
HGR	HANGER
HM	HOLLOW METAL
HORIZ	HORIZONTAL
HR	HOUR
HSB	HIGH STRENGTH BOLT
HT	HEIGHT
HVAC	HEATING, VENTILATING, AIR CONDITIONING
HWY	HIGHWAY
ID	INSIDE DIAMETER
ID	IDENTIFICATION
IN	INCH
INSUL	INSULATION
INT	INTERIOR
ISA	INTERNATIONAL SYMBOL OF ACCESSIBILITY
JAN	JANITOR
JH	JOIST HANGER
JST	JOIST
JT	JOINT
KIT	KITCHEN
LAB	LABORATORY
LAM	LAMINATE
LAV	LAVATORY
LBF	POUND-FORCE
LBS	POUNDS
LF	LINEAR FEET
LKR	LOCKER
LPG	LIQUIFIED PETROLEUM GAS
LS	LAG SCREW
MAT	MATERIAL
MAX	MAXIMUM
MB	MACHINE BOLT
MBR	MEMBER
MECH	MECHANICAL
MEMB	MEMBRANE
MET	METAL
MFR	MANUFACTURER
MH	MAN HOLE
MIN	MINIMUM
MIR	MIRROR
MISC	MISCELLANEOUS
MIW	MALLEABLE IRON WASHER
MO	MASONRY OPENING
MR	MOISTURE RESISTANT
MTD	MOUNTED
MUL	MULLION
N	NORTH
NIC	NOT IN CONTRACT
NO	NUMBER
NOM	NOMINAL
NTS	NOT TO SCALE
OBSC	OBSCURE
OC	ON CENTER
OD	OUTSIDE DIAMETER
OFF	OFFICE
OH	OPPOSITE HAND, OVERHEAD
OHD	OVERHEAD DOOR
OHWS	OVAL HEAD WOOD SCREW
OPNG	OPENING
OPP	OPPOSITE
OPT	OPTION, OPTIONAL
PB	POST BASE
PC	POST CAP
PCC	PORTLAND CEMENT CONCRETE
PERF	PERFORATED
PH	PHILIPS HEAD
PL	PLATE, PROPERTY LINE
PLAM	PLASTIC LAMINATE
PLAS	PLASTER
PLWD	PLYWOOD
PMF	PRESSED METAL FRAME
PR	PAIR
PRTN	PARTITION
PT	POINT
PTD	PAPER TOWEL DISPENSER
PTDR	PAPER TOWEL DISPENSER/ WASTE RECEPTACLE
PVC	POLYVINYL CHLORIDE
QT	QUARRY TILE
QTY	QUANTITY
(R)	RELOCATED
R	RADIUS, RISER
RA	RETURN AIR
R/W	RIGHT OF WAY
RD	ROOF DRAIN
RDWD	REDWOOD
REF	REFERENCE
REFG	REFRIGERATOR
REINF	REINFORCED(ING)
REQD	REQUIRED
RFG	ROOFING
RFSWN	ROUGHSAWN
RH	ROUND HEAD
RHWS	ROUND HEAD WOOD SCREW
RJ	ROOF JOIST
RM	ROOM
RO	ROUGH OPENING
RSWN	RESAWN
RTE	ROUTE
RWL	RAINWATER LEADER
S	SOUTH
SA	SUPPLY AIR
SC	SOLID CORE
SCHD	SCHEDULE
SD	SOAP DISPENSER
SDST	SELF DRILLING SELF TAPPING
SF	SQUARE FEET
SH	SHELF
SHR	SHOWER
SHT	SHEET
SHTG	SHEATHING
SIM	SIMILAR
SMS	SHEET METAL SCREW
SND	SANITARY NAPKIN DISPOSAL
SPEC	SPECIFICATION
SPS	STRUCTURAL PLYWOOD SHEATHING
SQ	SQUARE
SRRA	SAFETY ROADSIDE REST AREA
SS	SERVICE SINK
SST	STAINLESS STEEL
STA	STATION
STAG	STAGGER
STD	STANDARD
STL	STEEL
STOR	STORAGE
STRUC	STRUCTURAL
SUSP	SUSPENDED
SYM	SYMETRICAL
T&B	TOP AND BOTTOM
T&G	TONGUE AND GROOVE
TB	TOLL BOOTH
TEL	TELEPHONE
TEMP	TEMPERED
TEMP	TEMPORARY
TER	TERRAZZO
TIF	TRUCK INSPECTION FACILITY
THK	THICK
THLD	THRESHOLD
TJ	TOOLED JOINT
TKBD	TACKBOARD
TN	TOE NAIL
TOC	TOP OF CURB/ CONCRETE
TOP	TOP OF PAVEMENT
TOS	TOE OF SLOPE
TOT	TOTAL
TOW	TOP OF WALL
TS	TUBULAR STEEL
TSCD	TOILET SEAT COVER DISPENSER
TTD	TOILET TISSUE DISPENSER
TYP	TYPICAL
UNF	UNFINISHED
UON	UNLESS OTHERWISE NOTED
UR	URINAL
VAR	VARIES
VCT	VINYL COMPOSITION TILE
VERT	VERTICAL
VEST	VESTIBULE
VTR	VENT THROUGH ROOF
	WEST
W/	WITH
W/O	WITHOUT
WHBD	WHITEBOARD
WC	WATER CLOSET
WD	WOOD
WDW	WINDOW
WH	WATER HEATER
WP	WORKING POINT
WR	WASTE RECEPTACLE
WR	WATER RESISTANT
WS	WALL SURFACE
WSCT	WAINSCOT
WT	WEIGHT
WTH	WIDTH
WTPR	WATERPROOFING
WWF	WELDED WIRE FABRIC
YD	YARD

SYMBOLS

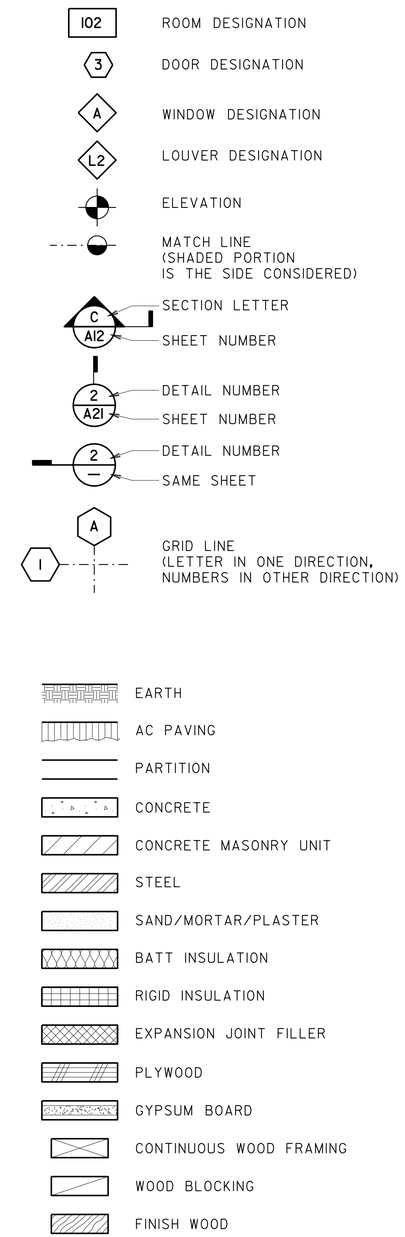

DIST.	COUNTY	LOCATION CODE	POST MILES TOTAL PROJECT	SHEET NO.	TOTAL SHEETS
11	Imp	5708		66	354

LICENSED ARCHITECT — 9/12/13 — DATE

LICENSED ARCHITECT ANTHONY V. MANANSALA No. C-32260 Ren. 4/30/15 STATE OF CALIFORNIA

01-06-14
PLANS APPROVAL DATE

The State of California or its officers or agents shall not be responsible for the accuracy or completeness of scanned copies of this plan sheet.

ACCESSIBILITY DESIGN APPROVAL STAMP DOT / DES / OTA
PROJECT ID **1100000035**
Reviewed by:
Date: 10-19-10

CALIFORNIA STATE FIRE MARSHAL APPROVED
Approval of this plan does not authorize or approve any omission or deviation from applicable regulations. Final approval is subject to field inspection. One set of approved plans shall be available on the project site at all times.
Reviewed by: FRANCIS SOLICH
Approval date: 11-29-2013
CSFM No. 01-13-11-0025

NOTE: SPECIFIC DETAILS OR NOTES ON OTHER SHEETS SHALL PREVAIL OVER STANDARD DETAILS AND NOTES ON THIS SHEET

STANDARD DRAWING
FILE NO. XS-26-4
DATE 12/06

	BY	CHECKED
DESIGN	MICHELE MARSON	ANTHONY MANANSALA
DETAILS	MICHELE MARSON	ANTHONY MANANSALA
QUANTITIES		

STATE OF CALIFORNIA
DEPARTMENT OF TRANSPORTATION

DIVISION OF ENGINEERING SERVICES
ARCHITECTURAL AND STRUCTURAL DESIGN

BRIDGE NO. 58M5708
POST MILE

EL CENTRO MAINTENANCE FACILITY
ARCHITECTURAL ABBREVIATIONS AND SYMBOLS

SHEET **A0-1**

a0_01.dgn
TAEMWW Imperial Rev. 7/10 21-JAN-2014 09:46

ORIGINAL SCALE IN INCHES FOR REDUCED PLANS 0 1 2 3

UNIT 3595
PROJECT NUMBER & PHASE 11000000351
EA 076701

DISREGARD PRINTS BEARING EARLIER REVISION DATES
REVISION DATES (PRELIMINARY STAGE ONLY) 07/08-23-13 09-13-13
SHEET X OF X

21-JAN-2014 09:46
a0_01.dgn

DIST.	COUNTY	LOCATION CODE	POST MILES TOTAL PROJECT	SHEET NO.	TOTAL SHEETS
11	SD	5708		67	354

LICENSED ARCHITECT — DATE 10-19-12

LICENSED ARCHITECT Y.A. WANG No. C14891 Exp. 11-30-15 STATE OF CALIFORNIA

01-06-14
PLANS APPROVAL DATE

The State of California or its officers or agents shall not be responsible for the accuracy or completeness of scanned copies of this plan sheet.

ACCESSIBILITY DESIGN APPROVAL STAMP DOT / DES / OTA
PROJECT ID **1100000035**
Reviewed by: Date: 10-19-10

CALIFORNIA STATE FIRE MARSHAL APPROVED
Approval of this plan does not authorize or approve any omission or deviation from applicable regulations. Final approval is subject to field inspection. One set of approved plans shall be available on the project site at all times.
Reviewed by: FRANCIS SOLICH
Approval date: 11-29-2013
CSFM No. 01-13-11-0025

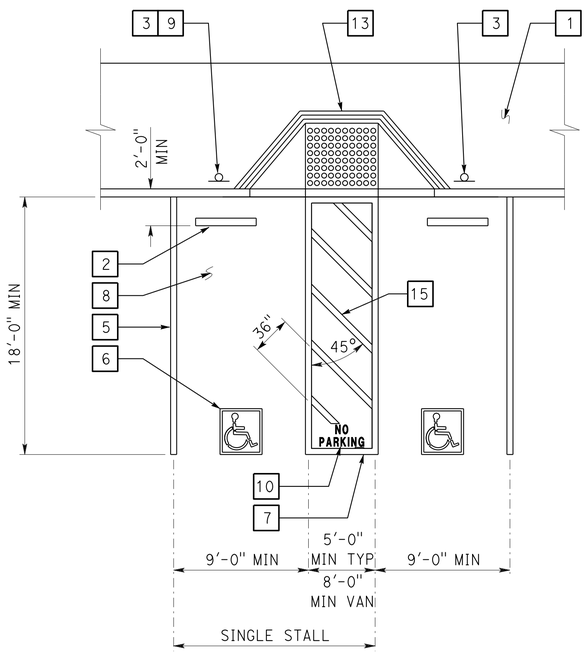

1 ACCESSIBLE PARKING STALL

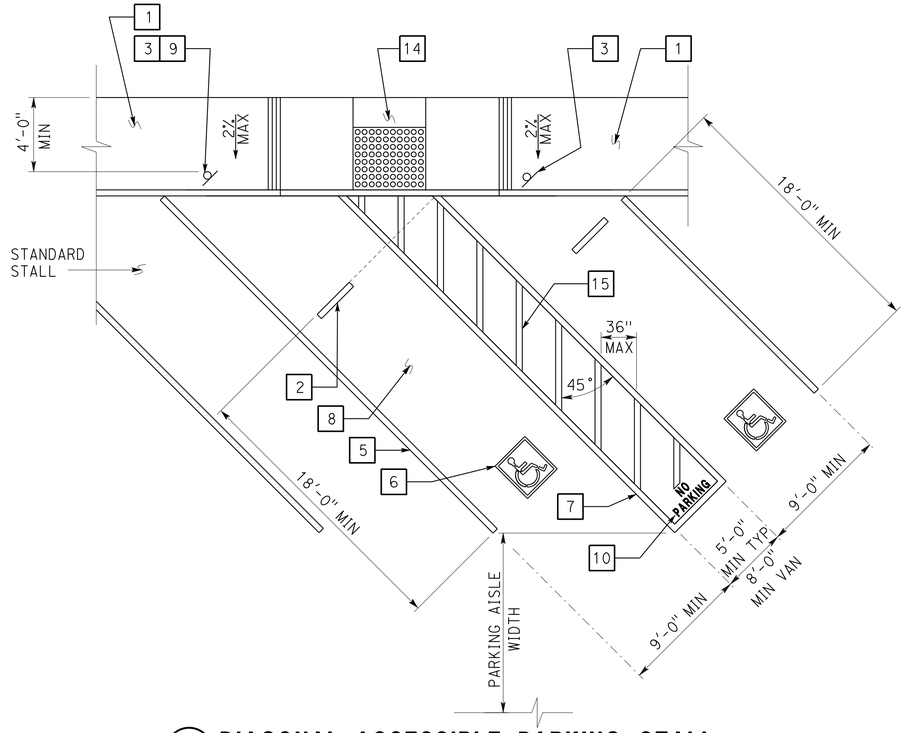

2 DIAGONAL ACCESSIBLE PARKING STALL

See plan for any variation of diagonal parking. Angle of parking stalls shall either match the existing angle or be indicated on plans.

KEYED NOTE LEGEND FOR DETAILS

1. Concrete walkway (where occurs). See plans for width, layout (may vary), finish, joints and elevations.
2. Parking bumper (away from access aisle). See Specifications.
3. Accessible parking space signage. See Detail 1 on sheet A0-3.2.
4. 1' wide grooved border on level surface typ at ramp perimeter. See Detail 3 on this sheet.
5. 4" wide white parking stall designation stripe. See site plan(s) for additional stall striping. See specifications for painting.
6. Accessible parking surface identification painted on pavement. See Detail 6 on sheet A0-3.2.
7. 4" wide blue border designating non-parking access aisle to curb ramp.
8. Maximum slope on parking stall and access aisle to be 2%.
9. Van accessible signage. See Detail 2 on sheet A0-3.2. Access aisle shall be on passenger side only.
10. "NO PARKING" in min 12" high white letters to be placed within access aisle to curb ramp. See Detail 7 on sheet A0-3.2.
11. Level landing -2% max slope w/36" deep detectable warning surface adjoining access aisle or vehicular way. See Detail 6 on this sheet.
12. Detectable warning surface to extend full width and min 36" deep from front edge of sidewalk. See Detail 6 on this sheet.
13. Curb ramp. See Detail 4 on this sheet. Also see plans for width and layout (may vary).
14. Curb ramp. See Detail 5 on this sheet. Also see plans for width and layout (may vary).
15. 4" wide white hatched lines to contrast with asphalt surface. Use blue hatched lines for light-color concrete surface.

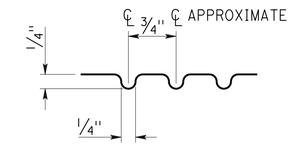

3 GROOVE DETAIL

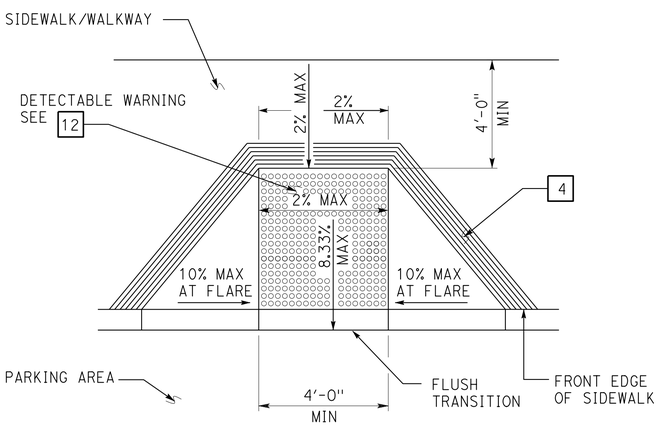

4 PERPENDICULAR CURB RAMP

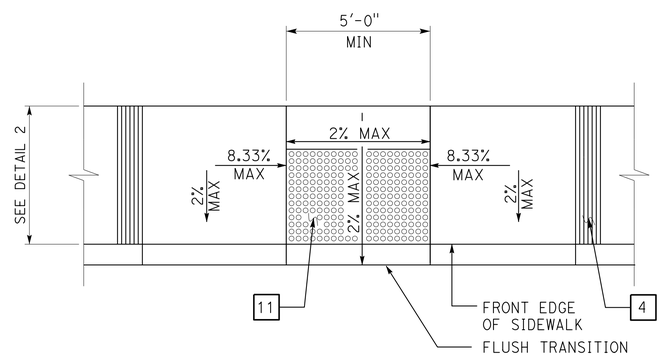

5 PARALLEL CURB RAMP

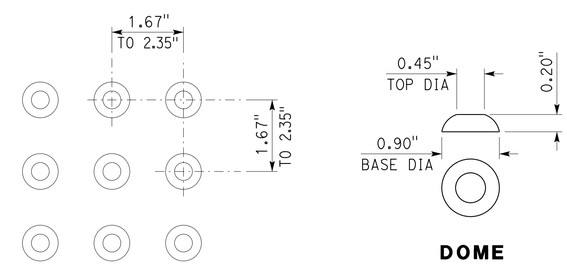

6 DETECTABLE WARNING SURFACE - TRUNCATED DOMES

Dome dimensions are nominal, which may be within ±0.05" for dome spacing, and ±0.02" for dome size.

DETAILS

No scale unless otherwise noted

NOTE: SPECIFIC DETAILS OR NOTES ON OTHER SHEETS SHALL PREVAIL OVER STANDARD DETAILS AND NOTES ON THIS SHEET

STANDARD DRAWING

FILE NO. __-__-__	DESIGN BY D. Alsey	CHECKED Y. A. Wang	APPROVED R E Travis DESIGN SUPERVISOR
DRAWING DATE 10-12	DETAILS BY D. Good	CHECKED Y. A. Wang	
	SUBMITTED BY Y.A. Wang		

STATE OF CALIFORNIA DEPARTMENT OF TRANSPORTATION

DIVISION OF ENGINEERING SERVICES ARCHITECTURAL AND STRUCTURAL DESIGN

BRIDGE NO. 58M5708 — POST MILE NA

EL CENTRO MAINTENANCE FACILITY — ACCESSIBILITY — ACCESSIBILITY STANDARD DETAILS

SHEET A0-3.1

a0_03a_i.dgn
TAEMWW Imperial Rev. 7/10 21-JAN-2014 09:46

ORIGINAL SCALE IN INCHES FOR REDUCED PLANS 0 1 2 3

UNIT 3595
PROJECT NUMBER & PHASE 11000000351

DISREGARD PRINTS BEARING EARLIER REVISION DATES → REVISION DATES (PRELIMINARY STAGE ONLY) 03-08-12 09-13-13 — SHEET OF

EA 076701

21-JAN-2014 09:46 a0_03a_i.dgn

DIST.	COUNTY	LOCATION CODE	POST MILES TOTAL PROJECT	SHEET NO.	TOTAL SHEETS
11	Imp	5708		68	354

LICENSED ARCHITECT — DATE 10-19-12

LICENSED ARCHITECT Y.A. WANG No. C14891 Exp. 11-30-15 STATE OF CALIFORNIA

01-06-14
PLANS APPROVAL DATE

The State of California or its officers or agents shall not be responsible for the accuracy or completeness of scanned copies of this plan sheet.

ACCESSIBILITY DESIGN APPROVAL STAMP DOT / DES / OTA
PROJECT ID **1100000035**
Reviewed by: Date: 10-19-10

CALIFORNIA STATE FIRE MARSHAL APPROVED
Approval of this plan does not authorize or approve any omission or deviation from applicable regulations. Final approval is subject to field inspection. One set of approved plans shall be available on the project site at all times.
Reviewed by: FRANCIS SOLICH
Approval date: 11-29-2013
CSFM No. 01-13-11-0025

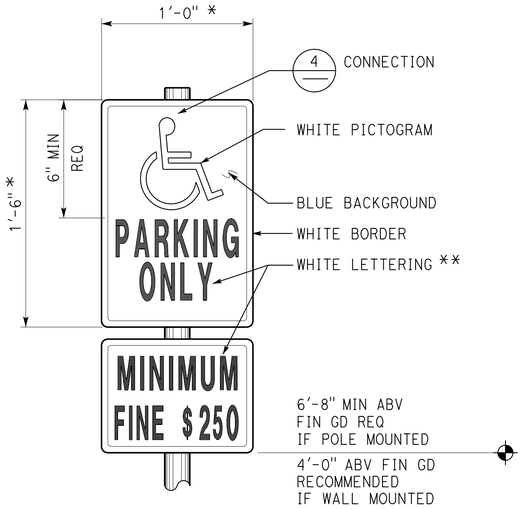

1 ACCESSIBLE PARKING SIGN

Refer to Site Plan for locations.
Combo sign may be used.
* Min area 70 sq in req
** 2" min ht req for up to 10'-0" mounting ht from baseline of highest letter to fin gd.
3" min ht req for mounting ht over 10'-0".

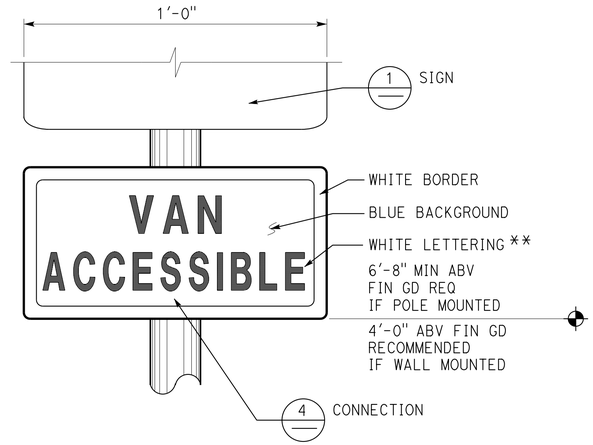

2 ACCESSIBLE VAN PARKING SIGN

Refer to Site Plan for locations.
Combo sign may be used.

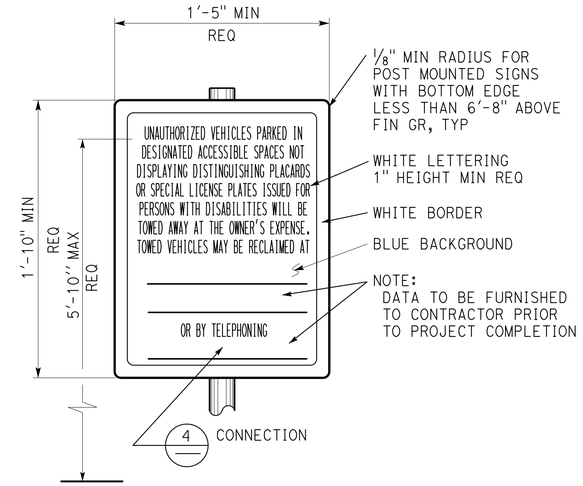

3 UNAUTHORIZED VEHICLES PARKING SIGN

Refer to Site Plan for locations. Colors may vary.
Sign shall not be posted in a path of travel.

Note:
All listed sign sizes are recommended standard sizes, unless otherwise noted as required. All mounting heights are recommended, unless otherwise noted as required.

7 ACCESS AISLE PAVEMENT MARKING

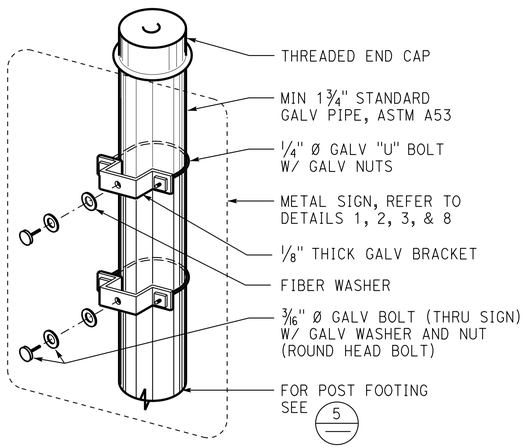

4 SIGN CONNECTION

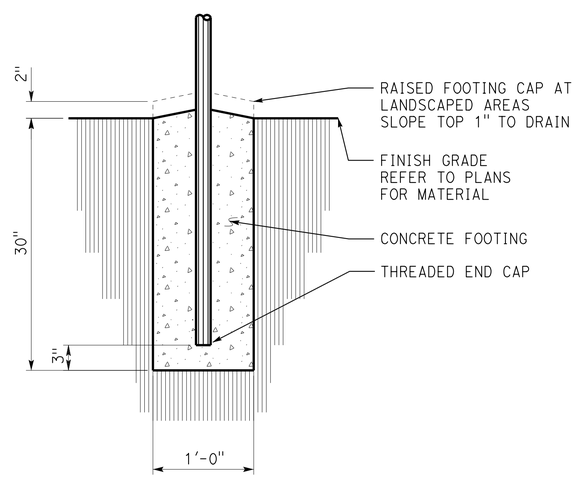

5 SIGN POST FOOTING

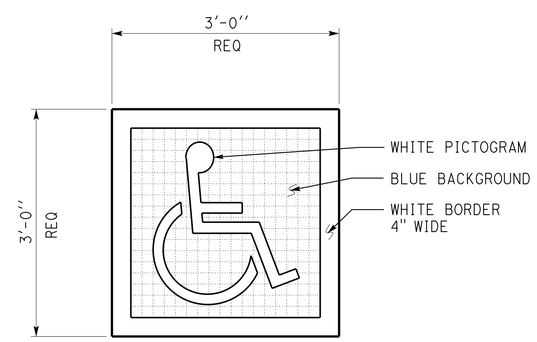

6 ACCESSIBLE PARKING SURFACE IDENTIFICATION

Refer to Details 1 and 2 on sheet A0-3.1 for locations.

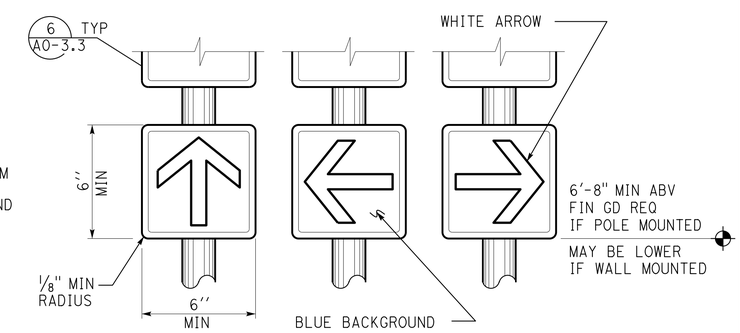

For additional information see 4

8 DIRECTIONAL SIGNS

Refer to Site Plan or General Plan for locations.
Wall or door mounted signs may be used.
Combo sign may be used.
Colors may vary.

DETAILS

No scale unless otherwise noted

NOTE: SPECIFIC DETAILS OR NOTES ON OTHER SHEETS SHALL PREVAIL OVER STANDARD DETAILS AND NOTES ON THIS SHEET

STANDARD DRAWING
FILE NO. __-__-__ | DESIGN BY D. Alsey | CHECKED Y. A. Wang | APPROVED R.E. Travis
DRAWING DATE 10-12 | DETAILS BY D. Good | CHECKED Y. A. Wang | DESIGN SUPERVISOR
SUBMITTED BY Y.A. Wang

STATE OF CALIFORNIA DEPARTMENT OF TRANSPORTATION

DIVISION OF ENGINEERING SERVICES ARCHITECTURAL AND STRUCTURAL DESIGN

BRIDGE NO. 58M5708 | POST MILE NA

EL CENTRO MAINTENANCE FACILITY

ACCESSIBILITY — ACCESSIBILITY STANDARD DETAILS

SHEET A0-3.2

a0_03b_i.dgn
TAEMWW Imperial Rev. 7/10 21-JAN-2014 09:46

ORIGINAL SCALE IN INCHES FOR REDUCED PLANS 0 1 2 3

UNIT 3595
PROJECT NUMBER & PHASE 11000000351
EA 076701

DISREGARD PRINTS BEARING EARLIER REVISION DATES → REVISION DATES (PRELIMINARY STAGE ONLY) 03-08-12 09-13-13 | SHEET | OF

21-JAN-2014 09:46
a0_03b_i.dgn

DIST.	COUNTY	LOCATION CODE	POST MILES TOTAL PROJECT	SHEET NO.	TOTAL SHEETS
11	Imp	5708		69	354

LICENSED ARCHITECT — DATE 10-19-12

LICENSED ARCHITECT Y.A. WANG No. C14891 Exp. 11-30-15 STATE OF CALIFORNIA

01-06-14
PLANS APPROVAL DATE

The State of California or its officers or agents shall not be responsible for the accuracy or completeness of scanned copies of this plan sheet.

ACCESSIBILITY DESIGN APPROVAL STAMP DOT / DES / OTA
PROJECT ID **1100000035**
Reviewed by: Date: 10-19-10

CALIFORNIA STATE FIRE MARSHAL APPROVED
Approval of this plan does not authorize or approve any omission or deviation from applicable regulations. Final approval is subject to field inspection. One set of approved plans shall be available on the project site at all times.
Reviewed by: FRANCIS SOLICH
Approval date: 11-29-2013
CSFM No. 01-13-11-0025

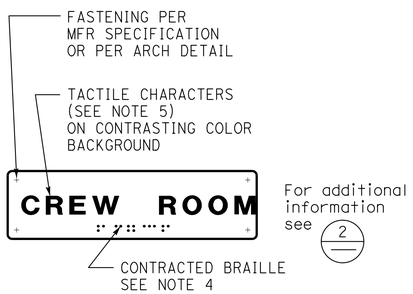

1 ROOM IDENTIFICATION SIGN

Install per Detail 5.
Text varies.
See plans, ext elevations, or door schedule for locations and text.
See Detail 7 for sign mounting heights.

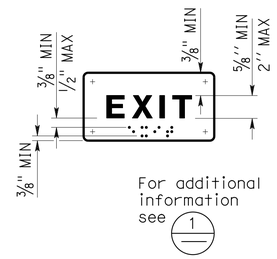

2 INTERIOR EXIT SIGN

Install per Detail 5.
Text may vary.
See plans, or door schedule for locations and text.
See Detail 7 for sign mounting heights.

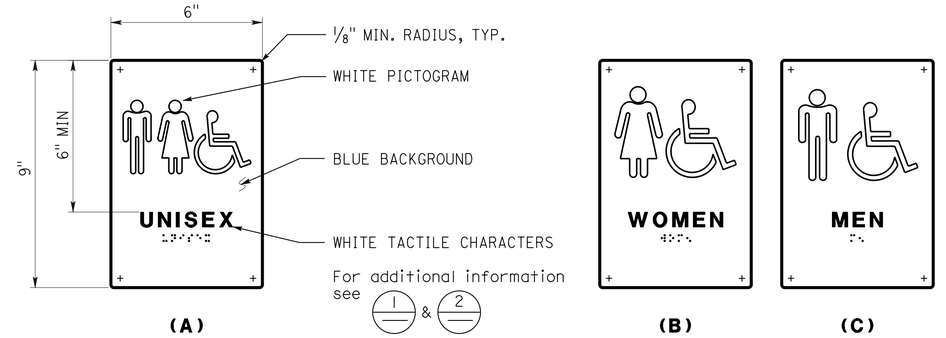

3 RESTROOM/SHOWER ROOM SIGNS

Install per Detail 5.
See Detail 7 for sign mounting height.

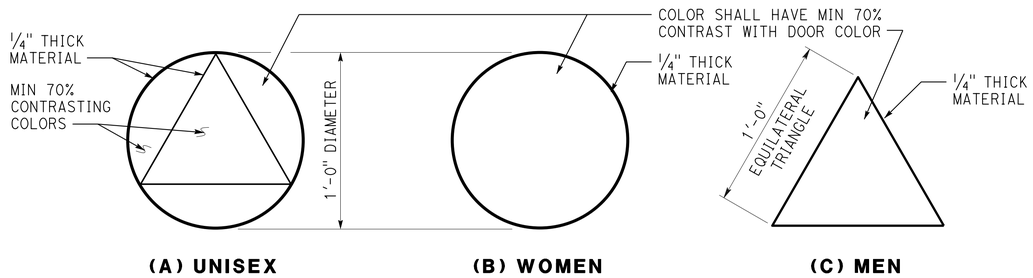

4 RESTROOM/SHOWER ROOM IDENTIFICATION SYMBOLS

Install per Detail 5.
Any pictogram and text are not required.

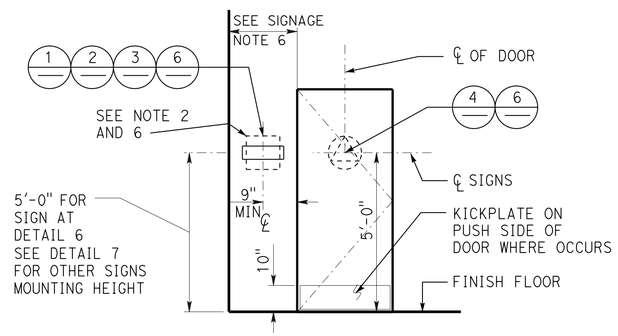

5 SIGN LOCATIONS

Refer to signage notes for additional information.

SIGNAGE NOTES:

1. Locate room identification signs, exit signs, and restroom signs on wall adjacent to door on latch side. If wall space is not available on latch side, locate on nearest adjacent wall. Locate sign on inactive leaf at double doors, or to the right of right hand door at double doors with two active leafs.
2. Refer to specifications for sign material and other color selection. Except Detail 6, sign colors may vary from details.
3. See door schedule for text and sign location, UON.
4. Contracted Braille: dots shall be 1/10" OC in each cell with 2/10" space between cells measured from the second column of dots in the first cell to the first column of dots in the second cell. Dots shall be raised a minimum of 1/40" above the background. Dots shall be domed or rounded.
5. Tactile characters shall be uppercase san serif raised 1/32" min. Fonts shall be selected where width of letter "O" is 60% min and 110% max of height of letter "I". Stroke thickness of letter"I" is 10% min and 20% max of height of the character.
6. Provide 18"x18" min clear floor space in front of and centered on any tactile sign.
7. Sign color shall have a minimum of 70% contrast to door or wall color. Text and pictogram shall have a minimum of 70% contrast to sign color.
8. Tactile character height is measured based on height of uppercase letter "I".

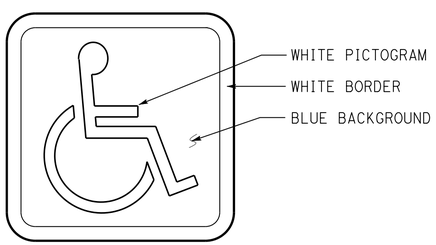

6 INTERNATIONAL SYMBOL OF ACCESSIBILITY SIGN

Install per Detail 5.
See plans, elevations, or schedule for sign locations.
Decal may be used.

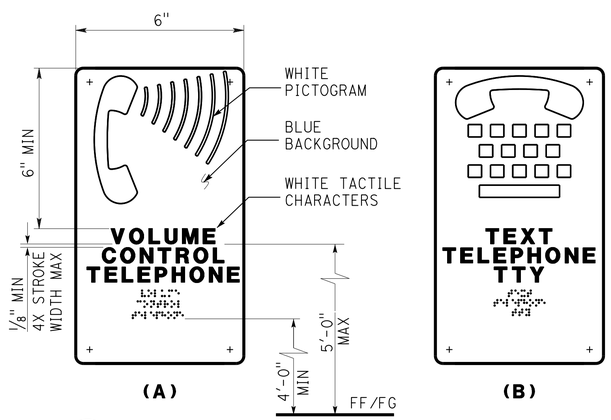

7 TELEPHONE SIGNS

Text may vary.
See plans or exterior elevations for sign locations and mounting heights.

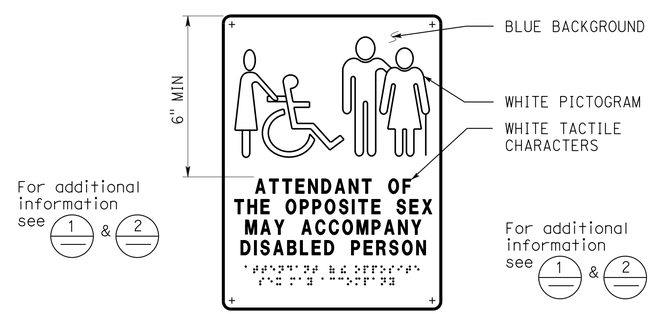

8 RESTROOM ACCOMPANY SIGN

See plans or elevations for locations.
See Detail 7 for sign mounting heights.

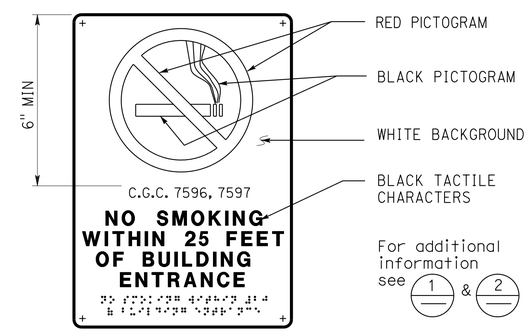

9 NO SMOKING SIGN

See plans or ext elevations for locations.
See Detail 7 for sign mounting heights.

DETAILS

No scale unless otherwise noted

NOTE: SPECIFIC DETAILS OR NOTES ON OTHER SHEETS SHALL PREVAIL OVER STANDARD DETAILS AND NOTES ON THIS SHEET

STANDARD DRAWING
FILE NO. __-__-__ | DESIGN BY D. Alsey | CHECKED Y. A. Wang | APPROVED R.E. Travis DESIGN SUPERVISOR
DRAWING DATE 10-12 | DETAILS BY D. Good | CHECKED Y. A. Wang
SUBMITTED BY Y.A. Wang

STATE OF CALIFORNIA DEPARTMENT OF TRANSPORTATION
DIVISION OF ENGINEERING SERVICES ARCHITECTURAL AND STRUCTURAL DESIGN
BRIDGE NO. 58M5708 | POST MILE NA
EL CENTRO MAINTENANCE FACILITY
ACCESSIBILITY | ACCESSIBILITY STANDARD DETAILS
SHEET A0-3.3

a0_03c_i.dgn
TAEMWW Imperial Rev. 7/10 21-JAN-2014 09:46
ORIGINAL SCALE IN INCHES FOR REDUCED PLANS 0 1 2 3
UNIT 3595
PROJECT NUMBER & PHASE 11000000351
EA 076701
DISREGARD PRINTS BEARING EARLIER REVISION DATES → 03-08-12 09-13-13
REVISION DATES (PRELIMINARY STAGE ONLY) SHEET OF
21-JAN-2014 09:46 a0_03c_i.dgn

DIST.	COUNTY	LOCATION CODE	POST MILES TOTAL PROJECT	SHEET NO.	TOTAL SHEETS
11	Imp	5708		70	354

LICENSED ARCHITECT — 10-19-12 DATE

LICENSED ARCHITECT Y.A. WANG No. C14891 Exp. 11-30-15 STATE OF CALIFORNIA

01-06-14
PLANS APPROVAL DATE

The State of California or its officers or agents shall not be responsible for the accuracy or completeness of scanned copies of this plan sheet.

ACCESSIBILITY DESIGN APPROVAL STAMP DOT / DES / OTA
PROJECT ID **1100000035**
Reviewed by:
Date: 10-19-10

CALIFORNIA STATE FIRE MARSHAL APPROVED
Approval of this plan does not authorize or approve any omission or deviation from applicable regulations. Final approval is subject to field inspection. One set of approved plans shall be available on the project site at all times.
Reviewed by: FRANCIS SOLICH
Approval date: 11-29-2013
CSFM No. 01-13-11-0025

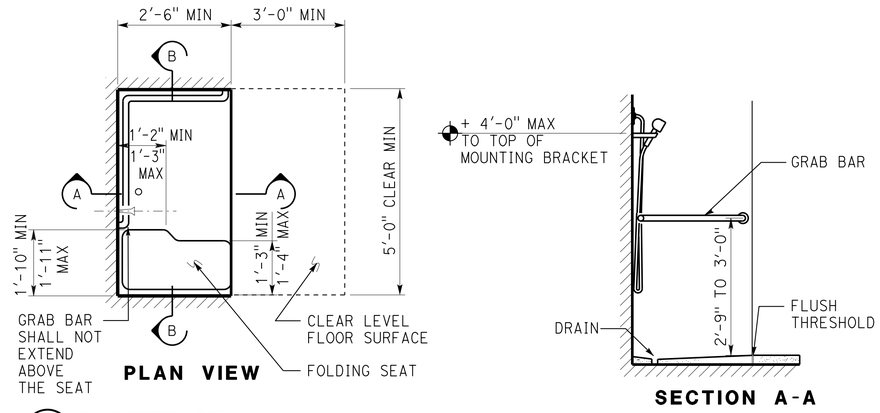

1 SHOWER STALL

Optional standard shower head may be added to wall opposite shower seat. Locate water diverter per water control.

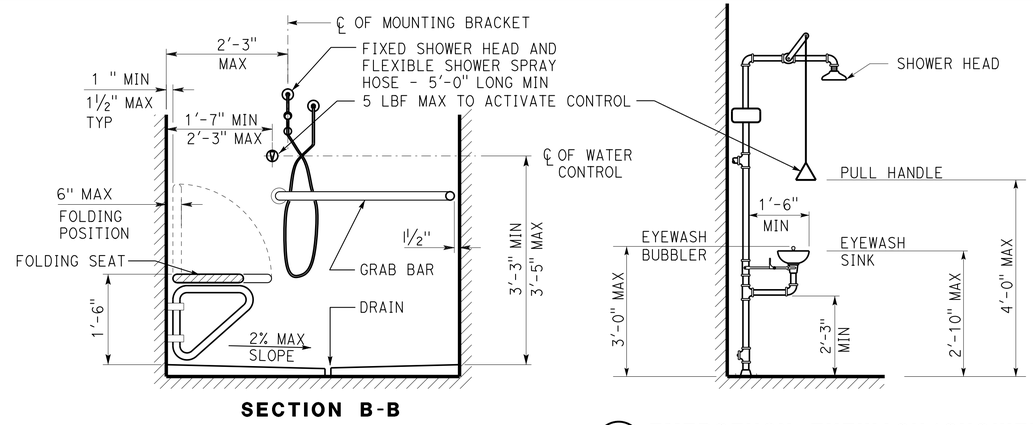

2 EMERGENCY EYEWASH/ SHOWER

Foot pedal may be added to operate equipment

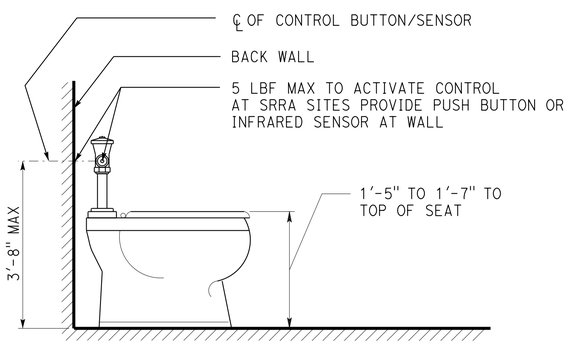

3 WATER CLOSET

See Spec for fixture type

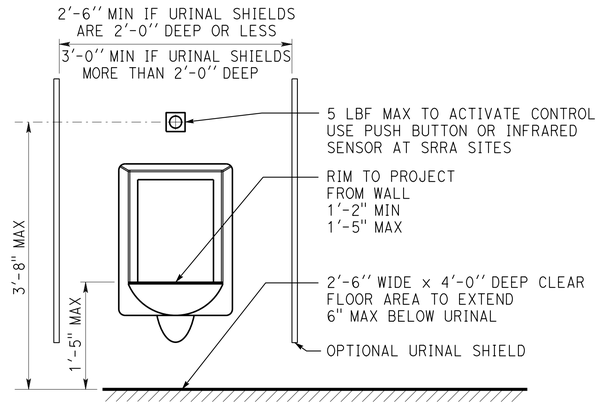

4 URINAL

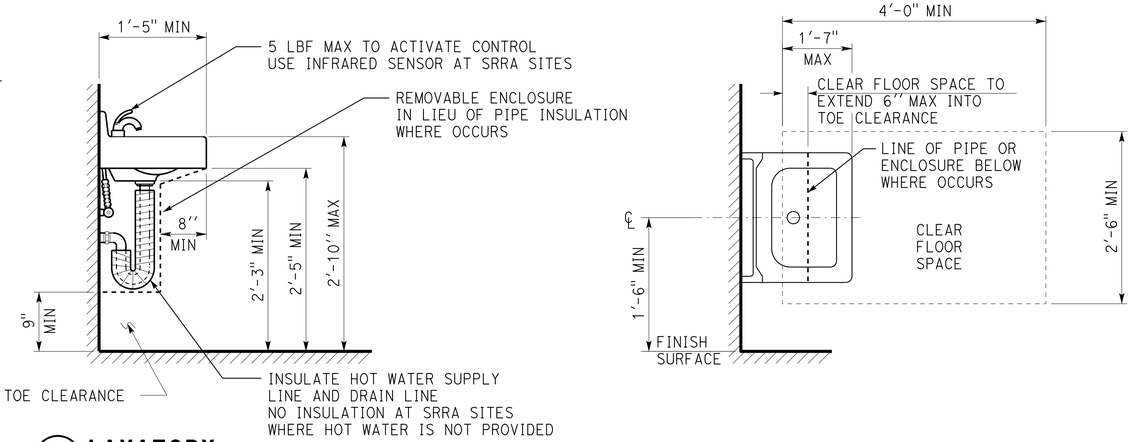

5 LAVATORY

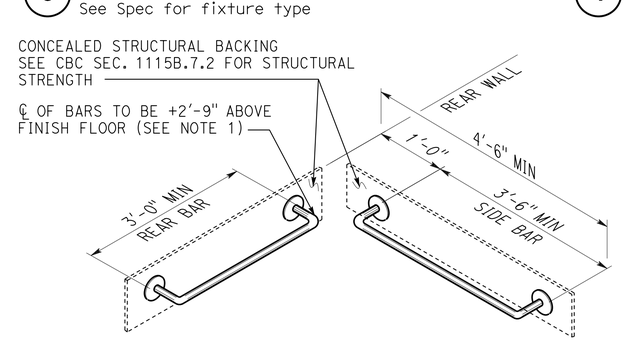

6 GRAB BARS/ WATER CLOSET

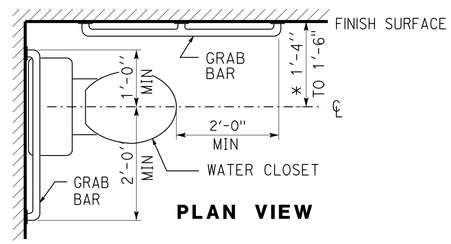

Grab bar note:
1. If tank type toilet is used, centerline of rear bar may be set to 3'-0" max above finish floor. Side bar to remain as shown.
2. Grab bars to be 1 ¼" To 1 ½" diameter with clear space of 1 ½" to smooth wall surface.

* 1'-5" to 1'-7" at ambulatory accessible compartment.

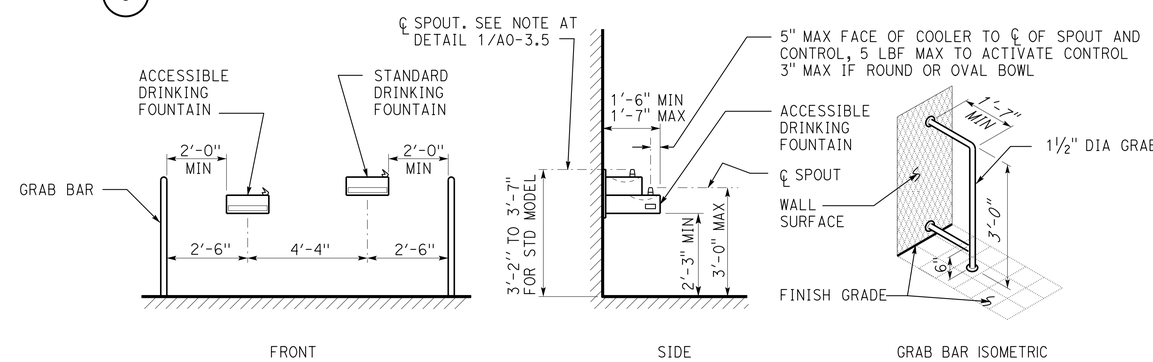

7 ELECTRIC WATER COOLER

In lieu of grab bars, other types of wing walls may be used.
Dimensions at front elevation may vary - see plan.
Provide clear level area w/max 2% slope in all directions at each fixture.
See clear floor space at detail 1/A0-3.5 for size and location.

DETAILS

No scale unless otherwise noted

NOTE: SPECIFIC DETAILS OR NOTES ON OTHER SHEETS SHALL PREVAIL OVER STANDARD DETAILS AND NOTES ON THIS SHEET

STANDARD DRAWING				
FILE NO. __-__-_	DESIGN	BY D. Alsey	CHECKED Y. A. Wang	APPROVED R E Travis DESIGN SUPERVISOR
DRAWING DATE 10-12	DETAILS	BY D. Good	CHECKED Y. A. Wang	
	SUBMITTED BY Y.A. Wang			

STATE OF CALIFORNIA DEPARTMENT OF TRANSPORTATION

DIVISION OF ENGINEERING SERVICES ARCHITECTURAL AND STRUCTURAL DESIGN

BRIDGE NO. 58M5708 | POST MILE NA

EL CENTRO MAINTENANCE FACILITY

ACCESSIBILITY — ACCESSIBILITY STANDARD DETAILS

SHEET A0-3.4

a0_03d_i.dgn
TAEMWW Imperial Rev. 7/10 21-JAN-2014 09:46

ORIGINAL SCALE IN INCHES FOR REDUCED PLANS 0 1 2 3

UNIT 3595
PROJECT NUMBER & PHASE 11000000351
EA 076701

DISREGARD PRINTS BEARING EARLIER REVISION DATES → 03-08-12 09-13-13

REVISION DATES (PRELIMINARY STAGE ONLY) SHEET OF

21-JAN-2014 09:46
a0_03d_i.dgn

DIST.	COUNTY	ROUTE	POST MILES TOTAL PROJECT	SHEET NO.	TOTAL SHEETS
11	Imp	5708		71	354

LICENSED ARCHITECT — DATE 10-19-12

LICENSED ARCHITECT Y.A. WANG No. C14891 Exp. 11-30-15 STATE OF CALIFORNIA

01-06-14
PLANS APPROVAL DATE

The State of California or its officers or agents shall not be responsible for the accuracy or completeness of scanned copies of this plan sheet.

ACCESSIBILITY DESIGN APPROVAL STAMP DOT / DES / OTA
PROJECT ID **1100000035**
Reviewed by:
Date: 10-19-10

CALIFORNIA STATE FIRE MARSHAL APPROVED
Approval of this plan does not authorize or approve any omission or deviation from applicable regulations. Final approval is subject to field inspection. One set of approved plans shall be available on the project site at all times.
Reviewed by: FRANCIS SOLICH
Approval date: 11-29-2013
CSFM No. 01-13-11-0025

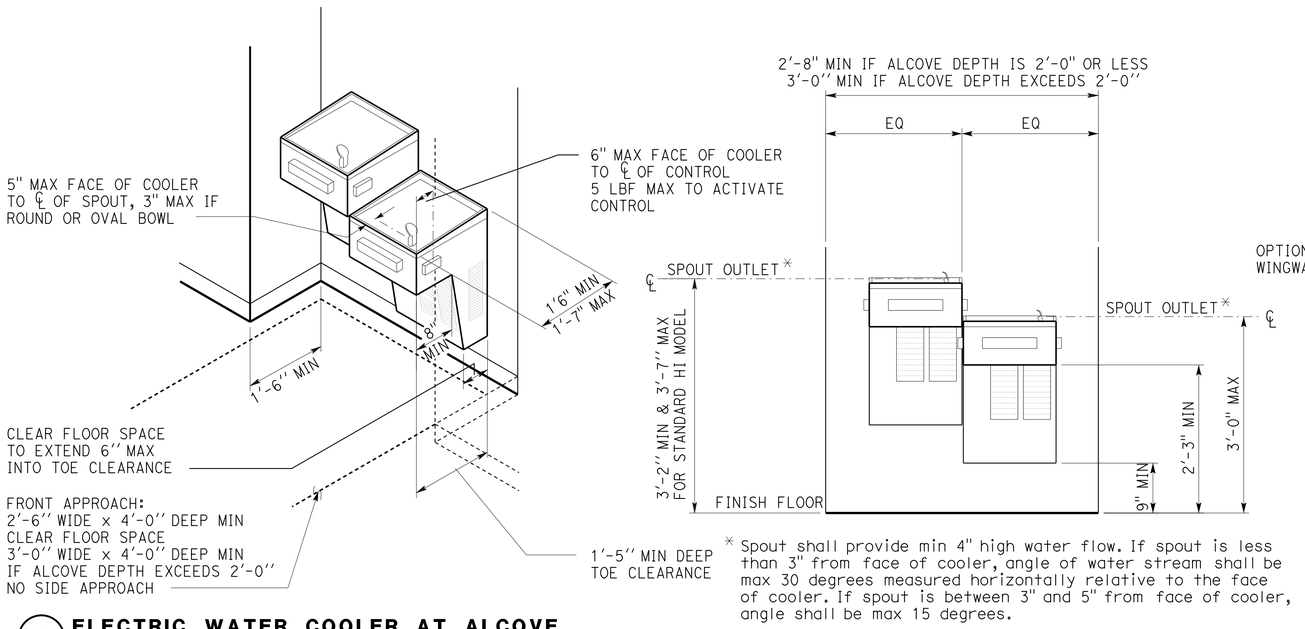

* Spout shall provide min 4" high water flow. If spout is less than 3" from face of cooler, angle of water stream shall be max 30 degrees measured horizontally relative to the face of cooler. If spout is between 3" and 5" from face of cooler, angle shall be max 15 degrees.

1 ELECTRIC WATER COOLER AT ALCOVE

Fixture type may vary.
Width of alcove may vary.
Two fixtures with separate mounting heights may be installed at separate locations.

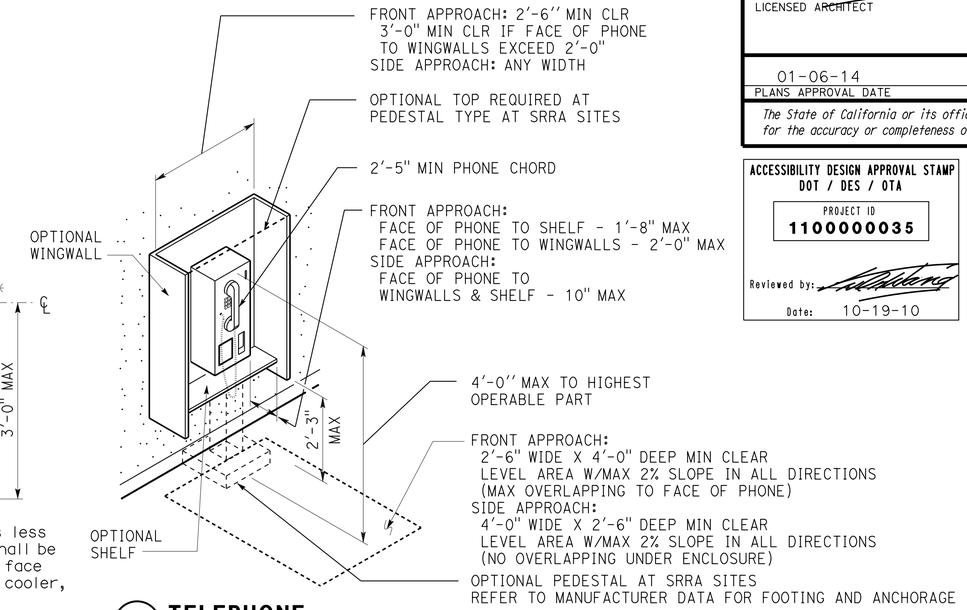

2 TELEPHONE

Note: Seat surface shall be slip resistant and shall not accumulate water (E.G., 2% max slope to drain) when installed in conjuction with wet locations. Structural strength of the bench and attachments shall comply w/CBC Sec. 1115B.7.2

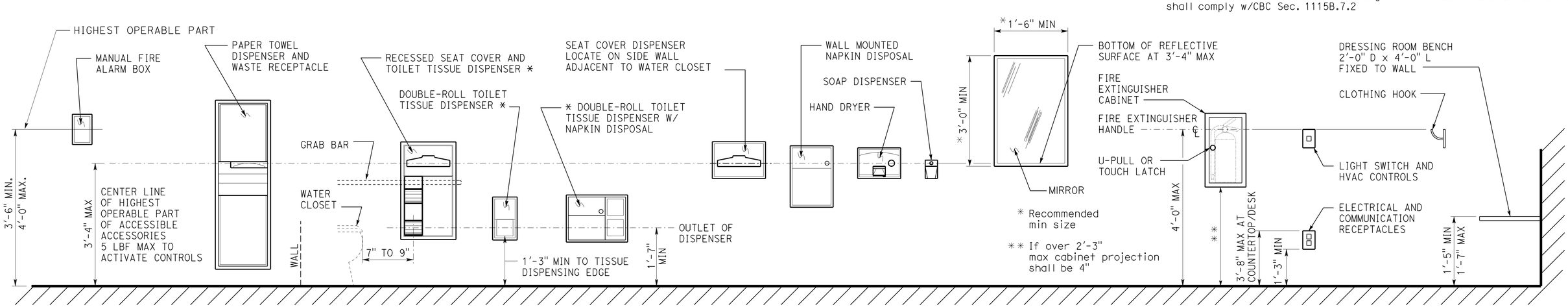

* Recommended min size

** If over 2'-3" max cabinet projection shall be 4"

* Toilet tissue dispenser shall be located on wall or partition closet to water closet

3 ACCESSORIES

DETAILS

No scale unless otherwise noted

NOTE: SPECIFIC DETAILS OR NOTES ON OTHER SHEETS SHALL PREVAIL OVER STANDARD DETAILS AND NOTES ON THIS SHEET

STANDARD DRAWING				
FILE NO. __-__-_	DESIGN	BY D. Alsey	CHECKED Y. A. Wang	APPROVED R E Travis DESIGN SUPERVISOR
DRAWING DATE 10-12r	DETAILS	BY D. Good	CHECKED Y. A. Wang	
	SUBMITTED BY Y.A. Wang			

STATE OF CALIFORNIA DEPARTMENT OF TRANSPORTATION

DIVISION OF ENGINEERING SERVICES ARCHITECTURAL AND STRUCTURAL DESIGN

BRIDGE NO. 58M5708 — POST MILE NA

EL CENTRO MAINTENANCE FACILITY

ACCESSIBILITY — ACCESSIBILITY STANDARD DETAILS

SHEET A0-3.5

a0_03e_i.dgn
TAEMWW imperial Rev. 7/10 21-JAN-2014 09:46

ORIGINAL SCALE IN INCHES FOR REDUCED PLANS 0 1 2 3

UNIT 3595
PROJECT NUMBER & PHASE 11000000351
EA 076701

DISREGARD PRINTS BEARING EARLIER REVISION DATES → 03-08-12 09-13-13

REVISION DATES (PRELIMINARY STAGE ONLY) — SHEET — OF

21-JAN-2014 09:46
a0_03e_i.dgn

DIST.	COUNTY	LOCATION CODE	POST MILES TOTAL PROJECT	SHEET NO.	TOTAL SHEETS
11	Imp	5708		72	354

LICENSED ARCHITECT — DATE 9/12/13

LICENSED ARCHITECT ANTHONY V. MANANSALA No. C-32260 Ren. 4/30/15 STATE OF CALIFORNIA

01-06-14
PLANS APPROVAL DATE

The State of California or its officers or agents shall not be responsible for the accuracy or completeness of scanned copies of this plan sheet.

ACCESSIBILITY DESIGN APPROVAL STAMP DOT / DES / OTA
PROJECT ID **11000000035**
Reviewed by:
Date: 10-19-10

CALIFORNIA STATE FIRE MARSHAL APPROVED
Approval of this plan does not authorize or approve any omission or deviation from applicable regulations. Final approval is subject to field inspection. One set of approved plans shall be available on the project site at all times.
Reviewed by: FRANCIS SOLTCH
Approval date: 11-29-2013
CSFM No. 01-13-11-0025

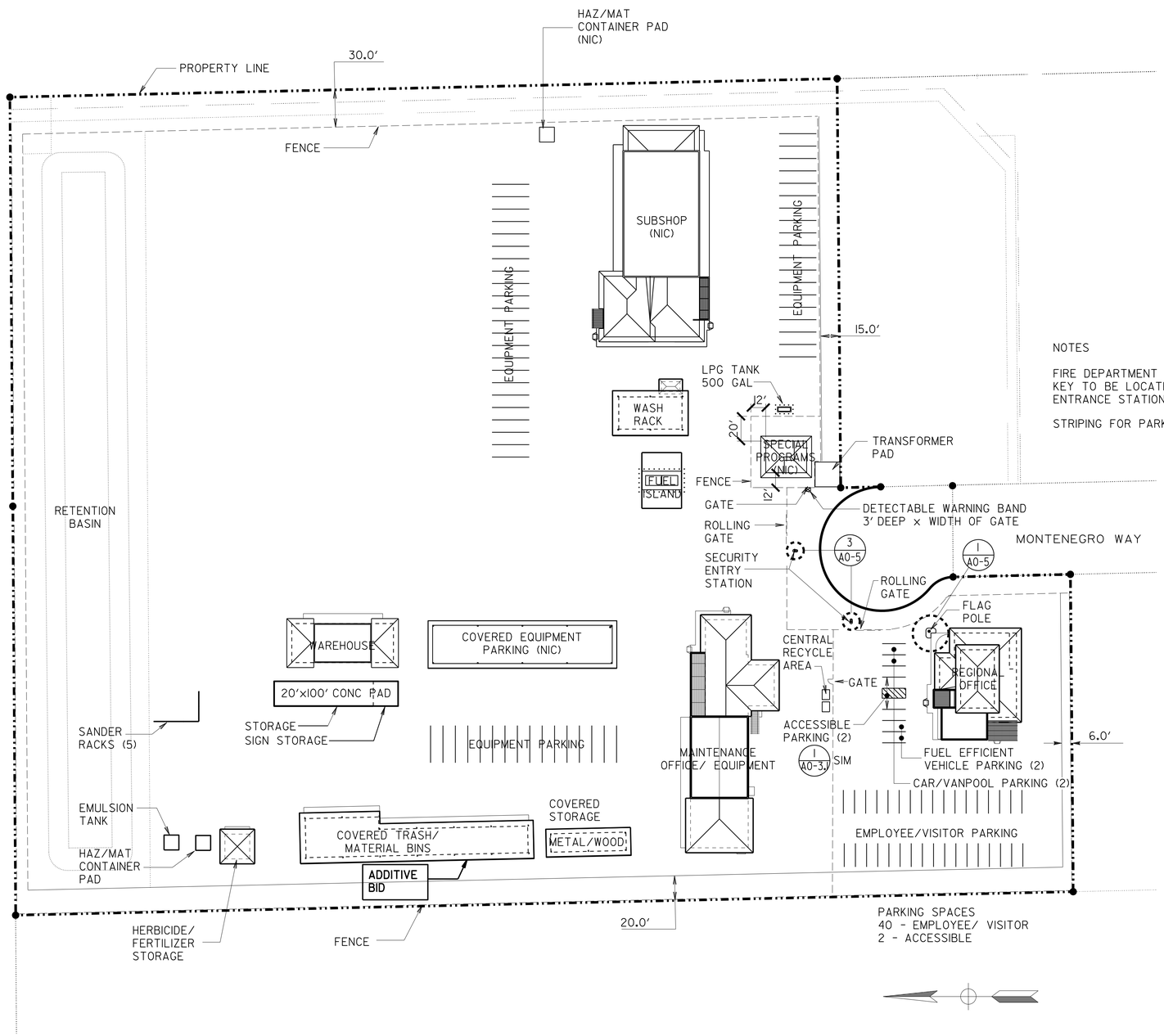

SITE PLAN

SCALE 1"=50'

NOTES

FIRE DEPARTMENT EMERGENCY ACCESS KEY TO BE LOCATED AT EACH SECURITY ENTRANCE STATION - SEE DETAIL 3/A0-5

STRIPING FOR PARKING AREAS - NIC

ACCESSIBILITY NOTES

1. ANY SPECIFIC EXTERIOR PEDESTRIAN PATH OF TRAVEL NEED NOT BE IDENTIFIED ON THE SITE PLAN, AS THE ENTIRE SITE, INCLUDING WALKWAYS, APRONS AND PATIOS, SHALL BE MADE ACCESSIBLE AND FULLY COMPLIANT TO THE CODE REQUIREMENTS, INCLUDING: MAX SLOPE IN ANY DIRECTION OF 2%; MIN 80" HEAD CLEARANCE; MAX 1/2" LEVEL CHANGE W/MAX 1:2 SLOPE; LEVEL CHANGE NOT EXCEEDING 1/4" MAY BE VERTICAL; LEVEL CHANGE EXCEEDING 1/2" SHALL BE ACCOMODATED BY CODE-COMPLIANT CURB RAMP; WALKWAY SURFACE SHALL BE FIRM, STABLE, SLIP-RESISTANT, W/O LOOSE GRAVEL, SAND, CHIPS, ETC; AND ANY PLANTER/GRATE/ COVER SHALL HAVE EDGE PROTECTION OF MIN 6" HIGH CURB IF LEVEL CHANGE BETWEEN WALKWAY AND PLANTER/GRATE/ COVER EXCEEDS 4".
2. ALL DOORS SHALL HAVE CLEAR, LEVEL AREAS ON BOTH SIDES OF DOORS W/ MAX 2% SLOPE IN ANY DIRECTION. EXTERIOR CLEAR, LEVEL AREAS SHALL BE MIN 60"x60" (OR 60" DEEP BY THE WIDTH OF DOUBLE DOORS) IN THE DIRECTION OF DOOR SWING (INCLUDING MIN 24" PAST DOOR STRIKE EDGE FOR SINGLE DOOR), AND MIN 48"x36" (OR 48" DEEP BY THE WIDTH OF DOUBLE DOORS) OPPOSITE DOOR SWING (PLUS MIN 12" PAST DOOR STRIKE EDGE IF A SINGLE DOOR HAS BOTH A LATCH AND A CLOSER). INTERIOR CLEAR, LEVEL AREAS SHALL BE MIN 60" DEEP x54" WIDE (OR 60" DEEP BY THE WIDTH OF DOUBLE DOORS) IN THE DIRECTION OF DOOR SWING (INCLUDING MIN 18" PAST DOOR STRIKE EDGE FOR SINGLE DOOR), AND MIN 48"x36" (OR 48" DEEP BY THE WIDTH OF DOUBLE DOORS) OPPOSITE DOOR SWING (PLUS MIN 12" PAST DOOR STRIKE EDGE IF A SINGLE DOOR HAS BOTH A LATCH AND A CLOSER).
3. LEVEL CHANGE AT DOORWAYS, INCLUDING THRESHOLD THICKNESS, SHALL BE MAX 1/2" W/MAX 1:2 SLOPE. LEVEL CHANGE NOT EXCEEDING 1/4" MAY BE VERTICAL.
4. AISLES FORMED BY EQUIPMENT, STORED MATERIALS OR WALLS AT ANY ROOMS OR AREAS SHALL BE MIN 36" WIDE IF SERVING ONE SIDE AND MIN 44" WIDE IF SERVING BOTH SIDES.
5. EMULSION TANK IS EXEMPT FROM ACCESSIBILITY REQUIREMENTS PER 2007 CBC SECTION 1103B.1, EXCEPTION 1 AND 1991 ADAAG 4.1.1 (5) (b) (ii)
6. PEDESTRIAN SWINGING GATES SHALL BE MIN 3' AND MAX 4' WIDE. GATE HARDWARE SHALL BE ACCESSIBLE TYPE, E.G., LEVER, ETC AND CENTERED BETWEEN 34" AND 44" ABOVE GROUND. OPENING FORCE SHALL BE MAX 5 LBF. WHERE CARD READERS ARE USED, OPERABLE PART OF CARD READER SHALL BE 48" MAX ABOVE ADJACENT GROUND.
7. COVERED TRASH/MATERIAL BINS, COVERED STORAGE, AND STORAGE/ SIGN STORAGE PADS ARE ACCESSED BY EQUIPMENT AND VEHICLES ONLY. NO DETECTABLE WARNING IS REQUIRED WHERE FACILITY ADJOINS VEHICLE WAY.

	BY		CHECKED
DESIGN	BY	MICHELE MARSON	CHECKED ANTHONY MANANSALA
DETAILS	BY	MICHELE MARSON	CHECKED ANTHONY MANANSALA
QUANTITIES	BY		CHECKED

STATE OF CALIFORNIA DEPARTMENT OF TRANSPORTATION

DIVISION OF ENGINEERING SERVICES ARCHITECTURAL AND STRUCTURAL DESIGN

BRIDGE NO. 58M5708
POST MILE

EL CENTRO MAINTENANCE FACILITY

SITE PLAN

SHEET **A0-4**

a0_04.dgn
TAEMWW Imperial Rev. 7/10
21-JAN-2014 09:46

ORIGINAL SCALE IN INCHES FOR REDUCED PLANS 0 1 2 3

UNIT 3595
PROJECT NUMBER & PHASE 11000000351
EA 076701

DISREGARD PRINTS BEARING EARLIER REVISION DATES

REVISION DATES (PRELIMINARY STAGE ONLY) 07 08-23-13 09-13-13

SHEET X OF X

21-JAN-2014 09:46
a0_04.dgn

DIST.	COUNTY	LOCATION CODE	POST MILES TOTAL PROJECT	SHEET NO.	TOTAL SHEETS
11	Imp	5708		73	354

LICENSED ARCHITECT — 9/12/13 — DATE

LICENSED ARCHITECT ANTHONY V. MANANSALA No. C-32260 Ren. 4/30/15 STATE OF CALIFORNIA

01-06-14
PLANS APPROVAL DATE

The State of California or its officers or agents shall not be responsible for the accuracy or completeness of scanned copies of this plan sheet.

ACCESSIBILITY DESIGN APPROVAL STAMP DOT / DES / OTA
PROJECT ID **1100000035**
Reviewed by:
Date: 10-19-10

CALIFORNIA STATE FIRE MARSHAL APPROVED
Approval of this plan does not authorize or approve any omission or deviation from applicable regulations. Final approval is subject to field inspection. One set of approved plans shall be available on the project site at all times.
Reviewed by: FRANCIS SOLICH
Approval date: 11-29-2013
CSFM No. 01-13-11-0025

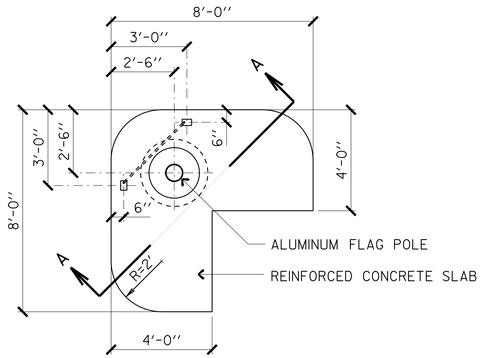

PLAN

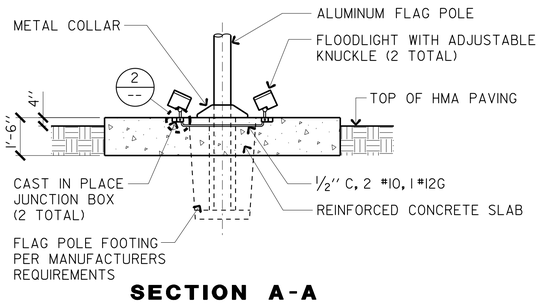

SECTION A-A

1 LIGHTED FLAG POLE
NO SCALE

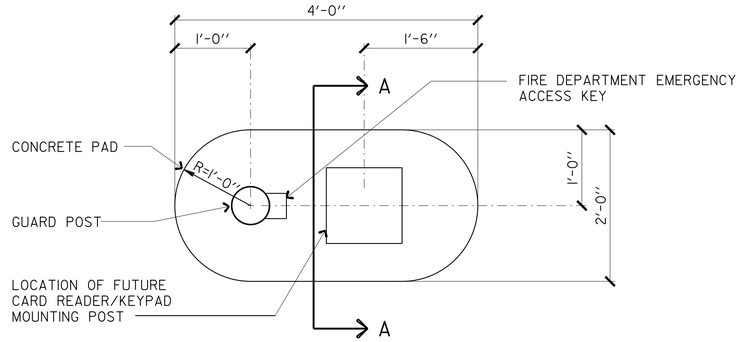

PLAN

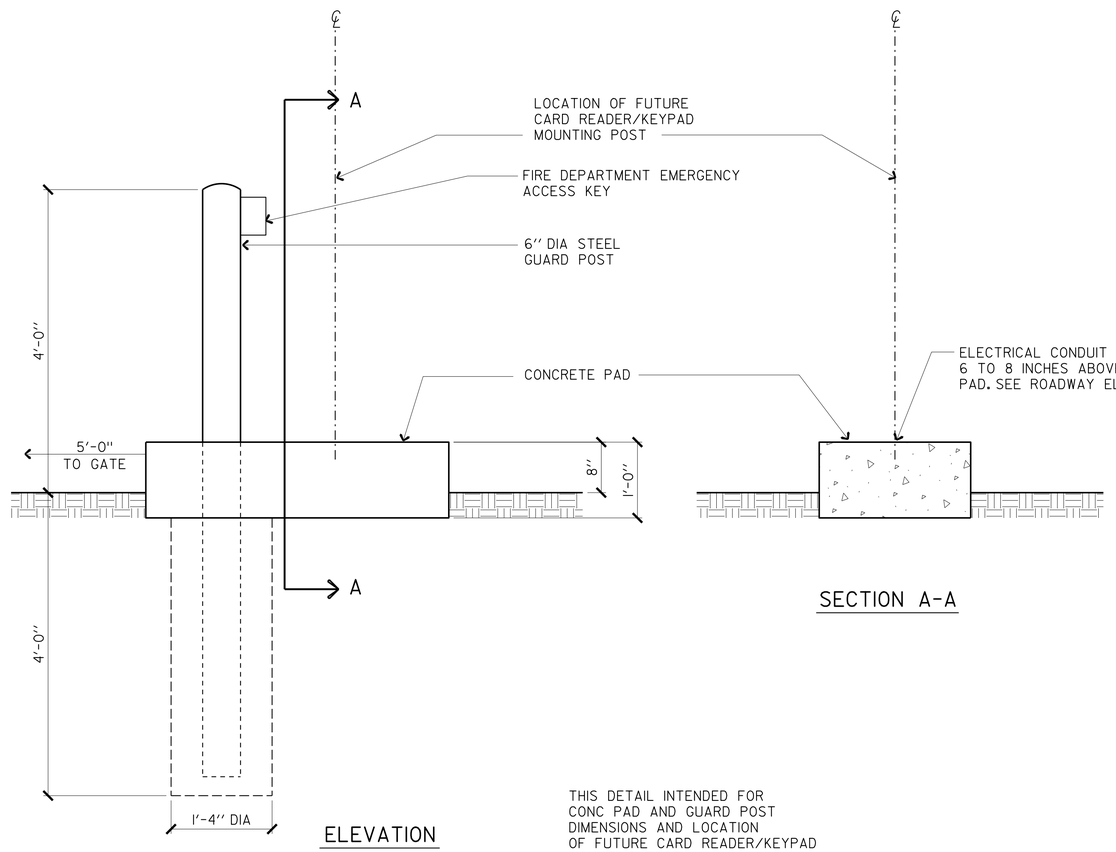

ELEVATION

SECTION A-A

THIS DETAIL INTENDED FOR CONC PAD AND GUARD POST DIMENSIONS AND LOCATION OF FUTURE CARD READER/KEYPAD MOUNTING POST

3 SECURITY ENTRY STATION
NO SCALE

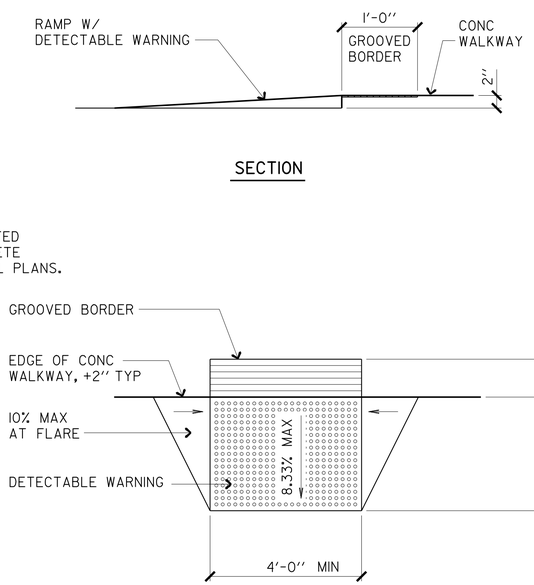

PLAN

FOR ADDITIONAL NOTES AND DETAILS, SEE SHEET A0-3.1, ACCESSIBLITY STANDARD DETAILS

4 ACCESSIBLE CURB RAMP @ CONCRETE WALKWAYS
NO SCALE

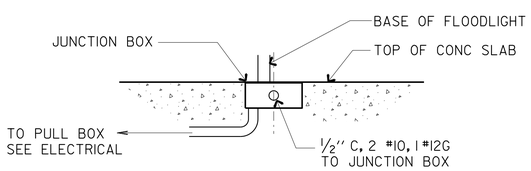

2 JUNCTION BOX
NO SCALE

DESIGN	BY MICHELE MARSON	CHECKED ANTHONY MANANSALA	
DETAILS	BY MICHELE MARSON	CHECKED ANTHONY MANANSALA	
QUANTITIES	BY	CHECKED	

STATE OF CALIFORNIA DEPARTMENT OF TRANSPORTATION

DIVISION OF ENGINEERING SERVICES ARCHITECTURAL AND STRUCTURAL DESIGN

BRIDGE NO. 58M5708
POST MILE

EL CENTRO MAINTENANCE FACILITY

SITE DETAILS

SHEET **A0-5**

a0_05.dgn
TAEMWW Imperial Rev. 7/10 21-JAN-2014 09:46

ORIGINAL SCALE IN INCHES FOR REDUCED PLANS 0 1 2 3

UNIT 3595
PROJECT NUMBER & PHASE 11000000351
EA 076701

DISREGARD PRINTS BEARING EARLIER REVISION DATES → 07-08-23-13 09-13-13 12-06-13

REVISION DATES (PRELIMINARY STAGE ONLY) SHEET X OF X

21-JAN-2014 09:46
a0_05.dgn

DOOR SCHEDULE

DOOR NO	DOOR TYPE	OPENING SIZE WIDTH x HT	DOOR THK	DOOR MAT	DOOR FIN	FRAME MAT	FRAME FIN	FRAME WTH	HDWR GROUP	LOUVER	SIGNS SHEET A0-3.3 DETAIL NO	SIGNS SHEET A0-3.3 TEXT	DETAILS SHEET A11-1 HEAD	DETAILS SHEET A11-1 JAMB	DETAILS SHEET A11-1 THLD
MAINTENANCE OFFICE/ EQUIPMENT															
1	A	3'-0"x7'-0"	1 3/4"	METAL	PAINT	PMF	PAINT	8"	1	--	2 & 6	EXIT	1	2	3
2	A	3'-0"x7'-0"	1 3/4"	METAL	PAINT	PMF	PAINT	8"	1	--	2 & 6	EXIT	1	2	3
3	D	4'-0"x7'-0"	1 3/4"	METAL	PAINT	PMF	PAINT	8"	2	YES	1 & 6	MECH ROOM	1	2	3
4	C	3'-0"x7'-0"	1 3/4"	METAL	PAINT	PMF	PAINT	10"	3	--	--	--	4	5	9
5	C	3'-0"x7'-0"	1 3/4"	METAL	PAINT	PMF	PAINT	6"	4	--	--	--	4	5	--
6	H	3'-0"x7'-0"	1 3/4"	WOOD	PAINT	PMF	PAINT	6"	5	--	1	113	4	5	--
7	H	3'-0"x7'-0"	1 3/4"	WOOD	PAINT	PMF	PAINT	6"	5	--	1	112	4	5	--
8	H	3'-0"x7'-0"	1 3/4"	WOOD	PAINT	PMF	PAINT	6"	6	--	1	KITCHEN	4	5	--
9	J	3'-0"x7'-0"	1 3/4"	WOOD	PAINT	PMF	PAINT	6"	7	--	1	106	4	5	--
10	H	3'-0"x7'-0"	1 3/4"	WOOD	PAINT	PMF	PAINT	6"	7	--	1	105	4	5	--
11	H	3'-0"x7'-0"	1 3/4"	WOOD	PAINT	PMF	PAINT	6"	7	--	1	104	4	5	--
12	H	3'-0"x7'-0"	1 3/4"	WOOD	PAINT	PMF	PAINT	6"	7	--	1	107	4	5	--
13	H	3'-0"x7'-0"	1 3/4"	WOOD	PAINT	PMF	PAINT	6"	7	--	1	108	4	5	--
14	K	3'-0"x7'-0"	1 3/4"	WOOD	PAINT	PMF	PAINT	6"	7	--	1	109	4	5	--
15	J	3'-0"x7'-0"	1 3/4"	WOOD	PAINT	PMF	PAINT	6"	6	--	1	110	4	5	--
16	K	3'-0"x7'-0"	1 3/4"	WOOD	PAINT	PMF	PAINT	6"	8	--	3C/4C	MEN	4	5	8
17	K	3'-0"x7'-0"	1 3/4"	WOOD	PAINT	PMF	PAINT	6"	9	--	3B/4B	WOMEN	4	5	8
18	K	3'-0"x7'-0"	1 3/4"	WOOD	PAINT	PMF	PAINT	6"	6	--	1	JANITOR	4	5	6
19	C	3'-0"x7'-0"	1 3/4"	METAL	PAINT	PMF	PAINT	10"	10	--	2 & 6	EXIT	1	2	9
20	O	16'-0"x15'-0"	2"	METAL	PAINT	PMF	PAINT	9 5/8"	--	YES	--	--	10	11	12
21	O	16'-0"x15'-0"	2"	METAL	PAINT	PMF	PAINT	9 5/8"	--	YES	--	--	10	11	12
22	O	16'-0"x15'-0"	2"	METAL	PAINT	PMF	PAINT	9 5/8"	--	YES	--	--	10	11	12
23	P	10'-0"x10'-0"	2"	METAL	PAINT	PMF	PAINT	7 5/8"	--	--	--	--	10	11	12
24	C	3'-0"x7'-0"	1 3/4"	METAL	PAINT	PMF	PAINT	10"	1	--	2 & 6	EXIT	1	2	3
25	C	3'-0"x7'-0"	1 3/4"	METAL	PAINT	PMF	PAINT	10"	1	--	2 & 6	EXIT	1	2	3
26	P	10'-0"x10'-0"	2"	METAL	PAINT	PMF	PAINT	7 5/8"	--	--	--	--	10	11	12
27	C	3'-0"x7'-0"	1 3/4"	METAL	PAINT	PMF	PAINT	10"	1	--	2 & 6	EXIT	1	2	3
28	C	3'-0"x7'-0"	1 3/4"	METAL	PAINT	PMF	PAINT	10"	1	--	2 & 6	EXIT	1	2	3
29	E	PR 3'-0"x7'-0"	1 3/4"	METAL	PAINT	PMF	PAINT	8"	11	--	1	STORAGE	4	5	--
30	E	PR 3'-0"x7'-0"	1 3/4"	METAL	PAINT	PMF	PAINT	10"	11	--	1	STORAGE	4	5	--
31	E	PR 3'-0"x7'-0"	1 3/4"	METAL	PAINT	PMF	PAINT	10"	11	--	1	STORAGE	4	5	--
32	E	PR 3'-0"x7'-0"	1 3/4"	METAL	PAINT	PMF	PAINT	10"	12	YES	1	MECH ROOM	4	5	9
33		NOT USED													
34		NOT USED													
35		NOT USED													
36		NOT USED													
37		NOT USED													
HERBICIDE/FERTILIZER STORAGE															
38	S	8'-0"x8'-0"	2"	METAL	PAINT	PMF	PAINT	7 5/8"	--	--	--	--	1	2	--
39	D	3'-0"x7'-0"	1 3/4"	METAL	PAINT	PMF	PAINT	8"	13	--	2 & 6	EXIT	10	11	12

DOOR NO	DOOR TYPE	OPENING SIZE WIDTH x HGT	DOOR THK	DOOR MAT	DOOR FIN	FRAME MAT	FRAME FIN	FRAME WTH	HDWR GROUP	LOUVER	SIGNS SHEET A0-3.3 DETAIL NO	SIGNS SHEET A0-3.3 TEXT	DETAILS SHEET A11-1 EXCEPT AS NOTED HEAD	DETAILS SHEET A11-1 EXCEPT AS NOTED JAMB	DETAILS SHEET A11-1 EXCEPT AS NOTED THLD
WASH RACK															
40	E	PR 3'-0"x7'-0"	1 3/4"	METAL	PAINT	PMF	PAINT	8"	14	YES	--	FIRE EXTINGUISHER INSIDE	1	2	--
WAREHOUSE															
41	D	4'-0"x7'-0"	1 3/4"	METAL	PAINT	PMF	PAINT	10"	1	--	2 & 6	EXIT	1	2	3
42	R	10'-0"x12'-0"	2"	METAL	PAINT	PMF	PAINT	9 5/8"	--	--	--	--	10	11	12
43	R	10'-0"x12'-0"	2"	METAL	PAINT	PMF	PAINT	9 5/8"	--	--	--	--	10	11	12
44	D	4'-0"x7'-0"	1 3/4"	METAL	PAINT	PMF	PAINT	10"	1	--	2 & 6	EXIT	1	2	3
REGIONAL OFFICE															
45	G	4'-0"x7'-0"	1 3/4"	METAL	PAINT	PMF	PAINT	8"	1	--	2 & 6	EXIT	1	2	3
46	F	3'-0"x7'-0"	1 3/4"	METAL	PAINT	PMF	PAINT	8"	1	--	2 & 6	EXIT	1	2	3
47	F	3'-0"x7'-0"	1 3/4"	METAL	PAINT	PMF	PAINT	8"	1	--	2 & 6	EXIT	1	2	3
48	D	4'-0"x7'-0"	1 3/4"	METAL	PAINT	PMF	PAINT	8"	2	YES	1 & 6	MECH ROOM	1	2	3
49	F	3'-0"x7'-0"	1 3/4"	METAL	PAINT	PMF	PAINT	8"	1	--	2 & 6	EXIT	1	2	3
50	N	3'-0"x7'-0"	1 3/4"	ALUM	PAINT	ALUM	PAINT	4"	15	--	--	--	8 A11-13	10 & 11 A11-13	9 A11-13
51	H	3'-0"x7'-0"	1 3/4"	WOOD	PAINT	PMF	PAINT	6"	7	--	1	605	4	5	--
52	K	3'-0"x7'-0"	1 3/4"	WOOD	PAINT	PMF	PAINT	6"	16	--	1	STORAGE	4	5	--
53	J	3'-0"x7'-0"	1 3/4"	WOOD	PAINT	PMF	PAINT	10"	7	--	1	607	4	5	--
54	J	3'-0"x7'-0"	1 3/4"	WOOD	PAINT	PMF	PAINT	10"	7	--	1	608	4	5	--
55	J	3'-0"x7'-0"	1 3/4"	WOOD	PAINT	PMF	PAINT	10"	7	--	1	609	4	5	--
56	J	3'-0"x7'-0"	1 3/4"	WOOD	PAINT	PMF	PAINT	10"	7	--	1	610	4	5	--
57	K	3'-0"x7'-0"	1 3/4"	WOOD	PAINT	PMF	PAINT	10"	9	--	3B/4B	WOMEN	4	5	8
58	K	3'-0"x7'-0"	1 3/4"	WOOD	PAINT	PMF	PAINT	6"	7	--	1	STORAGE	4	5	--
59	K	3'-0"x7'-0"	1 3/4"	WOOD	PAINT	PMF	PAINT	6"	6	--	1	JANITOR	4	5	6
60	K	3'-0"x7'-0"	1 3/4"	WOOD	PAINT	PMF	PAINT	10"	9	--	3C/4C	MEN	4	5	8
61	H	3'-0"x7'-0"	1 3/4"	WOOD	PAINT	PMF	PAINT	10"	6	--	1	614	4	5	--
62	J	3'-0"x7'-0"	1 3/4"	WOOD	PAINT	PMF	PAINT	6"	7	--	1	619	4	5	--
63	M	PR 3'-0"x7'-0"	1 3/4"	WOOD	PAINT	PMF	PAINT	10"	17	--	1	STORAGE	4	5	--
64	L	PR 3'-0"x7'-0"	1 3/4"	WOOD	PAINT	PMF	PAINT	10"	18	--	1	EXIT ROUTE/ 619*	4	5	--
												* "EXIT ROUTE" RM 619 SIDE "619" RM 600 SIDE			

DIST.	COUNTY	LOCATION CODE	POST MILES TOTAL PROJECT	SHEET NO.	TOTAL SHEETS
11	Imp	5708		74	354

LICENSED ARCHITECT — 9/12/13 — DATE

LICENSED ARCHITECT ANTHONY V. MANANSALA No. C-32260 Ren. 4/30/15 STATE OF CALIFORNIA

01-06-14
PLANS APPROVAL DATE

The State of California or its officers or agents shall not be responsible for the accuracy or completeness of scanned copies of this plan sheet.

ACCESSIBILITY DESIGN APPROVAL STAMP DOT / DES / OTA
PROJECT ID **1100000035**
Reviewed by:
Date: 10-19-10

CALIFORNIA STATE FIRE MARSHAL APPROVED
Approval of this plan does not authorize or approve any omission or deviation from applicable regulations. Final approval is subject to field inspection. One set of approved plans shall be available on the project site at all times.
Reviewed by: FRANCIS SOLICH
Approval date: 11-29-2013
CSFM No. 01-13-11-0025

DESIGN	BY MICHELE MARSON	CHECKED ANTHONY MANANSALA	
DETAILS	BY MICHELE MARSON	CHECKED ANTHONY MANANSALA	
QUANTITIES	BY	CHECKED	

STATE OF CALIFORNIA DEPARTMENT OF TRANSPORTATION

DIVISION OF ENGINEERING SERVICES ARCHITECTURAL AND STRUCTURAL DESIGN

BRIDGE NO. 58M5708
POST MILE

EL CENTRO MAINTENANCE FACILITY

DOOR SCHEDULE

SHEET **A0-6**

ORIGINAL SCALE IN INCHES FOR REDUCED PLANS 0 1 2 3

UNIT 3595
PROJECT NUMBER & PHASE 11000000351
EA 076701

DISREGARD PRINTS BEARING EARLIER REVISION DATES

REVISION DATES (PRELIMINARY STAGE ONLY) 07 08-23-13 09-13-13

SHEET X OF X

a0_06.dgn
TAEMWW Imperial Rev. 7/10 21-JAN-2014 09:46

21-JAN-2014 09:46 a0_06.dgn

DIST.	COUNTY	LOCATION CODE	POST MILES TOTAL PROJECT	SHEET NO.	TOTAL SHEETS
11	Imp	5708		75	354

LICENSED ARCHITECT — 9/12/13 — DATE

LICENSED ARCHITECT ANTHONY V. MANANSALA No. C-32260 Ren. 4/30/15 STATE OF CALIFORNIA

01-06-14
PLANS APPROVAL DATE

The State of California or its officers or agents shall not be responsible for the accuracy or completeness of scanned copies of this plan sheet.

ACCESSIBILITY DESIGN APPROVAL STAMP DOT / DES / OTA
PROJECT ID **1100000035**
Reviewed by:
Date: 10-19-10

CALIFORNIA STATE FIRE MARSHAL APPROVED
Approval of this plan does not authorize or approve any omission or deviation from applicable regulations. Final approval is subject to field inspection. One set of approved plans shall be available on the project site at all times.
Reviewed by: FRANCIS SOLTCH
Approval date: 11-29-2013
CSFM No. 01-13-11-0025

WINDOW TYPES

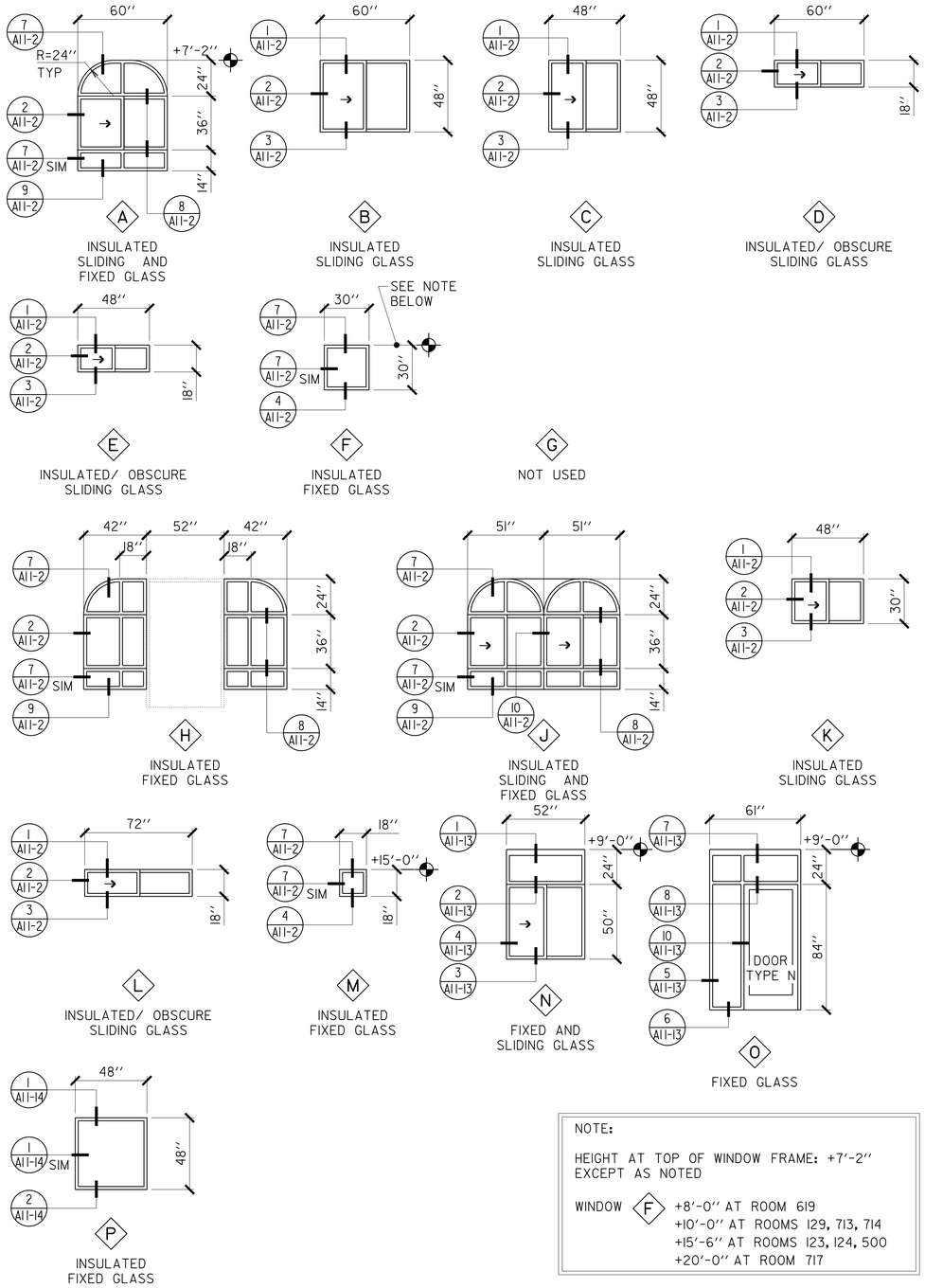

NOTE:

HEIGHT AT TOP OF WINDOW FRAME: +7'-2'' EXCEPT AS NOTED

WINDOW F
+8'-0'' AT ROOM 619
+10'-0'' AT ROOMS 129, 713, 714
+15'-6'' AT ROOMS 123, 124, 500
+20'-0'' AT ROOM 717

DOOR TYPES

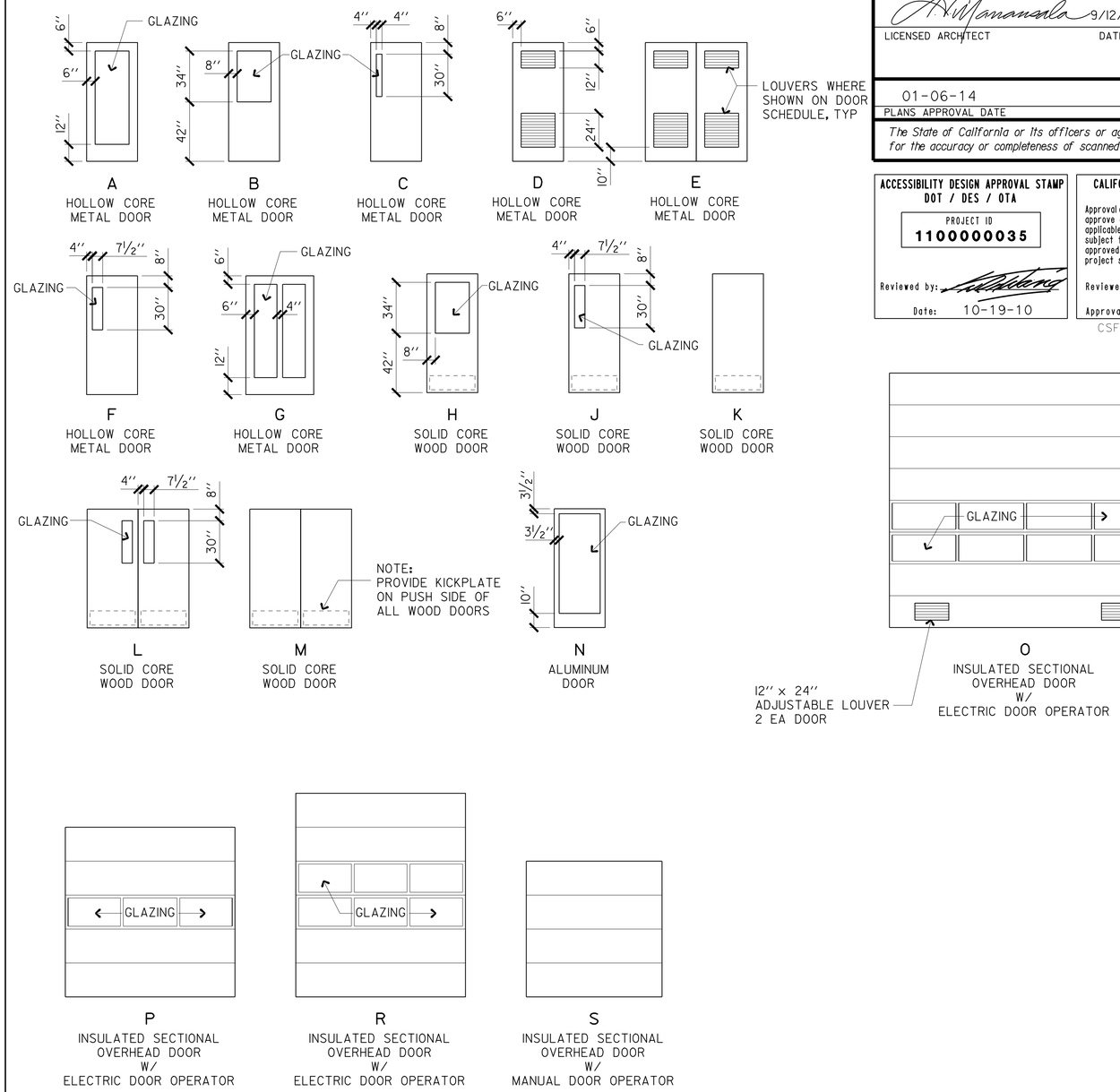

DESIGN	BY MICHELE MARSON	CHECKED ANTHONY MANANSALA	
DETAILS	BY MICHELE MARSON	CHECKED ANTHONY MANANSALA	
QUANTITIES	BY	CHECKED	

STATE OF CALIFORNIA
DEPARTMENT OF TRANSPORTATION

DIVISION OF ENGINEERING SERVICES
ARCHITECTURAL AND STRUCTURAL DESIGN

BRIDGE NO. 58M5708
POST MILE

EL CENTRO MAINTENANCE FACILITY

DOOR AND WINDOW TYPES

SHEET **A0-7**

a0_07.dgn
TAEMWW Imperial Rev. 7/10
21-JAN-2014 09:46

ORIGINAL SCALE IN INCHES FOR REDUCED PLANS 0 1 2 3

UNIT 3595
PROJECT NUMBER & PHASE 11000000351
EA 076701

DISREGARD PRINTS BEARING EARLIER REVISION DATES
REVISION DATES (PRELIMINARY STAGE ONLY) 07 08-23-13 09-13-13
SHEET X OF X

21-JAN-2014 09:46
a0_07.dgn

FINISH SCHEDULE

DIST.	COUNTY	LOCATION CODE	POST MILES TOTAL PROJECT	SHEET NO.	TOTAL SHEETS
11	Imp	5708		76	354

LICENSED ARCHITECT — 9/12/13 — DATE

LICENSED ARCHITECT ANTHONY V. MANANSALA No. C-32260 Ren. 4/30/15 STATE OF CALIFORNIA

01-06-14
PLANS APPROVAL DATE

The State of California or its officers or agents shall not be responsible for the accuracy or completeness of scanned copies of this plan sheet.

NOTES:

1. CERAMIC WALL TILE TO BE INSTALLED OVER CEMENTITIOUS BACKER BOARD
2. 5/8" GYPSUM BOARD AT ROOM 300 MUST BE TYPE "X"

ACCESSIBILITY DESIGN APPROVAL STAMP DOT / DES / OTA
PROJECT ID **11000000035**
Reviewed by: [signature]
Date: 10-19-10

CALIFORNIA STATE FIRE MARSHAL APPROVED
Approval of this plan does not authorize or approve any omission or deviation from applicable regulations. Final approval is subject to field inspection. One set of approved plans shall be available on the project site at all times.
Reviewed by: [signature] FRANCIS SOLICH
Approval date: 11-29-2013
CSFM No. 01-13-11-0025

FINISHES: A. NO JOB FINISH; B. PAINT; C. CLEAN AND POLISH; D. CLEAN AND POLISH; E. CLEAN; F. VACUUM

ROOM NUMBER/ NAME	FLOOR: CONCRETE	FLOOR: VINYL COMPOSITION TILE	FLOOR: 1" x 1" CERAMIC TILE	FLOOR: 12" x 12" CERAMIC TILE	FLOOR: CARPET	BASE: RESILIENT BASE	BASE: 6" HIGH CERAMIC TILE BASE	WALLS NORTH: 1/2" GYPSUM BD	WALLS NORTH: 1/2" GLASS-MAT FACED BD	WALLS NORTH: 5/8" GYPSUM BD	WALLS NORTH: 3" x 3" CERAMIC TILE	WALLS NORTH: FIBERGLASS REINFORCED PLASTIC PANEL	WALLS EAST: 1/2" GYPSUM BD	WALLS EAST: 1/2" GLASS-MAT FACED BD	WALLS EAST: 5/8" GYPSUM BD	WALLS EAST: 3" x 3" CERAMIC TILE	WALLS EAST: FIBERGLASS REINFORCED PLASTIC PANEL	WALLS SOUTH: 1/2" GYPSUM BD	WALLS SOUTH: 1/2" GLASS-MAT FACED BD	WALLS SOUTH: 5/8" GYPSUM BD	WALLS SOUTH: 3" x 3" CERAMIC TILE	WALLS SOUTH: FIBERGLASS REINFORCED PLASTIC PANEL	WALLS WEST: 1/2" GYPSUM BD	WALLS WEST: 1/2" GLASS-MAT FACED BD	WALLS WEST: 5/8" GYPSUM BD	WALLS WEST: 3" x 3" CERAMIC TILE	WALLS WEST: FIBERGLASS REINFORCED PLASTIC PANEL	WSCT: FIBERGLASS REINFORCED PLASTIC PANEL	WSCT: 1/2" PLYWOOD PANELING	CLG: 5/8" GYPSUM BD	CLG: ACOUSTIC CEILING TILES	HEIGHT	COLOR # A0-9: CERAMIC TILE FLOOR ACCENT	COLOR # A0-9: CERAMIC TILE WALL ACCENT	COLOR # A0-9: WOOD & HOLLOW METAL DRS	COLOR # A0-9: PRESSED METAL FRAMES
MAINTENANCE OFFICE/ EQUIPMENT																																				
100 HALLWAY		C				A				B					B					B					B					B		9'-0"			2	2
101 HALLWAY		C				A				B					B					B					B					B		9'-0"			2	2
102 HALLWAY		C				A				B					B					B					B					B		9'-0"			2	2
103 HALLWAY		C				A				B					B					B					B					B		9'-0"			2	2
104 SUPERVISOR		C				A		B					B					B					B							B		9'-0"			1	2
105 LEADWORKER		C				A		B					B					B					B							B		9'-0"			1	2
106 COMMUNICATION ROOM		C				A		B					B					B					B							B		9'-0"			1	2
107 SUPERVISOR		C				A		B					B					B					B							B		9'-0"			1	2
108 LEADWORKER		C				A		B					B					B					B							B		9'-0"			1	2
109 SUPPLY STORAGE		C				A		B					B					B					B							B		9'-0"			1	1
110 IRRIGATION CONTROL		C				A		B					B					B					B							B		9'-0"			1	1
111 KITCHEN		C				A		B					B					B					B							B		9'-0"			2	2
112 CREW ROOM		C				A		B					B					B												B		9'-0"			2	2
113 CREW ROOM		C				A		B										B					B							B		9'-0"			2	2
114 JANITOR		C				A			B					B					B					B				A		B		9'-0"			1	1
115 WOMEN'S LOCKERS			D				D	B					B					B					B							B		9'-0"	1	1	2	2
116 WOMEN			D				D		B					B		D			B		D			B		D				B		9'-0"	1	1		
117 SHOWER			D				D		B		D			B		D			B		D			B						B		9'-0"	1	1		
118 SHOWER			D				D		B		D			B					B		D			B		D				B		9'-0"	2	2		
119 MEN			D				D		B		D			B		D			B		D			B		D				B		9'-0"	2	2		
120 MEN'S LOCKERS			D				D	B					B					B					B							B		9'-0"	2	2	2	2
121 HVAC/ ELECTRIC	A									B					B					B					B					B		9'-0"			1	1
122 VESTIBULE		C				A				B					B					B					B					B		9'-0"			2	2
123 UTILITY	A									B					B					B					B					B		9'-0"			1	1
124 SERVICE BAY	A									B					B					B					B				B			18'-0"			1	1
125 STORAGE BAYS	A									B					B					B					B				B			18'-0"			1	1
126 CREW SECURE STORAGE	A									B					B					B					B				B	B		12'-0"			1	1
127 CREW SECURE STORAGE	A									B					B					B					B				B	B		12'-0"			1	1
128 SPECIAL CREW STORAGE	A									B					B					B					B				B	B		12'-0"			1	1
129 SPECIAL CREW SHOP	A									B					B					B					B				B	B		12'-0"			1	1
HERBICIDE/FERTILIZER STORAGE																																				
300 STORAGE	A									B					B					B					B					B		11'-0"			1	1
WASH RACK																																				
400 WASHER/SWEEPER ROOM	A									B					B					B					B					B		9'-0"			1	1
WAREHOUSE																																				
500 WAREHOUSE	A									B					B					B					B				B			17'-0"			1	1
REGIONAL OFFICE																																				
600 FOYER				E			E			B					B					B					B					B		VARIES			1	2
601 HALLWAY					F	A				B					B					B					B					B		VARIES			1	2
602 HALLWAY		C			F	A				B					B					B					B					B		VARIES			1	2
603 HALLWAY		C			F	A				B					B					B					B					B		VARIES			1	2
604 HALLWAY					F	A				B					B					B					B					B		16'-6"			1	2
605 RAO					F	A		B					B					B					B							B		9'-0"			1	2
606 CLERICAL					F	A		B					B					B					B							B		9'-0"			1	2
607 REGIONAL MANAGER					F	A		B					B					B					B							B		9'-0"			1	2
608 ASST REGIONAL MANAGER					F	A		B					B					B					B							B		9'-0"			1	2
609 SUPERINTENDENT					F	A		B					B					B					B							B		9'-0"			1	2
610 SUPERINTENDENT					F	A		B					B					B					B							B		9'-0"			1	2
611 HVAC/ELEC	A					A				B					B					B					B					B		9'-0"			1	1
612 WOMEN			D				D		B		D			B					B		D			B		D				B		9'-0"	1	1	2	2
613 MEN			D				D		B		D			B		D			B		D			B		D				B		9'-0"	2	2	2	2
614 BREAK ROOM		C				A		B					B					B					B							B		9'-0"			2	2

FINISHES: A. NO JOB FINISH; B. PAINT; C. CLEAN AND POLISH; D. CLEAN AND POLISH; E. CLEAN; F. VACUUM

ROOM NUMBER/ NAME	FLOOR: CONCRETE	FLOOR: VINYL COMPOSITION TILE	FLOOR: 1" x 1" CERAMIC TILE	FLOOR: 12" x 12" CERAMIC TILE	FLOOR: CARPET	BASE: RESILIENT BASE	BASE: 6" HIGH CERAMIC TILE BASE	WALLS NORTH: 1/2" GYPSUM BD	WALLS NORTH: 1/2" GLASS-MAT FACED BD	WALLS NORTH: 5/8" GYPSUM BD	WALLS NORTH: 3" x 3" CERAMIC TILE	WALLS NORTH: FIBERGLASS REINFORCED PLASTIC PANEL	WALLS EAST: 1/2" GYPSUM BD	WALLS EAST: 1/2" GLASS-MAT FACED BD	WALLS EAST: 5/8" GYPSUM BD	WALLS EAST: 3" x 3" CERAMIC TILE	WALLS EAST: FIBERGLASS REINFORCED PLASTIC PANEL	WALLS SOUTH: 1/2" GYPSUM BD	WALLS SOUTH: 1/2" GLASS-MAT FACED BD	WALLS SOUTH: 5/8" GYPSUM BD	WALLS SOUTH: 3" x 3" CERAMIC TILE	WALLS SOUTH: FIBERGLASS REINFORCED PLASTIC PANEL	WALLS WEST: 1/2" GYPSUM BD	WALLS WEST: 1/2" GLASS-MAT FACED BD	WALLS WEST: 5/8" GYPSUM BD	WALLS WEST: 3" x 3" CERAMIC TILE	WALLS WEST: FIBERGLASS REINFORCED PLASTIC PANEL	WSCT: FIBERGLASS REINFORCED PLASTIC PANEL	WSCT: 1/2" PLYWOOD PANELING	CLG: 5/8" GYPSUM BD	CLG: ACOUSTICAL TILES	HEIGHT	COLOR # A0-9: CERAMIC TILE FLOOR ACCENT	COLOR # A0-9: CERAMIC TILE WALL ACCENT	COLOR # A0-9: WOOD & HOLLOW METAL DRS	COLOR # A0-9: PRESSED METAL FRAMES
REGIONAL OFFICE (CONT)																																				
615 RECORD STORAGE		C				A		B					B					B					B							B		9'-0"			1	1
616 EQUIPMENT ALCOVE		C				A		B					B					B					B							B		9'-0"				
617 SUPPLY STORAGE		C				A		B					B					B					B							B		9'-0"			1	1
618 JANITOR		C				A			B					B					B					B				A		B		9'-0"			1	1
619 TRAINING/ CONFERENCE					F	A		B					B					B					B							B	A	9'-6"			1	2
620 CONFERENCE STORAGE		C				A		B					B					B					B							B		9'-0"			1	1

DESIGN	BY MICHELE MARSON	CHECKED ANTHONY MANANSALA	
DETAILS	BY MICHELE MARSON	CHECKED ANTHONY MANANSALA	
QUANTITIES	BY	CHECKED	

STATE OF CALIFORNIA
DEPARTMENT OF TRANSPORTATION

DIVISION OF ENGINEERING SERVICES
ARCHITECTURAL AND STRUCTURAL DESIGN

BRIDGE NO. 58M5708
POST MILE

EL CENTRO MAINTENANCE FACILITY

FINISH SCHEDULE

SHEET **A0-8**

a0_08.dgn
TAEMWW Imperial Rev. 7/10
21-JAN-2014 09:46

ORIGINAL SCALE IN INCHES FOR REDUCED PLANS 0 1 2 3

UNIT 3595
PROJECT NUMBER & PHASE 11000000351
EA 076701

DISREGARD PRINTS BEARING EARLIER REVISION DATES →

REVISION DATES (PRELIMINARY STAGE ONLY): 07 08-23-13 09-13-13

SHEET X OF X

21-JAN-2014 09:46
a0_08.dgn

DIST.	COUNTY	LOCATION CODE	POST MILES TOTAL PROJECT	SHEET NO.	TOTAL SHEETS
11	Imp	5708		77	354

LICENSED ARCHITECT — 9/12/13
DATE

LICENSED ARCHITECT
ANTHONY V. MANANSALA
No. C-32260
Ren. 4/30/15
STATE OF CALIFORNIA

01-06-14
PLANS APPROVAL DATE

The State of California or its officers or agents shall not be responsible for the accuracy or completeness of scanned copies of this plan sheet.

ACCESSIBILITY DESIGN APPROVAL STAMP DOT / DES / OTA
PROJECT ID **1100000035**
Reviewed by:
Date: 10-19-10

CALIFORNIA STATE FIRE MARSHAL APPROVED
Approval of this plan does not authorize or approve any omission or deviation from applicable regulations. Final approval is subject to field inspection. One set of approved plans shall be available on the project site at all times.
Reviewed by: FRANCIS SOLICH
Approval date: 11-29-2013
CSFM No. 01-13-11-0025

COLOR SCHEDULE

MANUFACTURERS' DESIGNATIONS BELOW ARE INCLUDED AS EXAMPLES OF COLOR AND FINISH ONLY. OTHER MANUFACTURERS' PRODUCTS WHICH MATCH THESE PRODUCTS MAY BE SUBMITTED FOR APPROVAL.

INTERIOR

1. Vinyl Composition Tile
   Azrock, #V-874, Desert Haze
2. Vinyl Composition Tile (Regional Office)
   Azrock, #TQ-291, Camel
3. Carpet (Regional Office)
   Pacific Crest, Pageant, #P0677-10, Forest Floor
4. Resilient Base
   Burke, #523, BlackBrown
5. Ceramic Tile Floor
   Daltile, #D147, Buffstone Range
6. Ceramic Tile Floor Accent
   Color #1 - Daltile, #D093, Fire Brick
   Color #2 - Daltile, #D452, Cypress
7. Ceramic Tile Entry Floor (Regional Office)
   Daltile, #CP83, Redwood
8. Ceramic Tile Walls
   Daltile, #D335, Almond
9. Ceramic Tile Wall Accent
   Color #1A - Daltile, #D166, Elemental Tan
   Color #1B - Daltile, #D093, Fire Brick
   Color #2A - Daltile, #D311, Black
   Color #2B - Daltile, #D452, Cypress
10. Grout
    Floor: Custom, #145, Light Smoke
    Entry Floor: Custom, #384, Camel
    Walls: Custom, #101, Quartz
11. Gypsum Board Walls & Ceilings
    Kelly-Moore, #OW211-1, Champagne Mist
12. Fiberglass Reinforced Plastic Panels
    Glasbord, #84, Ivory
13. Plywood Wainscot
    Kelly-Moore, #OW211-1, Champagne Mist
14. Acoustic Ceiling Tiles
    White
15. Exposed Steel Columns
    Kelly-Moore, #OW211-1, Champagne Mist
16. Exposed Trusses, Roof Decking & Fasteners
    Kelly-Moore, #OW211-1, Champagne Mist
17. Wood & Hollow Metal Doors
    Color #1, Kelly-Moore, #KM4186-1, Bohemian
    Color #2, Kelly-Moore, #KM3915-1, Dillard
18. Pressed Metal Frames
    Color #1, Kelly-Moore, #KM4186-1, Bohemian
    Color #2, Kelly-Moore, #KM3915-1, Dillard
19. Aluminum Door, Window & Frame
    (Regional Office- Between Rms 600 & 601 only)
    Kelly-Moore, #KM4186-1, Bohemian
20. Sectional Overhead Doors
    Factory Finish, White
21. Metal Jambs @ Overhead Doors
    Match Adjacent Color
22. Metal Louvers @ OH Doors
    Bronze Anodized
23. Window Frames
    Kelly-Moore, #OW211-1, Champagne Mist
24. Window Sill and Trim
    Kelly-Moore, #KM3915-1, Dillard
25. Horizontal Blinds
    Hunter-Douglas, #C269, Chenille
26. Wood Shelves & Clothes Rod
    Kelly-Moore, #KM4186-1, Bohemian
27. Plastic Laminate Cabinets
    Formica, #858-58, Pumice
28. Plastic Laminate Countertop @ Kitchen
    Formica, #6214-58, Seagrass Strand
29. Plastic Laminate Countertop @ Men/Women
    Formica, #303-58, Antique White Oxide
30. Plastic Laminate Countertop @ Entry (Reg Office)
    Formica, #7732-90, Butterum Granite
31. Plastic Laminate @ Locker Bench
    Formica, #858-58, Pumice
32. Metal Toilet Partitions
    To Be Selected From Mfr Std Colors
33. Metal Lockers
    To Be Selected From Mfr Std Colors
34. Plumbing Fixtures
    White
35. Mechanical Ducts, Exposed Conduit & Piping
    Match Adjacent Wall/ Ceiling Color
36. Bridge Crane Beams & Columns
    Kelly-Moore, #AC208-Y, Happy Holidays

EXTERIOR

40. Concrete Roof Tiles
    Eagle Roofing, #SMC8404, San Juan
41. EIFS Walls
    Color #1 - Dryvit, #442, Cotton or
    Kelly-Moore, #KM4002-1, Limestone Ridge
    Color #2 - Dryvit, #399, Coffee Milk or
    Kelly-Moore, #KM4030-2, Supreme Bean
42. EIFS Soffits
    Dryvit, #442, Cotton or
    Kelly-Moore, #KM4002-1, Limestone Ridge
43. Hollow Metal Doors
    Kelly-Moore, #KM4030-2, Supreme Bean
44. Pressed Metal Frames
    Kelly-Moore, #72, Catalina
45. Aluminum Window Frames
    Kelly-Moore, #72, Catalina
46. Sectional Overhead Doors
    Kelly-Moore, #KM4030-2, Supreme Bean
47. Metal Jambs @ Overhead Doors
    Match Adjacent Color
48. Metal Louvers @ OH Doors
    Bronze Anodized
49. Metal Trim at Overhangs
    Kelly-Moore, #KM4071-3, Terrific Tan
50. Aluminum Canopies
    To Be Selected From Mfr Color Options
51. Evaporative Cooler Platforms
    Kelly-Moore, #KM4002-1, Limestone Ridge
52. Guard Posts
    Kelly-Moore, #AC208-Y, Happy Holidays

WASH RACK, COVERED TRASH/ MATERIAL BINS AND COVERED STORAGE ONLY

60. Metal Roof Deck (Roof Side)
    Paint: White - Solar Reflectance Index ≥ 78
    Paint System 3
61. Metal Roof Deck (Ceiling Side)
    No Job Finish
62. Metal Fascia Panels
    Kelly-Moore, #KM4071-3, Terrific Tan
63. Steel Columns
    Kelly-Moore, #KM4030-2, Supreme Bean
64. Steel Beams & Purlins
    Kelly-Moore, #KM4030-2, Supreme Bean
65. Prefinished Metal Siding
    Kynar 500, Sierra White

NOTES

1. ITEM #6, Ceramic Tile Floor Accent
   10% OF CERAMIC FLOOR TILE SHALL BE TILE FLOOR ACCENT COLOR INSTALLED IN A RANDOM PATTERN
   CERAMIC TILE BASE SHALL BE TILE FLOOR ACCENT COLOR WHERE SHOWN ON DETAIL 9/A11-11
   SEE FINISH SCHEDULE FOR ROOM LOCATION OF ACCENT COLORS
2. ITEM #9, Ceramic Tile Wall Accent
   SEE FINISH SCHEDULE FOR ROOM LOCATION OF ACCENT COLORS, SEE DETAIL 9/A11-11 FOR PATTERN
3. ITEM #16, Wood & Hollow Metal Doors and
   ITEM #17, Pressed Metal Frames
   SEE FINISH SCHEDULE FOR ROOM LOCATION OF DOOR AND FRAME COLORS
4. ITEM #41, EIFS Walls
   SEE EXTERIOR ELEVATIONS FOR COLOR LOCATIONS

DESIGN	BY MICHELE MARSON	CHECKED ANTHONY MANANSALA	
DETAILS	BY MICHELE MARSON	CHECKED ANTHONY MANANSALA	
QUANTITIES	BY	CHECKED	

STATE OF CALIFORNIA
DEPARTMENT OF TRANSPORTATION

DIVISION OF ENGINEERING SERVICES
ARCHITECTURAL AND STRUCTURAL DESIGN

BRIDGE NO. 58M5708
POST MILE

EL CENTRO MAINTENANCE FACILITY

COLOR SCHEDULE

SHEET **A0-9**

a0_09.dgn
TAEMWW Imperial Rev. 7/10 21-JAN-2014 09:46

ORIGINAL SCALE IN INCHES FOR REDUCED PLANS 0 1 2 3

UNIT 3595
PROJECT NUMBER & PHASE 11000000351
EA 076701

DISREGARD PRINTS BEARING EARLIER REVISION DATES
REVISION DATES (PRELIMINARY STAGE ONLY) 07 08-23-13 09-13-13
SHEET X OF X

21-JAN-2014 09:46
a0_09.dgn

DIST.	COUNTY	LOCATION CODE	POST MILES TOTAL PROJECT	SHEET NO.	TOTAL SHEETS
11	Imp	5708		78	354

LICENSED ARCHITECT — DATE: 9/12/13

LICENSED ARCHITECT ANTHONY V. MANANSALA No. C-32260 Ren. 4/30/15 STATE OF CALIFORNIA

01-06-14
PLANS APPROVAL DATE

The State of California or its officers or agents shall not be responsible for the accuracy or completeness of scanned copies of this plan sheet.

ACCESSIBILITY DESIGN APPROVAL STAMP DOT / DES / OTA
PROJECT ID **11000000035**
Reviewed by:
Date: 10-19-10

CALIFORNIA STATE FIRE MARSHAL APPROVED
Approval of this plan does not authorize or approve any omission or deviation from applicable regulations. Final approval is subject to field inspection. One set of approved plans shall be available on the project site at all times.
Reviewed by: FRANCIS SOLICH
Approval date: 11-29-2013
CSFM No. 01-13-11-0025

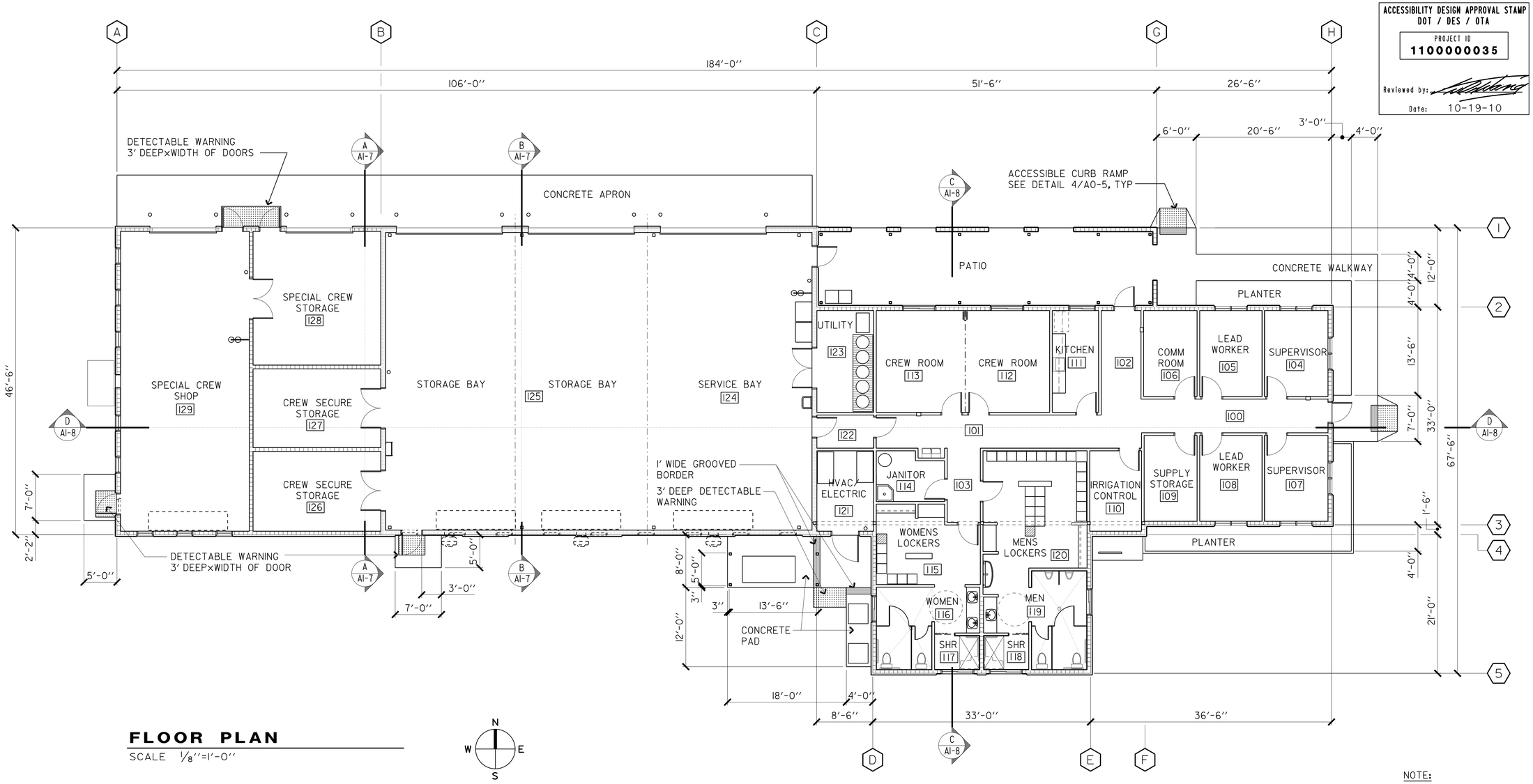

FLOOR PLAN

SCALE 1/8"=1'-0"

NOTE:
FOR LOCATIONS OF ADDITIONAL PLANTERS, SEE PP SHEETS.

DESIGN	BY MICHELE MARSON	CHECKED ANTHONY MANANSALA	
DETAILS	BY MICHELE MARSON	CHECKED ANTHONY MANANSALA	
QUANTITIES	BY	CHECKED	

STATE OF CALIFORNIA
DEPARTMENT OF TRANSPORTATION

DIVISION OF ENGINEERING SERVICES
ARCHITECTURAL AND STRUCTURAL DESIGN

BRIDGE NO. 58M5708
POST MILE

EL CENTRO MAINTENANCE FACILITY

MAINTENANCE OFFICE/EQUIPMENT

FLOOR PLAN

SHEET **A1-1**

ORIGINAL SCALE IN INCHES FOR REDUCED PLANS 0 1 2 3

UNIT 3595
PROJECT NUMBER & PHASE 11000000351
EA 076701

DISREGARD PRINTS BEARING EARLIER REVISION DATES

REVISION DATES (PRELIMINARY STAGE ONLY) 01 08-23-13 09-13-13

SHEET X OF X

a1_01.dgn
TAEMWW Imperial Rev. 7/10
21-JAN-2014 09:46

21-JAN-2014 09:46
a1_01.dgn

DIST.	COUNTY	LOCATION CODE	POST MILES TOTAL PROJECT	SHEET NO.	TOTAL SHEETS
11	Imp	5708		79	354

LICENSED ARCHITECT — ANTHONY V. MANANSALA — No. C-32260 — Ren. 4/30/15 — STATE OF CALIFORNIA

LICENSED ARCHITECT — DATE: 9/12/13

01-06-14
PLANS APPROVAL DATE

The State of California or its officers or agents shall not be responsible for the accuracy or completeness of scanned copies of this plan sheet.

ACCESSIBILITY DESIGN APPROVAL STAMP DOT / DES / OTA
PROJECT ID **1100000035**
Reviewed by:
Date: 10-19-10

CALIFORNIA STATE FIRE MARSHAL APPROVED
Approval of this plan does not authorize or approve any omission or deviation from applicable regulations. Final approval is subject to field inspection. One set of approved plans shall be available on the project site at all times.
Reviewed by: FRANCIS SOLICH
Approval date: 11-29-2013
CSFM No. 01-13-11-0025

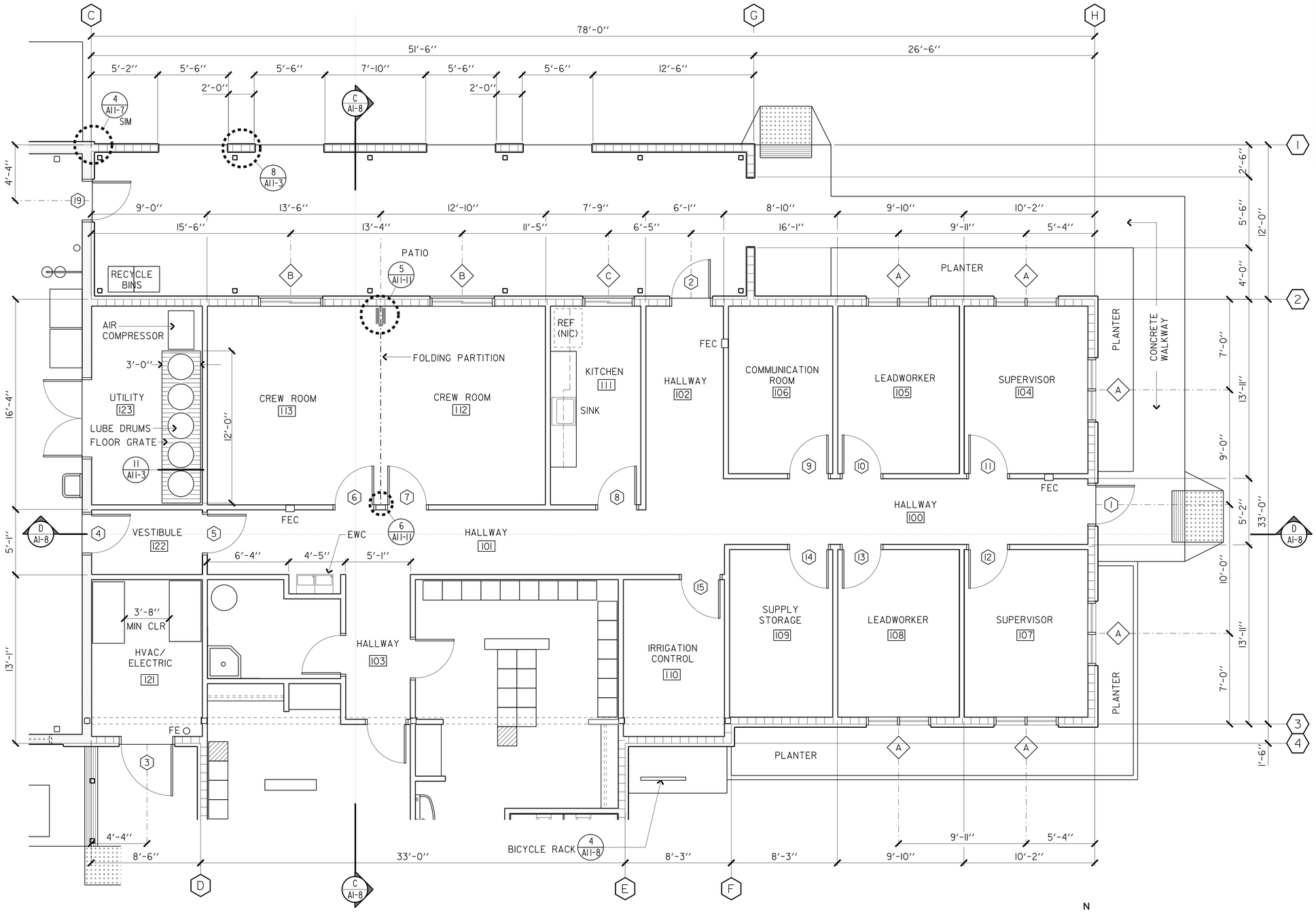

FLOOR PLAN

SCALE 1/4"=1'-0"

WALL LEGEND

- 2" x 4" METAL STUDS
- 2" x 6" METAL STUDS
- 2" x 8" METAL STUDS

NOTE:
THERMAL BATT INSULATION AT PERIMETER WALLS
ACOUSTIC BATT INSULATION AT INTERIOR WALLS

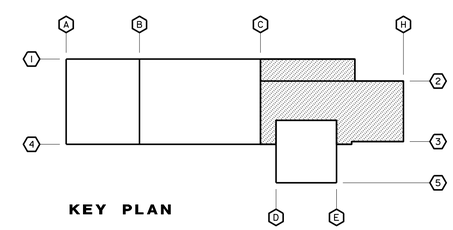

KEY PLAN

DESIGN	BY MICHELE MARSON	CHECKED ANTHONY MANANSALA	
DETAILS	BY MICHELE MARSON	CHECKED ANTHONY MANANSALA	
QUANTITIES	BY	CHECKED	

STATE OF CALIFORNIA
DEPARTMENT OF TRANSPORTATION

DIVISION OF ENGINEERING SERVICES
ARCHITECTURAL AND STRUCTURAL DESIGN

BRIDGE NO. 58M5708
POST MILE

EL CENTRO MAINTENANCE FACILITY

MAINTENANCE OFFICE/EQUIPMENT

PARTIAL FLOOR PLAN I

SHEET **A1-2**

a1_02.dgn
TAEMWW Imperial Rev. 7/10
21-JAN-2014 09:46

ORIGINAL SCALE IN INCHES FOR REDUCED PLANS 0 1 2 3

UNIT 3595
PROJECT NUMBER & PHASE 11000000351
EA 076701

DISREGARD PRINTS BEARING EARLIER REVISION DATES
REVISION DATES (PRELIMINARY STAGE ONLY): 07 08-23-13 09-13-13

SHEET X OF X

21-JAN-2014 09:46
a1_02.dgn

DIST.	COUNTY	LOCATION CODE	POST MILES TOTAL PROJECT	SHEET NO.	TOTAL SHEETS
11	Imp	5708		80	354

LICENSED ARCHITECT — DATE 9/12/13

LICENSED ARCHITECT ANTHONY V. MANANSALA No. C-32260 Ren. 4/30/15 STATE OF CALIFORNIA

01-06-14
PLANS APPROVAL DATE

The State of California or its officers or agents shall not be responsible for the accuracy or completeness of scanned copies of this plan sheet.

ACCESSIBILITY DESIGN APPROVAL STAMP DOT / DES / OTA
PROJECT ID **11000000035**
Reviewed by:
Date: 10-19-10

CALIFORNIA STATE FIRE MARSHAL APPROVED
Approval of this plan does not authorize or approve any omission or deviation from applicable regulations. Final approval is subject to field inspection. One set of approved plans shall be available on the project site at all times.
Reviewed by: FRANCIS SOLICH
Approval date: 11-29-2013
CSFM No. 01-13-11-0025

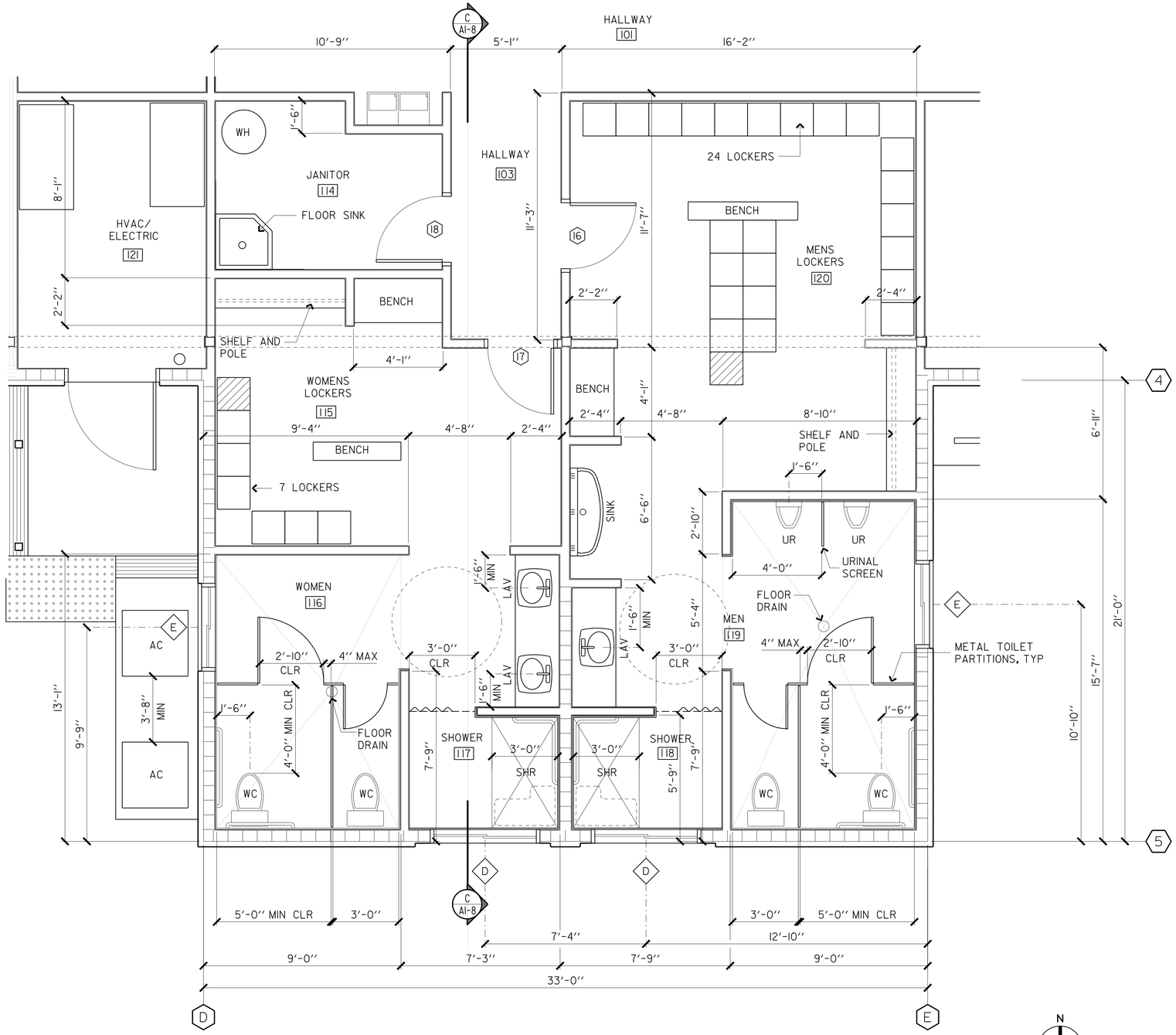

FLOOR PLAN

SCALE 3/8"=1'-0"

WALL LEGEND

- 2" x 4" METAL STUDS
- 2" x 6" METAL STUDS
- 2" x 8" METAL STUDS

NOTE:
THERMAL BATT INSULATION AT PERIMETER WALLS
ACOUSTIC BATT INSULATION AT INTERIOR WALLS

DENOTES ACCESSIBLE LOCKER

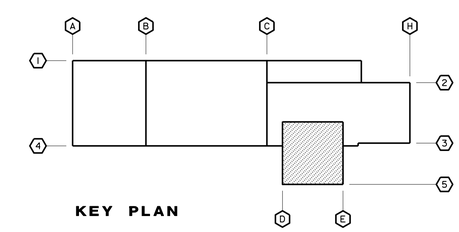

KEY PLAN

DESIGN	BY MICHELE MARSON	CHECKED ANTHONY MANANSALA	
DETAILS	BY MICHELE MARSON	CHECKED ANTHONY MANANSALA	
QUANTITIES	BY	CHECKED	

STATE OF CALIFORNIA DEPARTMENT OF TRANSPORTATION

DIVISION OF ENGINEERING SERVICES ARCHITECTURAL AND STRUCTURAL DESIGN

BRIDGE NO. 58M5708
POST MILE

EL CENTRO MAINTENANCE FACILITY
MAINTENANCE OFFICE/EQUIPMENT
PARTIAL FLOOR PLAN 2

SHEET **A1-3**

a1_03.dgn
TAEMWW Imperial Rev. 7/10
21-JAN-2014 09:46

ORIGINAL SCALE IN INCHES FOR REDUCED PLANS 0 1 2 3

UNIT 3595
PROJECT NUMBER & PHASE 11000000351
EA 076701

DISREGARD PRINTS BEARING EARLIER REVISION DATES
REVISION DATES (PRELIMINARY STAGE ONLY) 07-08-23-13 09-13-13
SHEET X OF X

21-JAN-2014 09:46
a1_03.dgn

DIST.	COUNTY	LOCATION CODE	POST MILES TOTAL PROJECT	SHEET NO.	TOTAL SHEETS
11	Imp	5708		81	354

LICENSED ARCHITECT — DATE: 9/12/13

LICENSED ARCHITECT ANTHONY V. MANANSALA No. C-32260 Ren. 4/30/15 STATE OF CALIFORNIA

01-06-14
PLANS APPROVAL DATE

The State of California or its officers or agents shall not be responsible for the accuracy or completeness of scanned copies of this plan sheet.

ACCESSIBILITY DESIGN APPROVAL STAMP DOT / DES / OTA
PROJECT ID **1100000035**
Reviewed by:
Date: 10-19-10

CALIFORNIA STATE FIRE MARSHAL APPROVED
Approval of this plan does not authorize or approve any omission or deviation from applicable regulations. Final approval is subject to field inspection. One set of approved plans shall be available on the project site at all times.
Reviewed by: FRANCIS SOLICH
Approval date: 11-29-2013
CSFM No. 01-13-11-0025

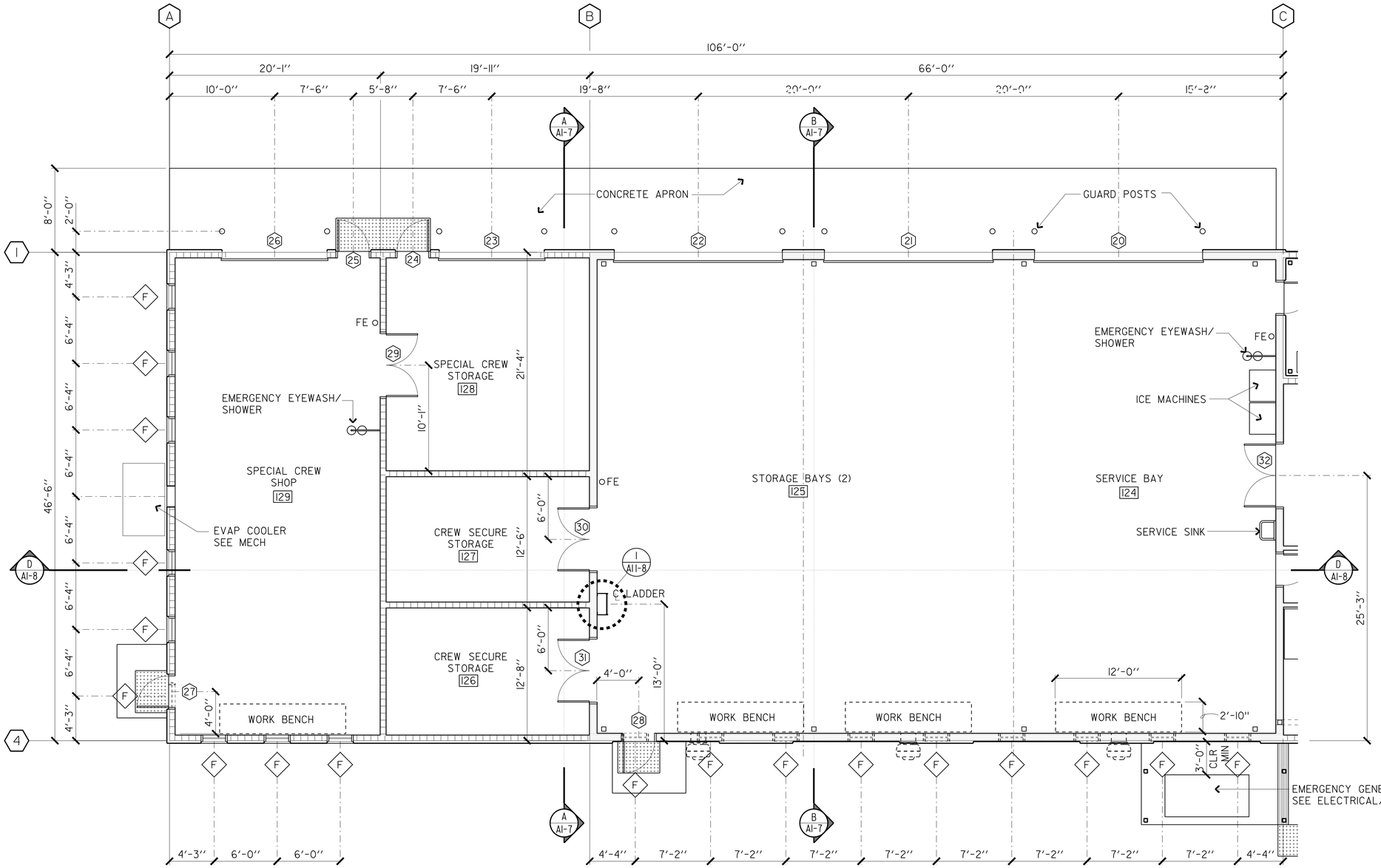

FLOOR PLAN

SCALE 3/16"=1'-0"

WALL LEGEND

- 2" x 4" METAL STUDS
- 2" x 6" METAL STUDS
- 2" x 8" METAL STUDS

NOTE:
THERMAL BATT INSULATION AT PERIMETER WALLS
ACOUSTIC BATT INSULATION AT INTERIOR WALLS

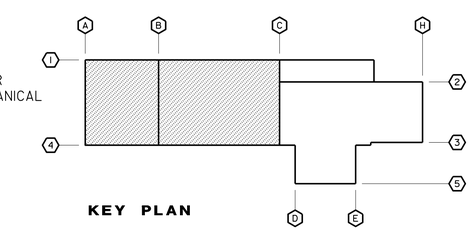

KEY PLAN

DESIGN	BY MICHELE MARSON	CHECKED ANTHONY MANANSALA	
DETAILS	BY MICHELE MARSON	CHECKED ANTHONY MANANSALA	
QUANTITIES	BY	CHECKED	

STATE OF CALIFORNIA DEPARTMENT OF TRANSPORTATION

DIVISION OF ENGINEERING SERVICES ARCHITECTURAL AND STRUCTURAL DESIGN

BRIDGE NO. 58M5708
POST MILE

EL CENTRO MAINTENANCE FACILITY
MAINTENANCE OFFICE/EQUIPMENT
PARTIAL FLOOR PLAN 3

SHEET **A1-4**

a1_04.dgn
TAEMWW Imperial Rev. 7/10
21-JAN-2014 09:46

ORIGINAL SCALE IN INCHES FOR REDUCED PLANS 0 1 2 3

UNIT 3595
PROJECT NUMBER & PHASE 11000000351
EA 076701

DISREGARD PRINTS BEARING EARLIER REVISION DATES
REVISION DATES (PRELIMINARY STAGE ONLY) 07 08-23-13 09-13-13
SHEET X OF X

21-JAN-2014 09:46
a1_04.dgn

DIST.	COUNTY	LOCATION CODE	POST MILES TOTAL PROJECT	SHEET NO.	TOTAL SHEETS
11	Imp	5708		82	354

LICENSED ARCHITECT — DATE 9/12/13

LICENSED ARCHITECT ANTHONY V. MANANSALA No. C-32260 Ren. 4/30/15 STATE OF CALIFORNIA

01-06-14
PLANS APPROVAL DATE

The State of California or its officers or agents shall not be responsible for the accuracy or completeness of scanned copies of this plan sheet.

ACCESSIBILITY DESIGN APPROVAL STAMP DOT / DES / OTA

PROJECT ID **1100000035**

Reviewed by:

Date: 10-19-10

CALIFORNIA STATE FIRE MARSHAL APPROVED

Approval of this plan does not authorize or approve any omission or deviation from applicable regulations. Final approval is subject to field inspection. One set of approved plans shall be available on the project site at all times.

Reviewed by: FRANCIS SOLICH

Approval date: 11-29-2013

CSFM No. 01-13-11-0025

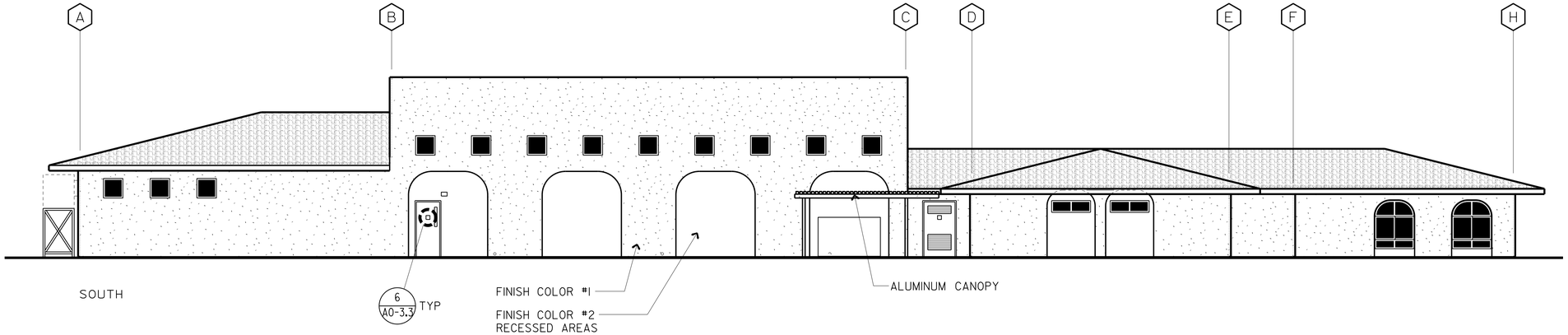

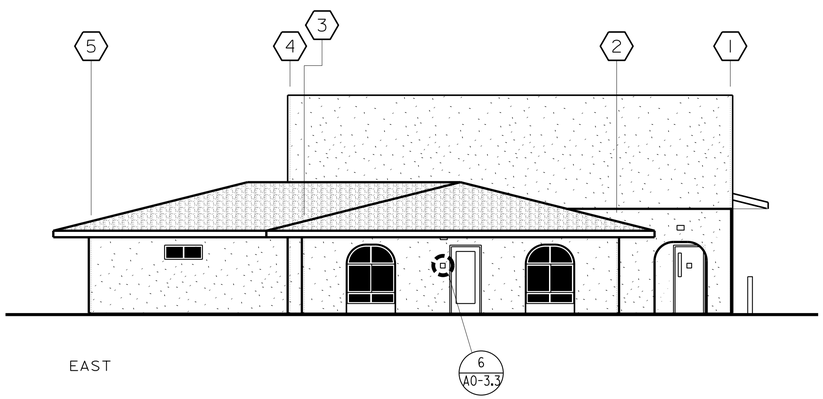

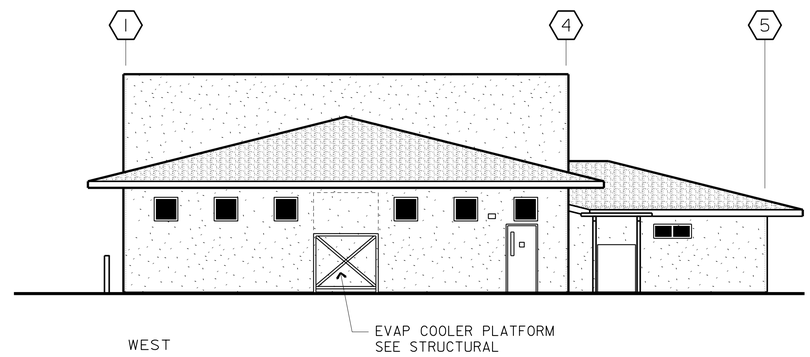

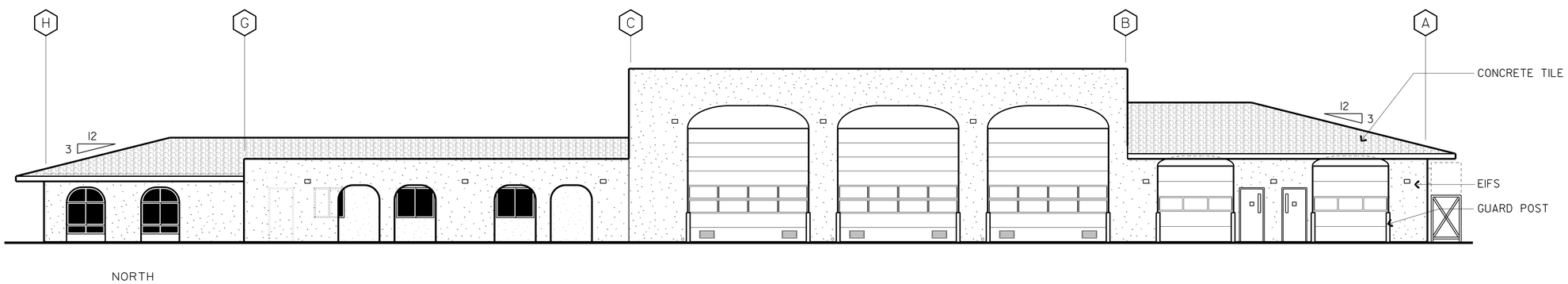

EXTERIOR ELEVATIONS

SCALE 1/8"=1'-0"

DESIGN	BY MICHELE MARSON	CHECKED ANTHONY MANANSALA	
DETAILS	BY MICHELE MARSON	CHECKED ANTHONY MANANSALA	
QUANTITIES	BY	CHECKED	

STATE OF CALIFORNIA DEPARTMENT OF TRANSPORTATION

DIVISION OF ENGINEERING SERVICES ARCHITECTURAL AND STRUCTURAL DESIGN

BRIDGE NO. 58M5708

POST MILE

EL CENTRO MAINTENANCE FACILITY

MAINTENANCE OFFICE/EQUIPMENT

EXTERIOR ELEVATIONS

SHEET **A1-5**

ORIGINAL SCALE IN INCHES FOR REDUCED PLANS 0 1 2 3

UNIT 3595

PROJECT NUMBER & PHASE 11000000351

EA 076701

DISREGARD PRINTS BEARING EARLIER REVISION DATES

REVISION DATES (PRELIMINARY STAGE ONLY) 07 08-23-13 09-13-13

SHEET X OF X

a1_05.dgn
TAEMWW Imperial Rev. 7/10
21-JAN-2014 09:46

21-JAN-2014 09:46
a1_05.dgn

DIST.	COUNTY	LOCATION CODE	POST MILES TOTAL PROJECT	SHEET NO.	TOTAL SHEETS
11	Imp	5708		83	354

LICENSED ARCHITECT — 9/12/13 — DATE

LICENSED ARCHITECT ANTHONY V. MANANSALA No. C-32260 Ren. 4/30/15 STATE OF CALIFORNIA

01-06-14
PLANS APPROVAL DATE

The State of California or its officers or agents shall not be responsible for the accuracy or completeness of scanned copies of this plan sheet.

ACCESSIBILITY DESIGN APPROVAL STAMP DOT / DES / OTA
PROJECT ID **11000000035**
Reviewed by:
Date: 10-19-10

CALIFORNIA STATE FIRE MARSHAL APPROVED
Approval of this plan does not authorize or approve any omission or deviation from applicable regulations. Final approval is subject to field inspection. One set of approved plans shall be available on the project site at all times.
Reviewed by: FRANCIS SOLICH
Approval date: 11-29-2013
CSFM No. 01-13-11-0025

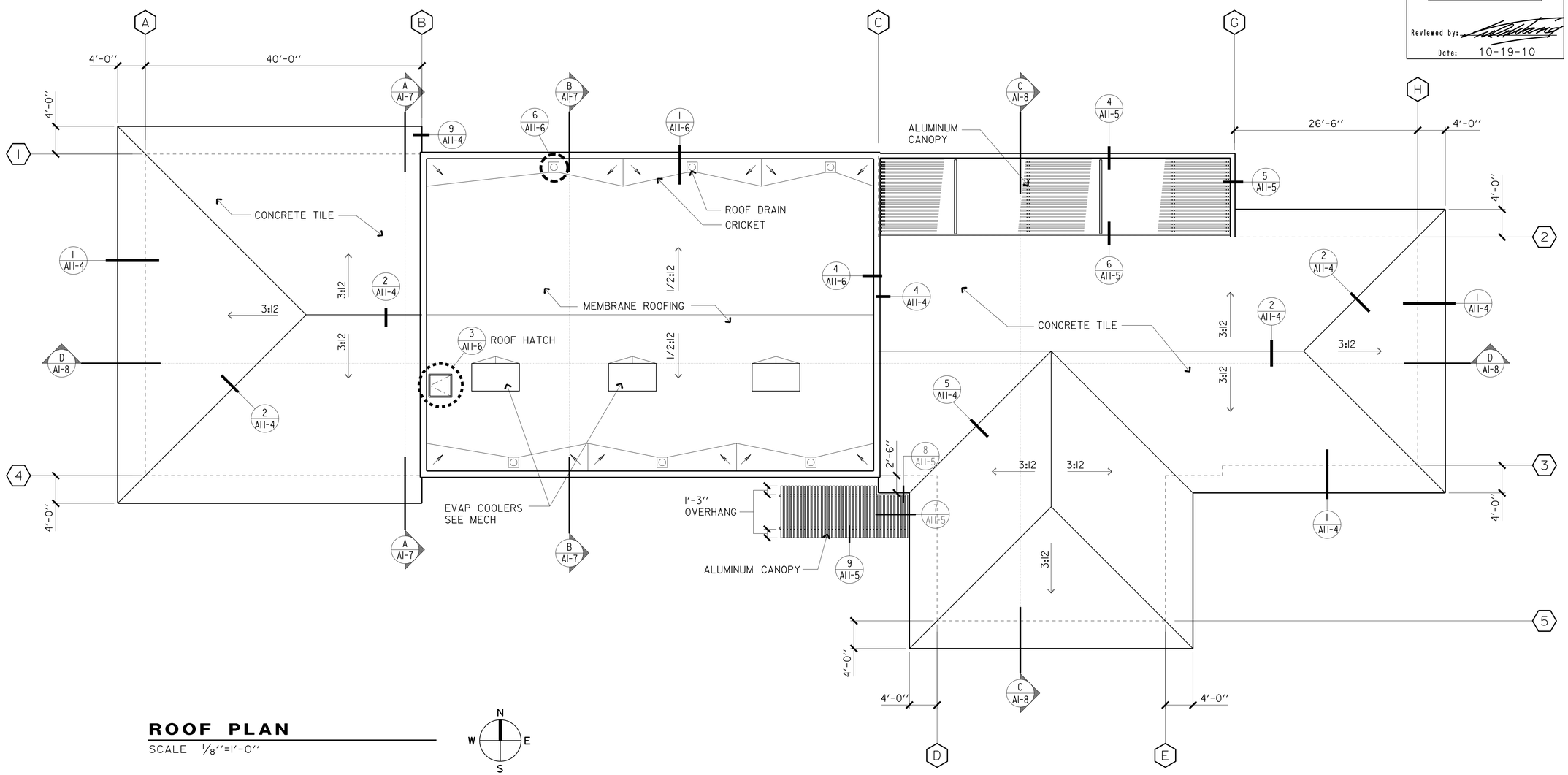

ROOF PLAN

SCALE 1/8"=1'-0"

N W E S

DESIGN	BY MICHELE MARSON	CHECKED ANTHONY MANANSALA	
DETAILS	BY MICHELE MARSON	CHECKED ANTHONY MANANSALA	
QUANTITIES	BY	CHECKED	

STATE OF CALIFORNIA DEPARTMENT OF TRANSPORTATION

DIVISION OF ENGINEERING SERVICES ARCHITECTURAL AND STRUCTURAL DESIGN

BRIDGE NO. 58M5708
POST MILE

EL CENTRO MAINTENANCE FACILITY
MAINTENANCE OFFICE/EQUIPMENT
ROOF PLAN

SHEET **A1-6**

a1_06.dgn
TAEMWW Imperial Rev. 7/10
21-JAN-2014 09:46

ORIGINAL SCALE IN INCHES FOR REDUCED PLANS 0 1 2 3

UNIT 3595
PROJECT NUMBER & PHASE 11000000351
EA 076701

DISREGARD PRINTS BEARING EARLIER REVISION DATES

REVISION DATES (PRELIMINARY STAGE ONLY) 07 08-23-13 09-13-13

SHEET X OF X

21-JAN-2014 09:46
a1_06.dgn

DIST.	COUNTY	LOCATION CODE	POST MILES TOTAL PROJECT	SHEET NO.	TOTAL SHEETS
11	Imp	5708		84	354

LICENSED ARCHITECT — DATE 9/12/13

LICENSED ARCHITECT ANTHONY V. MANANSALA No. C-32260 Ren. 4/30/15 STATE OF CALIFORNIA

01-06-14
PLANS APPROVAL DATE

The State of California or its officers or agents shall not be responsible for the accuracy or completeness of scanned copies of this plan sheet.

ACCESSIBILITY DESIGN APPROVAL STAMP DOT / DES / OTA
PROJECT ID **1100000035**
Reviewed by:
Date: 10-19-10

CALIFORNIA STATE FIRE MARSHAL APPROVED
Approval of this plan does not authorize or approve any omission or deviation from applicable regulations. Final approval is subject to field inspection. One set of approved plans shall be available on the project site at all times.
Reviewed by: FRANCIS SOLICH
Approval date: 11-29-2013
CSFM No. 01-13-11-0025

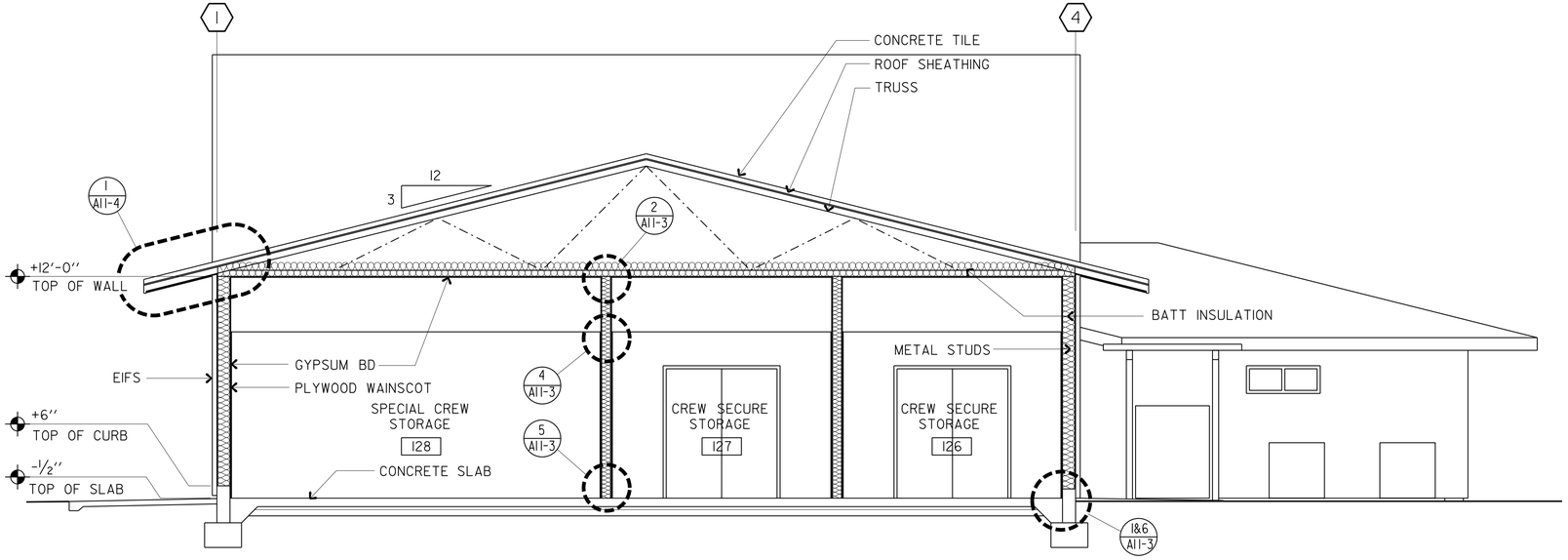

SECTION A

SCALE 1/4"=1'-0"

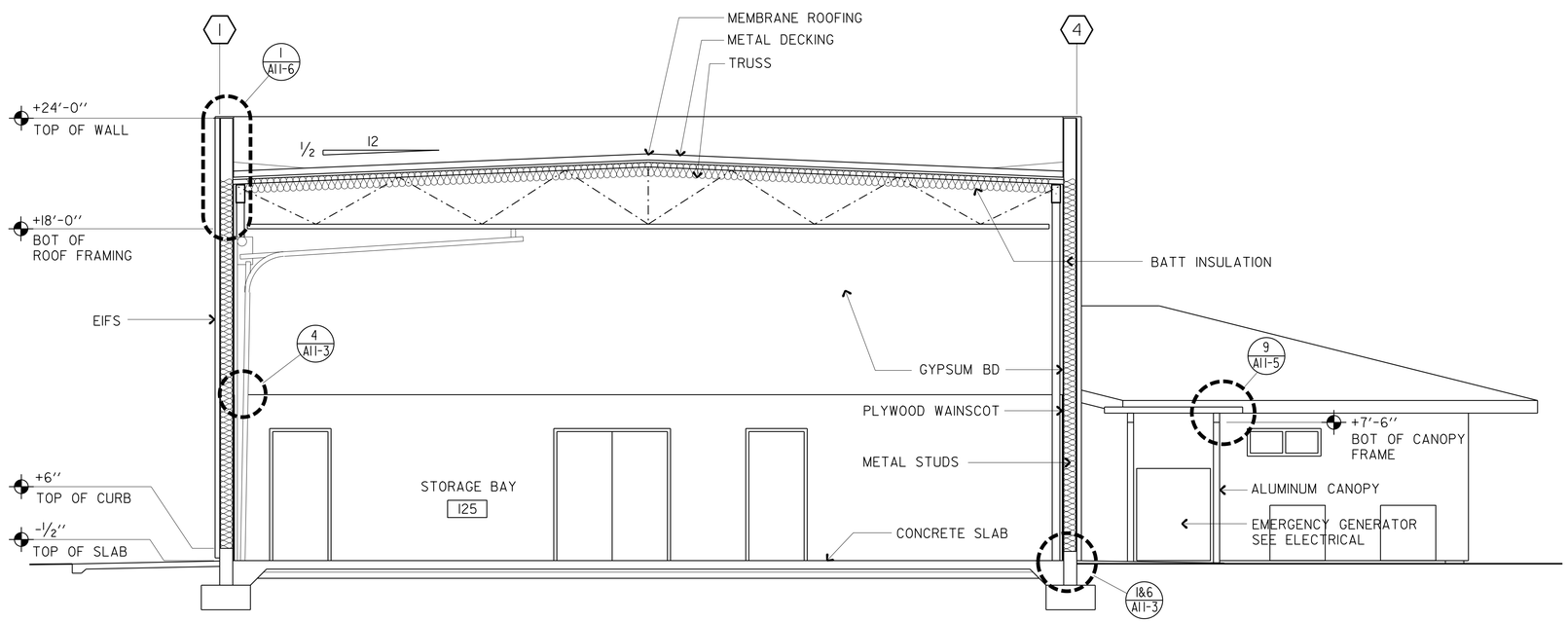

SECTION B

SCALE 1/4"=1'-0"

	BY		CHECKED
DESIGN	BY	MICHELE MARSON	CHECKED ANTHONY MANANSALA
DETAILS	BY	MICHELE MARSON	CHECKED ANTHONY MANANSALA
QUANTITIES	BY		CHECKED

STATE OF CALIFORNIA DEPARTMENT OF TRANSPORTATION

DIVISION OF ENGINEERING SERVICES
ARCHITECTURAL AND STRUCTURAL DESIGN

BRIDGE NO. 58M5708
POST MILE

EL CENTRO MAINTENANCE FACILITY

MAINTENANCE OFFICE/EQUIPMENT

BUILDING SECTIONS 1

SHEET **A1-7**

a1_07.dgn
TAEMWW Imperial Rev. 7/10 21-JAN-2014 09:46

ORIGINAL SCALE IN INCHES FOR REDUCED PLANS 0 1 2 3

UNIT 3595
PROJECT NUMBER & PHASE 11000000351
EA 076701

DISREGARD PRINTS BEARING EARLIER REVISION DATES

REVISION DATES (PRELIMINARY STAGE ONLY) 07/08-23-13 09-13-13

SHEET	OF
X	X

21-JAN-2014 09:46
a1_07.dgn

DIST.	COUNTY	LOCATION CODE	POST MILES TOTAL PROJECT	SHEET NO.	TOTAL SHEETS
11	Imp	5708		85	354

LICENSED ARCHITECT — DATE 9/12/13

LICENSED ARCHITECT ANTHONY V. MANANSALA No. C-32260 Ren. 4/30/15 STATE OF CALIFORNIA

01-06-14
PLANS APPROVAL DATE

The State of California or its officers or agents shall not be responsible for the accuracy or completeness of scanned copies of this plan sheet.

ACCESSIBILITY DESIGN APPROVAL STAMP DOT / DES / OTA
PROJECT ID **1100000035**
Reviewed by:
Date: 10-19-10

CALIFORNIA STATE FIRE MARSHAL APPROVED
Approval of this plan does not authorize or approve any omission or deviation from applicable regulations. Final approval is subject to field inspection. One set of approved plans shall be available on the project site at all times.
Reviewed by: FRANCIS SOLICH
Approval date: 11-29-2013
CSFM No. 01-13-11-0025

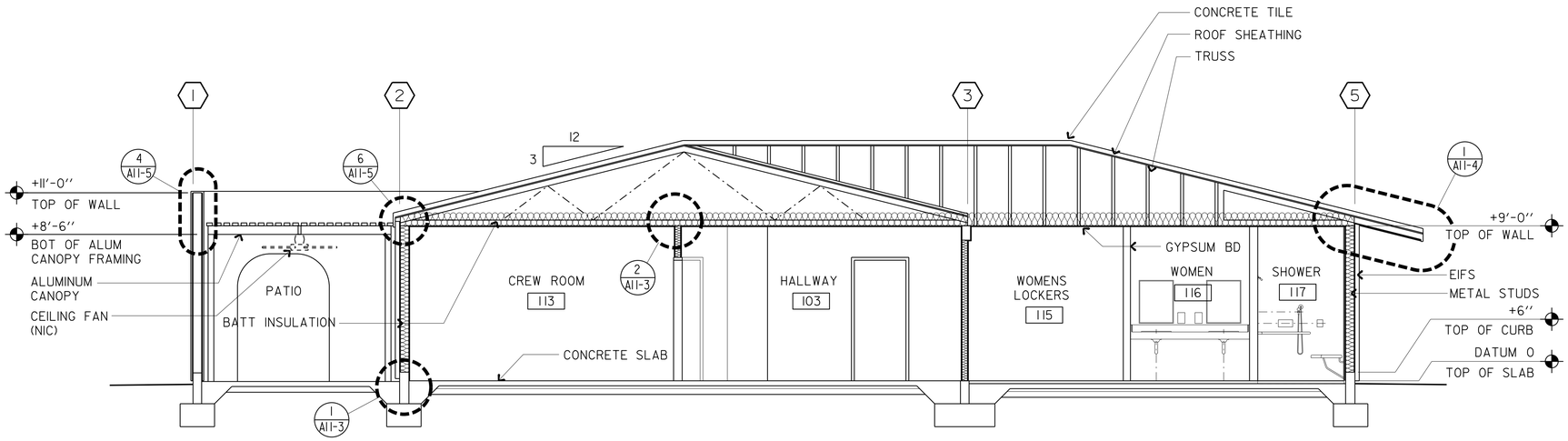

SECTION C

SCALE 1/4"=1'-0"

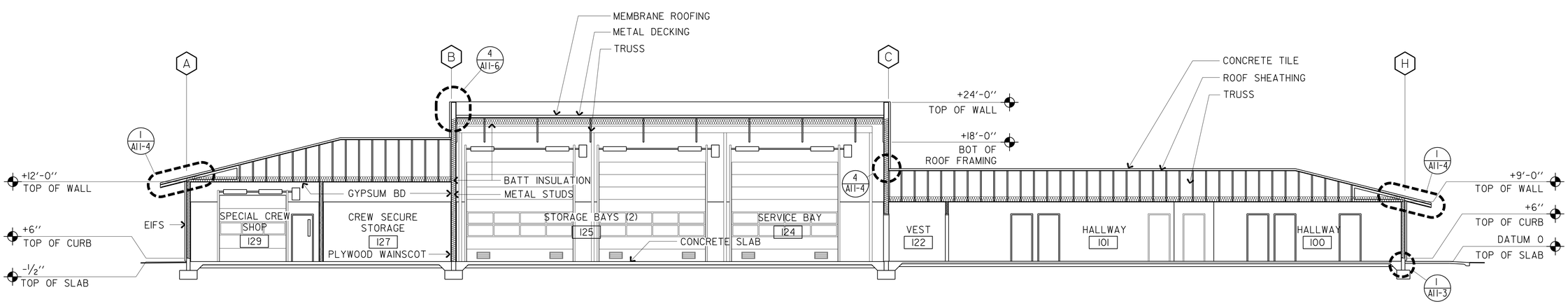

SECTION D

SCALE 1/8"=1'-0"

DESIGN	BY MICHELE MARSON	CHECKED ANTHONY MANANSALA	
DETAILS	BY MICHELE MARSON	CHECKED ANTHONY MANANSALA	
QUANTITIES	BY	CHECKED	

STATE OF CALIFORNIA DEPARTMENT OF TRANSPORTATION

DIVISION OF ENGINEERING SERVICES ARCHITECTURAL AND STRUCTURAL DESIGN

BRIDGE NO. 58M5708
POST MILE

EL CENTRO MAINTENANCE FACILITY

MAINTENANCE OFFICE/EQUIPMENT

BUILDING SECTIONS 2

SHEET **A1-8**

a1_08.dgn
TAEMWW Imperial Rev. 7/10 21-JAN-2014 09:46

ORIGINAL SCALE IN INCHES FOR REDUCED PLANS 0 1 2 3

UNIT 3595
PROJECT NUMBER & PHASE 11000000351
EA 076701

DISREGARD PRINTS BEARING EARLIER REVISION DATES

REVISION DATES (PRELIMINARY STAGE ONLY) 07-08-23-13 09-13-13

SHEET X OF X

21-JAN-2014 09:46
a1_08.dgn

DIST.	COUNTY	LOCATION CODE	POST MILES TOTAL PROJECT	SHEET NO.	TOTAL SHEETS
11	Imp	5708		86	354

LICENSED ARCHITECT — DATE 9/12/13

LICENSED ARCHITECT ANTHONY V. MANANSALA No. C-32260 Ren. 4/30/15 STATE OF CALIFORNIA

01-06-14
PLANS APPROVAL DATE

The State of California or its officers or agents shall not be responsible for the accuracy or completeness of scanned copies of this plan sheet.

ACCESSIBILITY DESIGN APPROVAL STAMP DOT / DES / OTA
PROJECT ID **1100000035**
Reviewed by:
Date: 10-19-10

CALIFORNIA STATE FIRE MARSHAL APPROVED
Approval of this plan does not authorize or approve any omission or deviation from applicable regulations. Final approval is subject to field inspection. One set of approved plans shall be available on the project site at all times.
Reviewed by: FRANCIS SOLICH
Approval date: 11-29-2013
CSFM No. 01-13-11-0025

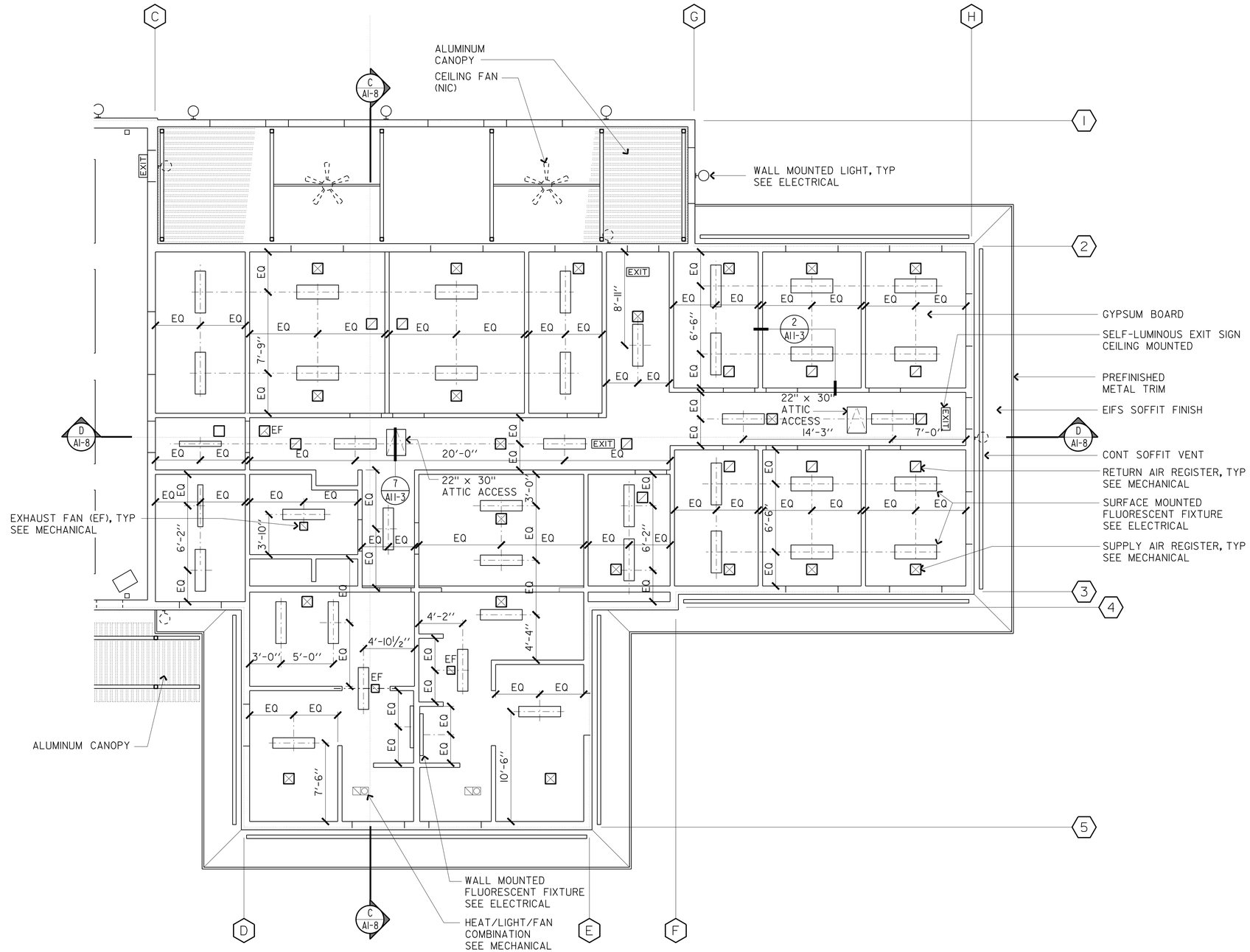

REFLECTED CEILING PLAN

SCALE 3/16"=1'-0"

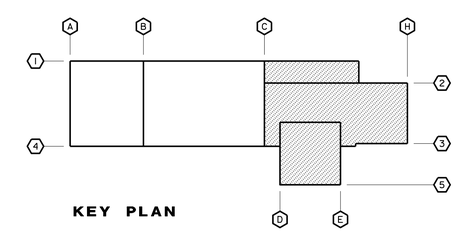

KEY PLAN

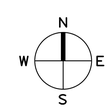

DESIGN	BY MICHELE MARSON	CHECKED ANTHONY MANANSALA	
DETAILS	BY MICHELE MARSON	CHECKED ANTHONY MANANSALA	
QUANTITIES	BY	CHECKED	

STATE OF CALIFORNIA DEPARTMENT OF TRANSPORTATION

DIVISION OF ENGINEERING SERVICES ARCHITECTURAL AND STRUCTURAL DESIGN

BRIDGE NO. 58M5708
POST MILE

EL CENTRO MAINTENANCE FACILITY

MAINTENANCE OFFICE/EQUIPMENT

PARTIAL REFLECTED CEILING PLAN I

SHEET **A1-9**

ORIGINAL SCALE IN INCHES FOR REDUCED PLANS 0 1 2 3

UNIT 3595
PROJECT NUMBER & PHASE 11000000351
EA 076701

DISREGARD PRINTS BEARING EARLIER REVISION DATES

REVISION DATES (PRELIMINARY STAGE ONLY) 07 08-23-13 09-13-13

SHEET X OF X

a1_09.dgn
TAEMWW Imperial Rev. 7/10
21-JAN-2014 09:46

21-JAN-2014 09:46
a1_09.dgn

DIST.	COUNTY	LOCATION CODE	POST MILES TOTAL PROJECT	SHEET NO.	TOTAL SHEETS
11	Imp	5708		87	354

LICENSED ARCHITECT — DATE 9/12/13

LICENSED ARCHITECT ANTHONY V. MANANSALA No. C-32260 Ren. 4/30/15 STATE OF CALIFORNIA

01-06-14
PLANS APPROVAL DATE

The State of California or its officers or agents shall not be responsible for the accuracy or completeness of scanned copies of this plan sheet.

ACCESSIBILITY DESIGN APPROVAL STAMP DOT / DES / OTA
PROJECT ID **1100000035**
Reviewed by:
Date: 10-19-10

CALIFORNIA STATE FIRE MARSHAL APPROVED
Approval of this plan does not authorize or approve any omission or deviation from applicable regulations. Final approval is subject to field inspection. One set of approved plans shall be available on the project site at all times.
Reviewed by: FRANCIS SOLICH
Approval date: 11-29-2013
CSFM No. 01-13-11-0025

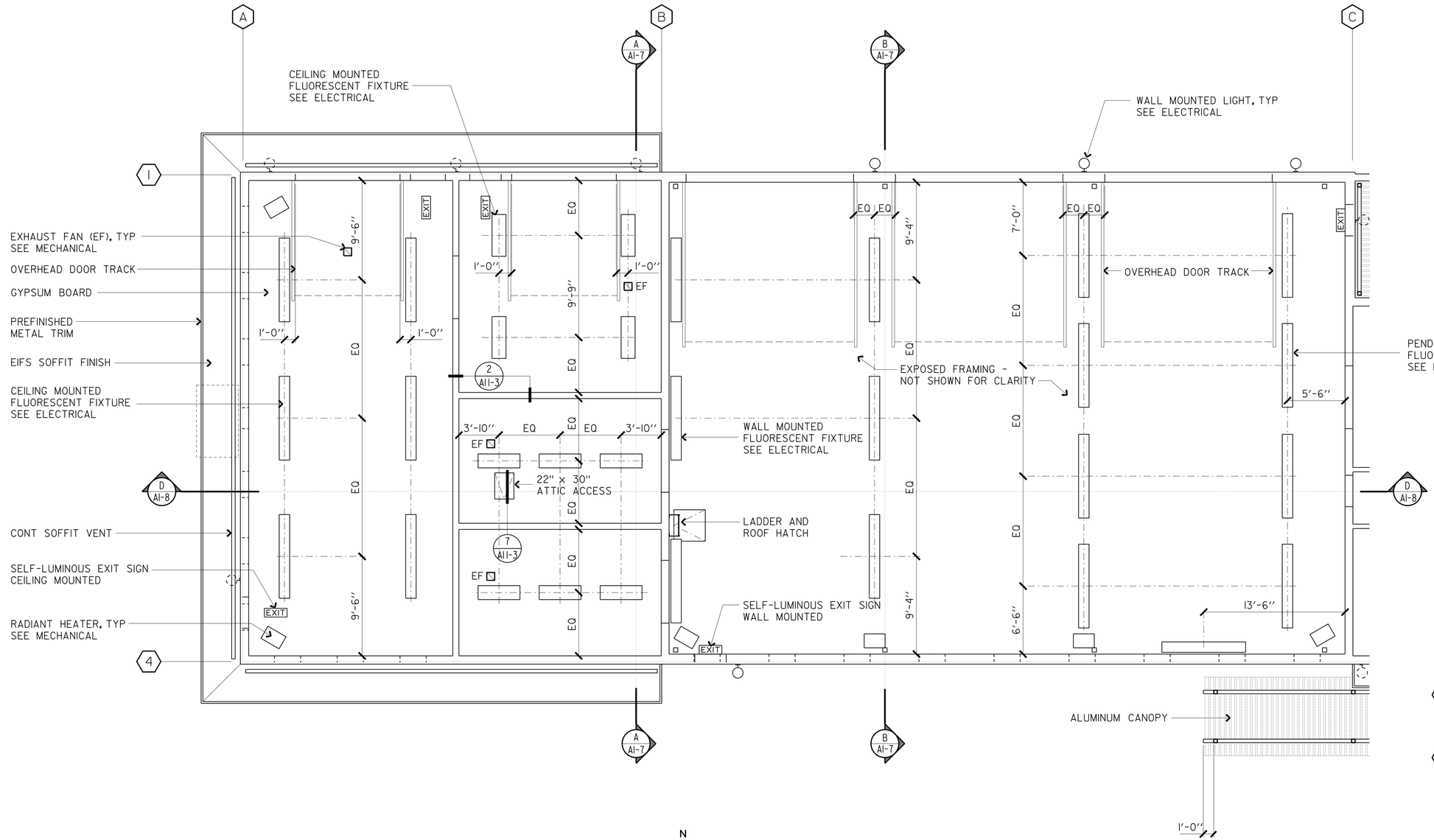

REFLECTED CEILING PLAN

SCALE 3/16"=1'-0"

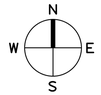

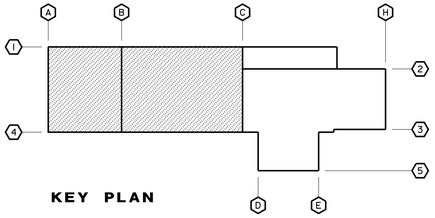

KEY PLAN

DESIGN	BY MICHELE MARSON	CHECKED ANTHONY MANANSALA	
DETAILS	BY MICHELE MARSON	CHECKED ANTHONY MANANSALA	
QUANTITIES	BY	CHECKED	

STATE OF CALIFORNIA DEPARTMENT OF TRANSPORTATION

DIVISION OF ENGINEERING SERVICES ARCHITECTURAL AND STRUCTURAL DESIGN

BRIDGE NO. 58M5708
POST MILE

EL CENTRO MAINTENANCE FACILITY

MAINTENANCE OFFICE/EQUIPMENT

PARTIAL REFLECTED CEILING PLAN 2

SHEET **A1-10**

a1_10.dgn
TAEMWW Imperial Rev. 7/10 21-JAN-2014 09:46

ORIGINAL SCALE IN INCHES FOR REDUCED PLANS 0 1 2 3

UNIT 3595
PROJECT NUMBER & PHASE 11000000351
EA 076701

DISREGARD PRINTS BEARING EARLIER REVISION DATES

REVISION DATES (PRELIMINARY STAGE ONLY) 07 08-23-13 09-13-13

SHEET X OF X

21-JAN-2014 09:46
a1_10.dgn

DIST.	COUNTY	LOCATION CODE	POST MILES TOTAL PROJECT	SHEET NO.	TOTAL SHEETS
11	Imp	5708		88	354

LICENSED ARCHITECT — DATE 9/12/13

LICENSED ARCHITECT ANTHONY V. MANANSALA No. C-32260 Ren. 4/30/15 STATE OF CALIFORNIA

01-06-14
PLANS APPROVAL DATE

The State of California or its officers or agents shall not be responsible for the accuracy or completeness of scanned copies of this plan sheet.

ACCESSIBILITY DESIGN APPROVAL STAMP DOT / DES / OTA
PROJECT ID **11000000035**
Reviewed by:
Date: 10-19-10

CALIFORNIA STATE FIRE MARSHAL APPROVED
Approval of this plan does not authorize or approve any omission or deviation from applicable regulations. Final approval is subject to field inspection. One set of approved plans shall be available on the project site at all times.
Reviewed by: FRANCIS SOLICH
Approval date: 11-29-2013
CSFM No. 01-13-11-0025

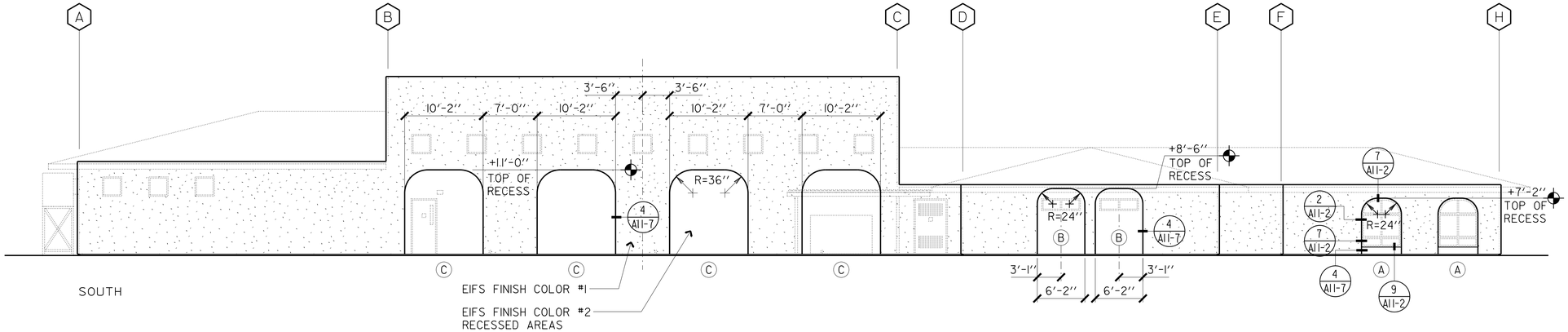

SOUTH

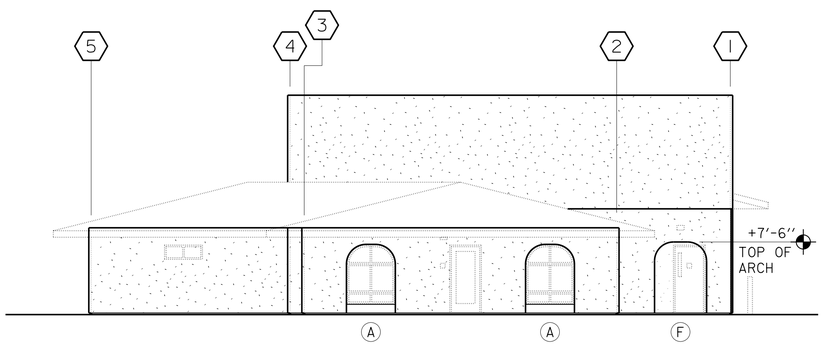

EAST

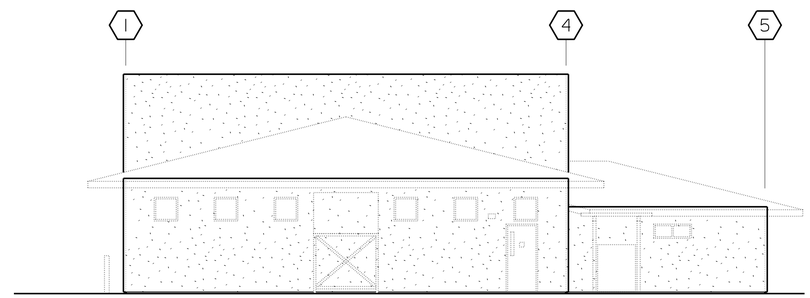

WEST

LEGEND:

- (A) RECESS AT ARCHED WINDOW
- (B) RECESS AT RECTANGULAR WINDOW
- (C) RECESSED AREA
- (D) RECESS AT 16' OH DOOR
- (E) RECESS AT 10' OH DOOR
- (F) ARCHED OPENING

DIMENSIONS AT RECESSES ARE TO FACE OF FINISH
DIMENSIONS AT ARCHED OPENINGS ARE TO FACE OF FRAMING

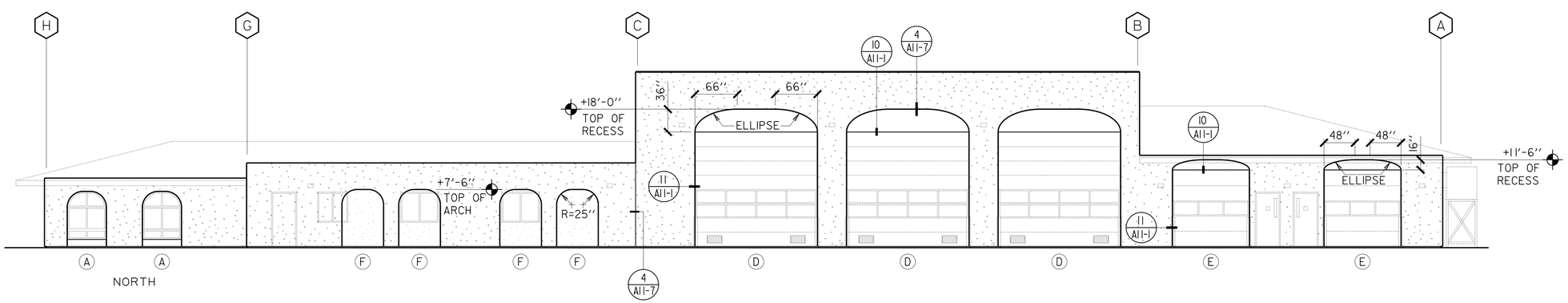

NORTH

EXTERIOR FINISH ELEVATIONS

SCALE 1/8"=1'-0"

DESIGN	BY MICHELE MARSON	CHECKED ANTHONY MANANSALA	
DETAILS	BY MICHELE MARSON	CHECKED ANTHONY MANANSALA	
QUANTITIES	BY	CHECKED	

STATE OF CALIFORNIA DEPARTMENT OF TRANSPORTATION

DIVISION OF ENGINEERING SERVICES ARCHITECTURAL AND STRUCTURAL DESIGN

BRIDGE NO. 58M5708
POST MILE

EL CENTRO MAINTENANCE FACILITY
MAINTENANCE OFFICE/EQUIPMENT
EXTERIOR WALL FINISH DETAIL DIMENSIONS

SHEET **A1-11**

a1_11.dgn
TAEMWW Imperial Rev. 7/10 21-JAN-2014 09:46

ORIGINAL SCALE IN INCHES FOR REDUCED PLANS 0 1 2 3

UNIT 3595
PROJECT NUMBER & PHASE 11000000351
EA 076701

DISREGARD PRINTS BEARING EARLIER REVISION DATES

REVISION DATES (PRELIMINARY STAGE ONLY) 07-08-23-13 09-13-13

SHEET X OF X

21-JAN-2014 09:46 a1_11.dgn

DIST.	COUNTY	LOCATION CODE	POST MILES TOTAL PROJECT	SHEET NO.	TOTAL SHEETS
11	Imp	5708		89	354

LICENSED ARCHITECT — DATE 9/12/13

LICENSED ARCHITECT ANTHONY V. MANANSALA No. C-32260 Ren. 4/30/15 STATE OF CALIFORNIA

01-06-14
PLANS APPROVAL DATE

The State of California or its officers or agents shall not be responsible for the accuracy or completeness of scanned copies of this plan sheet.

ACCESSIBILITY DESIGN APPROVAL STAMP DOT / DES / OTA
PROJECT ID **1100000035**
Reviewed by:
Date: 10-19-10

CALIFORNIA STATE FIRE MARSHAL APPROVED
Approval of this plan does not authorize or approve any omission or deviation from applicable regulations. Final approval is subject to field inspection. One set of approved plans shall be available on the project site at all times.
Reviewed by: FRANCIS SOLICH
Approval date: 11-29-2013
CSFM No. 01-13-11-0025

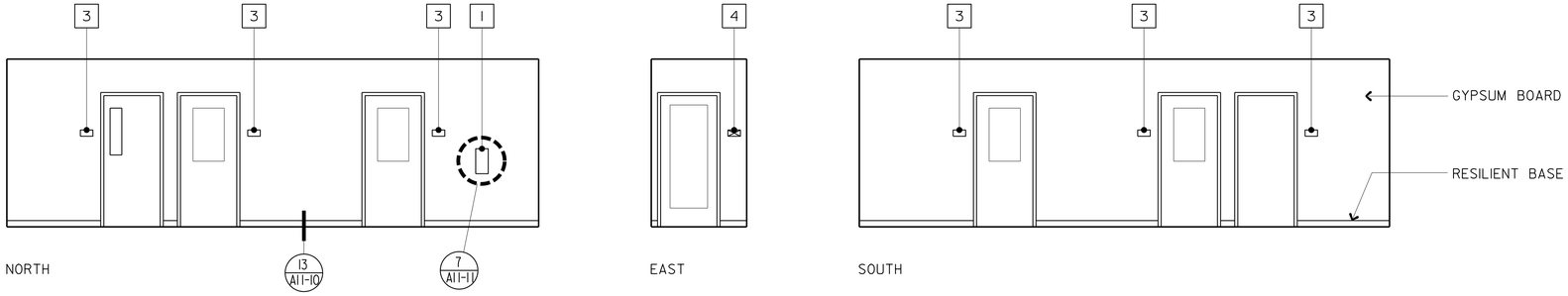

HALLWAY 100

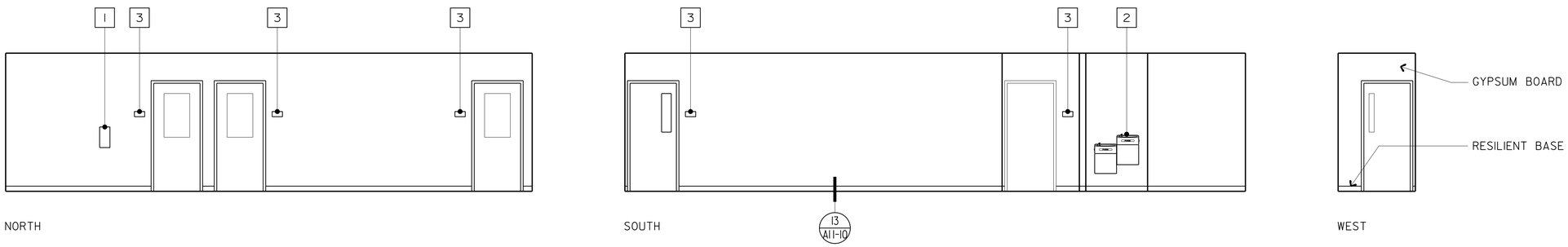

HALLWAY 101

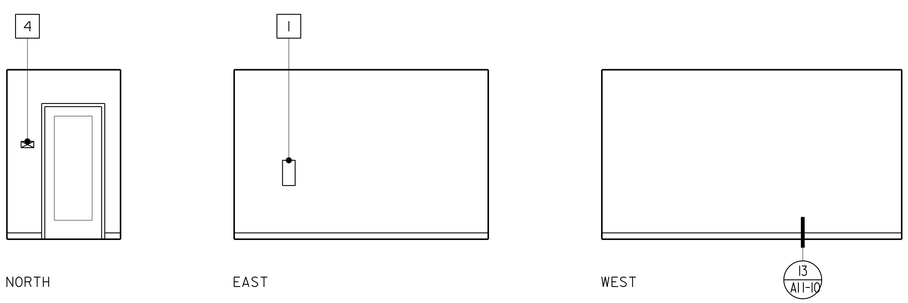

HALLWAY 102

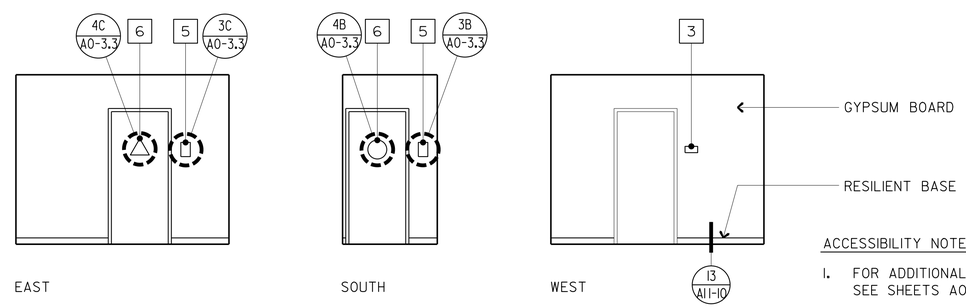

HALLWAY 103

KEY NOTES

1. FIRE EXTINGUISHER CABINET (3/A0-3.5)
2. ELECTRIC WATER COOLER (1/A0-3.5)
3. ROOM IDENTIFICATION SIGN (1/A0-3.3)
4. EXIT SIGN (2/A0-3.3)
5. RESTROOM SIGN
6. RESTROOM IDENTIFICATION SYMBOL

ACCESSIBILITY NOTES:

1. FOR ADDITIONAL NOTES AND DIMENSIONS, SEE SHEETS A0-3.3, A0-3.4, AND A0-3.5
2. FOR ACCESSORY HEIGHTS NOT SHOWN ON INTERIOR ELEVATIONS, SEE DETAIL 3/A0-3.5
3. DETAILS SHOWN IN KEY NOTES APPLY TO ACCESSIBLE FIXTURES ONLY
4. DETAILS ON SHEETS A0-3.4/A0-3.5, ARE GENERIC FOR ACTUAL FIXTURE STYLE AND PLUMBING SEE SPECIAL PROVISIONS AND PROJECT SPECIFIC PLANS

INTERIOR ELEVATIONS

SCALE 1/4"=1'-0"

	BY		CHECKED
DESIGN	MICHELE MARSON		ANTHONY MANANSALA
DETAILS	MICHELE MARSON		ANTHONY MANANSALA
QUANTITIES			

STATE OF CALIFORNIA DEPARTMENT OF TRANSPORTATION

DIVISION OF ENGINEERING SERVICES ARCHITECTURAL AND STRUCTURAL DESIGN

BRIDGE NO. 58M5708
POST MILE

EL CENTRO MAINTENANCE FACILITY
MAINTENANCE OFFICE/EQUIPMENT
INTERIOR ELEVATIONS I

SHEET A1-12

a1_12.dgn
TAEMWW Imperial Rev. 7/10 21-JAN-2014 09:46

ORIGINAL SCALE IN INCHES FOR REDUCED PLANS 0 1 2 3

UNIT 3595
PROJECT NUMBER & PHASE 11000000351
EA 076701

DISREGARD PRINTS BEARING EARLIER REVISION DATES
REVISION DATES (PRELIMINARY STAGE ONLY) 07 08-23-13 09-13-13

SHEET X OF X

21-JAN-2014 09:46
a1_12.dgn

DIST.	COUNTY	LOCATION CODE	POST MILES TOTAL PROJECT	SHEET NO.	TOTAL SHEETS
11	Imp	5708		90	354

A V Manansala 9/12/13
LICENSED ARCHITECT DATE

LICENSED ARCHITECT ANTHONY V. MANANSALA No. C-32260 Ren. 4/30/15 STATE OF CALIFORNIA

01-06-14
PLANS APPROVAL DATE

The State of California or its officers or agents shall not be responsible for the accuracy or completeness of scanned copies of this plan sheet.

ACCESSIBILITY DESIGN APPROVAL STAMP DOT / DES / OTA
PROJECT ID **1100000035**
Reviewed by:
Date: 10-19-10

CALIFORNIA STATE FIRE MARSHAL APPROVED
Approval of this plan does not authorize or approve any omission or deviation from applicable regulations. Final approval is subject to field inspection. One set of approved plans shall be available on the project site at all times.
Reviewed by: FRANCIS SOLICH
Approval date: 11-29-2013
CSFM No. 01-13-11-0025

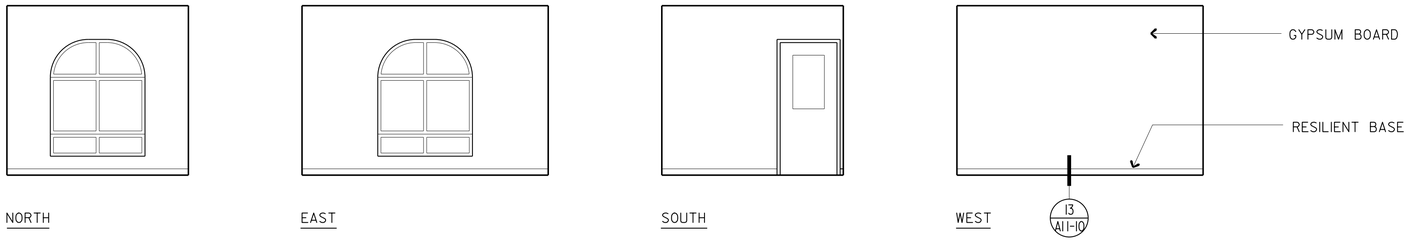

SUPERVISOR 104

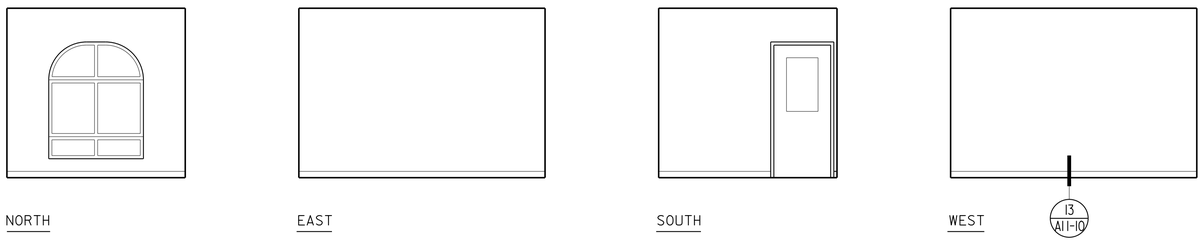

LEADWORKER 105

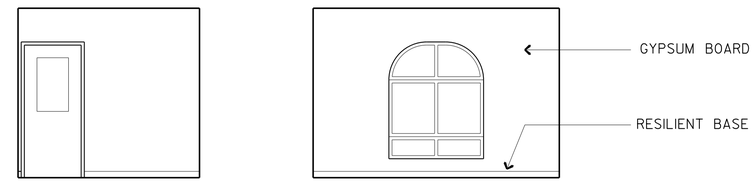

SUPERVISOR 107

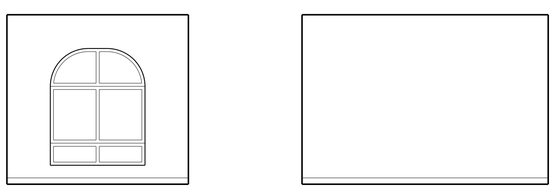

SUPERVISOR 107

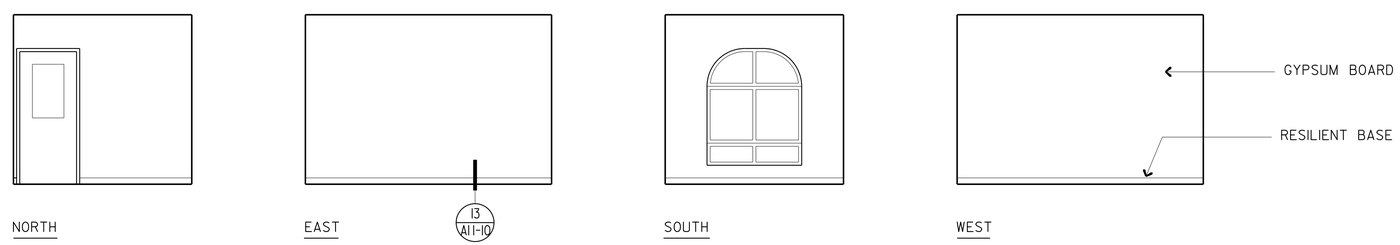

LEADWORKER 108

INTERIOR ELEVATIONS

SCALE 1/4"=1'-0"

DESIGN	BY MICHELE MARSON	CHECKED ANTHONY MANANSALA	
DETAILS	BY MICHELE MARSON	CHECKED ANTHONY MANANSALA	
QUANTITIES	BY	CHECKED	

STATE OF CALIFORNIA
DEPARTMENT OF TRANSPORTATION

DIVISION OF ENGINEERING SERVICES
ARCHITECTURAL AND STRUCTURAL DESIGN

BRIDGE NO. 58M5708
POST MILE

EL CENTRO MAINTENANCE FACILITY
MAINTENANCE OFFICE/EQUIPMENT
INTERIOR ELEVATIONS 2

SHEET **A1-13**

a1_13.dgn
TAEMWW Imperial Rev. 7/10
21-JAN-2014 09:46

ORIGINAL SCALE IN INCHES FOR REDUCED PLANS 0 1 2 3

UNIT 3595
PROJECT NUMBER & PHASE 11000000351
EA 076701

DISREGARD PRINTS BEARING EARLIER REVISION DATES
REVISION DATES (PRELIMINARY STAGE ONLY) 07 08-23-13 09-13-13
SHEET X OF X

21-JAN-2014 09:46
a1_13.dgn

DIST.	COUNTY	LOCATION CODE	POST MILES TOTAL PROJECT	SHEET NO.	TOTAL SHEETS
11	Imp	5708		91	354

LICENSED ARCHITECT — 9/12/13 — DATE

LICENSED ARCHITECT ANTHONY V. MANANSALA No. C-32260 Ren. 4/30/15 STATE OF CALIFORNIA

01-06-14
PLANS APPROVAL DATE

The State of California or its officers or agents shall not be responsible for the accuracy or completeness of scanned copies of this plan sheet.

ACCESSIBILITY DESIGN APPROVAL STAMP DOT / DES / OTA
PROJECT ID **1100000035**
Reviewed by:
Date: 10-19-10

CALIFORNIA STATE FIRE MARSHAL APPROVED
Approval of this plan does not authorize or approve any omission or deviation from applicable regulations. Final approval is subject to field inspection. One set of approved plans shall be available on the project site at all times.
Reviewed by: FRANCIS SOLTCH
Approval date: 11-29-2013
CSFM No. 01-13-11-0025

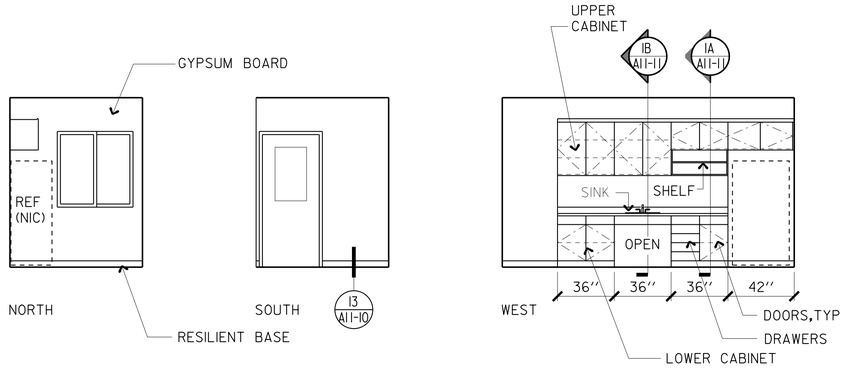

KITCHEN 111

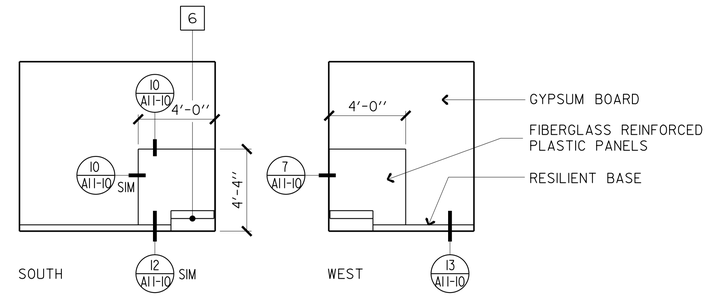

JANITOR 114

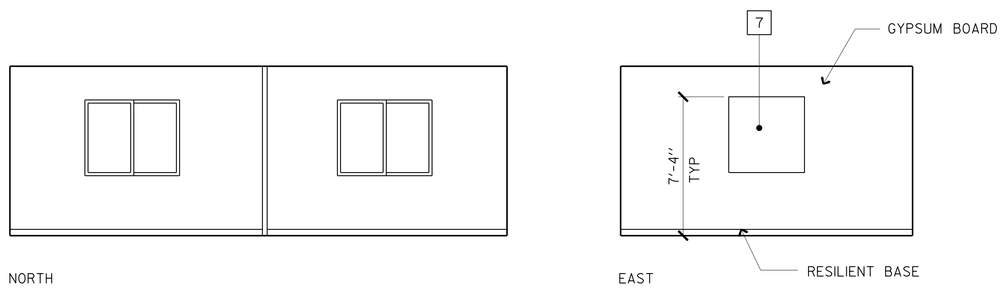

CREW ROOM 112/ 113

KEY NOTES

1. SHOWER (1 / A0-3.4)
2. FOLDING SEAT
3. GRAB BAR
4. CLOTHES HOOK
5. PRIVACY CURTAIN
6. MOP SINK
7. 4' x4' MARKER BOARD

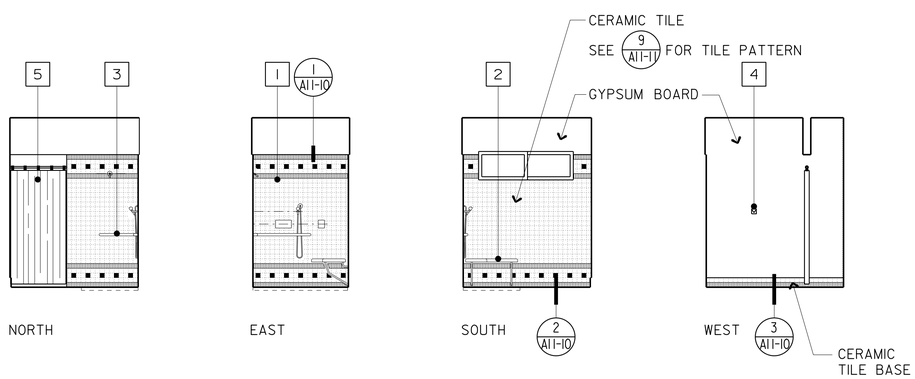

SHOWER - WOMEN 117

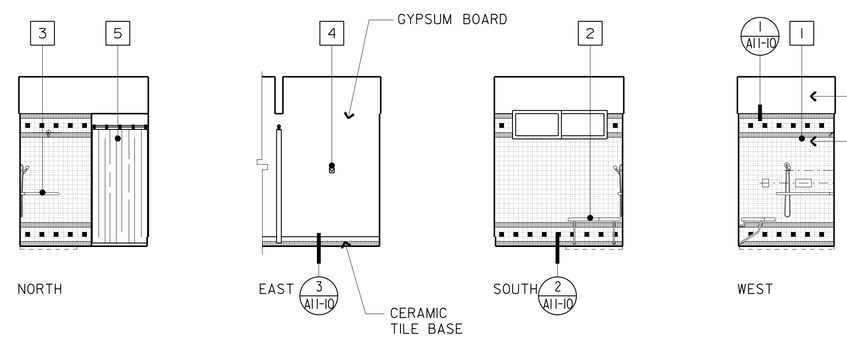

SHOWER - MEN 118

ACCESSIBILITY NOTES:

1. FOR ADDITIONAL NOTES AND DIMENSIONS, SEE SHEETS A0-3.4, A0-3.5 AND A1-3
2. FOR ACCESSORY HEIGHTS NOT SHOWN ON INTERIOR ELEVATIONS, SEE DETAIL 3/A0-3.5
3. DETAILS SHOWN IN KEY NOTES APPLY TO ACCESSIBLE FIXTURES ONLY
4. DETAILS ON SHEETS A0-3.4/A0-3.5, ARE GENERIC FOR ACTUAL FIXTURE STYLE AND PLUMBING SEE SPECIAL PROVISIONS AND PROJECT SPECIFIC PLANS

INTERIOR ELEVATIONS

SCALE 1/4''=1'-0''

	BY	CHECKED
DESIGN	MICHELE MARSON	ANTHONY MANANSALA
DETAILS	MICHELE MARSON	ANTHONY MANANSALA
QUANTITIES		

STATE OF CALIFORNIA DEPARTMENT OF TRANSPORTATION

DIVISION OF ENGINEERING SERVICES ARCHITECTURAL AND STRUCTURAL DESIGN

BRIDGE NO. 58M5708
POST MILE

EL CENTRO MAINTENANCE FACILITY
MAINTENANCE OFFICE/EQUIPMENT
INTERIOR ELEVATIONS 3

SHEET A1-14

a1_14.dgn
TAEMWW Imperial Rev. 7/10 21-JAN-2014 09:46

ORIGINAL SCALE IN INCHES FOR REDUCED PLANS 0 1 2 3

UNIT 3595
PROJECT NUMBER & PHASE 11000000351
EA 076701

DISREGARD PRINTS BEARING EARLIER REVISION DATES
REVISION DATES (PRELIMINARY STAGE ONLY) 07 08-23-13 09-13-13
SHEET X OF X

21-JAN-2014 09:46
a1_14.dgn

DIST.	COUNTY	LOCATION CODE	POST MILES TOTAL PROJECT	SHEET NO.	TOTAL SHEETS
11	Imp	5708		92	354

LICENSED ARCHITECT — DATE 9/12/13

LICENSED ARCHITECT ANTHONY V. MANANSALA No. C-32260 Ren. 4/30/15 STATE OF CALIFORNIA

01-06-14
PLANS APPROVAL DATE

The State of California or its officers or agents shall not be responsible for the accuracy or completeness of scanned copies of this plan sheet.

ACCESSIBILITY DESIGN APPROVAL STAMP DOT / DES / OTA
PROJECT ID **1100000035**
Reviewed by:
Date: 10-19-10

CALIFORNIA STATE FIRE MARSHAL APPROVED
Approval of this plan does not authorize or approve any omission or deviation from applicable regulations. Final approval is subject to field inspection. One set of approved plans shall be available on the project site at all times.
Reviewed by: FRANCIS SOLICH
Approval date: 11-29-2013
CSFM No. 01-13-11-0025

ACCESSIBILITY NOTES:

1. FOR ADDITIONAL NOTES AND DIMENSIONS, SEE SHEETS A0-3.4, A0-3.5 AND A1-3
2. FOR ACCESSORY HEIGHTS NOT SHOWN ON INTERIOR ELEVATIONS, SEE DETAIL 3/A0-3.5
3. DETAILS SHOWN IN KEY NOTES APPLY TO ACCESSIBLE FIXTURES ONLY
4. DETAILS ON SHEETS A0-3.4/A0-3.5, ARE GENERIC FOR ACTUAL FIXTURE STYLE AND PLUMBING SEE SPECIAL PROVISIONS AND PROJECT SPECIFIC PLANS

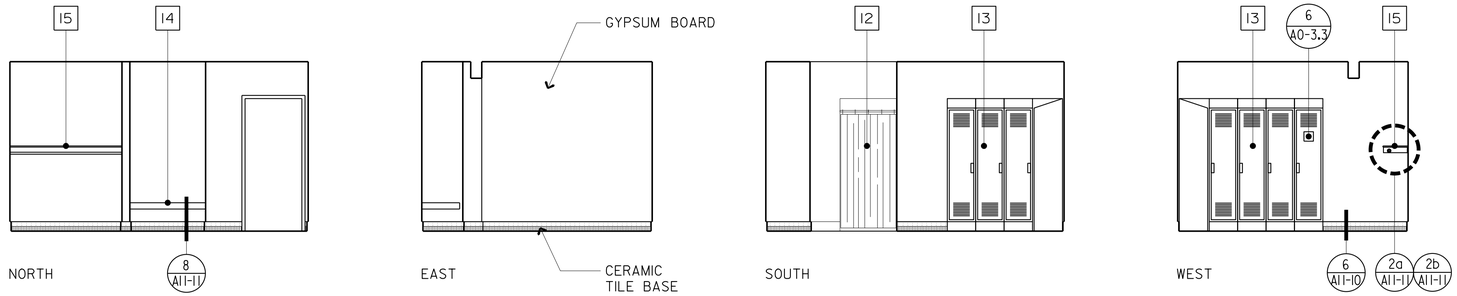

WOMENS LOCKERS 115

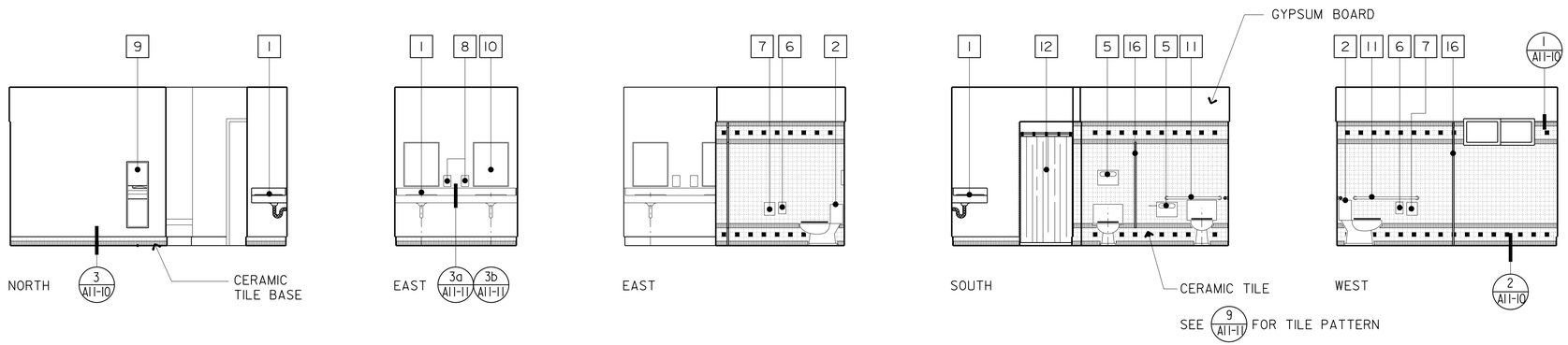

WOMEN 116

KEY NOTES

1	LAVATORY (5 A0-3.4)	12	PRIVACY CURTAIN
2	WATER CLOSET (3 A0-3.4) (6 A0-3.4)	13	LOCKERS
3	TROUGH SINK-ACCESSIBLE	14	BENCH (3 A0-3.5)
4	URINAL (4 A0-3.4)	15	CLOTHES ROD AND SHELF
5	SEAT COVER DISPENSER	16	METAL TOILET PARTITION
6	TOILET TISSUE DISPENSER	17	URINAL SCREEN
7	NAPKIN RECEPTACLE		
8	SOAP DISPENSER		
9	PAPER TOWEL/ WASTE COMBO		
10	24'' x 30'' MIRROR		
11	GRAB BAR (6 A0-3.4)		

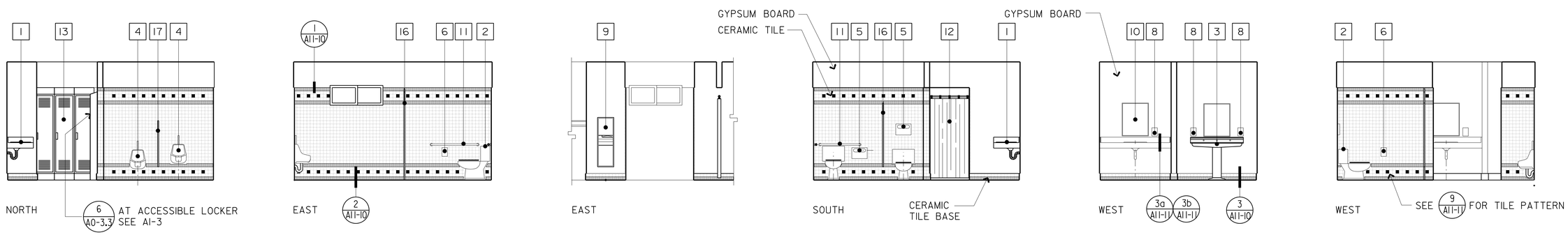

MEN 119

INTERIOR ELEVATIONS

SCALE 1/4''=1'-0''

DESIGN	BY MICHELE MARSON	CHECKED ANTHONY MANANSALA	
DETAILS	BY MICHELE MARSON	CHECKED ANTHONY MANANSALA	
QUANTITIES	BY	CHECKED	

STATE OF CALIFORNIA DEPARTMENT OF TRANSPORTATION

DIVISION OF ENGINEERING SERVICES ARCHITECTURAL AND STRUCTURAL DESIGN

BRIDGE NO. 58M5708
POST MILE

EL CENTRO MAINTENANCE FACILITY
MAINTENANCE OFFICE/EQUIPMENT
INTERIOR ELEVATIONS 4

SHEET **A1-15**

a1_15.dgn
TAEMWW Imperial Rev. 7/10 21-JAN-2014 09:46

ORIGINAL SCALE IN INCHES FOR REDUCED PLANS 0 1 2 3

UNIT 3595
PROJECT NUMBER & PHASE 11000000351
EA 076701

DISREGARD PRINTS BEARING EARLIER REVISION DATES

REVISION DATES (PRELIMINARY STAGE ONLY): 07-08-23-13 09-13-13

SHEET X OF X

21-JAN-2014 09:46
a1_15.dgn

DIST.	COUNTY	LOCATION CODE	POST MILES TOTAL PROJECT	SHEET NO.	TOTAL SHEETS
11	Imp	5708		93	354

LICENSED ARCHITECT — 9/12/13 — DATE

LICENSED ARCHITECT ANTHONY V. MANANSALA No. C-32260 Ren. 4/30/15 STATE OF CALIFORNIA

01-06-14
PLANS APPROVAL DATE

The State of California or its officers or agents shall not be responsible for the accuracy or completeness of scanned copies of this plan sheet.

ACCESSIBILITY DESIGN APPROVAL STAMP DOT / DES / OTA
PROJECT ID **1100000035**
Reviewed by:
Date: 10-19-10

CALIFORNIA STATE FIRE MARSHAL APPROVED
Approval of this plan does not authorize or approve any omission or deviation from applicable regulations. Final approval is subject to field inspection. One set of approved plans shall be available on the project site at all times.
Reviewed by: FRANCIS SOLICH
Approval date: 11-29-2013
CSFM No. 01-13-11-0025

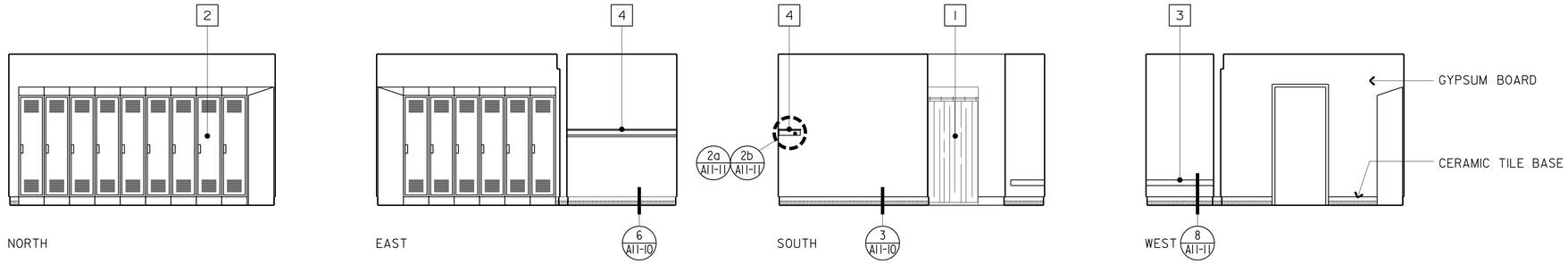

MENS LOCKERS 120

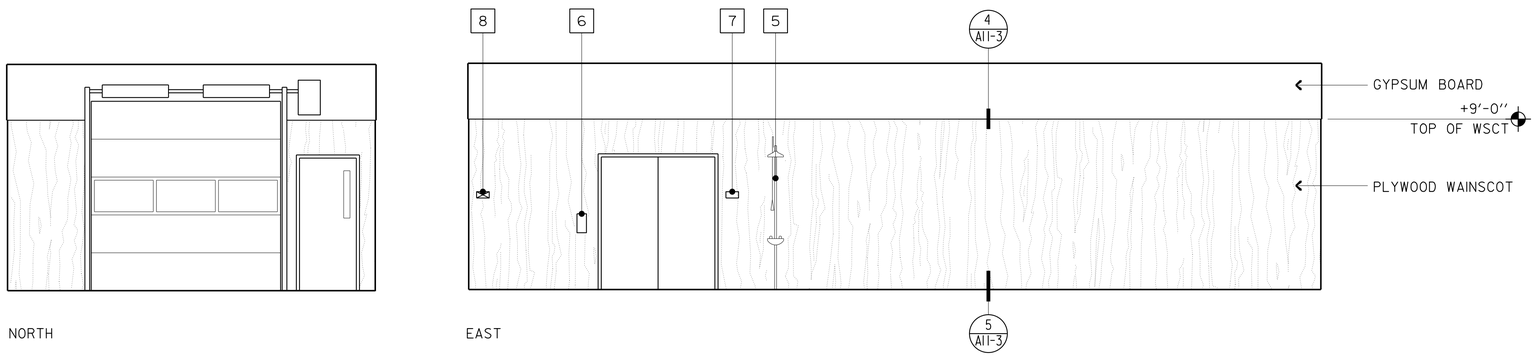

SPECIAL CREW SHOP 129

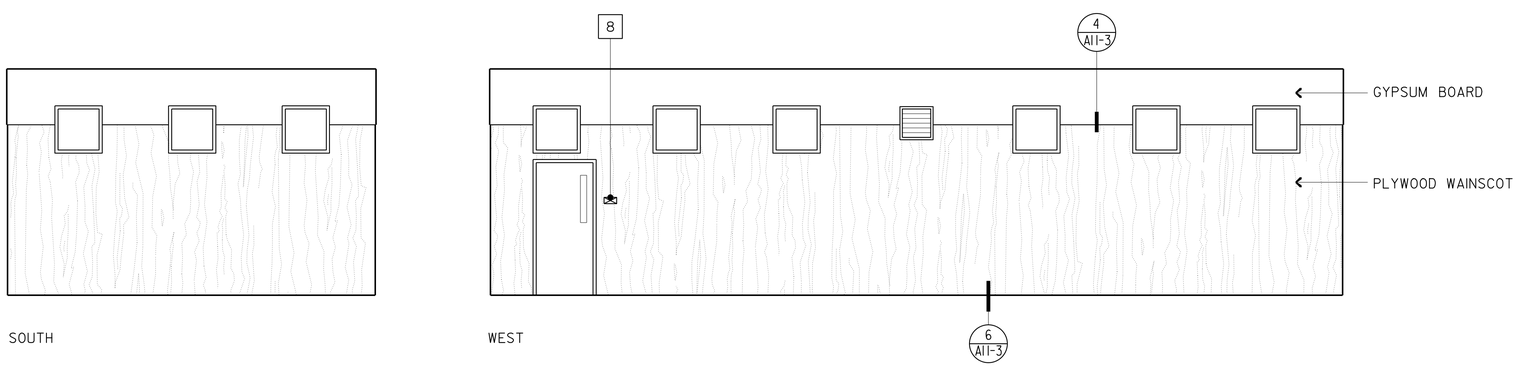

SPECIAL CREW SHOP 129

KEY NOTES

1. PRIVACY CURTAIN
2. LOCKERS
3. BENCH (3 / A0-3.5)
4. CLOTHES ROD AND SHELF
5. EMERGENCY EYEWASH/SHOWER
6. FIRE EXTINGUISHER (3 / A0-3.5)
7. ROOM IDENTIFICATION SIGN (1 / A0-3.3)
8. EXIT SIGN (2 / A0-3.3)

ACCESSIBILITY NOTES:

1. FOR ADDITIONAL NOTES AND DIMENSIONS, SEE SHEETS A0-3.3, A0-3.4, A0-3.5 AND A1-3
2. FOR ACCESSORY HEIGHTS NOT SHOWN ON INTERIOR ELEVATIONS, SEE DETAIL 3/A0-3.5
3. DETAILS SHOWN IN KEY NOTES APPLY TO ACCESSIBLE FIXTURES ONLY
4. DETAILS ON SHEETS A0-3.4/A0-3.5, ARE GENERIC FOR ACTUAL FIXTURE STYLE AND PLUMBING SEE SPECIAL PROVISIONS AND PROJECT SPECIFIC PLANS

INTERIOR ELEVATIONS

SCALE 1/4"=1'-0"

	BY		CHECKED
DESIGN	BY	MICHELE MARSON	CHECKED ANTHONY MANANSALA
DETAILS	BY	MICHELE MARSON	CHECKED ANTHONY MANANSALA
QUANTITIES	BY		CHECKED

STATE OF CALIFORNIA DEPARTMENT OF TRANSPORTATION

DIVISION OF ENGINEERING SERVICES ARCHITECTURAL AND STRUCTURAL DESIGN

BRIDGE NO. 58M5708
POST MILE

EL CENTRO MAINTENANCE FACILITY
MAINTENANCE OFFICE/EQUIPMENT
INTERIOR ELEVATIONS 5

SHEET A1-16

a1_16.dgn
TAEMWW Imperial Rev. 7/10 21-JAN-2014 09:46

ORIGINAL SCALE IN INCHES FOR REDUCED PLANS 0 1 2 3

UNIT 3595
PROJECT NUMBER & PHASE 11000000351
EA 076701

DISREGARD PRINTS BEARING EARLIER REVISION DATES

REVISION DATES (PRELIMINARY STAGE ONLY) 07 08-23-13 09-13-13

SHEET X OF X

21-JAN-2014 09:46
a1_16.dgn

DIST.	COUNTY	LOCATION CODE	POST MILES TOTAL PROJECT	SHEET NO.	TOTAL SHEETS
11	Imp	5708		94	354

LICENSED ARCHITECT — 9/12/13 — DATE

LICENSED ARCHITECT ANTHONY V. MANANSALA No. C-32260 Ren. 4/30/15 STATE OF CALIFORNIA

01-06-14
PLANS APPROVAL DATE

The State of California or its officers or agents shall not be responsible for the accuracy or completeness of scanned copies of this plan sheet.

ACCESSIBILITY DESIGN APPROVAL STAMP DOT / DES / OTA
PROJECT ID **1100000035**
Reviewed by:
Date: 10-19-10

CALIFORNIA STATE FIRE MARSHAL APPROVED
Approval of this plan does not authorize or approve any omission or deviation from applicable regulations. Final approval is subject to field inspection. One set of approved plans shall be available on the project site at all times.
Reviewed by: FRANCIS SOLICH
Approval date: 11-29-2013
CSFM No. 01-13-11-0025

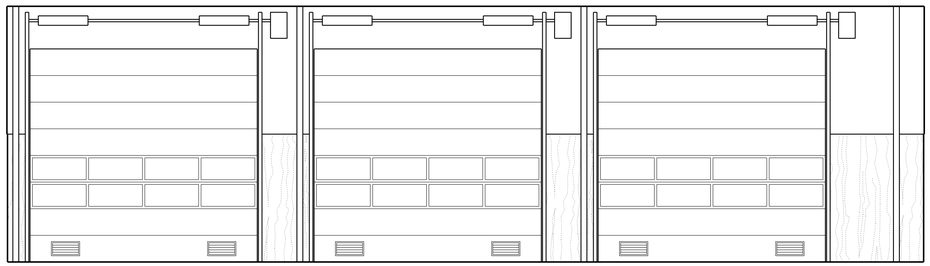

NORTH

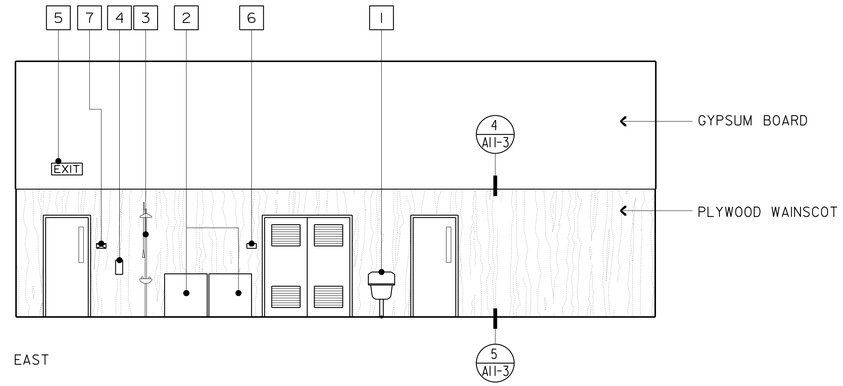

EAST

SERVICE BAY/ STORAGE BAYS 124/125

KEY NOTES

1. SERVICE SINK
2. ICE MACHINE
3. EMERGENCY EYEWASH/SHOWER
4. FIRE EXTINGUISHER (3/A0-3.5)
5. SELF-LUMINOUS EXIT SIGN
6. ROOM IDENTIFICATION SIGN (1/A0-3.3)
7. EXIT SIGN (2/A0-3.3)

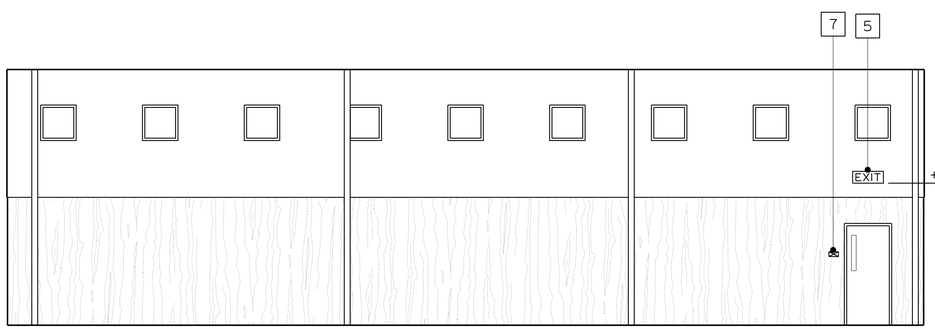

SOUTH

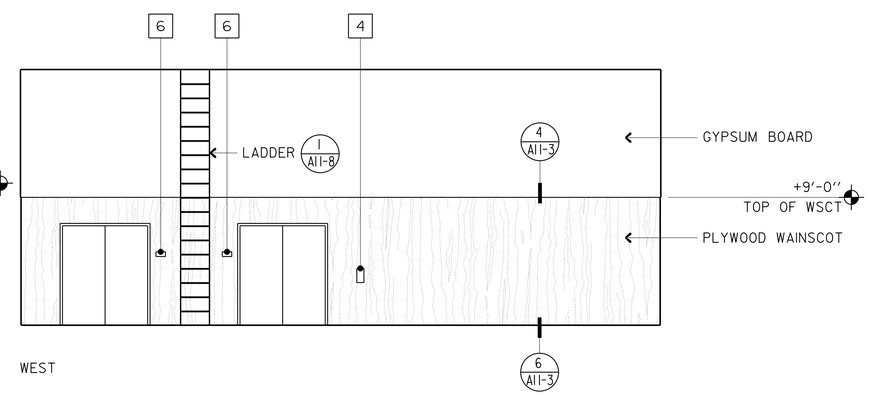

WEST

SERVICE BAY/ STORAGE BAYS 124/125

ACCESSIBILITY NOTES:

1. FOR ADDITIONAL NOTES AND DIMENSIONS, SEE SHEETS A0-3.3, A0-3.4, AND A0-3.5
2. FOR ACCESSORY HEIGHTS NOT SHOWN ON INTERIOR ELEVATIONS, SEE DETAIL 3/A0-3.5
3. DETAILS SHOWN IN KEY NOTES APPLY TO ACCESSIBLE FIXTURES ONLY
4. DETAILS ON SHEETS A0-3.4/A0-3.5, ARE GENERIC FOR ACTUAL FIXTURE STYLE AND PLUMBING SEE SPECIAL PROVISIONS AND PROJECT SPECIFIC PLANS

INTERIOR ELEVATIONS

SCALE 3/16"=1'-0"

	BY		CHECKED
DESIGN	MICHELE MARSON		ANTHONY MANANSALA
DETAILS	MICHELE MARSON		ANTHONY MANANSALA
QUANTITIES			

STATE OF CALIFORNIA DEPARTMENT OF TRANSPORTATION

DIVISION OF ENGINEERING SERVICES ARCHITECTURAL AND STRUCTURAL DESIGN

BRIDGE NO. 58M5708
POST MILE

EL CENTRO MAINTENANCE FACILITY
MAINTENANCE OFFICE/EQUIPMENT
INTERIOR ELEVATIONS 6

SHEET A1-17

a1_17.dgn
TAEMWW Imperial Rev. 7/10 21-JAN-2014 09:46

ORIGINAL SCALE IN INCHES FOR REDUCED PLANS 0 1 2 3

UNIT 3595
PROJECT NUMBER & PHASE 11000000351
EA 076701

DISREGARD PRINTS BEARING EARLIER REVISION DATES

REVISION DATES (PRELIMINARY STAGE ONLY) 07 08-23-13 09-13-13

SHEET X OF X

21-JAN-2014 09:46
a1_17.dgn

DIST.	COUNTY	LOCATION CODE	POST MILES TOTAL PROJECT	SHEET NO.	TOTAL SHEETS
11	Imp	5708		95	354

LICENSED ARCHITECT — DATE 9/12/13

LICENSED ARCHITECT ANTHONY V. MANANSALA No. C-32260 Ren. 4/30/15 STATE OF CALIFORNIA

01-06-14
PLANS APPROVAL DATE

The State of California or its officers or agents shall not be responsible for the accuracy or completeness of scanned copies of this plan sheet.

ACCESSIBILITY DESIGN APPROVAL STAMP DOT / DES / OTA
PROJECT ID **1100000035**
Reviewed by:
Date: 10-19-10

CALIFORNIA STATE FIRE MARSHAL APPROVED
Approval of this plan does not authorize or approve any omission or deviation from applicable regulations. Final approval is subject to field inspection. One set of approved plans shall be available on the project site at all times.
Reviewed by: FRANCIS SOLICH
Approval date: 11-29-2013
CSFM No. 01-13-11-0025

WALL LEGEND:

2" x 6" METAL STUDS

NOTE:
THERMAL BATT INSULATION AT PERIMETER WALLS

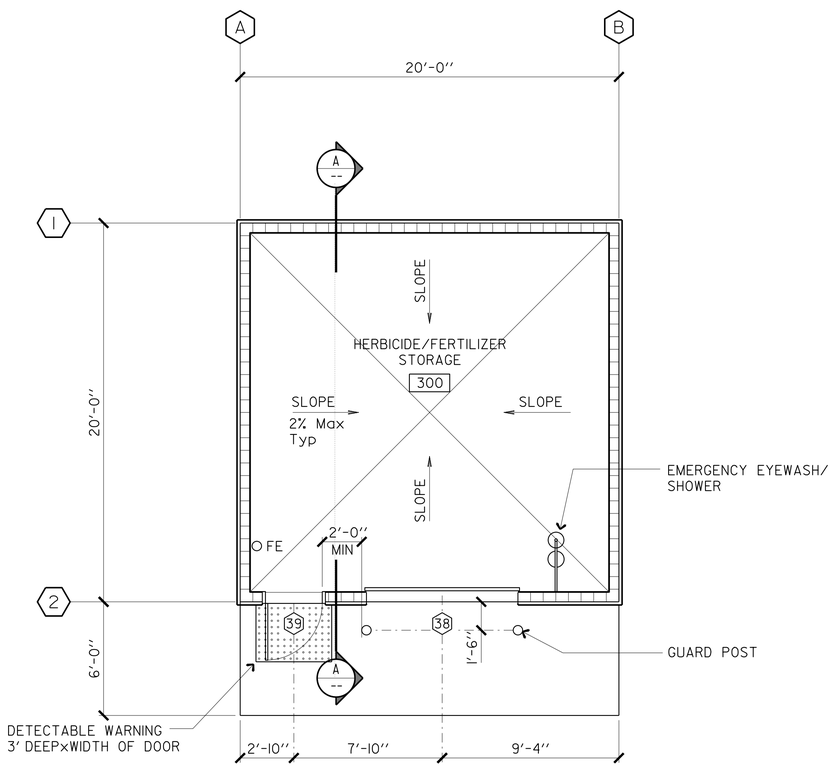

FLOOR PLAN

SCALE 1/4"=1'-0"

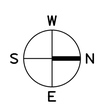

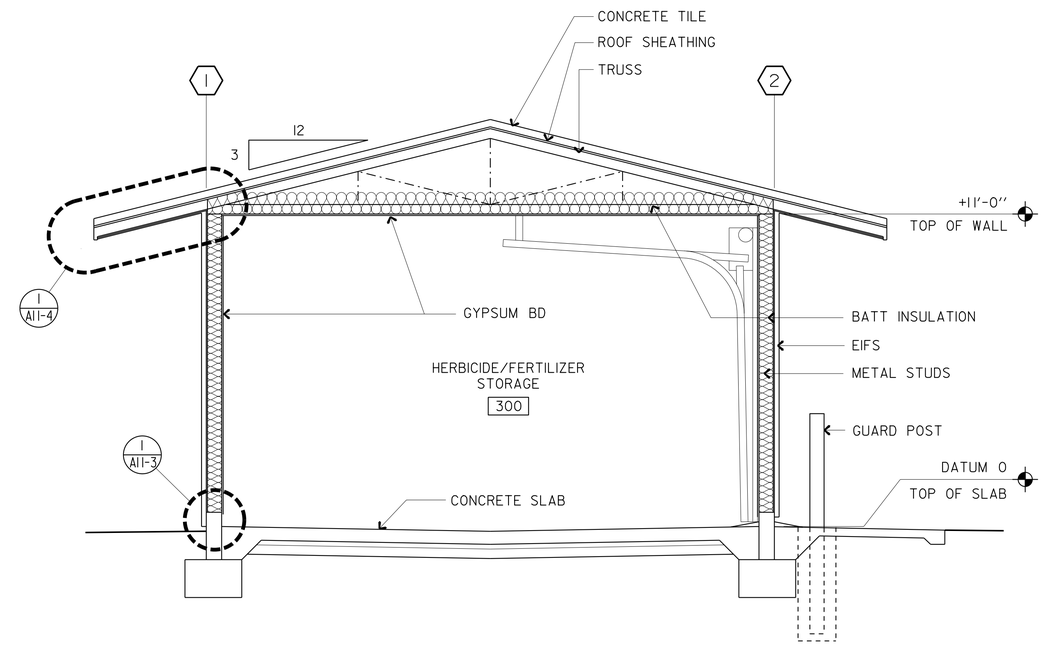

SECTION A

SCALE 3/8"=1'-0"

DESIGN	BY MICHELE MARSON	CHECKED ANTHONY MANANSALA	
DETAILS	BY MICHELE MARSON	CHECKED ANTHONY MANANSALA	
QUANTITIES	BY	CHECKED	

STATE OF CALIFORNIA DEPARTMENT OF TRANSPORTATION

DIVISION OF ENGINEERING SERVICES ARCHITECTURAL AND STRUCTURAL DESIGN

BRIDGE NO. 58M5708
POST MILE

EL CENTRO MAINTENANCE FACILITY
HERBICIDE/FERTILIZER STORAGE
FLOOR PLAN/BUILDING SECTION

SHEET **A3-1**

a3_01.dgn
TAEMWW Imperial Rev. 7/10
21-JAN-2014 09:47

ORIGINAL SCALE IN INCHES FOR REDUCED PLANS 0 1 2 3

UNIT 3595
PROJECT NUMBER & PHASE 11000000351
EA 076701

DISREGARD PRINTS BEARING EARLIER REVISION DATES
REVISION DATES (PRELIMINARY STAGE ONLY) 07 08-23-13 09-13-13
SHEET X OF X

21-JAN-2014 09:47
a3_01.dgn

DIST.	COUNTY	LOCATION CODE	POST MILES TOTAL PROJECT	SHEET NO.	TOTAL SHEETS
11	Imp	5708		96	354

LICENSED ARCHITECT — 9/12/13 — DATE

LICENSED ARCHITECT ANTHONY V. MANANSALA No. C-32260 Ren. 4/30/15 STATE OF CALIFORNIA

01-06-14
PLANS APPROVAL DATE

The State of California or its officers or agents shall not be responsible for the accuracy or completeness of scanned copies of this plan sheet.

ACCESSIBILITY DESIGN APPROVAL STAMP DOT / DES / OTA

PROJECT ID **1100000035**

Reviewed by:

Date: 10-19-10

CALIFORNIA STATE FIRE MARSHAL APPROVED

Approval of this plan does not authorize or approve any omission or deviation from applicable regulations. Final approval is subject to field inspection. One set of approved plans shall be available on the project site at all times.

Reviewed by: FRANCIS SOLICH

Approval date: 11-29-2013

CSFM No. 01-13-11-0025

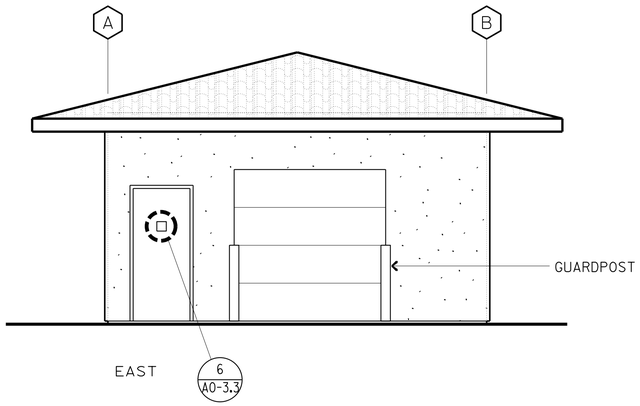

EAST

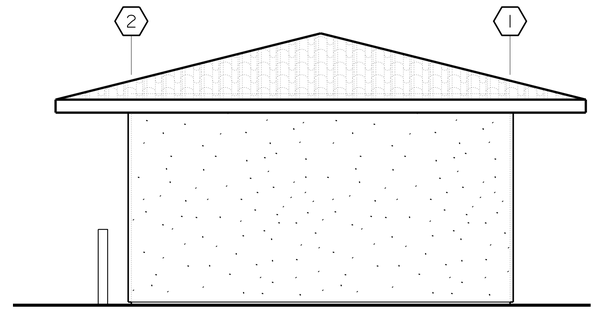

NORTH

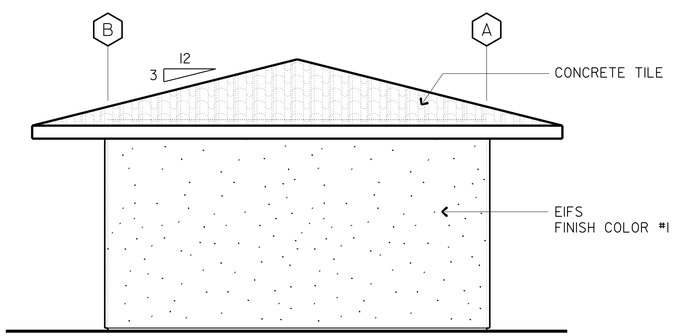

WEST

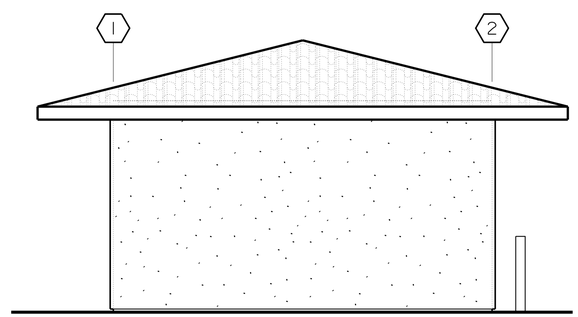

SOUTH

EXTERIOR ELEVATIONS

SCALE 1/4"=1'-0"

DESIGN	BY MICHELE MARSON	CHECKED ANTHONY MANANSALA	
DETAILS	BY MICHELE MARSON	CHECKED ANTHONY MANANSALA	
QUANTITIES	BY	CHECKED	

STATE OF CALIFORNIA DEPARTMENT OF TRANSPORTATION

DIVISION OF ENGINEERING SERVICES ARCHITECTURAL AND STRUCTURAL DESIGN

BRIDGE NO. 58M5708

POST MILE

EL CENTRO MAINTENANCE FACILITY

HERBICIDE/FERTILIZER STORAGE

EXTERIOR ELEVATIONS

SHEET **A3-2**

a3_02.dgn
TAEMWW Imperial Rev. 7/10 21-JAN-2014 09:47

ORIGINAL SCALE IN INCHES FOR REDUCED PLANS 0 1 2 3

UNIT 3595
PROJECT NUMBER & PHASE 11000000351
EA 076701

DISREGARD PRINTS BEARING EARLIER REVISION DATES

REVISION DATES (PRELIMINARY STAGE ONLY) 07-08-23-13 09-13-13

SHEET X OF X

21-JAN-2014 09:47
a3_02.dgn

DIST.	COUNTY	LOCATION CODE	POST MILES TOTAL PROJECT	SHEET NO.	TOTAL SHEETS
11	Imp	5708		97	354

LICENSED ARCHITECT — DATE 9/12/13

LICENSED ARCHITECT ANTHONY V. MANANSALA No. C-32260 Ren. 4/30/15 STATE OF CALIFORNIA

01-06-14
PLANS APPROVAL DATE

The State of California or its officers or agents shall not be responsible for the accuracy or completeness of scanned copies of this plan sheet.

ACCESSIBILITY DESIGN APPROVAL STAMP DOT / DES / OTA
PROJECT ID **11000000035**
Reviewed by:
Date: 10-19-10

CALIFORNIA STATE FIRE MARSHAL APPROVED
Approval of this plan does not authorize or approve any omission or deviation from applicable regulations. Final approval is subject to field inspection. One set of approved plans shall be available on the project site at all times.
Reviewed by: FRANCIS SOLICH
Approval date: 11-29-2013
CSFM No. 01-13-11-0025

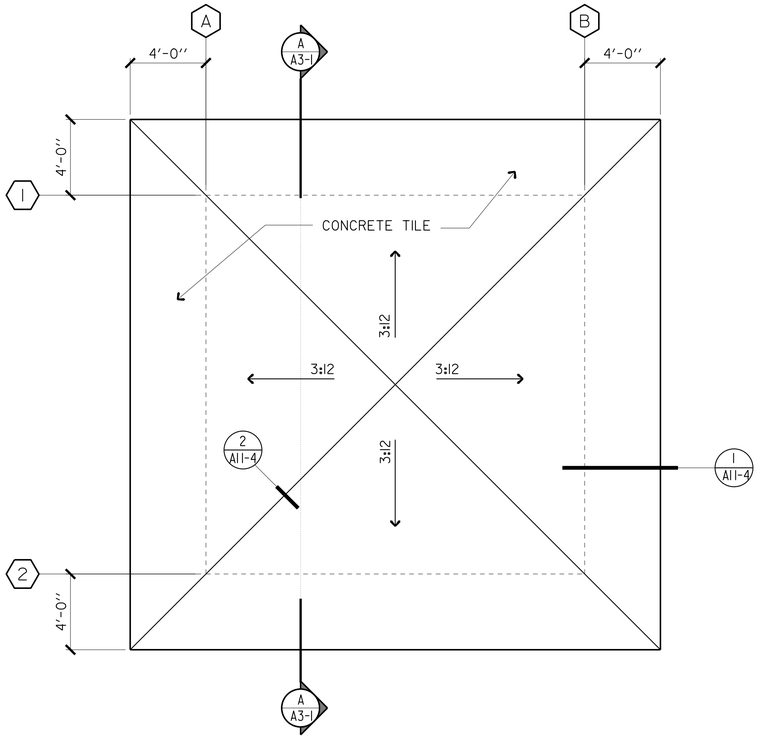

ROOF PLAN
SCALE 1/4"=1'-0"

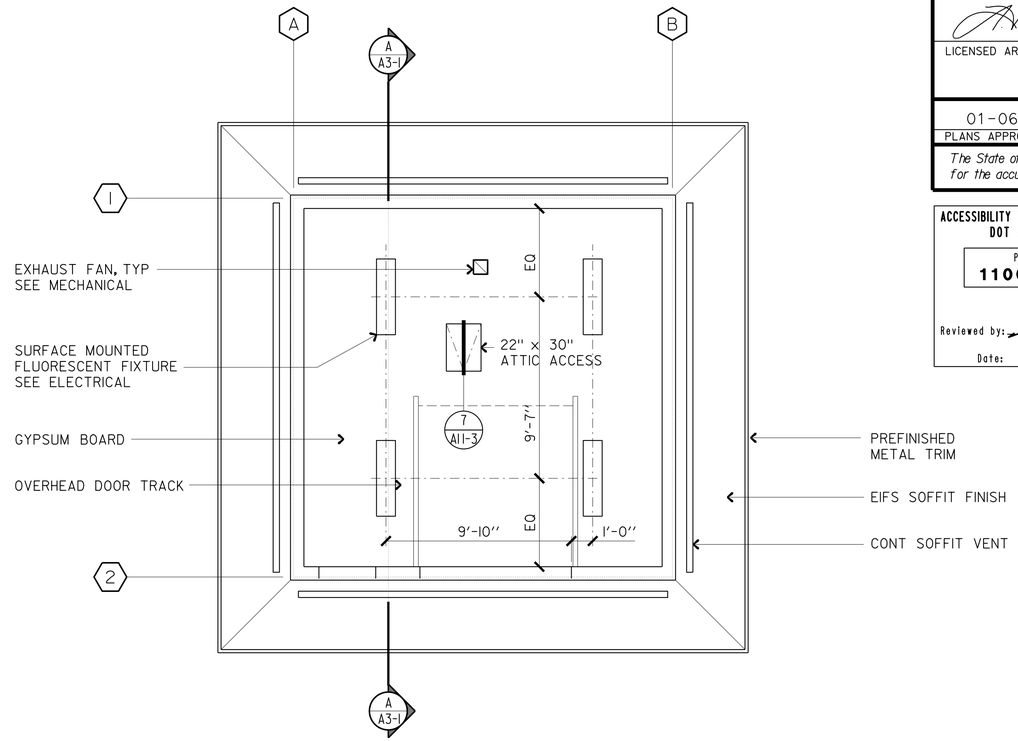

REFLECTED CEILING PLAN
SCALE 1/4"=1'-0"

DESIGN	BY MICHELE MARSON	CHECKED ANTHONY MANANSALA	STATE OF CALIFORNIA DEPARTMENT OF TRANSPORTATION
DETAILS	BY MICHELE MARSON	CHECKED ANTHONY MANANSALA	
QUANTITIES	BY	CHECKED	

DIVISION OF ENGINEERING SERVICES
ARCHITECTURAL AND STRUCTURAL DESIGN

BRIDGE NO. 58M5708
POST MILE

EL CENTRO MAINTENANCE FACILITY
HERBICIDE/FERTILIZER STORAGE
ROOF PLAN/ REFLECTED CEILING PLAN

SHEET **A3-3**

a3_03.dgn
TAEMWW Imperial Rev. 7/10 21-JAN-2014 09:47

ORIGINAL SCALE IN INCHES FOR REDUCED PLANS 0 1 2 3

UNIT 3595
PROJECT NUMBER & PHASE 11000000351
EA 076701

DISREGARD PRINTS BEARING EARLIER REVISION DATES

REVISION DATES (PRELIMINARY STAGE ONLY) 07 08-23-13 09-13-13

SHEET X OF X

21-JAN-2014 09:47
a3_03.dgn

DIST.	COUNTY	LOCATION CODE	POST MILES TOTAL PROJECT	SHEET NO.	TOTAL SHEETS
11	Imp	5708		98	354

LICENSED ARCHITECT — DATE 9/12/13

LICENSED ARCHITECT ANTHONY V. MANANSALA No. C-32260 Ren. 4/30/15 STATE OF CALIFORNIA

01-06-14
PLANS APPROVAL DATE

The State of California or its officers or agents shall not be responsible for the accuracy or completeness of scanned copies of this plan sheet.

ACCESSIBILITY DESIGN APPROVAL STAMP DOT / DES / OTA
PROJECT ID **1100000035**
Reviewed by:
Date: 10-19-10

CALIFORNIA STATE FIRE MARSHAL APPROVED
Approval of this plan does not authorize or approve any omission or deviation from applicable regulations. Final approval is subject to field inspection. One set of approved plans shall be available on the project site at all times.
Reviewed by: FRANCIS SOLICH
Approval date: 11-29-2013
CSFM No. 01-13-11-0025

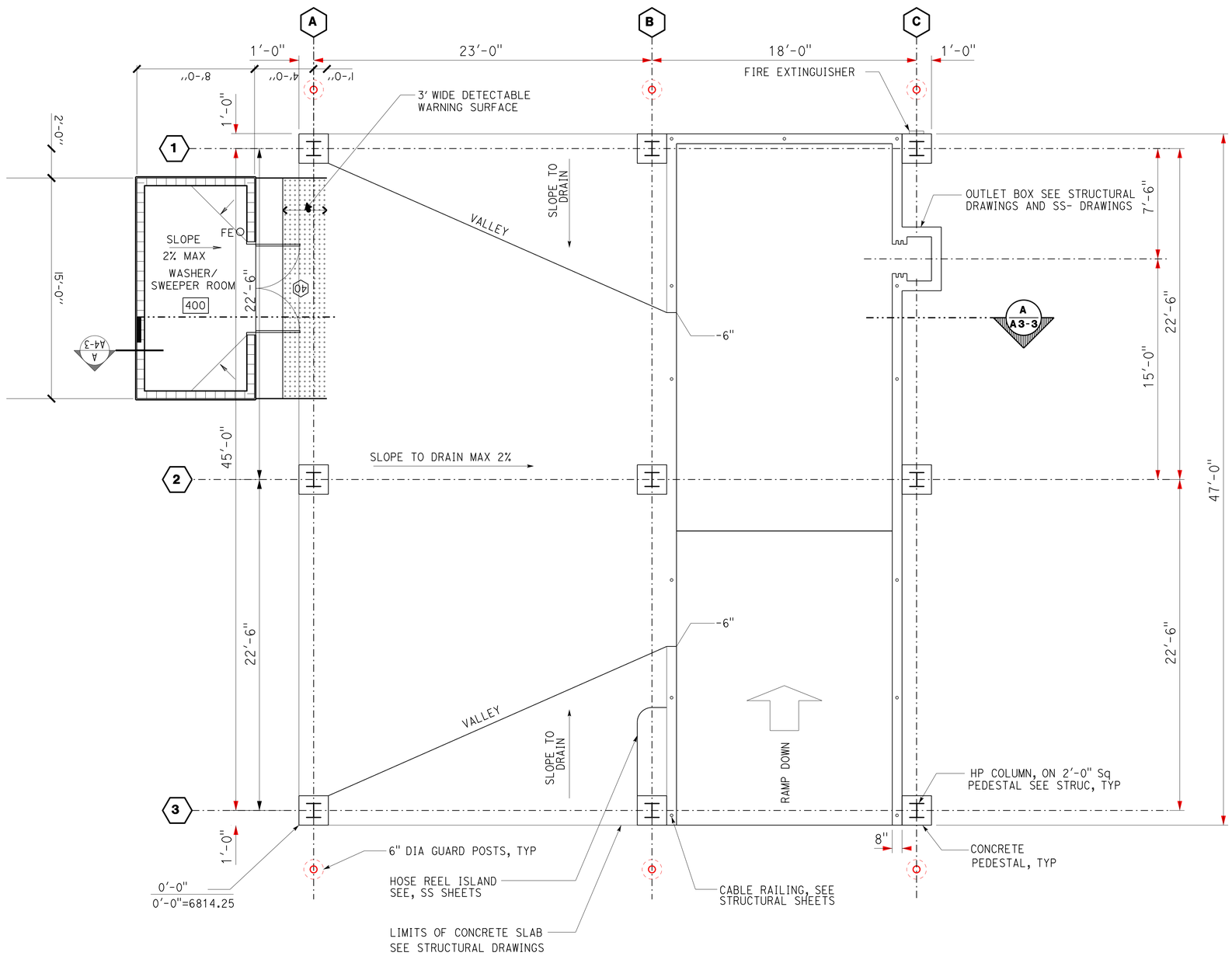

FLOOR PLAN

SCALE 1/4"=1'-0"

S E M N

DESIGN	BY MICHELE MARSON	CHECKED ANTHONY MANANSALA	
DETAILS	BY MICHELE MARSON	CHECKED ANTHONY MANANSALA	
QUANTITIES	BY	CHECKED	

STATE OF CALIFORNIA DEPARTMENT OF TRANSPORTATION

DIVISION OF ENGINEERING SERVICES ARCHITECTURAL AND STRUCTURAL DESIGN

BRIDGE NO. 58M5708
POST MILE

EL CENTRO MAINTENANCE FACILITY

WASH RACK — FLOOR PLAN

SHEET **A4-1**

a4_01.dgn
TAEMWW Imperial Rev. 7/10
21-JAN-2014 09:47

ORIGINAL SCALE IN INCHES FOR REDUCED PLANS 0 1 2 3

UNIT 3595
PROJECT NUMBER & PHASE 11000000351
EA 076701

DISREGARD PRINTS BEARING EARLIER REVISION DATES
REVISION DATES (PRELIMINARY STAGE ONLY) 07 08-23-13 09-13-13
SHEET X OF X

21-JAN-2014 09:47 a4_01.dgn

DIST.	COUNTY	LOCATION CODE	POST MILES TOTAL PROJECT	SHEET NO.	TOTAL SHEETS
11	Imp	5708		99	354

LICENSED ARCHITECT — DATE 9/12/13

LICENSED ARCHITECT ANTHONY V. MANANSALA No. C-32260 Ren. 4/30/15 STATE OF CALIFORNIA

01-06-14
PLANS APPROVAL DATE

The State of California or its officers or agents shall not be responsible for the accuracy or completeness of scanned copies of this plan sheet.

ACCESSIBILITY DESIGN APPROVAL STAMP DOT / DES / OTA

PROJECT ID **1100000035**

Reviewed by:

Date: 10-19-10

CALIFORNIA STATE FIRE MARSHAL APPROVED

Approval of this plan does not authorize or approve any omission or deviation from applicable regulations. Final approval is subject to field inspection. One set of approved plans shall be available on the project site at all times.

Reviewed by: FRANCIS SOLICH

Approval date: 11-29-2013

CSFM No. 01-13-11-0025

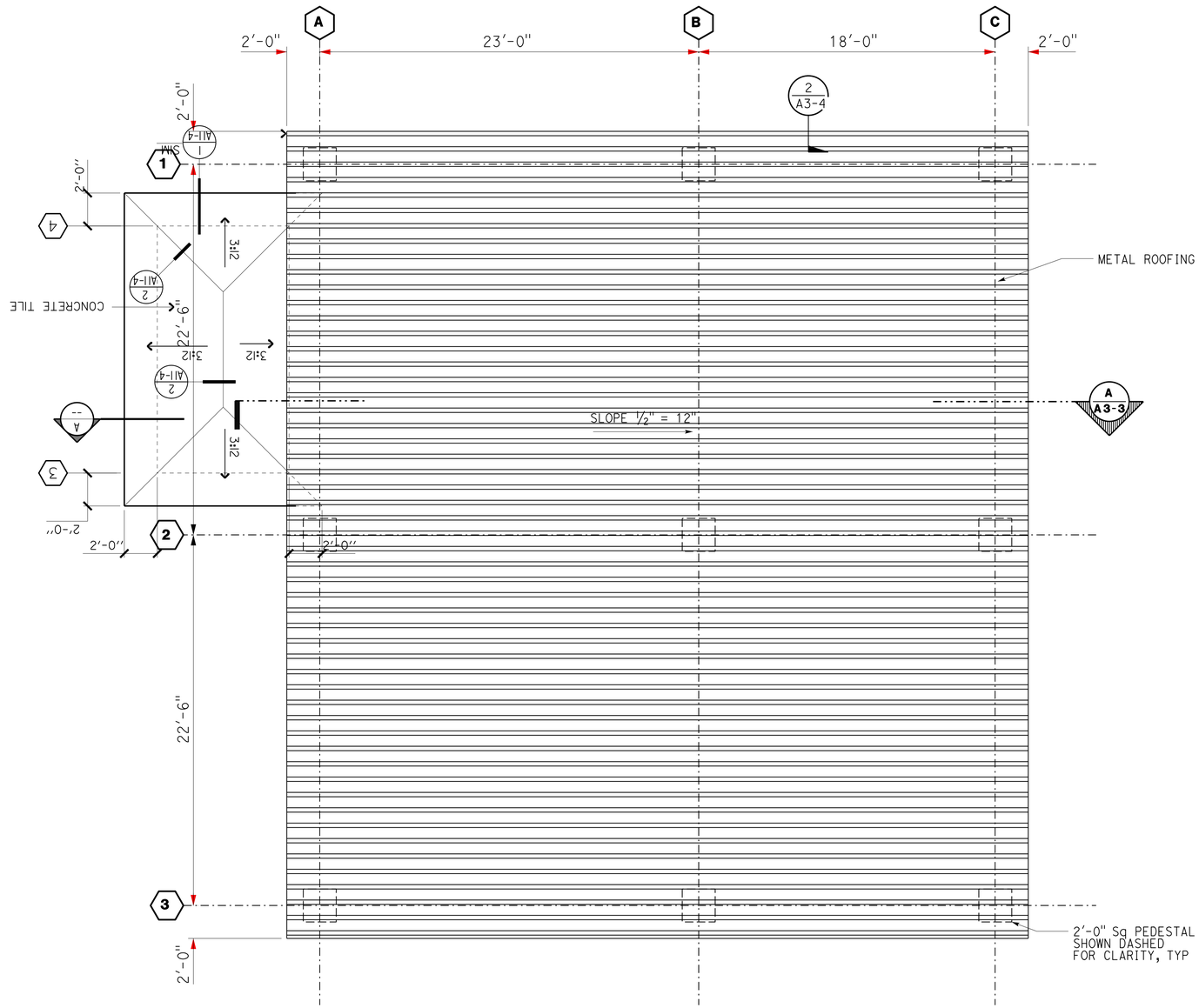

FLOOR PLAN

SCALE 1/4"=1'-0"

DESIGN	BY ANTHONY MANANSALA	CHECKED ANTHONY MANANSALA	
DETAILS	BY ANTHONY MANANSALA	CHECKED ANTHONY MANANSALA	
QUANTITIES	BY	CHECKED	

STATE OF CALIFORNIA DEPARTMENT OF TRANSPORTATION

DIVISION OF ENGINEERING SERVICES ARCHITECTURAL AND STRUCTURAL DESIGN

BRIDGE NO. 58M5708

POST MILE

EL CENTRO MAINTENANCE FACILITY

WASH RACK

ROOF PLAN

SHEET **A4-2**

a4_02.dgn
TAEMWW Imperial Rev. 7/10
21-JAN-2014 09:47

ORIGINAL SCALE IN INCHES FOR REDUCED PLANS 0 1 2 3

UNIT 3595
PROJECT NUMBER & PHASE 11000000351
EA 076701

DISREGARD PRINTS BEARING EARLIER REVISION DATES →

REVISION DATES (PRELIMINARY STAGE ONLY): 07 08-23-13 09-13-13

SHEET X OF X

21-JAN-2014 09:47 a4_02.dgn

DIST.	COUNTY	LOCATION CODE	POST MILES TOTAL PROJECT	SHEET NO.	TOTAL SHEETS
11	Imp	5708		100	354

LICENSED ARCHITECT — 9/12/13 — DATE

LICENSED ARCHITECT ANTHONY V. MANANSALA No. C-32260 Ren. 4/30/15 STATE OF CALIFORNIA

01-06-14
PLANS APPROVAL DATE

The State of California or its officers or agents shall not be responsible for the accuracy or completeness of scanned copies of this plan sheet.

ACCESSIBILITY DESIGN APPROVAL STAMP DOT / DES / OTA
PROJECT ID **1100000035**
Reviewed by:
Date: 10-19-10

CALIFORNIA STATE FIRE MARSHAL APPROVED
Approval of this plan does not authorize or approve any omission or deviation from applicable regulations. Final approval is subject to field inspection. One set of approved plans shall be available on the project site at all times.
Reviewed by: FRANCIS SOLICH
Approval date: 11-29-2013
CSFM No. 01-13-11-0025

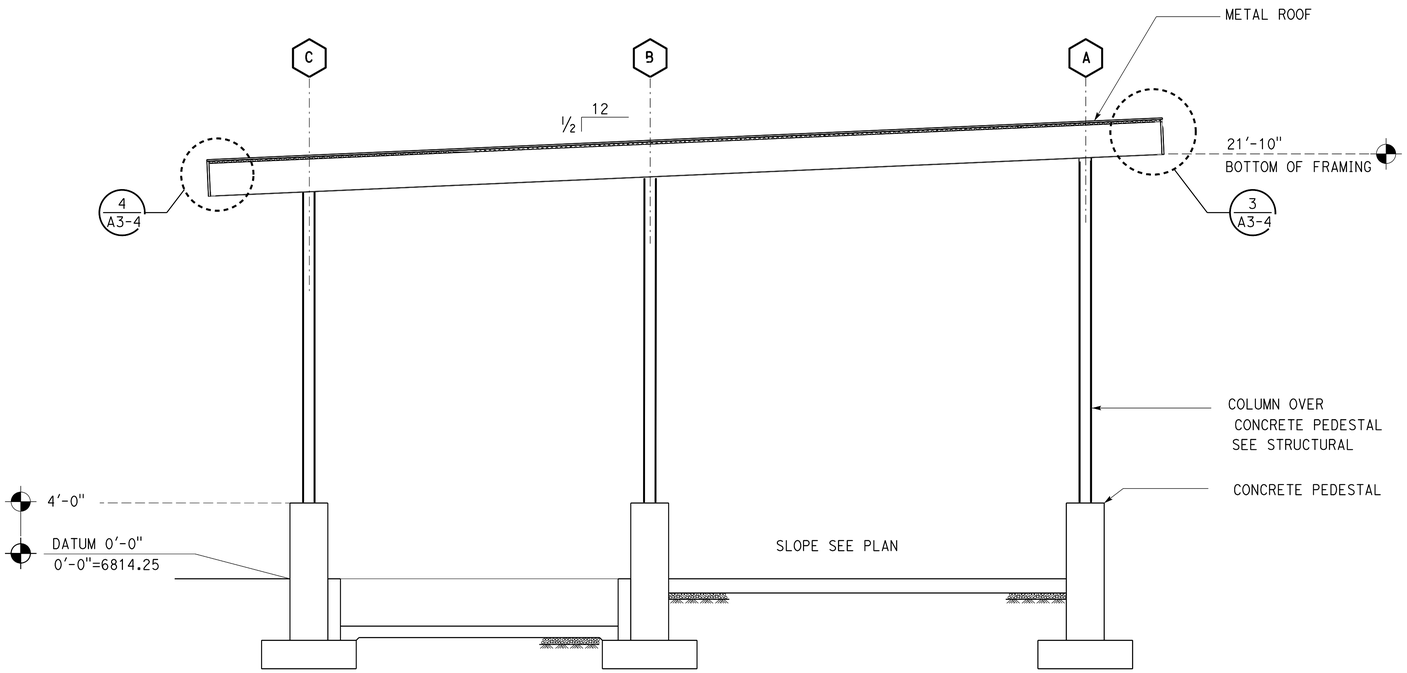

SECTION A-A

SCALE 1/4" = 1'-0"

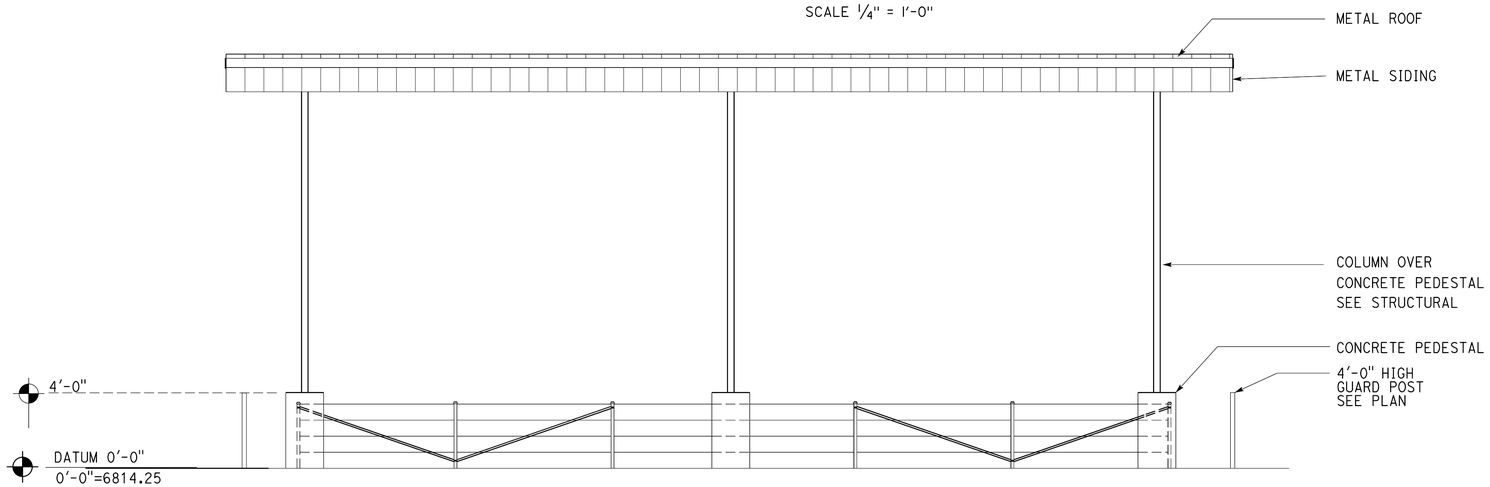

SOUTH ELEVATION

SCALE 1/4" = 1'-0"

DESIGN	BY ANTHONY MANANSALA	CHECKED ANTHONY MANANSALA	
DETAILS	BY ANTHONY MANANSALA	CHECKED ANTHONY MANANSALA	
QUANTITIES	BY	CHECKED	

STATE OF CALIFORNIA
DEPARTMENT OF TRANSPORTATION

DIVISION OF ENGINEERING SERVICES
ARCHITECTURAL AND STRUCTURAL DESIGN

BRIDGE NO. 58M5708
POST MILE

EL CENTRO MAINTENANCE FACILITY
WASH RACK
SECTION, ELEVATION

SHEET **A4-3**

a4_03.dgn
TAEMWW Imperial Rev. 7/10
21-JAN-2014 09:47

ORIGINAL SCALE IN INCHES FOR REDUCED PLANS 0 1 2 3

UNIT 3595
PROJECT NUMBER & PHASE 11000000351
EA 076701

DISREGARD PRINTS BEARING EARLIER REVISION DATES
REVISION DATES (PRELIMINARY STAGE ONLY) 07 08-23-13 09-13-13
SHEET X OF X

21-JAN-2014 09:47
a4_03.dgn