DIST	COUNTY	ROUTE	KILOMETER POST TOTAL PROJECT	SHEET No.	TOTAL SHEETS
11	SD	805	40.6/42.4	401	567

Kurt W Carlson 09-09-09
REGISTERED LANDSCAPE ARCHITECT — DATE

6-14-10
PLANS APPROVAL DATE

REGISTERED LANDSCAPE ARCHITECT — KURT W. CARLSON — No. RLA 2342 — Exp. 2/28/11 — STATE OF CALIFORNIA

THE STATE OF CALIFORNIA OR ITS OFFICERS OR AGENTS SHALL NOT BE RESPONSIBLE FOR THE ACCURACY OR COMPLETENESS OF ELECTRONIC COPIES OF THIS PLAN SHEET.

KTU+A LANDSCAPE ARCHITECTURE
3916 NORMAL STREET
SAN DIEGO, CA 92103

CITY OF SAN DIEGO
1010 SECOND AVENUE, SUITE 1200
SAN DIEGO, CA 92101

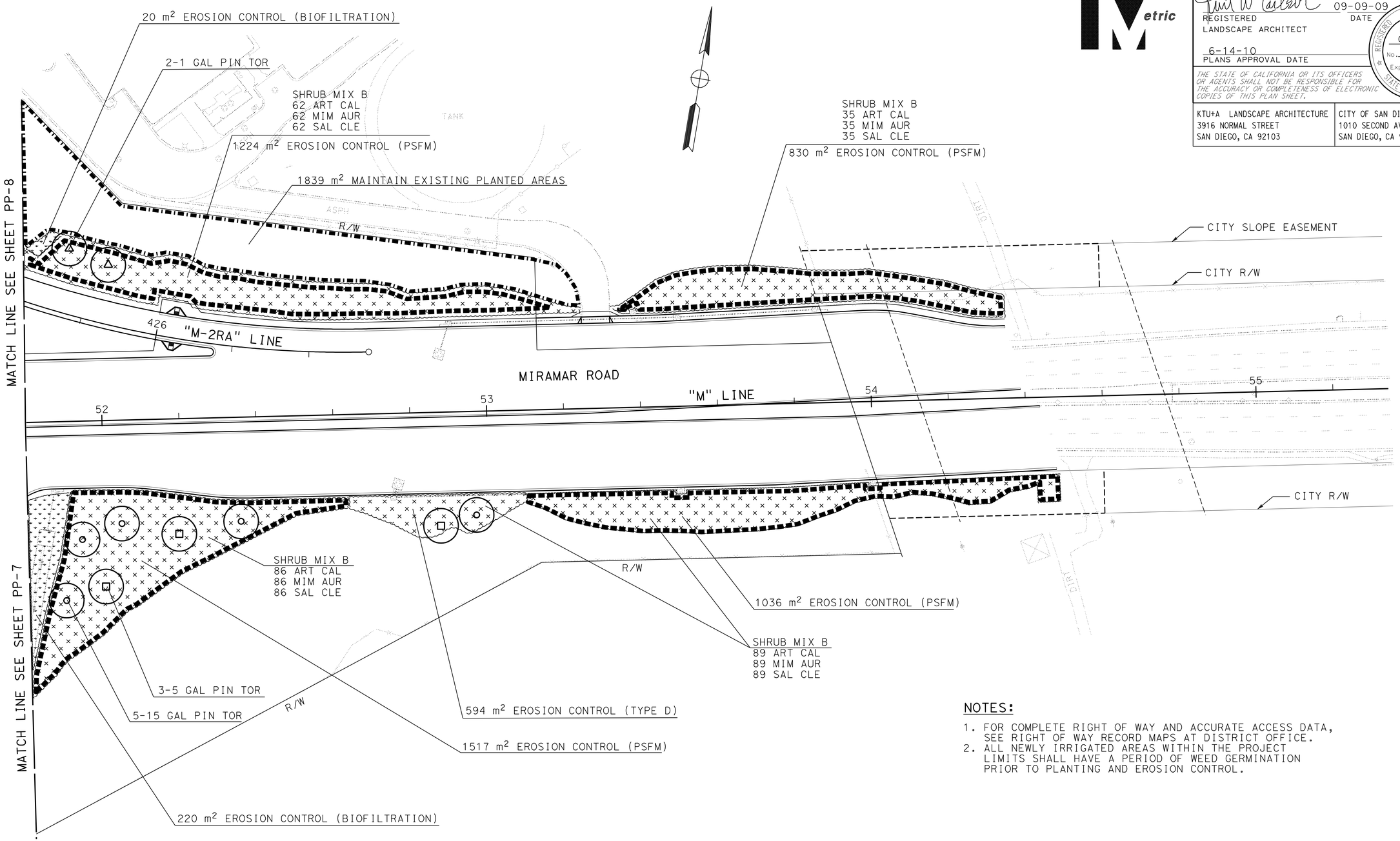

NOTES:

1. FOR COMPLETE RIGHT OF WAY AND ACCURATE ACCESS DATA, SEE RIGHT OF WAY RECORD MAPS AT DISTRICT OFFICE.
2. ALL NEWLY IRRIGATED AREAS WITHIN THE PROJECT LIMITS SHALL HAVE A PERIOD OF WEED GERMINATION PRIOR TO PLANTING AND EROSION CONTROL.

PLANTING PLAN

SCALE 1:500

PP-9

THIS PLAN SHEET ACCURATE FOR LANDSCAPE WORK ONLY.

ALL DIMENSIONS ARE IN METERS UNLESS OTHERWISE SHOWN

REVISED BY | DATE REVISED
TIM HENDERSON | KURT CARLSON/BERNARD EVERLING
CALCULATED-DESIGNED BY | CHECKED BY
CONSULTANT FUNCTIONAL SUPERVISOR | MICHAEL SINGLETON
STATE OF CALIFORNIA - DEPARTMENT OF TRANSPORTATION

LAST REVISION | DATE PLOTTED => 19-JUN-2010 | TIME PLOTTED => 07:37
10-29-09

DIST	COUNTY	ROUTE	KILOMETER POST TOTAL PROJECT	SHEET No.	TOTAL SHEETS
11	SD	805	40.6/42.4	402	567

Kurt W Carlson 09-09-09
REGISTERED LANDSCAPE ARCHITECT — DATE

6-14-10
PLANS APPROVAL DATE

REGISTERED LANDSCAPE ARCHITECT — KURT W. CARLSON — No. RLA 2342 — Exp. 2/28/11 — STATE OF CALIFORNIA

THE STATE OF CALIFORNIA OR ITS OFFICERS OR AGENTS SHALL NOT BE RESPONSIBLE FOR THE ACCURACY OR COMPLETENESS OF ELECTRONIC COPIES OF THIS PLAN SHEET.

KTU+A LANDSCAPE ARCHITECTURE
3916 NORMAL STREET
SAN DIEGO, CA 92103

CITY OF SAN DIEGO
1010 SECOND AVENUE, SUITE 1200
SAN DIEGO, CA 92101

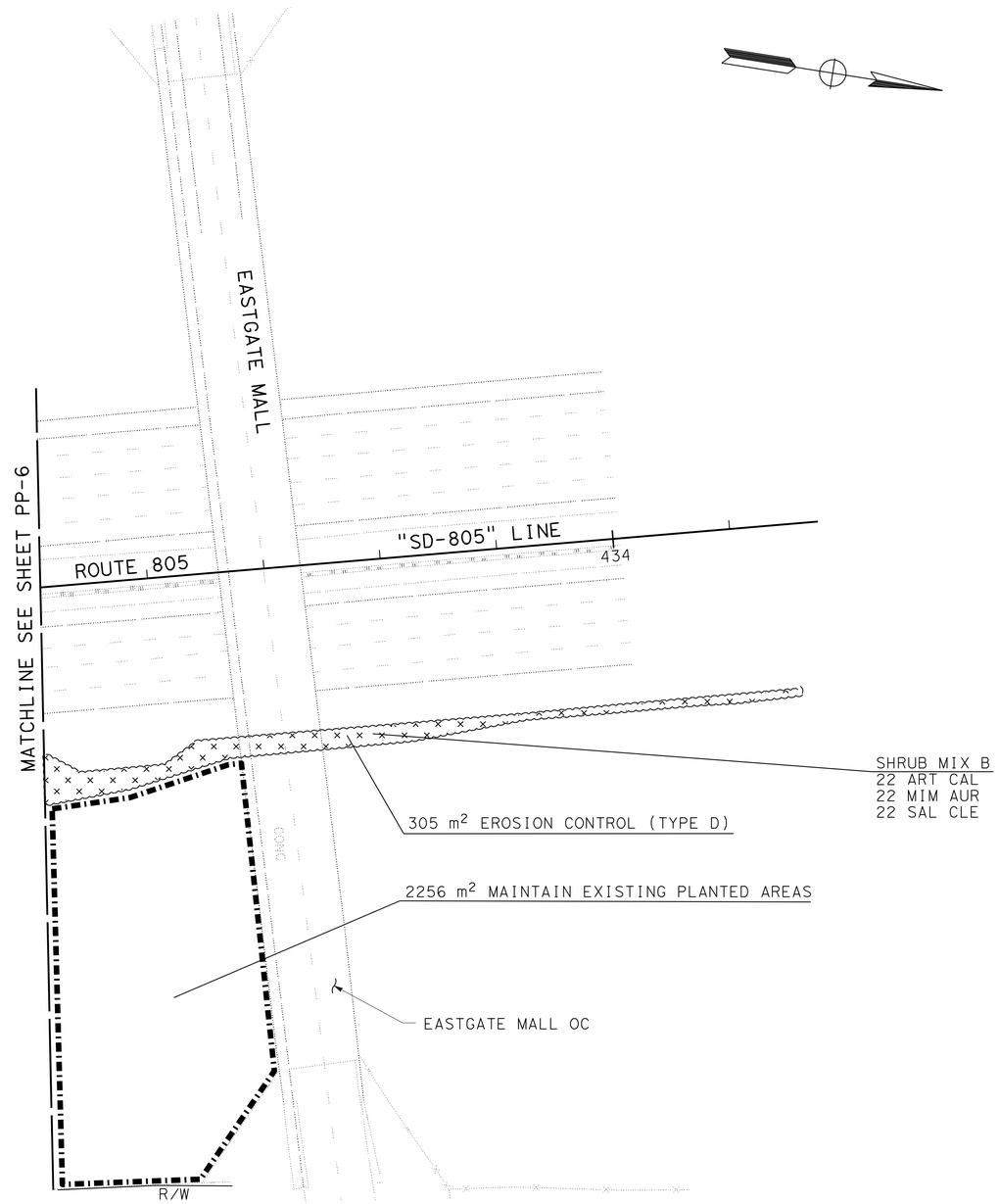

NOTES:

1. FOR COMPLETE RIGHT OF WAY AND ACCURATE ACCESS DATA, SEE RIGHT OF WAY RECORD MAPS AT DISTRICT OFFICE.
2. ALL NEWLY IRRIGATED AREAS WITHIN THE PROJECT LIMITS SHALL HAVE A PERIOD OF WEED GERMINATION PRIOR TO PLANTING AND EROSION CONTROL.

THIS PLAN SHEET ACCURATE FOR LANDSCAPE WORK ONLY.

ALL DIMENSIONS ARE IN METERS UNLESS OTHERWISE SHOWN

PLANTING PLAN

SCALE 1:500

PP-10

REVISED BY	TIM HENDERSON
DATE REVISED	KURT CARLSON/BERNARD EVERLING
CALCULATED-DESIGNED BY	
CHECKED BY	
CONSULTANT FUNCTIONAL SUPERVISOR	MICHAEL SINGLETON

STATE OF CALIFORNIA - DEPARTMENT OF TRANSPORTATION
Caltrans

LAST REVISION 10-15-09 | DATE PLOTTED => 19-JUN-2010 | TIME PLOTTED => 11:01

DIST	COUNTY	ROUTE	KILOMETER POST TOTAL PROJECT	SHEET No.	TOTAL SHEETS
11	SD	805	40.6/42.4	403	567

REGISTERED LANDSCAPE ARCHITECT — 09-09-09 DATE

6-14-10
PLANS APPROVAL DATE

REGISTERED LANDSCAPE ARCHITECT — KURT W. CARLSON — No. RLA 2342 — Exp. 2/28/11 — STATE OF CALIFORNIA

THE STATE OF CALIFORNIA OR ITS OFFICERS OR AGENTS SHALL NOT BE RESPONSIBLE FOR THE ACCURACY OR COMPLETENESS OF ELECTRONIC COPIES OF THIS PLAN SHEET.

KTU+A LANDSCAPE ARCHITECTURE
3916 NORMAL STREET
SAN DIEGO, CA 92103

CITY OF SAN DIEGO
1010 SECOND AVENUE, SUITE 1200
SAN DIEGO, CA 92101

Caltrans Metric

EXISTING IRRIGATION EQUIPMENT TO BE REMOVED
(QUANTITIES ARE APPROXIMATE)

IRRIGATION TYPE	QUANTITY
POP-UP ROTOR HEAD	39
ROTOR HEAD ON RISER	16
GATE VALVE	6
REMOTE CONTROL VALVE	20

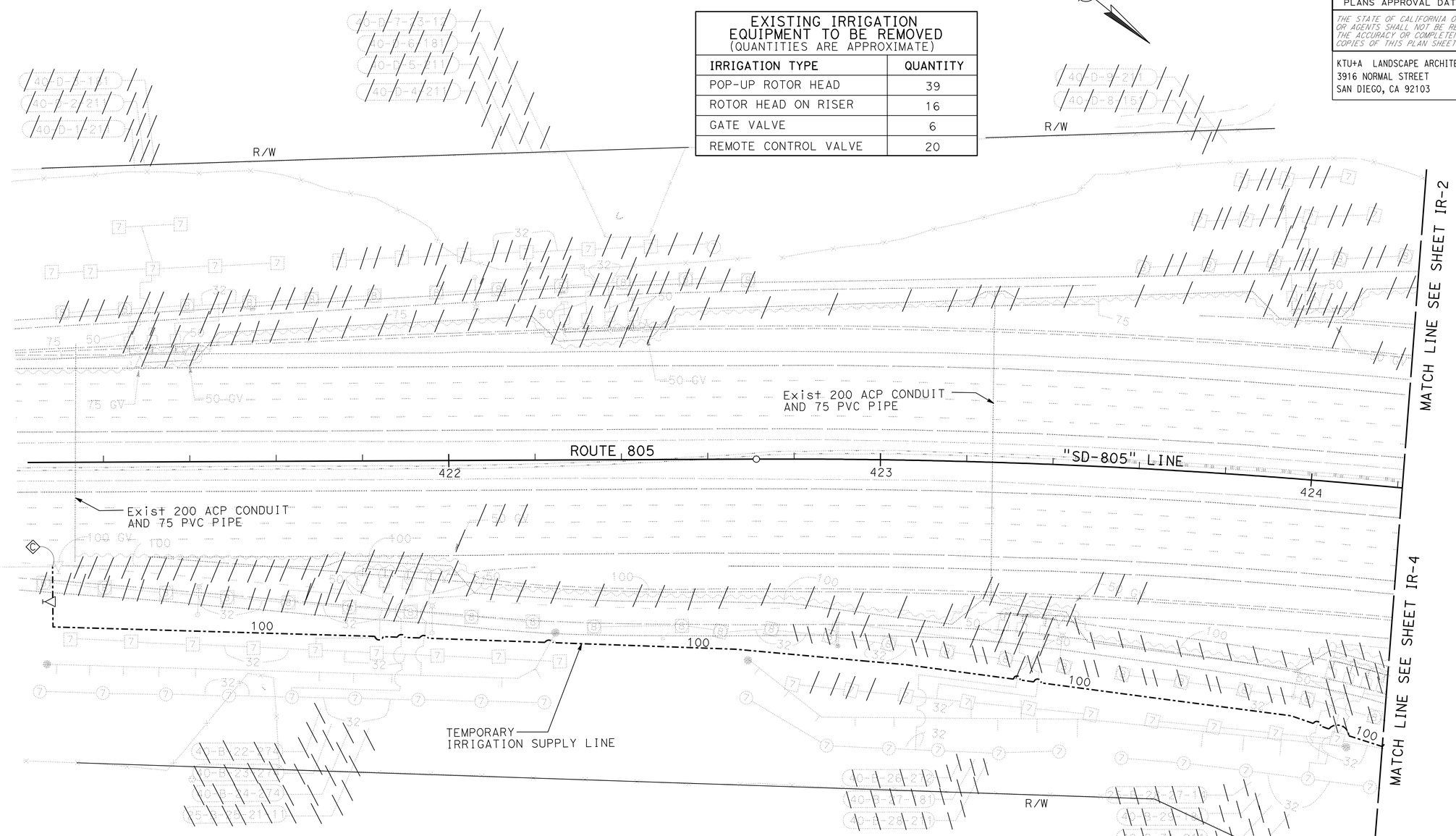

NOTES:

1. FOR COMPLETE RIGHT OF WAY AND ACCURATE ACCESS DATA, SEE RIGHT OF WAY RECORD MAPS AT DISTRICT OFFICE.
2. TEMPORARY IRRIGATION SUPPLY LINE; FIELD VERIFY LOCATION PRIOR TO INSTALLATION.
3. FOR LOCATION OF ICC '11 (A,B,C,& D)' SEE SHEET IP-1

THIS PLAN SHEET ACCURATE FOR LANDSCAPE WORK ONLY.

ALL IRRIGATION EQUIPMENT SIZES ARE SHOWN IN MILLIMETERS (DIAMETER NOMINAL) UNLESS OTHERWISE NOTED

IRRIGATION REMOVAL PLAN

SCALE 1:500

IR-1

REVISED BY	DATE REVISED

CALCULATED-DESIGNED BY: TIM HENDERSON
CHECKED BY: KURT CARLSON/BERNARD EVERLING
CONSULTANT FUNCTIONAL SUPERVISOR: MICHAEL SINGLETON

STATE OF CALIFORNIA - DEPARTMENT OF TRANSPORTATION
Caltrans

LAST REVISION 10-15-09
DATE PLOTTED => 19-JUN-2010
TIME PLOTTED => 07:37

DIST	COUNTY	ROUTE	KILOMETER POST TOTAL PROJECT	SHEET No.	TOTAL SHEETS
11	SD	805	40.6/42.4	404	567

Kurt W Carlson 60-60-60
REGISTERED LANDSCAPE ARCHITECT — DATE

6-14-10
PLANS APPROVAL DATE

REGISTERED LANDSCAPE ARCHITECT — KURT W. CARLSON — No. RLA 2342 — Exp. 2/28/11 — STATE OF CALIFORNIA

THE STATE OF CALIFORNIA OR ITS OFFICERS OR AGENTS SHALL NOT BE RESPONSIBLE FOR THE ACCURACY OR COMPLETENESS OF ELECTRONIC COPIES OF THIS PLAN SHEET.

KTU+A LANDSCAPE ARCHITECTURE
3916 NORMAL STREET
SAN DIEGO, CA 92103

CITY OF SAN DIEGO
1010 SECOND AVENUE, SUITE 1200
SAN DIEGO, CA 92101

Caltrans Metric

EXISTING IRRIGATION EQUIPMENT TO BE REMOVED (QUANTITIES ARE APPROXIMATE)	
IRRIGATION TYPE	QUANTITY
POP-UP ROTOR HEAD	7
ROTOR HEAD ON RISER	16
GATE VALVE	1
REMOTE CONTROL VALVE	4

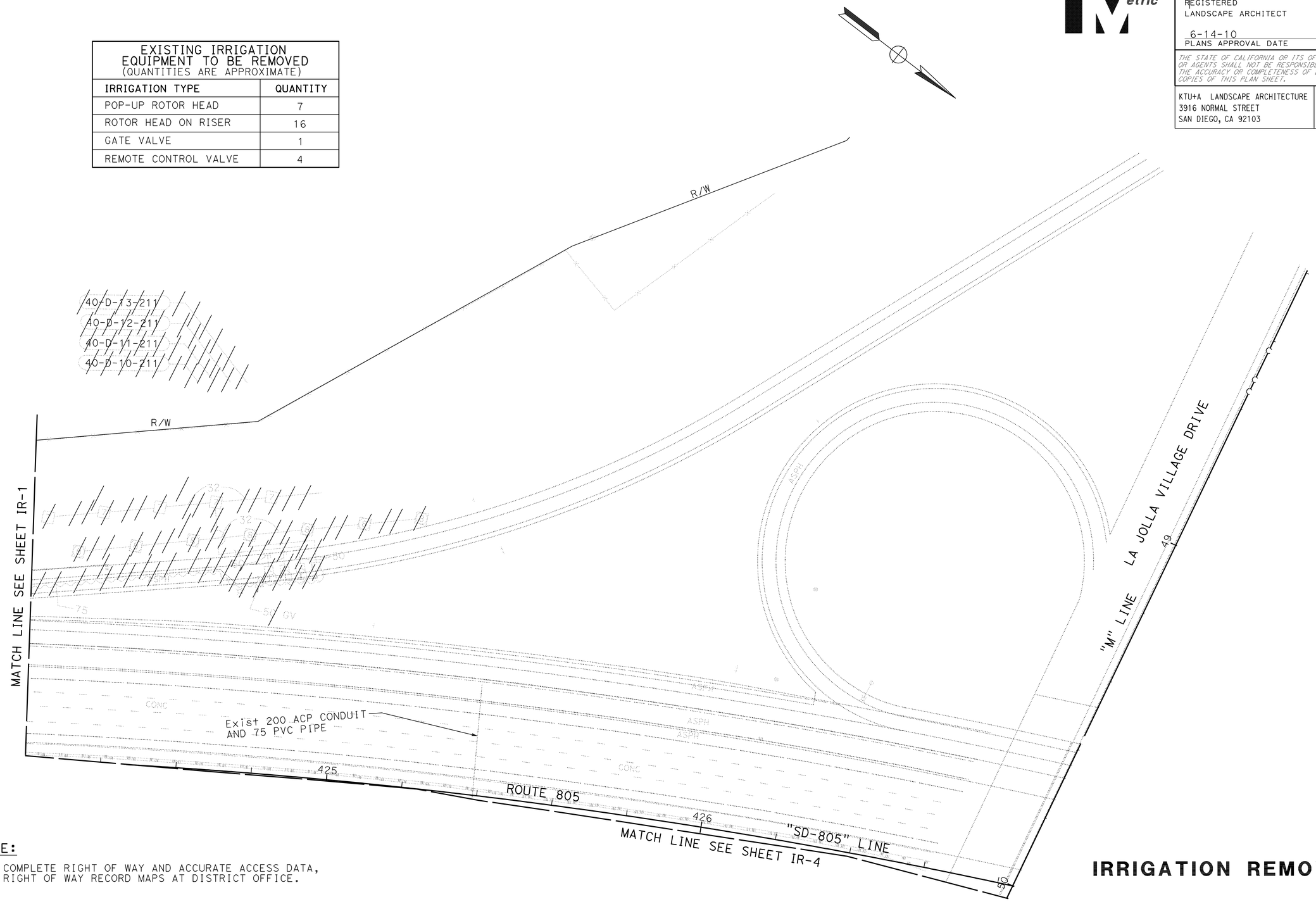

NOTE:

FOR COMPLETE RIGHT OF WAY AND ACCURATE ACCESS DATA, SEE RIGHT OF WAY RECORD MAPS AT DISTRICT OFFICE.

THIS PLAN ACCURATE FOR IRRIGATION WORK ONLY

ALL IRRIGATION EQUIPMENT SIZES ARE SHOWN IN MILLIMETERS (DIAMETER NOMINAL) UNLESS OTHERWISE NOTED

IRRIGATION REMOVAL PLAN

SCALE 1:500

IR-2

REVISED BY | DATE REVISED

TIM HENDERSON

KURT CARLSON/BERNARD EVERLING

CALCULATED-DESIGNED BY | CHECKED BY

CONSULTANT FUNCTIONAL SUPERVISOR

MICHAEL SINGLETON

STATE OF CALIFORNIA - DEPARTMENT OF TRANSPORTATION

Caltrans

LAST REVISION 10-15-09

DATE PLOTTED => 19-JUN-2010
TIME PLOTTED => 07:37

DIST	COUNTY	ROUTE	KILOMETER POST TOTAL PROJECT	SHEET No.	TOTAL SHEETS
11	SD	805	40.6/42.4	405	567

REGISTERED LANDSCAPE ARCHITECT — DATE 09-09-09

6-14-10
PLANS APPROVAL DATE

REGISTERED LANDSCAPE ARCHITECT — KURT W. CARLSON — No. RLA 2342 — Exp. 2/28/11 — STATE OF CALIFORNIA

THE STATE OF CALIFORNIA OR ITS OFFICERS OR AGENTS SHALL NOT BE RESPONSIBLE FOR THE ACCURACY OR COMPLETENESS OF ELECTRONIC COPIES OF THIS PLAN SHEET.

KTU+A LANDSCAPE ARCHITECTURE
3916 NORMAL STREET
SAN DIEGO, CA 92103

CITY OF SAN DIEGO
1010 SECOND AVENUE, SUITE 1200
SAN DIEGO, CA 92101

Caltrans Metric

NOTES:

1. FOR COMPLETE RIGHT OF WAY AND ACCURATE ACCESS DATA, SEE RIGHT OF WAY RECORD MAPS AT DISTRICT OFFICE.
2. ✳ EXISTING IRRIGATION SYSTEMS, INCLUDING MAINLINE AND VALVES SHALL REMAIN IN PLACE AND OPERATIONAL UNTIL PERMANENT LOCATION IS AVAILABLE.

EXISTING IRRIGATION EQUIPMENT TO BE REMOVED
(QUANTITIES ARE APPROXIMATE)

IRRIGATION TYPE	QUANTITY
POP-UP ROTOR HEAD	0
ROTOR HEAD ON RISER	19
GATE VALVE	7
REMOTE CONTROL VALVE	24

Exist 100 GATE VALVE JUST INSIDE WATER TREATMENT PLANT FENCE.
Exist 150 (6") X 450 (18") SIGN READING "WATER" (IN WHITE LETTER ON BLUE BACKGROUND) ON THE FENCE 1.2M (4′) ABOVE THE GATE VALVE.

POINT OF CONNECTION TO EXISTING GATE VALVE

IRRIGATION REMOVAL PLAN

SCALE 1:500

IR-3

THIS PLAN SHEET ACCURATE FOR LANDSCAPE WORK ONLY.

ALL IRRIGATION EQUIPMENT SIZES ARE SHOWN IN MILLIMETERS (DIAMETER NOMINAL) UNLESS OTHERWISE NOTED

REVISED BY | DATE REVISED
TIM HENDERSON | KURT CARLSON/BERNARD EVERLING
CALCULATED-DESIGNED BY | CHECKED BY
CONSULTANT FUNCTIONAL SUPERVISOR: MICHAEL SINGLETON
STATE OF CALIFORNIA - DEPARTMENT OF TRANSPORTATION — Caltrans

LAST REVISION | DATE PLOTTED => 19-JUN-2010 | TIME PLOTTED => 07:37
10-15-09

DIST	COUNTY	ROUTE	KILOMETER POST TOTAL PROJECT	SHEET No.	TOTAL SHEETS
11	SD	805	40.6/42.4	406	567

Kurt W Carlson 09-09-09
REGISTERED LANDSCAPE ARCHITECT — DATE

6-14-10
PLANS APPROVAL DATE

REGISTERED LANDSCAPE ARCHITECT — KURT W. CARLSON — No. RLA 2342 — Exp. 2/28/11 — STATE OF CALIFORNIA

THE STATE OF CALIFORNIA OR ITS OFFICERS OR AGENTS SHALL NOT BE RESPONSIBLE FOR THE ACCURACY OR COMPLETENESS OF ELECTRONIC COPIES OF THIS PLAN SHEET.

KTU+A LANDSCAPE ARCHITECTURE
3916 NORMAL STREET
SAN DIEGO, CA 92103

CITY OF SAN DIEGO
1010 SECOND AVENUE, SUITE 1200
SAN DIEGO, CA 92101

Caltrans Metric

EXISTING IRRIGATION EQUIPMENT TO BE REMOVED (QUANTITIES ARE APPROXIMATE)	
IRRIGATION TYPE	QUANTITY
POP-UP ROTOR HEAD	3
MASTER VALVE	1
GATE VALVE	3

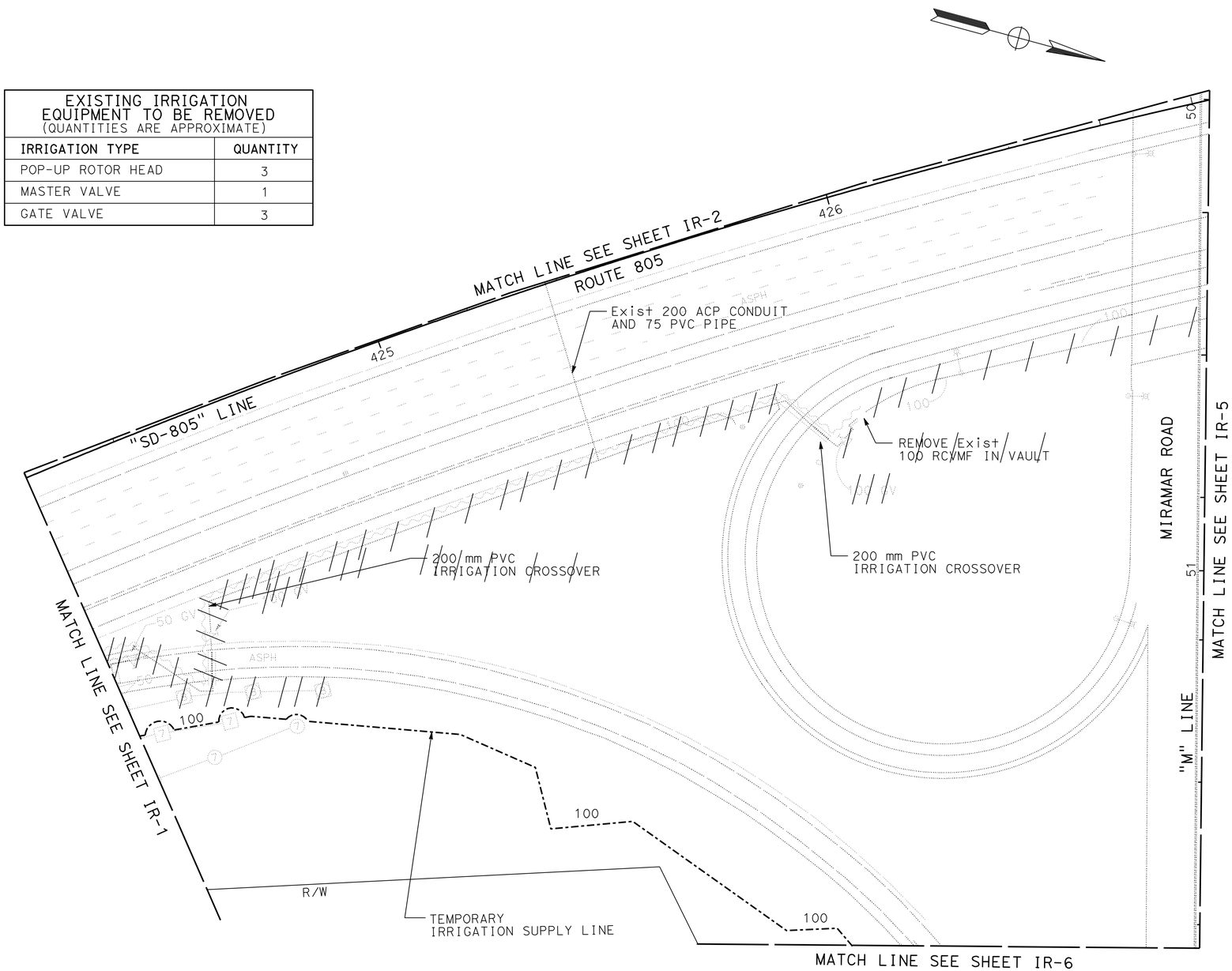

NOTES:

1. FOR COMPLETE RIGHT OF WAY AND ACCURATE ACCESS DATA, SEE RIGHT OF WAY RECORD MAPS AT DISTRICT OFFICE.
2. TEMPORARY IRRIGATION SUPPLY LINE; FIELD VERIFY LOCATION PRIOR TO INSTALLATION.
3. FOR LOCATION OF ICC '11 (A,B,C,& D)' SEE SHEET IP-1

THIS PLAN SHEET ACCURATE FOR LANDSCAPE WORK ONLY.

ALL IRRIGATION EQUIPMENT SIZES ARE SHOWN IN MILLIMETERS (DIAMETER NOMINAL) UNLESS OTHERWISE NOTED

IRRIGATION REMOVAL PLAN

SCALE 1:500

IR-4

REVISED BY | DATE REVISED
TIM HENDERSON | KURT CARLSON/BERNARD EVERLING
CALCULATED-DESIGNED BY | CHECKED BY
CONSULTANT FUNCTIONAL SUPERVISOR
MICHAEL SINGLETON
STATE OF CALIFORNIA - DEPARTMENT OF TRANSPORTATION
Caltrans

LAST REVISION 10-15-09 | DATE PLOTTED => 19-JUN-2010 | TIME PLOTTED => 07:37

DIST	COUNTY	ROUTE	KILOMETER POST TOTAL PROJECT	SHEET No.	TOTAL SHEETS
11	SD	805	40.6/42.4	407	567

REGISTERED LANDSCAPE ARCHITECT — DATE 09-09-09

6-14-10
PLANS APPROVAL DATE

REGISTERED LANDSCAPE ARCHITECT — KURT W. CARLSON — No. RLA 2342 — Exp. 2/28/11 — STATE OF CALIFORNIA

THE STATE OF CALIFORNIA OR ITS OFFICERS OR AGENTS SHALL NOT BE RESPONSIBLE FOR THE ACCURACY OR COMPLETENESS OF ELECTRONIC COPIES OF THIS PLAN SHEET.

KTU+A LANDSCAPE ARCHITECTURE
3916 NORMAL STREET
SAN DIEGO, CA 92103

CITY OF SAN DIEGO
1010 SECOND AVENUE, SUITE 1200
SAN DIEGO, CA 92101

Caltrans Metric

NOTES:

1. FOR COMPLETE RIGHT OF WAY AND ACCURATE ACCESS DATA, SEE RIGHT OF WAY RECORD MAPS AT DISTRICT OFFICE.
2. TEMPORARY IRRIGATION SUPPLY LINE; FIELD VERIFY LOCATION PRIOR TO INSTALLATION.
3. FOR LOCATION OF ICC '11 (A,B,C,& D)' SEE SHEET IP-1.
4. ✳ EXISTING IRRIGATION SYSTEMS, INCLUDING MAINLINE AND VALVES SHALL REMAIN IN PLACE AND OPERATIONAL UNTIL PERMANENT LOCATION IS AVAILABLE.

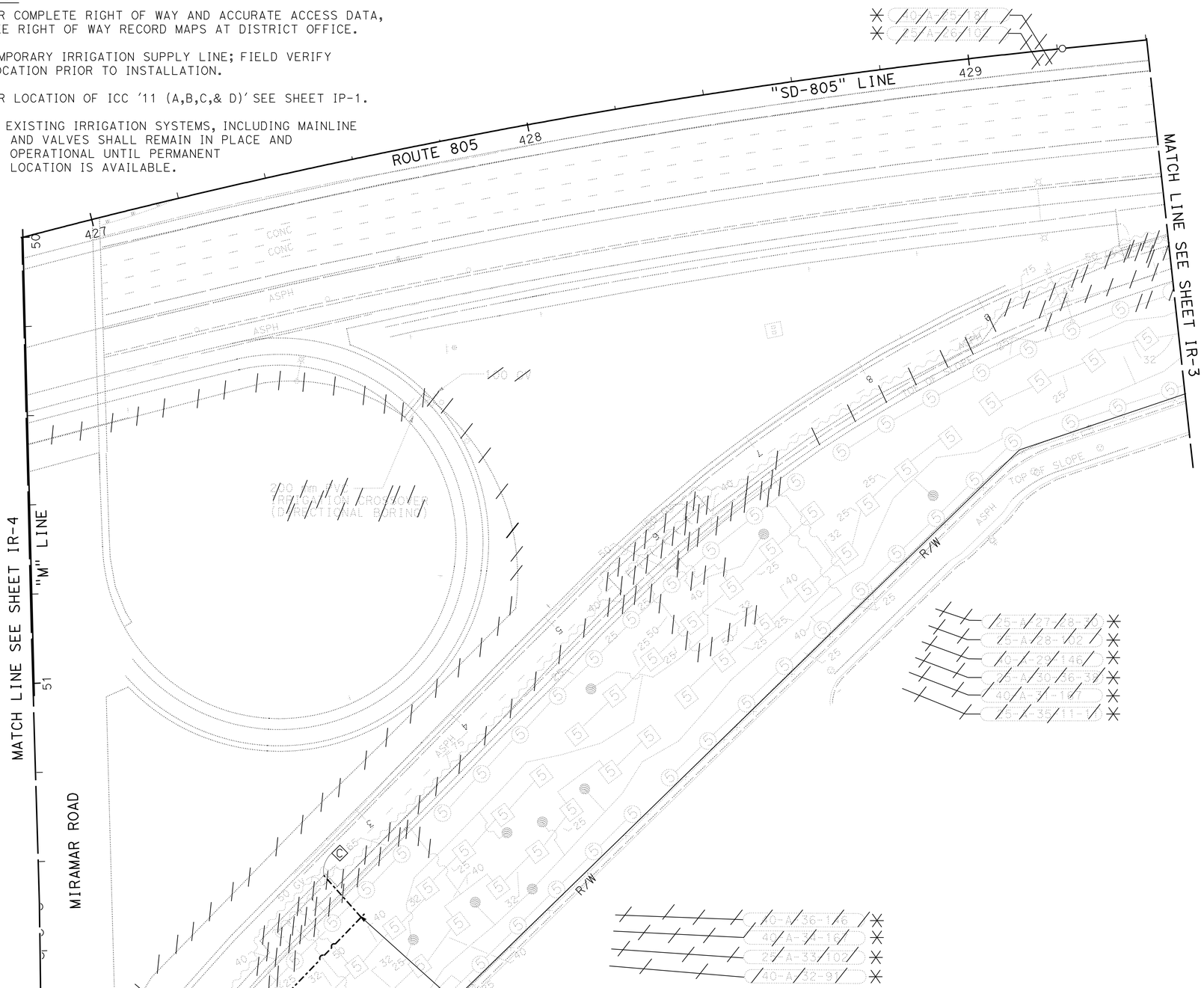

EXISTING IRRIGATION EQUIPMENT TO BE REMOVED (QUANTITIES ARE APPROXIMATE)	
IRRIGATION TYPE	QUANTITY
ROTOR HEAD ON RISER	4
SHRUB SPRAY HEAD	8
GATE VALVE	4
REMOTE CONTROL VALVE	12

THIS PLAN SHEET ACCURATE FOR LANDSCAPE WORK ONLY

ALL IRRIGATION EQUIPMENT SIZES ARE SHOWN IN MILLIMETERS (DIAMETER NOMINAL) UNLESS OTHERWISE NOTED

IRRIGATION REMOVAL PLAN

SCALE 1:500

IR-5

REVISED BY	DATE REVISED

TIM HENDERSON — CALCULATED-DESIGNED BY
KURT CARLSON/BERNARD EVERLING — CHECKED BY
MICHAEL SINGLETON — CONSULTANT FUNCTIONAL SUPERVISOR

STATE OF CALIFORNIA - DEPARTMENT OF TRANSPORTATION — Caltrans

LAST REVISION 10-15-09 — DATE PLOTTED => 19-JUN-2010 — TIME PLOTTED => 07:37

DIST	COUNTY	ROUTE	KILOMETER POST TOTAL PROJECT	SHEET No.	TOTAL SHEETS
11	SD	805	40.6/42.4	408	567

REGISTERED LANDSCAPE ARCHITECT — DATE 09-09-09

6-14-10
PLANS APPROVAL DATE

REGISTERED LANDSCAPE ARCHITECT — KURT W. CARLSON — No. RLA 2342 — Exp. 2/28/11 — STATE OF CALIFORNIA

THE STATE OF CALIFORNIA OR ITS OFFICERS OR AGENTS SHALL NOT BE RESPONSIBLE FOR THE ACCURACY OR COMPLETENESS OF ELECTRONIC COPIES OF THIS PLAN SHEET.

KTU+A LANDSCAPE ARCHITECTURE
3916 NORMAL STREET
SAN DIEGO, CA 92103

CITY OF SAN DIEGO
1010 SECOND AVENUE, SUITE 1200
SAN DIEGO, CA 92101

Caltrans Metric

NOTES:

1. FOR COMPLETE RIGHT OF WAY AND ACCURATE ACCESS DATA, SEE RIGHT OF WAY RECORD MAPS AT DISTRICT OFFICE.
2. TEMPORARY IRRIGATION SUPPLY LINE; FIELD VERIFY LOCATION PRIOR TO INSTALLATION.
3. FOR LOCATION OF ICC '11 (A,B,C,& D)' SEE SHEET IP-1
4. EXISTING CITY IRRIGATION CONTROLLER 'E' IS LOCATED AT NORTH CITY RECLAMATION PLANT. POINT OF CONNECTION IS LOCATED AT NORTH CITY RECLAMATION PLANT. SITE ENGINEER: PHONE # (858) 824-6023

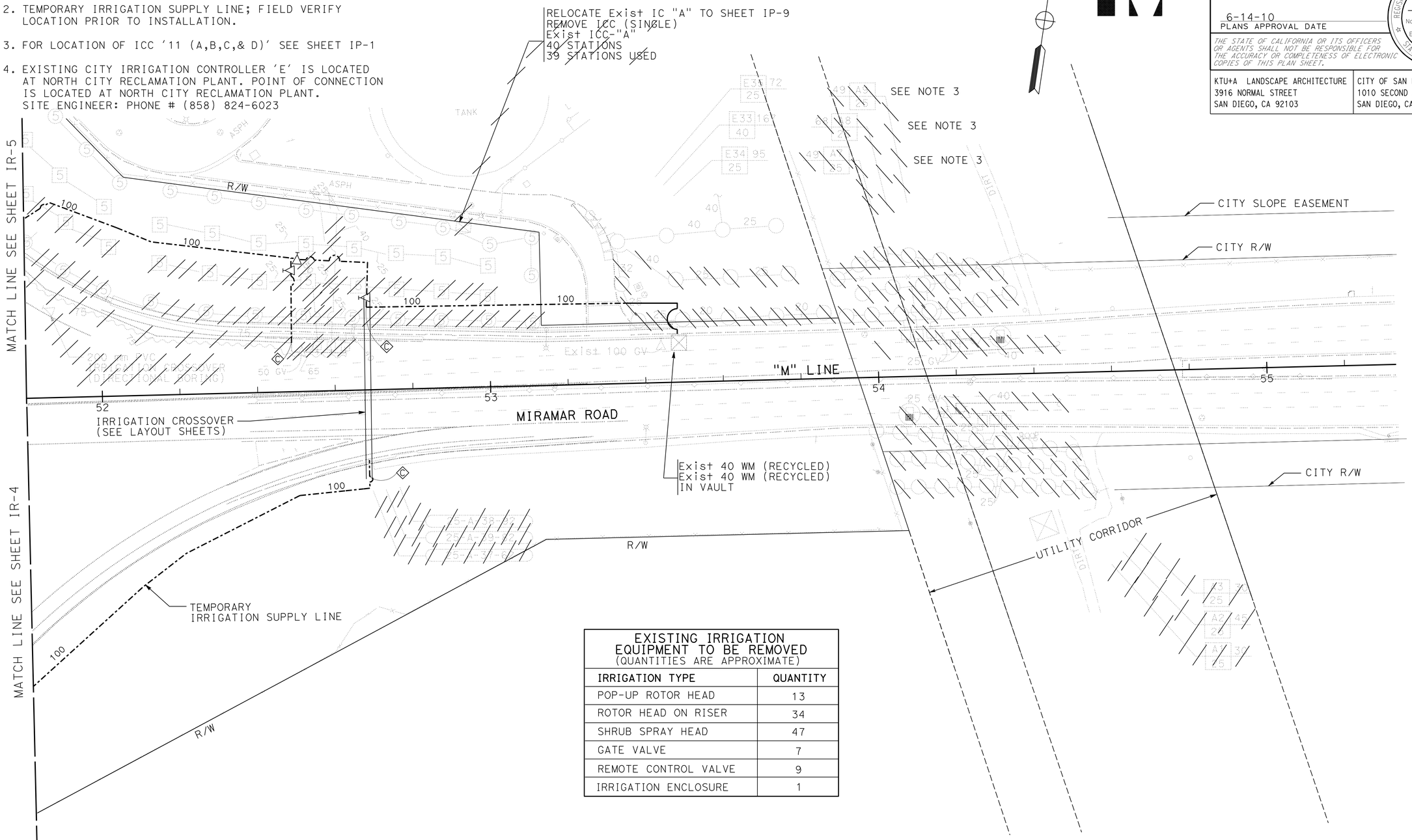

EXISTING IRRIGATION EQUIPMENT TO BE REMOVED
(QUANTITIES ARE APPROXIMATE)

IRRIGATION TYPE	QUANTITY
POP-UP ROTOR HEAD	13
ROTOR HEAD ON RISER	34
SHRUB SPRAY HEAD	47
GATE VALVE	7
REMOTE CONTROL VALVE	9
IRRIGATION ENCLOSURE	1

IRRIGATION REMOVAL PLAN

SCALE 1:500

IR-6

THIS PLAN SHEET ACCURATE FOR LANDSCAPE WORK ONLY.

ALL IRRIGATION EQUIPMENT SIZES ARE SHOWN IN MILLIMETERS (DIAMETER NOMINAL) UNLESS OTHERWISE NOTED

REVISED BY | DATE REVISED
TIM HENDERSON | KURT CARLSON/BERNARD EVERLING
CALCULATED-DESIGNED BY | CHECKED BY
CONSULTANT FUNCTIONAL SUPERVISOR | MICHAEL SINGLETON
STATE OF CALIFORNIA - DEPARTMENT OF TRANSPORTATION
Caltrans

LAST REVISION 10-15-09 | DATE PLOTTED => 19-JUN-2010 | TIME PLOTTED => 07:37

DIST	COUNTY	ROUTE	KILOMETER POST TOTAL PROJECT	SHEET No.	TOTAL SHEETS
11	SD	805	40.6/42.4	409	567

Kurt W Carlson 09-09-09
REGISTERED LANDSCAPE ARCHITECT — DATE

6-14-10
PLANS APPROVAL DATE

REGISTERED LANDSCAPE ARCHITECT — KURT W. CARLSON — No. RLA 2342 — Exp. 2/28/11 — STATE OF CALIFORNIA

THE STATE OF CALIFORNIA OR ITS OFFICERS OR AGENTS SHALL NOT BE RESPONSIBLE FOR THE ACCURACY OR COMPLETENESS OF ELECTRONIC COPIES OF THIS PLAN SHEET.

KTU+A LANDSCAPE ARCHITECTURE
3916 NORMAL STREET
SAN DIEGO, CA 92103

CITY OF SAN DIEGO
1010 SECOND AVENUE, SUITE 1200
SAN DIEGO, CA 92101

Caltrans Metric

NOTES:

1. FOR COMPLETE RIGHT OF WAY AND ACCURATE ACCESS DATA, SEE RIGHT OF WAY RECORD MAPS AT DISTRICT OFFICE.
2. ✳ EXISTING IRRIGATION SYSTEMS, INCLUDING MAINLINE AND VALVES SHALL REMAIN IN PLACE AND OPERATIONAL UNTIL PERMANENT LOCATION IS AVAILABLE.

EXISTING IRRIGATION EQUIPMENT TO BE REMOVED
(QUANTITIES ARE APPROXIMATE)

IRRIGATION TYPE	QUANTITY
POP-UP ROTOR HEAD	-
ROTOR HEAD ON RISER	3
SHRUB SPRAY HEAD	-
GATE VALVE	-
REMOTE CONTROL VALVE	1
IRRIGATION ENCLOSURE	-

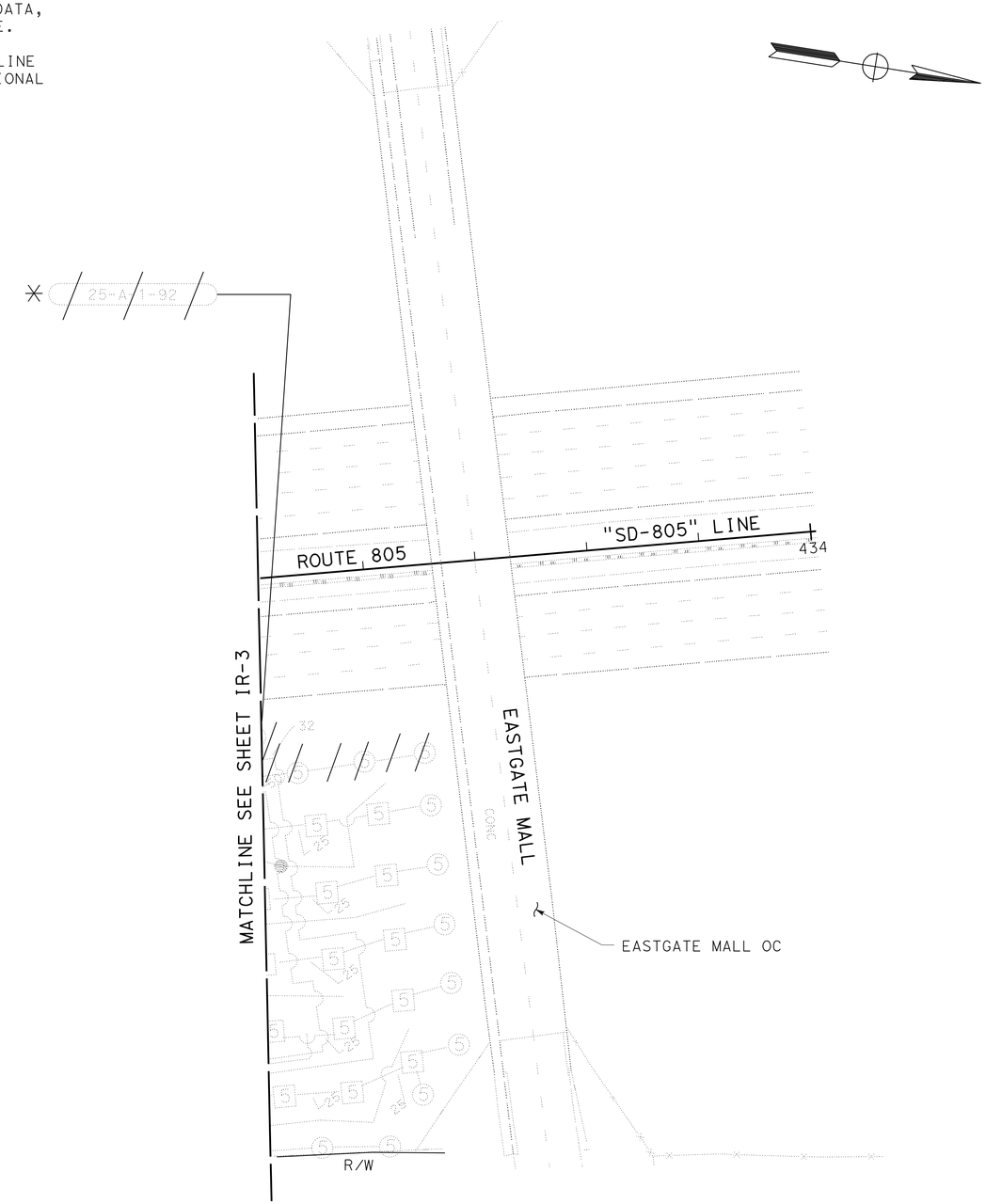

THIS PLAN SHEET ACCURATE FOR LANDSCAPE WORK ONLY.

ALL IRRIGATION EQUIPMENT SIZES ARE SHOWN IN MILLIMETERS (DIAMETER NOMINAL) UNLESS OTHERWISE NOTED

IRRIGATION REMOVAL PLAN

SCALE 1:500

IR-7

REVISED BY | DATE REVISED
TIM HENDERSON | KURT CARLSON/BERNARD EVERLING
CALCULATED-DESIGNED BY | CHECKED BY
CONSULTANT FUNCTIONAL SUPERVISOR
MICHAEL SINGLETON
STATE OF CALIFORNIA - DEPARTMENT OF TRANSPORTATION
Caltrans

LAST REVISION 10-15-09 | DATE PLOTTED => 19-JUN-2010 | TIME PLOTTED => 07:38

DIST	COUNTY	ROUTE	KILOMETER POST TOTAL PROJECT	SHEET No.	TOTAL SHEETS
11	SD	805	40.6/42.4	410	567

Kurt W Carlson 09-09-09
REGISTERED LANDSCAPE ARCHITECT — DATE

6-14-10
PLANS APPROVAL DATE

REGISTERED LANDSCAPE ARCHITECT — KURT W. CARLSON — No. RLA 2342 — Exp. 2/28/11 — STATE OF CALIFORNIA

THE STATE OF CALIFORNIA OR ITS OFFICERS OR AGENTS SHALL NOT BE RESPONSIBLE FOR THE ACCURACY OR COMPLETENESS OF ELECTRONIC COPIES OF THIS PLAN SHEET.

KTU+A LANDSCAPE ARCHITECTURE
3916 NORMAL STREET
SAN DIEGO, CA 92103

CITY OF SAN DIEGO
1010 SECOND AVENUE, SUITE 1200
SAN DIEGO, CA 92101

Caltrans Metric

NOTE:

FOR COMPLETE RIGHT OF WAY AND ACCURATE ACCESS DATA, SEE RIGHT OF WAY RECORD MAPS AT DISTRICT OFFICE.

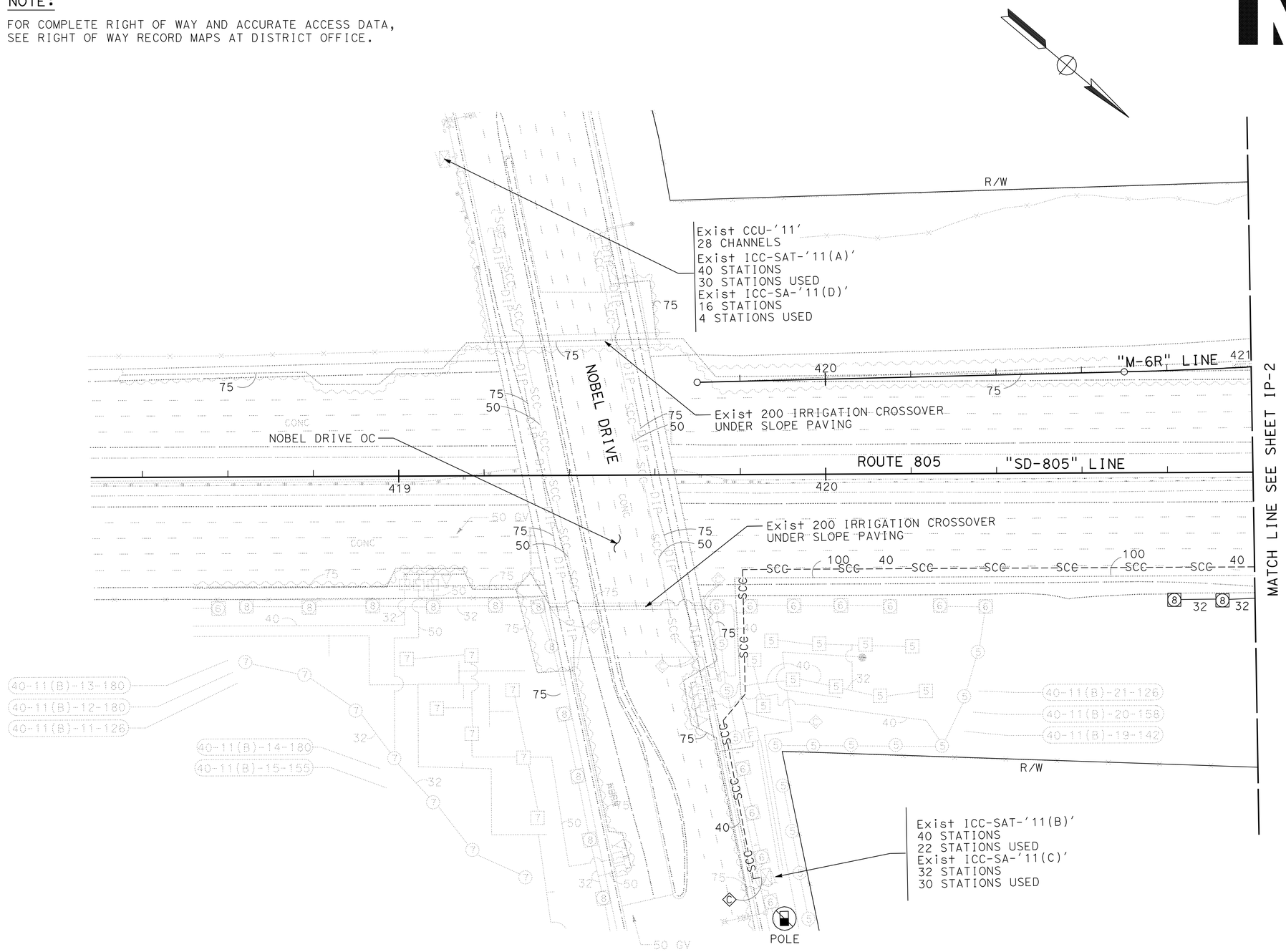

IRRIGATION PLAN

SCALE 1:500

IP-1

THIS PLAN SHEET ACCURATE FOR LANDSCAPE WORK ONLY.

ALL IRRIGATION EQUIPMENT SIZES ARE SHOWN IN MILLIMETERS (DIAMETER NOMINAL) UNLESS OTHERWISE NOTED

REVISED BY	DATE REVISED
TIM HENDERSON	KURT CARLSON/BERNARD EVERLING

CALCULATED-DESIGNED BY — CHECKED BY

CONSULTANT FUNCTIONAL SUPERVISOR — MICHAEL SINGLETON

STATE OF CALIFORNIA - DEPARTMENT OF TRANSPORTATION — Caltrans

LAST REVISION 10-15-09 — DATE PLOTTED => 19-JUN-2010 — TIME PLOTTED => 07:38

DIST	COUNTY	ROUTE	KILOMETER POST TOTAL PROJECT	SHEET No.	TOTAL SHEETS
11	SD	805	40.6/42.4	411	567

REGISTERED LANDSCAPE ARCHITECT — DATE 09-09-09

PLANS APPROVAL DATE 6-14-10

REGISTERED LANDSCAPE ARCHITECT — KURT W. CARLSON — No. RLA 2342 — Exp. 2/28/11 — STATE OF CALIFORNIA

THE STATE OF CALIFORNIA OR ITS OFFICERS OR AGENTS SHALL NOT BE RESPONSIBLE FOR THE ACCURACY OR COMPLETENESS OF ELECTRONIC COPIES OF THIS PLAN SHEET.

KTU+A LANDSCAPE ARCHITECTURE
3916 NORMAL STREET
SAN DIEGO, CA 92103

CITY OF SAN DIEGO
1010 SECOND AVENUE, SUITE 1200
SAN DIEGO, CA 92101

Caltrans Metric

NOTES:

1. FOR COMPLETE RIGHT OF WAY AND ACCURATE ACCESS DATA, SEE RIGHT OF WAY RECORD MAPS AT DISTRICT OFFICE.
2. INSTALL TWO CNC AND FLOW SENSOR CABLE IN SPRINKLER CONTROL CONDUIT FROM RCVM AND FS TO ICC ' 11 (B)' AND ' 11 (C)' AT NOBEL DRIVE.

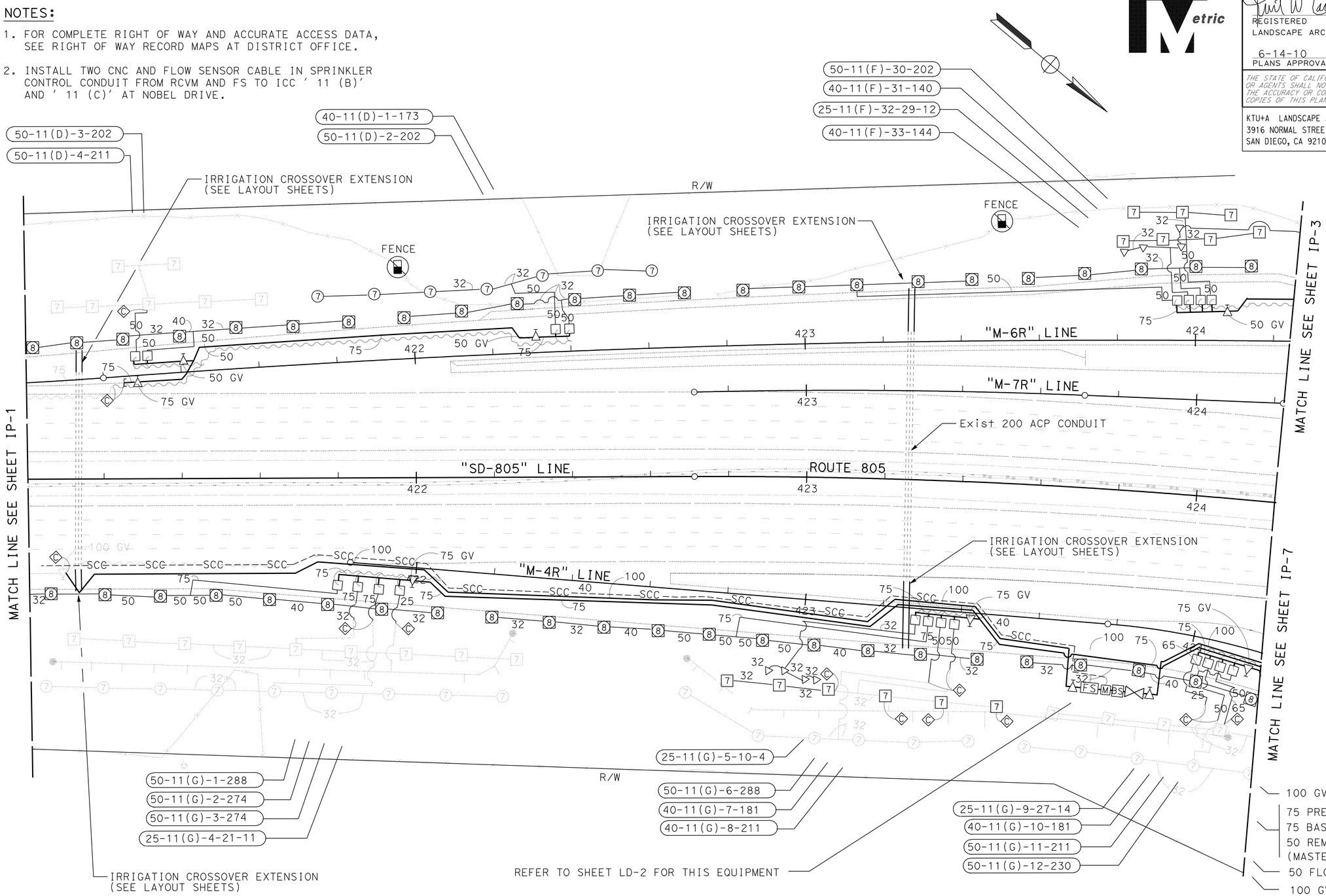

IRRIGATION PLAN

SCALE 1:500

IP-2

THIS PLAN SHEET ACCURATE FOR LANDSCAPE WORK ONLY.

ALL IRRIGATION EQUIPMENT SIZES ARE SHOWN IN MILLIMETERS (DIAMETER NOMINAL) UNLESS OTHERWISE NOTED

REVISED BY	DATE REVISED
TIM HENDERSON	KURT CARLSON/BERNARD EVERLING

CALCULATED-DESIGNED BY — CHECKED BY

CONSULTANT FUNCTIONAL SUPERVISOR — MICHAEL SINGLETON

STATE OF CALIFORNIA - DEPARTMENT OF TRANSPORTATION — Caltrans

LAST REVISION 10-15-09 — DATE PLOTTED => 19-JUN-2010 — TIME PLOTTED => 07:38

DIST	COUNTY	ROUTE	KILOMETER POST TOTAL PROJECT	SHEET No.	TOTAL SHEETS
11	SD	805	40.6/42.4	412	567

REGISTERED LANDSCAPE ARCHITECT — DATE 09-09-09

PLANS APPROVAL DATE 6-14-10

REGISTERED LANDSCAPE ARCHITECT — KURT W. CARLSON — No. RLA 2342 — Exp. 2/28/11 — STATE OF CALIFORNIA

THE STATE OF CALIFORNIA OR ITS OFFICERS OR AGENTS SHALL NOT BE RESPONSIBLE FOR THE ACCURACY OR COMPLETENESS OF ELECTRONIC COPIES OF THIS PLAN SHEET.

KTU+A LANDSCAPE ARCHITECTURE
3916 NORMAL STREET
SAN DIEGO, CA 92103

CITY OF SAN DIEGO
1010 SECOND AVENUE, SUITE 1200
SAN DIEGO, CA 92101

NOTES:

1. FOR COMPLETE RIGHT OF WAY AND ACCURATE ACCESS DATA, SEE RIGHT OF WAY RECORD MAPS AT DISTRICT OFFICE.
2. ✳ SUPPLY LINES, VALVES AND CONDUCTORS ADJACENT TO BIOSWALES, SHALL BE INSTALLED ON THE LANDSCAPE SIDE OF BIOSWALE.

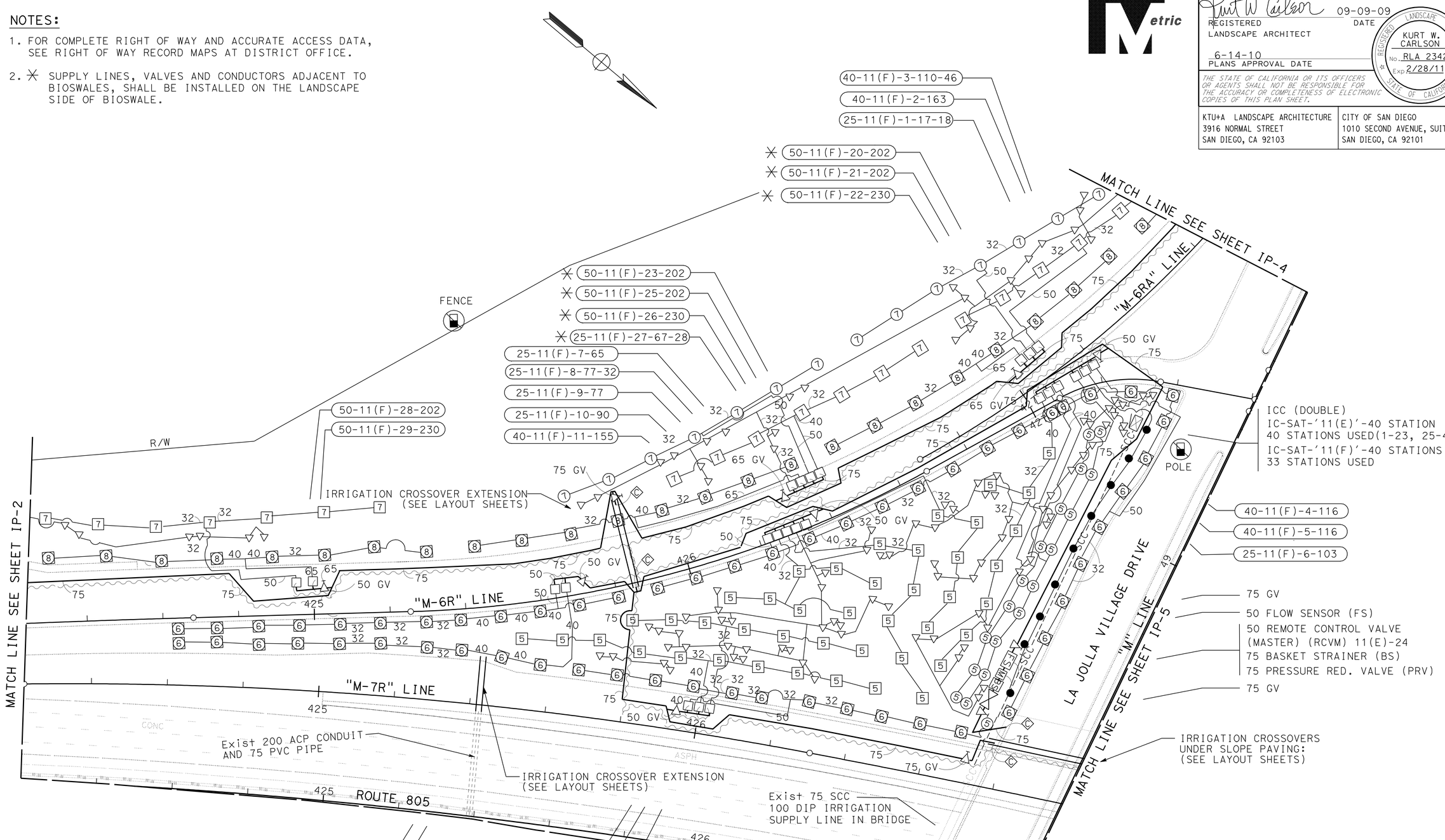

IRRIGATION PLAN

SCALE 1:500

IP-3

THIS PLAN SHEET ACCURATE FOR LANDSCAPE WORK ONLY.

ALL IRRIGATION EQUIPMENT SIZES ARE SHOWN IN MILLIMETERS (DIAMETER NOMINAL) UNLESS OTHERWISE NOTED

REVISED BY	DATE REVISED

TIM HENDERSON — KURT CARLSON/BERNARD EVERLING — CALCULATED-DESIGNED BY — CHECKED BY

MICHAEL SINGLETON — CONSULTANT FUNCTIONAL SUPERVISOR

STATE OF CALIFORNIA - DEPARTMENT OF TRANSPORTATION — Caltrans

LAST REVISION 10-15-09 — DATE PLOTTED => 19-JUN-2010 — TIME PLOTTED => 07:38

DIST	COUNTY	ROUTE	KILOMETER POST TOTAL PROJECT	SHEET No.	TOTAL SHEETS
11	SD	805	40.6/42.4	413	567

REGISTERED LANDSCAPE ARCHITECT — DATE 09-09-09

6-14-10
PLANS APPROVAL DATE

REGISTERED LANDSCAPE ARCHITECT — KURT W. CARLSON — No. RLA 2342 — Exp. 2/28/11 — STATE OF CALIFORNIA

THE STATE OF CALIFORNIA OR ITS OFFICERS OR AGENTS SHALL NOT BE RESPONSIBLE FOR THE ACCURACY OR COMPLETENESS OF ELECTRONIC COPIES OF THIS PLAN SHEET.

KTU+A LANDSCAPE ARCHITECTURE
3916 NORMAL STREET
SAN DIEGO, CA 92103

CITY OF SAN DIEGO
1010 SECOND AVENUE, SUITE 1200
SAN DIEGO, CA 92101

Caltrans Metric

NOTE:

FOR COMPLETE RIGHT OF WAY AND ACCURATE ACCESS DATA, SEE RIGHT OF WAY RECORD MAPS AT DISTRICT OFFICE.

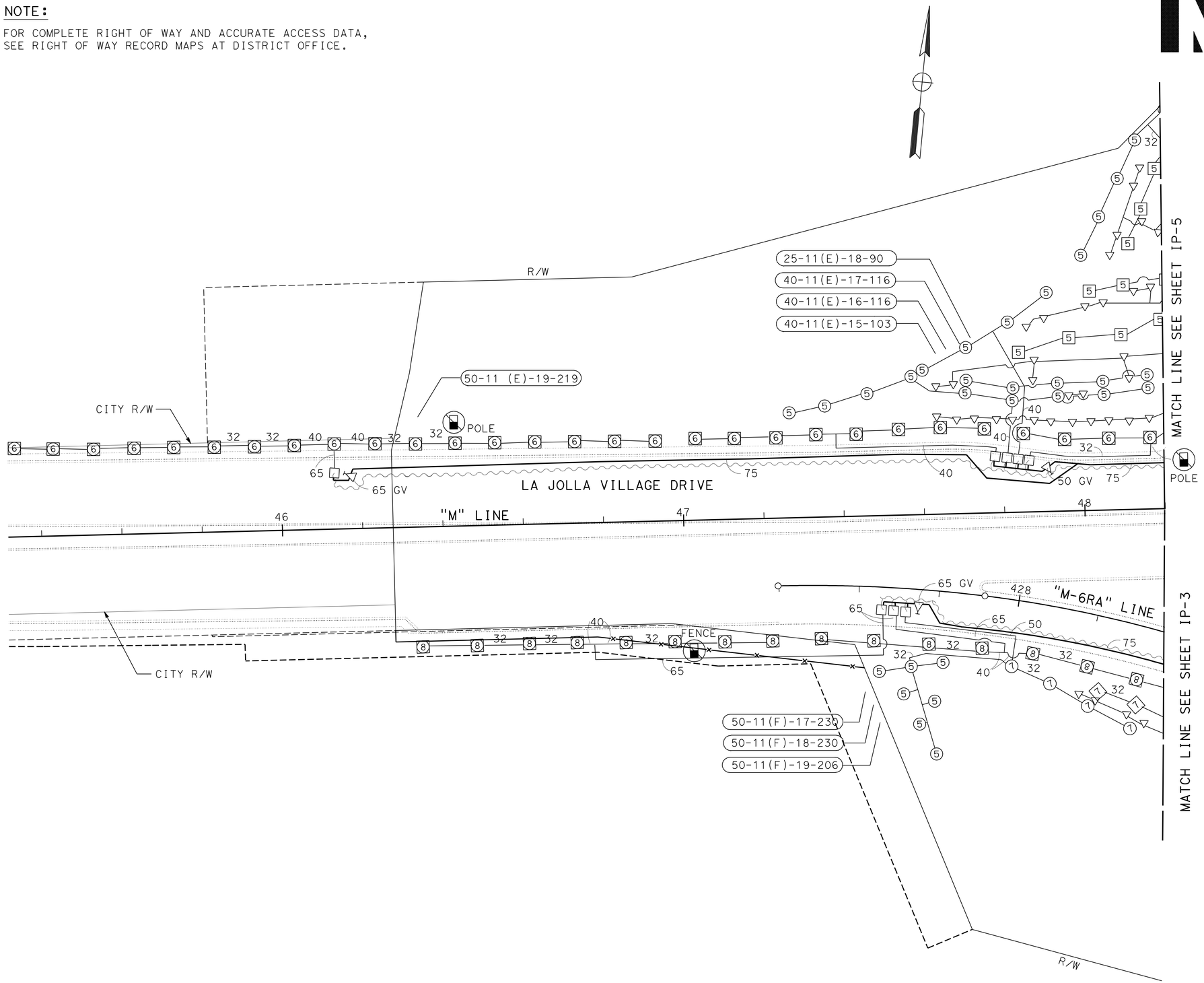

THIS PLAN SHEET ACCURATE FOR LANDSCAPE WORK ONLY.

ALL IRRIGATION EQUIPMENT SIZES ARE SHOWN IN MILLIMETERS (DIAMETER NOMINAL) UNLESS OTHERWISE NOTED

IRRIGATION PLAN

SCALE 1:500

IP-4

REVISED BY | DATE REVISED

TIM HENDERSON

CALCULATED-DESIGNED BY: KURT CARLSON/BERNARD EVERLING

CHECKED BY

CONSULTANT FUNCTIONAL SUPERVISOR: MICHAEL SINGLETON

STATE OF CALIFORNIA - DEPARTMENT OF TRANSPORTATION

Caltrans

LAST REVISION 10-15-09 | DATE PLOTTED => 19-JUN-2010 | TIME PLOTTED => 07:38

DIST	COUNTY	ROUTE	KILOMETER POST TOTAL PROJECT	SHEET No.	TOTAL SHEETS
11	SD	805	40.6/42.4	414	567

Kurt W Carlson 09-09-09
REGISTERED LANDSCAPE ARCHITECT — DATE

6-14-10
PLANS APPROVAL DATE

REGISTERED LANDSCAPE ARCHITECT — KURT W. CARLSON — No. RLA 2342 — Exp. 2/28/11 — STATE OF CALIFORNIA

THE STATE OF CALIFORNIA OR ITS OFFICERS OR AGENTS SHALL NOT BE RESPONSIBLE FOR THE ACCURACY OR COMPLETENESS OF ELECTRONIC COPIES OF THIS PLAN SHEET.

KTU+A LANDSCAPE ARCHITECTURE
3916 NORMAL STREET
SAN DIEGO, CA 92103

CITY OF SAN DIEGO
1010 SECOND AVENUE, SUITE 1200
SAN DIEGO, CA 92101

Caltrans Metric

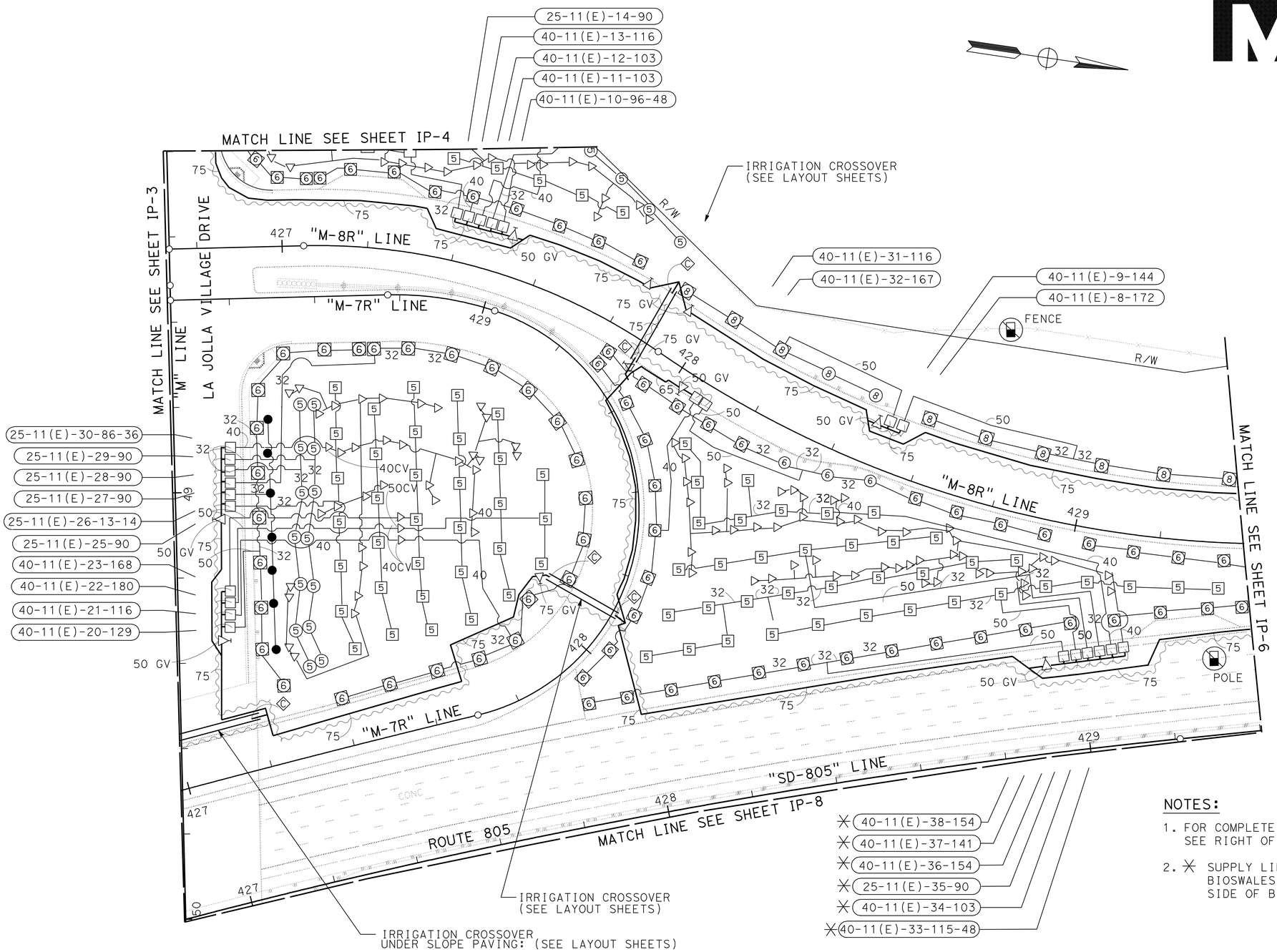

NOTES:

1. FOR COMPLETE RIGHT OF WAY AND ACCURATE ACCESS DATA, SEE RIGHT OF WAY RECORD MAPS AT DISTRICT OFFICE.
2. ✳ SUPPLY LINES, VALVES AND CONDUCTORS ADJACENT TO BIOSWALES, SHALL BE INSTALLED ON THE LANDSCAPE SIDE OF BIOSWALE.

IRRIGATION PLAN

SCALE 1:500

IP-5

THIS PLAN SHEET ACCURATE FOR LANDSCAPE WORK ONLY.

ALL IRRIGATION EQUIPMENT SIZES ARE SHOWN IN MILLIMETERS (DIAMETER NOMINAL) UNLESS OTHERWISE NOTED

REVISED BY	DATE REVISED
TIM HENDERSON	KURT CARLSON/BERNARD EVERLING
CALCULATED-DESIGNED BY	CHECKED BY
CONSULTANT FUNCTIONAL SUPERVISOR	MICHAEL SINGLETON

STATE OF CALIFORNIA - DEPARTMENT OF TRANSPORTATION — Caltrans

LAST REVISION 10-15-09 — DATE PLOTTED => 19-JUN-2010 — TIME PLOTTED => 07:38

DIST	COUNTY	ROUTE	KILOMETER POST TOTAL PROJECT	SHEET No.	TOTAL SHEETS
11	SD	805	40.6/42.4	415	567

REGISTERED LANDSCAPE ARCHITECT — DATE 09-09-09

6-14-10
PLANS APPROVAL DATE

REGISTERED LANDSCAPE ARCHITECT — KURT W. CARLSON — No. RLA 2342 — Exp. 2/28/11 — STATE OF CALIFORNIA

THE STATE OF CALIFORNIA OR ITS OFFICERS OR AGENTS SHALL NOT BE RESPONSIBLE FOR THE ACCURACY OR COMPLETENESS OF ELECTRONIC COPIES OF THIS PLAN SHEET.

KTU+A LANDSCAPE ARCHITECTURE
3916 NORMAL STREET
SAN DIEGO, CA 92103

CITY OF SAN DIEGO
1010 SECOND AVENUE, SUITE 1200
SAN DIEGO, CA 92101

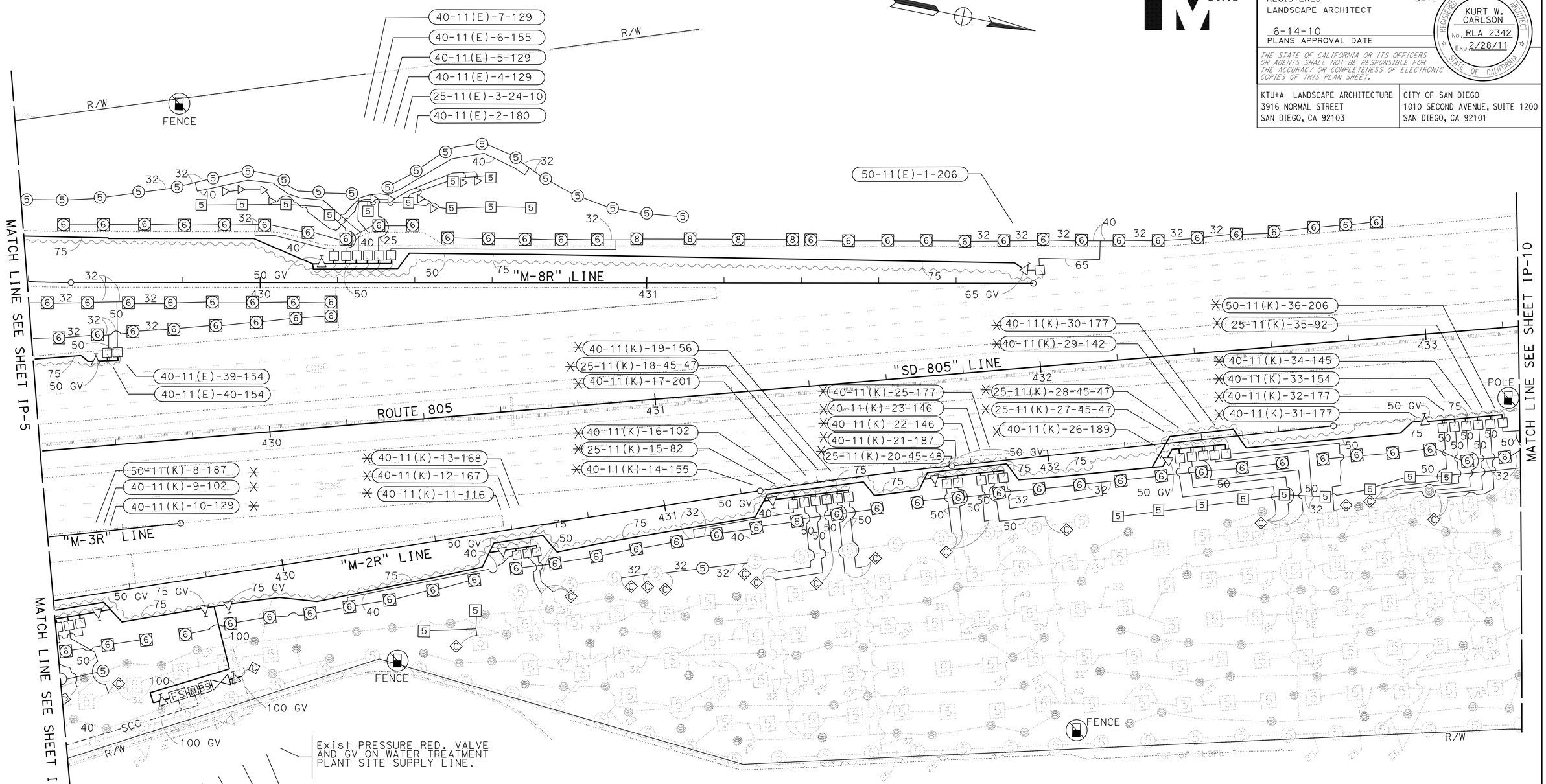

Exist PRESSURE RED. VALVE AND GV ON WATER TREATMENT PLANT SITE SUPPLY LINE.

100 GV

50 PRESSURE RED. VALVE (PRV)

50 BASKET STRAINER (BS)

50 REMOTE CONTROL VALVE (MASTER) (RCVM) 11(J)-24

50 FLOW SENSOR (FS)

100 GV

NOTES:

1. FOR COMPLETE RIGHT OF WAY AND ACCURATE ACCESS DATA, SEE RIGHT OF WAY RECORD MAPS AT DISTRICT OFFICE.
2. ✳ SUPPLY LINES, VALVES AND CONDUCTORS ADJACENT TO BIOSWALES, SHALL BE INSTALLED ON THE LANDSCAPE SIDE OF BIOSWALE.

THIS PLAN SHEET ACCURATE FOR LANDSCAPE WORK ONLY.

ALL IRRIGATION EQUIPMENT SIZES ARE SHOWN IN MILLIMETERS (DIAMETER NOMINAL) UNLESS OTHERWISE NOTED

IRRIGATION PLAN

SCALE 1:500

IP-6

REVISED BY | DATE REVISED

TIM HENDERSON | KURT CARLSON/BERNARD EVERLING

CALCULATED-DESIGNED BY | CHECKED BY

CONSULTANT FUNCTIONAL SUPERVISOR | MICHAEL SINGLETON

STATE OF CALIFORNIA - DEPARTMENT OF TRANSPORTATION

Caltrans

LAST REVISION | DATE PLOTTED => 19-JUN-2010 | TIME PLOTTED => 07:38

10-15-09

DIST	COUNTY	ROUTE	KILOMETER POST TOTAL PROJECT	SHEET No.	TOTAL SHEETS
11	SD	805	40.6/42.4	416	567

REGISTERED LANDSCAPE ARCHITECT — DATE 09-09-09

6-14-10
PLANS APPROVAL DATE

REGISTERED LANDSCAPE ARCHITECT — KURT W. CARLSON — No. RLA 2342 — Exp. 2/28/11 — STATE OF CALIFORNIA

THE STATE OF CALIFORNIA OR ITS OFFICERS OR AGENTS SHALL NOT BE RESPONSIBLE FOR THE ACCURACY OR COMPLETENESS OF ELECTRONIC COPIES OF THIS PLAN SHEET.

KTU+A LANDSCAPE ARCHITECTURE
3916 NORMAL STREET
SAN DIEGO, CA 92103

CITY OF SAN DIEGO
1010 SECOND AVENUE, SUITE 1200
SAN DIEGO, CA 92101

Caltrans Metric

NOTES:

1. FOR COMPLETE RIGHT OF WAY AND ACCURATE ACCESS DATA, SEE RIGHT OF WAY RECORD MAPS AT DISTRICT OFFICE.
2. ✳ SUPPLY LINES, VALVES AND CONDUCTORS ADJACENT TO BIOSWALES, SHALL BE INSTALLED ON THE LANDSCAPE SIDE OF BIOSWALE.

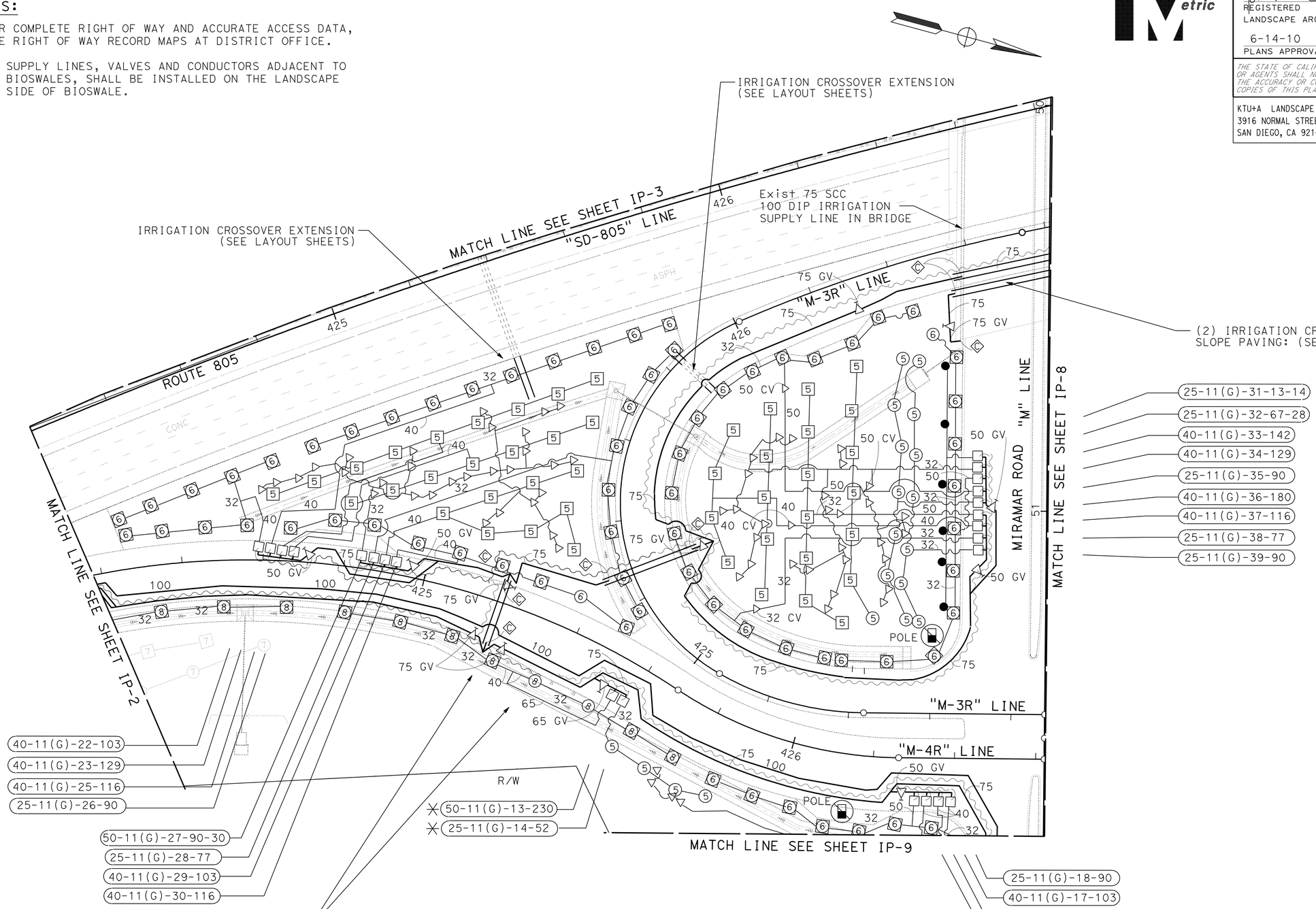

THIS PLAN SHEET ACCURATE FOR LANDSCAPE WORK ONLY.

ALL IRRIGATION EQUIPMENT SIZES ARE SHOWN IN MILLIMETERS (DIAMETER NOMINAL) UNLESS OTHERWISE NOTED

IRRIGATION PLAN

SCALE 1:500

IP-7

REVISED BY	DATE REVISED
TIM HENDERSON	KURT CARLSON/BERNARD EVERLING

CALCULATED-DESIGNED BY — CHECKED BY

CONSULTANT FUNCTIONAL SUPERVISOR — MICHAEL SINGLETON

STATE OF CALIFORNIA - DEPARTMENT OF TRANSPORTATION — Caltrans

LAST REVISION 10-15-09 — DATE PLOTTED => 19-JUN-2010 — TIME PLOTTED => 07:46

DIST	COUNTY	ROUTE	KILOMETER POST TOTAL PROJECT	SHEET No.	TOTAL SHEETS
11	SD	805	40.6/42.4	417	567

REGISTERED LANDSCAPE ARCHITECT — DATE 09-09-09

6-14-10
PLANS APPROVAL DATE

KURT W. CARLSON — No. RLA 2342 — Exp. 2/28/11 — REGISTERED LANDSCAPE ARCHITECT — STATE OF CALIFORNIA

THE STATE OF CALIFORNIA OR ITS OFFICERS OR AGENTS SHALL NOT BE RESPONSIBLE FOR THE ACCURACY OR COMPLETENESS OF ELECTRONIC COPIES OF THIS PLAN SHEET.

KTU+A LANDSCAPE ARCHITECTURE
3916 NORMAL STREET
SAN DIEGO, CA 92103

CITY OF SAN DIEGO
1010 SECOND AVENUE, SUITE 1200
SAN DIEGO, CA 92101

Caltrans Metric

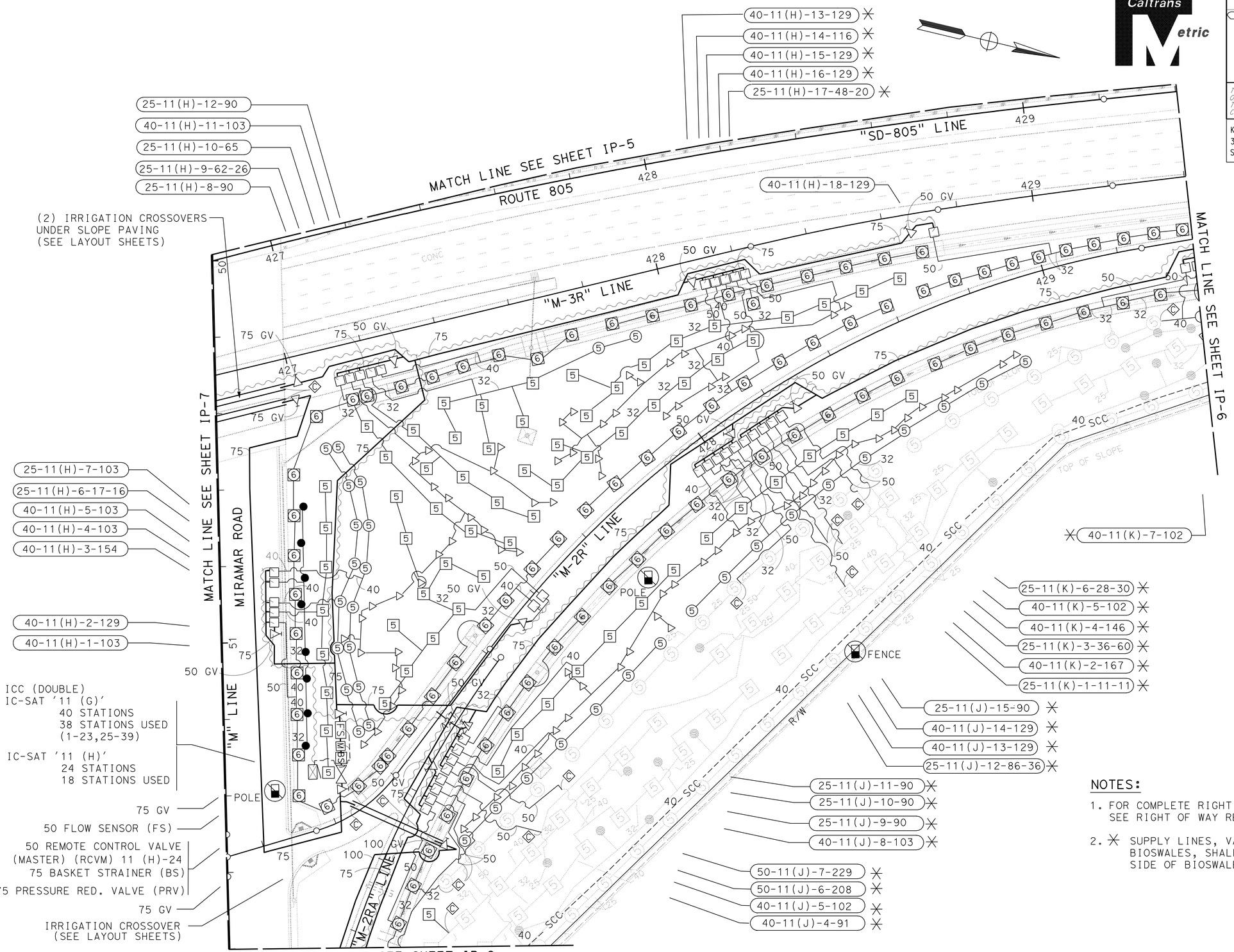

NOTES:

1. FOR COMPLETE RIGHT OF WAY AND ACCURATE ACCESS DATA, SEE RIGHT OF WAY RECORD MAPS AT DISTRICT OFFICE.
2. ✳ SUPPLY LINES, VALVES AND CONDUCTORS ADJACENT TO BIOSWALES, SHALL BE INSTALLED ON THE LANDSCAPE SIDE OF BIOSWALE.

THIS PLAN SHEET ACCURATE FOR LANDSCAPE WORK ONLY

ALL IRRIGATION EQUIPMENT SIZES ARE SHOWN IN MILLIMETERS (DIAMETER NOMINAL) UNLESS OTHERWISE NOTED

IRRIGATION PLAN

SCALE 1:500

IP-8

REVISED BY — DATE REVISED
TIM HENDERSON — KURT CARLSON/BERNARD EVERLING
CALCULATED-DESIGNED BY — CHECKED BY
CONSULTANT FUNCTIONAL SUPERVISOR — MICHAEL SINGLETON
STATE OF CALIFORNIA - DEPARTMENT OF TRANSPORTATION — Caltrans

LAST REVISION — DATE PLOTTED => 19-JUN-2010 — TIME PLOTTED => 07:46
10-29-09

DIST	COUNTY	ROUTE	KILOMETER POST TOTAL PROJECT	SHEET No.	TOTAL SHEETS
11	SD	805	40.6/42.4	418	567

Kurt W Carlson 09-09-09
REGISTERED LANDSCAPE ARCHITECT — DATE

6-14-10
PLANS APPROVAL DATE

REGISTERED LANDSCAPE ARCHITECT — KURT W. CARLSON — No. RLA 2342 — Exp. 2/28/11 — STATE OF CALIFORNIA

THE STATE OF CALIFORNIA OR ITS OFFICERS OR AGENTS SHALL NOT BE RESPONSIBLE FOR THE ACCURACY OR COMPLETENESS OF ELECTRONIC COPIES OF THIS PLAN SHEET.

KTU+A LANDSCAPE ARCHITECTURE
3916 NORMAL STREET
SAN DIEGO, CA 92103

CITY OF SAN DIEGO
1010 SECOND AVENUE, SUITE 1200
SAN DIEGO, CA 92101

Caltrans Metric

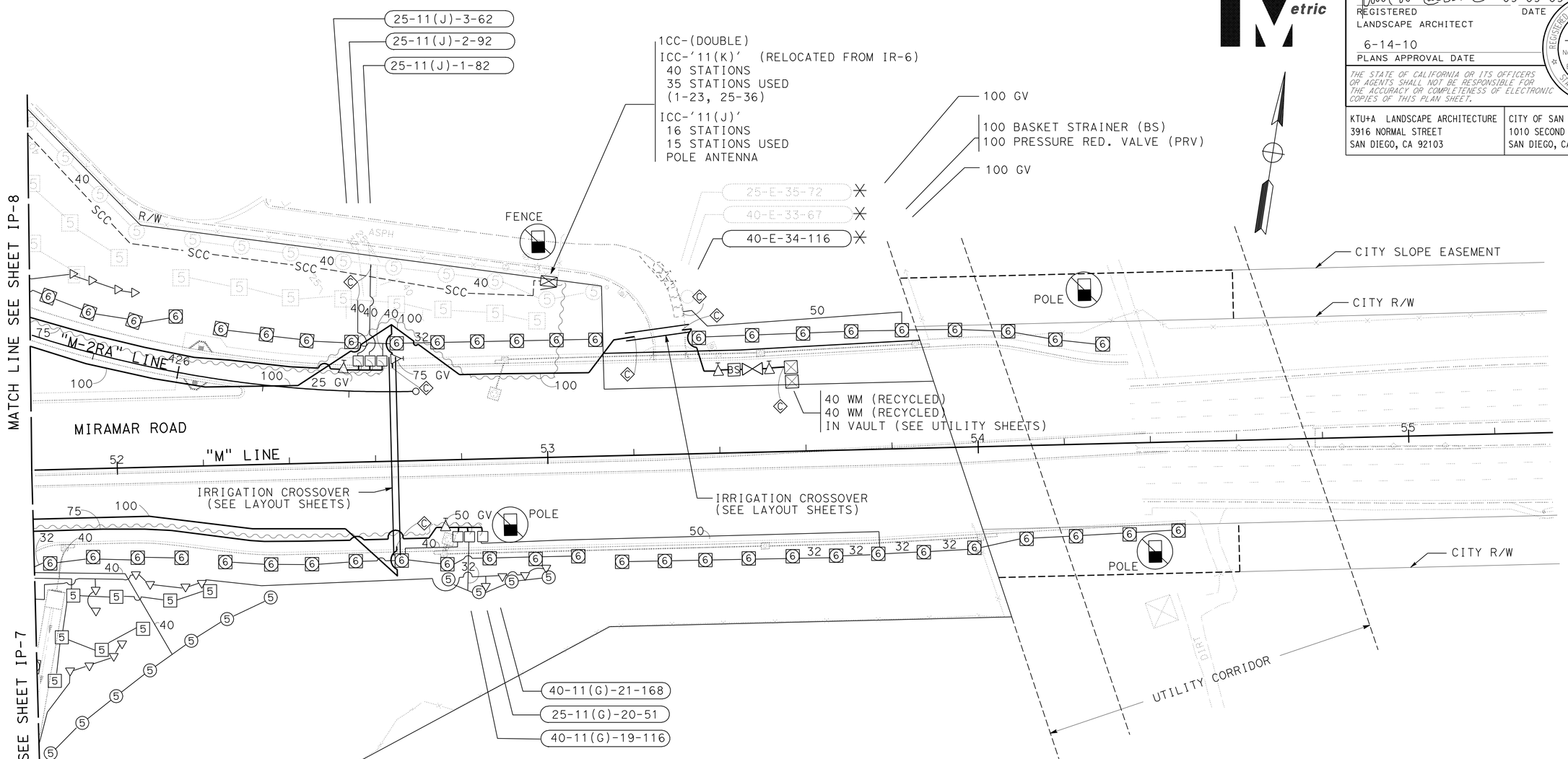

NOTES:

1. FOR COMPLETE RIGHT OF WAY AND ACCURATE ACCESS DATA, SEE RIGHT OF WAY RECORD MAPS AT DISTRICT OFFICE.
2. ✳ EXISTING CITY IRRIGATION CONTROLLER 'E' IS LOCATED AT NORTH CITY RECLAMATION PLANT. POINT OF CONNECTION IS LOCATED AT NORTH CITY RECLAMATION PLANT. SITE ENGINEER: PHONE # (858) 824-6023

THIS PLAN SHEET ACCURATE FOR LANDSCAPE WORK ONLY.

ALL IRRIGATION EQUIPMENT SIZES ARE SHOWN IN MILLIMETERS (DIAMETER NOMINAL) UNLESS OTHERWISE NOTED

IRRIGATION PLAN

SCALE 1:500

IP-9

REVISED BY | DATE REVISED
TIM HENDERSON | KURT CARLSON/BERNARD EVERLING
CALCULATED-DESIGNED BY | CHECKED BY
CONSULTANT FUNCTIONAL SUPERVISOR
MICHAEL SINGLETON

STATE OF CALIFORNIA - DEPARTMENT OF TRANSPORTATION
Caltrans

LAST REVISION 10-15-09 | DATE PLOTTED => 19-JUN-2010 | TIME PLOTTED => 07:46

DIST	COUNTY	ROUTE	KILOMETER POST TOTAL PROJECT	SHEET No.	TOTAL SHEETS
11	SD	805	40.6/42.4	419	567

REGISTERED LANDSCAPE ARCHITECT — DATE 09-09-09

6-14-10
PLANS APPROVAL DATE

REGISTERED LANDSCAPE ARCHITECT — KURT W. CARLSON — No. RLA 2342 — Exp. 2/28/11 — STATE OF CALIFORNIA

THE STATE OF CALIFORNIA OR ITS OFFICERS OR AGENTS SHALL NOT BE RESPONSIBLE FOR THE ACCURACY OR COMPLETENESS OF ELECTRONIC COPIES OF THIS PLAN SHEET.

KTU+A LANDSCAPE ARCHITECTURE
3916 NORMAL STREET
SAN DIEGO, CA 92103

CITY OF SAN DIEGO
1010 SECOND AVENUE, SUITE 1200
SAN DIEGO, CA 92101

NOTE:

FOR COMPLETE RIGHT OF WAY AND ACCURATE ACCESS DATA, SEE RIGHT OF WAY RECORD MAPS AT DISTRICT OFFICE.

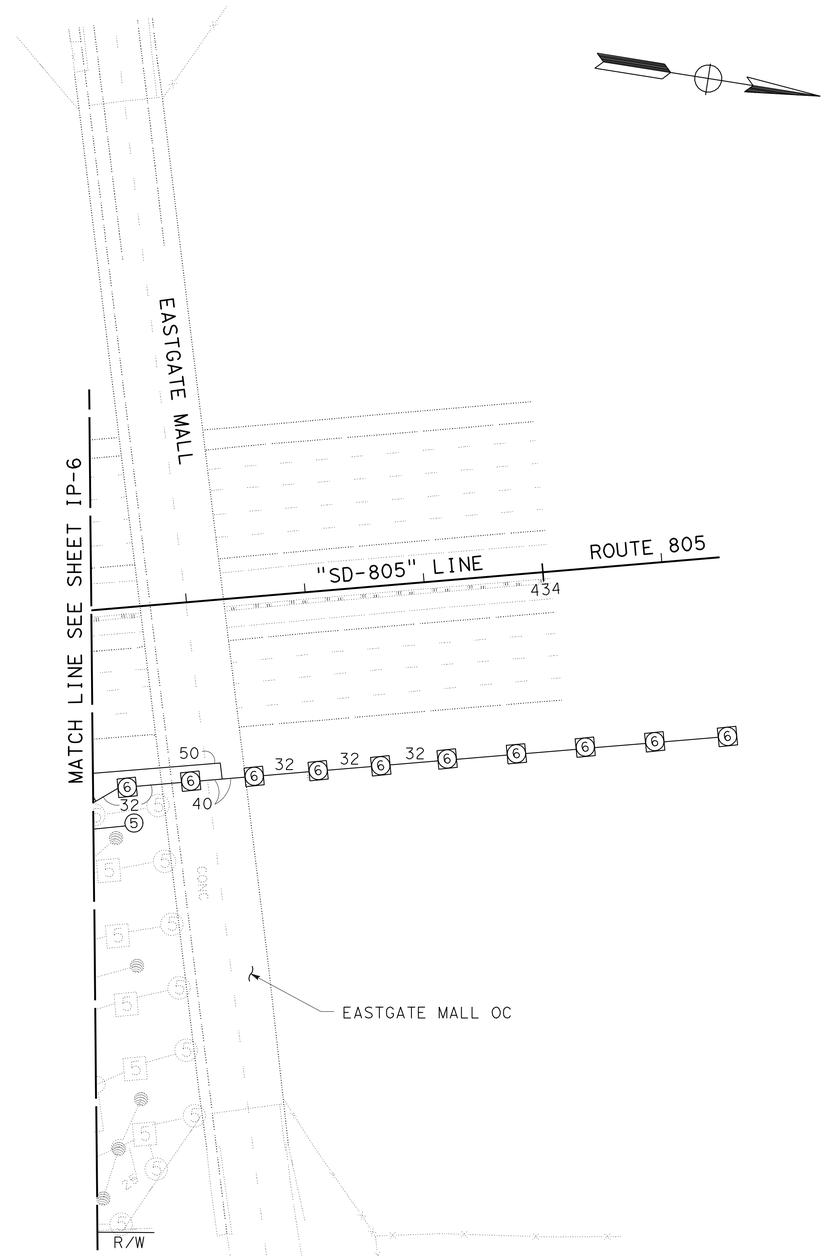

THIS PLAN SHEET ACCURATE FOR LANDSCAPE WORK ONLY.

ALL DIMENSIONS ARE IN METERS UNLESS OTHERWISE SHOWN

IRRIGATION PLAN

SCALE 1:500

IP-10

STATE OF CALIFORNIA - DEPARTMENT OF TRANSPORTATION — Caltrans

CONSULTANT FUNCTIONAL SUPERVISOR: MICHAEL SINGLETON

CALCULATED-DESIGNED BY: TIM HENDERSON

CHECKED BY: KURT CARLSON/BERNARD EVERLING

REVISED BY

DATE REVISED

LAST REVISION 10-15-09

DATE PLOTTED => 19-JUN-2010
TIME PLOTTED => 07:46

DIST	COUNTY	ROUTE	KILOMETER POST TOTAL PROJECT	SHEET No.	TOTAL SHEETS
11	SD	805	40.6/42.4	420	567

Kurt W Carlson 09-09-09
REGISTERED LANDSCAPE ARCHITECT — DATE

6-14-10
PLANS APPROVAL DATE

REGISTERED LANDSCAPE ARCHITECT — KURT W. CARLSON — No. RLA 2342 — Exp. 2/28/11 — STATE OF CALIFORNIA

THE STATE OF CALIFORNIA OR ITS OFFICERS OR AGENTS SHALL NOT BE RESPONSIBLE FOR THE ACCURACY OR COMPLETENESS OF ELECTRONIC COPIES OF THIS PLAN SHEET.

KTU+A LANDSCAPE ARCHITECTURE
3916 NORMAL STREET
SAN DIEGO, CA 92103

CITY OF SAN DIEGO
1010 SECOND AVENUE, SUITE 1200
SAN DIEGO, CA 92101

Caltrans Metric

SPRINKLER SCHEDULE

SYMBOL	TYPE	DESCRIPTION	SPRAY PATTERN	OPERATING PRESSURE (KILOPASCAL) (kPa)	PRESSURE COMPENSATING	PLUS / MINUS 5% ② DISCHARGE: LITERS PER SECOND L/s	LITERS PER MINUTE L/Min	LITERS PER HOUR L/h	RADIUS (IN METERS) (m)	WIDTH x LENGTH (IN METERS) (m)	MATERIALS	NOZZLE SIZE IN MILLIMETERS (mm)	INLET CONNECTION (INPT) (DN IN MILLIMETERS) (mm)	POSITIVE-LOCKING ADJ ARC STOP	BACKSPLASH PREVENTER	DIFFUSER PIN	DISTANCE CONTROL FLAP	ADJ DISCHARGE	RISER: TYPE	MATERIAL: PLASTIC	MATERIAL: GALVANIZED	SIZE (IPS) IN MILLIMETERS (mm)	HEIGHT IN MILLIMETERS (mm)	FLOW SHUTOFF DEVICE	SWING JOINT (TYPE)	RISER SUPPORT	SPRINKLER PROTECTOR (TYPE)	REMARKS
[5]	A-5	GEAR DRIVEN	F	345	-	-	12.9	-	12	-	PL	-	20	-	-	X	-	-	I	X	-	20	150	-	I	-	-	③
(5)	A-5	GEAR DRIVEN	P	345	-	-	12.9	-	12	-	PL	-	20	-	-	X	-	-	I	X	-	20	150	-	I	-	-	③ ⑦
[7]	A-7	GEAR DRIVEN	F	345	-	-	28.8	-	14.3	-	PL	-	20	-	-	X	-	-	I	X	-	20	150	-	I	-	-	③
(7)	A-7	GEAR DRIVEN	P	345	-	-	28.8	-	14.3	-	PL	-	20	-	-	X	-	-	I	X	-	20	150	-	I	-	-	③ ⑦
△	B-1	TREE SPRAY	H	207	-	-	2.0	-	2.0	-	PL	-	15	-	-	X	-	-	I	X	-	15	300	-	I	-	-	③ ⑧ ⑨ ⑩
[6]	A-6	GEAR DRIVEN	P	345	-	-	12.9	-	12	-	PL	-	20	-	-	X	-	-	-	-	-	-	-	-	I	-	I	③ ⑦ 300mm POP-UP
[8]	A-8	GEAR DRIVEN	P	345	-	-	28.8	-	14.3	-	PL	-	20	-	-	X	-	-	-	-	-	-	-	-	I	-	I	③ ⑦ 300mm POP-UP
●	C-2 MOD	MODIFIED FLOOD BUBBLER	-	207	X	-	1.9	-	-	-	PL	-	15	-	-	X	-	-	⑩	X	-	15	300	-	I	-	-	③ ④ ⑨ ⑩

NOTE: X IN BOX DENOTES REQUIREMENT

APPLICABLE WHEN CIRCLED:

1- SEE SPECIAL PROVISIONS
② IF A PRESSURE COMPENSATING DEVICE IS SPECIFIED, THE DISCHARGE AND RADII SHOWN REFLECT ITS USE
③ SHALL HAVE AN INTERNAL OR EXTERNAL CHECK VALVE.
④ NON-ADJUSTABLE DISCHARGE RATE.
5- REQUIRED ADJACENT TO SHOULDERS, CURBS, SIDEWALKS, AND DIKES.
6- UNLESS OTHERWISE SHOWN ON PLANS.
⑦ ADJUSTABLE ARC
⑧ MATCHED PRECIPITATION RATE NOZZLES.
⑨ REFER TO PIPE SIZING CHARTS.
⑩ -SEE DETAIL

ABBREVIATIONS:

ADJ — ADJUSTABLE
B/B — BRASS/BRONZE
B/B/PL — BRASS/BRONZE/PLASTIC
B/PL — BRASS/PLASTIC
CST — CENTER STRIP
DIP — DUTILE IRON PIPE
DN — DIAMETER NOMINAL
EST — END STRIP
F — FULL CIRCLE
F/P — FULL/PART CIRCLE
H — HALF CIRCLE
IPS — IRON PIPE SIZE
kPa — KILOPASCAL
L/h — LITERS PER HOUR
L/min — LITERS PER MINUTE
L/s — LITERS PER SECOND
m — METERS
mm — MILLIMETERS
NPT — NATIONAL PIPE THREAD
P — PART CIRCLE
PL — PLASTIC
Q — QUARTER CIRCLE
SST — SIDE STRIP
T — third circle
TQ — THREE QUARTER CIRCLE
TT — TWO THIRDS CIRCLE

NEW VALVE CODE:

XX-11(X)-XX-XX-XX
- RCV SIZE
- IRRIGATION CLUSTER CONTROL UNIT - (CCU)
- IRRIGATION SATELLITE CONTROLLER - (SAT)
- CONTROL VALVE STATION
- LITERS PER MINUTE (L/m)
- QUANTITY TYPE C-2 AND TYPE C-2 (MOD)

LEGEND:

- XX-X-X-XX — EXISTING IRRIGATION SYSTEM TO BE MODIFIED
- XX-X-X-XX — EXISTING IRRIGATION SYSTEM
- X-XX XX-11(X)-XX — EXISTING IRRIGATION SYSTEM - WITH NEW VALVE
- X-XX — EXISTING AUTOMATIC IRRIGATION VALVE TO BE REMOVED
- EXISTING IRRIGATION SYSTEM TO BE REMOVED
- NEW SPRINKLER ON EXISTING RISERS
- EXISTING C-2 BUBBLER SYSTEM
- TEMPORARY IRRIGATION SUPPLY LINE
- BS — BASKET STRAINER (BS)
- POLE OR FENCE — RECYCLED WATER WARNING SIGN MOUNTED AS SHOWN ON PLANS. INSTALL POLE MOUNTED SIGNS IMMEDIATELY ADJACENT TO SIDEWALKS

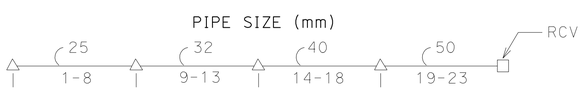

NUMBER OF HALF HEADS
(2 HALF HEADS=1 FULL HEAD)

PIPE SIZING CHART
TYPE B-1 SPRINKLERS

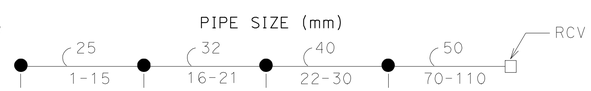

NUMBER OF HEADS

PIPE SIZING CHART
TYPE C-2 (Mod) SPRINKLERS

NOTES:

1. ALL PROPOSED LATERAL PIPE NOT LABELED SHALL BE 25 mm, OR AS SHOWN ON PIPE SIZING CHARTS.
2. ALL SPRINKLER HEADS, VALVES AND SUPPLY LINE SHOWN NEAR MVP LOCATIONS ARE TO BE INSTALLED OUTSIDE OF THE PAVED MVP AREA. VALVES TO BE INSTALLED AT EXITING END OF THE MVP.
3. ALL NEW SUPPLY LINE PIPE WHICH HAS A 90 DEGREE CHANGE IN DIRECTION SHALL HAVE (2) 45 ELBOWS.
4. PULL ONE ADDITIONAL CNC WIRE FROM EACH DESIGNATED CONTROLLER TO THE LAST VALVE BOX AT EACH VALVE MANIFOLD. (FOR FUTURE USE)
5. REFER TO RECYCLED WATER USE REGULATIONS AND TO FOLLOW SAN DIEGO DEPARTMENT OF EVIRONMENTAL HEALTH (DEH) GUIDELINES.
6. SPRINKLERS SHALL BE FURNISHED WITH PURPLE CAPS FOR USE WITH RECYCLED WATER

ALL IRRIGATION EQUIPMENT SIZES ARE SHOWN IN MILLIMETERS (DIAMETER NOMINAL) UNLESS OTHERWISE NOTED

LANDSCAPE DETAILS
LD-1

REVISED BY | DATE REVISED
TIM HENDERSON | KURT CARLSON/BERNARD EVERLING
CALCULATED-DESIGNED BY | CHECKED BY
CONSULTANT FUNCTIONAL SUPERVISOR: MICHAEL SINGLETON
STATE OF CALIFORNIA - DEPARTMENT OF TRANSPORTATION
Caltrans

LAST REVISION 10-15-09 | DATE PLOTTED => 19-JUN-2010 | TIME PLOTTED => 07:46

DIST	COUNTY	ROUTE	KILOMETER POST TOTAL PROJECT	SHEET No.	TOTAL SHEETS
11	SD	805	40.6/42.4	421	567

Kurt W Carlson 09-09-09
REGISTERED LANDSCAPE ARCHITECT — DATE

6-14-10
PLANS APPROVAL DATE

REGISTERED LANDSCAPE ARCHITECT — KURT W. CARLSON — No. RLA 2342 — Exp. 2/28/11 — STATE OF CALIFORNIA

THE STATE OF CALIFORNIA OR ITS OFFICERS OR AGENTS SHALL NOT BE RESPONSIBLE FOR THE ACCURACY OR COMPLETENESS OF ELECTRONIC COPIES OF THIS PLAN SHEET.

KTU+A LANDSCAPE ARCHITECTURE
3916 NORMAL STREET
SAN DIEGO, CA 92103

CITY OF SAN DIEGO
1010 SECOND AVENUE, SUITE 1200
SAN DIEGO, CA 92101

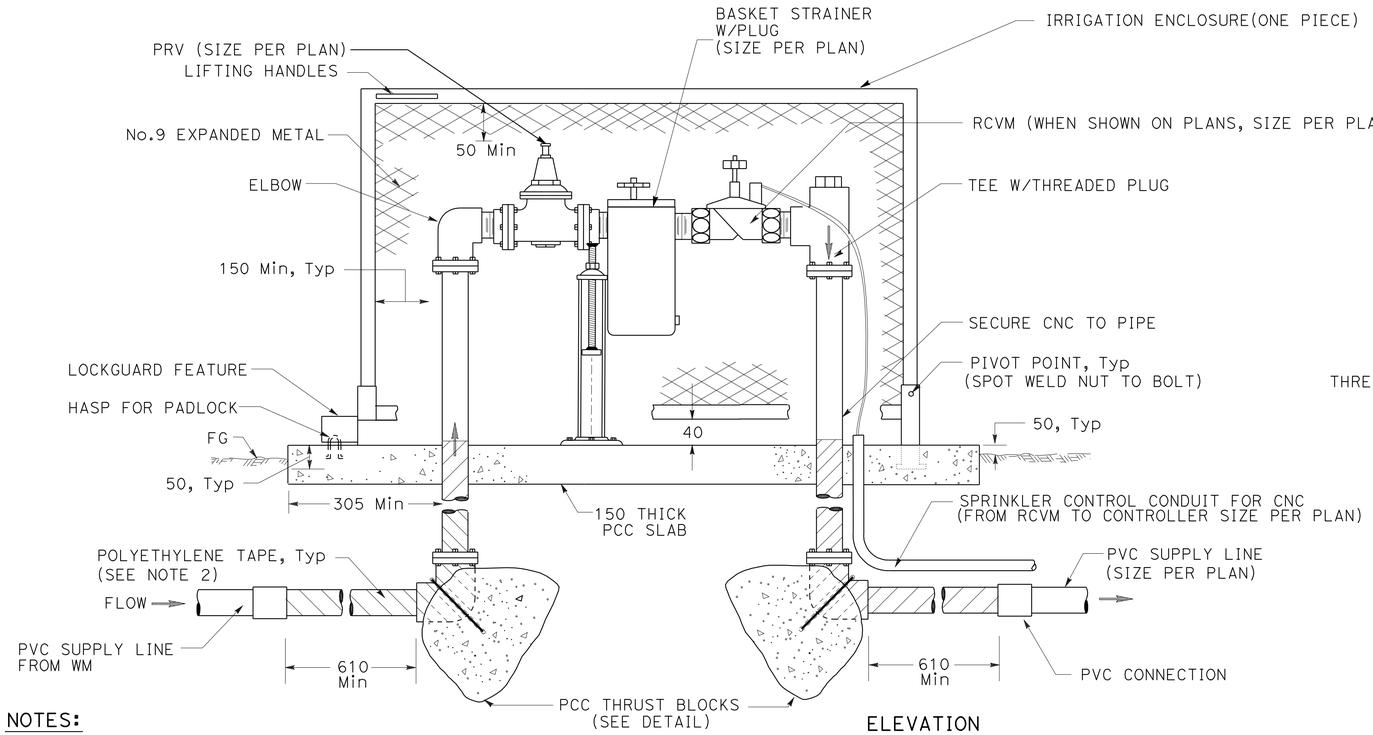

ELEVATION

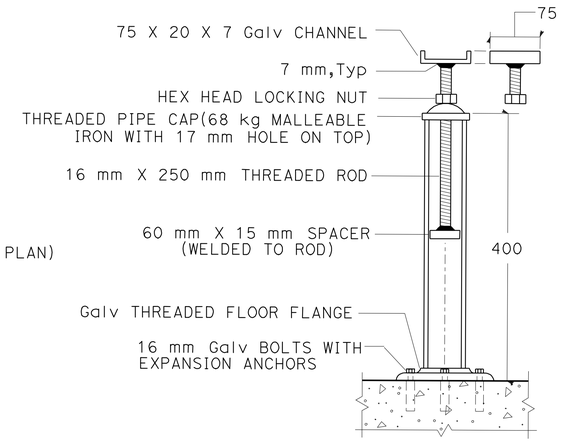

ADJUSTABLE SUPPORT

NOTES:

1. FITTINGS SHALL BE SAME SIZE AS PRESSURE REDUCING VALVE SHOWN ON PLANS.
2. ALL METAL IN CONTACT WITH SOIL AND PCC SHALL BE POLYETHYLENE WRAPPED USING 50 mm WIDE PLASTIC BACKED ADHESIVE TAPE 20 MIL THICK WITH 15 mm OVERLAP.
3. DIELECTRIC FITTINGS SHALL BE USED AT ALL DISSIMILAR METAL CONNECTIONS.
4. FLANGED CONNECTIONS ON ALL FITTINGS IS REQUIRED.
5. ADJUSTABLE SUPPORT REQUIRED FOR EQUIPMENT 75 MM AND LARGER.

BASKET STRAINER ASSEMBLY, PRESSURE REDUCING VALVE AND REMOTE CONTROL VALVE MASTER IN IRRIGATION ENCLOSURE

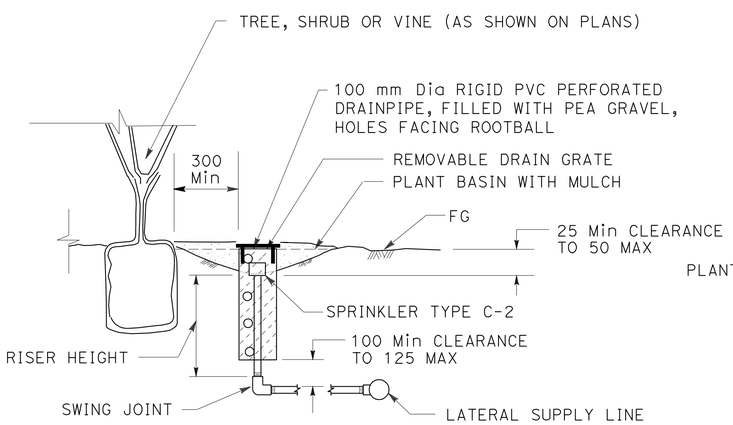

NOTE:
INSTALL SPRINKLER TYPE C-2 MOD ON UP-HILL SIDE OF PLANT WHEN ON SLOPE.

SECTION

SPRINKLER TYPE C-2 MOD INSTALLATION

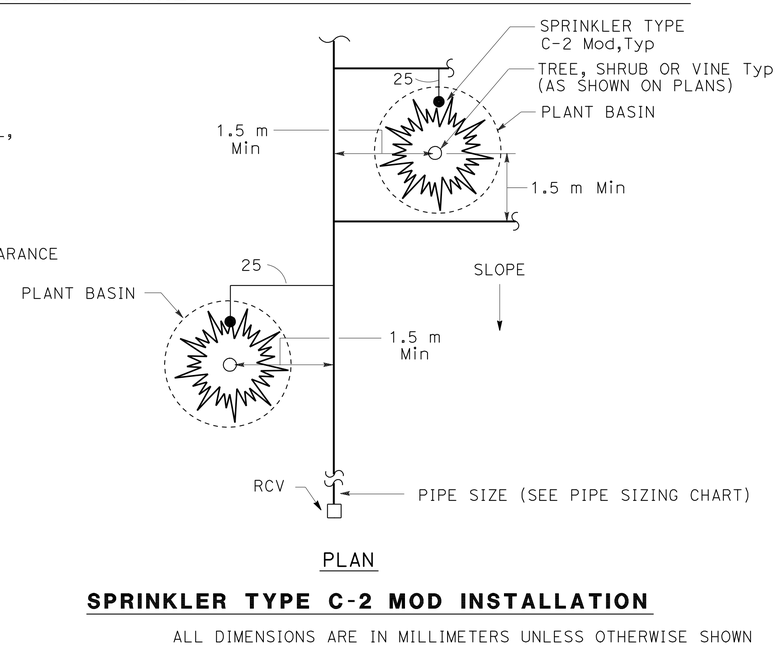

PLAN

SPRINKLER TYPE C-2 MOD INSTALLATION

ALL DIMENSIONS ARE IN MILLIMETERS UNLESS OTHERWISE SHOWN

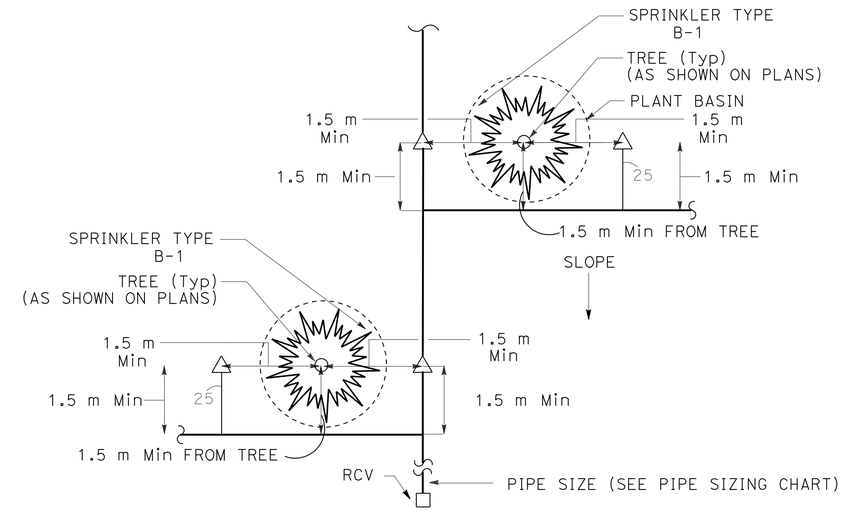

PLAN

SPRINKLER TYPE B-1 INSTALLATION

LANDSCAPE DETAILS

NO SCALE

LD-2

REVISED BY | DATE REVISED
TIM HENDERSON | KURT CARLSON/BERNARD EVERLING
CALCULATED-DESIGNED BY | CHECKED BY
CONSULTANT FUNCTIONAL SUPERVISOR | MICHAEL SINGLETON
STATE OF CALIFORNIA - DEPARTMENT OF TRANSPORTATION
Caltrans

LAST REVISION 10-15-09 | DATE PLOTTED => | TIME PLOTTED =>

DIST	COUNTY	ROUTE	KILOMETER POST TOTAL PROJECT	SHEET No.	TOTAL SHEETS
11	SD	805	40.6/42.4	422	567

Kurt W Carlson 09-09-09
REGISTERED LANDSCAPE ARCHITECT — DATE

6-14-10
PLANS APPROVAL DATE

REGISTERED LANDSCAPE ARCHITECT — KURT W. CARLSON — No. RLA 2342 — Exp. 2/28/11 — STATE OF CALIFORNIA

THE STATE OF CALIFORNIA OR ITS OFFICERS OR AGENTS SHALL NOT BE RESPONSIBLE FOR THE ACCURACY OR COMPLETENESS OF ELECTRONIC COPIES OF THIS PLAN SHEET.

KTU+A LANDSCAPE ARCHITECTURE
3916 NORMAL STREET
SAN DIEGO, CA 92103

CITY OF SAN DIEGO
1010 SECOND AVENUE, SUITE 1200
SAN DIEGO, CA 92101

MULCH SUMMARY (N)

SHEET NUMBER	VOLUME OF MULCH (m^3)
PP-1	-
PP-2	-
PP-3	76.6
PP-4	84.1
PP-5	52.0
PP-6	-
PP-7	57.8
PP-8	92.8
PP-9	-
PLANT BASINS	46.6
TOTAL	409.9

TEMPORARY IRRIGATION SUPPLY LINE

SHEET NUMBER	LENGTH (m)
IR-1	315
IR-4	180
IR-5	50
IR-6	340
TOTAL	885

EROSION CONTROL SUMMARY

SHEET NUMBER	EROSION CONTROL (TYPE D) m^2	EROSION CONTROL ** (PSFM) m^2	EROSION CONTROL (BIOFILTRATION) m^2
PP-1	42	137	-
PP-2	-	2505	348
PP-3	353	6823	2934
PP-4	653	2617	336
PP-5	-	9336	2606
PP-6	-	3332	3497
PP-7	32	6642	2699
PP-8	-	8492	3527
PP-9	594	4607	240
PP-10	305	-	-
TOTAL	1979	44491	16187

** POLYMER STABILIZED FIBER MATRIX (PSFM)

RECYCLED WATER WARNING SIGN (N)

SHEET NUMBER	POLE MOUNTED EA	FENCE MOUNTED EA
IP-1	1	-
IP-2	-	2
IP-3	1	1
IP-4	2	1
IP-5	1	1
IP-6	-	3
IP-7	2	-
IP-8	1	1
IP-9	3	1
TOTAL	11	10

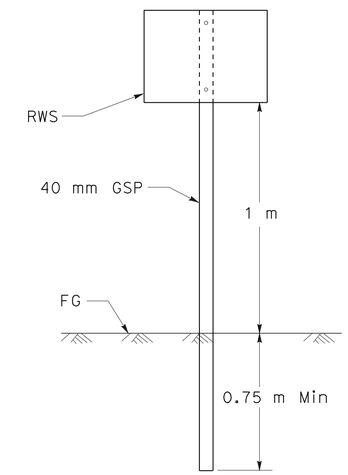

NOTE:
ATTACH RWS TO POLE WITH 6 mm ø THEFT PROOF BOLTS.

RECYCLED WATER WARNING SIGN (RWS)
(POLE MOUNTED)

EROSION CONTROL COMPONENT QUANTITIES SUMMARY (N)

TYPE	STABILIZING EMULSION kg	FIBER kg	COMMERCIAL FERTILIZER kg	COMPOST kg	MYCORRHIZAL INOCULUM kg	PURE LIVE SEED (TYPE D) kg	PURE LIVE SEED (TYPE BFM) kg	PURE LIVE SEED (BIOFILTRATION) kg	WOOD FIBER kg	CELLULOSE FIBER kg	TACKIFIER LITER
EROSION CONTROL (BIOFILTRATION)	404.68	1294.9	-	-	-	-	-	62.32	-	-	-
EROSION CONTROL (POLYMER STABILIZED FIBER MATRIX) (PSFM)	-	-	222.46	-	13.28	-	48.05	-	8898.2	4449.1	418.22
EROSION CONTROL (TYPE D)	39.58	356.22	4.95	0.60	0.60	2.13	-	-	-	-	-

(N)-NOT A SEPARATE PAY ITEM, FOR INFORMATION ONLY.

LANDSCAPE DETAILS

NO SCALE

LD-3

REVISED BY | DATE REVISED
TIM HENDERSON | KURT CARLSON/BERNARD EVERLING
CALCULATED-DESIGNED BY | CHECKED BY
CONSULTANT FUNCTIONAL SUPERVISOR
MICHAEL SINGLETON
STATE OF CALIFORNIA - DEPARTMENT OF TRANSPORTATION
Caltrans

LAST REVISION 10-29-09 | DATE PLOTTED => 19-JUN-2010 | TIME PLOTTED => 07:46

DIST	COUNTY	ROUTE	KILOMETER POST TOTAL PROJECT	SHEET No.	TOTAL SHEETS
11	SD	805	40.6/42.4	423	567

Kurt W Carlson 09-09-09
REGISTERED LANDSCAPE ARCHITECT — DATE

6-14-10
PLANS APPROVAL DATE

REGISTERED LANDSCAPE ARCHITECT — KURT W. CARLSON — No. RLA 2342 — Exp. 2/28/11 — STATE OF CALIFORNIA

THE STATE OF CALIFORNIA OR ITS OFFICERS OR AGENTS SHALL NOT BE RESPONSIBLE FOR THE ACCURACY OR COMPLETENESS OF ELECTRONIC COPIES OF THIS PLAN SHEET.

KTU+A LANDSCAPE ARCHITECTURE
3916 NORMAL STREET
SAN DIEGO, CA 92103

CITY OF SAN DIEGO
1010 SECOND AVENUE, SUITE 1200
SAN DIEGO, CA 92101

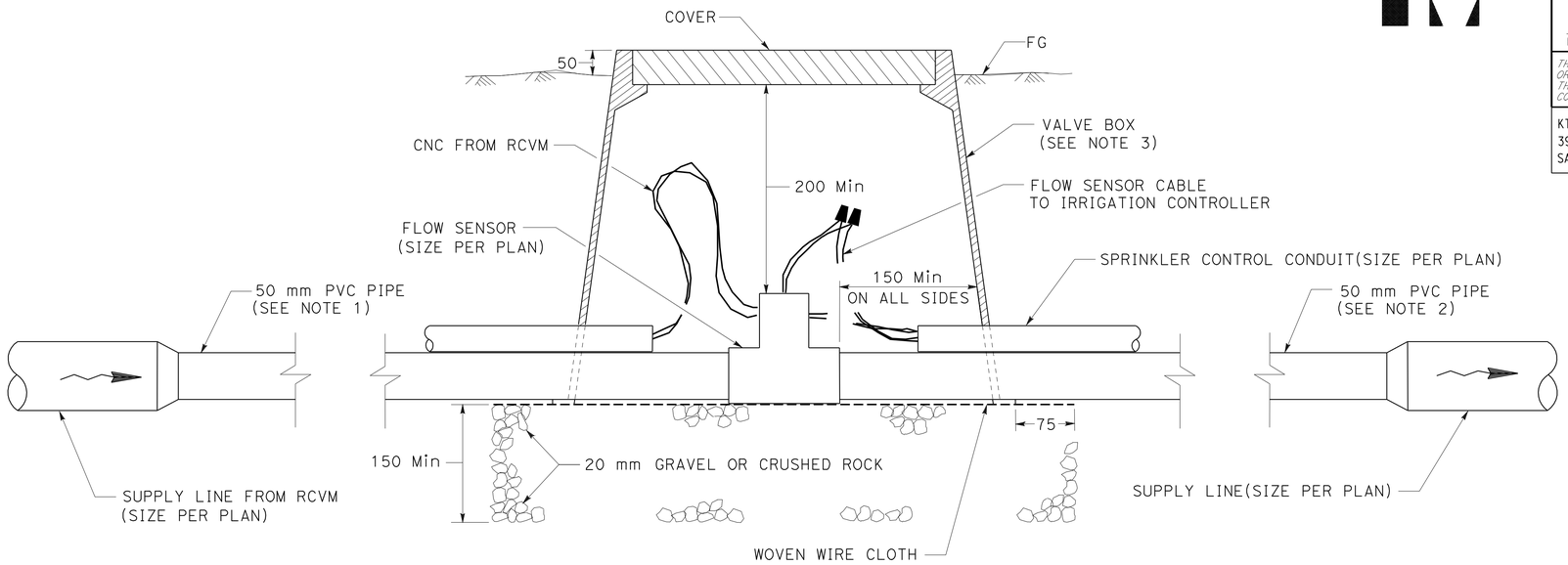

NOTES:

1. LENGTH = 10 X SUPPLY LINE Dia (UNRESTRICTED, NO FITTINGS).
2. LENGTH = 5 X SUPPLY LINE Dia (UNRESTRICTED, NO FITTINGS).
3. VALVE BOX OR BOX EXTENSION WITH 2 SIDE OPENINGS.
   SEAL OPENINGS WITH No.30 ASPHALT-SATURATED FELT.

FLOW SENSOR

THRUST BLOCK DETAIL

INSTALLATION	TYPE FITTING	INSTALLATION	TYPE FITTING
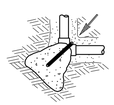	90° ELL	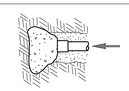	DEAD END
	BEND 45° 22.5° 11.25°	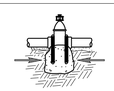	GATE VALVE
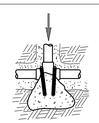	TEE	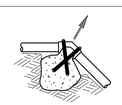	VERTICAL BEND (TYPE I) 45° 22.5° 11.25°
		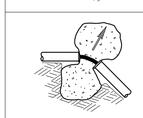	OR VERTICAL BEND (TYPE II) 45° 22.5° 11.25°

NOTES:
Min 0.03 m^3 PCC FOR PIPE 40 mm AND SMALLER.
Min 0.06 m^3 PCC FOR PIPE 50 mm AND LARGER.
USE #10 REINFORCING BAR WHERE SHOWN (Ω).

ALL DIMENSIONS ARE IN METERS UNLESS OTHERWISE SHOWN

LANDSCAPE DETAILS

NO SCALE

LD-4

REVISED BY	DATE REVISED

TIM HENDERSON — KURT CARLSON/BERNARD EVERLING

CALCULATED-DESIGNED BY — CHECKED BY

CONSULTANT FUNCTIONAL SUPERVISOR — MICHAEL SINGLETON

STATE OF CALIFORNIA - DEPARTMENT OF TRANSPORTATION — Caltrans

LAST REVISION 10-15-09 — DATE PLOTTED => 19-JUN-2010 — TIME PLOTTED => 07:47

DIST	COUNTY	ROUTE	KILOMETER POST TOTAL PROJECT	SHEET No.	TOTAL SHEETS
11	SD	805	40.6/42.4	424	567

REGISTERED LANDSCAPE ARCHITECT — DATE 09-09-09

6-14-10
PLANS APPROVAL DATE

REGISTERED LANDSCAPE ARCHITECT — KURT W. CARLSON — No. RLA 2342 — Exp. 2/28/11 — STATE OF CALIFORNIA

THE STATE OF CALIFORNIA OR ITS OFFICERS OR AGENTS SHALL NOT BE RESPONSIBLE FOR THE ACCURACY OR COMPLETENESS OF ELECTRONIC COPIES OF THIS PLAN SHEET.

KTU+A LANDSCAPE ARCHITECTURE
3916 NORMAL STREET
SAN DIEGO, CA 92103

CITY OF SAN DIEGO
1010 SECOND AVENUE, SUITE 1200
SAN DIEGO, CA 92101

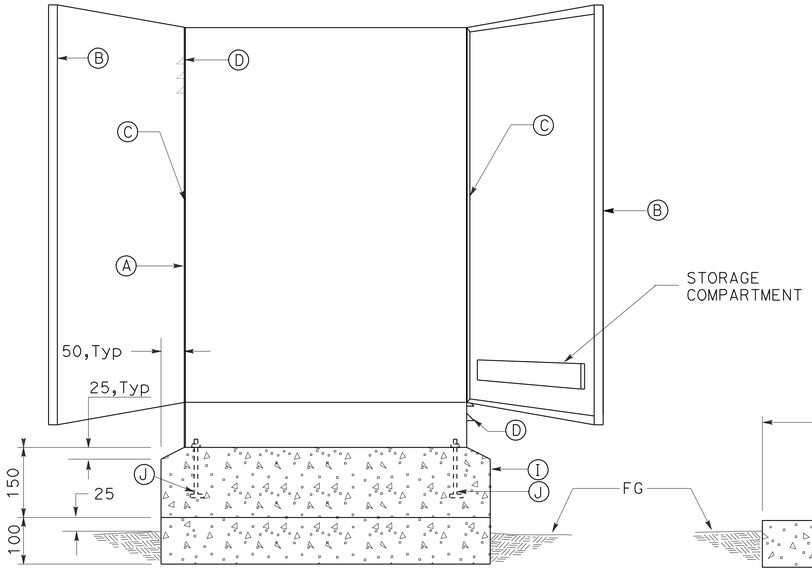

ELEVATION

CABINET, SECURITY DOOR, AND FOUNDATION

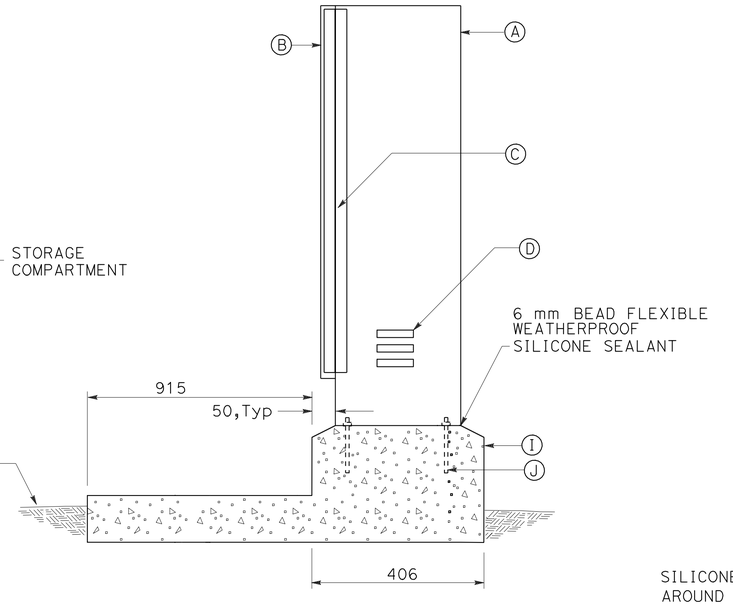

SIDE SECTION

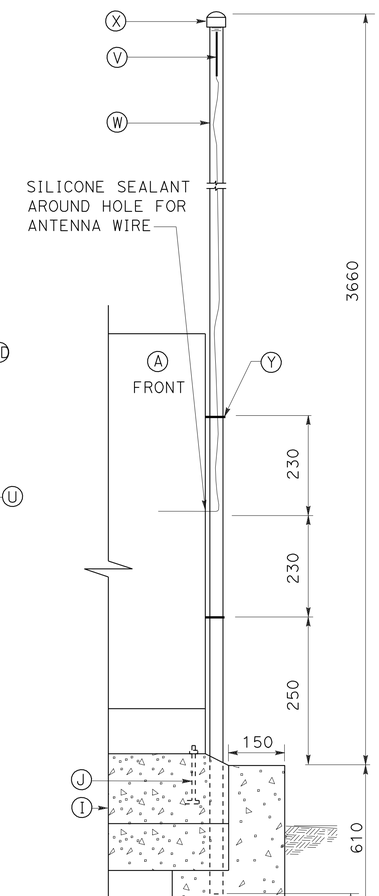

POLE MOUNT ANTENNA FOR ICC 'J'

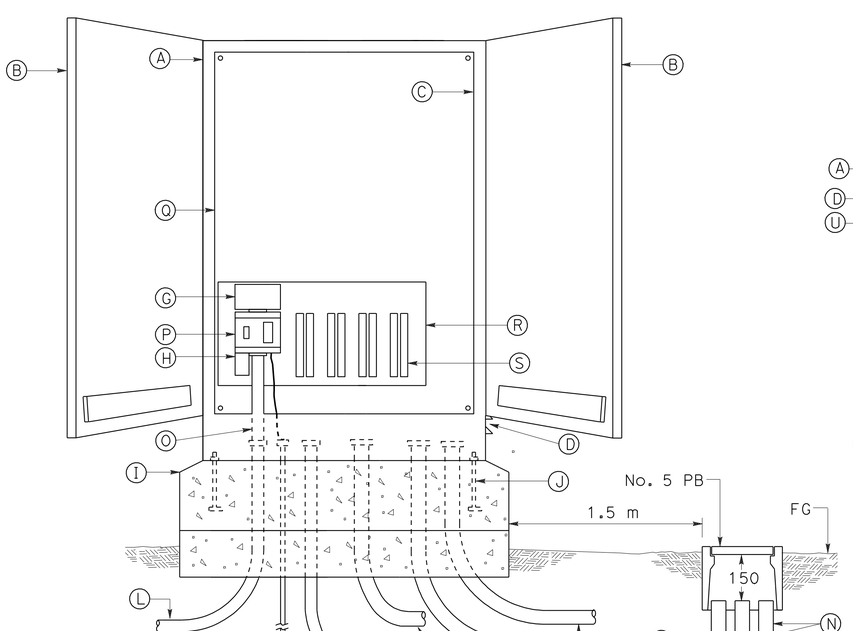

ELEVATION

ELECTRICAL LAYOUT

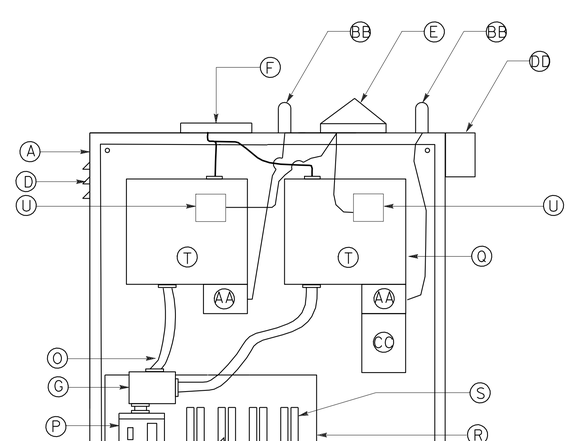

SATELLITE CONTROLLER(SAT)

DOUBLE CONTROLLER LAYOUT

NOTES:

- (A) STAINLESS STEEL CONTROLLER ENCLOSURE CABINET.
- (B) DOOR WITH THREE POINT LOCKING MECHANISM, FLUSH-MOUNTED ACCESS HANDLE FOR PADLOCK, AND STORAGE FOR PLANS.
- (C) CONTINUOUS STAINLESS STEEL PIANO HINGE.
- (D) LOUVERS AT TOP AND BOTTOM FOR CROSS VENTILATION.
- (E) SHARED ANTENNA AND CABLE (FOR PERMANENT HAND HELD RADIO COMMUNICATION BETWEEN SAT AND HAND HELD RADIO).
- (F) LOW PROFILE ANTENNA AND CABLE (FOR COMMUNICATION BETWEEN CCU AND SAT).
- (G) JUNCTION BOX
- (H) SURGE PROTECTION.
- (I) PCC PAD AND FOUNDATION.
- (J) 10 mm DIAMETER, 70 mm LONG, WINGED STAINLESS STEEL ANCHOR BOLTS WITH WASHERS AND HEX HEAD LOCKNUTS.
- (K) 16 mm X 3.0 m LONG COPPER CLAD STEEL ROD GROUND ELECTRODE.
- (L) SIZE 27, TYPE 3 CONDUIT FOR ELECTRICAL SERVICE.
- (M) SIZE 27, TYPE 3 CONDUIT FOR FLOW SENSOR INPUT WIRING.
- (N) SIZE 53, TYPE 3 CONDUIT FOR LOW VOLTAGE WIRING.
- (O) FLEXIBLE CONDUIT.
- (P) 2 GANG WEATHERPROOF BOX WITH GROUND FAULT PROTECTED RECEPTACLE AND LOCKING ON-OFF SWITCH, SEE DETAIL "D" ON THIS SHEET.
- (Q) STAINLESS STEEL MOUNTING PANEL(4 mm Min. THICKNESS), ATTACHED TO ENCLOSURE.
- (R) MOUNTING BOARD 406 mm W X 248 mm H Min, BRUSHED ALUMINUM, SECURED WITH STAINLESS STEEL BOLTS.
- (S) SCREWLESS CAGE-CLAMP TERMINAL BLOCKS WITH SIDE ENTRY FOR LOW VOLTAGE WIRES.
- (T) SATELLITE IRRIGATION CONTROLLER (SAT) WITH TWO WAY RADIO CONNECTIONS (NEW OR RELOCATED QUANTITIES SHOWN ON PLANS).
- (U) TRC AND RECEIVER CARD FOR HAND HELD REMOTE OPERATION (QUANTITIES SHOWN ON PLANS).
- (V) OMNI, POLE MOUNT ANTENNA (ICC-SAT 'J' LOCATION ONLY) (FOR COMMUNICATION BETWEEN NOBEL DRIVE CCU AND SAT).
- (W) 40 mm GALVANIZED STEEL POLE (TOP THREADED).
- (X) SCHEDULE 80 PVC CAP (THREADED).
- (Y) 25 mm WIDE STEEL STRAP, AROUND GSP POLE, BOLTED TO CABINET.
- (Z) SIZE 27, TYPE 3 CONDUIT PER TELEPHONE SERVICE (WHEN REQUIRED).
- (AA) EVAPOTRANSPIRATION MANAGER
- (BB) EVAPOTRANSPIRATION MANAGER ANTENNA
- (CC) FLOW MONITOR WITH POWER SUPPLY
- (DD) RAIN SENSOR

ALL DIMENSIONS ARE IN MILLIMETERS UNLESS OTHERWISE SHOWN

LANDSCAPE DETAILS

NO SCALE

LD-5

REVISED BY | DATE REVISED

TIM HENDERSON | KURT CARLSON/BERNARD EVERLING

CALCULATED-DESIGNED BY | CHECKED BY

CONSULTANT FUNCTIONAL SUPERVISOR: MICHAEL SINGLETON

STATE OF CALIFORNIA - DEPARTMENT OF TRANSPORTATION

Caltrans

LAST REVISION 10-15-09 | DATE PLOTTED => 19-JUN-2010 | TIME PLOTTED => 07:47

DIST	COUNTY	ROUTE	KILOMETER POST TOTAL PROJECT	SHEET No.	TOTAL SHEETS
11	SD	805	40.6/42.4	425	567

Caltrans Metric

Andrew P. Schlaefli 09-09-09
REGISTERED CIVIL ENGINEER DATE

6-14-10
PLANS APPROVAL DATE

REGISTERED PROFESSIONAL ENGINEER ANDREW P. SCHLAEFLI No. 15964 Exp. 6/30/11 CIVIL STATE OF CALIFORNIA

THE STATE OF CALIFORNIA OR ITS OFFICERS OR AGENTS SHALL NOT BE RESPONSIBLE FOR THE ACCURACY OR COMPLETENESS OF ELECTRONIC COPIES OF THIS PLAN SHEET.

URBAN SYSTEMS ASSOCIATES INC.
4540 KEARNEY VILLA Rd, Ste 106
SAN DIEGO, CA 92123-1573

CITY OF SAN DIEGO
1010 SECOND AVENUE, SUITE 1200
SAN DIEGO, CA 92101

LEGEND:

N C	EXISTING CONDUIT NO CHANGE
L S	FOR INFORMATION SEE LIGHTING AND SIGN ILLUMINATION PLANS.
S L	FOR INFORMATION SEE SIGNAL AND LIGHTING PLANS.
R M	FOR INFORMATION SEE RAMP METER PLANS.
(TSO)	TO THIS SHEET ONLY

SDG&E	SAN DIEGO GAS AND ELECTRIC COMPANY
AT&T	TELEPHONE COMPANY
(S)	SIGN ILLUMINATION
PX	PASSAGE DETECTION NUMBER
DX	DEMAND DETECTION NUMBER
QX	QUEUE DETECTION NUMBER
ML	MAIN LINE DETECTION
OR	OFF RAMP DETECTION
U3	UPPER SIGNAL HEAD (3 SECTION)
L2	LOWER SIGNAL HEAD (2 SECTION)
L3	LOWER SIGNAL HEAD (3 SECTION)
AWG	AMERICAN WIRE GAGE
(L)	LEFT SIGNAL Std (Std L)
(R)	RIGHT SIGNAL Std (Std R)
(M)	SIGNAL WITH SMA (Std M)

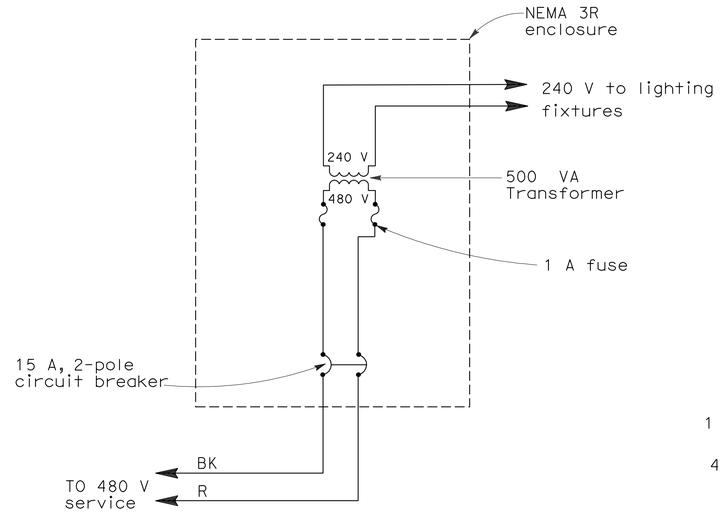

TYPE SC3 (Mod) CONTROL
(For 480 V switched sign circuit)

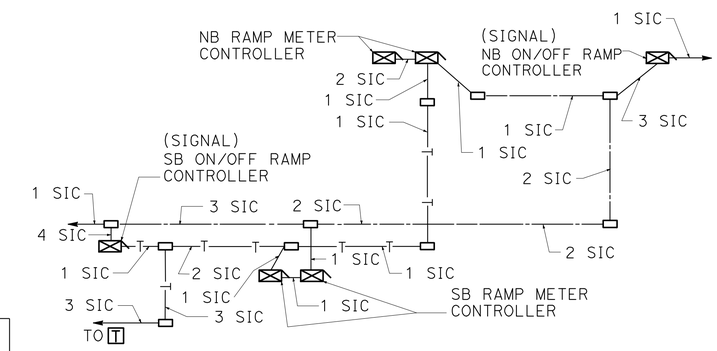

SINGLE LINE DIAGRAM

CIRCUIT BREAKERS:

MAIN - 2P - 200 AMP
A - 1P - 50 AMP
B - 1P - 15 AMP
C - 1P - 15 AMP
D, E - 1P - 30 AMP
F, G - 1P - 30 AMP

1 - LIGHTING
2 - SIGN
3 - SPARE
4 - PEU
5 - IRRIGATION CONTROLLER

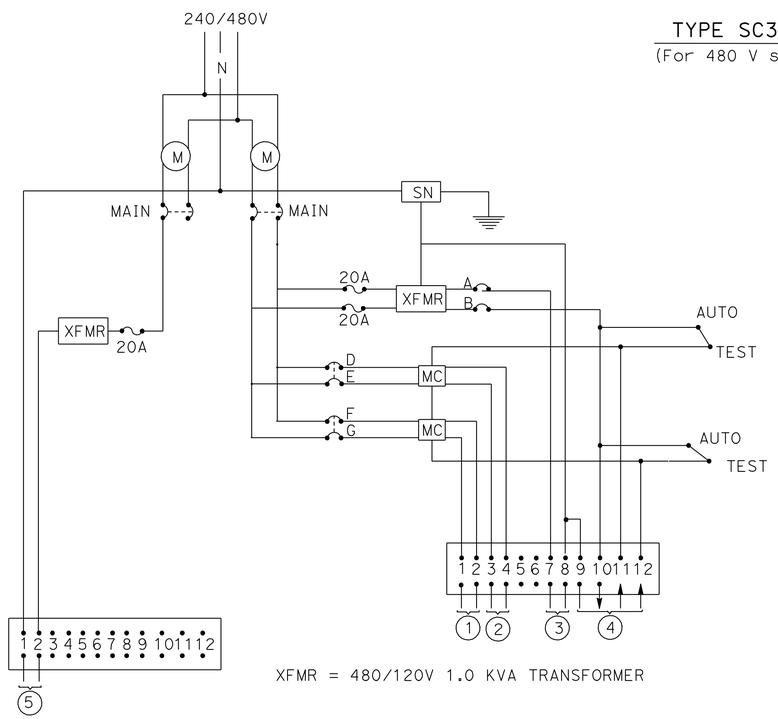

XFMR = 480/120V 1.0 KVA TRANSFORMER

WIRING DIAGRAM "A"
TYPE III-CF EQUIPMENT ENCLOSURE
(SEE ES-2C & ES-2F)

CIRCUIT BREAKERS:

MAIN - 2P - 200 AMP
A - 1P - 50 AMP
B - 1P - 30 AMP
C - 1P - 50 AMP
D - 1P - 30 AMP
E - 1P - 30 AMP
F - 1P - 15 AMP
G - 1P - 30 AMP
H - 1P - 15 AMP
J, K - 2P - 30 AMP
L, M - 2P - 30 AMP SPARE

1 - SPARE
2 - RAMP METER NB
3 - LIGHTING
4 - RAMP METER LOOP NB
5 - RAMP METER SB
6 - RAMP METER LOOP SB
7 - SIGNAL NB
8 - SIGNAL SB
9 - TDC
10 - PEU

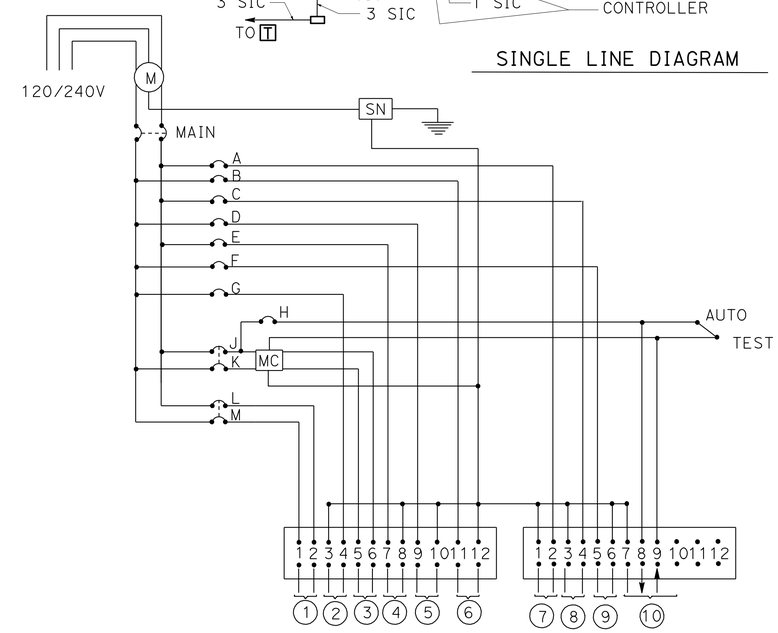

WIRING DIAGRAM "B"
TYPE III-BF EQUIPMENT ENCLOSURE
(SEE ES-2C & ES-2F)

LIGHTING AND SIGN ILLUMINATION
ELECTRICAL DETAILS

NO SCALE

E-1

REVISED BY | DATE REVISED
MORT VAHABZADEH | SAM P. KAB, II
CALCULATED-DESIGNED BY | CHECKED BY
CONSULTANT FUNCTIONAL SUPERVISOR
F.R. CLARK FERNON

STATE OF CALIFORNIA - DEPARTMENT OF TRANSPORTATION
Caltrans

LAST REVISION 11-04-09 | DATE PLOTTED => 19-JUN-2010 | TIME PLOTTED => 07:47

DIST	COUNTY	ROUTE	KILOMETER POST TOTAL PROJECT	SHEET No.	TOTAL SHEETS
11	SD	805	40.6/42.4	426	567

Caltrans Metric

Andrew P. Schlaefli 09-09-09
REGISTERED CIVIL ENGINEER DATE

6-14-10
PLANS APPROVAL DATE

REGISTERED PROFESSIONAL ENGINEER ANDREW P. SCHLAEFLI No. 15964 Exp. 6/30/11 CIVIL STATE OF CALIFORNIA

THE STATE OF CALIFORNIA OR ITS OFFICERS OR AGENTS SHALL NOT BE RESPONSIBLE FOR THE ACCURACY OR COMPLETENESS OF ELECTRONIC COPIES OF THIS PLAN SHEET.

URBAN SYSTEMS ASSOCIATES INC.
4540 KEARNEY VILLA Rd, Ste 106
SAN DIEGO, CA 92123-1573

CITY OF SAN DIEGO
1010 SECOND AVENUE, SUITE 1200
SAN DIEGO, CA 92101

NOTE:
FOR COMPLETE RIGHT OF WAY AND ACCURATE ACCESS DATA, SEE RIGHT OF WAY RECORD MAPS AT DISTRICT OFFICE.

CONDUIT NOTES: (TSO)

1. 53C, 2#6 (LTG)
2. 53C, 2#6 (LTG), 2#6(S)
3. 53C, 2#6 (S)

NOTE: (TSO)

1-RC SIGN LIGHTING FIXTURE

SIGN No.	ILLUMINATED SIGNS AND APPURTENANCES				
	Sta	QUANTITY OF 85 W ISL	VOLTAGE	LOAD	REMARKS
1	417+30	2	480	174 W	SC3(Mod)

SEE E-1 AND STANDARD PLAN ES-15A

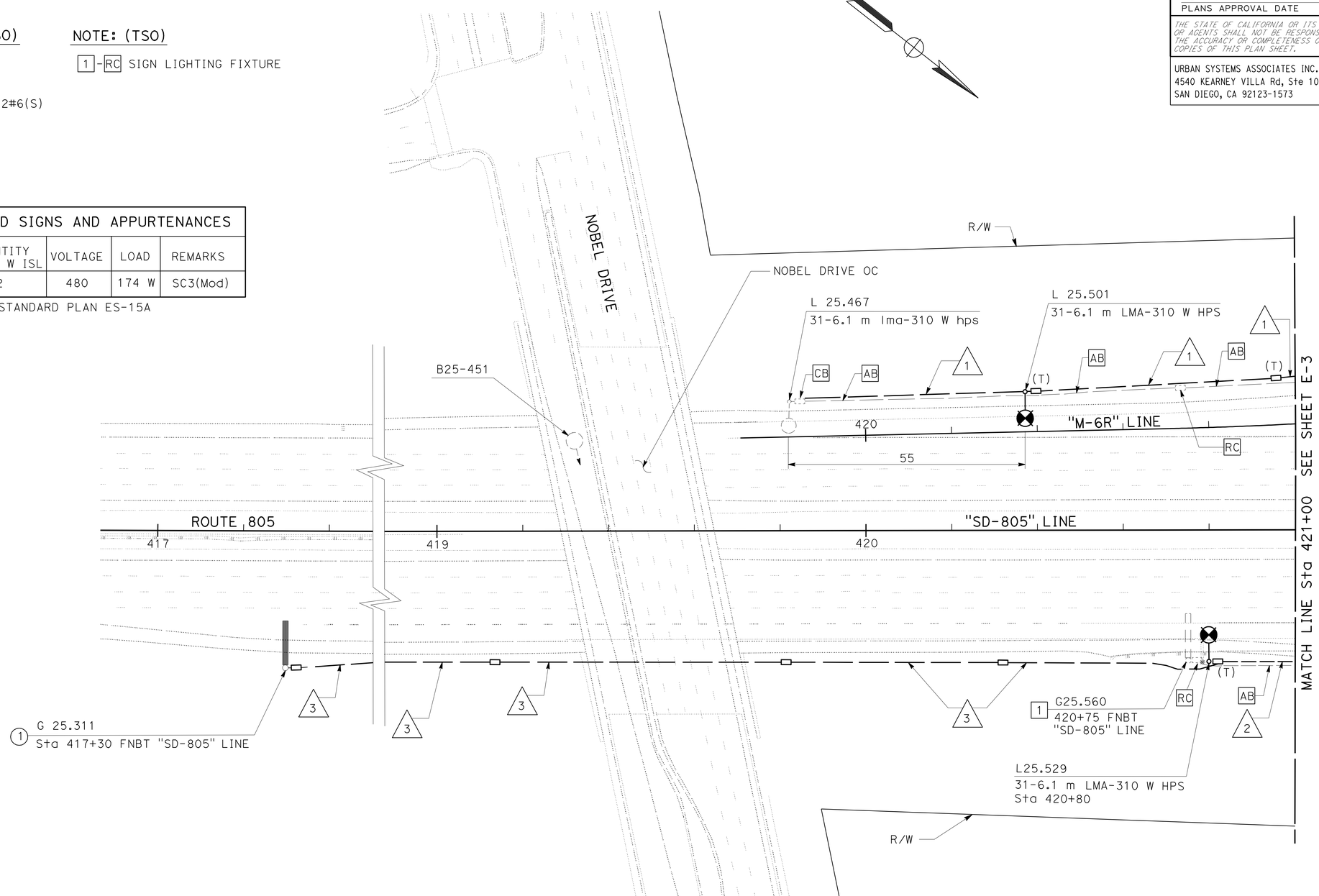

THIS PLAN IS ACCURATE FOR ELECTRICAL WORK ONLY.

ALL DIMENSIONS ARE IN METERS UNLESS OTHERWISE SHOWN

LIGHTING AND SIGN ILLUMINATION

SCALE 1:500

E-2

STATE OF CALIFORNIA - DEPARTMENT OF TRANSPORTATION
Caltrans

CONSULTANT FUNCTIONAL SUPERVISOR: F.R. CLARK FERNON
CALCULATED-DESIGNED BY: MORT VAHABZADEH
CHECKED BY: SAM P. KAB, II
REVISED BY
DATE REVISED

LAST REVISION 10-15-09
DATE PLOTTED => 19-JUN-2010
TIME PLOTTED => 07:47

DIST	COUNTY	ROUTE	KILOMETER POST TOTAL PROJECT	SHEET No.	TOTAL SHEETS
11	SD	805	40.6/42.4	427	567

Caltrans Metric

Andrew P. Schlaefli 09-09-09
REGISTERED CIVIL ENGINEER DATE

6-14-10
PLANS APPROVAL DATE

REGISTERED PROFESSIONAL ENGINEER ANDREW P. SCHLAEFLI No. 15964 Exp. 6/30/11 CIVIL STATE OF CALIFORNIA

THE STATE OF CALIFORNIA OR ITS OFFICERS OR AGENTS SHALL NOT BE RESPONSIBLE FOR THE ACCURACY OR COMPLETENESS OF ELECTRONIC COPIES OF THIS PLAN SHEET.

URBAN SYSTEMS ASSOCIATES INC.
4540 KEARNEY VILLA Rd, Ste 106
SAN DIEGO, CA 92123-1573

CITY OF SAN DIEGO
1010 SECOND AVENUE, SUITE 1200
SAN DIEGO, CA 92101

NOTE:
FOR COMPLETE RIGHT OF WAY AND ACCURATE ACCESS DATA, SEE RIGHT OF WAY RECORD MAPS AT DISTRICT OFFICE.

CONDUIT NOTES: (TSO)

1 — 53C, 2#6 (LTG)

2 — 53C, 2#6 (LTG), 2#6 (S)

NOTE: (TSO)

1-RC SIGN LIGHTING FIXTURE

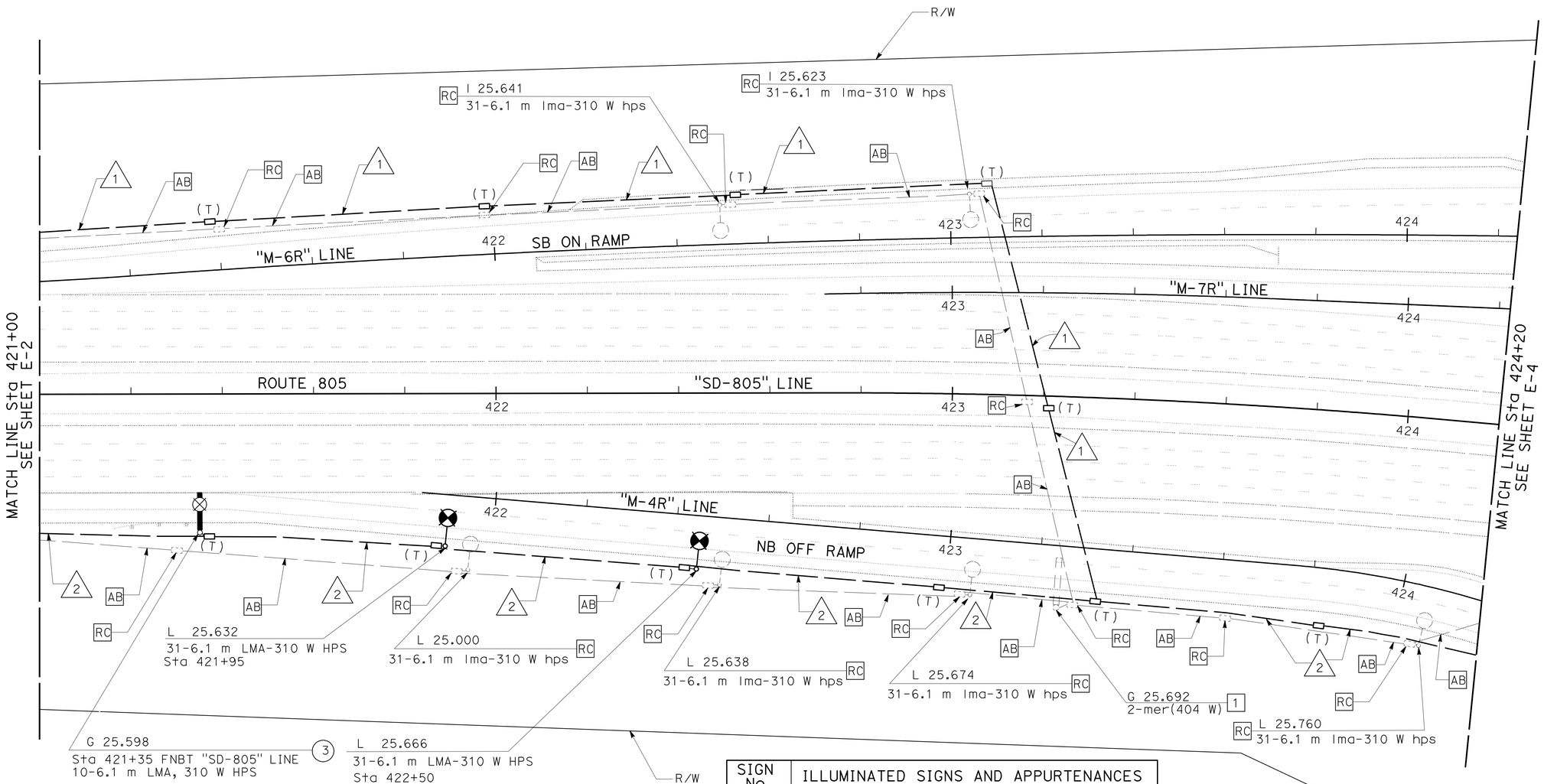

SIGN No.	ILLUMINATED SIGNS AND APPURTENANCES				
	Sta	QUANTITY	VOLTAGE	LOAD	REMARKS
3	421+35	1	480	310 W	HPS

SEE E-1

THIS PLAN IS ACCURATE FOR ELECTRICAL WORK ONLY.

ALL DIMENSIONS ARE IN METERS UNLESS OTHERWISE SHOWN

LIGHTING AND SIGN ILLUMINATION

SCALE 1:500

E-3

STATE OF CALIFORNIA - DEPARTMENT OF TRANSPORTATION
Caltrans

CONSULTANT FUNCTIONAL SUPERVISOR: F.R. CLARK FERNON

CALCULATED-DESIGNED BY: MORT VAHABZADEH
CHECKED BY: SAM P. KAB, II

REVISED BY
DATE REVISED

LAST REVISION 10-15-09
DATE PLOTTED => 19-JUN-2010
TIME PLOTTED => 07:47

DIST	COUNTY	ROUTE	KILOMETER POST TOTAL PROJECT	SHEET No.	TOTAL SHEETS
11	SD	805	40.6/42.4	428	567

Caltrans Metric

Andrew P. Schlaefli 09-09-09
REGISTERED CIVIL ENGINEER DATE

6-14-10
PLANS APPROVAL DATE

REGISTERED PROFESSIONAL ENGINEER ANDREW P. SCHLAEFLI No. 15964 Exp. 6/30/11 CIVIL STATE OF CALIFORNIA

THE STATE OF CALIFORNIA OR ITS OFFICERS OR AGENTS SHALL NOT BE RESPONSIBLE FOR THE ACCURACY OR COMPLETENESS OF ELECTRONIC COPIES OF THIS PLAN SHEET.

URBAN SYSTEMS ASSOCIATES INC.
4540 KEARNEY VILLA Rd, Ste 106
SAN DIEGO, CA 92123-1573

CITY OF SAN DIEGO
1010 SECOND AVENUE, SUITE 1200
SAN DIEGO, CA 92101

NOTE:
FOR COMPLETE RIGHT OF WAY AND ACCURATE ACCESS DATA, SEE RIGHT OF WAY RECORD MAPS AT DISTRICT OFFICE.

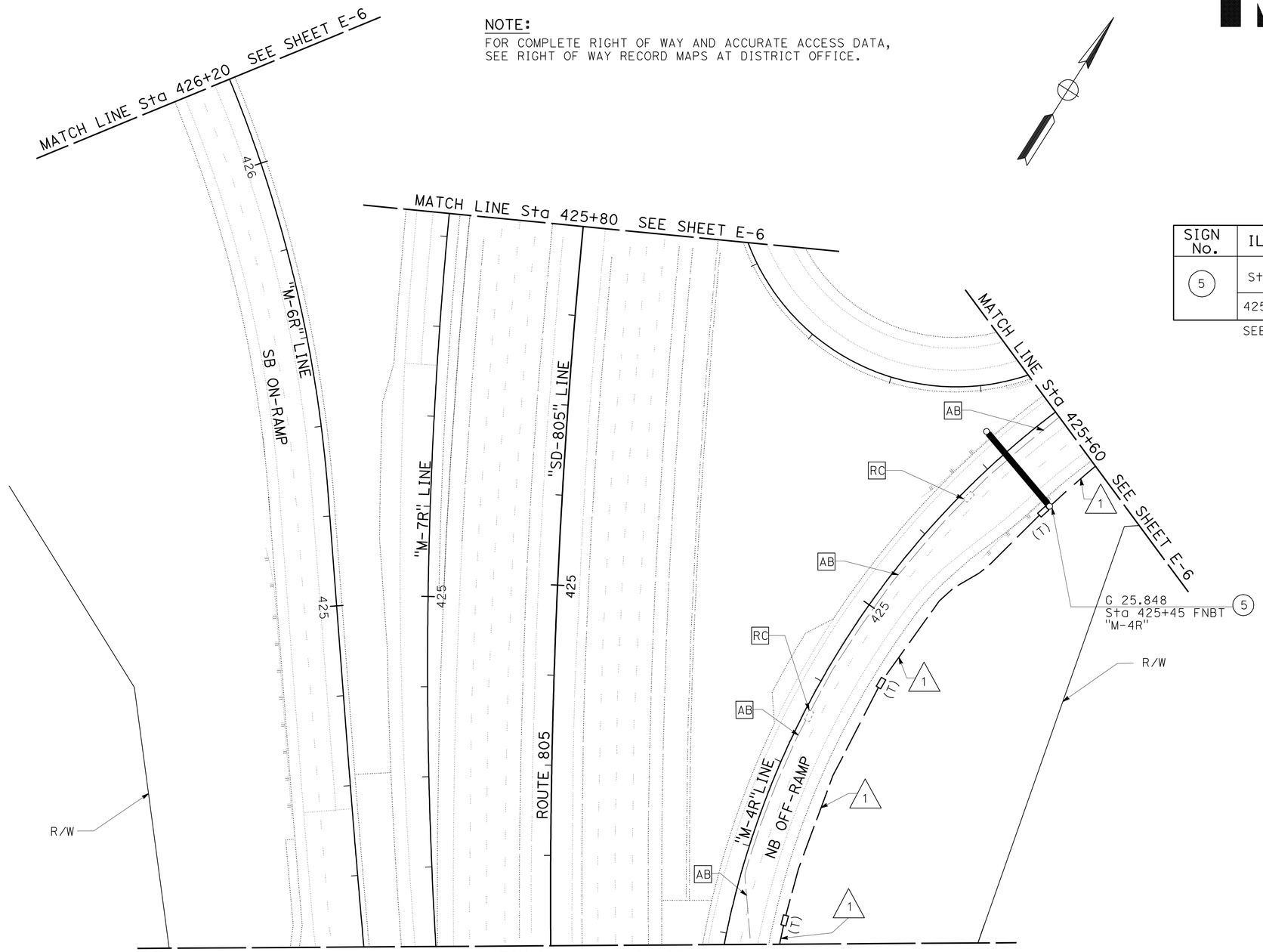

SIGN No.	ILLUMINATED SIGNS AND APPURTENANCES				
	Sta	QUANTITY OF 85 W ISL	VOLTAGE	LOAD	REMARKS
5	425+45	4	480	348 W	SC3(Mod)

SEE E-1 AND STANDARD PLAN ES-15A

CONDUIT NOTE: (TSO)

1 53C, 2#6 (LTG), 2#6 (S)

THIS PLAN IS ACCURATE FOR ELECTRICAL WORK ONLY.

ALL DIMENSIONS ARE IN METERS UNLESS OTHERWISE SHOWN

LIGHTING AND SIGN ILLUMINATION

SCALE 1:500

E-4

STATE OF CALIFORNIA - DEPARTMENT OF TRANSPORTATION
Caltrans

CONSULTANT FUNCTIONAL SUPERVISOR: F.R. CLARK FERNON
CALCULATED-DESIGNED BY: MORT VAHABZADEH
CHECKED BY: SAM P. KAB, II
REVISED BY
DATE REVISED

LAST REVISION 10-15-09
DATE PLOTTED => 19-JUN-2010
TIME PLOTTED => 07:47

DIST	COUNTY	ROUTE	KILOMETER POST TOTAL PROJECT	SHEET No.	TOTAL SHEETS
11	SD	805	40.6/42.4	429	567

Andrew P. Schlaefli 09-09-09
REGISTERED CIVIL ENGINEER DATE

6-14-10
PLANS APPROVAL DATE

REGISTERED PROFESSIONAL ENGINEER ANDREW P. SCHLAEFLI No. 15964 Exp. 6/30/11 CIVIL STATE OF CALIFORNIA

THE STATE OF CALIFORNIA OR ITS OFFICERS OR AGENTS SHALL NOT BE RESPONSIBLE FOR THE ACCURACY OR COMPLETENESS OF ELECTRONIC COPIES OF THIS PLAN SHEET.

URBAN SYSTEMS ASSOCIATES INC.
4540 KEARNEY VILLA Rd, Ste 106
SAN DIEGO, CA 92123-1573

CITY OF SAN DIEGO
1010 SECOND AVENUE, SUITE 1200
SAN DIEGO, CA 92101

NOTE:
FOR COMPLETE RIGHT OF WAY AND ACCURATE ACCESS DATA, SEE RIGHT OF WAY RECORD MAPS AT DISTRICT OFFICE.

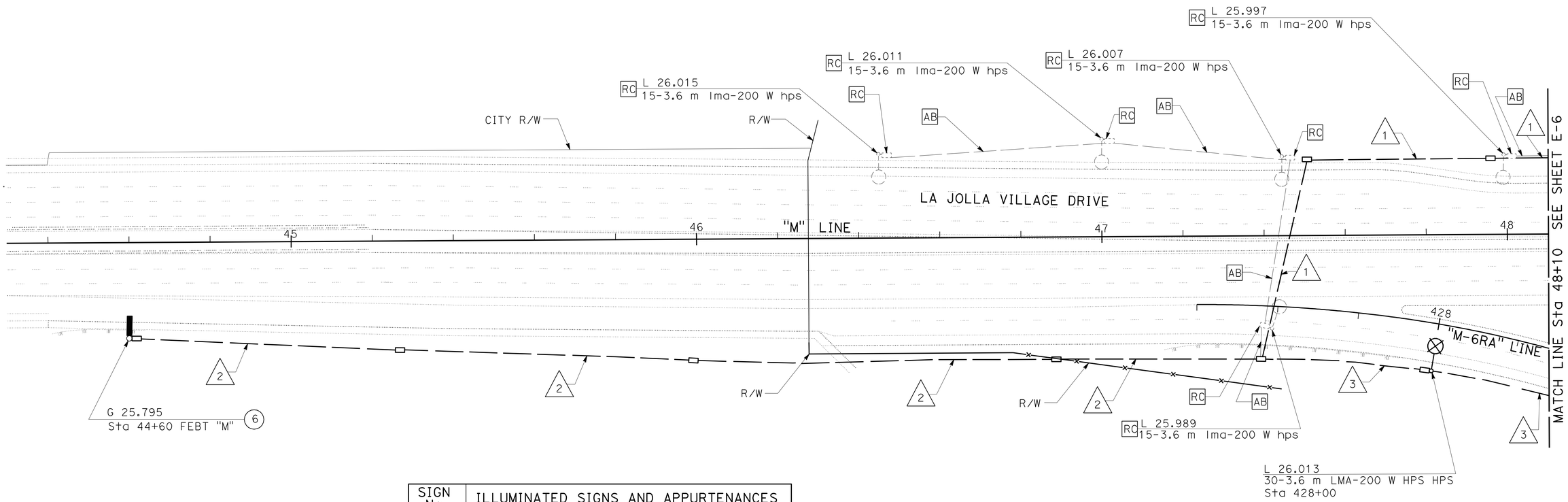

SIGN No.	ILLUMINATED SIGNS AND APPURTENANCES				
	Sta	QUANTITY OF 85 W ISL	VOLTAGE	LOAD	REMARKS
6	44+10	1	480	87 W	SC3(Mod)

SEE E-1 AND STANDARD PLAN ES-15A

CONDUIT NOTES: (TSO)

1. 53C, 2#6 (LTG), 2#6 (S)
2. 53C, 2#6 (S)
3. 53C, 2#6 (LTG)

THIS PLAN IS ACCURATE FOR ELECTRICAL WORK ONLY.

ALL DIMENSIONS ARE IN METERS UNLESS OTHERWISE SHOWN

LIGHTING AND SIGN ILLUMINATION

SCALE 1:500

E-5

STATE OF CALIFORNIA - DEPARTMENT OF TRANSPORTATION
Caltrans

CONSULTANT FUNCTIONAL SUPERVISOR: F.R. CLARK FERNON

CALCULATED-DESIGNED BY: MORT VAHABZADEH
CHECKED BY: SAM P. KAB, II

REVISED BY
DATE REVISED

LAST REVISION 10-15-09
DATE PLOTTED => 19-JUN-2010
TIME PLOTTED => 07:47

DIST	COUNTY	ROUTE	KILOMETER POST TOTAL PROJECT	SHEET No.	TOTAL SHEETS
11	SD	805	40.6/42.4	430	567

Andrew P. Schlaefli 09-09-09
REGISTERED CIVIL ENGINEER DATE

6-14-10
PLANS APPROVAL DATE

REGISTERED PROFESSIONAL ENGINEER ANDREW P. SCHLAEFLI No. 15964 Exp. 6/30/11 CIVIL STATE OF CALIFORNIA

THE STATE OF CALIFORNIA OR ITS OFFICERS OR AGENTS SHALL NOT BE RESPONSIBLE FOR THE ACCURACY OR COMPLETENESS OF ELECTRONIC COPIES OF THIS PLAN SHEET.

URBAN SYSTEMS ASSOCIATES INC.
4540 KEARNEY VILLA Rd, Ste 106
SAN DIEGO, CA 92123-1573

CITY OF SAN DIEGO
1010 SECOND AVENUE, SUITE 1200
SAN DIEGO, CA 92101

Caltrans Metric

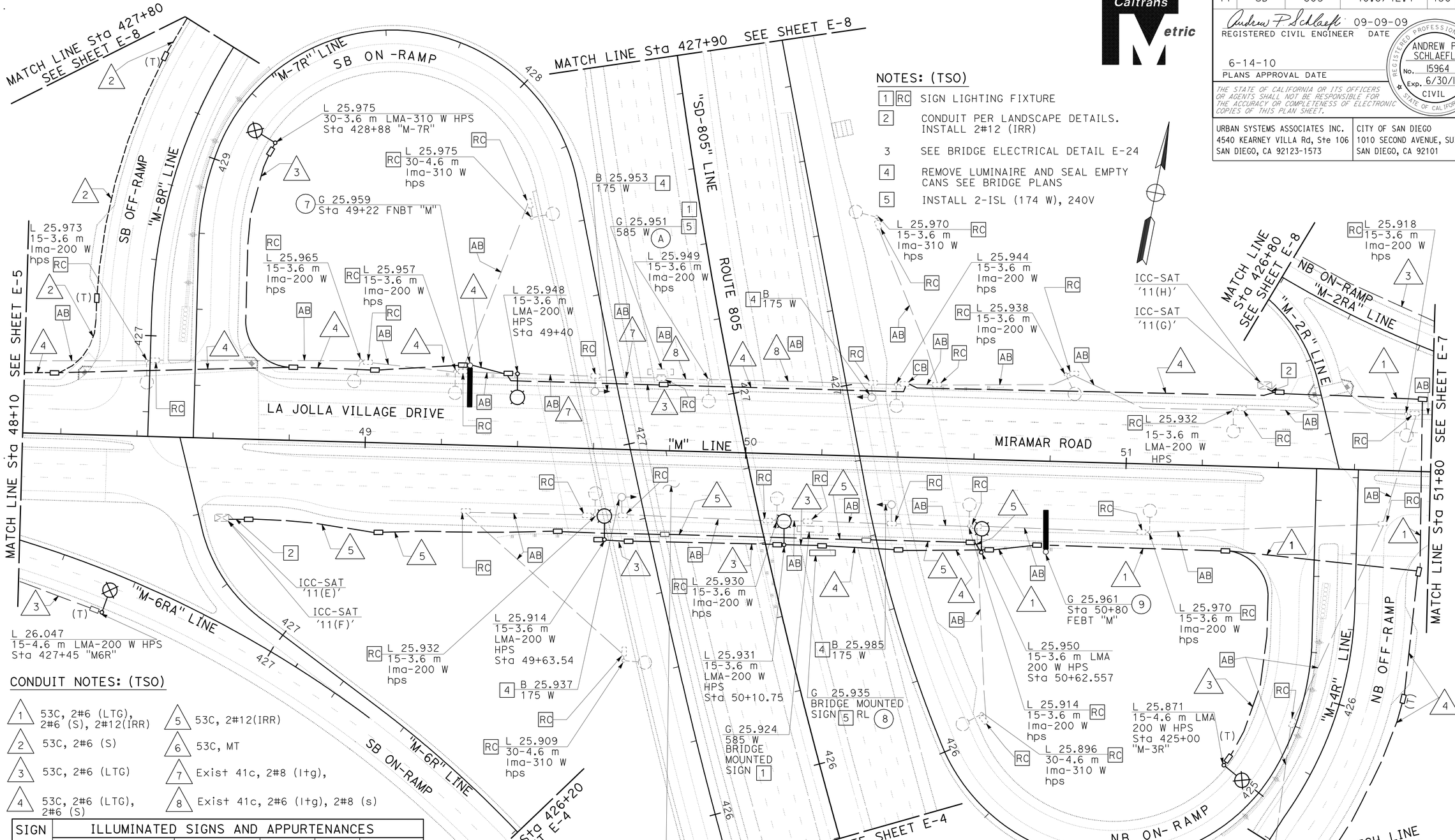

NOTES: (TSO)

1 RC SIGN LIGHTING FIXTURE

2 CONDUIT PER LANDSCAPE DETAILS. INSTALL 2#12 (IRR)

3 SEE BRIDGE ELECTRICAL DETAIL E-24

4 REMOVE LUMINAIRE AND SEAL EMPTY CANS SEE BRIDGE PLANS

5 INSTALL 2-ISL (174 W), 240V

CONDUIT NOTES: (TSO)

1. 53C, 2#6 (LTG), 2#6 (S), 2#12(IRR)
2. 53C, 2#6 (S)
3. 53C, 2#6 (LTG)
4. 53C, 2#6 (LTG), 2#6 (S)
5. 53C, 2#12(IRR)
6. 53C, MT
7. Exist 41c, 2#8 (ltg),
8. Exist 41c, 2#6 (ltg), 2#8 (s)

SIGN No.	ILLUMINATED SIGNS AND APPURTENANCES				
	Sta	QUANTITY OF 85 W ISL	VOLTAGE	LOAD	REMARKS
7	49+22	1	480	87 W	SC3(Mod)
9	50+80	1	480	87 W	SC3(Mod)
8	BRIDGE MOUNT FNBT	2	480	174 W	SC3(Mod)
A	BRIDGE MOUNT FSBT	2	480	174 W	SC3(Mod)

SEE E-1 AND STANDARD PLAN ES-15A

THIS PLAN IS ACCURATE FOR ELECTRICAL WORK ONLY.

ALL DIMENSIONS ARE IN METERS UNLESS OTHERWISE SHOWN

LIGHTING, SIGN ILLUMINATION AND ELECTRICAL SERVICE IRRIGATION

SCALE 1:500

E-6

STATE OF CALIFORNIA - DEPARTMENT OF TRANSPORTATION
Caltrans

CONSULTANT FUNCTIONAL SUPERVISOR: F.R. CLARK FERNON
CALCULATED-DESIGNED BY: MORT VAHABZADEH
CHECKED BY: SAM P. KAB, II
REVISED BY
DATE REVISED

LAST REVISION 10-15-09
DATE PLOTTED => 19-JUN-2010
TIME PLOTTED => 07:47

DIST	COUNTY	ROUTE	KILOMETER POST TOTAL PROJECT	SHEET No.	TOTAL SHEETS
11	SD	805	40.6/42.4	431	567

Caltrans Metric

Andrew P. Schlaefli 09-09-09
REGISTERED CIVIL ENGINEER DATE

6-14-10
PLANS APPROVAL DATE

REGISTERED PROFESSIONAL ENGINEER ANDREW P. SCHLAEFLI No. 15964 Exp. 6/30/11 CIVIL STATE OF CALIFORNIA

THE STATE OF CALIFORNIA OR ITS OFFICERS OR AGENTS SHALL NOT BE RESPONSIBLE FOR THE ACCURACY OR COMPLETENESS OF ELECTRONIC COPIES OF THIS PLAN SHEET.

URBAN SYSTEMS ASSOCIATES INC.
4540 KEARNEY VILLA Rd, Ste 106
SAN DIEGO, CA 92123-1573

CITY OF SAN DIEGO
1010 SECOND AVENUE, SUITE 1200
SAN DIEGO, CA 92101

NOTE:

FOR COMPLETE RIGHT OF WAY AND ACCURATE ACCESS DATA, SEE RIGHT OF WAY RECORD MAPS AT DISTRICT OFFICE.

NOTES: (TSO)

1 RC EXISTING SERVICE EQUIPMENT BOX MOUNTED ON POLE WITH 2 POLE, 70 AMP MAIN CIRCUIT BREAKER FOR SIGN AND HIGHWAY LIGHTING.

2 INSTALL NEW TYPE III-CF SERVICE EQUIPMENT ENCLOSURE. SEE WIRING DIAGRAM "A" ON SHEET E-1

CONDUIT NOTES: (TSO)

1. 53C, 2#6 (LTG), 2#6 (S), 2#12 (IRR)
2. EXISTING 53c, mt ADD 2#6 (S)
3. 53C, 2#6 (LTG)
4. 53C, 2#6 (S)
5. 53C, 2#6 (LTG), 2#6 (S), 2#14 (PEU), 2#12 (IRR)
6. 53C PER SDG&E REQUIREMENTS
7. EXISTING CONDUIT
8. 53C, 4#12 (IRR)

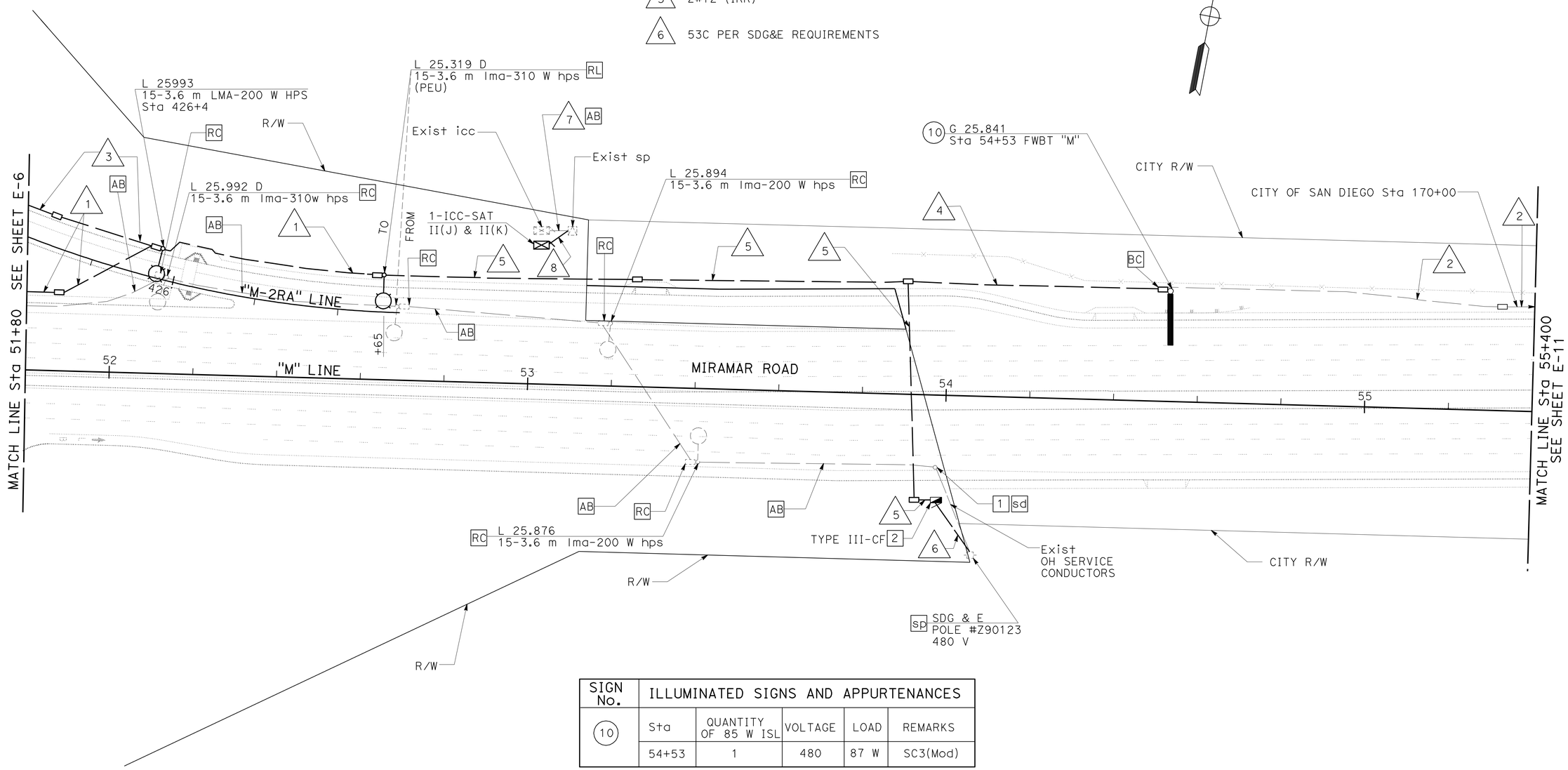

SIGN No.	ILLUMINATED SIGNS AND APPURTENANCES				
	Sta	QUANTITY OF 85 W ISL	VOLTAGE	LOAD	REMARKS
10	54+53	1	480	87 W	SC3(Mod)

SEE E-1 AND STANDARD PLAN ES-15A

THIS PLAN IS ACCURATE FOR ELECTRICAL WORK ONLY.

ALL DIMENSIONS ARE IN METERS UNLESS OTHERWISE SHOWN

LIGHTING AND SIGN ILLUMINATION

SCALE 1:500

E-7

STATE OF CALIFORNIA - DEPARTMENT OF TRANSPORTATION
Caltrans

CONSULTANT FUNCTIONAL SUPERVISOR: F.R. CLARK FERNON
CALCULATED-DESIGNED BY: MORT VAHABZADEH
CHECKED BY: SAM P. KAB, II
REVISED BY
DATE REVISED

LAST REVISION 10-15-09
DATE PLOTTED => 19-JUN-2010
TIME PLOTTED => 07:48

DIST	COUNTY	ROUTE	KILOMETER POST TOTAL PROJECT	SHEET No.	TOTAL SHEETS
11	SD	805	40.6/42.4	432	567

Caltrans Metric

Andrew P. Schlaefli 09-09-09
REGISTERED CIVIL ENGINEER DATE

6-14-10
PLANS APPROVAL DATE

REGISTERED PROFESSIONAL ENGINEER ANDREW P. SCHLAEFLI No. 15964 Exp. 6/30/11 CIVIL STATE OF CALIFORNIA

THE STATE OF CALIFORNIA OR ITS OFFICERS OR AGENTS SHALL NOT BE RESPONSIBLE FOR THE ACCURACY OR COMPLETENESS OF ELECTRONIC COPIES OF THIS PLAN SHEET.

URBAN SYSTEMS ASSOCIATES INC.
4540 KEARNEY VILLA Rd, Ste 106
SAN DIEGO, CA 92123-1573

CITY OF SAN DIEGO
1010 SECOND AVENUE, SUITE 1200
SAN DIEGO, CA 92101

NOTE:

FOR COMPLETE RIGHT OF WAY AND ACCURATE ACCESS DATA, SEE RIGHT OF WAY RECORD MAPS AT DISTRICT OFFICE.

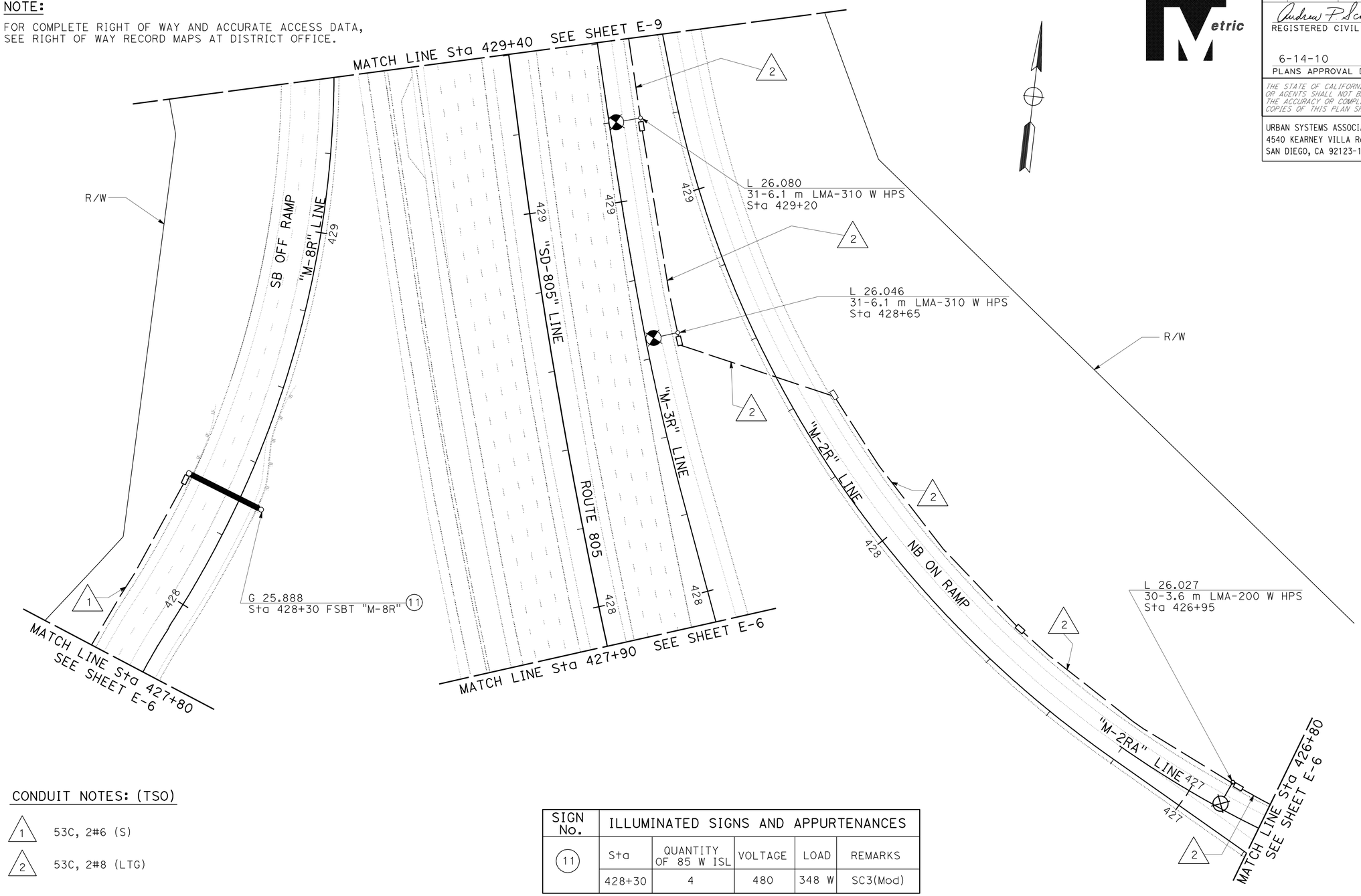

CONDUIT NOTES: (TSO)

1 — 53C, 2#6 (S)

2 — 53C, 2#8 (LTG)

SIGN No.	ILLUMINATED SIGNS AND APPURTENANCES				
11	Sta	QUANTITY OF 85 W ISL	VOLTAGE	LOAD	REMARKS
	428+30	4	480	348 W	SC3(Mod)

SEE E-1 AND STANDARD PLAN ES-15A

THIS PLAN IS ACCURATE FOR ELECTRICAL WORK ONLY.

ALL DIMENSIONS ARE IN METERS UNLESS OTHERWISE SHOWN

LIGHTING AND SIGN ILLUMINATION

SCALE 1:500

E-8

REVISED BY	DATE REVISED

CALCULATED-DESIGNED BY	MORT VAHABZADEH
CHECKED BY	SAM P. KAB, II
CONSULTANT FUNCTIONAL SUPERVISOR	F.R. CLARK FERNON

STATE OF CALIFORNIA - DEPARTMENT OF TRANSPORTATION

Caltrans

LAST REVISION 10-15-09 | DATE PLOTTED => 19-JUN-2010 | TIME PLOTTED => 07:48

DIST	COUNTY	ROUTE	KILOMETER POST TOTAL PROJECT	SHEET No.	TOTAL SHEETS
11	SD	805	40.6/42.4	433	567

Caltrans Metric

Andrew P. Schlaefli 09-09-09
REGISTERED CIVIL ENGINEER DATE

6-14-10
PLANS APPROVAL DATE

REGISTERED PROFESSIONAL ENGINEER ANDREW P. SCHLAEFLI No. 15964 Exp. 6/30/11 CIVIL STATE OF CALIFORNIA

THE STATE OF CALIFORNIA OR ITS OFFICERS OR AGENTS SHALL NOT BE RESPONSIBLE FOR THE ACCURACY OR COMPLETENESS OF ELECTRONIC COPIES OF THIS PLAN SHEET.

URBAN SYSTEMS ASSOCIATES INC.
4540 KEARNEY VILLA Rd, Ste 106
SAN DIEGO, CA 92123-1573

CITY OF SAN DIEGO
1010 SECOND AVENUE, SUITE 1200
SAN DIEGO, CA 92101

NOTE:

FOR COMPLETE RIGHT OF WAY AND ACCURATE ACCESS DATA, SEE RIGHT OF WAY RECORD MAPS AT DISTRICT OFFICE.

CONDUIT NOTES: (TSO)

- N/C 1 — Exist 53c, 2#8(s)
- 2 — 53C, 2#8 (LTG)
- 3 — 53C, 2#8 (LTG), 2#8 (S)

NOTE: (TSO)

- 1 RC — SIGN LIGHTING FIXTURE

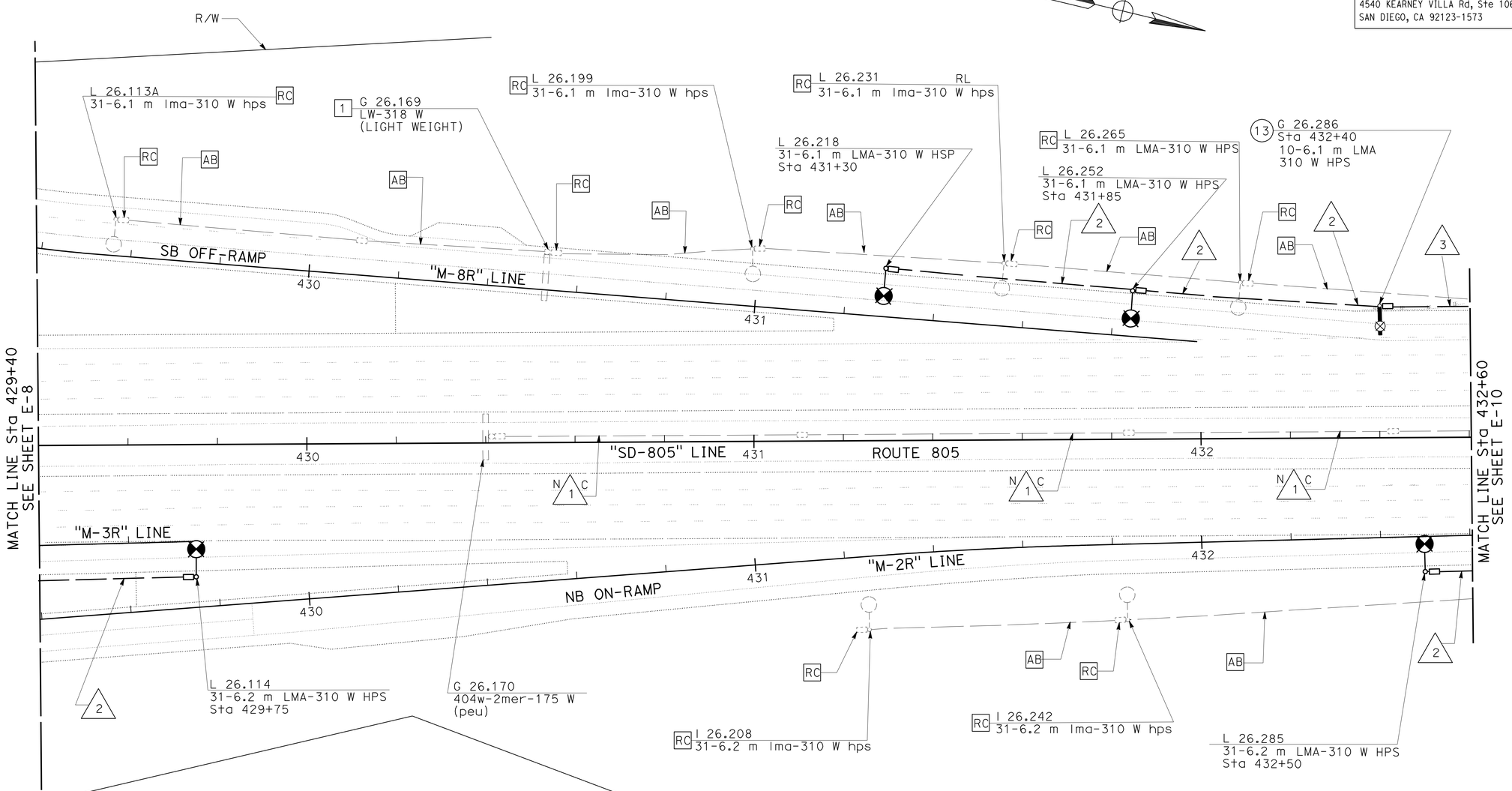

SIGN No.	ILLUMINATED SIGNS AND APPURTENANCES				
13	Sta	QUANTITY	VOLTAGE	LOAD	REMARKS
	432+40	1	480	310 W	HPS

SEE E-1

THIS PLAN IS ACCURATE FOR ELECTRICAL WORK ONLY.

ALL DIMENSIONS ARE IN METERS UNLESS OTHERWISE SHOWN

LIGHTING AND SIGN ILLUMINATION

SCALE 1:500

E-9

REVISED BY | DATE REVISED
MORT VAHABZADEH | SAM P. KAB, II
CALCULATED-DESIGNED BY | CHECKED BY
CONSULTANT FUNCTIONAL SUPERVISOR
F.R. CLARK FERNON
STATE OF CALIFORNIA - DEPARTMENT OF TRANSPORTATION
Caltrans

LAST REVISION 10-15-09 | DATE PLOTTED => 19-JUN-2010 | TIME PLOTTED => 07:48

DIST	COUNTY	ROUTE	KILOMETER POST TOTAL PROJECT	SHEET No.	TOTAL SHEETS
11	SD	805	40.6/42.4	434	567

Caltrans Metric

Andrew P. Schlaefli 09-09-09
REGISTERED CIVIL ENGINEER DATE

6-14-10
PLANS APPROVAL DATE

REGISTERED PROFESSIONAL ENGINEER ANDREW P. SCHLAEFLI No. 15964 Exp. 6/30/11 CIVIL STATE OF CALIFORNIA

THE STATE OF CALIFORNIA OR ITS OFFICERS OR AGENTS SHALL NOT BE RESPONSIBLE FOR THE ACCURACY OR COMPLETENESS OF ELECTRONIC COPIES OF THIS PLAN SHEET.

URBAN SYSTEMS ASSOCIATES INC.
4540 KEARNEY VILLA Rd, Ste 106
SAN DIEGO, CA 92123-1573

CITY OF SAN DIEGO
1010 SECOND AVENUE, SUITE 1200
SAN DIEGO, CA 92101

NOTE: (TSO)

1 - RC SIGN LIGHTING FIXTURE

CONDUIT NOTES: (TSO)

N 1 C	Exist 53c, 2#8 (s)
2	53C, 2#8 (LTG)
3	53C, 2#8 (LTG), 2#8 (S)
4	Exist 41c, 2#8 (ltg), 2#8 (s)
N 5 C	Exist 41c
N 6 C	Exist 53c, 2#8 (ltg), 2#8 (s)
N 7 C	Exist 41c, 2#8 (ltg), 2#8 (s), 2#4 unswitched
N 8 C	Exist 41c, 2#8 (s),

NOTE:

FOR COMPLETE RIGHT OF WAY AND ACCURATE ACCESS DATA, SEE RIGHT OF WAY RECORD MAPS AT DISTRICT OFFICE.

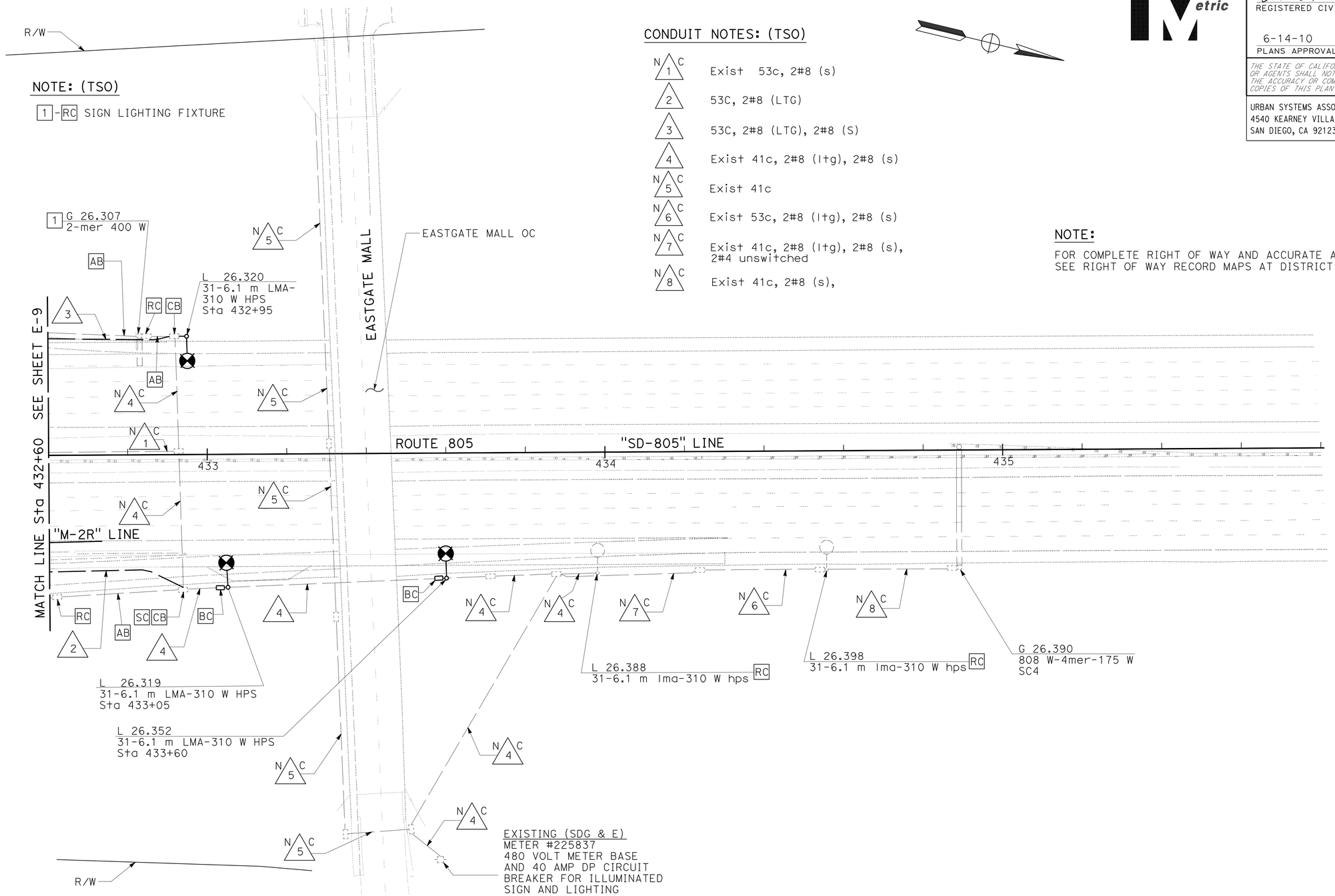

THIS PLAN IS ACCURATE FOR ELECTRICAL WORK ONLY.

ALL DIMENSIONS ARE IN METERS UNLESS OTHERWISE SHOWN

LIGHTING AND SIGN ILLUMINATION

SCALE 1:500

E-10

STATE OF CALIFORNIA - DEPARTMENT OF TRANSPORTATION
Caltrans

CONSULTANT FUNCTIONAL SUPERVISOR: F.R. CLARK FERNON

CALCULATED-DESIGNED BY: MORT VAHABZADEH
CHECKED BY: SAM P. KAB, II

REVISED BY
DATE REVISED

LAST REVISION 10-15-09
DATE PLOTTED => 19-JUN-2010
TIME PLOTTED => 07:48

DIST	COUNTY	ROUTE	KILOMETER POST TOTAL PROJECT	SHEET No.	TOTAL SHEETS
11	SD	805	40.6/42.4	435	567

Andrew P. Schlaefli 09-09-09
REGISTERED CIVIL ENGINEER DATE

6-14-10
PLANS APPROVAL DATE

REGISTERED PROFESSIONAL ENGINEER
ANDREW P. SCHLAEFLI
No. 15964
Exp. 6/30/11
CIVIL
STATE OF CALIFORNIA

THE STATE OF CALIFORNIA OR ITS OFFICERS OR AGENTS SHALL NOT BE RESPONSIBLE FOR THE ACCURACY OR COMPLETENESS OF ELECTRONIC COPIES OF THIS PLAN SHEET.

URBAN SYSTEMS ASSOCIATES INC.
4540 KEARNEY VILLA Rd, Ste 106
SAN DIEGO, CA 92123-1573

CITY OF SAN DIEGO
1010 SECOND AVENUE, SUITE 1200
SAN DIEGO, CA 92101

Caltrans Metric

NOTE:

FOR COMPLETE RIGHT OF WAY AND ACCURATE ACCESS DATA, SEE RIGHT OF WAY RECORD MAPS AT DISTRICT OFFICE.

CONDUIT NOTE: (TSO)

(1) Exist 53c, mt, ADD 2#6 (S)

NOTE: (TSO)

[1] EXISTING SIGN ADD 1-ISL (87 W).

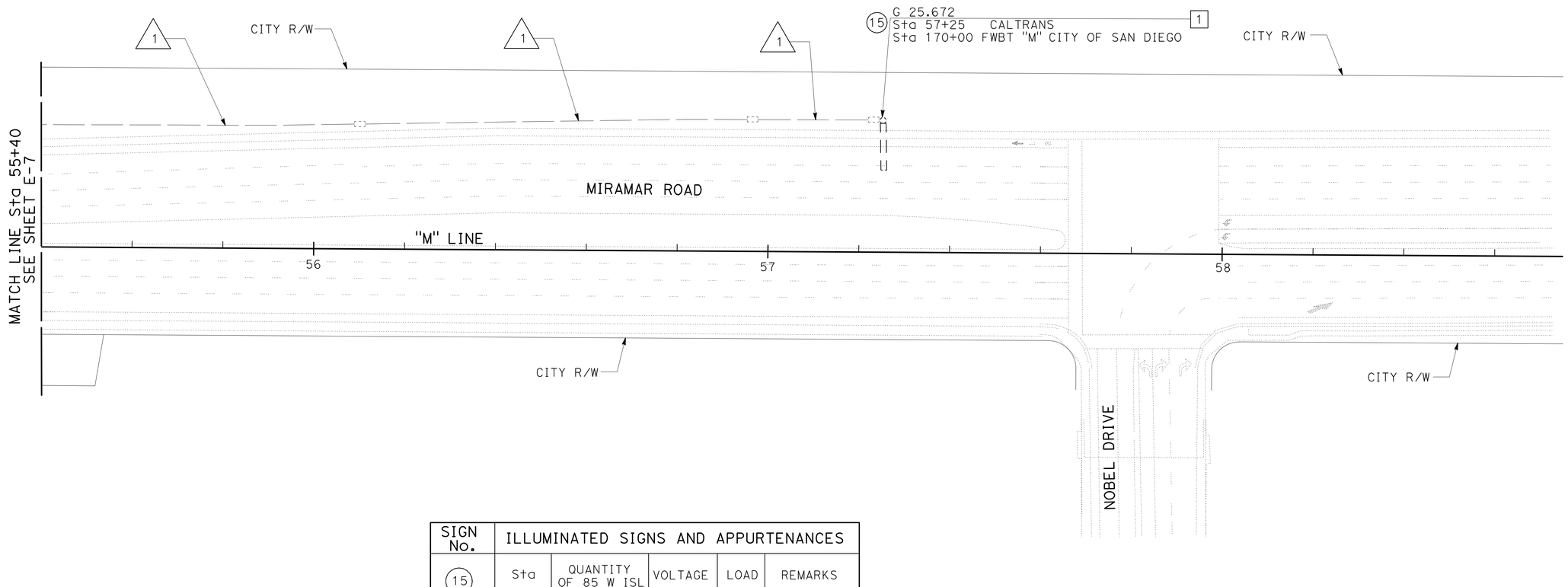

SIGN No.	ILLUMINATED SIGNS AND APPURTENANCES				
(15)	Sta	QUANTITY OF 85 W ISL	VOLTAGE	LOAD	REMARKS
	57+25	1	480	87 W	SC3(Mod)

SEE E-1 AND STANDARD PLAN ES-15A

THIS PLAN IS ACCURATE FOR ELECTRICAL WORK ONLY.

ALL DIMENSIONS ARE IN METERS UNLESS OTHERWISE SHOWN

LIGHTING AND SIGN ILLUMINATION

SCALE 1:500

E-11

STATE OF CALIFORNIA - DEPARTMENT OF TRANSPORTATION
Caltrans

CONSULTANT FUNCTIONAL SUPERVISOR: F.R. CLARK FERNON
CALCULATED-DESIGNED BY: MORT VAHABZADEH
CHECKED BY: SAM P. KAB, II
REVISED BY
DATE REVISED

LAST REVISION 10-15-09
DATE PLOTTED => 19-JUN-2010
TIME PLOTTED => 07:48

DIST	COUNTY	ROUTE	KILOMETER POST TOTAL PROJECT	SHEET No.	TOTAL SHEETS
11	SD	805	40.6/42.4	436	567

REGISTERED CIVIL ENGINEER 09-09-09 DATE

6-14-10
PLANS APPROVAL DATE

REGISTERED PROFESSIONAL ENGINEER ANDREW P. SCHLAEFLI No. 15964 Exp. 6/30/11 CIVIL STATE OF CALIFORNIA

THE STATE OF CALIFORNIA OR ITS OFFICERS OR AGENTS SHALL NOT BE RESPONSIBLE FOR THE ACCURACY OR COMPLETENESS OF ELECTRONIC COPIES OF THIS PLAN SHEET.

URBAN SYSTEMS ASSOCIATES INC.
4540 KEARNEY VILLA Rd, Ste 106
SAN DIEGO, CA 92123-1573

CITY OF SAN DIEGO
1010 SECOND AVENUE, SUITE 1200
SAN DIEGO, CA 92101

Caltrans Metric

POLE AND EQUIPMENT SCHEDULE

Loc	STANDARD TYPE	SMA	LMA	PLACEMENT DIMENSIONS A	B	SIGNAL MOUNTING AND PLACEMENT VEHICLE POLE	MAST ARM	PEDESTRIAN SIGNAL	PPB	LUMINAIRE HPS	REMARKS
A	26-4-161	12.2	4.6	1.0	5.17	SV-1-T	2-MAS	-	-	310 W	-
B	1-A (3.05)	-	-	0.9	6.06	TV-1-T	-	-	-	-	-
C	15TS	-	4.6	0.9	7.11	-	-	-	-	310 W	-
D	1-A (3.05)	-	-	0.9	3.56	TV-1-T	-	-	-	-	-
E	26-4-161	13.7	4.6	0.9	STA 51+35	SV-2-TD	2-MAS	-	-	310 W	-
F	1-A (2.13)	-	-	2.8	-	-	-	TP-1-T	Ø6P	-	-
G	1-A (2.13)	-	-	0.9	.25	-	-	TP-1-T	Ø6P	-	-
H	17-3-161	6.1	4.6	1.2	-.96	SV-1-T	1-MAS	-	-	310 W	-
J	MODEL 170 CONTROLLER ASSEMBLY 1 7 6										

NOTES:

1. INSTALL VIDEO DETECTION UNITS (VDU) COMMUNICATION CARD AND VIDEO DISPLAY IN MODEL 332 CABINET.
2. DETAIL "U" ES-7A REQUIRED. SEE SIGNING PLANS.
3. INSTALL VIDEO IMAGE SENSORS (VIS).
4. INSTALL EMERGENCY VEHICLE DETECTOR (EVD) PER STANDARD PLANS ES-4E.
5. SEE BRIDGE PLANS FOR DETAILS.
6. BBS BATTERIES AND EXTERNAL CABINET. CONSTRUCT FOUNDATION PER E-25.
7. INSTALL MODEL 262 DISCRIMINATOR.

PHASE DIAGRAM

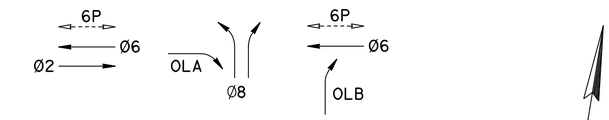

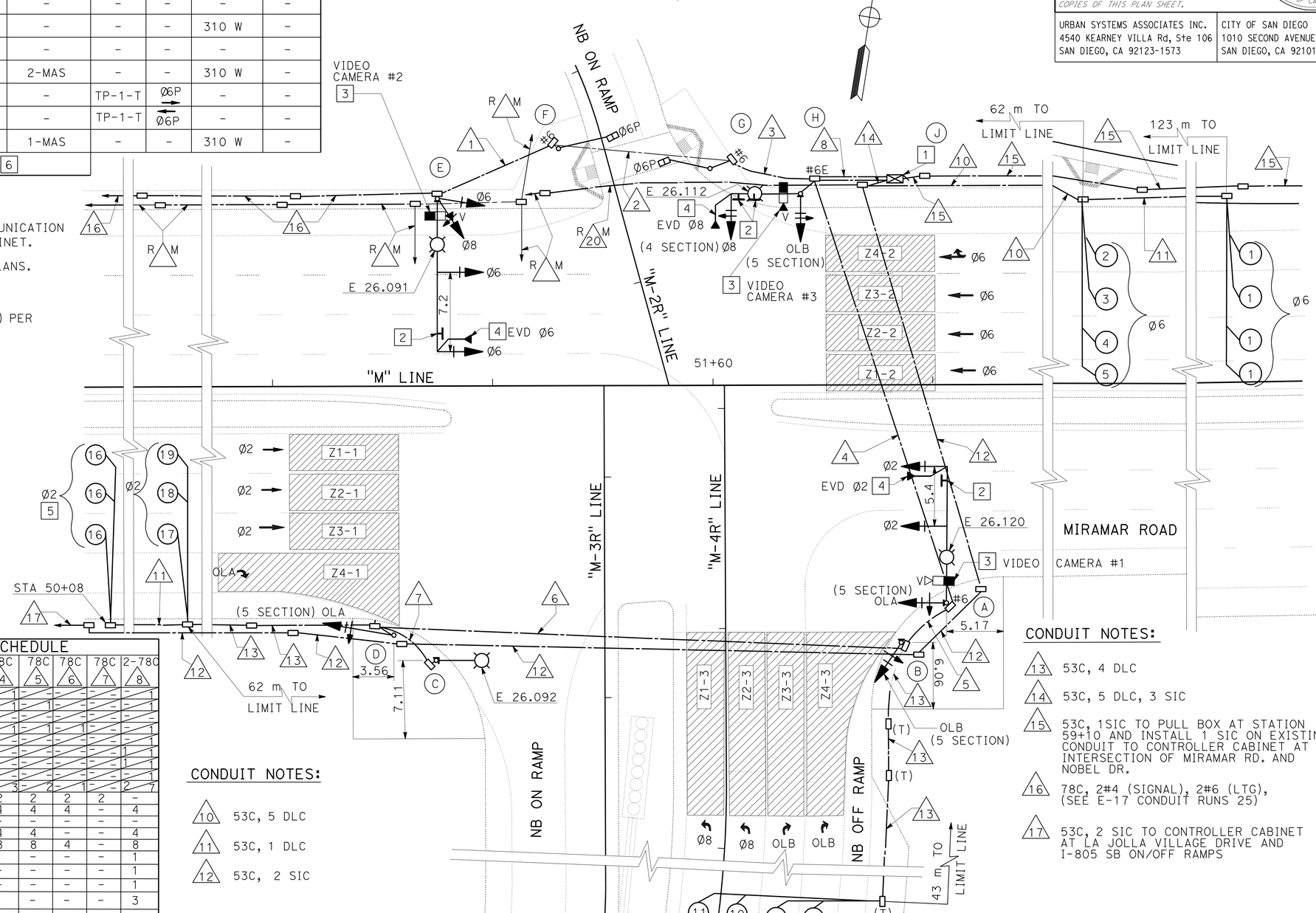

CONDUIT AND CONDUCTOR SCHEDULE

AWG	PHASE	CIRCUIT	78C 1	78C 2	78C 3	78C 4	78C 5	78C 6	78C 7	2-78C 8
3CSC		POLE A	-	-	-	-	1	-	-	-
		POLE B	-	-	-	-	1	-	-	1
		POLE C	-	-	-	-	-	-	-	-
12CSC		POLE D	-	-	-	-	1	-	1	1
		POLE E	-	1	-	1	-	-	-	1
		POLE F	-	1	1	1	-	-	-	1
		POLE G	-	-	-	1	-	-	-	1
		POLE H	-	-	-	-	-	-	-	1
TOTAL CABLES - 3CSC / 12CSC			- 1	1 2	2 3	- 3	- 2	- 1	- 2	7
#6		LTG	2	2	2	2	2	2	2	-
DLC TYPE B	2	DLC	-	-	-	4	4	4	-	4
	6	DLC	-	-	-	-	-	-	-	-
	8	DLC	-	-	-	4	4	-	-	4
		TOTAL DLC	-	-	-	8	8	4	-	8
VIDEO HARNESS		VIDEO CAMERA #1	-	-	-	1	-	-	-	1
		VIDEO CAMERA #2	1	1	1	-	-	-	-	1
		VIDEO CAMERA #3	-	-	-	-	-	-	-	1
		TOTAL	1	1	1	1	-	-	-	3
	EVD		1	1	1	1	-	-	-	3
#4	SERVICE		2	2	2	-	-	-	-	2
INTERCONNECT CABLE- SIC			-	-	-	-	-	-	-	-
TOTAL CONDUCTORS/CABLES			8	10	12	24	20	11	2	36

CONDUIT NOTES:

10. 53C, 5 DLC
11. 53C, 1 DLC
12. 53C, 2 SIC

CONDUIT NOTES:

13. 53C, 4 DLC
14. 53C, 5 DLC, 3 SIC
15. 53C, 1SIC TO PULL BOX AT STATION 59+10 AND INSTALL 1 SIC ON EXISTING CONDUIT TO CONTROLLER CABINET AT INTERSECTION OF MIRAMAR RD. AND NOBEL DR.
16. 78C, 2#4 (SIGNAL), 2#6 (LTG), (SEE E-17 CONDUIT RUNS 25)
17. 53C, 2 SIC TO CONTROLLER CABINET AT LA JOLLA VILLAGE DRIVE AND I-805 SB ON/OFF RAMPS

THIS PLAN IS ACCURATE FOR ELECTRICAL WORK ONLY.

ALL DIMENSIONS ARE IN METERS UNLESS OTHERWISE SHOWN

SIGNAL AND LIGHTING (LOCATION 1)

SCALE 1:200

E-12

REVISED BY | DATE REVISED
MORT VAHABZADEH | SAM P. KAB, II
CALCULATED-DESIGNED BY | CHECKED BY
CONSULTANT FUNCTIONAL SUPERVISOR: F.R. CLARK FERNON
STATE OF CALIFORNIA - DEPARTMENT OF TRANSPORTATION

LAST REVISION 11-04-09 | DATE PLOTTED => 19-JUN-2010 | TIME PLOTTED => 11:12

DIST	COUNTY	ROUTE	KILOMETER POST TOTAL PROJECT	SHEET No.	TOTAL SHEETS
11	SD	805	40.6/42.4	437	567

Caltrans Metric

Andrew P. Schlaefli 09-09-09
REGISTERED CIVIL ENGINEER DATE

6-14-10
PLANS APPROVAL DATE

REGISTERED PROFESSIONAL ENGINEER ANDREW P. SCHLAEFLI No. 15964 Exp. 6/30/11 CIVIL STATE OF CALIFORNIA

THE STATE OF CALIFORNIA OR ITS OFFICERS OR AGENTS SHALL NOT BE RESPONSIBLE FOR THE ACCURACY OR COMPLETENESS OF ELECTRONIC COPIES OF THIS PLAN SHEET.

URBAN SYSTEMS ASSOCIATES INC.
4540 KEARNEY VILLA Rd, Ste 106
SAN DIEGO, CA 92123-1573

CITY OF SAN DIEGO
1010 SECOND AVENUE, SUITE 1200
SAN DIEGO, CA 92101

POLE AND EQUIPMENT SCHEDULE

Loc	STANDARD TYPE	STANDARD SMA	STANDARD LMA	PLACEMENT DIMENSIONS A	PLACEMENT DIMENSIONS B	SIGNAL MOUNTING AND PLACEMENT VEHICLE POLE	VEHICLE MAST ARM	PEDESTRIAN SIGNAL	PEDESTRIAN PPB	LUMINAIRE HPS	REMARKS
A	26-4-161	12.2	4.6	2.0	4.6	SV-1-T	2-MAS	SP-1-T	-	310 W	-
B	1-A (3.05)	-	-	0.9	4.5	TV-1-T	-	-	Ø6P →	-	-
C	15TS	-	4.6	2.0	4.6	-	-	-	Ø6P ←	310 W	-
D	1-A (3.05)	-	-	0.9	4.6	TV-1-T	-	SP-1-T	-	-	-
E	24-4-161	10.7	4.6	0.9	STA 48+70	SV-2-T	2-MAS	-	-	310 W	-
F	19-4-161	9.1	4.6	0.9	STA 48+32	SV-1-T	1-MAS	-		310 W	-
G	MODEL 170 CONTROLLER ASSEMBLY [1] [8] [6]										

CONDUIT AND CONDUCTOR SCHEDULE

AWG	PHASE	CIRCUIT	53C 1	78C 2	78C 3	78C 4	53C 5	2-78C 6
3CSC / 12CSC		POLE A	- -	- -	- -	- 1	- -	- 1
		POLE B	- -	- -	1 1	1 1	- -	1 1
		POLE C	1 -	1 -	- -	1 -	- -	1 -
		POLE D	- -	- 1	- -	- 1	- -	- 1
		POLE E	- -	- -	- -	- -	- 1	- 1
		POLE F	- -	- -	- -	- -	- -	- 1
TOTAL CABLES - 3CSC / 12CSC			1 1	1 1	1 1	2 3	- 1	2 5
#6		LTG	2	2	-	2	2	-
DLC TYPE B	2	DLC	-	-	-	-	-	-
	6	DLC	-	4	-	4	-	4
	4	DLC	-	-	2	2	-	2
	OLB	DLC	-	-	2	2	-	2
		TOTAL DLC	-	4	4	8		8
VIDEO HARNESS		VIDEO CAMERA #1	-	-	-	-	1	1
		VIDEO CAMERA #2	-	-	-	-	-	1
		VIDEO CAMERA #3	-	-	-	1	-	1
		TOTAL	-	-	-	1	1	3
		EVD	-	-	-	1	1	3
#4		SERVICE	-	-	-	-	-	-
INTERCONNECT CABLE- SIC			-	-	-	-	-	-
TOTAL CONDUCTORS/CABLES			4	12	10	26	6	32

CONDUIT NOTES: (TSO)

- 7 — 53C, 4 DLC, 4 SIC
- 8 — 53C, 1 DLC
- 10 — 53C, 4 DLC
- 11 — 53C, 2#4(SIGNAL)

NOTES:

1. INSTALL VIDEO DETECTION UNITS (VDU) COMMUNICATION CARD AND VIDEO DISPLAY IN MODEL 332 CABINET.
2. DETAIL "U" ES-7N REQUIRED. SEE SIGNING PLANS.
3. INSTALL VIDEO IMAGE SENSORS (VIS).
4. INSTALL EMERGENCY VEHICLE DETECTOR (EVD) PER STANDARD PLANS ES-4E.
5. SEE BRIDGE PLANS FOR DETAILS.
6. BBS BATTERIES AND EXTERNAL CABINET. CONSTRUCT FOUNDATION PER E-25.
7. FOR TYPE III-BF SERVICE EQUIPMENT ENCLOSURE SEE E-21.
8. INSTALL MODEL 262 DISCRIMINATOR.

CONDUIT NOTES: (TSO)

- 13 — 53C, 1 SIC TO CONTROLLER CABINET AT LA JOLLA VILLAGE Dr AND TOWN CENTER Dr

PHASE DIAGRAM

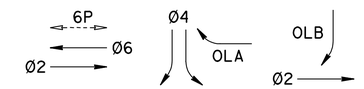

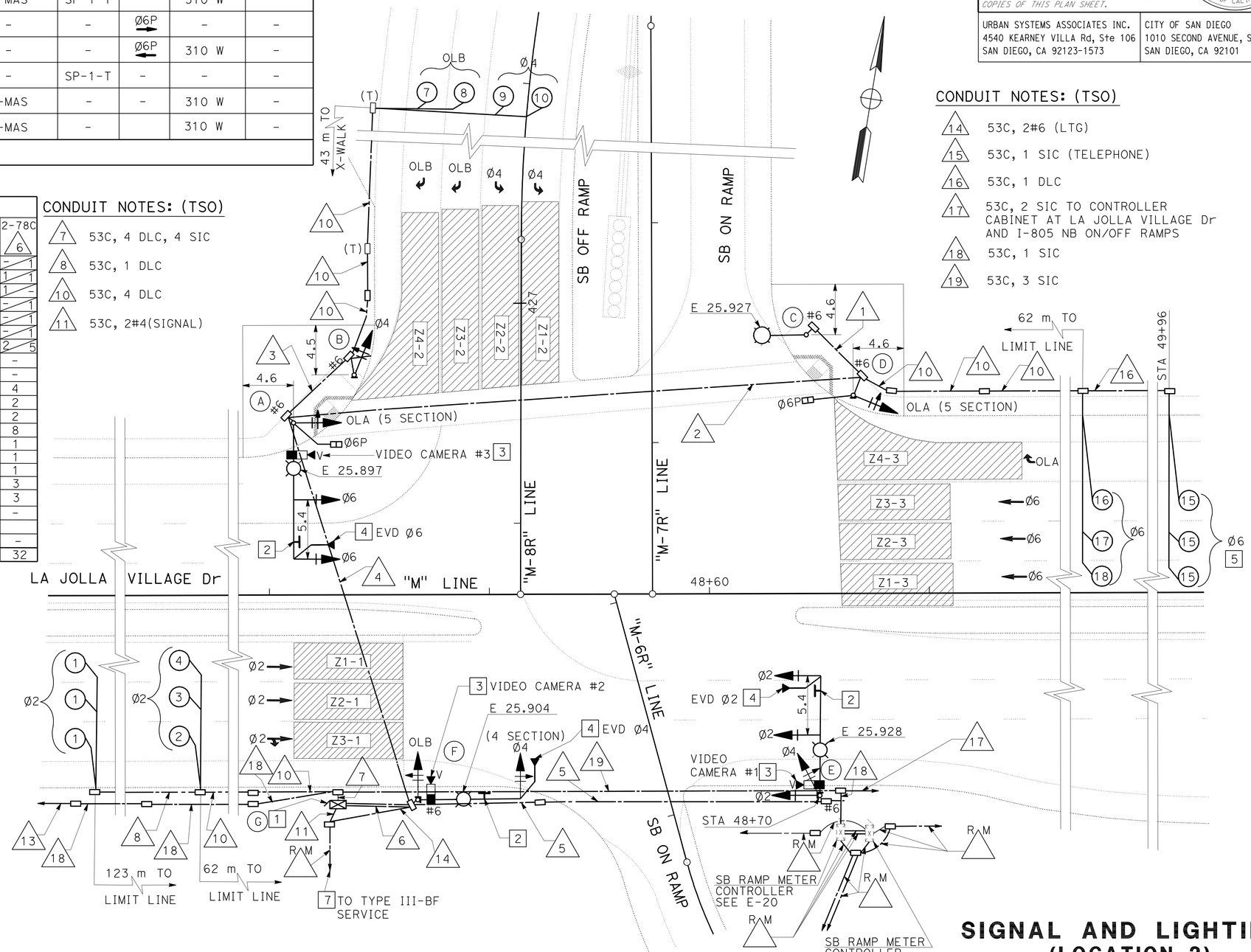

CONDUIT NOTES: (TSO)

- 14 — 53C, 2#6 (LTG)
- 15 — 53C, 1 SIC (TELEPHONE)
- 16 — 53C, 1 DLC
- 17 — 53C, 2 SIC TO CONTROLLER CABINET AT LA JOLLA VILLAGE Dr AND I-805 NB ON/OFF RAMPS
- 18 — 53C, 1 SIC
- 19 — 53C, 3 SIC

THIS PLAN IS ACCURATE FOR ELECTRICAL WORK ONLY.

ALL DIMENSIONS ARE IN METERS UNLESS OTHERWISE SHOWN

SIGNAL AND LIGHTING (LOCATION 2)

SCALE 1:200

E-13

MORT VAHABZADEH — REVISED BY
SAM P. KAB, II — DATE REVISED
CALCULATED-DESIGNED BY
CHECKED BY
F.R. CLARK FERNON — CONSULTANT FUNCTIONAL SUPERVISOR
STATE OF CALIFORNIA - DEPARTMENT OF TRANSPORTATION — Caltrans

LAST REVISION 11-04-09 | DATE PLOTTED => 19-JUN-2010 | TIME PLOTTED => 11:13

DIST	COUNTY	ROUTE	KILOMETER POST TOTAL PROJECT	SHEET No.	TOTAL SHEETS
11	SD	805	40.6/42.4	438	567

Andrew P. Schlaefli 09-09-09
REGISTERED CIVIL ENGINEER DATE

6-14-10
PLANS APPROVAL DATE

REGISTERED PROFESSIONAL ENGINEER ANDREW P. SCHLAEFLI No. 15964 Exp. 6/30/11 CIVIL STATE OF CALIFORNIA

THE STATE OF CALIFORNIA OR ITS OFFICERS OR AGENTS SHALL NOT BE RESPONSIBLE FOR THE ACCURACY OR COMPLETENESS OF ELECTRONIC COPIES OF THIS PLAN SHEET.

URBAN SYSTEMS ASSOCIATES INC.
4540 KEARNEY VILLA Rd, Ste 106
SAN DIEGO, CA 92123-1573

CITY OF SAN DIEGO
1010 SECOND AVENUE, SUITE 1200
SAN DIEGO, CA 92101

NOTE:

FOR COMPLETE RIGHT OF WAY AND ACCURATE ACCESS DATA, SEE RIGHT OF WAY RECORD MAPS AT DISTRICT OFFICE.

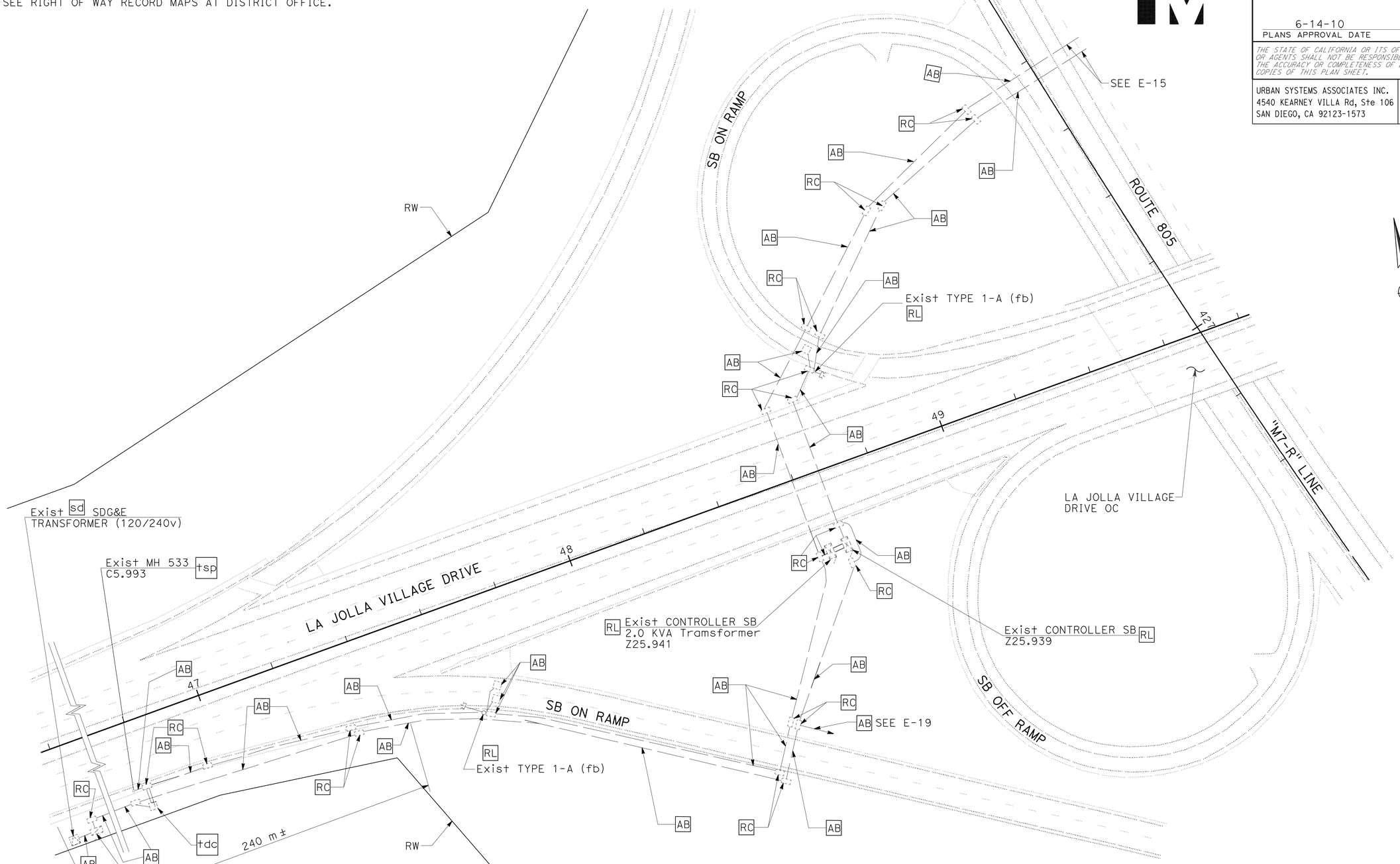

THIS PLAN IS ACCURATE FOR ELECTRICAL WORK ONLY.

ALL DIMENSIONS ARE IN METERS UNLESS OTHERWISE SHOWN

ROUTE 805 SB ON RAMPS AT LA JOLLA VILLAGE DRIVE

RAMP METERING SYSTEM
(LOCATION 1) EXISTING

SCALE 1:500

E-14

STATE OF CALIFORNIA - DEPARTMENT OF TRANSPORTATION
Caltrans

CONSULTANT FUNCTIONAL SUPERVISOR: F.R. CLARK FERNON

CALCULATED-DESIGNED BY: MORT VAHABZADEH
CHECKED BY: SAM P. KAB, II

REVISED BY
DATE REVISED

LAST REVISION 10-15-09
DATE PLOTTED => 19-JUN-2010
TIME PLOTTED => 07:39

DIST	COUNTY	ROUTE	KILOMETER POST TOTAL PROJECT	SHEET No.	TOTAL SHEETS
11	SD	805	40.6/42.4	439	567

Andrew P. Schlaefli 09-09-09
REGISTERED CIVIL ENGINEER DATE

6-14-10
PLANS APPROVAL DATE

REGISTERED PROFESSIONAL ENGINEER ANDREW P. SCHLAEFLI No. 15964 Exp. 6/30/11 CIVIL STATE OF CALIFORNIA

THE STATE OF CALIFORNIA OR ITS OFFICERS OR AGENTS SHALL NOT BE RESPONSIBLE FOR THE ACCURACY OR COMPLETENESS OF ELECTRONIC COPIES OF THIS PLAN SHEET.

URBAN SYSTEMS ASSOCIATES INC.
4540 KEARNEY VILLA Rd, Ste 106
SAN DIEGO, CA 92123-1573

CITY OF SAN DIEGO
1010 SECOND AVENUE, SUITE 1200
SAN DIEGO, CA 92101

NOTE:

FOR COMPLETE RIGHT OF WAY AND ACCURATE ACCESS DATA, SEE RIGHT OF WAY RECORD MAPS AT DISTRICT OFFICE.

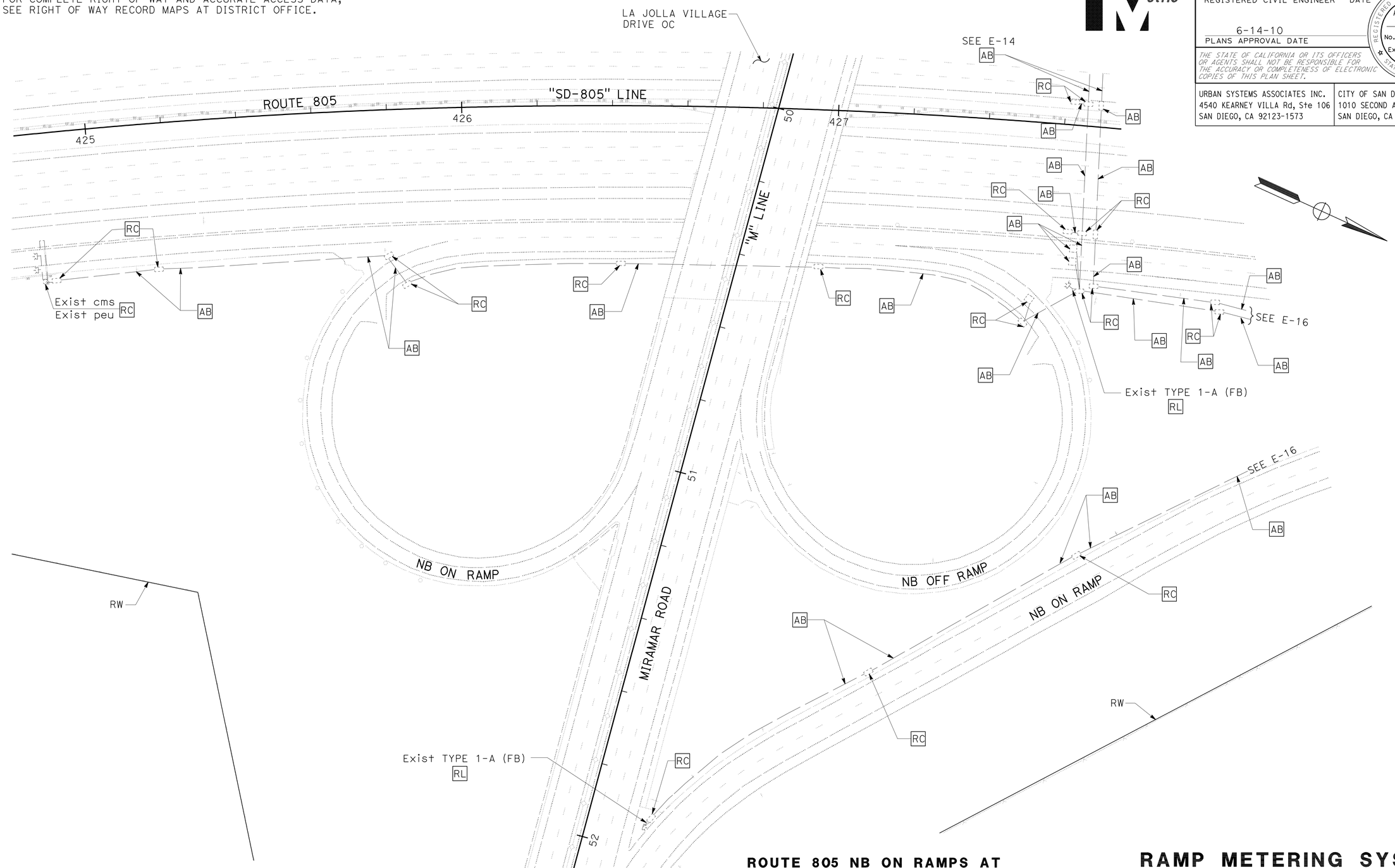

THIS PLAN IS ACCURATE FOR ELECTRICAL WORK ONLY.

ALL DIMENSIONS ARE IN METERS UNLESS OTHERWISE SHOWN

ROUTE 805 NB ON RAMPS AT LA JOLLA VILLAGE DRIVE

RAMP METERING SYSTEM
(LOCATION 1)
EXISTING

SCALE 1:500

E-15

STATE OF CALIFORNIA - DEPARTMENT OF TRANSPORTATION
Caltrans

CONSULTANT FUNCTIONAL SUPERVISOR: F.R. CLARK FERNON
CALCULATED-DESIGNED BY: MORT VAHABZADEH
CHECKED BY: SAM P. KAB, II
REVISED BY
DATE REVISED

LAST REVISION 10-15-09
DATE PLOTTED => 19-JUN-2010
TIME PLOTTED => 07:39

DIST	COUNTY	ROUTE	KILOMETER POST TOTAL PROJECT	SHEET No.	TOTAL SHEETS
11	SD	805	40.6/42.4	440	567

Andrew P. Schlaefli 09-09-09
REGISTERED CIVIL ENGINEER DATE

6-14-10
PLANS APPROVAL DATE

REGISTERED PROFESSIONAL ENGINEER
ANDREW P. SCHLAEFLI
No. 15964
Exp. 6/30/11
CIVIL
STATE OF CALIFORNIA

THE STATE OF CALIFORNIA OR ITS OFFICERS OR AGENTS SHALL NOT BE RESPONSIBLE FOR THE ACCURACY OR COMPLETENESS OF ELECTRONIC COPIES OF THIS PLAN SHEET.

URBAN SYSTEMS ASSOCIATES INC.
4540 KEARNEY VILLA Rd, Ste 106
SAN DIEGO, CA 92123-1573

CITY OF SAN DIEGO
1010 SECOND AVENUE, SUITE 1200
SAN DIEGO, CA 92101

NOTE:

FOR COMPLETE RIGHT OF WAY AND ACCURATE ACCESS DATA, SEE RIGHT OF WAY RECORD MAPS AT DISTRICT OFFICE.

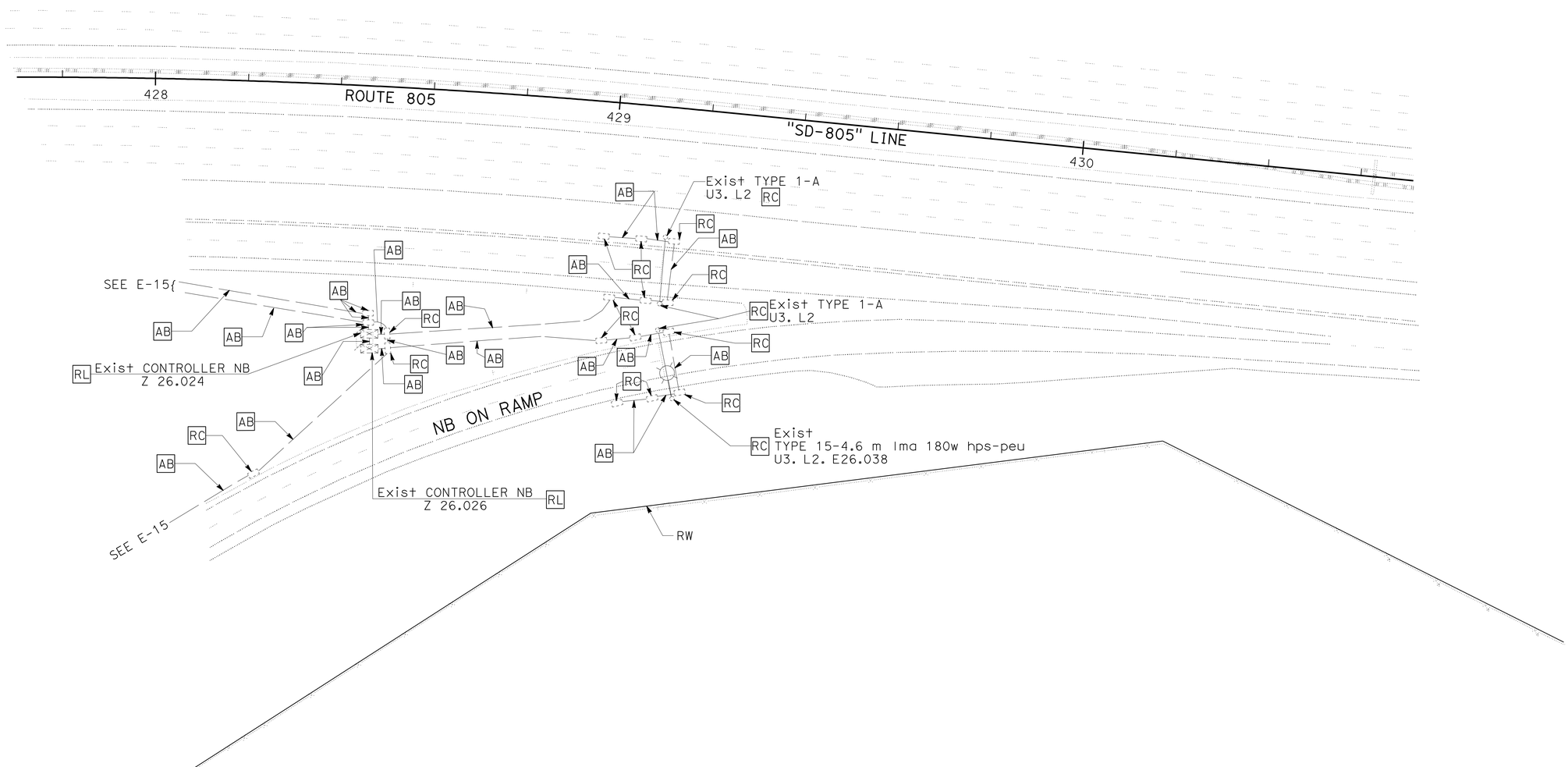

ROUTE 805 NB ON RAMPS AT LA JOLLA VILLAGE DRIVE

RAMP METERING SYSTEM
(LOCATION 1)
EXISTING

SCALE 1:500

E-16

THIS PLAN IS ACCURATE FOR ELECTRICAL WORK ONLY.

ALL DIMENSIONS ARE IN METERS UNLESS OTHERWISE SHOWN

STATE OF CALIFORNIA - DEPARTMENT OF TRANSPORTATION
Caltrans

CONSULTANT FUNCTIONAL SUPERVISOR: F.R. CLARK FERNON

CALCULATED-DESIGNED BY: MORT VAHABZADEH
CHECKED BY: SAM P. KAB, II

REVISED BY
DATE REVISED

LAST REVISION 10-15-09
DATE PLOTTED => 19-JUN-2010
TIME PLOTTED => 07:39

DIST	COUNTY	ROUTE	KILOMETER POST TOTAL PROJECT	SHEET No.	TOTAL SHEETS
11	SD	805	40.6/42.4	441	567

Caltrans Metric

Andrew P. Schlaefli 09-09-09
REGISTERED CIVIL ENGINEER DATE

6-14-10
PLANS APPROVAL DATE

REGISTERED PROFESSIONAL ENGINEER ANDREW P. SCHLAEFLI No. 15964 Exp. 6/30/11 CIVIL STATE OF CALIFORNIA

THE STATE OF CALIFORNIA OR ITS OFFICERS OR AGENTS SHALL NOT BE RESPONSIBLE FOR THE ACCURACY OR COMPLETENESS OF ELECTRONIC COPIES OF THIS PLAN SHEET.

URBAN SYSTEMS ASSOCIATES INC.
4540 KEARNEY VILLA Rd, Ste 106
SAN DIEGO, CA 92123-1573

CITY OF SAN DIEGO
1010 SECOND AVENUE, SUITE 1200
SAN DIEGO, CA 92101

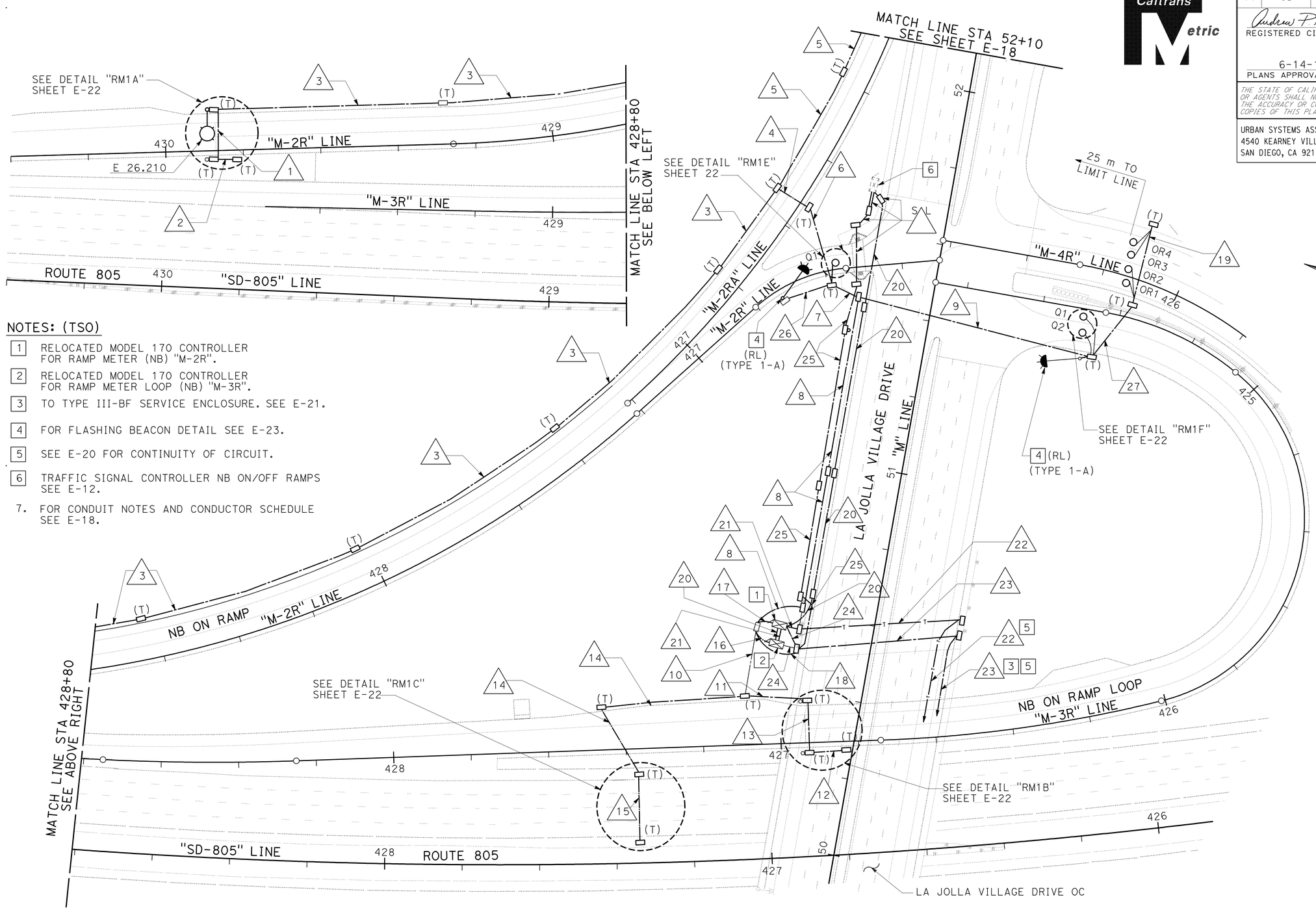

NOTES: (TSO)

1. RELOCATED MODEL 170 CONTROLLER FOR RAMP METER (NB) "M-2R".
2. RELOCATED MODEL 170 CONTROLLER FOR RAMP METER LOOP (NB) "M-3R".
3. TO TYPE III-BF SERVICE ENCLOSURE. SEE E-21.
4. FOR FLASHING BEACON DETAIL SEE E-23.
5. SEE E-20 FOR CONTINUITY OF CIRCUIT.
6. TRAFFIC SIGNAL CONTROLLER NB ON/OFF RAMPS SEE E-12.
7. FOR CONDUIT NOTES AND CONDUCTOR SCHEDULE SEE E-18.

THIS PLAN IS ACCURATE FOR ELECTRICAL WORK ONLY.

ROUTE 805 NB ON RAMPS AT LA JOLLA VILLAGE DRIVE

ALL DIMENSIONS ARE IN METERS UNLESS OTHERWISE SHOWN

RAMP METERING SYSTEM (LOCATION 1)

SCALE 1:500

E-17

STATE OF CALIFORNIA - DEPARTMENT OF TRANSPORTATION
Caltrans

CONSULTANT FUNCTIONAL SUPERVISOR: F.R. CLARK FERNON
CALCULATED-DESIGNED BY: MORT VAHABZADEH
CHECKED BY: SAM P. KAB, II
REVISED BY
DATE REVISED

LAST REVISION 11-04-09
DATE PLOTTED => 19-JUN-2010
TIME PLOTTED => 07:40

DIST	COUNTY	ROUTE	KILOMETER POST TOTAL PROJECT	SHEET No.	TOTAL SHEETS
11	SD	805	40.6/42.4	442	567

Andrew P. Schlaefli 09-09-09
REGISTERED CIVIL ENGINEER DATE

6-14-10
PLANS APPROVAL DATE

REGISTERED PROFESSIONAL ENGINEER ANDREW P. SCHLAEFLI No. 15964 Exp. 6/30/11 CIVIL STATE OF CALIFORNIA

THE STATE OF CALIFORNIA OR ITS OFFICERS OR AGENTS SHALL NOT BE RESPONSIBLE FOR THE ACCURACY OR COMPLETENESS OF ELECTRONIC COPIES OF THIS PLAN SHEET.

URBAN SYSTEMS ASSOCIATES INC.
4540 KEARNEY VILLA Rd, Ste 106
SAN DIEGO, CA 92123-1573

CITY OF SAN DIEGO
1010 SECOND AVENUE, SUITE 1200
SAN DIEGO, CA 92101

Caltrans Metric

NOTE:

FOR COMPLETE RIGHT OF WAY AND ACCURATE ACCESS DATA, SEE RIGHT OF WAY RECORD MAPS AT DISTRICT OFFICE.

NOTE: (TSO)

1 FOR FLASHING BEACON SEE E-23.

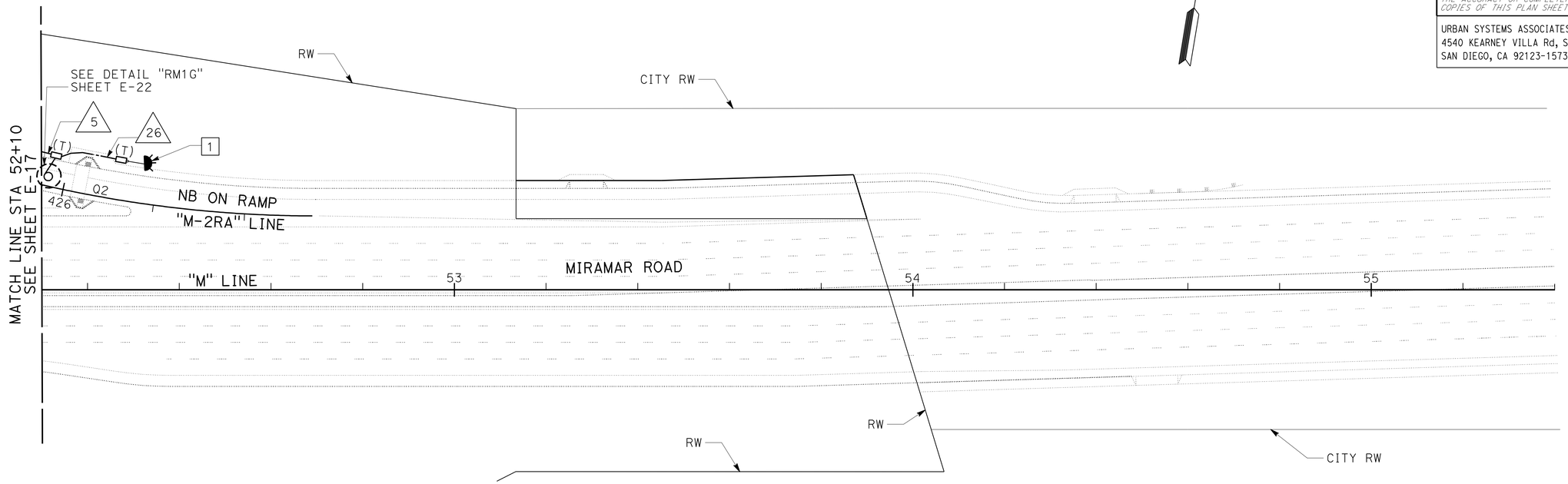

CONDUIT AND CONDUCTOR SCHEDULE

AWG	CIRCUIT ID	78C 1	78C 2	78C 3	78C 4	78C 5	78C 6	53C 7	(2) 78C 8	78C 9	(2) 78C 10	78C 11	78C 12	78C 13	78C 14	78C 15	78C 16	(2) 78C 17
		CONDUIT SIZE AND RUN No.																
4	RM POWER	-	-	-	-	-	-	-	-	-	-	-	-	-	-	-	-	-
6	LIGHTING	-	-	2	2	-	2	2	2	-	-	-	-	-	-	-	-	-
12	TDC	-	-	-	-	-	-	-	-	-	-	-	-	-	-	-	-	-
	ICC	-	-	-	-	-	-	-	-	-	-	-	-	-	-	-	-	-
14	PEU	-	-	-	-	-	-	-	-	-	-	-	-	-	-	-	-	-
10	FB	-	-	-	-	2	2	2	2	2	-	-	-	-	-	-	-	2
9CSC	SIGNAL STANDARD R+ "M-2R"	-	-	1	1	-	1	1	1	-	-	-	-	-	-	-	-	1
	SIGNAL STANDARD L+ "M-2R"	1	-	1	1	-	1	1	1	-	-	-	-	-	-	-	-	1
	SIGNAL STANDARD R+ "M3R"	-	-	-	-	-	-	-	-	-	1	1	-	-	-	-	1	-
	SIGNAL STANDARD L+ "M-3R"	-	-	-	-	-	-	-	-	-	1	1	-	1	-	-	1	-
12CSC	SIGNAL STANDARD MA	-	-	-	-	-	-	-	-	-	-	-	-	-	-	-	-	-
DLC	PASSAGE LOOPS "M-2R"	1	-	2	2	-	2	2	2	-	-	-	-	-	-	-	-	2
	PASSAGE LOOPS "M-3R"	-	-	-	-	-	-	-	-	-	2	2	-	-	-	-	2	-
	QUEUE LOOPS "M-2R"	-	-	-	1	1	1	1	2	-	-	-	-	-	-	-	-	2
	QUEUE LOOPS "M-3R"	-	-	-	-	-	-	-	2	2	-	-	-	-	-	-	2	2
	DEMAND LOOPS "M-2R"	1	1	2	2	-	2	2	2	-	-	-	-	-	-	-	-	-
	DEMAND LOOPS "M-3R"	-	-	-	-	-	-	-	-	-	2	2	1	1	-	-	2	-
	MAIN LANE LOOPS NB	-	-	-	-	-	-	-	-	-	8	-	-	-	8	4	8	-
	OFF RAMP LOOPS	-	-	-	-	-	-	-	4	4	-	-	-	-	-	-	4	4
SIC	CONTROLLER	-	-	-	-	-	-	-	-	-	-	-	-	-	-	-	-	-
	TELEPHONE	-	-	-	-	-	-	-	-	-	-	-	-	-	-	-	-	-
TOTAL CONDUCTORS/CABLES		3	1	8	9	3	11	11	18	8	14	6	1	2	8	4	20	16

CONDUIT NOTES:

18 53C, 2#6 (LTG)

19 53C, 2 DLC

20 53C, 1 SIC

21 53C, 1 SIC (TELEPHONE)

22 53C, 1 SIC (TELEPHONE) (SEE E-20)

23 78C, 2#4 (SIGNAL), 4#4 (RAMP METERS)(NB), 4#6 (LTG). SEE E-20)

24 53C, 2#4 (RAMP METER)

25 78C, 2#4 (SIGNAL), 2#6 (LTG),

26 53C, 2#10 (FB)

27 53C, 4 DLC

THIS PLAN IS ACCURATE FOR ELECTRICAL WORK ONLY.

ROUTE 805 NB ON RAMPS AT LA JOLLA VILLAGE DRIVE

ALL DIMENSIONS ARE IN METERS UNLESS OTHERWISE SHOWN

RAMP METERING SYSTEM
(LOCATION 1)

SCALE 1:500

E-18

STATE OF CALIFORNIA - DEPARTMENT OF TRANSPORTATION
Caltrans

CONSULTANT FUNCTIONAL SUPERVISOR: F.R. CLARK FERNON
CALCULATED-DESIGNED BY: SAM P. KAB, II
CHECKED BY: MORT VAHABZADEH
REVISED BY
DATE REVISED

LAST REVISION 11-04-09
DATE PLOTTED => 19-JUN-2010
TIME PLOTTED => 09:10

DIST	COUNTY	ROUTE	KILOMETER POSTMILE TOTAL PROJECT	SHEET No.	TOTAL SHEETS
11	SD	805	40.6/42.4	443	567

Andrew P. Schlaefli 09-09-09
REGISTERED CIVIL ENGINEER DATE

6-14-10
PLANS APPROVAL DATE

REGISTERED PROFESSIONAL ENGINEER ANDREW P. SCHLAEFLI No. 15964 Exp. 6/30/11 CIVIL STATE OF CALIFORNIA

THE STATE OF CALIFORNIA OR ITS OFFICERS OR AGENTS SHALL NOT BE RESPONSIBLE FOR THE ACCURACY OR COMPLETENESS OF ELECTRONIC COPIES OF THIS PLAN SHEET.

URBAN SYSTEMS ASSOCIATES INC.
4540 KEARNEY VILLA Rd, Ste 106
SAN DIEGO, CA 92123-1573

CITY OF SAN DIEGO
1010 SECOND AVENUE, SUITE 1200
SAN DIEGO, CA 92101

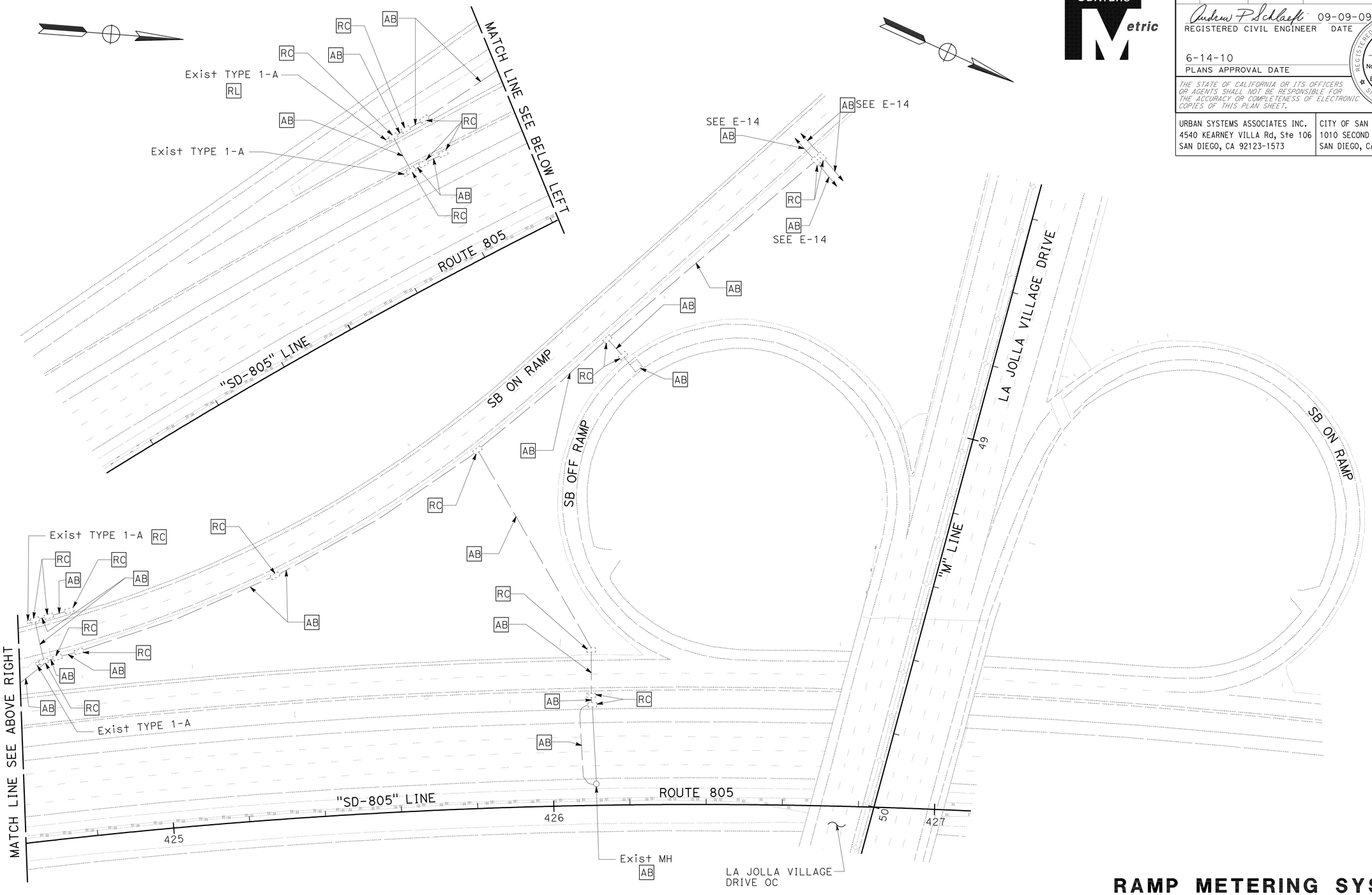

ROUTE 805 SB ON RAMPS AT LA JOLLA VILLAGE DRIVE

THIS PLAN IS ACCURATE FOR ELECTRICAL WORK ONLY.

ALL DIMENSIONS ARE IN METERS UNLESS OTHERWISE SHOWN

RAMP METERING SYSTEM
(LOCATION 2)
EXISTING

SCALE 1:500

E-19

STATE OF CALIFORNIA - DEPARTMENT OF TRANSPORTATION
Caltrans

CONSULTANT FUNCTIONAL SUPERVISOR: F.R. CLARK FERNON
CALCULATED-DESIGNED BY: MORT VAHABZADEH
CHECKED BY: SAM P. KAB, II
REVISED BY
DATE REVISED

LAST REVISION 10-15-09 | DATE PLOTTED => 19-JUN-2010 | TIME PLOTTED => 08:42

DIST	COUNTY	ROUTE	KILOMETER POST TOTAL PROJECT	SHEET No.	TOTAL SHEETS
11	SD	805	40.6/42.4	444	567

Caltrans Metric

Andrew P. Schlaefli 09-09-09
REGISTERED CIVIL ENGINEER DATE

6-14-10
PLANS APPROVAL DATE

REGISTERED PROFESSIONAL ENGINEER ANDREW P. SCHLAEFLI No. 15964 Exp. 6/30/11 CIVIL STATE OF CALIFORNIA

THE STATE OF CALIFORNIA OR ITS OFFICERS OR AGENTS SHALL NOT BE RESPONSIBLE FOR THE ACCURACY OR COMPLETENESS OF ELECTRONIC COPIES OF THIS PLAN SHEET.

URBAN SYSTEMS ASSOCIATES INC.
4540 KEARNEY VILLA Rd, Ste 106
SAN DIEGO, CA 92123-1573

CITY OF SAN DIEGO
1010 SECOND AVENUE, SUITE 1200
SAN DIEGO, CA 92101

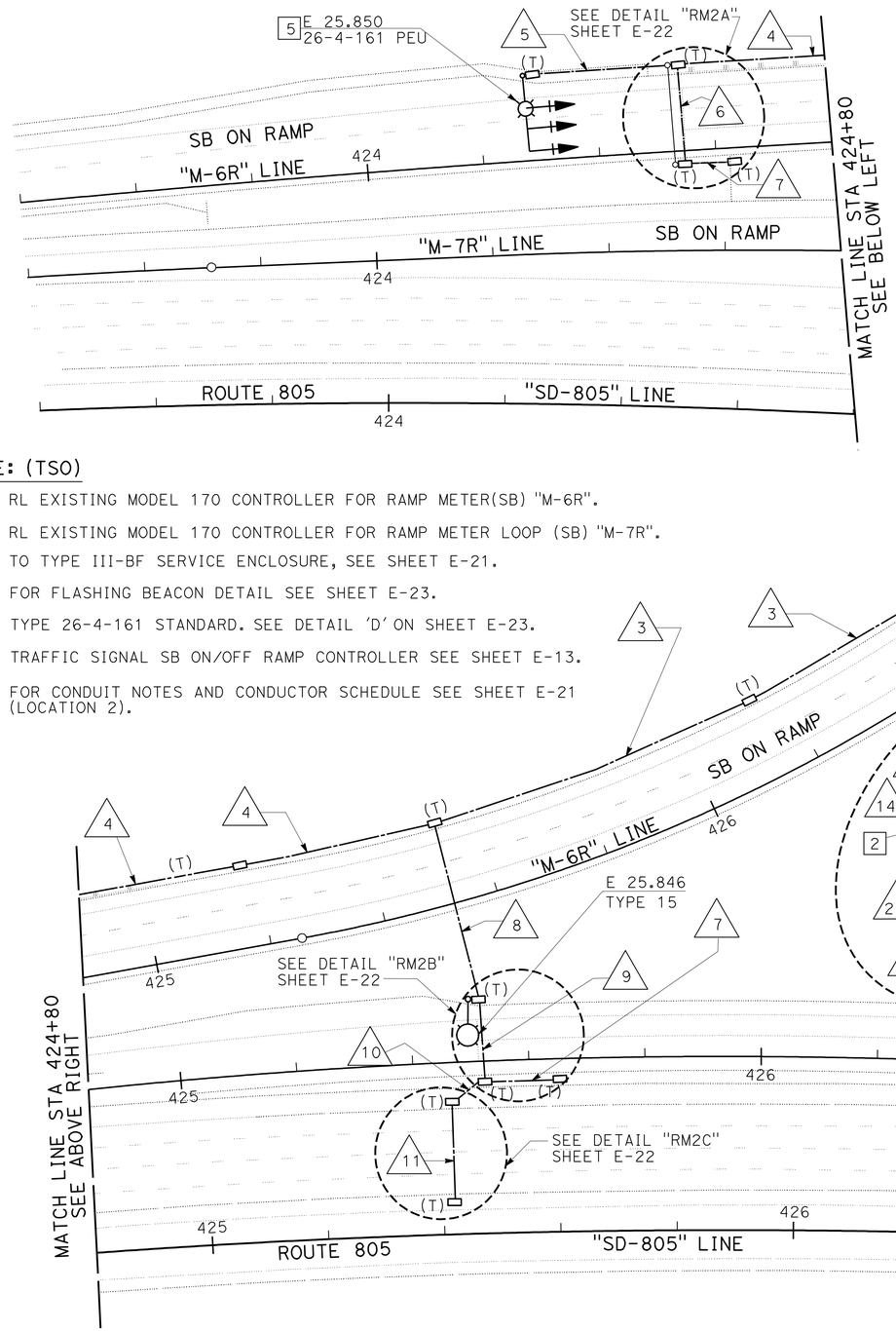

NOTE: (TSO)

1. RL EXISTING MODEL 170 CONTROLLER FOR RAMP METER(SB) "M-6R".
2. RL EXISTING MODEL 170 CONTROLLER FOR RAMP METER LOOP (SB) "M-7R".
3. TO TYPE III-BF SERVICE ENCLOSURE, SEE SHEET E-21.
4. FOR FLASHING BEACON DETAIL SEE SHEET E-23.
5. TYPE 26-4-161 STANDARD. SEE DETAIL 'D' ON SHEET E-23.
6. TRAFFIC SIGNAL SB ON/OFF RAMP CONTROLLER SEE SHEET E-13.
7. FOR CONDUIT NOTES AND CONDUCTOR SCHEDULE SEE SHEET E-21 (LOCATION 2).

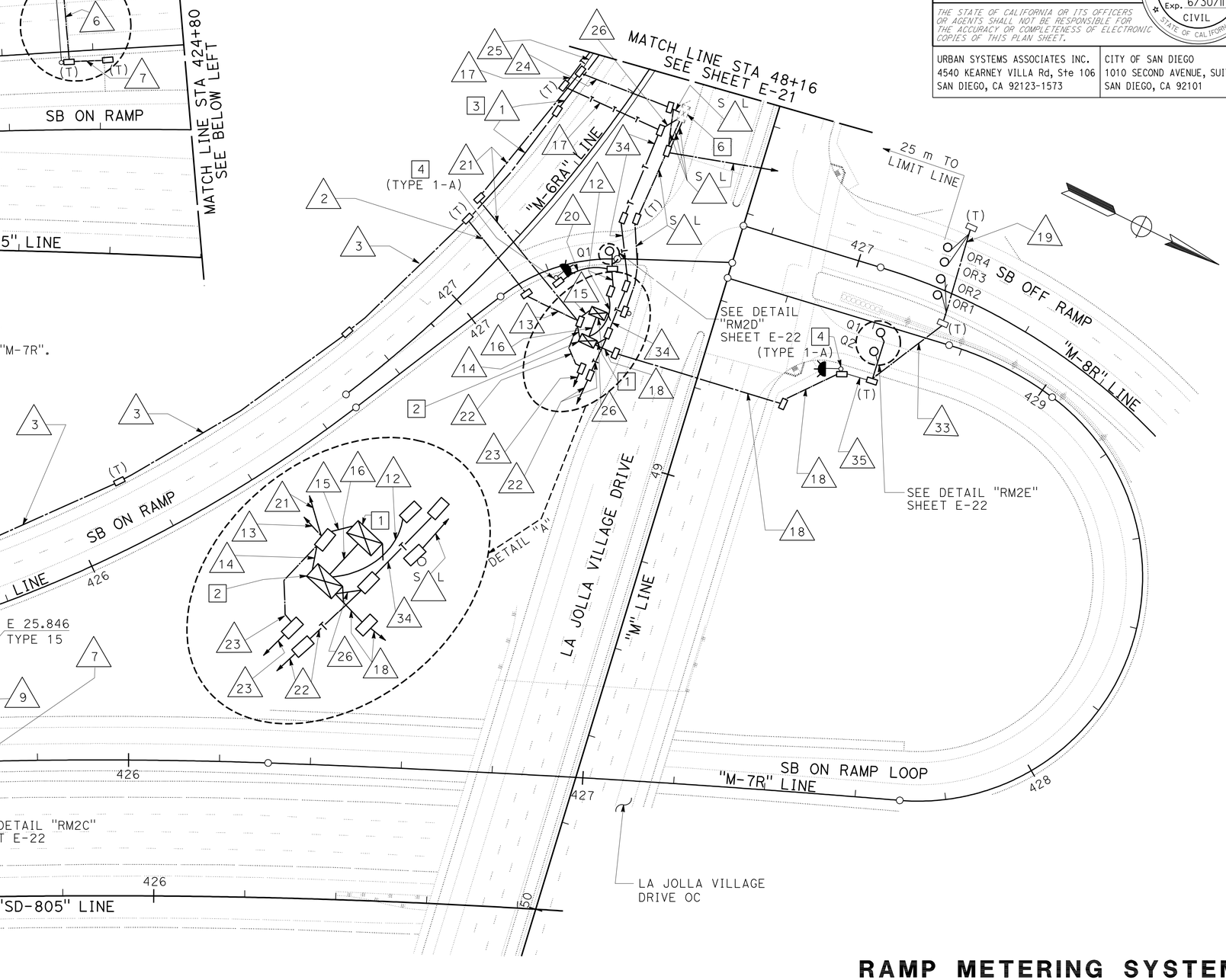

ROUTE 805 SB ON RAMPS AT LA JOLLA VILLAGE DRIVE

RAMP METERING SYSTEM
(LOCATION 2)

SCALE 1:500

E-20

THIS PLAN IS ACCURATE FOR ELECTRICAL WORK ONLY.

ALL DIMENSIONS ARE IN METERS UNLESS OTHERWISE SHOWN

STATE OF CALIFORNIA - DEPARTMENT OF TRANSPORTATION
Caltrans

CONSULTANT FUNCTIONAL SUPERVISOR: F.R. CLARK FERNON

CALCULATED-DESIGNED BY: MORT VAHABZADEH
CHECKED BY: SAM P. KAB, II

REVISED BY | DATE REVISED

LAST REVISION 11-04-09 | DATE PLOTTED => 19-JUN-2010 | TIME PLOTTED => 08:42

DIST	COUNTY	ROUTE	KILOMETER POST TOTAL PROJECT	SHEET No.	TOTAL SHEETS
11	SD	805	40.6/42.4	445	567

Caltrans Metric

Andrew P. Schlaefli 09-09-09
REGISTERED CIVIL ENGINEER DATE

6-14-10
PLANS APPROVAL DATE

REGISTERED PROFESSIONAL ENGINEER ANDREW P. SCHLAEFLI No. 15964 Exp. 6/30/11 CIVIL STATE OF CALIFORNIA

THE STATE OF CALIFORNIA OR ITS OFFICERS OR AGENTS SHALL NOT BE RESPONSIBLE FOR THE ACCURACY OR COMPLETENESS OF ELECTRONIC COPIES OF THIS PLAN SHEET.

URBAN SYSTEMS ASSOCIATES INC.
4540 KEARNEY VILLA Rd, Ste 106
SAN DIEGO, CA 92123-1573

CITY OF SAN DIEGO
1010 SECOND AVENUE, SUITE 1200
SAN DIEGO, CA 92101

CONDUIT NOTES:

16. 53C, 1 SIC
17. 53C, 3 SIC (TELEPHONE)
18. 53C, 2#12 (FB), 6 DLC
19. 53C, 6 DLC
20. 53C, 2#14 (FB)
21. 78C, 2#4 (SIGNAL), 8#4 (RAMP METERS), 6#6 (LTG), 3#14 (PEU)
22. 53C, 1 SIC (TELEPHONE).
23. 78C, 2#4 (SIGNAL), 4#4 (RAMP METERS), 4#6 (LTG).
24. 53C, 2#4 (SIGNAL), 2#6 (LTG)
25. 78C, 4#4 (SIGNAL), 8#4 (RAMP METERS), 8#6 (LTG), 3#14 (PEU)
26. 53C, 1 SIC (TELEPHONE)
27. EXISTING 27C, 1 CABLE (5 PAIRS), 1 sic
    RC ALL CABLES
28. EXISTING 27c, 2#12 (tdc service)
    ADD 3 SIC
29. EXISTING 41c, CONDUCTORS BY PAC BEL
30. 78C, 4#4 (SIGNAL), 8#4 (RAMP METERS), 8#6 (LTG), 2#14 (PEU), 2 #12 (TDC)
31. 53C, 2#12 (TDC SERVICE)
32. 53C PER SDG&E REQUIREMENTS
33. 53C, 4DLC
34. 53C, 2 SIC (TELEPHONE)
35. 53C, 6DLC

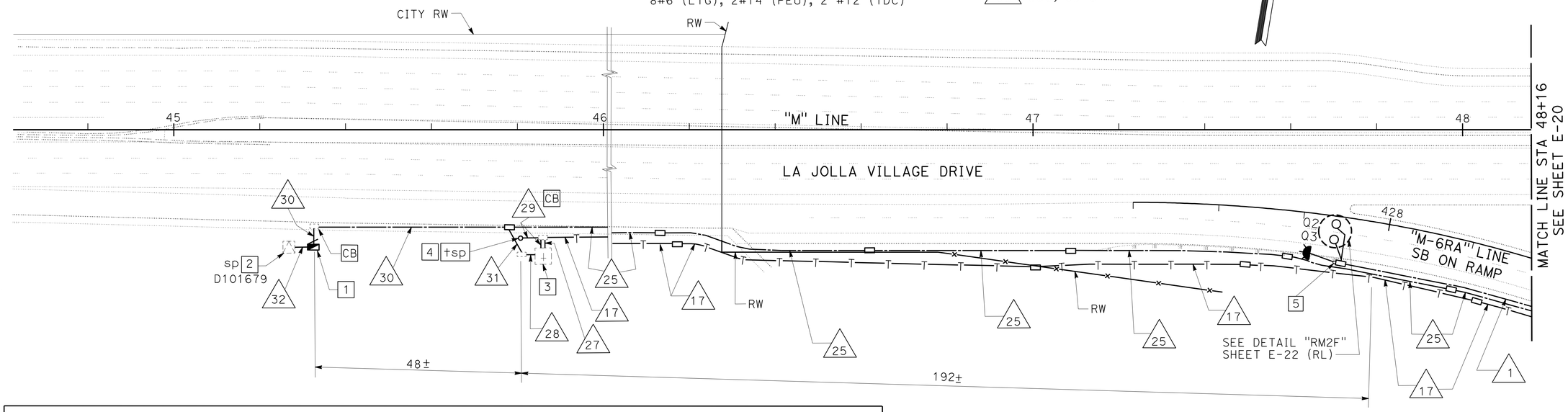

CONDUIT AND CONDUCTOR SCHEDULE

AWG	CIRCUIT ID	78C 1	(2) 78C 2	78C 3	78C 4	78C 5	78C 6	53C 7	(2) 78C 8	78C 9	78C 10	78C 11	(2) 78C 12	(2) 78C 13	78C 14	78C 15
4	RM POWER	-	-	-	-	-	-	-	-	-	-	-	-	-	2	2
6	LIGHTING	-	2	2	2	2	-	-	2	-	-	-	-	2	-	-
12	TDC	-	-	-	-	-	-	-	-	-	-	-	-	-	-	-
	ICC	-	-	-	-	-	-	-	-	-	-	-	-	-	-	-
14	PEU	-	3	3	3	3	-	-	-	-	-	-	-	-	-	-
	FB	2	2	-	-	-	-	-	-	-	-	-	2X	2	-	2
9CSC	SIGNAL STANDARD R+ "M-6R"	-	1	1	1	-	-	-	-	-	-	-	-	1	-	1
	SIGNAL STANDARD L+ "M-6R"	-	1	1	1	-	1	-	-	-	-	-	-	1	-	1
	SIGNAL STANDARD R+ "M-7R"	-	1	1	-	-	-	-	1	-	-	-	-	1	1	-
	SIGNAL STANDARD L+ "M-7R"	-	1	1	-	-	-	-	1	1	-	-	-	1	1	-
12CSC	SIGNAL STANDARD MA "M-6R"	-	1	1	1	1	-	-	-	-	-	-	-	1	-	1
DLC	PASSAGE LOOPS "M-6R"	-	3	3	3	-	1	-	-	-	-	-	-	3	-	3
	PASSAGE LOOPS "M-7R"	-	2	2	2	-	-	-	2	2	-	-	-	2	2	-
	QUEUE LOOPS "M-6R"	2	2	-	-	-	-	-	-	-	-	-	1X	2	-	2
	QUEUE LOOPS "M-7R"	-	-	-	-	-	-	1	-	-	-	-	-	-	-	-
	DEMAND LOOPS "M-6R"	-	3	3	3	-	2	1	-	-	-	-	-	3	-	3
	DEMAND LOOPS "M-7R"	-	2	2	-	-	-	-	2	1	-	-	-	2	2	-
	MAIN LANE LOOPS SB	-	8	8	-	-	-	-	8	8	8	4	-	8	8	-
	OFF RAMP LOOPS	-	4	4	-	-	-	-	4	4	-	-	-	4	4	-
SIC	CONTROLLER	-	-	-	-	-	-	-	-	-	-	-	-	-	-	-
	TELEPHONE	-	-	-	-	-	-	-	-	-	-	-	-	-	-	-
TOTAL CONDUCTORS/CABLES		4	35	31	15	5	4	2	20	16	8	4	3	35	20	15

NOTES:

1. INSTALL NEW TYPE III-BF SERVICE ENCLOSURE, SEE WIRING DIAGRAM 'B' SHEET E-1.
2. EXISTING TRANSFORMER (120/240V) D101679. CONDUIT TO ENTER PER SDG&E REQUIREMENTS.
3. EXISTING TELEPHONE DEMARCATION CABINET.
4. EXISTING MH 533 (C5.993).
5. FOR FLASHING BEACON DETAIL SEE SHEET E-23.
6. FOR SINGLE LINE DIAGRAM SEE SHEET E-1.

THIS PLAN IS ACCURATE FOR ELECTRICAL WORK ONLY.

ALL DIMENSIONS ARE IN METERS UNLESS OTHERWISE SHOWN

ROUTE 805 SB ON RAMPS AT LA JOLLA VILLAGE DRIVE

RAMP METERING SYSTEM
(LOCATION 2)

SCALE 1:500

E-21

STATE OF CALIFORNIA - DEPARTMENT OF TRANSPORTATION
Caltrans

CONSULTANT FUNCTIONAL SUPERVISOR: F.R. CLARK FERNON
CALCULATED-DESIGNED BY: MORT VAHABZADEH
CHECKED BY: SAM P. KAB, II
REVISED BY
DATE REVISED

LAST REVISION 10-15-09
DATE PLOTTED => 19-JUN-2010
TIME PLOTTED => 08:43

DIST	COUNTY	ROUTE	KILOMETER POST TOTAL PROJECT	SHEET No.	TOTAL SHEETS
11	SD	805	40.6/42.4	446	567

Caltrans Metric

Andrew P. Schlaefli 09-09-09
REGISTERED CIVIL ENGINEER DATE

6-14-10
PLANS APPROVAL DATE

REGISTERED PROFESSIONAL ENGINEER ANDREW P. SCHLAEFLI No. 15964 Exp. 6/30/11 CIVIL STATE OF CALIFORNIA

THE STATE OF CALIFORNIA OR ITS OFFICERS OR AGENTS SHALL NOT BE RESPONSIBLE FOR THE ACCURACY OR COMPLETENESS OF ELECTRONIC COPIES OF THIS PLAN SHEET.

URBAN SYSTEMS ASSOCIATES INC.
4540 KEARNEY VILLA Rd, Ste 106
SAN DIEGO, CA 92123-1573

CITY OF SAN DIEGO
1010 SECOND AVENUE, SUITE 1200
SAN DIEGO, CA 92101

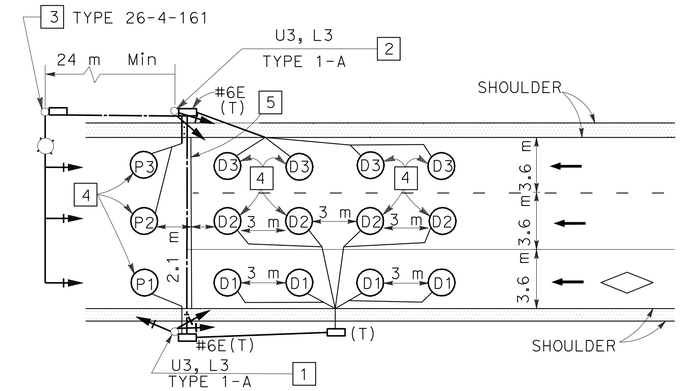

DETAIL 'RM2A'

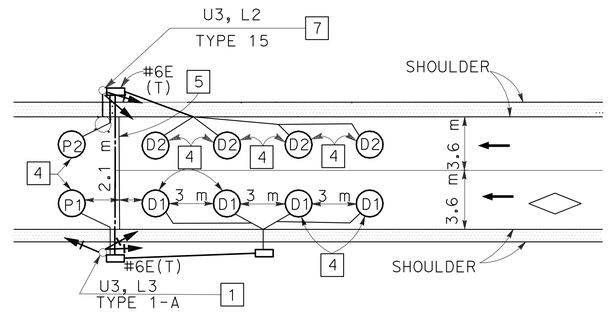

DETAIL 'RM1A', 'RM1B' AND 'RM2B'

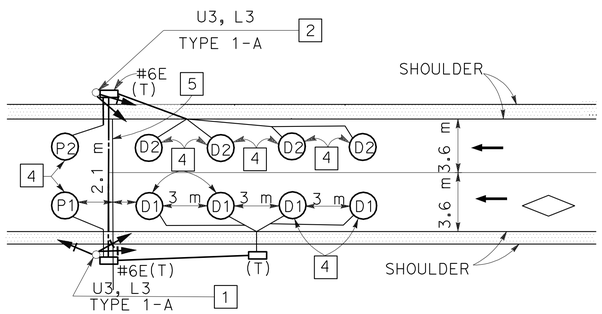

DETAIL 'RM1B'

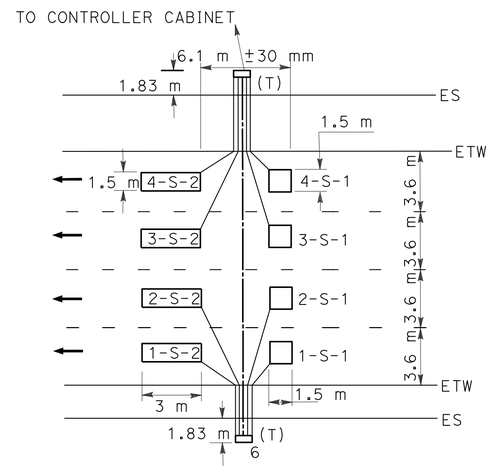

DETAIL 'RM2C'

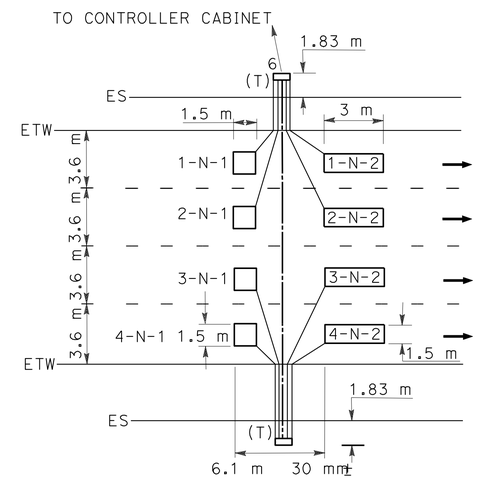

DETAIL 'RM1C'

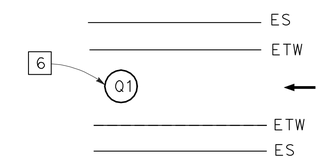

QUEUE (TYPICAL)

DETAIL 'RM1D', 'RM2D'

NOTES:

1. SIGNAL STANDARD PLACEMENT (Lt). SEE DETAIL "A" ON SHEET E-23.
2. SIGNAL STANDARD PLACEMENT (Rt). SEE DETAIL "B" ON SHEET E-23.
3. SIGNAL STANDARD PLACEMENT (Rt). SEE DETAIL "D" ON SHEET E-23.
4. TYPE A LOOP DETECTORS SEE STANDARD PLAN ES-5B.
5. LOCATION OF 300 mm PAINTED LIMIT LINE.
6. POSITION LOOPS AS SHOWN. CENTER LOOPS IN EACH LANE. LIKE NUMBERED LOOPS SHALL BE CONNECTED TO SAME DLC. FOR OTHER DETAILS, SEE ES-5A AND ES-5B OF STANDARD PLANS.
7. SIGNAL STANDARD PLACEMENT (RT), SEE DETAIL "C" ON SHEET E-23.
8. ALL LOOP DIMENSIONS ARE TYPICAL

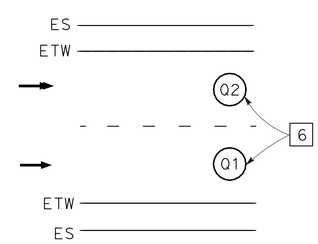

QUEUE (TYPICAL)

DETAIL 'RM1E' AND 'RM2E'

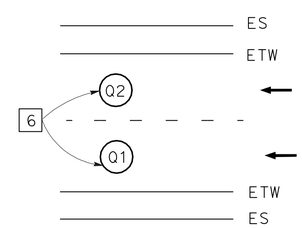

QUEUE (TYPICAL)

DETAIL 'RM2F'

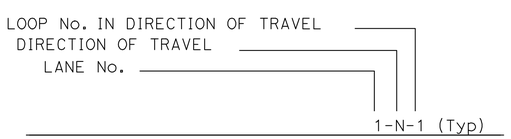

MAINLINE LOOP DETECTOR ID

ALL DIMENSIONS ARE IN METERS UNLESS OTHERWISE SHOWN

RAMP METERING SYSTEM
ELECTRICAL DETAILS

NO SCALE

E-22

STATE OF CALIFORNIA - DEPARTMENT OF TRANSPORTATION
Caltrans

CONSULTANT FUNCTIONAL SUPERVISOR: F.R. CLARK FERNON
CALCULATED-DESIGNED BY: MORT VAHABZADEH
CHECKED BY: SAM P. KAB, II
REVISED BY
DATE REVISED

LAST REVISION 10-15-09
DATE PLOTTED => 19-JUN-2010
TIME PLOTTED => 11:19

DIST	COUNTY	ROUTE	KILOMETER POST TOTAL PROJECT	SHEET No.	TOTAL SHEETS
11	SD	805	40.6/42.4	447	567

Caltrans Metric

Andrew P. Schlaefli 09-09-09
REGISTERED CIVIL ENGINEER DATE

6-14-10
PLANS APPROVAL DATE

REGISTERED PROFESSIONAL ENGINEER ANDREW P. SCHLAEFLI No. 15964 Exp. 6/30/11 CIVIL STATE OF CALIFORNIA

THE STATE OF CALIFORNIA OR ITS OFFICERS OR AGENTS SHALL NOT BE RESPONSIBLE FOR THE ACCURACY OR COMPLETENESS OF ELECTRONIC COPIES OF THIS PLAN SHEET.

URBAN SYSTEMS ASSOCIATES INC.
4540 KEARNEY VILLA Rd, Ste 106
SAN DIEGO, CA 92123-1573

CITY OF SAN DIEGO
1010 SECOND AVENUE, SUITE 1200
SAN DIEGO, CA 92101

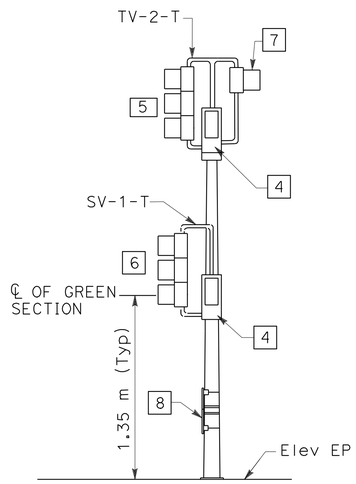

DETAIL 'A' (L+)

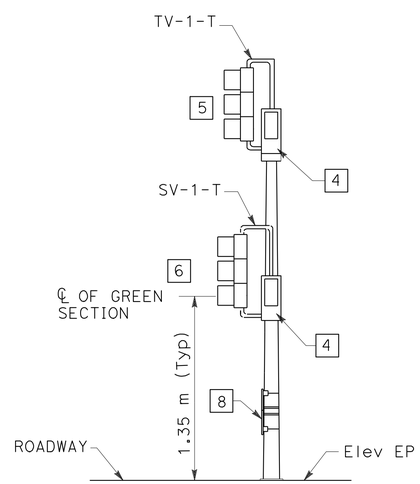

DETAIL 'B' (R+)

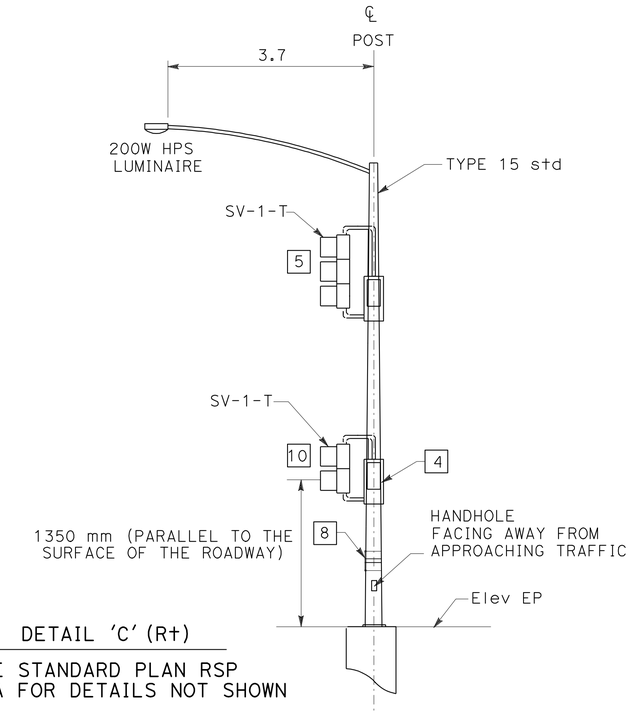

DETAIL 'C' (R+)

SEE STANDARD PLAN RSP ES-6A FOR DETAILS NOT SHOWN

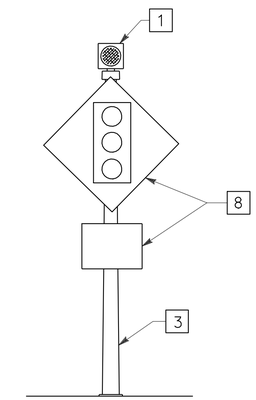

DETAIL 'FB'

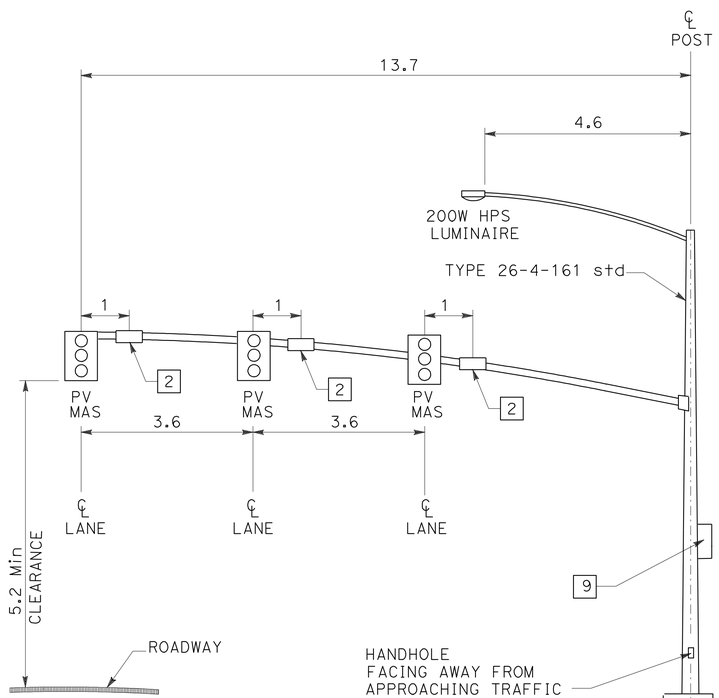

DETAIL 'D'

SEE STANDARD PLAN RSP ES-7E FOR DETAILS NOT SHOWN

NOTES:

1. ONE SECTION SIGNAL HEAD WITH 200 mm YELLOW LENS. BACKPLATE NOT REQUIRED.
2. DETAIL "U" ES-7N REQUIRED.
3. TYPE 1-A (3 m) SIGNAL STANDARD.
4. PLACE TERMINAL COMPARTMENT ON SIDE OF POLE AWAY FROM METERED TRAFFIC.
5. THREE SECTION SIGNAL HEAD, 300 mm RED YELLOW AND GREEN. BACKPLATE REQUIRED.
6. THREE SECTION SIGNAL HEAD, AS SHOWN ON THIS PLANS. BACKPLATE NOT REQUIRED. ALL LENSES SHALL BE 200 mm.
7. ONE SECTION SIGNAL HEAD WITH 200 mm RED LENS WHEN SHOWN ON PLANS.
8. SIGN PANELS SEE PD SHEETS.
9. SIDEMOUNTED TERMINAL COMPARTMENT FACING AWAY FROM APPROACHING TRAFFIC. SEE STANDARD PLANS ES-3D.
10. TWO SECTION SIGNAL HEAD. BACKPLATE NOT REQUIRED. ALL LENSES SHALL BE 200 mm.

ALL DIMENSIONS ARE IN METERS UNLESS OTHERWISE SHOWN

RAMP METERING SYSTEM
ELECTRICAL DETAILS

NO SCALE

E-23

STATE OF CALIFORNIA - DEPARTMENT OF TRANSPORTATION
Caltrans

CONSULTANT FUNCTIONAL SUPERVISOR: F.R. CLARK FERNON

CALCULATED-DESIGNED BY: MORT VAHABZADEH
CHECKED BY: SAM P. KAB, II

REVISED BY | DATE REVISED

LAST REVISION 10-15-09 | DATE PLOTTED => 19-JUN-2010 | TIME PLOTTED => 11:19

DIST	COUNTY	ROUTE	KILOMETER POST TOTAL PROJECT	SHEET No.	TOTAL SHEETS
11	SD	805	40.6/42.4	448	567

Caltrans Metric

Andrew P. Schlaefli 09-09-09
REGISTERED CIVIL ENGINEER DATE

6-14-10
PLANS APPROVAL DATE

REGISTERED PROFESSIONAL ENGINEER ANDREW P. SCHLAEFLI No. 15964 Exp. 6/30/11 CIVIL STATE OF CALIFORNIA

THE STATE OF CALIFORNIA OR ITS OFFICERS OR AGENTS SHALL NOT BE RESPONSIBLE FOR THE ACCURACY OR COMPLETENESS OF ELECTRONIC COPIES OF THIS PLAN SHEET.

URBAN SYSTEMS ASSOCIATES INC.
4540 KEARNEY VILLA Rd, Ste 106
SAN DIEGO, CA 92123-1573

CITY OF SAN DIEGO
1010 SECOND AVENUE, SUITE 1200
SAN DIEGO, CA 92101

CONDUIT NOTES:

1. 53C, (COMMUNICATION) SEE SIGNAL PLANS.
2. 78C, SEE SIGNAL PLAN
3. 53C, SEE LIGHTING PLAN
4. 78C, MT (SPRINKLER CONTROL CONDUIT BRIDGE)
5. Exist 41c, 2#6 (ltg), 2#8 (s) SEE LIGHTING PLAN.
6. 53C, 1DLC
7. 50C, FIBER OPTIC (CITY OF SAN DIEGO) SEE UTILITY PLANS.

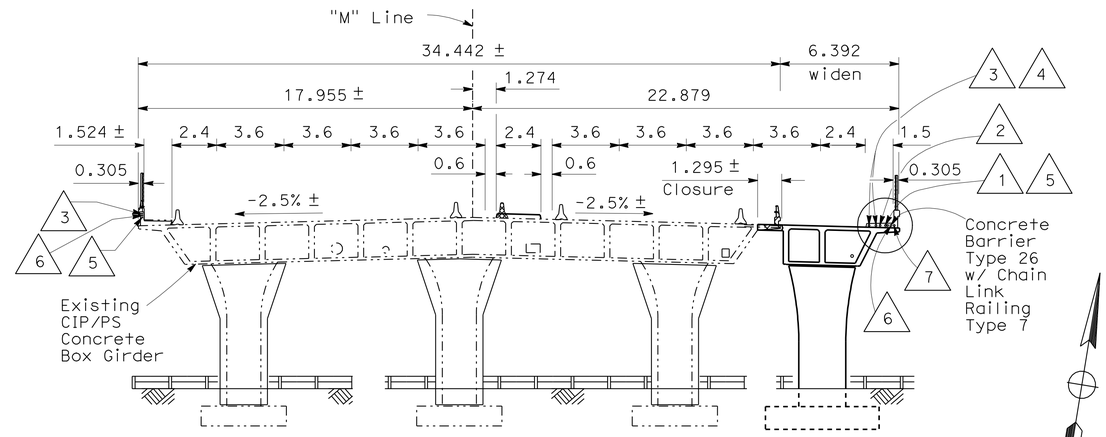

TYPICAL SECTION

NO SCALE

NOTES

1. SAW HORIZONTALLY INTO SIDEWALK TO PROVIDE 25mm DEPTH (DIAGONALLY) AT CORNER.
2. SAW CUT 25mm DEEP x 13mm WIDE MAXIMUM FOR INSTALLATION OF PREFORMED LOOP. AVOID CUTTING REBAR.
3. SAW CUT TO TERMINATION CONDUIT.

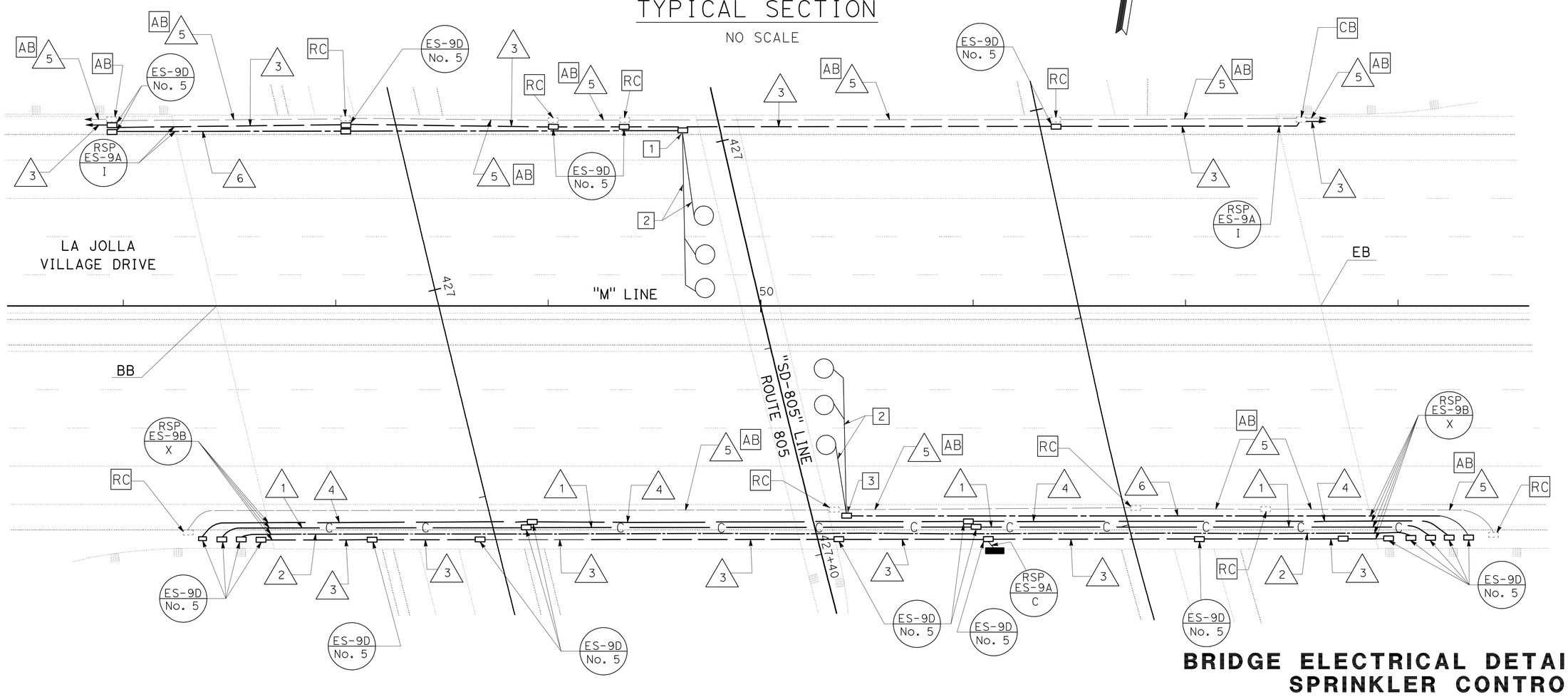

BRIDGE ELECTRICAL DETAIL SPRINKLER CONTROL CONDUIT (BRIDGE)

SCALE 1:200

E-24

THIS PLAN IS ACCURATE FOR ELECTRICAL WORK ONLY.

ALL DIMENSIONS ARE IN METERS UNLESS OTHERWISE SHOWN

STATE OF CALIFORNIA - DEPARTMENT OF TRANSPORTATION
Caltrans

CONSULTANT FUNCTIONAL SUPERVISOR: F.R. CLARK FERNON

CALCULATED-DESIGNED BY: MORT VAHABZADEH
CHECKED BY: SAM P. KAB, II

REVISED BY
DATE REVISED

LAST REVISION
DATE PLOTTED => 19-JUN-2010
TIME PLOTTED => 08:43
11-04-09

DIST	COUNTY	ROUTE	KILOMETER POST TOTAL PROJECT	SHEET No.	TOTAL SHEETS
11	SD	805	40.6/42.4	449	567

Caltrans Metric

Enrique P. Bernal 11-17-09
REGISTERED ELECTRICAL ENGINEER DATE

6-14-10
PLANS APPROVAL DATE

REGISTERED PROFESSIONAL ENGINEER ENRIQUE P. BERNAL No. 15675 Exp. 6/30/10 ELECTRICAL STATE OF CALIFORNIA

THE STATE OF CALIFORNIA OR ITS OFFICERS OR AGENTS SHALL NOT BE RESPONSIBLE FOR THE ACCURACY OR COMPLETENESS OF ELECTRONIC COPIES OF THIS PLAN SHEET.

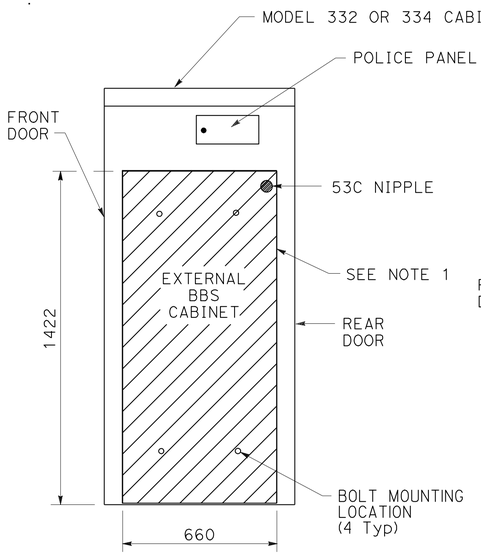

SIDE VIEW

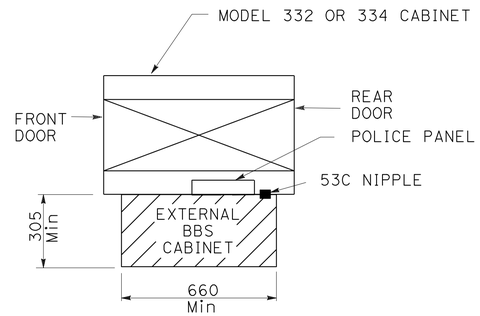

TOP VIEW

EXTERNAL BBS CABINET MOUNTED TO THE MODEL 332 OR 334 CABINET

NOTE: (THIS SHEET ONLY)

1. THE EXTERNAL BBS CABINET SHALL BE MOUNTED TO THE MODEL 332 OR 334 CABINET WITH FOUR 18-8 STAINLESS STEEL Hex Hd, FULLY-THREADED, 9.5 mm-16 X 25.4 mm BOLTS; TWO WASHERS PER BOLT, DESIGNED FOR 9.5 mm BOLTS AND ARE 18-8 STAINLESS STEEL, 25.4 mm OUTSIDE DIAMETER, ROUND, AND FLAT; AND ONE K-LOCK NUT PER BOLT, THAT IS 18-8 STAINLESS STEEL AND A HEXAGONAL-NUT. THE ENGINEER WILL HAVE TO APPROVE THE BOLT MOUNTING LOCATION PRIOR TO INSTALLATION.
2. THE ANCHOR BOLTS SHALL BE 19 mm Dia X 380 mm WITH A 50 mm-90° BEND. THE CABINET MANUFACTURER'S SPECIFICATION SHALL DETERMINE THE LOCATION OF THE ANCHOR BOLTS IN THE FOUNDATION. THE ENGINEER WILL HAVE TO APPROVE ANCHOR BOLTS AND ITS LOCATION IN THE FOUNDATION PRIOR TO CONSTRUCTION.
3. THE CONTRACTOR SHALL VERIFY THE DIMENSIONS OF THE BBS CABINET PRIOR TO CONSTRUCTING THE FOUNDATION OF THE MODIFIED PORTION OF THE Std MODEL 332 AND 334 CABINET FOUNDATION. THE ENGINEER WILL HAVE TO APPROVE ANY NECESSARY DEVIATIONS PRIOR TO CONSTRUCTION.
4. ALL DIMENSIONS ARE NOMINAL.

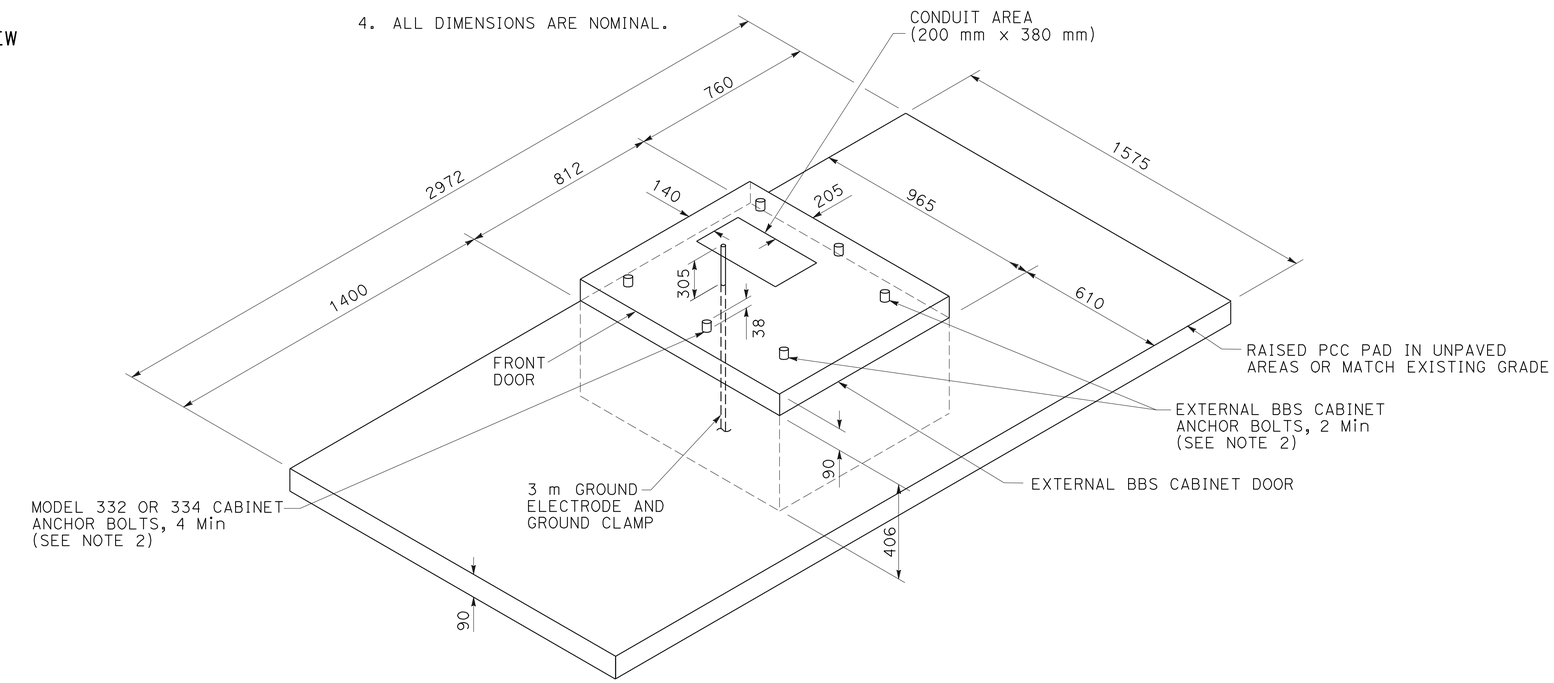

MODIFIED MODEL 332 AND 334 CABINET FOUNDATION DETAIL FOR BATTERY BACKUP SYSTEM (BBS)

(FOR DIMENSIONS AND DETAILS NOT SHOWN AND ADDITIONAL NOTES, SEE SHEET ES-3C OF THE STANDARDS PLANS FOR MODEL 332 AND 334 CABINETS)

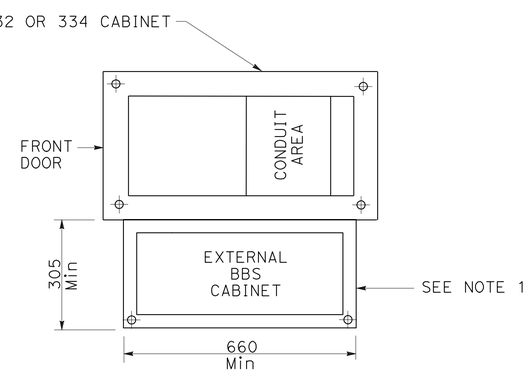

BASE PLAN FOR BBS MOUNTED TO THE MODEL 332 OR 334 CABINET

(FOR DIMENSIONS AND DETAILS NOT SHOWN, SEE SHEET A6-1 TO A6-4, CABINET HOUSING DETAILS OF THE TRANSPORTATION ELECTRICAL EQUIPMENT SPECIFICATION (TEES))

THIS PLAN IS ACCURATE FOR ELECTRICAL WORK ONLY.

ALL DIMENSIONS ARE IN METERS UNLESS OTHERWISE SHOWN

ALL DIMENSIONS ARE IN MILLIMETERS UNLESS OTHERWISE SHOWN

ELECTRICAL SYSTEMS (BBS FOUNDATION DETAILS)

NO SCALE

E-25

STATE OF CALIFORNIA - DEPARTMENT OF TRANSPORTATION
Caltrans TRAFFIC ELECTRICAL

FUNCTIONAL SUPERVISOR: DAVE WILSON
CALCULATED-DESIGNED BY: THERESA GABRIEL
CHECKED BY: ENRIQUE BERNAL
REVISED BY
DATE REVISED

LAST REVISION 11-18-09
DATE PLOTTED => 19-JUN-2010
TIME PLOTTED => 08:43

DIST	COUNTY	ROUTE	KILOMETER POST TOTAL PROJECT	SHEET NO.	TOTAL SHEETS
11	SD	805	40.6/42.4	450	567

Caltrans Metric

Donald E Howe
REGISTERED CIVIL ENGINEER

June 6, 2008
PLANS APPROVAL DATE

REGISTERED PROFESSIONAL ENGINEER
Donald E. Howe
No. C46402
Exp. 3-31-09
CIVIL
STATE OF CALIFORNIA

The State of California or its officers or agents shall not be responsible for the accuracy or completeness of electronic copies of this plan sheet.

To get to the Caltrans web site, go to: http://www.dot.ca.gov

To accompany plans dated 6-14-10

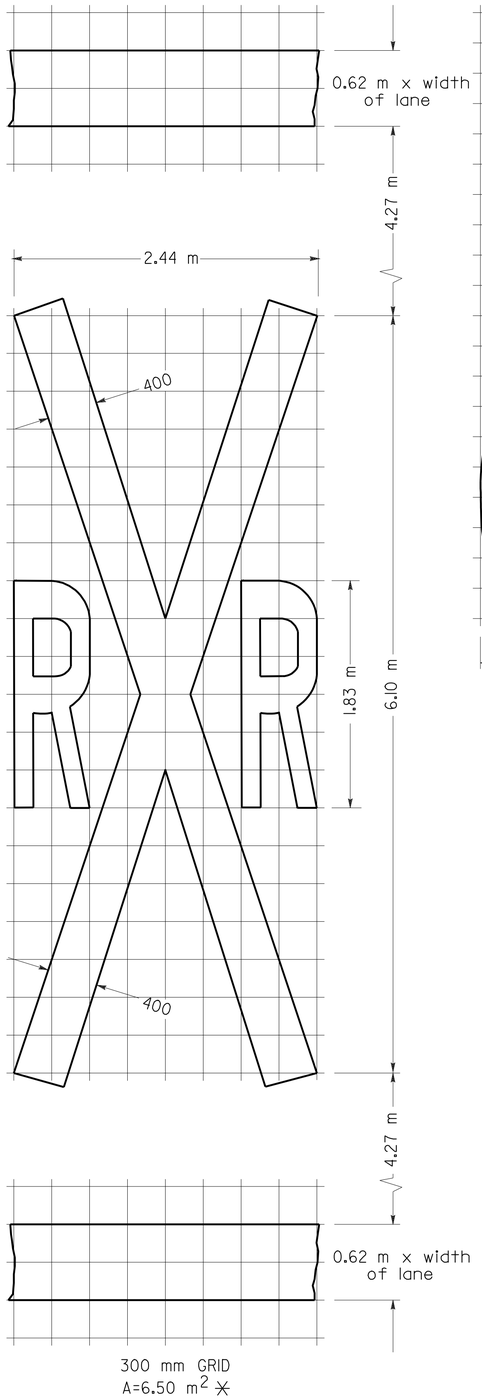

RAILROAD CROSSING SYMBOL

✳6.5 m^2 DOES NOT INCLUDE THE 0.6 m x VARIABLE WIDTH TRANSVERSE LINES.

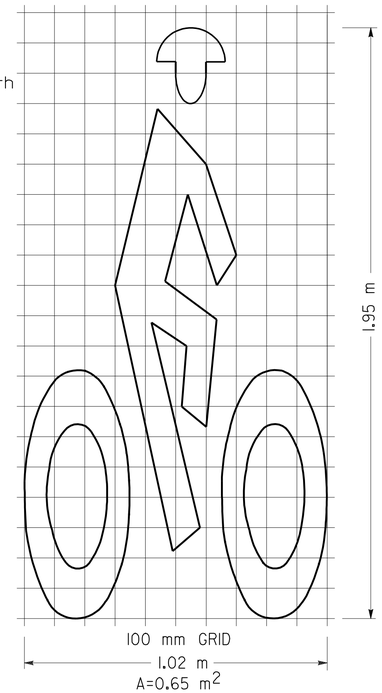

BIKE LANE SYMBOL

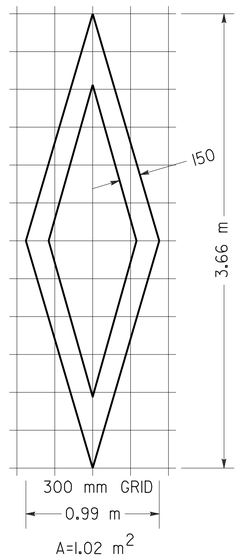

DIAMOND SYMBOL

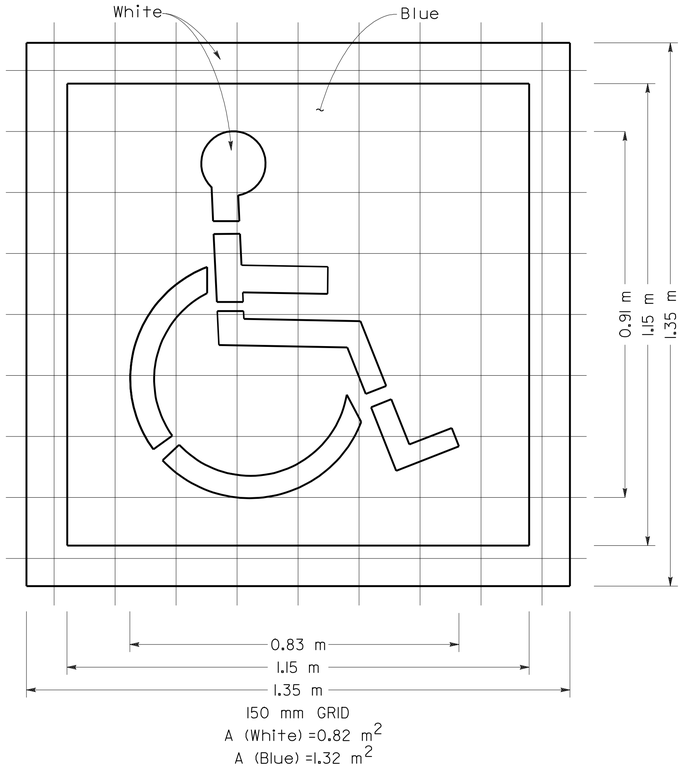

INTERNATIONAL SYMBOL
OF ACCESSIBILITY MARKING

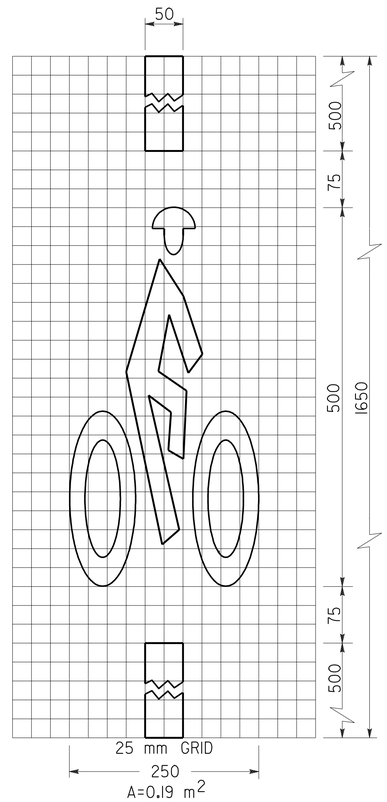

BICYCLE LOOP
DETECTOR SYMBOL

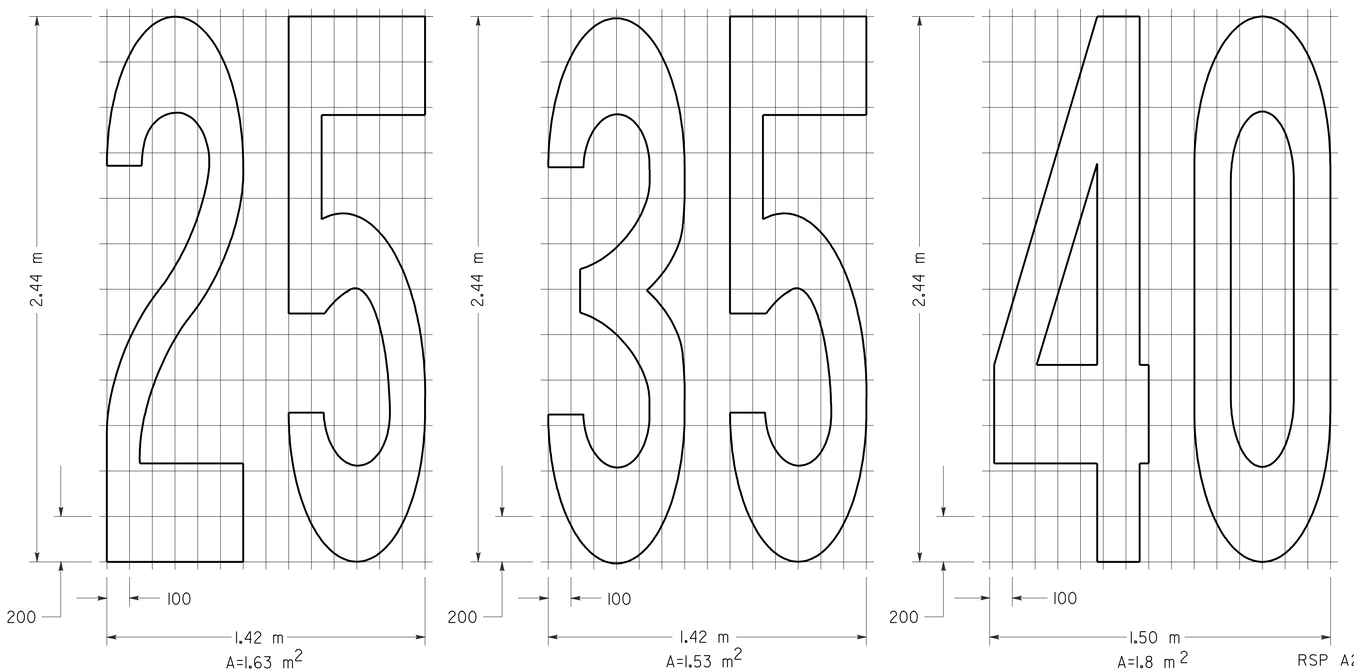

NUMERALS

NOTE:

1. Minor variations in dimensions may be accepted by the Engineer.

STATE OF CALIFORNIA
DEPARTMENT OF TRANSPORTATION

PAVEMENT MARKINGS SYMBOLS AND NUMERALS

NO SCALE

ALL DIMENSIONS ARE IN MILLIMETERS UNLESS OTHERWISE SHOWN

RSP A24C DATED JUNE 6, 2008 SUPERSEDES STANDARD PLAN A24C DATED July 1, 2004 - PAGE 11 OF THE STANDARD PLANS BOOK DATED July 2004.

REVISED STANDARD PLAN RSP A24C

2004 REVISED Std PLAN RSP A24C

5-27-08

DIST	COUNTY	ROUTE	KILOMETER POST TOTAL PROJECT	SHEET NO.	TOTAL SHEETS
11	SD	805	40.6/42.4	451	567

Caltrans Metric

Randell D. Hiatt
REGISTERED CIVIL ENGINEER

June 6, 2008
PLANS APPROVAL DATE

REGISTERED PROFESSIONAL ENGINEER Randell D. Hiatt No. C50200 Exp. 6-30-09 STATE OF CALIFORNIA

The State of California or its officers or agents shall not be responsible for the accuracy or completeness of electronic copies of this plan sheet.

To get to the Caltrans web site, go to: http://www.dot.ca.gov

To accompany plans dated 6-14-10

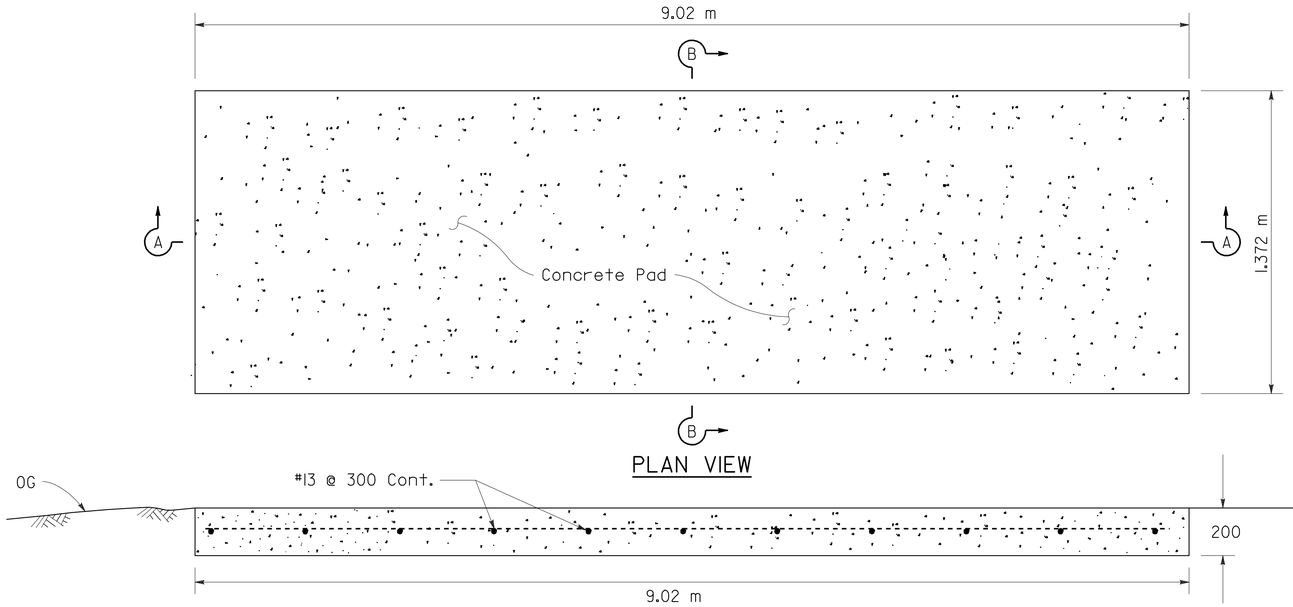

PLAN VIEW

SECTION A-A

CONCRETE ANCHOR SLAB

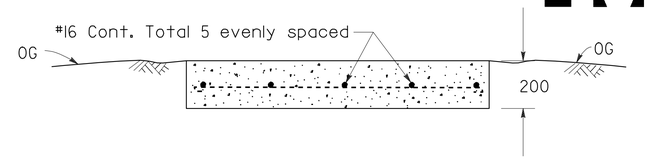

SECTION B-B

NOTES

1. For additional details of this crash cushion, refer to manufacturer's installation instructions.
2. For details of the REACT Crash Cushion with self contained backup support (no concrete backup block), see Standard Plan A82D1.
3. The base track frame with cylinders attached comes from the manufacturer as a completely pre-assembled unit.
4. Place the crash cushion unit on the cured concrete anchor slab and use the base track frame of the crash cushion as a template for drilling anchor bolt holes. Drill holes in slab and attach crash cushion with wedge anchor bolts supplied by the manufacturer.
5. Attach last cylinder to concrete backup block with manufacturer supplied fastener in such manner as recommended by the manufacturer.
6. Attach the manufacturer supplied side cable anchor plates to the cured concrete backup block with the manufacturer supplied bolts in such manner as recommended by the manufacturer.
7. Place manufacturer supplied cover over cylinders and attach cover to cylinders with manufacturer supplied fasteners.

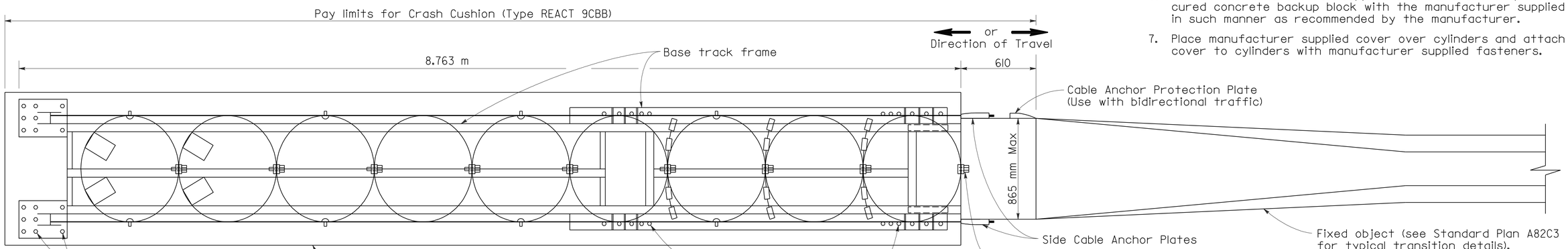

PLAN VIEW

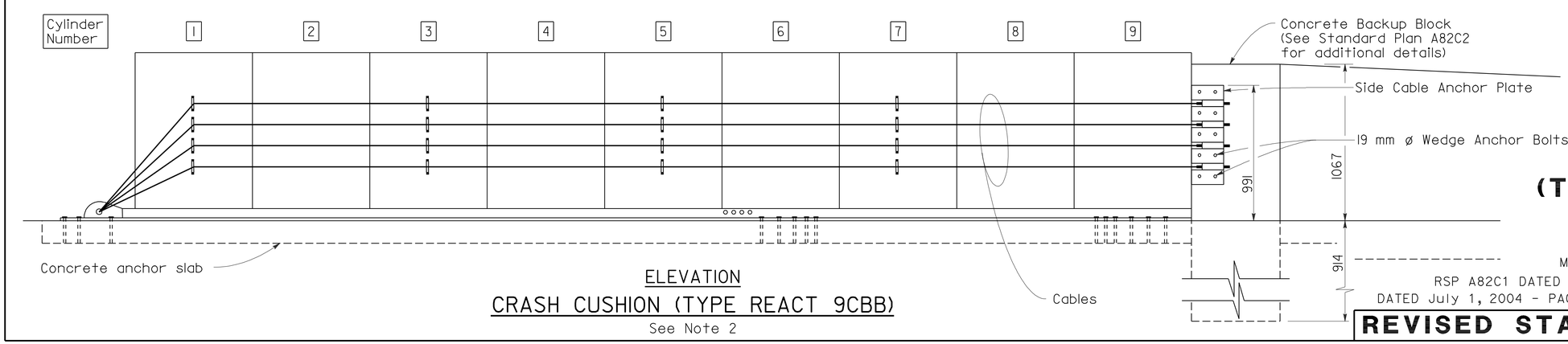

ELEVATION

CRASH CUSHION (TYPE REACT 9CBB)

See Note 2

STATE OF CALIFORNIA
DEPARTMENT OF TRANSPORTATION

CRASH CUSHION (TYPE REACT 9CBB)

NO SCALE

ALL DIMENSIONS ARE IN MILLIMETERS UNLESS OTHERWISE SHOWN

RSP A82C1 DATED JUNE 6, 2008 SUPERSEDES STANDARD PLAN A82C1
DATED July 1, 2004 - PAGE 106 OF THE STANDARD PLANS BOOK DATED July 2004.

REVISED STANDARD PLAN RSP A82C1

2004 REVISED Std PLAN RSP A82C1

5-19-08

DIST	COUNTY	ROUTE	KILOMETER POST TOTAL PROJECT	SHEET NO.	TOTAL SHEETS
11	SD	805	40.6/42.4	452	567

Caltrans Metric

REGISTERED CIVIL ENGINEER

November 17, 2006
PLANS APPROVAL DATE

REGISTERED PROFESSIONAL ENGINEER Michael Janzen No. 44788 Exp. 03-31-08 CIVIL STATE OF CALIFORNIA

The State of California or its officers or agents shall not be responsible for the accuracy or completeness of electronic copies of this plan sheet.

To get to the Caltrans web site, go to: http://www.dot.ca.gov

To accompany plans dated 6-14-10

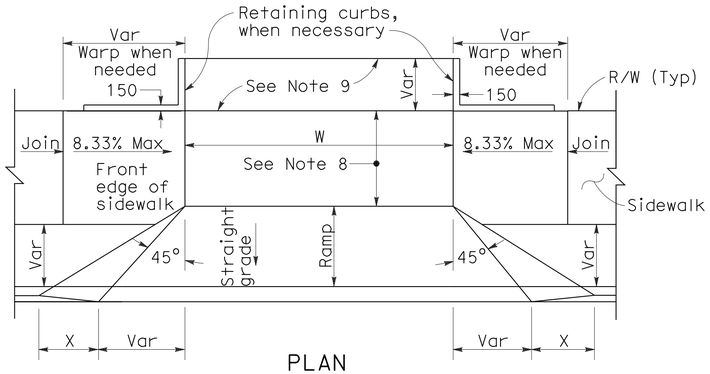

PLAN

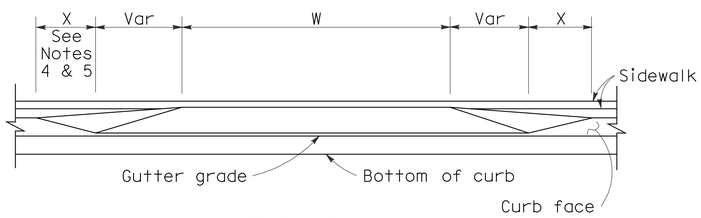

ELEVATION

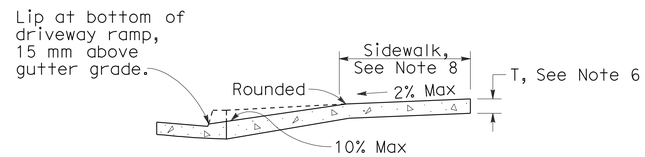

CASE A

Typical driveway, sidewalk not depressed

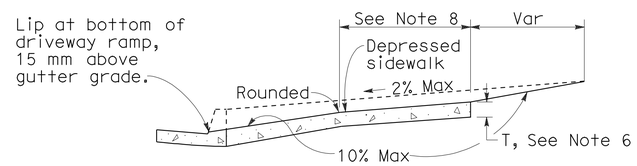

CASE B

Driveway with depressed sidewalk

SECTIONS

DRIVEWAYS

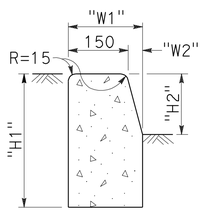

TYPE A1 CURBS

See Table A

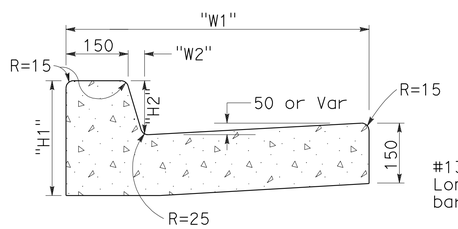

TYPE A2 CURBS

See Table A

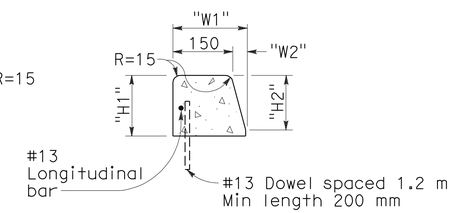

TYPE A3 CURBS

Superimposed on existing pavement
See Table A

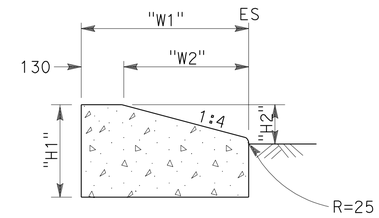

TYPE D CURBS

See Table A

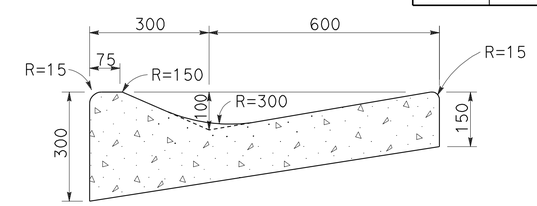

TYPE E CURB

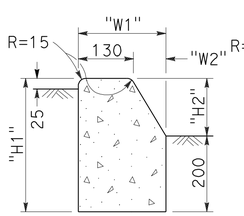

TYPE B1 CURBS

See Table A

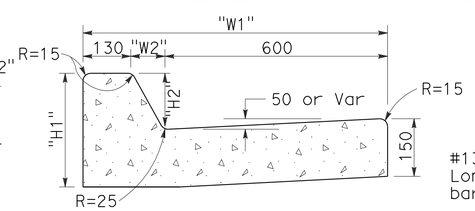

TYPE B2 CURBS

See Table A

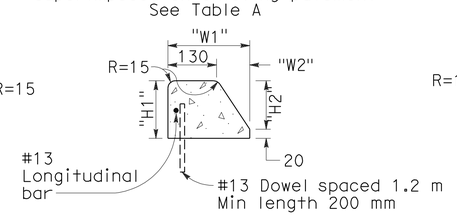

TYPE B3 CURBS

Superimposed on existing pavement
See Table A

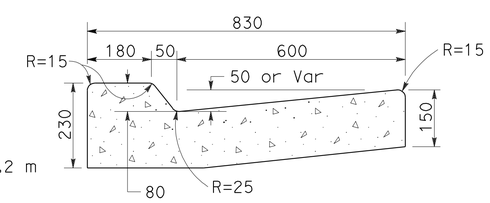

TYPE B4 CURBS

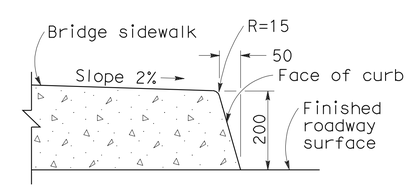

TYPE H CURB

On Bridges

CURBS

CURB QUANTITIES

TYPE	CUBIC METERS PER METER
A1-150	0.064
A1-200	0.075
A2-150	0.144
A2-200	0.155
A3-150	0.025
A3-200	0.035
B1-100	0.056
B1-150	0.073
B2-100	0.137
B2-150	0.152
B3-100	0.017
B3-150	0.027
B4	0.142
D-100	0.100
D-150	0.162
E	0.161

TABLE A

CURB TYPE	DIMENSIONS "H1"	"H2"	"W1"	"W2"
A1-150	350	150	190	40
A1-200	400	200	200	50
A2-150	300	150	790	40
A2-200	350	200	800	50
A3-150	150	130	185	35
A3-200	200	180	198	48
B1-100	300	100	200	70
B1-150	350	150	230	100
B2-100	250	100	800	70
B2-150	300	150	830	100
B3-100	100	80	185	55
B3-150	150	130	217	87
D-100	250	100	452	322
D-150	300	150	652	522

NOTES

1. Case A driveway section typically applies.
2. Use Case B driveway section when ramp slopes would exceed 10% in Case A.
3. Use Case B driveway section when sidewalk cross slope would exceed 2% in Case A.
4. X=900 mm except for curb heights over 250 mm where 1:4 slopes shall be used on curb slope.
5. X is a variable when sidewalk is located where wheelchairs may traverse the surface. Slopes shall not exceed 8.33%.
6. Sidewalk and ramp thickness ``T'' at driveway shall be 100 mm for residental and 150 mm for commercial.
7. Difference in slope of the driveway ramp and the slope of a line between the gutter and a point on the roadway 1.5 meters from gutter line shall not exceed 15%. Reduce driveway ramp slope, not gutter slope, where required.
8. Minimum width of clear passageway for sidewalk shall be 1.22 meters.
9. Retaining curbs and acquisition of construction easement may be necessary for narrow sidewalks or curb heights in excess of 150 mm.
10. Across the pedestrian route at curb ramp locations, the gutter pan slope shall not exceed 25 mm of depth for each 600 mm of width.

STATE OF CALIFORNIA
DEPARTMENT OF TRANSPORTATION

CURBS AND DRIVEWAYS

NO SCALE

ALL DIMENSIONS ARE IN MILLIMETERS UNLESS OTHERWISE SHOWN

RSP A87A DATED NOVEMBER 17, 2006 SUPERSEDES STANDARD PLAN A87A DATED JULY 1, 2004-PAGE 115 OF THE STANDARD PLANS BOOK DATED JULY 2004.

REVISED STANDARD PLAN RSP A87A

2004 REVISED Std PLAN RSP A87A

10-25-06

DIST	COUNTY	ROUTE	KILOMETER POST TOTAL PROJECT	SHEET NO.	TOTAL SHEETS
11	SD	805	40.6/42.4	453	567

REGISTERED CIVIL ENGINEER

December 16, 2005
PLANS APPROVAL DATE

REGISTERED PROFESSIONAL ENGINEER Hector David Cordova No. C41957 Exp. 3-31-06 CIVIL STATE OF CALIFORNIA

The State of California or its officers or agents shall not be responsible for the accuracy or completeness of electronic copies of this plan sheet.

To get to the Caltrans web site, go to: http://www.dot.ca.gov

To accompany plans dated 6-14-10

Caltrans Metric

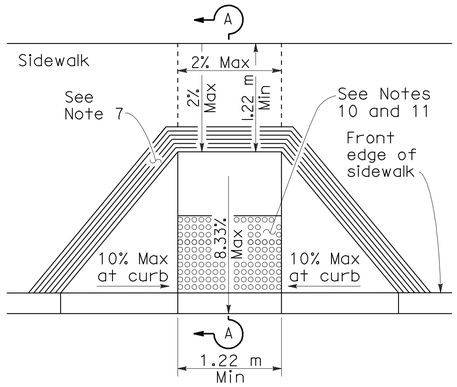

CASE A

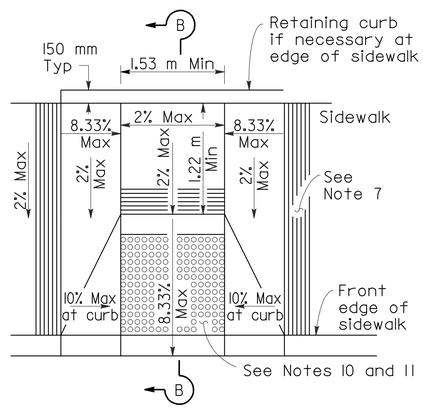

CASE B

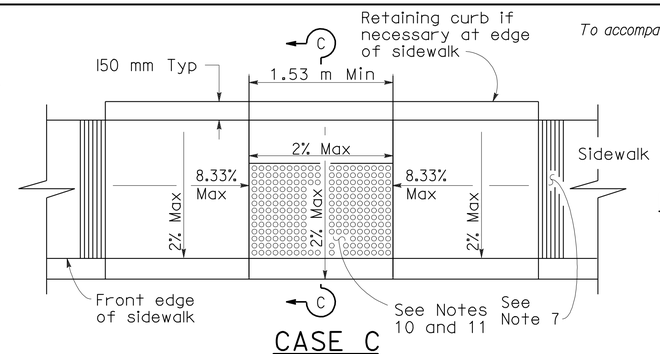

CASE C

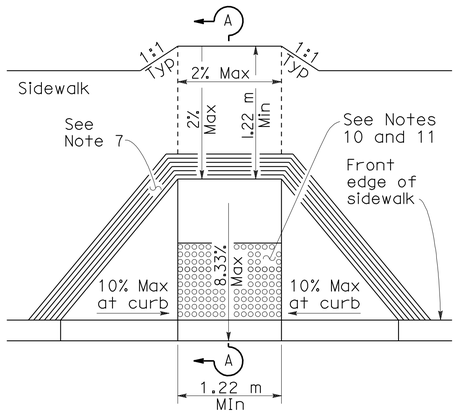

CASE D

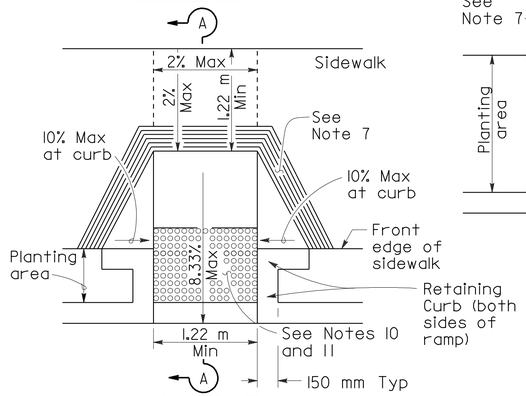

CASE E

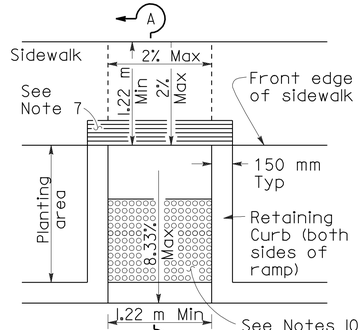

CASE F

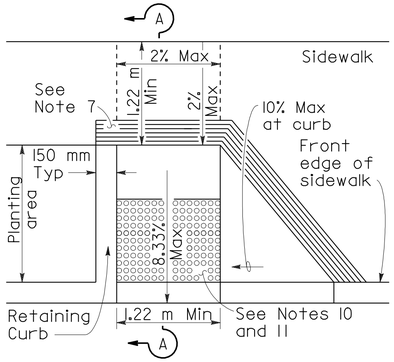

CASE G

See Note 4

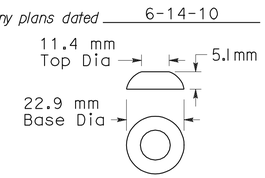

RAISED TRUNCATED DOME

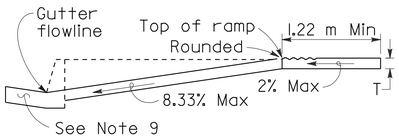

SECTION A-A

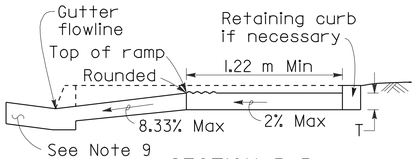

SECTION B-B

Depress entire sidewalk as required

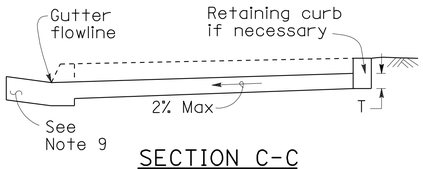

SECTION C-C

NOTES

1. As site conditions dictate, Case A through Case G curb ramps may be used for corner installations similar to those shown in Detail A and Detail B. The case of curb ramps used in Detail A do not have to be the same. Case A through Case G curb ramps also may be used at mid block locations, as site conditions dictate. For Cases B and C, the side of the curb ramp should always be perpendicular to curb face.
2. If distance from curb to back of sidewalk is too short to accommodate ramp and 1.22 m platform (landing) as shown in Case A, the sidewalk may be depressed longitudinally as in Case B, or C or may be widened as in Case D.
3. When ramp is located in center of curb return, crosswalk configuration must be similar to that shown for Detail B.
4. As site conditions dictate, the retaining curb side and the flared side of the Case G ramp shall be constructed in reversed position.
5. If located on a curve, the sides of the ramp need not be parallel, but the minimum width of the ramp shall be 1.22 m.
6. Side slope of ramp flares vary uniformly from a maximum of 10% at curb to conform with longitudinal sidewalk slope adjacent to top of the ramp, except in Case C and Case F.
7. The curb ramp shall be outlined, as shown, with a 305 mm wide border with 6 mm grooves approximately 19 mm on center. See grooving detail.
8. Transitions from ramps and landings to walks, gutters or streets shall be flush and free of abrupt changes.
9. Maximum slopes of adjoining gutters, the road surface immediately adjacent to the curb ramp, or accessible route shall not exceed 5 percent within 1.22 m of the top and bottom of the curb ramp.
10. Curb ramps shall have a detectable warning surface that extends the full width and 914 mm depth of the ramp. Detectable Warning Surfaces shall conform to the details on this plan and the requirements in the Special Provisions.
11. The edge of the detectable warning surface nearest the street shall be between 150 mm and 205 mm from the gutter flowline.
12. Sidewalk and ramp thickness, "T", shall be 90 mm minimum.
13. Utility pull boxes, manholes, vaults and all other utility facilities within the boundaries of the curb ramp will be relocated or adjusted to grade by the owner prior to, or in conjunction with, curb ramp construction.
14. For retrofit conditions, removal and replacement of curb apron will be at the Contractor's option, unless otherwise shown on project plans.

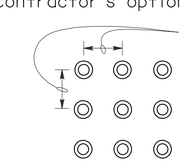

RAISED TRUNCATED DOME PATTERN (IN-LINE)

DETECTABLE WARNING SURFACE

See Note 10

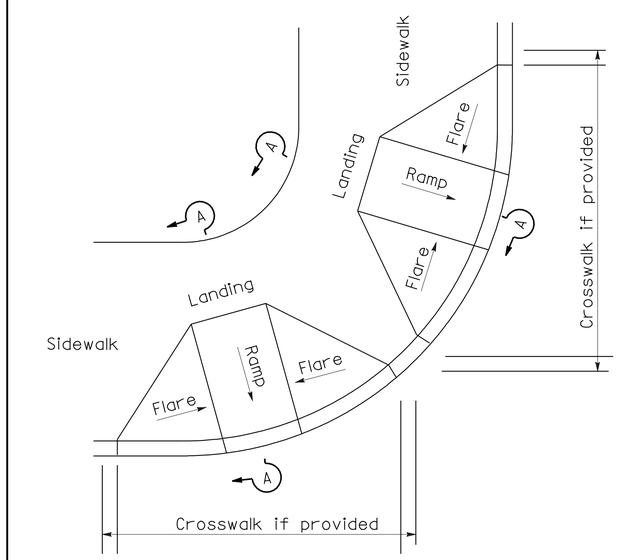

DETAIL A

TYPICAL TWO-RAMP CORNER INSTALLATION

See Note 1

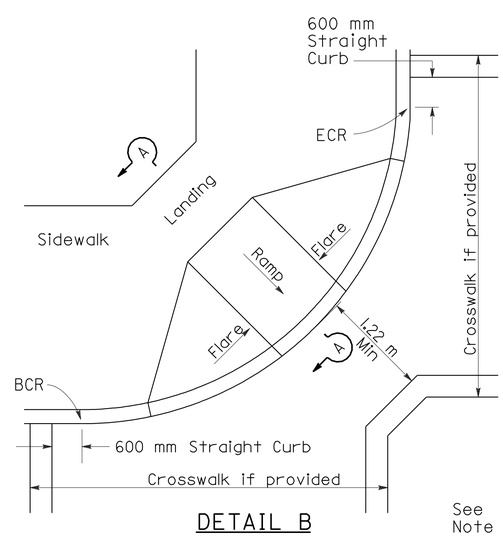

DETAIL B

TYPICAL ONE-RAMP CORNER INSTALLATION

See Notes 1 and 3

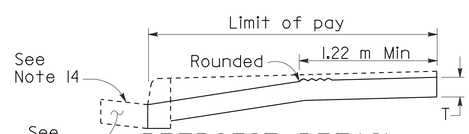

RETROFIT DETAIL

Existing curb and sidewalk

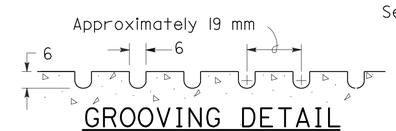

GROOVING DETAIL

STATE OF CALIFORNIA
DEPARTMENT OF TRANSPORTATION

CURB RAMP DETAILS

NO SCALE

ALL DIMENSIONS ARE IN MILLIMETERS UNLESS OTHERWISE SHOWN

RSP A88A DATED DECEMBER 16, 2005 SUPERSEDES STANDARD PLAN A88A DATED JULY 1, 2004-PAGE 117 OF THE STANDARD PLANS BOOK DATED JULY 2004.

REVISED STANDARD PLAN RSP A88A

2004 REVISED Std PLAN RSP A88A

12-16-05

DIST	COUNTY	ROUTE	KILOMETER POST TOTAL PROJECT	SHEET NO.	TOTAL SHEETS
11	SD	805	40.6/42.4	454	567

Caltrans Metric

REGISTERED CIVIL ENGINEER

December 16, 2005
PLANS APPROVAL DATE

REGISTERED PROFESSIONAL ENGINEER
Hector David Cordova
No. C41957
Exp. 3-31-06
CIVIL
STATE OF CALIFORNIA

The State of California or its officers or agents shall not be responsible for the accuracy or completeness of electronic copies of this plan sheet.

To get to the Caltrans web site, go to: http://www.dot.ca.gov

To accompany plans dated 6-14-10

2004 REVISED Std PLAN RSP A88B

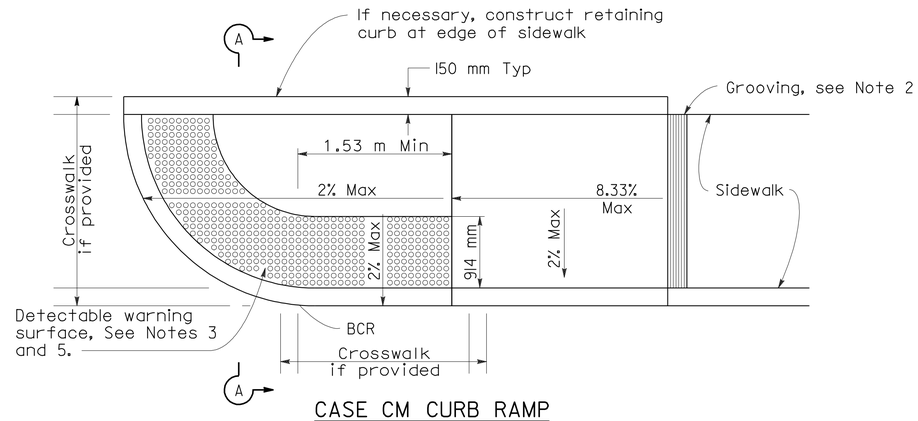

CASE CM CURB RAMP

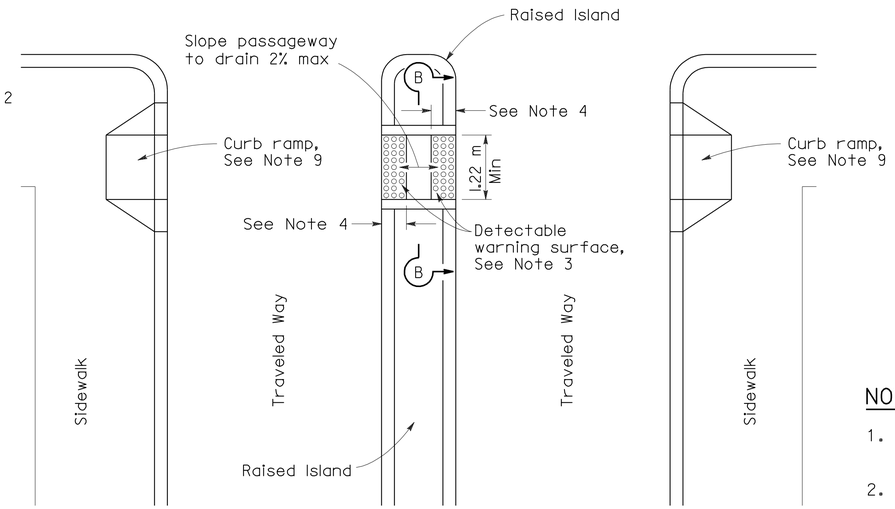

TYPE A PASSAGEWAY

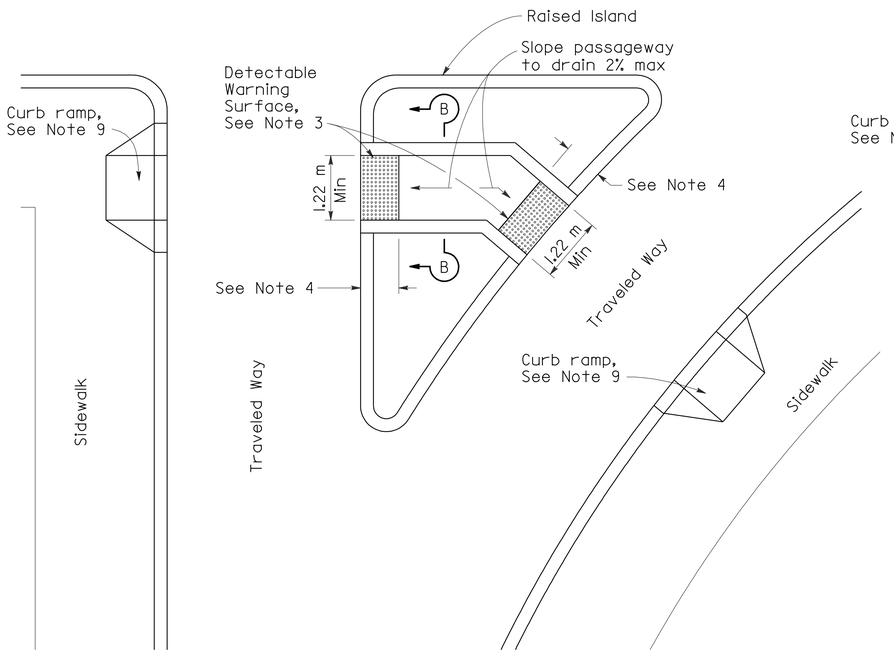

TYPE B PASSAGEWAY

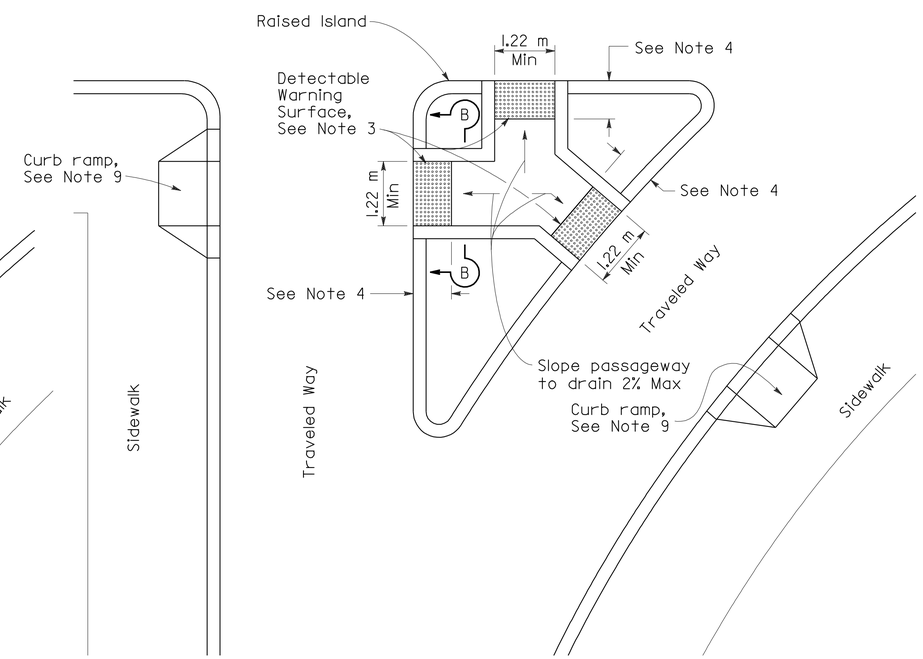

TYPE C PASSAGEWAY

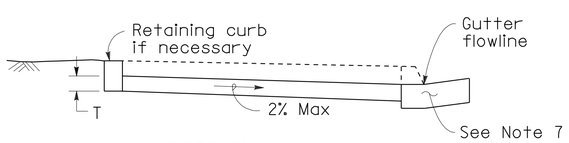

SECTION A-A

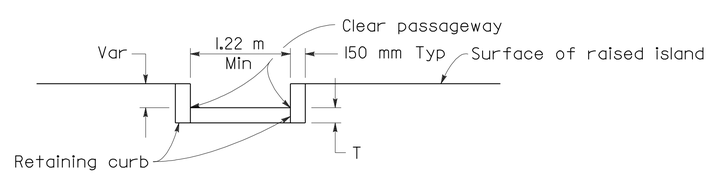

SECTION B-B

NOTES

1. Sidewalk, ramp and passageway thickness, ``T'', shall be 90 mm minimum.
2. For details of grooving used with Case CM curb ramp, see Revised Standard Plan RSP A88A.
3. For details of detectable warning surfaces, see Revised Standard Plan RSP A88A.
4. Where an island passage way length is less than 1.8 m, the detectable warning surface shall extend the full width and full depth of the passage way length. Where an island passage way length is greater than or equal to 1.8 m, but less than 2.44 m, each detectable warning surface shall extend the full width and 600 mm depth of the passage way length. Where an island passage way length is greater than or equal to 2.44 m, each detectable warning surface shall extend the full width and 914 mm depth of the passage way length.
5. For Case CM curb ramp, the edge of the detectable warning surface nearest the street shall be between 150 mm and 205 mm from the gutter flowline.
6. Transitions from ramps to walks, gutters or streets shall be flush and free of abrupt changes.
7. Maximum slopes of adjoining gutters, the road surface immediately adjacent to the curb ramp, or accessible route shall not exceed 5 percent within 1.22 m of the top and bottom of the curb ramp.
8. Utility pull boxes, manholes, vaults and all other utility facilities within the boundaries of the curb ramp will be relocated or adjusted to grade by the owner prior to, or in conjunction with, curb ramp construction.
9. For additional curb ramp details, see Revised Standard Plan RSP A88A.

STATE OF CALIFORNIA
DEPARTMENT OF TRANSPORTATION

CURB RAMP AND ISLAND PASSAGEWAY DETAILS

NO SCALE

ALL DIMENSIONS ARE IN MILLIMETERS UNLESS OTHERWISE SHOWN

RSP A88B DATED DECEMBER 16, 2005 SUPERSEDES STANDARD PLAN A88B DATED JULY 1, 2004-PAGE 118 OF THE STANDARD PLANS BOOK DATED JULY 2004.

REVISED STANDARD PLAN RSP A88B

12-16-05

DIST	COUNTY	ROUTE	KILOMETER POST TOTAL PROJECT	SHEET NO.	TOTAL SHEETS
11	SD	805	40.6/42.4	455	567

Caltrans Metric

Raymond Don Tsztoo
REGISTERED CIVIL ENGINEER

June 6, 2008
PLANS APPROVAL DATE

REGISTERED PROFESSIONAL ENGINEER
Raymond Don Tsztoo
No. C37332
Exp. 6-30-08
CIVIL
STATE OF CALIFORNIA

The State of California or its officers or agents shall not be responsible for the accuracy or completeness of electronic copies of this plan sheet.

To get to the Caltrans web site, go to: http://www.dot.ca.gov

To accompany plans dated 6-14-10

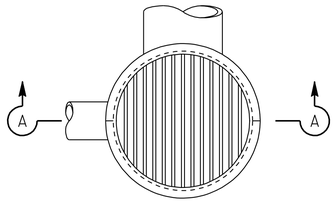

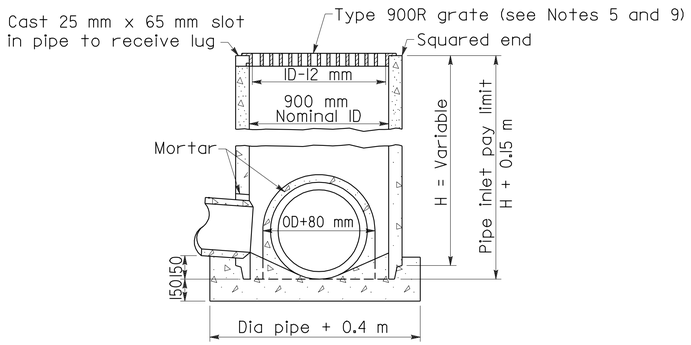

SECTION A-A

TYPE GCP

CONCRETE PIPE INLET WITH GRATE

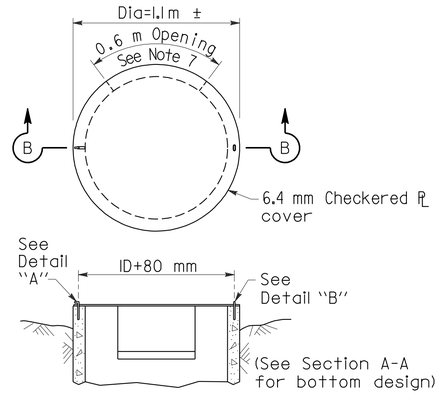

SECTION B-B

TYPE OCP or OCPI

CONCRETE PIPE INLET WITH STEEL COVER
(See Note 6)

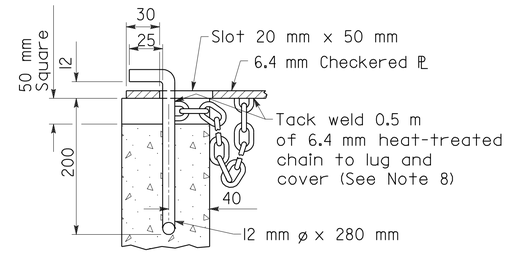

DETAIL "A"

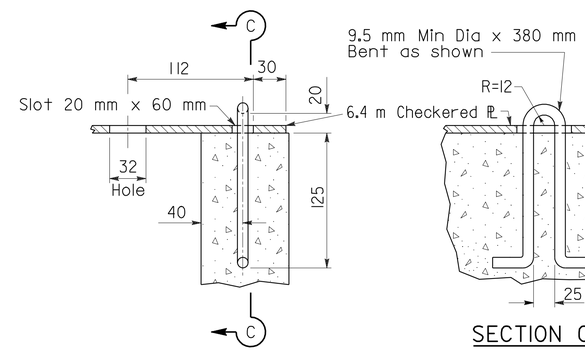

DETAIL "B"

SECTION C-C

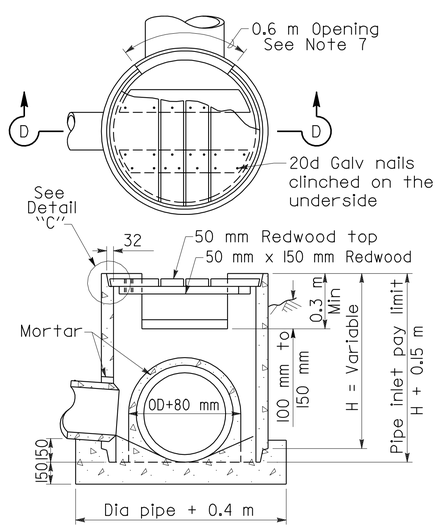

SECTION D-D

TYPE OCP or OCPI

CONCRETE PIPE INLET WITH REDWOOD COVER
(See Notes 6 and 10)

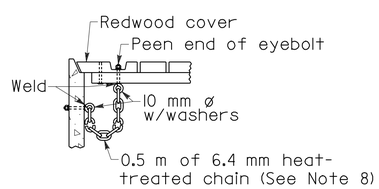

DETAIL "C"

NOTES

1. For details of steel pipe inlets, see Standard Plan D75A.
2. For details of ladder and steps and when ladder or steps are required, see Standard Plan D75C.
3. Inlet pipes shall not protrude into basin.
4. Except for inlets used for junction boxes, basin floors shall have minimum slope of 1:4 from all directions toward outlet pipe, and a wood trowel finish.
5. See Revised Standard Plan RSP D77A and Standard Plan D77B for Grate and Frame Details and Weights of Miscellaneous Iron and Steel.
6. Designation of Type OCPI pipe inlets on plans indicates trash racks are to be furnished and installed on all side openings. See Standard Plan D75C for Trash Rack details.
7. More than one side opening may be required. Location and number as ordered by the Engineer. Opening may be cast in pipe.
8. Chain to be provided when specified.
9. Place pipe so bars of grate will be parallel with main surface flow.
10. Redwood covers shall only be placed at locations designated on the plans.

STATE OF CALIFORNIA
DEPARTMENT OF TRANSPORTATION

PIPE INLETS

NO SCALE

ALL DIMENSIONS ARE IN MILLIMETERS UNLESS OTHERWISE SHOWN

RSP D75B DATED JUNE 6, 2008 SUPERSEDES STANDARD PLAN D75B
DATED July 1, 2004 - PAGE 153 OF THE STANDARD PLANS BOOK DATED July 2004.

REVISED STANDARD PLAN RSP D75B

2004 REVISED Std PLAN RSP D75B

05-20-08

DIST	COUNTY	ROUTE	KILOMETER POST TOTAL PROJECT	SHEET NO.	TOTAL SHEETS
11	SD	805	40.6/42.4	456	567

Caltrans Metric

Raymond Don Tsztoo
REGISTERED CIVIL ENGINEER

January 18, 2008
PLANS APPROVAL DATE

REGISTERED PROFESSIONAL ENGINEER Raymond Don Tsztoo No. C37332 Exp. 6-30-08 CIVIL STATE OF CALIFORNIA

The State of California or its officers or agents shall not be responsible for the accuracy or completeness of electronic copies of this plan sheet.

To get to the Caltrans web site, go to: http://www.dot.ca.gov

To accompany plans dated 6-14-10

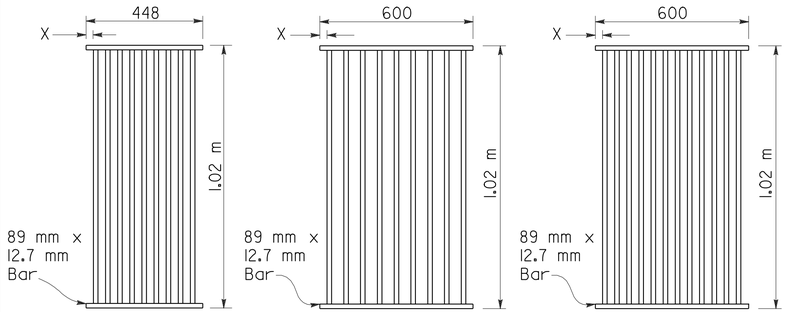

TYPE 450-9

35 mm Clear spacing. Use within the roadbed on highways where bicycles and pedestrians are excluded.

TYPE 600-9

51 mm Clear spacing. Use in locations off the roadbed on all types of highways.

TYPE 600-12

35 mm Clear spacing. Use within the roadbed on highways where bicycles and pedestrians are excluded.

RECTANGULAR GRATE DETAILS

(See table below)

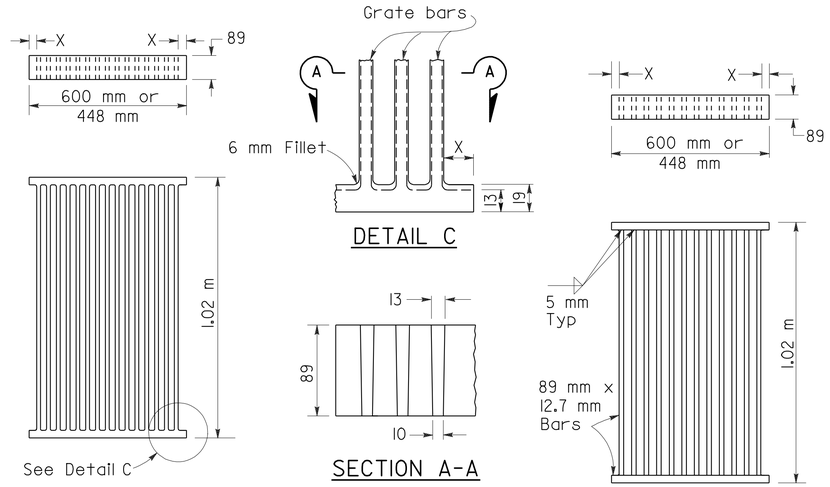

ALTERNATIVE CAST NODULAR IRON GRATE OR CAST STEEL GRATE

ALTERNATIVE WELDED GRATE

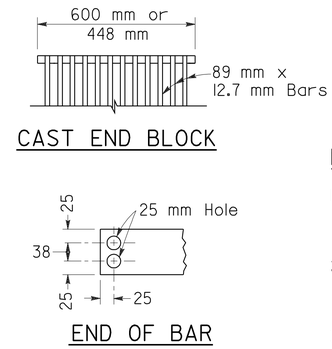

CAST END BLOCK

END OF BAR

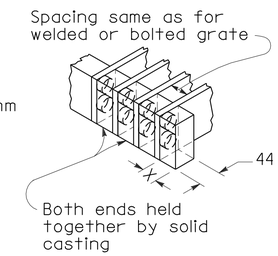

ALTERNATIVE CAST NODULAR IRON OR CAST STEEL END BLOCK GRATE

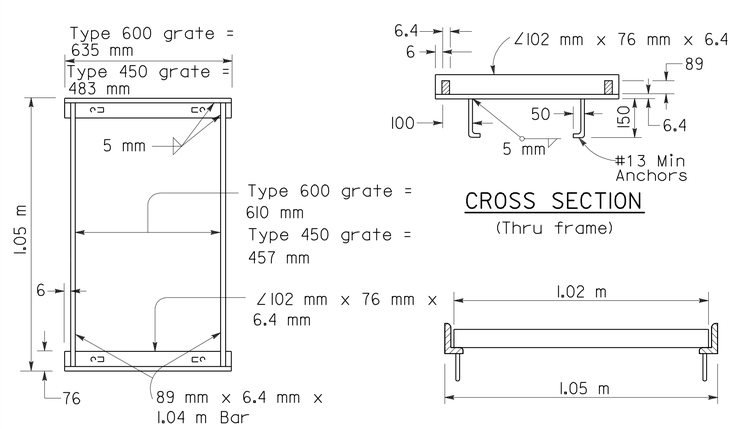

RECTANGULAR FRAME DETAILS

(For all rectangular grates)

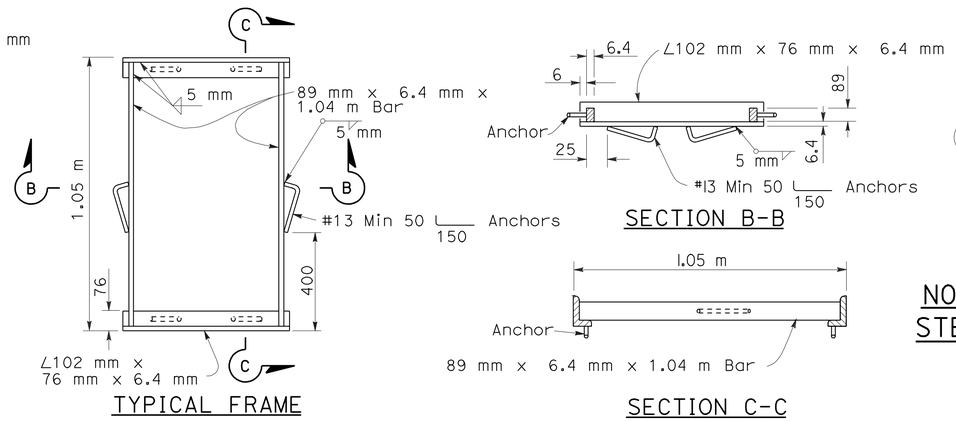

ALTERNATIVE ANCHOR FOR RECTANGULAR FRAME

(For details not shown, See Rectangular Frame Details)

NOTES

1. Grate type numbers refer to approximate width of grate in millimeters and number of bars, respectively.
2. Contractor has the option of using cast nodular iron, cast steel, welded, bolted, or cast end block grate.
3. See Special Provisions for requirements pertaining to galvanizing or asphalt dipping of grates and frames.
4. Rounded top of bars optional on all grates.
5. Pipe inlets with a grate shall be placed so that bars parallel direction of principle surface flow.
6. Full penetration butt welds may be substituted for the fillet welds on all anchors.
7. Standard square, hexagon, round or equivalent headed anchors may be substituted for the right angle hooks on the anchors shown on this plan.
8. Grate and frame weights are based on welded grates (weights of face angles, steps, protection bars, etc. are not included).

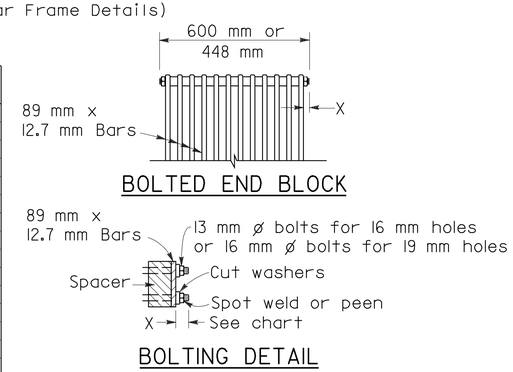

ALTERNATIVE BOLTED GRATE

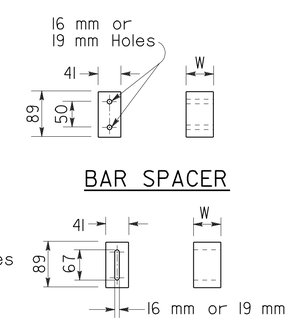

GRATE BAR SPACING TABLE

TYPE	No. OF BARS	CLEAR BAR SPACING (mm)	X (mm)
450-9	9	35	27
600-9	9	51	40
600-12	12	35	32

INLET TYPE	COVER TYPE	MASS (kg)
OS	PLATE	79
OL-2.1	PLATE	77
OL-3.0	PLATE	77
OL-4.3	PLATE	77
OL-6.4	PLATE	77
OCP	PLATE	51
OCPI	PLATE	51
OCPI	REDWOOD	19
OMP	PLATE	80
OMPI	PLATE	80

INLET TYPE	GRATE TYPE	No. OF GRATES	MASS (kg)
GDO	600-12	2	288
GOL-2.1	600-12	1	148
GOL-3.0	600-12	1	148
GO,G1,G2,G3,G4(TYPE 600)	600-9	1	119
	600-12	1	148
G4(TYPE 450),G5,G6	450-9	1	113
GT-1	450-9	2	226
GT-2	450-9	2	226
GT-3	600-12	2	296
GT-4	600-12	2	296
TRASH RACK			10

BASIS FOR MISC IRON & STEEL FINAL PAY MASSES FOR DRAINAGE INLETS

(See General Notes, No. 8)

STATE OF CALIFORNIA
DEPARTMENT OF TRANSPORTATION

GRATE DETAILS

NO SCALE

ALL DIMENSIONS ARE IN MILLIMETERS UNLESS OTHERWISE SHOWN

RSP D77A DATED JANUARY 18, 2008 SUPERSEDES STANDARD PLAN D77A DATED JULY 1, 2004 - PAGE 155 OF THE STANDARD PLANS BOOK DATED JULY 2004.

REVISED STANDARD PLAN RSP D77A

2004 REVISED Std PLAN RSP D77A

DIST	COUNTY	ROUTE	KILOMETER POST TOTAL PROJECT	SHEET No.	TOTAL SHEETS
11	SD	805	40.6/42.4	457	567

Caltrans Metric

Glenn DeCou
REGISTERED CIVIL ENGINEER

April 28, 2005
PLANS APPROVAL DATE

REGISTERED PROFESSIONAL ENGINEER
Glenn DeCou
No. C34547
Exp. 9-30-05
CIVIL
STATE OF CALIFORNIA

The State of California or its officers or agents shall not be responsible for the accuracy or completeness of electronic copies of this plan sheet.

To get to the Caltrans web site, go to: http://www.dot.ca.gov

To accompany plans dated 6-14-10

2004 REVISED Std PLAN RSP D78C

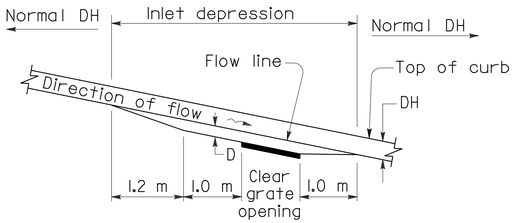

PROFILE

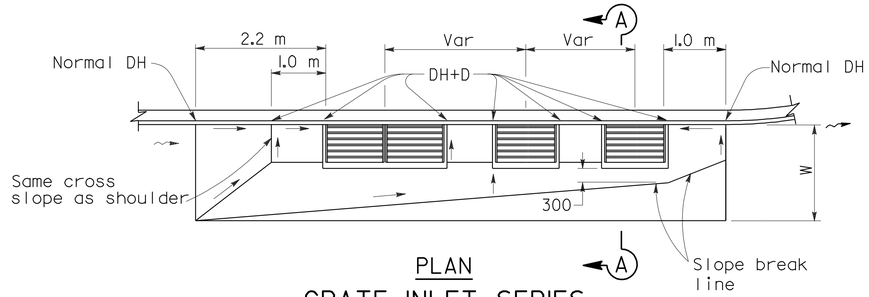

PLAN

GRATE INLET SERIES

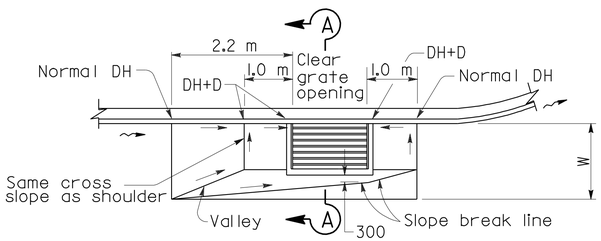

PLAN

TYPE GO AND GI THRU G6 INLETS ON GRADE

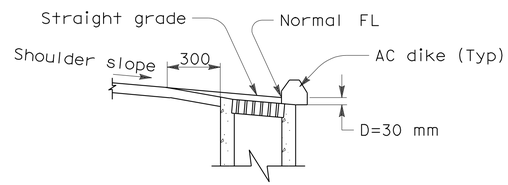

SECTION A-A

(Single grate shown)

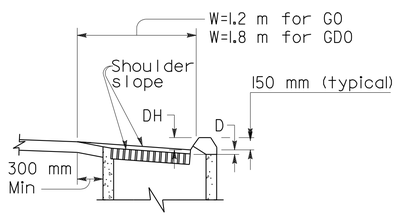

SECTION B-B

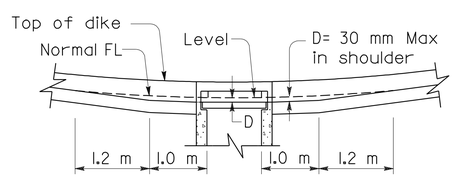

SECTION D-D

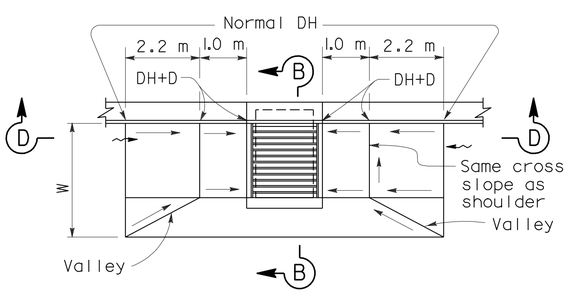

PLAN

TYPE GO AND GDO INLET GRADE SAG

(GDO shown)

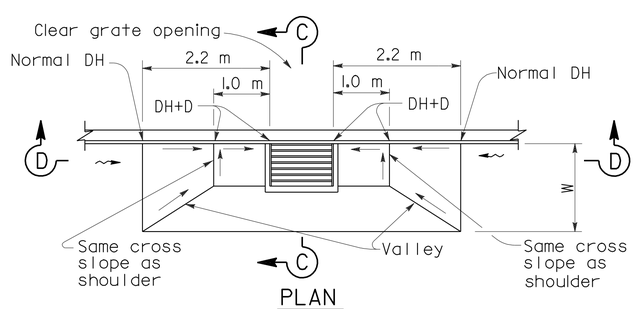

PLAN

TYPE GI THRU G6 GT3 AND GT4

INLETS IN GRADE SAG

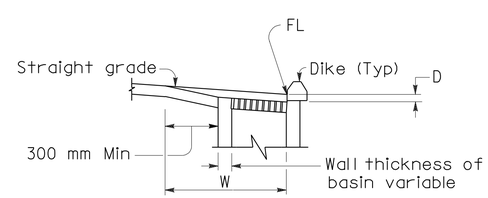

SECTION C-C

NOTES

1. W = Width of depressed apron. Depressed aprons shall be 1.2 m unless indicated otherwise.

   D = Inlet depression. The Inlet depression shall be 30 mm unless indicated otherwise.

   DH = Dike Height.

   ⟶ = Straight grade, downward slope.

   ⇝ = Direction of flow.

2. Apron shall be asphalt concrete and match thickness of adjacent shoulder pavement.

3. Establish curb opening height of Type GO or GDO at midpoint of grate. See Standard Plan D74B for details of curb opening.

STATE OF CALIFORNIA
DEPARTMENT OF TRANSPORTATION

INLET DEPRESSIONS ASPHALT CONCRETE SHOULDERS

NO SCALE

ALL DIMENSIONS ARE IN MILLIMETERS UNLESS OTHERWISE SHOWN

RSP D78C DATED APRIL 28, 2005 SUPERSEDES STANDARD PLAN D78C DATED JULY 1, 2004-PAGE 160 OF THE STANDARD PLANS BOOK DATED JULY 2004.

REVISED STANDARD PLAN RSP D78C

To accompany plans dated 6-14-10

Caltrans Metric

DIST	COUNTY	ROUTE	KILOMETER POST TOTAL PROJECT	SHEET NO.	TOTAL SHEETS
11	SD	805	40.6/42.4	458	567

Raymond Don Tsztoo
REGISTERED CIVIL ENGINEER

June 6, 2008
PLANS APPROVAL DATE

REGISTERED PROFESSIONAL ENGINEER Raymond Don Tsztoo No. C37332 Exp. 6-30-08 STATE OF CALIFORNIA

The State of California or its officers or agents shall not be responsible for the accuracy or completeness of electronic copies of this plan sheet.

To get to the Caltrans web site, go to: http://www.dot.ca.gov

ANNULAR AND HELICAL PROFILE

COUPLING TYPE	PIPE CORRUGATION (mm)	PIPE SIZE (mm)	W OR A (mm)	PIPE WALL THICKNESS CSP (mm)	PIPE WALL THICKNESS CAP (mm)	BAND THICKNESS CSP (mm)	BAND THICKNESS CAP (mm)	BAR AND STRAP (CSP ONLY) STRAP THICKNESS (mm)	BOLTS (mm ø)	BAR Dia (mm)	BAR YIELD STRENGTH (MPa)	ANGLE DIMENSIONS CSP (mm)	ANGLE DIMENSIONS CAP (mm)	BOLTS (No.-mm ø) CSP	BOLTS (No.-mm ø) CAP	RIVETS ANGLE TO BAND CSP	RIVETS ANGLE TO BAND CAP	SPOT WELDS ANGLE TO BAND CSP
TWO PIECE INTEGRAL FLANGE	38 x 6.5	150 - 250	178	1.32 - 2.01	1.22 - 1.52	1.32	1.52							2-10	2-10			
		300 - 450	178	1.32 - 2.01		1.63								2-13				
	68 x 13	300 - 600	178	1.32 - 2.01	1.52 - 2.67	1.63	1.52							2-13	2-13			
UNIVERSAL	68 x 13	THROUGH 900	305	1.32 - 3.51	1.52 - 3.43	1.32	1.52					51 x 51 x 4.8	51 x 51 x 4.8	3-13	3-13	3-9.5 mm	3-9.5 mm	3-15 mm
		1050 - 1500	305	1.32 - 4.27	1.91 - 4.17	1.32	1.52					51 x 51 x 4.8	51 x 51 x 4.8	3-13	3-13	3-9.5 mm	3-9.5 mm	5-15 mm
		THROUGH 1800	305	1.32 - 4.27	4.17	1.32	2.67	2.01	13	22	220	51 x 51 x 4.8	51 x 51 x 4.8	3-13	3-13	3-9.5 mm	3-9.5 mm	5-15 mm
		1950 - 2100	413	4.27		2.01		DOUBLE 2.01	13	22	220							
ANNULAR	68 x 13	THROUGH 900	178	1.63 - 3.51	1.52 - 3.43	1.32	1.52	2.01	13	22	220	51 x 51 x 4.8	51 x 51 x 4.8	2-13	2-13	3-9.5 mm	3-9.5 mm	3-15 mm
		1050 - 1800	305	1.63 - 4.27	1.91 - 4.17	1.32	2.67	2.01	13	22	220	51 x 51 x 4.8	51 x 51 x 4.8	3-13	3-13	3-9.5 mm	3-9.5 mm	5-15 mm
		1950 - 2100	305	4.27		2.01		2.77	13	22	310	51 x 51 x 4.8		3-13		3-9.5 mm		5-15 mm
	75 x 25	1200 - 2250	355	1.63 - 2.77		1.32		2.01	13	22	220	51 x 51 x 4.8		3-13		3-9.5 mm		5-15 mm
		2400 - 3000	355	2.01 - 2.77		1.32		2.77	13	22	310	51 x 51 x 4.8		3-13		4-9.5 mm		
		1050 - 2700	355		1.52 - 3.43		1.52						51 x 51 x 4.8		3-13		3-9.5 mm	
HELICAL	68 x 13	THROUGH 900	305	1.32 - 3.51	1.52 - 3.43	1.32	1.52	2.01	13	22	220	51 x 51 x 4.8	51 x 51 x 4.8	3-13	3-13	3-9.5 mm	3-9.5 mm	3-15 mm
		1050 - 1800	305	1.32 - 4.27	1.91 - 4.17	1.32	1.52	2.01	13	22	220	51 x 51 x 4.8	51 x 51 x 4.8	3-13	3-13	3-9.5 mm	3-9.5 mm	5-15 mm
		1950 - 2100	305	4.27		2.01		2.77	13	22	310	51 x 51 x 4.8		3-13		3-9.5 mm		5-15 mm
	75 x 25	1200 - 2250	355	1.63 - 2.77		1.32		2.01	13	22	220	51 x 51 x 4.8		3-13		3-9.5 mm		5-15 mm
		2400 - 3000	355	2.01 - 2.77		1.32		2.77	13	22	310	51 x 51 x 4.8		3-13		4-9.5 mm		
		1050 - 2700	355		1.52 - 3.43		1.52						51 x 51 x 4.8		3-13		3-9.5 mm	
HUGGER	68 x 13 REROLLED END	300 - 1350	100	1.32 - 2.77		1.32						64 x 38 x 4.8	64 x 38 x 4.8	1-13				3-15 mm
		1500 - 1650	100	2.77		1.63						64 x 38 x 4.8	64 x 38 x 4.8	1-13				3-15 mm
		900 - 1200	100	3.51		1.63						64 x 38 x 4.8	64 x 38 x 4.8	1-13				3-15 mm
		THROUGH 1800	267	1.32 - 4.27		1.32		2.01	13	22	220							
		1950 - 2100	267	4.27		2.01		2.77	13	22	310							
	75 x 25 REROLLED END	1200 - 2250	267	1.63 - 2.77		1.32		2.01	13	22	220							
		2400 - 3000	267	2.01 - 2.77		1.32		2.77	13	22	310							
	125 x 25 REROLLED END	1200 - 1650	190	1.63 - 2.77		1.63		2.01	13	22	220	64 x 38 x 4.8	64 x 38 x 4.8	1-13				3-15 mm
		1800 - 2250	190	1.63 - 2.01		1.63		2.01	13	22	220	64 x 38 x 4.8	64 x 38 x 4.8	1-13				3-15 mm
		1200 - 2250	190	1.63 - 3.51		1.63		2.01	13	22	220							
		1200 - 3000	305 SEE	1.63 - 2.77		1.63		2.01	13	22	220							
		1200 - 2100	305 NOTE	3.51		1.63		2.01	13	22	220							
		2250 - 3000	305 11	3.51		1.63		DOUBLE 2.01	13	22	220							

SPIRAL RIB PROFILE

COUPLING TYPE	PIPE CORRUGATION (mm)	PIPE SIZE (mm)	W (mm)	PIPE WALL THICKNESS SSRP (mm)	PIPE WALL THICKNESS ASRP (mm)	BAND THICKNESS SSRP (mm)	BAND THICKNESS ASRP (mm)	BAR AND STRAP (SSRP ONLY) STRAP THICKNESS (mm)	BOLTS (mm ø)	BAR Dia (mm)	BAR YIELD STRENGTH (MPa)	ANGLE DIMENSIONS SSRP (mm)	ANGLE DIMENSIONS ASRP (mm)	BOLTS (No.- mm ø) SSRP	BOLTS (No.- mm ø) ASRP	RIVETS ANGLE TO BAND SSRP	RIVETS ANGLE TO BAND ASRP	SPOT WELDS ANGLE TO BAND SSRP
ANNULAR	68 x 13 * REROLLED END	600 - 900	305	1.63 - 2.77	1.52 - 2.67	1.32	1.52	2.01	13	22	220	51 x 51 x 4.8	51 x 51 x 4.8	3-13	3-13	3-9.5 mm	3-9.5 mm	5-15 mm
		1050 - 1500	305	1.63 - 2.77	1.91 - 2.67	1.32	2.67	2.01	13	22	220	51 x 51 x 4.8	51 x 51 x 4.8	3-13	3-13	3-9.5 mm	3-9.5 mm	5-15 mm
		1650 - 1800	305	1.63 - 2.77		1.32		2.01	13	22	220	51 x 51 x 4.8	51 x 51 x 4.8	3-13	3-13	3-9.5 mm	3-9.5 mm	5-15 mm
		1950 - 2900	305	2.01 - 2.77		2.01		2.77	13	22	310	51 x 51 x 4.8	51 x 51 x 4.8	3-13	3-13	3-9.5 mm	3-9.5 mm	5-15 mm
HUGGER	68 x 13 * REROLLED END	600 - 1800	267	1.63 - 2.77		1.32		2.01	13	22	220							
		1950 - 2100	267	2.77		2.01		2.77	13	22	310							

* See Note 14.

14. All profiles of Spiral Rib Pipe (19 mm x 19 mm ribs at 191 mm pitch and 19 mm x 25 mm ribs at 292 mm pitch in both steel and aluminum and 19 mm x 25 mm ribs at 216 mm pitch in steel only) shall be manufactured with rerolled ends. Corrugation profile of the rerolled ends shall be 68 mm x 13 mm annual corrugations with a minimum of two full corrugations at each end.

ALL DIMENSIONS ARE IN MILLIMETERS UNLESS OTHERWISE SHOWN

NOTES

1. All ferrous metal coupling band connection hardware shall be galvanized or electro-plated in accordance with the Standard Specifications.
2. For helically corrugated coupling bands, the connection angles may be oriented parallel to the pipe axis, provided connecting holes are slotted lengthwise sufficiently to allow adjustment for the helix angle.
3. Tension strap may be connected to band with either spot welds or fillet welds that develop minimum required strength of strap.
4. Use 32 mm gage line dimension on attached angle leg for rivets and spot welds.
5. Band thickness shall not be less than:
   a. 3 standard thicknesses lighter than the thickness of the pipe for Corrugated Steel Pipe.
   b. 2 standard thicknesses lighter than the thickness of the pipe and in no case lighter than 1.5 mm for Corrugated Aluminum Pipe.
6. Dimensions, thicknesses and strengths shown are minimum.
7. For pipe arches use same width band as for round pipe of equal periphery.
8. Fillet welds of equivalent strenght may be substituted for spot welds or rivets.
9. Spot welds shall develop minimum required strength of strap.
10. Pipe with rerolled ends having at least two 68 mm x 13 mm annular corrugations at each end with or without an upturned flange may be connected with any of the annular coupling bands shown for pipe of the same diameter and wall thickness and having 68 mm x 13 mm corrugations.
11. In the case of H-305 huggerbands, two piece bands are required for diameters through 2400 mm and three piece bands are required for diameters 2550 mm through 3000 mm.
12. Two piece bands are required for pipes greater than 1050 mm diameter.
13. The 57 mm x 51 mm x 2.8 mm thick galvanized die-formed angle connector may be used in lieu of the 51 mm x 51 mm 4.8 mm angle connector for standard joints only on pipes through 1800 mm diameter.

STATE OF CALIFORNIA
DEPARTMENT OF TRANSPORTATION

CORRUGATED METAL PIPE COUPLING DETAILS No. 5 STANDARD JOINT

NO SCALE

RSP D97E DATED JUNE 6, 2008 SUPERSEDES STANDARD PLAN D97E DATED July 1, 2004 - PAGE 187 OF THE STANDARD PLANS BOOK DATED July 2004.

REVISED STANDARD PLAN RSP D97E

2004 REVISED Std PLAN RSP D97E

05-19-08

To accompany plans dated 6-14-10

Caltrans Metric

DIST	COUNTY	ROUTE	KILOMETER POST TOTAL PROJECT	SHEET NO.	TOTAL SHEETS
11	SD	805	40.6/42.4	459	567

Raymond Don Tsztoo
REGISTERED CIVIL ENGINEER

June 6, 2008
PLANS APPROVAL DATE

REGISTERED PROFESSIONAL ENGINEER Raymond Don Tsztoo No. C37332 Exp. 6-30-08 STATE OF CALIFORNIA

The State of California or its officers or agents shall not be responsible for the accuracy or completeness of electronic copies of this plan sheet.

To get to the Caltrans web site, go to: http://www.dot.ca.gov

ANNULAR AND HELICAL PROFILE

COUPLING TYPE	PIPE CORRUGATION (mm)	PIPE SIZE (mm)	W OR A (mm)	PIPE WALL THICKNESS		BAND THICKNESS		BAR AND STRAP (CSP ONLY)			ANGLE						
											DIMENSIONS		BOLTS (No.-mm ø)		RIVETS ANGLE TO BAND		SPOT WELDS ANGLE TO BAND
				CSP (mm)	CAP (mm)	CSP (mm)	CAP (mm)	STRAP THICKNESS (mm)	BOLTS (mm ø)	BAR Dia (mm)	CSP (mm)	CAP (mm)	CSP	CAP	CSP	CAP	CSP
TWO PIECE INTEGRAL FLANGE	38 x 6.5	150	178	1.63 - 4.27		1.32							3-10				
	38 x 6.5	200 - 250	178	1.63 - 4.27	1.52 - 4.17	1.63	1.52						3-10	3-10			
ANNULAR	68 x 13	THROUGH 600	305	1.63 - 4.27	1.52 - 4.17	1.63	1.52				51 x 51 x 4.8	51 x 51 x 4.8	3-13	3-13	3-9.5 mm	3-9.5 mm	3-15 mm
HUGGER	68 x 13 REROLLED END	THROUGH 600	267	1.63 - 4.27		1.63		2.01	13	22	51 x 51 x 4.8	51 x 51 x 4.8	3-13	3-13	3-9.5 mm	3-9.5 mm	3-15 mm

SPIRAL RIB PROFILE

COUPLING TYPE	PIPE CORRUGATION (mm)	PIPE SIZE (mm)	W (mm)	PIPE WALL THICKNESS		BAND THICKNESS		BAR AND STRAP (SSRP ONLY)			ANGLE						
											DIMENSIONS		BOLTS (No.- mm ø)		RIVETS ANGLE TO BAND		SPOT WELDS ANGLE TO BAND
				SSRP (mm)	ASRP (mm)	SSRP (mm)	ASRP (mm)	STRAP THICKNESS (mm)	BOLTS (mm ø)	BAR Dia (mm)	SSRP (mm)	ASRP (mm)	SSRP	ASRP	SSRP	ASRP	SSRP
ANNULAR	68 x 13 * REROLLED END	600	305	1.63 - 4.27	1.52 - 4.17	1.63	1.52				51 x 51 x 4.8	51 x 51 x 4.8	3-13	3-13	3-9.5 mm	3-9.5 mm	3-15 mm
HUGGER	68 x 13 * REROLLED END	600	267	1.63 - 4.27		1.63		2.01	13	22							

* See Note 12.

NOTES

1. All ferrous metal coupling band connection hardware shall be galvanized or electroplated in accordance with the Standard Specifications.
2. For helically corrugated coupling bands, the connection angles may be oriented parallel to the pipe axis, provided connecting holes are slotted lengthwise sufficiently to allow adjustment for the helix angle.
3. Tension straps may be connected to band with either spot welds or fillet welds that develop minimum required strength of strap.
4. Use 32 mm gage line dimension on attached angle leg for rivets and spot welds.
5. Band thickness shall not be less than:
   a. 3 standard thickness lighter than the thickness of the pipe for corrugated steel pipe.
   b. 2 standard thickness lighter than the thickness of the pipe and in no case lighter than 1.5 mm for corrugated aluminum pipe.
6. Dimensions, thickness and strengths shown are minimum.
7. For pipe arches use same width band as for round pipe of equal periphery.
8. Fillet welds of equivalent strength may be substituted for spot welds or rivets.
9. Spot welds shall develop minimum required strength of strap.
10. Pipe with rerolled ends having at least two 68 mm x 13 mm annular corrugations at each end with or without an upturned flange may be connected with any of the annular coupling bands shown for pipe of the same diameter and wall thickness and having 68 mm x 13 mm corrugations.
11. For downdrain applications, two piece integral flange couplers shall have factory applied sleeve type rubber gaskets with a minimum length of 175 mm measured along the length of the pipe.
12. All profiles of Spiral Rib Pipe (19 mm x 19 mm ribs at 191 mm pitch and 19 mm x 25 mm ribs at 292 mm pitch in both steel and aluminum and 19 mm x 25 mm ribs at 216 mm pitch in steel only) shall be manufactured with rerolled ends. Corrugation profile of the rerolled ends shall be 68 mm x 13 mm annual corrugations with a minimum of two full corrugations at each end.

STATE OF CALIFORNIA
DEPARTMENT OF TRANSPORTATION

CORRUGATED METAL PIPE COUPLING DETAILS No. 7 DOWNDRAIN

NO SCALE

ALL DIMENSIONS ARE IN MILLIMETERS UNLESS OTHERWISE SHOWN

RSP D97G DATED JUNE 6, 2008 SUPERSEDES STANDARD PLAN D97G DATED July 1, 2004 - PAGE 189 OF THE STANDARD PLANS BOOK DATED July 2004.

REVISED STANDARD PLAN RSP D97G

2004 REVISED Std PLAN RSP D97G

DIST	COUNTY	ROUTE	KILOMETER POST TOTAL PROJECT	SHEET NO.	TOTAL SHEETS
11	SD	805	40.6/42.4	460	567

Caltrans Metric

Raymond Don Tsztoo
REGISTERED CIVIL ENGINEER

March 7, 2008
PLANS APPROVAL DATE

REGISTERED PROFESSIONAL ENGINEER
Raymond Don Tsztoo
No. C37332
Exp. 6-30-08
CIVIL
STATE OF CALIFORNIA

The State of California or its officers or agents shall not be responsible for the accuracy or completeness of electronic copies of this plan sheet.

To get to the Caltrans web site, go to: http://www.dot.ca.gov

To accompany plans dated 6-14-10

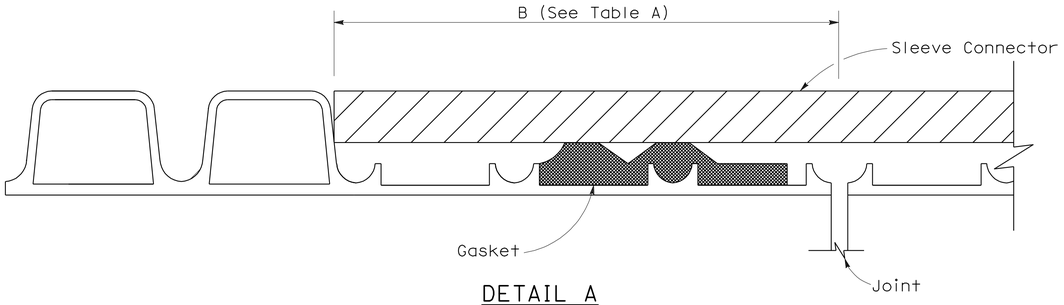

DETAIL A

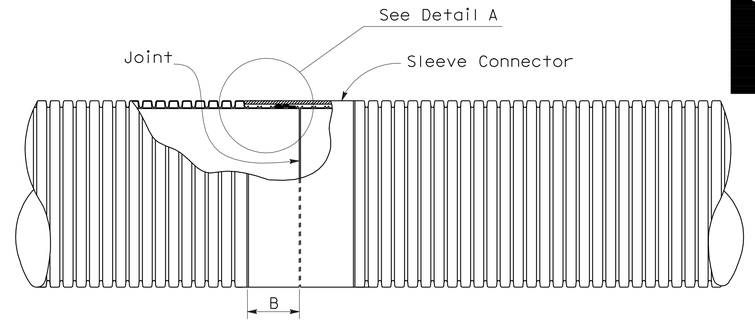

PLAN VIEW
Liner Insert
See Note 4

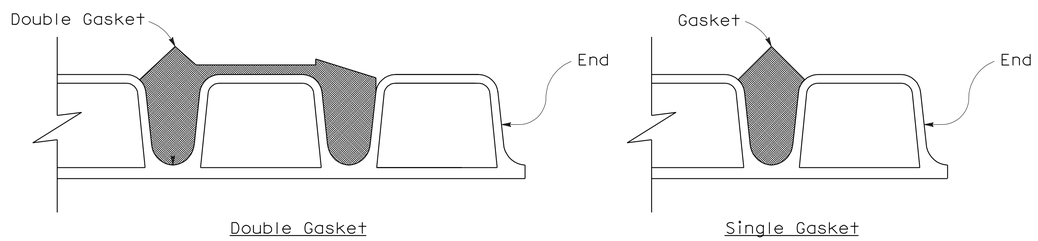

DETAIL B

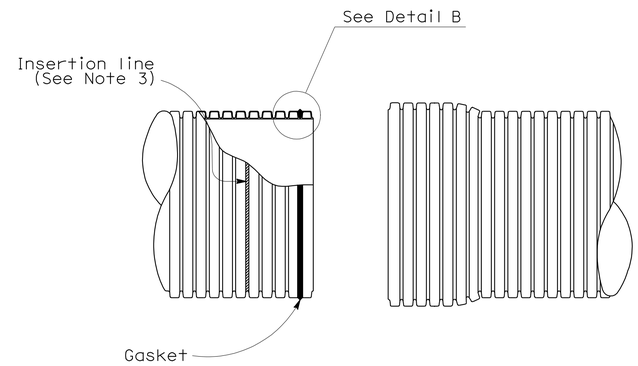

SPIGOT BELL

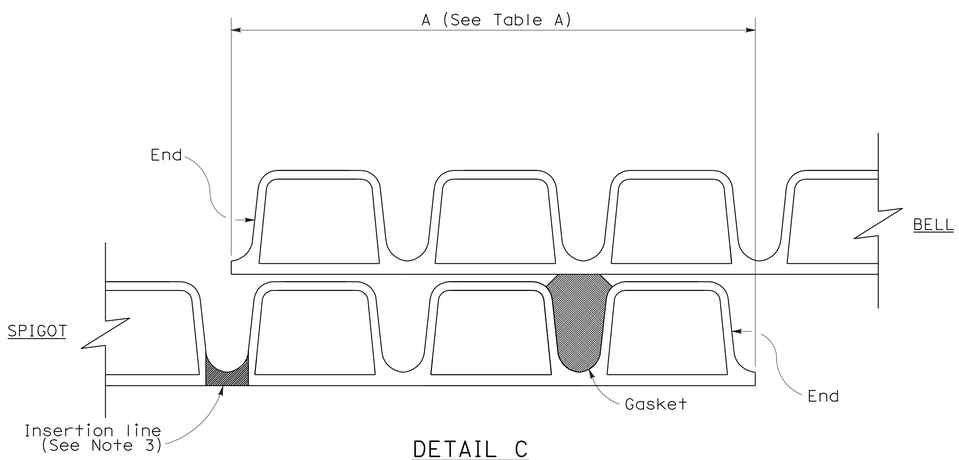

DETAIL C
(Single gasket shown)

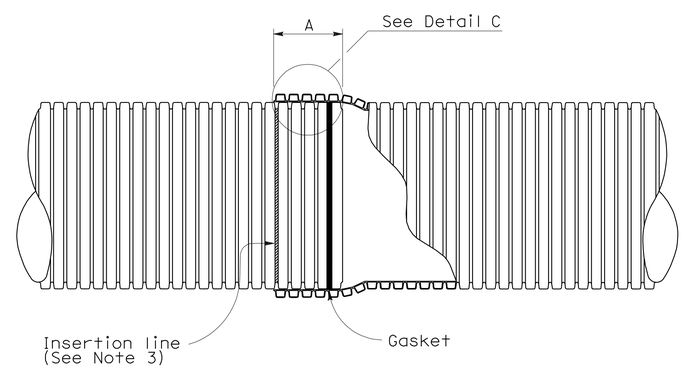

BELL AND SPIGOT JOINT

NOTES:

1. For pipe sections installed on straight alignment, the pipe sections shall be joined to achieve maxium joint overlap at all points on the periphery as indicated in Table A where the plans call for positive or watertight joints. Maxium joint overlap is recommended where the plans call for standard joints, but in no case shall the joint overlap be less than 89 mm.

2. For pipe sections installed on curved alignment, the maxium angle of deflection from straight alignment at any joint shall not exceed two degrees. Where the plans call for watertightness, field testing for compliance is required. Where plans call for positive joints, the pipe sections shall be joined to achieve Table A Dimensions on one side of the joint. Joints classified as standard shall have no less than 89 mm joint overlap at any point on the periphery.

3. Factory applied insertion line limit shall be placed on spigot.

4. Liner insert to be used inside of existing pipe.

TABLE A

JOINT OVERLAP DIMENSIONS		
PIPE Dia (NOMINAL) (mm)	A (mm)	B (mm)
305	146	108
380	171	143
460	171	143
535	216	143
610	216	156
760	216	181
915	216	206

STATE OF CALIFORNIA
DEPARTMENT OF TRANSPORTATION

CORRUGATED POLYVINYL CHLORIDE PIPE WITH SMOOTH INTERIOR STANDARD AND POSITIVE JOINTS

NO SCALE
ALL DIMENSIONS ARE IN MILLIMETERS UNLESS OTHERWISE SHOWN
NSP D97I DATED MARCH 7, 2008 SUPPLEMENTS THE STANDARD PLANS BOOK DATED JULY 2004.

NEW STANDARD PLAN NSP D97I

2004 NEW Std PLAN NSP D97I

2-21-08

DIST	COUNTY	ROUTE	KILOMETER POST TOTAL PROJECT	SHEET NO.	TOTAL SHEETS
11	SD	805	40.6/42.4	461	567

Caltrans Metric

REGISTERED CIVIL ENGINEER

June 6, 2008
PLANS APPROVAL DATE

REGISTERED PROFESSIONAL ENGINEER Raymond Don Tsztoo No. C37332 Exp. 6-30-08 CIVIL STATE OF CALIFORNIA

The State of California or its officers or agents shall not be responsible for the accuracy or completeness of electronic copies of this plan sheet.

To get to the Caltrans web site, go to: http://www.dot.ca.gov

To accompany plans dated 6-14-10

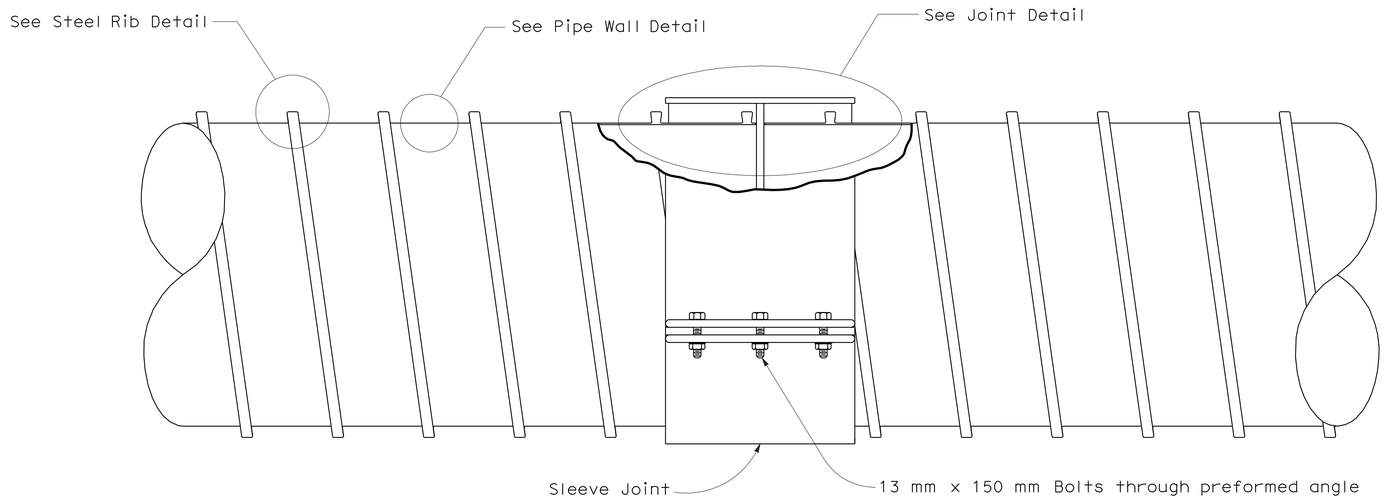

COMPOSITE STEEL SPIRAL RIB PIPE

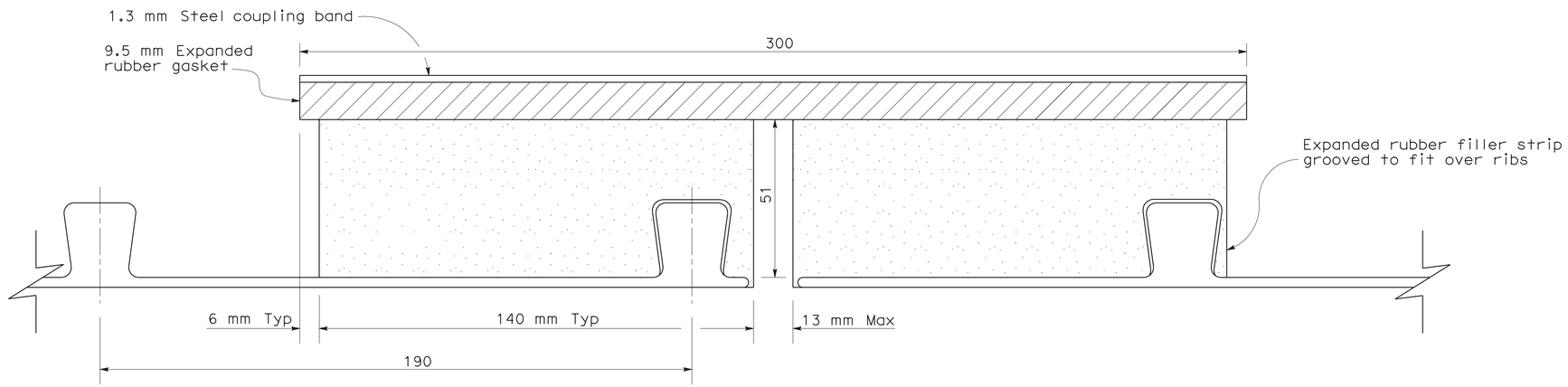

JOINT DETAIL

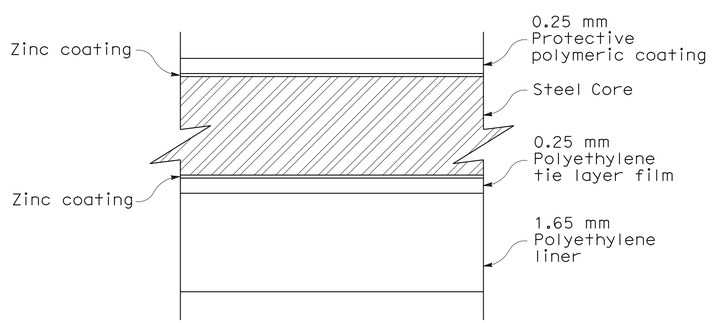

PIPE WALL DETAIL

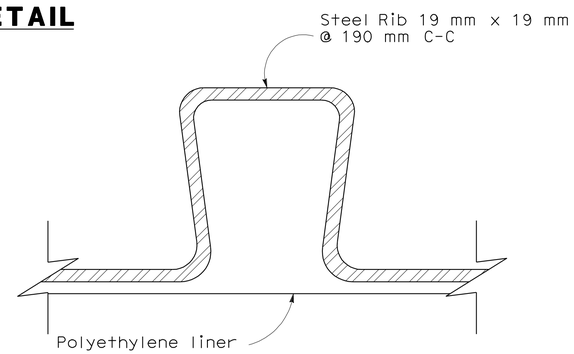

STEEL RIB DETAIL

NOTES:

1. Pipe to conform to ASTM A 978.
2. See Standard Plan A62F for backfill details.
3. Protective polymer film to conform to ASTM A 742 and AASHTO M 246.
4. See Standard Plan D97C for Universal Coupling details.
5. Strap joint connection shall consist of 2 separate bolted preformed connectors joined to form one strap when pipe inside diameter is greater than or equal to 1.5 m.

STATE OF CALIFORNIA
DEPARTMENT OF TRANSPORTATION

COMPOSITE STEEL SPIRAL RIB PIPE WITH SMOOTH INTERIOR STANDARD JOINT

NO SCALE

ALL DIMENSIONS ARE IN MILLIMETERS UNLESS OTHERWISE SHOWN

NSP D97J DATED JUNE 6, 2008 SUPPLEMENTS THE STANDARD PLANS BOOK DATED JULY 2004.

NEW STANDARD PLAN NSP D97J

2004 NEW Std PLAN NSP D97J

4-29-08

DIST	COUNTY	ROUTE	KILOMETER POST TOTAL PROJECT	SHEET NO.	TOTAL SHEETS
11	SD	805	40.6/42.4	462	567

Caltrans Metric

Raymond Don Tsztoo
REGISTERED CIVIL ENGINEER

January 18, 2008
PLANS APPROVAL DATE

REGISTERED PROFESSIONAL ENGINEER
Raymond Don Tsztoo
No. C37332
Exp. 6-30-08
CIVIL
STATE OF CALIFORNIA

The State of California or its officers or agents shall not be responsible for the accuracy or completeness of electronic copies of this plan sheet.

To get to the Caltrans web site, go to: http://www.dot.ca.gov

To accompany plans dated 6-14-10

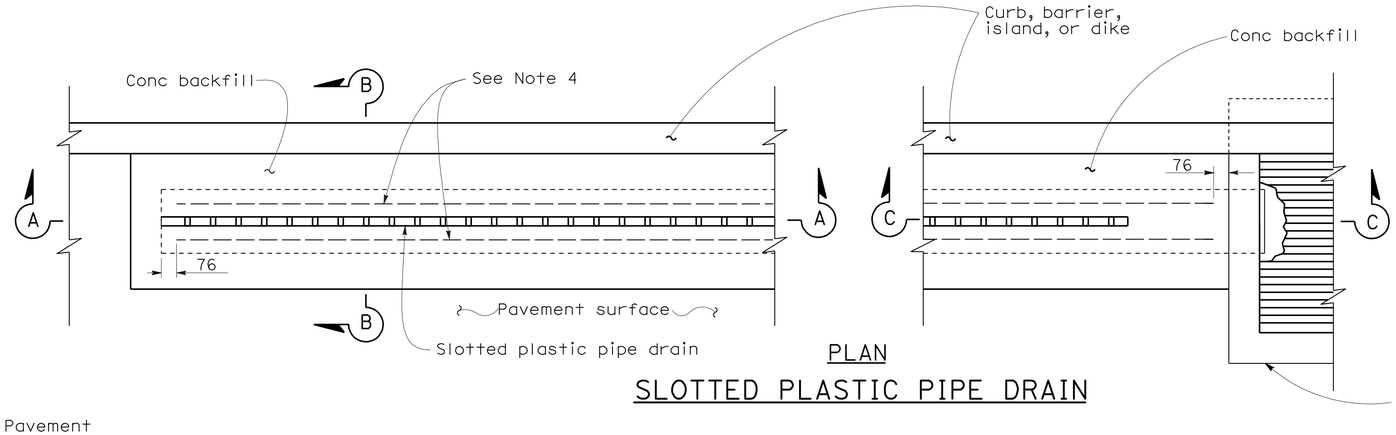

PLAN

SLOTTED PLASTIC PIPE DRAIN

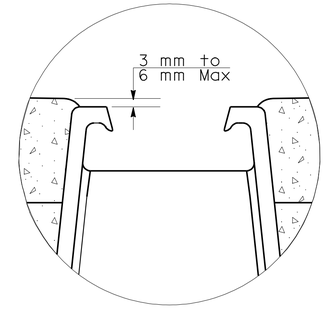

DETAIL A

NOTES:

1. Plastic weld shall be factory fabricated.
2. When Heel Resistant Grate is to be used, see New Standard Plan NSP D98E for details.
3. Exterior wall stiffener ridges and details not shown on section views. See transition fitting detail for typical exterior ridges and throat stiffeners.
4. Lateral support, #13 bar, to be placed on both sides of slotted plastic pipe.

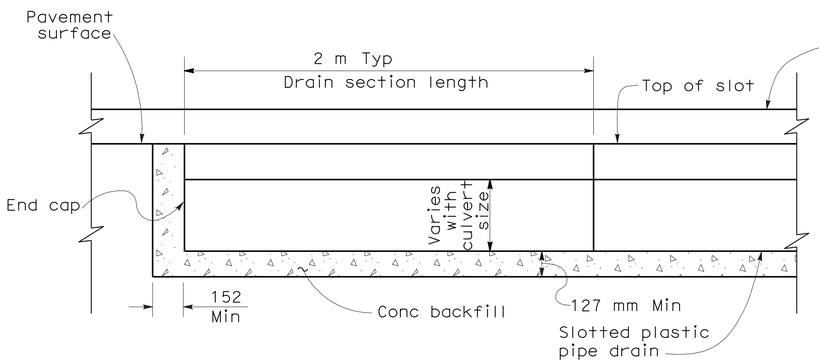

SECTION A-A

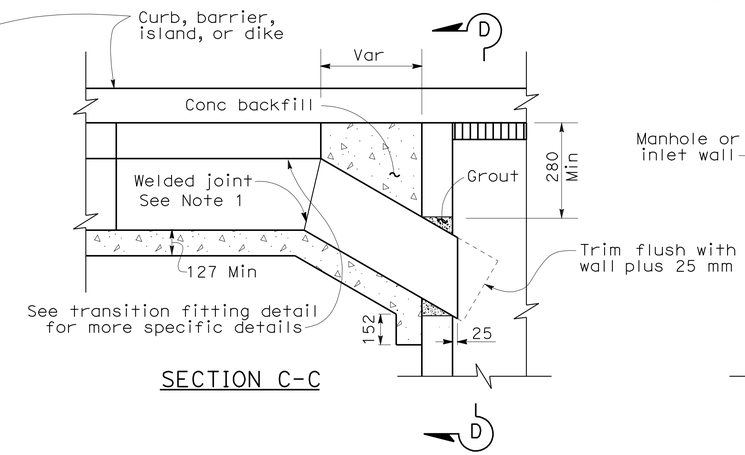

SECTION C-C

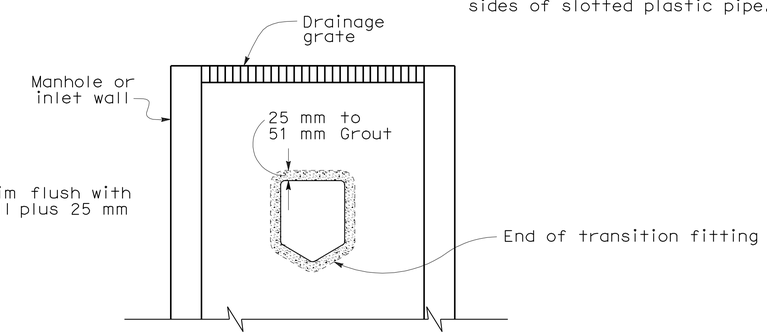

SECTION D-D

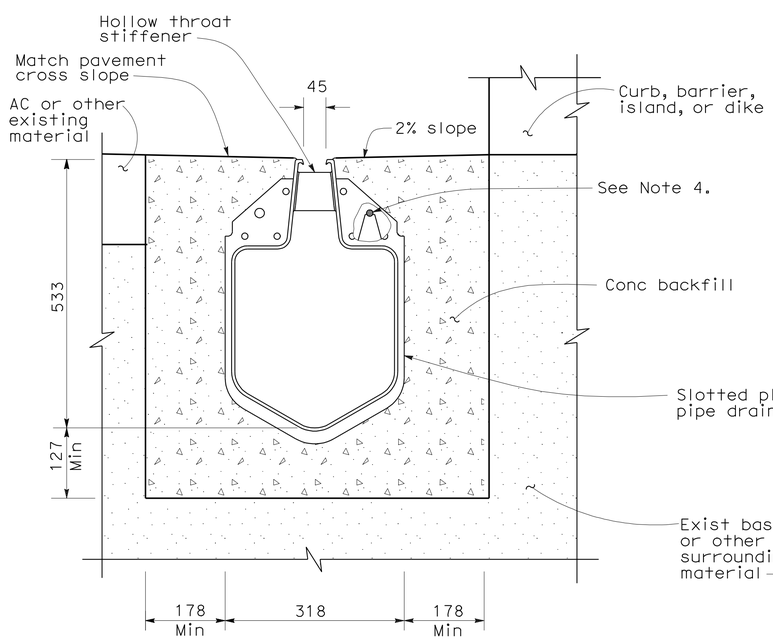

SECTION B-B

457 mm Slotted Plastic Pipe Drain

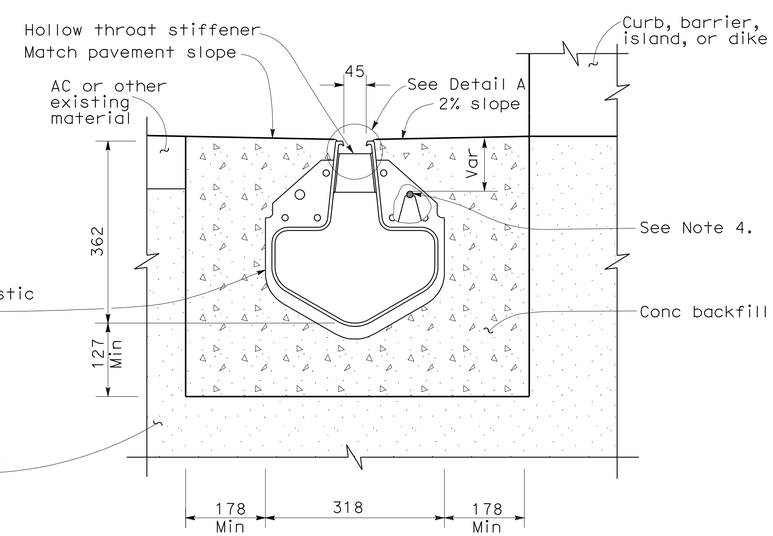

SECTION B-B

305 mm Slotted Plastic Pipe Drain

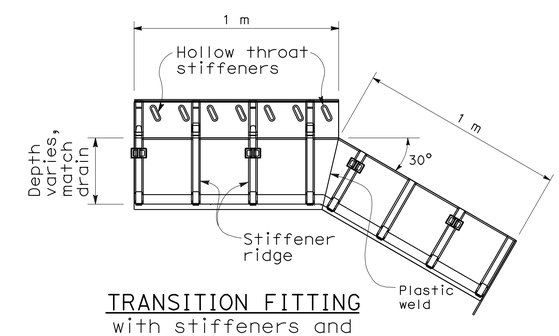

TRANSITION FITTING

with stiffeners and details shown

STATE OF CALIFORNIA
DEPARTMENT OF TRANSPORTATION

SLOTTED PLASTIC PIPE DRAIN DETAILS

NO SCALE

ALL DIMENSIONS ARE IN MILLIMETERS UNLESS OTHERWISE SHOWN

NSP D98D DATED JANUARY 18, 2008 SUPPLEMENTS THE STANDARD PLANS BOOK DATED JULY 2004.

NEW STANDARD PLAN NSP D98D

2004 NEW Std PLAN NSP D98D

11-5-07

DIST	COUNTY	ROUTE	KILOMETER POST TOTAL PROJECT	SHEET NO.	TOTAL SHEETS
11	SD	805	40.6/42.4	463	567

Caltrans Metric

Raymond Don Tsztoo
REGISTERED CIVIL ENGINEER

January 18, 2008
PLANS APPROVAL DATE

REGISTERED PROFESSIONAL ENGINEER
Raymond Don Tsztoo
No. C37332
Exp. 6-30-08
CIVIL
STATE OF CALIFORNIA

The State of California or its officers or agents shall not be responsible for the accuracy or completeness of electronic copies of this plan sheet.

To get to the Caltrans web site, go to: http://www.dot.ca.gov

To accompany plans dated 6-14-10

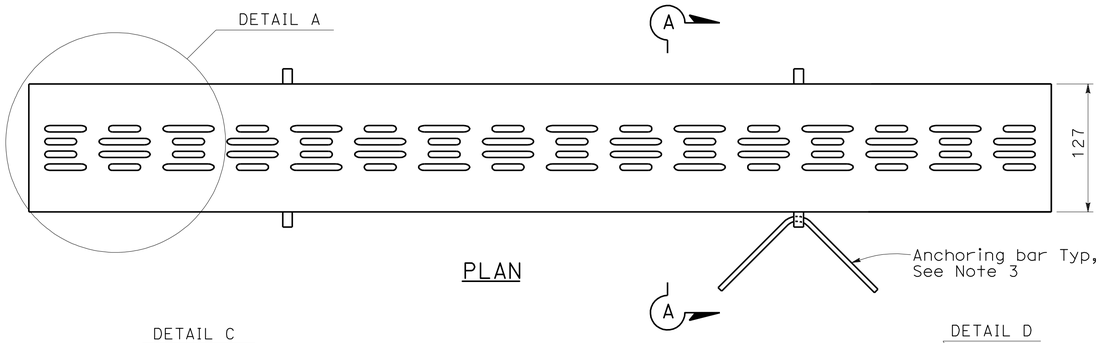

PLAN

ELEVATION
See Note 5

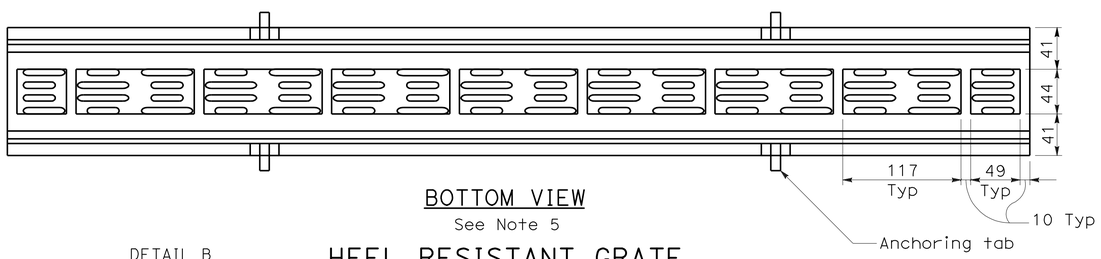

BOTTOM VIEW
See Note 5

HEEL RESISTANT GRATE

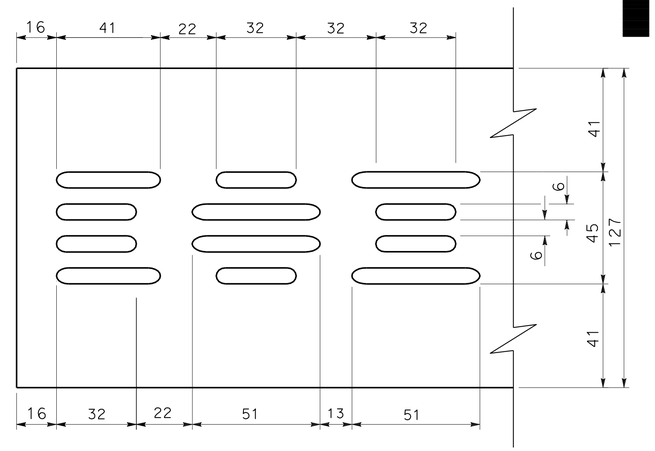

DETAIL A

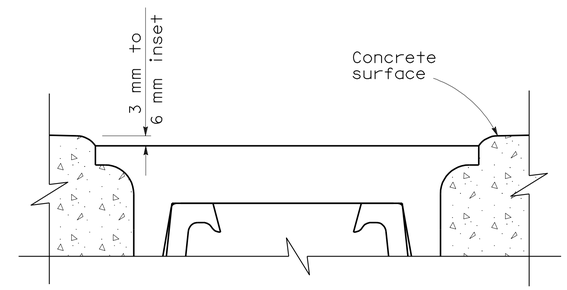

DETAIL B

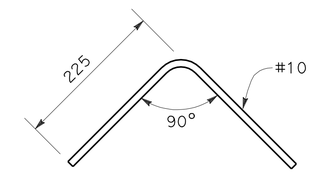

ANCHORING BAR DETAIL
See Note 3

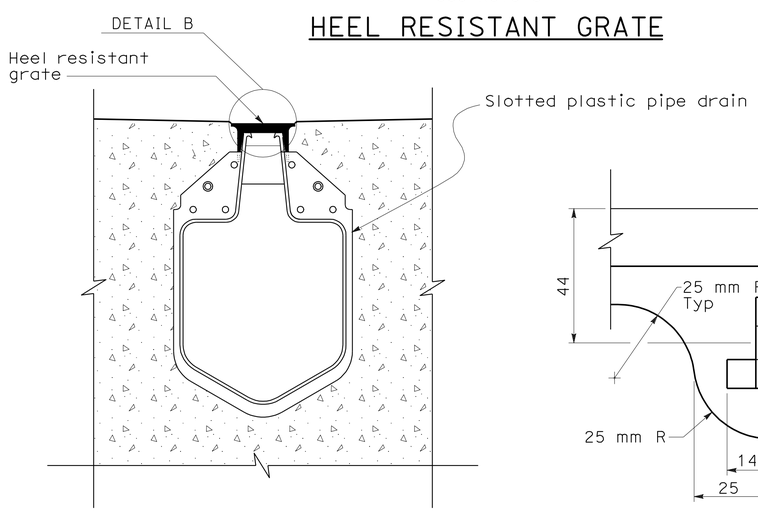

TYPICAL SLOTTED
PLASTIC PIPE DRAIN
WITH HEEL RESISTANT GRATE

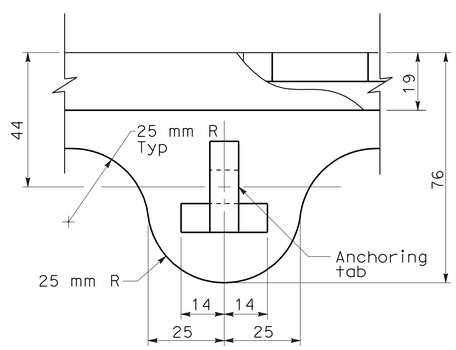

DETAIL C

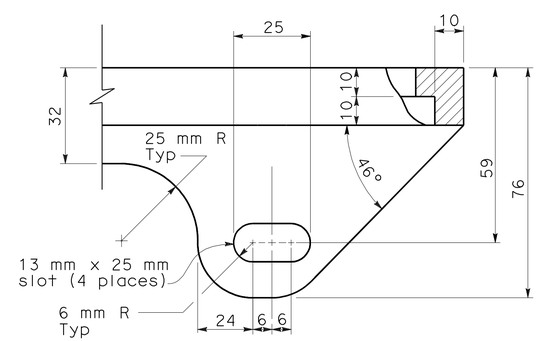

DETAIL D
See Note 4

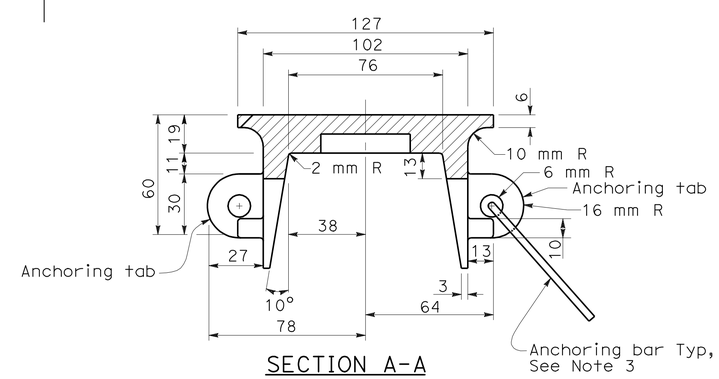

SECTION A-A

NOTES:

1. Grate patterns may vary from detail shown. See special provisions for requirements.
2. 4.8 mm maximum gap between adjacent gratings.
3. Use anchoring bar through each anchoring tab to anchor heel resistant grate to concrete backfill. 4 locations for each grate section.
4. Use 9.5 mm diameter bolt, nut, and washer to hold grate to slotted drain, prior to backfilling with concrete. 4 locations.
5. Anchoring bars are not shown.

STATE OF CALIFORNIA
DEPARTMENT OF TRANSPORTATION

HEEL RESISTANT GRATE FOR SLOTTED PLASTIC PIPE DRAIN

NO SCALE

ALL DIMENSIONS ARE IN
MILLIMETERS UNLESS OTHERWISE SHOWN

NSP D98E DATED JANUARY 18, 2008 SUPPLEMENTS
THE STANDARD PLANS BOOK DATED JULY 2004.

NEW STANDARD PLAN NSP D98E

2004 NEW Std PLAN NSP D98E

193B

11-19-07

DIST	COUNTY	ROUTE	KILOMETER POST TOTAL PROJECT	SHEET NO.	TOTAL SHEETS
11	SD	805	40.6/42.4	464	567

Caltrans Metric

LICENSED LANDSCAPE ARCHITECT

March 7, 2008
PLANS APPROVAL DATE

LICENSED LANDSCAPE ARCHITECT Gregory A. Balzer 2216 Signature 02-28-2009 Renewal Date 02-21-08 Date STATE OF CALIFORNIA

The State of California or its officers or agents shall not be responsible for the accuracy or completeness of electronic copies of this plan sheet.

To get to the Caltrans web site, go to: http://www.dot.ca.gov

To accompany plans dated 6-14-10

2004 REVISED Std PLAN RSP H2

EXISTING	PROPOSED	ITEM DESCRIPTION
		WATER METER (WM)
		BACKFLOW PREVENTER ASSEMBLY (BPA)
		BACKFLOW PREVENTER ASSEMBLY IN ENCLOSURE (BPAE)
		BACKFLOW PREVENTER ENCLOSURE (BPE)
		BOOSTER PUMP (BP)
		TRUCK LOADING STANDPIPE (TLS)
fs	FS	FLOW SENSOR (FS)
		MASTER IRRIGATION CONTROLLER (MIC)
		AUXILIARY IRRIGATION CONTROLLER (AIC)
		IRRIGATION CONTROLLER (IC)/ IRRIGATION CONTROLLER (IC) (BATTERY)
		IRRIGATION CONTROLLER(S) IN CONTROLLER ENCLOSURE CABINET (ICC)
		CONTROL AND NEUTRAL CONDUCTORS (CNC)
scc	SCC	SPRINKLER CONTROL CONDUIT (SCC)
		CONDUIT (COND)
		IRRIGATION SLEEVE
dip	DIP	DUCTILE IRON PIPE (SUPPLY LINE) (MAIN) (DIP)
		GALVANIZED STEEL PIPE (SUPPLY LINE) (MAIN) (GSP)
		GALVANIZED STEEL PIPE (SUPPLY LINE) (LATERAL) (GSP)
		PLASTIC PIPE (PR 200) (SUPPLY LINE) (MAIN)
		PLASTIC PIPE (PR 200) (SUPPLY LINE) (LATERAL)
		PLASTIC PIPE (IRRIGATION LINE)
		REMOTE CONTROL VALVE (RCV) REMOTE CONTROL VALVE (MASTER) (RCVM)
		MANUAL CONTROL VALVE (MCV)
		VALVE ASSEMBLY UNIT (VAU)
		WYE STRAINER (WS)
		FILTER ASSEMBLY UNIT (FAU)
		GATE VALVE (GV)
		BALL VALVE (BV)

EXISTING	PROPOSED	ITEM DESCRIPTION
		QUICK COUPLING VALVE (QCV)
		CAM COUPLING ASSEMBLY (CCA)
		PRESSURE REDUCING VALVE (PRV)
		PRESSURE RELIEF VALVE (PRLV)
		FLOW CONTROL VALVE (FCV)
		COMBINATION AIR RELEASE VALVE (CARV)
		CHECK VALVE (CV)
		FLUSH VALVE (FV)
		NOZZLE LINE W/TURNING UNION
		IRRIGATION SYSTEM
		IRRIGATION SYSTEM TO BE REMOVED
		CHAIN LINK GATE
		QUICK COUPLING VALVE W/SPRINKLER PROTECTOR
3	3	SPRINKLER W/SPRINKLER PROTECTOR
		CONNECT TO EXISTING SYSTEM
		CAP
		CAP EXISTING

VALVE CODE

RCV SIZE (mm)
IRRIGATION CONTROLLER
CONTROLLER STATION
VALVE IN PARALLEL (IF APPLICABLE)
L/min
QUANTITY OF SPRINKLERS (WHEN SHOWN)

* 63.5-A-2b-151.4-60

MCV SIZE (mm)
VALVE NUMBER
L/min
QUANTITY OF TYPE SPRINKLERS (WHEN SHOWN)

* 50.8-3-113.5-50

* VALVE CODES FOR EXISTING VALVES ARE SHOWN IN A DASHED ENCLOSURE.

STATE OF CALIFORNIA
DEPARTMENT OF TRANSPORTATION

PLANTING AND IRRIGATION SYMBOLS

NO SCALE

ALL DIMENSIONS ARE IN MILLIMETERS UNLESS OTHERWISE SHOWN

RSP H2 DATED MARCH 7, 2008 SUPERSEDES STANDARD PLAN H2 DATED JULY 1, 2004 - PAGE 202 OF THE STANDARD PLANS BOOK DATED JULY 2004.

REVISED STANDARD PLAN RSP H2

DIST	COUNTY	ROUTE	KILOMETER POST TOTAL PROJECT	SHEET NO.	TOTAL SHEETS
11	SD	805	40.6/42.4	465	567

Caltrans Metric

LICENSED LANDSCAPE ARCHITECT

December 1, 2006
PLANS APPROVAL DATE

LICENSED LANDSAPE ARCHITECT — Gregory A. Balzer 3878 — Signature — 02-28-2007 Renewal Date — 11-27-06 Date — STATE OF CALIFORNIA

The State of California or its officers or agents shall not be responsible for the accuracy or completeness of electronic copies of this plan sheet.

To get to the Caltrans web site, go to: http://www.dot.ca.gov

To accompany Plans dated 6-14-10

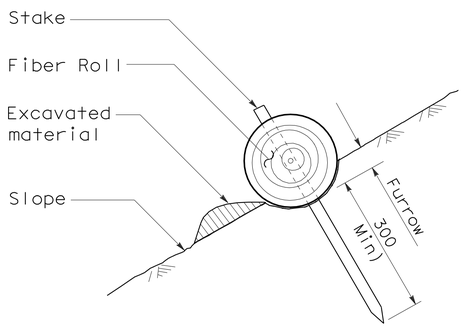

SECTION

FIBER ROLL (TYPE 1)

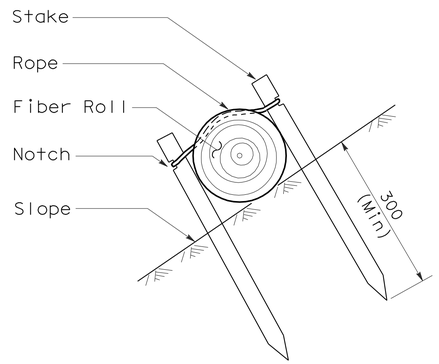

SECTION

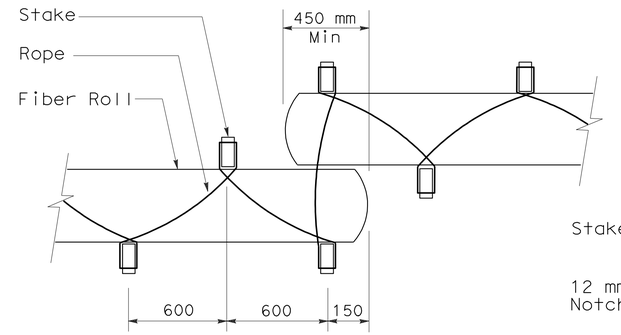

PLAN

FIBER ROLL (TYPE 2)

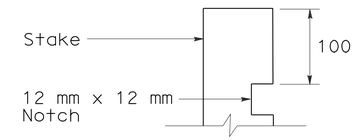

ELEVATION

STAKE NOTCH DETAIL

NOTE

1. Fiber roll spacing varies depending upon slope inclination.
2. Installations shown in the perspectives are for slope inclination of 1:10 and steeper.

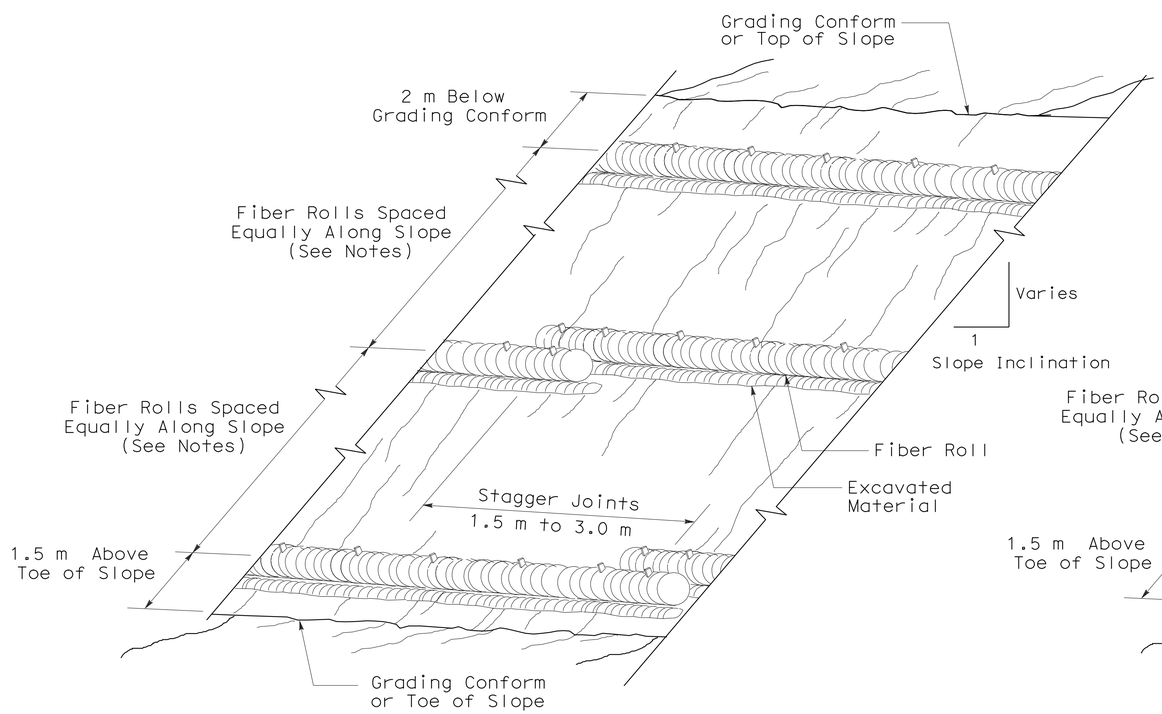

PERSPECTIVE

FIBER ROLL (TYPE 1)

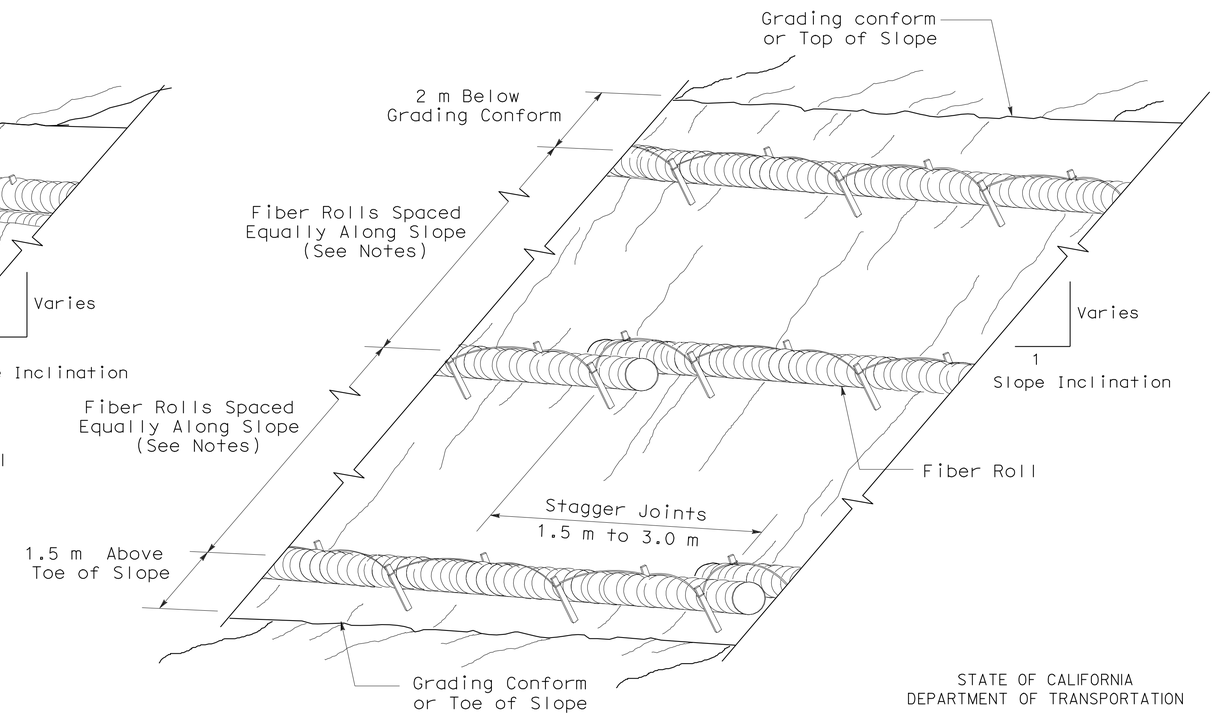

PERSPECTIVE

FIBER ROLL (TYPE 2)

STATE OF CALIFORNIA
DEPARTMENT OF TRANSPORTATION

EROSION CONTROL DETAILS (FIBER ROLL)

NO SCALE

ALL DIMENSIONS ARE IN MILLIMETERS UNLESS OTHERWISE SHOWN

NSP H51 DATED DECEMBER 1, 2006 SUPPLEMENTS THE STANDARD PLANS BOOK DATED JULY 2004.

NEW STANDARD PLAN NSP H51

2004 NEW Std PLAN NSP H51

10-5-06

DIST	COUNTY	ROUTE	KILOMETER POST TOTAL PROJECT	SHEET NO.	TOTAL SHEETS
11	SD	805	40.6/42.4	466	567

Randell D. Hiatt
REGISTERED CIVIL ENGINEER

June 6, 2008
PLANS APPROVAL DATE

REGISTERED PROFESSIONAL ENGINEER
Randell D. Hiatt
No. C50200
Exp. 6-30-09
CIVIL
STATE OF CALIFORNIA

The State of California or its officers or agents shall not be responsible for the accuracy or completeness of electronic copies of this plan sheet.

To get to the Caltrans web site, go to: http://www.dot.ca.gov

To accompany plans dated 6-14-10

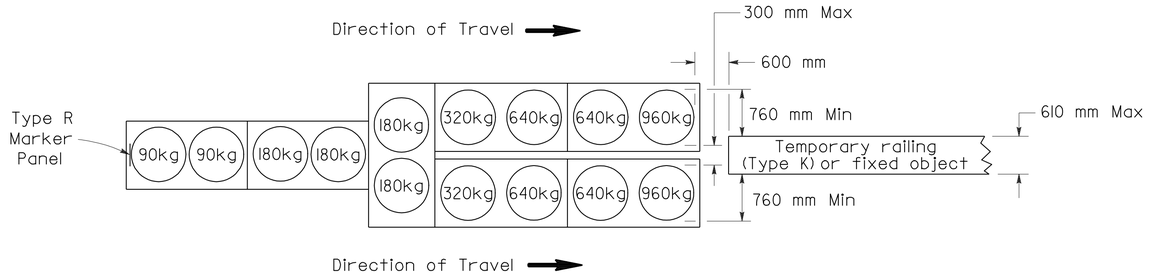

ARRAY 'TU14'

Approach speed 70 km/h or more

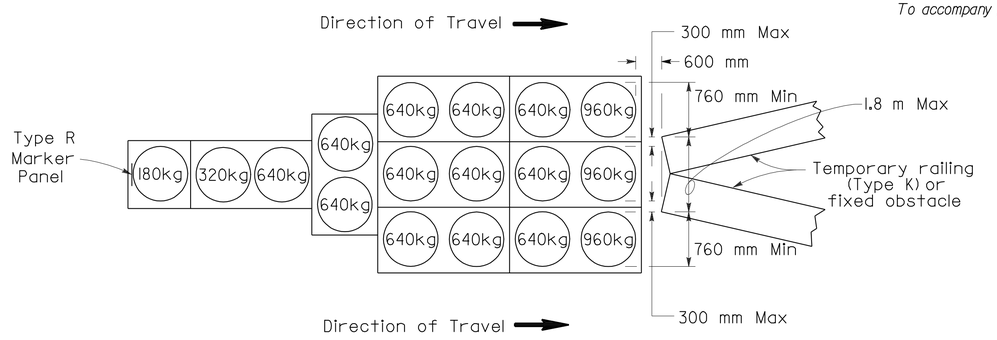

ARRAY 'TU17'

Approach speed less than 70 km/h

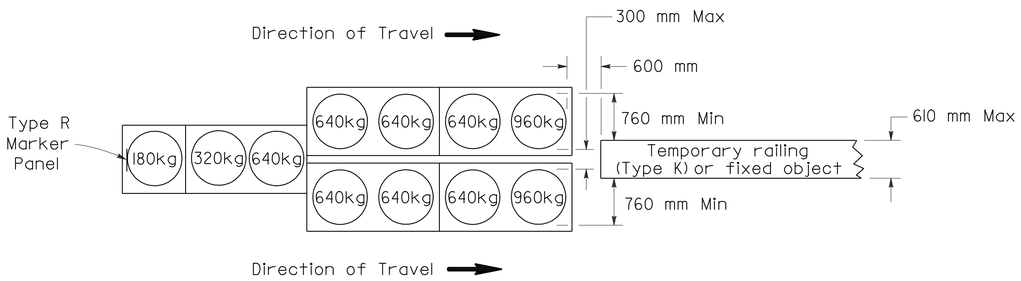

ARRAY 'TU11'

Approach speed less than 70 km/h

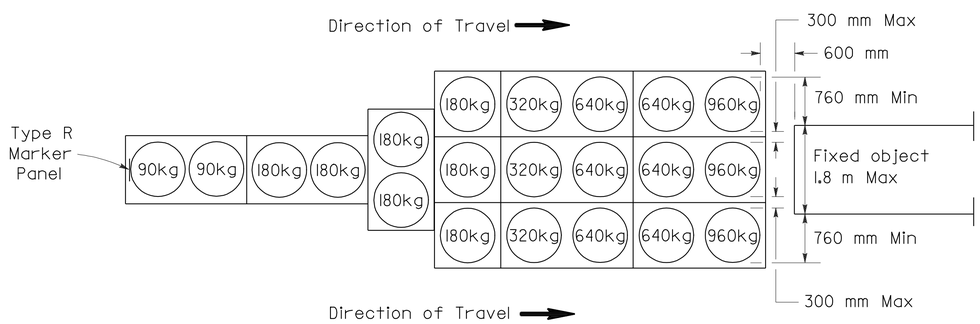

ARRAY 'TU21'

Approach speed 70 km/h or more

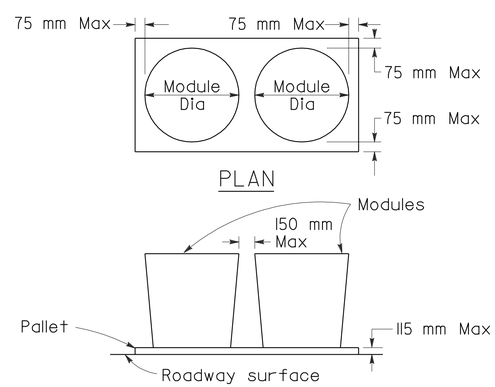

CRASH CUSHION PALLET DETAIL

See Note 7

NOTES:

1. (XXX) Indicates sand filled module location and mass of sand in kilograms for each module. Module spacing is based on the greater diameter of the module.
2. All sand masses are nominal.
3. Temporary crash cushion arrays shall not encroach on the traveled way.
4. Place the top of Type R marker panel 25 mm below the module lid.
5. Refer to Standard Plan A73B for marker details.
6. Approach speeds indicated conform to NCHRP 350 Report criteria.
7. Use of Pallets is optional.

STATE OF CALIFORNIA
DEPARTMENT OF TRANSPORTATION

TEMPORARY CRASH CUSHION, SAND FILLED (UNIDIRECTIONAL)

NO SCALE

ALL DIMENSIONS ARE IN MILLIMETERS UNLESS OTHERWISE SHOWN

RSP T1A DATED JUNE 6, 2008 SUPERSEDES STANDARD PLAN T1A
DATED July 1, 2004 - PAGE 211 OF THE STANDARD PLANS BOOK DATED July 2004.

REVISED STANDARD PLAN RSP T1A

2004 REVISED Std PLAN RSP T1A

5-16-08

DIST	COUNTY	ROUTE	KILOMETER POST TOTAL PROJECT	SHEET NO.	TOTAL SHEETS
11	SD	805	40.6/42.4	467	567

Randell D. Hiatt
REGISTERED CIVIL ENGINEER

June 6, 2008
PLANS APPROVAL DATE

REGISTERED PROFESSIONAL ENGINEER
Randell D. Hiatt
No. C50200
Exp. 6-30-09
CIVIL
STATE OF CALIFORNIA

The State of California or its officers or agents shall not be responsible for the accuracy or completeness of electronic copies of this plan sheet.

To get to the Caltrans web site, go to: http://www.dot.ca.gov

To accompany plans dated 6-14-10

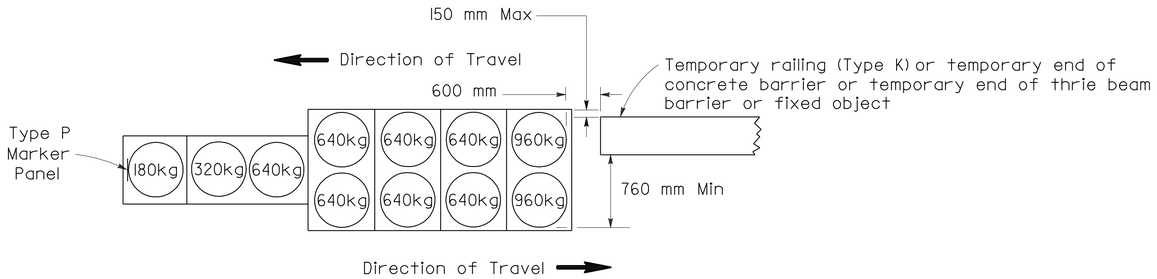

ARRAY 'TBI1'

Approach speed less than 70 km/h

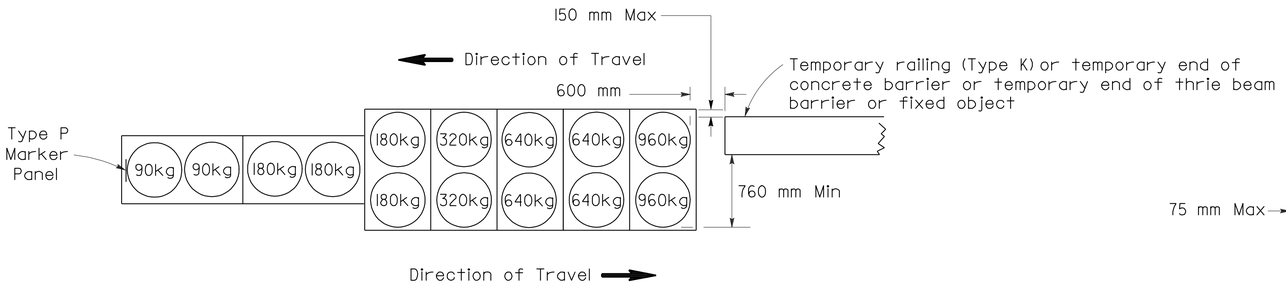

ARRAY 'TBI4'

Approach speed 70 km/h or more

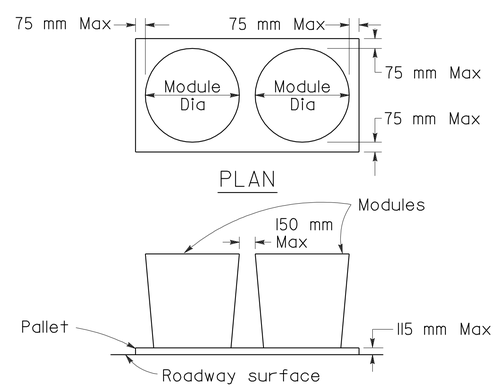

CRASH CUSHION PALLET DETAIL

See Note 7

NOTES

1. (XXX) Indicates sand filled module location and mass of sand in kilograms for each module. Module spacing is based on the greater diameter of the module.
2. All sand masses are nominal.
3. Temporary crash cushion arrays shall not encroach on the traveled way.
4. Place the Type P marker panel so that the bottom of the panel rests upon the pallet.
5. Refer to Standard Plan A73B for marker details.
6. Approach speeds indicated conform to NCHRP 350 Report criteria.
7. Use of Pallets is optional.

STATE OF CALIFORNIA
DEPARTMENT OF TRANSPORTATION

TEMPORARY CRASH CUSHION, SAND FILLED (BIDIRECTIONAL)

NO SCALE

ALL DIMENSIONS ARE IN MILLIMETERS UNLESS OTHERWISE SHOWN

RSP T1B DATED JUNE 6, 2008 SUPERSEDES STANDARD PLAN T1B DATED July 1, 2004 - PAGE 212 OF THE STANDARD PLANS BOOK DATED July 2004.

REVISED STANDARD PLAN RSP T1B

2004 REVISED Std PLAN RSP T1B

5-16-08

DIST	COUNTY	ROUTE	KILOMETER POST TOTAL PROJECT	SHEET NO.	TOTAL SHEETS
11	SD	805	40.6/42.4	468	567

Randell D. Hiatt
REGISTERED CIVIL ENGINEER

June 6, 2008
PLANS APPROVAL DATE

REGISTERED PROFESSIONAL ENGINEER
Randell D. Hiatt
No. C50200
Exp. 6-30-09
CIVIL
STATE OF CALIFORNIA

The State of California or its officers or agents shall not be responsible for the accuracy or completeness of electronic copies of this plan sheet.

To get to the Caltrans web site, go to: http://www.dot.ca.gov

To accompany plans dated 6-14-10

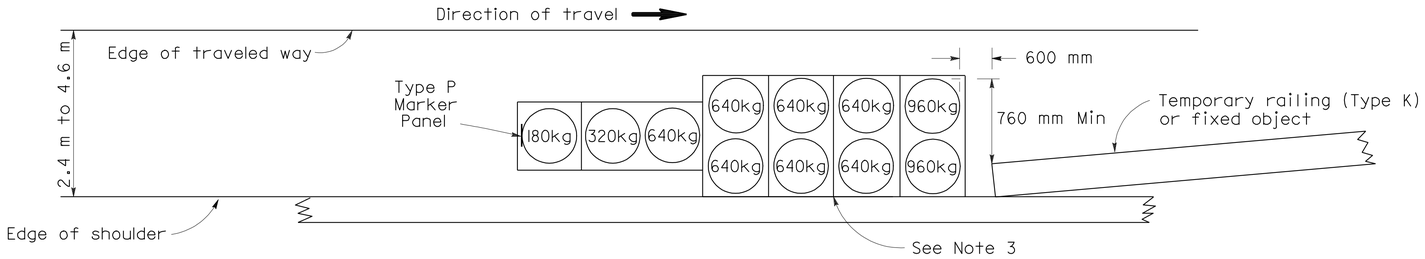

ARRAY 'TSI1'

Approach speed less than 70 km/h
See Note 9

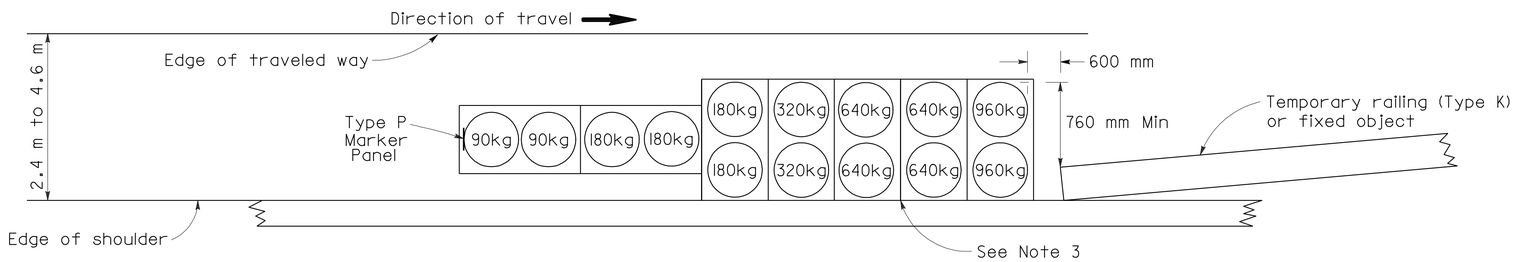

ARRAY 'TSI4'

Approach speed 70 km/h or more
See Note 9

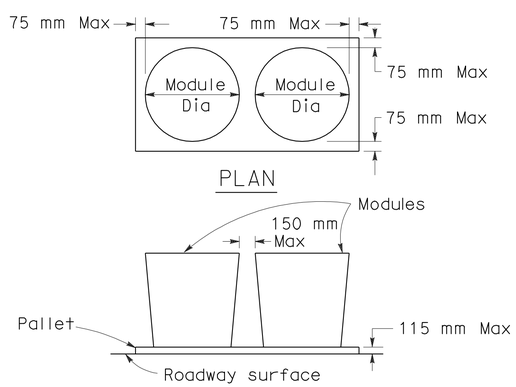

CRASH CUSHION PALLET DETAIL

See Note 11

NOTES

1. (XXX) Indicates sand filled module location and mass of sand in kilograms for each module. Module spacing is based on the greater diameter of the module.
2. All sand masses are nominal.
3. The temporary crash cushion arrays shown on this plan shall be used only in locations where there will be traffic on one side of the temporary crash cushion array.
4. If the fixed object or approach end of the temporary railing is less than 4.60 meters from the edge of traveled way, a temporary crash cushion is required.
5. Temporary crash cushion arrays shall not encroach on the traveled way.
6. Arrays for median shoulders shall conform to details shown on this plan for outside shoulders.
7. Place the Type P marker panel so that the bottom of the panel rest upon the pallet and faces traffic.
8. Refer to Standard Plan A73B for marker details.
9. For shoulder widths less than 2.4 m, appropriate approved crash cushion protection, other than sand filled modules, shall be provided at fixed objects and at approach ends of temporary railing. The specific type of crash cushion shall be as shown on the project plans or as specified in the Special Provisions, or if not shown on the project plans or specified in the Special Provisions, shall be as approved by the Engineer.
10. Approach speeds indicated conform to NCHRP 350 Report criteria.
11. Use of Pallets is optional.

STATE OF CALIFORNIA
DEPARTMENT OF TRANSPORTATION

TEMPORARY CRASH CUSHION, SAND FILLED (SHOULDER INSTALLATIONS)

NO SCALE

ALL DIMENSIONS ARE IN MILLIMETERS UNLESS OTHERWISE SHOWN

RSP T2 DATED JUNE 6, 2008 SUPERSEDES STANDARD PLAN T2
DATED July 1, 2004 - PAGE 213 OF THE STANDARD PLANS BOOK DATED July 2004.

REVISED STANDARD PLAN RSP T2

2004 REVISED Std PLAN RSP T2

5-16-08

DIST	COUNTY	ROUTE	KILOMETER POST TOTAL PROJECT	SHEET NO.	TOTAL SHEETS
11	SD	805	40.6/42.4	469	567

REGISTERED CIVIL ENGINEER

April 28, 2005
PLANS APPROVAL DATE

REGISTERED PROFESSIONAL ENGINEER Greg W. Edwards No. C36386 Exp. 6-30-06 CIVIL STATE OF CALIFORNIA

The State of California or its officers or agents shall not be responsible for the accuracy or completeness of electronic copies of this plan sheet.

To get to the Caltrans web site, go to: http://www.dot.ca.gov

To accompany plans dated 6-14-10

Caltrans Metric

NOTES

Unless otherwise specified in the special provisions, all temporary warning signs shall have black legend on orange background.

California code are designated by (CA). Otherwise, Federal codes are shown.

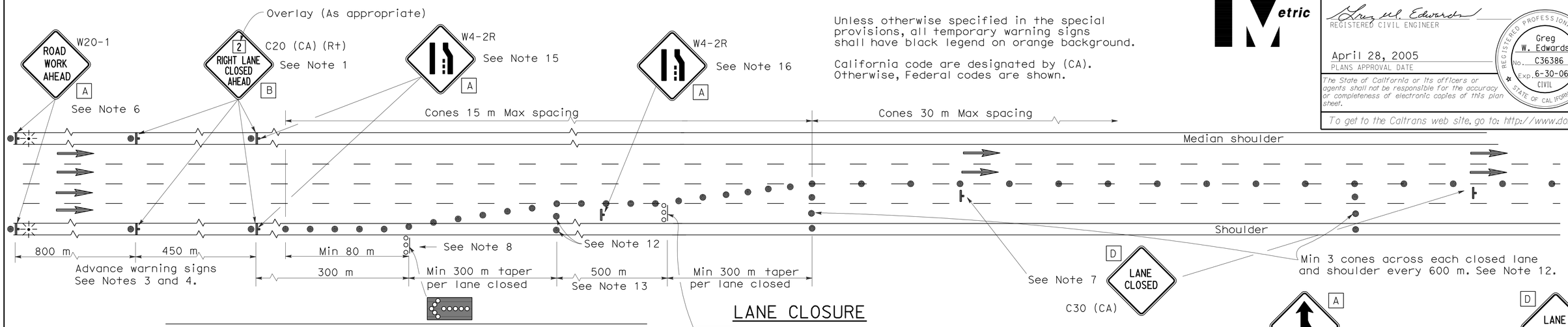

LANE CLOSURE

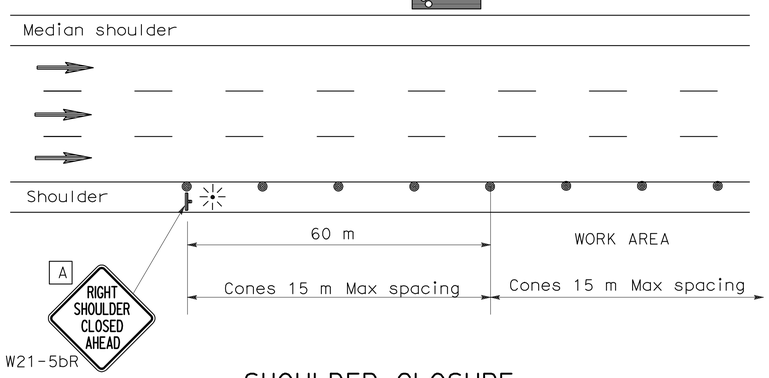

SHOULDER CLOSURE

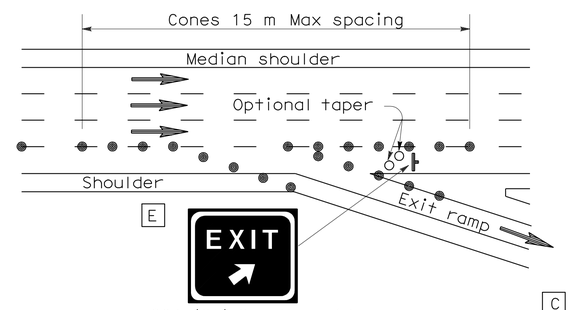

LANE CLOSURE AT EXIT RAMP

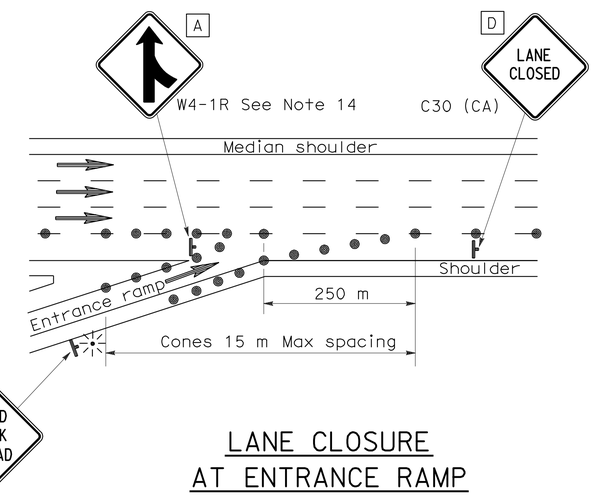

LANE CLOSURE AT ENTRANCE RAMP

NOTES

1. Median lane closures shall conform to the details for outside lane closures except that C20 (CA) (Lt) signs shall be used.
2. At least one person shall be assigned to provide full time maintenance of traffic control devices for lane closures.
3. Duplicate sign installations are not required:
   a) On opposite shoulder if at least one-half of the available lanes remain open to traffic.
   b) In the median if the width of the median shoulder is less than 2.4 m and the outside lanes are to be closed.
4. Each advance warning sign on each side of the roadway shall be equipped with at least two flags for daytime closure. Each flag shall be at least 400 mm x 400 mm in size and shall be orange or fluorescent red-orange in color. Flashing beacons shall be placed at the locations indicated for lane closure during hours of darkness.
5. A C14 (CA) "END ROAD WORK" sign, as appropriate, shall be placed at the end of the lane closure unless the end of work area is obvious or ends within a larger project's limits.
6. If the W20-1 sign would follow within 600 m of a stationary W20-1 or C11 (CA) "ROAD WORK NEXT _____ MILES", use a C20 (CA) sign for the first advance warning sign.
7. Place a C30 (CA) sign every 600 m throughout length of lane closure.
8. One flashing arrow sign for each lane closed. The first flashing arrow sign shall be Type I. All others may be either Type I or Type II.
9. A minimum 450 m of sight distance shall be provided where possible for vehicles approaching the first flashing arrow sign. Lane closures shall not begin at top of crest vertical curve or on a horizontal curve.
10. All cones used for lane closures during the hours of darkness shall be fitted with retroreflective bands (or sleeves) as specified in the specifications.
11. Portable delineators, placed at one-half the spacing indicated for traffic cones may be used instead of cones for daytime closures only.
12. Unless otherwise specified in the special provisions, a minimum of 3 cones shall be placed transversely across each closed lane and shoulder at each location where a taper across a traffic lane ends and every 600 m as shown on the "Lane Closure" detail. Two Type II barricades may be used instead of the 3 cones. The transverse alignment of the cones or barricades on the closed shoulder may be shifted from the transverse alignment to provide access to the work.
13. Unless otherwise specified in the special provisions, the 500 m tangent shown along lane lines shall be used between the 300 m tapers required for each closed traffic lane.
14. Unless otherwise specified in the special provisions, the G84 (CA) and W4-1 signs shall be used as shown.
15. When specified in the special provisions, a W4-2 "LANE ENDS" symbol sign is to be used in place of the C20 (CA) "RIGHT LANE CLOSED AHEAD" sign.
16. The W4-2 "LANE ENDS" symbol sign shown at this location is to be used where the W4-2 sign is used as advance warning as described in Note 15.

SIGN PANEL SIZE (Min)

A	1200 mm x 1200 mm
B	1219 mm x 1219 mm
C	750 mm x 750 mm
D	762 mm x 762 mm
E	1372 mm x 1219 mm

LEGEND

- Traffic Cone
- Traffic Cone (optional taper)
- Temporary Sign
- Flashing Arrow Sign (FAS)
- FAS Support or Trailer
- Direction of Travel
- Portable Flashing Beacon

STATE OF CALIFORNIA
DEPARTMENT OF TRANSPORTATION

TRAFFIC CONTROL SYSTEM FOR LANE CLOSURE ON FREEWAYS AND EXPRESSWAYS

NO SCALE

ALL DIMENSIONS ARE IN MILLIMETERS UNLESS OTHERWISE SHOWN

RSP T10 DATED APRIL 28, 2005 SUPERSEDES STANDARD PLAN T10
DATED JULY 1, 2004-PAGE 218 OF THE STANDARD PLANS BOOK DATED JULY 2004.

REVISED STANDARD PLAN RSP T10

2004 REVISED Std PLAN RSP T10

DIST	COUNTY	ROUTE	KILOMETER POST TOTAL PROJECT	SHEET NO.	TOTAL SHEETS
11	SD	805	40.6/42.4	470	567

REGISTERED CIVIL ENGINEER

April 28, 2005
PLANS APPROVAL DATE

REGISTERED PROFESSIONAL ENGINEER G.W. Edwards No. C36386 Exp. 6-30-06 CIVIL STATE OF CALIFORNIA

The State of California or its officers or agents shall not be responsible for the accuracy or completeness of electronic copies of this plan sheet.

To get to the Caltrans web site, go to: http://www.dot.ca.gov

Caltrans Metric

To accompany plans dated 6-14-10

NOTES

Unless otherwise specified in the special provisions, all temporary warning signs shall have black legend on orange background.

California code are designated by (CA). Otherwise, Federal codes are shown.

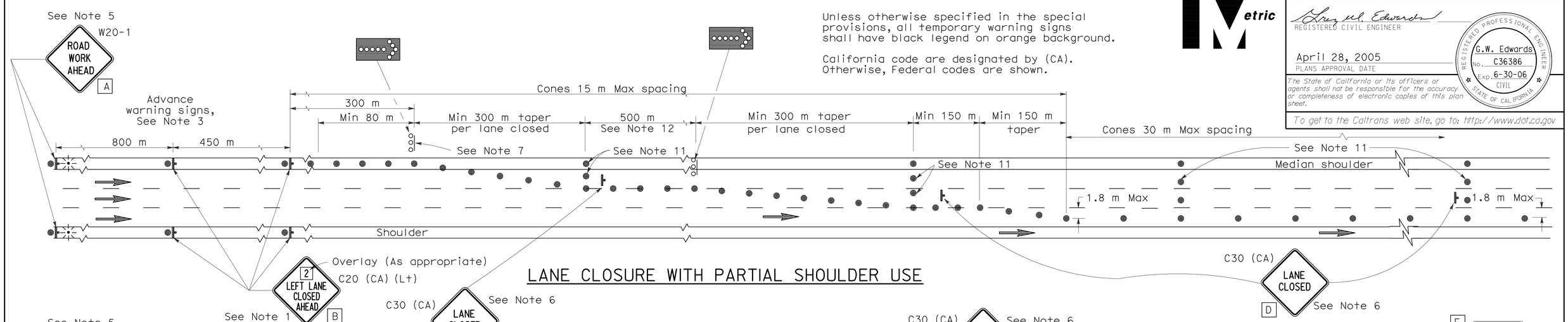

LANE CLOSURE WITH PARTIAL SHOULDER USE

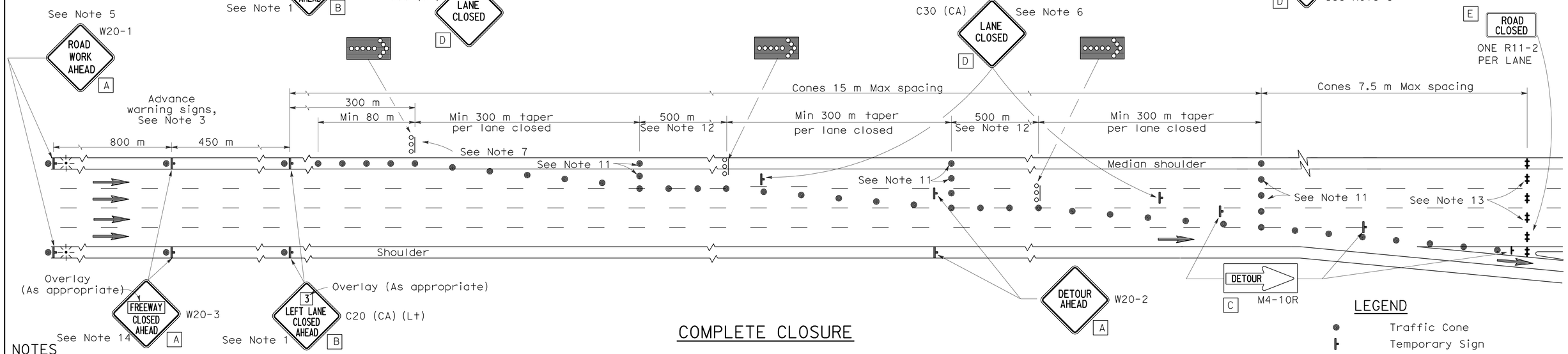

COMPLETE CLOSURE

NOTES

1. Lane closures on the right side using partial median shoulder as a traffic lane shall conform to the details for inside lane closure except that C20 (CA) (Rt) signs shall be used.
2. At least one person shall be assigned to provide full time maintenance of traffic control devices for lane closures.
3. Each advance warning sign on each side of the roadway shall be equipped with at least two flags for daytime closure. Each flag shall be at least 400 mm x 400 mm in size and shall be orange or fluorescent red-orange in color. Flashing beacons shall be placed at the locations indicated for lane closure during hours of darkness.
4. A C14 (CA) "END ROAD WORK" sign, as appropriate, shall be placed at the end of the lane closure unless the end of work area is obvious or ends within a larger project's limits.
5. If the W20-1 sign would follow within 600 m of a stationary W20-1 or C11 (CA) "ROAD WORK NEXT ___ MILES", use a C20 (CA) sign for the first advance warning sign.
6. Place a C30 (CA) sign every 600 m throughout length of lane closure.
7. One flashing arrow sign for each lane closed. The first flashing arrow sign shall be Type I. All others may be either Type I or Type II.
8. A minimum 450 m of sight distance shall be provided where possible for vehicles approaching the first flashing arrow sign. Lane closures shall not begin at the top of crest vertical curve or on a horizontal curve.
9. All cones used for lane closures during the hours of darkness shall be fitted with retroreflective bands (or sleeves) as specified in the specifications.
10. Portable delineators, placed at one-half the spacing indicated for traffic cones, may be used instead of cones for daytime closures only.
11. Unless otherwise specified in the special provisions, a minimum of 3 cones shall be placed transversely across each closed lane and shoulder at each location where a taper across a traffic lane ends and every 600 m as shown on the "Lane Closure With Partial Shoulder Use" detail. Two Type II barricades may be used instead of the 3 cones. The transverse alignment of the cones or barricades on the closed shoulder may be shifted from the transverse alignment to provide access to the work.
12. Unless otherwise specified in the special provisions, the 500 m tangent shown along lane lines shall be used between the 300 m tapers required for each closed traffic lane.
13. A minimum of Two Type II barricades shall be placed across each closed lane and shoulder at the location shown and every 600 m within the complete closure area. Within the complete closure area, the transverse alignment of the barricades on the closed shoulder may be shifted from the transverse alignment to provide access to the work.
14. When specified in the special provisions, a W20-2 "DETOUR AHEAD" sign is to be used in place of the W20-3 "FREEWAY CLOSED AHEAD" sign.

SIGN PANEL SIZE (Min)

A	1200 mm x 1200 mm
B	1219 mm x 1219 mm
C	1200 mm x 450 mm
D	762 mm x 762 mm
E	1200 mm x 750 mm

LEGEND

- Traffic Cone
- Temporary Sign
- Barricade
- Flashing Arrow Sign (FAS)
- FAS Support or Trailer
- Direction of Travel
- Portable Flashing Beacon

STATE OF CALIFORNIA
DEPARTMENT OF TRANSPORTATION

TRAFFIC CONTROL SYSTEM FOR LANE AND COMPLETE CLOSURES ON FREEWAYS AND EXPRESSWAYS

NO SCALE

ALL DIMENSIONS ARE IN MILLIMETERS UNLESS OTHERWISE SHOWN

RSP T10A DATED APRIL 28, 2005 SUPERSEDES STANDARD PLAN T10A DATED JULY 1, 2004-PAGE 219 OF THE STANDARD PLANS BOOK DATED JULY 2004.

REVISED STANDARD PLAN RSP T10A

2004 REVISED Std PLAN RSP T10A

DIST	COUNTY	ROUTE	KILOMETER POST TOTAL PROJECT	SHEET NO.	TOTAL SHEETS
11	SD	805	40.6/42.4	471	567

Caltrans Metric

Greg W. Edwards
REGISTERED CIVIL ENGINEER

April 28, 2005
PLANS APPROVAL DATE

REGISTERED PROFESSIONAL ENGINEER
Greg W. Edwards
No. C36386
Exp. 6-30-06
CIVIL
STATE OF CALIFORNIA

The State of California or its officers or agents shall not be responsible for the accuracy or completeness of electronic copies of this plan sheet.

To get to the Caltrans web site, go to: http://www.dot.ca.gov

To accompany plans dated 6-14-10

TYPICAL LANE CLOSURE

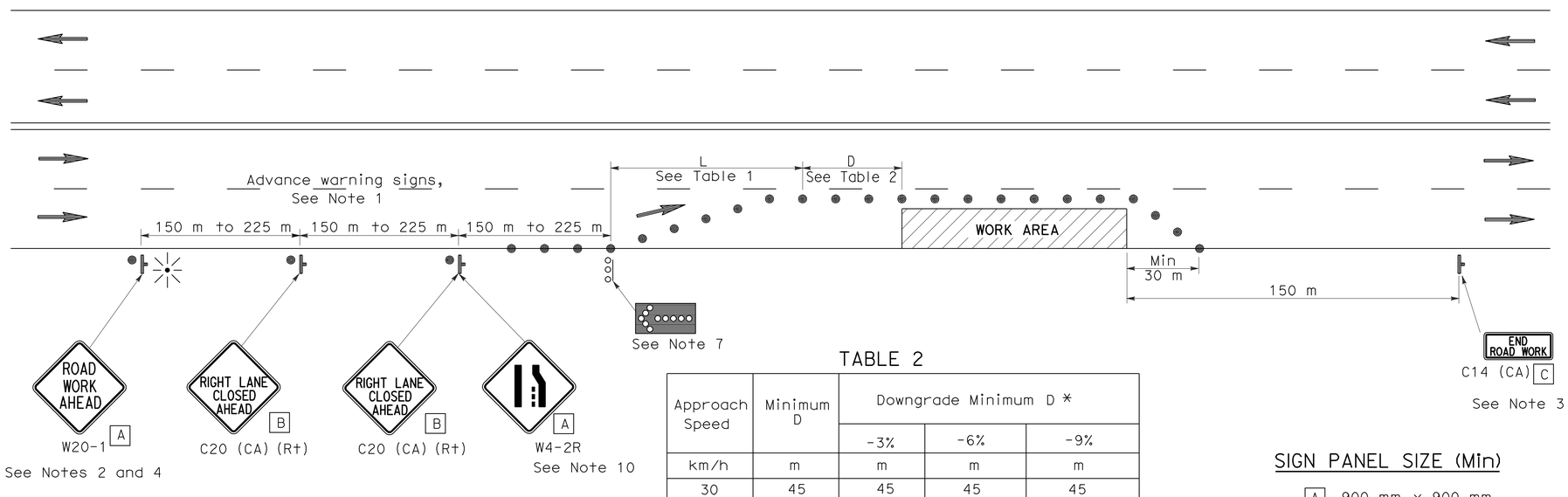

TABLE 2

Approach Speed	Minimum D	Downgrade Minimum D *		
		-3%	-6%	-9%
km/h	m	m	m	m
30	45	45	45	45
40	45	50	50	53
50	45	66	70	74
60	45	87	92	97
70	65	1 10	1 16	124
80	85	136	144	154

* Use on sustained downgrade steeper than or equal to grades shown and longer than 1.6 km.

SIGN PANEL SIZE (Min)

A 900 mm x 900 mm

B 914 mm x 914 mm

C 914 mm x 457 mm

LEGEND

- Traffic Cone
- Temporary Sign
- Direction of Travel
- Flashing Arrow Sign (FAS)
- FAS Support or Trailer
- Portable Flashing Beacon

NOTES

Unless otherwise specified in the special provisions, all temporary warning signs shall have black legend on orange background.

California code are designated by (CA). Otherwise, Federal codes are shown.

NOTES

1. Where approach speeds are low, advance warning signs may be placed at 90 m spacing and placed closer in urban areas.
2. Each advance warning sign shall be equipped with at least two flags for daytime closure. Each flag shall be at least 400 mm x 400 mm in size and shall be orange or fluorescent red-orange in color. Flashing beacons shall be placed at the locations indicated for lane closure during hours of darkness.
3. A C14 (CA) "END ROAD WORK" sign, as appropriate, shall be placed at the end of the lane closure unless the end of work area is obvious, or ends within a larger project's limits.
4. If the W20-1 sign would follow within 600 m of a stationary W20-1 or C11 (CA) "ROAD WORK NEXT _____ MILES", use a C20 (CA) sign for the first advance warning sign.
5. All cones used for lane closures during the hours of darkness shall be fitted with retroreflective bands (or sleeves) as specified in the specifications.
6. Portable delineators, placed at one-half the spacing indicated for traffic cones, may be used instead of cones for daytime closures only.
7. Flashing arrow sign shall be either Type I or Type II.
8. The maximum spacing between cones along a tangent shall be 15 m and along a taper shall be approximately as shown in Table 1.
9. For approach speeds over 80 km/h, use the "Traffic Control System for Lane Closure On Freeways And Expressways" plan for lane closure details and requirements.
10. When specified in the special provisions, a W4-2 "LANE ENDS" symbol sign is to be used in place of the C20 (CA) "RIGHT LANE CLOSED AHEAD" sign.

TABLE I

Approach Speed	* Minimum L	** Max spacing of cones along taper
km/h	m	m
30	38	6
40	38	8
50	98	10
60	98	12
70	183	14
80	183	15
Over 80	See Note 9	

* Use L for lane widths less than or equal to 3.6 m.

** See Note 8

STATE OF CALIFORNIA
DEPARTMENT OF TRANSPORTATION

TRAFFIC CONTROL SYSTEM FOR LANE CLOSURE ON MULTILANE CONVENTIONAL HIGHWAYS

NO SCALE

ALL DIMENSIONS ARE IN MILLIMETERS UNLESS OTHERWISE SHOWN

RSP T11 DATED APRIL 28, 2005 SUPERSEDES STANDARD PLAN T11
DATED JULY 1, 2004-PAGE 220 OF THE STANDARD PLANS BOOK DATED JULY 2004.

REVISED STANDARD PLAN RSP T11

2004 REVISED Std PLAN RSP T11

TYPICAL RAMP CLOSURES

LEGEND

- Traffic Cone
- Temporary Sign
- Barricades
- Direction of Travel
- Turn Arrow

SIGN PANEL SIZE (Min)

A	1200 mm x 1200 mm
B	1200 mm x 750 mm
C	750 mm x 750 mm
D	762 mm x 762 mm
E	900 mm x 900 mm
F	1219 mm x 914 mm

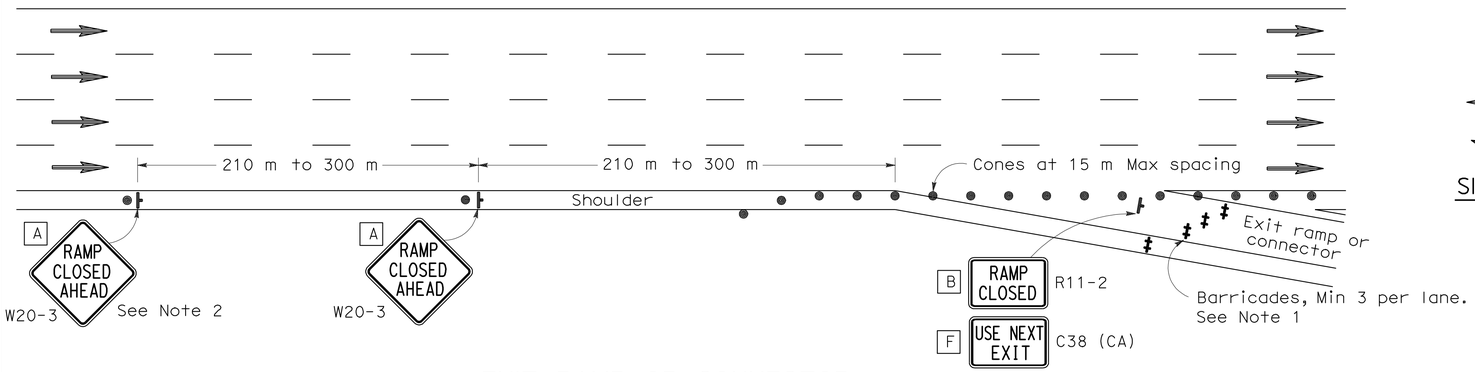

EXIT RAMP OR CONNECTOR

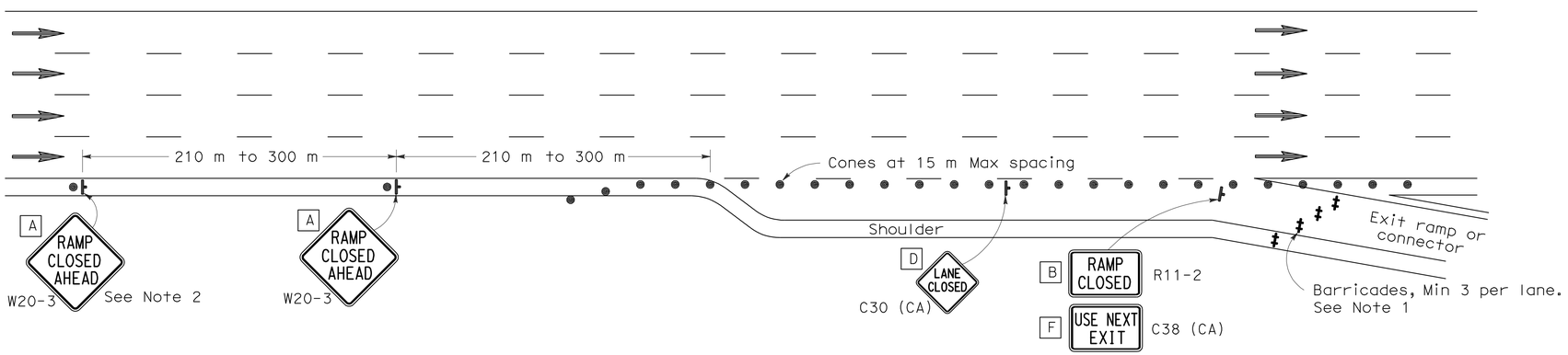

EXIT RAMP OR CONNECTOR WITH ADDITIONAL LANE

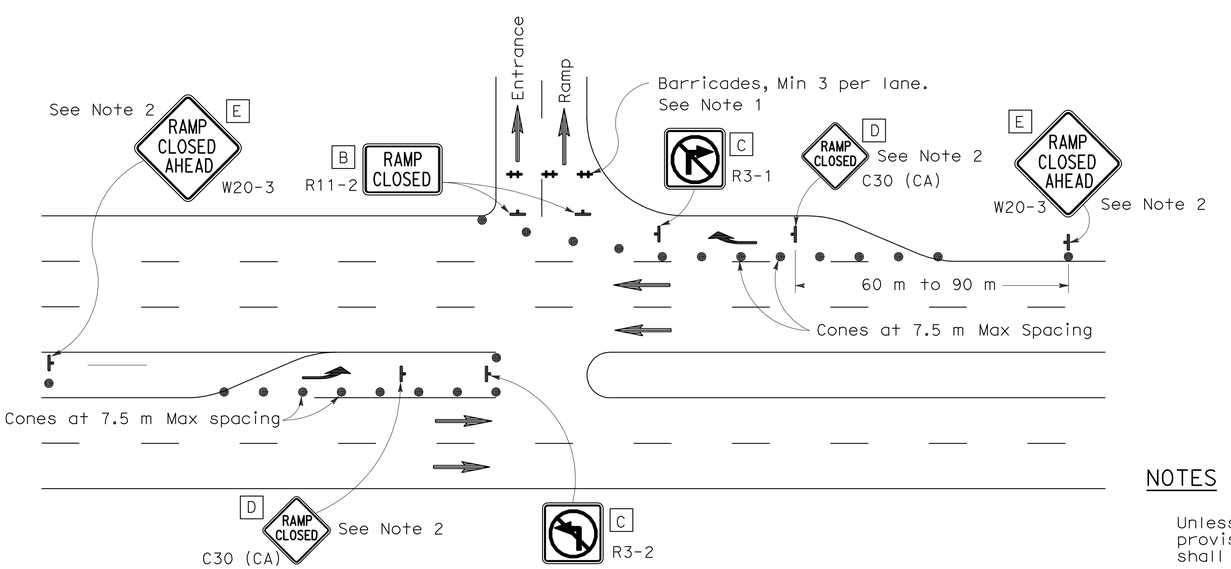

ENTRANCE RAMP WITH TURNING POCKETS

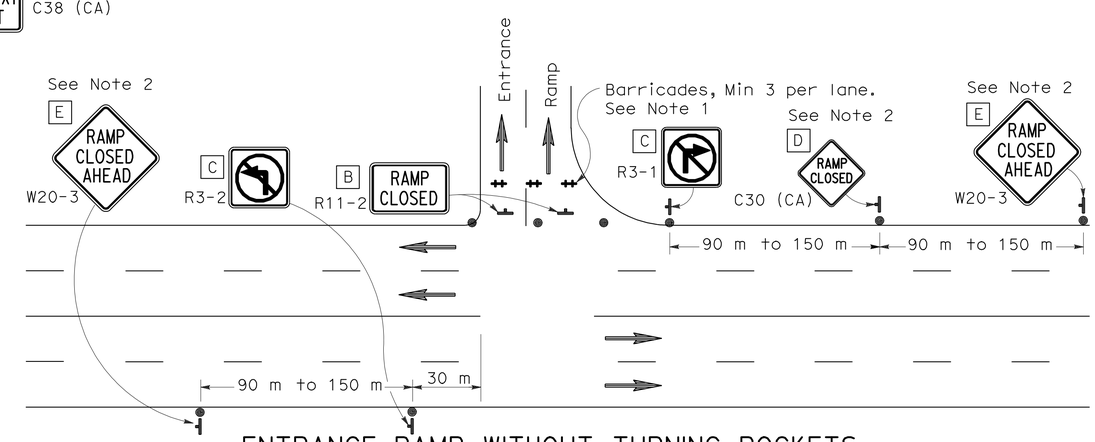

ENTRANCE RAMP WITHOUT TURNING POCKETS

NOTES

1. Barricades shall be Type I, II, or III for closures lasting one week or less and Type III for closures lasting longer than one week.
2. Instead of placing the W20-3 "RAMP CLOSED AHEAD" and C30 (CA) "RAMP CLOSED" signs, black on orange overlay plates with the word "CLOSED" may be mounted, as directed by the Engineer, on all guide signs that refer to the closed ramp. The letter size on the overlay shall be the same as the guide sign.
3. Each advance W20-3 "RAMP CLOSED AHEAD" sign shall be equipped with at least two flags for daytime closure. Each flag shall be at least 400 mm x 400 mm in size and shall be orange or fluorescent red-orange in color.
4. All cones used for ramp closures during the hours of darkness shall be fitted with retroreflective bands (or sleeves) as specified in the specifications.
5. Portable delineators, placed at one-half the spacing indicated for traffic cones, may be used instead of cones for daytime ramp closures only.
6. At least one person shall be assigned to provide full time maintenance of traffic control devices, unless otherwise directed by the Engineer.
7. The existing "EXIT" sign in the gore area shall be covered during ramp closures.

NOTES

Unless otherwise specified in the special provisions, all temporary warning signs shall have black legend on orange background.

California code are designated by (CA). Otherwise, Federal codes are shown.

DIST	COUNTY	ROUTE	KILOMETER POST TOTAL PROJECT	SHEET NO.	TOTAL SHEETS
11	SD	805	40.6/42.4	472	567

Caltrans Metric

REGISTERED CIVIL ENGINEER

April 28, 2005
PLANS APPROVAL DATE

REGISTERED PROFESSIONAL ENGINEER
Greg W. Edwards
No. C36386
Exp. 6-30-06
CIVIL
STATE OF CALIFORNIA

The State of California or its officers or agents shall not be responsible for the accuracy or completeness of electronic copies of this plan sheet.

To get to the Caltrans web site, go to: http://www.dot.ca.gov

To accompany plans dated 6-14-10

STATE OF CALIFORNIA
DEPARTMENT OF TRANSPORTATION

TRAFFIC CONTROL SYSTEM FOR RAMP CLOSURE

NO SCALE

ALL DIMENSIONS ARE IN MILLIMETERS UNLESS OTHERWISE SHOWN

RSP T14 DATED APRIL 28, 2005 SUPERSEDES STANDARD PLAN T14 DATED JULY 1, 2004-PAGE 223 OF THE STANDARD PLANS BOOK DATED JULY 2004.

REVISED STANDARD PLAN RSP T14

2004 REVISED Std PLAN RSP T14

To accompany plans dated 6-14-10

Caltrans Metric

DIST	COUNTY	ROUTE	KILOMETER POST TOTAL PROJECT	SHEET NO.	TOTAL SHEETS
11	SD	805	40.6/42.4	473	567

REGISTERED CIVIL ENGINEER

April 28, 2005
PLANS APPROVAL DATE

REGISTERED PROFESSIONAL ENGINEER Greg W. Edwards No. C36386 Exp. 6-30-06 CIVIL STATE OF CALIFORNIA

The State of California or its officers or agents shall not be responsible for the accuracy or completeness of electronic copies of this plan sheet.

To get to the Caltrans web site, go to: http://www.dot.ca.gov

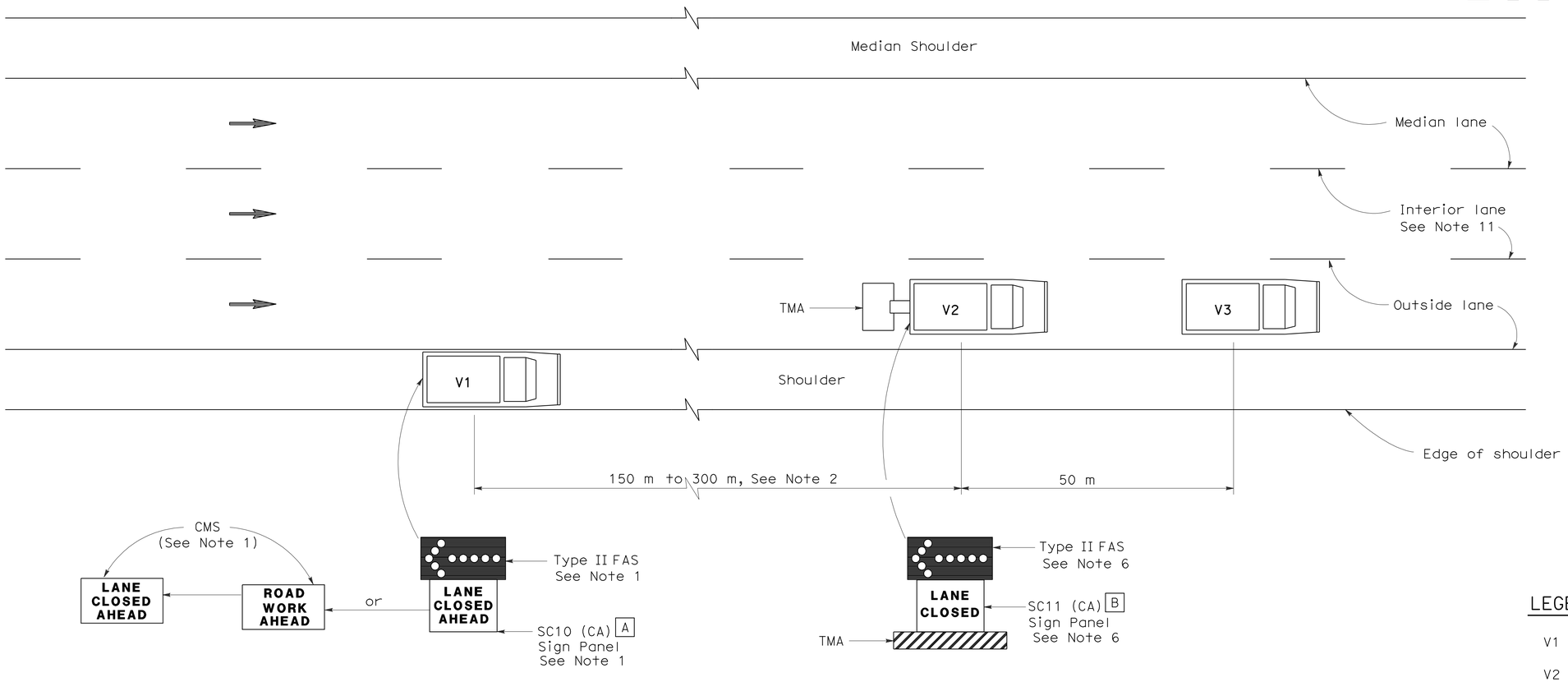

MOVING LANE CLOSURE ON MEDIAN OR OUTSIDE LANE OF MULTILANE HIGHWAYS

SIGN PANEL SIZE (Min)

A 1676 mm x 914 mm

B 1372 mm x 1067 mm

LEGEND

V1	Sign Vehicle
V2	Shadow Vehicle
V3	Work/Application Vehicle
	Flashing Arrow Sign (FAS)
CMS	Changeable Message Sign
TMA	Truck-Mounted Attenuator
	Direction of Travel

NOTES

1. Either a changeable message sign or a SC10 (CA) sign panel and a Type II flashing arrow sign shall be mounted on the rear of sign vehicle V1. A Type II flashing arrow sign shall be mounted on the rear of sign vehicle V1 and used with the SC10 (CA) sign panel. A Type II flashing arrow sign will not be required with the changeable message sign provided the flashing arrow sign symbol is displayed on the changeable message sign board. The changeable message sign shall be sequenced to show the "ROAD WORK AHEAD" message first, followed by the "LANE CLOSED AHEAD" message and then the flashing arrow sign symbol. For median lane closure, the flashing arrow symbol shall be reversed with the arrowhead on the right.

2. If traffic queues develop, sign vehicle V1 should be positioned upstream from the end of queue. Sign vehicle V1 shall be positioned where highly visible when shoulders are not available.

3. A minimum sight distance of 450 m should be provided in advance of sign vehicle V1.

4. Sign vehicle V1 should remain at the beginning of horizontal or vertical curves until the other vehicles (V2 and V3) are far enough beyond the curve to resume the minimum sight distance of 450 m.

5. Vehicle-mounted sign panels shall be Type III, IV, VII, VIII or IX retroreflective sheeting, black on white, black on orange, or black on fluorescent orange, with 150 mm minimum series D letters per Caltrans sign specifications.

6. Gross Vehicle Weight of shadow vehicle V2 shall be a minimum of 9000 kilograms and shall be equipped with a truck-mounted attenuator. The sign panel shown and a Type II flashing arrow sign shall be mounted on the rear of shadow vehicle V2. For median lane closure the flashing arrow sign symbol shall be displayed with the arrowhead on the right.

7. All vehicles used for lane closures shall be equipped with two-way radios, and the vehicle operators shall maintain communication during the work or application operation.

8. All vehicles shall be equipped with flashing or rotating amber lights.

9. Where sufficient shoulder width is not available, sign vehicle V1 may encroach into the traffic lane staying as close to the edge of shoulder as practicable. Both V1 and V2 shall be equipped with a truck-mounted attenuator. The Gross Vehicle Weight of V1 and V2 shall be at least 9000 kg, respectively.

10. Where workers would be on foot in the work area, a stationary type lane closure (Revised Standard Plan RSP T10, RSP T11, etc., as applicable) shall be used instead of this plan.

11. For moving lane closure on interior lane of multilane highways, see Revised Standard Plan RSP T16.

12. When multiple work vehicles are used in close proximity to each other, only one shadow vehicle is required, and spacing between work vehicles shall be minimized in order to deter traffic from entering the closdlane.

STATE OF CALIFORNIA
DEPARTMENT OF TRANSPORTATION

TRAFFIC CONTROL SYSTEM FOR MOVING LANE CLOSURE ON MULTILANE HIGHWAYS

NO SCALE

ALL DIMENSIONS ARE IN MILLIMETERS UNLESS OTHERWISE SHOWN

RSP T15 DATED APRIL 28, 2005 SUPERSEDES STANDARD PLAN T15 DATED JULY 1, 2004-PAGE 224 OF THE STANDARD PLANS BOOK DATED JULY 2004.

REVISED STANDARD PLAN RSP T15

2004 REVISED Std PLAN RSP T15

DIST	COUNTY	ROUTE	KILOMETER POST TOTAL PROJECT	SHEET NO.	TOTAL SHEETS
11	SD	805	40.6/42.4	474	567

REGISTERED CIVIL ENGINEER

April 28, 2005
PLANS APPROVAL DATE

REGISTERED PROFESSIONAL ENGINEER G.W. Edwards No. C36386 Exp. 6-30-06 CIVIL STATE OF CALIFORNIA

The State of California or its officers or agents shall not be responsible for the accuracy or completeness of electronic copies of this plan sheet.

To get to the Caltrans web site, go to: http://www.dot.ca.gov

To accompany plans dated 6-14-10

2004 REVISED Std PLAN RSP T16

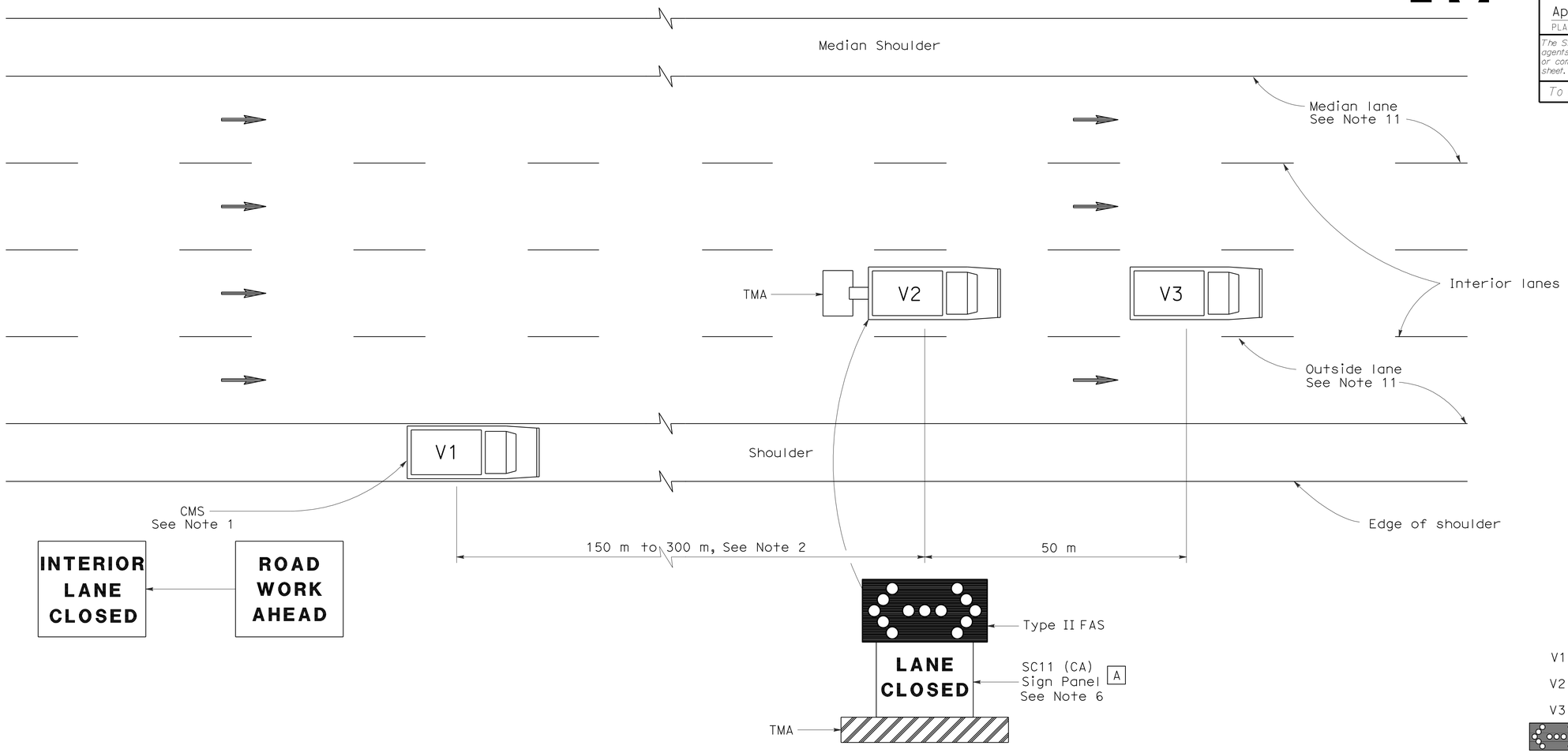

MOVING LANE CLOSURE ON INTERIOR LANE OF MULTILANE HIGHWAYS

SIGN PANEL SIZE (Min)

A 1372 mm x 1067 mm

LEGEND

V1	Sign Vehicle
V2	Shadow Vehicle
V3	Work/Application Vehicle
	Flashing Arrow Sign (FAS) in flashing double arrow mode
CMS	Changeable Message Sign
TMA	Truck-Mounted Attenuator
	Direction of Travel

NOTES

1. A changeable message sign shall be mounted on the rear of sign vehicle V1. The changeable message sign shall be sequenced to show the "ROAD WORK AHEAD" message first, followed by the "INTERIOR LANE CLOSED" message. The message "CENTER LANE CLOSED" may be used in place of the "INTERIOR LANE CLOSED" message.
2. If traffic queues develop, sign vehicle V1 should be positioned upstream from the end of queue. Sign vehicle V1 shall be positioned where highly visible when shoulders are not available.
3. A minimum sight distance of 450 m should be provided in advance of sign vehicle V1.
4. Sign vehicle V1 should remain at the beginning of horizontal or vertical curves until the other vehicles (V2 and V3) are far enough beyond the curve to resume the minimum sight distance of 450 m.
5. Vehicle-mounted sign panels shall be Type III, IV, VII, VIII, or IX retroreflective sheeting, black on white, black on orange, or black on fluorescent orange, with 150 mm minimum series D letters per Caltrans sign specifications.
6. Gross Vehicle Weight of shadow vehicle V2 shall be a minimum of 9000 kilograms and shall be equipped with a truck-mounted attenuator. The sign panel shown and a Type II flashing arrow sign shall be mounted on the rear of shadow vehicle V2.
7. All vehicles used for lane closures shall be equipped with two-way radios, and the vehicle operators shall maintain communication during the work or application operation.
8. All vehicles shall be equipped with flashing or rotating amber lights.
9. Where sufficient shoulder width is not available, sign vehicle V1 may encroach into the traffic lane staying as close to the edge of shoulder as practicable. Both V1 and V2 shall be equipped with a truck-mounted attenuator. The Gross Vehicle Weight of V1 and V2 shall be at least 9000 kg, respectively.
10. Where workers would be on foot in the work area, a stationary type lane closure (Revised Standard Plan RSP T10, RSP T11 etc., as applicable) shall be used instead of this plan.
11. For moving lane closure on median or outside lanes of multilane highways, see Revised Standard Plan RSP T15.
12. When multiple work vehicles are used in close proximity to each other, only one shadow vehicle is required, and spacing between work vehicles shall be minimized in order to deter traffic from entering the closed lane.

STATE OF CALIFORNIA
DEPARTMENT OF TRANSPORTATION

TRAFFIC CONTROL SYSTEM FOR MOVING LANE CLOSURE ON MULTILANE HIGHWAYS

NO SCALE

ALL DIMENSIONS ARE IN MILLIMETERS UNLESS OTHERWISE SHOWN

RSP T16 DATED APRIL 28, 2005 SUPERSEDES STANDARD PLAN T16 DATED JULY 1, 2004-PAGE 225 OF THE STANDARD PLANS BOOK DATED JULY 2004.

REVISED STANDARD PLAN RSP T16

DIST	COUNTY	ROUTE	KILOMETER POST TOTAL PROJECT	SHEET NO.	TOTAL SHEETS
11	SD	805	40.6/42.4	475	567

Caltrans Metric

REGISTERED CIVIL ENGINEER

April 28, 2005
PLANS APPROVAL DATE

REGISTERED PROFESSIONAL ENGINEER
Greg W. Edwards
No. C36386
Exp. 6-30-06
CIVIL
STATE OF CALIFORNIA

The State of California or its officers or agents shall not be responsible for the accuracy or completeness of electronic copies of this plan sheet.

To get to the Caltrans web site, go to: http://www.dot.ca.gov

To accompany plans dated 6-14-10

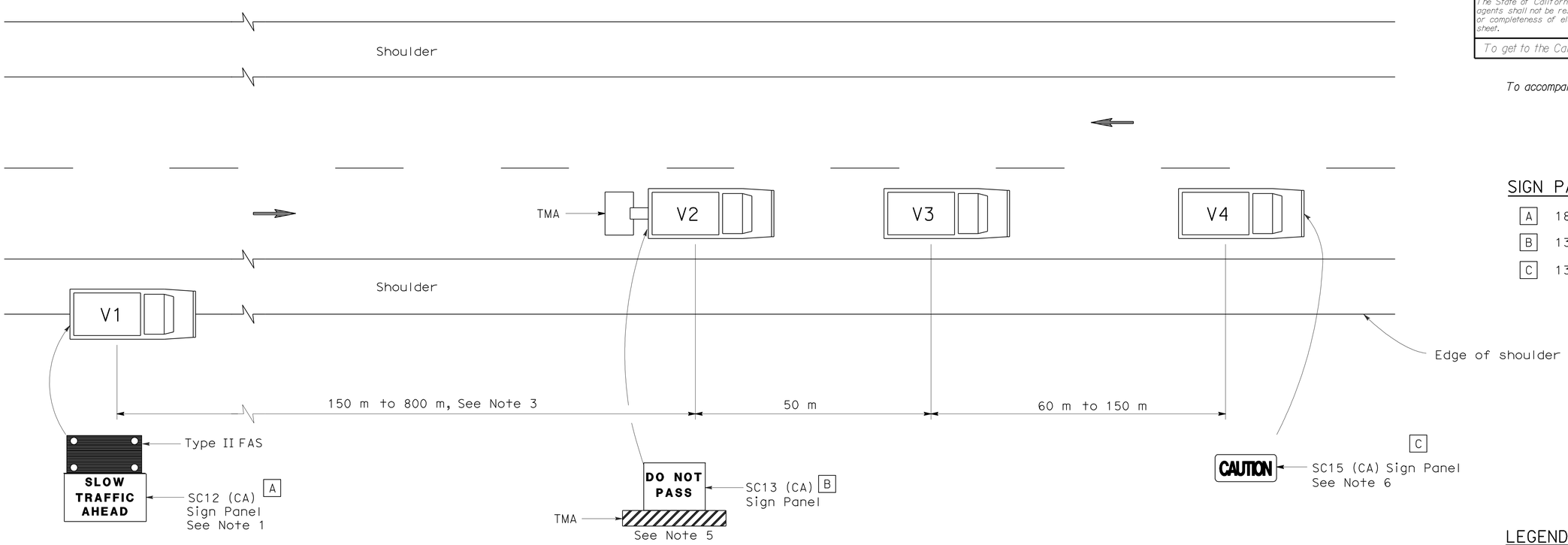

SIGN PANEL SIZE (Min)

A	1829 mm x 1067 mm
B	1372 mm x 1067 mm
C	1372 mm x 610 mm

LEGEND

V1	Sign Vehicle
V2	Shadow Vehicle
V3	Work/Application Vehicle
V4	Sign Vehicle
TMA	Truck-Mounted Attenuator
→	Direction of Travel
▭	Flashing Arrow Sign (FAS) in flashing caution mode

NOTES

1. Either a changeable message sign or a SC12 (CA) "SLOW TRAFFIC AHEAD" sign shall be mounted on the rear of sign vehicle V1. A Type II flashing arrow sign may be used with the SC12 (CA) sign panel.
2. Sign vehicle V1 should be positioned where highly
3. If traffic queues develop, sign vehicle V1 should be
4. Vehicle-mounted sign panels shall be Type III, IV VII, VIII, or IX retroreflective sheeting, black on white, black on orange, or black on fluorescent orange, with 150 mm minimum series D letters per Caltrans sign specifications.
5. Gross Vehicle Weight of shadow vehicle shall be a minimum of 9000 kilograms and shall be equipped with a truck-mounted attenuator. The sign panel shown shall be mounted on the rear of shadow vehicle V2. The message "LANE CLOSED" may be used in place of the "DO NOT PASS" message.
6. The sign panel shown shall be mounted on the front of sign vehicle V4, facing opposing traffic.
7. All vehicles shall be equipped with flashing or rotating amber lights.
8. Sign vehicle V4 will not be required when the work and vehicles V2 and V3 are 0.6 m or more from the centerline of the highway during the work or application operations.
9. All vehicles used for lane closures shall be equipped with two-way radios and the vehicle operators shall maintain communication during the work or application operation.
10. This plan shall not be used where workers would be on foot in the work area. Use a stationary type lane closure (Revised Standard Plan RSP T13) for this condition.
11. When multiple work vehicles are used in close proximity to each other, only one shadow vehicle is required and spacing between work vehicles shall be minimized in order to deter traffic from entering the closed lane.

STATE OF CALIFORNIA
DEPARTMENT OF TRANSPORTATION

TRAFFIC CONTROL SYSTEM FOR MOVING LANE CLOSURE ON TWO LANE HIGHWAYS

NO SCALE

ALL DIMENSIONS ARE IN MILLIMETERS UNLESS OTHERWISE SHOWN

RSP T17 DATED APRIL 28, 2005 SUPERSEDES STANDARD PLAN T17 DATED JULY 1, 2004-PAGE 226 OF THE STANDARD PLANS BOOK DATED JULY 2004.

REVISED STANDARD PLAN RSP T17

2004 REVISED Std PLAN RSP T17

To accompany plans dated 6-14-10

Caltrans Metric

DIST	COUNTY	ROUTE	KILOMETER POST TOTAL PROJECT	SHEET NO.	TOTAL SHEETS
11	SD	805	40.6/42.4	476	567

REGISTERED CIVIL ENGINEER

April 28, 2005
PLANS APPROVAL DATE

REGISTERED PROFESSIONAL ENGINEER Michael Pope No. C54503 Exp. 12-31-05 CIVIL STATE OF CALIFORNIA

The State of California or its officers or agents shall not be responsible for the accuracy or completeness of electronic copies of this plan sheet.

To get to the Caltrans web site, go to: http://www.dot.ca.gov

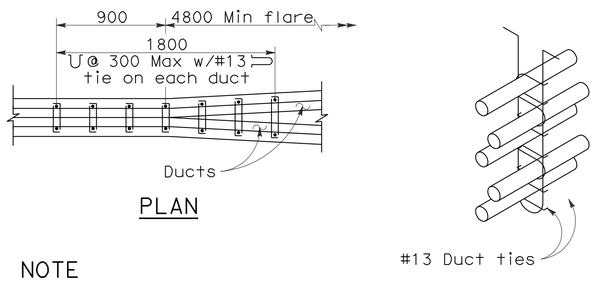

PLAN

NOTE

Place closed end of duct ties in direction of flare.

STIRRUP REINFORCEMENT AT FLARE OF GIRDER STEM

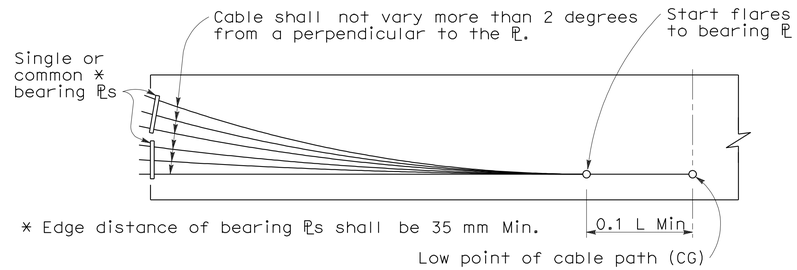

BEARING PLATE PRESTRESSING PATH

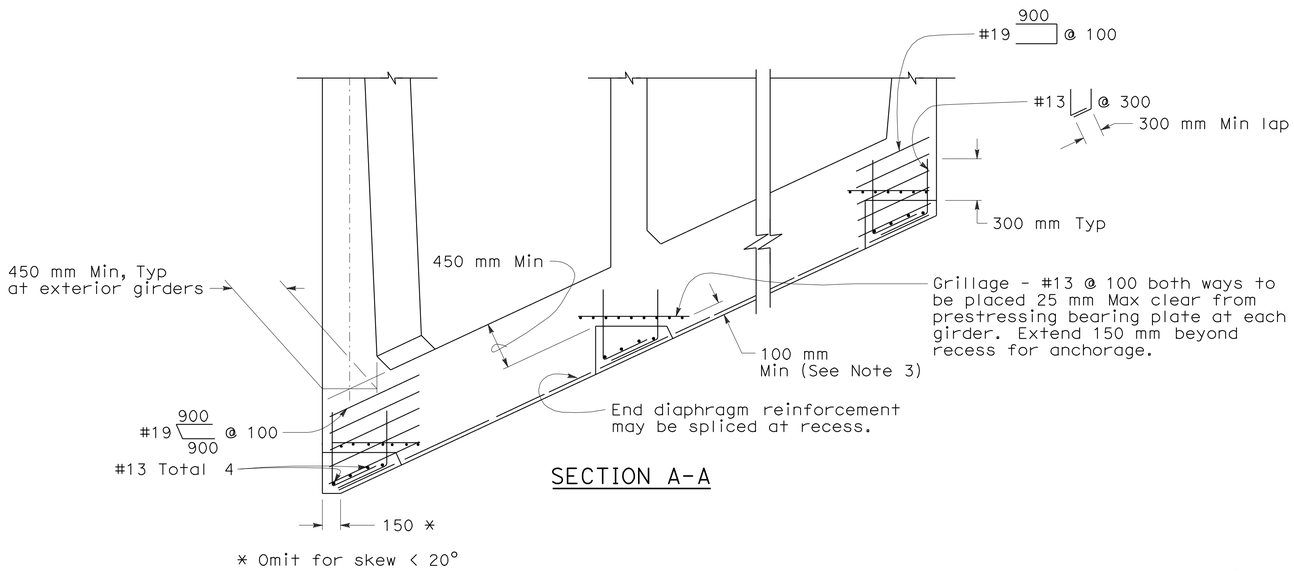

SECTION A-A

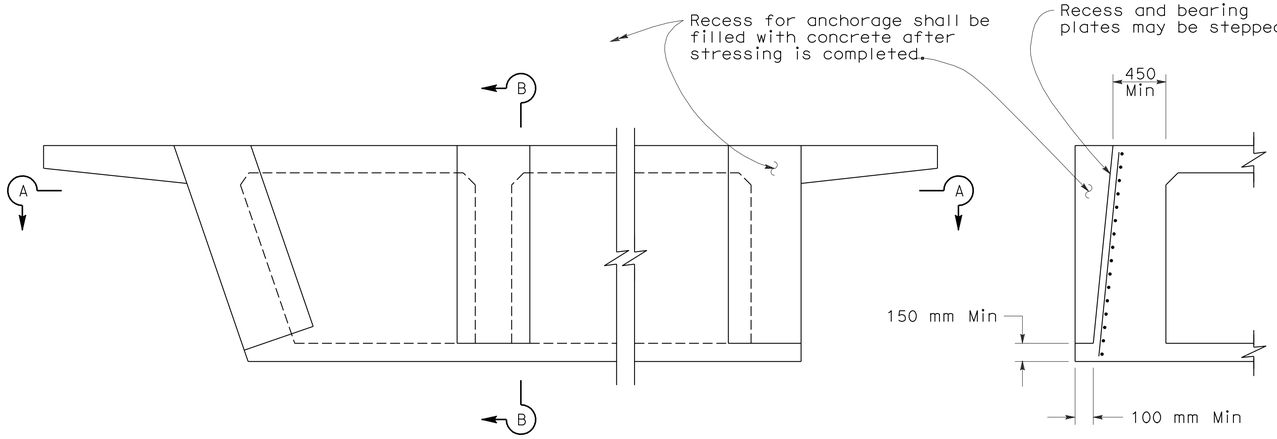

PRESTRESS ANCHORAGE DETAILS AT SEAT TYPE ABUTMENTS

SECTION B-B

NOTES

Distribution of prestressing force:

Unless otherwise noted, the prestressing force shall be distributed with an approximately equal amount in each girder and shall be placed symmetrically about the center line of the structure. In slabs, the prestressing force shall be uniformly distributed across the slab.

Stressing sequence:

No more than ½ of the prestressing force in any girder may be applied before an equal force is applied in the adjacent girders. The maximum force variation between girders shall also not exceed the prestressing force of the largest tendon used in all girders. At no time during stressing operations will more than 1/6 of total prestressing force be applied eccentrically about the centerline of the structure.

Girder stem may be flared near anchorage to provide clearances for the particular anchorage system.

Place duct ties, as shown for flare girder stem, at each location where ducts change horizontal direction.

Bar reinforcement interfering with the prestressing tendon alignment shall be adjusted, as approved by the Engineer.

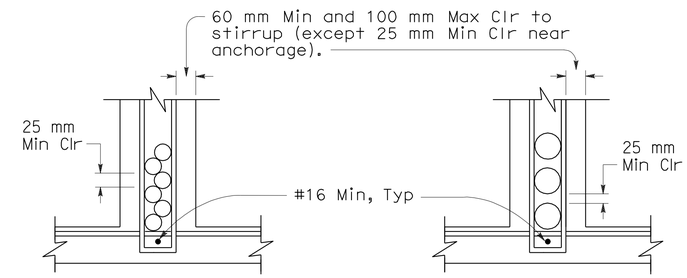

DUCTS 114 mm OD AND LESS

DUCTS OVER 114 mm OD

CLEARANCE REQUIREMENTS FOR DUCTS

NOTES

1. Duct patterns shown are for a 300 mm wide girder stem. For other widths the minimum clearances must be maintained.
2. ⊔ Stirrups may also be used. For continuous stirrups in girder stems greater than 400 mm wide (ie: at flares) use 2-#16 minimum ⊔ or ⊔.
3. 100 mm minimum is not required if this detail is used at hinge location.
4. For additional details, see Standard Plan B7-1.
5. Approval of the Engineer is required for deviations.

STATE OF CALIFORNIA
DEPARTMENT OF TRANSPORTATION

CAST-IN-PLACE PRESTRESSED GIRDER DETAILS

NO SCALE

ALL DIMENSIONS ARE IN MILLIMETERS UNLESS OTHERWISE SHOWN

RSP B8-5 DATED APRIL 28, 2005 SUPERSEDES STANDARD PLAN B8-5 DATED JULY 1, 2004-PAGE 266 OF THE STANDARD PLANS BOOK DATED JULY 2004.

REVISED STANDARD PLAN RSP B8-5

2004 REVISED Std PLAN RSP B8-5

DIST	COUNTY	ROUTE	KILOMETER POST TOTAL PROJECT	SHEET NO.	TOTAL SHEETS
11	SD	805	40.6/42.4	477	567

REGISTERED CIVIL ENGINEER

January 24, 2005
PLANS APPROVAL DATE

REGISTERED PROFESSIONAL ENGINEER
Tillat Sattar
No. C42892
Exp. 03-31-2006
CIVIL
STATE OF CALIFORNIA

The State of California or its officers or agents shall not be responsible for the accuracy or completeness of electronic copies of this plan sheet.

To get to the Caltrans web site, go to: http://www.dot.ca.gov

To accompany plans dated 6-14-10

INSTRUCTIONS TO FABRICATOR

PROJECT PLANS SHOW:

1. Sign structure location.
2. Length of structure frame.
3. Panel size and locations on structure.
4. Walkway length for two post signs.
5. Post type and height to bottom of frame.
6. Base plate elevation.
7. Footing elevation or location of pile foundation.
8. Photoelectric unit location if required.

REFER TO THE FOLLOWING STANDARD PLANS FOR DETAILS NOT SHOWN ON PROJECT PLANS:

Sheet #	SHEET NAME
RSP S1	Overhead Signs-Truss, Instructions and Examples
RSP S2	Overhead Signs-Truss, Single Post Type, Post Types II to IX
RSP S3	Overhead Signs-Truss, Single Post Type, Base Plate and Anchorage Details
RSP S4	Overhead Signs-Truss, Single Post Type, Structural Frame Members Details No. 1
RSP S5	Overhead Signs-Truss, Single Post Type, Structural Frame Members Details No. 2
RSP S6	Overhead Signs-Truss, Gusset Plate Details
RSP S7	Overhead Signs-Truss, Single Post Type, Square Pedestal Pile Foundation
RSP S8	Overhead Signs-Truss, Single Post Type, Round Pedestal Pile Foundation
RSP S9	Overhead Signs-Truss, Two Post Type, Post Types I-S through VII-S
RSP S10	Overhead Signs-Truss, Two Post Type, Base Plate and Anchorage Details
RSP S11	Overhead Signs-Truss, Two Post Type, Structural Frame Members
RSP S12	Overhead Signs-Truss, Structural Frame Details
RSP S13	Overhead Signs-Truss, Frame Juncture Details
RSP S14	Overhead Signs-Truss, Two Post Type, Square Pedestal Pile Foundation
RSP S15	Overhead Signs-Truss, Two Post Type, Round Pedestal Pile Foundation
RSP S16	Overhead Signs, Walkway Details No. 1
RSP S17	Overhead Signs, Walkway Details No. 2
NSP S17A	Overhead Signs, Walkway Details No. 3
RSP S18	Overhead Signs, Walkway Safety Railing Details
RSP S19	Overhead Signs-Truss, Sign Mounting Details, Laminated Panel-Type A
RSP S20	Overhead Signs, Steel Frames, Removable Sign Panel Frames
RSP S21	Overhead Signs, Removable Sign Panel Frames, Mounting Details
RSP S22	Overhead Signs-Truss, Removable Sign Panel Frames, 2794 mm and 3048 mm Sign Panels

WALKWAY BRACKETS:

Space all walkway brackets maintaining uniform spacing where possible. Maximum spacing shall not exceed 1676 mm.

LIGHTING FIXTURE SUPPORTS:

Where distance from walkway bracket to end of sign panel exceeds 406 mm, extend lighting fixture supports to next walkway bracket. See Example No. 2.

WALKWAY AND SAFETY RAILING:

Walkway to be continuous for entire length of frame for single post signs. For two post signs, see Project Plans. Safety railing to protect entire walkway, but continuous for no more than 3353 mm in one unit.

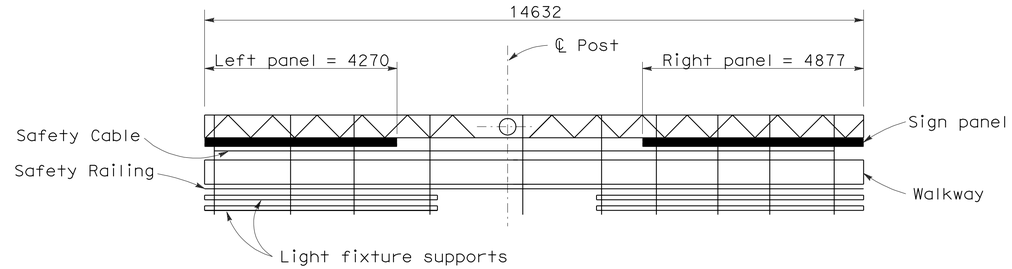

PLAN

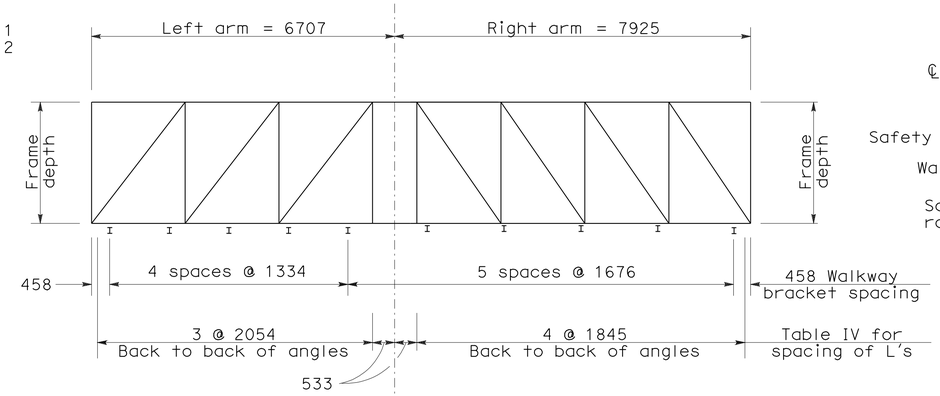

UNBALANCED SINGLE POST TYPE

Example No. 1

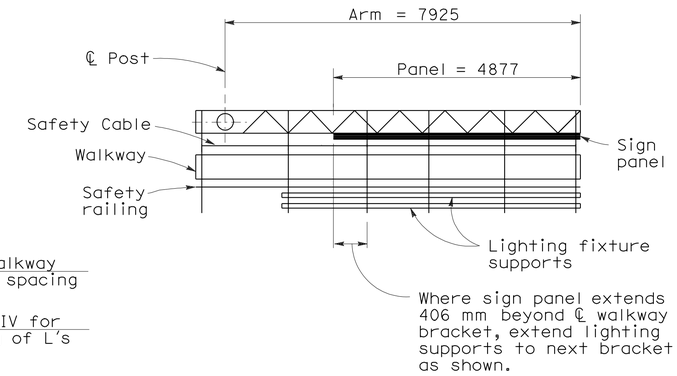

PLAN

CANTILEVER SINGLE POST TYPE

Example No. 2

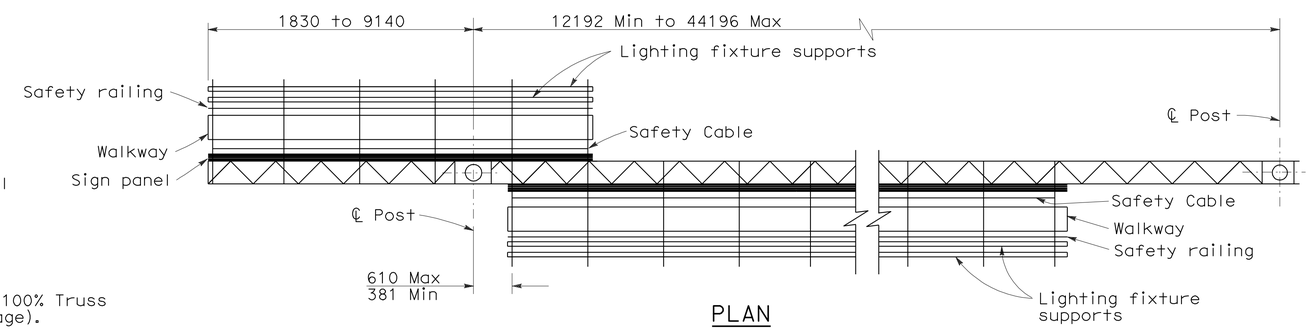

PLAN

TWO POST TYPE WITH CANTILEVER (PART DOUBLE-FACED)

Example No. 3

GENERAL NOTES

DESIGN:

AASHTO Specifications for Structural Supports for Highway Signs, Luminaires and Traffic Signals, dated 2001.

CONSTRUCTION:

Standard Specifications and the Special Provisions.

LOADING:

WIND LOADING:

Normal to face of sign: 1930 Pa on 100% Truss surface area (i.e. 100% panel coverage).

Transverse to face of sign: 20% of normal force.

WALKWAY LOADING:

Dead load +229 kg concentrated live load.

UNIT STRESSES:

STRUCTURAL STEEL: fy = 250 MPa
REINFORCED CONCRETE: fy = 415 MPa
f'c = 25 MPa

FOOTING SOIL PRESSURE: 120 kPa (spread footing)

MINIMUM CLEARANCE

Vertical roadway clearance 5500 mm.

WELDING:

All welding continuous unless otherwise noted on the plans. All welding to be done in accordance with the Standard Specifications.

Standard Plan Sheet No.

Detail No.

NOTE

Signs are shown and dimensioned looking in the direction of traffic. Double faced signs are shown and dimensioned looking ahead along stationing.

STATE OF CALIFORNIA
DEPARTMENT OF TRANSPORTATION

OVERHEAD SIGNS-TRUSS INSTRUCTIONS AND EXAMPLES

NO SCALE

ALL DIMENSIONS ARE IN MILLIMETERS UNLESS OTHERWISE SHOWN

RSP S1 DATED JANUARY 24, 2005 SUPERSEDES STANDARD PLAN S1 DATED JULY 1, 2004-PAGE 310 OF THE STANDARD PLANS BOOK DATED JULY 2004.

REVISED STANDARD PLAN RSP S1

2004 REVISED Std PLAN RSP S1

DIST	COUNTY	ROUTE	KILOMETER POST TOTAL PROJECT	SHEET NO.	TOTAL SHEETS
11	SD	805	40.6/42.4	478	567

Caltrans Metric

REGISTERED CIVIL ENGINEER

April 28, 2005
PLANS APPROVAL DATE

REGISTERED PROFESSIONAL ENGINEER Tillat Sattar No. C42892 Exp. 03-31-2006 CIVIL STATE OF CALIFORNIA

The State of California or its officers or agents shall not be responsible for the accuracy or completeness of electronic copies of this plan sheet.

To get to the Caltrans web site, go to: http://www.dot.ca.gov

To accompany plans dated 6-14-10

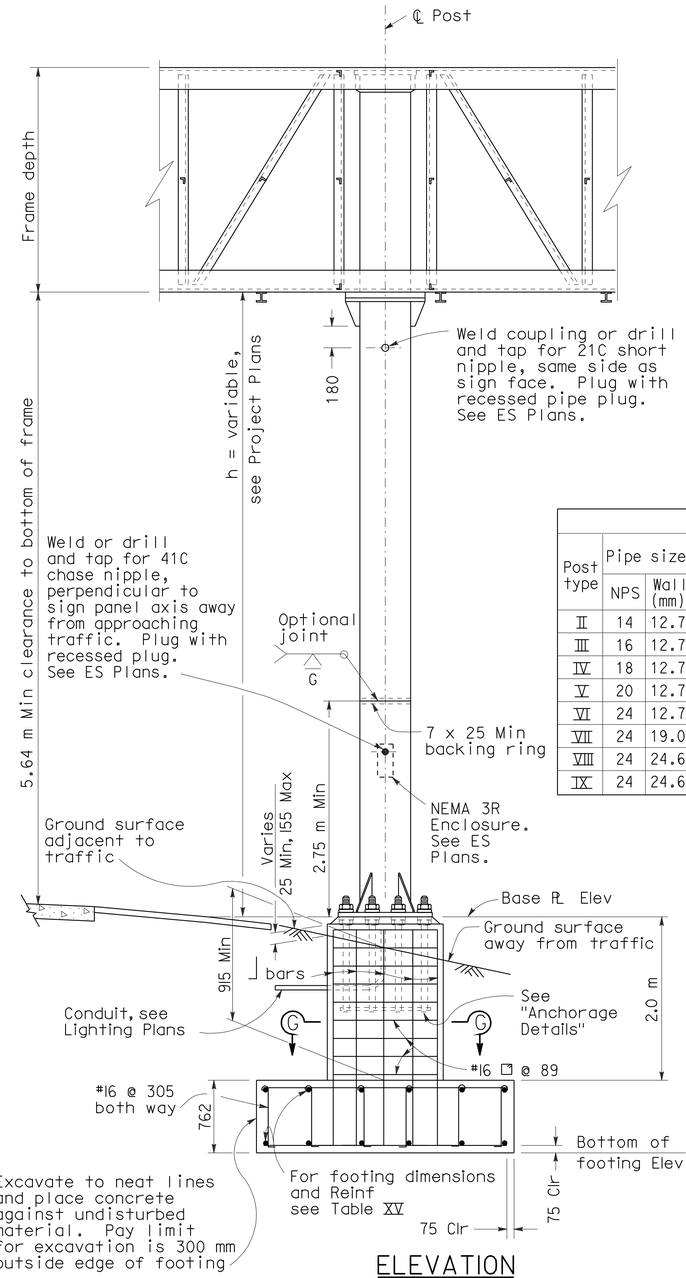

ELEVATION

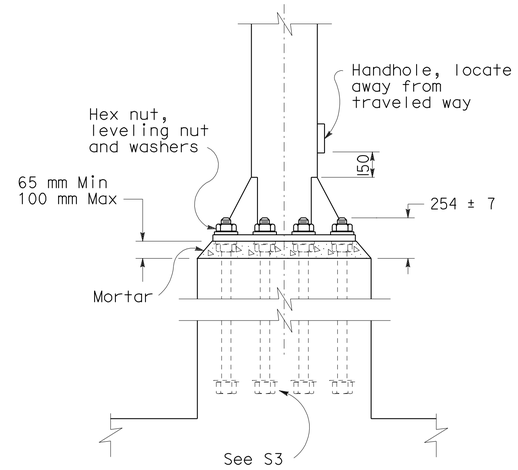

ANCHORAGE DETAILS

TABLE XV

Post type	Pipe size NPS	Pipe size Wall (mm)	Cap Plate for L 127x127 (mm)	Cap Plate for L 152x152 (mm)	Round Pedestal: Pedestal Size Dia (mm)	Round Pedestal: Vertical ⌋-Bars Equally spaced total	Round Pedestal: Vertical ⌋-Bars Bar Size	Round Pedestal: Vertical ⌋-Bars Bar B.C. (mm)	Round Pedestal: Spiral Bar Size	Round Pedestal: Spiral Pitch (mm)	Square Pedestal: Pedestal Size Square (mm)	Square Pedestal: Vertical ⌋-Bars Equally spaced total	Square Pedestal: Vertical ⌋-Bars Bar Size	Square Pedestal: Vertical ⌋-Bars Spacing ea face (mm)	Square Pedestal: Hoop Bar Size	Square Pedestal: Hoop Spacing (mm)	Pile footing Dia (mm)	Pile footing Depth (m)	Alternate: Spread Footing See note 2 (mm)	Alternate: Spread Footing Reinforcement Width Top	Alternate: Spread Footing Reinforcement Width Bottom	Alternate: Spread Footing Reinforcement Longitudinal Top	Alternate: Spread Footing Reinforcement Longitudinal Bottom	Alternate: Spread Footing Reinforcement Footing Stirrups
II	14	12.7	610 x 610 x 25	660 x 660 x 25	1600	16	32	1372	16	89	1600	16	32	346	16	89	1372	4.5	3658 x 4267 x 762	14-#19	14-#22	13-#29	13-#29	#16 @ 305
III	16	12.7	660 x 660 x 25	711 x 711 x 25	1600	16	32	1372	16	89	1600	16	32	346	16	89	1372	4.9	3658 x 4267 x 762	15-#19	15-#22	13-#29	13-#29	#16 @ 305
IV	18	12.7	711 x 711 x 25	762 x 762 x 25	1600	16	32	1372	16	89	1600	16	32	346	16	89	1372	5.5	3658 x 4267 x 762	15-#19	15-#22	13-#29	13-#29	#16 @ 305
V	20	12.7	762 x 762 x 25	813 x 813 x 25	1600	16	32	1372	16	89	1600	16	32	346	16	89	1372	5.8	3962 x 4267 x 762	15-#19	15-#22	14-#29	14-#29	#16 @ 305
VI	24	12.7	864 x 864 x 25	914 x 914 x 25	1753	16	36	1534	16	89	1753	16	36	381	16	89	1524	6.7	3962 x 4877 x 762	17-#22	17-#22	14-#29	14-#36	#16 @ 305
VII	24	19.0	864 x 864 x 25	914 x 914 x 25	1753	16	36	1534	16	89	1753	16	36	381	16	89	1524	7.0	3962 x 5182 x 762	18-#22	18-#22	14-#29	14-#36	#16 @ 305
VIII	24	24.6	864 x 864 x 25	914 x 914 x 25	1753	16	36	1534	16	89	1753	16	36	381	16	89	1524	7.6	3962 x 5486 x 762	19-#22	19-#22	14-#29	14-#36	#16 @ 305
IX	24	24.6	864 x 864 x 25	914 x 914 x 25	1753	16	36	1534	16	89	1753	16	36	381	16	89	1524	7.6	3962 x 5486 x 762	19-#22	19-#22	14-#29	14-#36	#16 @ 305

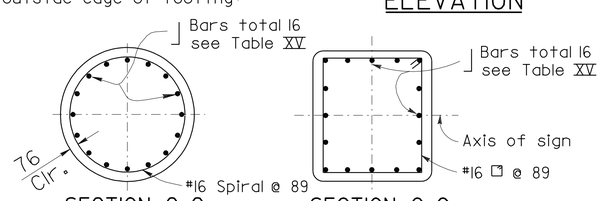

SECTION G-G
ROUND PEDESTAL

SECTION G-G
RECTANGLE PEDESTAL

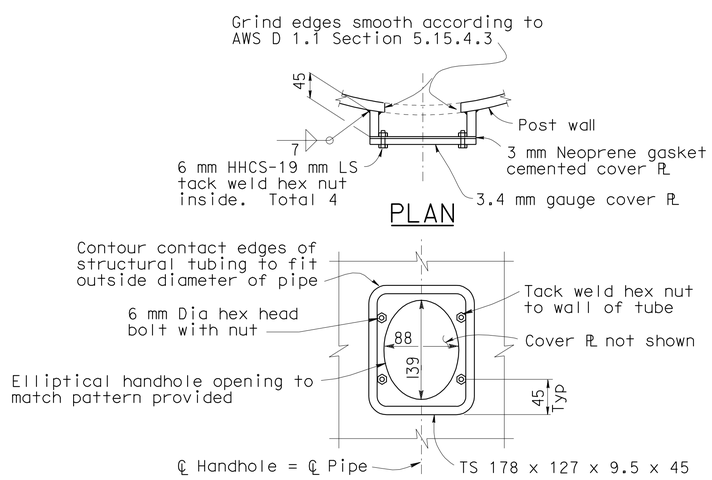

PLAN

ELEVATION

TYPICAL DETAILS OF HANDHOLE AND COVER

Notes:

1. For "General Notes" see Revised Standard Plan RSP S1.
2. Longer side of footing shall be normal to axis of sign.
3. Backfill shall be in place prior to erection of post.
4. Thread upper 254 mm of anchor bolts and galvanize upper 305 mm.
5. Spread footing shown, use Pile Foundation when shown on the Project Plans.
6. Anchor plates may be retained with hexagon nut or formed head as alternatives to details shown.
7. On single post sign structures, the post shall be raked out of plumb, with the use of the leveling nuts to make the bottom of the sign frame level.
8. At final position of post all top and bottom nuts shall be tightened against base plate.
9. When foundation is located on a steep slope with exposed face of concrete adjacent to traffic, see "Detail C" on Revised Standard Plan RSP S7 or RSP S8, as applicable.
10. Slope protection required when indicated on the Project Plans.

STATE OF CALIFORNIA
DEPARTMENT OF TRANSPORTATION

OVERHEAD SIGNS-TRUSS SINGLE POST TYPE POST TYPES II THROUGH IX

NO SCALE

ALL DIMENSIONS ARE IN MILLIMETERS UNLESS OTHERWISE SHOWN

RSP S2 DATED APRIL 28, 2005 SUPERSEDES RSP S2 DATED JANUARY 24,2005 AND STANDARD PLAN S2 DATED JULY 1, 2004-PAGE 311 OF THE STANDARD PLANS BOOK DATED JULY 2004.

REVISED STANDARD PLAN RSP S2

2004 REVISED Std PLAN RSP S2

DIST	COUNTY	ROUTE	KILOMETER POST TOTAL PROJECT	SHEET NO.	TOTAL SHEETS
11	SD	805	40.6/42.4	479	567

REGISTERED CIVIL ENGINEER

January 24, 2005
PLANS APPROVAL DATE

REGISTERED PROFESSIONAL ENGINEER
Tillat Sattar
No. C42892
Exp. 03-31-2006
CIVIL
STATE OF CALIFORNIA

The State of California or its officers or agents shall not be responsible for the accuracy or completeness of electronic copies of this plan sheet.

To get to the Caltrans web site, go to: http://www.dot.ca.gov

To accompany plans dated 6-14-10

Caltrans Metric

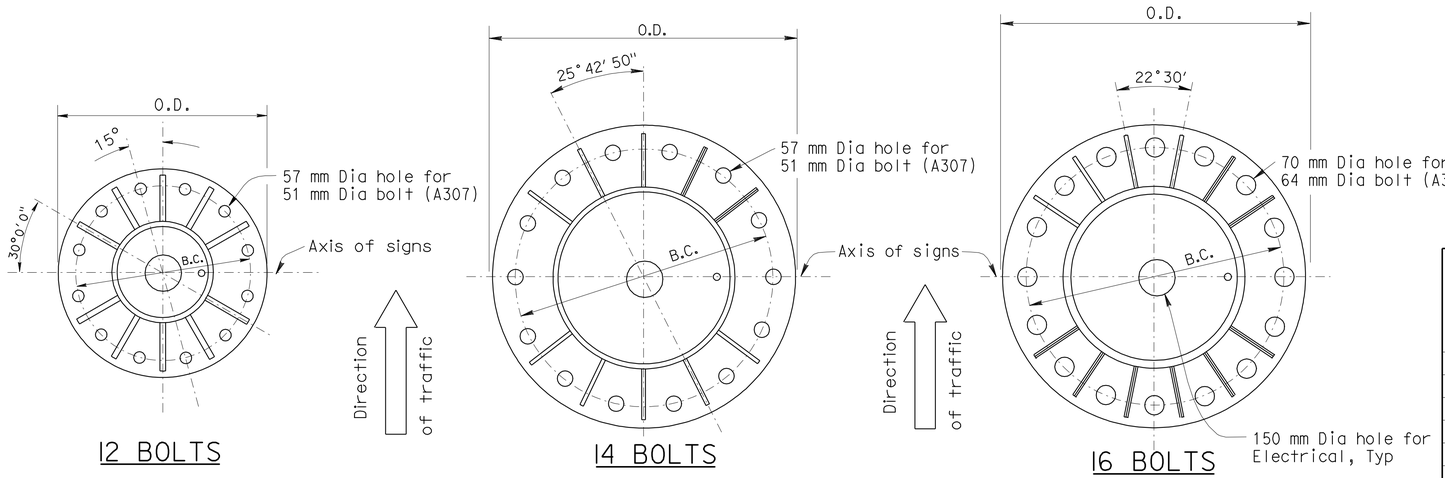

SINGLE POST TYPE BASE PLATE DETAILS

Post Type No.	Nominal Pipe Size (NPS)	Pipe Thickness (mm)	Base PL OD & Thickness (mm)	Anchor: Bolt Circle (mm)	Anchor: Bolts Total & Dia (mm)	CIDH: Pile Dia (mm)	CIDH: Pile Depth (m)	CIDH: Vertical Reinforcing: Total	CIDH: Vertical Reinforcing: Bar Size	CIDH: Vertical Reinforcing: Bar Circle (mm)	CIDH: Spiral: Bar Size	CIDH: Spiral: Pitch (mm)
II	14	12.7	864 x 51	610	12-51	1372	4.5	26	32	1143	16	89
III	16	12.7	864 x 51	610	12-51	1372	4.9	26	32	1143	16	89
IV	18	12.7	864 x 51	610	12-51	1372	5.5	26	32	1143	16	89
V	20	12.7	1016 x 64	864	14-51	1372	5.8	26	32	1143	16	89
VI	24	12.7	1016 x 64	864	16-64	1524	6.7	28	36	1295	16	89
VII	24	19.0	1016 x 64	864	16-64	1524	7.0	28	36	1295	16	89
VIII	24	24.6	1016 x 89	864	16-64	1524	7.6	28	36	1295	16	89
IX	24	24.6	1016 x 89	864	16-64	1524	7.6	28	36	1295	16	89

SINGLE POST TABLE

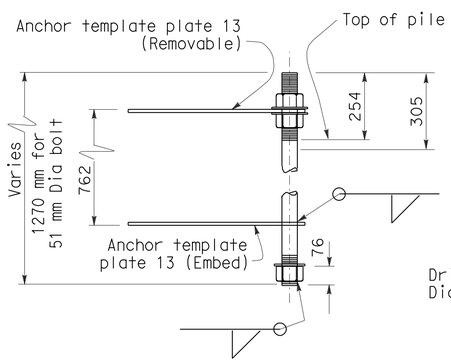

FOR POST II THRU IV
12 BOLTS PATTERN

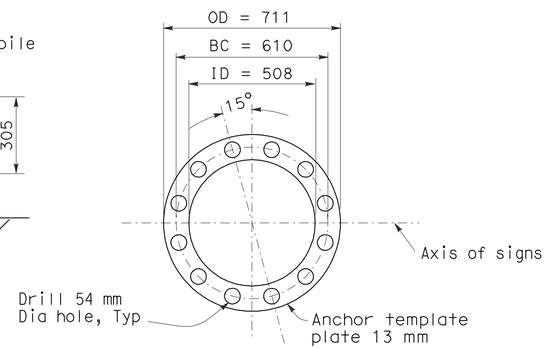

12 BOLTS

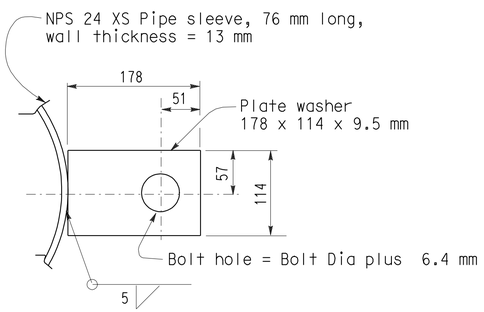

PLATE WASHER FOR
14 &16 BOLT PATTERN

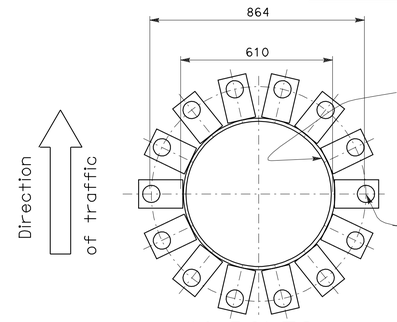

14 BOLTS
ANCHOR BOLT TEMPLATE

Template to match base plate anchor bolt layouts

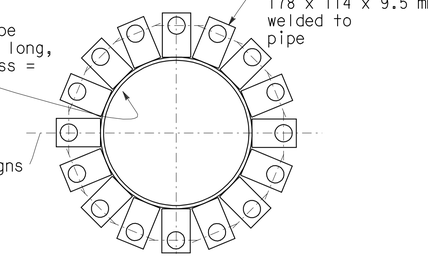

16 BOLTS

(Option: Permanent template similar to ring plate type can be used in lieu of plate washer type).

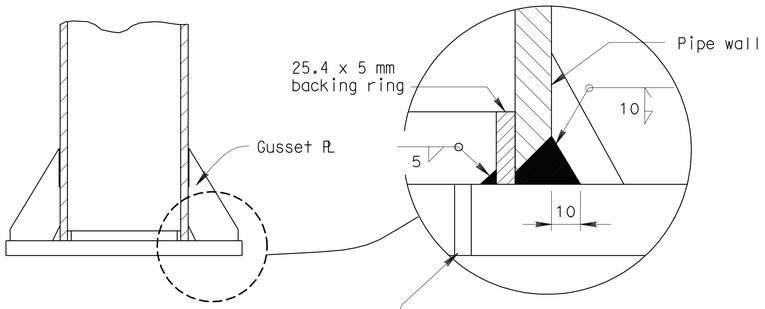

THRU POST AT
BASE PLATE

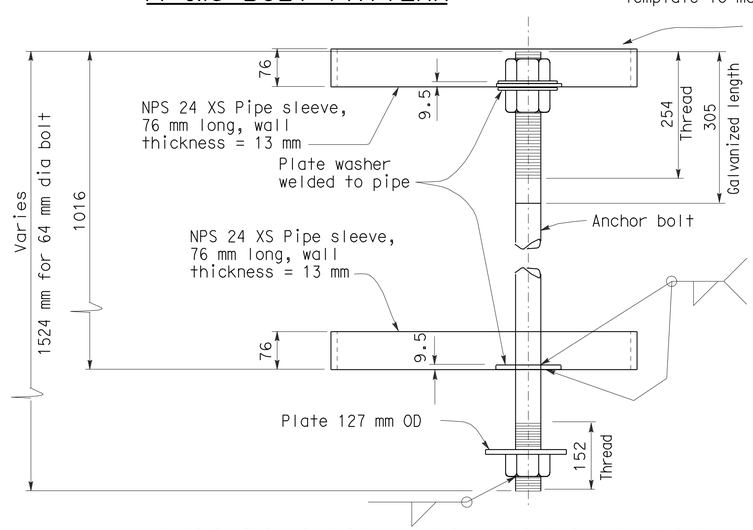

ANCHOR BOLT TEMPLATE ASSEMBLY DETAIL

Note: One bolt shown only. Other bolts not shown.

STATE OF CALIFORNIA
DEPARTMENT OF TRANSPORTATION

OVERHEAD SIGNS-TRUSS SINGLE POST TYPE BASE PLATE AND ANCHORAGE DETAILS

NO SCALE

ALL DIMENSIONS ARE IN
MILLIMETERS UNLESS OTHERWISE SHOWN

RSP S3 DATED JANUARY 24, 2005 SUPERSEDES STANDARD PLAN S3
DATED JULY 1, 2004-PAGE 312 OF THE STANDARD PLANS BOOK DATED JULY 2004.

REVISED STANDARD PLAN RSP S3

2004 REVISED Std PLAN RSP S3

To accompany plans dated 6-14-10

Caltrans Metric

DIST	COUNTY	ROUTE	KILOMETER POST TOTAL PROJECT	SHEET NO.	TOTAL SHEETS
11	SD	805	40.6/42.4	480	567

REGISTERED CIVIL ENGINEER

January 24, 2005
PLANS APPROVAL DATE

REGISTERED PROFESSIONAL ENGINEER Tillat Sattar No. C42892 Exp. 03-31-2006 CIVIL STATE OF CALIFORNIA

The State of California or its officers or agents shall not be responsible for the accuracy or completeness of electronic copies of this plan sheet.

To get to the Caltrans web site, go to: http://www.dot.ca.gov

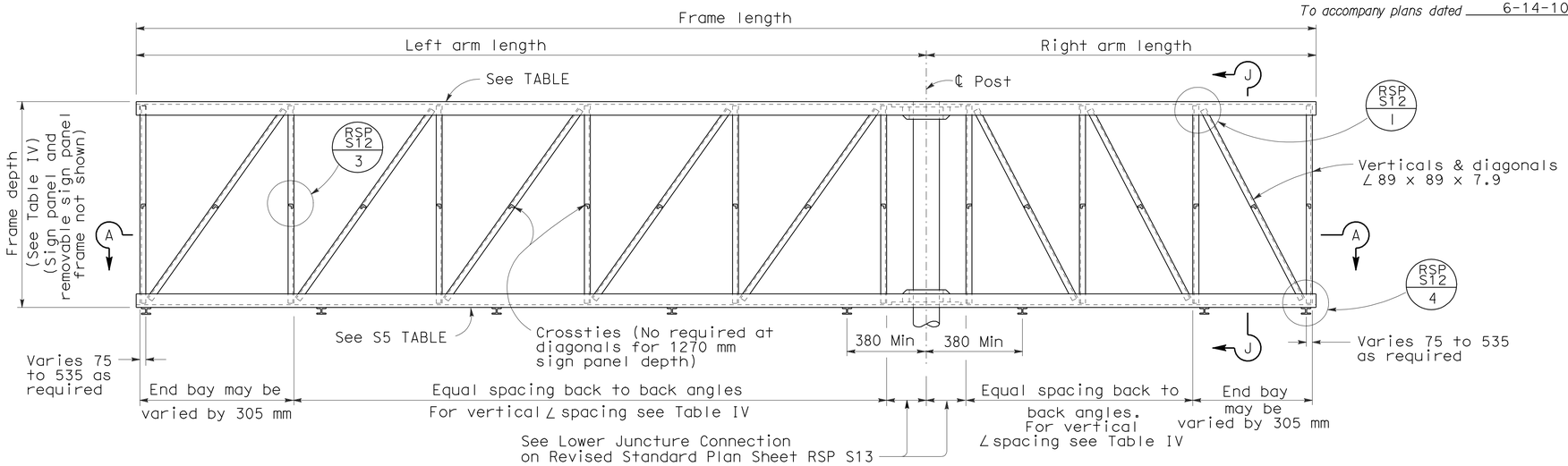

Note:

Left arm may be shorter, longer or equal to right arm length

ELEVATION

TABLE IV

Sign Panel Depth (mm)	Frame Depth (mm)	Maximum Vertical ∠ Spacing (mm)	See Note 6 (mm)
1270	1423	1372	1220
1524	1675	1524	1220
1778	1931	1676	1220
2032	2185	1829	1525
2286	2439	2134	1525
2540	2693	2134	1830
2794	2693	2134	1830
3048	2693	2134	1830

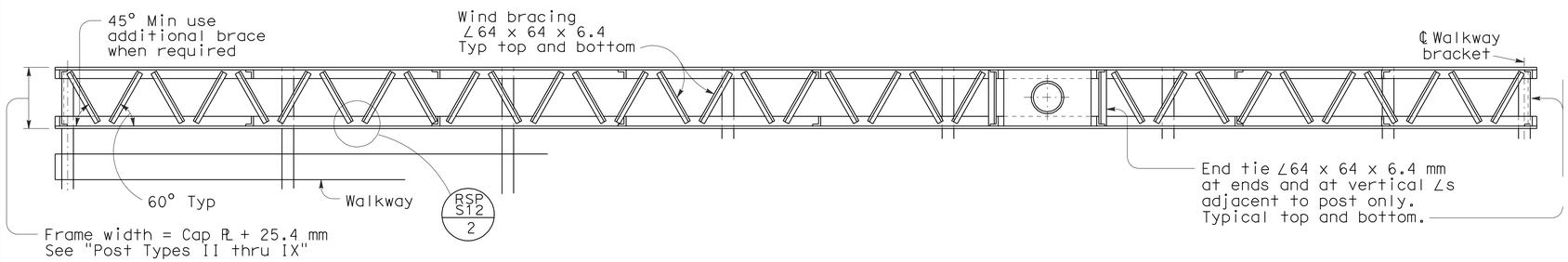

SECTION A-A

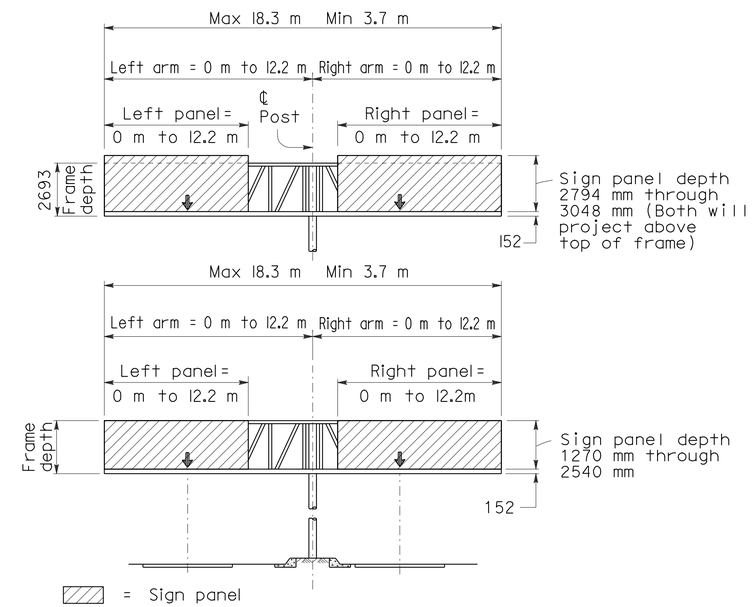

RANGE OF STRUCTURE SIZES

Notes:

1. For connection of frame to post see RSP S13.
2. For walkway see RSP S16 and RSP S17.
3. For walkway length see RSP S1.
4. Minimum length of frame = 3660 mm.
5. Maximum length of frame = 18 290 mm.
6. Diagonal not required if arm length is equal to or less than shown in this column see table IV.

Standard Plan sheet number
Detail number

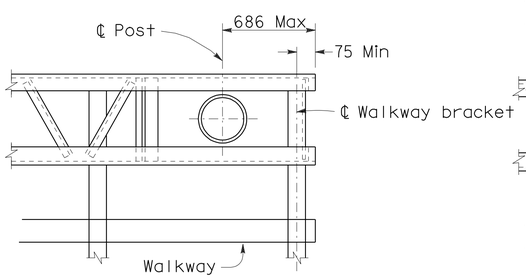

PART PLAN OF CANTILEVER TYPE AT POST

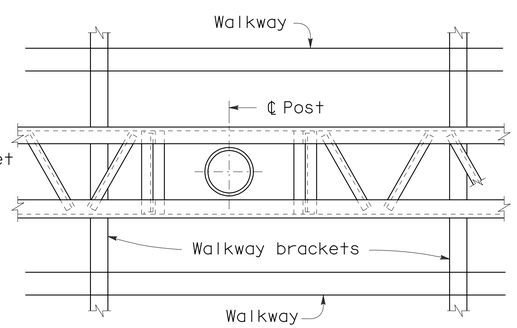

PART PLAN OF DOUBLE FACED TYPE AT POST

STATE OF CALIFORNIA
DEPARTMENT OF TRANSPORTATION

OVERHEAD SIGNS-TRUSS SINGLE POST TYPE STRUCTURAL FRAME MEMBERS DETAILS No.1

NO SCALE

ALL DIMENSIONS ARE IN MILLIMETERS UNLESS OTHERWISE SHOWN

RSP S4 DATED JANUARY 24, 2005 SUPERSEDES STANDARD PLAN S4 DATED JULY 1, 2004-PAGE 313 OF THE STANDARD PLANS BOOK DATED JULY 2004.

REVISED STANDARD PLAN RSP S4

2004 REVISED Std PLAN RSP S4

DIST	COUNTY	ROUTE	KILOMETER POST TOTAL PROJECT	SHEET NO.	TOTAL SHEETS
11	SD	805	40.6/42.4	481	567

REGISTERED CIVIL ENGINEER

January 24, 2005
PLANS APPROVAL DATE

REGISTERED PROFESSIONAL ENGINEER
Tillat Sattar
No. C42892
Exp. 03-31-2006
CIVIL
STATE OF CALIFORNIA

The State of California or its officers or agents shall not be responsible for the accuracy or completeness of electronic copies of this plan sheet.

To get to the Caltrans web site, go to: http://www.dot.ca.gov

To accompany plans dated 6-14-10

2004 REVISED Std PLAN RSP S6

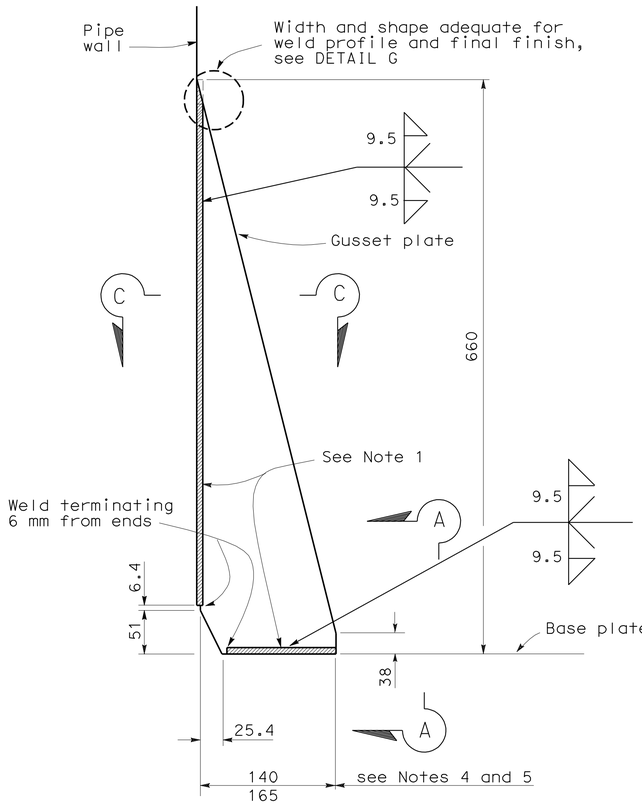

WELD DETAILS

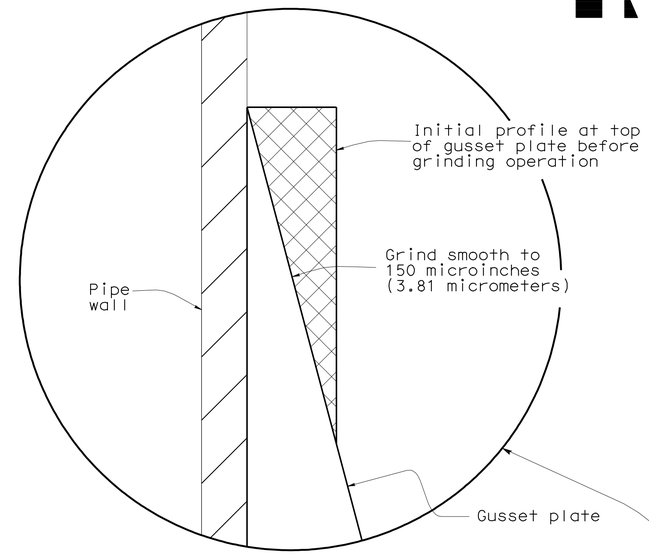

DETAIL G

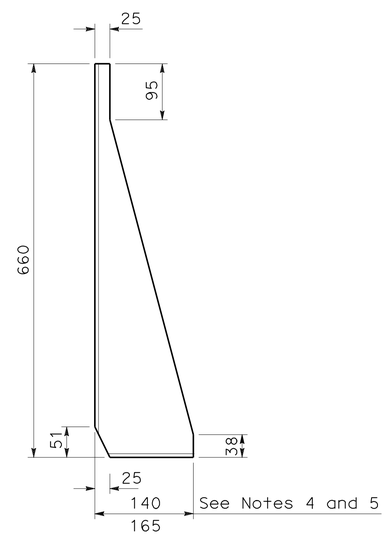

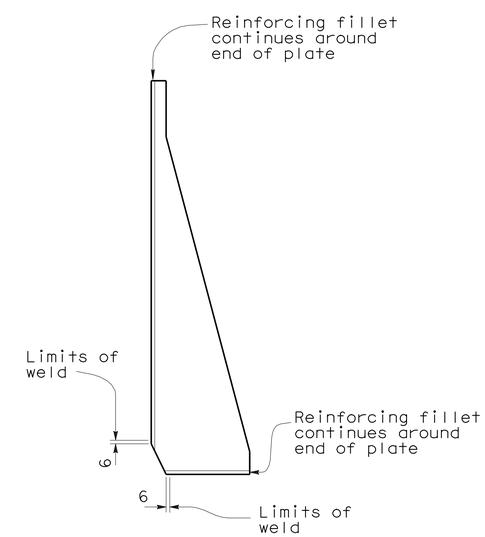

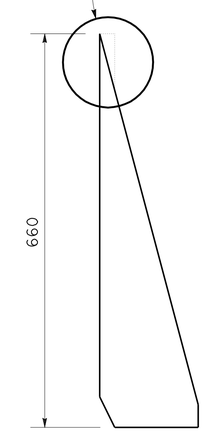

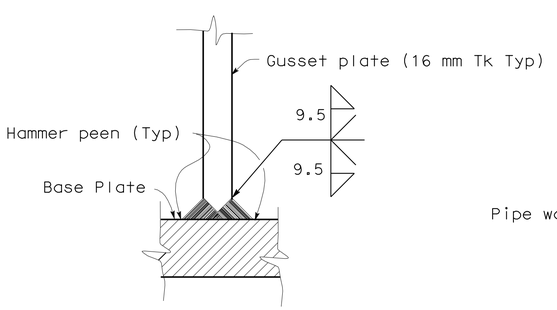

SECTION A-A

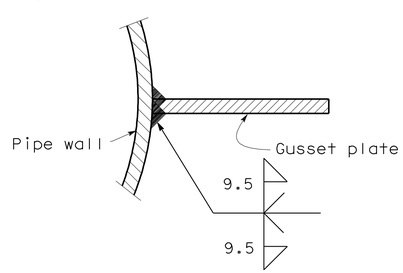

SECTION C-C

NOTES

1. All welding details shall conform to the requirements of AWS D1.1 and special provisions.
2. All gussets to be same height.
3. Provide a smooth transition from gusset plate to tube.
4. 140 mm for post Types I-S through V-S and single post with 12 and 14 bolts pattern.
5. 165 mm for post Type VI-S and VII-S and single post with 16 bolts pattern.

STATE OF CALIFORNIA
DEPARTMENT OF TRANSPORTATION

OVERHEAD SIGNS-TRUSS GUSSET PLATE DETAILS

NO SCALE

ALL DIMENSIONS ARE IN MILLIMETERS UNLESS OTHERWISE SHOWN

RSP S6 DATED JANUARY 24, 2005 SUPERSEDES STANDARD PLAN S6 DATED JULY 1, 2004-PAGE 315 OF THE STANDARD PLANS BOOK DATED JULY 2004.

REVISED STANDARD PLAN RSP S6

DIST	COUNTY	ROUTE	KILOMETER POST TOTAL PROJECT	SHEET NO.	TOTAL SHEETS
11	SD	805	40.6/42.4	482	567

REGISTERED CIVIL ENGINEER

January 24, 2005
PLANS APPROVAL DATE

REGISTERED PROFESSIONAL ENGINEER
Tillat Sattar
No. C42892
Exp. 03-31-2006
CIVIL
STATE OF CALIFORNIA

The State of California or its officers or agents shall not be responsible for the accuracy or completeness of electronic copies of this plan sheet.

To get to the Caltrans web site, go to: http://www.dot.ca.gov

To accompany plans dated 6-14-10

2004 REVISED Std PLAN RSP S6

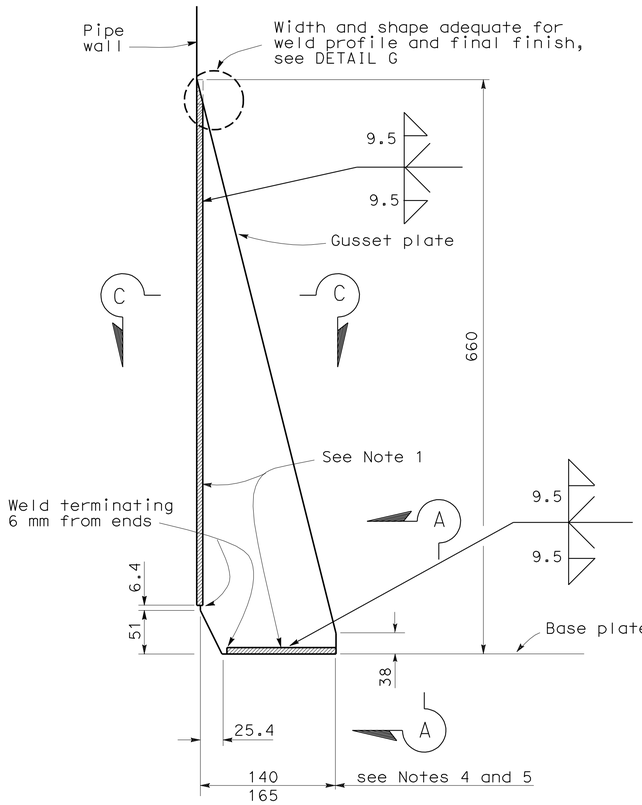

WELD DETAILS

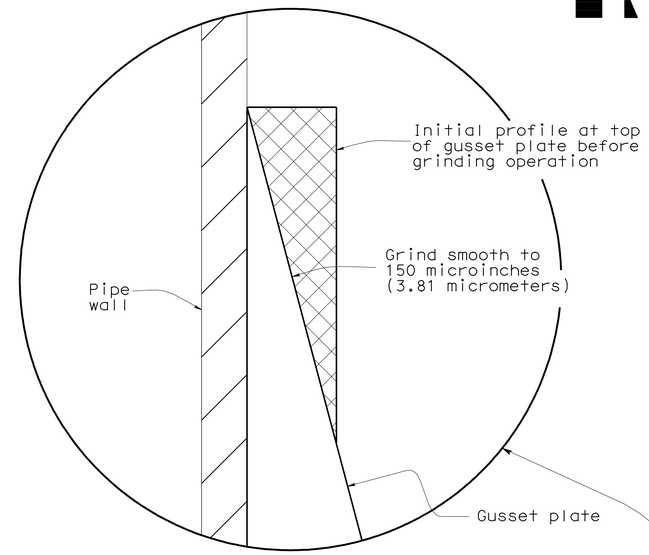

DETAIL G

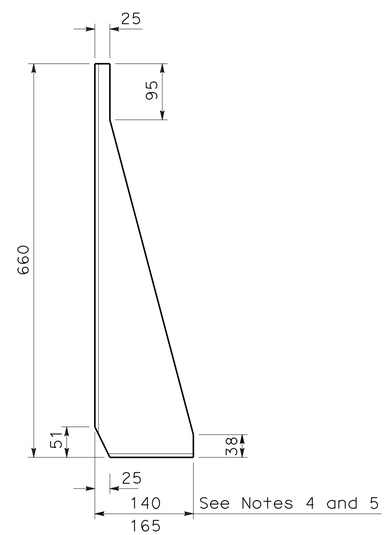

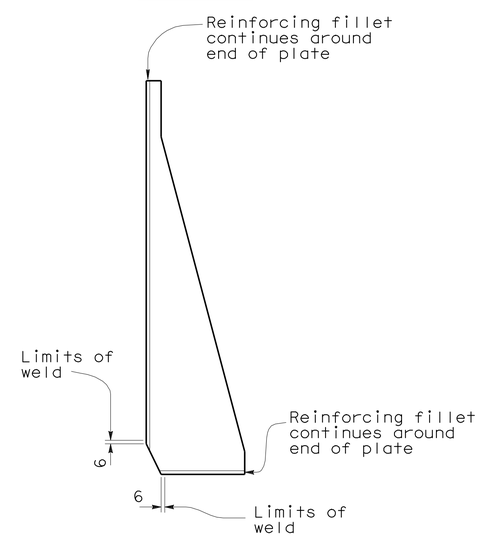

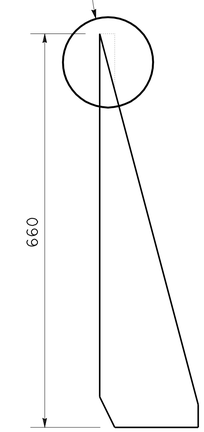

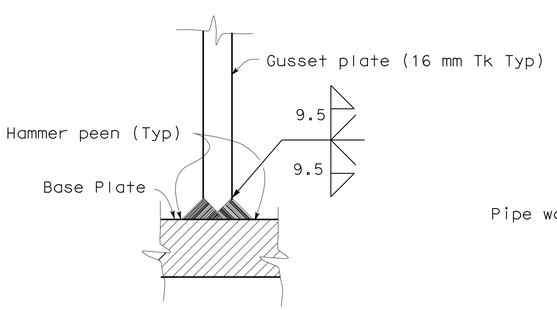

SECTION A-A

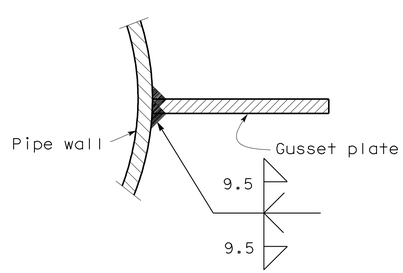

SECTION C-C

NOTES

1. All welding details shall conform to the requirements of AWS D1.1 and special provisions.
2. All gussets to be same height.
3. Provide a smooth transition from gusset plate to tube.
4. 140 mm for post Types I-S through V-S and single post with 12 and 14 bolts pattern.
5. 165 mm for post Type VI-S and VII-S and single post with 16 bolts pattern.

STATE OF CALIFORNIA
DEPARTMENT OF TRANSPORTATION

OVERHEAD SIGNS-TRUSS GUSSET PLATE DETAILS

NO SCALE

ALL DIMENSIONS ARE IN MILLIMETERS UNLESS OTHERWISE SHOWN

RSP S6 DATED JANUARY 24, 2005 SUPERSEDES STANDARD PLAN S6 DATED JULY 1, 2004-PAGE 315 OF THE STANDARD PLANS BOOK DATED JULY 2004.

REVISED STANDARD PLAN RSP S6

DIST	COUNTY	ROUTE	KILOMETER POST TOTAL PROJECT	SHEET NO.	TOTAL SHEETS
11	SD	805	40.6/42.4	483	567

REGISTERED CIVIL ENGINEER

January 24, 2005
PLANS APPROVAL DATE

REGISTERED PROFESSIONAL ENGINEER — Tillat Sattar — No. C42892 — Exp. 03-31-2006 — CIVIL — STATE OF CALIFORNIA

The State of California or its officers or agents shall not be responsible for the accuracy or completeness of electronic copies of this plan sheet.

To get to the Caltrans web site, go to: http://www.dot.ca.gov

Caltrans Metric

To accompany plans dated 6-14-10

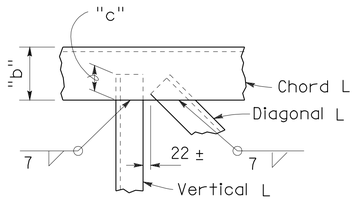

DETAIL ①

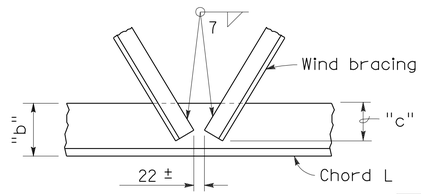

DETAIL ②

OVERLAP DISTANCES

"b"	"c"
89	57
102	70
127	83
152	102
203	127

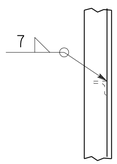

DETAIL ③

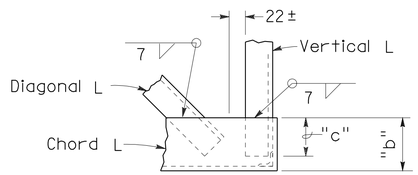

DETAIL ④

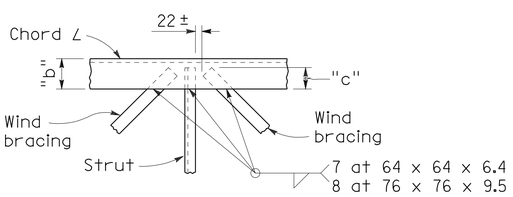

DETAIL ⑤

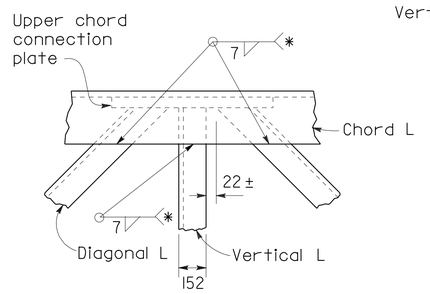

DETAIL ⑥

* Welds are to upper chord connection plate and chord angle

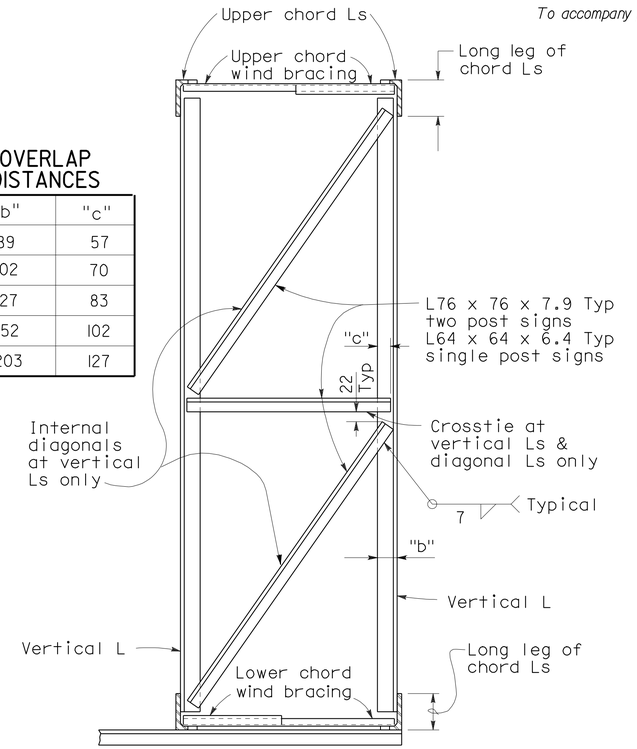

TYPICAL SECTION J-J

Note:

Diagonal Ls in plane of truss not shown. Bracing shown is at all vertical Ls of truss.

BOLTED CHORD SPLICE

TWO POST SIGNS		
Chord ∠	Nominal Bolt Diameter	"a" mm Min
127 x 89 x 9.5	M20 x 2.5	64
152 x 102 x 12.7	M22 x 2.5	76
203 x 102 x 19.0	M30 x 3.5	96
203 x 152 x 19.0	M30 x 3.5	96
SINGLE POST SIGNS		
Chord ∠	Nominal Bolt Diameter	"a" mm Min
127 x 127 x 12.7	M22 x 2.5	76
152 x 152 x 12.7	M22 x 2.5	76

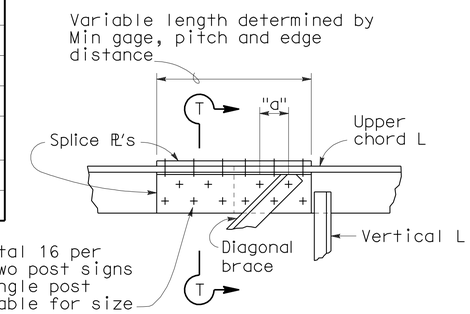

SPLICE WITH DIAGONAL ANGLE

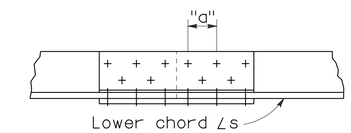

SPLICE WITHOUT DIAGONAL ANGLE

BOLTED CHORD SPLICE

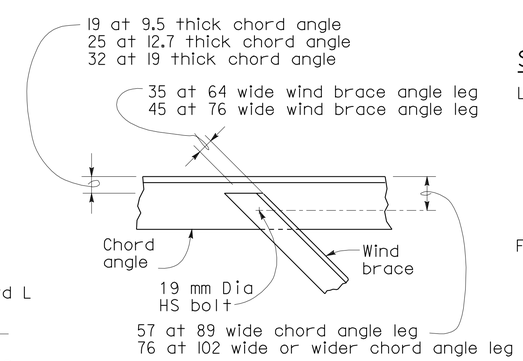

BOLTED WIND BRACE DETAIL

Each end of wind brace at bolted chord splice

SPLICE NOTES

Location of Splices:

The splice shall be located so as not to interfere with mounting the walkway brackets or the clip angles for the removable sign panel frame. For two post type see also S11.

Filler PL :

The plates welded to the angle legs on the inside shall be welded before drilling the bolt holes. The plates shall be the same length as the cover plates. The plates are not necessary on the single post signs if the splice is located over 1/3 of the cantilever length from the post. Alternative splice details may be used if approved by the Engineer.

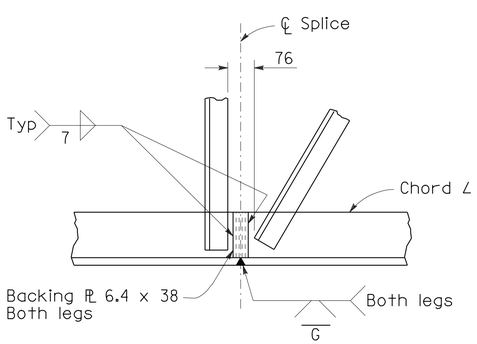

WELDED CHORD SPLICE

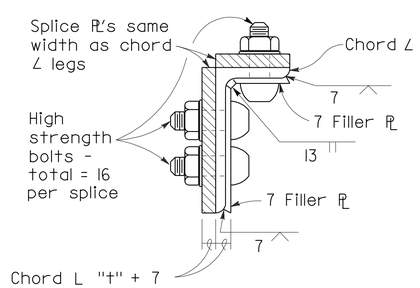

SECTION T-T
TWO POST SIGNS

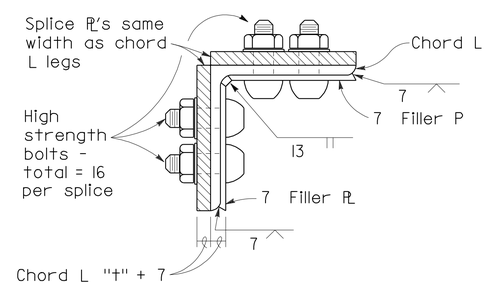

SECTION T-T
SINGLE POST SIGNS

STATE OF CALIFORNIA
DEPARTMENT OF TRANSPORTATION

OVERHEAD SIGNS-TRUSS STRUCTURAL FRAME DETAILS

NO SCALE

ALL DIMENSIONS ARE IN MILLIMETERS UNLESS OTHERWISE SHOWN

RSP S12 DATED JANUARY 24, 2005 SUPERSEDES STANDARD PLAN S12 DATED JULY 1, 2004-PAGE 321 OF THE STANDARD PLANS BOOK DATED JULY 2004.

REVISED STANDARD PLAN RSP S12

2004 REVISED Std PLAN RSP S12

DIST	COUNTY	ROUTE	KILOMETER POST TOTAL PROJECT	SHEET NO.	TOTAL SHEETS
11	SD	805	40.6/42.4	484	567

REGISTERED CIVIL ENGINEER

January 24, 2005
PLANS APPROVAL DATE

REGISTERED PROFESSIONAL ENGINEER — Tillat Sattar — No. C42892 — Exp. 03-31-2006 — CIVIL — STATE OF CALIFORNIA

The State of California or its officers or agents shall not be responsible for the accuracy or completeness of electronic copies of this plan sheet.

To get to the Caltrans web site, go to: http://www.dot.ca.gov

Caltrans Metric

To accompany plans dated 6-14-10

Notes:

1. Post not shown.
2. Photoelectric unit and 3-prong, EEI-NEMA standard, twist lock plug reception.

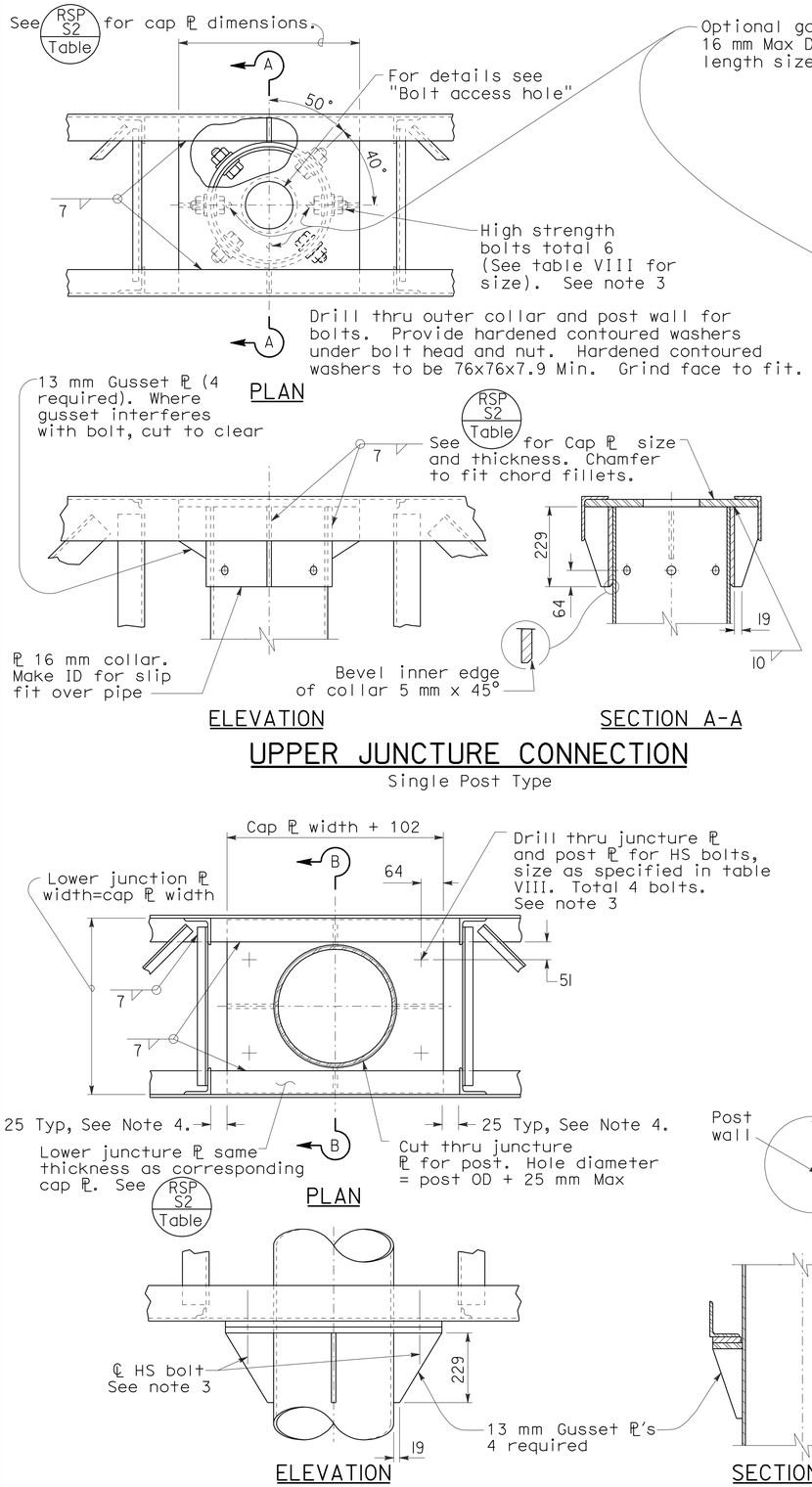

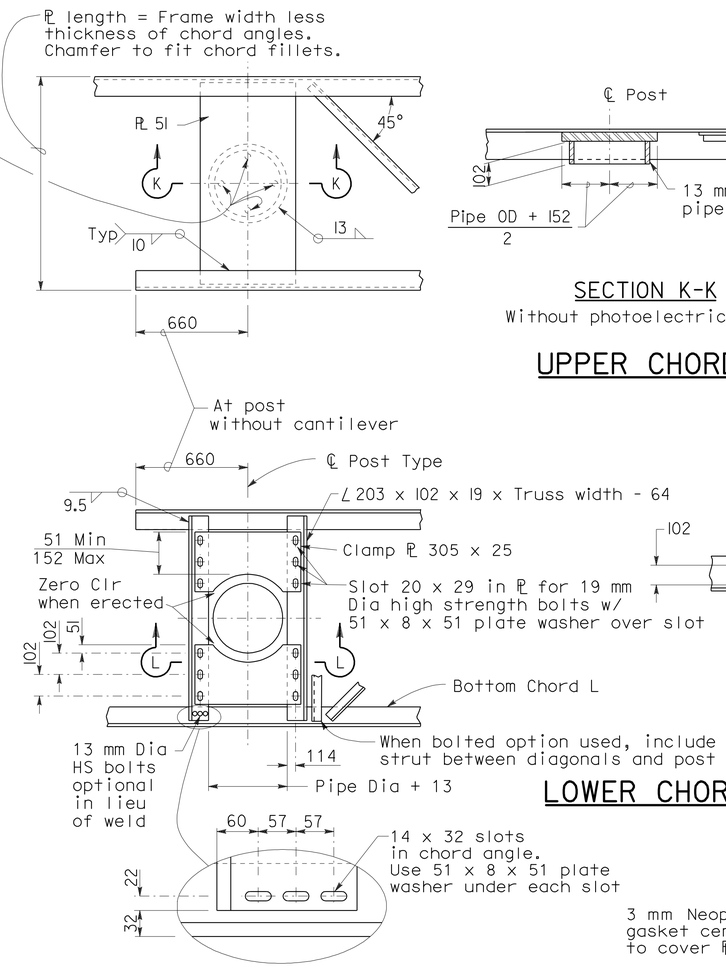

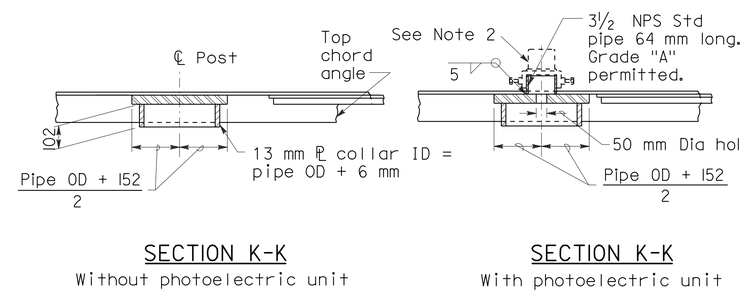

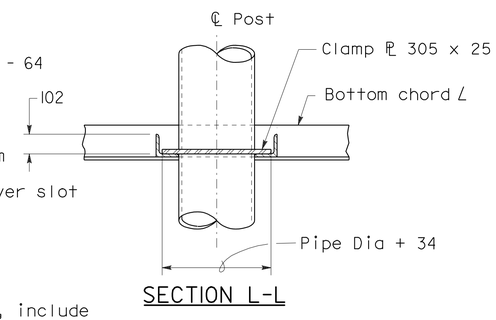

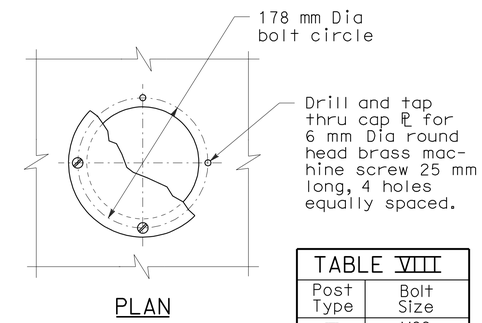

TABLE VIII	
Post Type	Bolt Size
II	M22
III	M24
IV	M27
V	M27
VI	M30
VII	M30
VIII	M36
IX	M36

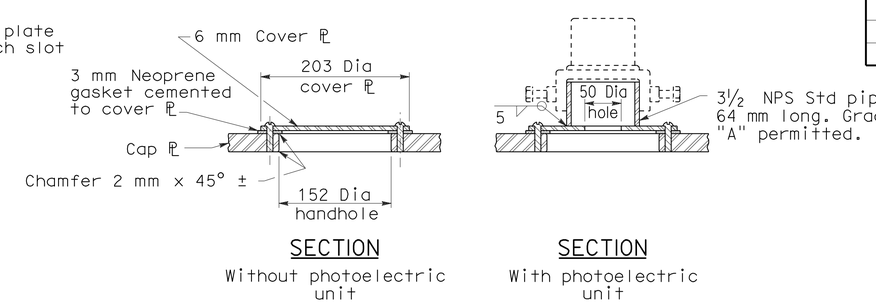

Notes: (Single Post Type)

1. In all cases, truss shall be supported at lower juncture connection. Bearing surface shall be finished true.
2. Post to truss connections shall be fitted in shop.
3. High strength bolts shall be snug tighten. Torque requirements are waived.
4. See Part Plan of Cantilever Type at post on Revised Standard Plan RSP S4.

STATE OF CALIFORNIA
DEPARTMENT OF TRANSPORTATION

OVERHEAD SIGNS-TRUSS FRAME JUNCTURE DETAILS

NO SCALE

ALL DIMENSIONS ARE IN MILLIMETERS UNLESS OTHERWISE SHOWN

RSP S13 DATED JANUARY 24, 2005 SUPERSEDES STANDARD PLAN S13 DATED JULY 1, 2004-PAGE 322 OF THE STANDARD PLANS BOOK DATED JULY 2004.

REVISED STANDARD PLAN RSP S13

2004 REVISED Std PLAN RSP S13

To accompany plans dated 6-14-10

Caltrans Metric

DIST	COUNTY	ROUTE	KILOMETER POST TOTAL PROJECT	SHEET NO.	TOTAL SHEETS
11	SD	805	40.6/42.4	485	567

REGISTERED CIVIL ENGINEER

January 24, 2005
PLANS APPROVAL DATE

REGISTERED PROFESSIONAL ENGINEER Tillat Sattar No. C42892 Exp. 03-31-2006 CIVIL STATE OF CALIFORNIA

The State of California or its officers or agents shall not be responsible for the accuracy or completeness of electronic copies of this plan sheet.

To get to the Caltrans web site, go to: http://www.dot.ca.gov

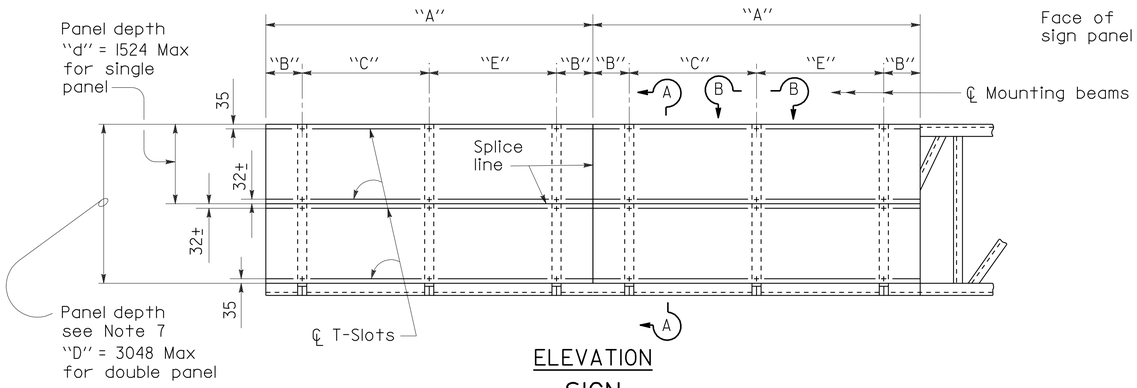

ELEVATION
SIGN

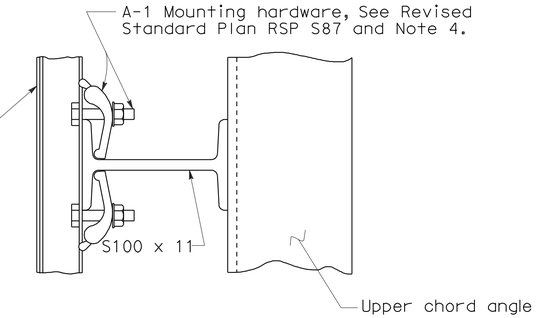

SECTION B-B

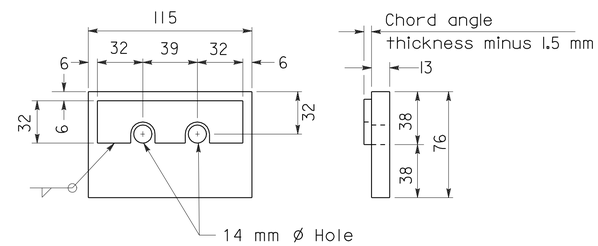

CHORD ANGLE CLAMP

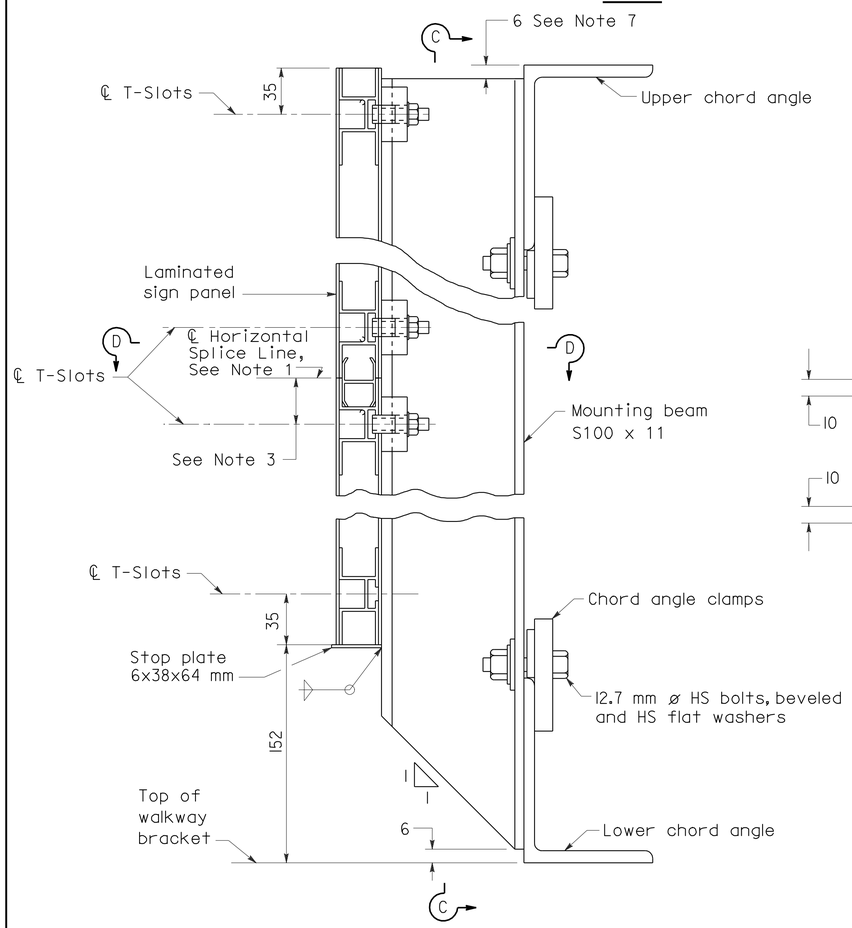

SECTION A-A

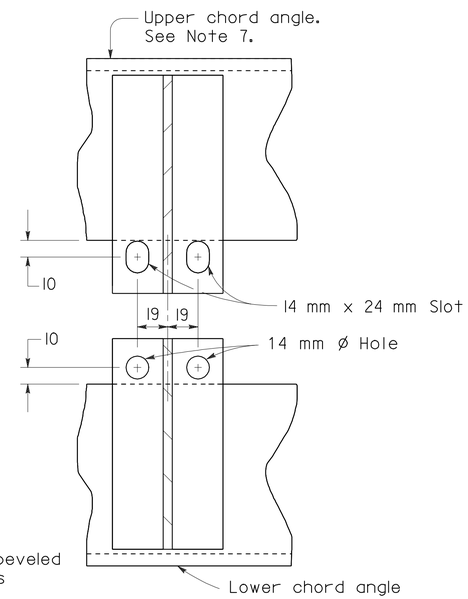

SECTION C-C

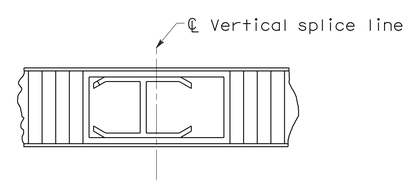

SECTION D-D

MOUNTING BEAM SPACING TABLE

SIGN PANEL LENGTH * (m) "A"	NUMBER MOUNTING BEAMS	SIGN PANEL OVERHANG (mm) "B"	MOUNTING BEAM SPACING (m) "C"	(m) "E"
1.52	2	229	1.02	
1.83	2	305	1.22	
2.13	2	381	1.37	
2.44	2	458	1.52	
2.74	2	559	1.63	
3.05	2	610	1.83	
3.35	2	610	2.13	
3.66	2	762	2.13	
3.96	2	762	2.44	
4.27	2	762	2.74	
4.57	2	915	2.74	
4.88	3	153	2.29	2.29
5.18	3	305	2.29	2.29
5.49	3	305	2.44	2.44
5.79	3	305	2.59	2.59
6.10	3	458	2.59	2.59
6.40	3	458	2.74	2.74
6.71	3	610	2.74	2.74
7.01	3	762	2.74	2.74
7.32	3	915	2.74	2.74

* Signs longer than 7.32 meters are fabricated and mounted as adjoining single panels. The location of the vertical splice line will be determined by the Engineer.

NOTES

1. The location of the horizontal splice line is dependent on the Contractor for signs greater than 1524 mm in depth.
2. Mounting bolts and clamps are required on each side of the horizontal splice lines at each support beam.
3. Dimension varies from panel to panel. Average value approximate 32 mm.
4. Torque stainless steel sign panel mounting bolts to 12 Nm.
5. Chord angle clamp to be galvanized after fabrication.
6. The Contractor shall verify all dependent dimensions in the field before ordering or fabricating any material.
7. 2794 mm and 3048 mm sign panel along with the mounting beams will project above the top chord truss member 254 mm and 508 mm respectively. Attachment details shall be the same.

STATE OF CALIFORNIA
DEPARTMENT OF TRANSPORTATION

OVERHEAD SIGNS-TRUSS SIGN MOUNTING DETAILS LAMINATED PANEL-TYPE A

NO SCALE

ALL DIMENSIONS ARE IN
MILLIMETERS UNLESS OTHERWISE SHOWN

RSP S19 DATED JANUARY 24, 2005 SUPERSEDES STANDARD PLAN S19
DATED JULY 1, 2004-PAGE 328 OF THE STANDARD PLANS BOOK DATED JULY 2004.

REVISED STANDARD PLAN RSP S19

2004 REVISED Std PLAN RSP S19

DIST	COUNTY	ROUTE	KILOMETER POST TOTAL PROJECT	SHEET No	TOTAL SHEETS
11	SD	805	40.6/42.4	486	567

REGISTERED CIVIL ENGINEER

January 24, 2005
PLANS APPROVAL DATE

REGISTERED PROFESSIONAL ENGINEER Tillat Sattar No. C42892 Exp. 03-31-2006 CIVIL STATE OF CALIFORNIA

The State of California or its officers or agents shall not be responsible for the accuracy or completeness of electronic copies of this plan sheet.

To get to the Caltrans web site, go to: http://www.dot.ca.gov

To accompany plans dated 6-14-10

Caltrans Metric

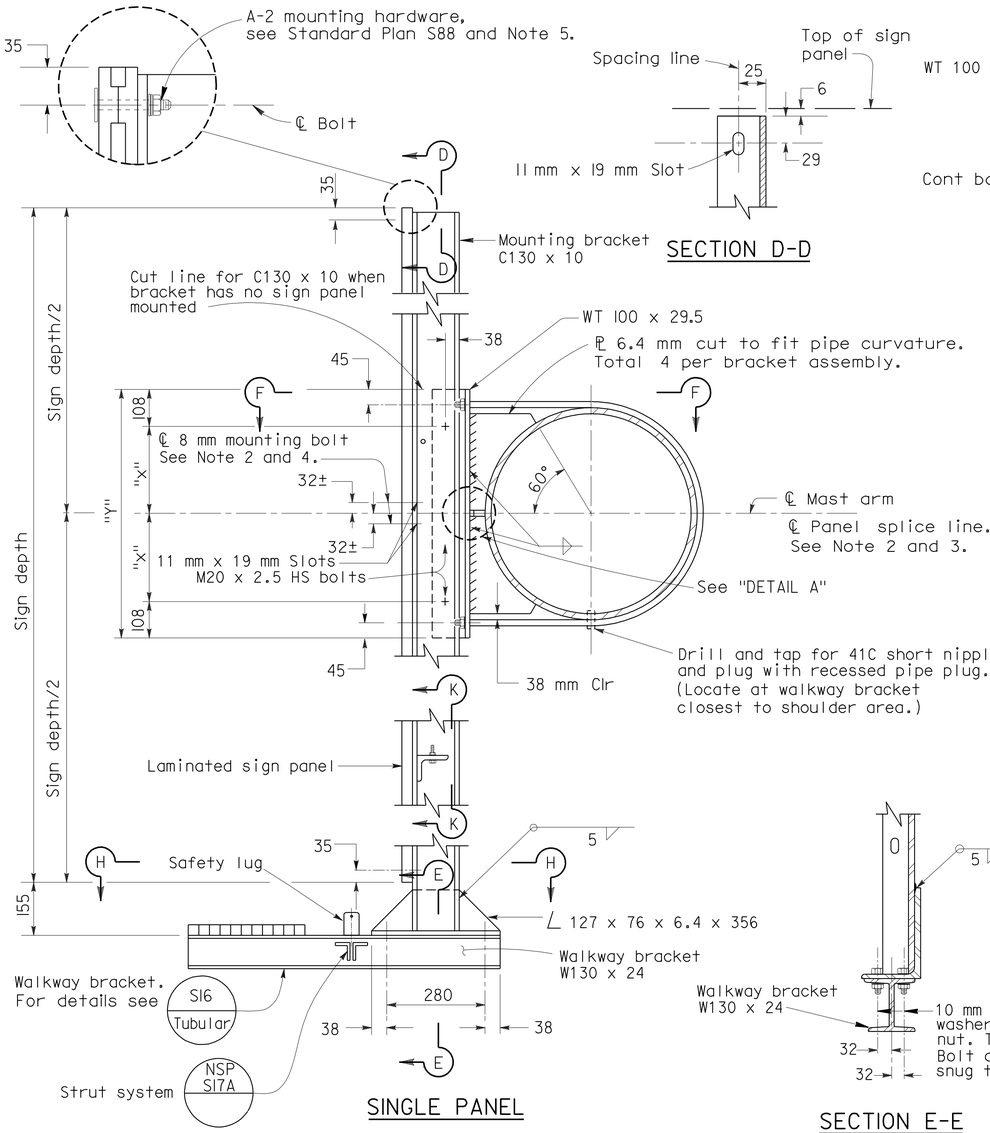

SINGLE PANEL

SECTION D-D

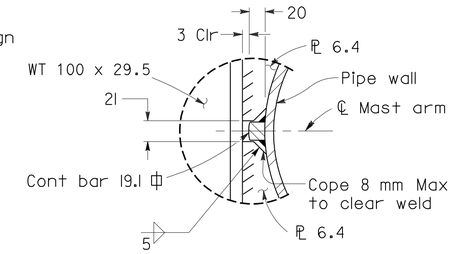

DETAIL A

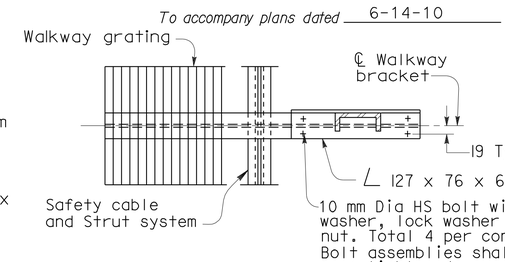

SECTION H-H

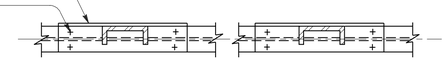

SECTION J-J

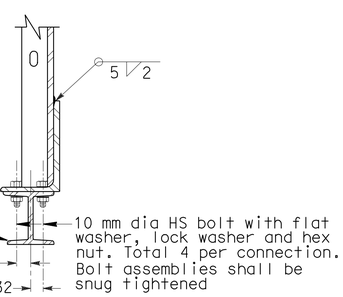

SECTION E-E

MOUNTING BRACKET ASSEMBLY DETAILS

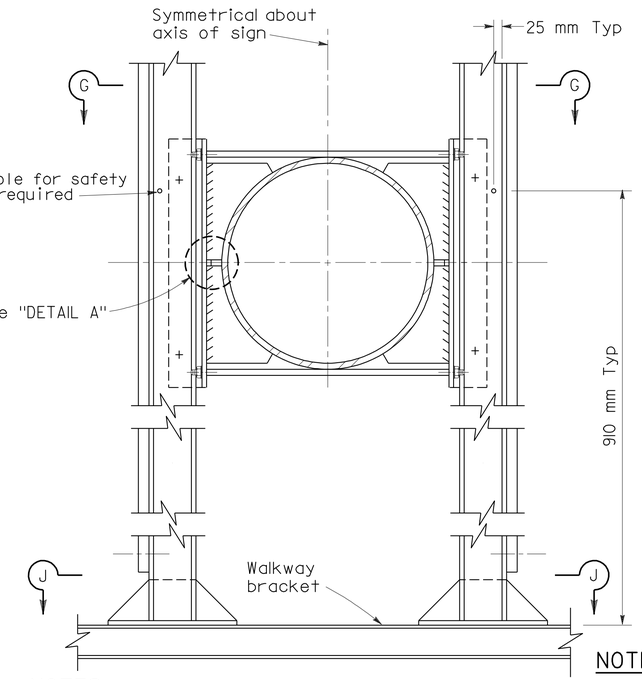

NOTES

For details not shown or noted see "SINGLE PANEL". Assembly details shown apply to tangent portion of pipe only. For mounting bracket on elbow see "DETAIL B".

DOUBLE PANEL

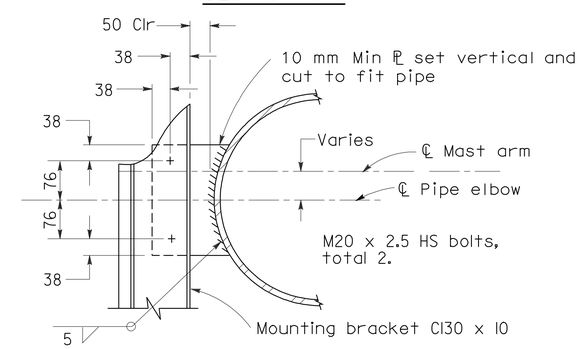

DETAIL B

Mounting bracket on elbow

Pipe Size NPS \ Distance	"X" (mm)	"Y" (mm)
20	200	616
24	251	718
30	327	870

NOTES

1. The exterior mounting brackets to face outward to accommodate the walkway chain angle.
2. Splice line not necessarily ℄ mast arm. Exact location is dependent on sign panel manufacturer.
3. Install aluminum "H" Section closure extrusions at vertical and horizontal sign panel splice lines.
4. Drill through panel at integral track. Install elevator bolt with interstate green finish on head. Typical at panel splice.
5. Remove reflector. Drill through panel at integral track. Install elevator head bolt and attach reflector. Typical at border.
6. For walkway chain details, see Revised Standard Plan sheet RSP S18.

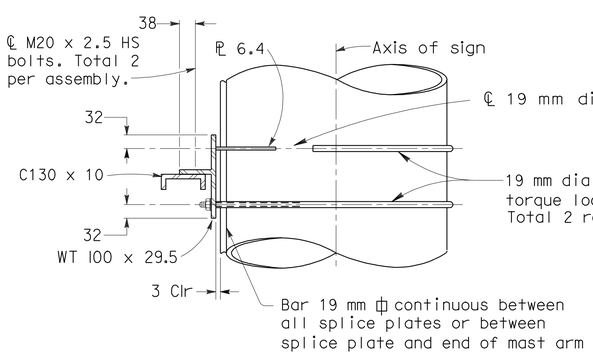

SECTION F-F

NPS = Nominal Pipe Size

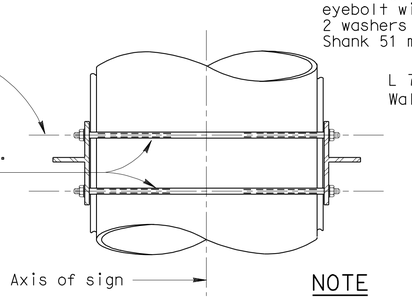

SECTION G-G

NOTE

For details not shown or noted see "SECTION F-F".

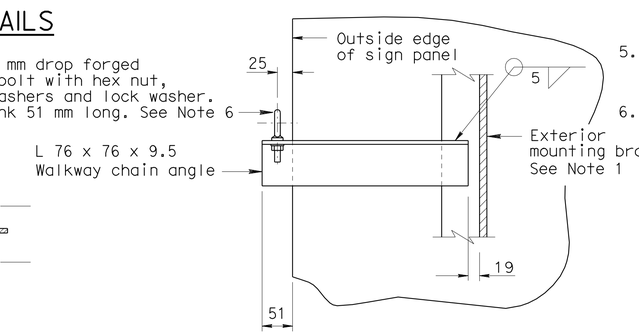

SECTION K-K

STATE OF CALIFORNIA
DEPARTMENT OF TRANSPORTATION

OVERHEAD SIGNS-TUBULAR STRUCTURAL FRAME DETAILS No. 1

NO SCALE

ALL DIMENSIONS ARE IN MILLIMETERS UNLESS OTHERWISE SHOWN

RSP S33 DATED JANUARY 24, 2005 SUPERSEDES STANDARD PLAN S33 DATED JULY 1, 2004-PAGE 335 OF THE STANDARD PLANS BOOK DATED JULY 2004.

REVISED STANDARD PLAN RSP S33

2004 REVISED Std PLAN RSP S33

DIST	COUNTY	ROUTE	KILOMETER POST TOTAL PROJECT	SHEET NO.	TOTAL SHEETS
11	SD	805	40.6/42.4	487	567

Caltrans Metric

REGISTERED CIVIL ENGINEER

January 24, 2005
PLANS APPROVAL DATE

REGISTERED PROFESSIONAL ENGINEER Tillat Sattar No. C42892 Exp. 03-31-2006 CIVIL STATE OF CALIFORNIA

The State of California or its officers or agents shall not be responsible for the accuracy or completeness of electronic copies of this plan sheet.

To get to the Caltrans web site, go to: http://www.dot.ca.gov

To accompany plans dated 6-14-10

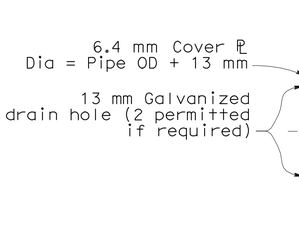

MAST ARM END DETAIL

(For "Single Post Type" only)

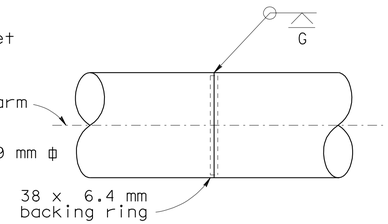

SHOP SPLICE

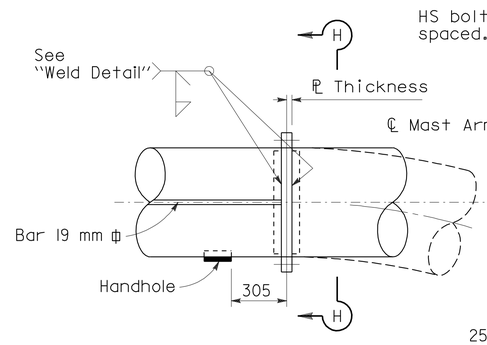

FIELD SPLICE

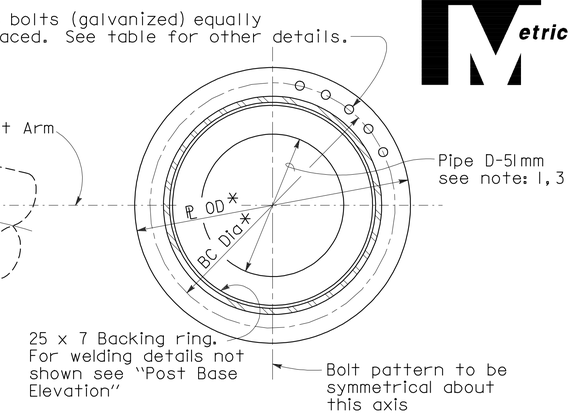

SECTION H-H

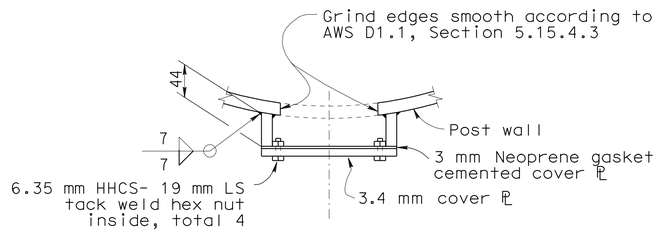

PLAN

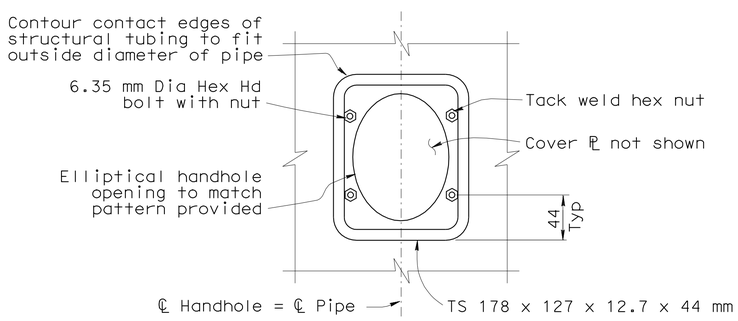

ELEVATION

DETAILS OF LOWER HANDHOLE & COVER

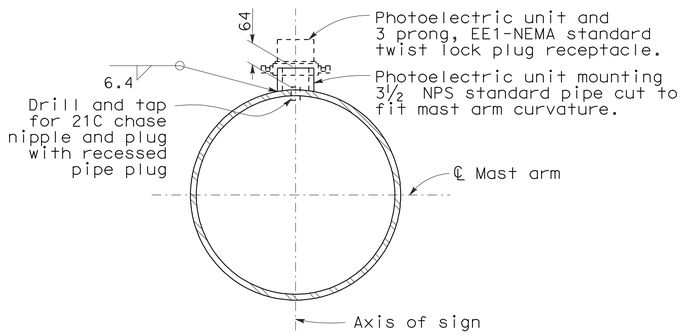

PHOTOELECTRIC UNIT DETAILS

(See "Layout" sheet for location when required)

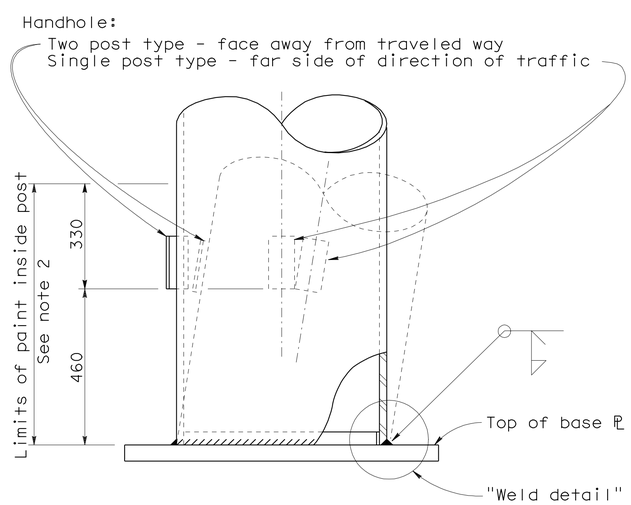

POST BASE ELEVATION

(For base ℙ details see "Basic Plate and Anchorage Detail" sheet)

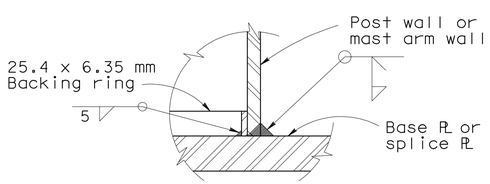

WELD DETAIL

FIELD SPLICE TABLE

Pipe Dia NPS	ℙ OD (mm) ✳	ℙ Thickness (mm)	BC Dia (mm) ✳	HS Bolts
20	686	35	610	22-M24x3
24	788	38	711	26-M24x3
30	940	41.3	864	34-M24x3

NOTE

Design based on capacity of standard pipe.

NOTES

1. Place single thin bead of silicone caulking compound around hole prior to bolting. Caulking not to interfere with friction between plates in bolted area.
2. Prime and paint post interior from base ℙ to 150 mm above lower handhole unless post is galvanized.
3. "D" is inside diameter of post pipe.
4. Field splice diameters marked "✳" may be increased 51 mm to facilitate bolting.

NPS = Nominal Pipe Size.

STATE OF CALIFORNIA
DEPARTMENT OF TRANSPORTATION

OVERHEAD SIGNS-TUBULAR STRUCTURAL FRAME DETAILS No. 2

NO SCALE

ALL DIMENSIONS ARE IN MILLIMETERS UNLESS OTHERWISE SHOWN

RSP S34 DATED JANUARY 24, 2005 SUPERSEDES STANDARD PLAN S34 DATED JULY 1, 2004-PAGE 336 OF THE STANDARD PLANS BOOK DATED JULY 2004.

REVISED STANDARD PLAN RSP S34

2004 REVISED Std PLAN RSP S34

DIST	COUNTY	ROUTE	KILOMETER POST TOTAL PROJECT	SHEET NO.	TOTAL SHEETS
11	SD	805	40.6/42.4	488	567

REGISTERED CIVIL ENGINEER

January 24, 2005
PLANS APPROVAL DATE

REGISTERED PROFESSIONAL ENGINEER — Tillat Sattar — No. C42892 — Exp. 03-31-2006 — CIVIL — STATE OF CALIFORNIA

The State of California or its officers or agents shall not be responsible for the accuracy or completeness of electronic copies of this plan sheet.

To get to the Caltrans web site, go to: http://www.dot.ca.gov

Caltrans Metric

To accompany plans dated 6-14-10

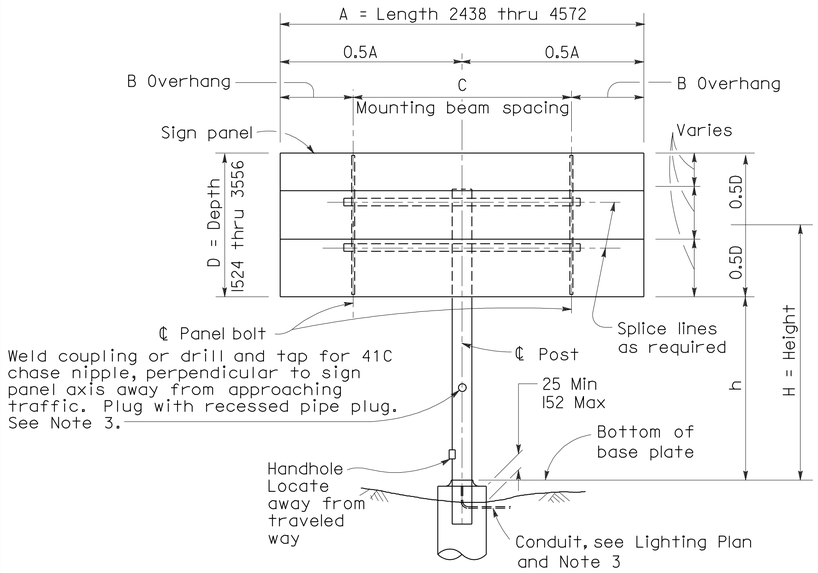

ELEVATION A

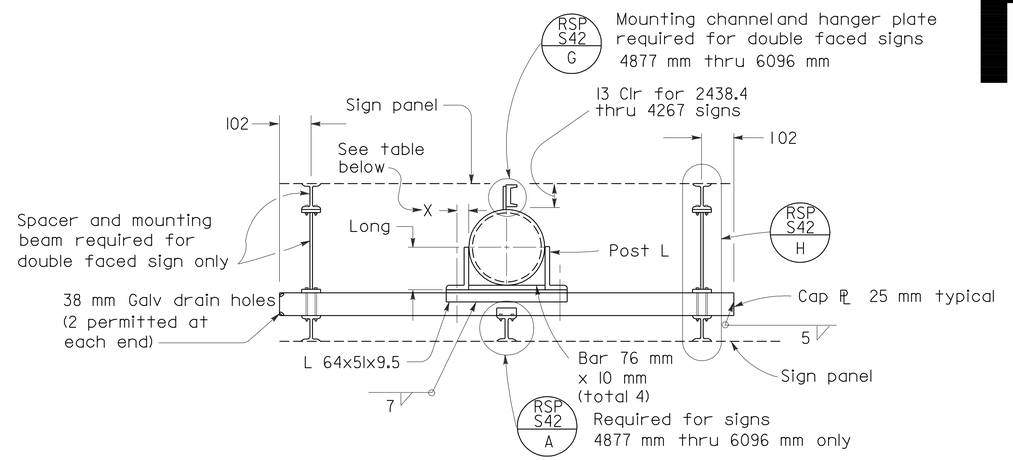

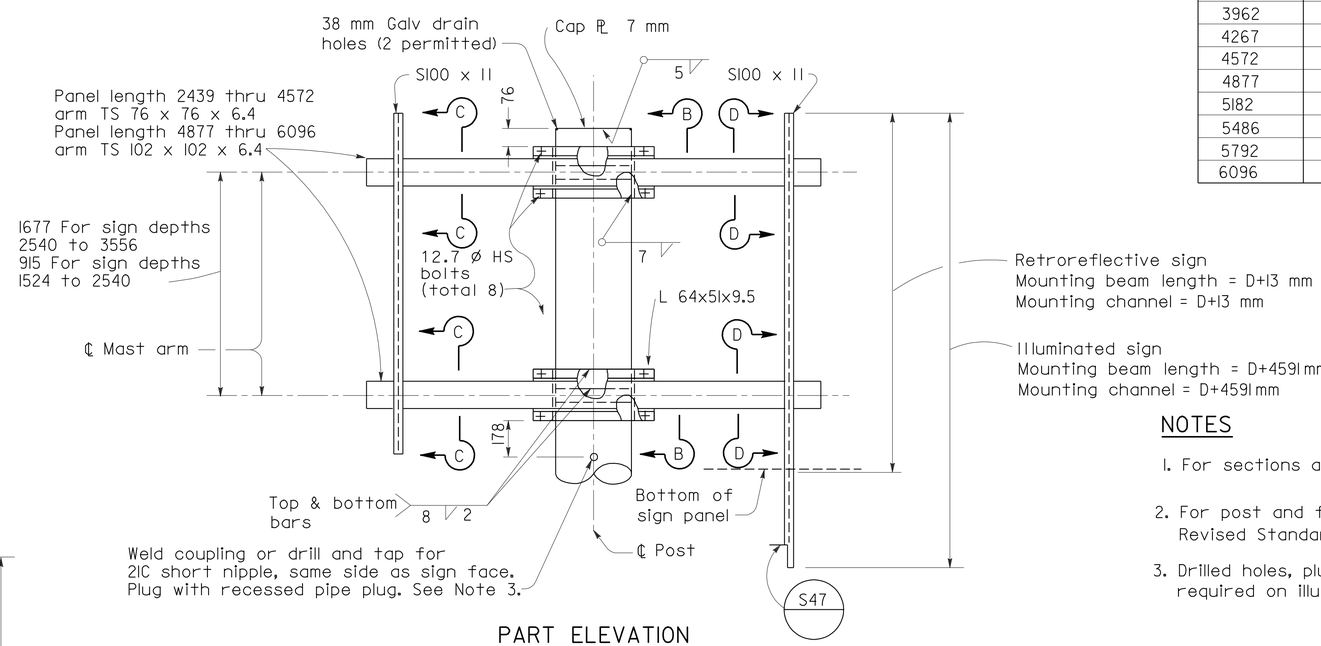

PART ELEVATION

MOUNTING BEAM SPACING

Sign Panel Length	Number Mounting Beams	Sign Panel Overhang	Mounting Beam Spacing	
A		B	C	E
1524	2	229	1066	
1829	2	305	1219	
2134	2	381	1372	
2438	2	457	1524	
2743	2	559	1625	
3048	2	610	1829	
3353	2	610	2134	
3657	2	762	2134	
3962	2	762	2438	
4267	2	762	2743	
4572	2	914.5	2743	
4877	3	152.5	2286	2286
5182	3	305	2286	2286
5486	3	305	2438	2438
5792	3	305	2591	2591
6096	3	457	2591	2591

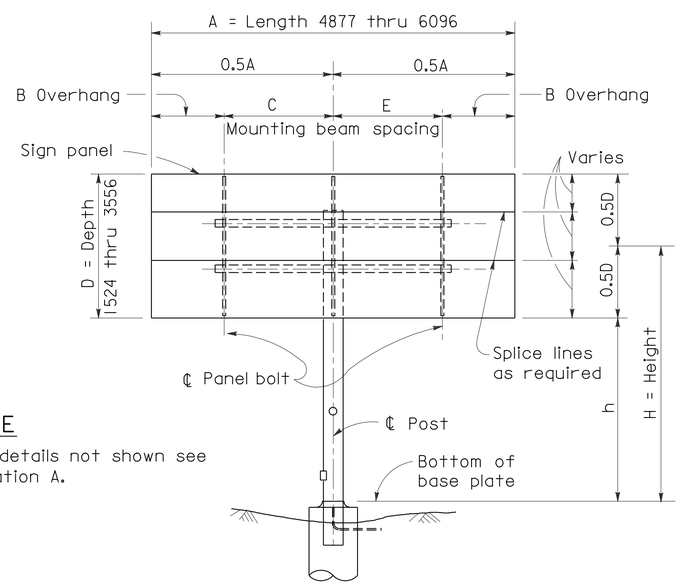

ELEVATION B

NOTE

For details not shown see Elevation A.

Post Size (Pipe)		Post Angles		
NPS	Min "t"	Angle	X (mm)	Weld (mm)
6	7.11	∠ 89x76x12.7	45	7
6	10.97	∠ 89x76x12.7	45	7
8	8.18	∠ 127x76x12.7	45	7
8	12.7	∠ 127x76x12.7	45	7
10	12.7	∠ 152x102x15.9	64	7
12	12.7	∠ 178x102x15.9	64	8
14	12.7	∠ 203x102x19.0	64	8
14	15.88	∠ 203x102x19.0	64	8

NOTES

1. For sections and detail not shown see RSP S42
2. For post and foundation details see Revised Standard Plans RSP S48 and RSP S49.
3. Drilled holes, plugs, conduit and handhole required on illuminated signs only.

STATE OF CALIFORNIA
DEPARTMENT OF TRANSPORTATION

OVERHEAD SIGNS-LIGHTWEIGHT BALANCED-SINGLE STEEL POST CONNECTION AND MOUNTING DETAILS

NO SCALE

ALL DIMENSIONS ARE IN MILLIMETERS UNLESS OTHERWISE SHOWN

RSP S41 DATED JANUARY 24, 2005 SUPERSEDES STANDARD PLAN S41 DATED JULY 1, 2004-PAGE 340 OF THE STANDARD PLANS BOOK DATED JULY 2004.

REVISED STANDARD PLAN RSP S41

2004 REVISED Std PLAN RSP S41

To accompany plans dated 6-14-10

Caltrans Metric

DIST	COUNTY	ROUTE	KILOMETER POST TOTAL PROJECT	SHEET NO.	TOTAL SHEETS
11	SD	805	40.6/42.4	489	567

REGISTERED CIVIL ENGINEER

January 24, 2005
PLANS APPROVAL DATE

REGISTERED PROFESSIONAL ENGINEER
Tillat Sattar
No. C42892
Exp. 03-31-2006
CIVIL
STATE OF CALIFORNIA

The State of California or its officers or agents shall not be responsible for the accuracy or completeness of electronic copies of this plan sheet.

To get to the Caltrans web site, go to: http://www.dot.ca.gov

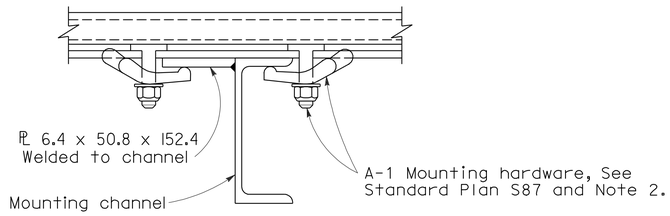

DETAIL K

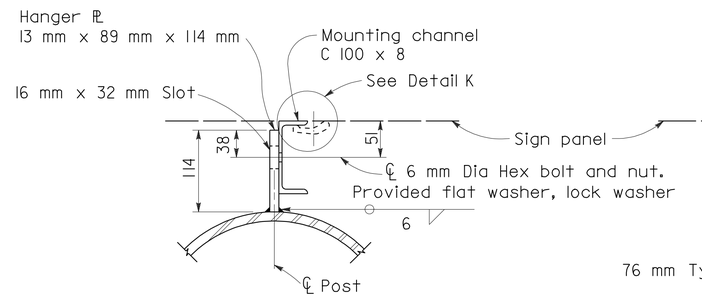

DETAIL G

32 NPS mm Std spacer

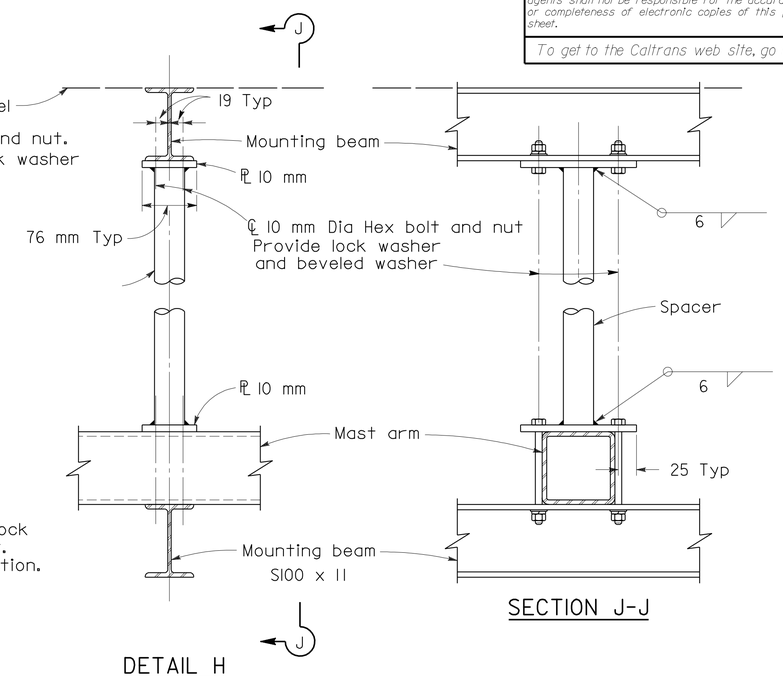

DETAIL H

SECTION J-J

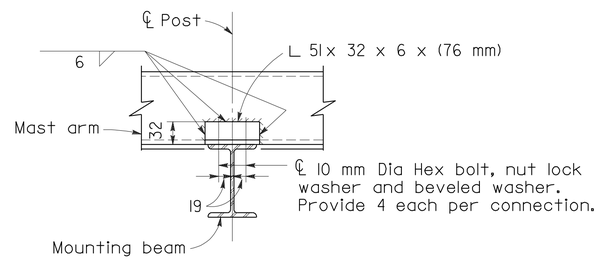

DETAIL A

NOTE

Spacer required for double faced sign only.

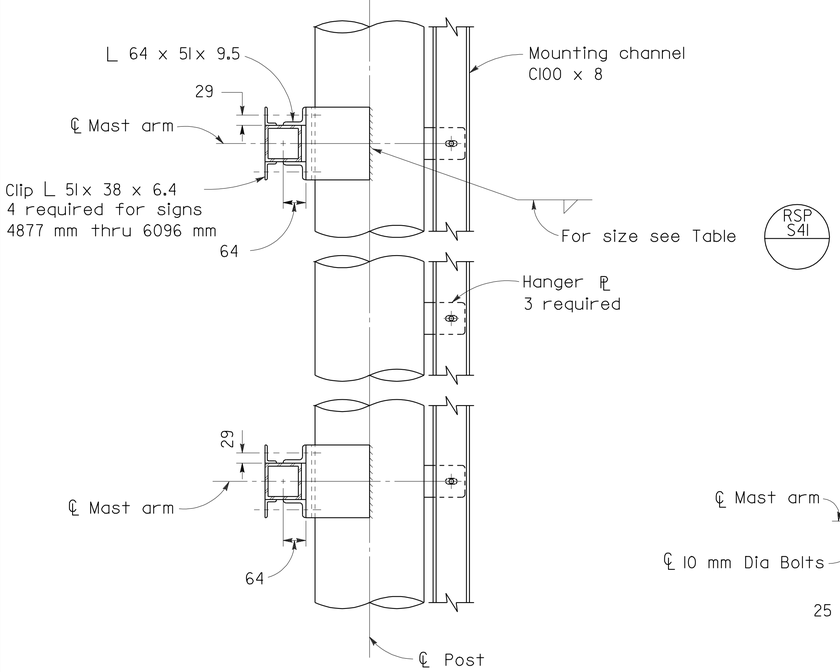

SECTION B-B

NOTE

Mounting channel and hanger ℙ required for double faced signs 4877 mm thru 6096 mm only.

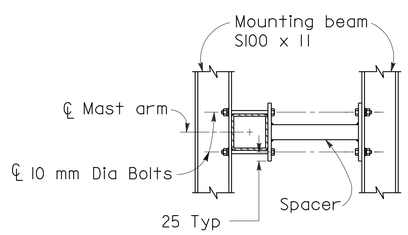

SECTION C-C

NOTE

Typical end mount for double faced signs.

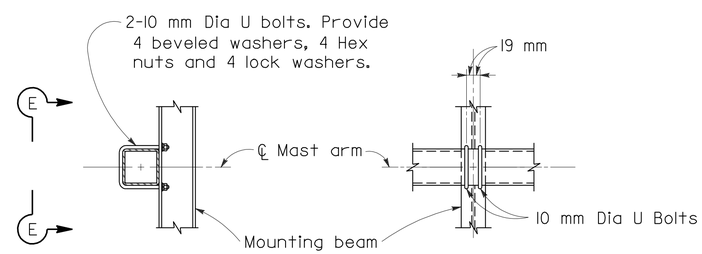

SECTION D-D

SECTION E-E

NOTE

Typical connection to single faced signs.

NOTES

1. For sections and details not shown, see RSP S41.
2. Torque stainless steel sign panel mounting bolts to 12 Nm.

STATE OF CALIFORNIA
DEPARTMENT OF TRANSPORTATION

OVERHEAD SIGNS-LIGHTWEIGHT BALANCED-SINGLE STEEL POST DETAILS

NO SCALE

ALL DIMENSIONS ARE IN MILLIMETERS UNLESS OTHERWISE SHOWN

RSP S42 DATED JANUARY 24, 2005 SUPERSEDES STANDARD PLAN S42 DATED JULY 1, 2004-PAGE 341 OF THE STANDARD PLANS BOOK DATED JULY 2004.

REVISED STANDARD PLAN RSP S42

2004 REVISED Std PLAN RSP S42

DIST	COUNTY	ROUTE	KILOMETER POST TOTAL PROJECT	SHEET NO.	TOTAL SHEETS
11	SD	805	40.6/42.4	490	567

REGISTERED CIVIL ENGINEER

January 24, 2005
PLANS APPROVAL DATE

REGISTERED PROFESSIONAL ENGINEER — Tillat Sattar — No. C42892 — Exp. 03-31-2006 — CIVIL — STATE OF CALIFORNIA

The State of California or its officers or agents shall not be responsible for the accuracy or completeness of electronic copies of this plan sheet.

To get to the Caltrans web site, go to: http://www.dot.ca.gov

To accompany plans dated 6-14-10

Caltrans Metric

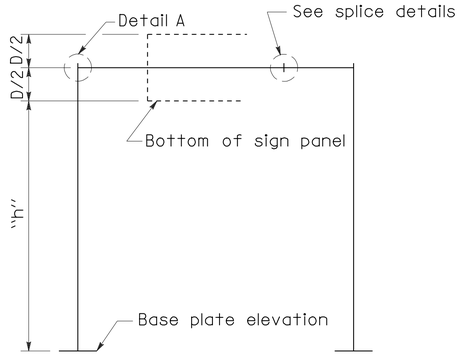

SINGLE CROSS BEAM SERIES
TYPE A-1

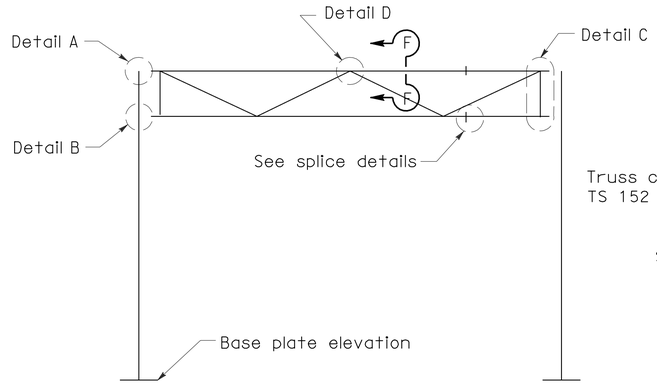

TRUSS CROSS BEAM SERIES
TYPE A-2

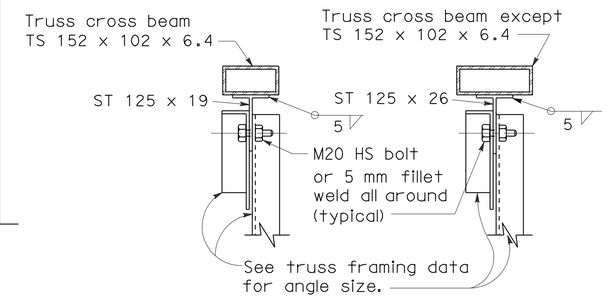

SECTION F-F

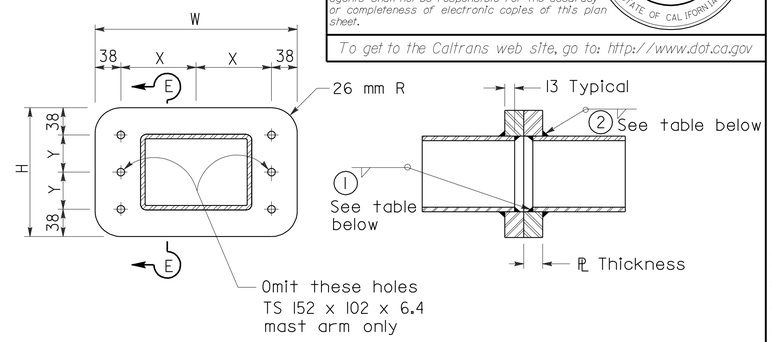

END VIEW

SECTION E-E

SPLICE DETAILS

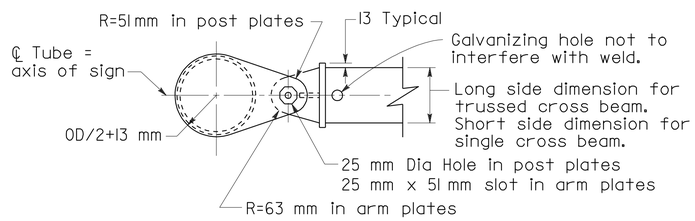

PLAN

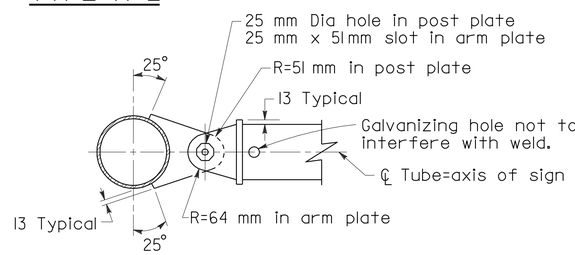

PLAN

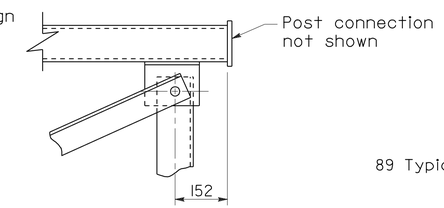

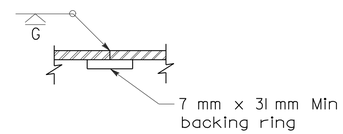

OPTIONAL
WELDED SPLICE

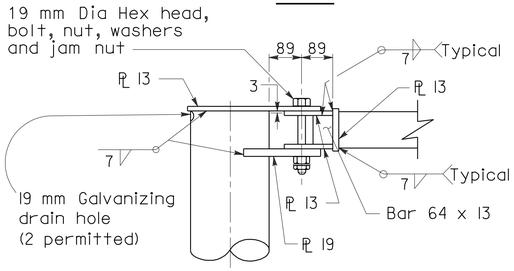

DETAIL A

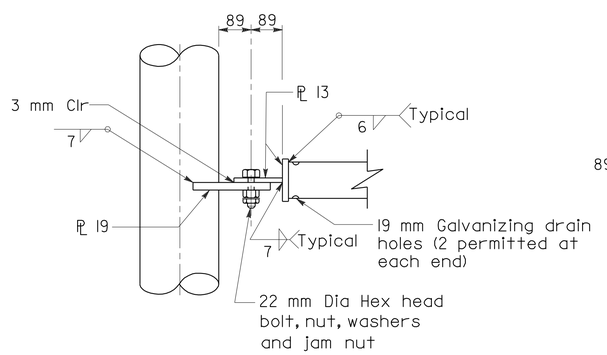

DETAIL B

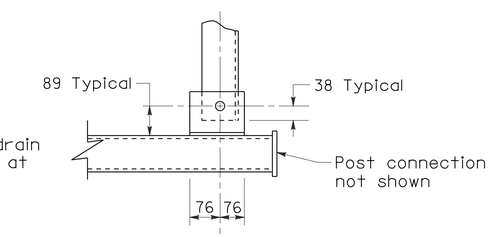

DETAIL C

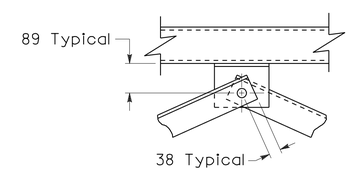

DETAIL D

NOTE

For post connection to base PL see RSP S48 A

For cross beam to sign panel connections see S46

See Format sheet for:

1. Sign type and location.
2. Panel type and location on structure.
3. Post size and dimension "h".
4. Cross beam size.
5. Foundation type.
6. Illumination if required.

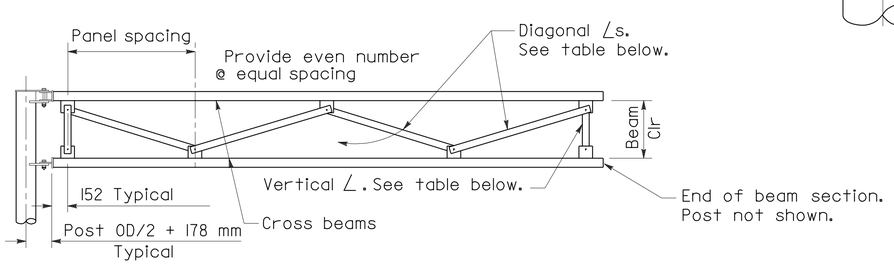

Camber for fabrication at ℄ span
Span < 9 m=0 mm
Span ≥ 9 m=13 mm

TRUSS FRAMING DATA

SIGN DEPTH (mm)	BEAM CLEARANCE (mm)	MAXIMUM PANEL SPACING (mm)	VERTICAL ANGLE (mm)	DIAGONAL ANGLE (mm)
1016-1778	610	1676	∠ 89x64x6.4 *	∠ 89x64x6.4 *
2032-2540	1372	1981	∠ 89x64x6.4 *	∠ 89x64x6.4 *

* Short leg outstanding.

SPLICE DATA

TUBULAR CROSS BEAM SIZE (mm)	HIGH STRENGTH BOLTS				A-36 PLATES (mm)			WELDING	
	No.	SIZE	X (mm)	Y (mm)	W (mm)	H (mm)	THICK-NESS	1	2
TS 152x102x6.4	4	M20	108	51	292	178	25.4	5	8
TS 203x102x6.4	6	M20	133	51	343	178	25.4	5	8
TS 203x152x6.4	6	M20	133	64	343	203	29	5	10
TS 203x152x9.5*	6	M20	108	89	292	254	29	7	8
TS 254x152x6.4	6	M20	165	64	406	203	35	5	10
TS 254x152x9.5	6	M20	165	76	406	229	41	8	13

* Long dimension vertical for single cross beam

STATE OF CALIFORNIA
DEPARTMENT OF TRANSPORTATION

OVERHEAD SIGNS-LIGHTWEIGHT TYPE A CONNECTION DETAILS

NO SCALE

ALL DIMENSIONS ARE IN
MILLIMETERS UNLESS OTHERWISE SHOWN

RSP S43 DATED JANUARY 24, 2005 SUPERSEDES STANDARD PLAN S43
DATED JULY 1, 2004-PAGE 342 OF THE STANDARD PLANS BOOK DATED JULY 2004.

REVISED STANDARD PLAN RSP S43

2004 REVISED Std PLAN RSP S43

To accompany plans dated 6-14-10

Caltrans Metric

DIST	COUNTY	ROUTE	KILOMETER POST TOTAL PROJECT	SHEET NO.	TOTAL SHEETS
11	SD	805	40.6/42.4	491	567

REGISTERED CIVIL ENGINEER

April 28, 2005
PLANS APPROVAL DATE

REGISTERED PROFESSIONAL ENGINEER Tillat Sattar No. C42892 Exp. 03-31-2006 CIVIL STATE OF CALIFORNIA

The State of California or its officers or agents shall not be responsible for the accuracy or completeness of electronic copies of this plan sheet.

To get to the Caltrans web site, go to: http://www.dot.ca.gov

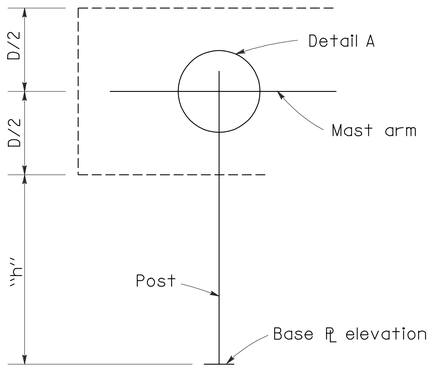

SINGLE ARM SERIES
TYPE B-1

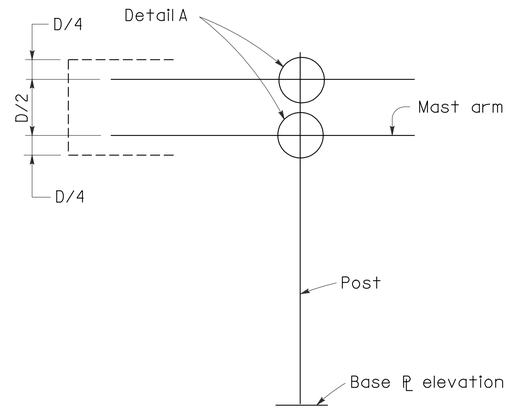

DOUBLE ARM SERIES
TYPE B-2

POST ANGLES			
POST SIZE	ANGLE	X (mm)	WELD (mm)
6	L102 x 76 x12.7	45	7
8	L127 x 76 x12.7	45	7
10	L152 x 102 x15.9	64	7
12	L178 x 102 x15.9	64	8
14	L203 x 102 x19.0	64	8

POST TO ARM FRAMING DATA

MAST ARM ANGLES				
ARM SIZE	ANGLE (mm)	HS BOLT	Y (mm)	WELD (mm)
TS 76 x 76 x 6.4	L64 x 64 x 9.5	M16	35	7
TS 102 x 102 x 6.4	L64 x 64 x 9.5	M16	35	7
TS 127 x 127 x 6.4	L76 x 64 x 9.5	M16	35	7
TS 152 x 152 x 6.4	L89 x 64 x 9.5	M16	35	7
TS 178 x 178 x 6.4	L102 x 76 x 12.7	M20	45	8
TS 203 x 203 x 6.4	L127 x 76 x 12.7	M22	45	8
TS 254 x 254 x 6.4	L152 x 102 x 15.9	M22	64	8

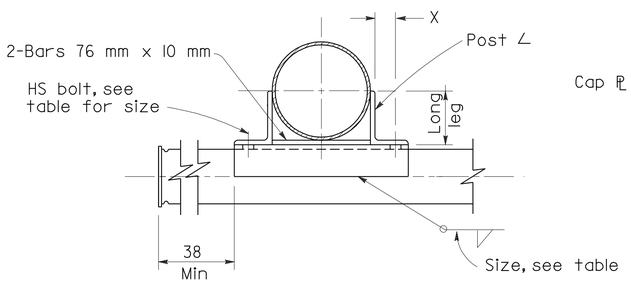

SECTION D-D

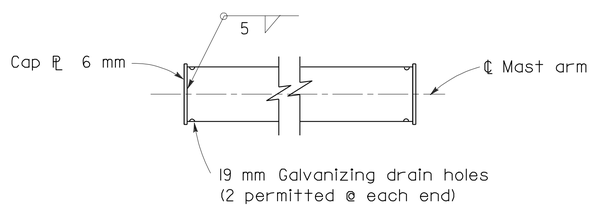

MAST ARM

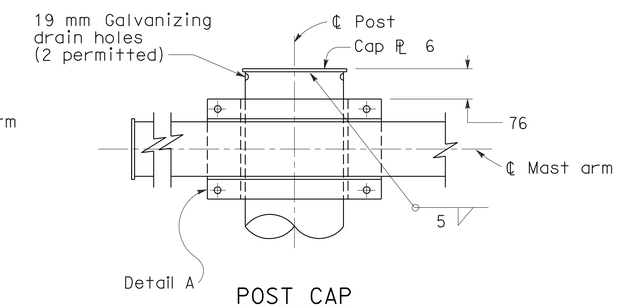

POST CAP

END DETAIL

SEE OTHER PLAN SHEETS FOR

1. Sign type and location
2. Panel type and location on structure
3. Post size and dimension "h".
4. Mast arm size.
5. Foundation type.
6. Illumination if required.

NOTES

For post connection to base plate see RSP S48

For mast arm length and mast arm-to-sign panel connections see S46

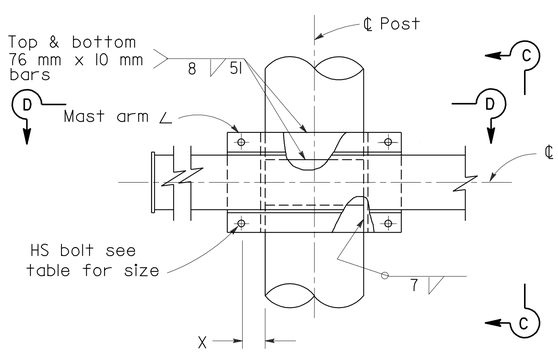

DETAIL A

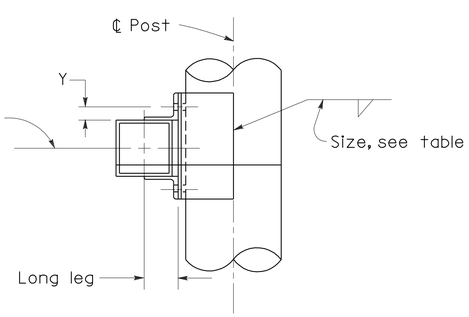

SECTION C-C

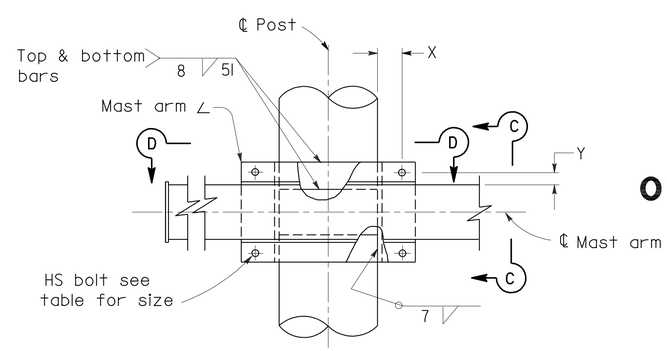

DETAIL B

STATE OF CALIFORNIA
DEPARTMENT OF TRANSPORTATION

OVERHEAD SIGNS-LIGHTWEIGHT TYPE B CONNECTION DETAILS

NO SCALE

ALL DIMENSIONS ARE IN MILLIMETERS UNLESS OTHERWISE SHOWN

RSP S44 DATED APRIL 28, 2005 SUPERSEDES RSP S44 DATED JANUARY 24, 2005 AND STANDARD PLAN S44 DATED JULY 1, 2004-PAGE 343 OF THE STANDARD PLANS BOOK DATED JULY 2004.

REVISED STANDARD PLAN RSP S44

2004 REVISED Std PLAN RSP S44

To accompany plans dated 6-14-10

Caltrans Metric

DIST	COUNTY	ROUTE	KILOMETER POST TOTAL PROJECT	SHEET NO.	TOTAL SHEETS
11	SD	805	40.6/42.4	492	567

REGISTERED CIVIL ENGINEER

January 24, 2005
PLANS APPROVAL DATE

REGISTERED PROFESSIONAL ENGINEER Tillat Sattar No. C42892 Exp. 03-31-2006 CIVIL STATE OF CALIFORNIA

The State of California or its officers or agents shall not be responsible for the accuracy or completeness of electronic copies of this plan sheet.

To get to the Caltrans web site, go to: http://www.dot.ca.gov

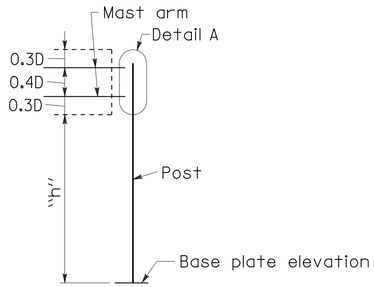

DOUBLE MAST ARM SERIES
TYPE C-1

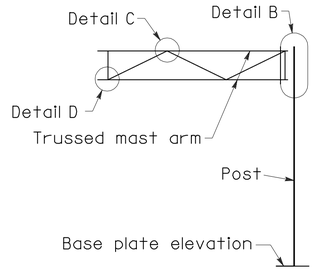

TRUSSED MAST ARM SERIES
TYPE C-2

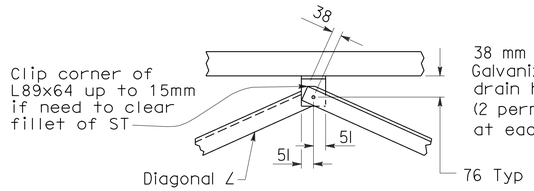

DETAIL C

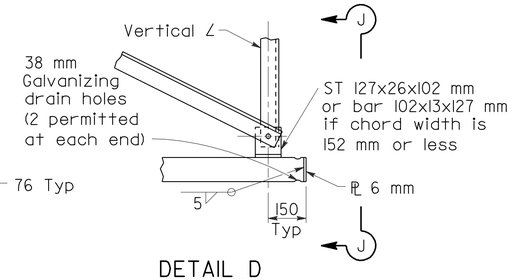

DETAIL D

POST ANGLES			
POST SIZE	ANGLE (mm)	X (mm)	WELD (mm)
6	∠127x76x12.7	44	7
8	∠152x102x15.9	57	7
10	∠178x102x15.9	57	7
12	∠203x102x19.0	57	8
14	∠203x102x19.0	57	8

POST TO ARM FRAMING DATA

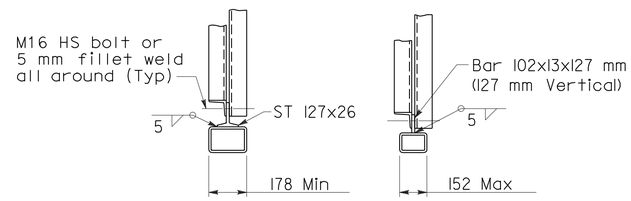

SECTION J-J

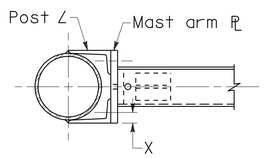

SECTION G-G

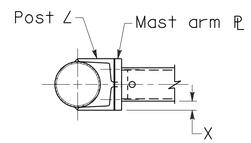

SECTION F-F

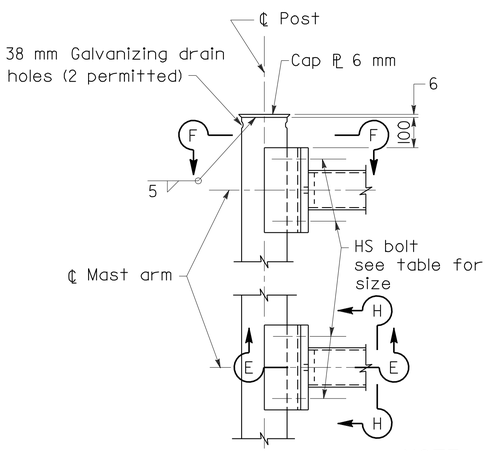

DETAIL A

NOTE

"T" equals vertical dimension of mast arm.

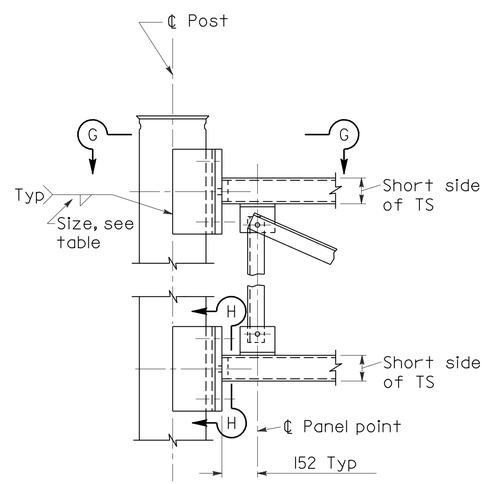

DETAIL B

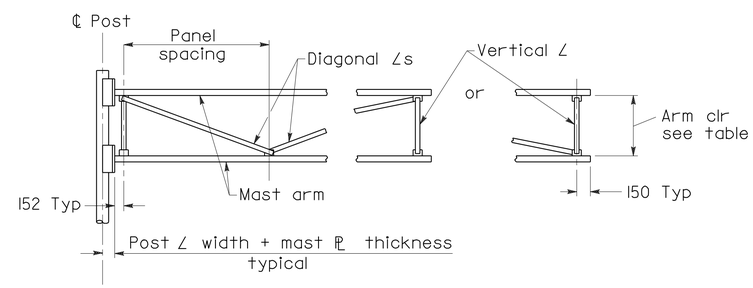

TRUSS FRAMING DATA

SIGN DEPTH (mm)	ARM CLEARANCE (mm)	MAX PANEL SPACING (mm)	VERTICAL ANGLE (mm)	DIAGONAL ANGLE (mm)
D=1016-1778	610	1321	51x51x6.4	51x51x6.4
D=2032-2540	914	1981	89x64x6.4*	89x64x6.4*

*Short leg outstanding

MAST ARM PLATE			
TWO ARMS	TRUSSED ARMS	PLATE (mm)	HS BOLT
TS 76x76x6.4		19	M16
TS 102x102x6.4		25.4	M16
TS 127x127x6.4		25.4	M20
TS 152x152x6.4		25.4	M20
TS 178x178x6.4	TS 127x76x9.5	32	M20
	TS 152x102x9.5	32	M22
	TS 178x127x9.5	32	M22
	TS 203x152x9.5	32	M22
	TS 254x152x9.5	32	M24

NOTES

For post connection to base PL see RSP S48

For mast arm length and mast-arm-to sign panel connections see S46

See other plan sheets for:

1. Sign type and location.
2. Panel type and location on structure.
3. Post size and dimension "h".
4. Mast arm size.
5. Foundation type.
6. Illumination if required.

For General Notes see RSP S48

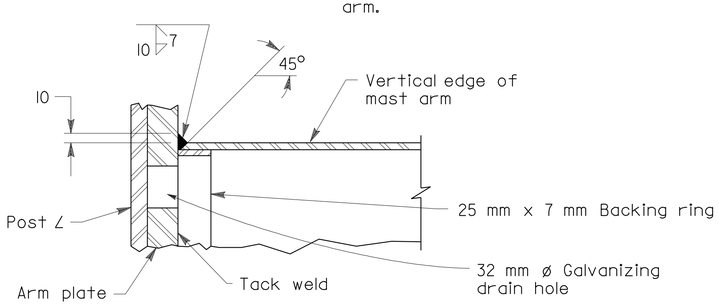

SECTION E-E

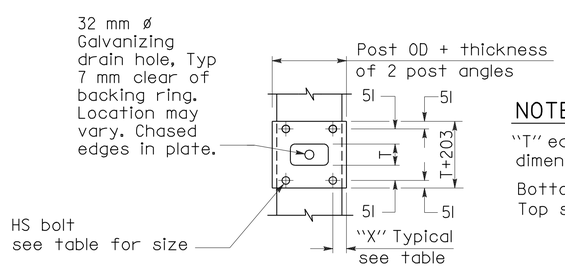

SECTION H-H

NOTE

"T" equals vertical dimension of mast arm.

Bottom connection shown. Top similar.

STATE OF CALIFORNIA
DEPARTMENT OF TRANSPORTATION

OVERHEAD SIGNS-LIGHTWEIGHT TYPE C CONNECTIONS DETAILS

NO SCALE

ALL DIMENSIONS ARE IN MILLIMETERS UNLESS OTHERWISE SHOWN

RSP S45 DATED JANUARY 24, 2005 SUPERSEDES STANDARD PLAN S45 DATED JULY 1, 2004-PAGE 344 OF THE STANDARD PLANS BOOK DATED JULY 2004.

REVISED STANDARD PLAN RSP S45

2004 REVISED Std PLAN RSP S45

DIST	COUNTY	ROUTE	KILOMETER POST TOTAL PROJECT	SHEET NO.	TOTAL SHEETS
11	SD	805	40.6/42.4	493	567

REGISTERED CIVIL ENGINEER

January 24, 2005
PLANS APPROVAL DATE

REGISTERED PROFESSIONAL ENGINEER Tillat Sattar No. C42892 Exp. 03-31-2006 CIVIL STATE OF CALIFORNIA

The State of California or its officers or agents shall not be responsible for the accuracy or completeness of electronic copies of this plan sheet.

To get to the Caltrans web site, go to: http://www.dot.ca.gov

To accompany plans dated 6-14-10

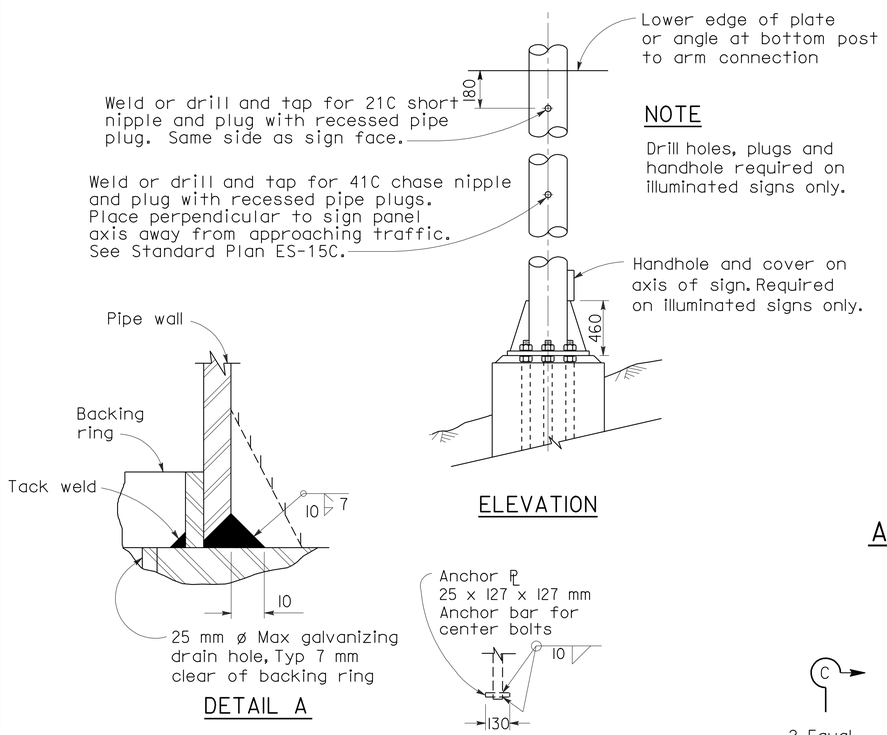

NOTE

Drill holes, plugs and handhole required on illuminated signs only.

DETAIL A

ELEVATION

SINGLE SIDE BOLT

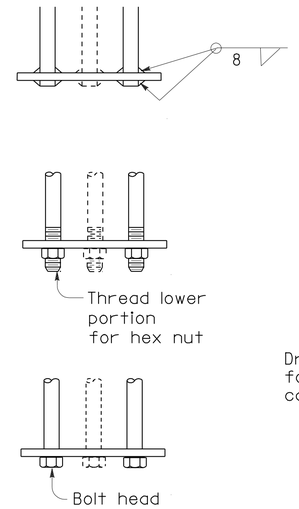

ALTERNATIVE BAR CONNECTIONS

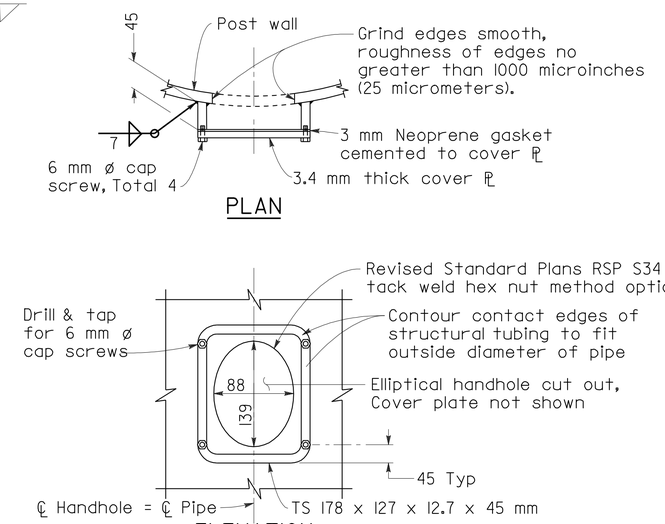

PLAN

ELEVATION

TYPICAL DETAILS OF HANDHOLE AND COVER

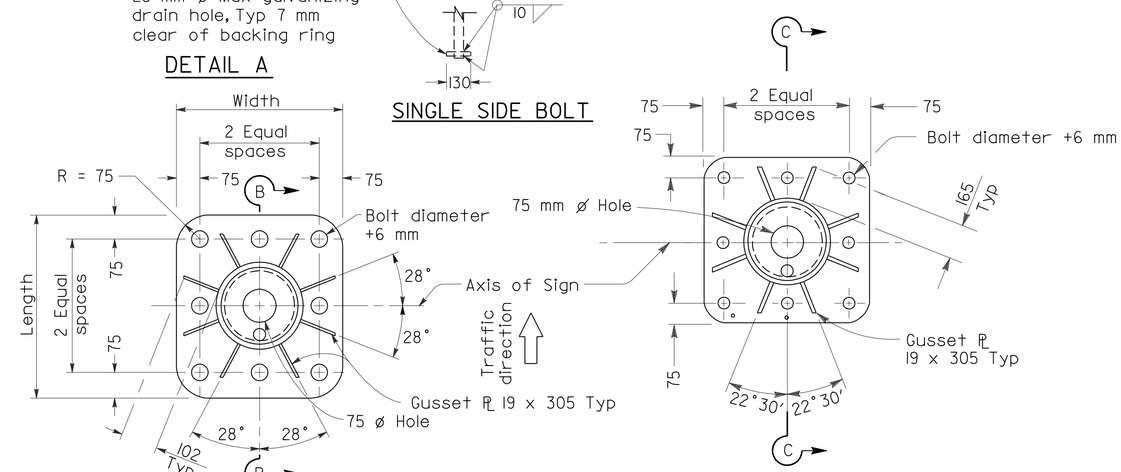

PLAN

PLAN

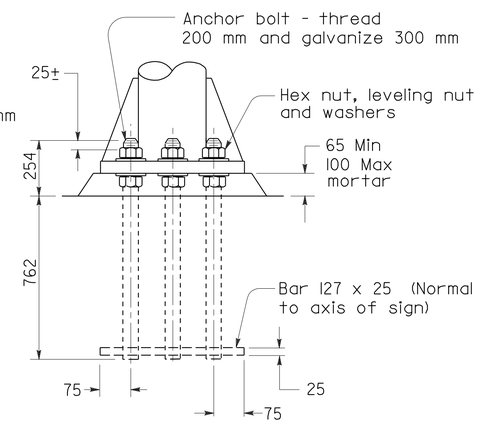

ANCHORAGE BOLT

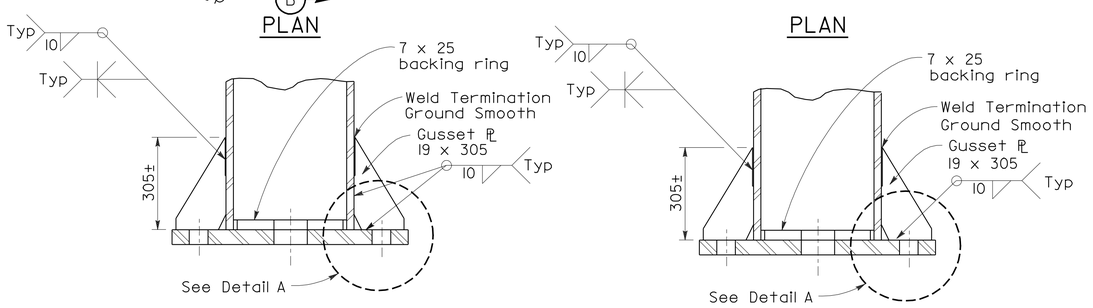

SECTION B-B
6 NPS THRU 8 NPS POSTS

SECTION C-C
10 NPS THRU 14 NPS POSTS

BASE PLATE DETAILS

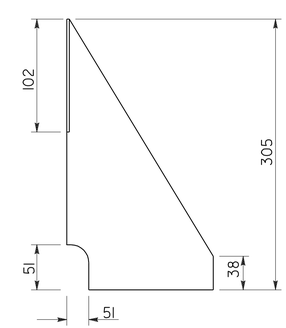

GUSSET DETAIL

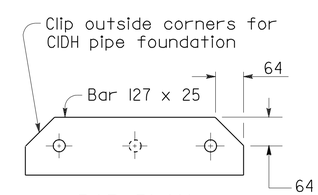

BAR PLAN

ANCHORAGE DETAILS

GENERAL NOTES:

DESIGN: AASHTO Standard Specifications for Structural Supports for Highway Signs, Luminaires and Traffic Signals, dated 1994.

CONSTRUCTION: Standard Specifications and the Special Provision.

WELDING: All welding continuous unless otherwise noted on the plans. All welding to be done in accordance with the Standard Specifications.

NOTES

1. Footing shall be placed with long dimensions normal to axis of sign.
2. On single post signs the post shall be raked out of plumb with the use of leveling nuts to make the bottom of the sign panel level.
3. 51mm ø anchor bolts may be substituted for 45 mm ø bolts. 64 mm ø anchor bolts may be substituted for 57 mm ø bolts.

Post Size		Base Plate (mm)	Anchor Bolts	
NPS	"t" (mm)		#	Bolt ø
6	7.11	51 x 534 x 534	8	51 mm
6	10.97	51 x 534 x 534	8	51 mm
8	8.18	51 x 534 x 534	8	51 mm
8	12.7	51 x 534 x 534	8	51 mm
10	12.7	51 x 715 x 715	8	57 mm
12	12.7	51 x 715 x 715	8	57 mm
14	12.7	51 x 715 x 715	8	57 mm
14	19.0	51 x 715 x 715	8	57 mm

"t" = Wall Thickness

STATE OF CALIFORNIA
DEPARTMENT OF TRANSPORTATION

OVERHEAD SIGNS-LIGHTWEIGHT POST DETAILS

NO SCALE

ALL DIMENSIONS ARE IN MILLIMETERS UNLESS OTHERWISE SHOWN

RSP S48 DATED JANUARY 24, 2005 SUPERSEDES STANDARD PLAN S48 DATED JULY 1, 2004-PAGE 347 OF THE STANDARD PLANS BOOK DATED JULY 2004.

REVISED STANDARD PLAN RSP S48

2004 REVISED Std PLAN RSP S48

DIST	COUNTY	ROUTE	KILOMETER POST TOTAL PROJECT	SHEET NO.	TOTAL SHEETS
11	SD	805	40.6/42.4	494	567

REGISTERED CIVIL ENGINEER

January 24, 2005
PLANS APPROVAL DATE

REGISTERED PROFESSIONAL ENGINEER
Tillat Sattar
No. C42892
Exp. 03-31-2006
CIVIL
STATE OF CALIFORNIA

The State of California or its officers or agents shall not be responsible for the accuracy or completeness of electronic copies of this plan sheet.

To get to the Caltrans web site, go to: http://www.dot.ca.gov

To accompany plans dated 6-14-10

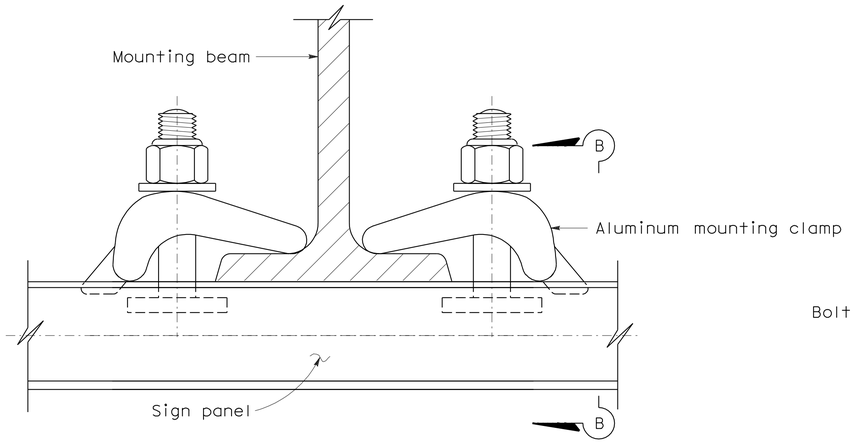

TYPICAL ALUMINUM CLAMP MOUNTING

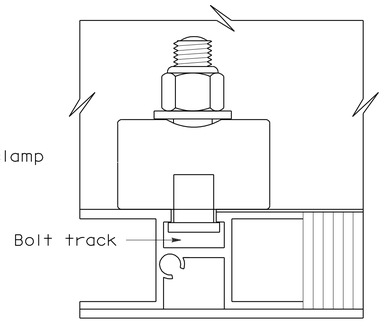

SECTION B-B
TYPICAL BOLTED CONNECTION TO STRUCTURE SUPPORT

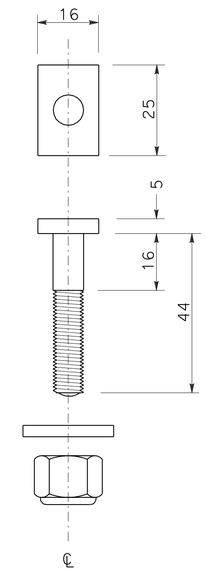

STAINLESS STEEL BOLT

A-1 HARDWARE QUANTITY TABLE

SIGN LENGTH mm	SIGN DEPTH mm - See Note 6	UNITS REQUIRED See Note 5
4572 or less	1270 - 1524	4
4877 - 7315	1270 - 1524	6
4572 or less	1778 - 3048	8
4877 - 7315	1778 - 3048	12

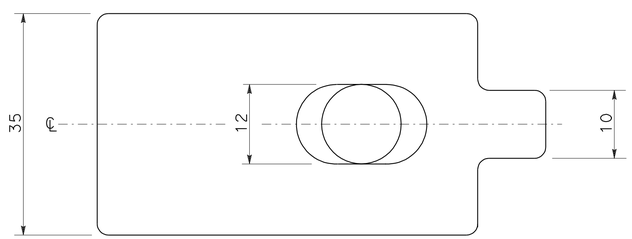

TOP VIEW

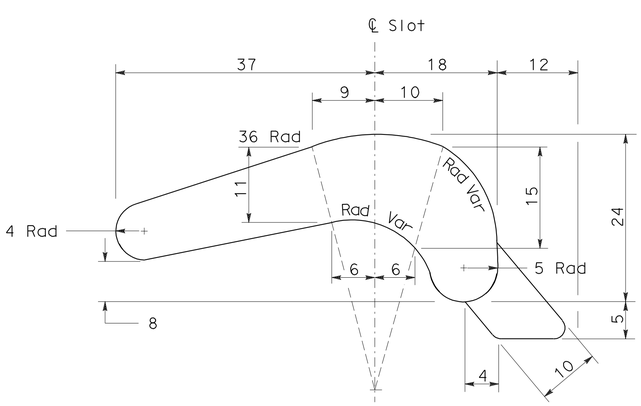

SIDE VIEW

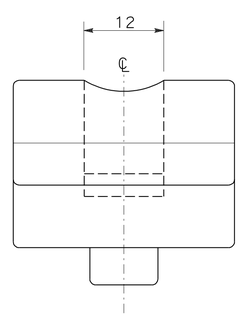

FRONT VIEW

NOTES:

1. Refer to applicable Standard Plan for additional mounting details.
2. Mounting clamp shall be aluminum casting as specified in the Special Provisions.
3. Rectangular head bolt, hexagon stop nut, and flat washer shall be 10 mm diameter (18-8) stainless steel.
4. One unit of A-1 hardware shall consist of two sets of these components: clamp, bolt, nut and washer.
5. Signs 2794 mm and 3048 mm in depth may be fabricated in three panel sections to avoid legend from being placed on a horizontal seam. Increase number of units of mounting hardware accordingly.

STATE OF CALIFORNIA
DEPARTMENT OF TRANSPORTATION

TYPE A-1 MOUNTING HARDWARE OVERHEAD LAMINATED TYPE A PANEL TRUSS AND LIGHTWEIGHT SIGN STRUCTURES

NO SCALE

ALL DIMENSIONS ARE IN MILLIMETERS UNLESS OTHERWISE SHOWN

RSP S87 DATED JANUARY 24, 2005 SUPERSEDES STANDARD PLAN S87 DATED JULY 1, 2004-PAGE 369 OF THE STANDARD PLANS BOOK DATED JULY 2004.

REVISED STANDARD PLAN RSP S87

2004 REVISED Std PLAN RSP S87

DIST	COUNTY	ROUTE	KILOMETER POST TOTAL PROJECT	SHEET NO.	TOTAL SHEETS
11	SD	805	40.6/42.4	495	567

REGISTERED CIVIL ENGINEER

January 24, 2005
PLANS APPROVAL DATE

REGISTERED PROFESSIONAL ENGINEER
Tillat Sattar
No. C42892
Exp. 03-31-2006
CIVIL
STATE OF CALIFORNIA

The State of California or its officers or agents shall not be responsible for the accuracy or completeness of electronic copies of this plan sheet.

To get to the Caltrans web site, go to: http://www.dot.ca.gov

To accompany plans dated 6-14-10

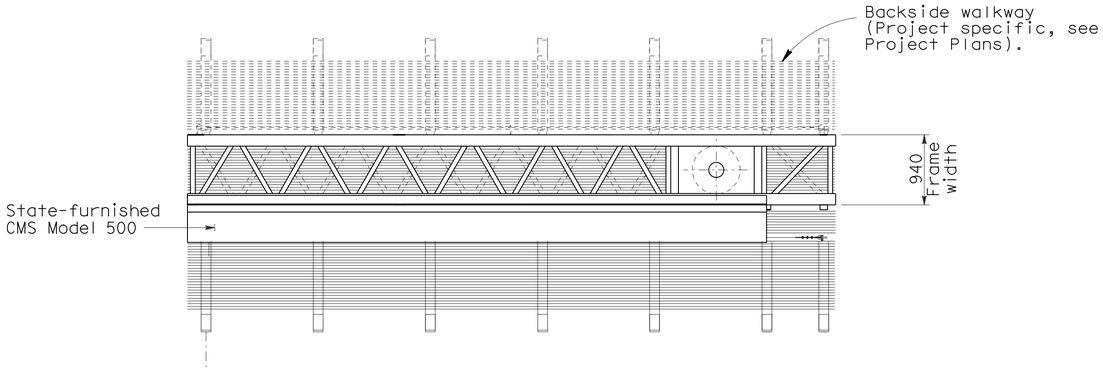

PLAN

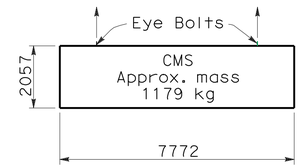

LIFTING DIAGRAM

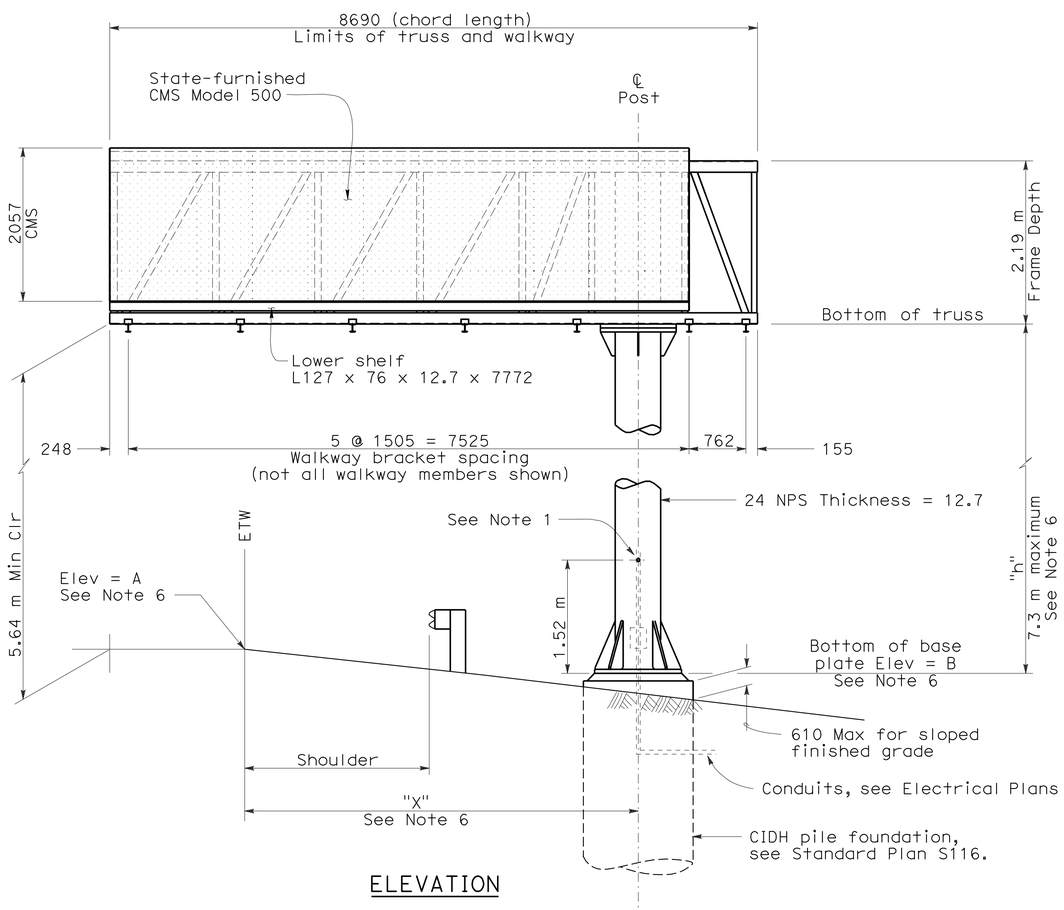

ELEVATION

GENERAL NOTES

DESIGN:

AASHTO Specifications for Structural Supports for Highway Signs, Luminaires and Traffic Signals, dated 2001.

CONSTRUCTION:

Standard Specifications and the Special Provisions.

LOADING:

WIND LOADING:

Normal to face of sign: 1930 Pa on 100% panel coverage.

Transverse to face of sign: 20% of normal force.

WALKWAY LOADING:

Dead load +229 kg concentrated live load.

UNIT STRESSES:

STRUCTURAL STEEL: fy = 250 MPa
REINFORCED CONCRETE: fy = 415 MPa
f'c = 25 MPa
FOOTING SOIL PRESSURE: 120 kPa (spread footing)

MINIMUM CLEARANCE

Vertical roadway clearance 5.50 m above roadway and shoulders

WELDING:

All welding continuous unless otherwise noted on the plans.

NOTES

1. Drill and tap for Size 63 recessed pipe plug.
2. Changeable Message Sign will be State-furnished.
3. For location and elevation of sign structure see Project Plans.
4. Sign support post shall be raked out of plumb with leveling nuts to make the bottom of the sign frame level.
5. At final position of post top and bottom nuts shall be tightened against base plate.
6. See Project Plans.

STATE OF CALIFORNIA
DEPARTMENT OF TRANSPORTATION

OVERHEAD SIGN-TRUSS SINGLE POST TYPE LAYOUT UNBALANCED BUTTERFLY CHANGEABLE MESSAGE SIGNS MODEL 500

NO SCALE

ALL DIMENSIONS ARE IN MILLIMETERS UNLESS OTHERWISE SHOWN

RSP S101 DATED JANUARY 24, 2005 SUPERSEDES STANDARD PLAN S101 DATED JULY 1, 2004-PAGE 378 OF THE STANDARD PLANS BOOK DATED JULY 2004.

REVISED STANDARD PLAN RSP S101

2004 REVISED Std PLAN RSP S101

DIST	COUNTY	ROUTE	KILOMETER POST TOTAL PROJECT	SHEET NO.	TOTAL SHEETS
11	SD	805	40.6/42.4	496	567

Caltrans Metric

REGISTERED ELECTRICAL ENGINEER

October 5, 2007
PLANS APPROVAL DATE

REGISTERED PROFESSIONAL ENGINEER
Jeffery G. McRae
No. E14512
Exp. 6-30-08
ELECTRICAL
STATE OF CALIFORNIA

The State of California or its officers or agents shall not be responsible for the accuracy or completeness of electronic copies of this plan sheet.

To get to the Caltrans web site, go to: http://www.dot.ca.gov

To accompany plans dated 6-14-10

2004 REVISED Std PLAN RSP ES-1A

ELECTROLIERS

STANDARD TYPES
15, 15D
15 STRUCTURE
21, 21D STRUCTURE
30
31
32
35
36-20A

High mast lighting standard

Double arm lighting standard

Existing electrolier

Electrolier foundation (Future installation)

NOTES

1. Luminaires shall be 310 W HPS when installed on Type 21, 21D, 30, 31, 32, 35 and 36-20A Standards, unless otherwise specified. Luminaires shall be 200 W HPS when installed on other type standards or poles, unless otherwise specified.
2. Luminaires shall be the cutoff type, ANSI Type III medium cutoff lighting distribution, unless otherwise specified.
3. Variations noted adjacent to symbol on project plans.

Electrolier (see project notes or project plans)

Luminaire on wood pole

STANDARD NOTES

- AB — Abandon. If applied to conduit, remove conductors.
- BC — Install pull box in existing conduit run.
- BP — Pedestrian barricade, type as indicated on plan.
- CB — Install conduit into existing pull box.
- CC — Connect new and existing conduit. Remove existing conductors and install conductors as indicated.
- CF — Conduit to remain for future use. Remove conductors. Install pull wire or rope.
- DH — Detector handhole.
- FA — Foundation to be abandoned.
- IS — Install sign on signal mast arm.
- NS — No slip base on standard.
- PEC — Photoelectric control.
- PEU — Photoelectric unit.
- RC — Equipment or material to be removed and become the property of the Contractor.
- RE — Remove electrolier, fuses and ballast. Tape ends of conductors.
- RL — Relocate equipment.
- RR — Remove and reuse equipment.
- RS — Remove and salvage equipment.
- SC — Splice new to existing conductors.
- SD — Service disconnect.
- SF — Standard to remain for future use. Remove luminaire, pole conductors, fuses and ballast. Tape disconnects.
- TSP — Telephone service point.

ABBREVIATIONS AND EQUIPMENT DESIGNATIONS

PROPOSED	EXISTING	
BBS	bbs	Battery backup system
BC	bc	Bolt circle
C	C	Conduit
CCTV	cctv	Closed circuit television
CKT	ckt	Circuit
CMS	cms	Changeable message sign
DLC	dlc	Loop detector lead-in cable
EMS	ems	Extinguishable message sign
EVC	evc	Emergency vehicle cable
EVD	evd	Emergency vehicle detector
FB	fb	Flashing beacon
FBCA	fbca	Flashing beacon control assembly
FBS	fbs	Flashing beacon with slip base
FO	fo	Fiber optic
G	G	Ground (Equipment Grounding Conductor)
GFCI	GFCI	Ground fault circuit interrupt
HAR	har	Highway advisory radio
HEX	hex	Hexagonal
HPS	hps	High pressure sodium
IISNS	iisns	Internally illuminated street name sign
ISL	isl	Induction sign lighting
LED	led	Light emitting diode
LMA	lma	Luminaire mast arm
LPS	lps	Low pressure sodium
LTG	ltg	Lighting
LUM	lum	Luminaire
MAT	mat	Mast arm mounted vehicle signal faces, top attachment
MAS	mas	Mast arm mounted vehicle signal faces, side attachment
MAS-4A	mas-4A	Mast arm mounted vehicle signal faces, side attachment - 4 signal section
MAS-4B	mas-4B	
MAS-4C	mas-4C	
MAS-5A	mas-5A	Mast arm mounted vehicle signal faces, side attachment - 5 signal section
MAS-5B	mas-5B	
MC	mc	Mercury contactor
M/M	m/m	Multiple to multiple transformer
MT	mt	Conduit with pull wire or rope only
MTG	mtg	Mounting
	mv	Mercury vapor lighting fixture
N	N	Neutral (Grounded Conductor)
NC	NC	Normally closed
NO	NO	Normally open
PB	pb	Pull box
PEC	pec	Photoelectric control (Type I, II, III, IV or V as shown)
PED	ped	Pedestrian
PEU	peu	Photoelectric unit
PPB	ppb	Pedestrian push button
RL	RL	Relocated equipment
RM	rm	Ramp metering
SB	sb	Slip base
SIC	sic	Signal interconnect cable
SIG	sig	Signal
SMA	sma	Signal mast arm
SNS	sns	Street name sign
SP	sp	Service point
TDC	tdc	Telephone demarcation cabinet
TMS	tms	Traffic monitoring station
TOS	tos	Traffic Operations System
VEH	veh	Vehicle
XFMR	xfmr	Transformer
COMM	comm	Communication
RWIS	rwis	Roadway weather information system

SOFFIT AND WALL MOUNTED LUMINAIRES

Pendant, 70 W HPS unless otherwise specified.

Flush, 70 W HPS unless otherwise specified.

Wall surface, 70 W HPS unless otherwise specified.

Existing soffit or wall luminaire to remain unmodified.

Existing soffit or wall luminaire to be modified as specified.

NOTE

Arrow indicates "street side" of luminaire.

STATE OF CALIFORNIA
DEPARTMENT OF TRANSPORTATION

ELECTRICAL SYSTEMS (SYMBOLS AND ABBREVIATIONS)

NO SCALE

ALL DIMENSIONS ARE IN MILLIMETERS UNLESS OTHERWISE SHOWN

RSP ES-1A DATED OCTOBER 5, 2007 SUPERSEDES STANDARD PLAN ES-1A DATED JULY 1, 2004-PAGE 413 OF THE STANDARD PLANS BOOK DATED JULY 2004.

REVISED STANDARD PLAN RSP ES-1A

DIST	COUNTY	ROUTE	KILOMETER POST TOTAL PROJECT	SHEET NO.	TOTAL SHEETS
11	SD	805	40.6/42.4	497	567

REGISTERED ELECTRICAL ENGINEER

October 5, 2007
PLANS APPROVAL DATE

REGISTERED PROFESSIONAL ENGINEER Jeffery G. McRae No. E14512 Exp. 6-30-08 ELECTRICAL STATE OF CALIFORNIA

The State of California or its officers or agents shall not be responsible for the accuracy or completeness of electronic copies of this plan sheet.

To get to the Caltrans web site, go to: http://www.dot.ca.gov

To accompany plans dated 6-14-10

CONDUIT

PROPOSED	EXISTING	
		Lighting conduit, unless otherwise indicated or noted
		Traffic signal conduit
C	c	Communication conduit
T	t	Telephone conduit
F	f	Fire alarm conduit
FO	fo	Fiber optic conduit
		Conduit termination (RSP ES-9A C)
R	r	Conduit riser in/on structure or Service pole

SERVICE EQUIPMENT

PROPOSED	EXISTING	
OH	oh	Overhead lines
U	u	Wood pole "U" indicates utility owned
		Pole guy-with anchor
		Utility transformer-ground mounted
III		Service equipment enclosure type
		Service equipment enclosure door indicates front of enclosure
T	t	Telephone demarcation cabinet

POLE-MOUNTED SERVICE DESIGNATION

Type of installation

TYPE H SERVICE - 8.8 m ← Pole height above grade

ILLUMINATED OVERHEAD SIGN

PROPOSED	EXISTING	
		Overhead sign - Single post
		Overhead sign - Two post
		Overhead sign - Mounted on structure
		Overhead sign with electrolier

SIGNAL EQUIPMENT

PROPOSED	EXISTING	
		Pedestrian signal face
		Pedestrian push button post
		Pedestrian barricade
		Vehicle signal face (with backplate, 3-Section: red, yellow and green)
		Vehicle signal face with angle visors
PV	PV	Modifications of basic symbols: "L" Indicates all non-arrow sections louvered "LG" indicates louvered green section only "PV" indicates 300 mm programmed visibility sections "200" indicates all 200 mm sections (only when specified)
		Type 15TS and Vehicle signal face
		Vehicle signal face with red, yellow and green left arrow sections
		Vehicle signal face with red and yellow sections and up green arrow
		Vehicle signal face (5 Section) with red, yellow and green sections and yellow and green right arrows
		Type 1 Standard and attached vehicle signal faces
		Standard with signal mast arm only and attached vehicle signal faces and internally illuminated street name sign
		Type 33 Standard, Left-turn vehicle signal face and sign
		Standard with luminaire and signal mast arms and attached vehicle signal faces
		Cantilever flashing beacon Type 9 Frame, with a sign unless otherwise specified or indicated
Y Y	Y Y	Type 15-FBS Standard with two vehicle signal face sections with lens, backplate and visor with a sign
R	Y	Flashing beacon. One vehicle signal face section with lens, backplate and visor. "R" indicates red indication, "Y" indicates yellow indication
		Controller assembly. Door indicates front of cabinet
		Guard post
		Type 1 Standard with "Meter On" sign
		Emergency vehicle detector

NOTES

1. All signal sections shall be 300 mm unless shown otherwise.
2. Signal heads shall be provided with backplates unless shown otherwise.
3. Signal indication shall be LED.

STATE OF CALIFORNIA
DEPARTMENT OF TRANSPORTATION

ELECTRICAL SYSTEMS (SYMBOLS AND ABBREVIATIONS)

NO SCALE

ALL DIMENSIONS ARE IN MILLIMETERS UNLESS OTHERWISE SHOWN

RSP ES-1B DATED OCTOBER 5, 2007 SUPERSEDES STANDARD PLAN ES-1B DATED JULY 1, 2004-PAGE 414 OF THE STANDARD PLANS BOOK DATED JULY 2004.

REVISED STANDARD PLAN RSP ES-1B

2004 REVISED Std PLAN RSP ES-1B

8-9-07

DIST	COUNTY	ROUTE	KILOMETER POST TOTAL PROJECT	SHEET NO.	TOTAL SHEETS
11	SD	805	40.6/42.4	498	567

Caltrans Metric

REGISTERED ELECTRICAL ENGINEER

October 5, 2007
PLANS APPROVAL DATE

REGISTERED PROFESSIONAL ENGINEER Jeffery G. McRae No. E14512 Exp. 6-30-08 ELECTRICAL STATE OF CALIFORNIA

The State of California or its officers or agents shall not be responsible for the accuracy or completeness of electronic copies of this plan sheet.

To get to the Caltrans web site, go to: http://www.dot.ca.gov

To accompany plans dated 6-14-10

EQUIPMENT IDENTIFICATION

ILLUMINATED SIGN IDENTIFICATION NUMBER:

Sign No. 12345 — Sign number - Place on post or structure

10 ISL SCI 1.0

- 1.0 — Transformer rating (kVA)
- SCI — Lighting control type
- ISL — Number and type of fixtures

Do NOT place on standard or structure

ELECTROLIER OR EQUIPMENT IDENTIFICATION NUMBER:

12345 - 4.6

- 4.6 — Mast arm length in meters, if shown. Do not place on standard or structure.
- 12345 — Equipment number - Place on standard or structure. Existing equipment numbers are shown in parenthesis

CONDUIT AND CONDUCTOR IDENTIFICATION:

41C, 2#10, 15#14, 2 DLC

- 2#10, 15#14, 2 DLC — Number and size of conductors and cables
- 41C — Size of conduit in millimeters

Ø1, Ø2, Ø2P, etc.	Traffic phase identification for signal faces, detectors and phase diagrams
1 2 3	Project note numbers
A B C	Equipment description, installation or item numbers
1 2 3	Conduit run numbers

SIGNAL AND LIGHTING STANDARD (TYPICAL DESIGNATION):

19A - 3 - 161

- 161 — Wind velocity=161 km/h
- 3 — Case 3 arm loading
- 19A — Standard type
- Standard Plan sheet number
- Detail number or letter

WIRING DIAGRAM LEGEND

P	Pole
CB	Circuit breaker
A	Ampere
V	Volt
M	Metered
UM	Unmetered
NB	Neutral bus
GB	Ground bus
G	Equipment grounding conductor
N	Grounded conductor (Neutral)

- External conductor
- Conductor or bus
- Tie point
- Contactor coil
- Contactor, Contact NO
- Terminal blocks
- Contactor, Contact NC
- Enclosure bond
- Grounding electrode
- Circuit breaker
- Receptacle

PULL BOXES

PROPOSED EXISTING

Pull box-No. 5 unless otherwise indicated or noted.

3 9A(21)

Pull box-Additional designations or descriptions

3 = No. 3½ pull box
5 = No. 5 pull box
6 = No. 6 pull box
7 = No. 7 (Ceiling pull box)
8 = No. 8 (Pendant soffit pull box)
9 = No. 9 pull box
9A = No. 9A pull box

(C) = Communications pull box
(E) = Pull box with extension
(S) = Sprinkler control pull box
(21) = Anchor bolts and conduit for future installation of Type 21 Standard
(T) = Traffic pull box

MISCELLANEOUS EQUIPMENT

PROPOSED	EXISTING	
CMS	cms	Changeable message sign
		Closed circuit television camera
		Highway advisory radio pole and antenna
EMS	ems	Extinguishable message sign
		Detection device
M V	m v	M = Microwave sensor V = Video image sensor

VEHICLE DETECTORS

5 J 9 U

- Vehicle detector designation
- U = Upper, L = Lower
- Slot number in input file
- Input file (I or J)
- Phase

PROPOSED	EXISTING	
		Type A detector loop. Outline of sawcut shown.
		Type B detector loop. Outline of sawcut shown.
		Type C detector loop. Outline of sawcut shown.
		Type D detector loop. Outline of sawcut shown.
		Type E detector loop. Outline of sawcut shown.
		Type Q detector loop. Outline of sawcut shown.
		Magnetic detector
DH	dh	Detector handhole
		Microwave or video detection zone

STATE OF CALIFORNIA
DEPARTMENT OF TRANSPORTATION

ELECTRICAL SYSTEMS (SYMBOLS AND ABBREVIATIONS)

NO SCALE

ALL DIMENSIONS ARE IN MILLIMETERS UNLESS OTHERWISE SHOWN

RSP ES-1C DATED OCTOBER 5, 2007 SUPERSEDES STANDARD PLAN ES-1C DATED JULY 1, 2004-PAGE 415 OF THE STANDARD PLANS BOOK DATED JULY 2004.

REVISED STANDARD PLAN RSP ES-1C

2004 REVISED Std PLAN RSP ES-1C

10-1-07

DIST	COUNTY	ROUTE	KILOMETER POST TOTAL PROJECT	SHEET NO.	TOTAL SHEETS
11	SD	805	40.6/42.4	499	567

Caltrans Metric

Jeffery G. McRae
REGISTERED ELECTRICAL ENGINEER

October 5, 2007
PLANS APPROVAL DATE

REGISTERED PROFESSIONAL ENGINEER Jeffery G. McRae No. E14512 Exp. 6-30-08 ELECTRICAL STATE OF CALIFORNIA

The State of California or its officers or agents shall not be responsible for the accuracy or completeness of electronic copies of this plan sheet.

To get to the Caltrans web site, go to: http://www.dot.ca.gov

To accompany plans dated 6-14-10

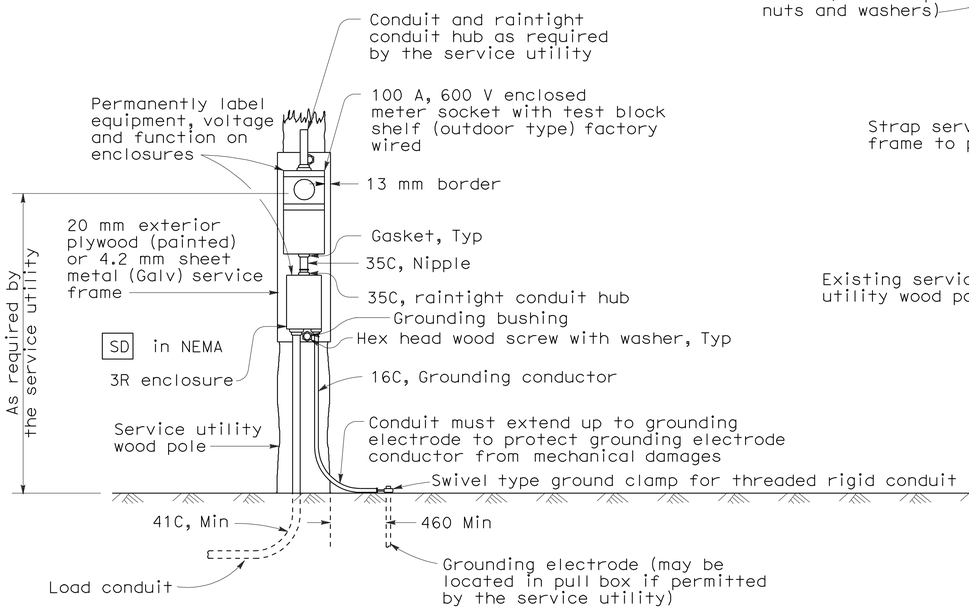

TYPE SCE-1 SERVICE

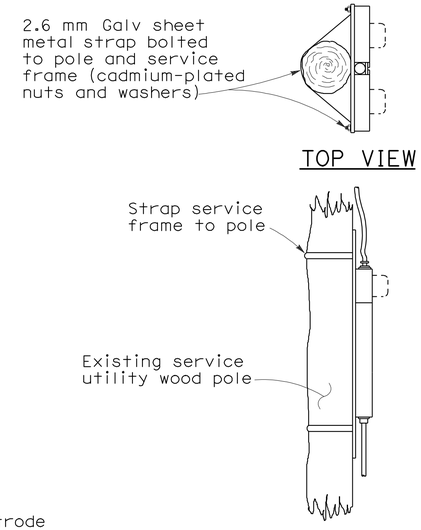

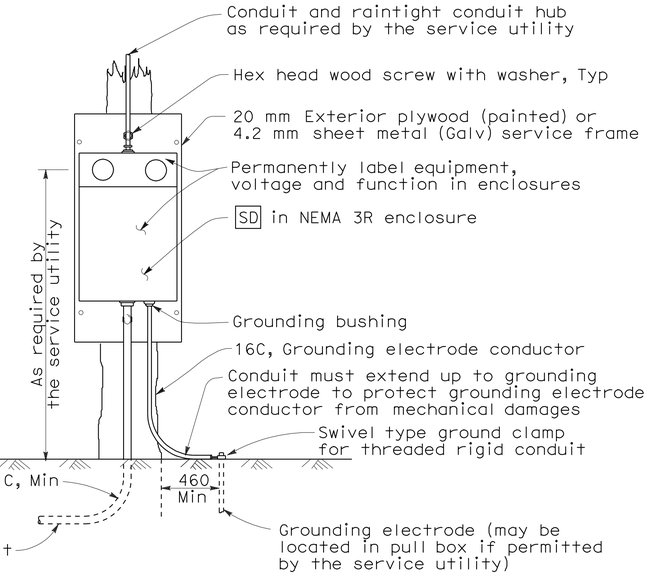

TYPE SCE-2 SERVICE

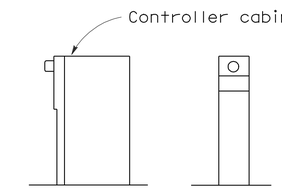

TYPE OF SERVICE (TYPICAL)

Type II service equipment enclosure mounted on a side of a controller cabinet.
Type III complete free-standing service equipment enclosure.

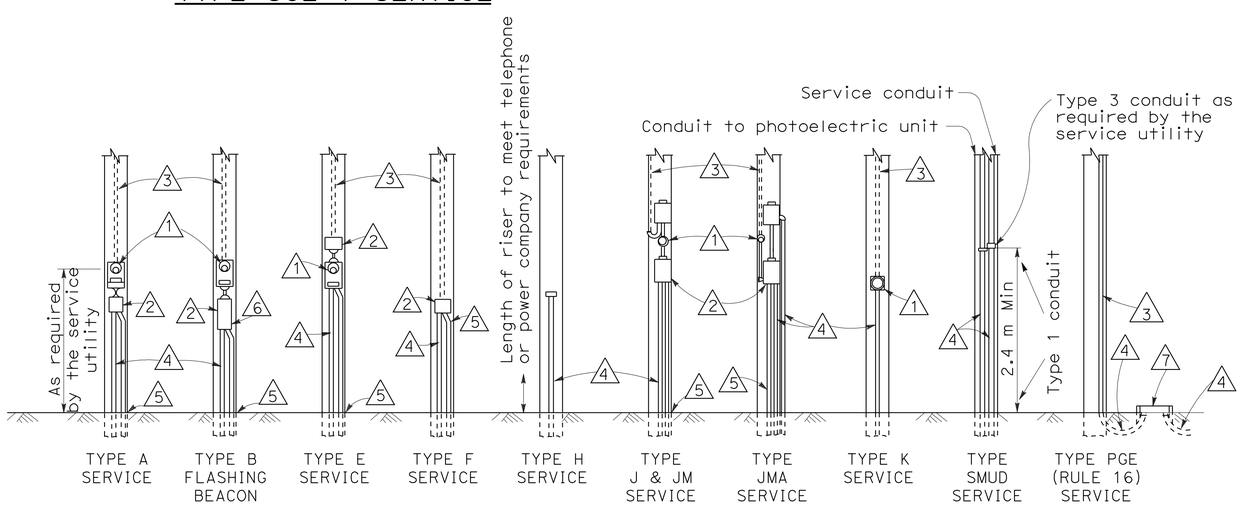

NOTES

1. Meter socket.
2. Service enclosure with a minimum 60 A rated main circuit breaker, unless otherwise shown.
3. (a) Utility owned pole. The service utility will furnish and install required service riser, PEU with conductors and other equipment as needed.
   (b) State owned pole. The Contractor shall furnish and install required service riser and equipment.
4. Conduit, length and size as required.
5. 16C, 1#6. See "Service Grounding" detail.
6. Flashing beacon control assembly.
7. Service pull box, No. 5 unless otherwise noted, furnished and installed by the Contractor. Service utility shall determine the exact location.

POLE MOUNTED SERVICE INSTALLATIONS

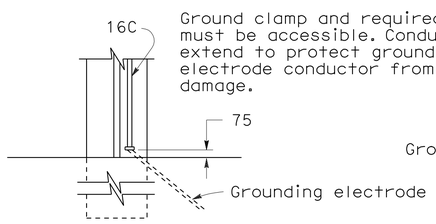

TYPE A

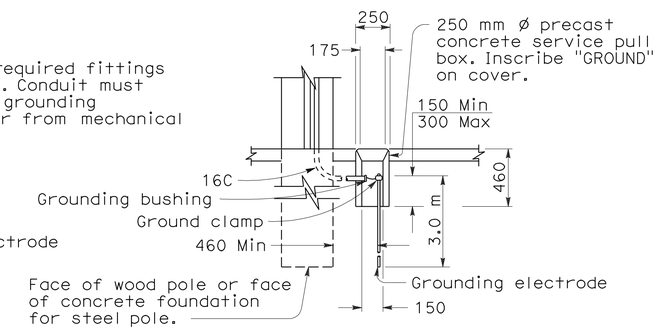

TYPE B

Use where service utility requires 460 mm clearance between grounding electrode and the pole or service equipment enclosure. Installation shown is for sidewalk or paved areas. In unpaved areas, omit special service pull box and locate ground clamp above ground or locate ground clamp in nearest pull box.

SERVICE GROUNDING

STATE OF CALIFORNIA
DEPARTMENT OF TRANSPORTATION

ELECTRICAL SYSTEMS (SERVICE EQUIPMENT)

NO SCALE

ALL DIMENSIONS ARE IN MILLIMETERS UNLESS OTHERWISE SHOWN

RSP ES-2A DATED OCTOBER 5, 2007 SUPERSEDES STANDARD PLAN ES-2A DATED JULY 1, 2004-PAGE 416 OF THE STANDARD PLANS BOOK DATED JULY 2004.

REVISED STANDARD PLAN RSP ES-2A

2004 REVISED Std PLAN RSP ES-2A

7-2-07

DIST	COUNTY	ROUTE	KILOMETER POST TOTAL PROJECT	SHEET NO.	TOTAL SHEETS
11	SD	805	40.6/42.4	500	567

Caltrans Metric

Jeffery G. McRae
REGISTERED ELECTRICAL ENGINEER

October 5, 2007
PLANS APPROVAL DATE

REGISTERED PROFESSIONAL ENGINEER
Jeffery G. McRae
No. E14512
Exp. 6-30-08
ELECTRICAL
STATE OF CALIFORNIA

The State of California or its officers or agents shall not be responsible for the accuracy or completeness of electronic copies of this plan sheet.

To get to the Caltrans web site, go to: http://www.dot.ca.gov

To accompany plans dated 6-14-10

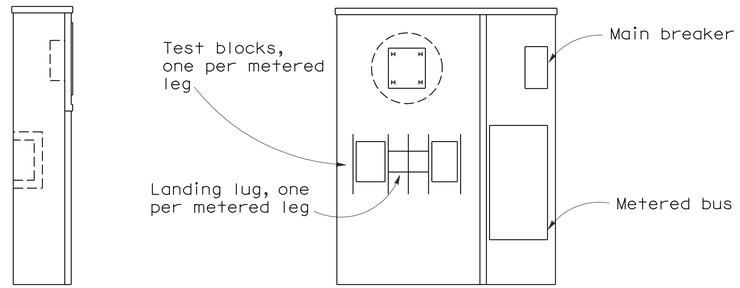

SIDE VIEW ELEVATION

TYPE II-A SERVICE EQUIPMENT ENCLOSURE

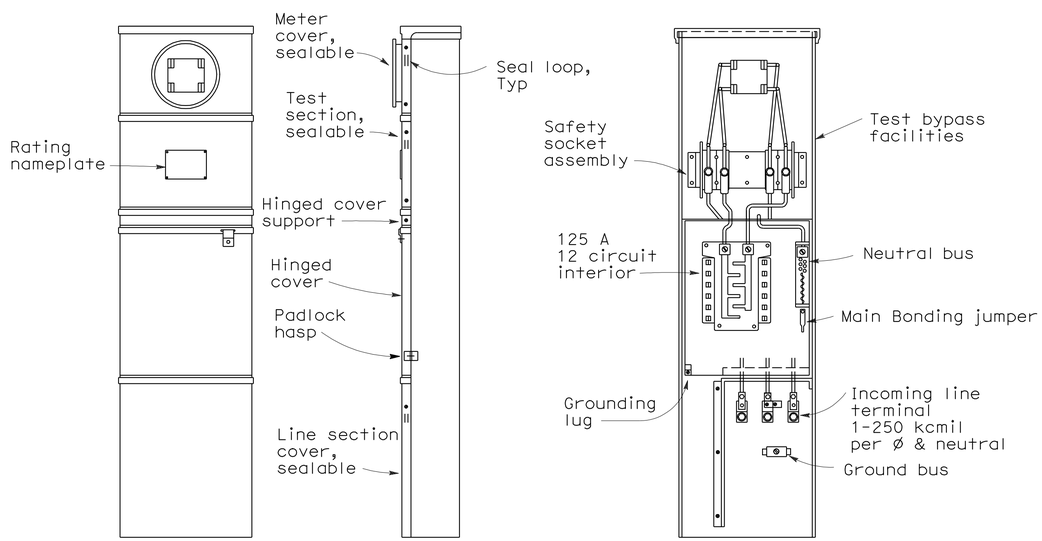

FRONT VIEW SIDE VIEW FRONT VIEW

(Less covers and dead front panel)
For metered circuits only

TYPE II-B SERVICE EQUIPMENT ENCLOSURE

NOTES-TYPE II SERVICE EQUIPMENT ENCLOSURES:

1. Service equipment enclosures and metering equipment shall meet the requirements of the service utility.
2. Service equipment enclosures shall be factory wired NEMA 3R construction and shall be provided with dead front panel and provisions for padlocking.
3. Control wiring shall be 600 V, No. 14 AWG stranded (THHN) machine tool wire. Where subject to flexing, 19 strand wire shall be used.
4. Main bus shall be rated for 125 A and shall be tin-plated copper.
5. An engraved phenolic nameplate on the dead front panel indicating the function of each circuit or device shall be installed with stainless steel rivets or stainless steel screws:
   a) Adjacent to the breaker or device with character size a minimum of 3 mm.
   b) At the top of the exterior door panel indicating system number, voltage level and number of phases with character size a minimum of 5 mm.
6. A plastic laminated wiring diagram shall be provided and attached to the inside of the front door.
7. In unpaved areas, a raised portland cement concrete pad of 600 mm x 100 mm x width of service equipment enclosure foundation or controller cabinet foundation shall be constructed in front of Type II service equipment enclosure.
8. Internal bus, where shown, is typical only. Alternative designs of proposed service equipment enclosure shall be submitted to the Engineer for approval.
9. Circuit breakers may be mounted in the vertical or horizontal position.
10. Dimensions of service equipment enclosures shall meet the requirements of the service utility.
11. Minimum clearance shall be required for front and back of service equipment enclosures per National Electrical Code, Article 110.26, "Spaces About Electrical Equipment (600 Volts, Nominal, or Less)".

STATE OF CALIFORNIA
DEPARTMENT OF TRANSPORTATION

ELECTRICAL SYSTEMS (SERVICE EQUIPMENT TYPE II SERIES)

NO SCALE

ALL DIMENSIONS ARE IN MILLIMETERS UNLESS OTHERWISE SHOWN

RSP ES-2B DATED OCTOBER 5, 2007 SUPERSEDES STANDARD PLAN ES-2B DATED JULY 1, 2004-PAGE 417 OF THE STANDARD PLANS BOOK DATED JULY 2004.

REVISED STANDARD PLAN RSP ES-2B

2004 REVISED Std PLAN RSP ES-2B

6-27-07