Dist	COUNTY	ROUTE	POST MILES TOTAL PROJECT	SHEET No.	TOTAL SHEETS
11	SD	905,805	R8.4/R9.8, 3.1/4.2	1	364

SARRA-A905(020)N

STATE OF CALIFORNIA
DEPARTMENT OF TRANSPORTATION

PROJECT PLANS FOR CONSTRUCTION ON
STATE HIGHWAY

IN SAN DIEGO COUNTY IN SAN DIEGO ON ROUTE 905 FROM 0.1 KM EAST TO 1.5 KM EAST OF ROUTE 905/805 SEPARATION AND ON ROUTE 805 FROM 0.2 KM NORTH OF ROUTE 905/805 SEPARATION TO 0.5 KM SOUTH OF PALM AVENUE OVERCROSSING

TO BE SUPPLEMENTED BY STANDARD PLANS DATED JULY 2004

INDEX OF PLANS

SHEET No.	DESCRIPTION
1	TITLE AND LOCATION MAP
2-10	TYPICAL CROSS SECTIONS
11	PROJECT CONTROL PLAN
12-20	LAYOUTS
21-36	PROFILES
37-40	CONSTRUCTION DETAILS
41-66	TEMPORARY WATER POLLUTION CONTROL PLANS AND DETAILS
67-78	EROSION CONTROL
79-87	CONTOUR GRADING
88-103	DRAINAGE PLANS, PROFILES, DETAILS AND QUANTITIES
104-106	UTILITY PLANS
107-108	CONSTRUCTION AREA SIGNS
109-142	STAGE CONSTRUCTION PLANS
143-157	TRAFFIC HANDLING, DETOUR PLANS, DETAILS AND QUANTITIES
158-171	PAVEMENT DELINEATION PLANS, DETAILS AND QUANTITIES
172-175	SUMMARY OF QUANTITIES
176-192	SIGN PLANS, DETAILS AND QUANTITIES
193-231	HIGHWAY PLANTING PLANS, DETAILS AND QUANTITIES
232-271	ELECTRICAL PLANS
272-345	REVISED AND NEW STANDARD PLANS

STRUCTURE PLANS

346-364	DEL SOL Blvd UNDERCROSSING (WIDEN) Br No. 57-0854R

THE STANDARD PLANS LIST APPLICABLE TO THIS CONTRACT IS INCLUDED IN THE NOTICE TO BIDDERS AND SPECIAL PROVISIONS BOOK.

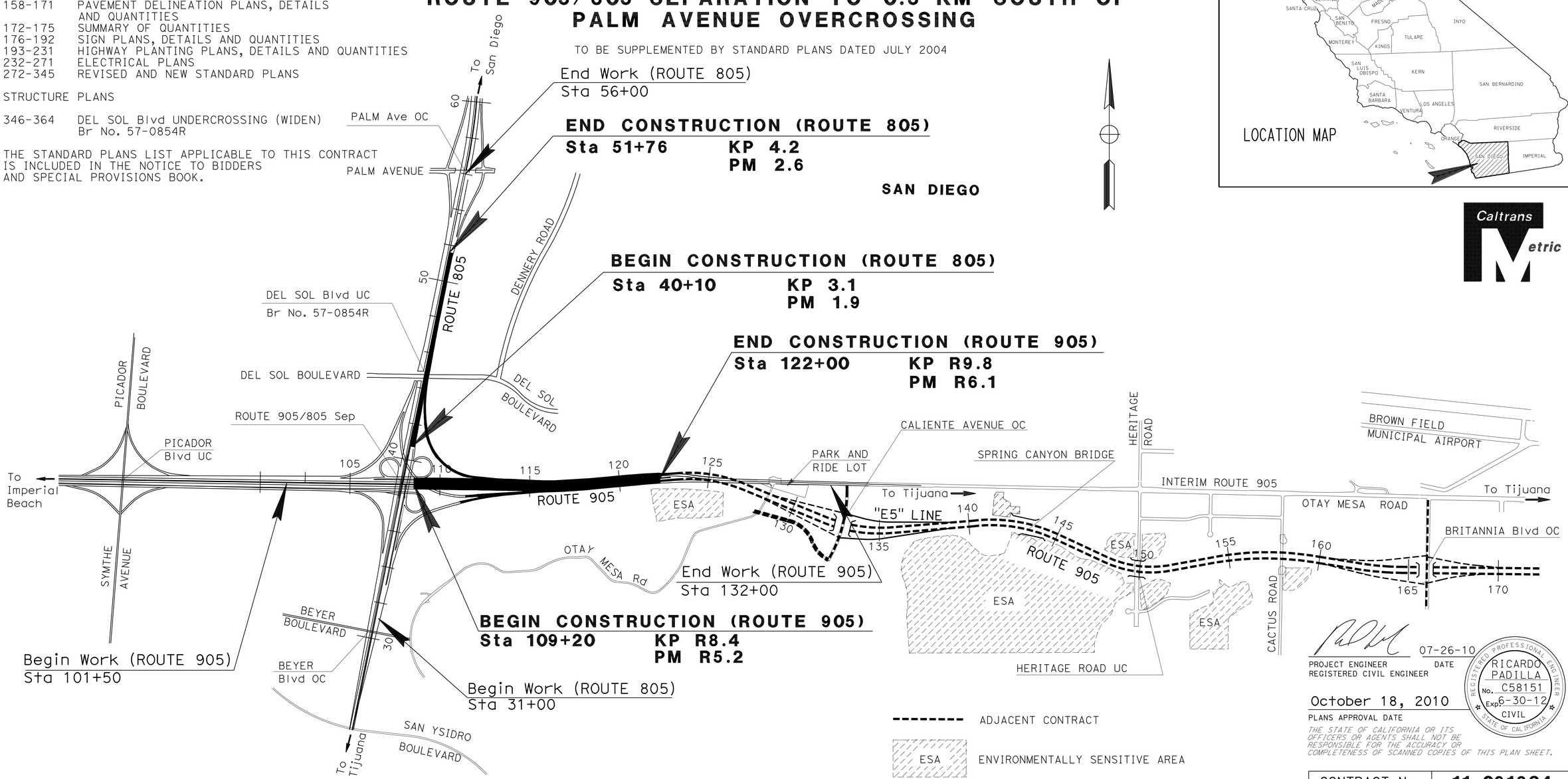

LOCATION MAP

Caltrans Metric

PROJECT MANAGER ISMAEL SALAZAR

DESIGN ENGINEER CHRIS M. THOMAS

07-26-10
PROJECT ENGINEER REGISTERED CIVIL ENGINEER — DATE

REGISTERED PROFESSIONAL ENGINEER RICARDO PADILLA No. C58151 Exp. 6-30-12 CIVIL STATE OF CALIFORNIA

October 18, 2010
PLANS APPROVAL DATE

THE STATE OF CALIFORNIA OR ITS OFFICERS OR AGENTS SHALL NOT BE RESPONSIBLE FOR THE ACCURACY OR COMPLETENESS OF SCANNED COPIES OF THIS PLAN SHEET.

CONTRACT No.	11-091834
PROJECT ID	1100020125

LAST REVISION 05-11-10 DATE PLOTTED => 20-OCT-2010 TIME PLOTTED => 11:10

THE CONTRACTOR SHALL POSSESS THE CLASS (OR CLASSES) OF LICENSE AS SPECIFIED IN THE "NOTICE TO BIDDERS."

Dist	COUNTY	ROUTE	KILOMETER POST TOTAL PROJECT	SHEET No.	TOTAL SHEETS
11	SD	905,805	R8.4/R9.8, 3.1/4.2	2	364

REGISTERED CIVIL ENGINEER 07-29-10 DATE

10-18-10
PLANS APPROVAL DATE

REGISTERED PROFESSIONAL ENGINEER RICARDO PADILLA No. C58151 Exp. 6-30-12 CIVIL STATE OF CALIFORNIA

THE STATE OF CALIFORNIA OR ITS OFFICERS OR AGENTS SHALL NOT BE RESPONSIBLE FOR THE ACCURACY OR COMPLETENESS OF ELECTRONIC COPIES OF THIS PLAN SHEET.

Caltrans Metric

NOTES:

1. DIMENSIONS OF THE STRUCTURAL SECTIONS ARE SUBJECT TO TOLERANCES SPECIFIED IN THE STANDARD SPECIFICATIONS.
2. SUPERELEVATION AS SHOWN OR AS DIRECTED BY THE ENGINEER.
3. FOG SEAL COAT SHALL BE APPLIED TO ALL HMA SURFACES EXCEPT TRAVELLED WAYS AND DETOURS.
4. FOR SAWCUT, SEE CONSTRUCTION DETAILS.

DESIGN DESIGNATION (ROUTE 905)

ADT (2005) = 55,000 D = 57%
ADT (2025) = 153,500 T = 10%
DHV = 6,475 V = 110 km/h

LEGEND:

1	275 mm JPCP 155 mm HMA (TYPE A) 215 mm CLASS 2 AB	1	76 mm AC 137 mm AB Var AS
2	125 mm HMA (TYPE A) 260 mm CLASS 2 AB 230 mm CLASS 4 AS	2	198 mm PCC 137 mm CTB 274 mm AS
3	160 mm HMA (TYPE A) 260 mm CLASS 2 AB 230 mm CLASS 4 AS	3	213 mm PCC 137 mm CTB 259 mm AS

ECP= EDGE OF CONCRETE PAVEMENT

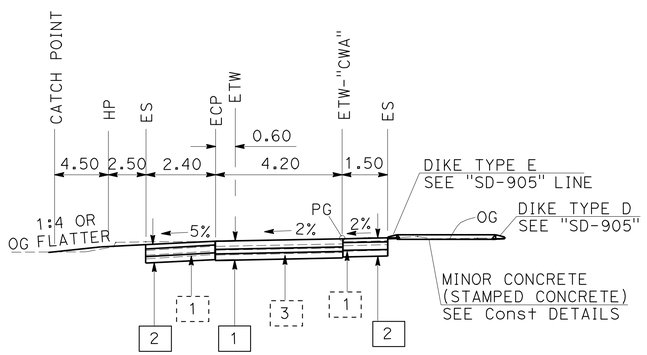

"CWA" LINE

Sta 110+09.000 TO Sta 110+63.800

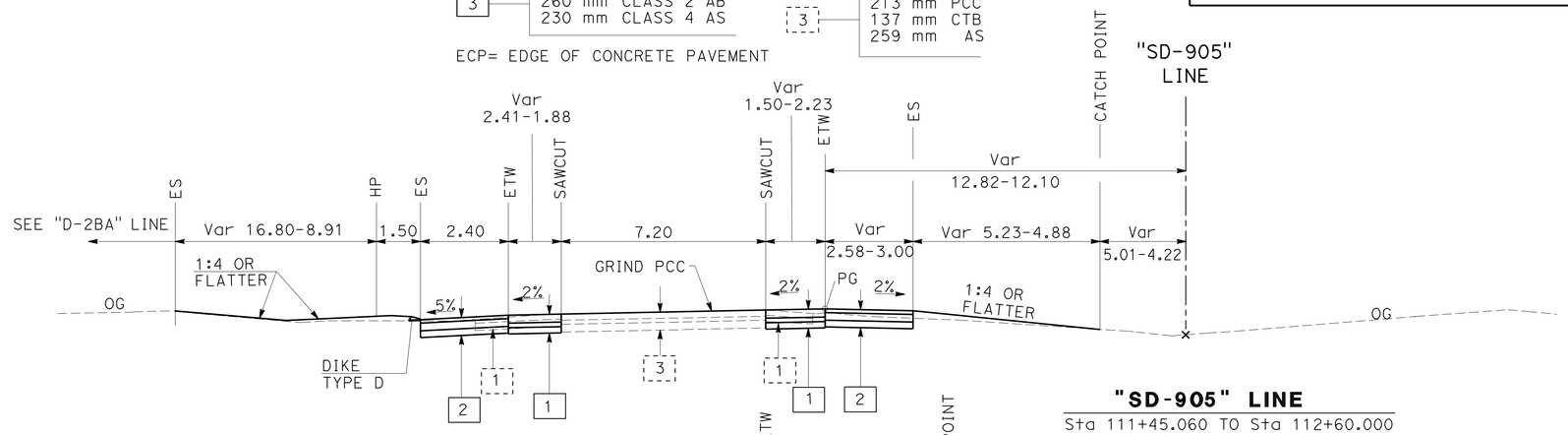

"SD-905" LINE

Sta 111+45.060 TO Sta 112+60.000

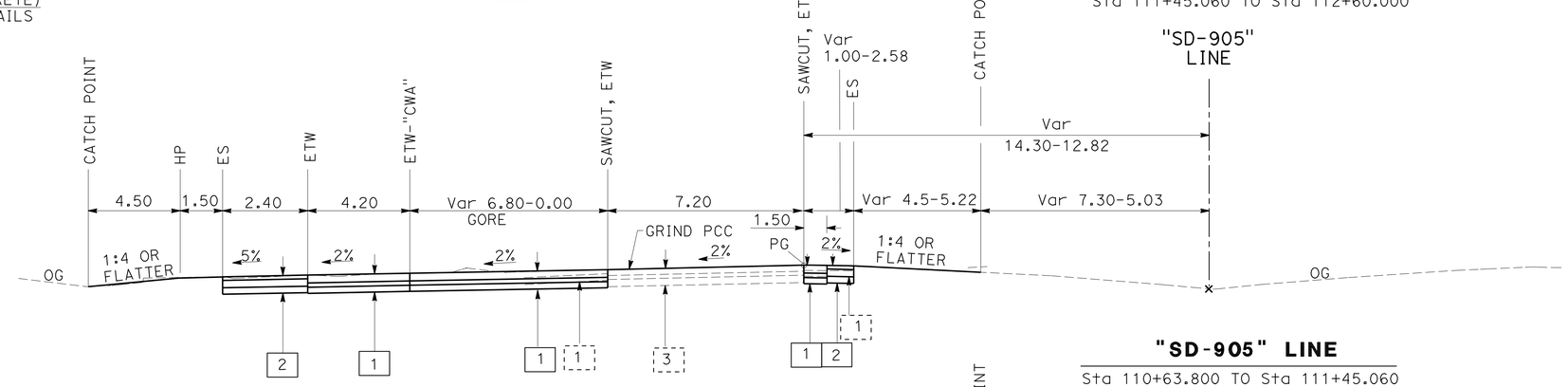

"SD-905" LINE

Sta 110+63.800 TO Sta 111+45.060

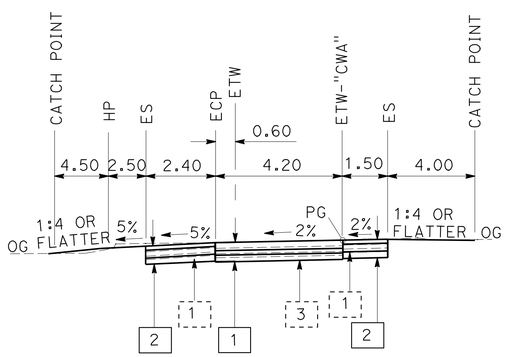

"CWA" LINE

Sta 109+92.797 TO Sta 110+09.000

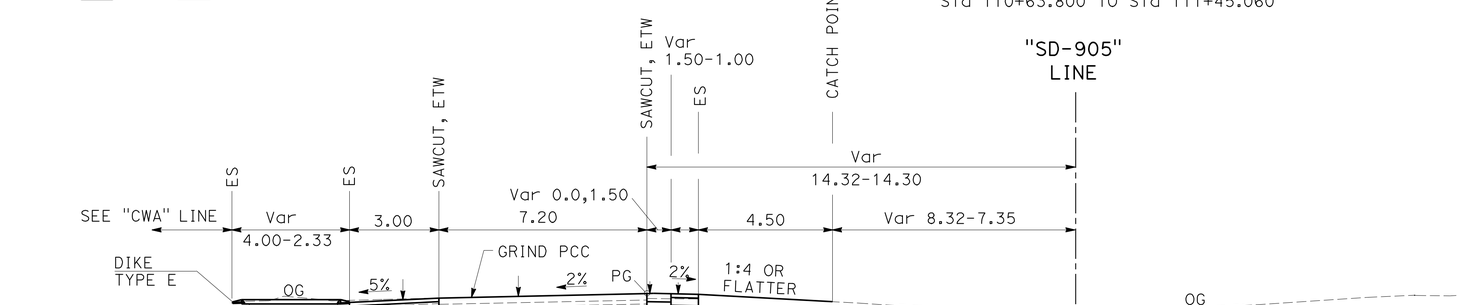

"SD-905" LINE

Sta 110+30.000 TO Sta 110+63.800

ALL DIMENSIONS ARE IN METERS UNLESS OTHERWISE SHOWN

TYPICAL CROSS SECTIONS X-1

NO SCALE

STATE OF CALIFORNIA - DEPARTMENT OF TRANSPORTATION
Caltrans PROJECT DEVELOPMENT

FUNCTIONAL SUPERVISOR: CHRIS M. THOMAS
CALCULATED-DESIGNED BY: RICARDO PADILLA
CHECKED BY: RAMON JUAREZ
REVISED BY / DATE REVISED

LAST REVISION 07-27-10
DATE PLOTTED => 20-OCT-2010
TIME PLOTTED => 13:22

Dist	COUNTY	ROUTE	KILOMETER POST TOTAL PROJECT	SHEET No.	TOTAL SHEETS
11	SD	905,805	R8.4/R9.8, 3.1/4.2	3	364

REGISTERED CIVIL ENGINEER 07-29-10 DATE

PLANS APPROVAL DATE 10-18-10

REGISTERED PROFESSIONAL ENGINEER RICARDO PADILLA No. C58151 Exp. 6-30-12 CIVIL STATE OF CALIFORNIA

THE STATE OF CALIFORNIA OR ITS OFFICERS OR AGENTS SHALL NOT BE RESPONSIBLE FOR THE ACCURACY OR COMPLETENESS OF ELECTRONIC COPIES OF THIS PLAN SHEET.

Caltrans Metric

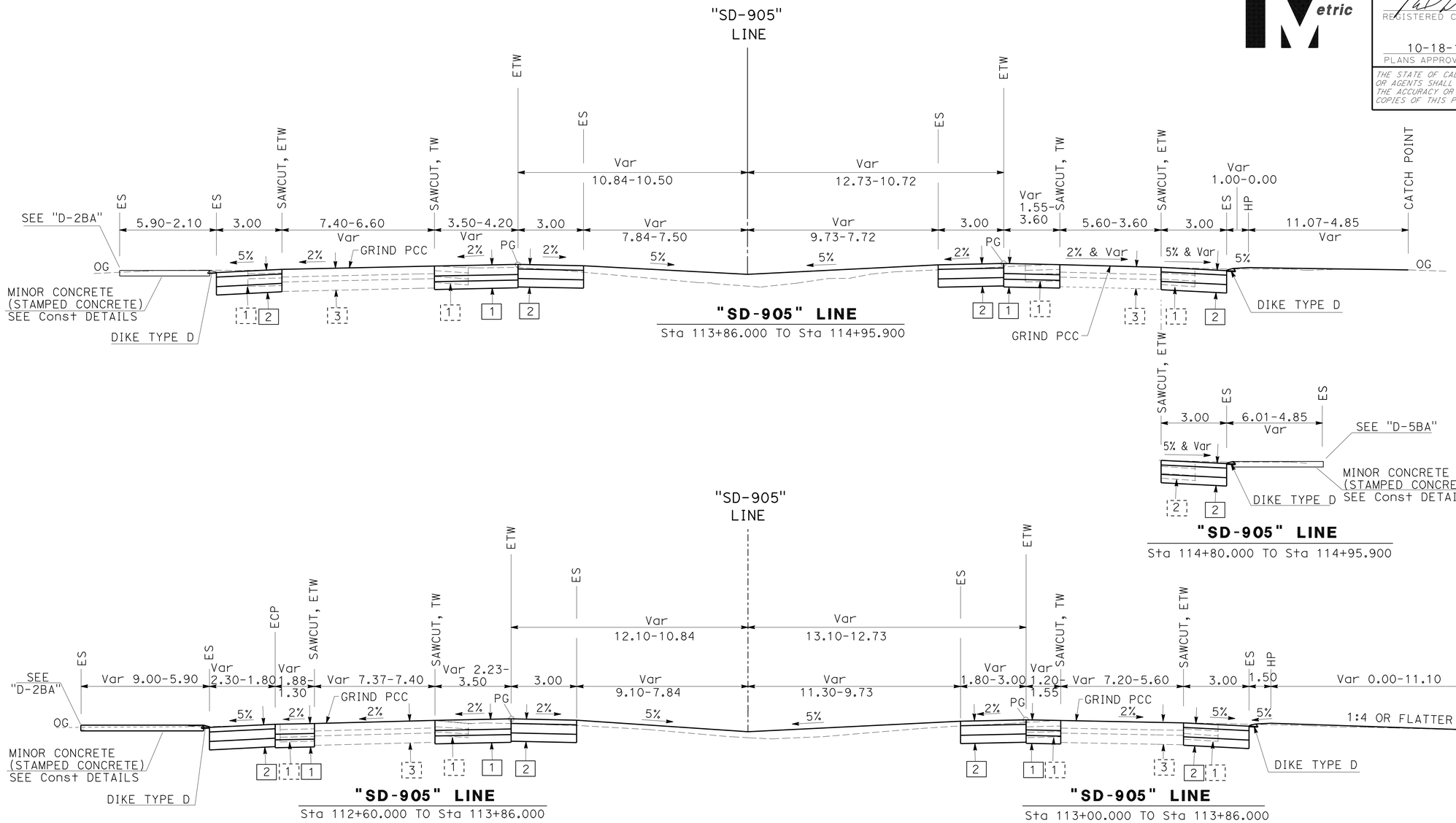

"ROUTE 905"
Sta 112+60.000 TO Sta 113+86.000

ALL DIMENSIONS ARE IN METERS UNLESS OTHERWISE SHOWN

TYPICAL CROSS SECTIONS

NO SCALE

X-2

REVISED BY	DATE REVISED

CALCULATED-DESIGNED BY: RICARDO PADILLA
CHECKED BY: RAMON JUAREZ
FUNCTIONAL SUPERVISOR: CHRIS M. THOMAS

STATE OF CALIFORNIA - DEPARTMENT OF TRANSPORTATION
Caltrans PROJECT DEVELOPMENT

LAST REVISION 07-27-10 | DATE PLOTTED => 20-OCT-2010 | TIME PLOTTED => 13:23

Dist	COUNTY	ROUTE	KILOMETER POST TOTAL PROJECT	SHEET No.	TOTAL SHEETS
11	SD	905,805	R8.4/R9.8, 3.1/4.2	4	364

REGISTERED CIVIL ENGINEER 07-29-10 DATE

10-18-10
PLANS APPROVAL DATE

REGISTERED PROFESSIONAL ENGINEER RICARDO PADILLA No. C58151 Exp. 6-30-12 CIVIL STATE OF CALIFORNIA

THE STATE OF CALIFORNIA OR ITS OFFICERS OR AGENTS SHALL NOT BE RESPONSIBLE FOR THE ACCURACY OR COMPLETENESS OF ELECTRONIC COPIES OF THIS PLAN SHEET.

Caltrans Metric

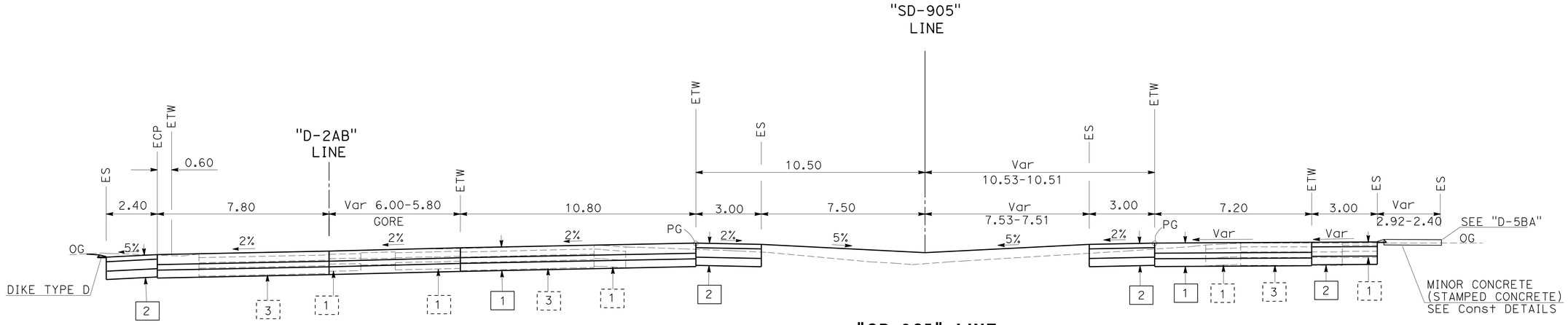

"SD-905" LINE

Sta 115+18.600 TO Sta 115+24.000

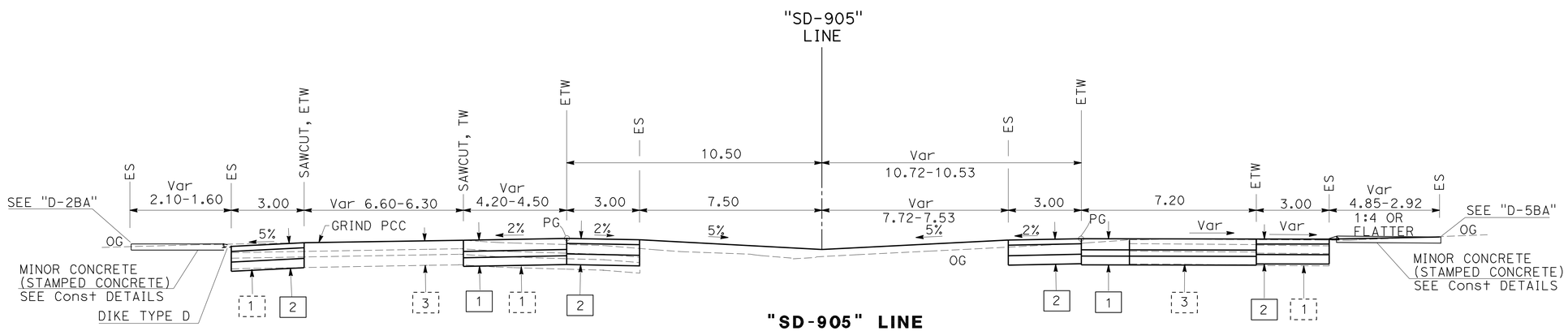

"SD-905" LINE

Sta 114+95.900 TO Sta 115+18.600

ROUTE 905

TYPICAL CROSS SECTIONS

NO SCALE

X-3

ALL DIMENSIONS ARE IN METERS UNLESS OTHERWISE SHOWN

STATE OF CALIFORNIA - DEPARTMENT OF TRANSPORTATION
Caltrans PROJECT DEVELOPMENT

FUNCTIONAL SUPERVISOR: CHRIS M. THOMAS

CALCULATED-DESIGNED BY: RICARDO PADILLA
CHECKED BY: RAMON JUAREZ
REVISED BY / DATE REVISED

LAST REVISION 07-19-10
DATE PLOTTED => 20-OCT-2010
TIME PLOTTED => 13:23

Dist	COUNTY	ROUTE	KILOMETER POST TOTAL PROJECT	SHEET No.	TOTAL SHEETS
11	SD	905,805	R8.4/R9.8, 3.1/4.2	5	364

REGISTERED CIVIL ENGINEER 07-29-10 DATE

10-18-10
PLANS APPROVAL DATE

REGISTERED PROFESSIONAL ENGINEER RICARDO PADILLA No. C58151 Exp. 6-30-12 CIVIL STATE OF CALIFORNIA

THE STATE OF CALIFORNIA OR ITS OFFICERS OR AGENTS SHALL NOT BE RESPONSIBLE FOR THE ACCURACY OR COMPLETENESS OF ELECTRONIC COPIES OF THIS PLAN SHEET.

Caltrans Metric

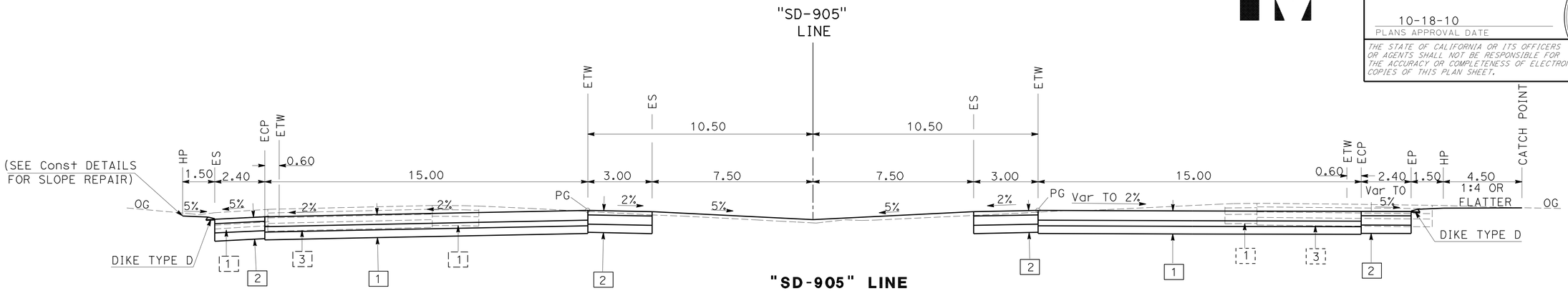

"SD-905" LINE

Sta 117+95.000 TO Sta 118+80.000

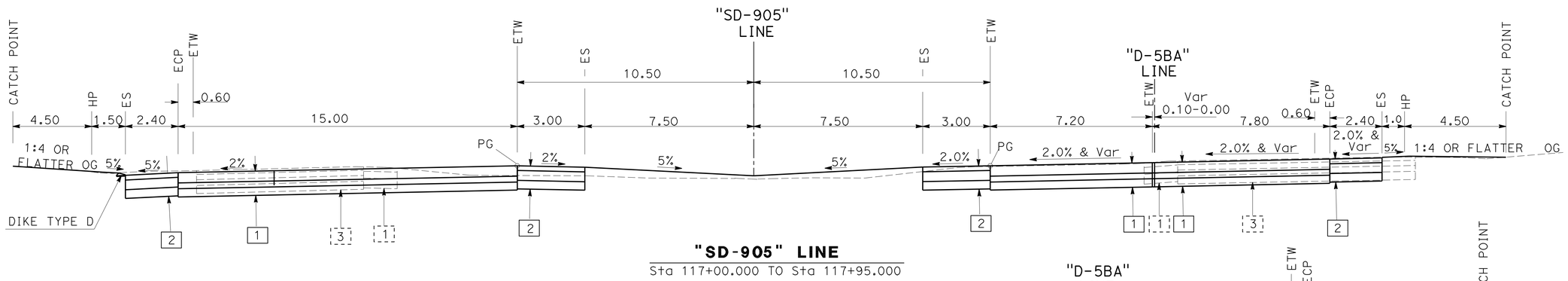

"SD-905" LINE

Sta 117+00.000 TO Sta 117+95.000

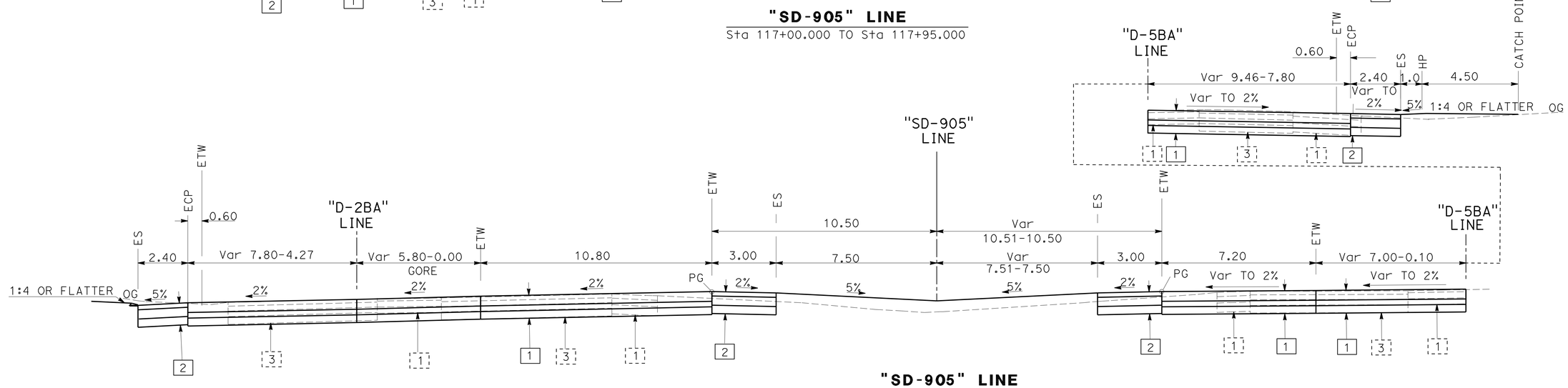

"SD-905" LINE

Sta 115+24.000 TO Sta 117+00.000

ROUTE 905

ALL DIMENSIONS ARE IN METERS UNLESS OTHERWISE SHOWN

TYPICAL CROSS SECTIONS

NO SCALE

X-4

STATE OF CALIFORNIA - DEPARTMENT OF TRANSPORTATION
Caltrans PROJECT DEVELOPMENT

FUNCTIONAL SUPERVISOR: CHRIS M. THOMAS
CALCULATED-DESIGNED BY: RICARDO PADILLA
CHECKED BY: RAMON JUAREZ
REVISED BY / DATE REVISED

LAST REVISION 07-27-10 | DATE PLOTTED => 20-OCT-2010 | TIME PLOTTED => 13:23

Dist	COUNTY	ROUTE	KILOMETER POST TOTAL PROJECT	SHEET No.	TOTAL SHEETS
11	SD	905,805	R8.4/R9.8, 3.1/4.2	6	364

REGISTERED CIVIL ENGINEER 07-29-10 DATE

10-18-10
PLANS APPROVAL DATE

REGISTERED PROFESSIONAL ENGINEER RICARDO PADILLA No. C58151 Exp. 6-30-12 CIVIL STATE OF CALIFORNIA

THE STATE OF CALIFORNIA OR ITS OFFICERS OR AGENTS SHALL NOT BE RESPONSIBLE FOR THE ACCURACY OR COMPLETENESS OF ELECTRONIC COPIES OF THIS PLAN SHEET.

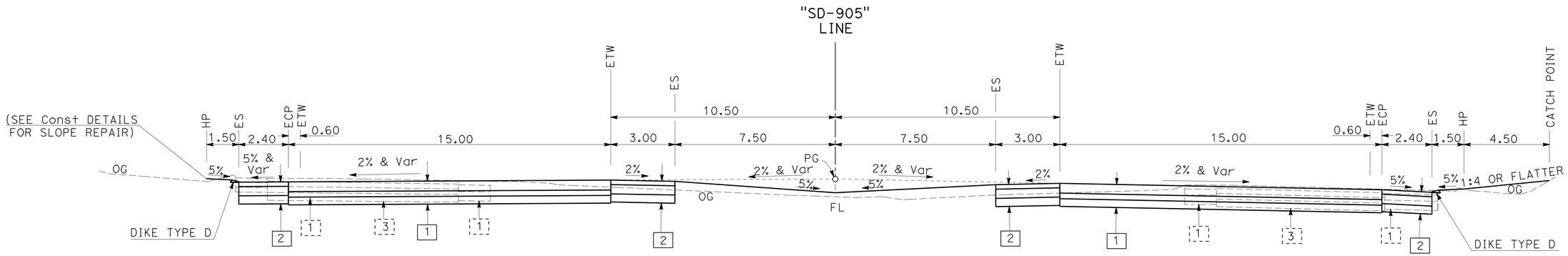

"SD-905" LINE

Sta 119+50.000 TO Sta 122+00.000

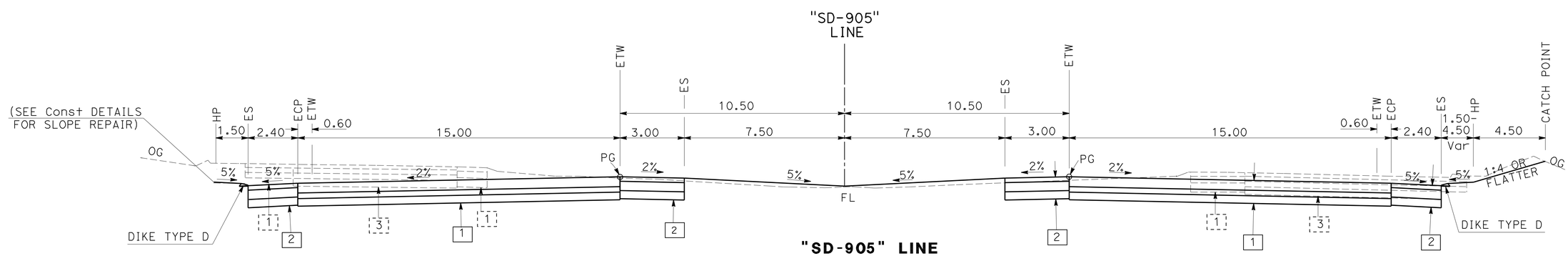

"SD-905" LINE

Sta 118+80.000 TO Sta 119+50.000

ROUTE 905

ALL DIMENSIONS ARE IN METERS UNLESS OTHERWISE SHOWN

TYPICAL CROSS SECTIONS

NO SCALE

X-5

STATE OF CALIFORNIA - DEPARTMENT OF TRANSPORTATION
Caltrans PROJECT DEVELOPMENT

FUNCTIONAL SUPERVISOR: CHRIS M. THOMAS
CALCULATED-DESIGNED BY: RAMON JUAREZ
CHECKED BY: RICARDO PADILLA
REVISED BY
DATE REVISED

LAST REVISION 07-27-10
DATE PLOTTED => 20-OCT-2010
TIME PLOTTED => 13:23

Dist	COUNTY	ROUTE	KILOMETER POST TOTAL PROJECT	SHEET No.	TOTAL SHEETS
11	SD	905,805	R8.4/R9.8, 3.1/4.2	7	364

REGISTERED CIVIL ENGINEER 07-29-10 DATE

10-18-10
PLANS APPROVAL DATE

REGISTERED PROFESSIONAL ENGINEER RICARDO PADILLA No. C58151 Exp. 6-30-12 CIVIL STATE OF CALIFORNIA

THE STATE OF CALIFORNIA OR ITS OFFICERS OR AGENTS SHALL NOT BE RESPONSIBLE FOR THE ACCURACY OR COMPLETENESS OF ELECTRONIC COPIES OF THIS PLAN SHEET.

Caltrans Metric

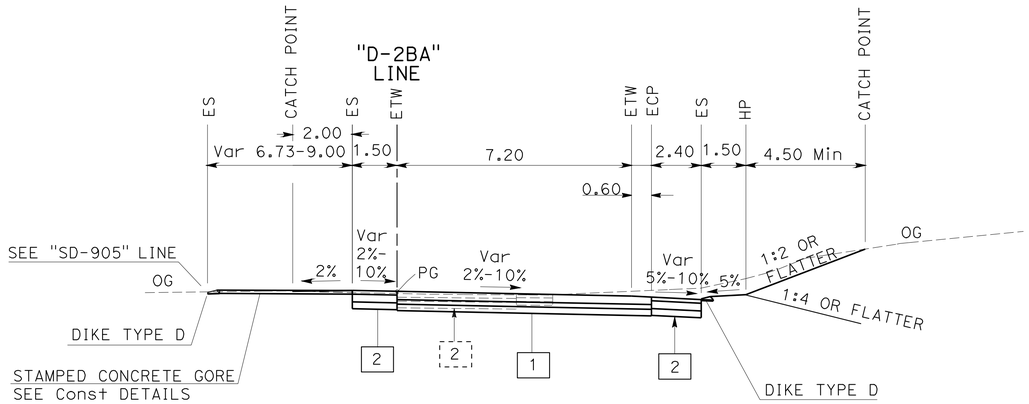

"D-2BA" LINE

Sta 36+15.670 TO Sta 38+20.000

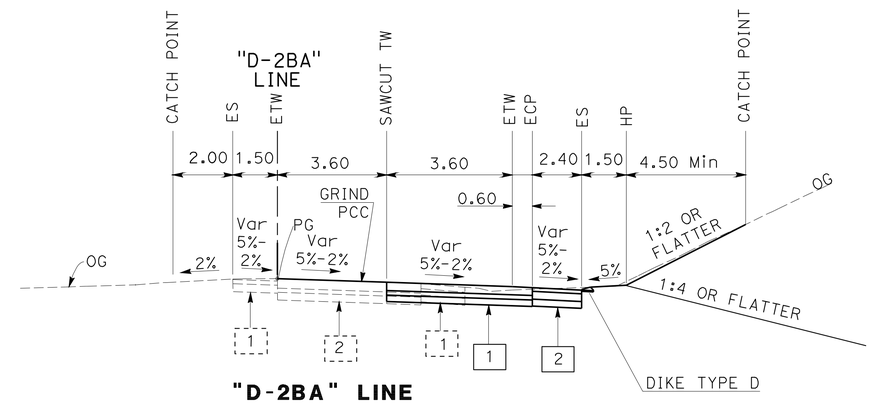

"D-2BA" LINE

Sta 42+13.970 TO Sta 44+50.000

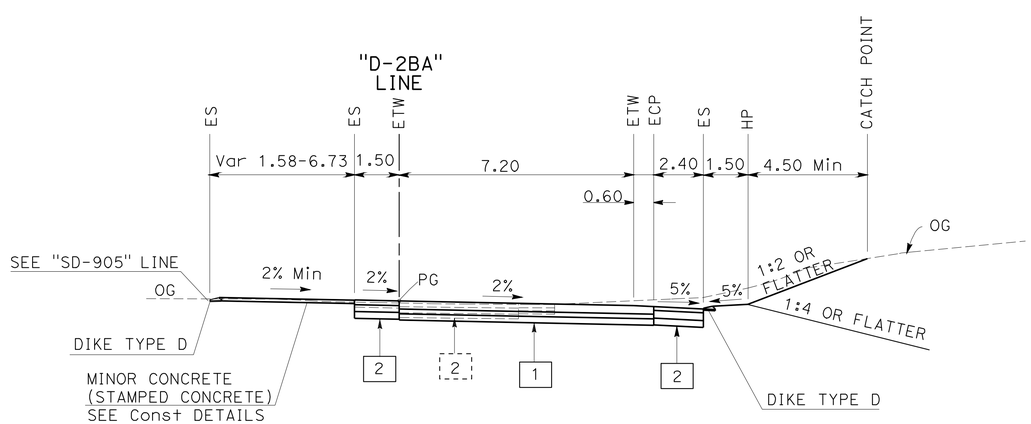

"D-2BA" LINE

Sta 34+36.890 TO Sta 36+15.670

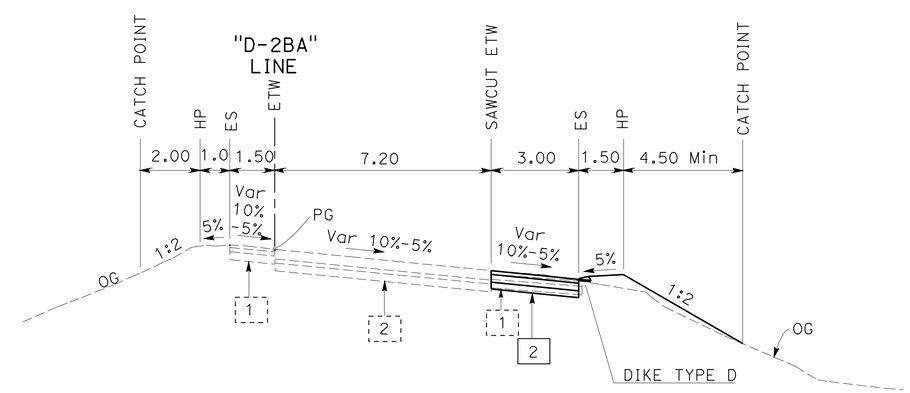

"D-2BA" LINE

Sta 38+20.000 TO Sta 42+13.970

ROUTE 905/805 CONNECTOR

ALL DIMENSIONS ARE IN METERS UNLESS OTHERWISE SHOWN

TYPICAL CROSS SECTIONS

NO SCALE

X-6

STATE OF CALIFORNIA - DEPARTMENT OF TRANSPORTATION
Caltrans PROJECT DEVELOPMENT

FUNCTIONAL SUPERVISOR: CHRIS M. THOMAS
CALCULATED-DESIGNED BY: RICARDO PADILLA
CHECKED BY: RAMON JUAREZ
REVISED BY
DATE REVISED

LAST REVISION 07-27-10
DATE PLOTTED => 20-OCT-2010
TIME PLOTTED => 13:23

Dist	COUNTY	ROUTE	KILOMETER POST TOTAL PROJECT	SHEET No.	TOTAL SHEETS
11	SD	905,805	R8.4/R9.8, 3.1/4.2	8	364

REGISTERED CIVIL ENGINEER 07-29-10 DATE

10-18-10
PLANS APPROVAL DATE

REGISTERED PROFESSIONAL ENGINEER RICARDO PADILLA No. C58151 Exp. 6-30-12 CIVIL STATE OF CALIFORNIA

THE STATE OF CALIFORNIA OR ITS OFFICERS OR AGENTS SHALL NOT BE RESPONSIBLE FOR THE ACCURACY OR COMPLETENESS OF ELECTRONIC COPIES OF THIS PLAN SHEET.

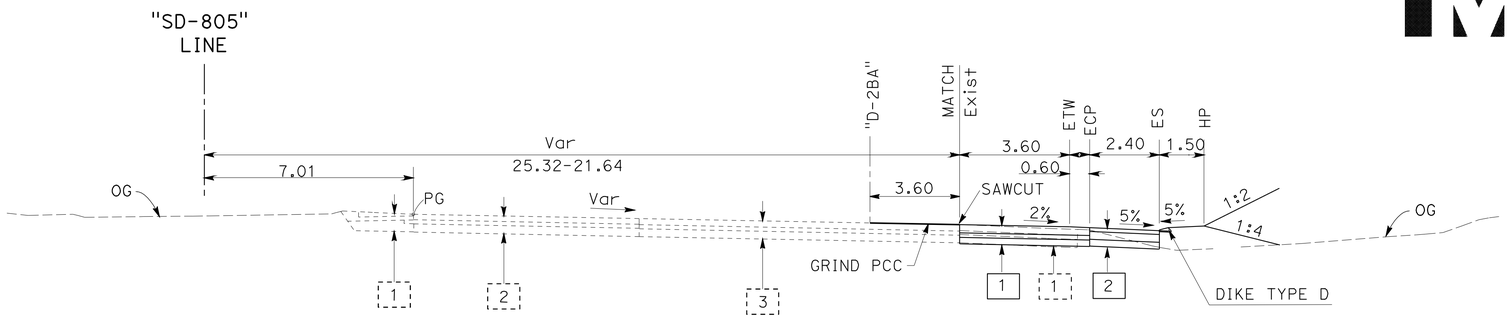

"SD-805" LINE

Sta 45+46.400 TO Sta 51+61.000

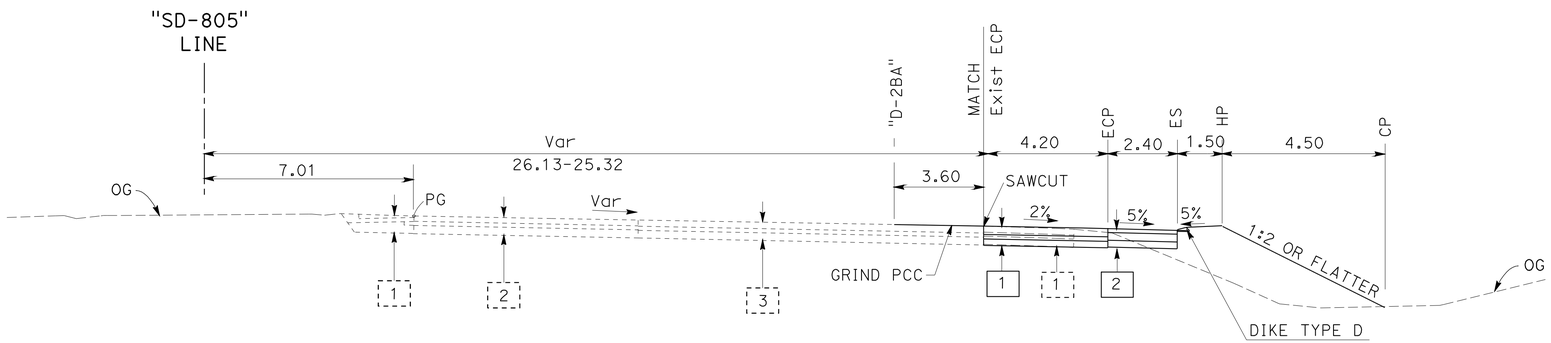

"SD-805" LINE

Sta 45+10.000 TO Sta 45+46.400

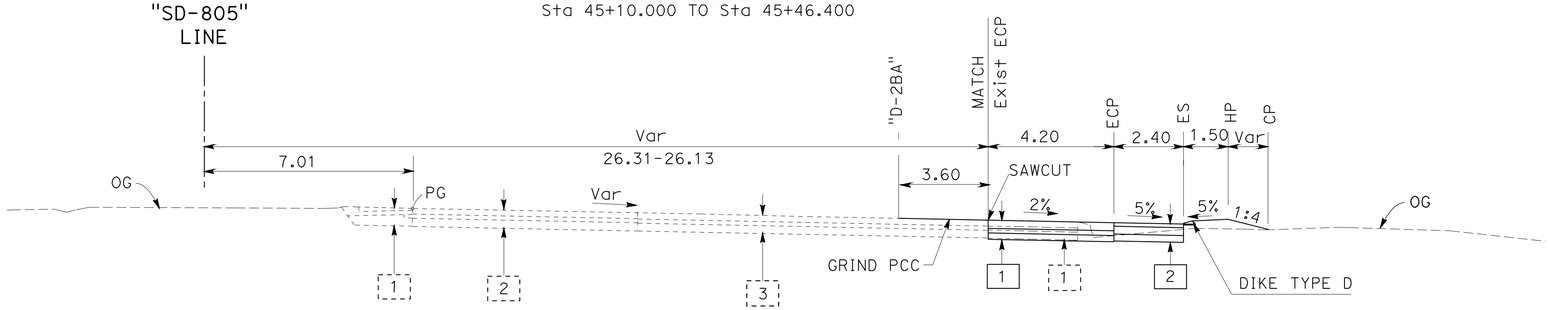

"SD-805" LINE

Sta 45+04.921 TO Sta 45+10.000

ROUTE 805

ALL DIMENSIONS ARE IN METERS UNLESS OTHERWISE SHOWN

TYPICAL CROSS SECTIONS

NO SCALE

X-7

STATE OF CALIFORNIA - DEPARTMENT OF TRANSPORTATION
Caltrans PROJECT DEVELOPMENT

FUNCTIONAL SUPERVISOR: CHRIS M. THOMAS
CALCULATED-DESIGNED BY: RICARDO PADILLA
CHECKED BY: RAMON JUAREZ
REVISED BY / DATE REVISED

LAST REVISION 07-27-10
DATE PLOTTED => 20-OCT-2010
TIME PLOTTED => 13:23

Dist	COUNTY	ROUTE	KILOMETER POST TOTAL PROJECT	SHEET No.	TOTAL SHEETS
11	SD	905,805	R8.4/R9.8, 3.1/4.2	9	364

REGISTERED CIVIL ENGINEER 07-29-10 DATE

10-18-10
PLANS APPROVAL DATE

REGISTERED PROFESSIONAL ENGINEER RICARDO PADILLA No. C58151 Exp. 6-30-12 CIVIL STATE OF CALIFORNIA

THE STATE OF CALIFORNIA OR ITS OFFICERS OR AGENTS SHALL NOT BE RESPONSIBLE FOR THE ACCURACY OR COMPLETENESS OF ELECTRONIC COPIES OF THIS PLAN SHEET.

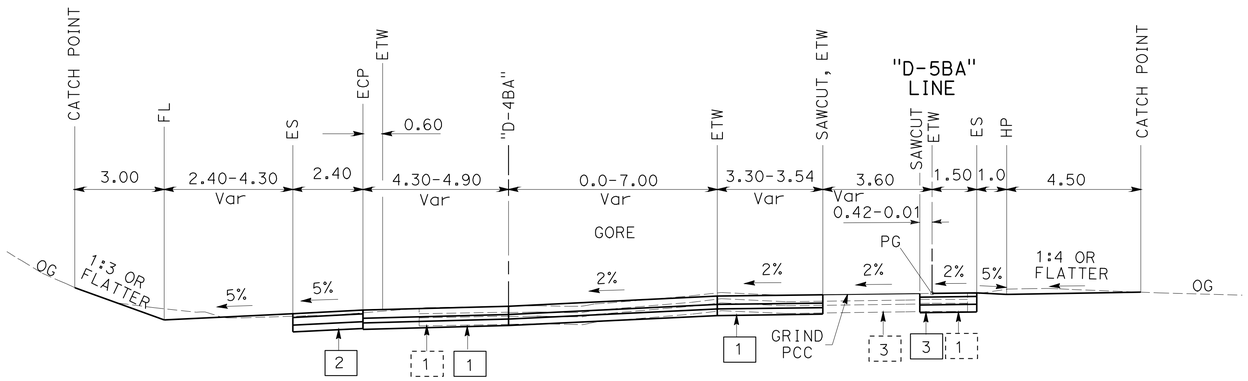

"D-5BA" LINE
Sta 33+00.000 TO Sta 34+78.000

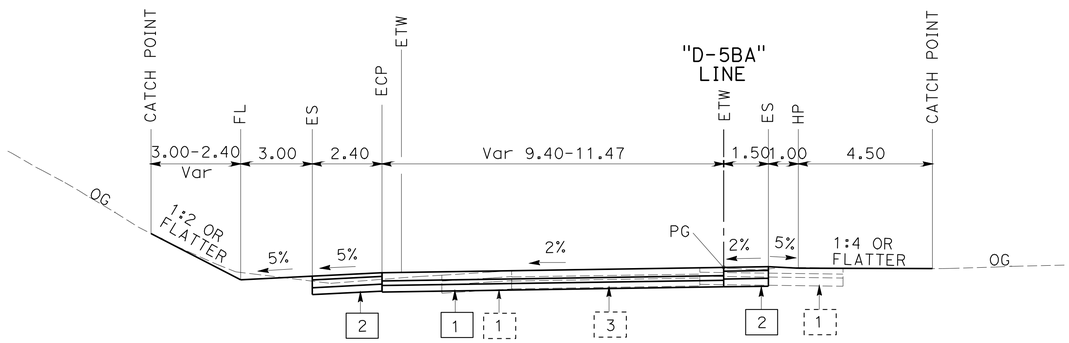

"D-5BA" LINE
Sta 32+40.000 TO Sta 33+00.000

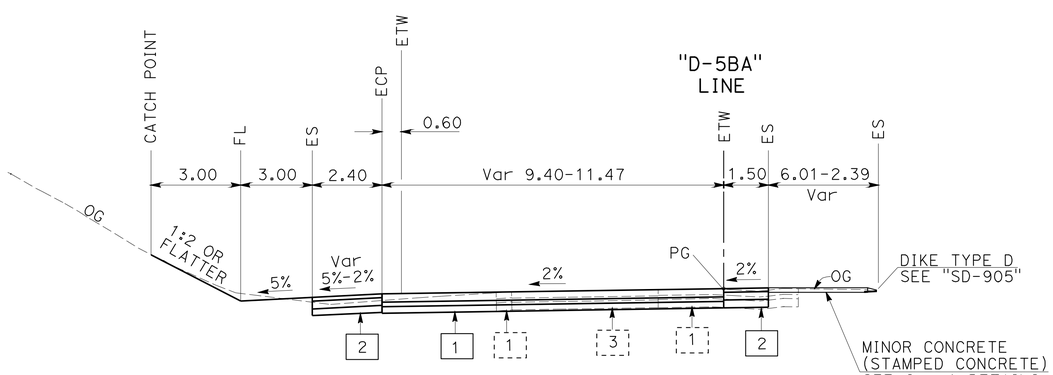

"D-5BA" LINE
Sta 31+96.660 TO Sta 32+40.000

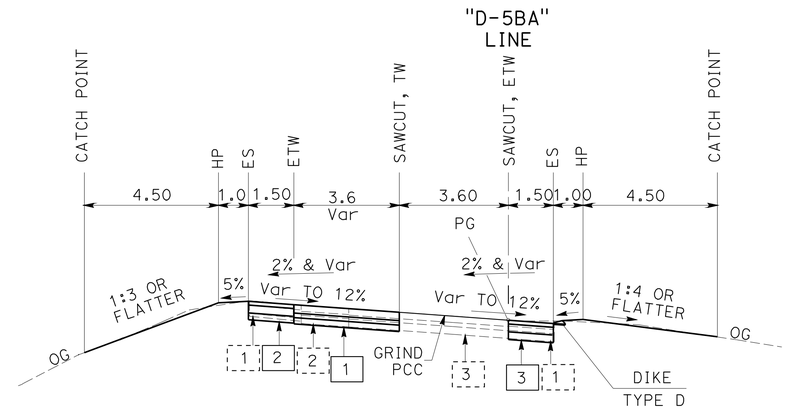

"D-5BA" LINE
Sta 35+00.000 TO Sta 35+85.000

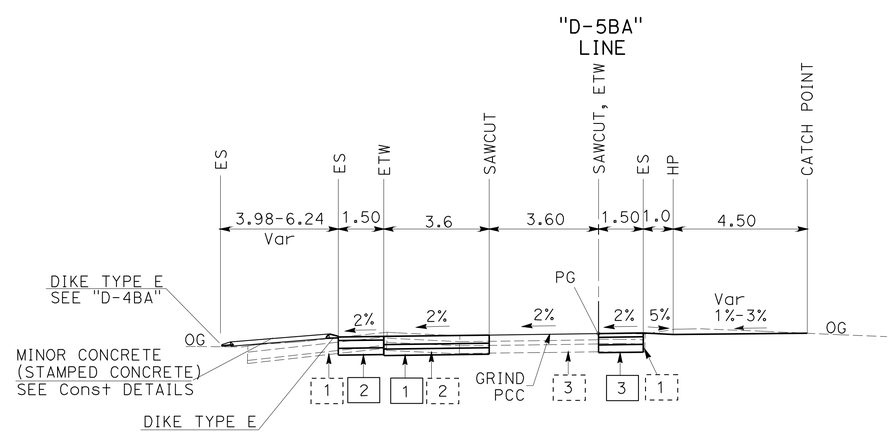

"D-5BA" LINE
Sta 34+78.000 TO Sta 35+00.000

ROUTE 805/905 CONNECTOR

TYPICAL CROSS SECTIONS

ALL DIMENSIONS ARE IN METERS UNLESS OTHERWISE SHOWN

NO SCALE

X-8

STATE OF CALIFORNIA - DEPARTMENT OF TRANSPORTATION
Caltrans PROJECT DEVELOPMENT

FUNCTIONAL SUPERVISOR: CHRIS M. THOMAS
CALCULATED-DESIGNED BY: RICARDO PADILLA
CHECKED BY: RAMON JUAREZ
REVISED BY / DATE REVISED

LAST REVISION 07-27-10 | DATE PLOTTED => 20-OCT-2010 | TIME PLOTTED => 13:23

Dist	COUNTY	ROUTE	KILOMETER POST TOTAL PROJECT	SHEET No.	TOTAL SHEETS
11	SD	905,805	R8.4/R9.8, 3.1/4.2	10	364

REGISTERED CIVIL ENGINEER DATE 07-29-10

PLANS APPROVAL DATE 10-18-10

REGISTERED PROFESSIONAL ENGINEER RICARDO PADILLA No. C58151 Exp. 6-30-12 CIVIL STATE OF CALIFORNIA

THE STATE OF CALIFORNIA OR ITS OFFICERS OR AGENTS SHALL NOT BE RESPONSIBLE FOR THE ACCURACY OR COMPLETENESS OF ELECTRONIC COPIES OF THIS PLAN SHEET.

Caltrans Metric

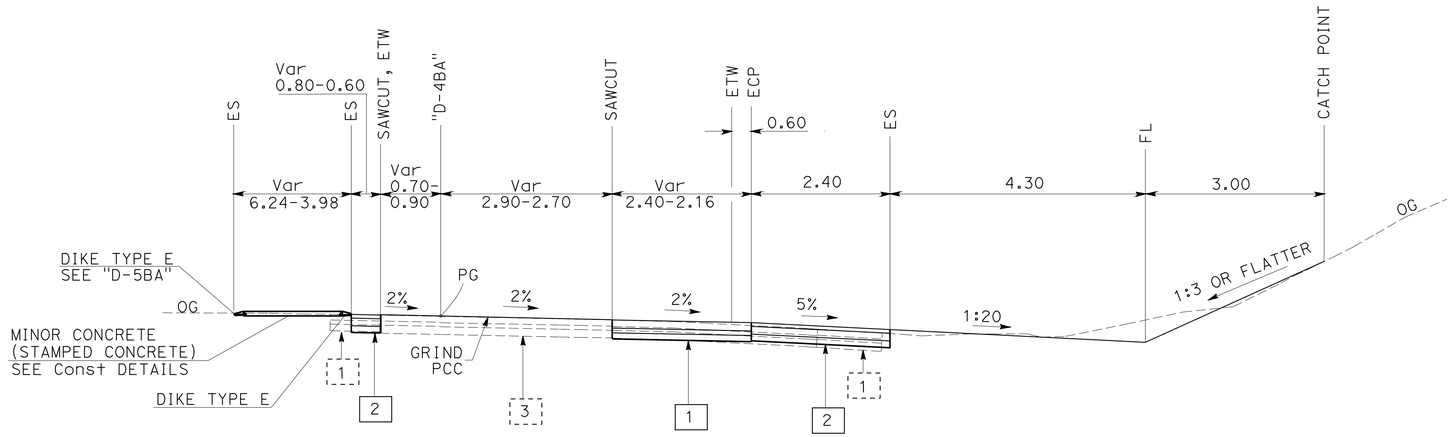

"D-4BA" LINE

Sta 40+62.000 TO 41+11.000

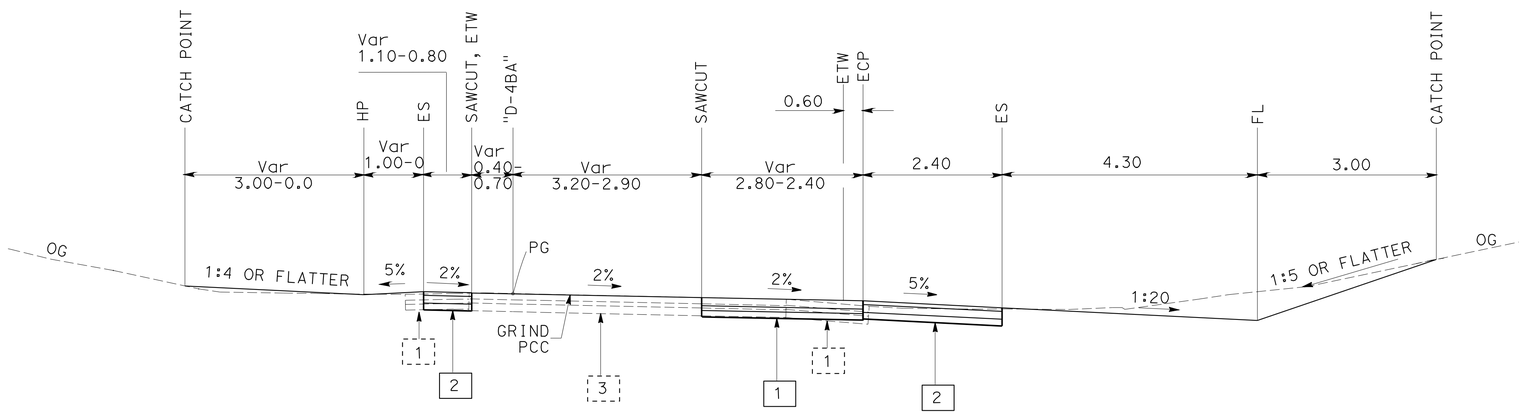

"D-4BA" LINE

Sta 40+40.000 TO 40+62.000

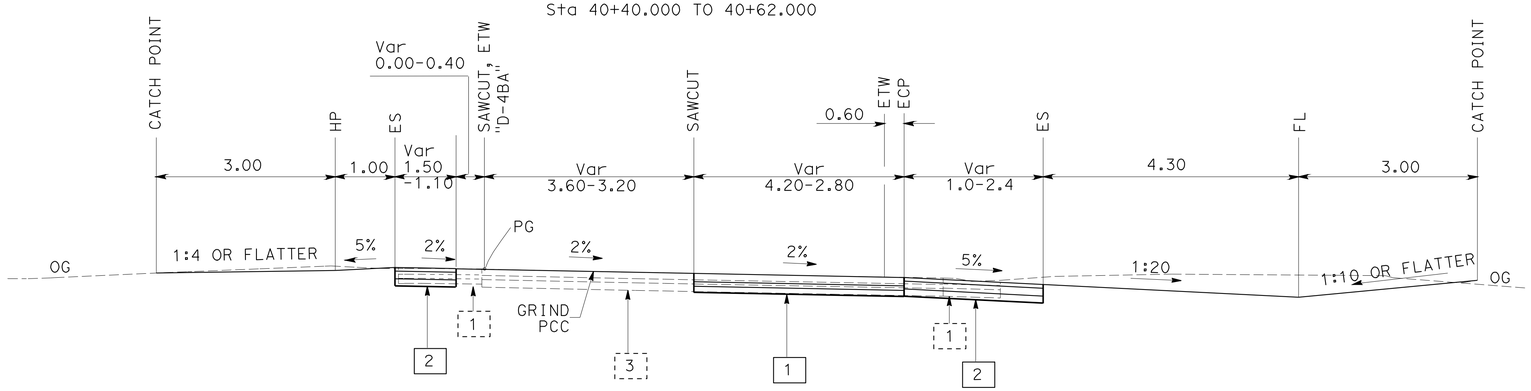

"D-4BA" LINE

Sta 39+29.000 TO 40+40.000

TYPICAL CROSS SECTIONS

NO SCALE

X-9

REVISED BY	DATE REVISED

CALCULATED-DESIGNED BY: RICARDO PADILLA
CHECKED BY: RAMON JUAREZ
FUNCTIONAL SUPERVISOR: CHRIS M. THOMAS

STATE OF CALIFORNIA - DEPARTMENT OF TRANSPORTATION
Caltrans PROJECT DEVELOPMENT

LAST REVISION 07-27-10
DATE PLOTTED => 20-OCT-2010
TIME PLOTTED => 13:23

Dist	COUNTY	ROUTE	KILOMETER POST TOTAL PROJECT	SHEET No.	TOTAL SHEETS
11	SD	905,805	R8.4/R9.8, 3.1/4.2	11	364

Caltrans Metric

George J. Schuh 06-14-10
PROFESSIONAL LAND SURVEYOR DATE

10-18-10
PLANS APPROVAL DATE

PROFESSIONAL LAND SURVEYOR GEORGE J. SCHUH No. 7121 Exp. 12-31-10 STATE OF CALIFORNIA

THE STATE OF CALIFORNIA OR ITS OFFICERS OR AGENTS SHALL NOT BE RESPONSIBLE FOR THE ACCURACY OR COMPLETENESS OF SCANNED COPIES OF THIS PLAN SHEET.

NOTES:

1. CONTACT DISTRICT 11 OFFICE OF LAND SURVEYS, PHONE (858) 467-4305, FOR ADDITIONAL INFORMATION OR QUERIES REGARDING THIS SURVEY PROJECT CONTROL.
2. BASIS OF BEARINGS AND COORDINATES
   FOR THIS PROJECT IS THE CALIFORNIA COORDINATE SYSTEM OF 1983, HPGN EPOCH ADJUSTMENT [CCS 83 (1991.35)], ZONE 6. 3RD ORDER PROJECT CONTROL STATIONS WERE ESTABLISHED IN JUNE 1997 ACCORDING TO CRITERIA SET FORTH IN THE FEDERAL GEODETIC CONTROL SUBCOMMITTEE'S "GEOMETRIC GEODETIC ACCURACY STANDARDS AND SPECIFICATIONS FOR USING GPS RELATIVE POSITIONING TECHNIQUES" REPRINTED AUGUST 1, 1989.

   A GPS FAST STATIC SURVEY WAS CONSTRAINED TO THE HPGN "A" ORDER STATION "HPGN CA 11 01", "B" ORDER STATION "SAN DIEGO GPS 24", 1ST ORDER STATION "54/805" AND 2ND ORDER STATION "805-1.1" PER THE ABOVE-REFERENCED STANDARDS.
3. BASIS OF ELEVATIONS
   FOR THIS PROJECT IS THE NORTH AMERICAN VERTICAL DATUM OF 1988 (NAVD 88). ELEVATIONS ARE ESTABLISHED BY GPS FAST STATIC METHODS CONSTRAINING TO "805-1.1".

ABBREVIATIONS:

CADT	CALIFORNIA DEPARTMENT OF TRANSPORTATION
NGS	NATIONAL GEODETIC SURVEY
IP	IRON PIPE

LEGEND:

- (A) "A" ORDER STATION
- (B) "B" ORDER STATION
- (1) 1ST ORDER STATION
- (2) 2ND ORDER STATION
- (3) 3RD ORDER STATION

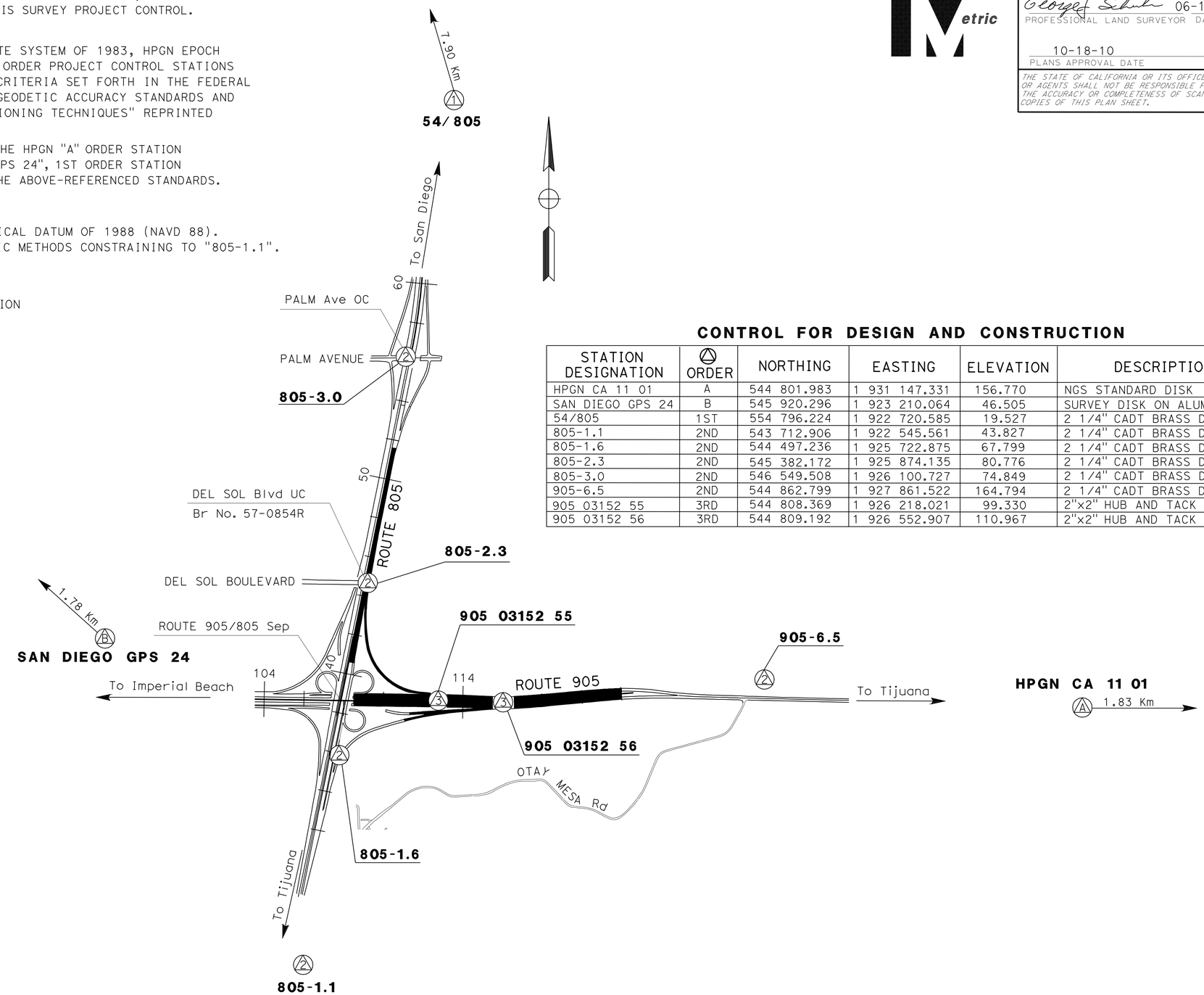

CONTROL FOR DESIGN AND CONSTRUCTION

STATION DESIGNATION	ORDER	NORTHING	EASTING	ELEVATION	DESCRIPTION
HPGN CA 11 01	A	544 801.983	1 931 147.331	156.770	NGS STANDARD DISK
SAN DIEGO GPS 24	B	545 920.296	1 923 210.064	46.505	SURVEY DISK ON ALUMINUM ROD
54/805	1ST	554 796.224	1 922 720.585	19.527	2 1/4" CADT BRASS DISK IN IP
805-1.1	2ND	543 712.906	1 922 545.561	43.827	2 1/4" CADT BRASS DISK
805-1.6	2ND	544 497.236	1 925 722.875	67.799	2 1/4" CADT BRASS DISK IN IP
805-2.3	2ND	545 382.172	1 925 874.135	80.776	2 1/4" CADT BRASS DISK IN IP
805-3.0	2ND	546 549.508	1 926 100.727	74.849	2 1/4" CADT BRASS DISK
905-6.5	2ND	544 862.799	1 927 861.522	164.794	2 1/4" CADT BRASS DISK IN IP
905 03152 55	3RD	544 808.369	1 926 218.021	99.330	2"x2" HUB AND TACK
905 03152 56	3RD	544 809.192	1 926 552.907	110.967	2"x2" HUB AND TACK

PROJECT CONTROL

NO SCALE

PC-1

THIS PLAN ACCURATE FOR PROJECT CONTROL INFORMATION ONLY

ALL DIMENSIONS ARE IN METERS UNLESS OTHERWISE SHOWN.

STATE OF CALIFORNIA - DEPARTMENT OF TRANSPORTATION
Caltrans OFFICE OF LAND SURVEYS

FUNCTIONAL SUPERVISOR: BRUCE URQUHART
CALCULATED-DESIGNED BY: GEORGE SCHUH
CHECKED BY: NED SALMAN
REVISED BY / DATE REVISED

LAST REVISION 04-22-10
DATE PLOTTED => 20-OCT-2010
TIME PLOTTED => 13:24

Dist	COUNTY	ROUTE	KILOMETER POST TOTAL PROJECT	SHEET No.	TOTAL SHEETS
11	SD	905,805	R8.4/R9.8, 3.1/4.2	12	364

REGISTERED CIVIL ENGINEER 07-29-10 DATE

10-18-10
PLANS APPROVAL DATE

REGISTERED PROFESSIONAL ENGINEER RICARDO PADILLA No. C58151 Exp. 6-30-12 CIVIL STATE OF CALIFORNIA

THE STATE OF CALIFORNIA OR ITS OFFICERS OR AGENTS SHALL NOT BE RESPONSIBLE FOR THE ACCURACY OR COMPLETENESS OF ELECTRONIC COPIES OF THIS PLAN SHEET.

Caltrans Metric

NOTE:

1. FOR ACCURATE RIGHT OF WAY AND ACCESS DATA, CONTACT RIGHT OF WAY ENGINEERING AT THE DISTRICT OFFICE.

LEGEND:

- HMA-A CONFORM
- MINOR CONCRETE (STAMPED CONCRETE)
- GRIND EXISTING CONCRETE PAVEMENT
- SLOPE REPAIR
- X — STRUCTURAL SECTION (SEE TYPICAL CROSS SECTIONS)
- X — METAL BEAM GUARD RAIL
- REPLACE CONCRETE PAVEMENT

CURVE DATA

No.	R	Δ	T	L
6	304.80	79°56′05"	255.46	425.24
3	1000.00	5°45′15"	50.26	100.43
15	335.28	113°7′45"	507.80	662.01
10	1828.77	14°6′45"	226.37	450.44
11	1700.00	8°13′11"	122.15	243.89

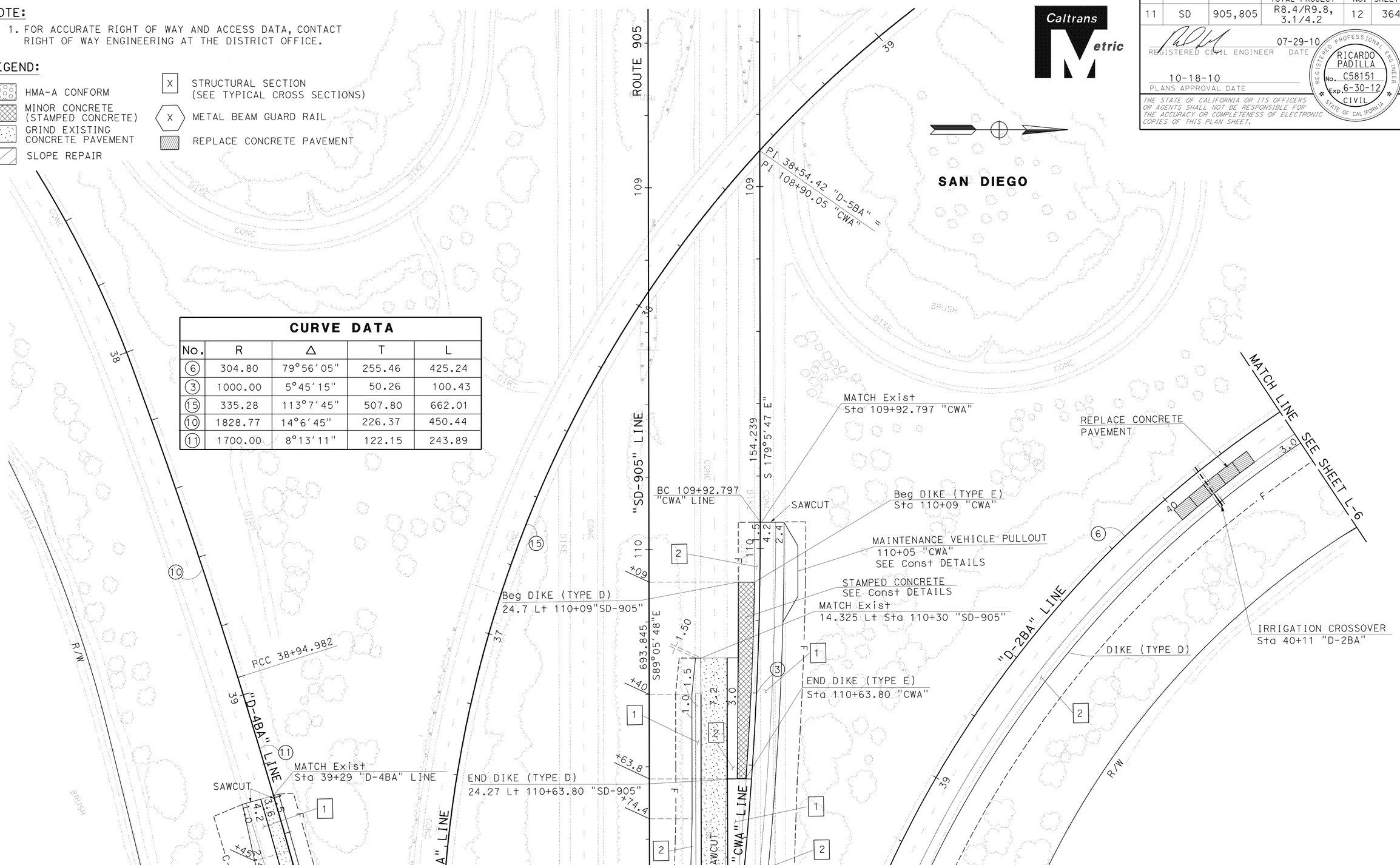

ALL DIMENSIONS ARE IN METERS UNLESS OTHERWISE SHOWN.

LAYOUT

SCALE 1:500 **L-1**

STATE OF CALIFORNIA - DEPARTMENT OF TRANSPORTATION
Caltrans PROJECT DEVELOPMENT

FUNCTIONAL SUPERVISOR: CHRIS M. THOMAS
CALCULATED-DESIGNED BY: RICARDO PADILLA
CHECKED BY: RAMON JUAREZ
REVISED BY / DATE REVISED

LAST REVISION 07-28-10 | DATE PLOTTED => 20-OCT-2010 | TIME PLOTTED => 13:24

Dist	COUNTY	ROUTE	KILOMETER POST TOTAL PROJECT	SHEET No.	TOTAL SHEETS
11	SD	905,805	R8.4/R9.8, 3.1/4.2	13	364

REGISTERED CIVIL ENGINEER 07-29-10 DATE

10-18-10
PLANS APPROVAL DATE

REGISTERED PROFESSIONAL ENGINEER RICARDO PADILLA No. C58151 Exp. 6-30-12 CIVIL STATE OF CALIFORNIA

THE STATE OF CALIFORNIA OR ITS OFFICERS OR AGENTS SHALL NOT BE RESPONSIBLE FOR THE ACCURACY OR COMPLETENESS OF ELECTRONIC COPIES OF THIS PLAN SHEET.

Caltrans Metric

SAN DIEGO

NOTE:

1. FOR ACCURATE RIGHT OF WAY AND ACCESS DATA, CONTACT RIGHT OF WAY ENGINEERING AT THE DISTRICT OFFICE.

CURVE DATA

No.	R	Δ	T	L
6	304.80	79°56'05"	255.46	425.24
15	335.28	113°07'45"	507.80	662.01
12	1700.00	8°13'11"	122.15	243.89
13	830.00	3°27'34"	25.06	50.11
14	6036.47	0°40'28"	35.52	71.05
16	6000.00	1°48'29"	94.69	189.35

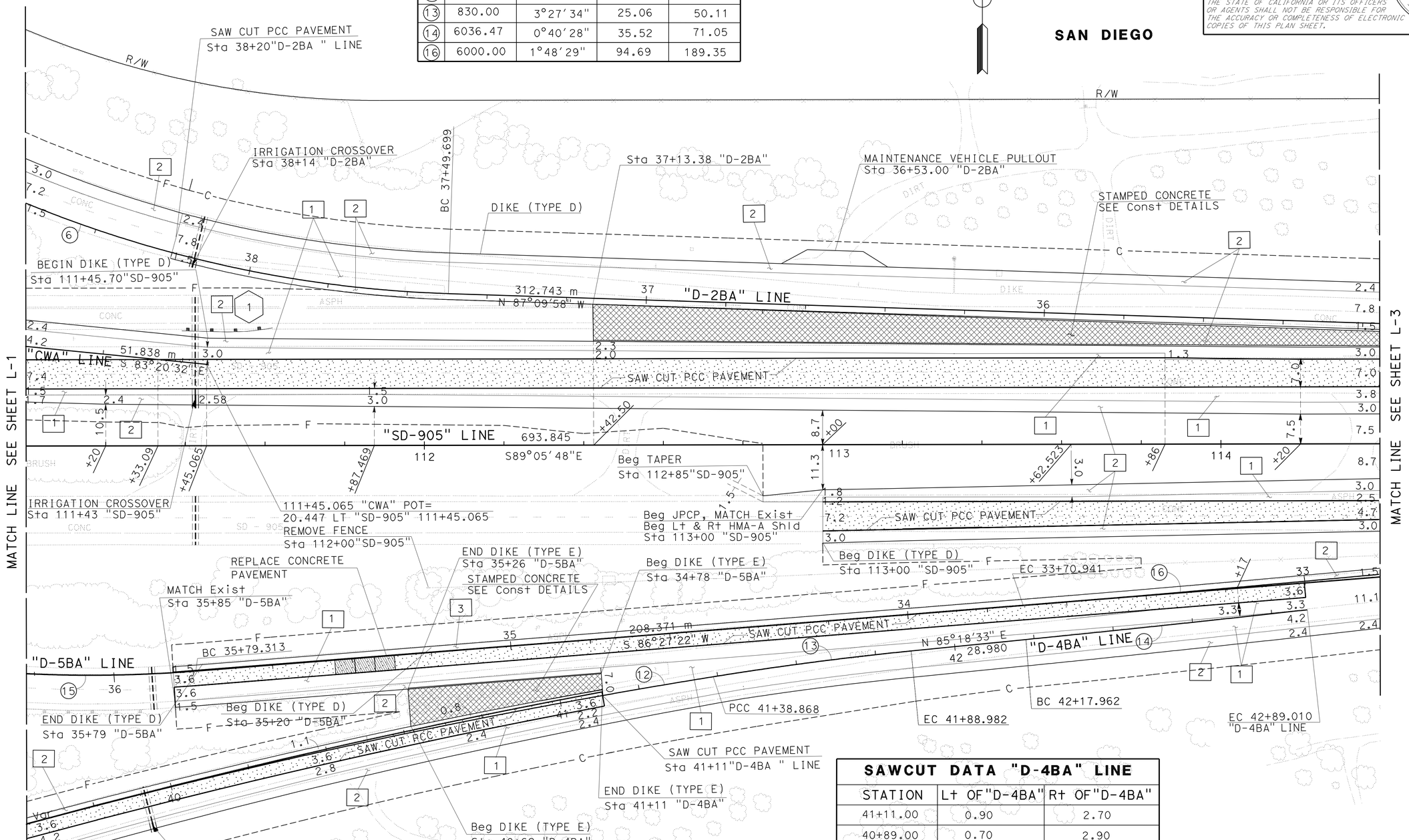

SAWCUT DATA "D-4BA" LINE

STATION	Lt OF"D-4BA"	Rt OF"D-4BA"
41+11.00	0.90	2.70
40+89.00	0.70	2.90
40+40.00	0.40	3.20
39+80.00	0.00	3.60

ALL DIMENSIONS ARE IN METERS
UNLESS OTHERWISE SHOWN.

LAYOUT

SCALE 1:500 **L-2**

STATE OF CALIFORNIA - DEPARTMENT OF TRANSPORTATION
Caltrans **PROJECT DEVELOPMENT**

FUNCTIONAL SUPERVISOR: CHRIS M. THOMAS
CALCULATED-DESIGNED BY: RICARDO PADILLA
CHECKED BY: RAMON JUAREZ
REVISED BY / DATE REVISED

LAST REVISION 06-09-10 DATE PLOTTED => 20-OCT-2010 TIME PLOTTED => 13:24

Dist	COUNTY	ROUTE	KILOMETER POST TOTAL PROJECT	SHEET No.	TOTAL SHEETS
11	SD	905,805	R8.4/R9.8, 3.1/4.2	14	364

REGISTERED CIVIL ENGINEER 07-29-10 DATE

10-18-10
PLANS APPROVAL DATE

REGISTERED PROFESSIONAL ENGINEER RICARDO PADILLA No. C58151 Exp. 6-30-12 CIVIL STATE OF CALIFORNIA

THE STATE OF CALIFORNIA OR ITS OFFICERS OR AGENTS SHALL NOT BE RESPONSIBLE FOR THE ACCURACY OR COMPLETENESS OF ELECTRONIC COPIES OF THIS PLAN SHEET.

Caltrans Metric

NOTE:

1. FOR ACCURATE RIGHT OF WAY AND ACCESS DATA, CONTACT RIGHT OF WAY ENGINEERING AT THE DISTRICT OFFICE.

CURVE DATA

No.	R	Δ	T	L
1	2743.01	5°30'03"	131.77	263.34
16	6000.00	1°48'29"	94.69	189.35
17	1566.69	2°29'06"	33.98	67.95
18	2759.86	2°04'38"	50.03	100.06
19	3048.01	2°20'58"	62.50	120.02

SAN DIEGO

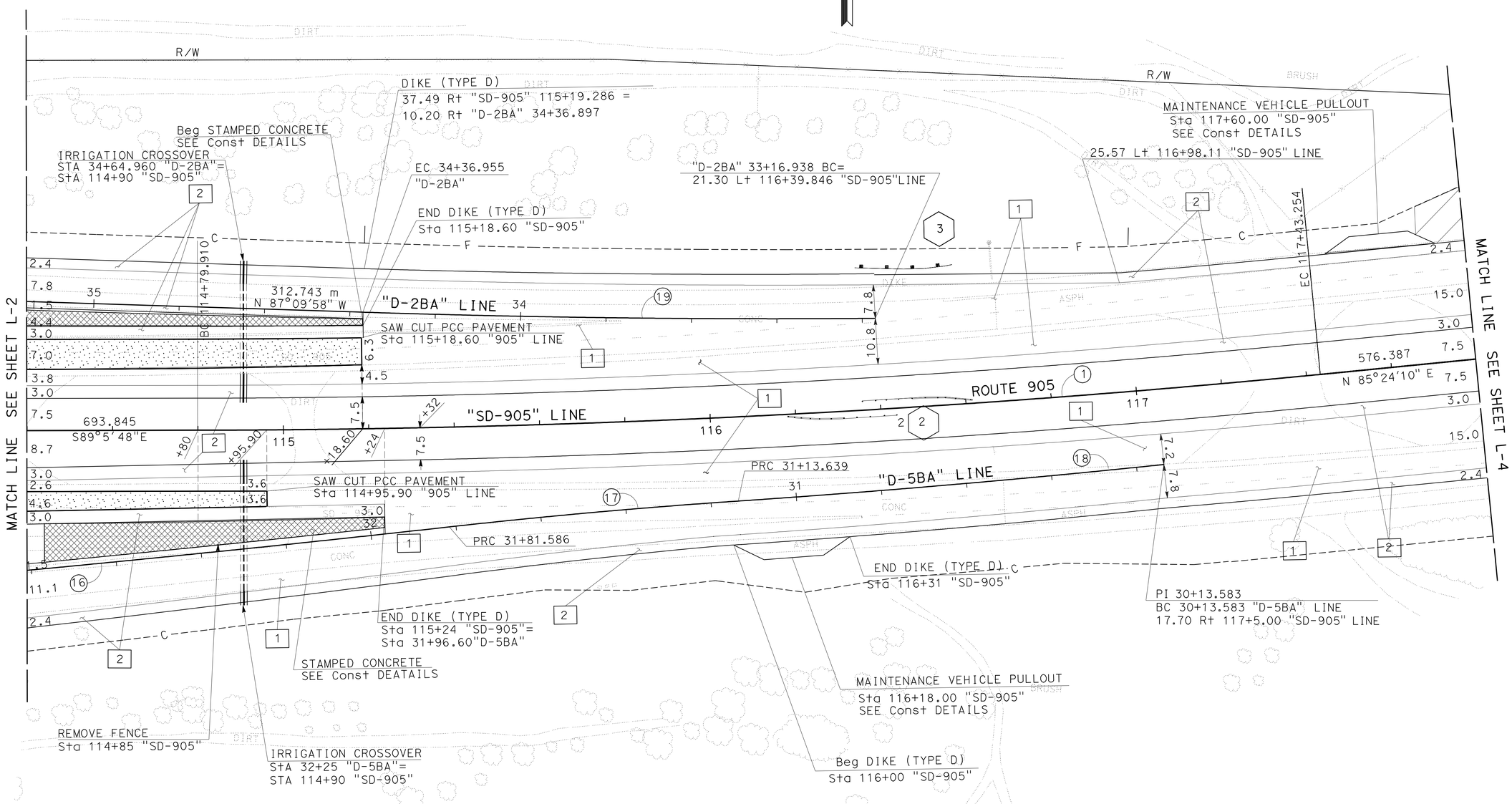

ALL DIMENSIONS ARE IN METERS
UNLESS OTHERWISE SHOWN.

LAYOUT

SCALE 1:500 **L-3**

STATE OF CALIFORNIA - DEPARTMENT OF TRANSPORTATION
Caltrans **PROJECT DEVELOPMENT**

FUNCTIONAL SUPERVISOR: CHRIS M. THOMAS
CALCULATED-DESIGNED BY: RICARDO PADILLA
CHECKED BY: RAMON JUAREZ
REVISED BY / DATE REVISED

LAST REVISION 06-2510
DATE PLOTTED => 20-OCT-2010
TIME PLOTTED => 13:24

Dist	COUNTY	ROUTE	KILOMETER POST TOTAL PROJECT	SHEET No.	TOTAL SHEETS
11	SD	905,805	R8.4/R9.8, 3.1/4.2	15	364

REGISTERED CIVIL ENGINEER 07-29-10 DATE

10-18-10
PLANS APPROVAL DATE

REGISTERED PROFESSIONAL ENGINEER RICARDO PADILLA No. C58151 Exp. 6-30-12 CIVIL STATE OF CALIFORNIA

THE STATE OF CALIFORNIA OR ITS OFFICERS OR AGENTS SHALL NOT BE RESPONSIBLE FOR THE ACCURACY OR COMPLETENESS OF ELECTRONIC COPIES OF THIS PLAN SHEET.

Caltrans Metric

NOTE:

1. FOR ACCURATE RIGHT OF WAY AND ACCESS DATA, CONTACT RIGHT OF WAY ENGINEERING AT THE DISTRICT OFFICE.

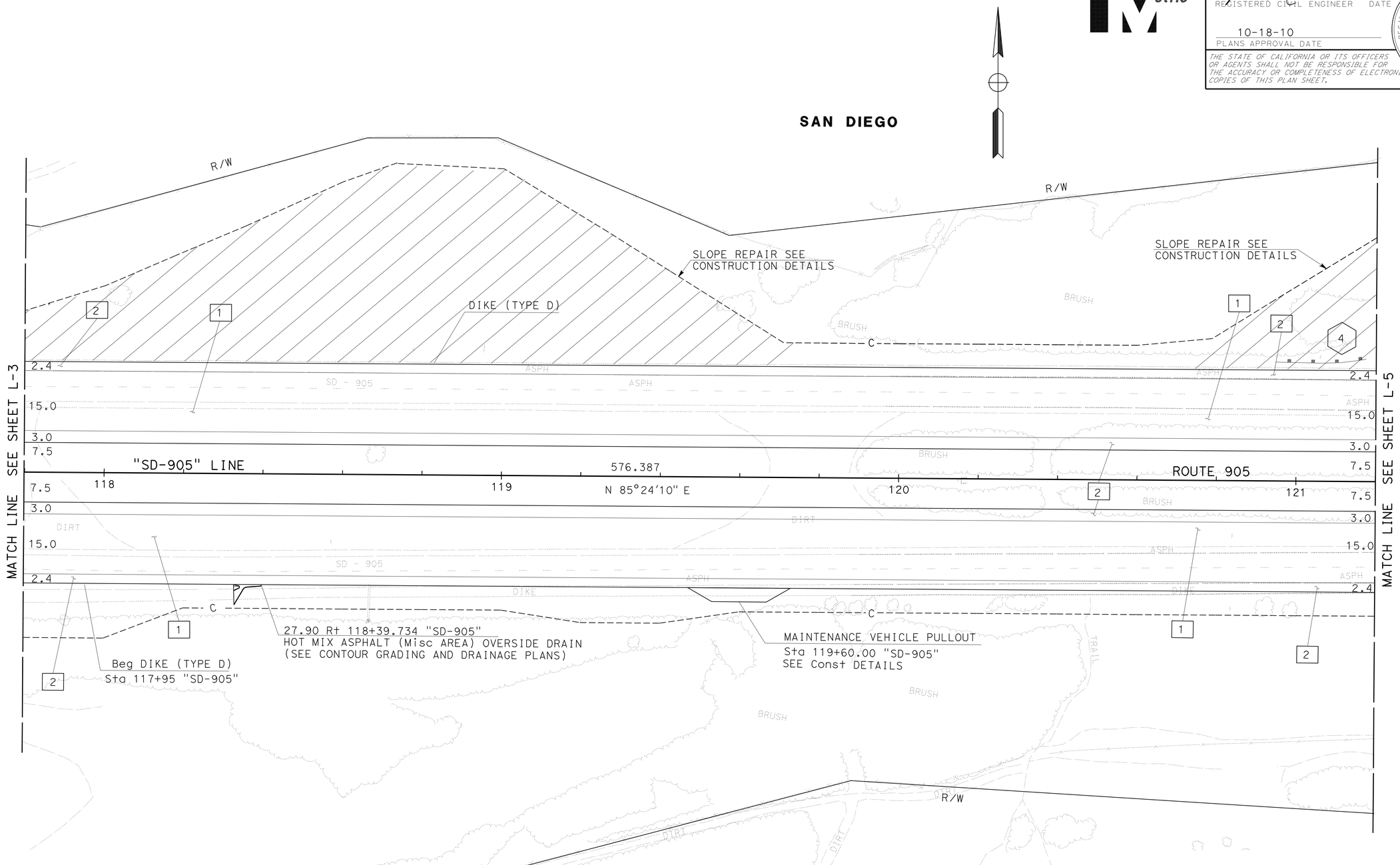

ALL DIMENSIONS ARE IN METERS UNLESS OTHERWISE SHOWN.

LAYOUT

SCALE 1:500 **L-4**

STATE OF CALIFORNIA - DEPARTMENT OF TRANSPORTATION
Caltrans **PROJECT DEVELOPMENT**

FUNCTIONAL SUPERVISOR: CHRIS M. THOMAS
CALCULATED-DESIGNED BY: RICARDO PADILLA
CHECKED BY: RAMON JUAREZ
REVISED BY / DATE REVISED

LAST REVISION 06-09-10 | DATE PLOTTED => 20-OCT-2010 | TIME PLOTTED => 13:25

Dist	COUNTY	ROUTE	KILOMETER POST TOTAL PROJECT	SHEET No.	TOTAL SHEETS
11	SD	905,805	R8.4/R9.8, 3.1/4.2	16	364

REGISTERED CIVIL ENGINEER 07-29-10 DATE

10-18-10
PLANS APPROVAL DATE

REGISTERED PROFESSIONAL ENGINEER RICARDO PADILLA No. C58151 Exp. 6-30-12 CIVIL STATE OF CALIFORNIA

THE STATE OF CALIFORNIA OR ITS OFFICERS OR AGENTS SHALL NOT BE RESPONSIBLE FOR THE ACCURACY OR COMPLETENESS OF ELECTRONIC COPIES OF THIS PLAN SHEET.

Caltrans Metric

NOTE:

1. FOR ACCURATE RIGHT OF WAY AND ACCESS DATA, CONTACT RIGHT OF WAY ENGINEERING AT THE DISTRICT OFFICE.

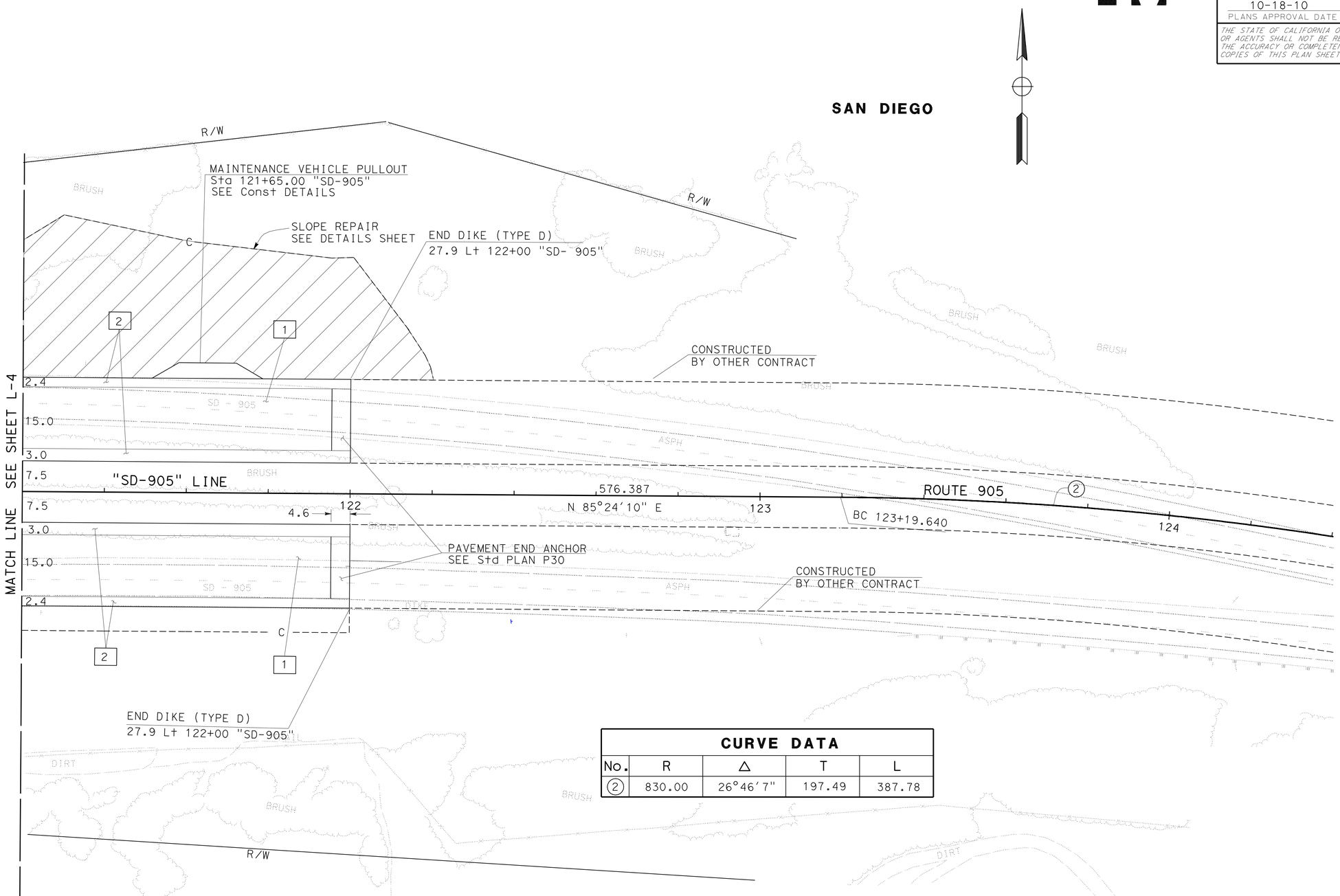

CURVE DATA				
No.	R	Δ	T	L
2	830.00	26°46′7"	197.49	387.78

ALL DIMENSIONS ARE IN METERS
UNLESS OTHERWISE SHOWN.

LAYOUT

SCALE 1:500 **L-5**

STATE OF CALIFORNIA - DEPARTMENT OF TRANSPORTATION
Caltrans **PROJECT DEVELOPMENT**

FUNCTIONAL SUPERVISOR: CHRIS M. THOMAS
CALCULATED-DESIGNED BY: RICARDO PADILLA
CHECKED BY: RAMON JUAREZ
REVISED BY / DATE REVISED

LAST REVISION 06-09-10
DATE PLOTTED => 20-OCT-2010
TIME PLOTTED => 13:25

Dist	COUNTY	ROUTE	KILOMETER POST TOTAL PROJECT	SHEET No.	TOTAL SHEETS
11	SD	905,805	R8.4/R9.8, 3.1/4.2	17	364

REGISTERED CIVIL ENGINEER 07-29-10 DATE

PLANS APPROVAL DATE 10-18-10

REGISTERED PROFESSIONAL ENGINEER RICARDO PADILLA No. C58151 Exp. 6-30-12 CIVIL STATE OF CALIFORNIA

THE STATE OF CALIFORNIA OR ITS OFFICERS OR AGENTS SHALL NOT BE RESPONSIBLE FOR THE ACCURACY OR COMPLETENESS OF ELECTRONIC COPIES OF THIS PLAN SHEET.

Caltrans Metric

NOTE:

1. FOR ACCURATE RIGHT OF WAY AND ACCESS DATA, CONTACT RIGHT OF WAY ENGINEERING AT THE DISTRICT OFFICE.

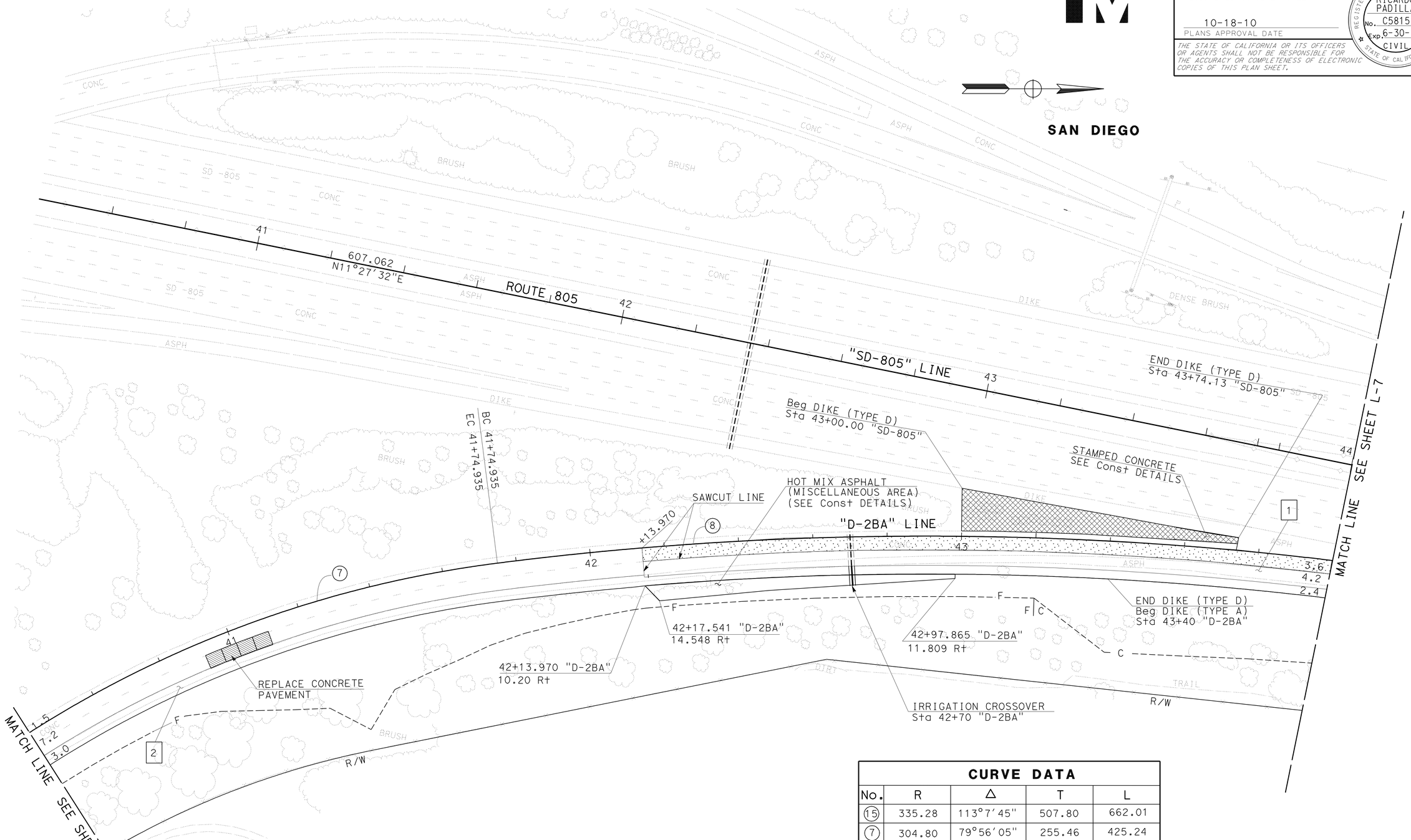

CURVE DATA				
No.	R	Δ	T	L
15	335.28	113°7'45"	507.80	662.01
7	304.80	79°56'05"	255.46	425.24
8	914.40	17°32'41"	141.10	280.00

ALL DIMENSIONS ARE IN METERS UNLESS OTHERWISE SHOWN.

LAYOUT

SCALE 1:500 **L-6**

STATE OF CALIFORNIA - DEPARTMENT OF TRANSPORTATION

Caltrans **PROJECT DEVELOPMENT**

FUNCTIONAL SUPERVISOR: CHRIS M. THOMAS

CALCULATED-DESIGNED BY: RICARDO PADILLA

CHECKED BY: RAMON JUAREZ

REVISED BY / DATE REVISED

LAST REVISION DATE PLOTTED => 20-OCT-2010 TIME PLOTTED => 13:25

OG-09-10

BORDER LAST REVISED 3/1/2007

RELATIVE BORDER SCALE IS IN MILLIMETERS 0 20 40 60 80

USERNAME => trpierce
DGN FILE => b09183ea006.dgn

CU 11225

EA 091831

Dist	COUNTY	ROUTE	KILOMETER POST TOTAL PROJECT	SHEET No.	TOTAL SHEETS
11	SD	905,805	R8.4/R9.8, 3.1/4.2	18	364

REGISTERED CIVIL ENGINEER 07-29-10 DATE

10-18-10
PLANS APPROVAL DATE

REGISTERED PROFESSIONAL ENGINEER RICARDO PADILLA No. C58151 Exp. 6-30-12 CIVIL STATE OF CALIFORNIA

THE STATE OF CALIFORNIA OR ITS OFFICERS OR AGENTS SHALL NOT BE RESPONSIBLE FOR THE ACCURACY OR COMPLETENESS OF ELECTRONIC COPIES OF THIS PLAN SHEET.

Caltrans Metric

NOTE:

1. FOR ACCURATE RIGHT OF WAY AND ACCESS DATA, CONTACT RIGHT OF WAY ENGINEERING AT THE DISTRICT OFFICE.

SAN DIEGO

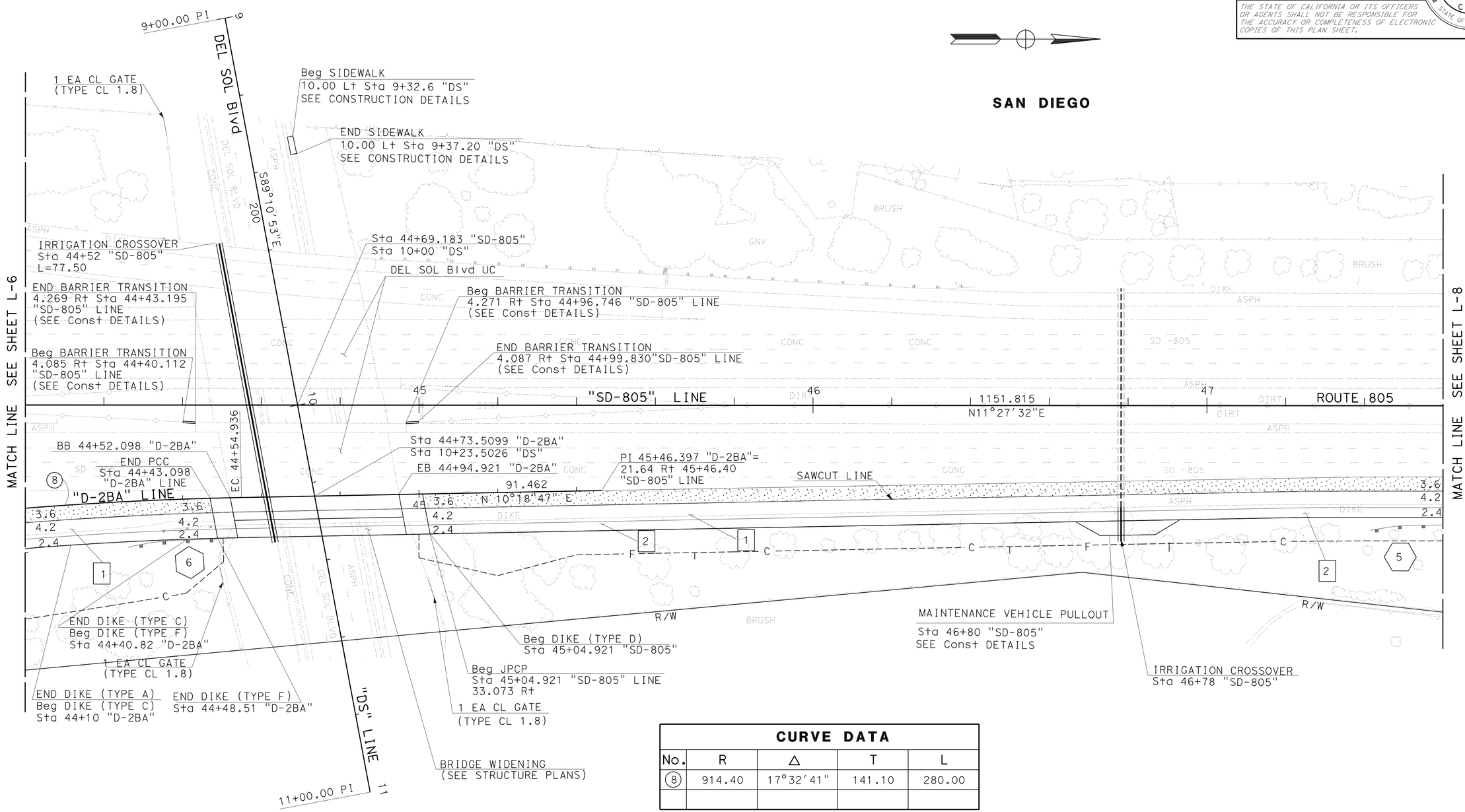

CURVE DATA				
No.	R	Δ	T	L
8	914.40	17°32'41"	141.10	280.00

ALL DIMENSIONS ARE IN METERS UNLESS OTHERWISE SHOWN.

LAYOUT

SCALE 1:500 **L-7**

STATE OF CALIFORNIA - DEPARTMENT OF TRANSPORTATION
Caltrans **PROJECT DEVELOPMENT**

FUNCTIONAL SUPERVISOR CHRIS M. THOMAS
CALCULATED-DESIGNED BY RAMON JUAREZ
CHECKED BY RICARDO PADILLA
REVISED BY
DATE REVISED

LAST REVISION 07-27-10 DATE PLOTTED => 20-OCT-2010 TIME PLOTTED => 13:25

Dist	COUNTY	ROUTE	KILOMETER POST TOTAL PROJECT	SHEET No.	TOTAL SHEETS
11	SD	905,805	R8.4/R9.8, 3.1/4.2	19	364

REGISTERED CIVIL ENGINEER 07-29-10 DATE

10-18-10
PLANS APPROVAL DATE

REGISTERED PROFESSIONAL ENGINEER RICARDO PADILLA No. C58151 Exp. 6-30-12 CIVIL STATE OF CALIFORNIA

THE STATE OF CALIFORNIA OR ITS OFFICERS OR AGENTS SHALL NOT BE RESPONSIBLE FOR THE ACCURACY OR COMPLETENESS OF ELECTRONIC COPIES OF THIS PLAN SHEET.

Caltrans Metric

NOTE:

1. FOR ACCURATE RIGHT OF WAY AND ACCESS DATA, CONTACT RIGHT OF WAY ENGINEERING AT THE DISTRICT OFFICE.

SAN DIEGO

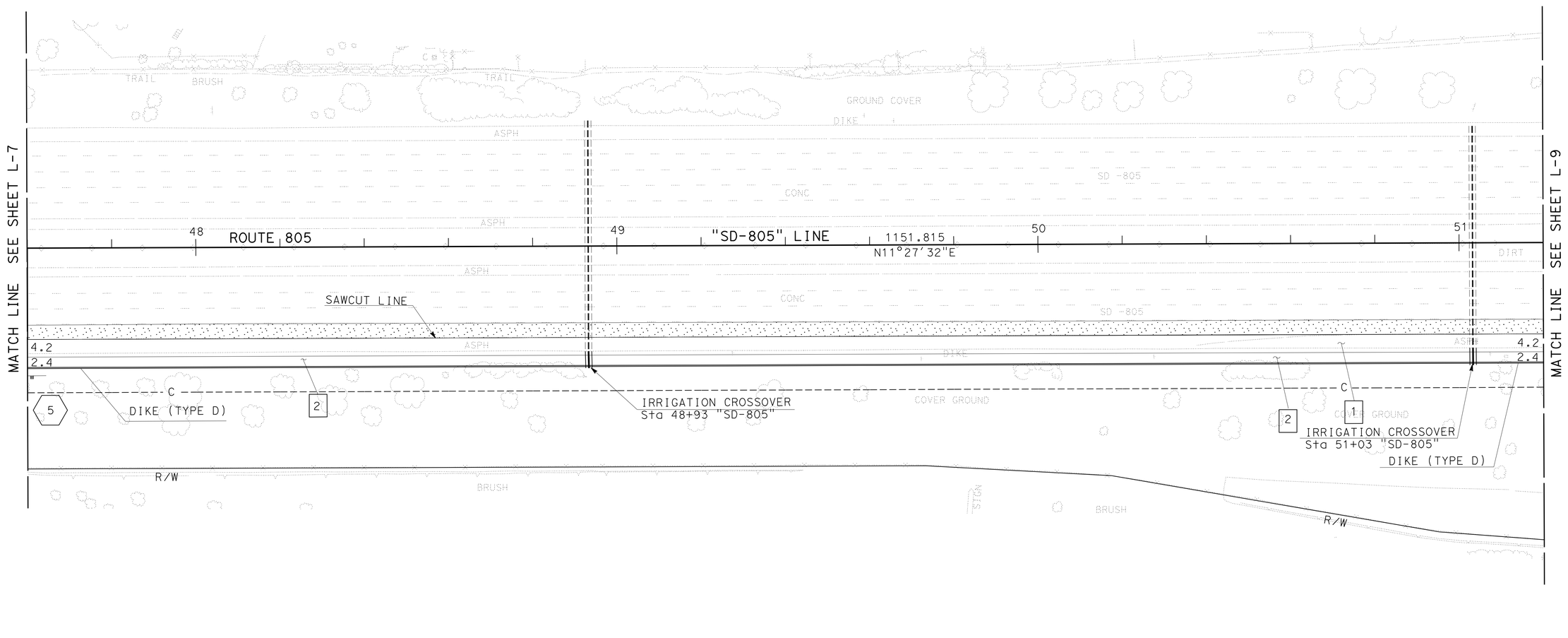

ALL DIMENSIONS ARE IN METERS
UNLESS OTHERWISE SHOWN.

LAYOUT

SCALE 1:500 **L-8**

STATE OF CALIFORNIA - DEPARTMENT OF TRANSPORTATION
Caltrans **PROJECT DEVELOPMENT**

FUNCTIONAL SUPERVISOR CHRIS M. THOMAS
CALCULATED-DESIGNED BY RICARDO PADILLA
CHECKED BY RAMON JUAREZ
REVISED BY
DATE REVISED

LAST REVISION 06-09-10
DATE PLOTTED => 20-OCT-2010
TIME PLOTTED => 13:25

Dist	COUNTY	ROUTE	KILOMETER POST TOTAL PROJECT	SHEET No.	TOTAL SHEETS
11	SD	905,805	R8.4/R9.8, 3.1/4.2	20	364

07-29-10
REGISTERED CIVIL ENGINEER DATE

10-18-10
PLANS APPROVAL DATE

REGISTERED PROFESSIONAL ENGINEER
RICARDO PADILLA
No. C58151
Exp. 6-30-12
CIVIL
STATE OF CALIFORNIA

THE STATE OF CALIFORNIA OR ITS OFFICERS OR AGENTS SHALL NOT BE RESPONSIBLE FOR THE ACCURACY OR COMPLETENESS OF ELECTRONIC COPIES OF THIS PLAN SHEET.

Caltrans Metric

NOTE:

1. FOR ACCURATE RIGHT OF WAY AND ACCESS DATA, CONTACT RIGHT OF WAY ENGINEERING AT THE DISTRICT OFFICE.

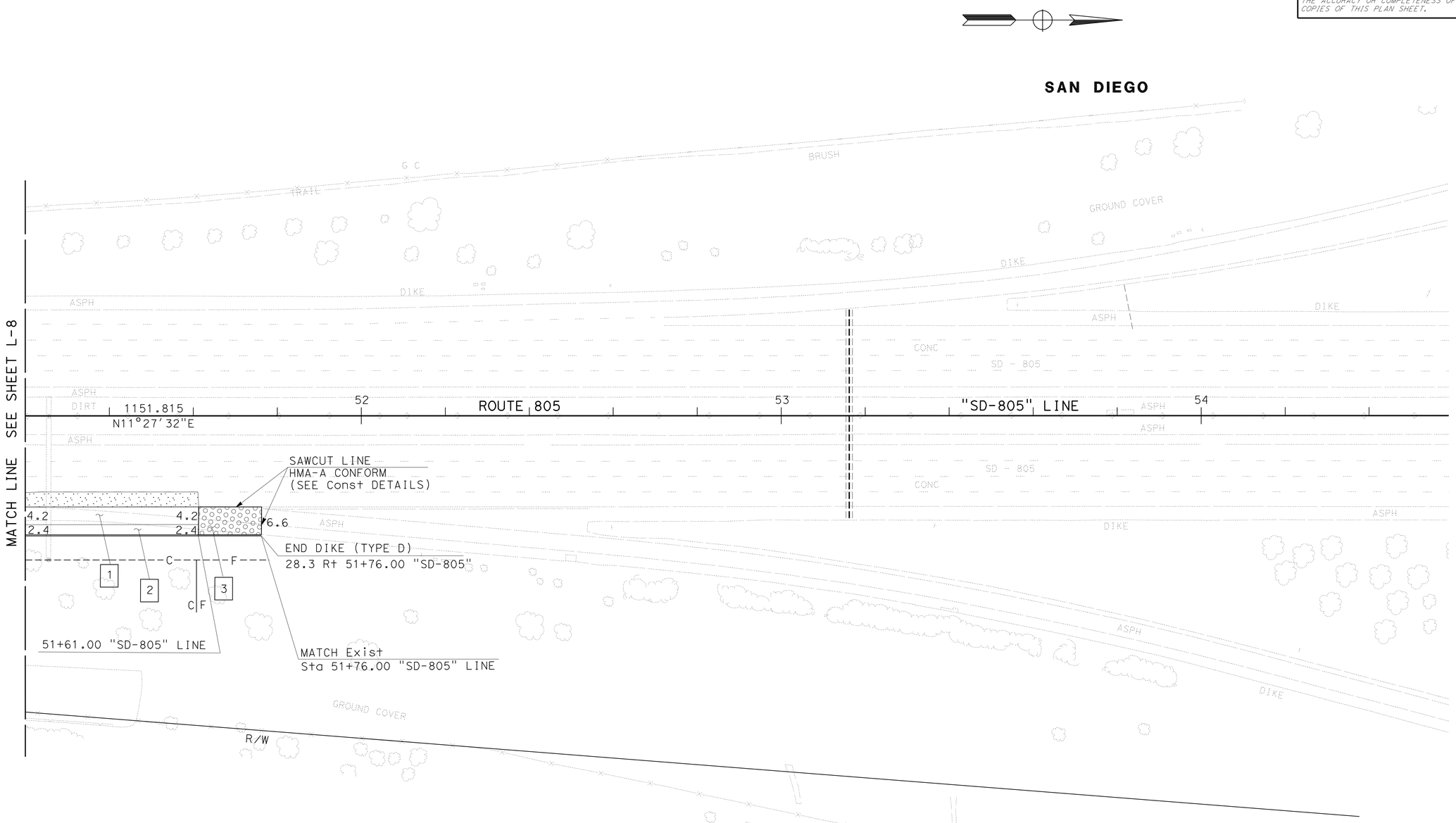

ALL DIMENSIONS ARE IN METERS
UNLESS OTHERWISE SHOWN.

LAYOUT

SCALE 1:500 **L-9**

STATE OF CALIFORNIA - DEPARTMENT OF TRANSPORTATION
Caltrans **PROJECT DEVELOPMENT**

FUNCTIONAL SUPERVISOR: CHRIS M. THOMAS
CALCULATED-DESIGNED BY: RICARDO PADILLA
CHECKED BY: RAMON JUAREZ
REVISED BY
DATE REVISED

LAST REVISION 06-09-10
DATE PLOTTED => 20-OCT-2010
TIME PLOTTED => 13:25

Dist	COUNTY	ROUTE	KILOMETER POST TOTAL PROJECT	SHEET No.	TOTAL SHEETS
11	SD	905,805	R8.4/R9.8, 3.1/4.2	21	364

REGISTERED CIVIL ENGINEER 08-02-10 DATE

PLANS APPROVAL DATE 10-18-10

REGISTERED PROFESSIONAL ENGINEER RICARDO PADILLA No. C58151 Exp. 6-30-12 CIVIL STATE OF CALIFORNIA

THE STATE OF CALIFORNIA OR ITS OFFICERS OR AGENTS SHALL NOT BE RESPONSIBLE FOR THE ACCURACY OR COMPLETENESS OF ELECTRONIC COPIES OF THIS PLAN SHEET.

Caltrans Metric

NOTE: ALL ELEVATIONS ARE BASED ON NAVD 88.

LEGEND: ECP - EDGE OF CONCRETE PAVEMENT.

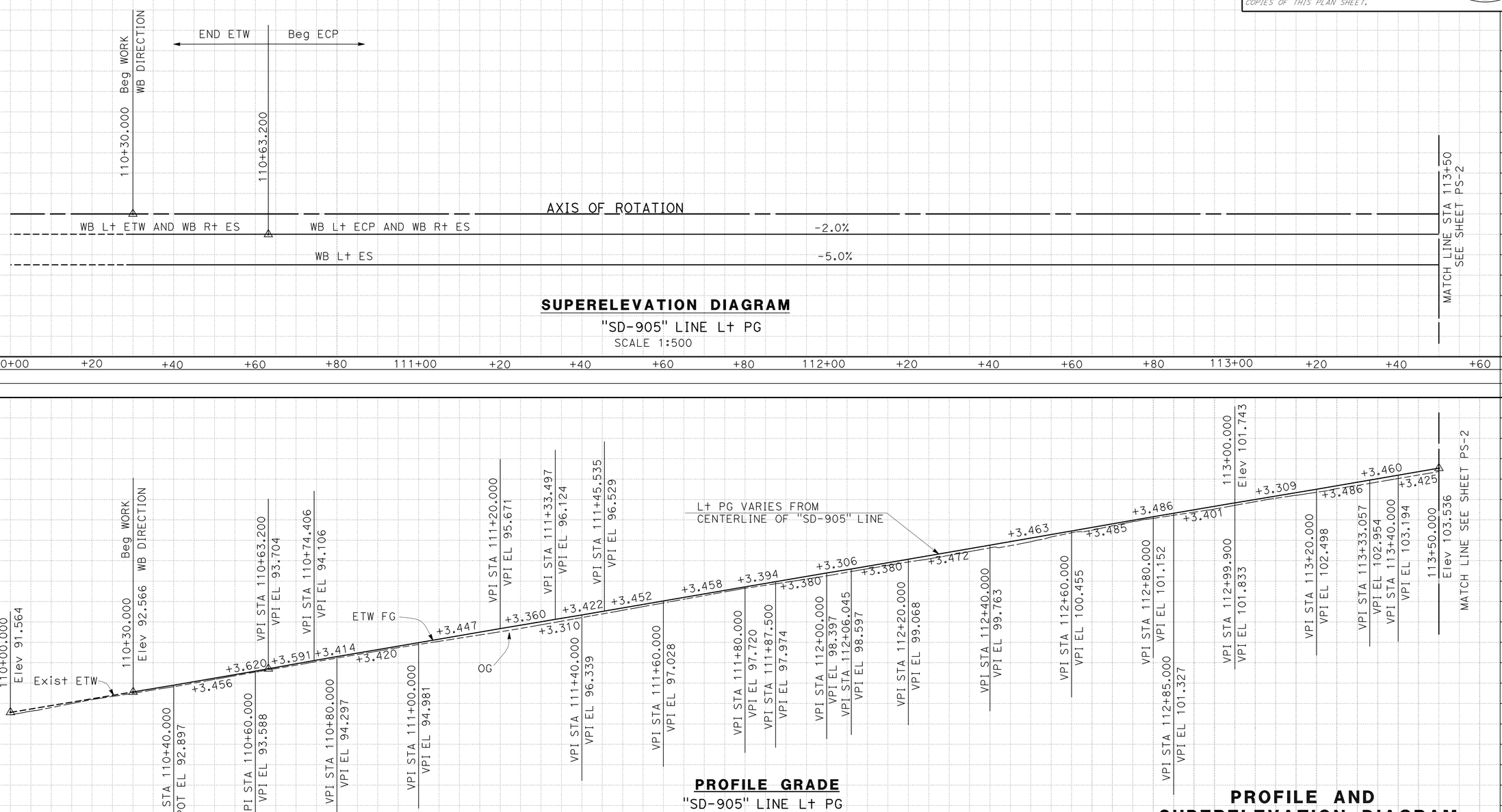

SUPERELEVATION DIAGRAM

"SD-905" LINE Lt PG

SCALE 1:500

PROFILE GRADE

"SD-905" LINE Lt PG

SCALE: Horiz 1:500
Vert 1:100

PROFILE AND SUPERELEVATION DIAGRAM

SCALE AS SHOWN

PS-1

ALL DIMENSIONS ARE IN METERS UNLESS OTHERWISE SHOWN

Station	110+00	+20	+40	+60	+80	111+00	+20	+40	+60	+80	112+00	+20	+40	+60	+80	113+00	+20	+40	+60	TOTAL
m3 Exc																				1851.6
m3 Emb																				347.4

REVISED BY | DATE REVISED

RICARDO PADILLA | RAMON JUAREZ

CALCULATED-DESIGNED BY | CHECKED BY

FUNCTIONAL SUPERVISOR: CHRIS M. THOMAS

STATE OF CALIFORNIA - DEPARTMENT OF TRANSPORTATION

Caltrans PROJECT DEVELOPMENT

LAST REVISION 07-27-10 | DATE PLOTTED => 20-OCT-2010 | TIME PLOTTED => 13:25

Dist	COUNTY	ROUTE	KILOMETER POST TOTAL PROJECT	SHEET No.	TOTAL SHEETS
11	SD	905,805	R8.4/R9.8, 3.1/4.2	22	364

REGISTERED CIVIL ENGINEER 08-02-10 DATE

10-18-10
PLANS APPROVAL DATE

REGISTERED PROFESSIONAL ENGINEER RICARDO PADILLA No. C58151 Exp. 6-30-12 CIVIL STATE OF CALIFORNIA

THE STATE OF CALIFORNIA OR ITS OFFICERS OR AGENTS SHALL NOT BE RESPONSIBLE FOR THE ACCURACY OR COMPLETENESS OF ELECTRONIC COPIES OF THINSIDE SHOULDER PLAN SHEET.

Caltrans Metric

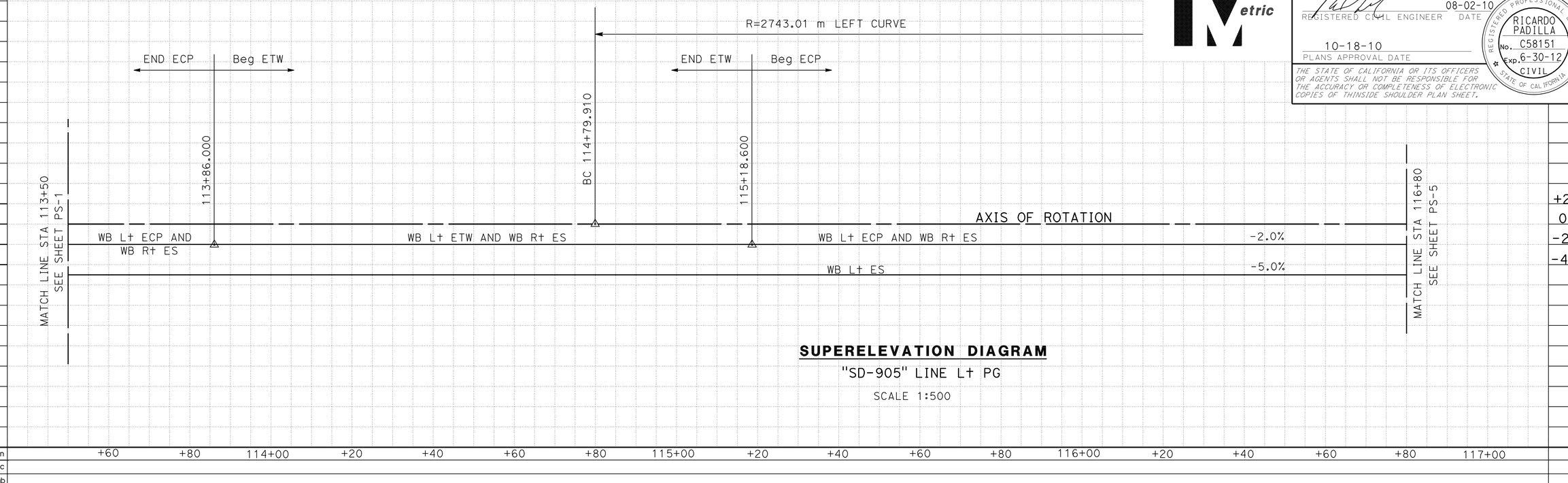

SUPERELEVATION DIAGRAM

"SD-905" LINE Lt PG

SCALE 1:500

Station	+60	+80	114+00	+20	+40	+60	+80	115+00	+20	+40	+60	+80	116+00	+20	+40	+60	+80	117+00
m³ Exc																		
m³ Emb																		

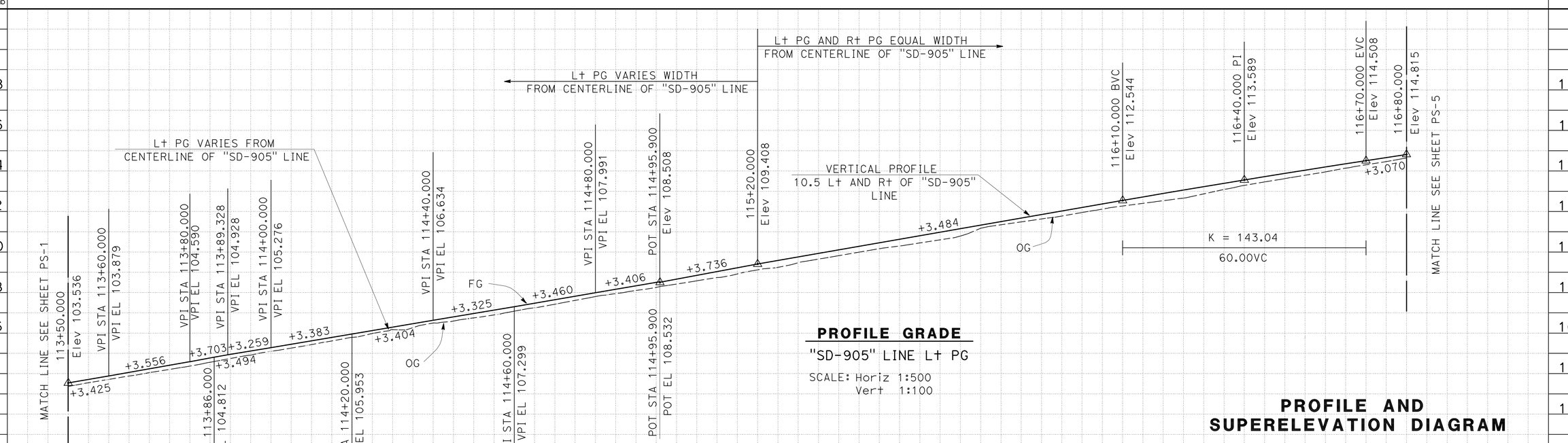

PROFILE GRADE

"SD-905" LINE Lt PG

SCALE: Horiz 1:500
Vert 1:100

PROFILE AND SUPERELEVATION DIAGRAM

SCALE AS SHOWN

PS-2

ALL DIMENSIONS ARE IN METERS UNLESS OTHERWINSIDE SHOULDERE SHOWN

Station	+40	+60	+80	114+00	+20	+40	+60	+80	115+00	+20	+40	+60	+80	116+00	+20	+40	+60	+80	TOTAL
m³ Exc																			2876.49
m³ Emb																			1108.11

REVISED BY | DATE REVISED

RICARDO PADILLA | RAMON JUAREZ

CALCULATED-DESIGNED BY | CHECKED BY

FUNCTIONAL SUPERVISOR: CHRIS M. THOMAS

STATE OF CALIFORNIA - DEPARTMENT OF TRANSPORTATION
Caltrans PROJECT DEVELOPMENT

LAST REVISION 07-27-10 | DATE PLOTTED => 20-OCT-2010 | TIME PLOTTED => 13:26

Dist	COUNTY	ROUTE	KILOMETER POST TOTAL PROJECT	SHEET No.	TOTAL SHEETS
11	SD	905,805	R8.4/R9.8, 3.1/4.2	23	364

REGISTERED CIVIL ENGINEER 08-02-10 DATE

10-18-10
PLANS APPROVAL DATE

REGISTERED PROFESSIONAL ENGINEER RICARDO PADILLA No. C58151 Exp. 6-30-12 CIVIL STATE OF CALIFORNIA

THE STATE OF CALIFORNIA OR ITS OFFICERS OR AGENTS SHALL NOT BE RESPONSIBLE FOR THE ACCURACY OR COMPLETENESS OF ELECTRONIC COPIES OF THIS PLAN SHEET.

Caltrans Metric

NOTE: ALL ELEVATIONS ARE BASED ON NAVD 88.

LEGEND: ECP - EDGE OF CONCRETE PAVEMENT.

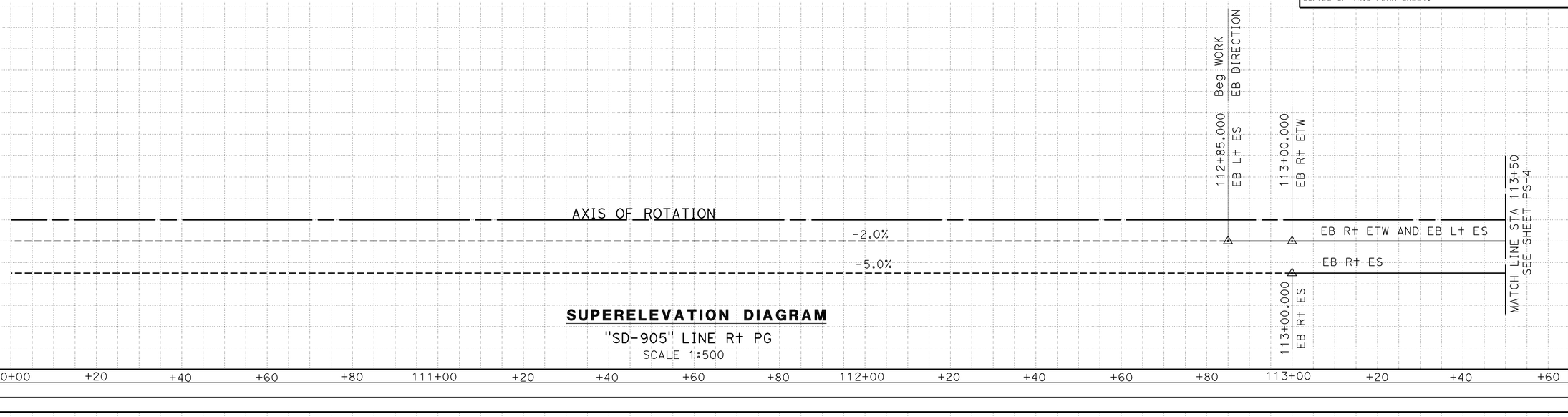

SUPERELEVATION DIAGRAM

"SD-905" LINE R+ PG

SCALE 1:500

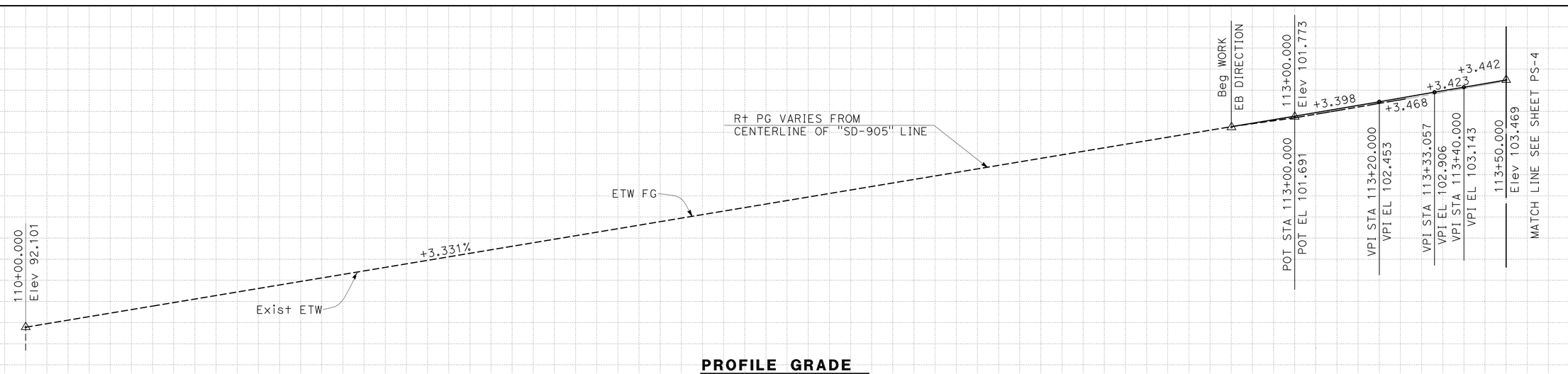

PROFILE GRADE

"SD-905" LINE R+ PG

SCALE: Horiz 1:500
Vert 1:100

PROFILE AND SUPERELEVATION DIAGRAM

SCALE AS SHOWN

PS-3

ALL DIMENSIONS ARE IN METERS UNLESS OTHERWISE SHOWN

Station	110+00	+20	+40	+60	+80	111+00	+20	+40	+60	+80	112+00	+20	+40	+60	+80	113+00	+20	+40	+60	TOTAL
m3 Exc																				298.5
m3 Emb																				115.0

REVISED BY | DATE REVISED

RICARDO PADILLA | RAMON JUAREZ

CALCULATED-DESIGNED BY | CHECKED BY

FUNCTIONAL SUPERVISOR | CHRIS M. THOMAS

STATE OF CALIFORNIA - DEPARTMENT OF TRANSPORTATION

Caltrans PROJECT DEVELOPMENT

LAST REVISION 07-27-10 | DATE PLOTTED => 20-OCT-2010 | TIME PLOTTED => 13:26

Dist	COUNTY	ROUTE	KILOMETER POST TOTAL PROJECT	SHEET No.	TOTAL SHEETS
11	SD	905,805	R8.4/R9.8, 3.1/4.2	24	364

REGISTERED CIVIL ENGINEER 08-02-10 DATE

10-18-10
PLANS APPROVAL DATE

REGISTERED PROFESSIONAL ENGINEER RICARDO PADILLA No. C58151 Exp. 6-30-12 CIVIL STATE OF CALIFORNIA

THE STATE OF CALIFORNIA OR ITS OFFICERS OR AGENTS SHALL NOT BE RESPONSIBLE FOR THE ACCURACY OR COMPLETENESS OF ELECTRONIC COPIES OF THINSIDE SHOULDER PLAN SHEET.

Caltrans Metric

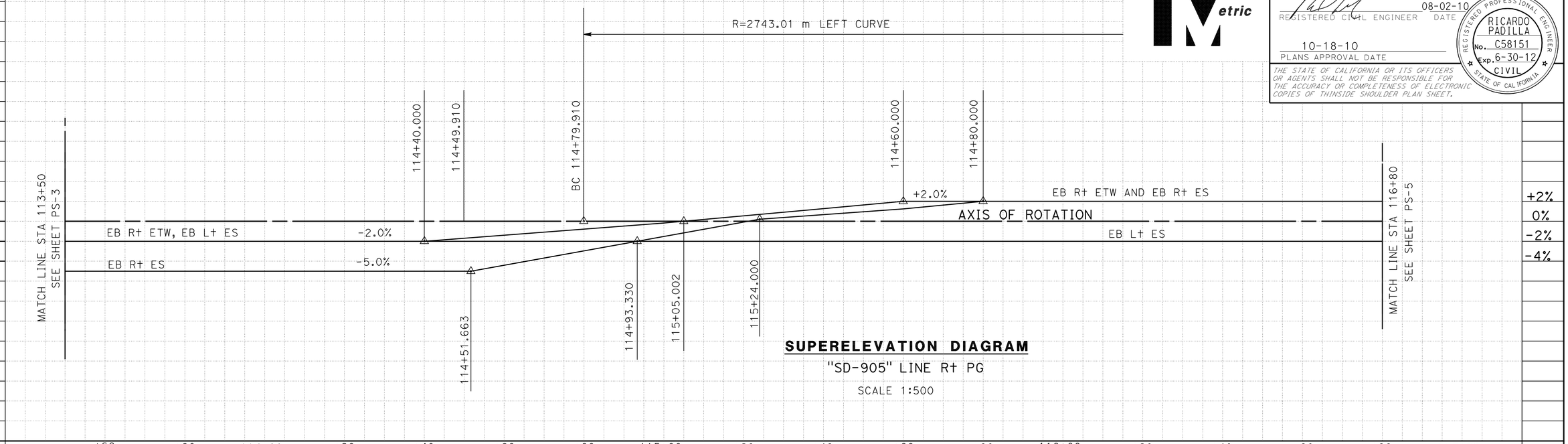

SUPERELEVATION DIAGRAM

"SD-905" LINE R+ PG

SCALE 1:500

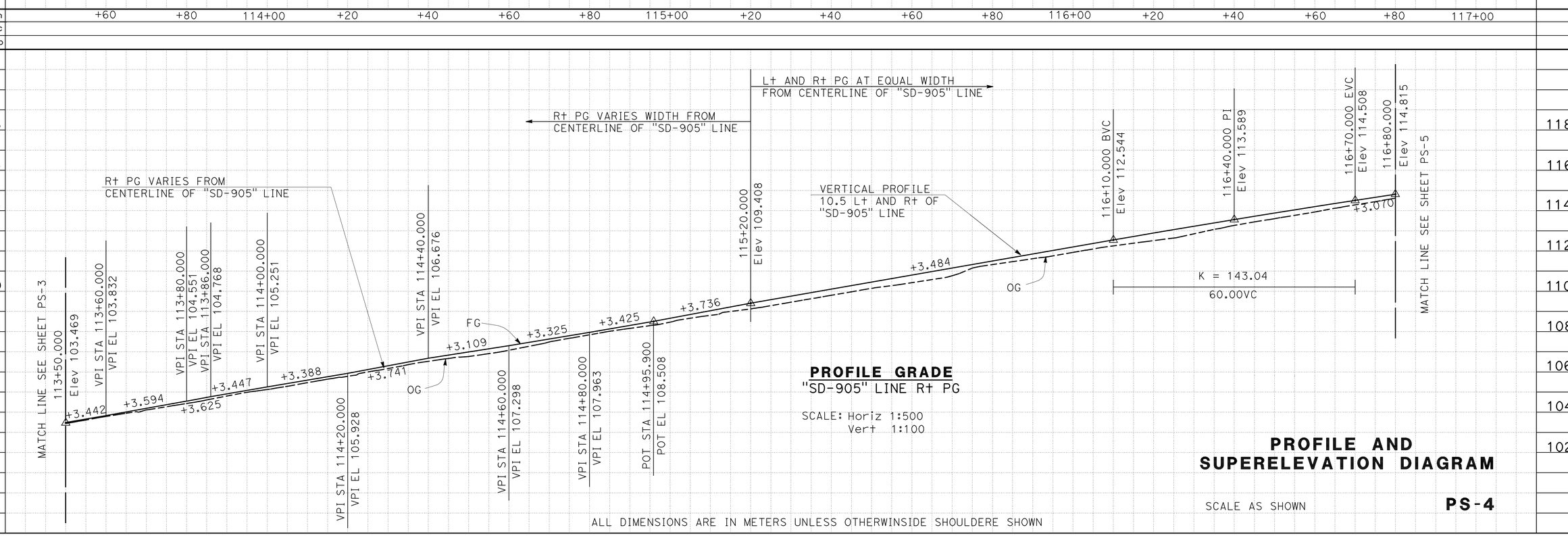

PROFILE GRADE

"SD-905" LINE R+ PG

SCALE: Horiz 1:500
Vert 1:100

PROFILE AND SUPERELEVATION DIAGRAM

SCALE AS SHOWN

PS-4

ALL DIMENSIONS ARE IN METERS UNLESS OTHERWINSIDE SHOULDERE SHOWN

Station	+40	+60	+80	114+00	+20	+40	+60	+80	115+00	+20	+40	+60	+80	116+00	+20	+40	+60	+80	TOTAL
m^3 Exc																			2876.49
m^3 Emb																			1108.11

REVISED BY | DATE REVISED

RICARDO PADILLA | RAMON JUAREZ

CALCULATED-DESIGNED BY | CHECKED BY

FUNCTIONAL SUPERVISOR | CHRIS M. THOMAS

STATE OF CALIFORNIA - DEPARTMENT OF TRANSPORTATION

Caltrans PROJECT DEVELOPMENT

LAST REVISION 07-27-10 | DATE PLOTTED => 20-OCT-2010 | TIME PLOTTED => 13:26

Dist	COUNTY	ROUTE	KILOMETER POST TOTAL PROJECT	SHEET No.	TOTAL SHEETS
11	SD	905,805	R8.4/R9.8, 3.1/4.2	25	364

Caltrans Metric

REGINSIDE CIVIL ENGINEER 08-02-10 DATE

10-18-10
PLANS APPROVAL DATE

REGISTERED PROFESSIONAL ENGINEER — RICARDO PADILLA — No. C58151 — Exp. 6-30-12 — CIVIL — STATE OF CALIFORNIA

THE STATE OF CALIFORNIA OR ITS OFFICERS OR AGENTS SHALL NOT BE RESPONSIBLE FOR THE ACCURACY OR COMPLETENESS OF ELECTRONIC COPIES OF THINSIDE SHOULDER PLAN SHEET.

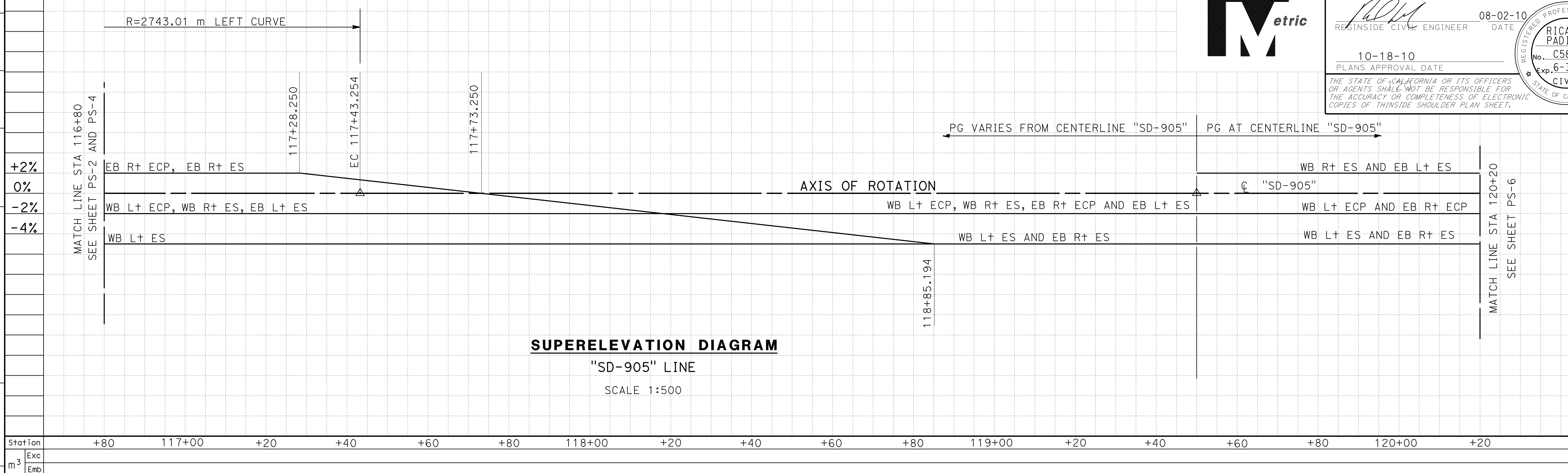

SUPERELEVATION DIAGRAM

"SD-905" LINE

SCALE 1:500

PROFILE GRADE

"SD-905" LINE

SCALE Horiz 1:500 Vert 1:100

ALL DIMENSIONS ARE IN METERS UNLESS OTHERWINSIDE SHOULDERE SHOWN

PROFILE AND SUPERELEVATION DIAGRAM

SCALE AS SHOWN

PS-5

DESIGNED BY / CALCULATED- : RICARDO PADILLA
CHECKED BY: RAMON JUAREZ
REVISED BY / DATE REVISED
FUNCTIONAL SUPERVISOR: CHRIS M. THOMAS

STATE OF CALIFORNIA - DEPARTMENT OF TRANSPORTATION
Caltrans PROJECT DEVELOPMENT

LAST REVISION 07-27-10
DATE PLOTTED => 20-OCT-2010
TIME PLOTTED => 13:26

Dist	COUNTY	ROUTE	KILOMETER POST TOTAL PROJECT	SHEET No.	TOTAL SHEETS
11	SD	905,805	R8.4/R9.8, 3.1/4.2	26	364

REGINSIDE CIVIL ENGINEER — DATE 08-02-10

10-18-10
PLANS APPROVAL DATE

REGISTERED PROFESSIONAL ENGINEER RICARDO PADILLA No. C58151 Exp. 6-30-12 CIVIL STATE OF CALIFORNIA

THE STATE OF CALIFORNIA OR ITS OFFICERS OR AGENTS SHALL NOT BE RESPONSIBLE FOR THE ACCURACY OR COMPLETENESS OF ELECTRONIC COPIES OF THINSIDE SHOULDER PLAN SHEET.

Caltrans Metric

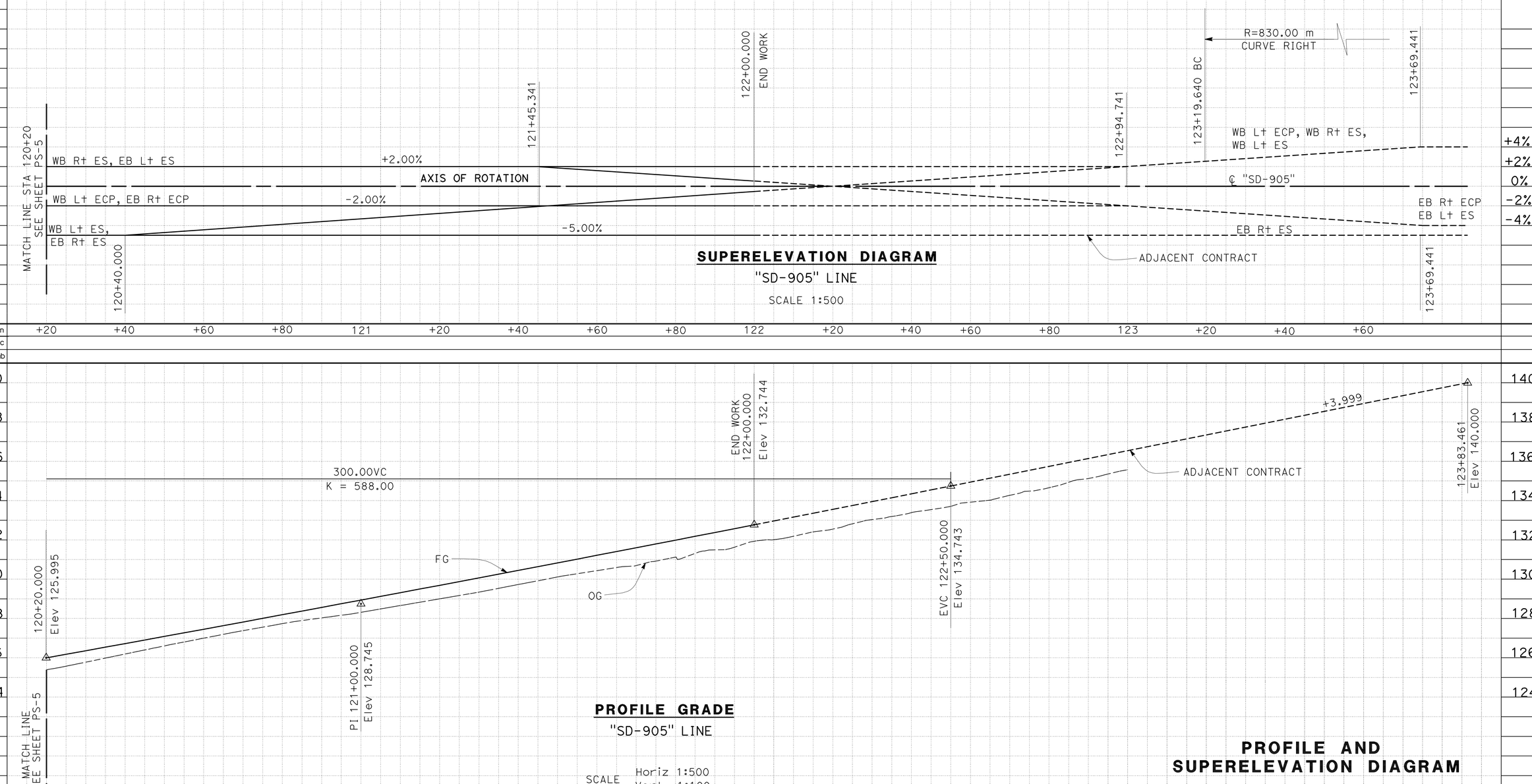

SUPERELEVATION DIAGRAM
"SD-905" LINE
SCALE 1:500

PROFILE GRADE
"SD-905" LINE

SCALE Horiz 1:500
Vert 1:100

ALL DIMENSIONS ARE IN METERS UNLESS OTHERWISE SHOWN

PROFILE AND SUPERELEVATION DIAGRAM

SCALE AS SHOWN

PS-6

REVISED BY | DATE REVISED

RICARDO PADILLA | RAMON JUAREZ

CALCULATED-DESIGNED BY | CHECKED BY

FUNCTIONAL SUPERVISOR | CHRIS M. THOMAS

STATE OF CALIFORNIA - DEPARTMENT OF TRANSPORTATION
Caltrans PROJECT DEVELOPMENT

LAST REVISION 07-27-10 | DATE PLOTTED => 20-OCT-2010 | TIME PLOTTED => 13:26

Dist	COUNTY	ROUTE	KILOMETER POST TOTAL PROJECT	SHEET No.	TOTAL SHEETS
11	SD	905,805	R8.4/R9.8, 3.1/4.2	27	364

REGISTERED CIVIL ENGINEER 08-02-10 DATE

PLANS APPROVAL DATE 10-18-10

REGISTERED PROFESSIONAL ENGINEER RICARDO PADILLA No. C58151 Exp. 6-30-12 CIVIL STATE OF CALIFORNIA

THE TE OF CALIFORNIA OR ITS OFFICERS OR AGENTS SHALL NOT BE RESPONSIBLE FOR THE ACCURACY OR COMPLETENESS OF ElevECTRONIC COPIES OF THIS PLAN SHEET.

Caltrans Metric

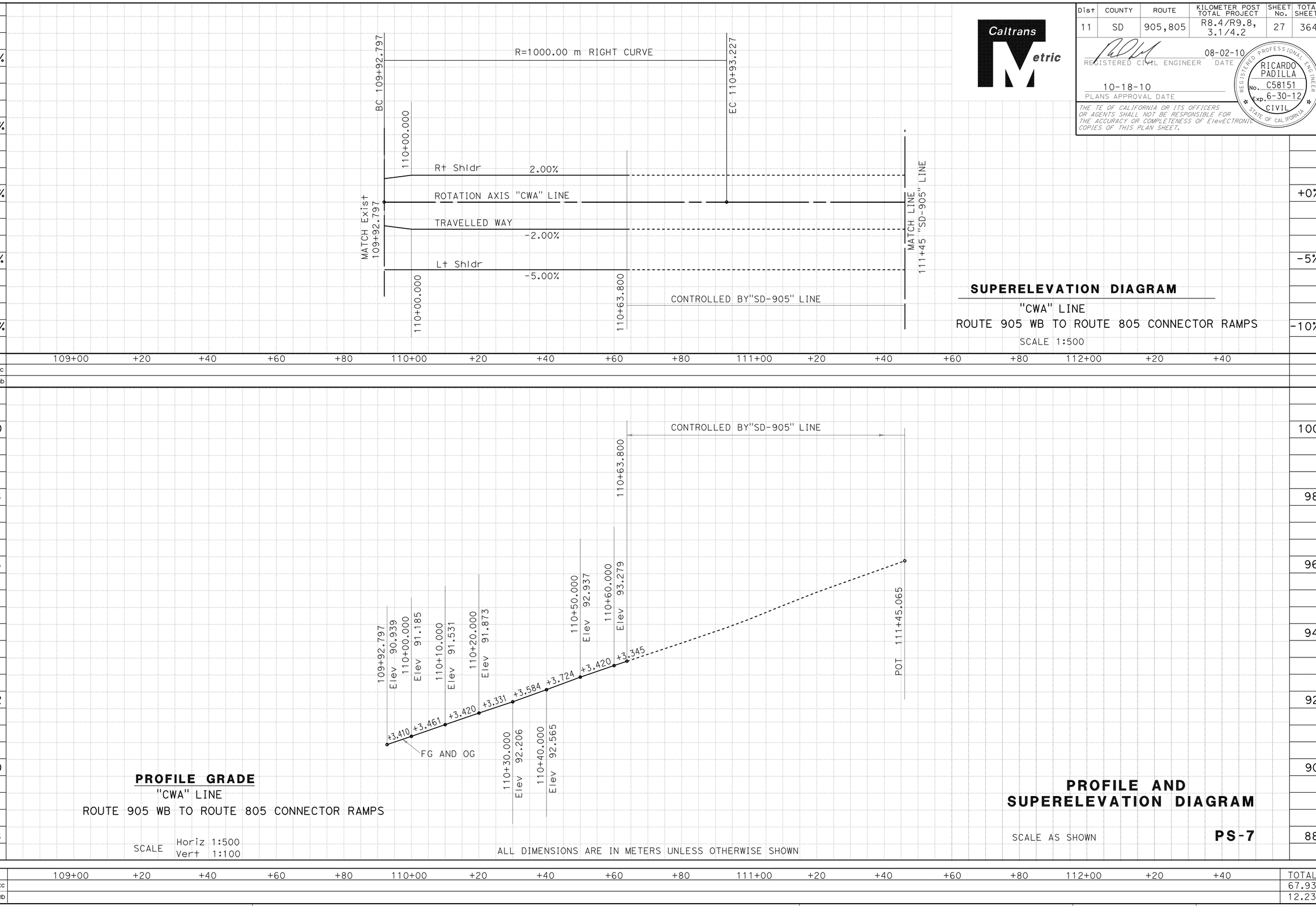

SUPERELEVATION DIAGRAM

"CWA" LINE

ROUTE 905 WB TO ROUTE 805 CONNECTOR RAMPS

SCALE 1:500

PROFILE GRADE

"CWA" LINE

ROUTE 905 WB TO ROUTE 805 CONNECTOR RAMPS

SCALE Horiz 1:500 Vert 1:100

ALL DIMENSIONS ARE IN METERS UNLESS OTHERWISE SHOWN

PROFILE AND SUPERELEVATION DIAGRAM

SCALE AS SHOWN

PS-7

tion	109+00	+20	+40	+60	+80	110+00	+20	+40	+60	+80	111+00	+20	+40	+60	+80	112+00	+20	+40	TOTAL
m3 Exc																			67.93
m3 Emb																			12.23

REVISED BY | DATE REVISED

RICARDO PADILLA | RAMON JUAREZ

CALCULATED-DESIGNED BY | CHECKED BY

FUNCTIONAL SUPERVISOR: CHRIS M. THOMAS

TE OF CALIFORNIA - DEPARTMENT OF TRANSPORTATION

Caltrans PROJECT DEVElevOPMENT

LAST REVISION | DATE PLOTTED => 20-OCT-2010 | TIME PLOTTED => 13:26

07-27-10

Dist	COUNTY	ROUTE	KILOMETER POST TOTAL PROJECT	SHEET No.	TOTAL SHEETS
11	SD	905,805	R8.4/R9.8, 3.1/4.2	28	364

REGISTERED CIVIL ENGINEER 08-02-10 DATE

10-18-10
PLANS APPROVAL DATE

REGISTERED PROFESSIONAL ENGINEER RICARDO PADILLA No. C58151 Exp. 6-30-12 CIVIL STATE OF CALIFORNIA

THE STATE OF CALIFORNIA OR ITS OFFICERS OR AGENTS SHALL NOT BE RESPONSIBLE FOR THE ACCURACY OR COMPLETENESS OF ELECTRONIC COPIES OF THIS PLAN SHEET.

Caltrans Metric

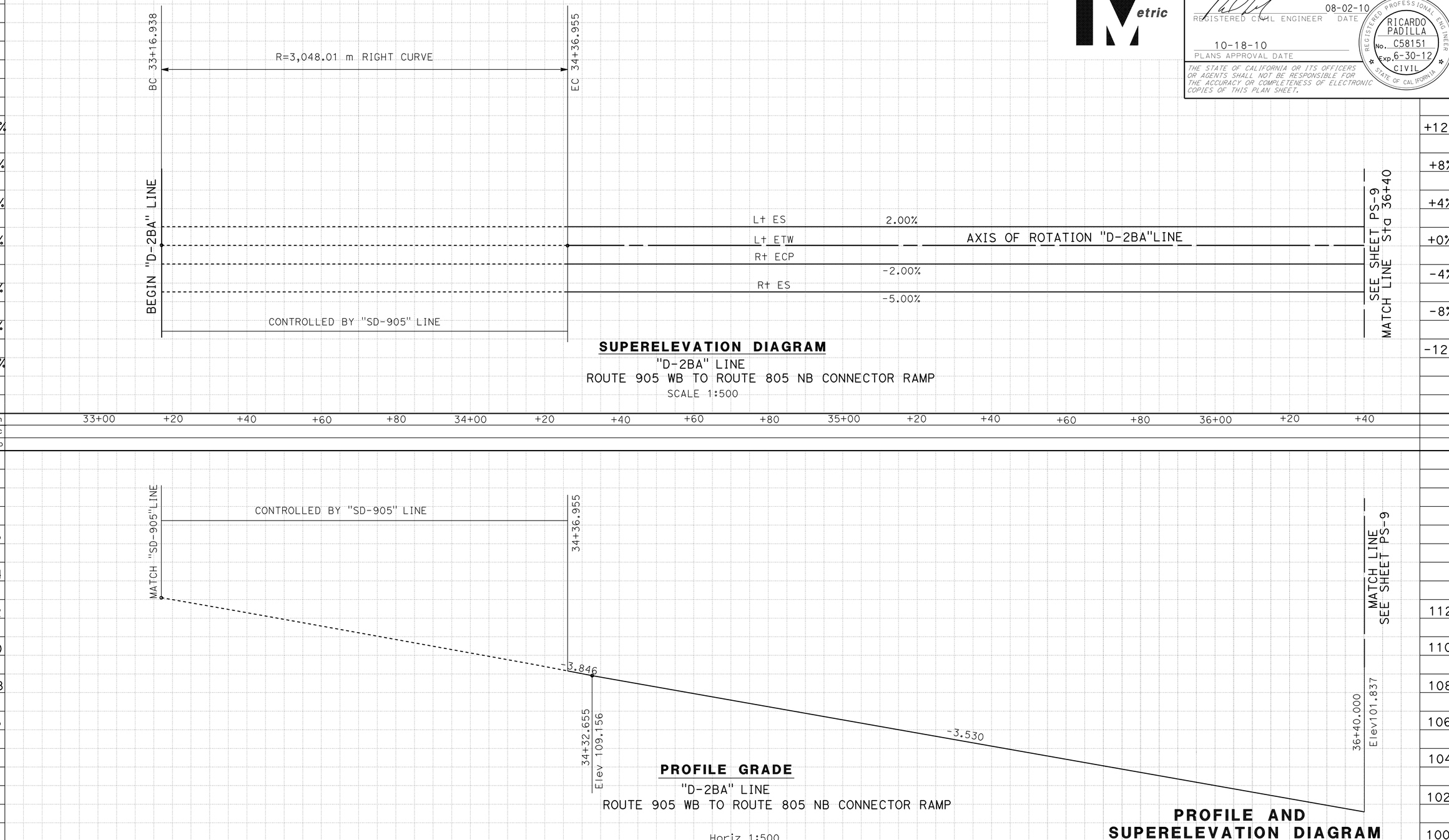

SUPERELEVATION DIAGRAM
"D-2BA" LINE
ROUTE 905 WB TO ROUTE 805 NB CONNECTOR RAMP
SCALE 1:500

PROFILE GRADE
"D-2BA" LINE
ROUTE 905 WB TO ROUTE 805 NB CONNECTOR RAMP

SCALE Horiz 1:500
Vert 1:100

PROFILE AND SUPERELEVATION DIAGRAM

SCALE AS SHOWN

PS-8

ALL DIMENSIONS ARE IN METERS UNLESS OTHERWISE SHOWN

REVISED BY | DATE REVISED

RICARDO PADILLA | RAMON JUAREZ

CALCULATED-DESIGNED BY | CHECKED BY

FUNCTIONAL SUPERVISOR | CHRIS M. THOMAS

STATE OF CALIFORNIA - DEPARTMENT OF TRANSPORTATION
Caltrans PROJECT DEVELOPMENT

LAST REVISION 07-27-10 | DATE PLOTTED => 20-OCT-2010 | TIME PLOTTED => 13:26

Dist	COUNTY	ROUTE	KILOMETER POST TOTAL PROJECT	SHEET No.	TOTAL SHEETS
11	SD	905,805	R8.4/R9.8, 3.1/4.2	29	364

REGISTERED CIVIL ENGINEER 08-02-10 DATE

10-18-10
PLANS APPROVAL DATE

REGISTERED PROFESSIONAL ENGINEER RICARDO PADILLA No. C58151 Exp. 6-30-12 CIVIL STATE OF CALIFORNIA

THE STATE OF CALIFORNIA OR ITS OFFICERS OR AGENTS SHALL NOT BE RESPONSIBLE FOR THE ACCURACY OR COMPLETENESS OF ELECTRONIC COPIES OF THIS PLAN SHEET.

Caltrans Metric

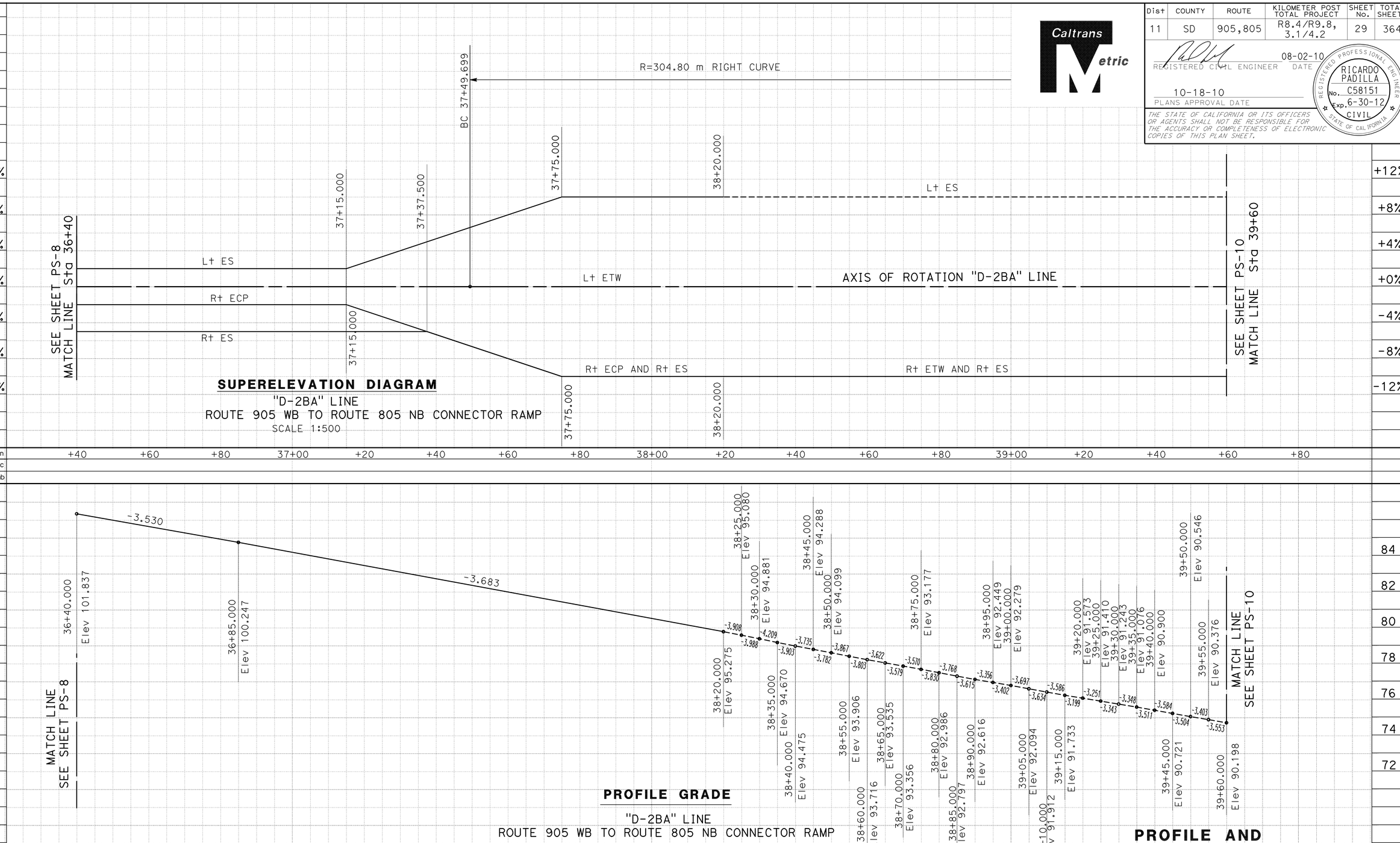

SUPERELEVATION DIAGRAM
"D-2BA" LINE
ROUTE 905 WB TO ROUTE 805 NB CONNECTOR RAMP
SCALE 1:500

PROFILE GRADE
"D-2BA" LINE
ROUTE 905 WB TO ROUTE 805 NB CONNECTOR RAMP
SCALE Horiz 1:500 Vert 1:100

PROFILE AND SUPERELEVATION DIAGRAM
SCALE AS SHOWN

PS-9

ALL DIMENSIONS ARE IN METERS UNLESS OTHERWISE SHOWN

Station	+40	+60	+80	37+00	+20	+40	+60	+80	38+00	+20	+40	+60	+80	39+00	+20	+40	+60	+80	TOTAL
m3 Exc																			1855.28
m3 Emb																			58.38

REVISED BY | DATE REVISED
RICARDO PADILLA | RAMON JUAREZ
CALCULATED-DESIGNED BY | CHECKED BY
FUNCTIONAL SUPERVISOR: CHRIS M. THOMAS

STATE OF CALIFORNIA - DEPARTMENT OF TRANSPORTATION
Caltrans PROJECT DEVELOPMENT

LAST REVISION 07-27-10 | DATE PLOTTED => 20-OCT-2010 | TIME PLOTTED => 13:26

Dist	COUNTY	ROUTE	KILOMETER POST TOTAL PROJECT	SHEET No.	TOTAL SHEETS
11	SD	905,805	R8.4/R9.8, 3.1/4.2	30	364

REGISTERED CIVIL ENGINEER 08-02-10 DATE

10-18-10
PLANS APPROVAL DATE

REGISTERED PROFESSIONAL ENGINEER RICARDO PADILLA No. C58151 Exp. 6-30-12 CIVIL STATE OF CALIFORNIA

THE STATE OF CALIFORNIA OR ITS OFFICERS OR AGENTS SHALL NOT BE RESPONSIBLE FOR THE ACCURACY OR COMPLETENESS OF ELECTRONIC COPIES OF THIS PLAN SHEET.

Caltrans Metric

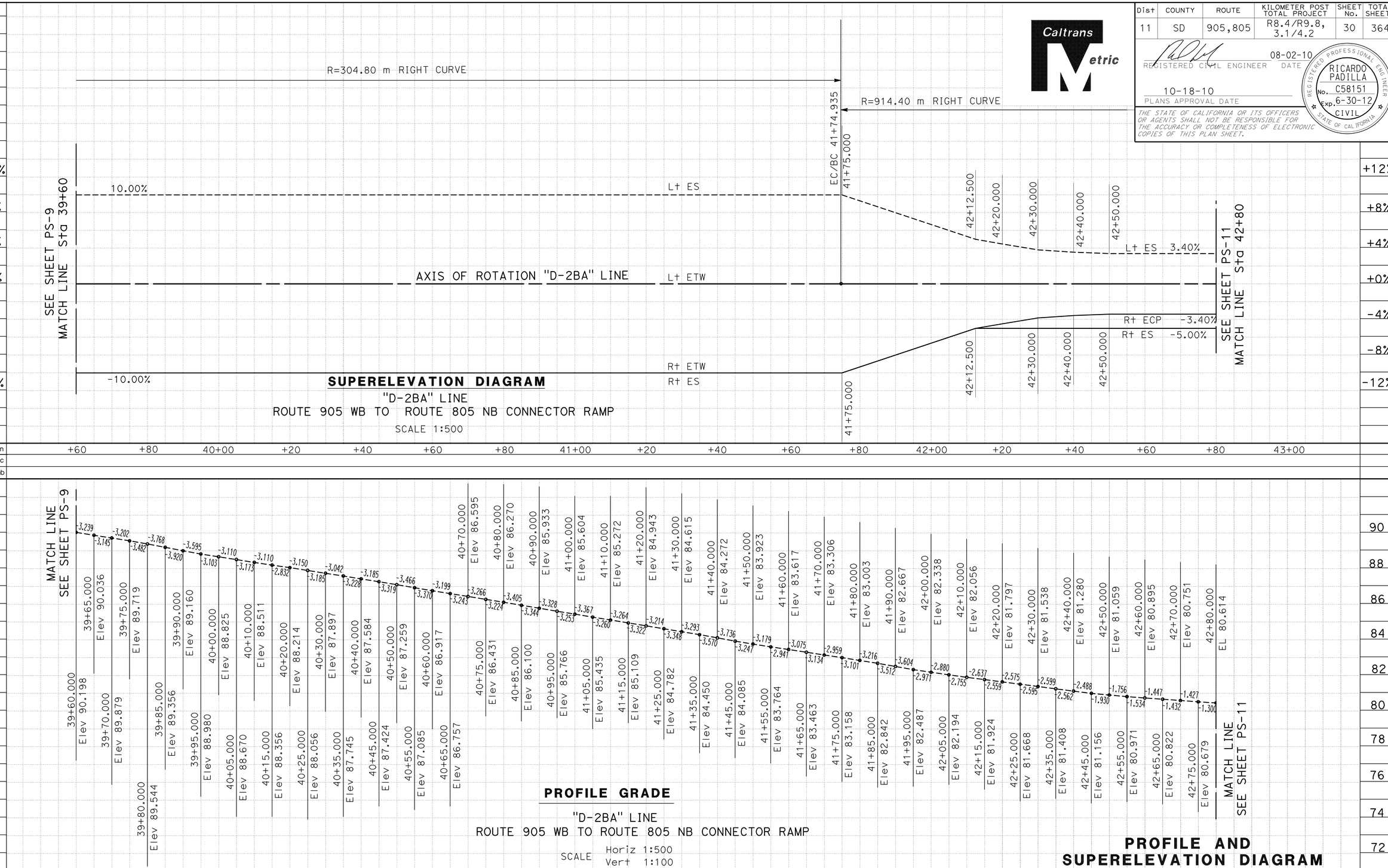

SUPERELEVATION DIAGRAM
"D-2BA" LINE
ROUTE 905 WB TO ROUTE 805 NB CONNECTOR RAMP
SCALE 1:500

PROFILE GRADE
"D-2BA" LINE
ROUTE 905 WB TO ROUTE 805 NB CONNECTOR RAMP
SCALE Horiz 1:500
Vert 1:100

ALL DIMENSIONS ARE IN METERS UNLESS OTHERWISE SHOWN

PROFILE AND SUPERELEVATION DIAGRAM
SCALE AS SHOW

PS-10

REVISED BY | DATE REVISED

RICARDO PADILLA | RAMON JUAREZ

CALCULATED-DESIGNED BY | CHECKED BY

FUNCTIONAL SUPERVISOR: CHRIS M. THOMAS

STATE OF CALIFORNIA - DEPARTMENT OF TRANSPORTATION
Caltrans PROJECT DEVELOPMENT

LAST REVISION | DATE PLOTTED => 20-OCT-2010 | TIME PLOTTED => 13:27
07-27-10

Dist	COUNTY	ROUTE	KILOMETER POST TOTAL PROJECT	SHEET No.	TOTAL SHEETS
11	SD	905,805	R8.4/R9.8, 3.1/4.2	31	364

REGISTERED CIVIL ENGINEER 08-02-10 DATE

10-18-10
PLANS APPROVAL DATE

REGISTERED PROFESSIONAL ENGINEER RICARDO PADILLA No. C58151 Exp. 6-30-12 CIVIL STATE OF CALIFORNIA

THE STATE OF CALIFORNIA OR ITS OFFICERS OR AGENTS SHALL NOT BE RESPONSIBLE FOR THE ACCURACY OR COMPLETENESS OF ELECTRONIC COPIES OF THIS PLAN SHEET.

Caltrans Metric

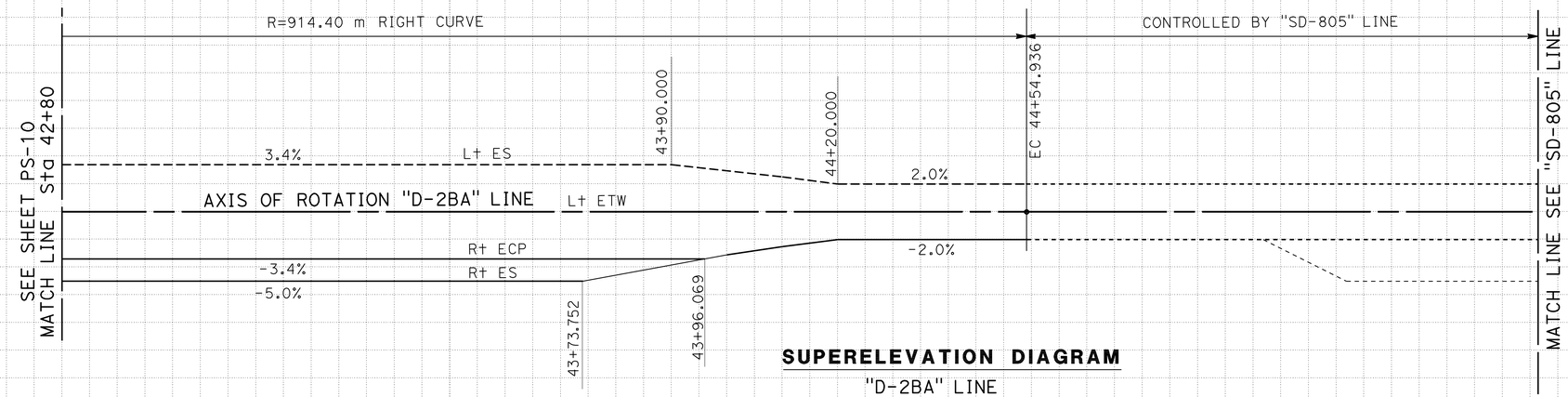

SUPERELEVATION DIAGRAM

"D-2BA" LINE
ROUTE 905 WB TO ROUTE 805 NB CONNECTOR RAMP
SCALE 1:500

Station	+80	43+00	+20	+40	+60	+80	44+00	+20	+40	+60	+80	45+00	+20	+40	+60
m³ Exc															
m³ Emb															

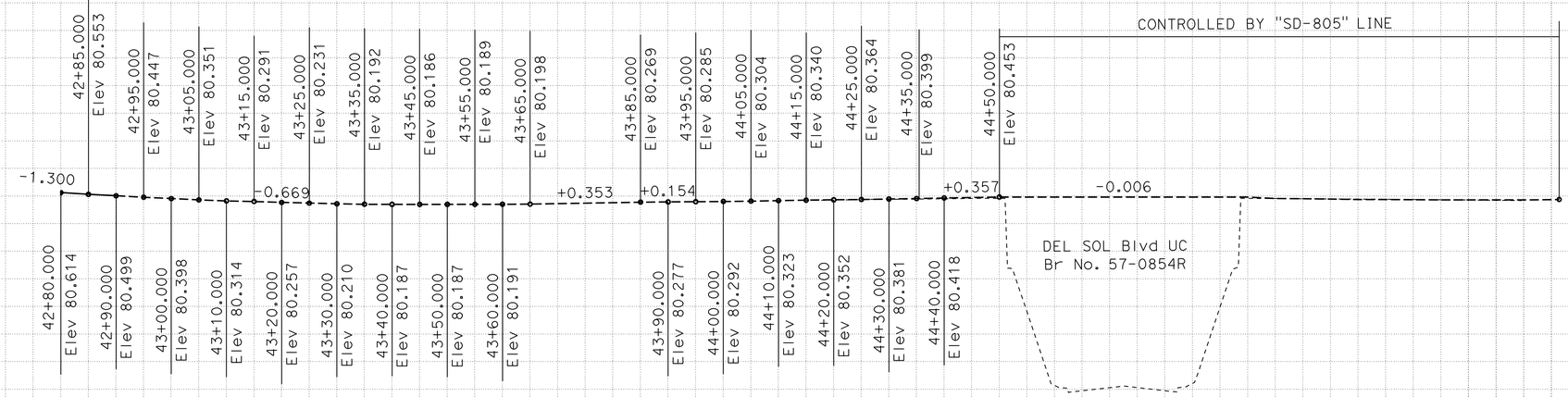

PROFILE GRADE

"D-2BA" LINE
ROUTE 905 WB TO ROUTE 805 NB CONNECTOR RAMP

SCALE Horiz 1:500
Vert 1:100

ALL DIMENSIONS ARE IN METERS UNLESS OTHERWISE SHOWN

PROFILE AND SUPERELEVATION DIAGRAM

SCALE AS SHOWN

PS-11

Station	+80	43+00	+20	+40	+60	+80	44+00	+20	+40	+60	+80	45+00	+20	+40	+60	TOTAL
m³ Exc																2761.43
m³ Emb																51.87

REVISED BY | DATE REVISED
RICARDO PADILLA | RAMON JUAREZ
CALCULATED-DESIGNED BY | CHECKED BY
FUNCTIONAL SUPERVISOR: CHRIS M. THOMAS

STATE OF CALIFORNIA - DEPARTMENT OF TRANSPORTATION
Caltrans PROJECT DEVELOPMENT

LAST REVISION 07-27-10 | DATE PLOTTED => 20-OCT-2010 | TIME PLOTTED => 12:35

Dist	COUNTY	ROUTE	KILOMETER POST TOTAL PROJECT	SHEET No.	TOTAL SHEETS
11	SD	905,805	R8.4/R9.8, 3.1/4.2	32	364

REGISTERED CIVIL ENGINEER 08-02-10 DATE

10-18-10
PLANS APPROVAL DATE

REGISTERED PROFESSIONAL ENGINEER RICARDO PADILLA No. C58151 Exp. 6-30-12 CIVIL STATE OF CALIFORNIA

THE STATE OF CALIFORNIA OR ITS OFFICERS OR AGENTS SHALL NOT BE RESPONSIBLE FOR THE ACCURACY OR COMPLETENESS OF ELECTRONIC COPIES OF THIS PLAN SHEET.

Caltrans Metric

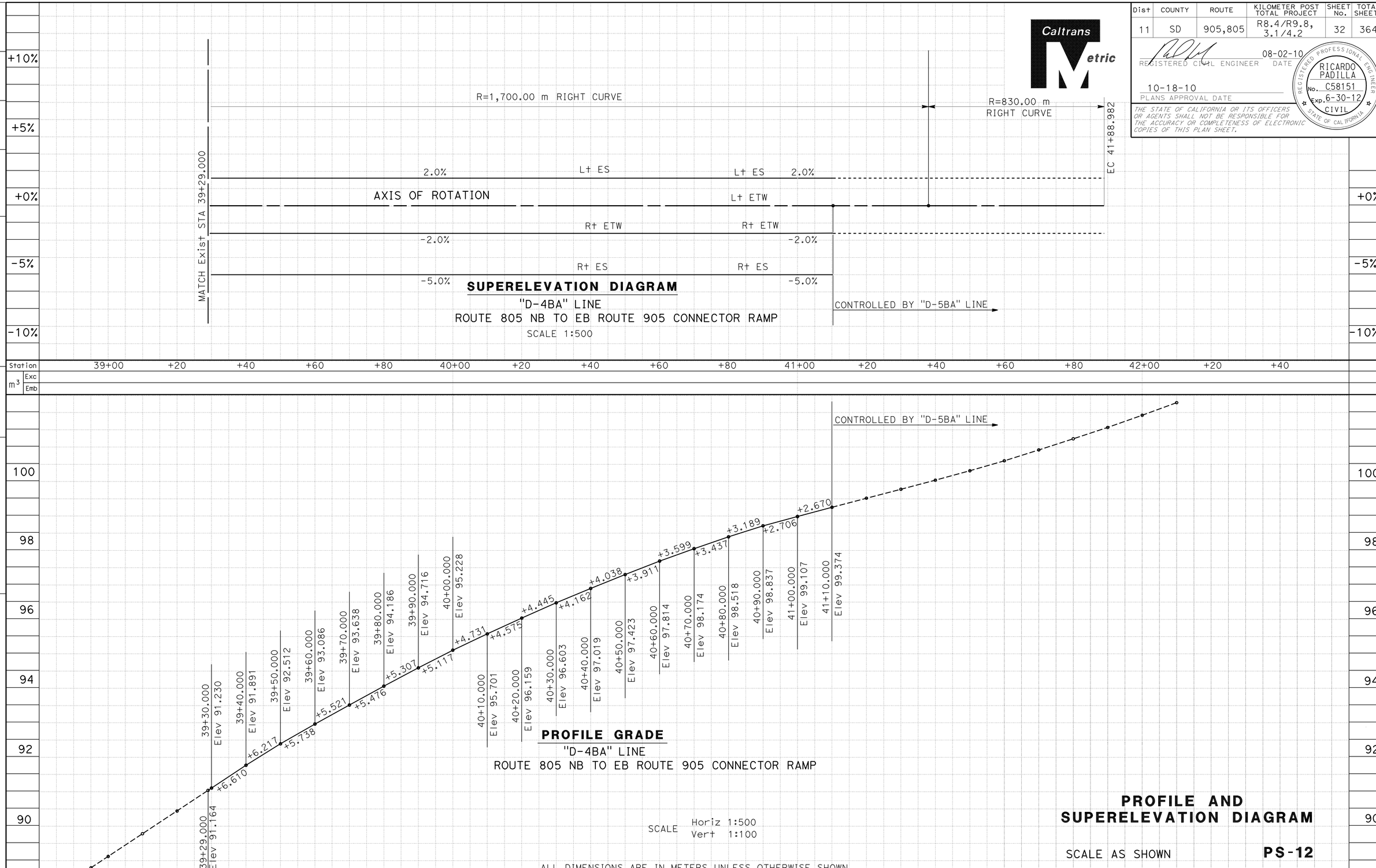

PROFILE AND SUPERELEVATION DIAGRAM

SCALE AS SHOWN

PS-12

STATE OF CALIFORNIA - DEPARTMENT OF TRANSPORTATION
Caltrans PROJECT DEVELOPMENT

FUNCTIONAL SUPERVISOR: CHRIS M. THOMAS

CALCULATED-DESIGNED BY: RICARDO PADILLA
CHECKED BY: RAMON JUAREZ

REVISED BY / DATE REVISED

LAST REVISION 07-27-10
DATE PLOTTED => 20-OCT-2010
TIME PLOTTED => 12:36

Dist	COUNTY	ROUTE	KILOMETER POST TOTAL PROJECT	SHEET No.	TOTAL SHEETS
11	SD	905,805	R8.4/R9.8, 3.1/4.2	33	364

REGISTERED CIVIL ENGINEER 08-02-10 DATE

10-18-10
PLANS APPROVAL DATE

REGISTERED PROFESSIONAL ENGINEER RICARDO PADILLA No. C58151 Exp. 6-30-12 CIVIL STATE OF CALIFORNIA

THE STATE OF CALIFORNIA OR ITS OFFICERS OR AGENTS SHALL NOT BE RESPONSIBLE FOR THE ACCURACY OR COMPLETENESS OF ELECTRONIC COPIES OF THIS PLAN SHEET.

Caltrans Metric

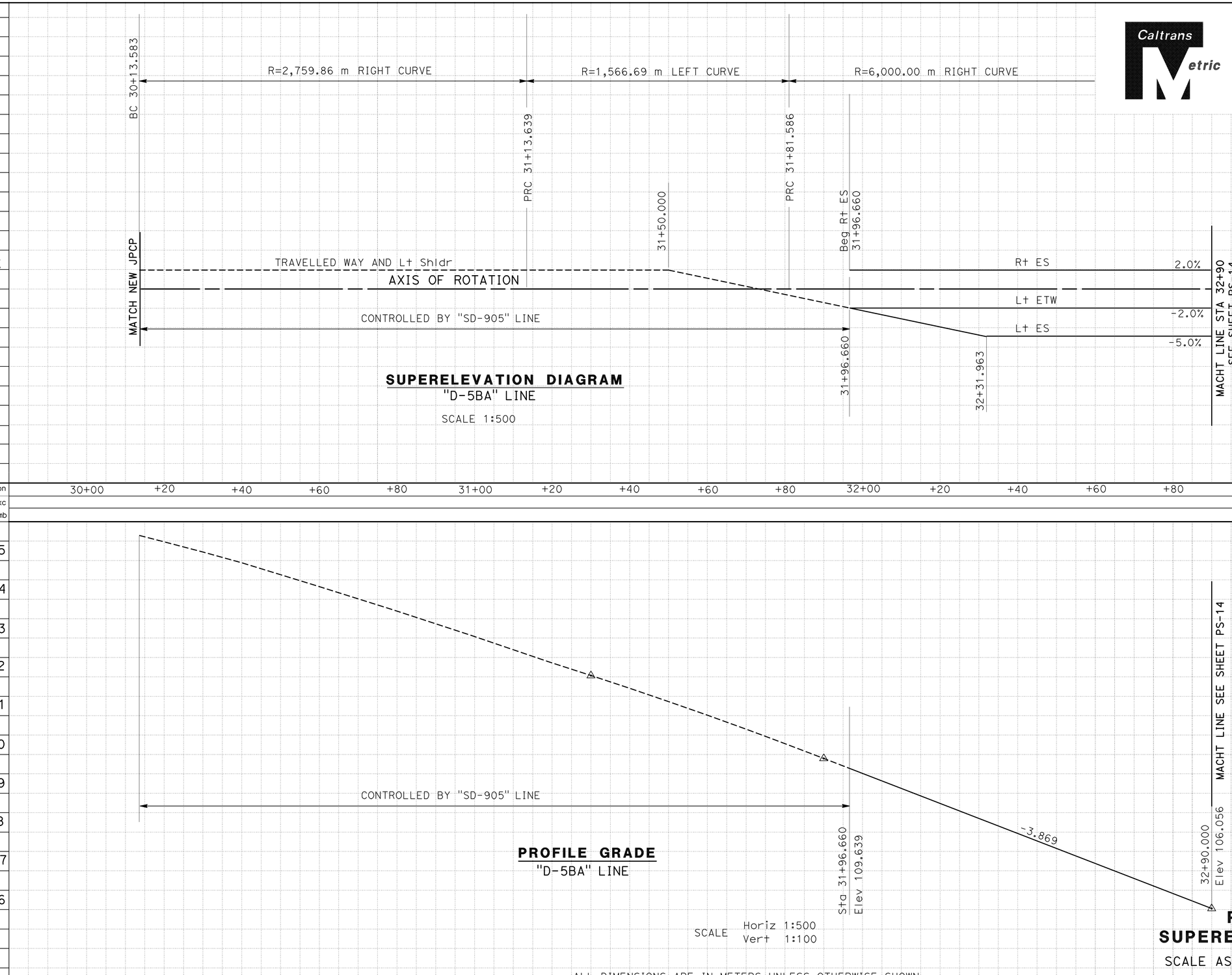

PROFILE AND SUPERELEVATION DIAGRAM
SCALE AS SHOWN
PS-13

REVISED BY | DATE REVISED
RICARDO PADILLA | RAMON JUAREZ
CALCULATED-DESIGNED BY | CHECKED BY
FUNCTIONAL SUPERVISOR

STATE OF CALIFORNIA - DEPARTMENT OF TRANSPORTATION
Caltrans PROJECT DEVELOPMENT

LAST REVISION 07-27-10 | DATE PLOTTED => 20-OCT-2010 | TIME PLOTTED => 12:36

Dist	COUNTY	ROUTE	KILOMETER POST TOTAL PROJECT	SHEET No.	TOTAL SHEETS
11	SD	905,805	R8.4/R9.8, 3.1/4.2	34	364

REGISTERED CIVIL ENGINEER 08-02-10 DATE

10-18-10
PLANS APPROVAL DATE

REGISTERED PROFESSIONAL ENGINEER RICARDO PADILLA No. C58151 Exp. 6-30-12 CIVIL STATE OF CALIFORNIA

THE STATE OF CALIFORNIA OR ITS OFFICERS OR AGENTS SHALL NOT BE RESPONSIBLE FOR THE ACCURACY OR COMPLETENESS OF ELECTRONIC COPIES OF THIS PLAN SHEET.

Caltrans Metric

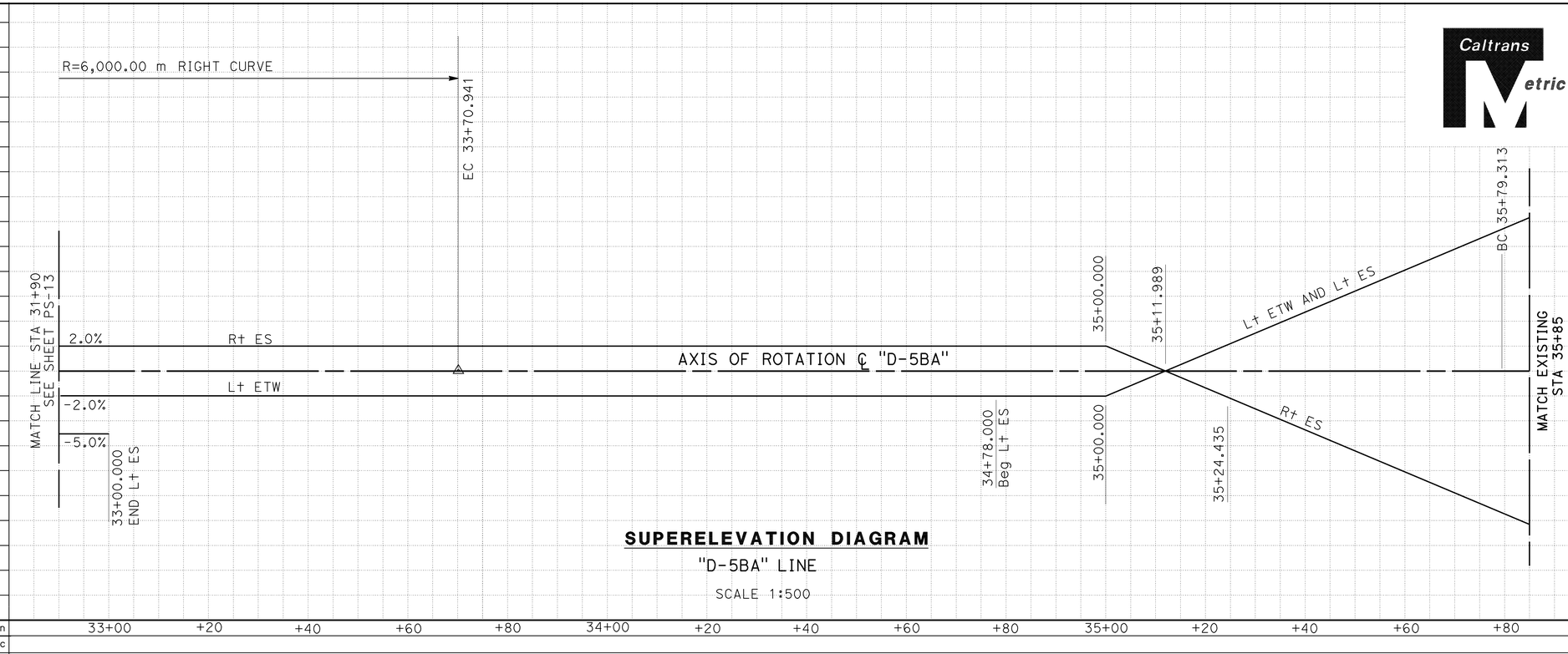

SUPERELEVATION DIAGRAM

"D-5BA" LINE

SCALE 1:500

Station: 33+00, +20, +40, +60, +80, 34+00, +20, +40, +60, +80, 35+00, +20, +40, +60, +80

m³ Exc / Emb

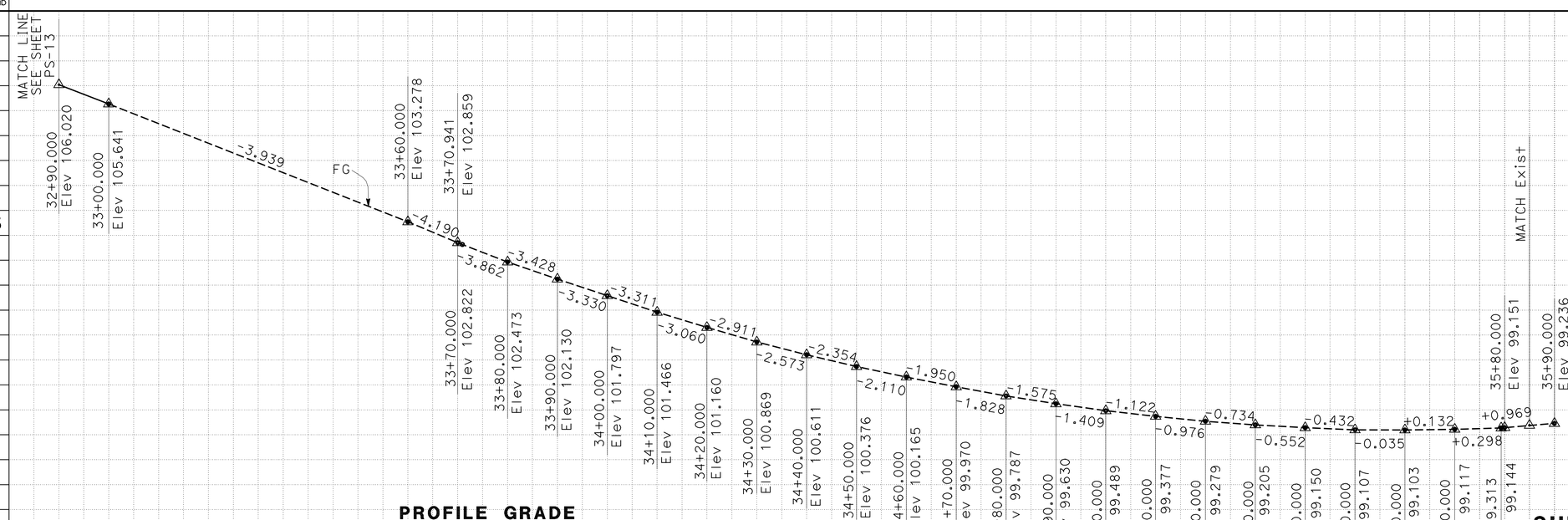

PROFILE GRADE

"D-5BA" LINE

SCALE: Horiz 1:500
Vert 1:100

PROFILE AND SUPERELEVATION DIAGRAM

SCALE AS SHOWN

PS-14

ALL DIMENSIONS ARE IN METERS UNLESS OTHERWISE SHOWN

Station: 33+00, +20, +40, +60, +80, 34+00, +20, +40, +60, +80, 35+00, +20, +40, +60, +80

m³ Exc / Emb

	TOTAL
Exc	2089.48
Emb	133.53

REVISED BY | DATE REVISED

RICARDO PADILLA | RAMON JUAREZ

CALCULATED-DESIGNED BY | CHECKED BY

FUNCTIONAL SUPERVISOR: CHIS M. THOMAS

STATE OF CALIFORNIA - DEPARTMENT OF TRANSPORTATION

Caltrans PROJECT DEVELOPMENT

LAST REVISION 07-27-10 | DATE PLOTTED => 20-OCT-2010 | TIME PLOTTED => 12:36

Dist	COUNTY	ROUTE	KILOMETER POST TOTAL PROJECT	SHEET No.	TOTAL SHEETS
11	SD	905,805	R8.4/R9.8, 3.1/4.2	35	364

REGISTERED CIVIL ENGINEER 08-02-10 DATE

10-18-10
PLANS APPROVAL DATE

REGISTERED PROFESSIONAL ENGINEER RICARDO PADILLA No. C58151 Exp. 6-30-12 CIVIL STATE OF CALIFORNIA

THE STATE OF CALIFORNIA OR ITS OFFICERS OR AGENTS SHALL NOT BE RESPONSIBLE FOR THE ACCURACY OR COMPLETENESS OF ELECTRONIC COPIES OF THIS PLAN SHEET.

Caltrans Metric

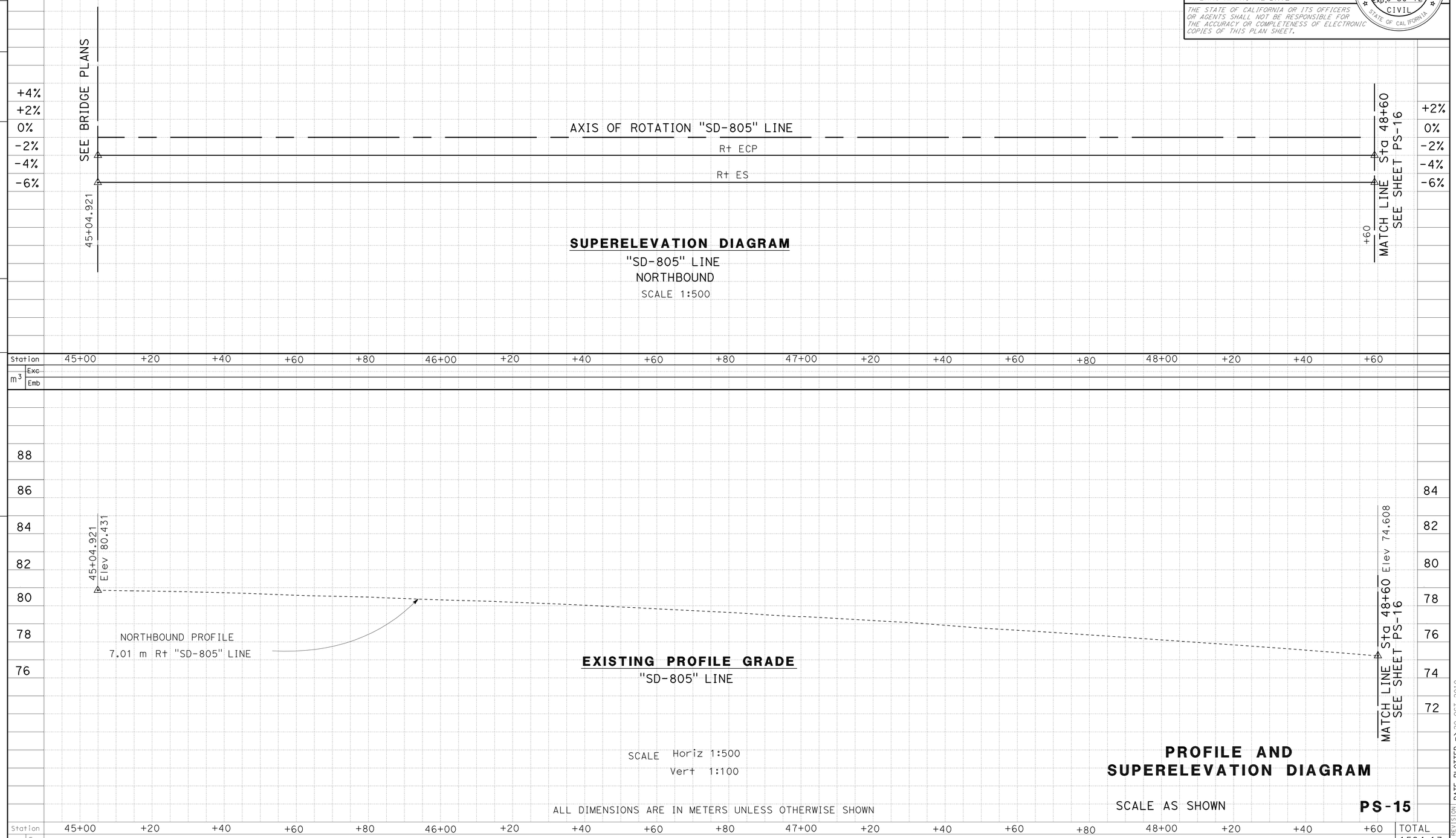

PROFILE AND SUPERELEVATION DIAGRAM

SCALE AS SHOWN

PS-15

REVISED BY | DATE REVISED

RICARDO PADILLA | RAMON JUAREZ

CALCULATED-DESIGNED BY | CHECKED BY

FUNCTIONAL SUPERVISOR: CHRIS M. THOMAS

STATE OF CALIFORNIA - DEPARTMENT OF TRANSPORTATION
Caltrans PROJECT DEVELOPMENT

LAST REVISION 07-27-10 | DATE PLOTTED => 20-OCT-2010 | TIME PLOTTED => 12:36

BORDER LAST REVISED 3/1/2007 | RELATIVE BORDER SCALE IS IN MILLIMETERS 0 20 40 60 80 | USERNAME => s135318 | DGN FILE => b09183fb015.dgn | CU 11225 | EA 091831

Dist	COUNTY	ROUTE	KILOMETER POST TOTAL PROJECT	SHEET No.	TOTAL SHEETS
11	SD	905,805	R8.4/R9.8, 3.1/4.2	36	364

REGISTERED CIVIL ENGINEER 08-02-10 DATE

10-18-10
PLANS APPROVAL DATE

REGISTERED PROFESSIONAL ENGINEER RICARDO PADILLA No. C58151 Exp. 6-30-12 CIVIL STATE OF CALIFORNIA

THE STATE OF CALIFORNIA OR ITS OFFICERS OR AGENTS SHALL NOT BE RESPONSIBLE FOR THE ACCURACY OR COMPLETENESS OF ELECTRONIC COPIES OF THIS PLAN SHEET.

Caltrans Metric

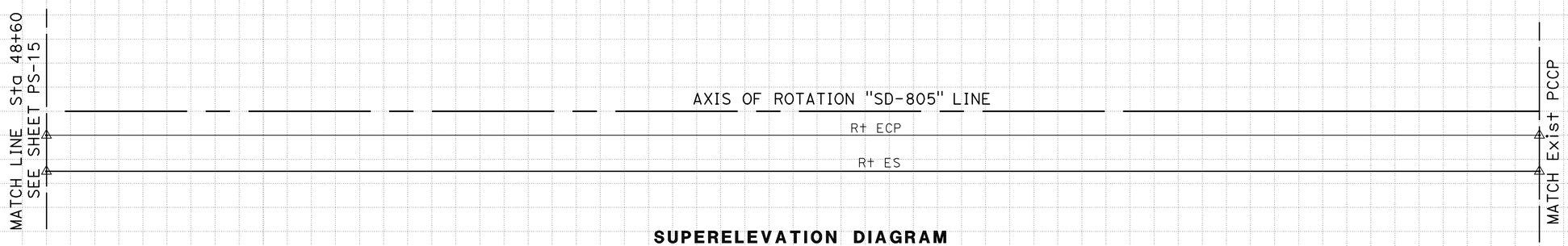

SUPERELEVATION DIAGRAM
"SD-805" LINE
NORTHBOUND
SCALE 1:500

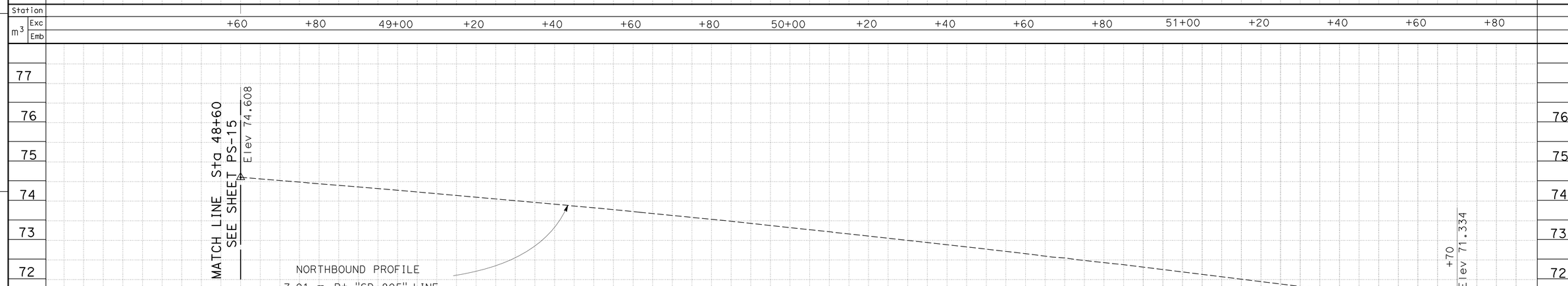

EXISTING PROFILE GRADE
"SD-805" LINE

SCALE Horiz 1:500
Vert 1:100

ALL DIMENSIONS ARE IN METERS UNLESS OTHERWISE SHOWN

PROFILE AND SUPERELEVATION DIAGRAM

SCALE AS SHOWN **PS-16**

Station	+60	+80	49+00	+20	+40	+60	+80	50+00	+20	+40	+60	+80	51+00	+20	+40	+60	+80	TOTAL
m3 Exc																		1489.37
m3 Emb																		138.34

REVISED BY | DATE REVISED
RICARDO PADILLA | RAMON JUAREZ
CALCULATED-DESIGNED BY | CHECKED BY
FUNCTIONAL SUPERVISOR: CHIS M. THOMAS

STATE OF CALIFORNIA - DEPARTMENT OF TRANSPORTATION
Caltrans PROJECT DEVELOPMENT

LAST REVISION 07-27-10 | DATE PLOTTED => 20-OCT-2010 | TIME PLOTTED => 12:36

Dist	COUNTY	ROUTE	KILOMETER POST TOTAL PROJECT	SHEET No.	TOTAL SHEETS
11	SD	905,805	R8.4/R9.8, 3.1/4.2	37	364

REGISTERED CIVIL ENGINEER 07-29-10 DATE

10-18-10
PLANS APPROVAL DATE

REGISTERED PROFESSIONAL ENGINEER RICARDO PADILLA No. C58151 Exp. 6-30-12 CIVIL STATE OF CALIFORNIA

THE STATE OF CALIFORNIA OR ITS OFFICERS OR AGENTS SHALL NOT BE RESPONSIBLE FOR THE ACCURACY OR COMPLETENESS OF ELECTRONIC COPIES OF THIS PLAN SHEET.

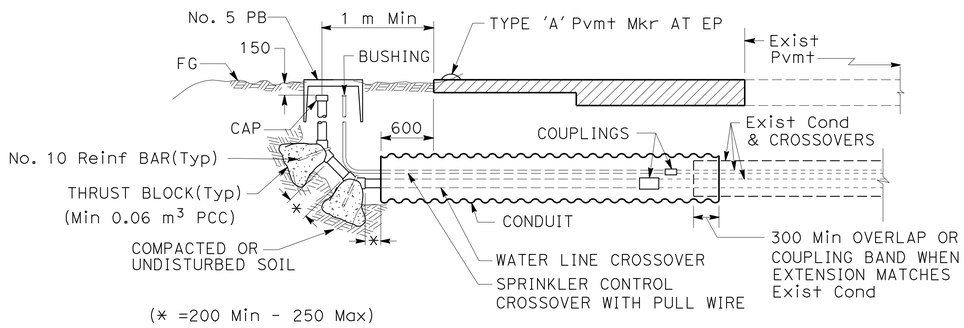

SECTION

EXTEND IRRIGATION CROSSOVER

(MODIFIED)

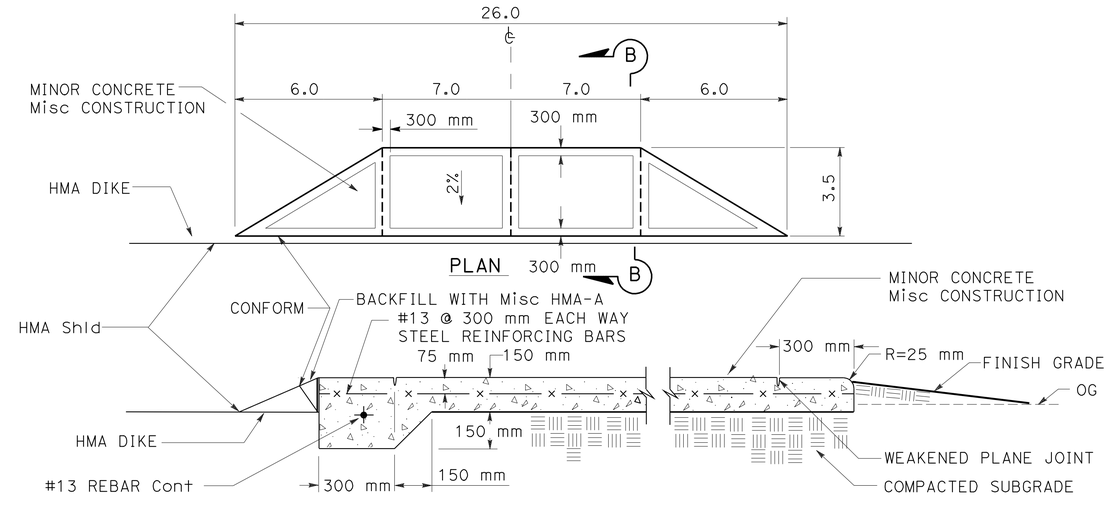

SECTION B-B

MINOR CONCRETE (MISCELLANEOUS CONSTRUCTION)

MAINTENANCE VEHICLE PULLOUT

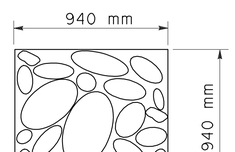

STAMPED COBBLE PATTERN

(SEE BRIDGE PLANS)
(IMPRESSION DEPTH 6 mm +/- 25%)

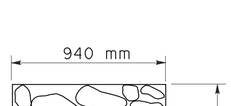

STAMPED CONCRETE PATTERN

RANDOM RIVER STONE (SEE LAYOUT SHEETS)
(IMPRESSION DEPTH 6 mm +/- 25%)

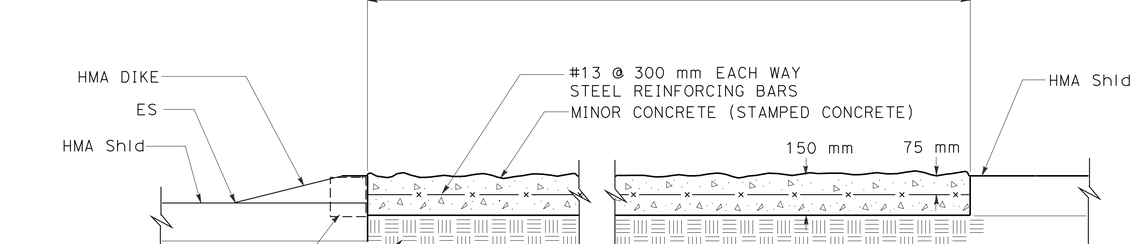

NOTE:
1. EXPANSION JOINTS AT 7.6 m OC Min

MINOR CONCRETE (STAMPED CONCRETE)

ALL DIMENSIONS ARE IN METERS UNLESS OTHERWISE SHOWN

CONSTRUCTION DETAILS

NO SCALE

C-1

REVISED BY	DATE REVISED

CALCULATED-DESIGNED BY: RICARDO PADILLA
CHECKED BY: RAMON JUAREZ
FUNCTIONAL SUPERVISOR: CHRIS M. THOMAS

STATE OF CALIFORNIA - DEPARTMENT OF TRANSPORTATION
Caltrans PROJECT DEVELOPMENT

LAST REVISION 07-20-10
DATE PLOTTED => 20-OCT-2010
TIME PLOTTED => 12:36

Dist	COUNTY	ROUTE	KILOMETER POST TOTAL PROJECT	SHEET No.	TOTAL SHEETS
11	SD	905,805	R8.4/R9.8, 3.1/4.2	38	364

REGISTERED CIVIL ENGINEER 07-29-10 DATE

10-18-10
PLANS APPROVAL DATE

REGISTERED PROFESSIONAL ENGINEER RICARDO PADILLA No. C58151 Exp. 6-30-12 CIVIL STATE OF CALIFORNIA

THE STATE OF CALIFORNIA OR ITS OFFICERS OR AGENTS SHALL NOT BE RESPONSIBLE FOR THE ACCURACY OR COMPLETENESS OF ELECTRONIC COPIES OF THIS PLAN SHEET.

Caltrans Metric

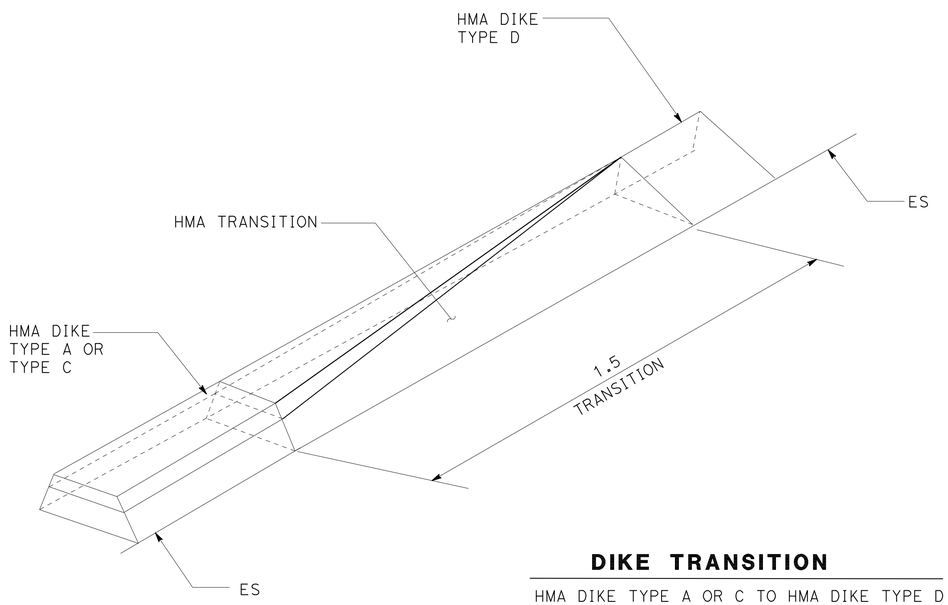

DIKE TRANSITION

HMA DIKE TYPE A OR C TO HMA DIKE TYPE D

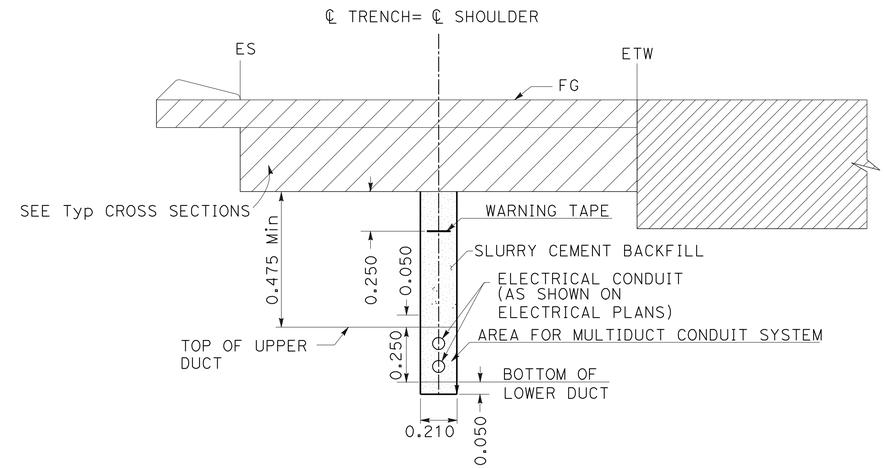

TRENCH IN SHOULDER

FOR MULTIDUCT CONDUIT SYSTEM

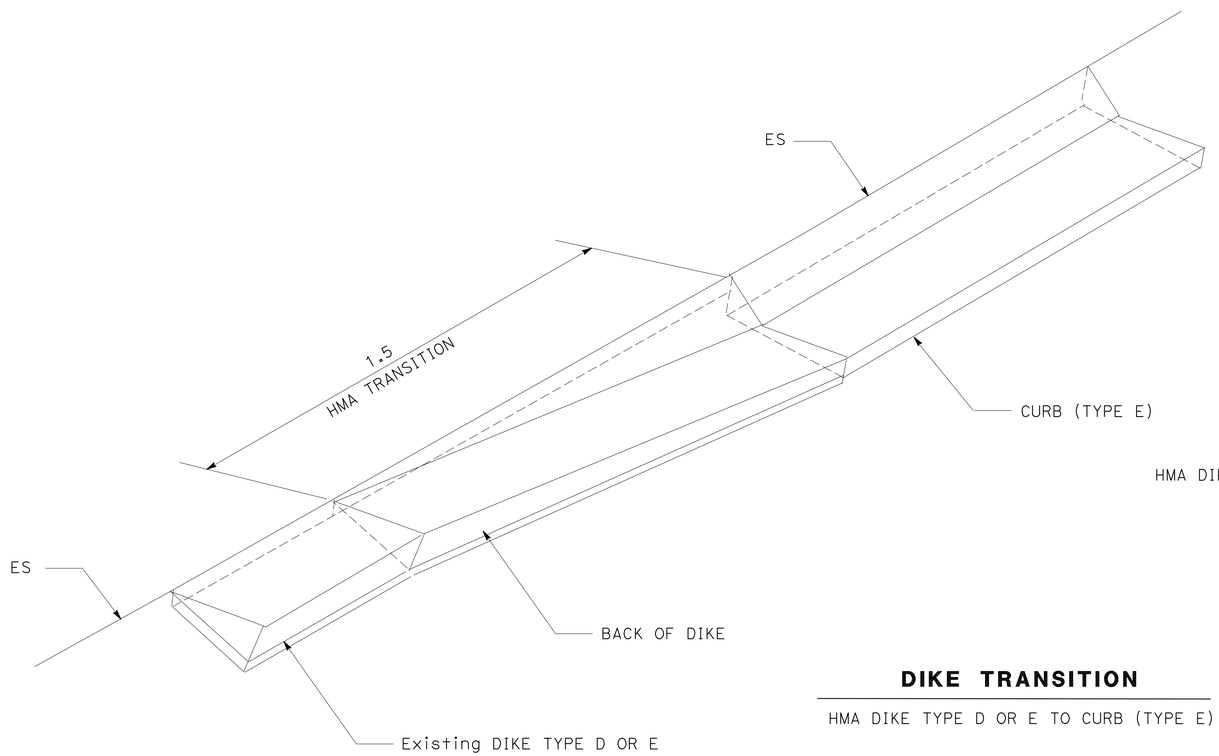

DIKE TRANSITION

HMA DIKE TYPE D OR E TO CURB (TYPE E)

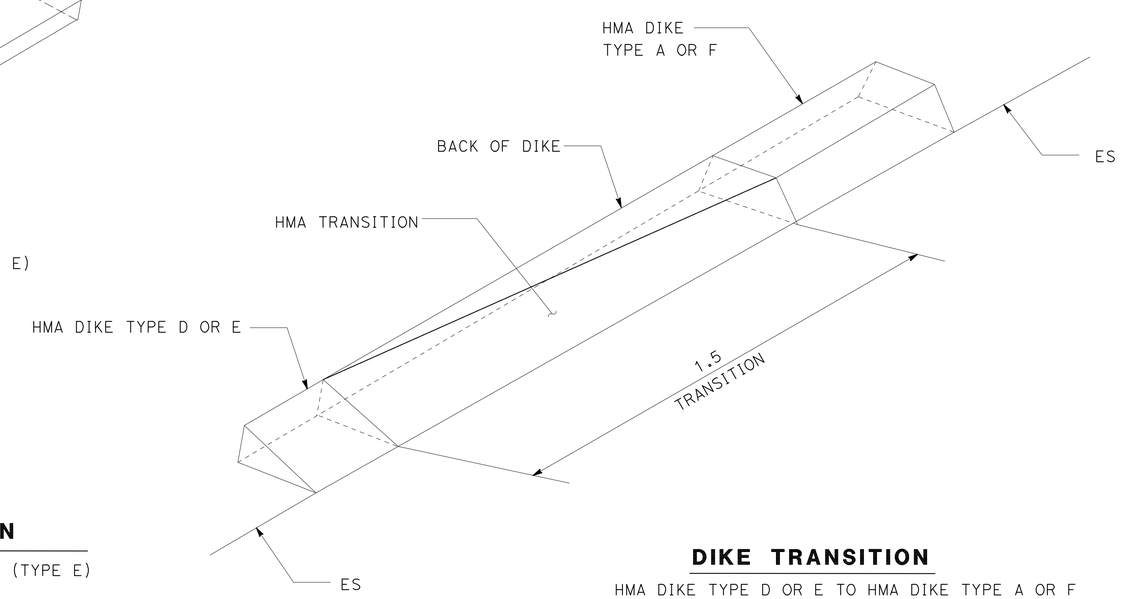

DIKE TRANSITION

HMA DIKE TYPE D OR E TO HMA DIKE TYPE A OR F

ALL DIMENSIONS ARE IN METERS
UNLESS OTHERWISE SHOWN.

CONSTRUCTION DETAILS

NO SCALE

C-2

STATE OF CALIFORNIA - DEPARTMENT OF TRANSPORTATION
Caltrans PROJECT DEVELOPMENT

FUNCTIONAL SUPERVISOR: CHRIS M. THOMAS
CALCULATED-DESIGNED BY: RICARDO PADILLA
CHECKED BY: RAMON JUAREZ
REVISED BY / DATE REVISED

LAST REVISION 04-22-10
DATE PLOTTED => 20-OCT-2010
TIME PLOTTED => 12:36

Dist	COUNTY	ROUTE	KILOMETER POST TOTAL PROJECT	SHEET No.	TOTAL SHEETS
11	SD	905,805	R8.4/R9.8, 3.1/4.2	39	364

REGISTERED CIVIL ENGINEER 07-29-10 DATE

10-18-10
PLANS APPROVAL DATE

REGISTERED PROFESSIONAL ENGINEER RICARDO PADILLA No. C58151 Exp. 6-30-12 CIVIL STATE OF CALIFORNIA

THE STATE OF CALIFORNIA OR ITS OFFICERS OR AGENTS SHALL NOT BE RESPONSIBLE FOR THE ACCURACY OR COMPLETENESS OF ELECTRONIC COPIES OF THIS PLAN SHEET.

Caltrans Metric

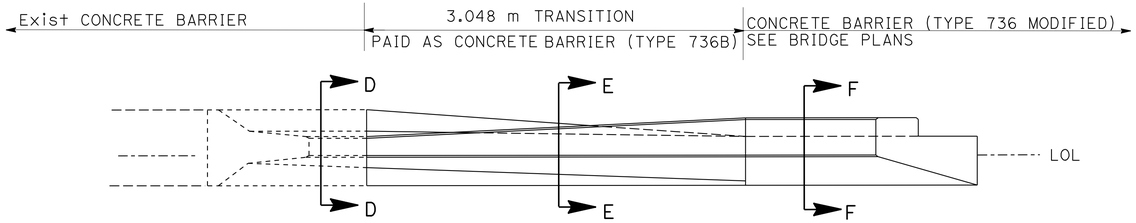

PLAN

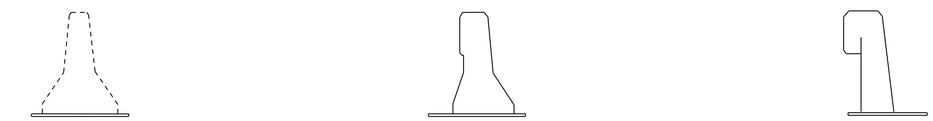

SECTION D-D SECTION E-E SECTION F-F

BARRIER TRANSITION

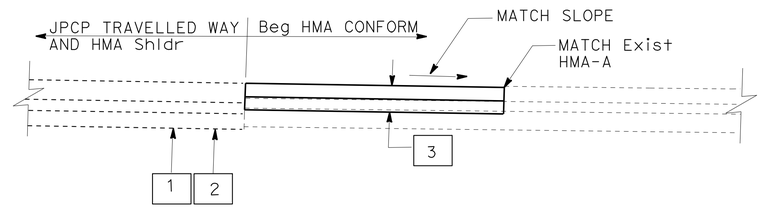

HMA-A CONFORM

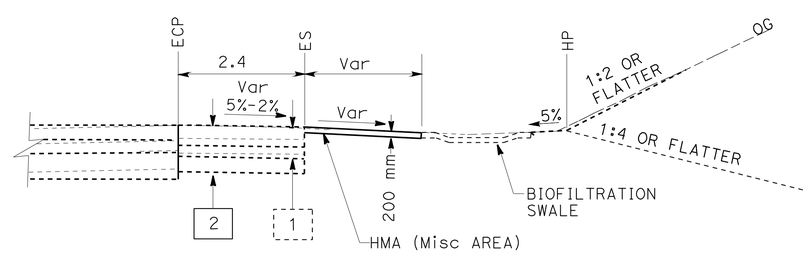

HOT MIX ASPHALT (MISCELLANEOUS AREA)

Sta 42+13.97 TO 42+97.87 "D-2BA" LINE

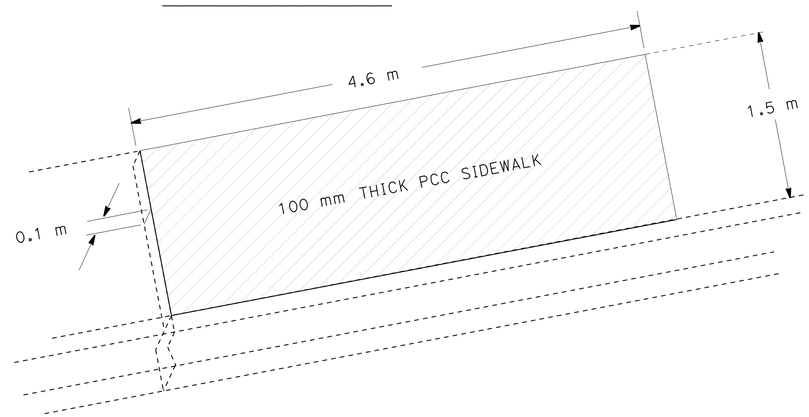

SIDEWALK DETAIL

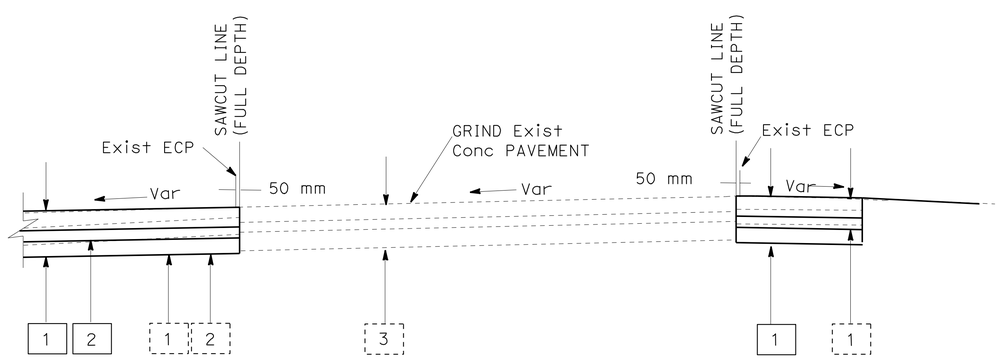

SAWCUT CONCRETE

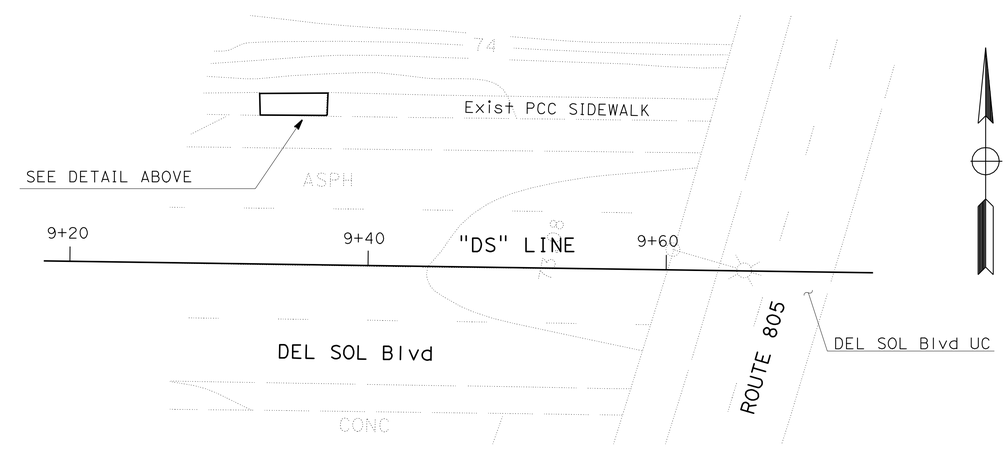

SIDEWALK REPLACEMENT

ALL DIMENSIONS ARE IN METERS UNLESS OTHERWISE SHOWN.

CONSTRUCTION DETAILS

NO SCALE

C-3

STATE OF CALIFORNIA - DEPARTMENT OF TRANSPORTATION
Caltrans PROJECT DEVELOPMENT

FUNCTIONAL SUPERVISOR: CHRIS M. THOMAS
CALCULATED-DESIGNED BY: RICARDO PADILLA
CHECKED BY: RAMON JUAREZ
REVISED BY / DATE REVISED

LAST REVISION 07-20-10 | DATE PLOTTED => 20-OCT-2010 | TIME PLOTTED => 12:36

Dist	COUNTY	ROUTE	KILOMETER POST TOTAL PROJECT	SHEET No.	TOTAL SHEETS
11	SD	905,805	R8.4/R9.8, 3.1/4.2	40	364

REGISTERED CIVIL ENGINEER 07-29-10 DATE

10-18-10
PLANS APPROVAL DATE

REGISTERED PROFESSIONAL ENGINEER RICARDO PADILLA No. C58151 Exp. 6-30-12 CIVIL STATE OF CALIFORNIA

THE STATE OF CALIFORNIA OR ITS OFFICERS OR AGENTS SHALL NOT BE RESPONSIBLE FOR THE ACCURACY OR COMPLETENESS OF ELECTRONIC COPIES OF THIS PLAN SHEET.

Caltrans Metric

LEGEND

- SLOPE REPAIR (1200 mm Max DEPTH)
- IMPORTED TOPSOIL (900 mm Max DEPTH)
- COMPOST (INCORPORATE) (150 mm)

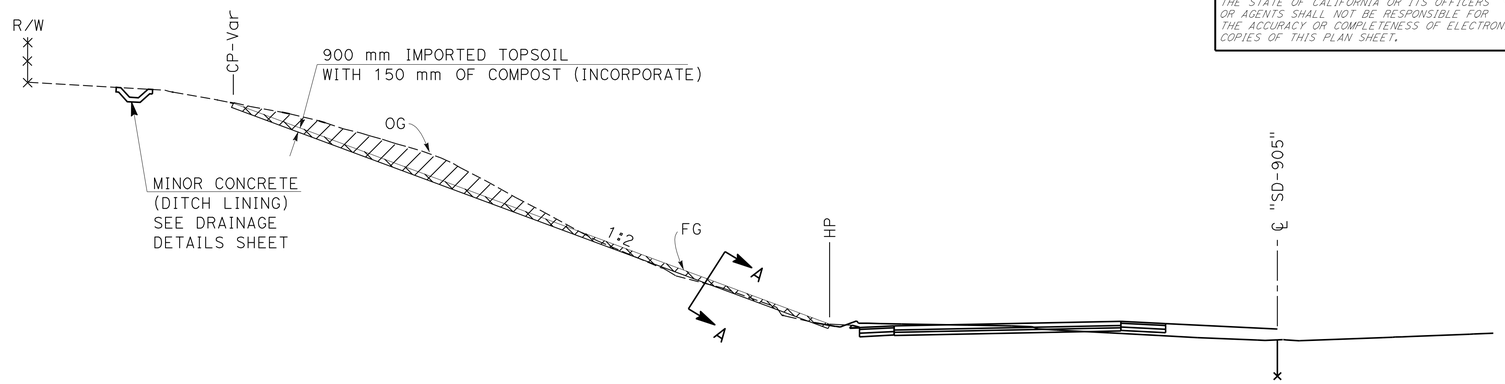

SD-905 SLOPE REPAIR

Sta 120+80 TO Sta 122+20 "SD-905" LINE

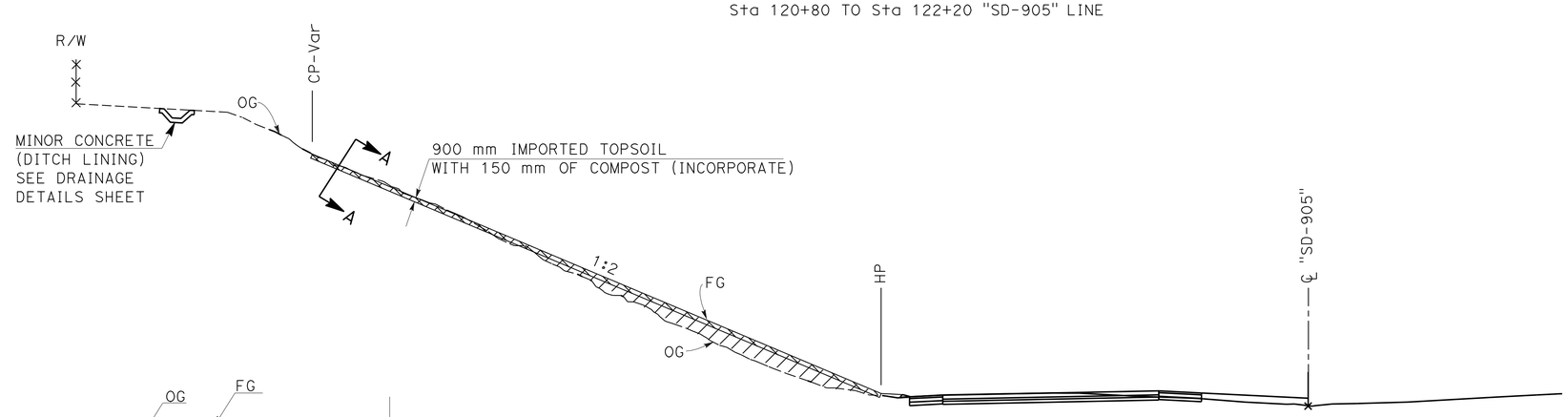

SD-905 SLOPE REPAIR

Sta 117+70 TO Sta 119+70 "SD-905" LINE

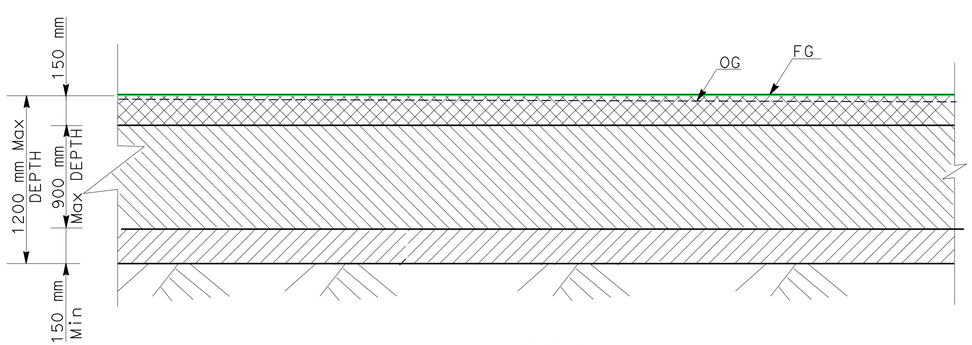

SECTION A-A

NOTE: FOR COMPOST (INCORPORATE) QUANTITIES SEE TEMPORARY WATER POLLUTION CONTROL SHEETS.

CONSTRUCTION DETAILS

NO SCALE

C-4

REVISED BY	DATE REVISED

CALCULATED-DESIGNED BY: RICARDO PADILLA
CHECKED BY: RAMON JUAREZ
FUNCTIONAL SUPERVISOR: CHRIS M. THOMAS

STATE OF CALIFORNIA - DEPARTMENT OF TRANSPORTATION
Caltrans PROJECT DEVELOPMENT

LAST REVISION 07-20-10
DATE PLOTTED => 20-OCT-2010
TIME PLOTTED => 12:36

Dist	COUNTY	ROUTE	KILOMETER POST TOTAL PROJECT	SHEET No.	TOTAL SHEETS
11	SD	905,805	R8.4/R9.8, 3.1/4.2	41	364

REGISTERED CIVIL ENGINEER 07-26-10 DATE

10-18-10
PLANS APPROVAL DATE

REGISTERED PROFESSIONAL ENGINEER RICARDO PADILLA No. C58151 Exp. 6-30-12 CIVIL STATE OF CALIFORNIA

THE STATE OF CALIFORNIA OR ITS OFFICERS OR AGENTS SHALL NOT BE RESPONSIBLE FOR THE ACCURACY OR COMPLETENESS OF ELECTRONIC COPIES OF THIS PLAN SHEET.

Caltrans Metric

NOTE:

1. FOR ACCURATE RIGHT OF WAY AND ACCESS DATA, CONTACT RIGHT OF WAY ENGINEERING AT THE DISTRICT OFFICE.

LEGEND

- DIRECTION OF FLOW
- SURFACE FLOW DIRECTION (1:2 SLOPE OR FLATTER UNLESS OTHERWISE NOTED)
- TEMPORARY CONSTRUCTION ENTRANCE (TYPE 2)
- TEMPORARY DRAINAGE INLET PROTECTION (TYPE 4A) OR (TYPE 5)
- TFR — TEMPORARY FIBER ROLL
- WASH — TEMPORARY CONCRETE WASHOUT FACILITY
- TEMPORARY HYDRAULIC MULCH
- TEMPORARY CHECK DAM (3 m EACH)
- COMPOST (INCORPORATE) EROSION CONTROL (HYDROSEED)
- BIOFILTRATION SWALE FLOWLINE

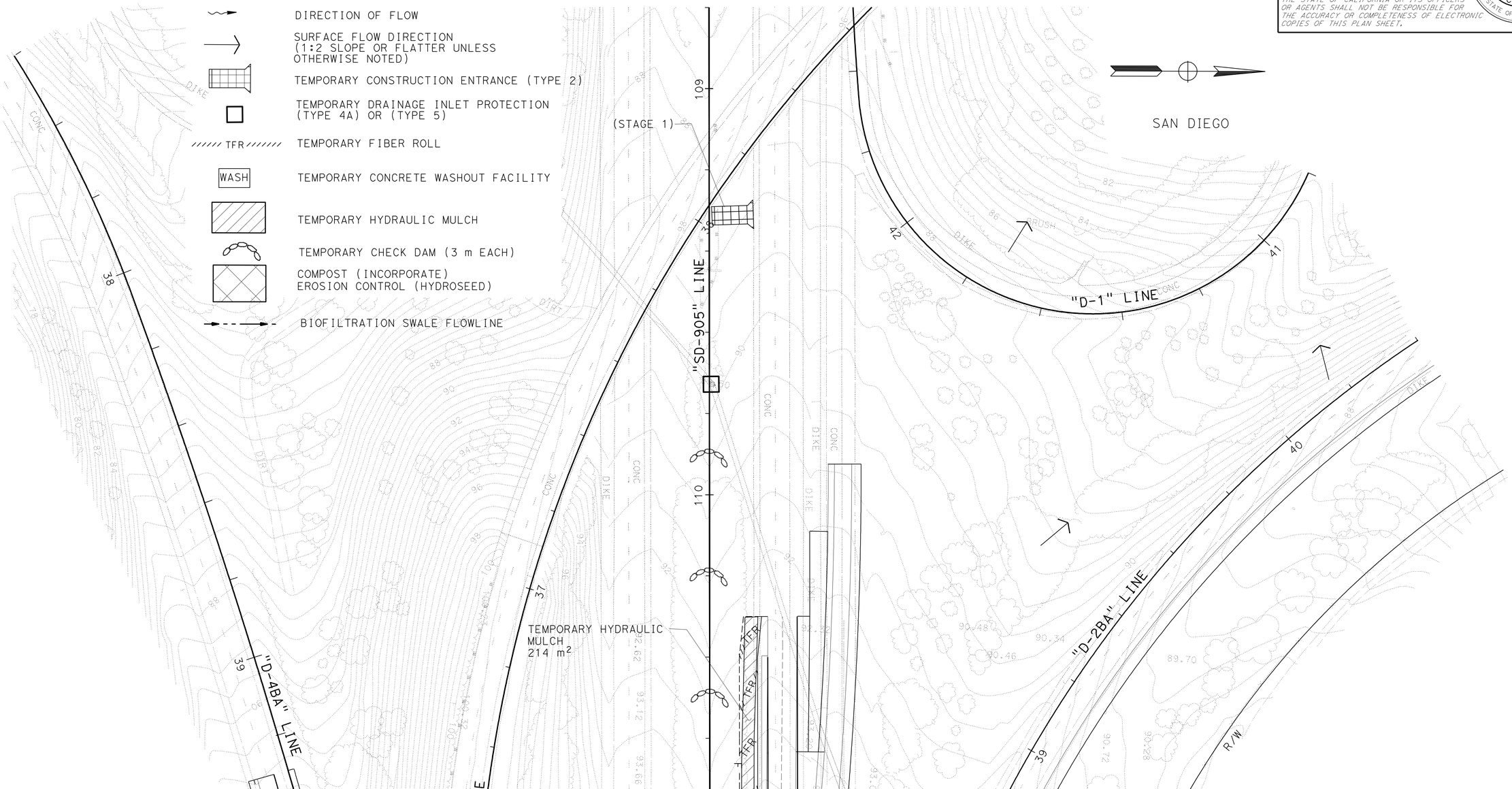

MATCH LINE SEE SHEET WPC-2

THIS PLAN ACCURATE FOR TEMPORARY WATER POLLUTION CONTROL WORK ONLY.

ALL DIMENSIONS ARE IN METERS UNLESS OTHERWISE SHOWN

TEMPORARY WATER POLLUTION CONTROL PLAN (STAGE 1A)

SCALE 1:500

WPC-1

STATE OF CALIFORNIA - DEPARTMENT OF TRANSPORTATION
Caltrans PROJECT DEVELOPMENT

FUNCTIONAL SUPERVISOR: CHRIS M. THOMAS

CALCULATED-DESIGNED BY: RICARDO PADILLA
CHECKED BY: RAMON JUAREZ

REVISED BY | DATE REVISED

LAST REVISION 06-21-10 | DATE PLOTTED => 20-OCT-2010 | TIME PLOTTED => 17:13

Dist	COUNTY	ROUTE	KILOMETER POST TOTAL PROJECT	SHEET No.	TOTAL SHEETS
11	SD	905,805	R8.4/R9.8, 3.1/4.2	42	364

REGISTERED CIVIL ENGINEER 07-26-10 DATE

10-18-10
PLANS APPROVAL DATE

REGISTERED PROFESSIONAL ENGINEER RICARDO PADILLA No. C58151 Exp. 6-30-12 CIVIL STATE OF CALIFORNIA

THE STATE OF CALIFORNIA OR ITS OFFICERS OR AGENTS SHALL NOT BE RESPONSIBLE FOR THE ACCURACY OR COMPLETENESS OF ELECTRONIC COPIES OF THIS PLAN SHEET.

Caltrans Metric

NOTE:

1. FOR ACCURATE RIGHT OF WAY AND ACCESS DATA, CONTACT RIGHT OF WAY ENGINEERING AT THE DISTRICT OFFICE.

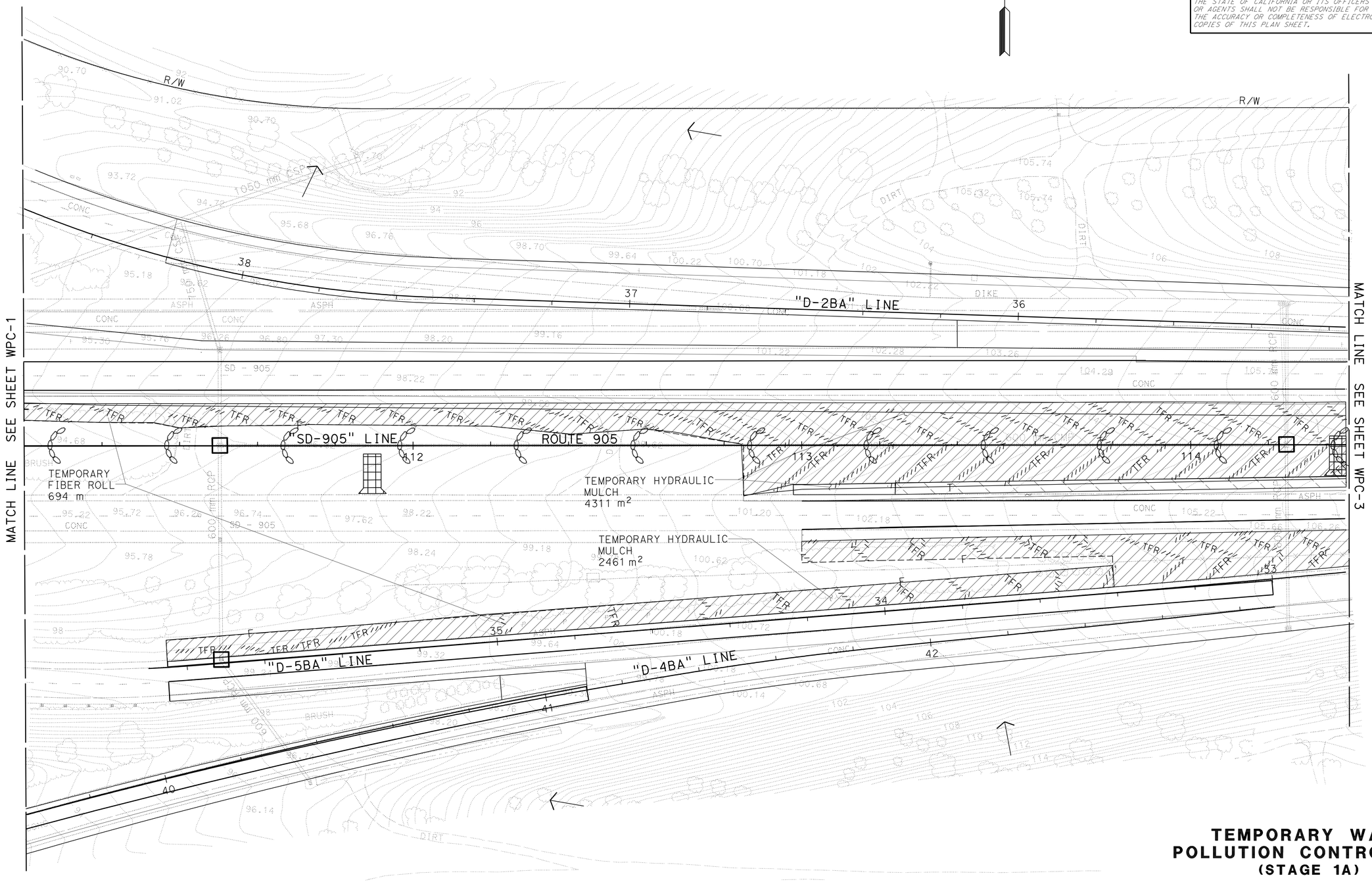

TEMPORARY WATER POLLUTION CONTROL PLAN
(STAGE 1A)

SCALE 1:500

WPC-2

THIS PLAN ACCURATE FOR TEMPORARY WATER POLLUTION CONTROL WORK ONLY.

ALL DIMENSIONS ARE IN METERS UNLESS OTHERWISE SHOWN

REVISED BY	DATE REVISED

CALCULATED-DESIGNED BY: RICARDO PADILLA
CHECKED BY: RAMON JUAREZ
FUNCTIONAL SUPERVISOR: CHRIS M. THOMAS

STATE OF CALIFORNIA - DEPARTMENT OF TRANSPORTATION
Caltrans PROJECT DEVELOPMENT

LAST REVISION 06-04-10 DATE PLOTTED => 20-OCT-2010 TIME PLOTTED => 17:13

Dist	COUNTY	ROUTE	KILOMETER POST TOTAL PROJECT	SHEET No.	TOTAL SHEETS
11	SD	905,805	R8.4/R9.8, 3.1/4.2	43	364

REGISTERED CIVIL ENGINEER 07-26-10 DATE

PLANS APPROVAL DATE 10-18-10

REGISTERED PROFESSIONAL ENGINEER RICARDO PADILLA No. C58151 Exp. 6-30-12 CIVIL STATE OF CALIFORNIA

THE STATE OF CALIFORNIA OR ITS OFFICERS OR AGENTS SHALL NOT BE RESPONSIBLE FOR THE ACCURACY OR COMPLETENESS OF ELECTRONIC COPIES OF THIS PLAN SHEET.

Caltrans Metric

NOTE:

1. FOR ACCURATE RIGHT OF WAY AND ACCESS DATA, CONTACT RIGHT OF WAY ENGINEERING AT THE DISTRICT OFFICE.

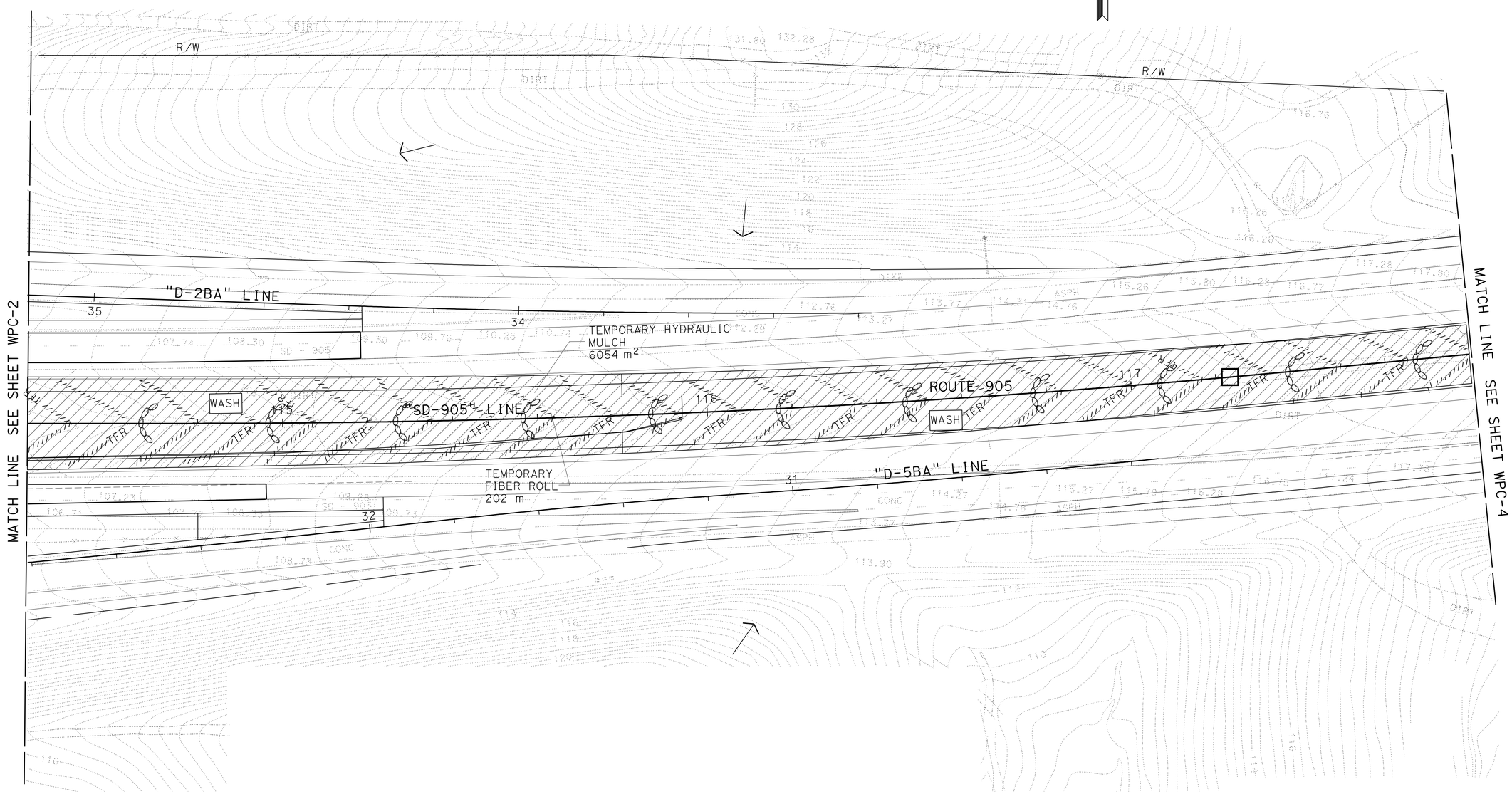

THIS PLAN ACCURATE FOR TEMPORARY WATER POLLUTION CONTROL WORK ONLY.

ALL DIMENSIONS ARE IN METERS UNLESS OTHERWISE SHOWN

TEMPORARY WATER POLLUTION CONTROL PLAN (STAGE 1A)

SCALE 1:500

WPC-3

STATE OF CALIFORNIA - DEPARTMENT OF TRANSPORTATION

Caltrans PROJECT DEVELOPMENT

FUNCTIONAL SUPERVISOR CHRIS M. THOMAS

CALCULATED-DESIGNED BY RICARDO PADILLA

CHECKED BY RAMON JUAREZ

REVISED BY DATE REVISED

LAST REVISION 06-04-10 DATE PLOTTED => 20-OCT-2010 TIME PLOTTED => 17:13

Dist	COUNTY	ROUTE	KILOMETER POST TOTAL PROJECT	SHEET No.	TOTAL SHEETS
11	SD	905,805	R8.4/R9.8, 3.1/4.2	44	364

REGISTERED CIVIL ENGINEER 07-26-10 DATE

10-18-10
PLANS APPROVAL DATE

REGISTERED PROFESSIONAL ENGINEER RICARDO PADILLA No. C58151 Exp. 6-30-12 CIVIL STATE OF CALIFORNIA

THE STATE OF CALIFORNIA OR ITS OFFICERS OR AGENTS SHALL NOT BE RESPONSIBLE FOR THE ACCURACY OR COMPLETENESS OF ELECTRONIC COPIES OF THIS PLAN SHEET.

Caltrans Metric

NOTE:

1. FOR ACCURATE RIGHT OF WAY AND ACCESS DATA, CONTACT RIGHT OF WAY ENGINEERING AT THE DISTRICT OFFICE.

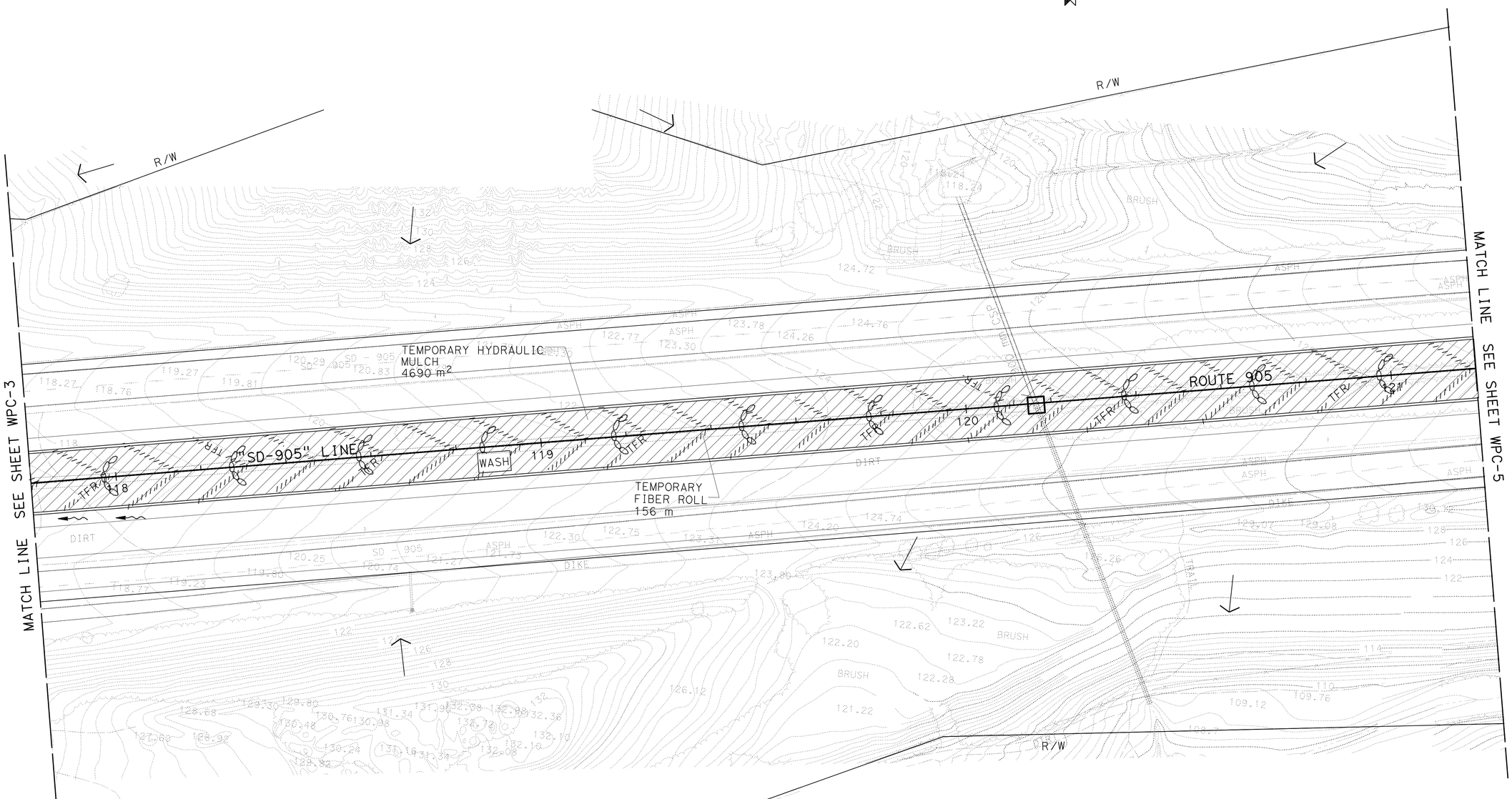

THIS PLAN ACCURATE FOR TEMPORARY WATER POLLUTION CONTROL WORK ONLY.

ALL DIMENSIONS ARE IN METERS UNLESS OTHERWISE SHOWN

TEMPORARY WATER POLLUTION CONTROL PLAN (STAGE 1A)

SCALE 1:500

WPC-4

STATE OF CALIFORNIA - DEPARTMENT OF TRANSPORTATION
Caltrans PROJECT DEVELOPMENT

FUNCTIONAL SUPERVISOR: CHRIS M. THOMAS

CALCULATED-DESIGNED BY: RICARDO PADILLA
CHECKED BY: RAMON JUAREZ

REVISED BY | DATE REVISED

LAST REVISION 06-04-10 | DATE PLOTTED => 20-OCT-2010 | TIME PLOTTED => 17:13

Dist	COUNTY	ROUTE	KILOMETER POST TOTAL PROJECT	SHEET No.	TOTAL SHEETS
11	SD	905,805	R8.4/R9.8, 3.1/4.2	45	364

REGISTERED CIVIL ENGINEER 07-26-10 DATE

PLANS APPROVAL DATE 10-18-10

REGISTERED PROFESSIONAL ENGINEER RICARDO PADILLA No. C58151 Exp. 6-30-12 CIVIL STATE OF CALIFORNIA

THE STATE OF CALIFORNIA OR ITS OFFICERS OR AGENTS SHALL NOT BE RESPONSIBLE FOR THE ACCURACY OR COMPLETENESS OF ELECTRONIC COPIES OF THIS PLAN SHEET.

Caltrans Metric

NOTE:

1. FOR ACCURATE RIGHT OF WAY AND ACCESS DATA, CONTACT RIGHT OF WAY ENGINEERING AT THE DISTRICT OFFICE.

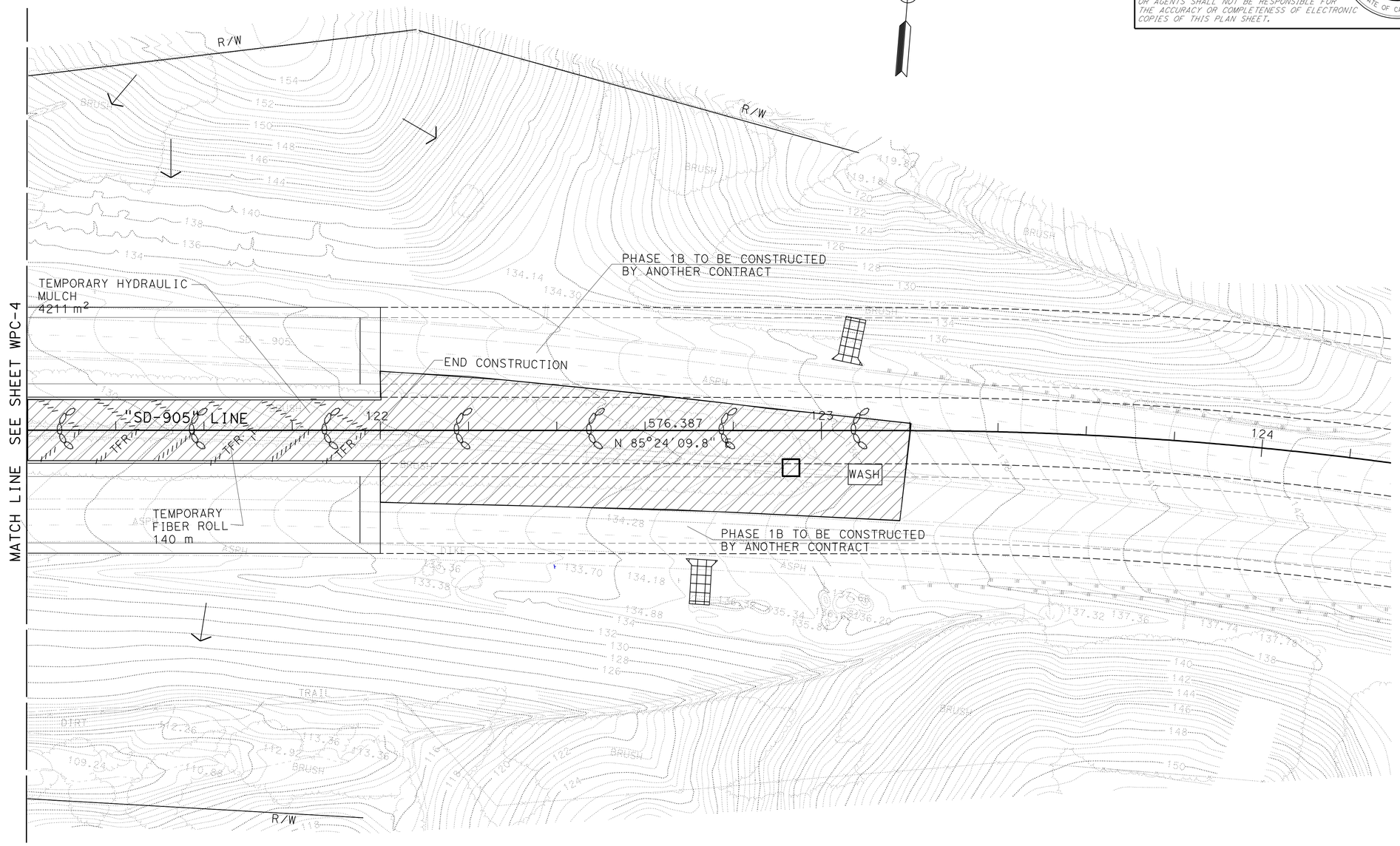

TEMPORARY WATER POLLUTION CONTROL PLAN (STAGE 1A)

SCALE 1:500

WPC-5

THIS PLAN ACCURATE FOR TEMPORARY WATER POLLUTION CONTROL WORK ONLY.

ALL DIMENSIONS ARE IN METERS UNLESS OTHERWISE SHOWN

STATE OF CALIFORNIA - DEPARTMENT OF TRANSPORTATION

Caltrans PROJECT DEVELOPMENT

FUNCTIONAL SUPERVISOR CHRIS M. THOMAS

CALCULATED-DESIGNED BY RICARDO PADILLA

CHECKED BY RAMON JUAREZ

REVISED BY

DATE REVISED

LAST REVISION 06-04-10

DATE PLOTTED => 20-OCT-2010

TIME PLOTTED => 17:13

Dist	COUNTY	ROUTE	KILOMETER POST TOTAL PROJECT	SHEET No.	TOTAL SHEETS
11	SD	905,805	R8.4/R9.8, 3.1/4.2	46	364

REGISTERED CIVIL ENGINEER 07-26-10 DATE

PLANS APPROVAL DATE 10-18-10

REGISTERED PROFESSIONAL ENGINEER RICARDO PADILLA No. C58151 Exp. 6-30-12 CIVIL STATE OF CALIFORNIA

THE STATE OF CALIFORNIA OR ITS OFFICERS OR AGENTS SHALL NOT BE RESPONSIBLE FOR THE ACCURACY OR COMPLETENESS OF ELECTRONIC COPIES OF THIS PLAN SHEET.

Caltrans Metric

NOTE:

1. FOR ACCURATE RIGHT OF WAY AND ACCESS DATA, CONTACT RIGHT OF WAY ENGINEERING AT THE DISTRICT OFFICE.

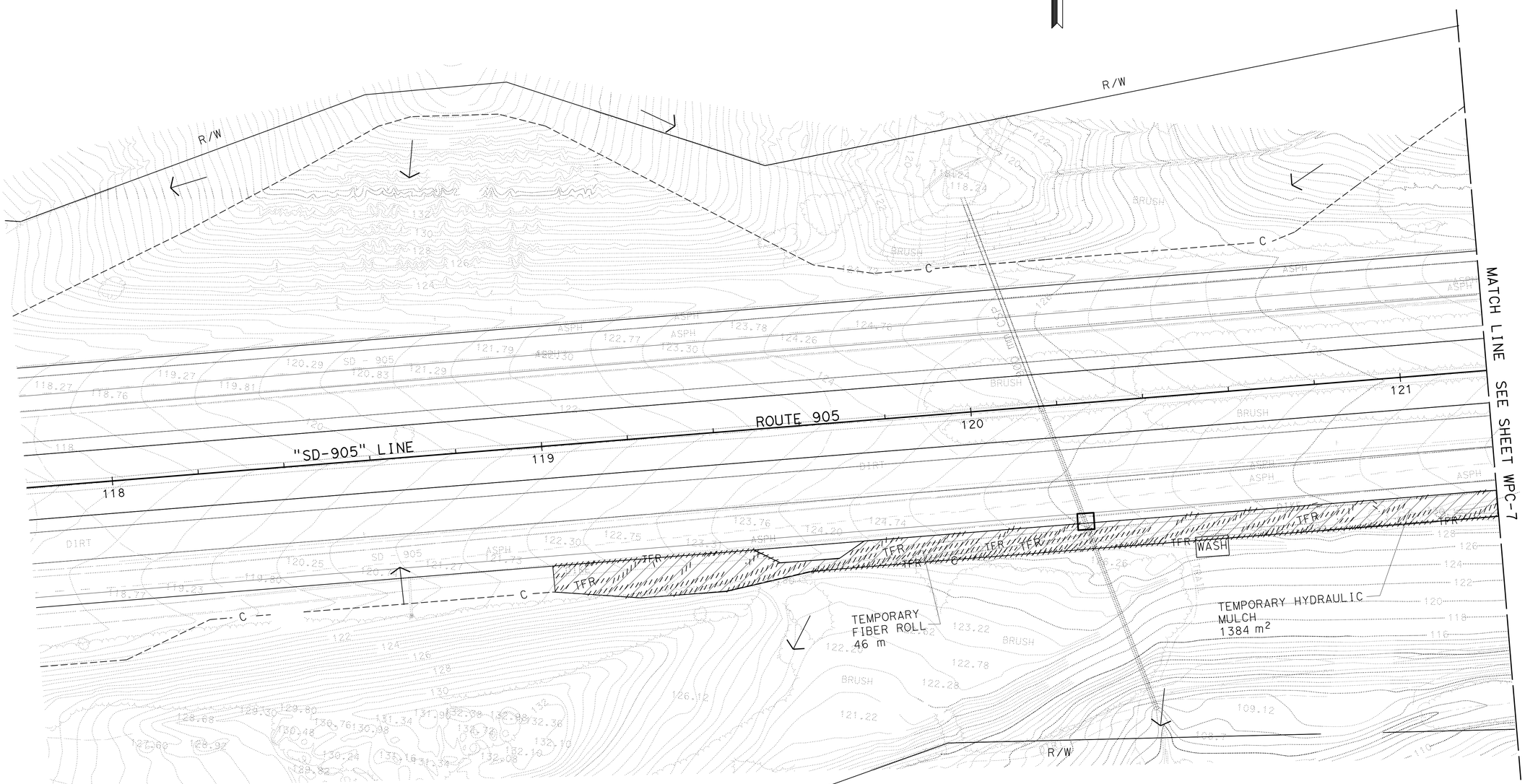

TEMPORARY WATER POLLUTION CONTROL PLAN

(STAGE 2)

WPC-6

THIS PLAN ACCURATE FOR TEMPORARY WATER POLLUTION CONTROL WORK ONLY.

ALL DIMENSIONS ARE IN METERS UNLESS OTHERWISE SHOWN

SCALE 1:500

STATE OF CALIFORNIA - DEPARTMENT OF TRANSPORTATION

Caltrans PROJECT DEVELOPMENT

FUNCTIONAL SUPERVISOR CHRIS M. THOMAS

CALCULATED-DESIGNED BY RICARDO PADILLA

CHECKED BY RAMON JUAREZ

REVISED BY

DATE REVISED

LAST REVISION 06-04-10

DATE PLOTTED => 20-OCT-2010

TIME PLOTTED => 17:13

Dist	COUNTY	ROUTE	KILOMETER POST TOTAL PROJECT	SHEET No.	TOTAL SHEETS
11	SD	905,805	R8.4/R9.8, 3.1/4.2	47	364

REGISTERED CIVIL ENGINEER 07-26-10 DATE

10-18-10
PLANS APPROVAL DATE

REGISTERED PROFESSIONAL ENGINEER RICARDO PADILLA No. C58151 Exp. 6-30-12 CIVIL STATE OF CALIFORNIA

THE STATE OF CALIFORNIA OR ITS OFFICERS OR AGENTS SHALL NOT BE RESPONSIBLE FOR THE ACCURACY OR COMPLETENESS OF ELECTRONIC COPIES OF THIS PLAN SHEET.

Caltrans Metric

NOTE:

1. FOR ACCURATE RIGHT OF WAY AND ACCESS DATA, CONTACT RIGHT OF WAY ENGINEERING AT THE DISTRICT OFFICE.

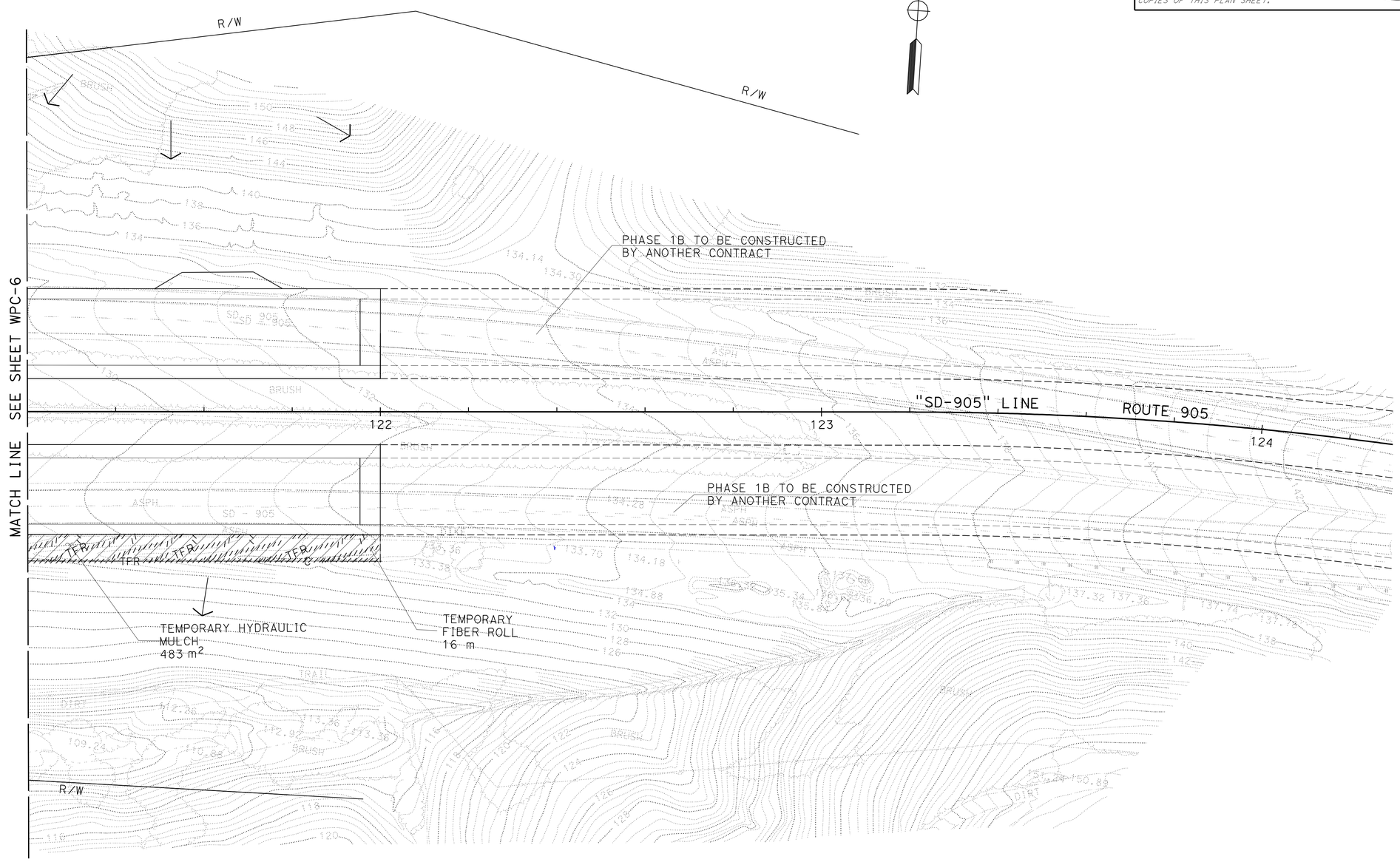

THIS PLAN ACCURATE FOR TEMPORARY WATER POLLUTION CONTROL WORK ONLY.

ALL DIMENSIONS ARE IN METERS UNLESS OTHERWISE SHOWN

TEMPORARY WATER POLLUTION CONTROL PLAN
(STAGE 2)

SCALE 1:500

WPC-7

STATE OF CALIFORNIA - DEPARTMENT OF TRANSPORTATION
Caltrans PROJECT DEVELOPMENT

FUNCTIONAL SUPERVISOR: CHRIS M. THOMAS
CALCULATED-DESIGNED BY: RICARDO PADILLA
CHECKED BY: RAMON JUAREZ
REVISED BY / DATE REVISED

LAST REVISION 06-04-10 | DATE PLOTTED => 20-OCT-2010 | TIME PLOTTED => 17:14

Dist	COUNTY	ROUTE	KILOMETER POST TOTAL PROJECT	SHEET No.	TOTAL SHEETS
11	SD	905,805	R8.4/R9.8, 3.1/4.2	48	364

REGISTERED CIVIL ENGINEER 07-26-10 DATE

PLANS APPROVAL DATE 10-18-10

REGISTERED PROFESSIONAL ENGINEER RICARDO PADILLA No. C58151 Exp. 6-30-12 CIVIL STATE OF CALIFORNIA

THE STATE OF CALIFORNIA OR ITS OFFICERS OR AGENTS SHALL NOT BE RESPONSIBLE FOR THE ACCURACY OR COMPLETENESS OF ELECTRONIC COPIES OF THIS PLAN SHEET.

Caltrans Metric

NOTE:

1. FOR ACCURATE RIGHT OF WAY AND ACCESS DATA, CONTACT RIGHT OF WAY ENGINEERING AT THE DISTRICT OFFICE.

THIS PLAN ACCURATE FOR TEMPORARY WATER POLLUTION CONTROL WORK ONLY.

ALL DIMENSIONS ARE IN METERS UNLESS OTHERWISE SHOWN

TEMPORARY WATER POLLUTION CONTROL PLAN (STAGE 2A)

SCALE 1:500

WPC-8

STATE OF CALIFORNIA - DEPARTMENT OF TRANSPORTATION

Caltrans PROJECT DEVELOPMENT

FUNCTIONAL SUPERVISOR: CHRIS M. THOMAS

CALCULATED-DESIGNED BY: RICARDO PADILLA

CHECKED BY: RAMON JUAREZ

REVISED BY / DATE REVISED

LAST REVISION 06-04-10 | DATE PLOTTED => 20-OCT-2010 | TIME PLOTTED => 17:14

Dist	COUNTY	ROUTE	KILOMETER POST TOTAL PROJECT	SHEET No.	TOTAL SHEETS
11	SD	905,805	R8.4/R9.8, 3.1/4.2	49	364

REGISTERED CIVIL ENGINEER 07-26-10 DATE

PLANS APPROVAL DATE 10-18-10

REGISTERED PROFESSIONAL ENGINEER RICARDO PADILLA No. C58151 Exp. 6-30-12 CIVIL STATE OF CALIFORNIA

THE STATE OF CALIFORNIA OR ITS OFFICERS OR AGENTS SHALL NOT BE RESPONSIBLE FOR THE ACCURACY OR COMPLETENESS OF ELECTRONIC COPIES OF THIS PLAN SHEET.

Caltrans Metric

NOTE:

1. FOR ACCURATE RIGHT OF WAY AND ACCESS DATA, CONTACT RIGHT OF WAY ENGINEERING AT THE DISTRICT OFFICE.

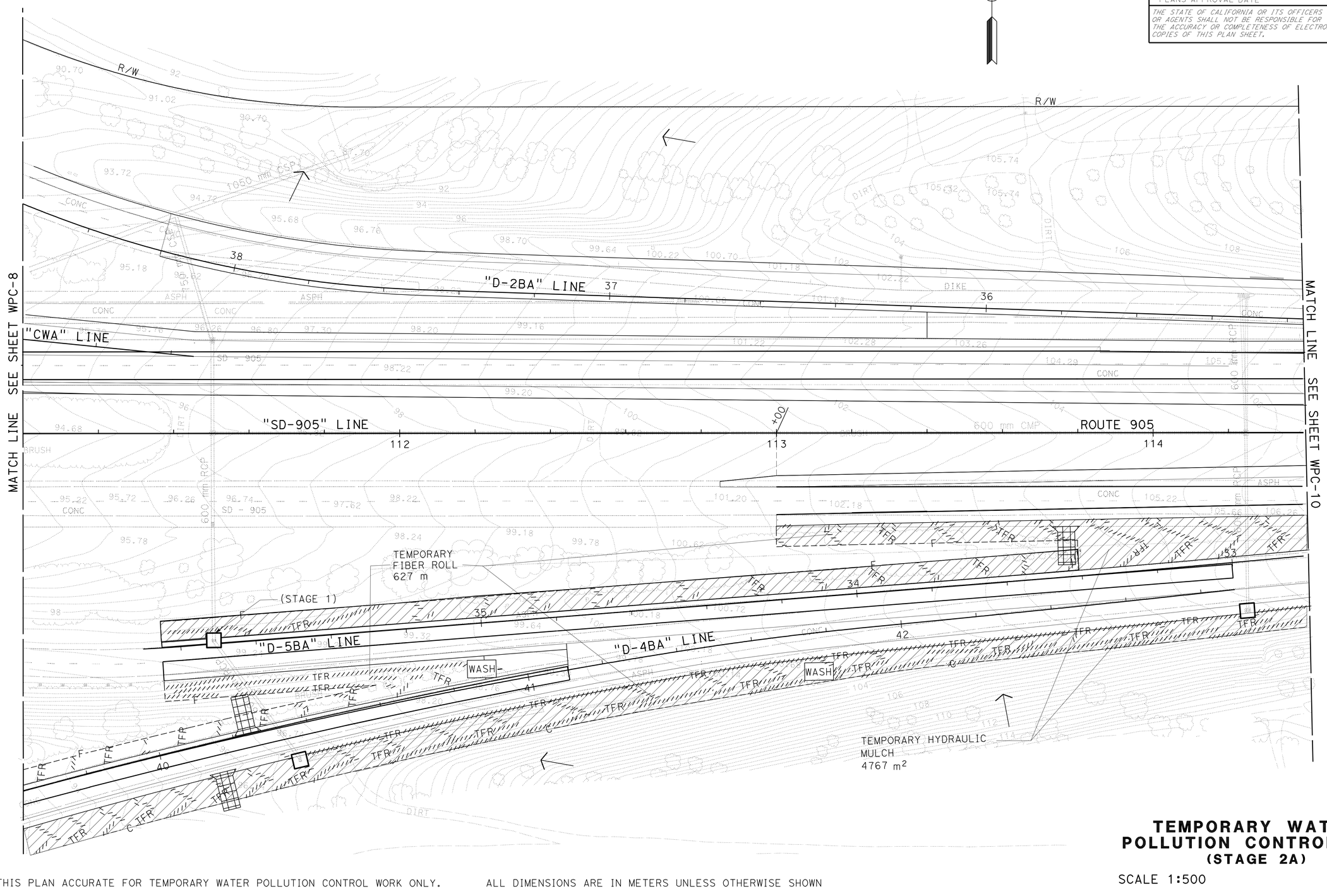

THIS PLAN ACCURATE FOR TEMPORARY WATER POLLUTION CONTROL WORK ONLY.

ALL DIMENSIONS ARE IN METERS UNLESS OTHERWISE SHOWN

TEMPORARY WATER POLLUTION CONTROL PLAN (STAGE 2A)

SCALE 1:500

WPC-9

STATE OF CALIFORNIA - DEPARTMENT OF TRANSPORTATION

Caltrans PROJECT DEVELOPMENT

FUNCTIONAL SUPERVISOR: CHRIS M. THOMAS

CALCULATED-DESIGNED BY: RICARDO PADILLA

CHECKED BY: RAMON JUAREZ

REVISED BY / DATE REVISED

LAST REVISION 06-04-10 | DATE PLOTTED => 20-OCT-2010 | TIME PLOTTED => 17:14

Dist	COUNTY	ROUTE	KILOMETER POST TOTAL PROJECT	SHEET No.	TOTAL SHEETS
11	SD	905,805	R8.4/R9.8, 3.1/4.2	50	364

REGISTERED CIVIL ENGINEER 07-26-10 DATE

10-18-10
PLANS APPROVAL DATE

REGISTERED PROFESSIONAL ENGINEER RICARDO PADILLA No. C58151 Exp. 6-30-12 CIVIL STATE OF CALIFORNIA

THE STATE OF CALIFORNIA OR ITS OFFICERS OR AGENTS SHALL NOT BE RESPONSIBLE FOR THE ACCURACY OR COMPLETENESS OF ELECTRONIC COPIES OF THIS PLAN SHEET.

Caltrans Metric

NOTE:

1. FOR ACCURATE RIGHT OF WAY AND ACCESS DATA, CONTACT RIGHT OF WAY ENGINEERING AT THE DISTRICT OFFICE.

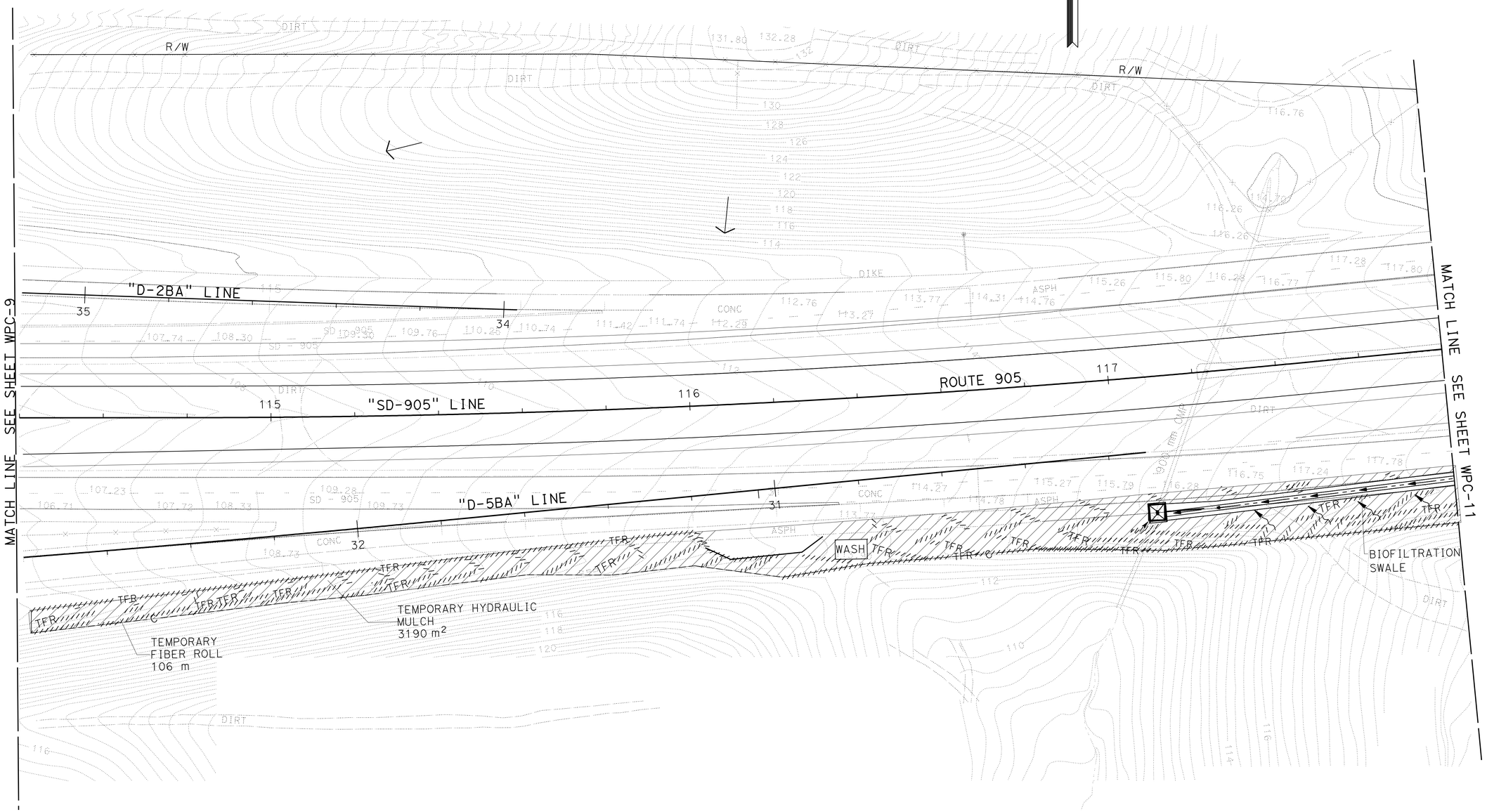

THIS PLAN ACCURATE FOR TEMPORARY WATER POLLUTION CONTROL WORK ONLY.

ALL DIMENSIONS ARE IN METERS UNLESS OTHERWISE SHOWN

TEMPORARY WATER POLLUTION CONTROL PLAN
(STAGE 2A)

SCALE 1:500

WPC-10

STATE OF CALIFORNIA - DEPARTMENT OF TRANSPORTATION
Caltrans PROJECT DEVELOPMENT

FUNCTIONAL SUPERVISOR: CHRIS M. THOMAS
CALCULATED-DESIGNED BY: RICARDO PADILLA
CHECKED BY: RAMON JUAREZ
REVISED BY / DATE REVISED

LAST REVISION 06-04-10 | DATE PLOTTED => 20-OCT-2010 | TIME PLOTTED => 17:14

Dist	COUNTY	ROUTE	KILOMETER POST TOTAL PROJECT	SHEET No.	TOTAL SHEETS
11	SD	905,805	R8.4/R9.8, 3.1/4.2	51	364

REGISTERED CIVIL ENGINEER 07-26-10 DATE

10-18-10
PLANS APPROVAL DATE

REGISTERED PROFESSIONAL ENGINEER RICARDO PADILLA No. C58151 Exp. 6-30-12 CIVIL STATE OF CALIFORNIA

THE STATE OF CALIFORNIA OR ITS OFFICERS OR AGENTS SHALL NOT BE RESPONSIBLE FOR THE ACCURACY OR COMPLETENESS OF ELECTRONIC COPIES OF THIS PLAN SHEET.

Caltrans Metric

NOTE:

1. FOR ACCURATE RIGHT OF WAY AND ACCESS DATA, CONTACT RIGHT OF WAY ENGINEERING AT THE DISTRICT OFFICE.

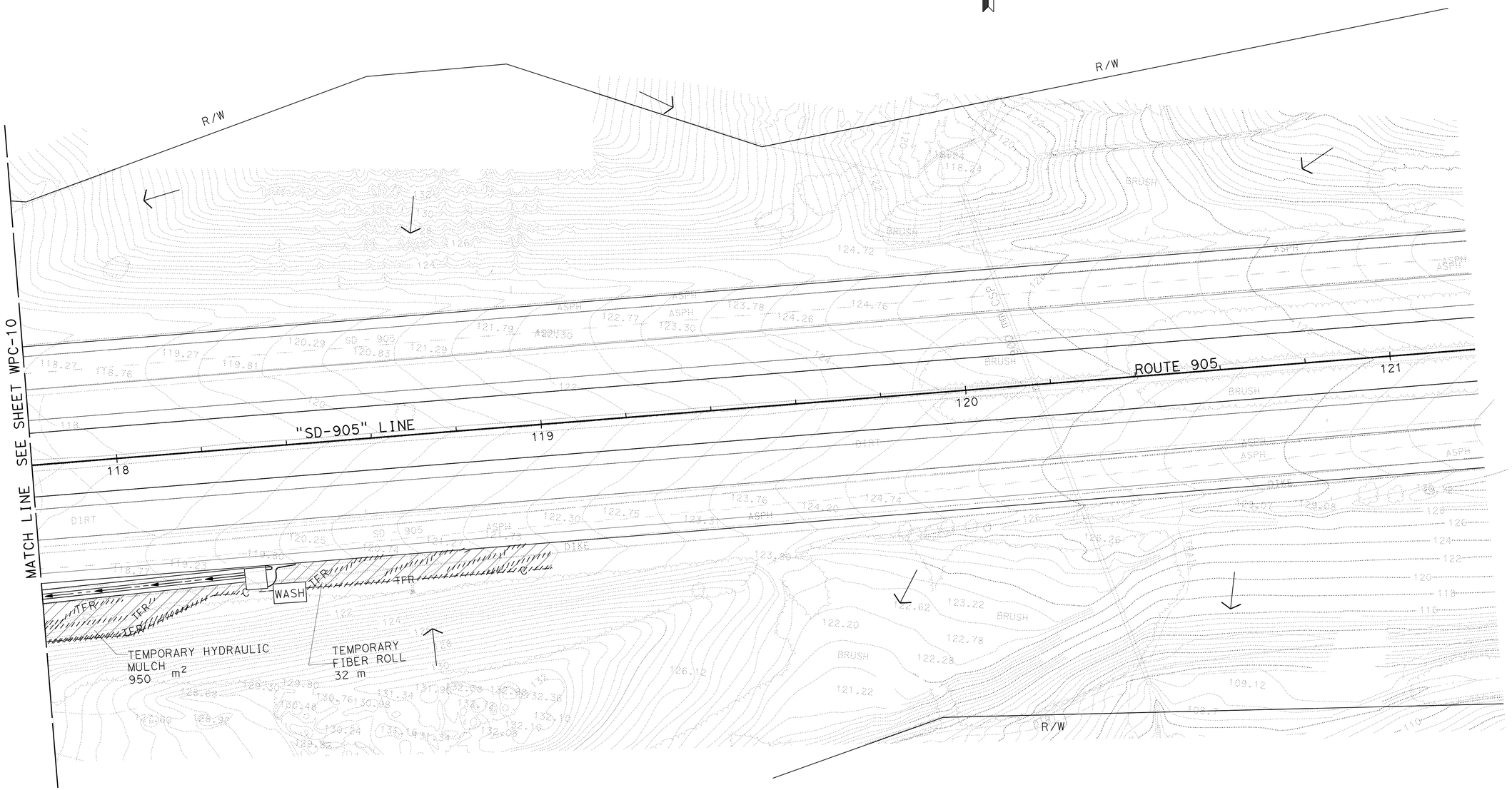

TEMPORARY WATER POLLUTION CONTROL PLAN

(STAGE 2A)

SCALE 1:500

WPC-11

THIS PLAN ACCURATE FOR TEMPORARY WATER POLLUTION CONTROL WORK ONLY.

ALL DIMENSIONS ARE IN METERS UNLESS OTHERWISE SHOWN

STATE OF CALIFORNIA - DEPARTMENT OF TRANSPORTATION
Caltrans PROJECT DEVELOPMENT

FUNCTIONAL SUPERVISOR: CHRIS M. THOMAS
CALCULATED-DESIGNED BY: RICARDO PADILLA
CHECKED BY: RAMON JUAREZ
REVISED BY / DATE REVISED

LAST REVISION 06-04-10
DATE PLOTTED => 20-OCT-2010
TIME PLOTTED => 17:14

Dist	COUNTY	ROUTE	KILOMETER POST TOTAL PROJECT	SHEET No.	TOTAL SHEETS
11	SD	905,805	R8.4/R9.8, 3.1/4.2	52	364

REGISTERED CIVIL ENGINEER 07-26-10 DATE

PLANS APPROVAL DATE 10-18-10

REGISTERED PROFESSIONAL ENGINEER RICARDO PADILLA No. C58151 Exp. 6-30-12 CIVIL STATE OF CALIFORNIA

THE STATE OF CALIFORNIA OR ITS OFFICERS OR AGENTS SHALL NOT BE RESPONSIBLE FOR THE ACCURACY OR COMPLETENESS OF ELECTRONIC COPIES OF THIS PLAN SHEET.

Caltrans Metric

NOTE:

1. FOR ACCURATE RIGHT OF WAY AND ACCESS DATA, CONTACT RIGHT OF WAY ENGINEERING AT THE DISTRICT OFFICE.

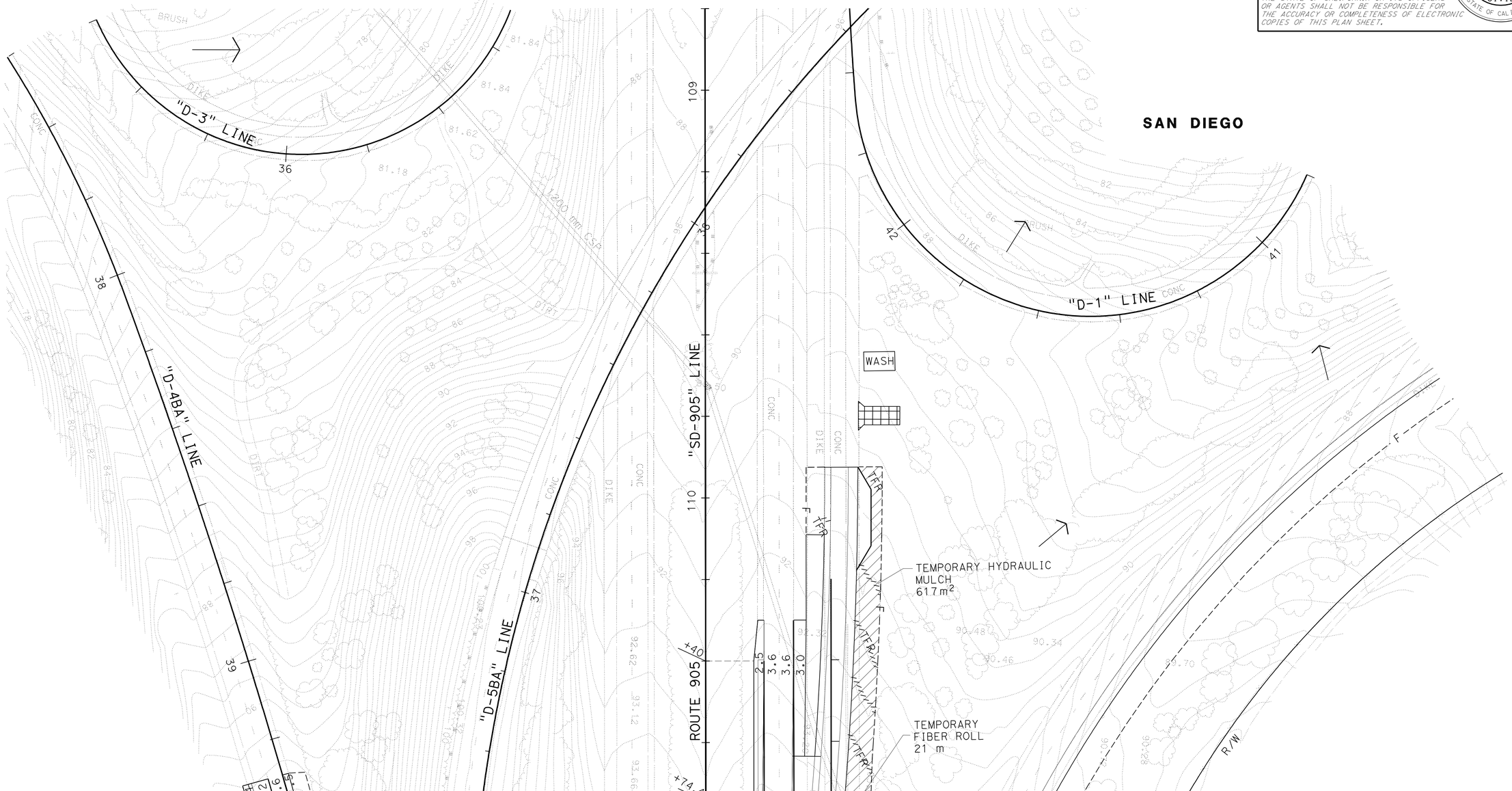

THIS PLAN ACCURATE FOR TEMPORARY WATER POLLUTION CONTROL WORK ONLY.

ALL DIMENSIONS ARE IN METERS UNLESS OTHERWISE SHOWN

TEMPORARY WATER POLLUTION CONTROL PLAN (STAGE 3)

SCALE 1:500

WPC-12

STATE OF CALIFORNIA - DEPARTMENT OF TRANSPORTATION

Caltrans PROJECT DEVELOPMENT

FUNCTIONAL SUPERVISOR CHRIS M. THOMAS

CALCULATED-DESIGNED BY RICARDO PADILLA

CHECKED BY RAMON JUAREZ

REVISED BY

DATE REVISED

LAST REVISION 06-04-10 DATE PLOTTED => 20-OCT-2010 TIME PLOTTED => 17:14

Dist	COUNTY	ROUTE	KILOMETER POST TOTAL PROJECT	SHEET No.	TOTAL SHEETS
11	SD	905,805	R8.4/R9.8, 3.1/4.2	53	364

REGISTERED CIVIL ENGINEER 07-26-10 DATE

PLANS APPROVAL DATE 10-18-10

REGISTERED PROFESSIONAL ENGINEER RICARDO PADILLA No. C58151 Exp. 6-30-12 CIVIL STATE OF CALIFORNIA

THE STATE OF CALIFORNIA OR ITS OFFICERS OR AGENTS SHALL NOT BE RESPONSIBLE FOR THE ACCURACY OR COMPLETENESS OF ELECTRONIC COPIES OF THIS PLAN SHEET.

Caltrans Metric

NOTE:

1. FOR ACCURATE RIGHT OF WAY AND ACCESS DATA, CONTACT RIGHT OF WAY ENGINEERING AT THE DISTRICT OFFICE.

THIS PLAN ACCURATE FOR TEMPORARY WATER POLLUTION CONTROL WORK ONLY.

ALL DIMENSIONS ARE IN METERS UNLESS OTHERWISE SHOWN

TEMPORARY WATER POLLUTION CONTROL PLAN
(STAGE 3)

SCALE 1:500

WPC-13

STATE OF CALIFORNIA - DEPARTMENT OF TRANSPORTATION

Caltrans PROJECT DEVELOPMENT

FUNCTIONAL SUPERVISOR: CHRIS M. THOMAS

CALCULATED-DESIGNED BY: RICARDO PADILLA

CHECKED BY: RAMON JUAREZ

REVISED BY / DATE REVISED

LAST REVISION 06-04-10

DATE PLOTTED => 20-OCT-2010

TIME PLOTTED => 17:15

Dist	COUNTY	ROUTE	KILOMETER POST TOTAL PROJECT	SHEET No.	TOTAL SHEETS
11	SD	905,805	R8.4/R9.8, 3.1/4.2	54	364

REGISTERED CIVIL ENGINEER 07-26-10 DATE

10-18-10
PLANS APPROVAL DATE

REGISTERED PROFESSIONAL ENGINEER RICARDO PADILLA No. C58151 Exp. 6-30-12 CIVIL STATE OF CALIFORNIA

THE STATE OF CALIFORNIA OR ITS OFFICERS OR AGENTS SHALL NOT BE RESPONSIBLE FOR THE ACCURACY OR COMPLETENESS OF ELECTRONIC COPIES OF THIS PLAN SHEET.

Caltrans Metric

NOTE:

1. FOR ACCURATE RIGHT OF WAY AND ACCESS DATA, CONTACT RIGHT OF WAY ENGINEERING AT THE DISTRICT OFFICE.

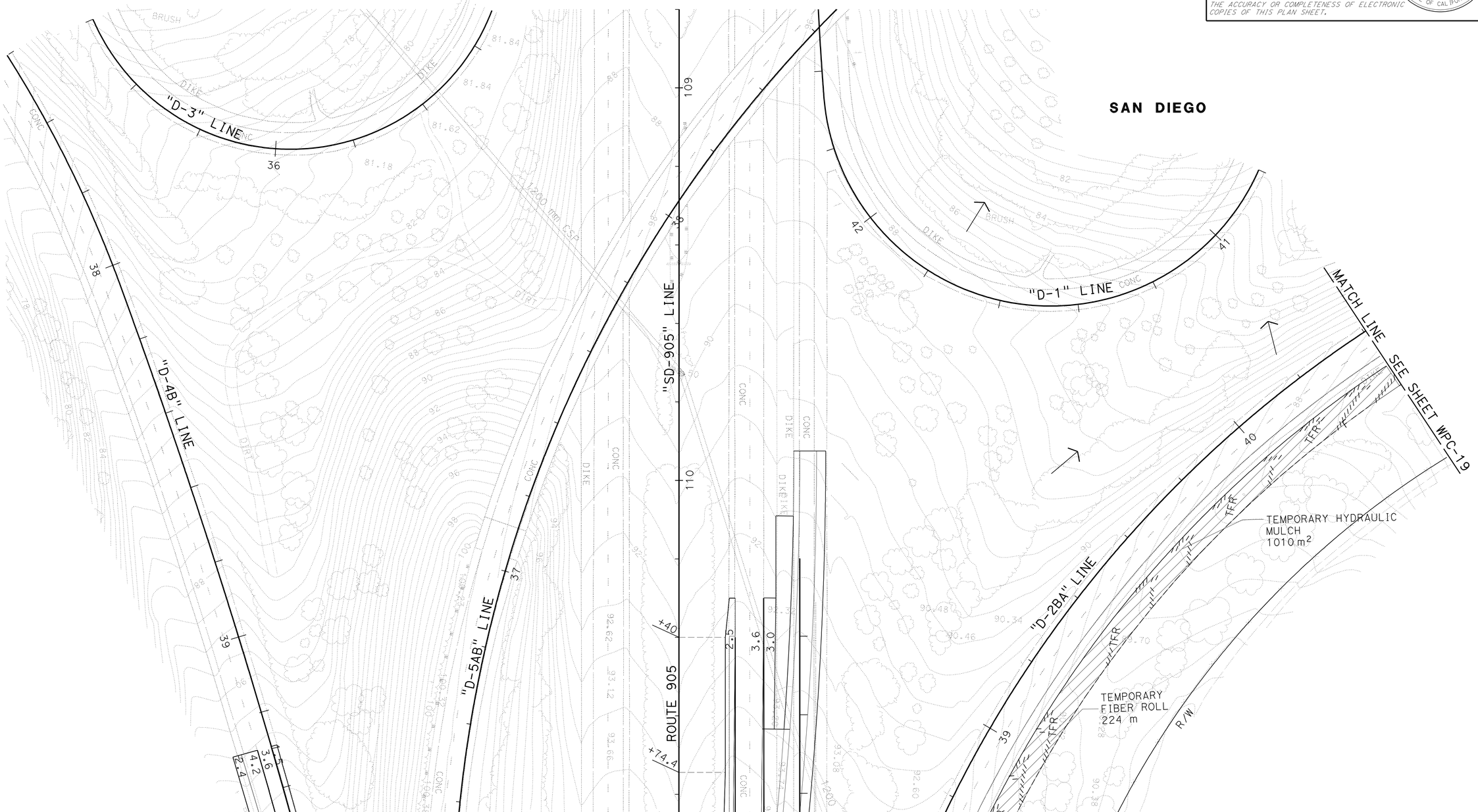

THIS PLAN ACCURATE FOR TEMPORARY WATER POLLUTION CONTROL WORK ONLY.

ALL DIMENSIONS ARE IN METERS UNLESS OTHERWISE SHOWN

TEMPORARY WATER POLLUTION CONTROL PLAN (STAGE 3A)

SCALE 1:500

WPC-14

STATE OF CALIFORNIA - DEPARTMENT OF TRANSPORTATION
Caltrans PROJECT DEVELOPMENT

FUNCTIONAL SUPERVISOR: CHRIS M. THOMAS
CALCULATED-DESIGNED BY: RICARDO PADILLA
CHECKED BY: RAMON JUAREZ
REVISED BY / DATE REVISED

LAST REVISION 06-04-10
DATE PLOTTED => 20-OCT-2010
TIME PLOTTED => 17:15

Dist	COUNTY	ROUTE	KILOMETER POST TOTAL PROJECT	SHEET No.	TOTAL SHEETS
11	SD	905,805	R8.4/R9.8, 3.1/4.2	55	364

REGISTERED CIVIL ENGINEER 07-26-10 DATE

10-18-10
PLANS APPROVAL DATE

REGISTERED PROFESSIONAL ENGINEER RICARDO PADILLA No. C58151 Exp. 6-30-12 CIVIL STATE OF CALIFORNIA

THE STATE OF CALIFORNIA OR ITS OFFICERS OR AGENTS SHALL NOT BE RESPONSIBLE FOR THE ACCURACY OR COMPLETENESS OF ELECTRONIC COPIES OF THIS PLAN SHEET.

Caltrans Metric

NOTE:

1. FOR ACCURATE RIGHT OF WAY AND ACCESS DATA, CONTACT RIGHT OF WAY ENGINEERING AT THE DISTRICT OFFICE.

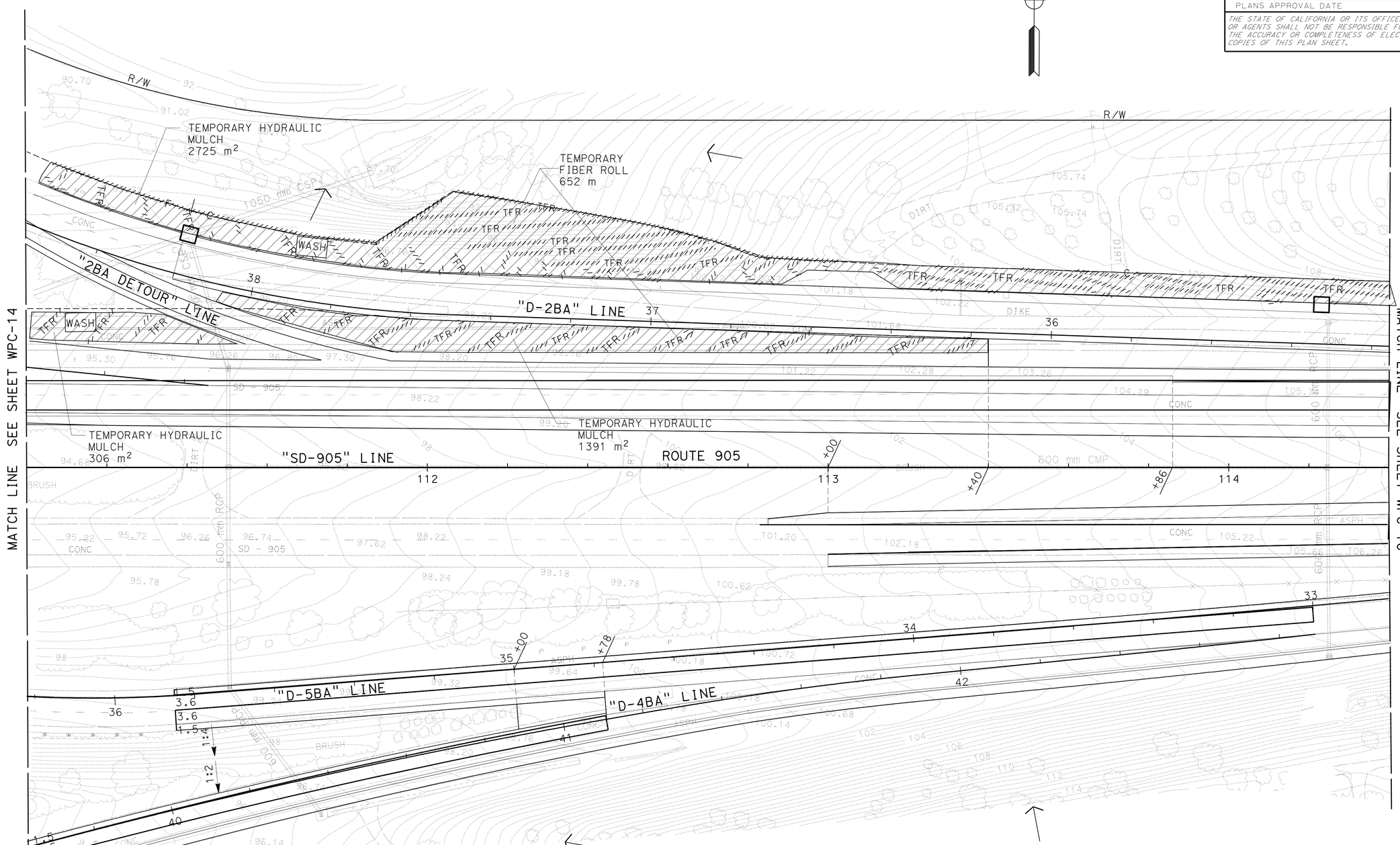

THIS PLAN ACCURATE FOR TEMPORARY WATER POLLUTION CONTROL WORK ONLY.

ALL DIMENSIONS ARE IN METERS UNLESS OTHERWISE SHOWN

TEMPORARY WATER POLLUTION CONTROL PLAN (STAGE 3A)

SCALE 1:500

WPC-15

STATE OF CALIFORNIA - DEPARTMENT OF TRANSPORTATION
Caltrans PROJECT DEVELOPMENT

FUNCTIONAL SUPERVISOR: CHRIS M. THOMAS
CALCULATED-DESIGNED BY: RICARDO PADILLA
CHECKED BY: RAMON JUAREZ
REVISED BY / DATE REVISED

LAST REVISION 06-04-10
DATE PLOTTED => 20-OCT-2010
TIME PLOTTED => 17:15

Dist	COUNTY	ROUTE	KILOMETER POST TOTAL PROJECT	SHEET No.	TOTAL SHEETS
11	SD	905,805	R8.4/R9.8, 3.1/4.2	56	364

REGISTERED CIVIL ENGINEER 07-26-10 DATE

PLANS APPROVAL DATE 10-18-10

REGISTERED PROFESSIONAL ENGINEER RICARDO PADILLA No. C58151 Exp. 6-30-12 CIVIL STATE OF CALIFORNIA

THE STATE OF CALIFORNIA OR ITS OFFICERS OR AGENTS SHALL NOT BE RESPONSIBLE FOR THE ACCURACY OR COMPLETENESS OF ELECTRONIC COPIES OF THIS PLAN SHEET.

Caltrans Metric

NOTE:

1. FOR ACCURATE RIGHT OF WAY AND ACCESS DATA, CONTACT RIGHT OF WAY ENGINEERING AT THE DISTRICT OFFICE.

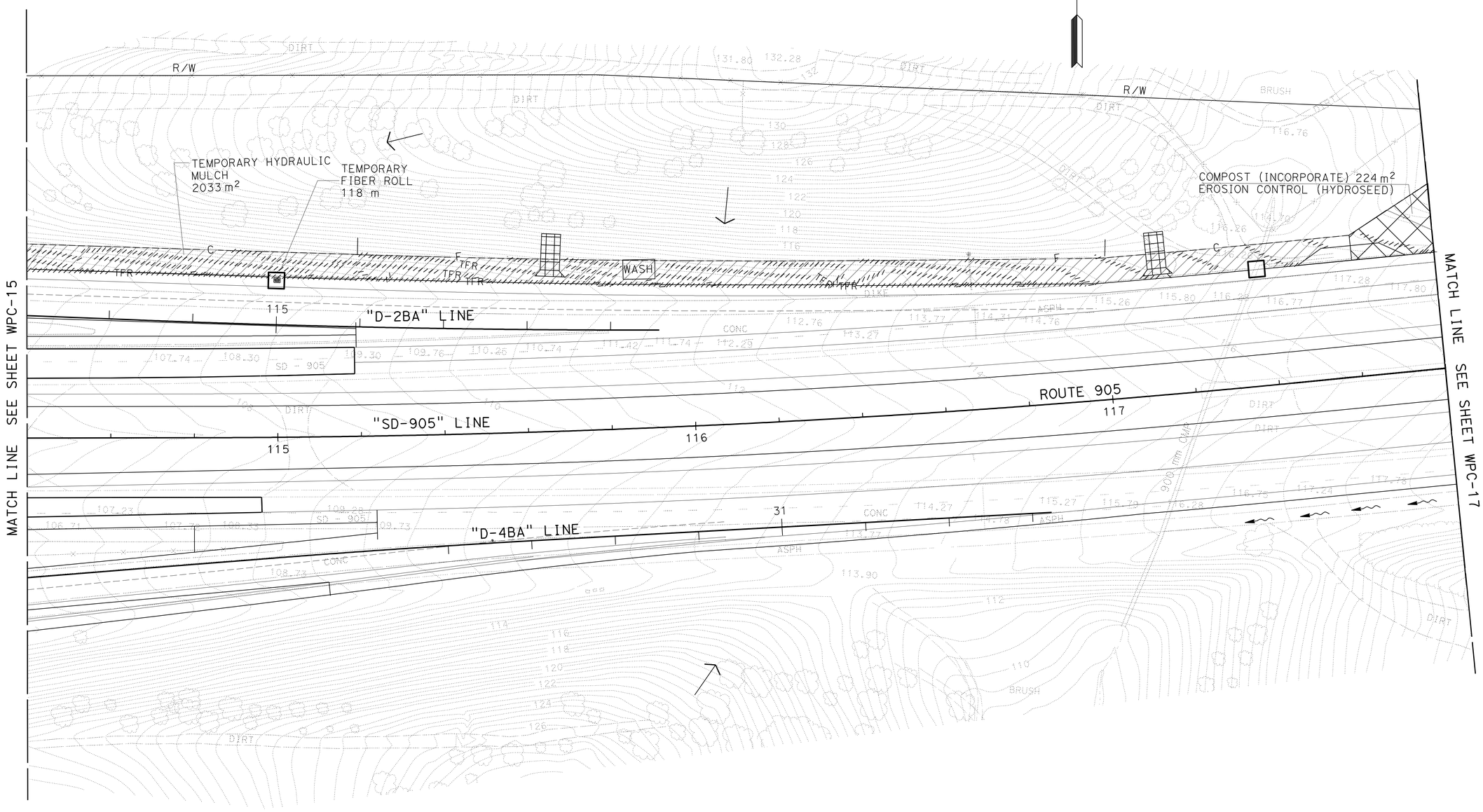

THIS PLAN ACCURATE FOR TEMPORARY WATER POLLUTION CONTROL WORK ONLY.

ALL DIMENSIONS ARE IN METERS UNLESS OTHERWISE SHOWN

TEMPORARY WATER POLLUTION CONTROL PLAN

(STAGE 3A)

SCALE 1:500

WPC-16

STATE OF CALIFORNIA - DEPARTMENT OF TRANSPORTATION

Caltrans PROJECT DEVELOPMENT

FUNCTIONAL SUPERVISOR: CHRIS M. THOMAS

CALCULATED-DESIGNED BY: RICARDO PADILLA

CHECKED BY: RAMON JUAREZ

REVISED BY | DATE REVISED

LAST REVISION 06-04-10 | DATE PLOTTED => 20-OCT-2010 | TIME PLOTTED => 17:15

Dist	COUNTY	ROUTE	KILOMETER POST TOTAL PROJECT	SHEET No.	TOTAL SHEETS
11	SD	905,805	R8.4/R9.8, 3.1/4.2	57	364

REGISTERED CIVIL ENGINEER 07-26-10 DATE

10-18-10
PLANS APPROVAL DATE

REGISTERED PROFESSIONAL ENGINEER RICARDO PADILLA No. C58151 Exp. 6-30-12 CIVIL STATE OF CALIFORNIA

THE STATE OF CALIFORNIA OR ITS OFFICERS OR AGENTS SHALL NOT BE RESPONSIBLE FOR THE ACCURACY OR COMPLETENESS OF ELECTRONIC COPIES OF THIS PLAN SHEET.

Caltrans Metric

NOTE:

1. FOR ACCURATE RIGHT OF WAY AND ACCESS DATA, CONTACT RIGHT OF WAY ENGINEERING AT THE DISTRICT OFFICE.

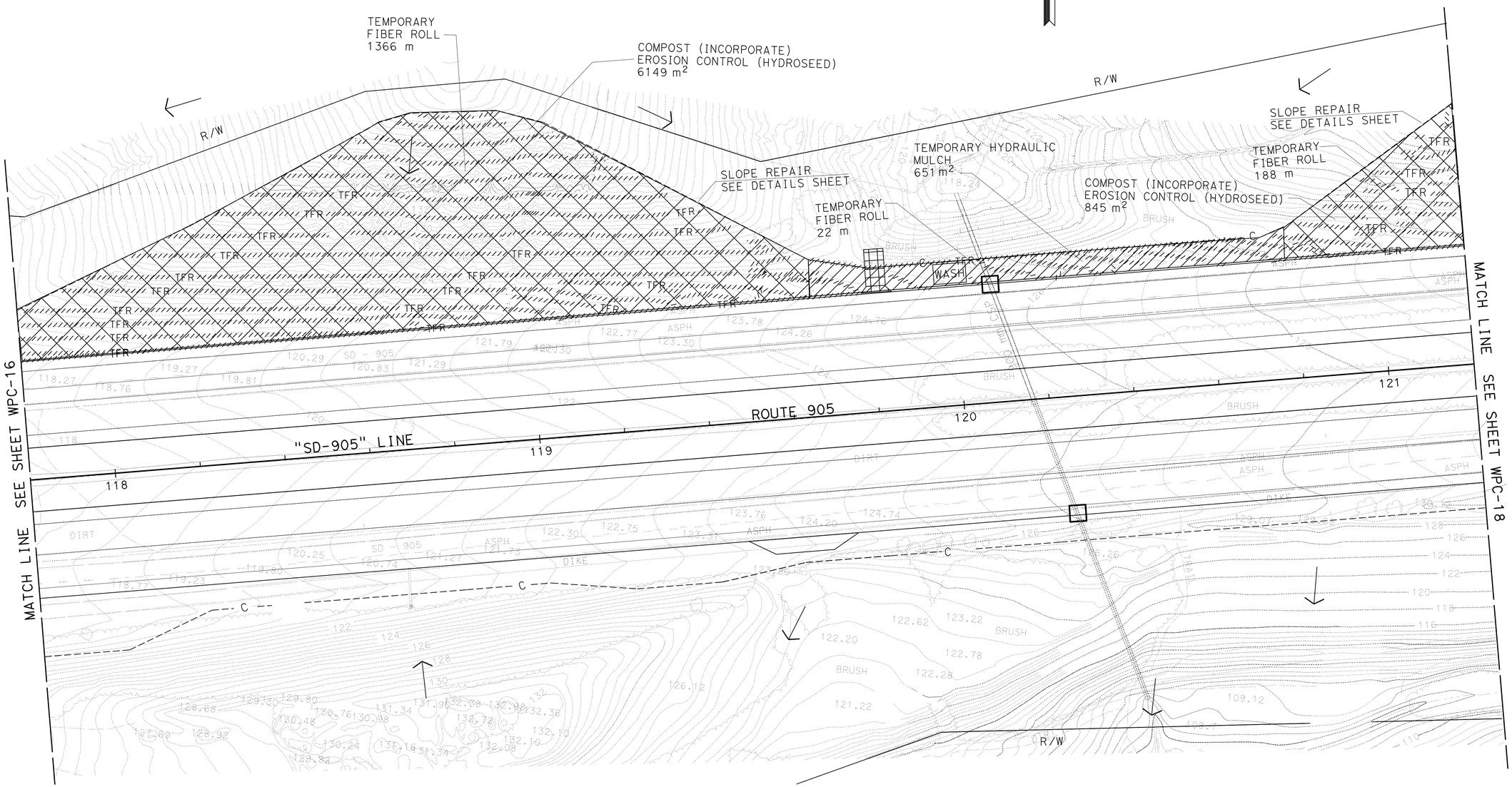

TEMPORARY WATER POLLUTION CONTROL PLAN

(STAGE 3A)

SCALE 1:500

WPC-17

THIS PLAN ACCURATE FOR TEMPORARY WATER POLLUTION CONTROL WORK ONLY.

ALL DIMENSIONS ARE IN METERS UNLESS OTHERWISE SHOWN

STATE OF CALIFORNIA - DEPARTMENT OF TRANSPORTATION
Caltrans PROJECT DEVELOPMENT

FUNCTIONAL SUPERVISOR: CHRIS M. THOMAS
CALCULATED-DESIGNED BY: RICARDO PADILLA
CHECKED BY: RAMON JUAREZ
REVISED BY
DATE REVISED

LAST REVISION 06-21-10
DATE PLOTTED => 20-OCT-2010
TIME PLOTTED => 17:15

Dist	COUNTY	ROUTE	KILOMETER POST TOTAL PROJECT	SHEET No.	TOTAL SHEETS
11	SD	905,805	R8.4/R9.8, 3.1/4.2	58	364

REGISTERED CIVIL ENGINEER 07-26-10 DATE

10-18-10
PLANS APPROVAL DATE

REGISTERED PROFESSIONAL ENGINEER RICARDO PADILLA No. C58151 Exp. 6-30-12 CIVIL STATE OF CALIFORNIA

THE STATE OF CALIFORNIA OR ITS OFFICERS OR AGENTS SHALL NOT BE RESPONSIBLE FOR THE ACCURACY OR COMPLETENESS OF ELECTRONIC COPIES OF THIS PLAN SHEET.

Caltrans Metric

NOTE:

1. FOR ACCURATE RIGHT OF WAY AND ACCESS DATA, CONTACT RIGHT OF WAY ENGINEERING AT THE DISTRICT OFFICE.

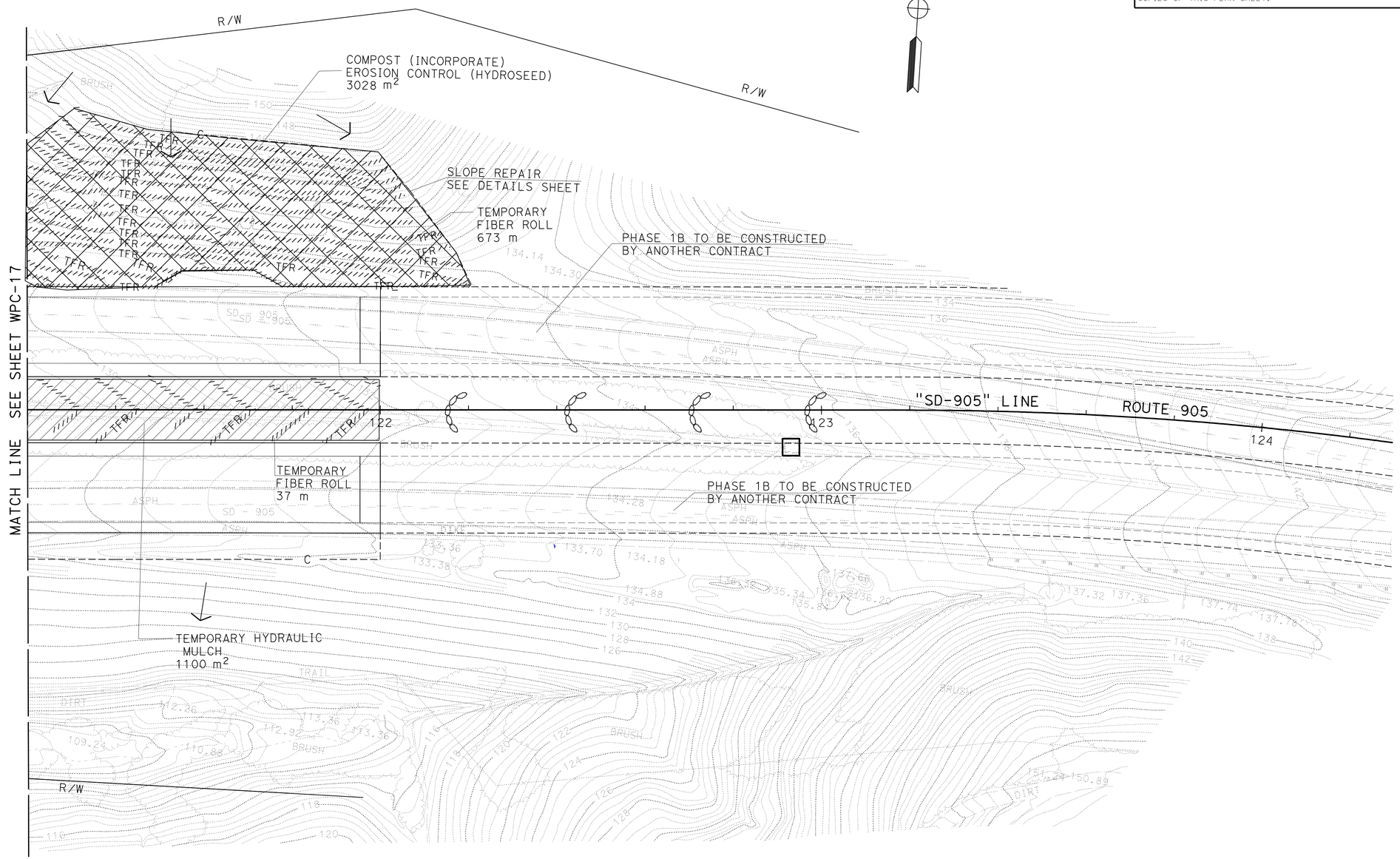

TEMPORARY WATER POLLUTION CONTROL PLAN
(STAGE 3A)

WPC-18

SCALE 1:500

THIS PLAN ACCURATE FOR TEMPORARY WATER POLLUTION CONTROL WORK ONLY.

ALL DIMENSIONS ARE IN METERS UNLESS OTHERWISE SHOWN

STATE OF CALIFORNIA - DEPARTMENT OF TRANSPORTATION
Caltrans PROJECT DEVELOPMENT

FUNCTIONAL SUPERVISOR: CHRIS M. THOMAS
CALCULATED-DESIGNED BY: RICARDO PADILLA
CHECKED BY: RAMON JUAREZ
REVISED BY
DATE REVISED

LAST REVISION 06-04-10
DATE PLOTTED => 20-OCT-2010
TIME PLOTTED => 17:16

Dist	COUNTY	ROUTE	KILOMETER POST TOTAL PROJECT	SHEET No.	TOTAL SHEETS
11	SD	905,805	R8.4/R9.8, 3.1/4.2	59	364

REGISTERED CIVIL ENGINEER 07-26-10 DATE

10-18-10
PLANS APPROVAL DATE

REGISTERED PROFESSIONAL ENGINEER RICARDO PADILLA No. C58151 Exp. 6-30-12 CIVIL STATE OF CALIFORNIA

THE STATE OF CALIFORNIA OR ITS OFFICERS OR AGENTS SHALL NOT BE RESPONSIBLE FOR THE ACCURACY OR COMPLETENESS OF ELECTRONIC COPIES OF THIS PLAN SHEET.

Caltrans Metric

NOTE:

1. FOR ACCURATE RIGHT OF WAY AND ACCESS DATA, CONTACT RIGHT OF WAY ENGINEERING AT THE DISTRICT OFFICE.

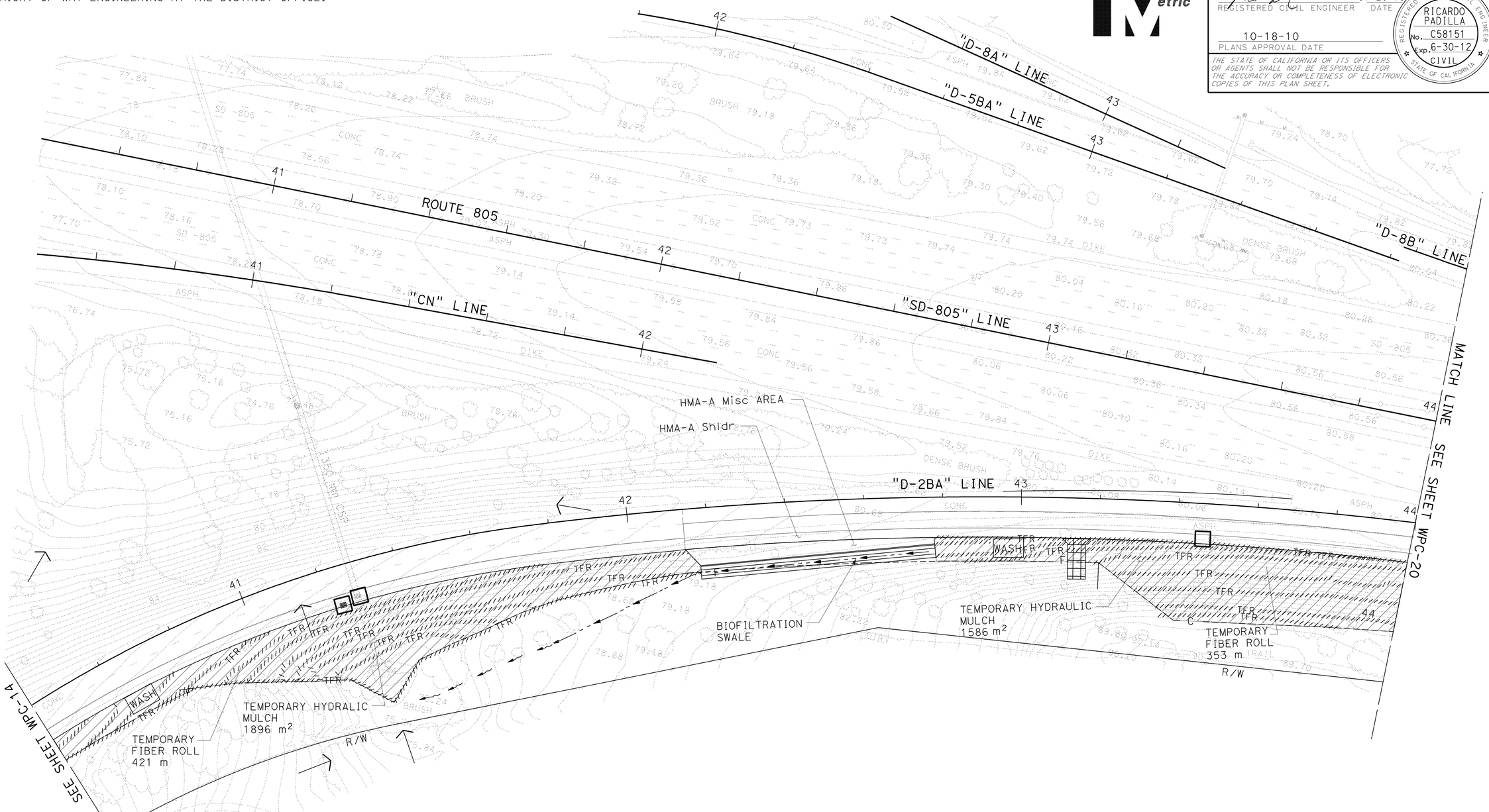

TEMPORARY WATER POLLUTION CONTROL PLAN
(STAGE 3A)

SCALE 1:500

WPC-19

THIS PLAN ACCURATE FOR TEMPORARY WATER POLLUTION CONTROL WORK ONLY.

ALL DIMENSIONS ARE IN METERS UNLESS OTHERWISE SHOWN

STATE OF CALIFORNIA - DEPARTMENT OF TRANSPORTATION
Caltrans PROJECT DEVELOPMENT

FUNCTIONAL SUPERVISOR: CHRIS M. THOMAS
CALCULATED-DESIGNED BY: RICARDO PADILLA
CHECKED BY: RAMON JUAREZ
REVISED BY / DATE REVISED

LAST REVISION 06-04-10
DATE PLOTTED => 20-OCT-2010
TIME PLOTTED => 17:16

Dist	COUNTY	ROUTE	KILOMETER POST TOTAL PROJECT	SHEET No.	TOTAL SHEETS
11	SD	905,805	R8.4/R9.8, 3.1/4.2	60	364

REGISTERED CIVIL ENGINEER 07-26-10 DATE

10-18-10
PLANS APPROVAL DATE

REGISTERED PROFESSIONAL ENGINEER RICARDO PADILLA No. C58151 Exp. 6-30-12 CIVIL STATE OF CALIFORNIA

THE STATE OF CALIFORNIA OR ITS OFFICERS OR AGENTS SHALL NOT BE RESPONSIBLE FOR THE ACCURACY OR COMPLETENESS OF ELECTRONIC COPIES OF THIS PLAN SHEET.

Caltrans Metric

NOTE:

1. FOR ACCURATE RIGHT OF WAY AND ACCESS DATA, CONTACT RIGHT OF WAY ENGINEERING AT THE DISTRICT OFFICE.

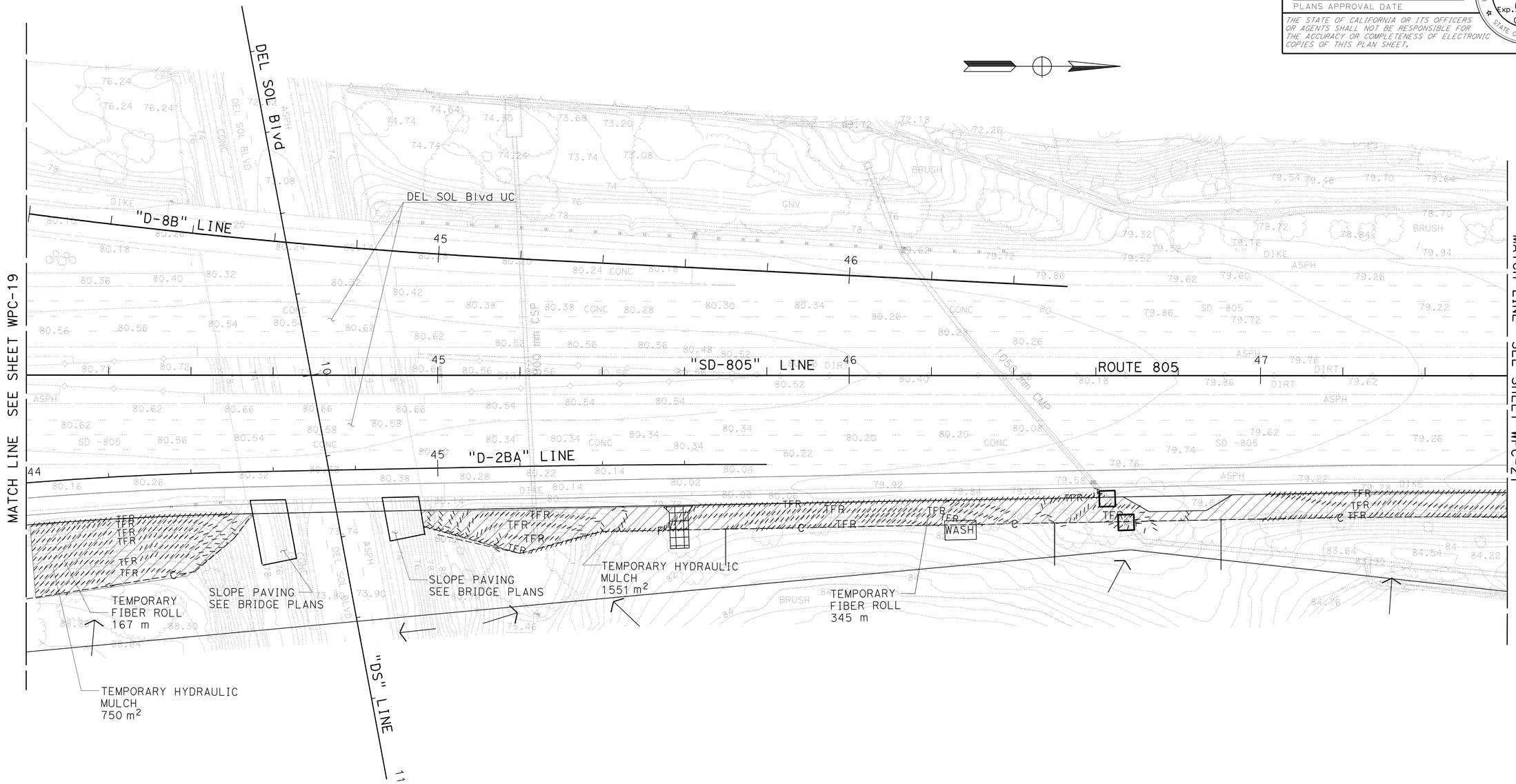

THIS PLAN ACCURATE FOR TEMPORARY WATER POLLUTION CONTROL WORK ONLY.

ALL DIMENSIONS ARE IN METERS UNLESS OTHERWISE SHOWN

TEMPORARY WATER POLLUTION CONTROL PLAN (STAGE 3A)

SCALE 1:500

WPC-20

STATE OF CALIFORNIA - DEPARTMENT OF TRANSPORTATION
Caltrans PROJECT DEVELOPMENT

FUNCTIONAL SUPERVISOR: CHRIS M. THOMAS
CALCULATED-DESIGNED BY: RICARDO PADILLA
CHECKED BY: RAMON JUAREZ
REVISED BY / DATE REVISED

LAST REVISION 04-23-10 | DATE PLOTTED => 20-OCT-2010 | TIME PLOTTED => 17:16

Dist	COUNTY	ROUTE	KILOMETER POST TOTAL PROJECT	SHEET No.	TOTAL SHEETS
11	SD	905,805	R8.4/R9.8, 3.1/4.2	61	364

REGISTERED CIVIL ENGINEER 07-26-10 DATE

PLANS APPROVAL DATE 10-18-10

REGISTERED PROFESSIONAL ENGINEER RICARDO PADILLA No. C58151 Exp. 6-30-12 CIVIL STATE OF CALIFORNIA

THE STATE OF CALIFORNIA OR ITS OFFICERS OR AGENTS SHALL NOT BE RESPONSIBLE FOR THE ACCURACY OR COMPLETENESS OF ELECTRONIC COPIES OF THIS PLAN SHEET.

Caltrans Metric

NOTE:

1. FOR ACCURATE RIGHT OF WAY AND ACCESS DATA, CONTACT RIGHT OF WAY ENGINEERING AT THE DISTRICT OFFICE.

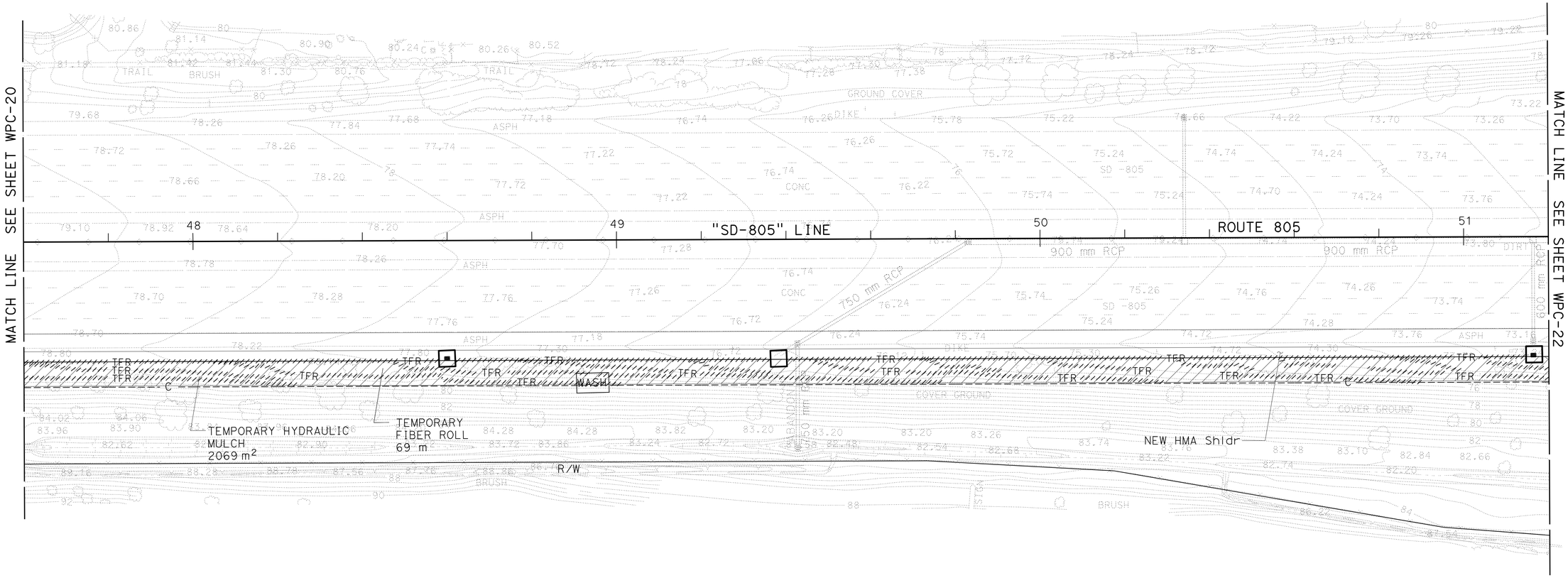

THIS PLAN ACCURATE FOR TEMPORARY WATER POLLUTION CONTROL WORK ONLY.

ALL DIMENSIONS ARE IN METERS UNLESS OTHERWISE SHOWN

TEMPORARY WATER POLLUTION CONTROL PLAN (STAGE 3A)

SCALE 1:500

WPC-21

STATE OF CALIFORNIA - DEPARTMENT OF TRANSPORTATION

Caltrans PROJECT DEVELOPMENT

FUNCTIONAL SUPERVISOR: CHRIS M. THOMAS

CALCULATED-DESIGNED BY: RICARDO PADILLA

CHECKED BY: RAMON JUAREZ

REVISED BY / DATE REVISED

LAST REVISION 06-04-10

DATE PLOTTED => 21-OCT-2010

TIME PLOTTED => 13:01

Dist	COUNTY	ROUTE	KILOMETER POST TOTAL PROJECT	SHEET No.	TOTAL SHEETS
11	SD	905,805	R8.4/R9.8, 3.1/4.2	62	364

REGISTERED CIVIL ENGINEER 07-26-10 DATE

PLANS APPROVAL DATE 10-18-10

REGISTERED PROFESSIONAL ENGINEER RICARDO PADILLA No. C58151 Exp. 6-30-12 CIVIL STATE OF CALIFORNIA

THE STATE OF CALIFORNIA OR ITS OFFICERS OR AGENTS SHALL NOT BE RESPONSIBLE FOR THE ACCURACY OR COMPLETENESS OF ELECTRONIC COPIES OF THIS PLAN SHEET.

Caltrans Metric

NOTE:

1. FOR ACCURATE RIGHT OF WAY AND ACCESS DATA, CONTACT RIGHT OF WAY ENGINEERING AT THE DISTRICT OFFICE.

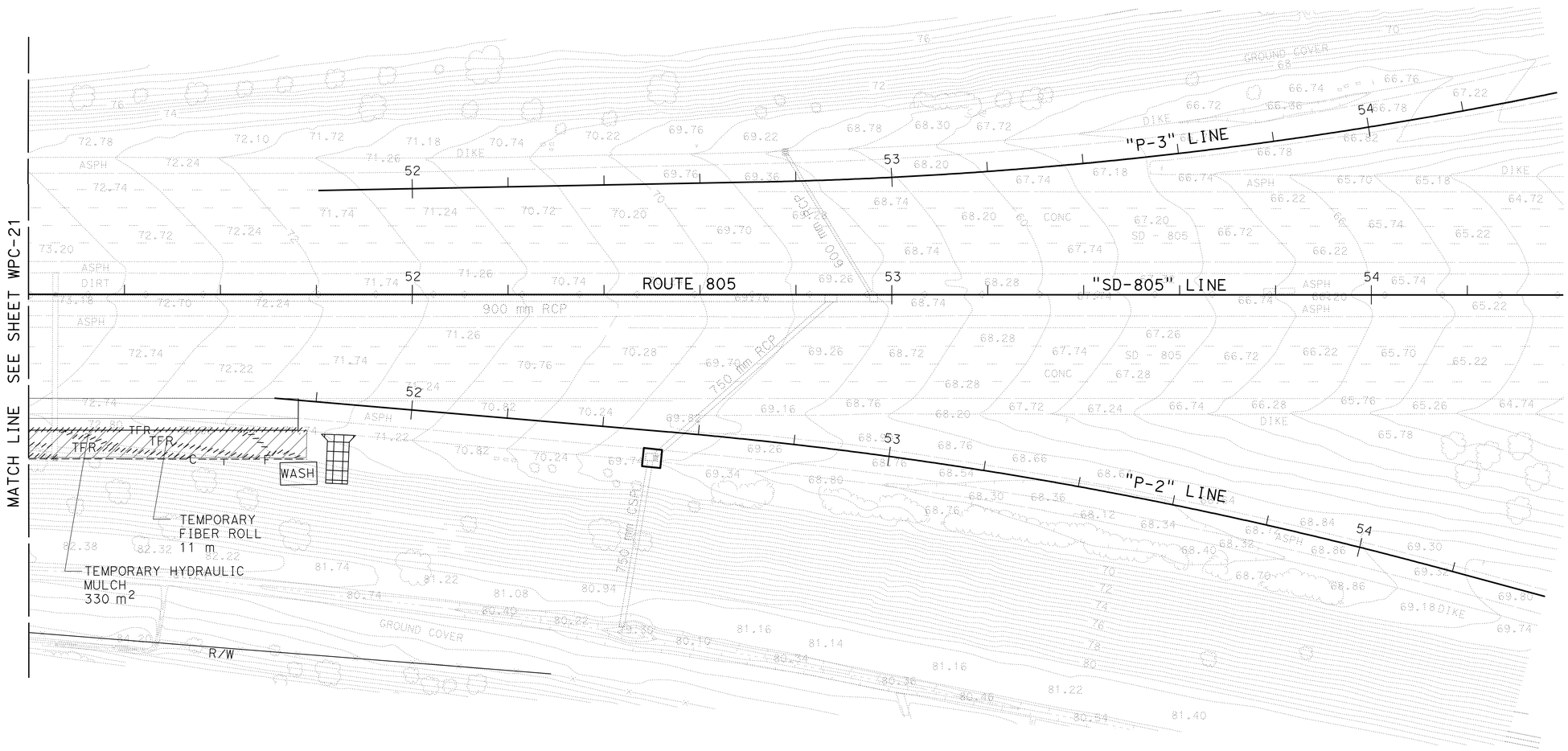

THIS PLAN ACCURATE FOR TEMPORARY WATER POLLUTION CONTROL WORK ONLY.

ALL DIMENSIONS ARE IN METERS UNLESS OTHERWISE SHOWN

TEMPORARY WATER POLLUTION CONTROL PLAN
(STAGE 3A)

SCALE 1:500

WPC-22

STATE OF CALIFORNIA - DEPARTMENT OF TRANSPORTATION
Caltrans PROJECT DEVELOPMENT

FUNCTIONAL SUPERVISOR: CHRIS M. THOMAS
CALCULATED-DESIGNED BY / CHECKED BY
RICARDO PADILLA / RAMON JUAREZ
REVISED BY / DATE REVISED

LAST REVISION 06-04-10
DATE PLOTTED => 20-OCT-2010
TIME PLOTTED => 17:16

Dist	COUNTY	ROUTE	KILOMETER POST TOTAL PROJECT	SHEET No.	TOTAL SHEETS
11	SD	905,805	R8.4/R9.8, 3.1/4.2	63	364

REGISTERED CIVIL ENGINEER 07-26-10 DATE

PLANS APPROVAL DATE 10-18-10

REGISTERED PROFESSIONAL ENGINEER RICARDO PADILLA No. C58151 Exp. 6-30-12 CIVIL STATE OF CALIFORNIA

THE STATE OF CALIFORNIA OR ITS OFFICERS OR AGENTS SHALL NOT BE RESPONSIBLE FOR THE ACCURACY OR COMPLETENESS OF ELECTRONIC COPIES OF THIS PLAN SHEET.

Caltrans Metric

NOTE:

1. FOR ACCURATE RIGHT OF WAY AND ACCESS DATA, CONTACT RIGHT OF WAY ENGINEERING AT THE DISTRICT OFFICE.

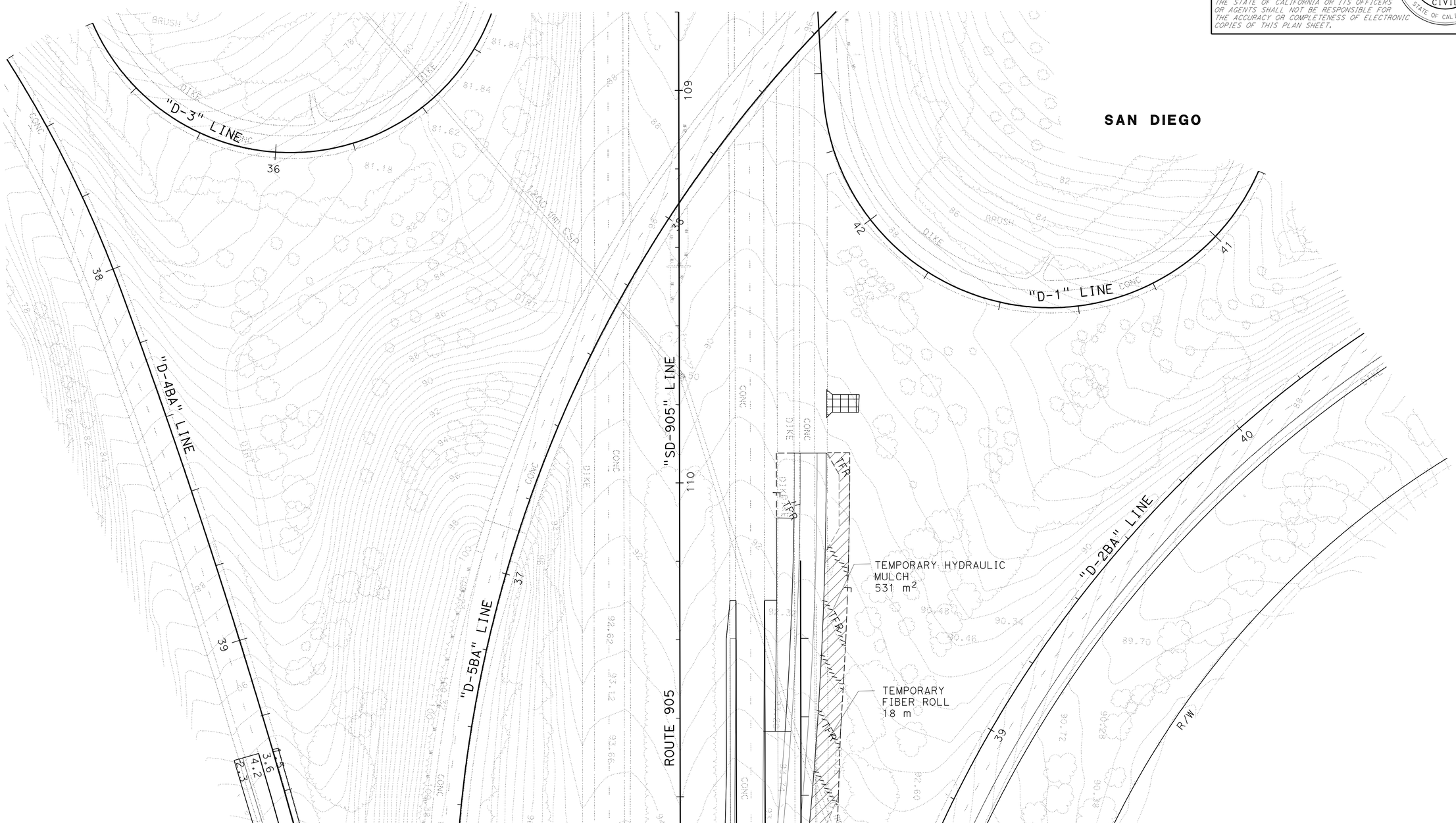

THIS PLAN ACCURATE FOR TEMPORARY WATER POLLUTION CONTROL WORK ONLY.

ALL DIMENSIONS ARE IN METERS UNLESS OTHERWISE SHOWN

TEMPORARY WATER POLLUTION CONTROL PLAN (STAGE 4)

SCALE 1:500

WPC-23

STATE OF CALIFORNIA - DEPARTMENT OF TRANSPORTATION

Caltrans PROJECT DEVELOPMENT

FUNCTIONAL SUPERVISOR: CHRIS M. THOMAS

CALCULATED-DESIGNED BY: RICARDO PADILLA

CHECKED BY: RAMON JUAREZ

REVISED BY / DATE REVISED

LAST REVISION 06-04-10 | DATE PLOTTED => 20-OCT-2010 | TIME PLOTTED => 17:16

Dist	COUNTY	ROUTE	KILOMETER POST TOTAL PROJECT	SHEET No.	TOTAL SHEETS
11	SD	905,805	R8.4/R9.8, 3.1/4.2	64	364

REGISTERED CIVIL ENGINEER 07-26-10 DATE

10-18-10
PLANS APPROVAL DATE

REGISTERED PROFESSIONAL ENGINEER RICARDO PADILLA No. C58151 Exp. 6-30-12 CIVIL STATE OF CALIFORNIA

THE STATE OF CALIFORNIA OR ITS OFFICERS OR AGENTS SHALL NOT BE RESPONSIBLE FOR THE ACCURACY OR COMPLETENESS OF ELECTRONIC COPIES OF THIS PLAN SHEET.

Caltrans Metric

NOTE:

1. FOR ACCURATE RIGHT OF WAY AND ACCESS DATA, CONTACT RIGHT OF WAY ENGINEERING AT THE DISTRICT OFFICE.

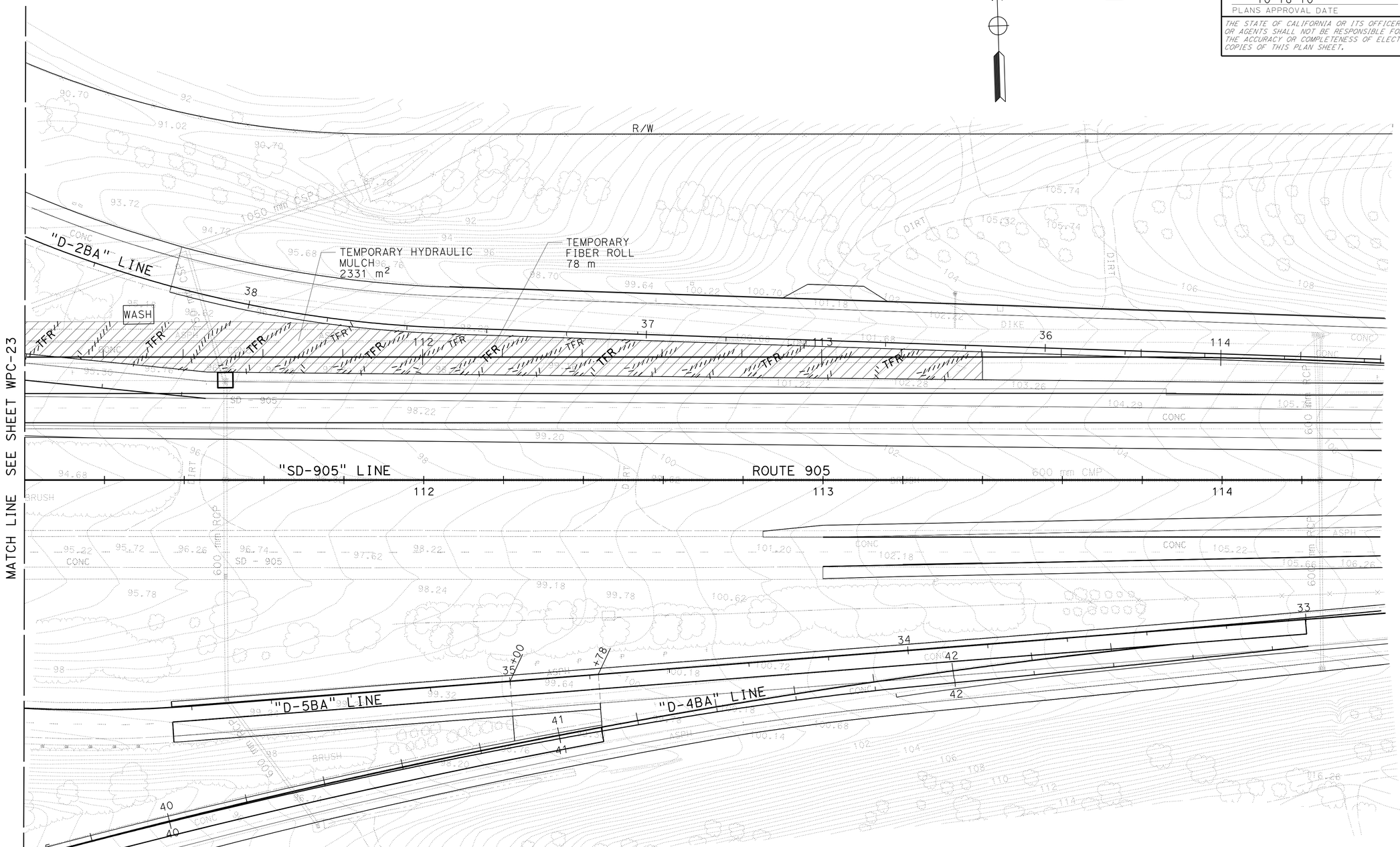

THIS PLAN ACCURATE FOR TEMPORARY WATER POLLUTION CONTROL WORK ONLY.

ALL DIMENSIONS ARE IN METERS UNLESS OTHERWISE SHOWN

TEMPORARY WATER POLLUTION CONTROL PLAN (STAGE 4)

SCALE 1:500

WPC-24

STATE OF CALIFORNIA - DEPARTMENT OF TRANSPORTATION
Caltrans PROJECT DEVELOPMENT

FUNCTIONAL SUPERVISOR: CHRIS M. THOMAS
CALCULATED-DESIGNED BY: RICARDO PADILLA
CHECKED BY: RAMON JUAREZ
REVISED BY / DATE REVISED

LAST REVISION 06-04-10
DATE PLOTTED => 20-OCT-2010
TIME PLOTTED => 17:17

Dist	COUNTY	ROUTE	KILOMETER POST TOTAL PROJECT	SHEET No.	TOTAL SHEETS
11	SD	905,805	R8.4/R9.8, 3.1/4.2	65	364

REGISTERED CIVIL ENGINEER 07-26-10 DATE

PLANS APPROVAL DATE 10-18-10

REGISTERED PROFESSIONAL ENGINEER RICARDO PADILLA No. C58151 Exp. 6-30-12 CIVIL STATE OF CALIFORNIA

THE STATE OF CALIFORNIA OR ITS OFFICERS OR AGENTS SHALL NOT BE RESPONSIBLE FOR THE ACCURACY OR COMPLETENESS OF ELECTRONIC COPIES OF THIS PLAN SHEET.

Caltrans Metric

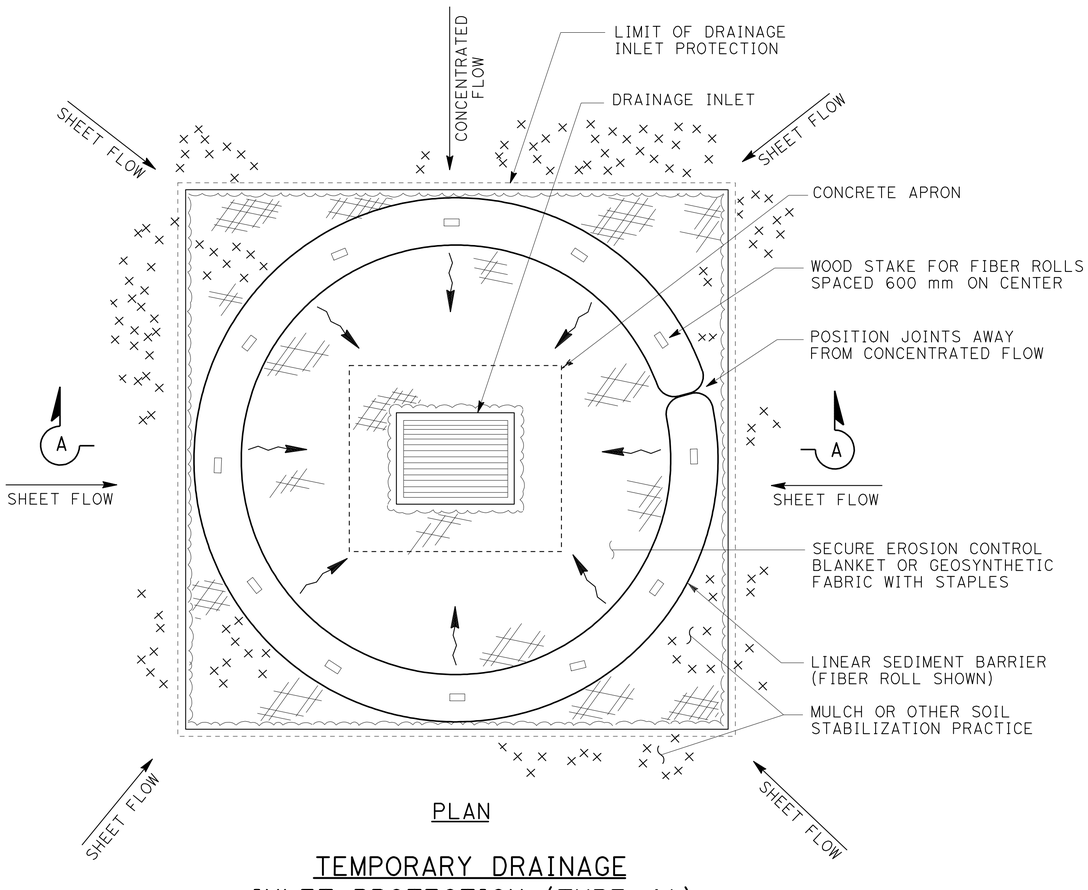

PLAN

TEMPORARY DRAINAGE INLET PROTECTION (TYPE 4A)

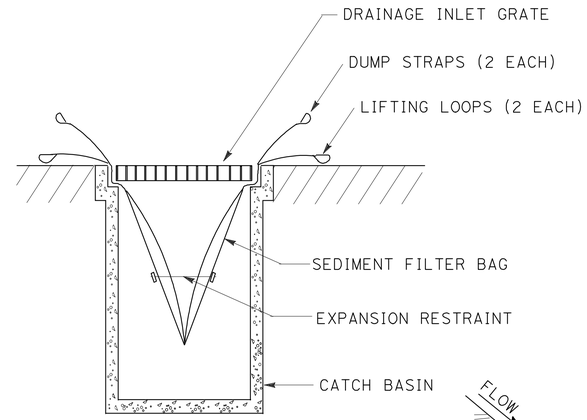

SECTION B-B

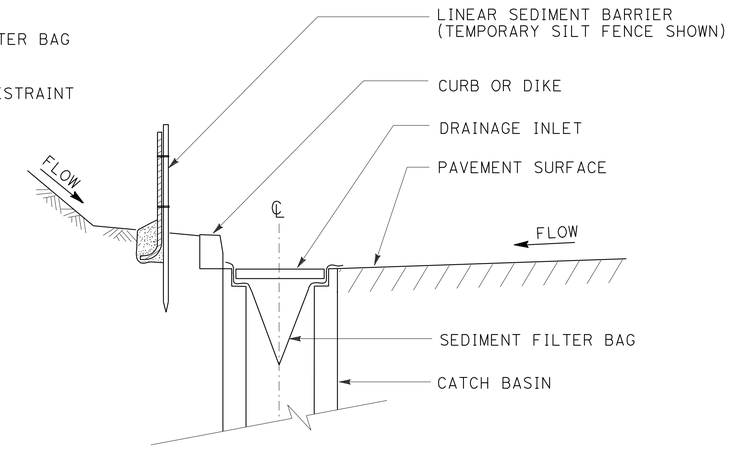

SECTION A-A

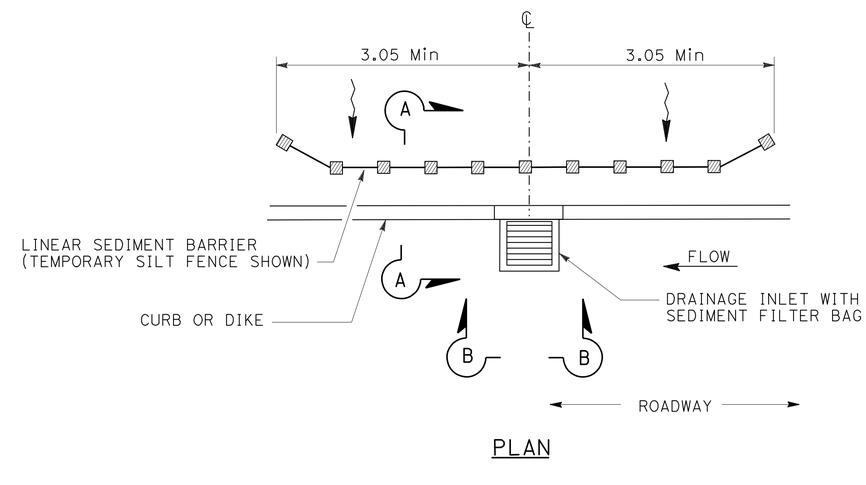

PLAN

TEMPORARY DRAINAGE INLET PROTECTION (TYPE 5) (SEDIMENT FILTER BAG)

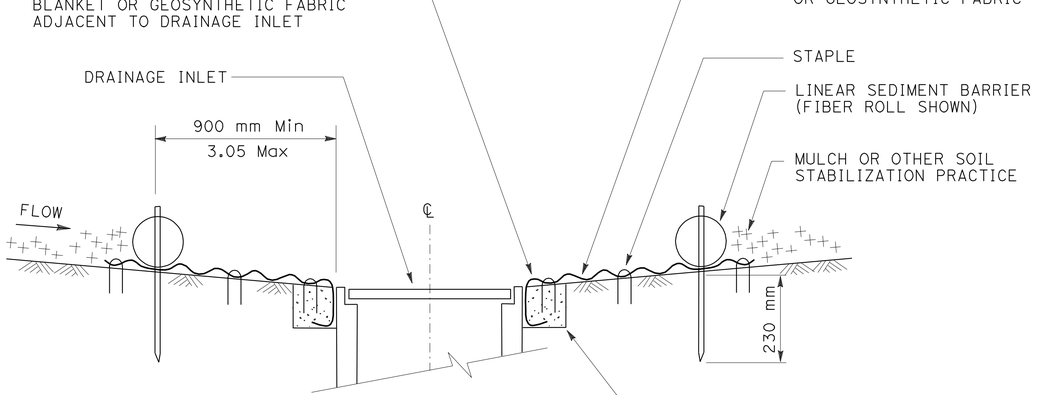

SECTION A-A

ALL DIMENSIONS ARE IN METERS UNLESS OTHERWISE SHOWN

TEMPORARY WATER POLLUTION CONTROL DETAILS

NO SCALE

WPCD-1

THIS PLAN ACCURATE FOR TEMPORARY WATER POLLUTION CONTROL WORK ONLY.

REVISED BY	DATE REVISED
RICARDO PADILLA	RAMON JUAREZ
CALCULATED-DESIGNED BY	CHECKED BY
FUNCTIONAL SUPERVISOR	CHRIS M. THOMAS

STATE OF CALIFORNIA - DEPARTMENT OF TRANSPORTATION
Caltrans PROJECT DEVELOPMENT

LAST REVISION 06-04-10 DATE PLOTTED => 20-OCT-2010 TIME PLOTTED => 15:15

Dist	COUNTY	ROUTE	KILOMETER POST TOTAL PROJECT	SHEET No.	TOTAL SHEETS
11	SD	905,805	R8.4/R9.8, 3.1/4.2	66	364

Caltrans Metric

REGISTERED CIVIL ENGINEER DATE 07-26-10

PLANS APPROVAL DATE 10-18-10

REGISTERED PROFESSIONAL ENGINEER RICARDO PADILLA No. C58151 Exp. 6-30-12 CIVIL STATE OF CALIFORNIA

THE STATE OF CALIFORNIA OR ITS OFFICERS OR AGENTS SHALL NOT BE RESPONSIBLE FOR THE ACCURACY OR COMPLETENESS OF ELECTRONIC COPIES OF THIS PLAN SHEET.

TEMPORARY WATER POLLUTION CONTROL

SHEET	TEMPORARY FIBER ROLL	TEMPORARY CONCRETE WASHOUT FACILITY	TEMPORARY CONSTRUCTION ENTRANCE	TEMPORARY DRAINAGE INLET PROTECTION	TEMPORARY HYDRAULIC MULCH	TEMPORARY HYDRAULIC MULCH (SECOND APPLICATION)	COMPOST (INCORPORATE)	TEMPORARY CHECK DAM	EROSION CONTROL (HYDROSEED)
	m	EACH	EACH	EACH	m^2	m^2	m^2	m	m^2
WPC-1	7	-	1	1	214	214	-	12	-
WPC-2	694	-	2	3	6772	6772	-	36	-
WPC-3	202	2	-	1	6054	6054	-	33	-
WPC-4	156	1	-	1	4690	4690	-	33	-
WPC-5	140	1	2	1	4211	4211	-	21	-
WPC-6	46	1	-	1	1384	1384	-	-	-
WPC-7	16	-	-	-	483	483	-	-	-
WPC-8	11	-	-	-	330	330	-	-	-
WPC-9	627	2	3	3	4767	4767	-	-	-
WPC-10	106	1	-	-	3190	3190	-	-	-
WPC-11	32	1	-	-	950	950	-	-	-
WPC-12	21	1	1	-	617	617	-	-	-
WPC-13	78	-	1	1	2347	2347	-	-	-
WPC-14	224	-	-	-	1010	1010	-	-	-
WPC-15	652	2	-	2	4116	4116	-	-	-
WPC-16	118	1	2	2	2033	2033	224	-	224
WPC-17	1576	1	1	2	651	651	6994	-	6994
WPC-18	710	-	-	1	1100	1100	3028	12	3028
WPC-18	774	2	1	3	3482	3482	-	-	-
WPC-20	511	1	1	2	2301	2301	-	-	-
WPC-21	69	1	-	3	2069	2069	-	-	-
WPC-22	11	1	1	1	330	330	-	-	-
WPC-23	18		1		531	531	-	-	-
WPC-24	78	1	-	1	2331	2331	-	-	-
TOTAL	6877	20	17	29	55 963	55 963	10 246	147	10 246

EROSION CONTROL (HYDROSEED) COMPONENTS

AREA	(N) PURE LIVE SEED	(N) FIBER	(N) COMMERCIAL FERTILIZER	(N) TACKIFIER
m^2	KG	KG	KG	KG
10246	22.8	1844.3	512.3	61.5

(N) NOT A SEPARATE PAY ITEM. FOR INFORMATION ONLY.

TEMPORARY WATER POLLUTION CONTROL QUANTITIES

WPCQ-1

STATE OF CALIFORNIA - DEPARTMENT OF TRANSPORTATION
Caltrans PROJECT DEVELOPMENT

FUNCTIONAL SUPERVISOR: CHRIS M. THOMAS
CALCULATED-DESIGNED BY: RICARDO PADILLA
CHECKED BY: RAMON JUAREZ
REVISED BY / DATE REVISED

LAST REVISION 06-23-10 | DATE PLOTTED => 20-OCT-2010 | TIME PLOTTED => 15:15

Dist	COUNTY	ROUTE	KILOMETER POST TOTAL PROJECT	SHEET No.	TOTAL SHEETS
11	SD	905,805	R8.4/R9.8, 3.1/4.2	67	364

REGISTERED CIVIL ENGINEER 07-26-10 DATE

10-18-10
PLANS APPROVAL DATE

REGISTERED PROFESSIONAL ENGINEER RICARDO PADILLA No. C58151 Exp. 6-30-12 CIVIL STATE OF CALIFORNIA

THE STATE OF CALIFORNIA OR ITS OFFICERS OR AGENTS SHALL NOT BE RESPONSIBLE FOR THE ACCURACY OR COMPLETENESS OF ELECTRONIC COPIES OF THIS PLAN SHEET.

Caltrans Metric

NOTE:

1. FOR ACCURATE RIGHT OF WAY AND ACCESS DATA, CONTACT RIGHT OF WAY ENGINEERING AT THE DISTRICT OFFICE.

LEGEND:

- DIRECTION OF FLOW
- SURFACE FLOW DIRECTION (1:2 SLOPE OR FLATTER UNLESS OTHERWISE NOTED)
- DRAINAGE INLET PROTECTION (EROSION CONTROL)
- FR — FIBER ROLLS
- BIOFILTRATION SWALE FLOWLINE
- CHECK DAM (EROSION CONTROL) (3 m EA)
- ROLLED EROSION CONTROL PRODUCT (JUTE MESH)

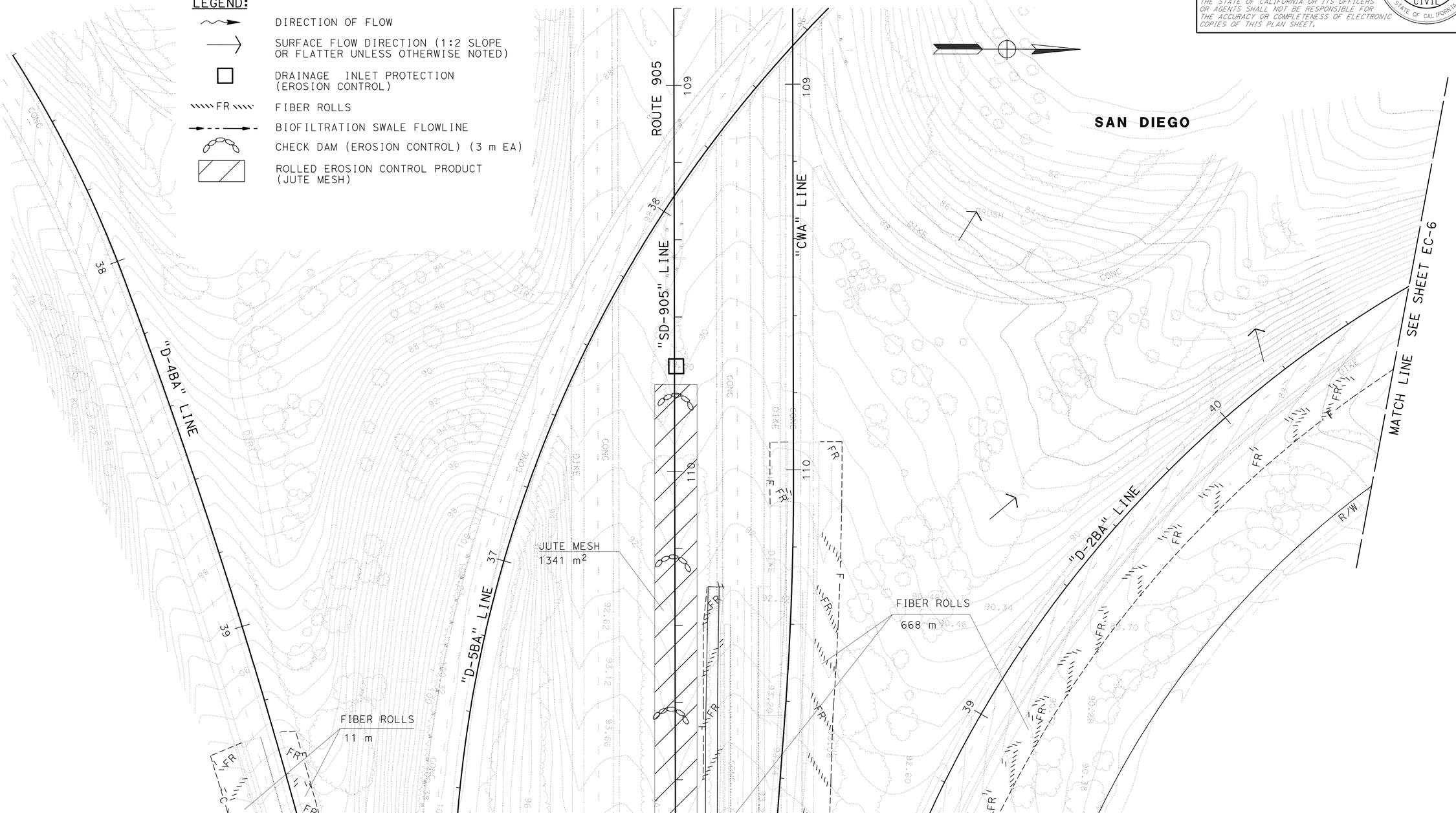

ALL DIMENSIONS ARE IN METERS UNLESS OTHERWISE SHOWN

EROSION CONTROL PLAN

SCALE 1:500

EC-1

THIS PLAN ACCURATE FOR EROSION CONTROL WORK ONLY.

STATE OF CALIFORNIA - DEPARTMENT OF TRANSPORTATION
Caltrans PROJECT DEVELOPMENT

FUNCTIONAL SUPERVISOR: CHRIS M. THOMAS
CALCULATED-DESIGNED BY: RICARDO PADILLA
CHECKED BY: RAMON JUAREZ
REVISED BY / DATE REVISED

LAST REVISION 06-20-10 | DATE PLOTTED => 20-OCT-2010 | TIME PLOTTED => 15:15

Dist	COUNTY	ROUTE	KILOMETER POST TOTAL PROJECT	SHEET No.	TOTAL SHEETS
11	SD	905,805	R8.4/R9.8, 3.1/4.2	68	364

REGISTERED CIVIL ENGINEER 07-26-10 DATE

10-18-10
PLANS APPROVAL DATE

REGISTERED PROFESSIONAL ENGINEER RICARDO PADILLA No. C58151 Exp. 6-30-12 CIVIL STATE OF CALIFORNIA

THE STATE OF CALIFORNIA OR ITS OFFICERS OR AGENTS SHALL NOT BE RESPONSIBLE FOR THE ACCURACY OR COMPLETENESS OF ELECTRONIC COPIES OF THIS PLAN SHEET.

Caltrans Metric

NOTE:

1. FOR ACCURATE RIGHT OF WAY AND ACCESS DATA, CONTACT RIGHT OF WAY ENGINEERING AT THE DISTRICT OFFICE.

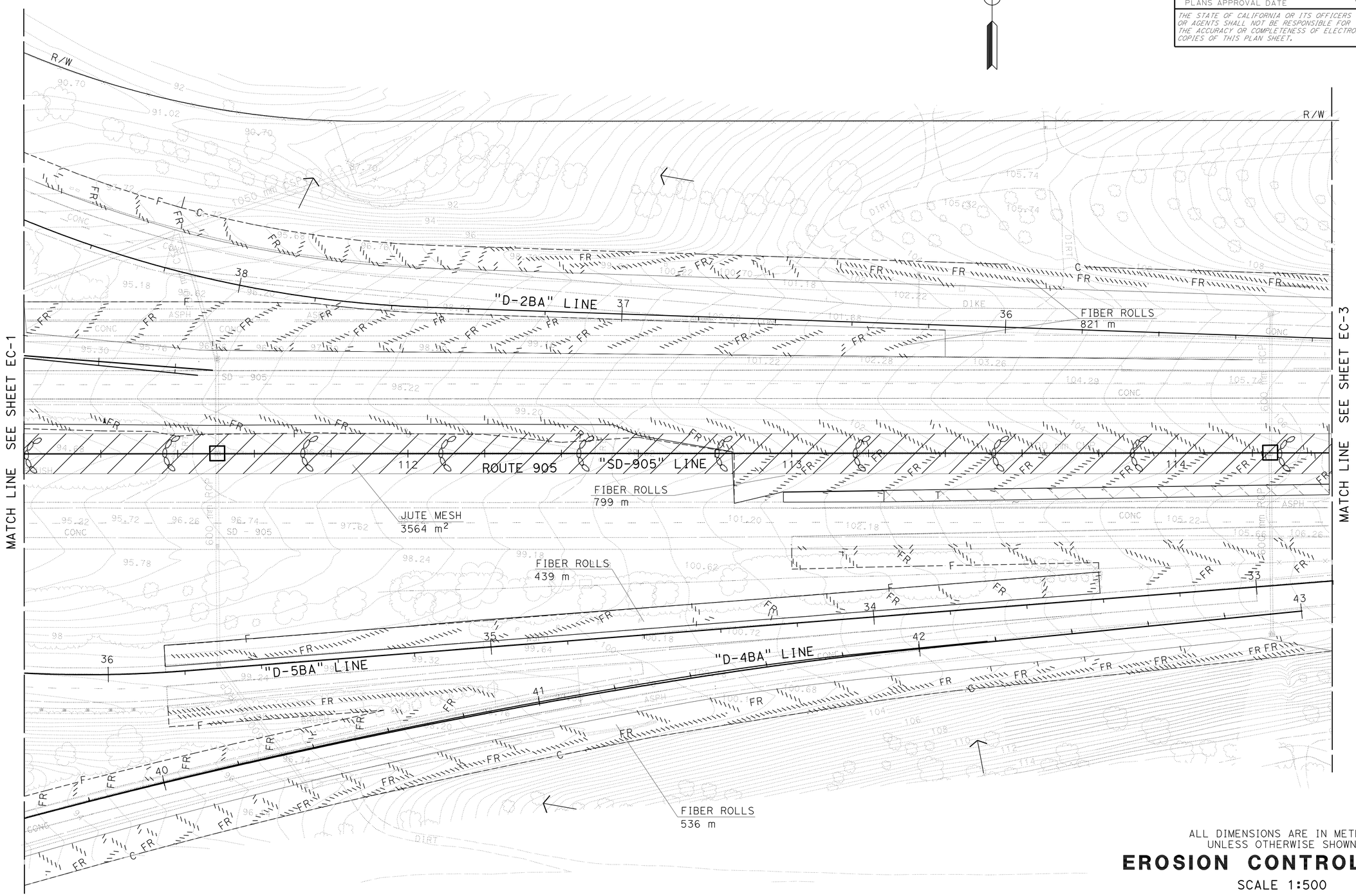

ALL DIMENSIONS ARE IN METERS
UNLESS OTHERWISE SHOWN

EROSION CONTROL PLAN

SCALE 1:500

EC-2

THIS PLAN ACCURATE FOR EROSION CONTROL WORK ONLY.

STATE OF CALIFORNIA - DEPARTMENT OF TRANSPORTATION
Caltrans PROJECT DEVELOPMENT

FUNCTIONAL SUPERVISOR: CHRIS M. THOMAS
CALCULATED-DESIGNED BY: RICARDO PADILLA
CHECKED BY: RAMON JUAREZ
REVISED BY / DATE REVISED

LAST REVISION 06-20-10
DATE PLOTTED => 20-OCT-2010
TIME PLOTTED => 15:15

Dist	COUNTY	ROUTE	KILOMETER POST TOTAL PROJECT	SHEET No.	TOTAL SHEETS
11	SD	905,805	R8.4/R9.8, 3.1/4.2	69	364

REGISTERED CIVIL ENGINEER 07-26-10 DATE

10-18-10
PLANS APPROVAL DATE

REGISTERED PROFESSIONAL ENGINEER RICARDO PADILLA No. C58151 Exp. 6-30-12 CIVIL STATE OF CALIFORNIA

THE STATE OF CALIFORNIA OR ITS OFFICERS OR AGENTS SHALL NOT BE RESPONSIBLE FOR THE ACCURACY OR COMPLETENESS OF ELECTRONIC COPIES OF THIS PLAN SHEET.

Caltrans Metric

NOTE:

1. FOR ACCURATE RIGHT OF WAY AND ACCESS DATA, CONTACT RIGHT OF WAY ENGINEERING AT THE DISTRICT OFFICE.

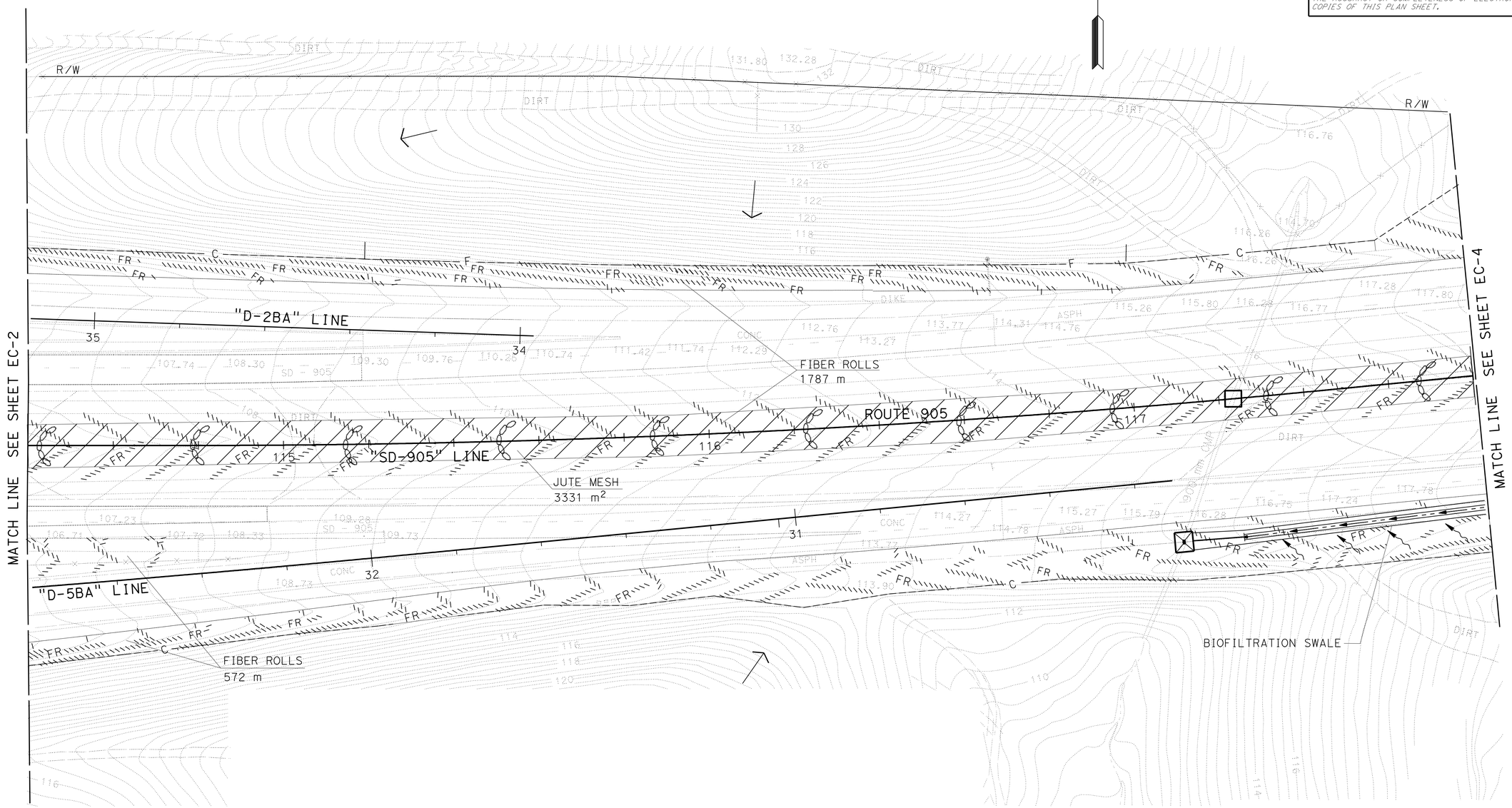

ALL DIMENSIONS ARE IN METERS
UNLESS OTHERWISE SHOWN

EROSION CONTROL PLAN

SCALE 1:500

EC-3

THIS PLAN ACCURATE FOR EROSION CONTROL WORK ONLY.

STATE OF CALIFORNIA - DEPARTMENT OF TRANSPORTATION
Caltrans PROJECT DEVELOPMENT

FUNCTIONAL SUPERVISOR: CHRIS M. THOMAS
CALCULATED-DESIGNED BY: RICARDO PADILLA
CHECKED BY: RAMON JUAREZ
REVISED BY / DATE REVISED

LAST REVISION 06-20-10 DATE PLOTTED => 20-OCT-2010 TIME PLOTTED => 15:15

Dist	COUNTY	ROUTE	KILOMETER POST TOTAL PROJECT	SHEET No.	TOTAL SHEETS
11	SD	905,805	R8.4/R9.8, 3.1/4.2	70	364

REGISTERED CIVIL ENGINEER 07-26-10 DATE

10-18-10
PLANS APPROVAL DATE

REGISTERED PROFESSIONAL ENGINEER RICARDO PADILLA No. C58151 Exp. 6-30-12 CIVIL STATE OF CALIFORNIA

THE STATE OF CALIFORNIA OR ITS OFFICERS OR AGENTS SHALL NOT BE RESPONSIBLE FOR THE ACCURACY OR COMPLETENESS OF ELECTRONIC COPIES OF THIS PLAN SHEET.

Caltrans Metric

NOTE:

1. FOR ACCURATE RIGHT OF WAY AND ACCESS DATA, CONTACT RIGHT OF WAY ENGINEERING AT THE DISTRICT OFFICE.

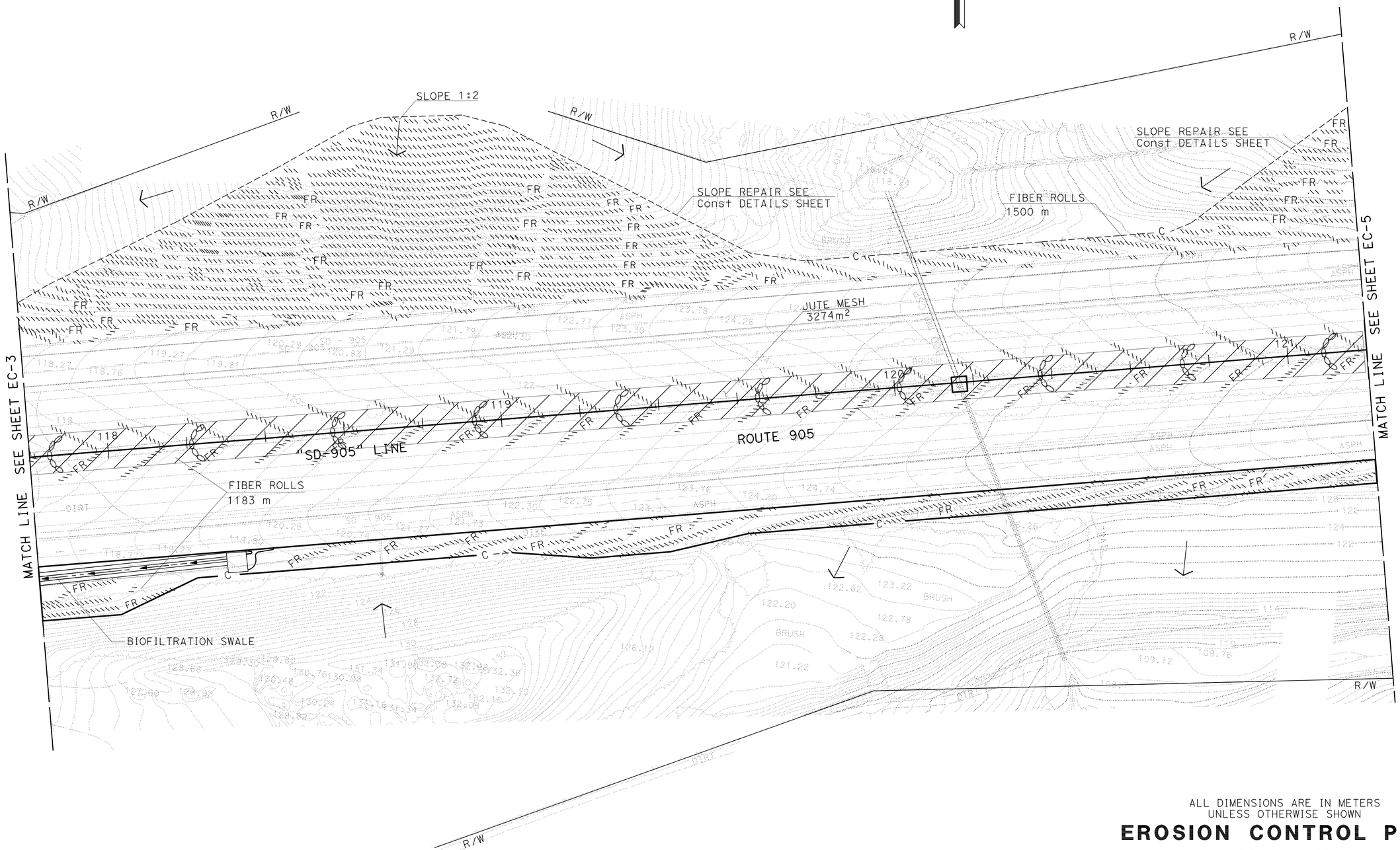

ALL DIMENSIONS ARE IN METERS UNLESS OTHERWISE SHOWN

EROSION CONTROL PLAN

SCALE 1:500

EC-4

THIS PLAN ACCURATE FOR EROSION CONTROL WORK ONLY.

STATE OF CALIFORNIA - DEPARTMENT OF TRANSPORTATION
Caltrans PROJECT DEVELOPMENT

FUNCTIONAL SUPERVISOR: CHRIS M. THOMAS
CALCULATED-DESIGNED BY: RICARDO PADILLA
CHECKED BY: RAMON JUAREZ
REVISED BY / DATE REVISED

LAST REVISION 06-20-10
DATE PLOTTED => 20-OCT-2010
TIME PLOTTED => 15:15

Dist	COUNTY	ROUTE	KILOMETER POST TOTAL PROJECT	SHEET No.	TOTAL SHEETS
11	SD	905,805	R8.4/R9.8, 3.1/4.2	71	364

REGISTERED CIVIL ENGINEER 07-26-10 DATE

10-18-10
PLANS APPROVAL DATE

REGISTERED PROFESSIONAL ENGINEER RICARDO PADILLA No. C58151 Exp. 6-30-12 CIVIL STATE OF CALIFORNIA

THE STATE OF CALIFORNIA OR ITS OFFICERS OR AGENTS SHALL NOT BE RESPONSIBLE FOR THE ACCURACY OR COMPLETENESS OF ELECTRONIC COPIES OF THIS PLAN SHEET.

Caltrans Metric

NOTE:

1. FOR ACCURATE RIGHT OF WAY AND ACCESS DATA, CONTACT RIGHT OF WAY ENGINEERING AT THE DISTRICT OFFICE.

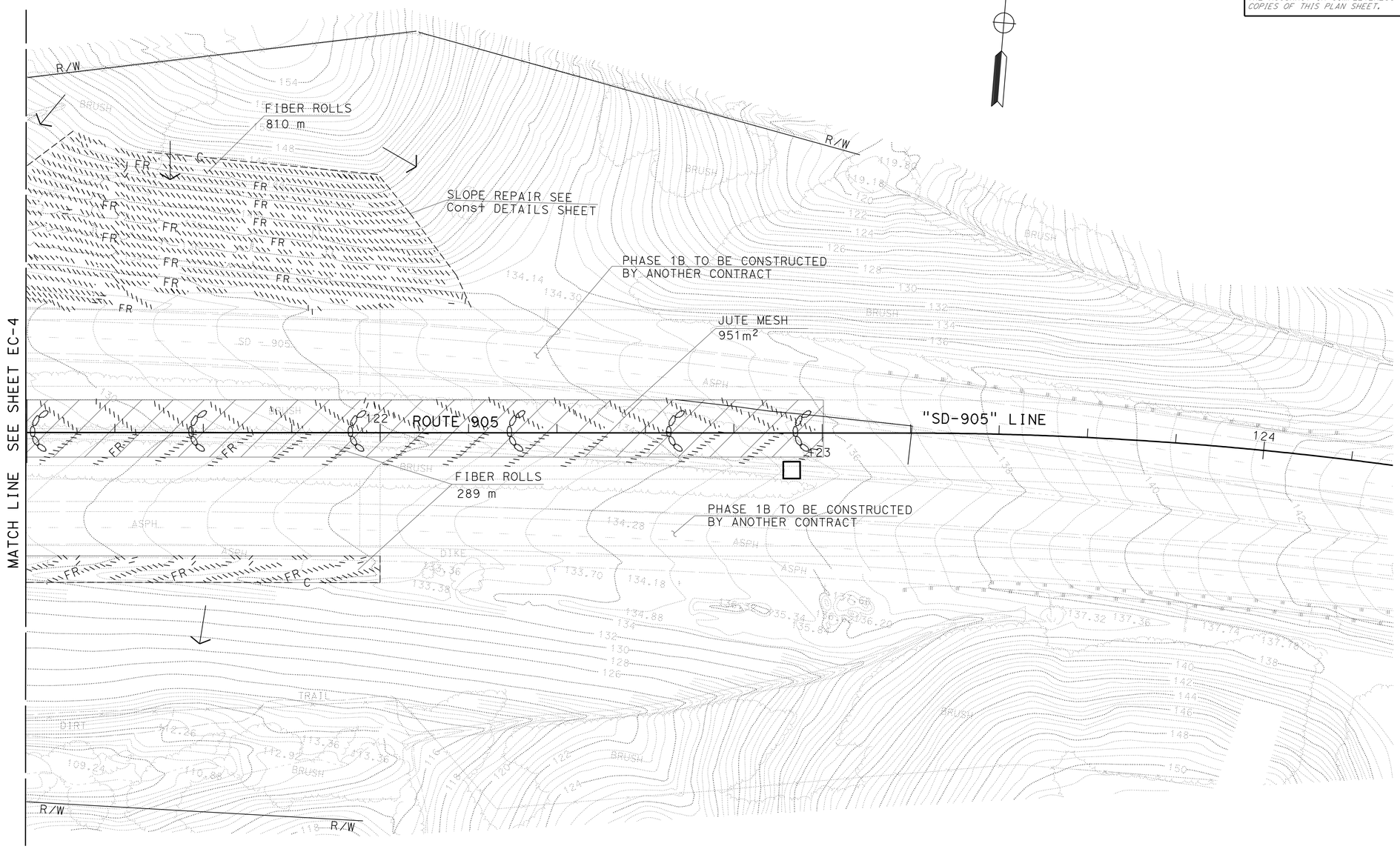

ALL DIMENSIONS ARE IN METERS
UNLESS OTHERWISE SHOWN

EROSION CONTROL PLAN

SCALE 1:500

EC-5

THIS PLAN ACCURATE FOR EROSION CONTROL WORK ONLY.

STATE OF CALIFORNIA - DEPARTMENT OF TRANSPORTATION
Caltrans PROJECT DEVELOPMENT

FUNCTIONAL SUPERVISOR: CHRIS M. THOMAS
CALCULATED-DESIGNED BY: RICARDO PADILLA
CHECKED BY: RAMON JUAREZ
REVISED BY / DATE REVISED

LAST REVISION 06-20-10
DATE PLOTTED => 20-OCT-2010
TIME PLOTTED => 15:16

Dist	COUNTY	ROUTE	KILOMETER POST TOTAL PROJECT	SHEET No.	TOTAL SHEETS
11	SD	905,805	R8.4/R9.8, 3.1/4.2	72	364

REGISTERED CIVIL ENGINEER 07-26-10 DATE

10-18-10
PLANS APPROVAL DATE

REGISTERED PROFESSIONAL ENGINEER RICARDO PADILLA No. C58151 Exp. 6-30-12 CIVIL STATE OF CALIFORNIA

THE STATE OF CALIFORNIA OR ITS OFFICERS OR AGENTS SHALL NOT BE RESPONSIBLE FOR THE ACCURACY OR COMPLETENESS OF ELECTRONIC COPIES OF THIS PLAN SHEET.

Caltrans Metric

NOTE:

1. FOR ACCURATE RIGHT OF WAY AND ACCESS DATA, CONTACT RIGHT OF WAY ENGINEERING AT THE DISTRICT OFFICE.

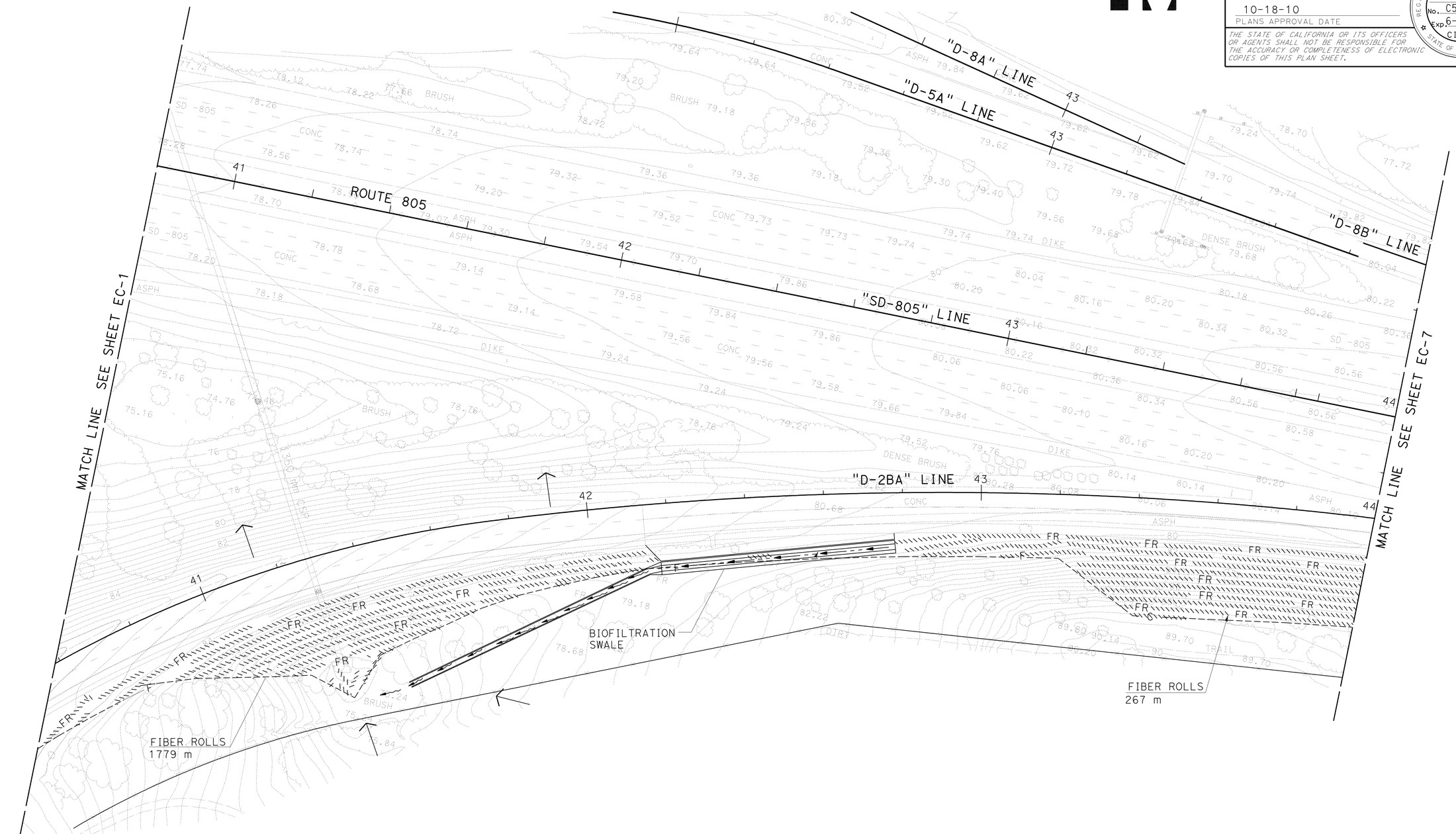

ALL DIMENSIONS ARE IN METERS UNLESS OTHERWISE SHOWN

EROSION CONTROL PLAN

SCALE 1:500

EC-6

THIS PLAN ACCURATE FOR EROSION CONTROL WORK ONLY.

STATE OF CALIFORNIA - DEPARTMENT OF TRANSPORTATION
Caltrans PROJECT DEVELOPMENT

FUNCTIONAL SUPERVISOR: CHRIS M. THOMAS
CALCULATED-DESIGNED BY: RICARDO PADILLA
CHECKED BY: RAMON JUAREZ
REVISED BY / DATE REVISED

LAST REVISION 04-20-10
DATE PLOTTED => 20-OCT-2010
TIME PLOTTED => 15:16

Dist	COUNTY	ROUTE	KILOMETER POST TOTAL PROJECT	SHEET No.	TOTAL SHEETS
11	SD	905,805	R8.4/R9.8, 3.1/4.2	73	364

REGISTERED CIVIL ENGINEER 07-26-10 DATE

10-18-10
PLANS APPROVAL DATE

REGISTERED PROFESSIONAL ENGINEER RICARDO PADILLA No. C58151 Exp. 6-30-12 CIVIL STATE OF CALIFORNIA

THE STATE OF CALIFORNIA OR ITS OFFICERS OR AGENTS SHALL NOT BE RESPONSIBLE FOR THE ACCURACY OR COMPLETENESS OF ELECTRONIC COPIES OF THIS PLAN SHEET.

Caltrans Metric

NOTE:

1. FOR ACCURATE RIGHT OF WAY AND ACCESS DATA, CONTACT RIGHT OF WAY ENGINEERING AT THE DISTRICT OFFICE.

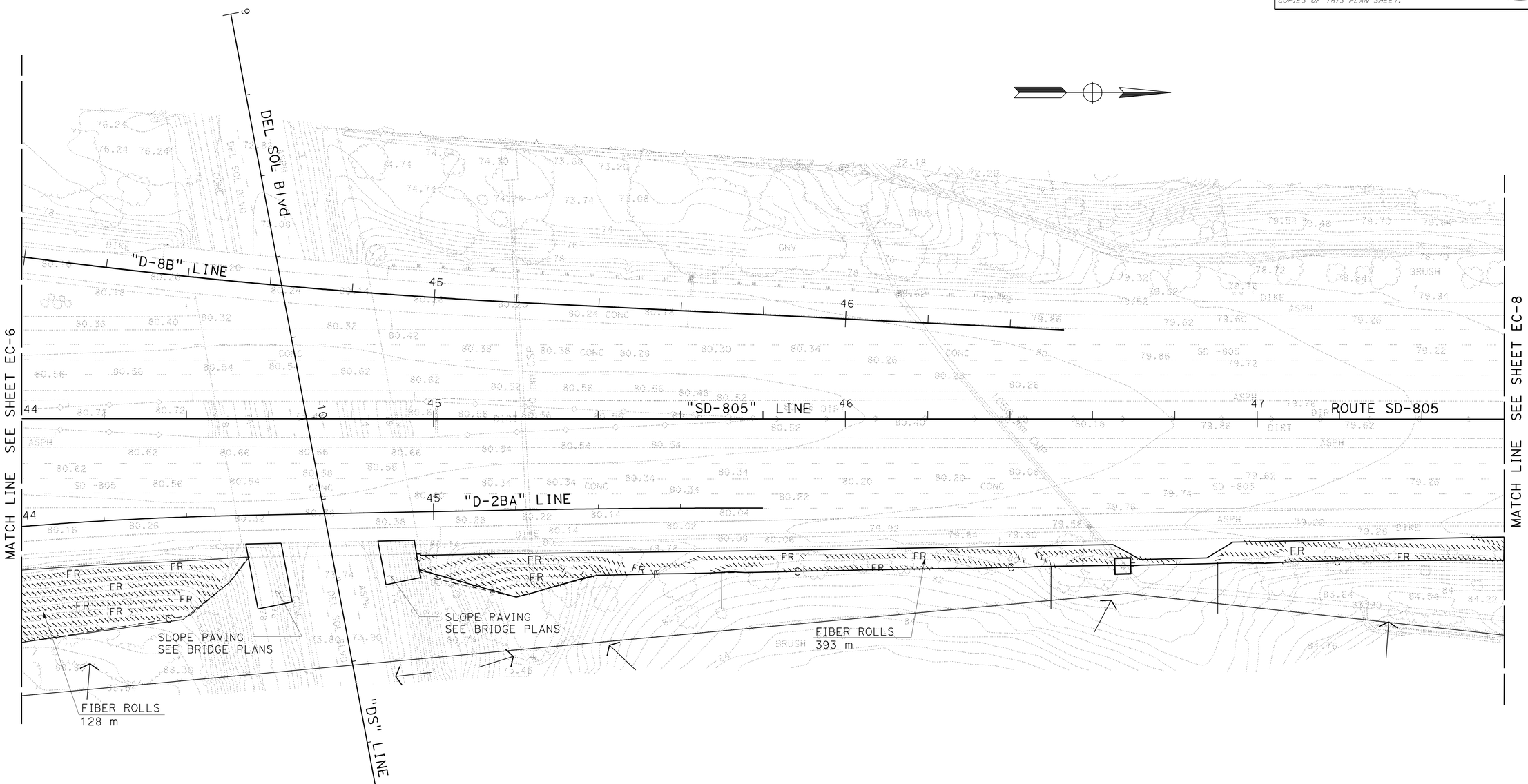

ALL DIMENSIONS ARE IN METERS
UNLESS OTHERWISE SHOWN

EROSION CONTROL PLAN

SCALE 1:500

EC-7

THIS PLAN ACCURATE FOR EROSION CONTROL WORK ONLY.

STATE OF CALIFORNIA - DEPARTMENT OF TRANSPORTATION
Caltrans PROJECT DEVELOPMENT

FUNCTIONAL SUPERVISOR: CHRIS M. THOMAS
CALCULATED-DESIGNED BY: RICARDO PADILLA
CHECKED BY: RAMON JUAREZ
REVISED BY / DATE REVISED

LAST REVISION 04-20-10 | DATE PLOTTED => 20-OCT-2010 | TIME PLOTTED => 15:16

Dist	COUNTY	ROUTE	KILOMETER POST TOTAL PROJECT	SHEET No.	TOTAL SHEETS
11	SD	905,805	R8.4/R9.8, 3.1/4.2	74	364

REGISTERED CIVIL ENGINEER 07-26-10 DATE

10-18-10
PLANS APPROVAL DATE

REGISTERED PROFESSIONAL ENGINEER RICARDO PADILLA No. C58151 Exp. 6-30-12 CIVIL STATE OF CALIFORNIA

THE STATE OF CALIFORNIA OR ITS OFFICERS OR AGENTS SHALL NOT BE RESPONSIBLE FOR THE ACCURACY OR COMPLETENESS OF ELECTRONIC COPIES OF THIS PLAN SHEET.

Caltrans Metric

NOTE:

1. FOR ACCURATE RIGHT OF WAY AND ACCESS DATA, CONTACT RIGHT OF WAY ENGINEERING AT THE DISTRICT OFFICE.

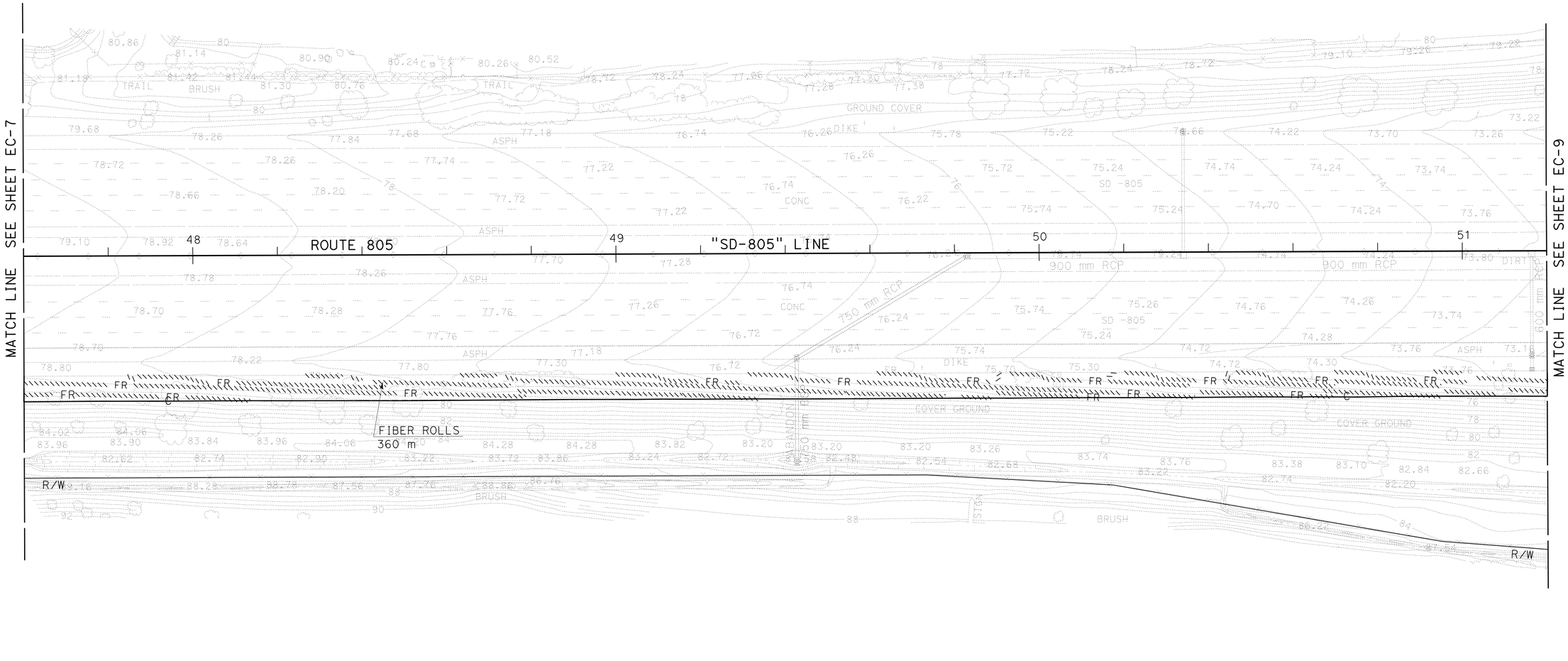

ALL DIMENSIONS ARE IN METERS
UNLESS OTHERWISE SHOWN

EROSION CONTROL PLAN

SCALE 1:500

EC-8

THIS PLAN ACCURATE FOR EROSION CONTROL WORK ONLY.

STATE OF CALIFORNIA - DEPARTMENT OF TRANSPORTATION
Caltrans PROJECT DEVELOPMENT

FUNCTIONAL SUPERVISOR: CHRIS M. THOMAS
CALCULATED-DESIGNED BY: RICARDO PADILLA
CHECKED BY: RAMON JUAREZ
REVISED BY / DATE REVISED

LAST REVISION 06-10-10
DATE PLOTTED => 20-OCT-2010
TIME PLOTTED => 15:16

Dist	COUNTY	ROUTE	KILOMETER POST TOTAL PROJECT	SHEET No.	TOTAL SHEETS
11	SD	905,805	R8.4/R9.8, 3.1/4.2	75	364

REGISTERED CIVIL ENGINEER 07-26-10 DATE

10-18-10
PLANS APPROVAL DATE

REGISTERED PROFESSIONAL ENGINEER RICARDO PADILLA No. C58151 Exp. 6-30-12 CIVIL STATE OF CALIFORNIA

THE STATE OF CALIFORNIA OR ITS OFFICERS OR AGENTS SHALL NOT BE RESPONSIBLE FOR THE ACCURACY OR COMPLETENESS OF ELECTRONIC COPIES OF THIS PLAN SHEET.

Caltrans Metric

NOTE:

1. FOR ACCURATE RIGHT OF WAY AND ACCESS DATA, CONTACT RIGHT OF WAY ENGINEERING AT THE DISTRICT OFFICE.

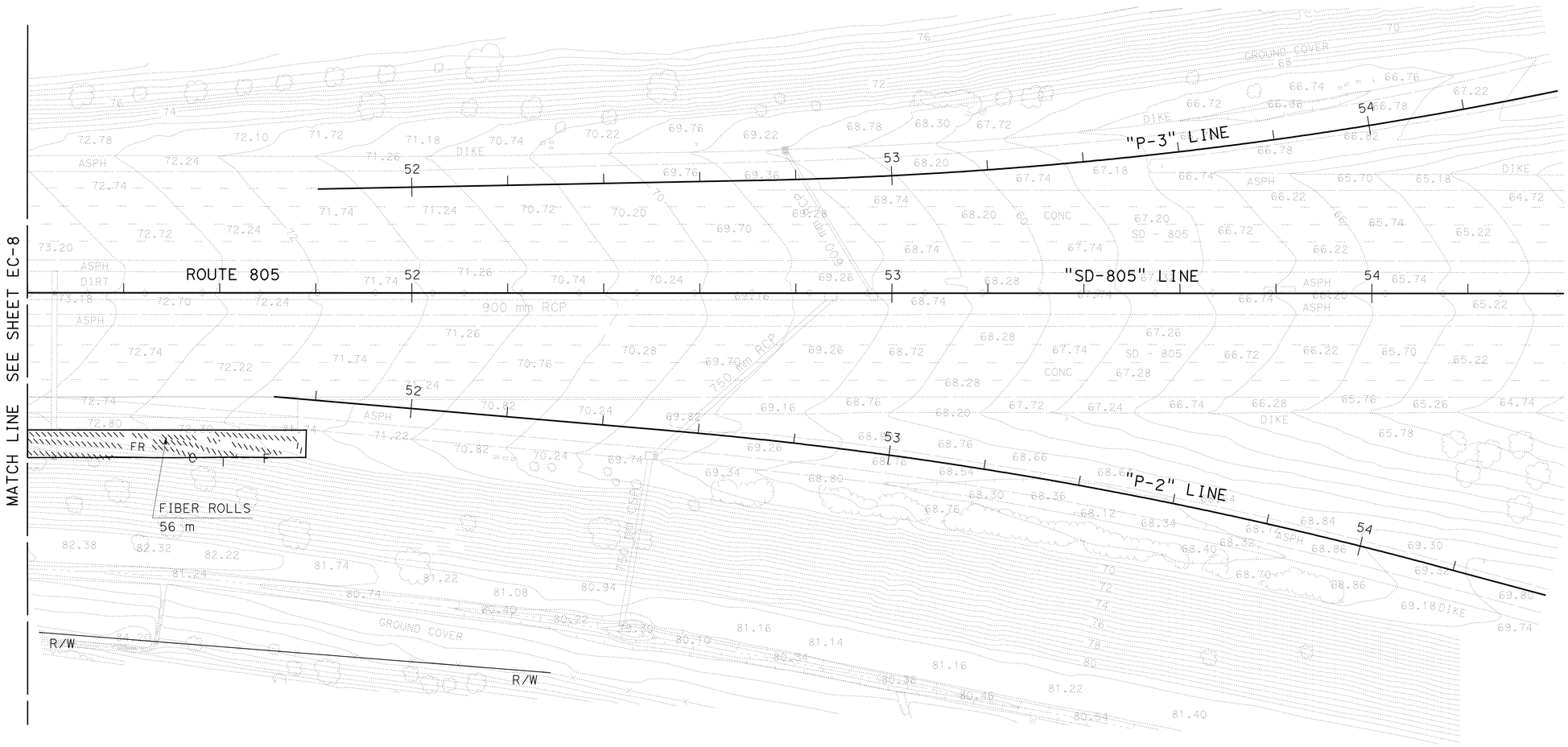

ALL DIMENSIONS ARE IN METERS
UNLESS OTHERWISE SHOWN

EROSION CONTROL PLAN

SCALE 1:500

EC-9

THIS PLAN ACCURATE FOR EROSION CONTROL WORK ONLY.

STATE OF CALIFORNIA - DEPARTMENT OF TRANSPORTATION
Caltrans PROJECT DEVELOPMENT

FUNCTIONAL SUPERVISOR: CHRIS M. THOMAS
CALCULATED-DESIGNED BY: RICARDO PADILLA
CHECKED BY: RAMON JUAREZ
REVISED BY / DATE REVISED

LAST REVISION 04-20-10
DATE PLOTTED => 20-OCT-2010
TIME PLOTTED => 15:16

Dist	COUNTY	ROUTE	KILOMETER POST TOTAL PROJECT	SHEET No.	TOTAL SHEETS
11	SD	905,805	R8.4/R9.8, 3.1/4.2	76	364

REGISTERED CIVIL ENGINEER 07-26-10 DATE

10-18-10
PLANS APPROVAL DATE

REGISTERED PROFESSIONAL ENGINEER RICARDO PADILLA No. C58151 Exp. 6-30-12 CIVIL STATE OF CALIFORNIA

THE STATE OF CALIFORNIA OR ITS OFFICERS OR AGENTS SHALL NOT BE RESPONSIBLE FOR THE ACCURACY OR COMPLETENESS OF ELECTRONIC COPIES OF THIS PLAN SHEET.

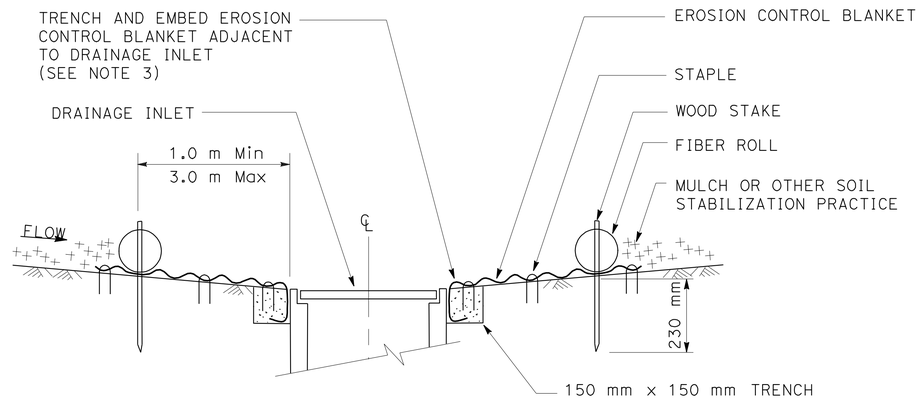

SECTION A-A

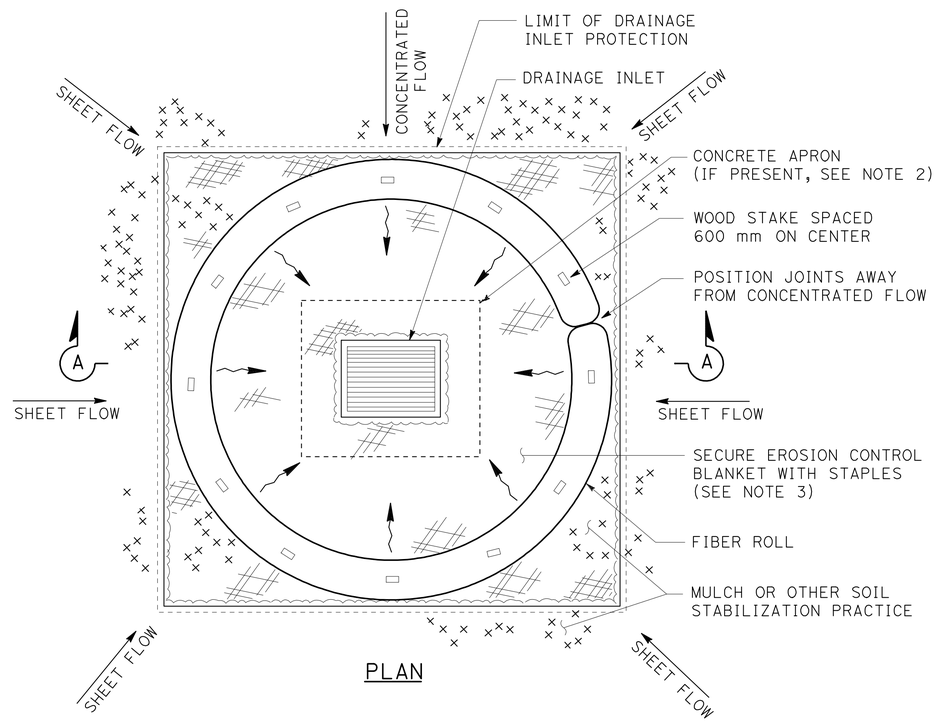

PLAN

DRAINAGE INLET PROTECTION (EROSION CONTROL)
(FIBER ROLLS)

NOTES:

1. DIMENSIONS MAY VARY TO FIT FIELD CONDITIONS.
2. POSITION EROSION CONTROL BLANKET AT EDGE OF CONCRETE APRON AND SECURE IN TRENCH.
3. EROSION CONTROL BLANKET IS NOT REQUIRED IF THE AREA ADJACENT TO THE DRAINAGE INLET IS VEGETATED.

ALL DIMENSIONS ARE IN METERS
UNLESS OTHERWISE SHOWN

EROSION CONTROL DETAILS

NO SCALE

ECD-1

STATE OF CALIFORNIA - DEPARTMENT OF TRANSPORTATION
Caltrans PROJECT DEVELOPMENT

FUNCTIONAL SUPERVISOR: CHRIS M. THOMAS
CALCULATED-DESIGNED BY: RICARDO PADILLA
CHECKED BY: RAMON JUAREZ
REVISED BY
DATE REVISED

LAST REVISION 04-22-10 | DATE PLOTTED => 20-OCT-2010 | TIME PLOTTED => 15:16

Dist	COUNTY	ROUTE	KILOMETER POST TOTAL PROJECT	SHEET No.	TOTAL SHEETS
11	SD	905,805	R8.4/R9.8, 3.1/4.2	77	364

REGISTERED CIVIL ENGINEER 07-26-10 DATE

10-18-10
PLANS APPROVAL DATE

REGISTERED PROFESSIONAL ENGINEER RICARDO PADILLA No. C58151 Exp. 6-30-12 CIVIL STATE OF CALIFORNIA

THE STATE OF CALIFORNIA OR ITS OFFICERS OR AGENTS SHALL NOT BE RESPONSIBLE FOR THE ACCURACY OR COMPLETENESS OF ELECTRONIC COPIES OF THIS PLAN SHEET.

Caltrans Metric

NOTES:

1. SPILLWAY DEPTH 'D' SHALL BE MAINTAINED TO PREVENT FLANKING OF CONCENTRATED FLOW AROUND THE ENDS OF EACH CHECK DAM.
2. FOR CLARITY, PERSPECTIVE VIEW DOES NOT SHOW ALL STAPLES.

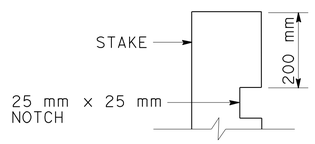

ELEVATION

STAKE NOTCH DETAIL

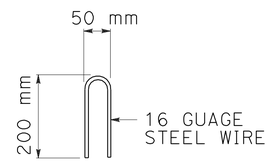

STAPLE DETAIL

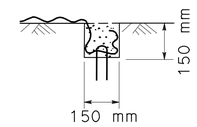

SECTION
DETAIL C

KEY TRENCH

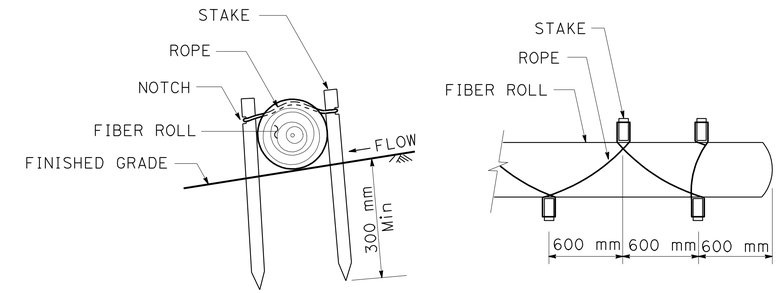

SECTION PLAN

STAKING AND LASHING DETAIL

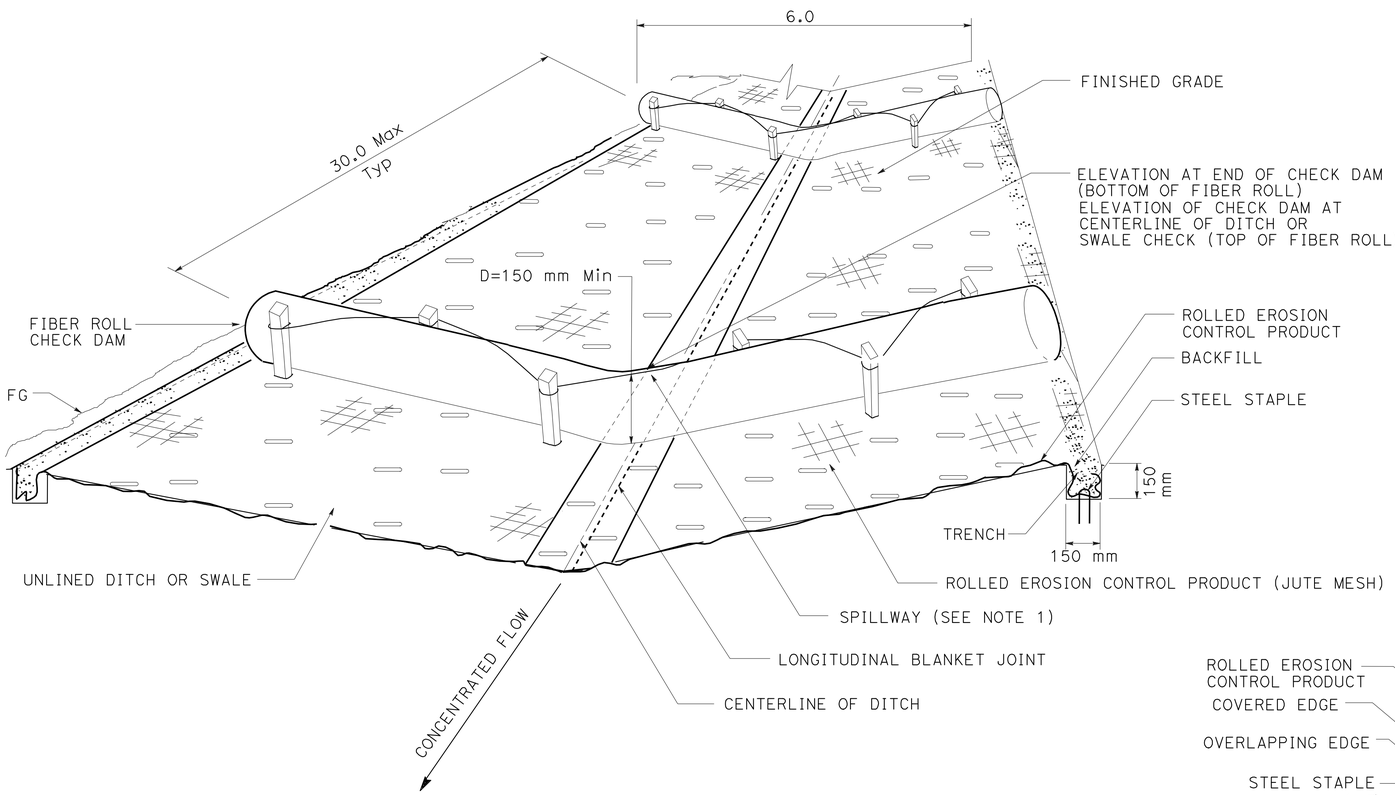

CHECK DAM (EROSION CONTROL)

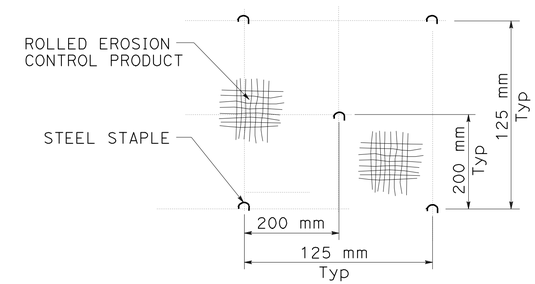

PLAN
DETAIL A

STAPLE PATTERN

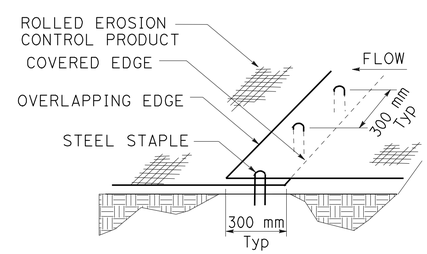

PERSPECTIVE
DETAIL B

LONGITUDINAL BLANKET JOINT

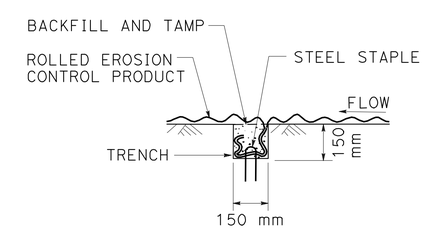

SECTION
DETAIL D

TRANSVERSE BLANKET JOINT

ALL DIMENSIONS ARE IN METERS
UNLESS OTHERWISE SHOWN

EROSION CONTROL DETAILS

NO SCALE

ECD-2

STATE OF CALIFORNIA - DEPARTMENT OF TRANSPORTATION
Caltrans PROJECT DEVELOPMENT

FUNCTIONAL SUPERVISOR CHRIS M. THOMAS
CALCULATED-DESIGNED BY RICARDO PADILLA
CHECKED BY RAMON JUAREZ
REVISED BY
DATE REVISED

LAST REVISION 04-22-10
DATE PLOTTED => 20-OCT-2010
TIME PLOTTED => 15:17

Dist	COUNTY	ROUTE	KILOMETER POST TOTAL PROJECT	SHEET No.	TOTAL SHEETS
11	SD	905,805	R8.4/R9.8, 3.1/4.2	78	364

REGISTERED CIVIL ENGINEER 07-26-10 DATE

10-18-10
PLANS APPROVAL DATE

REGISTERED PROFESSIONAL ENGINEER RICARDO PADILLA No. C58151 Exp. 6-30-12 CIVIL STATE OF CALIFORNIA

THE STATE OF CALIFORNIA OR ITS OFFICERS OR AGENTS SHALL NOT BE RESPONSIBLE FOR THE ACCURACY OR COMPLETENESS OF ELECTRONIC COPIES OF THIS PLAN SHEET.

Caltrans Metric

EROSION CONTROL

SHEET	FIBER ROLLS	DRAINAGE INLET PROTECTION (EROSION CONTROL)	ROLLED EROSION CONTROL PRODUCT (JUTE MESH)	CHECK DAM (EROSION CONTROL)
	m	EACH	m^2	m
EC- 1	679	1	1341	24
EC- 2	2595	2	3564	60
EC- 3	2359	2	3331	60
EC- 4	2683	1	3274	60
EC- 5	1099	1	951	36
EC- 6	2046	0	0	0
EC- 7	521	1	0	0
EC- 8	360	0	0	0
EC- 9	56	0	0	0
TOTAL	12 398	8	12 461	240

EROSION CONTROL QUANTITIES
ECQ-1

STATE OF CALIFORNIA - DEPARTMENT OF TRANSPORTATION
Caltrans PROJECT DEVELOPMENT

FUNCTIONAL SUPERVISOR: CHRIS M. THOMAS
CALCULATED-DESIGNED BY: RICARDO PADILLA
CHECKED BY: RAMON JUAREZ
REVISED BY
DATE REVISED

LAST REVISION 06-20-10
DATE PLOTTED => 20-OCT-2010
TIME PLOTTED => 15:17

Dist	COUNTY	ROUTE	KILOMETER POST TOTAL PROJECT	SHEET No.	TOTAL SHEETS
11	SD	905,805	R8.4/R9.8, 3.1/4.2	79	364

REGISTERED CIVIL ENGINEER 08-02-10 DATE

10-18-10
PLANS APPROVAL DATE

REGISTERED PROFESSIONAL ENGINEER RICARDO PADILLA No. C58151 Exp. 6-30-12 CIVIL STATE OF CALIFORNIA

THE STATE OF CALIFORNIA OR ITS OFFICERS OR AGENTS SHALL NOT BE RESPONSIBLE FOR THE ACCURACY OR COMPLETENESS OF ELECTRONIC COPIES OF THIS PLAN SHEET.

Caltrans Metric

NOTES:

1. FOR ACCURATE RIGHT OF WAY AND ACCESS DATA, CONTACT RIGHT OF WAY ENGINEERING AT THE DISTRICT OFFICE.
2. ELEVATION BASED ON NGVD29 DATUM.

LEGEND:

- (X) DRAINAGE SYSTEM
- (X) DRAINAGE UNIT
- FLOW LINE

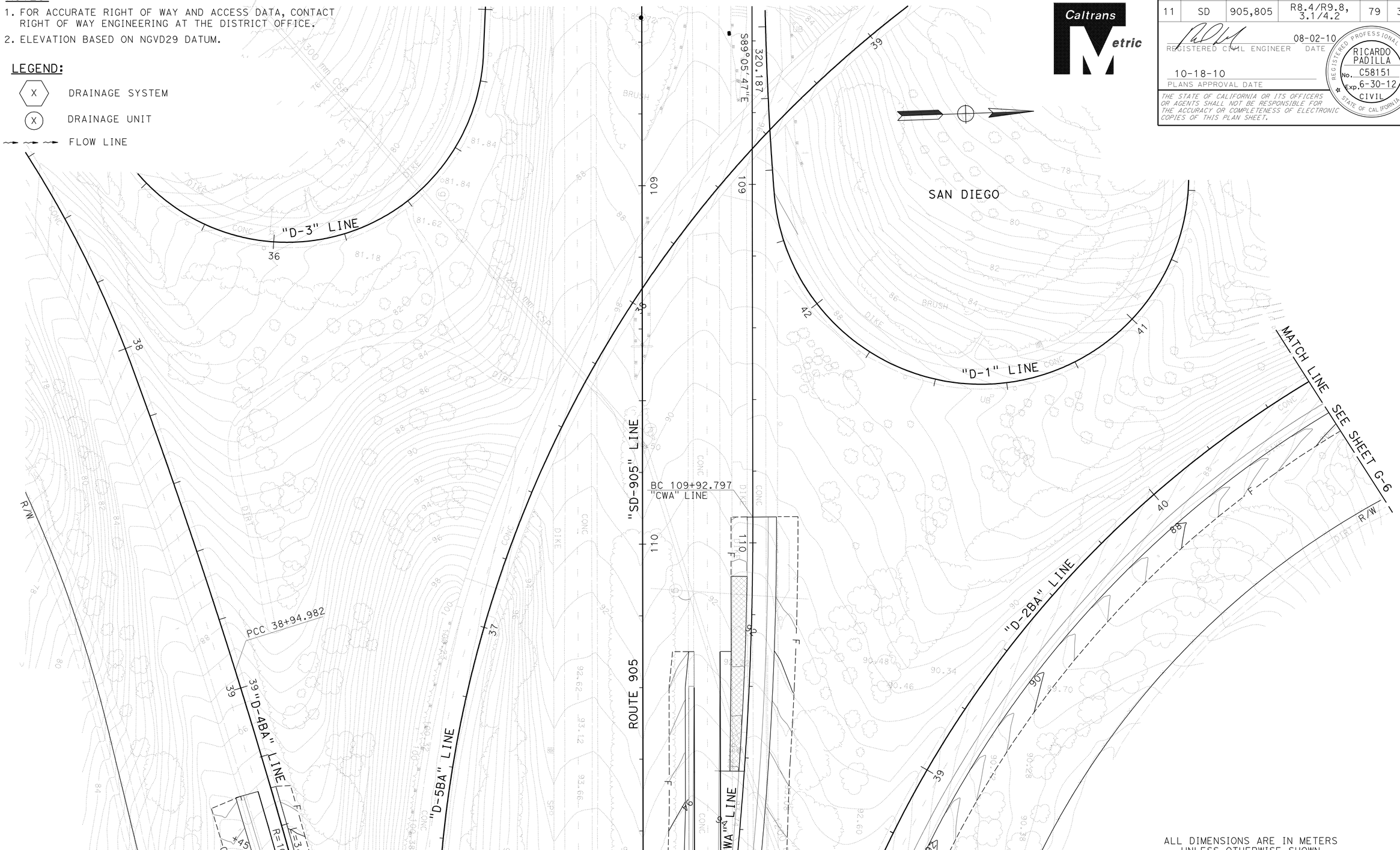

ALL DIMENSIONS ARE IN METERS UNLESS OTHERWISE SHOWN

CONTOUR GRADING AND DRAINAGE PLAN

SCALE 1:500

G-1

THIS PLAN ACCURATE FOR CONTOUR GRADING AND DRAINAGE WORK ONLY.

STATE OF CALIFORNIA - DEPARTMENT OF TRANSPORTATION
Caltrans PROJECT DEVELOPMENT

FUNCTIONAL SUPERVISOR: CHRIS M. THOMAS
CALCULATED-DESIGNED BY: RICARDO PADILLA
CHECKED BY: RAMON JUAREZ
REVISED BY / DATE REVISED

LAST REVISION 06-04-10
DATE PLOTTED => 20-OCT-2010
TIME PLOTTED => 15:17

DIST	COUNTY	ROUTE	KILOMETER POST TOTAL PROJECT	SHEET No.	TOTAL SHEETS
11	SD	905,805	R8.4/R9.8, 3.1/4.2	80	364

08-02-10
REGISTERED CIVIL ENGINEER DATE

10-18-10
PLANS APPROVAL DATE

REGISTERED PROFESSIONAL ENGINEER RICARDO PADILLA No. C58151 Exp. 6-30-12 CIVIL STATE OF CALIFORNIA

The State of California or its officers or agents shall not be responsible for the accuracy or completeness of electronic copies of this plan sheet.

Caltrans Metric

NOTE:

1. FOR ACCURATE RIGHT OF WAY AND ACCESS DATA, CONTACT RIGHT OF WAY ENGINEERING AT THE DISTRICT OFFICE.

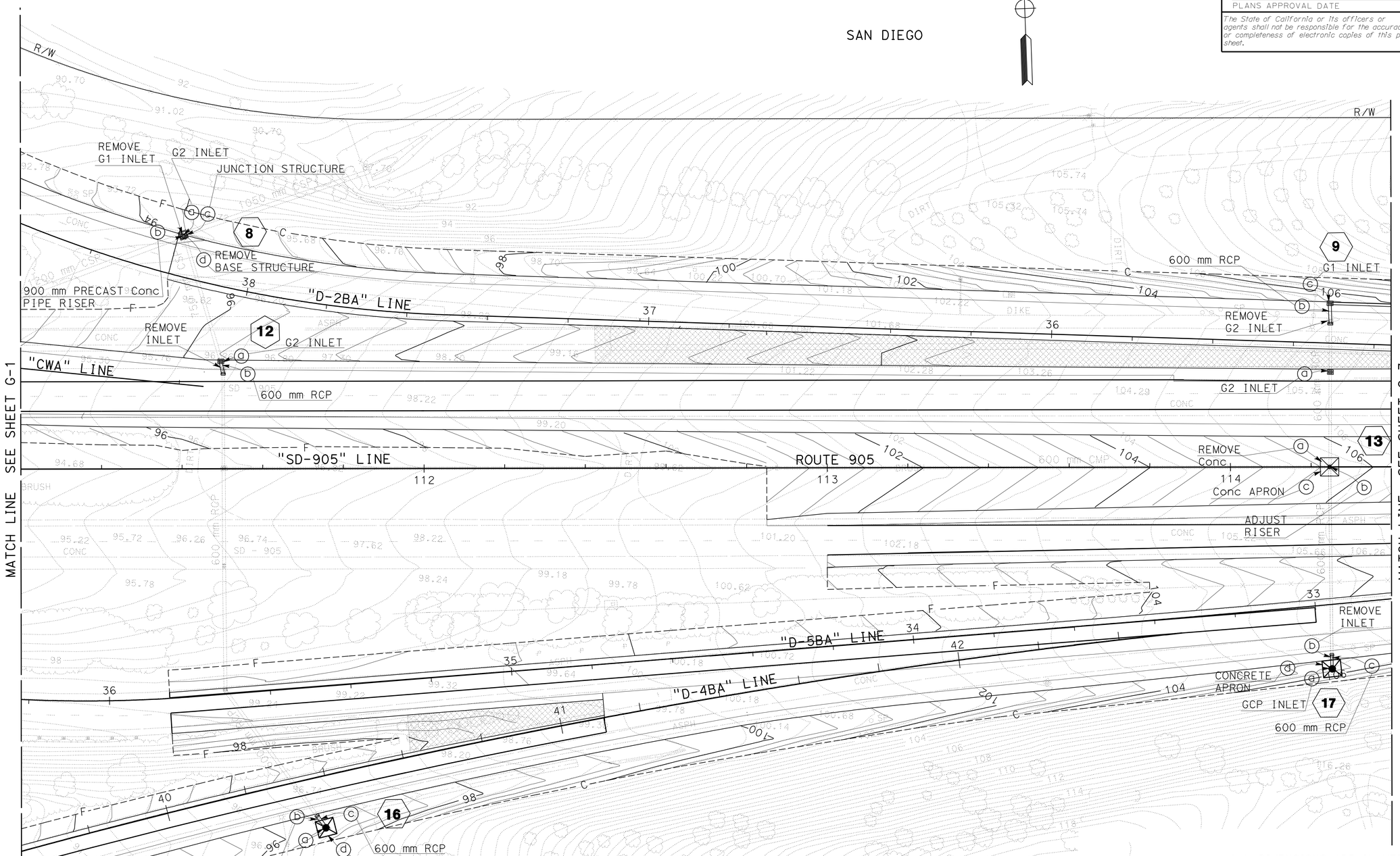

ALL DIMENSIONS ARE IN METERS UNLESS OTHERWISE SHOWN

CONTOUR GRADING AND DRAINAGE PLAN

SCALE 1:500

G-2

THIS PLAN ACCURATE FOR CONTOUR GRADING AND DRAINAGE WORK ONLY.

STATE OF CALIFORNIA - DEPARTMENT OF TRANSPORTATION
Caltrans PROJECT DEVELOPMENT

FUNCTIONAL SUPERVISOR: CHRIS M. THOMAS
CALCULATED-DESIGNED BY: RICARDO PADILLA
CHECKED BY: RAMON JUAREZ
REVISED BY / DATE REVISED

LAST REVISION 07-22-10
DATE PLOTTED => 20-OCT-2010
TIME PLOTTED => 15:17

Dist	COUNTY	ROUTE	KILOMETER POST TOTAL PROJECT	SHEET No.	TOTAL SHEETS
11	SD	905,805	R8.4/R9.8, 3.1/4.2	81	364

REGISTERED CIVIL ENGINEER 08-02-10 DATE

10-18-10
PLANS APPROVAL DATE

REGISTERED PROFESSIONAL ENGINEER RICARDO PADILLA No. C58151 Exp. 6-30-12 CIVIL STATE OF CALIFORNIA

THE STATE OF CALIFORNIA OR ITS OFFICERS OR AGENTS SHALL NOT BE RESPONSIBLE FOR THE ACCURACY OR COMPLETENESS OF ELECTRONIC COPIES OF THIS PLAN SHEET.

Caltrans Metric

NOTE:

1. FOR ACCURATE RIGHT OF WAY AND ACCESS DATA, CONTACT RIGHT OF WAY ENGINEERING AT THE DISTRICT OFFICE.

CONTOUR GRADING AND DRAINAGE PLAN

SCALE 1:500

G-3

THIS PLAN ACCURATE FOR CONTOUR GRADING AND DRAINAGE WORK ONLY.

ALL DIMENSIONS ARE IN METERS UNLESS OTHERWISE SHOWN

STATE OF CALIFORNIA - DEPARTMENT OF TRANSPORTATION
Caltrans PROJECT DEVELOPMENT

FUNCTIONAL SUPERVISOR CHRIS M. THOMAS
CALCULATED-DESIGNED BY RAMON JUAREZ
CHECKED BY RICARDO PADILLA
REVISED BY
DATE REVISED

LAST REVISION 07-22-10
DATE PLOTTED => 20-OCT-2010
TIME PLOTTED => 13:17

Dist	COUNTY	ROUTE	KILOMETER POST TOTAL PROJECT	SHEET No.	TOTAL SHEETS
11	SD	905,805	R8.4/R9.8, 3.1/4.2	82	364

REGISTERED CIVIL ENGINEER 08-02-10 DATE

10-18-10
PLANS APPROVAL DATE

REGISTERED PROFESSIONAL ENGINEER RICARDO PADILLA No. C58151 Exp. 6-30-12 CIVIL STATE OF CALIFORNIA

THE STATE OF CALIFORNIA OR ITS OFFICERS OR AGENTS SHALL NOT BE RESPONSIBLE FOR THE ACCURACY OR COMPLETENESS OF ELECTRONIC COPIES OF THIS PLAN SHEET.

Caltrans Metric

NOTE:

1. FOR ACCURATE RIGHT OF WAY AND ACCESS DATA, CONTACT RIGHT OF WAY ENGINEERING AT THE DISTRICT OFFICE.

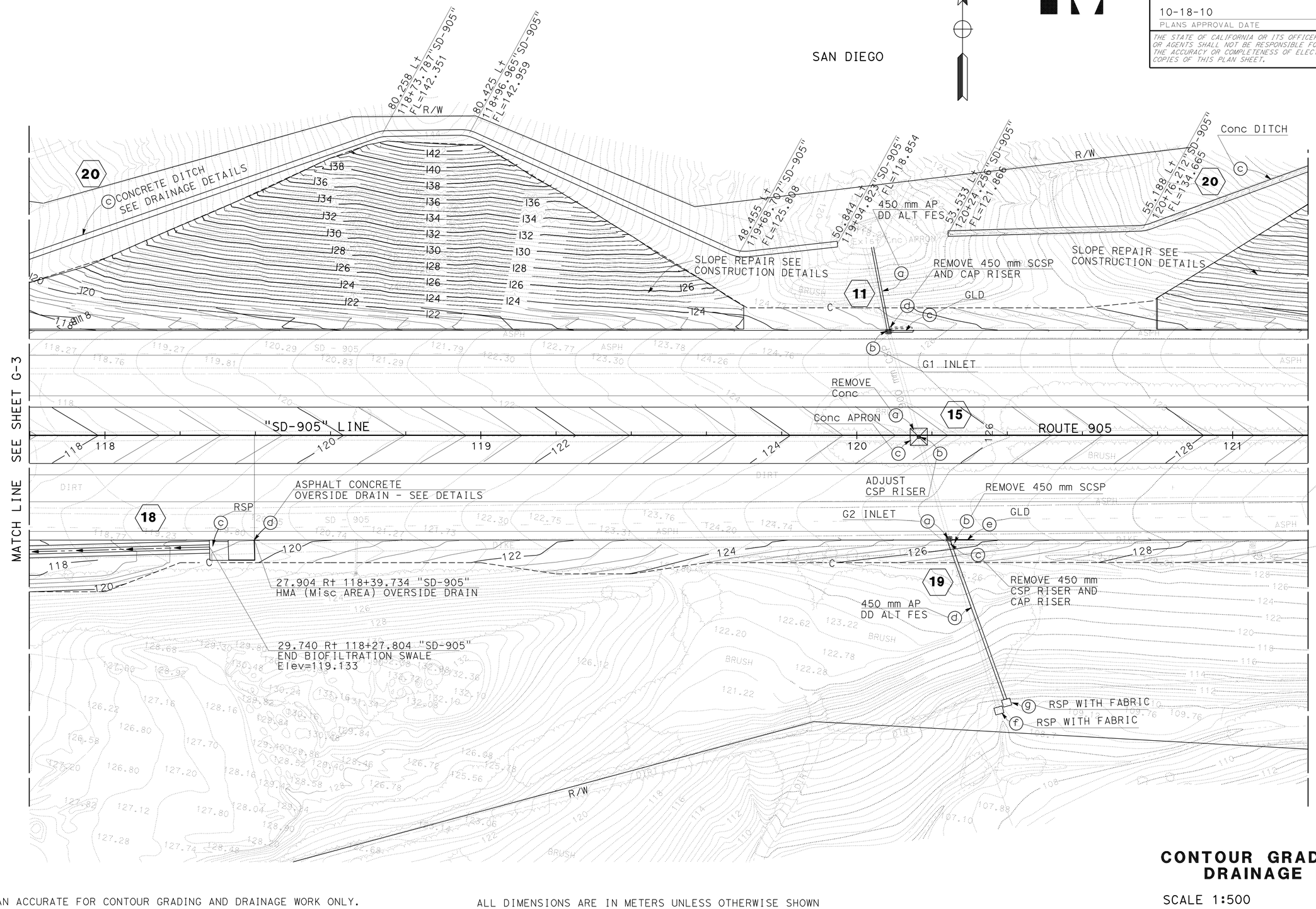

THIS PLAN ACCURATE FOR CONTOUR GRADING AND DRAINAGE WORK ONLY.

ALL DIMENSIONS ARE IN METERS UNLESS OTHERWISE SHOWN

CONTOUR GRADING AND DRAINAGE PLAN

SCALE 1:500

G-4

STATE OF CALIFORNIA - DEPARTMENT OF TRANSPORTATION
Caltrans PROJECT DEVELOPMENT

FUNCTIONAL SUPERVISOR: CHRIS M. THOMAS
CALCULATED-DESIGNED BY: RICARDO PADILLA
CHECKED BY: RAMON JUAREZ
REVISED BY / DATE REVISED

LAST REVISION 07-22-10 DATE PLOTTED => 20-OCT-2010 TIME PLOTTED => 13:17

Dist	COUNTY	ROUTE	KILOMETER POST TOTAL PROJECT	SHEET No.	TOTAL SHEETS
11	SD	905,805	R8.4/R9.8, 3.1/4.2	83	364

REGISTERED CIVIL ENGINEER DATE 08-02-10

10-18-10
PLANS APPROVAL DATE

REGISTERED PROFESSIONAL ENGINEER RICARDO PADILLA No. C58151 Exp. 6-30-12 CIVIL STATE OF CALIFORNIA

THE STATE OF CALIFORNIA OR ITS OFFICERS OR AGENTS SHALL NOT BE RESPONSIBLE FOR THE ACCURACY OR COMPLETENESS OF ELECTRONIC COPIES OF THIS PLAN SHEET.

Caltrans Metric

NOTE:

1. FOR ACCURATE RIGHT OF WAY AND ACCESS DATA, CONTACT RIGHT OF WAY ENGINEERING AT THE DISTRICT OFFICE.

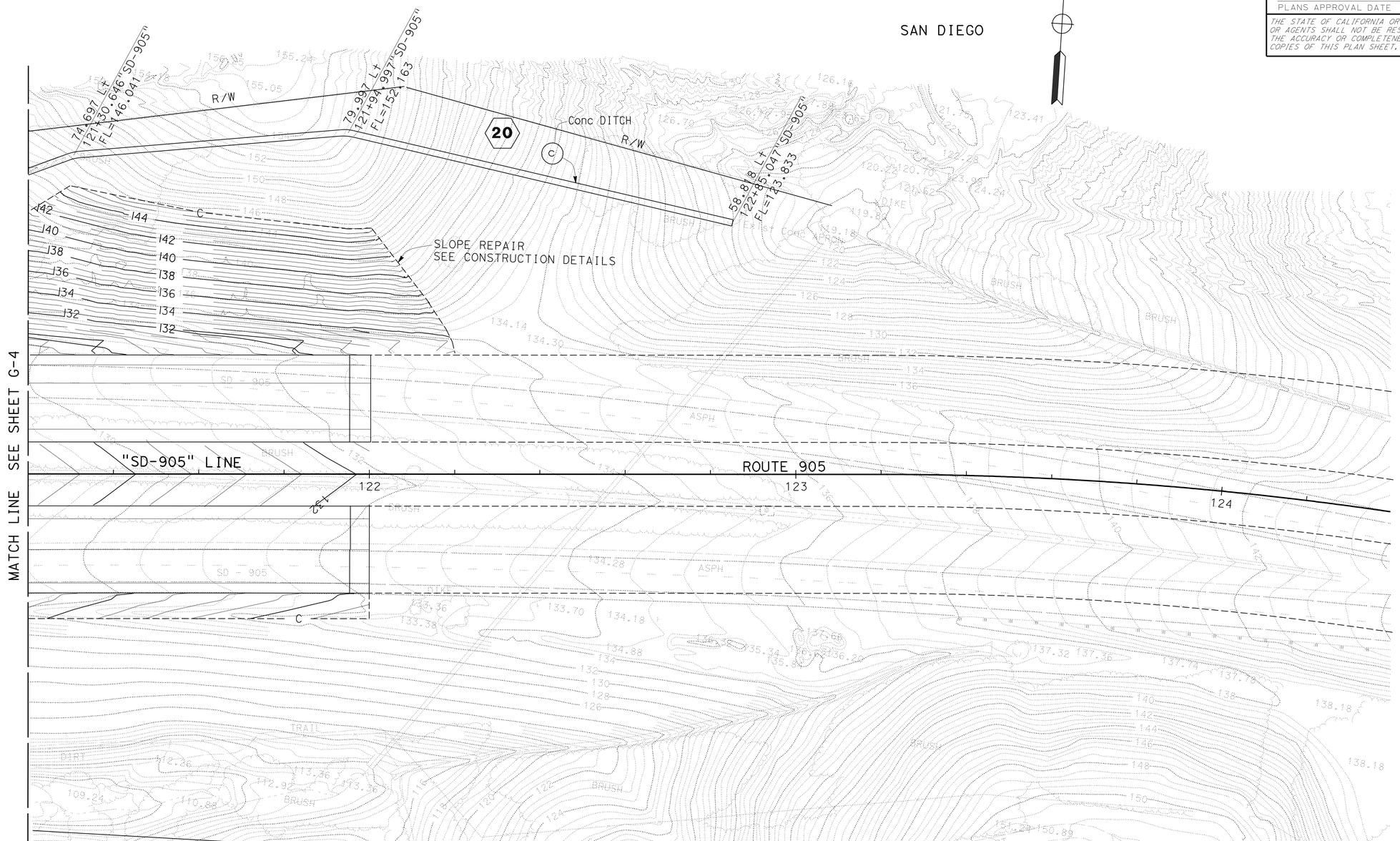

THIS PLAN ACCURATE FOR CONTOUR GRADING AND DRAINAGE WORK ONLY.

ALL DIMENSIONS ARE IN METERS UNLESS OTHERWISE SHOWN

CONTOUR GRADING AND DRAINAGE PLAN

SCALE 1:500

G-5

STATE OF CALIFORNIA - DEPARTMENT OF TRANSPORTATION
Caltrans PROJECT DEVELOPMENT

FUNCTIONAL SUPERVISOR: CHRIS M THOMAS
CALCULATED-DESIGNED BY: RICARDO PADILLA
CHECKED BY: RAMON JUAREZ
REVISED BY / DATE REVISED

LAST REVISION 07-22-10 | DATE PLOTTED => 20-OCT-2010 | TIME PLOTTED => 13:17

Dist	COUNTY	ROUTE	KILOMETER POST TOTAL PROJECT	SHEET No.	TOTAL SHEETS
11	SD	905,805	R8.4/R9.8, 3.1/4.2	84	364

REGISTERED CIVIL ENGINEER 08-02-10 DATE

10-18-10
PLANS APPROVAL DATE

REGISTERED PROFESSIONAL ENGINEER RICARDO PADILLA No. C58151 Exp. 6-30-12 CIVIL STATE OF CALIFORNIA

THE STATE OF CALIFORNIA OR ITS OFFICERS OR AGENTS SHALL NOT BE RESPONSIBLE FOR THE ACCURACY OR COMPLETENESS OF ELECTRONIC COPIES OF THIS PLAN SHEET.

Caltrans Metric

NOTE:

1. FOR ACCURATE RIGHT OF WAY AND ACCESS DATA, CONTACT RIGHT OF WAY ENGINEERING AT THE DISTRICT OFFICE.

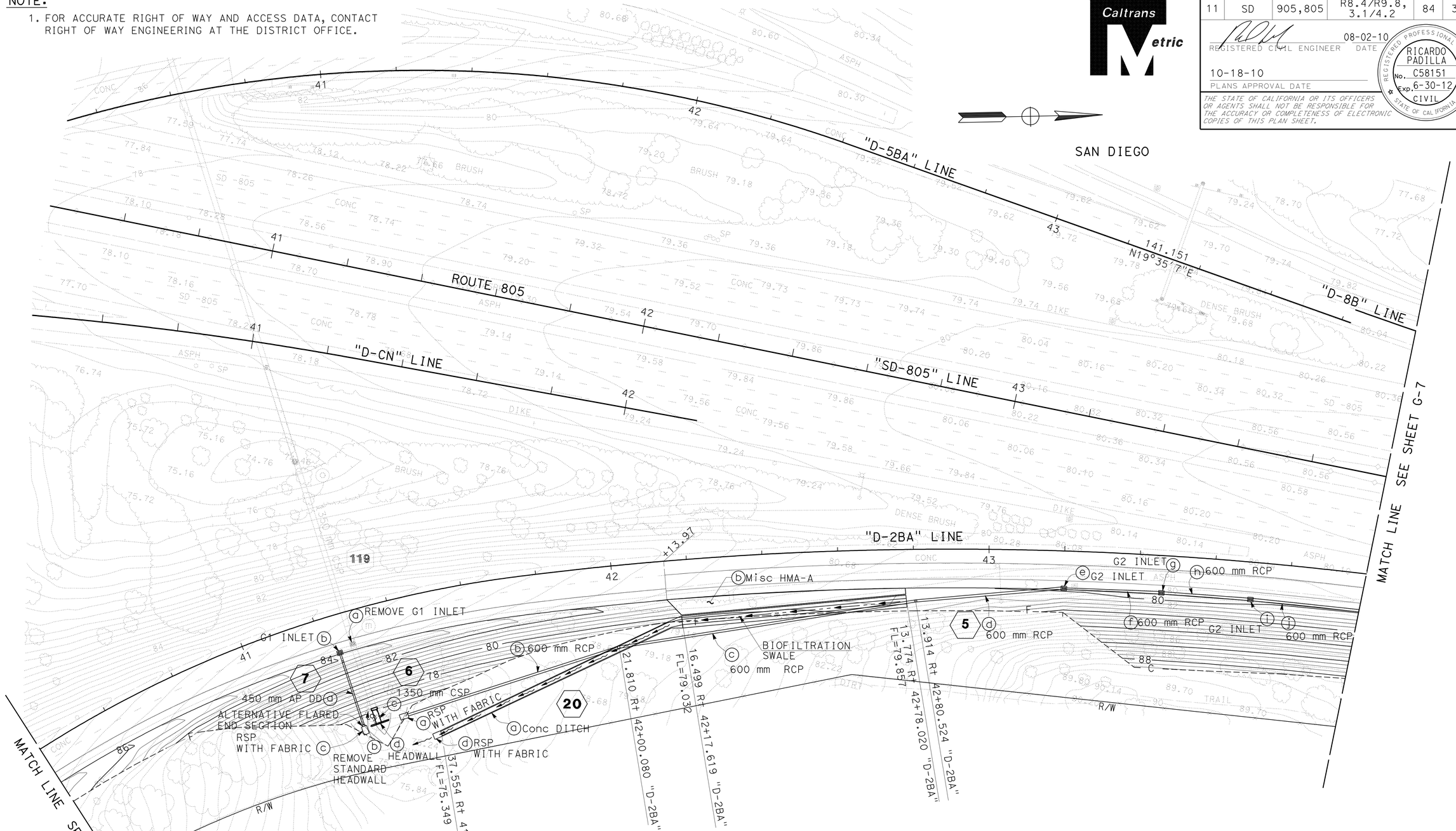

THIS PLAN ACCURATE FORCONTOUR GRADING AND DRAINAGE WORK ONLY.

ALL DIMENSIONS ARE IN METERS UNLESS OTHERWISE SHOWN

CONTOUR GRADING AND DRAINAGE PLAN

SCALE 1:500

G-6

STATE OF CALIFORNIA - DEPARTMENT OF TRANSPORTATION
Caltrans PROJECT DEVELOPMENT

FUNCTIONAL SUPERVISOR: CHRIS M. THOMAS
CALCULATED-DESIGNED BY: RICARDO PADILLA
CHECKED BY: RAMON JUAREZ
REVISED BY / DATE REVISED

LAST REVISION 07-31-10 | DATE PLOTTED => 20-OCT-2010 | TIME PLOTTED => 13:17

BORDER LAST REVISED 3/1/2007 | RELATIVE BORDER SCALE IS IN MILLIMETERS 0 20 40 60 80 | USERNAME => trlenard | DGN FILE => b09183ha006.dgn | CU 11225 | EA 091831

Dist	COUNTY	ROUTE	KILOMETER POST TOTAL PROJECT	SHEET No.	TOTAL SHEETS
11	SD	905,805	R8.4/R9.8, 3.1/4.2	85	364

REGISTERED CIVIL ENGINEER 08-02-10 DATE

10-18-10
PLANS APPROVAL DATE

REGISTERED PROFESSIONAL ENGINEER RICARDO PADILLA No. C58151 Exp. 6-30-12 CIVIL STATE OF CALIFORNIA

THE STATE OF CALIFORNIA OR ITS OFFICERS OR AGENTS SHALL NOT BE RESPONSIBLE FOR THE ACCURACY OR COMPLETENESS OF ELECTRONIC COPIES OF THIS PLAN SHEET.

Caltrans Metric

NOTE:

1. FOR COMPLETE RIGHT OF WAY AND ACCURATE ACCESS DATA, SEE RIGHT OF WAY RECORD MAPS AT DISTRICT OFFICE.

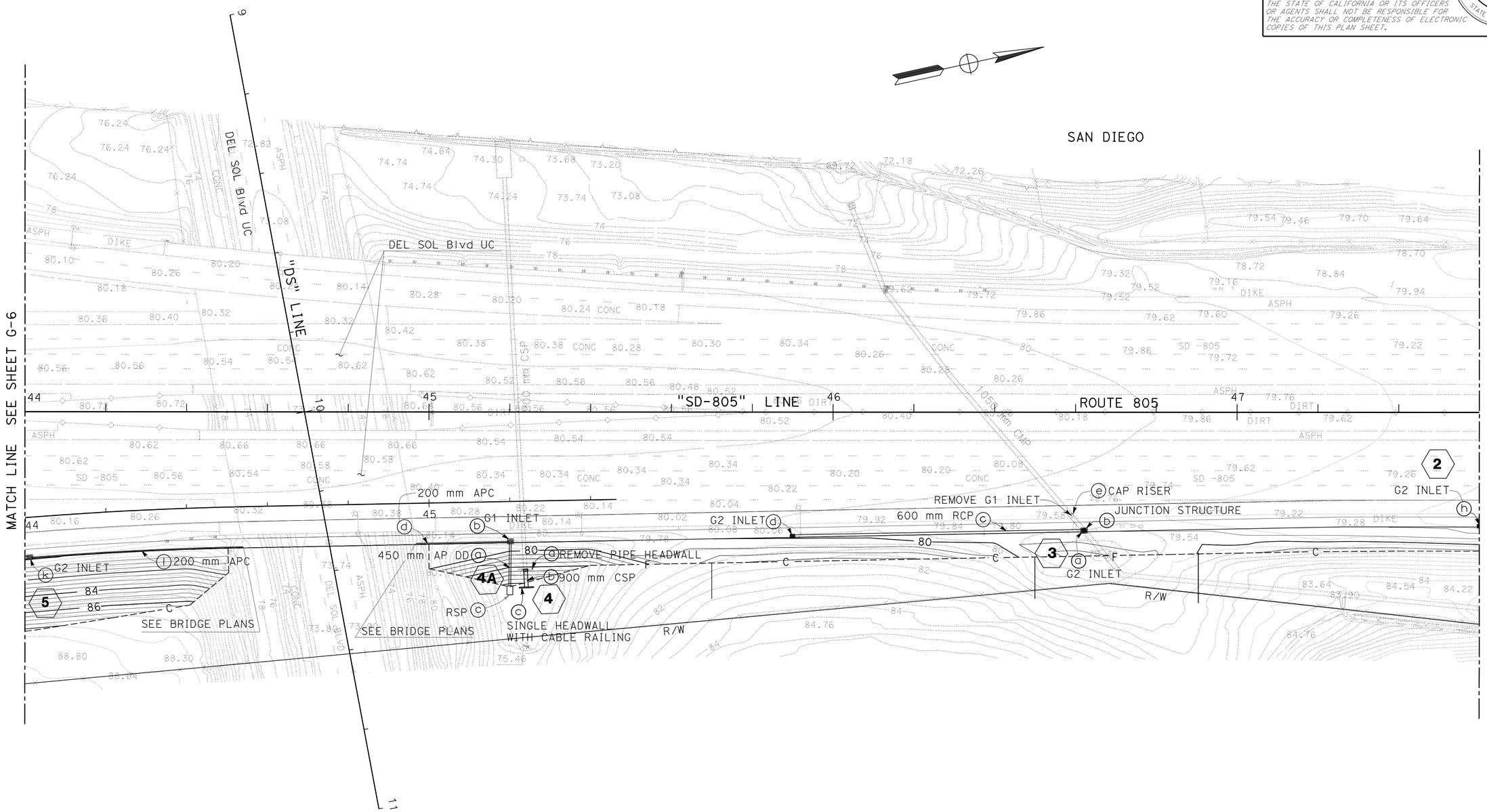

THIS PLAN ACCURATE FORCONTOUR GRADING AND DRAINAGE WORK ONLY.

ALL DIMENSIONS ARE IN METERS UNLESS OTHERWISE SHOWN

CONTOUR GRADING AND DRAINAGE PLAN

SCALE 1:500

G-7

STATE OF CALIFORNIA - DEPARTMENT OF TRANSPORTATION
Caltrans PROJECT DEVELOPMENT

FUNCTIONAL SUPERVISOR CHRIS M. THOMAS
CALCULATED-DESIGNED BY RICARDO PADILLA
CHECKED BY RAMON JUAREZ
REVISED BY
DATE REVISED

LAST REVISION 07-22-10
DATE PLOTTED => 20-OCT-2010
TIME PLOTTED => 13:18

Dist	COUNTY	ROUTE	KILOMETER POST TOTAL PROJECT	SHEET No.	TOTAL SHEETS
11	SD	905,805	R8.4/R9.8, 3.1/4.2	86	364

REGISTERED CIVIL ENGINEER 08-02-10 DATE

10-18-10
PLANS APPROVAL DATE

REGISTERED PROFESSIONAL ENGINEER RICARDO PADILLA No. C58151 Exp. 6-30-12 CIVIL STATE OF CALIFORNIA

THE STATE OF CALIFORNIA OR ITS OFFICERS OR AGENTS SHALL NOT BE RESPONSIBLE FOR THE ACCURACY OR COMPLETENESS OF ELECTRONIC COPIES OF THIS PLAN SHEET.

Caltrans Metric

NOTE:

1. FOR COMPLETE RIGHT OF WAY AND ACCURATE ACCESS DATA, SEE RIGHT OF WAY RECORD MAPS AT DISTRICT OFFEICE.

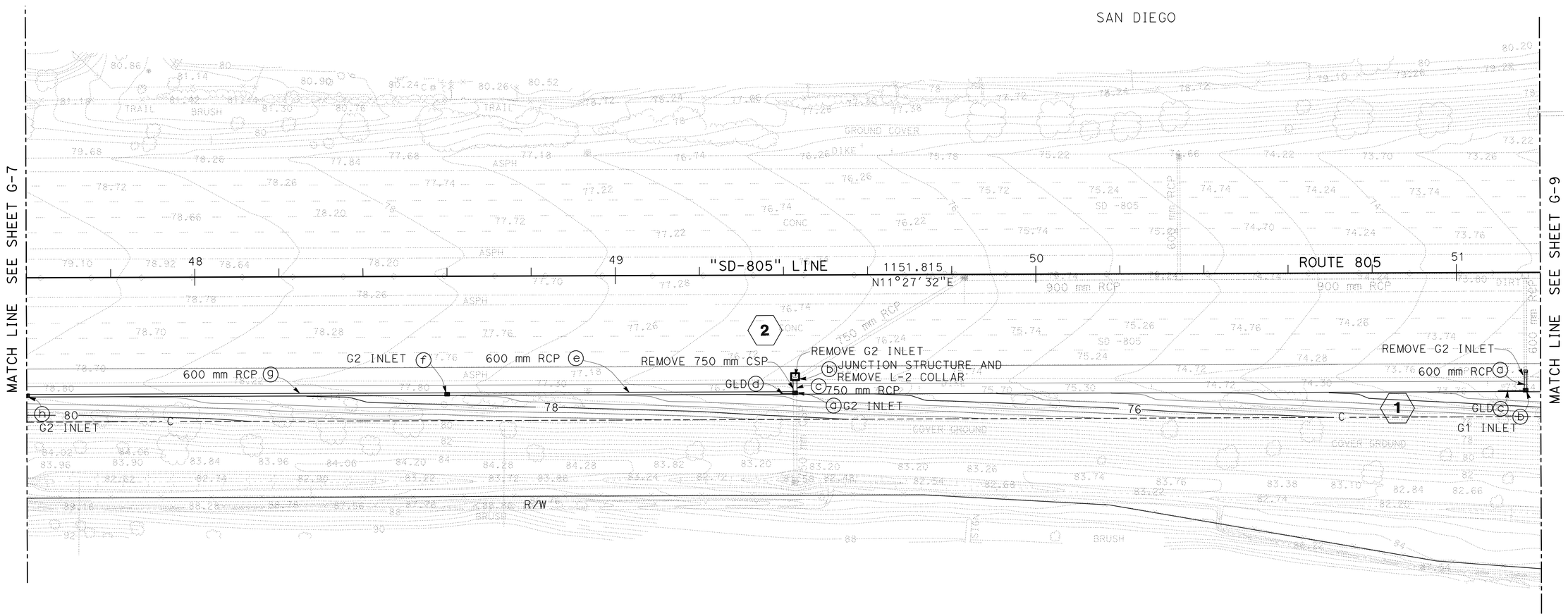

THIS PLAN ACCURATE FOR CONTOUR GRADING AND DRAINAGE WORK ONLY.

ALL DIMENSIONS ARE IN METERS UNLESS OTHERWISE SHOWN

CONTOUR GRADING AND DRAINAGE PLAN

SCALE 1:500

G-8

STATE OF CALIFORNIA - DEPARTMENT OF TRANSPORTATION
Caltrans PROJECT DEVELOPMENT

FUNCTIONAL SUPERVISOR: CHRIS M. THOMAS
CALCULATED-DESIGNED BY: RICARDO PADILLA
CHECKED BY: RAMON JUAREZ
REVISED BY / DATE REVISED

LAST REVISION 07-22-10
DATE PLOTTED => 20-OCT-2010
TIME PLOTTED => 13:18

Dist	COUNTY	ROUTE	KILOMETER POST TOTAL PROJECT	SHEET No.	TOTAL SHEETS
11	SD	905,805	R8.4/R9.8, 3.1/4.2	87	364

REGISTERED CIVIL ENGINEER 08-02-10 DATE

10-18-10
PLANS APPROVAL DATE

REGISTERED PROFESSIONAL ENGINEER RICARDO PADILLA No. C58151 Exp. 6-30-12 CIVIL STATE OF CALIFORNIA

THE STATE OF CALIFORNIA OR ITS OFFICERS OR AGENTS SHALL NOT BE RESPONSIBLE FOR THE ACCURACY OR COMPLETENESS OF ELECTRONIC COPIES OF THIS PLAN SHEET.

Caltrans Metric

NOTE:

1. FOR COMPLETE RIGHT OF WAY AND ACCURATE ACCESS DATA, SEE RIGHT OF WAY RECORD MAPS AT DISTRICT OFFICE.

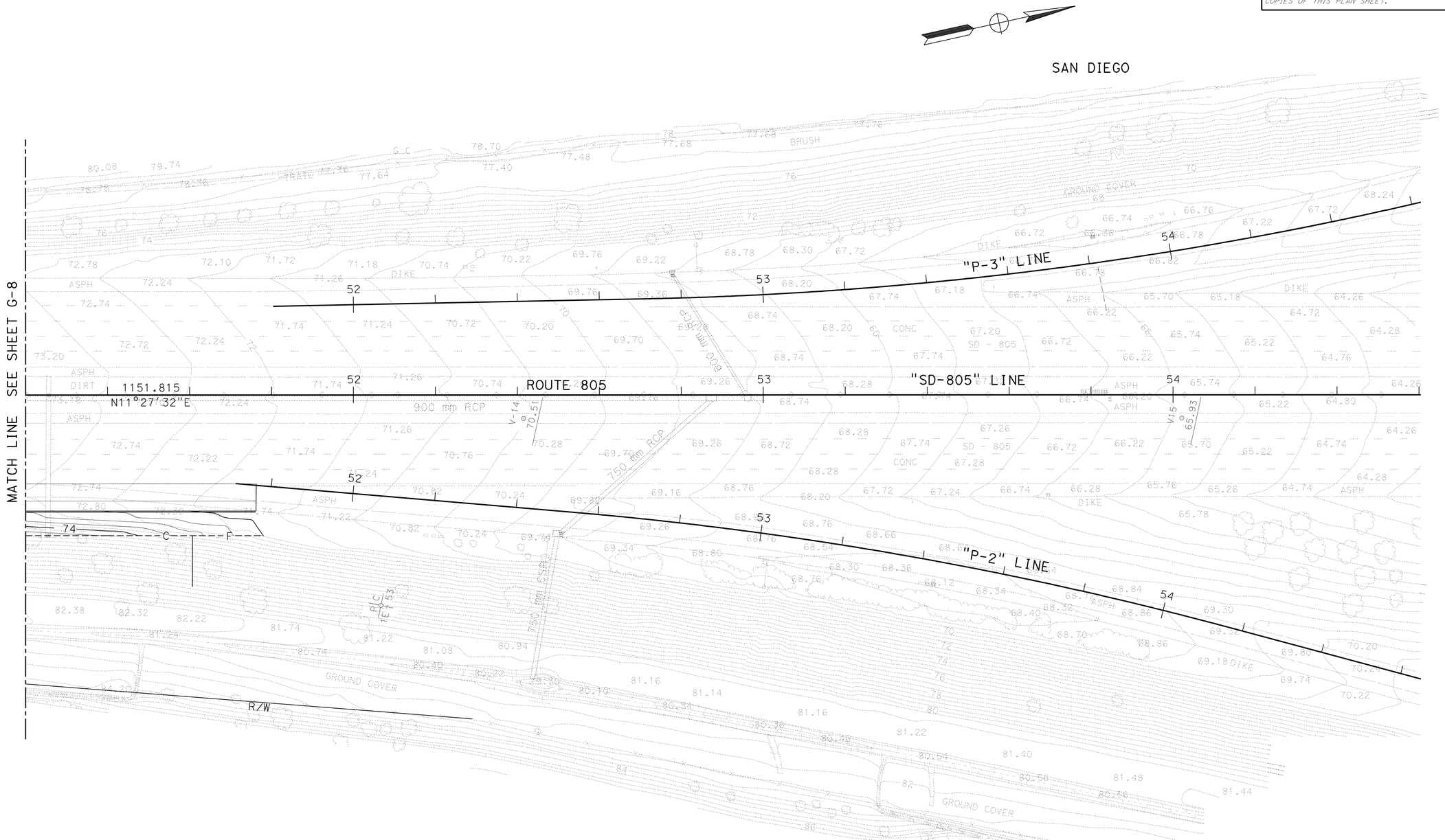

THIS PLAN ACCURATE FOR CONTOUR GRADING AND DRAINAGE WORK ONLY.

ALL DIMENSIONS ARE IN METERS UNLESS OTHERWISE SHOWN

CONTOUR GRADING AND DRAINAGE PLAN

SCALE 1:500

G-9

STATE OF CALIFORNIA - DEPARTMENT OF TRANSPORTATION
Caltrans PROJECT DEVELOPMENT

FUNCTIONAL SUPERVISOR: CHRIS M. THOMAS
CALCULATED-DESIGNED BY: RICARDO PADILLA
CHECKED BY: RAMON JUAREZ
REVISED BY / DATE REVISED

LAST REVISION 07-22-10
DATE PLOTTED => 20-OCT-2010
TIME PLOTTED => 13:18

Dist	COUNTY	ROUTE	KILOMETER POST TOTAL PROJECT	SHEET No.	TOTAL SHEETS
11	SD	905,805	R8.4/R9.8, 3.1/4.2	88	364

REGISTERED CIVIL ENGINEER 08-02-10 DATE

10-18-10
PLANS APPROVAL DATE

REGISTERED PROFESSIONAL ENGINEER RICARDO PADILLA No. C58151 Exp. 6-30-12 CIVIL STATE OF CALIFORNIA

THE STATE OF CALIFORNIA OR ITS OFFICERS OR AGENTS SHALL NOT BE RESPONSIBLE FOR THE ACCURACY OR COMPLETENESS OF ELECTRONIC COPIES OF THIS PLAN SHEET.

Caltrans Metric

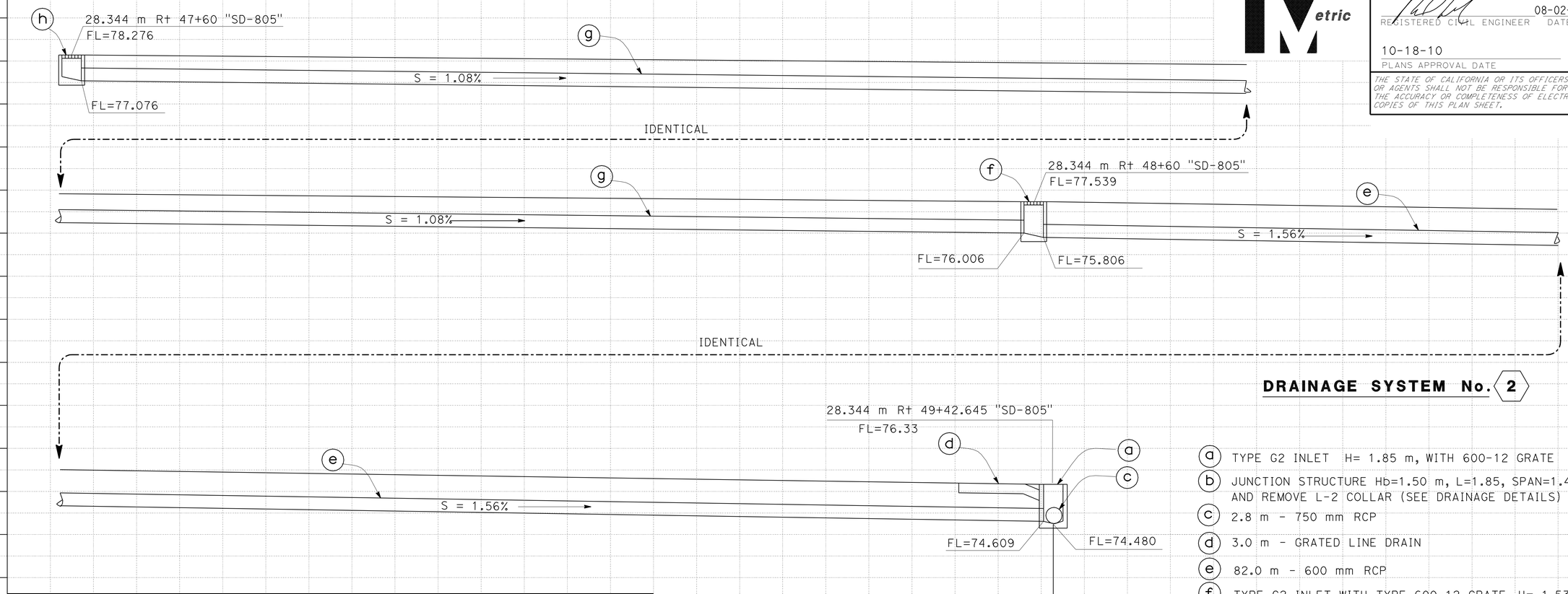

DRAINAGE SYSTEM No. 2

(a) TYPE G2 INLET H= 1.85 m, WITH 600-12 GRATE

(b) JUNCTION STRUCTURE Hb=1.50 m, L=1.85, SPAN=1.45 AND REMOVE L-2 COLLAR (SEE DRAINAGE DETAILS)

(c) 2.8 m - 750 mm RCP

(d) 3.0 m - GRATED LINE DRAIN

(e) 82.0 m - 600 mm RCP

(f) TYPE G2 INLET WITH TYPE 600-12 GRATE, H= 1.53 m

(g) 99.0 m - 600 mm RCP

(h) TYPE G2 INLET WITH TYPE 600-12 GRATE, H= 1.2 m

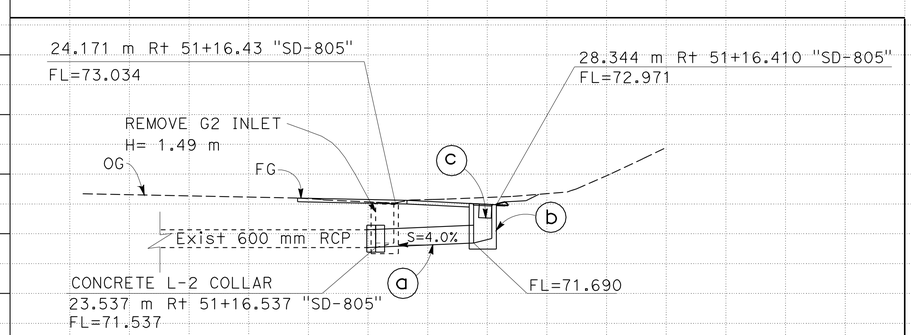

DRAINAGE SYSTEM No. 1

(a) 4.2 m - 600 mm RCP WITH L-2 CONCRETE COLLAR (SEE DRAINAGE DETAILS)

(b) TYPE G1 INLET WITH TYPE 600-12 GRATE, H= 1.28 m

(c) 6.0 m - GRATED LINE DRAIN

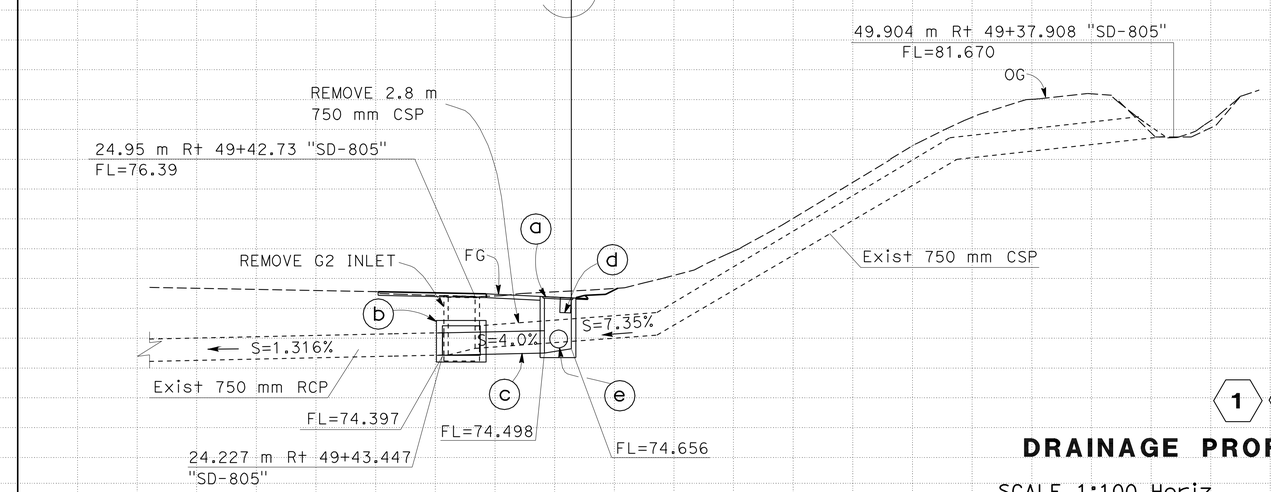

ALL DIMENSIONS ARE IN METERS UNLESS OTHERWISE SHOWN

1 2

DRAINAGE PROFILES

SCALE 1:100 Horiz
1:100 Vert

DP-1

REVISED BY | DATE REVISED

RICARDO PADILLA | RAMON JUAREZ

CALCULATED-DESIGNED BY | CHECKED BY

FUNCTIONAL SUPERVISOR | CHRIS M. THOMAS

STATE OF CALIFORNIA - DEPARTMENT OF TRANSPORTATION
Caltrans PROJECT DEVELOPMENT

LAST REVISION 07-28-10 | DATE PLOTTED => 20-OCT-2010 | TIME PLOTTED => 13:18

Dist	COUNTY	ROUTE	KILOMETER POST TOTAL PROJECT	SHEET No.	TOTAL SHEETS
11	SD	905,805	R8.4/R9.8, 3.1/4.2	89	364

REGISTERED CIVIL ENGINEER 08-02-10 DATE

10-18-10
PLANS APPROVAL DATE

REGISTERED PROFESSIONAL ENGINEER RICARDO PADILLA No. C58151 Exp. 6-30-12 CIVIL STATE OF CALIFORNIA

THE STATE OF CALIFORNIA OR ITS OFFICERS OR AGENTS SHALL NOT BE RESPONSIBLE FOR THE ACCURACY OR COMPLETENESS OF ELECTRONIC COPIES OF THIS PLAN SHEET.

Caltrans Metric

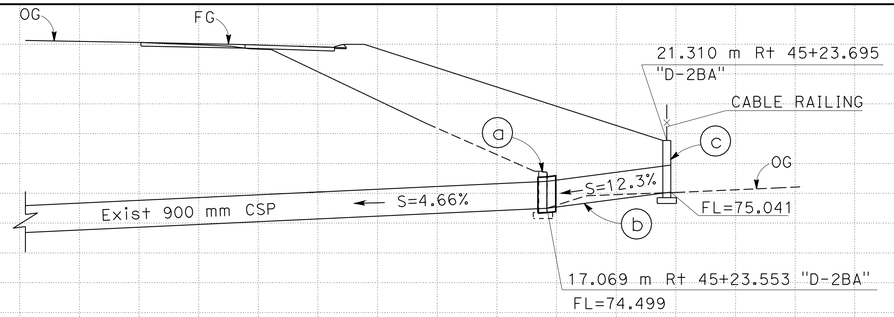

DRAINAGE SYSTEM No. 4

(a) REMOVE PIPE HEADWALL

(b) 4.4 m - 900 mm CSP WITH 900 mm CSP COUPLING

(c) SINGLE HEADWALL H=1.35 m WITH CABLE RAILING L=3.6 m

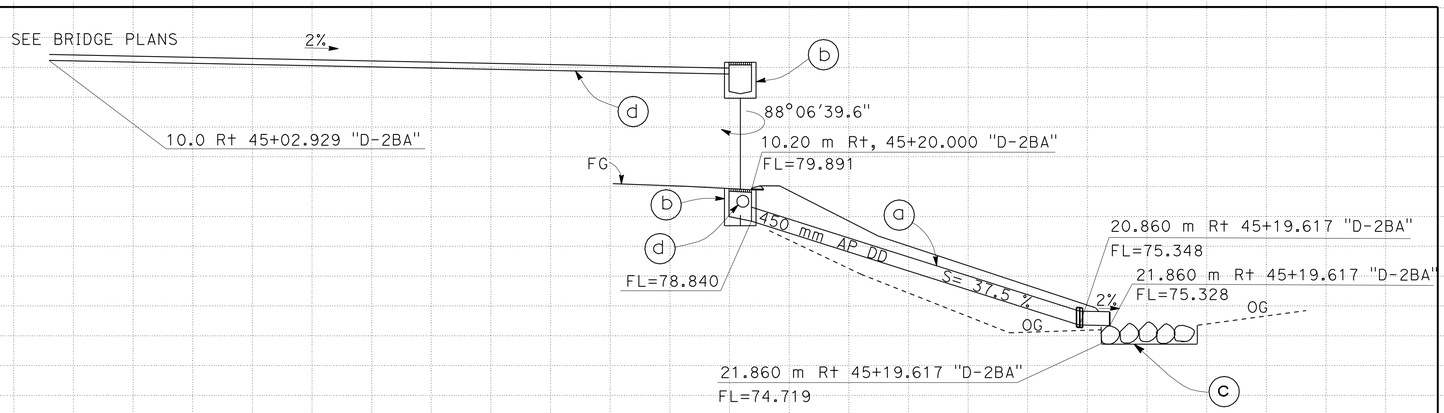

DRAINAGE SYSTEM No. 4A

(a) 10.66 m - 450 mm ALTERNATIVE PIPE DOWNDRAIN WITH L-2 COLLAR

(b) G1 INLET H=1.05 m WITH 600X12 GRATE

(c) RSP, LIGHT, METHOD B WITH RSP FABRIC (SEE DRAINAGE DETAILS)

(d) 23.0 m - 200 mm ALTERNATIVE PIPE CULVERT

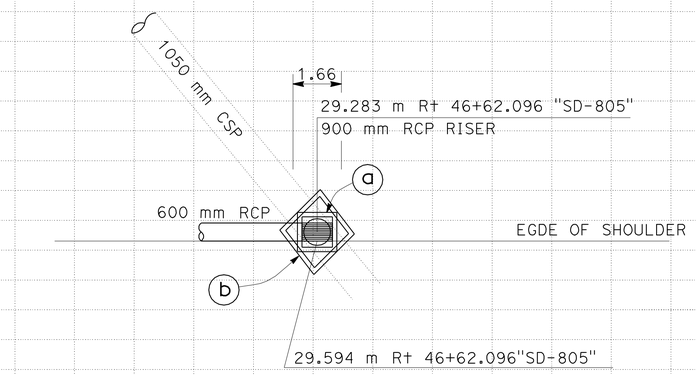

DETAIL A

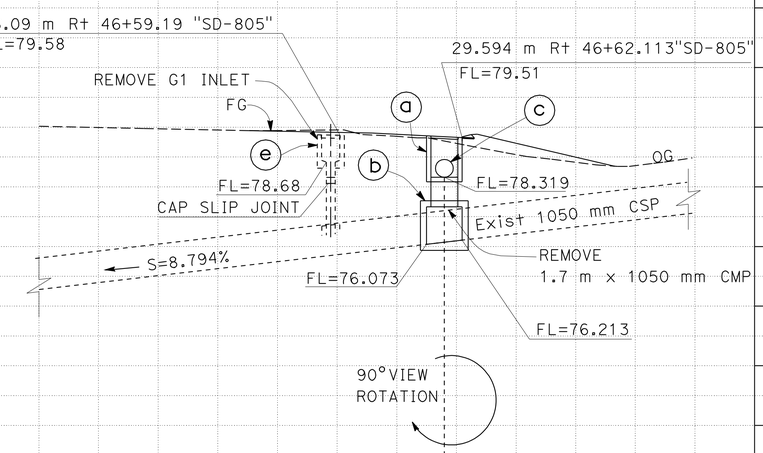

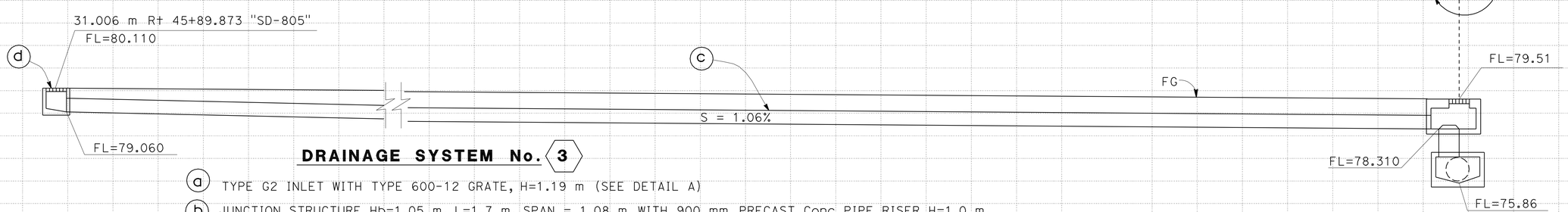

DRAINAGE SYSTEM No. 3

(a) TYPE G2 INLET WITH TYPE 600-12 GRATE, H=1.19 m (SEE DETAIL A)

(b) JUNCTION STRUCTURE Hb=1.05 m, L=1.7 m, SPAN = 1.08 m WITH 900 mm PRECAST Conc PIPE RISER H=1.0 m, AND SAFETY CAGE (SEE DRAINAGE DETAILS AND DETAIL A)

(c) 71.0 m - 600 mm RCP

(d) TYPE G2 INLET WITH TYPE 600-12 GRATE, H=1.05 m

(e) CAP RISER 300 mm

ALL DIMENSIONS ARE IN METERS UNLESS OTHERWISE SHOWN

3 4 4A

DRAINAGE PROFILES

SCALE 1:100 Horiz
1:100 Vert

DP-2

REVISED BY | DATE REVISED

RICARDO PADILLA | RAMON JUAREZ

CALCULATED-DESIGNED BY | CHECKED BY

FUNCTIONAL SUPERVISOR | CHRIS M. THOMAS

STATE OF CALIFORNIA - DEPARTMENT OF TRANSPORTATION
Caltrans PROJECT DEVELOPMENT

LAST REVISION 07-26-10 | DATE PLOTTED => 20-OCT-2010 | TIME PLOTTED => 13:18

Dist	COUNTY	ROUTE	KILOMETER POST TOTAL PROJECT	SHEET No.	TOTAL SHEETS
11	SD	905,805	R8.4/R9.8, 3.1/4.2	90	364

REGISTERED CIVIL ENGINEER 08-02-10 DATE

10-18-10
PLANS APPROVAL DATE

REGISTERED PROFESSIONAL ENGINEER RICARDO PADILLA No. C58151 Exp. 6-30-12 CIVIL STATE OF CALIFORNIA

THE STATE OF CALIFORNIA OR ITS OFFICERS OR AGENTS SHALL NOT BE RESPONSIBLE FOR THE ACCURACY OR COMPLETENESS OF ELECTRONIC COPIES OF THIS PLAN SHEET.

Caltrans Metric

DRAINAGE SYSTEM No 5

- (a) RSP, LIGHT, METHOD B WITH RSP FABRIC (SEE DRAINAGE DETAILS)
- (b) 58.5 m - 600 mm RCP WITH PRECAST CONCRETE FLARED END SECTION TYPE A
- (c) 79.3 m - 600 mm RCP WITH L-2 COLLAR
- (d) 38.8 m - 600 mm RCP WITH L-2 COLLAR
- (e) TYPE G2 INLET WITH TYPE 600-12 GRATE, H=1.75 m
- (f) 24.8 m - 600 mm RCP
- (g) TYPE G2 INLET WITH TYPE 600-12 GRATE, H=1.40 m
- (h) 22.6 m - 600 mm RCP
- (i) TYPE G2 INLET WITH TYPE 600-12 GRATE, H=1.26 m
- (j) 29.0 m - 600 mm RCP
- (k) TYPE G2 INLET WITH TYPE 600-12 GRATE, H=1.20 m
- (l) 52.5 m - 200 mm ALTERNATIVE PIPE CULVERT

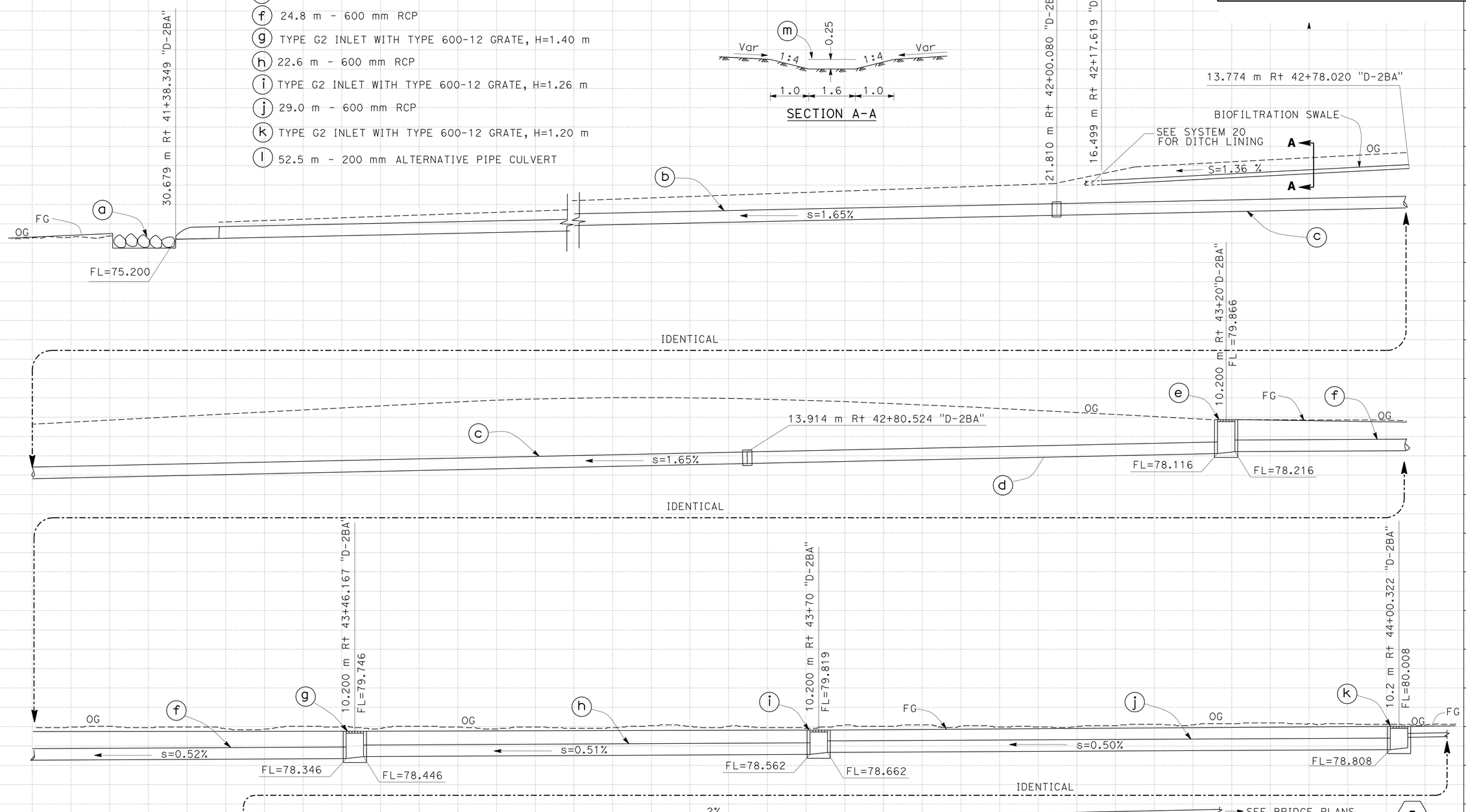

ALL DIMENSIONS ARE IN METERS UNLESS OTHERWISE SHOWN

5

DRAINAGE PROFILES

SCALE 1:100 Horiz
1:100 Vert

DP-3

STATE OF CALIFORNIA - DEPARTMENT OF TRANSPORTATION
Caltrans PROJECT DEVELOPMENT

FUNCTIONAL SUPERVISOR: CHRIS M. THOMAS
CALCULATED-DESIGNED BY: RAMON JUAREZ
CHECKED BY: RICARDO PADILLA
REVISED BY / DATE REVISED

LAST REVISION DATE PLOTTED => 20-OCT-2010
07-26-10 TIME PLOTTED => 13:18

BORDER LAST REVISED 3/1/2007 | RELATIVE BORDER SCALE IS IN MILLIMETERS 0 20 40 60 80 | USERNAME => trlenard | DGN FILE => b091831b003.dgn | CU 11225 | EA 091831

Dist	COUNTY	ROUTE	KILOMETER POST TOTAL PROJECT	SHEET No.	TOTAL SHEETS
11	SD	905,805	R8.4/R9.8, 3.1/4.2	91	364

REGISTERED CIVIL ENGINEER 08-02-10 DATE

10-18-10
PLANS APPROVAL DATE

REGISTERED PROFESSIONAL ENGINEER RICARDO PADILLA No. C58151 Exp. 6-30-12 CIVIL STATE OF CALIFORNIA

THE STATE OF CALIFORNIA OR ITS OFFICERS OR AGENTS SHALL NOT BE RESPONSIBLE FOR THE ACCURACY OR COMPLETENESS OF ELECTRONIC COPIES OF THIS PLAN SHEET.

Caltrans Metric

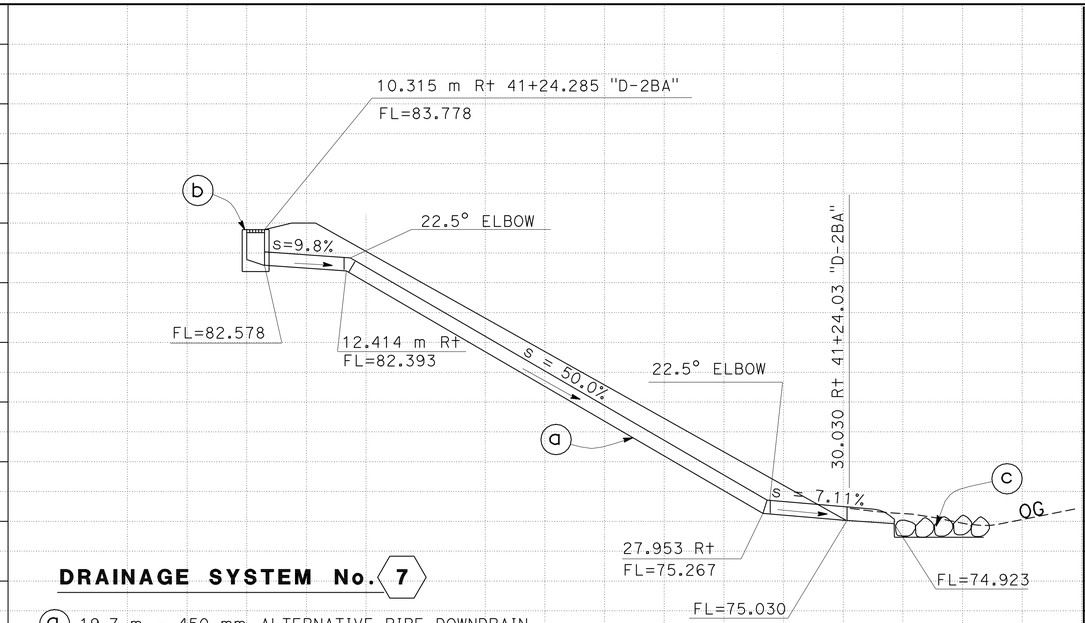

DRAINAGE SYSTEM No. 7

(a) 19.7 m - 450 mm ALTERNATIVE PIPE DOWNDRAIN WITH ALTERNATIVE FLARED END SECTION

(b) TYPE G1 INLET WITH TYPE 600-12 GRATE, H=1.20 m

(c) RSP, LIGHT METHOD B WITH RSP FABRIC (SEE DRAINAGE DETAILS)

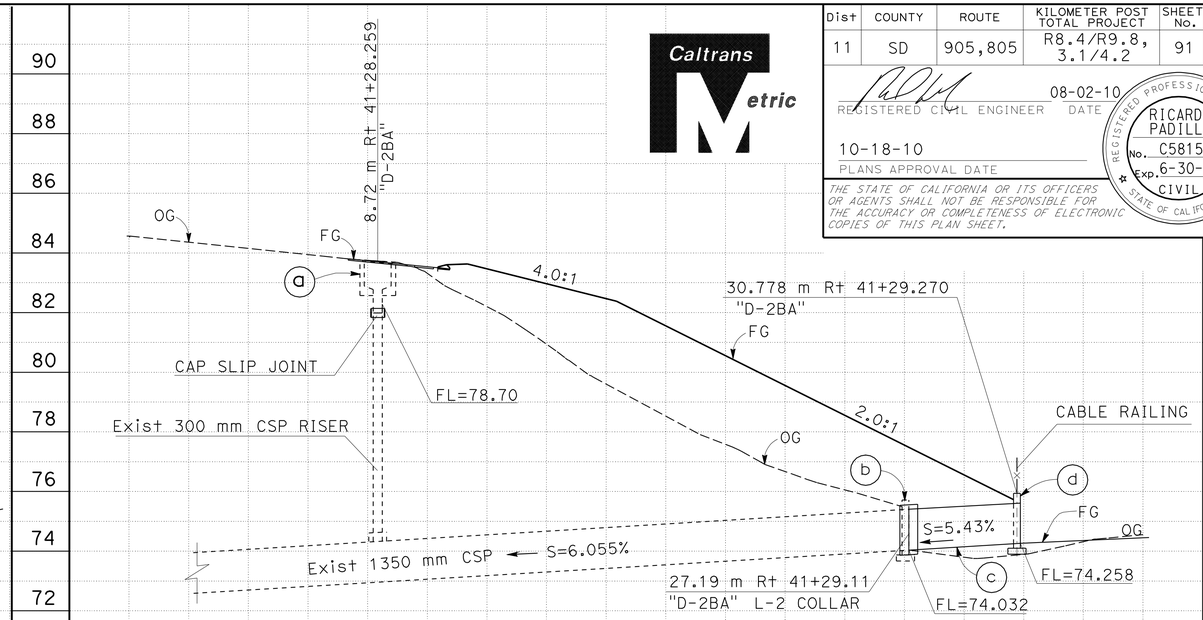

DRAINAGE SYSTEM No. 6

(a) REMOVE G1 INLET H=0.91 AND CAP RISER

(b) REMOVE STANDARD HEADWALL

(c) 4.16 m - 1350 mm CSP WITH CSP COUPLING

(d) HEADWALL H=1.86 WITH CABLE RAILING L=5.1 m

DRAINAGE SYSTEM No. 9

(a) TYPE G2 INLET H=1.73 m WITH TYPE 600-12 GRATE

(b) 4.8 m - 600 mm RCP WITH CONCRETE L-2 COLLAR (SEE DRAINAGE DETAILS)

(c) TYPE G1 INLET H = 1.1 m WITH TYPE 600-12 GRATE (SEE DRAINAGE DETAILS)

(d) 74.0 m - 600 mm RCP

(e) TYPE G2 INLET H = 1.2 m WITH TYPE 600-12 GRATE

(f) 6.0 m - GRATED LINE DRAIN

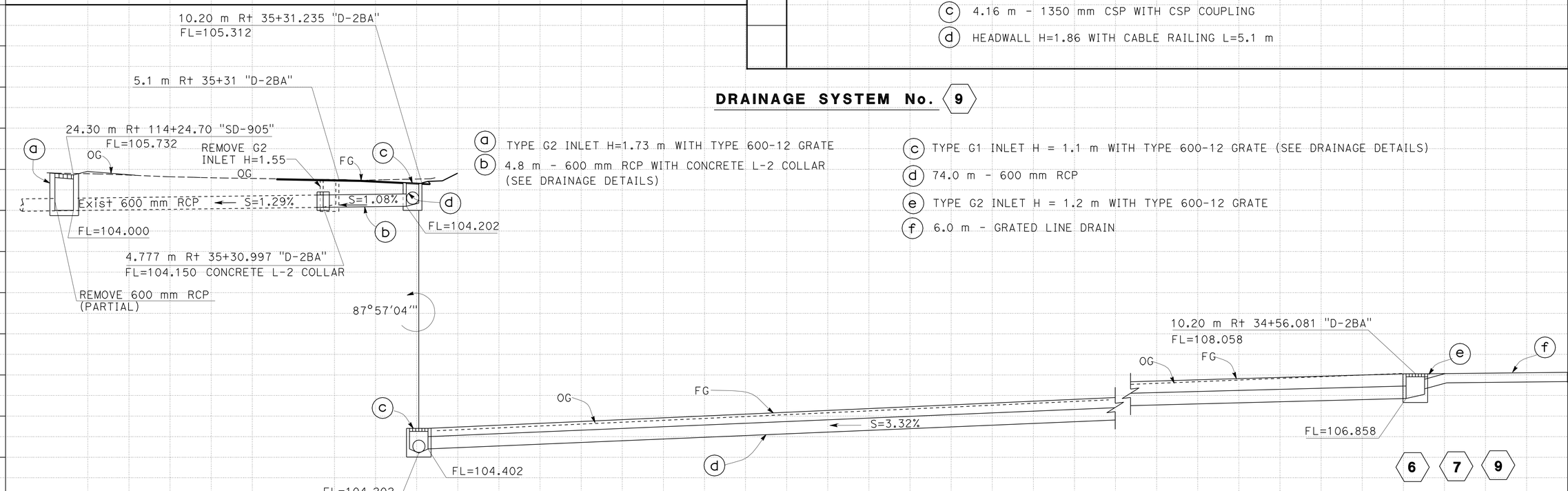

6 7 9

DRAINAGE PROFILES

SCALE 1:100 Horiz
1:100 Vert

DP-4

ALL DIMENSIONS ARE IN METERS UNLESS OTHERWISE SHOWN

REVISED BY | DATE REVISED

RICARDO PADILLA | RAMON JUAREZ

CALCULATED-DESIGNED BY | CHECKED BY

FUNCTIONAL SUPERVISOR | CHRIS M. THOMAS

STATE OF CALIFORNIA - DEPARTMENT OF TRANSPORTATION
Caltrans PROJECT DEVELOPMENT

LAST REVISION 06-20-10 | DATE PLOTTED => 20-OCT-2010 | TIME PLOTTED => 13:18

Dist	COUNTY	ROUTE	KILOMETER POST TOTAL PROJECT	SHEET No.	TOTAL SHEETS
11	SD	905,805	R8.4/R9.8, 3.1/4.2	92	364

REGISTERED CIVIL ENGINEER 08-02-10 DATE

10-18-10
PLANS APPROVAL DATE

REGISTERED PROFESSIONAL ENGINEER RICARDO PADILLA No. C58151 Exp. 6-30-12 CIVIL STATE OF CALIFORNIA

THE STATE OF CALIFORNIA OR ITS OFFICERS OR AGENTS SHALL NOT BE RESPONSIBLE FOR THE ACCURACY OR COMPLETENESS OF ELECTRONIC COPIES OF THIS PLAN SHEET.

Caltrans Metric

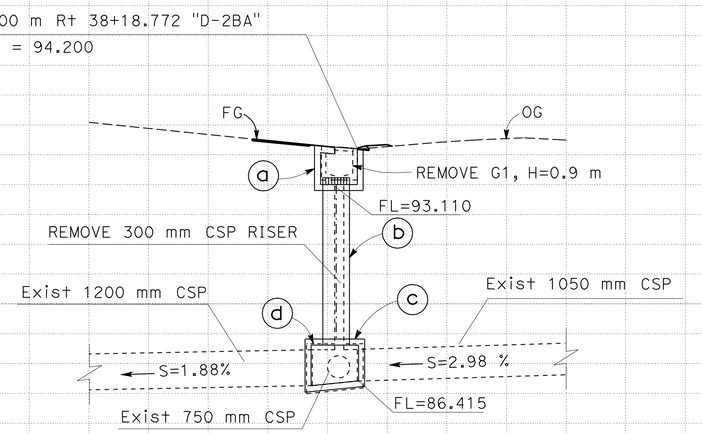

DRAINAGE SYSTEM No. 8

(a) TYPE G2 INLET H= 1.09 m WITH 600-12 GRATE

(b) 900 mm PRECAST CONCRETE PIPE RISER H= 5.4 m

(c) JUNCTION STRUCTURE Hb= 1.79 m, SPAN = 1.60 m , L = 2.0 m (SEE DRAINAGE DETAILS)

(d) REMOVE Y-BASE STRUCTURE

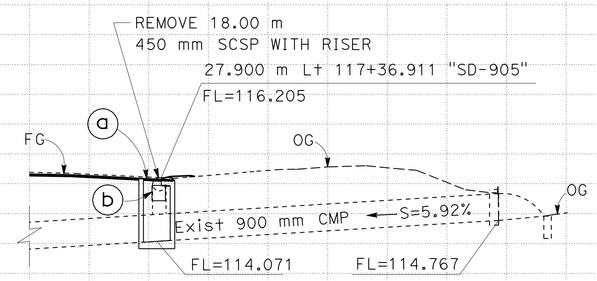

DRAINAGE SYSTEM No. 10

(a) TYPE G2 INLET WITH TYPE 600-12 GRATE, H= 2.36

(b) 6.0 m - GRATED LINE DRAIN

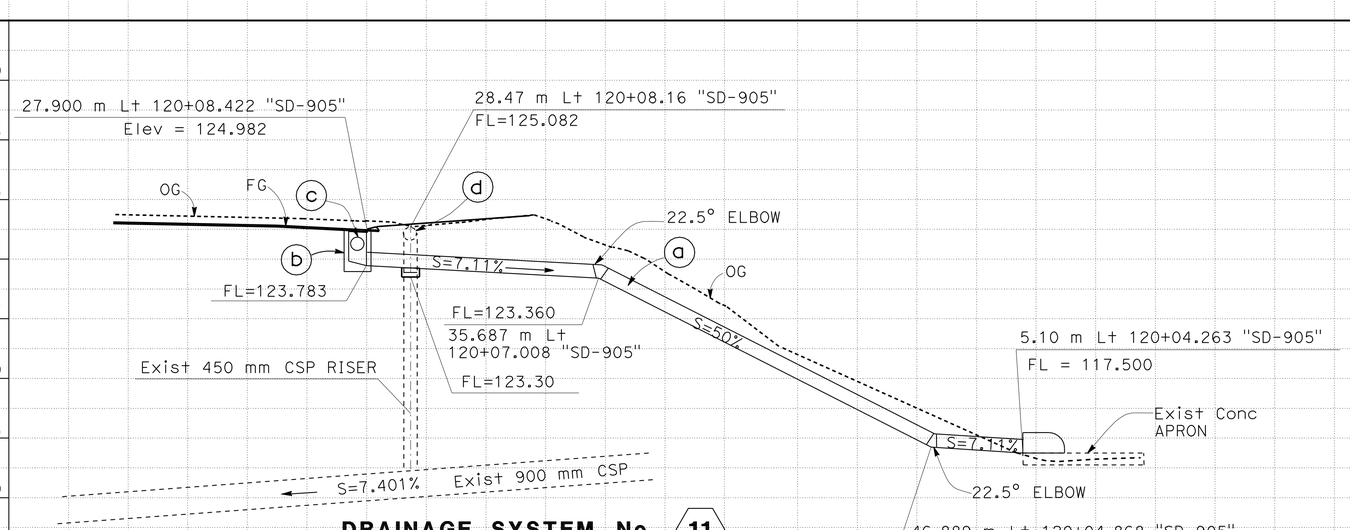

DRAINAGE SYSTEM No. 11

(a) 22.65 m-450 mm ALTERNATIVE PIPE DOWNDRAIN WITH ALTERNATIVE FLARED END SECTION

(b) G1 INLET WITH 600 x 12 GRATE H=1.2 m

(c) 6.0 m - GRATED LINE DRAIN

(d) REMOVE 450 mm SCSP AND CAP RISER

ALL DIMENSIONS ARE IN METERS UNLESS OTHERWISE SHOWN

8 10 11

DRAINAGE PROFILES

SCALE 1:100 Horiz
1:100 Vert

DP-5

REVISED BY | DATE REVISED

RICARDO PADILLA | RAMON JUAREZ

CALCULATED-DESIGNED BY | CHECKED BY

FUNCTIONAL SUPERVISOR: CHRIS M. THOMAS

STATE OF CALIFORNIA - DEPARTMENT OF TRANSPORTATION
Caltrans PROJECT DEVELOPMENT

LAST REVISION 07-26-10 | DATE PLOTTED => 20-OCT-2010 | TIME PLOTTED => 13:18

Dist	COUNTY	ROUTE	KILOMETER POST TOTAL PROJECT	SHEET No.	TOTAL SHEETS
11	SD	905,805	R8.4/R9.8, 3.1/4.2	93	364

REGISTERED CIVIL ENGINEER 08-02-10 DATE

10-18-10
PLANS APPROVAL DATE

REGISTERED PROFESSIONAL ENGINEER RICARDO PADILLA No. C58151 Exp. 6-30-12 CIVIL STATE OF CALIFORNIA

THE STATE OF CALIFORNIA OR ITS OFFICERS OR AGENTS SHALL NOT BE RESPONSIBLE FOR THE ACCURACY OR COMPLETENESS OF ELECTRONIC COPIES OF THIS PLAN SHEET.

Caltrans Metric

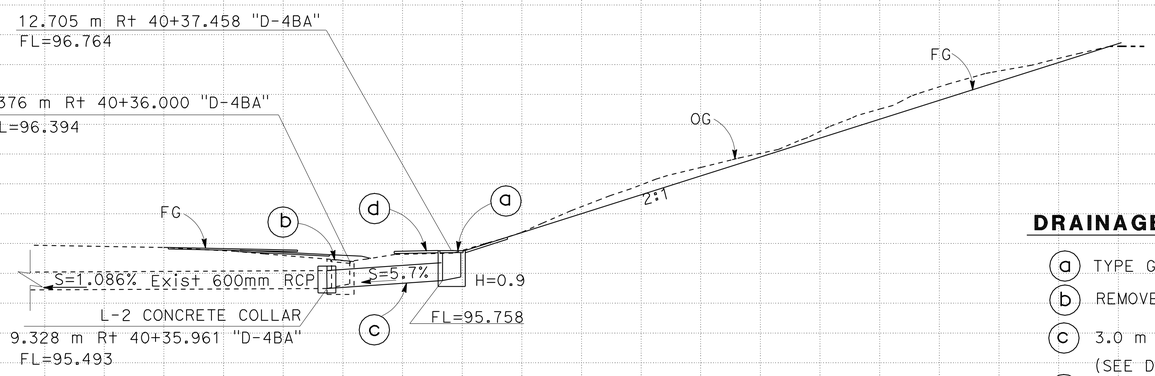

DRAINAGE SYSTEM No. 16

(a) TYPE GCP CONCRETE PIPE INLET 900R GRATE, H=0.90
(b) REMOVE INLET WITH GRATE H=0.90
(c) 3.0 m - 600 mm RCP WITH L-2 CONCRETE COLLAR (SEE DRAINAGE DETAILS)
(d) TYPE 2 Conc APRON (SEE DRAINAGE DETAILS)

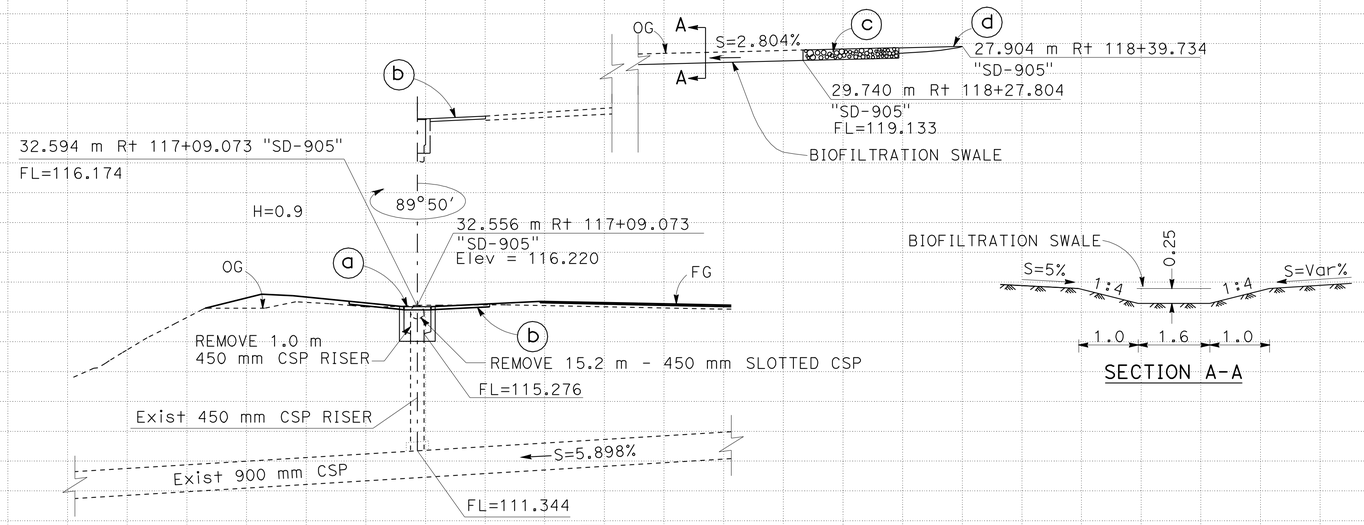

DRAINAGE SYSTEM No. 18

(a) TYPE GCP CONCRETE PIPE INLET 900R GRATE, H= 0.90
(b) TYPE 2 Conc APRON (SEE DRAINAGE DETAILS)
(c) ROCK SLOPE PROTECTION (LIGHT, METHOD B)
(d) HMA (MISCELLANEOUS AREA) OVERSIDE DRAIN

ALL DIMENSIONS ARE IN METERS UNLESS OTHERWISE SHOWN

16 18

DRAINAGE PROFILES

SCALE 1:100 Horiz
1:100 Vert

DP-6

STATE OF CALIFORNIA - DEPARTMENT OF TRANSPORTATION
Caltrans PROJECT DEVELOPMENT

FUNCTIONAL SUPERVISOR: CHRIS M. THOMAS
CALCULATED-DESIGNED BY: RAMON JUAREZ
CHECKED BY: RICARDO PADILLA
REVISED BY / DATE REVISED

LAST REVISION 06-21-10 DATE PLOTTED => 20-OCT-2010 TIME PLOTTED => 13:18

Dist	COUNTY	ROUTE	KILOMETER POST TOTAL PROJECT	SHEET No.	TOTAL SHEETS
11	SD	905,805	R8.4/R9.8, 3.1/4.2	94	364

REGISTERED CIVIL ENGINEER 08-02-10 DATE

10-18-10
PLANS APPROVAL DATE

REGISTERED PROFESSIONAL ENGINEER RICARDO PADILLA No. C58151 Exp. 6-30-12 CIVIL STATE OF CALIFORNIA

THE STATE OF CALIFORNIA OR ITS OFFICERS OR AGENTS SHALL NOT BE RESPONSIBLE FOR THE ACCURACY OR COMPLETENESS OF ELECTRONIC COPIES OF THIS PLAN SHEET.

Caltrans Metric

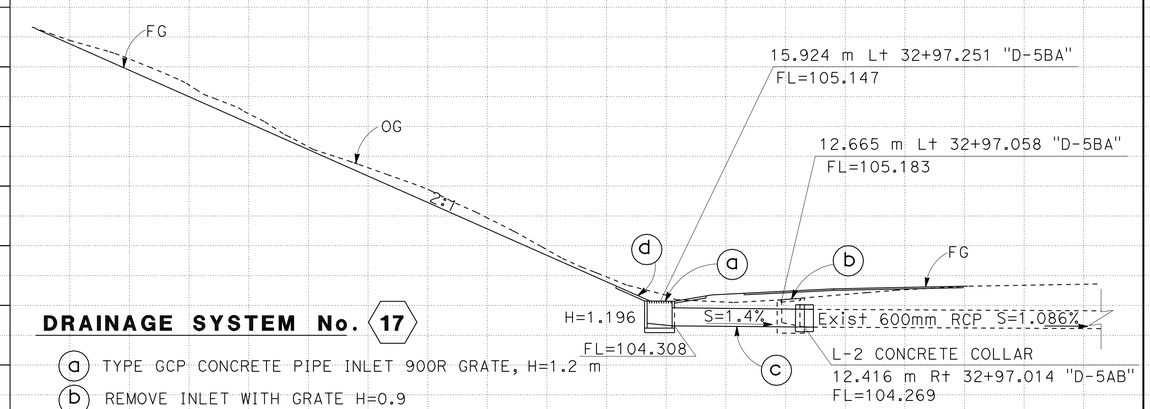

DRAINAGE SYSTEM No. 17

(a) TYPE GCP CONCRETE PIPE INLET 900R GRATE, H=1.2 m
(b) REMOVE INLET WITH GRATE H=0.9
(c) 2.8 m - 600 mm RCP WITH L-2 CONCRETE COLLAR (SEE DRAINAGE DETAILS)
(d) TYPE 2 Conc APRON (SEE DRANAGE DETAILS)

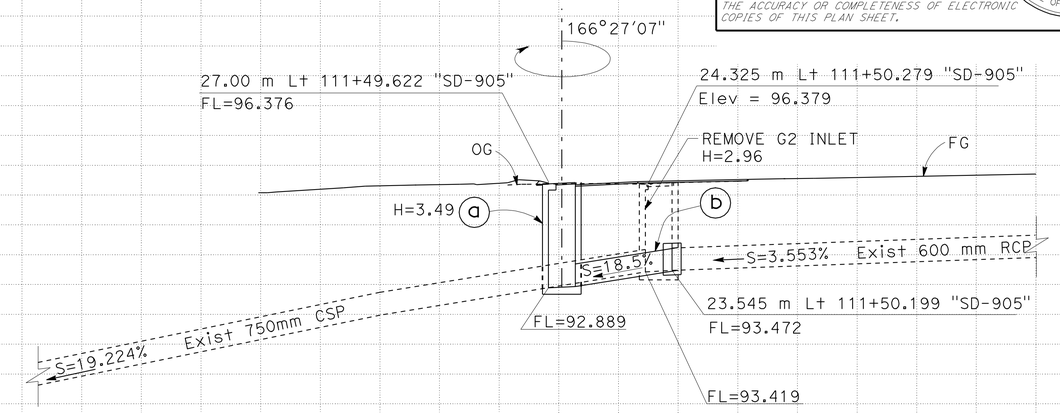

DRAINAGE SYSTEM No. 12

(a) TYPE G2 INLET WITH TYPE 600-12 GRATE, H= 3.49
(b) 2.86 m - 600 mm RCP WITH L-2 COLLAR

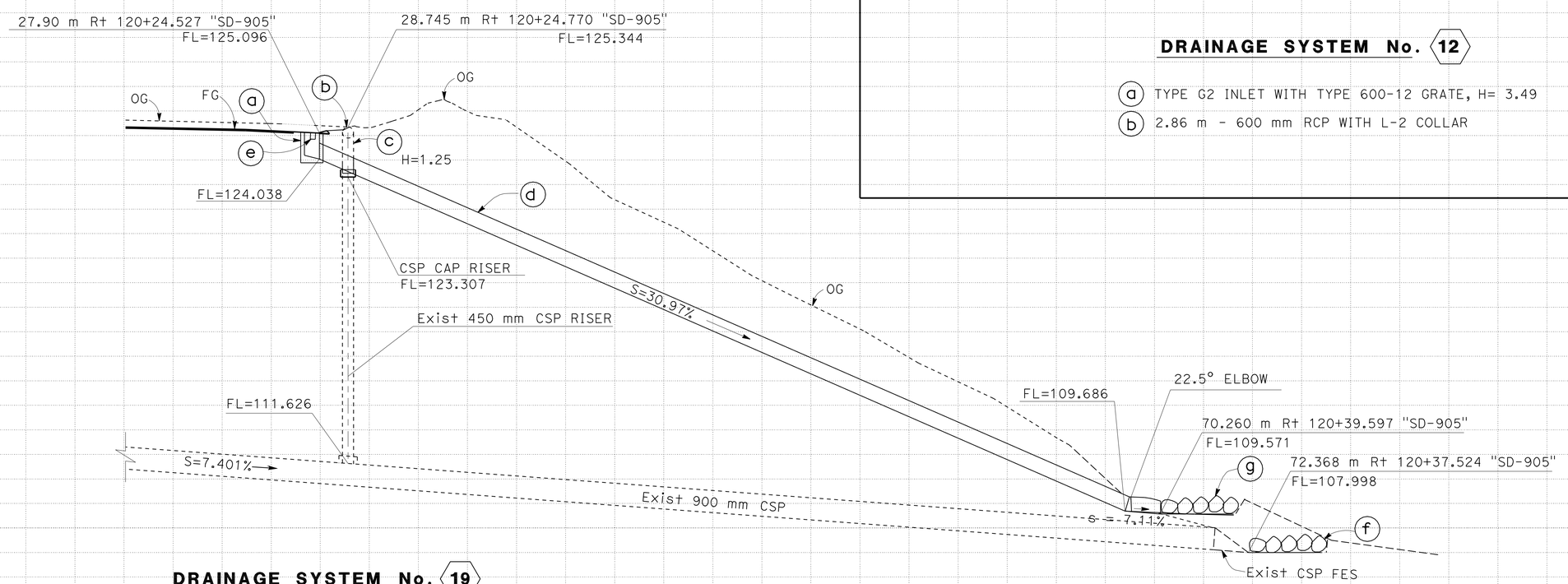

DRAINAGE SYSTEM No. 19

(a) TYPE G2 INLET WITH TYPE 600-12 GRATE, H=1.06
(b) REMOVE 12.00 m - 450 mm SCSP
(c) REMOVE 1.50 m - 450 mm CSP AND CAP RISER
(d) 48.50 m - 450 mm ALTERNATIVE PIPE DOWNDRAIN AND 450 mm ALTERNATIVE FLARED END SECTION
(e) 6.0 m GRATED LINE DRAIN
(f) RSP, LIGHT, METHOD B WITH RSP FABRIC (SEE DRAINAGE DETAILS)
(g) RSP, LIGHT, METHOD B WITH RSP FABRIC (SEE DRAINAGE DETAILS)

12 17 19

DRAINAGE PROFILES

SCALE 1:100 Horiz
1:100 Vert

DP-7

REVISED BY | DATE REVISED
RICARDO PADILLA | RAMON JUAREZ
CALCULATED-DESIGNED BY | CHECKED BY
FUNCTIONAL SUPERVISOR | CHRIS M. THOMAS

STATE OF CALIFORNIA - DEPARTMENT OF TRANSPORTATION
Caltrans PROJECT DEVELOPMENT

LAST REVISION 07-27-10 | DATE PLOTTED => 20-OCT-2010 | TIME PLOTTED => 13:18

Dist	COUNTY	ROUTE	KILOMETER POST TOTAL PROJECT	SHEET No.	TOTAL SHEETS
11	SD	905,805	R8.4/R9.8, 3.1/4.2	95	364

REGISTERED CIVIL ENGINEER 08-02-10 DATE

10-18-10
PLANS APPROVAL DATE

REGISTERED PROFESSIONAL ENGINEER RICARDO PADILLA No. C58151 Exp. 6-30-12 CIVIL STATE OF CALIFORNIA

THE STATE OF CALIFORNIA OR ITS OFFICERS OR AGENTS SHALL NOT BE RESPONSIBLE FOR THE ACCURACY OR COMPLETENESS OF ELECTRONIC COPIES OF THIS PLAN SHEET.

Caltrans Metric

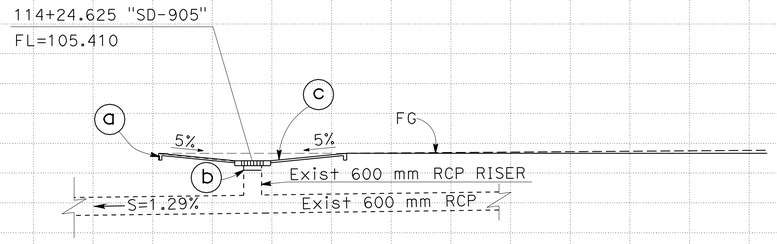

DRAINAGE SYSTEM No. 13

(a) REMOVE Conc APRON
(b) ADJUST RISER
(c) TYPE 2 Conc APRON (SEE DRAINAGE DETAILS)

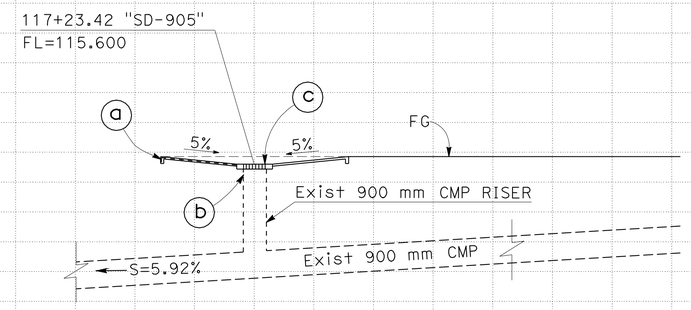

DRAINAGE SYSTEM No. 14

(a) REMOVE Conc APRON
(b) ADJUST RISER
(c) TYPE 2 Conc APRON (SEE DRAINAGE DETAILS)

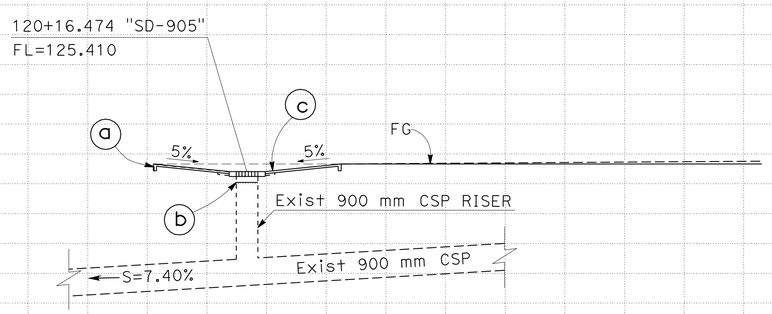

DRAINAGE SYSTEM No. 15

(a) REMOVE Conc APRON
(b) ADJUST RISER
(c) TYPE 2 Conc APRON (SEE DRAINAGE DETAILS)

ALL DIMENSIONS ARE IN METERS UNLESS OTHERWISE SHOWN

13 14 15

DRAINAGE PROFILES

SCALE 1:100 Horiz
1:100 Vert

DP-8

STATE OF CALIFORNIA - DEPARTMENT OF TRANSPORTATION
Caltrans PROJECT DEVELOPMENT

FUNCTIONAL SUPERVISOR CHRIS M. THOMAS
CALCULATED-DESIGNED BY RAMON JUAREZ
CHECKED BY RICARDO PADILLA
REVISED BY
DATE REVISED

LAST REVISION 06-21-10
DATE PLOTTED => 20-OCT-2010
TIME PLOTTED => 13:19

Dist	COUNTY	ROUTE	KILOMETER POST TOTAL PROJECT	SHEET No.	TOTAL SHEETS
11	SD	905,805	R8.4/R9.8, 3.1/4.2	96	364

Caltrans Metric

REGISTERED CIVIL ENGINEER 08-02-10 DATE

10-18-10
PLANS APPROVAL DATE

REGISTERED PROFESSIONAL ENGINEER RICARDO PADILLA No. C58151 Exp. 6-30-12 CIVIL STATE OF CALIFORNIA

THE STATE OF CALIFORNIA OR ITS OFFICERS OR AGENTS SHALL NOT BE RESPONSIBLE FOR THE ACCURACY OR COMPLETENESS OF ELECTRONIC COPIES OF THIS PLAN SHEET.

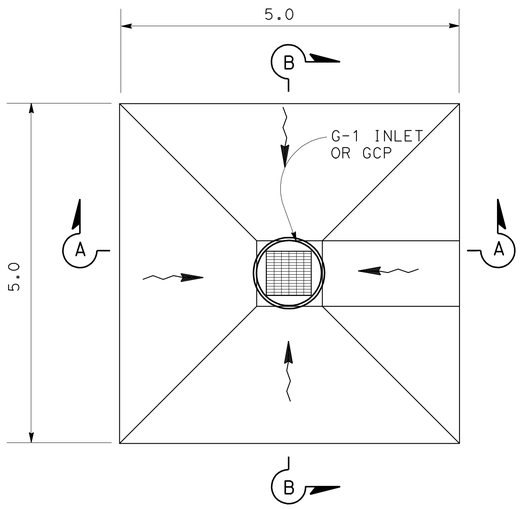

PLAN
PCC APRON IN SAG

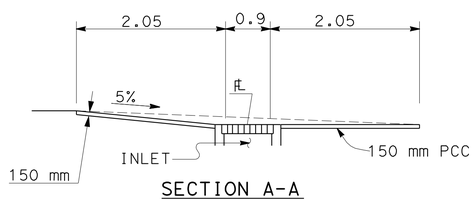

SECTION A-A

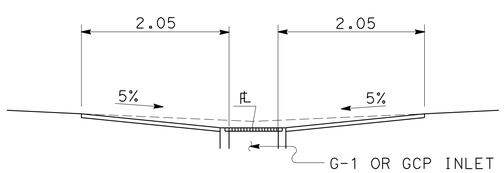

SECTION B-B

CONCRETE APRON DETAILS

TYPE 2 CONCRETE APRON

14 a 15 a 16 a 17 d 18 b 19 b

NOTE:
FOR DETAILS OR DIMENSIONS NOT SHOWN
SEE STANDARD PLANS

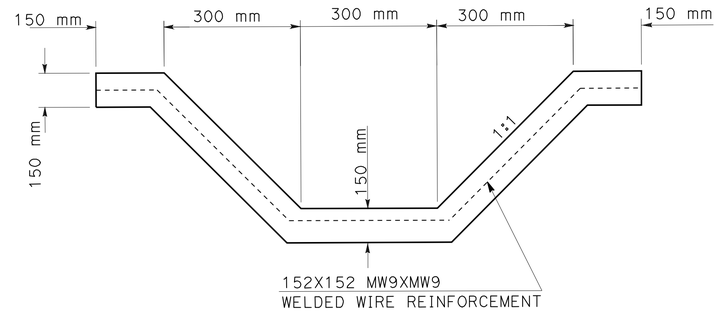

MINOR CONCRETE (DITCH LINING)

20 a b c

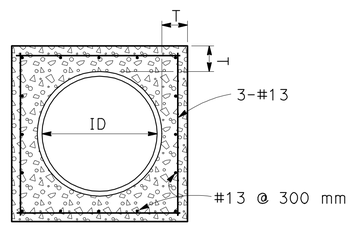

ID	L	T
600	300	150
750	300	200
900	450	200

SECTION A-A

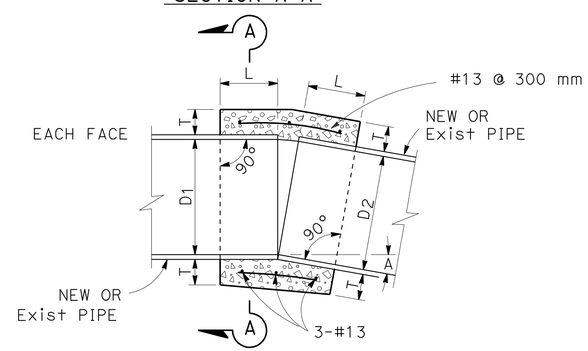

L-2 CONCRETE COLLAR

1 b 5 c d 6 c 9 c 16 b 17 b

NOTES (CONCRETE COLLAR):

1. WHERE PIPES OF DIFFERENT DIAMETERS ARE JOINED WITH A CONCRETE COLLAR, D SHALL BE THE DIAMETER OF THE LARGER PIPE.
2. FOR PIPE SIZE NOT LISTED, USE NEXT SIZE LARGER.
3. OMIT REINFORCING ON PIPES LESS THAN 600 mm IN DIAMETER.
4. REINFORCEMENT SHALL BE PLACED 40 mm CLEAR FROM OUTSIDE DIAMETER OF PIPE.

ALL DIMENSIONS ARE IN METERS UNLESS OTHERWISE SHOWN

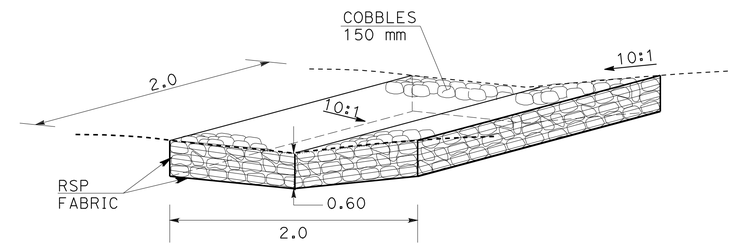

ROCK SLOPE PROTECTION
(LIGHT METHOD B)

4A c 5 a 7 c 18 c 19 f g 20 d

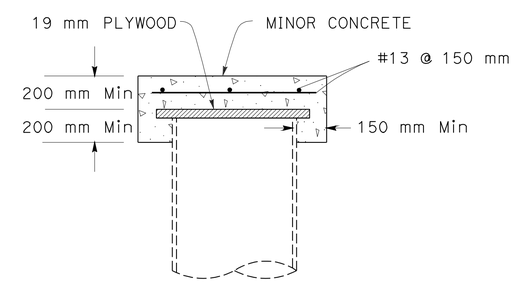

CAP RISER DETAIL

3 e 6 a 11 d 19 c

DRAINAGE DETAILS

NO SCALE

DD-1

REVISED BY	DATE REVISED

CALCULATED-DESIGNED BY: RICARDO PADILLA
CHECKED BY: RAMON JUAREZ
FUNCTIONAL SUPERVISOR: CHRIS M THOMAS

STATE OF CALIFORNIA - DEPARTMENT OF TRANSPORTATION
Caltrans PROJECT DEVELOPMENT

LAST REVISION 06-07-10
DATE PLOTTED => 20-OCT-2010
TIME PLOTTED => 13:19

Dist	COUNTY	ROUTE	KILOMETER POST TOTAL PROJECT	SHEET No.	TOTAL SHEETS
11	SD	905,805	R8.4/R9.8, 3.1/4.2	97	364

REGISTERED CIVIL ENGINEER 08-02-10 DATE

10-18-10
PLANS APPROVAL DATE

REGISTERED PROFESSIONAL ENGINEER RICARDO PADILLA No. C58151 Exp. 6-30-12 CIVIL STATE OF CALIFORNIA

THE STATE OF CALIFORNIA OR ITS OFFICERS OR AGENTS SHALL NOT BE RESPONSIBLE FOR THE ACCURACY OR COMPLETENESS OF ELECTRONIC COPIES OF THIS PLAN SHEET.

Caltrans Metric

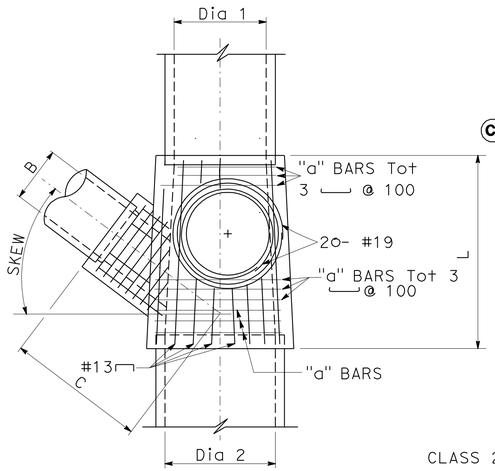

PLAN

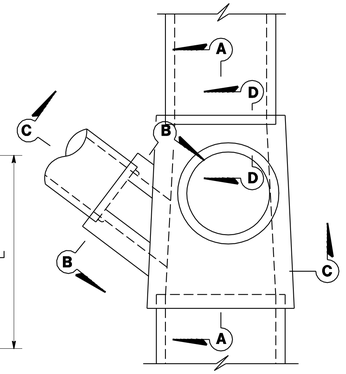

PLAN

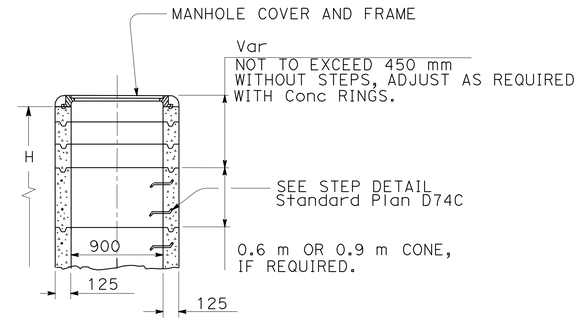

UPPER STRUCTURE TYPE MH

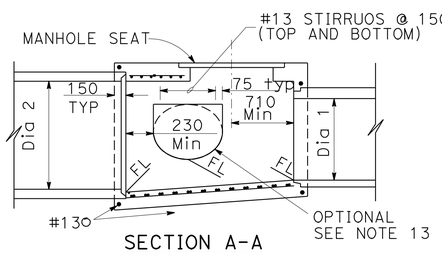

SECTION A-A

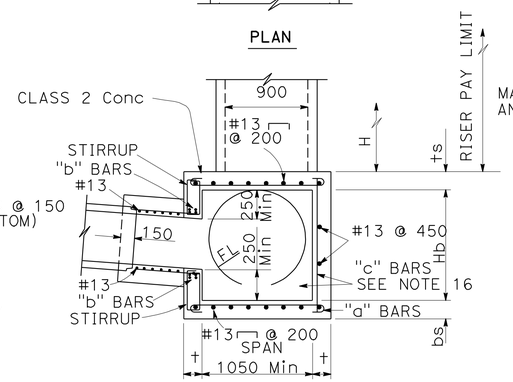

SECTION C-C

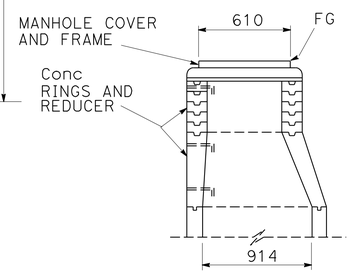

UPPER STRUCTURE TYPE MH

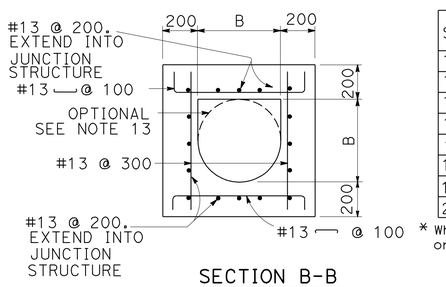

SECTION B-B

SPAN	"a" BARS	TOP AND BOTTOM * SLAB THICKNESS (ts,bs)
1050	#13 @ 100	200
1200	#13 @ 100	200
1350	#16 @ 125	200
1500	#16 @ 115	200
1650	#19 @ 140	200
1800	#19 @ 140	230
1950	#19 @ 115	230
2100	#19 @ 100	240

* When fill over junction structure is 600 mm or less, ts shall be increased by 50 mm.

B	"b" BARS TOP & BOTTOM
750	#16 TOTAL 4
900	#16 TOTAL 4
1050	#16 TOTAL 4
1200	#16 TOTAL 4
1350	#16 TOTAL 4
1500	#19 TOTAL 4

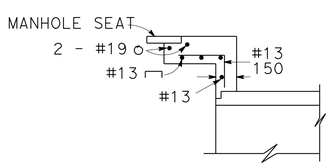

SECTION D-D

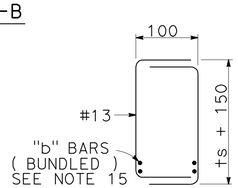

STIRRUPS

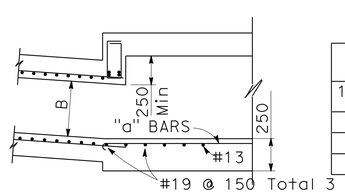

SECTION C-C (OPTIONAL)

MAXIMUM FILL HEIGHT=2.4 m
FOR REINFORCEMENT AND DETAILS NOT SHOWN, SEE SECTION C-C

Hb	"c" BARS	SIDEWALL THICKNESS (t)
1650 or less	#13 @ 100	200
1950	#16 @ 100	215
2100	#16 @ 100	230
2400	#19 @ 100	240

JUNCTION STRUCTURE

DESIGN NOTES

1. DESIGNED IN CONFORMANCE WITH BRIDGE DESIGN SPECIFICATION (1983 AASHTO SPECIFICATIONS WITH REVISIONS BY CALTRANS).
2. LIVE LOAD: HS20-44 TRUCK. EARTH PRESSURES: 22.0 kpa/m VERTICAL, 15.7 kPa/m HORIZONTAL.
3. UNIT STRESSES: f'_c = 25 MPa; f_y = 400 MPa
4. MAXIMUM FILL HEIGHT = 6 m.

GENERAL NOTES:

1. PLANS SHALL DESIGNATE: INLET AND OUTLET PIPE DIAMETERS UPER STRUCTURE OR MANHOLE (IF REQUIRED), LATERAL PIPE DIAMETER AND SKEW (IF REQUIRED), C, H, AND H_b . MANHOLE OR LATERAL MAY BE OMITED.
2. UPPER STRUCTURE, WHEN REQUIRED, MAY BE ANY DESIGNATED INLET TYPE AS SHOWN ON STANDARD PLAN D72, D73, D74, D75 OR THIS SHEET.
3. RISER SHALL BE POSITIONED TO EITHER SIDE OF THE STRUCTURE OS SHOWN.
4. EACH RISER SHALL HAVE A LADDER. FOR DETAILS SEE STANDARD PLAN D74C.
5. THICKNESS OF DECK SHALL VARY AS NECESSARY TO PROVIDE A LEVEL MANHOLE SEAT.
6. REINFORCING STEEL SHALL BE PLACE 50 mm CLEAR, EXCEPT AS SHOWN.
7. MAXIMUM SKEW OF LATERAL PIPE B IS 45°.
8. LATERAL MAY BE PLACED IN EITHER SIDE WALL.
9. WHERE Dia 1 AND/OR Dia 2 ARE LESS THAN 1050 mm, CLEAR DISTANCE BETWEEN SIDES WALLS SHALL BE 1050 mm. END WALLS SHALL BE 150 mm THICK WITH #13 @ 300 mm PLACED BOTH WAYS.
10. SIDE WALLS SHALL BE FLUSH WITH THE INSIDE OF THE INLET AND OUTLET PIPES WHEN PIPE DIAMETER ARE 1050 mm OR MORE.
11. L=1720 mm Min. IF A RISER IS REQUIRED. IF NO RISER THEN L=1500 mm Min.
12. WHEN C IS NOT SPECIFIED, BRING THE LATERAL DIRECTLY INTO THE WALL OF THE STRUCTURE.
13. WHEN C IS SPECIFIED, CONTRACTOR MAY, AT HIS OPTION, BRING THE LATERAL DIRECTLY INTO THE WALL FOR USE AS AN INSIDE FORM. A COLLAR CONFORMING WITH THE WALL THICKNESS AND THE REINFORCEMENT AS SHOWN IN SECTION B-B SHALL BE POURED AROUND THE PIPE.
14. WHEN LATERAL IS EXTENDED DIRECTLY INTO THE WALL. IT SHALL BE MITERED AS NECESSARY TO BE FLUSH WITH WALL.
15. "b" BARS SHALL EXTEND A MINIMUM OF 200 mm ON EITHER SIDE OF OPENING.
16. ADJACENT TO EACH SIDE OF THE OPENING, PLACE ADDITIONAL REINFORCEMENT EQUIVALENT TO HALF THE INTERRUPTED MAIN REINFORCEMENT.

NOTE: FOR DETAILS OR DIMENSIONS NOT SHOWN SEE STANDARD PLANS.

ALL DIMENSIONS ARE IN MILLIMETERS UNLESS OTHERWISE SHOWN

DRAINAGE DETAILS

NO SCALE

DD-2

STATE OF CALIFORNIA - DEPARTMENT OF TRANSPORTATION
Caltrans PROJECT DEVELOPMENT

FUNCTIONAL SUPERVISOR CHRIS M. THOMAS
CALCULATED-DESIGNED BY RICARDO PADILLA
CHECKED BY RAMON JUAREZ
REVISED BY
DATE REVISED

LAST REVISION 06-07-10
DATE PLOTTED => 20-OCT-2010
TIME PLOTTED => 13:19

Dist	COUNTY	ROUTE	KILOMETER POST TOTAL PROJECT	SHEET No.	TOTAL SHEETS
11	SD	905,805	R8.4/R9.8, 3.1/4.2	98	364

REGISTERED CIVIL ENGINEER 08-02-10 DATE

10-18-10
PLANS APPROVAL DATE

REGISTERED PROFESSIONAL ENGINEER RICARDO PADILLA No. C58151 Exp. 6-30-12 CIVIL STATE OF CALIFORNIA

THE STATE OF CALIFORNIA OR ITS OFFICERS OR AGENTS SHALL NOT BE RESPONSIBLE FOR THE ACCURACY OR COMPLETENESS OF ELECTRONIC COPIES OF THIS PLAN SHEET.

Caltrans Metric

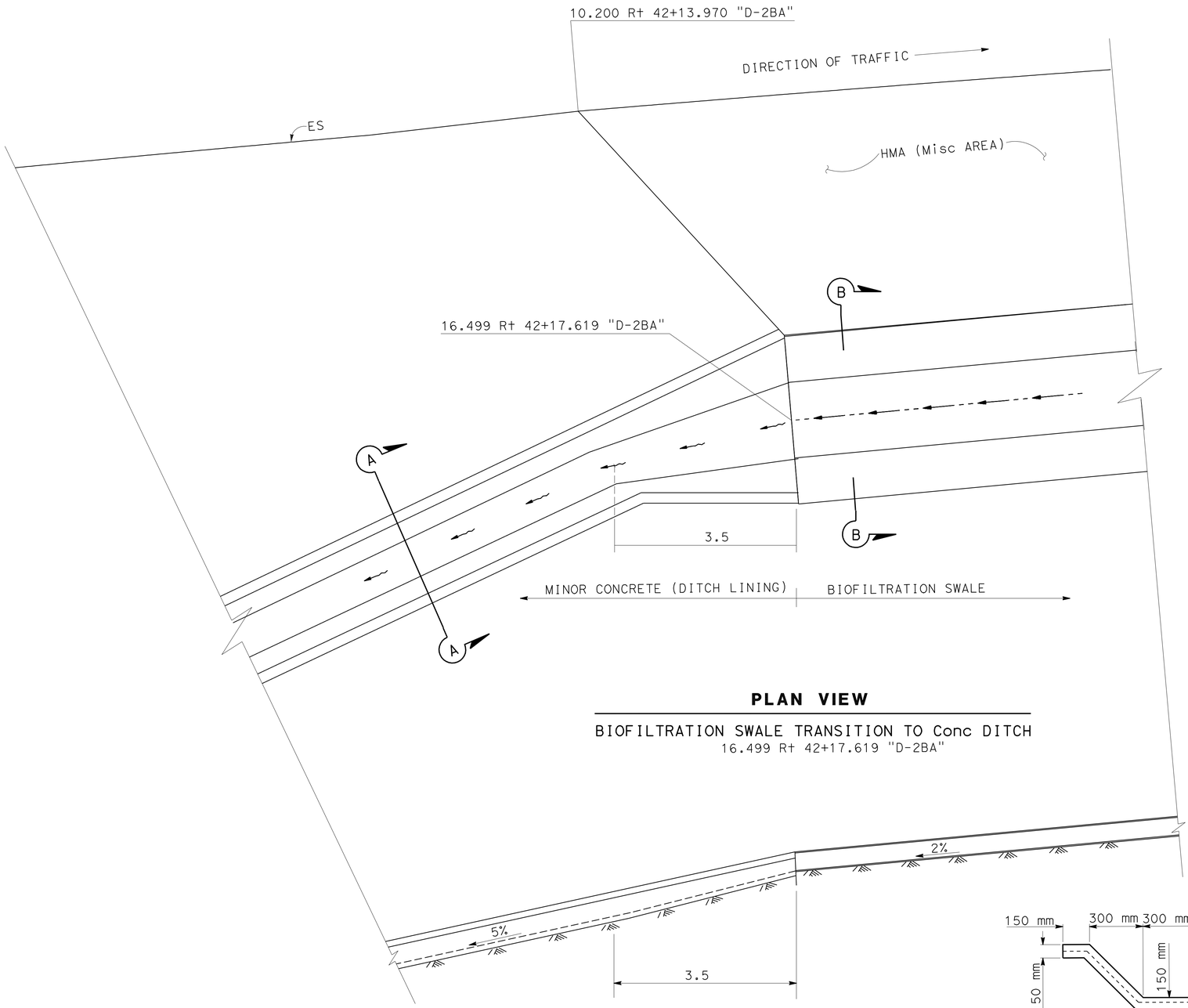

PLAN VIEW

BIOFILTRATION SWALE TRANSITION TO Conc DITCH
16.499 R+ 42+17.619 "D-2BA"

PROFILE VIEW

BIOFILTRATION SWALE TRANSITION TO Conc DITCH

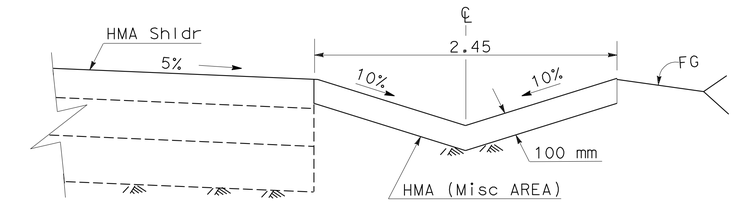

SECTION A-A

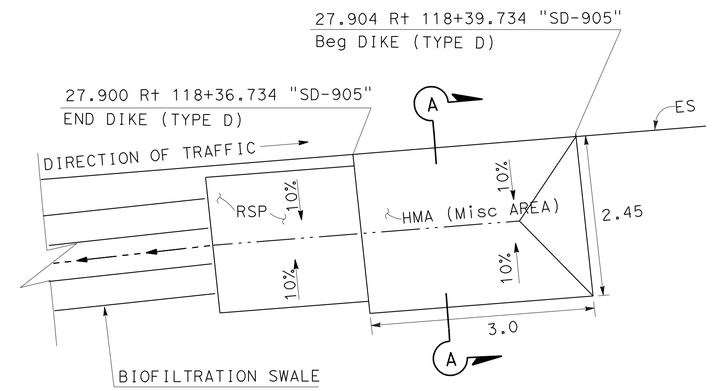

PLAN VIEW

ASPHALT CONCRETE OVERSIDE DRAIN - HMA (Misc AREA)

NO SCALE

18 d

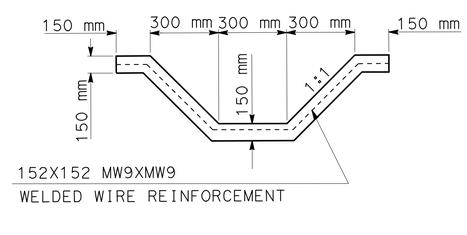

MINOR CONCRETE (DITCH LINING)

SECTION A-A

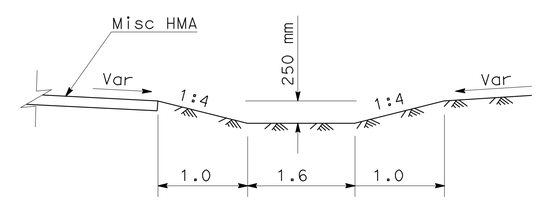

BIOFILTRATION SWALE

SECTION B-B

ALL DIMENSIONS ARE IN METERS UNLESS OTHERWISE SHOWN

DRAINAGE DETAILS

NO SCALE

DD-3

STATE OF CALIFORNIA - DEPARTMENT OF TRANSPORTATION
Caltrans PROJECT DEVELOPMENT

FUNCTIONAL SUPERVISOR: CHRIS M THOMAS
CALCULATED-DESIGNED BY: RICARDO PADILLA
CHECKED BY: RAMON JUAREZ
REVISED BY
DATE REVISED

LAST REVISION 07-31-10
DATE PLOTTED => 20-OCT-2010
TIME PLOTTED => 13:19

Dist	COUNTY	ROUTE	KILOMETER POST TOTAL PROJECT	SHEET No.	TOTAL SHEETS
11	SD	905,805	R8.4/R9.8, 3.1/4.2	99	364

REGISTERED CIVIL ENGINEER 08-02-10 DATE

10-18-10
PLANS APPROVAL DATE

REGISTERED PROFESSIONAL ENGINEER RICARDO PADILLA No. C58151 Exp. 6-30-12 CIVIL STATE OF CALIFORNIA

THE STATE OF CALIFORNIA OR ITS OFFICERS OR AGENTS SHALL NOT BE RESPONSIBLE FOR THE ACCURACY OR COMPLETENESS OF ELECTRONIC COPIES OF THIS PLAN SHEET.

Caltrans Metric

LEGEND:

1. (N) - NOT A SEPARATE PAY ITEM. FOR INFORMATION ONLY.
2. PIPE JOINT TYPES: S - STANDARD
   P - POSITIVE
3. WTJ-WATER TIGHT JOINT
4. ALL GRATED LINE DRAINS WILL BE 300 mm DEEP AND FLAT BOTTOM UNLESS NOTED OTHERWISE.

DRAINAGE QUANTITIES

DRAINAGE PLAN SHEET No.	DRAINAGE SYSTEM No.	DRAINAGE UNIT No.	REMOVE INLET (EA)	900 mm PRECAST CONCRETE PIPE INLET (m)	REMOVE CULVERT (m)	REMOVE RISER (m)	ADJUST RISER (EA)	REMOVE CONCRETE (MISCELLANEOUS) (m^3)	CAP RISER (EA)	INLET GRATE (TYPE 36R) (Kg)	750 mm CORRUGATED STEEL PIPE (2.01 mm THICK) (m)	GRATED LINE DRAIN (m)	PLACE HOT MIX ASPHALT (MISCELLANEOUS AREA) (m^2)	DITCH EXCAVATION (m^3)	200 mm ALTERNATIVE PIPE CULVERT (m)	450 mm CORRUGATED STEEL PIPE (2.01 mm THICK) (m)	1350 mm CORRUGATED STEEL PIPE (2.01 mm THICK) (m)	900 mm CORRUGATED STEEL PIPE (3.51 mm THICK) (m)	600 mm REINFORCED CONCRETE PIPE (m)	750 mm REINFORCED CONCRETE PIPE (m)	450 mm ALTERNATIVE FLARED END SECTION (EA)	450 mm ALTERNATIVE PIPE DOWNDRAIN (m)	600 mm ALTERNATIVE PIPE DOWNDRAIN (m)	REMOVE HEADWALL (EA)	MINOR CONCRETE (DITCH LINING) (m^3)	CONCRETE COLLAR (N) (EA)	MINOR CONCRETE (MINOR STRUCTURE) (m^3)	CONCRETE (CONCRETE APRON) (m^3)	600 mm CONCRETE FLARED END SECTION (EA)	MISCELLANEOUS IRON & STEEL (Kg)	ROCK SLOPE PROTECTION (LIGHT, METHOD B) (m^3)	ROCK SLOPE PROTECTION FABRIC (m^2)	HEIGHT OF INLET "H" (N) (m)	PIPE JOINT TYPE (N) (-)	Max HEIGHT OF COVER (N) (m)	CABLE RAILING (m)	DESCRIPTION	STATION	DRAINAGE PLAN SHEET No.	DRAINAGE SYSTEM No.	DRAINAGE UNIT No.
G-8	1	a																	4.2							1								S	0.9		600 mm RCP WITH CONCRETE L-2 COLLAR				a
		b																									0.9			148			1.28				G-1 INLET WITH TYPE 600-12 GRATE	28.344 m R+ 51+16.378 "SD-805"	G-8	1	b
		C										6.0																									GRATED LINE DRAIN WITH REMOVABLE GRATE				C
G-8	2	a																									1.60			148			1.85				G-2 INLET WITH TYPE 600-12 GRATE	28.344 m R+ 49+42.645 "SD-805"	G-8	2	a
		b																									1.60										JUNCTION STRUCTURE AND REMOVE L-2 COLLAR	24.227 m R+ 49+43.447 "SD-805"			b
		c																		2.8														S	0.9		750 mm RCP				c
		d										3.0																									GRATED LINE DRAIN WITH REMOVABLE GRATE				d
		e																	82.0															S	0.9		600 mm RCP				e
		f																									1.41			148			1.53				G-2 INLET WITH TYPE 600-12 GRATE	28.344 m R+ 48+60.00 "SD-805"			f
		g																	99.0															S	0.9		600 mm RCP				g
		h																									1.20			148			1.20				G-2 INLET WITH TYPE 600-12 GRATE	28.344 m R+ 47+60.00 "SD-805"			h
G-7	3	a																									1.50			148			1.19				G-2 INLET WITH TYPE 600-12 GRATE	29.594 m R+ 46+63.113 "SD-805"	G-7	3	a
		b		1.0																							1.93			46							JUNCTION STRUCTURE WITH 900 mm PCP RISER				b
		c																	71.0															S	0.9		600mm RCP				c
		d																									1.11			148			1.05				G-2 INLET WITH TYPE 600-12 GRATE	31.006 m R+ 45+89.873 "SD-805"			d
		e	1						1																												REMOVE G1 INLET AND CAP RISER	26.09 m R+ 46+59.19 "SD-805"			e
G-7	4	a																						1													REMOVE PIPE HEADWALL	17.069 m R+ 45+23.553 "D-2BA"	G-7	4	a
		b															4.4																	S	0.9		900 mm CSP WITH 900 mm CSP COUPLING				b
		c																									1.46									3.6	SINGLE HEADWALL H= 1.35 m	21.31 m R+ 45+23.695 "D-2BA"			c
G-7	4A	a																				10.66				1								S	0.9		450 mm AP DOWNDRAIN WITH L-2 COLLAR		G-7	4A	a
		b																									0.77			148			1.05				G1 INLET WITH 600X12 GRATE				b
		c																													2.4	8.8					RSP (LIGHT, METHOD B) WITH FABRIC	10.2 m R+ 45+20 "SD-805"			c
		d													23.0																						200 mm ALTERNATIVE PIPE	20.86 m R+ 45+19.617 "D-2BA"			d
SUBTOTAL			1	1.0					1			9.0			23.0			4.4	256.2	2.8		10.66		1			13.48			1082	2.4	8.8				3.6					

APC ALLOWABLE PIPE MATERIAL (450 mm - 600 mm Dia)

CORRUGATED POLYETHYLENE PIPE (HDPE) OR
RIBBED POLYVINYL CHLORIDE (PVC) PIPE.

REINFORCED CONCRETE PIPE

ALTERNATIVE PIPE DOWNDRAIN ALLOWABLE PIPE MATERIAL (450 mm - 600 mm Dia)

CORRUGATED POLYETHYLENE PIPE (HDPE) OR
RIBBED POLYVINYL CHLORIDE (PVC) PIPE.

FUNCTIONAL SUPERVISOR: CHRIS M. THOMAS
CALCULATED-DESIGNED BY: RICARDO PADILLA
CHECKED BY: RAMON JUAREZ
REVISED BY
DATE REVISED

STATE OF CALIFORNIA - DEPARTMENT OF TRANSPORTATION
Caltrans PROJECT DEVELOPMENT

DRAINAGE QUANTITIES
DQ-1

LAST REVISION 07-29-10
DATE PLOTTED => 20-OCT-2010
TIME PLOTTED => 13:19

Dist	COUNTY	ROUTE	KILOMETER POST TOTAL PROJECT	SHEET No.	TOTAL SHEETS
11	SD	905,805	R8.4/R9.8, 3.1/4.2	100	364

REGISTERED CIVIL ENGINEER 08-02-10 DATE

PLANS APPROVAL DATE 10-18-10

REGISTERED PROFESSIONAL ENGINEER RICARDO PADILLA No. C58151 Exp. 6-30-12 CIVIL STATE OF CALIFORNIA

THE STATE OF CALIFORNIA OR ITS OFFICERS OR AGENTS SHALL NOT BE RESPONSIBLE FOR THE ACCURACY OR COMPLETENESS OF ELECTRONIC COPIES OF THIS PLAN SHEET.

Caltrans Metric

NOTES:

1. (N) - NOT A SEPARATE PAY ITEM. FOR INFORMATION ONLY.
2. PIPE JOINT TYPES: S - STANDARD, P - POSITIVE
3. WTJ-WATER TIGHT JOINT
4. ALL GRATED LINE DRAINS WILL BE 300 mm DEEP AND FLAT BOTTOM UNLESS NOTED OTHERWISE.

DRAINAGE QUANTITIES

DRAINAGE PLAN SHEET No.	DRAINAGE SYSTEM No.	DRAINAGE UNIT No.	REMOVE INLET (EA)	900 mm PRECAST CONCRETE PIPE RISER (m)	REMOVE CULVERT (m)	REMOVE RISER (m)	ADJUST RISER (EA)	REMOVE CONCRETE (MISCELLANEOUS) (m^3)	CAP RISER (EA)	TYPE GCP CONCRETE PIPE INLET 900R GRATE (EA)	750 mm CORRUGATED STEEL PIPE (2.01 mm THICK) (m)	GRATED LINE DRAIN (m)	PLACE HOT MIX ASPHALT (MISCELLANEOUS AREA) (m^2)	DITCH EXCAVATION (m^3)	200 mm ALTERNATIVE PIPE CULVERT (m)	450 mm CORRUGATED STEEL PIPE (2.01 mm THICK) (m)	1350 mm CORRUGATED STEEL PIPE (2.01 mm THICK) (m)	900 mm CORRUGATED STEEL PIPE (3.51 mm THICK) (m)	600 mm REINFORCED CONCRETE PIPE (m)	750 mm REINFORCED CONCRETE PIPE (m)	450 mm ALTERNATIVE FLARED END SECTION (EA)	450 mm ALTERNATIVE PIPE DOWNDRAIN (m)	600 mm ALTERNATIVE PIPE DOWNDRAIN (m)	REMOVE HEADWALL (EA)	MINOR CONCRETE (DITCH LINING) (m^3)	CONCRETE COLLAR (N) (EA)	MINOR CONCRETE (MINOR STRUCTURE) (m^3)	CONCRETE (CONCRETE APRON) (m^3)	600 mm CONCRETE FLARED END SECTION (EA)	MISCELLANEOUS IRON & STEEL (Kg)	ROCK SLOPE PROTECTION (LIGHT, METHOD B) (m^3)	ROCK SLOPE PROTECTION FABRIC (m^2)	HEIGHT OF INLET "H" (N) (m)	PIPE JOINT TYPE (N) (-)	Max HEIGHT OF COVER (N) (m)	CABLE RAILING (m)	DESCRIPTION	STATION	DRAINAGE PLAN SHEET No.	DRAINAGE SYSTEM No.	DRAINAGE UNIT No.
G-6	5	a																													2.4	8.8					RSP (LIGHT, METHOD B) WITH FABRIC	30.679 m R+ 41+38.349 "D-2BA"	G-6	5	a
		b																	58.5										1					S	0.9		600 mm RCP WITH PRECAST CONCRETE FLARED END SECTION TYPE A				b
		c																	79.3							1								S	0.9		600 mm RCP WITH L-2 CONCRETE COLLAR	21.511 m R+ 42+00.00 "D-2BA"			c
		d																	38.8							1								S	0.9		600 mm RCP WITH L-2 CONCRETE COLLAR	13.620 m R+ 42+80.48 "D-2BA"			d
		e																									1.55			148			1.75				TYPE G-2 INLET WITH TYPE 600-12 GRATE	10.2 m R+ 43+20 "D-2BA"			e
		f																	24.8															S	0.9		600 mm RCP				f
		g																									1.33			148			1.40				TYPE G-2 INLET WITH TYPE 600-12 GRATE	10.2 m R+ 43+46.137 "D-2BA"			g
		h																	22.6															S	0.9		600 mm RCP				h
		i																									1.24			148			1.26				TYPE G-2 INLET WITH TYPE 600-12 GRATE	10.2 m R+ 43+70 "D-2BA"			i
		j																	29.0															S	0.9		600 mm RCP				j
G-7		k																									1.20			148			1.20				TYPE G-2 INLET WITH TYPE 600-12 GRATE	10.2 m R+ 44+00.322 "D-2BA"	G-7		k
		l													52.5																			S	0.9		200 mm ALTERNATIVE PIPE	10.0 m R+ 44+48 "D-2BA"			l
G-6	6	a	1						1																								0.91				REMOVE INLET AND CAP RISER	8.72 m R+ 41+28.259 "D-2BA"	G-6	6	a
		b																						1													REMOVE STANDARD HEADWALL	27.19 m R+ 41+29.11 "D-2BA"			b
		c															4.16																		0.9		1350 mm CSP WITH CSP COUPLING				c
		d																									2.47									5.1	STRAIGHT PIPE HEADWALL H=1.86 WITH CABLE RAILING	30.778 m R+ 41+29.270 "D-2BA"			d
G-6	7	a																				1	19.7												0.9		450 mm AP DD WITH ALTERNATIVE FES	30.03 m R+ 41+24.03 "D-2BA"	G-6	7	a
		b																									0.90			148			1.20				G1 INLET WITH 600-12 GRATE	10.315 m R+ 41+24.285 "D-2BA"			b
		c																													2.4	8.8					RSP (LIGHT, METHOD B) WITH FABRIC	30.395 m R+ 41+24.806 "D-2BA"			c
G-2	8	a																									0.95			148			1.09				G-2 INLET WITH 600-12 GRATE	10.20 m R+ 38+18.772 "D-2BA"	G-2	8	a
		b		5.4																																	900 mm PRECAST CONCRETE PIPE RISER				b
		c																									2.30						1.80				JUNCTION STRUCTURE				c
		d	1																																		REMOVE Y-BASE STRUCTURE				d
SUB-TOTAL			2	5.4					1						52.5		4.16		253		1	19.7		1			11.94		1	888	4.8	17.6				5.1					

DRAINAGE QUANTITIES
DQ-2

STATE OF CALIFORNIA - DEPARTMENT OF TRANSPORTATION
Caltrans PROJECT DEVELOPMENT

FUNCTIONAL SUPERVISOR: CHRIS M. THOMAS
CALCULATED-DESIGNED BY: RICARDO PADILLA
CHECKED BY: RAMON JUAREZ
REVISED BY / DATE REVISED

LAST REVISION 07-31-10
DATE PLOTTED => 20-OCT-2010
TIME PLOTTED => 13:48