DIST	COUNTY	ROUTE	KILOMETER POST TOTAL PROJECT	SHEET NO.	TOTAL SHEETS
11	Imp	78,86	R14.6/R19.5, 38.3/39.1	301	325

REGISTERED CIVIL ENGINEER

October 5, 2007
PLANS APPROVAL DATE

REGISTERED PROFESSIONAL ENGINEER
Stanley P. Johnson
No. C57793
Exp. 03-31-08
CIVIL
STATE OF CALIFORNIA

The State of California or its officers or agents shall not be responsible for the accuracy or completeness of electronic copies of this plan sheet.

To get to the Caltrans web site, go to: http://www.dot.ca.gov

To accompany plans dated 4-19-10

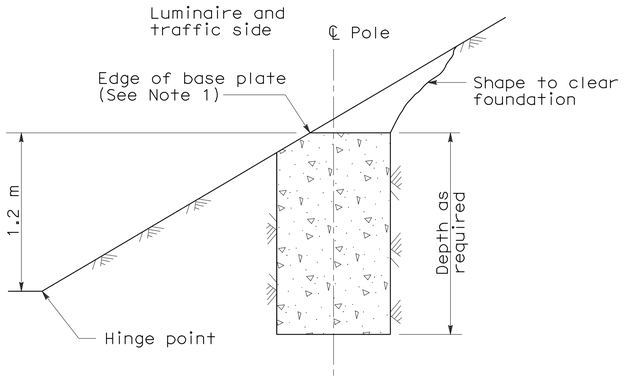

CUT SLOPES
STEEPER THAN 1:4
See Note 2

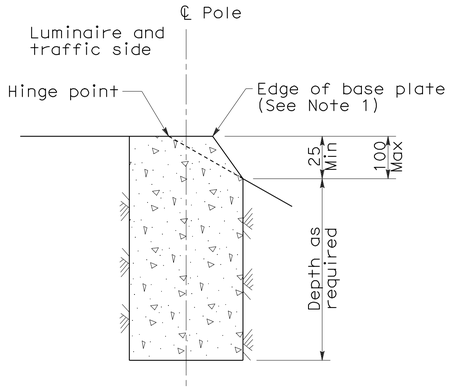

FILL SLOPES
STEEPER THAN 1:4
See Note 2

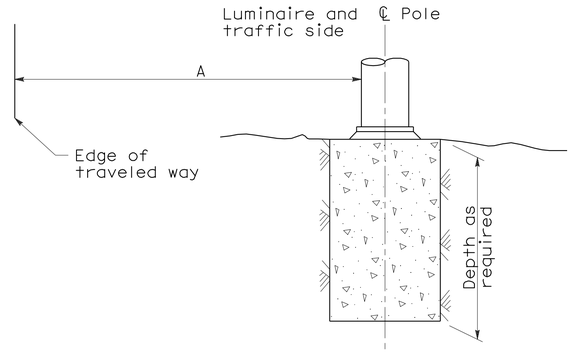

FLAT SECTIONS, CUT OR FILL SLOPES
1:4 OR FLATTER

STANDARD TYPE	SETBACK (DIMENSION A)
32	9 m Min
31, 36-20A	6 m Min
15, 15D, 15-SB, 21, 21D, 30	Mast Arm Length (Min)

FOUNDATIONS ADJACENT TO ALL ROADWAYS EXCEPT IN SIDEWALK, MEDIAN AND ISLAND AREAS

NOTES:

1. Where a portion of the foundation is above grade, the top edges shall have a 25 mm chamfer.
2. Horizontal setbacks on cut and fill slopes steeper than 1:4 shall not exceed the distance shown for flat sections.

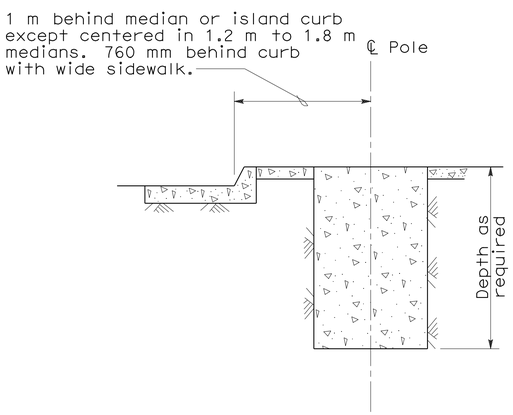

MEDIAN, ISLAND
OR WIDE SIDEWALK
(2 m wide and wider)

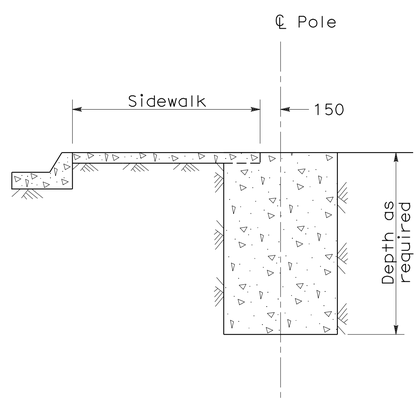

NARROW SIDEWALK
(Less than 2 m wide)

FOUNDATIONS IN SIDEWALK, MEDIAN AND ISLAND AREAS

STATE OF CALIFORNIA
DEPARTMENT OF TRANSPORTATION

ELECTRICAL SYSTEMS (FOUNDATION INSTALLATIONS)

NO SCALE

ALL DIMENSIONS ARE IN MILLIMETERS UNLESS OTHERWISE SHOWN

RSP ES-11 DATED OCTOBER 5, 2007 SUPERSEDES STANDARD PLAN ES-11 DATED JULY 1, 2004-PAGE 475 OF THE STANDARD PLANS BOOK DATED JULY 2004.

REVISED STANDARD PLAN RSP ES-11

2004 REVISED Std PLAN RSP ES-11

10-1-07

DIST	COUNTY	ROUTE	KILOMETER POST TOTAL PROJECT	SHEET NO.	TOTAL SHEETS
11	Imp	78,86	R14.6/R19.5, 38.3/39.1	302	325

Caltrans Metric

REGISTERED ELECTRICAL ENGINEER

October 5, 2007
PLANS APPROVAL DATE

REGISTERED PROFESSIONAL ENGINEER
Jeffery G. McRae
No. E14512
Exp. 6-30-08
ELECTRICAL
STATE OF CALIFORNIA

The State of California or its officers or agents shall not be responsible for the accuracy or completeness of electronic copies of this plan sheet.

To get to the Caltrans web site, go to: http://www.dot.ca.gov

To accompany plans dated 4-19-10

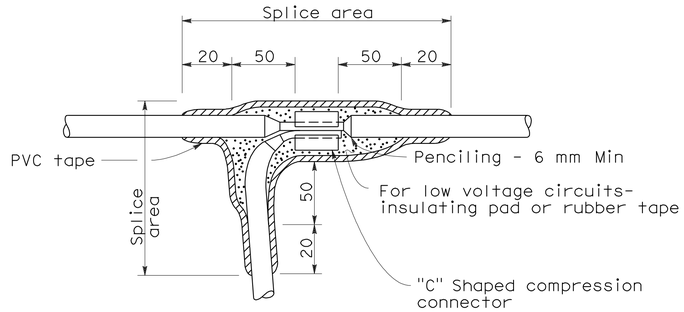

TYPE "C" SPLICE

Between 1 free-end and 1 through conductor

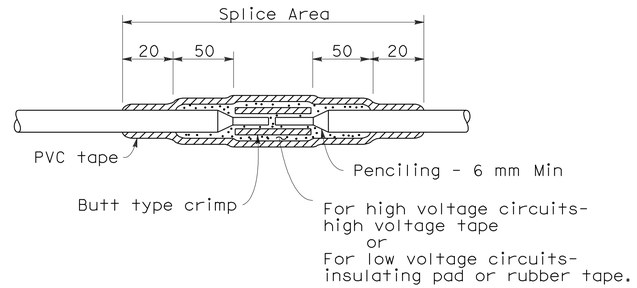

TYPE "S" SPLICE

Between 2 free-ends

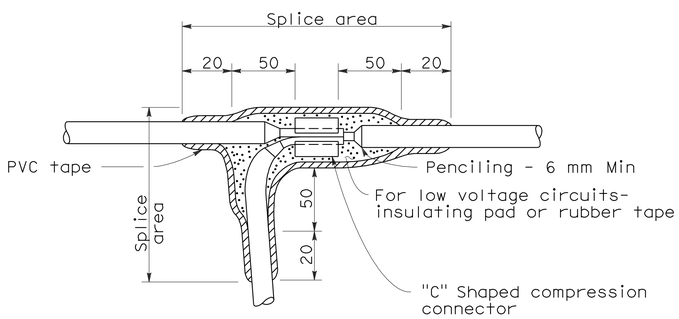

TYPE "T" SPLICE

For 3 free-ends

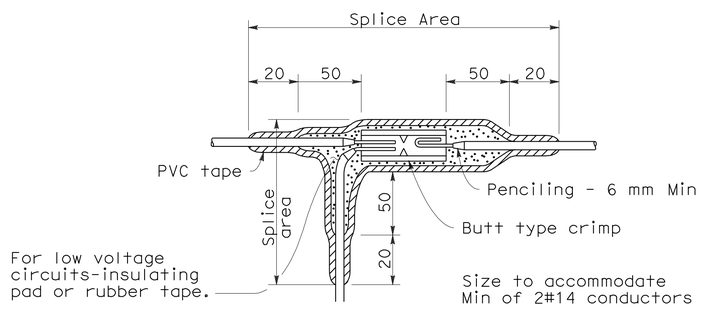

TYPE "ST" SPLICE

NOTES:

1. Dimensions are minimum.
2. Rubber tapes shall be rolled after application.

INSULATION METHODS

Low Voltage Circuits (0-600 V)

METHOD "B"

1. Completely cover the splice area with electrical insulating coating and allow to dry.
2. Apply 2 layers of electrical insulating pad with minimum thickness of 4 mm each layer or 2 layers, half lapped, synthetic oil resistant, self fusing rubber tape.
3. Apply 3 layers half lapped polyvinyl chloride tape.
4. Cover entire splice with electrical insulating coating and allow to dry.

High Voltage Circuits (Over 600 V)

1. Completely cover the splice area with electrical insulating coating and allow to dry.
2. Apply high voltage tape to a minimum thickness equal to original insulation.
3. Apply 3 layers half lapped polyvinyl chloride tape.
4. Cover entire splice with electrical insulating coating and allow to dry.

STATE OF CALIFORNIA
DEPARTMENT OF TRANSPORTATION

ELECTRICAL SYSTEMS (SPLICING DETAILS)

NO SCALE

ALL DIMENSIONS ARE IN MILLIMETERS UNLESS OTHERWISE SHOWN

RSP ES-13A DATED OCTOBER 5, 2007 SUPERSEDES STANDARD PLAN ES-13A DATED JULY 1, 2004-PAGE 478 OF THE STANDARD PLANS BOOK DATED JULY 2004.

REVISED STANDARD PLAN RSP ES-13A

2004 REVISED Std PLAN RSP ES-13A

6-27-07

DIST	COUNTY	ROUTE	KILOMETER POST TOTAL PROJECT	SHEET NO.	TOTAL SHEETS
11	Imp	78,86	R14.6/R19.5, 38.3/39.1	303	325

Caltrans Metric

REGISTERED ELECTRICAL ENGINEER

October 5, 2007
PLANS APPROVAL DATE

REGISTERED PROFESSIONAL ENGINEER Jeffery G. McRae No. E14512 Exp. 6-30-08 ELECTRICAL STATE OF CALIFORNIA

The State of California or its officers or agents shall not be responsible for the accuracy or completeness of electronic copies of this plan sheet.

To get to the Caltrans web site, go to: http://www.dot.ca.gov

To accompany plans dated 4-19-10

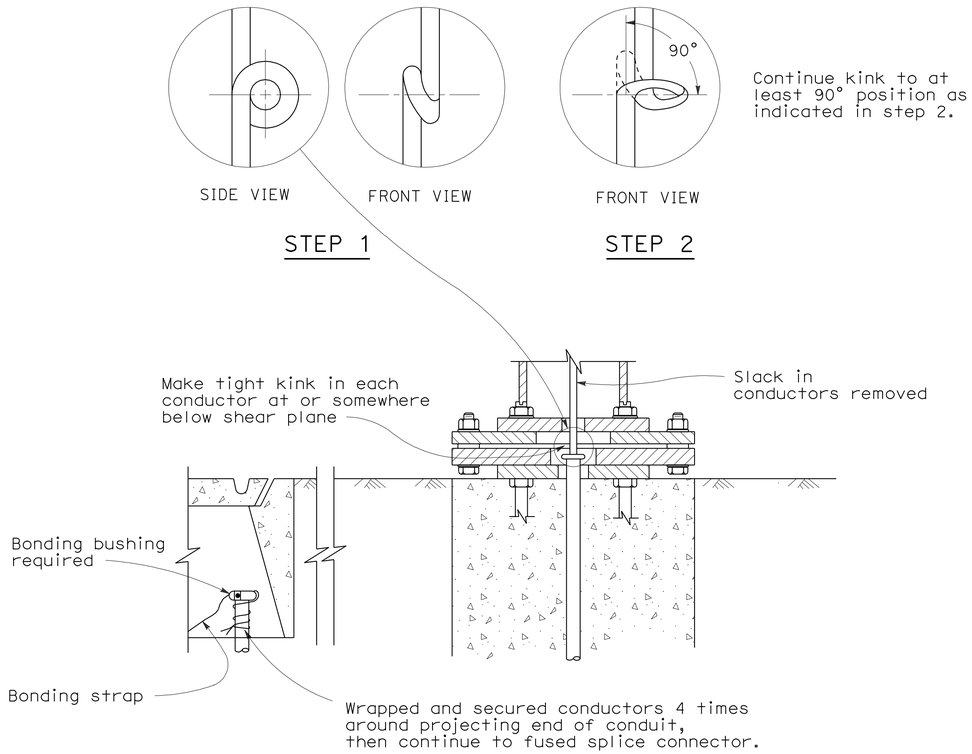

KINKING DETAIL FOR SLIP BASE STANDARDS

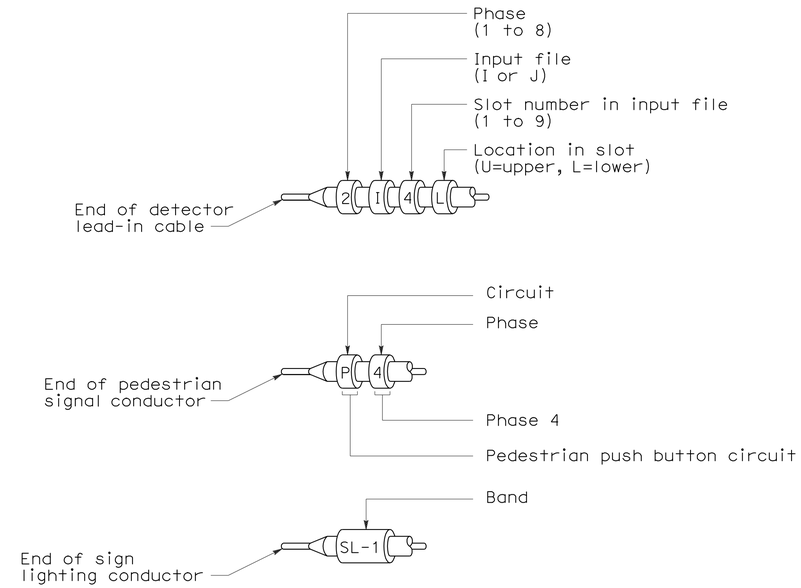

TYPICAL BANDING OF CONDUCTOR ENDS

Primary lines of multiple ballasts shall be provided with fused connectors.
Fuse ratings shall be as noted below.

CIRCUIT VOLTAGE	FUSE VOLTAGE RATING	FUSE CURRENT RATING																
		HPS LAMP BALLAST								LOW PRESSURE SODIUM BALLAST					INDUCTION SIGN LIGHTING	SINGLE PHASE (TWO WIRE) TRANSFORMERS (PRIMARY SIDE)		
		70 W	100 W	150 W	200 W	250 W	310 W	400 W	1000 W	35 W	55 W	90 W	135 W	180 W	85 W	1 kVA	2 kVA	3 kVA
120 V	250 V	5	5	5	5	5	5	5	-	5	5	5	5	5	5	10	20	30
240 V	250 V	5	5	5	5	5	5	5	5	3	3	3	5	5	5	6	10	20
480 V	500-600 V	5	5	5	5	5	5	5	5	2	2	2	3	3	1*	3	6	10

* See Revised Standard Plan RSP ES-15D, Type SC3 Control.

FUSE RATINGS FOR FUSED CONNECTORS

LUMINAIRE BALLAST FUSING

STATE OF CALIFORNIA
DEPARTMENT OF TRANSPORTATION

ELECTRICAL SYSTEMS (WIRING DETAILS AND FUSE RATINGS)

NO SCALE

ALL DIMENSIONS ARE IN MILLIMETERS UNLESS OTHERWISE SHOWN

RSP ES-13B DATED OCTOBER 5, 2007 SUPERSEDES STANDARD PLAN ES-13B DATED JULY 1, 2004-PAGE 479 OF THE STANDARD PLANS BOOK DATED JULY 2004.

REVISED STANDARD PLAN RSP ES-13B

2004 REVISED Std PLAN RSP ES-13B

10-1-07

DIST	COUNTY	ROUTE	KILOMETER POST TOTAL PROJECT	SHEET No	TOTAL SHEETS
11	Imp	78,86	R14.6/R19.5, 38.3/39.1	304	325

REGISTERED CIVIL ENGINEER 08/20/09 DATE

4-19-10
PLANS APPROVAL DATE

REGISTERED PROFESSIONAL ENGINEER MAMUNUR RAHMAN No. C48515 Exp. 6/30/10 CIVIL STATE OF CALIFORNIA

The State of California or its officers or agents shall not be responsible for the accuracy or completeness of electronic copies of this plan sheet.

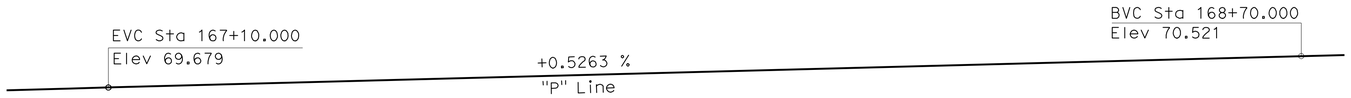

PROFILE GRADE
1:400

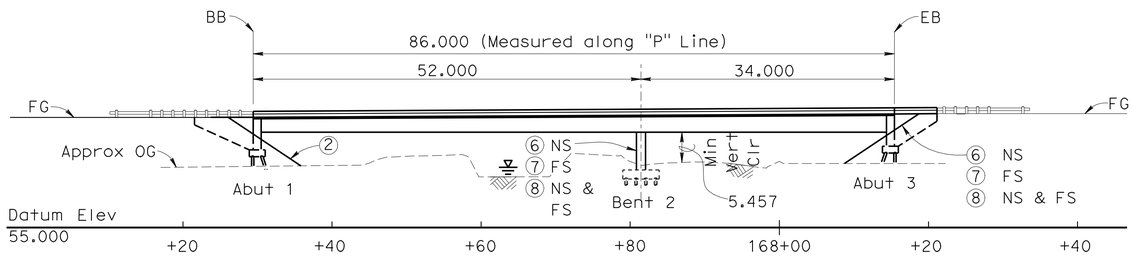

ELEVATION
1:400

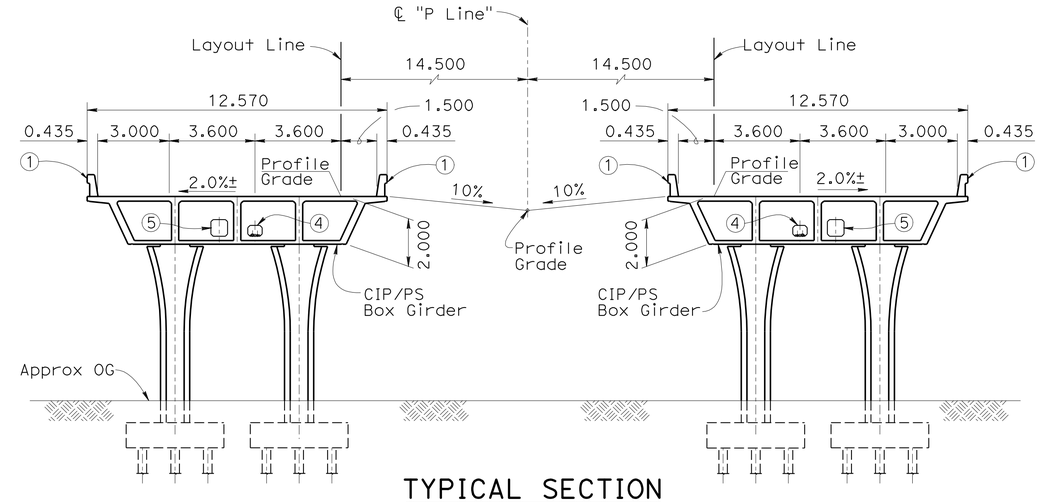

TYPICAL SECTION
1:125

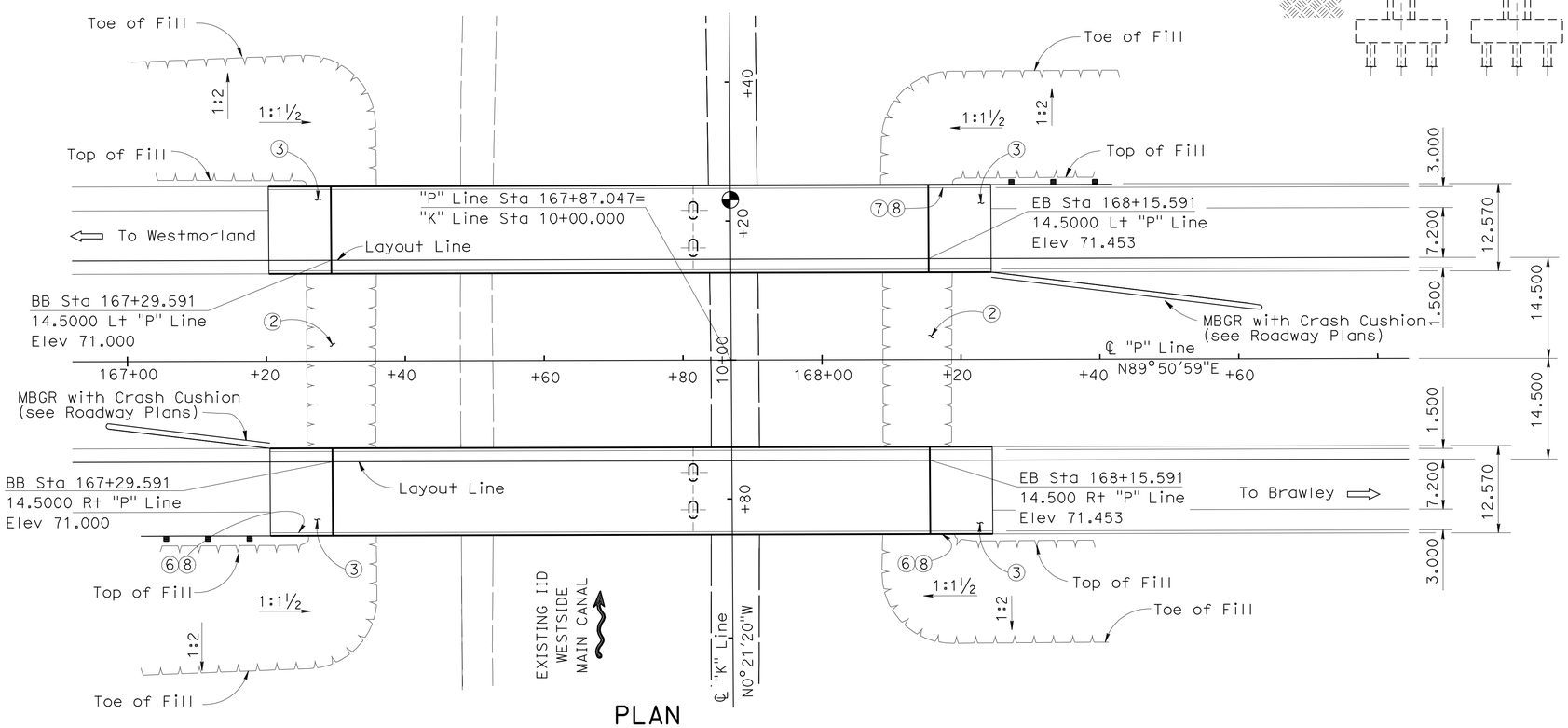

PLAN
1:400

LEGEND

1. Concrete Barrier Type 732
2. Slope Paving - Full Slope
3. Structure Approach Type N(9S)
4. NPS 3 supply line with 50 mm sprinkler control conduit
5. Future utility opening and 610mm Welded Steel Pipe Casing (6mm thick)
6. Paint BR No. "58-0344R"
7. Paint BR No. "58-0344L"
8. Paint "Kalin Road UC"

◐ Denotes Point of Minimum Vertical Clearance

QUANTITIES

STRUCTURE EXCAVATION (BRIDGE)	460	m3
STRUCTURE EXCAVATION (TYPE D)	125	m3
STRUCTURE BACKFILL (BRIDGE)	385	m3
NPS 3 SUPPLY LINE (BRIDGE)	210	m
FURNISH PILING (CLASS 625) (ALTERNATIVE X)	866	m
DRIVE PILE (CLASS 625) (ALTERNATIVE X)	32	EA
FURNISH PILING (CLASS 900) (ALTERNATIVE X)	1890	m
DRIVE PILE (CLASS 900) (ALTERNATIVE X)	80	EA
PRESTRESSING CAST-IN-PLACE CONCRETE	LUMP SUM	
STRUCTURAL CONCRETE, BRIDGE FOOTING	155	m3
STRUCTURAL CONCRETE, BRIDGE	1490	m3
STRUCTURAL CONCRETE, APPROACH SLAB (TYPE N)	135	m3
JOINT SEAL ASSEMBLY (MR 60 MM)	26	m
JOINT SEAL (MR 40 MM)	26	m
BAR REINFORCING STEEL (BRIDGE)	238 000	kg
PREFABRICATED VERTICAL DRAIN	147 000	m
600 MM WELDED STEEL PIPE CASING (BRIDGE)	50	m
SLOPE PAVING (CONCRETE)	105	m3
CONCRETE BARRIER (TYPE 732)	416	m
SPRINKLER CONTROL CONDUIT (BRIDGE)	210	m

Caltrans Metric

ALL DIMENSIONS ARE IN METERS UNLESS OTHERWISE SHOWN

ORIGINAL SCALE IN MILLIMETERS FOR REDUCED PLANS 0 10 20 30 40 50 60 70 80 90 100

	BY	CHECKED
DESIGN	D. BALBAS/M. RAHMAN	WEI-KUNG HSIA
DETAILS	HECTOR INIGUEZ	WEI-KUNG HSIA
QUANTITIES	CESAR SANCHEZ	MAMUNUR RAHMAN

STATE OF CALIFORNIA
DEPARTMENT OF TRANSPORTATION

DIVISION OF ENGINEERING SERVICES
STRUCTURE DESIGN
DESIGN BRANCH 19

CU 11278
EA 167891

BRIDGE NO. 58-0344 R/L
KILOMETER POST KP 15.61

KALIN ROAD UC
GENERAL PLAN

DISREGARD PRINTS BEARING EARLIER REVISION DATES

REVISION DATES: 7-11-08 | 7-28-08 | 01-26-09 | 04-14-09 | 04-16-09 | 05-06-09 | 08-20-09 | 10-07-09 | 11-05-09 | 12-09-09

SHEET 1 OF 22

FILE => 58-0344r1-a-gp01.dgn

STRUCTURES DESIGN DETAIL SHEET (METRIC) (REV.03-17-04)

USERNAME => trlenard DATE PLOTTED => 22-APR-2010 TIME PLOTTED => 11:27

DIST	COUNTY	ROUTE	KILOMETER POST TOTAL PROJECT	SHEET No	TOTAL SHEETS
11	Imp	78,86	R14.6/R19.5, 38.3/39.1	305	325

REGISTERED CIVIL ENGINEER 08/20/09 DATE

4-19-10
PLANS APPROVAL DATE

REGISTERED PROFESSIONAL ENGINEER MAMUNUR RAHMAN No. C48515 Exp. 6/30/10 CIVIL STATE OF CALIFORNIA

The State of California or its officers or agents shall not be responsible for the accuracy or completeness of electronic copies of this plan sheet.

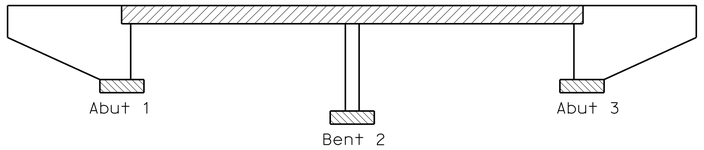

Structural Concrete, Bridge
Structural Concrete, Bridge Footing
Structural Concrete, Bridge (f'c = 28 Mpa @ 28 days)

CONCRETE STRENGTH AND TYPE LIMITS

NO SCALE

GENERAL NOTES - LOAD AND RESISTANCE FACTOR DESIGN

DESIGN: AASHTO LRFD BRIDGE SPECIFICATIONS 3RD EDITION WITH 2006 INTERIMS AND CALTRANS AMEDMENTS v.3.06.01

SEISMIC DESIGN: Caltrans Seismic Design Criteria (SDC). Version 1.4 June 2006

DEAD LOAD: Includes 1675 Pa for future wearing surface.

LIVE LOADING: HL-93 Design Truck and Tandem, and P15 long deck Permit design load.

SEISMIC LOADING: SDC Figure B.8
Soil Type D, Magnitude 7.25±
Rock Peak Accelaration = 0.6g

REINFORCED CONCRETE: ASTM A706
f_y = 420 MPa
f'_c = See "Concrete Strength and Type Limits"

PRESTRESSED CONCRETE: See "Prestressing Notes" on "Girder Layout" sheet

INDEX TO PLANS

SHEET NO.	TITLE
1	GENERAL PLAN
2	INDEX TO PLANS
3	DECK CONTOURS
4	FOUNDATION PLAN
5	FOUNDATION TREATMENT PLAN
6	FOUNDATION TREATMENT DETAILS
7	ABUTMENT LAYOUT
8	ABUTMENT DETAILS NO.1
9	ABUTMENT DETAILS NO.2
10	BENT LAYOUT
11	BENT DETAILS
12	TYPICAL SECTION
13	GIRDER LAYOUT
14	GIRDER REINFORCEMENT
15	STRUCTURE APPROACH TYPE N(9S)
16	JOINT SEAL ASSEMBLY(MAXIMUM MOVEMENT RATING = 100 mm)
17	STRUCTURE APPROACH DRAINAGE DETAILS
18	SLOPE PAVING - FULL SLOPE
19	LOG OF TEST BORINGS 1 OF 4
20	LOG OF TEST BORINGS 2 OF 4
21	LOG OF TEST BORINGS 3 OF 4
22	LOG OF TEST BORINGS 4 OF 4

STANDARD PLANS DATED JULY 2004

	A10A	ACRONYMS AND ABBREVIATIONS (A-L)
	A10B	ACRONYMS AND ABBREVIATIONS (M-Z)
	A10C	SYMBOLS (SHEET 1 OF 2)
	A10D	SYMBOLS (SHEET 2 OF 2)
	A62C	LIMITS OF PAYMENT FOR EXCAVATION AND BACKFILL BRIDGE
	B0-1	BRIDGE DETAILS
	B0-5	BRIDGE DETAILS
	B0-13	BRIDGE DETAILS
	B2-5	PILE DETAILS CLASS 400 AND CLASS 625
RSP	B6-21	JOINT SEALS (MAXIMUM MOVEMENT RATING = 50 MM)
	B7-1	BOX GIRDER DETAILS
	B7-10	UTILITY OPENING BOX GIRDER
RSP	B8-5	CAST-IN-PLACE PRESTRESSED GIRDER DETAILS
	B11-55	CONCRETE BARRIER TYPE 732
	B14-3	COMMUNICATION AND SPRINKLER CONTROL CONDUITS (CONDUIT LESS THAN SIZE 103)
	B14-4	WATER SUPPLY LINE (BRIDGE) (PIPE SIZE LESS THAN NPS 4)
	B14-5	WATER SUPPLY LINE (DETAILS) (PIPE SIZES LESS THAN NPS 4)
	ES-9B	ELECTRICAL SYSTEMS (ELECTRICAL DETAILS STRUCTURE INSTALLATIONS)

STANDARD PLAN SHEET NO.
DETAIL NO.

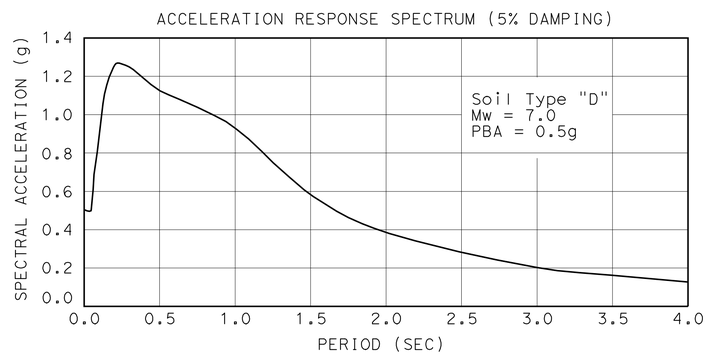

ARS CURVE

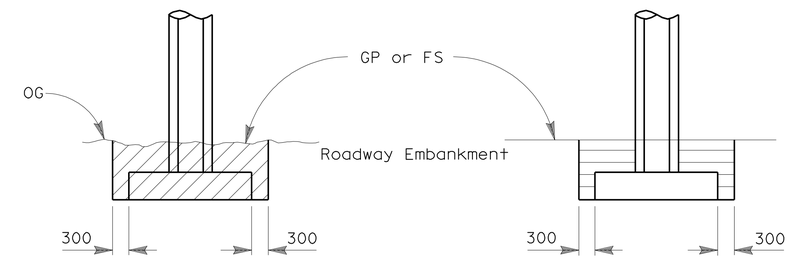

LEGEND
Structure Excavation
Structure Backfill

LIMITS OF STRUCTURE EXCAVATION TYPE "D" AND STRUCTURE BACKFILL BENT 2 ONLY

No Scale

PILE DATA TABLE

LOCATION	PILE TYPE	NOMINAL RESISTANCE COMPRESSION	NOMINAL RESISTANCE TENSION	DESIGN TIP ELEVATION	SPECIFIED TIP ELEVATION	NOMINAL DRIVING RESISTANCE
Abut 1	*Class 900 Alt "X"	1350 kN	0	39.95 m (a)	39.95 m	1350 kN
Bent 2	*Class 900 Alt "X"	1600 kN	0	39.95 m (a)	39.95 m	1600 kN
Abut 3	*Class 625 Alt "X"	950 kN	0	39.95 m (a)	39.95 m	950 kN

Notes:
Design Tip Elevations are controlled by: (a) Compression
* from 2004 Standard Plans

Caltrans Metric

	BY	CHECKED
DESIGN	D. BALBAS / M.RAHMAN	WEI-KUNG HSIA
DETAILS	HECTOR INIGUEZ	WEI-KUNG HSIA
QUANTITIES	CESAR SANCHEZ	MAMUNUR RAHMAN

STATE OF CALIFORNIA
DEPARTMENT OF TRANSPORTATION

DIVISION OF ENGINEERING SERVICES
STRUCTURE DESIGN
DESIGN BRANCH 19

BRIDGE NO. 58-0344 R/L
KILOMETER POST KP 15.61

KALIN ROAD UC
INDEX TO PLANS

ALL DIMENSIONS ARE IN MILLIMETERS UNLESS OTHERWISE SHOWN

ORIGINAL SCALE IN MILLIMETERS FOR REDUCED PLANS 0 10 20 30 40 50 60 70 80 90 100

CU 11278
EA 167891

DISREGARD PRINTS BEARING EARLIER REVISION DATES

REVISION DATES: 7-22-08 1-26-09 01-28-09 04-16-09 04-28-09 05-06-09 05-29-09 07-09-09 08-28-09 11-05-09

SHEET 2 OF 22

FILE => 58-0344rl-g-itp.dgn

STRUCTURES DESIGN DETAIL SHEET (METRIC) (REV.03-17-04)

USERNAME => trienard DATE PLOTTED => 22-APR-2010 TIME PLOTTED => 11:27

DIST	COUNTY	ROUTE	KILOMETER POST TOTAL PROJECT	SHEET No	TOTAL SHEETS
11	Imp	78,86	R14.6/R19.5, 38.3/39.1	306	325

REGISTERED CIVIL ENGINEER 08/20/09 DATE

4-19-10
PLANS APPROVAL DATE

REGISTERED PROFESSIONAL ENGINEER MAMUNUR RAHMAN No. C48515 Exp. 6/30/10 CIVIL STATE OF CALIFORNIA

The State of California or its officers or agents shall not be responsible for the accuracy or completeness of electronic copies of this plan sheet.

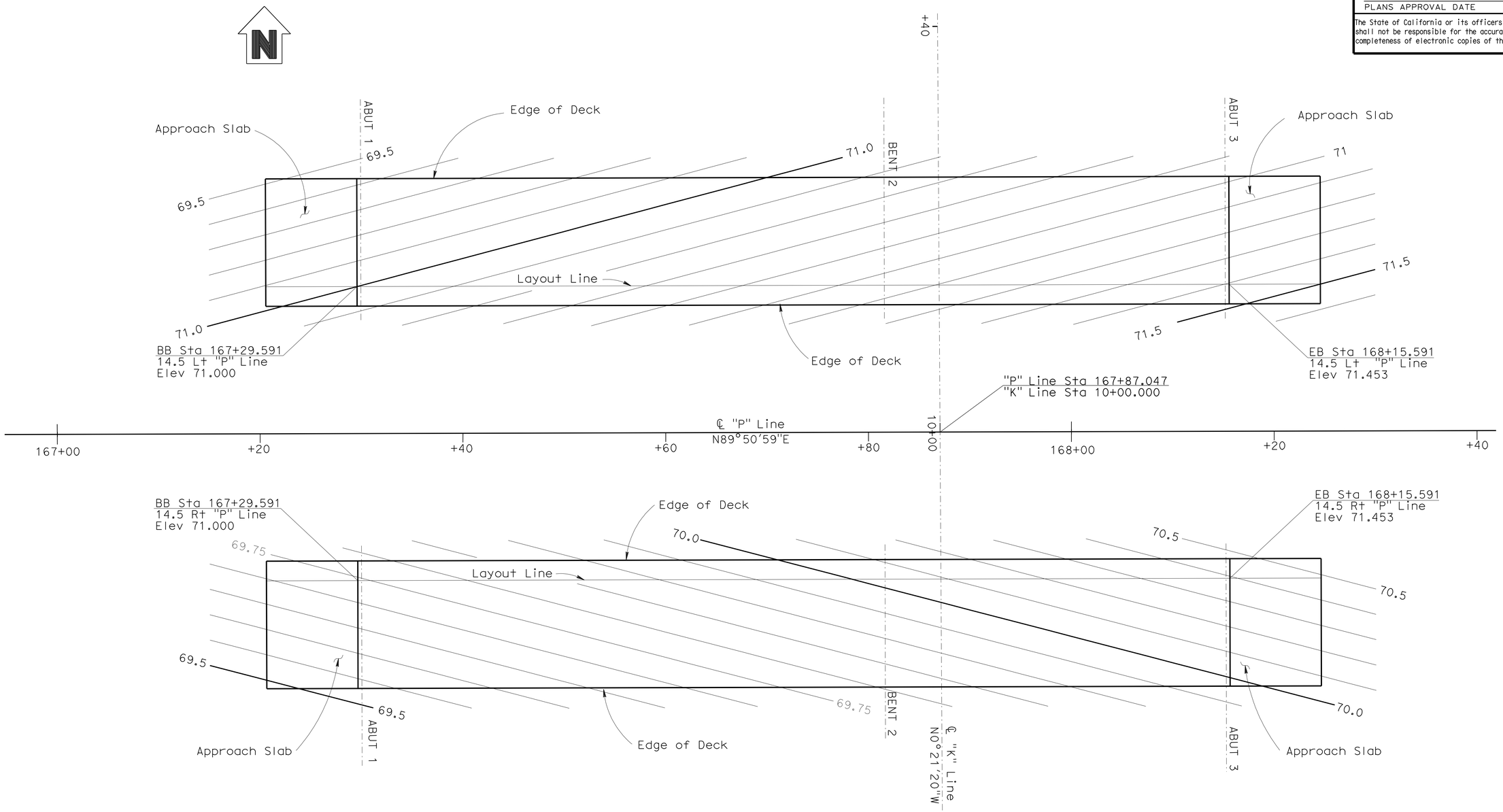

PLAN
1:200

NOTES:

1. Contours do not include camber
2. Contour interval is 0.05 m

DESIGN	BY D. BALBAS / M. RAHMAN	CHECKED WEI-KUNG HSIA	
DETAILS	BY HECTOR INIGUEZ	CHECKED WEI-KUNG HSIZ	
QUANTITIES	BY CESAR SANCHEZ	CHECKED MAMUNUR RAHMAN	

STATE OF CALIFORNIA
DEPARTMENT OF TRANSPORTATION

DIVISION OF ENGINEERING SERVICES
STRUCTURE DESIGN
DESIGN BRANCH 19

CU 11278
EA 167891

BRIDGE NO. 58-0344 R/L
KILOMETER POST KP 15.61

KALIN ROAD UC
DECK CONTOURS

ALL DIMENSIONS ARE IN METERS UNLESS OTHERWISE SHOWN

ORIGINAL SCALE IN MILLIMETERS FOR REDUCED PLANS 0 10 20 30 40 50 60 70 80 90 100

DISREGARD PRINTS BEARING EARLIER REVISION DATES

REVISION DATES: 7-22-08 7-22-08 01-26-09 04-14-09 05-06-09 05-29-09 08-20-09 10-08-09 11-04-09

SHEET 3 OF 22

STRUCTURES DESIGN DETAIL SHEET (METRIC) (REV.03-17-04)

FILE => 58-0344r1-d-dc.dgn

USERNAME => trlenard DATE PLOTTED => 22-APR-2010 TIME PLOTTED => 11:27

DIST	COUNTY	ROUTE	KILOMETER POST TOTAL PROJECT	SHEET No	TOTAL SHEETS
11	Imp	78,86	R14.6/R19.5, 38.3/39.1	307	325

Caltrans Metric

REGISTERED CIVIL ENGINEER 08/20/09 DATE

4-19-10
PLANS APPROVAL DATE

REGISTERED PROFESSIONAL ENGINEER MAMUNUR RAHMAN No. C48515 Exp. 6/30/10 CIVIL STATE OF CALIFORNIA

The State of California or its officers or agents shall not be responsible for the accuracy or completeness of electronic copies of this plan sheet.

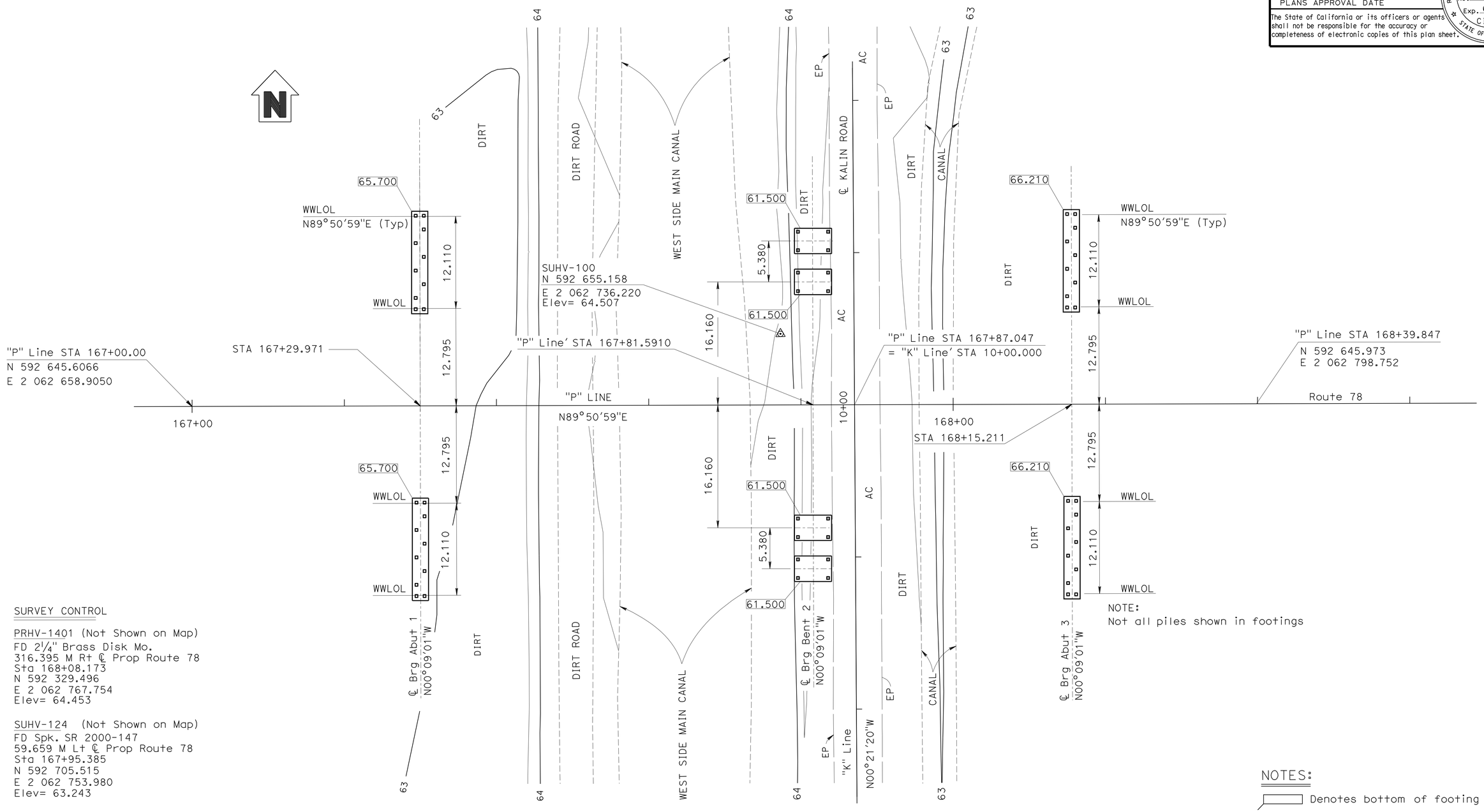

NOTE:
Not all piles shown in footings

SURVEY CONTROL

PRHV-1401 (Not Shown on Map)
FD 2¼" Brass Disk Mo.
316.395 M Rt ℄ Prop Route 78
Sta 168+08.173
N 592 329.496
E 2 062 767.754
Elev= 64.453

SUHV-124 (Not Shown on Map)
FD Spk. SR 2000-147
59.659 M Lt ℄ Prop Route 78
Sta 167+95.385
N 592 705.515
E 2 062 753.980
Elev= 63.243

NOTES:

Denotes bottom of footing elevation

ALL DIMENSIONS ARE IN METERS UNLESS OTHERWISE SHOWN

PRELIMINARY INVESTIGATION SECTION

SCALE	VERT. DATUM NAVD88	PHOTOGRAMMETRY AS OF:			
1:250	HORZ. DATUM NAD 83 (1991.35)	SURVEYED	BY T.PHUNG 4/2007	DRAFTED	BY C.STEWART 4/2007
ALIGNMENT TIES	DIST. TRAV. SHEETS	FIELD CHECKED	BY V.PHAM 5/2007	CHECKED	BY S.ALIVIO 5/2007

STRUCTURES FOUNDATION PLAN SHEET (METRIC) (REV.12-1-01)

	BY	CHECKED
DESIGN	D. BALBAS / M.RAHMAN	WEI-KUNG HSIA
DETAILS	HECTOR INIGUEZ	WEI-KUNG HSIA
QUANTITIES	CESAR SANCHEZ	M. RAHMAN

STATE OF CALIFORNIA
DEPARTMENT OF TRANSPORTATION

DIVISION OF STRUCTURES
STRUCTURE DESIGN 19

CU 11278
EA 167891

BRIDGE NO. 58-0344 R/L
KILOMETER POST KP 15.61

KALIN ROAD UC
FOUNDATION PLAN

ORIGINAL SCALE IN MILLIMETERS FOR REDUCED PLANS 0 10 20 30 40 50 60 70 80 90 100

DISREGARD PRINTS BEARING EARLIER REVISION DATES

REVISION DATES (PRELIMINARY STAGE ONLY): 1-22-08 7-28-08 01-26-09 04-16-09 04-28-09 05-06-09 08-28-09 10-07-09 11-05-09

SHEET 4 OF 22

FILE => 58-0344r1-e-fd_pl01.dgn

USERNAME => friehard DATE PLOTTED => 22-APR-2010 TIME PLOTTED => 11:27

DIST	COUNTY	ROUTE	KILOMETER POST TOTAL PROJECT	SHEET No	TOTAL SHEETS
11	Imp	78,86	R14.6/R19.5, 38.3/39.1	308	325

08/20/09
REGISTERED CIVIL ENGINEER DATE

4-19-10
PLANS APPROVAL DATE

REGISTERED PROFESSIONAL ENGINEER
MAMUNUR RAHMAN
No. C48515
Exp. 6/30/10
CIVIL
STATE OF CALIFORNIA

The State of California or its officers or agents shall not be responsible for the accuracy or completeness of electronic copies of this plan sheet.

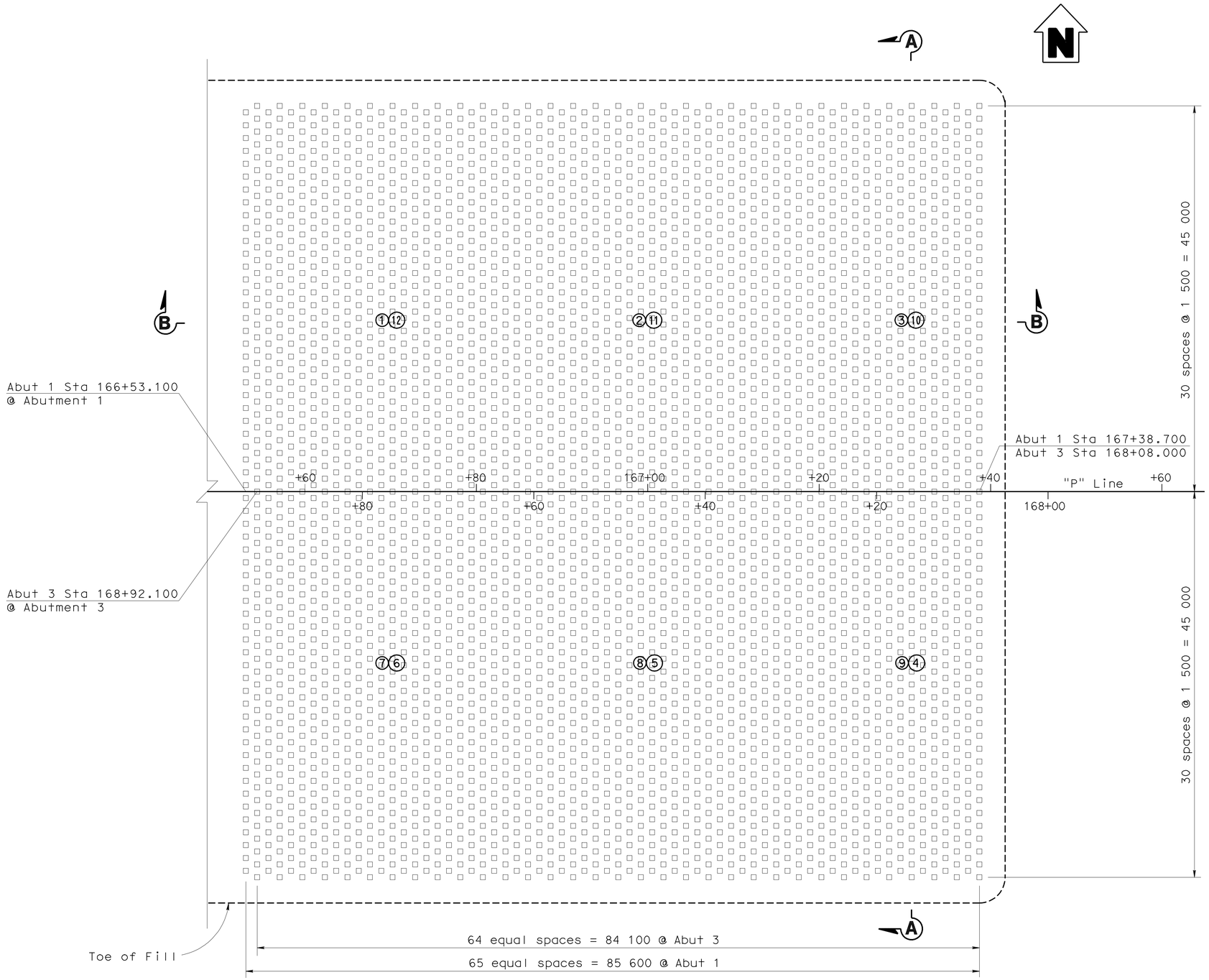

PLAN
1:250

NOTES

1. For ground surface contours, alignment data, and bench marks, see the "Foundation Plan".
2. Both Abutments shown. Note Stationing sequence.
3. For section A-A & B-B see "Foundation Treatment Details" sheet.

LEGEND

□ Denotes location, not actual size, of prefabricated vertical drain.

(X) Denotes settlement platform location.

SETTLEMENT PLATFORM NO.	SETTLEMENT PLATFORM TABLE	
	LOCATION	ABUTMENT
1	20.0 m LT "P" Line 166+69.000	1
2	20.0 m LT "P" Line 166+99.000	1
3	20.0 m LT "P" Line 167+29.590	1
7	20.0 m RT "P" Line 166+69.000	1
8	20.0 m RT "P" Line 166+99.000	1
9	20.0 m RT "P" Line 167+29.590	1
4	20.0 m LT "P" Line 168+15.590	3
5	20.0 m LT "P" Line 168+46.000	3
6	20.0 m LT "P" Line 168+76.000	3
10	20.0 m RT "P" Line 168+15.590	3
11	20.0 m RT "P" Line 168+46.000	3
12	20.0 m RT "P" Line 168+76.000	3

LOCATION	STATION	BOTTOM OF WICK DRAIN ELEVATION
Abutment 1 Approach fill Left and Right Bridge	Sta 166+53.100 To Sta 166+68.400	52.2m
Abutment 1 Approach fill Left and Right Bridge	Sta 166+68.400 To Sta 166+83.600	46.4m
Abutment 1 Approach fill Left and Right Bridge	Sta 166+83.600 To Sta 167+38.700	42.1m
Abutment 3 Approach fill Left and Right Bridge	Sta 168+08.000 To Sta 168+61.600	42.1m
Abutment 3 Approach fill Left and Right Bridge	Sta 168+61.600 To Sta 168+76.800	46.4m
Abutment 3 Approach fill Left and Right Bridge	Sta 168+76.800 To Sta 168+92.100	52.2m

Caltrans Metric

	BY	CHECKED
DESIGN	B. BALBAS / M. RAHMAN	WEI-KUNG HSIA
DETAILS	HECTOR INIGUEZ	WEI-KUNG HSIA
QUANTITIES	CESAR SANCHEZ	MAMUNUR RAHMAN

STATE OF CALIFORNIA
DEPARTMENT OF TRANSPORTATION

DIVISION OF ENGINEERING SERVICES
STRUCTURE DESIGN
DESIGN BRANCH 19

BRIDGE NO. 58-0344 R/L
KILOMETER POST KP 15.61

KALIN ROAD UC
FOUNDATION TREATMENT PLAN

ALL DIMENSIONS ARE IN MILLIMETERS UNLESS OTHERWISE SHOWN

ORIGINAL SCALE IN MILLIMETERS FOR REDUCED PLANS 0 10 20 30 40 50 60 70 80 90 100

CU 11278
EA 167891

DISREGARD PRINTS BEARING EARLIER REVISION DATES

REVISION DATES: 7-22-08 8-22-08 01-28-09 04-16-09 05-28-09 08-20-09

SHEET 5 OF 22

FILE => 58-0344ri-e-fd_trmt01.dgn

STRUCTURES DESIGN DETAIL SHEET (METRIC) (REV.03-17-04)

USERNAME => friehard DATE PLOTTED => 22-APR-2010 TIME PLOTTED => 11:27

DIST	COUNTY	ROUTE	KILOMETER POST TOTAL PROJECT	SHEET No	TOTAL SHEETS
11	Imp	78,86	R14.6/R19.5, 38.3/39.1	309	325

08/20/09
REGISTERED CIVIL ENGINEER DATE

4-19-10
PLANS APPROVAL DATE

REGISTERED PROFESSIONAL ENGINEER
MAMUNUR RAHMAN
No. C48515
Exp. 6/30/10
CIVIL
STATE OF CALIFORNIA

The State of California or its officers or agents shall not be responsible for the accuracy or completeness of electronic copies of this plan sheet.

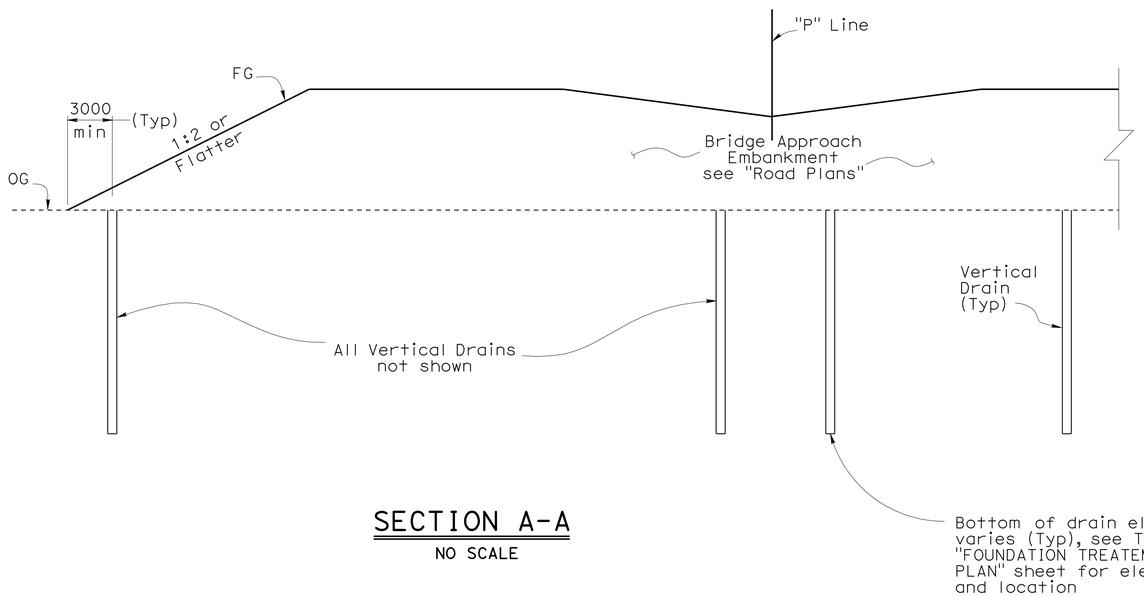

SECTION A-A
NO SCALE

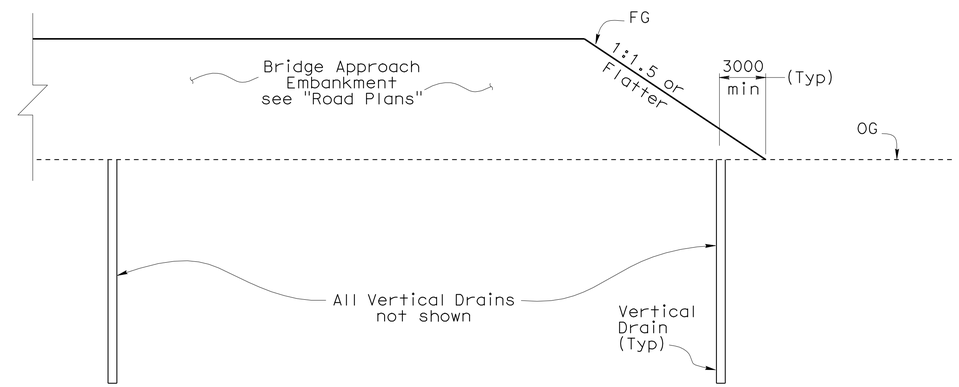

SECTION B-B
NO SCALE

NOTES:

1. For location of section A-A & B-B see "Foundation Treatment Plan".
2. Roadway cross section is approximate.
3. Abutment piling not shown.
4. Drainage wicks shall be cut off at OG.

Caltrans Metric

	BY	CHECKED
DESIGN	D. BALBAS / M. RAHMAN	WEI-KUNG HSIA
DETAILS	HECTOR INIGUEZ	WEI-KUNG HSIA
QUANTITIES	CESAR SANCHEZ	MAMUNUR RAHMAN

ALL DIMENSIONS ARE IN MILLIMETERS UNLESS OTHERWISE SHOWN

ORIGINAL SCALE IN MILLIMETERS FOR REDUCED PLANS 0 10 20 30 40 50 60 70 80 90 100

STATE OF CALIFORNIA
DEPARTMENT OF TRANSPORTATION

DIVISION OF ENGINEERING SERVICES
STRUCTURE DESIGN
DESIGN BRANCH 19

CU 11278
EA 167891

BRIDGE NO. 58-0344 R/L
KILOMETER POST KP 15.61

KALIN ROAD UC
FOUNDATION TREATMENT DETAILS

DISREGARD PRINTS BEARING EARLIER REVISION DATES

REVISION DATES: 7-22-08, 08-27-08, 01-29-09, 04-16-09, 05-29-09, 07-09-09, 08-20-09

SHEET 6 OF 22

FILE => 58-0344ri-e-fd_trmt_dt01.dgn

STRUCTURES DESIGN DETAIL SHEET (METRIC) (REV.03-17-04)

USERNAME => trleonard DATE PLOTTED => 22-APR-2010 TIME PLOTTED => 11:27

DIST	COUNTY	ROUTE	KILOMETER POST TOTAL PROJECT	SHEET No	TOTAL SHEETS
11	Imp	78,86	R14.6/R19.5, 38.3/39.1	310	325

REGISTERED CIVIL ENGINEER 08/20/09 DATE

4-19-10
PLANS APPROVAL DATE

REGISTERED PROFESSIONAL ENGINEER MAMUNUR RAHMAN No. C48515 Exp. 6/30/10 CIVIL STATE OF CALIFORNIA

The State of California or its officers or agents shall not be responsible for the accuracy or completeness of electronic copies of this plan sheet.

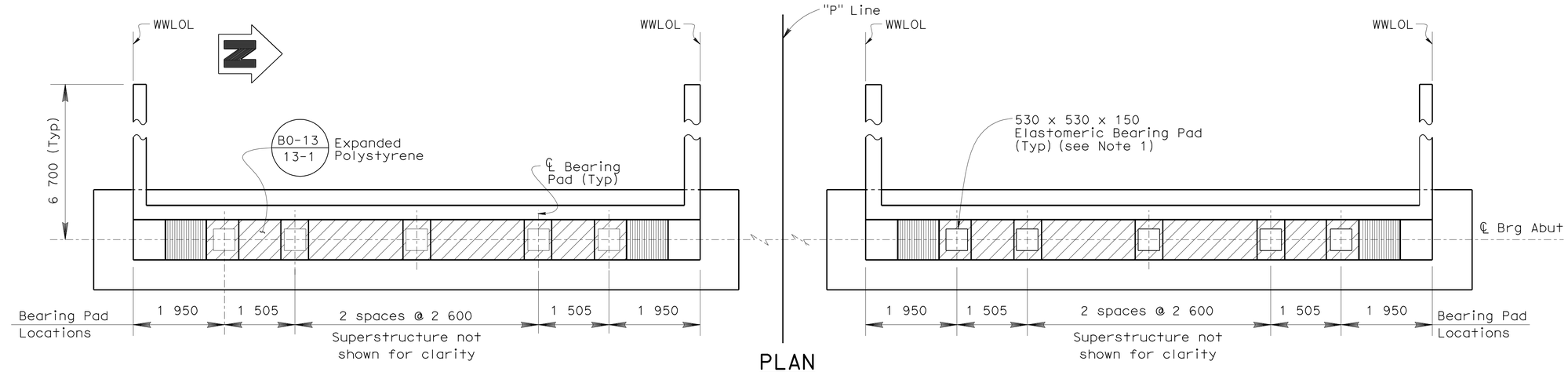

PLAN
1:50

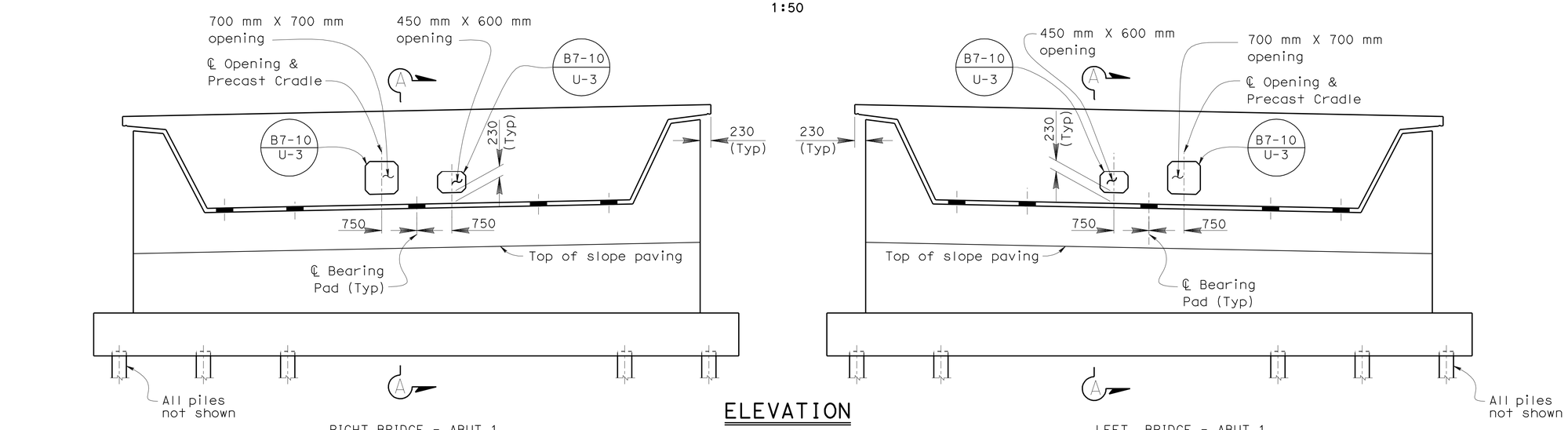

ELEVATION
1:50

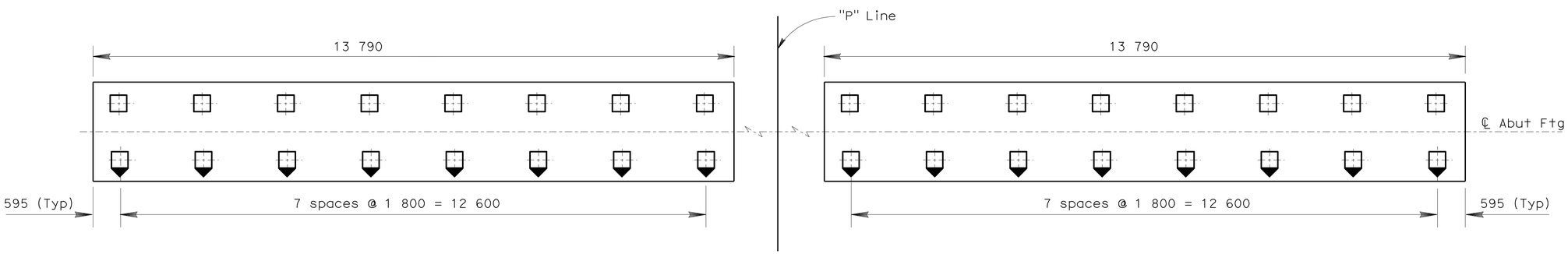

FOOTING AND PILE LAYOUT
1:50

NOTES:

1. See "Bearing Pad Detail" on "Abutment Details No. 2" Sheet
2. For Section A-A see "Abutment Details No. 2" sheet.
3. For drainage details, see "Structure Approach Drainage Details" sheet.
4. Abutment 1 shown, Abutment 3 similar

☐ Indicates Vertical Pile
▼ Indicates Battered Pile (1:3 Batter)

Caltrans Metric

	BY	CHECKED
DESIGN	D. BALBAS / M. RAHMAN	WEI-KUNG HSIA
DETAILS	HECTOR INIGUEZ	WEI-KUNG HSIA
QUANTITIES	CESAR SANCHEZ	MAMUNUR RAHMAN

STATE OF CALIFORNIA
DEPARTMENT OF TRANSPORTATION

DIVISION OF ENGINEERING SERVICES
STRUCTURE DESIGN
DESIGN BRANCH 19

BRIDGE NO. 58-0344 R/L
KILOMETER POST KP 15.61

KALIN ROAD UC
ABUTMENT LAYOUT

ALL DIMENSIONS ARE IN MILLIMETERS UNLESS OTHERWISE SHOWN

ORIGINAL SCALE IN MILLIMETERS FOR REDUCED PLANS 0 10 20 30 40 50 60 70 80 90 100

CU 11278
EA 167891

DISREGARD PRINTS BEARING EARLIER REVISION DATES

REVISION DATES: 7-22-08 | 1-29-08 | 04-08-09 | 04-16-09 | 05-06-09 | 08-20-09 | 10-09-09 | 11-05-09

SHEET 7 OF 22

FILE => 58-0344rl-f-a01_lo01.dgn

STRUCTURES DESIGN DETAIL SHEET (METRIC) (REV.03-17-04)

USERNAME => trlemard DATE PLOTTED => 22-APR-2010 TIME PLOTTED => 11:27

DIST	COUNTY	ROUTE	KILOMETER POST TOTAL PROJECT	SHEET No	TOTAL SHEETS
11	Imp	78,86	R14.6/R19.5, 38.3/39.1	311	325

REGISTERED CIVIL ENGINEER — DATE 08/20/09

4-19-10
PLANS APPROVAL DATE

REGISTERED PROFESSIONAL ENGINEER — MAMUNUR RAHMAN — No. C48515 — Exp. 6/30/10 — CIVIL — STATE OF CALIFORNIA

The State of California or its officers or agents shall not be responsible for the accuracy or completeness of electronic copies of this plan sheet.

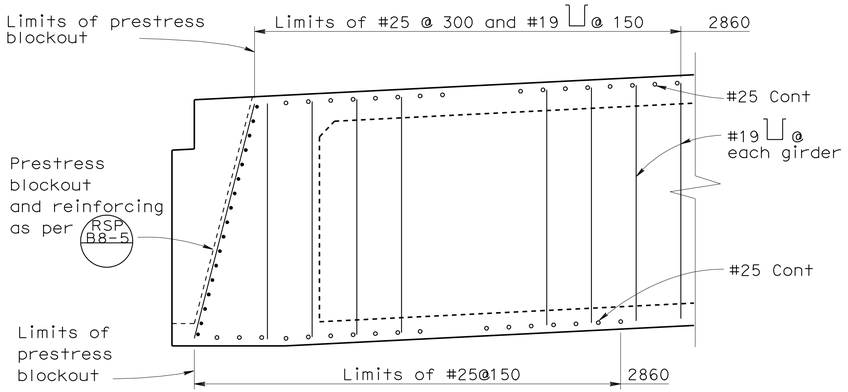

All reinforcement to be placed perpendicular to ℄ Girders
Detail Typical to all abutments

ADDITIONAL DIAPHRAGM REINFORCEMENT DETAIL

No Scale

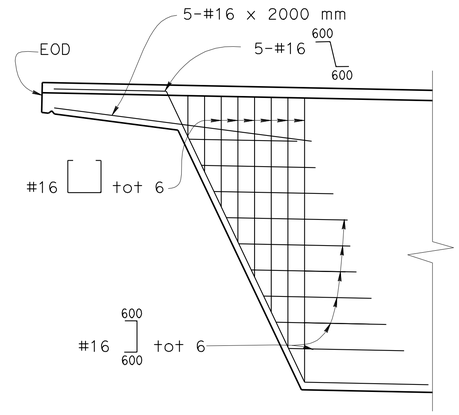

ADDITIONAL REINFORCEMENT AT END DIAPHRAGM

1:20

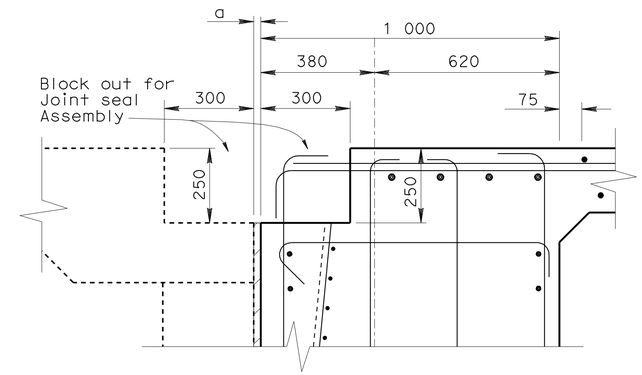

DETAIL A

1:10

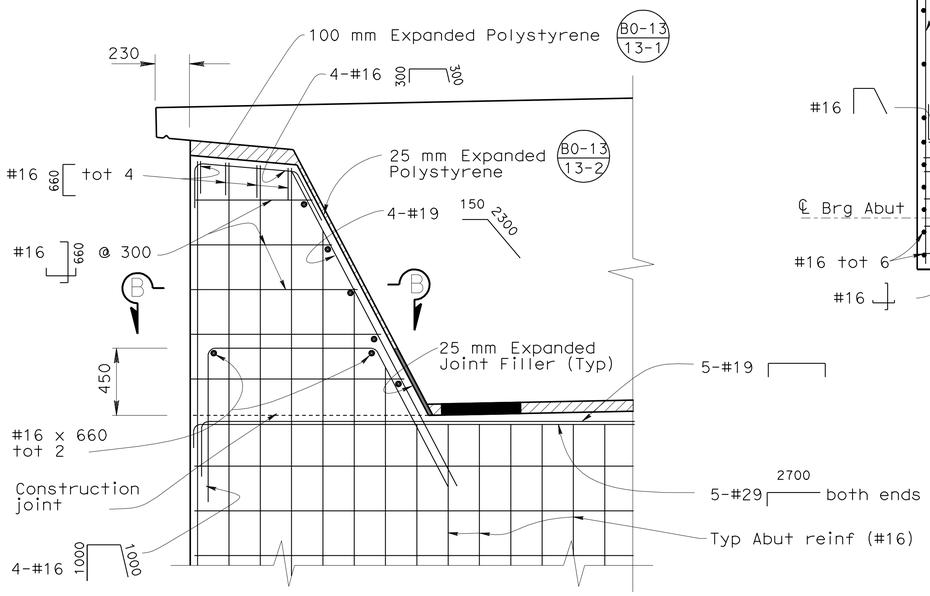

ABUTMENT REINFORECEMENT AT END DIAPHRAGM

1:20

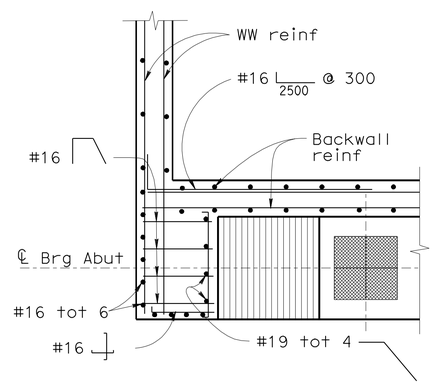

SECTION B-B

1:25

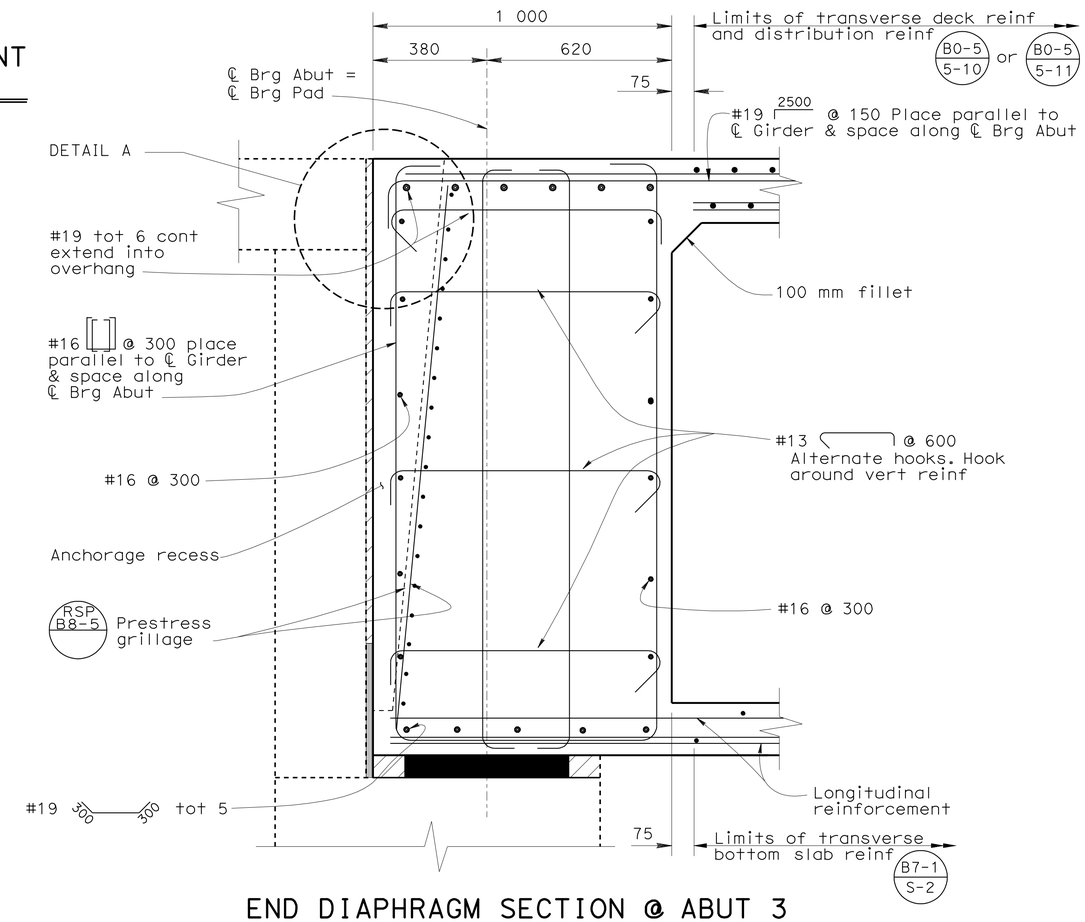

END DIAPHRAGM SECTION @ ABUT 3

(ABUT 1 SIMILAR EXCEPT FOR DETAIL A)

1:10

DESIGN	BY D. BALBAS / M. RAHMAN	CHECKED WEI-KUNG HSIA	
DETAILS	BY HECTOR INIGUEZ	CHECKED WEI-KUNG HSIA	
QUANTITIES	BY HECTOR INIGUEZ	CHECKED MAMUNUR RAHMAN	

STATE OF CALIFORNIA
DEPARTMENT OF TRANSPORTATION

DIVISION OF ENGINEERING SERVICES
STRUCTURE DESIGN
DESIGN BRANCH 19

CU 11278
EA 167891

BRIDGE NO. 58-0344 R/L
KILOMETER POST KP 15.61

KALIN ROAD UC
ABUTMENT DETAILS NO.1

ALL DIMENSIONS ARE IN MILLIMETERS UNLESS OTHERWISE SHOWN

ORIGINAL SCALE IN MILLIMETERS FOR REDUCED PLANS 0 10 20 30 40 50 60 70 80 90 100

DISREGARD PRINTS BEARING EARLIER REVISION DATES

REVISION DATES: 7-22-08 7-25-08 04-08-09 04-28-09 05-06-09 08-20-09

SHEET 8 OF 22

FILE => 58-0344r1-f-a_dt01.dgn

STRUCTURES DESIGN DETAIL SHEET (METRIC) (REV.03-17-04)

USERNAME => friehard DATE PLOTTED => 22-APR-2010 TIME PLOTTED => 13:02

DIST	COUNTY	ROUTE	KILOMETER POST TOTAL PROJECT	SHEET No	TOTAL SHEETS
11	Imp	78,86	R14.6/R19.5, 38.3/39.1	312	325

REGISTERED CIVIL ENGINEER 08/20/09 DATE

4-19-10
PLANS APPROVAL DATE

REGISTERED PROFESSIONAL ENGINEER MAMUNUR RAHMAN No. C48515 Exp. 6/30/10 CIVIL STATE OF CALIFORNIA

The State of California or its officers or agents shall not be responsible for the accuracy or completeness of electronic copies of this plan sheet.

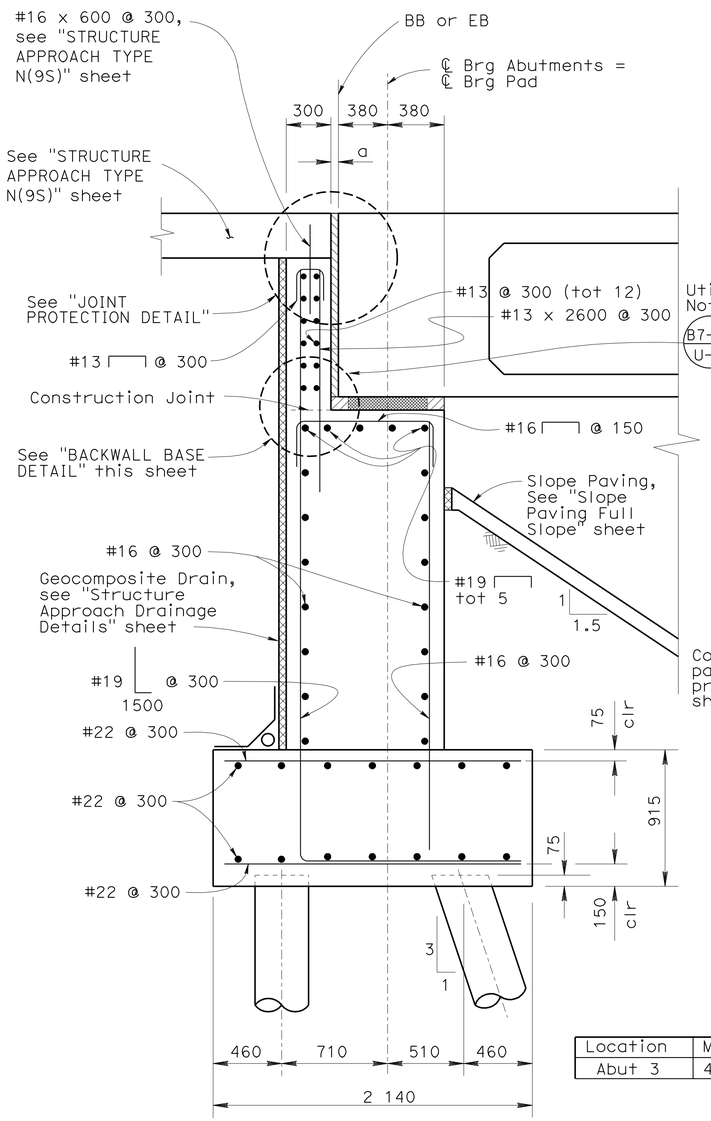

Location	MR	Type
Abut 3	40	B

SECTION A-A (shown for Abut 3)

(For Abut 1 see "JOINT SEAL ASSEMBLY" sheet)

1:20

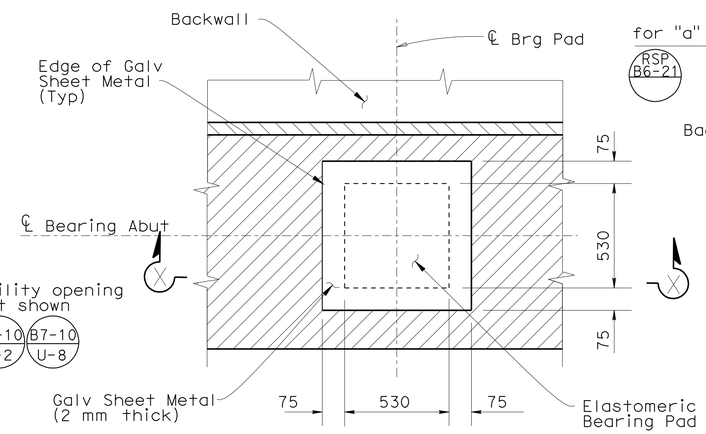

PLAN

NO SCALE

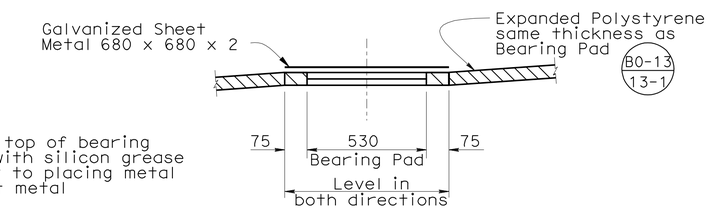

SECTION X-X BEARING PAD DETAIL

NO SCALE
(Details Typical at all bearing pads)

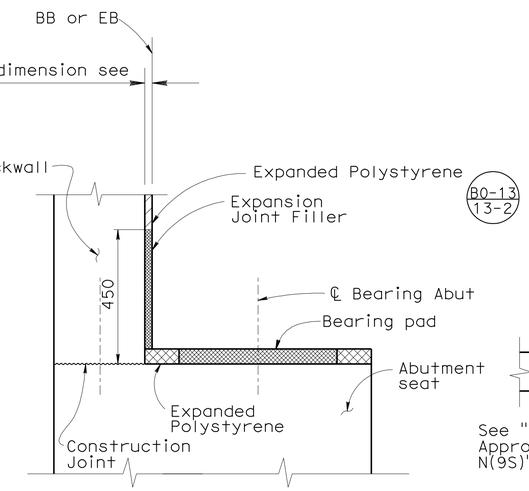

BACKWALL BASE DETAIL

1:10

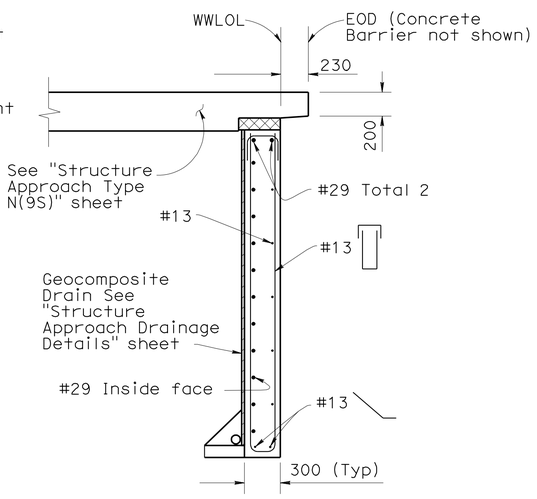

SECTION D-D

1:25

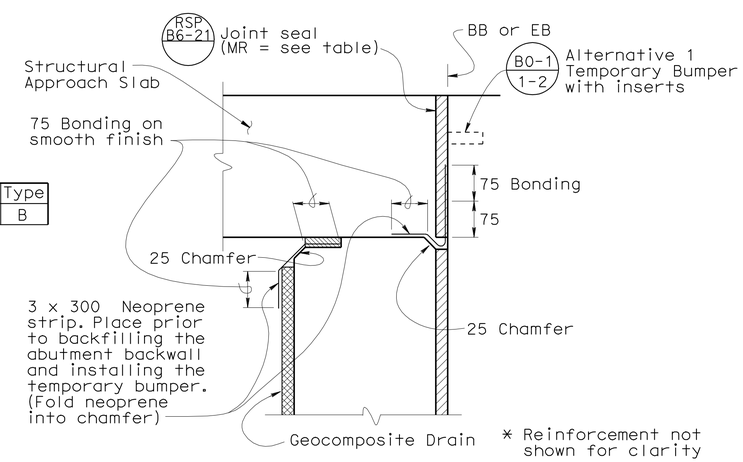

JOINT PROTECTION DETAIL

NO SCALE

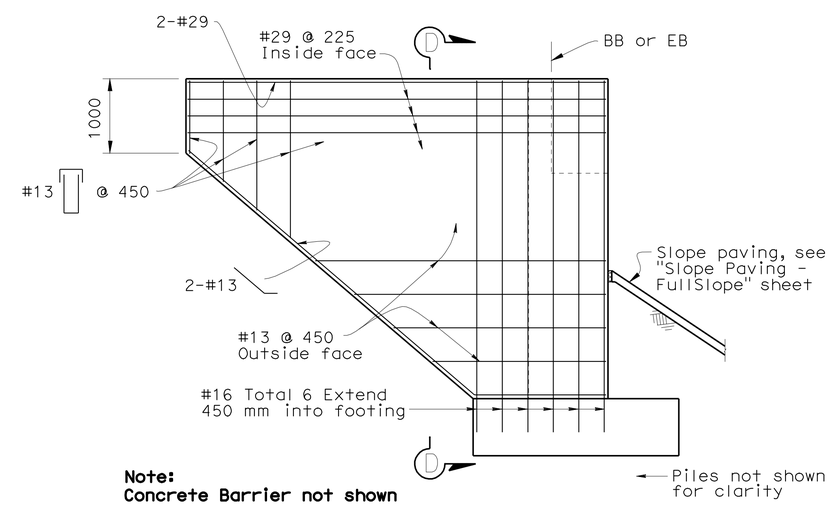

Note:
Concrete Barrier not shown

WINGWALL ELEVATION

1:40

NOTES:

1. For location of Section A-A see "ABUTMENT LAYOUT" sheet
2. For additional abutment reinforcement see "ABUTMENT DETAILS NO.1" sheet

Caltrans Metric

	BY	CHECKED
DESIGN	D. BALBAS / M. RAHMAN	WEI-KUNG HSIA
DETAILS	HECTOR INIGUEZ	WEI-KUNG HSIA
QUANTITIES	CESAR SANCHEZ	MAMUNUR RAHMAN

STATE OF CALIFORNIA
DEPARTMENT OF TRANSPORTATION

DIVISION OF ENGINEERING SERVICES
STRUCTURE DESIGN
DESIGN BRANCH 19

CU 11278
EA 167891

BRIDGE NO. 58-0344 R/L
KILOMETER POST KP 15.61

KALIN ROAD UC
ABUTMENT DETAILS NO. 2

ALL DIMENSIONS ARE IN MILLIMETERS UNLESS OTHERWISE SHOWN

ORIGINAL SCALE IN MILLIMETERS FOR REDUCED PLANS 0 10 20 30 40 50 60 70 80 90 100

DISREGARD PRINTS BEARING EARLIER REVISION DATES

REVISION DATES: 7-22-08 7-25-08 04-24-09 04-28-09 05-06-09 08-20-09

SHEET 9 OF 22

FILE => 58-0344ri-f-a_dt02.dgn

STRUCTURES DESIGN DETAIL SHEET (METRIC) (REV.03-17-04)

USERNAME => trlenard DATE PLOTTED => 22-APR-2010 TIME PLOTTED => 13:02

DIST	COUNTY	ROUTE	KILOMETER POST TOTAL PROJECT	SHEET No	TOTAL SHEETS
11	Imp	78,86	R14.6/R19.5, 38.3/39.1	313	325

REGISTERED CIVIL ENGINEER 08/20/09 DATE

4-19-10
PLANS APPROVAL DATE

REGISTERED PROFESSIONAL ENGINEER MAMUNUR RAHMAN No. C48515 Exp. 6/30/10 CIVIL STATE OF CALIFORNIA

The State of California or its officers or agents shall not be responsible for the accuracy or completeness of electronic copies of this plan sheet.

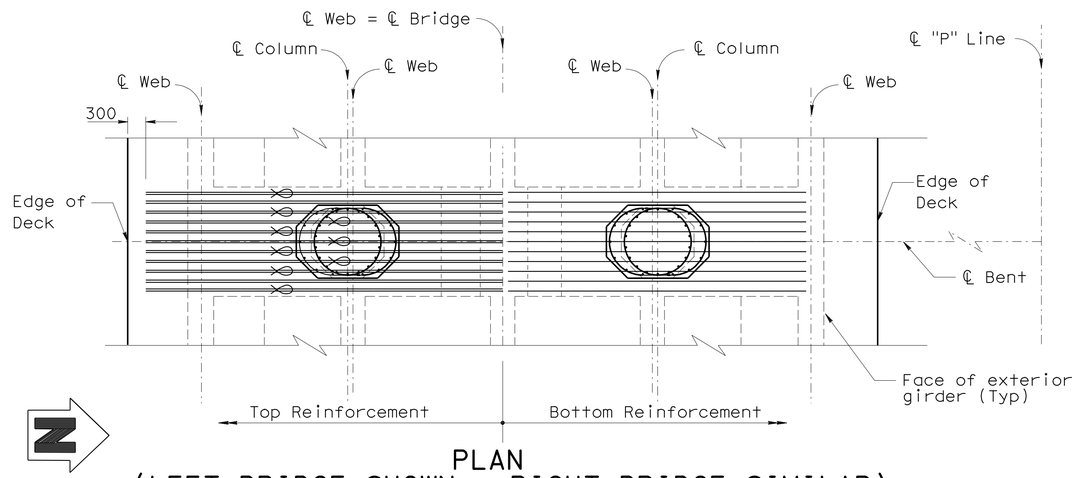

PLAN
(LEFT BRIDGE SHOWN - RIGHT BRIDGE SIMILAR)
1:50

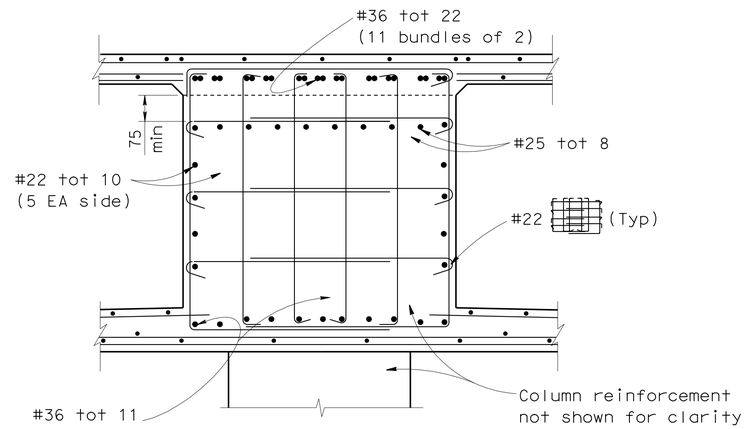

SECTION A-A
1:20

For details not shown see "Section B-B"

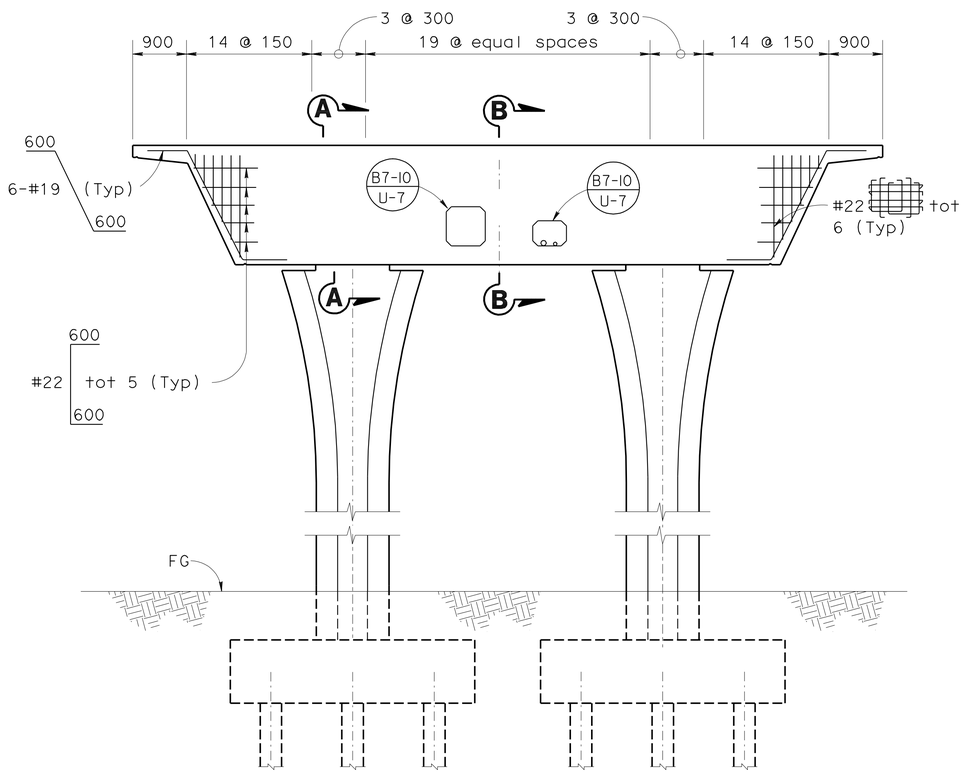

ELEVATION
1:50

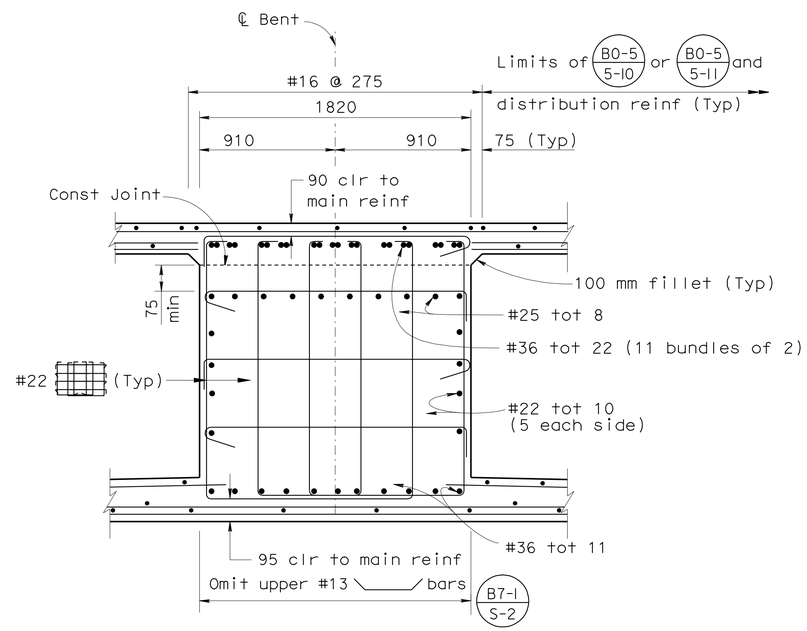

SECTION B-B
1:20

NOTES:

1. No lap or mechanical splices allowed in longitudinal cap reinforcement. Adjust to clear main column reinforcement.
2. Place stirrups parallel to ℄ girders and space along ℄ bent.
3. Reinforcement may be adjusted to clear PS ducts.
4. For column reinforcement see "Bent Details" sheet.
5. For column geometrics see "Bent Details" sheet.
6. For footing reinforcement see "Bent Details" sheet.

Typical for all 135° hooks

Denotes bundled reinforcement

Caltrans Metric

	BY	CHECKED
DESIGN	D. BALBAS / M. RAHMAN	WEI-KUNG HSIA
DETAILS	HECTOR INIGUEZ	WEI-KUNG HSIA
QUANTITIES	CESAR SANCHEZ	MAMUNUR RAHMAN

STATE OF CALIFORNIA
DEPARTMENT OF TRANSPORTATION

DIVISION OF ENGINEERING SERVICES
STRUCTURE DESIGN
DESIGN BRANCH 19

BRIDGE NO. 58-0344 R/L
KILOMETER POST KP 15.61

KALIN ROAD UC
BENT LAYOUT

ALL DIMENSIONS ARE IN MILLIMETERS UNLESS OTHERWISE SHOWN

ORIGINAL SCALE IN MILLIMETERS FOR REDUCED PLANS 0 10 20 30 40 50 60 70 80 90 100

CU 11278
EA 167891

DISREGARD PRINTS BEARING EARLIER REVISION DATES

REVISION DATES: 7-16-08 08-05-08 04-09-09 04-28-09 05-06-09 08-20-09

SHEET 10 OF 22

FILE => 58-0344r1-h-b01_b1o01.dgn

STRUCTURES DESIGN DETAIL SHEET (METRIC) (REV.03-17-04)

USERNAME => trlenard DATE PLOTTED => 22-APR-2010 TIME PLOTTED => 13:02

DIST	COUNTY	ROUTE	KILOMETER POST TOTAL PROJECT	SHEET No	TOTAL SHEETS
11	Imp	78,86	R14.6/R19.5, 38.3/39.1	314	325

REGISTERED CIVIL ENGINEER 08/20/09 DATE

4-19-10
PLANS APPROVAL DATE

REGISTERED PROFESSIONAL ENGINEER MAMUNUR RAHMAN No. C48515 Exp. 6/30/10 CIVIL STATE OF CALIFORNIA

The State of California or its officers or agents shall not be responsible for the accuracy or completeness of electronic copies of this plan sheet.

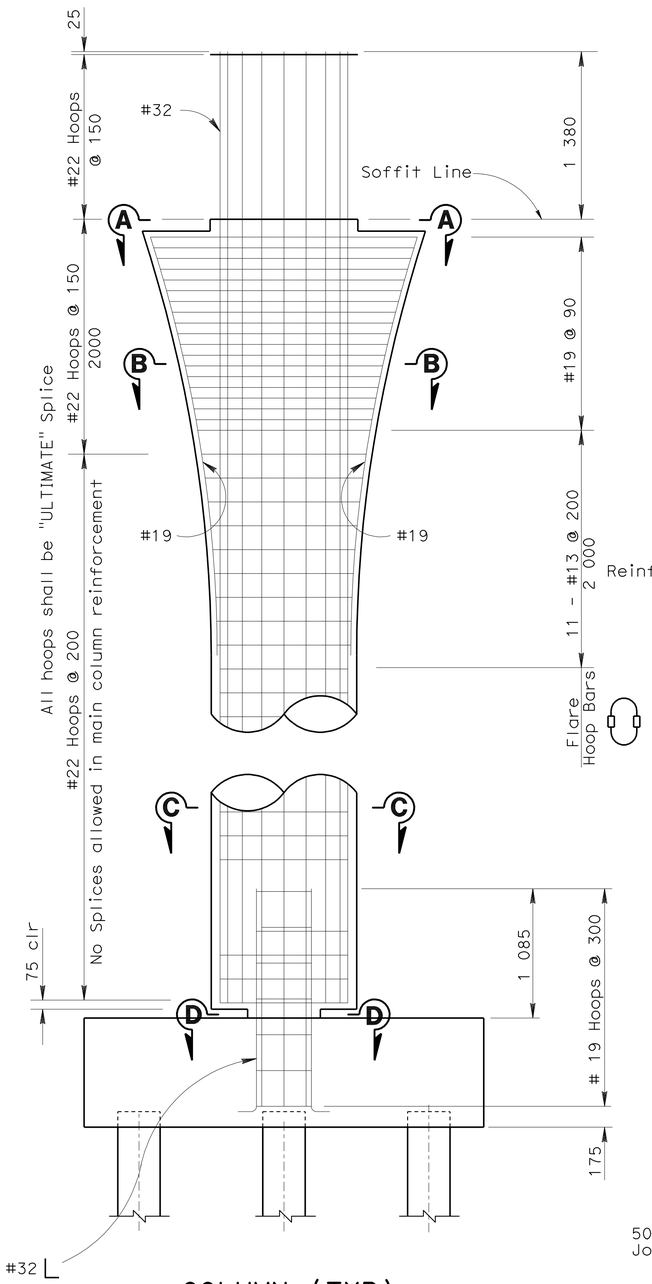

COLUMN (TYP)
1:25

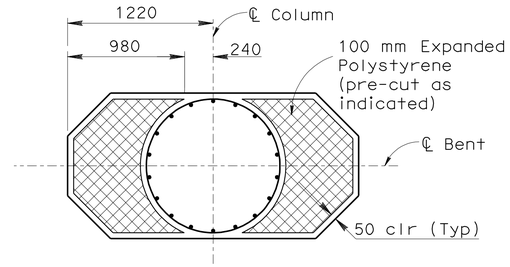

SECTION A-A
1:25

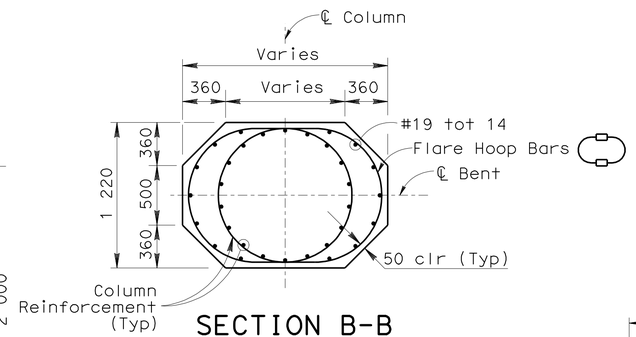

SECTION B-B
1:25

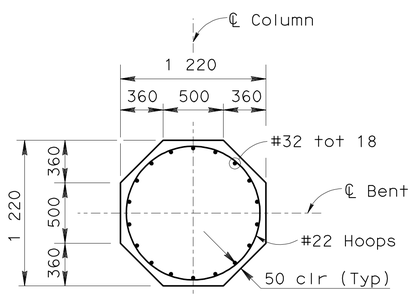

SECTION C-C
1:25

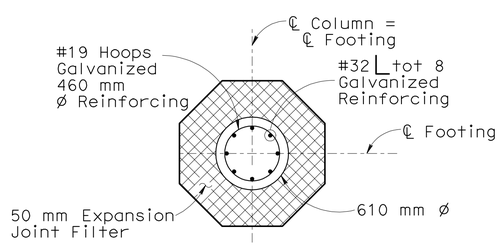

SECTION D-D
1:25

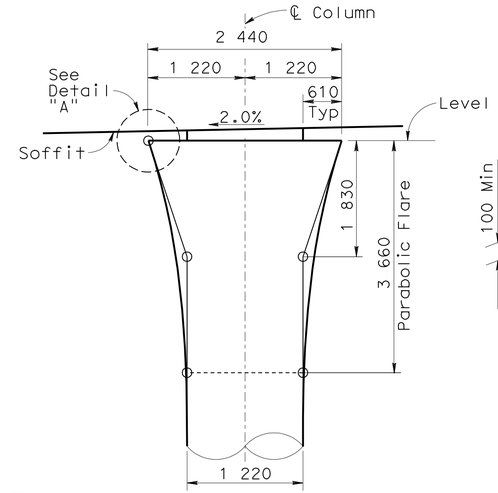

FLARE DETAIL
(Left Bridge Shown
Right Bridge Similar)
NO SCALE

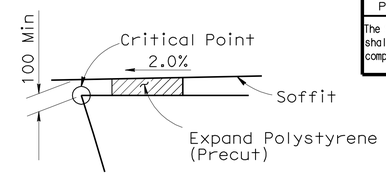

DETAIL "A"
NO SCALE

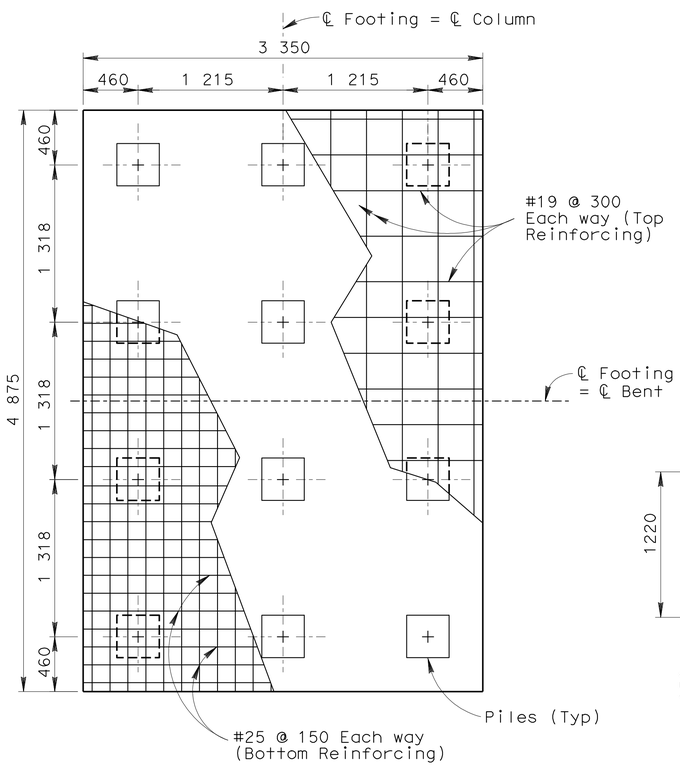

FOOTING PLAN (TYP)
1:25

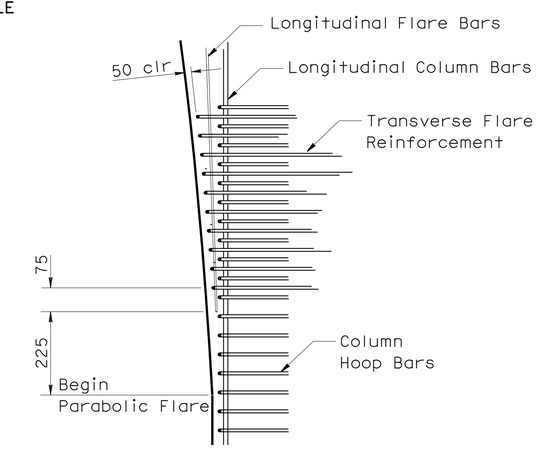

HOOP AND TIE DETAILS
NO SCALE

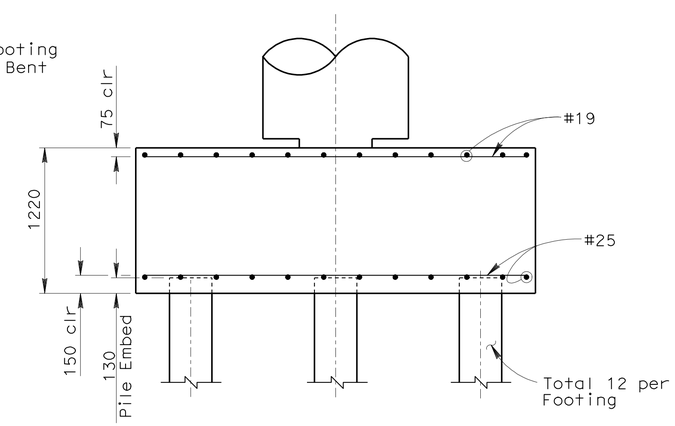

FOOTING ELEVATION (TYP)
1:25

Caltrans Metric

	BY	CHECKED
DESIGN	D. BALBAS / M. RAHMAN	WEI-KUNG HSIZ
DETAILS	HECTOR INIGUEZ	WEI-KUNG HSIA
QUANTITIES	CESAR SANCHEZ	MAMUNUR RAHMAN

STATE OF CALIFORNIA
DEPARTMENT OF TRANSPORTATION

DIVISION OF ENGINEERING SERVICES
STRUCTURE DESIGN
DESIGN BRANCH 19

BRIDGE NO. 58-0344 R/L
KILOMETER POST KP 15.61

KALIN ROAD UC
BENT DETAILS

ALL DIMENSIONS ARE IN MILLIMETERS UNLESS OTHERWISE SHOWN

ORIGINAL SCALE IN MILLIMETERS FOR REDUCED PLANS 0 10 20 30 40 50 60 70 80 90 100

CU 11278
EA 167891

DISREGARD PRINTS BEARING EARLIER REVISION DATES

REVISION DATES: 8-14-08 8-19-08 04-09-09 04-21-09 05-06-09 07-29-09 08-28-09 11-05-09

SHEET 11 OF 22

FILE => 58-0344r1-h-b01_dt01.dgn

STRUCTURES DESIGN DETAIL SHEET (METRIC) (REV.03-17-04)

USERNAME => friehard DATE PLOTTED => 22-APR-2010 TIME PLOTTED => 13:03

DIST	COUNTY	ROUTE	KILOMETER POST TOTAL PROJECT	SHEET No	TOTAL SHEETS
11	Imp	78,86	R14.6/R19.5, 38.3/39.1	315	325

REGISTERED CIVIL ENGINEER 08/20/09 DATE

4-19-10
PLANS APPROVAL DATE

REGISTERED PROFESSIONAL ENGINEER MAMUNUR RAHMAN No. C48515 Exp. 6/30/10 CIVIL STATE OF CALIFORNIA

The State of California or its officers or agents shall not be responsible for the accuracy or completeness of electronic copies of this plan sheet.

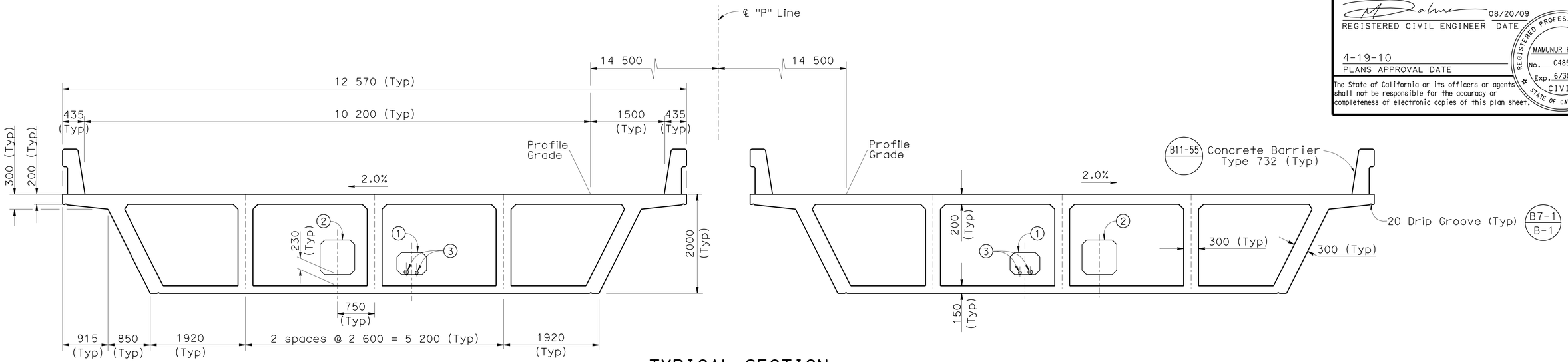

TYPICAL SECTION

1:40

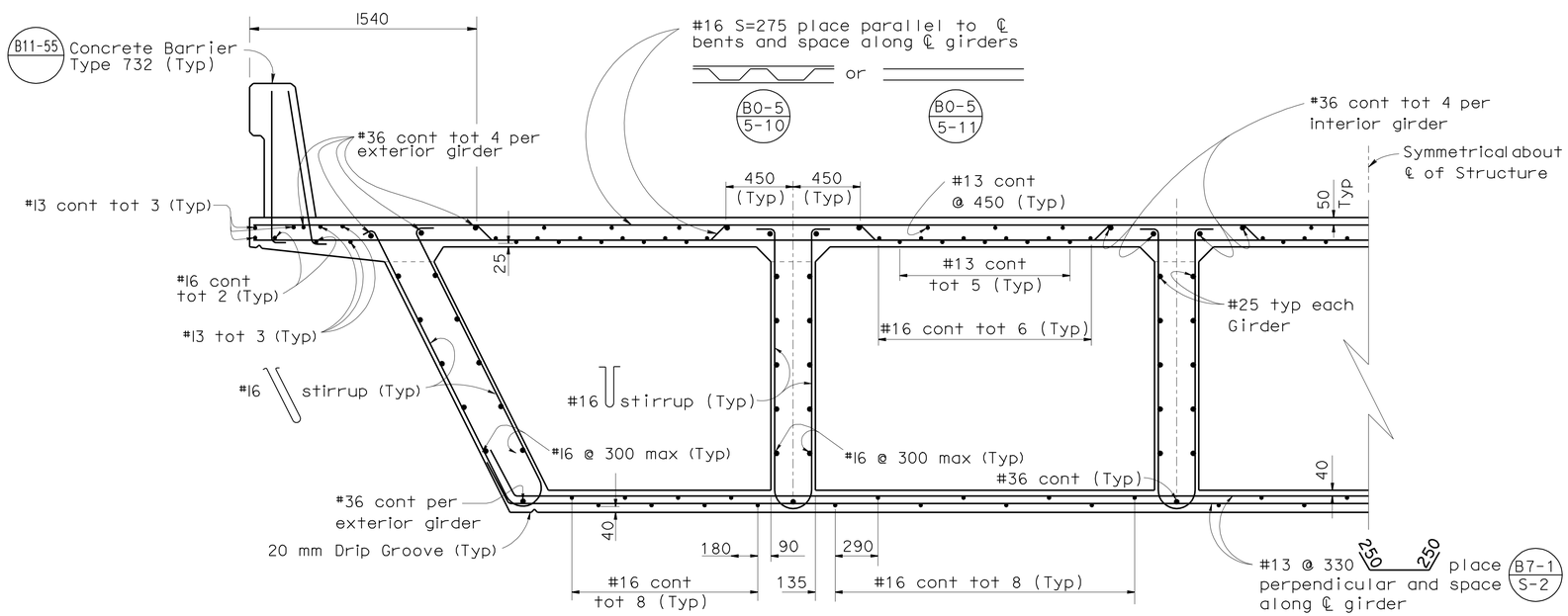

PARTIAL TYPICAL SECTION

B0-5 B7-1 B8-5 B11-55 B14-3

1:20

LEGEND:

1. ℄ 450 mm H x 600 mm W utility opening for NPS 3 supply line and 50 mm sprinkler control conduit
2. Future utility opening
3. NPS3 Supply Line and Sprinkler Control Conduit, see Road Plans

NOTES

Under the first cradle support inside bridge near abutment, epoxy 12 gage galvanized steel sheet 800 mm x 400 mm (2'-8" x 1'-4") to the floor of cell. Do not secure cradle to steel sheet. Cradle shall be free to slide to accommodate lateral movement.

Caltrans Metric

ALL DIMENSIONS ARE IN MILLIMETERS UNLESS OTHERWISE SHOWN

ORIGINAL SCALE IN MILLIMETERS FOR REDUCED PLANS 0 10 20 30 40 50 60 70 80 90 100

	BY	CHECKED
DESIGN	D. BALBAS/MA. RAHMAN	WEI-KUNG HSIA
DETAILS	HECTOR INIGUEZ	WEI-KUNG HSIA
QUANTITIES	CESAR SANCHEZ	MAMUNUR RAHMAN

STATE OF CALIFORNIA DEPARTMENT OF TRANSPORTATION

DIVISION OF ENGINEERING SERVICES STRUCTURE DESIGN DESIGN BRANCH 19

CU 11278
EA 167891

BRIDGE NO. 58-0344R/L
KILOMETER POST KP 15.61

KALIN ROAD UC
TYPICAL SECTION

DISREGARD PRINTS BEARING EARLIER REVISION DATES

REVISION DATES: 7-28-08 04-09-09 04-23-09 05-08-09 07-08-09 08-20-09

SHEET 12 OF 22

FILE => 58-0344r1-k-ts01.dgn

STRUCTURES DESIGN DETAIL SHEET (METRIC) (REV.03-17-04)

USERNAME => trlenard DATE PLOTTED => 22-APR-2010 TIME PLOTTED => 13:03

DIST	COUNTY	ROUTE	KILOMETER POST TOTAL PROJECT	SHEET No	TOTAL SHEETS
11	Imp	78,86	R14.6/R19.5, 38.3/39.1	316	325

REGISTERED CIVIL ENGINEER 08/20/09 DATE

4-19-10
PLANS APPROVAL DATE

REGISTERED PROFESSIONAL ENGINEER MAMUNUR RAHMAN No. C48515 Exp. 6/30/10 CIVIL STATE OF CALIFORNIA

The State of California or its officers or agents shall not be responsible for the accuracy or completeness of electronic copies of this plan sheet.

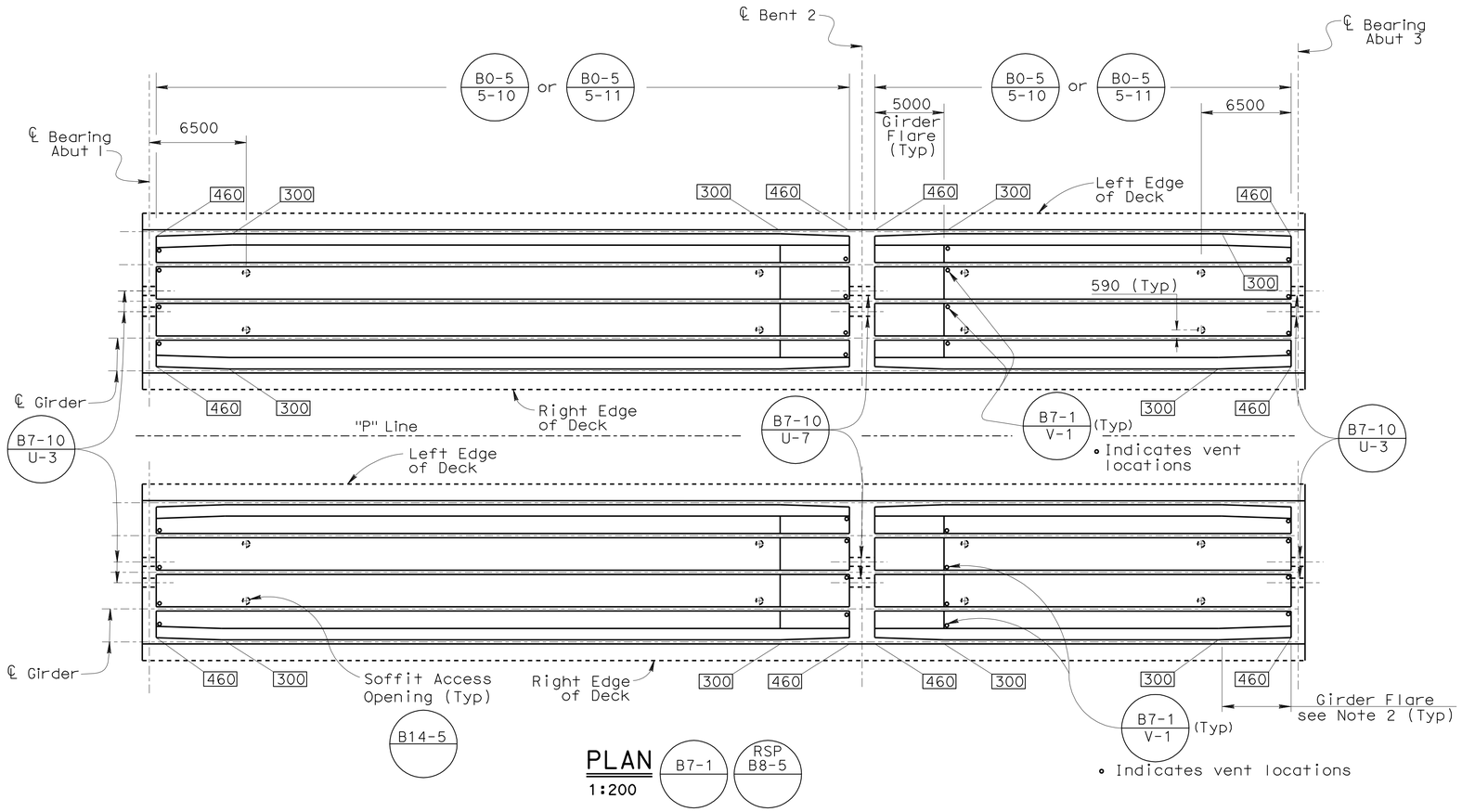

PLAN
1:200

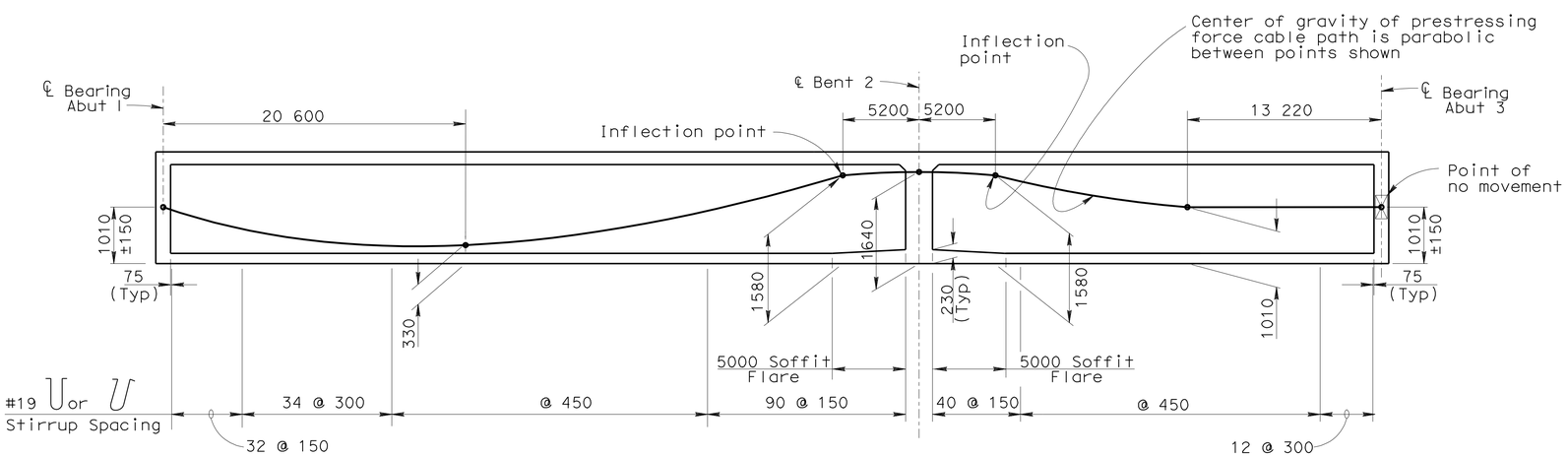

LONGITUDINAL SECTION
NO SCALE

PRESTRESSING NOTES:

1860 MPa Low Relaxation Strand:

P_{jack} = 47 150 kN

Anchor Set = 10 mm

Total Number of Girders = 5

Distribution of prestress force (Pjack) between girders shall not exceed the ratio of 3:2. Maximum final force variation between girders shall not exceed 3200 kN.

Concrete: f'_c = 28 MPa @ 28 days

f'_{ci} = 24 MPa @ time of stressing

Contractor shall submit elongation calculations based on initial stress at

☒ = 0.900 times jacking stress.

μ = 0.15 K = 6.6 x 10^{-7}/mm

Stressing shall be performed from Abut 1 end only

NOTES:

1. Indicates girder stem width in millimeters
2. Girder flares are 5000 (Typ) from face of Abutment end diaphragm and bent cap, exterior Girders only
3. For end diaphragm details see "Abutment Details No. 1" sheet

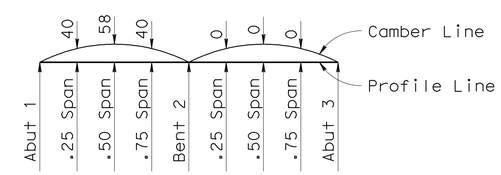

CAMBER DIAGRAM
NO SCALE

Does not Include Allowance for Falsework Settlement

DESIGN	BY D. BALBAS/MA. RAHMAN	CHECKED WEI-KUNG HSIA	
DETAILS	BY HECTOR INIGUEZ	CHECKED WEI-KUNG HSIA	
QUANTITIES	BY CESAR SANCHEZ	CHECKED MAMUNUR RAHMAN	

STATE OF CALIFORNIA
DEPARTMENT OF TRANSPORTATION

DIVISION OF ENGINEERING SERVICES
STRUCTURE DESIGN
DESIGN BRANCH 19

CU 11278
EA 167891

BRIDGE NO. 58-0344 R/L
KILOMETER POST KP 15.61

KALIN ROAD UC
GIRDER LAYOUT

Caltrans Metric

ALL DIMENSIONS ARE IN MILLIMETERS UNLESS OTHERWISE SHOWN

ORIGINAL SCALE IN MILLIMETERS FOR REDUCED PLANS 0 10 20 30 40 50 60 70 80 90 100

DISREGARD PRINTS BEARING EARLIER REVISION DATES

REVISION DATES: 7-16-08 7-30-08 04-08-09 04-27-09 05-06-09 05-28-09 08-20-09

SHEET 13 OF 22

FILE => 58-0344ri-o-gir_lo01.dgn

STRUCTURES DESIGN DETAIL SHEET (METRIC) (REV.03-17-04)

USERNAME => rrleonard DATE PLOTTED => 22-APR-2010 TIME PLOTTED => 13:03

DIST	COUNTY	ROUTE	KILOMETER POST TOTAL PROJECT	SHEET No	TOTAL SHEETS
11	Imp	78,86	R14.6/R19.5, 38.3/39.1	317	325

08/20/09
REGISTERED CIVIL ENGINEER DATE

4-19-10
PLANS APPROVAL DATE

REGISTERED PROFESSIONAL ENGINEER
MAMUNUR RAHMAN
No. C48515
Exp. 6/30/10
CIVIL
STATE OF CALIFORNIA

The State of California or its officers or agents shall not be responsible for the accuracy or completeness of electronic copies of this plan sheet.

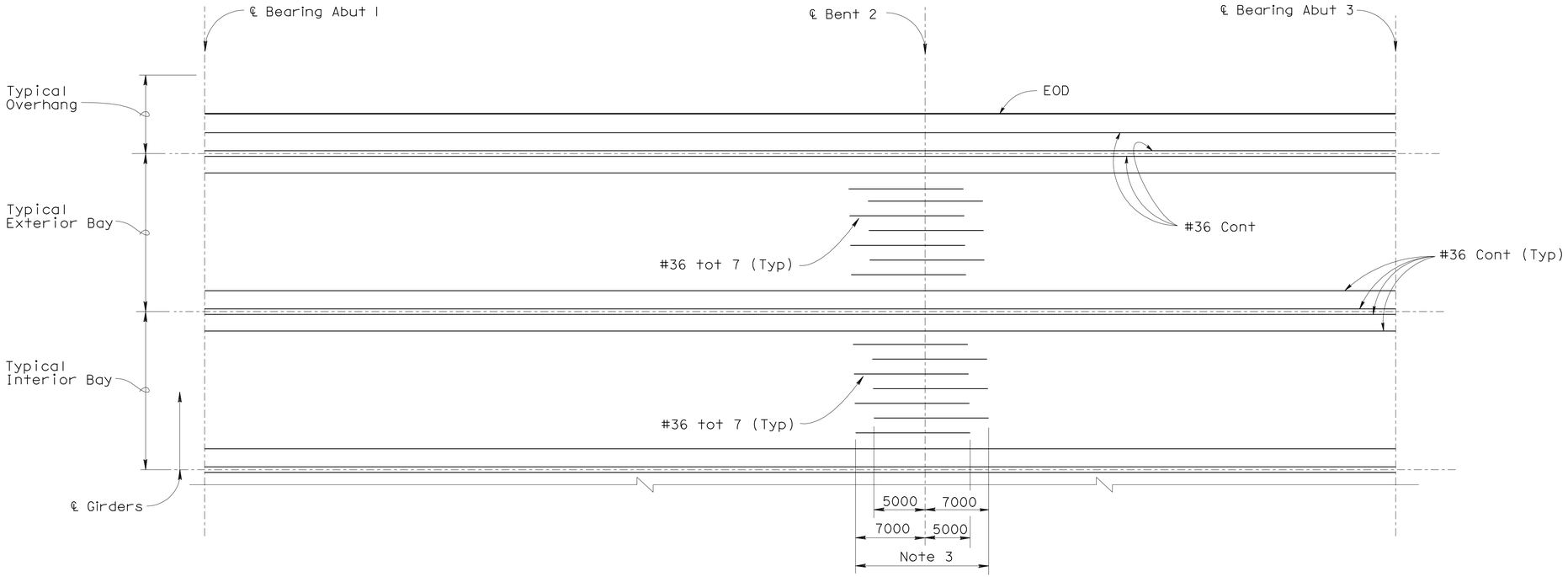

TOP LONGITUDINAL REINFORCEMENT

NO SCALE

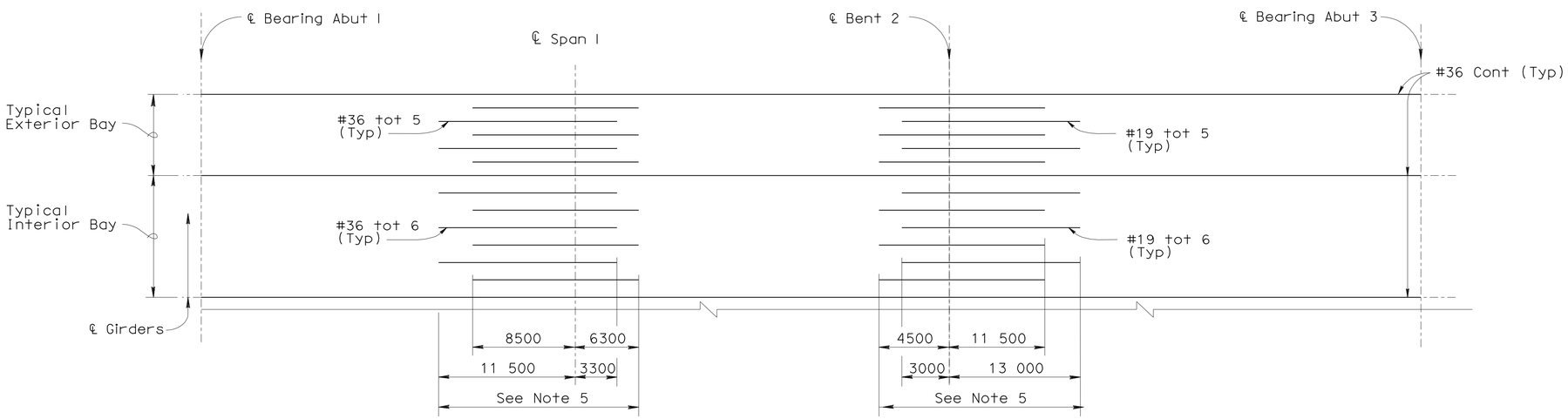

BOTTOM LONGITUDINAL REINFORCEMENT

NO SCALE

NOTES:

1. For additional details and reinforcement see "Typical Section" sheet.
2. Adjust location of bottom longitudinal reinforcement to clear soffit openings.
3. No lap or mechanical splices allowed in longitudinal top reinforcement within noted zone.
4. Left structure shown, right structure is identical.
5. Only service splices allowed in longitudinal bottom reinforcement within noted zone.

Caltrans Metric

	BY	CHECKED
DESIGN	D. BALBAS / M. RAHMAN	WEI-KUNG HSIA
DETAILS	HECTOR INIGUEZ	WEI-KUNG HSIA
QUANTITIES	CESAR SANCHEZ	MAMUNUR RAHMAN

STATE OF CALIFORNIA
DEPARTMENT OF TRANSPORTATION

DIVISION OF ENGINEERING SERVICES
STRUCTURE DESIGN
DESIGN BRANCH 19

BRIDGE NO. 58-0344 R/L
KILOMETER POST KP 15.61

KALIN ROAD UC
GIRDER REINFORCEMENT

ALL DIMENSIONS ARE IN MILLIMETERS UNLESS OTHERWISE SHOWN

ORIGINAL SCALE IN MILLIMETERS FOR REDUCED PLANS 0 10 20 30 40 50 60 70 80 90 100

CU 11278
EA 167891

DISREGARD PRINTS BEARING EARLIER REVISION DATES

REVISION DATES: 7-18-08 7-31-08 02-02-09 04-27-09 05-06-09 08-20-09 11-05-09

SHEET 14 OF 22

FILE => 58-0344ri-o-gir_rf01.dgn

STRUCTURES DESIGN DETAIL SHEET (METRIC) (REV.03-17-04)

USERNAME => trienard DATE PLOTTED => 22-APR-2010 TIME PLOTTED => 13:03

DIST.	COUNTY	ROUTE	KILOMETER POST TOTAL PROJECT	SHEET NO.	TOTAL SHEETS
11	Imp	78,86	R14.6/R19.5, 38.3/39.1	318	325

Caltrans Metric

REGISTERED ENGINEER - CIVIL 08/20/09

4-19-10
PLANS APPROVAL DATE

REGISTERED PROFESSIONAL ENGINEER MAMUNUR RAHMAN No. C48515 Exp. 6/30/10 CIVIL STATE OF CALIFORNIA

The State of California or its officers or agents shall not be responsible for the accuracy or completeness of electronic copies of this plan sheet.

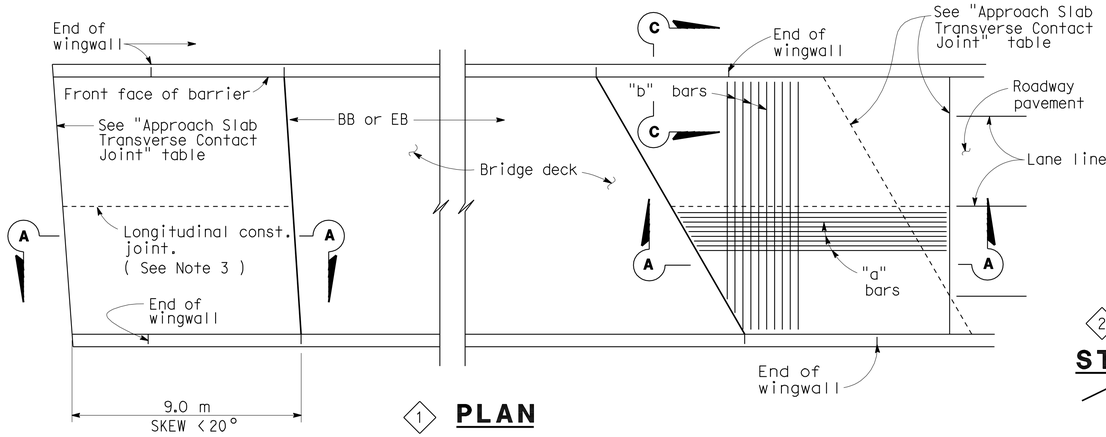

1 **PLAN**

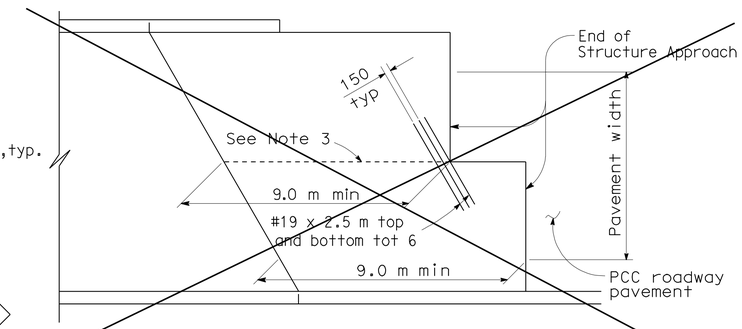

2 **STRUCTURE APPROACH - END STAGGER DETAIL**

APPROACH SLAB TRANSVERSE CONTACT JOINT		
APPROACH SKEW	WITH AC ROADWAY PAVEMENT	WITH PCC ROADWAY PAVEMENT
< 20°	Parallel to face of paving notch	Parallel to face of paving notch

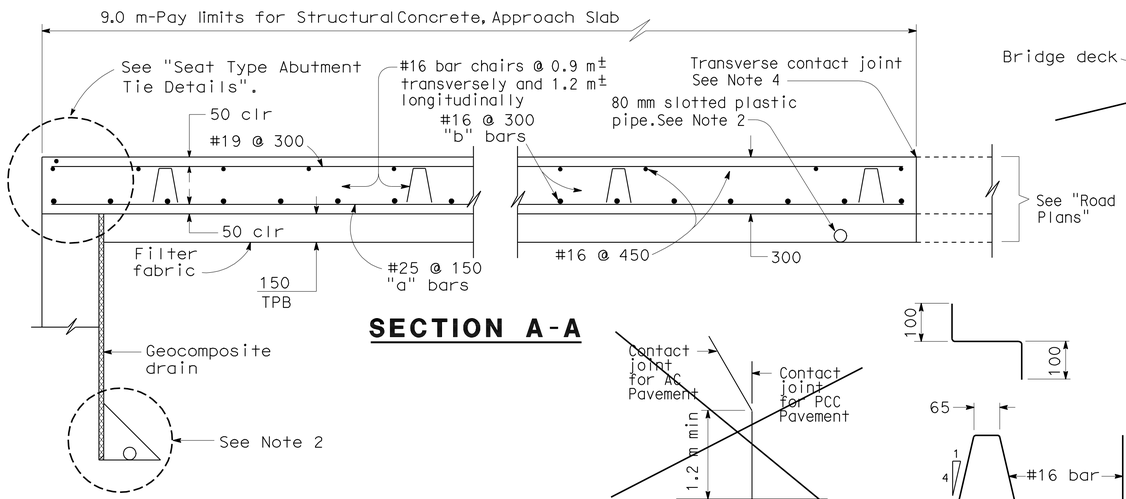

SECTION A-A

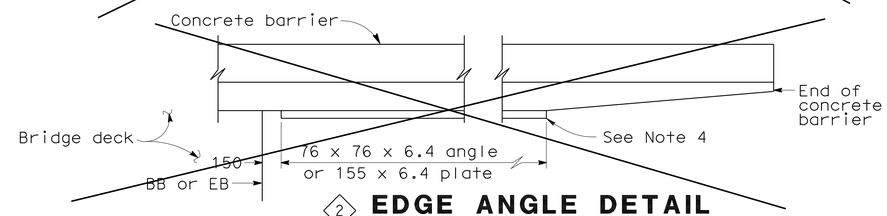

2 **EDGE ANGLE DETAIL**

2 **DETAIL A**

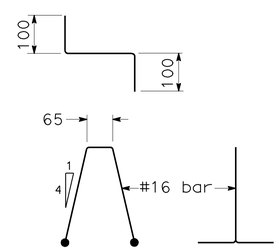

BAR CHAIR DETAIL

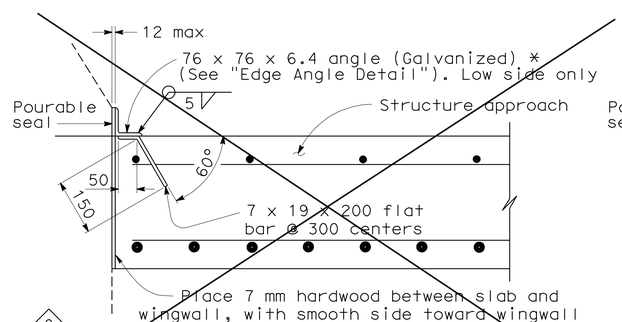

2 ***(TO BE USED WITH TYPE 25 OR TYPE 27 CONCRETE BARRIER)**

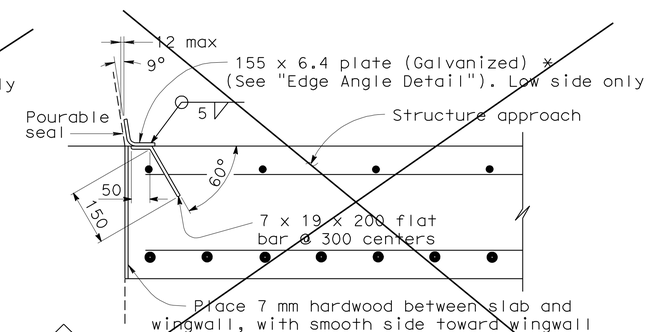

2 ***(TO BE USED WITH TYPE 732 OR TYPE 736 CONCRETE BARRIER)**

DETAIL B

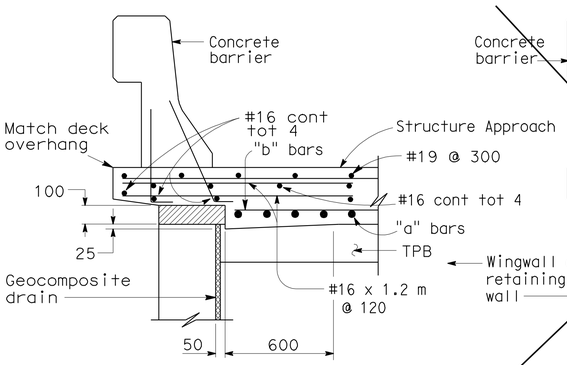

TYPE E-1

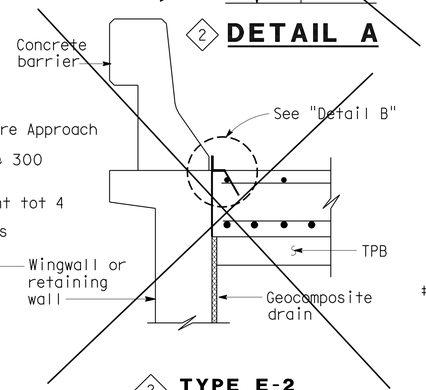

2 **TYPE E-2**

SECTION C-C

(Type E-1 to be used,unless otherwise shown on plans and shall extend from BB/EB to approach slab transverse contact joint.)

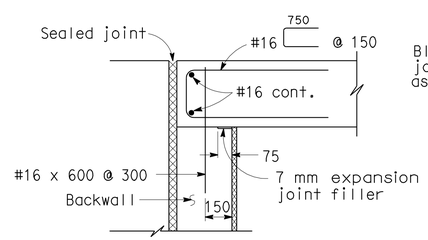

MR ≤ 50 mm

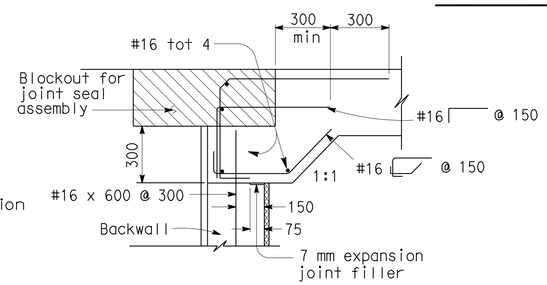

MR > 50 mm

SEAT TYPE ABUTMENT TIE DETAILS (SEE NOTE 1)

NOTES:

1. For details not shown,see Structure Plans. For MR ≤ 50 mm,adjust bar reinforcement to clear a sawcut for sealed joint,when required.
2. For drainage details,see "Structure Approach Drainage Details" sheet.
3. Longitudinal construction joints,when permitted by the Engineer, shall be located on lane lines.
4. For transverse contact joint with new PCC paving, refer to Standard Plan A35-A.

NO SCALE
ALL DIMENSIONS ARE IN MILLIMETERS UNLESS OTHERWISE SHOWN

STANDARD DRAWING					
RELEASE DATE 7/9/03	DESIGN	BY M. TRAFFALIS	CHECKED E. THORKILDSEN	RELEASED BY	
FILE NO. xs3-120	DETAILS	BY R. YEE	CHECKED E. THORKILDSEN		
	SUBMITTED	BY M. HA	DRAWING DATE 4/98	OFFICE CHIEF	

1 Revised Detail
2 Deleted Detail

STATE OF CALIFORNIA
DEPARTMENT OF TRANSPORTATION

DIVISION OF STRUCTURES
STRUCTURE DESIGN 19

BRIDGE NO. 58-0344 R/L
KILOMETER POST KP 15.61

KALIN ROAD UC

STRUCTURE APPROACH TYPE N(9S)

DS OSD 2147A (METRIC) (REV. 2/25/97)

ORIGINAL SCALE IN MILLIMETERS FOR REDUCED PLANS 0 10 20 30 40 50 60 70 80 90 100

CU 11278
EA 167891

DISREGARD PRINTS BEARING EARLIER REVISION DATES

REVISION DATES (PRELIMINARY STAGE ONLY) 8-20-08 8-22-08 2-02-09 4-20-09 05-06-09 08-20-09 11-05-09

SHEET 15 OF 22

USERNAME => trlenard

58-0344r1-o1-s-sa.dgn

DATE PLOTTED => 22-APR-2010 TIME PLOTTED => 13:03

DIST.	COUNTY	ROUTE	KILOMETER POST TOTAL PROJECT	SHEET NO.	TOTAL SHEETS
11	Imp	78,86	R14.6/R19.5, 38.3/39.1	319	325

Caltrans Metric

08/20/09
REGISTERED ENGINEER - CIVIL

4-19-10
PLANS APPROVAL DATE

REGISTERED PROFESSIONAL ENGINEER MAMUNUR RAHMAN No. C48515 Exp. 6/30/10 CIVIL STATE OF CALIFORNIA

The State of California or its officers or agents shall not be responsible for the accuracy or completeness of electronic copies of this plan sheet.

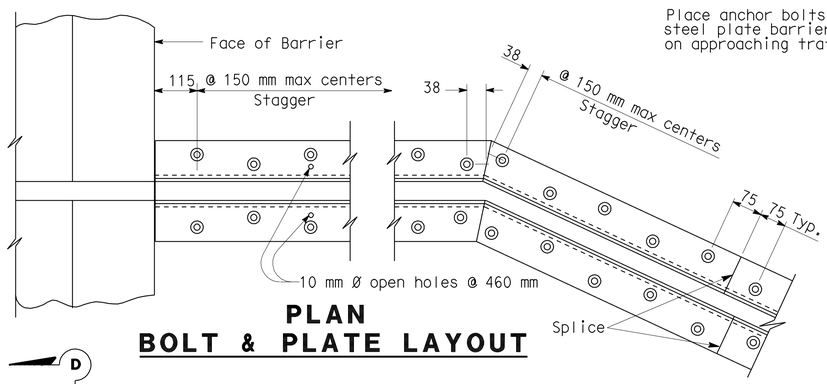

PLAN
BOLT & PLATE LAYOUT

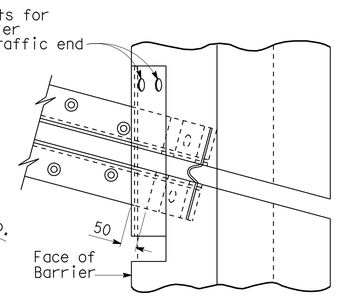

SKEW ≤ 20°

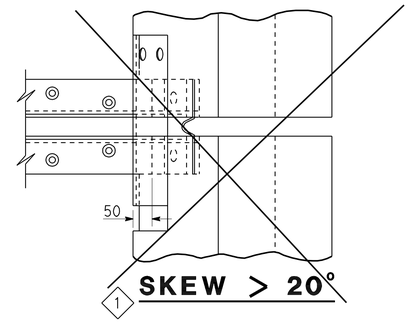

SKEW > 20°

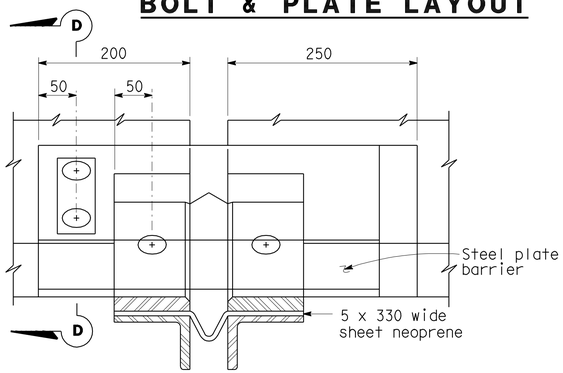

VIEW B-B

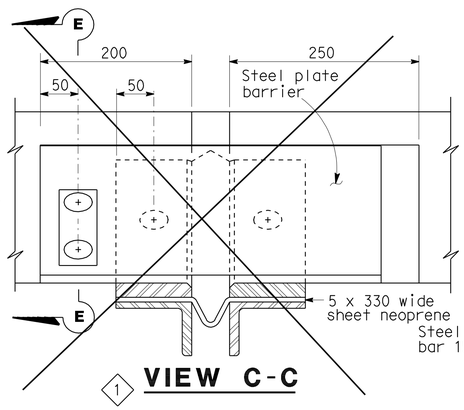

VIEW C-C

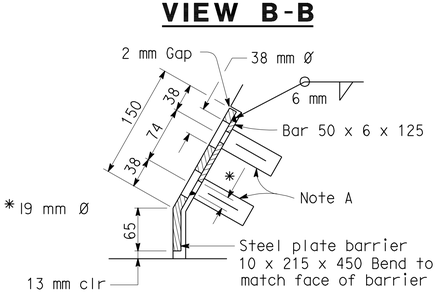

SECTION D-D

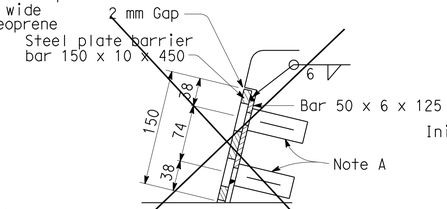

SECTION E-E

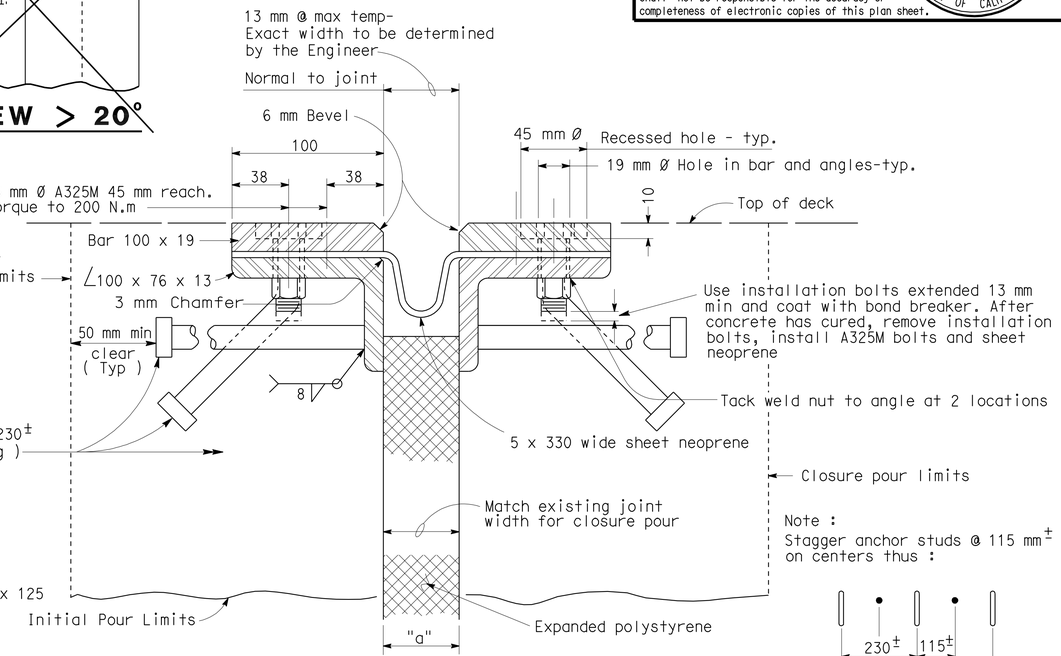

SECTION A-A

Note :
Stagger anchor studs @ 115 mm± on centers thus :

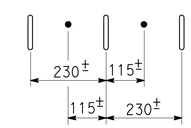

Joint Information			"a" Dimensions		
Location	Movement Rating (MR)	Skew	Winter	Spring & Fall	Summer
Abut 1	60	0	30	23	15

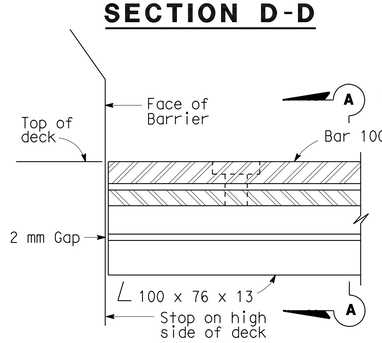

HIGH SIDE BARRIER DETAIL

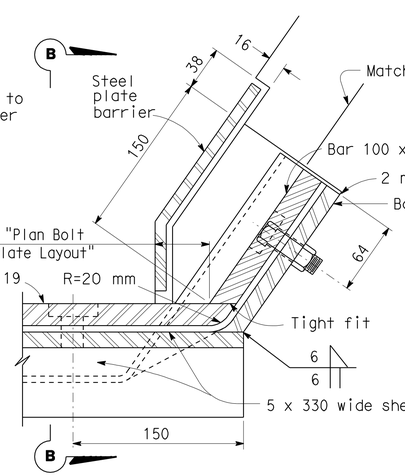

LOW SIDE BARRIER DETAIL
(See Note B)

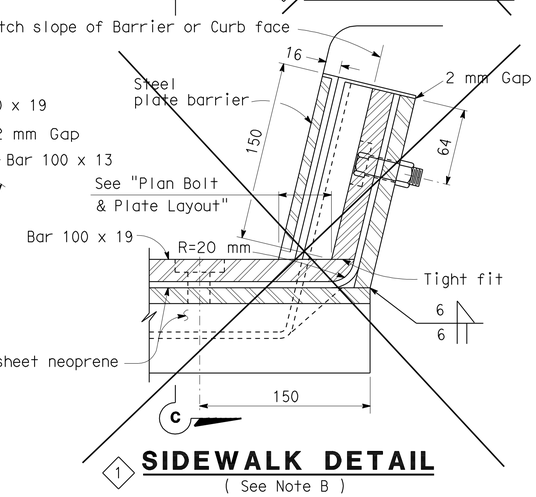

SIDEWALK DETAIL
(See Note B)

NOTES:

Full penetration butt welds may be substituted for fillet welds on all anchor studs.

Alternate types of anchor studs may be permitted subject to the approval by the Engineer.

Joint seal assembly to be used in conjunction with closure pour. (See other sheets for limits). Closure pour shall not be placed until final deck surface is within the tolerance specified.

Use joint at crown of roadway, at any change in transverse slope in deck and at changes in horizontal direction. Place other joints at or near lanes. All metal parts to be painted or galvanized after fabrication.

Sheet neoprene shall be fabricated in one continuous piece or joints shall be vulcanized. Neoprene shall be fabricated to bend around corners. 25 mm holes in neoprene sheets shall be drilled or punched so that the neoprene is not distorted at the time of installation.

NOTE A

Insert assembly or expansion anchorage for 16 x 45 A325M bolt.

NOTE B

Use the Sidewalk Detail at all sidewalk joints. Use the Barrier Detail at both sides if the roadway is crowned or if the difference in elevation between the ends of the seal is 150 mm or less.

ALL DIMENSIONS ARE IN MILLIMETERS UNLESS OTHERWISE SHOWN

NO SCALE

1 Deleted Detail

STANDARD DRAWING

RELEASE DATE 4/1/97	DESIGN BY H. HERR	CHECKED R. LACALLE	RELEASED BY
FILE NO. xs8-010	DETAILS BY R. YEE	CHECKED R. LACALLE	
	SUBMITTED BY C.W. PURKISS	DRAWING DATE 9/93	OFFICE CHIEF

STATE OF CALIFORNIA
DEPARTMENT OF TRANSPORTATION

DIVISION OF ENGINEERING SERVICES

BRIDGE NO. 58-0344 R/L
KILOMETER POST KP 15.61

KALIN ROAD UC
JOINT SEAL ASSEMBLY (MAXIMUM MOVEMENT RATING = 100 mm)

DS OSD 2147A (METRIC) (REV. 2/25/97)

ORIGINAL SCALE IN MILLIMETERS FOR REDUCED PLANS 0 10 20 30 40 50 60 70 80 90 100

CU 11278
EA 167891

DISREGARD PRINTS BEARING EARLIER REVISION DATES 05-06-09 08-20-09

REVISION DATES (PRELIMINARY STAGE ONLY)

SHEET 16 OF 22

USERNAME => trlenard

58-0344rl-sa-sjsa

DATE PLOTTED => 22-APR-2010 TIME PLOTTED => 13:03

DIST.	COUNTY	ROUTE	KILOMETER POST TOTAL PROJECT	SHEET NO.	TOTAL SHEETS
11	Imp	78,86	R14.6/R19.5, 38.3/39.1	320	325

Caltrans Metric

08/20/09
REGISTERED ENGINEER - CIVIL

4-19-10
PLANS APPROVAL DATE

REGISTERED PROFESSIONAL ENGINEER MAMUNUR RAHMAN No. C48515 Exp. 6/30/10 CIVIL STATE OF CALIFORNIA

The State of California or its officers or agents shall not be responsible for the accuracy or completeness of electronic copies of this plan sheet.

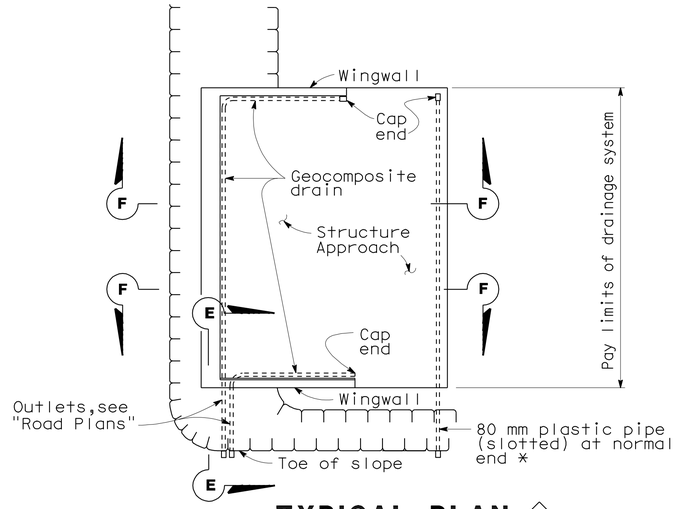

TYPICAL PLAN (1)

*For pipe layout at staggered end, see "Detail B".

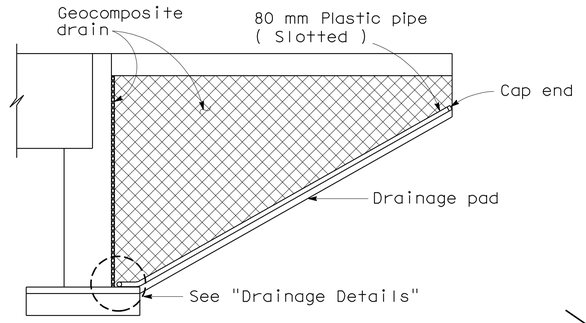

CANTILEVER WINGWALL SECTION F-F

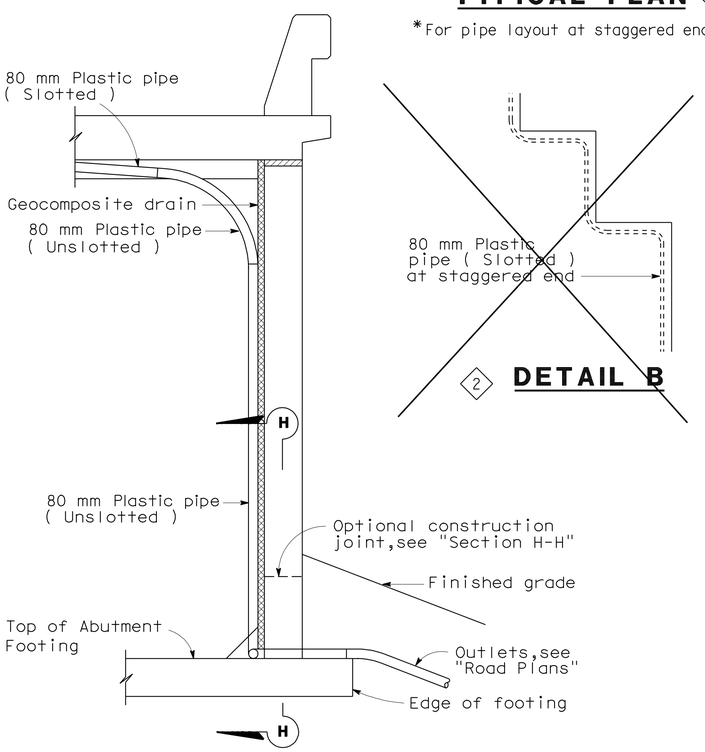

SECTION E-E (1)

NOTE: Bends and junctions in 80 mm plastic pipe are 750 mm radius min.

(2) DETAIL B

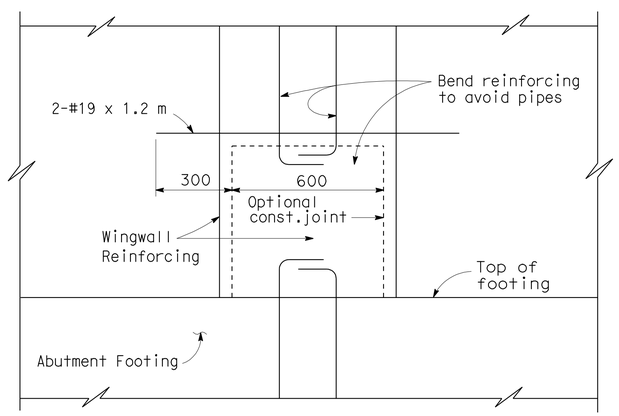

(1) SECTION H-H

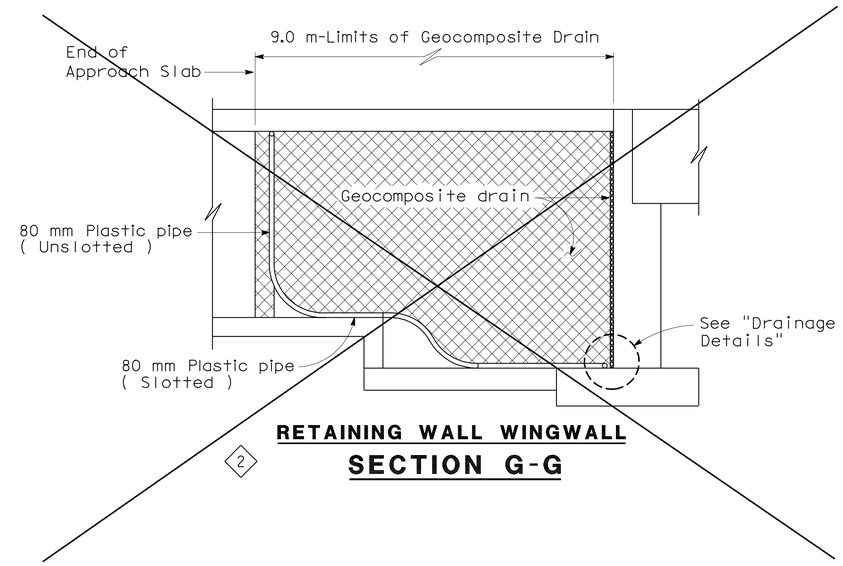

RETAINING WALL WINGWALL SECTION G-G

(2)

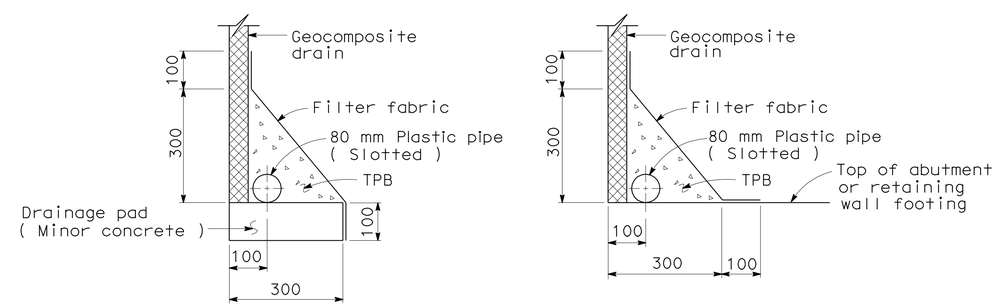

WITHOUT FOOTING — WITH FOOTING

DRAINAGE DETAILS

NO SCALE

ALL DIMENSIONS ARE IN MILLIMETERS UNLESS OTHERWISE SHOWN

STANDARD DRAWING

RELEASE DATE	4/23/98	DESIGN	BY M. TRAFFALIS	CHECKED E. THORKILDSEN	RELEASED BY
		DETAILS	BY R. YEE	CHECKED E. THORKILDSEN	
FILE NO.	xs3-110	SUBMITTED	BY M. HA	DRAWING DATE 4/98	OFFICE CHIEF

(1) Revised Detail
(2) Deleted Detail

STATE OF CALIFORNIA DEPARTMENT OF TRANSPORTATION

DIVISION OF STRUCTURES STRUCTURE DESIGN 19

BRIDGE NO. 58-0344 R/L
KILOMETER POST KP 15.61

KALIN ROAD UC

STRUCTURE APPROACH DRAINAGE DETAILS

DS OSD 2147A (METRIC) (REV. 2/25/97)

ORIGINAL SCALE IN MILLIMETERS FOR REDUCED PLANS 0 10 20 30 40 50 60 70 80 90 100

CU 11278
EA 167891

DISREGARD PRINTS BEARING EARLIER REVISION DATES

REVISION DATES (PRELIMINARY STAGE ONLY) 8-20-08 8-27-08 02-02-09 04-20-09 05-06-09 08-20-09

SHEET 17 OF 22

USERNAME => trlenard

58-0344rl-s-sad_dt01.dgn

DATE PLOTTED => 22-APR-2010 TIME PLOTTED => 13:03

DIST	COUNTY	ROUTE	KILOMETER POST TOTAL PROJECT	SHEET No	TOTAL SHEETS
11	Imp	78,86	R14.6/R19.5, 38.3/39.1	321	325

REGISTERED CIVIL ENGINEER 08/20/09 DATE

4-19-10
PLANS APPROVAL DATE

REGISTERED PROFESSIONAL ENGINEER MAMUNUR RAHMAN No. C48515 Exp. 6/30/10 CIVIL STATE OF CALIFORNIA

The State of California or its officers or agents shall not be responsible for the accuracy or completeness of electronic copies of this plan sheet.

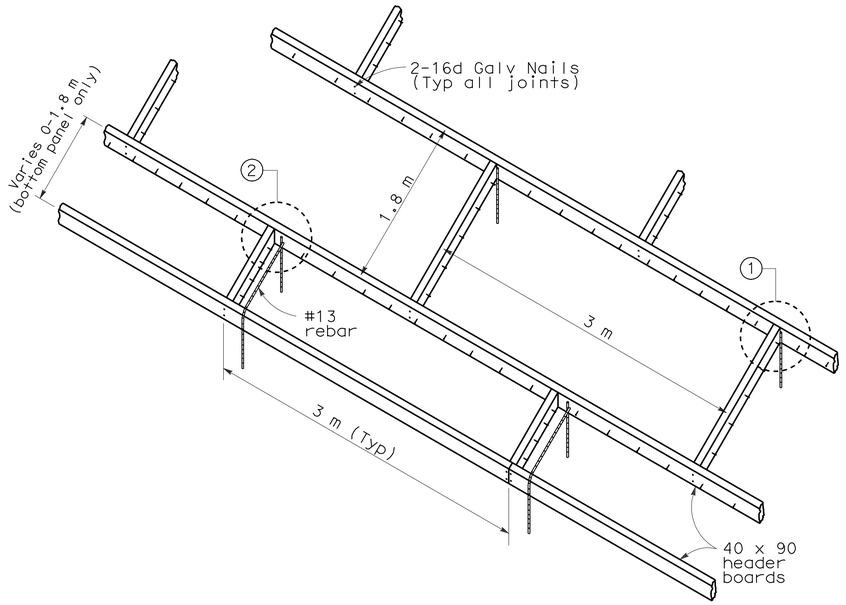

HEADER BOARD LAYOUT WITH REBAR ANCHORS

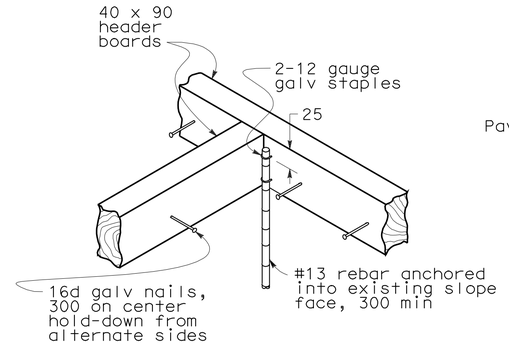

① HEADER BOARD JOINT W/ ANCHOR

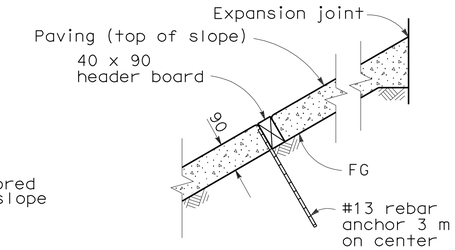

③ TOP OF SLOPE DETAIL

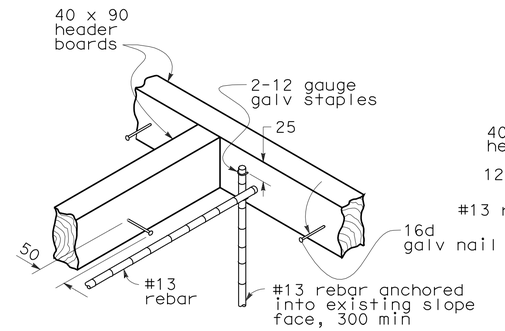

② HEADER BOARD JOINT W/ ANCHOR

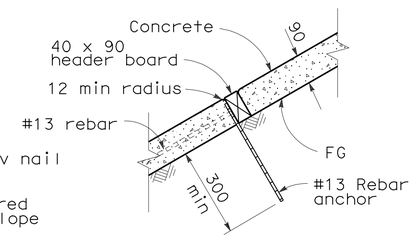

④ SECTION DETAIL

NOTES:

1. Concrete slope paving shall extend minimum of 900 mm (min) outside the bridge drip line from top to bottom of the slope.
2. The number of concrete panels (horizontal and vertical) shall be determined on site to fit each slope
3. Caulk header board/concrete joints in drainage wale to prevent sub-slab water seepage. Use commercial grade (silicone type) clear exterior sealer.
4. In paved slope areas, where surface runoff may run down the face of the slope, caulk all header board/ concrete joints.
5. 152 x 152 - MW 9 x MW 9 welded wire mesh mid-depth in all concrete panels.

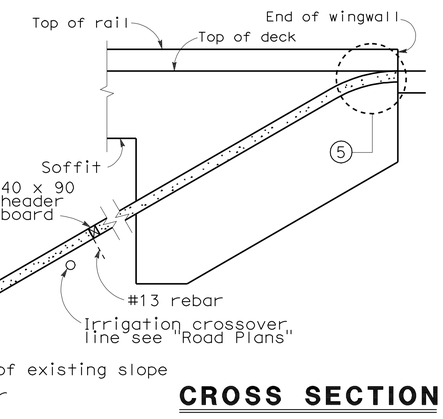

CROSS SECTION

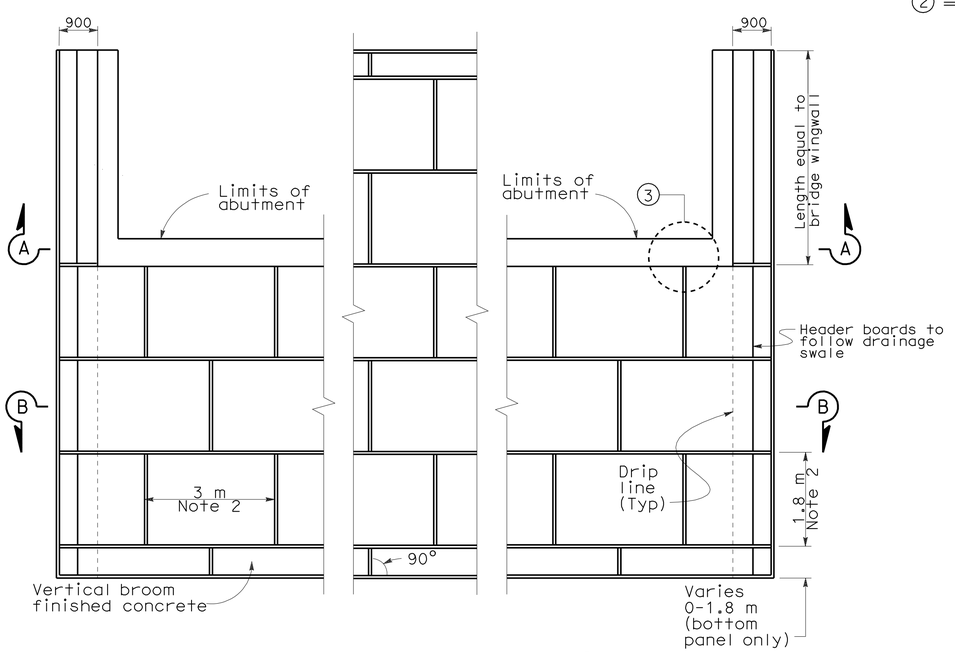

PLAN VIEW (PATTERN LAYOUT)

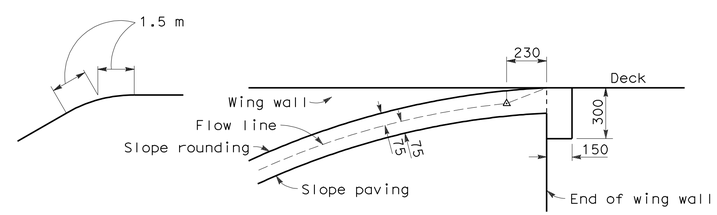

⑤ SLOPE ROUNDING DETAIL

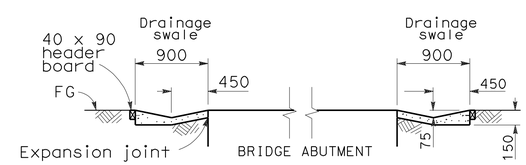

SECTION A-A AT ABUTMENT

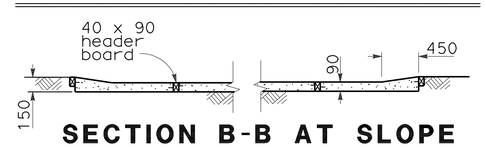

SECTION B-B AT SLOPE

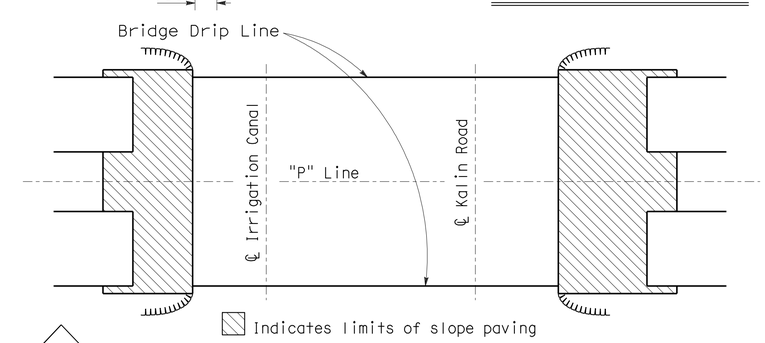

LIMITS OF SLOPE PAVING

NO SCALE

ALL DIMENSIONS ARE IN MILLIMETERS UNLESS OTHERWISE SHOWN

Caltrans Metric

	BY	CHECKED
DESIGN	D. BALBAS / M. RAHMAN	WEI-KUNG HSIA
DETAILS	HECTOR INIGUEZ	WEI-KUNG HSIA
QUANTITIES	CESAR SANCHEZ	MAMUNUR RAHMAN

STATE OF CALIFORNIA DEPARTMENT OF TRANSPORTATION

DIVISION OF ENGINEERING SERVICES STRUCTURE DESIGN

DESIGN BRANCH 19

BRIDGE NO. 58-0344 R/L

KILOMETER POST KP 15.61

KALIN ROAD UC

SLOPE PAVING - FULL SLOPE

ALL DIMENSIONS ARE IN MILLIMETERS UNLESS OTHERWISE SHOWN

ORIGINAL SCALE IN MILLIMETERS FOR REDUCED PLANS 0 10 20 30 40 50 60 70 80 90 100

CU 11278
EA 167891

DISREGARD PRINTS BEARING EARLIER REVISION DATES

REVISION DATES: 8-20-08 8-27-08 02-02-09 04-20-09 05-06-09 08-20-09 11-05-09

SHEET 18 OF 22

FILE => 58-0344rl-s-slppvng.dgn

STRUCTURES DESIGN DETAIL SHEET (METRIC) (REV.03-17-04)

USERNAME => trlenard DATE PLOTTED => 22-APR-2010 TIME PLOTTED => 13:03

DIST	COUNTY	ROUTE	KILOMETER POST TOTAL PROJECT	SHEET No	TOTAL SHEETS
11	Imp	78,86	R14.6/R19.5, 38.3/39.1	322	325

REGISTERED CIVIL ENGINEER 8-10-09

4-19-10
PLANS APPROVAL DATE

REGISTERED PROFESSIONAL ENGINEER
David T-M Liao
No. C59838
Exp. 12-31-09
CIVIL
STATE OF CALIFORNIA

The State of California or its officers or agents shall not be responsible for the accuracy or completeness of electronic copies of this plan sheet.

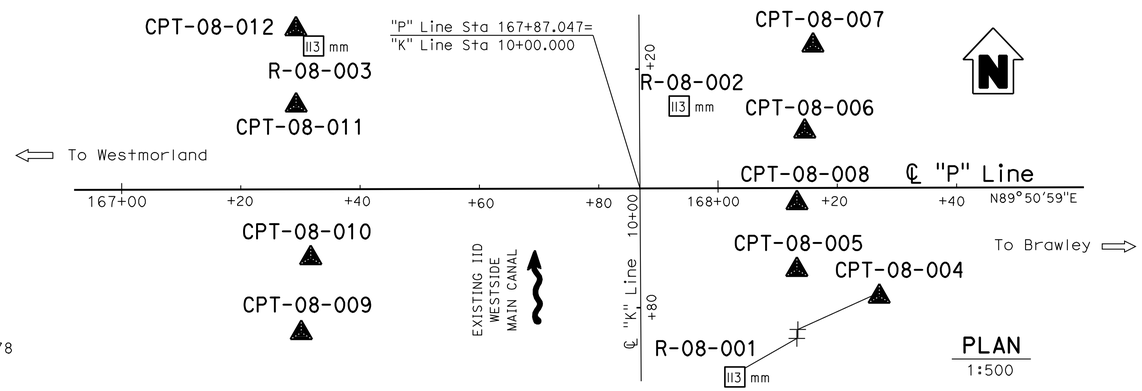

PLAN
1:500

BENCH MARK

SURVEY CONTROL

PRHV-1401
FD 2¼" Brass Disk Mo.
316.395 M Rt C/L Prop Rte 78
Sta 168+08.173
N 592 329.496
E 2 062 767.754
Elev = 64.453

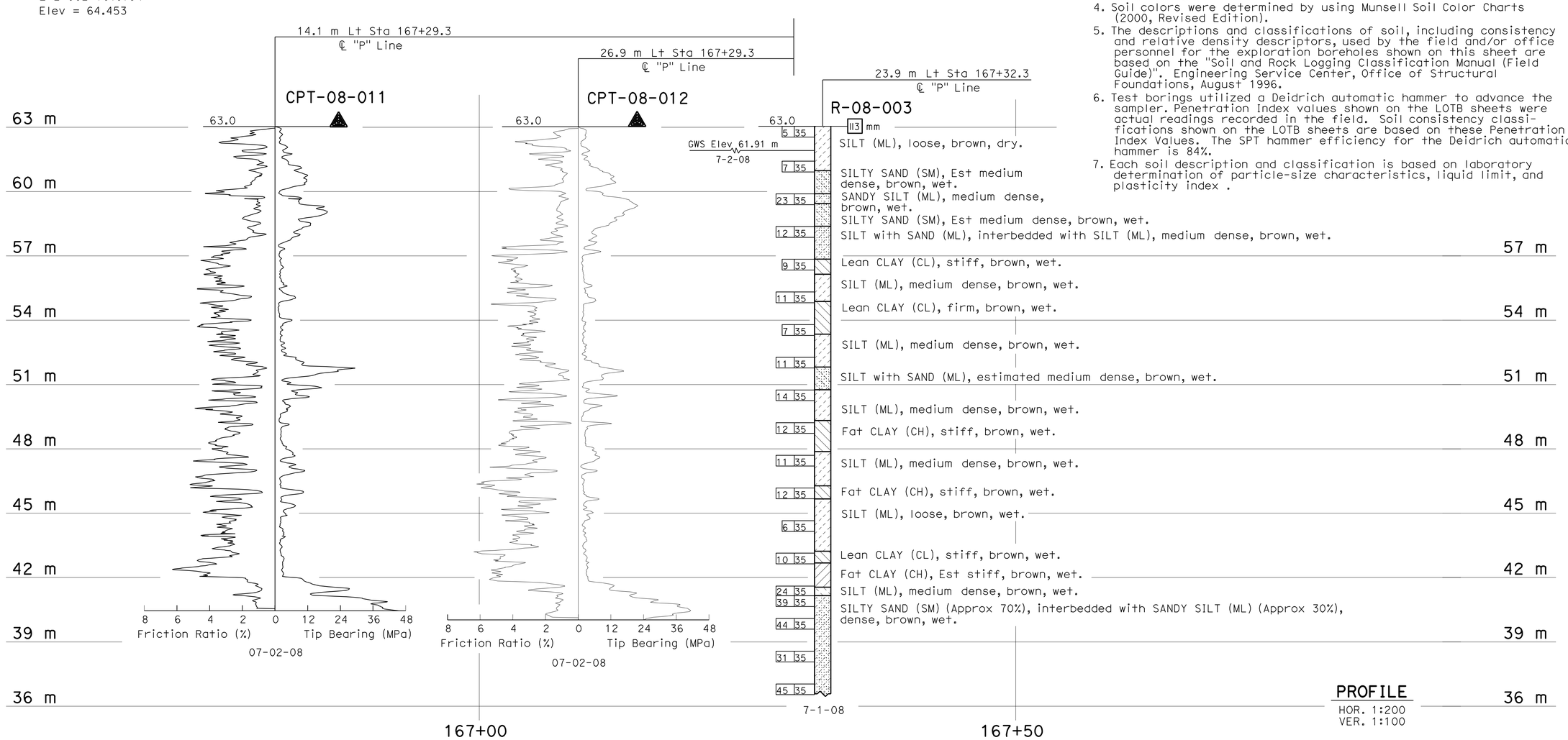

PROFILE
HOR. 1:200
VER. 1:100

NOTES:

1. Ground water was measured in borings R-08-001 and R-08-003 during field investigations. Please refer to the elevation views of these borings for measured ground water elevations.
2. Attempt was not made to measure ground water in boring R-08-002. The boring was immediately backfilled after completion of drilling operations.
3. Groundwater levels indicated on the Log of Test Borings sheets reflect the measured groundwater level measurement in the borehole on the specified date. Groundwater surface elevations are subject to seasonal fluctuations and will be encountered at higher or lower elevations depending on conditions at time of construction.
4. Soil colors were determined by using Munsell Soil Color Charts (2000, Revised Edition).
5. The descriptions and classifications of soil, including consistency and relative density descriptors, used by the field and/or office personnel for the exploration boreholes shown on this sheet are based on the "Soil and Rock Logging Classification Manual (Field Guide)". Engineering Service Center, Office of Structural Foundations, August 1996.
6. Test borings utilized a Deidrich automatic hammer to advance the sampler. Penetration Index values shown on the LOTB sheets were actual readings recorded in the field. Soil consistency classifications shown on the LOTB sheets are based on these Penetration Index Values. The SPT hammer efficiency for the Deidrich automatic hammer is 84%.
7. Each soil description and classification is based on laboratory determination of particle-size characteristics, liquid limit, and plasticity index .

LEGEND OF BORING OPERATIONS

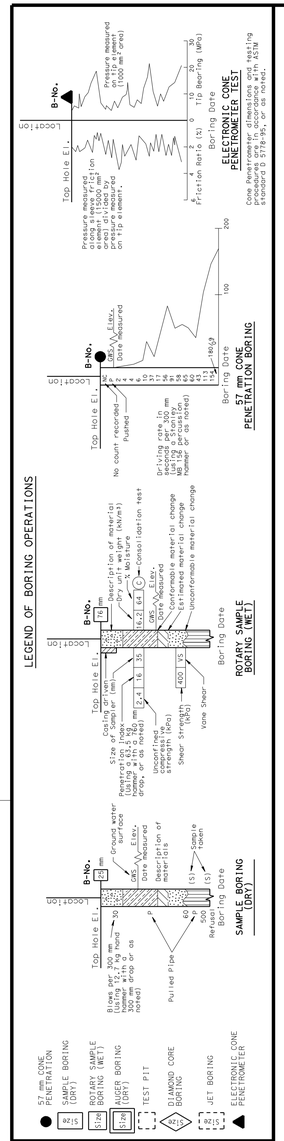

LEGEND OF EARTH MATERIALS

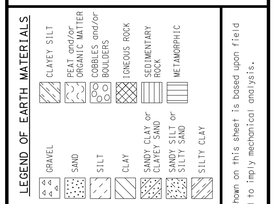

CONSISTENCY CLASSIFICATION FOR SOILS

According to the Standard Penetration Test

SPT N-Value (Blows/0.3m)	Granular	SPT N-Value (Blows/0.3m)	Cohesive
0-4	Very Loose	<2	Very Soft
5-10	Loose	2-4	Soft
11-30	Medium Dense	5-8	Firm
31-50	Dense	9-15	Stiff
>50	Very Dense	16-30	Very stiff
		>30	Hard

NOTE: Classification of earth material as shown on this sheet is based upon field inspection and is not to be construed to imply mechanical analysis.

OGS CIVIL LOG OF TEST BORINGS SHEET (METRIC) (REV. 4/04)

Caltrans Metric

ENGINEERING SERVICES	GEOTECHNICAL SERVICES
DRAWN BY	I.G-Remmen, 7/09
CHECKED BY	T-M Liao

FIELD INVESTIGATION BY: T-M Liao

STATE OF CALIFORNIA DEPARTMENT OF TRANSPORTATION

DIVISION OF ENGINEERING SERVICES STRUCTURE DESIGN
DESIGN BRANCH

BRIDGE NO. 58-0344R/L
KILOMETER POST 15.61

KALIN ROAD UC
LOG OF TEST BORINGS 1 OF 4

ALL DIMENSIONS ARE IN METERS UNLESS OTHERWISE SHOWN

ORIGINAL SCALE IN MILLIMETERS FOR REDUCED PLANS 0 10 20 30 40 50 60 70 80 90 100

CU 11
EA 167891

DISREGARD PRINTS BEARING EARLIER REVISION DATES

REVISION DATES (PRELIMINARY STAGE ONLY) 07-27-09 07-28-09 08-06-09

SHEET 19 OF 22

FILE => 58-0344rl-z-ltb01.dgn

USERNAME => trlenard DATE PLOTTED => 22-APR-2010 TIME PLOTTED => 13:04

DIST	COUNTY	ROUTE	KILOMETER POST TOTAL PROJECT	SHEET No	TOTAL SHEETS
11	Imp	78,86	R14.6/R19.5, 38.3/39.1	323	325

REGISTERED CIVIL ENGINEER 8-10-09

4-19-10
PLANS APPROVAL DATE

REGISTERED PROFESSIONAL ENGINEER
David T-M Liao
No. C59838
Exp. 12-31-09
CIVIL
STATE OF CALIFORNIA

The State of California or its officers or agents shall not be responsible for the accuracy or completeness of electronic copies of this plan sheet.

FOR PLAN VIEW, SEE
"LOG OF TEST BORINGS" 1 OF 4

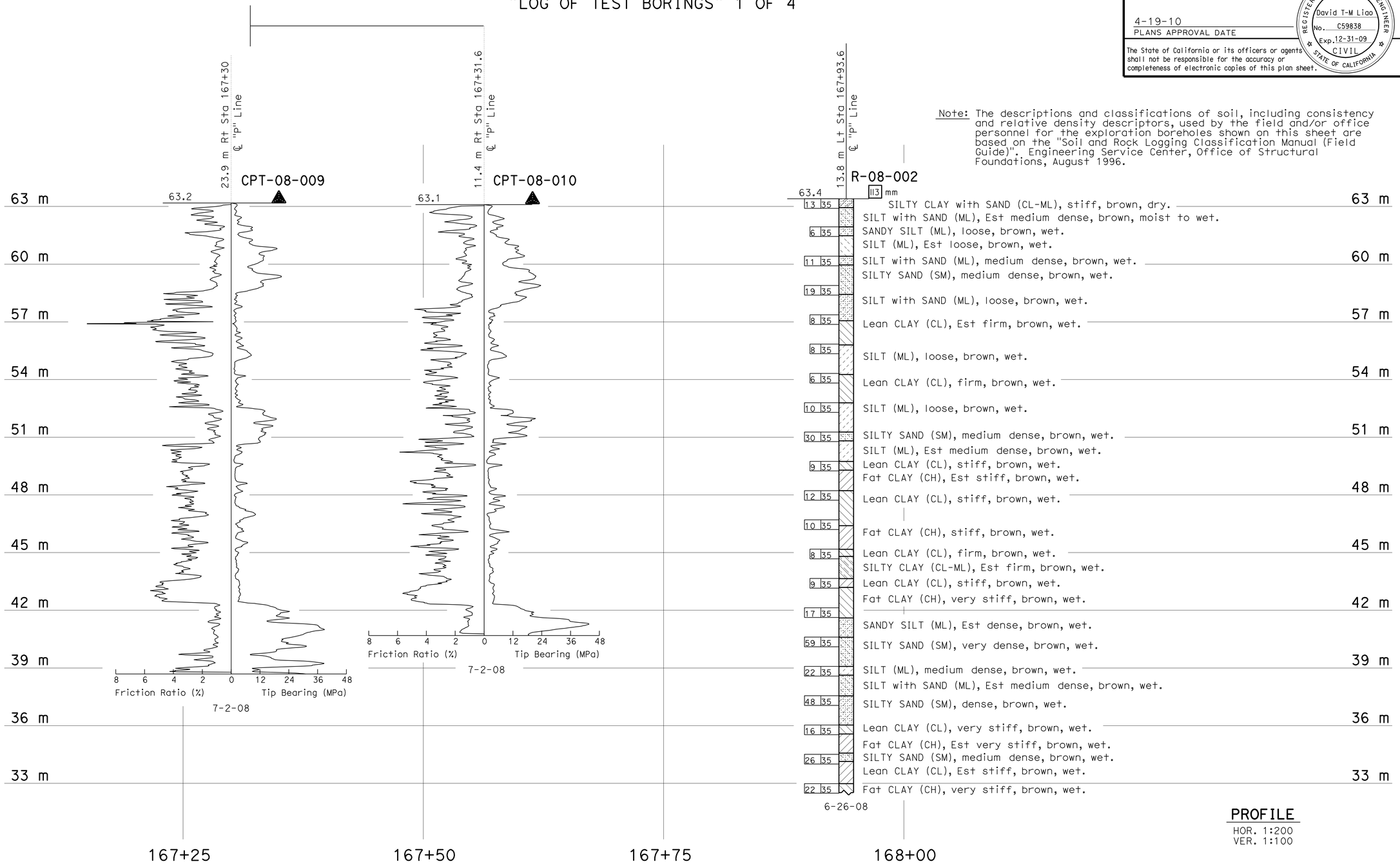

Note: The descriptions and classifications of soil, including consistency and relative density descriptors, used by the field and/or office personnel for the exploration boreholes shown on this sheet are based on the "Soil and Rock Logging Classification Manual (Field Guide)". Engineering Service Center, Office of Structural Foundations, August 1996.

PROFILE
HOR. 1:200
VER. 1:100

LEGEND OF BORING OPERATIONS

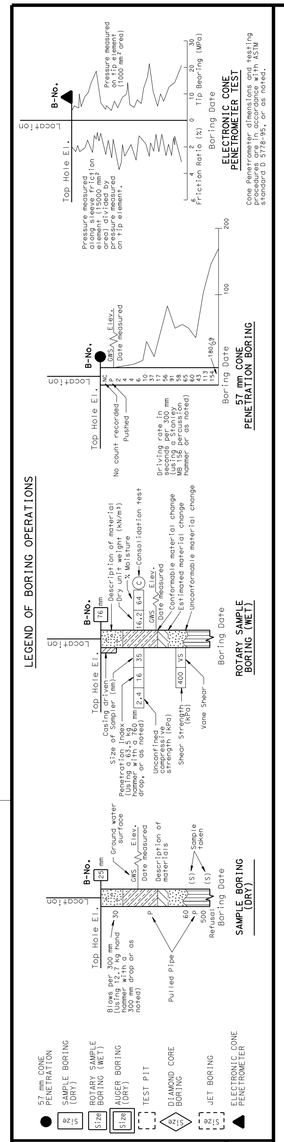

LEGEND OF EARTH MATERIALS

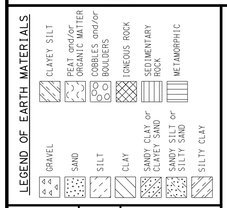

CONSISTENCY CLASSIFICATION FOR SOILS

According to the Standard Penetration Test

SPT N-Value (Blows/0.3m)	Granular	SPT N-Value (Blows/0.3m)	Cohesive
0-4	Very Loose	<2	Very Soft
5-10	Loose	2-4	Soft
11-30	Medium Dense	5-8	Firm
31-50	Dense	9-15	Stiff
>50	Very Dense	16-30	Very stiff
		>30	Hard

NOTE: Classification of earth material as shown on this sheet is based upon field inspection and is not to be construed to imply mechanical analysis.

OGS CIVIL LOG OF TEST BORINGS SHEET (METRIC) (REV. 4/04)

Caltrans Metric

ENGINEERING SERVICES	GEOTECHNICAL SERVICES
DRAWN BY	I.G-Remmen, 7/09
CHECKED BY	T-M Liao

FIELD INVESTIGATION BY: T-M Liao

STATE OF CALIFORNIA
DEPARTMENT OF TRANSPORTATION

DIVISION OF ENGINEERING SERVICES
STRUCTURE DESIGN
DESIGN BRANCH

BRIDGE NO. 58-0344R/L
KILOMETER POST 15.61

KALIN ROAD UC
LOG OF TEST BORINGS 2 OF 4

ALL DIMENSIONS ARE IN METERS UNLESS OTHERWISE SHOWN

ORIGINAL SCALE IN MILLIMETERS FOR REDUCED PLANS 0 10 20 30 40 50 60 70 80 90 100

CU 11
EA 167891

DISREGARD PRINTS BEARING EARLIER REVISION DATES

REVISION DATES (PRELIMINARY STAGE ONLY) 07-23-09 07-28-09 08-06-09

SHEET 20 OF 22

FILE => 58-0344rl-z-ltb02.dgn

USERNAME => rtirenord DATE PLOTTED => 22-APR-2010 TIME PLOTTED => 13:04

DIST	COUNTY	ROUTE	KILOMETER POST TOTAL PROJECT	SHEET No	TOTAL SHEETS
11	Imp	78,86	R14.6/R19.5, 38.3/39.1	324	325

REGISTERED CIVIL ENGINEER 8-10-09

4-19-10
PLANS APPROVAL DATE

REGISTERED PROFESSIONAL ENGINEER
David T-M Liao
No. C59838
Exp. 12-31-09
CIVIL
STATE OF CALIFORNIA

The State of California or its officers or agents shall not be responsible for the accuracy or completeness of electronic copies of this plan sheet.

FOR PLAN VIEW, SEE
"LOG OF TEST BORINGS" 1 OF 4

Note: The descriptions and classifications of soil, including consistency and relative density descriptors, used by the field and/or office personnel for the exploration boreholes shown on this sheet are based on the "Soil and Rock Logging Classification Manual (Field Guide)". Engineering Service Center, Office of Structural Foundations, August 1996.

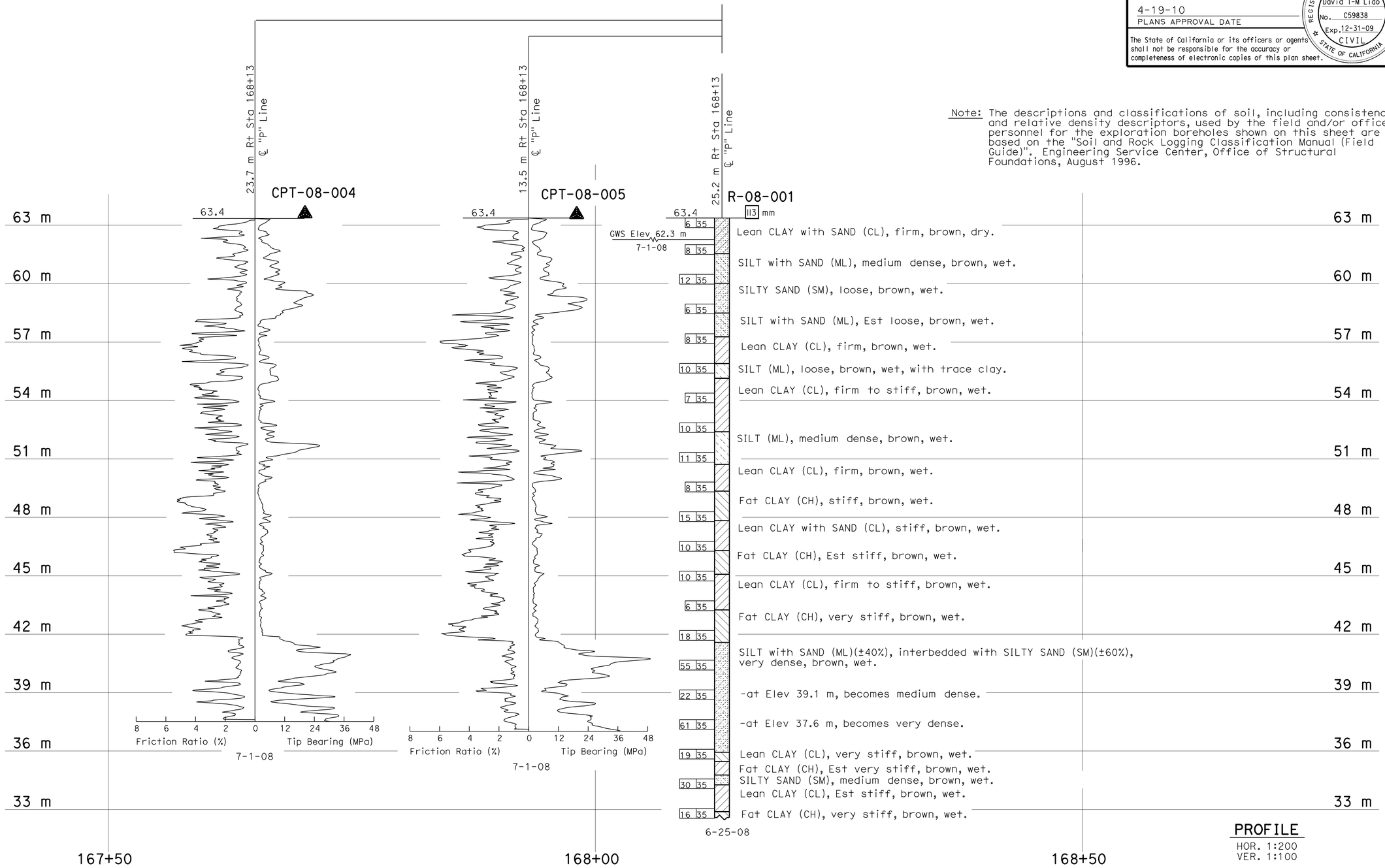

PROFILE
HOR. 1:200
VER. 1:100

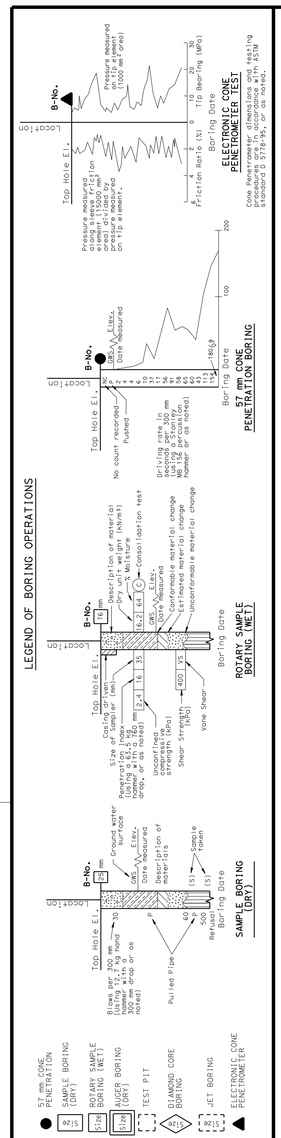

LEGEND OF EARTH MATERIALS

GRAVEL, SAND, SILT, CLAY, SANDY CLAY or CLAYEY SAND, SANDY SILT or SILTY SAND, SILTY CLAY, CLAYEY SILT, PEAT and/or ORGANIC MATTER, COBBLES and/or BOULDERS, IGNEOUS ROCK, SEDIMENTARY ROCK, METAMORPHIC

CONSISTENCY CLASSIFICATION FOR SOILS

According to the Standard Penetration Test

SPT N-Value (Blows/ 0.3m)	Granular	SPT N-Value (Blows/ 0.3m)	Cohesive
0-4	Very Loose	<2	Very Soft
5-10	Loose	2-4	Soft
11-30	Medium Dense	5-8	Firm
31-50	Dense	9-15	Stiff
>50	Very Dense	16-30	Very stiff
		>30	Hard

NOTE: Classification of earth material as shown on this sheet is based upon field inspection and is not to be construed to imply mechanical analysis.

OGS CIVIL LOG OF TEST BORINGS SHEET (METRIC) (REV. 4/04)

Caltrans Metric

ENGINEERING SERVICES	GEOTECHNICAL SERVICES
DRAWN BY	I.G-Remmen, 7/09
CHECKED BY	T-M Liao

FIELD INVESTIGATION BY: T-M Liao

STATE OF CALIFORNIA
DEPARTMENT OF TRANSPORTATION

DIVISION OF ENGINEERING SERVICES
STRUCTURE DESIGN
DESIGN BRANCH

BRIDGE NO. 58-0344R/L
KILOMETER POST 15.61

KALIN ROAD UC
LOG OF TEST BORINGS 3 OF 4

ALL DIMENSIONS ARE IN METERS UNLESS OTHERWISE SHOWN

ORIGINAL SCALE IN MILLIMETERS FOR REDUCED PLANS 0 10 20 30 40 50 60 70 80 90 100

CU 11
EA 167891

DISREGARD PRINTS BEARING EARLIER REVISION DATES

REVISION DATES (PRELIMINARY STAGE ONLY) 07-27-09 07-28-09 08-06-09

SHEET 21 OF 22

FILE => 58-0344r1-z-1tb03.dgn

USERNAME => trlenard DATE PLOTTED => 22-APR-2010 TIME PLOTTED => 13:04

DIST	COUNTY	ROUTE	KILOMETER POST TOTAL PROJECT	SHEET No	TOTAL SHEETS
11	Imp	78,86	R14.6/R19.5, 38.3/39.1	325	325

REGISTERED CIVIL ENGINEER 8-10-09

4-19-10
PLANS APPROVAL DATE

REGISTERED PROFESSIONAL ENGINEER
David T-M Liao
No. C59838
Exp. 12-31-09
CIVIL
STATE OF CALIFORNIA

The State of California or its officers or agents shall not be responsible for the accuracy or completeness of electronic copies of this plan sheet.

FOR PLAN VIEW, SEE
"LOG OF TEST BORINGS" 1 OF 4

Note: The descriptions and classifications of soil, including consistency and relative density descriptors, used by the field and/or office personnel for the exploration boreholes shown on this sheet are based on the "Soil and Rock Logging Classification Manual (Field Guide)". Engineering Service Center, Office of Structural Foundations, August 1996.

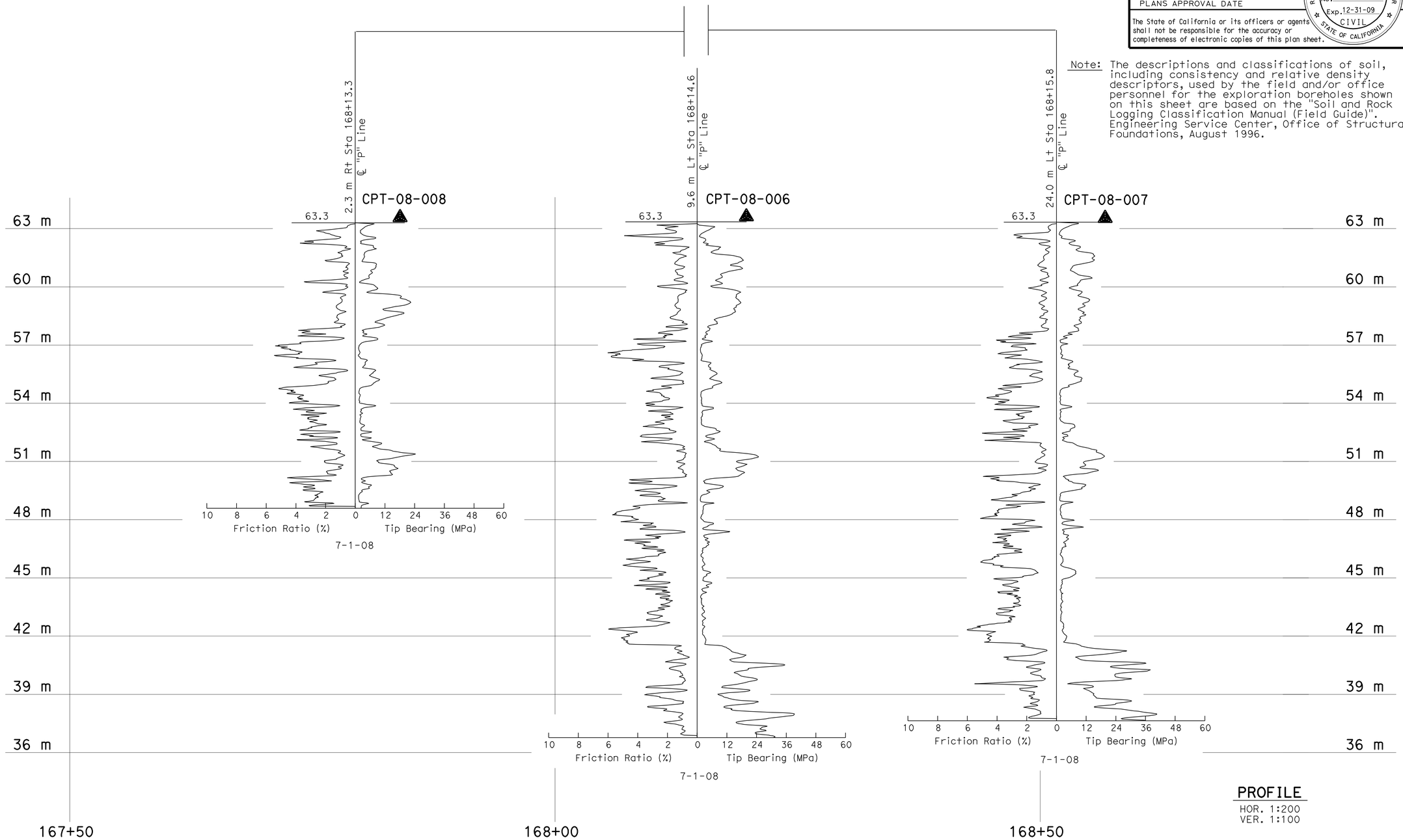

PROFILE
HOR. 1:200
VER. 1:100

LEGEND OF BORING OPERATIONS

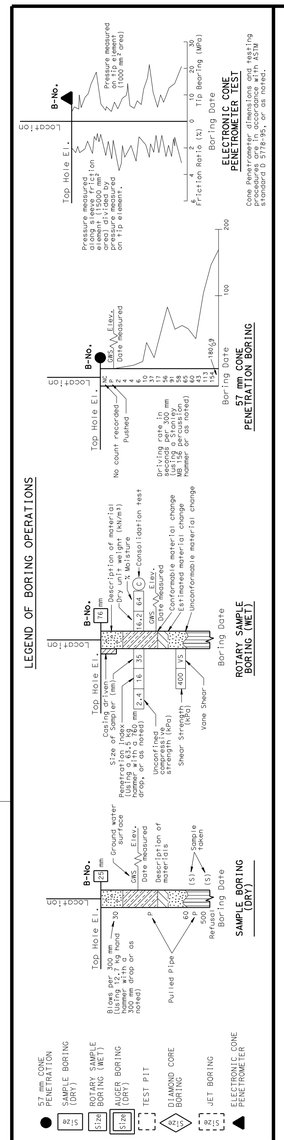

LEGEND OF EARTH MATERIALS

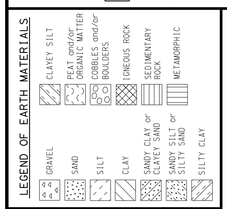

CONSISTENCY CLASSIFICATION FOR SOILS

According to the Standard Penetration Test

SPT N-Value (Blows/ 0.3m)	Granular	SPT N-Value (Blows/ 0.3m)	Cohesive
0-4	Very Loose	<2	Very Soft
5-10	Loose	2-4	Soft
11-30	Medium Dense	5-8	Firm
31-50	Dense	9-15	Stiff
>50	Very Dense	16-30	Very stiff
		>30	Hard

NOTE: Classification of earth material as shown on this sheet is based upon field inspection and is not to be construed to imply mechanical analysis.

OGS CIVIL LOG OF TEST BORINGS SHEET (METRIC) (REV. 4/04)

Caltrans Metric

ENGINEERING SERVICES	GEOTECHNICAL SERVICES
DRAWN BY	I.G-Remmen, 7/09
CHECKED BY	T-M Liao

FIELD INVESTIGATION BY: T-M Liao

STATE OF CALIFORNIA
DEPARTMENT OF TRANSPORTATION

DIVISION OF ENGINEERING SERVICES
STRUCTURE DESIGN
DESIGN BRANCH

BRIDGE NO. 58-0344R/L
KILOMETER POST 15.61

KALIN ROAD UC
LOG OF TEST BORINGS 4 OF 4

ALL DIMENSIONS ARE IN METERS UNLESS OTHERWISE SHOWN

ORIGINAL SCALE IN MILLIMETERS FOR REDUCED PLANS 0 10 20 30 40 50 60 70 80 90 100

CU 11
EA 167891

DISREGARD PRINTS BEARING EARLIER REVISION DATES

REVISION DATES (PRELIMINARY STAGE ONLY) 07-28-09 08-06-09

SHEET 22 OF 22

FILE => 58-0344rl-z-lltb04.dgn

USERNAME => friehard DATE PLOTTED => 22-APR-2010 TIME PLOTTED => 13:04