DIST	COUNTY	ROUTE	POST MILES TOTAL PROJECT	SHEET No.	TOTAL SHEETS
11	SD	5,8,15,52, 94,805	Var	101	116

Renee M. Anderson 9-26-11
REGISTERED CIVIL ENGINEER DATE

4-30-12
PLANS APPROVAL DATE

REGISTERED PROFESSIONAL ENGINEER RENEE ANDERSON No. 61040 Exp. 12/31/12 CIVIL STATE OF CALIFORNIA

The State of California or its officers or agents shall not be responsible for the accuracy or completeness of electronic copies of this plan sheet.

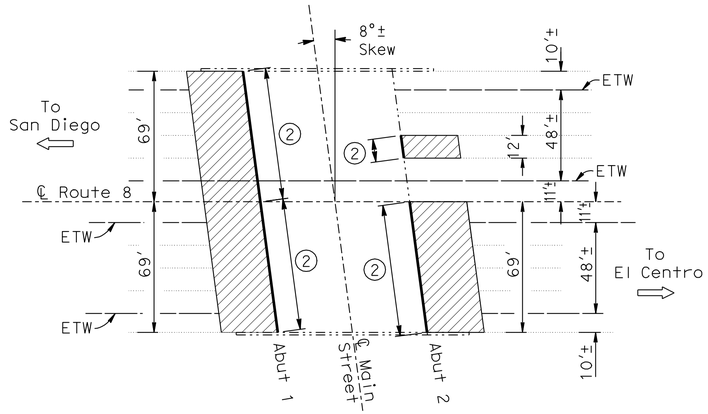

MAIN STREET UC

Bridge No. 57-0363R/L Rte 8 Post Mile 14.59
1" = 40'

23

QUANTITIES

BRIDGE NO. 57-0363R/L

AGGREGATE BASE (APPROACH SLAB)	49	CY
STRUCTURAL CONCRETE, APPROACH SLAB (TYPE R)	292	CY
PAVING NOTCH EXTENSION	166	CF
CORE CONCRETE (2")	20	LF
JOINT SEAL (MR 1½")	222	LF

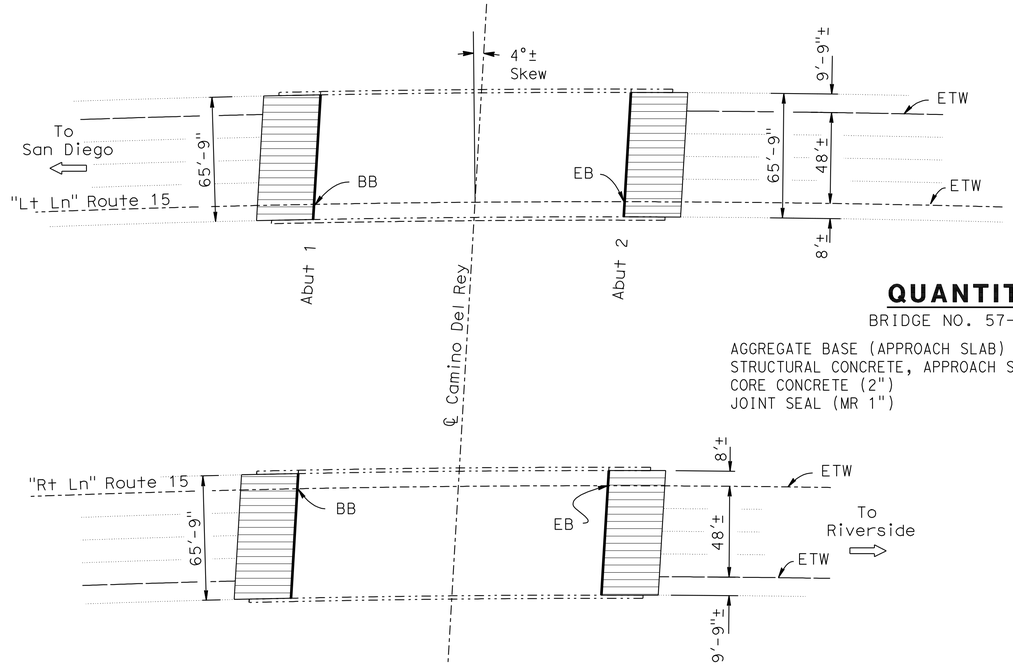

CAMINO DEL REY UC

Bridge No. 57-0889R/L Rte 15 Post Mile 41.82
1" = 40'

25

QUANTITIES

BRIDGE NO. 57-0889R/L

AGGREGATE BASE (APPROACH SLAB)	58	CY
STRUCTURAL CONCRETE, APPROACH SLAB (TYPE R)	350	CY
CORE CONCRETE (2")	24	LF
JOINT SEAL (MR 1")	264	LF

LEGEND:

- Indicates Existing Structure
- Indicates location of existing Joint Seal removal, clean Expansion Joint, and placement of new Joint Seal.
- Indicates Limits of Approach Slab Type R(30D)
- Indicates Limits of Approach Slab Type R(30S)
- (1) Existing Approach Slab
- (2) Limits of Paving Notch Extension
- [X] Structure Location, see Joint Seal Table on "JOINT SEAL DETAILS" sheet.

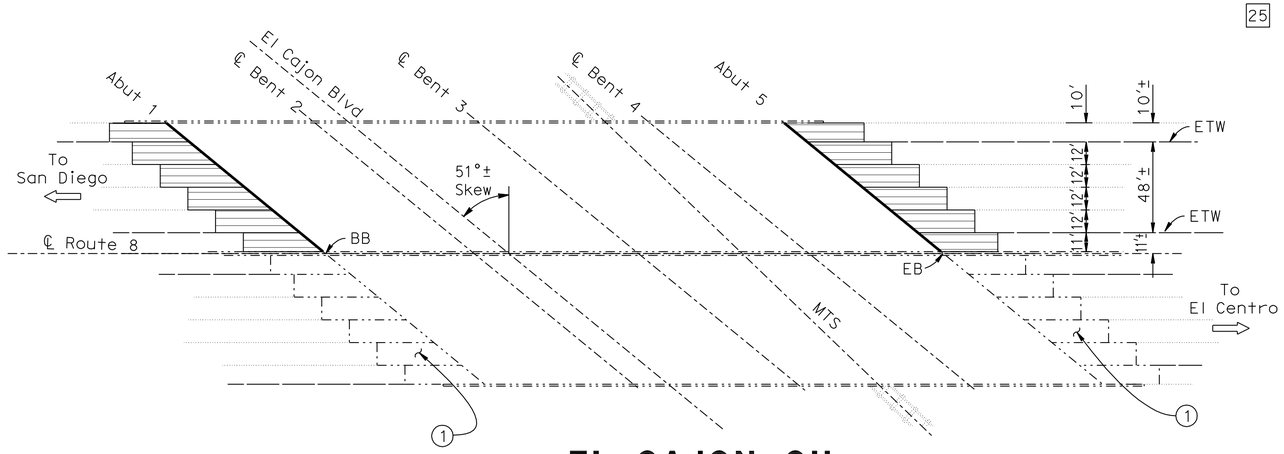

EL CAJON OH

Bridge No. 57-0362 Rte 8 Post Mile 13.66
1" = 40'

24

QUANTITIES

BRIDGE NO. 57-0362

AGGREGATE BASE (APPROACH SLAB)	37	CY
STRUCTURAL CONCRETE, APPROACH SLAB (TYPE R)	227	CY
CORE CONCRETE (2")	12	LF
JOINT SEAL (MR 1½")	222	LF

NOTE:
THE CONTRACTOR SHALL VERIFY ALL CONTROLLING FIELD DIMENSIONS BEFORE ORDERING OR FABRICATING ANY MATERIAL.

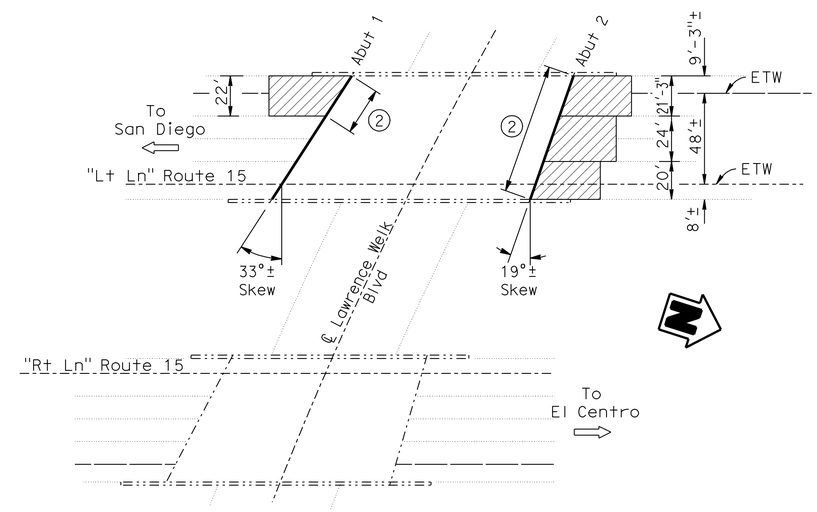

LAWRENCE WELK DRIVE UC

Bridge No. 57-0894L Rte 15 Post Mile 39.35
1" = 40'

26

QUANTITIES

BRIDGE NO. 57-0894L

AGGREGATE BASE (APPROACH SLAB)	23	CY
STRUCTURAL CONCRETE, APPROACH SLAB (TYPE R)	135	CY
PAVING NOTCH EXTENSION	72	CF
CLEAN EXPANSION JOINT	52	LF
CORE CONCRETE (2")	8	LF
JOINT SEAL (MR 2")	148	LF

Daniel T. Adams
DESIGN ENGINEER

	BY	CHECKED
DESIGN	D. Azzam	R. Anderson
DETAILS	R. Kirkland	R. Anderson
QUANTITIES	D. Azzam	R. Anderson

LOAD & RESISTANCE FACTOR DESIGN — LIVE LOADING: HL93 W/"LOW-BOY"; PERMIT DESIGN VEHICLE

LAYOUT: D. Azzam — CHECKED: R. Anderson
SPECIFICATIONS: T. Nedwick — PLANS AND SPECS COMPARED: T. Nedwick

ORIGINAL SCALE IN INCHES FOR REDUCED PLANS 0 1 2 3

STATE OF CALIFORNIA
DEPARTMENT OF TRANSPORTATION

DIVISION OF ENGINEERING SERVICES
STRUCTURE DESIGN
DESIGN BRANCH 10

BRIDGE NO.: Varies
POST MILE: Varies

APPROACH SLAB REHABILITATION
GENERAL PLAN NO. 7

UNIT: 3589
PROJECT NUMBER & PHASE: 11000201841
CONTRACT NO.: 11-238601

DISREGARD PRINTS BEARING EARLIER REVISION DATES

REVISION DATES: 4/08/11 9/23/11 1/24/12

SHEET 7 OF 22

STRUCTURES DESIGN GENERAL PLAN SHEET (ENGLISH) (REV.09-01-10)

FILE => 11-238601agp07.dgn

USERNAME => s128843 DATE PLOTTED => 02-MAY-2012 TIME PLOTTED => 15:51

DIST	COUNTY	ROUTE	POST MILES TOTAL PROJECT	SHEET No.	TOTAL SHEETS
11	SD	5,8,15,52, 94,805	Var	102	116

Renee M. Anderson 9-26-11
REGISTERED CIVIL ENGINEER DATE

4-30-12
PLANS APPROVAL DATE

REGISTERED PROFESSIONAL ENGINEER RENEE ANDERSON No. 61040 Exp. 12/31/12 CIVIL STATE OF CALIFORNIA

The State of California or its officers or agents shall not be responsible for the accuracy or completeness of electronic copies of this plan sheet.

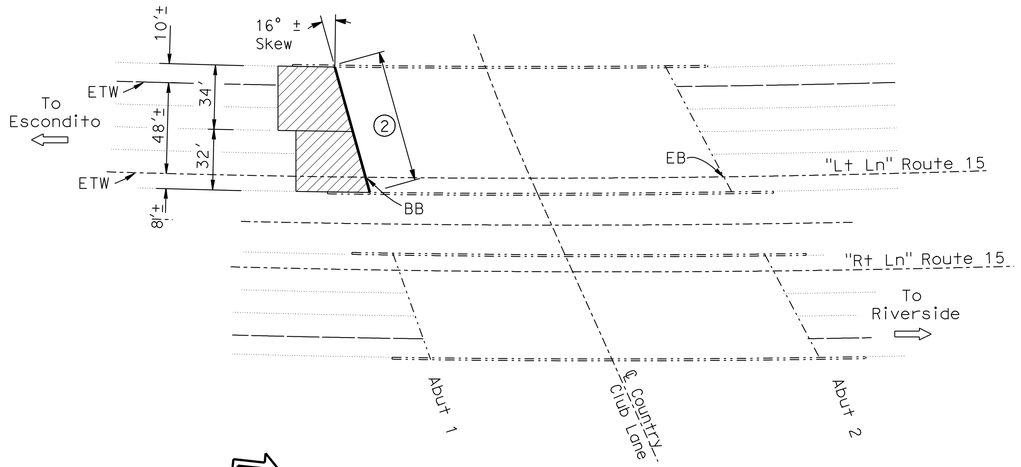

COUNTRY CLUB LANE UC

Bridge No. 57-0819L Rte 15 Post Mile 33.57
1" = 40'

27

QUANTITIES

BRIDGE NO. 57-0819L

AGGREGATE BASE (APPROACH SLAB)	17	CY
STRUCTURAL CONCRETE, APPROACH SLAB (TYPE R)	102	CY
PAVING NOTCH EXTENSION	52	CF
CORE CONCRETE (2")	6	LF
JOINT SEAL (MR 1")	69	LF

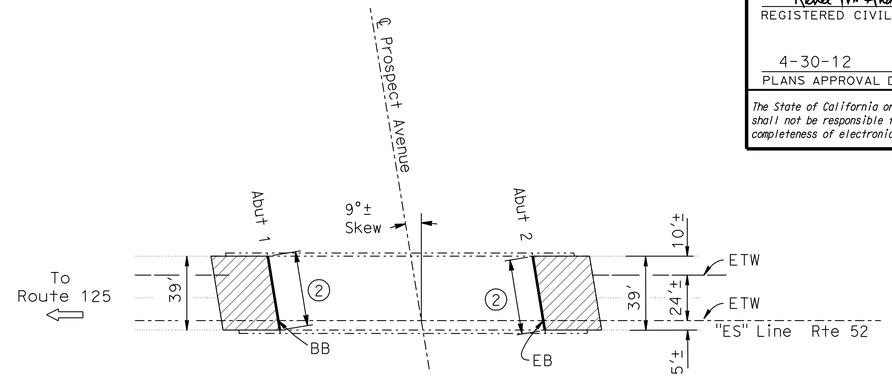

PROSPECT AVE UC (E52/S125 CONNECTOR)

Bridge No. 57-1024G Rte 52 Post Mile 15.16
1" = 40'

29

QUANTITIES

BRIDGE NO. 57-1024G

AGGREGATE BASE (APPROACH SLAB)	17	CY
STRUCTURAL CONCRETE, APPROACH SLAB (TYPE R)	104	CY
PAVING NOTCH EXTENSION	60	CF
CORE CONCRETE (2")	6	LF
JOINT SEAL (MR 2")	80	LF

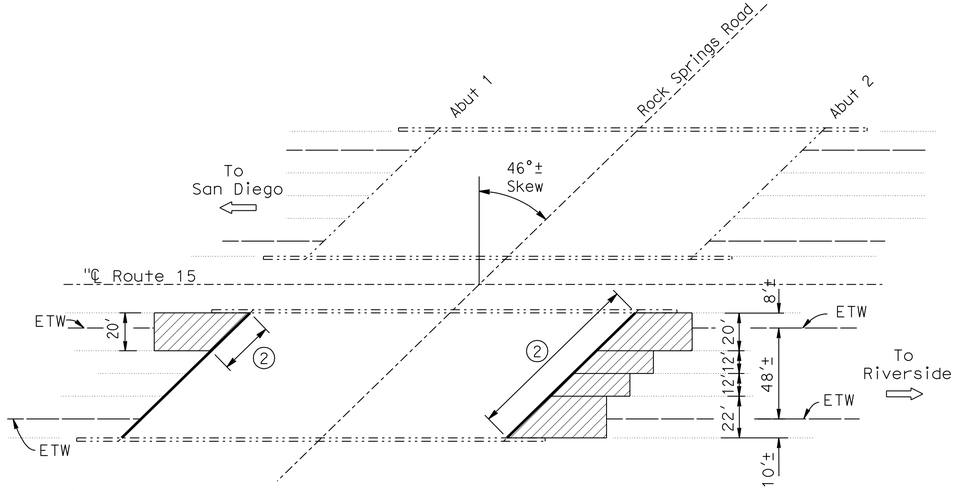

ROCK SPRINGS ROAD UC

Bridge No. 57-0817R Rte 15 Post Mile 31.99
1" = 40'

28

QUANTITIES

BRIDGE NO. 57-0817R

AGGREGATE BASE (APPROACH SLAB)	25	CY
STRUCTURAL CONCRETE, APPROACH SLAB (TYPE R)	148	CY
PAVING NOTCH EXTENSION	92	CF
CLEAN EXPANSION JOINT	66	LF
CORE CONCRETE (2")	8	LF
JOINT SEAL (MR 1")	192	LF

NOTE:
THE CONTRACTOR SHALL VERIFY ALL CONTROLLING FIELD DIMENSIONS BEFORE ORDERING OR FABRICATING ANY MATERIAL.

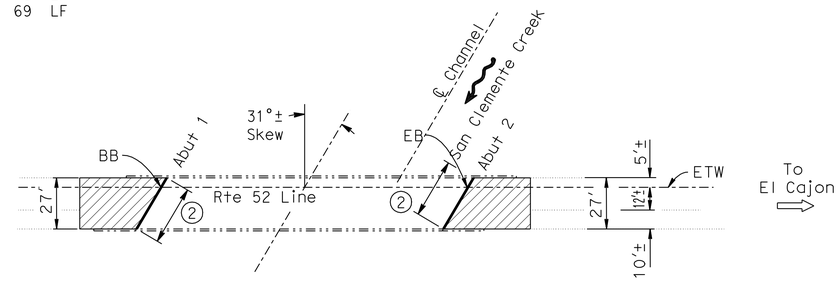

E52-N805/SAN CLEMENTE CREEK BRIDGE

Bridge No. 57-0753G Rte 52 Post Mile 3.36
1" = 40'

30

QUANTITIES

BRIDGE NO. 57-0753G

AGGREGATE BASE (APPROACH SLAB)	15	CY
STRUCTURAL CONCRETE, APPROACH SLAB (TYPE R)	91	CY
PAVING NOTCH EXTENSION	48	CF
CORE CONCRETE (2")	3	LF
JOINT SEAL (MR1/2")	64	LF

LEGEND:

- Indicates Existing Structure
- Indicates location of existing Joint Seal removal, clean Expansion Joint, and placement of new Joint Seal.
- Indicates Limits of Approach Slab Type R(30D)
- (1) Existing Approach Slab
- (2) Limits of Paving Notch Extension
- [X] Structure Location, see Joint Seal Table on "JOINT SEAL DETAILS" sheet.

Daniel T. Adams
DESIGN ENGINEER

	BY	CHECKED
DESIGN	D. Azzam	R. Anderson
DETAILS	R. Kirkland	R. Anderson
QUANTITIES	D. Azzam	R. Anderson

LOAD & RESISTANCE FACTOR DESIGN — LIVE LOADING: HL93 W/"LOW-BOY"; PERMIT DESIGN VEHICLE

	BY	CHECKED
LAYOUT	D. Azzam	R. Anderson
SPECIFICATIONS	T. Nedwick	PLANS AND SPECS COMPARED T. Nedwick

ORIGINAL SCALE IN INCHES FOR REDUCED PLANS 0 1 2 3

STATE OF CALIFORNIA
DEPARTMENT OF TRANSPORTATION

DIVISION OF ENGINEERING SERVICES
STRUCTURE DESIGN
DESIGN BRANCH 10

BRIDGE NO. Varies
POST MILE Varies

APPROACH SLAB REHABILITATION
GENERAL PLAN NO. 8

UNIT: 3589
PROJECT NUMBER & PHASE: 11000201841
CONTRACT NO.: 11-238601

DISREGARD PRINTS BEARING EARLIER REVISION DATES

REVISION DATES 4/08/11 9/29/11 1/24/12

SHEET 8 OF 22

USERNAME => s128843 DATE PLOTTED => 02-MAY-2012 TIME PLOTTED => 15:51

STRUCTURES DESIGN GENERAL PLAN SHEET (ENGLISH) (REV.09-01-10)

FILE => 11-238601agp08.dgn

DIST	COUNTY	ROUTE	POST MILES TOTAL PROJECT	SHEET No.	TOTAL SHEETS
11	SD	5,8,15,52, 94,805	Var	103	116

Renee M. Anderson 9-26-11
REGISTERED CIVIL ENGINEER DATE

4-30-12
PLANS APPROVAL DATE

REGISTERED PROFESSIONAL ENGINEER RENEE ANDERSON No. 61040 Exp. 12/31/12 CIVIL STATE OF CALIFORNIA

The State of California or its officers or agents shall not be responsible for the accuracy or completeness of electronic copies of this plan sheet.

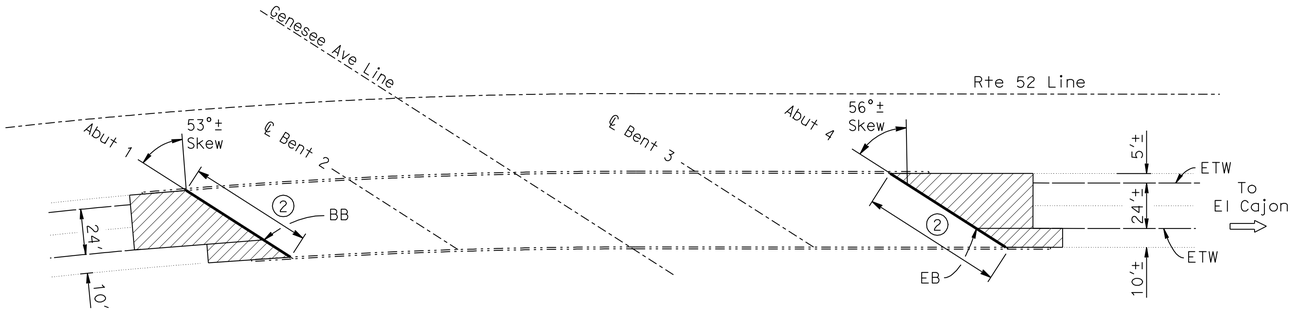

GENESEE AVENUE UC

Bridge No. 57-0744R Rte 52 Post Mile 2.29
1" = 40'

31

QUANTITIES

BRIDGE NO. 57-0744R

AGGREGATE BASE (APPROACH SLAB)	28	CY
STRUCTURAL CONCRETE, APPROACH SLAB (TYPE R)	165	CY
PAVING NOTCH EXTENSION	102	CF
CORE CONCRETE (2")	6	LF
JOINT SEAL (MR 1")	136	LF

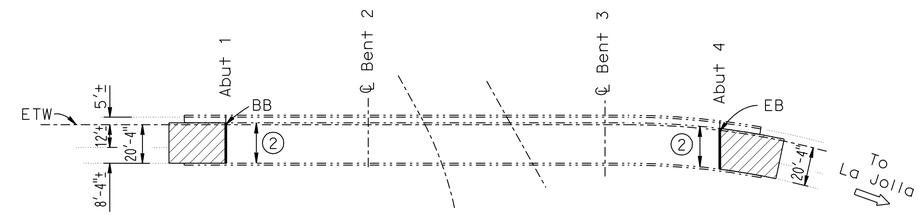

W52-N5 CONNECTOR OH

Bridge No. 57-0523F Rte 52 Post Mile 0.37
1" = 40'

33

QUANTITIES

BRIDGE NO. 57-0523F

AGGREGATE BASE (APPROACH SLAB)	9	CY
STRUCTURAL CONCRETE, APPROACH SLAB (TYPE R)	54	CY
PAVING NOTCH EXTENSION	31	CF
CORE CONCRETE (2")	3	LF
JOINT SEAL (MR 1")	42	LF

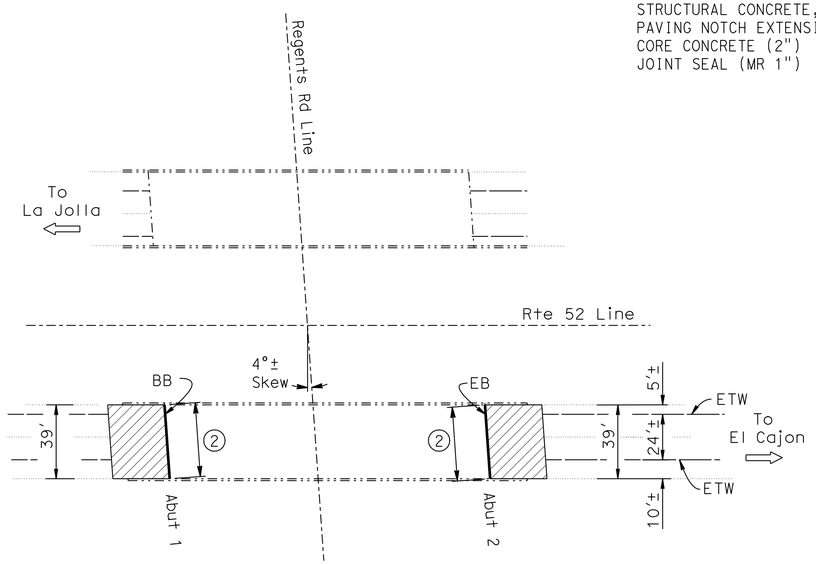

REGENTS ROAD UC

Bridge No. 57-0743R Rte 52 Post Mile 1.35
1" = 40'

32

QUANTITIES

BRIDGE NO. 57-0743R

AGGREGATE BASE (APPROACH SLAB)	17	CY
STRUCTURAL CONCRETE, APPROACH SLAB (TYPE R)	104	CY
PAVING NOTCH EXTENSION	59	CF
CORE CONCRETE (2")	6	LF
JOINT SEAL (MR1/2")	40	LF
JOINT SEAL (MR 1")	40	LF

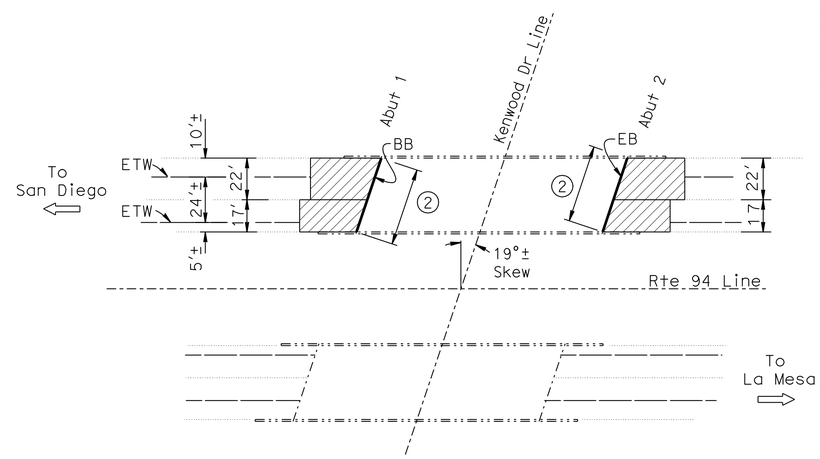

KENWOOD DRIVE UC

Bridge No. 57-0572L Rte 94 Post Mile 11.80
1" = 40'

34

QUANTITIES

BRIDGE NO. 57-0572L

AGGREGATE BASE (APPROACH SLAB)	19	CY
STRUCTURAL CONCRETE, APPROACH SLAB (TYPE R)	116	CY
PAVING NOTCH EXTENSION	63	CF
CORE CONCRETE (2")	6	LF
JOINT SEAL (MR 1")	84	LF

LEGEND:

- Indicates Existing Structure
- Indicates location of existing Joint Seal removal, clean Expansion Joint, and placement of new Joint Seal.
- Indicates Limits of Approach Slab Type R(30D)
- (1) Existing Approach Slab
- (2) Limits of Paving Notch Extension
- [X] Structure Location, see Joint Seal Table on "JOINT SEAL DETAILS" sheet.

NOTE:
THE CONTRACTOR SHALL VERIFY ALL CONTROLLING FIELD DIMENSIONS BEFORE ORDERING OR FABRICATING ANY MATERIAL.

Daniel T. Adams
DESIGN ENGINEER

	BY	CHECKED
DESIGN	D. Azzam	R. Anderson
DETAILS	R. Kirkland	R. Anderson
QUANTITIES	D. Azzam	R. Anderson

LOAD & RESISTANCE FACTOR DESIGN — LIVE LOADING: HL93 W/"LOW-BOY": PERMIT DESIGN VEHICLE

	BY	CHECKED
LAYOUT	D. Azzam	R. Anderson
SPECIFICATIONS	T. Nedwick	PLANS AND SPECS COMPARED T. Nedwick

ORIGINAL SCALE IN INCHES FOR REDUCED PLANS 0 1 2 3

STATE OF CALIFORNIA
DEPARTMENT OF TRANSPORTATION

DIVISION OF ENGINEERING SERVICES
STRUCTURE DESIGN
DESIGN BRANCH 10

BRIDGE NO. Varies
POST MILE Varies

APPROACH SLAB REHABILITATION
GENERAL PLAN NO. 9

UNIT: 3589
PROJECT NUMBER & PHASE: 11000201841
CONTRACT NO.: 11-238601

DISREGARD PRINTS BEARING EARLIER REVISION DATES
REVISION DATES 4/08/11 9/28/11 1/24/12
SHEET 9 OF 22

USERNAME => s128843 DATE PLOTTED => 02-MAY-2012 TIME PLOTTED => 15:51

STRUCTURES DESIGN GENERAL PLAN SHEET (ENGLISH) (REV.09-01-10)

FILE => 11-238601agp09.dgn

DIST	COUNTY	ROUTE	POST MILES TOTAL PROJECT	SHEET No.	TOTAL SHEETS
11	SD	5,8,15,52, 94,805	Var	104	116

Renee M. Anderson 9-26-11
REGISTERED CIVIL ENGINEER DATE

4-30-12
PLANS APPROVAL DATE

REGISTERED PROFESSIONAL ENGINEER RENEE ANDERSON No. 61040 Exp. 12/31/12 CIVIL STATE OF CALIFORNIA

The State of California or its officers or agents shall not be responsible for the accuracy or completeness of electronic copies of this plan sheet.

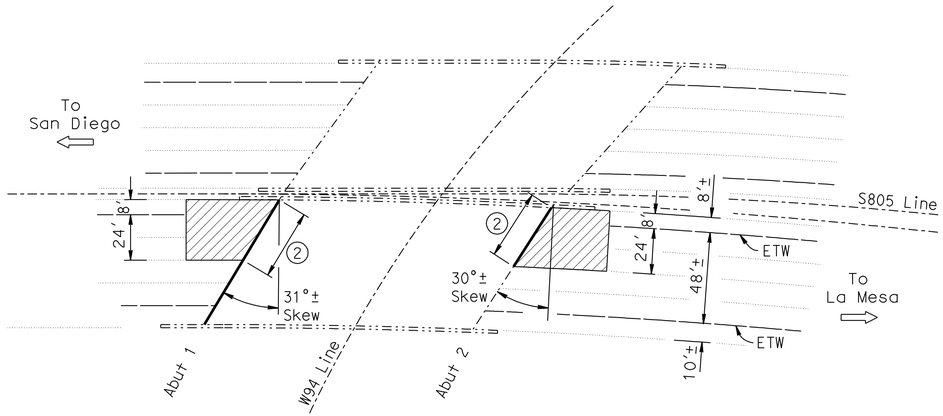

W94-S805 CONNECTOR UC

Bridge No. 57-0663R Rte 94 Post Mile 4.00
1" = 40'

35

QUANTITIES

BRIDGE NO. 57-0663R

AGGREGATE BASE (APPROACH SLAB)	19	CY
STRUCTURAL CONCRETE, APPROACH SLAB (TYPE R)	113	CY
PAVING NOTCH EXTENSION	58	CF
CLEAN EXPANSION JOINT	40	LF
CORE CONCRETE (2")	6	LF
JOINT SEAL (MR 1/2")	37	LF
JOINT SEAL (MR 1")	77	LF

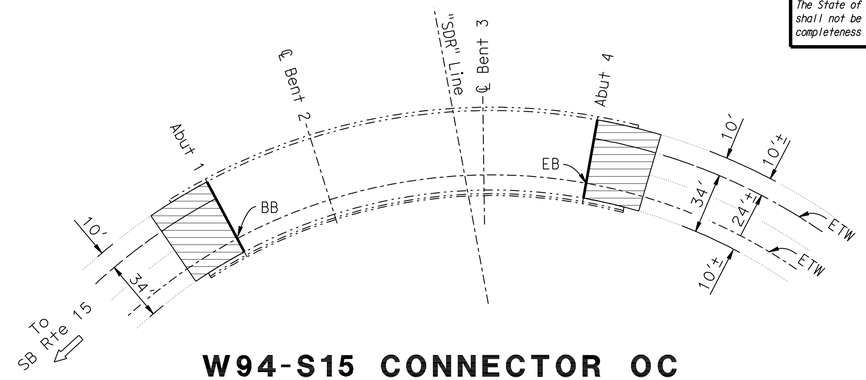

W94-S15 CONNECTOR OC

Bridge No. 57-0350F Rte 94 Post Mile 3.08
1" = 40'

37

QUANTITIES

BRIDGE NO. 57-0350F

AGGREGATE BASE (APPROACH SLAB)	20	CY
STRUCTURAL CONCRETE, APPROACH SLAB (TYPE R)	117	CY
CORE CONCRETE (2")	6	LF
JOINT SEAL (MR 1")	89	LF

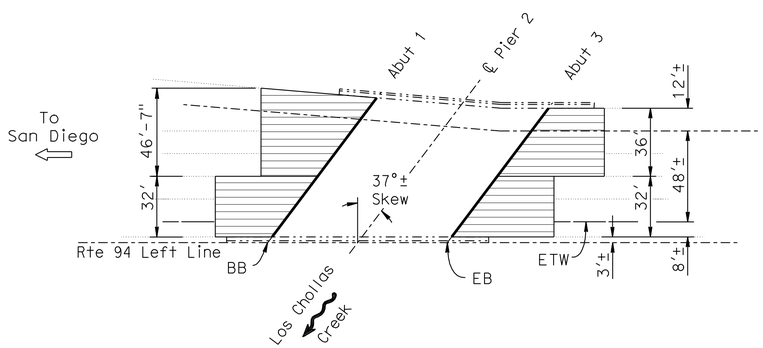

CHOLLAS CREEK BRIDGE

Bridge No. 57-0107L Rte 94 Post Mile 3.36
1" = 40'

36

QUANTITIES

BRIDGE NO. 57-0107L

AGGREGATE BASE (APPROACH SLAB)	46	CY
STRUCTURAL CONCRETE, APPROACH SLAB (TYPE R)	274	CY
PAVING NOTCH EXTENSION	133	CF
CORE CONCRETE (2")	12	LF
JOINT SEAL (MR 1/2")	179	LF

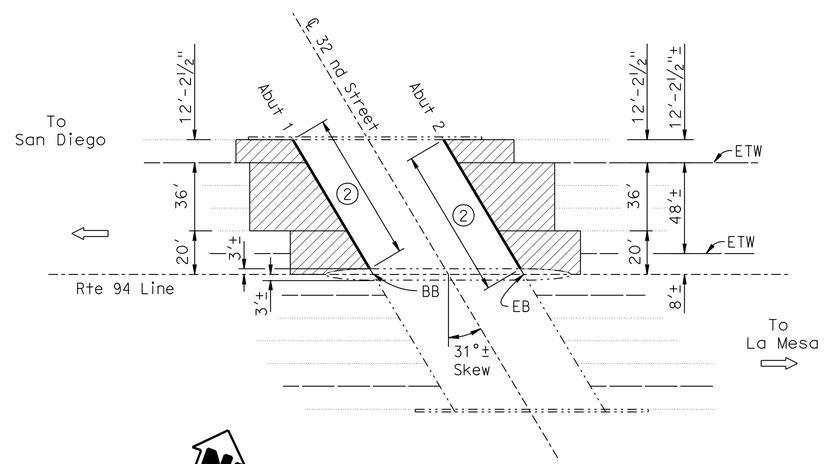

LEGEND:

- Indicates Existing Structure
- Indicates location of existing Joint Seal removal, clean Expansion Joint, and placement of new Joint Seal.
- Indicates Limits of Approach Slab Type R(30D)
- Indicates Limits of Approach Slab Type R(30S)
- (1) Existing Approach Slab
- (2) Limits of Paving Notch Extension
- [X] Structure Location, see Joint Seal Table on "JOINT SEAL DETAILS" sheet.

32ND STREET UC

Bridge No. 57-0361 Rte 94 Post Mile 2.68
1" = 40'

38

QUANTITIES

BRIDGE NO. 57-0361

AGGREGATE BASE (APPROACH SLAB)	39	CY
STRUCTURAL CONCRETE, APPROACH SLAB (TYPE R)	237	CY
PAVING NOTCH EXTENSION	120	CF
CORE CONCRETE (2")	12	LF
JOINT SEAL (MR 1/2 ")	160	LF

NOTE:
THE CONTRACTOR SHALL VERIFY ALL CONTROLLING FIELD DIMENSIONS BEFORE ORDERING OR FABRICATING ANY MATERIAL.

Daniel T. Adams
DESIGN ENGINEER

	BY	CHECKED
DESIGN	D. Azzam	R. Anderson
DETAILS	R. Kirkland	R. Anderson
QUANTITIES	D. Azzam	R. Anderson

LOAD & RESISTANCE FACTOR DESIGN — LIVE LOADING: HL93 W/"LOW-BOY": PERMIT DESIGN VEHICLE

	BY	CHECKED
LAYOUT	D. Azzam	R. Anderson
SPECIFICATIONS	T. Nedwick	PLANS AND SPECS COMPARED T. Nedwick

ORIGINAL SCALE IN INCHES FOR REDUCED PLANS 0 1 2 3

STATE OF CALIFORNIA
DEPARTMENT OF TRANSPORTATION

DIVISION OF ENGINEERING SERVICES
STRUCTURE DESIGN
DESIGN BRANCH 10

BRIDGE NO. Varies
POST MILE Varies

APPROACH SLAB REHABILITATION
GENERAL PLAN NO. 10

UNIT: 3589
PROJECT NUMBER & PHASE: 11000201841
CONTRACT NO.: 11-238601

DISREGARD PRINTS BEARING EARLIER REVISION DATES

REVISION DATES 4/06/11 9/23/11 1/24/12

SHEET 10 OF 22

USERNAME => s128843 DATE PLOTTED => 02-MAY-2012 TIME PLOTTED => 15:51

STRUCTURES DESIGN GENERAL PLAN SHEET (ENGLISH) (REV.09-01-10)

FILE => 11-238601agp10.dgn

DIST	COUNTY	ROUTE	POST MILES TOTAL PROJECT	SHEET No.	TOTAL SHEETS
11	SD	5,8,15,52, 94,805	Var	105	116

Renee M. Anderson 9-26-11
REGISTERED CIVIL ENGINEER DATE

4-30-12
PLANS APPROVAL DATE

REGISTERED PROFESSIONAL ENGINEER
RENEE ANDERSON
No. 61040
Exp. 12/31/12
CIVIL
STATE OF CALIFORNIA

The State of California or its officers or agents shall not be responsible for the accuracy or completeness of electronic copies of this plan sheet.

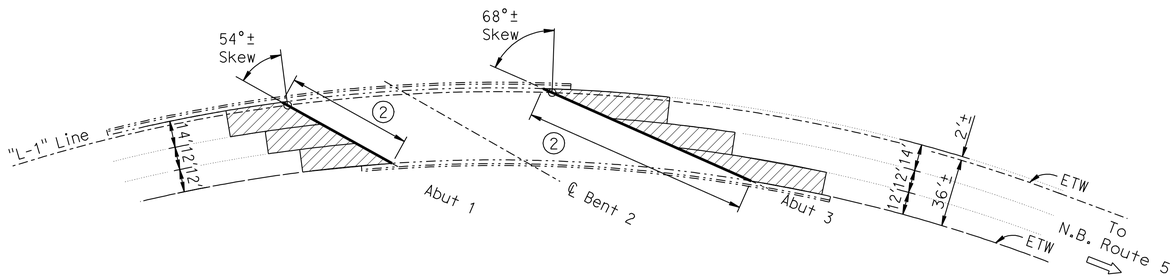

W94-N5 CONNECTOR OC

Bridge No. 57-0430F Rte 94 Post Mile 1.46
1" = 40'

39

QUANTITIES

BRIDGE NO. 57-0430F

AGGREGATE BASE (APPROACH SLAB)	24	CY
STRUCTURAL CONCRETE, APPROACH SLAB (TYPE R)	144	CY
PAVING NOTCH EXTENSION	129	CF
CORE CONCRETE (2")	9	LF
JOINT SEAL (MR1/2")	172	LF

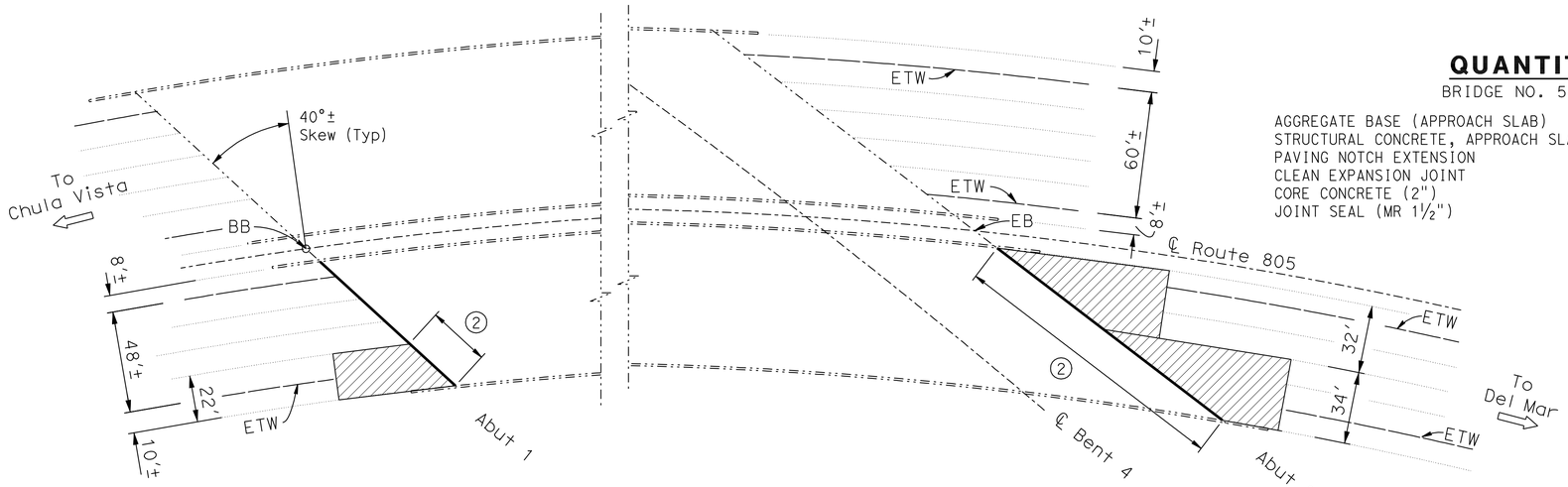

QUANTITIES

BRIDGE NO. 57-0611R

AGGREGATE BASE (APPROACH SLAB)	28	CY
STRUCTURAL CONCRETE, APPROACH SLAB (TYPE R)	168	CY
PAVING NOTCH EXTENSION	87	CF
CLEAN EXPANSION JOINT	57	LF
CORE CONCRETE (2")	8	LF
JOINT SEAL (MR 1½")	174	LF

LEGEND:

- Indicates Existing Structure
- Indicates location of existing Joint Seal removal, clean Expansion Joint, and placement of new Joint Seal.
- Indicates Limits of Approach Slab Type R(30D)
- ① Existing Approach Slab
- ② Limits of Paving Notch Extension
- [X] Structure Location, see Joint Seal Table on "JOINT SEAL DETAILS" sheet.

ROUTE 805/15 SEPARATION

Bridge No. 57-0611R Rte 805 PM 14.59
1" = 40'

40

NOTE:
THE CONTRACTOR SHALL VERIFY ALL CONTROLLING FIELD DIMENSIONS BEFORE ORDERING OR FABRICATING ANY MATERIAL.

Daniel T. Adams
DESIGN ENGINEER

	BY	CHECKED			
DESIGN	D. Azzam	R. Anderson	LOAD & RESISTANCE FACTOR DESIGN	LIVE LOADING: HL93 W/"LOW-BOY": PERMIT DESIGN VEHICLE	
DETAILS	R. Kirkland	R. Anderson	LAYOUT	D. Azzam	R. Anderson
QUANTITIES	D. Azzam	R. Anderson	SPECIFICATIONS	T. Nedwick	PLANS AND SPECS COMPARED T. Nedwick

ORIGINAL SCALE IN INCHES FOR REDUCED PLANS 0 1 2 3

STATE OF CALIFORNIA
DEPARTMENT OF TRANSPORTATION

DIVISION OF ENGINEERING SERVICES
STRUCTURE DESIGN
DESIGN BRANCH 10

BRIDGE NO. Varies
POST MILE Varies

APPROACH SLAB REHABILITATION
GENERAL PLAN NO. 11

UNIT: 3589
PROJECT NUMBER & PHASE: 11000201841
CONTRACT NO.: 11-238601

DISREGARD PRINTS BEARING EARLIER REVISION DATES

REVISION DATES: 4/06/11 9/23/11 1/24/12

SHEET 11 OF 22

USERNAME => s128843 DATE PLOTTED => 02-MAY-2012 TIME PLOTTED => 15:51

DIST	COUNTY	ROUTE	POST MILES TOTAL PROJECT	SHEET No.	TOTAL SHEETS
11	SD	5,8,15,52, 94,805	Var	106	116

Renee M. Anderson 9-26-11
REGISTERED CIVIL ENGINEER DATE

4-30-12
PLANS APPROVAL DATE

REGISTERED PROFESSIONAL ENGINEER RENEE ANDERSON No. 61040 Exp. 12/31/12 CIVIL STATE OF CALIFORNIA

The State of California or its officers or agents shall not be responsible for the accuracy or completeness of electronic copies of this plan sheet.

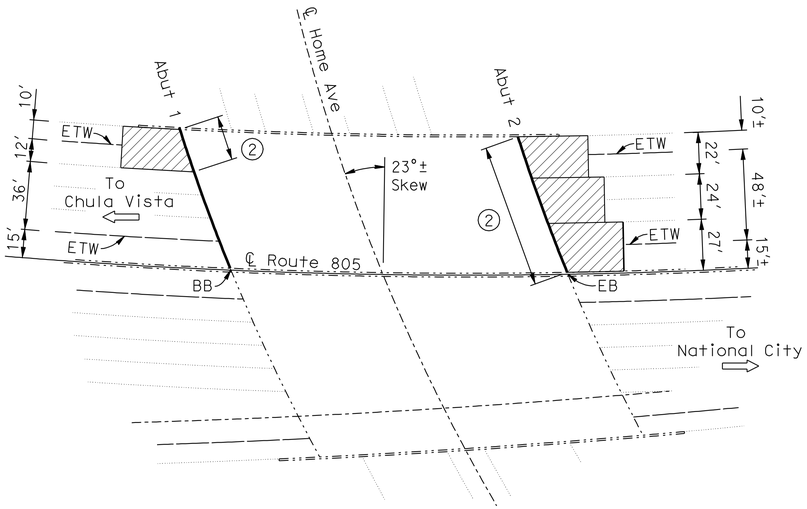

HOME AVENUE UC

Bridge No. 57-0671L Rte 805 PM 13.95
1" = 40'

41

QUANTITIES

BRIDGE NO. 57-0671L

AGGREGATE BASE (APPROACH SLAB)	25	CY
STRUCTURAL CONCRETE, APPROACH SLAB (TYPE R)	148	CY
PAVING NOTCH EXTENSION	78	CF
CLEAN EXPANSION JOINT	55	LF
CORE CONCRETE (2")	8	LF
JOINT SEAL (MR 1")	160	LF

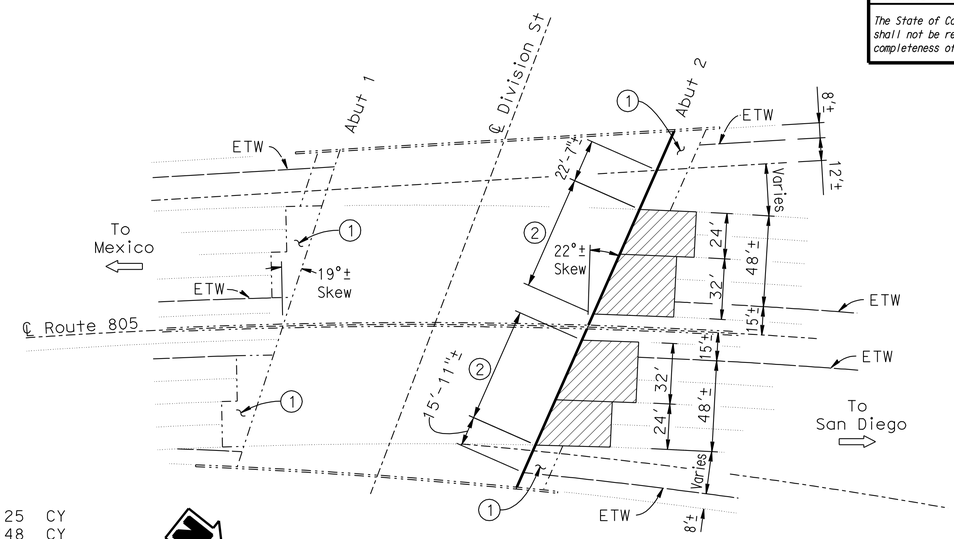

DIVISION STREET UC

Bridge No. 57-0646 Rte 805 Post Mile 11.14
1" = 40'

43

QUANTITIES

BRIDGE NO. 57-0646

AGGREGATE BASE (APPROACH SLAB)	30	CY
STRUCTURAL CONCRETE, APPROACH SLAB (TYPE R)	180	CY
PAVING NOTCH EXTENSION	92	CF
CLEAN EXPANSION JOINT	89	LF
CORE CONCRETE (2")	12	LF
JOINT SEAL (MR 1")	205	LF

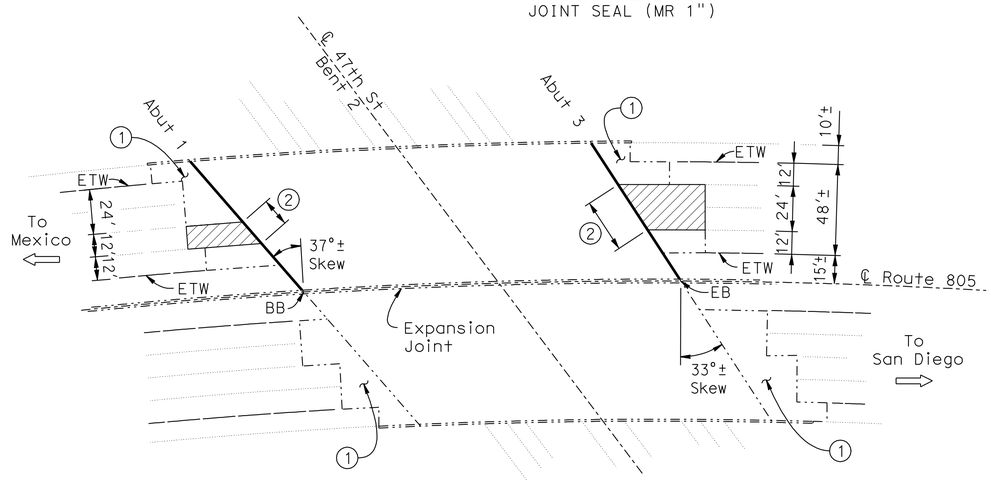

47TH STREET UC

Bridge No. 57-0647 Rte 805 Post Mile 11.36
1" = 40'

42

QUANTITIES

BRIDGE NO. 57-0647

AGGREGATE BASE (APPROACH SLAB)	10	CY
STRUCTURAL CONCRETE, APPROACH SLAB (TYPE R)	59	CY
PAVING NOTCH EXTENSION	32	CF
CLEAN EXPANSION JOINT	133	LF
CORE CONCRETE (2")	5	LF
JOINT SEAL (MR 1½")	176	LF

NOTE:
THE CONTRACTOR SHALL VERIFY ALL CONTROLLING FIELD DIMENSIONS BEFORE ORDERING OR FABRICATING ANY MATERIAL.

LEGEND:

- Indicates Existing Structure
- Indicates location of existing Joint Seal removal, clean Expansion Joint, and placement of new Joint Seal.
- Indicates Limits of Approach Slab Type R(30D)
- (1) Existing Approach Slab
- (2) Limits of Paving Notch Extension
- [X] Structure Location, see Joint Seal Table on "JOINT SEAL DETAILS" sheet.

Daniel T. Adams
DESIGN ENGINEER

	BY	CHECKED
DESIGN	R. Anderson	D. Azzam
DETAILS	R. Kirkland	D. Azzam
QUANTITIES	R. Anderson	D. Azzam

LOAD & RESISTANCE FACTOR DESIGN — LIVE LOADING: HL93 W/"LOW-BOY"; PERMIT DESIGN VEHICLE

	BY	CHECKED
LAYOUT	R. Anderson	D. Azzam
SPECIFICATIONS	T. Nedwick	T. Nedwick (PLANS AND SPECS COMPARED)

ORIGINAL SCALE IN INCHES FOR REDUCED PLANS 0 1 2 3

STATE OF CALIFORNIA
DEPARTMENT OF TRANSPORTATION

DIVISION OF ENGINEERING SERVICES
STRUCTURE DESIGN
DESIGN BRANCH 10

UNIT: 3589
PROJECT NUMBER & PHASE: 11000201841
CONTRACT NO.: 11-238601

BRIDGE NO. Varies
POST MILE Varies

APPROACH SLAB REHABILITATION
GENERAL PLAN NO. 12

DISREGARD PRINTS BEARING EARLIER REVISION DATES
REVISION DATES 4/08/11 9/29/11 1/24/12
SHEET 12 OF 22

STRUCTURES DESIGN GENERAL PLAN SHEET (ENGLISH) (REV.09-01-10)

FILE => 11-238601agp12.dgn

USERNAME => s128843 DATE PLOTTED => 02-MAY-2012 TIME PLOTTED => 15:52

DIST	COUNTY	ROUTE	POST MILES TOTAL PROJECT	SHEET No.	TOTAL SHEETS
11	SD	5,8,15,52, 94,805	Var	107	116

Renee M. Anderson 9-26-11
REGISTERED CIVIL ENGINEER DATE

4-30-12
PLANS APPROVAL DATE

REGISTERED PROFESSIONAL ENGINEER RENEE ANDERSON No. 61040 Exp. 12/31/12 CIVIL STATE OF CALIFORNIA

The State of California or its officers or agents shall not be responsible for the accuracy or completeness of electronic copies of this plan sheet.

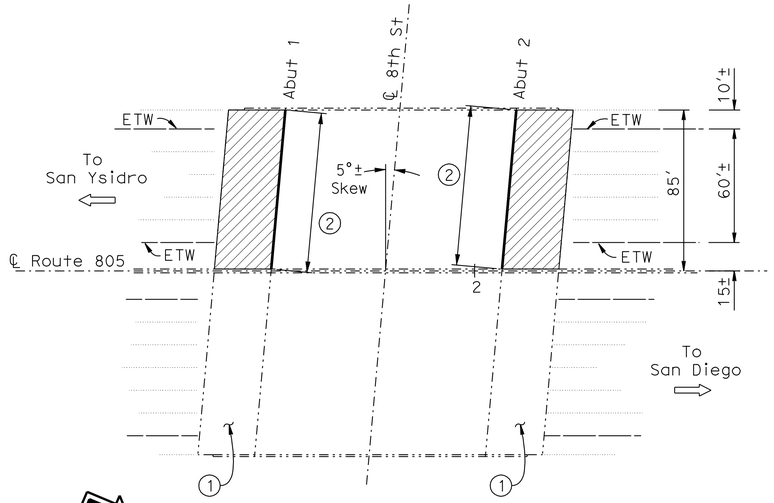

8TH STREET UC

Bridge No. 57-0644 Rte 805 Post Mile 10.61
1" = 40'

44

QUANTITIES

BRIDGE NO. 57-0644

AGGREGATE BASE (APPROACH SLAB)	38	CY
STRUCTURAL CONCRETE, APPROACH SLAB (TYPE R)	226	CY
PAVING NOTCH EXTENSION	130	CF
CORE CONCRETE (2")	15	LF
JOINT SEAL (MR 1/2")	171	LF

QUANTITIES

BRIDGE NO. 57-0640R/L

AGGREGATE BASE (APPROACH SLAB)	21	CY
STRUCTURAL CONCRETE, APPROACH SLAB (TYPE R)	124	CY
PAVING NOTCH EXTENSION	70	CF
CLEAN EXPANSION JOINT	275	LF
CORE CONCRETE (2")	11	LF
JOINT SEAL (MR 1")	366	LF

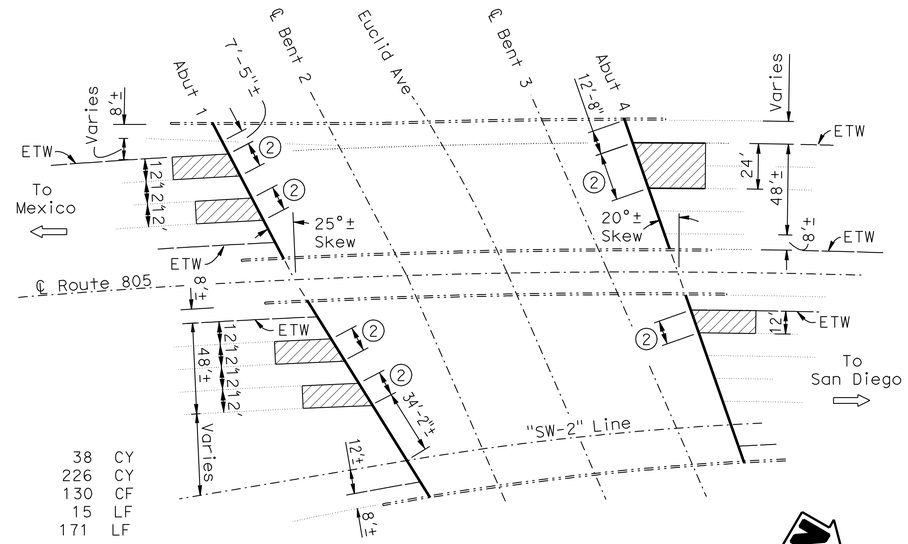

LEGEND:

- Indicates Existing Structure
- Indicates location of existing Joint Seal removal, clean Expansion Joint, and placement of new Joint Seal.
- Indicates Limits of Approach Slab Type R(30D)
- (1) Existing Approach Slab
- (2) Limits of Paving Notch Extension
- [X] Structure Location, see Joint Seal Table on "JOINT SEAL DETAILS" sheet.

EUCLID AVENUE UC

Bridge No. 57-0640R/L Rte No. 805 Post Mile 9.19
1" = 40'

46

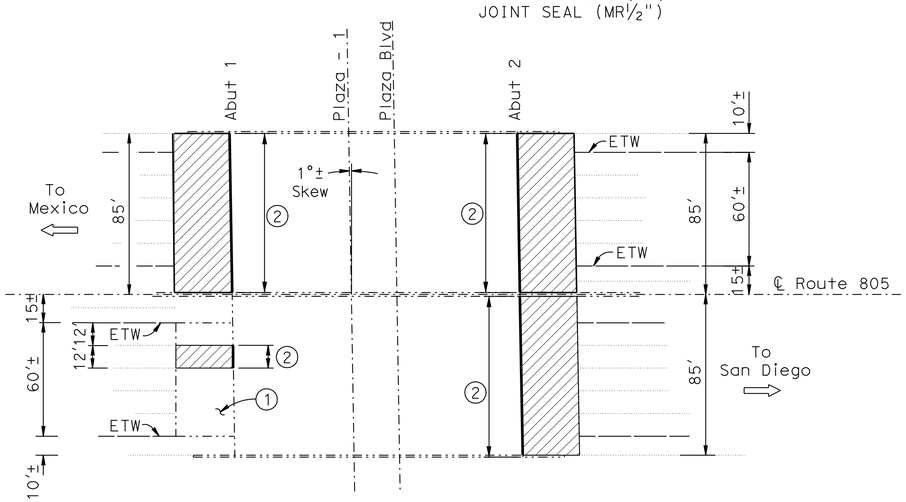

PLAZA BOULEVARD UC

Bridge No. 57-0643 Rte 805 Post Mile 10.28
1" = 40'

45

QUANTITIES

BRIDGE NO. 57-0643

AGGREGATE BASE (APPROACH SLAB)	59	CY
STRUCTURAL CONCRETE, APPROACH SLAB (TYPE R)	356	CY
PAVING NOTCH EXTENSION	200	CF
CORE CONCRETE (2")	24	LF
JOINT SEAL (MR 1/2")	267	LF

NOTE:
THE CONTRACTOR SHALL VERIFY ALL CONTROLLING FIELD DIMENSIONS BEFORE ORDERING OR FABRICATING ANY MATERIAL.

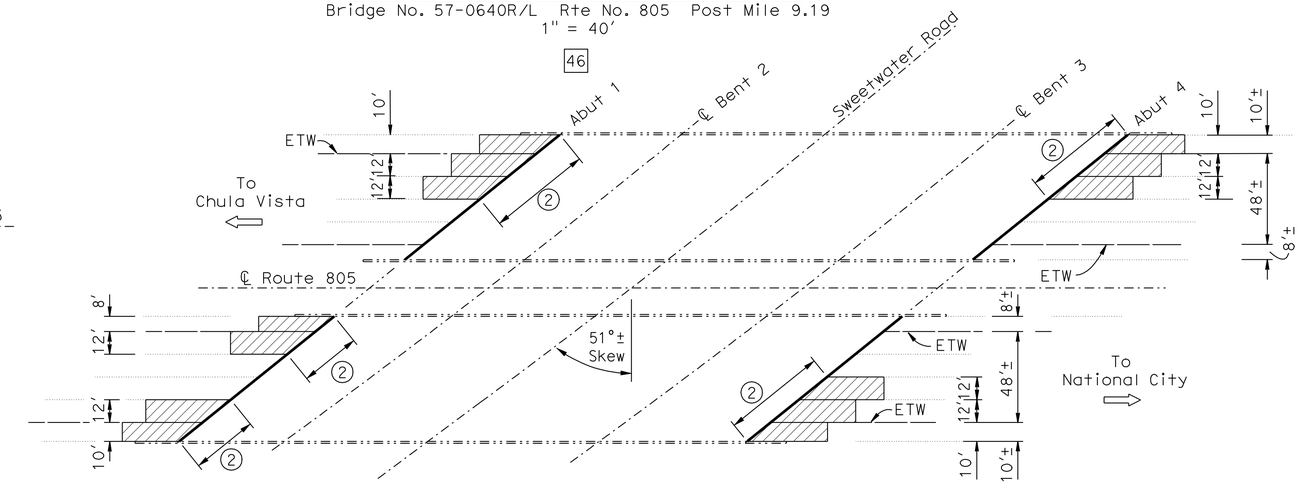

SWEETWATER ROAD UC

Bridge No. 57-0639R/L Rte 805 Post Mile 9.05
1" = 40'

47

QUANTITIES

BRIDGE NO. 57-0639R/L

AGGREGATE BASE (APPROACH SLAB)	39	CY
STRUCTURAL CONCRETE, APPROACH SLAB (TYPE R)	236	CY
PAVING NOTCH EXTENSION	173	CF
CLEAN EXPANSION JOINT	191	LF
CORE CONCRETE (2")	12	LF
JOINT SEAL (MR 1")	420	LF

Daniel T. Adams
DESIGN ENGINEER

	BY	CHECKED
DESIGN	R. Anderson	D. Azzam
DETAILS	R. Kirkland	D. Azzam
QUANTITIES	R. Anderson	D. Azzam

LOAD & RESISTANCE FACTOR DESIGN — LIVE LOADING: HL93 W/"LOW-BOY"; PERMIT DESIGN VEHICLE

	BY	CHECKED
LAYOUT	R. Anderson	D. Azzam
SPECIFICATIONS	T. Nedwick	PLANS AND SPECS COMPARED T. Nedwick

ORIGINAL SCALE IN INCHES FOR REDUCED PLANS 0 1 2 3

STATE OF CALIFORNIA
DEPARTMENT OF TRANSPORTATION

DIVISION OF ENGINEERING SERVICES
STRUCTURE DESIGN
DESIGN BRANCH 10

BRIDGE NO. Varies
POST MILE Varies

APPROACH SLAB REHABILITATION
GENERAL PLAN NO. 13

UNIT: 3589
PROJECT NUMBER & PHASE: 11000201841
CONTRACT NO.: 11-238601

DISREGARD PRINTS BEARING EARLIER REVISION DATES

REVISION DATES: 4/08/11 9/23/11 1/24/12

SHEET 13 OF 22

USERNAME => s128843 DATE PLOTTED => 02-MAY-2012 TIME PLOTTED => 15:52

STRUCTURES DESIGN GENERAL PLAN SHEET (ENGLISH) (REV.09-01-10)

FILE => 11-238601agp13.dgn

DIST	COUNTY	ROUTE	POST MILES TOTAL PROJECT	SHEET No.	TOTAL SHEETS
11	SD	5,8,15,52, 94,805	Var	108	116

Renee M. Anderson 9-26-11
REGISTERED CIVIL ENGINEER DATE

4-30-12
PLANS APPROVAL DATE

REGISTERED PROFESSIONAL ENGINEER RENEE ANDERSON No. 61040 Exp. 12/31/12 CIVIL STATE OF CALIFORNIA

The State of California or its officers or agents shall not be responsible for the accuracy or completeness of electronic copies of this plan sheet.

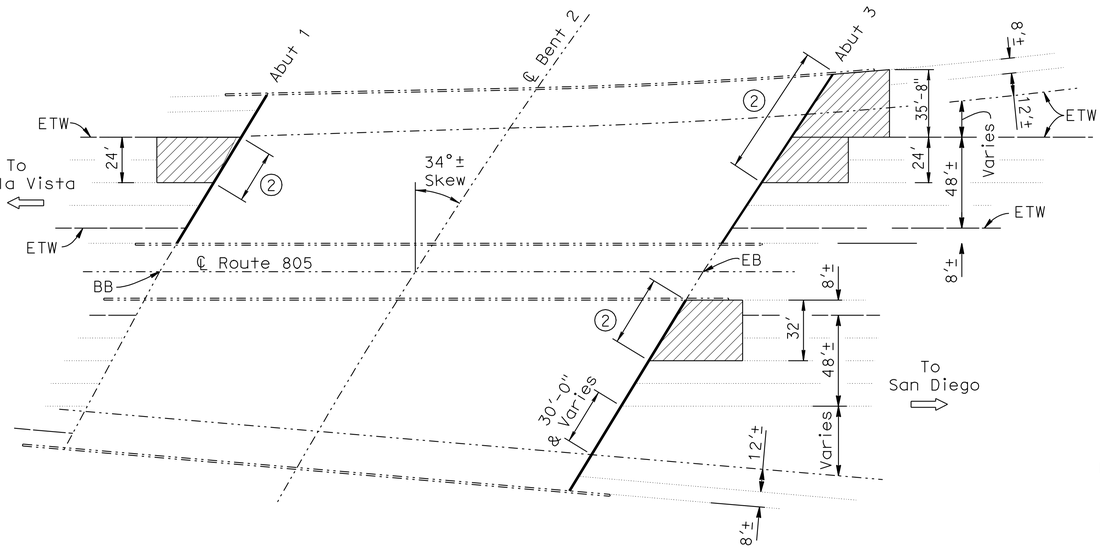

ROUTE 805/54 SEPARATION

Bridge No. 57-0746R/L Rte No. 805 Post Mile 8.83
1" = 40'

48

QUANTITIES

BRIDGE NO. 57-0746R/L

AGGREGATE BASE (APPROACH SLAB)	36	CY
STRUCTURAL CONCRETE, APPROACH SLAB (TYPE R)	217	CY
PAVING NOTCH EXTENSION	100	CF
CLEAN EXPANSION JOINT	172	LF
CORE CONCRETE (2")	11	LF
JOINT SEAL (MR 1")	317	LF

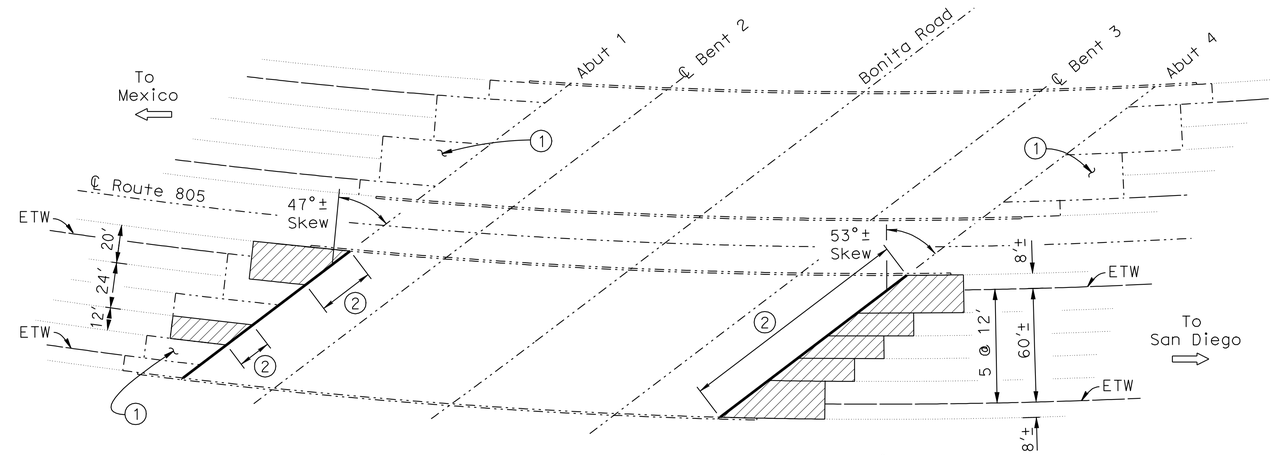

BONITA ROAD UC

Bridge No. 57-0637R Rte 805 Post Mile 7.76
1" = 40'

50

QUANTITIES

BRIDGE NO. 57-0637R

AGGREGATE BASE (APPROACH SLAB)	32	CY
STRUCTURAL CONCRETE, APPROACH SLAB (TYPE R)	193	CY
PAVING NOTCH EXTENSION	130	CF
CLEAN EXPANSION JOINT	65	LF
CORE CONCRETE (2")	11	LF
JOINT SEAL (MR 1")	238	LF

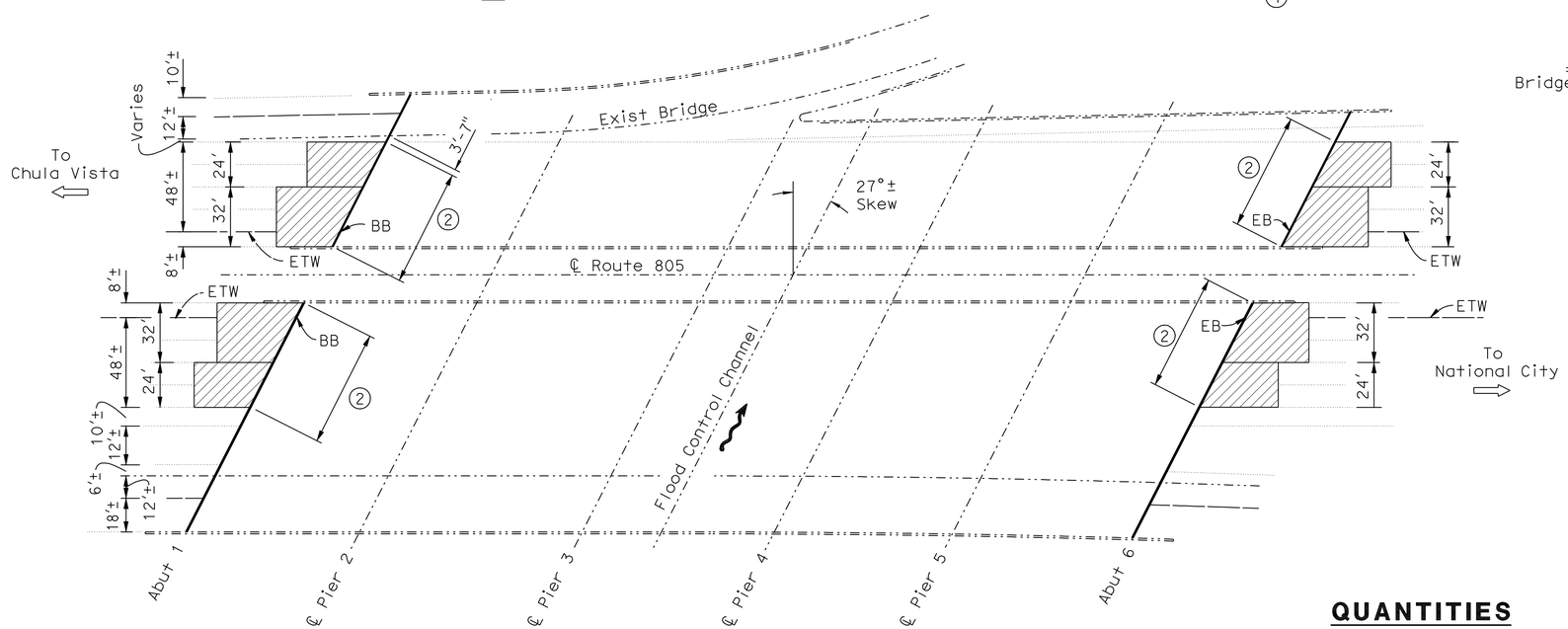

SWEETWATER RIVER BRIDGE

Bridge No. 57-0638R/L Rte 805 Post Mile 8.66
1" = 40'

49

QUANTITIES

BRIDGE NO. 57-0638R/L

AGGREGATE BASE (APPROACH SLAB)	62	CY
STRUCTURAL CONCRETE, APPROACH SLAB (TYPE R)	370	CY
PAVING NOTCH EXTENSION	189	CF
CLEAN EXPANSION JOINT	179	LF
CORE CONCRETE (2")	24	LF
JOINT SEAL (MR 1")	430	LF

LEGEND:

- Indicates Existing Structure
- Indicates location of existing Joint Seal removal, clean Expansion Joint, and placement of new Joint Seal.
- Indicates Limits of Approach Slab Type R(30D)
- (1) Existing Approach Slab
- (2) Limits of Paving Notch Extension
- [X] Structure Location, see Joint Seal Table on "JOINT SEAL DETAILS" sheet.

NOTE:
THE CONTRACTOR SHALL VERIFY ALL CONTROLLING FIELD DIMENSIONS BEFORE ORDERING OR FABRICATING ANY MATERIAL.

Daniel T. Adams
DESIGN ENGINEER

	BY	CHECKED
DESIGN	R. Anderson	D. Azzam
DETAILS	R. Kirkland	D. Azzam
QUANTITIES	R. Anderson	D. Azzam

LOAD & RESISTANCE FACTOR DESIGN — LIVE LOADING: HL93 W/"LOW-BOY"; PERMIT DESIGN VEHICLE

	BY	CHECKED
LAYOUT	R. Anderson	D. Azzam
SPECIFICATIONS	T. Nedwick	PLANS AND SPECS COMPARED T. Nedwick

ORIGINAL SCALE IN INCHES FOR REDUCED PLANS 0 1 2 3

STATE OF CALIFORNIA
DEPARTMENT OF TRANSPORTATION

DIVISION OF ENGINEERING SERVICES
STRUCTURE DESIGN
DESIGN BRANCH 10

BRIDGE NO. Varies
POST MILE Varies

APPROACH SLAB REHABILITATION
GENERAL PLAN NO. 14

UNIT: 3589
PROJECT NUMBER & PHASE: 11000201841
CONTRACT NO.: 11-238601

DISREGARD PRINTS BEARING EARLIER REVISION DATES

REVISION DATES: 4/08/11 9/23/11 1/24/12

SHEET 14 OF 22

USERNAME => s128843 DATE PLOTTED => 02-MAY-2012 TIME PLOTTED => 15:52

STRUCTURES DESIGN GENERAL PLAN SHEET (ENGLISH) (REV.09-01-10)

FILE => 11-238601agp14.dgn

DIST	COUNTY	ROUTE	POST MILES TOTAL PROJECT	SHEET No.	TOTAL SHEETS
11	SD	5,8,15,52, 94,805	Var	109	116

Renee M. Anderson 9-26-11
REGISTERED CIVIL ENGINEER DATE

4-30-12
PLANS APPROVAL DATE

REGISTERED PROFESSIONAL ENGINEER RENEE ANDERSON No. 61040 Exp. 12/31/12 CIVIL STATE OF CALIFORNIA

The State of California or its officers or agents shall not be responsible for the accuracy or completeness of electronic copies of this plan sheet.

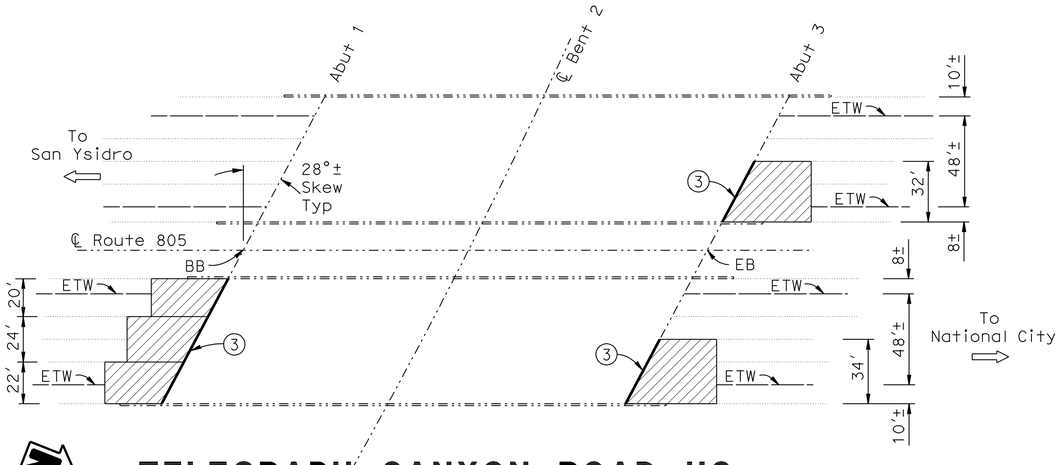

TELEGRAPH CANYON ROAD UC

Bridge No. 57-0635R/L Rte 805 Post Mile 6.06
1" = 40'

51

QUANTITIES

BRIDGE NO. 57-0635R/L

AGGREGATE BASE (APPROACH SLAB)	37	CY
STRUCTURAL CONCRETE, APPROACH SLAB (TYPE R)	220	CY
CORE CONCRETE (2")	12	LF
JOINT SEAL (MR1½")	150	LF

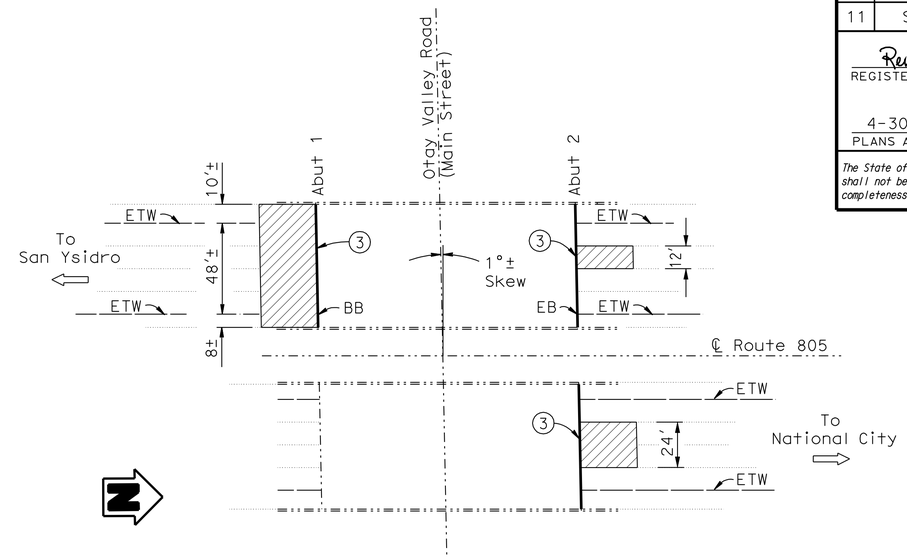

MAIN STREET UC (OTAY VALLEY ROAD)

Bridge No. 57-0632R/L Rte 805 Post Mile 3.65
1" = 40'

53

QUANTITIES

BRIDGE NO. 57-0632R/L

AGGREGATE BASE (APPROACH SLAB)	23	CY
STRUCTURAL CONCRETE, APPROACH SLAB (TYPE R)	136	CY
CLEAN EXPANSION JOINT	98	LF
CORE CONCRETE (2")	11	LF
JOINT SEAL (MR 1")	201	LF

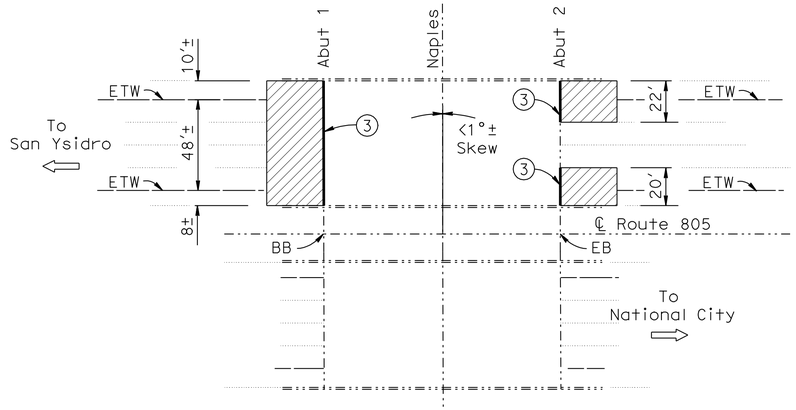

NAPLES STREET UC

Bridge No. 57-0634L Rte 805 Post Mile 5.54
1" = 40'

52

QUANTITIES

BRIDGE NO. 57-0634L

AGGREGATE BASE (APPROACH SLAB)	24	CY
STRUCTURAL CONCRETE, APPROACH SLAB (TYPE R)	144	CY
CORE CONCRETE (2")	9	LF
JOINT SEAL (MR½")	109	LF

NOTE:
THE CONTRACTOR SHALL VERIFY ALL CONTROLLING FIELD DIMENSIONS BEFORE ORDERING OR FABRICATING ANY MATERIAL.

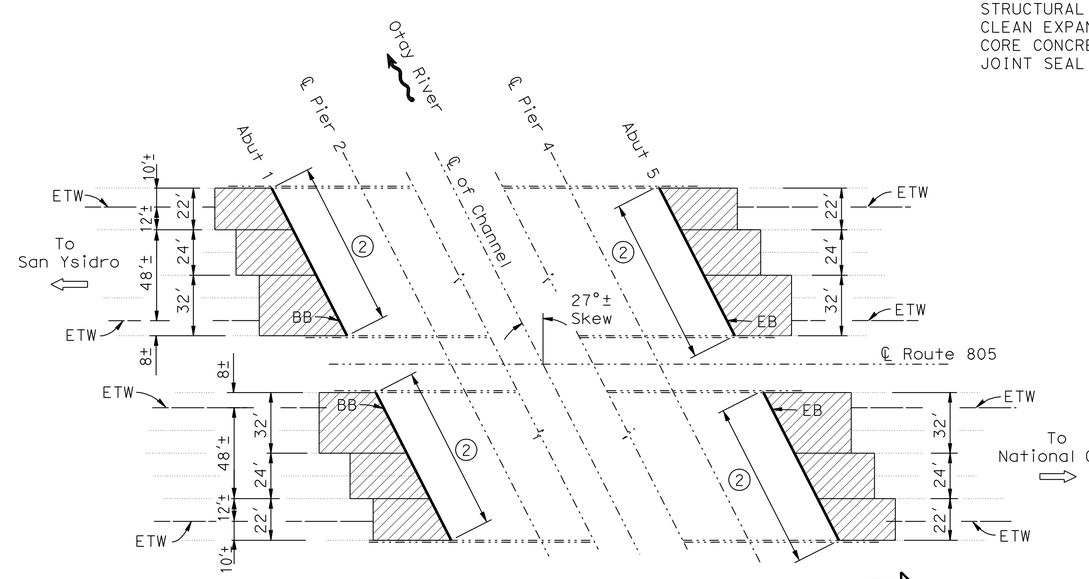

OTAY RIVER BRIDGE

Bridge No. 57-0631R/L Rte 805 Post Mile 3.34
1" = 40'

54

LEGEND:

- Indicates Existing Structure
- Indicates location of existing Joint Seal removal, clean Expansion Joint, and placement of new Joint Seal.
- Indicates Limits of Approach Slab Type R(30D)
- (1) Existing Approach Slab
- (2) Limits of Paving Notch Extension
- (3) Paving Notch Extension not required
- [X] Structure Location, see Joint Seal Table on "JOINT SEAL DETAILS" sheet.

QUANTITIES

BRIDGE NO. 57-0631R/L

AGGREGATE BASE (APPROACH SLAB)	85	CY
STRUCTURAL CONCRETE, APPROACH SLAB (TYPE R)	511	CY
PAVING NOTCH EXTENSION	270	CF
CORE CONCRETE (2")	30	LF
JOINT SEAL (MR 1½")	350	LF

Daniel T. Adams
DESIGN ENGINEER

	BY	CHECKED
DESIGN	R. Anderson	D. Azzam
DETAILS	R. Kirkland	D. Azzam
QUANTITIES	R. Anderson	D. Azzam

LOAD & RESISTANCE FACTOR DESIGN — LIVE LOADING: HL93 W/"LOW-BOY"; PERMIT DESIGN VEHICLE

	BY	CHECKED
LAYOUT	R. Anderson	D. Azzam
SPECIFICATIONS	T. Nedwick	PLANS AND SPECS COMPARED T. Nedwick

ORIGINAL SCALE IN INCHES FOR REDUCED PLANS 0 1 2 3

STATE OF CALIFORNIA
DEPARTMENT OF TRANSPORTATION

DIVISION OF ENGINEERING SERVICES
STRUCTURE DESIGN
DESIGN BRANCH 10

UNIT: 3589
PROJECT NUMBER & PHASE: 11000201841
CONTRACT NO.: 11-238601

BRIDGE NO. Varies
POST MILE Varies

APPROACH SLAB REHABILITATION
GENERAL PLAN NO. 15

DISREGARD PRINTS BEARING EARLIER REVISION DATES

REVISION DATES 4/08/11 3/25/11 1/24/12

SHEET 15 OF 22

FILE => 11-238601agp15.dgn

STRUCTURES DESIGN GENERAL PLAN SHEET (ENGLISH) (REV.09-01-10)

USERNAME => s128843 DATE PLOTTED => 02-MAY-2012 TIME PLOTTED => 15:52

DIST	COUNTY	ROUTE	POST MILES TOTAL PROJECT	SHEET No.	TOTAL SHEETS
11	SD	5,8,15,52, 94,805	Var	110	116

Renee M. Anderson 9-26-11
REGISTERED CIVIL ENGINEER DATE

4-30-12
PLANS APPROVAL DATE

REGISTERED PROFESSIONAL ENGINEER RENEE ANDERSON No. 61040 Exp. 12/31/12 CIVIL STATE OF CALIFORNIA

The State of California or its officers or agents shall not be responsible for the accuracy or completeness of electronic copies of this plan sheet.

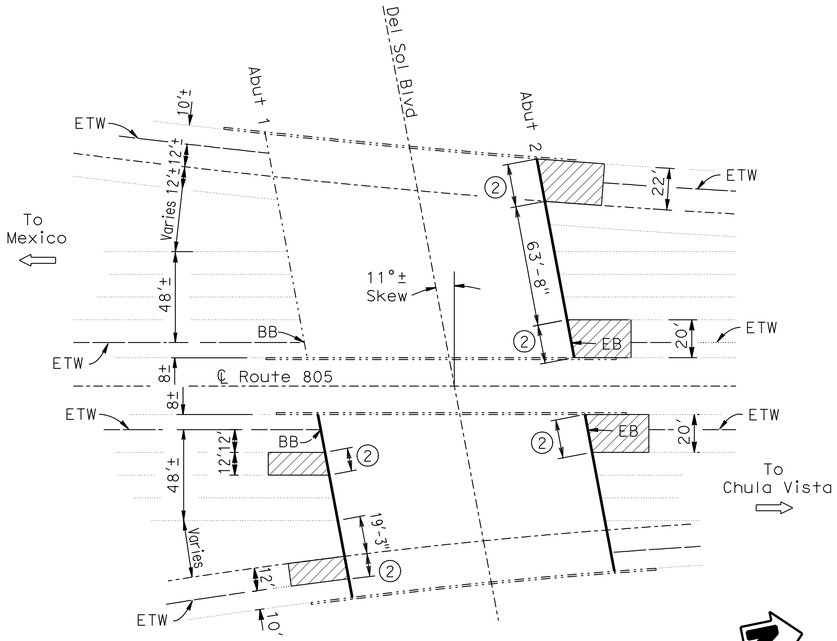

DEL SOL BOULEVARD UC

Bridge No. 57-0854R/L Rte 805 Post Mile 2.17
1" = 40'

55

QUANTITIES

BRIDGE NO. 57-0854R/L

AGGREGATE BASE (APPROACH SLAB)	20	CY
STRUCTURAL CONCRETE, APPROACH SLAB (TYPE R)	122	CY
PAVING NOTCH EXTENSION	65	CF
CLEAN EXPANSION JOINT	202	LF
CORE CONCRETE (2")	8	LF
JOINT SEAL (MR 1")	290	LF

LEGEND:

- Indicates Existing Structure
- Indicates location of existing Joint Seal removal, clean Expansion Joint, and placement of new Joint Seal.
- Indicates Limits of Approach Slab Type R(30D)
- (1) Existing Approach Slab
- (2) Limits of Paving Notch Extension
- [X] Structure Location, see Joint Seal Table on "JOINT SEAL DETAILS" sheet.

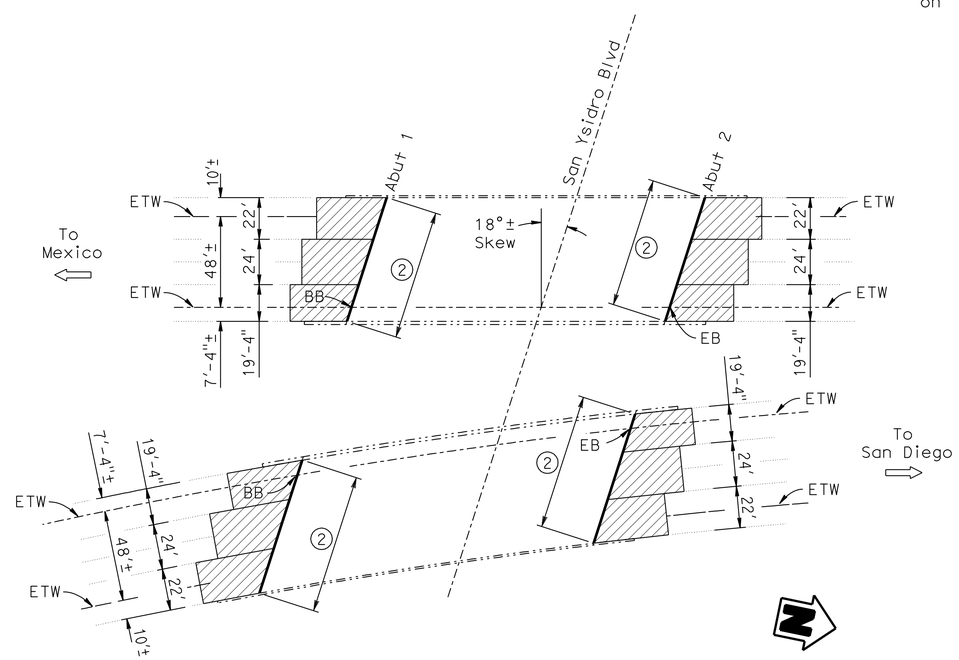

QUANTITIES

BRIDGE NO. 57-0776R/L

AGGREGATE BASE (APPROACH SLAB)	67	CY
STRUCTURAL CONCRETE, APPROACH SLAB (TYPE R)	400	CY
PAVING NOTCH EXTENSION	213	CF
CORE CONCRETE (2")	24	LF
JOINT SEAL (MR1/2")	275	LF

SAN YSIDRO BOULEVARD UC

Bridge No. 57-0776R/L Rte 805 Post Mile 0.65
1" = 40'

56

NOTE:
THE CONTRACTOR SHALL VERIFY ALL CONTROLLING FIELD DIMENSIONS BEFORE ORDERING OR FABRICATING ANY MATERIAL.

Daniel T. Adams
DESIGN ENGINEER

	BY	CHECKED
DESIGN	R. Anderson	D. Azzam
DETAILS	R. Kirkland	D. Azzam
QUANTITIES	R. Anderson	D. Azzam

LOAD & RESISTANCE FACTOR DESIGN — LIVE LOADING: HL93 W/"LOW-BOY"; PERMIT DESIGN VEHICLE

	BY	CHECKED
LAYOUT	R. Anderson	D. Azzam
SPECIFICATIONS	T. Nedwick	PLANS AND SPECS COMPARED T. Nedwick

ORIGINAL SCALE IN INCHES FOR REDUCED PLANS 0 1 2 3

STATE OF CALIFORNIA
DEPARTMENT OF TRANSPORTATION

DIVISION OF ENGINEERING SERVICES
STRUCTURE DESIGN
DESIGN BRANCH 10

BRIDGE NO. Varies
POST MILE Varies

APPROACH SLAB REHABILITATION
GENERAL PLAN NO. 16

UNIT: 3589
PROJECT NUMBER & PHASE: 11000201841
CONTRACT NO.: 11-238601

DISREGARD PRINTS BEARING EARLIER REVISION DATES

REVISION DATES: 4/06/11 9/23/11 1/24/12

SHEET 16 OF 22

USERNAME => s128843 DATE PLOTTED => 02-MAY-2012 TIME PLOTTED => 15:52

STRUCTURES DESIGN GENERAL PLAN SHEET (ENGLISH) (REV.09-01-10)

FILE => 11-238601agp16.dgn

DIST	COUNTY	ROUTE	POST MILES TOTAL PROJECT	SHEET No.	TOTAL SHEETS
11	SD	5,8,15,52, 94,805	Var	111	116

Renee M. Anderson 9-26-11
REGISTERED CIVIL ENGINEER DATE

4-30-12
PLANS APPROVAL DATE

REGISTERED PROFESSIONAL ENGINEER
Renee Anderson
No. 61040
Exp. 12/31/12
CIVIL
STATE OF CALIFORNIA

The State of California or its officers or agents shall not be responsible for the accuracy or completeness of electronic copies of this plan sheet.

JOINT SEAL TABLE

STRUCTURE LOCATION	ROUTE	BRIDGE NUMBER	LOCATION		JOINT SEAL TYPE	MINIMUM "MR" (in)	LENGTH (ft)	EXISTING WATERSTOP	APPROX. DEPTH TO CLEAN EXP. JOINT SEAL (in)
1	5	57-0587L	Abut 1	-	-	-	-	-	-
			Abut 4	PN	A	1/2	44	NO	12
2	5	57-0005R	Abut 1	BB	A	1/2	67.5	NO	12
			Abut 4	EB	A	1/2	67.5	NO	12
3	5	57-0583R	Abut 1	PN	B	1 1/2	67	NO	12
			Abut 7	PN	A	1	67	NO	12
4	5	57-0007R	Abut 1	PN	A	1/2	14	NO	12
			Abut 4	PN	A	1/2	22	NO	12
5	5	57-0581L	Abut 1	-	-	-	-	-	-
			Abut 9	EB	A	1/2	67	NO	12
6	5	57-0713R	Abut 1	-	-	-	-	-	-
			Abut 7	EB	B	2	90	YES	12
7	5	57-0125	Abut 1	BB	A	1/2	12	NO	12
			Abut 4	EB	A	1/2	32	NO	12
8	5	57-0277	Abut 1	BB	A	1/2	12	NO	12
			Abut 4	EB	A	1/2	36	NO	12
9	5	57-0274	Abut 1	BB	A	1/2	23	NO	12
			Abut 2	-	-	-	-	-	-
10	5	57-0275	Abut 1	BB	A	1/2	23	NO	12
			Abut 2	EB	A	1/2	68	NO	12
11	5	57-0263	Abut 1	BB	A	1/2	27	NO	12
			Abut 13	EB	A	1/2	24	NO	12
12	5	57-0246	Abut 1	BB	A	1/2	27	NO	12
			Abut 8	EB	A	1/2	24	NO	12
13	8	57-0692L	Abut 1	BB	A	1/2	45	NO	12
			Abut 6	EB	A	1/2	45	NO	12
14	8	57-0690L	Abut 1	-	-	-	-	-	-
			Abut 2	EB	A	1/2	40	NO	12
15	8	57-0688L	Abut 1	BW	A	1/2	40	NO	12
			Abut 4	-	-	-	-	-	-
16	8	57-0528L	Abut 1	BW	A	1/2	43	NO	12
			Abut 4	BW	A	1/2	43	NO	12
		57-0528R	Abut 1	BW	A	1/2	62	NO	12
			Abut 4	BW	A	1/2	62	NO	12
17	8	57-0539L	Abut 1	BB	A	1/2	40	NO	12
			Abut 4	EB	A	1/2	40	NO	12
		57-0539R	Abut 1	BB	A	1/2	40	NO	12
			Abut 4	EB	A	1/2	40	NO	12

JOINT SEAL TABLE

STRUCTURE LOCATION	ROUTE	BRIDGE NUMBER	LOCATION		JOINT SEAL TYPE	MINIMUM "MR" (in)	LENGTH (ft)	EXISTING WATERSTOP	APPROX. DEPTH TO CLEAN EXP. JOINT SEAL (in)
18	8	57-0534L	Abut 1	BB	B	1 1/2	66	NO	12
			Abut 4	EB	B	1 1/2	66	NO	12
		57-0534R	Abut 1	BB	B	1 1/2	66	NO	12
			Abut 4	EB	B	1 1/2	66	NO	12
19	8	57-0462L	Abut 1	BB	A	1/2	51	NO	12
			Abut 4	EB	A	1/2	57	NO	12
		57-0462R	Abut 1	BB	A	1/2	52	NO	12
			Abut 4	EB	A	1/2	48	NO	12
20	8	57-0474L	Abut 1	BB	A	1/2	39	NO	12
			Abut 4	EB	A	1/2	39	NO	12
21	8	57-0366R	Abut 1	BB	A	1/2	23	NO	12
			Abut 2	-	-	-	-	-	-
22	8	57-0364	Abut 1	BB	A	1/2	46	NO	12
			Abut 2	EB	A	1/2	36	NO	12
23	8	57-0363L	Abut 1	BB	A	1/2	70	NO	12
			Abut 2	EB	A	1/2	12	NO	12
		57-0363R	Abut 1	BB	A	1/2	70	NO	12
			Abut 2	EB	A	1/2	70	NO	12
24	8	57-0362	Abut 1	BB	B	1 1/2	111	NO	12
			Abut 5	EB	B	1 1/2	111	NO	12
25	15	57-0889L	Abut 1	BB	A	1	66	NO	12
			Abut 2	EB	A	1	66	NO	12
		57-0889R	Abut 1	BB	A	1	66	NO	12
			Abut 2	EB	A	1	66	NO	12
26	15	57-0894L	Abut 1	BB	B	2	78	NO	12
			Abut 2	EB	B	2	70	NO	12
27	15	57-0819L	Abut 1	BB	A	1	69	NO	12
			Abut 2	-	-	-	-	-	-
28	15	57-0817R	Abut 1	BB	A	1	96	NO	12
			Abut 2	EB	A	1	96	NO	12
29	52	57-1024G	Abut 1	BB	B	2	40	NO	12
			Abut 2	EB	B	2	40	NO	12
30	52	57-0753G	Abut 1	BB	A	1/2	32	NO	12
			Abut 2	EB	A	1/2	32	NO	12

LEGEND:

BB = Begin Bridge
EB = End Bridge
JSA = Joint Seal Assembly
PN = Paving Notch
BW = Backwall

NOTE:
THE CONTRACTOR SHALL VERIFY ALL CONTROLLING FIELD DIMENSIONS BEFORE ORDERING OR FABRICATING ANY MATERIAL.

	BY	CHECKED
DESIGN	R. Anderson	D. Azzam
DETAILS	R. Kirkland	D. Azzam
QUANTITIES	R. Anderson	D. Azzam

STATE OF CALIFORNIA
DEPARTMENT OF TRANSPORTATION

DIVISION OF ENGINEERING SERVICES
STRUCTURE DESIGN
DESIGN BRANCH 10

BRIDGE NO. Varies
POST MILE Varies

APPROACH SLAB REHABILITATION
JOINT SEAL DETAILS NO.1

STRUCTURES DESIGN DETAIL SHEET (ENGLISH) (REV. 09-01-10)

ORIGINAL SCALE IN INCHES FOR REDUCED PLANS 0 1 2 3

UNIT: 3589
PROJECT NUMBER & PHASE: 11000201841
CONTRACT NO.: 11-238601

DISREGARD PRINTS BEARING EARLIER REVISION DATES

REVISION DATES: 4/08/11 5/18/11 1/24/12

SHEET 17 OF 22

FILE => 11-238601qjntdt17.dgn

USERNAME => s128843 DATE PLOTTED => 02-MAY-2012 TIME PLOTTED => 15:52

DIST	COUNTY	ROUTE	POST MILES TOTAL PROJECT	SHEET No.	TOTAL SHEETS
11	SD	5,8,15,52, 94,805	Var	112	116

Renee M. Anderson 9-26-11
REGISTERED CIVIL ENGINEER DATE

4-30-12
PLANS APPROVAL DATE

REGISTERED PROFESSIONAL ENGINEER Renee Anderson No. 61040 Exp. 12/31/12 CIVIL STATE OF CALIFORNIA

The State of California or its officers or agents shall not be responsible for the accuracy or completeness of electronic copies of this plan sheet.

JOINT SEAL TABLE

STRUCTURE LOCATION	ROUTE	BRIDGE NUMBER	LOCATION		JOINT SEAL TYPE	MINIMUM "MR" (in)	LENGTH (ft)	EXISTING WATERSTOP	APPROX. DEPTH TO CLEAN EXP. JOINT SEAL (in)
31	52	57-0744R	Abut 1	BB	A	1	65	NO	12
			Abut 4	EB	A	1	71	NO	12
32	52	57-0743R	Abut 1	BB	A	1/2	40	NO	12
			Abut 2	EB	A	1	40	NO	12
33	52	57-0523F	Abut 1	BB	A	1	21	NO	12
			Abut 4	EB	A	1	21	NO	12
34	94	57-0572L	Abut 1	BB	A	1	42	NO	12
			Abut 2	EB	A	1	42	NO	12
35	94	57-0663R	Abut 1	BB	A	1	77	NO	12
			Abut 2	EB	A	1/2	37	NO	12
36	94	57-0107L	Abut 1	BB	A	1/2	94	NO	12
			Abut 3	EB	A	1/2	85	NO	12
37	94	57-0350F	Abut 1	BB	A	1	44.5	YES	12
			Abut 4	EB	A	1	44.5	YES	12
38	94	57-0361	Abut 1	BB	A	1/2	80	NO	12
			Abut 2	EB	A	1/2	80	NO	12
39	94	57-0430F	Abut 1	BB	A	1/2	67	NO	12
			Abut 3	EB	A	1/2	105	NO	12
40	805	57-0611R	Abut 1	BB	B	1 1/2	87	NO	12
			Abut 5	EB	B	1 1/2	87	NO	12
41	805	57-0671L	Abut 1	BB	A	1	80	NO	12
			Abut 2	EB	A	1	80	NO	12
42	805	57-0647L	Abut 1	BB	B	1 1/2	88	NO	12
			Abut 3	EB	B	1 1/2	88	NO	12
43	805	57-0646	Abut 1	-	-	-	-	-	-
			Abut 2	EB	A	1	205	NO	12
44	805	57-0644	Abut 1	BB	A	1/2	85.5	NO	12
			Abut 2	EB	A	1/2	85.5	NO	12
45	805	57-0643L	Abut 1	BB	A	1/2	85	NO	12
			Abut 2	EB	A	1/2	85	NO	12
		57-0643R	Abut 1	BB	A	1/2	12	NO	12
			Abut 2	EB	A	1/2	85	NO	12
46	805	57-0640L	Abut 1	BB	A	1	80	NO	12
			Abut 4	EB	A	1	72	NO	12
		57-0640R	Abut 1	BB	A	1	121	NO	12
			Abut 4	EB	A	1	93	NO	12

JOINT SEAL TABLE

STRUCTURE LOCATION	ROUTE	BRIDGE NUMBER	LOCATION		JOINT SEAL TYPE	MINIMUM "MR" (in)	LENGTH (ft)	EXISTING WATERSTOP	APPROX. DEPTH TO CLEAN EXP. JOINT SEAL (in)
47	805	57-0639L	Abut 1	BB	A	1	105	NO	12
			Abut 4	EB	A	1	105	NO	12
		57-0639R	Abut 1	BB	A	1	105	NO	12
			Abut 4	EB	A	1	105	NO	12
48	805	57-0746L	Abut 1	BB	A	1	92	NO	12
			Abut 3	EB	A	1	107	NO	12
		57-0746R	Abut 1	-	-	-	-	-	-
			Abut 3	EB	A	1	118	NO	12
49	805	57-0638L	Abut 1	BB	A	1	92	NO	12
			Abut 6	EB	A	1	82	NO	12
		57-0638R	Abut 1	BB	A	1	128	NO	12
			Abut 6	EB	A	1	128	NO	12
50	805	57-0637R	Abut 1	BB	A	1	112	NO	12
			Abut 4	EB	A	1	126	NO	12
51	805	57-0635L	Abut 1	-	-	-	-	-	-
			Abut 3	EB	A	1/2	36	NO	12
		57-0635R	Abut 1	BB	A	1/2	75	NO	12
			Abut 3	EB	A	1/2	39	NO	12
52	805	57-0634L	Abut 1	BB	A	1/2	67	NO	12
			Abut 2	EB	A	1/2	42	NO	12
53	805	57-0632L	Abut 1	BB	A	1	67	NO	12
			Abut 2	EB	A	1	67	-	-
		57-0632R	Abut 1	-	-	-	-	NO	12
			Abut 2	EB	A	1	67	NO	12
54	805	57-0631L	Abut 1	BB	A	1 1/2	87.5	NO	12
			Abut 5	EB	A	1 1/2	87.5	NO	12
		57-0631R	Abut 1	BB	A	1 1/2	87.5	NO	12
			Abut 5	EB	A	1 1/2	87.5	NO	12
55	805	57-0854L	Abut 1	-	-	-	-	-	-
			Abut 2	EB	A	1	106.8	NO	12
		57-0854R	Abut 1	BB	A	1	98.3	NO	12
			Abut 2	EB	A	1	84.2	NO	12
56	805	57-0776L	Abut 1	BB	A	1/2	68.7	NO	12
			Abut 2	EB	A	1/2	68.7	NO	12
		57-0776R	Abut 1	BB	A	1/2	68.7	NO	12
			Abut 2	EB	A	1/2	68.7	NO	12

LEGEND:

BB = Begin Bridge
EB = End Bridge
JSA = Joint Seal Assembly
PN = Paving Notch
BW = Backwall

NOTE:
THE CONTRACTOR SHALL VERIFY ALL CONTROLLING FIELD DIMENSIONS BEFORE ORDERING OR FABRICATING ANY MATERIAL.

	BY	CHECKED
DESIGN	R. Anderson	D. Azzam
DETAILS	R. Kirkland	D. Azzam
QUANTITIES	R. Anderson	D. Azzam

STATE OF CALIFORNIA
DEPARTMENT OF TRANSPORTATION

DIVISION OF ENGINEERING SERVICES
STRUCTURE DESIGN
DESIGN BRANCH 10

BRIDGE NO. Varies
POST MILE Varies

APPROACH SLAB REHABILITATION
JOINT SEAL DETAILS NO. 2

STRUCTURES DESIGN DETAIL SHEET (ENGLISH) (REV. 09-01-10)

ORIGINAL SCALE IN INCHES FOR REDUCED PLANS 0 1 2 3

UNIT: 3589
PROJECT NUMBER & PHASE: 11000201841
CONTRACT NO.: 11-238601

DISREGARD PRINTS BEARING EARLIER REVISION DATES

REVISION DATES 4/08/11 9-23-11 1/24/12

SHEET 18 OF 22

USERNAME => s128843 DATE PLOTTED => 02-MAY-2012 TIME PLOTTED => 15:53

FILE => 11-238601qjntdt18.dgn

DIST	COUNTY	ROUTE	POST MILES TOTAL PROJECT	SHEET No.	TOTAL SHEETS
11	SD	5,8,15,52, 94,805	Var	113	116

Renee M. Anderson 9-26-11
REGISTERED CIVIL ENGINEER DATE

4-30-12
PLANS APPROVAL DATE

REGISTERED PROFESSIONAL ENGINEER
Renee Anderson
No. 61040
Exp. 12/31/12
CIVIL
STATE OF CALIFORNIA

The State of California or its officers or agents shall not be responsible for the accuracy or completeness of electronic copies of this plan sheet.

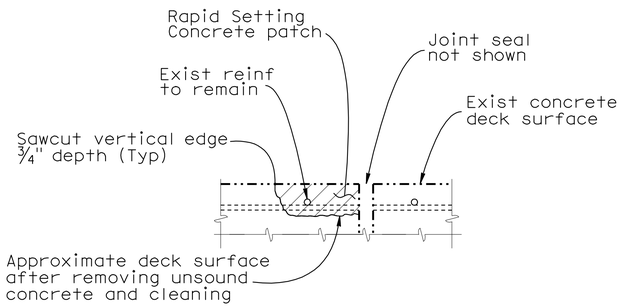

JOINT REPAIR DETAIL

Reinforcement may be encountered during deck concrete removal and is to remain undamaged.

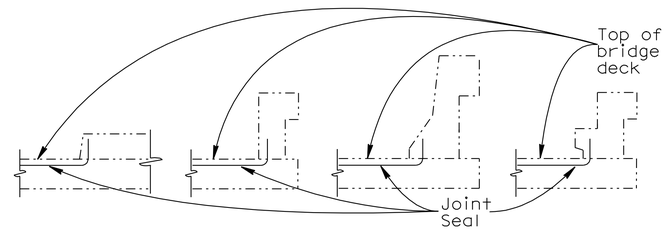

BARRIER RAIL

JOINT SEAL AT LOW SIDE OF DECK

Note: Details shown for illustration purposes only.

For use only where deck joint matches the sidewalk, curb or barrier rail joint.

NOTES:

The following notes apply to JOINT SEAL TYPE A:

Install Joint Seal (MR = ½") or Silicone Joint Seal 3" up into curb or barrier rail on the low side of the deck where deck joint aligns with curb or barrier rail joint.

For details not shown see RSP B6-21

The following notes apply to JOINT SEAL TYPE B:

1) Seal must satisfy both minimum Movement Rating (MR) and minimum W1 requirements.

2) Minimum W1 is the calculated maximum width of the joint based on field measurements. After the joints have been cleaned, minimum W1 is to be recalculated by the Engineer.

3) W1 shall be the smaller of the values determined as follows:
   A) 0.85 times the manufacturer's designed minimum uncompressed width of the seal.
   B) The width of the seal on the third successive test cycle of the pressure deflection test, when compressed to an average pressure of 3.0 PSI.

4) Bend Type B joint seal 6 inches up into curb or rail on the low side of the deck where deck joint matches curb or rail joint.

For details not shown see RSP B6-21

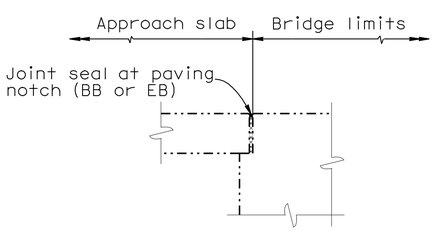

DIAPHRAGM ABUTMENT

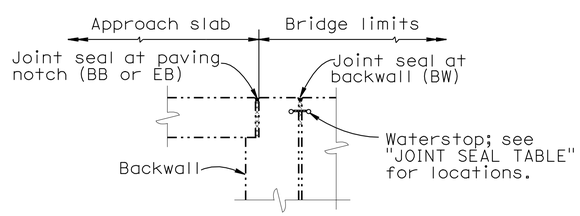

ABUTMENT WITH BACKWALL AND PAVING NOTCH

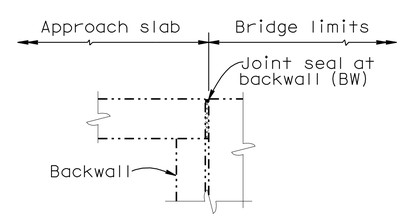

ABUTMENT WITH BACKWALL

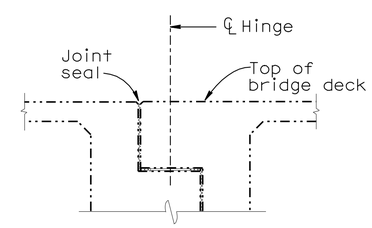

HINGE

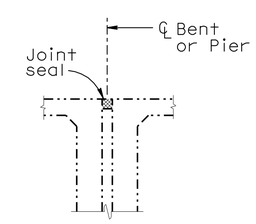

BENT OR PIER

JOINT SEAL LOCATION

NO SCALE

NOTE:
THE CONTRACTOR SHALL VERIFY ALL CONTROLLING FIELD DIMENSIONS BEFORE ORDERING OR FABRICATING ANY MATERIAL.

	BY	CHECKED
DESIGN	R. Anderson	D. Azzam
DETAILS	R. Kirkland	D. Azzam
QUANTITIES	R. Anderson	D. Azzam

STATE OF CALIFORNIA
DEPARTMENT OF TRANSPORTATION

DIVISION OF ENGINEERING SERVICES
STRUCTURE DESIGN
DESIGN BRANCH 10

BRIDGE NO. Varies
POST MILE Varies

APPROACH SLAB REHABILITATION
JOINT SEAL DETAILS NO. 3

STRUCTURES DESIGN DETAIL SHEET (ENGLISH) (REV. 09-01-10)

ORIGINAL SCALE IN INCHES FOR REDUCED PLANS 0 1 2 3

UNIT: 3589
PROJECT NUMBER & PHASE: 11000201841
CONTRACT NO.: 11-238601

DISREGARD PRINTS BEARING EARLIER REVISION DATES

REVISION DATES: 4/08/11 9-26-11 1/24/12

SHEET 19 OF 22

FILE => 11-238601qjntdt19.dgn

USERNAME => s128843 DATE PLOTTED => 02-MAY-2012 TIME PLOTTED => 15:53

DIST	COUNTY	ROUTE	POST MILES TOTAL PROJECT	SHEET No.	TOTAL SHEETS
11	SD	5,8,15,52, 94,805	Var	114	116

Renee M. Anderson 9-26-11
REGISTERED CIVIL ENGINEER DATE

4-30-12
PLANS APPROVAL DATE

REGISTERED PROFESSIONAL ENGINEER Renee Anderson No. 61040 Exp. 12/31/12 CIVIL STATE OF CALIFORNIA

The State of California or its officers or agents shall not be responsible for the accuracy or completeness of electronic copies of this plan sheet.

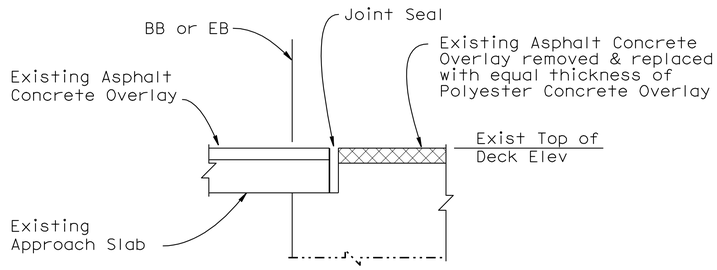

WITHOUT APPROACH SLAB REPLACEMENT

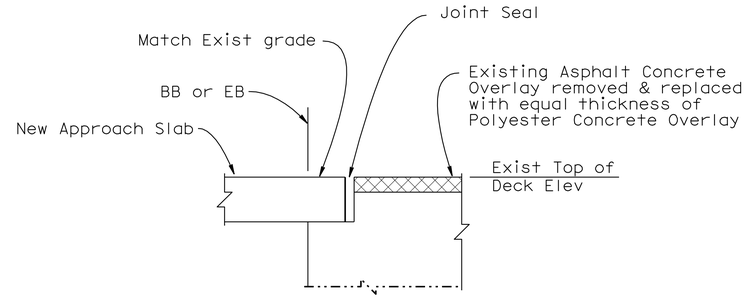

WITH APPROACH SLAB REPLACEMENT

CONCRETE OVERLAY REMOVAL & REPLACEMENT DETAIL

no scale

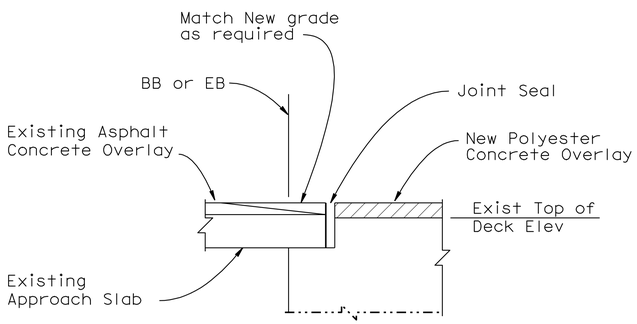

WITHOUT APPROACH SLAB REPLACEMENT

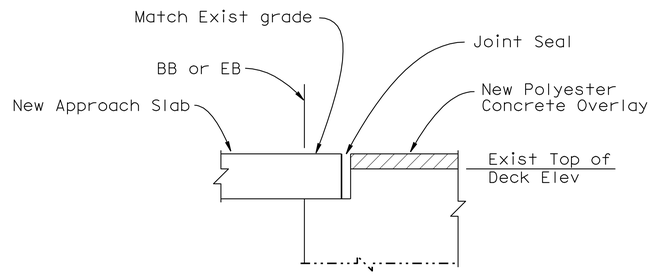

WITH APPROACH SLAB REPLACEMENT

NEW CONCRETE OVERLAY PLACEMENT DETAIL

no scale

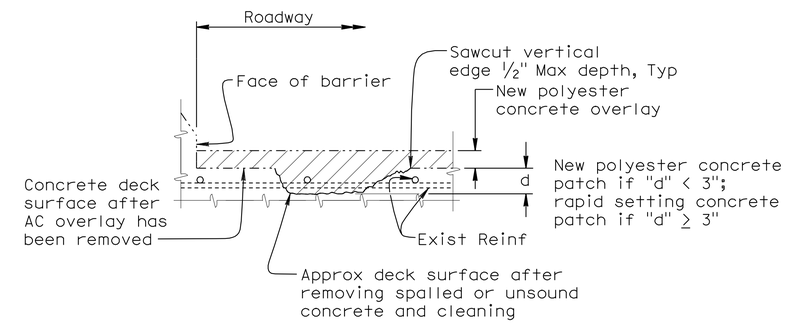

DECK OVERLAY DETAIL

Note: Location will be determined by the Engineer. Reinforcement may be encountered during deck concrete removal and is to remain undamaged.

NO SCALE

DECK REPAIR TABLE

STRUCTURE LOCATION	BRIDGE NUMBER	APPROXIMATE AREA DAMAGED (PERCENT)	APPROXIMATE DEPTH (INCHES)
17	57-0539L	10	3
	57-0539R	10	3
18	57-0534L	10	3
	57-0534R	10	3
19	57-0462L	10	3
	57-0462R	10	3

Locations to be determined by the Engineer.
For details see "DECK OVERLAY DETAIL".

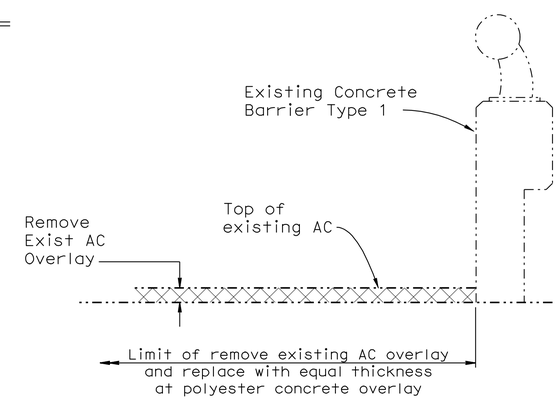

DECK OVERLAY AT BARRIER

no scale

DECK REPAIR NOTES:

1. Existing reinforcement shall be protected in place during unsound concrete removal and patching operations.
2. It is the responsibility of the Contractor to repair any reinforcement that is accidently cut by saw cutting operations.
3. When existing transverse reinforcement is exposed in the deck surface, saw cutting may be waived with the approval of the Engineer.
4. The saw cut depth shall not exceed 1/2 inch or the concrete cover over the top steel reinforcing bars, whichever is less.
5. Remove unsound concrete to expose sound, hard concrete substrate. Replace with rapid setting concrete patch if depth of patch is greater than or equal to 3 inches. If depth of patch is less than 3 inches, then replace with polyester concrete.
6. Repair deck prior to placing polyester overlay.

NOTE:
THE CONTRACTOR SHALL VERIFY ALL CONTROLLING FIELD DIMENSIONS BEFORE ORDERING OR FABRICATING ANY MATERIAL.

	BY	CHECKED
DESIGN	R. Anderson	D. Azzam
DETAILS	R. Kirkland	R. Anderson
QUANTITIES	R. Anderson	D. Azzam

STATE OF CALIFORNIA
DEPARTMENT OF TRANSPORTATION

DIVISION OF ENGINEERING SERVICES
STRUCTURE DESIGN
DESIGN BRANCH 10

BRIDGE NO. Varies
POST MILE Varies

APPROACH SLAB REHABILITATION
DECK OVERLAY DETAILS

STRUCTURES DESIGN DETAIL SHEET (ENGLISH) (REV. 09-01-10)

ORIGINAL SCALE IN INCHES FOR REDUCED PLANS 0 1 2 3

UNIT: 3589
PROJECT NUMBER & PHASE: 11000201841
CONTRACT NO.: 11-238601

DISREGARD PRINTS BEARING EARLIER REVISION DATES

REVISION DATES 8/08/11 9-26-11 1/24/12

SHEET 20 OF 22

FILE => 11-238601qjntdt20.dgn

USERNAME => s128843 DATE PLOTTED => 02-MAY-2012 TIME PLOTTED => 15:53

DIST.	COUNTY	ROUTE	MILE POST TOTAL PROJECT	SHEET NO.	TOTAL SHEETS
11	SD	5,8,15,52, 94,805	Var	115	116

Renee M. Anderson 9-26-11
REGISTERED ENGINEER - CIVIL

4-30-12
PLANS APPROVAL DATE

REGISTERED PROFESSIONAL ENGINEER Renee Anderson No. 61040 Exp. 12/31/12 CIVIL STATE OF CALIFORNIA

The State of California or its officers or agents shall not be responsible for the accuracy or completeness of electronic copies of this plan sheet.

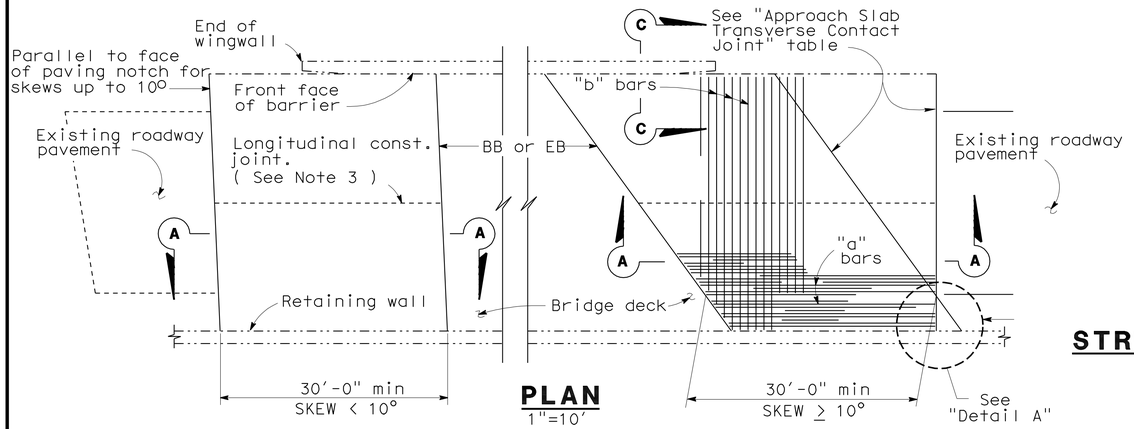

PLAN
1"=10'

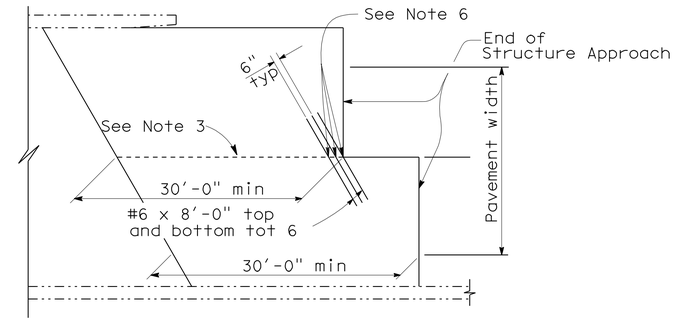

STRUCTURE APPROACH - END STAGGER DETAIL
No Scale

APPROACH SLAB TRANSVERSE CONTACT JOINT		
APPROACH SKEW	WITH AC ROADWAY PAVEMENT	WITH PCC ROADWAY PAVEMENT
< 10°	Parallel to face of paving notch	Parallel to face of paving notch
10° - 45°	Parallel to face of P N use (Detail A)	Stagger lines 24' to 36' apart
> 45°	Parallel to face of P N use (Detail A)	Stagger at each lane line

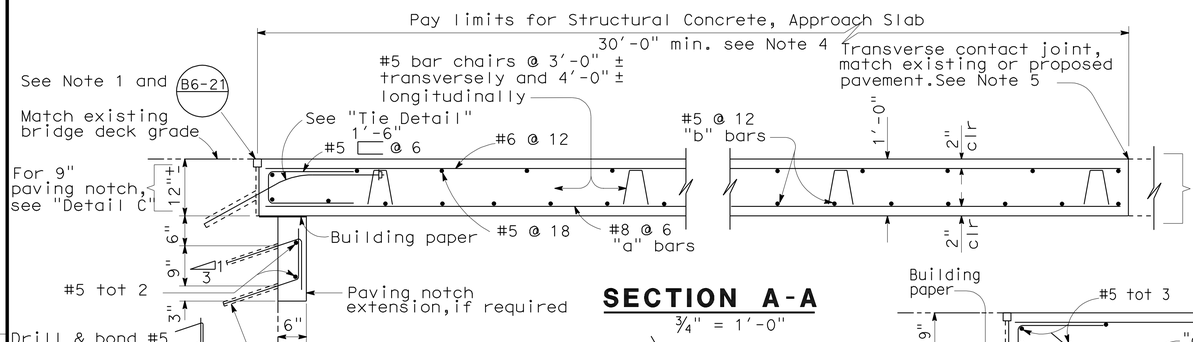

SECTION A-A
¾" = 1'-0"

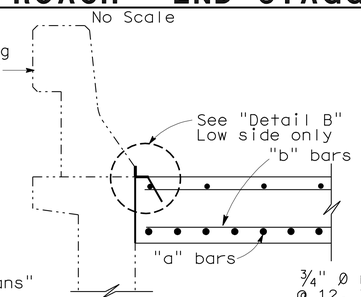

SECTION C-C
¾" = 1'-0"

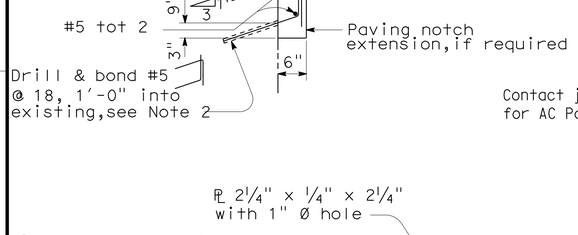

DETAIL A
No Scale

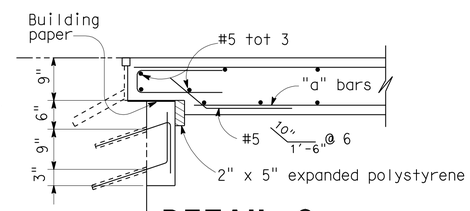

DETAIL C
¾" = 1'-0"

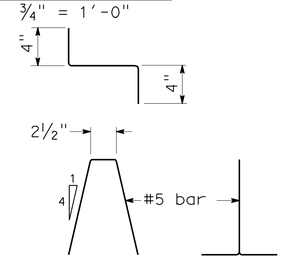

BAR CHAIR DETAIL
1½" = 1'-0"

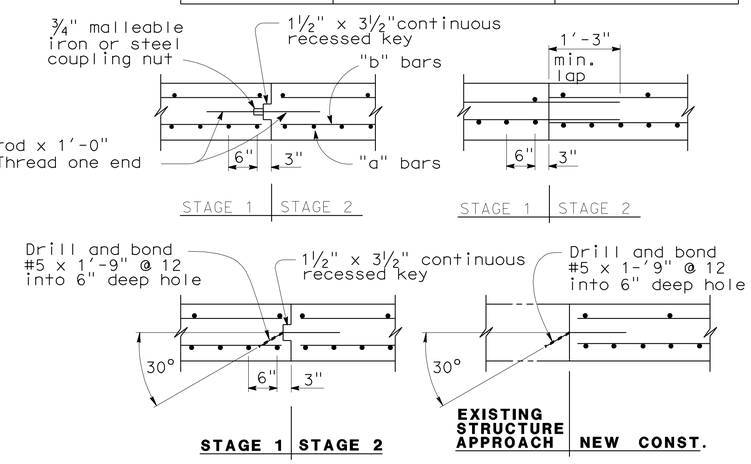

LONGITUDINAL CONSTRUCTION JOINT ALTERNATIVES
¾" = 1'-0"

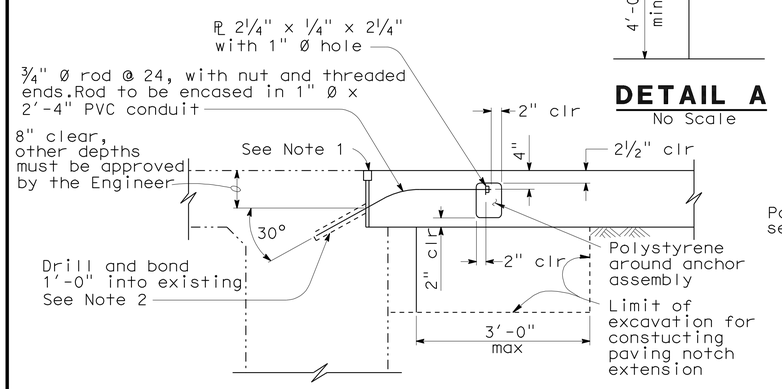

TIE DETAIL
¾" = 1'-0"

NOTE:
THE CONTRACTOR SHALL VERIFY ALL CONTROLLING FIELD DIMENSIONS BEFORE ORDERING OR FABRICATING ANY MATERIAL.

NOTE: For details not shown,see "Section A-A".

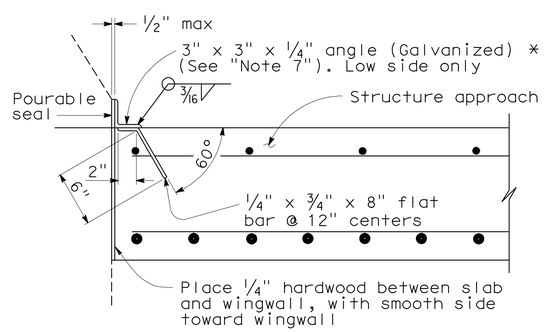

*(TO BE USED WITH TYPE 25 OR TYPE 27 CONCRETE BARRIER)

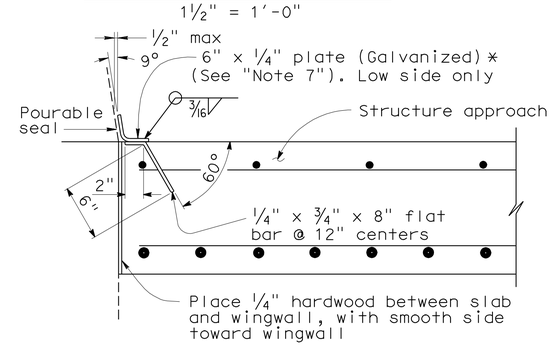

*(TO BE USED WITH TYPE 732 OR TYPE 736 CONCRETE BARRIER)

DETAIL B
1½" = 1'-0"

NOTES:

1. For details not shown or noted,see Structure Plans. Adjust bar reinforcement to clear a sawcut for sealed joint,when required.
2. Space to avoid existing prestress anchorages and main reinforcement.
3. Longitudinal construction joints,when permitted by the Engineer,shall be located on lane lines.
4. Transverse contact joint shall be a minimum of 5'-0" from an existing or constructed weakened plane joint.
5. For transverse contact joint with new PCC paving. refer to Standard Plan P10.
6. Couplers are required for stage construction.
7. End angle or plate at beginning of barrier transition, end of wingwall or end of structure approach as applicable.
8. One Concrete Core (2" Diameter x 18" long) per each approach slab lane. The exact location of coring will be determined by the engineer. △1

REVISED STANDARD DRAWING

RELEASE DATE 3/14/05	DESIGN	BY M.TRAFFALIS	CHECKED E.THORKILDSEN	RELEASED BY
FILE NO. xs3-140e	DETAILS	BY R.YEE	CHECKED E.THORKILDSEN	
	SUBMITTED	BY M.HA	DRAWING DATE 8/92	OFFICE CHIEF

△1 Added Note 8

STATE OF CALIFORNIA
DEPARTMENT OF TRANSPORTATION

DIVISION OF ENGINEERING SERVICES

BRIDGE NO. Varies
MILE POST Varies

APPROACH SLAB REHABILITATION
STRUCTURE APPROACH TYPE R(30D)

DS OSD 2147A (ENGLISH) (REV. X/XX/XX)

ORIGINAL SCALE IN INCHES FOR REDUCED PLANS 0 1 2 3

CU 11
EA 238601

DISREGARD PRINTS BEARING EARLIER REVISION DATES

REVISION DATES (PRELIMINARY STAGE ONLY) 4/13/11 9/26/11 1/24/12

SHEET 21 OF 22

USERNAME => s128843

11-238601xs-130e21

DATE PLOTTED => 02-MAY-2012 TIME PLOTTED => 15:53

DIST.	COUNTY	ROUTE	MILE POST TOTAL PROJECT	SHEET NO.	TOTAL SHEETS
11	SD	5,8,15,52, 94,805	Var	116	116

Renee M. Anderson 9-26-11
REGISTERED ENGINEER - CIVIL

4-30-12
PLANS APPROVAL DATE

The State of California or its officers or agents shall not be responsible for the accuracy or completeness of electronic copies of this plan sheet.

REGISTERED PROFESSIONAL ENGINEER Renee Anderson No. 61040 Exp. 12/31/12 CIVIL STATE OF CALIFORNIA

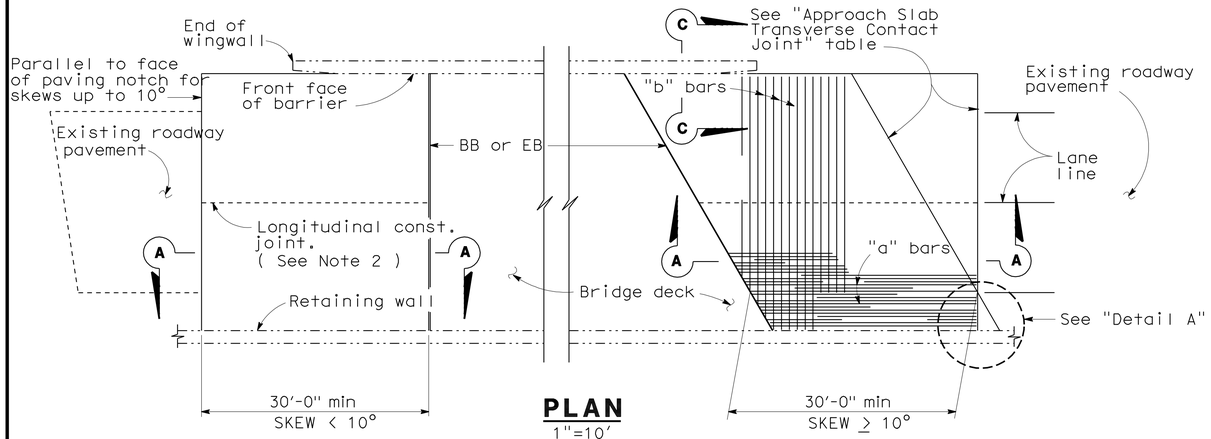

PLAN
1"=10'

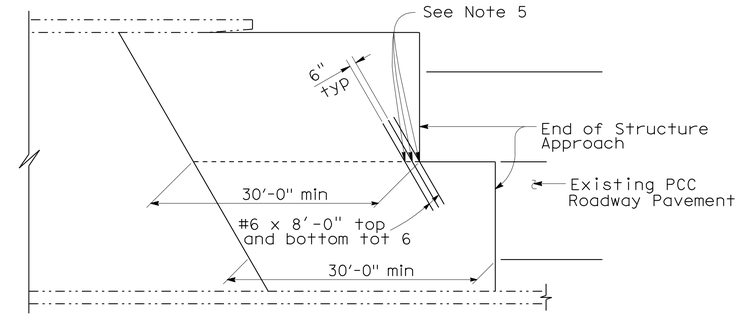

STRUCTURE APPROACH - END STAGGER DETAIL
No Scale

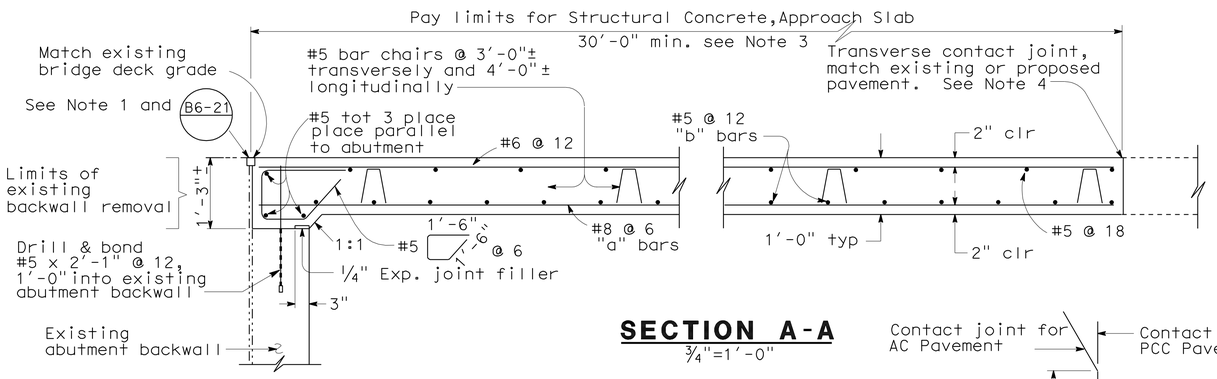

SECTION A-A
3/4"=1'-0"

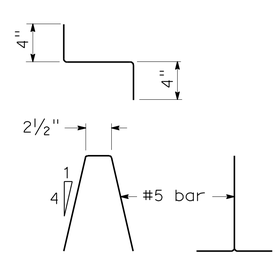

BAR CHAIR DETAIL
1 1/2"=1'-0"

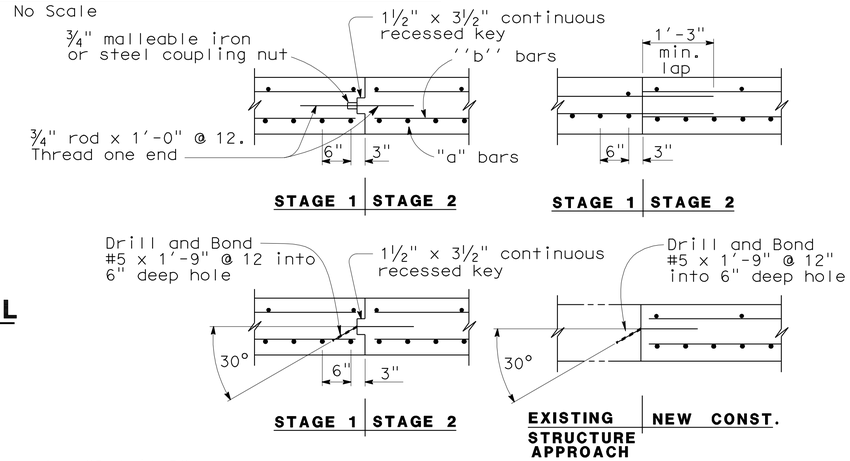

LONGITUDINAL CONSTRUCTION JOINT ALTERNATIVES
3/4"=1'-0"

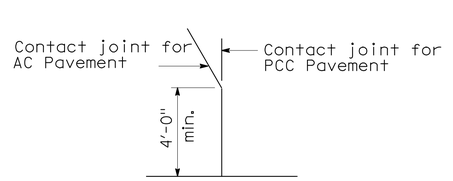

DETAIL A
No Scale

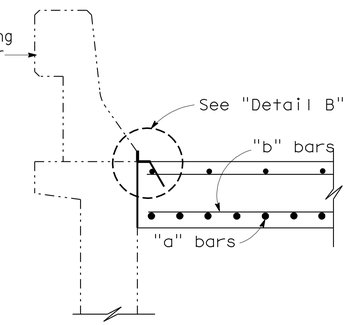

SECTION C-C
3/4"=1'-0"

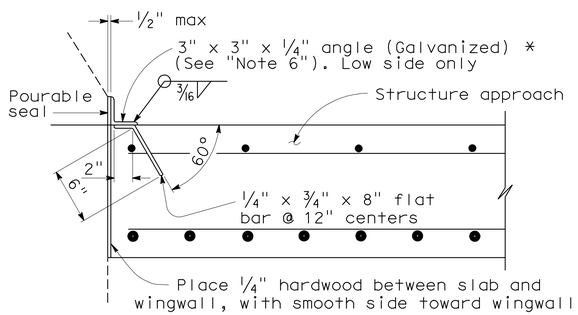

***(TO BE USED WITH TYPE 25 OR TYPE 27 CONCRETE BARRIER)**

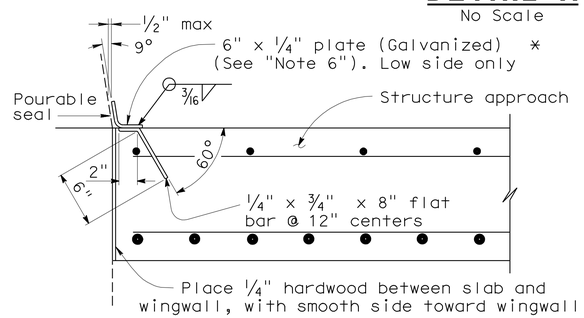

***(TO BE USED WITH TYPE 732 OR TYPE 736 CONCRETE BARRIER)**

DETAIL B
1 1/2"=1'-0"

NOTE:

THE CONTRACTOR SHALL VERIFY ALL CONTROLLING FIELD DIMENSIONS BEFORE ORDERING OR FABRICATING ANY MATERIAL.

APPROACH SLAB TRANSVERSE CONTACT JOINT

APPROACH SKEW	WITH AC ROADWAY PAVEMENT	WITH PCC ROADWAY PAVEMENT
< 10°	Parallel to face of paving notch	Parallel to face of paving notch
10°- 45°	Parallel to face of P N use (Detail A)	Stagger lines 24' to 36' apart
> 45°	Parallel to face of P N use (Detail A)	Stagger at each lane line

NOTES:

1. Sealed joint,for M.R.see Structure Plans. Adjust bar reinforcement to clear a sawcut for sealed joint,when required.
2. Longitudinal construction joints,when permitted by Engineer,shall be located on lane lines.
3. Transverse contact joint shall be a minimum of 5'-0" from an existing or constructed weakened plane joint.
4. For transverse contact joint with new PCC paving, refer to Standard Plan P10.
5. Couplers are required for stage construction.
6. End angle or plate at beginning of barrier transition, end of wingwall or end of structure approach as applicable.
7. (1) One Concrete Core (2" Diameter x 18" long) per each approach slab lane. The exact location of coring will be determined by the engineer.

REVISED STANDARD DRAWING

RELEASE DATE 3/14/05	DESIGN	BY M.TRAFFALIS	CHECKED E.THORKILDSEN	RELEASED BY
FILE NO. xs3-130e	DETAILS	BY R.YEE	CHECKED E.THORKILDSEN	
	SUBMITTED	BY M.HA	DRAWING DATE 8/92	OFFICE CHIEF

(1) Added Note 7

STATE OF CALIFORNIA DEPARTMENT OF TRANSPORTATION

DIVISION OF ENGINEERING SERVICES

BRIDGE NO. Varies
MILE POST Varies

APPROACH SLAB REHABILITATION
STRUCTURE APPROACH TYPE R(30S)

DS OSD 2147A (ENGLISH) (REV. X/XX/XX)

ORIGINAL SCALE IN INCHES FOR REDUCED PLANS 0 1 2 3

CU 11
EA 238601

DISREGARD PRINTS BEARING EARLIER REVISION DATES

REVISION DATES (PRELIMINARY STAGE ONLY) 4/13/11 9/26/11 1/24/12

SHEET 22 OF 22

USERNAME => s128843

DATE PLOTTED => 02-MAY-2012 TIME PLOTTED => 15:53

11-238601xs-140e22