Dist	COUNTY	ROUTE	POST MILES TOTAL PROJECT	SHEET No.	TOTAL SHEETS
11	SD	8	R37.8	1	23

INDEX OF PLANS

SHEET NO.	DESCRIPTION
1	TITLE AND LOCATION MAP
2	PROJECT CONTROL
3-4	LAYOUT
5	PROFILE
6-8	CONSTRUCTION DETAILS
9-11	TEMPORARY WATER POLUTION CONTROL PLAN AND QUANTITIES
12	EROSION CONTROL PLAN AND QUANTITIES
13	CONSTRUCTION AREA SIGNS
14	SUMMARY OF QUANTITIES
15-23	REVISED AND NEW STANDARD PLANS

THE STANDARD PLANS LIST APPLICABLE TO THIS CONTRACT IS INCLUDED IN THE NOTICE TO BIDDERS AND SPECIAL PROVISIONS BOOK.

STATE OF CALIFORNIA

DEPARTMENT OF TRANSPORTATION

PROJECT PLANS FOR CONSTRUCTION ADJACENT TO STATE HIGHWAY

IN SAN DIEGO COUNTY ABOUT 8 MILES EAST OF ALPINE AT ROUTE 8/79 SEPARATION

TO BE SUPPLEMENTED BY STANDARD PLANS DATED MAY 2006

LOCATION MAP

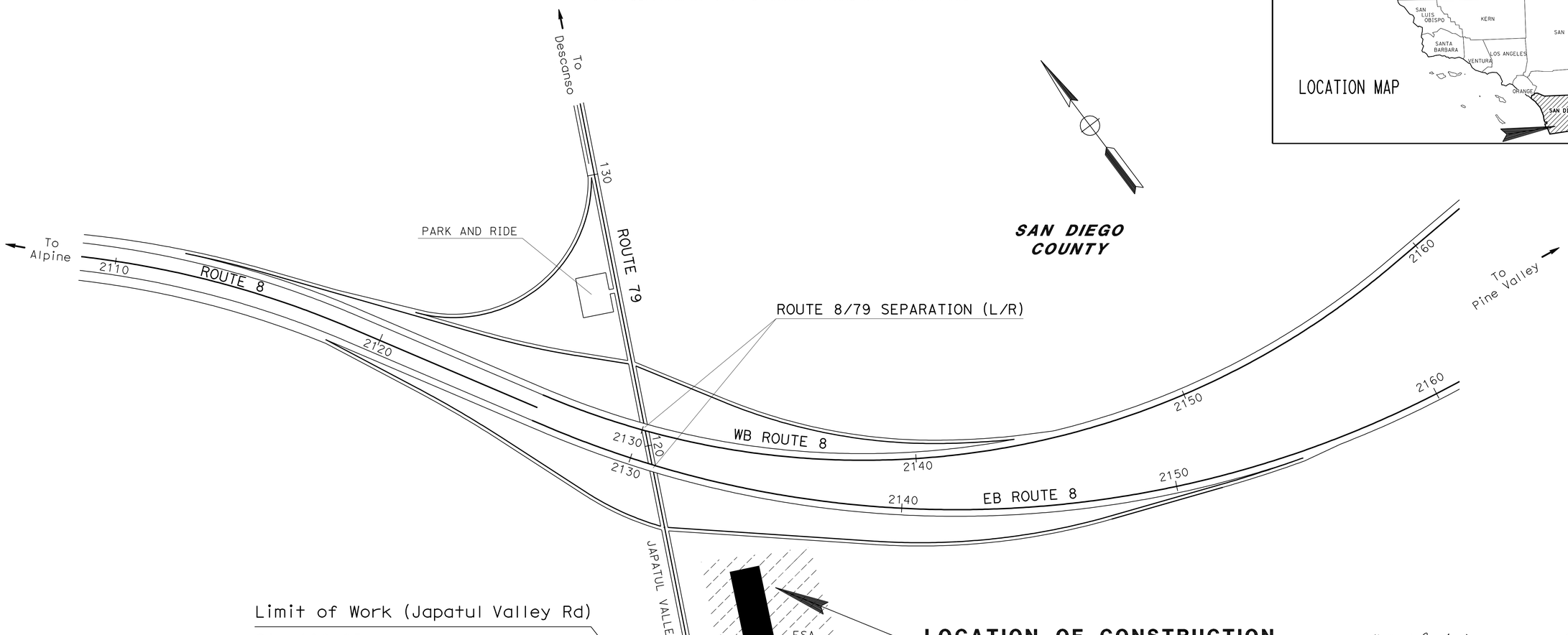

ESA ENVIRONMENTALLY SENSITIVE AREA

THE CONTRACTOR SHALL POSSESS THE CLASS (OR CLASSES) OF LICENSE AS SPECIFIED IN THE "NOTICE TO BIDDERS."

NO SCALE

PROJECT MANAGER: KAZIM MAMDANI

DESIGN ENGINEER: GERRY E CRUZ

K.A. Mamdani 12-27-12
PROJECT ENGINEER DATE
REGISTERED CIVIL ENGINEER

01-30-12
PLANS APPROVAL DATE

REGISTERED PROFESSIONAL ENGINEER KAZIM MAMDANI No. 53426 Exp. 06-30-13 CIVIL STATE OF CALIFORNIA

THE STATE OF CALIFORNIA OR ITS OFFICERS OR AGENTS SHALL NOT BE RESPONSIBLE FOR THE ACCURACY OR COMPLETENESS OF SCANNED COPIES OF THIS PLAN SHEET.

CONTRACT No.	11-260424
PROJECT ID	1100000204

LAST REVISION 12-30-11

DATE PLOTTED => 05-APR-2012
TIME PLOTTED => 15:55

Dist	COUNTY	ROUTE	POST MILES TOTAL PROJECT	SHEET No.	TOTAL SHEETS
11	SD	8	R37.8	2	23

PROFESSIONAL LAND SURVEYOR 01-03-12 DATE

01-30-12
PLANS APPROVAL DATE

PROFESSIONAL LAND SURVEYOR MARK D. PHELAN L.S.7111 EXP:12-31-12 STATE OF CALIFORNIA

THE STATE OF CALIFORNIA OR ITS OFFICERS OR AGENTS SHALL NOT BE RESPONSIBLE FOR THE ACCURACY OR COMPLETENESS OF SCANNED COPIES OF THIS PLAN SHEET.

NOTES:

CONTACT DISTRICT 11 OFFICE OF LAND SURVEYS, PHONE (858) 467-4305, FOR ADDITIONAL INFORMATION OR QUERIES REGARDING THIS SURVEY PROJECT CONTROL.

BASIS OF BEARINGS AND COORDINATES

FOR THIS PROJECT IS THE CALIFORNIA COORDINATE SYSTEM OF 1983, HPGN EPOCH ADJUSTMENT [CCS 83 (1991.35)], ZONE 6. 3RD ORDER PROJECT CONTROL WORK STATIONS WERE ESTABLISHED IN NOVEMBER 2003 ACCORDING TO CRITERIA SET FORTH IN THE FEDERAL GEODETIC CONTROL SUBCOMMITTEE'S "GEOMETRIC GEODETIC ACCURACY STANDARDS AND SPECIFICATIONS FOR USING GPS RELATIVE POSITIONING TECHNIQUES" REPRINTED AUGUST 1, 1989.

THIS GPS REAL TIME KINEMATIC (RTK) SURVEY WAS CONSTRAINED TO NGS "B" ORDER STATION SAN DIEGO GPS 21 RESULTING IN 3RD ORDER ACCURACIES PER THE ABOVE-REFERENCED STANDARDS.

BASIS OF ELEVATIONS

FOR THIS PROJECT IS THE NORTH AMERICAN VERTICAL DATUM OF 1988 (NAVD 88). ELEVATIONS WERE ESTABLISHED BY THIS GPS RTK SURVEY CONSTRAINING TO THE ABOVE-MENTIONED "B" ORDER STATION AND MEET 20 mm VERTICAL ACCURACY REQUIREMENTS.

ABBREVIATIONS:

NGS	NATIONAL GEODETIC SURVEY
SDCE	SAN DIEGO COUNTY ENGINEER
PK	PARKER-KALON NAIL
HPGN	HIGH PRECISION GEODETIC NETWORK

LEGEND:

B ORDER STATION

3RD ORDER STATION

CONTROL FOR DESIGN AND CONSTRUCTION

STATION DESIGNATION	ORDER	NORTHING	EASTING	ELEVATION	DESCRIPTION
SAN DIEGO GPS 21	B	1,879,763.25	6,448,238.25	3598.84	SDCE SURVEY DISK IN ROCK OUTCROP
8 04092 dms	3RD	1,879,466.50	6,446,033.39	3352.14	PK & WASHER IN CONCRETE
8 04092 jvr	3RD	1,880,043.46	6,445,935.88	3387.89	PK & WASHER IN SHOULDER
8 650+60	3RD	1,880,464.67	6,446,423.54	3422.08	PK & WASHER IN AC DIKE
8 652+80	3RD	1,880,004.31	6,447,019.94	3473.88	PK & WASHER IN EDGE SHOULDER
8 654+35	3RD	1,880,086.23	6,447,736.25	3495.40	PK & WASHER TOP OF DIKE

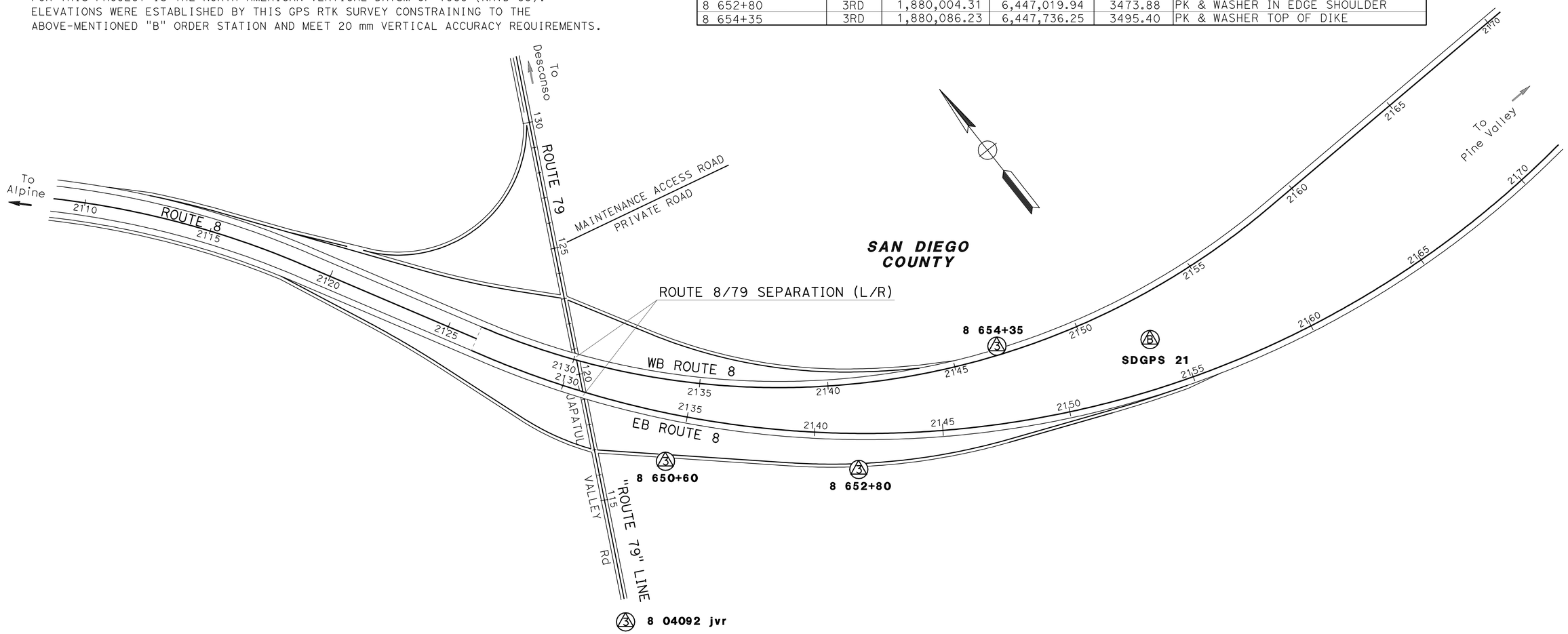

8 04092 dms

APPROVED FOR PROJECT CONTROL INFORMATION ONLY

PROJECT CONTROL

NO SCALE

PC-1

STATE OF CALIFORNIA - DEPARTMENT OF TRANSPORTATION
Caltrans OFFICE OF LAND SURVEYS

FUNCTIONAL SUPERVISOR: BRUCE URQUHART
CALCULATED-DESIGNED BY: MARK PHELAN
CHECKED BY: NED SALMAN
REVISED BY
DATE REVISED

LAST REVISION 01-03-12
DATE PLOTTED => 05-APR-2012
TIME PLOTTED => 15:55

Dist	COUNTY	ROUTE	POST MILES TOTAL PROJECT	SHEET No.	TOTAL SHEETS
11	SD	8	R37.8	3	23

K.A. Mamdani 12-27-12
REGISTERED CIVIL ENGINEER DATE

01-30-12
PLANS APPROVAL DATE

REGISTERED PROFESSIONAL ENGINEER KAZIM MAMDANI No. 53426 Exp. 06-30-13 CIVIL STATE OF CALIFORNIA

THE STATE OF CALIFORNIA OR ITS OFFICERS OR AGENTS SHALL NOT BE RESPONSIBLE FOR THE ACCURACY OR COMPLETENESS OF SCANNED COPIES OF THIS PLAN SHEET.

NOTE:

FOR ACCURATE RIGHT OF WAY DATA, CONTACT RIGHT OF WAY ENGINEERING AT THE DISTRICT OFFICE.

CHANNEL DATA

No.	R	Δ/BEARING	L	T
2	-	S 28°58′13"W	28.03′	-
3	-	S 28°54′05"W	63.00′	-
4	-	S 29°01′24"W	35.69′	-
5	100.00′	10°40′53"	18.64′	9.35′
6	-	S 39°38′10"W	33.62′	-
7	100.00′	20°57′20"	36.57′	18.49′
8	100.00′	14°13′15"	24.82′	12.47′
9	-	S 32°53′51"W	15.80′	-

CHANNEL DATA

No.	R	Δ/BEARING	L	T
10	-	S 32°54′09"W	51.00′	-
11	52.47′	10°44′52"	9.84′	4.94′
12	-	S 19°53′44"W	54.95′	-
13	100.00′	21°50′54"	38.13′	19.30′
14	-	S 01°57′10"E	30.25′	-
15	100.00′	10°14′05"	17.86′	8.96′
16	-	S 08°16′56"W	13.16′	-
17	-	S 07°54′41"W	35.94′	-

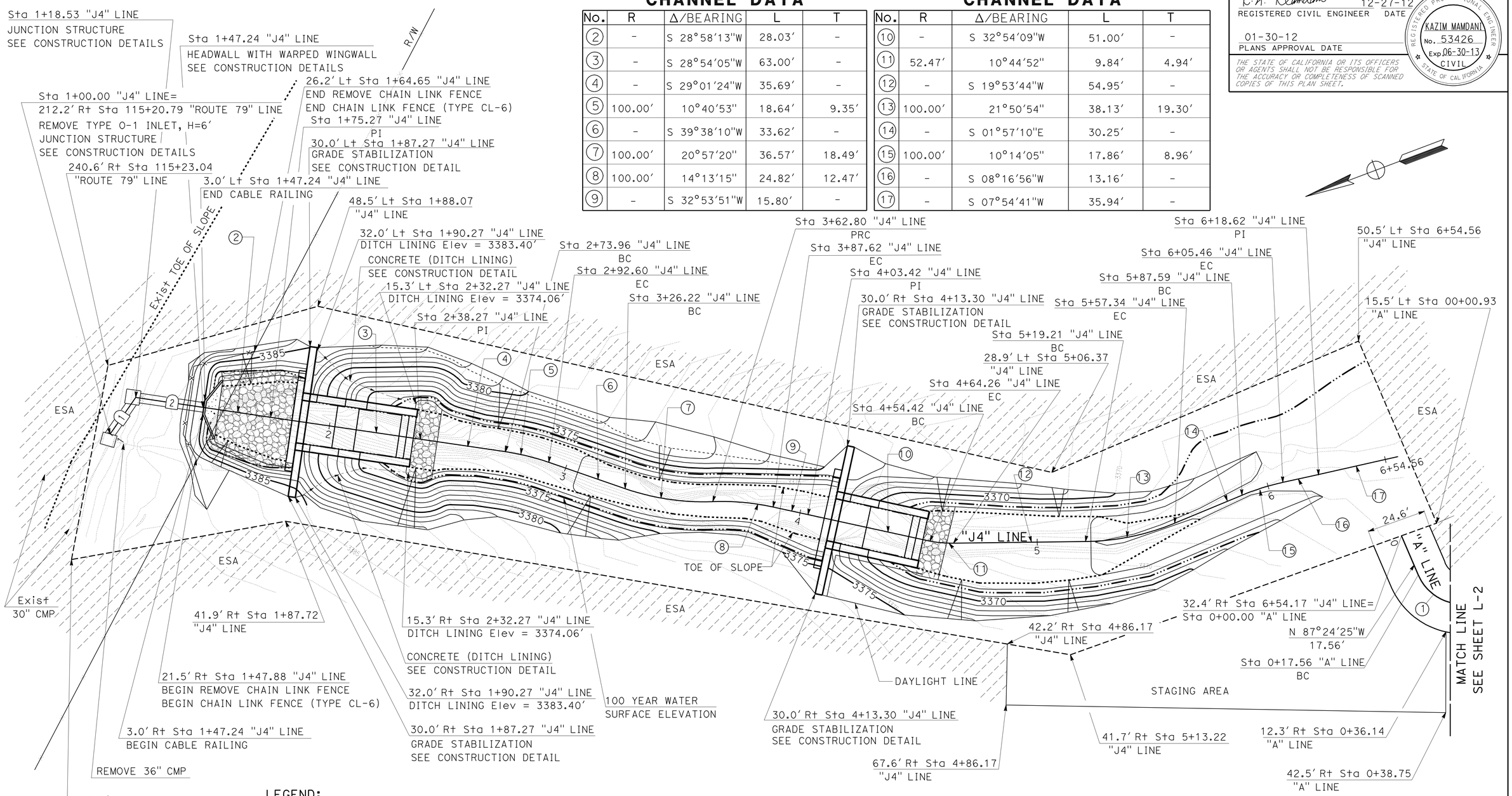

ACCESS ROAD CURVE DATA

No.	R	Δ	T	L
1	20.00′	65°49′58"	12.95′	22.98′

STORM DRAIN DATA TABLE

No.	BEARING	D-LOAD	LENGTH	REMARK
1	S 34°27′49" E	2000-D	18.53′	48" RCP
2	S 28°58′13" W	1350-D	28.71′	48" RCP

LEGEND:

- WORK AREA
- ROCK SLOPE PROTECTION WITH RSP FABRIC
- ESA — ENVIRONMENTALLY SENSITIVE AREA
- WATER SURFACE ELEVATION (100 YEAR)
- TOE OF SLOPE
- TOP OF SLOPE
- RIGHT OF WAY FENCE
- X — STORM DRAIN

SCALE: 1" = 20′

LAYOUT L-1

STATE OF CALIFORNIA - DEPARTMENT OF TRANSPORTATION
Caltrans® MINOR A PROJECTS

FUNCTIONAL SUPERVISOR: KAZIM MAMDANI
CALCULATED-DESIGNED BY: GERRY CRUZ
CHECKED BY: RUDY GABRIEL
REVISED BY / DATE REVISED

LAST REVISION 01-03-12 | DATE PLOTTED => 05-APR-2012 | TIME PLOTTED => 15:55

Dist	COUNTY	ROUTE	POST MILES TOTAL PROJECT	SHEET No.	TOTAL SHEETS
11	SD	8	R37.8	4	23

K.A. Mamdani 12-27-12
REGISTERED CIVIL ENGINEER DATE

01-30-12
PLANS APPROVAL DATE

REGISTERED PROFESSIONAL ENGINEER KAZIM MAMDANI No. 53426 Exp. 06-30-13 CIVIL STATE OF CALIFORNIA

THE STATE OF CALIFORNIA OR ITS OFFICERS OR AGENTS SHALL NOT BE RESPONSIBLE FOR THE ACCURACY OR COMPLETENESS OF SCANNED COPIES OF THIS PLAN SHEET.

NOTE:

FOR ACCURATE RIGHT OF WAY DATA, CONTACT RIGHT OF WAY ENGINEERING AT THE DISTRICT OFFICE.

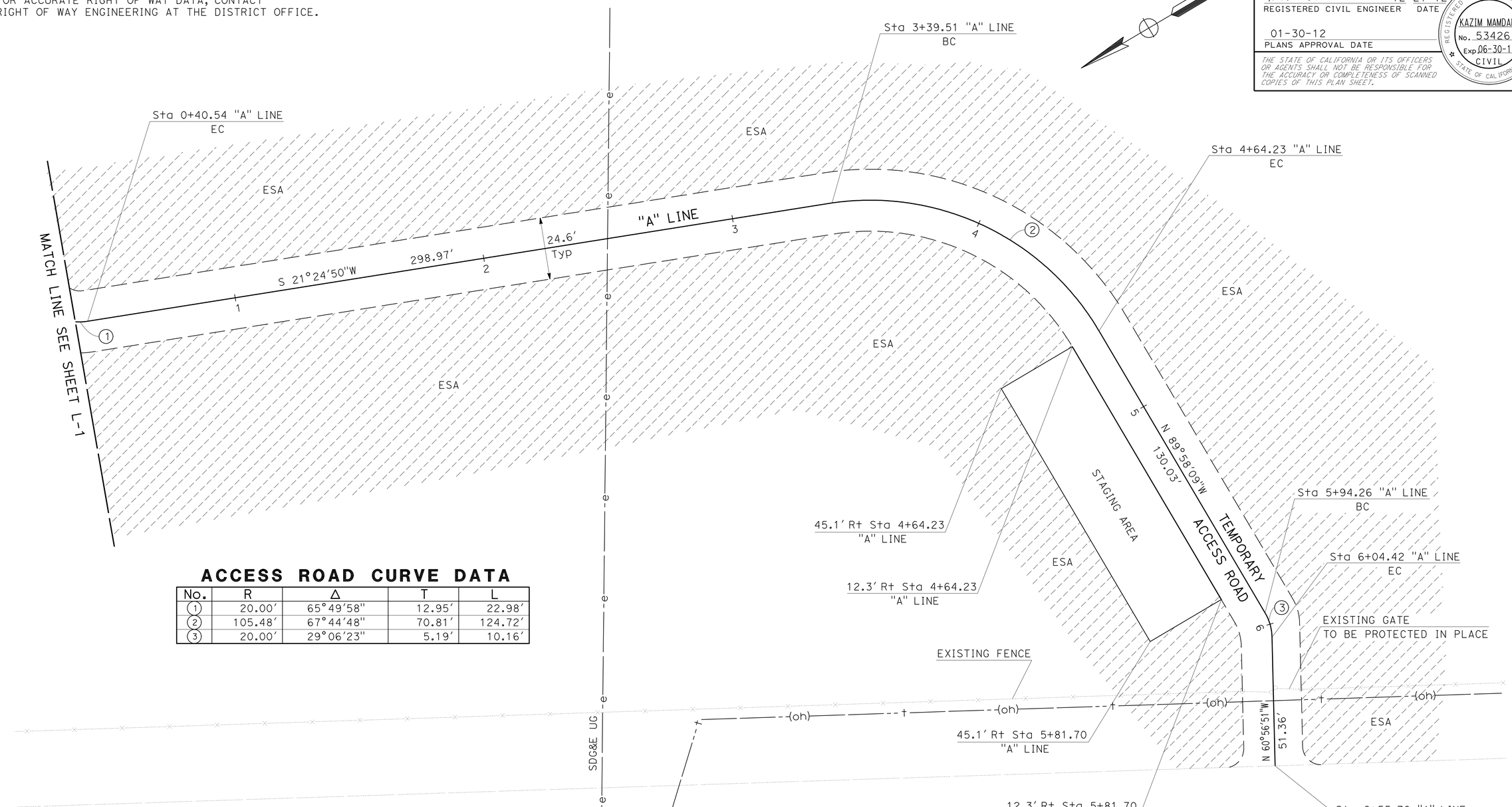

ACCESS ROAD CURVE DATA

No.	R	Δ	T	L
1	20.00'	65°49'58"	12.95'	22.98'
2	105.48'	67°44'48"	70.81'	124.72'
3	20.00'	29°06'23"	5.19'	10.16'

LAYOUT

SCALE: 1" = 20'

L-2

STATE OF CALIFORNIA - DEPARTMENT OF TRANSPORTATION
Caltrans MINOR A PROJECTS

FUNCTIONAL SUPERVISOR: KAZIM MAMDANI
CALCULATED-DESIGNED BY: GERRY CRUZ
CHECKED BY: RUDY GABRIEL
REVISED BY
DATE REVISED

LAST REVISION 01-03-12
DATE PLOTTED => 05-APR-2012
TIME PLOTTED => 15:55

Dist	COUNTY	ROUTE	POST MILES TOTAL PROJECT	SHEET No.	TOTAL SHEETS
11	SD	8	R37.8	5	23

K.A. Mamdani 12-27-12
REGISTERED CIVIL ENGINEER DATE

01-30-12
PLANS APPROVAL DATE

REGISTERED PROFESSIONAL ENGINEER KAZIM MAMDANI No. 53426 Exp. 06-30-13 CIVIL STATE OF CALIFORNIA

THE STATE OF CALIFORNIA OR ITS OFFICERS OR AGENTS SHALL NOT BE RESPONSIBLE FOR THE ACCURACY OR COMPLETENESS OF SCANNED COPIES OF THIS PLAN SHEET.

NOTE: Horiz: NORTH AMERICAN DATUM OF 1983
Vert: NORTH AMERICAN VERTICAL DATUM OF 1988
THE BENCHMARK HELD IS CALTRANS WORK POINT 8 652+80, A PK NAIL & WASHER AT THE SOUTHERLY EDGE OF THE JAPATUL VALLEY ROAD ON RAMP TO ROUTE 8 EASTBOUND.
ELEVATION = 3473.88 (CONVERTED FROM 1058.84 METRIC).

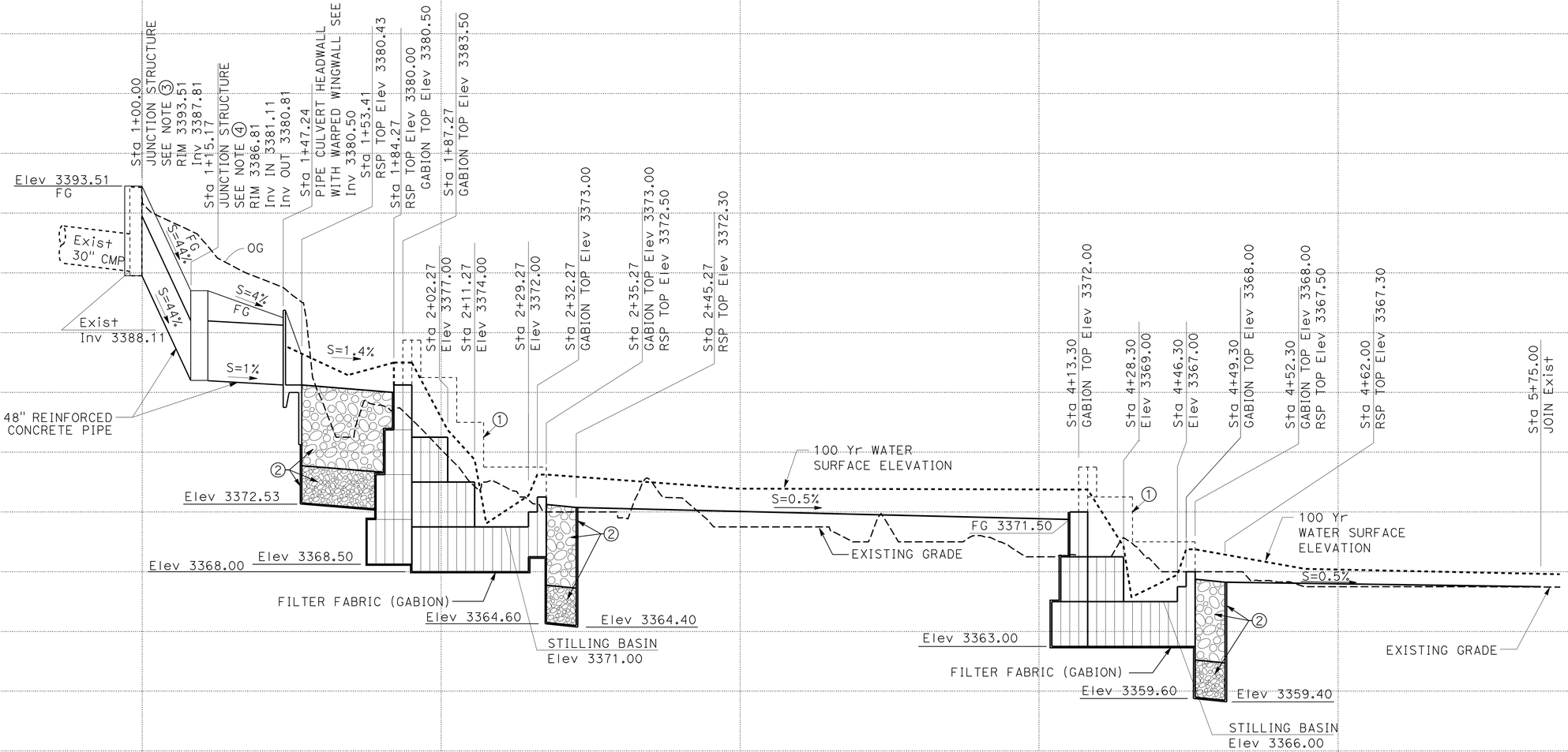

NOTES:

① FOR COMPLETE GABION ELEVATIONS AND FURTHER INFORMATION, SEE CONSTRUCTION DETAILS.

② ROCK SLOPE PROTECTION (1 TON, METHOD B), Min 5.4′ THICK.
ROCK SLOPE PROTECTION (LIGHT, METHOD B), Min 2.5′ THICK.
ROCK SLOPE PROTECTION FABRIC.

③ JUNCTION STRUCTURE WITH MANHOLE; H=0, B=2.5′, H_b=5′, Dia 1=2.5′, Dia 2=4′.

④ JUNCTION STRUCTURE WITH MANHOLE; H=0, B=4′, H_b=5′, Dia 1=4′.

⑤ PIPE CULVERT HEADWALL WITH WARPED WINGWALL; H=3′-5′, W=7.5′, L=7.25′.
FOR ADDITIONAL INFORMATION, SEE Std PLAN D86B.

PROFILE

SCALE: Horiz 1"=20′
Vert 1"=4′

P-1

STATION		1	2	3	4	5	TOTAL
CY	Exc	502.2	596.3		301.4		1393.4
	Emb			186.7		64.5	251.2

STATE OF CALIFORNIA - DEPARTMENT OF TRANSPORTATION
Caltrans® MINOR A PROJECTS

FUNCTIONAL SUPERVISOR: KAZIM MAMDANI
CALCULATED-DESIGNED BY: GERRY CRUZ
CHECKED BY: RUDY GABRIEL
REVISED BY
DATE REVISED

LAST REVISION 01-03-12
DATE PLOTTED => 05-APR-2012
TIME PLOTTED => 15:56

Dist	COUNTY	ROUTE	POST MILES TOTAL PROJECT	SHEET No.	TOTAL SHEETS
11	SD	8	R37.8	6	23

K.A. Mamdani 12-27-12
REGISTERED CIVIL ENGINEER DATE

01-30-12
PLANS APPROVAL DATE

REGISTERED PROFESSIONAL ENGINEER KAZIM MAMDANI No. 53426 Exp. 06-30-13 CIVIL STATE OF CALIFORNIA

THE STATE OF CALIFORNIA OR ITS OFFICERS OR AGENTS SHALL NOT BE RESPONSIBLE FOR THE ACCURACY OR COMPLETENESS OF SCANNED COPIES OF THIS PLAN SHEET.

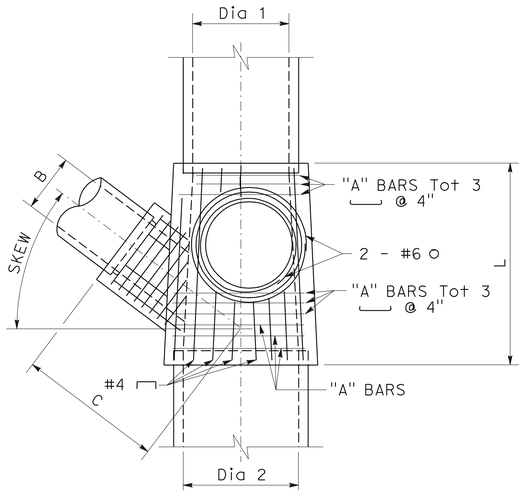

PLAN

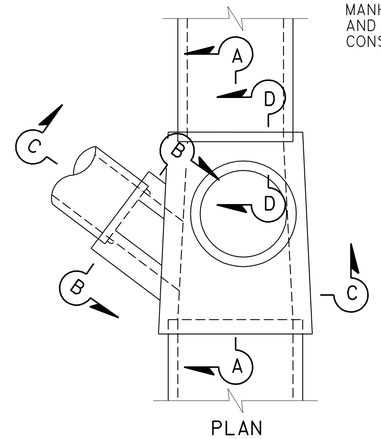

PLAN

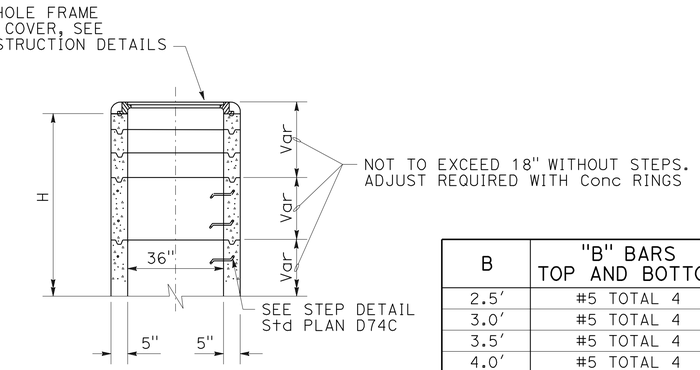

TYPE MANHOLE

B	"B" BARS TOP AND BOTTOM
2.5′	#5 TOTAL 4
3.0′	#5 TOTAL 4
3.5′	#5 TOTAL 4
4.0′	#5 TOTAL 4
4.5′	#5 TOTAL 4
5.0′	#6 TOTAL 4

DESIGN NOTES:

1. DESIGNED IN CONFORMANCE WITH BRIDGE DESIGN SPECIFICATIONS (1983 AASHTO SPECIFICATIONS WITH REVISIONS BY CALTRANS).
2. LIVE LOAD: HS20-44 TRUCK. EARTH PRESSURES: 140 PCF VERTICAL, 100 PCF HORIZONTAL.
3. UNIT STRESSES: F'_c= 3600 PSI; F_y= 60,000 PSI.
4. MAXIMUM FILL HEIGHT = 20 Ft.

GENERAL NOTES:

1. SEE PROFILE SHEET FOR: Dia 1, Dia 2, UPPER STRUCTURE OR MANHOLE (IF REQUIRED), LATERAL PIPE DIAMETER (B) AND SKEW (IF REQUIRED), C, H, AND H_b. MANHOLE OR LATERAL MAY BE OMITTED.
2. UPPER STRUCTURE, WHEN REQUIRED, MAY BE ANY DESIGNATED INLET TYPE AS SHOWN ON STANDARD PLAN D72, D73, D74, D75 OR THIS SHEET.
3. RISER SHALL BE POSITIONED TO EITHER SIDE OF THE STRUCTURE AS SHOWN.
4. EACH RISER SHALL HAVE STEPS. FOR DETAILS SEE STANDARD PLANS D74C.
5. THICKNESS OF DECK SHALL VARY AS NECESSARY TO PROVIDE A LEVEL MANHOLE SEAT.
6. REINFORCING STEEL SHALL BE PLACED 2" Clr EXCEPT AS SHOWN.
7. MAXIMUM SKEW OF LATERAL PIPE B IS 45°.
8. LATERAL MAY BE PLACED IN EITHER SIDE WALL.
9. WHERE Dia 1 AND/OR Dia 2 ARE LESS THAN 3.5′, Clr DISTANCE BETWEEN SIDE WALLS SHALL BE 3.5′. END WALLS SHALL BE 6" THICK WITH #4 @ 12" PLACED BOTH WAYS.
10. SIDE WALLS SHALL BE FLUSH WITH THE INSIDE OF THE INLET AND OUTLET PIPES WHEN PIPE DIAMETER ARE 3.5′ OR MORE.
11. L IS 5′-8" IF A RISER IS REQUIRED. IF NO RISER THEN L IS 5′-0".
12. WHEN C IS NOT SPECIFIED, BRING THE LATERAL DIRECTLY INTO THE WALL OF THE STRUCTURE.
13. WHEN C IS SPECIFIED, CONTRACTOR MAY, AT HIS OPTION, BRING THE LATERAL DIRECTLY INTO THE WALL FOR USE AS AN INSIDE FORM. A COLLAR CONFORMING WITH THE WALL THICKNESS AND REINFORCEMENT AS SHOWN IN SECTION B-B SHALL BE POURED AROUND THE PIPE.
14. WHEN LATERAL IS EXTENDED DIRECTLY INTO THE WALL. IT SHALL BE MITERED AS NECESSARY TO BE FLUSH WITH INSIDE WALL.
15. "B" BARS SHALL EXTEND A MINIMUM OF 8" ON EITHER SIDE OF THE OPENING.
16. ADJACENT TO EACH SIDE OF THE OPENING, PLACE ADDITIONAL REINFORCEMENT, EQUIVALENT TO HALF THE INTERRUPTED MAIN REINFORCEMENT.

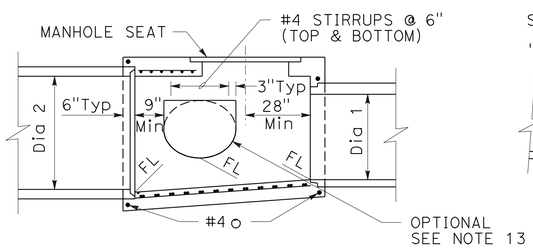

SECTION A-A

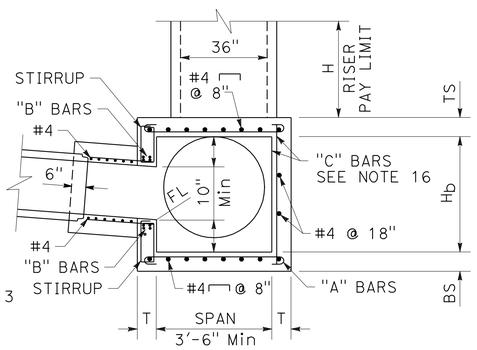

SECTION C-C

H_b	"C" BARS	SIDEWALL THICKNESS (T)
5.5′ OR LESS	#4 @ 4"	8"
6.5′	#5 @ 4"	8.5"
7.0′	#5 @ 4"	9"
8.0′	#6 @ 4"	9.5"

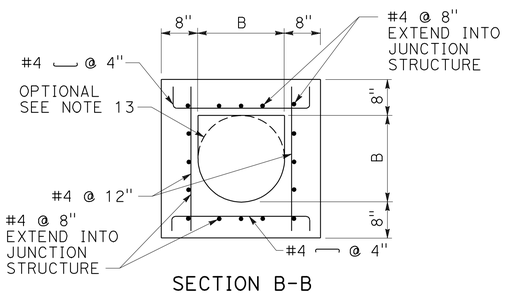

SECTION B-B

SPAN	"A" BARS	TOP AND BOTTOM SLAB THICKNESS (TS, BS)*
3.5′	#4 @ 4"	8"
4.0′	#4 @ 4"	8"
4.5′	#5 @ 5"	8"
5.0′	#5 @ 4.5"	8"
5.5′	#6 @ 5.5"	8"
6.0′	#6 @ 5.5"	9"
6.5′	#6 @ 4.5"	9"
7.0′	#6 @ 4"	9.5"

* WHEN FILL OVER JUNCTION STRUCTURE IS 2′-0" OR LESS, TS SHALL BE INCREASED BY 2"

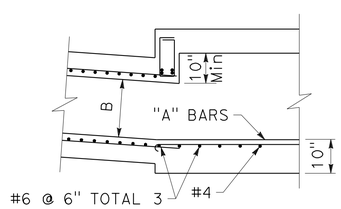

SECTION C-C (OPTIONAL)

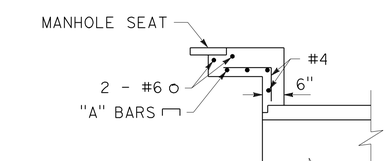

SECTION D-D

MAXIMUM FILL HEIGHT = 8′-0", FOR REINFORCEMENT AND DETAILS NOT SHOWN, SEE SECTION C-C.

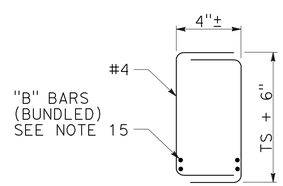

STIRRUPS

JUNCTION STRUCTURE

CONSTRUCTION DETAILS

NO SCALE

C-1

STATE OF CALIFORNIA - DEPARTMENT OF TRANSPORTATION
Caltrans® MINOR A PROJECTS

FUNCTIONAL SUPERVISOR: KAZIM MAMDANI
CALCULATED-DESIGNED BY: GERRY CRUZ
CHECKED BY: RUDY GABRIEL
REVISED BY
DATE REVISED

LAST REVISION 01-03-12
DATE PLOTTED => 05-APR-2012
TIME PLOTTED => 15:56

Dist	COUNTY	ROUTE	POST MILES TOTAL PROJECT	SHEET No.	TOTAL SHEETS
11	SD	8	R37.8	7	23

K.A. Mamdani 12-27-12
REGISTERED CIVIL ENGINEER DATE

01-30-12
PLANS APPROVAL DATE

REGISTERED PROFESSIONAL ENGINEER KAZIM MAMDANI No. 53426 Exp. 06-30-13 CIVIL STATE OF CALIFORNIA

THE STATE OF CALIFORNIA OR ITS OFFICERS OR AGENTS SHALL NOT BE RESPONSIBLE FOR THE ACCURACY OR COMPLETENESS OF SCANNED COPIES OF THIS PLAN SHEET.

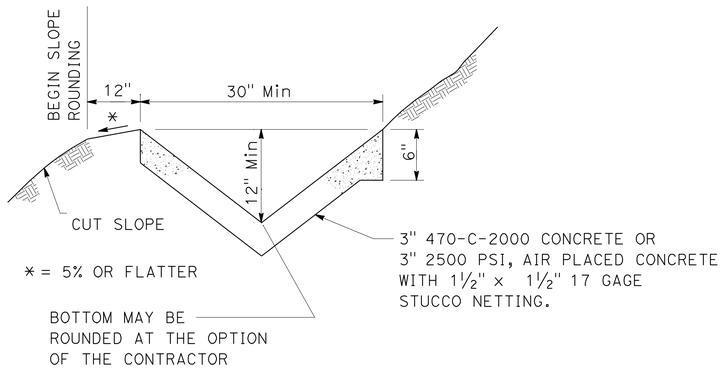

NOTES:

1. LONGITUDINAL SLOPE OF LINED DITCH SHALL BE 2% MINIMUM.
2. OVER SLOPE DOWN DITCHES SHALL EMPLOY 6" THICKENED EDGE SECTION AT BOTH SIDES OF DITCH.

CONCRETE (DITCH LINING)

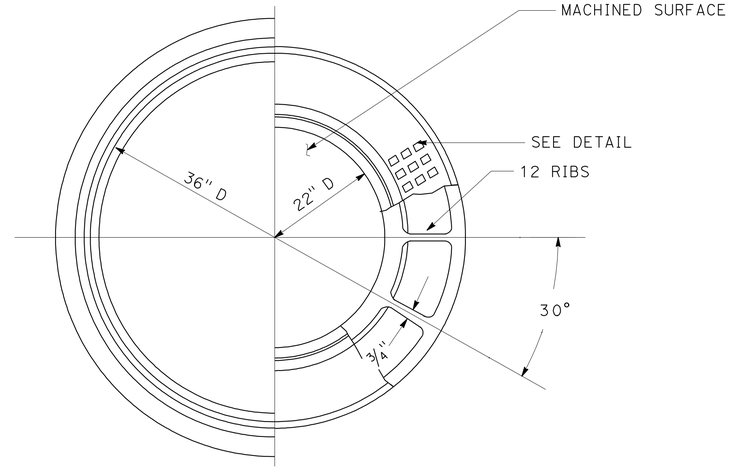

HALF PLAN FRAME & COVER

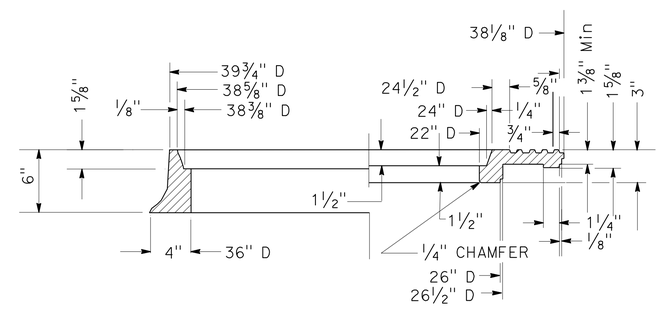

HALF SECTION FRAME & COVER

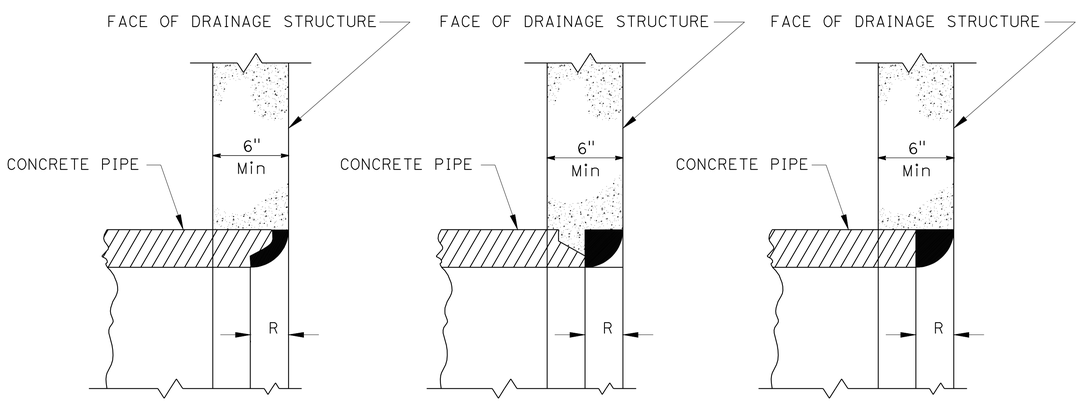

BELL END SPIGOT END CUT END

R = THICKNESS OF PIPE

NOTE:

THE ROUNDED AREAS MAY BE BUILT UP OF CEMENT MORTAR OR POURED IN PLACE WITH THE DRAINAGE STRUCTURE

ROUNDED PIPE ENDS

NOTES:

1. FRAME AND COVER SHALL BE CAST IRON. CAST IRON SHALL CONFORM TO ASTM 48, CLASS 35B.
2. WEIGHTS: FRAME 314 - 363 LBS
   OUTER COVER 285 - 330 LBS
   INNER COVER 147 - 171 LBS
3. MACHINE ALL MATCHING SURFACES AND SEATS OF FRAME AND COVER TO PREVENT ROCKING.
4. IMPORTED FRAMES AND COVERS SHALL HAVE THE COUNTRY OF ORIGIN MARKED IN COMPLIANCE WITH FEDERAL REGULATIONS.

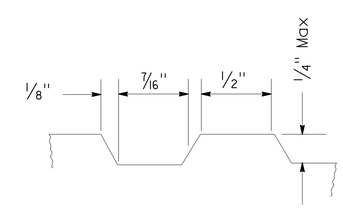

DETAIL

MANHOLE FRAME AND COVER

CONSTRUCTION DETAILS

NO SCALE

C-2

STATE OF CALIFORNIA - DEPARTMENT OF TRANSPORTATION
Caltrans® MINOR A PROJECTS

FUNCTIONAL SUPERVISOR: KAZIM MAMDANI
CALCULATED-DESIGNED BY: GERRY CRUZ
CHECKED BY: RUDY GABRIEL
REVISED BY
DATE REVISED

LAST REVISION 01-03-12 | DATE PLOTTED => 05-APR-2012 | TIME PLOTTED => 15:56

Dist	COUNTY	ROUTE	POST MILES TOTAL PROJECT	SHEET No.	TOTAL SHEETS
11	SD	8	R37.8	8	23

K.A. Mamdani 12-27-12
REGISTERED CIVIL ENGINEER DATE

01-30-12
PLANS APPROVAL DATE

REGISTERED PROFESSIONAL ENGINEER KAZIM MAMDANI No. 53426 Exp. 06-30-13 CIVIL STATE OF CALIFORNIA

THE STATE OF CALIFORNIA OR ITS OFFICERS OR AGENTS SHALL NOT BE RESPONSIBLE FOR THE ACCURACY OR COMPLETENESS OF SCANNED COPIES OF THIS PLAN SHEET.

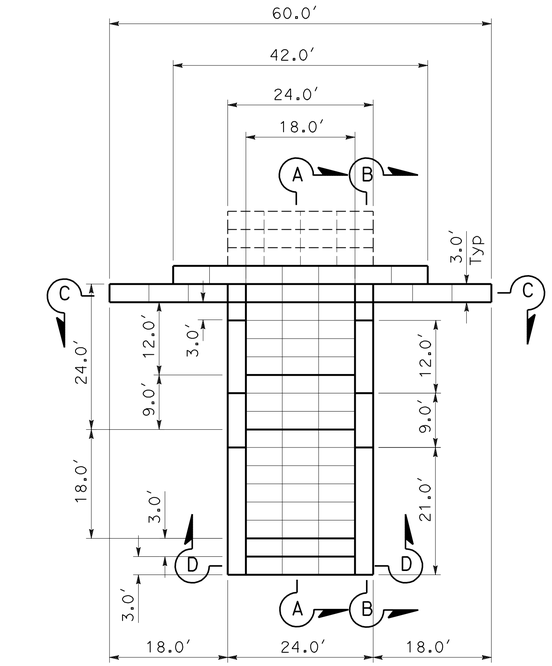

STRUCTURE PLAN AT Sta 1+87.27

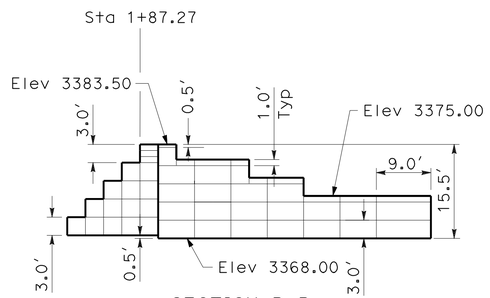

SECTION B-B

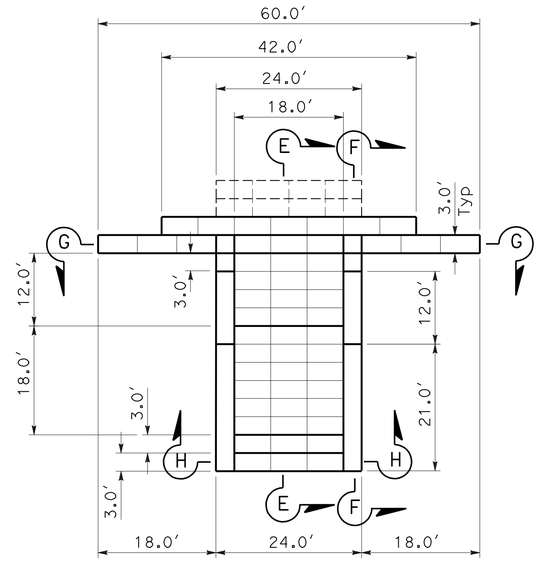

STRUCTURE PLAN AT Sta 4+13.30

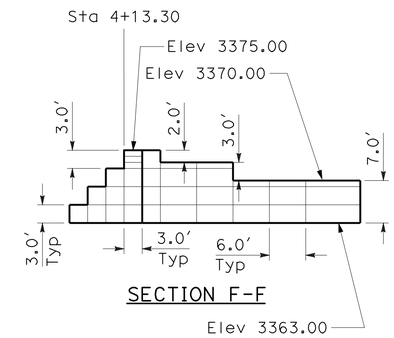

SECTION F-F

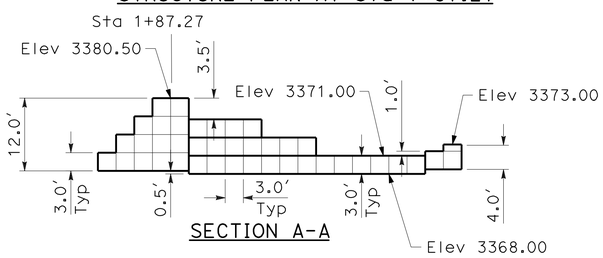

SECTION A-A

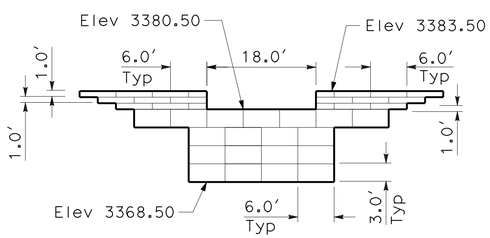

SECTION C-C

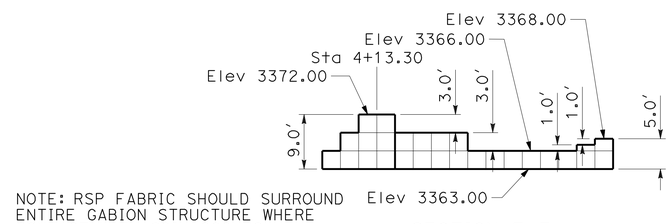

NOTE: RSP FABRIC SHOULD SURROUND ENTIRE GABION STRUCTURE WHERE CONTACT WITH SOIL OCCURS

SECTION E-E

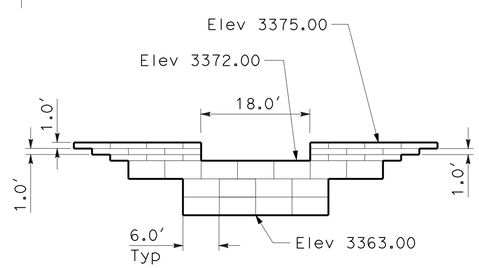

SECTION G-G

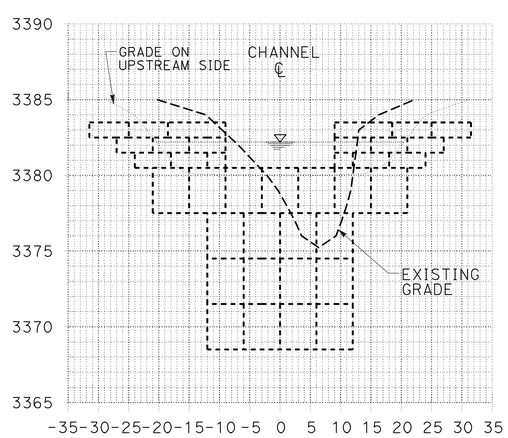

STRUCTURE ELEVATION VIEW
AT Sta 1+87.27

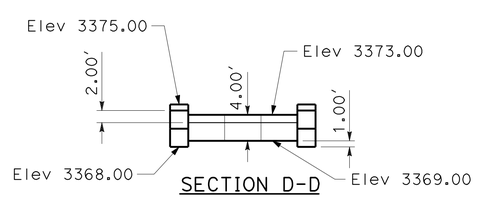

SECTION D-D

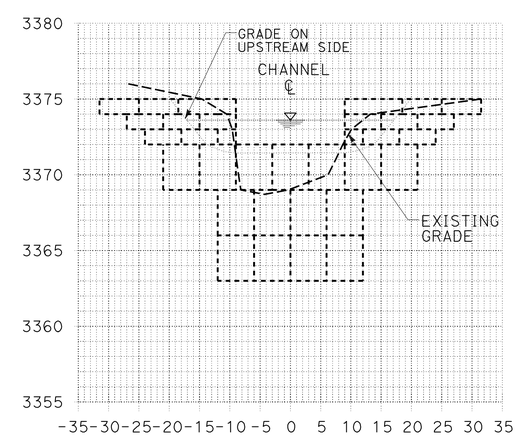

STRUCTURE ELEVATION VIEW
AT Sta 4+13.30

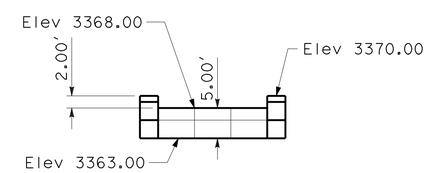

SECTION H-H

GRADE STABILIZATION TRIPLE

GRADE STABILIZATION DOUBLE

CONSTRUCTION DETAILS

NO SCALE

C-3

STATE OF CALIFORNIA - DEPARTMENT OF TRANSPORTATION
Caltrans MINOR A PROJECTS

FUNCTIONAL SUPERVISOR: KAZIM MAMDANI
CALCULATED-DESIGNED BY: GERRY CRUZ
CHECKED BY: RUDY GABRIEL
REVISED BY
DATE REVISED

LAST REVISION 01-03-12
DATE PLOTTED => 05-APR-2012
TIME PLOTTED => 15:56

Dist	COUNTY	ROUTE	POST MILES TOTAL PROJECT	SHEET No.	TOTAL SHEETS
11	SD	8	R37.8	9	23

K.A. Mamdani 12-27-12
REGISTERED CIVIL ENGINEER DATE

01-30-12
PLANS APPROVAL DATE

REGISTERED PROFESSIONAL ENGINEER
KAZIM MAMDANI
No. 53426
Exp. 06-30-13
CIVIL
STATE OF CALIFORNIA

THE STATE OF CALIFORNIA OR ITS OFFICERS OR AGENTS SHALL NOT BE RESPONSIBLE FOR THE ACCURACY OR COMPLETENESS OF SCANNED COPIES OF THIS PLAN SHEET.

NOTE:

FOR ACCURATE RIGHT OF WAY DATA, CONTACT RIGHT OF WAY ENGINEERING AT THE DISTRICT OFFICE.

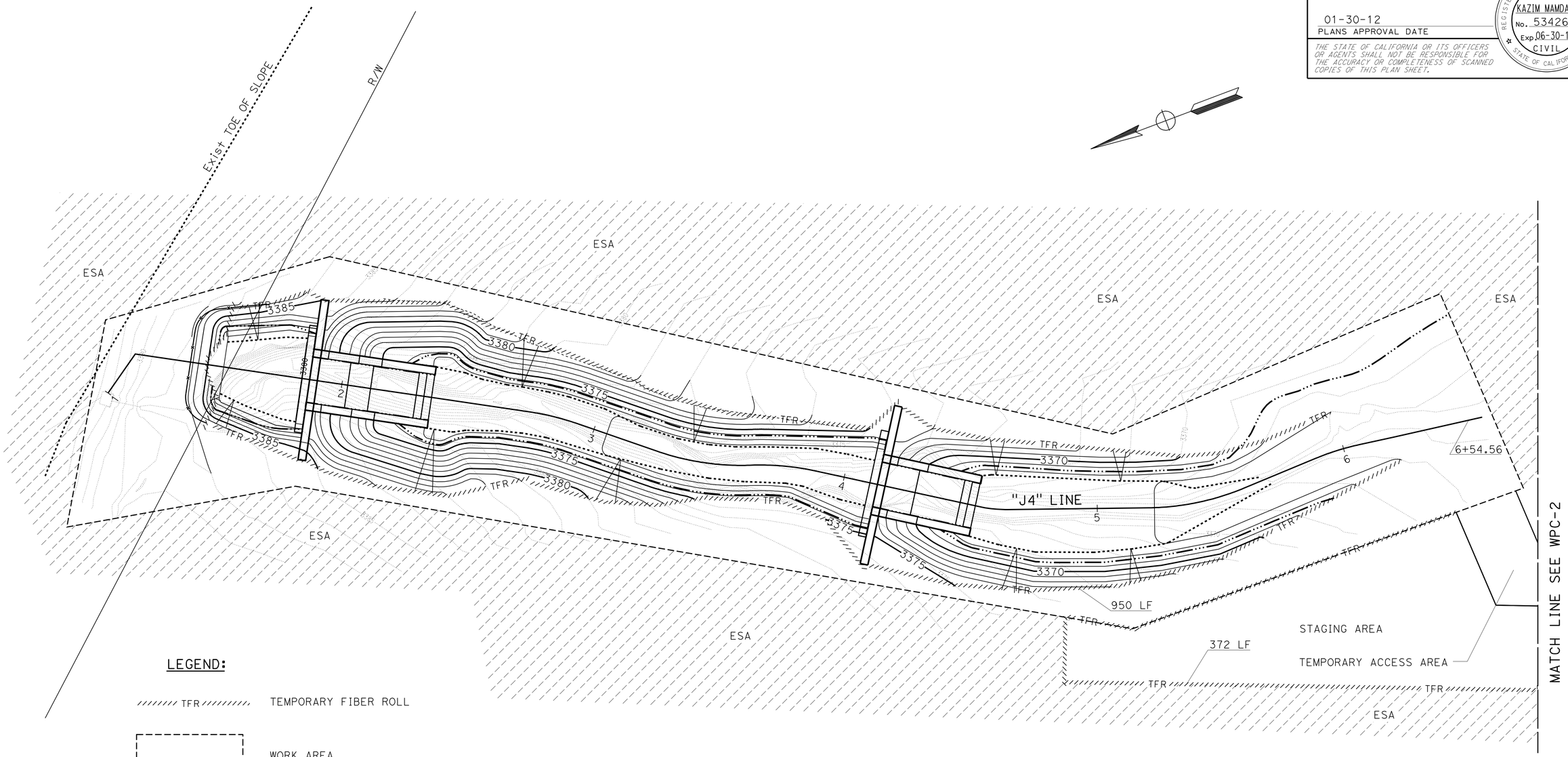

LEGEND:

TFR — TEMPORARY FIBER ROLL

WORK AREA

TEMPORARY CONSTRUCTION ENTRANCE (TYPE 2)

ESA — ENVIRONMENTALLY SENSITIVE AREA

APPROVED FOR TEMPORARY WATER POLLUTION CONTROL WORK ONLY

TEMPORARY WATER POLLUTION CONTROL PLAN

SCALE: 1" = 20'

WPC-1

STATE OF CALIFORNIA - DEPARTMENT OF TRANSPORTATION
Caltrans® MINOR A PROJECTS

FUNCTIONAL SUPERVISOR: KAZIM MAMDANI
CALCULATED-DESIGNED BY: GERRY CRUZ
CHECKED BY: RUDY GABRIEL
REVISED BY
DATE REVISED

LAST REVISION 01-03-12
DATE PLOTTED => 05-APR-2012
TIME PLOTTED => 15:56

Dist	COUNTY	ROUTE	POST MILES TOTAL PROJECT	SHEET No.	TOTAL SHEETS
11	SD	8	R37.8	10	23

K.A. Mamdani 12-27-12
REGISTERED CIVIL ENGINEER DATE

01-30-12
PLANS APPROVAL DATE

REGISTERED PROFESSIONAL ENGINEER
KAZIM MAMDANI
No. 53426
Exp. 06-30-13
CIVIL
STATE OF CALIFORNIA

THE STATE OF CALIFORNIA OR ITS OFFICERS OR AGENTS SHALL NOT BE RESPONSIBLE FOR THE ACCURACY OR COMPLETENESS OF SCANNED COPIES OF THIS PLAN SHEET.

NOTE:

FOR ACCURATE RIGHT OF WAY DATA, CONTACT
RIGHT OF WAY ENGINEERING AT THE DISTRICT OFFICE.

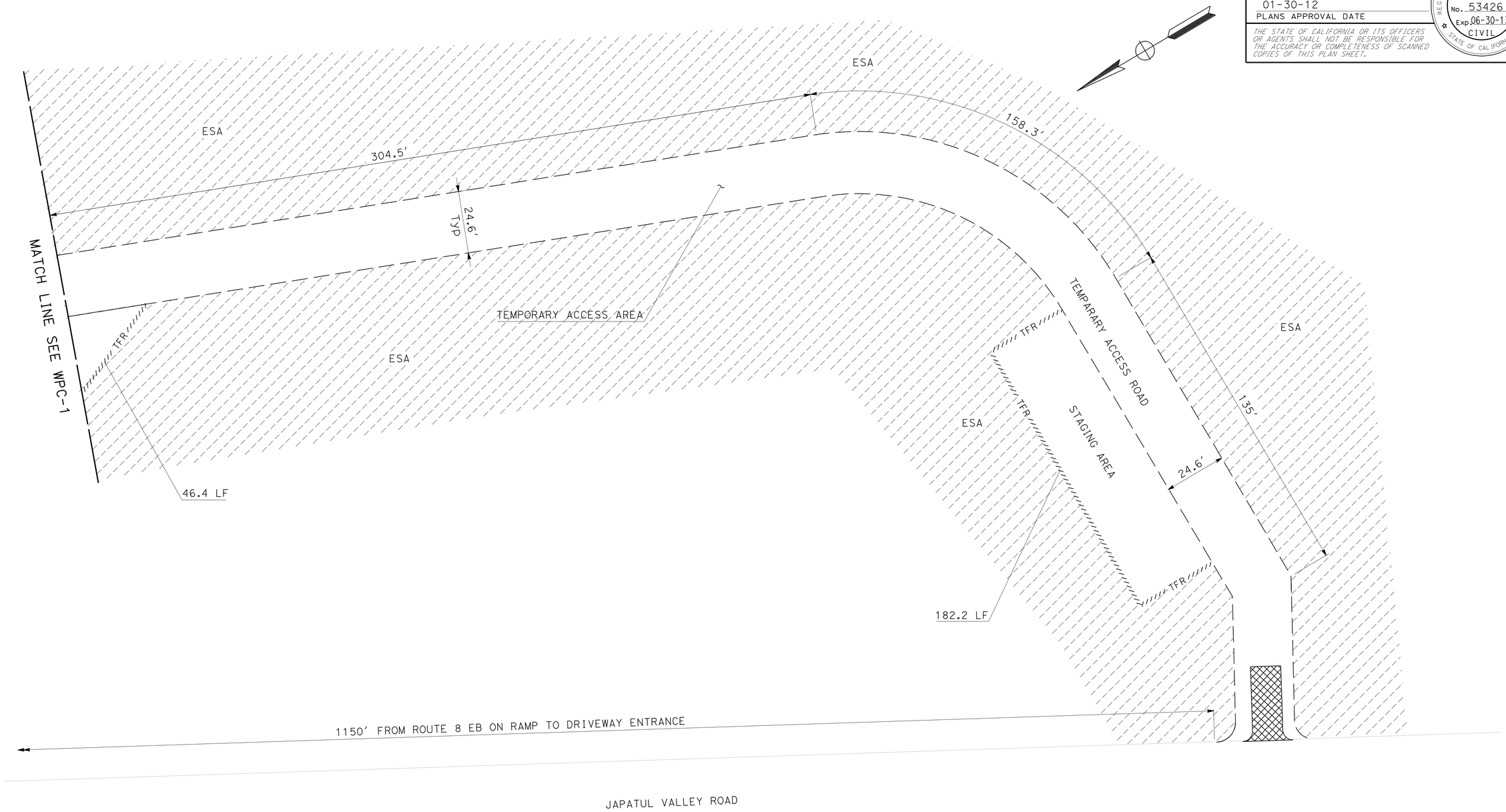

TEMPORARY WATER POLLUTION CONTROL PLAN

SCALE: 1" = 20'

WPC-2

APPROVED FOR TEMPORARY WATER POLLUTION CONTROL WORK ONLY

STATE OF CALIFORNIA - DEPARTMENT OF TRANSPORTATION
Caltrans® **MINOR A PROJECTS**

FUNCTIONAL SUPERVISOR: KAZIM MAMDANI
CALCULATED-DESIGNED BY: GERRY CRUZ
CHECKED BY: RUDY GABRIEL
REVISED BY
DATE REVISED

LAST REVISION 01-03-12
DATE PLOTTED => 05-APR-2012
TIME PLOTTED => 15:56

Dist	COUNTY	ROUTE	POST MILES TOTAL PROJECT	SHEET No.	TOTAL SHEETS
11	SD	8	R37.8	11	23

K.A. Mamdani 12-27-12
REGISTERED CIVIL ENGINEER DATE

01-30-12
PLANS APPROVAL DATE

REGISTERED PROFESSIONAL ENGINEER
KAZIM MAMDANI
No. 53426
Exp. 06-30-13
CIVIL
STATE OF CALIFORNIA

THE STATE OF CALIFORNIA OR ITS OFFICERS OR AGENTS SHALL NOT BE RESPONSIBLE FOR THE ACCURACY OR COMPLETENESS OF SCANNED COPIES OF THIS PLAN SHEET.

TEMPORARY WATER POLLUTION CONTROL QUAANTITIES

SHEET	TEMPORARY FIBER ROLL	TEMPORARY CONSTRUCTION ENTRANCE (TYPE 2)
	(LF)	(EA)
WPC-1	1322	
WPC-2	228.6	1
TOTAL	1550.6	1

TEMPORARY WATER POLLUTION CONTROL QUANTITIES

WPCQ-1

REVISED BY | DATE REVISED
GERRY CRUZ | RUDY GABRIEL
CALCULATED-DESIGNED BY | CHECKED BY
FUNCTIONAL SUPERVISOR
KAZIM MAMDANI

STATE OF CALIFORNIA - DEPARTMENT OF TRANSPORTATION
Caltrans® MINOR A PROJECTS

LAST REVISION 01-03-12
DATE PLOTTED => 05-APR-2012
TIME PLOTTED => 15:56

Dist	COUNTY	ROUTE	POST MILES TOTAL PROJECT	SHEET No.	TOTAL SHEETS
11	SD	8	R37.8	12	23

K.A. Mamdani 12-27-12
REGISTERED CIVIL ENGINEER DATE

01-30-12
PLANS APPROVAL DATE

REGISTERED PROFESSIONAL ENGINEER
KAZIM MAMDANI
No. 53426
Exp. 06-30-13
CIVIL
STATE OF CALIFORNIA

THE STATE OF CALIFORNIA OR ITS OFFICERS OR AGENTS SHALL NOT BE RESPONSIBLE FOR THE ACCURACY OR COMPLETENESS OF SCANNED COPIES OF THIS PLAN SHEET.

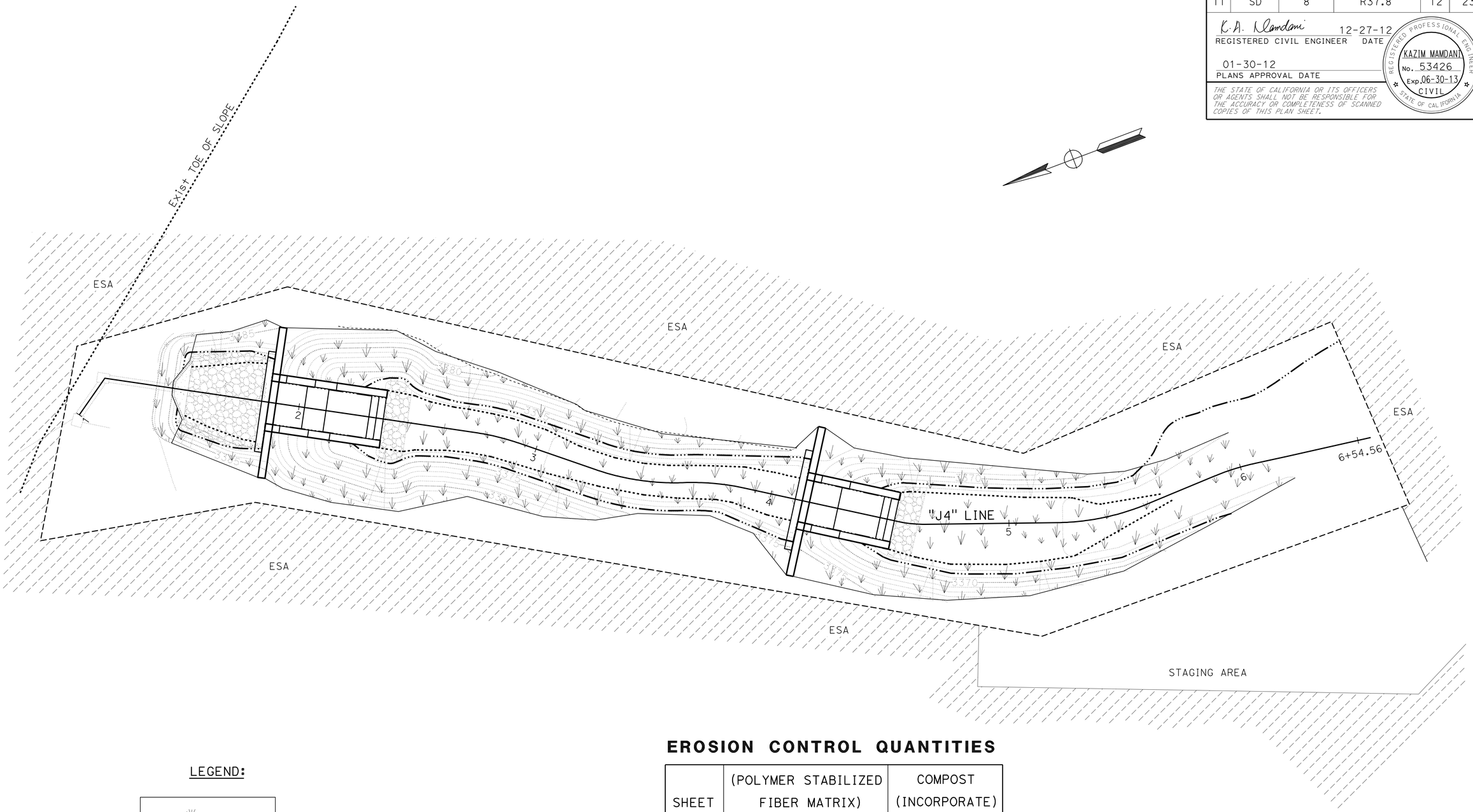

LEGEND:

EROSION CONTROL (POLYMER STABILIZED FIBER MATRIX) WITH COMPOST (INCORPORATE)

ESA ENVIRONMENTALLY SENSITIVE AREA

EROSION CONTROL QUANTITIES

SHEET	(POLYMER STABILIZED FIBER MATRIX)	COMPOST (INCORPORATE)
	(SQFT)	(SQYD)
EC-1	21,000	2,333
TOTAL	21,000	2,333

EROSION CONTROL PLAN AND QUANTITIES

SCALE: 1" = 20'

EC-1

APPROVED FOR EROSION CONTROL WORK ONLY

STATE OF CALIFORNIA - DEPARTMENT OF TRANSPORTATION
Caltrans® MINOR A PROJECTS

FUNCTIONAL SUPERVISOR: KAZIM MAMDANI
CALCULATED-DESIGNED BY: GERRY CRUZ
CHECKED BY: RUDY GABRIEL
REVISED BY
DATE REVISED

LAST REVISION 01-03-12 DATE PLOTTED => 05-APR-2012 TIME PLOTTED => 15:56

Dist	COUNTY	ROUTE	POST MILES TOTAL PROJECT	SHEET No.	TOTAL SHEETS
11	SD	8	R37.8	13	23

K.A. Mamdani 12-27-12
REGISTERED CIVIL ENGINEER DATE

01-30-12
PLANS APPROVAL DATE

REGISTERED PROFESSIONAL ENGINEER
KAZIM MAMDANI
No. 53426
Exp. 06-30-13
CIVIL
STATE OF CALIFORNIA

THE STATE OF CALIFORNIA OR ITS OFFICERS OR AGENTS SHALL NOT BE RESPONSIBLE FOR THE ACCURACY OR COMPLETENESS OF SCANNED COPIES OF THIS PLAN SHEET.

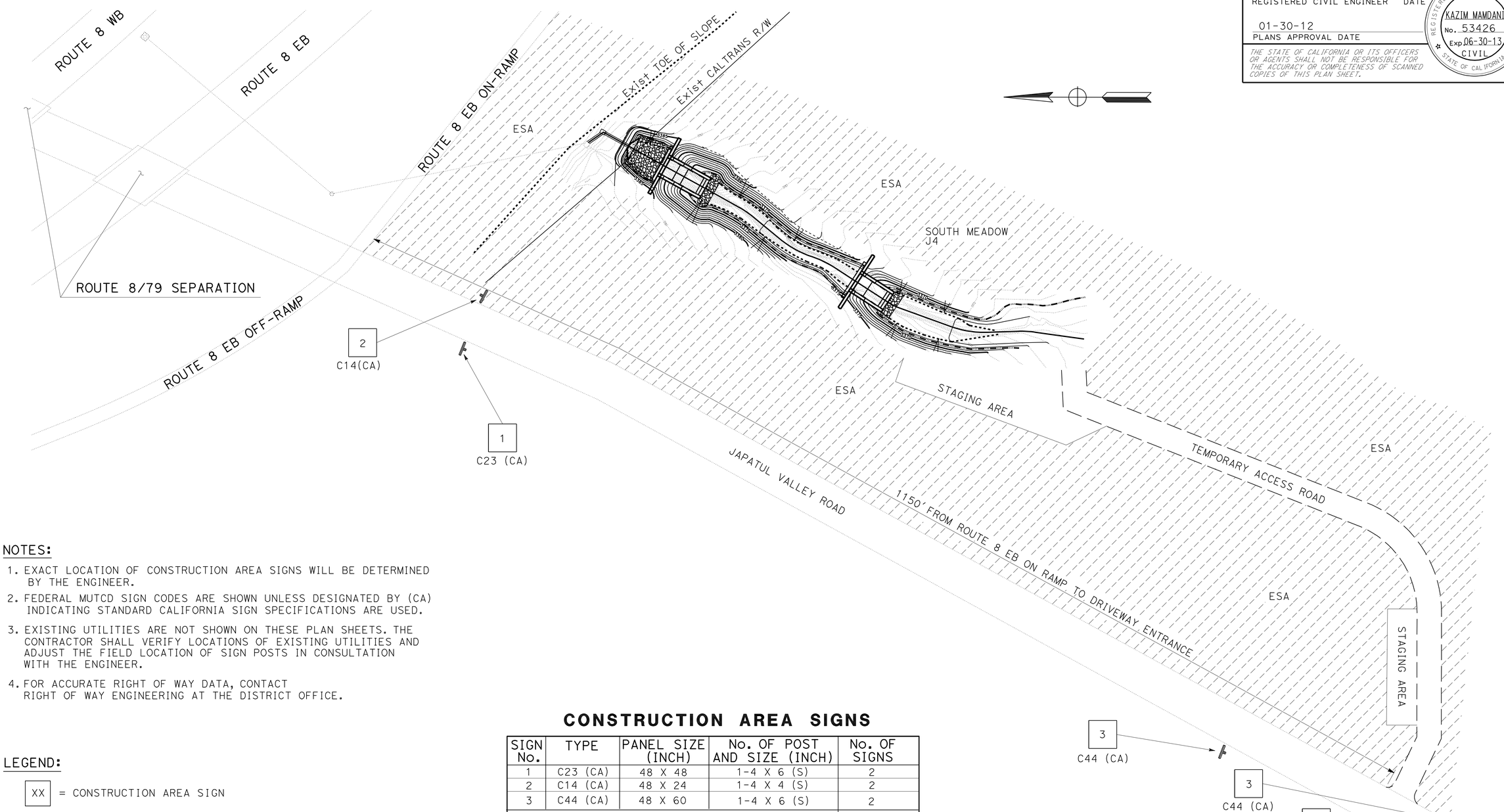

NOTES:

1. EXACT LOCATION OF CONSTRUCTION AREA SIGNS WILL BE DETERMINED BY THE ENGINEER.
2. FEDERAL MUTCD SIGN CODES ARE SHOWN UNLESS DESIGNATED BY (CA) INDICATING STANDARD CALIFORNIA SIGN SPECIFICATIONS ARE USED.
3. EXISTING UTILITIES ARE NOT SHOWN ON THESE PLAN SHEETS. THE CONTRACTOR SHALL VERIFY LOCATIONS OF EXISTING UTILITIES AND ADJUST THE FIELD LOCATION OF SIGN POSTS IN CONSULTATION WITH THE ENGINEER.
4. FOR ACCURATE RIGHT OF WAY DATA, CONTACT RIGHT OF WAY ENGINEERING AT THE DISTRICT OFFICE.

LEGEND:

XX = CONSTRUCTION AREA SIGN

ESA = ENVIRONMENTALLY SENSITIVE AREA

CONSTRUCTION AREA SIGNS

SIGN No.	TYPE	PANEL SIZE (INCH)	No. OF POST AND SIZE (INCH)	No. OF SIGNS
1	C23 (CA)	48 X 48	1-4 X 6 (S)	2
2	C14 (CA)	48 X 24	1-4 X 4 (S)	2
3	C44 (CA)	48 X 60	1-4 X 6 (S)	2
			TOTAL	6

(S) DENOTES STATIONARY MOUNTED SIGN

APPROVED FOR CONSTRUCTION AREA SIGN WORK ONLY

CONSTRUCTION AREA SIGNS

NO SCALE

CS-1

STATE OF CALIFORNIA - DEPARTMENT OF TRANSPORTATION
Caltrans® MINOR A PROJECTS

FUNCTIONAL SUPERVISOR: KAZIM MAMDANI
CALCULATED-DESIGNED BY: GERRY CRUZ
CHECKED BY: RUDY GABRIEL
REVISED BY
DATE REVISED

LAST REVISION 01-04-12
DATE PLOTTED => 05-APR-2012
TIME PLOTTED => 15:56

Dist	COUNTY	ROUTE	POST MILES TOTAL PROJECT	SHEET No.	TOTAL SHEETS
11	SD	8	R37.8	14	23

K.A. Mamdani 12-27-12
REGISTERED CIVIL ENGINEER DATE

01-30-12
PLANS APPROVAL DATE

REGISTERED PROFESSIONAL ENGINEER
KAZIM MAMDANI
No. 53426
Exp. 06-30-13
CIVIL
STATE OF CALIFORNIA

THE STATE OF CALIFORNIA OR ITS OFFICERS OR AGENTS SHALL NOT BE RESPONSIBLE FOR THE ACCURACY OR COMPLETENESS OF SCANNED COPIES OF THIS PLAN SHEET.

ROCK SLOPE PROTECTION

LOCATION	1 TON, METHOD B	LIGHT, METHOD B	FABRIC
	(CY)	(CY)	(SQYD)
Sta 1+53.42 - Sta 1+84.27	240.6	111.4	284.0
Sta 2+35.27 - Sta 2+45.27	68.0	31.5	142.8
Sta 4+52.30 - Sta 4+62.00	75.7	35.0	155.3
TOTAL	384.3	177.9	582.1

CABLE RAILING

LOCATION	(LF)
Sta 1+47.24	6
TOTAL	6

MINOR CONCRETE (MINOR STRUCTURE)

LOCATION	HEADWALL	WARPED WINGWALL	CUTOFF WALL	SLAB
	(CY)	(CY)	(CY)	(CY)
Sta 1+47.24	1.0	2.1	3.6	1.0
TOTAL	7.7			

EARTHWORK

STATION	ROADWAY EXCAVATION	EMBANKMENT (N)
	(CY)	(CY)
Sta 1+00.00 - Sta 1+87.27	502.2	
Sta 1+87.27 - Sta 2+45.27	596.3	
Sta 2+45.27 - Sta 4+13.30		186.7
Sta 4+13.30 - Sta 4+62.00	301.4	
Sta 4+62.00 - Sta 6+18.62		64.5
TOTAL	1399.7	251.2

(N) - NOT A SEPARATE PAY ITEM. FOR INFORMATION ONLY

GABION

LOCATION	(CY)
Sta 1+87.27	856.7
Sta 4+13.30	433.8
TOTAL	1290.5

CHAIN LINK FENCE

SHEET	REMOVE	TYPE CL-6
	(LF)	(LF)
L-1	52	72
TOTAL	52	72

DRAINAGE QUANTITY

LOCATION	REMOVE PIPE	48" REINFORCED CONCRETE PIPE JOINT TYPE (WATERTIGHT)	CONCRETE (DITCH LINING)	STRUCTURAL CONCRETE, JUNCTION STRUCTURE	MANHOLE FRAME AND COVER
	(LF)	(LF)	(CY)	(CY)	(EA)
Sta 1+00.00 - Sta 1+15.17	12	16		5	1
Sta 1+20.35 - Sta 1+47.24		27		5	1
Sta 1+90.00 - Sta 2+35.00			3		
TOTAL	12	43	3	10	2

SUMMARY OF QUANTITIES

Q-1

STATE OF CALIFORNIA - DEPARTMENT OF TRANSPORTATION
Caltrans MINOR A PROJECTS

FUNCTIONAL SUPERVISOR: KAZIM MAMDANI
CALCULATED-DESIGNED BY: GERRY CRUZ
CHECKED BY: RUDY GABRIEL
REVISED BY
DATE REVISED

LAST REVISION 01-04-12
DATE PLOTTED => 05-APR-2012
TIME PLOTTED => 15:56

DIST	COUNTY	ROUTE	POST MILES TOTAL PROJECT	SHEET NO.	TOTAL SHEETS
11	SD	8	R37.8	15	23

REGISTERED CIVIL ENGINEER

November 17, 2006
PLANS APPROVAL DATE

REGISTERED PROFESSIONAL ENGINEER Dallas Forester No. C37765 Exp. 12-31-06 CIVIL STATE OF CALIFORNIA

The State of California or its officers or agents shall not be responsible for the accuracy or completeness of electronic copies of this plan sheet.

To accompany plans dated 01-30-12

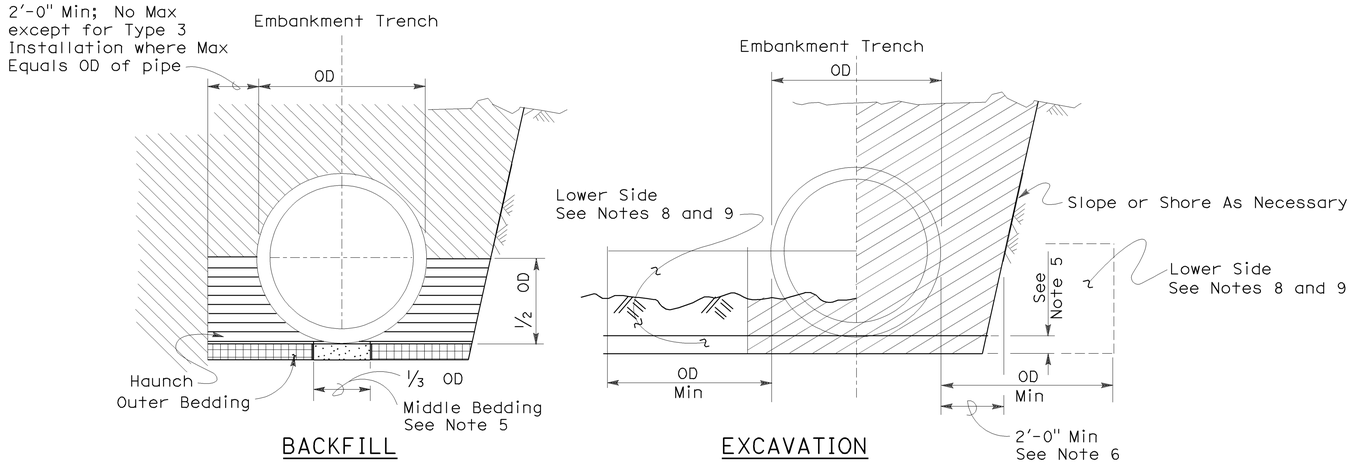

Roadway Embankment

Structure Backfill (Culvert) See Note 6

Structure Backfill (Culvert) See Note 6

Loose Backfill

Excavation Structure (Culvert)

TYPE 1 INSTALLATION:

The haunch and outer bedding shall be compacted to a minimum 90 percent relative compaction. In addition, the minimum sand equivalent in these areas shall be 30 and the maximum percentage passing the 75 μm sieve size shall be 12.

TYPE 2 INSTALLATION:

The haunch and outer bedding shall be compacted to a minimum 90 percent relative compaction. In addition, the minimum sand equivalent in these areas shall be 25.

TYPE 3 INSTALLATION:

The haunch and outer bedding shall be compacted to a minimum 85 percent relative compaction. 90 percent relative compaction will be required where the fill over the pipe is less than 4'-0" or 1/2 OD.

NOTES:

1. Unless otherwise shown on the plans or specified in the special provision, the Contractor shall have the option of selecting the class of RCP and the type of installation to be used, provided the height of cover does not exceed the value shown for the RCP selected.
   Example: 24" RCP culvert with maximum cover of 19'-0" the options are:
   a) Class II or stronger with Installation Type 1.
   b) Class III Special or stronger with Installation Type 2.
   c) Class IV Special or stronger with Installation Type 3.
   Cover is defined as the maximum vertical distance from top of the pipe to finished grade within the length of any given culvert.
2. The class of RCP and Installation Type selected shall be the same throughout the length of any given culvert.
3. The "length of any culvert" is defined as the culvert between:
   a) Successive drainage structure (inlets, junction boxes, headwalls, etc.).
   b) A drainage structure and the inlet or outlet end of the culvert.
   c) The inlet and outlet end of the culvert when there are no intervening drainage structures.
4. Oval and arch shaped RCP shall not be used.
5. 1/25 OD Min, not less than 3".
6. Slurry cement backfill may be substituted for backfill in the outer bedding and haunch areas. If slurry is used the outer and middle beddings shall be omitted. Prior to installation the soil under the middle 1/3 of the outside diameter of the pipe shall be softened by scarifying or other means to a minimum depth of 1/25 OD, but not less than 3". Where slurry cement backfill is used clear distance to trench wall may be reduced as set forth in Section 19-3.062 of the Standard Specifications.
7. Backfill shall be placed full width of excavation except where dimensions are shown for backfill width or thickness. Dimensions shown are minimums.
8. Lower side shall be suitable material as determined by the Engineer. Otherwise it shall be considered unsuitable as set forth in Section 19-2.02 of the Standard Specifications. See Note 9.
9. Where the pipe is placed in a trench, if the trench walls are sloped at 5 vertical to 1 horizontal or steeper for at least 90 percent of the trench height or up to not less than 12" from the grading plane, the firmness of the soil in the lower side need not be considered.
10. Non-reinforced precast concrete pipe sizes 3'-0" or smaller may be placed under installation Types 1, 2 or 3.

INSTALLATION TYPE 1

MINIMUM CLASS AND D-LOAD	COVER	
	108" Dia AND SMALLER	OVER 108" Dia
Class II 1000D	14.9'	12.9'
Class III 1350D	15.0' - 20.9'	13.0' - 18.9'
Class III Special 1700D	21.0' - 26.9'	19.0' - 24.9'
Class IV 2000D	27.0' - 31.9'	25.0' - 29.9'
Class IV Special 2500D	32.0' - 40.9'	30.0' - 38.9'
Class V 3000D	41.0' - 49.9'	39.0' - 46.9'
Class V Special 3600D	50.0' - 59.0'	47.0' - 58.0'

INSTALLATION TYPE 2

MINIMUM CLASS AND D-LOAD	COVER
Class II 1000D	9.9'
Class III 1350D	10.0'- 14.9'
Class III Special 1700D	15.0' - 19.9'
Class IV 2000D	20.0' - 24.9'
Class IV Special 2500D	25.0' - 31.9'
Class V 3000D	32.0' - 38.9'
Class V Special 3600D	39.0' - 47.0'

INSTALLATION TYPE 3

MINIMUM CLASS AND D-LOAD	COVER	
	48" Dia AND SMALLER	OVER 48" Dia
Class II 1000D	7.9'	5.9'
Class III 1350D	8.0' - 10.9'	6.0' - 8.9'
Class III Special 1700D	11.0' - 14.9'	9.0' - 12.9'
Class IV 2000D	15.0' - 17.9'	13.0' - 15.9'
Class IV Special 2500D	18.0' - 21.9'	16.0' - 19.9'
Class V 3000D	22.0' - 26.9'	20.0' - 24.9'
Class V Special 3600D	30.0' - 33.0'	25.0' - 31.0'

STATE OF CALIFORNIA
DEPARTMENT OF TRANSPORTATION

EXCAVATION AND BACKFILL CONCRETE PIPE CULVERTS

NO SCALE

RSP A62DA DATED NOVEMBER 17, 2006 SUPERSEDES STANDARD PLAN A62DA DATED MAY 1, 2006 - PAGE 20 OF THE STANDARD PLANS BOOK DATED MAY 2006.

REVISED STANDARD PLAN RSP A62DA

2006 REVISED STANDARD PLAN RSP A62DA

10-26-06

DIST	COUNTY	ROUTE	POST MILES TOTAL PROJECT	SHEET NO.	TOTAL SHEETS
11	SD	8	R37.8	16	23

REGISTERED CIVIL ENGINEER

June 5, 2009
PLANS APPROVAL DATE

Glenn DeCou No. C34547 Exp. 9-30-09 CIVIL — REGISTERED PROFESSIONAL ENGINEER — STATE OF CALIFORNIA

The State of California or its officers or agents shall not be responsible for the accuracy or completeness of electronic copies of this plan sheet.

To accompany plans dated 01-30-12

2006 REVISED STANDARD PLAN RSP A85

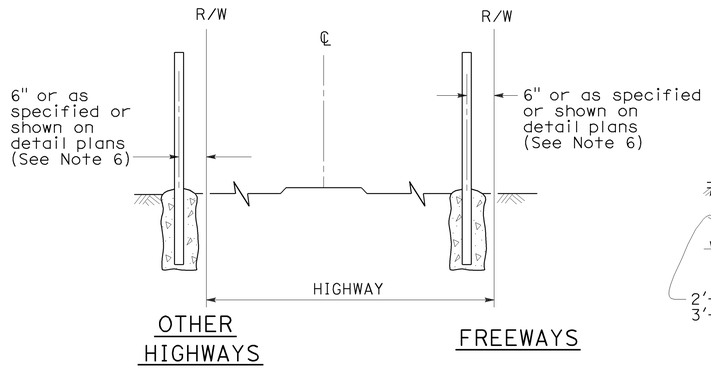

FENCE LOCATION

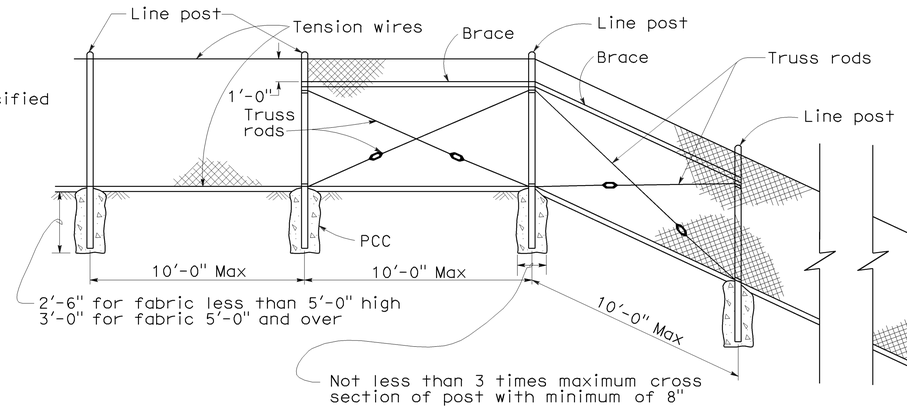

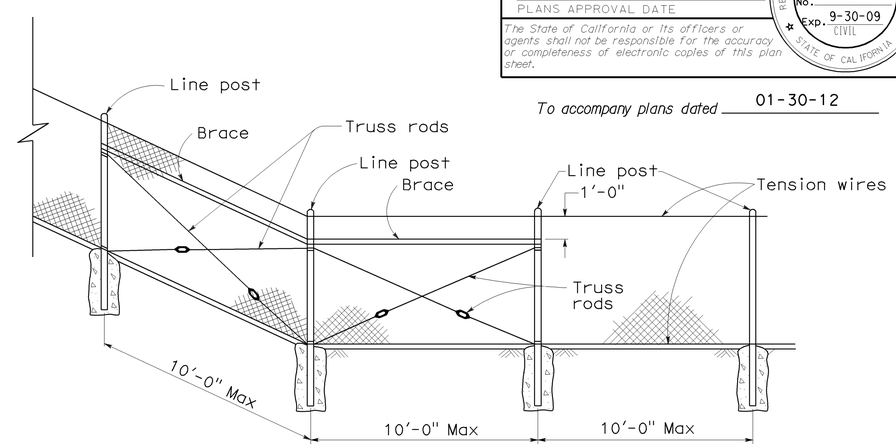

CHAIN LINK FENCE ON SHARP BREAK IN GRADE

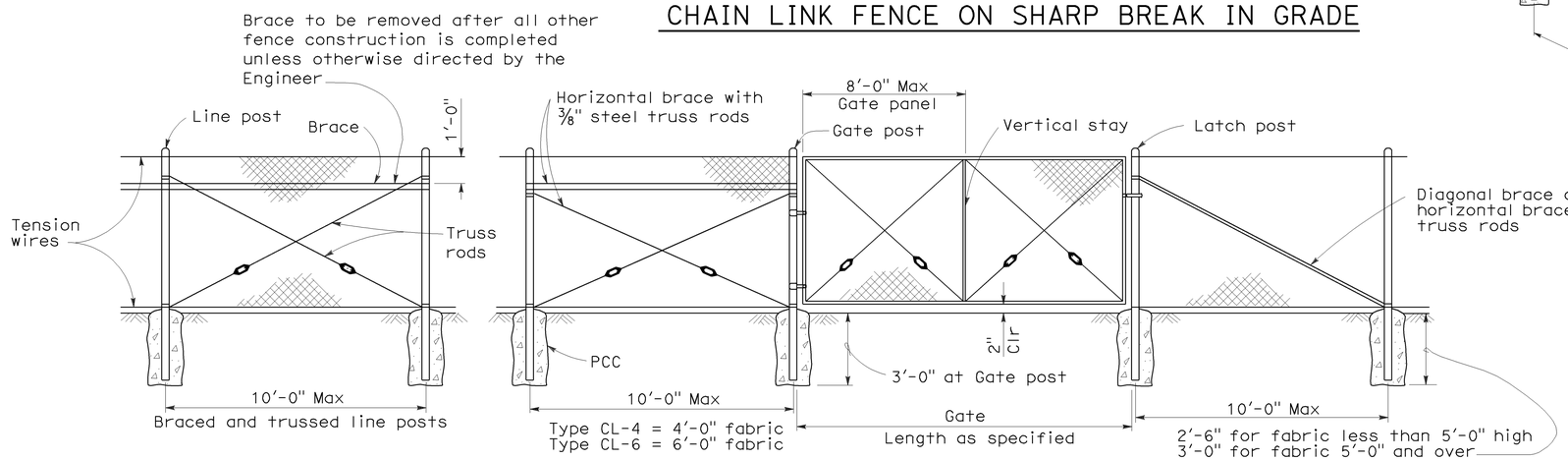

CHAIN LINK GATE INSTALLATION

GATE POST			
FENCE HEIGHT	GATE WIDTHS	NOMINAL ID	WEIGHT PER FOOT
6'-0" and Less	Up thru 6'-0"	2½"	4.95 LB
	Over 6'-0" thru 12'-0"	4"	10.79 LB
	Over 12'-0" thru 18'-0"	5"	14.62 LB
	Over 18'-0" to 24'-0" Max	6"	18.97 LB
Over 6'-0"	Up thru 6'-0"	3"	7.58 LB
	Over 6'-0" thru 12'-0"	5"	14.62 LB
	Over 12'-0" thru 18'-0"	6"	18.97 LB
	Over 18'-0" to 24'-0" Max	8"	28.55 LB

Above post dimensions and weights are minimums. Larger sizes may be used on approval of the Engineer.

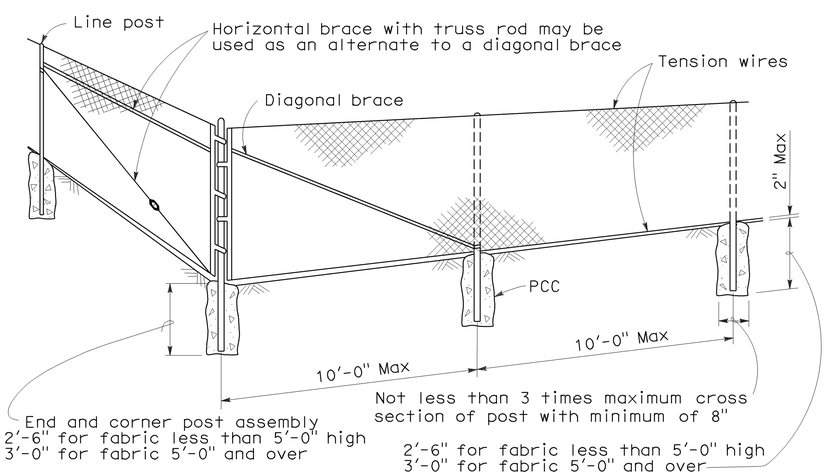

CORNER POST

NOTES:

1. The below table shows examples of post and brace sections which may comply with the Specifications.
2. Sections shown in the tables must also comply with the strength requirements and other provisions of the Specifications.
3. Other sections which comply with the strength requirements and other provisions of the Specifications may be used on approval of the Engineer.
4. Options exercised shall be uniform on any one project.
5. Dimensions shown are nominal.
6. Offset to be 2'-0" at monument locations, measured at right angles to R/W lines. Taper to achieve offset to be at least 20'-0" long.

TYPICAL MEMBER DIMENSIONS (See Notes)											
FENCE HEIGHT	LINE POSTS			END, LATCH & CORNER POSTS				BRACES			
	ROUND ID	H	ROLL FORMED	ROUND ID	ROLL FORMED			ROUND ID	H	ROLL FORMED	
6' & less	1½"	1⅞" × 1⅝"	1⅞" × 1⅝"	2"	3½" × 3½"	2" × 1¾"		1¼"	1½" × 1 5/16"	1⅝" × 1¼"	1¾" × 1¼"
Over 6'	2"	2¼" × 2"	2" × 1¾"	2½"	3½" × 3½"	2½" × 2½"		1¼"	1½" × 1 5/16"	1⅝" × 1¼"	1¾" × 1¼"

STATE OF CALIFORNIA
DEPARTMENT OF TRANSPORTATION

CHAIN LINK FENCE

NO SCALE

RSP A85 DATED JUNE 5, 2009 SUPERSEDES STANDARD PLAN A85
DATED MAY 1, 2006 - PAGE 111 OF THE STANDARD PLANS BOOK DATED MAY 2006.

REVISED STANDARD PLAN RSP A85

5-7-09

DIST	COUNTY	ROUTE	POST MILES TOTAL PROJECT	SHEET NO.	TOTAL SHEETS
11	SD	8	R37.8	17	23

REGISTERED CIVIL ENGINEER

June 5, 2009
PLANS APPROVAL DATE

REGISTERED PROFESSIONAL ENGINEER Glenn DeCou No. C34547 Exp. 9-30-09 CIVIL STATE OF CALIFORNIA

The State of California or its officers or agents shall not be responsible for the accuracy or completeness of electronic copies of this plan sheet.

To accompany plans dated 01-30-12

NOTES:

1. H is 2'-6" for fabric less than 5'-0" high.
   H is 3'-0" for fabric 5'-0" and over.
2. T is not less than 3 times maximum cross section of post with minimum of 8".
3. Arms with barbed wire to be used where shown on plans.
4. See Revised Standard Plan RSP A85 for Chain Link Fencing dimensions.
5. Reinforcing must comply with ASTM A 706.
6. See Detail A on New Standard Plan NSP A86B for connection at headwall.

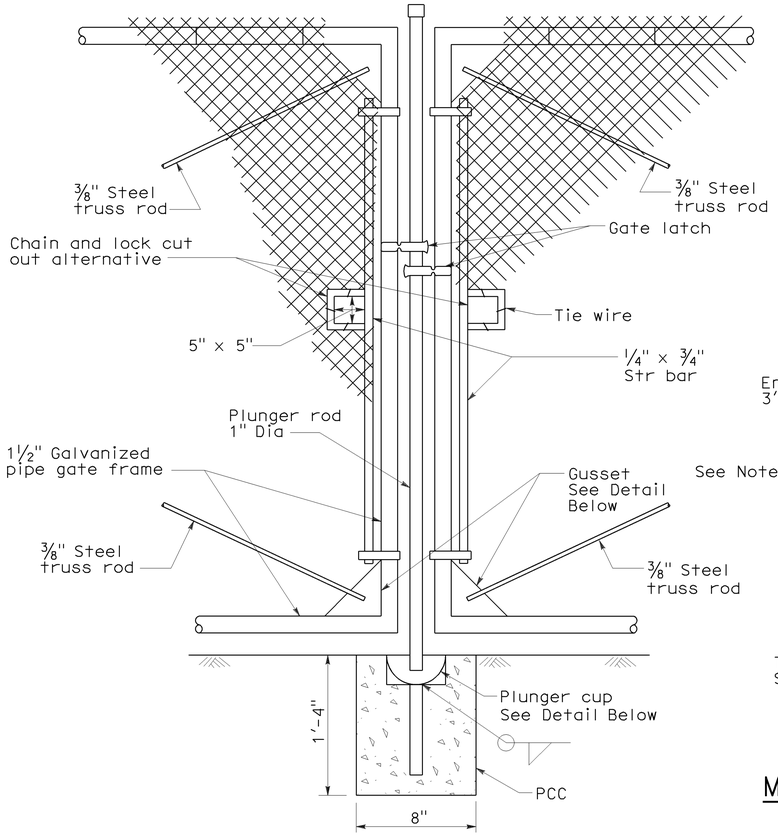

TYPICAL DOUBLE GATE
REMOVABLE CENTER POST

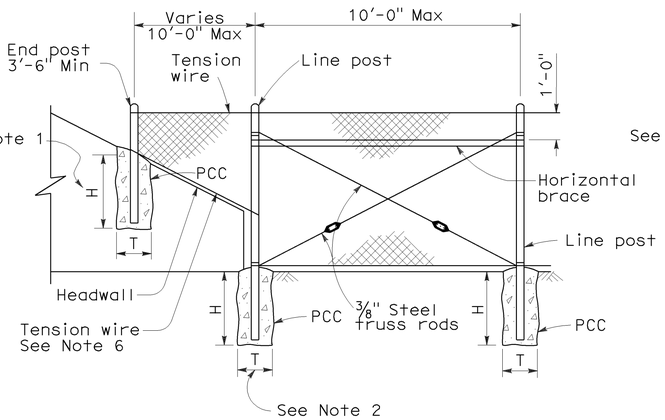

METHOD OF TYING FENCE TO HEADWALL

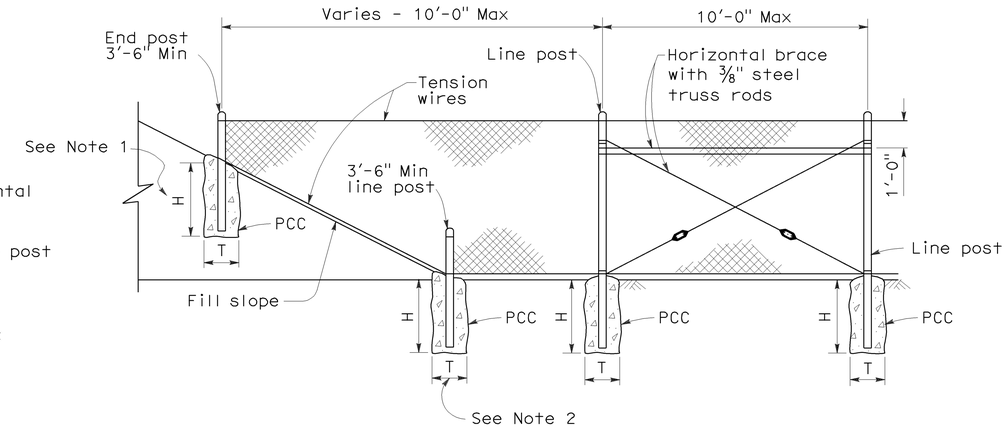

METHOD OF ERECTING FENCE FOR FILL SLOPE

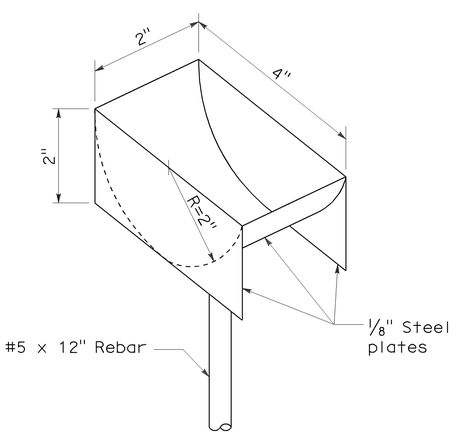

PLUNGER CUP DETAIL

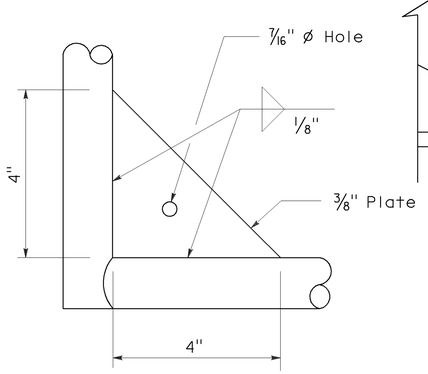

GUSSET DETAIL

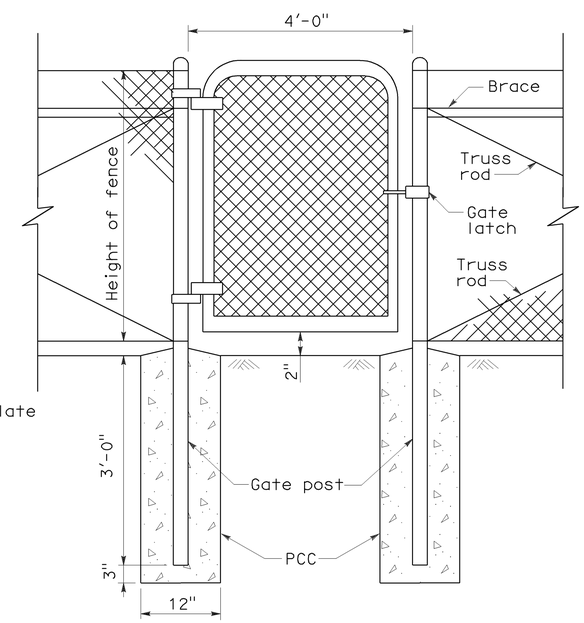

WALK GATE

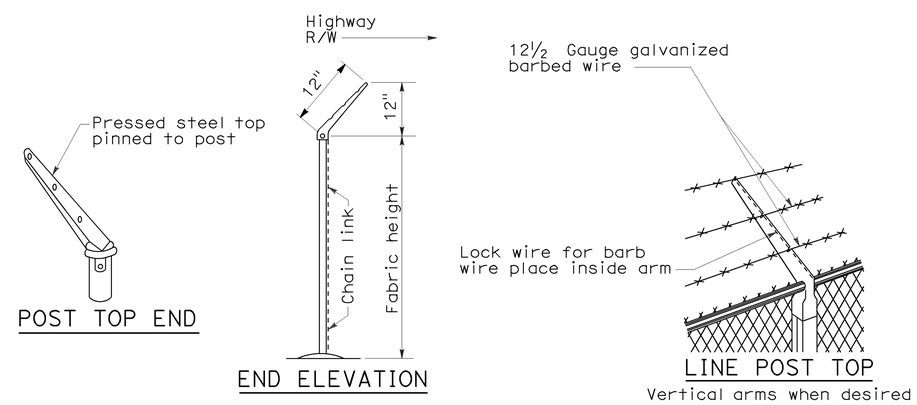

POST TOP END

END ELEVATION

LINE POST TOP
Vertical arms when desired

BARBED WIRE POST TOP
See Note 3

STATE OF CALIFORNIA
DEPARTMENT OF TRANSPORTATION

CHAIN LINK FENCE DETAILS

NO SCALE

NSP A85A DATED JUNE 5, 2009 SUPPLEMENTS THE STANDARD PLANS BOOK DATED MAY 2006.

NEW STANDARD PLAN NSP A85A

2006 NEW STANDARD PLAN NSP A85A

5-7-09

DIST	COUNTY	ROUTE	POST MILES TOTAL PROJECT	SHEET NO.	TOTAL SHEETS
11	SD	8	R37.8	18	23

Glenn DeCou
REGISTERED CIVIL ENGINEER

June 5, 2009
PLANS APPROVAL DATE

REGISTERED PROFESSIONAL ENGINEER Glenn DeCou No. C34547 Exp. 9-30-09 CIVIL STATE OF CALIFORNIA

The State of California or its officers or agents shall not be responsible for the accuracy or completeness of electronic copies of this plan sheet.

To accompany plans dated 01-30-12

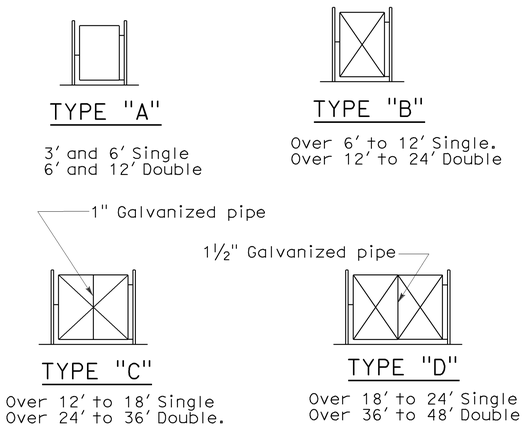

TYPICAL FRAMEWORK SHOWING NUMBER OF BAYS IN GATE

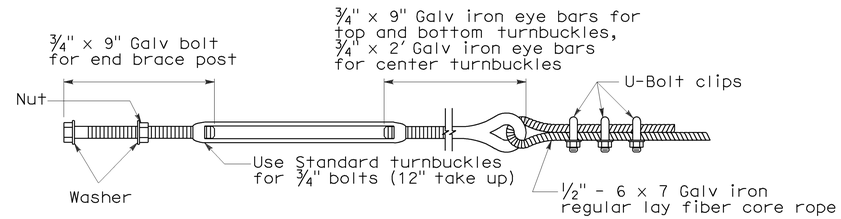

TURNBUCKLE A

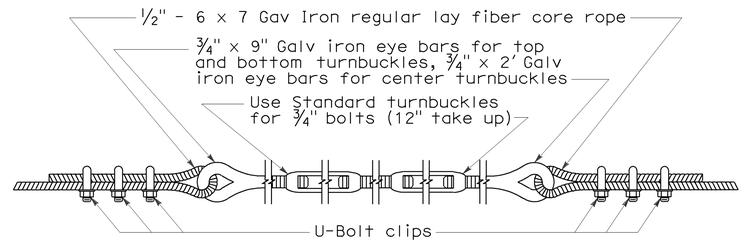

TURNBUCKLE B

NOTES:

1. All material for abutment connection to be galvanized.
2. The chain link fabric shall be replaced by barbed wire strands at 12" maximum centers between the double posts.
3. When the width of the culvert makes it necessary to anchor a post to the top of the culvert, a cast iron shoe or other device approved by the Engineer shall be used.
4. Fencing over stream and around headwall may also use Barbed Wire or Wire Mesh fencing with either wood post or steel post installation.
5. See Revised Standard Plan RSP A85 for Chain Link fence dimensions. See Standard Plan A86 for Barbed Wire and Wire Mesh fence dimensions and for wood post and steel post installation.

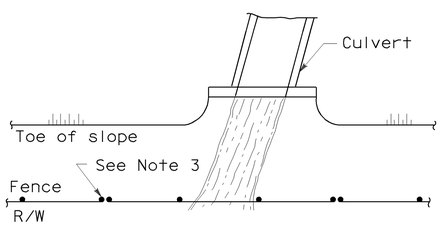

PLAN

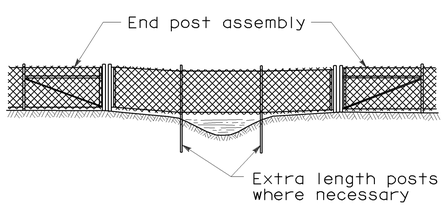

ELEVATION

INSTALLATION OVER STREAM

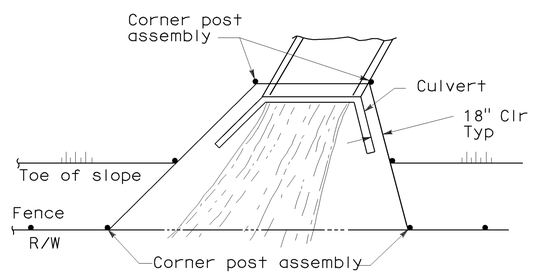

PLAN

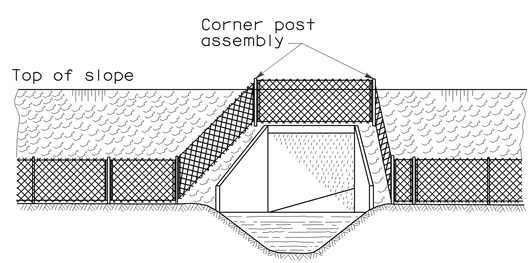

ELEVATION

INSTALLATION AROUND HEADWALL

See Note 4

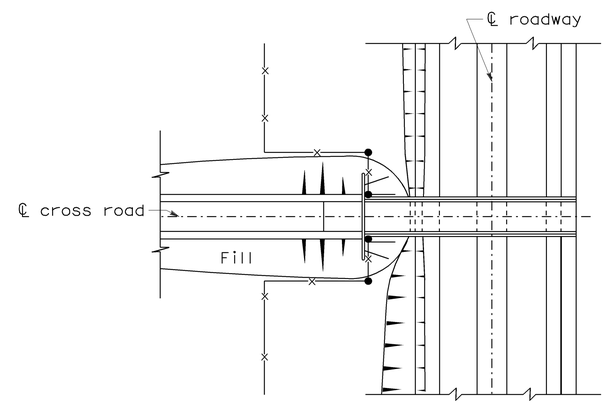

PLAN OF ROADWAY - UNDERPASS

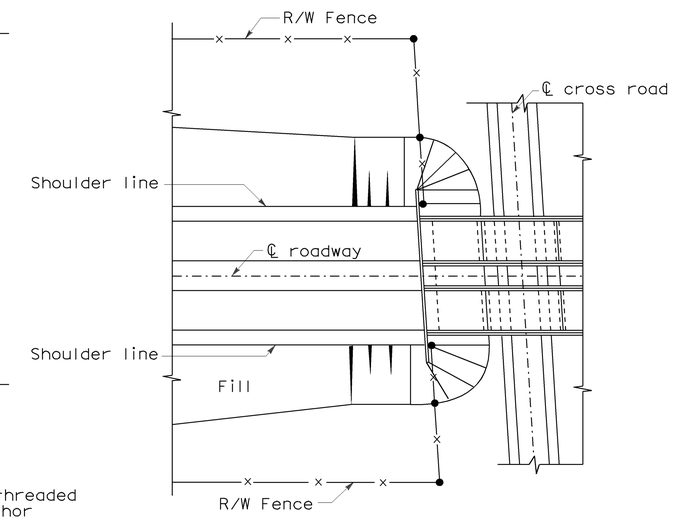

PLAN OF ROADWAY - OVERPASS

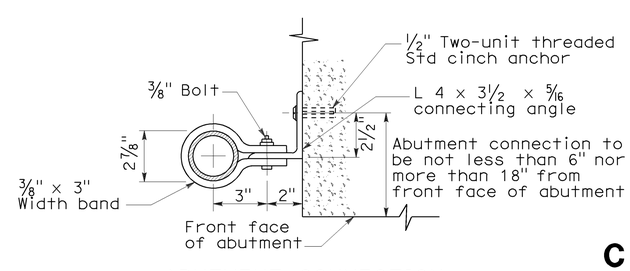

ABUTMENT CONNECTION

TYPICAL INSTALLATION AT BRIDGES

STATE OF CALIFORNIA
DEPARTMENT OF TRANSPORTATION

CHAIN LINK FENCE DETAILS

NO SCALE

NSP A85B DATED JUNE 5, 2009 SUPPLEMENTS THE STANDARD PLANS BOOK DATED MAY 2006.

NEW STANDARD PLAN NSP A85B

2006 NEW STANDARD PLAN NSP A85B

5-12-09

DIST	COUNTY	ROUTE	POST MILES TOTAL PROJECT	SHEET NO.	TOTAL SHEETS
11	SD	8	R37.8	19	23

Randell D. Hiatt
REGISTERED CIVIL ENGINEER

June 6, 2008
PLANS APPROVAL DATE

REGISTERED PROFESSIONAL ENGINEER
Randell D. Hiatt
No. C50200
Exp. 6-30-09
CIVIL
STATE OF CALIFORNIA

The State of California or its officers or agents shall not be responsible for the accuracy or completeness of electronic copies of this plan sheet.

To accompany plans dated 01-30-12

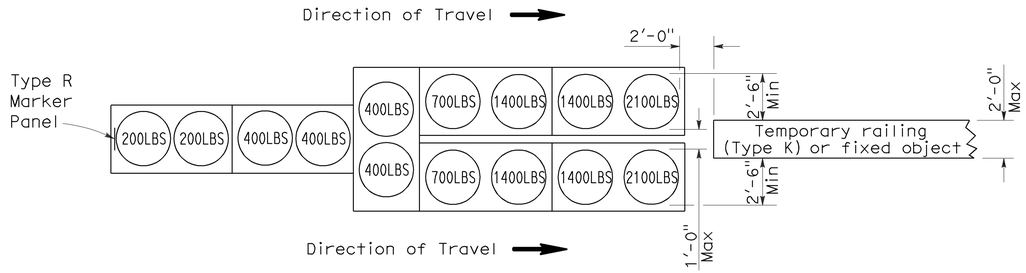

ARRAY 'TU14'

Approach speed 45 mph or more

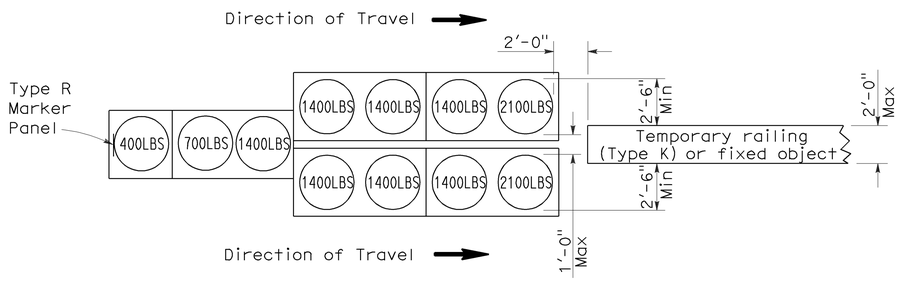

ARRAY 'TU11'

Approach speed less than 45 mph

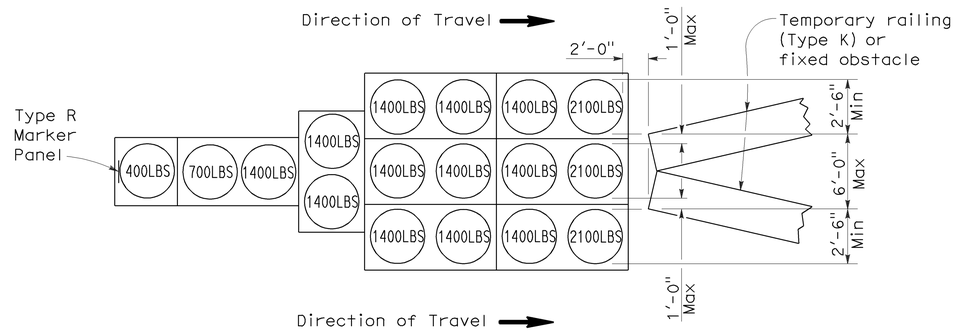

ARRAY 'TU17'

Approach speed less than 45 mph

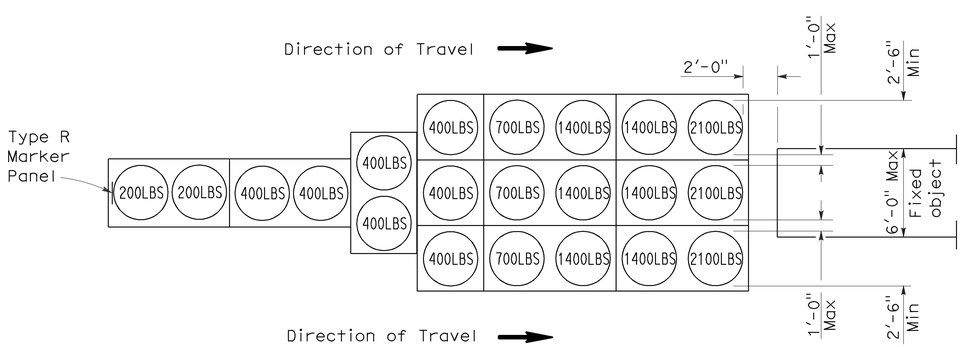

ARRAY 'TU21'

Approach speed 45 mph or more

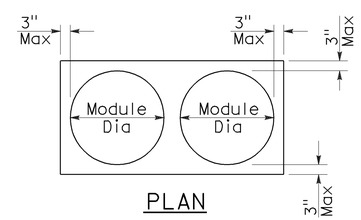

PLAN

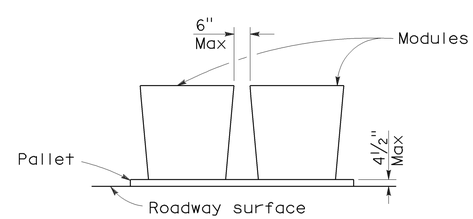

ELEVATION

CRASH CUSHION PALLET DETAIL

See Note 7

NOTES:

1. (XXX) Indicates sand filled module location and weight of sand in pounds for each module. Module spacing is based on the greater diameter of the module.
2. All sand weights are nominal.
3. Temporary crash cushion arrays shall not encroach on the traveled way.
4. Place the top of Type R marker panel 1" below the module lid.
5. Refer to Standard Plan A73B for marker details.
6. Approach speeds indicated conform to NCHRP 350 Report criteria.
7. Use of pallets is optional.

STATE OF CALIFORNIA
DEPARTMENT OF TRANSPORTATION

TEMPORARY CRASH CUSHION, SAND FILLED (UNIDIRECTIONAL)

NO SCALE

RSP T1A DATED JUNE 6, 2008 SUPERSEDES STANDARD PLAN T1A
DATED MAY 1, 2006 - PAGE 211 OF THE STANDARD PLANS BOOK DATED MAY 2006.

REVISED STANDARD PLAN RSP T1A

2006 REVISED STANDARD PLAN RSP T1A

DIST	COUNTY	ROUTE	POST MILES TOTAL PROJECT	SHEET NO.	TOTAL SHEETS
11	SD	8	R37.8	20	23

Randell D. Hiatt
REGISTERED CIVIL ENGINEER

June 6, 2008
PLANS APPROVAL DATE

REGISTERED PROFESSIONAL ENGINEER
Randell D. Hiatt
No. C50200
Exp. 6-30-09
CIVIL
STATE OF CALIFORNIA

The State of California or its officers or agents shall not be responsible for the accuracy or completeness of electronic copies of this plan sheet.

To accompany plans dated 01-30-12

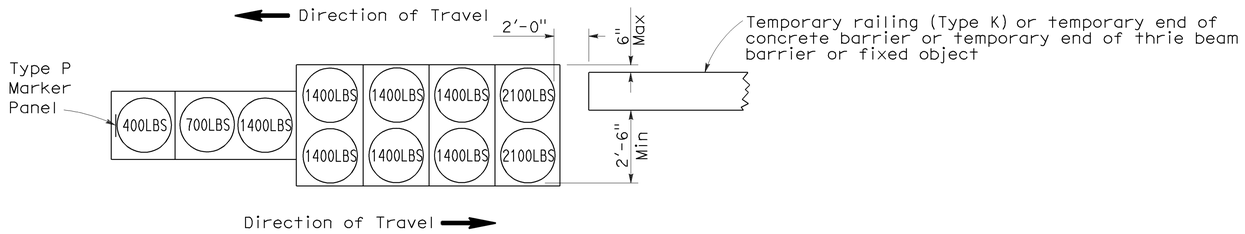

ARRAY 'TB11'

Approach speed less than 45 mph

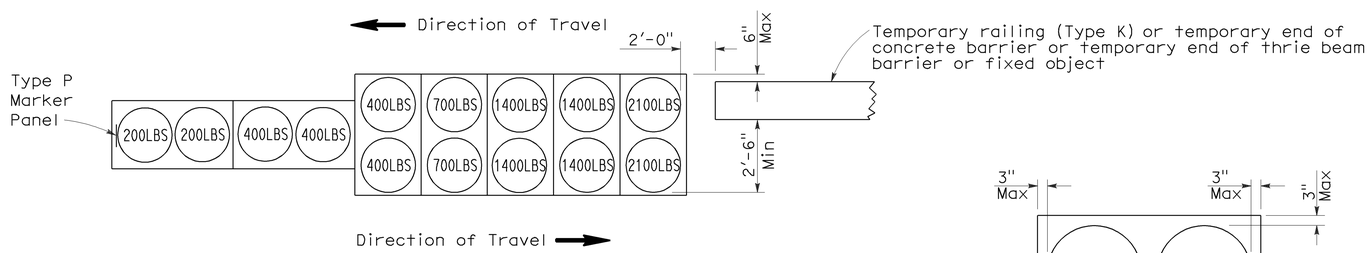

ARRAY 'TB14'

Approach speed 45 mph or more

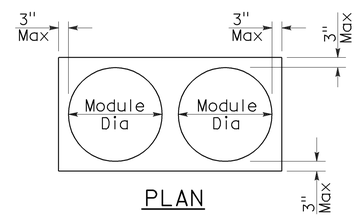

PLAN

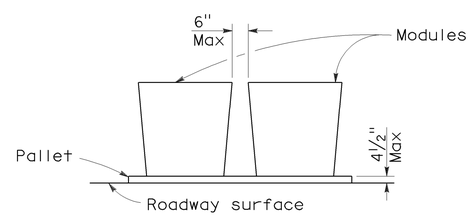

ELEVATION

CRASH CUSHION PALLET DETAIL

See Note 7

NOTES:

1. (XXX) Indicates sand filled module location and weight of sand in pounds for each module. Module spacing is based on the greater diameter of the module.
2. All sand weights are nominal.
3. Temporary crash cushion arrays shall not encroach on the traveled way.
4. Place the Type P marker panel so that the bottom of the panel rests upon the pallet.
5. Refer to Standard Plan A73B for marker details.
6. Approach speeds indicated conform to NCHRP 350 Report criteria.
7. Use of pallets is optional.

STATE OF CALIFORNIA
DEPARTMENT OF TRANSPORTATION

TEMPORARY CRASH CUSHION, SAND FILLED (BIDIRECTIONAL)

NO SCALE

RSP T1B DATED JUNE 6, 2008 SUPERSEDES STANDARD PLAN T1B
DATED MAY 1, 2006 - PAGE 212 OF THE STANDARD PLANS BOOK DATED MAY 2006.

REVISED STANDARD PLAN RSP T1B

2006 REVISED STANDARD PLAN RSP T1B

5-15-08

DIST	COUNTY	ROUTE	POST MILES TOTAL PROJECT	SHEET NO.	TOTAL SHEETS
11	SD	8	R37.8	21	23

Randell D. Hiatt
REGISTERED CIVIL ENGINEER

June 6, 2008
PLANS APPROVAL DATE

REGISTERED PROFESSIONAL ENGINEER
Randell D. Hiatt
No. C50200
Exp. 6-30-09
CIVIL
STATE OF CALIFORNIA

The State of California or its officers or agents shall not be responsible for the accuracy or completeness of electronic copies of this plan sheet.

To accompany plans dated 01-30-12

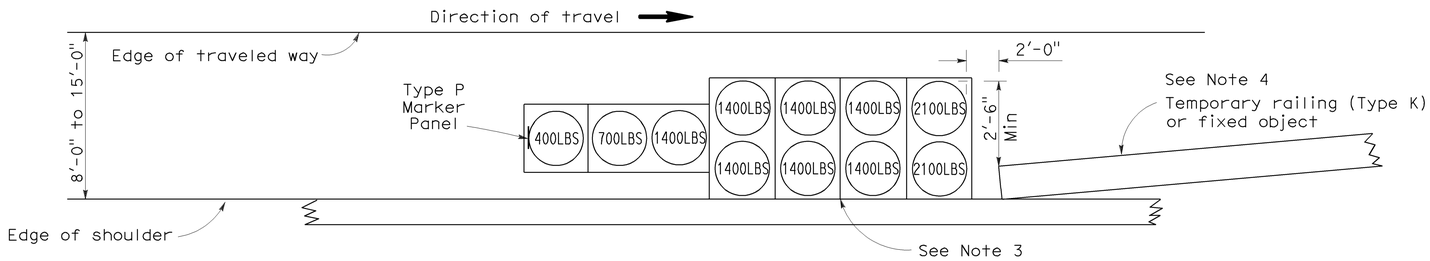

ARRAY 'TS11'

Approach speed less than 45 mph
See Note 9

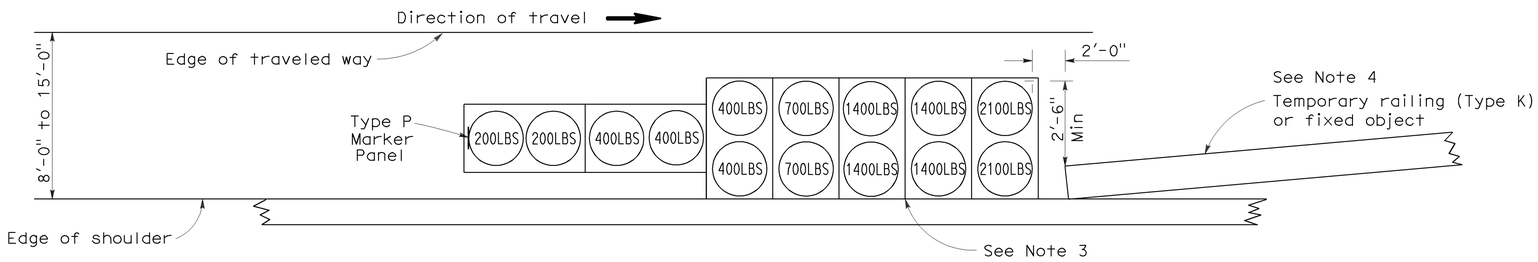

ARRAY 'TS14'

Approach speed 45 mph or more
See Note 9

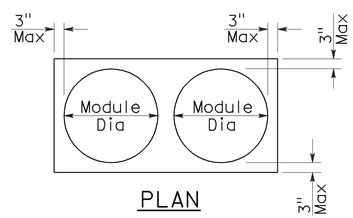

PLAN

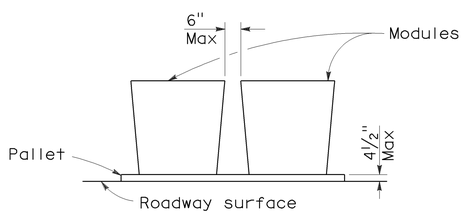

ELEVATION

CRASH CUSHION PALLET DETAIL

See Note 11

NOTES:

1. (XXX) Indicates sand filled module location and weight of sand in pounds for each module. Module spacing is based on the greater diameter of the module.
2. All sand weights are nominal.
3. The temporary crash cushion arrays shown on this plan shall be used only in locations where there will be traffic on one side of the temporary crash cushion array.
4. If the fixed object or approach end of the temporary railing is less than 15'-0" from the edge of traveled way, a temporary crash cushion is required in a construction or work zone.
5. Temporary crash cushion arrays shall not encroach on the traveled way.
6. Arrays for median shoulders shall conform to details shown on this plan for outside shoulders.
7. Place the Type P marker panel so that the bottom of the panel rests upon the pallet and faces traffic.
8. Refer to Standard Plan A73B for marker details.
9. For shoulder widths less than 8'-0", appropriate approved crash cushion protection, other than sand filled modules, shall be provided at fixed objects and at approach ends of temporary railing. The specific type of crash cushion shall be as shown on the project plans or as specified in the Special Provisions, or if not shown on the project plans or specified in the Special Provisions, shall be as approved by the Engineer.
10. Approach speeds indicated conform to NCHRP 350 Report criteria.
11. Use of pallets is optional.

STATE OF CALIFORNIA
DEPARTMENT OF TRANSPORTATION

TEMPORARY CRASH CUSHION, SAND FILLED (SHOULDER INSTALLATIONS)

NO SCALE

RSP T2 DATED JUNE 6, 2008 SUPERSEDES STANDARD PLAN T2
DATED MAY 1, 2006 - PAGE 213 OF THE STANDARD PLANS BOOK DATED MAY 2006.

REVISED STANDARD PLAN RSP T2

2006 REVISED STANDARD PLAN RSP T2

5-15-08

Dist	COUNTY	ROUTE	POST MILES TOTAL PROJECT	SHEET No.	TOTAL SHEETS
11	SD	8	R37.8	22	23

Randell D. Hiatt
REGISTERED CIVIL ENGINEER

May 20, 2011
PLANS APPROVAL DATE

REGISTERED PROFESSIONAL ENGINEER
Randell D. Hiatt
No. C50200
Exp. 6-30-11
CIVIL
STATE OF CALIFORNIA

The State of California or its officers or agents shall not be responsible for the accuracy or completeness of electronic copies of this plan sheet.

To accompany plans dated 01-30-12

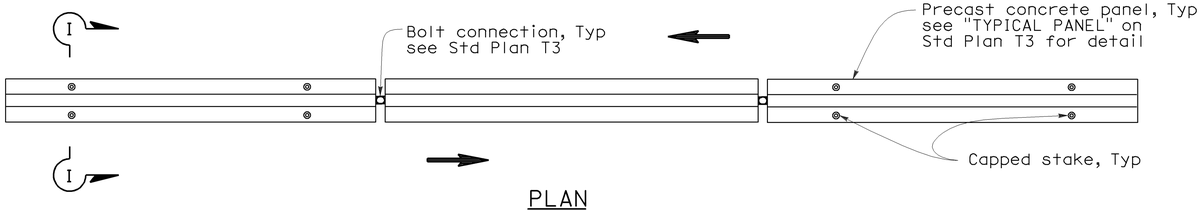

PLAN

RAILING STAKING CONFIGURATION FOR TWO-WAY TRAFFIC

See Note 1

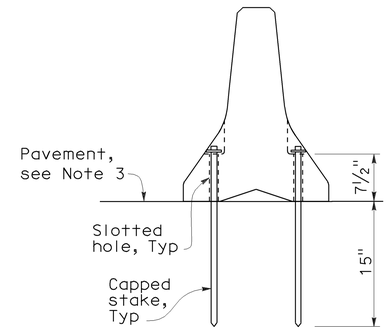

SECTION I-I

NOTES:

1. Where Type K Temporary Railing is placed as a temporary or long term barrier in two-way traffic on highways with less than 24" from the edge of traveled way, use four capped stakes per every other panel with end panels staked.
2. Where Type K Temporary Railing is placed 3" to 24" from the edge of an excavation on highways, use two capped stakes per panel along the traffic side.
3. Staked Type K Temporary Railing must be supported by at least 4" thick concrete, hot mix asphalt or existing asphalt concrete pavement.
4. The minimum yield strength for the washer must be 60,000 psi.
5. Direction of adjacent traffic indicated by ⟹.

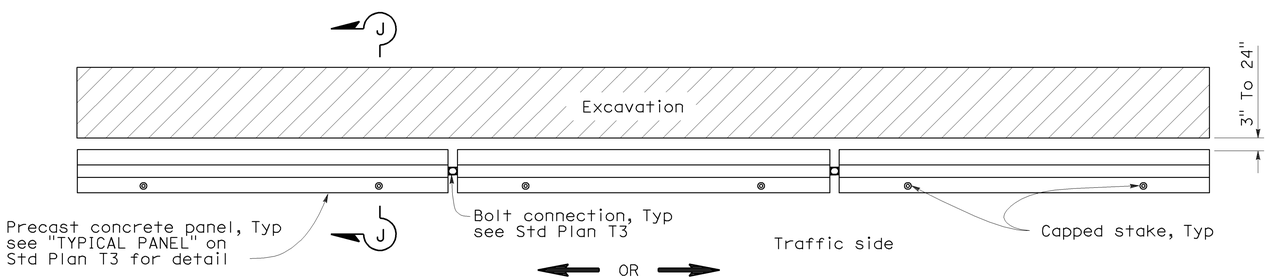

PLAN

RAILING STAKING CONFIGURATION ADJACENT TO AN EXCAVATION

See Note 2

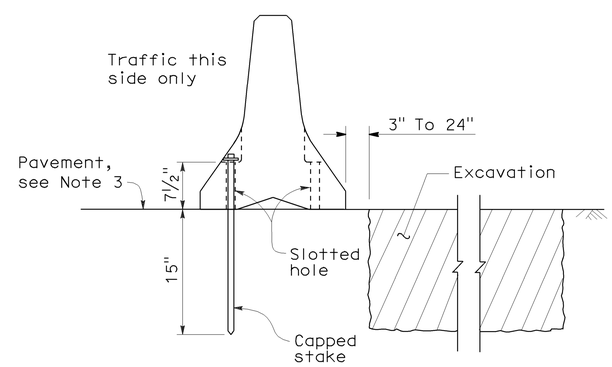

SECTION J-J

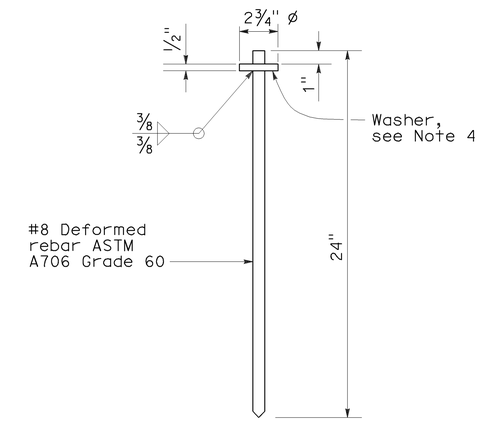

CAPPED STAKE DETAIL

STATE OF CALIFORNIA
DEPARTMENT OF TRANSPORTATION

TEMPORARY RAILING (TYPE K)

NO SCALE

NSP T3A DATED MAY 20, 2011 SUPPLEMENTS
THE STANDARD PLANS BOOK DATED MAY 2006.

NEW STANDARD PLAN NSP T3A

2006 NEW STANDARD PLAN NSP T3A

DIST	COUNTY	ROUTE	POST MILES TOTAL PROJECT	SHEET NO.	TOTAL SHEETS
11	SD	8	R37.8	23	23

LICENSED LANDSCAPE ARCHITECT

April 3, 2009
PLANS APPROVAL DATE

The State of California or its officers or agents shall not be responsible for the accuracy or completeness of electronic copies of this plan sheet.

LICENSED LANDSCAPE ARCHITECT — Robert B. Schott 3635 — 11-30-10 Renewal Date — 2-25-09 Date — STATE OF CALIFORNIA

To accompany plans dated 01-30-12

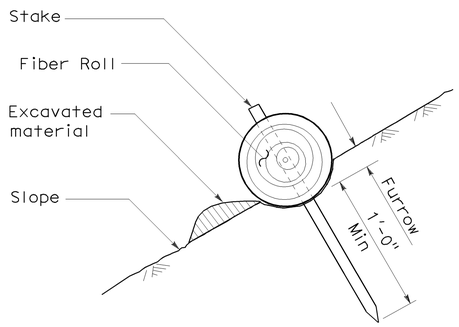

SECTION

TEMPORARY FIBER ROLL (TYPE 1)

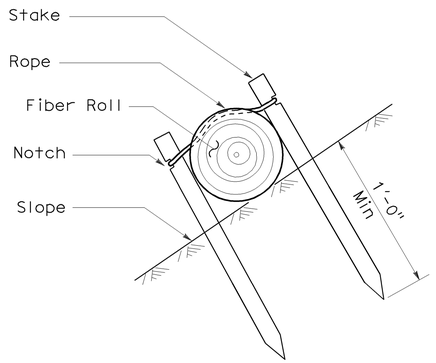

SECTION

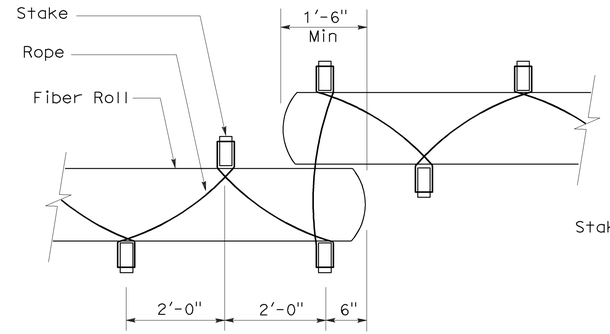

PLAN

TEMPORARY FIBER ROLL (TYPE 2)

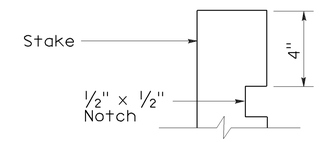

ELEVATION

STAKE NOTCH DETAIL

NOTES:

1. Temporary fiber roll spacing varies depending upon slope inclination.
2. Installations shown in the perspectives are for slope inclination of 10:1 and steeper.

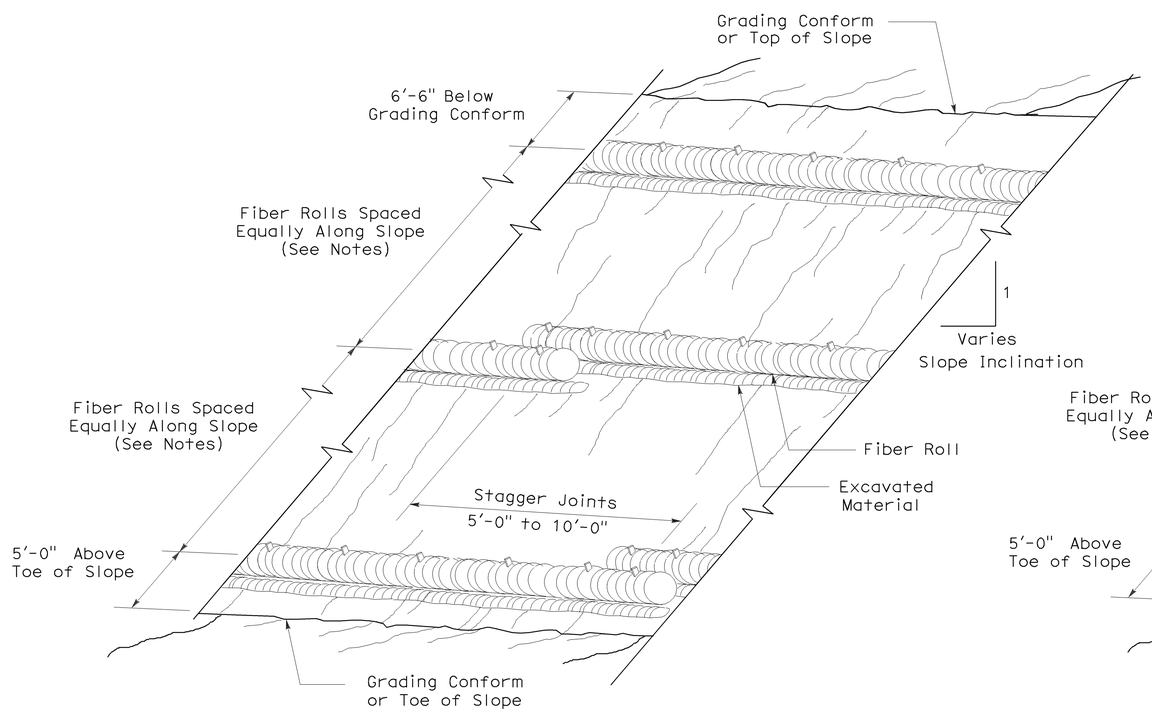

PERSPECTIVE

TEMPORARY FIBER ROLL (TYPE 1)

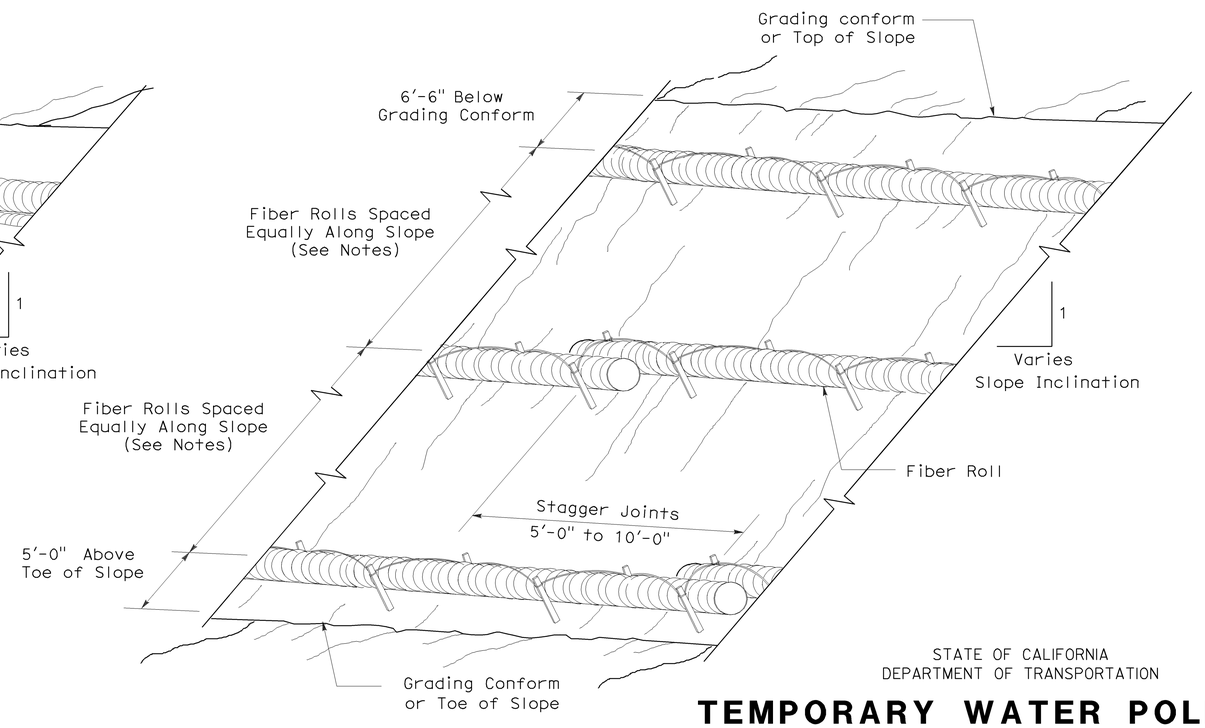

PERSPECTIVE

TEMPORARY FIBER ROLL (TYPE 2)

STATE OF CALIFORNIA
DEPARTMENT OF TRANSPORTATION

TEMPORARY WATER POLLUTION CONTROL DETAILS (TEMPORARY FIBER ROLL)

NO SCALE

RSP T56 DATED APRIL 3, 2009 SUPERSEDES STANDARD PLAN T56
DATED MAY 1, 2006 - PAGE 232 OF THE STANDARD PLANS BOOK DATED MAY 2006.

REVISED STANDARD PLAN RSP T56

2006 REVISED STANDARD PLAN RSP T56