Dist	COUNTY	ROUTE	POST MILES TOTAL PROJECT	SHEET No.	TOTAL SHEETS
11	SD	15	M38.3/M42.2	1	67

HPLU-6211(098)

STATE OF CALIFORNIA
DEPARTMENT OF TRANSPORTATION

PROJECT PLANS FOR CONSTRUCTION ON
STATE HIGHWAY

IN SAN DIEGO COUNTY
IN SAN DIEGO FROM 0.2 KM NORTH OF RANCHO BERNARDO ROAD UNDERCROSSING TO LAKE HODGES BRIDGE

TO BE SUPPLEMENTED BY STANDARD PLANS DATED JULY 2004

INDEX OF SHEETS

Sheet No.	Description
1	Title and Location Map
2-14	Temporary Water Pollution Control Plan and Quantities
15	Plant List
16-27	Planting Plan
28-40	Irrigation Plan
41-46	Landscape Details
47-50	Irrigation Quantities
51-54	Existing Utilities Plan
55	Construction Area Signs
56	Electrical
57-67	Revised Standard Plan

THE STANDARD PLANS LIST APPLICABLE TO THIS CONTRACT IS INCLUDED IN THE NOTICE TO BIDDERS AND SPECIAL PROVISIONS BOOK.

BEGIN CONSTRUCTION
STA 393+88 "SD-15M" KP M38.3
PM M23.8

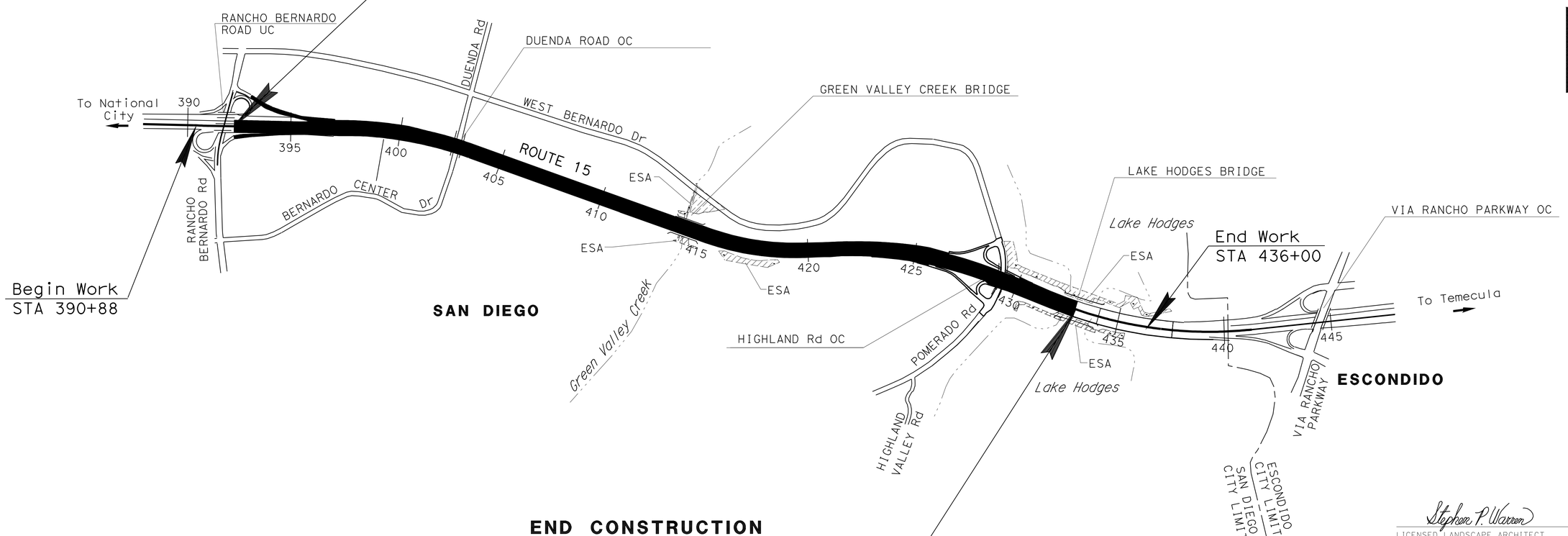

END CONSTRUCTION
STA 433+00 "SD-15M" KP M42.2
PM M26.2

ESA = ENVIRONMENTALLY SENSITIVE AREA

NO SCALE

THE CONTRACTOR SHALL POSSESS THE CLASS (OR CLASSES) OF LICENSE AS SPECIFIED IN THE "NOTICE TO BIDDERS."

PROJECT MANAGER: STEPHEN WARREN
DESIGN ARCHITECT: STEPHEN ALVAREZ

Stephen P. Warren
LICENSED LANDSCAPE ARCHITECT

May 10, 2010
PLANS APPROVAL DATE

LICENSED LANDSCAPE ARCHITECT — STEPHEN P. WARREN NO. 3442 — Signature 10-31-10 — Renewal Date 01-05-10 — Date — STATE OF CALIFORNIA

THE STATE OF CALIFORNIA OR ITS OFFICERS OR AGENTS SHALL NOT BE RESPONSIBLE FOR THE ACCURACY OR COMPLETENESS OF SCANNED COPIES OF THIS PLAN SHEET.

LAST REVISION 02-01-10 | DATE PLOTTED => 01-JUN-2010 | TIME PLOTTED => 15:53

CONTRACT No. **11-260734**

Dist	COUNTY	ROUTE	KILOMETER POST TOTAL PROJECT	SHEET No.	TOTAL SHEETS
11	SD	15	M38.3/M42.2	2	67

Stephen P. Warren
LICENSED LANDSCAPE ARCHITECT

05-10-10
PLANS APPROVAL DATE

LICENSED LANDSCAPE ARCHITECT
STEPHEN P. WARREN NO. 3482
Signature
10-31-10
Renewal Date
01-05-10
Date
STATE OF CALIFORNIA

THE STATE OF CALIFORNIA OR ITS OFFICERS OR AGENTS SHALL NOT BE RESPONSIBLE FOR THE ACCURACY OR COMPLETENESS OF SCANNED COPIES OF THIS PLAN SHEET.

Caltrans Metric

NOTE: FOR ACCURATE RIGHT OF WAY AND ACCESS DATA, CONTACT RIGHT OF WAY ENGINEERING AT THE DISTRICT OFFICE.

LEGEND:

- FR — FIBER ROLLS
- Temp CHECK DAM (6 m EACH)
- Temp CONSTRUCTION ENTRANCE (TYPE 2)
- 1:2 — SLOPE DOWN DIRECTION
- ESA — ENVIRONMENTALLY SENSITIVE AREA

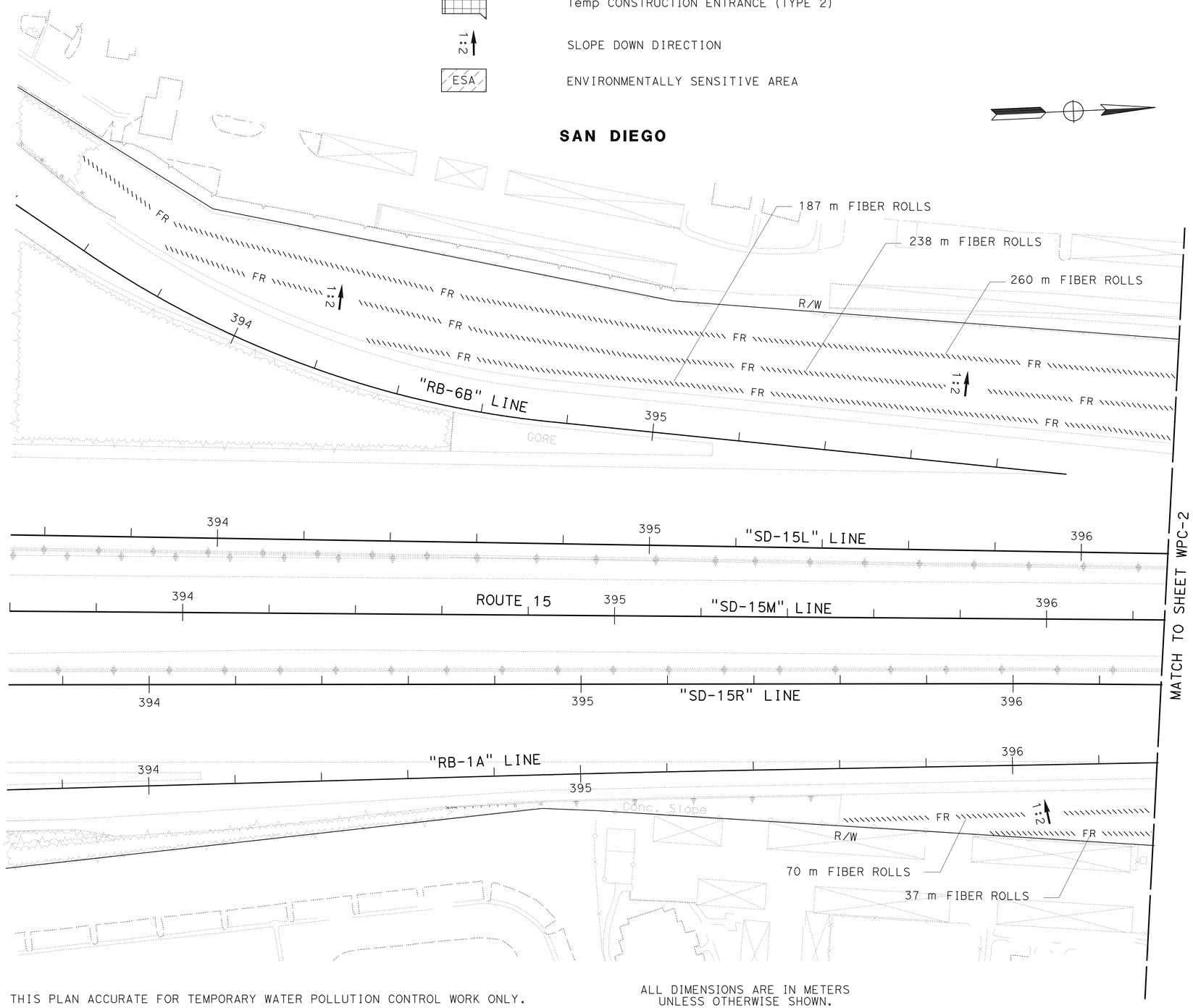

THIS PLAN ACCURATE FOR TEMPORARY WATER POLLUTION CONTROL WORK ONLY.

ALL DIMENSIONS ARE IN METERS UNLESS OTHERWISE SHOWN.

TEMPORARY WATER POLLUTION CONTROL PLAN

SCALE 1:500

WPC-1

STATE OF CALIFORNIA - DEPARTMENT OF TRANSPORTATION
Caltrans LANDSCAPE ARCHITECTURE

SENIOR LANDSCAPE ARCHITECT: STEPHEN ALVAREZ
CALCULATED-DESIGNED BY: STEVE WARREN
CHECKED BY: JOEL HORTIZUELA
REVISED BY
DATE REVISED

LAST REVISION 02-01-10
DATE PLOTTED => 01-JUN-2010
TIME PLOTTED => 15:53

Dist	COUNTY	ROUTE	KILOMETER POST TOTAL PROJECT	SHEET No.	TOTAL SHEETS
11	SD	15	M38.3/M42.2	3	67

Stephen P. Warren
LICENSED LANDSCAPE ARCHITECT

05-10-10
PLANS APPROVAL DATE

LICENSED LANDSCAPE ARCHITECT STEPHEN P. WARREN No. 3442 Signature 10-31-10 Renewal Date 01-05-10 Date STATE OF CALIFORNIA

THE STATE OF CALIFORNIA OR ITS OFFICERS OR AGENTS SHALL NOT BE RESPONSIBLE FOR THE ACCURACY OR COMPLETENESS OF SCANNED COPIES OF THIS PLAN SHEET.

Caltrans Metric

NOTE:

FOR ACCURATE RIGHT OF WAY AND ACCESS DATA, CONTACT RIGHT OF WAY ENGINEERING AT THE DISTRICT OFFICE.

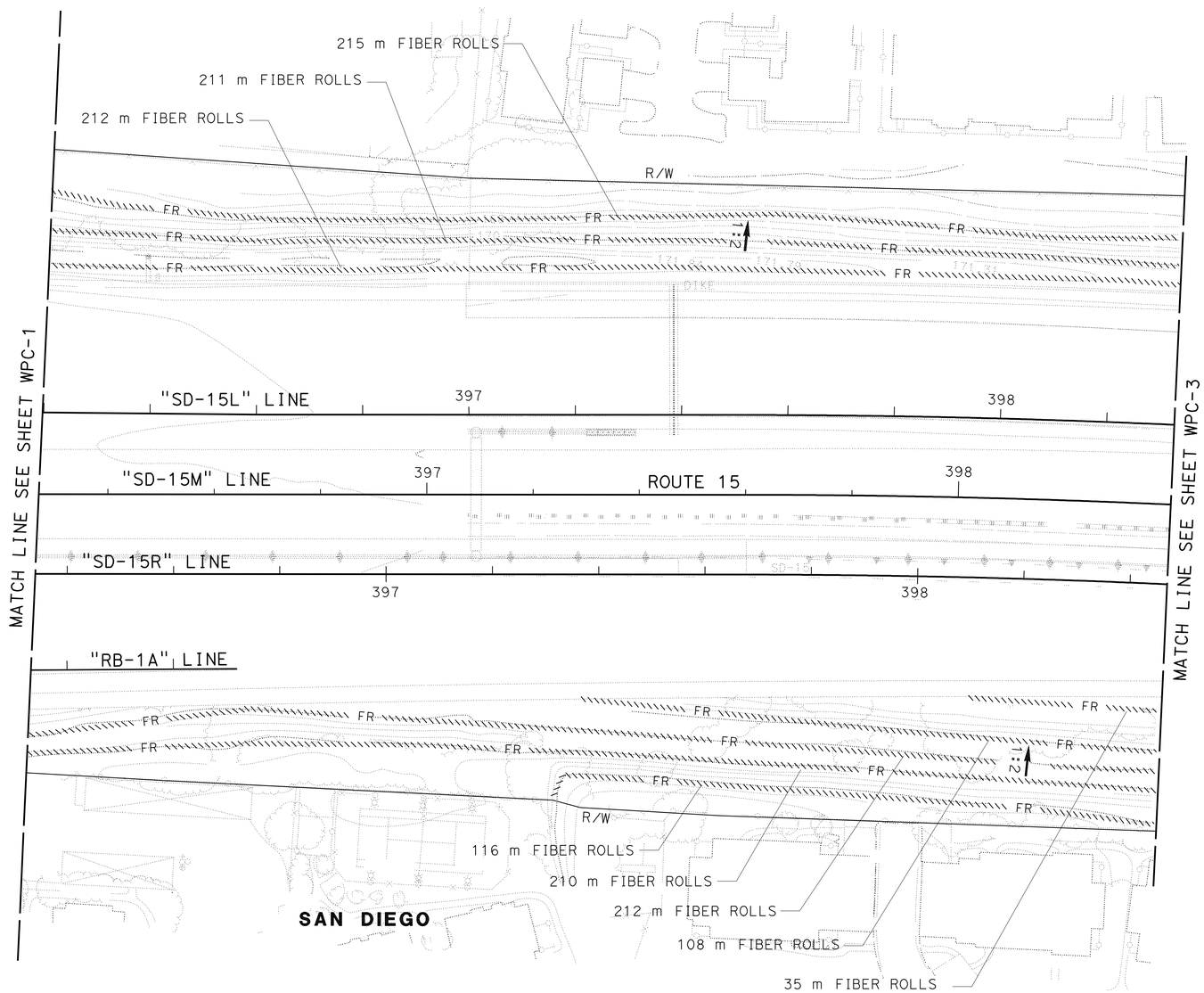

THIS PLAN ACCURATE FOR TEMPORARY WATER POLLUTION CONTROL WORK ONLY.

ALL DIMENSIONS ARE IN METERS UNLESS OTHERWISE SHOWN.

TEMPORARY WATER POLLUTION CONTROL PLAN

SCALE 1:500

WPC-2

STATE OF CALIFORNIA - DEPARTMENT OF TRANSPORTATION
Caltrans LANDSCAPE ARCHITECTURE

SENIOR LANDSCAPE ARCHITECT: STEPHEN ALVAREZ
CALCULATED-DESIGNED BY: STEVE WARREN
CHECKED BY: JOEL HORTIZUELA
REVISED BY
DATE REVISED

LAST REVISION 02-01-10
DATE PLOTTED => 01-JUN-2010
TIME PLOTTED => 15:53

Dist	COUNTY	ROUTE	KILOMETER POST TOTAL PROJECT	SHEET No.	TOTAL SHEETS
11	SD	15	M38.3/M42.2	4	67

Stephen P. Warren
LICENSED LANDSCAPE ARCHITECT

05-10-10
PLANS APPROVAL DATE

LICENSED LANDSCAPE ARCHITECT
STEPHEN P. WARREN NO. 3482
Signature
10-31-10
Renewal Date
01-05-10
Date
STATE OF CALIFORNIA

THE STATE OF CALIFORNIA OR ITS OFFICERS OR AGENTS SHALL NOT BE RESPONSIBLE FOR THE ACCURACY OR COMPLETENESS OF SCANNED COPIES OF THIS PLAN SHEET.

Caltrans Metric

NOTE:

FOR ACCURATE RIGHT OF WAY AND ACCESS DATA, CONTACT RIGHT OF WAY ENGINEERING AT THE DISTRICT OFFICE.

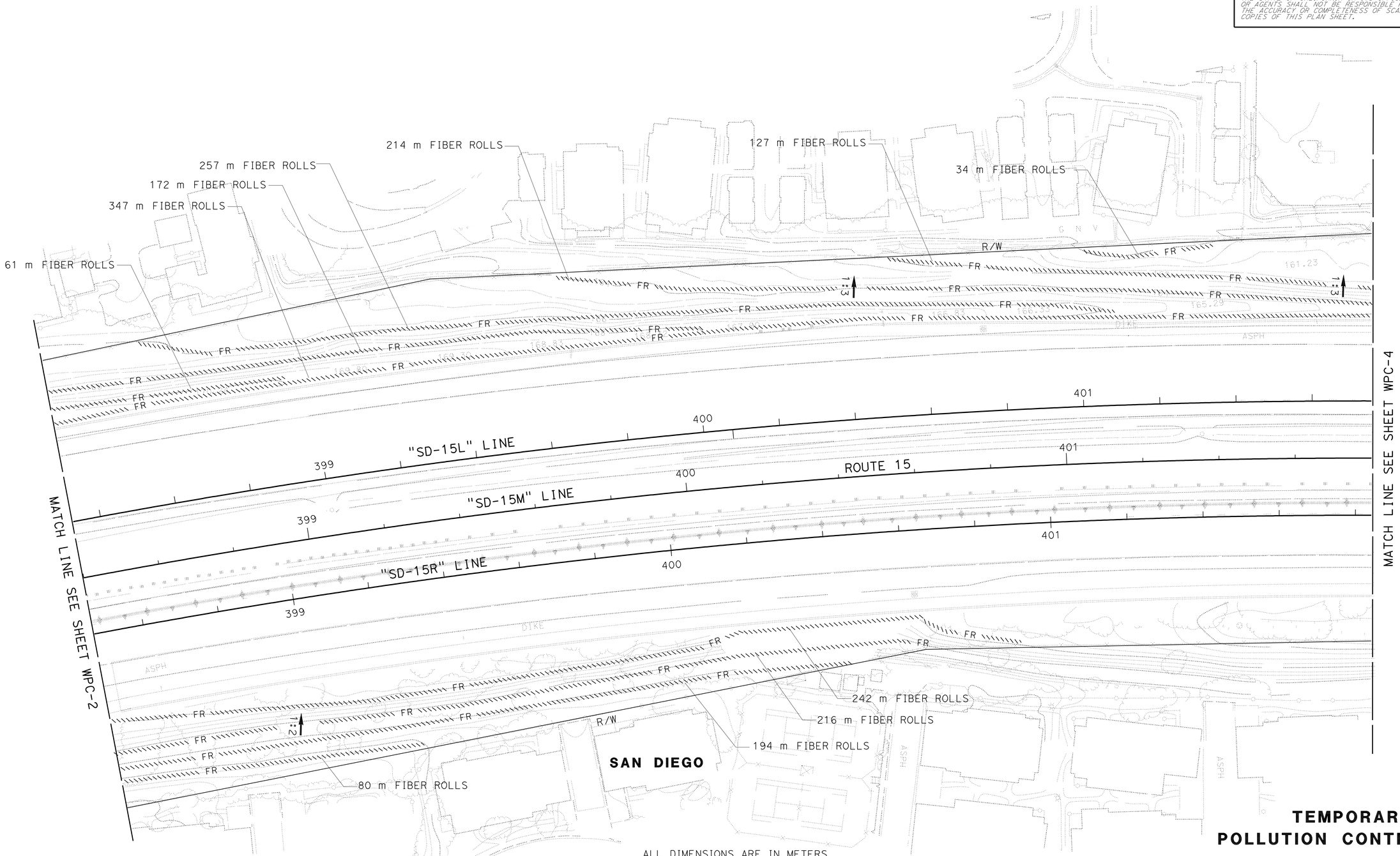

THIS PLAN ACCURATE FOR TEMPORARY WATER POLLUTION CONTROL WORK ONLY.

ALL DIMENSIONS ARE IN METERS UNLESS OTHERWISE SHOWN.

SCALE 1:500

TEMPORARY WATER POLLUTION CONTROL PLAN

WPC-3

STATE OF CALIFORNIA - DEPARTMENT OF TRANSPORTATION
Caltrans LANDSCAPE ARCHITECTURE

SENIOR LANDSCAPE ARCHITECT: STEPHEN ALVAREZ
CALCULATED-DESIGNED BY: STEVE WARREN
CHECKED BY: JOEL HORTIZUELA
REVISED BY
DATE REVISED

LAST REVISION 09-29-09
DATE PLOTTED => 01-JUN-2010
TIME PLOTTED => 15:53

Dist	COUNTY	ROUTE	KILOMETER POST TOTAL PROJECT	SHEET No.	TOTAL SHEETS
11	SD	15	M38.3/M42.2	5	67

Stephen P. Warren
LICENSED LANDSCAPE ARCHITECT

05-10-10
PLANS APPROVAL DATE

LICENSED LANDSCAPE ARCHITECT
STEPHEN P. WARREN NO. 3482
Signature 10-31-10
Renewal Date 01-05-10
Date
STATE OF CALIFORNIA

THE STATE OF CALIFORNIA OR ITS OFFICERS OR AGENTS SHALL NOT BE RESPONSIBLE FOR THE ACCURACY OR COMPLETENESS OF SCANNED COPIES OF THIS PLAN SHEET.

Caltrans Metric

NOTE:

FOR ACCURATE RIGHT OF WAY AND ACCESS DATA, CONTACT RIGHT OF WAY ENGINEERING AT THE DISTRICT OFFICE.

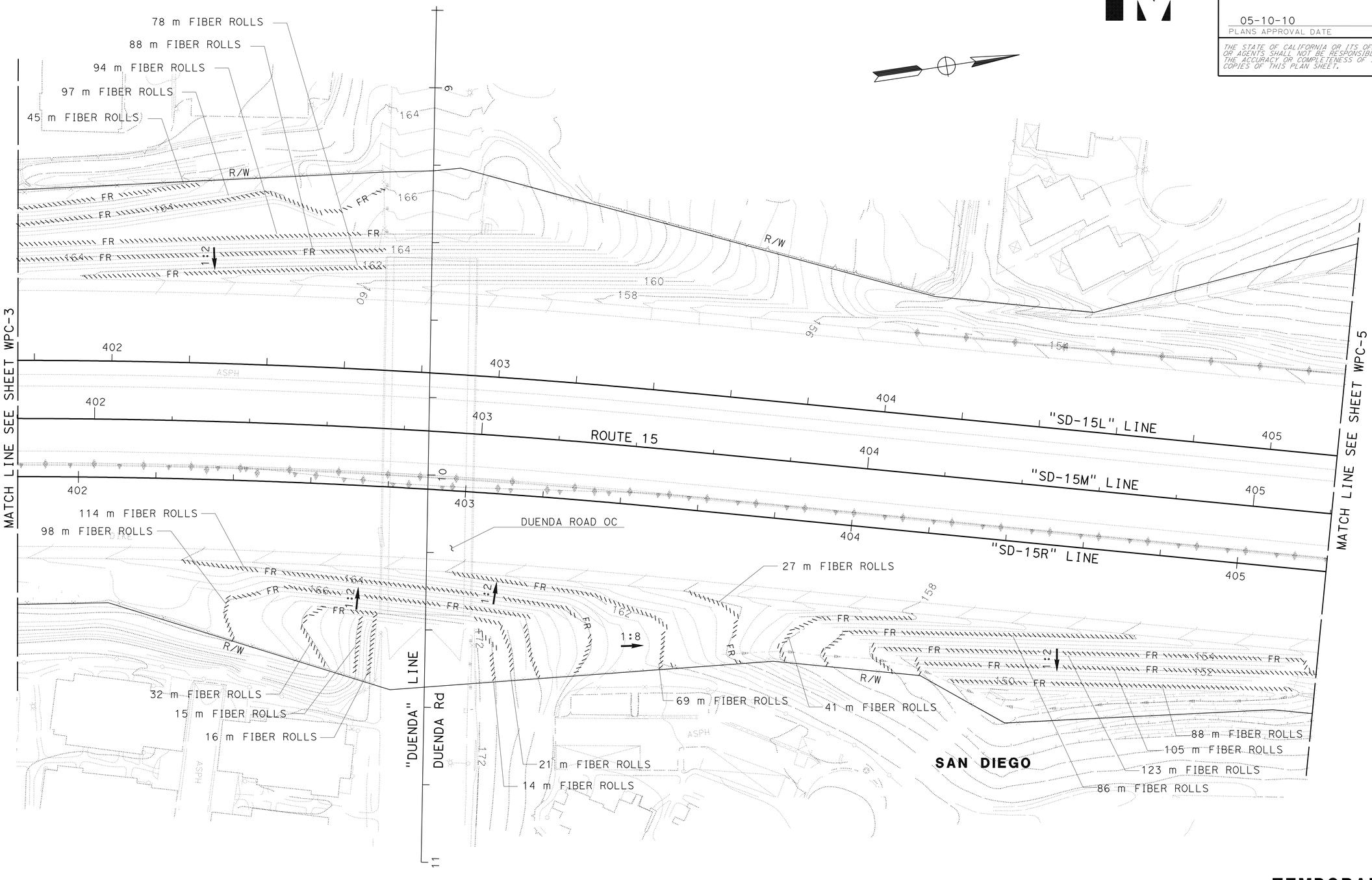

THIS PLAN ACCURATE FOR TEMPORARY WATER POLLUTION CONTROL WORK ONLY.

ALL DIMENSIONS ARE IN METERS UNLESS OTHERWISE SHOWN.

TEMPORARY WATER POLLUTION CONTROL PLAN

SCALE 1:500

WPC-4

REVISED BY	DATE REVISED
JOEL HORTIZUELA	
STEVE WARREN	

CALCULATED-DESIGNED BY
CHECKED BY

SENIOR LANDSCAPE ARCHITECT
STEPHEN ALVAREZ

STATE OF CALIFORNIA - DEPARTMENT OF TRANSPORTATION
Caltrans LANDSCAPE ARCHITECTURE

LAST REVISION 02-01-10
DATE PLOTTED => 01-JUN-2010
TIME PLOTTED => 15:53

Dist	COUNTY	ROUTE	KILOMETER POST TOTAL PROJECT	SHEET No.	TOTAL SHEETS
11	SD	15	M38.3/M42.2	6	67

Stephen P. Warren
LICENSED LANDSCAPE ARCHITECT

05-10-10
PLANS APPROVAL DATE

LICENSED LANDSCAPE ARCHITECT
STEPHEN P. WARREN NO. 3482
Signature
10-31-10
Renewal Date
01-05-10
Date
STATE OF CALIFORNIA

THE STATE OF CALIFORNIA OR ITS OFFICERS OR AGENTS SHALL NOT BE RESPONSIBLE FOR THE ACCURACY OR COMPLETENESS OF SCANNED COPIES OF THIS PLAN SHEET.

Caltrans Metric

NOTE:

FOR ACCURATE RIGHT OF WAY AND ACCESS DATA, CONTACT RIGHT OF WAY ENGINEERING AT THE DISTRICT OFFICE.

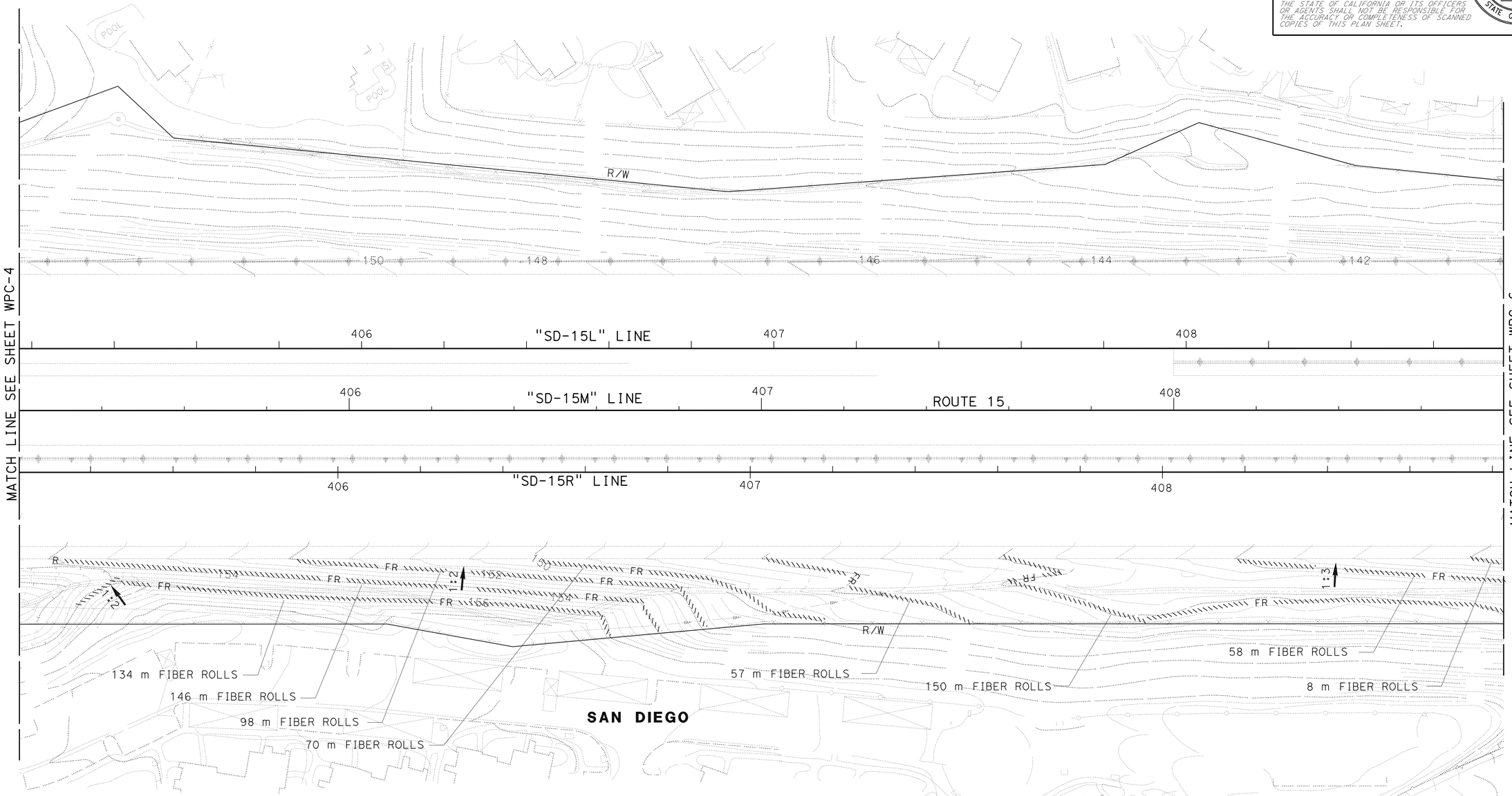

THIS PLAN ACCURATE FOR TEMPORARY WATER POLLUTION CONTROL WORK ONLY.

ALL DIMENSIONS ARE IN METERS UNLESS OTHERWISE SHOWN.

TEMPORARY WATER POLLUTION CONTROL PLAN

SCALE 1:500

WPC-5

STATE OF CALIFORNIA - DEPARTMENT OF TRANSPORTATION
Caltrans LANDSCAPE ARCHITECTURE

SENIOR LANDSCAPE ARCHITECT: STEPHEN ALVAREZ
CALCULATED-DESIGNED BY: JOEL HORTIZUELA
CHECKED BY: STEVE WARREN
REVISED BY
DATE REVISED

LAST REVISION 02-01-10
DATE PLOTTED => 01-JUN-2010
TIME PLOTTED => 15:55

Dist	COUNTY	ROUTE	KILOMETER POST TOTAL PROJECT	SHEET No.	TOTAL SHEETS
11	SD	15	M38.3/M42.2	7	67

Stephen P. Warren
LICENSED LANDSCAPE ARCHITECT

05-10-10
PLANS APPROVAL DATE

LICENSED LANDSCAPE ARCHITECT
STEPHEN P. WARREN NO. 3422
Signature
10-31-10
Renewal Date
01-05-10
Date
STATE OF CALIFORNIA

THE STATE OF CALIFORNIA OR ITS OFFICERS OR AGENTS SHALL NOT BE RESPONSIBLE FOR THE ACCURACY OR COMPLETENESS OF SCANNED COPIES OF THIS PLAN SHEET.

Caltrans Metric

NOTE:
FOR ACCURATE RIGHT OF WAY AND ACCESS DATA, CONTACT RIGHT OF WAY ENGINEERING AT THE DISTRICT OFFICE.

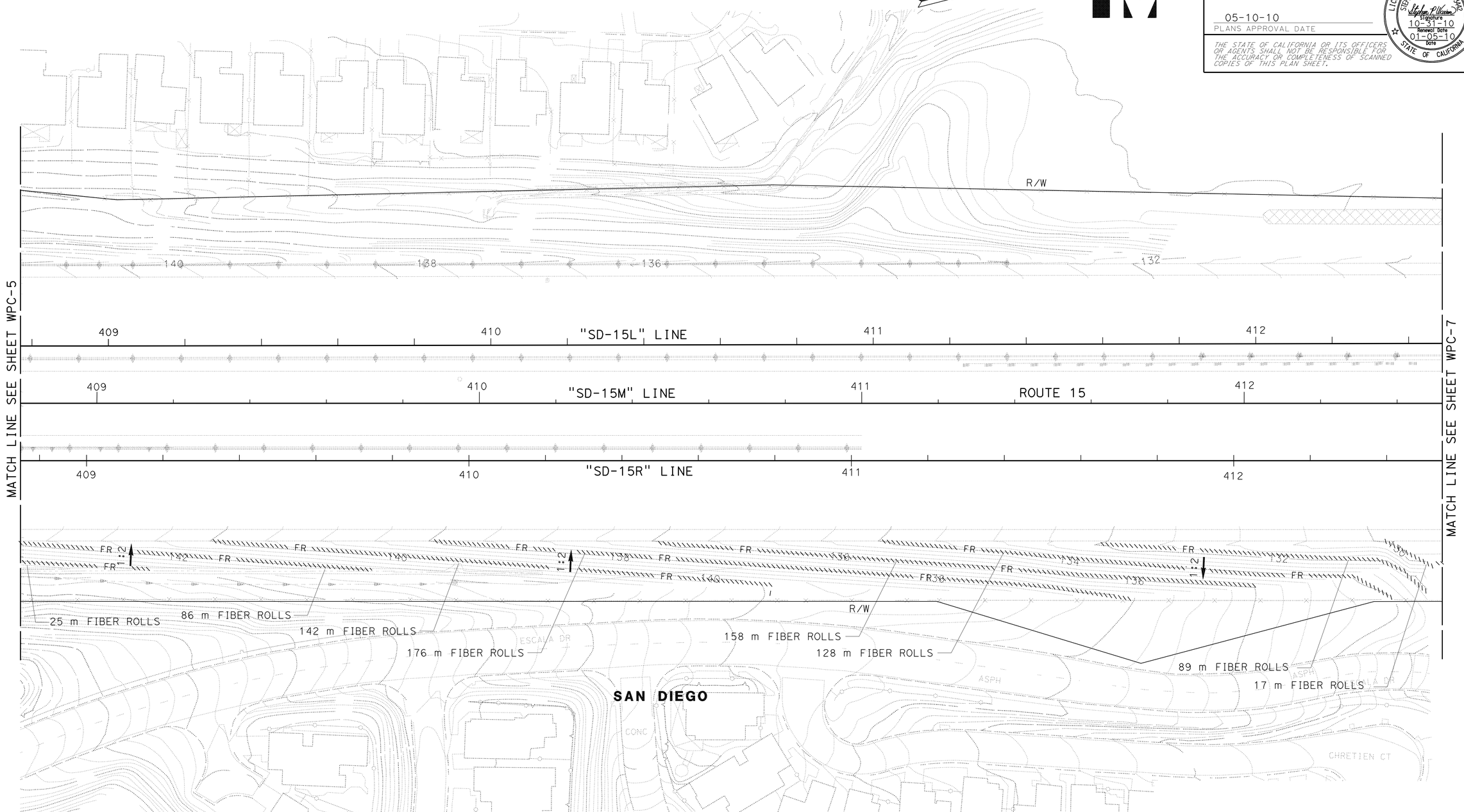

THIS PLAN ACCURATE FOR TEMPORARY WATER POLLUTION CONTROL WORK ONLY.

ALL DIMENSIONS ARE IN METERS UNLESS OTHERWISE SHOWN.

TEMPORARY WATER POLLUTION CONTROL PLAN

SCALE 1:500

WPC-6

STATE OF CALIFORNIA - DEPARTMENT OF TRANSPORTATION
Caltrans LANDSCAPE ARCHITECTURE

SENIOR LANDSCAPE ARCHITECT: STEPHEN ALVAREZ
CALCULATED-DESIGNED BY: JOEL HORTIZUELA
CHECKED BY: STEVE WARREN
REVISED BY
DATE REVISED

LAST REVISION 02-01-10
DATE PLOTTED => 01-JUN-2010
TIME PLOTTED => 15:53

Dist	COUNTY	ROUTE	KILOMETER POST TOTAL PROJECT	SHEET No.	TOTAL SHEETS
11	SD	15	M38.3/M42.2	8	67

Stephen P. Warren
LICENSED LANDSCAPE ARCHITECT

05-10-10
PLANS APPROVAL DATE

LICENSED LANDSCAPE ARCHITECT STEPHEN P. WARREN NO. 3482 Signature 10-31-10 Renewal Date 01-05-10 Date STATE OF CALIFORNIA

THE STATE OF CALIFORNIA OR ITS OFFICERS OR AGENTS SHALL NOT BE RESPONSIBLE FOR THE ACCURACY OR COMPLETENESS OF SCANNED COPIES OF THIS PLAN SHEET.

Caltrans Metric

NOTE:

FOR ACCURATE RIGHT OF WAY AND ACCESS DATA, CONTACT RIGHT OF WAY ENGINEERING AT THE DISTRICT OFFICE.

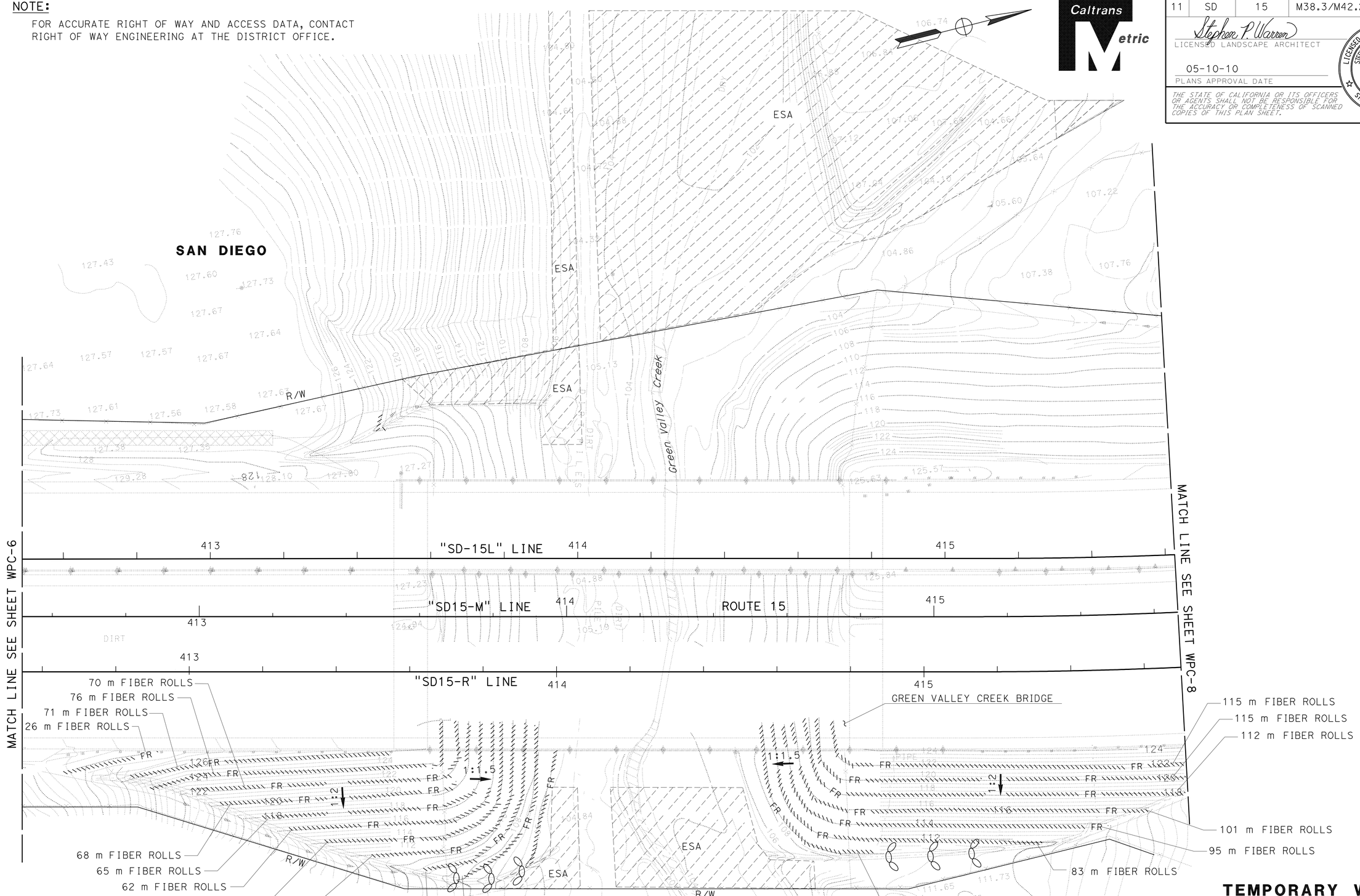

THIS PLAN ACCURATE FOR TEMPORARY WATER POLLUTION CONTROL WORK ONLY.

ALL DIMENSIONS ARE IN METERS UNLESS OTHERWISE SHOWN.

TEMPORARY WATER POLLUTION CONTROL PLAN

SCALE 1:500

WPC-7

STATE OF CALIFORNIA - DEPARTMENT OF TRANSPORTATION
Caltrans LANDSCAPE ARCHITECTURE

SENIOR LANDSCAPE ARCHITECT: STEPHEN ALVAREZ
CALCULATED-DESIGNED BY: JOEL HORTIZUELA
CHECKED BY: STEVE WARREN
REVISED BY
DATE REVISED

LAST REVISION 02-02-10
DATE PLOTTED => 01-JUN-2010
TIME PLOTTED => 15:53

Dist	COUNTY	ROUTE	KILOMETER POST TOTAL PROJECT	SHEET No.	TOTAL SHEETS
11	SD	15	M38.3/M42.2	9	67

Stephen P. Warren
LICENSED LANDSCAPE ARCHITECT

05-10-10
PLANS APPROVAL DATE

LICENSED LANDSCAPE ARCHITECT
STEPHEN P. WARREN NO. 3492
Signature
10-31-10
Renewal Date
01-05-10
Date
STATE OF CALIFORNIA

THE STATE OF CALIFORNIA OR ITS OFFICERS OR AGENTS SHALL NOT BE RESPONSIBLE FOR THE ACCURACY OR COMPLETENESS OF SCANNED COPIES OF THIS PLAN SHEET.

Caltrans Metric

NOTE:

FOR ACCURATE RIGHT OF WAY AND ACCESS DATA, CONTACT RIGHT OF WAY ENGINEERING AT THE DISTRICT OFFICE.

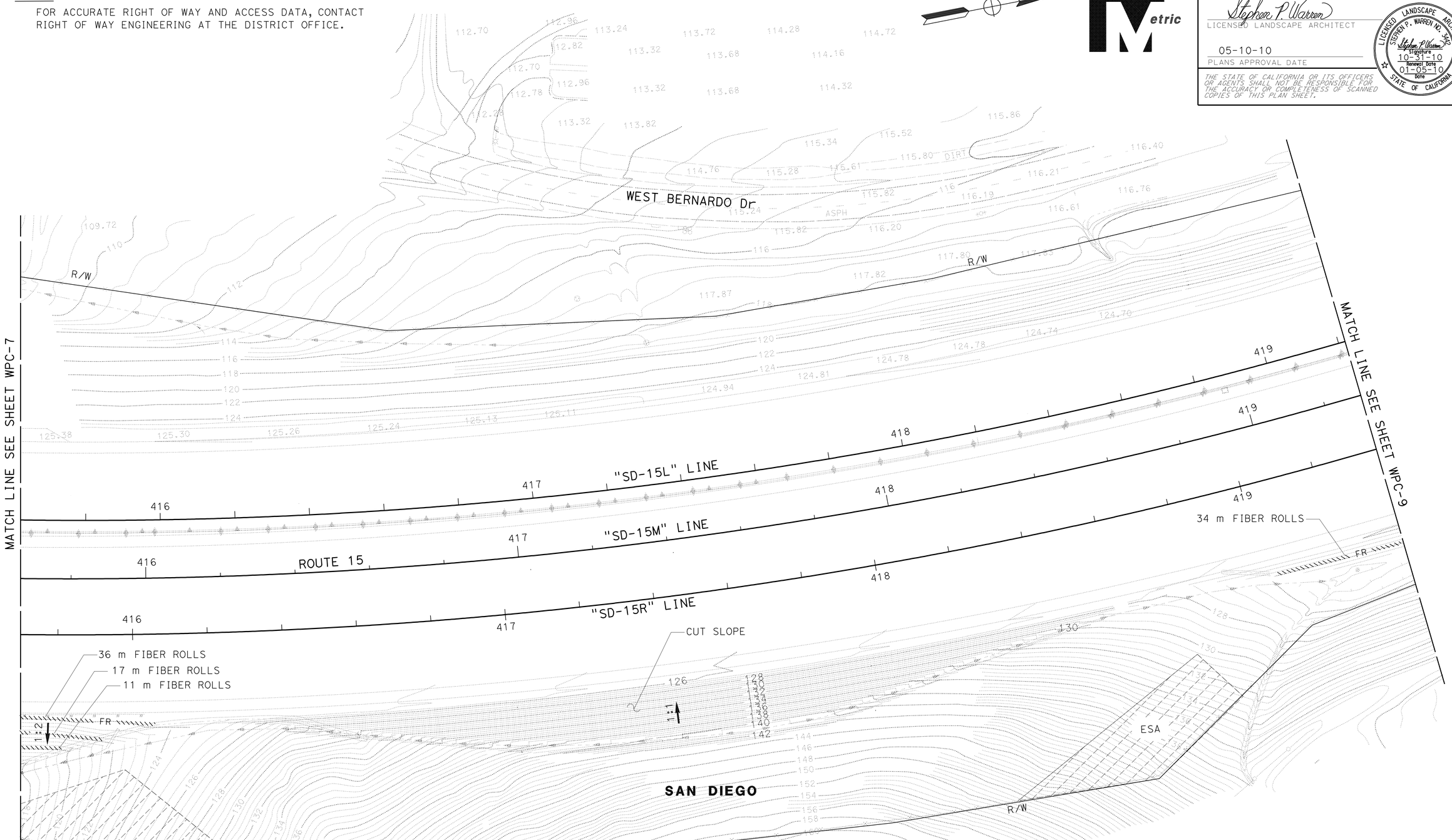

THIS PLAN ACCURATE FOR TEMPORARY WATER POLLUTION CONTROL WORK ONLY.

ALL DIMENSIONS ARE IN METERS UNLESS OTHERWISE SHOWN.

TEMPORARY WATER POLLUTION CONTROL PLAN

SCALE 1:500

WPC-8

STATE OF CALIFORNIA - DEPARTMENT OF TRANSPORTATION
Caltrans LANDSCAPE ARCHITECTURE

SENIOR LANDSCAPE ARCHITECT: STEPHEN ALVAREZ
CALCULATED-DESIGNED BY: JOEL HORTIZUELA
CHECKED BY: STEVE WARREN
REVISED BY
DATE REVISED

LAST REVISION 02-02-10
DATE PLOTTED => 01-JUN-2010
TIME PLOTTED => 15:53

Dist	COUNTY	ROUTE	KILOMETER POST TOTAL PROJECT	SHEET No.	TOTAL SHEETS
11	SD	15	M38.3/M42.2	10	67

Stephen P. Warren
LICENSED LANDSCAPE ARCHITECT

05-10-10
PLANS APPROVAL DATE

LICENSED LANDSCAPE ARCHITECT STEPHEN P. WARREN NO. 3482 STATE OF CALIFORNIA
Signature 10-31-10
Renewal Date 01-05-10
Date

THE STATE OF CALIFORNIA OR ITS OFFICERS OR AGENTS SHALL NOT BE RESPONSIBLE FOR THE ACCURACY OR COMPLETENESS OF SCANNED COPIES OF THIS PLAN SHEET.

Caltrans Metric

NOTE:

FOR ACCURATE RIGHT OF WAY AND ACCESS DATA, CONTACT RIGHT OF WAY ENGINEERING AT THE DISTRICT OFFICE.

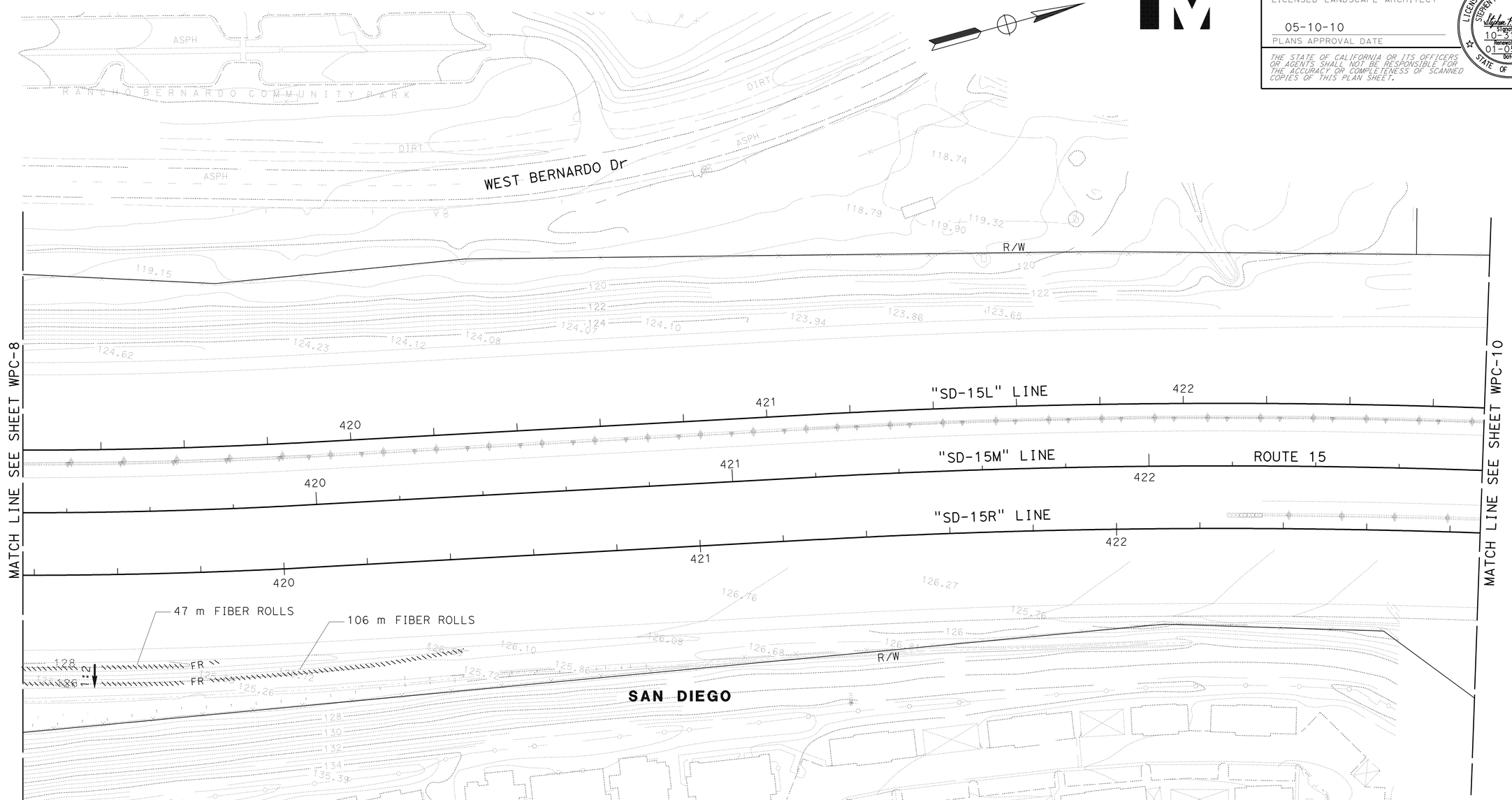

THIS PLAN ACCURATE FOR TEMPORARY WATER POLLUTION CONTROL WORK ONLY.

ALL DIMENSIONS ARE IN METERS UNLESS OTHERWISE SHOWN.

TEMPORARY WATER POLLUTION CONTROL PLAN

SCALE 1:500

WPC-9

STATE OF CALIFORNIA - DEPARTMENT OF TRANSPORTATION
Caltrans LANDSCAPE ARCHITECTURE

SENIOR LANDSCAPE ARCHITECT: STEPHEN ALVAREZ
CALCULATED-DESIGNED BY: JOEL HORTIZUELA
CHECKED BY: STEVE WARREN
REVISED BY
DATE REVISED

LAST REVISION 02-02-10
DATE PLOTTED => 01-JUN-2010
TIME PLOTTED => 15:54

Dist	COUNTY	ROUTE	KILOMETER POST TOTAL PROJECT	SHEET No.	TOTAL SHEETS
11	SD	15	M38.3/M42.2	11	67

Stephen P. Warren
LICENSED LANDSCAPE ARCHITECT

05-10-10
PLANS APPROVAL DATE

LICENSED LANDSCAPE ARCHITECT
STEPHEN P. WARREN NO. 3492
Stephen P. Warren
Signature
10-31-10
Renewal Date
01-05-10
Date
STATE OF CALIFORNIA

THE STATE OF CALIFORNIA OR ITS OFFICERS OR AGENTS SHALL NOT BE RESPONSIBLE FOR THE ACCURACY OR COMPLETENESS OF SCANNED COPIES OF THIS PLAN SHEET.

Caltrans Metric

NOTE:

FOR ACCURATE RIGHT OF WAY AND ACCESS DATA, CONTACT RIGHT OF WAY ENGINEERING AT THE DISTRICT OFFICE.

THIS PLAN ACCURATE FOR TEMPORARY WATER POLLUTION CONTROL WORK ONLY.

ALL DIMENSIONS ARE IN METERS UNLESS OTHERWISE SHOWN.

TEMPORARY WATER POLLUTION CONTROL PLAN

SCALE 1:500

WPC-10

STATE OF CALIFORNIA - DEPARTMENT OF TRANSPORTATION
Caltrans LANDSCAPE ARCHITECTURE

SENIOR LANDSCAPE ARCHITECT: STEPHEN ALVAREZ
CALCULATED-DESIGNED BY: JOEL HORTIZUELA
CHECKED BY: STEVE WARREN
REVISED BY
DATE REVISED

LAST REVISION 02-02-10
DATE PLOTTED => 01-JUN-2010
TIME PLOTTED => 15:54

Dist	COUNTY	ROUTE	KILOMETER POST TOTAL PROJECT	SHEET No.	TOTAL SHEETS
11	SD	15	M38.3/M42.2	12	67

Stephen P. Warren
LICENSED LANDSCAPE ARCHITECT

05-10-10
PLANS APPROVAL DATE

LICENSED LANDSCAPE ARCHITECT STEPHEN P. WARREN NO. 3442 Signature 10-31-10 Renewal Date 01-05-10 Date STATE OF CALIFORNIA

THE STATE OF CALIFORNIA OR ITS OFFICERS OR AGENTS SHALL NOT BE RESPONSIBLE FOR THE ACCURACY OR COMPLETENESS OF SCANNED COPIES OF THIS PLAN SHEET.

Caltrans Metric

NOTE:
FOR ACCURATE RIGHT OF WAY AND ACCESS DATA, CONTACT RIGHT OF WAY ENGINEERING AT THE DISTRICT OFFICE.

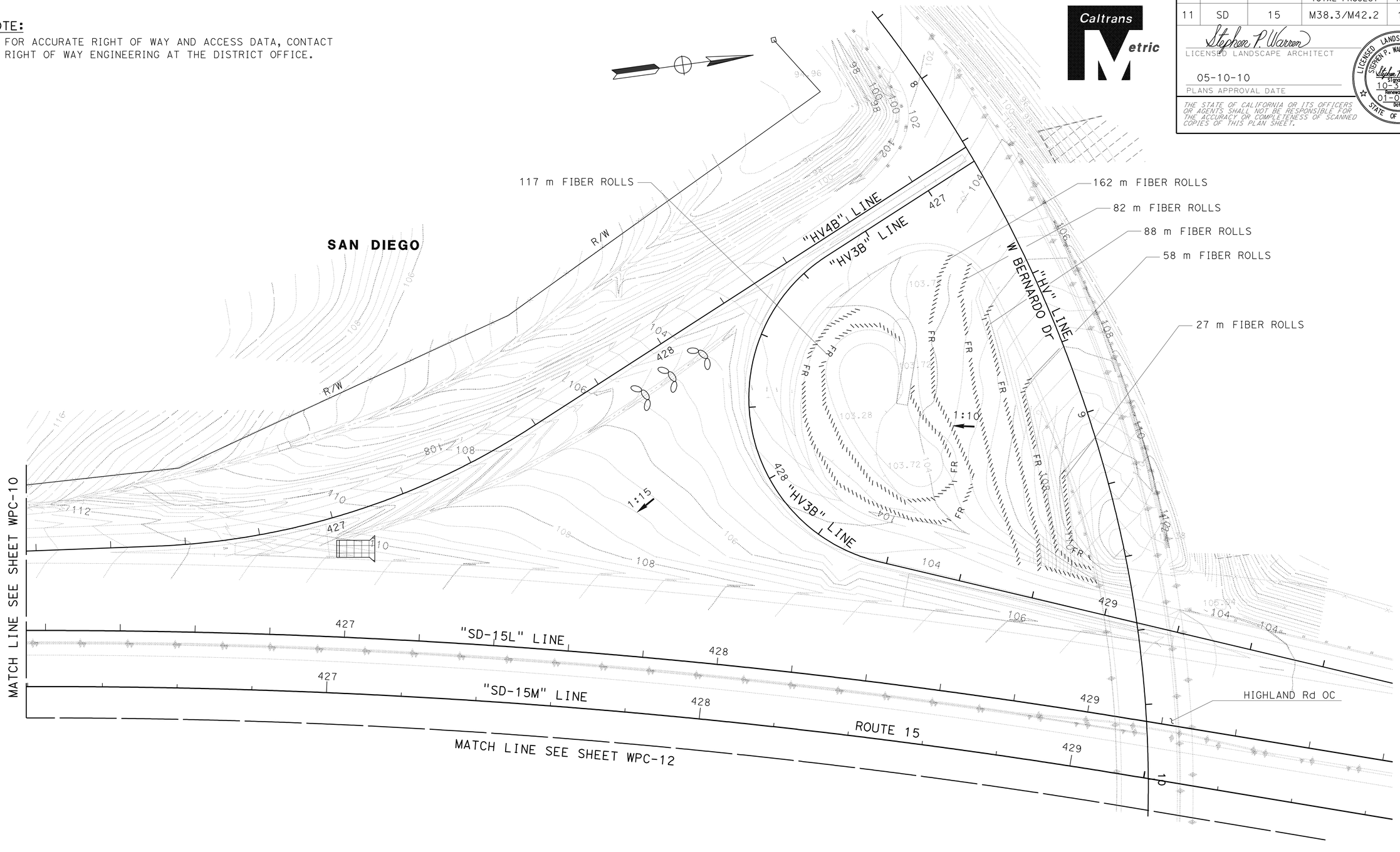

THIS PLAN ACCURATE FOR TEMPORARY WATER POLLUTION CONTROL WORK ONLY.

ALL DIMENSIONS ARE IN METERS UNLESS OTHERWISE SHOWN.

TEMPORARY WATER POLLUTION CONTROL PLAN

SCALE 1:500

WPC-11

STATE OF CALIFORNIA - DEPARTMENT OF TRANSPORTATION
Caltrans LANDSCAPE ARCHITECTURE

SENIOR LANDSCAPE ARCHITECT: STEPHEN ALVAREZ
CALCULATED-DESIGNED BY: JOEL HORTIZUELA
CHECKED BY: STEVE WARREN
REVISED BY / DATE REVISED

LAST REVISION 02-02-10 | DATE PLOTTED => 01-JUN-2010 | TIME PLOTTED => 15:54

Dist	COUNTY	ROUTE	KILOMETER POST TOTAL PROJECT	SHEET No.	TOTAL SHEETS
11	SD	15	M38.3/M42.2	13	67

Stephen P. Warren
LICENSED LANDSCAPE ARCHITECT

05-10-10
PLANS APPROVAL DATE

LICENSED LANDSCAPE ARCHITECT STEPHEN P. WARREN NO. 3442 Signature 10-31-10 Renewal Date 01-05-10 Date STATE OF CALIFORNIA

THE STATE OF CALIFORNIA OR ITS OFFICERS OR AGENTS SHALL NOT BE RESPONSIBLE FOR THE ACCURACY OR COMPLETENESS OF SCANNED COPIES OF THIS PLAN SHEET.

Caltrans Metric

SAN DIEGO

NOTE:
FOR ACCURATE RIGHT OF WAY AND ACCESS DATA, CONTACT RIGHT OF WAY ENGINEERING AT THE DISTRICT OFFICE.

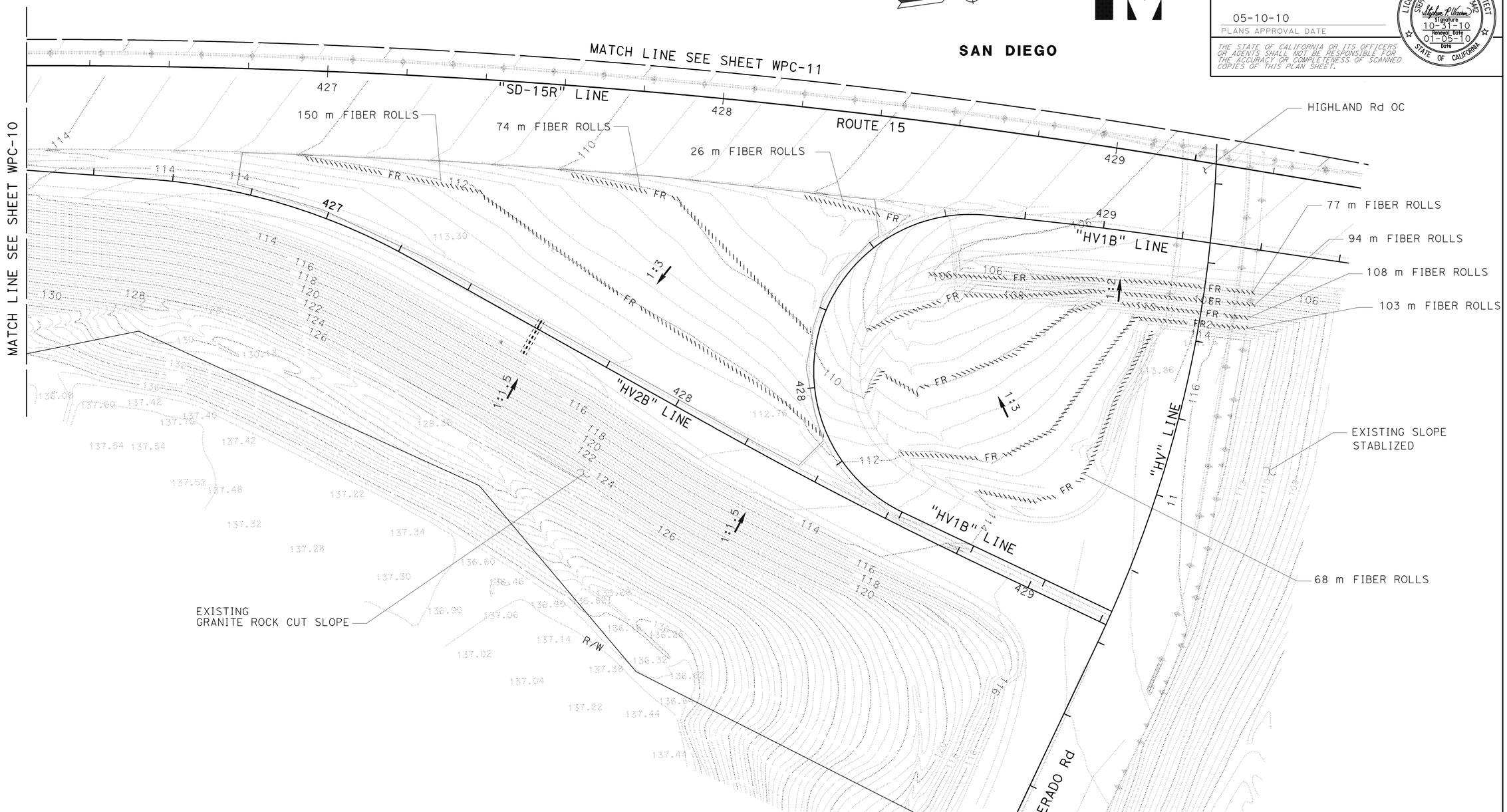

THIS PLAN ACCURATE FOR TEMPORARY WATER POLLUTION CONTROL WORK ONLY.

ALL DIMENSIONS ARE IN METERS UNLESS OTHERWISE SHOWN.

TEMPORARY WATER POLLUTION CONTROL PLAN

SCALE 1:500

WPC-12

STATE OF CALIFORNIA - DEPARTMENT OF TRANSPORTATION
Caltrans LANDSCAPE ARCHITECTURE

SENIOR LANDSCAPE ARCHITECT: STEPHEN ALVAREZ
CALCULATED-DESIGNED BY: STEVE WARREN
CHECKED BY: JOEL HORTIZUELA
REVISED BY / DATE REVISED

LAST REVISION 02-03-10
DATE PLOTTED => 01-JUN-2010
TIME PLOTTED => 15:54

Dist	COUNTY	ROUTE	KILOMETER POST TOTAL PROJECT	SHEET No.	TOTAL SHEETS
11	SD	15	M38.3/M42.2	14	67

Caltrans Metric

Stephen P. Warren
LICENSED LANDSCAPE ARCHITECT

05-10-10
PLANS APPROVAL DATE

LICENSED LANDSCAPE ARCHITECT
STEPHEN P. WARREN NO. 3442
Stephen P. Warren
Signature
10-31-10
Renewal Date
01-05-10
Date
STATE OF CALIFORNIA

THE STATE OF CALIFORNIA OR ITS OFFICERS OR AGENTS SHALL NOT BE RESPONSIBLE FOR THE ACCURACY OR COMPLETENESS OF SCANNED COPIES OF THIS PLAN SHEET.

FIBER ROLLS

SHEET	m
WPC-1	792
WPC-2	1319
WPC-3	1944
WPC-4	1251
WPC-5	721
WPC-6	821
WPC-7	1327
WPC-8	98
WPC-9	153
WPC-10	0
WPC-11	534
WPC-12	700
TOTAL	9 660

Temp CHECK DAM

SHEET	m
WPC-1	0
WPC-2	0
WPC-3	0
WPC-4	0
WPC-5	0
WPC-6	0
WPC-7	36
WPC-8	0
WPC-9	0
WPC-10	36
WPC-11	18
WPC-12	0
TOTAL	90

Temp CONSTRUCTION ENTRANCE

(TYPE 2)

SHEET	EA
WPC-1	0
WPC-2	0
WPC-3	0
WPC-4	0
WPC-5	0
WPC-6	0
WPC-7	0
WPC-8	0
WPC-9	0
WPC-10	0
WPC-11	1
WPC-12	0
TOTAL	1

TEMPORARY WATER POLLUTION CONTROL QUANTITIES

WPCQ-1

STATE OF CALIFORNIA - DEPARTMENT OF TRANSPORTATION
Caltrans LANDSCAPE ARCHITECTURE

SENIOR LANDSCAPE ARCHITECT: STEPHEN ALVAREZ
CALCULATED-DESIGNED BY: STEVE WARREN
CHECKED BY: JOEL HORTIZUELA
REVISED BY
DATE REVISED

LAST REVISION 02-03-10
DATE PLOTTED => 01-JUN-2010
TIME PLOTTED => 15:54

Dist	COUNTY	ROUTE	KILOMETER POST TOTAL PROJECT	SHEET No.	TOTAL SHEETS
11	SD	15	M38.3/M42.2	15	67

Stephen P. Warren
LICENSED LANDSCAPE ARCHITECT

05-10-10
PLANS APPROVAL DATE

LICENSED LANDSCAPE ARCHITECT STEPHEN P. WARREN NO. 3442 Signature 10-31-10 Renewal Date 01-05-10 Date STATE OF CALIFORNIA

THE STATE OF CALIFORNIA OR ITS OFFICERS OR AGENTS SHALL NOT BE RESPONSIBLE FOR THE ACCURACY OR COMPLETENESS OF ELECTRONIC COPIES OF THIS PLAN SHEET.

Caltrans Metric

ABBREVIATIONS

BTH — BROWN TRUNK HEIGHT
g — GRAM
Kg — KILOGRAM
L — LITER
m — METER
m^2 — SQUARE METER
m^3 — CUBIC METER
ha — HECTARE
mm — MILLIMETER
No. — NUMBER
Pkt — PACKETS
PLT ESTB - PLANT ESTABLISHMENT
PVMT — PAVEMENT
R/W — RIGHT OF WAY
SF — STATE FURNISHED
TAB — TABLET(S)
TRVD — TRAVELED

NOTE:

UNDERLINED PORTIONS OF BOTANICAL NAMES INDICATE ABBREVIATIONS USED ON PLANTING PLANS.

PLANT LIST AND PLANTING SPECIFICATIONS

PLANT GROUP	PLANT No.	SYMBOL	BOTANICAL NAME	COMMON NAME	SIZE	QUANTITY EACH	HOLE SIZE (mm) Dia	HOLE SIZE (mm) DEPTH	BASIN TYPE	IRON SULFATE ①	SOIL Amend	COMMERCIAL FERTILIZER ① PLANTING	COMMERCIAL FERTILIZER ① PLT ESTB	BASIN MULCH ① (m^3)	STAKING	PLANTING LIMITS MINIMUM DISTANCE (m) FROM TRVD WAY	Pvmt	FENCE	WALL	PAVED DITCH	EARTH DITCH	ON CENTER (m)	REMARKS
A	1		ERIOGONIUM FASCICULATUM	CALIFORNIA BUCKWHEAT	No. 1	2 250	②		1	110 g	-	2 Pkt	220 g	0.05	-	-	3	4	4	4	4	④ ⑧	SHRUB ⑧
	2		ERIOGONIUM FASCICULATUM	CALIFORNIA BUCKWHEAT	No. 1	842	②		1	110 g	-	2 Pkt	220 g	0.05	-	-	3	4	4	4	4	④	SHRUB
	3		EUCALYPTUS MICROTHECA	COOLIBAH GUM	No. 1	24	②		1	110 g	-	2 Pkt	220 g	0.05	-	-	3	2	2	2	2	④	TREE
	4		LOMANDRA LONGIFOLIA 'BREEZE'	BREEZE LOMANDRA (GRASS)	No. 1	1 375	②		1	110 g	-	2 Pkt	220 g	0.05	-	-	3	4	4	4	4	0.60	SHRUB ⑧
	5		MUHLENBERGIA RIGENS	DEER GRASS	No. 1	4 250	②		1	110 g	-	2 Pkt	220 g	0.05	-	-	3	2	2	2	2	0.60	SHRUB ⑧
	6		NASSELLA PULCHRA	PURPLE NEEDLE GRASS	No. 1	1 375	②		1	110 g	-	2 Pkt	220 g	0.05	-	-	3	2	2	2	2	0.60	SHRUB ⑧
	7		RHUS INTEGRIFOLIA	LEMONADE BERRY	No. 1	400	②		1	110 g	-	2 Pkt	220 g	0.05	-	-	3	2	2	2	2		SHRUB
	8		SALVIA CLEVELANDII	CLEVELAND SALVIA	No. 1	750	②		1	110 g	-	2 Pkt	220 g	0.05	-	-	3	2	2	2	2	0.60	SHRUB ⑧
	9		SALIX GOODDINGII	BLACK WILLOW	No. 1	150	②		1	110 g	-	2 Pkt	220 g	0.05	-	-	3	2	2	2	2	④	TREE
	10		SALIX LASIOLEPIS	ARROYO WILLOW	No. 1	150	②		1	110 g	-	2 Pkt	220 g	0.05	-	-	3	2	2	2	2	④	TREE
	11		VIGUIERA LACINIATA	SAN DIEGO SUN FLOWER	No. 1	750	②		1	110 g	-	2 Pkt	220 g	0.05	-	-	3	2	2	2	2	0.60	SHRUB ⑧
B	12		EUCALYPTUS CITRIODORA	LEMON-SCENTED GUM	No. 5	14	②		1	110 g	-	3 Pkt	220 g	0.05	⑥	9	3	4	4	4	4	④	TREE
	13		POPULUS FREMONTII	BLACK COTTONWOOD	No. 5	46	②		1	110 g	-	3 Pkt	220 g	0.05	⑥	9	3	4	4	4	4	④	TREE
	14		PLATANUS RACEMOSA	CALIFORNIA SYCAMORE	No. 5	64	②		1	110 g	-	3 Pkt	220 g	0.05	⑥	9	3	4	4	4	4	④	TREE
	15		SCHINUS MOLLE	CALIFORNIA PEPPER	No. 5	137	②		1	110 g	-	3 Pkt	220 g	0.05	⑥	9	3	4	4	4	4	④	TREE
F	16		BACCHARIS PILULARIS 'PIGEON POINT'	DWARF COYOTE BRUSH	IN FLATS	236 900	-		-	-	-	4 kg/ 100 m^2	3 kg/ 100 m^2	-	-	2	1	1	1	1	1	0.45	GROUND COVER
G	17		BACCHARIS SALICIFOLIA	MULEFAT	ROOTED CUTTINGS	260	-		-	-	-	-	-	-	-	-	2.5	2	2	2	2	④ ⑧	SHRUB
U	18		CERCIS CANADENSIS 'FOREST PANSY'	REDBUD	No. 15	190	②		1	220 g	-	5 Pkt	450 g	0.2	⑥	9	1	4	4	4	4	④	TREE
	19		PINUS CANARIENSIS	CANARY ISLAND PINE	No. 15	188	②		1	220 g	-	5 Pkt	450 g	0.2	⑥	9	1	4	4	4	4	④	TREE
	20		PINUS TORREYANA	TORREY PINE	No. 15	62	②		1	220 g	-	5 Pkt	450 g	0.2	⑥	9	1	4	4	4	4	④	TREE
	21		QUERCUS AGRIFOLIA	COAST LIVE OAK	No. 15	297	②		1	220 g	-	5 Pkt	450 g	0.2	⑥	9	1	4	4	4	4	④	TREE
W	22		SALIX GOODDINGII	BLACK WILLOW	WILLOW CUTTINGS	200	-		-	-	-	-	-	-	-	-	4.5	3	2	3	3.5	④ ⑧	TREE
	23		SALIX LASIOLEPIS	ARROYO WILLOW	WILLOW CUTTINGS	200	-		-	-	-	-	-	-	-	-	4.5	3	2	3	3.5	④ ⑧	TREE

APPLICABLE WHEN CIRCLED:

① - QUANTITIES SHOWN ARE 'PER PLANT' UNLESS SHOWN AS m^2 APPLICATION RATES.
② - SUFFICIENT TO RECEIVE ROOT BALL.
3 - DOES NOT APPLY TO MULCH AREAS.
④ - AS SHOWN ON PLANS.
5 - UNLESS OTHERWISE SHOWN ON PLANS.
⑥ - PER STANDARD PLAN H4.
7 - SEE SPECIAL PROVISIONS.
⑧ - RANDOMLY PLANT IN AREA SHOWN IN ODD NUMBERS
EXAMPLE: 3'S,5'S,7'S,9'S,11'S ETC.

LEGEND

MAINTAIN EXISTING PLANTED AREAS

ESA — ENVIRONMENTALLY SENSITIVE AREA

ROCK MULCH (100 mm DEEP)

EROSION CONTROL (HYDROSEED)

EROSION CONTROL (POLYMER STABILIZED FIBER MATRIX)

EROSION CONTROL (POLYMER STABILIZED FIBER MATRIX) BAC SAL, SAL GOO, & SAL LAS PLANTINGS

MULCH (75 mm DEEP)

PLANT LIST

NO SCALE **PL-1**

REVISED BY | DATE REVISED
STEVE WARREN | JOEL HORTIZUELA
CALCULATED-DESIGNED BY | CHECKED BY
SENIOR LANDSCAPE ARCHITECT | STEPHEN ALVAREZ
STATE OF CALIFORNIA - DEPARTMENT OF TRANSPORTATION
Caltrans LANDSCAPE ARCHITECTURE

LAST REVISION 05-24-10 | DATE PLOTTED => 01-JUN-2010 | TIME PLOTTED => 15:54

Dist	COUNTY	ROUTE	KILOMETER POST TOTAL PROJECT	SHEET No.	TOTAL SHEETS
11	SD	15	M38.3/M42.2	16	67

Stephen P. Warren
LICENSED LANDSCAPE ARCHITECT

05-10-10
PLANS APPROVAL DATE

LICENSED LANDSCAPE ARCHITECT
STEPHEN P. WARREN NO. 3442
Signature
10-31-10
Renewal Date
01-05-10
Date
STATE OF CALIFORNIA

THE STATE OF CALIFORNIA OR ITS OFFICERS OR AGENTS SHALL NOT BE RESPONSIBLE FOR THE ACCURACY OR COMPLETENESS OF SCANNED COPIES OF THIS PLAN SHEET.

Caltrans Metric

NOTE: FOR ACCURATE RIGHT OF WAY AND ACCESS DATA, CONTACT RIGHT OF WAY ENGINEERING AT THE DISTRICT OFFICE.

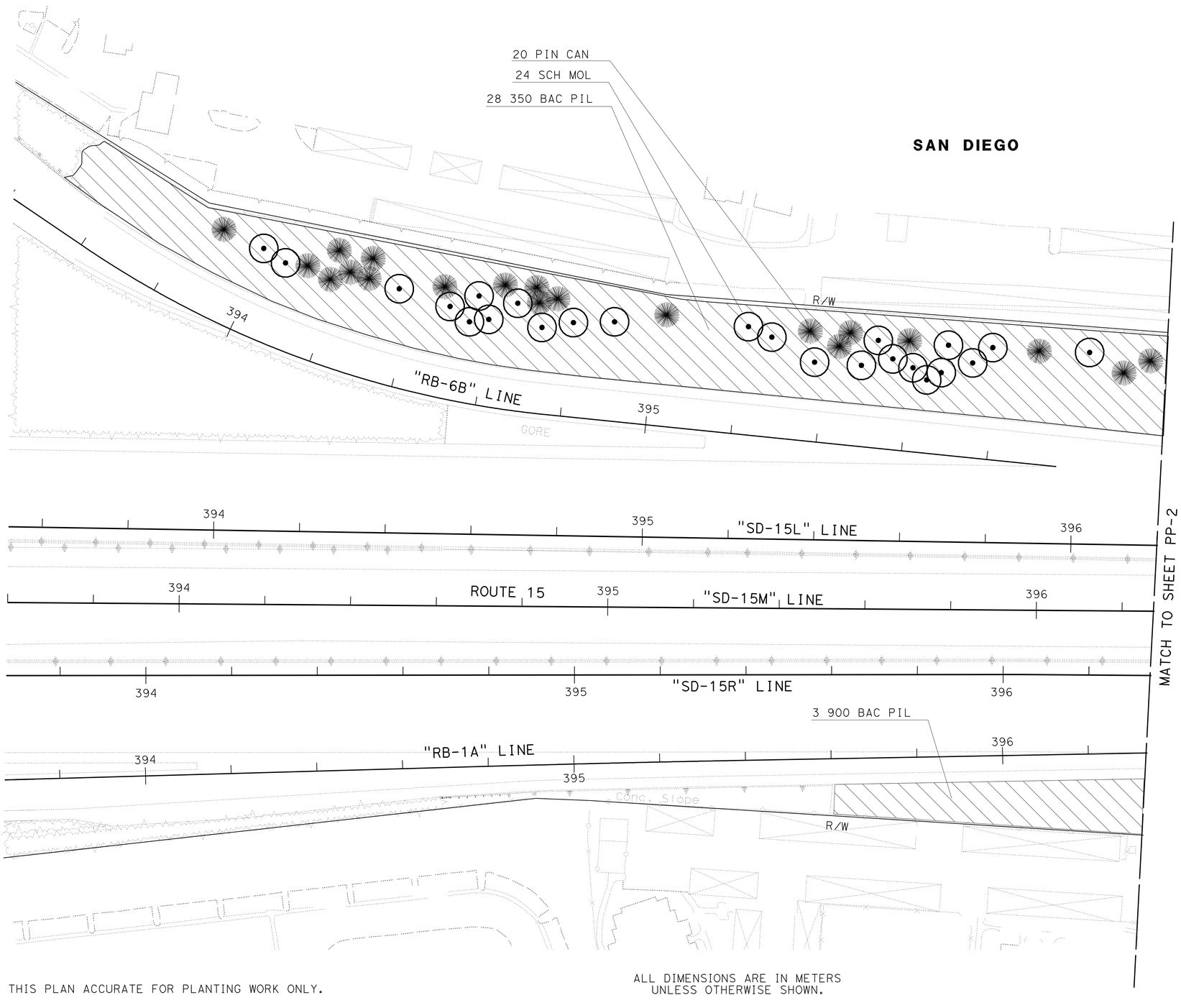

THIS PLAN ACCURATE FOR PLANTING WORK ONLY.

ALL DIMENSIONS ARE IN METERS UNLESS OTHERWISE SHOWN.

PLANTING PLAN

SCALE 1:500 **PP-1**

STATE OF CALIFORNIA - DEPARTMENT OF TRANSPORTATION
Caltrans LANDSCAPE ARCHITECTURE

SENIOR LANDSCAPE ARCHITECT: STEPHEN ALVAREZ
CALCULATED-DESIGNED BY: STEVE WARREN
CHECKED BY: JOEL HORTIZUELA
REVISED BY
DATE REVISED

LAST REVISION 05-24-10
DATE PLOTTED => 01-JUN-2010
TIME PLOTTED => 15:54

Dist	COUNTY	ROUTE	KILOMETER POST TOTAL PROJECT	SHEET No.	TOTAL SHEETS
11	SD	15	M38.3/M42.2	17	67

Stephen P. Warren
LICENSED LANDSCAPE ARCHITECT

05-10-10
PLANS APPROVAL DATE

LICENSED LANDSCAPE ARCHITECT
STEPHEN P. WARREN NO. 3482
Signature
10-31-10
Renewal Date
01-05-10
Date
STATE OF CALIFORNIA

THE STATE OF CALIFORNIA OR ITS OFFICERS OR AGENTS SHALL NOT BE RESPONSIBLE FOR THE ACCURACY OR COMPLETENESS OF SCANNED COPIES OF THIS PLAN SHEET.

Caltrans Metric

NOTE:

FOR ACCURATE RIGHT OF WAY AND ACCESS DATA, CONTACT RIGHT OF WAY ENGINEERING AT THE DISTRICT OFFICE.

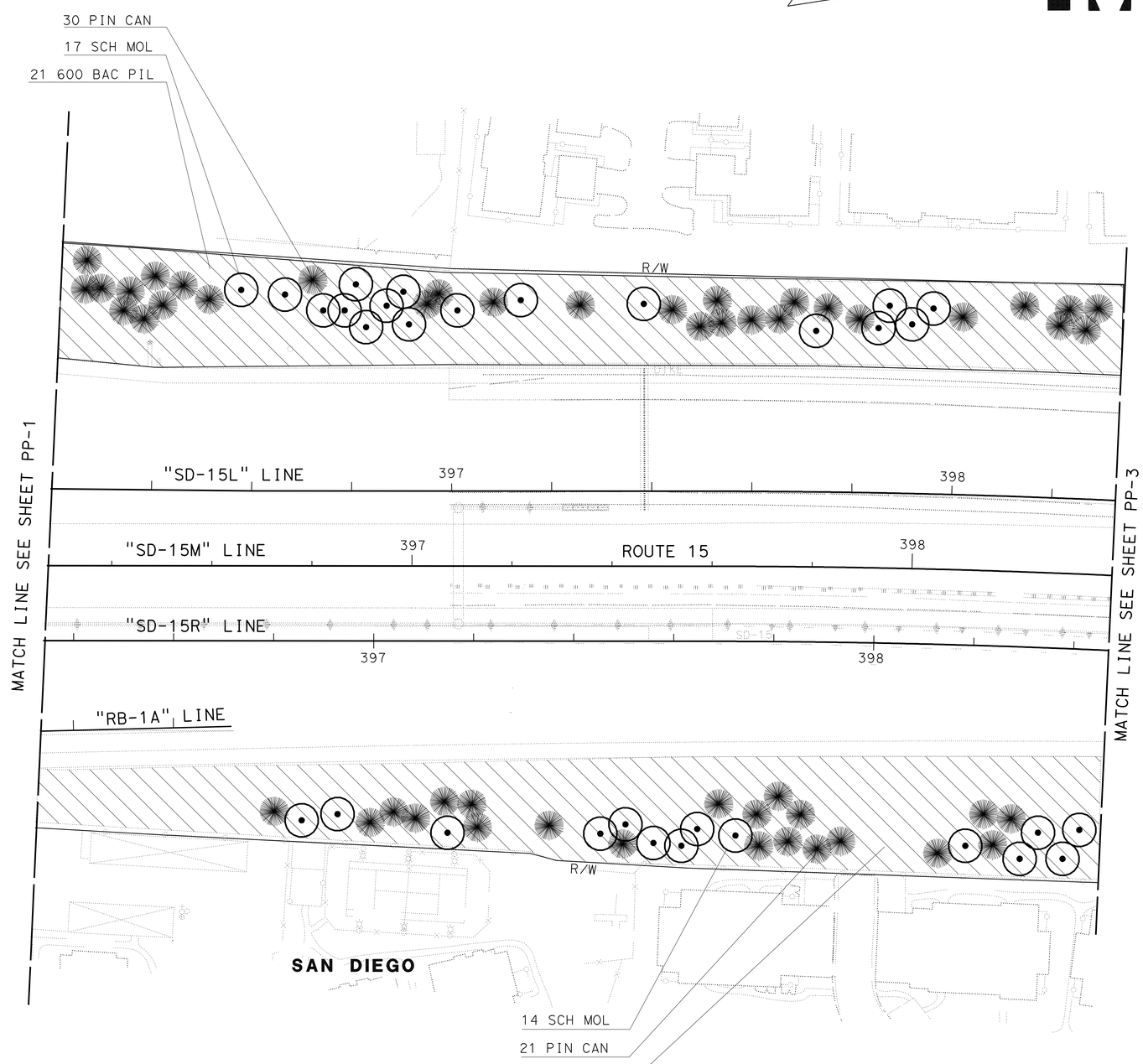

THIS PLAN ACCURATE FOR PLANTING WORK ONLY.

ALL DIMENSIONS ARE IN METERS UNLESS OTHERWISE SHOWN.

PLANTING PLAN

SCALE 1:500

PP-2

STATE OF CALIFORNIA - DEPARTMENT OF TRANSPORTATION
Caltrans LANDSCAPE ARCHITECTURE

SENIOR LANDSCAPE ARCHITECT: STEPHEN ALVAREZ
CALCULATED-DESIGNED BY: STEVE WARREN
CHECKED BY: JOEL HORTIZUELA
REVISED BY
DATE REVISED

LAST REVISION 05-24-10
DATE PLOTTED => 01-JUN-2010
TIME PLOTTED => 15:54

Dist	COUNTY	ROUTE	KILOMETER POST TOTAL PROJECT	SHEET No.	TOTAL SHEETS
11	SD	15	M38.3/M42.2	18	67

Stephen P. Warren
LICENSED LANDSCAPE ARCHITECT

05-10-10
PLANS APPROVAL DATE

LICENSED LANDSCAPE ARCHITECT
STEPHEN P. WARREN NO. 3442
Signature
10-31-10
Renewal Date
01-05-10
Date
STATE OF CALIFORNIA

THE STATE OF CALIFORNIA OR ITS OFFICERS OR AGENTS SHALL NOT BE RESPONSIBLE FOR THE ACCURACY OR COMPLETENESS OF SCANNED COPIES OF THIS PLAN SHEET.

Caltrans Metric

NOTE:

FOR ACCURATE RIGHT OF WAY AND ACCESS DATA, CONTACT RIGHT OF WAY ENGINEERING AT THE DISTRICT OFFICE.

THIS PLAN ACCURATE FOR PLANTING WORK ONLY.

ALL DIMENSIONS ARE IN METERS UNLESS OTHERWISE SHOWN.

PLANTING PLAN

SCALE 1:500

PP-3

STATE OF CALIFORNIA - DEPARTMENT OF TRANSPORTATION
Caltrans LANDSCAPE ARCHITECTURE

SENIOR LANDSCAPE ARCHITECT: STEPHEN ALVAREZ
CALCULATED-DESIGNED BY: STEVE WARREN
CHECKED BY: JOEL HORTIZUELA
REVISED BY
DATE REVISED

LAST REVISION 05-24-10
DATE PLOTTED => 01-JUN-2010
TIME PLOTTED => 15:54

Dist	COUNTY	ROUTE	KILOMETER POST TOTAL PROJECT	SHEET No.	TOTAL SHEETS
11	SD	15	M38.3/M42.2	19	67

Stephen P. Warren
LICENSED LANDSCAPE ARCHITECT

05-10-10
PLANS APPROVAL DATE

LICENSED LANDSCAPE ARCHITECT STEPHEN P. WARREN NO. 3482 STATE OF CALIFORNIA
Signature 10-31-10 Renewal Date 01-05-10 Date

THE STATE OF CALIFORNIA OR ITS OFFICERS OR AGENTS SHALL NOT BE RESPONSIBLE FOR THE ACCURACY OR COMPLETENESS OF SCANNED COPIES OF THIS PLAN SHEET.

Caltrans Metric

NOTE:

FOR ACCURATE RIGHT OF WAY AND ACCESS DATA, CONTACT RIGHT OF WAY ENGINEERING AT THE DISTRICT OFFICE.

THIS PLAN ACCURATE FOR PLANTING WORK ONLY.

ALL DIMENSIONS ARE IN METERS UNLESS OTHERWISE SHOWN.

PLANTING PLAN

SCALE 1:500 **PP-4**

STATE OF CALIFORNIA - DEPARTMENT OF TRANSPORTATION
Caltrans LANDSCAPE ARCHITECTURE

SENIOR LANDSCAPE ARCHITECT: STEPHEN ALVAREZ
CALCULATED-DESIGNED BY: STEVE WARREN
CHECKED BY: JOEL HORTIZUELA
REVISED BY / DATE REVISED

LAST REVISION 05-24-10
DATE PLOTTED => 01-JUN-2010
TIME PLOTTED => 15:54

Dist	COUNTY	ROUTE	KILOMETER POST TOTAL PROJECT	SHEET No.	TOTAL SHEETS
11	SD	15	M38.3/M42.2	20	67

Stephen P. Warren
LICENSED LANDSCAPE ARCHITECT

05-10-10
PLANS APPROVAL DATE

LICENSED LANDSCAPE ARCHITECT
STEPHEN P. WARREN NO. 3482
Signature 10-31-10
Renewal Date 01-05-10
Date
STATE OF CALIFORNIA

THE STATE OF CALIFORNIA OR ITS OFFICERS OR AGENTS SHALL NOT BE RESPONSIBLE FOR THE ACCURACY OR COMPLETENESS OF SCANNED COPIES OF THIS PLAN SHEET.

Caltrans Metric

NOTE:

FOR ACCURATE RIGHT OF WAY AND ACCESS DATA, CONTACT RIGHT OF WAY ENGINEERING AT THE DISTRICT OFFICE.

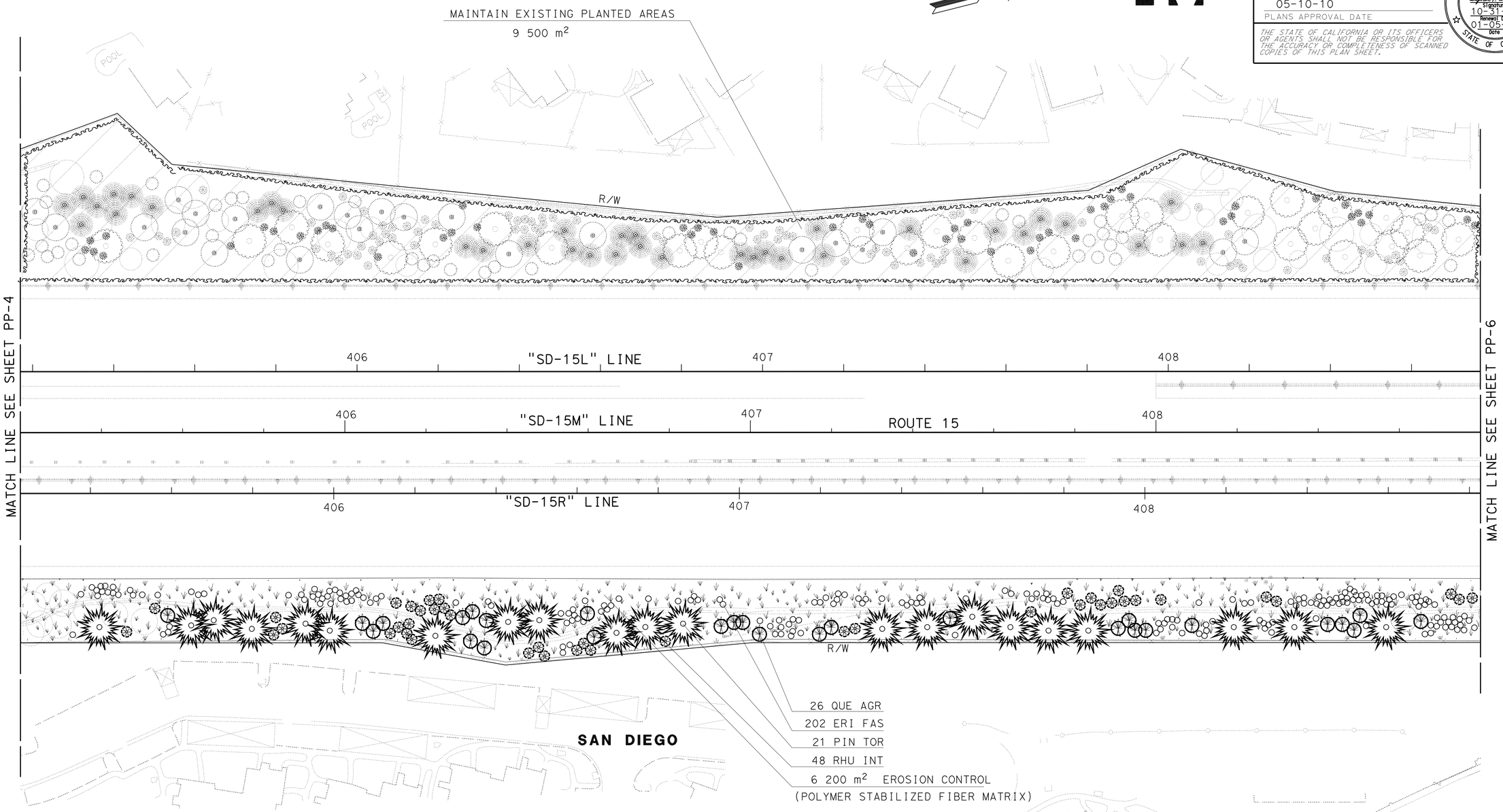

THIS PLAN ACCURATE FOR PLANTING WORK ONLY.

ALL DIMENSIONS ARE IN METERS UNLESS OTHERWISE SHOWN.

PLANTING PLAN

SCALE 1:500 **PP-5**

REVISED BY	STEVE WARREN
DATE REVISED	JOEL HORTIZUELA
CALCULATED-DESIGNED BY	STEPHEN ALVAREZ
CHECKED BY	
SENIOR LANDSCAPE ARCHITECT	

STATE OF CALIFORNIA - DEPARTMENT OF TRANSPORTATION
Caltrans LANDSCAPE ARCHITECTURE

LAST REVISION 02-04-10 | DATE PLOTTED => 01-JUN-2010 | TIME PLOTTED => 15:55

Dist	COUNTY	ROUTE	KILOMETER POST TOTAL PROJECT	SHEET No.	TOTAL SHEETS
11	SD	15	M38.3/M42.2	21	67

Stephen P. Warren
LICENSED LANDSCAPE ARCHITECT

05-10-10
PLANS APPROVAL DATE

LICENSED LANDSCAPE ARCHITECT STEPHEN P. WARREN NO. 3422 Signature 10-31-10 Renewal Date 01-05-10 Date STATE OF CALIFORNIA

THE STATE OF CALIFORNIA OR ITS OFFICERS OR AGENTS SHALL NOT BE RESPONSIBLE FOR THE ACCURACY OR COMPLETENESS OF SCANNED COPIES OF THIS PLAN SHEET.

Caltrans Metric

NOTE:
FOR ACCURATE RIGHT OF WAY AND ACCESS DATA, CONTACT RIGHT OF WAY ENGINEERING AT THE DISTRICT OFFICE.

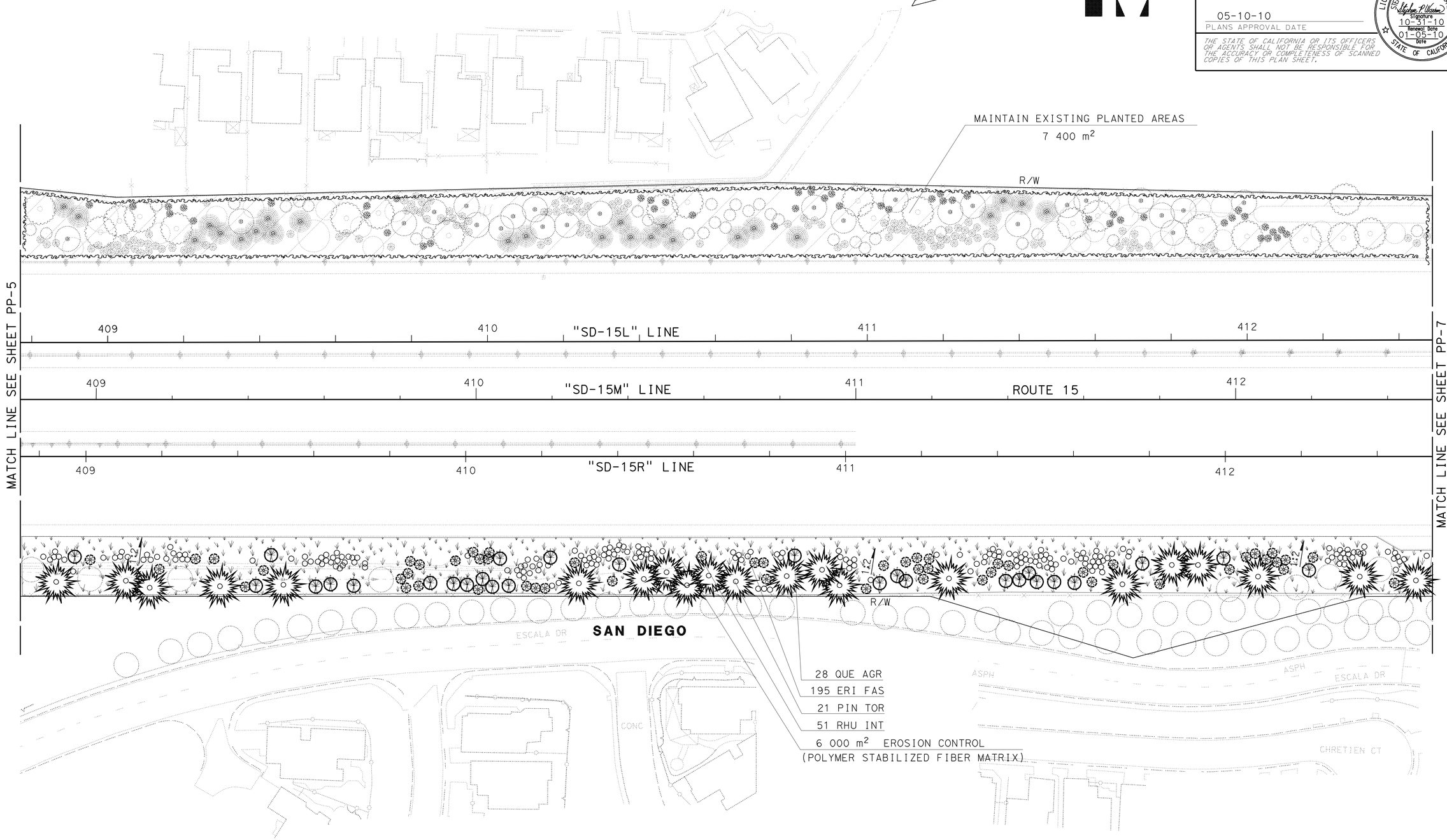

THIS PLAN ACCURATE FOR PLANTING WORK ONLY.

ALL DIMENSIONS ARE IN METERS UNLESS OTHERWISE SHOWN.

PLANTING PLAN

SCALE 1:500 **PP-6**

STATE OF CALIFORNIA - DEPARTMENT OF TRANSPORTATION
Caltrans LANDSCAPE ARCHITECTURE

SENIOR LANDSCAPE ARCHITECT: STEPHEN ALVAREZ
CALCULATED-DESIGNED BY: STEVE WARREN
CHECKED BY: JOEL HORTIZUELA
REVISED BY / DATE REVISED

LAST REVISION 02-04-10 | DATE PLOTTED => 01-JUN-2010 | TIME PLOTTED => 15:55

Dist	COUNTY	ROUTE	KILOMETER POST TOTAL PROJECT	SHEET No.	TOTAL SHEETS
11	SD	15	M38.3/M42.2	22	67

Stephen P. Warren
LICENSED LANDSCAPE ARCHITECT

05-10-10
PLANS APPROVAL DATE

LICENSED LANDSCAPE ARCHITECT
STEPHEN P. WARREN NO. 3442
Signature 10-31-10 Renewal Date
01-05-10 Date
STATE OF CALIFORNIA

THE STATE OF CALIFORNIA OR ITS OFFICERS OR AGENTS SHALL NOT BE RESPONSIBLE FOR THE ACCURACY OR COMPLETENESS OF SCANNED COPIES OF THIS PLAN SHEET.

Caltrans Metric

NOTE:

FOR ACCURATE RIGHT OF WAY AND ACCESS DATA, CONTACT RIGHT OF WAY ENGINEERING AT THE DISTRICT OFFICE.

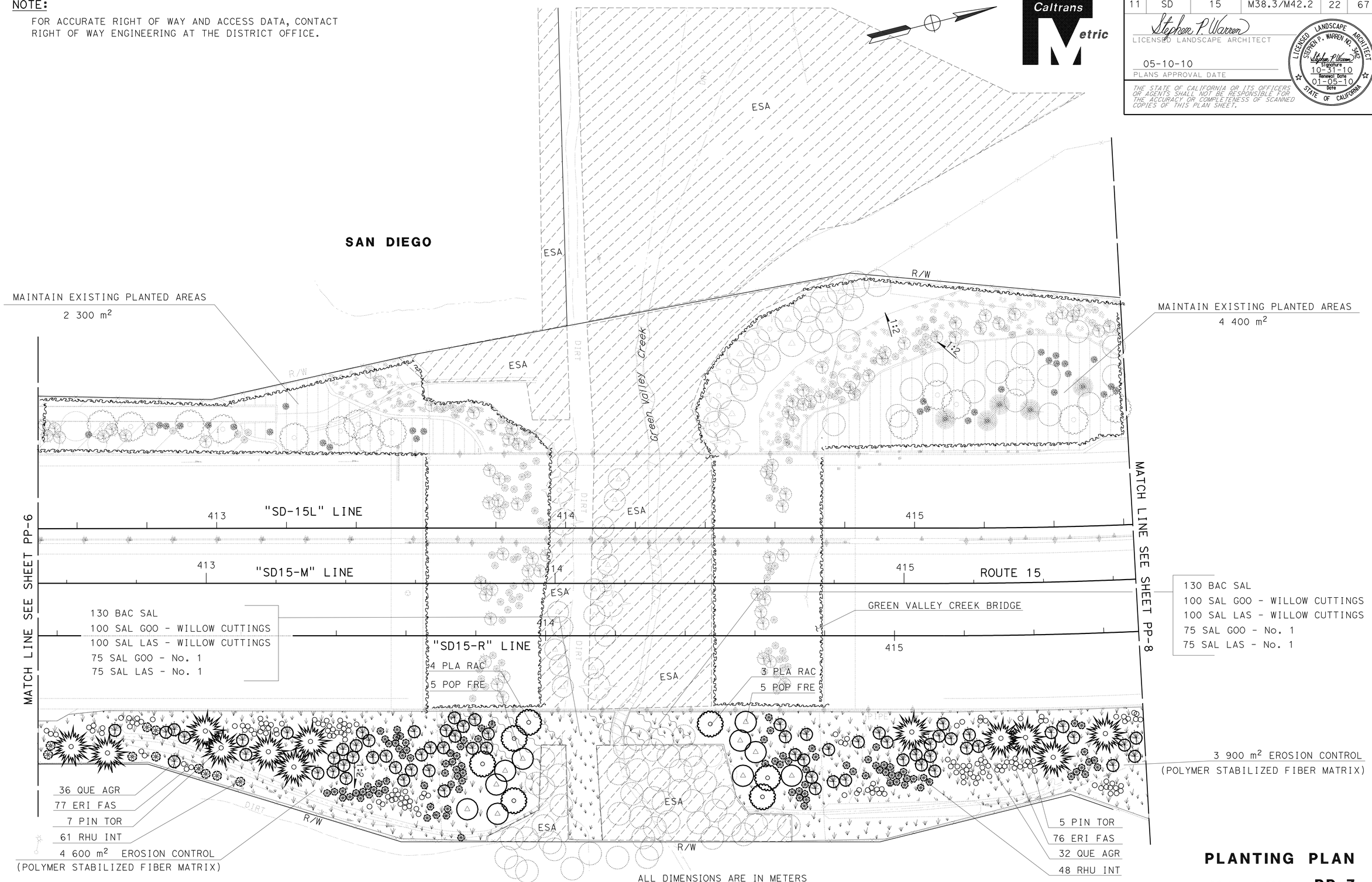

THIS PLAN ACCURATE FOR PLANTING WORK ONLY.

ALL DIMENSIONS ARE IN METERS UNLESS OTHERWISE SHOWN.

PLANTING PLAN

SCALE 1:500 **PP-7**

REVISED BY	DATE REVISED
STEVE WARREN	JOEL HORTIZUELA

CALCULATED-DESIGNED BY
CHECKED BY

SENIOR LANDSCAPE ARCHITECT
STEPHEN ALVAREZ

STATE OF CALIFORNIA - DEPARTMENT OF TRANSPORTATION
Caltrans LANDSCAPE ARCHITECTURE

LAST REVISION 02-04-10 | DATE PLOTTED => 01-JUN-2010 | TIME PLOTTED => 15:55

Dist	COUNTY	ROUTE	KILOMETER POST TOTAL PROJECT	SHEET No.	TOTAL SHEETS
11	SD	15	M38.3/M42.2	23	67

Stephen P. Warren
LICENSED LANDSCAPE ARCHITECT

05-10-10
PLANS APPROVAL DATE

LICENSED LANDSCAPE ARCHITECT
STEPHEN P. WARREN NO. 3482
Signature
10-31-10
Renewal Date
01-05-10
Date
STATE OF CALIFORNIA

THE STATE OF CALIFORNIA OR ITS OFFICERS OR AGENTS SHALL NOT BE RESPONSIBLE FOR THE ACCURACY OR COMPLETENESS OF SCANNED COPIES OF THIS PLAN SHEET.

Caltrans Metric

NOTE:

FOR ACCURATE RIGHT OF WAY AND ACCESS DATA, CONTACT RIGHT OF WAY ENGINEERING AT THE DISTRICT OFFICE.

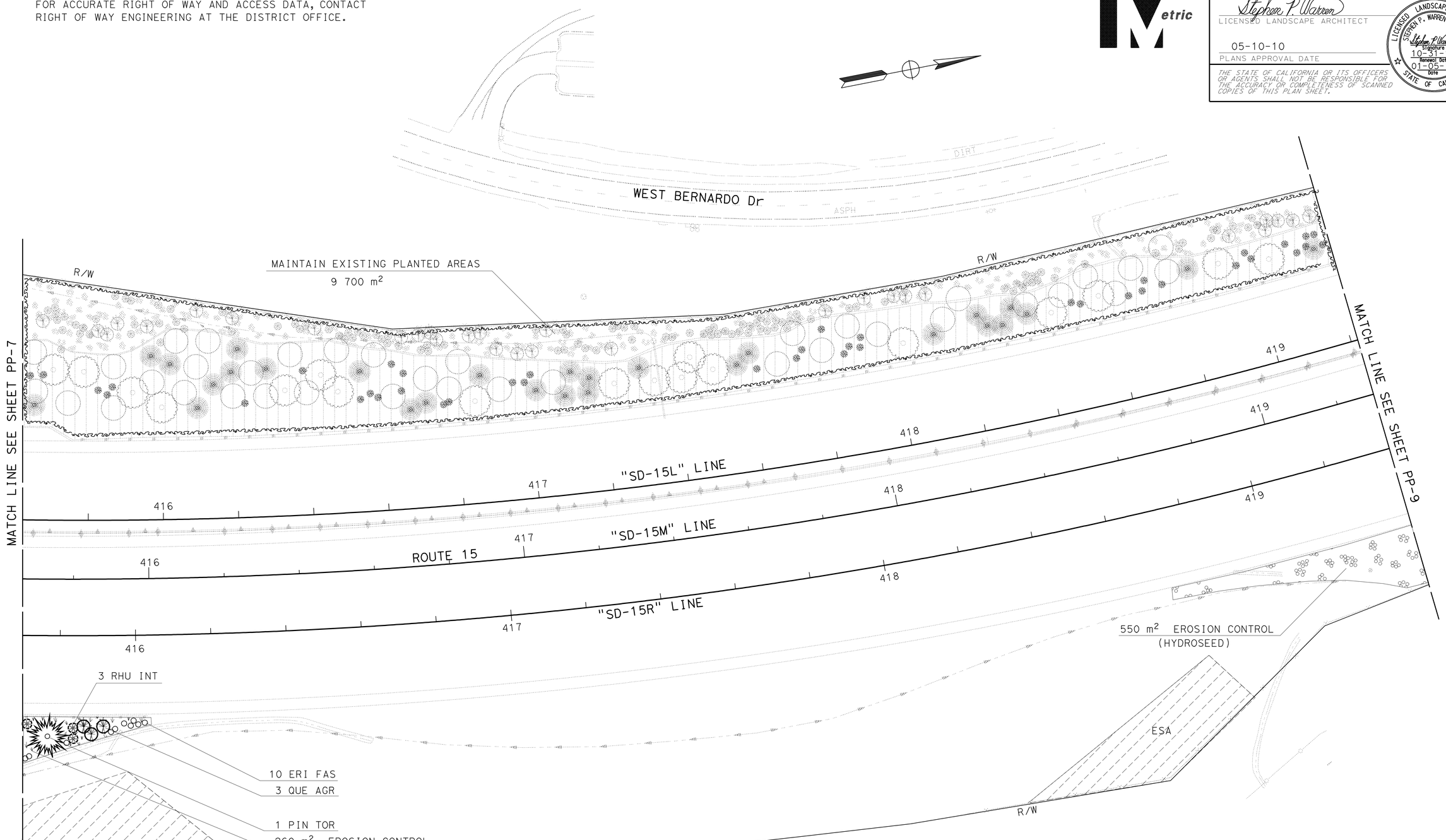

THIS PLAN ACCURATE FOR PLANTING WORK ONLY.

ALL DIMENSIONS ARE IN METERS UNLESS OTHERWISE SHOWN.

PLANTING PLAN

SCALE 1:500

PP-8

STATE OF CALIFORNIA - DEPARTMENT OF TRANSPORTATION
Caltrans LANDSCAPE ARCHITECTURE

SENIOR LANDSCAPE ARCHITECT: STEPHEN ALVAREZ
CALCULATED-DESIGNED BY: STEVE WARREN
CHECKED BY: JOEL HORTIZUELA
REVISED BY
DATE REVISED

LAST REVISION 02-04-10
DATE PLOTTED => 01-JUN-2010
TIME PLOTTED => 15:55

Dist	COUNTY	ROUTE	KILOMETER POST TOTAL PROJECT	SHEET No.	TOTAL SHEETS
11	SD	15	M38.3/M42.2	24	67

Stephen P. Warren
LICENSED LANDSCAPE ARCHITECT

05-10-10
PLANS APPROVAL DATE

LICENSED LANDSCAPE ARCHITECT
STEPHEN P. WARREN NO. 3482
Signature 10-31-10
Renewal Date 01-05-10
Date
STATE OF CALIFORNIA

THE STATE OF CALIFORNIA OR ITS OFFICERS OR AGENTS SHALL NOT BE RESPONSIBLE FOR THE ACCURACY OR COMPLETENESS OF SCANNED COPIES OF THIS PLAN SHEET.

Caltrans Metric

NOTE: FOR ACCURATE RIGHT OF WAY AND ACCESS DATA, CONTACT RIGHT OF WAY ENGINEERING AT THE DISTRICT OFFICE.

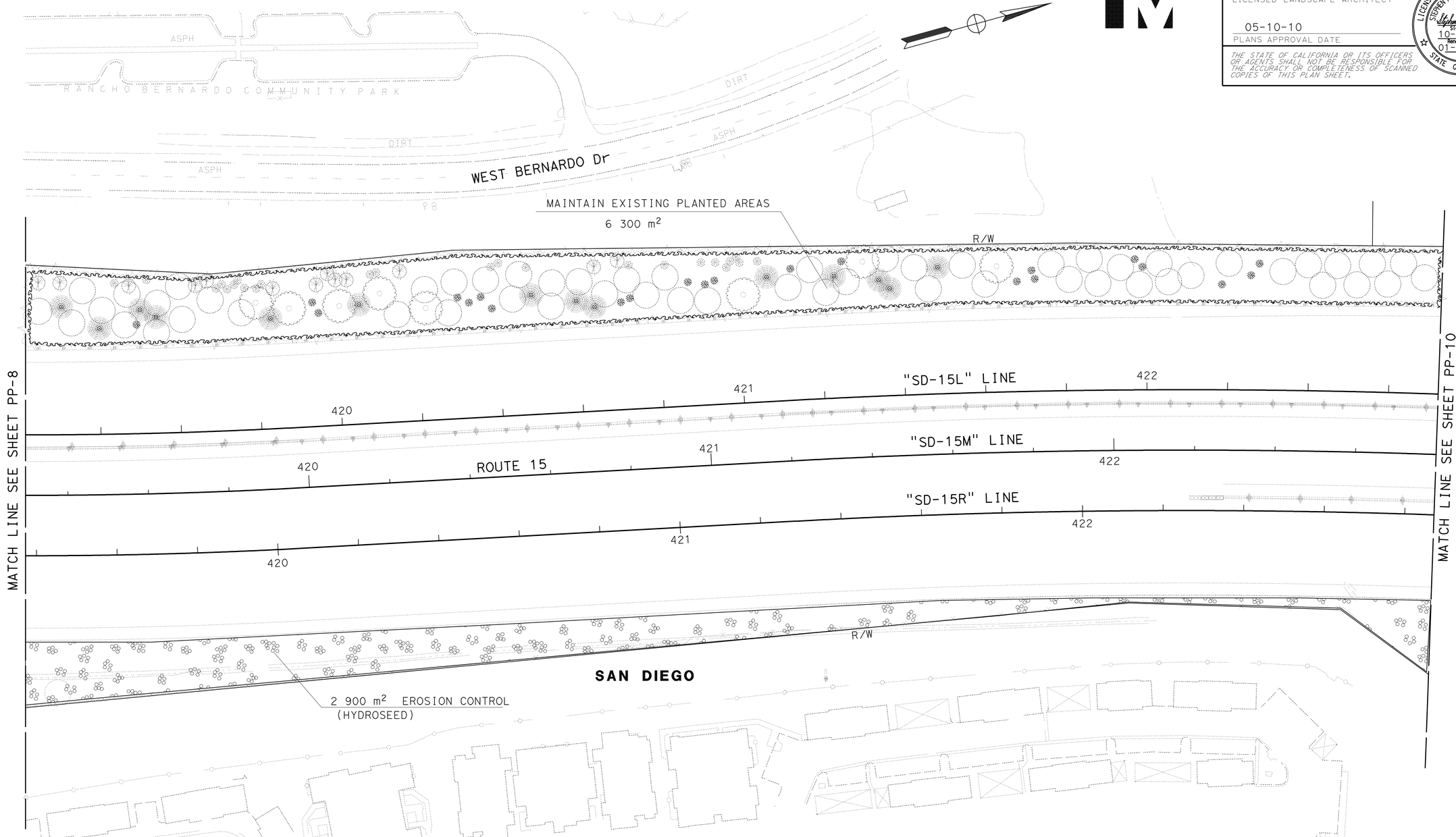

THIS PLAN ACCURATE FOR PLANTING WORK ONLY.

ALL DIMENSIONS ARE IN METERS UNLESS OTHERWISE SHOWN.

PLANTING PLAN

SCALE 1:500

PP-9

STATE OF CALIFORNIA - DEPARTMENT OF TRANSPORTATION
Caltrans LANDSCAPE ARCHITECTURE

SENIOR LANDSCAPE ARCHITECT: STEPHEN ALVAREZ
CALCULATED-DESIGNED BY: STEVE WARREN
CHECKED BY: JOEL HORTIZUELA
REVISED BY
DATE REVISED

LAST REVISION 02-08-10
DATE PLOTTED => 01-JUN-2010
TIME PLOTTED => 15:55

Dist	COUNTY	ROUTE	KILOMETER POST TOTAL PROJECT	SHEET No.	TOTAL SHEETS
11	SD	15	M38.3/M42.2	25	67

Stephen P. Warren
LICENSED LANDSCAPE ARCHITECT

05-10-10
PLANS APPROVAL DATE

LICENSED LANDSCAPE ARCHITECT
STEPHEN P. WARREN NO. 3482
Signature
10-31-10
Renewal Date
01-05-10
Date
STATE OF CALIFORNIA

THE STATE OF CALIFORNIA OR ITS OFFICERS OR AGENTS SHALL NOT BE RESPONSIBLE FOR THE ACCURACY OR COMPLETENESS OF SCANNED COPIES OF THIS PLAN SHEET.

Caltrans Metric

NOTE:

FOR ACCURATE RIGHT OF WAY AND ACCESS DATA, CONTACT RIGHT OF WAY ENGINEERING AT THE DISTRICT OFFICE.

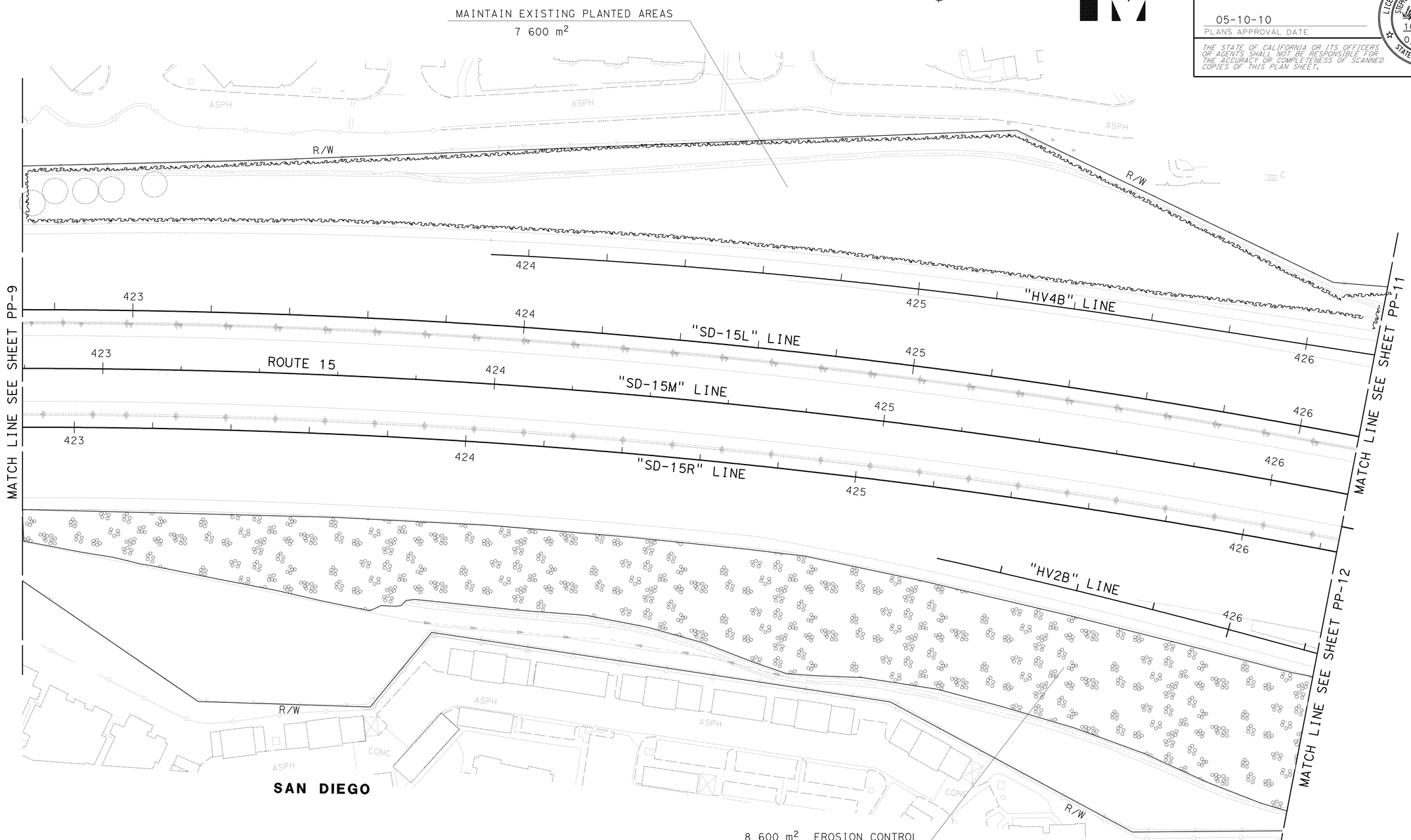

THIS PLAN ACCURATE FOR PLANTING WORK ONLY.

ALL DIMENSIONS ARE IN METERS UNLESS OTHERWISE SHOWN.

PLANTING PLAN

SCALE 1:500 **PP-10**

STATE OF CALIFORNIA - DEPARTMENT OF TRANSPORTATION
Caltrans LANDSCAPE ARCHITECTURE

SENIOR LANDSCAPE ARCHITECT: STEPHEN ALVAREZ
CALCULATED-DESIGNED BY: HENRY CASTILLO
CHECKED BY: STEVE WARREN
REVISED BY / DATE REVISED

LAST REVISION 02-08-10 | DATE PLOTTED => 01-JUN-2010 | TIME PLOTTED => 15:55

Dist	COUNTY	ROUTE	KILOMETER POST TOTAL PROJECT	SHEET No.	TOTAL SHEETS
11	SD	15	M38.3/M42.2	26	67

Stephen P. Warren
LICENSED LANDSCAPE ARCHITECT

05-10-10
PLANS APPROVAL DATE

LICENSED LANDSCAPE ARCHITECT STEPHEN P. WARREN NO. 3442 Signature 10-31-10 Renewal Date 01-05-10 Date STATE OF CALIFORNIA

THE STATE OF CALIFORNIA OR ITS OFFICERS OR AGENTS SHALL NOT BE RESPONSIBLE FOR THE ACCURACY OR COMPLETENESS OF SCANNED COPIES OF THIS PLAN SHEET.

Caltrans Metric

NOTE:

FOR ACCURATE RIGHT OF WAY AND ACCESS DATA, CONTACT RIGHT OF WAY ENGINEERING AT THE DISTRICT OFFICE.

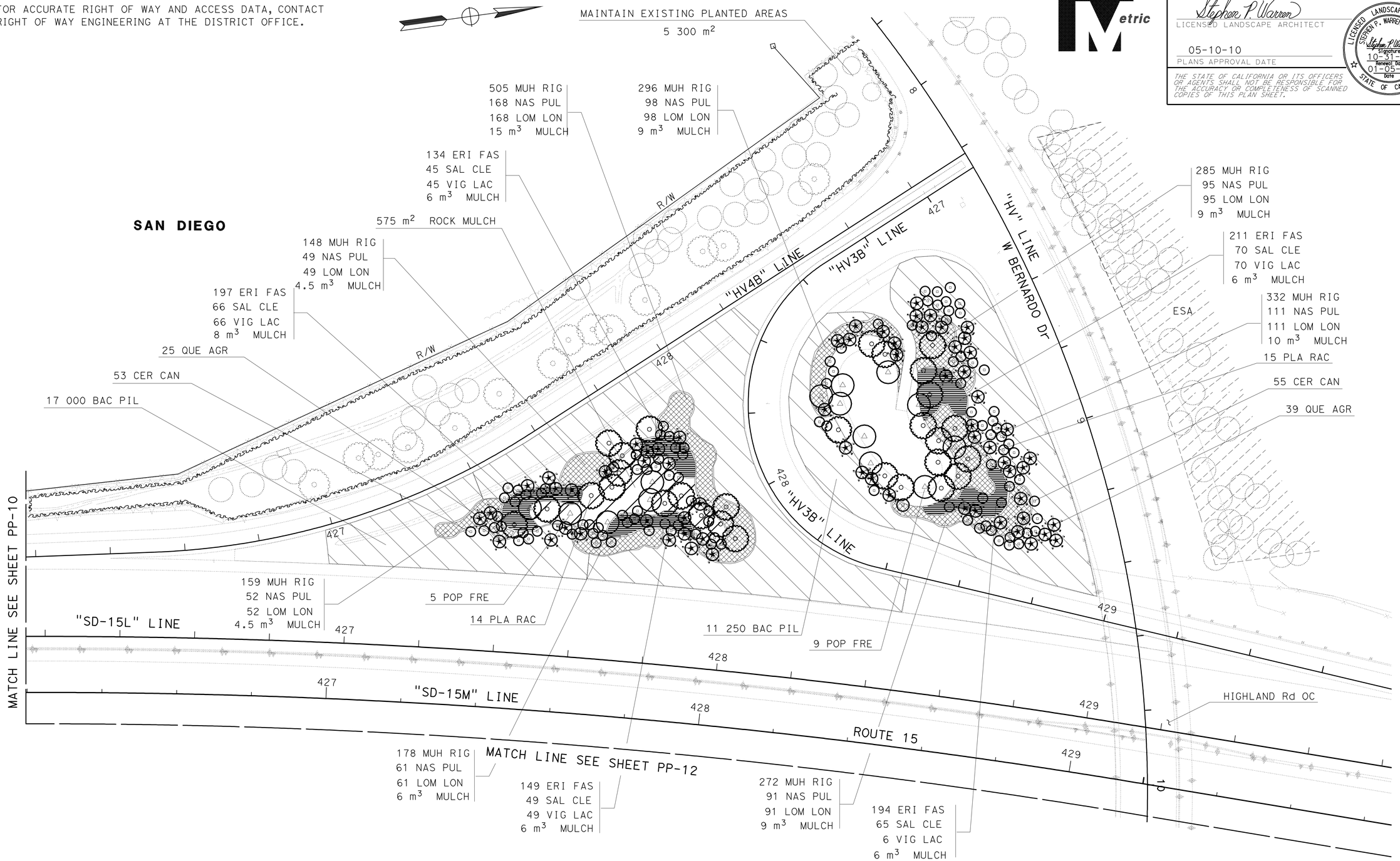

THIS PLAN ACCURATE FOR PLANTING WORK ONLY.

ALL DIMENSIONS ARE IN METERS UNLESS OTHERWISE SHOWN.

PLANTING PLAN

SCALE 1:500

PP-11

STATE OF CALIFORNIA - DEPARTMENT OF TRANSPORTATION
Caltrans LANDSCAPE ARCHITECTURE

SENIOR LANDSCAPE ARCHITECT: STEPHEN ALVAREZ
CALCULATED-DESIGNED BY: STEVE WARREN
CHECKED BY: JOEL HORTIZUELA
REVISED BY
DATE REVISED

LAST REVISION 05-24-10
DATE PLOTTED => 01-JUN-2010
TIME PLOTTED => 15:55

Dist	COUNTY	ROUTE	KILOMETER POST TOTAL PROJECT	SHEET No.	TOTAL SHEETS
11	SD	15	M38.3/M42.2	27	67

Stephen P. Warren
LICENSED LANDSCAPE ARCHITECT

05-10-10
PLANS APPROVAL DATE

LICENSED LANDSCAPE ARCHITECT STEPHEN P. WARREN NO. 3482 Signature 10-31-10 Renewal Date 01-05-10 Date STATE OF CALIFORNIA

THE STATE OF CALIFORNIA OR ITS OFFICERS OR AGENTS SHALL NOT BE RESPONSIBLE FOR THE ACCURACY OR COMPLETENESS OF SCANNED COPIES OF THIS PLAN SHEET.

Caltrans Metric

SAN DIEGO

NOTE:
FOR ACCURATE RIGHT OF WAY AND ACCESS DATA, CONTACT RIGHT OF WAY ENGINEERING AT THE DISTRICT OFFICE.

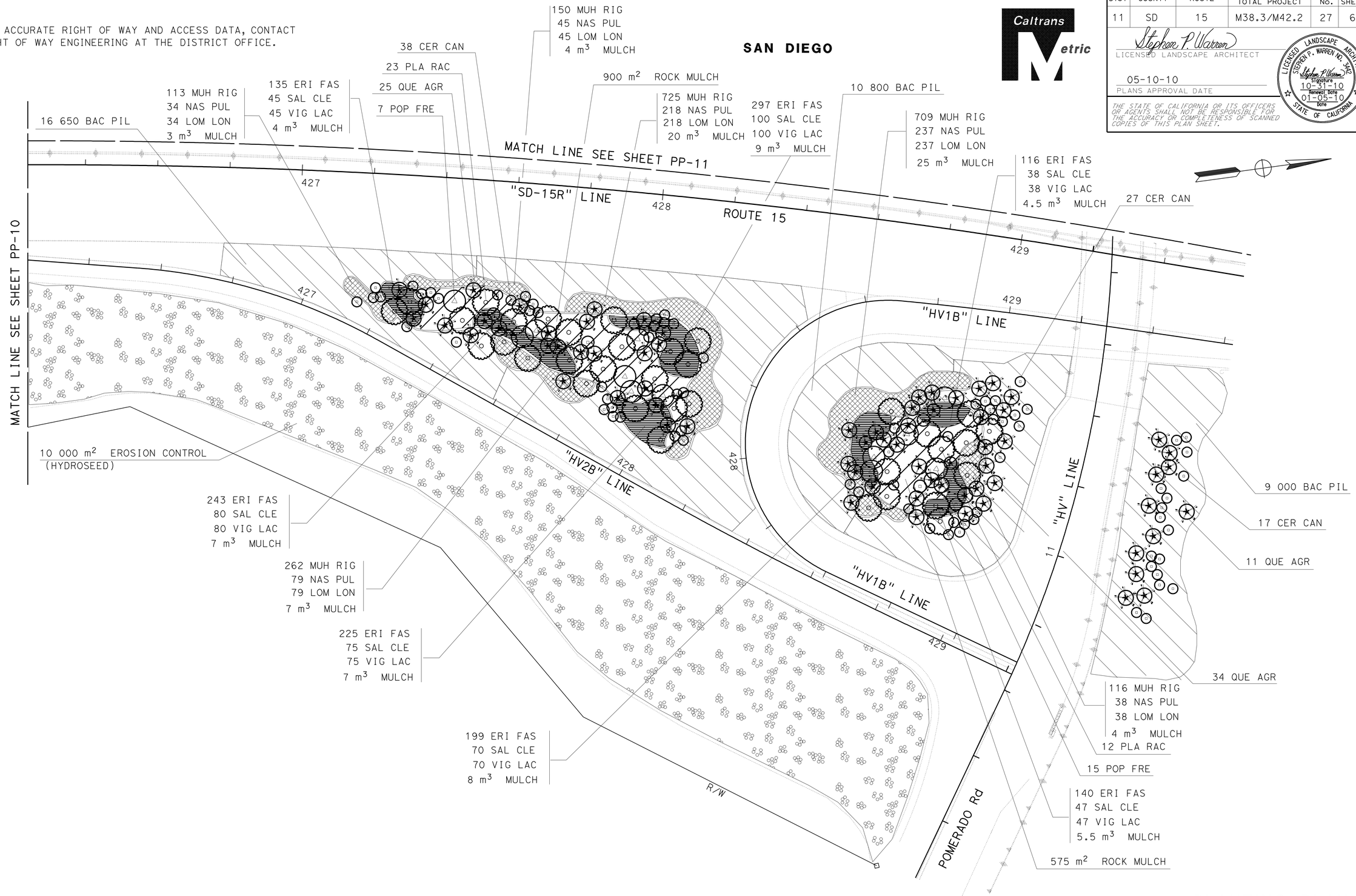

THIS PLAN ACCURATE FOR PLANTING WORK ONLY.

ALL DIMENSIONS ARE IN METERS UNLESS OTHERWISE SHOWN.

PLANTING PLAN

SCALE 1:500 **PP-12**

STATE OF CALIFORNIA - DEPARTMENT OF TRANSPORTATION
Caltrans LANDSCAPE ARCHITECTURE

SENIOR LANDSCAPE ARCHITECT: STEPHEN ALVAREZ
CALCULATED-DESIGNED BY: STEVE WARREN
CHECKED BY: JOEL HORTIZUELA
REVISED BY / DATE REVISED

LAST REVISION 05-24-10
DATE PLOTTED => 01-JUN-2010
TIME PLOTTED => 15:55

Dist	COUNTY	ROUTE	KILOMETER POST TOTAL PROJECT	SHEET No.	TOTAL SHEETS
11	SD	15	M38.3/M42.2	28	67

Stephen P. Warren
LICENSED LANDSCAPE ARCHITECT

05-10-10
PLANS APPROVAL DATE

LICENSED LANDSCAPE ARCHITECT
STEPHEN P. WARREN NO. 3482
Signature
10-31-10
Renewal Date
01-05-10
Date
STATE OF CALIFORNIA

THE STATE OF CALIFORNIA OR ITS OFFICERS OR AGENTS SHALL NOT BE RESPONSIBLE FOR THE ACCURACY OR COMPLETENESS OF SCANNED COPIES OF THIS PLAN SHEET.

Caltrans Metric

NOTE:

FOR ACCURATE RIGHT OF WAY AND ACCESS DATA, CONTACT RIGHT OF WAY ENGINEERING AT THE DISTRICT OFFICE.

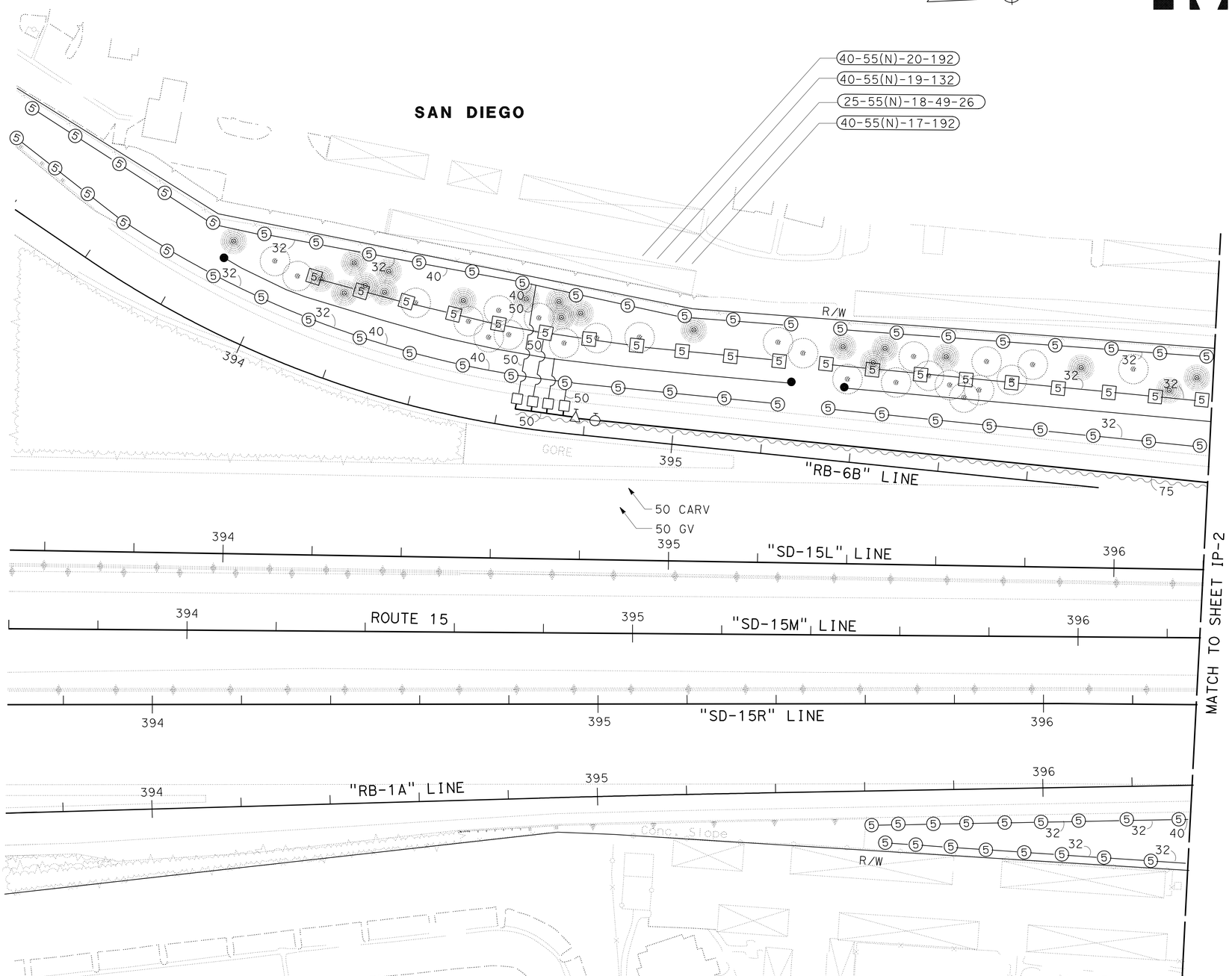

THIS PLAN ACCURATE FOR IRRIGATION WORK ONLY.

ALL IRRIGATION EQUIPMENT SIZES ARE IN MILLIMETERS (DIAMETER NOMINAL) UNLESS OTHERWISE SHOWN.

IRRIGATION PLAN

SCALE 1:500

IP-1

STATE OF CALIFORNIA - DEPARTMENT OF TRANSPORTATION
Caltrans LANDSCAPE ARCHITECTURE

SENIOR LANDSCAPE ARCHITECT: STEPHEN ALVAREZ
CALCULATED-DESIGNED BY: STEVE WARREN
CHECKED BY: JOEL HORTIZUELA
REVISED BY
DATE REVISED

LAST REVISION 02-08-10
DATE PLOTTED => 01-JUN-2010
TIME PLOTTED => 15:56

Dist	COUNTY	ROUTE	KILOMETER POST TOTAL PROJECT	SHEET No.	TOTAL SHEETS
11	SD	15	M38.3/M42.2	29	67

Stephen P. Warren
LICENSED LANDSCAPE ARCHITECT

05-10-10
PLANS APPROVAL DATE

LICENSED LANDSCAPE ARCHITECT
STEPHEN P. WARREN NO. 3482
Signature
10-31-10
Renewal Date
01-05-10
Date
STATE OF CALIFORNIA

THE STATE OF CALIFORNIA OR ITS OFFICERS OR AGENTS SHALL NOT BE RESPONSIBLE FOR THE ACCURACY OR COMPLETENESS OF SCANNED COPIES OF THIS PLAN SHEET.

Caltrans Metric

NOTE:

FOR ACCURATE RIGHT OF WAY AND ACCESS DATA, CONTACT RIGHT OF WAY ENGINEERING AT THE DISTRICT OFFICE.

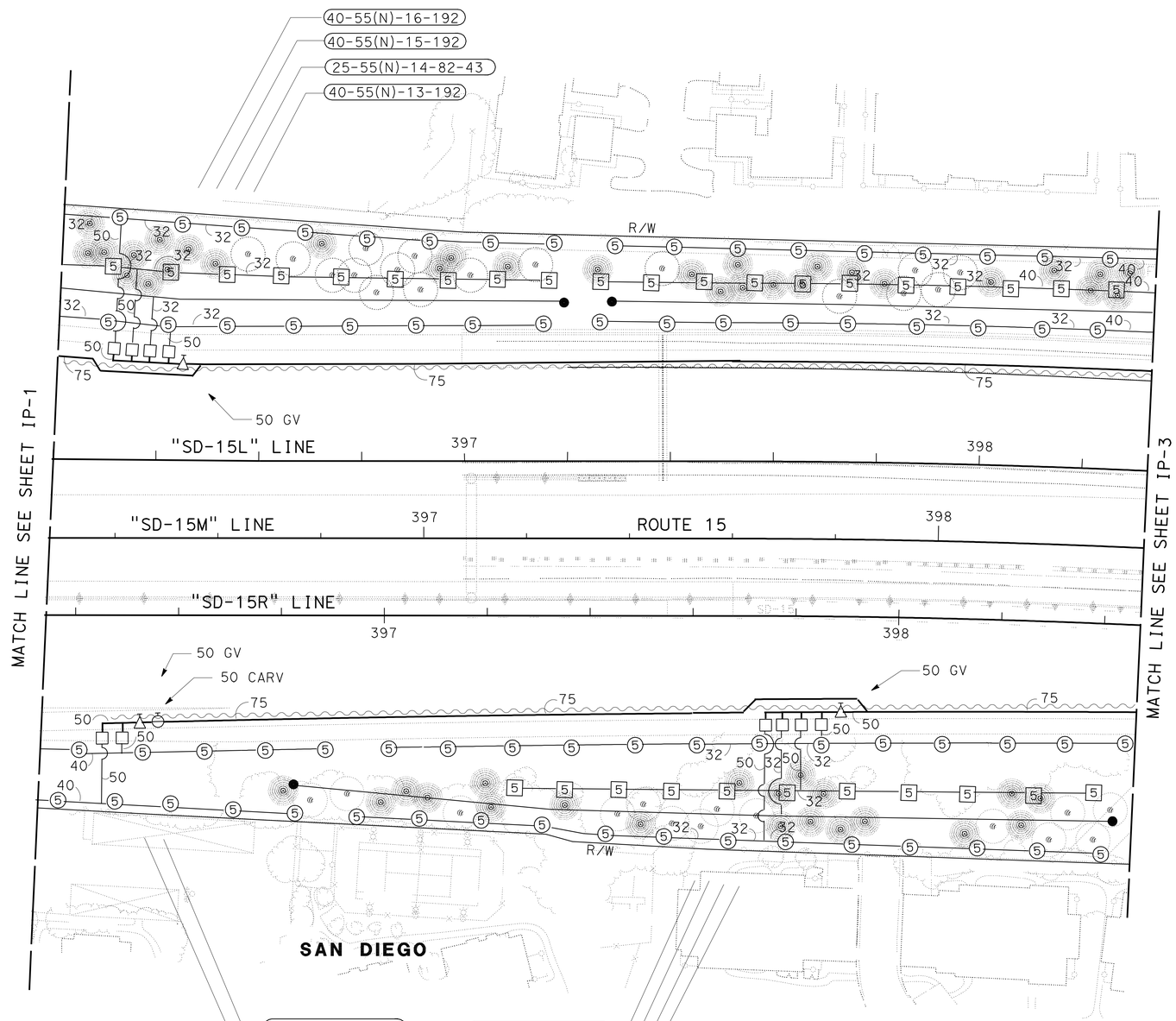

THIS PLAN ACCURATE FOR IRRIGATION WORK ONLY.

ALL IRRIGATION EQUIPMENT SIZES ARE IN MILLIMETERS (DIAMETER NOMINAL) UNLESS OTHERWISE SHOWN.

IRRIGATION PLAN

SCALE 1:500

IP-2

STATE OF CALIFORNIA - DEPARTMENT OF TRANSPORTATION
Caltrans LANDSCAPE ARCHITECTURE

SENIOR LANDSCAPE ARCHITECT: STEPHEN ALVAREZ
CALCULATED-DESIGNED BY: STEVE WARREN
CHECKED BY: JOEL HORTIZUELA
REVISED BY
DATE REVISED

LAST REVISION 02-17-10
DATE PLOTTED => 01-JUN-2010
TIME PLOTTED => 15:56

BORDER LAST REVISED 4/11/2008

RELATIVE BORDER SCALE IS IN MILLIMETERS 0 20 40 60 80

USERNAME => s127400
DGN FILE => b26073t1002.dgn

CU 11341

EA 260731

Dist	COUNTY	ROUTE	KILOMETER POST TOTAL PROJECT	SHEET No.	TOTAL SHEETS
11	SD	15	M38.3/M42.2	30	67

Stephen P. Warren
LICENSED LANDSCAPE ARCHITECT

05-10-10
PLANS APPROVAL DATE

LICENSED LANDSCAPE ARCHITECT STEPHEN P. WARREN NO. 3482 Signature 10-31-10 Renewal Date 01-05-10 Date STATE OF CALIFORNIA

THE STATE OF CALIFORNIA OR ITS OFFICERS OR AGENTS SHALL NOT BE RESPONSIBLE FOR THE ACCURACY OR COMPLETENESS OF SCANNED COPIES OF THIS PLAN SHEET.

Caltrans Metric

NOTE:

FOR ACCURATE RIGHT OF WAY AND ACCESS DATA, CONTACT RIGHT OF WAY ENGINEERING AT THE DISTRICT OFFICE.

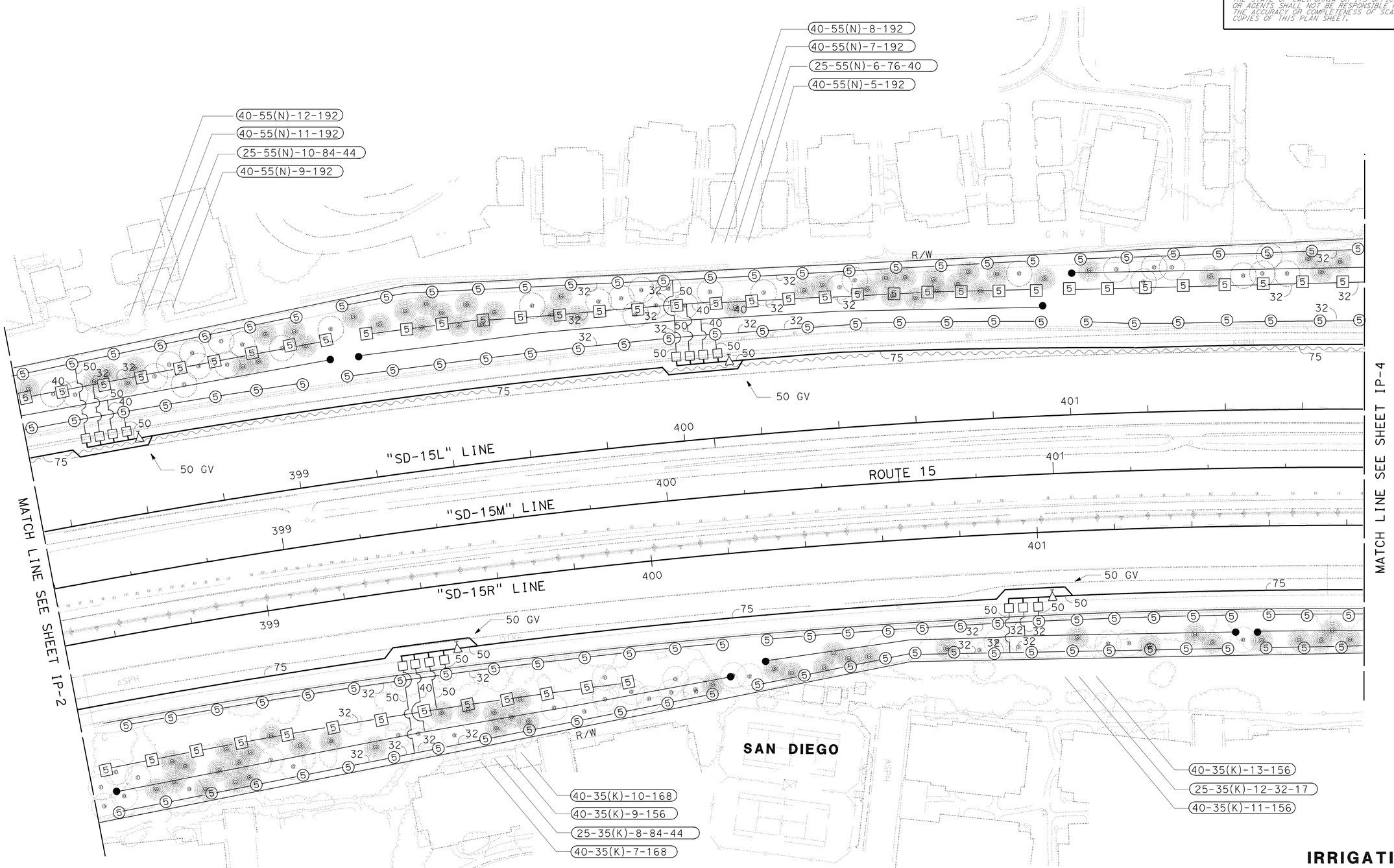

THIS PLAN ACCURATE FOR IRRIGATION WORK ONLY.

ALL IRRIGATION EQUIPMENT SIZES ARE IN MILLIMETERS (DIAMETER NOMINAL) UNLESS OTHERWISE SHOWN.

IRRIGATION PLAN

SCALE 1:500

IP-3

STATE OF CALIFORNIA - DEPARTMENT OF TRANSPORTATION
Caltrans LANDSCAPE ARCHITECTURE

SENIOR LANDSCAPE ARCHITECT: STEPHEN ALVAREZ
CALCULATED-DESIGNED BY: STEVE WARREN
CHECKED BY: JOEL HORTIZUELA
REVISED BY
DATE REVISED

LAST REVISION 02-17-10
DATE PLOTTED => 01-JUN-2010
TIME PLOTTED => 15:56

BORDER LAST REVISED 4/11/2008
RELATIVE BORDER SCALE IS IN MILLIMETERS 0 20 40 60 80
USERNAME => s127400
DGN FILE => b26073t1003.dgn
CU 11341
EA 260731

Dist	COUNTY	ROUTE	KILOMETER POST TOTAL PROJECT	SHEET No.	TOTAL SHEETS
11	SD	15	M38.3/M42.2	31	67

Stephen P. Warren
LICENSED LANDSCAPE ARCHITECT

05-10-10
PLANS APPROVAL DATE

LICENSED LANDSCAPE ARCHITECT STEPHEN P. WARREN No. 3492 Signature 10-31-10 Renewal Date 01-05-10 Date STATE OF CALIFORNIA

THE STATE OF CALIFORNIA OR ITS OFFICERS OR AGENTS SHALL NOT BE RESPONSIBLE FOR THE ACCURACY OR COMPLETENESS OF SCANNED COPIES OF THIS PLAN SHEET.

Caltrans Metric

NOTE:

FOR ACCURATE RIGHT OF WAY AND ACCESS DATA, CONTACT RIGHT OF WAY ENGINEERING AT THE DISTRICT OFFICE.

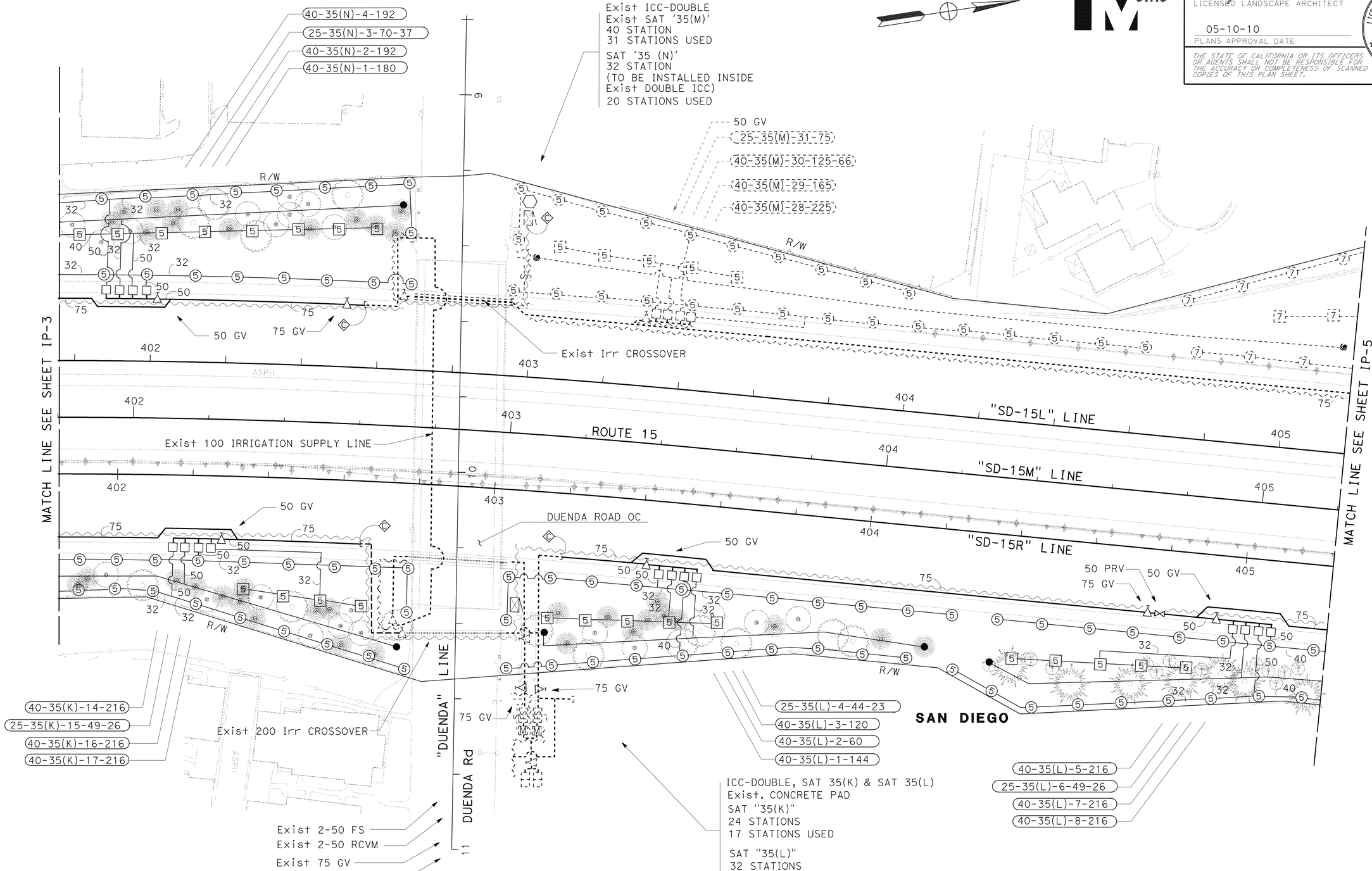

THIS PLAN ACCURATE FOR IRRIGATION WORK ONLY.

ALL IRRIGATION EQUIPMENT SIZES ARE IN MILLIMETERS (DIAMETER NOMINAL) UNLESS OTHERWISE SHOWN.

IRRIGATION PLAN

SCALE 1:500

IP-4

STATE OF CALIFORNIA - DEPARTMENT OF TRANSPORTATION
Caltrans LANDSCAPE ARCHITECTURE

SENIOR LANDSCAPE ARCHITECT: STEPHEN ALVAREZ
CALCULATED-DESIGNED BY: STEVE WARREN
CHECKED BY: JOEL HORTIZUELA
REVISED BY
DATE REVISED

LAST REVISION 02-17-10
DATE PLOTTED => 01-JUN-2010
TIME PLOTTED => 15:56

Dist	COUNTY	ROUTE	KILOMETER POST TOTAL PROJECT	SHEET No.	TOTAL SHEETS
11	SD	15	M38.3/M42.2	32	67

Stephen P. Warren
LICENSED LANDSCAPE ARCHITECT

05-10-10
PLANS APPROVAL DATE

LICENSED LANDSCAPE ARCHITECT STEPHEN P. WARREN NO. 3442 Signature 10-31-10 Renewal Date 01-05-10 Date STATE OF CALIFORNIA

THE STATE OF CALIFORNIA OR ITS OFFICERS OR AGENTS SHALL NOT BE RESPONSIBLE FOR THE ACCURACY OR COMPLETENESS OF SCANNED COPIES OF THIS PLAN SHEET.

Caltrans Metric

NOTE:

FOR ACCURATE RIGHT OF WAY AND ACCESS DATA, CONTACT RIGHT OF WAY ENGINEERING AT THE DISTRICT OFFICE.

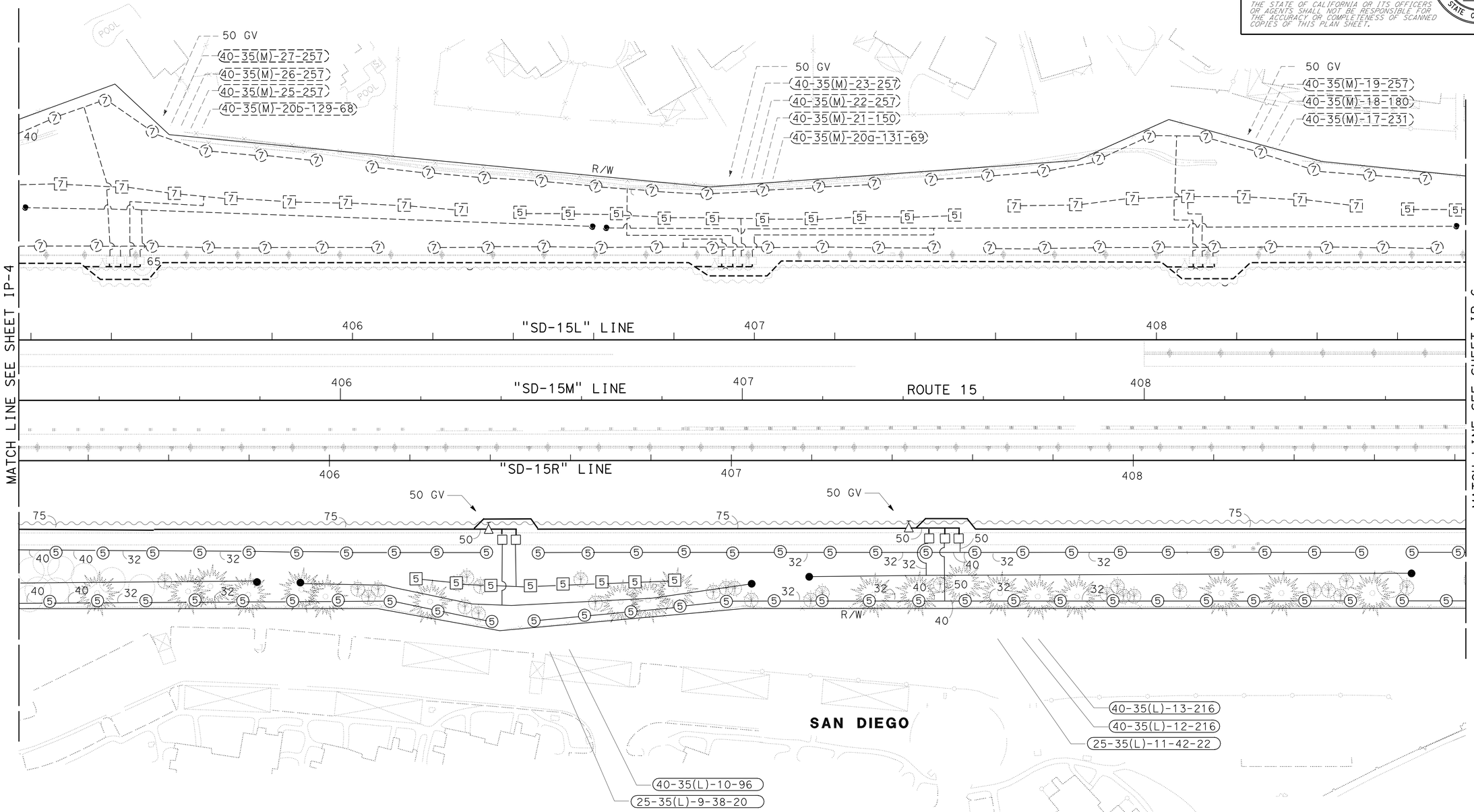

THIS PLAN ACCURATE FOR IRRIGATION WORK ONLY.

ALL IRRIGATION EQUIPMENT SIZES ARE IN MILLIMETERS (DIAMETER NOMINAL) UNLESS OTHERWISE SHOWN.

IRRIGATION PLAN

SCALE 1:500

IP-5

STATE OF CALIFORNIA - DEPARTMENT OF TRANSPORTATION
Caltrans LANDSCAPE ARCHITECTURE

SENIOR LANDSCAPE ARCHITECT: STEPHEN ALVAREZ
CALCULATED-DESIGNED BY: STEVE WARREN
CHECKED BY: JOEL HORTIZUELA
REVISED BY / DATE REVISED

LAST REVISION 02-17-10 | DATE PLOTTED => 01-JUN-2010 | TIME PLOTTED => 15:56

Dist	COUNTY	ROUTE	KILOMETER POST TOTAL PROJECT	SHEET No.	TOTAL SHEETS
11	SD	15	M38.3/M42.2	33	67

Stephen P. Warren
LICENSED LANDSCAPE ARCHITECT

05-10-10
PLANS APPROVAL DATE

LICENSED LANDSCAPE ARCHITECT
STEPHEN P. WARREN NO. 3422
Signature 10-31-10
Renewal Date 01-05-10
Date
STATE OF CALIFORNIA

THE STATE OF CALIFORNIA OR ITS OFFICERS OR AGENTS SHALL NOT BE RESPONSIBLE FOR THE ACCURACY OR COMPLETENESS OF SCANNED COPIES OF THIS PLAN SHEET.

Caltrans Metric

NOTE:

FOR ACCURATE RIGHT OF WAY AND ACCESS DATA, CONTACT RIGHT OF WAY ENGINEERING AT THE DISTRICT OFFICE.

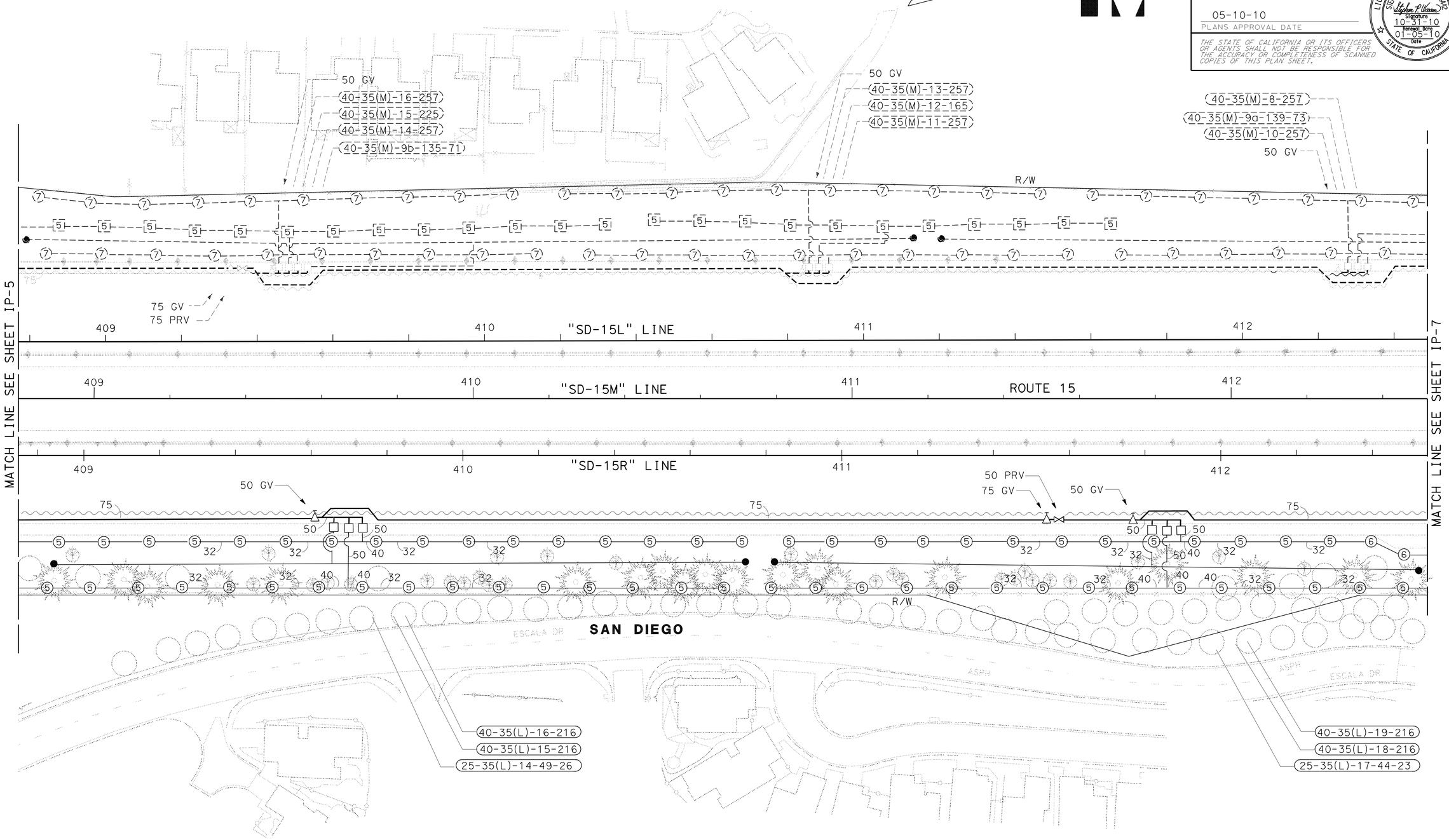

THIS PLAN ACCURATE FOR IRRIGATION WORK ONLY.

ALL IRRIGATION EQUIPMENT SIZES ARE IN MILLIMETERS (DIAMETER NOMINAL) UNLESS OTHERWISE SHOWN.

IRRIGATION PLAN

SCALE 1:500

IP-6

REVISED BY	DATE REVISED
STEVE WARREN	JOEL HORTIZUELA

CALCULATED-DESIGNED BY
CHECKED BY

SENIOR LANDSCAPE ARCHITECT
STEPHEN ALVAREZ

STATE OF CALIFORNIA - DEPARTMENT OF TRANSPORTATION
Caltrans LANDSCAPE ARCHITECTURE

LAST REVISION 02-17-10
DATE PLOTTED => 01-JUN-2010
TIME PLOTTED => 15:56

Dist	COUNTY	ROUTE	KILOMETER POST TOTAL PROJECT	SHEET No.	TOTAL SHEETS
11	SD	15	M38.3/M42.2	34	67

Stephen P. Warren
LICENSED LANDSCAPE ARCHITECT

05-10-10
PLANS APPROVAL DATE

LICENSED LANDSCAPE ARCHITECT
STEPHEN P. WARREN NO. 3442
Signature 10-31-10
Renewal Date 01-05-10
Date
STATE OF CALIFORNIA

THE STATE OF CALIFORNIA OR ITS OFFICERS OR AGENTS SHALL NOT BE RESPONSIBLE FOR THE ACCURACY OR COMPLETENESS OF SCANNED COPIES OF THIS PLAN SHEET.

Caltrans Metric

NOTE:

FOR ACCURATE RIGHT OF WAY AND ACCESS DATA, CONTACT RIGHT OF WAY ENGINEERING AT THE DISTRICT OFFICE.

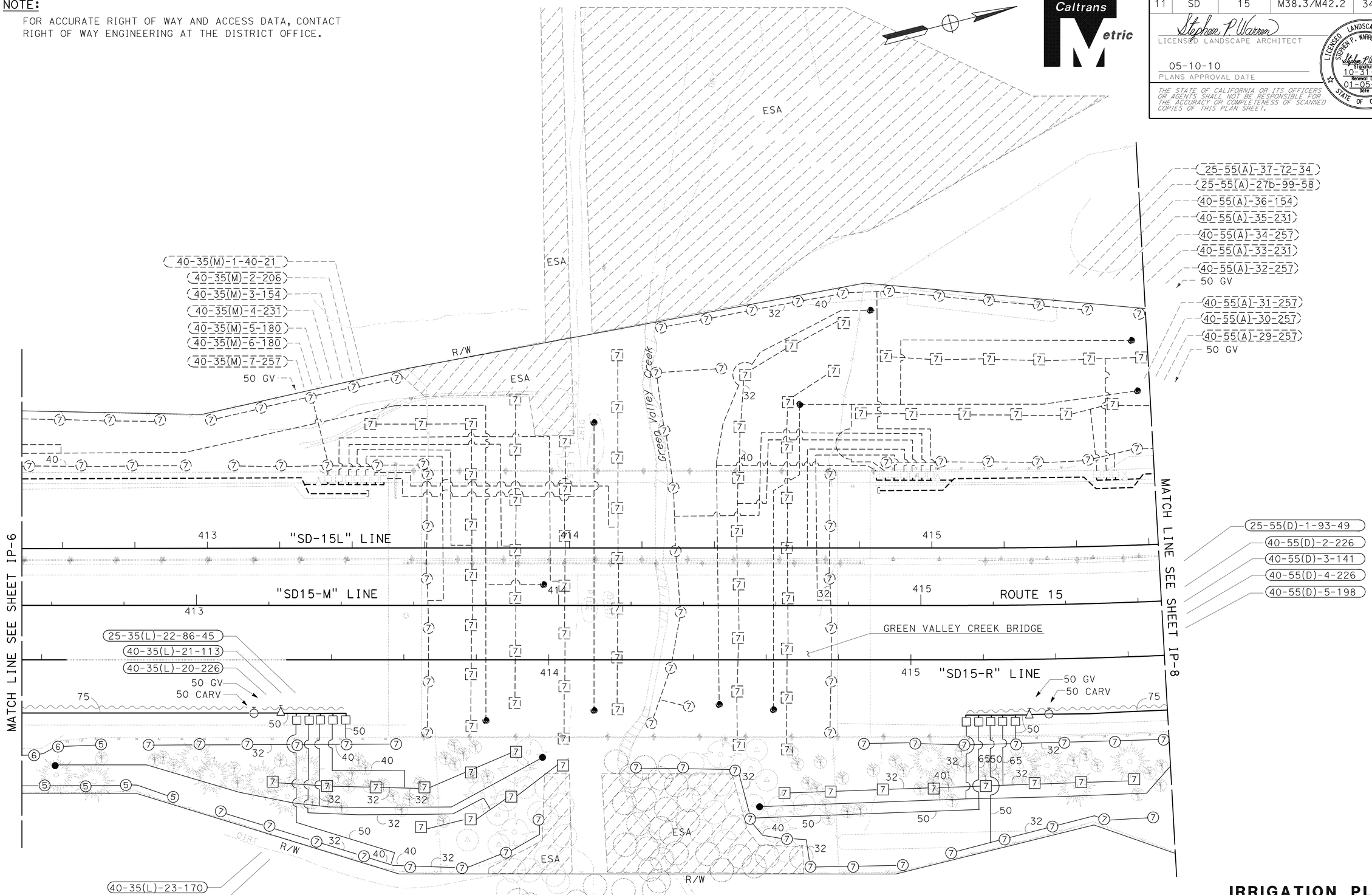

SAN DIEGO

THIS PLAN ACCURATE FOR IRRIGATION WORK ONLY.

ALL IRRIGATION EQUIPMENT SIZES ARE IN MILLIMETERS (DIAMETER NOMINAL) UNLESS OTHERWISE SHOWN.

IRRIGATION PLAN

SCALE 1:500

IP-7

STATE OF CALIFORNIA - DEPARTMENT OF TRANSPORTATION
Caltrans LANDSCAPE ARCHITECTURE

SENIOR LANDSCAPE ARCHITECT: STEPHEN ALVAREZ
CALCULATED-DESIGNED BY: STEVE WARREN
CHECKED BY: JOEL HORTIZUELA
REVISED BY
DATE REVISED

LAST REVISION 02-17-10
DATE PLOTTED => 01-JUN-2010
TIME PLOTTED => 15:56

NOTE: FOR ACCURATE RIGHT OF WAY AND ACCESS DATA, CONTACT RIGHT OF WAY ENGINEERING AT THE DISTRICT OFFICE.

Dist	COUNTY	ROUTE	KILOMETER POST TOTAL PROJECT	SHEET No.	TOTAL SHEETS
11	SD	15	M38.3/M42.2	35	67

Stephen P. Warren
LICENSED LANDSCAPE ARCHITECT

05-10-10
PLANS APPROVAL DATE

LICENSED LANDSCAPE ARCHITECT STEPHEN P. WARREN NO. 3482 Signature 10-31-10 Renewal Date 01-05-10 Date STATE OF CALIFORNIA

THE STATE OF CALIFORNIA OR ITS OFFICERS OR AGENTS SHALL NOT BE RESPONSIBLE FOR THE ACCURACY OR COMPLETENESS OF SCANNED COPIES OF THIS PLAN SHEET.

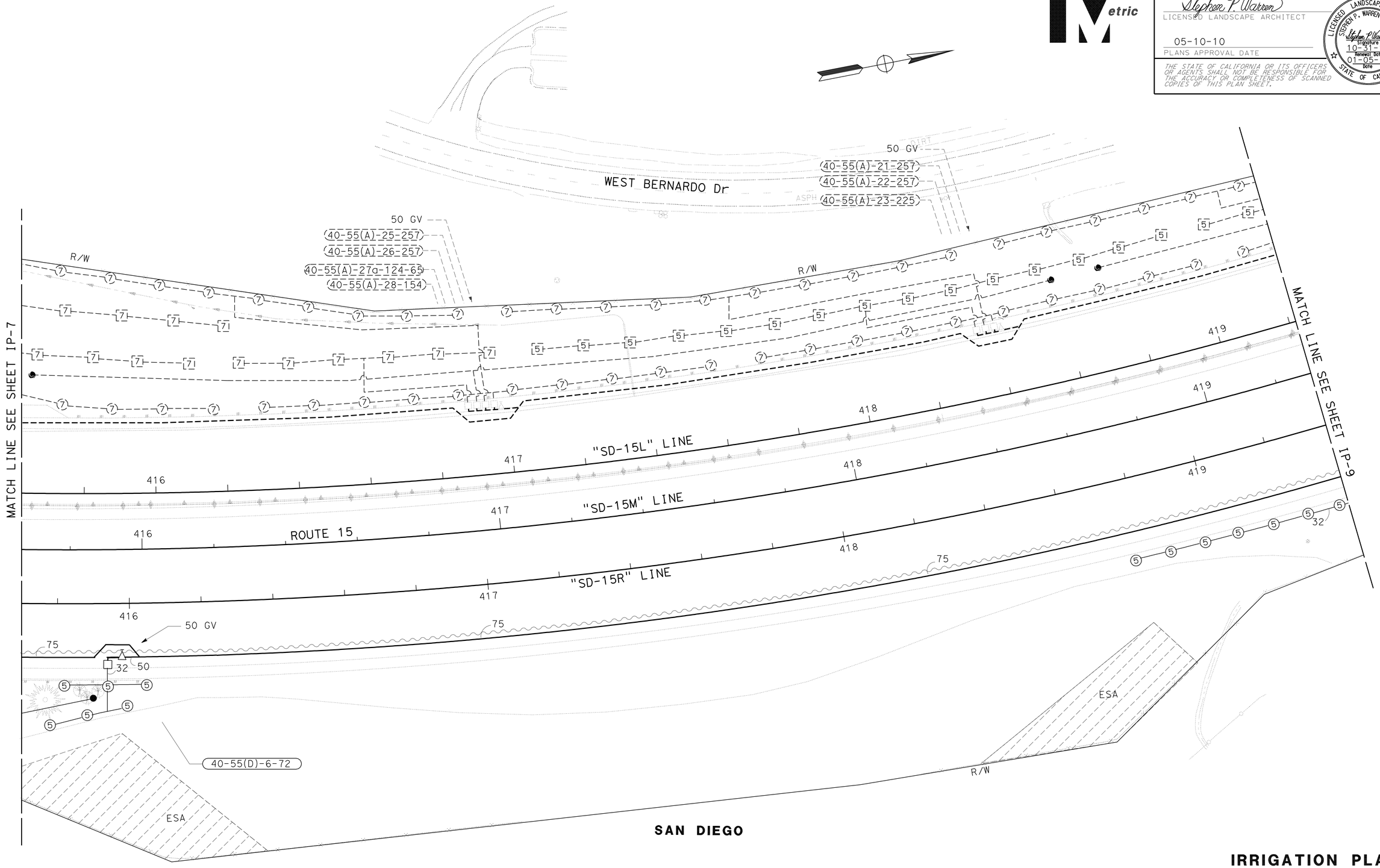

SAN DIEGO

THIS PLAN ACCURATE FOR IRRIGATION WORK ONLY.

ALL IRRIGATION EQUIPMENT SIZES ARE IN MILLIMETERS (DIAMETER NOMINAL) UNLESS OTHERWISE SHOWN.

IRRIGATION PLAN

SCALE 1:500

IP-8

STATE OF CALIFORNIA - DEPARTMENT OF TRANSPORTATION
Caltrans LANDSCAPE ARCHITECTURE

SENIOR LANDSCAPE ARCHITECT: STEPHEN ALVAREZ
CALCULATED-DESIGNED BY: STEVE WARREN
CHECKED BY: JOEL HORTIZUELA
REVISED BY
DATE REVISED

LAST REVISION 02-17-10
DATE PLOTTED => 01-JUN-2010
TIME PLOTTED => 15:56

NOTE: FOR ACCURATE RIGHT OF WAY AND ACCESS DATA, CONTACT RIGHT OF WAY ENGINEERING AT THE DISTRICT OFFICE.

Dist	COUNTY	ROUTE	KILOMETER POST TOTAL PROJECT	SHEET No.	TOTAL SHEETS
11	SD	15	M38.3/M42.2	36	67

Caltrans Metric

Stephen P. Warren
LICENSED LANDSCAPE ARCHITECT

05-10-10
PLANS APPROVAL DATE

LICENSED LANDSCAPE ARCHITECT STEPHEN P. WARREN NO. 3442 Signature 10-31-10 Renewal Date 01-05-10 Date STATE OF CALIFORNIA

THE STATE OF CALIFORNIA OR ITS OFFICERS OR AGENTS SHALL NOT BE RESPONSIBLE FOR THE ACCURACY OR COMPLETENESS OF SCANNED COPIES OF THIS PLAN SHEET.

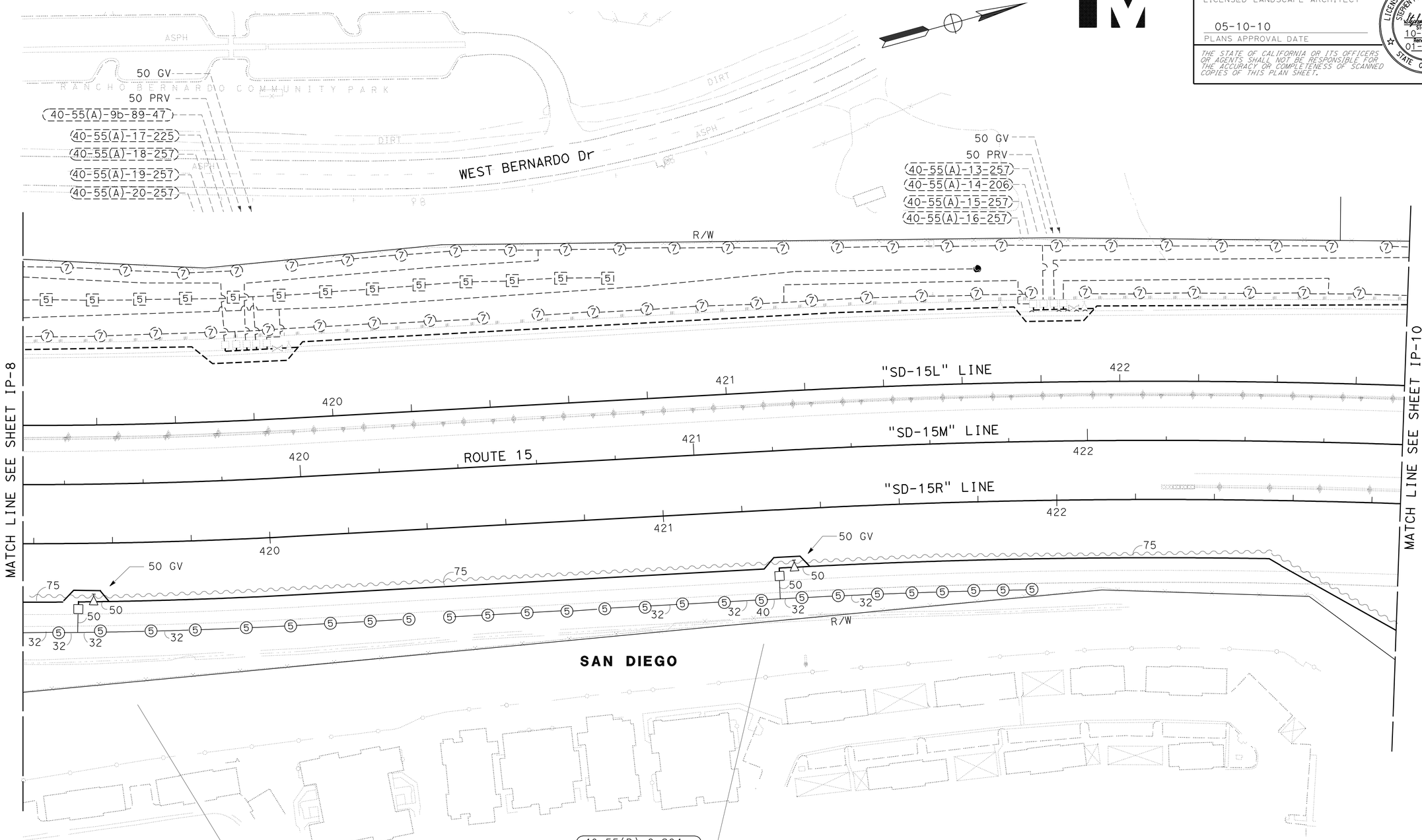

THIS PLAN ACCURATE FOR IRRIGATION WORK ONLY.

ALL IRRIGATION EQUIPMENT SIZES ARE IN MILLIMETERS (DIAMETER NOMINAL) UNLESS OTHERWISE SHOWN.

IRRIGATION PLAN

SCALE 1:500

IP-9

STATE OF CALIFORNIA - DEPARTMENT OF TRANSPORTATION
Caltrans LANDSCAPE ARCHITECTURE

SENIOR LANDSCAPE ARCHITECT: STEPHEN ALVAREZ
CALCULATED-DESIGNED BY: STEVE WARREN
CHECKED BY: JOEL HORTIZUELA
REVISED BY / DATE REVISED

LAST REVISION 02-17-10
DATE PLOTTED => 01-JUN-2010
TIME PLOTTED => 15:56

Dist	COUNTY	ROUTE	KILOMETER POST TOTAL PROJECT	SHEET No.	TOTAL SHEETS
11	SD	15	M38.3/M42.2	37	67

Stephen P. Warren
LICENSED LANDSCAPE ARCHITECT

05-10-10
PLANS APPROVAL DATE

LICENSED LANDSCAPE ARCHITECT STEPHEN P. WARREN NO. 3442 Signature 10-31-10 Renewal Date 01-05-10 Date STATE OF CALIFORNIA

THE STATE OF CALIFORNIA OR ITS OFFICERS OR AGENTS SHALL NOT BE RESPONSIBLE FOR THE ACCURACY OR COMPLETENESS OF SCANNED COPIES OF THIS PLAN SHEET.

Caltrans Metric

NOTE: FOR ACCURATE RIGHT OF WAY AND ACCESS DATA, CONTACT RIGHT OF WAY ENGINEERING AT THE DISTRICT OFFICE.

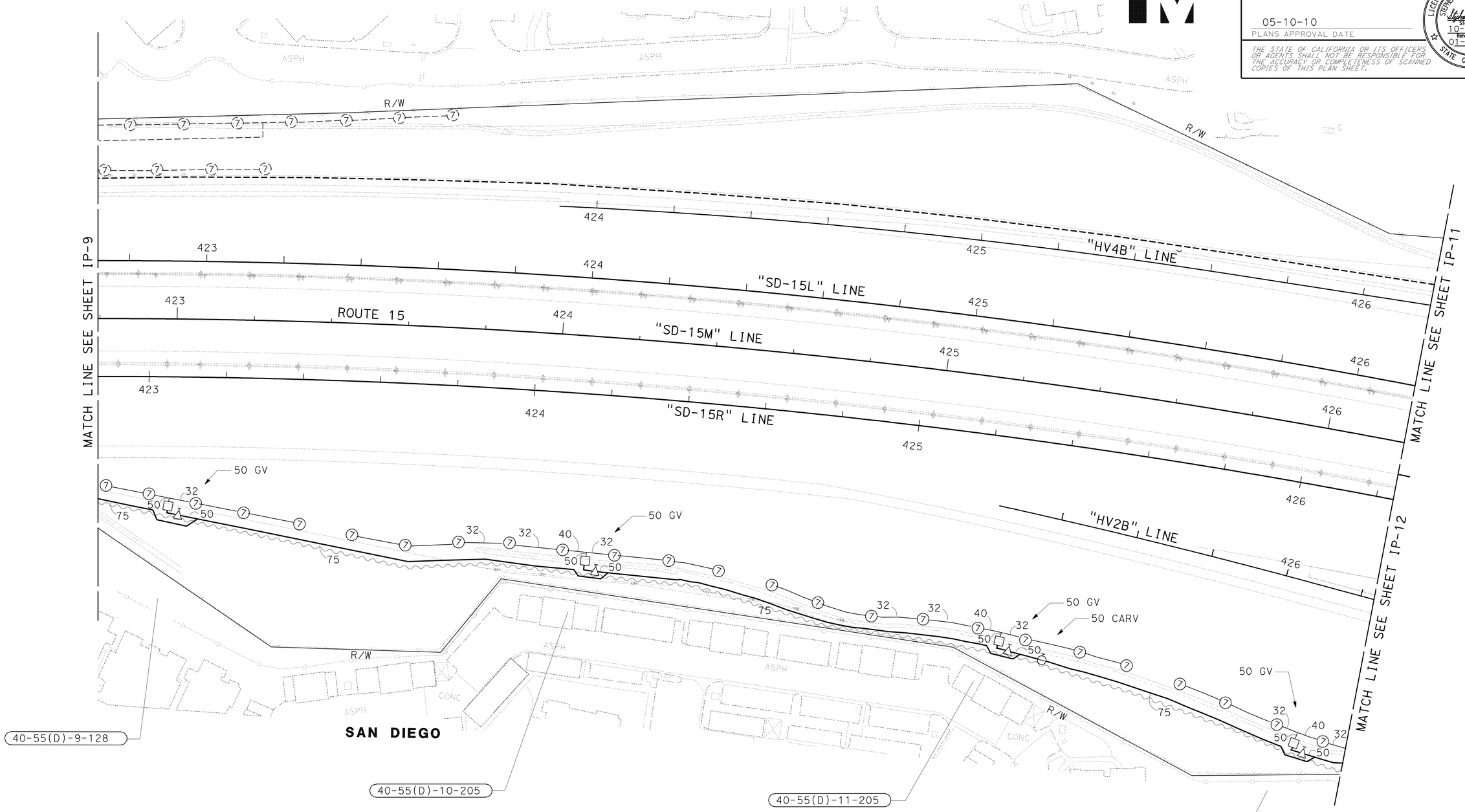

THIS PLAN ACCURATE FOR IRRIGATION WORK ONLY.

ALL IRRIGATION EQUIPMENT SIZES ARE IN MILLIMETERS (DIAMETER NOMINAL) UNLESS OTHERWISE SHOWN.

IRRIGATION PLAN

SCALE 1:500

IP-10

STATE OF CALIFORNIA - DEPARTMENT OF TRANSPORTATION
Caltrans LANDSCAPE ARCHITECTURE

SENIOR LANDSCAPE ARCHITECT: STEPHEN ALVAREZ
CALCULATED-DESIGNED BY: HENRY CASTILLO
CHECKED BY: STEVE WARREN
REVISED BY / DATE REVISED

LAST REVISION 02-17-10
DATE PLOTTED => 01-JUN-2010
TIME PLOTTED => 15:57

Dist	COUNTY	ROUTE	KILOMETER POST TOTAL PROJECT	SHEET No.	TOTAL SHEETS
11	SD	15	M38.3/M42.2	38	67

Stephen P. Warren
LICENSED LANDSCAPE ARCHITECT

05-10-10
PLANS APPROVAL DATE

LICENSED LANDSCAPE ARCHITECT STEPHEN P. WARREN NO. 3442 STATE OF CALIFORNIA
Signature 10-31-10 Renewal Date 01-05-10 Date

THE STATE OF CALIFORNIA OR ITS OFFICERS OR AGENTS SHALL NOT BE RESPONSIBLE FOR THE ACCURACY OR COMPLETENESS OF SCANNED COPIES OF THIS PLAN SHEET.

Caltrans Metric

NOTE:
FOR ACCURATE RIGHT OF WAY AND ACCESS DATA, CONTACT RIGHT OF WAY ENGINEERING AT THE DISTRICT OFFICE.

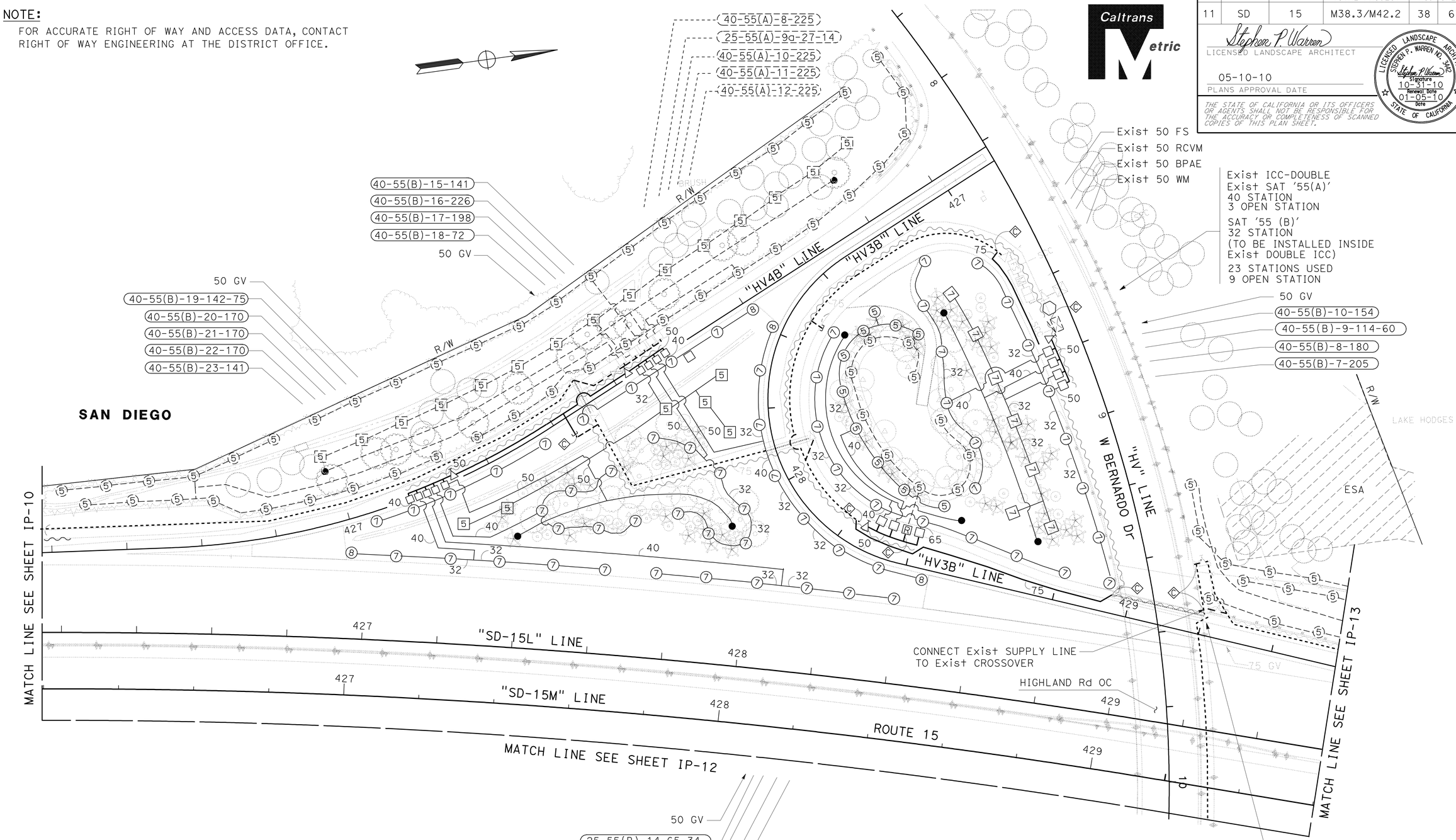

THIS PLAN ACCURATE FOR IRRIGATION WORK ONLY.

ALL IRRIGATION EQUIPMENT SIZES ARE IN MILLIMETERS (DIAMETER NOMINAL) UNLESS OTHERWISE SHOWN.

IRRIGATION PLAN

SCALE 1:500 **IP-11**

STATE OF CALIFORNIA - DEPARTMENT OF TRANSPORTATION
Caltrans LANDSCAPE ARCHITECTURE

SENIOR LANDSCAPE ARCHITECT: STEPHEN ALVAREZ
CALCULATED-DESIGNED BY: STEVE WARREN
CHECKED BY: JOEL HORTIZUELA
REVISED BY / DATE REVISED

LAST REVISION 02-18-10 | DATE PLOTTED => 01-JUN-2010 | TIME PLOTTED => 15:57

Dist	COUNTY	ROUTE	KILOMETER POST TOTAL PROJECT	SHEET No.	TOTAL SHEETS
11	SD	15	M38.3/M42.2	39	67

Stephen P. Warren
LICENSED LANDSCAPE ARCHITECT

05-10-10
PLANS APPROVAL DATE

LICENSED LANDSCAPE ARCHITECT STEPHEN P. WARREN NO. 3482 STATE OF CALIFORNIA
Signature 10-31-10 Renewal Date 01-05-10 Date

THE STATE OF CALIFORNIA OR ITS OFFICERS OR AGENTS SHALL NOT BE RESPONSIBLE FOR THE ACCURACY OR COMPLETENESS OF SCANNED COPIES OF THIS PLAN SHEET.

Caltrans Metric

NOTE: FOR ACCURATE RIGHT OF WAY AND ACCESS DATA, CONTACT RIGHT OF WAY ENGINEERING AT THE DISTRICT OFFICE.

SAN DIEGO

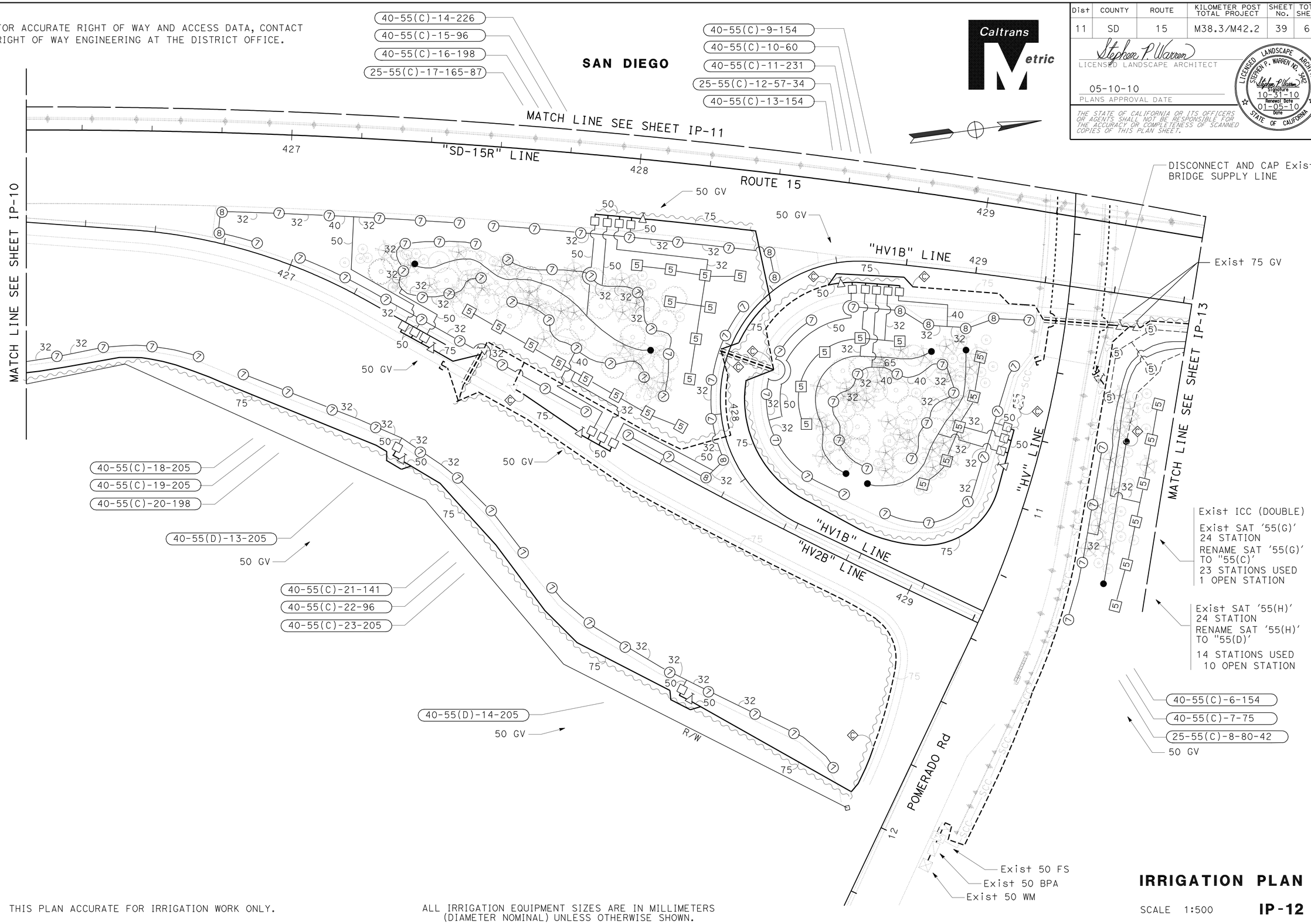

THIS PLAN ACCURATE FOR IRRIGATION WORK ONLY.

ALL IRRIGATION EQUIPMENT SIZES ARE IN MILLIMETERS (DIAMETER NOMINAL) UNLESS OTHERWISE SHOWN.

IRRIGATION PLAN

SCALE 1:500

IP-12

REVISED BY	DATE REVISED
STEVE WARREN	JOEL HORTIZUELA

CALCULATED-DESIGNED BY / CHECKED BY

SENIOR LANDSCAPE ARCHITECT: STEPHEN ALVAREZ

STATE OF CALIFORNIA - DEPARTMENT OF TRANSPORTATION
Caltrans LANDSCAPE ARCHITECTURE

LAST REVISION 02-18-10 | DATE PLOTTED => 01-JUN-2010 | TIME PLOTTED => 15:57

NOTE: FOR ACCURATE RIGHT OF WAY AND ACCESS DATA, CONTACT RIGHT OF WAY ENGINEERING AT THE DISTRICT OFFICE.

Dist	COUNTY	ROUTE	KILOMETER POST TOTAL PROJECT	SHEET No.	TOTAL SHEETS
11	SD	15	M38.3/M42.2	40	67

Stephen P. Warren
LICENSED LANDSCAPE ARCHITECT

05-10-10
PLANS APPROVAL DATE

LICENSED LANDSCAPE ARCHITECT STEPHEN P. WARREN NO. 3442 Signature 10-31-10 Renewal Date 01-05-10 Date STATE OF CALIFORNIA

THE STATE OF CALIFORNIA OR ITS OFFICERS OR AGENTS SHALL NOT BE RESPONSIBLE FOR THE ACCURACY OR COMPLETENESS OF SCANNED COPIES OF THIS PLAN SHEET.

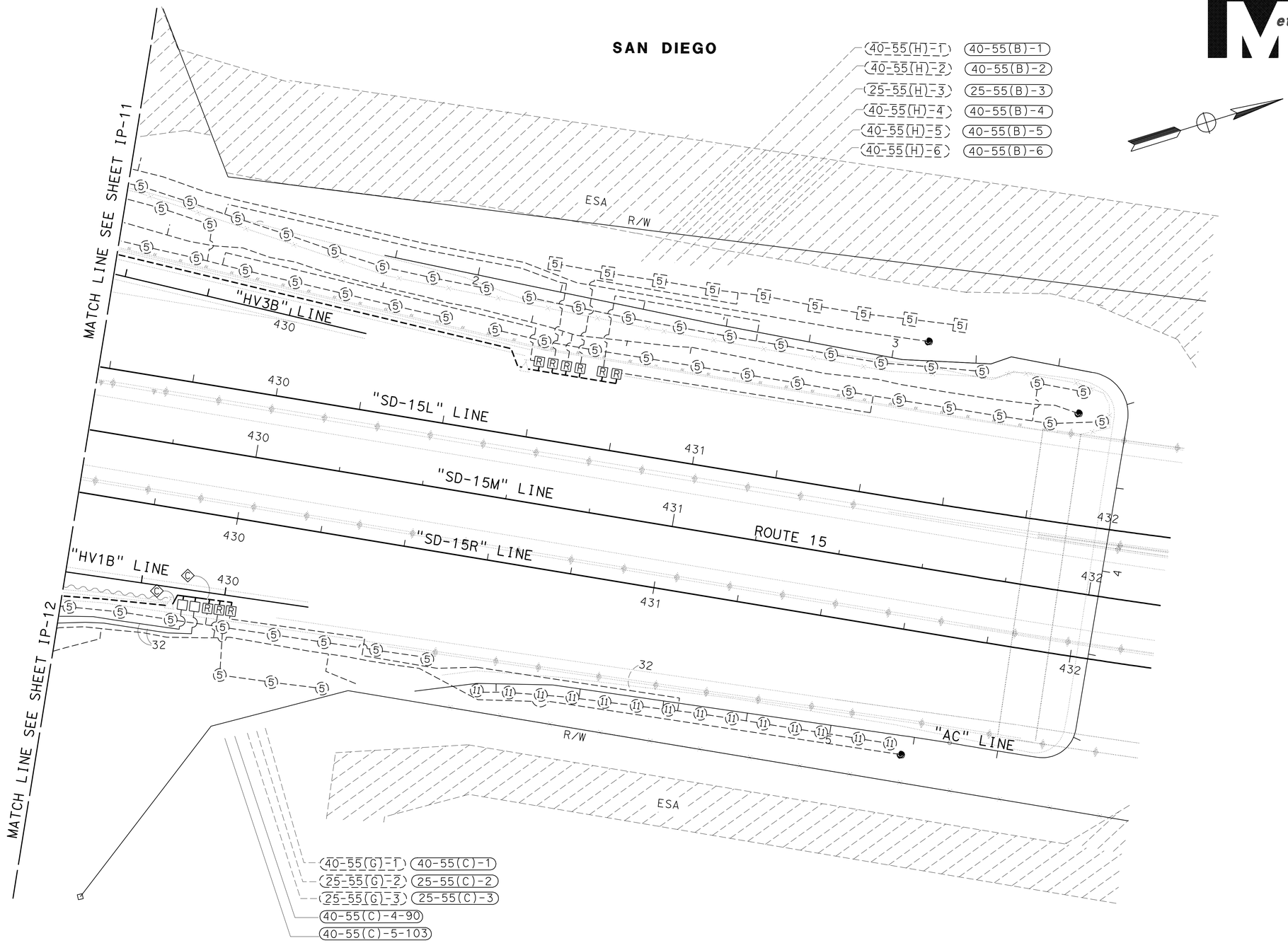

THIS PLAN ACCURATE FOR IRRIGATION WORK ONLY.

ALL IRRIGATION EQUIPMENT SIZES ARE IN MILLIMETERS (DIAMETER NOMINAL) UNLESS OTHERWISE SHOWN.

IRRIGATION PLAN

SCALE 1:500

IP-13

STATE OF CALIFORNIA - DEPARTMENT OF TRANSPORTATION
Caltrans LANDSCAPE ARCHITECTURE

SENIOR LANDSCAPE ARCHITECT: STEPHEN ALVAREZ
CALCULATED-DESIGNED BY: STEVE WARREN
CHECKED BY: JOEL HORTIZUELA
REVISED BY / DATE REVISED

LAST REVISION 02-18-10 | DATE PLOTTED => 01-JUN-2010 | TIME PLOTTED => 15:57

BORDER LAST REVISED 4/11/2008

0 20 40 60 80

USERNAME => s127400
DGN FILE => b26073t1013.dgn

CU 11341

EA 260731

Dist	COUNTY	ROUTE	KILOMETER POST TOTAL PROJECT	SHEET No.	TOTAL SHEETS
11	SD	15	M38.3/M42.2	41	67

Caltrans Metric

Stephen P. Warren
LICENSED LANDSCAPE ARCHITECT

05-10-10
PLANS APPROVAL DATE

LICENSED LANDSCAPE ARCHITECT STEPHEN P. WARREN NO. 3482 — Signature — Renewal Date 10-31-10 — Date 01-05-10 — STATE OF CALIFORNIA

THE STATE OF CALIFORNIA OR ITS OFFICERS OR AGENTS SHALL NOT BE RESPONSIBLE FOR THE ACCURACY OR COMPLETENESS OF SCANNED COPIES OF THIS PLAN SHEET.

SPRINKLER SCHEDULE

SYMBOL	TYPE	DESCRIPTION	SPRAY PATTERN	OPERATING PRESSURE (KILOPASCAL) (kPa)	PRESSURE COMPENSATING	PLUS / MINUS 5% ② DISCHARGE: LITERS PER SECOND L/s	LITERS PER MINUTE L/min	LITERS PER HOUR L/h	RADIUS (IN METERS)(m)	WIDTH x LENGTH (IN METERS)(m)	MATERIAL	NOZZLE SIZE IN MILLIMETERS (mm)	INLET CONNECTION (NPT) (DN IN MILLIMETERS)(mm)	POSITIVE-LOCKING ADJ ARC STOP	BACKSPLASH PREVENTER	DIFFUSER PIN	DISTANCE CONTROL FLAP	ADJ DISCHARGE	RISER: TYPE	MATERIAL: PLASTIC	GALVANIZED	SIZE (IPS) (IN MILLIMETERS)(mm)	HEIGHT (IN MILLIMETERS)(mm)	SWING JOINT (TYPE)	RISER SUPPORT	SPRINKLER PROTECTOR (TYPE)	REMARKS
[5]	A-5	GEAR DRIVEN	F	345	-	-	12	-	12.2	-	PL	-	20	-	-	X	-	-	I	X	-	20	300	I	X	-	⑨
⑤	A-5	GEAR DRIVEN	P	345	-	-	12	-	12.2	-	PL	-	20	-	-	X	-	-	I	X	-	20	150	I	-	-	⑦ ⑨
⑥	A-6	GEAR DRIVEN	P	345	-	-	12	-	12.2	-	PL	-	20	-	-	X	-	-	I	X	-	20	150	I	-	I	⑦ ⑨ 300 mm POP-UP
[7]	A-7	GEAR DRIVEN	F	345	-	-	25	-	14	-	PL	-	20	-	-	X	-	-	I	X	-	20	300	I	X	-	⑨
⑦	A-7	GEAR DRIVEN	P	345	-	-	25	-	14	-	PL	-	20	-	-	X	-	-	I	X	-	20	150	I	-	-	⑦ ⑨
⑧	A-8	GEAR DRIVEN	P	345	-	-	25	-	14	-	PL	-	20	-	-	X	-	-	I	X	-	20	150	I	-	I	⑦ ⑨ 300 mm POP-UP
●	C-2 Mod	MODIFIED FLOOD BUBBLER	-	207	X	-	1.9	-	-	-	PL	-	15	-	-	-	-	-	II	X	-	15	-	III	-	-	④ ⑩ ⑪

X IN BOX DENOTES REQUIREMENT

APPLICABLE WHEN CIRCLED BELOW:

1 -SEE SPECIAL PROVISIONS
② - IF A PRESSURE COMPENSATING DEVICE IS SPECIFIED, THE DISCHARGE AND RADII SHOWN REFLECT ITS USE.
3 - ARC STOP SHALL BE FITTED WITH A NUT AND BOLT.
④ - NON-ADJUSTABLE DISCHARGE RATE.
5 - SWING JOINTS REQUIRED ADJACENT TO SHOULDERS, CURBS, SIDEWALKS AND DIKES.
6 - UNLESS OTHERWISE SHOWN ON PLANS.
⑦ - ADJUSTABLE ARC.
8 - MATCHED PRECIPITATION RATE NOZZLES.
⑨ - SHALL HAVE AN INTERNAL OR EXTERNAL CHECK VALVE.
⑩ - SEE DETAIL
⑪ - INSTALL ONE C-2 BUBBLER PER EACH PLANT GROUP 'B' AND 'U' TREE

ABBREVIATIONS

ADJ — ADJUSTABLE
B/B — BRASS/BRONZE
B/B/PL — BRASS/BRONZE/PLASTIC
B/PL — BRASS/PLASTIC
CST — CENTER STRIP
DN — DIAMETER NOMINAL
EST — END STRIP
F — FULL CIRCLE
F/P — FULL/PART CIRCLE
H — HALF CIRCLE
IPS — IRON PIPE SIZE
kPa — KILOPASCAL
L/h — LITERS PER HOUR
L/min — LITERS PER MINUTE
L/s — LITERS PER SECOND
m — METERS
mm — MILLIMETERS
NPT — NATIONAL PIPE THREAD
P — PART CIRCLE
PL — PLASTIC
Q — QUARTER CIRCLE
SST — SIDE STRIP
T — THIRD CIRCLE
TQ — THREE QUARTER CIRCLE
TT — TWO THIRDS CIRCLE

NOTES:

1. ALL NEW LATERAL PIPE NOT LABELED SHALL BE 25 mm, OR AS SHOWN ON PIPE SIZING CHARTS.
2. ALL SPRINKLER HEADS, VALVES, MAINLINE AND LATERAL LINE NEAR MVP LOCATIONS ARE TO BE INSTALLED OUTSIDE OF THE MVP AREA. VALVES TO BE INSTALLED AT DEPARTURE END OF MVP. HEADS TO BE INSTALLED 2 METERS FROM MVP AT APPROACH AND DEPARTURE EDGES.
3. ALL NEW MAINLINE PIPE WHICH HAS A CHANGE IN DIRECTION OF 90 DEGREES OR MORE SHALL HAVE (2)-45 DEGREE ELBOWS.
4. PULL ONE ADDITIONAL CNC WIRE FROM EACH CONTROLLER TO LAST VALVE BOX IN EACH VALVE MANIFOLD. (SEE CNC DETAIL)

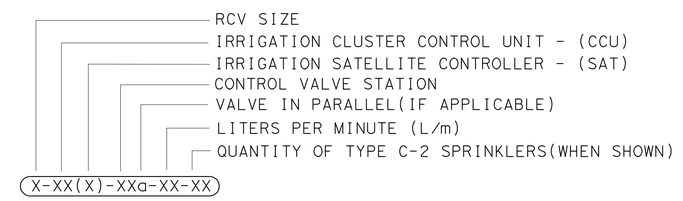

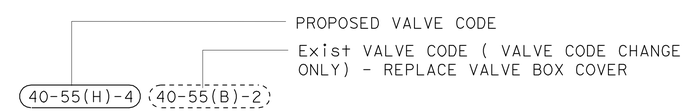

VALVE CODE

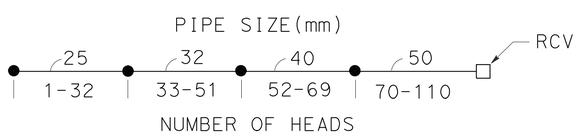

PIPE SIZING CHART
C-2 Mod SPRINKLERS

LEGEND

SCC — Exist 25 mm SPRINKLER CONTROL CONDUIT(SCC) FOR FLOW SENSOR CABLE/CNC FOR RCVM
FS — Exist FLOW SENSOR
— Exist Irr CROSSOVER WITH Exist WATERLINE AND Exist CNC AND/OR SCC CONDUIT
SAT — IRRIGATION SATELLITE CONTROLLER
M — Exist REMOTE CONTROL VALVE MASTER (RCVM)
R — REPLACE VALVE BOX COVER

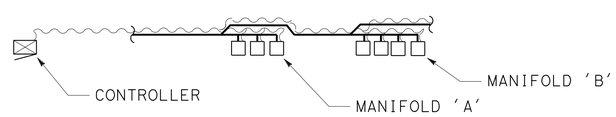

EXAMPLE:

MANIFOLD 'A' - INSTALL 4 CNC AND 1 ADDITIONAL WIRE FROM CONTROLLER TO LAST VALVE BOX IN MANIFOLD 'A'.
MANIFOLD 'B' - INSTALL 5 CNC AND 1 ADDITIONAL WIRE FROM CONTROLLER TO LAST VALVE BOX IN MANIFOLD 'B'.

CONTROL AND NEUTRAL CONDUCTOR

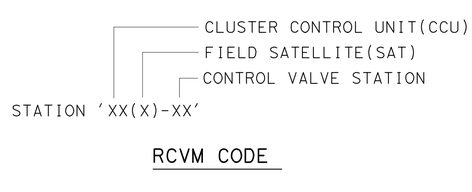

RCVM CODE

ALL IRRIGATION EQUIPMENT SIZES ARE IN MILLIMETERS (DIAMETER NOMINAL) UNLESS OTHERWISE SHOWN.

LANDSCAPE DETAILS

NO SCALE

LD-1

STATE OF CALIFORNIA - DEPARTMENT OF TRANSPORTATION
Caltrans LANDSCAPE ARCHITECTURE
SENIOR LANDSCAPE ARCHITECT: STEPHEN ALVAREZ
CALCULATED-DESIGNED BY: STEVE WARREN
CHECKED BY: JOEL HORTIZUELA
REVISED BY / DATE REVISED

LAST REVISION 02-18-10
DATE PLOTTED => 01-JUN-2010
TIME PLOTTED => 15:57

Dist	COUNTY	ROUTE	KILOMETER POST TOTAL PROJECT	SHEET No.	TOTAL SHEETS
11	SD	15	M38.3/M42.2	42	67

Caltrans Metric

Stephen P. Warren
LICENSED LANDSCAPE ARCHITECT

05-10-10
PLANS APPROVAL DATE

LICENSED LANDSCAPE ARCHITECT
STEPHEN P. WARREN NO. 3442
Signature
10-31-10
Renewal Date
01-05-10
Date
STATE OF CALIFORNIA

THE STATE OF CALIFORNIA OR ITS OFFICERS OR AGENTS SHALL NOT BE RESPONSIBLE FOR THE ACCURACY OR COMPLETENESS OF SCANNED COPIES OF THIS PLAN SHEET.

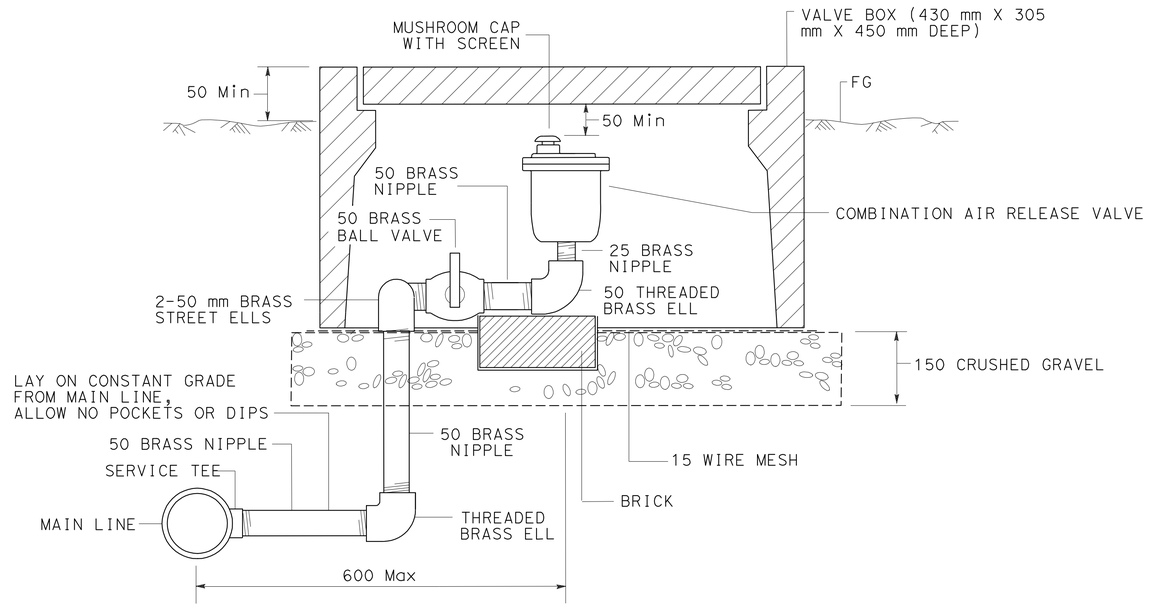

COMBINATION AIR RELEASE VALVE (CARV)

LEGEND

1. 0.70 m X 0.46 m X 0.33 m CONCRETE VALVE BOX WITH COVER
2. PRESSURE REGULATING VALVE WITH UNION AND WITH PRESSURE GAUGE PORT.
3. CONCRETE COVER
4. 20 CRUSHED GRAVEL SUMP (300 DEEP) WITH 15 WIRE MESH
5. PVC PIPE (SIZE PER PLAN) (DEPTH PER SPECIFICATIONS)
6. PRESSURE GAUGE
7. PRESSURE GAUGE PORT
8. 152 Min
9. COPPER OR B/B NIPPLE (LENGTH AS REQUIRED)(SIZE PER PLAN)
10. DIELECTRIC UNION
11. MT X S PVC ELL- ANGLE DOWN TO REQUIRED DEPTH
12. T X S PVC ADAPTOR
13. PVC NIPPLE 150 MIN

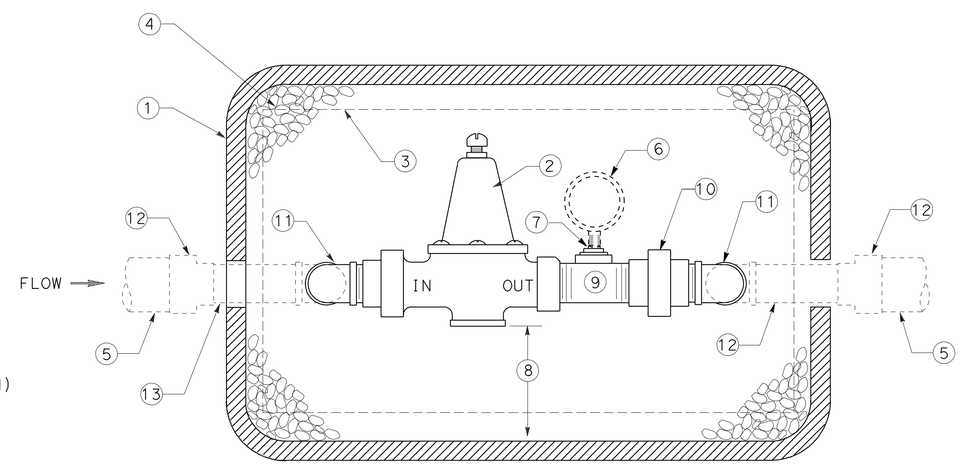

PLAN

PRESSURE REDUCING VALVE (PRV)

ALL DIMENSIONS ARE IN MILLIMETERS UNLESS OTHERWISE SHOWN

LANDSCAPE DETAILS

NO SCALE

LD-2

STATE OF CALIFORNIA - DEPARTMENT OF TRANSPORTATION
Caltrans LANDSCAPE ARCHITECTURE

SENIOR LANDSCAPE ARCHITECT: STEPHEN ALVAREZ
CALCULATED-DESIGNED BY: STEVE WARREN
CHECKED BY: JOEL HORTIZUELA
REVISED BY
DATE REVISED

LAST REVISION 02-18-10
DATE PLOTTED => 01-JUN-2010
TIME PLOTTED => 15:57

Dist	COUNTY	ROUTE	KILOMETER POST TOTAL PROJECT	SHEET No.	TOTAL SHEETS
11	SD	15	M38.3/M42.2	43	67

Caltrans Metric

Stephen P. Warren
LICENSED LANDSCAPE ARCHITECT

05-10-10
PLANS APPROVAL DATE

LICENSED LANDSCAPE ARCHITECT
STEPHEN P. WARREN NO. 3442
Signature
10-31-10
Renewal Date
01-05-10
Date
STATE OF CALIFORNIA

THE STATE OF CALIFORNIA OR ITS OFFICERS OR AGENTS SHALL NOT BE RESPONSIBLE FOR THE ACCURACY OR COMPLETENESS OF SCANNED COPIES OF THIS PLAN SHEET.

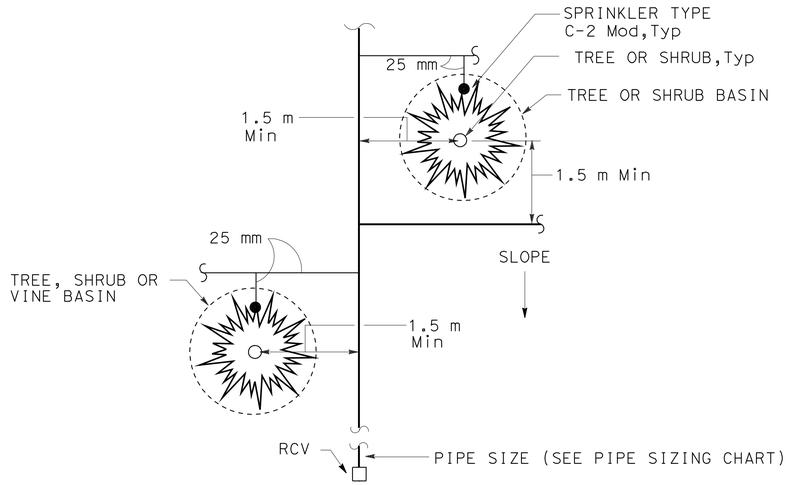

PLAN VIEW

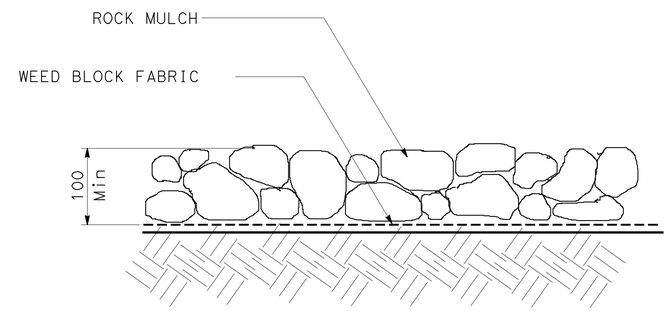

ROCK MULCH

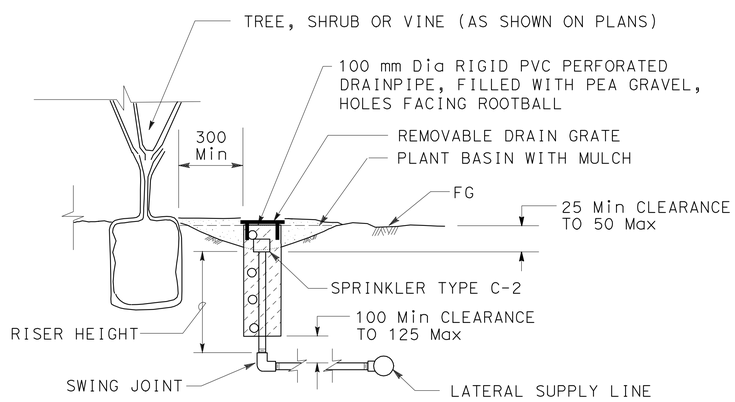

NOTE:
INSTALL SPRINKLER TYPE C-2 Mod ON
UP-HILL SIDE OF PLANT WHEN ON SLOPE.

SECTION

SPRINKLER TYPE C-2 Mod INSTALLATION

ALL DIMENSIONS ARE IN MILLIMETERS
UNLESS OTHERWISE SHOWN

LANDSCAPE DETAILS

NO SCALE

LD-3

REVISED BY	STEVE WARREN
DATE REVISED	JOEL HORTIZUELA
CALCULATED-DESIGNED BY	STEPHEN ALVAREZ
CHECKED BY	
SENIOR LANDSCAPE ARCHITECT	

STATE OF CALIFORNIA - DEPARTMENT OF TRANSPORTATION
Caltrans LANDSCAPE ARCHITECTURE

LAST REVISION 02-18-10 | DATE PLOTTED => 01-JUN-2010 | TIME PLOTTED => 15:57

Dist	COUNTY	ROUTE	KILOMETER POST TOTAL PROJECT	SHEET No.	TOTAL SHEETS
11	SD	15	M38.3/M42.2	44	67

Caltrans Metric

Stephen P. Warren
LICENSED LANDSCAPE ARCHITECT

05-10-10
PLANS APPROVAL DATE

LICENSED LANDSCAPE ARCHITECT STEPHEN P. WARREN NO. 3442 Signature 10-31-10 Renewal Date 01-05-10 Date STATE OF CALIFORNIA

THE STATE OF CALIFORNIA OR ITS OFFICERS OR AGENTS SHALL NOT BE RESPONSIBLE FOR THE ACCURACY OR COMPLETENESS OF SCANNED COPIES OF THIS PLAN SHEET.

EROSION CONTROL SUMMARY OF QUANTITIES

SHEET NUMBER	EROSION CONTROL (POLYMER STABILIZED FIBER MATRIX) m^2	EROSION CONTROL (HYDROSEED) m^2	EROSION CONTROL (HYDROSEED) SECOND APPLICATION (PLANT ESTABLISHMENT) m^2
PP-4	2000	-	-
PP-5	6200	-	-
PP-6	6000	-	-
PP-7	8500	-	-
PP-8	260	550	550
PP-9	-	2900	2900
PP-10	-	8600	8600
PP-12	-	10000	10000
TOTAL	22 960	SUBTOTAL 22 050	22 050
		TOTAL 44 100	

MULCH

SHEET	m^3
PP-11	99
PP-12	108
BASINS	778
TOTAL	985

EROSION CONTROL (HYDROSEED) COMPONENTS QUANTITIES SUMMARY (N)

AREA m^2	FIBER kg	COMMERCIAL FERTILIZER kg	TACKIFIER kg	SEED kg
22 050	3 960	990	440	163

REPLACE VALVE BOX COVER

SHEET	EACH
IP-11	1
IP-13	9
TOTAL	10

ROCK MULCH

SHEET	m^2	(N) m^3
PP-11	575	77
PP-12	1475	195
TOTAL	2050	272

EROSION CONTROL (POLYMER STABILIZED FIBER MATRIX) COMPONENTS QUANTITIES SUMMARY (N)

AREA m^2	FIBER kg	COMMERCIAL FERTILIZER kg	TACKIFIER kg	SEED kg
22 960	4 122	1 030	458	170

MAINTAIN EXISTING PLANTED AREAS

SHEET	m^2 (N)
PP-4	4400
PP-5	9500
PP-6	7400
PP-7	6700
PP-8	9700
PP-9	6300
PP-10	7600
PP-11	5300
TOTAL	56900

(N) - NOT A SEPARATE PAY ITEM, FOR INFORMATION ONLY

LANDSCAPE DETAILS (QUANTITIES)

LD-4

STATE OF CALIFORNIA - DEPARTMENT OF TRANSPORTATION
Caltrans LANDSCAPE ARCHITECTURE

SENIOR LANDSCAPE ARCHITECT: STEPHEN ALVAREZ
CALCULATED-DESIGNED BY: STEVE WARREN
CHECKED BY: JOEL HORTIZUELA
REVISED BY / DATE REVISED

LAST REVISION 02-18-10 | DATE PLOTTED => 01-JUN-2010 | TIME PLOTTED => 15:57

Dist	COUNTY	ROUTE	KILOMETER POST TOTAL PROJECT	SHEET No.	TOTAL SHEETS
11	SD	15	M38.3/M42.2	45	67

Caltrans Metric

Stephen P. Warren
LICENSED LANDSCAPE ARCHITECT

05-10-10
PLANS APPROVAL DATE

LICENSED LANDSCAPE ARCHITECT STEPHEN P. WARREN NO. 3482 Signature 10-31-10 Renewal Date 01-05-10 Date STATE OF CALIFORNIA

THE STATE OF CALIFORNIA OR ITS OFFICERS OR AGENTS SHALL NOT BE RESPONSIBLE FOR THE ACCURACY OR COMPLETENESS OF SCANNED COPIES OF THIS PLAN SHEET.

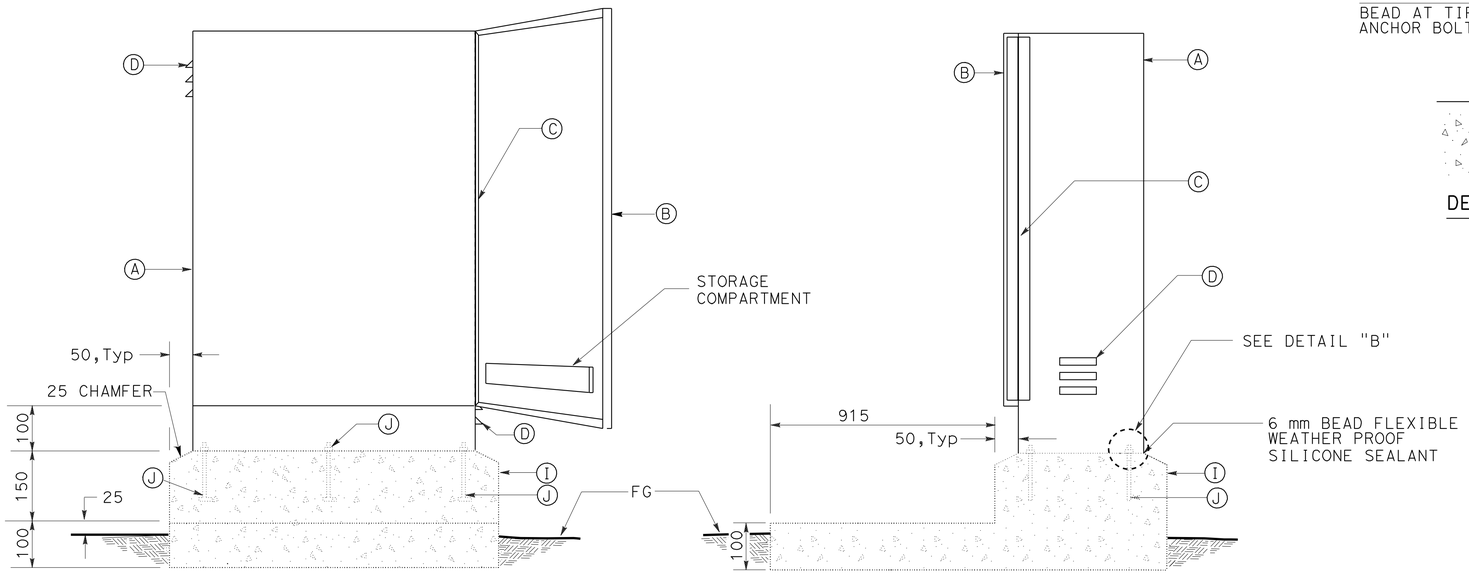

FRONT ELEVATION

SIDE SECTION

CABINET, SECURITY DOOR, AND FOUNDATION

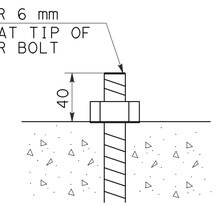

DETAIL "B"

LEGEND

- (A) STAINLESS STEEL CONTROLLER ENCLOSURE CABINET- (SEE PLAN)
- (B) DOOR WITH THREE POINT LOCKING MECHANISM, FLUSH-MOUNTED ACCESS HANDLE FOR PADLOCK, AND STORAGE FOR PLANS
  NOTE: DOUBLE CABINETS HAVE SIDE BY SIDE LOCKABLE DOORS
- (C) CONTINUOUS STAINLESS STEEL PIANO HINGE
- (D) LOUVERS AT TOP AND BOTTOM FOR CROSS VENTILATION
- (E) No. 8 GROUND CONDUCTOR
- (F) LOW PRO ANTENNA AND CABLE (FOR COMMUNICATION BETWEEN CCU AND SAT)
- (G) JUNCTION BOX
- (H) SURGE PROTECTION
- (I) PCC PAD AND FOUNDATION - Exist (SEE PLAN)
- (J) Exist 10 mm DIAMETER, 70 mm LONG, WINGED STAINLESS STEEL ANCHOR BOLTS WITH WASHERS AND HEX HEAD LOCKNUTS (4 BOLTS FOR SINGLE, 6 BOLTS FOR DOUBLE)
- (K) 16 mm X 3.0 m LONG COPPER CLAD STEEL ROD GROUND ELECTRODE AND GROUND CLAMP - Exist (SEE PLAN)
- (L) SIZE 27, TYPE 3 CONDUIT FOR ELECTRICAL SERVICE (2 FOR CABINET WITH TELEPHONE SERVICE)- Exist (SEE PLAN)
- (M) SIZE 41, TYPE 3 CONDUIT FOR RCVM INPUT WIRING AND OMNI POLE (2 FOR SINGLE/CCU/OMNI POLE, ONE FOR DOUBLE CABINET)- Exist (SEE PLAN)
- (N) SIZE 53, TYPE 3 CONDUIT FOR LOW VOLTAGE WIRING (2 FOR SINGLE CABINET, 3 FOR DOUBLE CABINET)- Exist (SEE PLAN)
- (O) SIZE 13, TYPE 4 CONDUIT
- (P) 2 GANG WEATHER PROOF BOX WITH GROUND FAULT PROTECTED RECEPTACLE AND ON-OFF SWITCH, SEE DETAIL "D" ON THIS SHEET
- (Q) STAINLESS STEEL MOUNTING PANEL (4 mm Min THICKNESS), ATTACHED TO ENCLOSURE
- (R) BRUSHED ALUMINUM MOUNTING BOARD, SECURED WITH STAINLESS STEEL BOLTS
- (S) TERMINAL STRIPS FOR LOW VOLTAGE WIRE CONNECTIONS
- (T) SATELLITE IRRIGATION CONTROLLER (SAT) WITH TWO WAY RADIO CONNECTIONS (QUANTITIES SHOWN ON PLANS)
- (U) TRC RECEIVER CARD WITH LO PRO ANTENNA (SAT ONLY)
- (V) RAIN SENSOR WITH STAINLESS STEEL HOUSING (MOUNTED ONLY TO CABINET WITH CCU)
- (W) MASTER VALVE RELAY (MVR)
- (a) EVAPOTRANSPIRATION MANAGER
- (b) EVAPOTRANSPIRATION MANAGER ANTENNA
- (d) DIGITAL FLOW MONITOR

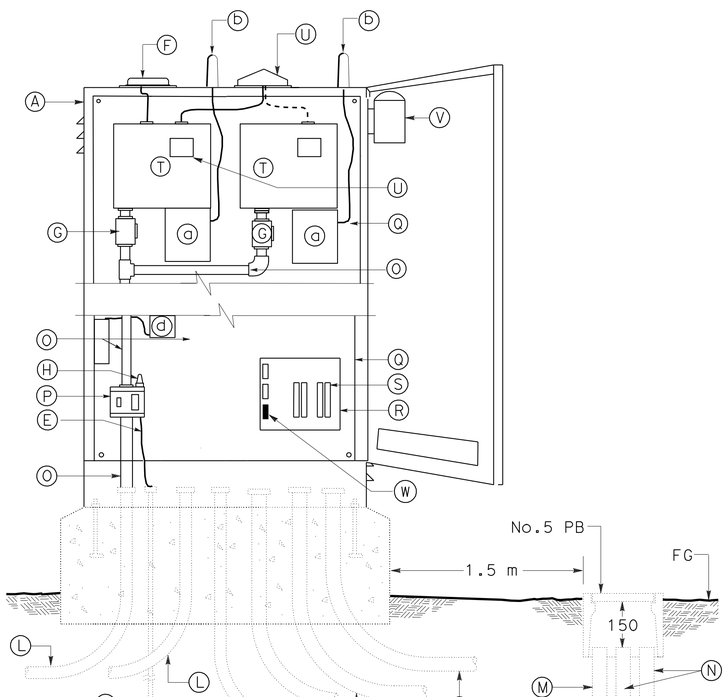

FRONT ELEVATION

ELECTRICAL AND DOUBLE CONTROLLER LAYOUT

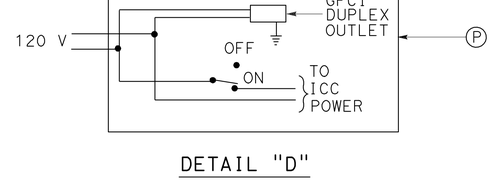

DETAIL "D"

ALL DIMENSIONS ARE IN MILLIMETERS UNLESS OTHERWISE SHOWN

LANDSCAPE DETAILS
IRRIGATION CONTROLLER AND ENCLOSURE CABINET

NO SCALE

LD-5

LAST REVISION 02-22-10 | DATE PLOTTED => 01-JUN-2010 | TIME PLOTTED => 15:57

STATE OF CALIFORNIA - DEPARTMENT OF TRANSPORTATION
Caltrans LANDSCAPE ARCHITECTURE

SENIOR LANDSCAPE ARCHITECT: STEPHEN ALVAREZ

CALCULATED-DESIGNED BY: STEVE WARREN | CHECKED BY: JOEL HORTIZUELA | REVISED BY | DATE REVISED

Dist	COUNTY	ROUTE	KILOMETER POST TOTAL PROJECT	SHEET No.	TOTAL SHEETS
11	SD	15	M38.3/M42.2	46	67

Caltrans Metric

Stephen P. Warren
LICENSED LANDSCAPE ARCHITECT

05-10-10
PLANS APPROVAL DATE

LICENSED LANDSCAPE ARCHITECT
STEPHEN P. WARREN NO. 3482
Signature
10-31-10
Renewal Date
01-05-10
Date
STATE OF CALIFORNIA

THE STATE OF CALIFORNIA OR ITS OFFICERS OR AGENTS SHALL NOT BE RESPONSIBLE FOR THE ACCURACY OR COMPLETENESS OF SCANNED COPIES OF THIS PLAN SHEET.

LEGEND

- Ⓐ EXISTING STAINLESS STEEL CONTROLLER ENCLOSURE CABINET
- Ⓑ SATELLITE IRRIGATION CONTROLLER (SAT) WITH TWO WAY RADIO CONNECTIONS (QUANTITIES SHOWN ON PLANS)
- Ⓒ EXISTING SATELLITE IRRIGATION CONTROLLER (SAT) WITH TWO WAY RADIO CONNECTIONS
- Ⓓ TRC RECEIVER CARD WITH LO PRO ANTENNA (SAT ONLY)
- Ⓔ EVAPOTRANSPIRATION MANAGER (ET MANAGER)
- Ⓕ EVAPOTRANSPIRATION MANAGER ANTENNA
- Ⓖ EXISTING TRC RECEIVER CARD WITH LO PRO ANTENNA (SAT ONLY)
- Ⓗ JUNCTION BOX
- Ⓘ SIZE 13, TYPE 4 CONDUIT
- Ⓙ EXISTING STAINLESS STEEL MOUNTING PANEL (4mm MINIMUM THICKNESS)

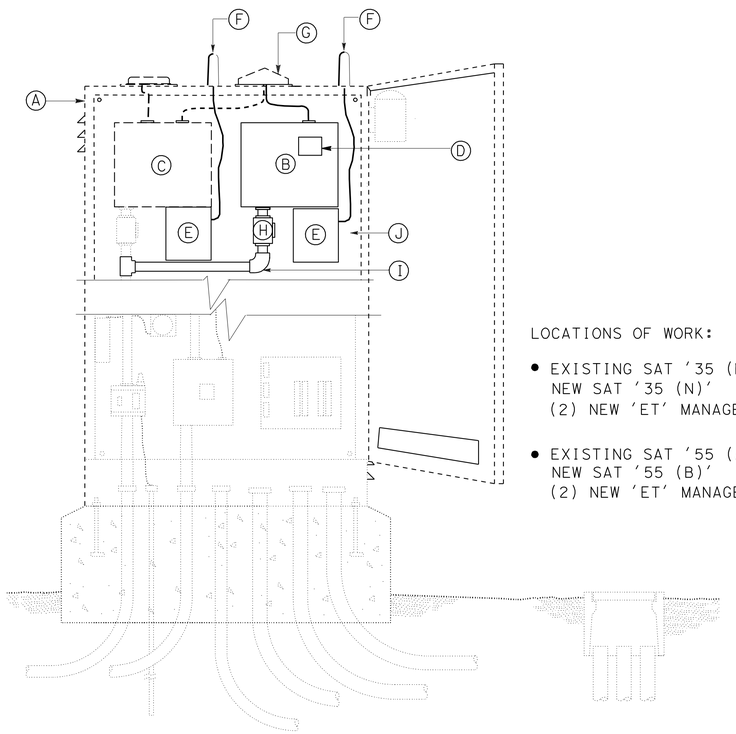

FRONT ELEVATION

LOCATIONS OF WORK:

- EXISTING SAT '35 (M)'
  NEW SAT '35 (N)'
  (2) NEW 'ET' MANAGERS AND ANTENNAS
- EXISTING SAT '55 (A)'
  NEW SAT '55 (B)'
  (2) NEW 'ET' MANAGERS AND ANTENNAS

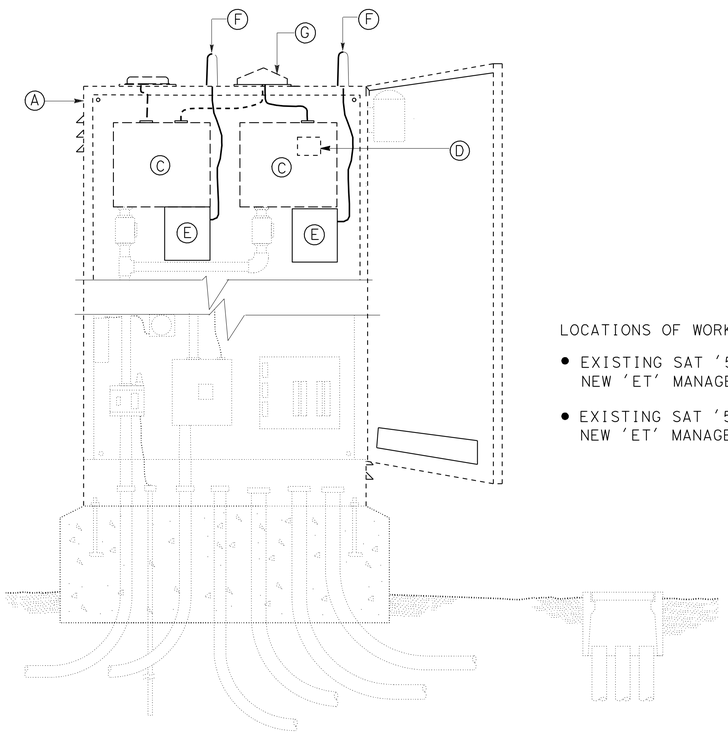

FRONT ELEVATION

LOCATIONS OF WORK:

- EXISTING SAT '55 (C)'
  NEW 'ET' MANAGER AND ANTENNA
- EXISTING SAT '55 (D)'
  NEW 'ET' MANAGER AND ANTENNA

MODIFY EXISTING IRRIGATION CONTROLLER CABINET (ELECTRICAL AND DOUBLE CONTROLLER LAYOUT)

ALL DIMENSIONS ARE IN MILLIMETERS
UNLESS OTHERWISE SHOWN

LANDSCAPE DETAILS
IRRIGATION CONTROLLER AND ENCLOSURE CABINET

NO SCALE

LD-6

STATE OF CALIFORNIA - DEPARTMENT OF TRANSPORTATION
Caltrans LANDSCAPE ARCHITECTURE

SENIOR LANDSCAPE ARCHITECT: STEPHEN ALVAREZ
CALCULATED-DESIGNED BY: STEVE WARREN
CHECKED BY: JOEL HORTIZUELA
REVISED BY
DATE REVISED

LAST REVISION 05-25-10
DATE PLOTTED => 01-JUN-2010
TIME PLOTTED => 15:58

Dist	COUNTY	ROUTE	KILOMETER POST TOTAL PROJECT	SHEET No.	TOTAL SHEETS
11	SD	15	M38.3/M42.2	47	67

Caltrans Metric

Stephen P. Warren
LICENSED LANDSCAPE ARCHITECT

05-10-10
PLANS APPROVAL DATE

LICENSED LANDSCAPE ARCHITECT STEPHEN P. WARREN NO. 3422 Signature 10-31-10 Renewal Date 01-05-10 Date STATE OF CALIFORNIA

THE STATE OF CALIFORNIA OR ITS OFFICERS OR AGENTS SHALL NOT BE RESPONSIBLE FOR THE ACCURACY OR COMPLETENESS OF SCANNED COPIES OF THIS PLAN SHEET.

SUBTOTALS PER VALVE ON LATERAL SUPPLY SIDE OF CONTROL VALVE

VALVE OR ASSEMBLY NUMBER FOR SAT - 32 STATION '55 (B)'

DESCRIPTION		UNIT	1	2	3	4	5	6	7	8	9	10	11	12	13	14	15	16	17	18	19	20	21	22	23	24	25	26	27	28	29	30	31	32	SUB TOTALS	UNIT	DESCRIPTION	
PLASTIC PIPE SUPPLY LINE PR 200	25 mm		EXISTING STATION	EXISTING STATION	EXISTING STATION	EXISTING STATION	EXISTING STATION	EXISTING STATION	50	50	70	70	50	EXISTING STATION	75	70	55	55	40	95	70	50	50	50	50	OPEN MAXICOM COMMUNICATION	-	-	-	-	-	-	-	-	950	m	25 mm	PR 200 PLASTIC PIPE SUPPLY LINE
	32 mm								40	25	-				10	3	-	30	20	10	-	-	10	10	-		-	-	-	-	-	-	-	-	158	m	32 mm	
	40 mm								-	-	20	30	70		35	-	-	10	-	-	-	40	100	25	-		-	-	-	-	-	-	-	-	330	m	40 mm	
	50 mm								3	15	-	-	-		-	-	3	25	25	-	60	-	-	-	3		-	-	-	-	-	-	-	-	134	m	50 mm	
	65 mm								-	-	-	-	5		5	-	-	-	-	-	-	-	-	-	-		-	-	-	-	-	-	-	-	10	m	65 mm	
PLASTIC PIPE SUPPLY LINE PR 315																																						PR 315 PLASTIC PIPE SUPPLY LINE
GSP																																						GSP
SPRINKLER TYPE	A-5								-	-	-	-	-		10	-	-	-	-	6	-	-	-	-	-										16		A-5	SPRINKLER TYPE
	A-7								8	7	-	6	9		-	-	4	6	7	-	-	6	6	5	5										69		A-7	
	A-8								-	-	-	-	-		-	-	1	2	-	-	-	-	-	1	-										4		A-8	
	C-2 Mod								-	-	60	-	-		-	34	-	-	-	-	75	-	-	-	-										169		C-2 Mod	

VALVE OR ASSEMBLY NUMBER FOR SAT - 24 STATION '55 (C)'

DESCRIPTION		UNIT	1	2	3	4	5	6	7	8	9	10	11	12	13	14	15	16	17	18	19	20	21	22	23	24	SUB TOTALS	UNIT	DESCRIPTION	
PLASTIC PIPE SUPPLY LINE PR 200	25 mm		EXISTING STATION	EXISTING STATION	EXISTING STATION	50	60	55	40	50	40	55	30	60	50	50	70	50	75	50	50	40	50	75	50	-	1050	m	25 mm	PR 200 PLASTIC PIPE SUPPLY LINE
	32 mm					95	95	20	10	12	25	10	30	20	10	45	35	30	-	40	35	25	-	25	30	-	592	m	32 mm	
	40 mm					-	-	-	-	-	-	-	20	-	-	-	-	-	-	5	-	-	30	-	-	-	55	m	40 mm	
	50 mm					-	-	3	-	-	20	-	-	-	45	3	-	15	25	40	3	15	-	-	35	-	204	m	50 mm	
	65 mm					-	-	-	-	-	-	-	20	-	-	-	-	-	-	-	-	-	-	-	-	-	20	m	65 mm	
PLASTIC PIPE SUPPLY LINE PR 315																														PR 315 PLASTIC PIPE SUPPLY LINE
GSP																														GSP
SPRINKLER TYPE	A-5					-	6	-	5	-	-	5	-	-	-	-	8	-	-	-	-	-	-	8	-	-	32		A-5	SPRINKLER TYPE
	A-7					4	-	6	-	-	2	-	9	-	6	6	-	7	-	6	8	7	5	-	6	-	72		A-7	
	A-8					-	-	-	-	-	4	-	-	-	-	2	-	-	-	2	-	-	-	-	2	-	10		A-8	
	C-2 Mod					-	-	-	-	42		-	-	34	-	-	-	-	87	-	-	-	-	-	-	-	163		C-2 Mod	

IRRIGATION QUANTITIES
IQ-1

STATE OF CALIFORNIA - DEPARTMENT OF TRANSPORTATION
Caltrans LANDSCAPE ARCHITECTURE

SENIOR LANDSCAPE ARCHITECT: STEPHEN ALVAREZ
CALCULATED-DESIGNED BY: STEVE WARREN
CHECKED BY: JOEL HORTIZUELA
REVISED BY
DATE REVISED

LAST REVISION 02-22-10
DATE PLOTTED => 01-JUN-2010
TIME PLOTTED => 15:58

Dist	COUNTY	ROUTE	KILOMETER POST TOTAL PROJECT	SHEET No.	TOTAL SHEETS
11	SD	15	M38.3/M42.2	48	67

Caltrans Metric

Stephen P. Warren
LICENSED LANDSCAPE ARCHITECT

05-10-10
PLANS APPROVAL DATE

LICENSED LANDSCAPE ARCHITECT STEPHEN P. WARREN NO. 3422 Signature 10-31-10 Renewal Date 01-05-10 Date STATE OF CALIFORNIA

THE STATE OF CALIFORNIA OR ITS OFFICERS OR AGENTS SHALL NOT BE RESPONSIBLE FOR THE ACCURACY OR COMPLETENESS OF SCANNED COPIES OF THIS PLAN SHEET.

SUBTOTALS PER VALVE ON LATERAL SUPPLY SIDE OF CONTROL VALVE

DESCRIPTION			UNIT	VALVE OR ASSEMBLY NUMBER FOR SAT - 24 STATION '55 (D)'																						SUB TOTALS	UNIT	DESCRIPTION		
				1	2	3	4	5	6	7	8	9	10	11	12	13	14	15	16	17	18	19	20	21	22	23	24					
PLASTIC PIPE SUPPLY LINE	PR 200	25 mm		130	60	40	60	60	40	100	100	60	60	60	60	60	60	-	-	-	-	-	-	-	-	-	-	950	m	25 mm	PR 200	PLASTIC PIPE SUPPLY LINE
		32 mm		20	20	10	20	20	5	55	35	35	35	35	35	35	35	-	-	-	-	-	-	-	-	-	-	395	m	32 mm		
		40 mm		-	10	-	10	-	-	-	5	5	5	5	5	-	-	-	-	-	-	-	-	-	-	-	-	45	m	40 mm		
		50 mm		-	-	30	-	5	-	5	5	5	5	5	5	5	5	-	-	-	-	-	-	-	-	-	-	95	m	50 mm		
		65 mm		-	80	-	15	-	-	-	-	-	-	-	-	-	-	-	-	-	-	-	-	-	-	-	-	95	m	65 mm		
	PR 315																														PR 315	
GSP																															GSP	
SPRINKLER TYPE		A-5		-	-	-	-	-	6	16	17	-	-	-	-	-	-	-	-	-	-	-	-	-	-	-	-	39		A-5	SPRINKLER TYPE	
		A-7		-	8	5	8	7	-	-	-	5	8	8	8	8	8	-	-	-	-	-	-	-	-	-	-	73		A-7		
		C-2 Mod		49	-	-	-	-	-	-	-	-	-	-	-	-	-	-	-	-	-	-	-	-	-	-	-	49		C-2 Mod		

DESCRIPTION			UNIT	VALVE OR ASSEMBLY NUMBER FOR SAT - 24 STATION '55 (K)'																						SUB TOTALS	UNIT	DESCRIPTION		
				1	2	3	4	5	6	7	8	9	10	11	12	13	14	15	16	17	18	19	20	21	22	23	24					
PLASTIC PIPE SUPPLY LINE	PR 200	25 mm		75	75	120	150	100	120	120	160	110	120	100	120	100	110	120	110	30	-	-	-	-	-	-	-	1840	m	25 mm	PR 200	PLASTIC PIPE SUPPLY LINE
		32 mm		30	30	25	10	10	25	35	-	25	35	20	5	20	10	5	10	40	-	-	-	-	-	-	-	335	m	32 mm		
		40 mm		10	10	-	-	-	-	-	15	-	-	-	-	-	-	-	-	-	-	-	-	-	-	-	-	35	m	40 mm		
		50 mm		10	3	20	-	10	3	20	-	10	3	8	-	3	10	-	3	-	-	-	-	-	-	-	-	103	m	50 mm		
		65 mm		-	-	-	-	-	-	-	-	-	-	-	-	-	-	-	-	-	-	-	-	-	-	-	-	-	m	65 mm		
	PR 315																														PR 315	
GSP																															GSP	
SPRINKLER TYPE		A-5		13	14	13	-	11	13	14	-	13	14	13	-	13	12	-	13	4	-	-	-	-	-	-	-	160		A-5	SPRINKLER TYPE	
		A-7		-	-	-	-	-	-	-	-	-	-	-	-	-	-	-	-	-	-	-	-	-	-	-	-	-		A-7		
		C-2 Mod		-	-	-	34	-	-	-	44	-	-	-	17	-	-	26	-	-	-	-	-	-	-	-	-	87		C-2 Mod		

IRRIGATION QUANTITIES
IQ-2

STATE OF CALIFORNIA - DEPARTMENT OF TRANSPORTATION
Caltrans LANDSCAPE ARCHITECTURE

SENIOR LANDSCAPE ARCHITECT: STEPHEN ALVAREZ
CALCULATED-DESIGNED BY: STEVE WARREN
CHECKED BY: JOEL HORTIZUELA
REVISED BY / DATE REVISED

LAST REVISION 02-22-10
DATE PLOTTED => 01-JUN-2010
TIME PLOTTED => 15:58

Dist	COUNTY	ROUTE	KILOMETER POST TOTAL PROJECT	SHEET No.	TOTAL SHEETS
11	SD	15	M38.3/M42.2	49	67

Caltrans Metric

Stephen P. Warren
LICENSED LANDSCAPE ARCHITECT

05-10-10
PLANS APPROVAL DATE

LICENSED LANDSCAPE ARCHITECT STEPHEN P. WARREN NO. 3422 Signature 10-31-10 Renewal Date 01-05-10 Date STATE OF CALIFORNIA

THE STATE OF CALIFORNIA OR ITS OFFICERS OR AGENTS SHALL NOT BE RESPONSIBLE FOR THE ACCURACY OR COMPLETENESS OF SCANNED COPIES OF THIS PLAN SHEET.

SUBTOTALS PER VALVE ON LATERAL SUPPLY SIDE OF CONTROL VALVE

VALVE OR ASSEMBLY NUMBER FOR SAT - 32 STATION '55 (L)'

DESCRIPTION			UNIT	1	2	3	4	5	6	7	8	9	10	11	12	13	14	15	16	17	18	19	20	21	22	23	24	25	26	27	28	29	30	31	32	SUB TOTALS	UNIT	DESCRIPTION		
PLASTIC PIPE SUPPLY LINE	PR 200	25 mm		110	45	100	100	50	150	120	120	110	65	150	120	120	180	120	120	170	120	120	60	45	140	60	OPEN MAXICOM COMMUNICATION	40	-	-	-	-	-	-	-	2495	m	25 mm	PR 200	PLASTIC PIPE SUPPLY LINE
		32 mm		20	10	20	10	40	10	55	45	10	5	5	70	70	10	70	70	-	70	70	20	75	-	10		10	-	-	-	-	-	-	-	775	m	32 mm		
		40 mm		-	-	-	-	-	-	35	35	-	-	-	-	-	-	10	10	-	20	20	10	-	-	35		10	-	-	-	-	-	-	-	185	m	40 mm		
		50 mm		3	-	-	-	-	-	15	3	-	-	-	15	5	-	15	3	-	15	3	55	-	-	-		5	-	-	-	-	-	-	-	137	m	50 mm		
		65 mm		-	-	-	-	-	-	-	-	-	-	-	-	-	-	-	-	-	-	-	-	-	-	-		-	-	-	-	-	-	-	-	-	m	65 mm		
	PR 315																																							
GSP																																								
SPRINKLER TYPE		A-5		12	5	10	-	5	-	19	18	-	8	-	18	18	-	18	18	-	19	14	-	-	-	-		-	-	-	-	-	-	-	-	182		A-5		
		A-6		-	-	-	-	-	-	-	-	-	-	-	-	-	-	-	-	-	-	4	-	-	-	-		-	-	-	-	-	-	-	-	4		A-6		
		A-7		-	-	-	-	-	-	-	-	-	-	-	-	-	-	-	-	-	-	-	8	4	-	6		6	-	-	-	-	-	-	-	24		A-7		
		C-2 Mod		-	-	-	23	-	26	-	-	20	-	22	-	-	26	-	-	23	-	-	-	-	45	-		-	-	-	-	-	-	-	-	185		C-2 Mod		

VALVE OR ASSEMBLY NUMBER FOR SAT - 32 STATION '55 (N)'

DESCRIPTION			UNIT	1	2	3	4	5	6	7	8	9	10	11	12	13	14	15	16	17	18	19	20	21	22	23	24	25	26	27	28	29	30	31	32	SUB TOTALS	UNIT	DESCRIPTION		
PLASTIC PIPE SUPPLY LINE	PR 200	25 mm		120	110	170	120	120	180	100	120	130	180	110	120	120	180	110	120	120	130	110	110	-	-	-	OPEN MAXICOM COMMUNICATION	-	-	-	-	-	-	-	-	2580	m	25 mm	PR 200	PLASTIC PIPE SUPPLY LINE
		32 mm		50	30	20	60	60	-	50	60	35	-	40	35	60	10	75	55	35	-	-	70	-	-	-		-	-	-	-	-	-	-	-	745	m	32 mm		
		40 mm		-	20	-	-	-	10	20	-	35	5	45	25	-	-	-	-	-	-	-	-	-	-	-		-	-	-	-	-	-	-	-	160	m	40 mm		
		50 mm		3	15	-	20	3	-	10	20	3	-	10	15	3	-	15	25	3	-	15	25	-	-	-		-	-	-	-	-	-	-	-	185	m	50 mm		
		65 mm		-	-	-	-	-	-	-	-	-	-	-	-	-	-	-	-	-	-	-	-	-	-	-		-	-	-	-	-	-	-	-	-	m	65 mm		
	PR 315																																							
GSP																																								
SPRINKLER TYPE		A-5		15	16	-	16	16	-	19	16	16	-	20	16	16	-	18	16	17	-	11	16	-	-	-		-	-	-	-	-	-	-	-	244		A-5		
		A-7		-	-	-	-	-	-	-	-	-	-	-	-	-	-	-	-	-	-	-	-	-	-	-		-	-	-	-	-	-	-	-	-		A-7		
		C-2 Mod		-	-	37	-	-	40	-	-	-	44	-	-	-	43	-	-	-	26	-	-	-	-	-		-	-	-	-	-	-	-	-	190		C-2 Mod		

IRRIGATION QUANTITIES
IQ-3

STATE OF CALIFORNIA - DEPARTMENT OF TRANSPORTATION
Caltrans LANDSCAPE ARCHITECTURE

SENIOR LANDSCAPE ARCHITECT: STEPHEN ALVAREZ
CALCULATED-DESIGNED BY: STEVE WARREN
CHECKED BY: JOEL HORTIZUELA
REVISED BY
DATE REVISED

LAST REVISION 02-22-10
DATE PLOTTED => 01-JUN-2010
TIME PLOTTED => 15:58

Dist	COUNTY	ROUTE	KILOMETER POST TOTAL PROJECT	SHEET No.	TOTAL SHEETS
11	SD	15	M38.3/M42.2	50	67

Stephen P. Warren
LICENSED LANDSCAPE ARCHITECT

05-10-10
PLANS APPROVAL DATE

LICENSED LANDSCAPE ARCHITECT STEPHEN P. WARREN NO. 3462 Signature 10-31-10 Renewal Date 01-05-10 Date STATE OF CALIFORNIA

THE STATE OF CALIFORNIA OR ITS OFFICERS OR AGENTS SHALL NOT BE RESPONSIBLE FOR THE ACCURACY OR COMPLETENESS OF SCANNED COPIES OF THIS PLAN SHEET.

Caltrans Metric

SUBTOTALS PER PLAN SHEET ON MAIN SUPPLY SIDE OF CONTROL VALVE

DESCRIPTION			UNIT	SHEET NUMBER IP-1	IP-2	IP-3	IP-4	IP-5	IP-6	IP-7	IP-8	IP-9	IP-10	IP-11	IP-12	IP-13	SUBTOTALS
BPA		25 mm	EA	-	-	-	-	-	-	-	-	-	-	-	-	-	-
BPA		50 mm	EA	-	-	-	-	-	-	-	-	-	-	-	-	-	-
BPA		75 mm	EA	-	-	-	-	-	-	-	-	-	-	-	-	-	-
BPA		ENCLOSURE	EA	-	-	-	-	-	-	-	-	-	-	-	-	-	-
WATER METER		25 mm	EA	-	-	-	-	-	-	-	-	-	-	-	-	-	-
WATER METER		50 mm	EA	-	-	-	-	-	-	-	-	-	-	-	-	-	-
WATER METER		75 mm	EA	-	-	-	-	-	-	-	-	-					-
BOOSTER PUMP			EA										-	-	-	-	-
IRRIGATION CONTROLLER	ETM	ETM ANTENNA	EA	-	-	-	4	-	-	-	-	-	-	2	2	-	8
IRRIGATION CONTROLLER	ETM	ET MANAGER	EA	-	-	-	4	-	-	-	-	-	-	2	2	-	8
IRRIGATION CONTROLLER	SAT	16 STATION	EA		-	-	-	-	-	-	-	-	-	-	-	-	-
IRRIGATION CONTROLLER	SAT	24 STATION	EA	-	-	-	1	-	-	-	-	-	-	-	-	-	1
IRRIGATION CONTROLLER	SAT	32 STATION	EA	-	-	-	2	-	-	-	-	-	-	1	-	-	3
IRRIGATION CONTROLLER	SAT	40 STATION	EA	-	-	-	-	-	-	-	-	-	-	-	-	-	-
IRRIGATION CONTROLLER	CEC	SINGLE	EA	-	-	-	-	-	-	-	-	-	-	-	-	-	-
IRRIGATION CONTROLLER	CEC	DOUBLE	EA	-	-	-	1	-	-	-	-	-	-	-	-	-	1
VALVES AND ASSEMBLIES	RCVM	50 mm	EA	-	-	-	-	-	-	-	-	-	-	-	-	-	-
VALVES AND ASSEMBLIES	RCV	25 mm	EA	1	1	4	4	2	2	2	-	-	-	1	2	-	19
VALVES AND ASSEMBLIES	RCV	40 mm	EA	3	8	11	12	3	4	8	2	2	3	16	18	2	92
VALVES AND ASSEMBLIES	RCV	50 mm	EA	-	-	-	-	-	-	-	-	-	-	-	-	-	-
VALVES AND ASSEMBLIES	GV	40 mm	EA	-	-	-	-	-	-	-	-	-	-	-	-	-	-
VALVES AND ASSEMBLIES	GV	50 mm	EA	1	2	4	4	2	2	2	2	2	3	4	7	-	35
VALVES AND ASSEMBLIES	GV	65 mm	EA	-	-	-	-	-	-	-	-	-	-	-	-	-	-
VALVES AND ASSEMBLIES	GV	75 mm	EA	-	-	-	4	-	1	-	-	-	-	-	-		5
VALVES AND ASSEMBLIES	CARV	50 mm	EA	1	1	-	-	-	-	2	-	-	1	-	-	-	5
VALVES AND ASSEMBLIES	FS	50 mm	EA	-	-	-	-	-	-	-	-	-	-	-	-	-	-
VALVES AND ASSEMBLIES	FS	75 mm	EA	-	-	-	-	-	-	-	-	-	-	-	-	-	-
VALVES AND ASSEMBLIES	PRV	50 mm	EA	-	-	-	1	-	1	-	-	-	-	-	-	-	2
CONDUIT	CSP																
CONDUIT	WSP																
PLASTIC PIPE SUPPLY LINE	PR 200	25 mm	m	-	-	-	-	-	-	-	-	-	-	-	-	-	-
PLASTIC PIPE SUPPLY LINE	PR 200	32 mm	m	-	-	-	-	-	-	-	-	-	-	-	-	-	-
PLASTIC PIPE SUPPLY LINE	PR 200	40 mm	m	-	-	-	-	-	-	-	-	-	-	-	-	-	-
PLASTIC PIPE SUPPLY LINE	PR 200	50 mm	m	3	9	12	12	6	6	6	3	6	12	12	21	-	108
PLASTIC PIPE SUPPLY LINE	PR 200	65 mm	m	-	-	-	-	-	-	-	-	-	-	-	-	-	-
PLASTIC PIPE SUPPLY LINE	PR 200	75 mm	m	150	400	680	360	340	340	110	360	340	320	170	300	-	3870
PLASTIC PIPE SUPPLY LINE	PR 315																
PB (N)		PULL BOX	EA	-	-	-	-	-	-	-	-	-	-	-	-	-	-
SCC (N)		25 mm	m	-	-	-	-	-	-	-	-	-	-	-	-	-	-

TOTAL QUANTITIES

TOTALS	UNIT	DESCRIPTION		
-	EA	25 mm		BPA
-	EA	50 mm		BPA
-	EA	75 mm		BPA
-	EA	ENCLOSURE		BPA
-	EA	25 mm		WATER METER
-	EA	50 mm		WATER METER
-	EA	75 mm		WATER METER
-	EA	BOOSTER PUMP		
8	EA	ETM ANTENNA	ETM	IRRIGATION CONTROLLER
8	EA	ET MANAGER	ETM	IRRIGATION CONTROLLER
-	EA	16 STATION	SAT	IRRIGATION CONTROLLER
1	EA	24 STATION	SAT	IRRIGATION CONTROLLER
3	EA	32 STATION	SAT	IRRIGATION CONTROLLER
-	EA	40 STATION	SAT	IRRIGATION CONTROLLER
-	EA	SINGLE	CEC	IRRIGATION CONTROLLER
1	EA	DOUBLE	CEC	IRRIGATION CONTROLLER
-	EA	50 mm	RCVM	VALVES AND ASSEMBLIES
19	EA	25 mm	RCV	VALVES AND ASSEMBLIES
92	EA	40 mm	RCV	VALVES AND ASSEMBLIES
-	EA	50 mm	RCV	VALVES AND ASSEMBLIES
-	EA	40 mm	GV	VALVES AND ASSEMBLIES
35	EA	50 mm	GV	VALVES AND ASSEMBLIES
-	EA	65 mm	GV	VALVES AND ASSEMBLIES
5	EA	75 mm	GV	VALVES AND ASSEMBLIES
5	EA	50 mm	CARV	VALVES AND ASSEMBLIES
-	EA	50 mm	FS	VALVES AND ASSEMBLIES
-	EA	75 mm	FS	VALVES AND ASSEMBLIES
2	EA	50 mm	PRV	VALVES AND ASSEMBLIES
			CSP	CONDUIT
			WSP	CONDUIT
9865	m	25 mm	PR 200	PLASTIC PIPE SUPPLY LINE
3000	m	32 mm	PR 200	PLASTIC PIPE SUPPLY LINE
810	m	40 mm	PR 200	PLASTIC PIPE SUPPLY LINE
966	m	50 mm	PR 200	PLASTIC PIPE SUPPLY LINE
125	m	65 mm	PR 200	PLASTIC PIPE SUPPLY LINE
3870	m	75 mm	PR 200	PLASTIC PIPE SUPPLY LINE
			PR 315	PLASTIC PIPE SUPPLY LINE
-	EA	PULL BOX		PB (N)
-	m	25 mm		SCC (N)
673	EA	A-5		SPRINKLER TYPE
4	EA	A-6		SPRINKLER TYPE
238	EA	A-7		SPRINKLER TYPE
14	EA	A-8		SPRINKLER TYPE
-	EA	A-11		SPRINKLER TYPE
-	EA	A-12		SPRINKLER TYPE
-	EA	B-1		SPRINKLER TYPE
-	EA	B-2		SPRINKLER TYPE
-	EA	C-2		SPRINKLER TYPE
843	EA	C-2 Mod		SPRINKLER TYPE

LEGEND

(N)- DENOTES NOT A SEPARATE PAY ITEM, FOR INFORMATION ONLY

ETM - EVAPOTRANSPIRATION MANAGER

IRRIGATION QUANTITIES
IQ-4

STATE OF CALIFORNIA - DEPARTMENT OF TRANSPORTATION
Caltrans LANDSCAPE ARCHITECTURE

SENIOR LANDSCAPE ARCHITECT: STEPHEN ALVAREZ
CALCULATED-DESIGNED BY: STEVE WARREN
CHECKED BY: JOEL HORTIZUELA
REVISED BY
DATE REVISED

LAST REVISION DATE PLOTTED => 01-JUN-2010
02-22-10 TIME PLOTTED => 15:58

Dist	COUNTY	ROUTE	KILOMETER POST TOTAL PROJECT	SHEET No.	TOTAL SHEETS
11	SD	15	M38.3/M42.2	51	67

Simon Tse 01-05-10
REGISTERED CIVIL ENGINEER DATE

05-10-10
PLANS APPROVAL DATE

REGISTERED PROFESSIONAL ENGINEER SIMON TSE No. C66401 Exp. 06-30-10 CIVIL STATE OF CALIFORNIA

THE STATE OF CALIFORNIA OR ITS OFFICERS OR AGENTS SHALL NOT BE RESPONSIBLE FOR THE ACCURACY OR COMPLETENESS OF ELECTRONIC COPIES OF THIS PLAN SHEET.

Caltrans Metric

NOTES:

1. FOR ACCURATE RIGHT OF WAY AND ACCESS DATA, CONTACT RIGHT OF WAY ENGINEERING AT THE DISTRICT OFFICE.
2. ALL UTILITIES TO BE FIELD VERIFIED.
3. LOCATION OF EXISTING UTILITY FACILITIES ARE LOCATED BASED ON OWNER'S RECORDS AND/OR STATE SURVEY.

LEGEND

ESA — ENVIRONMENTALLY SENSITIVE AREA

LEGEND

EXISTING UTILITIES

	FACILITY	OWNER
-——w——————w——	WATER	- CITY OF SAN DIEGO
——--s——--——--s——	SEWER	- CITY OF SAN DIEGO
——-g——-——-g——	GAS	- SAN DIEGO GAS & ELECTRIC
——-e——————-e——	ELECTRIC	- SAN DIEGO GAS & ELECTRIC
——-e——————-(oh)——	OVERHEAD ELECTRIC	- SAN DIEGO GAS & ELECTRIC
——---tv——————---tv——	CABLE TV	- TIME WARNER CABLE (TWC)
——————UG——————		UNDERGROUND
——————————————		DENOTES END OF UTILITY

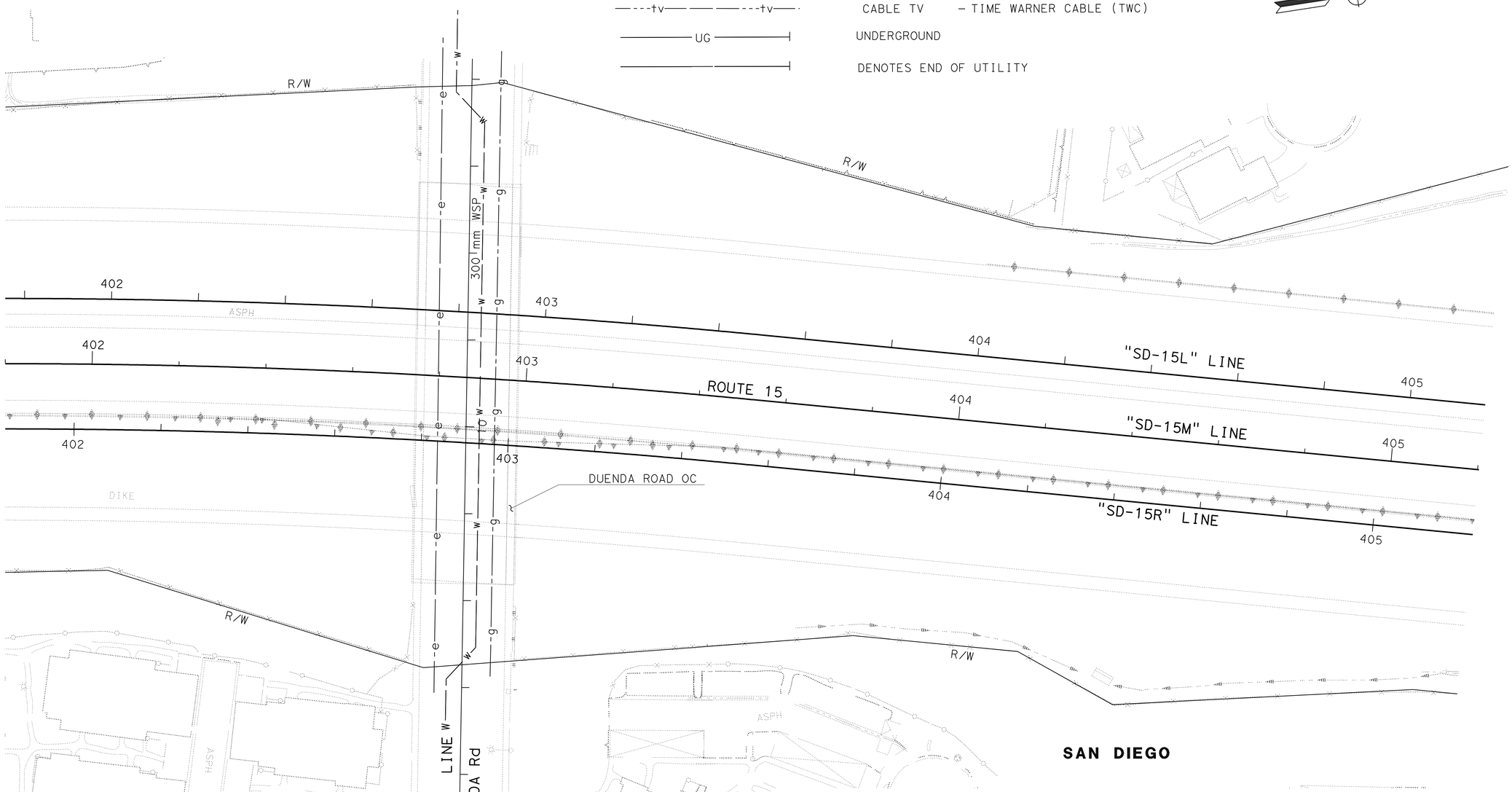

THIS PLAN ACCURATE FOR EXISTING UTILITIES ONLY

ALL DIMENSIONS ARE IN METERS UNLESS OTHERWISE SHOWN

EXISTING UTILITIES PLAN

SCALE 1:500

EU-1

STATE OF CALIFORNIA - DEPARTMENT OF TRANSPORTATION
Caltrans ENGINEERING SERVICES

FUNCTIONAL SUPERVISOR: ABU-BAKR AL-JAFRI

CALCULATED-DESIGNED BY: ANNH HOANG
CHECKED BY: SIMON TSE

REVISED BY | DATE REVISED

LAST REVISION 02-22-10 | DATE PLOTTED => 01-JUN-2010 | TIME PLOTTED => 15:58

Dist	COUNTY	ROUTE	KILOMETER POST TOTAL PROJECT	SHEET No.	TOTAL SHEETS
11	SD	15	M38.3/M42.2	52	67

Simon Tse 01-05-10
REGISTERED CIVIL ENGINEER DATE

05-10-10
PLANS APPROVAL DATE

REGISTERED PROFESSIONAL ENGINEER SIMON TSE No. C66401 Exp. 06-30-10 CIVIL STATE OF CALIFORNIA

THE STATE OF CALIFORNIA OR ITS OFFICERS OR AGENTS SHALL NOT BE RESPONSIBLE FOR THE ACCURACY OR COMPLETENESS OF SCANNED COPIES OF THIS PLAN SHEET.

Caltrans Metric

NOTE: FOR ACCURATE RIGHT OF WAY AND ACCESS DATA, CONTACT RIGHT OF WAY ENGINEERING AT THE DISTRICT OFFICE.

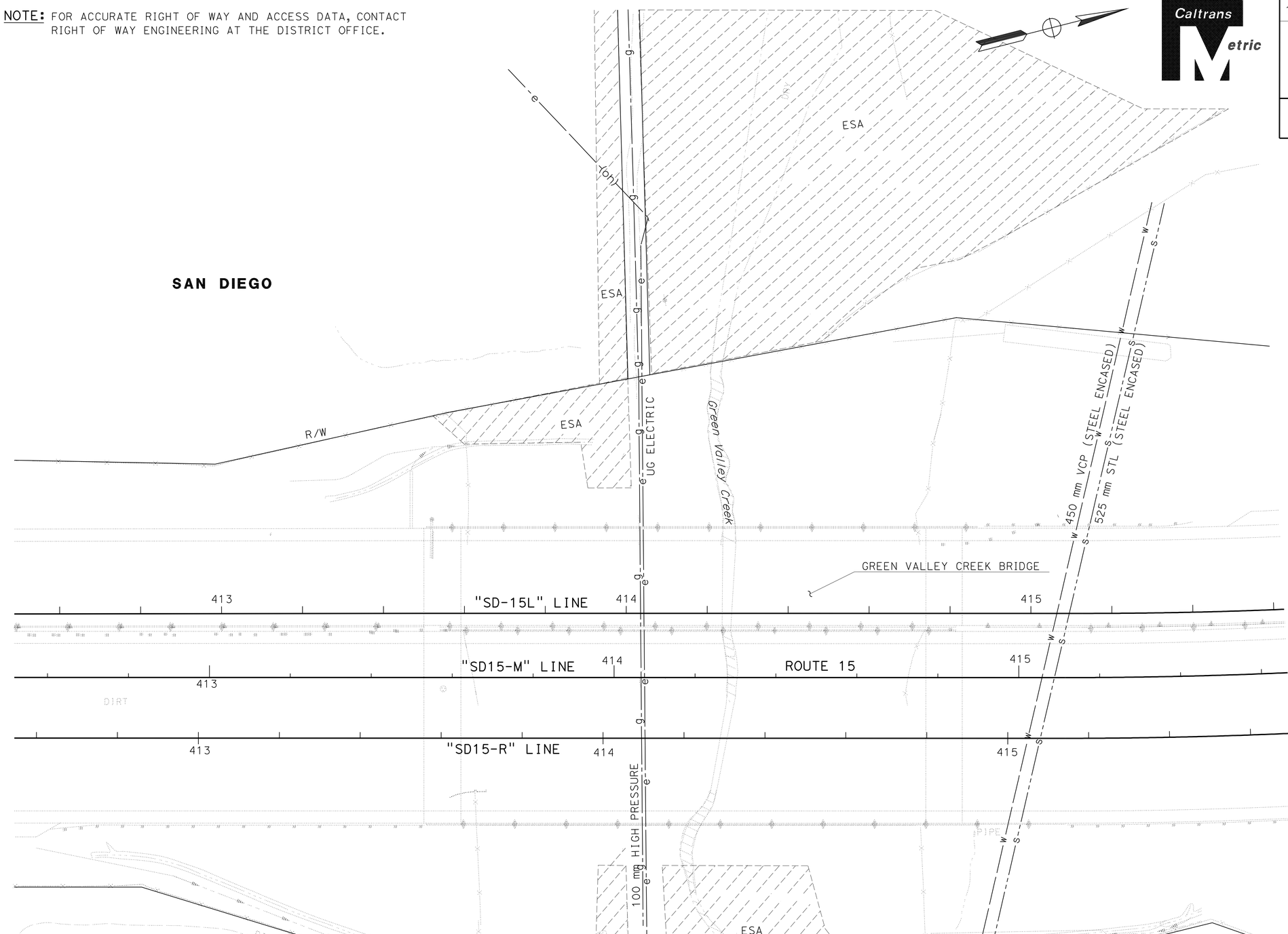

THIS PLAN ACCURATE FOR EXISTING UTILITIES ONLY

ALL DIMENSIONS ARE IN METERS UNLESS OTHERWISE SHOWN

EXISTING UTILITIES PLAN

SCALE 1:500

EU-2

STATE OF CALIFORNIA - DEPARTMENT OF TRANSPORTATION
Caltrans ENGINEERING SERVICES

FUNCTIONAL SUPERVISOR: ABU-BAKR AL-JAFRI
CALCULATED-DESIGNED BY: ANH HOANG
CHECKED BY: SIMON TSE
REVISED BY
DATE REVISED

LAST REVISION 09-29-09
DATE PLOTTED => 01-JUN-2010
TIME PLOTTED => 15:58

Dist	COUNTY	ROUTE	KILOMETER POST TOTAL PROJECT	SHEET No.	TOTAL SHEETS
11	SD	15	M38.3/M42.2	53	67

Simon Tse 01-05-10
REGISTERED CIVIL ENGINEER DATE

05-10-10
PLANS APPROVAL DATE

REGISTERED PROFESSIONAL ENGINEER SIMON TSE No. C66401 Exp. 06-30-10 CIVIL STATE OF CALIFORNIA

THE STATE OF CALIFORNIA OR ITS OFFICERS OR AGENTS SHALL NOT BE RESPONSIBLE FOR THE ACCURACY OR COMPLETENESS OF SCANNED COPIES OF THIS PLAN SHEET.

Caltrans Metric

NOTE: FOR ACCURATE RIGHT OF WAY AND ACCESS DATA, CONTACT RIGHT OF WAY ENGINEERING AT THE DISTRICT OFFICE.

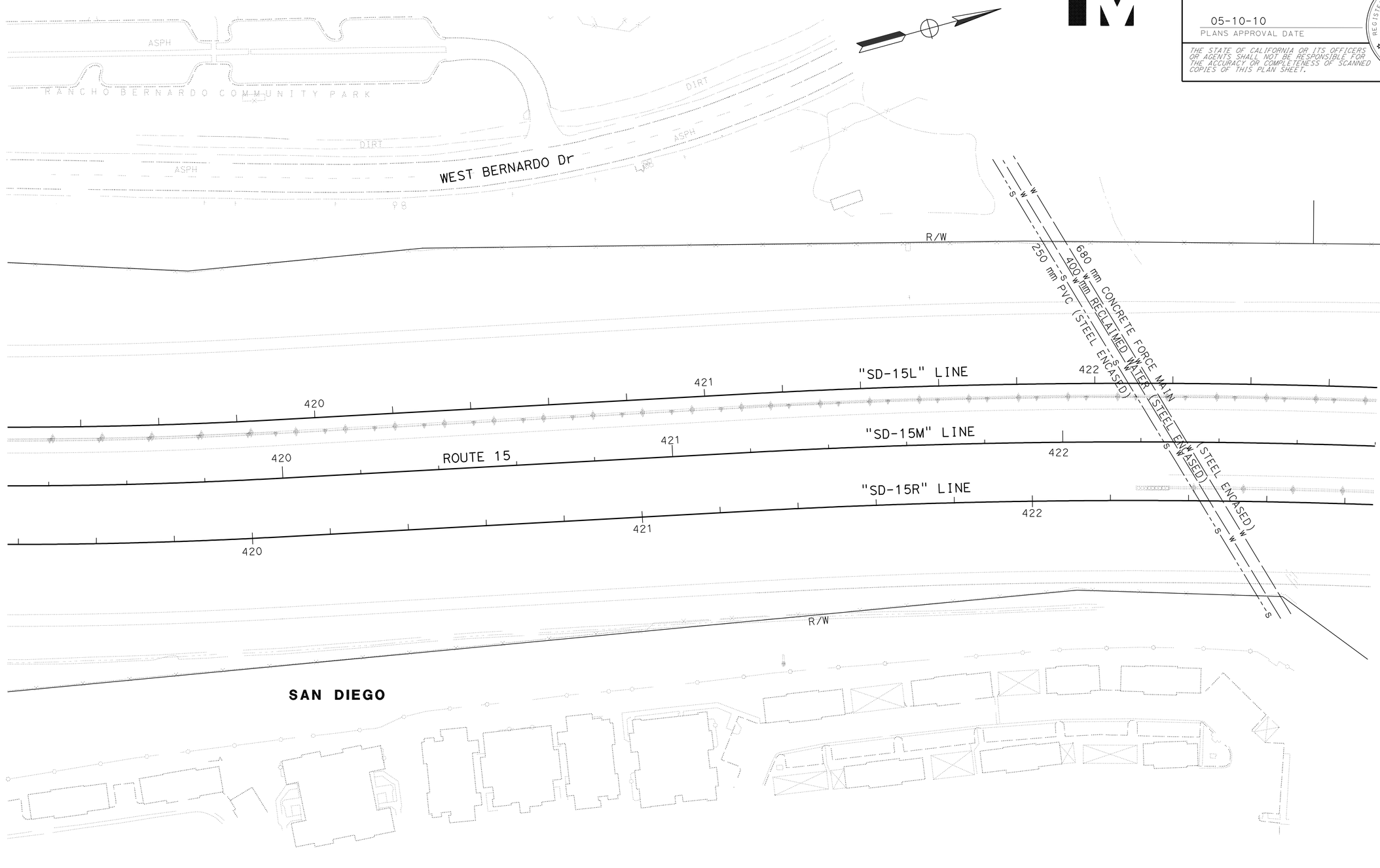

THIS PLAN ACCURATE FOR EXISTING UTILITIES ONLY

ALL DIMENSIONS ARE IN METERS UNLESS OTHERWISE SHOWN

EXISTING UTILITIES PLAN

SCALE 1:500

EU-3

REVISED BY	DATE REVISED

CALCULATED-DESIGNED BY: ANH HOANG
CHECKED BY: SIMON TSE

FUNCTIONAL SUPERVISOR: ABU-BAKR AL-JAFRI

STATE OF CALIFORNIA - DEPARTMENT OF TRANSPORTATION
Caltrans ENGINEERING SERVICES

LAST REVISION 02-22-10 | DATE PLOTTED => 01-JUN-2010 | TIME PLOTTED => 15:58

Dist	COUNTY	ROUTE	KILOMETER POST TOTAL PROJECT	SHEET No.	TOTAL SHEETS
11	SD	15	M38.3/M42.2	54	67

Simon Tse 01-05-10
REGISTERED CIVIL ENGINEER DATE

05-10-10
PLANS APPROVAL DATE

REGISTERED PROFESSIONAL ENGINEER SIMON TSE No. C66401 Exp 06-30-10 CIVIL STATE OF CALIFORNIA

THE STATE OF CALIFORNIA OR ITS OFFICERS OR AGENTS SHALL NOT BE RESPONSIBLE FOR THE ACCURACY OR COMPLETENESS OF SCANNED COPIES OF THIS PLAN SHEET.

Caltrans Metric

NOTE:

FOR ACCURATE RIGHT OF WAY AND ACCESS DATA, CONTACT RIGHT OF WAY ENGINEERING AT THE DISTRICT OFFICE.

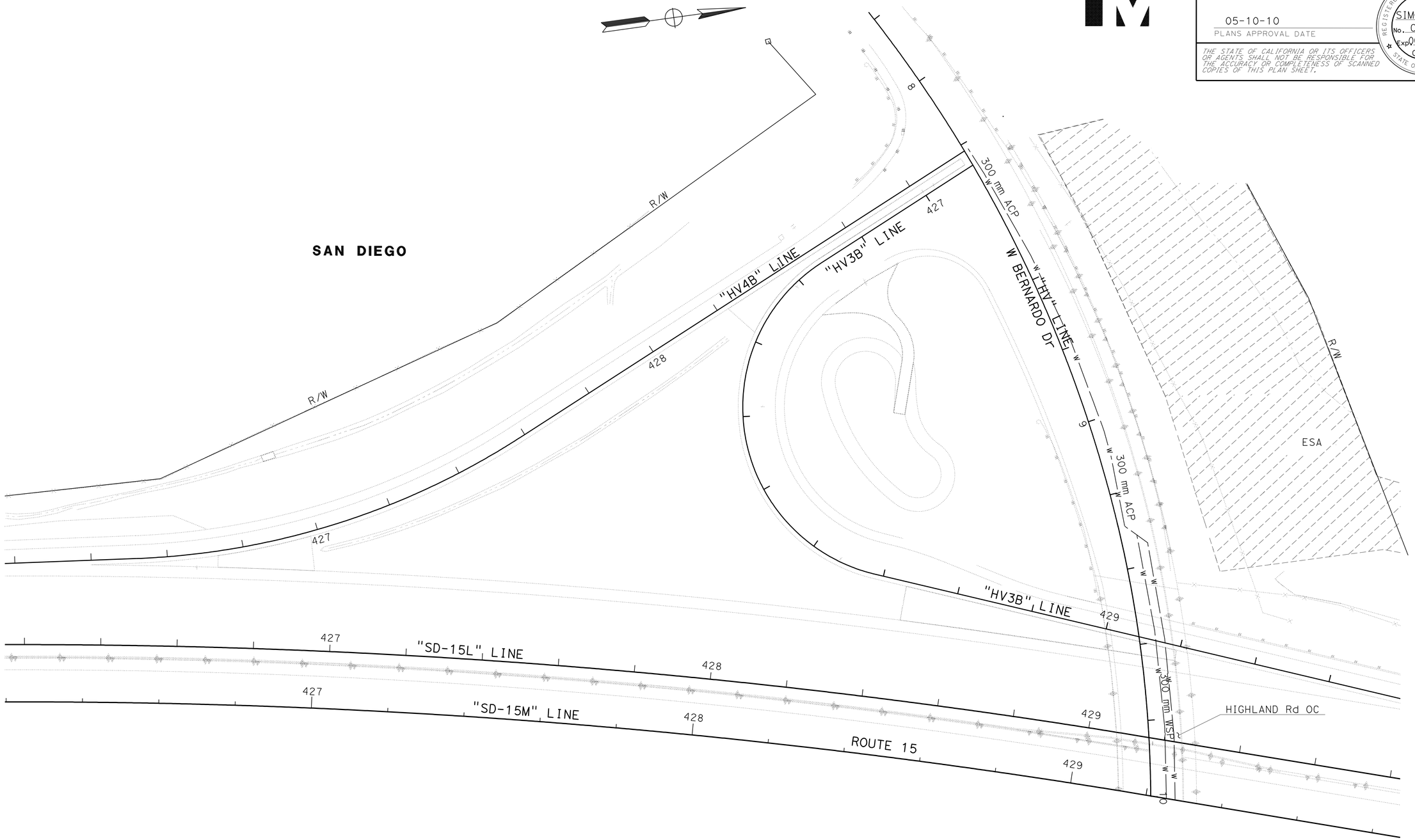

THIS PLAN ACCURATE FOR EXISTING UTILITIES ONLY

ALL DIMENSIONS ARE IN METERS UNLESS OTHERWISE SHOWN

EXISTING UTILITIES PLAN

SCALE 1:500

EU-4

STATE OF CALIFORNIA - DEPARTMENT OF TRANSPORTATION
Caltrans ENGINEERING SERVICES

FUNCTIONAL SUPERVISOR: ABU-BAKR AL-JAFRI

CALCULATED-DESIGNED BY: ANH HOANG
CHECKED BY: SIMON TSE

REVISED BY | DATE REVISED

LAST REVISION 02-22-10 | DATE PLOTTED => 01-JUN-2010 | TIME PLOTTED => 15:58

Dist	COUNTY	ROUTE	KILOMETER POST TOTAL PROJECT	SHEET No.	TOTAL SHEETS
11	SD	15	M38.3/M42.2	55	67

REGISTERED CIVIL ENGINEER 01-05-10 DATE

05-10-10
PLANS APPROVAL DATE

REGISTERED PROFESSIONAL ENGINEER SHAHIN T ADIBI No. 54839 Exp. 06/30/10 CIVIL STATE OF CALIFORNIA

THE STATE OF CALIFORNIA OR ITS OFFICERS OR AGENTS SHALL NOT BE RESPONSIBLE FOR THE ACCURACY OR COMPLETENESS OF SCANNED COPIES OF THIS PLAN SHEET.

Caltrans Metric

CONSTRUCTION AREA SIGNS

SIGN No.	TYPE	PANEL SIZE (mm)	No. OF POST AND SIZE (mm)	NUMBER OF SIGNS	REMARKS
1	C14 (CA) (Mod)	1200 X 600	1-89 X 89 (S)	8	
2	C23 (CA) (Mod)	1200 X 1200	1-89 X 150 (S)	8	
			TOTAL	16	

NOTES:

1. EXACT SIGN LOCATIONS TO BE DETERMINED BY THE ENGINEER.
2. (S) DENOTES STATIONARY MOUNTED SIGN.
3. (CA) INDICATES CALIFORNIA SIGN SPECS ARE USED
4. EXISTING UTILITIES HAVE NOT BEEN SHOWN ON THESE PLAN SHEETS. CONTRACTOR SHALL VERIFY LOCATIONS OF EXISTING UTILITIES AND AVOID IMPACTING THESE EXISTING UTILITIES BY ADJUSTING THE FIELD LOCATION OF SIGN POSTS IN CONSULTATION WITH ENGINEER.

LEGEND

XX = CONSTRUCTION AREA SIGN

TYPICAL- PLACEMENT OF TRAFFIC PLASTIC DRUM

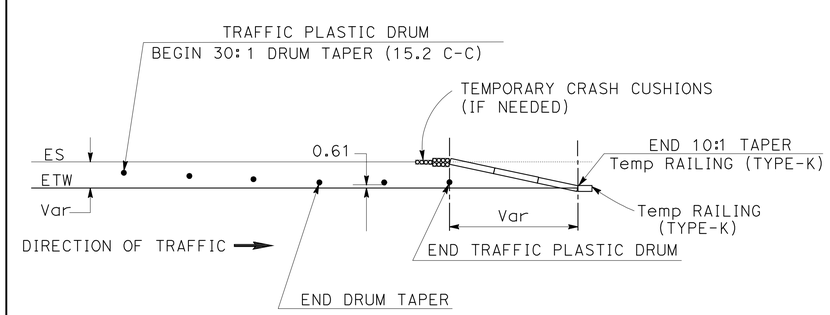

C23 (CA) (Mod)

2

C14 (CA) (Mod)

1

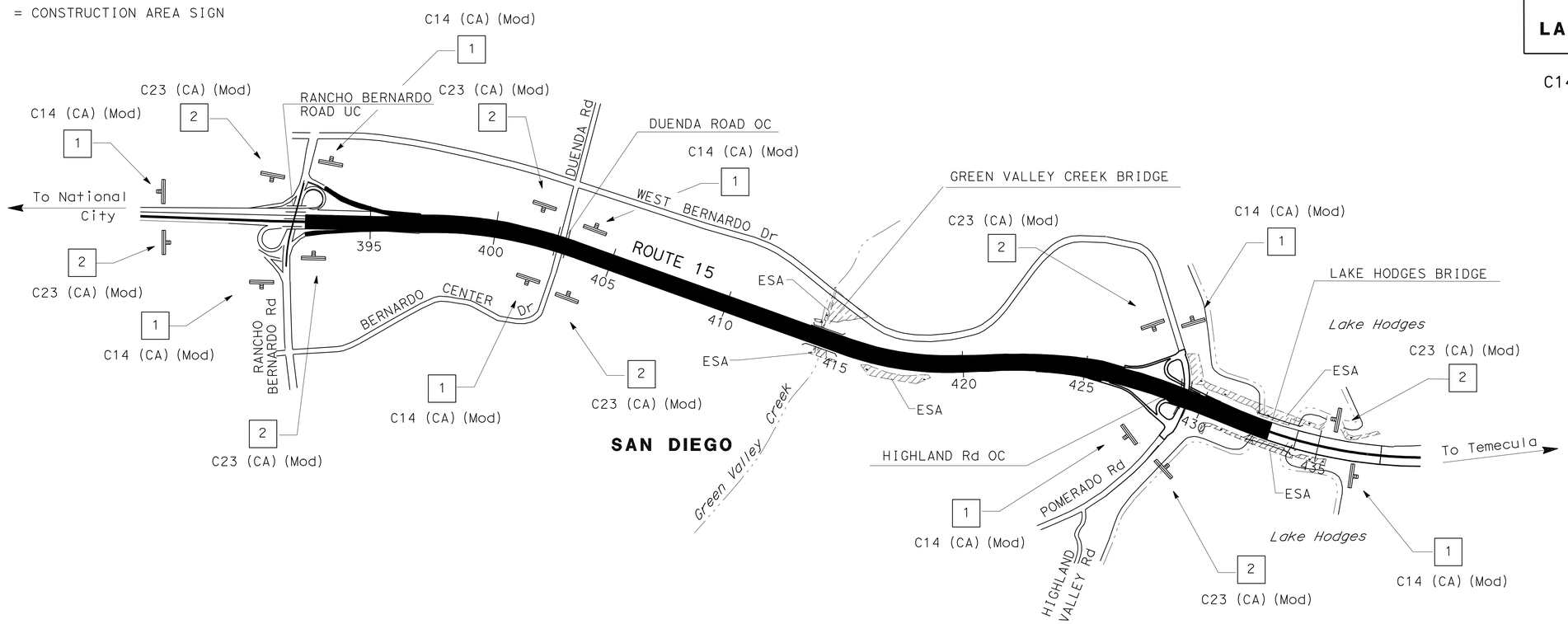

THIS PLAN ACCURATE FOR CONSTRUCTION AREA SIGNS WORK ONLY.

ALL DIMENSIONS ARE IN
METERS UNLESS OTHERWISE SHOWN

CONSTRUCTION AREA SIGNS

SCALE 1:500

CS-1

STATE OF CALIFORNIA - DEPARTMENT OF TRANSPORTATION
Caltrans
TRAFFIC DESIGN

FUNCTIONAL SUPERVISOR: CAMILLE ABOUFADEL
CALCULATED-DESIGNED BY: STEVE WARREN
CHECKED BY: SHAHIN T. ADIBI
REVISED BY
DATE REVISED

LAST REVISION 02-22-10
DATE PLOTTED => 01-JUN-2010
TIME PLOTTED => 15:58

Dist	COUNTY	ROUTE	KILOMETER POST TOTAL PROJECT	SHEET No.	TOTAL SHEETS
11	SD	15	M38.3/M42.2	56	67

Enrique P Bernal 01-05-10
REGISTERED ELECTRICAL ENGINEER DATE

05-10-10
PLANS APPROVAL DATE

REGISTERED PROFESSIONAL ENGINEER
ENRIQUE P BERNAL
No. 15675
Exp. 6-30-10
ELECTRICAL
STATE OF CALIFORNIA

THE STATE OF CALIFORNIA OR ITS OFFICERS OR AGENTS SHALL NOT BE RESPONSIBLE FOR THE ACCURACY OR COMPLETENESS OF SCANNED COPIES OF THIS PLAN SHEET.

Caltrans Metric

NOTE:

FOR ACCURATE RIGHT OF WAY AND ACCESS DATA, CONTACT RIGHT OF WAY ENGINEERING AT THE DISTRICT OFFICE.

CONDUIT NOTES:

(1) - Exist 27C, mt.
ADD 2#10 (CEC), REUSED.

N (2) C - Exist 53C, 2#10 (cec).

N (3) C - Exist 78C, 2#2 (SIGN), 8#6 (tms), 3#14 (peu), 2#10 (cec), 2#6 (CCTV).

N (4) C - Exist 53C, CONDUCTORS BY SDG&E.

NOTES (TSO):

[1] - CEC ON Exist FOUNDATION PER LANDSCAPE PLANS. CONNECT 2#10 (CEC).

[2] - Exist IRRIGATION CONTROLLER ENCLOSURE CABINET (TYPE 1).

[3] - Exist TYPE III SERVICE EQUIPMENT ENCLOSURE WITH:

2P-100 A CB (MAIN)
2P-30 A CB (SIGN)
1P-15 A CB (TMS-U24.495)
1P-15 A CB (TMS-U24.499)
1P-15 A CB (TMS-U25.027)
1P-15 A CB (TMS-U25.031)
1P-15 A CB (CEC)
1P-15 A CB (CCTV)
1P-15 A CB (PEU)
1P-15 A CB (CEC)

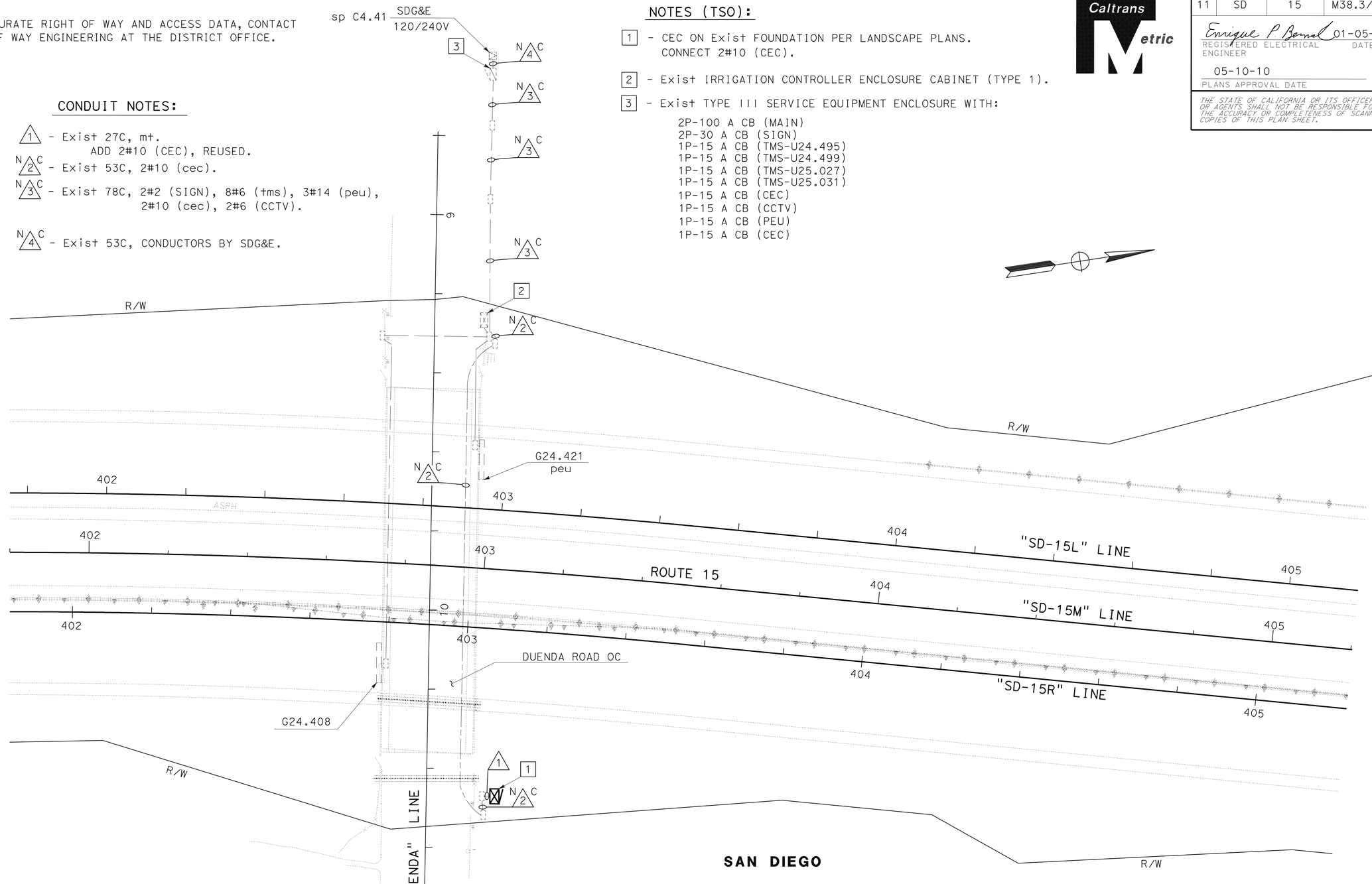

THIS PLAN ACCURATE FOR ELECTRICAL WORK ONLY.

ALL ELECTRICAL EQUIPMENT SIZES ARE IN MILLIMETERS (DIAMETER NOMINAL) UNLESS OTHERWISE SHOWN.

ELECTRICAL SERVICE (IRRIGATION) PLAN

SCALE 1:500

E-1

STATE OF CALIFORNIA - DEPARTMENT OF TRANSPORTATION
Caltrans TRAFFIC ELECTRICAL

SENIOR TRAFFIC ELECTRICAL: DALE WILSON
CALCULATED-DESIGNED BY: HENRY TSUI
CHECKED BY: ENRIQUE BERNAL
REVISED BY / DATE REVISED

LAST REVISION 02-22-10 | DATE PLOTTED => 01-JUN-2010 | TIME PLOTTED => 15:58

DIST	COUNTY	ROUTE	KILOMETER POST TOTAL PROJECT	SHEET NO.	TOTAL SHEETS
11	SD	15	M38.3/M42.2	57	67

Caltrans Metric

REGISTERED ELECTRICAL ENGINEER

October 5, 2007
PLANS APPROVAL DATE

REGISTERED PROFESSIONAL ENGINEER Jeffery G. McRae No. E14512 Exp. 6-30-08 ELECTRICAL STATE OF CALIFORNIA

The State of California or its officers or agents shall not be responsible for the accuracy or completeness of electronic copies of this plan sheet.

To get to the Caltrans web site, go to: http://www.dot.ca.gov

To accompany plans dated 05-10-10

ELECTROLIERS

STANDARD TYPES
15, 15D
15 STRUCTURE
21, 21D STRUCTURE
30
31
32
35
36-20A

High mast lighting standard

Double arm lighting standard

Existing electrolier

Electrolier foundation (Future installation)

NOTES

1. Luminaires shall be 310 W HPS when installed on Type 21, 21D, 30, 31, 32, 35 and 36-20A Standards, unless otherwise specified. Luminaires shall be 200 W HPS when installed on other type standards or poles, unless otherwise specified.
2. Luminaires shall be the cutoff type, ANSI Type III medium cutoff lighting distribution, unless otherwise specified.
3. Variations noted adjacent to symbol on project plans.

Electrolier (see project notes or project plans)

Luminaire on wood pole

STANDARD NOTES

- AB — Abandon. If applied to conduit, remove conductors.
- BC — Install pull box in existing conduit run.
- BP — Pedestrian barricade, type as indicated on plan.
- CB — Install conduit into existing pull box.
- CC — Connect new and existing conduit. Remove existing conductors and install conductors as indicated.
- CF — Conduit to remain for future use. Remove conductors. Install pull wire or rope.
- DH — Detector handhole.
- FA — Foundation to be abandoned.
- IS — Install sign on signal mast arm.
- NS — No slip base on standard.
- PEC — Photoelectric control.
- PEU — Photoelectric unit.
- RC — Equipment or material to be removed and become the property of the Contractor.
- RE — Remove electrolier, fuses and ballast. Tape ends of conductors.
- RL — Relocate equipment.
- RR — Remove and reuse equipment.
- RS — Remove and salvage equipment.
- SC — Splice new to existing conductors.
- SD — Service disconnect.
- SF — Standard to remain for future use. Remove luminaire, pole conductors, fuses and ballast. Tape disconnects.
- TSP — Telephone service point.

ABBREVIATIONS AND EQUIPMENT DESIGNATIONS

PROPOSED	EXISTING	
BBS	bbs	Battery backup system
BC	bc	Bolt circle
C	C	Conduit
CCTV	cctv	Closed circuit television
CKT	ckt	Circuit
CMS	cms	Changeable message sign
DLC	dlc	Loop detector lead-in cable
EMS	ems	Extinguishable message sign
EVC	evc	Emergency vehicle cable
EVD	evd	Emergency vehicle detector
FB	fb	Flashing beacon
FBCA	fbca	Flashing beacon control assembly
FBS	fbs	Flashing beacon with slip base
FO	fo	Fiber optic
G	G	Ground (Equipment Grounding Conductor)
GFCI	GFCI	Ground fault circuit interrupt
HAR	har	Highway advisory radio
HEX	hex	Hexagonal
HPS	hps	High pressure sodium
IISNS	iisns	Internally illuminated street name sign
ISL	isl	Induction sign lighting
LED	led	Light emitting diode
LMA	lma	Luminaire mast arm
LPS	lps	Low pressure sodium
LTG	ltg	Lighting
LUM	lum	Luminaire
MAT	mat	Mast arm mounted vehicle signal faces, top attachment
MAS	mas	Mast arm mounted vehicle signal faces, side attachment
MAS-4A	mas-4A	Mast arm mounted vehicle signal faces, side attachment - 4 signal section
MAS-4B	mas-4B	
MAS-4C	mas-4C	
MAS-5A	mas-5A	Mast arm mounted vehicle signal faces, side attachment - 5 signal section
MAS-5B	mas-5B	
MC	mc	Mercury contactor
M/M	m/m	Multiple to multiple transformer
MT	mt	Conduit with pull wire or rope only
MTG	mtg	Mounting
	mv	Mercury vapor lighting fixture
N	N	Neutral (Grounded Conductor)
NC	NC	Normally closed
NO	NO	Normally open
PB	pb	Pull box
PEC	pec	Photoelectric control (Type I, II, III, IV or V as shown)
PED	ped	Pedestrian
PEU	peu	Photoelectric unit
PPB	ppb	Pedestrian push button
RL	RL	Relocated equipment
RM	rm	Ramp metering
SB	sb	Slip base
SIC	sic	Signal interconnect cable
SIG	sig	Signal
SMA	sma	Signal mast arm
SNS	sns	Street name sign
SP	sp	Service point
TDC	tdc	Telephone demarcation cabinet
TMS	tms	Traffic monitoring station
TOS	tos	Traffic Operations System
VEH	veh	Vehicle
XFMR	xfmr	Transformer
COMM	comm	Communication
RWIS	rwis	Roadway weather information system

SOFFIT AND WALL MOUNTED LUMINAIRES

Pendant, 70 W HPS unless otherwise specified.

Flush, 70 W HPS unless otherwise specified.

Wall surface, 70 W HPS unless otherwise specified.

Existing soffit or wall luminaire to remain unmodified.

Existing soffit or wall luminaire to be modified as specified.

NOTE

Arrow indicates "street side" of luminaire.

STATE OF CALIFORNIA
DEPARTMENT OF TRANSPORTATION

ELECTRICAL SYSTEMS (SYMBOLS AND ABBREVIATIONS)

NO SCALE

ALL DIMENSIONS ARE IN MILLIMETERS UNLESS OTHERWISE SHOWN

RSP ES-1A DATED OCTOBER 5, 2007 SUPERSEDES STANDARD PLAN ES-1A DATED JULY 1, 2004-PAGE 413 OF THE STANDARD PLANS BOOK DATED JULY 2004.

REVISED STANDARD PLAN RSP ES-1A

2004 REVISED Std PLAN RSP ES-1A

6-27-07

DIST	COUNTY	ROUTE	KILOMETER POST TOTAL PROJECT	SHEET NO.	TOTAL SHEETS
11	SD	15	M38.3/M42.2	58	67

Caltrans Metric

REGISTERED ELECTRICAL ENGINEER

October 5, 2007
PLANS APPROVAL DATE

REGISTERED PROFESSIONAL ENGINEER Jeffery G. McRae No. E14512 Exp. 6-30-08 ELECTRICAL STATE OF CALIFORNIA

The State of California or its officers or agents shall not be responsible for the accuracy or completeness of electronic copies of this plan sheet.

To get to the Caltrans web site, go to: http://www.dot.ca.gov

To accompany plans dated 05-10-10

CONDUIT

PROPOSED	EXISTING	
		Lighting conduit, unless otherwise indicated or noted
		Traffic signal conduit
C	c	Communication conduit
T	t	Telephone conduit
F	f	Fire alarm conduit
FO	fo	Fiber optic conduit
		Conduit termination (RSP ES-9A C)
R	r	Conduit riser in/on structure or Service pole

SERVICE EQUIPMENT

PROPOSED	EXISTING	
OH	oh	Overhead lines
U	u	Wood pole "U" indicates utility owned
		Pole guy-with anchor
		Utility transformer-ground mounted
III		Service equipment enclosure type
		Service equipment enclosure door indicates front of enclosure
T	t	Telephone demarcation cabinet

POLE-MOUNTED SERVICE DESIGNATION

Type of installation

TYPE H SERVICE - 8.8 m ← Pole height above grade

ILLUMINATED OVERHEAD SIGN

PROPOSED	EXISTING	
		Overhead sign - Single post
		Overhead sign - Two post
		Overhead sign - Mounted on structure
		Overhead sign with electrolier

SIGNAL EQUIPMENT

PROPOSED	EXISTING	
		Pedestrian signal face
		Pedestrian push button post
		Pedestrian barricade
		Vehicle signal face (with backplate, 3-Section: red, yellow and green)
		Vehicle signal face with angle visors
PV	PV	Modifications of basic symbols: "L" Indicates all non-arrow sections louvered "LG" Indicates louvered green section only "PV" indicates 300 mm programmed visibility sections "200" indicates all 200 mm sections (only when specified)
		Type 15TS and Vehicle signal face
		Vehicle signal face with red, yellow and green left arrow sections
		Vehicle signal face with red and yellow sections and up green arrow
		Vehicle signal face (5 Section) with red, yellow and green sections and yellow and green right arrows
		Type 1 Standard and attached vehicle signal faces
		Standard with signal mast arm only and attached vehicle signal faces and internally illuminated street name sign
		Type 33 Standard, Left-turn vehicle signal face and sign
		Standard with luminaire and signal mast arms and attached vehicle signal faces
		Cantilever flashing beacon Type 9 Frame, with a sign unless otherwise specified or indicated
Y Y	Y Y	Type 15-FBS Standard with two vehicle signal face sections with lens, backplate and visor with a sign
R	Y	Flashing beacon. One vehicle signal face section with lens, backplate and visor. "R" indicates red indication, "Y" indicates yellow indication
		Controller assembly. Door indicates front of cabinet
		Guard post
		Type 1 Standard with "Meter On" sign
		Emergency vehicle detector

NOTES

1. All signal sections shall be 300 mm unless shown otherwise.
2. Signal heads shall be provided with backplates unless shown otherwise.
3. Signal indication shall be LED.

STATE OF CALIFORNIA
DEPARTMENT OF TRANSPORTATION

ELECTRICAL SYSTEMS (SYMBOLS AND ABBREVIATIONS)

NO SCALE

ALL DIMENSIONS ARE IN MILLIMETERS UNLESS OTHERWISE SHOWN

RSP ES-1B DATED OCTOBER 5, 2007 SUPERSEDES STANDARD PLAN ES-1B DATED JULY 1, 2004-PAGE 414 OF THE STANDARD PLANS BOOK DATED JULY 2004.

REVISED STANDARD PLAN RSP ES-1B

2004 REVISED Std PLAN RSP ES-1B

8-9-07

DIST	COUNTY	ROUTE	KILOMETER POST TOTAL PROJECT	SHEET NO.	TOTAL SHEETS
11	SD	15	M38.3/M42.2	59	67

Caltrans Metric

REGISTERED ELECTRICAL ENGINEER

October 5, 2007
PLANS APPROVAL DATE

REGISTERED PROFESSIONAL ENGINEER Jeffery G. McRae No. E14512 Exp. 6-30-08 ELECTRICAL STATE OF CALIFORNIA

The State of California or its officers or agents shall not be responsible for the accuracy or completeness of electronic copies of this plan sheet.

To get to the Caltrans web site, go to: http://www.dot.ca.gov

To accompany plans dated 05-10-10

EQUIPMENT IDENTIFICATION

ILLUMINATED SIGN IDENTIFICATION NUMBER:

Sign No. 12345

10 ISL SCI 1.0

- Sign number - Place on post or structure
- Transformer rating (kVA)
- Lighting control type
- Number and type of fixtures

Do NOT place on standard or structure

ELECTROLIER OR EQUIPMENT IDENTIFICATION NUMBER:

12345 - 4.6

- Mast arm length in meters, if shown. Do not place on standard or structure.
- Equipment number - Place on standard or structure. Existing equipment numbers are shown in parenthesis

CONDUIT AND CONDUCTOR IDENTIFICATION:

41C, 2#10, 15#14, 2 DLC

- Number and size of conductors and cables
- Size of conduit in millimeters

ø1, ø2, ø2P, etc.	Traffic phase identification for signal faces, detectors and phase diagrams
1 2 3	Project note numbers
A B C	Equipment description, installation or item numbers
1 2 3	Conduit run numbers

SIGNAL AND LIGHTING STANDARD (TYPICAL DESIGNATION):

19A - 3 - 161

- Wind velocity=161 km/h
- Case 3 arm loading
- Standard type
- Standard Plan sheet number
- Detail number or letter

WIRING DIAGRAM LEGEND

P	Pole
CB	Circuit breaker
A	Ampere
V	Volt
M	Metered
UM	Unmetered
NB	Neutral bus
GB	Ground bus
G	Equipment grounding conductor
N	Grounded conductor (Neutral)

- External conductor
- Conductor or bus
- Tie point
- Contactor coil
- Contactor, Contact NO
- Terminal blocks
- Contactor, Contact NC
- Enclosure bond
- Grounding electrode
- Circuit breaker
- Receptacle

PULL BOXES

PROPOSED EXISTING

Pull box-No. 5 unless otherwise indicated or noted.

3 9A(21)

Pull box-Additional designations or descriptions

3 = No. 3½ pull box
5 = No. 5 pull box
6 = No. 6 pull box
7 = No. 7 (Ceiling pull box)
8 = No. 8 (Pendant soffit pull box)
9 = No. 9 pull box
9A = No. 9A pull box

(C) = Communications pull box
(E) = Pull box with extension
(S) = Sprinkler control pull box
(21) = Anchor bolts and conduit for future installation of Type 21 Standard
(T) = Traffic pull box

MISCELLANEOUS EQUIPMENT

PROPOSED	EXISTING	
CMS	cms	Changeable message sign
		Closed circuit television camera
		Highway advisory radio pole and antenna
EMS	ems	Extinguishable message sign
		Detection device
M V	m v	M = Microwave sensor V = Video image sensor

VEHICLE DETECTORS

5 J 9 U

- Vehicle detector designation
- U = Upper
  L = Lower
- Slot number in input file
- Input file (I or J)
- Phase

PROPOSED	EXISTING	
		Type A detector loop. Outline of sawcut shown.
		Type B detector loop. Outline of sawcut shown.
		Type C detector loop. Outline of sawcut shown.
		Type D detector loop. Outline of sawcut shown.
		Type E detector loop. Outline of sawcut shown.
		Type Q detector loop. Outline of sawcut shown.
		Magnetic detector
DH	dh	Detector handhole
		Microwave or video detection zone

STATE OF CALIFORNIA
DEPARTMENT OF TRANSPORTATION

ELECTRICAL SYSTEMS (SYMBOLS AND ABBREVIATIONS)

NO SCALE

ALL DIMENSIONS ARE IN MILLIMETERS UNLESS OTHERWISE SHOWN

RSP ES-1C DATED OCTOBER 5, 2007 SUPERSEDES STANDARD PLAN ES-1C DATED JULY 1, 2004-PAGE 415 OF THE STANDARD PLANS BOOK DATED JULY 2004.

REVISED STANDARD PLAN RSP ES-1C

2004 REVISED Std PLAN RSP ES-1C

10-1-07

DIST	COUNTY	ROUTE	KILOMETER POST TOTAL PROJECT	SHEET NO.	TOTAL SHEETS
11	SD	15	M38.3/M42.2	60	67

Caltrans Metric

Jeffery G. McRae
REGISTERED ELECTRICAL ENGINEER

October 5, 2007
PLANS APPROVAL DATE

REGISTERED PROFESSIONAL ENGINEER Jeffery G. McRae No. E14512 Exp. 6-30-08 ELECTRICAL STATE OF CALIFORNIA

The State of California or its officers or agents shall not be responsible for the accuracy or completeness of electronic copies of this plan sheet.

To get to the Caltrans web site, go to: http://www.dot.ca.gov

To accompany plans dated 05-10-10

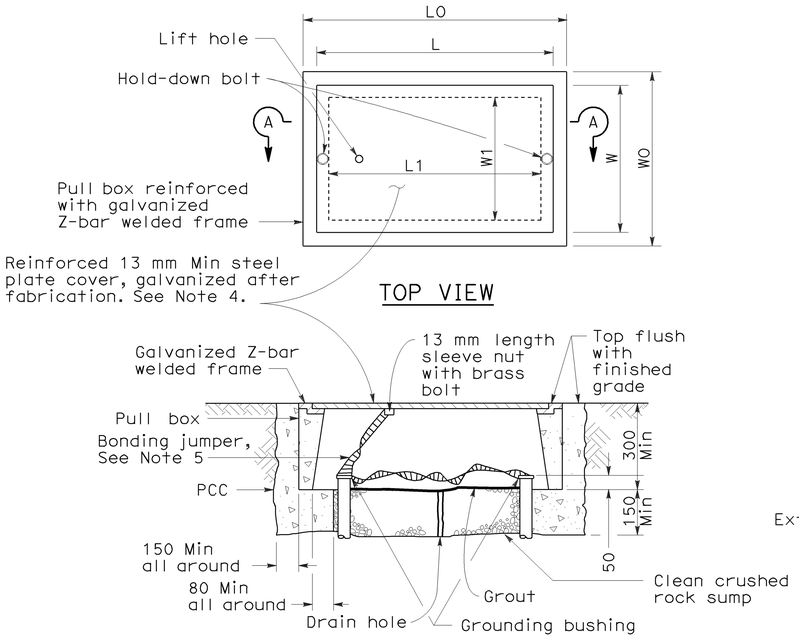

SECTION A-A

No. 3½(T), No. 5(T) AND No. 6(T) TRAFFIC PULL BOX

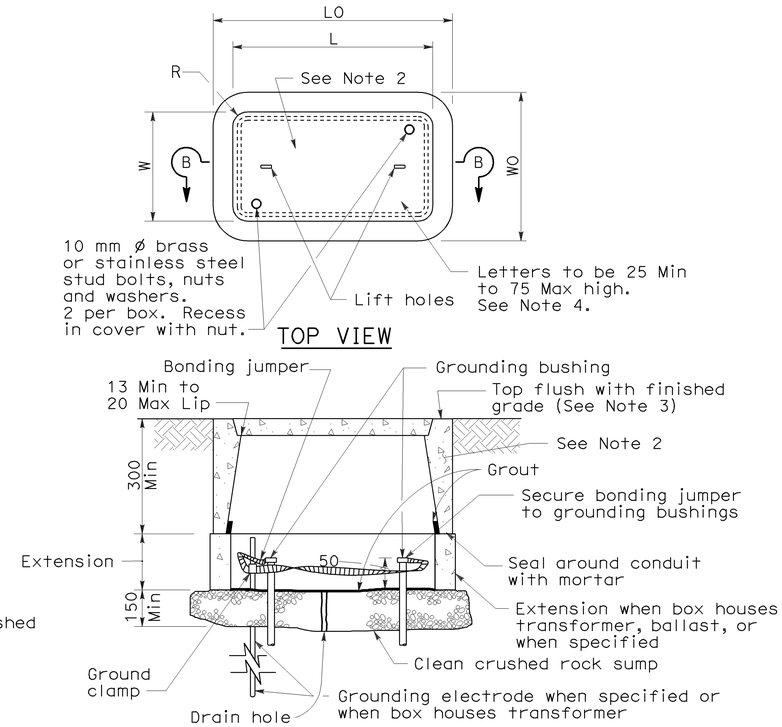

SECTION B-B

INSTALLATION DETAILS

DIMENSION TABLE

PULL BOX	CONCRETE BOX				NON-PCC BOX		CONCRETE OR NON-PCC COVERS				
	Minimum * Thickness	Minimum Depth Box and Extension	LO (mm)	WO (mm)	Minimum ** Thickness	Minimum Depth Box and Extension	L ** (mm)	W ** (mm)	R (mm)	Edge Thickness	Edge Taper
No. 3½	25 mm	No Extension	457	330	8 mm	No Extension	390	260	27	45 mm	3 mm
No. 5	25 mm	560 mm	666	425	8 mm	510 mm	590	350	32	50 mm	3 mm
No. 6	40 mm	610 mm	854	524	10 mm	510 mm	775	444	32	50 mm	3 mm

* Excluding conduit web ** Top dimension

DIMENSION TABLE

PULL BOX	CONCRETE BOX						NON-PCC BOX		CONCRETE OR NON-PCC COVERS				
	Minimum * Thickness	Minimum Depth Box and Extension	LO (mm)	WO (mm)	L1 (mm)	W1 (mm)	Minimum ** Thickness	Minimum Depth Box and Extension	L ** (mm)	W ** (mm)	R (mm)	Edge Thickness	Edge Taper
No. 3½(T)	40 mm	305 mm	530 ±	430 ± 25	370 ±	270 ± 25	Does Not Apply		510 ±	350 ±	0	13 mm	None
No. 5(T)	45 mm	305 mm	750 ±	600 ± 25	480 ±	330 ± 25	Does Not Apply		690 ±	410 ±	0	13 mm	None
No. 6(T)	50 mm	305 mm	900 ±	760 ± 25	600 ±	430 ± 25	Does Not Apply		840 ±	510 ±	0	13 mm	None

* Excluding conduit web ** Top dimension

NOTES ON PULL BOXES:

1. Traffic pull box shall be provided with steel cover and special concrete footing. Steel cover shall have embossed non-skid pattern.

2. Steel reinforcing shall be as regularly used in the standard products of the respective manufacturer.

3. Top of pull boxes shall be flush with surrounding grade or top of adjacent curb, except that in unpaved areas where pull box is not immediately adjacent to and protected by a concrete foundation, pole or other protective construction, the box shall be placed with its top 30 mm above surrounding grade. Where practicable, pull boxes shown in the vicinity of curbs shall be placed adjacent to the back of curb, and pull boxes shown adjacent to standards shall be placed on side of foundation facing away from traffic, unless otherwise noted. When pull box is installed in sidewalk area, the depth of the pull box shall be adjusted so that the top of the pull box is flush with the sidewalk.

4. Pull box covers shall be marked as follows: "SERVICE" Service circuits between service point and service disconnect; "SPRINKLER-CONTROL" Sprinkler control circuits, 50 V or less; "CALTRANS" On all pull boxes, except pull boxes marked "SPRINKLER-CONTROL"; and "TELEPHONE" Telephone service.

   a) No. 3½ pull box.

      1) "SIGNAL" Traffic signal circuits with or without street or sign lighting circuits.

      2) "ST LIGHTING" Street or sign lighting circuits where voltage is under 600 V.

   b) No. 5, 6, 9 or 9A pull box.

      1) "TRAFFIC SIGNAL" Traffic signal circuits with or without street or sign lighting circuits.

      2) "STREET LIGHTING" Street or sign lighting circuits where voltage is under 600 V.

      3) "STREET LIGHTING-HIGH VOLTAGE" Street or sign lighting circuits where voltage is above 600 V.

      4) "IRRIGATION" Circuits to irrigation controller 120 V or more.

      5) "RAMP METER" Ramp meter circuits.

      6) "COUNT STATION" Count or speed monitor circuits.

      7) "COMMUNICATION" Communication circuits.

      8) "TOS COMMUNICATIONS" TOS communications line.

      9) "TOS POWER" TOS power.

      10) "TDC POWER" Telephone demarcation cabinet power.

      11) "CCTV" Closed circuit television circuits.

      12) "TMS" Traffic monitoring station circuits.

      13) "CMS" Changeable message sign circuits.

      14) "HAR" Highway advisory radio circuits.

5. Bonding jumper for metal covers shall be 1 m long, minimum.

6. The nominal dimensions of the opening in which the cover sets shall be the same as the cover dimensions except the length and width dimensions shall be 3 mm greater.

7. Covers and boxes shall be interchangeable with California standard male and female gages. When interchanged with a standard male or female gage, the top surfaces shall be flush within 3 mm. Top outside edge of concrete covers and pull boxes shall have a 6 mm minimum radius.

8. Pull box shall not be installed within the boundaries of new or existing curb ramps.

9. Pull boxes for electroliers, post and signal standards shall be located ± 1.5 m from the station of the adjacent electrolier, post or signal standard. Pull boxes shall be placed adjacent to back of curb or edge of shoulder except where this is impractical, a box may be placed in another suitable protected and accessible location.

STATE OF CALIFORNIA
DEPARTMENT OF TRANSPORTATION

ELECTRICAL SYSTEMS (PULL BOX DETAILS)

NO SCALE

ALL DIMENSIONS ARE IN MILLIMETERS UNLESS OTHERWISE SHOWN

RSP ES-8 DATED OCTOBER 5, 2007 SUPERSEDES STANDARD PLAN ES-8 DATED JULY 1, 2004-PAGE 467 OF THE STANDARD PLANS BOOK DATED JULY 2004.

REVISED STANDARD PLAN RSP ES-8

2004 REVISED Std PLAN RSP ES-8

7-3-07

DIST	COUNTY	ROUTE	KILOMETER POST TOTAL PROJECT	SHEET NO.	TOTAL SHEETS
11	SD	15	M38.3/M42.2	61	67

Caltrans Metric

REGISTERED ELECTRICAL ENGINEER

October 5, 2007
PLANS APPROVAL DATE

REGISTERED PROFESSIONAL ENGINEER
Jeffery G. McRae
No. E14512
Exp. 6-30-08
ELECTRICAL
STATE OF CALIFORNIA

The State of California or its officers or agents shall not be responsible for the accuracy or completeness of electronic copies of this plan sheet.

To get to the Caltrans web site, go to: http://www.dot.ca.gov

To accompany plans dated 05-10-10

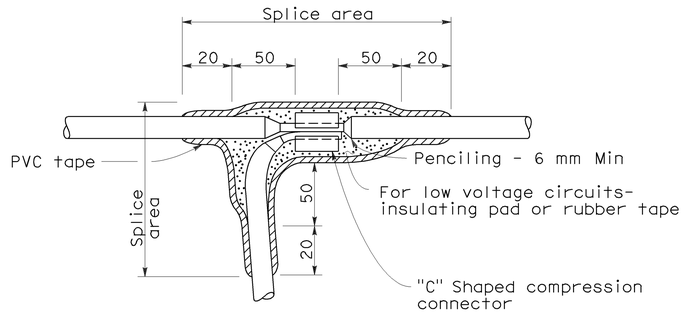

TYPE "C" SPLICE

Between 1 free-end and 1 through conductor

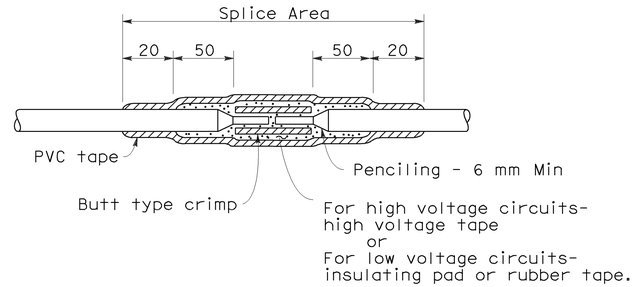

TYPE "S" SPLICE

Between 2 free-ends

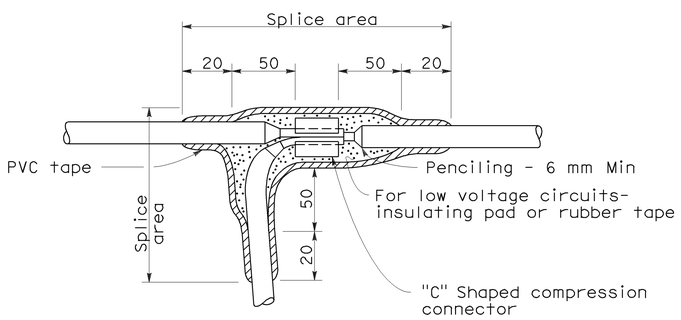

TYPE "T" SPLICE

For 3 free-ends

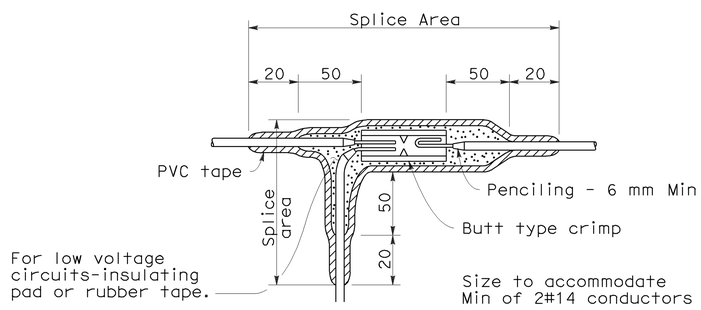

TYPE "ST" SPLICE

NOTES:

1. Dimensions are minimum.
2. Rubber tapes shall be rolled after application.

INSULATION METHODS

Low Voltage Circuits (0-600 V)

METHOD "B"

1. Completely cover the splice area with electrical insulating coating and allow to dry.
2. Apply 2 layers of electrical insulating pad with minimum thickness of 4 mm each layer or 2 layers, half lapped, synthetic oil resistant, self fusing rubber tape.
3. Apply 3 layers half lapped polyvinyl chloride tape.
4. Cover entire splice with electrical insulating coating and allow to dry.

High Voltage Circuits (Over 600 V)

1. Completely cover the splice area with electrical insulating coating and allow to dry.
2. Apply high voltage tape to a minimum thickness equal to original insulation.
3. Apply 3 layers half lapped polyvinyl chloride tape.
4. Cover entire splice with electrical insulating coating and allow to dry.

STATE OF CALIFORNIA
DEPARTMENT OF TRANSPORTATION

ELECTRICAL SYSTEMS (SPLICING DETAILS)

NO SCALE

ALL DIMENSIONS ARE IN MILLIMETERS UNLESS OTHERWISE SHOWN

RSP ES-13A DATED OCTOBER 5, 2007 SUPERSEDES STANDARD PLAN ES-13A DATED JULY 1, 2004-PAGE 478 OF THE STANDARD PLANS BOOK DATED JULY 2004.

REVISED STANDARD PLAN RSP ES-13A

2004 REVISED Std PLAN RSP ES-13A

DIST	COUNTY	ROUTE	KILOMETER POST TOTAL PROJECT	SHEET NO.	TOTAL SHEETS
11	SD	15	M38.3/M42.2	62	67

Caltrans Metric

LICENSED LANDSCAPE ARCHITECT

March 7, 2008
PLANS APPROVAL DATE

LICENSED LANDSCAPE ARCHITECT Gregory A. Balzer 2576 Signature 02-28-2009 Renewal Date 02-21-08 Date STATE OF CALIFORNIA

The State of California or its officers or agents shall not be responsible for the accuracy or completeness of electronic copies of this plan sheet.

To get to the Caltrans web site, go to: http://www.dot.ca.gov

To accompany plans dated 05-10-10

EXISTING	PROPOSED	ITEM DESCRIPTION
		WATER METER (WM)
		BACKFLOW PREVENTER ASSEMBLY (BPA)
		BACKFLOW PREVENTER ASSEMBLY IN ENCLOSURE (BPAE)
		BACKFLOW PREVENTER ENCLOSURE (BPE)
		BOOSTER PUMP (BP)
		TRUCK LOADING STANDPIPE (TLS)
fs	FS	FLOW SENSOR (FS)
X		MASTER IRRIGATION CONTROLLER (MIC)
		AUXILIARY IRRIGATION CONTROLLER (AIC)
		IRRIGATION CONTROLLER (IC)/ IRRIGATION CONTROLLER (IC) (BATTERY)
		IRRIGATION CONTROLLER(S) IN CONTROLLER ENCLOSURE CABINET (ICC)
		CONTROL AND NEUTRAL CONDUCTORS (CNC)
scc	SCC	SPRINKLER CONTROL CONDUIT (SCC)
		CONDUIT (COND)
		IRRIGATION SLEEVE
dip	DIP	DUCTILE IRON PIPE (SUPPLY LINE) (MAIN) (DIP)
		GALVANIZED STEEL PIPE (SUPPLY LINE) (MAIN) (GSP)
		GALVANIZED STEEL PIPE (SUPPLY LINE) (LATERAL) (GSP)
		PLASTIC PIPE (PR 200) (SUPPLY LINE) (MAIN)
		PLASTIC PIPE (PR 200) (SUPPLY LINE) (LATERAL)
		PLASTIC PIPE (IRRIGATION LINE)
		REMOTE CONTROL VALVE (RCV) REMOTE CONTROL VALVE (MASTER) (RCVM)
		MANUAL CONTROL VALVE (MCV)
		VALVE ASSEMBLY UNIT (VAU)
		WYE STRAINER (WS)
		FILTER ASSEMBLY UNIT (FAU)
		GATE VALVE (GV)
		BALL VALVE (BV)

EXISTING	PROPOSED	ITEM DESCRIPTION
		QUICK COUPLING VALVE (QCV)
		CAM COUPLING ASSEMBLY (CCA)
		PRESSURE REDUCING VALVE (PRV)
		PRESSURE RELIEF VALVE (PRLV)
		FLOW CONTROL VALVE (FCV)
		COMBINATION AIR RELEASE VALVE (CARV)
		CHECK VALVE (CV)
		FLUSH VALVE (FV)
		NOZZLE LINE W/TURNING UNION
		IRRIGATION SYSTEM
		IRRIGATION SYSTEM TO BE REMOVED
		CHAIN LINK GATE
		QUICK COUPLING VALVE W/SPRINKLER PROTECTOR
3	3	SPRINKLER W/SPRINKLER PROTECTOR
	C	CONNECT TO EXISTING SYSTEM
		CAP
		CAP EXISTING

VALVE CODE

RCV SIZE (mm)
IRRIGATION CONTROLLER
CONTROLLER STATION
VALVE IN PARALLEL (IF APPLICABLE)
L/min
QUANTITY OF SPRINKLERS (WHEN SHOWN)

* 63.5-A-2b-151.4-60

MCV SIZE (mm)
VALVE NUMBER
L/min
QUANTITY OF TYPE SPRINKLERS (WHEN SHOWN)

* 50.8-3-113.5-50

* VALVE CODES FOR EXISTING VALVES ARE SHOWN IN A DASHED ENCLOSURE.

STATE OF CALIFORNIA
DEPARTMENT OF TRANSPORTATION

PLANTING AND IRRIGATION SYMBOLS

NO SCALE

ALL DIMENSIONS ARE IN MILLIMETERS UNLESS OTHERWISE SHOWN

RSP H2 DATED MARCH 7, 2008 SUPERSEDES STANDARD PLAN H2 DATED JULY 1, 2004 - PAGE 202 OF THE STANDARD PLANS BOOK DATED JULY 2004.

REVISED STANDARD PLAN RSP H2

2004 REVISED Std PLAN RSP H2

2-20-08

DIST	COUNTY	ROUTE	KILOMETER POST TOTAL PROJECT	SHEET NO.	TOTAL SHEETS
11	SD	15	M38.3/M42.2	63	67

Caltrans Metric

Randell D. Hiatt
REGISTERED CIVIL ENGINEER

June 6, 2008
PLANS APPROVAL DATE

REGISTERED PROFESSIONAL ENGINEER
Randell D. Hiatt
No. C50200
Exp. 6-30-09
CIVIL
STATE OF CALIFORNIA

The State of California or its officers or agents shall not be responsible for the accuracy or completeness of electronic copies of this plan sheet.

To get to the Caltrans web site, go to: http://www.dot.ca.gov

To accompany plans dated 05-10-10

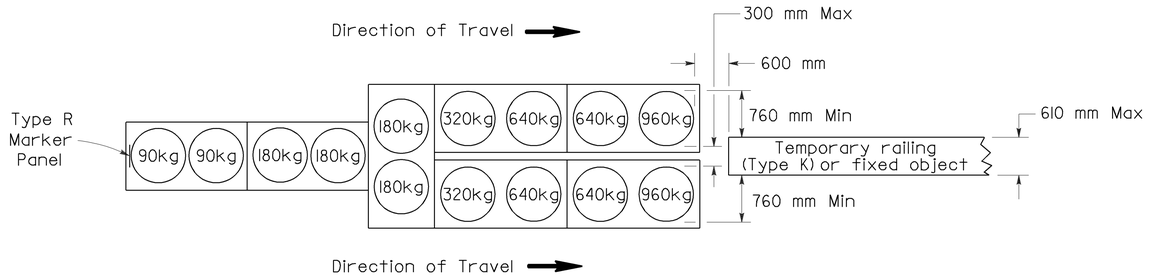

ARRAY 'TU14'

Approach speed 70 km/h or more

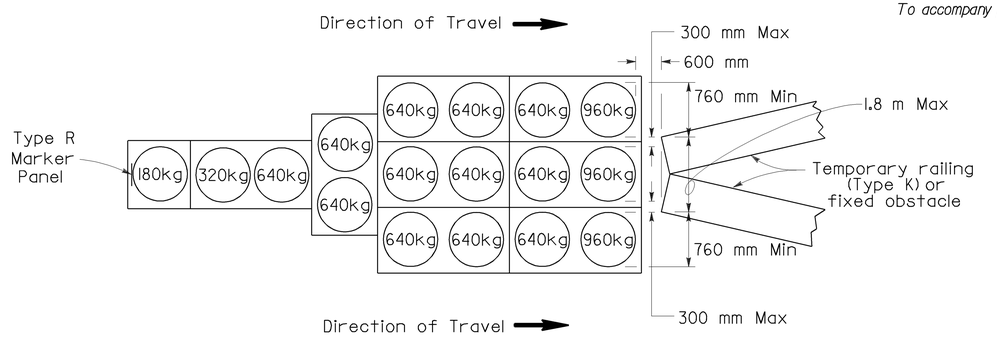

ARRAY 'TU17'

Approach speed less than 70 km/h

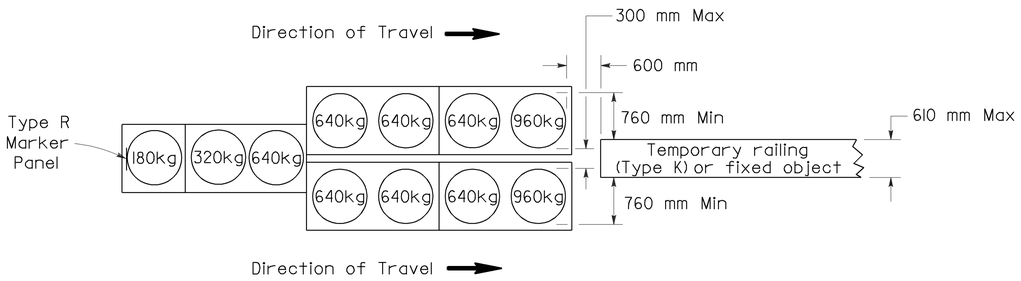

ARRAY 'TU11'

Approach speed less than 70 km/h

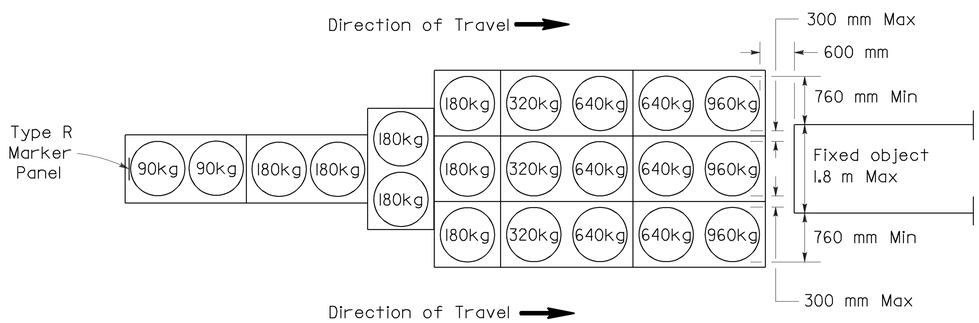

ARRAY 'TU21'

Approach speed 70 km/h or more

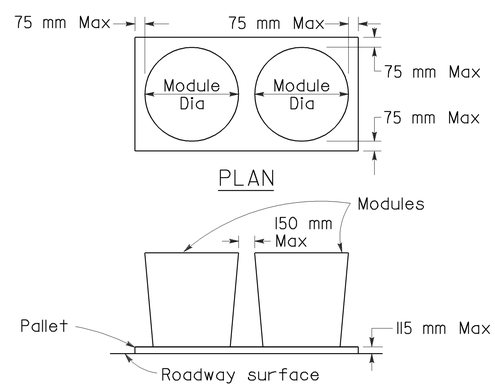

CRASH CUSHION PALLET DETAIL

See Note 7

NOTES

1. (XXX) Indicates sand filled module location and mass of sand in kilograms for each module. Module spacing is based on the greater diameter of the module.
2. All sand masses are nominal.
3. Temporary crash cushion arrays shall not encroach on the traveled way.
4. Place the top of Type R marker panel 25 mm below the module lid.
5. Refer to Standard Plan A73B for marker details.
6. Approach speeds indicated conform to NCHRP 350 Report criteria.
7. Use of Pallets is optional.

STATE OF CALIFORNIA
DEPARTMENT OF TRANSPORTATION

TEMPORARY CRASH CUSHION, SAND FILLED (UNIDIRECTIONAL)

NO SCALE

ALL DIMENSIONS ARE IN MILLIMETERS UNLESS OTHERWISE SHOWN

RSP T1A DATED JUNE 6, 2008 SUPERSEDES STANDARD PLAN T1A
DATED July 1, 2004 - PAGE 211 OF THE STANDARD PLANS BOOK DATED July 2004.

REVISED STANDARD PLAN RSP T1A

2004 REVISED Std PLAN RSP T1A

5-16-08

DIST	COUNTY	ROUTE	KILOMETER POST TOTAL PROJECT	SHEET NO.	TOTAL SHEETS
11	SD	15	M38.3/M42.2	64	67

Caltrans Metric

Randell D. Hiatt
REGISTERED CIVIL ENGINEER

June 6, 2008
PLANS APPROVAL DATE

REGISTERED PROFESSIONAL ENGINEER
Randell D. Hiatt
No. C50200
Exp. 6-30-09
CIVIL
STATE OF CALIFORNIA

The State of California or its officers or agents shall not be responsible for the accuracy or completeness of electronic copies of this plan sheet.

To get to the Caltrans web site, go to: http://www.dot.ca.gov

To accompany plans dated 05-10-10

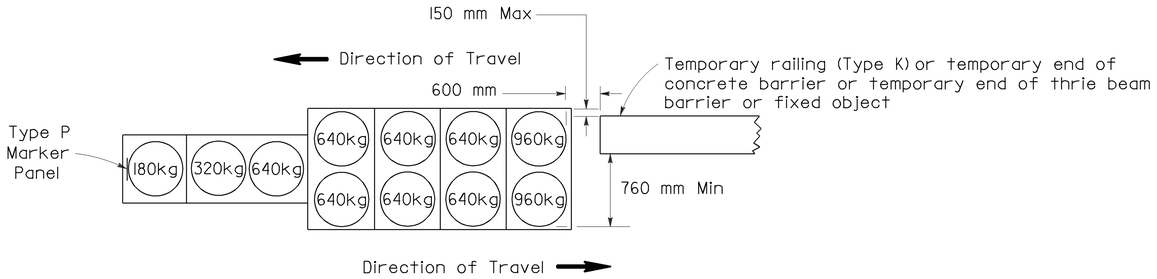

ARRAY 'TBI1'

Approach speed less than 70 km/h

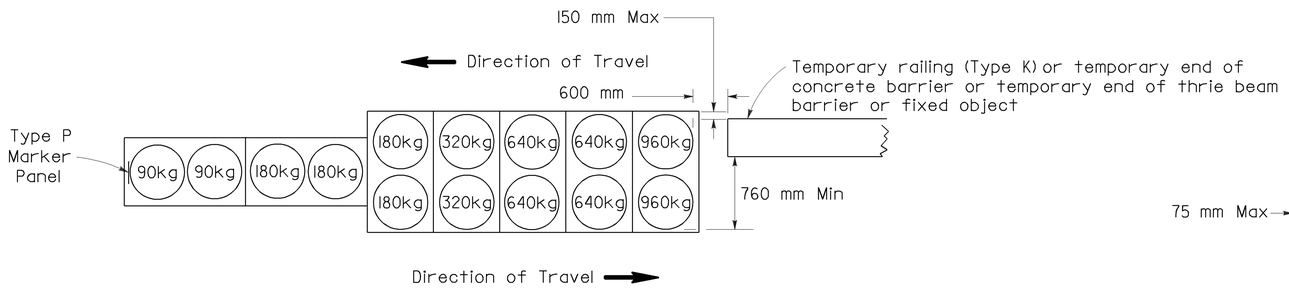

ARRAY 'TBI4'

Approach speed 70 km/h or more

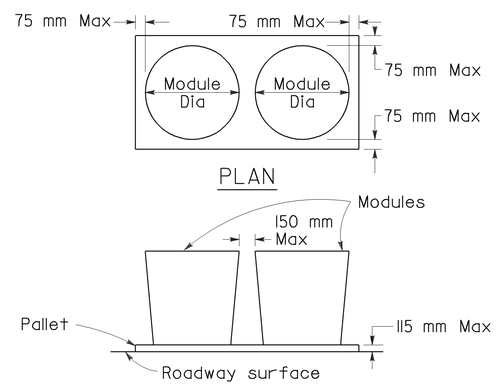

CRASH CUSHION PALLET DETAIL

See Note 7

NOTES

1. (XXX) Indicates sand filled module location and mass of sand in kilograms for each module. Module spacing is based on the greater diameter of the module.
2. All sand masses are nominal.
3. Temporary crash cushion arrays shall not encroach on the traveled way.
4. Place the Type P marker panel so that the bottom of the panel rests upon the pallet.
5. Refer to Standard Plan A73B for marker details.
6. Approach speeds indicated conform to NCHRP 350 Report criteria.
7. Use of Pallets is optional.

STATE OF CALIFORNIA
DEPARTMENT OF TRANSPORTATION

TEMPORARY CRASH CUSHION, SAND FILLED (BIDIRECTIONAL)

NO SCALE

ALL DIMENSIONS ARE IN MILLIMETERS UNLESS OTHERWISE SHOWN

RSP T1B DATED JUNE 6, 2008 SUPERSEDES STANDARD PLAN T1B DATED July 1, 2004 - PAGE 212 OF THE STANDARD PLANS BOOK DATED July 2004.

REVISED STANDARD PLAN RSP T1B

2004 REVISED Std PLAN RSP T1B

5-16-08

DIST	COUNTY	ROUTE	KILOMETER POST TOTAL PROJECT	SHEET NO.	TOTAL SHEETS
11	SD	15	M38.3/M42.2	65	67

Caltrans Metric

Randell D. Hiatt
REGISTERED CIVIL ENGINEER

June 6, 2008
PLANS APPROVAL DATE

REGISTERED PROFESSIONAL ENGINEER
Randell D. Hiatt
No. C50200
Exp. 6-30-09
CIVIL
STATE OF CALIFORNIA

The State of California or its officers or agents shall not be responsible for the accuracy or completeness of electronic copies of this plan sheet.

To get to the Caltrans web site, go to: http://www.dot.ca.gov

To accompany plans dated 05-10-10

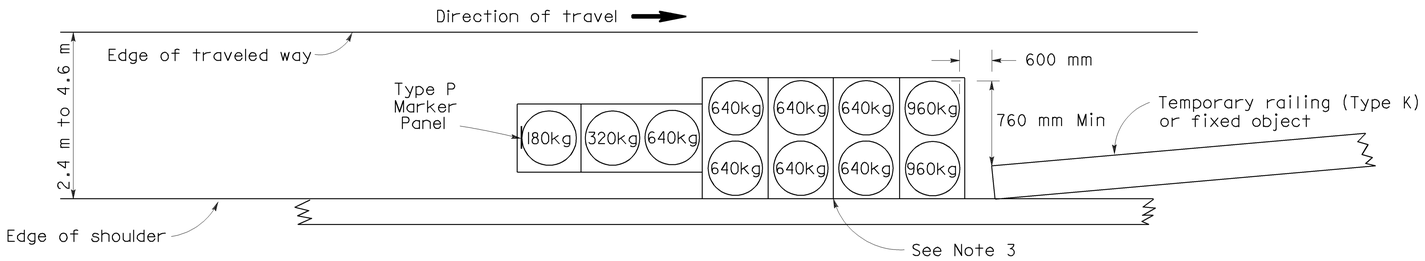

ARRAY 'TSI1'

Approach speed less than 70 km/h
See Note 9

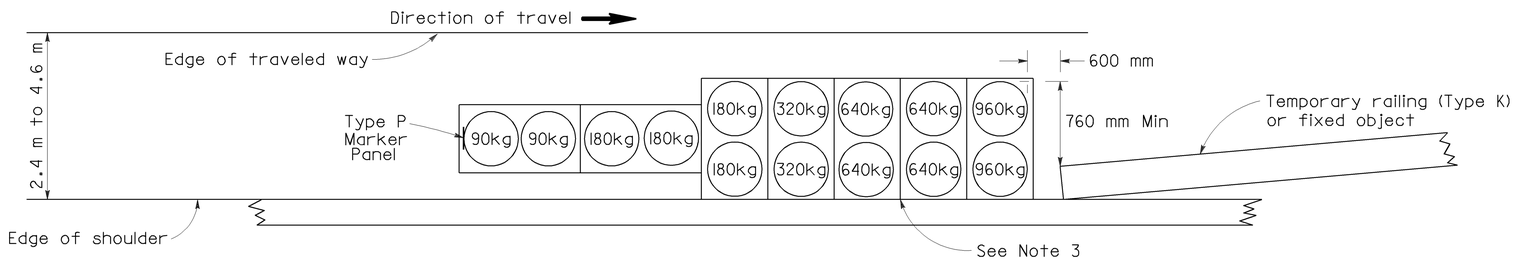

ARRAY 'TSI4'

Approach speed 70 km/h or more
See Note 9

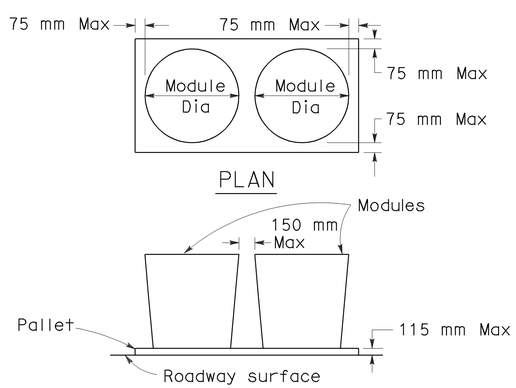

CRASH CUSHION PALLET DETAIL

See Note 11

NOTES

1. (XXX) Indicates sand filled module location and mass of sand in kilograms for each module. Module spacing is based on the greater diameter of the module.
2. All sand masses are nominal.
3. The temporary crash cushion arrays shown on this plan shall be used only in locations where there will be traffic on one side of the temporary crash cushion array.
4. If the fixed object or approach end of the temporary railing is less than 4.60 meters from the edge of traveled way, a temporary crash cushion is required.
5. Temporary crash cushion arrays shall not encroach on the traveled way.
6. Arrays for median shoulders shall conform to details shown on this plan for outside shoulders.
7. Place the Type P marker panel so that the bottom of the panel rest upon the pallet and faces traffic.
8. Refer to Standard Plan A73B for marker details.
9. For shoulder widths less than 2.4 m, appropriate approved crash cushion protection, other than sand filled modules, shall be provided at fixed objects and at approach ends of temporary railing. The specific type of crash cushion shall be as shown on the project plans or as specified in the Special Provisions, or if not shown on the project plans or specified in the Special Provisions, shall be as approved by the Engineer.
10. Approach speeds indicated conform to NCHRP 350 Report criteria.
11. Use of Pallets is optional.

STATE OF CALIFORNIA
DEPARTMENT OF TRANSPORTATION

TEMPORARY CRASH CUSHION, SAND FILLED (SHOULDER INSTALLATIONS)

NO SCALE

ALL DIMENSIONS ARE IN MILLIMETERS UNLESS OTHERWISE SHOWN

RSP T2 DATED JUNE 6, 2008 SUPERSEDES STANDARD PLAN T2
DATED July 1, 2004 - PAGE 213 OF THE STANDARD PLANS BOOK DATED July 2004.

REVISED STANDARD PLAN RSP T2

2004 REVISED Std PLAN RSP T2

5-16-08

To accompany plans dated 05-10-10

Caltrans Metric

DIST	COUNTY	ROUTE	KILOMETER POST TOTAL PROJECT	SHEET NO.	TOTAL SHEETS
11	SD	15	M38.3/M42.2	66	67

REGISTERED CIVIL ENGINEER

November 17, 2006
PLANS APPROVAL DATE

REGISTERED PROFESSIONAL ENGINEER Greg W. Edwards No. C36386 Exp. 6-30-08 CIVIL STATE OF CALIFORNIA

The State of California or its officers or agents shall not be responsible for the accuracy or completeness of electronic copies of this plan sheet.

To get to the Caltrans web site, go to: http://www.dot.ca.gov

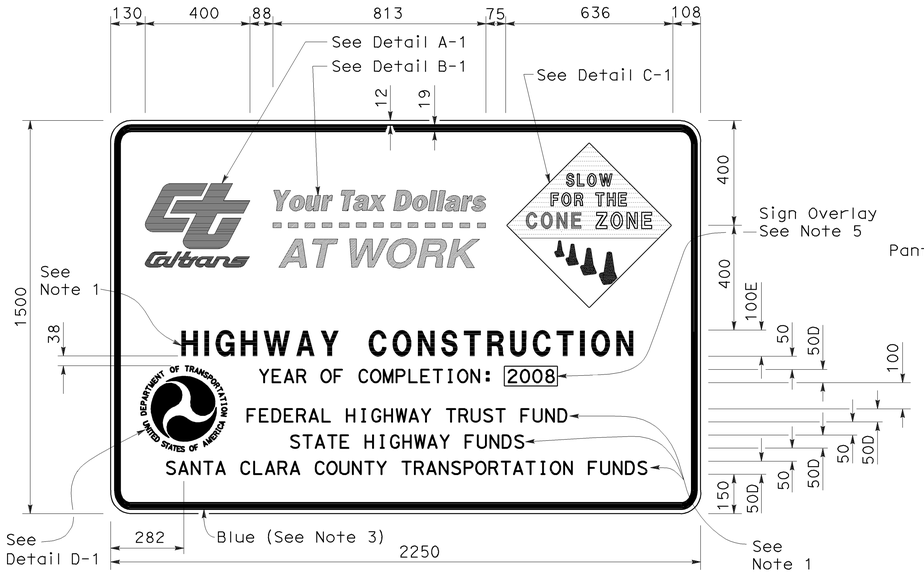

TYPE 1

DETAIL A-1

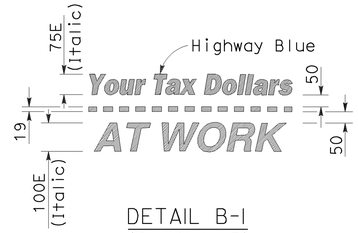

DETAIL B-1
(See Note 3)

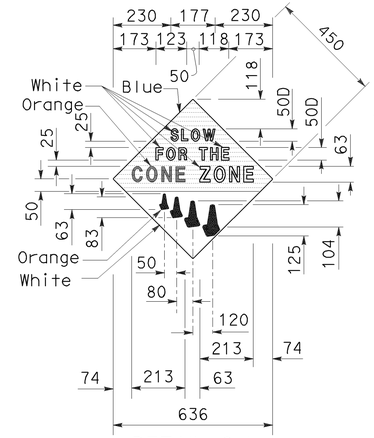

DETAIL C-1
(See Note 4)

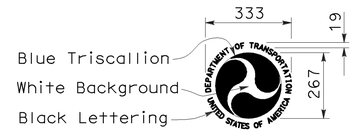

DETAIL D-1
(See Note 6)

NOTES:

1. The sign messages shown for type of project and fund types are examples only. See the Special Provisions for the applicable type of project and fund type messages to be used.
2. Except as otherwise shown, the legend of sign shall be black on a white background (non-reflective).
3. The border of the signs and details "B-1" and "B-2" shall be blue (non-reflective).
4. The diamond in details "C-1" and "C-2" shall be blue for the background of message, " SLOW FOR THE CONE ZONE", and white background for the orange cones. The color and type of font for the "SLOW FOR THE CONE ZONE" message shall be: "SLOW" white D; "FOR THE" white D; "CONE" orange Arial font; "ZONE" white Arial font.
5. Year of completion of project construction shown on the overlay is an example only. See the Special Provisions.
6. Use when the Project involves Federal Highway Trust Fund.

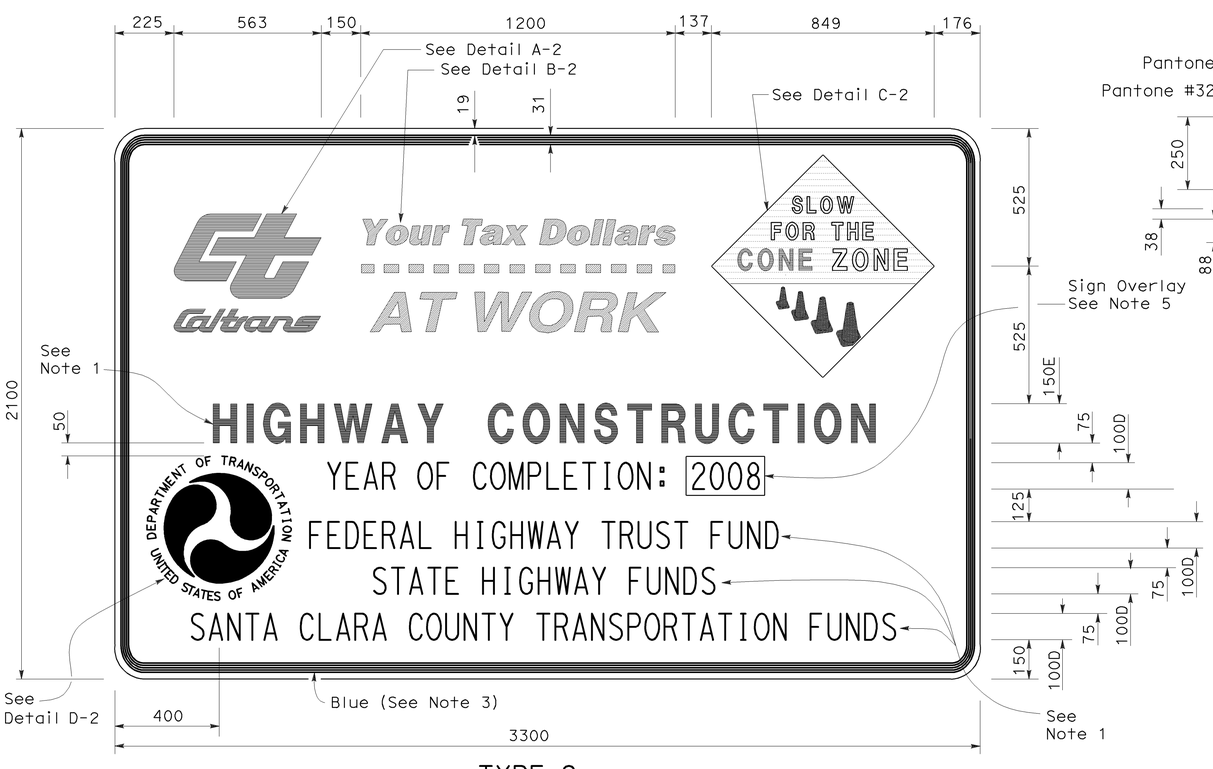

TYPE 2

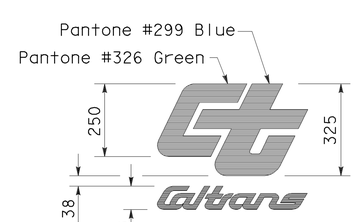

DETAIL A-2

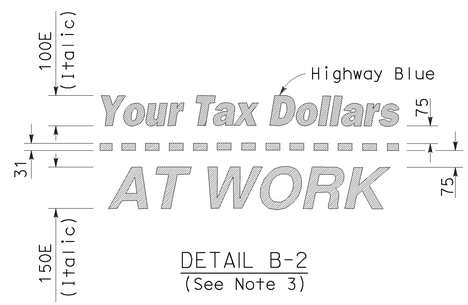

DETAIL B-2
(See Note 3)

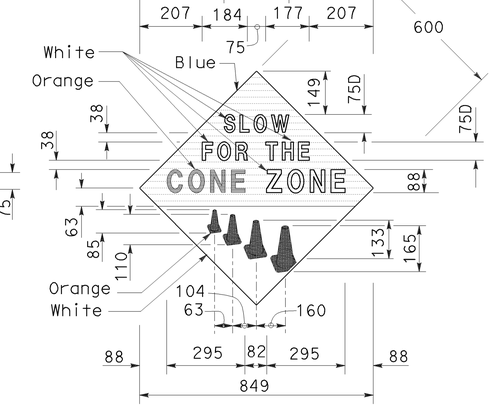

DETAIL C-2
(See Note 4)

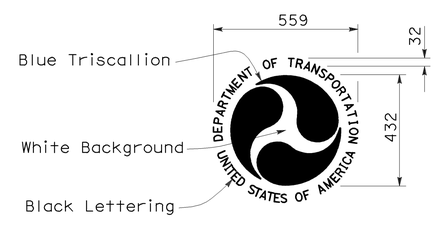

DETAIL D-2
(See Note 6)

STATE OF CALIFORNIA
DEPARTMENT OF TRANSPORTATION

CONSTRUCTION PROJECT FUNDING IDENTIFICATION SIGNS

NO SCALE

ALL DIMENSIONS ARE IN MILLIMETERS UNLESS OTHERWISE SHOWN

RSP T7 DATED NOVEMBER 17, 2006 SUPERSEDES RSP T7 DATED APRIL 28, 2005 AND STANDARD PLAN T7 DATED JULY 1, 2004-PAGE 217 OF THE STANDARD PLANS BOOK DATED JULY 2004.

REVISED STANDARD PLAN RSP T7

2004 REVISED Std PLAN RSP T7

9-7-06

To accompany plans dated 05-10-10

Caltrans Metric

DIST	COUNTY	ROUTE	KILOMETER POST TOTAL PROJECT	SHEET NO.	TOTAL SHEETS
11	SD	15	M38.3/M42.2	67	67

REGISTERED CIVIL ENGINEER

April 28, 2005
PLANS APPROVAL DATE

REGISTERED PROFESSIONAL ENGINEER Greg W. Edwards No. C36386 Exp. 6-30-06 CIVIL STATE OF CALIFORNIA

The State of California or its officers or agents shall not be responsible for the accuracy or completeness of electronic copies of this plan sheet.

To get to the Caltrans web site, go to: http://www.dot.ca.gov

NOTES

Unless otherwise specified in the special provisions, all temporary warning signs shall have black legend on orange background.

California code are designated by (CA). Otherwise, Federal codes are shown.

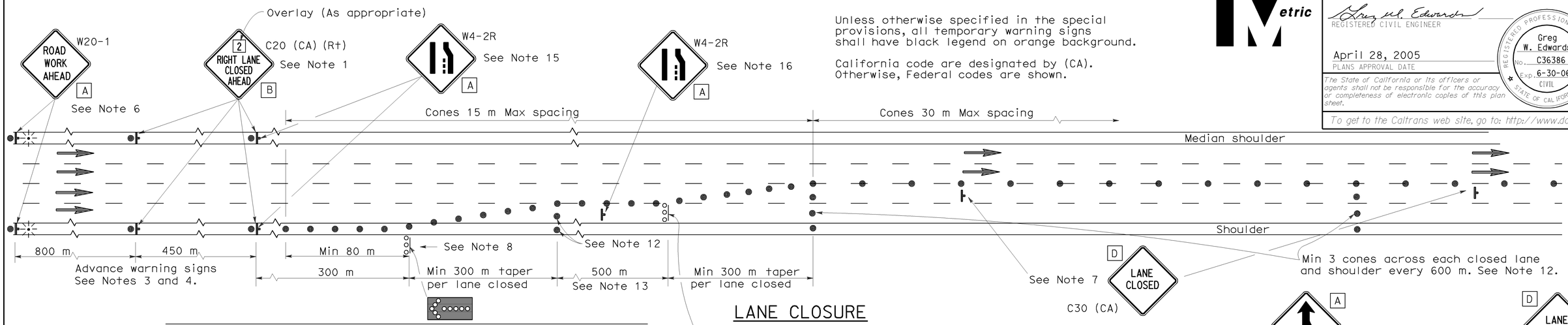

LANE CLOSURE

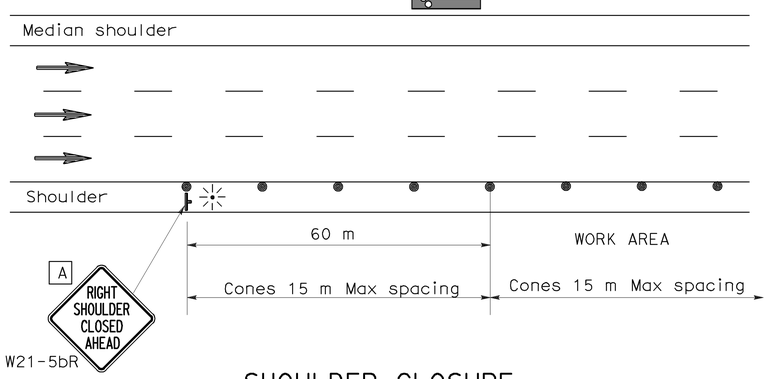

SHOULDER CLOSURE

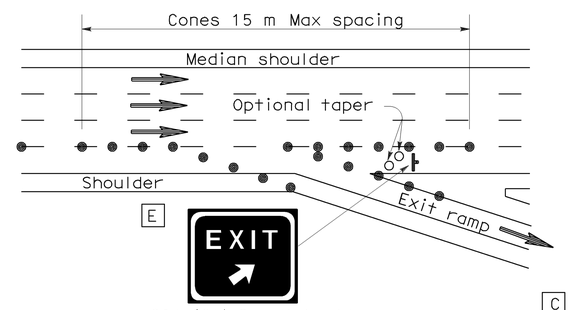

LANE CLOSURE AT EXIT RAMP

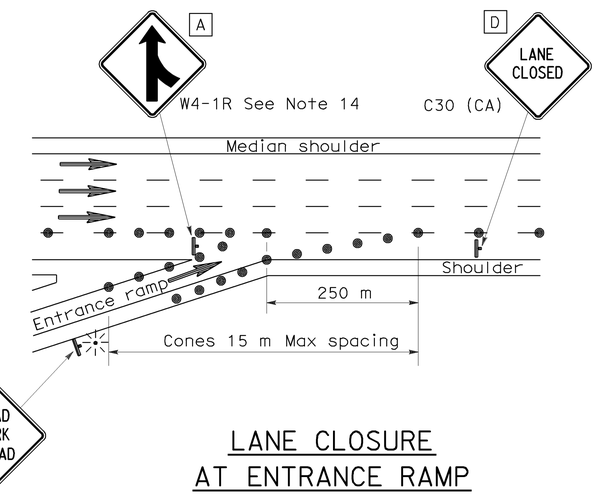

LANE CLOSURE AT ENTRANCE RAMP

NOTES

1. Median lane closures shall conform to the details for outside lane closures except that C20 (CA) (Lt) signs shall be used.
2. At least one person shall be assigned to provide full time maintenance of traffic control devices for lane closures.
3. Duplicate sign installations are not required:
   a) On opposite shoulder if at least one-half of the available lanes remain open to traffic.
   b) In the median if the width of the median shoulder is less than 2.4 m and the outside lanes are to be closed.
4. Each advance warning sign on each side of the roadway shall be equipped with at least two flags for daytime closure. Each flag shall be at least 400 mm x 400 mm in size and shall be orange or fluorescent red-orange in color. Flashing beacons shall be placed at the locations indicated for lane closure during hours of darkness.
5. A C14 (CA) "END ROAD WORK" sign, as appropriate, shall be placed at the end of the lane closure unless the end of work area is obvious or ends within a larger project's limits.
6. If the W20-1 sign would follow within 600 m of a stationary W20-1 or C11 (CA) "ROAD WORK NEXT _____ MILES", use a C20 (CA) sign for the first advance warning sign.
7. Place a C30 (CA) sign every 600 m throughout length of lane closure.
8. One flashing arrow sign for each lane closed. The first flashing arrow sign shall be Type I. All others may be either Type I or Type II.
9. A minimum 450 m of sight distance shall be provided where possible for vehicles approaching the first flashing arrow sign. Lane closures shall not begin at top of crest vertical curve or on a horizontal curve.
10. All cones used for lane closures during the hours of darkness shall be fitted with retroreflective bands (or sleeves) as specified in the specifications.
11. Portable delineators, placed at one-half the spacing indicated for traffic cones may be used instead of cones for daytime closures only.
12. Unless otherwise specified in the special provisions, a minimum of 3 cones shall be placed transversely across each closed lane and shoulder at each location where a taper across a traffic lane ends and every 600 m as shown on the "Lane Closure" detail. Two Type II barricades may be used instead of the 3 cones. The transverse alignment of the cones or barricades on the closed shoulder may be shifted from the transverse alignment to provide access to the work.
13. Unless otherwise specified in the special provisions, the 500 m tangent shown along lane lines shall be used between the 300 m tapers required for each closed traffic lane.
14. Unless otherwise specified in the special provisions, the G84 (CA) and W4-1 signs shall be used as shown.
15. When specified in the special provisions, a W4-2 "LANE ENDS" symbol sign is to be used in place of the C20 (CA) "RIGHT LANE CLOSED AHEAD" sign.
16. The W4-2 "LANE ENDS" symbol sign shown at this location is to be used where the W4-2 sign is used as advance warning as described in Note 15.

SIGN PANEL SIZE (Min)

A	1200 mm x 1200 mm
B	1219 mm x 1219 mm
C	750 mm x 750 mm
D	762 mm x 762 mm
E	1372 mm x 1219 mm

LEGEND

- Traffic Cone
- Traffic Cone (optional taper)
- Temporary Sign
- Flashing Arrow Sign (FAS)
- FAS Support or Trailer
- Direction of Travel
- Portable Flashing Beacon

STATE OF CALIFORNIA
DEPARTMENT OF TRANSPORTATION

TRAFFIC CONTROL SYSTEM FOR LANE CLOSURE ON FREEWAYS AND EXPRESSWAYS

NO SCALE

ALL DIMENSIONS ARE IN MILLIMETERS UNLESS OTHERWISE SHOWN

RSP T10 DATED APRIL 28, 2005 SUPERSEDES STANDARD PLAN T10 DATED JULY 1, 2004-PAGE 218 OF THE STANDARD PLANS BOOK DATED JULY 2004.

REVISED STANDARD PLAN RSP T10

2004 REVISED Std PLAN RSP T10