DIST.	COUNTY	ROUTE	POST MILES TOTAL PROJECT	SHEET NO.	TOTAL SHEETS
11	SD	5	R59.4/R60.0	101	241

LICENSED ARCHITECT

LICENSED ARCHITECT HASSAN AKHAVAN No. C-20451 Exp. 04-30-11 STATE OF CALIFORNIA

6-21-10
PLANS APPROVAL DATE

The State of California or its officers or agents shall not be responsible for the accuracy or completeness of electronic copies of this plan sheet.

KEY NOTES :

1 MISSION TILE ROOFING
2 BULLETIN BOARD DISPLAY SEE SHEET A6-12
3 WOOD TRELLIS SEE SHEET A6-15
4 8"X8" GLASS BLOCK SEE SHEET A6-16
5 CEMENT PLASTER FINISHED 16"x16" CMU COLUMN SEE SHEET A6-14 A6-15 FEDERAL STANDARD 17925
6 CEMENT PLASTER OVER CMU FEDERAL STANDARD 17925
7 CERAMIC TILE FACE IN ALCOVE 3052 DALTILE (DALTILEPROUDUCTS WEB SITE) OR EQUIL
8 OBSCURE GLAZING W/GRID FRAME AND GRID FS 33617
9 BULLET RESISTANT GLAZING CHP OFFICE SEE SPEC GRID FS 33617 (BUILDING 3 ONLY)
10 CERAMIC TILE PATTERN SEE SHEET A6-13 A6-14
11 ATTIC VENT W/INSECT SCREEN AND GRILL SEE SHEET A6-14
12 DRINKING FOUNTAIN SEE MECH A0-3.4
13 OBSCURE GLAZING W/GRID (OPERABLE INSIDE)
14 UTILITY ROOM DOOR SEE SHEET A3-15
15 LOUVER SEE SHEET A1-13 A6-16 FEDERAL STANDARD 30166
16 NOT USED
17 RESTROOM SIGNAGE SEE SHEET A6-13 A6-16
18 LIGHT FIXTURE (SEE ELEC)
19 IRON WORK SEE SHEET A6-14
20 ACCESSIBLE SIGNAGE SEE SHEET A0-3.3 DETAILS 3,4&5.
21 PRE PAINTED 1½" CASING BEAD ALL BUILDINGS
22 ACCESSIBILITY SYMBOL SEE A0-3.3/6
23 LASER CUT SIGN (ROOM NAME)¼" POWDER COATED PLATE SEE A6-16

NOTE:

01 ELEVATION DETAIL SHEET A6-12 A6-13 A6-14 A6-15 A6-16

DOORS & HINGES PRE COLOR COATED FS 33617

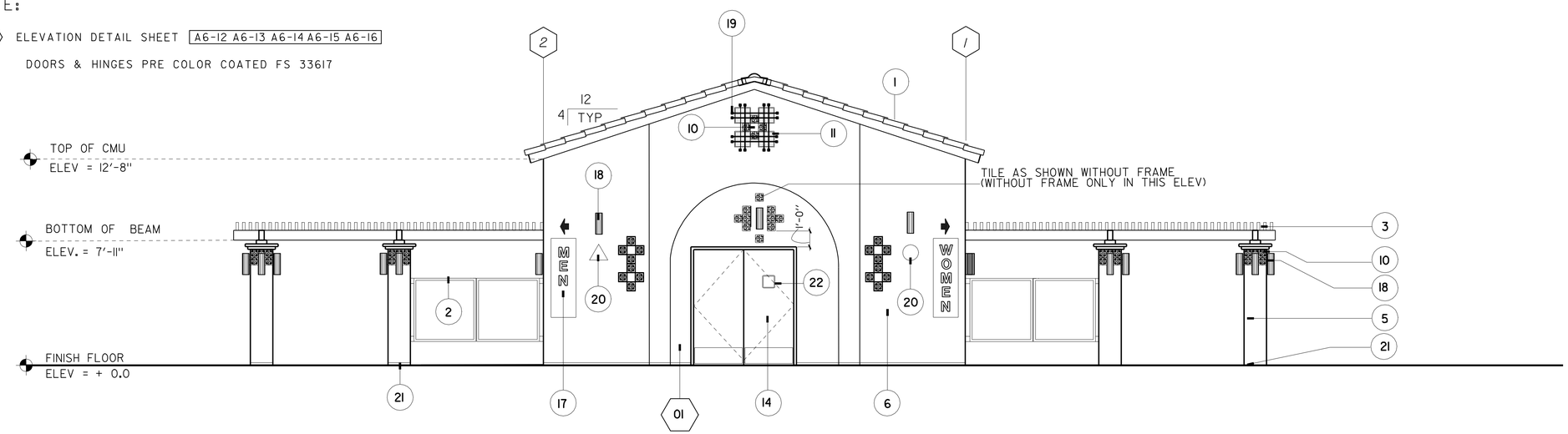

SOUTH ELEVATION

SCALE ¼"= 1'-0"

ACCESSIBILITY DESIGN APPROVAL STAMP
DOT / DES / OTA
11-261401
Reviewed by:
Date: 09-01-09

CALIFORNIA STATE FIRE MARSHAL
APPROVED
Approval of this plan does not authorize or approve any omission or deviation from applicable regulations. Final approval is subject to field inspection. One set of approved plans shall be available on the project site at all times.
Reviewed by:
BILL ROBERTSON DSFM III
Approval date: 11-04-09

CSFM #: 01-37-11-0033

	BY		CHECKED
DESIGN	BY	HASSAN AKHAVAN	CHECKED Donald E. Alvey
DETAILS	BY	ROBERT QUIBIN	CHECKED Donald E. Alvey
QUANTITIES	BY		CHECKED

STATE OF CALIFORNIA
DEPARTMENT OF TRANSPORTATION

DIVISION OF ENGINEERING SERVICES
ARCHITECTURAL AND STRUCTURAL DESIGN

BRIDGE NO. 57R0001R 57R0001R
POST MILE R59.4/R60.0

ALISO CREEK SAFETY ROADSIDE REST AREA
SOUTHBOUND NEW BUILDINGS 1&2
NORTHBOUND NEW BUILDING 4
SOUTH ELEVATION

SHEET **A1-4**

a1_04_SelevM.dgn
DS OSD Imperial Rev. 10/07 23-JUN-2010 18:53

ORIGINAL SCALE IN INCHES FOR REDUCED PLANS 0 1 2 3

CU 11-340
EA 11-261401

DISREGARD PRINTS BEARING EARLIER REVISION DATES → JULY-09 DEC 09

REVISION DATES (PRELIMINARY STAGE ONLY) SHEET OF

23-JUN-2010 18:53
a1_04_SelevM.dgn

DIST.	COUNTY	ROUTE	POST MILES TOTAL PROJECT	SHEET NO.	TOTAL SHEETS
11	SD	5	R59.4/R60.0	102	241

LICENSED ARCHITECT

DEC 09

LICENSED ARCHITECT HASSAN AKHAVAN No. C-20451 Exp. 04-30-11 STATE OF CALIFORNIA

6-21-10
PLANS APPROVAL DATE

The State of California or its officers or agents shall not be responsible for the accuracy or completeness of electronic copies of this plan sheet.

KEY NOTES :

1 MISSION TILE ROOFING
2 BULLETIN BOARD DISPLAY SEE SHEET A6-12
3 WOOD TRELLIS SEE SHEET A6-15
4 8"X8" GLASS BLOCK SEE SHEET A6-16
5 CEMENT PLASTER FINISHED 16"x16" CMU COLUMN SEE SHEET A6-14 A6-15 FEDERAL STANDARD 17925
6 CEMENT PLASTER OVER CMU FEDERAL STANDARD 17925
7 CERAMIC TILE FACE IN ALCOVE 3052 DALTILE (DALTILEPROUDUCTS WEB SITE) OR EQUIL
8 OBSCURE GLAZING W/GRID FRAME AND GRID FS 33617
9 BULLET RESISTANT GLAZING CHP OFFICE SEE SPEC GRID FS 33617 (BUILDING 3 ONLY)
10 CERAMIC TILE PATTERN SEE SHEET A6-13 A6-14
11 ATTIC VENT W/INSECT SCREEN AND GRILL SEE SHEET A6-14
12 DRINKING FOUNTAIN SEE MECH A0-3.4
13 OBSCURE GLAZING W/GRID (OPERABLE INSIDE)
14 UTILITY ROOM DOOR SEE SHEET A3-15
15 LOUVER SEE SHEET A1-13 A6-16 FEDERAL STANDARD 30166
16 NOT USED
17 RESTROOM SIGNAGE SEE SHEET A6-13 A6-16
18 LIGHT FIXTURE (SEE ELEC)
19 IRON WORK SEE SHEET A6-14
20 ACCESSIBLE SIGNAGE SEE SHEET A0-3.3 DETAILS 3,4&5.
21 PRE PAINTED 1½" CASING BEAD ALL BUILDINGS
22 ACCESSIBILITY SYMBOL SEE A0-3.3/6
23 LASER CUT SIGN (ROOM NAME)¼" POWDER COATED PLATE SEE A6-16

NOTE:

01 ELEVATION DETAIL SHEET A6-12 A6-13 A6-14 A6-15 A6-16

DOORS & HINGES PRE COLOR COATED FS 33617

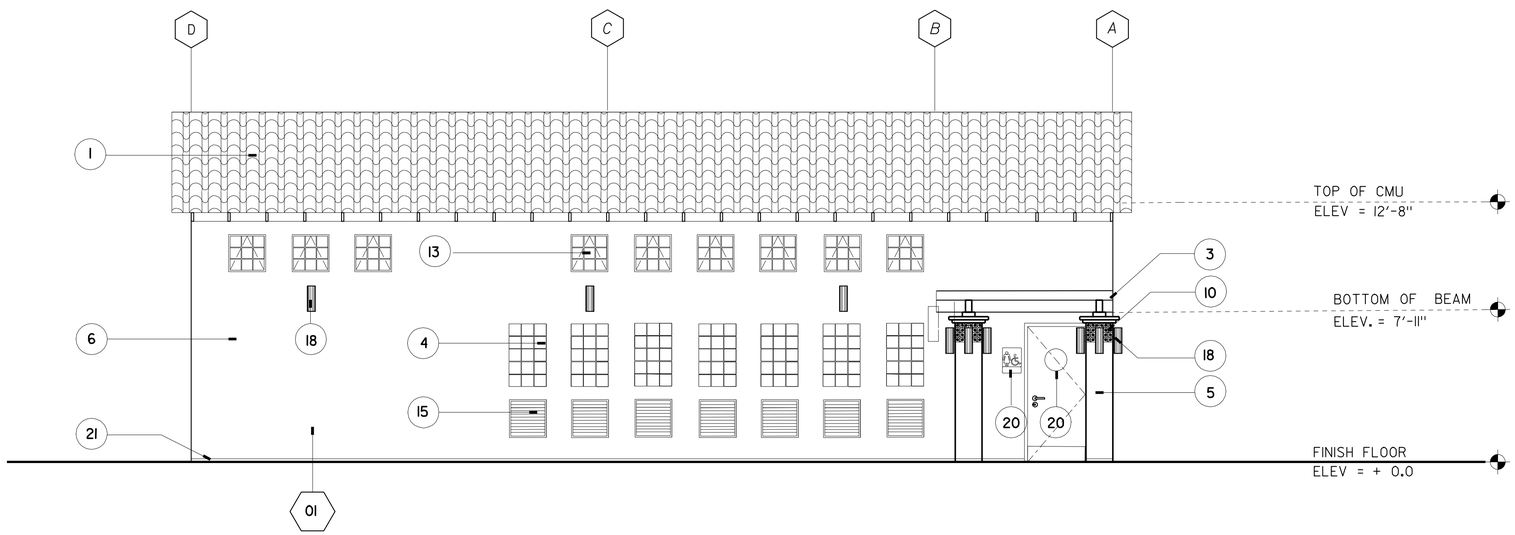

EAST ELEVATION

SCALE ¼"= 1'-0"

ACCESSIBILITY DESIGN APPROVAL STAMP DOT / DES / OTA

11-261401

Reviewed by:

Date: 09-01-09

CALIFORNIA STATE FIRE MARSHAL APPROVED

Approval of this plan does not authorize or approve any omission or deviation from applicable regulations. Final approval is subject to field inspection. One set of approved plans shall be available on the project site at all times.

Reviewed by: BILL ROBERTSON DSFM III

Approval date: 11-04-09

CSFM #: 01-37-11-0033

	BY	CHECKED
DESIGN	HASSAN AKHAVAN	Donald E. Alsey
DETAILS	ROBERT QUIBIN	Donald E. Alsey
QUANTITIES		

STATE OF CALIFORNIA DEPARTMENT OF TRANSPORTATION

DIVISION OF ENGINEERING SERVICES ARCHITECTURAL AND STRUCTURAL DESIGN

BRIDGE NO. 57R000IR 57R000IR
POST MILE R59.4/R60.0

ALISO CREEK SAFETY ROADSIDE REST AREA

SOUTHBOUND NEW BUILDINGS 1&2
NORTHBOUND NEW BUILDING 4

EAST ELEVATION

SHEET **A1-5**

a1_05_ElevM.dgn
DS OSD Imperial Rev. 10/07 23-JUN-2010 18:53

ORIGINAL SCALE IN INCHES FOR REDUCED PLANS 0 1 2 3

CU 11-340
EA 11-261401

DISREGARD PRINTS BEARING EARLIER REVISION DATES → JULY-09 DEC 09

REVISION DATES (PRELIMINARY STAGE ONLY) SHEET OF

23-JUN-2010 18:53

a1_05_ElevM.dgn

DIST.	COUNTY	ROUTE	POST MILES TOTAL PROJECT	SHEET NO.	TOTAL SHEETS
11	SD	5	R59.4/R60.0	103	241

LICENSED ARCHITECT

DEC 09

LICENSED ARCHITECT HASSAN AKHAVAN No. C-20451 Exp. 04-30-11 STATE OF CALIFORNIA

6-21-10
PLANS APPROVAL DATE

The State of California or its officers or agents shall not be responsible for the accuracy or completeness of electronic copies of this plan sheet.

KEY NOTES :

1 MISSION TILE ROOFING
2 BULLETIN BOARD DISPLAY SEE SHEET A6-12
3 WOOD TRELLIS SEE SHEET A6-15
4 8"X8" GLASS BLOCK SEE SHEET A6-16
5 CEMENT PLASTER FINISHED 16"x16" CMU COLUMN SEE SHEET A6-14 A6-15 FEDERAL STANDARD 17925
6 CEMENT PLASTER OVER CMU FEDERAL STANDARD 17925
7 CERAMIC TILE FACE IN ALCOVE 3052 DALTILE (DALTILEPROUDUCTS WEB SITE) OR EQUIL
8 OBSCURE GLAZING W/GRID FRAME AND GRID FS 33617
9 BULLET RESISTANT GLAZING CHP OFFICE SEE SPEC GRID FS 33617 (BUILDING 3 ONLY)
10 CERAMIC TILE PATTERN SEE SHEET A6-13 A6-14
11 ATTIC VENT W/INSECT SCREEN AND GRILL SEE SHEET A6-14
12 DRINKING FOUNTAIN SEE MECH A0-3.4
13 OBSCURE GLAZING W/GRID (OPERABLE INSIDE)
14 UTILITY ROOM DOOR SEE SHEET A3-15
15 LOUVER SEE SHEET A1-13 A6-16 FEDERAL STANDARD 30166
16 NOT USED
17 RESTROOM SIGNAGE SEE SHEET A6-13 A6-16
18 LIGHT FIXTURE (SEE ELEC)
19 IRON WORK SEE SHEET A6-14
20 ACCESSIBLE SIGNAGE SEE SHEET A0-3.3 DETAILS 3,4&5.
21 PRE PAINTED 1½" CASING BEAD ALL BUILDINGS
22 ACCESSIBILITY SYMBOL SEE A0-3.3/6
23 LASER CUT SIGN (ROOM NAME)¼" POWDER COATED PLATE SEE A6-16

NOTE:

01 ELEVATION DETAIL SHEET A6-12 A6-13 A6-14 A6-15 A6-16

DOORS & HINGES PRE COLOR COATED FS 33617

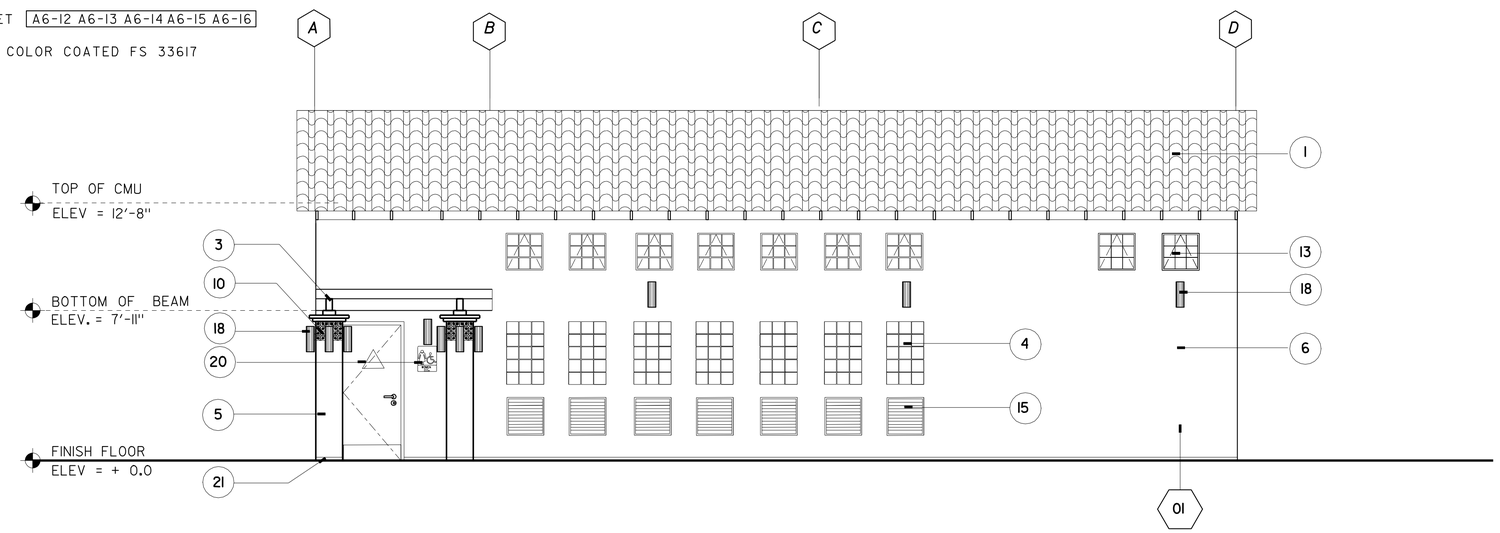

WEST ELEVATION

SCALE ¼"= 1'-0"

ACCESSIBILITY DESIGN APPROVAL STAMP DOT / DES / OTA

11-261401

Reviewed by:

Date: 09-01-09

CALIFORNIA STATE FIRE MARSHAL APPROVED

Approval of this plan does not authorize or approve any omission or deviation from applicable regulations. Final approval is subject to field inspection. One set of approved plans shall be available on the project site at all times.

Reviewed by: BILL ROBERTSON DSFM III

Approval date: 11-04-09

CSFM #: 01-37-11-0033

DESIGN	BY HASSAN AKHAVAN	CHECKED Donald E. Alvarez	
DETAILS	BY ROBERT QUIBIN	CHECKED Donald E. Alvarez	
QUANTITIES	BY	CHECKED	

STATE OF CALIFORNIA DEPARTMENT OF TRANSPORTATION

DIVISION OF ENGINEERING SERVICES ARCHITECTURAL AND STRUCTURAL DESIGN

BRIDGE NO. 57R000IR 57R000IR
POST MILE R59.4/R60.0

ALISO CREEK SAFETY ROADSIDE REST AREA

SOUTHBOUND NEW BUILDINGS 1&2
NORTHBOUND NEW BUILDING 4

WEST ELEVATIONS

SHEET **A1-6**

a1_06_WelevM.dgn
DS OSD Imperial Rev. 10/07 23-JUN-2010 18:54

ORIGINAL SCALE IN INCHES FOR REDUCED PLANS 0 1 2 3

CU 11-340
EA 11-261401

DISREGARD PRINTS BEARING EARLIER REVISION DATES → JULY-09 DEC 09

REVISION DATES (PRELIMINARY STAGE ONLY) SHEET OF

23-JUN-2010 18:54

a1_06_WelevM.dgn

DIST.	COUNTY	ROUTE	POST MILES TOTAL PROJECT	SHEET NO.	TOTAL SHEETS
11	SD	5	R59.4/R60.0	104	241

LICENSED ARCHITECT

DEC 09

LICENSED ARCHITECT HASSAN AKHAVAN No. C-20451 Exp. 04-30-11 STATE OF CALIFORNIA

6-21-10
PLANS APPROVAL DATE

The State of California or its officers or agents shall not be responsible for the accuracy or completeness of electronic copies of this plan sheet.

ACCESSIBILITY DESIGN APPROVAL STAMP DOT / DES / OTA

11-261401

Reviewed by:

Date: 09-01-09

CALIFORNIA STATE FIRE MARSHAL APPROVED

Approval of this plan does not authorize or approve any omission or deviation from applicable regulations. Final approval is subject to field inspection. One set of approved plans shall be available on the project site at all times.

Reviewed by: BILL ROBERTSON DSFM III

Approval date: 11-04-09

CSFM #: 01-37-11-0033

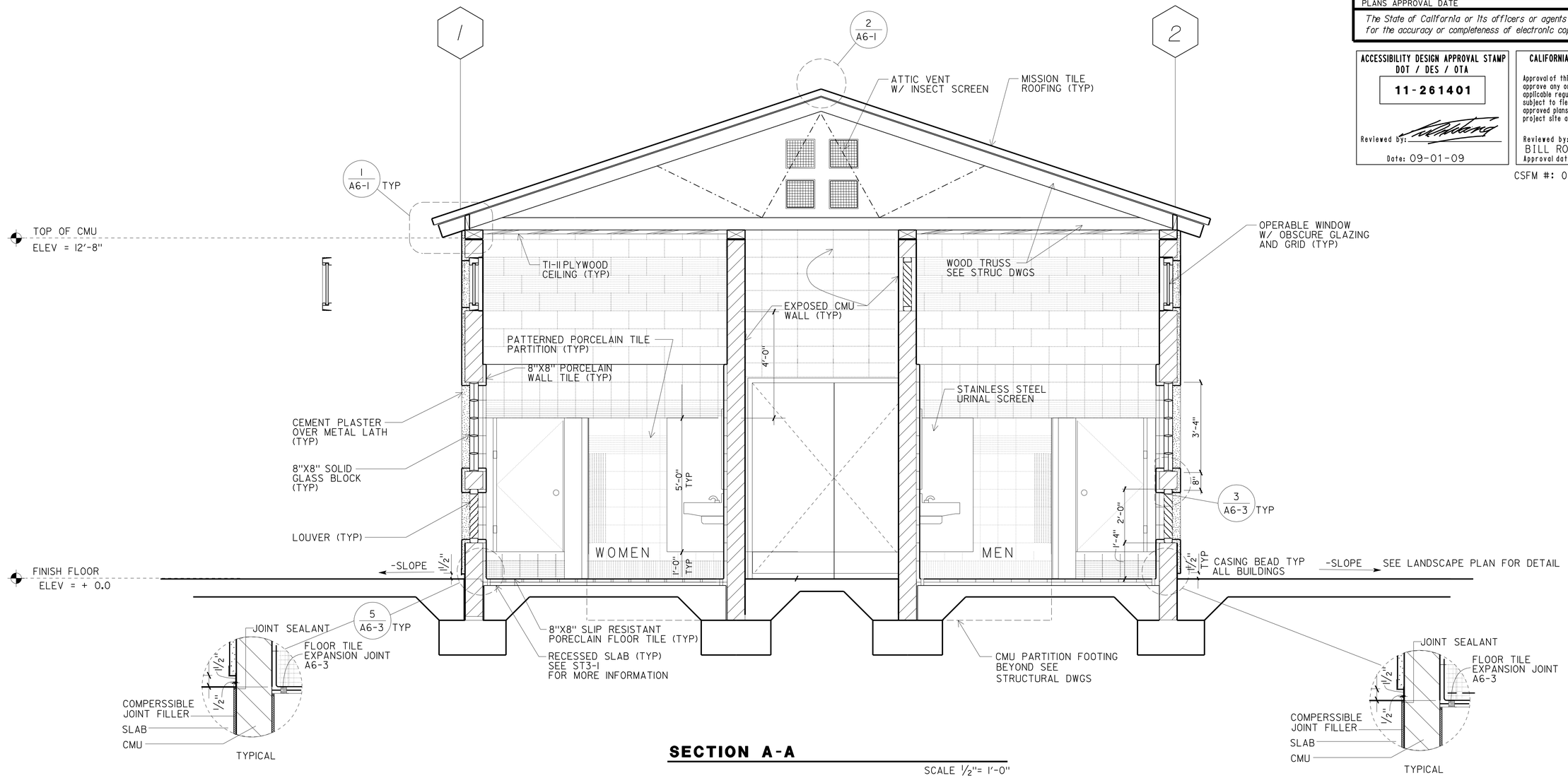

SECTION A-A

SCALE 1/2"= 1'-0"

DESIGN	BY HASSAN AKHAVAN	CHECKED Donald E. Alsey	
DETAILS	BY ROBERT QUIBIN	CHECKED Donald E. Alsey	
QUANTITIES	BY	CHECKED	

STATE OF CALIFORNIA DEPARTMENT OF TRANSPORTATION

DIVISION OF ENGINEERING SERVICES
ARCHITECTURAL AND STRUCTURAL DESIGN

BRIDGE NO. 57R0001R 57R0001R
POST MILE R59.4/R60.0

ALISO CREEK SAFETY ROADSIDE REST AREA

SOUTHBOUND NEW BUILDINGS 1&2
NORTHBOUND NEW BUILDING 4

SECTION

SHEET **A1-7**

a1_07_SecAAM.dgn
DS OSD Imperial Rev. 10/07 23-JUN-2010 18:54

ORIGINAL SCALE IN INCHES FOR REDUCED PLANS 0 1 2 3

CU 11-340
EA 11-261401

DISREGARD PRINTS BEARING EARLIER REVISION DATES

REVISION DATES (PRELIMINARY STAGE ONLY) JULY-09 DEC 09

SHEET OF

23-JUN-2010 18:54

a1_07_SecAAM.dgn

DIST.	COUNTY	ROUTE	POST MILES TOTAL PROJECT	SHEET NO.	TOTAL SHEETS
11	SD	5	R59.4,R60.0	105	241

LICENSED ARCHITECT

DEC 09

LICENSED ARCHITECT HASSAN AKHAVAN No. C-20451 Exp. 04-30-11 STATE OF CALIFORNIA

6-21-10
PLANS APPROVAL DATE

The State of California or its officers or agents shall not be responsible for the accuracy or completeness of electronic copies of this plan sheet.

ACCESSIBILITY DESIGN APPROVAL STAMP DOT / DES / OTA

11-261401

Reviewed by:

Date: 09-01-09

CALIFORNIA STATE FIRE MARSHAL APPROVED

Approval of this plan does not authorize or approve any omission or deviation from applicable regulations. Final approval is subject to field inspection. One set of approved plans shall be available on the project site at all times.

Reviewed by: BILL ROBERTSON DSFM III

Approval date: 11-04-09

CSFM #: 01-37-11-0033

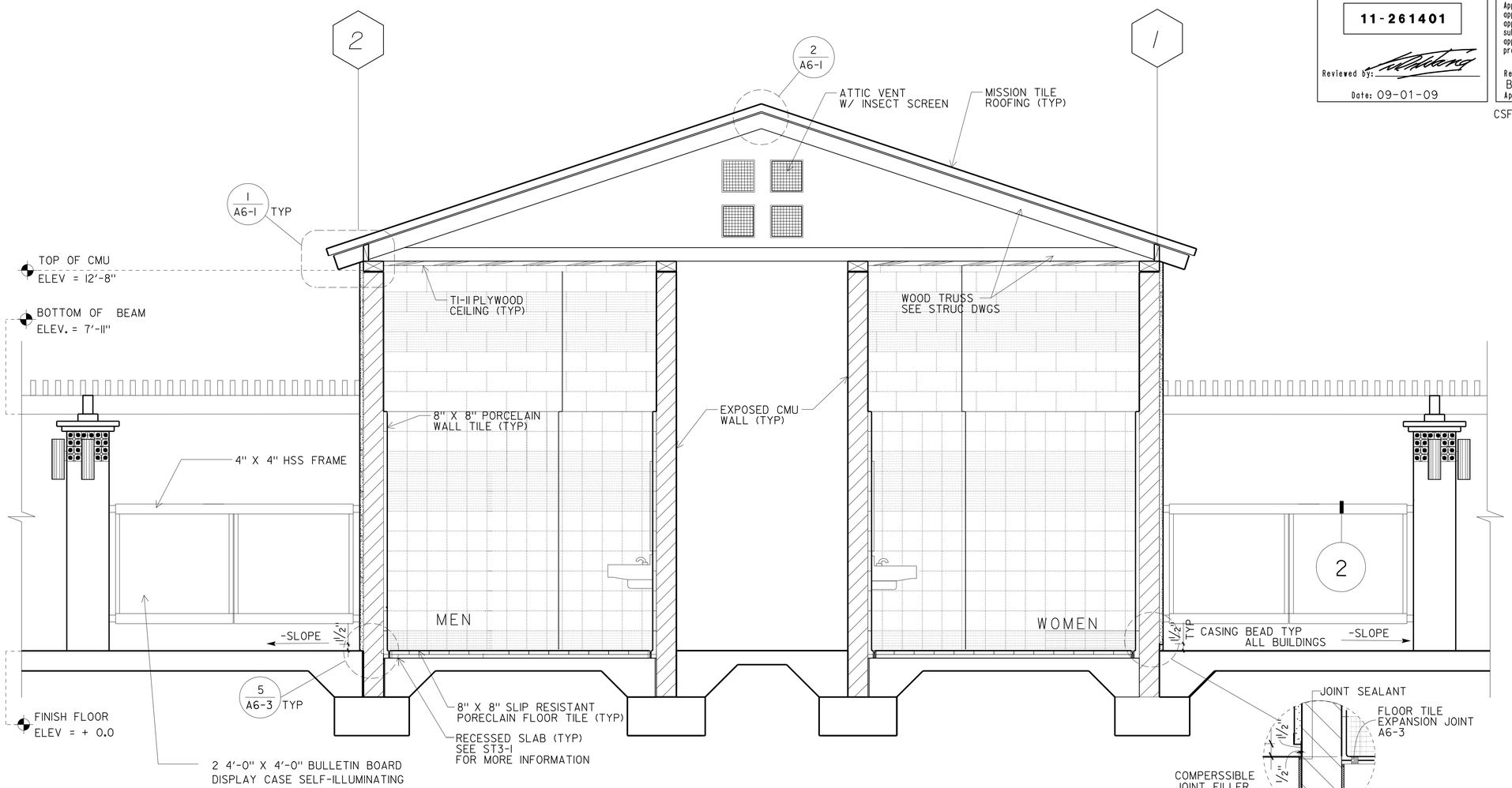

SECTION B-B

SCALE: 1/2" = 1'-0"

DESIGN	BY HASSAN AKHAVAN	CHECKED Donald E. Alvarez	
DETAILS	BY ROBERT QUIBIN	CHECKED Donald E. Alvarez	
QUANTITIES	BY	CHECKED	

STATE OF CALIFORNIA DEPARTMENT OF TRANSPORTATION

DIVISION OF ENGINEERING SERVICES ARCHITECTURAL AND STRUCTURAL DESIGN

BRIDGE NO. 57R0001R 57R0001R

POST MILE R59.4/R60.0

ALISO CREEK SAFETY ROADSIDE REST AREA

SOUTHBOUND NEW BUILDINGS 1&2
NORTHBOUND NEW BUILDING 4

SECTION

SHEET **A1-7a**

a1_07a_SecBBm.dgn
DS OSD Imperial Rev. 10/07 24-JUN-2010 14:06

ORIGINAL SCALE IN INCHES FOR REDUCED PLANS 0 1 2 3

CU 11-340
EA 11-261401

DISREGARD PRINTS BEARING EARLIER REVISION DATES

REVISION DATES (PRELIMINARY STAGE ONLY) MAY 09 DEC 09

SHEET OF

24-JUN-2010 14:06

a1_07a_SecBBm.dgn

DIST.	COUNTY	ROUTE	POST MILES TOTAL PROJECT	SHEET NO.	TOTAL SHEETS
11	SD	5	R59.4,R60.0	106	241

LICENSED ARCHITECT

DEC 09

LICENSED ARCHITECT
HASSAN AKHAVAN
No. C-20451
Exp. 04-28-11
STATE OF CALIFORNIA

6-21-10
PLANS APPROVAL DATE

The State of California or its officers or agents shall not be responsible for the accuracy or completeness of electronic copies of this plan sheet.

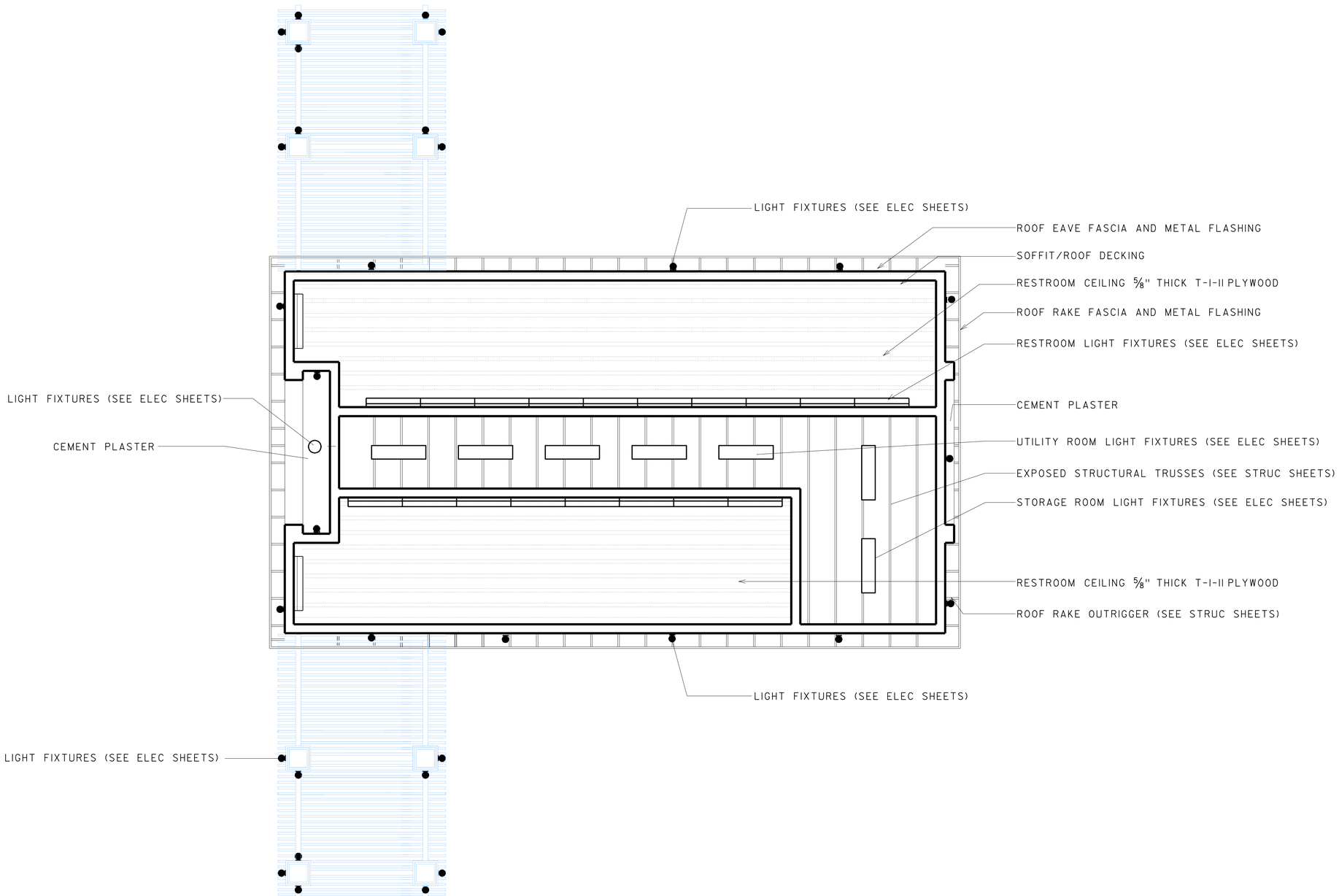

NEW COMFORT BUILDINGS NUMBER 1 AND 2
REFLECTED CEILING PLAN

SCALE: 1/4" = 1'-0"

N E S W

ACCESSIBILITY DESIGN APPROVAL STAMP
DOT / DES / OTA
11-261401
Reviewed by:
Date: 09-01-09

CALIFORNIA STATE FIRE MARSHAL APPROVED
Approval of this plan does not authorize or approve any omission or deviation from applicable regulations. Final approval is subject to field inspection. One set of approved plans shall be available on the project site at all times.
Reviewed by:
BILL ROBERTSON DSFM III
Approval date: 11-04-09

CSFM #: 01-37-11-0033

DESIGN	BY HASSAN AKHAVAN	CHECKED Donald E. Avery	
DETAILS	BY ROBERT QUIBIN	CHECKED Donald E. Avery	
QUANTITIES	BY	CHECKED	

STATE OF CALIFORNIA
DEPARTMENT OF TRANSPORTATION

DIVISION OF ENGINEERING SERVICES
ARCHITECTURAL AND STRUCTURAL DESIGN

BRIDGE NO. 57R0001R 57R0001L
POST MILE R59.4/R60.0

ALISO CREEK SAFETY ROADSIDE REST AREA
SOUTHBOUND NEW BUILDINGS 1&2
NORTHBOUND NEW BUILDING 4
REFLECTED CEILING PLAN

SHEET **A1-8**

a1_08_bldg4_reflect_ceilingM.dgn
DS OSD Imperial Rev. 11/98 24-JUN-2010 14:06

ORIGINAL SCALE IN INCHES FOR REDUCED PLANS 0 1 2 3

CU 11-340
EA 11-261401

DISREGARD PRINTS BEARING EARLIER REVISION DATES →

REVISION DATES (PRELIMINARY STAGE ONLY) JULY-09 DEC 09 SHEET OF

DIST.	COUNTY	ROUTE	POST MILES TOTAL PROJECT	SHEET NO.	TOTAL SHEETS
11	SD	5	R59.4,R60.0	107	241

LICENSED ARCHITECT

DEC 09

LICENSED ARCHITECT
HASSAN AKHAVAN
No. C-20451
Exp. 04-30-11
STATE OF CALIFORNIA

6-21-10
PLANS APPROVAL DATE

The State of California or its officers or agents shall not be responsible for the accuracy or completeness of electronic copies of this plan sheet.

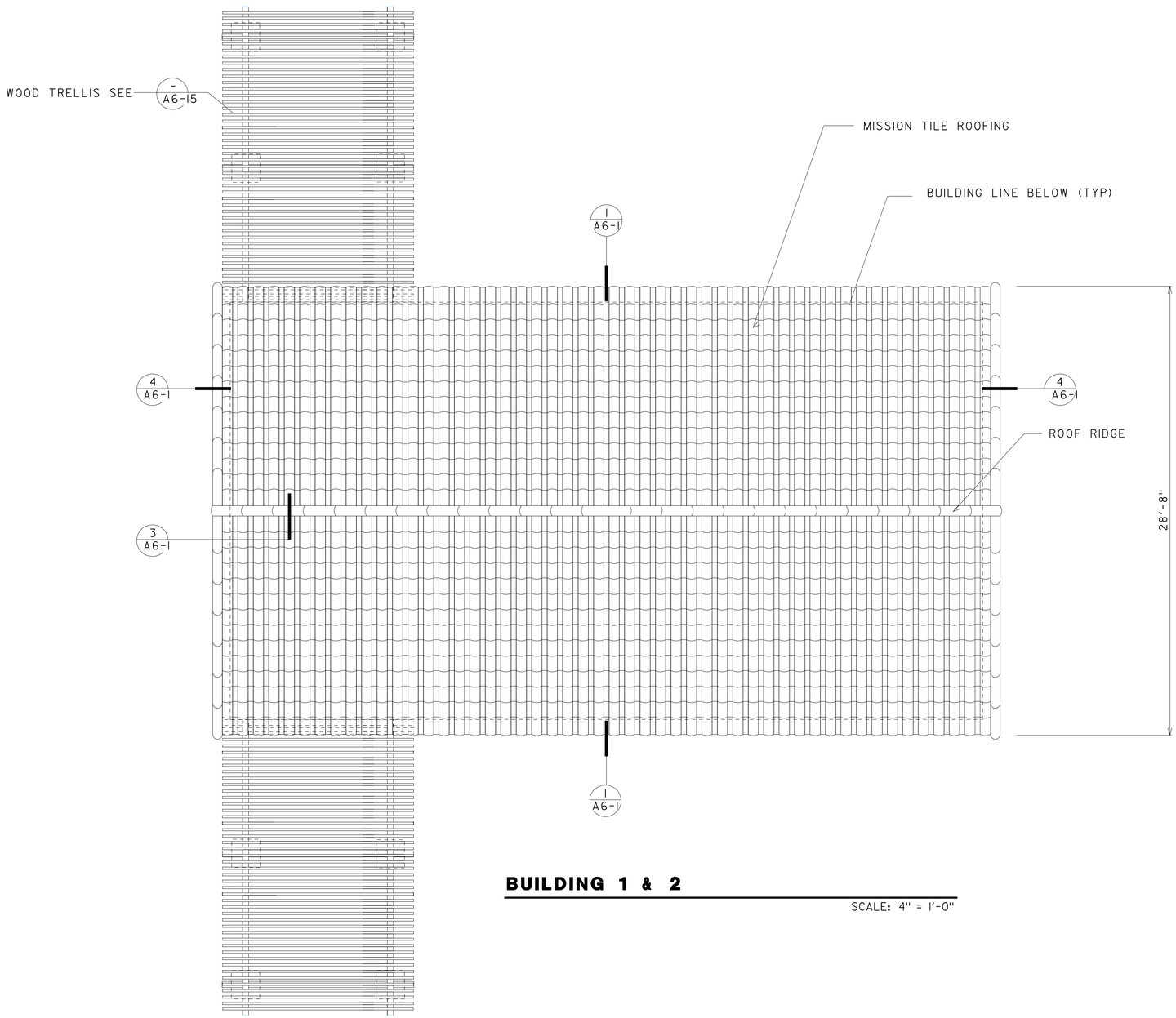

BUILDING 1 & 2

SCALE: 4" = 1'-0"

NOTE:

FOR MECHANICAL EQUIPMENT. EXHAUST, VENTS AND OTHER ROOF PENETRATION SEE MECHANICAL PLANS.

ACCESSIBILITY DESIGN APPROVAL STAMP
DOT / DES / OTA

11-261401

Reviewed by:

Date: 09-01-09

CALIFORNIA STATE FIRE MARSHAL APPROVED

Approval of this plan does not authorize or approve any omission or deviation from applicable regulations. Final approval is subject to field inspection. One set of approved plans shall be available on the project site at all times.

Reviewed by:
BILL ROBERTSON DSFM III
Approval date: 11-04-09

CSFM #: 01-37-11-0033

DESIGN	BY HASSAN AKHAVAN	CHECKED Donald E. Alvarez	
DETAILS	BY ROBERT QUIBIN	CHECKED Donald E. Alvarez	
QUANTITIES	BY	CHECKED	

STATE OF
CALIFORNIA
DEPARTMENT OF TRANSPORTATION

DIVISION OF ENGINEERING SERVICES
ARCHITECTURAL
AND
STRUCTURAL DESIGN

BRIDGE NO. 57R0001R 57R0001R
POST MILE R59.4/R60.0

ALISO CREEK SAFETY ROADSIDE REST AREA

SOUTHBOUND NEW BUILDING 1&2
NORTHBOUND NEW BUILDING 4

ROOF PLAN

SHEET **A1-9**

a1_09_bldg4_roof_plM.dgn
DS OSD Imperial Rev. 10/07 24-JUN-2010 14:06

ORIGINAL SCALE IN INCHES FOR REDUCED PLANS 0 1 2 3

CU 11-340
EA 11-261401

DISREGARD PRINTS BEARING EARLIER REVISION DATES →

REVISION DATES (PRELIMINARY STAGE ONLY) JULY-09 DEC 09

SHEET OF

24-JUN-2010 14:06

a1_09_bldg4_roof_plM.dgn

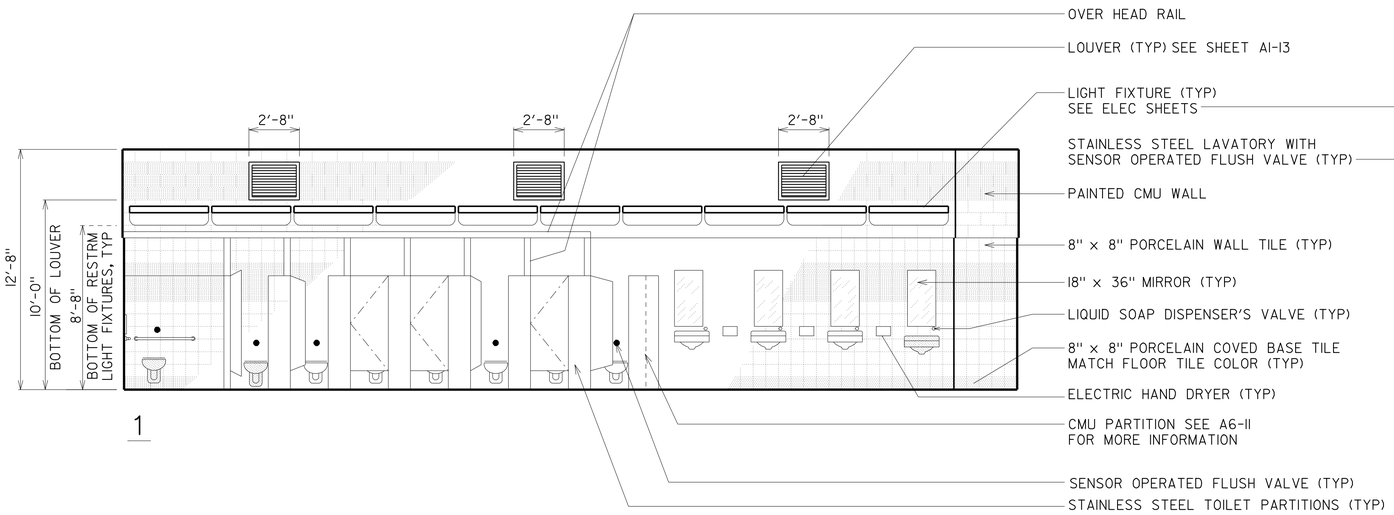

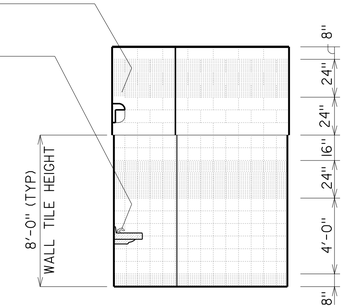

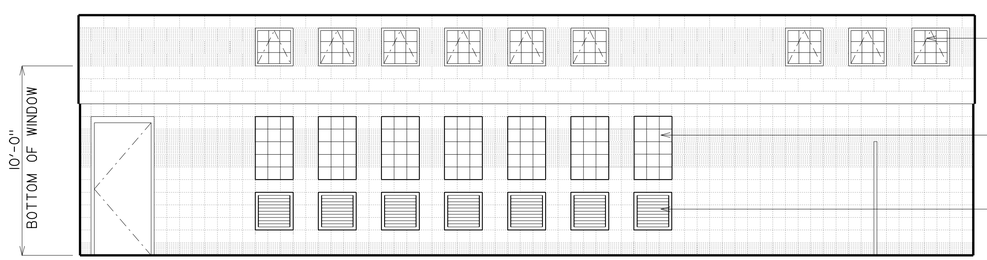

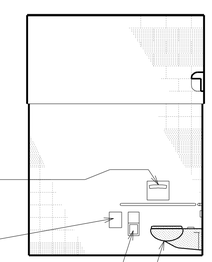

24" x 24" OBSCURE GLAZING OPERABLE METAL WINDOW
WITH GRID AND METAL INSECT SCREEN (TYP)

8" x 8" SOLID GLASS BLOCK
15 BLOCKS EACH WINDOW (TYP)

TOILET SEAT COVER DISPENSER (TYP)

24" x 24" METAL LOUVER (TYP)

NAPKIN DISPOSAL AT ALL WOMEN'S TOILETS (TYP)

DOUBLE-ROLL TOILET TISSUE DISPENSER (TYP)

STAINLESS STEEL WATER-CLOSET (TYP)

100 WOMEN'S RESTROOMS

SCALE: 1/4" = 1'-0"

DIST.	COUNTY	ROUTE	POST MILES TOTAL PROJECT	SHEET NO.	TOTAL SHEETS
11	SD	5	R59.4,R60.0	108	241

LICENSED ARCHITECT

DEC '09

LICENSED ARCHITECT
HASSAN AKHAVAN
No. C-20451
Exp. 04-30-11
STATE OF CALIFORNIA

6-21-10
PLANS APPROVAL DATE

The State of California or its officers or agents shall not be responsible for the accuracy or completeness of electronic copies of this plan sheet.

ACCESSIBILITY DESIGN APPROVAL STAMP
DOT / DES / OTA
11-261401
Reviewed by:
Date: 09-01-09

CALIFORNIA STATE FIRE MARSHAL APPROVED
Approval of this plan does not authorize or approve any omission or deviation from applicable regulations. Final approval is subject to field inspection. One set of approved plans shall be available on the project site at all times.
Reviewed by: BILL ROBERTSON DSFM III
Approval date: 11-04-09

CSFM #: 01-37-11-0033

	BY		CHECKED
DESIGN	BY	HASSAN AKHAVAN	CHECKED Donald E. Alsey
DETAILS	BY	ROBERT QUIBIN	CHECKED Donald E. Alsey
QUANTITIES	BY		CHECKED

STATE OF
CALIFORNIA
DEPARTMENT OF TRANSPORTATION

DIVISION OF ENGINEERING SERVICES
ARCHITECTURAL
AND
STRUCTURAL DESIGN

BRIDGE NO. 57R000IR 57R000IR
POST MILE R59.4/R60.0

ALISO CREEK SAFETY ROADSIDE REST AREA
SOUTHBOUND NEW BUILDINGS 1&2
NORTHBOUND NEW BUILDINGS 4
INTERIOR ELEVEATIONS

SHEET **A1-10**

a1_10_women_rm_int_elevm.dgn
DS OSD Imperial Rev. 10/07 24-JUN-2010 14:06

ORIGINAL SCALE IN INCHES FOR REDUCED PLANS 0 1 2 3

CU 11-340
EA 11-261401

DISREGARD PRINTS BEARING EARLIER REVISION DATES →

REVISION DATES (PRELIMINARY STAGE ONLY) JULY-09 DEC 09 SHEET OF

24-JUN-2010 14:06
a1_10_women_rm_int_elevm.dgn

DIST.	COUNTY	ROUTE	POST MILES TOTAL PROJECT	SHEET NO.	TOTAL SHEETS
11	SD	5	R59.4,R60.0	109	241

LICENSED ARCHITECT

DEC 09

LICENSED ARCHITECT HASSAN AKHAVAN No. C-20451 Exp. 04-30-11 STATE OF CALIFORNIA

6-21-10
PLANS APPROVAL DATE

The State of California or its officers or agents shall not be responsible for the accuracy or completeness of electronic copies of this plan sheet.

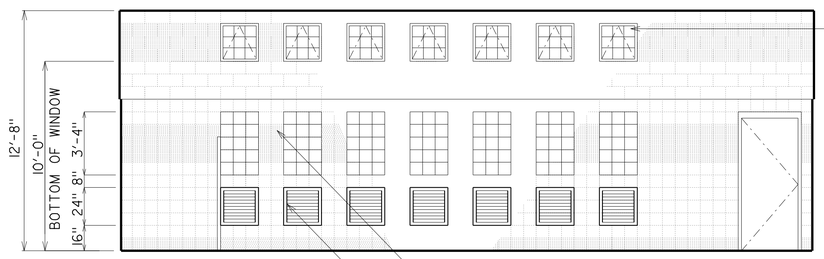

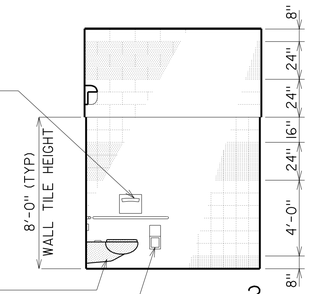

24" x 24" OBSCURE GLAZING OPERABLE METAL WINDOW WITH GRID AND METAL INSECT SCREEN (TYP)

TOILET SEAT COVER DISPENSER (TYP)

STAINLESS STEEL WATER-CLOSET (TYP)

DOUBLE-ROLL TOILET TISSUE DISPENSER (TYP)

8" x 8" SOLID GLASS BLOCK 15 BLOCKS EACH WINDOW (TYP)

24" x 24" METAL LOUVER WITH METAL INSECT SCREEN (TYP)

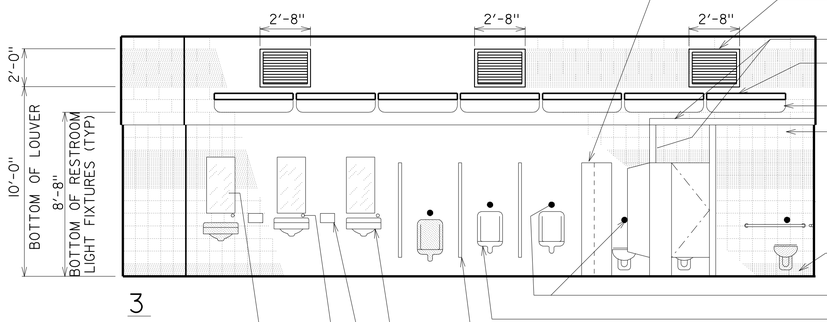

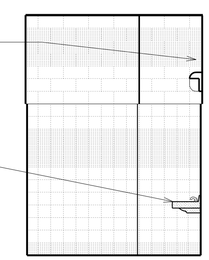

6" x 16" x 8" CMU PARTITION COVERED WITH 8" x 8" PORCELAIN WALL TILES BEHIND STAINLESS STEEL PILASTER AT THIS LOCATION ONLY (SEE FLOOR PLAN)

LOUVER (TYP), SEE 11,12 / A6-7

OVER HEAD RAIL (TYP)

LIGHT FIXTURE (TYP) SEE ELEC SHEETS

PAINTED EXPOSED CMU WALL

8" x 8" PORCELAIN WALL TILE (TYP)

STAINLESS STEEL LAVATORY WITH INFRARED SENSOR ACTIVATED FAUCET (TYP)

8" x 8" PORCELAIN COVED BASE TILE MATCH FLOOR TILE COLOR (TYP)

INFRARED SENSOR ACTIVATED FLUSH VALVE (TYP)

STAINLESS STEEL URINAL (TYP)

24" x 60" STAINLESS STEEL URINAL SCREEN 12" ABOVE FINISH FLOOR (TYP)

STAINLESS STEEL LAVATORY WITH INFRARED SENSOR ACTIVATED FAUCET (TYP)

ELECTRIC HAND DRYER (TYP)

LIQUID SOAP DISPENSER'S VALVE (TYP)

18" x 36" MIRROR (TYP)

102 MEN'S RESTROOMS

SCALE: 1/4" = 1'-0"

ACCESSIBILITY DESIGN APPROVAL STAMP DOT / DES / OTA

11-261401

Reviewed by:

Date: 09-01-09

CALIFORNIA STATE FIRE MARSHAL APPROVED

Approval of this plan does not authorize or approve any omission or deviation from applicable regulations. Final approval is subject to field inspection. One set of approved plans shall be available on the project site at all times.

Reviewed by: BILL ROBERTSON DSFM III

Approval date: 11-04-09

CSFM #: 01-37-11-0033

DESIGN	BY HASSAN AKHAVAN	CHECKED Donald E. Alsey	
DETAILS	BY ROBERT QUIBIN	CHECKED Donald E. Alsey	
QUANTITIES	BY	CHECKED	

STATE OF CALIFORNIA DEPARTMENT OF TRANSPORTATION

DIVISION OF ENGINEERING SERVICES ARCHITECTURAL AND STRUCTURAL DESIGN

BRIDGE NO. 57R0001R 57R0001R

POST MILE R59.4/R60.0

ALISO CREEK SAFETY ROADSIDE REST AREA

SOUTHBOUND NEW BUILDINGS 1&2
NORTHBOUND NEW BUILDINGS 4

INTERIOR ELEVATION

SHEET **A1-11**

a1_11_men_rm_int_elevm.dgn
DS OSD Imperial Rev. 10/07 24-JUN-2010 14:06

ORIGINAL SCALE IN INCHES FOR REDUCED PLANS 0 1 2 3

CU 11-340
EA 11-261401

DISREGARD PRINTS BEARING EARLIER REVISION DATES → JULY-09 DEC 09

REVISION DATES (PRELIMINARY STAGE ONLY) SHEET OF

24-JUN-2010 14:06

a1_11_men_rm_int_elevm.dgn

DIST.	COUNTY	ROUTE	POST MILES TOTAL PROJECT	SHEET NO.	TOTAL SHEETS
11	SD	5	R59.4,R60.0	110	241

LICENSED ARCHITECT

DEC 09

LICENSED ARCHITECT
HASSAN AKHAVAN
No. C-20451
Exp. 04-30-11
STATE OF CALIFORNIA

6-21-10
PLANS APPROVAL DATE

The State of California or its officers or agents shall not be responsible for the accuracy or completeness of electronic copies of this plan sheet.

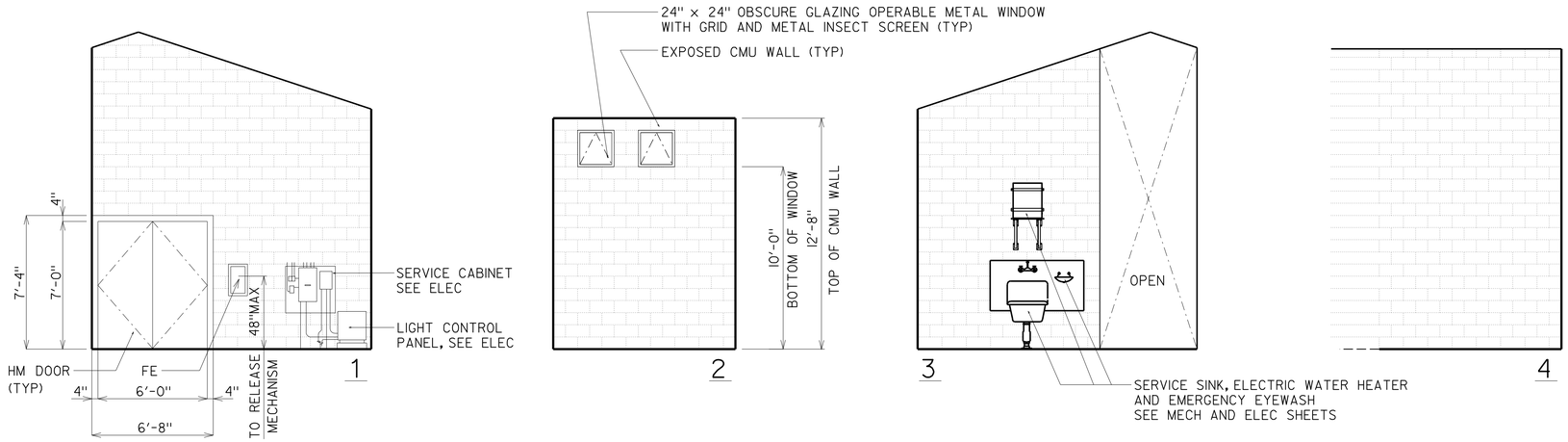

101 STORAGE / ELECTRICAL / MECHANICAL

SCALE: 1/4" = 1'-0"

ACCESSIBILITY DESIGN APPROVAL STAMP DOT / DES / OTA	CALIFORNIA STATE FIRE MARSHAL APPROVED
11-261401	Approval of this plan does not authorize or approve any omission or deviation from applicable regulations. Final approval is subject to field inspection. One set of approved plans shall be available on the project site at all times.
Reviewed by:	Reviewed by: BILL ROBERTSON DSFM III
Date: 09-01-09	Approval date: 11-04-09

CSFM #: 01-37-11-0033

	BY		CHECKED
DESIGN	HASSAN AKHAVAN		
DETAILS	ROBERT QUIBIN		
QUANTITIES			

STATE OF CALIFORNIA
DEPARTMENT OF TRANSPORTATION

DIVISION OF ENGINEERING SERVICES
ARCHITECTURAL AND STRUCTURAL DESIGN

BRIDGE NO. 57R000IR 57R000IR
POST MILE R59.4/R60.0

ALISO CREEK SAFETY ROADSIDE REST AREA

SOUTHBOUND NEW BUILDINGS 1&2
NORTHBOUND NEW BUILDINGS 4

INTERIOR ELEVATIONS

SHEET A1-12

a1_12_batch_storage_int_elevM.dgn
DS OSD Imperial Rev. 10/07 24-JUN-2010 14:06

ORIGINAL SCALE IN INCHES FOR REDUCED PLANS 0 1 2 3

CU 11-340
EA 11-261401

DISREGARD PRINTS BEARING EARLIER REVISION DATES

REVISION DATES (PRELIMINARY STAGE ONLY) JULY-09 DEC 09

SHEET OF

24-JUN-2010 14:06

a1_12_batch_storage_int_elevM.dgn

DIST.	COUNTY	ROUTE	POST MILES TOTAL PROJECT	SHEET NO.	TOTAL SHEETS
11	SD	5	R59.4,R60.0	111	241

LICENSED ARCHITECT

REC 09

LICENSED ARCHITECT HASSAN AKHAVAN No. C-20451 Exp. 04-30-11 STATE OF CALIFORNIA

6-21-10

The State of California or its officers or agents shall not be responsible for the accuracy or completeness of electronic copies of this plan sheet.

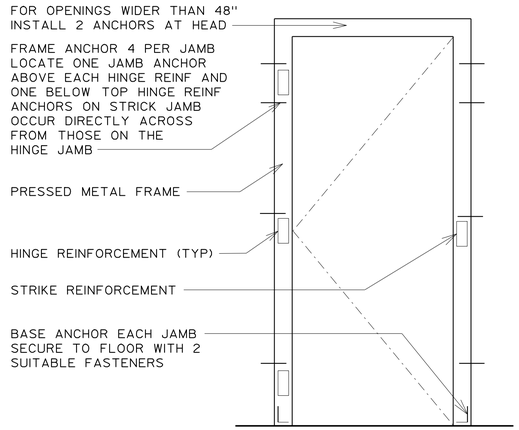

DOOR FRAME ANCHORAGE
SCALE: N.T.S.

DOOR SCHEDULE

DOOR NO	DOOR TYPE	DOOR SIZE WIDTH X HGT	DOOR THICK.	DOOR MAT	DOOR FIN	FRAME MAT	FRAME TYPE	FRAME FIN	FRAME WIDTH	LABEL ASSY	HDWR GROUP	GLAZING	LOUVER	SIGN DETAIL NO	DETAILS HEAD	DETAILS JAMB		DETAILS THLD	TEXT	REMARKS
1	A	3'-0" X 7'-0"	1¾"	METAL	PAINT	METAL	1	PAINT	5¾"	--	1	--	--	3B&4B A0-3.3	2 A6-6	1 A6-6	4 A6-6	5 A6-6	WOMEN	
2	B	(PR) 3'-0" X 7-0"	1¾"	METAL	PAINT	METAL	2	PAINT	5¾"	--	4	--	--	6 A0-3.3	7 A6-5	3 A6-5	6 A6-5	10 A6-5	UTILITY STORAGE	PAIR DOORS
3	A	3'-0" X 7'-0"	1¾"	METAL	PAINT	METAL	1	PAINT	5¾"	--	1	--	--	3C&4C A0-3.3	2 A6-6	1 A6-6	4 A6-6	5 A6-6	MEN	

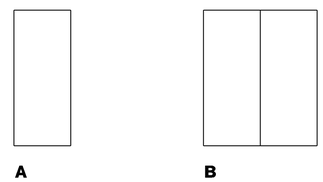

DOOR TYPES
SCALE: 1/4" = 1'-0"

NOTE:
REFER TO THE COLOR SCHEDULE ON SHEET A1-14 FOR ALL DOOR AND DOOR FRAME COLORS.
ALL DOORS WITH 1/8" THICK PUSH PLATE BOTH SIDE WITH ENGRAVED LETTER "PUSH" OR "PULL" (FONT TYPE ARIAL BLACK SIZE 2" HEIGHT)

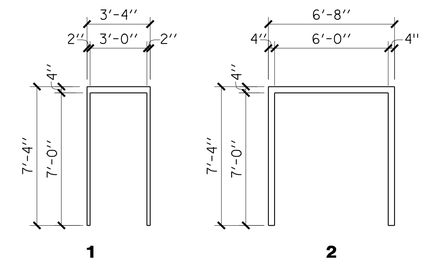

FRAME TYPES
SCALE: 1/4" = 1'-0"

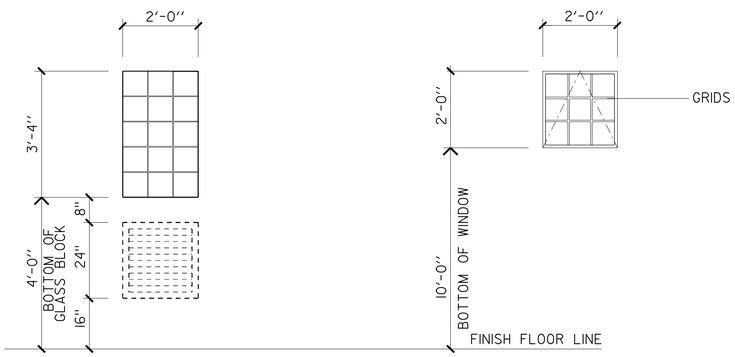

WINDOW TYPES
SCALE: 1/4" = 1'-0"

A GLASS BLOCK

D AWNING PROJECT OUT

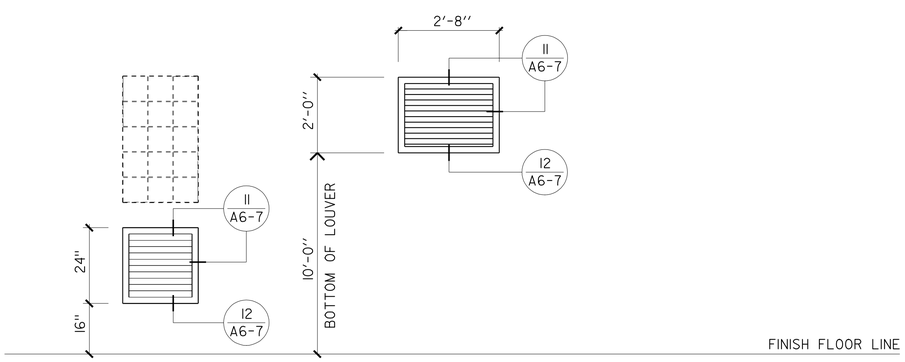

LOUVER SCHEDULE
SCALE: 1/4" = 1'-0"

15

E

WINDOW SCHEDULE

WINDOW TYPE	WINDOW SIZE WIDTH X HGT	FRAME MAT	FRAME FIN	DETAILS HEAD	DETAILS JAMB		DETAILS SILL	REMARKS
A	2'-0" X 3'-4"	METAL	PAINT	9 A6-7	9 A6-7	9 A6-7	10 A6-7	8X8" GLASS BLOCK
B	BLANK							
C	BLANK					A6-7		
D	2'-0" X 2'-0"	METAL	PAINT	7 A6-7	7 A6-7	7 A6-7	8 A6-7	OPERABLE

ACCESSIBILITY DESIGN APPROVAL STAMP
DOT / DES / OTA
11-261401
Reviewed by:
Date: 09-01-09

CALIFORNIA STATE FIRE MARSHAL APPROVED
Approval of this plan does not authorize or approve any omission or deviation from applicable regulations. Final approval is subject to field inspection. One set of approved plans shall be available on the project site at all times.
Reviewed by: BILL ROBERTSON DSFM III
Approval date: 11-04-09
CSFM #: 01-37-11-0033

DESIGN	BY HASSAN AKHAVAN	CHECKED Donald E. Alsey	
DETAILS	BY ROBERT QUIBIN	CHECKED Donald E. Alsey	
QUANTITIES	BY	CHECKED	

STATE OF CALIFORNIA
DEPARTMENT OF TRANSPORTATION

DIVISION OF ENGINEERING SERVICES
ARCHITECTURAL AND STRUCTURAL DESIGN

BRIDGE NO. 57R000R 57R000R
POST MILE R59.4/R60.0

ALISO CREEK SAFETY ROADSIDE REST AREA
SOUTHBOUND NEW BUILDINGS 1&2
NORTHBOUND NEW BUILDINGS 4
DOOR, WINDOW & LOUVER SCHEDULE

SHEET **A1-13**

a1_13_door & window schedM.dgn
DS OSD Imperial Rev. 10/07 24-JUN-2010 14:06

ORIGINAL SCALE IN INCHES FOR REDUCED PLANS 0 1 2 3

CU 11-340
EA 11-261401

DISREGARD PRINTS BEARING EARLIER REVISION DATES → JULY-09 DEC 09

REVISION DATES (PRELIMINARY STAGE ONLY) SHEET OF

24-JUN-2010 14:06
a1_13_door & window schedM.dgn

DIST.	COUNTY	ROUTE	POST MILES TOTAL PROJECT	SHEET NO.	TOTAL SHEETS
11	SD	5	R59.4,R60.0	112	241

LICENSED ARCHITECT

LICENSED ARCHITECT
HASSAN AKHAVAN
No. C-20451
Exp. 04-28-11
STATE OF CALIFORNIA

6-21-10
PLANS APPROVAL DATE

The State of California or its officers or agents shall not be responsible for the accuracy or completeness of electronic copies of this plan sheet.

BUILDING 1&2 FINISH SCHEDULE

	ROOM NAME	FLOOR: CONCRETE	FLOOR: 8x8" SLIP RESISTANT PORCELAIN FLOOR TILE	BASE: RESILIENT BASE	BASE: 8X8" PORCELAIN COVED BASE TILE	WALLS NORTH: 8x8" PORCELAIN WALL TILE	WALLS NORTH: EXPOSED CMU WALL	WALLS EAST: 8x8" PORCELAIN WALL TILE	WALLS EAST: EXPOSED CMU WALL	WALLS SOUTH: 8x8" PORCELAIN WALL TILE	WALLS SOUTH: EXPOSED CMU WALL	WALLS WEST: 8x8" PORCELAIN WALL TILE	WALLS WEST: EXPOSED CMU WALL	CEILING: GYPSUM BOARD	CEILING: T-1-11 PLYWOOD CEILING	CEILING: EXPOSED FRAMING	CEILING: APPROXIMATE CEILING HEIGHT	MISC
100	WOMEN'S RESTROOM (FIELD)		30A		30B	40A	50A	40A	50A	40A	50A	40A	50A		60A		12'-11"	
	(PATTERN)					40B	50B	40B	50B	40B	50B	40B	50B					
102	MEN'S RESTROOM (FIELD)		30C		30D	40C	50C	40C	50C	40C	50C	40C	50C		60B		12'-11"	
	(PATTERN)					40D	50D	40D	50D	40D	50D	40D	50D					
101	STORAGE/ELEC/MECH	10					20		20		20		20			80	EXPOSED	

10 CONCRETE
NATURAL COLOR LIGHT BROOM FINISH
CONCRETE SEALER & HARDNER
SEE 10/A6-5

20 CONCRETE MASONRY UNITS

22 RESILIENT FLOOR TILE & BASE

30 PORCELAIN FLOOR TILE
A - 8X8 DATILE PRODUCTS
GRIGIO GRANITE CD40
B - SAME AS A COVE
C - 8X8 DATILEPRODUCTS
PEPE GRANITE CD40
D - SAME AS C COVE

40 PORCELAIN WALL TILE
A - WHITE 0100
B - AQUE GLOW 0197
C - ALMOND 0135
D - ELEMENTAL TAN 0166

50 CONCRETE MASONRY UNITS COLOR
A - FS 27705
B - FS 24491
C - FS 20450
D - FS 20117

60 T-1-11 PLYWOOD CEILING
A - FS 14491
B - FS 20313

70 GYPSUM BOARD
PAINT FS 13522

80 EXPOSED FARMING

EXTERIOR:

EXTERIOR CEMENT PLASTER CHRYSTAL WHITE
(X-50 BASE) LAHABRA COLOR
LOUVERS, GRILL, WINDOW'S GRID, ALL EXPOSED
METAL CONNECTIONS AND TILE FRAMES
SHALL BE POWDER COATED FS 33617
COLOR SAMPLES MUST BE SUBMITTED TO
THE ARCHITECT FOR FINAL APPROVAL.
EXPOSED TRELLIS WILL RECEIVE STAIN AS NATURAL FINISH "RED WOOD"

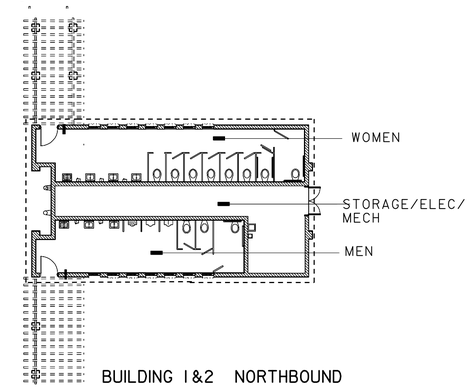

BUILDING 1&2 NORTHBOUND

NOTES:
MANUFACTURER'S DESIGNATIONS ARE LISTED TO INDICATE COLOR, PATTERN, FORM AND SHAPE ONLY. NO PREFERENCE FOR A PARTICULAR BRAND IS INTENDED.

COLORS NOT LISTED SHALL BE SELECTED BY THE ENGINEER FROM SAMPLES SUBMITTED BY THE CONTRACTOR.

FINISHES AND COLORS ARE SHOWN ON THE INTERIOR ELEVATIONS FLOOR PLANS, BUILDING SECTIONS AND EXTERIOR ELEVATIONS AND REFERENCE TO THIS SHEET.

ACCESSIBILITY DESIGN APPROVAL STAMP DOT / DES / OTA
11-261401
Reviewed by:
Date: 09-01-09

CALIFORNIA STATE FIRE MARSHAL APPROVED
Approval of this plan does not authorize or approve any omission or deviation from applicable regulations. Final approval is subject to field inspection. One set of approved plans shall be available on the project site at all times.
Reviewed by:
BILL ROBERTSON DSFM III
Approval date: 11-04-09
CSFM #: 01-37-11-0033

	BY		CHECKED
DESIGN	BY	HASSAN AKHAVAN	CHECKED Donald E. Avery
DETAILS	BY	ROBERT QUIBIN	CHECKED Donald E. Avery
QUANTITIES	BY		CHECKED

STATE OF CALIFORNIA
DEPARTMENT OF TRANSPORTATION

DIVISION OF ENGINEERING SERVICES
ARCHITECTURAL AND STRUCTURAL DESIGN

BRIDGE NO. 57R0001R 57R0001R
POST MILE R59.4/R60.0

ALISO CREEK SAFETY ROADSIDE REST AREA
SOUTHBOUND NEW BUILDINGS 1&2
NORTHBOUND NEW BUILDINGS 4
FINISH SCHEDULE

SHEET **A1-14**

a1_14_Bldg1_2Finish_schedule1M.dgn
DS OSD Imperial Rev. 10/07 24-JUN-2010 14:06

ORIGINAL SCALE IN INCHES FOR REDUCED PLANS 0 1 2 3

CU 11-340
EA 11-261401

DISREGARD PRINTS BEARING EARLIER REVISION DATES → JULY-09 DEC 09

REVISION DATES (PRELIMINARY STAGE ONLY) SHEET OF

24-JUN-2010 14:06

a1_14_Bldg1_2Finish_schedule1M.dgn

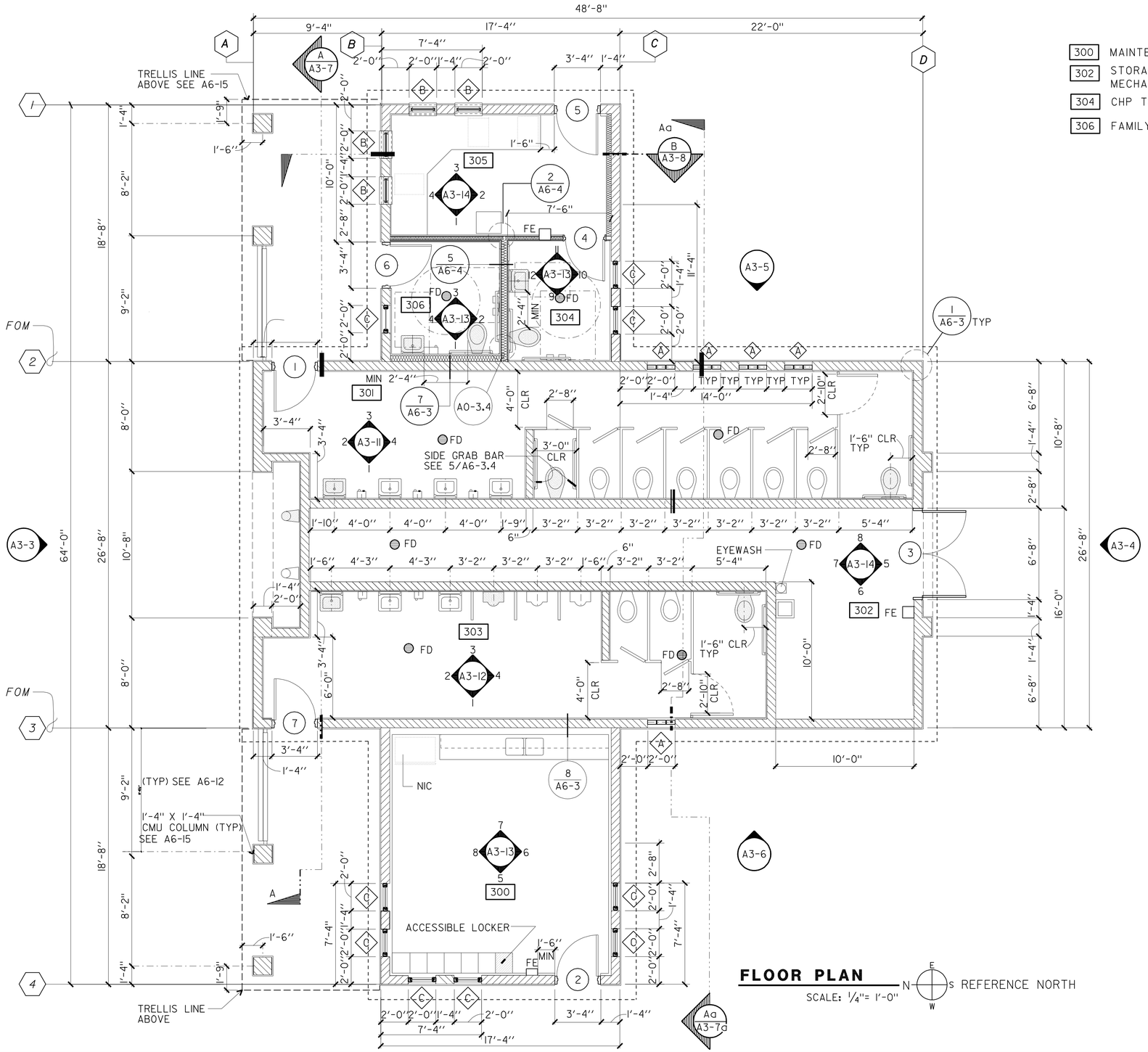

FLOOR PLAN

SCALE: 1/4"= 1'-0"

DIST.	COUNTY	ROUTE	POST MILES TOTAL PROJECT	SHEET NO.	TOTAL SHEETS
11	SD	5	R59.4,R60.0	113	241

LICENSED ARCHITECT

DEC 09

LICENSED ARCHITECT HASSAN AKHAVAN C-20451 04-30-11 STATE OF CALIFORNIA

6-21-10

The State of California or its officers or agents shall not be responsible for the accuracy or completeness of electronic copies of this plan sheet.

LEGEND FOR THIS SHEET ONLY

ACCESSIBLE FIXTURES SHOWN SHADED

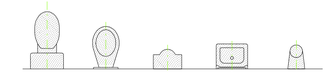

NOTE - SOLID LINE DIMENSIONS ARE TO FACE OF 6" OR 8" CMU MODULES . CENTER LINE DIMENSIONS ARE TO CENTER OF ROOF STRUCTURAL MEMBERS, 6" FROM 8" CMU MODULE FACE, UNLESS OTHERWISE SHOWN AS CENTER LINE OR NOTED.

FOR BLDG STRUC LAYOUT, SEE STRUC DWGS
FOR CONC SLAB RECESS DIMENSIONS, FLOOR DRAIN LOCATIONS SEE LANDSCAPE STRUCTURAL AND MECHANICAL

☐ FINISHES AND COLORS ARE SHOWN ON THE FINISH SCEDULE SHEET A3-16

SEED DISTRICT DWG FOR RAMPS' SLOPE AND WALKWAY'S PATTERN

MEN WOMEN, CHP AND FAMILY ASSIST TOILET HAVE A TILE FLOOR SLOPED TO DRAIN SEE MECH

SLOPE ELEVATIONS SHALL NOT EXCEED 2% (VARYING BY VARYING MORTAR BED)

THE MECHANICAL ROOM SHALL BE CONCRETE SLAB SLOPED TO DRAIN SEE MECH FINISHED AS INDICATED ON THE FINISH SCHEDULE

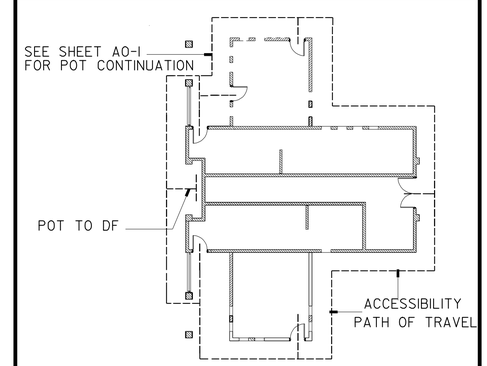

ACCESSIBILITY PATH OF TRAVEL

ACCESSIBILITY DESIGN APPROVAL STAMP DOT / DES / OTA

11-261401

Reviewed by:

Date: 09-01-09

CALIFORNIA STATE FIRE MARSHAL APPROVED

Approval of this plan does not authorize or approve any omission or deviation from applicable regulations. Final approval is subject to field inspection. One set of approved plans shall be available on the project site at all times.

Reviewed by: BILL ROBERTSON DSFM III

Approval date: 11-04-09

CSFM #: 01-37-11-0033

	BY		CHECKED
DESIGN	BY	HASSAN AKHAVAN	CHECKED Ronald E. Alsey
DETAILS	BY	ROBERT QUIBIN	CHECKED Ronald E. Alsey
QUANTITIES	BY		CHECKED

STATE OF CALIFORNIA DEPARTMENT OF TRANSPORTATION

DIVISION OF ENGINEERING SERVICES ARCHITECTURAL AND STRUCTURAL DESIGN

CU II-340
EA II-261401

BRIDGE NO. 57R000IR 57R000IR
POST MILE R59.4/R60.0

ALISO CREEK SAFETY ROADSIDE REST AREA

SOUTH BOUND NEW BUILDING 3

FLOOR PLAN

SHEET **A3-1**

a3_01_flplnM.dgn
DS OSD Imperial Rev. 10/07 24-JUN-2010 14:07

ORIGINAL SCALE IN INCHES FOR REDUCED PLANS 0 1 2 3

DISREGARD PRINTS BEARING EARLIER REVISION DATES → JULY-09 DEC 09

REVISION DATES (PRELIMINARY STAGE ONLY) SHEET OF

24-JUN-2010 14:07

a3_01_flplnM.dgn

DIST.	COUNTY	ROUTE	POST MILES TOTAL PROJECT	SHEET NO.	TOTAL SHEETS
11	SD	5	R59.4,R60.0	114	241

LICENSED ARCHITECT

LICENSED ARCHITECT HASSAN AKHAVAN No. C-20451 Exp. 04-28-11 STATE OF CALIFORNIA

DEC 09

6-21-10
PLANS APPROVAL DATE

The State of California or its officers or agents shall not be responsible for the accuracy or completeness of electronic copies of this plan sheet.

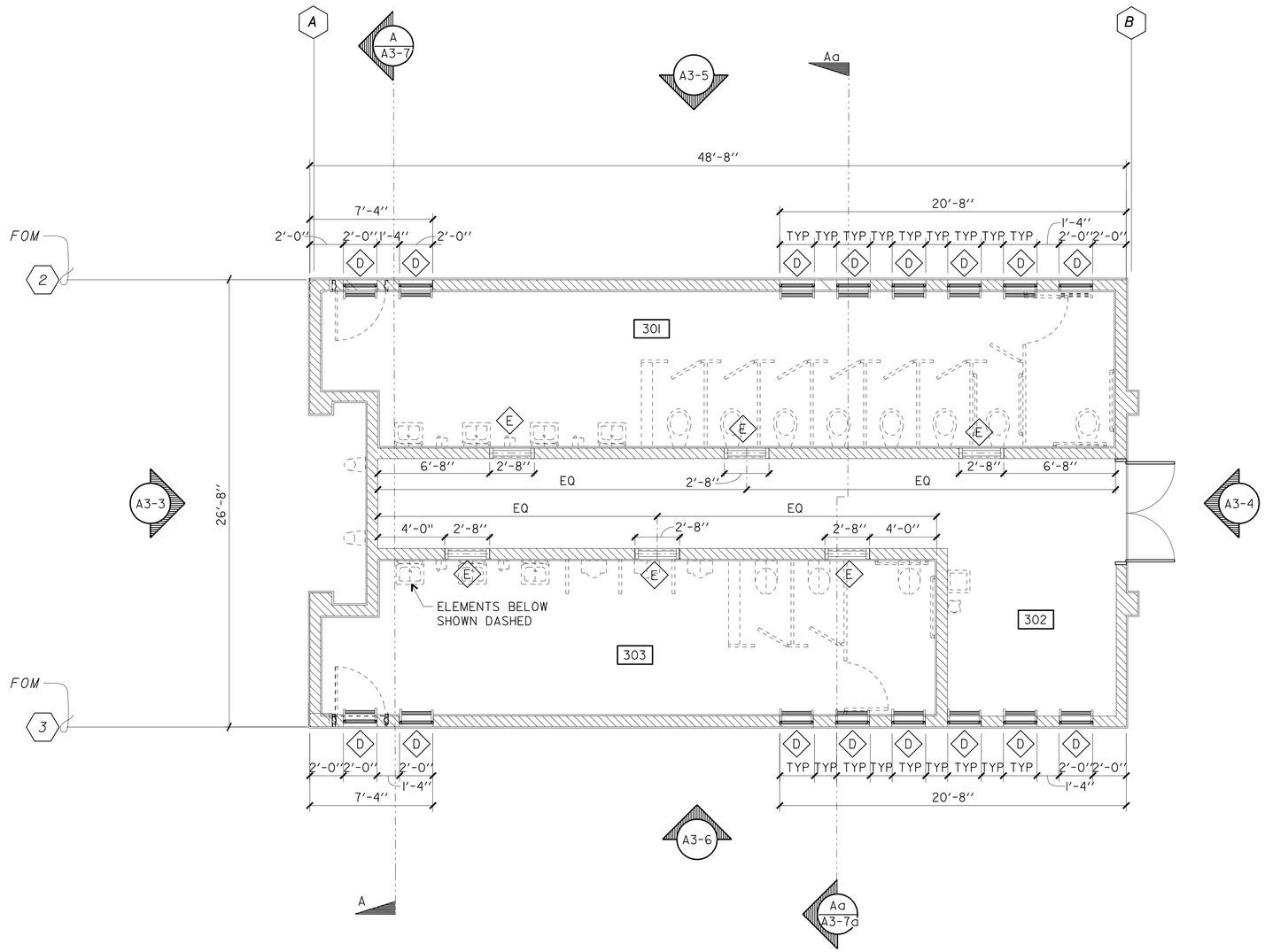

CLEARSTORY PLAN

SCALE: 1/4"= 1'-0"

E S W REFERENCE NORTH

ACCESSIBILITY DESIGN APPROVAL STAMP
DOT / DES / OTA

11-261401

Reviewed by:

Date: 09-01-09

CALIFORNIA STATE FIRE MARSHAL APPROVED

Approval of this plan does not authorize or approve any omission or deviation from applicable regulations. Final approval is subject to field inspection. One set of approved plans shall be available on the project site at all times.

Reviewed by:
BILL ROBERTSON DSFM III
Approval date: 11-04-09

CSFM #: 01-37-11-0033

DESIGN	BY HASSAN AKHAVAN	CHECKED Ronald E. Alsey	
DETAILS	BY ROBERT QUIBIN	CHECKED Ronald E. Alsey	
QUANTITIES	BY	CHECKED	

STATE OF CALIFORNIA
DEPARTMENT OF TRANSPORTATION

DIVISION OF ENGINEERING SERVICES
ARCHITECTURAL AND STRUCTURAL DESIGN

BRIDGE NO. 57R000IR 57R000IR
POST MILE R59.4/R60.0

ALISO CREEK SAFETY ROADSIDE REST AREA

SOUTH BOUND NEW BUILDING 3

CLEARSTORY PLAN

SHEET **A3-2**

a3_02_CLS_plnM.dgn
DS OSD Imperial Rev. 10/07 24-JUN-2010 14:07

ORIGINAL SCALE IN INCHES FOR REDUCED PLANS 0 1 2 3

CU 11-340
EA 11-261401

DISREGARD PRINTS BEARING EARLIER REVISION DATES →

REVISION DATES (PRELIMINARY STAGE ONLY) JULY-09 DEC 09

SHEET OF

24-JUN-2010 14:07

a3_02_CLS_plnM.dgn

DIST.	COUNTY	ROUTE	POST MILES TOTAL PROJECT	SHEET NO.	TOTAL SHEETS
11	SD	5	R59.4,R60.0	115	241

LICENSED ARCHITECT

JULY-09

LICENSED ARCHITECT HASSAN AKHAVAN No. C-20451 Exp. 04-30-11 STATE OF CALIFORNIA

6-21-10
PLANS APPROVAL DATE

The State of California or its officers or agents shall not be responsible for the accuracy or completeness of electronic copies of this plan sheet.

KEY NOTES :

1 MISSION TILE ROOFING
2 BULLETIN BOARD DISPLAY SEE SHEET A6-12
3 WOOD TRELLIS SEE SHEET A6-15
4 8"X8" GLASS BLOCK SEE SHEET A6-16
5 CEMENT PLASTER FINISHED 16"x16" CMU COLUMN SEE SHEET A6-14 A6-15 FEDERAL STANDARD 17925
6 CEMENT PLASTER OVER CMU FEDERAL STANDARD 17925
7 CERAMIC TILE FACE IN ALCOVE 3052 DALTILE (DALTILEPROUDUCTS WEB SITE) OR EQUIL
8 OBSCURE GLAZING W/GRID FRAME AND GRID FS 33617
9 BULLET RESISTANT GLAZING CHP OFFICE SEE SPEC GRID FS 33617
10 CERAMIC TILE PATTERN SEE SHEET A6-13 A6-14
11 ATTIC VENT W/INSECT SCREEN AND GRILL SEE SHEET A6-14
12 DRINKING FOUNTAIN SEE MECH A0-3.4
13 OBSCURE GLAZING W/GRID (OPERABLE INSIDE)
14 UTILITY ROOM DOOR SEE SHEET A3-15
15 LOUVER SEE SHEET A3-15 A6-16 FEDERAL STANDARD 30166
16 NOT USED
17 RESTROOM SIGNAGE SEE SHEET A6-13 A6-16
18 LIGHT FIXTURE (SEE ELEC)
19 IRON WORK SEE SHEET A6-14
20 ACCESSIBLE SIGNAGE SEE SHEET A0-3.3 DETAILS 3,4&5.
21 PRE PAINTED 1½" CASING BEAD ALL BUILDINGS
22 ACCESSIBILITY SYMBOL SEE A0-3.3/6
23 LASER CUT SIGN (ROOM NAME) ¼" POWDER COATED PLATE SEE A6-16

NOTE:

01 ELEVATION DETAIL SHEET A6-12 A6-13 A6-14 A6-15 A6-16

DOORS & HINGES PRE COLOR COATED FS 33617

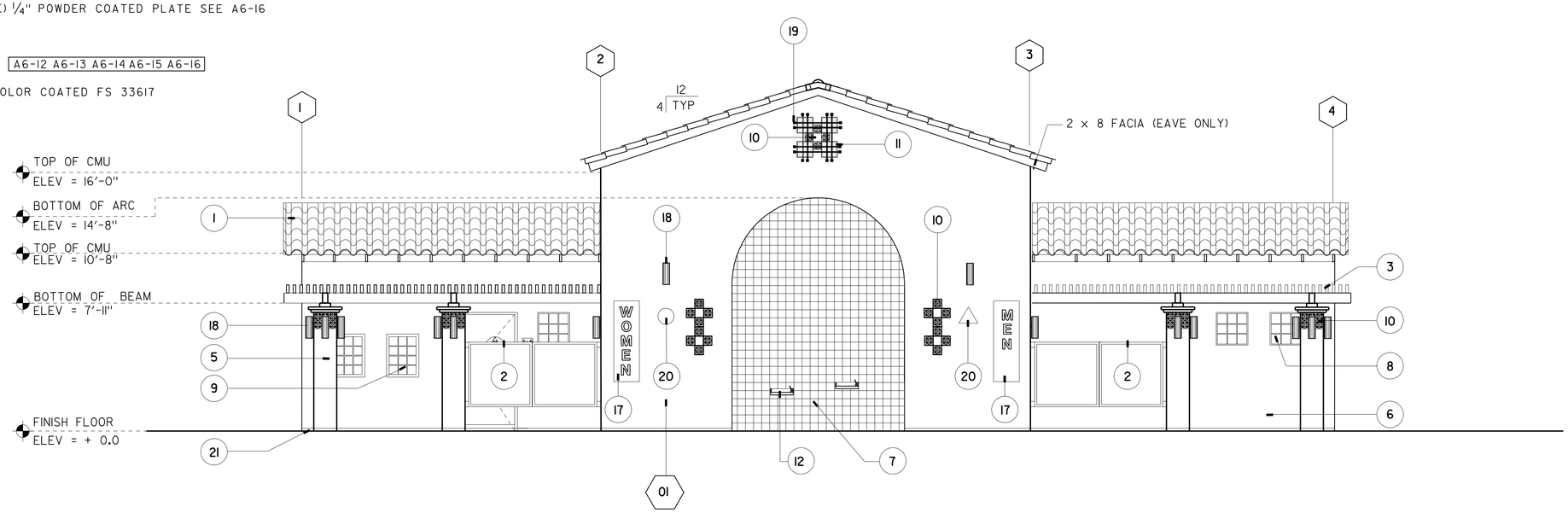

NORTH ELEVATION

SCALE: ¼" = 1'-0"

ACCESSIBILITY DESIGN APPROVAL STAMP DOT / DES / OTA

11-261401

Reviewed by:

Date: 09-01-09

CALIFORNIA STATE FIRE MARSHAL APPROVED

Approval of this plan does not authorize or approve any omission or deviation from applicable regulations. Final approval is subject to field inspection. One set of approved plans shall be available on the project site at all times.

Reviewed by: BILL ROBERTSON DSFM III

Approval date: 11-04-09

CSFM #: 01-37-11-0033

DESIGN	BY HASSAN AKHAVAN	CHECKED Ronald E. Alvarez	
DETAILS	BY ROBERT QUIBIN	CHECKED Ronald E. Alvarez	
QUANTITIES	BY	CHECKED	

STATE OF CALIFORNIA
DEPARTMENT OF TRANSPORTATION

DIVISION OF ENGINEERING SERVICES
ARCHITECTURAL AND STRUCTURAL DESIGN

BRIDGE NO.

POST MILE R59.4/R60.0

ALISO CREEK SAFETY ROADSIDE REST AREA

SOUTH BOUND NEW BUILDING 3

NORTH ELEVATION

SHEET **A3-3**

a3_03_NelevM.dgn
DS OSD Imperial Rev. 10/07 25-JUN-2010 08:09

ORIGINAL SCALE IN INCHES FOR REDUCED PLANS 0 1 2 3

CU 11-340
EA 11-261401

DISREGARD PRINTS BEARING EARLIER REVISION DATES → JULY-09 DEC 09

REVISION DATES (PRELIMINARY STAGE ONLY) SHEET OF

25-JUN-2010 08:09

a3_03_NelevM.dgn

DIST.	COUNTY	ROUTE	POST MILES TOTAL PROJECT	SHEET NO.	TOTAL SHEETS
11	SD	5	R59.4,R60.0	116	241

LICENSED ARCHITECT

DEC 09

LICENSED ARCHITECT HASSAN AKHAVAN No. C-20451 Exp. 04-30-11 STATE OF CALIFORNIA

6-21-10
PLANS APPROVAL DATE

The State of California or its officers or agents shall not be responsible for the accuracy or completeness of electronic copies of this plan sheet.

KEY NOTES :

1 MISSION TILE ROOFING
2 BULLETIN BOARD DISPLAY SEE SHEET A6-12
3 WOOD TRELLIS SEE SHEET A6-15
4 8"X8" GLASS BLOCK SEE SHEET A6-16
5 CEMENT PLASTER FINISHED 16" x 16" CMU COLUMN SEE SHEET A6-14 A6-15 FEDERAL STANDARD 17925
6 CEMENT PLASTER OVER CMU FEDERAL STANDARD 17925
7 CERAMIC TILE FACE IN ALCOVE 3052 DALTILE (DALTILEPROUDUCTS WEB SITE) OR EQUIL
8 OBSCURE GLAZING W/GRID FRAME AND GRID FS 33617
9 BULLET RESISTANT GLAZING CHP OFFICE SEE SPEC GRID FS 33617
10 CERAMIC TILE PATTERN SEE SHEET A6-13 A6-14
11 ATTIC VENT W/INSECT SCREEN AND GRILL SEE SHEET A6-14
12 DRINKING FOUNTAIN SEE MECH A0-3.4
13 OBSCURE GLAZING W/GRID (OPERABLE INSIDE)
14 UTILITY ROOM DOOR SEE SHEET A3-15
15 LOUVER SEE SHEET A3-15 A6-16 FEDERAL STANDARD 30166
16 NOT USED
17 RESTROOM SIGNAGE SEE SHEET A6-13 A6-16
18 LIGHT FIXTURE (SEE ELEC)
19 IRON WORK SEE SHEET A6-14
20 ACCESSIBLE SIGNAGE SEE SHEET A0-3.3 DETAILS 3,4&5.
21 PRE PAINTED 1½" CASING BEAD ALL BUILDINGS
22 ACCESSIBILITY SYMBOL SEE A0-3.3/6
23 LASER CUT SIGN (ROOM NAME) ¼" POWDER COATED PLATE SEE A6-16

NOTE:

01 ELEVATION DETAIL SHEET A6-12 A6-13 A6-14 A6-15 A6-16

DOORS & HINGES PRE COLOR COATED FS 33617

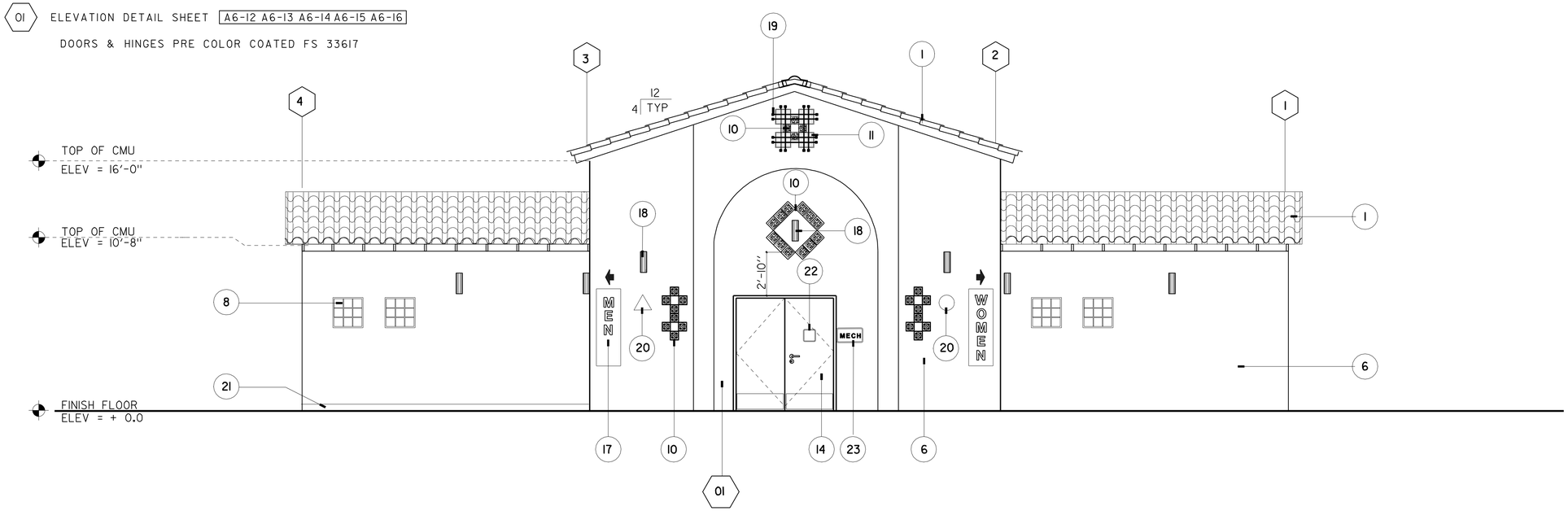

SOUTH ELEVATION

SCALE: ¼" = 1'-0"

ACCESSIBILITY DESIGN APPROVAL STAMP
DOT / DES / OTA
11-261401
Reviewed by:
Date: 09-01-09

CALIFORNIA STATE FIRE MARSHAL
APPROVED
Approval of this plan does not authorize or approve any omission or deviation from applicable regulations. Final approval is subject to field inspection. One set of approved plans shall be available on the project site at all times.
Reviewed by: BILL ROBERTSON DSFM III
Approval date: 11-04-09
CSFM #: 01-37-11-0033

DESIGN	BY HASSAN AKHAVAN	CHECKED Donald E. Alsey	
DETAILS	BY ROBERT QUIBIN	CHECKED Donald E. Alsey	
QUANTITIES	BY	CHECKED	

STATE OF CALIFORNIA
DEPARTMENT OF TRANSPORTATION

DIVISION OF ENGINEERING SERVICES
ARCHITECTURAL AND STRUCTURAL DESIGN

BRIDGE NO. 57R0001R 57R0001R
POST MILE R59.4/R60.0

ALISO CREEK SAFETY ROADSIDE REST AREA
SOUTH BOUND NEW BUILDING 3 | SOUTH ELEVATION

SHEET **A3-4**

a3_04_SelevM.dgn
DS OSD Imperial Rev. 10/07 24-JUN-2010 14:07

ORIGINAL SCALE IN INCHES FOR REDUCED PLANS 0 1 2 3

CU 11-340
EA 11-261401

DISREGARD PRINTS BEARING EARLIER REVISION DATES → JULY-09 DEC 09

REVISION DATES (PRELIMINARY STAGE ONLY) SHEET OF

24-JUN-2010 14:07
a3_04_SelevM.dgn

DIST.	COUNTY	ROUTE	POST MILES TOTAL PROJECT	SHEET NO.	TOTAL SHEETS
11	SD	5	R59.4,R60.0	117	241

LICENSED ARCHITECT

JULY-08

LICENSED ARCHITECT HASSAN AKHAVAN No. C-20451 Exp. 04-28-11 STATE OF CALIFORNIA

6-21-10
PLANS APPROVAL DATE

The State of California or its officers or agents shall not be responsible for the accuracy or completeness of electronic copies of this plan sheet.

KEY NOTES :

1 MISSION TILE ROOFING
2 BULLETIN BOARD DISPLAY SEE SHEET A6-12
3 WOOD TRELLIS SEE SHEET A6-15
4 8"X8" GLASS BLOCK SEE SHEET A6-16
5 CEMENT PLASTER FINISHED 16" x 16" CMU COLUMN SEE SHEET A6-14 A6-15 FEDERAL STANDARD 17925
6 CEMENT PLASTER OVER CMU FEDERAL STANDARD 17925
7 CERAMIC TILE FACE IN ALCOVE 3052 DALTILE (DALTILEPROUDUCTS WEB SITE) OR EQUIL
8 OBSCURE GLAZING W/GRID FRAME AND GRID FS 33617
9 BULLET RESISTANT GLAZING CHP OFFICE SEE SPEC GRID FS 33617
10 CERAMIC TILE PATTERN SEE SHEET A6-13 A6-14
11 ATTIC VENT W/INSECT SCREEN AND GRILL SEE SHEET A6-14
12 DRINKING FOUNTAIN SEE MECH A0-3.4
13 OBSCURE GLAZING W/GRID (OPERABLE INSIDE)
14 UTILITY ROOM DOOR SEE SHEET A3-15
15 LOUVER SEE SHEET A3-15 A6-16 FEDERAL STANDARD 30166
16 NOT USED
17 RESTROOM SIGNAGE SEE SHEET A6-13 A6-16
18 LIGHT FIXTURE (SEE ELEC)
19 IRON WORK SEE SHEET A6-14
20 ACCESSIBLE SIGNAGE SEE SHEET A0-3.3 DETAILS 3,4&5.
21 PRE PAINTED 1½" CASING BEAD ALL BUILDINGS
22 ACCESSIBILITY SYMBOL SEE A0-3.3/6
23 LASER CUT SIGN (ROOM NAME) ¼" POWDER COATED PLATE SEE A6-16

NOTE:

01 ELEVATION DETAIL SHEET A6-12 A6-13 A6-14 A6-15 A6-16

DOORS & HINGES PRE COLOR COATED FS 33617

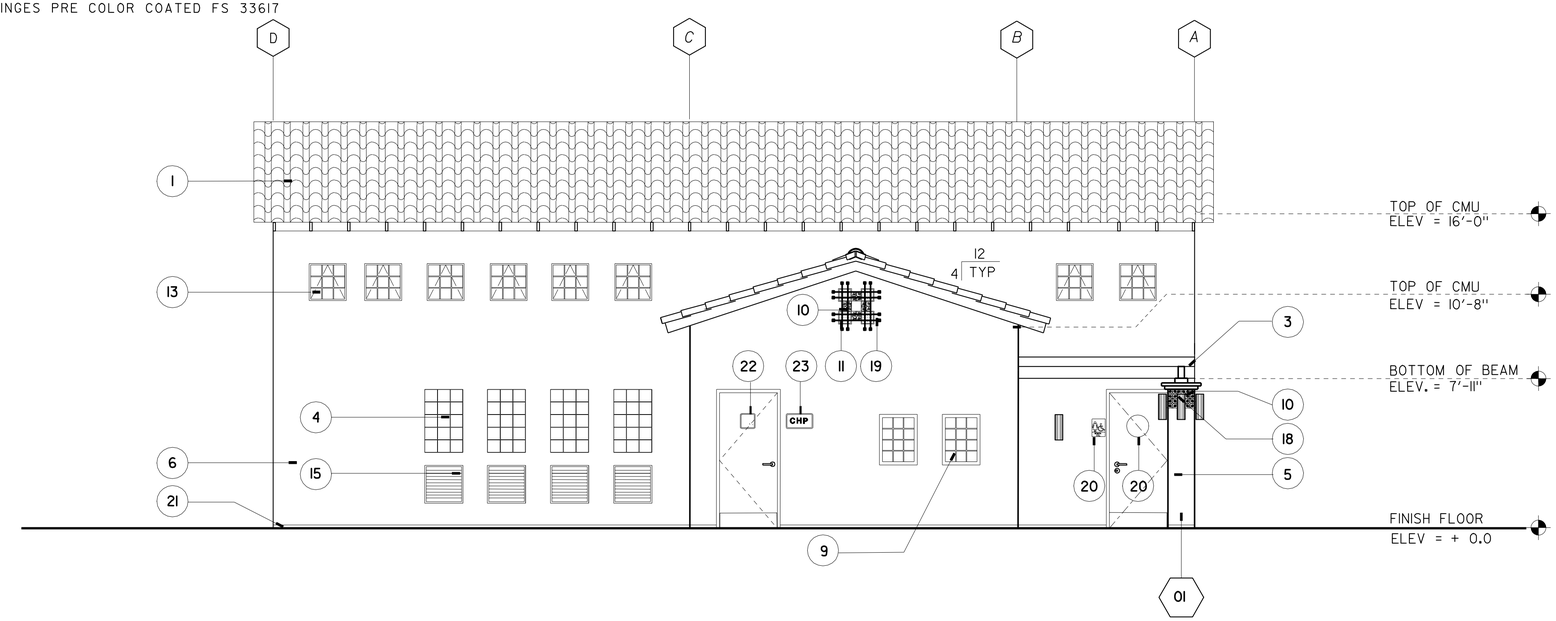

EAST ELEVATION

SCALE: ¼" = 1'-0"

ACCESSIBILITY DESIGN APPROVAL STAMP DOT / DES / OTA

11-261401

Reviewed by:

Date: 09-01-09

CALIFORNIA STATE FIRE MARSHAL APPROVED

Approval of this plan does not authorize or approve any omission or deviation from applicable regulations. Final approval is subject to field inspection. One set of approved plans shall be available on the project site at all times.

Reviewed by: BILL ROBERTSON DSFM III

Approval date: 11-04-09

CSFM #: 01-37-11-0033

DESIGN	BY HASSAN AKHAVAN	CHECKED Donald E. Alsey	
DETAILS	BY ROBERT QUIBIN	CHECKED Donald E. Alsey	
QUANTITIES	BY	CHECKED	

STATE OF CALIFORNIA DEPARTMENT OF TRANSPORTATION

DIVISION OF ENGINEERING SERVICES ARCHITECTURAL AND STRUCTURAL DESIGN

BRIDGE NO. 57R000IR 57R000IR
POST MILE R59.4/R60.0

ALISO CREEK SAFETY ROADSIDE REST AREA

SOUTH BOUND NEW BUILDING 3

EAST ELEVATION

SHEET **A3-5**

a3_05_EelevM.dgn
DS OSD Imperial Rev. 10/07 24-JUN-2010 14:07

ORIGINAL SCALE IN INCHES FOR REDUCED PLANS 0 1 2 3

CU 11-340
EA 11-261401

DISREGARD PRINTS BEARING EARLIER REVISION DATES →

REVISION DATES (PRELIMINARY STAGE ONLY) JULY-09 DEC 09

SHEET OF

24-JUN-2010 14:07

a3_05_EelevM.dgn

DIST.	COUNTY	ROUTE	POST MILES TOTAL PROJECT	SHEET NO.	TOTAL SHEETS
11	SD	5	R59.4,R60.0	118	241

LICENSED ARCHITECT

DEC 09

LICENSED ARCHITECT
HASSAN AKHAVAN
No. C-20451
Exp. 04-30-11
STATE OF CALIFORNIA

6-21-10
PLANS APPROVAL DATE

The State of California or its officers or agents shall not be responsible for the accuracy or completeness of electronic copies of this plan sheet.

KEY NOTES :

1 MISSION TILE ROOFING
2 BULLETIN BOARD DISPLAY SEE SHEET A6-12
3 WOOD TRELLIS SEE SHEET A6-15
4 8"X8" GLASS BLOCK SEE SHEET A6-16
5 CEMENT PLASTER FINISHED 16" x 16" CMU COLUMN SEE SHEET A6-14 A6-15 FEDERAL STANDARD 17925
6 CEMENT PLASTER OVER CMU FEDERAL STANDARD 17925
7 CERAMIC TILE FACE IN ALCOVE 3052 DALTILE (DALTILEPROUDUCTS WEB SITE) OR EQUIL
8 OBSCURE GLAZING W/GRID FRAME AND GRID FS 33617
9 BULLET RESISTANT GLAZING CHP OFFICE SEE SPEC GRID FS 33617
10 CERAMIC TILE PATTERN SEE SHEET A6-13 A6-14
11 ATTIC VENT W/INSECT SCREEN AND GRILL SEE SHEET A6-14
12 DRINKING FOUNTAIN SEE MECH A0-3.4
13 OBSCURE GLAZING W/GRID (OPERABLE INSIDE)
14 UTILITY ROOM DOOR SEE SHEET A3-15
15 LOUVER SEE SHEET A3-15 A6-16 FEDERAL STANDARD 30166
16 NOT USED
17 RESTROOM SIGNAGE SEE SHEET A6-13 A6-16
18 LIGHT FIXTURE (SEE ELEC)
19 IRON WORK SEE SHEET A6-14
20 ACCESSIBLE SIGNAGE SEE SHEET A0-3.3 DETAILS 3,4&5.
21 PRE PAINTED 1½" CASING BEAD ALL BUILDINGS
22 ACCESSIBILITY SYMBOL SEE A0-3.3/6
23 LASER CUT SIGN (ROOM NAME) ¼" POWDER COATED PLATE SEE A6-16

NOTE:

01 ELEVATION DETAIL SHEET A6-12 A6-13 A6-14 A6-15 A6-16

DOORS & HINGES PRE COLOR COATED FS 33617

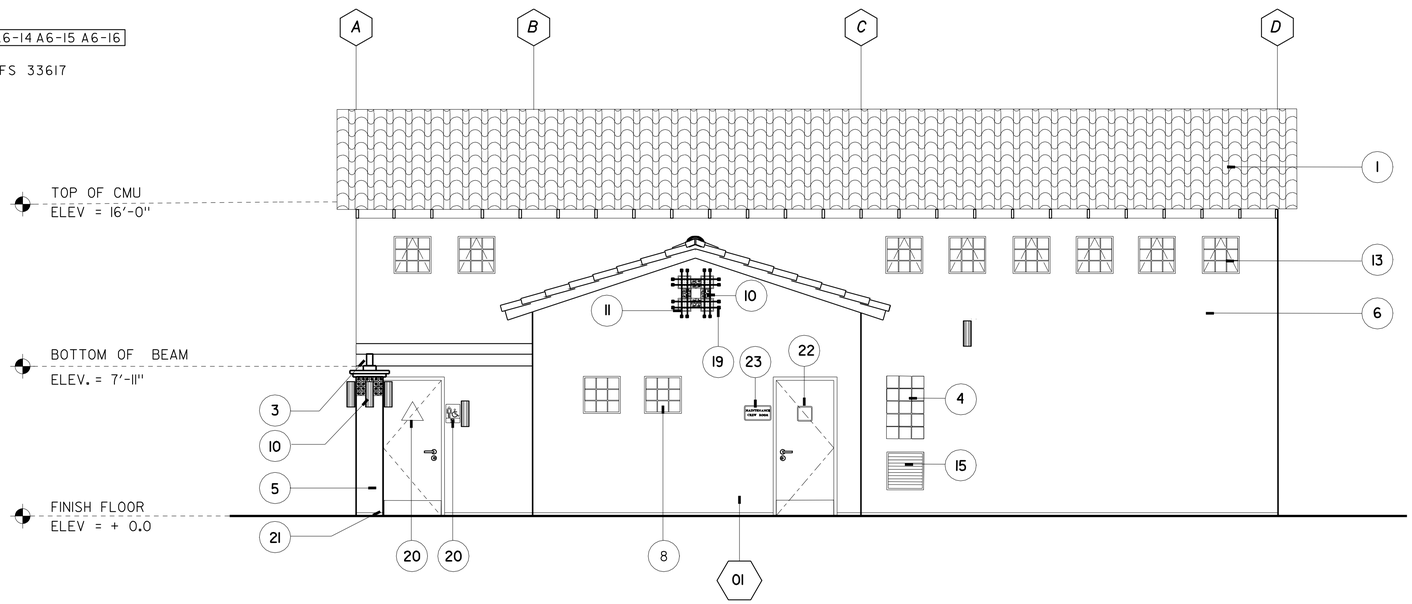

WEST ELEVATION

SCALE: ¼" = 1'-0"

ACCESSIBILITY DESIGN APPROVAL STAMP
DOT / DES / OTA
11-261401
Reviewed by:
Date: 09-01-09

CALIFORNIA STATE FIRE MARSHAL APPROVED
Approval of this plan does not authorize or approve any omission or deviation from applicable regulations. Final approval is subject to field inspection. One set of approved plans shall be available on the project site at all times.
Reviewed by:
BILL ROBERTSON DSFM III
Approval date: 11-04-09

CSFM #: 01-37-11-0033

DESIGN	BY HASSAN AKHAVAN	CHECKED Donald E. Alsing	
DETAILS	BY ROBERT QUIBIN	CHECKED Donald E. Alsing	
QUANTITIES	BY	CHECKED	

STATE OF CALIFORNIA
DEPARTMENT OF TRANSPORTATION

DIVISION OF ENGINEERING SERVICES
ARCHITECTURAL AND STRUCTURAL DESIGN

BRIDGE NO. 57R0001R 57R0001R
POST MILE R59.4/R60.0

ALISO CREEK SAFETY ROADSIDE REST AREA
SOUTH BOUND NEW BUILDING 3 | WEST ELEVATION

SHEET **A3-6**

a3_06_WelevM.dgn
DS OSD Imperial Rev. 10/07 24-JUN-2010 14:07

ORIGINAL SCALE IN INCHES FOR REDUCED PLANS 0 1 2 3

CU 11-340
EA 11-261401

DISREGARD PRINTS BEARING EARLIER REVISION DATES →

REVISION DATES (PRELIMINARY STAGE ONLY) JULY-09 DEC 09 | SHEET | OF

24-JUN-2010 14:07
a3_06_WelevM.dgn

DIST.	COUNTY	ROUTE	POST MILES TOTAL PROJECT	SHEET NO.	TOTAL SHEETS
11	SD	5	R59.4,R60.0	119	241

LICENSED ARCHITECT

DEC '09

LICENSED ARCHITECT
HASSAN AKHAVAN
No. C-20451
Exp. 04-30-11
STATE OF CALIFORNIA

6-21-10
PLANS APPROVAL DATE

The State of California or its officers or agents shall not be responsible for the accuracy or completeness of electronic copies of this plan sheet.

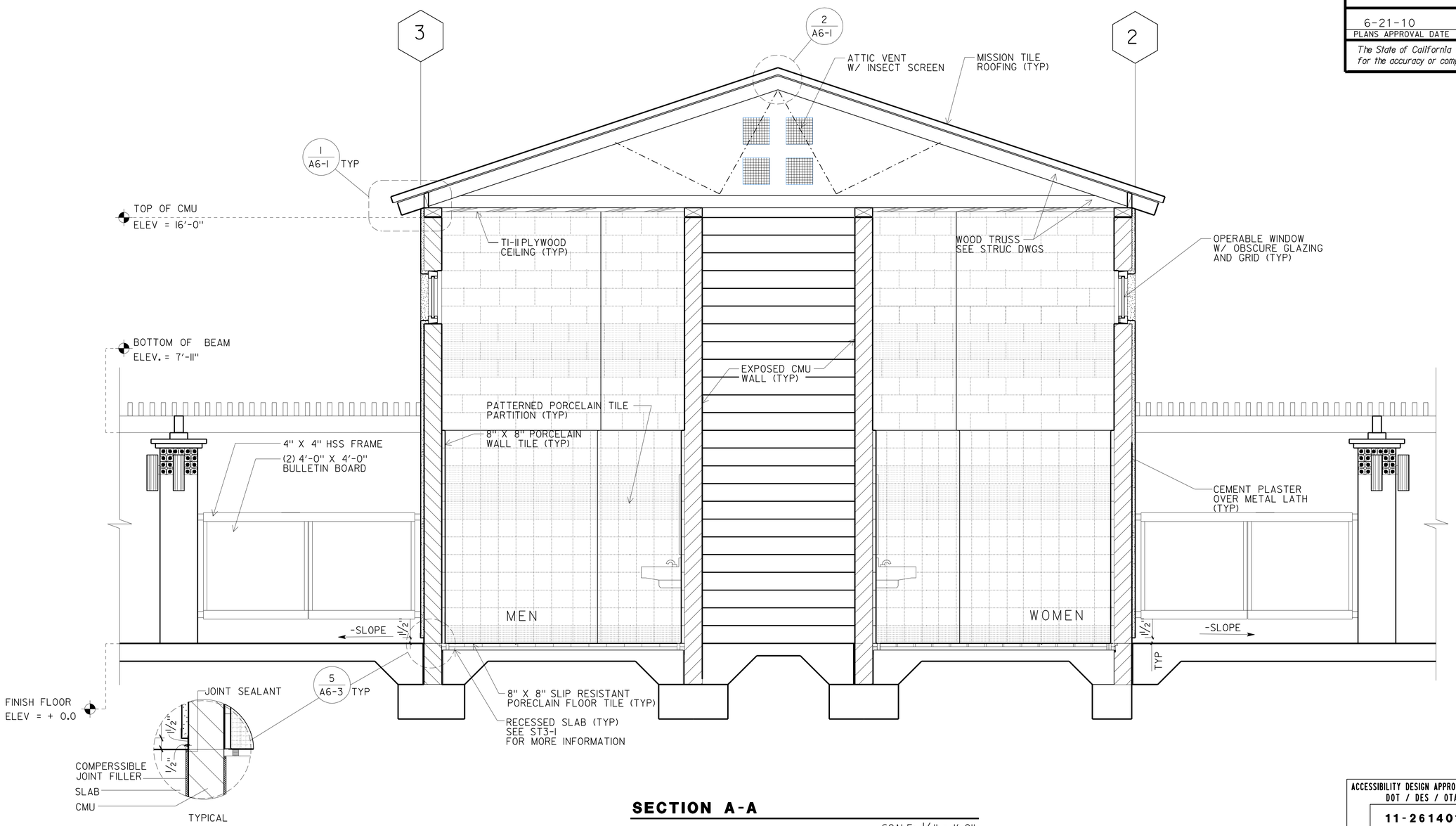

SECTION A-A

SCALE: 1/4" = 1'-0"

ACCESSIBILITY DESIGN APPROVAL STAMP
DOT / DES / OTA
11-261401
Reviewed by:
Date: 09-01-09

CALIFORNIA STATE FIRE MARSHAL
APPROVED
Approval of this plan does not authorize or approve any omission or deviation from applicable regulations. Final approval is subject to field inspection. One set of approved plans shall be available on the project site at all times.
Reviewed by: BILL ROBERTSON DSFM III
Approval date: 11-04-09

CSFM #: 01-37-11-0033

	BY	CHECKED
DESIGN	HASSAN AKHAVAN	Donald E. Reay
DETAILS	ROBERT QUIBIN	
QUANTITIES		

STATE OF
CALIFORNIA
DEPARTMENT OF TRANSPORTATION

DIVISION OF ENGINEERING SERVICES
ARCHITECTURAL
AND
STRUCTURAL DESIGN

BRIDGE NO. 57R0001R 57R0001R
POST MILE R59.4/R60.0

ALISO CREEK SAFETY ROADSIDE REST AREA
SOUTHBOUND NEW BUILDING 3 | SECTION

SHEET **A3-7**

a3_07_SecAAM.dgn
DS OSD Imperial Rev. 10/07 24-JUN-2010 14:07

ORIGINAL SCALE IN INCHES FOR REDUCED PLANS 0 1 2 3

CU 11-340
EA 11-261401

DISREGARD PRINTS BEARING EARLIER REVISION DATES → JULY-09 DEC 09

REVISION DATES (PRELIMINARY STAGE ONLY) SHEET OF

24-JUN-2010 14:07
a3_07_SecAAM.dgn

DIST.	COUNTY	ROUTE	POST MILES TOTAL PROJECT	SHEET NO.	TOTAL SHEETS
11	SD	5	R59.4,R60.0	120	241

LICENSED ARCHITECT

LICENSED ARCHITECT HASSAN AKHAVAN No. C-20451 Exp. 04-30-11 STATE OF CALIFORNIA

DEC 09

6-21-10
PLANS APPROVAL DATE

The State of California or its officers or agents shall not be responsible for the accuracy or completeness of electronic copies of this plan sheet.

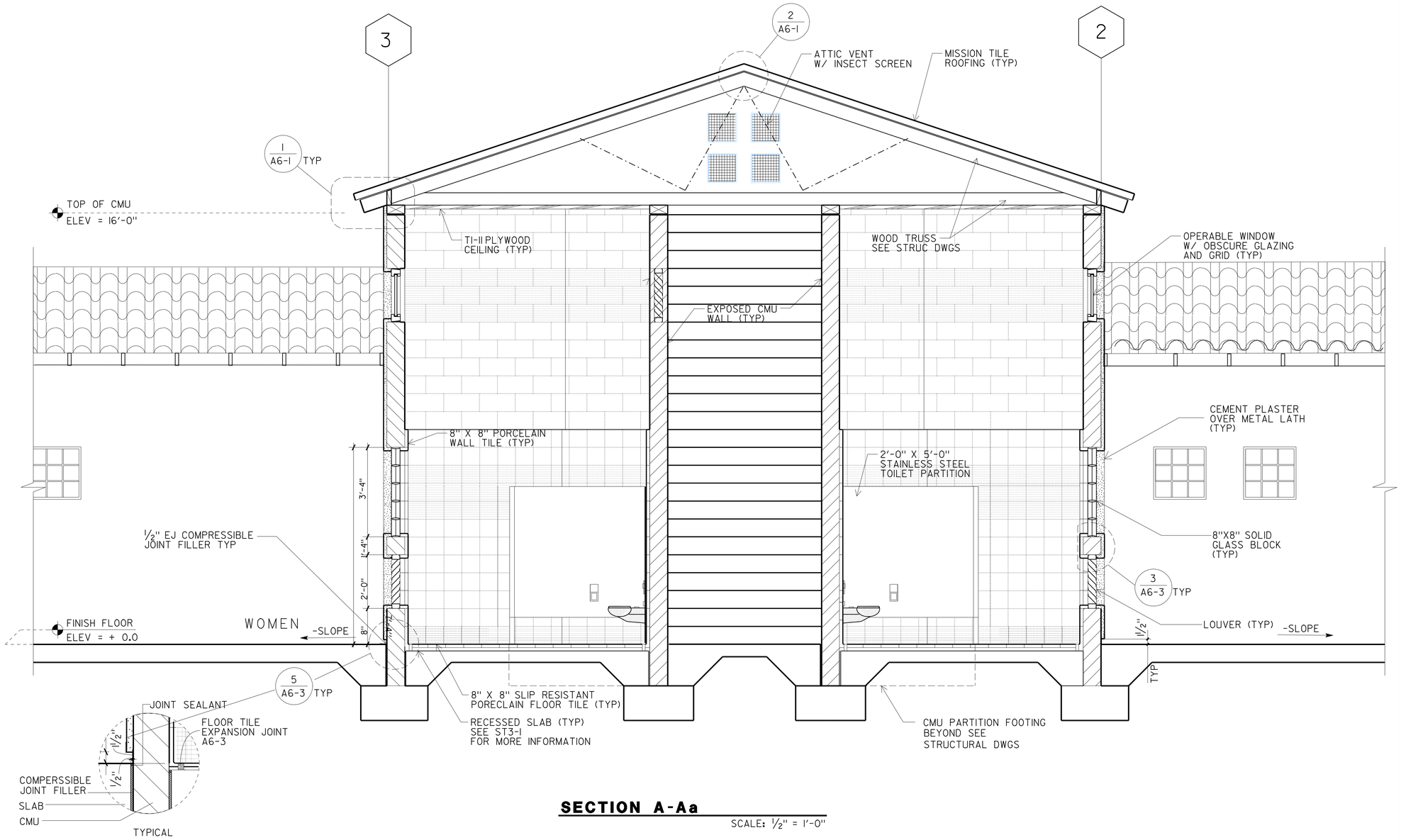

SECTION A-Aa

SCALE: 1/2" = 1'-0"

ACCESSIBILITY DESIGN APPROVAL STAMP DOT / DES / OTA

11-261401

Reviewed by:

Date: 09-01-09

CALIFORNIA STATE FIRE MARSHAL APPROVED

Approval of this plan does not authorize or approve any omission or deviation from applicable regulations. Final approval is subject to field inspection. One set of approved plans shall be available on the project site at all times.

Reviewed by: BILL ROBERTSON DSFM III

Approval date: 11-04-09

CSFM #: 01-37-11-0033

DESIGN	BY HASSAN AKHAVAN	CHECKED Ronald E. Alsey	
DETAILS	BY ROBERT QUIBIN	CHECKED Ronald E. Alsey	
QUANTITIES	BY	CHECKED	

STATE OF CALIFORNIA
DEPARTMENT OF TRANSPORTATION

DIVISION OF ENGINEERING SERVICES
ARCHITECTURAL AND STRUCTURAL DESIGN

BRIDGE NO. 57R000IR 57R000IR
POST MILE R59.4/R60.0

ALISO CREEK SAFETY ROADSIDE REST AREA

SOUTHBOUND NEW BUILDING 3 — SECTION

SHEET **A3-7a**

a3_07a_SecAAaM.dgn
DS OSD Imperial Rev. 10/07 24-JUN-2010 14:07

ORIGINAL SCALE IN INCHES FOR REDUCED PLANS 0 1 2 3

CU 11-340
EA 11-261401

DISREGARD PRINTS BEARING EARLIER REVISION DATES → JULY-09 DEC 09

REVISION DATES (PRELIMINARY STAGE ONLY) SHEET OF

24-JUN-2010 14:07

a3_07a_SecAAaM.dgn

DIST.	COUNTY	ROUTE	POST MILES TOTAL PROJECT	SHEET NO.	TOTAL SHEETS
11	SD	5	R59.4,R60.0	121	241

LICENSED ARCHITECT

LICENSED ARCHITECT
HASSAN AKHAVAN
No. C-20451
Exp. 04-30-11
STATE OF CALIFORNIA

6-21-10
PLANS APPROVAL DATE

The State of California or its officers or agents shall not be responsible for the accuracy or completeness of electronic copies of this plan sheet.

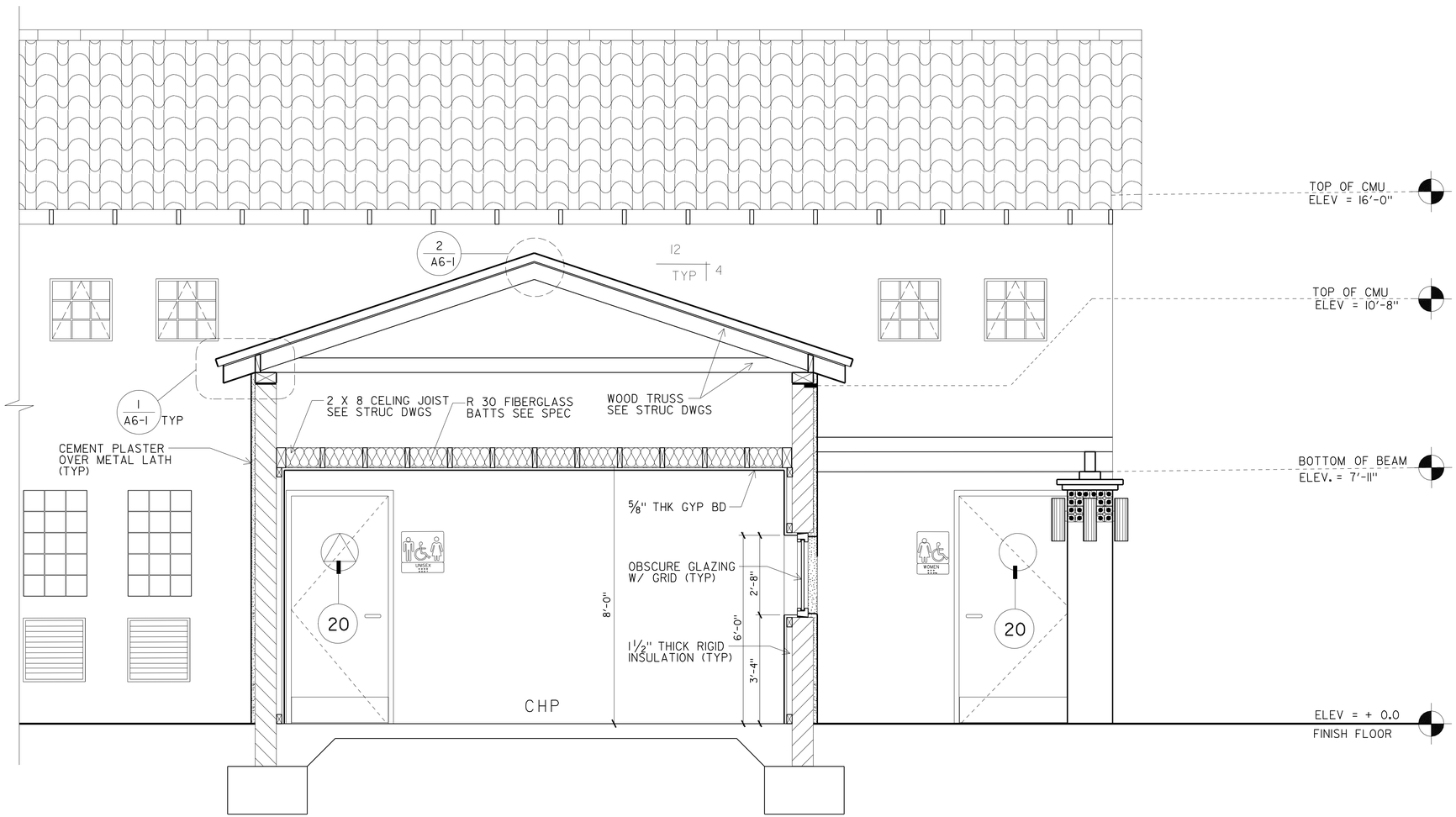

SECTION B-B

SCALE: 1/2" = 1'-0"

ACCESSIBILITY DESIGN APPROVAL STAMP
DOT / DES / OTA
11-261401
Reviewed by:
Date: 09-01-09

CALIFORNIA STATE FIRE MARSHAL
APPROVED
Approval of this plan does not authorize or approve any omission or deviation from applicable regulations. Final approval is subject to field inspection. One set of approved plans shall be available on the project site at all times.
Reviewed by:
BILL ROBERTSON DSFM III
Approval date: 11-04-09

CSFM #: 01-37-11-0033

DESIGN	BY HASSAN AKHAVAN	CHECKED Donald E. Avery	
DETAILS	BY ROBERT QUIBIN	CHECKED Donald E. Avery	
QUANTITIES	BY	CHECKED	

STATE OF CALIFORNIA
DEPARTMENT OF TRANSPORTATION

DIVISION OF ENGINEERING SERVICES
ARCHITECTURAL AND STRUCTURAL DESIGN

BRIDGE NO. 57R000IR 57R000IR
POST MILE R59.4/R60.0

ALISO CREEK SAFETY ROADSIDE REST AREA
SOUTHBOUND NEW BUILDING 3
SECTION

SHEET **A3-8**

a3_08_SecBBM.dgn
DS OSD Imperial Rev. 10/07 24-JUN-2010 14:08

ORIGINAL SCALE IN INCHES FOR REDUCED PLANS 0 1 2 3

CU 11-340
EA 11-261401

REVISION DATES (PRELIMINARY STAGE ONLY) SHEET OF
EARLIER REVISION DATES → JULY-09 DEC 09

24-JUN-2010 14:08
a3_08_SecBBM.dgn

DIST.	COUNTY	ROUTE	POST MILES TOTAL PROJECT	SHEET NO.	TOTAL SHEETS
11	SD	5	R59.4,R60.0	122	241

LICENSED ARCHITECT

JULY-09

LICENSED ARCHITECT
HASSAN AKHAVAN
No. C-20451
Exp. 04-30-11
STATE OF CALIFORNIA

6-21-10
PLANS APPROVAL DATE

The State of California or its officers or agents shall not be responsible for the accuracy or completeness of electronic copies of this plan sheet.

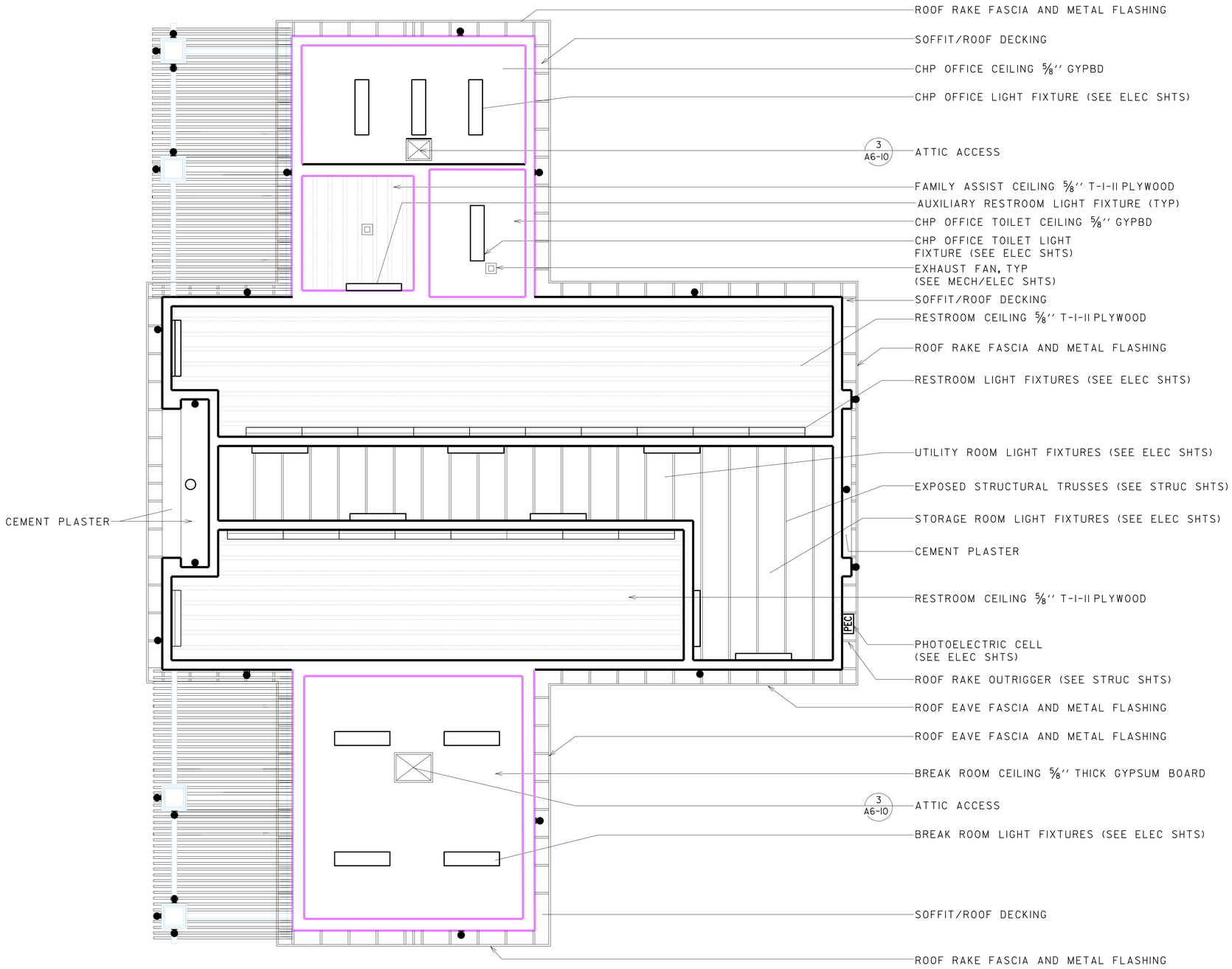

NEW BUILDING 3 REFLECTED CEILING PLAN

SCALE: 1/4'' = 1'-0''

ACCESSIBILITY DESIGN APPROVAL STAMP DOT / DES / OTA

11-261401

Reviewed by:

Date: 09-01-09

CALIFORNIA STATE FIRE MARSHAL APPROVED

Approval of this plan does not authorize or approve any omission or deviation from applicable regulations. Final approval is subject to field inspection. One set of approved plans shall be available on the project site at all times.

Reviewed by:
BILL ROBERTSON DSFM III
Approval date: 11-04-09

CSFM #: 01-37-11-0033

DESIGN	BY HASSAN AKHAVAN	CHECKED Donald E. Alvarez	
DETAILS	BY ROBERT QUIBIN	CHECKED Donald E. Alvarez	
QUANTITIES	BY	CHECKED	

STATE OF CALIFORNIA
DEPARTMENT OF TRANSPORTATION

DIVISION OF ENGINEERING SERVICES
ARCHITECTURAL AND STRUCTURAL DESIGN

BRIDGE NO. 57R000IR 57R000IR
POST MILE R59.4/R60.0

ALISO CREEK SAFETY ROADSIDE REST AREA

SOUTHBOUND NEW BUILDING 3 | REFLECTED CEILING PLAN

SHEET **A3-9**

A3_9_Reflected_Ceiling_PlanM.dgn
DS OSD Imperial Rev. 10/07 24-JUN-2010 14:08

ORIGINAL SCALE IN INCHES FOR REDUCED PLANS 0 1 2 3

CU 11-340
EA 11-261401

DISREGARD PRINTS BEARING EARLIER REVISION DATES → JULY-09 DEC 09

REVISION DATES (PRELIMINARY STAGE ONLY) SHEET OF

24-JUN-2010 14:08

A3_9_Reflected_Ceiling_PlanM.dgn

6-21-10

DIST.	COUNTY	ROUTE	POST MILES TOTAL PROJECT	SHEET NO.	TOTAL SHEETS
11	SD	5	R59.4,R60.0	123	241

LICENSED ARCHITECT

JUL-09

LICENSED ARCHITECT
HASSAN AKHAVAN
No. C-20451
Exp. 04-30-11
STATE OF CALIFORNIA

6-21-10
PLANS APPROVAL DATE

The State of California or its officers or agents shall not be responsible for the accuracy or completeness of electronic copies of this plan sheet.

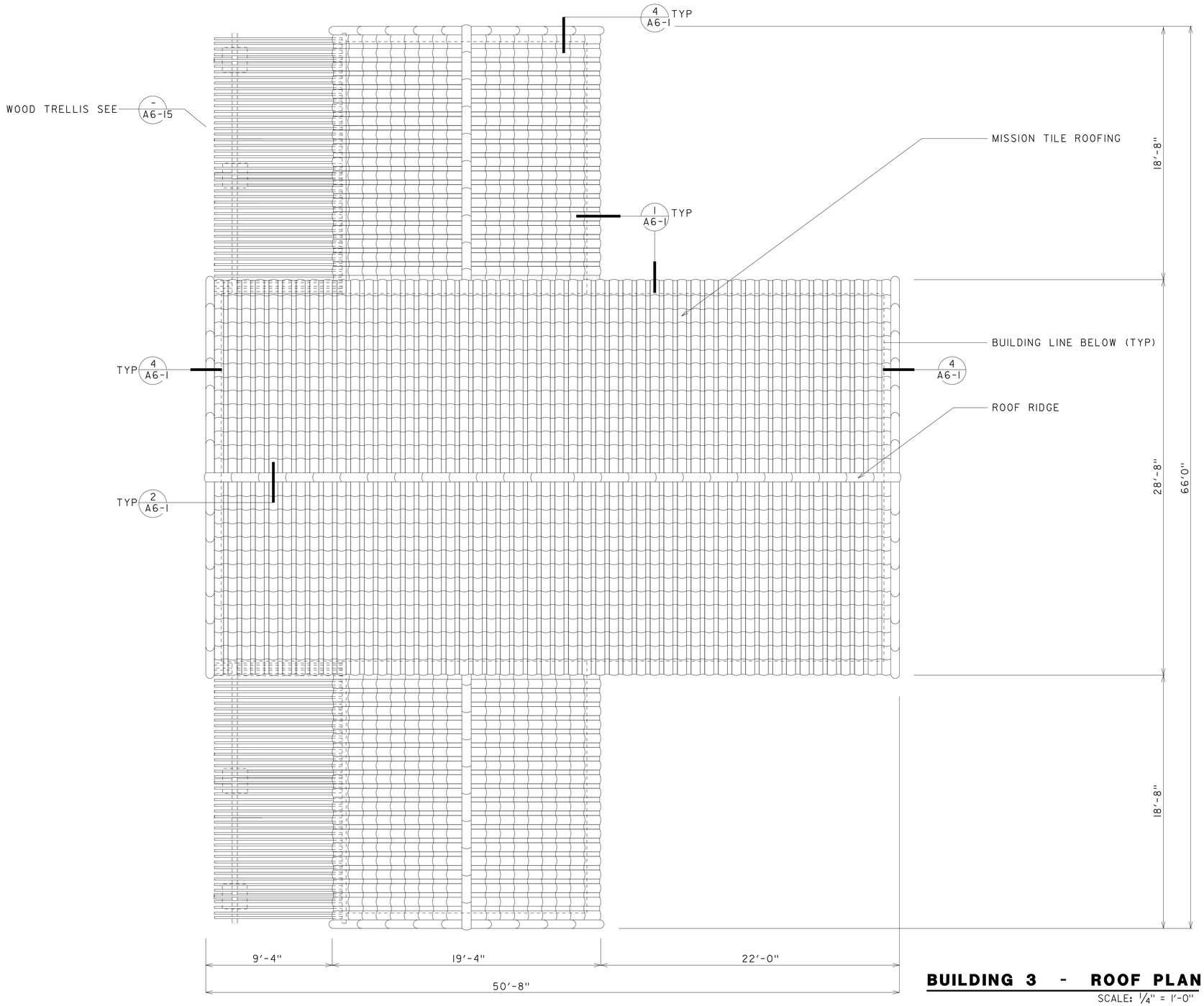

BUILDING 3 - ROOF PLAN

SCALE: 1/4" = 1'-0"

N E S

NOTE:

FOR MECHANICAL EQUIPMENT. EXHAUST, VENTS AND OTHER ROOF PENETRATION SEE MECHANICAL PLANS.

ACCESSIBILITY DESIGN APPROVAL STAMP DOT / DES / OTA

11-261401

Reviewed by:

Date: 09-01-09

CALIFORNIA STATE FIRE MARSHAL APPROVED

Approval of this plan does not authorize or approve any omission or deviation from applicable regulations. Final approval is subject to field inspection. One set of approved plans shall be available on the project site at all times.

Reviewed by: BILL ROBERTSON DSFM III

Approval date: 11-04-09

CSFM #: 01-37-11-0033

	BY		CHECKED
DESIGN	HASSAN AKHAVAN		Donald E. Alsey
DETAILS	ROBERT QUIBIN		Donald E. Alsey
QUANTITIES			

STATE OF CALIFORNIA
DEPARTMENT OF TRANSPORTATION

DIVISION OF ENGINEERING SERVICES
ARCHITECTURAL AND STRUCTURAL DESIGN

BRIDGE NO. 57R000IR 57R000IR
POST MILE R59.4/R60.0

ALISO CREEK SAFETY ROADSIDE REST AREA

SOUTHBOUND NEW BUILDINGS 3 | ROOF PLAN

SHEET **A3-10**

a3_10_bldg3_roof_plM.dgn
DS OSD Imperial Rev. 10/07 24-JUN-2010 14:08

ORIGINAL SCALE IN INCHES FOR REDUCED PLANS 0 1 2 3

CU 11-340
EA 11-261401

DISREGARD PRINTS BEARING EARLIER REVISION DATES

REVISION DATES (PRELIMINARY STAGE ONLY) JULY-09 DEC 09 SHEET OF

24-JUN-2010 14:08

a3_10_bldg3_roof_plM.dgn

DIST.	COUNTY	ROUTE	POST MILES TOTAL PROJECT	SHEET NO.	TOTAL SHEETS
11	SD	5	R59.4,R60.0	124	241

LICENSED ARCHITECT

LICENSED ARCHITECT HASSAN AKHAVAN No. C-20451 Exp. 04-30-11 STATE OF CALIFORNIA

6-21-10
PLANS APPROVAL DATE

The State of California or its officers or agents shall not be responsible for the accuracy or completeness of electronic copies of this plan sheet.

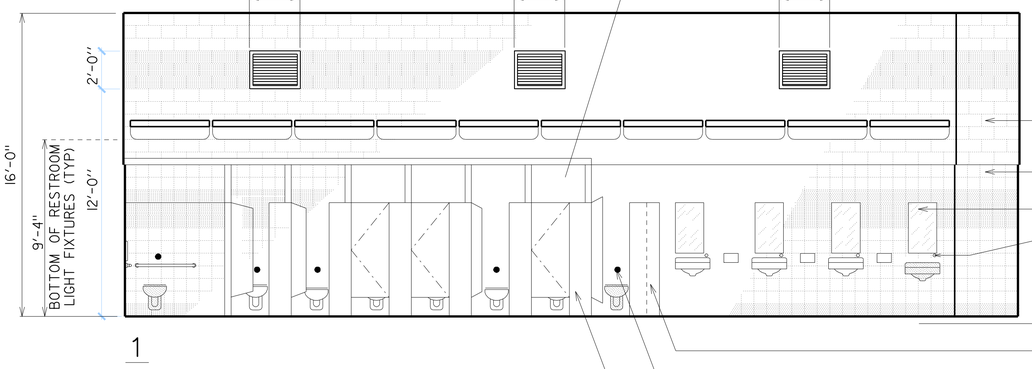

1

OVER HEAD RAIL
LOUVERS (TYP), SEE 11,12 / A6-7
LIGHT FIXTURE (TYP) SEE ELEC SHEETS
STAINLESS STEEL LAVATORY WITH INFRARED SENSOR ACTIVATED FAUCET (TYP)
PAINTED EXPOSED CMU WALL
8" x 8" PORCELAIN WALL TILE (TYP)
18" x 36" MIRROR (TYP)
LIQUID SOAP DISPENSER'S VALVE (TYP)
8" x 8" PORCELAIN COVED BASE TILE MATCH FLOOR TILE COLOR (TYP)
ELECTRIC HAND DRYER (TYP)
CMU PARTITION SEE A6-11 FOR MORE INFORMATION
INFRARED SENSOR ACTIVATED FLUSH VALVE (TYP)
STAINLESS STEEL TOILET PARTITIONS (TYP)

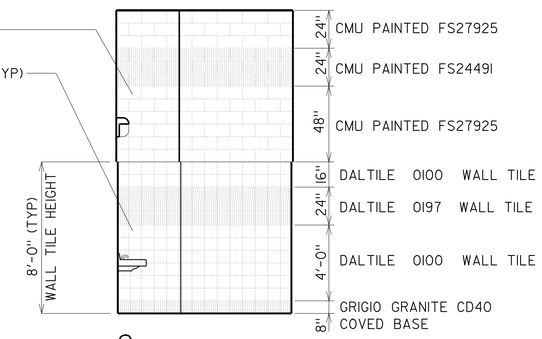

2

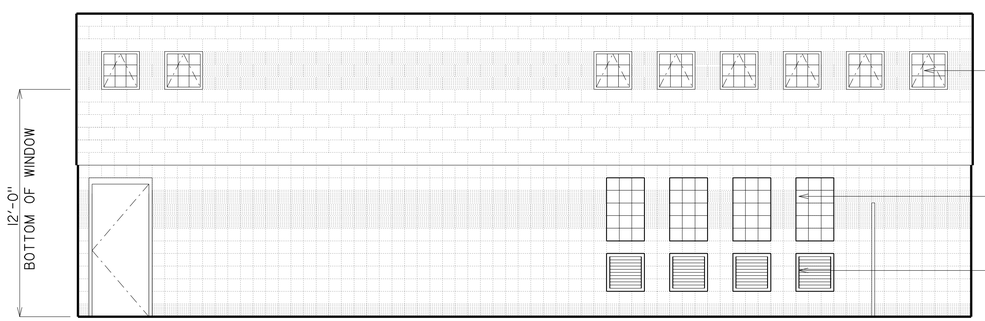

3

24" x 24" OBSCURE GLAZING OPERABLE METAL WINDOW WITH GRID AND METAL INSECT SCREEN (TYP)
8" x 8" SOLID GLASS BLOCK 15 BLOCKS EACH WINDOW (TYP)
24" x 24" METAL LOUVER (TYP)

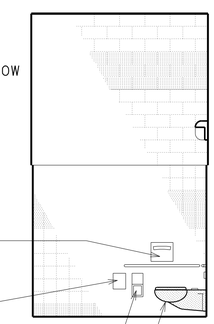

TOILET SEAT COVER DISPENSER (TYP)
NAPKIN DISPOSAL AT ALL WOMEN'S TOILETS (TYP)
DOUBLE-ROLL TOILET TISSUE DISPENSER (TYP)
STAINLESS STEEL WATER-CLOSET (TYP)

4

WOMEN'S RESTROOM

(SEE SHEET A0-3.5 FOR ACCESSIBLE MOUNTING HEIGHTS)

SCALE: 1/4" = 1'-0"

ACCESSIBILITY DESIGN APPROVAL STAMP DOT / DES / OTA
11-261401
Reviewed by:
Date: 09-01-09

CALIFORNIA STATE FIRE MARSHAL APPROVED
Approval of this plan does not authorize or approve any omission or deviation from applicable regulations. Final approval is subject to field inspection. One set of approved plans shall be available on the project site at all times.
Reviewed by:
BILL ROBERTSON DSFM III
Approval date: 11-04-09
CSFM #: 01-37-11-0033

	BY		CHECKED
DESIGN	BY	HASSAN AKHAVAN	CHECKED Donald E. Avery
DETAILS	BY	ROBERT QUIBIN	CHECKED Donald E. Avery
QUANTITIES	BY		CHECKED

STATE OF CALIFORNIA DEPARTMENT OF TRANSPORTATION

DIVISION OF ENGINEERING SERVICES ARCHITECTURAL AND STRUCTURAL DESIGN

BRIDGE NO. 57R000IR 57R000IR
POST MILE R59.4/R60.0

ALISO CREEK SAFETY ROADSIDE REST AREA

SOUTHBOUND NEW BUILDING 3 | INTERIOR ELEVATION

SHEET **A3-11**

a3_11_women_rm_int_elevM.dgn
DS OSD Imperial Rev. 10/07 24-JUN-2010 14:08

ORIGINAL SCALE IN INCHES FOR REDUCED PLANS 0 1 2 3

CU 11-340
EA 11-261401

DISREGARD PRINTS BEARING EARLIER REVISION DATES →

REVISION DATES (PRELIMINARY STAGE ONLY) JULY-09 DEC 09 SHEET OF

24-JUN-2010 14:08
a3_11_women_rm_int_elevM.dgn

DIST.	COUNTY	ROUTE	POST MILES TOTAL PROJECT	SHEET NO.	TOTAL SHEETS
11	SD	5	R59.4,R60.0	125	241

LICENSED ARCHITECT

DEC 09

LICENSED ARCHITECT
HASSAN AKHAVAN
No. C-20451
Exp. 04-30-11
STATE OF CALIFORNIA

6-21-10
PLANS APPROVAL DATE

The State of California or its officers or agents shall not be responsible for the accuracy or completeness of electronic copies of this plan sheet.

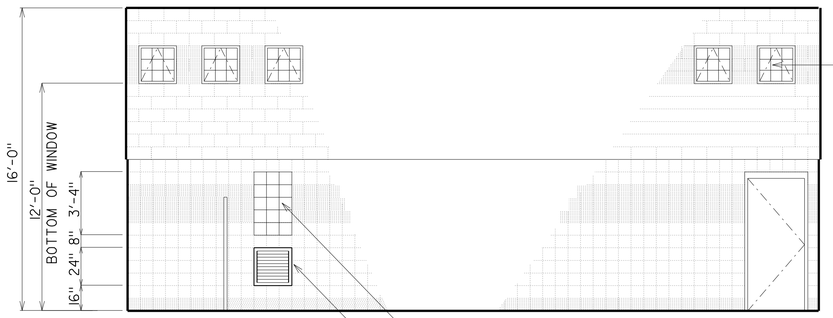

1

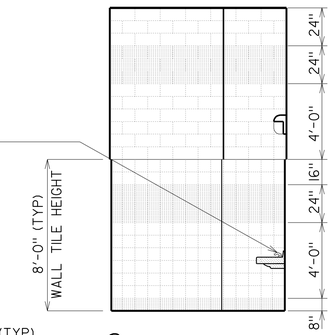

2

24" x 24" OBSCURE GLAZING OPERABLE METAL WINDOW WITH GRID AND METAL INSECT SCREEN (TYP)

STAINLESS STEEL LAVATORY WITH INFRARED SENSOR ACTIVATED FAUCET (TYP)

8" x 8" SOLID GLASS BLOCK 15 BLOCKS EACH WINDOW (TYP)

24" x 24" METAL LOUVER WITH METAL INSECT SCREEN (TYP)

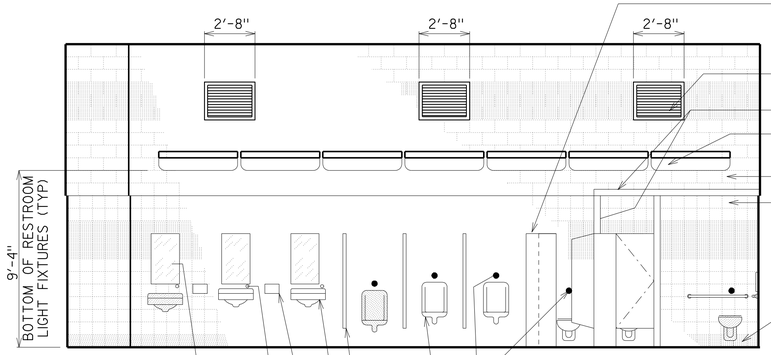

3

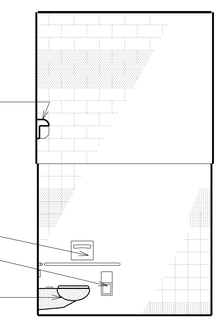

4

CMU PARTITION SEE A6-11 FOR MORE INFORMATION

LOUVER (TYP) SEE SHEET A3-15

OVER HEAD RAIL (TYP)

LIGHT FIXTURE (TYP) SEE ELEC SHEETS

PAINTED EXPOSED CMU WALL

8" x 8" PORCELAIN WALL TILE (TYP)

TOILET SEAT COVER DISPENSER (TYP)

DOUBLE-ROLL TOILET TISSUE DISPENSER (TYP)

8" x 8" PORCELAIN COVED BASE TILE MATCH FLOOR TILE COLOR (TYP)

STAINLESS STEEL WATER-CLOSET (TYP)

INFRARED SENSOR ACTIVATED FLUSH VALVE (TYP)

STAINLESS STEEL URINAL (TYP)

24" x 60" STAINLESS STEEL URINAL SCREEN 12" ABOVE FINISH FLOOR (TYP)

STAINLESS STEEL LAVATORY WITH INFRARED SENSOR ACTIVATED FAUCET (TYP)

ELECTRIC HAND DRYER (TYP)

LIQUID SOAP DISPENSER'S VALVE (TYP)

18" x 36" MIRROR (TYP)

303 MEN'S RESTROOM

(SEE SHEET A0-3.5 FOR ACCESSIBILITY MOUNTING HEIGHTS)

SCALE: 1/4" = 1'-0"

ACCESSIBILITY DESIGN APPROVAL STAMP DOT / DES / OTA

11-261401

Reviewed by:

Date: 09-01-09

CALIFORNIA STATE FIRE MARSHAL APPROVED

Approval of this plan does not authorize or approve any omission or deviation from applicable regulations. Final approval is subject to field inspection. One set of approved plans shall be available on the project site at all times.

Reviewed by: BILL ROBERTSON DSFM III

Approval date: 11-04-09

CSFM #: 01-37-11-0033

DESIGN	BY HASSAN AKHAVAN	CHECKED Donald E. Alsey	
DETAILS	BY ROBERT QUIBIN	CHECKED Donald E. Alsey	
QUANTITIES	BY	CHECKED	

STATE OF CALIFORNIA
DEPARTMENT OF TRANSPORTATION

DIVISION OF ENGINEERING SERVICES
ARCHITECTURAL AND STRUCTURAL DESIGN

BRIDGE NO. 57R0001R 57R0001R
POST MILE R59.4/R60.0

ALISO CREEK SAFETY ROADSIDE REST AREA

NORTHBOUND NEW BUILDING 5 | INTERIOR ELEVATION

SHEET **A3-12**

a3_12_men_rm_int_elevM.dgn
DS OSD Imperial Rev. 10/07 24-JUN-2010 14:08

ORIGINAL SCALE IN INCHES FOR REDUCED PLANS 0 1 2 3

CU 11-340
EA 11-261401

DISREGARD PRINTS BEARING EARLIER REVISION DATES →

REVISION DATES (PRELIMINARY STAGE ONLY): JULY-09 DEC 09

SHEET OF

24-JUN-2010 14:08

a3_12_men_rm_int_elevM.dgn

DIST.	COUNTY	ROUTE	POST MILES TOTAL PROJECT	SHEET NO.	TOTAL SHEETS
11	SD	5	R59.4,R60.0	126	241

LICENSED ARCHITECT

LICENSED ARCHITECT HASSAN AKHAVAN No. C-20451 Exp. 04-30-11 STATE OF CALIFORNIA

6-21-10
PLANS APPROVAL DATE

The State of California or its officers or agents shall not be responsible for the accuracy or completeness of electronic copies of this plan sheet.

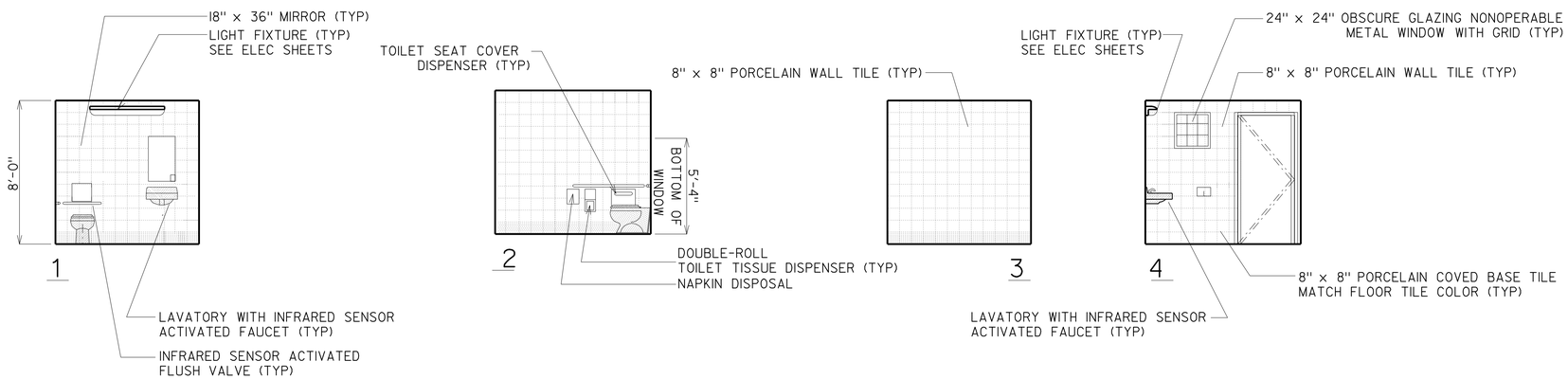

306 FAMILY ASSIST TOILET

(SEE SHEET A0-3.5 FOR ACCESSIBLE MOUNTING HEIGHTS)

SCALE: 1/4" = 1'-0"

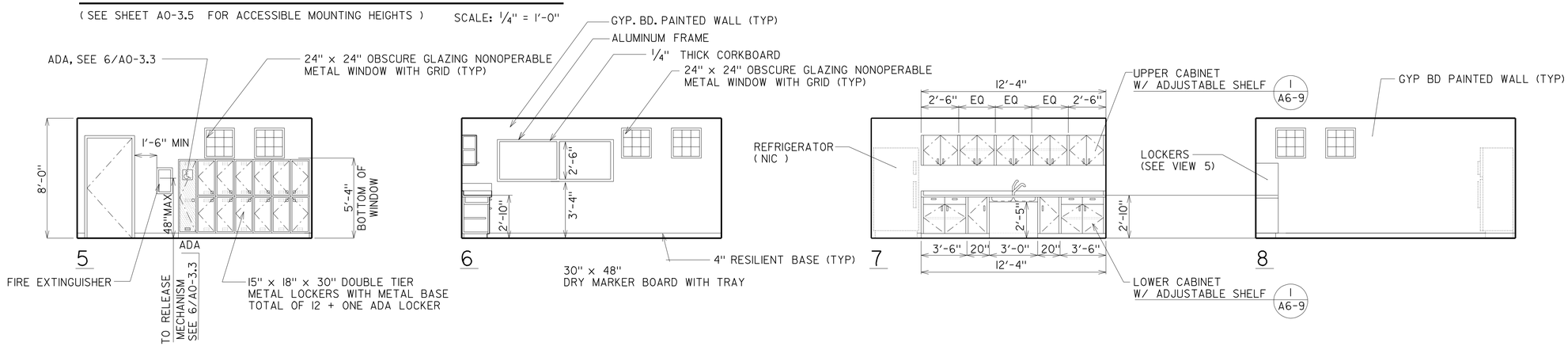

300 MAINTENANCE CREW ROOM

SCALE: 1/4" = 1'-0"

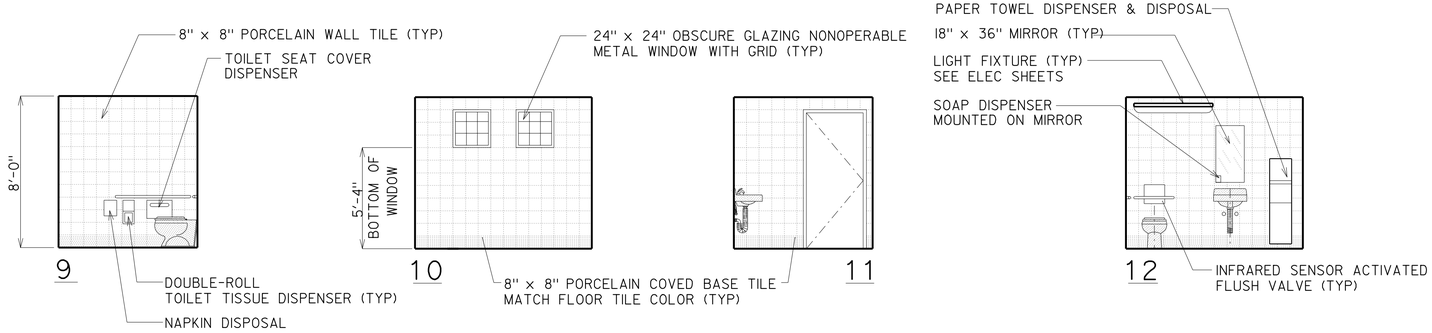

304 CHP TOILET

SCALE: 1/4" = 1'-0"

ACCESSIBILITY DESIGN APPROVAL STAMP DOT / DES / OTA

11-261401

Reviewed by: [signature]

Date: 09-01-09

CALIFORNIA STATE FIRE MARSHAL APPROVED

Approval of this plan does not authorize or approve any omission or deviation from applicable regulations. Final approval is subject to field inspection. One set of approved plans shall be available on the project site at all times.

Reviewed by: [signature]
BILL ROBERTSON DSFM III
Approval date: 11-04-09

CSFM #: 01-37-11-0033

	BY		CHECKED
DESIGN	BY	HASSAN AKHAVAN	CHECKED Ronald E. Alvarez
DETAILS	BY	ROBERT QUIBIN	CHECKED Ronald E. Alvarez
QUANTITIES	BY		CHECKED

STATE OF CALIFORNIA
DEPARTMENT OF TRANSPORTATION

DIVISION OF ENGINEERING SERVICES
ARCHITECTURAL AND STRUCTURAL DESIGN

BRIDGE NO. 57R000IR 57R000IR
POST MILE R59.4/R60.0

ALISO CREEK SAFETY ROADSIDE REST AREA

SOUTHBOUND NEW BUILDING 3 | INTERIOR ELEVATION

SHEET **A3-13**

a3_13_breakrm_int_elevM.dgn
DS OSD Imperial Rev. 10/07 25-JUN-2010 08:18

ORIGINAL SCALE IN INCHES FOR REDUCED PLANS 0 1 2 3

CU 11-340
EA 11-261401

DISREGARD PRINTS BEARING EARLIER REVISION DATES → JULY-09 DEC 09

REVISION DATES (PRELIMINARY STAGE ONLY) SHEET OF

25-JUN-2010 08:18

a3_13_breakrm_int_elevM.dgn

DIST.	COUNTY	ROUTE	POST MILES TOTAL PROJECT	SHEET NO.	TOTAL SHEETS
11	SD	5	R59.4,R60.0	127	241

LICENSED ARCHITECT

DEC 09

LICENSED ARCHITECT HASSAN AKHAVAN No. C-20451 Exp. 04-30-11 STATE OF CALIFORNIA

6-21-10
PLANS APPROVAL DATE

The State of California or its officers or agents shall not be responsible for the accuracy or completeness of electronic copies of this plan sheet.

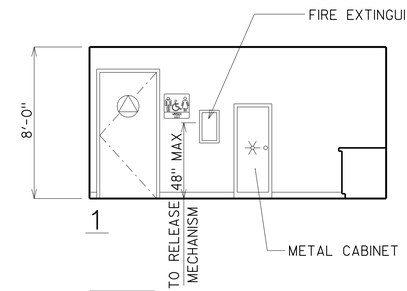

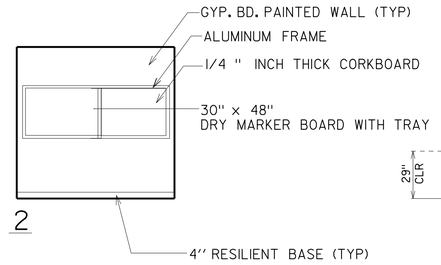

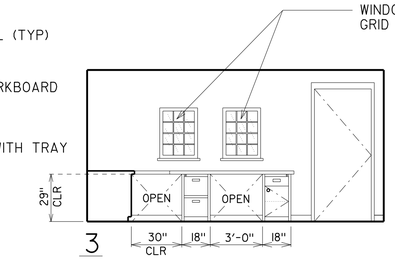

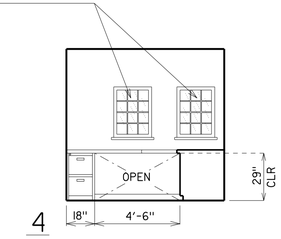

305 CHP

SCALE: 1/4" = 1'-0"

FOR CABINETS DETAILS SEE SHEET A6-9

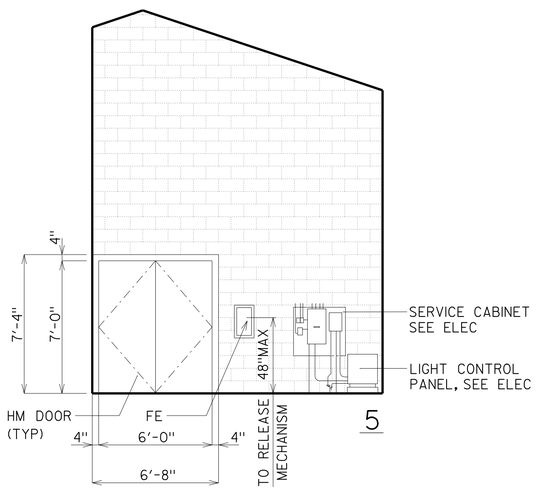

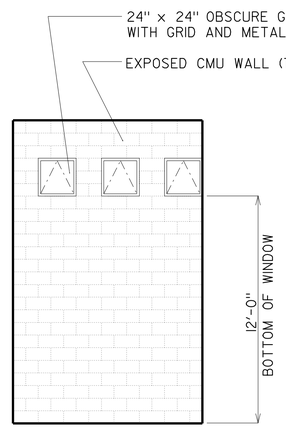

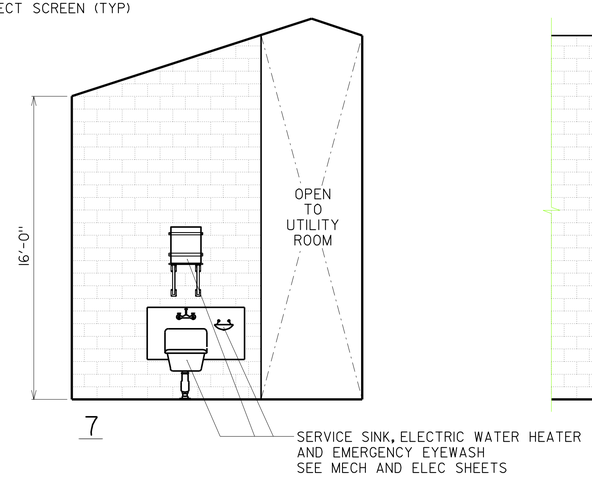

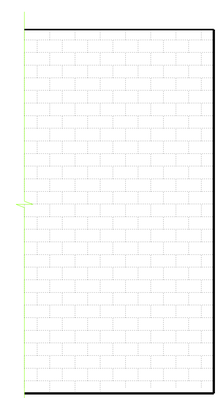

NOTE: FOR MECHANICAL AND ELECTRICAL EQUIPMENTS AND PANELS SEE MECHANICAL AND ELECTRICAL SHEETS

302 STORAGE / ELECTRICAL / MECHANICAL

SCALE: 1/4" = 1'-0"

ACCESSIBILITY DESIGN APPROVAL STAMP DOT / DES / OTA

11-261401

Reviewed by:

Date: 09-01-09

CALIFORNIA STATE FIRE MARSHAL APPROVED

Approval of this plan does not authorize or approve any omission or deviation from applicable regulations. Final approval is subject to field inspection. One set of approved plans shall be available on the project site at all times.

Reviewed by: BILL ROBERTSON DSFM III

Approval date: 11-04-09

CSFM #: 01-37-11-0033

DESIGN	BY HASSAN AKHAVAN	CHECKED Ronald E. Reay	
DETAILS	BY ROBERT QUIBIN	CHECKED Ronald E. Reay	
QUANTITIES	BY	CHECKED	

STATE OF CALIFORNIA DEPARTMENT OF TRANSPORTATION

DIVISION OF ENGINEERING SERVICES ARCHITECTURAL AND STRUCTURAL DESIGN

BRIDGE NO. 57R0001R 57R0001R
POST MILE R59.4/R60.0

ALISO CREEK SAFETY ROADSIDE REST AREA

SOUTHBOUND NEW BUILDING 3 | INTERIOR ELEVATION

SHEET **A3-14**

a3_14_chp_office_intM_ele.dgn
DS OSD Imperial Rev. 10/07 24-JUN-2010 14:08

ORIGINAL SCALE IN INCHES FOR REDUCED PLANS 0 1 2 3

CU 11-340
EA 11-261401

DISREGARD PRINTS BEARING EARLIER REVISION DATES → JULY-09 DEC 09

REVISION DATES (PRELIMINARY STAGE ONLY) SHEET OF

24-JUN-2010 14:08
a3_14_chp_office_intM_ele.dgn

DIST.	COUNTY	ROUTE	POST MILES TOTAL PROJECT	SHEET NO.	TOTAL SHEETS
11	SD	5	R59.4,R60.0	128	241

LICENSED ARCHITECT

DEC 09

LICENSED ARCHITECT HASSAN AKHAVAN No. C-20451 Exp. 04-30-11 STATE OF CALIFORNIA

6-21-10
PLANS APPROVAL DATE

The State of California or its officers or agents shall not be responsible for the accuracy or completeness of electronic copies of this plan sheet.

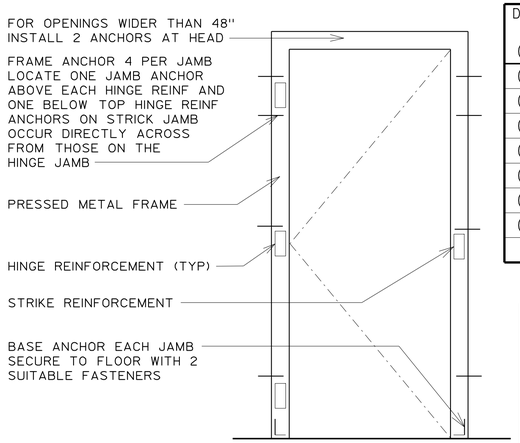

DOOR FRAME ANCHORAGE

SCALE: N.T.S.

DOOR SCHEDULE

DOOR NO	DOOR TYPE	DOOR SIZE WIDTH X HGT	DOOR THICK.	DOOR MAT	DOOR FIN	FRAME MAT	FRAME TYPE	FRAME FIN	FRAME WIDTH	LABEL ASSY	HDWR GROUP	GLAZING	LOUVER	SIGN DETAIL NO	DETAILS HEAD	DETAILS JAMB	DETAILS JAMB	DETAILS THLD	SIGN TEXT	REMARKS
1	A	3'-0" X 7'-0"	1 3/4"	HM	PAINT	METAL	1	PAINT	5 3/4"	--	1	--	--	3B&4B A0-3.3	2 A6-6	1 A6-6	4 A6-6	5 A6-6	WOMEN	
2	A	3'-0" X 7'-0"	1 3/4"	HM	PAINT	METAL	1	PAINT	5 3/4"	--	2	--	--	1&6 A0-3.3	2 A6-5	1 SIM A6-5	4 SIM A6-5	5 A6-5	MAINTENANCE CREW ROOM	
3	B	(PR) 3'-0" X 7-0"	1 3/4"	HM	PAINT	METAL	2	PAINT	5 3/4"	--	4	--	--	1&6 A0-3.3	7 A6-5	3 A6-5	6 A6-5	10 A6-5	UTILITY	PAIR DOORS PRIVECY LOCK SEE SPEC
4	A	3'-0" X 6'-8"	1 3/4"	HM	PAINT	METAL	3	PAINT	5 3/4"	--	3	--	--	3A&4A A0-3.3	9 A6-5	8 A6-5	11 A6-5	12 A6-5	CHP TOILET	
5	A	3'-0" X 7'-0"	1 3/4"	HM	PAINT	METAL	1	PAINT	5 3/4"	--	2	--	--	1&6 A0-3.3	2 A6-5	1 A6-5	4 A6-5	5 A6-5	CHP	
6	A	3'-0" X 7'-0"	1 3/4"	HM	PAINT	METAL	1	PAINT	5 3/4"	--	3	--	--	1,3A&4A A0-3.3	2 A6-6	1 A6-6	4 A6-6	5 A6-6	FAMILY ASSISTED	PRIVECY LOCK SEE SPEC
7	A	3'-0" X 7'-0"	1 3/4"	HM	PAINT	METAL	1	PAINT	5 3/4"	--	1	--	--	3C&4C A0-3.3	2 A6-6	1 A6-6	4 A6-6	5 A6-6	MEN	

NOTE:
REFER TO THE COLOR SCHEDULE ON SHEET AI-14 FOR ALL DOOR AND DOOR FRAME COLORS.
ALL DOORS WITH 1/8" THICK PUSH PLATE BOTH SIDE WITH ENGRAVED LETTER "PUSH" OR "PULL" (FONT TYPE ARIAL BLACK SIZE 2" HEIGHT)

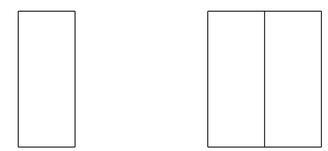

DOOR TYPES

SCALE: 1/4" = 1'-0"

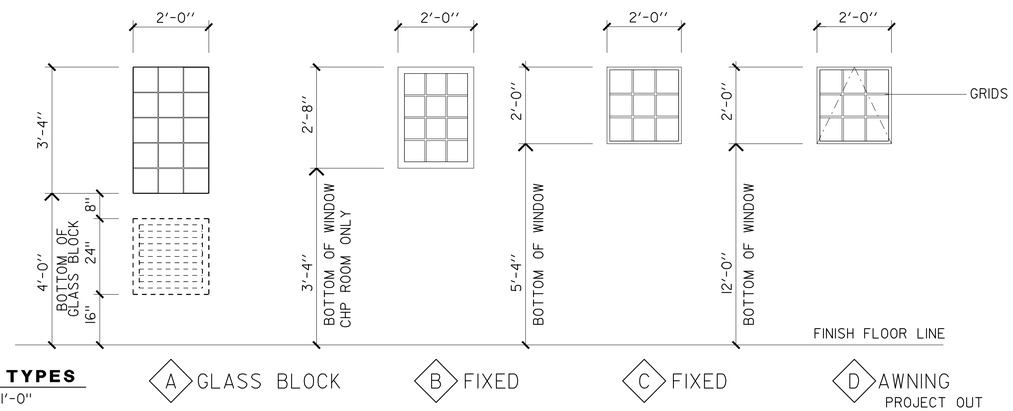

WINDOW TYPES

SCALE: 1/2" = 1'-0"

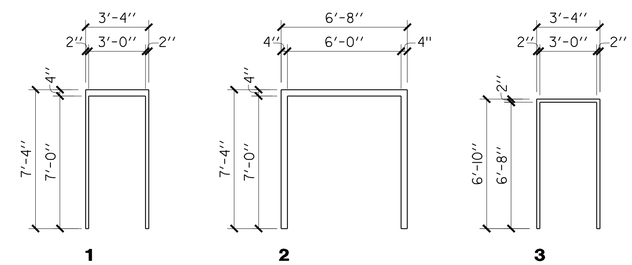

FRAME TYPES

SCALE: 1/4" = 1'-0"

WINDOW SCHEDULE

WINDOW TYPE	WINDOW SIZE WIDTH X HGT	FRAME MAT	FRAME FIN	DETAILS HEAD	DETAILS JAMB	DETAILS JAMB	DETAILS SILL	REMARKS
A	2'-0" X 3'-4"	METAL	PAINT	9 A6-7	9 A6-7	9 A6-7	10 A6-7	8X8" GLASS BLOCK
B	2'-0" X 2'-8"	METAL	PAINT	5 A6-7	5 A6-7	5 A6-7	6 A6-7	BULLET RESISTANT
C	2'-0" X 2'-0"	METAL	PAINT	1, 2 A6-7	1, 2 A6-7	1, 2 A6-7	2, 4 A6-7	NON-OPERABLE
D	2'-0" X 2'-0"	METAL	PAINT	7 A6-7 1	7 A6-7	7 A6-7	8 A6-7 1	OPERABLE

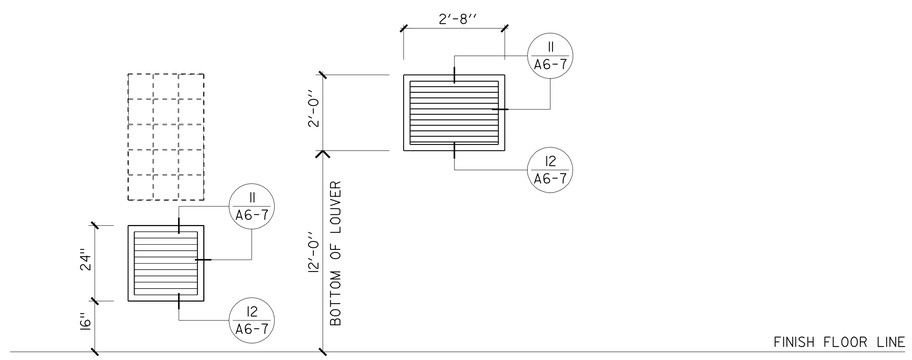

LOUVER SCHEDULE

SCALE: 1/2" = 1'-0"

15 E

ACCESSIBILITY DESIGN APPROVAL STAMP DOT / DES / OTA
11-261401
Reviewed by:
Date: 09-01-09

CALIFORNIA STATE FIRE MARSHAL APPROVED
Approval of this plan does not authorize or approve any omission or deviation from applicable regulations. Final approval is subject to field inspection. One set of approved plans shall be available on the project site at all times.
Reviewed by: BILL ROBERTSON DSFM III
Approval date: 11-04-09
CSFM #: 01-37-11-0033

DESIGN	BY HASSAN AKHAVAN	CHECKED Ronald E. Alsey	
DETAILS	BY ROBERT QUIBIN	CHECKED Ronald E. Alsey	
QUANTITIES	BY	CHECKED	

STATE OF CALIFORNIA
DEPARTMENT OF TRANSPORTATION

DIVISION OF ENGINEERING SERVICES
ARCHITECTURAL AND STRUCTURAL DESIGN

BRIDGE NO. 57R0001R 57R0001R
POST MILE R59.4/R60.0

ALISO CREEK SAFETY ROADSIDE REST AREA

SOUTHBOUND NEW BUILDING 3

DOOR, WINDOW AND LOUVER SCHEDULE

SHEET **A3-15**

a3_15_door & window schedM.dgn
DS OSD Imperial Rev. 10/07 24-JUN-2010 14:08

ORIGINAL SCALE IN INCHES FOR REDUCED PLANS 0 1 2 3

CU 11-340
EA 11-261401

DISREGARD PRINTS BEARING EARLIER REVISION DATES → JULY-09 DEC 09

REVISION DATES (PRELIMINARY STAGE ONLY) SHEET OF

24-JUN-2010 14:08
a3_15_door & window schedM.dgn

DIST.	COUNTY	ROUTE	POST MILES TOTAL PROJECT	SHEET NO.	TOTAL SHEETS
11	SD	5	R59.4,R60.0	129	241

LICENSED ARCHITECT

LICENSED ARCHITECT
HASSAN AKHAVAN
No. C-20451
Exp. 04-30-11
STATE OF CALIFORNIA

6-21-10
PLANS APPROVAL DATE

The State of California or its officers or agents shall not be responsible for the accuracy or completeness of electronic copies of this plan sheet.

BUILDING 3 FINISH SCHEDULE

	ROOM NAME		FLOOR: CONCRETE	FLOOR: 8x8" SLIP RESISTANT PORCELAIN FLOOR TILE	BASE: RESILIENT BASE	BASE: 8x8" PORCELAIN COVED BASE TILE	WALLS NORTH: 8x8" PORCELAIN WALL TILE	WALLS NORTH: EXPOSED CMU WALL	WALLS NORTH: GYPSUM BOARD	WALLS EAST: 8x8" PORCELAIN WALL TILE	WALLS EAST: EXPOSED CMU WALL	WALLS EAST: GYPSUM BOARD	WALLS SOUTH: 8x8" PORCELAIN WALL TILE	WALLS SOUTH: EXPOSED CMU WALL	WALLS SOUTH: GYPSUM BOARD	WALLS WEST: 8x8" PORCELAIN WALL TILE	WALLS WEST: EXPOSED CMU WALL	WALLS WEST: GYPSUM BOARD	CEILING: GYPSUM BOARD	CEILING: T-1-11 PLYWOOD CELING	CEILING: APPROXIMATE CEILING HEIGHT	MISC
A3-11/301	WOMEN'S RESTROOM	(FIELD)		30A		30B	40A	50A		40A	50A		40A	50A		40A	50A			60	16'-3"	
		(PATTERN)					40B	50B		40B	50B		40B	50B		40B	50B					
A3-12/303	MEN'S RESTROOM	(FIELD)		30C		30D	40C	50C		40C	50C		40C	50C		40C	50C			60	16'-3"	
		(PATTERN)					40D	50D		40D	50D		40D	50D		40D	50D					
	STORAGE/ELEC/MECH		10					20			20			20			20			60	EXPOSED	
A3-14/305	CHP		22		22				70			70			70			70	70		8'-0"	
A3-13/304	CHP TOILET			30C		30D	40C	50C	70	40C	50C	70	93		70	93		70	70		8'-0"	
A3-13/304	FAMILY ASSIST RESTROOM			30C		30D	40			40			40			40				60	8'-0"	
A3-13/304	MAINTENANCE/CREW ROOM			30C		30D						70			70			70	70		8'-0"	

10 CONCRETE
NATURAL COLOR LIGHT BROOM FINISH
CONCRETE SEALER SEE SPEC

20 CONCRETE MASONRY UNITS

22 RESILIENT FLOOR TILE & BASE

30 PORCELAIN FLOOR TILE
A - 8X8 DATILEPRODUCTS GRIGIO GRANITE CD40
B - SAME AS A COVE
C - 8X8 DATILEPRODUCTS PEPE GRANITE CD40
D - SAME AS C COVE

50 CONCRETE MASONRY UNITS COLOR
A - FS 27705
B - FS 24491
C - FS 20450
D - FS 20117

40 PORCELAIN WALL TILE
A - WHITE 0100
B - AQUE GLOW 0197
C - ALMOND 0135
D - ELEMENTAL TAN 0166

60 T-1-11 PLYWOOD CEILING
A - FS 14491
B - FS 20313

50 EXPOSED FARMING

70 GYPSUM BOARD
PAINT FS 13522

EXTERIOR:

EXTERIOR CEMENT PLASTER CHRYSTAL WHITE
(X-50 BASE) LAHABRA COLOR
LOUVERS, GRILL, WINDOW'S GRID, ALL EXPOSED
METAL CONNECTIONS AND TILE FRAMES
SHALL BE POWDER COATED FS 33617
COLOR SAMPLES MUST BE SUBMITTED TO
THE ARCHITECT FOR FINAL APPROVAL.
EXPOSED TRELLIS WILL RECEIVE STAIN AS NATURAL FINISH "RED WOOD"

INTERIOR:

CHP CABINET SF 24441

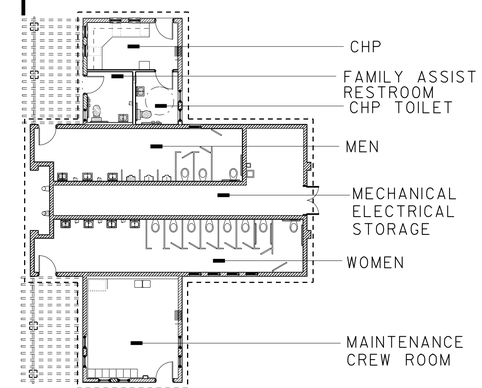

BUILDING 3 SOUTH BOUND

NOTES:

MANUFACTURER'S DESIGNATIONS ARE LISTED TO INDICATE COLOR ONLY. NO PREFERENCE FOR A PARTICULAR BRAND IS INTENDED.

COLORS NOT LISTED SHALL BE SELECTED BY THE ENGINEER FROM SAMPLES SUBMITTED BY THE CONTRACTOR.

FINISHES AND COLORS ARE SHOWN ON THE INTERIOR FLOOR PLANS BUILDING SECTIONS AND EXTERIOR ELEVATIONS AND REFERENCE TO THIS SHEET.

ACCESSIBILITY DESIGN APPROVAL STAMP DOT / DES / OTA
11-261401
Reviewed by:
Date: 09-01-09

CALIFORNIA STATE FIRE MARSHAL APPROVED
Approval of this plan does not authorize or approve any omission or deviation from applicable regulations. Final approval is subject to field inspection. One set of approved plans shall be available on the project site at all times.
Reviewed by:
BILL ROBERTSON DSFM III
Approval date: 11-04-09

CSFM #: 01-37-11-0033

	BY	CHECKED
DESIGN	HASSAN AKHAVAN	Donald E. Alsey
DETAILS	ROBERT QUIBIN	Donald E. Alsey
QUANTITIES		

STATE OF CALIFORNIA
DEPARTMENT OF TRANSPORTATION

DIVISION OF ENGINEERING SERVICES
ARCHITECTURAL AND STRUCTURAL DESIGN

BRIDGE NO. 57R0001R 57R0001R
POST MILE R59.4/R60.0

ALISO CREEK SAFETY ROADSIDE REST AREA
SOUTHBOUND NEW BUILDING 3 | FINISH SCHEDULE

SHEET A3-16

a3_16_Bldg3Finish_scheduleM.dgn
DS OSD Imperial Rev. 10/07 24-JUN-2010 14:08

ORIGINAL SCALE IN INCHES FOR REDUCED PLANS 0 1 2 3

CU 11-340
EA 11-261401

DISREGARD PRINTS BEARING EARLIER REVISION DATES → JULY-09 DEC 09

REVISION DATES (PRELIMINARY STAGE ONLY) SHEET OF

24-JUN-2010 14:08
a3_16_Bldg3Finish_scheduleM.dgn

DIST.	COUNTY	ROUTE	POST MILES TOTAL PROJECT	SHEET NO.	TOTAL SHEETS
11	SD	5	R59.4,R60.0	130	241

LICENSED ARCHITECT

LICENSED ARCHITECT HASSAN AKHAVAN No. C-20451 Exp. 04-30-11 STATE OF CALIFORNIA

6-21-10
PLANS APPROVAL DATE

The State of California or its officers or agents shall not be responsible for the accuracy or completeness of electronic copies of this plan sheet.

NOTES:

MEN WOMEN, AND FAMILY ASSISTED TOILET HAVE A TILE FLOOR SLOPED TO DRAIN SEE MECH

SLOPE ELEVATIONS SHALL NOT EXCEED 2% (VARYING BY VARYING MORTAR BED)

THE MECHANICAL ROOM SHALL BE CONCRETE SLAB SLOPED TO DRAIN SEE MECH FINISHED AS INDICATED ON THE FINISH SCHEDULE

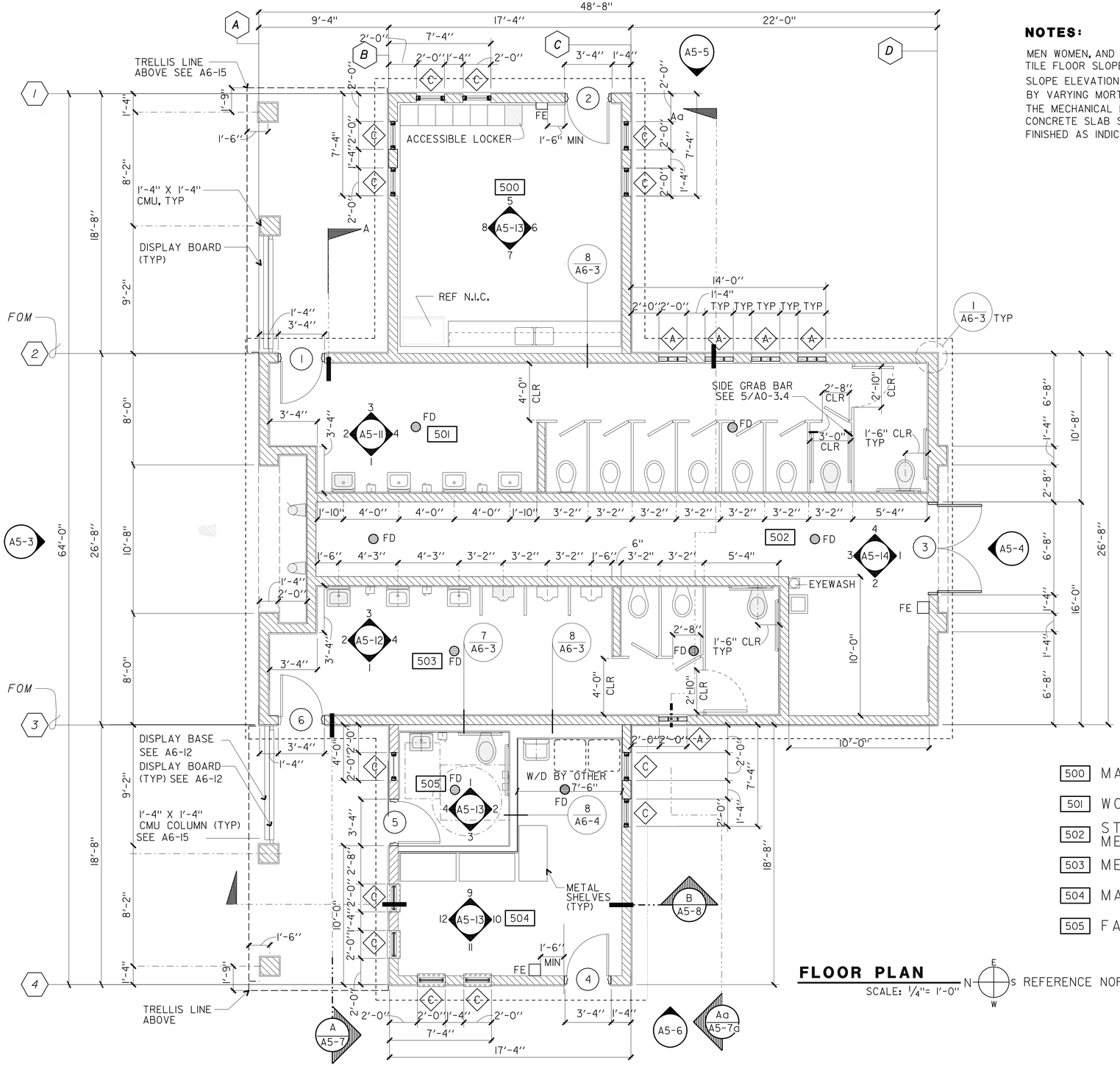

500	MAINTENANCE CREW ROOM
501	WOMEN
502	STORAGE/ELECTRICAL/ MECHANICAL
503	MEN
504	MAINTENANCE STORAGE
505	FAMILY ASSIST RESTROOM

FLOOR PLAN

SCALE: 1/4"= 1'-0"

N E S W REFERENCE NORTH

ACCESSIBLE FIXTURES SHOWN SHADED

LEGEND FOR THIS SHEET ONLY

NOTE - SOLID LINE DIMENSIONS ARE TO FACE OF 6" OR 8" CMU MODULES . CENTER LINE DIMENSIONS ARE TO CENTER OF ROOF STRUCTURAL MEMBERS, 6" FROM 8" CMU MODULE FACE UNO.

FOR BLDG STRUC LAYOUT, SEE STRUC DWGS

FOR CONC SLAB RECESS DIMENSIONS, FLOOR DRAIN LOCATIONS SEE STRUCTURAL AND MECHANICAL

FINISHES AND COLORS ARE SHOWN ON THE FINISH SCEDULE SHEET A5-16

SEE LANDSCAPE DWG FOR INFORMATION ON WALKWAY AND RAMPS

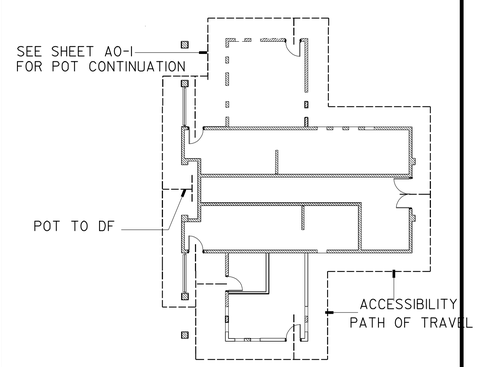

ACCESSIBILITY PATH OF TRAVEL

ACCESSIBILITY DESIGN APPROVAL STAMP DOT / DES / OTA

11-261401

Reviewed by:

Date: 09-01-09

CALIFORNIA STATE FIRE MARSHAL APPROVED

Approval of this plan does not authorize or approve any omission or deviation from applicable regulations. Final approval is subject to field inspection. One set of approved plans shall be available on the project site at all times.

Reviewed by: BILL ROBERTSON DSFM III

Approval date: 11-04-09

CSFM #: 01-37-11-0033

DESIGN	BY HASSAN AKHAVAN	CHECKED Ronald E. Alvey	
DETAILS	BY ROBERT QUIBIN	CHECKED Ronald E. Alvey	
QUANTITIES	BY	CHECKED	

STATE OF CALIFORNIA DEPARTMENT OF TRANSPORTATION

DIVISION OF ENGINEERING SERVICES ARCHITECTURAL AND STRUCTURAL DESIGN

BRIDGE NO. 57R0001R 57R0001R

POST MILE R59.4/R60.0

ALISO CREEK SAFETY ROADSIDE REST AREA

NORTHBOUND NEW BUILDING 5 — FLOOR PLAN

SHEET **A5-1**

a5_01_flplnM.dgn
DS OSD Imperial Rev. 10/07 24-JUN-2010 14:09

ORIGINAL SCALE IN INCHES FOR REDUCED PLANS 0 1 2 3

CU 11-340
EA 11-261401

DISREGARD PRINTS BEARING EARLIER REVISION DATES → JULY-09 DEC 09

REVISION DATES (PRELIMINARY STAGE ONLY) SHEET OF

24-JUN-2010 14:09

a5_01_flplnM.dgn

DIST.	COUNTY	ROUTE	POST MILES TOTAL PROJECT	SHEET NO.	TOTAL SHEETS
11	SD	5	R59.4,R60.0	131	241

LICENSED ARCHITECT

JULY-09

LICENSED ARCHITECT
HASSAN AKHAVAN
No. C-20451
Exp. 04-30-11
STATE OF CALIFORNIA

6-21-10
PLANS APPROVAL DATE

The State of California or its officers or agents shall not be responsible for the accuracy or completeness of electronic copies of this plan sheet.

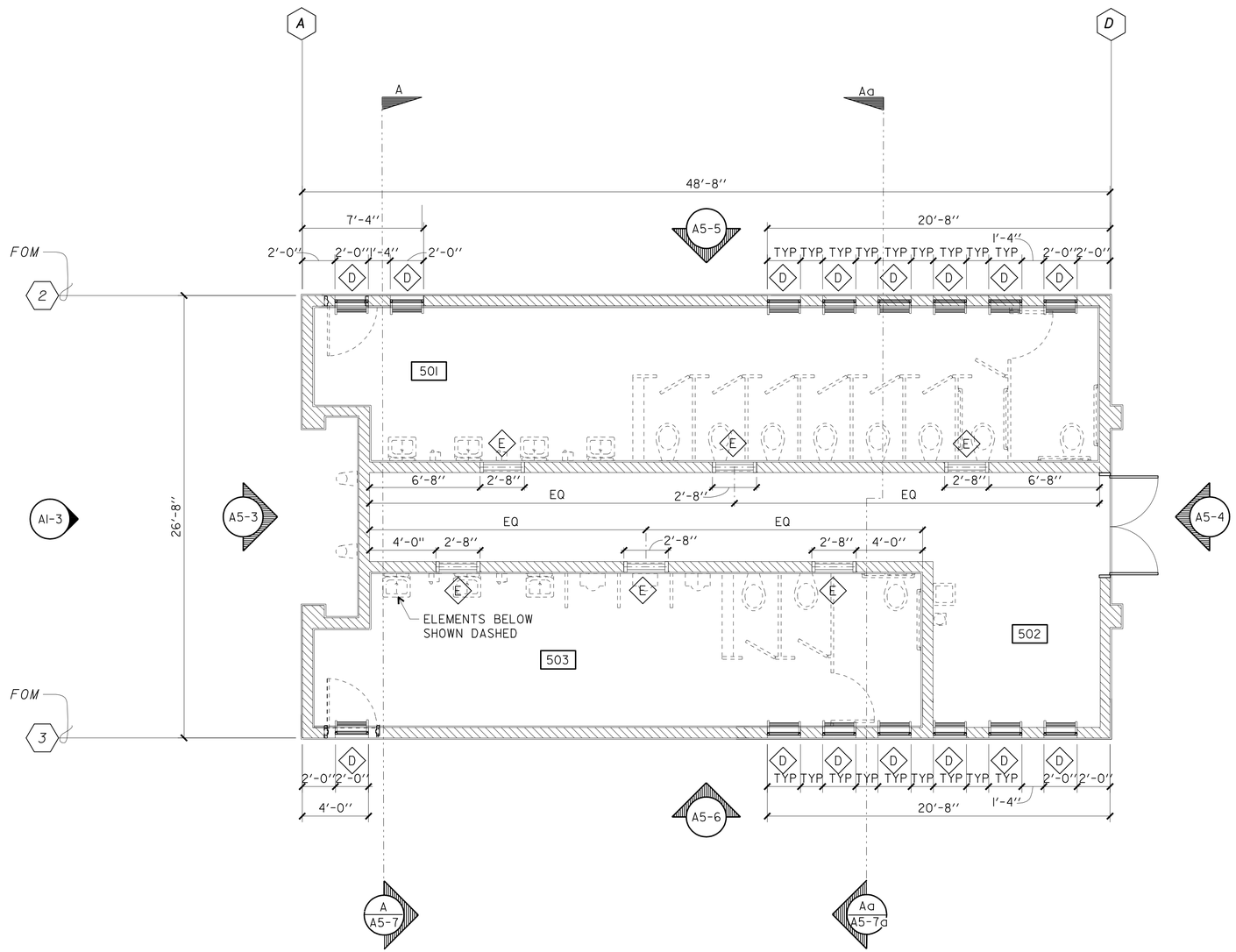

CLEARSTORY PLAN

SCALE: 1/4" = 1'-0"

N E S W REFERENCE NORTH

ACCESSIBILITY DESIGN APPROVAL STAMP
DOT / DES / OTA
11-261401
Reviewed by:
Date: 09-01-09

CALIFORNIA STATE FIRE MARSHAL APPROVED
Approval of this plan does not authorize or approve any omission or deviation from applicable regulations. Final approval is subject to field inspection. One set of approved plans shall be available on the project site at all times.
Reviewed by:
BILL ROBERTSON DSFM III
Approval date: 11-04-09

CSFM #: 01-37-11-0033

DESIGN	BY HASSAN AKHAVAN	CHECKED Donald E. Alsey	
DETAILS	BY ROBERT QUIBIN	CHECKED Donald E. Alsey	
QUANTITIES	BY	CHECKED	

STATE OF
CALIFORNIA
DEPARTMENT OF TRANSPORTATION

DIVISION OF ENGINEERING SERVICES
ARCHITECTURAL
AND
STRUCTURAL DESIGN

BRIDGE NO. 57R000IR 57R000IR
POST MILE R59.4/R60.0

ALISO CREEK SAFETY ROADSIDE REST AREA
NORTHBOUND NEW BUILDING 5
CLEARSTORY PLAN

SHEET **A5-2**

a5_02_CLS_plnM.dgn
DS OSD Imperial Rev. 10/07 24-JUN-2010 14:09

ORIGINAL SCALE IN INCHES FOR REDUCED PLANS 0 1 2 3

CU 11-340
EA 11-261401

DISREGARD PRINTS BEARING EARLIER REVISION DATES → JULY-09 DEC 09

REVISION DATES (PRELIMINARY STAGE ONLY) SHEET OF

24-JUN-2010 14:09
a5_02_CLS_plnM.dgn

DIST.	COUNTY	ROUTE	POST MILES TOTAL PROJECT	SHEET NO.	TOTAL SHEETS
11	SD	5	R59.4,R60.0	132	241

LICENSED ARCHITECT

LICENSED ARCHITECT HASSAN AKHAVAN No. C-20451 Exp. 04-30-11 STATE OF CALIFORNIA

6-21-10
PLANS APPROVAL DATE

The State of California or its officers or agents shall not be responsible for the accuracy or completeness of electronic copies of this plan sheet.

KEY NOTES :

1 MISSION TILE ROOFING
2 BULLETIN BOARD DISPLAY SEE SHEET A6-12
3 WOOD TRELLIS SEE SHEET A6-15
4 8"X8" GLASS BLOCK SEE SHEET A6-16
5 CEMENT PLASTER FINISHED 16" x 16" CMU COLUMN SEE SHEET A6-14 A6-15 FEDERAL STANDARD 17925
6 CEMENT PLASTER OVER CMU FEDERAL STANDARD 17925
7 CERAMIC TILE FACE IN ALCOVE 3052 DALTILE (DALTILEPROUDUCTS WEB SITE) OR EQUIL
8 OBSCURE GLAZING W/GRID FRAME AND GRID FS 33617
9 BULLET RESISTANT GLAZING CHP OFFICE SEE SPEC GRID FS 33617
10 CERAMIC TILE PATTERN SEE SHEET A6-13 A6-14
11 ATTIC VENT W/INSECT SCREEN AND GRILL SEE SHEET A6-14
12 DRINKING FOUNTAIN SEE MECH A0-3.4
13 OBSCURE GLAZING W/GRID (OPERABLE INSIDE)
14 UTILITY ROOM DOOR SEE SHEET A3-15
15 LOUVER SEE SHEET A5-15 A6-16 FEDERAL STANDARD 30166
16 NOT USED
17 RESTROOM SIGNAGE SEE SHEET A6-13 A6-16
18 LIGHT FIXTURE (SEE ELEC)
19 IRON WORK SEE SHEET A6-14
20 ACCESSIBLE SIGNAGE SEE SHEET A0-3.3 DETAILS 3,4&5.
21 PRE PAINTED 1½" CASING BEAD ALL BUILDINGS
22 ACCESSIBILITY SYMBOL SEE A0-3.3/6
23 LASER CUT SIGN (ROOM NAME) ¼" POWDER COATED PLATE SEE A6-16

NOTE:

01 ELEVATION DETAIL SHEET A6-12 A6-13 A6-14 A6-15 A6-16

DOORS & HINGES PRE COLOR COATED FS 33617

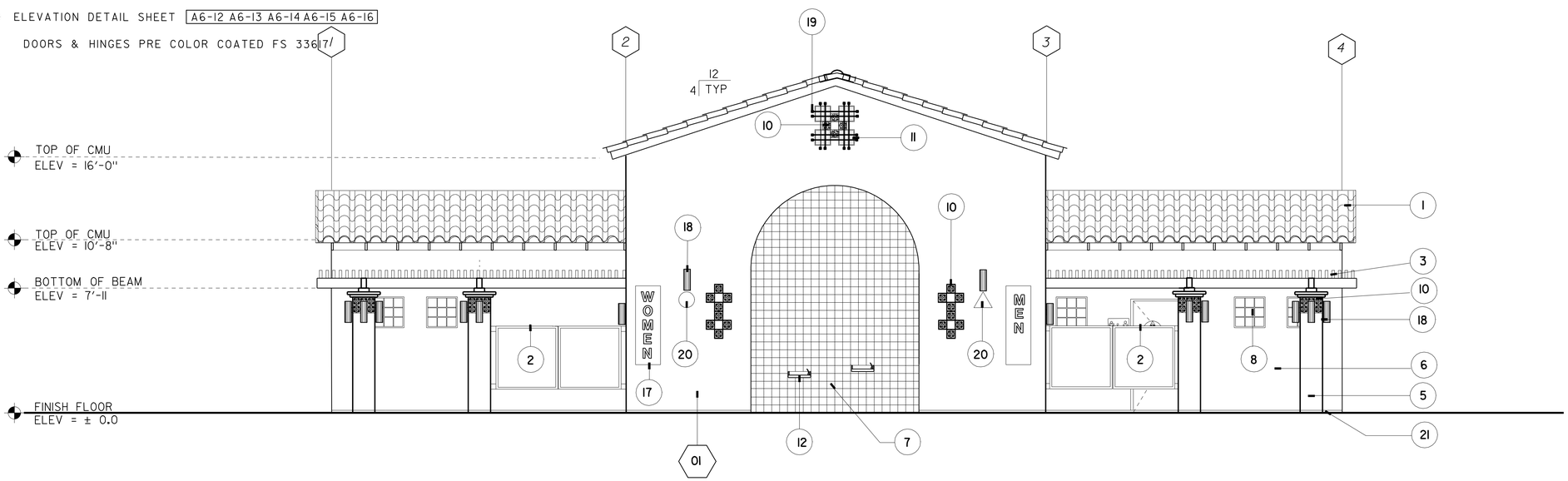

NORTH ELEVATION

SCALE: ¼"= 1'-0"

ACCESSIBILITY DESIGN APPROVAL STAMP
DOT / DES / OTA
11-261401
Reviewed by:
Date: 09-01-09

CALIFORNIA STATE FIRE MARSHAL APPROVED
Approval of this plan does not authorize or approve any omission or deviation from applicable regulations. Final approval is subject to field inspection. One set of approved plans shall be available on the project site at all times.
Reviewed by: BILL ROBERTSON DSFM III
Approval date: 11-04-09
CSFM #: 01-37-11-0033

	BY		CHECKED
DESIGN	BY	HASSAN AKHAVAN	CHECKED Donald E. Alsey
DETAILS	BY	ROBERT QUIBIN	CHECKED Donald E. Alsey
QUANTITIES	BY		CHECKED

STATE OF CALIFORNIA DEPARTMENT OF TRANSPORTATION

DIVISION OF ENGINEERING SERVICES ARCHITECTURAL AND STRUCTURAL DESIGN

BRIDGE NO. 57R000IR 57R000IR
POST MILE R59.4/R60.0

ALISO CREEK SAFETY ROADSIDE REST AREA

NORTHBOUND NEW BUILDING 5 | NORTH ELEVATION

SHEET **A5-3**

a5_03_NelevM.dgn
DS OSD Imperial Rev. 10/07 24-JUN-2010 14:09

ORIGINAL SCALE IN INCHES FOR REDUCED PLANS 0 1 2 3

CU 11-340
EA 11-261401

DISREGARD PRINTS BEARING EARLIER REVISION DATES → JULY-09 DEC 09

REVISION DATES (PRELIMINARY STAGE ONLY) SHEET OF

24-JUN-2010 14:09
a5_03_NelevM.dgn

DIST.	COUNTY	ROUTE	POST MILES TOTAL PROJECT	SHEET NO.	TOTAL SHEETS
11	SD	5	R59.4,R60.0	133	241

LICENSED ARCHITECT

DEC 09

LICENSED ARCHITECT HASSAN AKHAVAN No. C-20451 Exp. 04-30-11 STATE OF CALIFORNIA

6-21-10
PLANS APPROVAL DATE

The State of California or its officers or agents shall not be responsible for the accuracy or completeness of electronic copies of this plan sheet.

KEY NOTES :

1 MISSION TILE ROOFING
2 BULLETIN BOARD DISPLAY SEE SHEET A6-12
3 WOOD TRELLIS SEE SHEET A6-15
4 8"X8" GLASS BLOCK SEE SHEET A6-16
5 CEMENT PLASTER FINISHED 16" x 16" CMU COLUMN SEE SHEET A6-14 A6-15 FEDERAL STANDARD 17925
6 CEMENT PLASTER OVER CMU FEDERAL STANDARD 17925
7 CERAMIC TILE FACE IN ALCOVE 3052 DALTILE (DALTILEPROUDUCTS WEB SITE) OR EQUIL
8 OBSCURE GLAZING W/GRID FRAME AND GRID FS 33617
9 BULLET RESISTANT GLAZING CHP OFFICE SEE SPEC GRID FS 33617 (BUILDING 3 ONLY)
10 CERAMIC TILE PATTERN SEE SHEET A6-13 A6-14
11 ATTIC VENT W/INSECT SCREEN AND GRILL SEE SHEET A6-14
12 DRINKING FOUNTAIN SEE MECH A0-3.4
13 OBSCURE GLAZING W/GRID (OPERABLE INSIDE)
14 UTILITY ROOM DOOR SEE SHEET A3-15
15 LOUVER SEE SHEET A5-15 A6-16 FEDERAL STANDARD 30166
16 NOT USED
17 RESTROOM SIGNAGE SEE SHEET A6-13 A6-16
18 LIGHT FIXTURE (SEE ELEC)
19 IRON WORK SEE SHEET A6-14
20 ACCESSIBLE SIGNAGE SEE SHEET A0-3.3 DETAILS 3,4&5.
21 PRE PAINTED 1½" CASING BEAD ALL BUILDINGS
22 ACCESSIBILITY SYMBOL SEE A0-3.3/6
23 LASER CUT SIGN (ROOM NAME) ¼" POWDER COATED PLATE SEE A6-16

NOTE:

01 ELEVATION DETAIL SHEET A6-12 A6-13 A6-14 A6-15 A6-16

DOORS & HINGES PRE COLOR COATED FS 33617

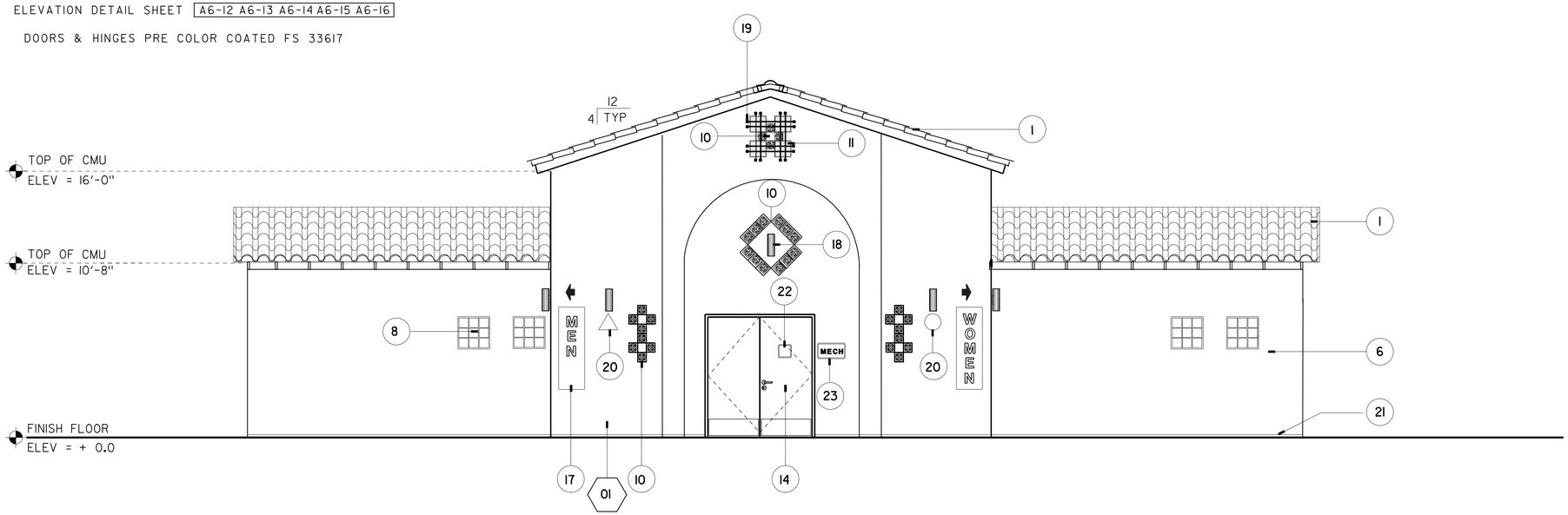

SOUTH ELEVATION

SCALE: ¼"= 1'-0"

ACCESSIBILITY DESIGN APPROVAL STAMP DOT / DES / OTA

11-261401

Reviewed by:

Date: 09-01-09

CALIFORNIA STATE FIRE MARSHAL APPROVED

Approval of this plan does not authorize or approve any omission or deviation from applicable regulations. Final approval is subject to field inspection. One set of approved plans shall be available on the project site at all times.

Reviewed by: BILL ROBERTSON DSFM III

Approval date: 11-04-09

CSFM #: 01-37-11-0033

DESIGN	BY HASSAN AKHAVAN	CHECKED Ronald E. Alsey	
DETAILS	BY ROBERT QUIBIN	CHECKED Ronald E. Alsey	
QUANTITIES	BY	CHECKED	

STATE OF CALIFORNIA DEPARTMENT OF TRANSPORTATION

DIVISION OF ENGINEERING SERVICES ARCHITECTURAL AND STRUCTURAL DESIGN

BRIDGE NO. 57R0001R 57R0001R
POST MILE R59.4/R60.0

ALISO CREEK SAFETY ROADSIDE REST AREA

NORTHBOUND NEW BUILDING 5 | SOUTH ELEVATION

SHEET **A5-4**

a5_04_SelevM.DGN
DS OSD Imperial Rev. 10/07 24-JUN-2010 14:09

ORIGINAL SCALE IN INCHES FOR REDUCED PLANS 0 1 2 3

CU 11-340
EA 11-261401

DISREGARD PRINTS BEARING EARLIER REVISION DATES

REVISION DATES (PRELIMINARY STAGE ONLY) JULY-09 DEC 09 SHEET OF

24-JUN-2010 14:09

a5_04_SelevM.DGN

DIST.	COUNTY	ROUTE	POST MILES TOTAL PROJECT	SHEET NO.	TOTAL SHEETS
11	SD	5	R59.4,R60.0	134	241

LICENSED ARCHITECT

LICENSED ARCHITECT
HASSAN AKHAVAN
No. C-20451
Exp. 04-30-11
STATE OF CALIFORNIA

6-21-10
PLANS APPROVAL DATE

The State of California or its officers or agents shall not be responsible for the accuracy or completeness of electronic copies of this plan sheet.

KEY NOTES :

1 MISSION TILE ROOFING
2 BULLETIN BOARD DISPLAY SEE SHEET A6-12
3 WOOD TRELLIS SEE SHEET A6-15
4 8"X8" GLASS BLOCK SEE SHEET A6-16
5 CEMENT PLASTER FINISHED 16" x 16" CMU COLUMN SEE SHEET A6-14 A6-15 FEDERAL STANDARD 17925
6 CEMENT PLASTER OVER CMU FEDERAL STANDARD 17925
7 CERAMIC TILE FACE IN ALCOVE 3052 DALTILE (DALTILEPROUDUCTS WEB SITE) OR EQUIL
8 OBSCURE GLAZING W/GRID FRAME AND GRID FS 33617
9 BULLET RESISTANT GLAZING CHP OFFICE SEE SPEC GRID FS 33617 (BUILDING 3 ONLY)
10 CERAMIC TILE PATTERN SEE SHEET A6-13 A6-14
11 ATTIC VENT W/INSECT SCREEN AND GRILL SEE SHEET A6-14
12 DRINKING FOUNTAIN SEE MECH A0-3.4
13 OBSCURE GLAZING W/GRID (OPERABLE INSIDE)
14 UTILITY ROOM DOOR SEE SHEET A3-15
15 LOUVER SEE SHEET A5-15 A6-16 FEDERAL STANDARD 30166
16 NOT USED
17 RESTROOM SIGNAGE SEE SHEET A6-13 A6-16
18 LIGHT FIXTURE (SEE ELEC)
19 IRON WORK SEE SHEET A6-14
20 ACCESSIBLE SIGNAGE SEE SHEET A0-3.3 DETAILS 3,4&5.
21 PRE PAINTED 1 1/2" CASING BEAD ALL BUILDINGS
22 ACCESSIBILITY SYMBOL SEE A0-3.3/6
23 LASER CUT SIGN (ROOM NAME) 1/4" POWDER COATED PLATE SEE A6-16

NOTE:

01 ELEVATION DETAIL SHEET A6-12 A6-13 A6-14 A6-15 A6-16

DOORS & HINGES PRE COLOR COATED FS 33617

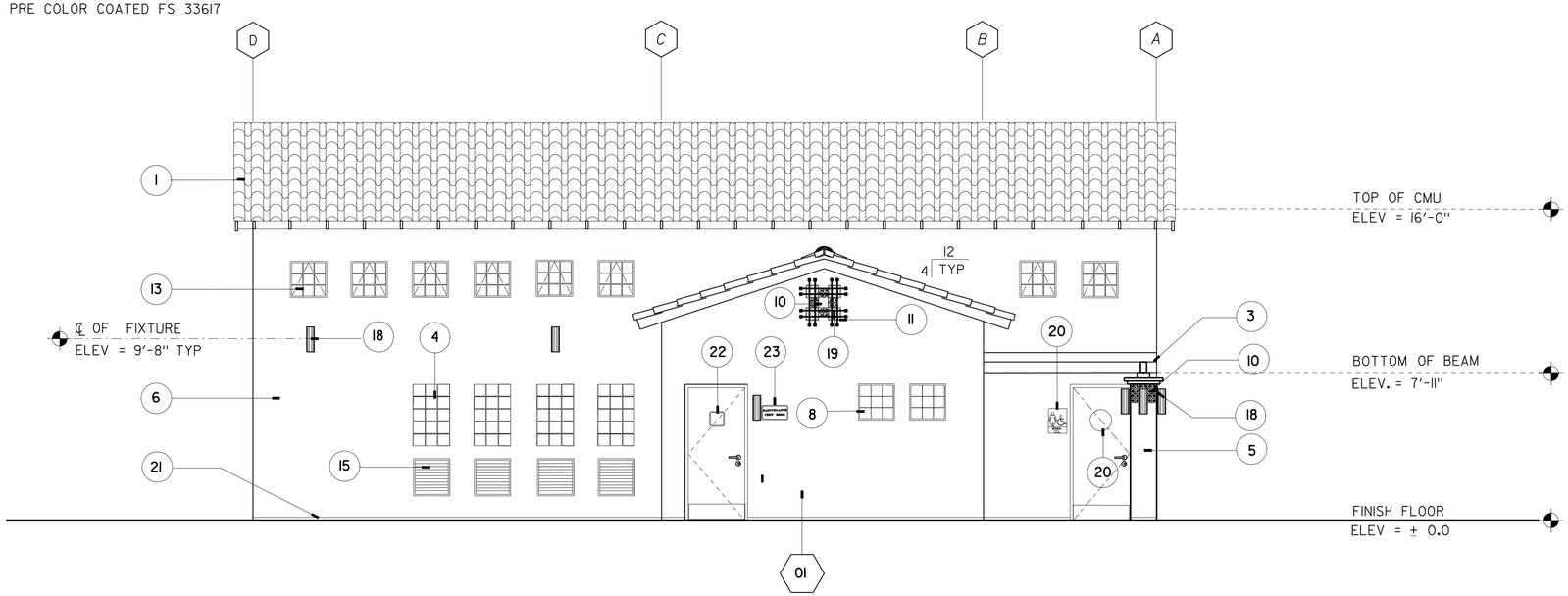

EAST ELEVATION

SCALE: 1/4"= 1'-0"

ACCESSIBILITY DESIGN APPROVAL STAMP DOT / DES / OTA

11-261401

Reviewed by:

Date: 09-01-09

CALIFORNIA STATE FIRE MARSHAL APPROVED

Approval of this plan does not authorize or approve any omission or deviation from applicable regulations. Final approval is subject to field inspection. One set of approved plans shall be available on the project site at all times.

Reviewed by: BILL ROBERTSON DSFM III

Approval date: 11-04-09

CSFM #: 01-37-11-0033

DESIGN	BY HASSAN AKHAVAN	CHECKED	
DETAILS	BY ROBERT QUIBIN	CHECKED	
QUANTITIES	BY	CHECKED	

STATE OF CALIFORNIA
DEPARTMENT OF TRANSPORTATION

DIVISION OF ENGINEERING SERVICES
ARCHITECTURAL AND STRUCTURAL DESIGN

BRIDGE NO. 57R0001R 57R0001R
POST MILE R59.4/R60.0

ALISO CREEK SAFETY ROADSIDE REST AREA

NORTHBOUND NEW BUILDING 5 | EAST ELEVATION

SHEET **A5-5**

a5_05_EelevM.dgn
DS OSD Imperial Rev. 10/07 25-JUN-2010 08:28

ORIGINAL SCALE IN INCHES FOR REDUCED PLANS 0 1 2 3

CU 11-340
EA 11-261401

DISREGARD PRINTS BEARING EARLIER REVISION DATES →

REVISION DATES (PRELIMINARY STAGE ONLY) JULY-09 DEC 09 SHEET OF

25-JUN-2010 08:28

a5_05_EelevM.dgn

DIST.	COUNTY	ROUTE	POST MILES TOTAL PROJECT	SHEET NO.	TOTAL SHEETS
11	SD	5	R59.4/R60.0	135	241

LICENSED ARCHITECT

LICENSED ARCHITECT HASSAN AKHAVAN No. C-20451 Exp. 04-30-11 STATE OF CALIFORNIA

6-21-10
PLANS APPROVAL DATE

The State of California or its officers or agents shall not be responsible for the accuracy or completeness of electronic copies of this plan sheet.

KEY NOTES:

1 MISSION TILE ROOFING
2 BULLETIN BOARD DISPLAY SEE SHEET A6-12
3 WOOD TRELLIS SEE SHEET A6-15
4 8"X8" GLASS BLOCK SEE SHEET A6-16
5 CEMENT PLASTER FINISHED 16"x 16" CMU COLUMN SEE SHEET A6-14 A6-15 FEDERAL STANDARD 17925
6 CEMENT PLASTER OVER CMU FEDERAL STANDARD 17925
7 CERAMIC TILE FACE IN ALCOVE 3052 DALTILE (DALTILEPROUDUCTS WEB SITE) OR EQUIL
8 OBSCURE GLAZING W/GRID FRAME AND GRID FS 33617
9 BULLET RESISTANT GLAZING CHP OFFICE SEE SPEC GRID FS 33617 (BUILDING 3 ONLY).
10 CERAMIC TILE PATTERN SEE SHEET A6-13 A6-14
11 ATTIC VENT W/INSECT SCREEN AND GRILL SEE SHEET A6-14
12 DRINKING FOUNTAIN SEE MECH A0-3.4
13 OBSCURE GLAZING W/GRID (OPERABLE INSIDE)
14 UTILITY ROOM DOOR SEE SHEET A3-15
15 LOUVER SEE SHEET A5-15 A6-16 FEDERAL STANDARD 30166
16 NOT USED
17 RESTROOM SIGNAGE SEE SHEET A6-13 A6-16
18 LIGHT FIXTURE (SEE ELEC)
19 IRON WORK SEE SHEET A6-14
20 ACCESSIBLE SIGNAGE SEE SHEET A0-3.3 DETAILS 3, 4 AND 5.
21 PRE PAINTED 1½" CASING BEAD ALL BUILDINGS
22 ACCESSIBILITY SYMBOL SEE A0-3.3/6
23 LASER CUT SIGN (ROOM NAME) ¼" POWDER COATED PLATE SEE A6-16

NOTE:

01 ELEVATION DETAIL SHEET A6-12 A6-13 A6-14 A6-15 A6-16
DOORS & HINGES PRE COLOR COATED FS 33617.

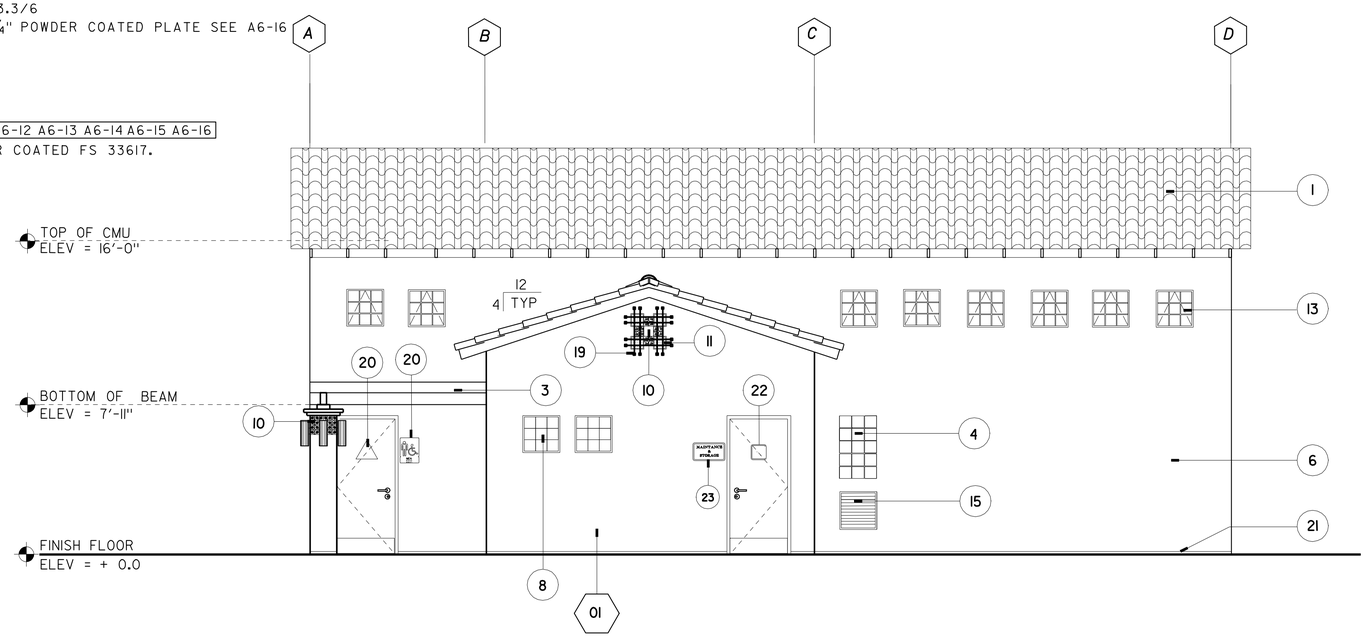

WEST ELEVATION

SCALE: ¼" = 1'-0"

ACCESSIBILITY DESIGN APPROVAL STAMP DOT / DES / OTA

11-261401

Reviewed by:

Date: 09-01-09

CALIFORNIA STATE FIRE MARSHAL APPROVED

Approval of this plan does not authorize or approve any omission or deviation from applicable regulations. Final approval is subject to field inspection. One set of approved plans shall be available on the project site at all times.

Reviewed by: BILL ROBERTSON DSFM III

Approval date: 11-04-09

CSFM #: 01-37-11-0033

	BY		CHECKED
DESIGN	BY	HASSAN AKHAVAN	CHECKED Donald E. Avery
DETAILS	BY	ROBERT QUIBIN	CHECKED Donald E. Avery
QUANTITIES	BY		CHECKED

STATE OF CALIFORNIA
DEPARTMENT OF TRANSPORTATION

DIVISION OF ENGINEERING SERVICES
ARCHITECTURAL AND STRUCTURAL DESIGN

BRIDGE NO. 57R0001R 57R0001R
POST MILE R59.4/R60.0

ALISO CREEK SAFETY ROADSIDE REST AREA

NORTHBOUND NEW BUILDING 5 | WEST ELEVATION

SHEET **A5-6**

a5_06_WelevM.dgn
DS OSD Imperial Rev. 10/07 24-JUN-2010 11:23

ORIGINAL SCALE IN INCHES FOR REDUCED PLANS 0 1 2 3

CU 11-340
EA 11-261401

DISREGARD PRINTS BEARING EARLIER REVISION DATES →

REVISION DATES (PRELIMINARY STAGE ONLY) JULY-09 DEC 09 SHEET OF

24-JUN-2010 11:23

a5_06_WelevM.dgn

DIST.	COUNTY	ROUTE	POST MILES TOTAL PROJECT	SHEET NO.	TOTAL SHEETS
11	SD	5	R59.4/R60.0	136	241

LICENSED ARCHITECT

LICENSED ARCHITECT HASSAN AKHAVAN No. C-20451 Exp. 04-30-11 STATE OF CALIFORNIA

6-21-10
PLANS APPROVAL DATE

The State of California or its officers or agents shall not be responsible for the accuracy or completeness of electronic copies of this plan sheet.

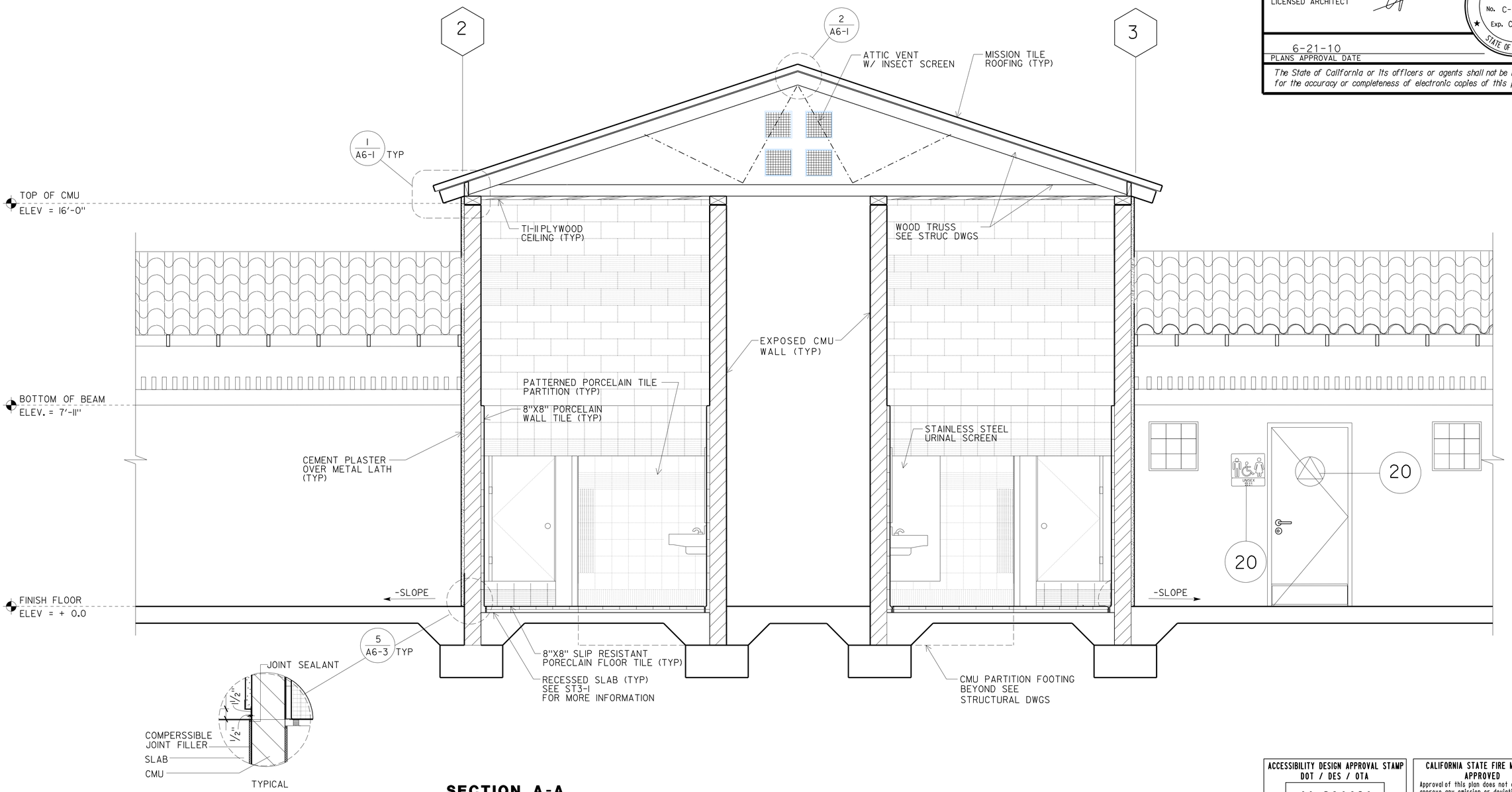

SECTION A-A

SCALE 1/2" = 1'-0"

ACCESSIBILITY DESIGN APPROVAL STAMP DOT / DES / OTA

11-261401

Reviewed by: [signature]

Date: 09-01-09

CALIFORNIA STATE FIRE MARSHAL APPROVED

Approval of this plan does not authorize or approve any omission or deviation from applicable regulations. Final approval is subject to field inspection. One set of approved plans shall be available on the project site at all times.

Reviewed by: [signature]
BILL ROBERTSON DSFM III
Approval date: 11-04-09

CSFM #: 01-37-11-0033

	BY		CHECKED
DESIGN	BY	HASSAN AKHAVAN	CHECKED Donald E. Alvey
DETAILS	BY	ROBERT QUIBIN	CHECKED Donald E. Alvey
QUANTITIES	BY		CHECKED

STATE OF CALIFORNIA
DEPARTMENT OF TRANSPORTATION

DIVISION OF ENGINEERING SERVICES
ARCHITECTURAL AND STRUCTURAL DESIGN

BRIDGE NO. 57R0001R 57R0001R
POST MILE R59.4/R60.0

ALISO CREEK SAFETY ROADSIDE REST AREA

NORTHBOUND NEW BUILDING 5 | BUILDING SECTION

SHEET **A5-7**

a5_07_SecAAM.dgn
DS OSD Imperial Rev. 10/07 24-JUN-2010 10:33

ORIGINAL SCALE IN INCHES FOR REDUCED PLANS 0 1 2 3

CU 11-340
EA 11-261401

DISREGARD PRINTS BEARING EARLIER REVISION DATES → JULY-09 DEC 09

REVISION DATES (PRELIMINARY STAGE ONLY) SHEET OF

24-JUN-2010 10:33
a5_07_SecAAM.dgn

DIST.	COUNTY	ROUTE	POST MILES TOTAL PROJECT	SHEET NO.	TOTAL SHEETS
11	SD	5	R59.4/R60.0	137	241

LICENSED ARCHITECT

LICENSED ARCHITECT HASSAN AKHAVAN No. C-20451 Exp. 04-30-11 STATE OF CALIFORNIA

6-21-10
PLANS APPROVAL DATE

The State of California or its officers or agents shall not be responsible for the accuracy or completeness of electronic copies of this plan sheet.

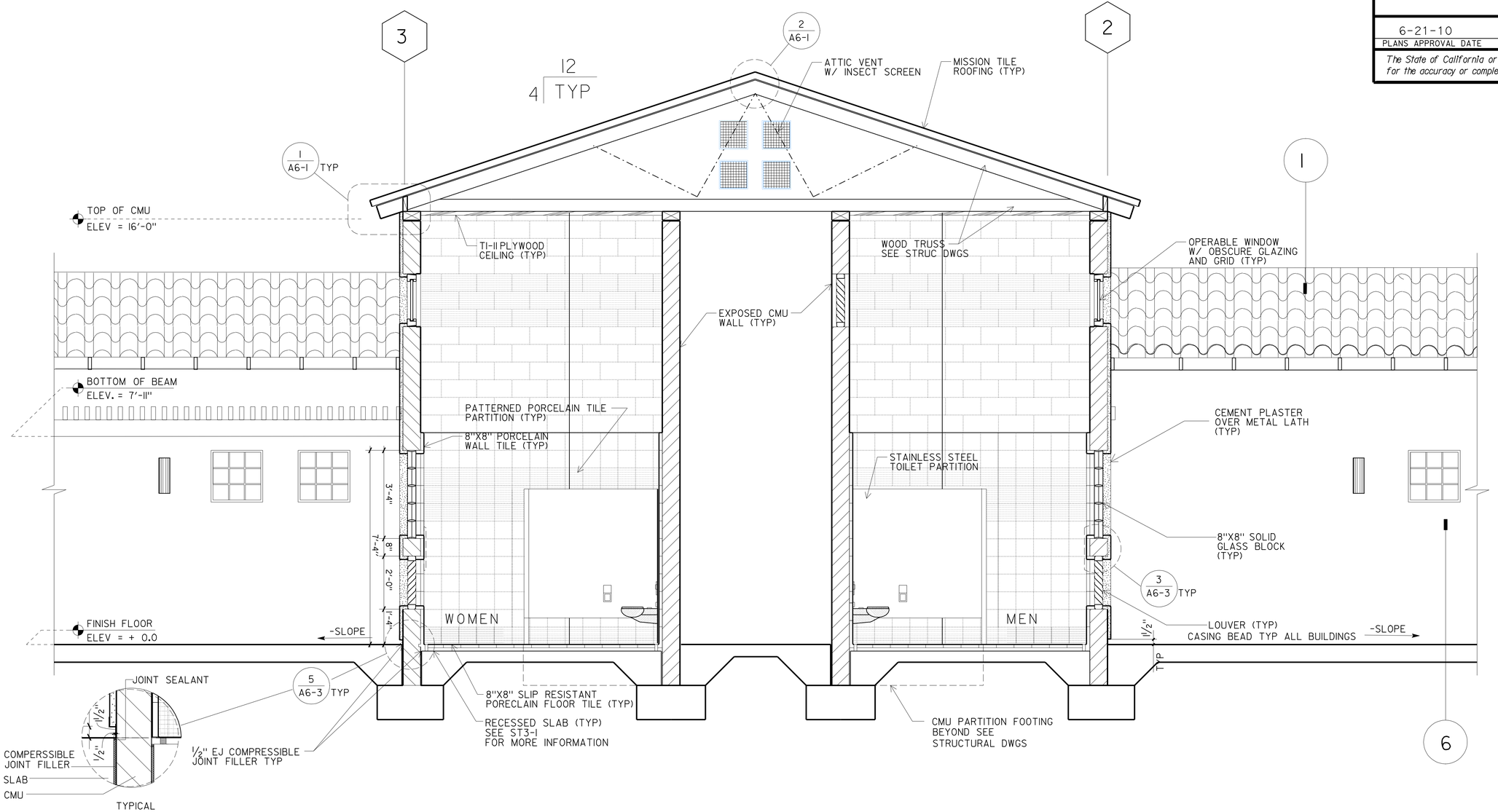

SECTION A-Aa

SCALE ½" = 1'-0"

ACCESSIBILITY DESIGN APPROVAL STAMP DOT / DES / OTA

11-261401

Reviewed by: Date: 09-01-09

CALIFORNIA STATE FIRE MARSHAL APPROVED

Approval of this plan does not authorize or approve any omission or deviation from applicable regulations. Final approval is subject to field inspection. One set of approved plans shall be available on the project site at all times.

Reviewed by: BILL ROBERTSON DSFM III
Approval date: 11-04-09

CSFM #: 01-37-11-0033

DESIGN	BY HASSAN AKHAVAN	CHECKED Donald E. Alsey	
DETAILS	BY ROBERT QUIBIN	CHECKED Donald E. Alsey	
QUANTITIES	BY	CHECKED	

STATE OF CALIFORNIA DEPARTMENT OF TRANSPORTATION

DIVISION OF ENGINEERING SERVICES
ARCHITECTURAL AND STRUCTURAL DESIGN

BRIDGE NO. 57R0001R 57R0001R
POST MILE R59.4/R60.0

ALISO CREEK SAFETY ROADSIDE REST AREA

NORTHBOUND NEW BUILDING 5 | BUILDING SECTION

SHEET **A5-7a**

a5_07a_SecAAam.dgn
DS OSD Imperial Rev. 10/07 24-JUN-2010 07:45

ORIGINAL SCALE IN INCHES FOR REDUCED PLANS 0 1 2 3

CU 11-340
EA 11-261401

DISREGARD PRINTS BEARING EARLIER REVISION DATES

REVISION DATES (PRELIMINARY STAGE ONLY) JULY-09 DEC 09 SHEET OF

24-JUN-2010 07:45

a5_07a_SecAAam.dgn

DIST.	COUNTY	ROUTE	POST MILES TOTAL PROJECT	SHEET NO.	TOTAL SHEETS
11	SD	5	R59.4/R60.0	138	241

LICENSED ARCHITECT

DEC 09

LICENSED ARCHITECT
HASSAN AKHAVAN
No. C-20451
Exp. 04-30-11
STATE OF CALIFORNIA

6-21-10
PLANS APPROVAL DATE

The State of California or its officers or agents shall not be responsible for the accuracy or completeness of electronic copies of this plan sheet.

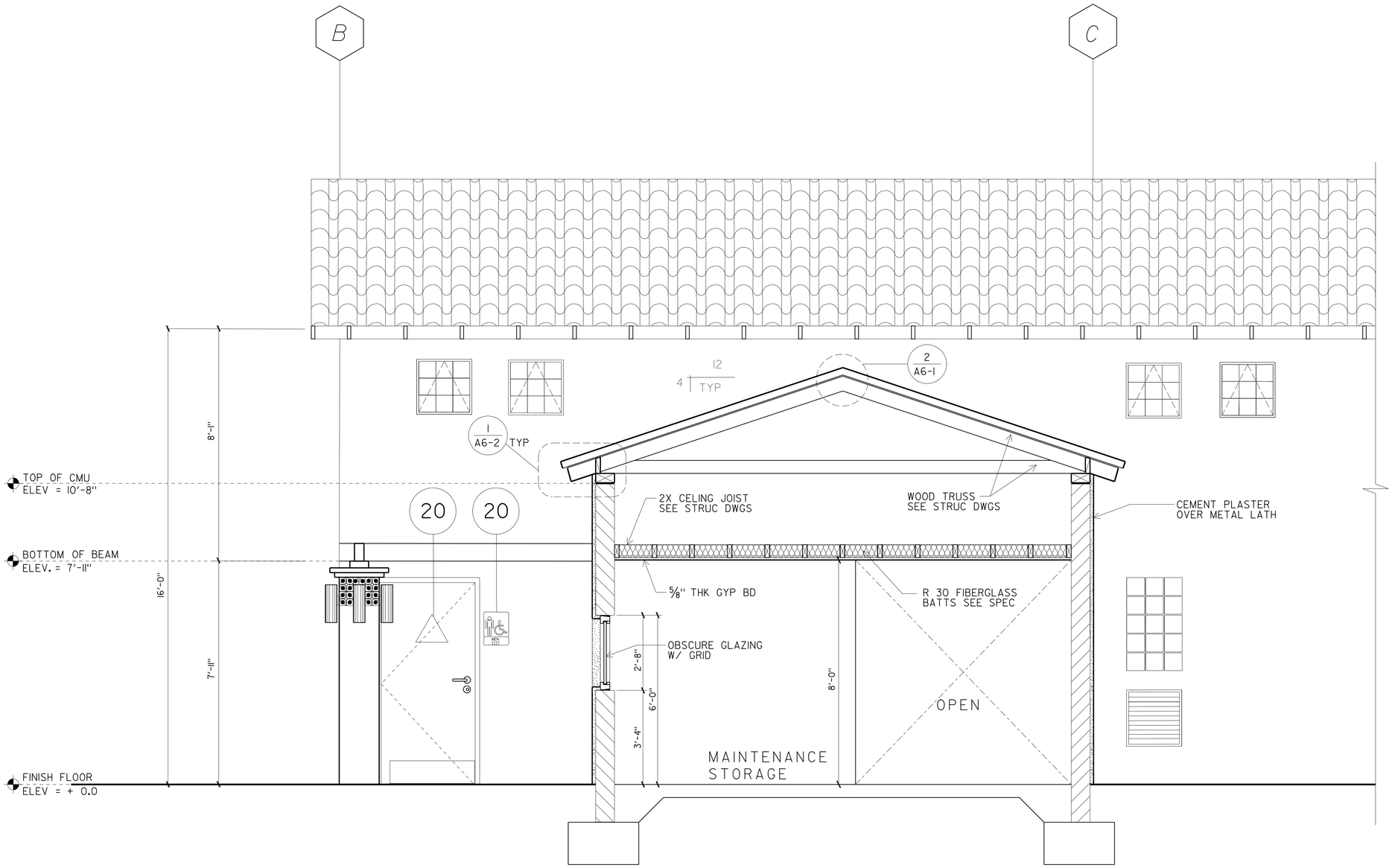

SECTION B-B

SCALE 1/4" = 1'-0"

ACCESSIBILITY DESIGN APPROVAL STAMP
DOT / DES / OTA
11-261401
Reviewed by:
Date: 09-01-09

CALIFORNIA STATE FIRE MARSHAL
APPROVED
Approval of this plan does not authorize or approve any omission or deviation from applicable regulations. Final approval is subject to field inspection. One set of approved plans shall be available on the project site at all times.
Reviewed by:
BILL ROBERTSON DSFM III
Approval date: 11-04-09

CSFM #: 01-37-11-0033

	BY		CHECKED
DESIGN	BY	HASSAN AKHAVAN	CHECKED Ronald E. Alsey
DETAILS	BY	ROBERT QUIBIN	CHECKED Ronald E. Alsey
QUANTITIES	BY		CHECKED

STATE OF
CALIFORNIA
DEPARTMENT OF TRANSPORTATION

DIVISION OF ENGINEERING SERVICES
ARCHITECTURAL
AND
STRUCTURAL DESIGN

BRIDGE NO. 57R000IR 57R000IR
POST MILE R59.4/R60.0

ALISO CREEK SAFETY ROADSIDE REST AREA
NORTHBOUND NEW BUILDING 5 | BUILDING SECTION

SHEET **A5-8**

a5_08_SecBBM.dgn
DS OSD Imperial Rev. 10/07 24-JUN-2010 07:46

ORIGINAL SCALE IN INCHES FOR REDUCED PLANS 0 1 2 3

CU 11-340
EA 11-261401

DISREGARD PRINTS BEARING EARLIER REVISION DATES → JULY-09 DEC 09

REVISION DATES (PRELIMINARY STAGE ONLY) SHEET OF

24-JUN-2010 07:46
a5_08_SecBBM.dgn

DIST.	COUNTY	ROUTE	POST MILES TOTAL PROJECT	SHEET NO.	TOTAL SHEETS
11	SD	5	R59.4/R60.0	139	241

LICENSED ARCHITECT

DEC 09

LICENSED ARCHITECT
HASSAN AKHAVAN
No. C-20451
Exp. 04-30-11
STATE OF CALIFORNIA

6-21-10
PLANS APPROVAL DATE

The State of California or its officers or agents shall not be responsible for the accuracy or completeness of electronic copies of this plan sheet.

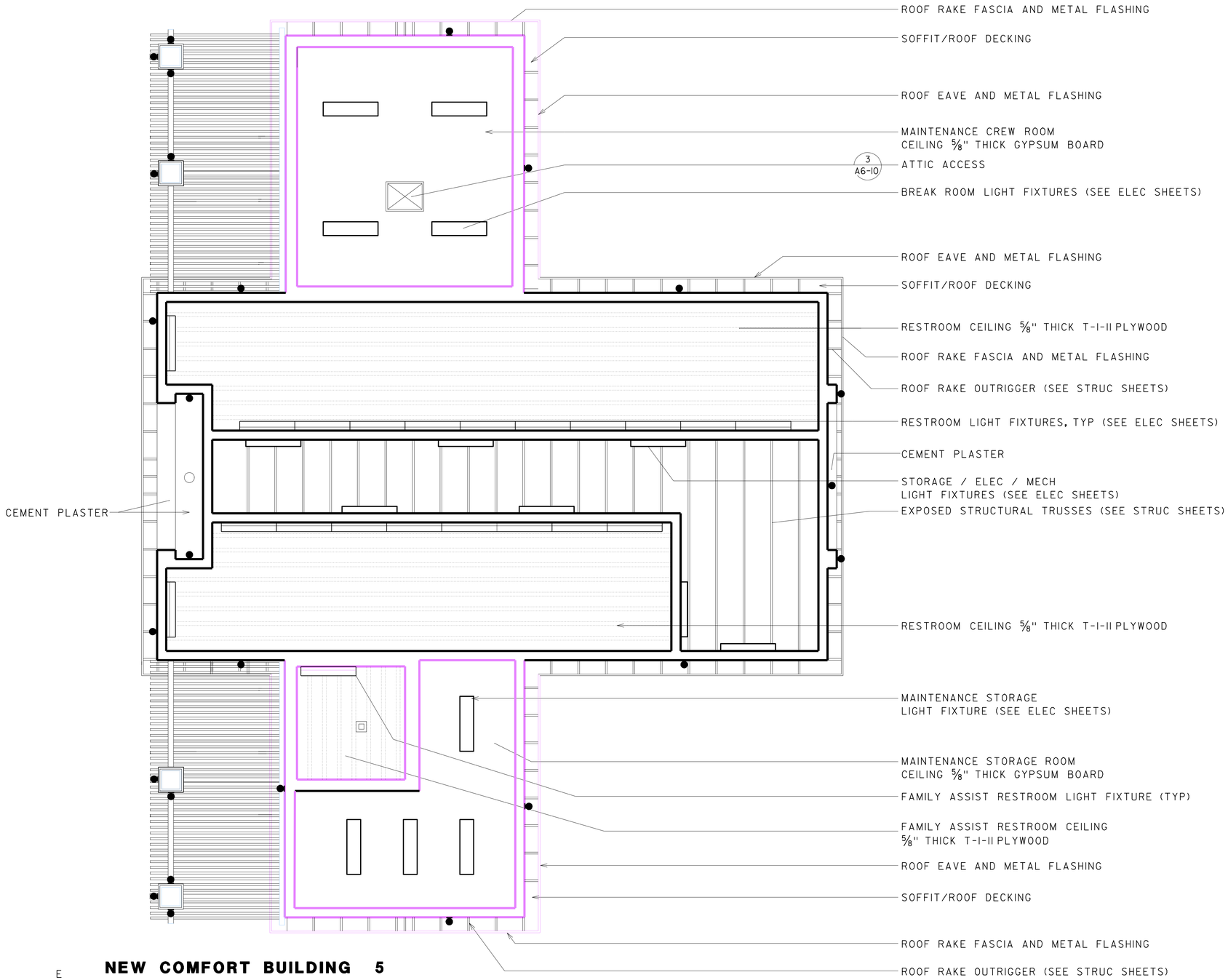

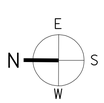

NEW COMFORT BUILDING 5
REFLECTED CEILING PLAN

SCALE 1/4" = 1'-0"

ACCESSIBILITY DESIGN APPROVAL STAMP DOT / DES / OTA	CALIFORNIA STATE FIRE MARSHAL APPROVED
11-261401	Approval of this plan does not authorize or approve any omission or deviation from applicable regulations. Final approval is subject to field inspection. One set of approved plans shall be available on the project site at all times.
Reviewed by: Date: 09-01-09	Reviewed by: BILL ROBERTSON DSFM III Approval date: 11-04-09

CSFM #: 01-37-11-0033

	BY		CHECKED
DESIGN	HASSAN AKHAVAN		Donald E. Alvarez
DETAILS	ROBERT QUIBIN		Donald E. Alvarez
QUANTITIES			

STATE OF CALIFORNIA
DEPARTMENT OF TRANSPORTATION

DIVISION OF ENGINEERING SERVICES
ARCHITECTURAL AND STRUCTURAL DESIGN

BRIDGE NO. 57R0001R 57R0001R
POST MILE R59.4/R60.0

ALISO CREEK SAFETY ROADSIDE REST AREA
NORTHBOUND NEW BUILDING 5 | REFLECTED CEILING PLAN

SHEET **A5-9**

a5_09_bldg5_reflect_ceilingnoattic1M.dgn
DS OSD Imperial Rev. 10/07 28-JUN-2010 14:10

ORIGINAL SCALE IN INCHES FOR REDUCED PLANS 0 1 2 3

CU 11-340
EA 11-261401

DISREGARD PRINTS BEARING EARLIER REVISION DATES →

REVISION DATES (PRELIMINARY STAGE ONLY) JULY-09 DEC 09 SHEET OF

28-JUN-2010 14:10

a5_09_bldg5_reflect_ceilingnoattic1M.dgn

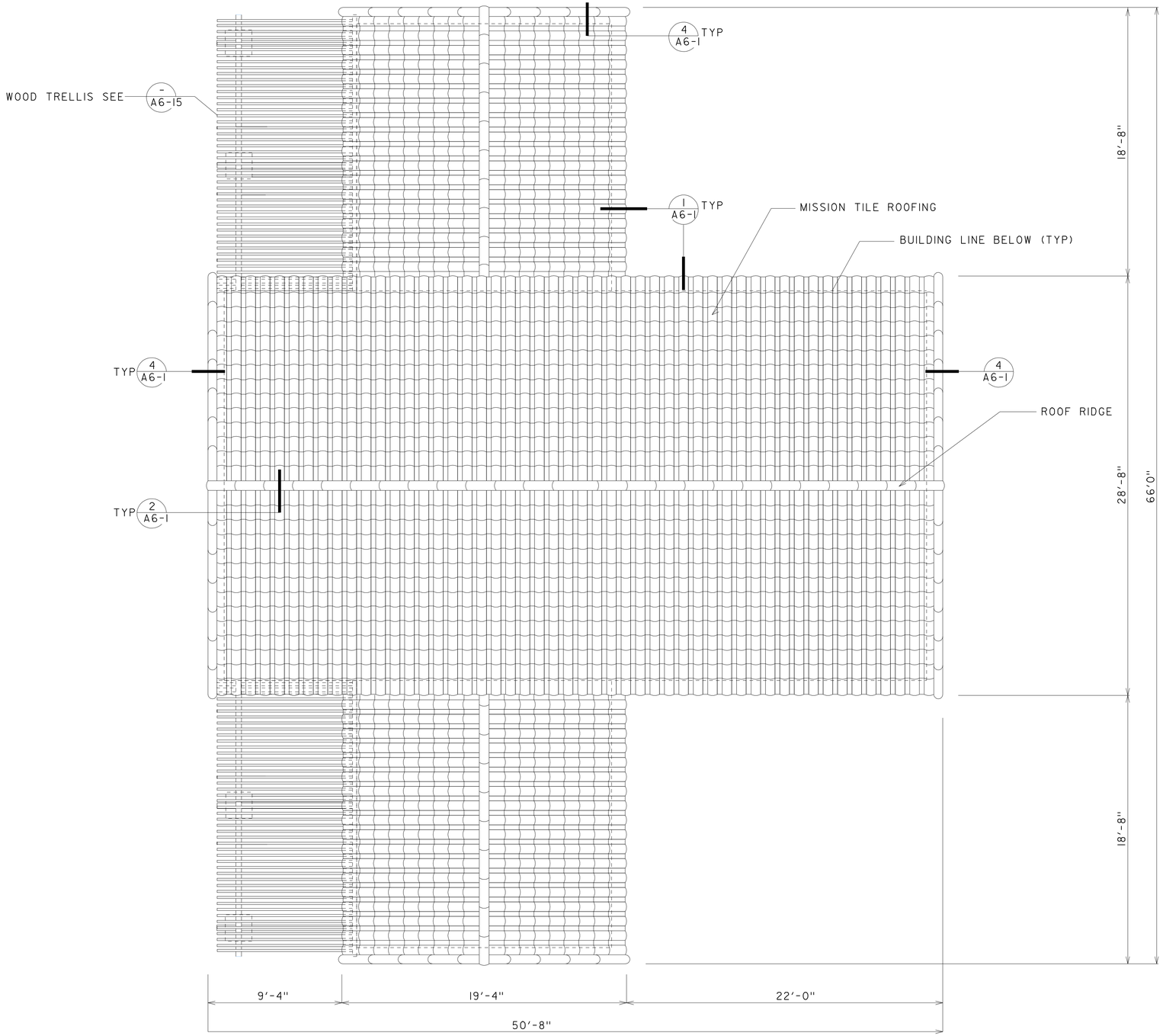

BUILDING 5 - ROOF PLAN

SCALE 1/4" = 1'-0"

N E S W

DIST.	COUNTY	ROUTE	POST MILES TOTAL PROJECT	SHEET NO.	TOTAL SHEETS
11	SD	5	R59.4/R60.0	140	241

LICENSED ARCHITECT

DEC 09

LICENSED ARCHITECT HASSAN AKHAVAN No. C-20451 Exp. 04-30-11 STATE OF CALIFORNIA

6-21-10
PLANS APPROVAL DATE

The State of California or its officers or agents shall not be responsible for the accuracy or completeness of electronic copies of this plan sheet.

NOTE:

FOR MECHANICAL EQUIPMENT, EXHAUST, VENTS AND OTHER ROOF PENETRATION SEE MECHANICAL PLANS.

ACCESSIBILITY DESIGN APPROVAL STAMP DOT / DES / OTA

11-261401

Reviewed by:

Date: 09-01-09

CALIFORNIA STATE FIRE MARSHAL APPROVED

Approval of this plan does not authorize or approve any omission or deviation from applicable regulations. Final approval is subject to field inspection. One set of approved plans shall be available on the project site at all times.

Reviewed by:

BILL ROBERTSON DSFM III

Approval date: 11-04-09

CSFM #: 01-37-11-0033

	BY		CHECKED
DESIGN	BY	HASSAN AKHAVAN	CHECKED Ronald E. Alvey
DETAILS	BY	ROBERT QUIBIN	CHECKED Ronald E. Alvey
QUANTITIES	BY		CHECKED

STATE OF CALIFORNIA DEPARTMENT OF TRANSPORTATION

DIVISION OF ENGINEERING SERVICES ARCHITECTURAL AND STRUCTURAL DESIGN

BRIDGE NO. 57R000IR 57R000IR

POST MILE R59.4/R60.0

ALISO CREEK SAFETY ROADSIDE REST AREA

NORTHBOUND NEW BUILDING 5 | ROOF PLAN

SHEET **A5-10**

a5_10_bldg5_roof1M_pl.dgn
DS OSD Imperial Rev. 10/07 24-JUN-2010 07:46

ORIGINAL SCALE IN INCHES FOR REDUCED PLANS 0 1 2 3

CU 11-340
EA 11-261401

DISREGARD PRINTS BEARING EARLIER REVISION DATES →

REVISION DATES (PRELIMINARY STAGE ONLY) JULY-09 DEC 09 SHEET OF

24-JUN-2010 07:46

a5_10_bldg5_roof1M_pl.dgn

DIST.	COUNTY	ROUTE	POST MILES TOTAL PROJECT	SHEET NO.	TOTAL SHEETS
11	SD	5	R59.4/R60.0	141	241

LICENSED ARCHITECT

LICENSED ARCHITECT HASSAN AKHAVAN No. C-20451 Exp. 04-30-11 STATE OF CALIFORNIA

6-21-10
PLANS APPROVAL DATE

The State of California or its officers or agents shall not be responsible for the accuracy or completeness of electronic copies of this plan sheet.

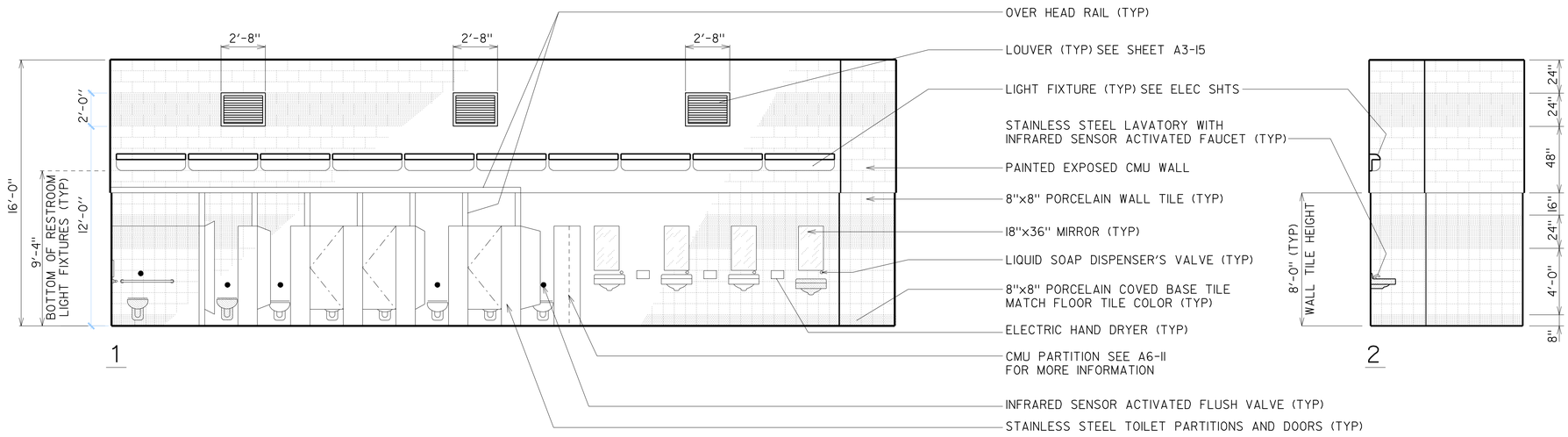

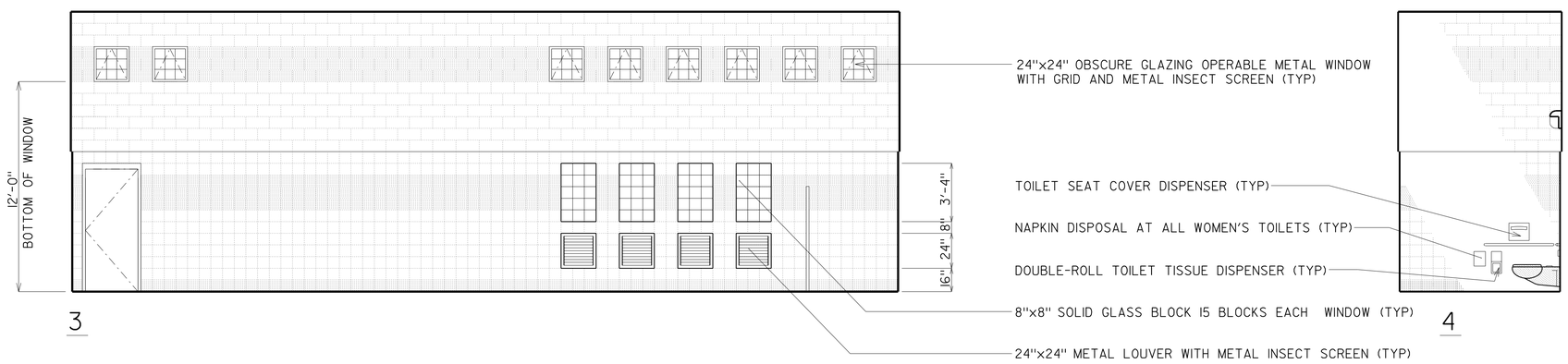

301 WOMEN'S RESTROOM

(SEE SHEET A0-3.5 FOR ACCESSIBLE MOUNTING HEIGHTS)

SCALE: 1/4" = 1'-0"

ACCESSIBILITY DESIGN APPROVAL STAMP DOT / DES / OTA

11-261401

Reviewed by: [signature]

Date: 09-01-09

CALIFORNIA STATE FIRE MARSHAL APPROVED

Approval of this plan does not authorize or approve any omission or deviation from applicable regulations. Final approval is subject to field inspection. One set of approved plans shall be available on the project site at all times.

Reviewed by: [signature]
BILL ROBERTSON DSFM III
Approval date: 11-04-09

CSFM #: 01-37-11-0033

	BY		CHECKED
DESIGN	HASSAN AKHAVAN		Donald E. Alvey
DETAILS	ROBERT QUIBIN		Donald E. Alvey
QUANTITIES			

STATE OF CALIFORNIA DEPARTMENT OF TRANSPORTATION

DIVISION OF ENGINEERING SERVICES ARCHITECTURAL AND STRUCTURAL DESIGN

BRIDGE NO. 57R000IR 57R000IR
POST MILE R59.4/R60.0

ALISO CREEK SAFETY ROADSIDE REST AREA

NORTHBOUND NEW BUILDING 5 | INTERIOR ELEVATION

SHEET **A5-11**

a5_11_women_rm_int_elevM.dgn
DS OSD Imperial Rev. 10/07 25-JUN-2010 08:37

ORIGINAL SCALE IN INCHES FOR REDUCED PLANS 0 1 2 3

CU 11-340
EA 11-261401

DISREGARD PRINTS BEARING EARLIER REVISION DATES →

REVISION DATES (PRELIMINARY STAGE ONLY) JULY-09 DEC 09 SHEET OF

25-JUN-2010 08:37
a5_11_women_rm_int_elevM.dgn

DIST.	COUNTY	ROUTE	POST MILES TOTAL PROJECT	SHEET NO.	TOTAL SHEETS
11	SD	5	R59.4/R60.0	142	241

LICENSED ARCHITECT

LICENSED ARCHITECT HASSAN AKHAVAN No. C-20451 Exp. 04-30-11 STATE OF CALIFORNIA

6-21-10
PLANS APPROVAL DATE

The State of California or its officers or agents shall not be responsible for the accuracy or completeness of electronic copies of this plan sheet.

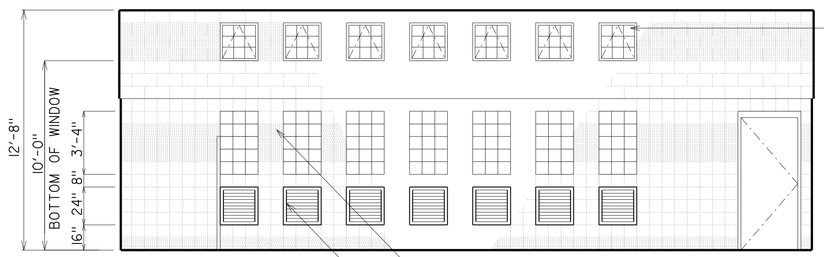

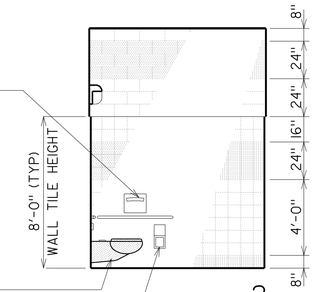

24"x24" OBSCURE GLAZING OPERABLE METAL WINDOW WITH GRID AND METAL INSECT SCREEN (TYP)

TOILET SEAT COVER DISPENSER (TYP)

STAINLESS STEEL WATER-CLOSET (TYP)

DOUBLE-ROLL TOILET TISSUE DISPENSER (TYP)

8"x8" SOLID GLASS BLOCK 15 BLOCKS EACH WINDOW (TYP)

24"x24" METAL LOUVER WITH METAL INSECT SCREEN (TYP)

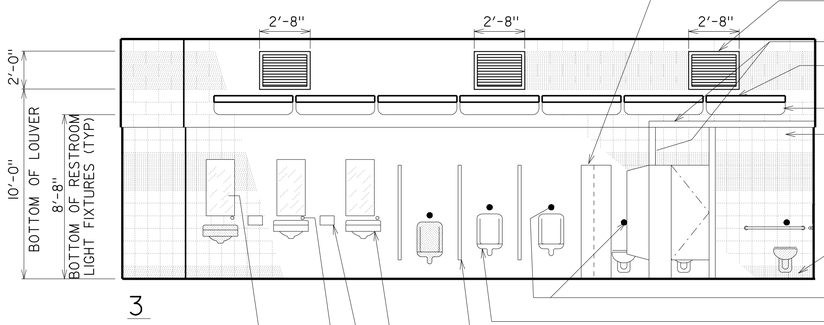

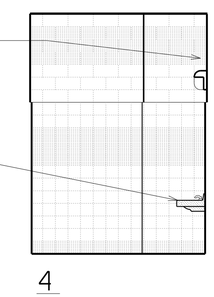

6"x16"x8" CMU PARTITION COVERED WITH 8"x8" PORCELAIN WALL TILES BEHIND STAINLESS STEEL PILASTER AT THIS LOCATION ONLY (SEE FLOOR PLAN)

LOUVER (TYP), SEE 11,12 / A6-7

OVER HEAD RAIL (TYP)

LIGHT FIXTURE (TYP) SEE ELEC SHTS

PAINTED EXPOSED CMU WALL

8"x8" PORCELAIN WALL TILE (TYP)

STAINLESS STEEL LAVATORY WITH INFRARED SENSOR ACTIVATED FAUCET (TYP)

8"x8" PORCELAIN COVED BASE TILE MATCH FLOOR TILE COLOR (TYP)

INFRARED SENSOR ACTIVATED FLUSH VALVE (TYP)

STAINLESS STEEL URINAL (TYP)

24"x60" STAINLESS STEEL URINAL SCREEN 12" ABOVE FINISH FLOOR (TYP)

STAINLESS STEEL LAVATORY WITH INFRARED SENSOR ACTIVATED FAUCET (TYP)

ELECTRIC HAND DRYER (TYP)

LIQUID SOAP DISPENSER'S VALVE (TYP)

18"x36" MIRROR (TYP)

MEN'S RESTROOM

(SEE SHEET A0-3.5 FOR ACCESSIBLE MOUNTING HEIGHTS)

SCALE 1/4" = 1'-0"

ACCESSIBILITY DESIGN APPROVAL STAMP DOT / DES / OTA

11-261401

Reviewed by:

Date: 09-01-09

CALIFORNIA STATE FIRE MARSHAL APPROVED

Approval of this plan does not authorize or approve any omission or deviation from applicable regulations. Final approval is subject to field inspection. One set of approved plans shall be available on the project site at all times.

Reviewed by: BILL ROBERTSON DSFM III

Approval date: 11-04-09

CSFM #: 01-37-11-0033

	BY		CHECKED
DESIGN	HASSAN AKHAVAN		Donald E. Alsey
DETAILS	ROBERT QUIBIN		Donald E. Alsey
QUANTITIES			

STATE OF CALIFORNIA DEPARTMENT OF TRANSPORTATION

DIVISION OF ENGINEERING SERVICES ARCHITECTURAL AND STRUCTURAL DESIGN

BRIDGE NO. 57R0001R 57R0001R

POST MILE R59.4/R60.0

ALISO CREEK SAFETY ROADSIDE REST AREA

NORTHBOUND NEW BUILDING 5 | INTERIOR ELEVATION

SHEET A5-12

a5_12_men_rm_int_elevM.dgn
DS OSD Imperial Rev. 10/07 24-JUN-2010 07:46

ORIGINAL SCALE IN INCHES FOR REDUCED PLANS 0 1 2 3

CU 11-340
EA 11-261401

DISREGARD PRINTS BEARING EARLIER REVISION DATES → JULY-09 DEC 09

REVISION DATES (PRELIMINARY STAGE ONLY) SHEET OF

24-JUN-2010 07:46
a5_12_men_rm_int_elevM.dgn

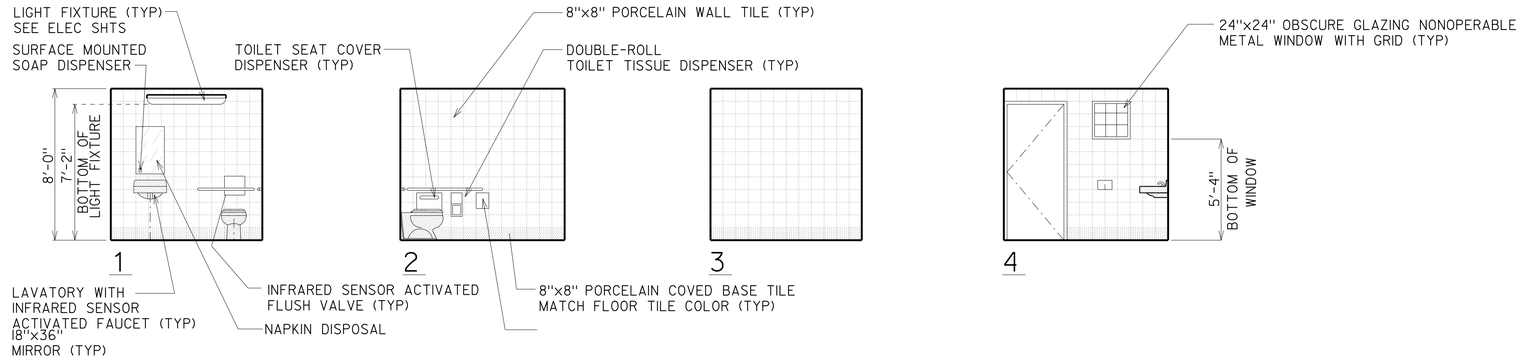

505 FAMILY ASSIST

SCALE 1/4" = 1'-0"

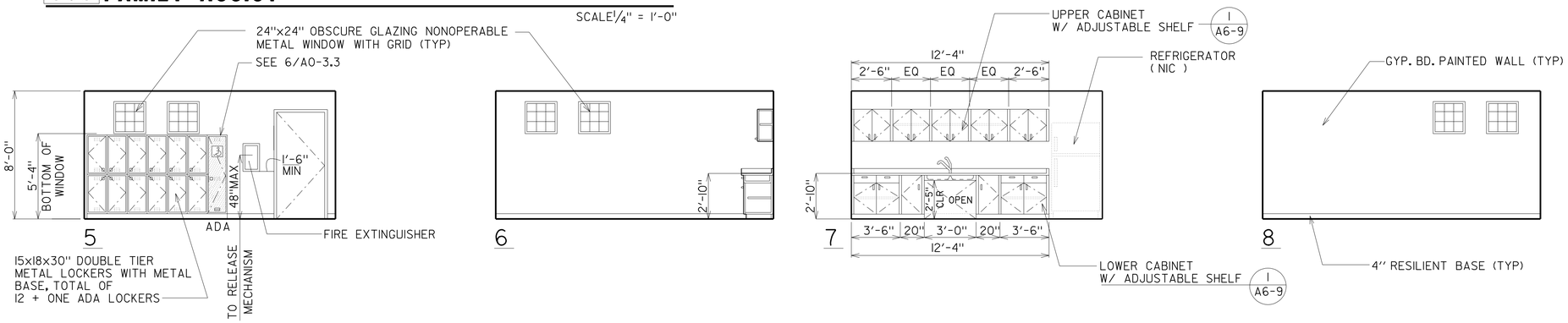

SCALE : 1/4" = 1'-0"

500 MAINTENANCE CREW ROOM

SCALE 1/4" = 1'-0"

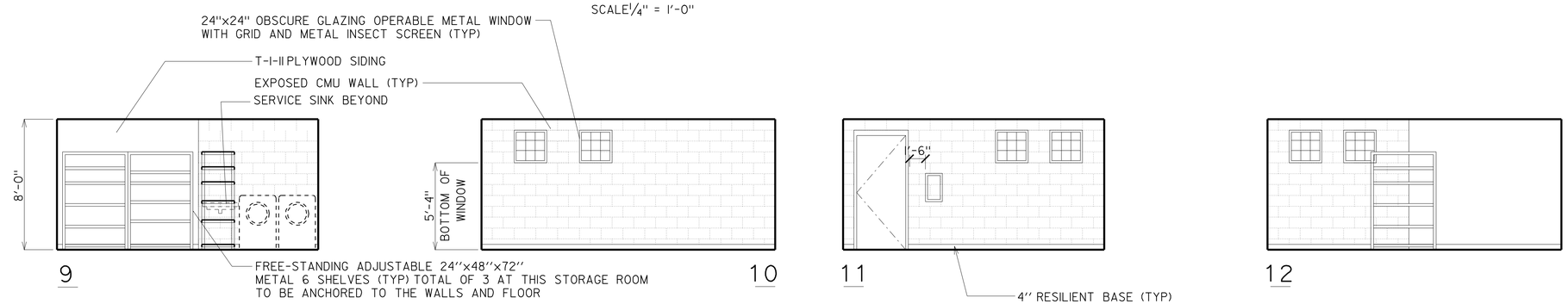

504 MAINTENANCE STORAGE

SCALE 1/4" = 1'-0"

DIST.	COUNTY	ROUTE	POST MILES TOTAL PROJECT	SHEET NO.	TOTAL SHEETS
11	SD	5	R59.4/R60.0	143	241

LICENSED ARCHITECT

DEC 09

LICENSED ARCHITECT HASSAN AKHAVAN No. C-20451 Exp. 04-30-11 STATE OF CALIFORNIA

6-21-10
PLANS APPROVAL DATE

The State of California or its officers or agents shall not be responsible for the accuracy or completeness of electronic copies of this plan sheet.

ACCESSIBILITY DESIGN APPROVAL STAMP DOT / DES / OTA

11-261401

Reviewed by:

Date: 09-01-09

CALIFORNIA STATE FIRE MARSHAL APPROVED

Approval of this plan does not authorize or approve any omission or deviation from applicable regulations. Final approval is subject to field inspection. One set of approved plans shall be available on the project site at all times.

Reviewed by: BILL ROBERTSON DSFM III

Approval date: 11-04-09

CSFM #: 01-37-11-0033

	BY		CHECKED
DESIGN	BY	HASSAN AKHAVAN	CHECKED Donald E. Olney
DETAILS	BY	ROBERT QUIBIN	CHECKED Donald E. Olney
QUANTITIES	BY		CHECKED

STATE OF CALIFORNIA DEPARTMENT OF TRANSPORTATION

DIVISION OF ENGINEERING SERVICES ARCHITECTURAL AND STRUCTURAL DESIGN

BRIDGE NO. 57R000IR 57R000IR

POST MILE R59.4/R60.0

ALISO CREEK SAFETY ROADSIDE REST AREA

NORTHBOUND NEW BUILDING 5 | INTERIOR ELEVATION

SHEET **A5-13**

a5_13_breakrm_int_elev1M.dgn
DS OSD Imperial Rev. 10/07 24-JUN-2010 08:03

ORIGINAL SCALE IN INCHES FOR REDUCED PLANS 0 1 2 3

CU 11-340
EA 11-261401

DISREGARD PRINTS BEARING EARLIER REVISION DATES

REVISION DATES (PRELIMINARY STAGE ONLY) JULY-09 DEC 09

SHEET OF

24-JUN-2010 08:03

a5_13_breakrm_int_elev1M.dgn

DIST.	COUNTY	ROUTE	POST MILES TOTAL PROJECT	SHEET NO.	TOTAL SHEETS
11	SD	5	R59.4/R60.0	144	241

LICENSED ARCHITECT

DEC 09

LICENSED ARCHITECT
HASSAN AKHAVAN
No. C-20451
Exp. 04-30-11
STATE OF CALIFORNIA

6-21-10
PLANS APPROVAL DATE

The State of California or its officers or agents shall not be responsible for the accuracy or completeness of electronic copies of this plan sheet.

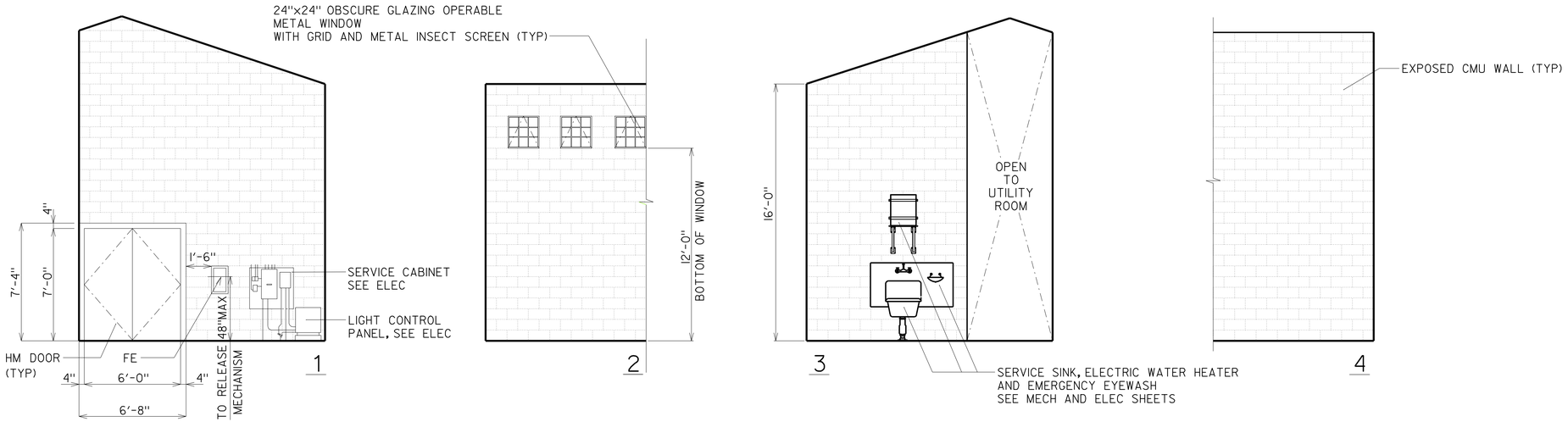

502 **STORAGE / ELECTRICAL / MECHANICAL**

SCALE: 1/4" = 1'-0"

ACCESSIBILITY DESIGN APPROVAL STAMP
DOT / DES / OTA

11-261401

Reviewed by:

Date: 09-01-09

CALIFORNIA STATE FIRE MARSHAL
APPROVED

Approval of this plan does not authorize or approve any omission or deviation from applicable regulations. Final approval is subject to field inspection. One set of approved plans shall be available on the project site at all times.

Reviewed by:
BILL ROBERTSON DSFM III
Approval date: 11-04-09

CSFM #: 01-37-11-0033

DESIGN	BY HASSAN AKHAVAN	CHECKED Donald E. Alvey	
DETAILS	BY ROBERT QUIBIN	CHECKED Donald E. Alvey	
QUANTITIES	BY	CHECKED	

STATE OF
CALIFORNIA
DEPARTMENT OF TRANSPORTATION

DIVISION OF ENGINEERING SERVICES
ARCHITECTURAL
AND
STRUCTURAL DESIGN

BRIDGE NO. 57R000IR 57R000IR
POST MILE R59.4/R60.0

ALISO CREEK SAFETY ROADSIDE REST AREA

NORTHBOUND NEW BUILDING 5 | INTERIOR ELEVATION

SHEET **A5-14**

a5_14_storage_int_elevM.dgn
DS OSD Imperial Rev. 10/07 24-JUN-2010 07:46

ORIGINAL SCALE IN INCHES FOR REDUCED PLANS 0 1 2 3

CU 11-340
EA 11-261401

DISREGARD PRINTS BEARING EARLIER REVISION DATES →

REVISION DATES (PRELIMINARY STAGE ONLY) | SHEET | OF
JULY-09 | DEC 09

24-JUN-2010 07:46
a5_14_storage_int_elevM.dgn

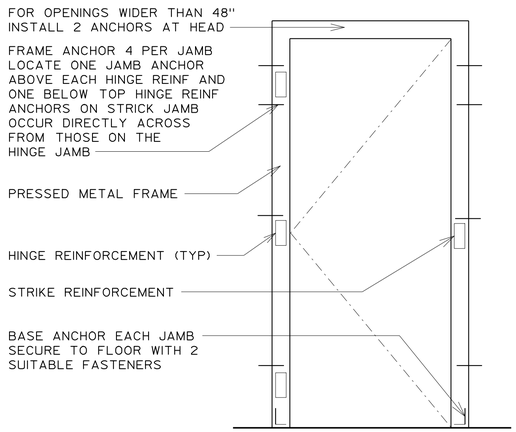

DOOR FRAME ANCHORAGE

SCALE: N.T.S.

DOOR SCHEDULE

DOOR NO	DOOR TYPE	DOOR SIZE WIDTH X HGT	DOOR THICK.	DOOR MAT	DOOR FIN	FRAME MAT	FRAME TYPE	FRAME FIN	FRAME WIDTH	LABEL ASSY	HDWR GROUP	GLAZING	LOUVER	SIGN DETAIL NO	DETAILS HEAD	DETAILS JAMB		DETAILS THLD	TEXT	REMARKS
1	A	3'-0" X 7'-0"	1¾"	METAL	PAINT	METAL	1	PAINT	5¾"	--	1	--	--	3B&4B A0-3.3	2 A6-6	1 A6-6	4 A6-6	5 A6-6	WOMEN	
2	A	3'-0" X 7'-0"	1¾"	METAL	PAINT	METAL	1	PAINT	5¾"	--	2	--	--	1&6 A0-3.3	2 A6-5	1 SIM A6-5	4 SIM A6-5	5 A6-5	MAINTENANCE CREW ROOM	
3	B	(PR) 3'-0" X 7-0"	1¾"	METAL	PAINT	METAL	2	PAINT	5¾"	--	4	--	--	6 A0-3.3	7 A6-5	3 A6-5	6 A6-5	10 A6-5	UTILITY	PAIR DOORS
4	A	3'-0" X 7'-0"	1¾"	METAL	PAINT	METAL	1	PAINT	5¾"	--	2	--	--	1&6 A0-3.3	4 A6-4	4 A6-4	7 A6-4	5 A6-5	MAINTENANCE STORAGE	
5	A	3'-0" X 7'-0"	1¾"	METAL	PAINT	METAL	1	PAINT	5¾"	--	3	--	--	1,3A&4A A0-3.3	2 A6-6	1 SIM A6-6	4 SIM A6-6	5 A6-6	FAMILY ASSISTED	
6	A	3'-0" X 7'-0"	1¾"	METAL	PAINT	METAL	1	PAINT	5¾"	--	1	--	--	3C&4C A0-3.3	2 A6-6	1 A6-6	4 A6-6	5 A6-6	MEN	

NOTE:
REFER TO THE COLOR SCHEDULE ON SHEET A1-14 FOR ALL DOOR AND DOOR FRAME COLORS.
ALL DOORS WITH 1/8" THICK PUSH PLATE BOTH SIDE WITH ENGRAVED LETTER "PUSH" OR "PULL" (FONT TYPE ARIAL BLACK SIZE 2" HEIGHT)

NOTE:
ALL DOORS WITH 1/8" THICK PUSH PLATE BOTHE SIDE WITH ENGRVED LETTER "PUSH" OR "PULL" (FONT TYPE ARIAL BLACK SIZE 2" HEIGHT)

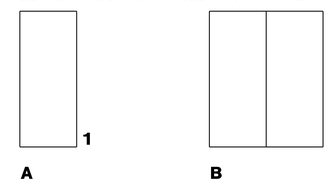

DOOR TYPES

SCALE: 1/4" = 1'-0"

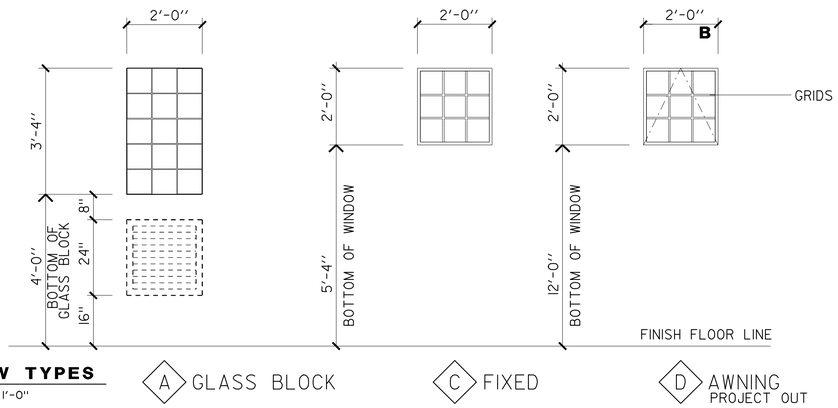

WINDOW TYPES

SCALE: 1/2" = 1'-0"

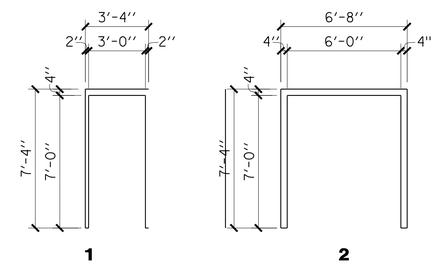

FRAME TYPES

SCALE: 1/4" = 1'-0"

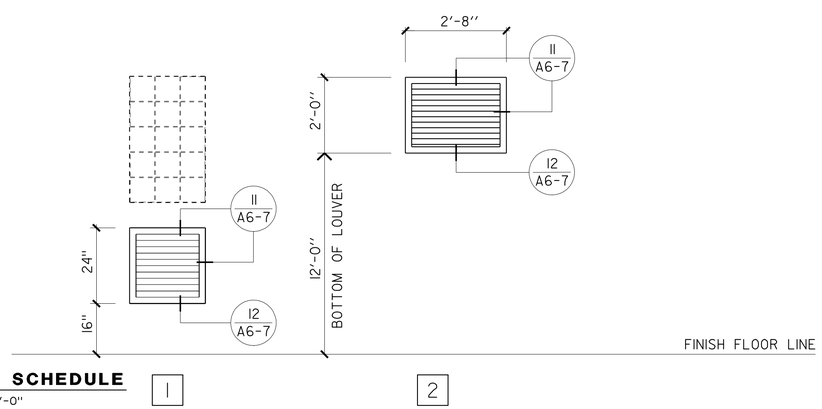

LOUVER SCHEDULE

SCALE: 1/2" = 1'-0"

WINDOW SCHEDULE

WINDOW TYPE	WINDOW SIZE WIDTH X HGT	FRAME MAT	FRAME FIN	DETAILS HEAD	DETAILS JAMB		DETAILS SILL	REMARKS
A	2'-0" X 3'-4"	METAL	PAINT	9 A6-7	9 A6-7	9 A6-7	10 A6-7	8X8" GLASS BLOCK
B	BLANK							
C	2'-0" X 2'-0"	METAL	PAINT	1, 2 A6-7	1, 2 A6-7	1, 2 A6-7	2, 4 A6-7	NON-OPERABLE
D	2'-0" X 2'-0"	METAL	PAINT	7 A6-7	7 A6-7	7 A6-7	8 A6-7	OPERABLE

DIST.	COUNTY	ROUTE	POST MILES TOTAL PROJECT	SHEET NO.	TOTAL SHEETS
11	SD	5	R59.4/R60.0	145	241

LICENSED ARCHITECT

LICENSED ARCHITECT HASSAN AKHAVAN No. C-20451 Exp. 04-30-11 STATE OF CALIFORNIA

6-21-10
PLANS APPROVAL DATE

The State of California or its officers or agents shall not be responsible for the accuracy or completeness of electronic copies of this plan sheet.

ACCESSIBILITY DESIGN APPROVAL STAMP DOT / DES / OTA
11-261401
Reviewed by:
Date: 09-01-09

CALIFORNIA STATE FIRE MARSHAL APPROVED
Approval of this plan does not authorize or approve any omission or deviation from applicable regulations. Final approval is subject to field inspection. One set of approved plans shall be available on the project site at all times.
Reviewed by: BILL ROBERTSON DSFM III
Approval date: 11-04-09
CSFM #: 01-37-11-0033

	BY	CHECKED
DESIGN	HASSAN AKHAVAN	Ronald E. Alsey
DETAILS	ROBERT QUIBIN	Ronald E. Alsey
QUANTITIES		

STATE OF CALIFORNIA
DEPARTMENT OF TRANSPORTATION

DIVISION OF ENGINEERING SERVICES
ARCHITECTURAL AND STRUCTURAL DESIGN

BRIDGE NO. 57R0001R 57R0001R
POST MILE R59.4/R60.0

ALISO CREEK SAFETY ROADSIDE REST AREA
NORTHBOUND NEW BUILDING 5
DOOR, WINDOW & LOUVER SCHEDULE

SHEET A5-15

a5_15_doors & window_schedM.dgn
DS OSD Imperial Rev. 10/07 24-JUN-2010 07:46

ORIGINAL SCALE IN INCHES FOR REDUCED PLANS 0 1 2 3

CU 11-340
EA 11-261401

DISREGARD PRINTS BEARING EARLIER REVISION DATES → JULY-09 DEC 09

REVISION DATES (PRELIMINARY STAGE ONLY) SHEET OF

24-JUN-2010 07:46
a5_15_doors & window_schedM.dgn

DIST.	COUNTY	ROUTE	POST MILES TOTAL PROJECT	SHEET NO.	TOTAL SHEETS
11	SD	5	R59.4/R60.0	146	241

LICENSED ARCHITECT

DEC 09

LICENSED ARCHITECT
HASSAN AKHAVAN
No. C-20451
Exp. 04-30-11
STATE OF CALIFORNIA

6-21-10
PLANS APPROVAL DATE

The State of California or its officers or agents shall not be responsible for the accuracy or completeness of electronic copies of this plan sheet.

BUILDING 5 FINISH SCHEDULE

SHEET NUMBER	ROOM NAME	FLOOR: CONCRETE	FLOOR: VINYL COMPOSITION TILE	FLOOR: 8x8" SLIP RESISTANT PORCELAIN FLOOR TILE	BASE: RESILIENT BASE	BASE: 8X8" PORCELAIN COVED BASE TILE	WALLS NORTH: 8x8" PORCELAIN WALL TILE	WALLS NORTH: EXPOSED CMU WALL	WALLS NORTH: GYPSUM BOARD	WALLS EAST: 8x8" PORCELAIN WALL TILE	WALLS EAST: EXPOSED CMU WALL	WALLS EAST: GYPSUM BOARD	WALLS SOUTH: 8x8" PORCELAIN WALL TILE	WALLS SOUTH: EXPOSED CMU WALL	WALLS SOUTH: GYPSUM BOARD	WALLS WEST: 8x8" PORCELAIN WALL TILE	WALLS WEST: EXPOSED CMU WALL	WALLS WEST: GYPSUM BOARD	CEILING: GYPSUM BOARD	CEILING: T-1-11 PLYWOOD CELING	CEILING: EXPOSED FRAMING	CEILING: APPROXIMATE CEILING HEIGHT	MISC
A5-11	WOMEN'S RESTROOM (FIELD)			30A		30B	40A	50A		40A	50A		40A	50A		40A	50A			60A		16'-3"	
	(PATTERN)						40B	50B		40B	50B		40B	50B		40B	50B						
A5-12	MEN'S RESTROOM (FIELD)			30C		30D	40C	50C		40C	50C		40C	50C		40C	50C			60B		16'-3"	
	(PATTERN)						40D	50D		40D	50D		40D	50D		40D	50D						
A5-14	STORAGE/ELEC/MECH	10						20			20			20			20				80	EXPOSED	
A5-13	MAINTENANCE STORAGE		22		22			20				20			20			20	20			8'-0"	
A5-13	FAMILY ASSIST			30C		30D	40C			40C			40C			40C				60B		8'-0"	
A5-13	MAINTENANCE/CREW ROOM			30C		30D						70			70			70	70			8'-0"	

10 CONCRETE
NATURAL COLOR LIGHT BROOM FINISH
CONCRETE SEALER SEE SPEC

20 CONCRETE MASONRY UNITS

22 RESILIENT FLOOR TILE & BASE

30 PORCELAIN FLOOR TILE
A - 8X8 DATILEPRODUCTS GRIGIO GRANITE CD40
B - SAME AS A COVE
C - 8X8 DATILEPRODUCTS PEPE GRANITE CD40
D - SAME AS C COVE

40 PORCELAIN WALL TILE
A - WHITE 0100
B - AQUE GLOW 0197
C - ALMOND 0135
D - ELEMENTAL TAN 0166

50 CONCRETE MASONRY UNITS COLOR
A - FS 27925
B - FS 24491
C - FS 20450
D - FS 20117

60 T-1-11 PLYWOOD CEILING
A - FS 14491
B - FS 20313

70 GYPSUM BOARD
PAINT FS 13522

80 EXPOSED FARMING

EXTERIOR:

EXTERIOR CEMENT PLASTER CHRYSTAL WHITE (X-50 BASE) LAHABRA COLOR
LOUVERS, GRILL, WINDOW'S GRID, ALL EXPOSED METAL CONNECTIONS AND TILE FRAMES SHALL BE POWDER COATED FS 33617 COLOR SAMPLES MUST BE SUBMITTED TO THE ARCHITECT FOR FINAL APPROVAL.
EXPOSED TRELLIS WILL RECEIVE STAIN AS NATURAL FINISH "RED WOOD"

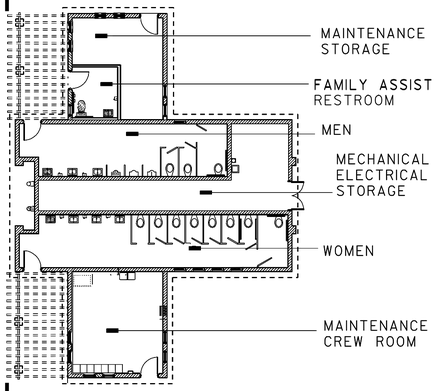

BUILDING 5 NORTHBOUND

NOTES: MANUFACTURER'S DESIGNATIONS ARE LISTED TO INDICATE COLOR, PATTERN, FORM AND SHAPE ONLY. NO PREFERENCE FOR A PARTICULAR BRAND IS INTENDED.

COLORS NOT LISTED SHALL BE SELECTED BY THE ENGINEER FROM SAMPLES SUBMITTED BY THE CONTRACTOR.

FINISHES AND COLORS ARE SHOWN ON THE INTERIOR ELEVATIONS FLOOR PLANS, BUILDING SECTIONS AND EXTERIOR ELEVATIONS AND REFERENCE TO THIS SHEET.

ACCESSIBILITY DESIGN APPROVAL STAMP DOT / DES / OTA
11-261401
Reviewed by:
Date: 09-01-09

CALIFORNIA STATE FIRE MARSHAL APPROVED
Approval of this plan does not authorize or approve any omission or deviation from applicable regulations. Final approval is subject to field inspection. One set of approved plans shall be available on the project site at all times.
Reviewed by:
BILL ROBERTSON DSFM III
Approval date: 11-04-09
CSFM #: 01-37-11-0033

DESIGN	BY HASSAN AKHAVAN	CHECKED Donald E. Avery	
DETAILS	BY ROBERT QUIBIN	CHECKED Donald E. Avery	
QUANTITIES	BY	CHECKED	

STATE OF CALIFORNIA
DEPARTMENT OF TRANSPORTATION

DIVISION OF ENGINEERING SERVICES
ARCHITECTURAL AND STRUCTURAL DESIGN

BRIDGE NO. 57R0001R 57R0001R
POST MILE R59.4/R60.0

ALISO CREEK SAFETY ROADSIDE REST AREA
NORTH BOUND NEW BUILDING 5
FINISH SCHEDULE

SHEET **A5-16**

a5_16_Bldg5Finish_scheduleM.dgn
DS OSD Imperial Rev. 10/07 28-JUN-2010 14:10

ORIGINAL SCALE IN INCHES FOR REDUCED PLANS 0 1 2 3

CU 11-340
EA 11-261401

DISREGARD PRINTS BEARING EARLIER REVISION DATES →

REVISION DATES (PRELIMINARY STAGE ONLY) JULY-09 DEC 09 SHEET OF

28-JUN-2010 14:10
a5_16_Bldg5Finish_scheduleM.dgn

DIST.	COUNTY	ROUTE	POST MILES TOTAL PROJECT	SHEET NO.	TOTAL SHEETS
11	SD	5	R59.4/R60.0	147	241

LICENSED ARCHITECT

LICENSED ARCHITECT HASSAN AKHAVAN No. C-20451 Exp. 04-30-11 STATE OF CALIFORNIA

DEC 09

6-21-10
PLANS APPROVAL DATE

The State of California or its officers or agents shall not be responsible for the accuracy or completeness of electronic copies of this plan sheet.

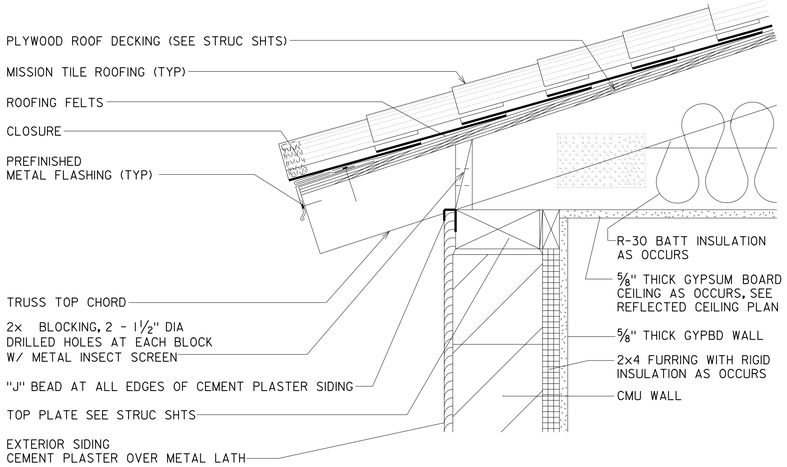

1 EAVE

SCALE 2" = 1'-0"

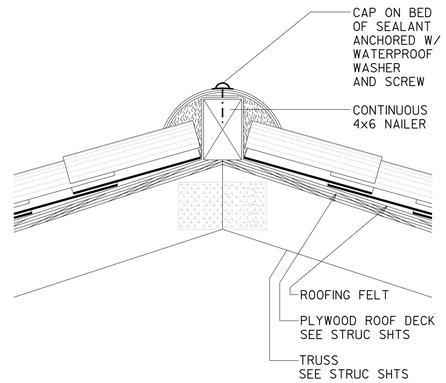

2 RIDGE

SCALE 2" = 1'-0"

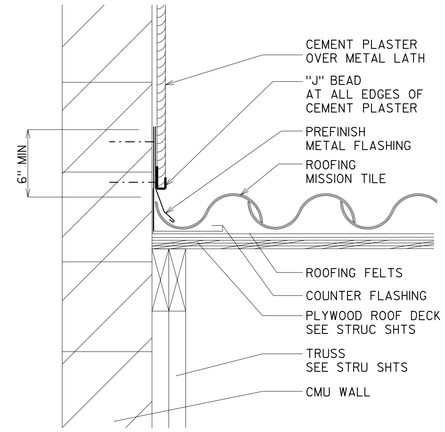

3 ROOF AND WALL

SCALE 2" = 1'-0"

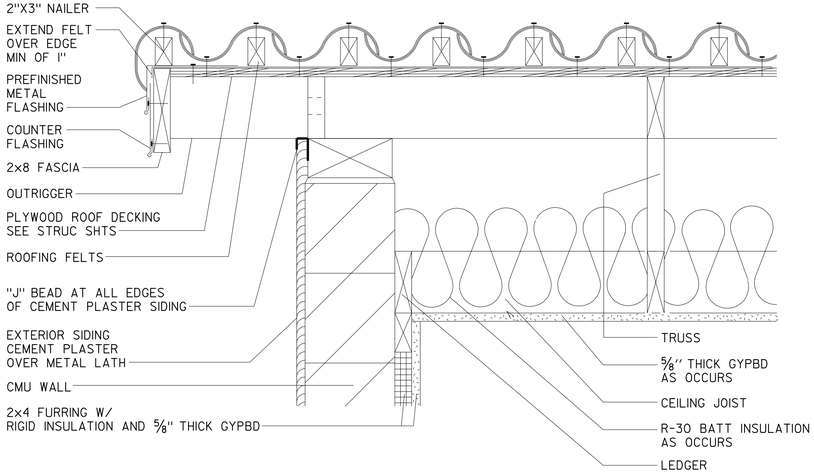

4 RAKE

SCALE 2" = 1'-0"

ACCESSIBILITY DESIGN APPROVAL STAMP DOT / DES / OTA

11-261401

Reviewed by:

Date: 09-01-09

CALIFORNIA STATE FIRE MARSHAL APPROVED

Approval of this plan does not authorize or approve any omission or deviation from applicable regulations. Final approval is subject to field inspection. One set of approved plans shall be available on the project site at all times.

Reviewed by: BILL ROBERTSON DSFM III

Approval date: 11-04-09

CSFM #: 01-37-11-0033

DESIGN	BY HASSAN AKHAVAN	CHECKED Donald E. Alsey	
DETAILS	BY ROBERT QUIBIN	CHECKED D. E. ALSEY	
QUANTITIES	BY	CHECKED CECILIA FAUST	

STATE OF CALIFORNIA DEPARTMENT OF TRANSPORTATION

DIVISION OF ENGINEERING SERVICES ARCHITECTURAL AND STRUCTURAL DESIGN

CU II-340
EA II-261401

BRIDGE NO. 57R0001R 57R0001R
POST MILE R59.4/R60.0

ALISO CREEK SAFETY ROADSIDE REST AREA

ALL NEW BUILDING | ROOF DETAILS

SHEET A6-1

a6_01_new_roof_detM.dgn
DS OSD Imperial Rev. 10/07 24-JUN-2010 07:47

ORIGINAL SCALE IN INCHES FOR REDUCED PLANS 0 1 2 3

DISREGARD PRINTS BEARING EARLIER REVISION DATES → JULY-09 DEC 09

REVISION DATES (PRELIMINARY STAGE ONLY) SHEET OF

24-JUN-2010 07:47

a6_01_new_roof_detM.dgn

DIST.	COUNTY	ROUTE	POST MILES TOTAL PROJECT	SHEET NO.	TOTAL SHEETS
11	SD	5	R59.4/R60.0	148	241

LICENSED ARCHITECT

LICENSED ARCHITECT HASSAN AKHAVAN No. C-20451 Exp. 04-30-11 STATE OF CALIFORNIA

DEC 09

6-21-10
PLANS APPROVAL DATE

The State of California or its officers or agents shall not be responsible for the accuracy or completeness of electronic copies of this plan sheet.

ACCESSIBILITY DESIGN APPROVAL STAMP DOT / DES / OTA

11-261401

Reviewed by:

Date: 09-01-09

CALIFORNIA STATE FIRE MARSHAL APPROVED

Approval of this plan does not authorize or approve any omission or deviation from applicable regulations. Final approval is subject to field inspection. One set of approved plans shall be available on the project site at all times.

Reviewed by: BILL ROBERTSON DSFM III

Approval date: 11-04-09

CSFM #: 01-37-11-0033

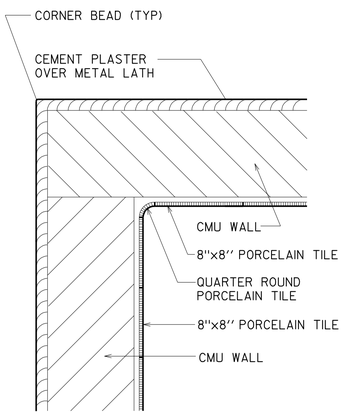

1 TILE AT CORNER
PLAN VIEW SCALE: 2" = 1'-0"

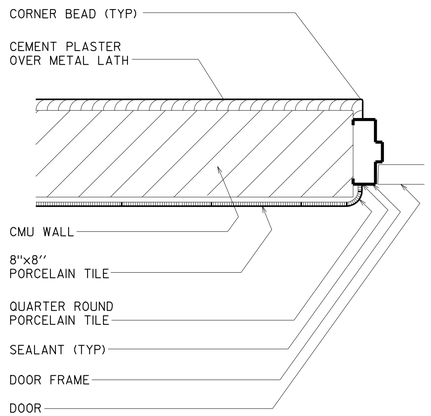

2 TILE AT DOOR JAMB
SCALE 2" = 1'-0"

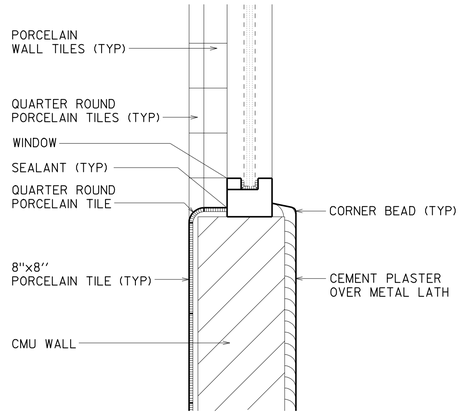

3 TILE AT WINDOW SILL
SECTION VIEW SCALE 2" = 1'-0"

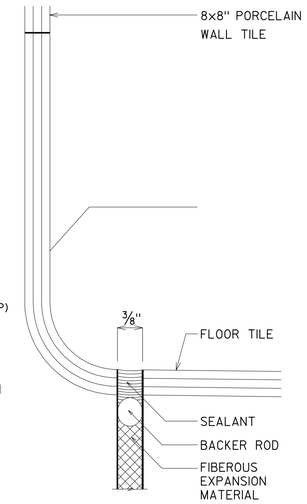

4 FLOOR TILE EXPANSION JOINT
RESTROOMS FLOORS SCALE 1:1

NOTE:

FOR TILE INSTALLATION SEE
TILE COUNCIL OF AMERICA
CALIFORNIA CERAMIC TILE INSTITUTE HANDBOOK
FLOOR : F 114-08 (CONCRETE)
WALL : W 215-08 (CONCRETE)
WALL : W 231-08 (WOOD STUD)

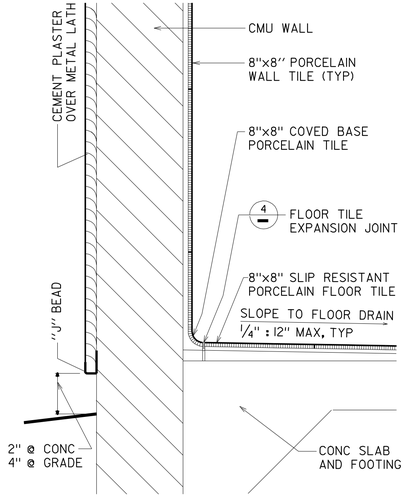

5 TILE AT WALL AND FLOOR
SECTION VIEW SCALE 2"= 1'-0"

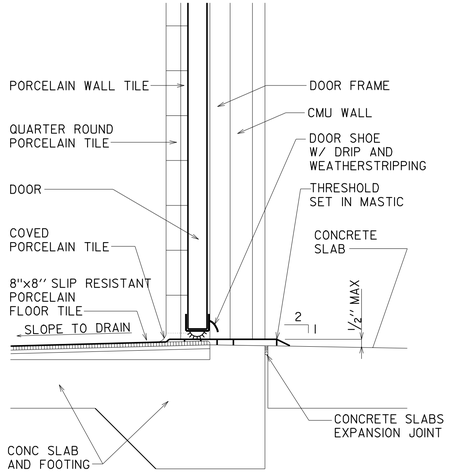

6 FLOOR TILE AT DOOR SILL
SECTION VIEW SCALE 2"= 1'-0"

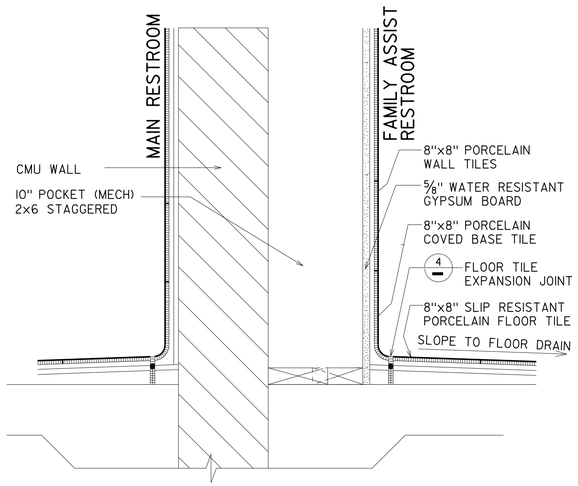

7 TILE AT WALL AND FLOOR
MAIN RESTROOM AND FAMILY ASSISTED RESTROOM

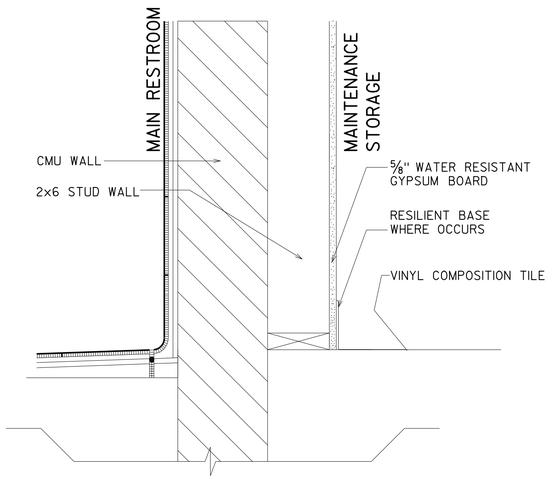

8 TILE AT WALL AND FLOOR
WALL BETWEEN MAIN RESTROOM AND BREAK ROOM 2"= 1'-0"

	BY		CHECKED
DESIGN	HASSAN AKHAVAN		Ronald E. Alsey
DETAILS	ROBERT QUIBIN		D. E. ALSEY
QUANTITIES			CECILIA FAUST

STATE OF CALIFORNIA
DEPARTMENT OF TRANSPORTATION

DIVISION OF ENGINEERING SERVICES
ARCHITECTURAL AND STRUCTURAL DESIGN

BRIDGE NO. 57R0001R 57R0001R
POST MILE R59.4/R60.0

ALISO CREEK SAFETY ROADSIDE REST AREA

ALL NEW BUILDINGS | TILE INSTALLATION DETAILES

SHEET **A6-3**

a6_03_tile_install_detM.dgn
DS OSD Imperial Rev. 10/07 24-JUN-2010 07:47

ORIGINAL SCALE IN INCHES FOR REDUCED PLANS 0 1 2 3

CU 11-340
EA 11-261401

DISREGARD PRINTS BEARING EARLIER REVISION DATES → JULY-09 DEC 09

REVISION DATES (PRELIMINARY STAGE ONLY) SHEET OF

24-JUN-2010 07:47
a6_03_tile_install_detM.dgn

DIST.	COUNTY	ROUTE	POST MILES TOTAL PROJECT	SHEET NO.	TOTAL SHEETS
11	SD	5	R59.4/R60.0	149	241

LICENSED ARCHITECT

LICENSED ARCHITECT HASSAN AKHAVAN No. C-20451 Exp. 04-30-11 STATE OF CALIFORNIA

DEC 09

6-21-10
PLANS APPROVAL DATE

The State of California or its officers or agents shall not be responsible for the accuracy or completeness of electronic copies of this plan sheet.

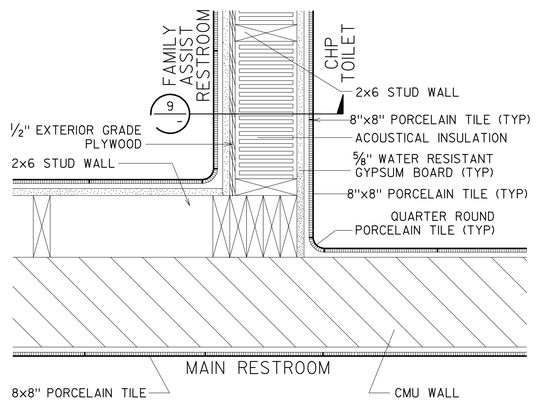

1 WALL DETAIL
PLAN VIEW — SCALE 2" = 1'-0"

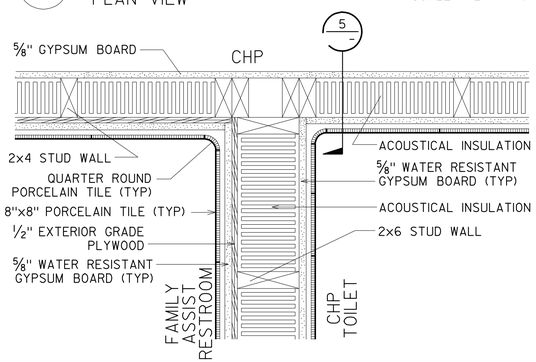

2 WALL DETAIL
PLAN VIEW — SCALE 2" = 1'-0"

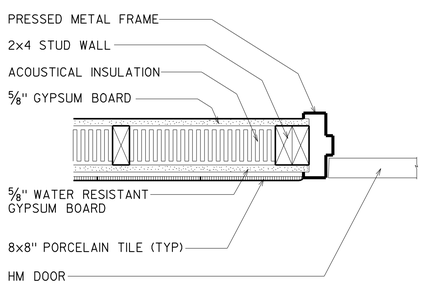

3 CHP OFFICE AND TOILET WALL
PLAN VIEW — SCALE 2" = 1'-0"

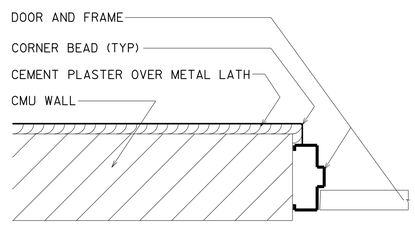

4 DOOR DETAIL
PLAN VIEW — SCALE 2" = 1'-0"

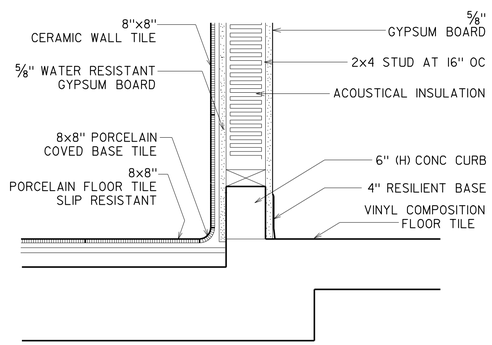

5 CHP/TOILET WALL & FLOOR
SECTION VIEW — SCALE 2" = 1'-0"

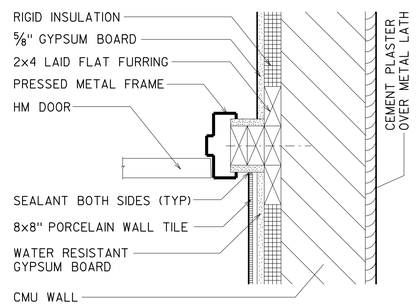

6 CHP OFFICE AND TOILET WALL
PLAN VIEW — SCALE 2" = 1'-0"

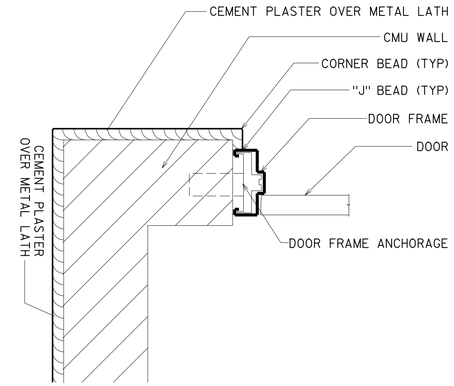

7 DOOR DETAIL
PLAN VIEW — SCALE 2" = 1'-0"

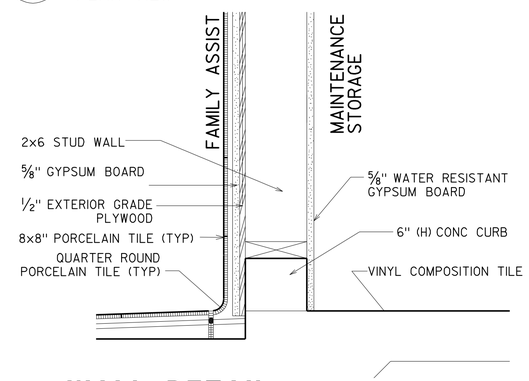

8 WALL DETAIL
SECTION VIEW — SCALE 2" = 1'-0"

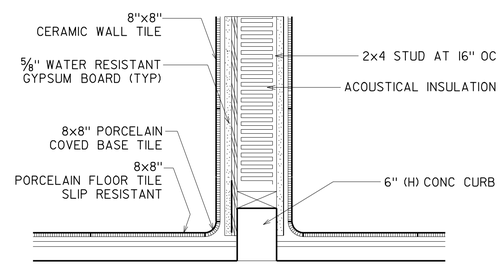

9 WALL DETAIL
SECTION VIEW — SCALE 2" = 1'-0"

ACCESSIBILITY DESIGN APPROVAL STAMP DOT / DES / OTA
11-261401
Reviewed by: [signature]
Date: 09-01-09

CALIFORNIA STATE FIRE MARSHAL APPROVED
Approval of this plan does not authorize or approve any omission or deviation from applicable regulations. Final approval is subject to field inspection. One set of approved plans shall be available on the project site at all times.
Reviewed by: [signature] BILL ROBERTSON DSFM III
Approval date: 11-04-09
CSFM #: 01-37-11-0033

	BY		CHECKED
DESIGN	HASSAN AKHAVAN		Ronald E. Alsey
DETAILS	ROBERT QUIBIN		D. E. ALSEY
QUANTITIES			CECILIA FAUST

STATE OF CALIFORNIA
DEPARTMENT OF TRANSPORTATION

DIVISION OF ENGINEERING SERVICES
ARCHITECTURAL AND STRUCTURAL DESIGN

BRIDGE NO. 57R000IR 57R000IR
POST MILE R59.4/R60.0

ALISO CREEK SAFETY ROADSIDE REST AREA
ALL NEW BUILDINGS — TILE INSULATION DETAIL

SHEET A6-4

ORIGINAL SCALE IN INCHES FOR REDUCED PLANS 0 1 2 3

CU 11-340
EA 11-261401

DISREGARD PRINTS BEARING EARLIER REVISION DATES → JULY-09 DEC 09

REVISION DATES (PRELIMINARY STAGE ONLY) SHEET OF

a6_04_bldg_detM.dgn
DS OSD Imperial Rev. 10/07 24-JUN-2010 07:47

24-JUN-2010 07:47
a6_04_bldg_detM.dgn

DIST.	COUNTY	ROUTE	POST MILES TOTAL PROJECT	SHEET NO.	TOTAL SHEETS
11	SD	5	R59.4/R60.0	150	241

LICENSED ARCHITECT

LICENSED ARCHITECT HASSAN AKHAVAN No. C-20451 Exp. 04-30-11 STATE OF CALIFORNIA

6-21-10
PLANS APPROVAL DATE

The State of California or its officers or agents shall not be responsible for the accuracy or completeness of electronic copies of this plan sheet.

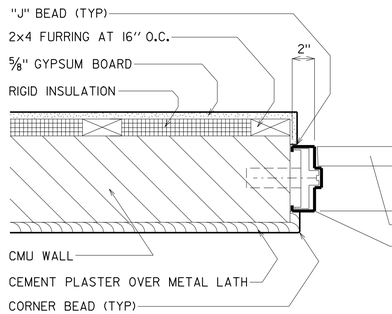

1 DOOR JAMB
CHP OFFICE & CREW RM SCALE: 2"=1'-0"

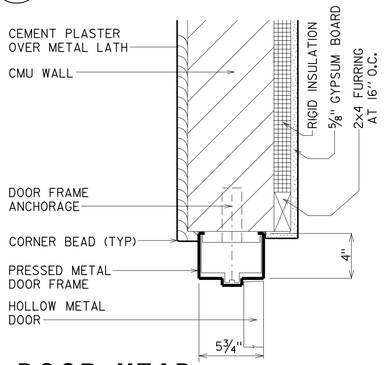

2 DOOR HEAD
CHP OFFICE & CREW RM SCALE 2" = 1'-0"

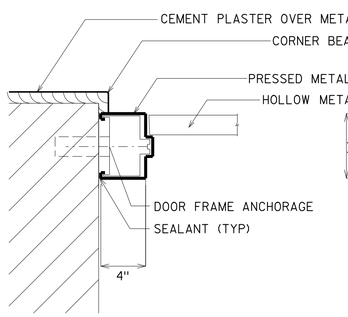

3 DOOR JAMB
STOR/ELEC/MECH RM SCALE 2" = 1'-0"

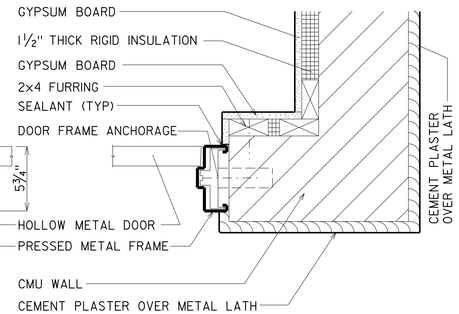

4 DOOR JAMB
CHP OFFICE & CREW RM SCALE 2" = 1'-0"

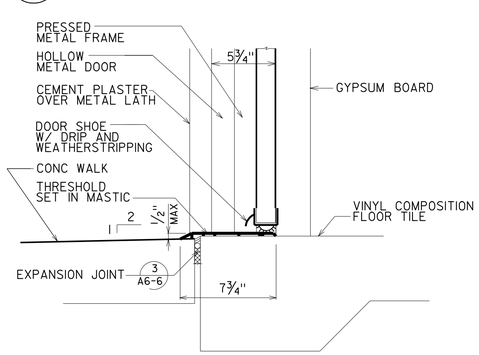

5 DOOR THRESHOLD
CHP OFFICE & BREAK RM SCALE 2" = 1'-0"

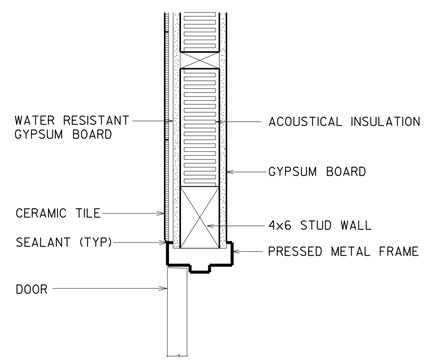

6 DOOR JAMB
STOR/ELEC/MECH RM SCALE 2" = 1'-0"

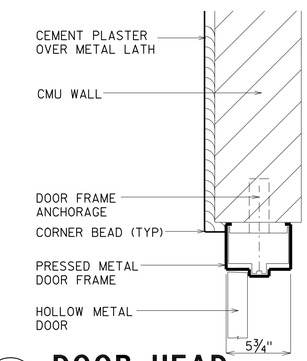

7 DOOR HEAD
STOR/ELEC/MECH RM SCALE 2" = 1'-0"

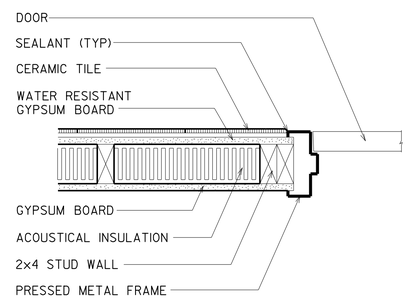

8 DOOR JAMB
CHP TOILET SCALE 2" = 1'-0"

9 DOOR HEAD
CHP TOILET SCALE 2" = 1'-0"

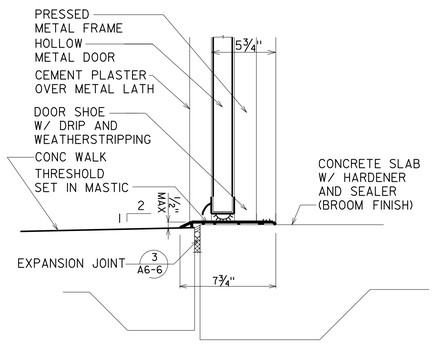

10 DOOR THRESHOLD
STOR/ELEC/MECH RM SCALE 2" = 1'-0"

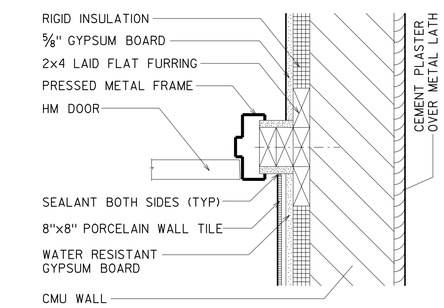

11 DOOR JAMB
CHP TOILET SCALE 2" = 1'-0"

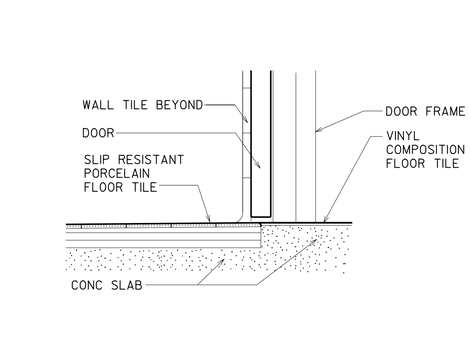

12 DOOR THRESHOLD
CHP TOILET SCALE 2" = 1'-0"

ACCESSIBILITY DESIGN APPROVAL STAMP DOT / DES / OTA

11-261401

Reviewed by: [signature]
Date: 09-01-09

CALIFORNIA STATE FIRE MARSHAL APPROVED

Approval of this plan does not authorize or approve any omission or deviation from applicable regulations. Final approval is subject to field inspection. One set of approved plans shall be available on the project site at all times.

Reviewed by: [signature]
BILL ROBERTSON DSFM III
Approval date: 11-04-09

CSFM #: 01-37-11-0033

DESIGN	BY HASSAN AKHAVAN	CHECKED [signature]	
DETAILS	BY ROBERT QUIBIN	CHECKED D. E. ALSEY	
QUANTITIES	BY	CHECKED CECILIA FAUST	

STATE OF CALIFORNIA
DEPARTMENT OF TRANSPORTATION

DIVISION OF ENGINEERING SERVICES
ARCHITECTURAL AND STRUCTURAL DESIGN

BRIDGE NO. 57R000IR 57R000IR
POST MILE R59.4/R60.0

ALISO CREEK SAFETY ROADSIDE REST AREA

ALL NEW BUILDINGS | DOOR DETAIL

SHEET **A6-5**

a6_05_door_detM.dgn
DS OSD Imperial Rev. 10/07 24-JUN-2010 10:33

ORIGINAL SCALE IN INCHES FOR REDUCED PLANS 0 1 2 3

CU 11-340
EA 11-261401

DISREGARD PRINTS BEARING EARLIER REVISION DATES → JULY-09 DEC 09

REVISION DATES (PRELIMINARY STAGE ONLY) SHEET OF

24-JUN-2010 10:33
a6_05_door_detM.dgn

DIST.	COUNTY	ROUTE	POST MILES TOTAL PROJECT	SHEET NO.	TOTAL SHEETS
11	SD	5	R59.4/R60.0	151	241

LICENSED ARCHITECT

REG. DATE

LICENSED ARCHITECT HASSAN AKHAVAN No. C-20451 Exp. 04-30-11 STATE OF CALIFORNIA

6-21-10
PLANS APPROVAL DATE

The State of California or its officers or agents shall not be responsible for the accuracy or completeness of electronic copies of this plan sheet.

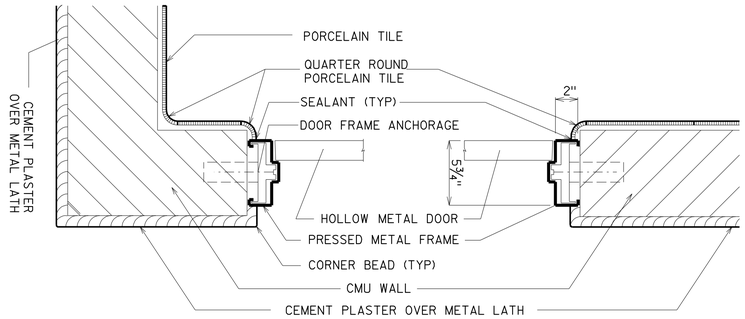

1 DOOR JAMB
FAMILY AND MAIN RESTRMS SCALE 2" = 1'-0"

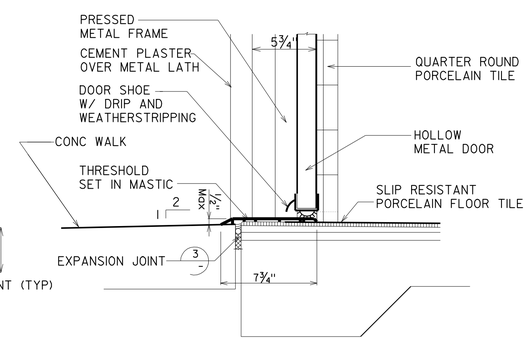

4 DOOR JAMB
FAMILY & MAIN RESTRM SCALE 2" = 1'-0"

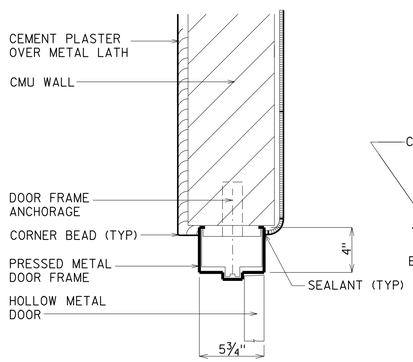

2 DOOR HEAD
FAMILY AND MAIN RESTRMS SCALE 2" = 1'-0"

5 DOOR SILL
FAMILY AND MAIN RESTRMS SCALE 2" = 1'-0"

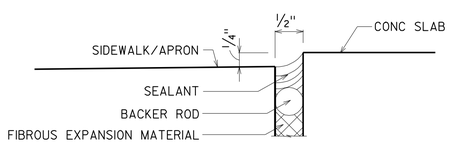

3 CONCRETE SLABS EXPANSION JOINT
NOT TO SCALE

ACCESSIBILITY DESIGN APPROVAL STAMP DOT / DES / OTA

11-261401

Reviewed by:

Date: 09-01-09

CALIFORNIA STATE FIRE MARSHAL APPROVED

Approval of this plan does not authorize or approve any omission or deviation from applicable regulations. Final approval is subject to field inspection. One set of approved plans shall be available on the project site at all times.

Reviewed by: BILL ROBERTSON DSFM III

Approval date: 11-04-09

CSFM #: 01-37-11-0033

	BY		CHECKED	
DESIGN	BY	HASSAN AKHAVAN	CHECKED	Donald E. Alsey
DETAILS	BY	ROBERT QUIBIN	CHECKED	D. E. ALSEY
QUANTITIES	BY		CHECKED	CECILIA FAUST

STATE OF CALIFORNIA
DEPARTMENT OF TRANSPORTATION

DIVISION OF ENGINEERING SERVICES
ARCHITECTURAL AND STRUCTURAL DESIGN

BRIDGE NO. 57R000IR 57R000IR
POST MILE R59.4/R60.0

ALISO CREEK SAFETY ROADSIDE REST AREA

ALL NEW BUILDING | DOOR DETAIL

SHEET **A6-6**

a6_06_door_detM.dgn
DS OSD Imperial Rev. 10/07 24-JUN-2010 10:33

ORIGINAL SCALE IN INCHES FOR REDUCED PLANS 0 1 2 3

CU 11-340
EA 11-261401

DISREGARD PRINTS BEARING EARLIER REVISION DATES → JULY-09 DEC 09

REVISION DATES (PRELIMINARY STAGE ONLY) SHEET OF

24-JUN-2010 10:33

a6_06_door_detM.dgn

DIST.	COUNTY	ROUTE	POST MILES TOTAL PROJECT	SHEET NO.	TOTAL SHEETS
11	SD	5	R59.4/R60.0	152	241

LICENSED ARCHITECT

DEC 09

LICENSED ARCHITECT HASSAN AKHAVAN No. C-20451 Exp. 04-30-11 STATE OF CALIFORNIA

6-21-10
PLANS APPROVAL DATE

The State of California or its officers or agents shall not be responsible for the accuracy or completeness of electronic copies of this plan sheet.

ACCESSIBILITY DESIGN APPROVAL STAMP DOT / DES / OTA

11-261401

Reviewed by:

Date: 09-01-09

CALIFORNIA STATE FIRE MARSHAL APPROVED

Approval of this plan does not authorize or approve any omission or deviation from applicable regulations. Final approval is subject to field inspection. One set of approved plans shall be available on the project site at all times.

Reviewed by: BILL ROBERTSON DSFM III

Approval date: 11-04-09

CSFM #: 01-37-11-0033

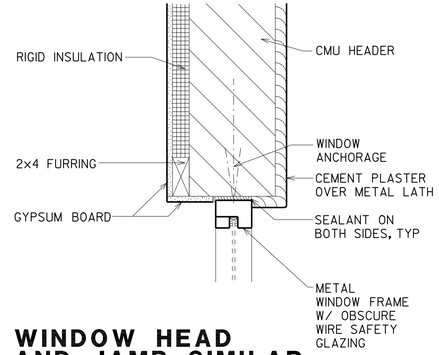

1 WINDOW HEAD AND JAMB SIMILAR

MAINTENANCE ROOM SCALE: 2" = 1'-0"

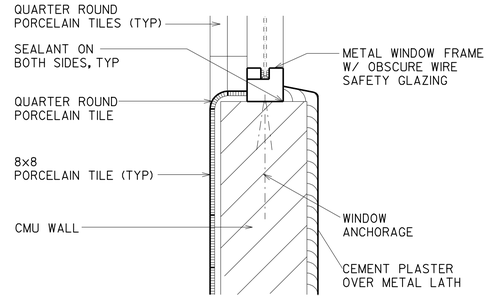

4 WINDOW SILL

FAMILY/CHP RESTROOM SCALE: 2" = 1'-0"

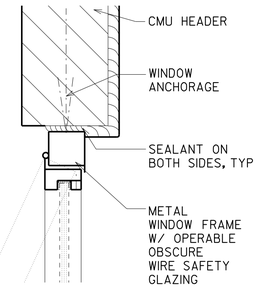

7 WINDOW HEAD AND JAMB SIMILAR

MAIN RESTROOM SCALE: 2" = 1'-0"

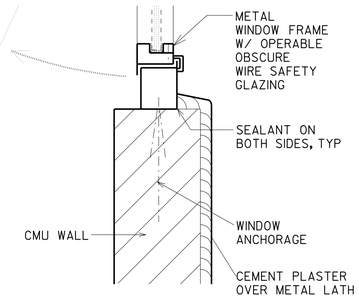

8 WINDOW SILL

MAIN RESTROOM SCALE: 2" = 1'-0"

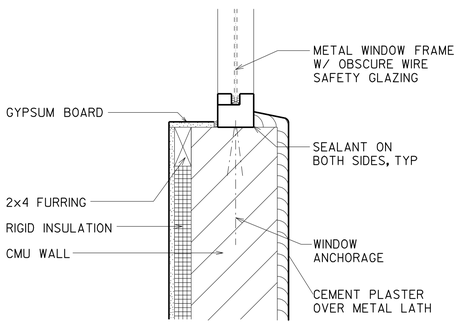

2 WINDOW SILL

MAINTENANCE ROOM SCALE: 2" = 1'-0"

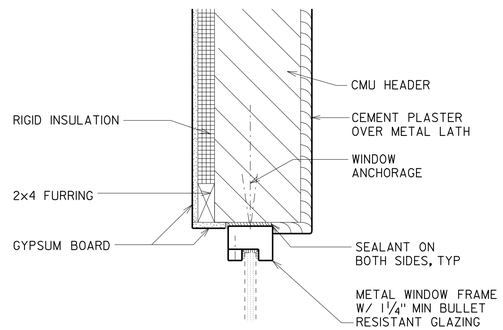

5 WINDOW HEAD AND JAMB SIMILAR

CHP OFFICE SCALE: 2" = 1'-0"

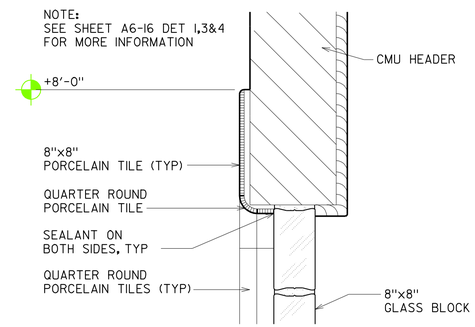

9 GLASS MASONRY UNIT WINDOW HEAD & JAMB SIM

MAIN RESTROOM SCALE: 2" = 1'-0"

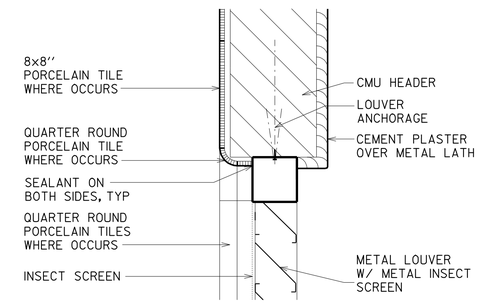

11 LOUVER HEAD & JAMB SIM

MAIN RESTROOM SCALE: 2" = 1'-0"

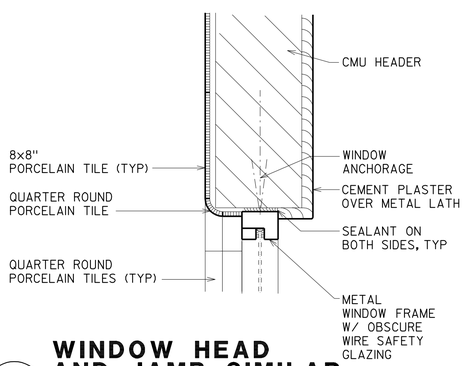

3 WINDOW HEAD AND JAMB SIMILAR

FAMILY/CHP RESTROOM SCALE: 2" = 1'-0"

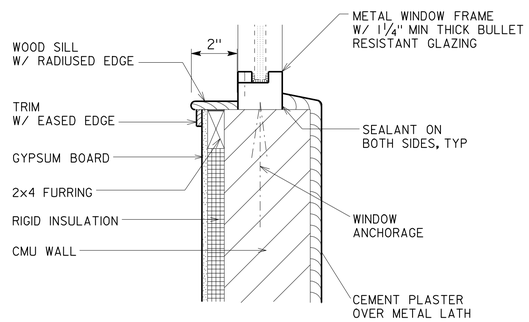

6 WINDOW SILL

CHP OFFICE SCALE: 2" = 1'-0"

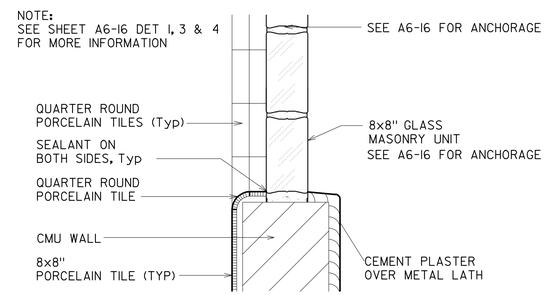

10 GLASS MASONRY UNIT WINDOW SILL

MAIN RESTROOM SCALE: 2" = 1'-0"

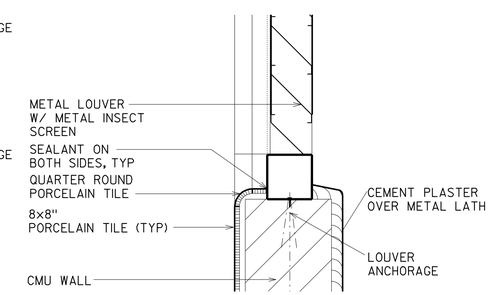

12 LOUVER SILL

MAIN RESTROOM SCALE: 2" = 1'-0"

DESIGN	BY HASSAN AKHAVAN	CHECKED Donald E. Alsey	
DETAILS	BY ROBERT QUIBIN	CHECKED D. E. ALSEY	
QUANTITIES	BY	CHECKED CECILIA FAUST	

STATE OF CALIFORNIA DEPARTMENT OF TRANSPORTATION

DIVISION OF ENGINEERING SERVICES ARCHITECTURAL AND STRUCTURAL DESIGN

BRIDGE NO. 57R000IR 57R000IR
POST MILE R59.4/R60.0

ALISO CREEK SAFETY ROADSIDE REST AREA

ALL NEW BUILDINGS | WINDOW, GLASS BLOCK & LOUVER DETAILS

SHEET **A6-7**

a6_07_window_detM.dgn
DS OSD Imperial Rev. 10/07 28-JUN-2010 14:10

ORIGINAL SCALE IN INCHES FOR REDUCED PLANS 0 1 2 3

CU 11-340
EA 11-261401

DISREGARD PRINTS BEARING EARLIER REVISION DATES → JULY-09 DEC 09

REVISION DATES (PRELIMINARY STAGE ONLY) SHEET OF

28-JUN-2010 14:10

a6_07_window_detM.dgn

DIST.	COUNTY	ROUTE	POST MILES TOTAL PROJECT	SHEET NO.	TOTAL SHEETS
11	SD	5	R59.4/R60.0	153	241

LICENSED ARCHITECT

LICENSED ARCHITECT HASSAN AKHAVAN No. C-20451 Exp. 04-30-11 STATE OF CALIFORNIA

6-21-10
PLANS APPROVAL DATE

The State of California or its officers or agents shall not be responsible for the accuracy or completeness of electronic copies of this plan sheet.

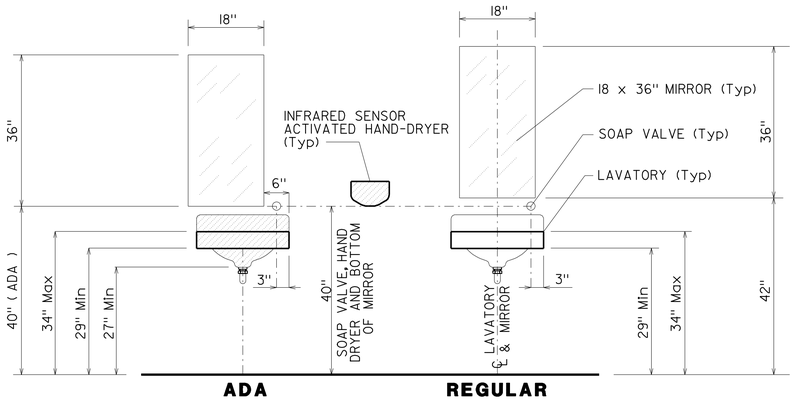

4 LAVATORY, SOAP-VALVE AND MIRROR POSITIONS

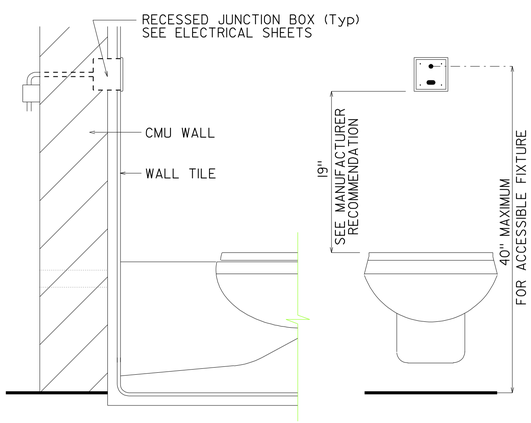

1 WATER CLOSET

SCALE: 2" = 1'-0"

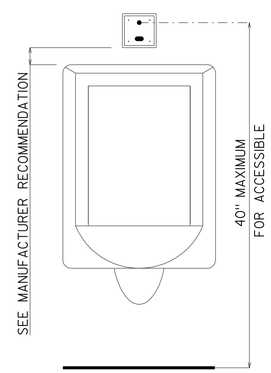

2 URINAL

SCALE: 2" = 1'-0"

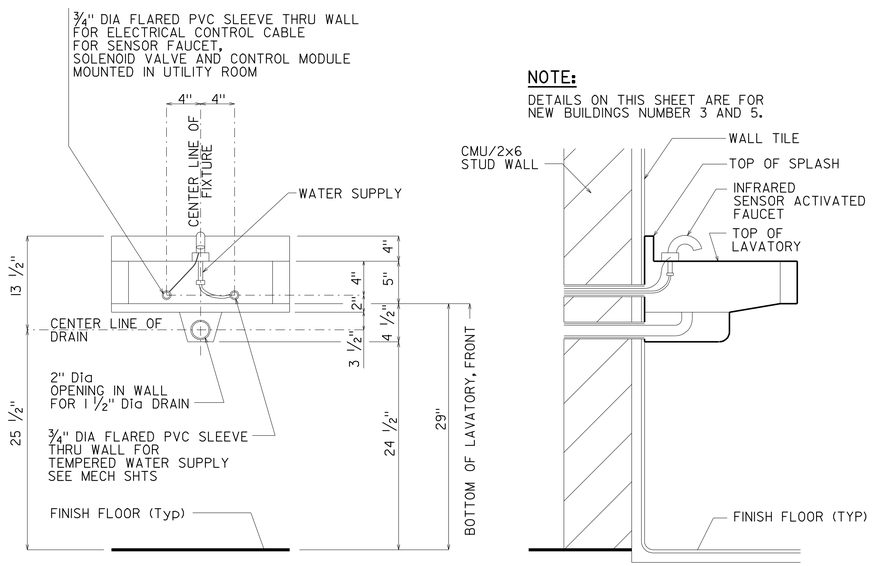

NOTE:

DETAILS ON THIS SHEET ARE FOR NEW BUILDINGS NUMBER 3 AND 5.

3 LAVATORY SENSOR FAUCET DETAIL

SCALE: 2" = 1'-0"

ACCESSIBILITY DESIGN APPROVAL STAMP DOT / DES / OTA

11-261401

Reviewed by: [signature]

Date: 09-01-09

CALIFORNIA STATE FIRE MARSHAL APPROVED

Approval of this plan does not authorize or approve any omission or deviation from applicable regulations. Final approval is subject to field inspection. One set of approved plans shall be available on the project site at all times.

Reviewed by: [signature]
BILL ROBERTSON DSFM III
Approval date: 11-04-09

CSFM #: 01-37-11-0033

	BY		CHECKED	
DESIGN	BY	HASSAN AKHAVAN	CHECKED	Donald E. Alsey
DETAILS	BY	ROBERT QUIBIN	CHECKED	D. E. ALSEY
QUANTITIES	BY		CHECKED	CECILIA FAUST

STATE OF CALIFORNIA
DEPARTMENT OF TRANSPORTATION

DIVISION OF ENGINEERING SERVICES
ARCHITECTURAL AND STRUCTURAL DESIGN

BRIDGE NO. 57R000IR 57R000IR
POST MILE R59.4/R60.0

ALISO CREEK SAFETY ROADSIDE REST AREA

ALL NEW BUILDINGS | TOILET FIXTURE AND ACCESSORIES DETAIL

SHEET **A6-8**

a6_08_sensor_activated_detM.dgn
DS OSD Imperial Rev. 10/07 24-JUN-2010 11:23

ORIGINAL SCALE IN INCHES FOR REDUCED PLANS 0 1 2 3

CU 11-340
EA 11-261401

DISREGARD PRINTS BEARING EARLIER REVISION DATES →

REVISION DATES (PRELIMINARY STAGE ONLY) JULY-09 DEC 09 SHEET OF

24-JUN-2010 11:23

a6_08_sensor_activated_detM.dgn

DIST.	COUNTY	ROUTE	POST MILES TOTAL PROJECT	SHEET NO.	TOTAL SHEETS
11	SD	5	R59.4/R60.0	154	241

LICENSED ARCHITECT

DEC '09

LICENSED ARCHITECT
HASSAN AKHAVAN
No. C-20451
Exp. 04-30-11
STATE OF CALIFORNIA

6-21-10
PLANS APPROVAL DATE

The State of California or its officers or agents shall not be responsible for the accuracy or completeness of electronic copies of this plan sheet.

ACCESSIBILITY DESIGN APPROVAL STAMP
DOT / DES / OTA

11-261401

Reviewed by:

Date: 09-01-09

CALIFORNIA STATE FIRE MARSHAL APPROVED

Approval of this plan does not authorize or approve any omission or deviation from applicable regulations. Final approval is subject to field inspection. One set of approved plans shall be available on the project site at all times.

Reviewed by:
BILL ROBERTSON DSFM III
Approval date: 11-04-09

CSFM #: 01-37-11-0033

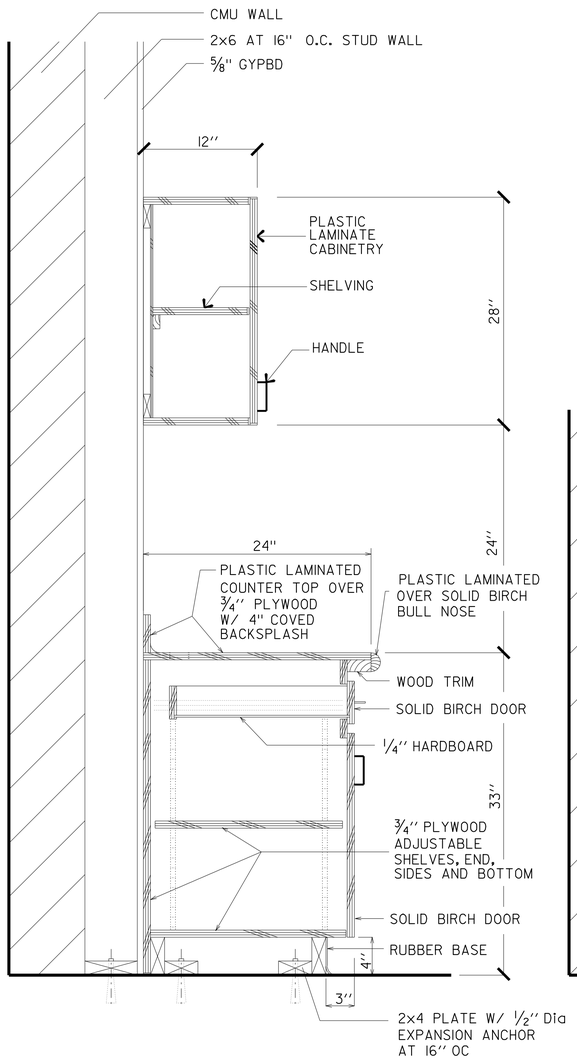

1 MAINTENANCE CREW ROOM

SCALE: 4" = 1'-0"

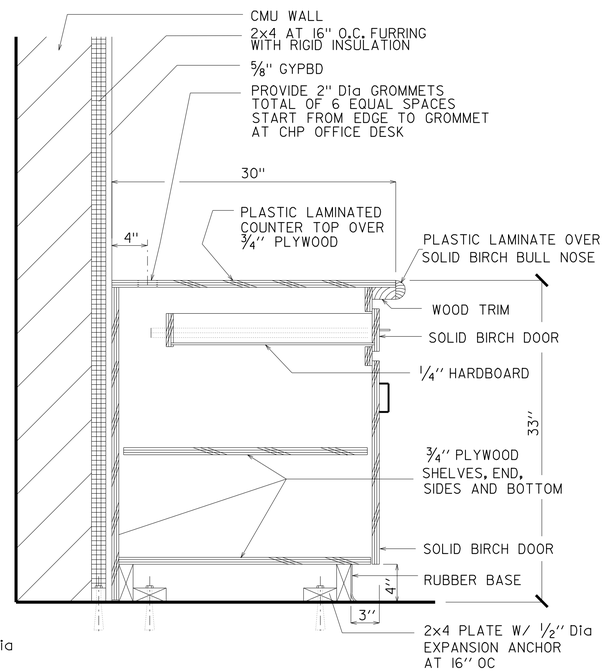

2 CHP OFFICE CABINET

SCALE: 4" = 1'-0"

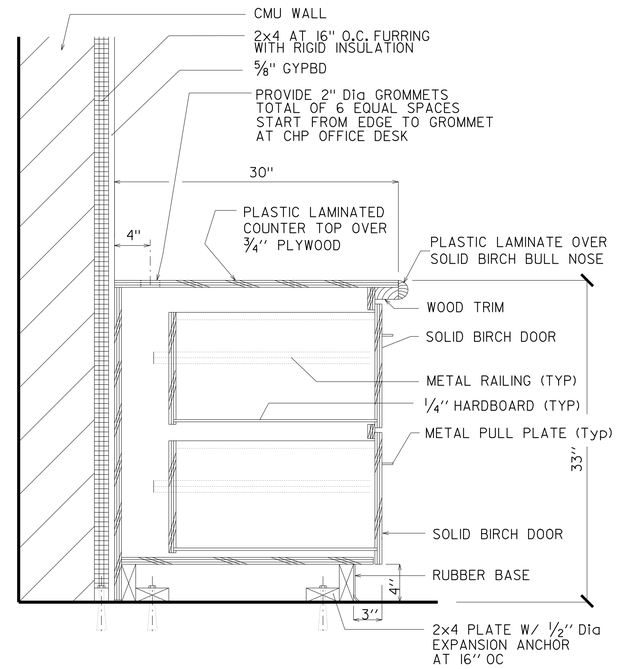

3 CHP OFFICE FILING CABINET

SCALE: 4" = 1'-0"

DESIGN	BY HASSAN AKHAVAN	CHECKED Donald E. Alsey	
DETAILS	BY ROBERT QUIBIN	CHECKED D. E. ALSEY	
QUANTITIES	BY	CHECKED CECILIA FAUST	

STATE OF CALIFORNIA
DEPARTMENT OF TRANSPORTATION

DIVISION OF ENGINEERING SERVICES
ARCHITECTURAL AND STRUCTURAL DESIGN

BRIDGE NO. 57R0001R 57R0001R
POST MILE R59.4/R60.0

ALISO CREEK SAFETY ROADSIDE REST AREA

BREAK ROOM AND CHP OFFICE CABINETS DETAIL

SHEET **A6-9**

a6_09_cabinet_detM.dgn
DS OSD Imperial Rev. 10/07 24-JUN-2010 11:23

ORIGINAL SCALE IN INCHES FOR REDUCED PLANS 0 1 2 3

CU 11-340
EA 11-261401

DISREGARD PRINTS BEARING EARLIER REVISION DATES → MAY 09 DEC 09

REVISION DATES (PRELIMINARY STAGE ONLY) SHEET OF

24-JUN-2010 11:23

a6_09_cabinet_detM.dgn

DIST.	COUNTY	ROUTE	POST MILES TOTAL PROJECT	SHEET NO.	TOTAL SHEETS
11	SD	5	R59.4/R60.0	155	241

LICENSED ARCHITECT

DEC 09

LICENSED ARCHITECT HASSAN AKHAVAN No. C-20451 Exp. 04-30-11 STATE OF CALIFORNIA

6-21-10
PLANS APPROVAL DATE

The State of California or its officers or agents shall not be responsible for the accuracy or completeness of electronic copies of this plan sheet.

ACCESSIBILITY DESIGN APPROVAL STAMP DOT / DES / OTA

11-261401

Reviewed by:

Date: 09-01-09

CALIFORNIA STATE FIRE MARSHAL APPROVED

Approval of this plan does not authorize or approve any omission or deviation from applicable regulations. Final approval is subject to field inspection. One set of approved plans shall be available on the project site at all times.

Reviewed by: BILL ROBERTSON DSFM III

Approval date: 11-04-09

CSFM #: 01-37-11-0033

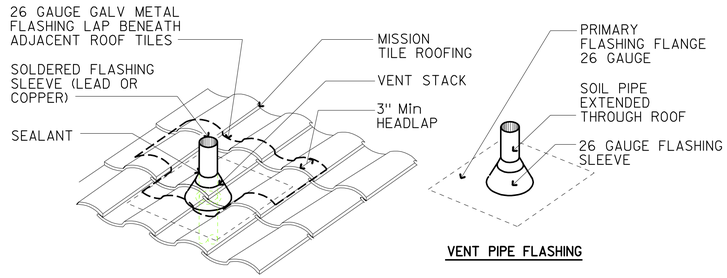

1 ROOF VENT

REFER TO MECHANICAL DRAWINGS FOR LOCATIONS — NO SCALE

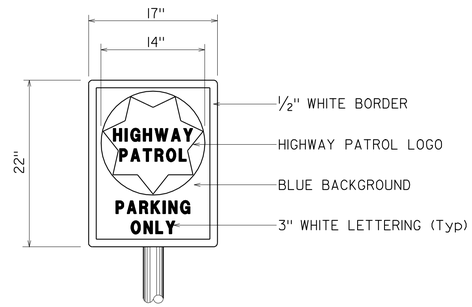

4 CHP VEHICLE PARKING SIGN

PER CODE S34 — NO SCALE

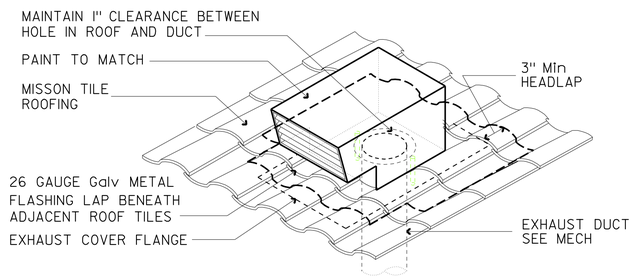

2 EXHAUST ROOF JACK

REFER TO MECHANICAL DRAWINGS FOR LOCATIONS — NO SCALE

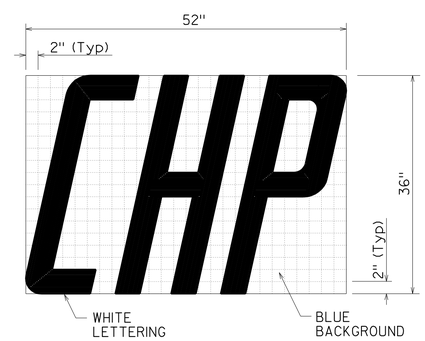

5 CHP VEHICLE PARKING SIGN

PER CODE S34 — NO SCALE

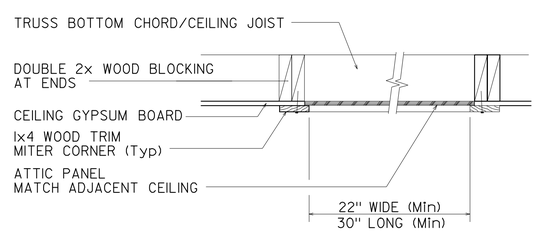

3 ATTIC ACCESS

SCALE 2" = 1'-0"

DESIGN	BY HASSAN AKHAVAN	CHECKED Donald E. Alvarez	
DETAILS	BY ROBERT QUIBIN	CHECKED Donald E. Alvarez	
QUANTITIES	BY	CHECKED	

STATE OF CALIFORNIA DEPARTMENT OF TRANSPORTATION

DIVISION OF ENGINEERING SERVICES ARCHITECTURAL AND STRUCTURAL DESIGN

BRIDGE NO. 57R0001R 57R0001R
POST MILE R59.4/R60.0

ALISO CREEK SAFETY ROADSIDE REST AREA

SIGN AND GLASS BLOCK DETAILS

SHEET A6-10

a6_10_miscellaneous_detM.dgn
DS OSD Imperial Rev. 10/07 24-JUN-2010 10:34

ORIGINAL SCALE IN INCHES FOR REDUCED PLANS 0 1 2 3

CU 11-340
EA 11-261401

DISREGARD PRINTS BEARING EARLIER REVISION DATES → JULY-09 DEC 09

REVISION DATES (PRELIMINARY STAGE ONLY) SHEET OF

24-JUN-2010 10:34

a6_10_miscellaneous_detM.dgn

DIST.	COUNTY	ROUTE	POST MILES TOTAL PROJECT	SHEET NO.	TOTAL SHEETS
11	SD	5	R59.4,R60.0	156	241

LICENSED ARCHITECT

LICENSED ARCHITECT
HASSAN AKHAVAN
No. C-20451
Exp. 04-30-11
STATE OF CALIFORNIA

6-21-10
PLANS APPROVAL DATE

The State of California or its officers or agents shall not be responsible for the accuracy or completeness of electronic copies of this plan sheet.

ACCESSIBILITY DESIGN APPROVAL STAMP DOT / DES / OTA

11-261401

Reviewed by:

Date: 09-01-09

CALIFORNIA STATE FIRE MARSHAL APPROVED

Approval of this plan does not authorize or approve any omission or deviation from applicable regulations. Final approval is subject to field inspection. One set of approved plans shall be available on the project site at all times.

Reviewed by: BILL ROBERTSON DSFM III

Approval date: 11-04-09

CSFM #: 01-37-11-0033

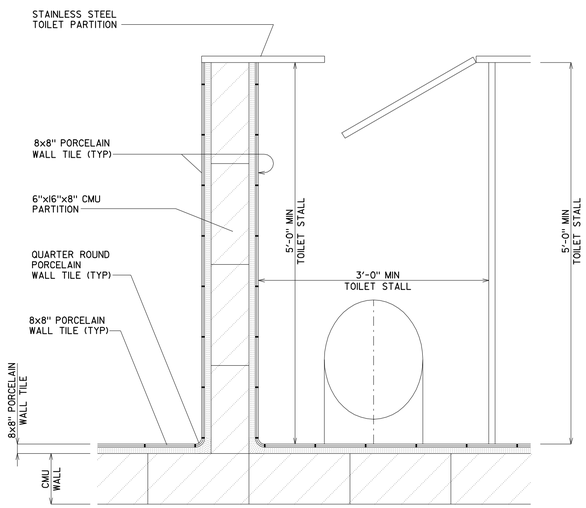

1 **CMU PARTITION DETAIL - PLAN**

SCALE x" = 1'-0"

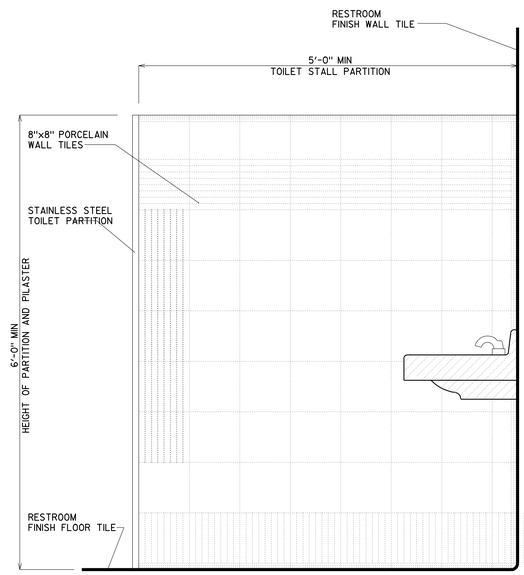

2 **CMU PARTITION SIDE ELEVATION**

SCALE x" = 1'-0"

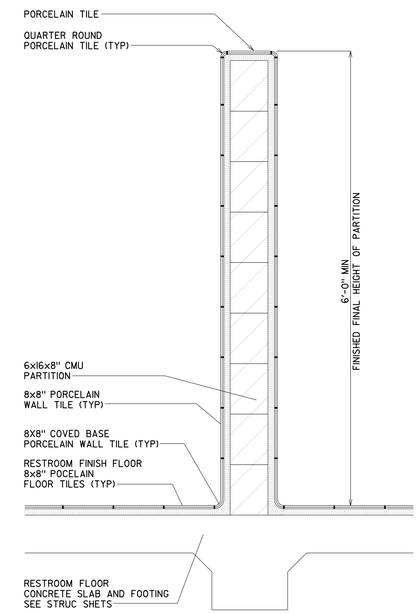

3 **CMU PARTITION SIDE SECTION**

SCALE x" = 1'-0"

DESIGN	BY HASSAN AKHAVAN	CHECKED Ronald E. Alsey	
DETAILS	BY ROBERT QUIBIN	CHECKED Ronald E. Alsey	
QUANTITIES	BY	CHECKED	

STATE OF CALIFORNIA
DEPARTMENT OF TRANSPORTATION

DIVISION OF ENGINEERING SERVICES
ARCHITECTURAL AND STRUCTURAL DESIGN

BRIDGE NO. 57R0001R 57R0001R
POST MILE R59.4/R60.0

ALISO CREEK SAFETY ROADSIDE REST AREA

SOUTHBOUND NEW BUILDINGS 1&2

LAV DETAIL

SHEET **A6-11**

a6_11_LAV_detM.dgn
DS OSD Imperial Rev. 10/07 24-JUN-2010 08:12

ORIGINAL SCALE IN INCHES FOR REDUCED PLANS 0 1 2 3

CU 11-340
EA 11-261401

DISREGARD PRINTS BEARING EARLIER REVISION DATES →

REVISION DATES (PRELIMINARY STAGE ONLY): JULY 09 DEC 09

SHEET OF

24-JUN-2010 08:12

a6_11_LAV_detM.dgn

DIST.	COUNTY	ROUTE	POST MILES TOTAL PROJECT	SHEET NO.	TOTAL SHEETS
11	SD	5	R59.4,R60.0	157	241

LICENSED ARCHITECT

LICENSED ARCHITECT HASSAN AKHAVAN No. C-20451 Exp. 04-30-11 STATE OF CALIFORNIA

DEC '09

6-21-10
PLANS APPROVAL DATE

The State of California or its officers or agents shall not be responsible for the accuracy or completeness of electronic copies of this plan sheet.

ACCESSIBILITY DESIGN APPROVAL STAMP DOT / DES / OTA

11-261401

Reviewed by:

Date: 09-01-09

CALIFORNIA STATE FIRE MARSHAL APPROVED

Approval of this plan does not authorize or approve any omission or deviation from applicable regulations. Final approval is subject to field inspection. One set of approved plans shall be available on the project site at all times.

Reviewed by: BILL ROBERTSON DSFM III

Approval date: 11-04-09

CSFM #: 01-37-11-0033

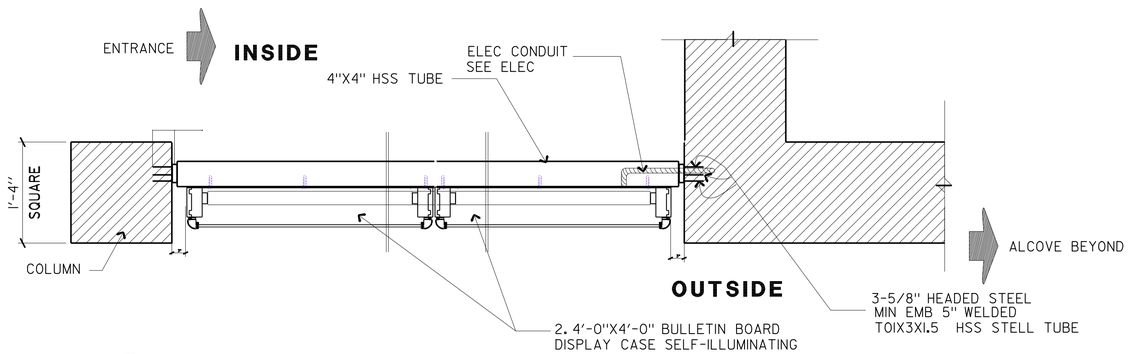

1 BULLETIN BOARD DISPLAY DETAIL

SCALE: 1" = 1'-0"

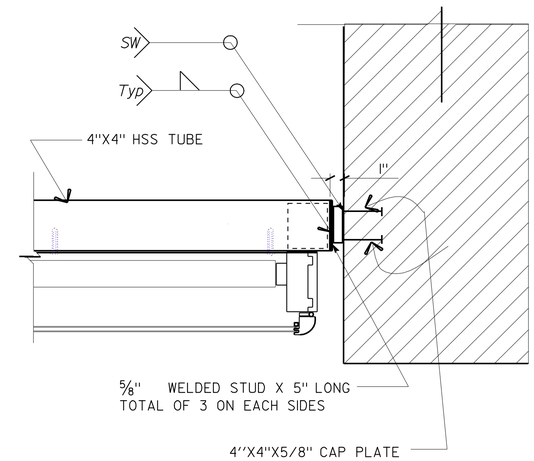

2 BULLETIN BOARD DISPLAY DETAIL

SCALE: 1" = 1'-0"

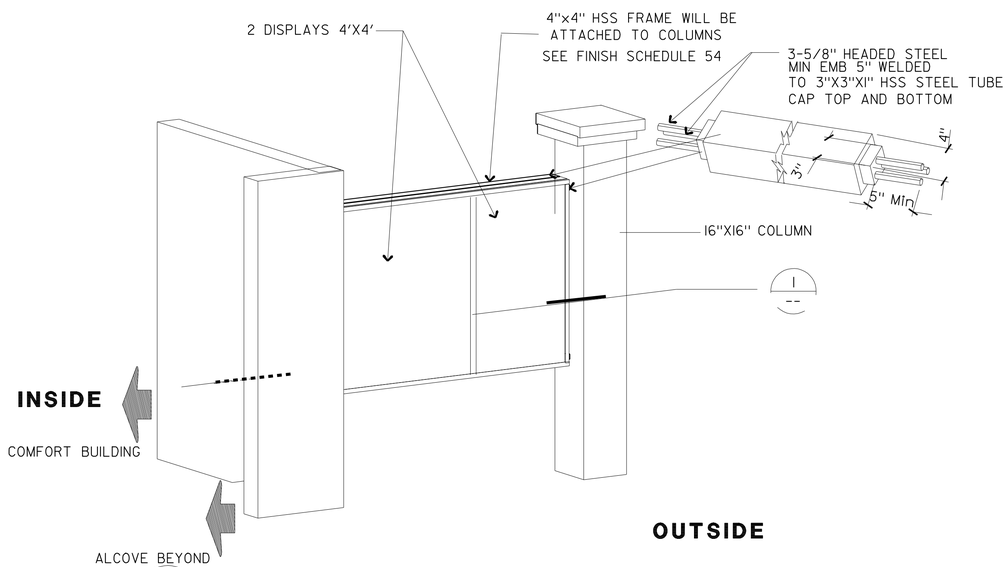

3 PERSPECTIVE BULLETIN BOARD DISPLAY

NO SCALE

DESIGN	BY HASSAN AKHAVAN	CHECKED Ronald E. Alsey	
DETAILS	BY ROBERT QUIBIN	CHECKED Ronald E. Alsey	
QUANTITIES	BY	CHECKED	

STATE OF CALIFORNIA
DEPARTMENT OF TRANSPORTATION

DIVISION OF ENGINEERING SERVICES
ARCHITECTURAL AND STRUCTURAL DESIGN

BRIDGE NO. 57R0001R 57R0001R
POST MILE R59.4/R60.0

ALISO CREEK SAFETY ROADSIDE REST AREA

MISCELLANEOUS DETAILS

SHEET **A6-12**

A6_12_miscellaneous_detM.dgn
DS OSD Imperial Rev. 10/07 24-JUN-2010 08:13

ORIGINAL SCALE IN INCHES FOR REDUCED PLANS 0 1 2 3

CU 11-340
EA 11-261401

DISREGARD PRINTS BEARING EARLIER REVISION DATES →

REVISION DATES (PRELIMINARY STAGE ONLY) JULY 09 DEC 09 SHEET OF

24-JUN-2010 08:13

A6_12_miscellaneous_detM.dgn

DIST.	COUNTY	ROUTE	POST MILES TOTAL PROJECT	SHEET NO.	TOTAL SHEETS
11	SD	5	R59.4,R60.0	158	241

LICENSED ARCHITECT

REC 09

LICENSED ARCHITECT HASSAN AKHAVAN No. C-20451 Exp. 04-30-11 STATE OF CALIFORNIA

6-21-10
PLANS APPROVAL DATE

The State of California or its officers or agents shall not be responsible for the accuracy or completeness of electronic copies of this plan sheet.

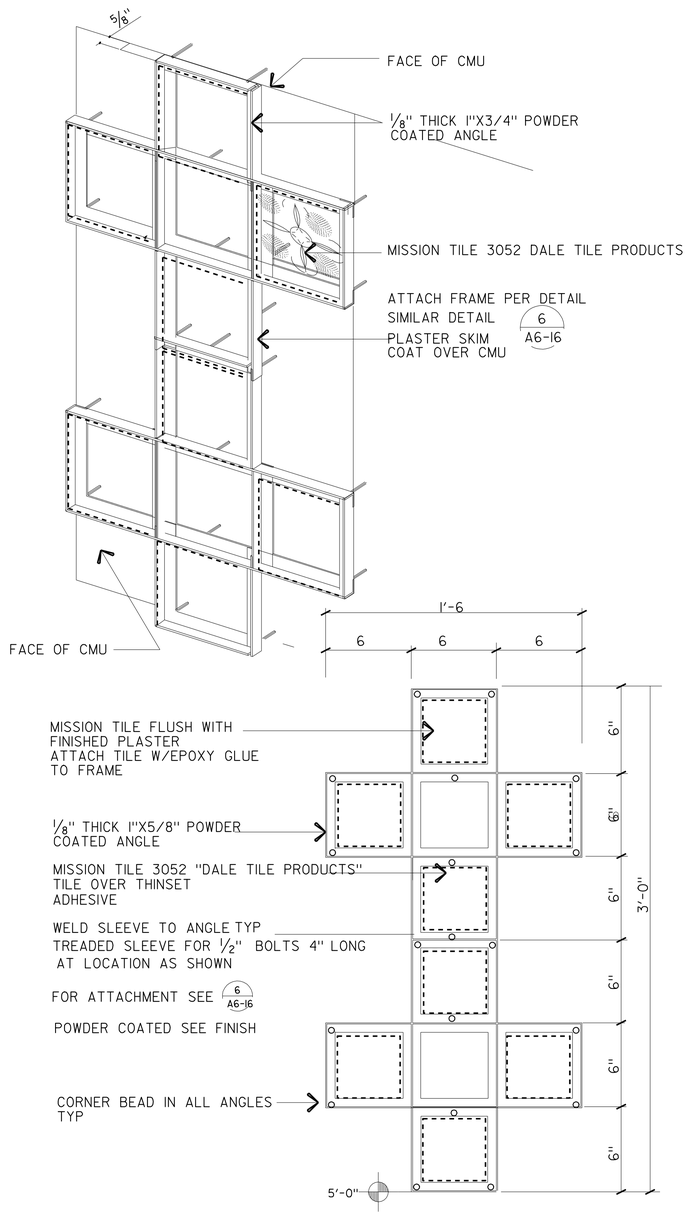

4 TILE FRAME DETAIL
SCALE: ? = 1'-0"

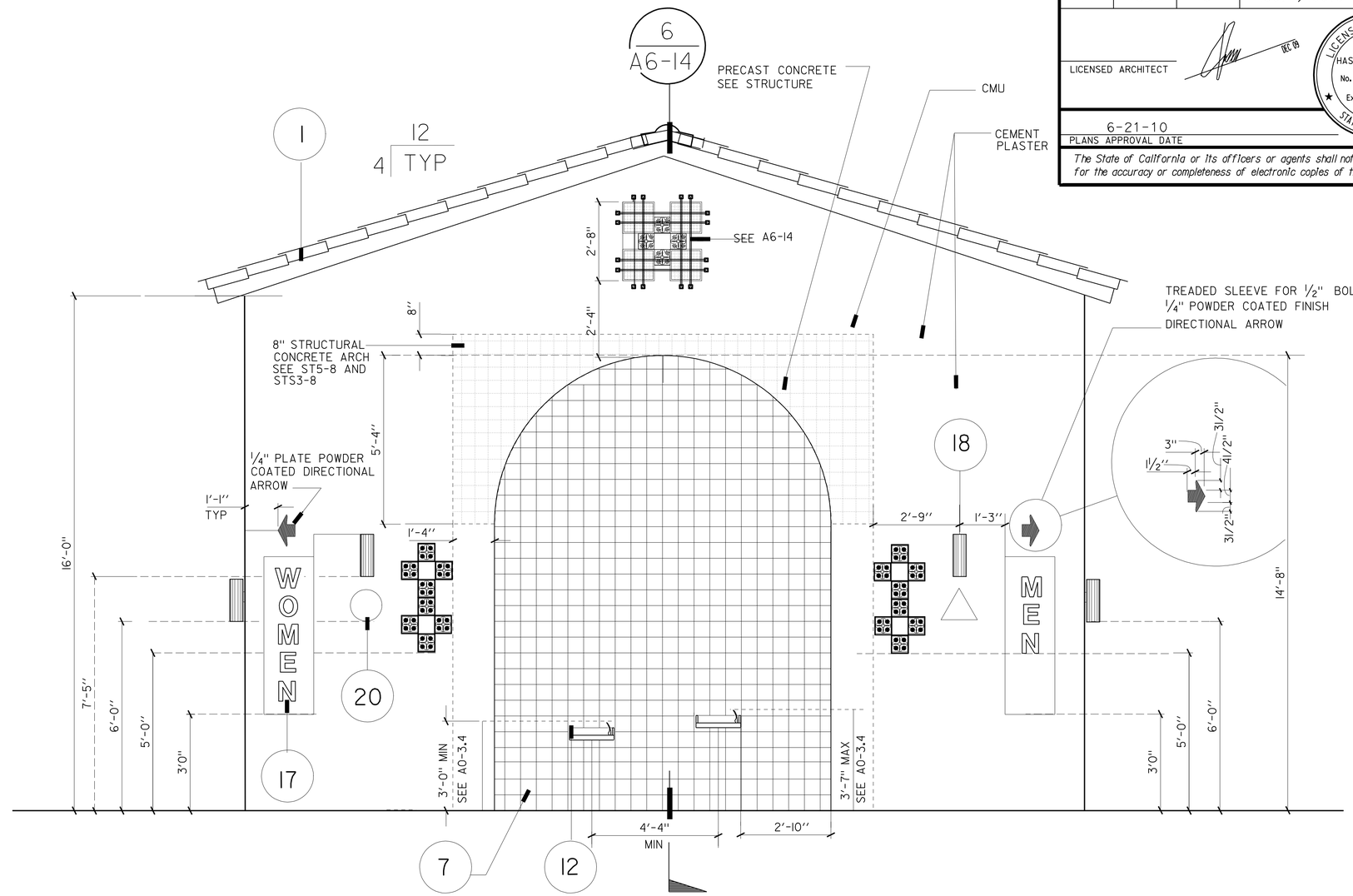

5 MAIN ELEVATION
SCALE: 1/2"= 1'-0"

KEY NOTES :

1 MISSION TILE ROOFING
7 CERAMIC TILE FACE IN ALCOVE 3052 DALE TILE (DALETILEPROUDUCTS WEB SITE) OR EQUAL
12 DRINKING FOUNTAIN SEE MECH A0-3.4
17 RESTROOM SIGNAGE SEE SHEET A6-16
18 LIGHT FIXTURE (SEE ELEC)
20 ACCESSIBLE SIGNAGE SEE SHEET A0-3.3 DETAILS 3,4&5.

ACCESSIBILITY DESIGN APPROVAL STAMP DOT / DES / OTA
11-261401
Reviewed by:
Date: 09-01-09

CALIFORNIA STATE FIRE MARSHAL APPROVED
Approval of this plan does not authorize or approve any omission or deviation from applicable regulations. Final approval is subject to field inspection. One set of approved plans shall be available on the project site at all times.
Reviewed by:
BILL ROBERTSON DSFM III
Approval date: 11-04-09
CSFM #: 01-37-11-0033

DESIGN	BY HASSAN AKHAVAN	CHECKED Donald E. Mary	
DETAILS	BY ROBERT QUIBIN	CHECKED Donald E. Mary	
QUANTITIES	BY	CHECKED	

STATE OF CALIFORNIA
DEPARTMENT OF TRANSPORTATION

DIVISION OF ENGINEERING SERVICES
ARCHITECTURAL AND STRUCTURAL DESIGN

BRIDGE NO. 57R000IR 57R000IR
POST MILE R59.4/R60.0

ALISO CREEK SAFETY ROADSIDE REST AREA

MISCELLANEOUS DETAILS

SHEET **A6-13**

a6_13_miscellaneous_detCHECKSECTIONM.dgn
DS OSD Imperial Rev. 10/07 24-JUN-2010 08:13

ORIGINAL SCALE IN INCHES FOR REDUCED PLANS 0 1 2 3

CU 11-340
EA 11-261401

DISREGARD PRINTS BEARING EARLIER REVISION DATES → JULY 09 DEC 09

REVISION DATES (PRELIMINARY STAGE ONLY) SHEET OF

24-JUN-2010 08:13
a6_13_miscellaneous_detCHECKSECTIONM.dgn

DIST.	COUNTY	ROUTE	POST MILES TOTAL PROJECT	SHEET NO.	TOTAL SHEETS
11	SD	5	R59.4,R60.0	159	241

LICENSED ARCHITECT

LICENSED ARCHITECT HASSAN AKHAVAN No. C-20451 Exp. 04-30-11 STATE OF CALIFORNIA

6-21-10
PLANS APPROVAL DATE

The State of California or its officers or agents shall not be responsible for the accuracy or completeness of electronic copies of this plan sheet.

ACCESSIBILITY DESIGN APPROVAL STAMP DOT / DES / OTA

11-261401

Reviewed by:

Date: 09-01-09

CALIFORNIA STATE FIRE MARSHAL APPROVED

Approval of this plan does not authorize or approve any omission or deviation from applicable regulations. Final approval is subject to field inspection. One set of approved plans shall be available on the project site at all times.

Reviewed by: BILL ROBERTSON DSFM III

Approval date: 11-04-09

CSFM #: 01-37-11-0033

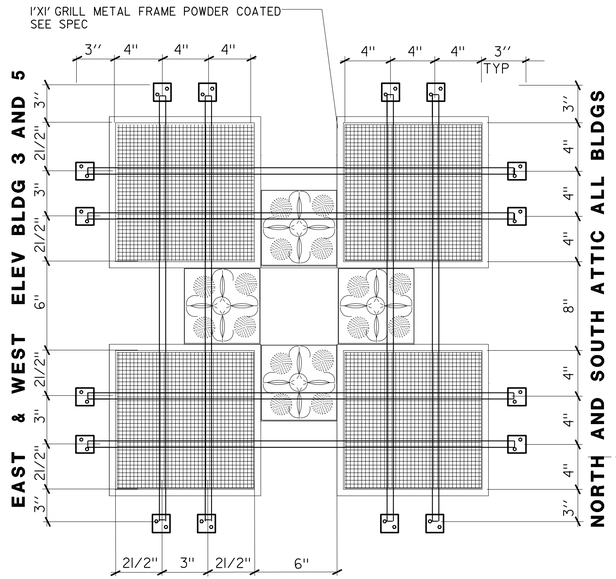

1 GRILL DETAIL AT ATTIC INSECT SCREEN

SCALE: 1"=1'-0"

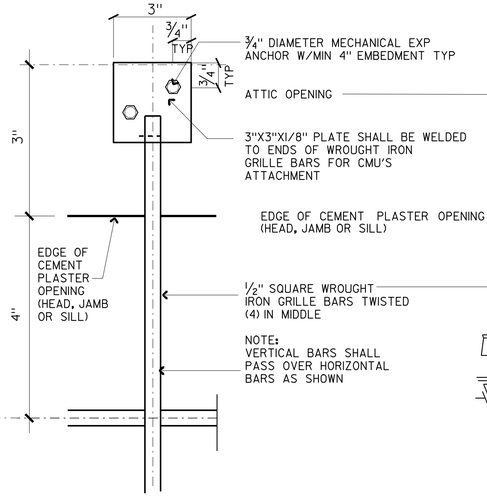

2 GRILL ATTACHMENT TYP

NO SCALE

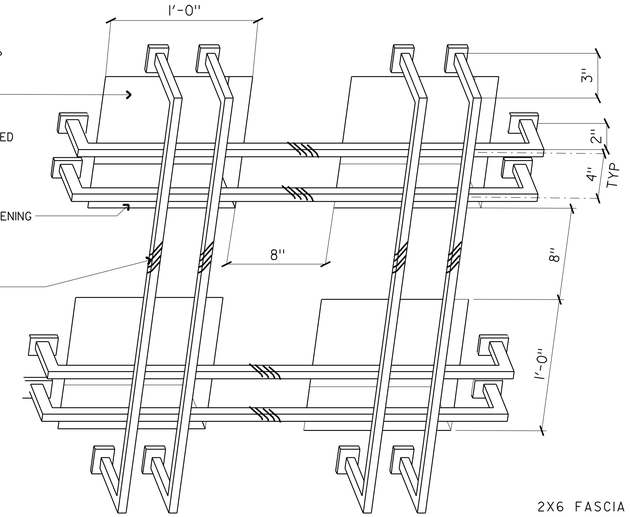

3 INSECT SCREEN PERSPECTIVE

NO SCALE

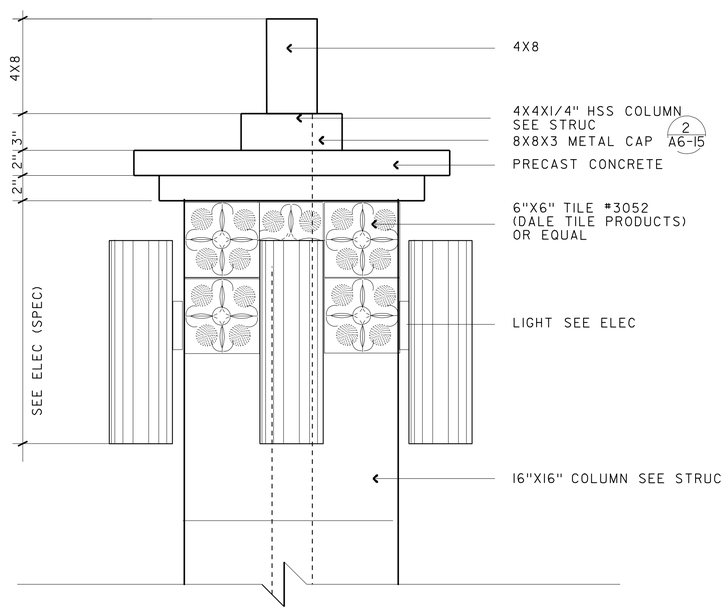

5 TRELLIS AND COLUMN ATTACHMENT

SCALE: 1"=1'-0"

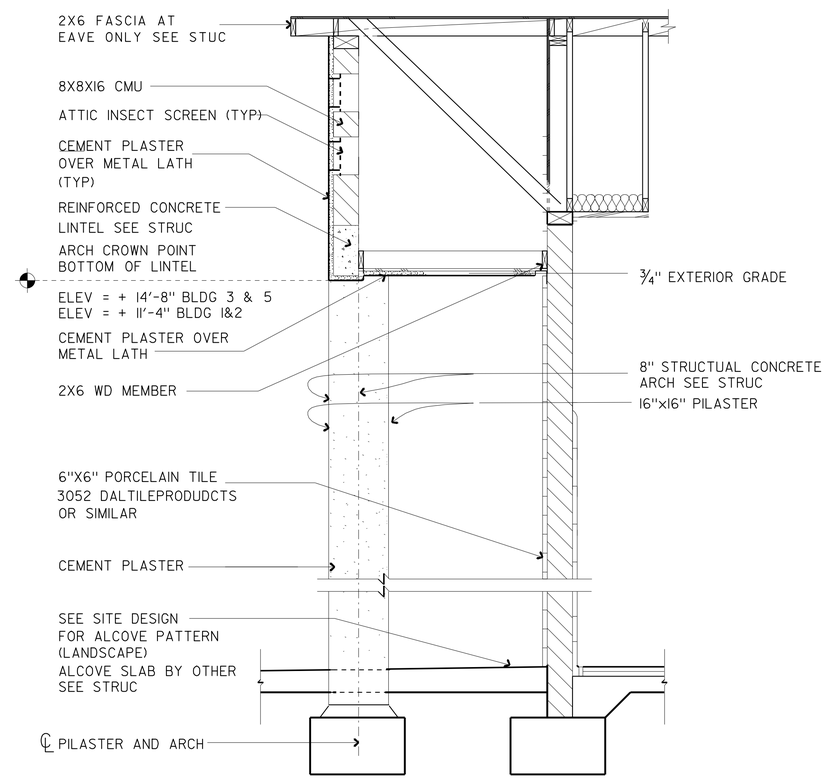

6 SECTION THROGH ALCOVE

SCALE: 1/4" = 1'-0"

DESIGN	BY HASSAN AKHAVAN	CHECKED Donald E. Alsey	
DETAILS	BY ROBERT QUIBIN	CHECKED Donald E. Alsey	
QUANTITIES	BY	CHECKED	

STATE OF CALIFORNIA DEPARTMENT OF TRANSPORTATION

DIVISION OF ENGINEERING SERVICES ARCHITECTURAL AND STRUCTURAL DESIGN

BRIDGE NO. 57R0001R 57R0001R
POST MILE R59.4/R60.0

ALISO CREEK SAFETY ROADSIDE REST AREA

GRILL AND ALCOVE DETAILS

SHEET **A6-14**

a6_14_grill_sec_alcove_detCH_PCCFOUNDATIONM.dgn
DS OSD Imperial Rev. 10/07 28-JUN-2010 14:11

ORIGINAL SCALE IN INCHES FOR REDUCED PLANS 0 1 2 3

CU 11-340
EA 11-261401

DISREGARD PRINTS BEARING EARLIER REVISION DATES

REVISION DATES (PRELIMINARY STAGE ONLY) JULY 09 DEC 09 SHEET OF

28-JUN-2010 14:11

a6_14_grill_sec_alcove_detCH_PCCFOUNDATIONM.dgn

ACCESSIBILITY DESIGN APPROVAL STAMP DOT / DES / OTA	CALIFORNIA STATE FIRE MARSHAL APPROVED
11-261401	Approval of this plan does not authorize or approve any omission or deviation from applicable regulations. Final approval is subject to field inspection. One set of approved plans shall be available on the project site at all times.
Reviewed by:	Reviewed by: BILL ROBERTSON DSFM III
Date: 09-01-09	Approval date: 11-04-09
	CSFM #: 01-37-11-0033

DIST.	COUNTY	ROUTE	POST MILES TOTAL PROJECT	SHEET NO.	TOTAL SHEETS
11	SD	5	R59.4,R60.0	160	241

LICENSED ARCHITECT

LICENSED ARCHITECT HASSAN AKHAVAN No. C-20451 Exp. 04-30-11 STATE OF CALIFORNIA

6-21-10

The State of California or its officers or agents shall not be responsible for the accuracy or completeness of electronic copies of this plan sheet.

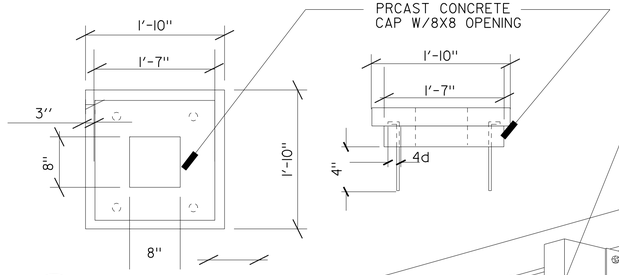

1 **PRECAST CONCRETE CAP**
NO SCALE

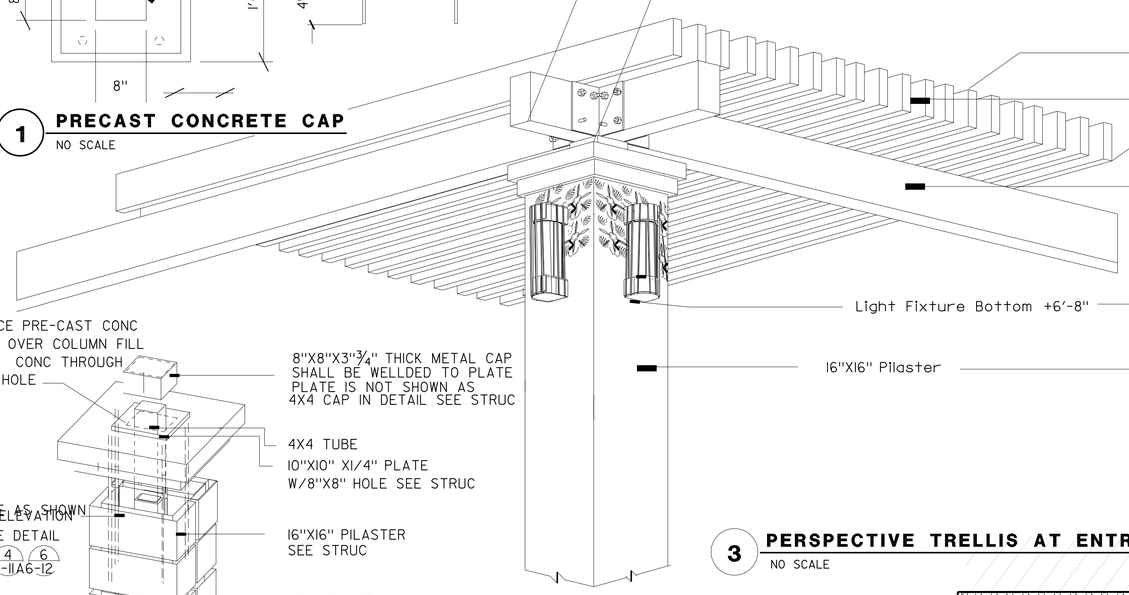

3 **PERSPECTIVE TRELLIS AT ENTRANCE**
NO SCALE

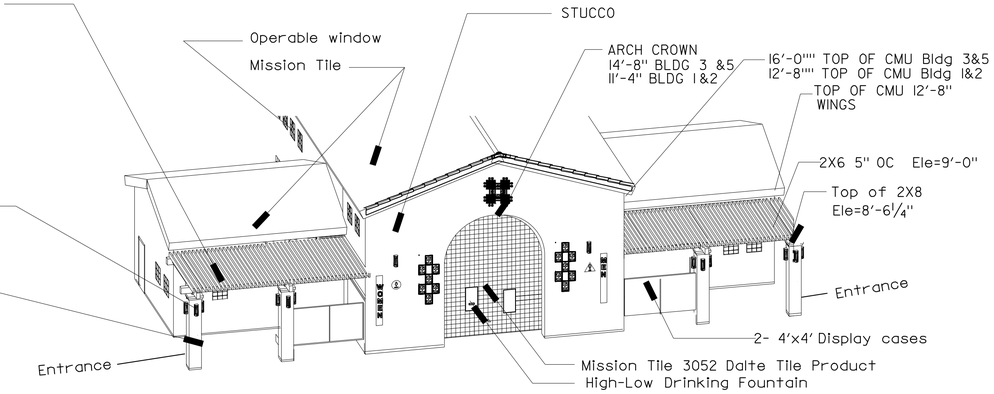

4 **MAIN ELEVATION PERSPECTIVE**
NO SCALE
BUILDING 3 & 5

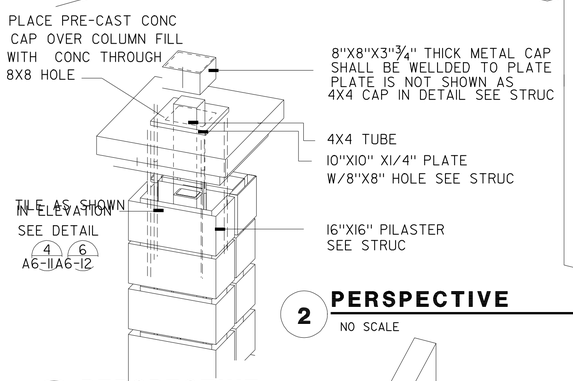

2 **PERSPECTIVE**
NO SCALE

7 **PERSPECTIVE**
NO SCALE

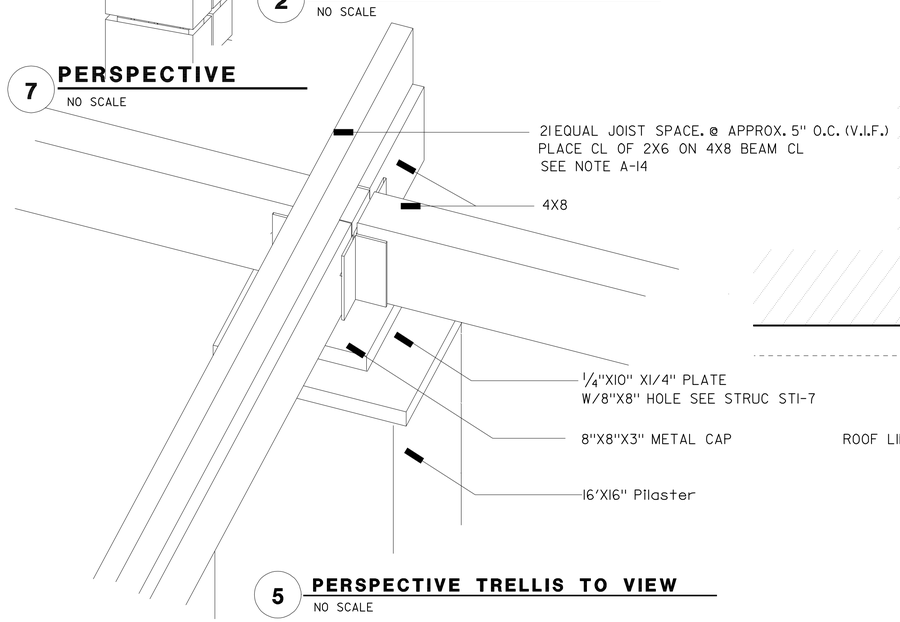

5 **PERSPECTIVE TRELLIS TO VIEW**
NO SCALE

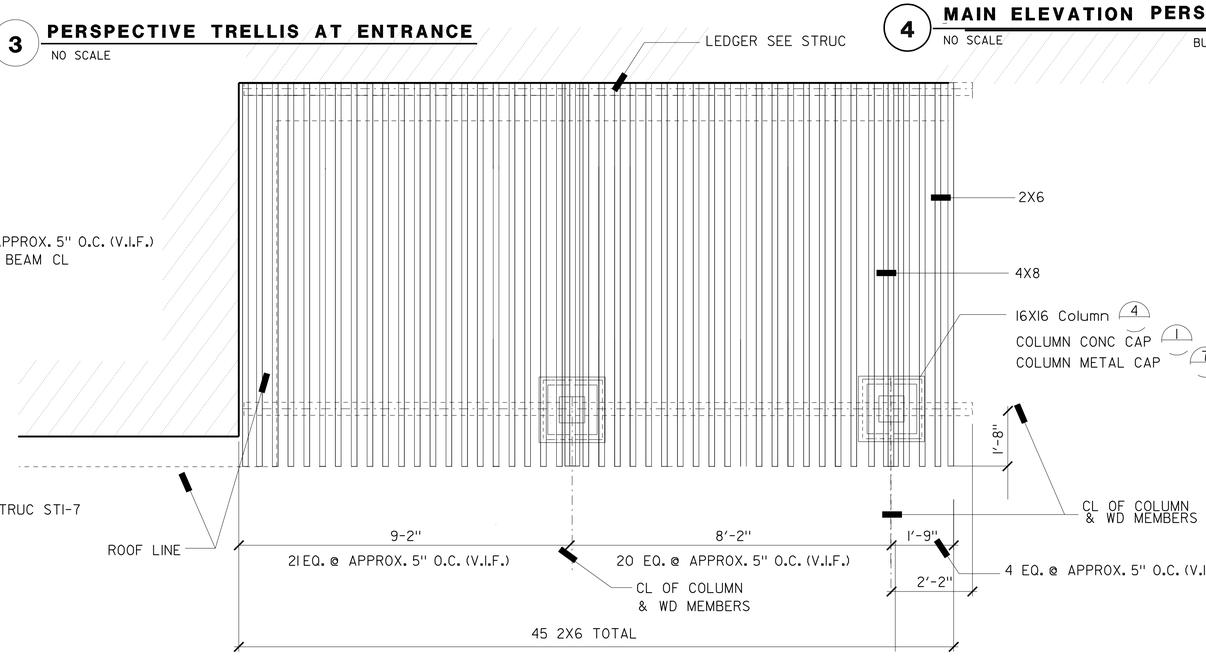

6 **TRELLIS PLAN**
NO SCALE

NOTE:
1- STARTING POINT FOR SPACING OF 2"X6" WD MEMBERS BEGIN FROM CL OF COLUMN AND WD MEMBERS AS SHOWN ON PLAN U.N.O.
2 - ALL METAL FRAMES AND CONNECTION POWDER COATED SEE FINISH SCHEDULE

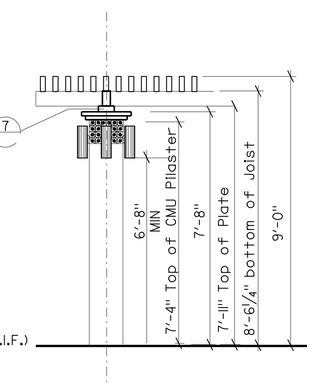

7 **COLUMN AND CAP**
NO SCALE

DESIGN	BY HASSAN AKHAVAN	CHECKED Ronald E. Alsey	
DETAILS	BY ROBERT QUIBIN	CHECKED Ronald E. Alsey	
QUANTITIES	BY	CHECKED	

STATE OF CALIFORNIA
DEPARTMENT OF TRANSPORTATION

DIVISION OF ENGINEERING SERVICES
ARCHITECTURAL AND STRUCTURAL DESIGN

BRIDGE NO. 57R0001R 57R0001R
POST MILE R59.4/R60.0

ALISO CREEK SAFETY ROADSIDE REST AREA

TRELLIS DETAIL

SHEET **A6-15**

a6_15_perspective_column_detPCCM.dgn
DS OSD Imperial Rev. 10/07 24-JUN-2010 08:36

ORIGINAL SCALE IN INCHES FOR REDUCED PLANS 0 1 2 3

CU 11-340
EA 11-261401

DISREGARD PRINTS BEARING EARLIER REVISION DATES → JULY 09 DEC 09

REVISION DATES (PRELIMINARY STAGE ONLY) SHEET OF

24-JUN-2010 08:36

a6_15_perspective_column_detPCCM.dgn

DIST.	COUNTY	ROUTE	POST MILES TOTAL PROJECT	SHEET NO.	TOTAL SHEETS
11	SD	5	R59.4,R60.0	161	241

LICENSED ARCHITECT

LICENSED ARCHITECT HASSAN AKHAVAN No. C-20451 Exp. 04-30-11 STATE OF CALIFORNIA

6-21-10
PLANS APPROVAL DATE

The State of California or its officers or agents shall not be responsible for the accuracy or completeness of electronic copies of this plan sheet.

ACCESSIBILITY DESIGN APPROVAL STAMP DOT / DES / OTA

11-261401

Reviewed by:

Date: 09-01-09

CALIFORNIA STATE FIRE MARSHAL APPROVED

Approval of this plan does not authorize or approve any omission or deviation from applicable regulations. Final approval is subject to field inspection. One set of approved plans shall be available on the project site at all times.

Reviewed by: BILL ROBERTSON DSFM III

Approval date: 11-04-09

CSFM #: 01-37-11-0033

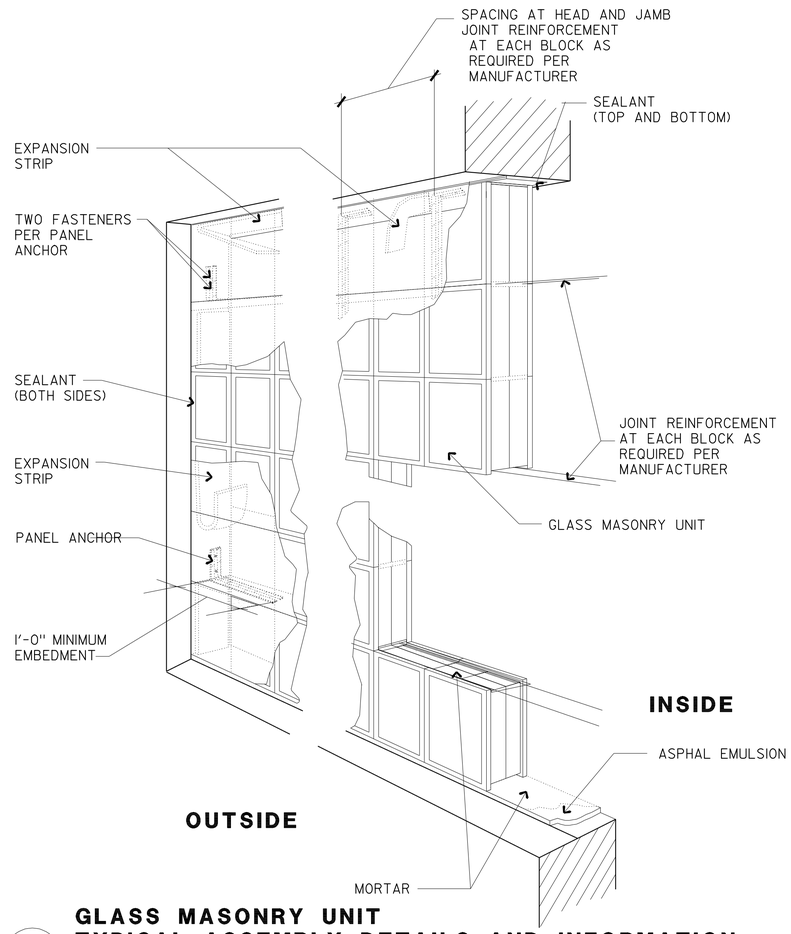

1 GLASS MASONRY UNIT TYPICAL ASSEMBLY DETAILS AND INFORMATION

NO SCALE

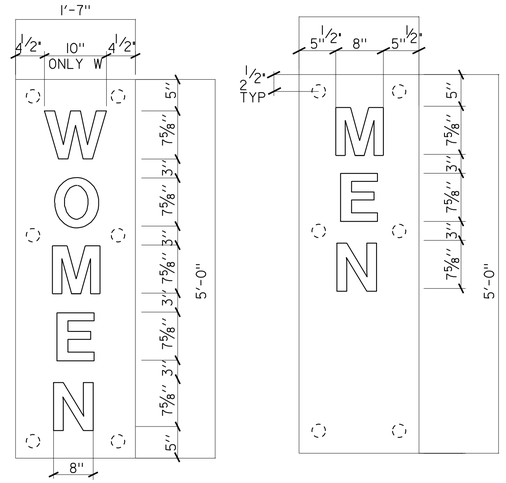

2 LASER CUT SIGN 1/4" PLATE

NO SCALE

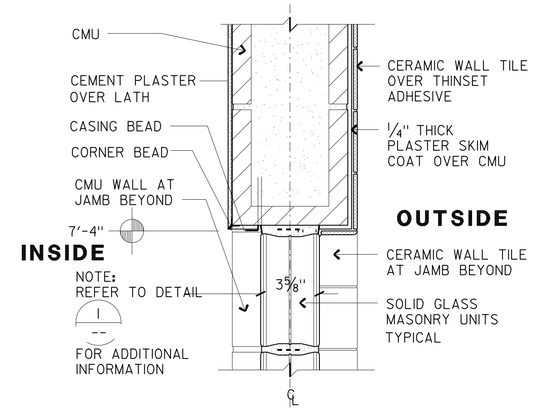

3 SOLID GLASS MASONRY

SCALE : 3" = 1'-0"

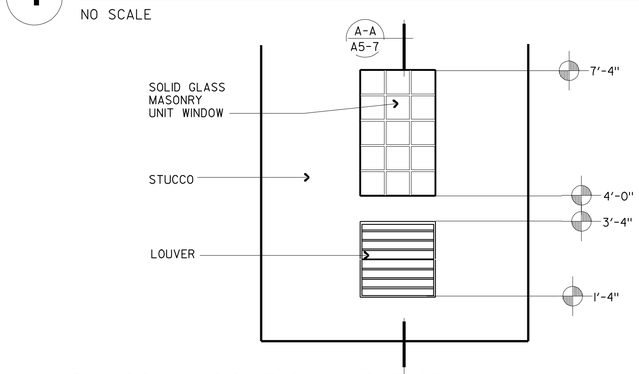

4 GLASS MASONRY UNIT TYP

SCALE: 1/2" = 1'-0"

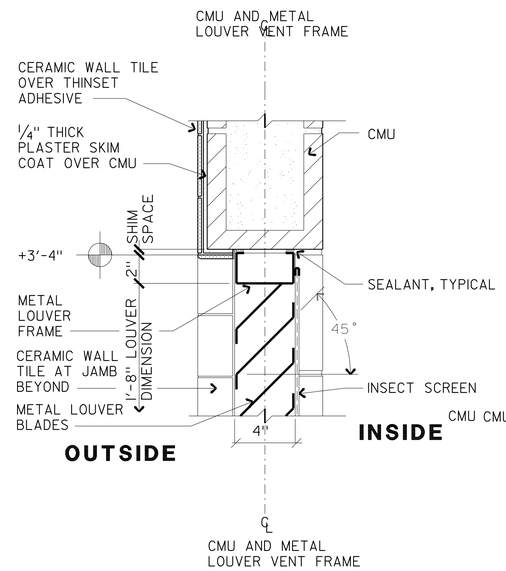

5 LOUVER VENT HEAD

SCALE: 3" = 1'-0"

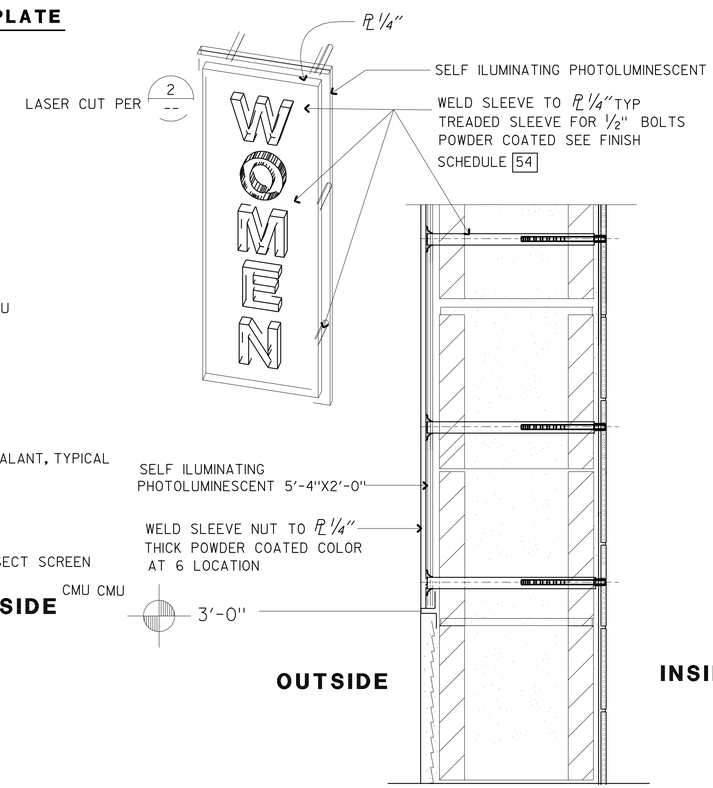

WROUGHT IRON GRILLE WALL BRACKET DETAIL

6 SCALE: ? = 1'-0"

DESIGN	BY HASSAN AKHAVAN	CHECKED Ronald E. Alvarez	
DETAILS	BY ROBERT QUIBIN	CHECKED Ronald E. Alvarez	
QUANTITIES	BY	CHECKED	

STATE OF CALIFORNIA DEPARTMENT OF TRANSPORTATION

DIVISION OF ENGINEERING SERVICES ARCHITECTURAL AND STRUCTURAL DESIGN

BRIDGE NO. 57R000IR 57R000IR
POST MILE R59.4/R60.0

ALISO CREEK SAFETY ROADSIDE REST AREA

ALL BUILDINGS | SIGN AND GLASS BLOCK DETAILS

SHEET **A6-16**

A6_16M.dgn
DS OSD Imperial Rev. 10/07 24-JUN-2010 08:13

ORIGINAL SCALE IN INCHES FOR REDUCED PLANS 0 1 2 3

CU 11-340
EA 11-261401

DISREGARD PRINTS BEARING EARLIER REVISION DATES → JULY-09 DEC 09

REVISION DATES (PRELIMINARY STAGE ONLY) SHEET OF

24-JUN-2010 08:13

A6_16M.dgn

DIST.	COUNTY	ROUTE	POST MILES TOTAL PROJECT	SHEET NO.	TOTAL SHEETS
11	SD	5	R59.4,R60.0	162	241

LICENSED ARCHITECT

LICENSED ARCHITECT HASSAN AKHAVAN No. C-20451 Exp. 04-30-11 STATE OF CALIFORNIA

6-21-10
PLANS APPROVAL DATE

The State of California or its officers or agents shall not be responsible for the accuracy or completeness of electronic copies of this plan sheet.

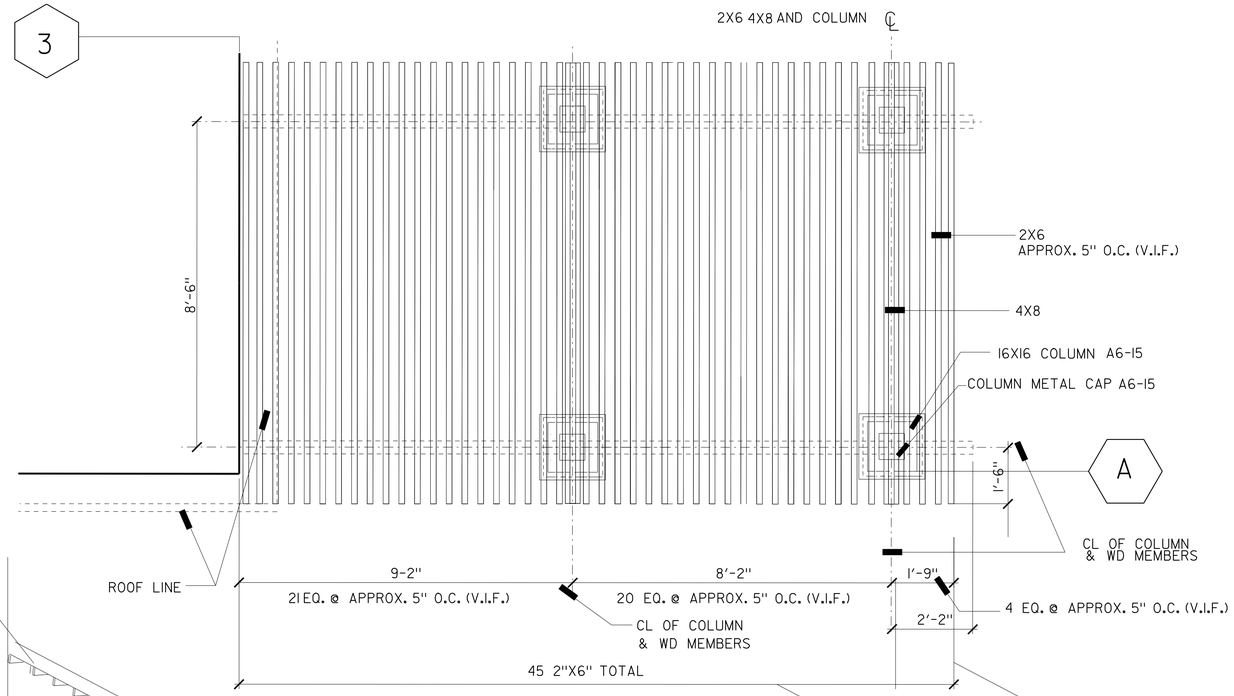

TRELLIS PLAN BULDING A-1

1/2"=1'-0"

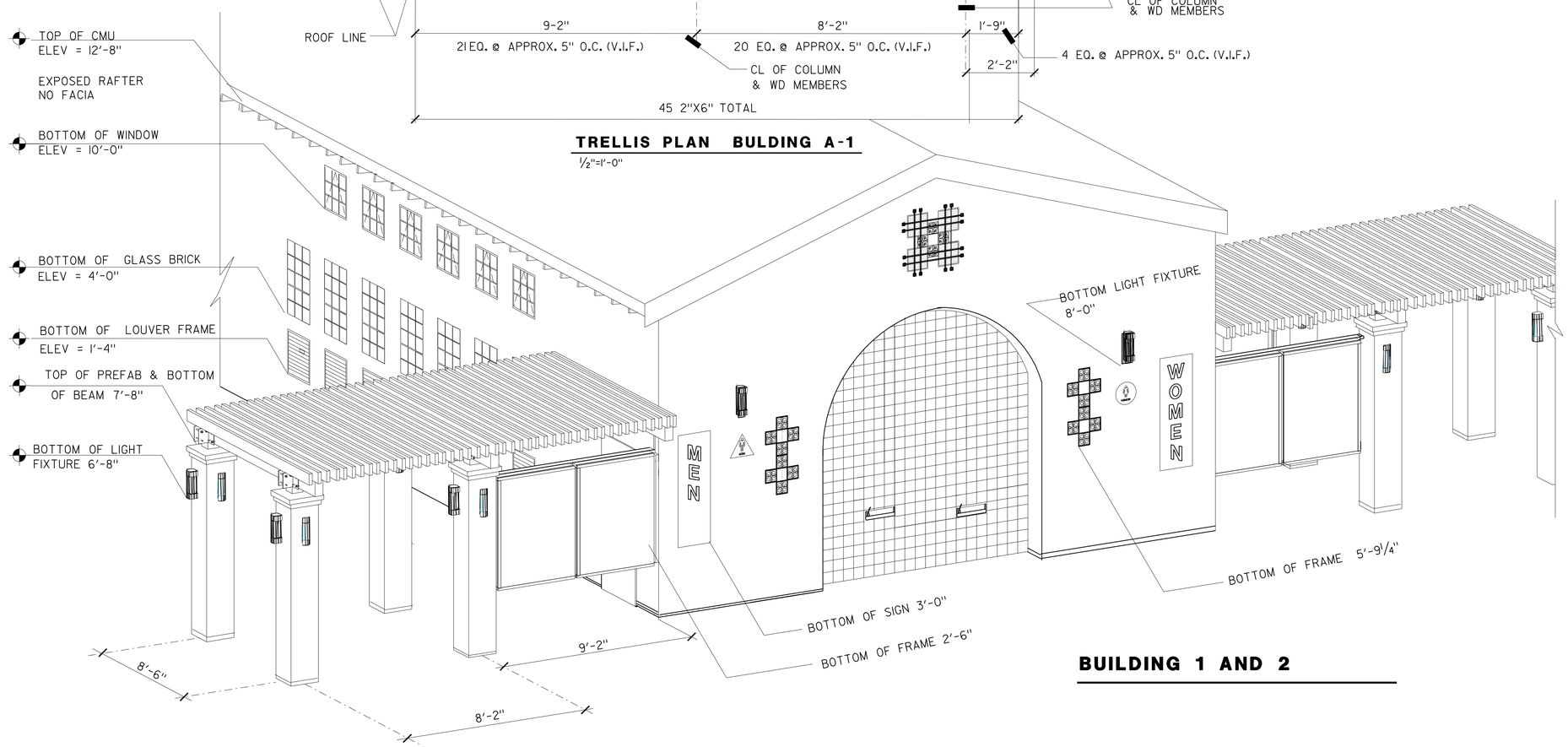

BUILDING 1 AND 2

ACCESSIBILITY DESIGN APPROVAL STAMP DOT / DES / OTA

11-261401

Reviewed by: [signature]

Date: 09-01-09

CALIFORNIA STATE FIRE MARSHAL APPROVED

Approval of this plan does not authorize or approve any omission or deviation from applicable regulations. Final approval is subject to field inspection. One set of approved plans shall be available on the project site at all times.

Reviewed by: [signature]
BILL ROBERTSON DSFM III
Approval date: 11-04-09

CSFM #: 01-37-11-0033

DESIGN	BY HASSAN AKHAVAN	CHECKED Ronald E. Alsey	
DETAILS	BY ROBERT QUIBIN	CHECKED Ronald E. Alsey	
QUANTITIES	BY	CHECKED	

STATE OF CALIFORNIA
DEPARTMENT OF TRANSPORTATION

DIVISION OF ENGINEERING SERVICES
ARCHITECTURAL AND STRUCTURAL DESIGN

BRIDGE NO. 57R0001R 57R0001R
POST MILE R59.4/R60.0

ALISO CREEK SAFETY ROADSIDE REST AREA

SOUTHBOUND NEW BUILDINGS 1&2
NORTHBOUND NEW BUILDINGS 4

PERSPECTIVE

SHEET **A6-17**

A6_17m.dgn
DS OSD Imperial Rev. 10/07 25-JUN-2010 08:46

ORIGINAL SCALE IN INCHES FOR REDUCED PLANS 0 1 2 3

CU 11-340
EA 11-261401

DISREGARD PRINTS BEARING EARLIER REVISION DATES → JULY-09 DEC 09

REVISION DATES (PRELIMINARY STAGE ONLY) SHEET OF

25-JUN-2010 08:46
A6_17m.dgn

DIST.	COUNTY	ROUTE	POST MILES TOTAL PROJECT	SHEET NO.	TOTAL SHEETS
11	SD	5	R59.4,R60.0	163	241

Joseph Camilleri 11-30-09
REGISTERED CIVIL ENGINEER DATE

REGISTERED PROFESSIONAL ENGINEER
Joseph F. Camilleri
No. 3656
Exp. 3-31-10
STRUCTURAL
STATE OF CALIFORNIA

6-21-10
PLANS APPROVAL DATE

The State of California or its officers or agents shall not be responsible for the accuracy or completeness of electronic copies of this plan sheet.

A DESIGN NOTES

1. Design: The building work on this project has been designed to conform to the 2007 California Building Code.

2. Loads : Live Loads : Roof 20 PSF
   Wind: 85 MPH, Exposure C, I=1.0 GC_{pi} = ± 0.18
   Seismic: S_S =1.470g, S_1 =0.554g, Site Class D
   S_{DS}=0.980g, S_{D1}=0.554g, Seismic Design Category D
   C_S =0.20, R = 5.0, I = 1.0, Occupancy Category II
   Bearing Wall System:
   Special Reinforced Masonry Shear Wall
   Equivalent Lateral Force Analysis
   V = 92 Kips

3. Structural Steel : f_y = 50,000 PSI Min
   Structural Tube: f_y = 46,000 PSI Min

4. Reinforced Concrete Masonry Units (Allowable Stress Design)
   f'm = 1,500 psi
   fy = 60,000 psi
   Concrete Masonry Units fully grouted and special inspection.

5. Reinforced Concrete : f'c = 3,000 PSI
   f_y = 60,000 PSI

6. Foundation :
   Soils report dated: Feb. 20, 2008
   Allowable Soil Pressure (Dead Load + Live Load): 1,000 psf
   See Log of Test Borings sheet ST6-1.

7. All Miscellaneous Metal to be hot-dip galvanized after fabrication.

8. Building dimensions are based on CMU block module of 8" x 8" x 16".

9. Mechanical Expansion Anchors shall be 5/8" dia and have 4" minimum embedment, 3'-0" max spacing and placed 6" maximum spacing from ends, two minimum per connection, unless otherwise shown.

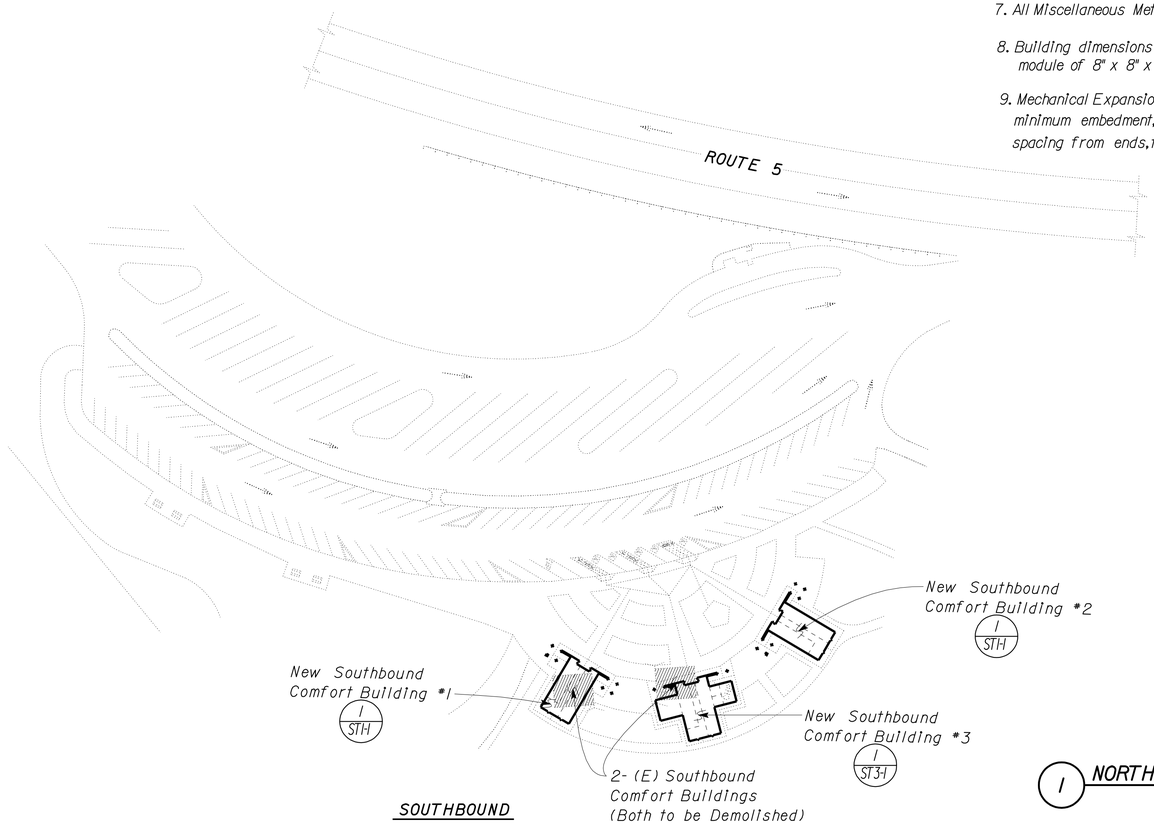

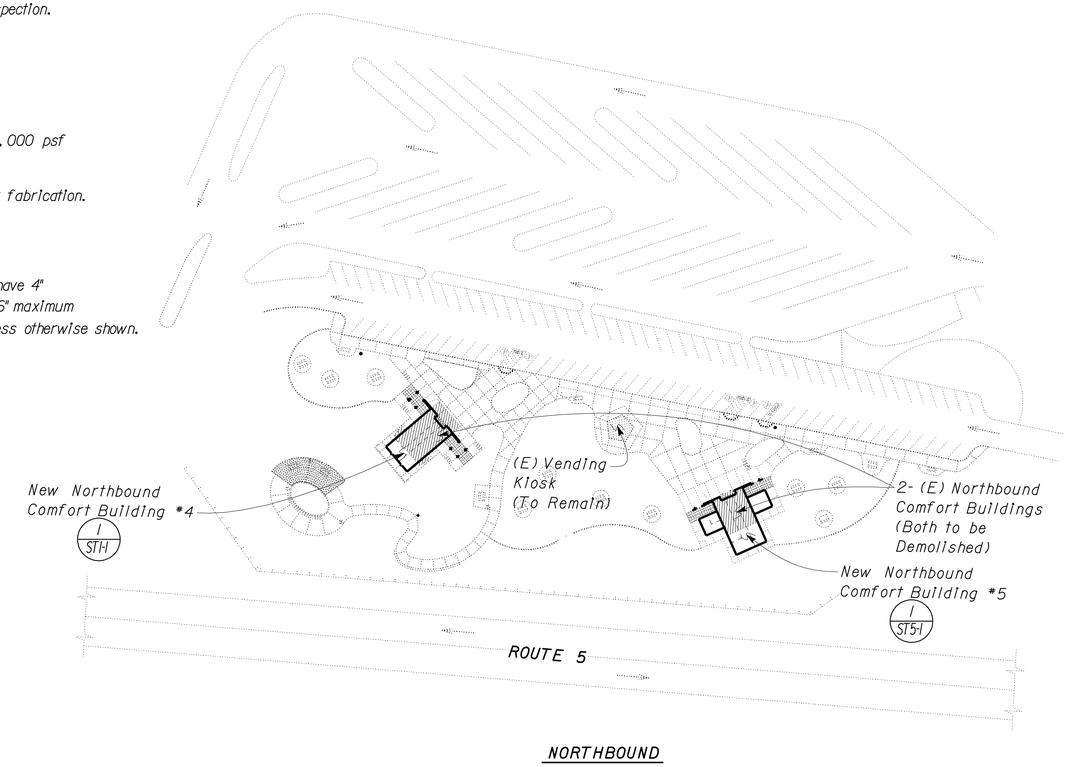

1 NORTHBOUND AND SOUTHBOUND STRUCTURAL PLAN

No Scale

DESIGN	BY Joseph Camilleri	CHECKED Justin Uyehara	
DETAILS	BY Pete von Savoye	CHECKED Joseph Camilleri	
QUANTITIES	BY	CHECKED	

STATE OF CALIFORNIA
DEPARTMENT OF TRANSPORTATION

DIVISION OF ENGINEERING SERVICES
ARCHITECTURAL AND STRUCTURAL DESIGN

CU 11 340
EA 261401

BRIDGE NO. 57R0001R 57R0001L
POST MILE R59.4/R60.0

ALISO CREEK SAFETY ROADSIDE REST AREA

Northbound & Southbound

STRUCTURAL PLAN

SHEET **ST-0**

DOES SD Imperial Rev. 9/02

ORIGINAL SCALE IN INCHES FOR REDUCED PLANS 0 1 2 3

DISREGARD PRINTS BEARING EARLIER REVISION DATES → 10/13/09

REVISION DATES (PRELIMINARY STAGE ONLY) SHEET OF

24-JUN-2010 08:14

st_00.dgn

DIST.	COUNTY	ROUTE	POST MILES TOTAL PROJECT	SHEET NO.	TOTAL SHEETS
11	SD	5	R59.4,R60.0	164	241

REGISTERED CIVIL ENGINEER — DATE: 11-30-09

REGISTERED PROFESSIONAL ENGINEER — Joseph F. Camilleri — No. 3656 — Exp. 3-31-10 — STRUCTURAL — STATE OF CALIFORNIA

6-21-10
PLANS APPROVAL DATE

The State of California or its officers or agents shall not be responsible for the accuracy or completeness of electronic copies of this plan sheet.

ABBREVIATIONS

AAD	Adhesive Anchorage Device
AB	Anchor Bolt
AC	Asphalt Concrete
Alt	Alternate
APA	American Plywood Association
APC	Alternative Pipe Culvert
Bldg	Building
Blkg	Blocking
BN	Boundary Nailing
Btm	Bottom
CB	Carriage Bolt
CIDH	Cast In Drilled Hole
CJ	Control Joint
Clr	Clear
CMU	Concrete Masonry Unit
Conc	Concrete
Const	Construction
Cont	Continuous
CP	Complete Penetration Weld
Dbl	Double
DF	Douglas Fir
Dia	Diameter
DIP	Ductile Iron Pipe
DN	Diameter Nominal
do	Ditto
(E)	Existing
Ea	Each
EL	Elevation
Elec	Electrical
Embed	Embedment
EN	Edge Nail
Eq	Equal
Exp	Expansion
FDGM	Free Draining Granular Material
FG	Finish Grade
FL	Flow Line
Flr	Floor
FN	Face (Field) Nail
FOC	Face of Concrete
FOM	Face of Masonry
FOS	Face of Stud
Ftg	Footing
Ga	Gage
Galv	Galvanized
GLM	Glue Laminated Member
Gyp Bd	Gypsum Board
HD	Holdown
Hex	Hexagon
Horiz	Horizontal
HSB	High Strength Bolt
HSS	Hollow Structural Section
Jt	Joint
LOL	Layout Line
LVL	Laminated Veneer Lumber
m	Meter
Max	Maximum
MEA	Mechanical Expansion Anchor
Mech	Mechanical
Mfr	Manufacturer
mm	Millimeter
Min	Minimum
MIW	Malleable Iron Washer
OC	On Center
OG	Original Grade
OH	Opposite Hand
Opt	Optional
P	Pitch
PDF	Powder Driven Fastener
Plwd	Plywood
PT	Pressure Treated
PW	Puddle Weld
PWB	Prefabricated Wood I Beam
RCP	Reinforced Concrete Pipe
Reinf	Reinforced, Reinforcing
Req'd	Required
SDSTS	Self Drill, Self Tap Screw
Sim	Similar
SPS	Structural Plywood Sheathing
Sq	Square
Stagg	Staggered
Std	Standard
SW	Stud Weld
Sym	Symmetrical
T&G	Tongue-and-Groove
TN	Toe Nail
TS	Tube Steel
Typ	Typical
UON	Unless Otherwise Noted
Vert	Vertical

SYMBOLS

- Blocking In Section or Elevation
- Continuous Member In Section
- End of Member
- Bearing Wall
- Shear Wall
- X XXXX — Length; Shearwall Schedule Symbol; Reference
- Glue Laminated Member Section
- North Arrow
- X STX-X — Partial Section Cut
- X STX-X — Full Section Cut
- X — Revision Callout
- A — Grid Line Indicator
- ℄ — Center Line
- ₤ — Station Line
- ℙ — Steel Plate
- Ø — Diameter
- ⌑ — Square
- CMU Wall on Plan Views
- Dropped Slab on Plan Views
- Reinforced Concrete
- Sand
- Structural Backfill
- Structural Excavation
- Original Ground
- Limits of Structural Backfill (shown on plan view)
- Free Draining Granular Material
- X — Bottom of Footing
- Elevation or Working Point
- Existing Features
- Holdown, Typ — Simpson / USP / Equal (Manufacturers are those noted in the order shown.)
- Frame Connector — Simpson / USP / Equal (Manufacturers are those noted in the order shown.)
- 3 5b ST-1 — Detail Number or Note Number; Additional Reference (if required); Sheet Number

NOTE: SPECIFIC DETAILS OR NOTES ON OTHER SHEETS SHALL PREVAIL OVER STANDARD DETAILS AND NOTES ON THIS SHEET

STANDARD DRAWING
FILE NO. XS-25-0 — DESIGN BY Jean Samuel — CHECKED Steve Schafer — APPROVED R.E. Travis
DRAWING DATE 1-04 — DETAILS BY George E. Rowe — CHECKED [illegible] — DESIGN SUPERVISOR
SUBMITTED BY Jean Samuel, DESIGN ENGINEER

STATE OF CALIFORNIA
DEPARTMENT OF TRANSPORTATION

DIVISION OF ENGINEERING SERVICES
ARCHITECTURAL AND STRUCTURAL DESIGN

BRIDGE NO. 57R0001R 57R0001L
POST MILE R59.4/R60.0

ALISO CREEK SAFETY ROADSIDE REST AREA

LEGEND

SHEET ST-1

DOES SD Imperial Rev. 9/02

ORIGINAL SCALE IN INCHES FOR REDUCED PLANS 0 1 2 3

CU 11 340
EA 261401

DISREGARD PRINTS BEARING EARLIER REVISION DATES → 02-03-09

REVISION DATES (PRELIMINARY STAGE ONLY) — SHEET — OF

24-JUN-2010 08:14
st_01.dgn

DIST.	COUNTY	ROUTE	POST MILES TOTAL PROJECT	SHEET NO.	TOTAL SHEETS
11	SD	5	R59.4/R60.0	165	241

Joseph Camilleri 11-30-09
REGISTERED CIVIL ENGINEER

REGISTERED PROFESSIONAL ENGINEER
Joseph F. Camilleri
No. 3656
Exp. 3-31-10
STRUCTURAL
STATE OF CALIFORNIA

6-21-10
PLANS APPROVAL DATE

The State of California or its officers or agents shall not be responsible for the accuracy or completeness of electronic copies of this plan sheet.

(A) FRAMING NOTES

1. Dimensions are typically shown to face of stud for exterior walls, to centerline of stud at interior walls, and to centerline of openings. Vertical dimensions are typically shown from rough floor or slab to top of plate or to underside of lintels. Dimensions shown as "clear" are from surface to surface.
2. Bearing, shear and exterior walls shall be sheathed with 3/8" structural plywood sheathing.
3. All roofs shall be sheathed with 5/8" structural plywood sheathing.
4. Plywood for floors and roofs shall be placed face grain perpendicular to supports. Where possible, plywood shall be placed in full sheets and staggered one-half sheet length. Any partial plywood sheet shall not be less than 2'-0" in length or width unless fully blocked. Plywood for wainscots, siding and wall sheathing may be placed parallel to framing and with the C-C plugged face exposed. See Detail 2, sheet ST-1B.
5. All wood members shall be Douglas Fir-Larch (DF) quality grade stamped. Grade stamps shall indicate compliance with the grading requirements of WWPA, WCLIB or other approved lumber inspection agency.
6. Structural plywood sheathing shall be APA grade stamped plywood conforming to Voluntary Product Standard PS1, Grade C-D, Exposure 1. Thickness and span rating shall be as shown on the plans.
7. Wood grades (unless otherwise noted):
   - A. For horizontal members:
     - Joists & Rafters — Grade #2
     - Beams & Stringers — Grade #1
     - Ledgers — Grade #1
   - B. For vertical members:
     - 2"x4" Studs — Construction Grade
     - 2"x6" & larger studs — Grade #2
     - Posts & Timbers — Grade #1
   - C. Glue laminated beams:
     - Simple spans — 24F-V4 DF/DF
     - Cantilevers & Continuous — 24F-V8 DF/DF
8. Glue laminated members shall be engineered, stress rated and factory laminated with adhesive for wet use.
9. Exposed members shall be "architectural appearance" grade and non-exposed members shall be "industrial appearance" grade.
10. All wood in direct contact with concrete or masonry shall be pressure treated Douglas Fir-Larch.
11. Joists framed into the side of wood girders shall be supported by joist hangers.
12. Joists shall be supported laterally at the ends and at each support by solid blocking or other approved means except where the ends of joists are nailed to a header, band or rim joist or to an adjoining stud. Solid blocking shall not be less than 2"x in thickness and the full depth of the joist.
13. Joists and roof rafters 1'-0" or deeper shall have full depth 2"x thick solid blocking at 8'-0" maximum spacing.
14. Provide 2"x blocking to secure fixtures shown on the project plans.
15. Joists under and parallel to bearing walls shall be doubled.
16. When there are multiple holes and notches in one structural element or when there are holes and notches occurring in more than two consecutive structural elements, the Engineers approval is required, unless the details are shown on plans.
17. Notches or cuts in bearing or shear wall studs may be to a depth not exceeding 25% of its width. Wood studs in non-bearing and non-shear walls supporting only their weight may be notched or cut to a depth not greater than 40% (See note 16 above).
18. Bored hole diameters shall not exceed 40% of the stud width in bearing walls and 60% in non-bearing walls. The top plates may not be bored or cut, without the Engineer's approval. Neither bearing nor shear wall top plates may be bored greater than 40%, unless detailed on the plans. Holes shall not be closer than 5/8" to the edge of the stud. (See note 16 above)
19. When it is necessary to cut the sole plate, sill plate or wood stud for plumbing, heating or other pipes, a 1/16" thick x 1½" wide galvanized metal stud shoe plate shall be fastened w/6-16d to the plate across the opening.
20. Equivalent metal bridging or ties may be submitted to the Engineer for approval.

(B) MINIMUM NAILING SCHEDULE

1. All structural nailing shall be common wire. Alternate fasteners may be substituted as approved by the Engineer.
2. For wood to wood joints, the spacing of nails shall not be less than the required nail penetration. Edge or end distances shall not be less than ½ the required nail penetration. Where pre-drilling is required to avoid splitting of the wood, the hole diameter shall not exceed three-fourths of the nail diameter.
3. Nailing not noted below or on the project plans shall be a minimum of 2 nails at each contact, 8d for 1"x members and 16d for 2"x members.
4. Joists or Rafters:
   - a. Bearing (sill, girder, top plate) Toe Nail — 3-8d
   - b. Laps (parallel members over walls or beams) Face Nail — 4-16d
     For each additional 3" member depth beyond 6" member add — 2-16d
   - c. Rim joist to floor joist, End Nail — 2-16d
     For each additional 4" member depth beyond 8" member add — 1-16d
   - d. Rim joist to top plate, Toe Nail — 8d @ 6" OC
   - e. Double joists under bearing walls, staggered Face Nail. — 16d @ 1'-0" OC
5. Studs:
   - a. Double studs, Face Nail — 16d @ 2'-0" OC
   - b. Top plate to stud, End Nail — 2-16d
   - c. Stud to sole plate, Toe Nail — 3-16d or 4-8d
   - d. Sole plate to stud, End Nail — 2-16d
   - e. Stud to continous header, Toe Nail — 3-16d or 4-8d
   - f. Built-up corner studs, Face Nail — 16d @ 2'-0" OC
6. Plates:
   - a. Top plate doubled, Face Nail — 16d @ 1'-4" OC
   - b. Top plate intersection, Face Nail — 2-16d
   - c. Sole plate to rim joist or blocking, Face Nail — 16d @ 1'-4" OC
   - d. Sole plate to floor framing, Face Nail — 16d @ 1'-4" OC
7. Blocking:
   - a. To studs, joists or rafters, Toe Nail — 3-16d or 4-8d
     or End Nail — 2-16d
     For each additional 4" member depth beyond 8" member add, Toe Nail — 2-8d
     or End Nail — 1-16d
   - b. To plates, Toe Nail — 16d @ 1'-0" OC
8. 2" Subfloor to each joist or girder one blind and one Face Nail. — 2-16d
9. Structural Plywood Nailing:
   - a. Spacing at subflooring, decking, roof and wall structural plywood sheathing to framing:

LOCATION	3/8" Plwd	7/16" - 1" Plwd
At supported edges (edge nailing) & over bearing (beams, girders, walls, etc.)	8d @ 6" OC	10d @ 6" OC
At intermediate supports (field nailing)	8d @ 6" OC	10d @ 1'-0" OC
Where bearing is 4'-0" or greater (field nailing)	———	10d @ 6" OC

   - b. Structural plywood edge nailing shall be staggered at supports, Detail 2, Sheet ST-1B; at double plates. Detail 3, Sheet ST-1B; and at double studs located at wall intersections and corners, Details 9A and 9B, Sheet ST-1B.
   - c. Decking and Underlayment: — Use deformed shank nail
     (see Sheet ST-1B for nail size and spacing)
   - d. Panel siding to framing: — Use zinc coated nail
     (see Sheet ST-1B for nail size and spacing)
10. Finish Plywood Nailing (non-structural):
    - a. Finish plywood to framing where the thickness is ½" or less:
      1) Finish nail at supported edges (edge nailing) — 6d @ 6" OC
      2) Finish nail at intermediate supports (field nailing) — 6d @ 1'-0" OC
11. Gypsum Sheathing (Structural):
    - a. Wall structural gypsum board sheathing to framing where the thickness 5/8" or less:
      1) Cooler nail, parker nail or wallboard nail with a flat or concave head and diamond point at all edges and intermediate supports (field nailing) — 6d @ 4" OC

(C) MECHANICAL FASTENER NOTES

1. The clearance holes for lag screw shanks shall be the same diameter and depth as the unthreaded shank. The lead hole for the threaded portion shall be of a diameter equal to 60% of the shank diameter for screws up to ½" diameter, and 75% of the shank diameter for larger lag screws. The lead hole shall be at least the length of the threaded portion.
2. Lag screws shall be turned into pre-drilled holes and not be driven.
3. All bolts and lag screws shall be tightened and retightened before closing in, or at completion of job.
4. All bolts and lag screws shall be provided with metal washers under heads and nuts which bear on wood.

MINIMUM WASHER FOR BOLTS & LAG SCREWS

Size	Malleable Iron Washer	Steel Plate Washer
½" Ø	2½" Ø x 5/16"	2" x 2" x ¼"
5/8" Ø	2¾" Ø x 5/16"	2" x 2" x ¼"
¾" Ø	3" Ø x 7/16"	2" x 2" x ¼"
7/8" Ø	3 5/16" Ø x 3/8"	3" x 3" x ¼"
1" Ø	4" Ø x ½"	3" x 3" x ¼"

Place under Bolt Heads & Nuts bearing on Wood

5. Fastener alternatives for non-bearing and non-shear walls: Two minimum per member and at 9" from ends.
   - a. 1/8" Ø Powder driven anchor with 1" penetration @ 2'-0" OC.
   - b. ¼" Ø expansion anchorage device embedded 1½" minimum at 2'-0" OC.
   - c. ½" Ø anchor bolt with 2½" embedment @ 4'-0" OC.
6. Equivalent mechanical fasteners may be submitted to the Engineer for approval.

NOTE: SPECIFIC DETAILS OR NOTES ON OTHER SHEETS SHALL PREVAIL OVER STANDARD DETAILS AND NOTES ON THIS SHEET

STANDARD DRAWING
FILE NO. XS-25-5
DRAWING DATE 1-04
DESIGN BY Sean Sennel — CHECKED Joe Olandin
DETAILS BY Peter F. von Savoye II — CHECKED
SUBMITTED BY Sean Sennel, DESIGN ENGINEER
APPROVED R E Travis, DESIGN SUPERVISOR
DOES SD Imperial Rev. 9/02

STATE OF CALIFORNIA
DEPARTMENT OF TRANSPORTATION

DIVISION OF ENGINEERING SERVICES
ARCHITECTURAL AND STRUCTURAL DESIGN

ORIGINAL SCALE IN INCHES FOR REDUCED PLANS 0 1 2 3

CU 11 340
EA 261401

BRIDGE NO. 57R0001R 57R0001L
POST MILE R59.4/R60.0

ALISO CREEK SAFETY ROADSIDE REST AREA
WOOD FRAMING STANDARD - NOTES

SHEET ST-1A

DISREGARD PRINTS BEARING EARLIER REVISION DATES → 02-03-09
REVISION DATES (PRELIMINARY STAGE ONLY)
SHEET OF

24-JUN-2010 10:34
st_01a.dgn

DIST.	COUNTY	ROUTE	POST MILES TOTAL PROJECT	SHEET NO.	TOTAL SHEETS
11	SD	5	R59.4/R60.0	166	241

REGISTERED CIVIL ENGINEER — Joseph Camilleri 11-30-09

REGISTERED PROFESSIONAL ENGINEER — Joseph F. Camilleri — No. 3656 — Exp. 3-31-10 — STRUCTURAL — STATE OF CALIFORNIA

6-21-10
PLANS APPROVAL DATE

The State of California or its officers or agents shall not be responsible for the accuracy or completeness of electronic copies of this plan sheet.

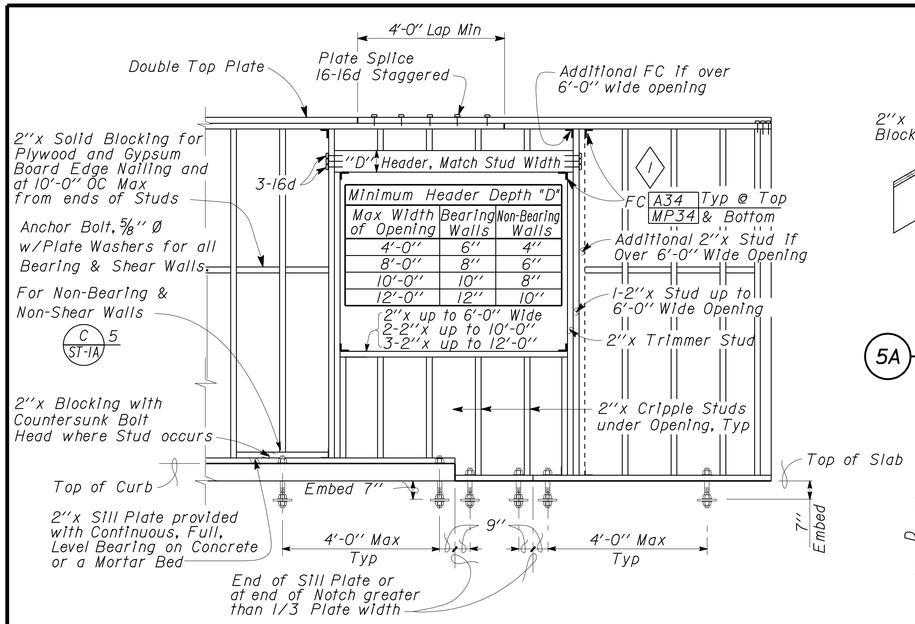

Minimum Header Depth "D"		
Max Width of Opening	Bearing Walls	Non-Bearing Walls
4'-0"	6"	4"
8'-0"	8"	6"
10'-0"	10"	8"
12'-0"	12"	10"

2"x up to 6'-0" Wide
2-2"x up to 10'-0"
3-2"x up to 12'-0"

1 TYPICAL WALL AND OPENING FRAMING
No Scale

Notch Rafter If Slope Exceeds 1:15

Plate Size	"X"
2"x 4"	2"
2" x 6"	3"
2" x 8"	4"

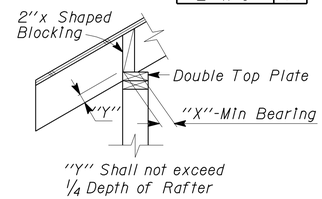

5A RAFTER BEARING

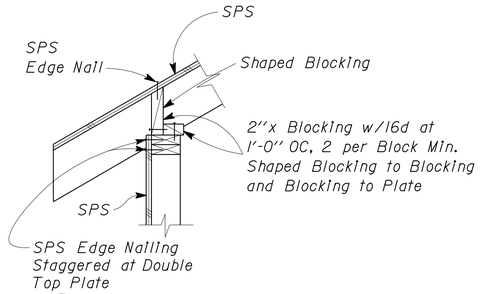

5B SHEAR TRANSFER

5 EXTERIOR WALL TOP PLATE DETAIL
No Scale

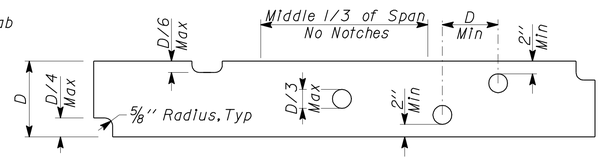

6 NOTCH LIMITS FOR JOISTS AND HEADERS
No Scale

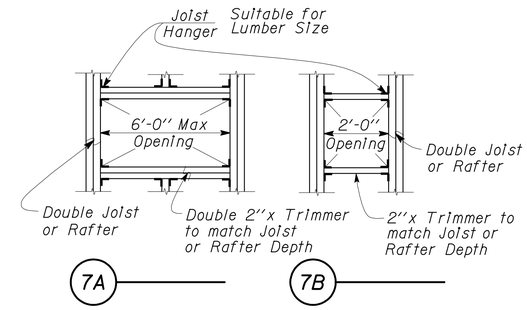

7A 7B

7 FRAMING AT OPENINGS
No Scale

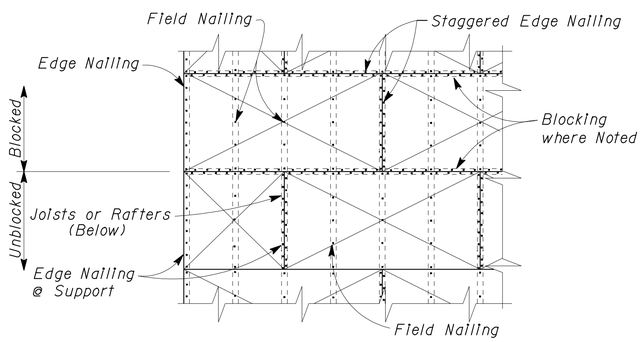

2 STRUCTURAL PLYWOOD LAYOUT
No Scale

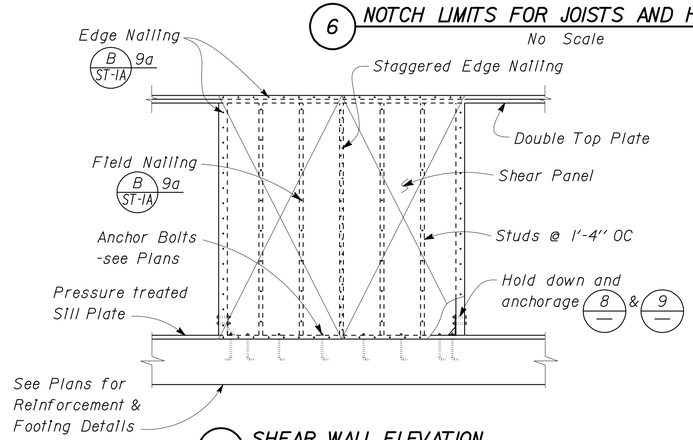

3 SHEAR WALL ELEVATION
No Scale

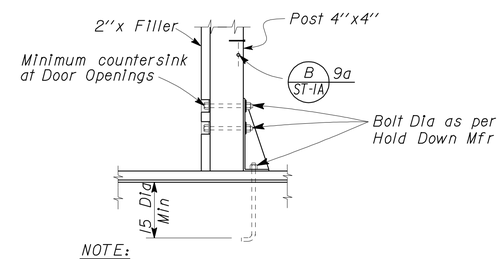

NOTE:
Provide additional 2"x Studs as Required for Grip noted on plans.

8 INTERIOR HOLD DOWN
No Scale

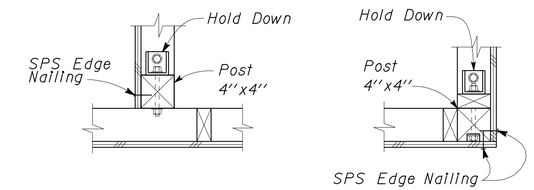

9A INTERSECTION 9B CORNER

NOTE:
Interior Sheathing and attachment not shown for clarity.

9 INTERIOR AND CORNER WALL FRAMING DETAILS
No Scale

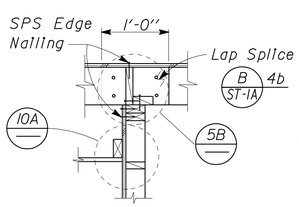

4A LAP SPLICE ACROSS JOISTS

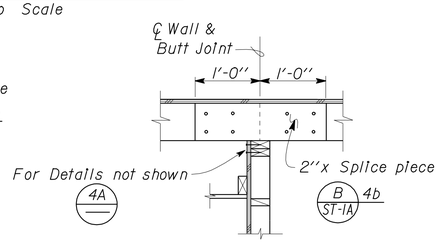

4B BUTT SPLICE ACROSS JOISTS

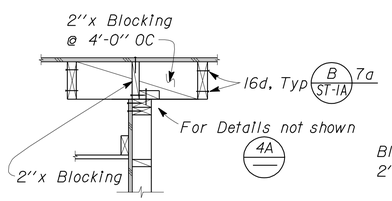

4C JOISTS PARALLEL TO WALL

4 JOIST LAYOUT AT TOP OF BEARING AND SHEAR WALL
No Scale

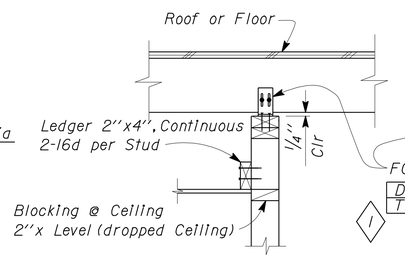

10A ACROSS JOISTS

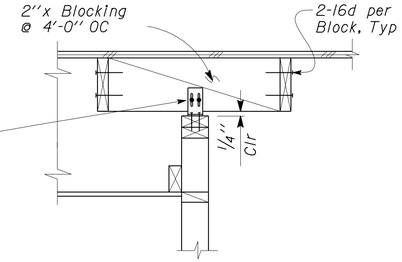

10B PARALLEL TO JOISTS

10 NON-BEARING WALL TOP PLATE CONNECTION
No Scale

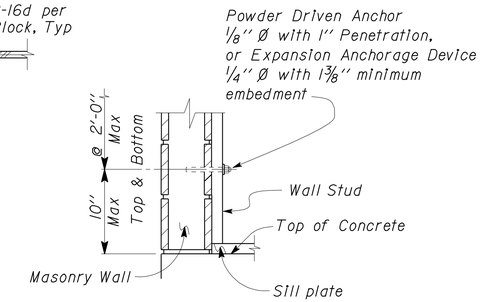

11 STUD ANCHORAGE TO MASONRY
No Scale

NOTE: SPECIFIC DETAILS OR NOTES ON OTHER SHEETS SHALL PREVAIL OVER STANDARD DETAILS AND NOTES ON THIS SHEET

STANDARD DRAWING

FILE NO. XS-25-5.1 | DESIGN BY Sean Sanad | CHECKED Lee Ofenbach | APPROVED R E Travis
DRAWING DATE 1-04 | DETAILS BY Peter Fivon Savage III | CHECKED Robert W. Ott
SUBMITTED BY Sean Sanad, DESIGN ENGINEER | DESIGN SUPERVISOR

1 Revision - 11-02-2006
Updated USP connector ID.

STATE OF CALIFORNIA
DEPARTMENT OF TRANSPORTATION

DIVISION OF ENGINEERING SERVICES
ARCHITECTURAL AND STRUCTURAL DESIGN

BRIDGE NO. 57R0001R 57R0001L
POST MILE R59.4/R60.0

ALISO CREEK SAFETY ROADSIDE REST AREA

WOOD FRAMING STANDARD - DETAILS

SHEET ST-1B

DOES SD Imperial Rev. 9/02

ORIGINAL SCALE IN INCHES FOR REDUCED PLANS 0 1 2 3

CU 11 340
EA 261401

DISREGARD PRINTS BEARING EARLIER REVISION DATES → 02-03-09

REVISION DATES (PRELIMINARY STAGE ONLY) | SHEET | OF

24-JUN-2010 10:34

st_01b.dgn

DIST.	COUNTY	ROUTE	POST MILES TOTAL PROJECT	SHEET NO.	TOTAL SHEETS
11	SD	5	R59.4/R60.0	167	241

Joseph Camilleri 11-30-09
REGISTERED CIVIL ENGINEER

REGISTERED PROFESSIONAL ENGINEER Joseph F. Camilleri No. 3656 Exp. 3-31-10 STRUCTURAL STATE OF CALIFORNIA

6-21-10
PLANS APPROVAL DATE

The State of California or its officers or agents shall not be responsible for the accuracy or completeness of electronic copies of this plan sheet.

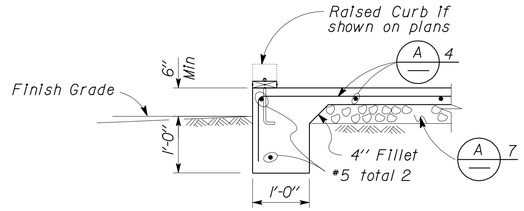

1 EXTERIOR FOOTING
No Scale

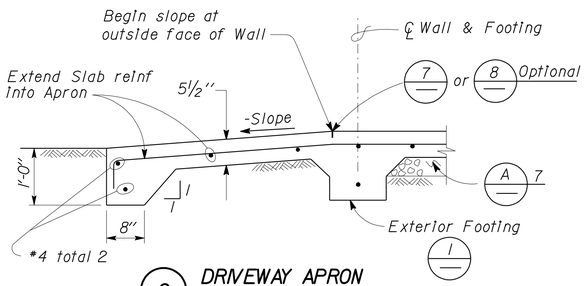

2 DRIVEWAY APRON
No Scale

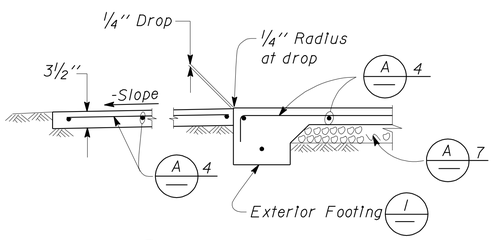

3 WALKWAY APRON
No Scale

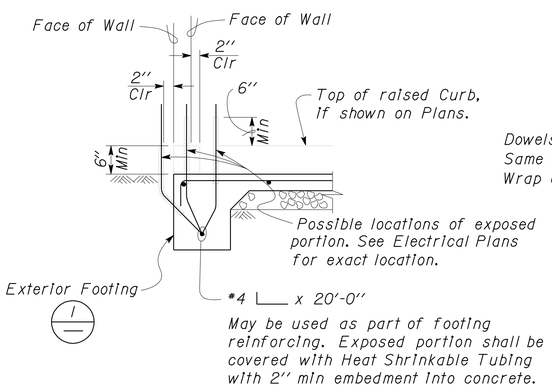

4 GROUND BAR DETAIL
No Scale

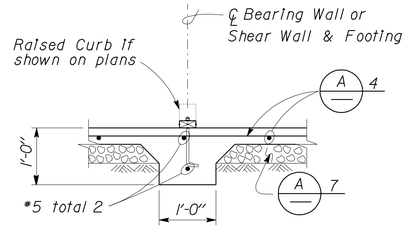

5 INTERIOR FOOTING
No Scale

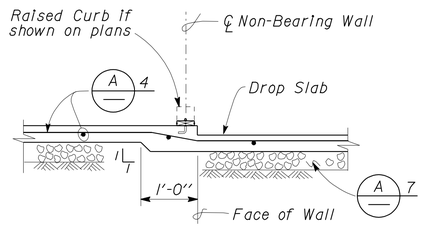

6 DROP SLAB AT NON-BEARING WALL
No Scale

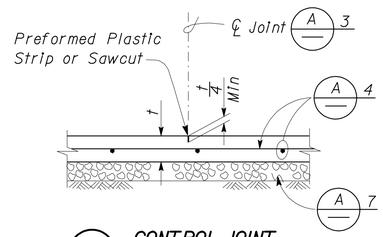

7 CONTROL JOINT
No Scale

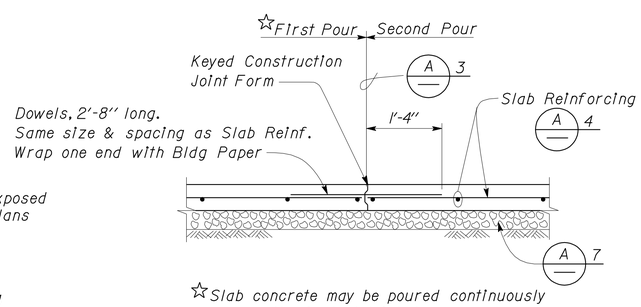

☆Slab concrete may be poured continuously across the Control Joint, to cover as large an area as practical.

8 CONTRACTION JOINT
No Scale

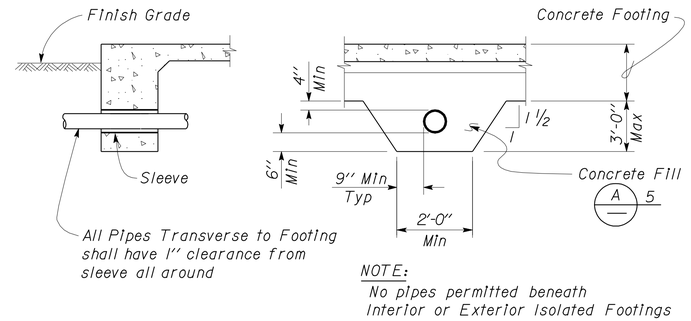

NOTE:
No pipes permitted beneath Interior or Exterior Isolated Footings

9 PIPE DETAILS THROUGH FOOTING
No Scale

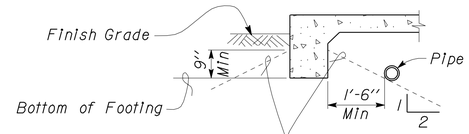

NOTE
For Pipe Cover, see Specifications: Earthwork for Building Work

No digging for Pipe Trench parallel to Footing below these lines.

Exterior Footing shown, Interior or Exterior Isolated Footings are similar.

10 PIPE DETAILS PARALLEL TO FOOTING
No Scale

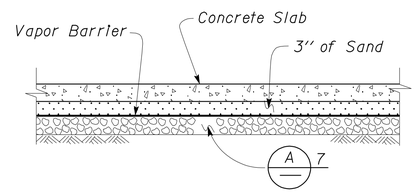

11 MOISTURE BARRIER
No Scale

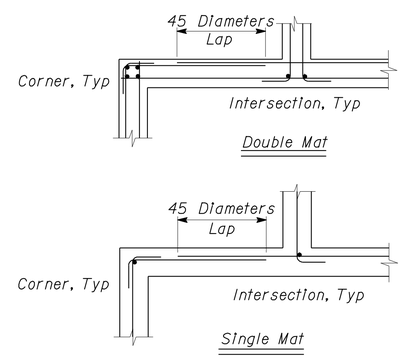

12 CORNER/INTERSECTION REINF SPLICE, TYPICAL
No Scale

A CONCRETE NOTES

1. The following minimum concrete cover shall be provided for reinforcement.

	Minimum Cover
a. Concrete cast against and permanently exposed to earth	3"
b. Concrete exposed to earth or weather but cast in forms :	
#6 thru #18 bars	2"
#5 bar and smaller, W31 or D31 Wire, and smaller	1½"
c. Concrete not exposed to weather or in contact with ground : Slabs, Walls and Joists :	
#14 and #18 Bar	1½"
#11 Bar and smaller	¾"
Beams and Columns : Primary Reinforcement, Ties, Stirrups and Spirals	1½"

2. Splices in continuous reinforcement as in Walls, Wall Footings, etc. #8 or smaller shall have a lap of 45 diameters and the splices in adjacent bars shall not be less than 5'-0" apart.

   Continuous Bars in spandrels, Wall Beams, etc. shall lap Top Bars at center of span and Bottom Bars at supports.

3. Contraction Joints and Control Joints shall divide slab into areas not exceeding 25 square yards without reentrant corners and with length to width ratios not exceeding 1.5 to 1. Joint spacing shall not exceed 15'-0".

4.

Slab Thickness (t)	Reinforcement	
3½"	#3 @ 18	Each way, place in center of Slab
5½"	#4 @ 18	Each way, place in center of Slab

5. Concrete fill is to be placed before Footing is poured. Make the same width as the Footing and the full width of the Pipe trench. Concrete fill not required for pipes less than 2" diameter for pipes more than 3'-0" below bottom of footing.

6. See Mechanical and Architectural Plans for size and locations of pipe, vents, ducts and other similar openings. See Electrical Plans for conduits and outlet boxes in floors, walls, etc.

7. Place 4" of free draining granular material under slabs.

NOTE: SPECIFIC DETAILS OR NOTES ON OTHER SHEETS SHALL PREVAIL OVER STANDARD DETAILS AND NOTES ON THIS SHEET

STANDARD DRAWING				
FILE NO. XS-25-1	DESIGN	BY Sean Samad	CHECKED Lee Saunders	APPROVED R.E. Travis
DRAWING DATE 1-04	DETAILS	BY Peter F. von Sauers, II	CHECKED Lee Saunders	DESIGN SUPERVISOR
	SUBMITTED BY Sean Samad		, DESIGN ENGINEER	

STATE OF CALIFORNIA DEPARTMENT OF TRANSPORTATION

DIVISION OF ENGINEERING SERVICES ARCHITECTURAL AND STRUCTURAL DESIGN

BRIDGE NO. 57R0001R 57R0001L
POST MILE R59.4/R60.0

ALISO CREEK SAFETY ROADSIDE REST AREA

CONCRETE STANDARD

SHEET ST-2

DOES SD Imperial Rev. 9/02

ORIGINAL SCALE IN INCHES FOR REDUCED PLANS 0 1 2 3

CU 11 340
EA 261401

DISREGARD PRINTS BEARING EARLIER REVISION DATES → 02-03-09

REVISION DATES (PRELIMINARY STAGE ONLY) SHEET OF

24-JUN-2010 10:34

st_02.dgn

DIST.	COUNTY	ROUTE	POST MILES TOTAL PROJECT	SHEET NO.	TOTAL SHEETS
11	SD	5	R59.4/R60.0	168	241

Joseph Camilleri 11-30-09
REGISTERED CIVIL ENGINEER

REGISTERED PROFESSIONAL ENGINEER Joseph F. Camilleri No. 3656 Exp. 3-31-10 STRUCTURAL STATE OF CALIFORNIA

6-21-10
PLANS APPROVAL DATE

The State of California or its officers or agents shall not be responsible for the accuracy or completeness of electronic copies of this plan sheet.

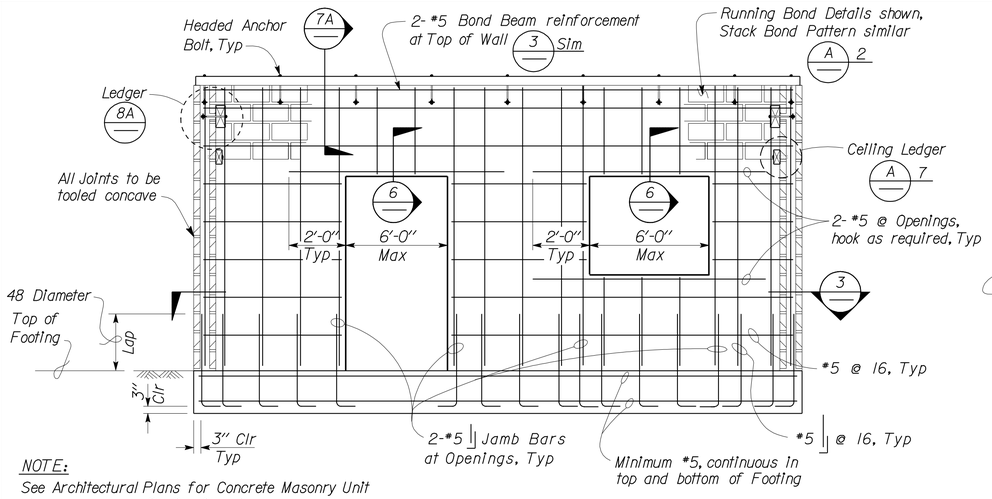

NOTE:
See Architectural Plans for Concrete Masonry Unit size and pattern, 8"x8"x16" Unit shown.

1 WALL ELEVATION
No Scale

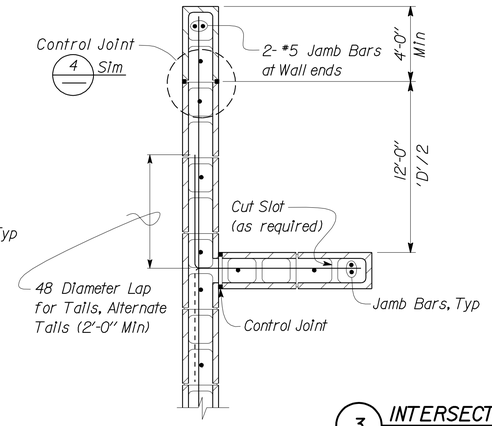

3 INTERSECTING WALL DETAILS
No Scale

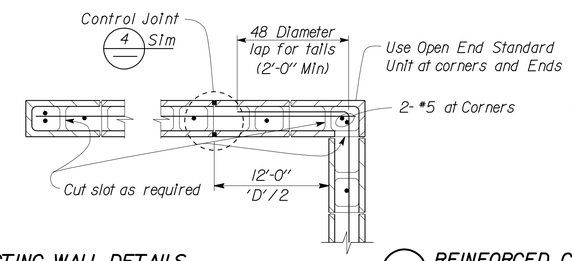

A REINFORCED CONCRETE MASONRY UNIT NOTES

1. All Walls shown on plans shall be solid grout, open end units, UON.
2. Stack Bond requires open end Bond Beam Units throughout.
3. All vertical reinforcement shall be centered in cell, UON. The minimum coverage of other reinforcement from the exposed surface of Concrete Masonry Unit shall be 2".
4. Reinforcement splices shall be as follows:
   a. Length of lap splice for a #7 or smaller bar shall be 48 diameters.
   b. Lintel lap splices, if necessary, shall be at midspan for top bars and beyond support for bottom bars.
5. There shall be a minimum 8" return at any Jamb adjacent to corner.
6. Dowels shall be at least the same size and spacing as wall reinforcement.
7. Ceiling Ledger shall be anchored with 1/4" Ø Expansion Anchors installed at 2'-8" OC maximum spacing. Expansion Anchors shall have 1 1/2" minimum distance to any edge of the masonry unit. Minimum embedment measured from the outside face of the unit shall be 2".
8. Pipes shall not be embedded in any Masonry Wall except when shown on plans or as approved by the Engineer.
9. Electrical Conduit, Panels or Fixtures may be placed in cells with the following restrictions:
   a. The Conduits shall not interfere with or displace the reinforcing steel.
   b. Conduits shall not be placed in such a congested manner as to prevent the complete filling of the cells with grout.
   c. Horizontal run of 3/4" maximum size conduit may be placed in a bond beam unit course that does not have horizontal reinforcing steel.
   d. Recesses more than 1" deep for Electrical Panels or Fixtures shall be framed and have similar reinforcement as doors and windows.
10. Steel washers shall be provided for all anchor bolts, over-sized holes and high strength bolts.
11. See Architectural and Mechanical Plans for offsets, sizes and locations of ducts, wall openings, vents and other details not shown on Structural sheets.

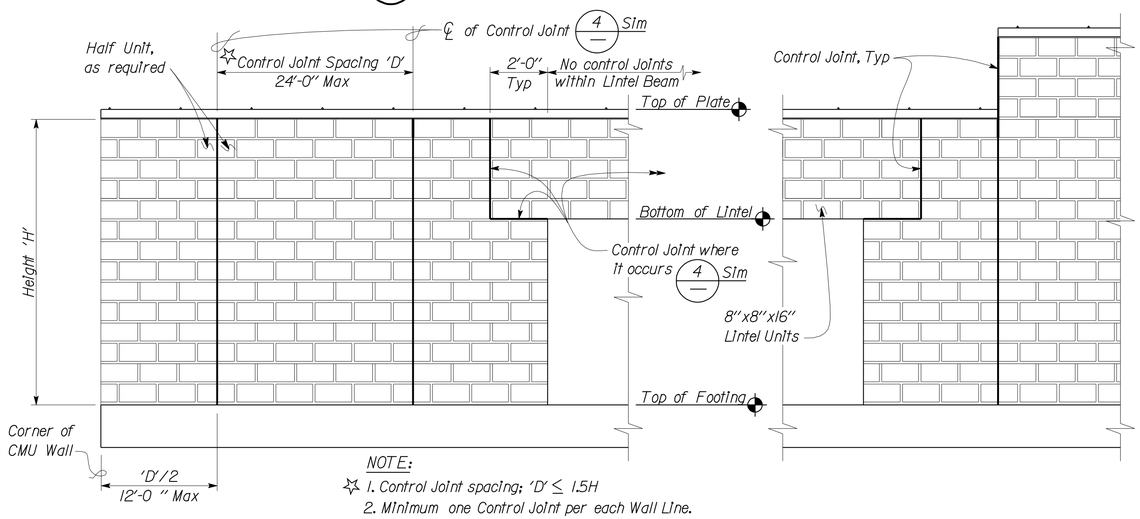

NOTE:
☆ 1. Control Joint spacing: 'D' ≤ 1.5H
2. Minimum one Control Joint per each Wall Line.
3. Location of the Control Joints to be approved by the Engineer.

2 WALL ELEVATION
No Scale

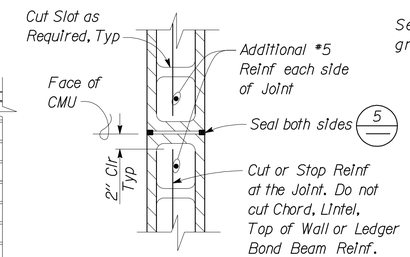

4 CONTROL JOINT DETAIL
No Scale

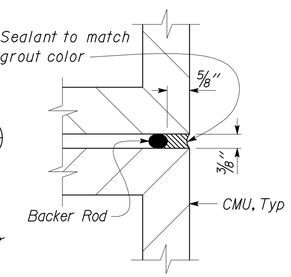

5 JOINT SEAL DETAIL
No Scale

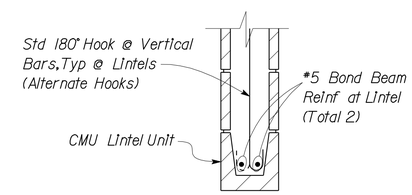

6 LINTEL DETAIL
No Scale

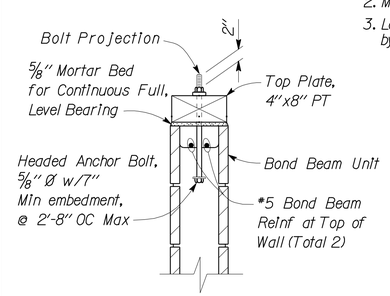

7A WOOD TOP PLATE DETAIL
No Scale

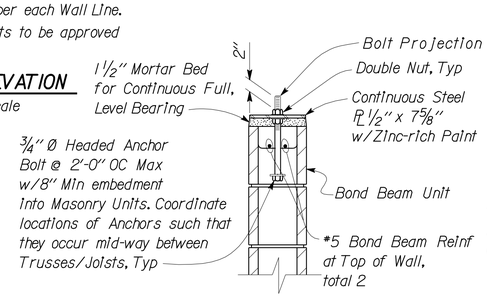

7B STEEL TOP PLATE DETAIL
No Scale

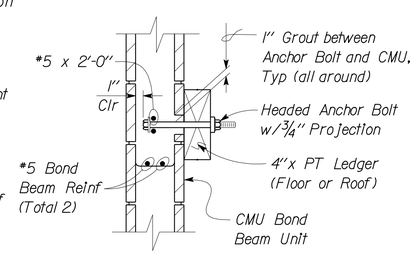

8A WOOD LEDGER DETAIL
No Scale

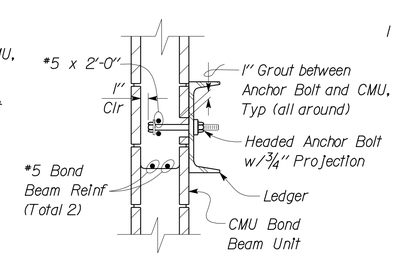

8B STEEL LEDGER DETAIL
No Scale

8" CMU

NOTE: SPECIFIC DETAILS OR NOTES ON OTHER SHEETS SHALL PREVAIL OVER STANDARD DETAILS AND NOTES ON THIS SHEET

FILE NO. XS-25-2	DESIGN	BY Sean Samuel	CHECKED Joe Camilleri	APPROVED R.E. Travis
DRAWING DATE 1-04	DETAILS	BY Peter Tyson Sawyer, II	CHECKED Joe Camilleri	DESIGN SUPERVISOR
	SUBMITTED BY Sean Samuel, DESIGN ENGINEER			

STANDARD DRAWING

DOES SD Imperial Rev. 9/02

ORIGINAL SCALE IN INCHES FOR REDUCED PLANS 0 1 2 3

STATE OF CALIFORNIA DEPARTMENT OF TRANSPORTATION

DIVISION OF ENGINEERING SERVICES ARCHITECTURAL AND STRUCTURAL DESIGN

CU 11 340
EA 261401

BRIDGE NO. 57R0001R 57R0001L
POST MILE R59.4/R60.0

ALISO CREEK SAFETY ROADSIDE REST AREA

CONCRETE MASONRY UNIT STANDARD

SHEET **ST-3**

DISREGARD PRINTS BEARING EARLIER REVISION DATES → 02-03-09

REVISION DATES (PRELIMINARY STAGE ONLY) SHEET OF

24-JUN-2010 10:34

st_03.dgn

DIST.	COUNTY	ROUTE	POST MILES TOTAL PROJECT	SHEET NO.	TOTAL SHEETS
11	SD	5	R59.4,R60.0	169	241

REGISTERED CIVIL ENGINEER — DATE: 11-30-09

REGISTERED PROFESSIONAL ENGINEER — Joseph F. Camilleri — No. 3656 — Exp. 3-31-10 — STRUCTURAL — STATE OF CALIFORNIA

6-21-10
PLANS APPROVAL DATE

The State of California or its officers or agents shall not be responsible for the accuracy or completeness of electronic copies of this plan sheet.

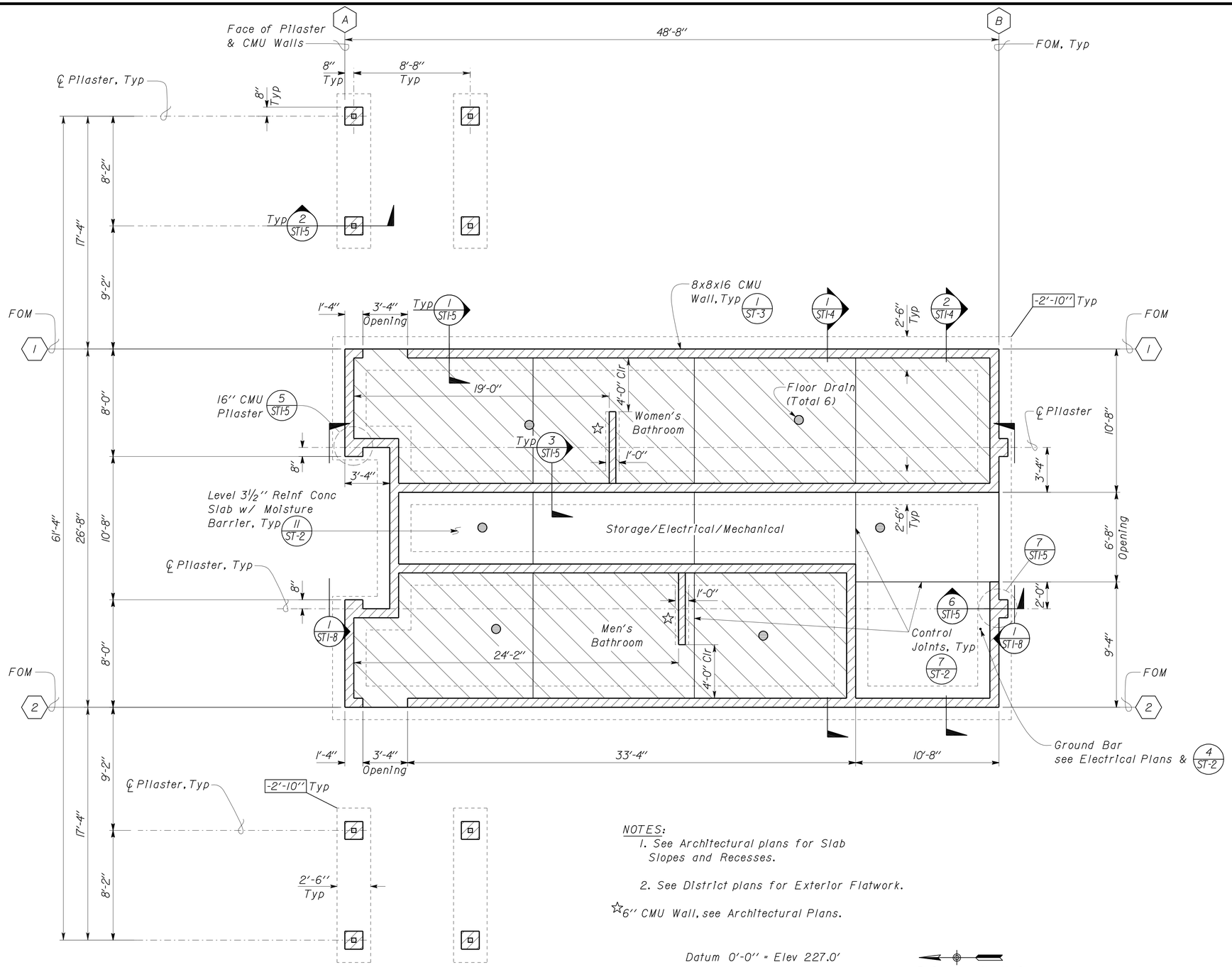

- Limits of Recessed Concrete Slab

NOTES:

1. See Architectural plans for Slab Slopes and Recesses.
2. See District plans for Exterior Flatwork.

☆ 6" CMU Wall, see Architectural Plans.

Datum 0'-0" = Elev 227.0'

Reference North for Buildings #1, #2 & #4

1 FOUNDATION PLAN
Scale 1/4" = 1'-0"

DESIGN	BY Joseph Camilleri	CHECKED Justin Uyehara	
DETAILS	BY Pete von Savoye	CHECKED Joseph Camilleri	
QUANTITIES	BY	CHECKED	

STATE OF CALIFORNIA
DEPARTMENT OF TRANSPORTATION

DIVISION OF ENGINEERING SERVICES
ARCHITECTURAL AND STRUCTURAL DESIGN

CU 11 340
EA 261401

BRIDGE NO. 57R0001R 57R0001L
POST MILE R59.4/R60.0

ALISO CREEK SAFETY ROADSIDE REST AREA
SOUTHBOUND BLDGS 1&2
NORTHBOUND BLDG 4
FOUNDATION PLAN

SHEET ST1-1

DOES SD Imperial Rev. 9/02

ORIGINAL SCALE IN INCHES FOR REDUCED PLANS 0 1 2 3

DISREGARD PRINTS BEARING EARLIER REVISION DATES → 09/22/09

REVISION DATES (PRELIMINARY STAGE ONLY) | SHEET | OF

24-JUN-2010 08:03

st1_01.dgn

DIST.	COUNTY	ROUTE	POST MILES TOTAL PROJECT	SHEET NO.	TOTAL SHEETS
11	SD	5	R59.4,R60.0	170	241

REGISTERED CIVIL ENGINEER — 11-30-09 DATE

REGISTERED PROFESSIONAL ENGINEER — Joseph F. Camilleri — No. 3656 — Exp. 3-31-10 — STRUCTURAL — STATE OF CALIFORNIA

6-21-10
PLANS APPROVAL DATE

The State of California or its officers or agents shall not be responsible for the accuracy or completeness of electronic copies of this plan sheet.

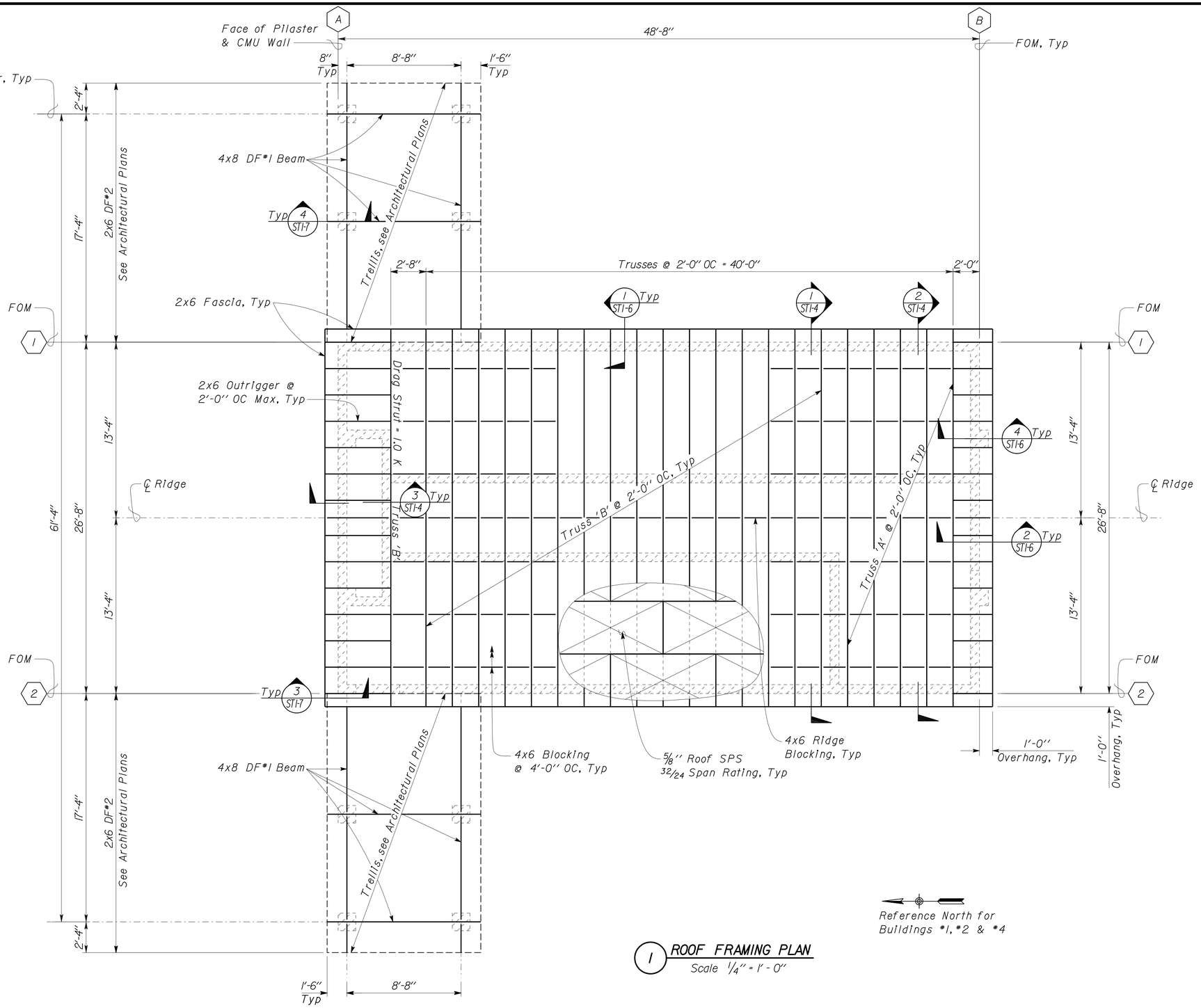

Reference North for Buildings #1, #2 & #4

1 ROOF FRAMING PLAN
Scale 1/4" = 1'-0"

A ROOF NAILING SCHEDULE

Nailing Schedule:
10d @ 4" OC @ Diaphragm Boundaries
10d @ 4" OC @ other SPS Panel edges
10d @ 12" OC Field Nailing

	BY	CHECKED
DESIGN	Joseph Camilleri	Justin Uyehara
DETAILS	Pete von Savoye	Joseph Camilleri
QUANTITIES		

STATE OF CALIFORNIA
DEPARTMENT OF TRANSPORTATION

DIVISION OF ENGINEERING SERVICES
ARCHITECTURAL AND STRUCTURAL DESIGN

BRIDGE NO. 57R0001R 57R0001L
POST MILE R59.4/R60.0

ALISO CREEK SAFETY ROADSIDE REST AREA
SOUTHBOUND BLDGS 1&2 NORTHBOUND BLDG 4
ROOF FRAMING PLAN

SHEET ST1-2

DOES SD Imperial Rev. 9/02

ORIGINAL SCALE IN INCHES FOR REDUCED PLANS 0 1 2 3

CU 11 340
EA 261401

DISREGARD PRINTS BEARING EARLIER REVISION DATES → 09/22/09

REVISION DATES (PRELIMINARY STAGE ONLY) SHEET OF

24-JUN-2010 08:03

st1_02.dgn

DIST.	COUNTY	ROUTE	POST MILES TOTAL PROJECT	SHEET NO.	TOTAL SHEETS
11	SD	5	R59.4,R60.0	171	241

REGISTERED CIVIL ENGINEER — DATE: 11-30-09

REGISTERED PROFESSIONAL ENGINEER — Joseph F. Camilleri — No. 3656 — Exp. 3-31-10 — STRUCTURAL — STATE OF CALIFORNIA

6-21-10
PLANS APPROVAL DATE

The State of California or its officers or agents shall not be responsible for the accuracy or completeness of electronic copies of this plan sheet.

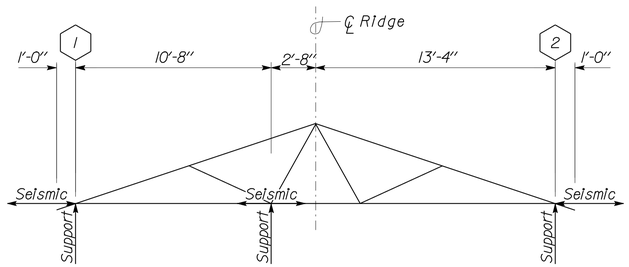

1 TRUSS "A"
No Scale

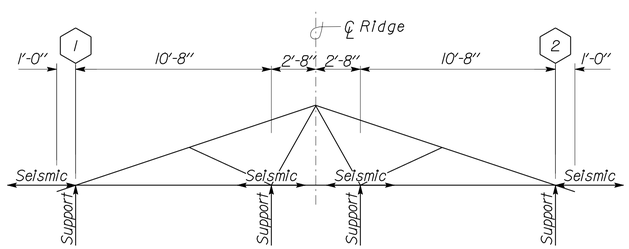

2 TRUSS "B"
No Scale

A PRE-ENGINEERED WOOD TRUSS REQUIREMENTS

LOADS:	Dead Load	Live Load
Top Chord (Roof):	30 psf	20 psf
Bottom Chord (Ceiling)	5 psf	10 psf

Seismic = 750 lbs per Rafter, see 1/ST1-2 for additional Seismic Drag Strut Force

1. Deflection:
   Live Load ---------- L/360
   Total Load ---------- L/240
2. Camber Shall be 1.5 Times Dead Load Deflection
3. Web material shall be 2x4 min DF#2.
4. Top and bottom chord shall be 2x6 min DF#1.
5. ⟷ Indicates Seismic Lateral Load.
6. ↑ Denotes Point of Support

DESIGN	BY Joseph Camilleri	CHECKED Justin Uyehara	
DETAILS	BY Pete von Savoye	CHECKED Joseph Camilleri	
QUANTITIES	BY	CHECKED	

STATE OF CALIFORNIA
DEPARTMENT OF TRANSPORTATION

DIVISION OF ENGINEERING SERVICES
ARCHITECTURAL AND STRUCTURAL DESIGN

BRIDGE NO. 57R0001R 57R0001L
POST MILE R59.4/R60.0

ALISO CREEK SAFETY ROADSIDE REST AREA
SOUTHBOUND BLDGS 1&2
NORTHBOUND BLDG 4
PRE-ENGINEERED TRUSS NOTES

SHEET ST1-3

DOES SD Imperial Rev. 9/02

ORIGINAL SCALE IN INCHES FOR REDUCED PLANS 0 1 2 3

CU 11 340
EA 261401

DISREGARD PRINTS BEARING EARLIER REVISION DATES ⟶ 09/22/09

REVISION DATES (PRELIMINARY STAGE ONLY) SHEET OF

24-JUN-2010 08:03

st1_03.dgn

DIST.	COUNTY	ROUTE	POST MILES TOTAL PROJECT	SHEET NO.	TOTAL SHEETS
11	SD	5	R59.4,R60.0	172	241

REGISTERED CIVIL ENGINEER — 11-30-09 DATE

REGISTERED PROFESSIONAL ENGINEER Joseph F. Camilleri No. 3656 Exp. 3-31-10 STRUCTURAL STATE OF CALIFORNIA

6-21-10
PLANS APPROVAL DATE

The State of California or its officers or agents shall not be responsible for the accuracy or completeness of electronic copies of this plan sheet.

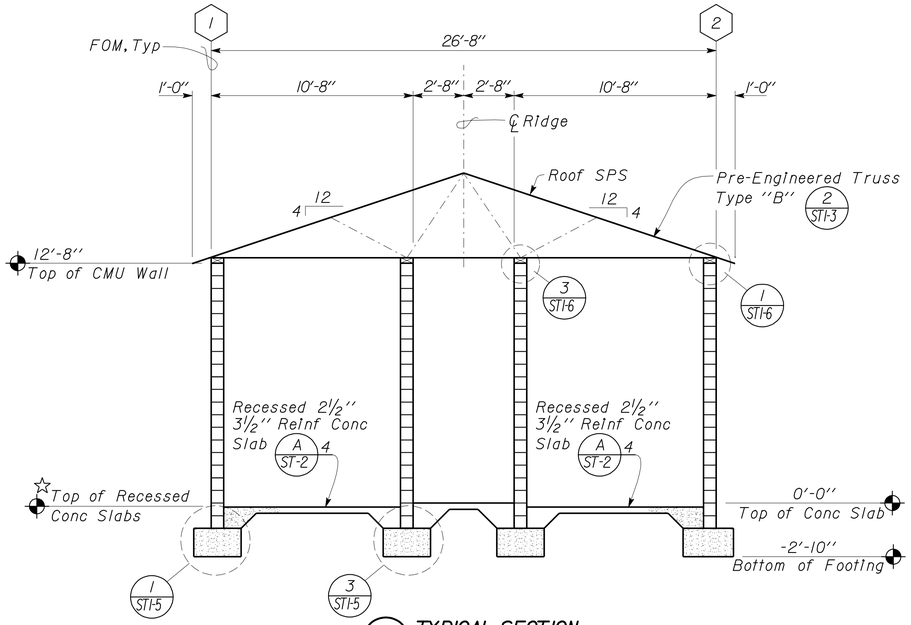

1 TYPICAL SECTION
Scale 1/4" = 1'-0"

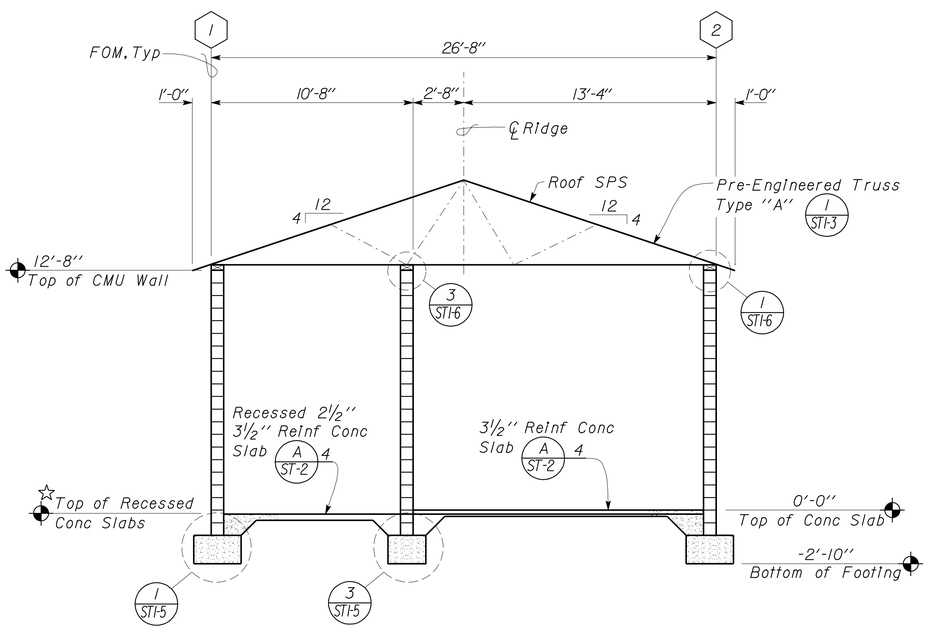

2 TYPICAL SECTION
Scale 1/4" = 1'-0"

☆NOTE:
See Architectural Plans for Elevation at Recessed Concrete Slab locations.

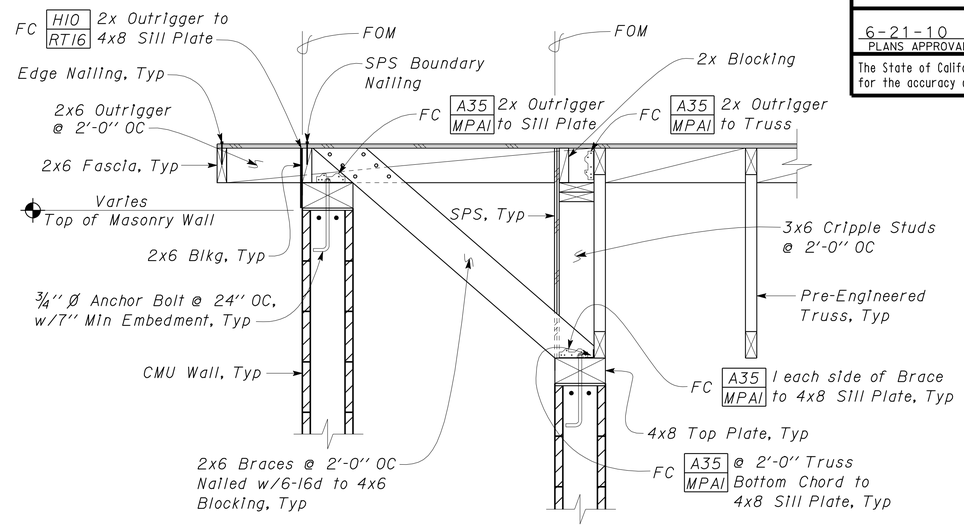

NOTE:
For Ceiling Framing not shown, see 4 and Architectural Plans.

3 SHEARWALL RAKE DETAIL
Scale 1" = 1'-0"

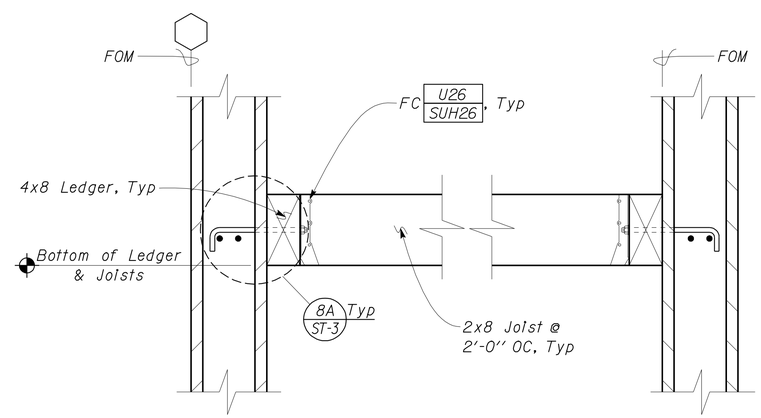

4 CEILING FRAMING DETAIL
Scale 1½" = 1'-0"

NOTE:
Roof Blocking not shown, see 1 ST1-2

DESIGN	BY Joseph Camilleri	CHECKED Justin Uyehara	
DETAILS	BY Pete von Savoye	CHECKED Joseph Camilleri	
QUANTITIES	BY	CHECKED	

STATE OF CALIFORNIA
DEPARTMENT OF TRANSPORTATION

DIVISION OF ENGINEERING SERVICES
ARCHITECTURAL AND STRUCTURAL DESIGN

BRIDGE NO. 57R0001R 57R0001L
POST MILE R59.4/R60.0

ALISO CREEK SAFETY ROADSIDE REST AREA
SOUTHBOUND BLDGS 1&2
NORTHBOUND BLDG 4
TYPICAL SECTIONS

SHEET ST1-4

DOES SD Imperial Rev. 9/02

ORIGINAL SCALE IN INCHES FOR REDUCED PLANS 0 1 2 3

CU 11 340
EA 261401

DISREGARD PRINTS BEARING EARLIER REVISION DATES → 09-22-09

REVISION DATES (PRELIMINARY STAGE ONLY) SHEET OF

24-JUN-2010 08:04

st1_04.dgn

DIST.	COUNTY	ROUTE	POST MILES TOTAL PROJECT	SHEET NO.	TOTAL SHEETS
11	SD	5	R59.4,R60.0	173	241

REGISTERED CIVIL ENGINEER — DATE: 11-30-09

REGISTERED PROFESSIONAL ENGINEER — Joseph F. Camilleri — No. 3656 — Exp. 3-31-10 — STRUCTURAL — STATE OF CALIFORNIA

PLANS APPROVAL DATE: 6-21-10

The State of California or its officers or agents shall not be responsible for the accuracy or completeness of electronic copies of this plan sheet.

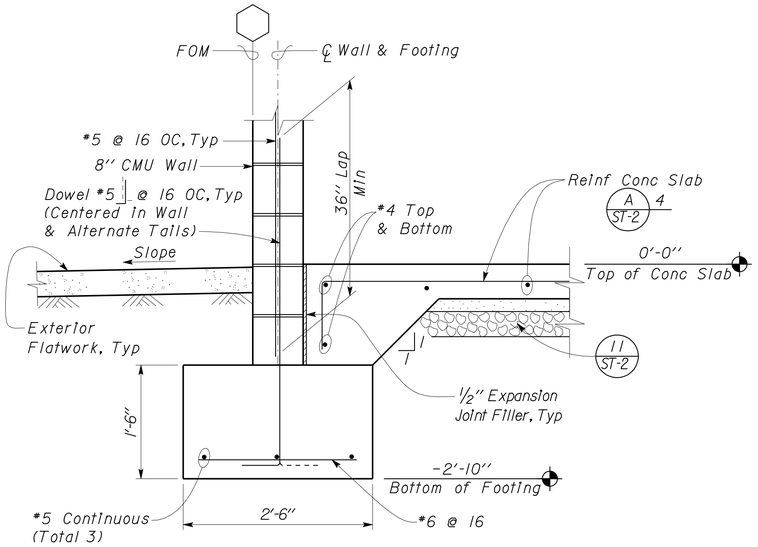

NOTES:
1. For location of Recess Slabs, see Foundation Plan.
2. See District plans for Notes & Details of Exterior Flatwork.

1 CMU EXTERIOR FOOTING
Scale 1" = 1'-0"

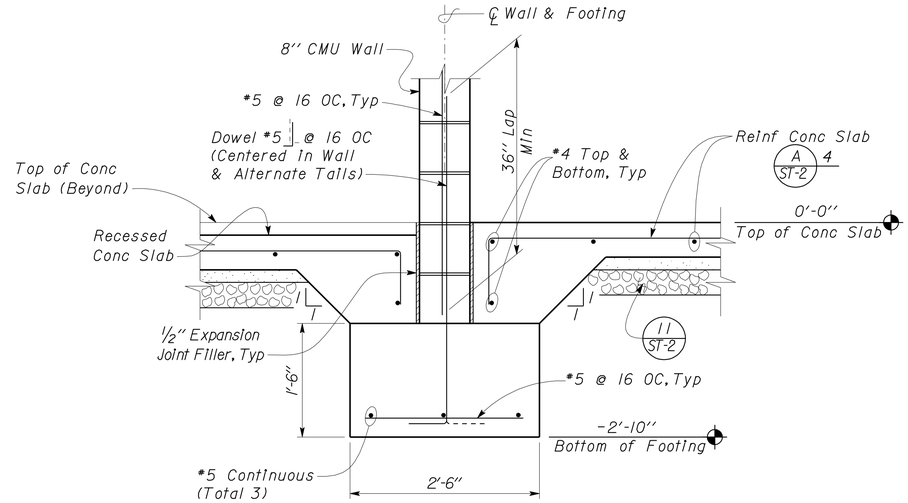

3 CMU INTERIOR FOOTING
Scale 1" = 1'-0"

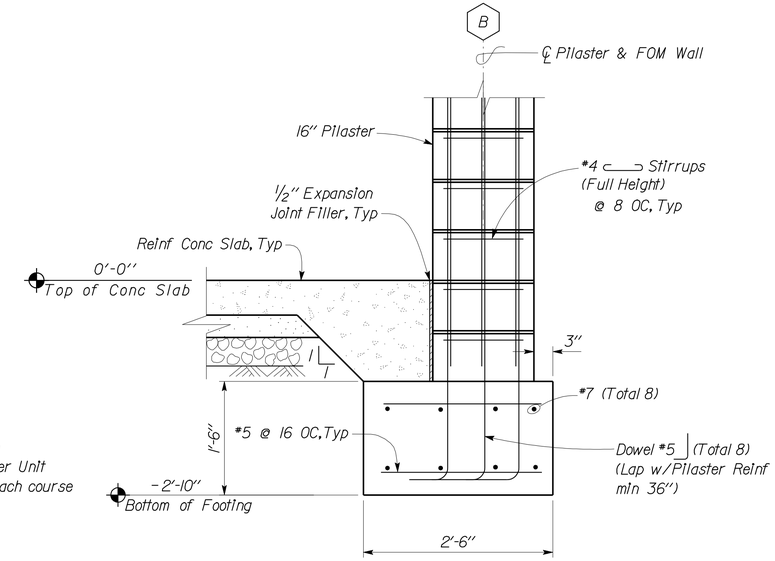

6 16" PILASTER FOOTING DETAIL
Scale 1" = 1'-0"

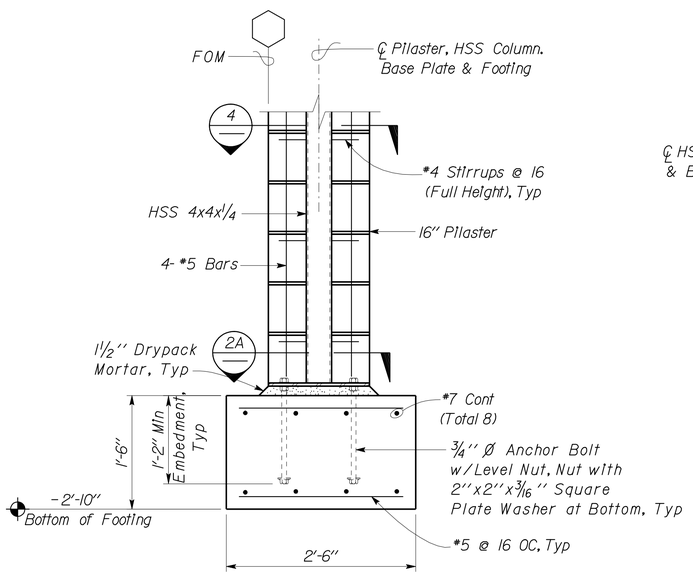

NOTE:
1. See District plans for Exterior Flatwork.

2 16" CMU PILASTER FOOTING
Scale 1" = 1'-0"

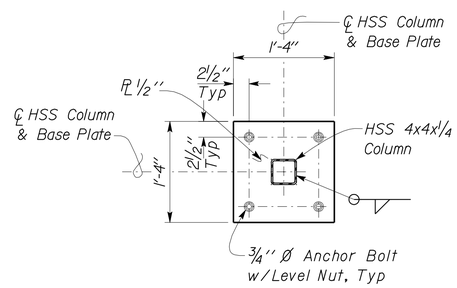

2A COLUMN BASE PLATE DETAIL
Scale 1" = 1'-0"

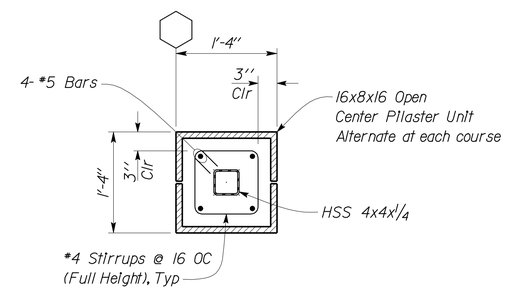

4 16" PILASTER DETAIL
Scale 1" = 1'-0"

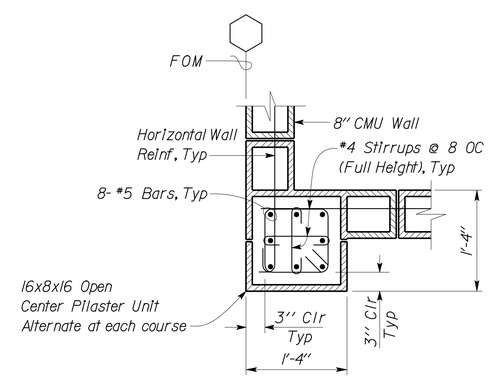

5 16" PILASTER DETAIL
Scale 1" = 1'-0"

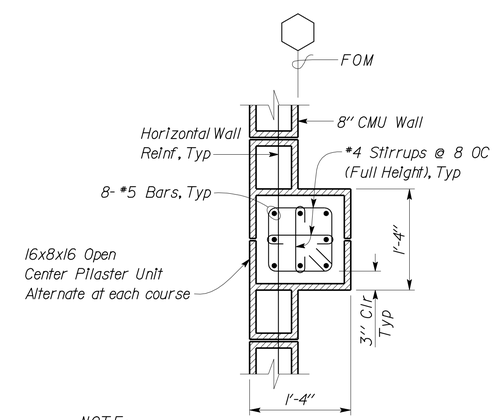

NOTE:
For Details not shown, see 4 Sim & 5 Sim

7 16" PILASTER DETAIL
Scale 1" = 1'-0"

DESIGN	BY Joseph Camilleri	CHECKED Justin Uyehara	
DETAILS	BY Pete von Savoye	CHECKED Joseph Camilleri	
QUANTITIES	BY	CHECKED	

STATE OF CALIFORNIA
DEPARTMENT OF TRANSPORTATION

DIVISION OF ENGINEERING SERVICES
ARCHITECTURAL AND STRUCTURAL DESIGN

BRIDGE NO. 57R0001R 57R0001L
POST MILE R59.4/R60.0

ALISO CREEK SAFETY ROADSIDE REST AREA
SOUTHBOUND BLDGS 1&2
NORTHBOUND BLDG 4
FOUNDATION DETAILS

SHEET ST1-5

DOES SD Imperial Rev. 9/02

ORIGINAL SCALE IN INCHES FOR REDUCED PLANS 0 1 2 3

CU 11 340
EA 261401

DISREGARD PRINTS BEARING EARLIER REVISION DATES → 09/22/09

REVISION DATES (PRELIMINARY STAGE ONLY) | SHEET | OF

24-JUN-2010 08:04

st1_05.dgn

DIST.	COUNTY	ROUTE	POST MILES TOTAL PROJECT	SHEET NO.	TOTAL SHEETS
11	SD	5	R59.4,R60.0	174	241

REGISTERED CIVIL ENGINEER — 11-30-09 DATE

REGISTERED PROFESSIONAL ENGINEER Joseph F. Camilleri No. 3656 Exp. 3-31-10 STRUCTURAL STATE OF CALIFORNIA

6-21-10
PLANS APPROVAL DATE

The State of California or its officers or agents shall not be responsible for the accuracy or completeness of electronic copies of this plan sheet.

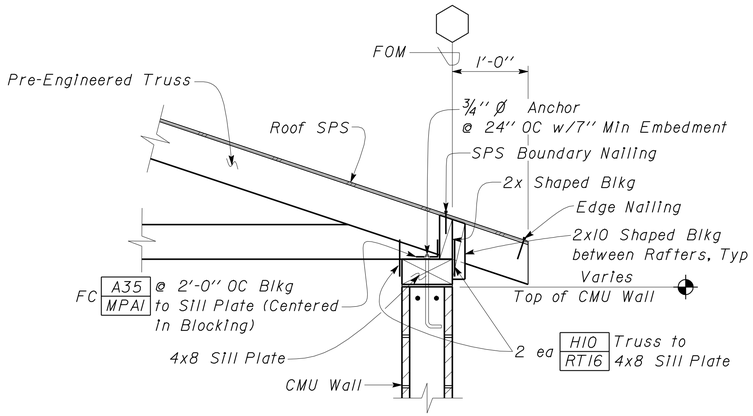

1 TRUSS TO CMU WALL
Scale 1" = 1'-0"

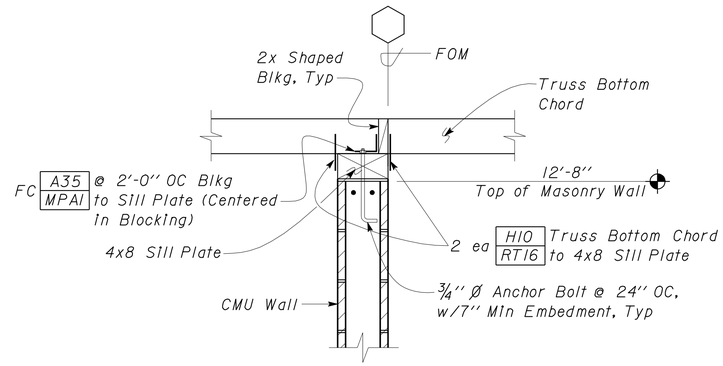

3 TRUSS TO CMU WALL DETAIL
Scale 1" = 1'-0"

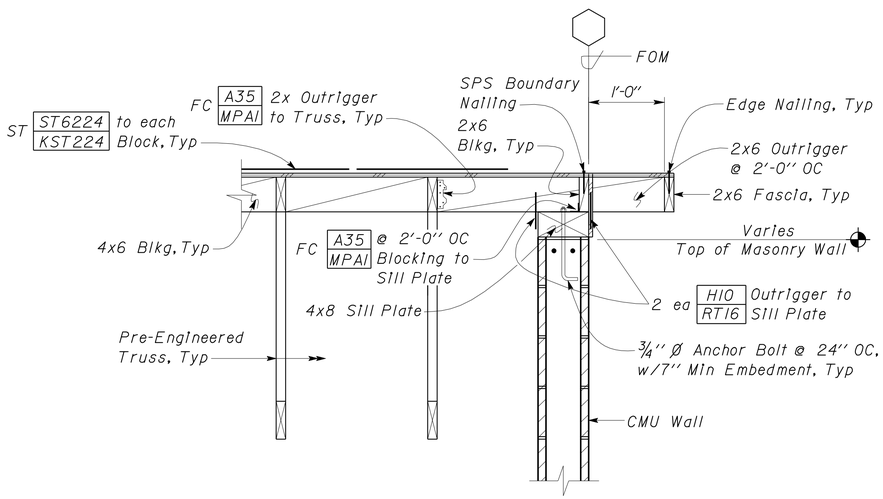

2 SHEARWALL RAKE DETAIL
Scale 1" = 1'-0"

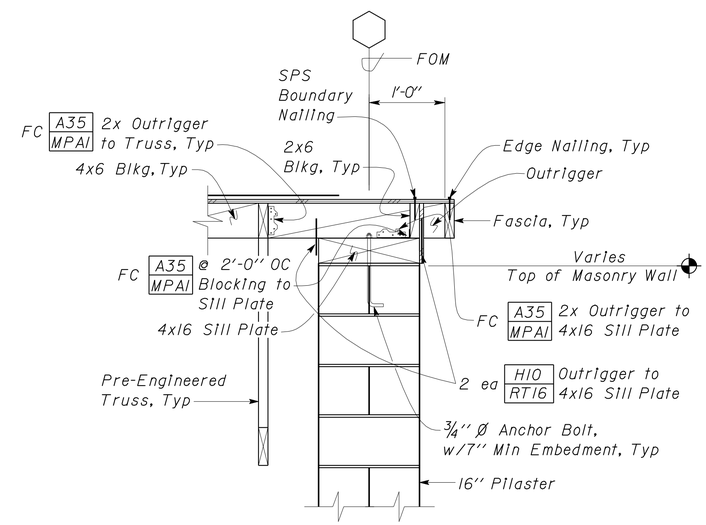

NOTE:
For Details not shown, see 2/S1m

4 PILASTER RAKE DETAIL
Scale 1" = 1'-0"

DESIGN	BY Joseph Camilleri	CHECKED Justin Uyehara	
DETAILS	BY Pete von Savoye	CHECKED Joseph Camilleri	
QUANTITIES	BY	CHECKED	

STATE OF CALIFORNIA
DEPARTMENT OF TRANSPORTATION

DIVISION OF ENGINEERING SERVICES
ARCHITECTURAL AND STRUCTURAL DESIGN

BRIDGE NO. 57R0001R 57R0001L
POST MILE R59.4/R60.0

ALISO CREEK SAFETY ROADSIDE REST AREA

SOUTHBOUND BLDGS 1&2
NORTHBOUND BLDG 4

FRAMING DETAILS

SHEET **ST1-6**

DOES SD Imperial Rev. 9/02

ORIGINAL SCALE IN INCHES FOR REDUCED PLANS 0 1 2 3

CU 11 340
EA 261401

DISREGARD PRINTS BEARING EARLIER REVISION DATES → 09/22/09

REVISION DATES (PRELIMINARY STAGE ONLY) SHEET OF

24-JUN-2010 08:04

st1_06.dgn

DIST.	COUNTY	ROUTE	POST MILES TOTAL PROJECT	SHEET NO.	TOTAL SHEETS
11	SD	5	R59.4,R60.0	175	241

Joseph Camilleri 11-30-09
REGISTERED CIVIL ENGINEER DATE

REGISTERED PROFESSIONAL ENGINEER Joseph F. Camilleri No. 3656 Exp. 3-31-10 STRUCTURAL STATE OF CALIFORNIA

6-21-10
PLANS APPROVAL DATE

The State of California or its officers or agents shall not be responsible for the accuracy or completeness of electronic copies of this plan sheet.

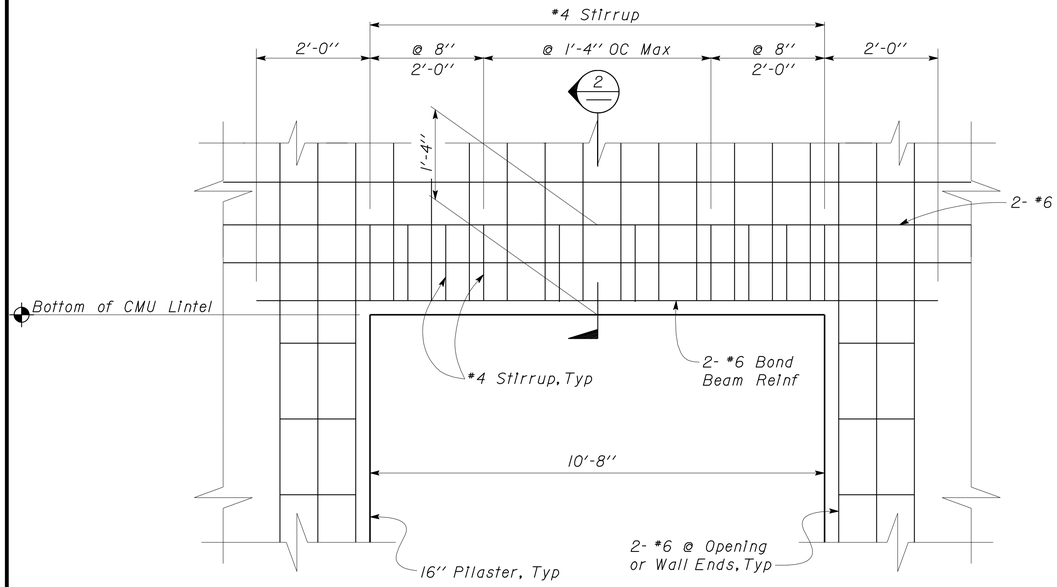

NOTES:
1. Not all CMU Wall Reinforcement shown for clarity.
2. For Attic CMU Wall Opening, see 1/ST-3 and Architectural Plans.

1 TYPICAL WALL OPENING
Scale No Scale

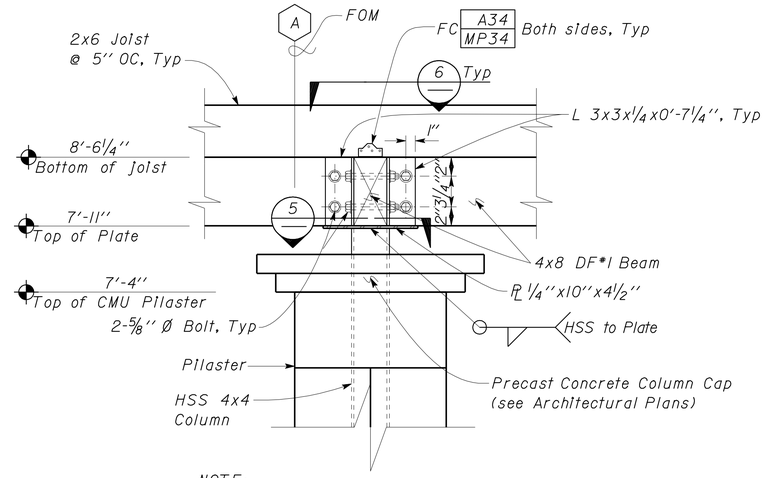

NOTE:
For other Reinf not shown, see 4/ST1-5

4 TRELLIS CONNECTION DETAIL
Scale 1 1/2" = 1'-0"

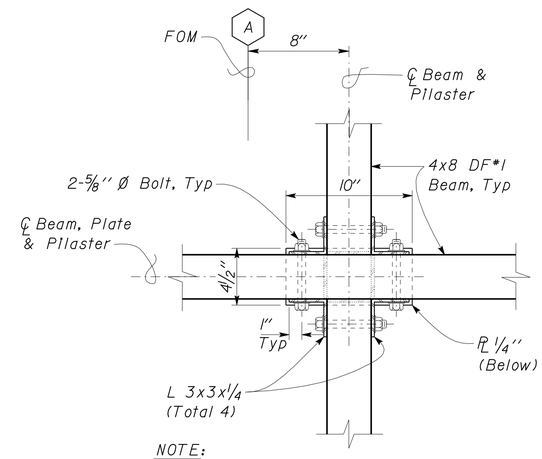

NOTE:
Pilaster & Joists not shown for clarity.

6 BEAM TO BEAM CONNECTION DETAIL
Scale 2" = 1'-0"

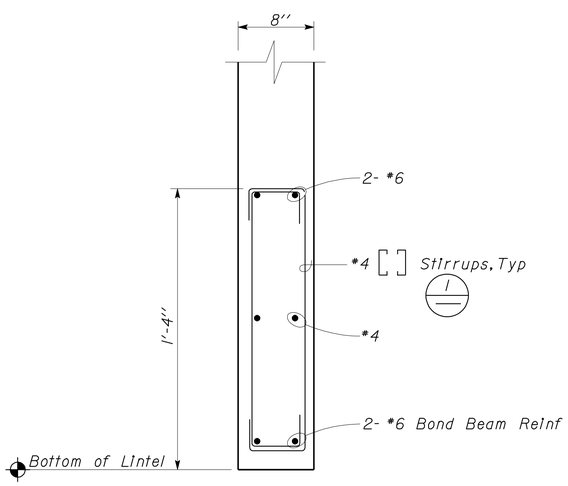

2 LINTEL DETAIL
Scale 1 1/2" = 1'-0"

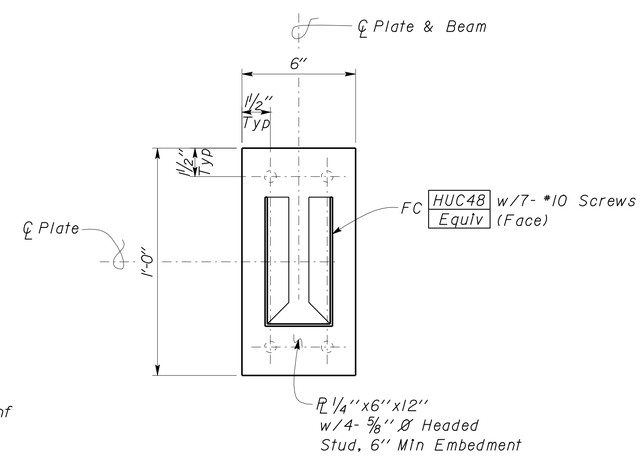

NOTE:
Beam not shown for clarity.

3 TRELLIS BEAM TO CMU WALL DETAIL
Scale 3" = 1'-0"

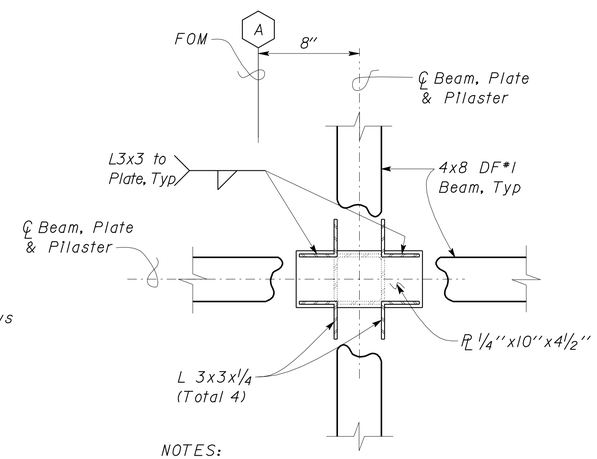

NOTES:
1. Pilaster & Joists not shown for clarity.
2. For Details not shown, see 6

5 BEAM TO PLATE CONNECTION DETAIL
Scale 2" = 1'-0"

DESIGN	BY Joseph Camilleri	CHECKED Justin Uyehara	
DETAILS	BY Pete von Savoye	CHECKED Joseph Camilleri	
QUANTITIES	BY	CHECKED	

STATE OF CALIFORNIA DEPARTMENT OF TRANSPORTATION

DIVISION OF ENGINEERING SERVICES ARCHITECTURAL AND STRUCTURAL DESIGN

BRIDGE NO. 57R0001R 57R0001L
POST MILE R59.4/R60.0

ALISO CREEK SAFETY ROADSIDE REST AREA
SOUTHBOUND BLDGS 1&2 NORTHBOUND BLDG 4
BUILDING DETAILS

SHEET ST1-7

DOES SD Imperial Rev. 9/02

ORIGINAL SCALE IN INCHES FOR REDUCED PLANS 0 1 2 3

CU 11 340
EA 261401

DISREGARD PRINTS BEARING EARLIER REVISION DATES → 09/22/09

REVISION DATES (PRELIMINARY STAGE ONLY) SHEET OF

24-JUN-2010 08:04

st1_07.dgn

DIST.	COUNTY	ROUTE	POST MILES TOTAL PROJECT	SHEET NO.	TOTAL SHEETS
11	SD	5	R59.4,R60.0	176	241

Joseph Camilleri 11-30-09
REGISTERED CIVIL ENGINEER DATE

REGISTERED PROFESSIONAL ENGINEER
Joseph F. Camilleri
No. 3656
Exp. 3-31-10
STRUCTURAL
STATE OF CALIFORNIA

6-21-10
PLANS APPROVAL DATE

The State of California or its officers or agents shall not be responsible for the accuracy or completeness of electronic copies of this plan sheet.

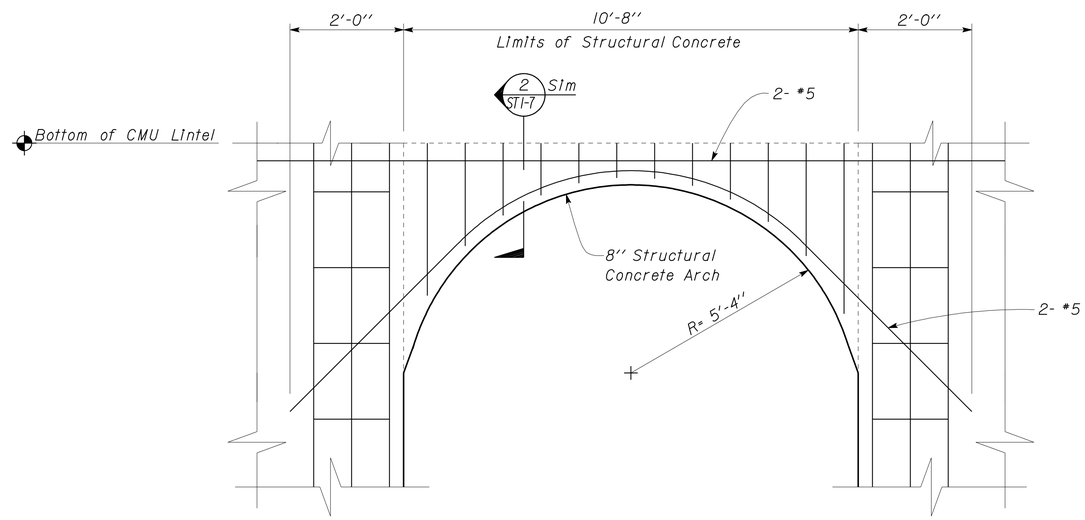

NOTES:
1. For Details not shown, see 1 S1m / ST1-7 & Architectural Plans.
2. Not all CMU Wall Reinforcement shown for clarity.

1 TYPICAL ARCH WALL OPENING
No Scale

DESIGN	BY Joseph Camilleri	CHECKED Justin Uyehara	
DETAILS	BY Pete von Savoye	CHECKED Joseph Camilleri	
QUANTITIES	BY	CHECKED	

STATE OF CALIFORNIA
DEPARTMENT OF TRANSPORTATION

DIVISION OF ENGINEERING SERVICES
ARCHITECTURAL AND STRUCTURAL DESIGN

BRIDGE NO. 57R0001R 57R0001L
POST MILE R59.4/R60.0

ALISO CREEK SAFETY ROADSIDE REST AREA
SOUTHBOUND BLDGS 1&2
NORTHBOUND BLDG 4
BUILDING DETAILS

SHEET ST1-8

DOES SD Imperial Rev. 9/02

ORIGINAL SCALE IN INCHES FOR REDUCED PLANS 0 1 2 3

CU 11 340
EA 261401

DISREGARD PRINTS BEARING EARLIER REVISION DATES → 09/22/09 11/03/09

REVISION DATES (PRELIMINARY STAGE ONLY) SHEET OF

24-JUN-2010 08:04

st1_08.dgn

DIST.	COUNTY	ROUTE	POST MILES TOTAL PROJECT	SHEET NO.	TOTAL SHEETS
11	SD	5	R59.4,R60.0	177	241

REGISTERED CIVIL ENGINEER — DATE: 11-30-09

REGISTERED PROFESSIONAL ENGINEER — Joseph F. Camilleri — No. 3656 — Exp. 3-31-10 — STRUCTURAL — STATE OF CALIFORNIA

6-21-10
PLANS APPROVAL DATE

The State of California or its officers or agents shall not be responsible for the accuracy or completeness of electronic copies of this plan sheet.

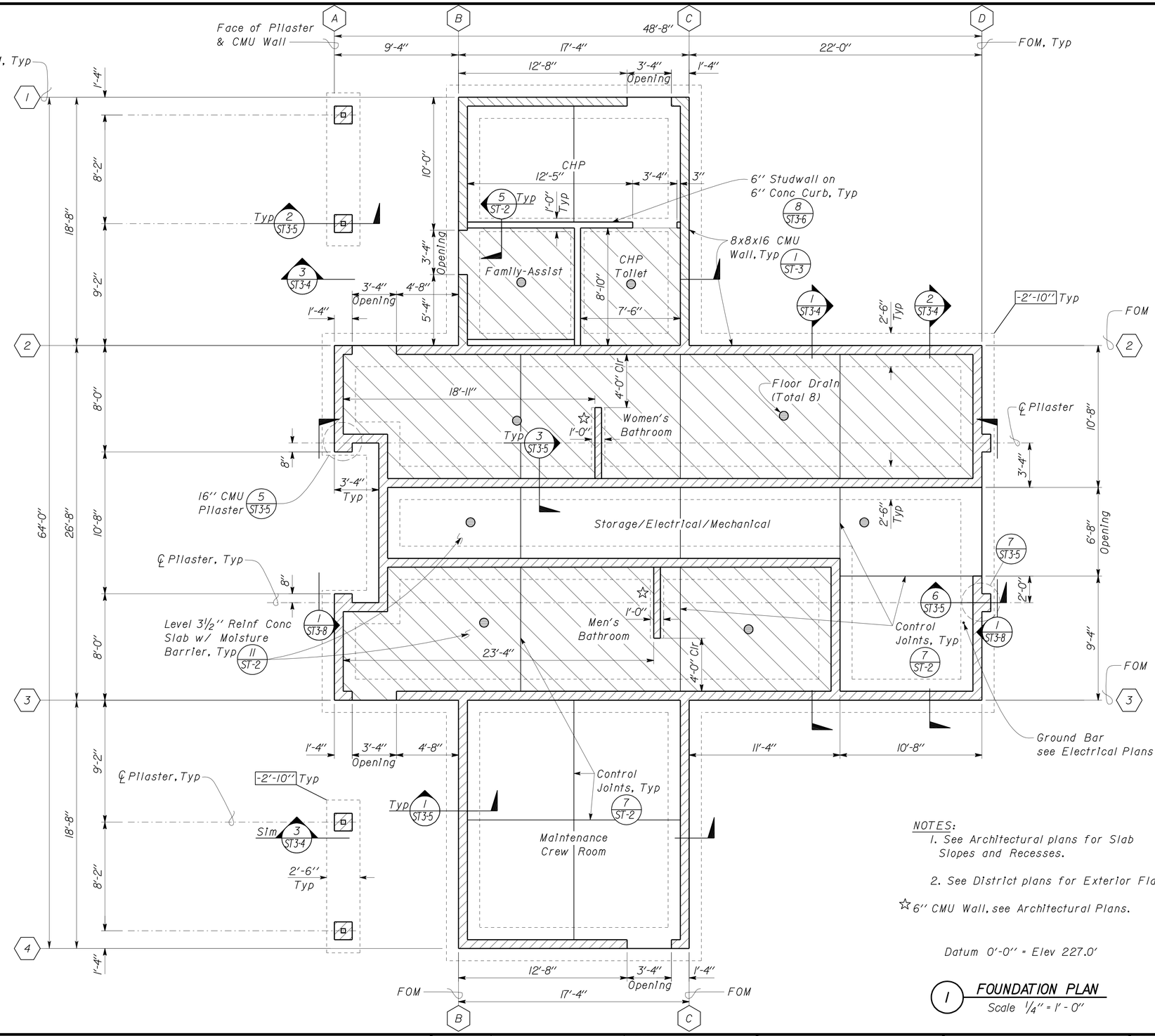

- Limits of Recessed Concrete Slab

NOTES:

1. See Architectural plans for Slab Slopes and Recesses.
2. See District plans for Exterior Flatwork.

☆ 6" CMU Wall, see Architectural Plans.

Datum 0'-0" = Elev 227.0'

1 FOUNDATION PLAN
Scale 1/4" = 1'-0"

Reference North for Building #3

DESIGN	BY Joseph Camilleri	CHECKED Justin Uyehara	
DETAILS	BY Pete von Savoye	CHECKED Joseph Camilleri	
QUANTITIES	BY	CHECKED	

STATE OF CALIFORNIA
DEPARTMENT OF TRANSPORTATION

DIVISION OF ENGINEERING SERVICES
ARCHITECTURAL AND STRUCTURAL DESIGN

CU 11 340
EA 261401

BRIDGE NO. 57R0001R 57R0001L
POST MILE R59.4/R60.0

ALISO CREEK SAFETY ROADSIDE REST AREA
SOUTHBOUND NEW BUILDING 3
FOUNDATION PLAN

SHEET ST3-1

DOES SD Imperial Rev. 9/02

ORIGINAL SCALE IN INCHES FOR REDUCED PLANS 0 1 2 3

DISREGARD PRINTS BEARING EARLIER REVISION DATES → 05/12/09

REVISION DATES (PRELIMINARY STAGE ONLY) SHEET OF

24-JUN-2010 08:04

st3_01.dgn

DIST.	COUNTY	ROUTE	POST MILES TOTAL PROJECT	SHEET NO.	TOTAL SHEETS
11	SD	5	R59.4,R60.0	178	241

REGISTERED CIVIL ENGINEER — 11-30-09 DATE

REGISTERED PROFESSIONAL ENGINEER Joseph F. Camilleri No. 3656 Exp. 3-31-10 STRUCTURAL STATE OF CALIFORNIA

6-21-10
PLANS APPROVAL DATE

The State of California or its officers or agents shall not be responsible for the accuracy or completeness of electronic copies of this plan sheet.

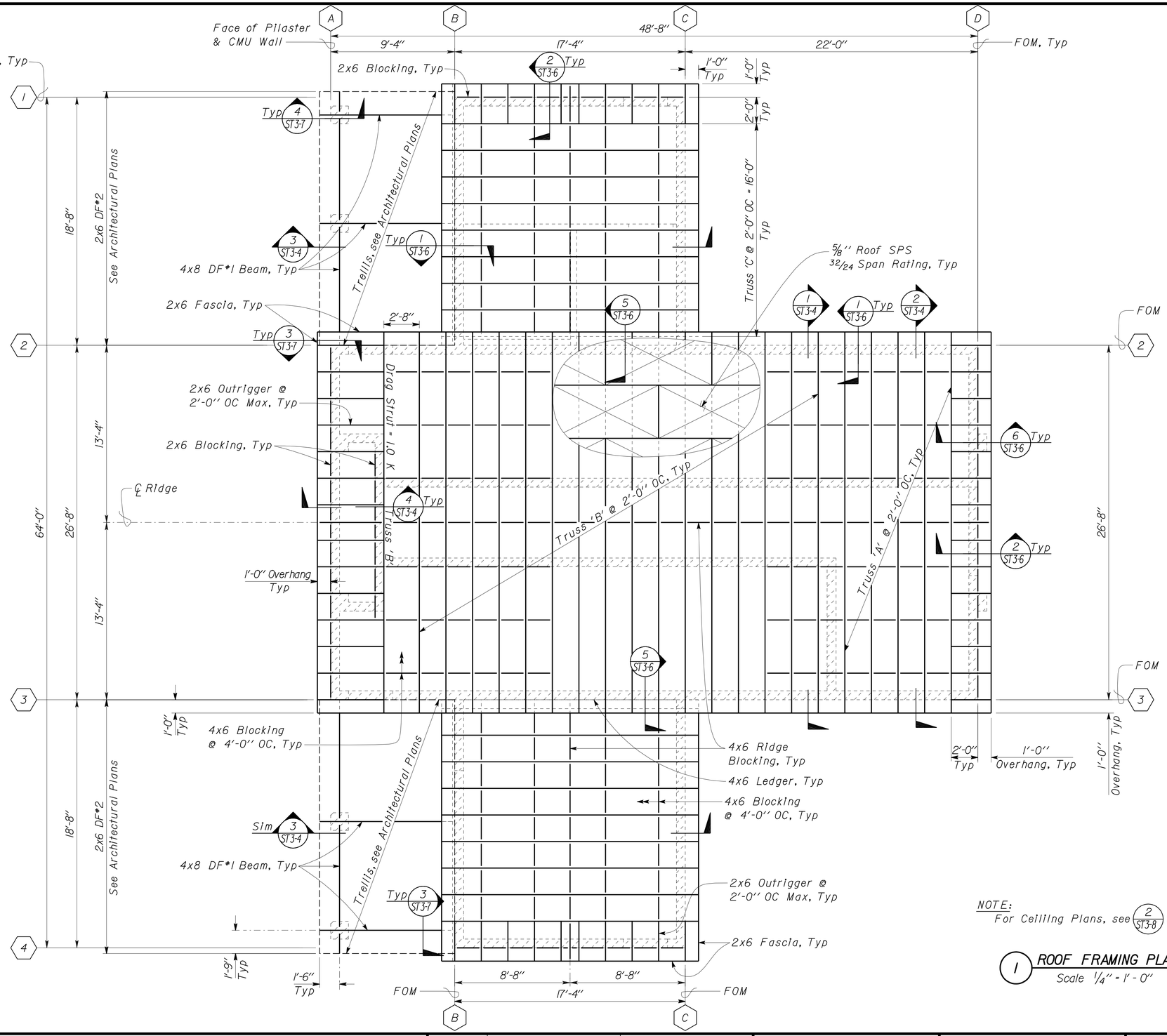

A ROOF NAILING SCHEDULE

Nailing Schedule:
10d @ 4" OC @ Diaphragm Boundaries
10d @ 4" OC @ other SPS Panel edges
10d @ 12" OC Field Nailing

NOTE:
For Ceiling Plans, see 2/ST3-8 & 3/ST3-8

1 ROOF FRAMING PLAN

Scale 1/4" = 1'-0"

Reference North for Building #3

	BY	CHECKED
DESIGN	Joseph Camilleri	Justin Uyehara
DETAILS	Pete von Savoye	Joseph Camilleri
QUANTITIES		

STATE OF CALIFORNIA
DEPARTMENT OF TRANSPORTATION

DIVISION OF ENGINEERING SERVICES
ARCHITECTURAL AND STRUCTURAL DESIGN

BRIDGE NO. 57R0001R 57R0001L
POST MILE R59.4/R60.0

ALISO CREEK SAFETY ROADSIDE REST AREA
SOUTHBOUND NEW BUILDING 3
ROOF FRAMING PLAN

SHEET ST3-2

DOES SD Imperial Rev. 9/02

ORIGINAL SCALE IN INCHES FOR REDUCED PLANS 0 1 2 3

CU 11 340
EA 261401

DISREGARD PRINTS BEARING EARLIER REVISION DATES → 05/12/09

REVISION DATES (PRELIMINARY STAGE ONLY) SHEET OF

24-JUN-2010 08:04

st3_02.dgn

DIST.	COUNTY	ROUTE	POST MILES TOTAL PROJECT	SHEET NO.	TOTAL SHEETS
11	SD	5	R59.4,R60.0	179	241

REGISTERED CIVIL ENGINEER — 11-30-09 DATE

REGISTERED PROFESSIONAL ENGINEER — Joseph F. Camilleri — No. 3656 — Exp. 3-31-10 — STRUCTURAL — STATE OF CALIFORNIA

6-21-10
PLANS APPROVAL DATE

The State of California or its officers or agents shall not be responsible for the accuracy or completeness of electronic copies of this plan sheet.

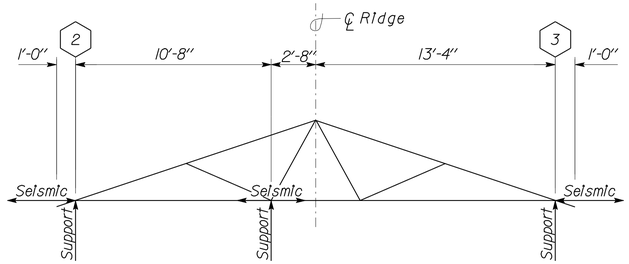

1 TRUSS "A"
No Scale

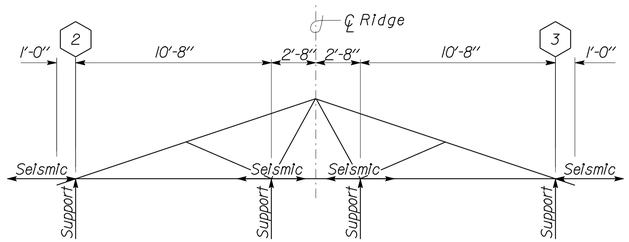

2 TRUSS "B"
No Scale

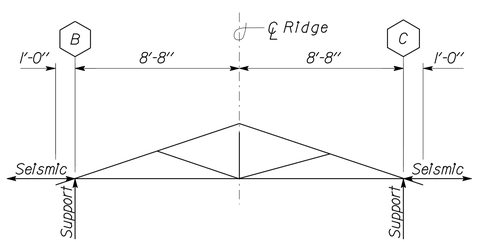

3 TRUSS "C"
No Scale

A PRE-ENGINEERED WOOD TRUSS REQUIREMENTS

LOADS:	Dead Load	Live Load
Top Chord (Roof):	30 psf	20 psf
Bottom Chord (Ceiling)	5 psf	10 psf

Seismic = 750 lbs per Rafter, see 1/ST3-2 for additional Seismic Drag Strut Force

1. Deflection:
   Live Load ---------- L/360
   Total Load ---------- L/240
2. Camber Shall be 1.5 Times Dead Load Deflection
3. Web material shall be 2x4 min DF#2.
4. Top and bottom chord shall be 2x6 min DF#1.
5. ⟷ Indicates Seismic Lateral Load.
6. ↑ Denotes Point of Support

	BY	CHECKED
DESIGN	Joseph Camilleri	Justin Uyehara
DETAILS	Pete von Savoye	Joseph Camilleri
QUANTITIES		

STATE OF CALIFORNIA
DEPARTMENT OF TRANSPORTATION

DIVISION OF ENGINEERING SERVICES
ARCHITECTURAL AND STRUCTURAL DESIGN

BRIDGE NO. 57R0001R 57R0001L
POST MILE R59.4/R60.0

ALISO CREEK SAFETY ROADSIDE REST AREA
SOUTHBOUND NEW BUILDING 3
PRE-ENGINEERED TRUSS NOTES

SHEET ST3-3

DOES SD Imperial Rev. 9/02

ORIGINAL SCALE IN INCHES FOR REDUCED PLANS 0 1 2 3

CU 11 340
EA 261401

DISREGARD PRINTS BEARING EARLIER REVISION DATES → 02/05/09

REVISION DATES (PRELIMINARY STAGE ONLY) SHEET OF

24-JUN-2010 08:04

st3_03.dgn

DIST.	COUNTY	ROUTE	POST MILES TOTAL PROJECT	SHEET NO.	TOTAL SHEETS
11	SD	5	R59.4,R60.0	180	241

REGISTERED CIVIL ENGINEER — 11-30-09 DATE

REGISTERED PROFESSIONAL ENGINEER — Joseph F. Camilleri — No. 3656 — Exp. 3-31-10 — STRUCTURAL — STATE OF CALIFORNIA

6-21-10
PLANS APPROVAL DATE

The State of California or its officers or agents shall not be responsible for the accuracy or completeness of electronic copies of this plan sheet.

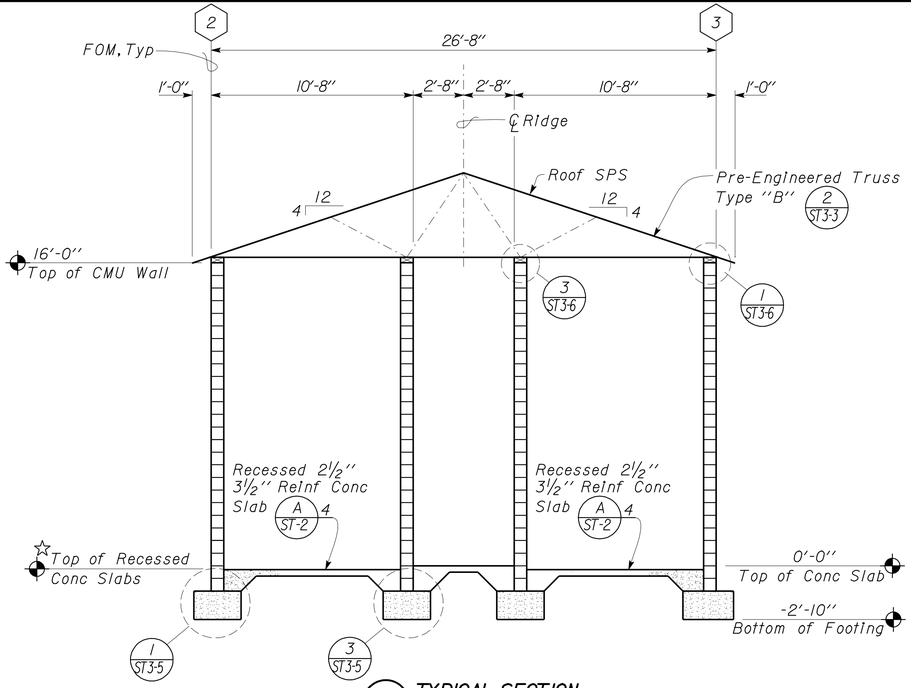

1 TYPICAL SECTION
Scale 1/4" = 1'-0"

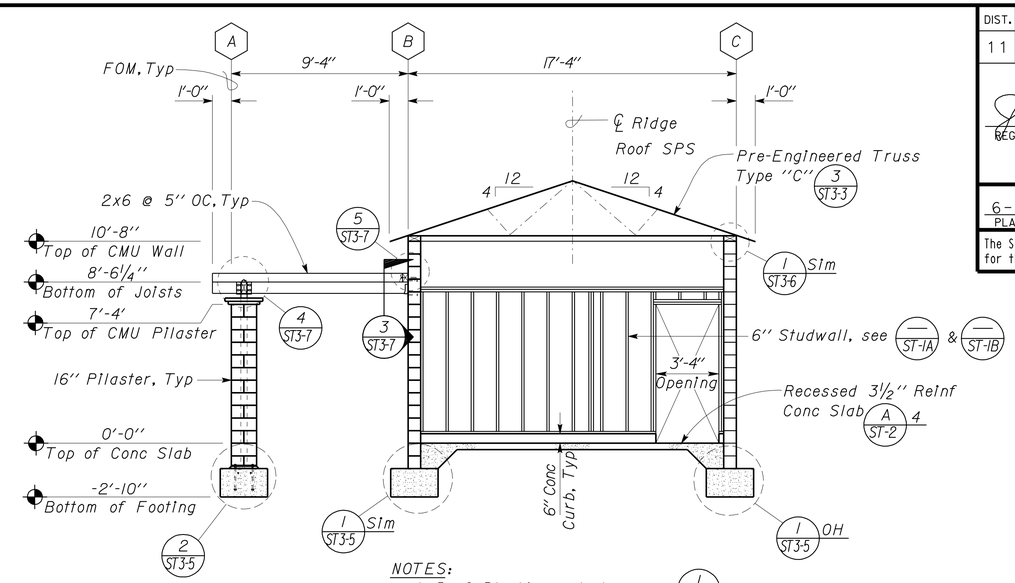

NOTES:
1. Roof Blocking not shown, see 1/ST3-2
2. See District plans for Exterior Flatwork.

3 TYPICAL SECTION
Scale 1/4" = 1'-0"

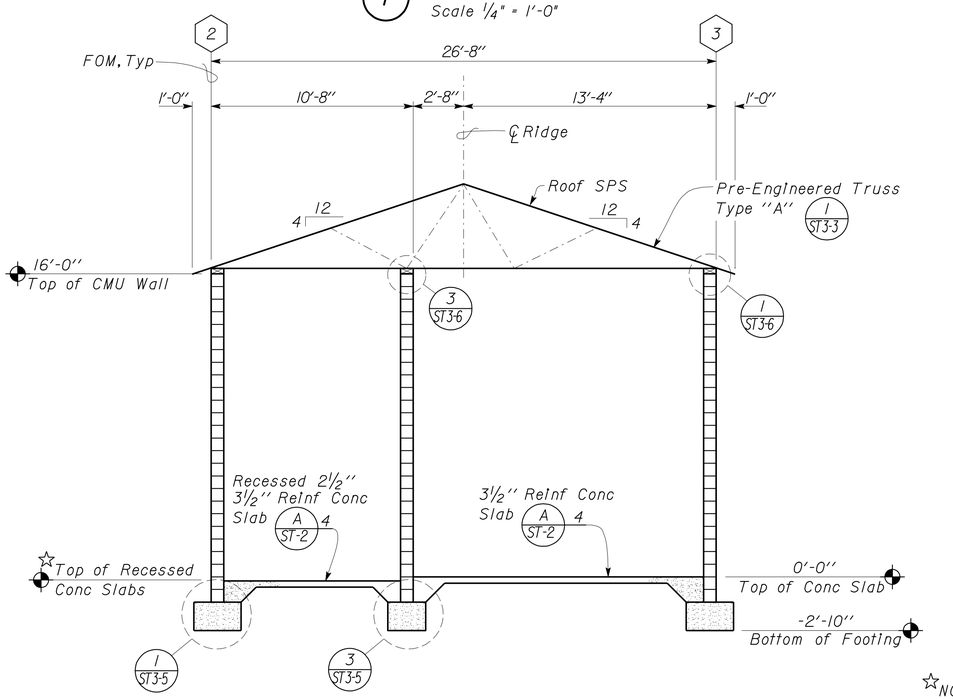

2 TYPICAL SECTION
Scale 1/4" = 1'-0"

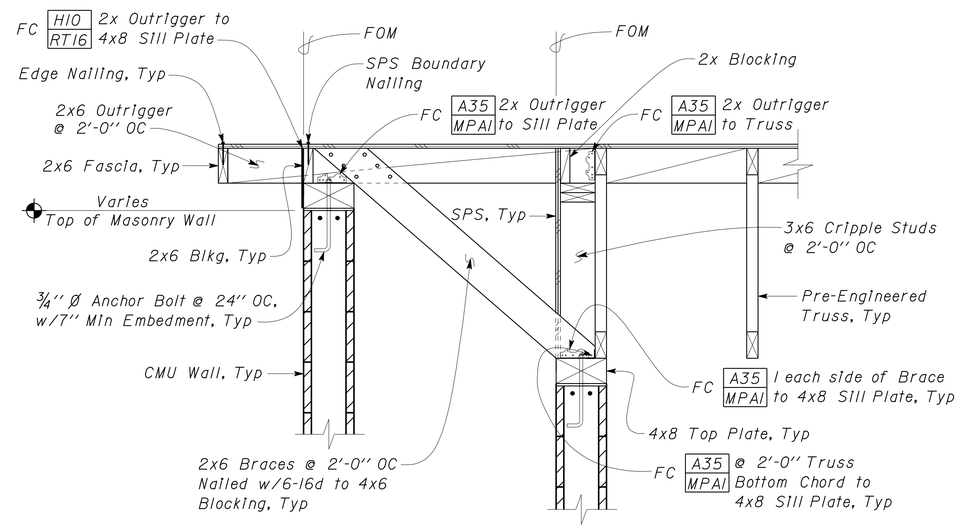

NOTE:
For Ceiling Framing not shown @ Elev 14'-9", see 7/ST3-6

4 SHEARWALL RAKE DETAIL
Scale 1" = 1'-0"

☆NOTE:
See Architectural Plans for Elevation
at Recessed Concrete Slab locations.

NOTE:
Roof Blocking not shown, see 1/ST3-2

	BY	CHECKED
DESIGN	Joseph Camilleri	Justin Uyehara
DETAILS	Pete von Savoye	Joseph Camilleri
QUANTITIES		

STATE OF CALIFORNIA
DEPARTMENT OF TRANSPORTATION

DIVISION OF ENGINEERING SERVICES
ARCHITECTURAL AND STRUCTURAL DESIGN

BRIDGE NO. 57R0001R 57R0001L
POST MILE R59.4/R60.0

ALISO CREEK SAFETY ROADSIDE REST AREA
SOUTHBOUND NEW BUILDING 3
TYPICAL SECTIONS

SHEET ST3-4

DOES SD Imperial Rev. 9/02

ORIGINAL SCALE IN INCHES FOR REDUCED PLANS 0 1 2 3

CU 11 340
EA 261401

DISREGARD PRINTS BEARING EARLIER REVISION DATES → 03/09/09

REVISION DATES (PRELIMINARY STAGE ONLY) SHEET OF

24-JUN-2010 08:04

st3_04.dgn

DIST.	COUNTY	ROUTE	POST MILES TOTAL PROJECT	SHEET NO.	TOTAL SHEETS
11	SD	5	R59.4,R60.0	181	241

REGISTERED CIVIL ENGINEER — 11-30-09 DATE

Joseph Camilleri — REGISTERED PROFESSIONAL ENGINEER — No. 3656 — Exp. 3-31-10 — STRUCTURAL — STATE OF CALIFORNIA

6-21-10
PLANS APPROVAL DATE

The State of California or its officers or agents shall not be responsible for the accuracy or completeness of electronic copies of this plan sheet.

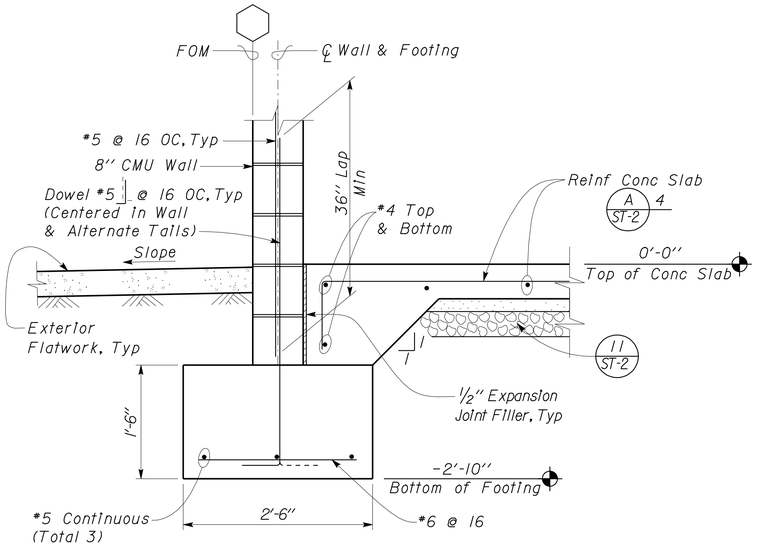

NOTES:
1. For location of Recess Slabs, see Foundation Plan.
2. See District plans for Notes & Details of Exterior Flatwork.

1 CMU EXTERIOR FOOTING
Scale 1" = 1'-0"

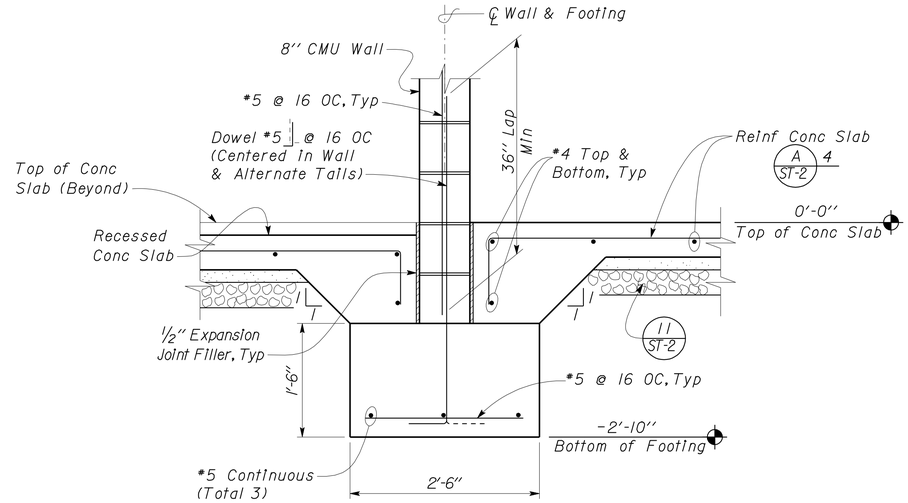

3 CMU INTERIOR FOOTING
Scale 1" = 1'-0"

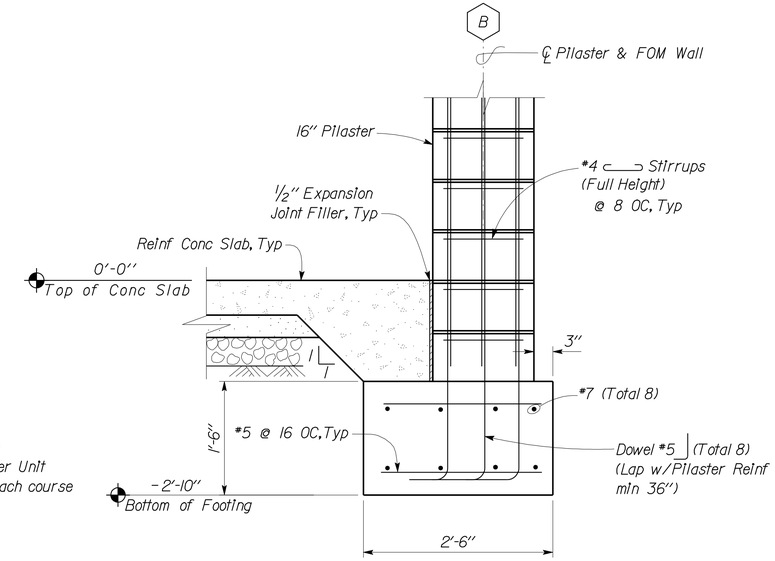

6 16" PILASTER FOOTING DETAIL
Scale 1" = 1'-0"

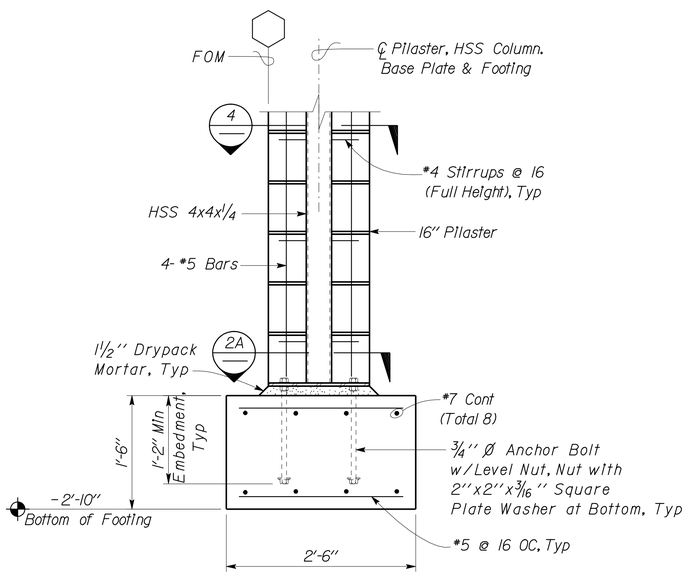

NOTE:
1. See District plans for Exterior Flatwork.

2 16" CMU PILASTER FOOTING
Scale 1" = 1'-0"

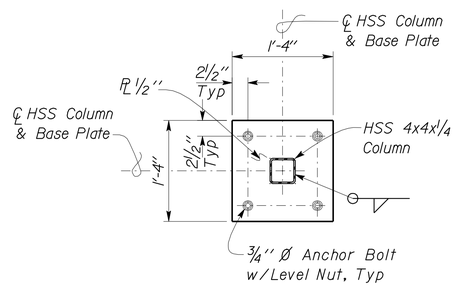

2A COLUMN BASE PLATE DETAIL
Scale 1" = 1'-0"

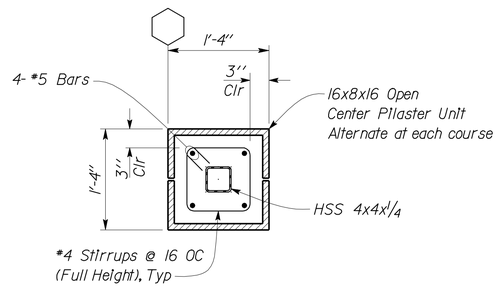

4 16" PILASTER DETAIL
Scale 1" = 1'-0"

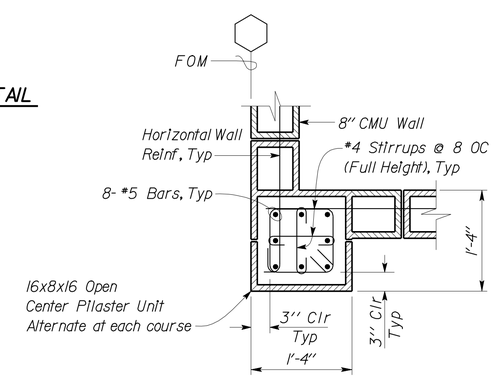

5 16" PILASTER DETAIL
Scale 1" = 1'-0"

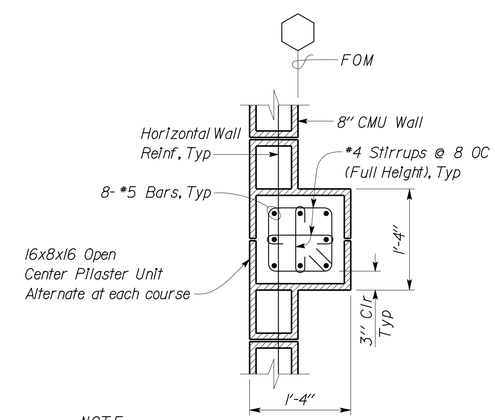

NOTE:
For Details not shown, see 4 Sim & 5 Sim

7 16" PILASTER DETAIL
Scale 1" = 1'-0"

DESIGN	BY Joseph Camilleri	CHECKED Justin Uyehara	
DETAILS	BY Pete von Savoye	CHECKED Joseph Camilleri	
QUANTITIES	BY	CHECKED	

STATE OF CALIFORNIA
DEPARTMENT OF TRANSPORTATION

DIVISION OF ENGINEERING SERVICES
ARCHITECTURAL AND STRUCTURAL DESIGN

BRIDGE NO. 57R0001R 57R0001L
POST MILE R59.4/R60.0

ALISO CREEK SAFETY ROADSIDE REST AREA
SOUTHBOUND NEW BUILDING 3
FOUNDATION DETAILS

SHEET ST3-5

DOES SD Imperial Rev. 9/02

ORIGINAL SCALE IN INCHES FOR REDUCED PLANS 0 1 2 3

CU 11 340
EA 261401

DISREGARD PRINTS BEARING EARLIER REVISION DATES → 03/03/09

REVISION DATES (PRELIMINARY STAGE ONLY) | SHEET | OF

24-JUN-2010 08:05

st3_05.dgn

DIST.	COUNTY	ROUTE	POST MILES TOTAL PROJECT	SHEET NO.	TOTAL SHEETS
11	SD	5	R59.4,R60.0	182	241

REGISTERED CIVIL ENGINEER — Joseph Camilleri — 11-30-09 DATE

REGISTERED PROFESSIONAL ENGINEER — Joseph F. Camilleri — No. 3656 — Exp. 3-31-10 — STRUCTURAL — STATE OF CALIFORNIA

6-21-10
PLANS APPROVAL DATE

The State of California or its officers or agents shall not be responsible for the accuracy or completeness of electronic copies of this plan sheet.

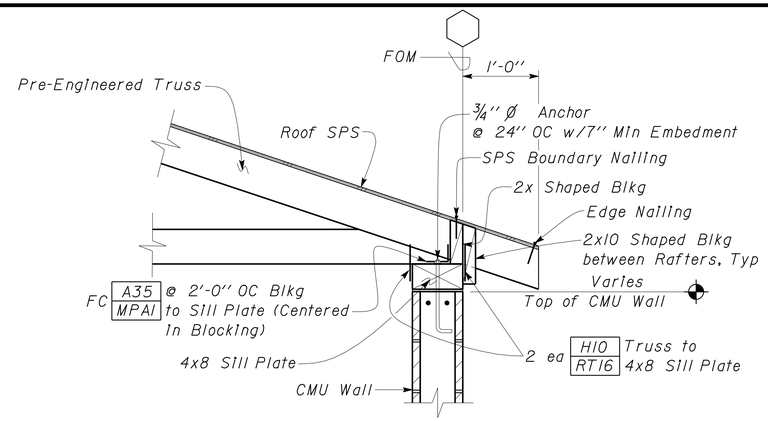

1 TRUSS TO CMU WALL
Scale 1" = 1'-0"

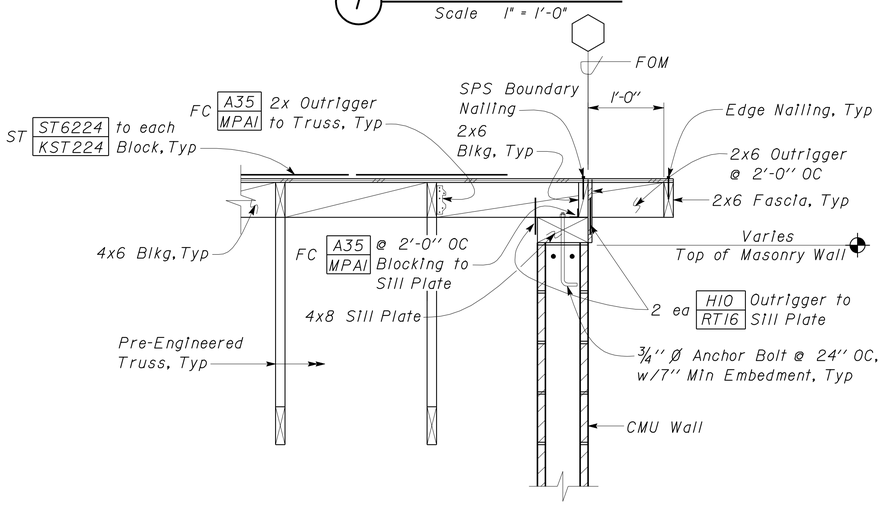

2 SHEARWALL RAKE DETAIL
Scale 1" = 1'-0"

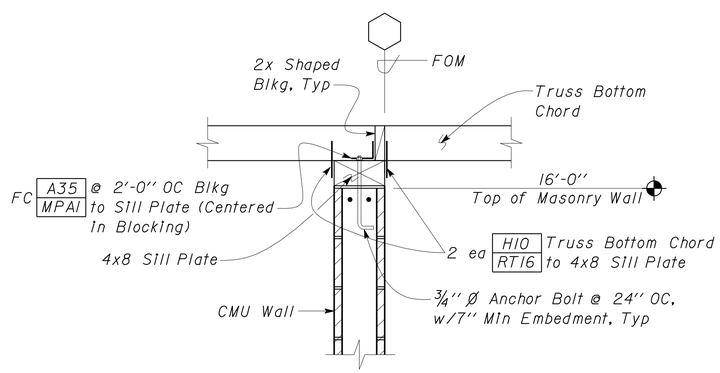

3 TRUSS TO CMU WALL DETAIL
Scale 1" = 1'-0"

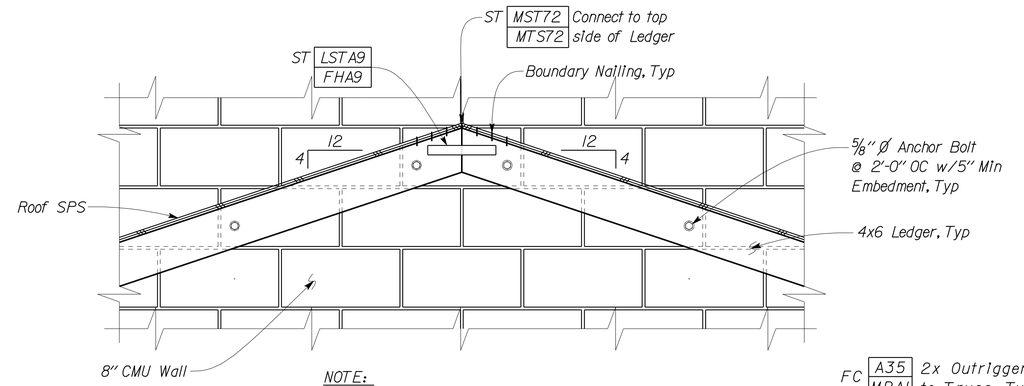

NOTE:
4x Blocking at Ridge with Holdown Connection not shown for clarity.

4 END ELEVATION
No Scale

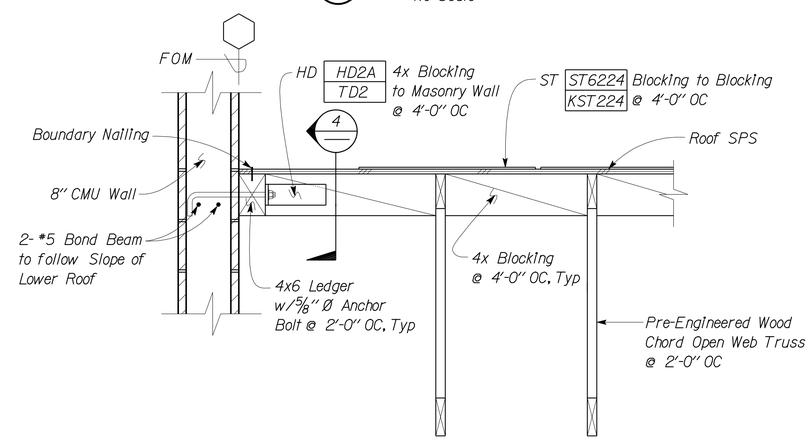

5 END SECTION
No Scale

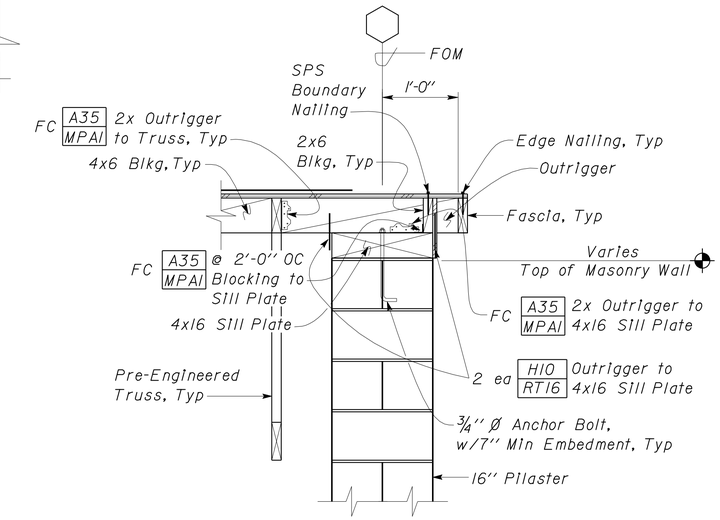

NOTE:
For Details not shown, see 2/Slm

6 PILASTER RAKE DETAIL
Scale 1" = 1'-0"

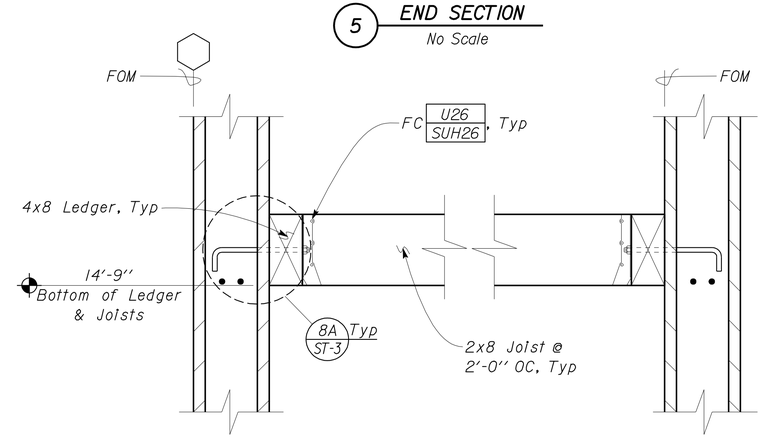

7 CEILING FRAMING DETAIL
Scale 1 1/2" = 1'-0"

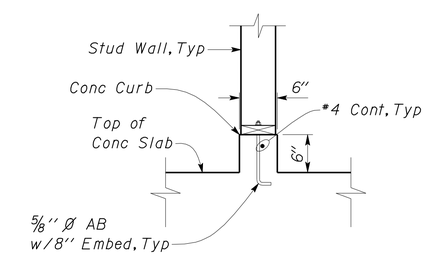

8 CURB DETAIL
Scale 1" = 1'-0"

DESIGN	BY Joseph Camilleri	CHECKED Justin Uyehara	
DETAILS	BY Pete von Savoye	CHECKED Joseph Camilleri	
QUANTITIES	BY	CHECKED	

STATE OF CALIFORNIA
DEPARTMENT OF TRANSPORTATION

DIVISION OF ENGINEERING SERVICES
ARCHITECTURAL AND STRUCTURAL DESIGN

CU 11 340
EA 261401

BRIDGE NO. 57R0001R 57R0001L
POST MILE R59.4/R60.0

ALISO CREEK SAFETY ROADSIDE REST AREA
SOUTHBOUND NEW BUILDING 3
FRAMING DETAILS

SHEET ST3-6

DOES SD Imperial Rev. 9/02

ORIGINAL SCALE IN INCHES FOR REDUCED PLANS 0 1 2 3

DISREGARD PRINTS BEARING EARLIER REVISION DATES → 03/04/09

REVISION DATES (PRELIMINARY STAGE ONLY) SHEET OF

24-JUN-2010 08:05

st3_06.dgn

DIST.	COUNTY	ROUTE	POST MILES TOTAL PROJECT	SHEET NO.	TOTAL SHEETS
11	SD	5	R59.4,R60.0	183	241

Joseph Camilleri 11-30-09
REGISTERED CIVIL ENGINEER DATE

REGISTERED PROFESSIONAL ENGINEER Joseph F. Camilleri No. 3656 Exp. 3-31-10 STRUCTURAL STATE OF CALIFORNIA

6-21-10
PLANS APPROVAL DATE

The State of California or its officers or agents shall not be responsible for the accuracy or completeness of electronic copies of this plan sheet.

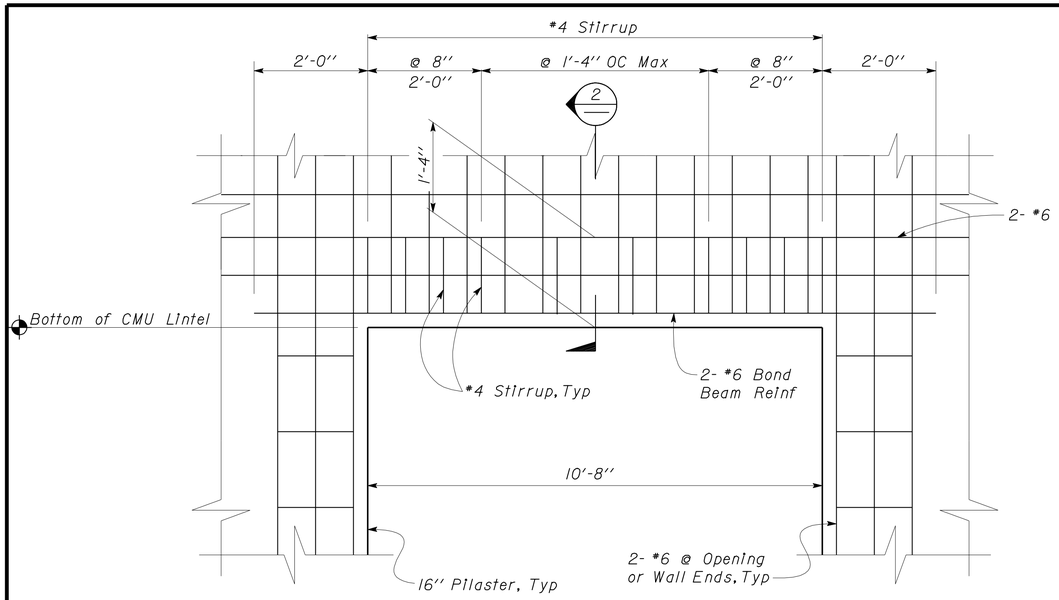

NOTES:
1. Not all CMU Wall Reinforcement shown for clarity.
2. For Attic CMU Wall Opening, see 1/ST-3 and Architectural Plans.

1 TYPICAL WALL OPENING
No Scale

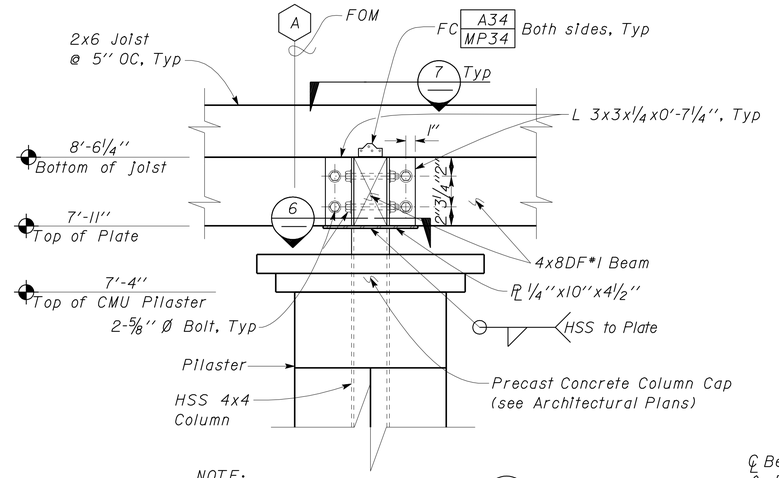

NOTE:
For other Reinf not shown, see 4/S13-5

4 TRELLIS CONNECTION DETAIL
Scale 1 1/2" = 1'-0"

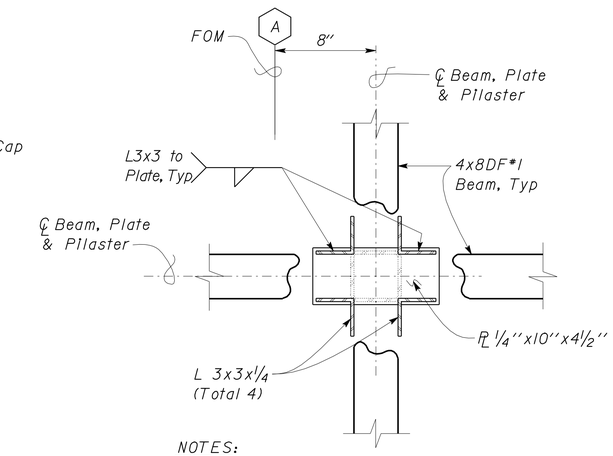

NOTES:
1. Pilaster & Joists not shown for clarity.
2. For Details not shown, see 7/—

6 BEAM TO PLATE CONNECTION DETAIL
Scale 2" = 1'-0"

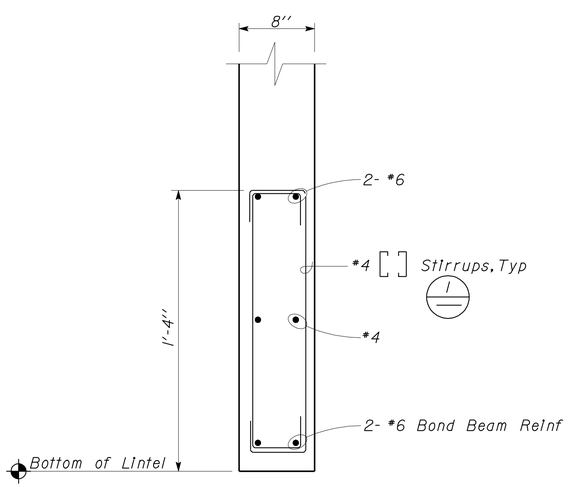

2 LINTEL DETAIL
Scale 1 1/2" = 1'-0"

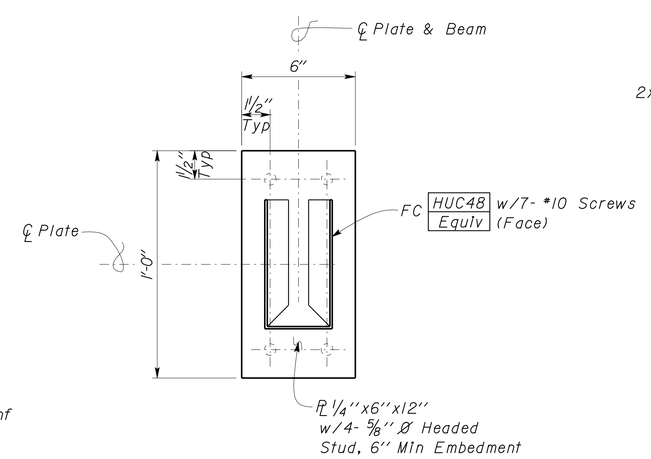

NOTE:
Beam not shown for clarity.

3 TRELLIS BEAM TO CMU WALL DETAIL
Scale 3" = 1'-0"

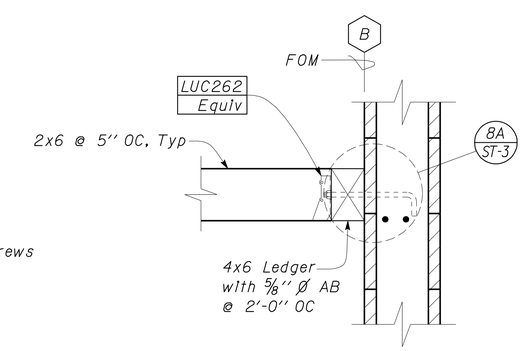

5 TRELLIS CONNECTION DETAIL
Scale 1 1/2" = 1'-0"

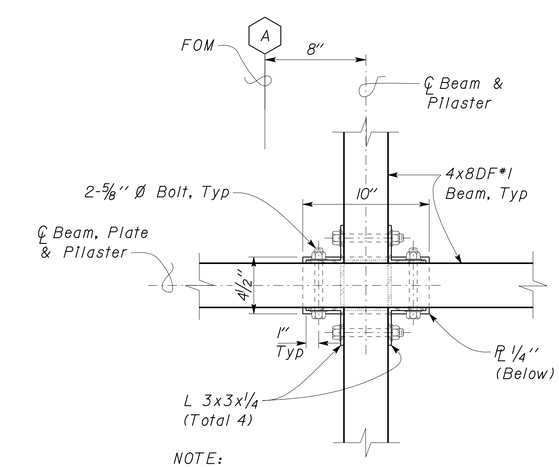

NOTE:
Pilaster & Joists not shown for clarity.

7 BEAM TO BEAM CONNECTION DETAIL
Scale 2" = 1'-0"

DESIGN	BY Joseph Camilleri	CHECKED Justin Uyehara	
DETAILS	BY Pete von Savoye	CHECKED Joseph Camilleri	
QUANTITIES	BY	CHECKED	

STATE OF CALIFORNIA
DEPARTMENT OF TRANSPORTATION

DIVISION OF ENGINEERING SERVICES
ARCHITECTURAL AND STRUCTURAL DESIGN

BRIDGE NO. 57R0001R 57R0001L
POST MILE R59.4/R60.0

ALISO CREEK SAFETY ROADSIDE REST AREA
SOUTHBOUND NEW BUILDING 3
BUILDING DETAILS

SHEET ST3-7

DOES SD Imperial Rev. 9/02

ORIGINAL SCALE IN INCHES FOR REDUCED PLANS 0 1 2 3

CU 11 340
EA 261401

DISREGARD PRINTS BEARING EARLIER REVISION DATES → 03/04/09

REVISION DATES (PRELIMINARY STAGE ONLY) SHEET OF

24-JUN-2010 08:05

st3_07.dgn

DIST.	COUNTY	ROUTE	POST MILES TOTAL PROJECT	SHEET NO.	TOTAL SHEETS
11	SD	5	R59.4,R60.0	184	241

Joseph Camilleri 11-30-09
REGISTERED CIVIL ENGINEER DATE

REGISTERED PROFESSIONAL ENGINEER
Joseph F. Camilleri
No. 3656
Exp. 3-31-10
STRUCTURAL
STATE OF CALIFORNIA

6-21-10
PLANS APPROVAL DATE

The State of California or its officers or agents shall not be responsible for the accuracy or completeness of electronic copies of this plan sheet.

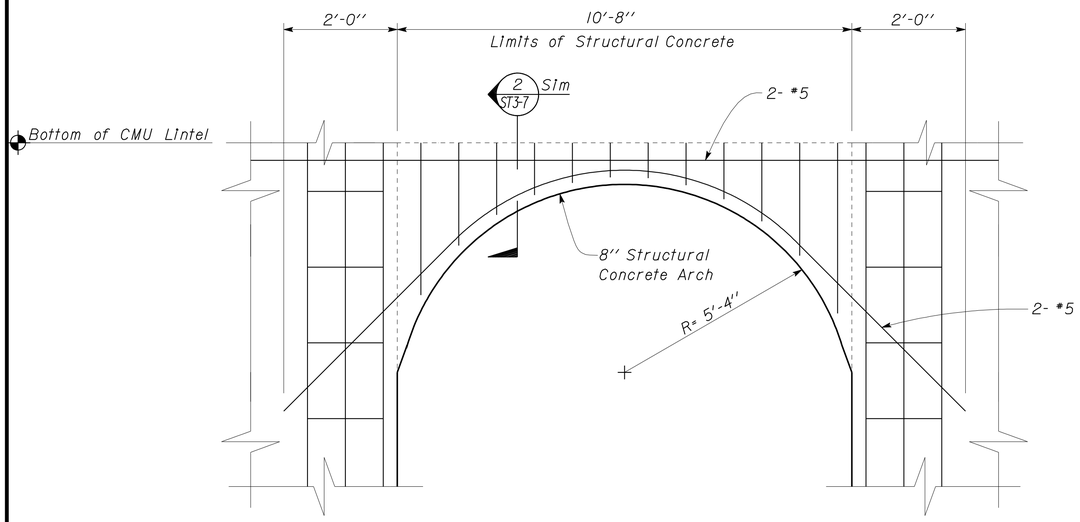

NOTES:
1. For Details not shown, see 1 ST3-7 Slm & Architectural Plans.
2. Not all CMU Wall Reinforcement shown for clarity.

1 TYPICAL ARCH WALL OPENING
No Scale

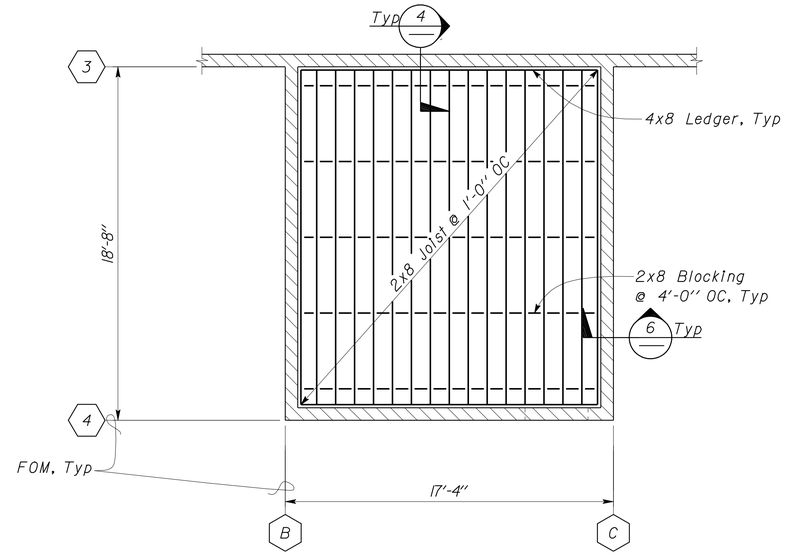

3 CEILING FRAMING PLAN
Scale 1/4" = 1'-0"

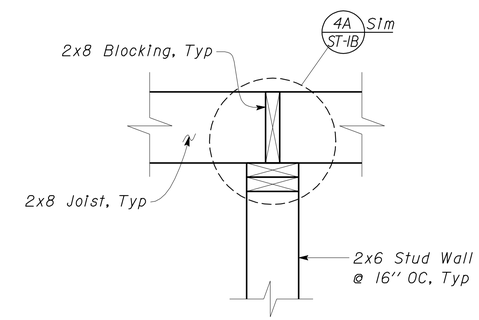

5 REFLECTED CEILING SECTION
Scale 1 1/2" = 1'-0"

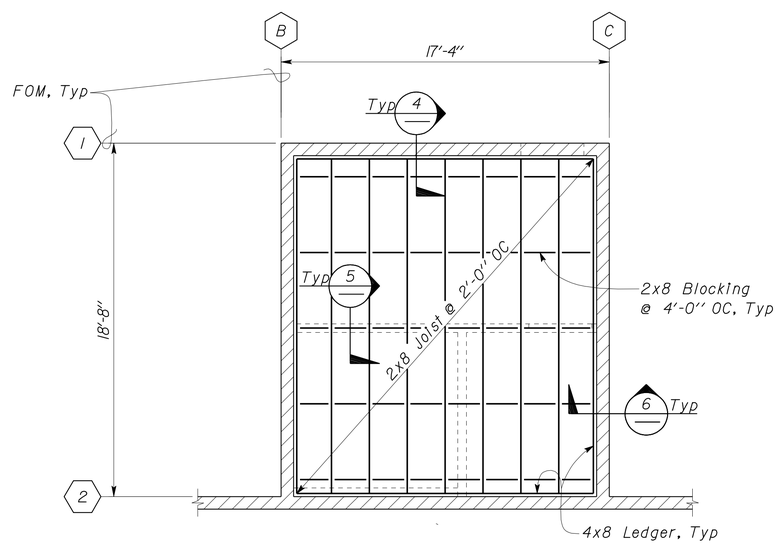

2 CEILING FRAMING PLAN
Scale 1/4" = 1'-0"

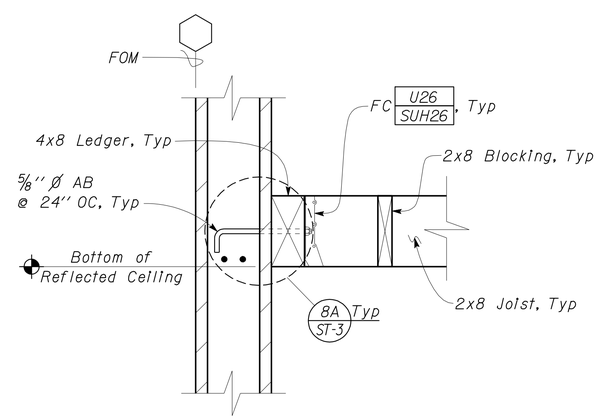

4 REFLECTED CEILING SECTION
Scale 1 1/2" = 1'-0"

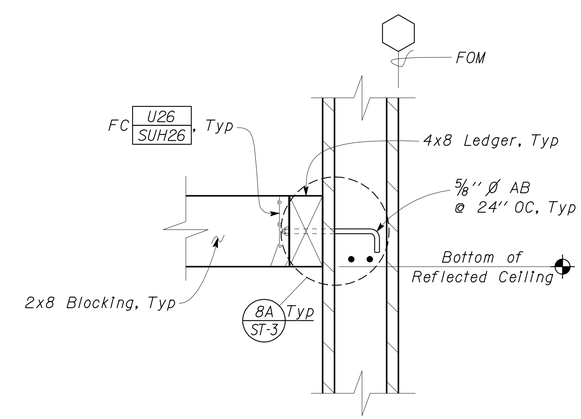

6 REFLECTED CEILING SECTION
Scale 1 1/2" = 1'-0"

	BY	CHECKED
DESIGN	Joseph Camilleri	Justin Uyehara
DETAILS	Pete von Savoye	Joseph Camilleri
QUANTITIES		

STATE OF CALIFORNIA
DEPARTMENT OF TRANSPORTATION

DIVISION OF ENGINEERING SERVICES
ARCHITECTURAL AND STRUCTURAL DESIGN

BRIDGE NO. 57R0001R 57R0001L
POST MILE R59.4/R60.0

ALISO CREEK SAFETY ROADSIDE REST AREA
SOUTHBOUND NEW BUILDING 3
BUILDING DETAILS

SHEET ST3-8

DOES SD Imperial Rev. 9/02

ORIGINAL SCALE IN INCHES FOR REDUCED PLANS 0 1 2 3

CU 11 340
EA 261401

DISREGARD PRINTS BEARING EARLIER REVISION DATES → 02/17/09 11/03/09

REVISION DATES (PRELIMINARY STAGE ONLY) SHEET OF

24-JUN-2010 08:05

st3_08.dgn

DIST.	COUNTY	ROUTE	POST MILES TOTAL PROJECT	SHEET NO.	TOTAL SHEETS
11	SD	5	R59.4,R60.0	185	241

REGISTERED CIVIL ENGINEER — DATE 11-30-09

REGISTERED PROFESSIONAL ENGINEER — Joseph F. Camilleri — No. 3656 — Exp. 3-31-10 — STRUCTURAL — STATE OF CALIFORNIA

6-21-10
PLANS APPROVAL DATE

The State of California or its officers or agents shall not be responsible for the accuracy or completeness of electronic copies of this plan sheet.

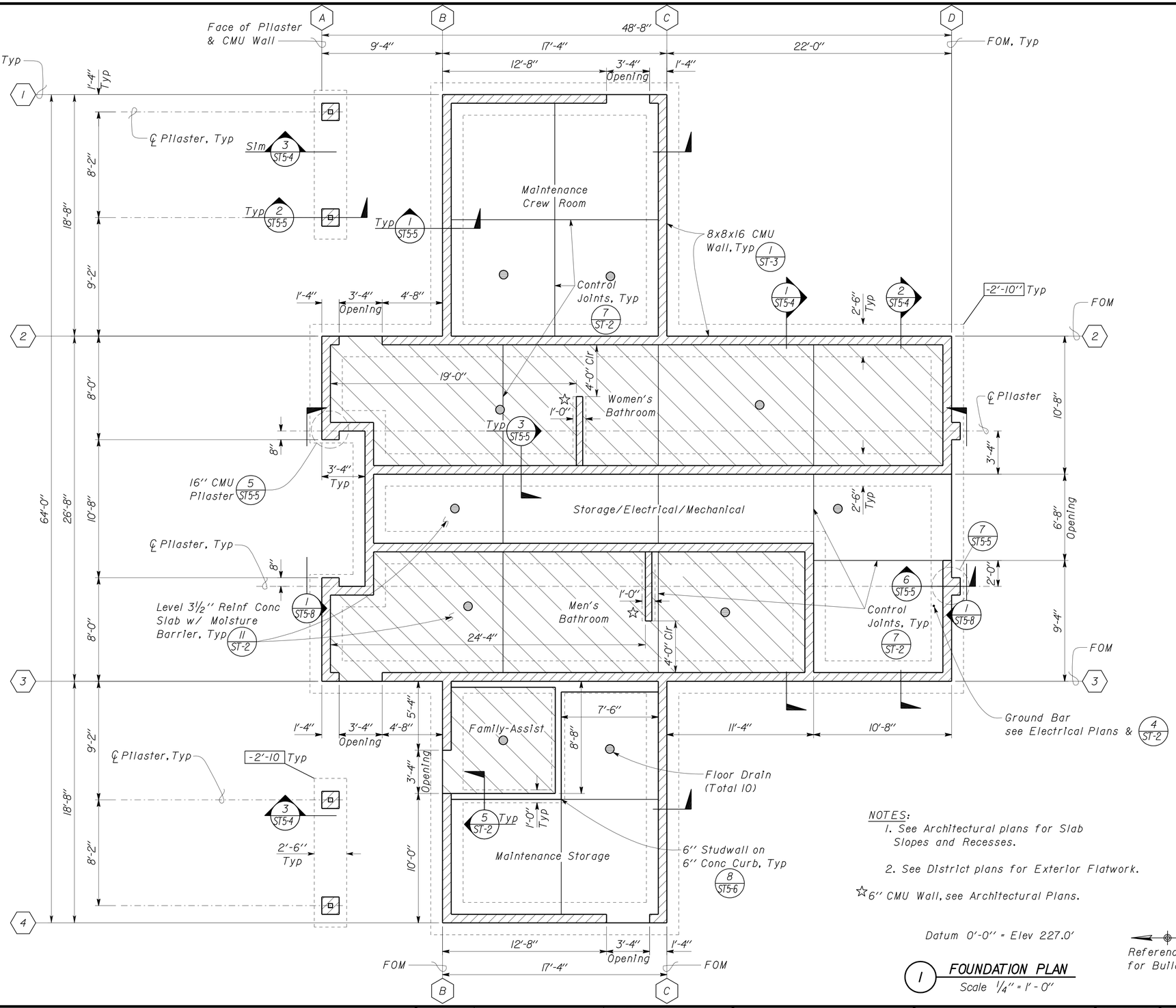

NOTES:

1. See Architectural plans for Slab Slopes and Recesses.
2. See District plans for Exterior Flatwork.

☆ 6" CMU Wall, see Architectural Plans.

Datum 0'-0" = Elev 227.0'

1 FOUNDATION PLAN
Scale 1/4" = 1'-0"

Reference North for Building #5

- Limits of Recessed Concrete Slab

	BY	CHECKED
DESIGN	Joseph Camilleri	Justin Uyehara
DETAILS	Pete von Savoye	Joseph Camilleri
QUANTITIES		

STATE OF CALIFORNIA
DEPARTMENT OF TRANSPORTATION

DIVISION OF ENGINEERING SERVICES
ARCHITECTURAL AND STRUCTURAL DESIGN

CU 11 340
EA 261401

BRIDGE NO. 57R0001R 57R0001L
POST MILE R59.4/R60.0

ALISO CREEK SAFETY ROADSIDE REST AREA
NORTHBOUND NEW BUILDING 5
FOUNDATION PLAN

SHEET ST5-1

DISREGARD PRINTS BEARING EARLIER REVISION DATES → 05/12/09
REVISION DATES (PRELIMINARY STAGE ONLY) SHEET OF

DOES SD Imperial Rev. 9/02

ORIGINAL SCALE IN INCHES FOR REDUCED PLANS 0 1 2 3

24-JUN-2010 08:05
st5_01.dgn

DIST.	COUNTY	ROUTE	POST MILES TOTAL PROJECT	SHEET NO.	TOTAL SHEETS
11	SD	5	R59.4,R60.0	186	241

REGISTERED CIVIL ENGINEER — DATE: 11-30-09

REGISTERED PROFESSIONAL ENGINEER — Joseph F. Camilleri — No. 3656 — Exp. 3-31-10 — STRUCTURAL — STATE OF CALIFORNIA

6-21-10
PLANS APPROVAL DATE

The State of California or its officers or agents shall not be responsible for the accuracy or completeness of electronic copies of this plan sheet.

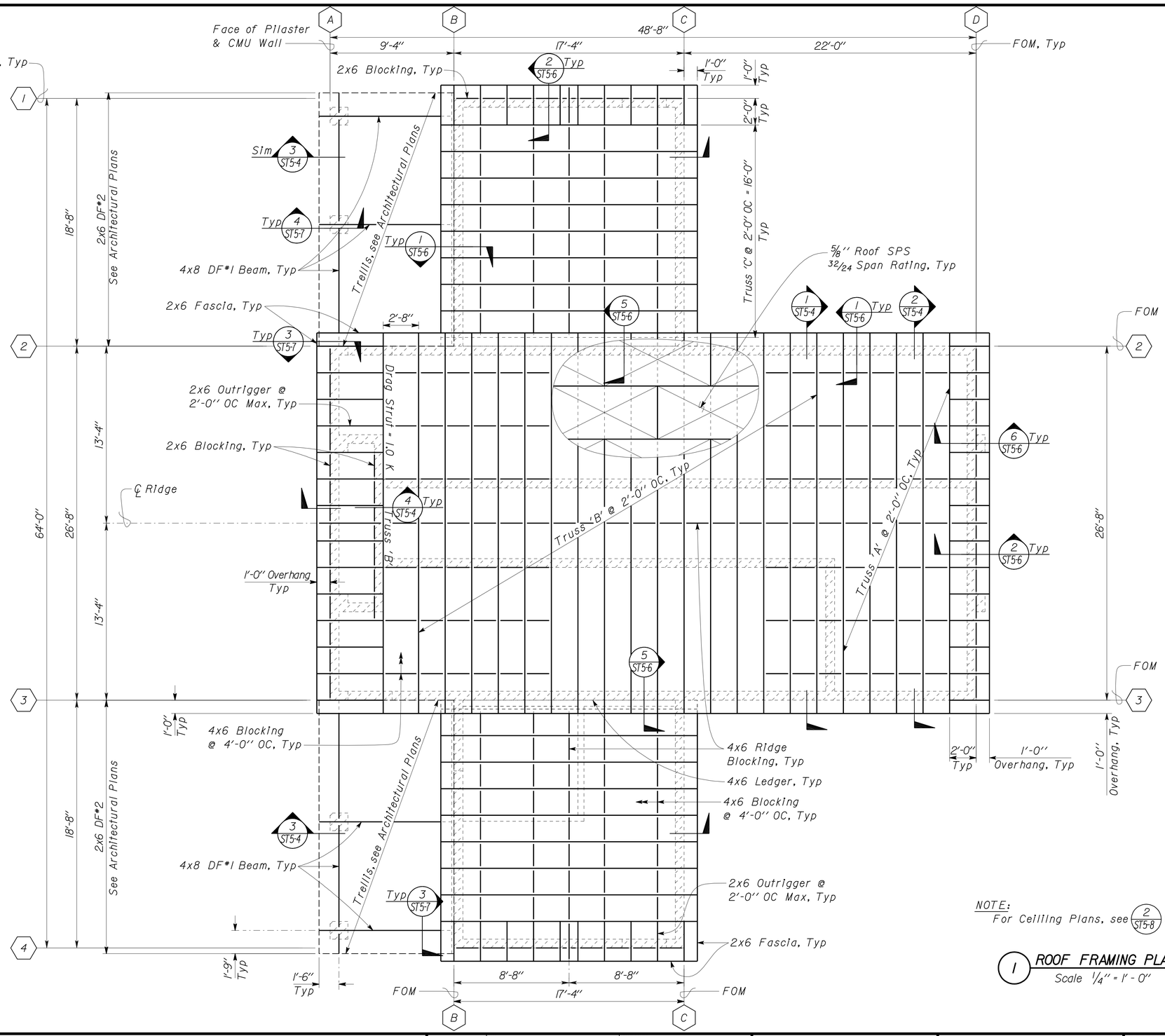

(A) ROOF NAILING SCHEDULE

Nailing Schedule:
10d @ 4" OC @ Diaphragm Boundaries
10d @ 4" OC @ other SPS Panel edges
10d @ 12" OC Field Nailing

NOTE:
For Ceiling Plans, see (2 / ST5-8) & (3 / ST5-8)

(1) ROOF FRAMING PLAN

Scale 1/4" = 1'-0"

Reference North for Building #5

DESIGN	BY Joseph Camilleri	CHECKED Justin Uyehara	
DETAILS	BY Pete von Savoye	CHECKED Joseph Camilleri	
QUANTITIES	BY	CHECKED	

STATE OF CALIFORNIA
DEPARTMENT OF TRANSPORTATION

DIVISION OF ENGINEERING SERVICES
ARCHITECTURAL AND STRUCTURAL DESIGN

BRIDGE NO. 57R0001R 57R0001L
POST MILE R59.4/R60.0

ALISO CREEK SAFETY ROADSIDE REST AREA

NORTHBOUND NEW BUILDING 5

ROOF FRAMING PLAN

SHEET **ST5-2**

DOES SD Imperial Rev. 9/02

ORIGINAL SCALE IN INCHES FOR REDUCED PLANS 0 1 2 3

CU 11 340
EA 261401

DISREGARD PRINTS BEARING EARLIER REVISION DATES → 05/12/09

REVISION DATES (PRELIMINARY STAGE ONLY) — SHEET — OF

24-JUN-2010 08:05

st5_02.dgn

DIST.	COUNTY	ROUTE	POST MILES TOTAL PROJECT	SHEET NO.	TOTAL SHEETS
11	SD	5	R59.4,R60.0	187	241

REGISTERED CIVIL ENGINEER — 11-30-09 DATE

REGISTERED PROFESSIONAL ENGINEER — Joseph F. Camilleri — No. 3656 — Exp. 3-31-10 — STRUCTURAL — STATE OF CALIFORNIA

6-21-10
PLANS APPROVAL DATE

The State of California or its officers or agents shall not be responsible for the accuracy or completeness of electronic copies of this plan sheet.

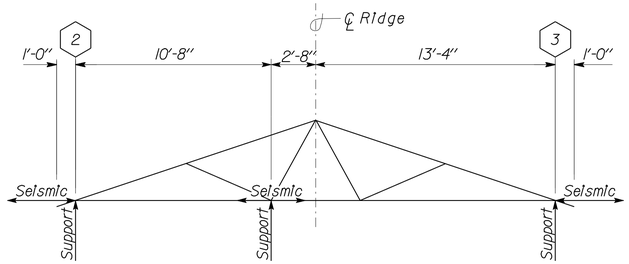

1 TRUSS "A"
No Scale

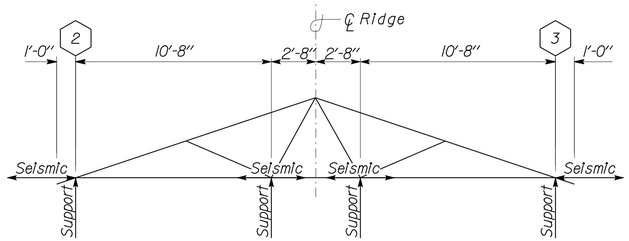

2 TRUSS "B"
No Scale

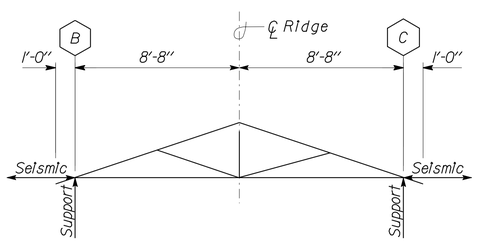

3 TRUSS "C"
No Scale

A PRE-ENGINEERED WOOD TRUSS REQUIREMENTS

LOADS:	Dead Load	Live Load
Top Chord (Roof):	30 psf	20 psf
Bottom Chord (Ceiling)	5 psf	10 psf

Seismic = 750 lbs per Rafter, see 1/ST5-2 for additional Seismic Drag Strut Force

1. Deflection:
   Live Load ---------- L/360
   Total Load ---------- L/240
2. Camber Shall be 1.5 Times Dead Load Deflection
3. Web material shall be 2x4 min DF#2.
4. Top and bottom chord shall be 2x6 min DF#1.
5. ⟷ Indicates Seismic Lateral Load.
6. ↑ Denotes Point of Support

	BY	CHECKED
DESIGN	Joseph Camilleri	Justin Uyehara
DETAILS	Pete von Savoye	Joseph Camilleri
QUANTITIES		

STATE OF CALIFORNIA
DEPARTMENT OF TRANSPORTATION

DIVISION OF ENGINEERING SERVICES
ARCHITECTURAL AND STRUCTURAL DESIGN

BRIDGE NO. 57R0001R 57R0001L
POST MILE R59.4/R60.0

ALISO CREEK SAFETY ROADSIDE REST AREA
NORTHBOUND NEW BUILDING 5
PRE-ENGINEERED TRUSS NOTES

SHEET ST5-3

DOES SD Imperial Rev. 9/02

ORIGINAL SCALE IN INCHES FOR REDUCED PLANS 0 1 2 3

CU 11 340
EA 261401

DISREGARD PRINTS BEARING EARLIER REVISION DATES → 02/05/09

REVISION DATES (PRELIMINARY STAGE ONLY) SHEET OF

24-JUN-2010 08:05

st5_03.dgn

DIST.	COUNTY	ROUTE	POST MILES TOTAL PROJECT	SHEET NO.	TOTAL SHEETS
11	SD	5	R59.4,R60.0	188	241

REGISTERED CIVIL ENGINEER — 11-30-09 DATE

REGISTERED PROFESSIONAL ENGINEER Joseph F. Camilleri No. 3656 Exp. 3-31-10 STRUCTURAL STATE OF CALIFORNIA

6-21-10
PLANS APPROVAL DATE

The State of California or its officers or agents shall not be responsible for the accuracy or completeness of electronic copies of this plan sheet.

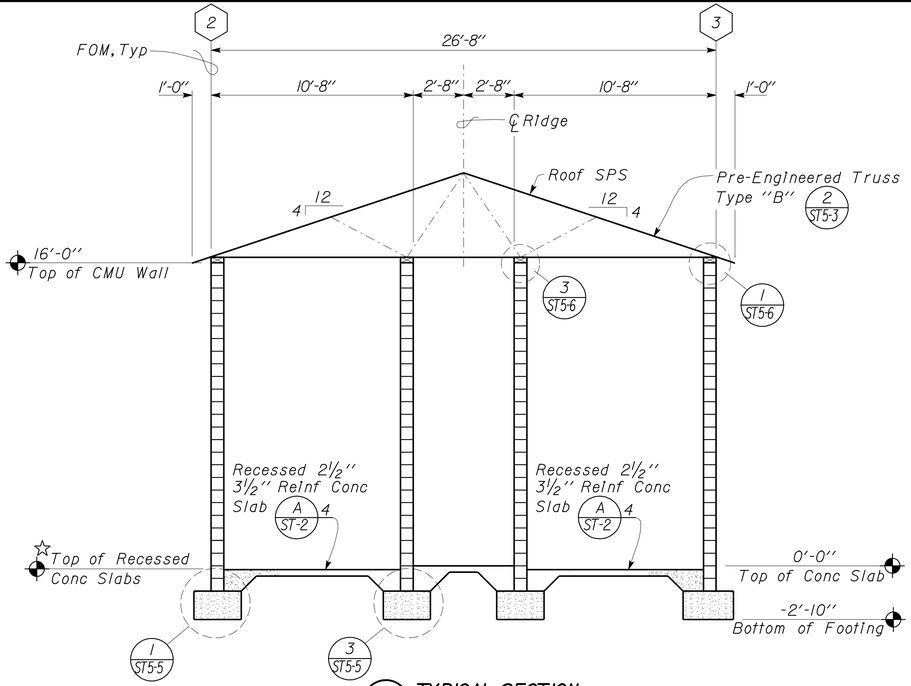

1 TYPICAL SECTION
Scale ¼" = 1'-0"

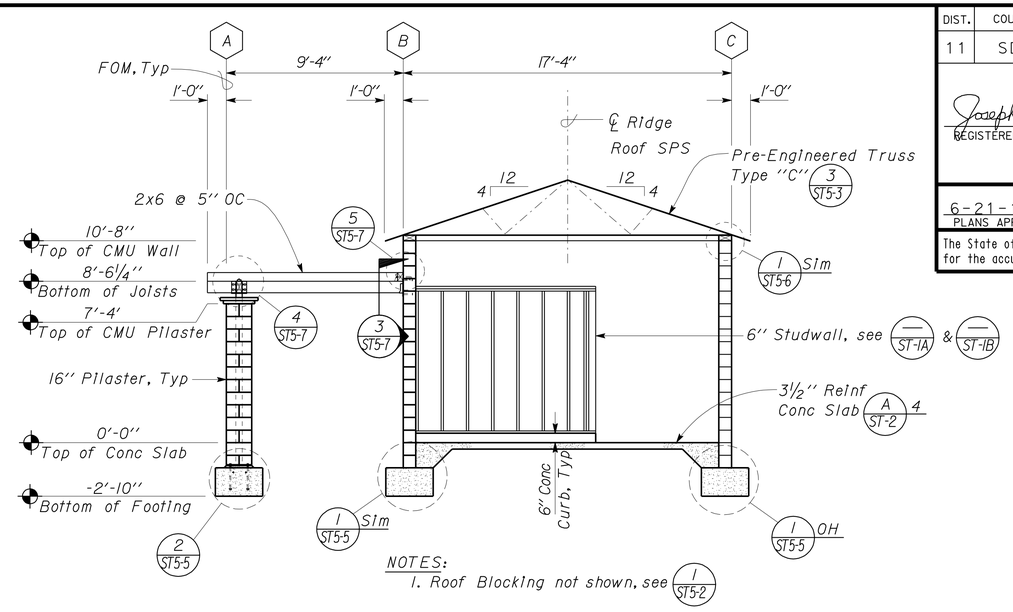

NOTES:
1. Roof Blocking not shown, see 1 ST5-2
2. See District plans for Exterior Flatwork.

3 TYPICAL SECTION
Scale ¼" = 1'-0"

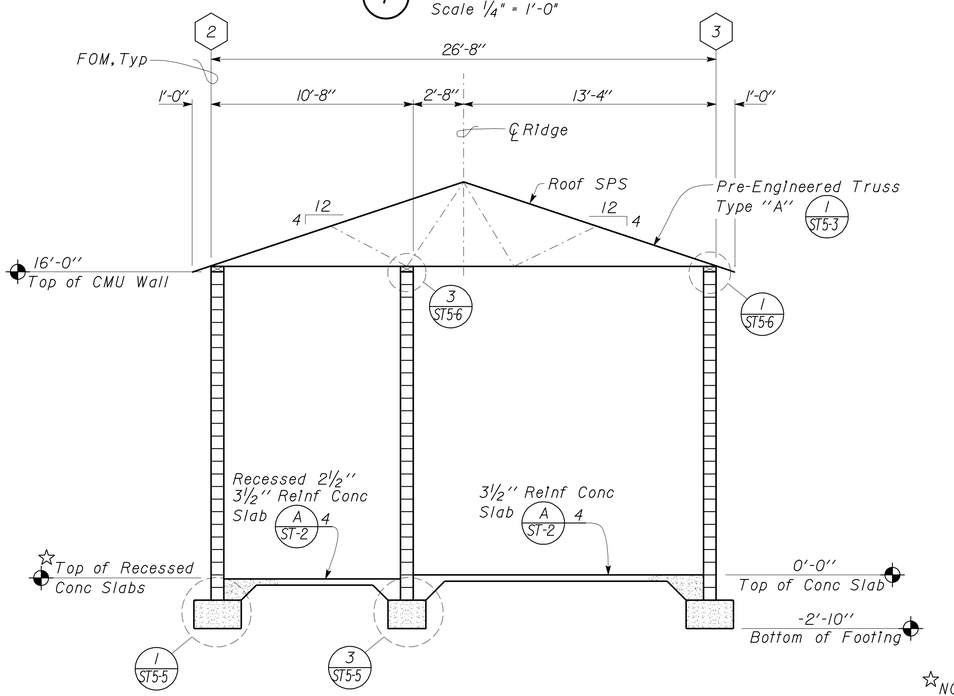

2 TYPICAL SECTION
Scale ¼" = 1'-0"

☆NOTE:
See Architectural Plans for Elevation at Recessed Concrete Slab locations.

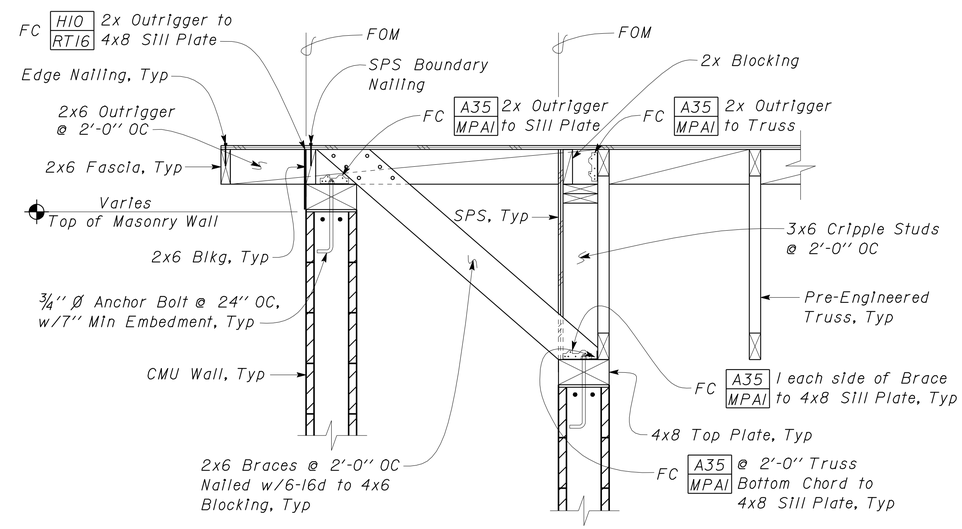

NOTE:
For Ceiling Framing not shown @ Elev 14'-9", see 7 ST5-6

4 SHEARWALL RAKE DETAIL
Scale 1" = 1'-0"

NOTE:
Roof Blocking not shown, see 1 ST5-2

DESIGN	BY Joseph Camilleri	CHECKED Justin Uyehara	
DETAILS	BY Pete von Savoye	CHECKED Joseph Camilleri	
QUANTITIES	BY	CHECKED	

STATE OF CALIFORNIA
DEPARTMENT OF TRANSPORTATION

DIVISION OF ENGINEERING SERVICES
ARCHITECTURAL AND STRUCTURAL DESIGN

BRIDGE NO. 57R0001R 57R0001L
POST MILE R59.4/R60.0

ALISO CREEK SAFETY ROADSIDE REST AREA
NORTHBOUND NEW BUILDING 5
TYPICAL SECTIONS

SHEET ST5-4

DOES SD Imperial Rev. 9/02

ORIGINAL SCALE IN INCHES FOR REDUCED PLANS 0 1 2 3

CU 11 340
EA 261401

DISREGARD PRINTS BEARING EARLIER REVISION DATES → 03/09/09

REVISION DATES (PRELIMINARY STAGE ONLY) SHEET OF

24-JUN-2010 08:05

st5_04.dgn

DIST.	COUNTY	ROUTE	POST MILES TOTAL PROJECT	SHEET NO.	TOTAL SHEETS
11	SD	5	R59.4,R60.0	189	241

Joseph Camilleri 11-30-09
REGISTERED CIVIL ENGINEER DATE

REGISTERED PROFESSIONAL ENGINEER Joseph F. Camilleri No. 3656 Exp. 3-31-10 STRUCTURAL STATE OF CALIFORNIA

6-21-10
PLANS APPROVAL DATE

The State of California or its officers or agents shall not be responsible for the accuracy or completeness of electronic copies of this plan sheet.

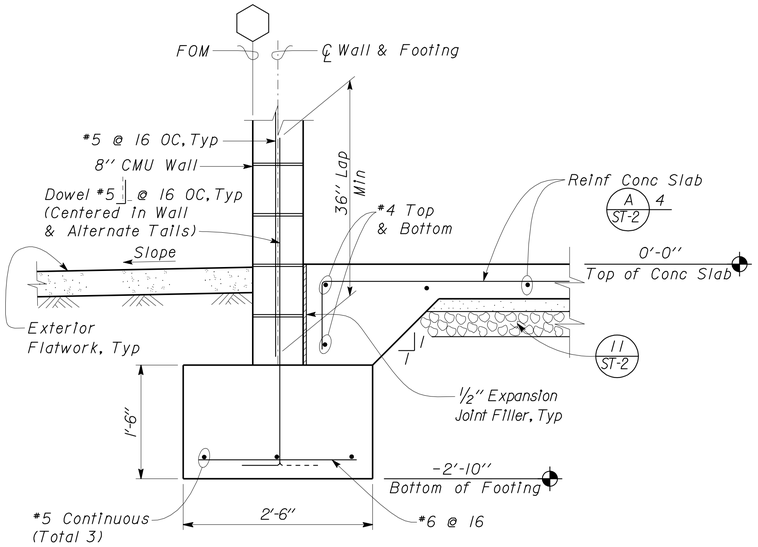

NOTES:
1. For location of Recess Slabs, see Foundation Plan.
2. See District plans for Notes & Details of Exterior Flatwork.

1 CMU EXTERIOR FOOTING
Scale 1" = 1'-0"

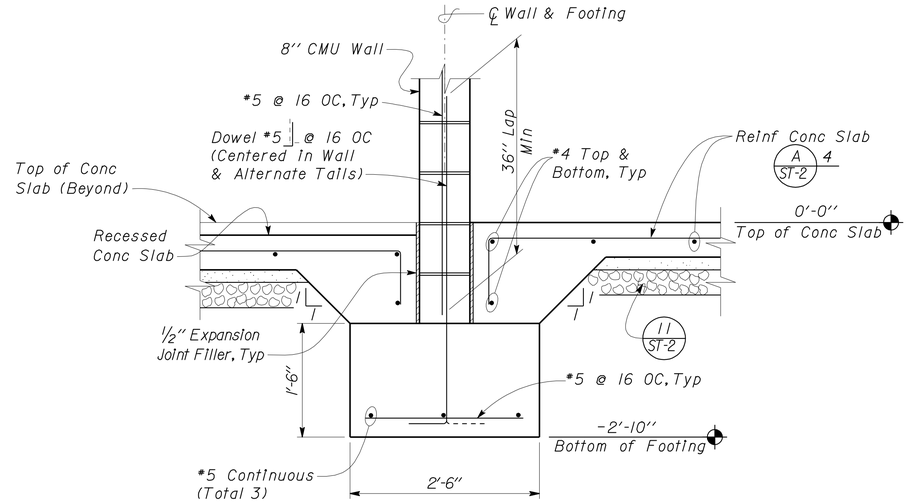

3 CMU INTERIOR FOOTING
Scale 1" = 1'-0"

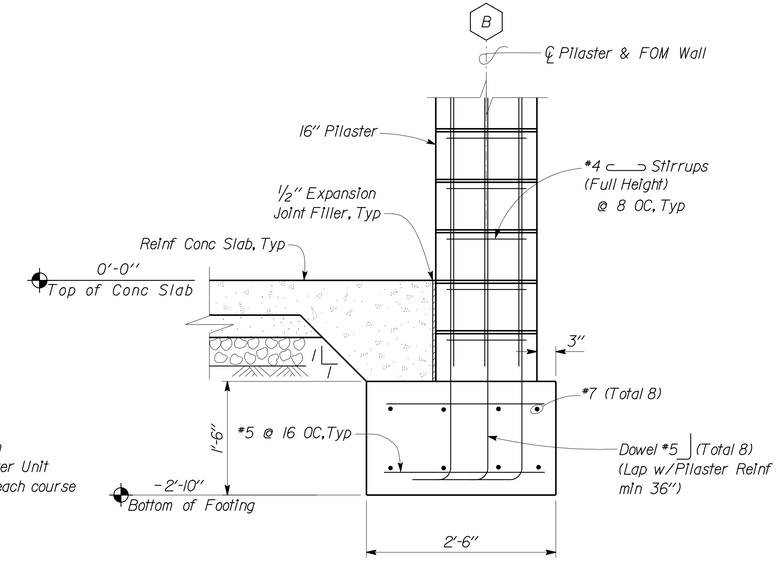

6 16" PILASTER FOOTING DETAIL
Scale 1" = 1'-0"

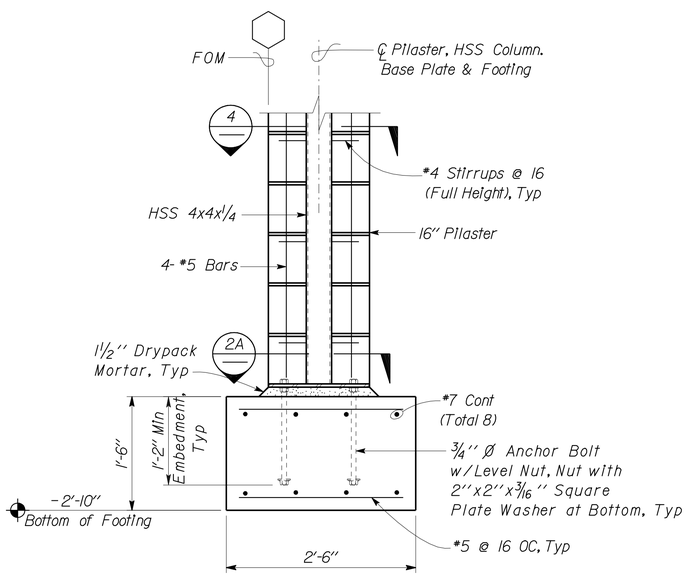

NOTE:
1. See District plans for Exterior Flatwork.

2 16" CMU PILASTER FOOTING
Scale 1" = 1'-0"

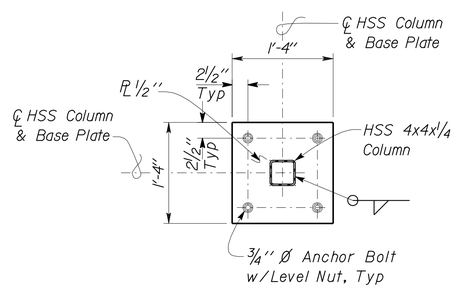

2A COLUMN BASE PLATE DETAIL
Scale 1" = 1'-0"

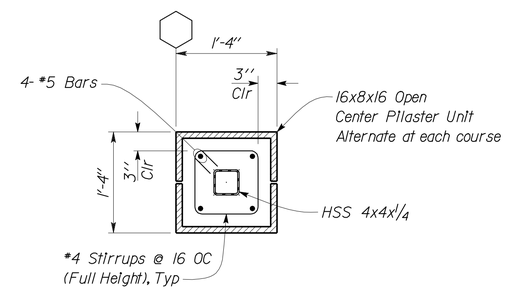

4 16" PILASTER DETAIL
Scale 1" = 1'-0"

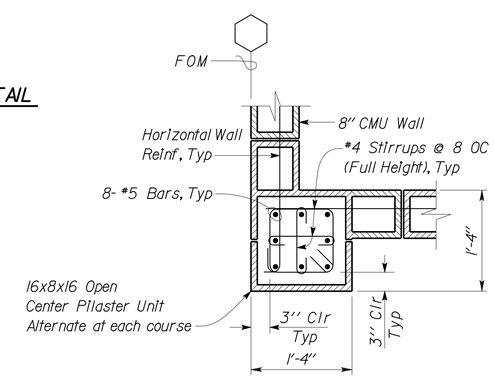

5 16" PILASTER DETAIL
Scale 1" = 1'-0"

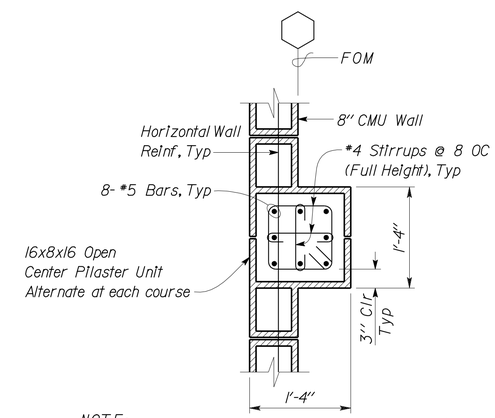

NOTE:
For Details not shown, see 4 Sim & 5 Sim

7 16" PILASTER DETAIL
Scale 1" = 1'-0"

DESIGN	BY Joseph Camilleri	CHECKED Justin Uyehara	
DETAILS	BY Pete von Savoye	CHECKED Joseph Camilleri	
QUANTITIES	BY	CHECKED	

STATE OF CALIFORNIA
DEPARTMENT OF TRANSPORTATION

DIVISION OF ENGINEERING SERVICES
ARCHITECTURAL AND STRUCTURAL DESIGN

BRIDGE NO. 57R0001R 57R0001L
POST MILE R59.4/R60.0

ALISO CREEK SAFETY ROADSIDE REST AREA
NORTHBOUND NEW BUILDING 5
FOUNDATION DETAILS

SHEET ST5-5

DOES SD Imperial Rev. 9/02

ORIGINAL SCALE IN INCHES FOR REDUCED PLANS 0 1 2 3

CU 11 340
EA 261401

DISREGARD PRINTS BEARING EARLIER REVISION DATES → 03/05/09

REVISION DATES (PRELIMINARY STAGE ONLY) SHEET OF

24-JUN-2010 09:57

st5_05.dgn

DIST.	COUNTY	ROUTE	POST MILES TOTAL PROJECT	SHEET NO.	TOTAL SHEETS
11	SD	5	R59.4,R60.0	190	241

Joseph Camilleri 11-30-09
REGISTERED CIVIL ENGINEER DATE

REGISTERED PROFESSIONAL ENGINEER Joseph F. Camilleri No. 3656 Exp. 3-31-10 STRUCTURAL STATE OF CALIFORNIA

6-21-10
PLANS APPROVAL DATE

The State of California or its officers or agents shall not be responsible for the accuracy or completeness of electronic copies of this plan sheet.

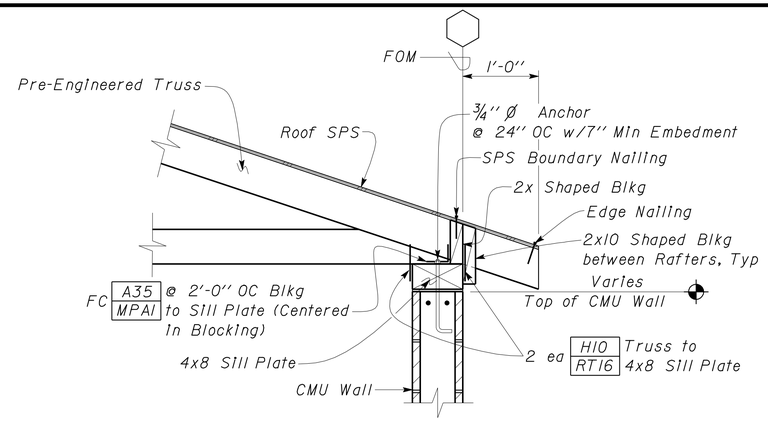

1 TRUSS TO CMU WALL
Scale 1" = 1'-0"

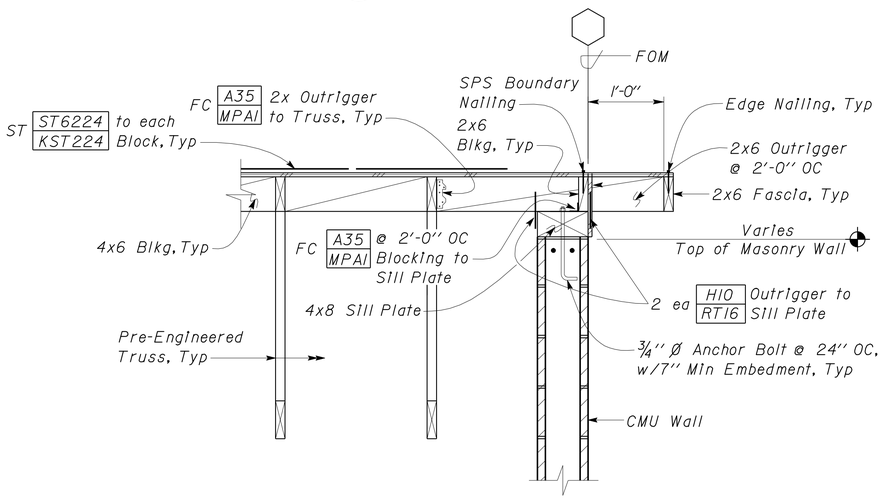

2 SHEARWALL RAKE DETAIL
Scale 1" = 1'-0"

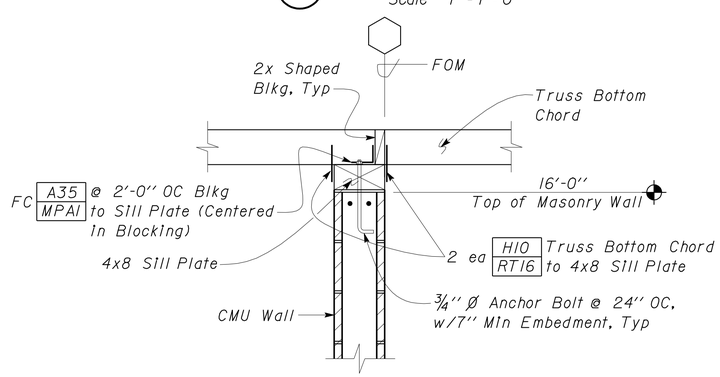

3 TRUSS TO CMU WALL DETAIL
Scale 1" = 1'-0"

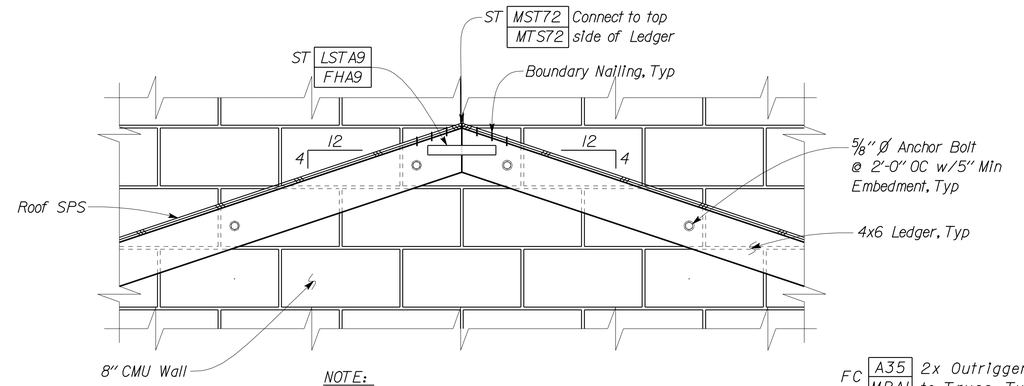

NOTE:
4x Blocking at Ridge with Holdown Connection not shown for clarity.

4 END ELEVATION
No Scale

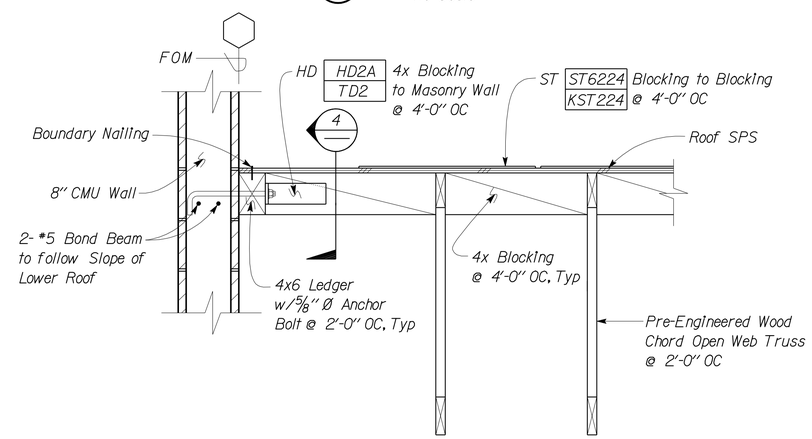

5 END SECTION
No Scale

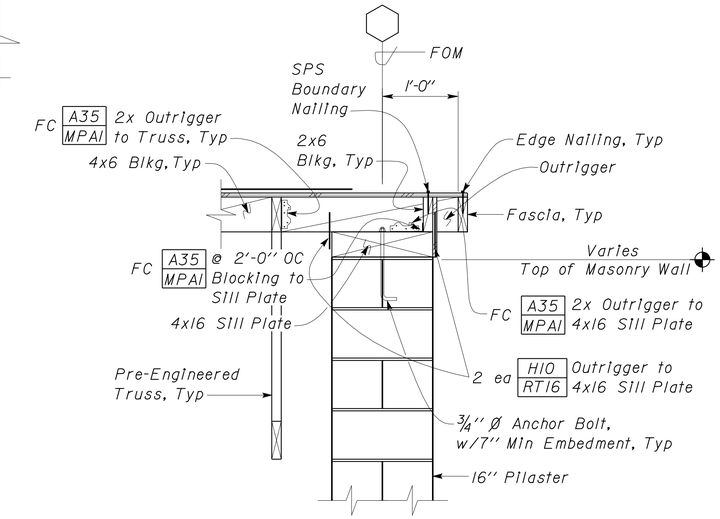

NOTE:
For Details not shown, see 2/S1m

6 PILASTER RAKE DETAIL
Scale 1" = 1'-0"

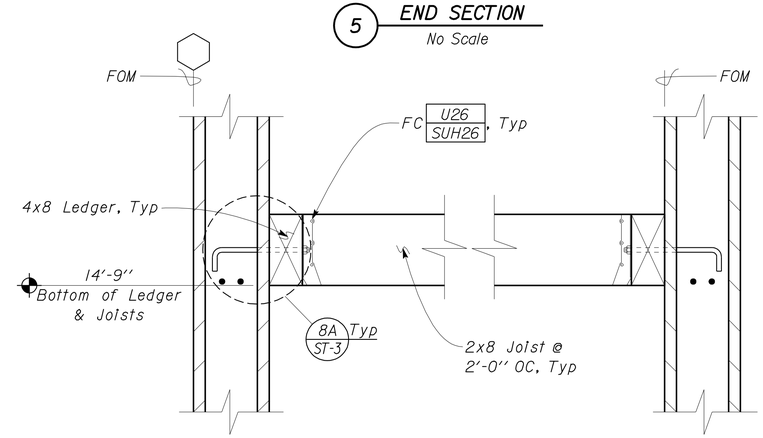

7 CEILING FRAMING DETAIL
Scale 1 1/2" = 1'-0"

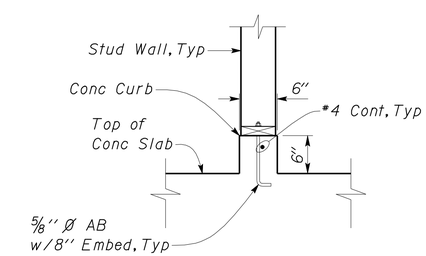

8 CURB DETAIL
Scale 1" = 1'-0"

DESIGN	BY Joseph Camilleri	CHECKED Justin Uyehara	
DETAILS	BY Pete von Savoye	CHECKED Joseph Camilleri	
QUANTITIES	BY	CHECKED	

STATE OF CALIFORNIA
DEPARTMENT OF TRANSPORTATION

DIVISION OF ENGINEERING SERVICES
ARCHITECTURAL AND STRUCTURAL DESIGN

BRIDGE NO. 57R0001R 57R0001L
POST MILE R59.4/R60.0

ALISO CREEK SAFETY ROADSIDE REST AREA
NORTHBOUND NEW BUILDING 5
FRAMING DETAILS

SHEET ST5-6

DOES SD Imperial Rev. 9/02

ORIGINAL SCALE IN INCHES FOR REDUCED PLANS 0 1 2 3

CU 11 340
EA 261401

DISREGARD PRINTS BEARING EARLIER REVISION DATES → 03/05/09

REVISION DATES (PRELIMINARY STAGE ONLY) SHEET OF

24-JUN-2010 09:57
st5_06.dgn

DIST.	COUNTY	ROUTE	POST MILES TOTAL PROJECT	SHEET NO.	TOTAL SHEETS
11	SD	5	R59.4,R60.0	191	241

Joseph Camilleri 11-30-09
REGISTERED CIVIL ENGINEER DATE

REGISTERED PROFESSIONAL ENGINEER Joseph F. Camilleri No. 3656 Exp. 3-31-10 STRUCTURAL STATE OF CALIFORNIA

6-21-10
PLANS APPROVAL DATE

The State of California or its officers or agents shall not be responsible for the accuracy or completeness of electronic copies of this plan sheet.

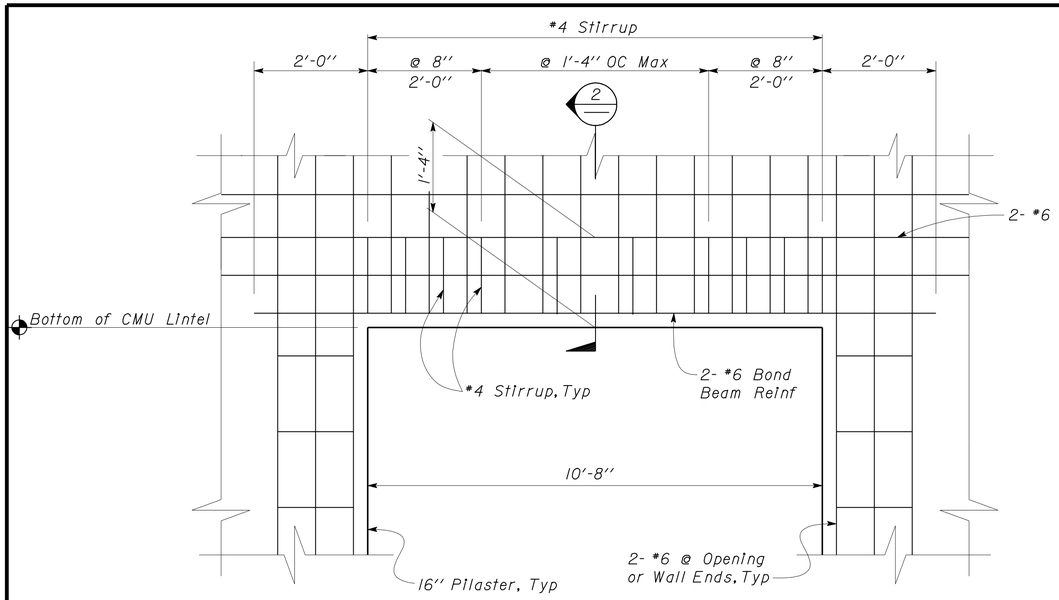

NOTES:
1. Not all CMU Wall Reinforcement shown for clarity.
2. For Attic CMU Wall Opening, see 1/ST-3 and Architectural Plans.

1 TYPICAL WALL OPENING
No Scale

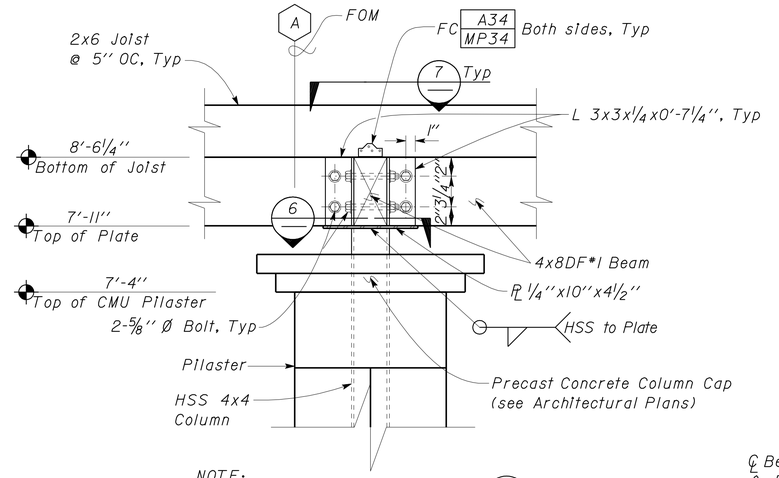

NOTE:
For other Reinf not shown, see 4/ST5-5

4 TRELLIS CONNECTION DETAIL
Scale 1 1/2" = 1'-0"

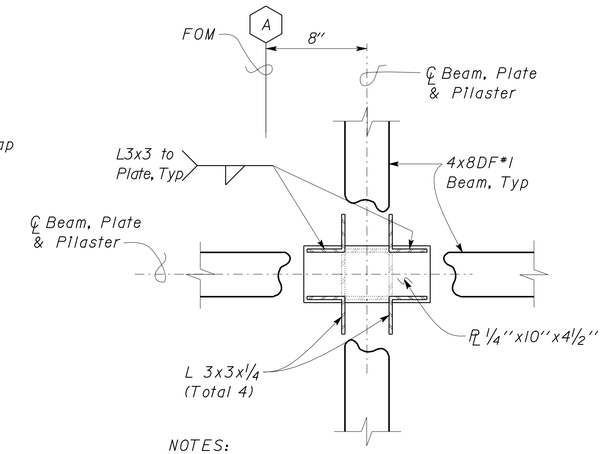

NOTES:
1. Pilaster & Joists not shown for clarity.
2. For Details not shown, see 7/—

6 BEAM TO PLATE CONNECTION DETAIL
Scale 2" = 1'-0"

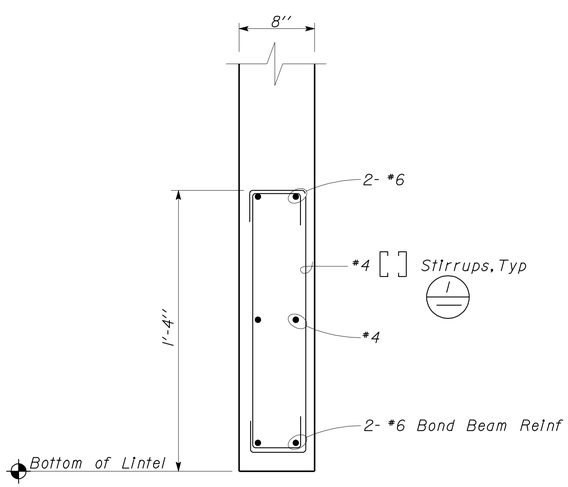

2 LINTEL DETAIL
Scale 1 1/2" = 1'-0"

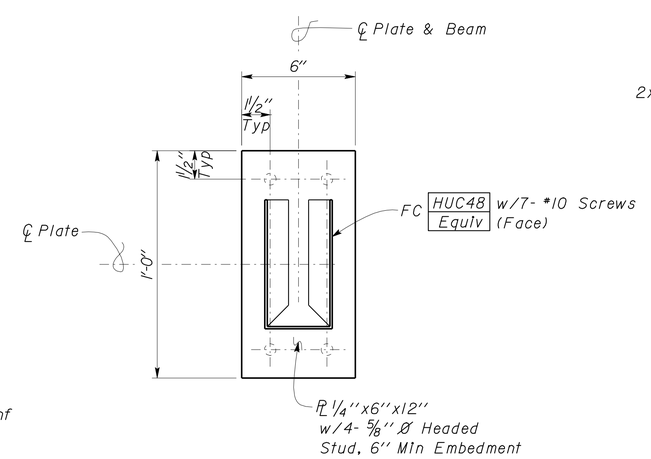

NOTE:
Beam not shown for clarity.

3 TRELLIS BEAM TO CMU WALL DETAIL
Scale 3" = 1'-0"

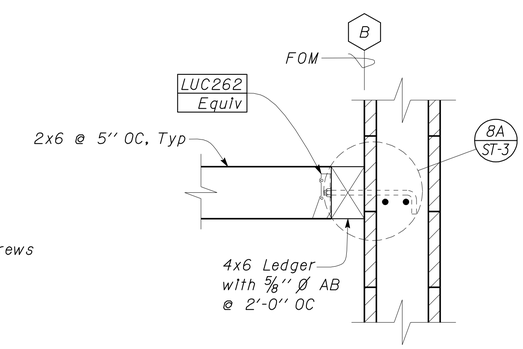

5 TRELLIS CONNECTION DETAIL
Scale 1 1/2" = 1'-0"

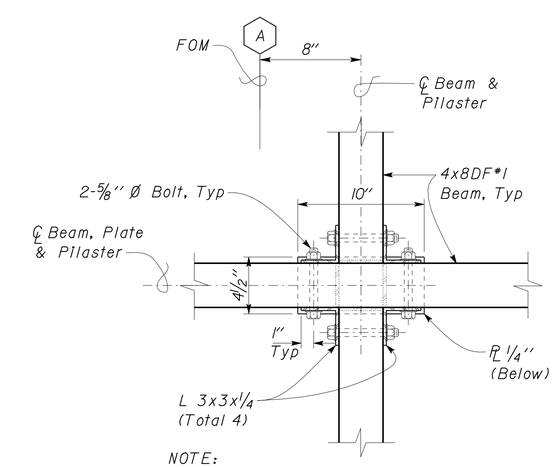

NOTE:
Pilaster & Joists not shown for clarity.

7 BEAM TO BEAM CONNECTION DETAIL
Scale 2" = 1'-0"

DESIGN	BY Joseph Camilleri	CHECKED Justin Uyehara	
DETAILS	BY Pete von Savoye	CHECKED Joseph Camilleri	
QUANTITIES	BY	CHECKED	

STATE OF CALIFORNIA
DEPARTMENT OF TRANSPORTATION

DIVISION OF ENGINEERING SERVICES
ARCHITECTURAL AND STRUCTURAL DESIGN

BRIDGE NO. 57R0001R 57R0001L
POST MILE R59.4/R60.0

ALISO CREEK SAFETY ROADSIDE REST AREA
NORTHBOUND NEW BUILDING 5
BUILDING DETAILS

SHEET ST5-7

DOES SD Imperial Rev. 9/02

ORIGINAL SCALE IN INCHES FOR REDUCED PLANS 0 1 2 3

CU 11 340
EA 261401

DISREGARD PRINTS BEARING EARLIER REVISION DATES → 03/05/09

REVISION DATES (PRELIMINARY STAGE ONLY) SHEET OF

24-JUN-2010 09:57

st5_07.dgn

DIST.	COUNTY	ROUTE	POST MILES TOTAL PROJECT	SHEET NO.	TOTAL SHEETS
11	SD	5	R59.4,R60.0	192	241

REGISTERED CIVIL ENGINEER — 11-30-09 DATE

REGISTERED PROFESSIONAL ENGINEER Joseph F. Camilleri No. 3656 Exp. 3-31-10 STRUCTURAL STATE OF CALIFORNIA

6-21-10
PLANS APPROVAL DATE

The State of California or its officers or agents shall not be responsible for the accuracy or completeness of electronic copies of this plan sheet.

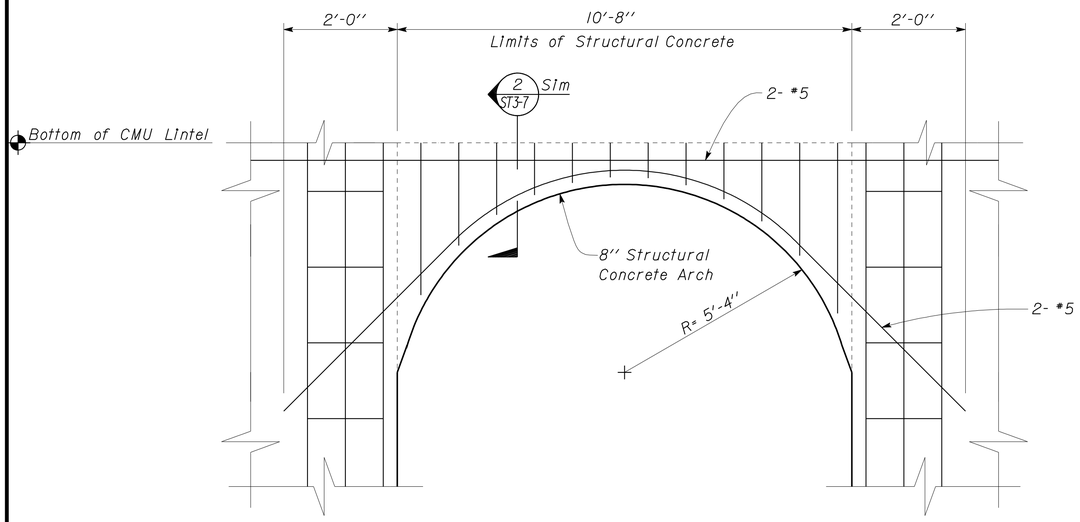

NOTES:
1. For Details not shown, see 1 ST3-7 Slm & Architectural Plans.
2. Not all CMU Wall Reinforcement shown for clarity.

1 TYPICAL ARCH WALL OPENING
No Scale

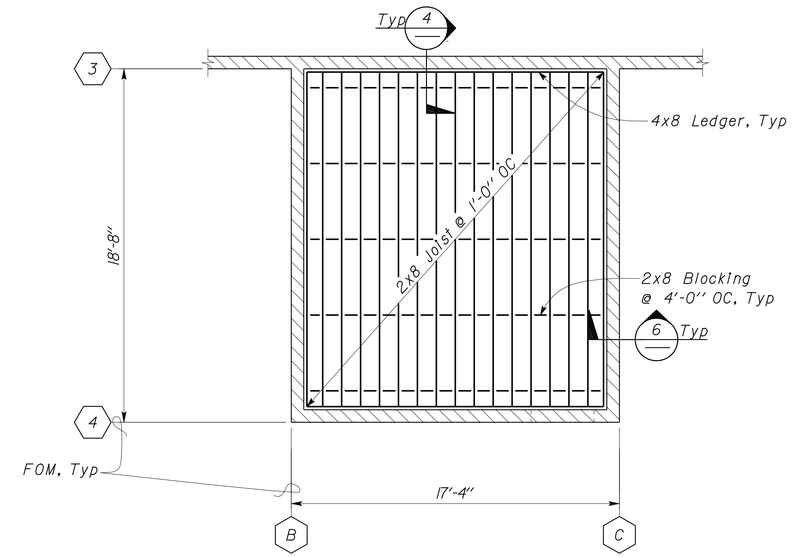

3 CEILING FRAMING PLAN
Scale 1/4" = 1'-0"

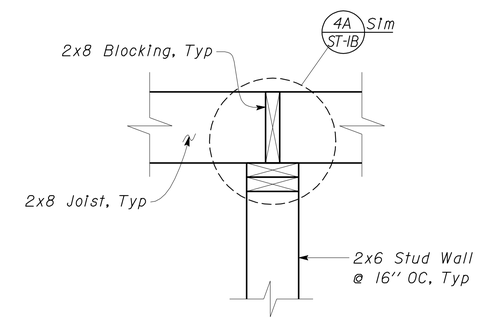

5 REFLECTED CEILING SECTION
Scale 1 1/2" = 1'-0"

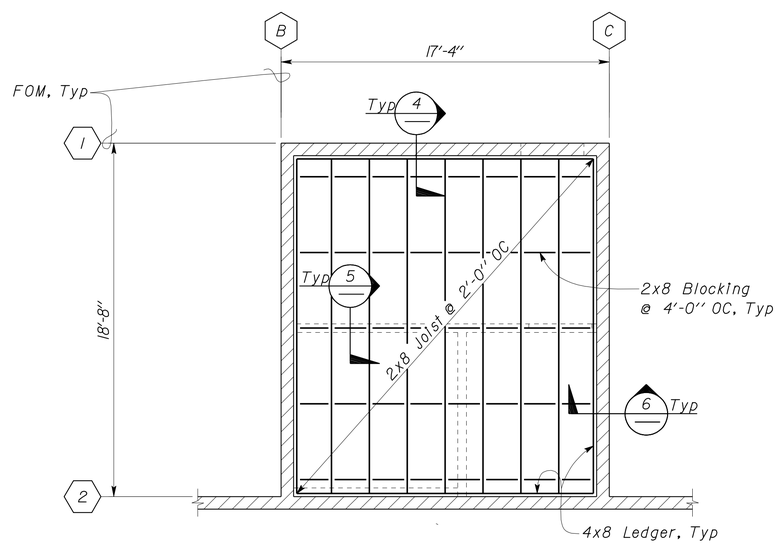

2 CEILING FRAMING PLAN
Scale 1/4" = 1'-0"

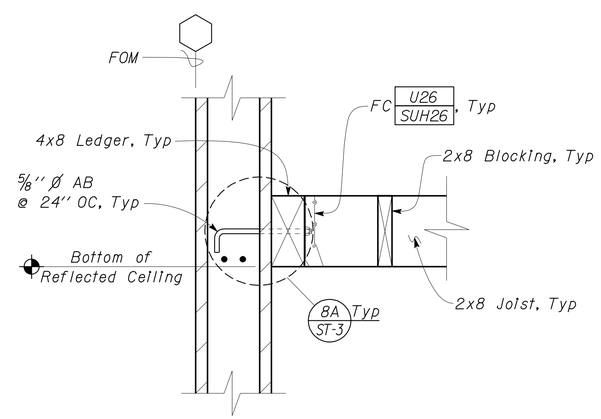

4 REFLECTED CEILING SECTION
Scale 1 1/2" = 1'-0"

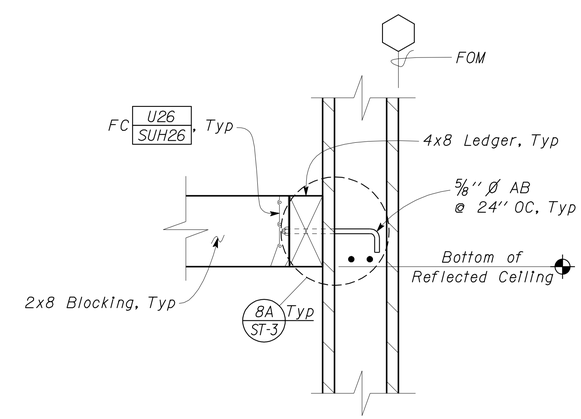

6 REFLECTED CEILING SECTION
Scale 1 1/2" = 1'-0"

DESIGN	BY Joseph Camilleri	CHECKED Justin Uyehara	
DETAILS	BY Pete von Savoye	CHECKED Joseph Camilleri	
QUANTITIES	BY	CHECKED	

STATE OF CALIFORNIA DEPARTMENT OF TRANSPORTATION

DIVISION OF ENGINEERING SERVICES ARCHITECTURAL AND STRUCTURAL DESIGN

BRIDGE NO. 57R0001R 57R0001L
POST MILE R59.4/R60.0

ALISO CREEK SAFETY ROADSIDE REST AREA
NORTHBOUND NEW BUILDING 5
BUILDING DETAILS

SHEET ST5-8

DOES SD Imperial Rev. 9/02

ORIGINAL SCALE IN INCHES FOR REDUCED PLANS 0 1 2 3

CU 11 340
EA 261401

DISREGARD PRINTS BEARING EARLIER REVISION DATES → 02/18/09 11/03/09

REVISION DATES (PRELIMINARY STAGE ONLY) SHEET OF

24-JUN-2010 09:58

st5_08.dgn

DIST	COUNTY	ROUTE	POST MILES TOTAL PROJECT	SHEET No	TOTAL SHEETS
11	SD	5	R59.4,R60.0	193	241

REGISTERED CIVIL ENGINEER 11-4-08

6-21-10
PLANS APPROVAL DATE

The State of California or its officers or agents shall not be responsible for the accuracy or completeness of electronic copies of this plan sheet.

REGISTERED PROFESSIONAL ENGINEER
Hassan Ibrahim
No. 59016
Exp. 06-30-09
CIVIL
STATE OF CALIFORNIA

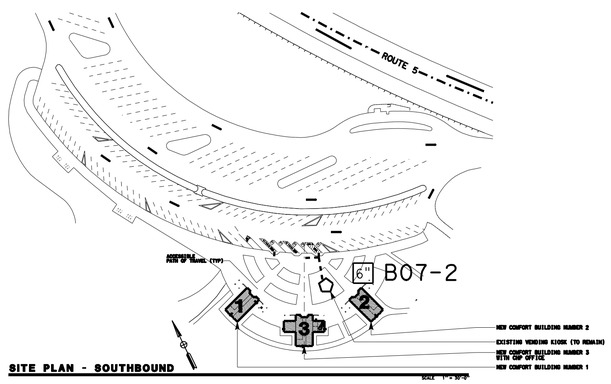

ALISO CREEK SRRA SOUTHBOUND
LAYOUT PLAN

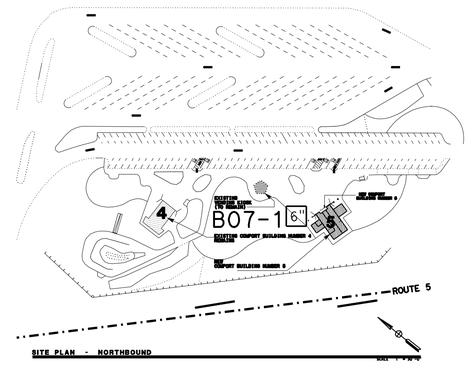

ALISO CREEK SRRA NORTHBOUND
LAYOUT PLAN

BENCH MARK

The monument 2 1/4 in CADT disk is located on the top of a low cut on the east side of I-5, about 0.4 mi. northwest of Northbound On Ramp from the ALISO REST AREA.
Elev = 24.045′

Notes:

1. Test boring utilized a safety hammer, foremost mobile B-4785 to advance the sampler. Penetrations shown on the Log of Test Boring (LOTB) sheets were recorded in the field. Soil descriptions shown on the LOTB sheets are based on these index values.
2. The descriptions and classifications of soil, including consistency and relative density descriptors, used by the field and/or office personnel for the exploration boreholes shown on this sheet are based on the "Soil and Rock Logging Classification and Presentation Manual", Engineering Service Center, Office of Structure Foundations, August 1996.
3. Ground water not encountered during the drilling on 7/25/2007, and did not intend to install piezometer in bore holes. Ground water surface elevations are subject to seasonal fluctuations and will be encountered at higher or lower elevations depending on conditions at time of construction.
4. Top of boring elevations were measured utilizing the available and proposed topographic of the existing and proposed ground surface.

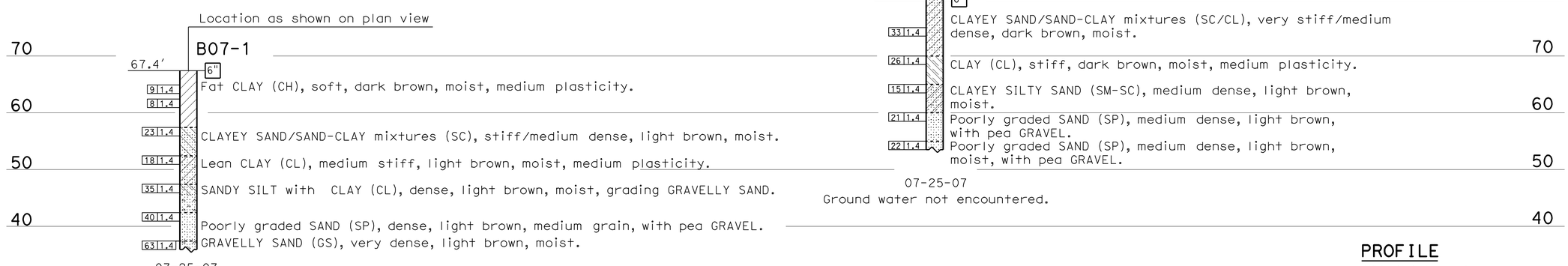

PROFILE

HOR: Not to scale
VER. 1"=10′

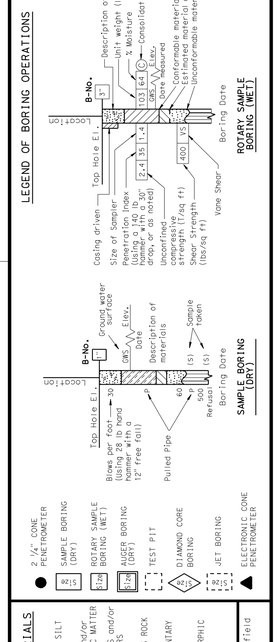

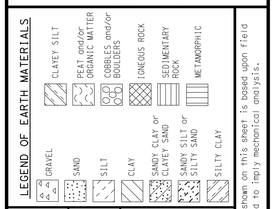

NOTE: Classification of earth material as shown on this sheet is based upon field Inspection and is not to be construed to imply mechanical analysis.

CONSISTENCY CLASSIFICATION FOR SOILS
According to the Standard Penetration Test

SPT N-Value (Blows/ Foot)	Granular	SPT N-Value (Blows/ Foot)	Cohesive
0-4	Very Loose	<2	Very Soft
5-10	Loose	2-4	Soft
11-30	Medium Dense	5-8	Medium stiff
31-50	Dense	9-15	Stiff
>50	Very Dense	16-30	Very Stiff
		31-60	Hard
		>60	Very Hard

ENGINEERING SERVICES	GEOTECHNICAL SERVICES
DRAWN BY	F. Nguyen 3/08
CHECKED BY	A. Wardak

FIELD INVESTIGATION BY: H. Ibrahim

STATE OF CALIFORNIA
DEPARTMENT OF TRANSPORTATION

DIVISION OF ENGINEERING SERVICES
STRUCTURE DESIGN
DESIGN BRANCH

BRIDGE NO. 57R0001R 57R0001L
POST MILE R59.4/R60.0

ALISO CREEK SAFETY ROADSIDE REST AREA
LOG OF TEST BORINGS

SHEET ST6-1

OGS LOG OF TEST BORINGS SHEET (ENGLISH) (REV. 5/25/07)

ORIGINAL SCALE IN INCHES FOR REDUCED PLANS 0 1 2 3

CU 11 340
EA 261401

DISREGARD PRINTS BEARING EARLIER REVISION DATES 10-29-08

REVISION DATES (PRELIMINARY STAGE ONLY) SHEET OF

FILE => st6_01.dgn

USERNAME => trphila DATE PLOTTED => 24-JUN-2010 TIME PLOTTED => 09:58

DIST.	COUNTY	ROUTE	POST MILES TOTAL PROJECT	SHEET NO.	TOTAL SHEETS
11	SD	5	R59.4,R60.0	194	241

REGISTERED ENGINEER-MECHANICAL 12-02-2009

REGISTERED PROFESSIONAL ENGINEER MARK HEDGLIN No. M32912 Exp. 9-30-10 MECH STATE OF CALIFORNIA

6-21-10
PLANS APPROVAL DATE

The State of California or its officers or agents shall not be responsible for the accuracy or completeness of electronic copies of this plan sheet.

CALIFORNIA STATE FIRE MARSHAL APPROVED
Approval of this plan does not authorize or approve any omission or deviation from applicable regulations. Final approval is subject to field inspection. One set of approved plans shall be available on the project site at all times.
Reviewed by: BILL ROBERTSON DSFM III
Approval date: 11-04-2009
CSFM #: 01-37-11-0033

PLUMBING

- Cold Water
- A — Compressed Air
- F — Fire Service Water Line
- G — Gas
- D — Equipment Drain
- RD — Roof Drain
- OD — Overflow Drain
- RWL — Rain Water Leader
- Hot Water
- R — Relief Valve Discharge Pipe
- S — Sewer Line
- Sanitary Sewer (above grade)
- Sewer Line
- Sanitary Sewer Vent
- FM — Sanitary Sewer Force Main

PIPE FITTINGS AND VALVES

- Cap, Threaded
- Elbow, Turned Down
- Elbow, Turned Up
- Reducer, Concentric
- Pressure Gauge (with gage cock and Snubber)
- Strainer
- Union
- Union, Insulating
- Valve, Ball
- Valve, Check
- Valve, Gas
- Valve, Gate
- Valve, Safety Relief
- Valve, Pressure Reducing
- Valve, Pressure/Temperature Relief
- Water Hammer Arrestor

HEATING, VENTILATING AND AIR CONDITIONING

- Balance Damper
- Flexible Duct
- EA — Exhaust Air
- RA — Return Air
- SA — Supply Air
- SIZE — Exhaust Register
- or SIZE — Return Register, See Note
- or SIZE CFM — Supply Diffuser, See Note
- T — Thermostat
- TS — Time Switch
- EF — Exhaust Fan
- FE — Fire Extinguisher
- CHLF — Combination Heat Lamp, Light and Fan Unit

NOTE Ceiling Registers and Diffusers are identified by Duct Connection Neck Size

MISCELLANEOUS

- L — Angle
- ℄ — Centerline
- Ø — Diameter
- Section / Elevation Letter — Sheet Number
- Detail Number — Sheet Number

MECHANICAL ABBREVIATIONS:

A/C	Air Conditioning
ABS	Acrylonitrile Butadiene Styrene
AC	Asphalt Concrete
AD	Air Drop
AP	Alternative Pipe
ATF	Automatic Transmission Fluid
BFP	Backflow Preventer
B.H.	Box Hydrant
BLDG	Building
BTU	British Thermal Unit
BTUH	British Thermal Unit Per Hour
BV	Balancing Valve
C	Conduit
Cap.	Capacity
CHLF	Combination Heat Lamp, Light and Fan Unit
CI	Cast-Iron
CO	Cleanout
COTF	Cleanout Through Floor
COTG	Cleanout Through Grade
COTW	Cleanout To Wall
CV	Check Valve
CW	Cold Water
CFM	Cubic Feet Per Minute
D	Depth
Dia	Diameter
DWV	Drain / Waste / Vent
DB	Dry Bulb
DF	Drinking Fountain
DH	Duct Heater
(E)	Existing
EA	Exhaust Air
EEW	Emergency Eyewash and Shower
EF	Exhaust Fan
EL	Elevation
Elect.	Electrical
ESP	External Static Pressure
EWC	Electric Water Cooler
EWH	Electric Water Heater
°F	Fahrenheit
FC	Flexible Connection
FD	Floor Drain
FDC	Fire Department Connection
FE	Fire Extinguisher
FG	Finish Grade
FL	Flow Line
FH	Fire Hydrant
FS	Flow Switch
FTR	Flue Through Roof
GA	Gauge
GALV	Galvanized
GH	Ground Hydrant
GLV	Globe Valve
GPM	Gallons Per Minute
GSP	Galvanized Steel Pipe
GV	Gate Valve
GWH	Gas Water Heater
GYP	Gypsum
H	Height
HB	Hydrant Box
H/C	Hot Water, High Pressure Cleaner
HF	Hose Faucet
HVAC	Heating, Ventilating And Air Conditioning
HW	Hot Water
HZ	Hertz
ID	Inside Diameter
IE	Invert Elevation
IN	Inch
IPS	International Pipe Standard
KS	Kitchen Sink
kW	Kilowatt
LAV	Lavatory
LPG	Liquified Petroleum Gas
L/s	Liters per Second
MAX	Maximum
MAN	Manhole
MIN	Minimum
MS	Mop Sink
(N)	New
NIC	Not In Contract
NO	Number
NPT	National Pipe Thread
NST	National Standard Thread
NPS	Nominal Pipe Size
OA	Outside Air
OC	On Center
OD	Outside Diameter
OG	Original Ground
PH	Phase
POC	Point of Connection
PVC	Polyvinyl Chloride
PCC	Portland Cement Concrete
PSI	Pounds Per Square Inch
PRV	Pressure Reducing Valve
R	Radius
RH	Radiant Heater
REG	Register
RCP	Reinforced Concrete Pipe
RV	Relief Valve
REQ	Required
RA	Return Air
RD	Roof Drain
RV	Recreational Vehicle
SDS	Sanitary Dump Station
SS	Sanitary Sewer
S.S.	Stainless Steel
SCH	Schedule
S/S	Service Sink
SHR	Shower
STD	Standard
S.P.	Static Pressure
STA	Station
SA	Supply Air
SF	Supply Fan
TCV	Temperature Control Valve
TP	Trap Primer
TOT	Total
TS	Time Switch
Typ.	Typical
UH	Unit Heater
UR	Urinal
V	Vent
VAC	Voltage, Alternating Current
VR	Vent Riser
VTR	Vent Thru Roof
W	Width
W/	With
W/O	Without
WB	Wet Bulb
WC	Water Closet
W.C.	Water Column
W.H.	Wall Hydrant
WH	Water Hammer Arrestor
W.H.	Wall Hydrant
WLS	Water Level Switch
WP	Weatherproof
WS	Wash Sink
WSP	Welded Steel Pipe

THIS DRAWING ACCURATE FOR MECHANICAL WORK ONLY

	BY	CHECKED
DESIGN	Severiano Gutierrez	Mark Hedglin
DETAILS	Rudy Sarte	Severiano Gutierrez
QUANTITIES	Severiano Gutierrez	Mark Hedglin

STATE OF CALIFORNIA
DEPARTMENT OF TRANSPORTATION

DIVISION OF ENGINEERING SERVICES
ELECTRICAL-MECHANICAL-WATER AND WASTEWATER DESIGN

BRIDGE NO. 57R0001L 57R0001R
POST MILE R59.4/R60.0

ALISO CREEK SAFETY ROADSIDE REST AREA

MECHANICAL LEGEND

SHEET **M-0**

DS OSD 2139A (4/89)
FILE NO.:
FILE => m0_0.dgn
DATE PLOTTED => 24-JUN-2010 TIME PLOTTED => 09:58
ORIGINAL SCALE IN INCHES FOR REDUCED PLANS 0 1 2 3
CU 11340
EA 261401
DISREGARD PRINTS BEARING EARLIER REVISION DATES
REVISION DATES (PRELIMINARY STAGE ONLY) 04-18-08 12-19-08 06-04-09 08-10-09 10-28-09 12-02-09
SHEET OF

USERNAME => trphtls DATE PLOTTED => 24-JUN-2010 TIME PLOTTED => 09:58

V1=1

DIST.	COUNTY	ROUTE	POST MILES TOTAL PROJECT	SHEET NO.	TOTAL SHEETS
11	SD	5	R59.4,R60.0	195	241

REGISTERED ENGINEER-MECHANICAL 12-02-2009

REGISTERED PROFESSIONAL ENGINEER MARK HEDGLIN No. M32912 Exp. 9-30-10 MECH STATE OF CALIFORNIA

6-21-10
PLANS APPROVAL DATE

The State of California or its officers or agents shall not be responsible for the accuracy or completeness of electronic copies of this plan sheet.

CALIFORNIA STATE FIRE MARSHAL APPROVED
Approval of this plan does not authorize or approve any omission or deviation from applicable regulations. Final approval is subject to field inspection. One set of approved plans shall be available on the project site at all times.
Reviewed by: BILL ROBERTSON DSFM III
Approval date: 11-04-2009
CSFM #: 01-37-11-0033

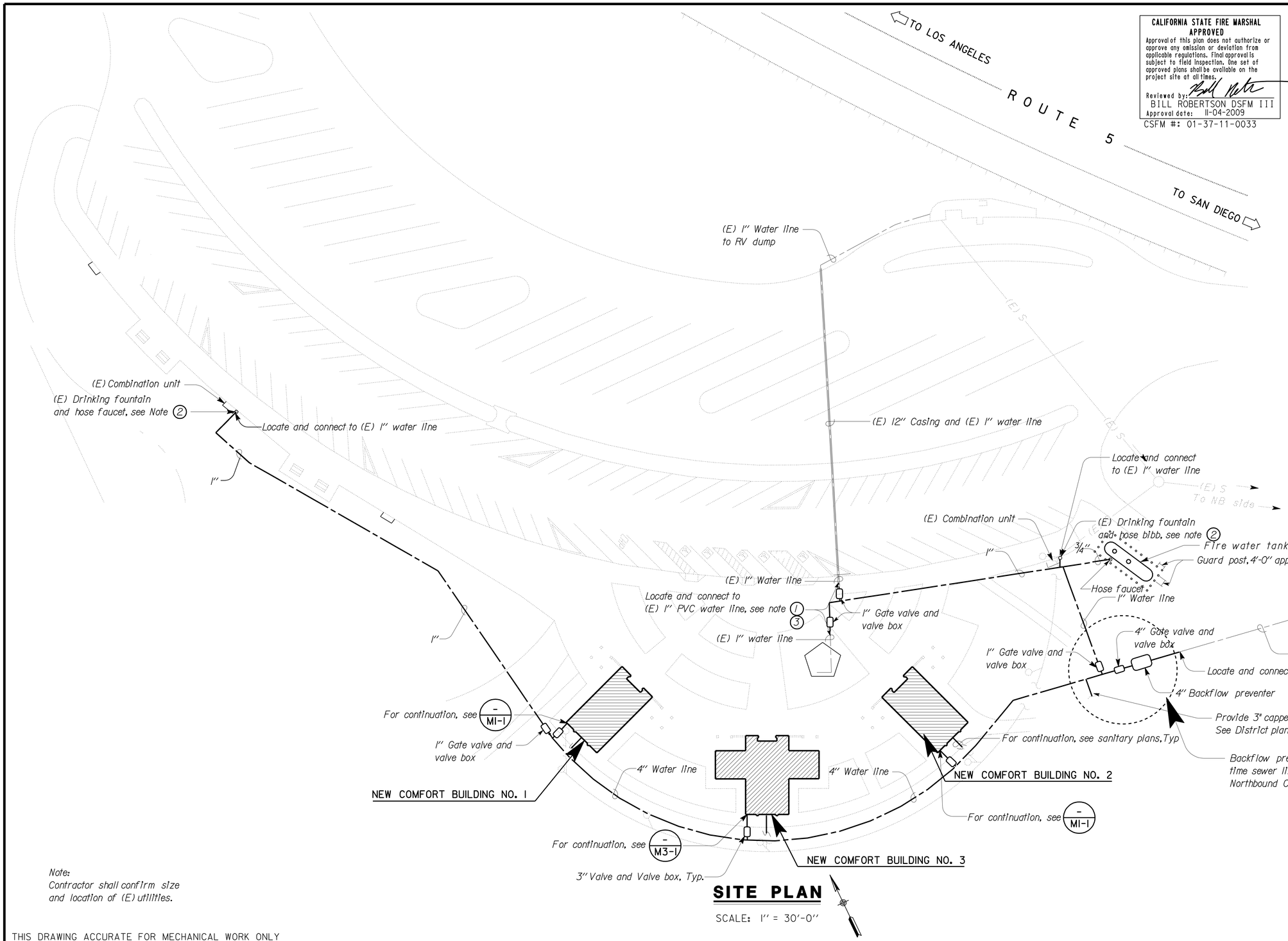

SITE PLAN

SCALE: 1" = 30'-0"

Notes:

1. Locate existing water supply line to the Kiosk and abandon existing water supply 5' from the building and connect new 1" water supply line as shown. Also locate and connect to existing RV dump 1" water supply line as shown.
2. Locate existing water supply line to the existing drinking fountain and hose bib at the combination units. Abandon existing water supply 5' from the combination unit and connect new 1" water supply line to combination unit as shown.
3. 1" Water supply line and valves for the vending Kiosk shall be install at the same time the sewer line replacement work is being done at the Northbound Comfort Station.
4. Water shall be available to to existing comfort stations and vending kiosk during phasing of construction, either by existing services lines or by temporary sevices lines.

Note:
Contractor shall confirm size and location of (E) utilities.

THIS DRAWING ACCURATE FOR MECHANICAL WORK ONLY

DESIGN SUPERVISOR
DESIGN ENGINEER

	BY	CHECKED
DESIGN	Severiano Gutierrez	Mark Hedglin
DETAILS	Rudy Sarte	Severiano Gutierrez
QUANTITIES	Severiano Gutierrez	Mark Hedglin

STATE OF CALIFORNIA
DEPARTMENT OF TRANSPORTATION

DIVISION OF ENGINEERING SERVICES
ELECTRICAL-MECHANICAL-WATER AND WASTEWATER DESIGN

BRIDGE NO. 57R0001L 57R0001R
POST MILE R59.4/R60.0

ALISO CREEK SAFETY ROADSIDE REST AREA
SOUTHBOUND
SITE PLAN

SHEET **MO-1**

DS OSD 2139A (4/89)
FILE NO.:
FILE => m0_1.dgn
DATE PLOTTED => 25-JUN-2010
TIME PLOTTED => 08:55
ORIGINAL SCALE IN INCHES FOR REDUCED PLANS 0 1 2 3
CU 11340
EA 261401
DISREGARD PRINTS BEARING EARLIER REVISION DATES
REVISION DATES (PRELIMINARY STAGE ONLY) 04-18-08 12-19-08 06-04-09 08-18-09 10-28-09 12-02-09
SHEET OF

USERNAME => trmikes1 DATE PLOTTED => 25-JUN-2010 TIME PLOTTED => 08:55

V1=1

DIST.	COUNTY	ROUTE	POST MILES TOTAL PROJECT	SHEET NO.	TOTAL SHEETS
11	SD	5	R59.4,R60.0	196	241

REGISTERED ENGINEER-MECHANICAL 12-02-2009

REGISTERED PROFESSIONAL ENGINEER MARK HEDGLIN No. M32912 Exp. 9-30-10 MECH STATE OF CALIFORNIA

6-21-10
PLANS APPROVAL DATE

The State of California or its officers or agents shall not be responsible for the accuracy or completeness of electronic copies of this plan sheet.

CALIFORNIA STATE FIRE MARSHAL APPROVED

Approval of this plan does not authorize or approve any omission or deviation from applicable regulations. Final approval is subject to field inspection. One set of approved plans shall be available on the project site at all times.

Reviewed by: BILL ROBERTSON DSFM III
Approval date: 11-04-2009
CSFM #: 01-37-11-0033

Notes:

1. *Locate (E) 6" sewer line and cap 20'-0" from (E) building during demolition.*
2. *Remove (E) 6" sewer Line 20'-0" from (E) Building.*
3. *Connect new 6" sewer line to (E) 6" sewer line.*
4. *Locate and connect to (E) water main.*
5. *Install new 3" gate valve and valve box.*
6. *Install new 4" gate valve and valve box.*
7. *Locate and connect 4" water supply line for building 4.*
8. *Install new 4" backflow preventer.*
9. *Northbound and Southbound comfort stations must be closed during the sewer line replacement. Do not use any of the facilities as this work is being completed.*
10. *Backflow preventer and valves installation shall be done at the same time frame as the sewer line replacement work is being done.*
11. *Cap building water supply line during building demolition in phase 1, Install new water supply to building as shown.*

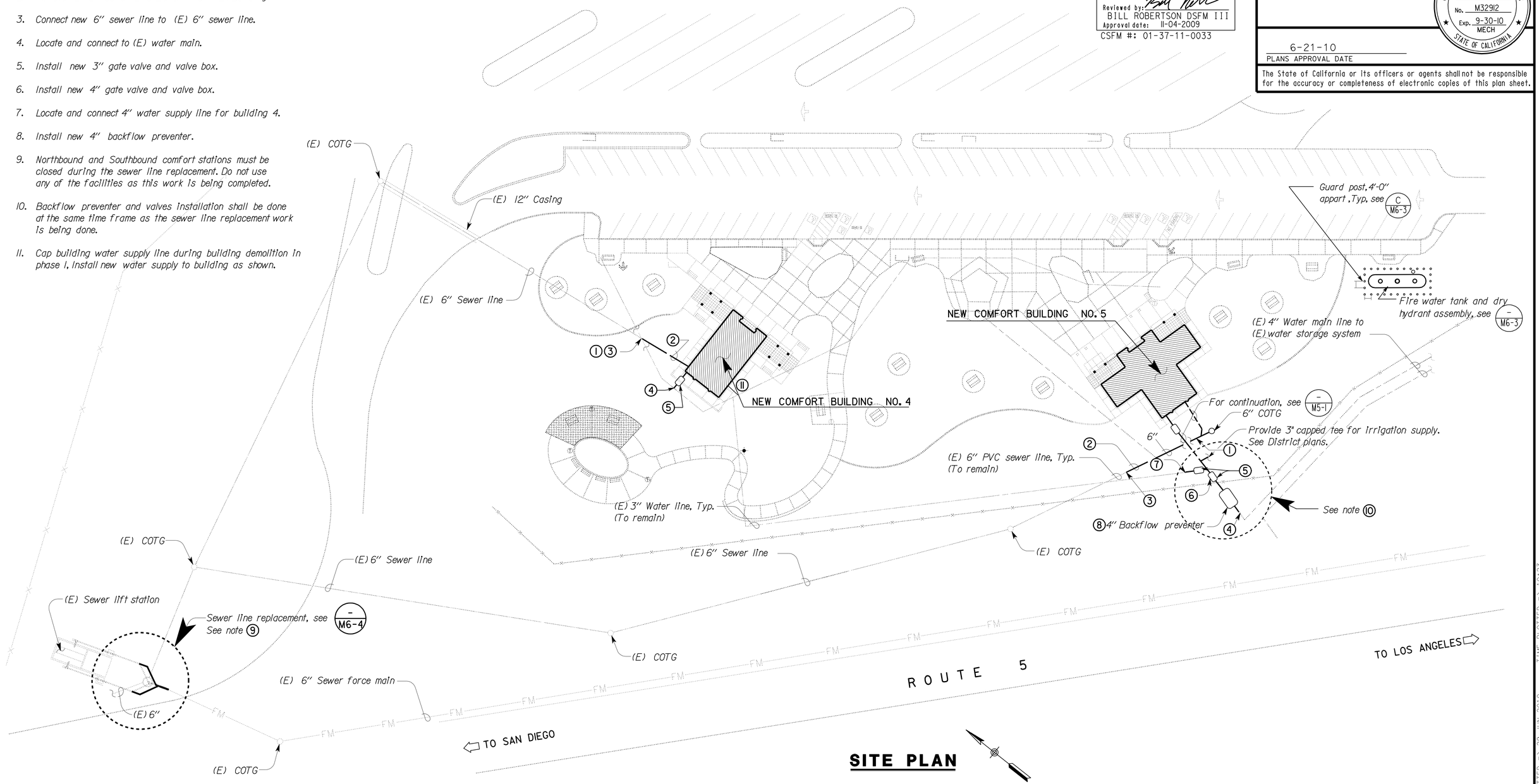

SITE PLAN

SCALE: 1" = 30'-0"

THIS DRAWING ACCURATE FOR MECHANICAL WORK ONLY

	BY	CHECKED
DESIGN	Severlano Gutierrez	Mark Hedglin
DETAILS	Rudy Sarte	Severlano Gutierrez
QUANTITIES	Severlano Gutierrez	Mark Hedglin

STATE OF CALIFORNIA DEPARTMENT OF TRANSPORTATION

DIVISION OF ENGINEERING SERVICES ELECTRICAL-MECHANICAL-WATER AND WASTEWATER DESIGN

BRIDGE NO. 57R0001L 57R0001R
POST MILE R59.4/R60.0

ALISO CREEK SAFETY ROADSIDE REST AREA

NORTHBOUND — SITE PLAN

SHEET **MO-2**

DS OSD 2139A (4/89)
FILE NO.:
FILE => m0_2.dgn
DATE PLOTTED => 29-JUN-2010 TIME PLOTTED => 10:23

ORIGINAL SCALE IN INCHES FOR REDUCED PLANS 0 1 2 3

CU 11340
EA 261401

DISREGARD PRINTS BEARING EARLIER REVISION DATES

REVISION DATES (PRELIMINARY STAGE ONLY) 04-18-08 12-19-08 06-04-09 08-18-09 10-28-09 12-02-09

SHEET OF

USERNAME => trmrkes1 DATE PLOTTED => 29-JUN-2010 TIME PLOTTED => 10:23

VI=1

DIST.	COUNTY	ROUTE	POST MILES TOTAL PROJECT	SHEET NO.	TOTAL SHEETS
11	SD	5	R59.4,R60.0	197	241

CALIFORNIA STATE FIRE MARSHAL APPROVED

Approval of this plan does not authorize or approve any omission or deviation from applicable regulations. Final approval is subject to field inspection. One set of approved plans shall be available on the project site at all times.

Reviewed by: BILL ROBERTSON DSFM III

Approval date: 11-04-2009

CSFM #: 01-37-11-0033

12-02-2009

REGISTERED ENGINEER-MECHANICAL

REGISTERED PROFESSIONAL ENGINEER — MARK HEDGLIN — No. M32912 — Exp. 9-30-10 — MECH — STATE OF CALIFORNIA

6-21-10

PLANS APPROVAL DATE

The State of California or its officers or agents shall not be responsible for the accuracy or completeness of electronic copies of this plan sheet.

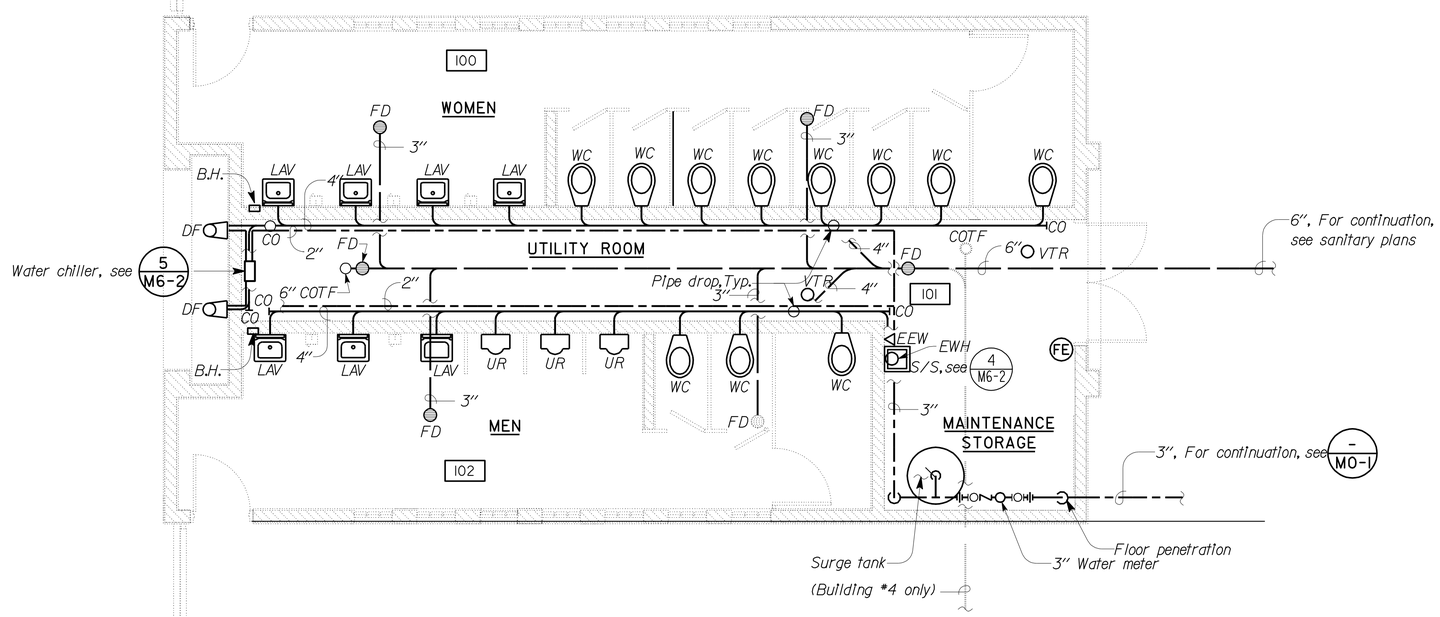

** Buildings 1, 2, & 4 are similar, See Architectural Plans for orientation. **

PLAN

SCALE: 1/4" = 1'-0"

Notes:

1. *For Piping Schematic, see* M1-2 *,* M1-3
2. *Electric Water Chiller shall be 325 Watts, 120V, 1 Phase, 60 Hz. Nominal.*
3. *Electric Water Heater shall be staroge tank type, 19 Gal 49 GPH @ 50 F temperature rise, 6000 watts, 230V, 1 phase, 60 Hz. Nominal. See* 4 M6-2
4. *Fire Extinguisher shall be bracket mounted, and shall be 2A-40BC.*

THIS DRAWING ACCURATE FOR MECHANICAL WORK ONLY

	BY	CHECKED
DESIGN	Severiano Gutierrez	Mark Hedglin
DETAILS	Rudy Sarte	Severiano Gutierrez
QUANTITIES	Severiano Gutierrez	Mark Hedglin

STATE OF CALIFORNIA DEPARTMENT OF TRANSPORTATION

DIVISION OF ENGINEERING SERVICES ELECTRICAL-MECHANICAL-WATER AND WASTEWATER DESIGN

BRIDGE NO. 57R0001L 57R0001R POST MILE R59.4/R60.0

ALISO CREEK SAFETY ROADSIDE REST AREA

SOUTHBOUND BUILDING 1&2

MECHANICAL PLAN

SHEET **M1-1**

DS OSD 2139A (4/89) FILE NO.:

FILE => m1_1.dgn DATE PLOTTED => 24-JUN-2010 TIME PLOTTED => 09:58

ORIGINAL SCALE IN INCHES FOR REDUCED PLANS 0 1 2 3

CU 11340 EA 261401

DISREGARD PRINTS BEARING EARLIER REVISION DATES

REVISION DATES (PRELIMINARY STAGE ONLY) 04-18-08 12-19-08 06-04-09 08-10-09 10-28-09 12-02-09

SHEET OF

USERNAME => trphtis DATE PLOTTED => 24-JUN-2010 TIME PLOTTED => 09:58

V|=|

DIST.	COUNTY	ROUTE	POST MILES TOTAL PROJECT	SHEET NO.	TOTAL SHEETS
11	SD	5	R59.4,R60.0	198	241

REGISTERED ENGINEER-MECHANICAL 12-02-2009

REGISTERED PROFESSIONAL ENGINEER MARK HEDGLIN No. M32912 Exp. 9-30-10 MECH STATE OF CALIFORNIA

6-21-10
PLANS APPROVAL DATE

The State of California or its officers or agents shall not be responsible for the accuracy or completeness of electronic copies of this plan sheet.

CALIFORNIA STATE FIRE MARSHAL APPROVED
Approval of this plan does not authorize or approve any omission or deviation from applicable regulations. Final approval is subject to field inspection. One set of approved plans shall be available on the project site at all times.
Reviewed by: BILL ROBERTSON DSFM III
Approval date: 11-04-2009
CSFM #: 01-37-11-0033

Notes:

1. *Trap primer for floor drains in men's bathroom and utility room.*
2. *Trap Primer for floor drains in women's bathroom.*

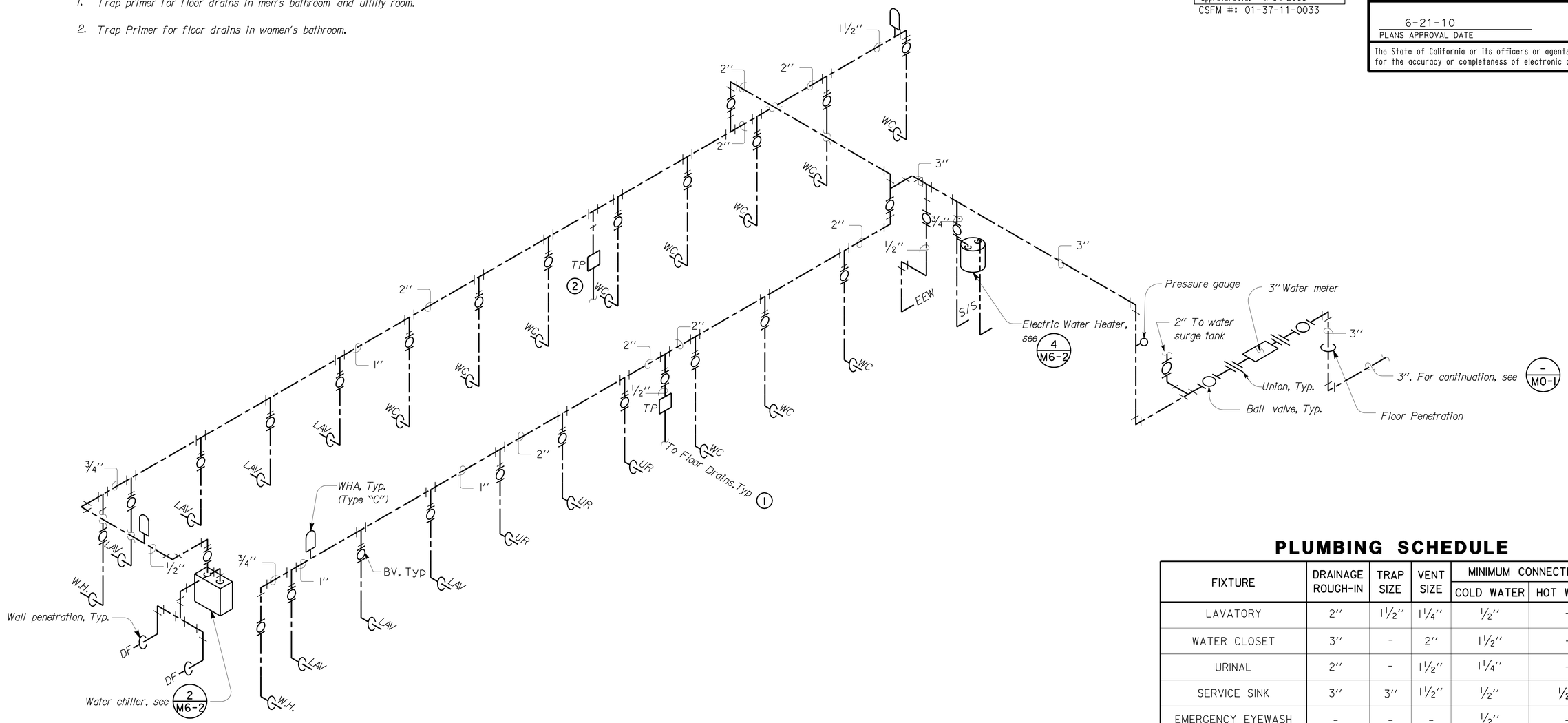

PLUMBING SCHEDULE

FIXTURE	DRAINAGE ROUGH-IN	TRAP SIZE	VENT SIZE	MINIMUM CONNECTIONS	
				COLD WATER	HOT WATER
LAVATORY	2''	1 1/2''	1 1/4''	1/2''	-
WATER CLOSET	3''	-	2''	1 1/2''	-
URINAL	2''	-	1 1/2''	1 1/4''	-
SERVICE SINK	3''	3''	1 1/2''	1/2''	1/2''
EMERGENCY EYEWASH	-	-	-	1/2''	-
DRINKING FOUNTAIN	2''	1 1/2''	1 1/4''	1/2''	1/2''
WALL HYDRANT	-	-	-	3/4''	-

DOMESTIC WATER

** Buildings 1, 2, & 4 are similar**

THIS DRAWING ACCURATE FOR MECHANICAL WORK ONLY

NO SCALE

	BY	CHECKED
DESIGN	Severiano Gutierrez	Mark Hedglin
DETAILS	Rudy Sarte	Severiano Gutierrez
QUANTITIES	Severiano Gutierrez	Mark Hedglin

STATE OF CALIFORNIA DEPARTMENT OF TRANSPORTATION

DIVISION OF ENGINEERING SERVICES
ELECTRICAL-MECHANICAL-WATER AND WASTEWATER DESIGN

BRIDGE NO. 57R0001L 57R0001R
POST MILE R59.4/R60.0

ALISO CREEK SAFETY ROADSIDE REST AREA
SOUTHBOUND BUILDING 1 & 2
DOMESTIC WATER

SHEET **M1-2**

DS OSD 2139A (4/89)
FILE NO.:
FILE => m1_2.dgn
DATE PLOTTED => 24-JUN-2010 TIME PLOTTED => 09:58

ORIGINAL SCALE IN INCHES FOR REDUCED PLANS 0 1 2 3

CU 11340
EA 261401

DISREGARD PRINTS BEARING EARLIER REVISION DATES

REVISION DATES (PRELIMINARY STAGE ONLY) 04-18-08 02-19-08 06-04-09 08-18-09 10-28-09 12-02-09

SHEET OF

USERNAME => trphi1s DATE PLOTTED => 24-JUN-2010 TIME PLOTTED => 09:58

V|=|

DIST.	COUNTY	ROUTE	POST MILES TOTAL PROJECT	SHEET NO.	TOTAL SHEETS
11	SD	5	R59.4,R60.0	199	241

CALIFORNIA STATE FIRE MARSHAL APPROVED

Approval of this plan does not authorize or approve any omission or deviation from applicable regulations. Final approval is subject to field inspection. One set of approved plans shall be available on the project site at all times.

Reviewed by: BILL ROBERTSON DSFM III
Approval date: 11-04-2009
CSFM #: 01-37-11-0033

12-02-2009
REGISTERED ENGINEER-MECHANICAL

REGISTERED PROFESSIONAL ENGINEER
MARK HEDGLIN
No. M32912
Exp. 9-30-10
MECH
STATE OF CALIFORNIA

6-21-10
PLANS APPROVAL DATE

The State of California or its officers or agents shall not be responsible for the accuracy or completeness of electronic copies of this plan sheet.

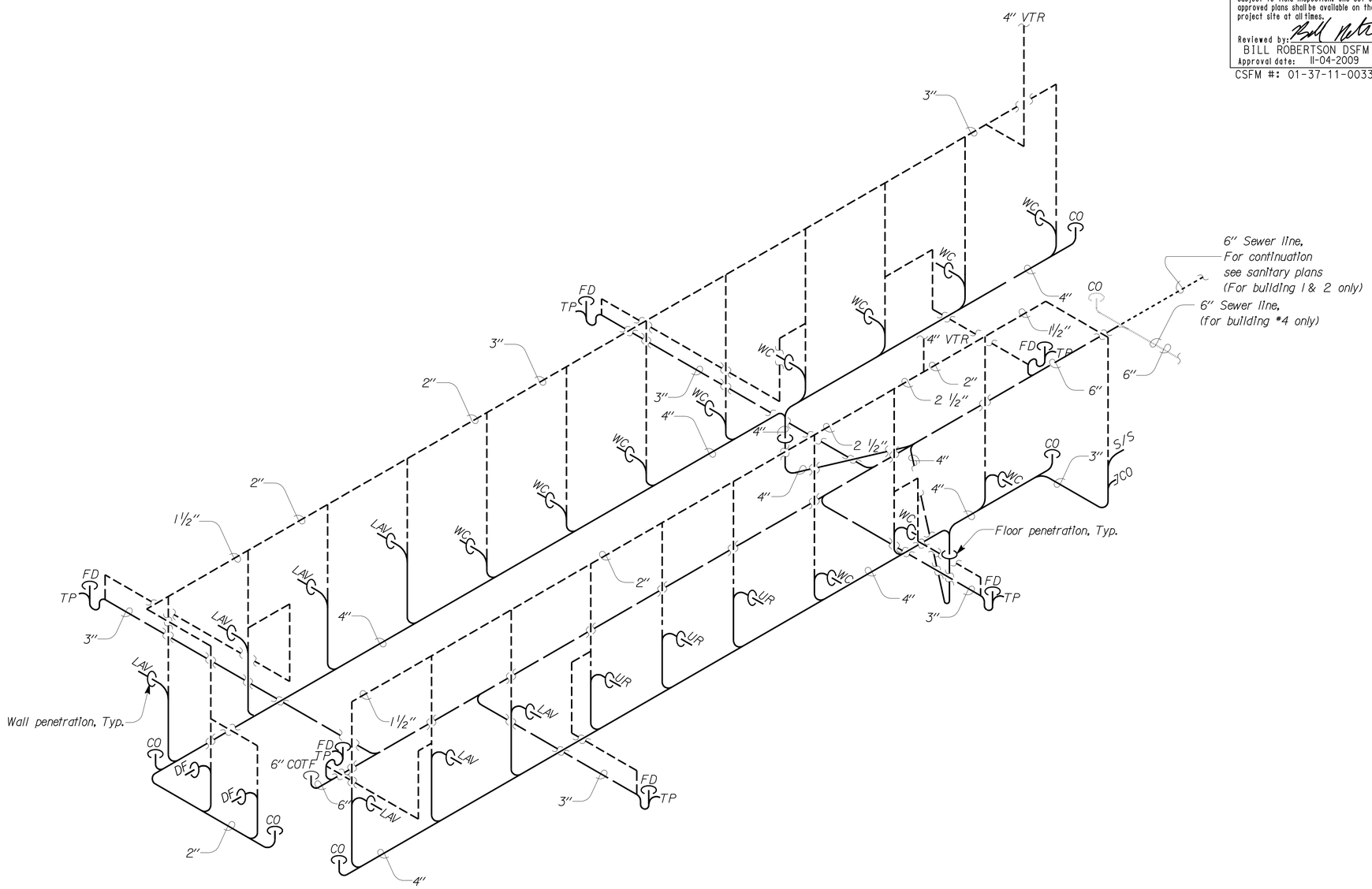

SANITARY SEWER

For plumbing schedule, see M1-2

** Buildings 1, 2, & 4 are similar**
For building #4 install clean out and come out on side of building as shown

NO SCALE

THIS DRAWING ACCURATE FOR MECHANICAL WORK ONLY

DESIGN	BY Severiano Gutierrez	CHECKED Mark Hedglin	
DETAILS	BY Rudy Sarte	CHECKED Severiano Gutierrez	
QUANTITIES	BY Severiano Gutierrez	CHECKED Mark Hedglin	

STATE OF CALIFORNIA
DEPARTMENT OF TRANSPORTATION

DIVISION OF ENGINEERING SERVICES
ELECTRICAL-MECHANICAL-WATER AND WASTEWATER DESIGN

BRIDGE NO. 57R0001L 57R0001R
POST MILE R59.4/R60.0

ALISO CREEK SAFETY ROADSIDE REST AREA
SOUTHBOUND BUILDING 1 & 2
SANITARY SEWER

SHEET **M1-3**

DS OSD 2139A (4/89)
FILE NO.:
FILE => m1_3.dgn
DATE PLOTTED => 24-JUN-2010 TIME PLOTTED => 09:58

ORIGINAL SCALE IN INCHES FOR REDUCED PLANS 0 1 2 3

CU 11340
EA 261401

DISREGARD PRINTS BEARING EARLIER REVISION DATES

REVISION DATES (PRELIMINARY STAGE ONLY) 04-18-08 02-19-08 06-04-09 08-18-09 10-28-09 12-02-09

SHEET OF

USERNAME => trphrlis DATE PLOTTED => 24-JUN-2010 TIME PLOTTED => 09:58

V|=|

DIST.	COUNTY	ROUTE	POST MILES TOTAL PROJECT	SHEET NO.	TOTAL SHEETS
11	SD	5	R59.4,R60.0	200	241

CALIFORNIA STATE FIRE MARSHAL APPROVED
Approval of this plan does not authorize or approve any omission or deviation from applicable regulations. Final approval is subject to field inspection. One set of approved plans shall be available on the project site at all times.
Reviewed by: BILL ROBERTSON DSFM III
Approval date: 11-04-2009
CSFM #: 01-37-11-0033

12-02-2009
REGISTERED ENGINEER-MECHANICAL

REGISTERED PROFESSIONAL ENGINEER
MARK HEDGLIN
No. M32912
Exp. 9-30-10
MECH
STATE OF CALIFORNIA

6-21-10
PLANS APPROVAL DATE

The State of California or its officers or agents shall not be responsible for the accuracy or completeness of electronic copies of this plan sheet.

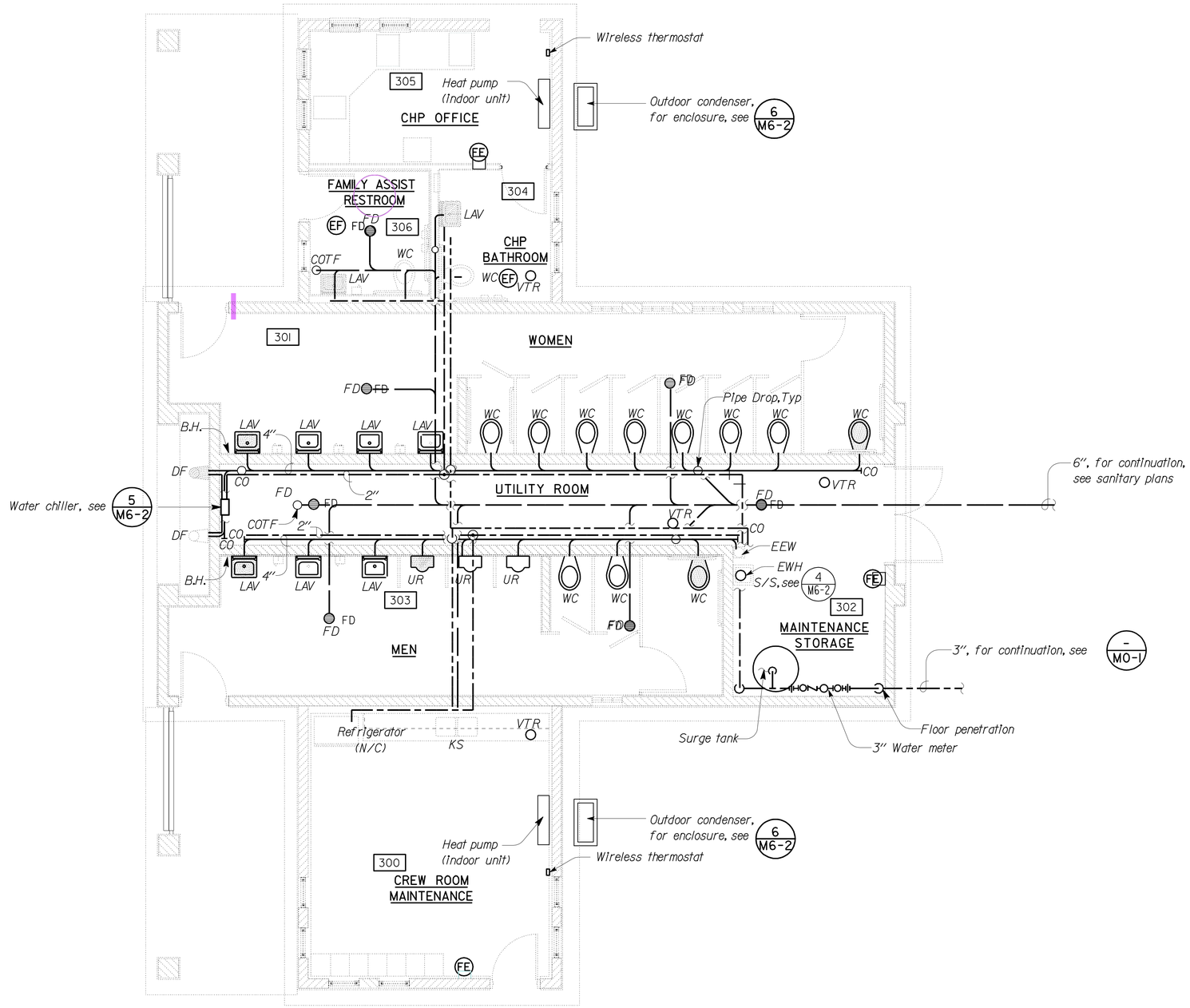

PLAN

SCALE: 1/4" = 1'-0"

Notes:

1. For Piping Schematic, see - M3-2 - M3-3
2. CHP Restroom Exhaust Fans shall be 60 watts, 100 CFM, 115 V, 60 HZ, .25 SP, 2 Sones, Nominal.
3. Family Assist Restroom Exaust Fan shall be 60 watts, 100 CFM, 115 V, 60 Hz, .25 SP, 2 Sones, Nominal.
4. CHP Room Heat Pump shall be ductless split system type, 9,000 BTUH, 120 V, 1 Phase, 60 Hz. Nominal. Indoor unit drain shall insulated.
5. Crew Room Heat Pump shall be thru the wall type 12,000 BTUH, 120 V, 1 Phase, 60 Hz. Nominal. Indoor unit drain shall insulated.
6. Electric Water Chiller shall be 325 Watts, 115 V, 1 Phase, 60 Hz. Nominal.
7. Electric Water Heater shall be staroge tank type, 19 Gal 49 GPH @ 50 F temperature rise, 6000 watts, 240V, 1 phase, 60 Hz. Nominal. See 4 M6-2
8. Fire Extinguisher shall be bracket mounted, and shall be 2A-40BC.

THIS DRAWING ACCURATE FOR MECHANICAL WORK ONLY

	BY	CHECKED
DESIGN	Severiano Gutierrez	Mark Hedglin
DETAILS	Rudy Sarte	Severiano Gutierrez
QUANTITIES	Severiano Gutierrez	Mark Hedglin

STATE OF CALIFORNIA
DEPARTMENT OF TRANSPORTATION

DIVISION OF ENGINEERING SERVICES
ELECTRICAL-MECHANICAL-WATER AND WASTEWATER DESIGN

BRIDGE NO. 57R0001L 57R0001R
POST MILE R59.4/R60.0

ALISO CREEK SAFETY ROADSIDE REST AREA
SOUTHBOUND BUILDING 3
MECHANICAL PLAN

SHEET M3-1

DS OSD 2139A (4/89)
FILE NO.:
FILE => m3_1.dgn
DATE PLOTTED => 24-JUN-2010 TIME PLOTTED => 09:59
ORIGINAL SCALE IN INCHES FOR REDUCED PLANS 0 1 2 3
CU 11340
EA 261401
DISREGARD PRINTS BEARING EARLIER REVISION DATES
REVISION DATES (PRELIMINARY STAGE ONLY) 04-18-08 12-19-08 06-04-09 08-18-09 10-28-09 12-02-09
SHEET OF

USERNAME => trphrlis DATE PLOTTED => 24-JUN-2010 TIME PLOTTED => 09:59

V|=|