| Dist | COUNTY | ROUTE | POST MILES TOTAL PROJECT | SHEET No. | TOTAL SHEETS |
|---|---|---|---|---|---|
| 11 | Imp | 8 | R38.8/R39.1 | 101 | 225 |

REGISTERED CIVIL ENGINEER 11-18-13 DATE

04-07-14
PLANS APPROVAL DATE

REGISTERED PROFESSIONAL ENGINEER SOLOMON TADESSE No. C62773 Exp. 06-30-14 CIVIL STATE OF CALIFORNIA

*THE STATE OF CALIFORNIA OR ITS OFFICERS OR AGENTS SHALL NOT BE RESPONSIBLE FOR THE ACCURACY OR COMPLETENESS OF SCANNED COPIES OF THIS PLAN SHEET.*

LEGEND:
TW = TRAVEL WAY
(N) = NOT A SEPARATE PAY ITEM, FOR INFORMATION ONLY.

# ROADWAY QUANTITIES

| LINE | STATION | | STRUCTURAL SECTION | LENGTH | TW | | INSIDE SHOULDER | | OUTSIDE SHOULDER | | TW AREA (N) | Shld AREA (N) | COLD PLANE ASPHALT CONCRETE PAVEMENT | HMA, SP (TYPE A) * | CLASS 2 AGGREGETE BASE | TACK COAT | ASPHALTIC EMULSION (FOG SEAL COAT) | REMARKS |
|---|---|---|---|---|---|---|---|---|---|---|---|---|---|---|---|---|---|---|
| | | | | | BEGIN WIDTH | END WIDTH | BEGIN WIDTH | END WIDTH | BEGIN WIDTH | END WIDTH | | | | | | | | |
| | BEGIN | END | | LF (N) | LF | LF | LF | LF | LF | LF | SQFT | SQFT | SQYD | TON | CY | TON | TON | |
| R5D2 | 2086+30.00 | 2091+37.00 | 5 | 507.00 | 0 | 24.90 | | | | | 6,312.15 | | | 280.54 | 526.02 | 0.11 | | GORE AREA |
| R5D2 | 2086+30.00 | 2095+10.62 | 4 | 880.62 | | | 8.00 | 8.00 | | | | 7,044.96 | | 182.65 | 352.25 | 0.13 | 0.13 | |
| R5D2 | 2095+10.62 | 2095+82.63 | 5 | 72.01 | | | 8.00 | 49.00 | | | | 2,052.29 | | 91.22 | 171.03 | 0.04 | 0.04 | |
| R5D2 | 2091+37.36 | 2095+82.63 | 5 | 445.63 | | | | | 4.00 | 4.00 | | 1,782.53 | | 79.23 | 148.55 | 0.04 | 0.04 | |
| R5D2 | 2093+45.92 | 2095+10.62 | 5 | 164.70 | | | | | 19.70 | 2.50 | | | | 81.25 | 152.35 | | | BETWEEN R5D2 & R1D2A |
| D | 21+76.00 | 28+24.95 | 3 | 648.95 | | | 2.63 | 2.63 | 2.63 | 2.63 | | 3,406.99 | | | 170.35 | | | CURB & GUTTER |
| D | 28+24.95 | 29+01.71 | 3 | | | | 2.63 | 2.63 | 2.63 | 2.63 | | 403.75 | | | 20.19 | | | CURB & GUTTER |
| D | 29+71.56 | 31+50.83 | 3 | 179.27 | | | 2.63 | 2.63 | 2.63 | 2.63 | | 942.96 | | | 47.16 | | | CURB & GUTTER |
| D | 34+10.83 | 35+33.81 | 3 | 122.98 | | | 2.63 | 2.63 | 2.63 | 2.63 | | 645.65 | | | 32.29 | | | CURB & GUTTER |
| D | 35+33.81 | 36+07.53 | 3 | | | | 2.63 | 2.63 | 2.63 | 2.63 | | 416.32 | | | 20.81 | | | CURB & GUTTER |
| D | 36+59.27 | 37+07.36 | 3 | | | | 2.63 | 2.63 | 2.63 | 2.63 | | 373.17 | | | 18.66 | | | CURB & GUTTER |
| D | 37+07.36 | 39+98.84 | 3 | 291.48 | | | 2.63 | 2.63 | 2.63 | 2.63 | | 1,530.27 | | | 76.52 | | | CURB & GUTTER |
| D | 39+98.84 | 40+44.02 | 3 | | | | 2.63 | 2.63 | 2.63 | 2.63 | | 368.88 | | | 18.44 | | | CURB & GUTTER |
| D | 21+76.00 | 24+00.00 | 1 | 224.00 | 9.50 | 5.90 | | | | | 1,724.80 | | | 83.05 | 150.13 | 0.03 | | L+ OF "D" LINE |
| D | 24+00.00 | 28+24.95 | 1 | 424.95 | 14.96 | 14.96 | | | | | 6,357.25 | | | 306.09 | 553.32 | 0.08 | | L+ OF "D" LINE |
| D | 29+71.56 | 31+50.83 | 1 | 179.27 | 27.00 | 27.00 | | | | | 4,840.29 | | | 233.05 | 421.29 | 0.09 | | L+ OF "D" LINE |
| D | 34+10.83 | 35+33.81 | 1 | 122.98 | 27.00 | 27.00 | | | | | 3,320.46 | | | 159.88 | 289.01 | 0.06 | | L+ OF "D" LINE |
| D | 36+92.00 | 39+98.84 | 1 | 306.84 | 25.00 | 14.40 | | | | | 6,044.75 | | | 291.05 | 525.16 | 0.10 | | L+ OF "D" LINE |
| D | 29+65.00 | 31+50.83 | 1 | 185.83 | 27.00 | 27.00 | | | | | 5,017.41 | | | 241.58 | 436.71 | 0.09 | | R+ OF "D" LINE |
| D | 34+10.83 | 35+33.81 | 1 | 122.98 | 27.00 | 27.00 | | | | | 3,320.46 | | | 159.88 | 289.01 | 0.06 | | R+ OF "D" LINE |
| D | 37+07.36 | 39+98.84 | 1 | 291.48 | 13.20 | 8.00 | | | | | 3,095.52 | | | 149.05 | 269.43 | 0.06 | | R+ OF "D" LINE |
| D | 41+34.25 | 43+94.84 | 1 | 260.59 | 7.63 | 3.00 | | | | | 1,385.04 | | | 66.69 | 120.55 | 0.03 | | R+ OF "D" LINE |
| D | 21+76.00 | 28+24.95 | 1 | 648.95 | | | | | 2.00 | 2.00 | | 1,297.90 | | 62.50 | 112.97 | 0.03 | 0.03 | |
| D | 29+65.00 | 31+50.83 | 1 | 185.83 | | | 2.00 | 2.00 | 2.00 | 2.00 | | 743.32 | | 35.79 | 64.70 | 0.02 | 0.02 | |
| D | 34+10.83 | 35+33.81 | 1 | 122.98 | | | 2.00 | 2.00 | 2.00 | 2.00 | | 491.92 | | 23.69 | 42.82 | 0.01 | 0.01 | |
| D | 37+07.36 | 39+98.84 | 1 | 291.48 | | | 2.00 | 2.00 | 2.00 | 2.00 | | 1,165.92 | | 56.14 | 101.48 | 0.03 | 0.03 | |
| D | 21+76.00 | 24+00.00 | 8 | 224.00 | 40.00 | 40.00 | | | | | 8,960.00 | | 995.56 | 260.51 | | 0.16 | | L+ OF "D" LINE |
| D | 24+00.00 | 28+24.95 | 8 | 424.95 | 24.00 | 24.00 | | | | | 10,198.80 | | 1,133.20 | 479.73 | | 0.18 | | L+ OF "D" LINE |
| D | 29+65.00 | 31+50.83 | 2 | 185.83 | 13.00 | 13.00 | | | | | 2,415.79 | | | 209.82 | | 0.05 | | L+ OF "D" LINE |
| D | 34+10.83 | 35+33.81 | 2 | 122.98 | 13.00 | 13.00 | | | | | 1,598.74 | | | 159.58 | | 0.04 | | L+ OF "D" LINE |
| D | 37+07.36 | 37+34.00 | 2 | 26.64 | 13.00 | 13.00 | | | | | 346.32 | | | 5.58 | | 0.01 | | L+ OF "D" LINE |
| D | 37+34.00 | 39+98.84 | 8 | 264.84 | 13.00 | 13.00 | | | | | 3,442.92 | | 382.55 | 159.40 | | 0.06 | | L+ OF "D" LINE |
| D | 21+76.00 | 25+00.00 | 8 | 324.00 | 12.50 | 11.20 | | | | | 3,841.02 | | 426.78 | 111.25 | | 0.07 | | R+ OF "D" LINE |
| D | 25+00.00 | 25+59.48 | 8 | 59.48 | 11.20 | 23.00 | | | | | 1,016.82 | | 112.98 | 46.67 | | 0.02 | | R+ OF "D" LINE |
| D | 25+59.48 | 28+24.95 | 8 | 265.48 | 23.00 | 36.40 | | | | | 7,883.14 | | 875.91 | 364.86 | | 0.14 | | R+ OF "D" LINE |
| D | 29+65.00 | 31+50.83 | 2 | 185.83 | 13.00 | 13.00 | | | | | 2,415.79 | | | 209.82 | | 0.05 | | R+ OF "D" LINE |
| D | 34+10.83 | 35+33.81 | 2 | 122.98 | 13.00 | 13.00 | | | | | 1,598.74 | | | 159.58 | | 0.03 | | R+ OF "D" LINE |
| D | 37+07.36 | 37+34.00 | 2 | 26.64 | 13.00 | 13.00 | | | | | 346.32 | | | 5.58 | | 0.01 | | R+ OF "D" LINE |
| D | 37+34.00 | 39+98.84 | 8 | 264.84 | 13.00 | 13.00 | | | | | 3,442.92 | | 382.55 | 159.40 | | 0.06 | | R+ OF "D" LINE |
| D | 21+76.00 | 24+00.00 | 8 | 224.00 | | | | | 2.00 | 2.00 | | 448.00 | 50.00 | 13.03 | | 0.01 | 0.01 | R+ OF "D" LINE |
| D | 24+00.00 | 28+24.95 | 8 | 424.95 | | | | | 2.00 | 2.00 | | 849.90 | 94.44 | 39.98 | | 0.02 | 0.02 | R+ OF "D" LINE |
| D | 41+34.25 | 43+94.84 | 8 | 260.59 | 13.00 | 13.00 | | | | | 3,387.67 | | 376.41 | 113.55 | | 0.06 | | R+ OF "D" LINE |
| D | 41+34.25 | 43+94.84 | 8 | 260.59 | 16.00 | 18.00 | | | | | 4,581.18 | | 509.02 | 151.14 | | 0.08 | | L+ OF "D" LINE |
| D | 28+24.95 | 29+65.00 | 1 | 140.05 | | | | | | | 2,993.00 | | | 144.11 | 260.51 | 0.06 | | INTERSECTION |
| D | 35+33.81 | 37+07.36 | 1 | 173.55 | | | | | | | 6,346.00 | | | 305.55 | 552.34 | 0.11 | | INTERSECTION |
| D | 28+24.95 | 29+65.00 | 2 | 140.05 | | | | | | | 10,110.00 | | | 531.71 | | 0.18 | | INTERSECTION |
| D | 35+33.81 | 37+07.36 | 2 | 173.55 | | | | | | | 8,000.00 | | | 491.85 | | 0.14 | | INTERSECTION |
| D | 39+98.84 | 41+34.25 | 8 | 135.41 | | | | | | | 3,114.43 | | 481.46 | 96.30 | | 0.08 | 0.03 | INTERSECTION |
| | | | | | | | | | | | SUBTOTAL 2 | | 5,820.86 | 6,802.32 | 5,944.05 | 2.63 | 0.36 | |
| | | | | | | | | | | | SUBTOTAL 1 | | 1,632.21 | 1,752.53 | 2,735.39 | 1.14 | 0.28 | |
| | | | | | | | | | | | TOTAL | | 7,453.07 | 8,554.85 | 8,679.44 | 3.77 | 0.64 | |

* FOR ADDITIONAL QUANTITIES, SEE SHEET Q-1,Q-3,Q-5 AND Q-6

# SUMMARY OF QUANTITIES
## Q-2

STATE OF CALIFORNIA - DEPARTMENT OF TRANSPORTATION
Caltrans PROJECT DEVELOPMENT
FUNCTIONAL SUPERVISOR: KAZIM MAMDANI
CALCULATED-DESIGNED BY: ARY JAFF
CHECKED BY: SOLOMON TADESSE
REVISED BY / DATE REVISED

LAST REVISION 12-09-13 | DATE PLOTTED => 11-APR-2014 | TIME PLOTTED => 10:42

| Dist | COUNTY | ROUTE | POST MILES TOTAL PROJECT | SHEET No. | TOTAL SHEETS |
|---|---|---|---|---|---|
| 11 | Imp | 8 | R38.8/R39.1 | 102 | 225 |

REGISTERED CIVIL ENGINEER 11-18-13 DATE

04-07-14
PLANS APPROVAL DATE

REGISTERED PROFESSIONAL ENGINEER SOLOMON TADESSE No. C62773 Exp. 06-30-14 CIVIL STATE OF CALIFORNIA

*THE STATE OF CALIFORNIA OR ITS OFFICERS OR AGENTS SHALL NOT BE RESPONSIBLE FOR THE ACCURACY OR COMPLETENESS OF SCANNED COPIES OF THIS PLAN SHEET.*

## MINOR CONCRETE (Misc CONSTRUCTION) QUANTITIES

| STATION | | | | SIDE | LENGTH (N) | MINOR CONCRETE (Misc CONSTRUCTION) | REMARK |
|---|---|---|---|---|---|---|---|
| BEGIN | LINE | END | LINE | | LF | CY | |
| 21+76 | "D" | 2089+18.14 | "R3D2" | L+ | 727 | 42.92 | TYPE A2-6 CURB |
| 21+37.29 | "DOG" | 2089+45.37 | "R2D2" | R+ | 799 | 47.16 | TYPE A2-6 CURB |
| 33+80.83 | "D" | 2095+10.50 | "R5D2" | R+ | 268 | 17.91 | TYPE A2-6 CURB |
| 2089+47.83 | "R2D2" | 31+80.83 | "D" | R+ | 421 | 24.85 | TYPE A2-6 CURB |
| 33+80.83 | "D" | 2089+23.46 | "R4D2" | L+ | 223 | 13.44 | TYPE A2-6 CURB |
| 2089+08.52 | "R4D2" | 40+44.02 | "D" | L+ | 426 | 25.17 | TYPE A2-6 CURB |
| 2089+43.87 | "R3D2" | 31+80.83 | "D" | L+ | 448 | 26.44 | TYPE A2-6 CURB |
| 2089+36.40 | "R1D2A" | 40+41.31 | "D" | R+ | 390 | 23.02 | TYPE A2-6 CURB |
| 21+76 | "D" | 28+62.63 | "D" | L+ | 679 | 41.49 | SIDEWALK** |
| 21+37.29 | "DOG" | 28+97.07 | "D" | R+ | 777 | 47.48 | SIDEWALK** |
| 33+80.83 | "D" | 2095+75.76 | "R5D2" | R+ | 192 | 11.73 | SIDEWALK** |
| 2089+47.83 | "R2D2" | 31+50.83 | "D" | R+ | 451 | 27.56 | SIDEWALK** |
| 34+10.83 | "D" | 2089+24.34 | "R4D2" | L+ | 193 | 11.79 | SIDEWALK** |
| 2089+42.77 | "R4D2" | 40+44.02 | "D" | L+ | 350 | 23.48 | SIDEWALK** |
| 2089+43.87 | "R3D2" | 31+50.83 | "D" | L+ | 418 | 25.54 | SIDEWALK** |
| 2089+19.32 | "R1D2A" | 40+41.31 | "D" | R+ | 373 | 22.79 | SIDEWALK** |
| | | | | | | | |
| TOTAL | | | | | | 430.64 | |

## HMA DIKE

| BEGIN STATION | END STATION | LINE | SIDE | PLACE HMA DIKE (TYPE E) | HMA,SP (TYPE A) *** |
|---|---|---|---|---|---|
| | | | | LF | TON * |
| 2089+36.40 | 2091+75.00 | "R1D2A" | R+ | 238.60 | 10.0 |
| 2088+10.00 | 2095+10.62 | "R5D2" | R+ | 700.62 | 29.4 |
| 2087+62.27 | 2089+08.52 | "R4D2" | R+ | 146.25 | 6.1 |
| 2088+66.00 | 2089+23.46 | "R4D2" | L+ | 57.46 | 1.7 |
| 2085+50.00 | 2089+18.14 | "R3D2" | R+ | 368.14 | 15.4 |
| 2087+55.55 | 2089+43.87 | "R3D2" | L+ | 188.32 | 7.8 |
| 2089+45.37 | 2089+90.00 | "R2D2" | R+ | 45.00 | 1.9 |
| | | | | | |
| | | TOTAL | | 1,744.40 | 72.3 |

## MINOR CONCRETE (TEXTURED PAVING)

| SHEET | RAMP | AREA (N) | MINOR CONCRETE (TEXTURED PAVING) |
|---|---|---|---|
| | | (SQYD) | (CY) |
| L-2 | "R5D2" | 105 | 17.5 |
| L-3 | "R4D2" | 175 | 29.0 |
| L-3 | "R3D2" | 220 | 36.6 |
| | TOTAL | 500 | 83.1 |

## SAFETY EDGE

| SHEET | LINE | LOCATION | | | SAFETY EDGE (N) |
|---|---|---|---|---|---|
| | | STATION | LEFT | RIGHT | LF |
| L-2 | "R5D2" | 2086+30 TO 2087+97 | X | | 167 |
| L-2 | "R5D2" | 2091+85 TO 2093+45 | | X | 160 |
| L-2 TO L-3 | "A" | 2082+52 TO 2086+30 | X | | 398 |

* INCLUDES 0.20' OF HMA UNDER DIKE.

** INCLUDES CURBRAMP QUANTITY.

(N) = NOT A SEPARATE PAY ITEM, FOR INFORMATION ONLY.

*** FOR ADDITIONAL QUANTITIES, SEE SHEET Q-1,Q-2,Q-5 AND Q-6

# SUMMARY OF QUANTITIES

## Q-3

REVISED BY | DATE REVISED

ARY JAFF | SOLOMON TADESSE

CALCULATED-DESIGNED BY | CHECKED BY

FUNCTIONAL SUPERVISOR: KAZIM MAMDANI

STATE OF CALIFORNIA - DEPARTMENT OF TRANSPORTATION

Caltrans® PROJECT DEVELOPMENT

LAST REVISION 12-09-13 | DATE PLOTTED => 11-APR-2014 | TIME PLOTTED => 10:42

| Dist | COUNTY | ROUTE | POST MILES TOTAL PROJECT | SHEET No. | TOTAL SHEETS |
|---|---|---|---|---|---|
| 11 | Imp | 8 | R38.8/R39.1 | 103 | 225 |

REGISTERED CIVIL ENGINEER 11-18-13 DATE

04-07-14
PLANS APPROVAL DATE

REGISTERED PROFESSIONAL ENGINEER SOLOMON TADESSE No. C62773 Exp. 06-30-14 CIVIL STATE OF CALIFORNIA

*THE STATE OF CALIFORNIA OR ITS OFFICERS OR AGENTS SHALL NOT BE RESPONSIBLE FOR THE ACCURACY OR COMPLETENESS OF SCANNED COPIES OF THIS PLAN SHEET.*

## CONCRETE BARRIER

| SHEET | LOCATION | LINE | TYPE 60 | ALTERNATIVE CRASH CUSHION SYSTEM |
|---|---|---|---|---|
| | | | LF | EA |
| L - 2 | 2089+55.84 TO 2091+75 | "R1D2A" | 219.16 | 2 |
| | | TOTAL | 219.16 | 2 |

## WATER METER

| SHEET | WATER METER |
|---|---|
| | (EA) |
| U-1 | 1 |

## ROCK MULCH

| SHEET | REMOVE ROCK MULCH (N) | STOCKPILE ROCK MULCH |
|---|---|---|
| | (SQFT) | (SQFT) |
| C-7 | 204,837 | 30,450 |

## REMOVE TREE

| SHEET | LINE | STATION | OFFSET | EA | REMARK |
|---|---|---|---|---|---|
| L-1 | "R3D2" | 2088+30 | 40' Rt | 1 (N) | WITHIN CLEAR ANG GRUB LIMIT |
| L-1 | "R3D2" | 2088+97 | 77' Rt | 1 | |
| L-1 | "R3D2" | 2089+37 | 95' Rt | 1 | |
| | | | TOTAL | 2 | |

## CURB RAMP DETECTABLE WARNING SURFACE

| SHEET | LINE | FROM POINT TO POINT | SIDE | | AREA |
|---|---|---|---|---|---|
| | | | RIGHT | LEFT | (SQFT) |
| C-1 | "DOG" | 2-3 | X | | 15.00 |
| C-2 | "D" | 3-4 | | X | 37.98 |
| C-2 | "D" | 15-16 | X | | 18.84 |
| C-2 | "D" | 21-22 | X | | 18.00 |
| C-2 | "D" | 10-11 | | X | 18.30 |
| C-2 | "D" | 27-29 | X | | 29.55 |
| C-3 | "D" | 2-3 | | X | 16.17 |
| C-3 | "D" | 6-7 | | X | 44.88 |
| C-3 | "D" | 13-14 | X | | 35.00 |
| C-3 | "D" | 22-23 | X | | 42.45 |
| C-4 | "D" | 17-18 | | X | 15.00 |
| C-4 | "D" | 3-4 | X | | 18.00 |
| | | | | TOTAL | 309.17 |

(N) = NOT A SEPARATE PAY ITEM, FOR INFORMATION ONLY.

# SUMMARY OF QUANTITIES
# Q-4

REVISED BY | DATE REVISED
ARY JAFF | SOLOMON TADESSE
CALCULATED-DESIGNED BY | CHECKED BY
FUNCTIONAL SUPERVISOR: KAZIM MAMDANI
STATE OF CALIFORNIA - DEPARTMENT OF TRANSPORTATION
Caltrans® PROJECT DEVELOPMENT

LAST REVISION 12-09-13 | DATE PLOTTED => 11-APR-2014 | TIME PLOTTED => 10:42

| Dist | COUNTY | ROUTE | POST MILES TOTAL PROJECT | SHEET No. | TOTAL SHEETS |
|---|---|---|---|---|---|
| 11 | Imp | 8 | R38.8/R39.1 | 104 | 225 |

REGISTERED CIVIL ENGINEER 11-18-13 DATE

04-07-14
PLANS APPROVAL DATE

REGISTERED PROFESSIONAL ENGINEER SOLOMON TADESSE No. C62773 Exp. 06-30-14 CIVIL STATE OF CALIFORNIA

*THE STATE OF CALIFORNIA OR ITS OFFICERS OR AGENTS SHALL NOT BE RESPONSIBLE FOR THE ACCURACY OR COMPLETENESS OF SCANNED COPIES OF THIS PLAN SHEET.*

## HMA OVERSIDE DRAIN

| SHEET | LINE | LOCATION | LENGTH (N) | WIDTH (N) | PLACE HMA (Misc AREA) | HMA,SP (TYPE A) | ASPHALTIC EMULSION (FOG SEAL COAT) | REMARKS |
|---|---|---|---|---|---|---|---|---|
| | | | (LF) | (LF) | SQYD | TON | TON | |
| L-2 | "R5D2" | 21.0' L+ 2088+00 | 14 | 3.3 | 5.13 | 1.14 | 0.001 | NEW |
| L-2 | "R5D2" | 25.5' L+ 2090+66.72 | 14 | 3.3 | 5.13 | 1.14 | 0.001 | NEW |
| L-2 | "R5D2" | 27.0' L+ 2091+10 | 14 | 3.3 | 5.13 | 1.14 | 0.001 | NEW |
| | | | | TOTAL | 15.39 | 3.42 *** | 0.003 **** | |

## GUARD RAILING SYSTEM

| MGS No. (X) | L+ / R+ | SHEET No. | LINE | STATION | LAYOUT TYPE | REMOVE GUARDRAIL | MIDWEST GUARDRAIL SYSTEM | END ANCHOR ASSEMBLY (TYPE SFT) | ALTERNATIVE IN-LINE TERMINAL SYSTEM | TRANSITION RAILING (TYPE WB-31) | END CAP (N) ** TYPE TC | END CAP (N) ** TYPE A | GUARD RAILING DELINEATOR (CLASS 1, TYPE E) | TREATED WOOD WASTE ***** | ALTERNATIVE FLARED TERMINAL SYSTEM | REMARKS |
|---|---|---|---|---|---|---|---|---|---|---|---|---|---|---|---|---|
| | | | | | | (LF) | (LF) | (EA) | (EA) | (EA) | (EA) | (EA) | (EA)* | (LB) | (EA) | |
| 1 | L+ | L-1 | "D" | 21+61.00 To 27+55.00 | | 594.00 | | | | | | | | 6,603 | | |
| 2 | L+ | L-1 | "D" | 30+82.65 To 31+70.00 | | 87.35 | | | | | | | | 974 | | |
| 3 | L+ | L-2 | "D" | 33+91.77 To 34+81.40 | | 89.63 | | | | | | | | 1,043 | | |
| 4 | R+ | L-2 | "D" | 33+91.77 To 35+84.50 | | 192.73 | | | | | | | | 2,141 | | |
| 5 | R+ | L-1 | "D" | 30+57.30 To 31+70.00 | | 112.70 | | | | | | | | 1,318 | | |
| 6 | L+ | L-1 | "D" | 29+80.83 To 31+80.83 | 12DD | | 137.50 | 1 | | 1 | | 1 | 16 | | | |
| 7 | L+ | L-2 | "D" | 33+80.83 To 35+43.33 | 12A | | 137.50 | | 1 | 1 | 1 | | 14 | | | |
| 8 | R+ | L-1 | "D" | 30+30.83 To 31+80.83 | 12A | | 125.00 | | 1 | 1 | 1 | | 13 | | | |
| 9 | R+ | L-2 | "D" | 33+80.83 To 35+18.33 | 12DD | | 112.50 | 1 | | 1 | | 1 | 12 | | | |
| 10 | L+/R+ | L-2 | "A" | 2088+95.85 To 2090+70.55 | | 174.70 | | | | | | | | 1,935 | | |
| 11 | L+ | L-2 | "A" | 2088+40.00 TO 2090+15.00 | 16B | | 137.50 | 1 | | | | | 14 | | 1 | |
| 12 | L+ | L-2 | "A" | 2088+40.00 TO 2090+15.00 | 16B | | 137.50 | 1 | | | | | 14 | | 1 | |
| 13 | L+ | L-2 | "R4D2" TO "D" | 2088+71 TO 37+51.62 | | 164.00 | | | | | | | | 1,867 | | |
| 14 | R+ | L-1 | "D" | 25+76.00 TO 29+42.90 | | 400.60 | | | | | | | | 4,475 | | |
| 15 | R+ | L-2 | "A" | 2088+32.00 TO 2090+44.50 | 16D | | 137.50 | | 2 | | | | 18 | | | |
| 16 | R+ | L-2 | "A" | 2088+72.10 TO 2090+42.10 | 16D | | 100.00 | | 2 | | | | 15 | | | |
| | | | | TOTAL | | 1,815.71 | 1,025.00 | 4 | 6 | 4 | | | 116 | 20,356 | 2 | |

* TYPE E DELINEATORS TO BE PLACED AT EVERY 12 F+ MAXIMUM SPACING OF NEW MGS, SEE STANDARD PLAN RSP A77N4.

** FOR END CAPS, SEE STANDARD PLAN SHEET B11-54.

*** FOR ADDITIONAL QUANTITIES SEE SHEET Q-1,Q-2,Q-3 AND Q-6.

**** FOR ADDITIONAL QUANTITIES SEE ROADWAY QUANTITITES TABLE.

***** FOR ADDITIONAL QUANTITIES SEE SIGN QUANTITIES SHEET.

(N) = NOT A SEPARATE PAY ITEM, FOR INFORMATION ONLY.

## SUMMARY OF QUANTITIES
## Q-5

REVISED BY | DATE REVISED
ARY JAFF | SOLOMON TADESSE
CALCULATED-DESIGNED BY | CHECKED BY
FUNCTIONAL SUPERVISOR: KAZIM MAMDANI
STATE OF CALIFORNIA - DEPARTMENT OF TRANSPORTATION
Caltrans PROJECT DEVELOPMENT

LAST REVISION 12-09-13 | DATE PLOTTED => 11-APR-2014 | TIME PLOTTED => 10:42

| Dist | COUNTY | ROUTE | POST MILES TOTAL PROJECT | SHEET No. | TOTAL SHEETS |
|---|---|---|---|---|---|
| 11 | Imp | 8 | R38.8/R39.1 | 105 | 225 |

REGISTERED CIVIL ENGINEER 11-18-13 DATE

04-07-14
PLANS APPROVAL DATE

REGISTERED PROFESSIONAL ENGINEER SOLOMON TADESSE No. C62773 Exp. 06-30-14 CIVIL STATE OF CALIFORNIA

*THE STATE OF CALIFORNIA OR ITS OFFICERS OR AGENTS SHALL NOT BE RESPONSIBLE FOR THE ACCURACY OR COMPLETENESS OF SCANNED COPIES OF THIS PLAN SHEET.*

## EARTHWORK QUANTITIES

| LINE | STATION | ROADWAY EXCAVATION | EMBANKMENT (N) | IMPORTED BORROW | REMARK |
|---|---|---|---|---|---|
| | | CY | CY | CY | |
| "D" | 21+76.00 TO 43+94.84 | 4,320 | 9,374 | | |
| "R1D2A" | 2088+67.14 TO 2090+75.00 | 97 | 207 | | |
| "R2D2" | 2088+83.71 TO 2089+90.00 | 9 | 4 | | |
| "R3D2" | 2085+00.00 TO 2089+50.00 | 1,472 | 534 | | |
| "R4D2" | 2087+62.27 TO 2089+23.46 | - | 120 | | |
| "R5D2" | 2086+30.00 TO 2095+82.63 | 1,064 | 5,925 | | |
| "A" | 2080+30.00 TO 2086+30.00 | 594 | 72 | | |
| "D" | 37+25.00 TO 39+83.52 | 1,097 | 0 | | DETENTION BASIN |
| "R5D2" | 2090+50.00 TO 2095+00.00 | 242 | 0 | | DETENTION BASIN |
| | TOTAL | 8,895 | 16,236 | 7,341 | |

## REMOVE FENCE

| LINE | BEGIN STATION | END STATION | LENGTH |
|---|---|---|---|
| | | | LF |
| "D" TO "R3D2" | 27+32 | 2084+85.00 | 511 |
| | | TOTAL | 511 |

## HMA (MISCELLANOUS AREA)

| LINE | STATION | | PLACE HMA * (Misc AREA) | VOLUME (N) | HMA,SP (TYPE A) * |
|---|---|---|---|---|---|
| | BEGIN | END | SQYD | CY | TON |
| "R1D2A" | 2089+00.00 | 2090+03.00 | 193 | 12.8 | 12.8 |
| "R2D2" | 2089+41.00 | 2089+70.00 | 40 | 2.7 | 2.7 |
| | | TOTAL | 233 | | 15.5 |

## 6' CHAIN LINK GATE (TYPE CL-6)

| LINE | STATION | SIDE | QUANTITY |
|---|---|---|---|
| "R3D2" | 2084+85 | RT | 1 |
| | | TOTAL | 1 |

## CHAIN LINK FENCE (TYPE CL-6)

| LINE | STATION | OFFSET | | LENGTH |
|---|---|---|---|---|
| | | BEGIN | END | |
| | | LF | | LF |
| "R3D2" | 2084+85 | 62 Rt | 22 Rt | 32 |
| | | TOTAL | | 32 |

## TUBULAR HANDRAILING

| LINE | LOCATION | STATION | | LF |
|---|---|---|---|---|
| | | FROM | TO | |
| "D" | TOP OF RETAINING WALL | 36+85.00 | 40+01.37 | 319 |
| | | TOTAL | | 319 |

(N) = NOT A SEPARATE PAY ITEM, FOR INFORMATION ONLY.

* FOR ADDITIONAL QUANTITIES, SEE SHEET Q-1,Q-2,Q-3 AND Q-5

# SUMMARY OF QUANTITIES
# Q-6

STATE OF CALIFORNIA - DEPARTMENT OF TRANSPORTATION
Caltrans PROJECT DEVELOPMENT

FUNCTIONAL SUPERVISOR: KAZIM MAMDANI
CALCULATED-DESIGNED BY: ARY JAFF
CHECKED BY: SOLOMON TADESSE
REVISED BY
DATE REVISED

LAST REVISION 12-09-13
DATE PLOTTED => 11-APR-2014
TIME PLOTTED => 10:42

| Dist | COUNTY | ROUTE | POST MILES TOTAL PROJECT | SHEET No. | TOTAL SHEETS |
|---|---|---|---|---|---|
| 11 | Imp | 8 | R38.8/R39.1 | 106 | 225 |

REGISTERED CIVIL ENGINEER 11-18-13 DATE

04-07-14
PLANS APPROVAL DATE

REGISTERED PROFESSIONAL ENGINEER SOLOMON TADESSE No. C62773 Exp. 06-30-14 CIVIL STATE OF CALIFORNIA

*THE STATE OF CALIFORNIA OR ITS OFFICERS OR AGENTS SHALL NOT BE RESPONSIBLE FOR THE ACCURACY OR COMPLETENESS OF SCANNED COPIES OF THIS PLAN SHEET.*

NOTES:

1. FOR COMPLETE RIGHT OF WAY DATA, CONTACT RIGHT OF WAY ENGINEERING AT THE DISTRICT OFFICE.
2. FOR TYPICAL SECTION AND DETAILS SEE RETAINING WALL DETAILS SHEET.
3. FOR DETAIL OF TYPE 26A Mod CONCRETE BARRIER, SEE CONSTRUCTION DETAIL C-8 SHEET.

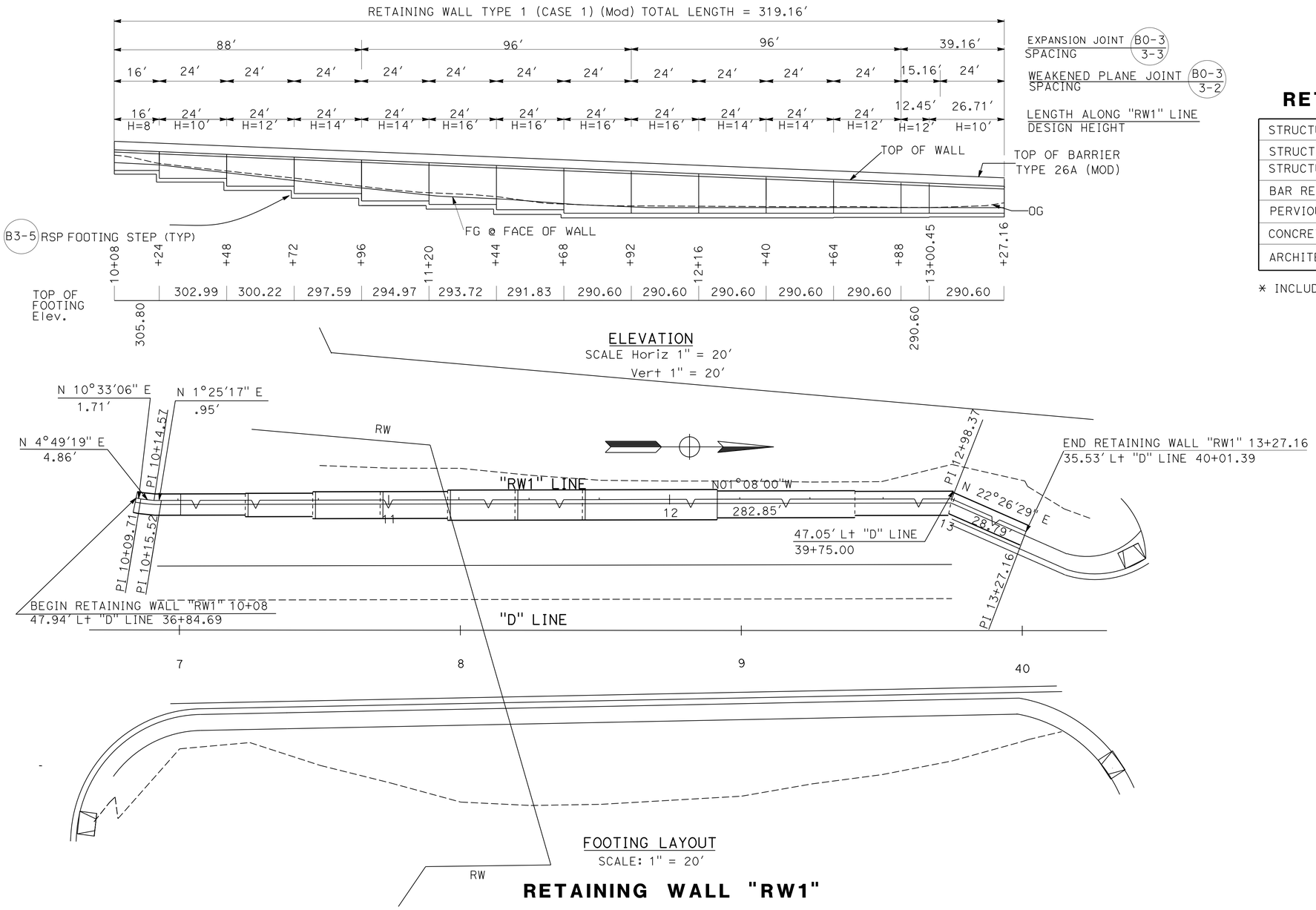


## RETAINING WALL "RW1"

## RETAINING WALL "RW1" QUANTITIES

| | | |
|---|---|---|
| STRUCTURAL CONCRETE (RETAINING WALL) | CY | 385 |
| STRUCTURE EXCAVATION (RETAINING WALL) * | CY | 1,452 |
| STRUCTURE BACKFILL (RETAINING WALL) * | CY | 1,636 |
| BAR REINFORCING STEEL (RETAINING WALL) | LB | 38,895 |
| PERVIOUS BACKFILL MATERIAL (RETAINING WALL) | CY | 91 |
| CONCRETE BARRIER (TYPE 26A Mod) | LF | 319.16 |
| ARCHITECTURAL TREATMENT | SQFT | 1,998 |

* INCLUDES FOUNDATION TREATMENT.

## TOP OF WALL ELEVATIONS

| STATION | ELEVATION |
|---|---|
| 10+08 | 313.18 |
| 10+24 | 312.50 |
| 10+48 | 311.50 |
| 10+72 | 310.49 |
| 10+96 | 309.48 |
| 11+20 | 308.48 |
| 11+44 | 307.47 |
| 11+68 | 306.46 |
| 11+92 | 305.46 |
| 12+16 | 304.45 |
| 12+40 | 303.44 |
| 12+64 | 302.44 |
| 12+88 | 301.44 |
| 13+00.45 | 301.02 |
| 13+27.16 | 300.18 |

# RETAINING WALL PLAN "RW1"

*APPROVED FOR RETAINING WALL WORK ONLY*

NO SCALE

R-1

STATE OF CALIFORNIA - DEPARTMENT OF TRANSPORTATION
Caltrans PROJECT DEVELOPMENT

FUNCTIONAL SUPERVISOR: KAZIM MAMDANI
CALCULATED-DESIGNED BY: ARY JAFF
CHECKED BY: SOLOMON TADESSE
REVISED BY
DATE REVISED

LAST REVISION 12-09-13 | DATE PLOTTED => 11-APR-2014 | TIME PLOTTED => 10:42

| Dist | COUNTY | ROUTE | POST MILES TOTAL PROJECT | SHEET No. | TOTAL SHEETS |
|---|---|---|---|---|---|
| 11 | Imp | 8 | R38.8/R39.1 | 107 | 225 |

REGISTERED CIVIL ENGINEER 11-18-13 DATE

04-07-14
PLANS APPROVAL DATE

REGISTERED PROFESSIONAL ENGINEER SOLOMON TADESSE No. C62773 Exp. 06-30-14 CIVIL STATE OF CALIFORNIA

*THE STATE OF CALIFORNIA OR ITS OFFICERS OR AGENTS SHALL NOT BE RESPONSIBLE FOR THE ACCURACY OR COMPLETENESS OF SCANNED COPIES OF THIS PLAN SHEET.*

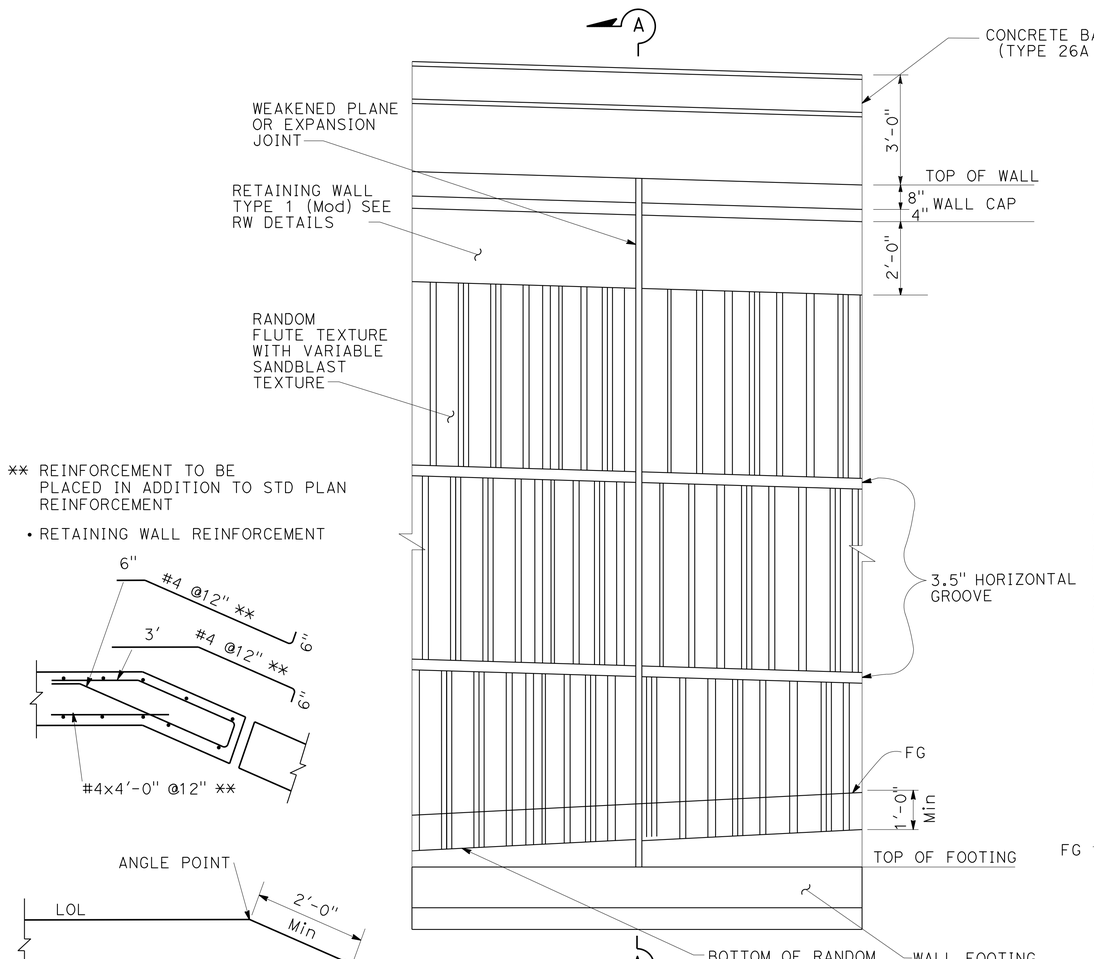


ELEVATION

## ARCHITECTURAL TREATMENT DETAIL

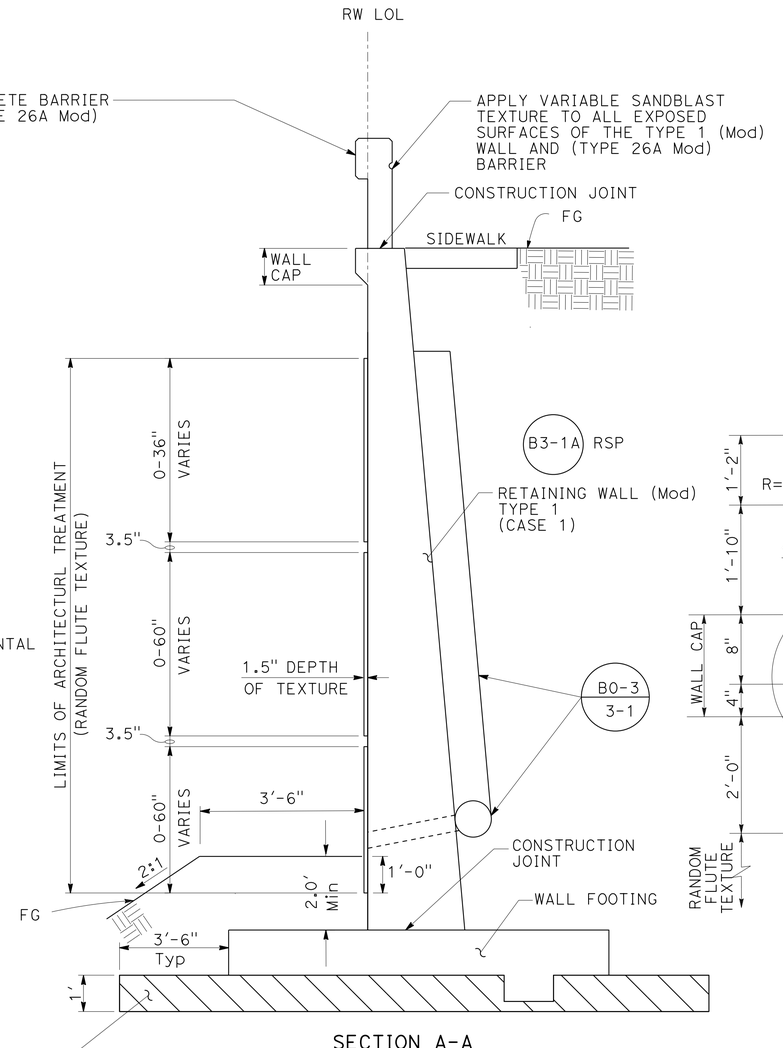


SECTION A-A

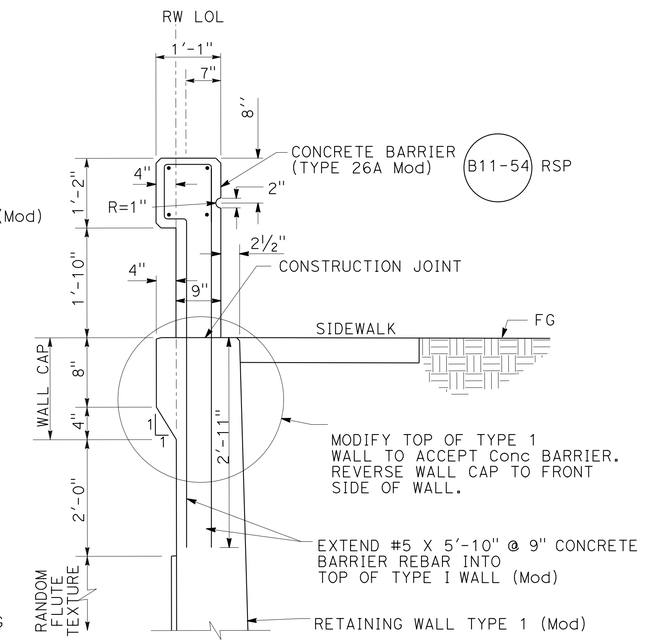


## TOP OF WALL DETAIL

NO SCALE

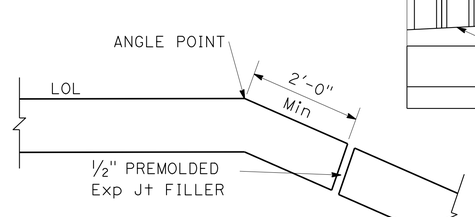


## ADDITIONAL REINFORCEMENT AT RETAINING WALL ANGLE POINT

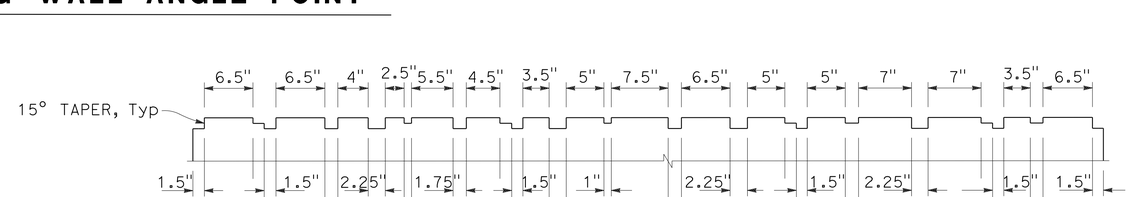


## RANDOM FLUTE TEXTURE DETAIL

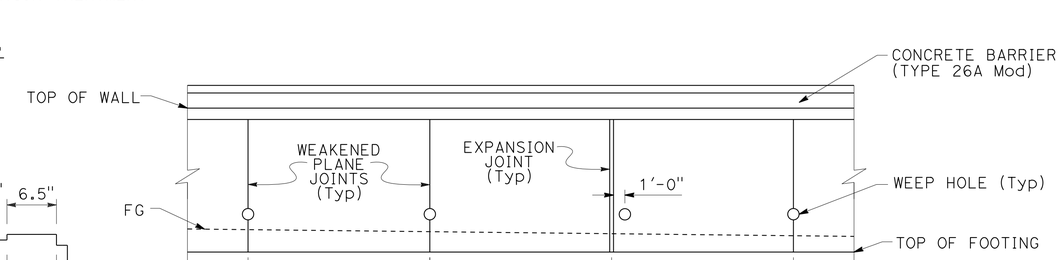


## WEEP HOLE LAYOUT DETAIL

LEGEND:

LIMIT OF FOUNDATION TREATMENT.

*APPROVED FOR RETAINING WALL WORK ONLY*

# RETAINING WALL DETAILS
## "RW1"

NO SCALE

**R-2**

| REVISED BY | DATE REVISED |
|---|---|
| | |

SOLOMON TADESSE — ARY JAFF — CALCULATED-DESIGNED BY — CHECKED BY — FUNCTIONAL SUPERVISOR — KAZIM MAMDANI

STATE OF CALIFORNIA - DEPARTMENT OF TRANSPORTATION — Caltrans

LAST REVISION 12-09-13 — DATE PLOTTED => 11-APR-2014 — TIME PLOTTED => 10:42

| Dist | COUNTY | ROUTE | POST MILES TOTAL PROJECT | SHEET No. | TOTAL SHEETS |
|---|---|---|---|---|---|
| 11 | Imp | 8 | R38.8/R39.1 | 108 | 225 |

REGISTERED CIVIL ENGINEER 11-18-13 DATE

04-07-14
PLANS APPROVAL DATE

REGISTERED PROFESSIONAL ENGINEER
SOLOMON TADESSE
No. C62773
Exp. 06-30-14
CIVIL
STATE OF CALIFORNIA

*THE STATE OF CALIFORNIA OR ITS OFFICERS OR AGENTS SHALL NOT BE RESPONSIBLE FOR THE ACCURACY OR COMPLETENESS OF SCANNED COPIES OF THIS PLAN SHEET.*

# EROSION CONTROL (TYPE 1)

| SEQUENCE | ITEM | MATERIAL DESCRIPTION | MATERIAL TYPE | APPLICATION RATE | REMARKS |
|---|---|---|---|---|---|
| STEP 1 | BONDED FIBER MATRIX | FIBER | | 2,500 LB/ACRE FOR SLOPES ≤ 4:1 (Horiz:Vert)<br>3,000 LB/ACRE FOR SLOPES > 4:1 AND ≤ 3:1 (Horiz:Vert)<br>3,500 LB/ACRE FOR SLOPES > 3:1 AND ≤ 2:1 (Horiz:Vert)<br>4,000 LB/ACRE FOR SLOPES > 2:1 AND ≤ 1:1 (Horiz:Vert)<br>4,500 LB/ACRE FOR SLOPES > 1:1 (Horiz:Vert) | APPLICATION RATE IS FOR FIBER AND TACKIFIER COMBINED |
| | | TACKIFIER | | | |
| STEP 2 | BONDED FIBER MATRIX | FIBER TACKIFIER | | 500 LB/ACRE | |

*APPROVED FOR EROSION CONTROL WORK ONLY*

# EROSION CONTROL LEGEND

## ECL-1

REVISED BY | DATE REVISED
DEVANGI DAVE | SOLOMON TADESSE
CALCULATED-DESIGNED BY | CHECKED BY
FUNCTIONAL SUPERVISOR
KAZIM MAMDANI

STATE OF CALIFORNIA - DEPARTMENT OF TRANSPORTATION
Caltrans PROJECT DEVELOPMENT

LAST REVISION 12-09-13 | DATE PLOTTED => 11-APR-2014 | TIME PLOTTED => 10:42

| Dist | COUNTY | ROUTE | POST MILES TOTAL PROJECT | SHEET No. | TOTAL SHEETS |
|---|---|---|---|---|---|
| 11 | Imp | 8 | R38.8/R39.1 | 109 | 225 |

REGISTERED CIVIL ENGINEER 11-18-13 DATE

04-07-14
PLANS APPROVAL DATE

REGISTERED PROFESSIONAL ENGINEER SOLOMON TADESSE No. C62773 Exp. 06-30-14 CIVIL STATE OF CALIFORNIA

*THE STATE OF CALIFORNIA OR ITS OFFICERS OR AGENTS SHALL NOT BE RESPONSIBLE FOR THE ACCURACY OR COMPLETENESS OF SCANNED COPIES OF THIS PLAN SHEET.*

NOTE:

FOR ACCURATE RIGHT OF WAY DATA, CONTACT RIGHT OF WAY ENGINEERING AT THE DISTRICT OFFICE.

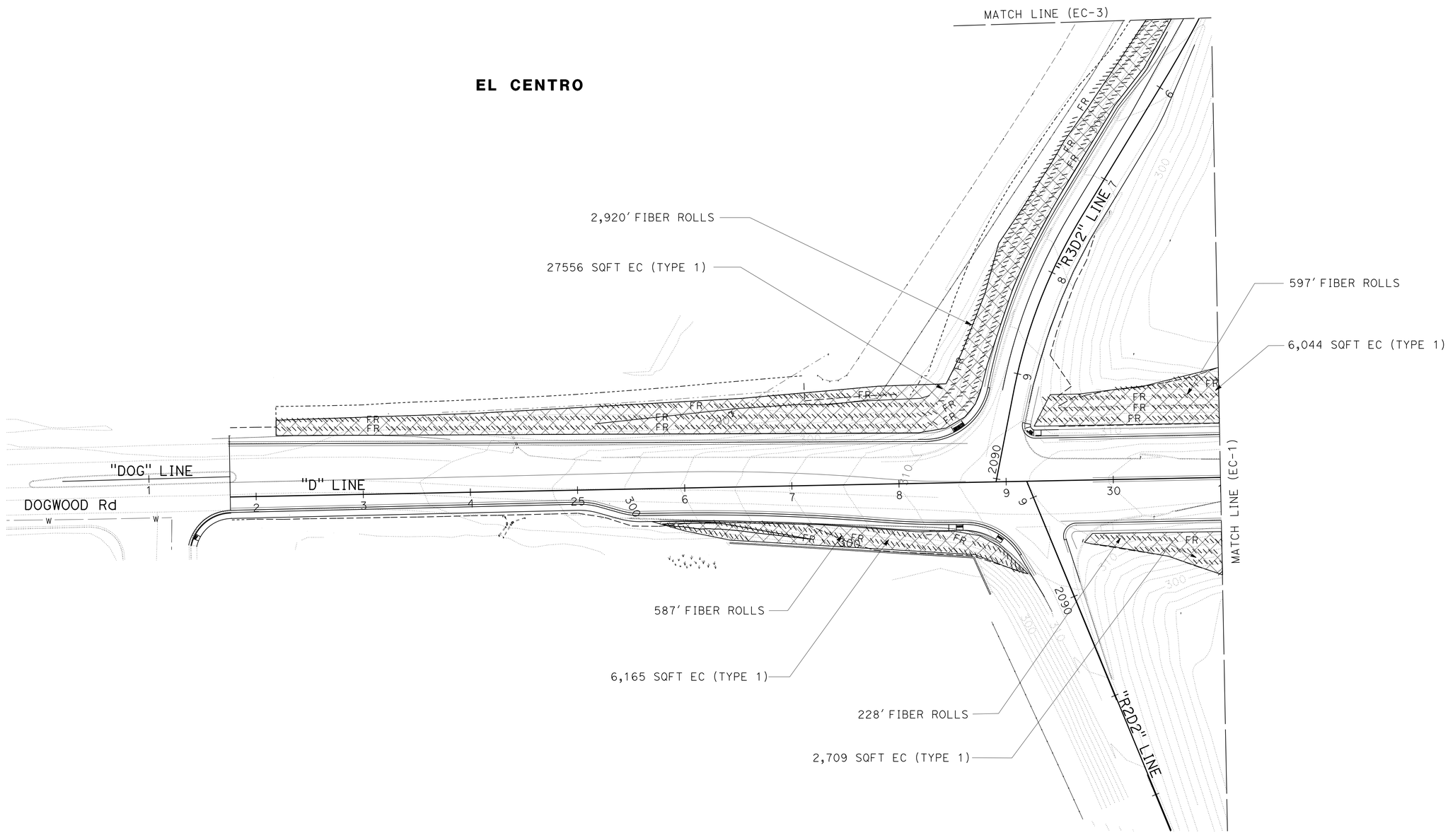


*APPROVED FOR EROSION CONTROL WORK ONLY*

# EROSION CONTROL PLAN

SCALE:1" = 50'

**EC-1**

STATE OF CALIFORNIA - DEPARTMENT OF TRANSPORTATION
Caltrans PROJECT DEVELOPMENT

FUNCTIONAL SUPERVISOR: KAZIM MAMDANI
CALCULATED-DESIGNED BY: DEVANGI DAVE
CHECKED BY: SOLOMON TADESSE
REVISED BY
DATE REVISED

LAST REVISION 12-09-13
DATE PLOTTED => 11-APR-2014
TIME PLOTTED => 10:42

| Dist | COUNTY | ROUTE | POST MILES TOTAL PROJECT | SHEET No. | TOTAL SHEETS |
|---|---|---|---|---|---|
| 11 | Imp | 8 | R38.8/R39.1 | 110 | 225 |

REGISTERED CIVIL ENGINEER 11-18-13 DATE

04-07-14
PLANS APPROVAL DATE

REGISTERED PROFESSIONAL ENGINEER SOLOMON TADESSE No. C62773 Exp. 06-30-14 CIVIL STATE OF CALIFORNIA

*THE STATE OF CALIFORNIA OR ITS OFFICERS OR AGENTS SHALL NOT BE RESPONSIBLE FOR THE ACCURACY OR COMPLETENESS OF SCANNED COPIES OF THIS PLAN SHEET.*

**NOTE:**

FOR ACCURATE RIGHT OF WAY DATA, CONTACT RIGHT OF WAY ENGINEERING AT THE DISTRICT OFFICE.

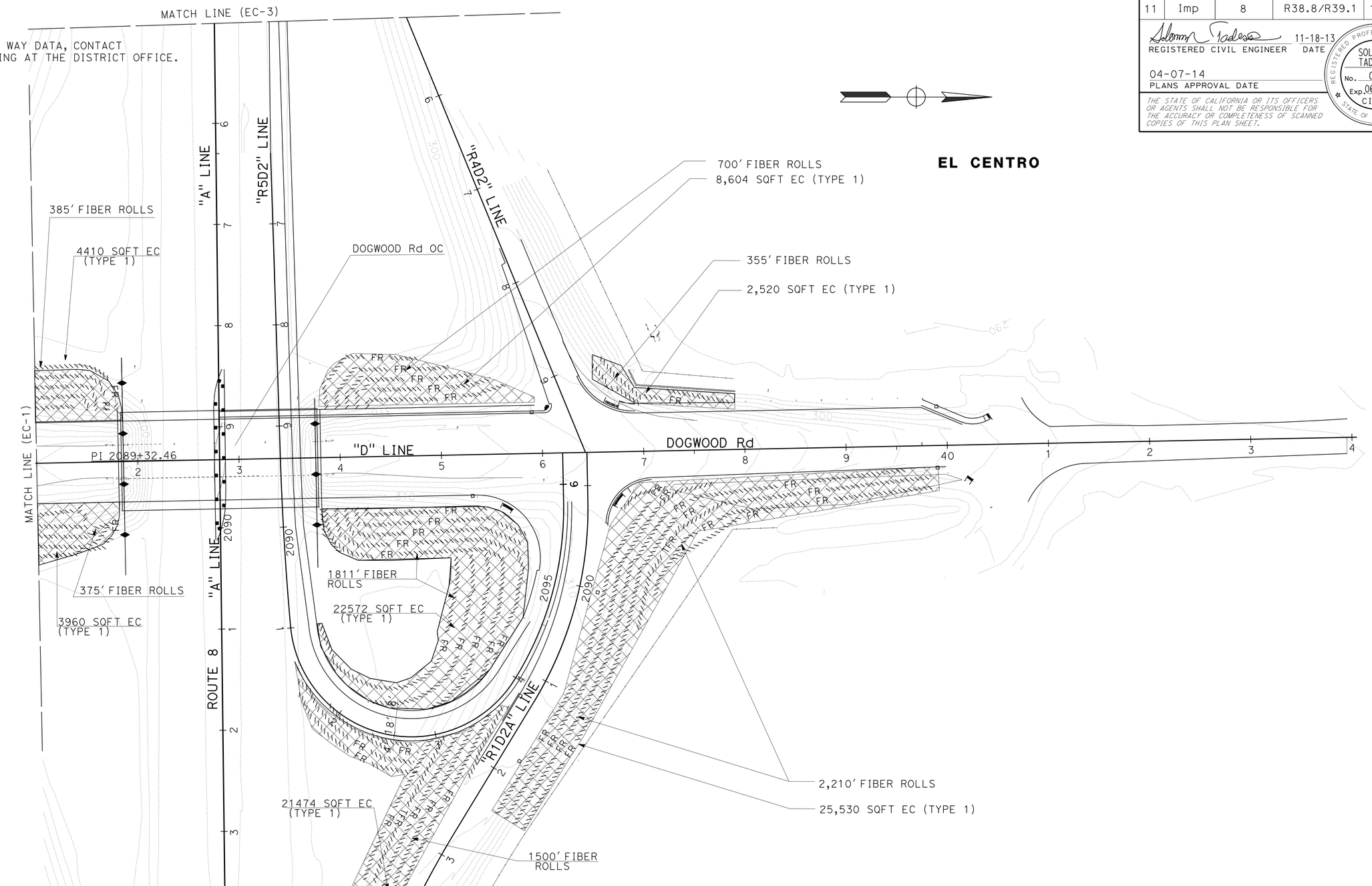


*APPROVED FOR EROSION CONTROL WORK ONLY*

# EROSION CONTROL PLAN

SCALE:1" = 50'

**EC-2**

STATE OF CALIFORNIA - DEPARTMENT OF TRANSPORTATION
Caltrans PROJECT DEVELOPMENT

FUNCTIONAL SUPERVISOR: KAZIM MAMDANI
CALCULATED-DESIGNED BY: SOLOMON TADESSE
CHECKED BY: DEVANGI DAVE
REVISED BY
DATE REVISED

LAST REVISION 12-09-13
DATE PLOTTED => 11-APR-2014
TIME PLOTTED => 10:42

| Dist | COUNTY | ROUTE | POST MILES TOTAL PROJECT | SHEET No. | TOTAL SHEETS |
|---|---|---|---|---|---|
| 11 | Imp | 8 | R38.8/R39.1 | 111 | 225 |

REGISTERED CIVIL ENGINEER 11-18-13 DATE

04-07-14
PLANS APPROVAL DATE

REGISTERED PROFESSIONAL ENGINEER
SOLOMON TADESSE
No. C62773
Exp. 06-30-14
CIVIL
STATE OF CALIFORNIA

*THE STATE OF CALIFORNIA OR ITS OFFICERS OR AGENTS SHALL NOT BE RESPONSIBLE FOR THE ACCURACY OR COMPLETENESS OF SCANNED COPIES OF THIS PLAN SHEET.*

NOTE:

FOR ACCURATE RIGHT OF WAY DATA, CONTACT RIGHT OF WAY ENGINEERING AT THE DISTRICT OFFICE.

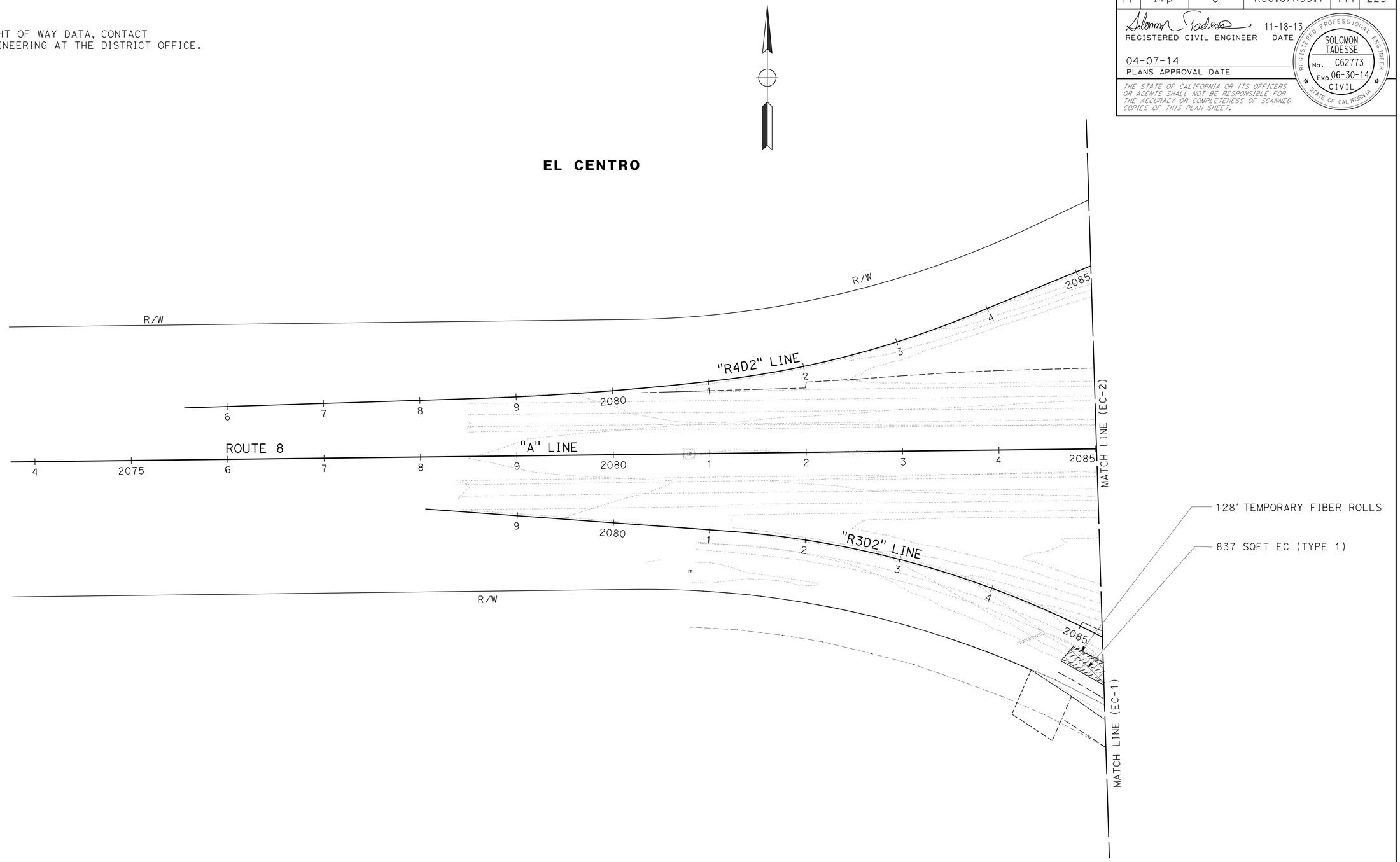


*APPROVED FOR EROSION CONTROL WORK ONLY*

# EROSION CONTROL PLAN

SCALE:1" = 50'

**EC-3**

STATE OF CALIFORNIA - DEPARTMENT OF TRANSPORTATION
Caltrans PROJECT DEVELOPMENT

FUNCTIONAL SUPERVISOR: KAZIM MAMDANI

CALCULATED-DESIGNED BY: DEVANGI DAVE
CHECKED BY: SOLOMON TADESSE

REVISED BY | DATE REVISED

LAST REVISION 12-09-13 | DATE PLOTTED => 11-APR-2014 | TIME PLOTTED => 10:42

| Dist | COUNTY | ROUTE | POST MILES TOTAL PROJECT | SHEET No. | TOTAL SHEETS |
|---|---|---|---|---|---|
| 11 | Imp | 8 | R38.8/R39.1 | 112 | 225 |

REGISTERED CIVIL ENGINEER 11-18-13 DATE

04-07-14
PLANS APPROVAL DATE

REGISTERED PROFESSIONAL ENGINEER
SOLOMON TADESSE
No. C62773
Exp. 06-30-14
CIVIL
STATE OF CALIFORNIA

*THE STATE OF CALIFORNIA OR ITS OFFICERS OR AGENTS SHALL NOT BE RESPONSIBLE FOR THE ACCURACY OR COMPLETENESS OF SCANNED COPIES OF THIS PLAN SHEET.*

# EROSION CONTROL

| LEGEND | | SHEET | DESCRIPTION | BONDED FIBER MATRIX (BFM) | FIBER ROLLS (FR) |
|---|---|---|---|---|---|
| BFM | FR | | | SQFT | LF |
| | | EC-1 | EROSION CONTROL (TYPE 1) | 42,474 | 4,332 |
| | | EC-2 | EROSION CONTROL (TYPE 1) | 89,070 | 7,336 |
| | | EC-3 | EROSION CONTROL (TYPE 1) | 837 | 128 |
| | | | TOTAL | 132,381 | 11,796 |

## EROSION CONTROL QUANTITIES
## ECQ-1

REVISED BY | DATE REVISED
DEVANGI DAVE | SOLOMON TADESSE
CALCULATED-DESIGNED BY | CHECKED BY
FUNCTIONAL SUPERVISOR
KAZIM MAMDANI
STATE OF CALIFORNIA - DEPARTMENT OF TRANSPORTATION
Caltrans® PROJECT DEVELOPMENT

LAST REVISION 12-09-13
DATE PLOTTED => 11-APR-2014
TIME PLOTTED => 10:42

| Dist | COUNTY | ROUTE | POST MILES TOTAL PROJECT | SHEET No. | TOTAL SHEETS |
|---|---|---|---|---|---|
| 11 | Imp | 8 | R38.8/R39.1 | 113 | 225 |

REGISTERED ELECTRICAL ENGINEER 11-19-13 DATE

04-07-14
PLANS APPROVAL DATE

REGISTERED PROFESSIONAL ENGINEER DANNY D. McCLURE No. 16074 Exp. 12-31-15 ELECTRICAL STATE OF CALIFORNIA

*THE STATE OF CALIFORNIA OR ITS OFFICERS OR AGENTS SHALL NOT BE RESPONSIBLE FOR THE ACCURACY OR COMPLETENESS OF SCANNED COPIES OF THIS PLAN SHEET.*

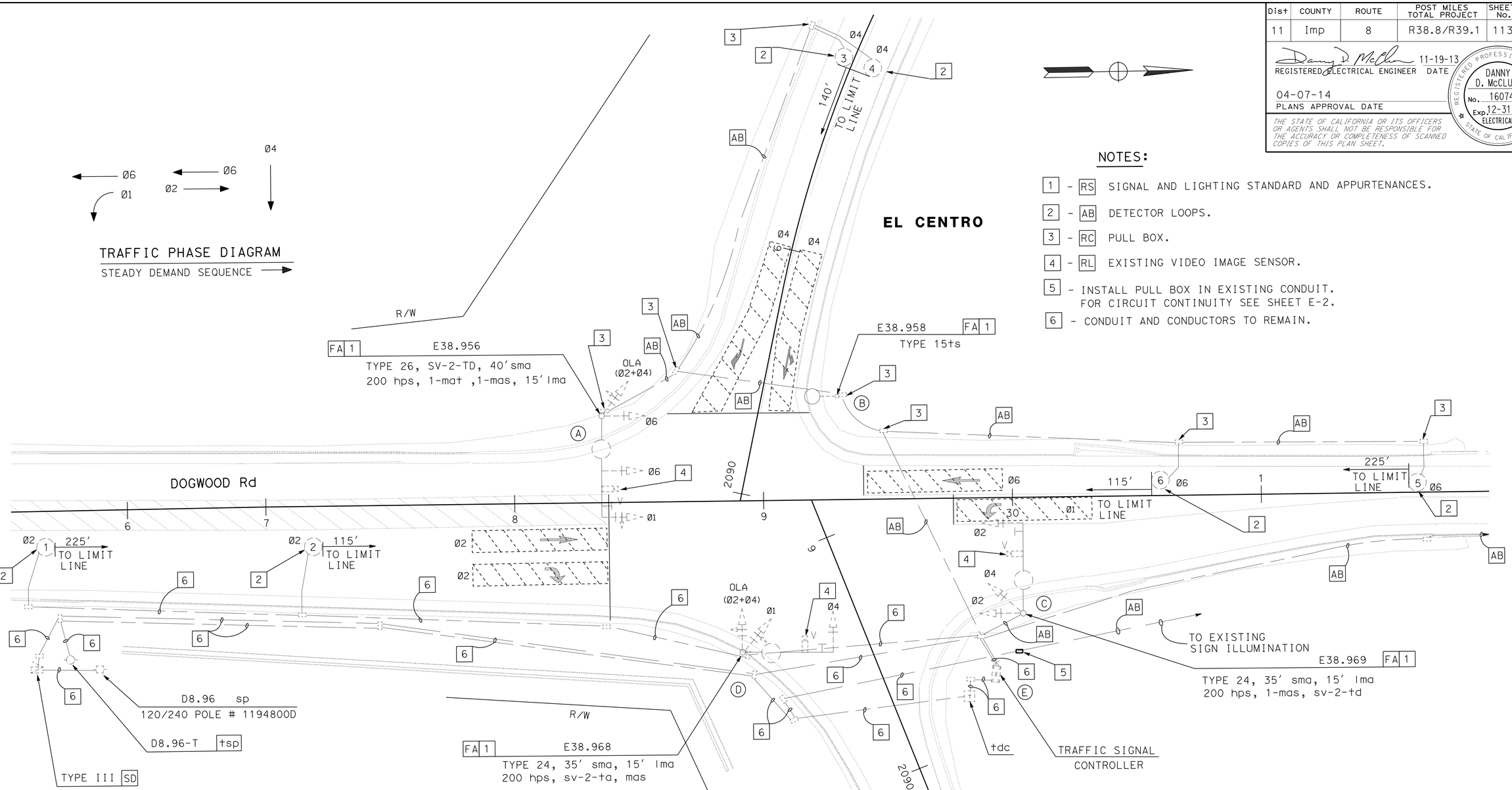


## NOTES:

1 - RS SIGNAL AND LIGHTING STANDARD AND APPURTENANCES.

2 - AB DETECTOR LOOPS.

3 - RC PULL BOX.

4 - RL EXISTING VIDEO IMAGE SENSOR.

5 - INSTALL PULL BOX IN EXISTING CONDUIT. FOR CIRCUIT CONTINUITY SEE SHEET E-2.

6 - CONDUIT AND CONDUCTORS TO REMAIN.

## LEGEND:

= CITY LIGHTING

IID = IMPERIAL IRRIGATION DISTRICT

FOR ACCURATE RIGHT OF WAY DATA, CONTACT RIGHT OF WAY ENGINEERING AT THE DISTRICT OFFICE.

*APPROVED FOR ELECTRICAL WORK ONLY*

ROUTE 8/DOGWOOD ROAD
EAST BOUND RAMP
TRAFFIC SIGNAL P38.964

# SIGNAL AND LIGHTING
## (LOCATION 1)
## (EXISTING AND SALVAGE)

SCALE: 1"= 20'

**E-1**

STATE OF CALIFORNIA - DEPARTMENT OF TRANSPORTATION
Caltrans® TRAFFIC ELECTRICAL

FUNCTIONAL SUPERVISOR: RAJPREET SINGH
CALCULATED-DESIGNED BY: DANNY MCCLURE
CHECKED BY: HECTOR SANTAMARIA
REVISED BY
DATE REVISED

LAST REVISION 12-09-13
DATE PLOTTED => 11-APR-2014
TIME PLOTTED => 13:14

| Dist | COUNTY | ROUTE | POST MILES TOTAL PROJECT | SHEET No. | TOTAL SHEETS |
|---|---|---|---|---|---|
| 11 | Imp | 8 | R38.8/R39.1 | 114 | 225 |

REGISTERED ELECTRICAL ENGINEER 11-19-13 DATE

04-07-14
PLANS APPROVAL DATE

REGISTERED PROFESSIONAL ENGINEER DANNY D. McCLURE No. 16074 Exp. 12-31-15 ELECTRICAL STATE OF CALIFORNIA

*THE STATE OF CALIFORNIA OR ITS OFFICERS OR AGENTS SHALL NOT BE RESPONSIBLE FOR THE ACCURACY OR COMPLETENESS OF SCANNED COPIES OF THIS PLAN SHEET.*

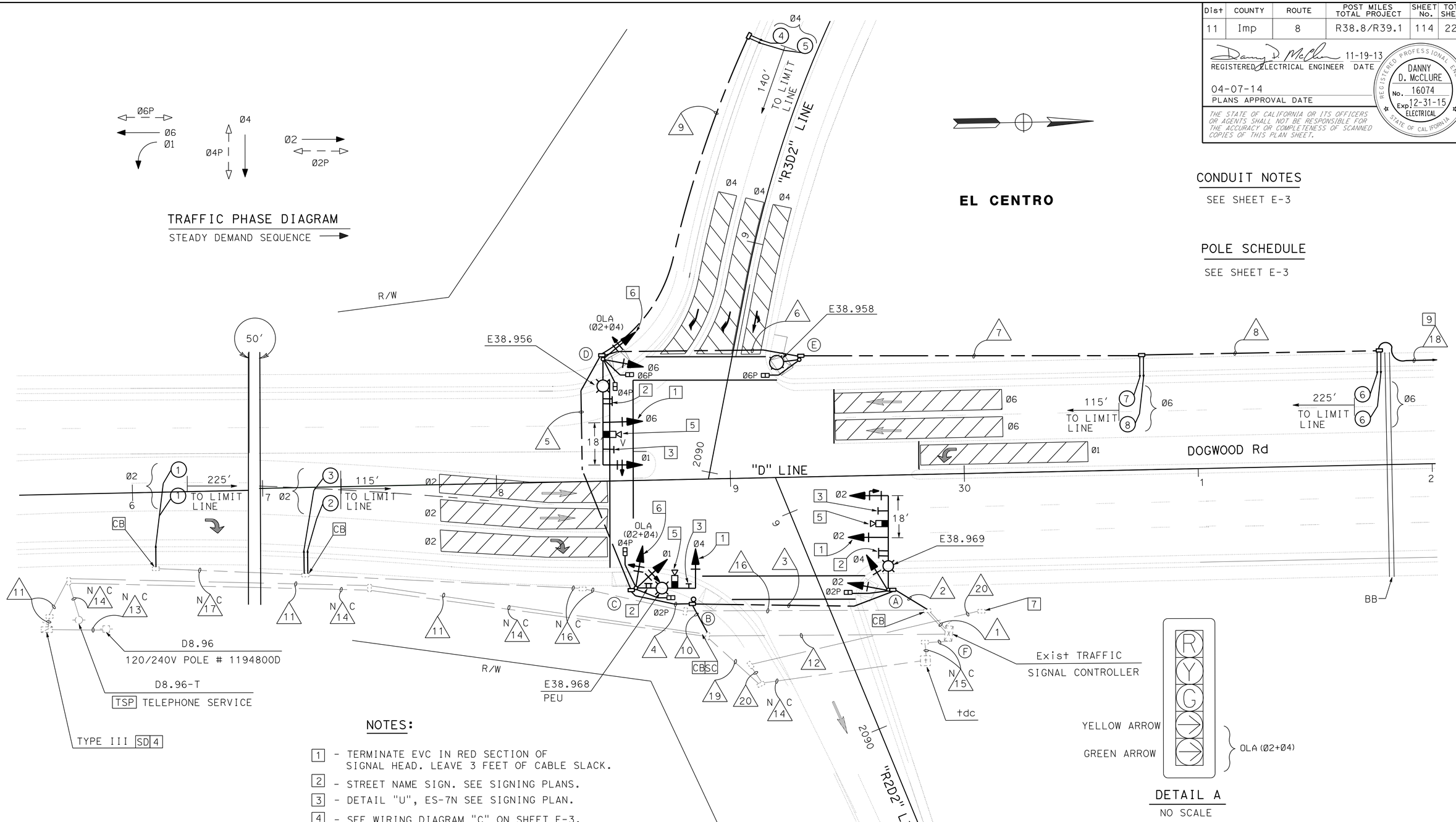


## CONDUIT NOTES

SEE SHEET E-3

## POLE SCHEDULE

SEE SHEET E-3

## NOTES:

1. TERMINATE EVC IN RED SECTION OF SIGNAL HEAD. LEAVE 3 FEET OF CABLE SLACK.
2. STREET NAME SIGN. SEE SIGNING PLANS.
3. DETAIL "U", ES-7N SEE SIGNING PLAN.
4. SEE WIRING DIAGRAM "C" ON SHEET E-3.
5. RELOCATED VIDEO IMAGE SENSOR.
6. 5-SECTION HEAD SEE DETAIL "A" ON THIS SHEET.
7. FOR CICUIT CONTINUITY SEE SHEET E-11.
8. SEE ES-7R FOR VIDEO IMAGE SENSOR MOUNTING DETAILS.
9. TO TRAFFIC SIGNAL LOCATION 2.

*APPROVED FOR ELECTRICAL WORK ONLY*

ROUTE 8/DOGWOOD ROAD
EAST BOUND RAMP
TRAFFIC SIGNAL P38.964

# SIGNAL AND LIGHTING
## (LOCATION 1)

SCALE: 1"= 20'

**E-2**

STATE OF CALIFORNIA - DEPARTMENT OF TRANSPORTATION
Caltrans® TRAFFIC ELECTRICAL

FUNCTIONAL SUPERVISOR: RAJPREET SINGH
CALCULATED-DESIGNED BY: DANNY MCCLURE
CHECKED BY: HECTOR SANTAMARIA
REVISED BY / DATE REVISED

LAST REVISION DATE PLOTTED => 11-APR-2014
12-09-13 TIME PLOTTED => 13:14

| Dist | COUNTY | ROUTE | POST MILES TOTAL PROJECT | SHEET No. | TOTAL SHEETS |
|---|---|---|---|---|---|
| 11 | Imp | 8 | R38.8/R39.1 | 115 | 225 |

REGISTERED CIVIL ENGINEER DATE 11-19-13

04-07-14
PLANS APPROVAL DATE

REGISTERED PROFESSIONAL ENGINEER DANNY D. McCLURE No. 16074 Exp. 12-31-15 ELECTRICAL STATE OF CALIFORNIA

*THE STATE OF CALIFORNIA OR ITS OFFICERS OR AGENTS SHALL NOT BE RESPONSIBLE FOR THE ACCURACY OR COMPLETENESS OF ELECTRONIC COPIES OF THIS PLAN SHEET.*

## CONDUIT AND CODUCTORS SCHEDULE

| AWG SIZE OR CABLE TYPE | PHASE | POLE OR CIRCUIT | CONDUIT SIZE AND RUN SCHEDULE | | | | | | | | | |
|---|---|---|---|---|---|---|---|---|---|---|---|---|
| | | | EX 2-3" 1 | 2-3" 2 | 2-3" 3 | 2-3" 4 | 3" 5 | 3" 6 | 2-3" 7 | 2-3" 8 | 3" 9 | 3" 10 |
| No. 14 CABLES | | POLE - A | 1 1 | 1 1 | | | | | | | | |
| CONDUCTORS 3 / CONDUCTORS 12 | | B | 1 0 | 1 0 | 1 0 | | | | | | | |
| | | C | 1 2 | 1 2 | 1 2 | 1 2 | | | | | | |
| | | D | 2 2 | 2 2 | 2 2 | 2 2 | 2 2 | | | | | |
| | | E | 1 1 | 1 1 | 1 1 | 1 1 | 1 1 | 1 1 | | | | |
| TOTAL CABLES-3 CONDUCTOR/12 CONDUCTOR | | | 6 6 | 6 6 | 5 5 | 4 5 | 3 3 | 1 1 | | | | |
| 6 | | SIGNAL POWER | | | | | | | | | | |
| 8 | | LIGHTING | | | 2 | 2 | 2 | 2 | | | | 2 |
| 14 | | PEU | | | | 3 | | | | | | 3 |
| 8 | | FB | | | | | | | | | | |
| 10 | | TDC POWER | | | | | | | | | | |
| TYPE B DLC | Ø2 | LOOP DETECTOR | 3 | | | | | | | | | |
| | Ø3 | LOOP DETECTOR | | | | | | | | | | |
| | Ø4 | LOOP DETECTOR | 2 | 2 | 2 | 2 | 2 | | | | 2 | |
| | Ø6 | LOOP DETECTOR | 3 | 3 | 3 | 3 | 3 | 3 | 3 | 3 | | |
| SIC | | | 1 | 1 | 1 | 1 | 1 | 1 | 1 | 1 | | |
| EVC | | | 3 | 3 | 2 | 2 | 1 | | | | | |
| VIDEO CABLE HARNESS | | | 3 | 2 | 2 | 2 | 1 | | | | | |
| TOTAL CONDUCTORS/CABLES | | | 27 | 24 | 22 | 24 | 16 | 8 | 5 | 4 | 2 | 5 |
| | | | 1 | | | | | | | | | |

## NOTES:

1 - EXISTING 2-3" CONDUIT.
RC ALL CONDUCTORS. ADD CONDUCTORS AS SHOWN ON TABLE.

2 - REMOVE 15 AMP BREAKER AND REPLACE WITH 2P-30 AMP BREAKER. LABEL NEW BREAKER "TYPE III SERVICE".

## CONDUIT NOTES:

11 - Exist 2"C, 2#6 (signal), 2#10 (ltg), 2#10 (sign), 3#14 (peu).
RC 2#10(sign).
ADD 2#6(TYPE III SERVICE)

12 - Exist 2"C, 2#6 (signal).

N C 13 - Exist 2"C, service conductors.

N C 14 - Exist 2"C, 2#10(tdc).

N C 15 - Exist 1"C, sic (telephone).

N C 16 - Exist 2"C, 3 dlc.

N C 17 - Exist 2"C, 1 dlc.

18 - 2"C, 1 SIC.

19 - Exist 2"C, 2#10 (sign), 2#10(tdc),
RC 2#10(sign),
ADD 2#6(TYPE III SERVICE).

20 - Exist 2"C, 2#10 (sign),
RC 2#10(sign),
ADD 2#6(TYPE III SERVICE).

## CIRCUIT BREAKERS

MAIN-2P-100 AMP

A-SP-15 AMP SPARE → (NEW) A, A1 } 2P-30 AMP 2

B-SP-30 AMP

C-SP-15 AMP

D-SP-15 AMP

E, F } 2P-30 AMP

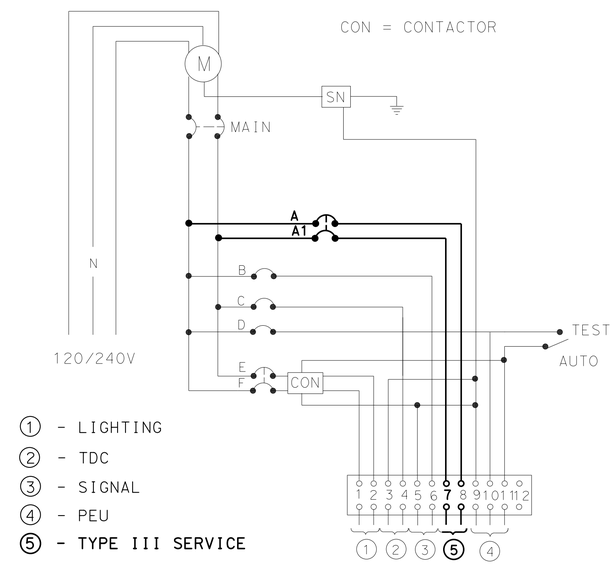


1 - LIGHTING
2 - TDC
3 - SIGNAL
4 - PEU
5 - TYPE III SERVICE

SD WIRING DIAGRAM "C" (EXISTING)

(TYPE III SERVICE EQUIPMENT ENCLOSURE
SEE ES-2C & ES-2E)

## POLE SCHEDULE AND EQUIPMENT

| Loc | STANDARD TYPE | STANDARD SMA | STANDARD LMA | PLACEMENT DIMENSIONS A ft | PLACEMENT DIMENSIONS B ft | SIGNAL MOUNTING AND PLACEMENT VEHICLE POLE | VEHICLE MASTARM | PEDESTRIAN (APS) SIGNAL | PEDESTRIAN (APS) P.P.B. | LED LUMINAIRE | REMARKS |
|---|---|---|---|---|---|---|---|---|---|---|---|
| A | 26-4-100 | 40' | 15' | 3 | 6 | SV-2-TD | MAT MAS | SP-1-T | Ø2P → | 165 W | SNS, RELOCATED (VIS) |
| B | TYPE 1A (5 FEET) | - | - | 25 | 5 | - | - | - | Ø2P ← | - | |
| C | 19-3-100 | 25' | 15' | 0 | 6 | SV-2-TD | MAT | SP-2-T | Ø4P → | 165 W | SNS, RELOCATED (VIS), PEU |
| D | 26-4-100 | 45' | 15' | 20 | 6 | SV-2-TA | MAT MAS | SP-2-T | Ø6P → Ø4P ← | 165 W | SNS, RELOCATED (VIS) |
| E | 15TS | - | 15' | 6 | 15 | - | - | SP-1-T | Ø6P ← | 165 W | |
| F | EXISTING MODEL 170 CONTROLLER ASSEMBLY (TYPE 332 CABINET). | | | | | | | | | | |

*APPROVED FOR ELECTRICAL WORK ONLY*

ROUTE 8/DOGWOOD ROAD
EB RAMP
TRAFFIC SIGNAL P38.965

# SIGNAL AND LIGHTING
## (LOCATION 1)

**E-3**

STATE OF CALIFORNIA - DEPARTMENT OF TRANSPORTATION
Caltrans TRAFFIC ELECTRICAL

FUNCTIONAL SUPERVISOR: RAJPREET SINGH
CALCULATED-DESIGNED BY: DANNY McCLURE
CHECKED BY: HECTOR SANTAMARIA
REVISED BY / DATE REVISED

LAST REVISION 12-09-13 | DATE PLOTTED => 11-APR-2014 | TIME PLOTTED => 13:14

| Dist | COUNTY | ROUTE | POST MILES TOTAL PROJECT | SHEET No. | TOTAL SHEETS |
|---|---|---|---|---|---|
| 11 | Imp | 8 | R38.8/R39.1 | 116 | 225 |

REGISTERED ELECTRICAL ENGINEER 11-19-13 DATE

04-07-14
PLANS APPROVAL DATE

REGISTERED PROFESSIONAL ENGINEER DANNY D. McCLURE No. 16074 Exp. 12-31-15 ELECTRICAL STATE OF CALIFORNIA

*THE STATE OF CALIFORNIA OR ITS OFFICERS OR AGENTS SHALL NOT BE RESPONSIBLE FOR THE ACCURACY OR COMPLETENESS OF SCANNED COPIES OF THIS PLAN SHEET.*

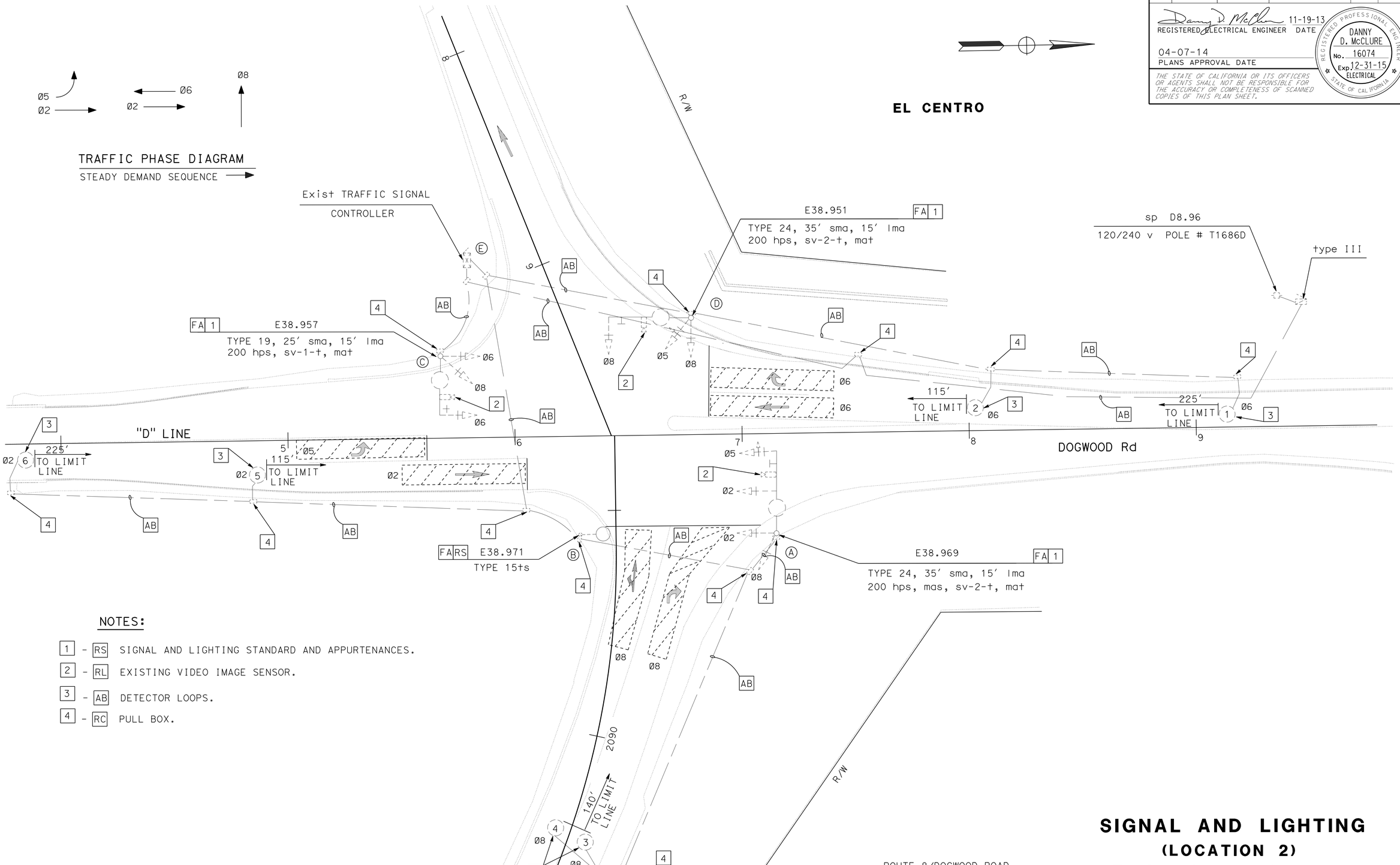


NOTES:

1 - RS SIGNAL AND LIGHTING STANDARD AND APPURTENANCES.

2 - RL EXISTING VIDEO IMAGE SENSOR.

3 - AB DETECTOR LOOPS.

4 - RC PULL BOX.

*APPROVED FOR ELECTRICAL WORK ONLY*

ROUTE 8/DOGWOOD ROAD
WEST BOUND RAMP
TRAFFIC SIGNAL P38.965

SCALE: 1"= 20'

# SIGNAL AND LIGHTING
## (LOCATION 2)
## EXISTING AND SALVAGE

E-4

STATE OF CALIFORNIA - DEPARTMENT OF TRANSPORTATION
Caltrans® TRAFFIC ELECTRICAL

FUNCTIONAL SUPERVISOR: RAJPREET SINGH
CALCULATED-DESIGNED BY: DANNY MCCLURE
CHECKED BY: HECTOR SANTAMARIA
REVISED BY
DATE REVISED

LAST REVISION 12-09-13
DATE PLOTTED => 11-APR-2014
TIME PLOTTED => 13:14

| Dist | COUNTY | ROUTE | POST MILES TOTAL PROJECT | SHEET No. | TOTAL SHEETS |
|---|---|---|---|---|---|
| 11 | Imp | 8 | R38.8/R39.1 | 117 | 225 |

REGISTERED ELECTRICAL ENGINEER 11-19-13 DATE

04-07-14
PLANS APPROVAL DATE

REGISTERED PROFESSIONAL ENGINEER DANNY D. McCLURE No. 16074 Exp. 12-31-15 ELECTRICAL STATE OF CALIFORNIA

*THE STATE OF CALIFORNIA OR ITS OFFICERS OR AGENTS SHALL NOT BE RESPONSIBLE FOR THE ACCURACY OR COMPLETENESS OF SCANNED COPIES OF THIS PLAN SHEET.*

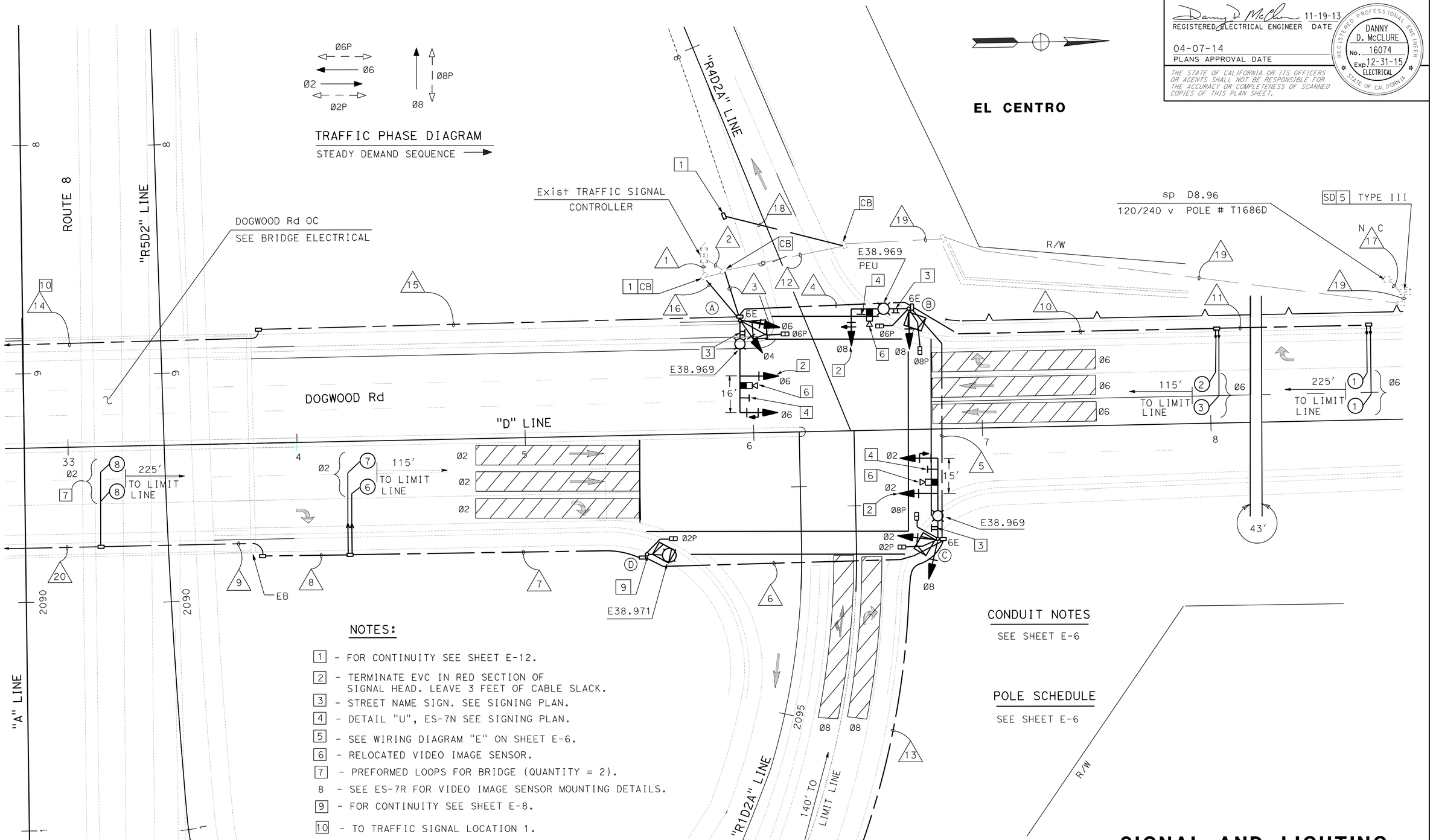


## NOTES:

1. FOR CONTINUITY SEE SHEET E-12.
2. TERMINATE EVC IN RED SECTION OF SIGNAL HEAD. LEAVE 3 FEET OF CABLE SLACK.
3. STREET NAME SIGN. SEE SIGNING PLAN.
4. DETAIL "U", ES-7N SEE SIGNING PLAN.
5. SEE WIRING DIAGRAM "E" ON SHEET E-6.
6. RELOCATED VIDEO IMAGE SENSOR.
7. PREFORMED LOOPS FOR BRIDGE (QUANTITY = 2).
8. SEE ES-7R FOR VIDEO IMAGE SENSOR MOUNTING DETAILS.
9. FOR CONTINUITY SEE SHEET E-8.
10. TO TRAFFIC SIGNAL LOCATION 1.

## CONDUIT NOTES

SEE SHEET E-6

## POLE SCHEDULE

SEE SHEET E-6

ROUTE 8/DOGWOOD ROAD
WB RAMP
TRAFFIC SIGNAL P38.965

# SIGNAL AND LIGHTING
## (LOCATION 2)

*APPROVED FOR ELECTRICAL WORK ONLY*

SCALE: 1"= 20′

E-5

STATE OF CALIFORNIA - DEPARTMENT OF TRANSPORTATION
Caltrans® TRAFFIC ELECTRICAL

FUNCTIONAL SUPERVISOR: RAJPREET SINGH
CALCULATED-DESIGNED BY: DANNY MCCLURE
CHECKED BY: HECTOR SANTAMARIA
REVISED BY
DATE REVISED

LAST REVISION
DATE PLOTTED => 11-APR-2014
TIME PLOTTED => 13:14
12-09-13

| Dist | COUNTY | ROUTE | POST MILES TOTAL PROJECT | SHEET No. | TOTAL SHEETS |
|---|---|---|---|---|---|
| 11 | Imp | 8 | R38.8/R39.1 | 118 | 225 |

Danny D. McClure 11-19-13
REGISTERED CIVIL ENGINEER DATE

04-07-14
PLANS APPROVAL DATE

REGISTERED PROFESSIONAL ENGINEER DANNY D. McCLURE No. 16074 Exp. 12-31-15 ELECTRICAL STATE OF CALIFORNIA

*THE STATE OF CALIFORNIA OR ITS OFFICERS OR AGENTS SHALL NOT BE RESPONSIBLE FOR THE ACCURACY OR COMPLETENESS OF ELECTRONIC COPIES OF THIS PLAN SHEET.*

## CONDUIT AND CONDUCTOR SCHEDULE

| AWG SIZE OR CABLE TYPE | PHASE | POLE OR CIRCUIT | EX 2" (1) | EX 2-3" (2) | 2-3" (3) | 2-3" (4) | 3" (5) | 2" (6) | 2" (7) | 2" (8) | 2" (9) | 2" (10) | 2" (11) | EX 2" (12) | 2" (13) | 2" (14) | 2" (15) | 2" (16) |
|---|---|---|---|---|---|---|---|---|---|---|---|---|---|---|---|---|---|---|
| No. 14 CABLES | | POLE - A | | 1 1 | 1 1 | | | | | | | | | | | | | |
| CONDUCTORS 3 / 12 CONDUCTORS | | B | | 2 1 | 2 1 | 2 1 | | | | | | | | | | | | |
| | | C | | 2 2 | 2 2 | 2 2 | 2 2 | | | | | | | | | | | |
| | | D | | 1 1 | 1 1 | 1 1 | 1 1 | 1 1 | | | | | | | | | | |
| TOTAL CABLES-3 CONDUCTOR/12 CONDUCTOR | | | | 6 5 | 6 5 | 5 4 | 3 3 | 1 1 | | | | | | | | | | |
| 6 | | SIGNAL POWER | | 2 | 2 | 2 | | | | | | 2 | 2 | 2 | | | | |
| 8 | | LIGHTING | | | | 2 | 2 | 2 | | | | 2 | 2 | 2 | | | | |
| 14 | | PEU | | | | | | | | | | 3 | 3 | 3 | | | | |
| TYPE B DLC | Ø2 | LOOP DETECTOR | 3 | | | 3 | 3 | 3 | 3 | 1 | 1 | | | | | | | 3 |
| | Ø3 | LOOP DETECTOR | | | | | | | | | | | | | | | | |
| | Ø6 | LOOP DETECTOR | 3 | | | 3 | | | | | | 3 | 1 | | | | | 3 |
| | Ø8 | LOOP DETECTOR | 2 | | | 2 | 2 | | | | | | | | 2 | | | 2 |
| SIC | | | 1 | | | | | | | | | | | | | 1 | 1 | 1 |
| EVC | | | | 3 | 3 | 2 | 1 | | | | | | | | | | | |
| VIDEO CABLE HARNESS | | | | 3 | 3 | 2 | 1 | | | | | | | | | | | |
| TOTAL CONDUCTORS/CABLES | | | 9 | 19 | 19 | 25 | 15 | 7 | 3 | 1 | 1 | 10 | 8 | 7 | 2 | 1 | 1 | 9 |
| | | | [1] | [2] | | | | | | | | | | | | | | |

## NOTES:

[1] - EXISTING 2" CONDUIT.
[RC] ALL CONDUCTORS. ADD CONDUCTORS AS SHOWN ON TABLE.

[2] - EXISTING 2-3" CONDUIT.
[RC] ALL CONDUCTORS. ADD CONDUCTORS AS SHOWN ON TABLE.

[3] - REMOVE 15 AMP BREAKER AND REPLACE WITH 2P-30 AMP BREAKER. LABEL NEW BREAKER "TYPE III SERVICE".

## POLE SCHEDULE AND EQUIPMENT

| Loc | STANDARD TYPE | SMA | LMA | PLACEMENT DIMENSIONS A ft | B ft | SIGNAL MOUNTING AND PLACEMENT VEHICLE POLE | MASTARM | PEDESTRIAN (APS) SIGNAL | P.P.B. | LED LUMINAIRE | REMARKS |
|---|---|---|---|---|---|---|---|---|---|---|---|
| (A) | 26-4-100 | 40′ | 15′ | 8 | 6 | SV-2-TD | MAT MAS | SP-1-T | Ø6P → | 165 W | SNS, RELOCATED (VIS) |
| (B) | 19-3-100 | 25′ | 15′ | 22 | 6 | SV-1-TD | MAT | SP-2-T | Ø8P → Ø6P ← | 165 W | SNS, RELOCATED (VIS) |
| (C) | 24-4-100 | 35′ | 15′ | 28 | 6 | SV-2-TD | MAT MAS | SP-2-T | Ø8P ← Ø2P → | 165 W | SNS, RELOCATED (VIS) |
| (D) | 15TS | - | 20′ | 18 | 6 | - | - | SP-1-T | Ø2P ← | 165 W | |
| (E) | EXISTING MODEL 170 CONTROLLER ASSEMBLY (TYPE 332 CABINET). | | | | | | | | | | |

## CONDUIT NOTES:

N C (17) - Exist 2"C, SERVICE CODUCTORS.

(18) - 2"C, 2#6 (TYPE III SERVICE).

(19) - Exist 3"C, 2#6 (signal), 2#10 (ltg), 3#14(peu).
ADD 2#6 (TYPE III SERVICE).

(20) - 2"C, MT.

## CIRCUIT BREAKERS

MAIN-2P-100 AMP

A-SP-15 AMP SPARE → (NEW) A, A1 } 2P-30 AMP [3]
B-SP-30 AMP
C-SP-15 AMP
D-SP-15 AMP
E, F } 2P-30 AMP

CON = CONTACTOR

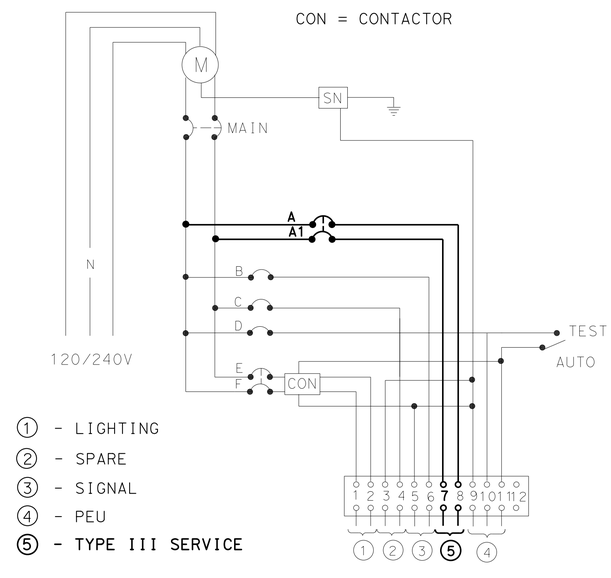


(1) - LIGHTING
(2) - SPARE
(3) - SIGNAL
(4) - PEU
(5) - TYPE III SERVICE

[SD] WIRING DIAGRAM "E" (EXISTING)
(TYPE III SERVICE EQUIPMENT ENCLOSURE
SEE ES-2C & ES-2E)

ROUTE 8/DOGWOOD ROAD
WB RAMP
TRAFFIC SIGNAL P38.965

*APPROVED FOR ELECTRICAL WORK ONLY*

# SIGNAL AND LIGHTING
## (LOCATION 2)

**E-6**

STATE OF CALIFORNIA - DEPARTMENT OF TRANSPORTATION
Caltrans TRAFFIC ELECTRICAL
FUNCTIONAL SUPERVISOR: RAJPREET SINGH
CALCULATED-DESIGNED BY: DANNY McCLURE
CHECKED BY: HECTOR SANTAMARIA
REVISED BY / DATE REVISED

LAST REVISION 12-09-13 | DATE PLOTTED => 11-APR-2014 | TIME PLOTTED => 13:14

| Dist | COUNTY | ROUTE | POST MILES TOTAL PROJECT | SHEET No. | TOTAL SHEETS |
|---|---|---|---|---|---|
| 11 | Imp | 8 | R38.8/R39.1 | 119 | 225 |

REGISTERED ELECTRICAL ENGINEER 11-19-13 DATE

04-07-14
PLANS APPROVAL DATE

REGISTERED PROFESSIONAL ENGINEER DANNY D. McCLURE No. 16074 Exp. 12-31-15 ELECTRICAL STATE OF CALIFORNIA

*THE STATE OF CALIFORNIA OR ITS OFFICERS OR AGENTS SHALL NOT BE RESPONSIBLE FOR THE ACCURACY OR COMPLETENESS OF SCANNED COPIES OF THIS PLAN SHEET.*

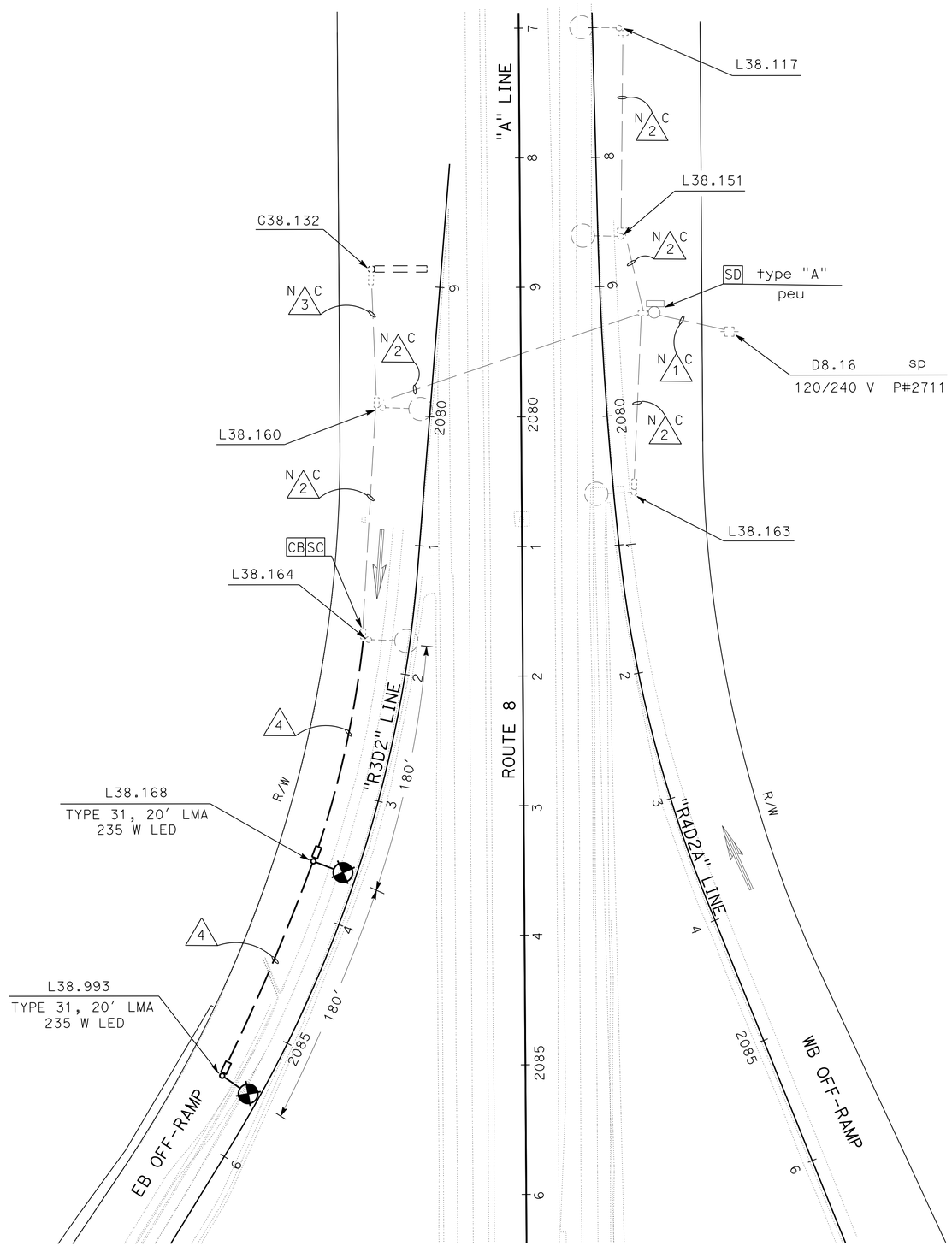


## CONDUIT NOTES:

N 1 C - Exist 2 "C, service conductors.

N 2 C - Exist 1½"C, 2#8(ltg).

N 3 C - Exist 1½"C, 2#8(sign).

4 - 2"C, 2#8 (LTG).

# LIGHTING AND SIGN ILLUMINATION

ROUTE 8/DOGWOOD ROAD

**E-7**

SCALE: 1"= 50'

*APPROVED FOR ELECTRICAL WORK ONLY*

STATE OF CALIFORNIA - DEPARTMENT OF TRANSPORTATION
Caltrans® **TRAFFIC ELECTRICAL**

FUNCTIONAL SUPERVISOR: RAJPREET SINGH
CALCULATED-DESIGNED BY: DANNY MCCLURE
CHECKED BY: HECTOR SANTAMARIA
REVISED BY / DATE REVISED

LAST REVISION 12-09-13 | DATE PLOTTED => 11-APR-2014 | TIME PLOTTED => 13:14

| Dist | COUNTY | ROUTE | POST MILES TOTAL PROJECT | SHEET No. | TOTAL SHEETS |
|---|---|---|---|---|---|
| 11 | Imp | 8 | R38.8/R39.1 | 120 | 225 |

REGISTERED ELECTRICAL ENGINEER 11-19-13 DATE

04-07-14
PLANS APPROVAL DATE

REGISTERED PROFESSIONAL ENGINEER DANNY D. McCLURE No. 16074 Exp. 12-31-15 ELECTRICAL STATE OF CALIFORNIA

*THE STATE OF CALIFORNIA OR ITS OFFICERS OR AGENTS SHALL NOT BE RESPONSIBLE FOR THE ACCURACY OR COMPLETENESS OF SCANNED COPIES OF THIS PLAN SHEET.*

## CONDUIT NOTES:

1 - 2"C, 2#10 (LTG).

## NOTE:

1 - FOR CIRCUIT CONTINUITY SEE SHEET E-5.

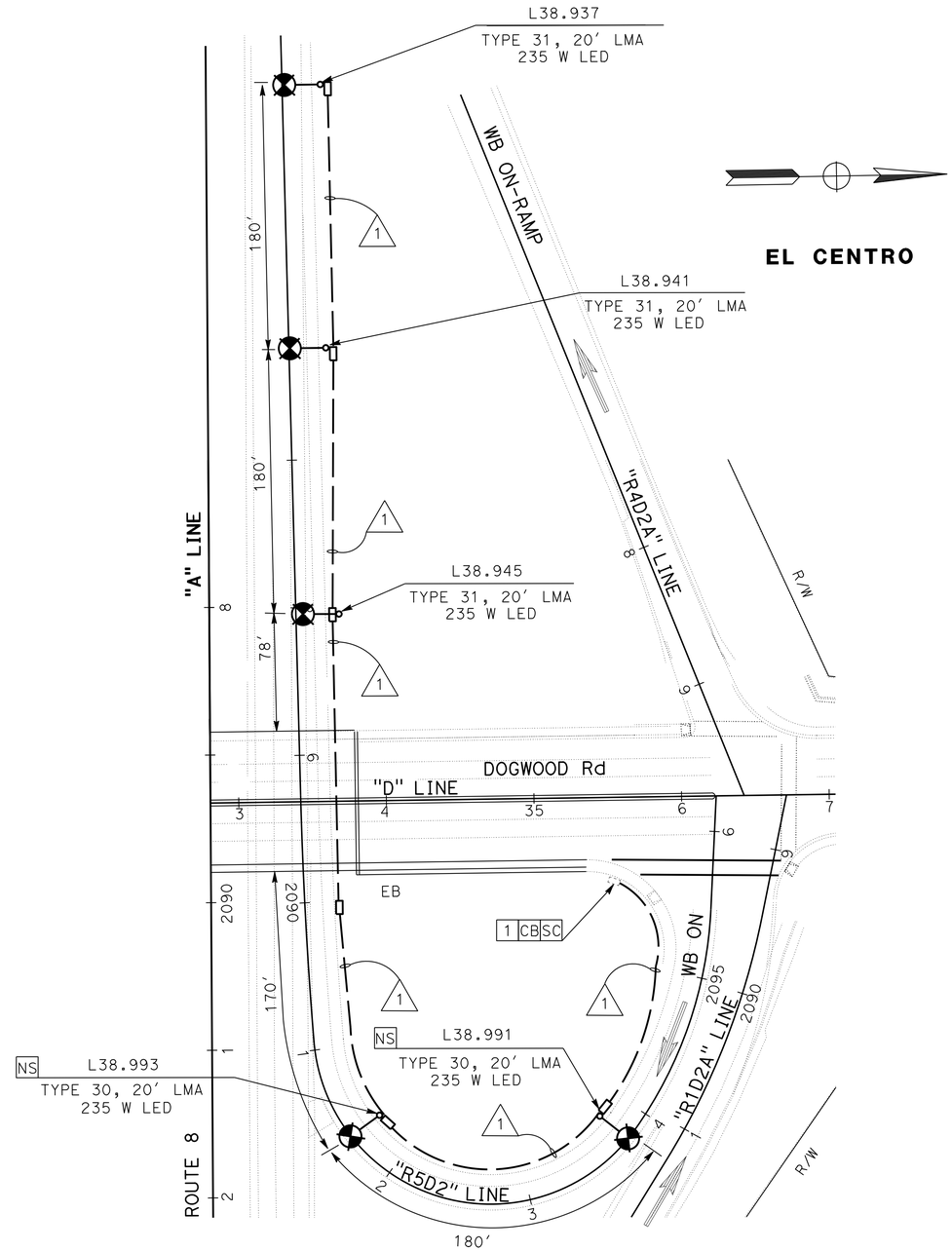


# LIGHTING AND SIGN ILLUMINATION

*APPROVED FOR ELECTRICAL WORK ONLY*

SCALE: 1"= 50'

E-8

STATE OF CALIFORNIA - DEPARTMENT OF TRANSPORTATION
Caltrans® TRAFFIC ELECTRICAL

FUNCTIONAL SUPERVISOR: RAJPREET SINGH
CALCULATED-DESIGNED BY: DANNY MCCLURE
CHECKED BY: HECTOR SANTAMARIA
REVISED BY
DATE REVISED

LAST REVISION 12-09-13
DATE PLOTTED => 11-APR-2014
TIME PLOTTED => 13:14

| Dist | COUNTY | ROUTE | POST MILES TOTAL PROJECT | SHEET No. | TOTAL SHEETS |
|---|---|---|---|---|---|
| 11 | Imp | 8 | R38.8/R39.1 | 121 | 225 |

REGISTERED ELECTRICAL ENGINEER 11-19-13 DATE

04-07-14
PLANS APPROVAL DATE

REGISTERED PROFESSIONAL ENGINEER
DANNY D. McCLURE
No. 16074
Exp. 12-31-15
ELECTRICAL
STATE OF CALIFORNIA

*THE STATE OF CALIFORNIA OR ITS OFFICERS OR AGENTS SHALL NOT BE RESPONSIBLE FOR THE ACCURACY OR COMPLETENESS OF SCANNED COPIES OF THIS PLAN SHEET.*

## CONDUIT NOTES:

N C 1 - Exist 2 "C, service conductors.

N C 2 - Exist 1½"C, 2#8(ltg).

3 - 2"C, 2#8(LTG).

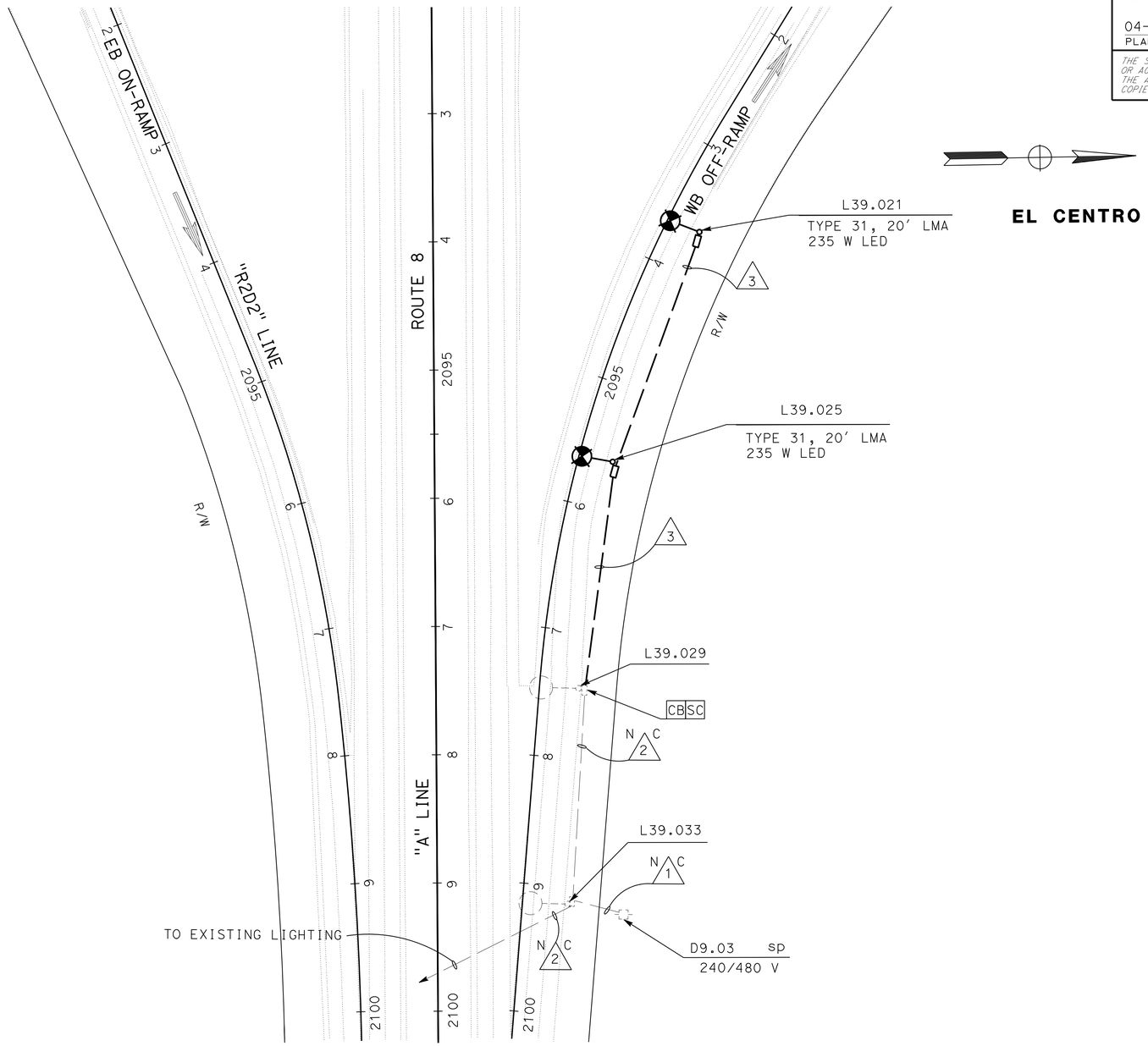


# LIGHTING AND SIGN ILLUMINATION

ROUTE 8/DOGWOOD ROAD

*APPROVED FOR ELECTRICAL WORK ONLY*

SCALE: 1"= 50'

**E-9**

STATE OF CALIFORNIA - DEPARTMENT OF TRANSPORTATION
Caltrans® TRAFFIC ELECTRICAL

FUNCTIONAL SUPERVISOR: RAJPREET SINGH
CALCULATED-DESIGNED BY: DANNY MCCLURE
CHECKED BY: HECTOR SANTAMARIA
REVISED BY
DATE REVISED

LAST REVISION 12-09-13
DATE PLOTTED => 11-APR-2014
TIME PLOTTED => 13:14

| Dist | COUNTY | ROUTE | POST MILES TOTAL PROJECT | SHEET No. | TOTAL SHEETS |
|---|---|---|---|---|---|
| 11 | Imp | 8 | R38.8/R39.1 | 122 | 225 |

REGISTERED ELECTRICAL ENGINEER 11-19-13 DATE

04-07-14
PLANS APPROVAL DATE

REGISTERED PROFESSIONAL ENGINEER DANNY D. McCLURE No. 16074 Exp. 12-31-15 ELECTRICAL STATE OF CALIFORNIA

*THE STATE OF CALIFORNIA OR ITS OFFICERS OR AGENTS SHALL NOT BE RESPONSIBLE FOR THE ACCURACY OR COMPLETENESS OF SCANNED COPIES OF THIS PLAN SHEET.*

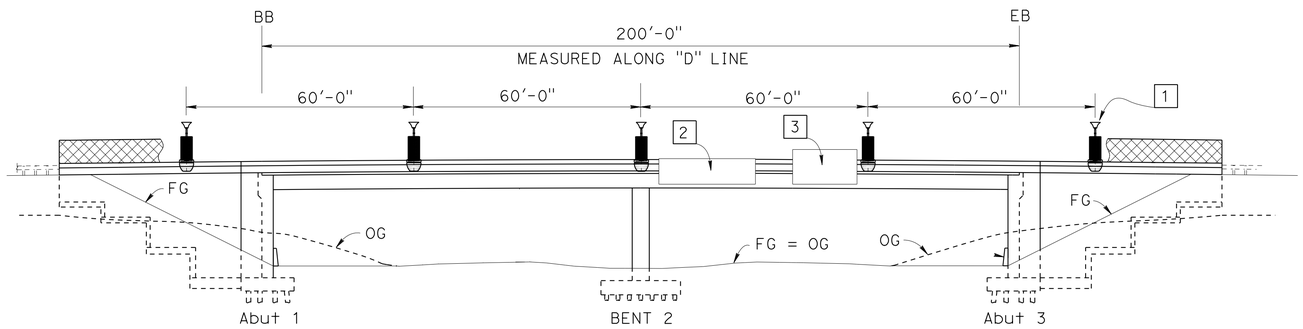


**ELEVATION**

SCALE: 1" = 20'

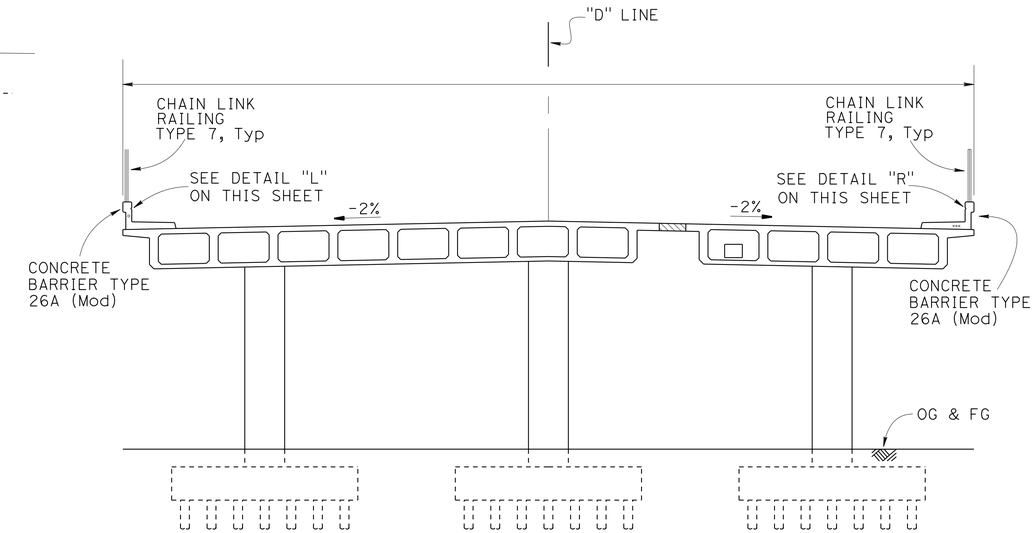


**TYPICAL SECTION - FINAL**

NO SCALE

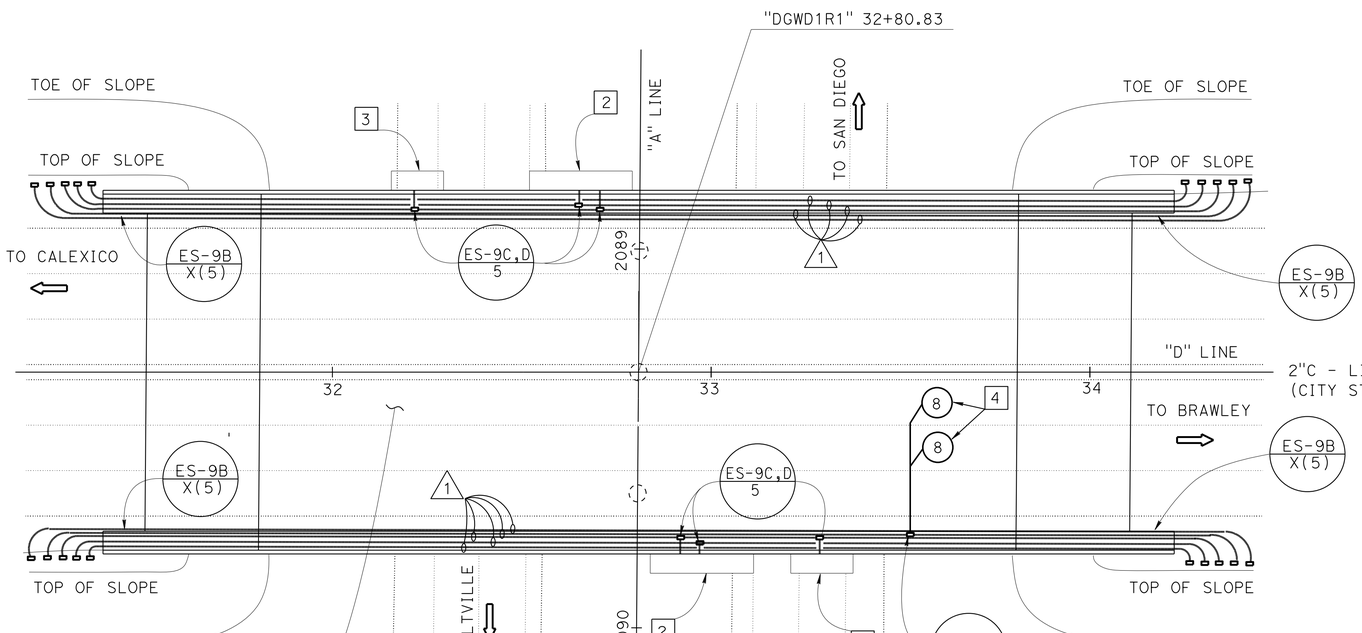


**PLAN**

SCALE: 1" = 20'

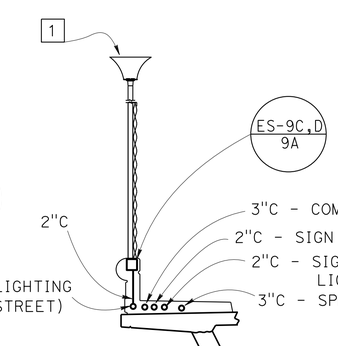


**DETAIL "L"**

(Typ)

NO SCALE

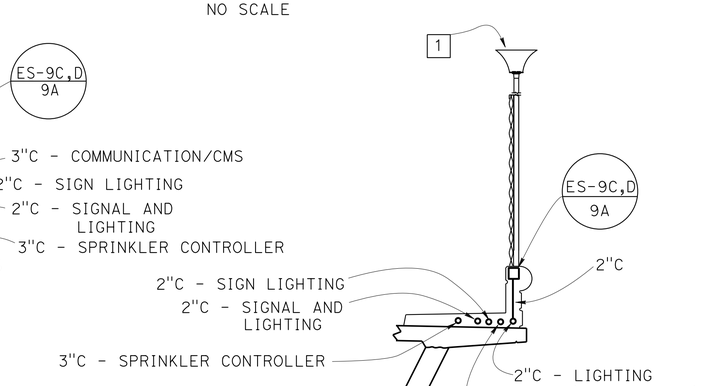


**DETAIL "R"**

(Typ)

NO SCALE

**NOTE:**

1. SEE ELECTRICAL PLAN SHEET E-20.
2. CMS STRUCTURE MOUNTED SIGN.
3. BRIDGE MOUNTED SIGN.
4. PREFORMED LOOPS SEE SHEET E-5.

**CONDUIT NOTE:**

1 - CONDUIT, (SEE DETAIL "L" AND "R" FOR DESIGNATION).

*APPROVED FOR ELECTRICAL WORK ONLY*

DOGWOOD ROAD OC
BRIDGE No. 58-0351

SCALE AS SHOWN

# BRIDGE ELECTRICAL
# E-10

STATE OF CALIFORNIA - DEPARTMENT OF TRANSPORTATION
Caltrans
TRAFFIC ELECTRICAL

FUNCTIONAL SUPERVISOR: RAJPREET SINGH
CALCULATED-DESIGNED BY: DANNY MCCLURE
CHECKED BY: HECTOR SANTAMARIA
REVISED BY
DATE REVISED

LAST REVISION 12-09-13
DATE PLOTTED => 11-APR-2014
TIME PLOTTED => 13:14

| Dist | COUNTY | ROUTE | POST MILES TOTAL PROJECT | SHEET No. | TOTAL SHEETS |
|---|---|---|---|---|---|
| 11 | Imp | 8 | R38.8/R39.1 | 123 | 225 |

REGISTERED ELECTRICAL ENGINEER 11-19-13 DATE

04-07-14
PLANS APPROVAL DATE

REGISTERED PROFESSIONAL ENGINEER DANNY D. McCLURE No. 16074 Exp. 12-31-15 ELECTRICAL STATE OF CALIFORNIA

*THE STATE OF CALIFORNIA OR ITS OFFICERS OR AGENTS SHALL NOT BE RESPONSIBLE FOR THE ACCURACY OR COMPLETENESS OF SCANNED COPIES OF THIS PLAN SHEET.*

## CONDUIT NOTES:

1. - 2"C, 2#6(TYPE III SERVICE).
2. - 3"C, 2#6(TYPE III SERVICE), 2#8(CMS POWER), 1#8(CMS POWER NEUTRAL), 3#14(PEU-SIGN).
3. - 2"C, 2#8 (CMS POWER).
4. - 2"C, 2 SIC (TELEPHONE).
5. - 3"C, CMS H #4 , CMS H #5, SIC (TELPHONE).
6. - 3"C, CMS H #4 , CMS H #5.
7. - 2"C, 1 SIC (TELEPHONE).
8. - 2"C, 3#14(PEU-SGN), 2#8 (CMS POWER), 1#8 (CMS POWER NEUTRAL).
9. - 3"C, 1 SIC (TELEPHONE).

**EL CENTRO**

1. - CMS
2. - CMS CONTROLLER
3. - HIGHWAY SIGN
4. - SPARE
5. - PEU (SIGN)

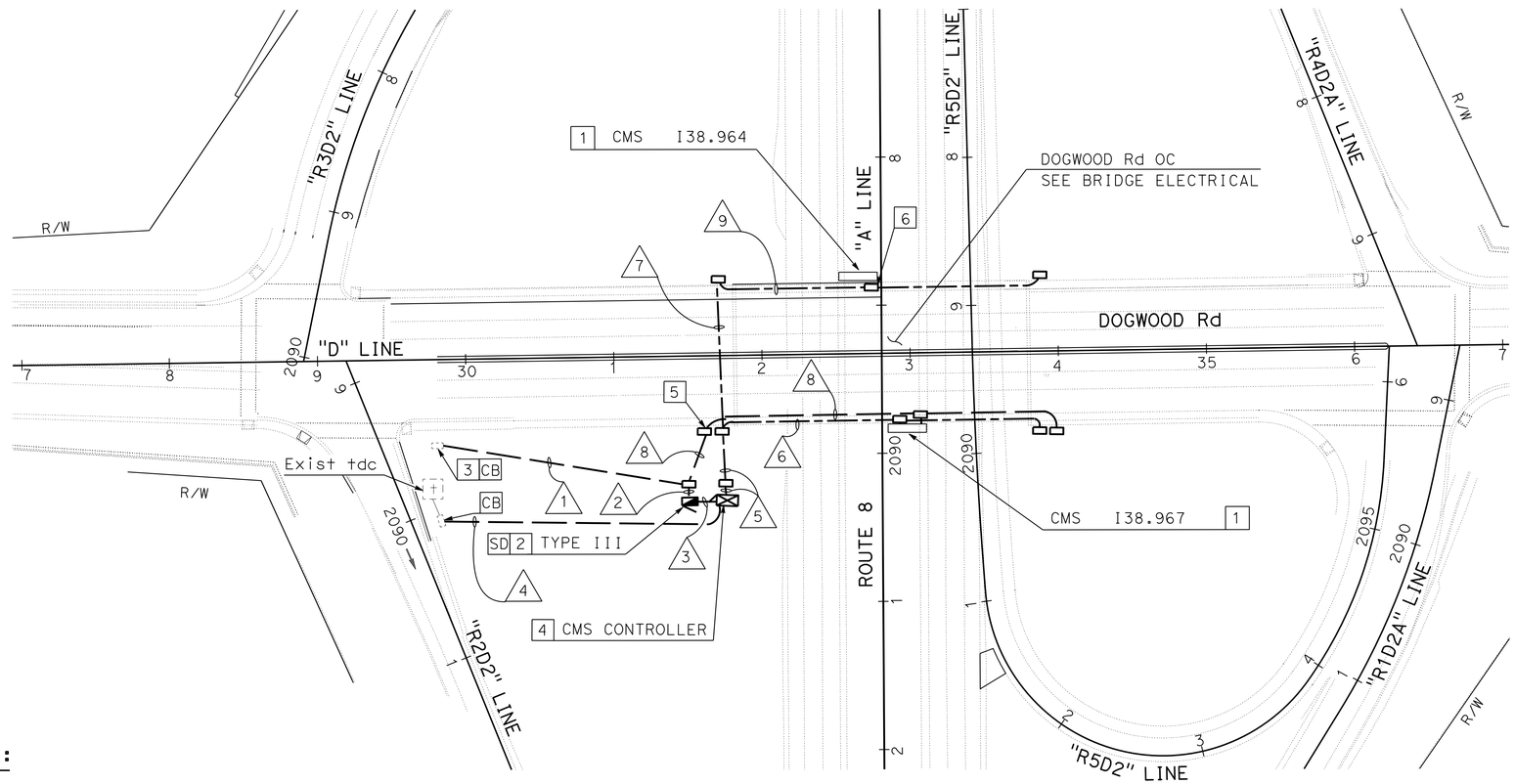


## CIRCUIT BREAKERS

MAIN-2P-15 A
A-1P-15 A
B-1P-15 A
C, D } 2P-30 A
E-1P-30 A
F, G } 2P-30 A

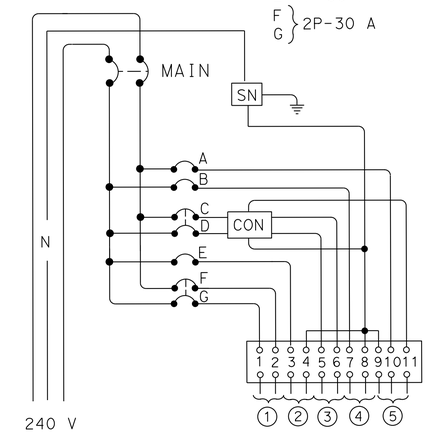


## WIRING DIAGRAM "D"

TYPE III-CF SERVICE EQUIPMENT
ENCLOSURE SEE RSP ES-2C AND RSP ES-2F

## NOTES:

1. - STATE-FURNISHED CMS MODEL 500. SEE SIGN SHEETS FOR DETAILS.
2. - SEE WIRING DIAGRAM "D" ON THIS SHEET.
3. - FOR CIRCUIT CONTINUITY SEE SHEET E-2.
4. - STATE-FURNISHED CONTROLLER ASSEMBLY MODEL 334 CABINET. SEE ES-4B FOR FOUNDATION DETAILS.
5. - FOR SIGN AND ILLUMINATION CIRCUIT CONTINUITY SEE SHEET E-13.
6. - FOR CIRCUIT CONTINUITY SEE SHEET E-12.

*APPROVED FOR ELECTRICAL WORK ONLY*

# CHANGEABLE MESSAGE SIGN SYSTEM
## (LOCATION 1)

SCALE: 1"= 50'

**E-11**

REVISED BY | DATE REVISED
DANNY MCCLURE | HECTOR SANTAMARIA
CALCULATED-DESIGNED BY | CHECKED BY
FUNCTIONAL SUPERVISOR | RAJPREET SINGH

STATE OF CALIFORNIA - DEPARTMENT OF TRANSPORTATION
Caltrans® TRAFFIC ELECTRICAL

LAST REVISION 12-09-13 | DATE PLOTTED => 11-APR-2014 | TIME PLOTTED => 13:14

| Dist | COUNTY | ROUTE | POST MILES TOTAL PROJECT | SHEET No. | TOTAL SHEETS |
|---|---|---|---|---|---|
| 11 | Imp | 8 | R38.8/R39.1 | 124 | 225 |

REGISTERED ELECTRICAL ENGINEER 11-19-13 DATE

04-07-14
PLANS APPROVAL DATE

REGISTERED PROFESSIONAL ENGINEER DANNY D. McCLURE No. 16074 Exp. 12-31-15 ELECTRICAL STATE OF CALIFORNIA

*THE STATE OF CALIFORNIA OR ITS OFFICERS OR AGENTS SHALL NOT BE RESPONSIBLE FOR THE ACCURACY OR COMPLETENESS OF SCANNED COPIES OF THIS PLAN SHEET.*

## CONDUIT NOTES:

1. - 2"C, 2#6(TYPE III SERVICE).
2. - 2"C, 2#8(CMS CONTROLLER).
3. - 2"C, 2#8(CMS POWER), 1#8(CMS POWER NEUTRAL).
4. - 3"C, CMSH #4, CMSH #5, 1 SIC(TELEPHONE)

EL CENTRO

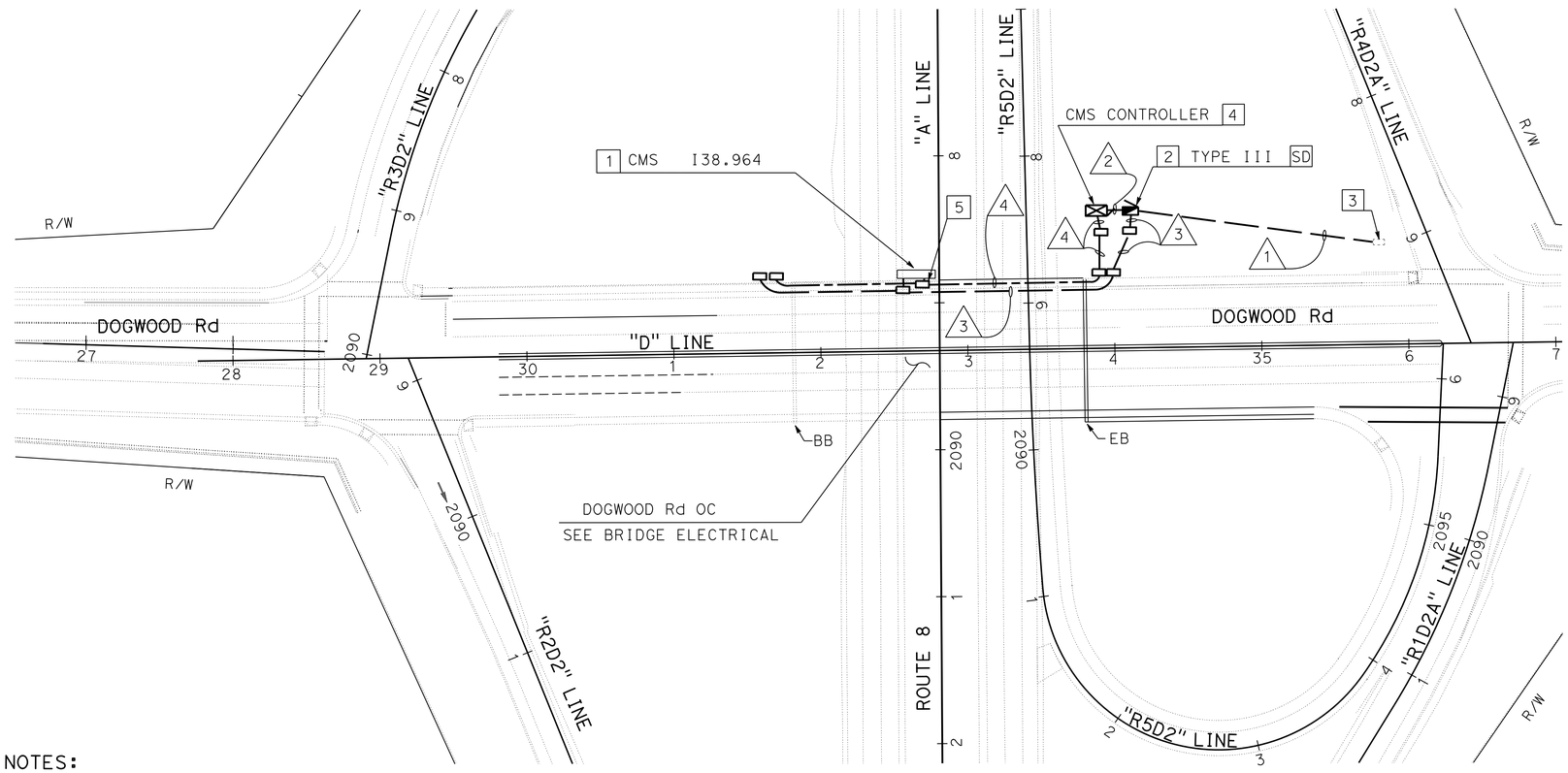


## NOTES:

1. STATE-FURNISHED CMS MODEL 500. SEE SIGN SHEETS FOR DETAILS.
2. SEE WIRING DIAGRAM "D" ON SHEET E-11.
3. FOR CIRCUIT CONTINUITY SEE SHEET E-5.
4. STATE-FURNISHED CONTROLLER ASSEMBLY MODEL 334 CABINET. SEE ES-4B FOR FOUNDATION DETAILS.
5. FOR CIRCUIT CONTINUITY SEE SHEET E-11.

*APPROVED FOR ELECTRICAL WORK ONLY*

# CHANGEABLE MESSAGE SIGN SYSTEM
## (LOCATION 2)

SCALE: 1"= 50'

**E-12**

STATE OF CALIFORNIA - DEPARTMENT OF TRANSPORTATION
Caltrans® TRAFFIC ELECTRICAL

FUNCTIONAL SUPERVISOR: RAJREET SINGH
CALCULATED-DESIGNED BY: DANNY MCCLURE
CHECKED BY: HECTOR SANTAMARIA
REVISED BY
DATE REVISED

LAST REVISION 12-09-13
DATE PLOTTED => 11-APR-2014
TIME PLOTTED => 13:14

| Dist | COUNTY | ROUTE | POST MILES TOTAL PROJECT | SHEET No. | TOTAL SHEETS |
|---|---|---|---|---|---|
| 11 | Imp | 8 | R38.8/R39.1 | 125 | 225 |

REGISTERED ELECTRICAL ENGINEER 11-19-13 DATE

04-07-14
PLANS APPROVAL DATE

REGISTERED PROFESSIONAL ENGINEER DANNY D. McCLURE No. 16074 Exp. 12-31-15 ELECTRICAL STATE OF CALIFORNIA

*THE STATE OF CALIFORNIA OR ITS OFFICERS OR AGENTS SHALL NOT BE RESPONSIBLE FOR THE ACCURACY OR COMPLETENESS OF SCANNED COPIES OF THIS PLAN SHEET.*

## CONDUIT NOTES

1 - Exist 2"C, 2#8(cms power), 1#8(cms power newtral)
ADD 2#8(SIGN), 3#14(PEU-SIGN)

2 - Exist 2"C, mt.
ADD 2#8(SIGN), 3#14(PEU-SIGN)

N C 3 - Exist 2"C, 2#6(type III service)

EL CENTRO

## NOTES:

1 - INSTALLED BY PLAN SHEET E-12.

2 - INSTALLED BY PLAN SHEET E-11.

3 - FOR CONDUIT SEE BRIDGE ELECTRICAL.

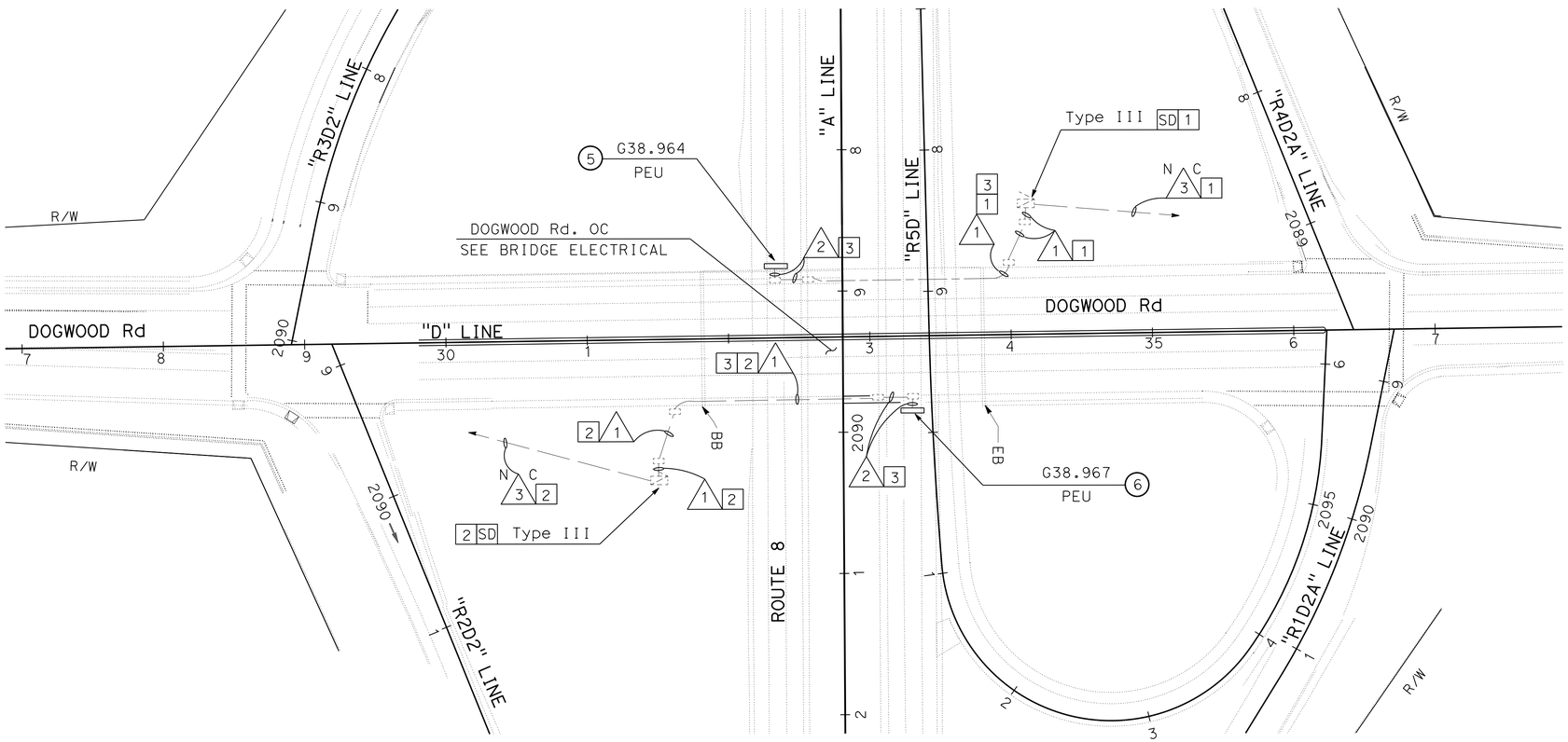


## ILLUMINATED SIGNS AND APPURTENANCES

| SIGN No. | QUANTITY OF 85 w ISL FIXTURES | VOLTAGE (SERVICE) | LOAD | REMARKS |
|---|---|---|---|---|
| 5 | 2 | 240 V | 174 W | SC1A SIGN CONTROL, SEE Std PLANS ES-15C, ES-15D |
| 6 | 2 | 240 V | 174 W | SC1A SIGN CONTROL, SEE Std PLANS ES-15C, ES-15D |

*APPROVED FOR ELECTRICAL WORK ONLY*

SCALE: 1"= 50'

# SIGN ILLUMINATION

E-13

STATE OF CALIFORNIA - DEPARTMENT OF TRANSPORTATION
Caltrans® TRAFFIC ELECTRICAL

FUNCTIONAL SUPERVISOR: RAJPREET SINGH
CALCULATED-DESIGNED BY: DANNY MCCLURE
CHECKED BY: HECTOR SANTAMARIA
REVISED BY
DATE REVISED

LAST REVISION 12-09-13
DATE PLOTTED => 11-APR-2014
TIME PLOTTED => 13:14

| Dist | COUNTY | ROUTE | POST MILES TOTAL PROJECT | SHEET No. | TOTAL SHEETS |
|---|---|---|---|---|---|
| 11 | Imp | 8 | R38.8/R39.1 | 126 | 225 |

REGISTERED ELECTRICAL ENGINEER 11-19-13 DATE

04-07-14
PLANS APPROVAL DATE

REGISTERED PROFESSIONAL ENGINEER DANNY D. McCLURE No. 16074 Exp. 12-31-15 ELECTRICAL STATE OF CALIFORNIA

*THE STATE OF CALIFORNIA OR ITS OFFICERS OR AGENTS SHALL NOT BE RESPONSIBLE FOR THE ACCURACY OR COMPLETENESS OF SCANNED COPIES OF THIS PLAN SHEET.*

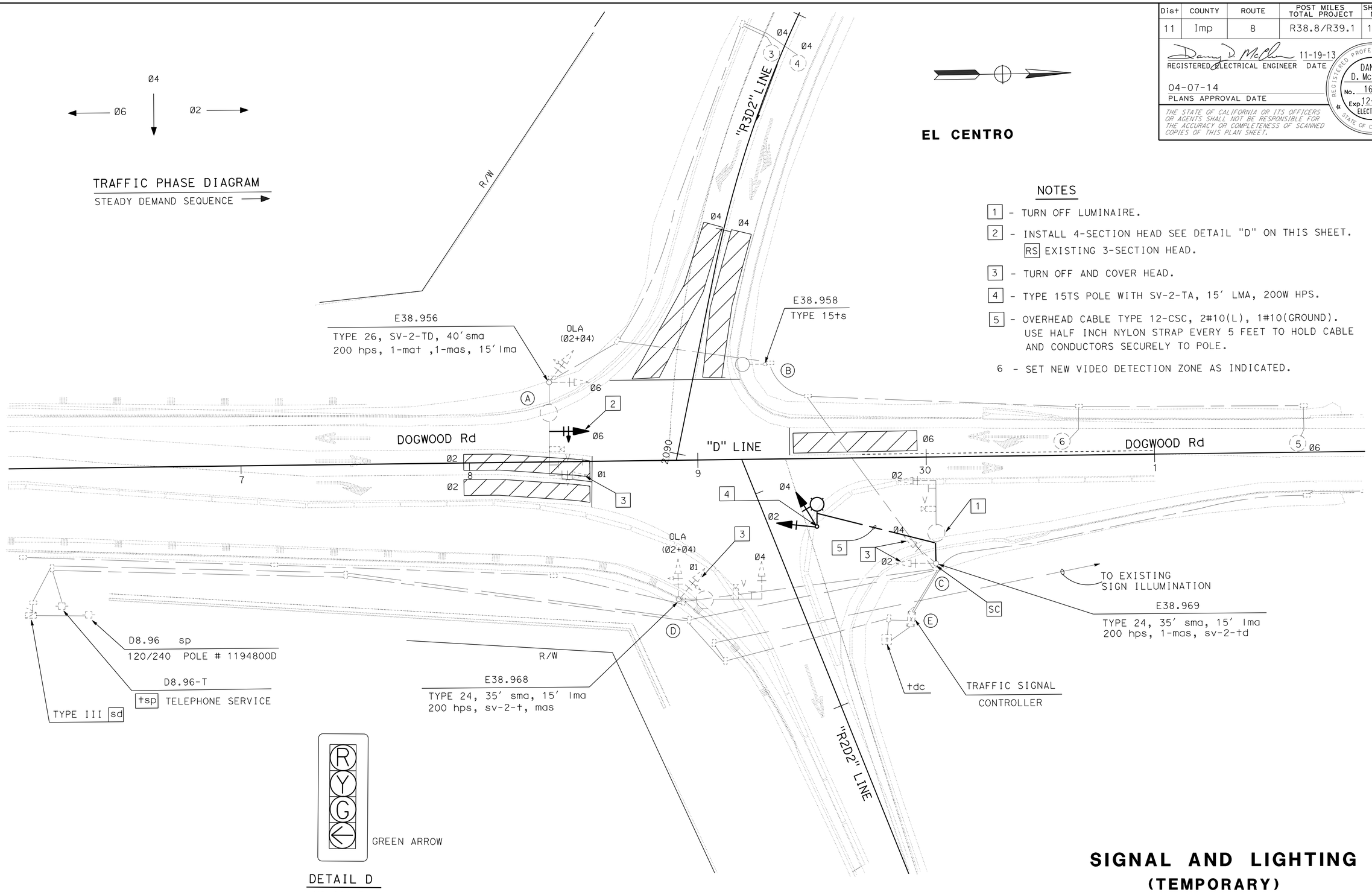


## NOTES

1 - TURN OFF LUMINAIRE.

2 - INSTALL 4-SECTION HEAD SEE DETAIL "D" ON THIS SHEET.
RS EXISTING 3-SECTION HEAD.

3 - TURN OFF AND COVER HEAD.

4 - TYPE 15TS POLE WITH SV-2-TA, 15′ LMA, 200W HPS.

5 - OVERHEAD CABLE TYPE 12-CSC, 2#10(L), 1#10(GROUND). USE HALF INCH NYLON STRAP EVERY 5 FEET TO HOLD CABLE AND CONDUCTORS SECURELY TO POLE.

6 - SET NEW VIDEO DETECTION ZONE AS INDICATED.

ROUTE 8/DOGWOOD ROAD
EAST BOUND RAMP
TRAFFIC SIGNAL P38.964

# SIGNAL AND LIGHTING
## (TEMPORARY)
## (LOCATION 1)
## STAGE 1

SCALE: 1"= 20′

**E-14**

*APPROVED FOR ELECTRICAL WORK ONLY*

| REVISED BY | DATE REVISED |
|---|---|
| | |
| | |
| | |

| CALCULATED-DESIGNED BY | CHECKED BY |
|---|---|
| DANNY MCCLURE | HECTOR SANTAMARIA |

FUNCTIONAL SUPERVISOR: RAJPREET SINGH

STATE OF CALIFORNIA - DEPARTMENT OF TRANSPORTATION
Caltrans® TRAFFIC ELECTRICAL

LAST REVISION 12-09-13 | DATE PLOTTED => 11-APR-2014 | TIME PLOTTED => 13:14

| Dist | COUNTY | ROUTE | POST MILES TOTAL PROJECT | SHEET No. | TOTAL SHEETS |
|---|---|---|---|---|---|
| 11 | Imp | 8 | R38.8/R39.1 | 127 | 225 |

REGISTERED ELECTRICAL ENGINEER 11-19-13 DATE

04-07-14
PLANS APPROVAL DATE

REGISTERED PROFESSIONAL ENGINEER DANNY D. McCLURE No. 16074 Exp. 12-31-15 ELECTRICAL STATE OF CALIFORNIA

*THE STATE OF CALIFORNIA OR ITS OFFICERS OR AGENTS SHALL NOT BE RESPONSIBLE FOR THE ACCURACY OR COMPLETENESS OF SCANNED COPIES OF THIS PLAN SHEET.*

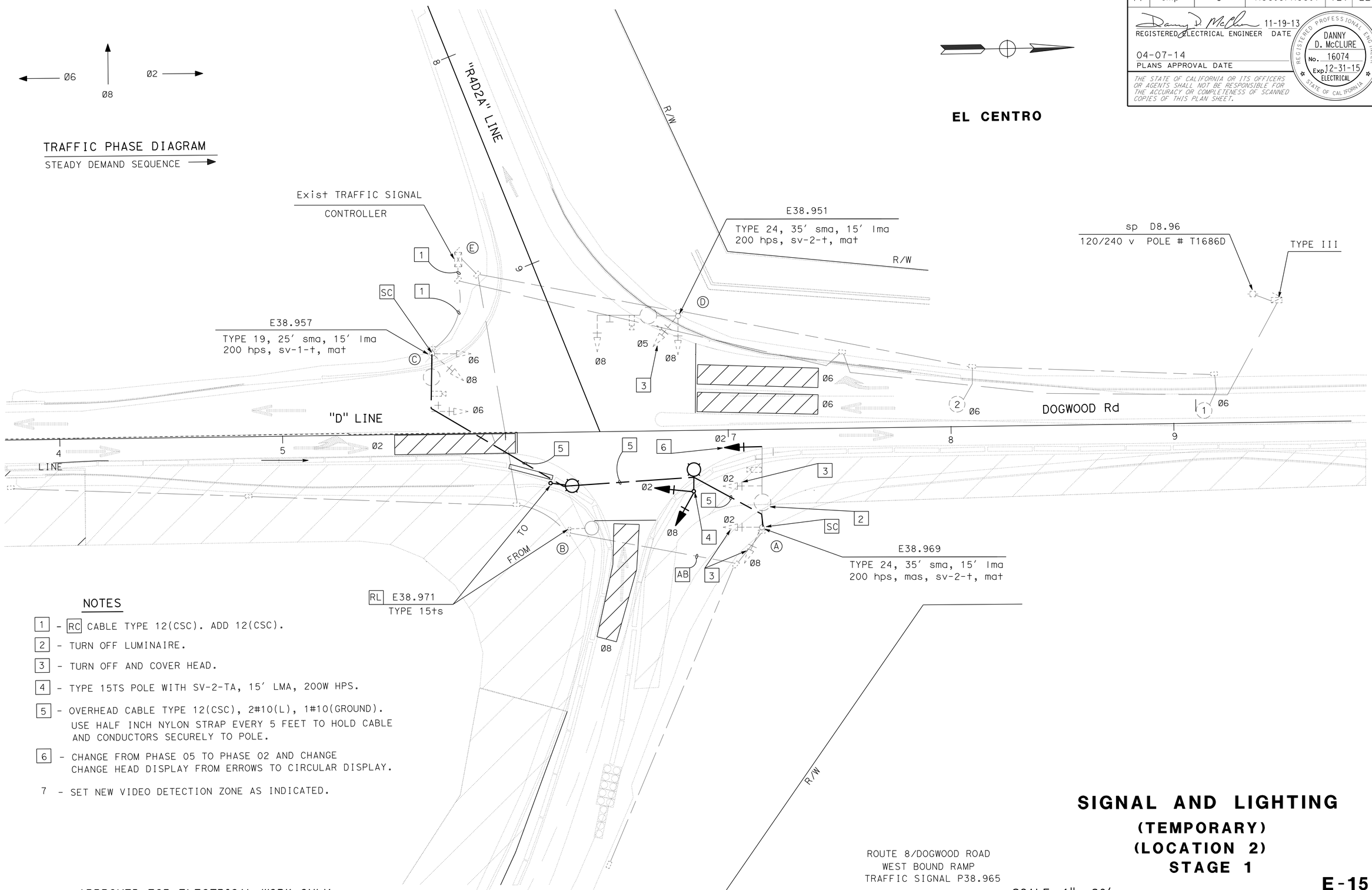


## NOTES

1 - RC CABLE TYPE 12(CSC). ADD 12(CSC).

2 - TURN OFF LUMINAIRE.

3 - TURN OFF AND COVER HEAD.

4 - TYPE 15TS POLE WITH SV-2-TA, 15' LMA, 200W HPS.

5 - OVERHEAD CABLE TYPE 12(CSC), 2#10(L), 1#10(GROUND). USE HALF INCH NYLON STRAP EVERY 5 FEET TO HOLD CABLE AND CONDUCTORS SECURELY TO POLE.

6 - CHANGE FROM PHASE 05 TO PHASE 02 AND CHANGE CHANGE HEAD DISPLAY FROM ERROWS TO CIRCULAR DISPLAY.

7 - SET NEW VIDEO DETECTION ZONE AS INDICATED.

*APPROVED FOR ELECTRICAL WORK ONLY*

ROUTE 8/DOGWOOD ROAD
WEST BOUND RAMP
TRAFFIC SIGNAL P38.965

SCALE: 1"= 20'

# SIGNAL AND LIGHTING
## (TEMPORARY)
## (LOCATION 2)
## STAGE 1

**E-15**

STATE OF CALIFORNIA - DEPARTMENT OF TRANSPORTATION
Caltrans® TRAFFIC ELECTRICAL

FUNCTIONAL SUPERVISOR: RAJPREET SINGH
CALCULATED-DESIGNED BY: DANNY MCCLURE
CHECKED BY: HECTOR SANTAMARIA
REVISED BY
DATE REVISED

LAST REVISION 12-09-13
DATE PLOTTED => 11-APR-2014
TIME PLOTTED => 13:14

| Dist | COUNTY | ROUTE | POST MILES TOTAL PROJECT | SHEET No. | TOTAL SHEETS |
|---|---|---|---|---|---|
| 11 | Imp | 8 | R38.8/R39.1 | 128 | 225 |

Danny D. McClure 11-19-13
REGISTERED ELECTRICAL ENGINEER DATE

04-07-14
PLANS APPROVAL DATE

REGISTERED PROFESSIONAL ENGINEER DANNY D. McCLURE No. 16074 Exp. 12-31-15 ELECTRICAL STATE OF CALIFORNIA

*THE STATE OF CALIFORNIA OR ITS OFFICERS OR AGENTS SHALL NOT BE RESPONSIBLE FOR THE ACCURACY OR COMPLETENESS OF SCANNED COPIES OF THIS PLAN SHEET.*

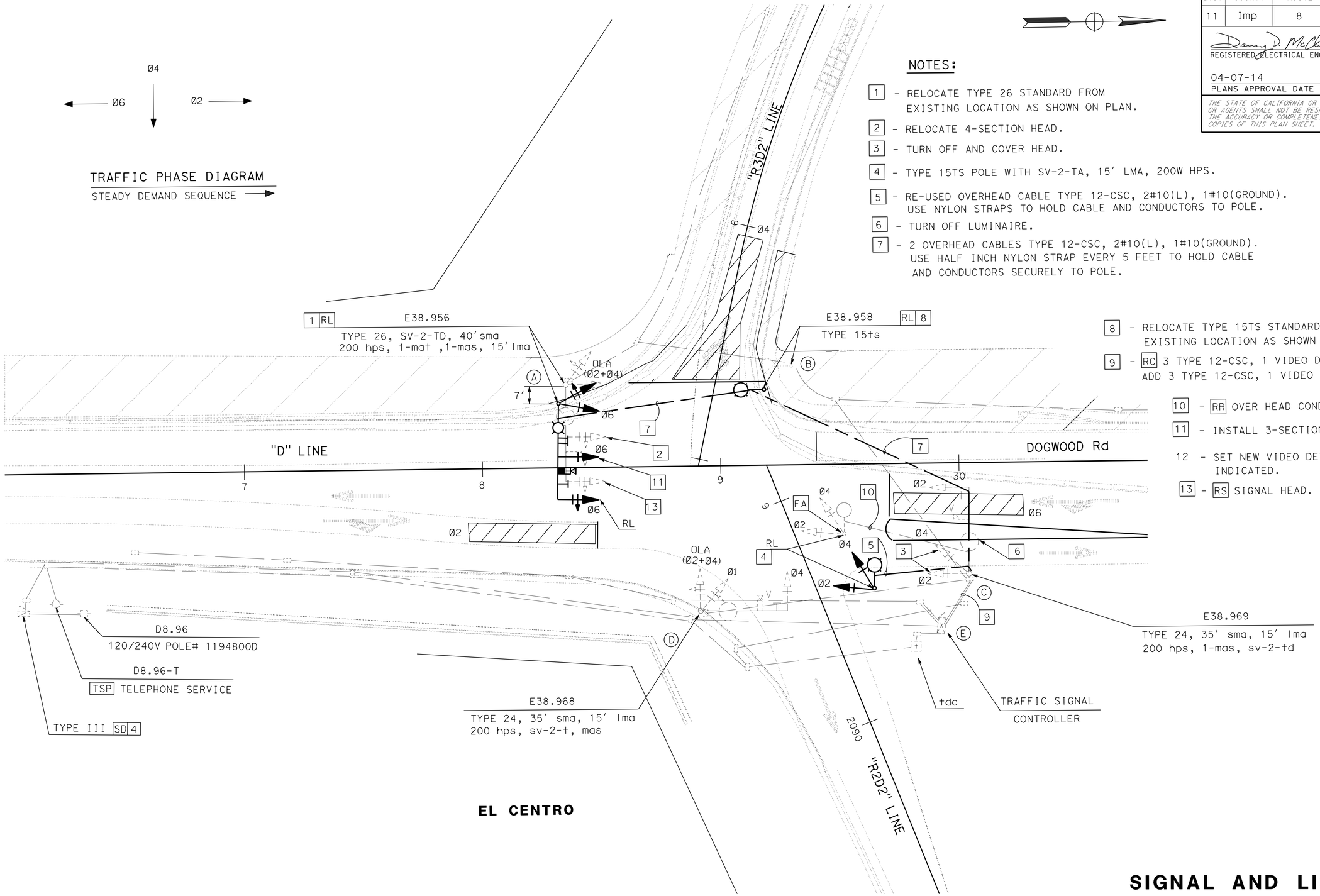


## NOTES:

1 - RELOCATE TYPE 26 STANDARD FROM EXISTING LOCATION AS SHOWN ON PLAN.

2 - RELOCATE 4-SECTION HEAD.

3 - TURN OFF AND COVER HEAD.

4 - TYPE 15TS POLE WITH SV-2-TA, 15' LMA, 200W HPS.

5 - RE-USED OVERHEAD CABLE TYPE 12-CSC, 2#10(L), 1#10(GROUND). USE NYLON STRAPS TO HOLD CABLE AND CONDUCTORS TO POLE.

6 - TURN OFF LUMINAIRE.

7 - 2 OVERHEAD CABLES TYPE 12-CSC, 2#10(L), 1#10(GROUND). USE HALF INCH NYLON STRAP EVERY 5 FEET TO HOLD CABLE AND CONDUCTORS SECURELY TO POLE.

8 - RELOCATE TYPE 15TS STANDARD FROM EXISTING LOCATION AS SHOWN ON PLAN.

9 - RC 3 TYPE 12-CSC, 1 VIDEO DETECTION CABLE. ADD 3 TYPE 12-CSC, 1 VIDEO DETECTION CABLE.

10 - RR OVER HEAD CONDUCTORS.

11 - INSTALL 3-SECTION HEAD.

12 - SET NEW VIDEO DETECTION ZONE AS INDICATED.

13 - RS SIGNAL HEAD.

*APPROVED FOR ELECTRICAL WORK ONLY*

ROUTE 8/DOGWOOD ROAD
EAST BOUND RAMP
TRAFFIC SIGNAL P38.964

# SIGNAL AND LIGHTING
## (TEMPORARY)
## (LOCATION 1)
## STAGE 2

SCALE: 1"= 20'

**E-16**

STATE OF CALIFORNIA - DEPARTMENT OF TRANSPORTATION
Caltrans® TRAFFIC ELECTRICAL

FUNCTIONAL SUPERVISOR: RAJPREET SINGH
CALCULATED-DESIGNED BY: DANNY MCCLURE
CHECKED BY: HECTOR SANTAMARIA
REVISED BY
DATE REVISED

LAST REVISION 12-09-13
DATE PLOTTED => 11-APR-2014
TIME PLOTTED => 13:14

| Dist | COUNTY | ROUTE | POST MILES TOTAL PROJECT | SHEET No. | TOTAL SHEETS |
|---|---|---|---|---|---|
| 11 | Imp | 8 | R38.8/R39.1 | 129 | 225 |

REGISTERED ELECTRICAL ENGINEER 11-19-13 DATE

04-07-14
PLANS APPROVAL DATE

REGISTERED PROFESSIONAL ENGINEER DANNY D. McCLURE No. 16074 Exp. 12-31-15 ELECTRICAL STATE OF CALIFORNIA

*THE STATE OF CALIFORNIA OR ITS OFFICERS OR AGENTS SHALL NOT BE RESPONSIBLE FOR THE ACCURACY OR COMPLETENESS OF SCANNED COPIES OF THIS PLAN SHEET.*

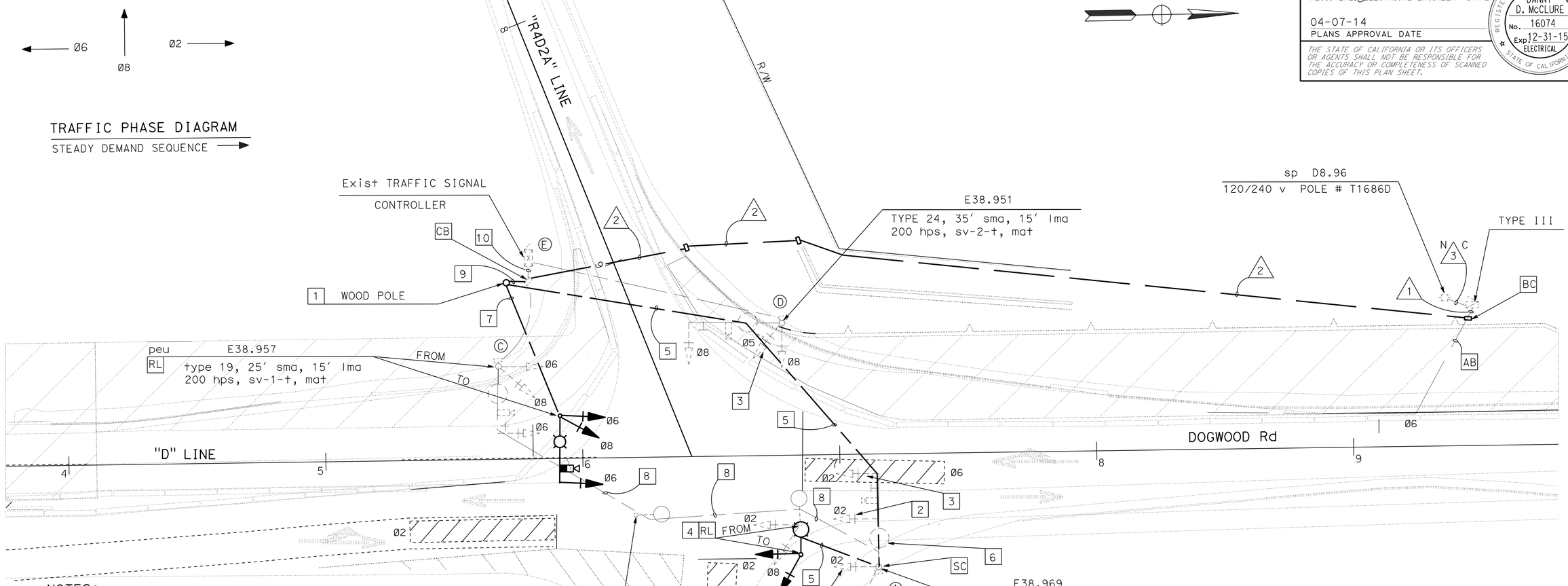


## NOTES:

1 - USE 6 INCH ROUND WOOD POLE AT 15' IN LENGHT WITH 5' BURY AS SHOWN ON PLAN.

2 - TURN ON AND UNCOVER HEAD.

3 - TURN OFF AND COVER HEAD.

4 - TYPE 15TS POLE WITH SV-2-TA, 15' LMA, 200W HPS.

5 - OVERHEAD CABLE TYPE 12-CSC, 2#10(L), 1#10(GROUND), VIDEO CABLE HARNESS. USE HALF INCH NYLON STRAP EVERY 5 FEET TO HOLD CABLE AND CONDUCTORS SECURELY TO POLE.

6 - TURN OFF LUMINAIRE.

7 - OVERHEAD CABLE TYPE 12-CSC, 2#10(L), 1#10(GROUND), VIDEO CABLE HARNESS, 3#14(PEU). USE HALF INCH NYLON STRAP EVERY 5 FEET TO HOLD CABLE AND CONDUCTORS SECURELY TO POLE.

8 - RC OVERHEAD CABLE AND CONDUCTORS.

9 - 2 OVERHEAD CABLES TYPE 12-CSC. USE HALF INCH NYLON STRAP EVERY 5 FEET TO HOLD CABLES SECURELY TO POLE. ENTER CONTROLLER CABINET THROUGH EXISTING PULL BOX.

10 - RC 3 CABLES TYPE 12-CSC. ADD 3 CABLES TYPE 12-CSC.

11 - SET NEW VIDEO DETECTION ZONE AS INDICATED.

## CONDUIT NOTES:

1 - Exist 3"C, 2#6 (signal), 2#10 (ltg), 3#14(peu).
RC 2#6(signal), 2#10(ltg), 3#14(peu).
ADD 2#6(SIGNAL), 2#10(LTG), 3#14(PEU).

2 - 3"C, 2#6 (SIGNAL), 2#10 (LTG), 3#14(PEU).

N C 3 - Exist 2"C, SERVICE CODUCTORS.

*APPROVED FOR ELECTRICAL WORK ONLY*

ROUTE 8/DOGWOOD ROAD
WEST BOUND RAMP
TRAFFIC SIGNAL P38.965

SCALE: 1"= 20'

# SIGNAL AND LIGHTING
## (TEMPORARY)
## (LOCATION 2)
## STAGE 2

**E-17**

STATE OF CALIFORNIA - DEPARTMENT OF TRANSPORTATION
Caltrans® TRAFFIC ELECTRICAL

FUNCTIONAL SUPERVISOR: RAJPREET SINGH
CALCULATED-DESIGNED BY: DANNY MCCLURE
CHECKED BY: HECTOR SANTAMARIA
REVISED BY
DATE REVISED

LAST REVISION 12-09-13 | DATE PLOTTED => 11-APR-2014 | TIME PLOTTED => 13:14

| Dist | COUNTY | ROUTE | POST MILES TOTAL PROJECT | SHEET No. | TOTAL SHEETS |
|---|---|---|---|---|---|
| 11 | Imp | 8 | R38.8/R39.1 | 130 | 225 |

REGISTERED ELECTRICAL ENGINEER 11-19-13 DATE

04-07-14
PLANS APPROVAL DATE

REGISTERED PROFESSIONAL ENGINEER
DANNY D. McCLURE
No. 16074
Exp. 12-31-15
ELECTRICAL
STATE OF CALIFORNIA

*THE STATE OF CALIFORNIA OR ITS OFFICERS OR AGENTS SHALL NOT BE RESPONSIBLE FOR THE ACCURACY OR COMPLETENESS OF SCANNED COPIES OF THIS PLAN SHEET.*

## CONDUIT NOTES(TSO):

1 - 2", 2#8 (LTG).

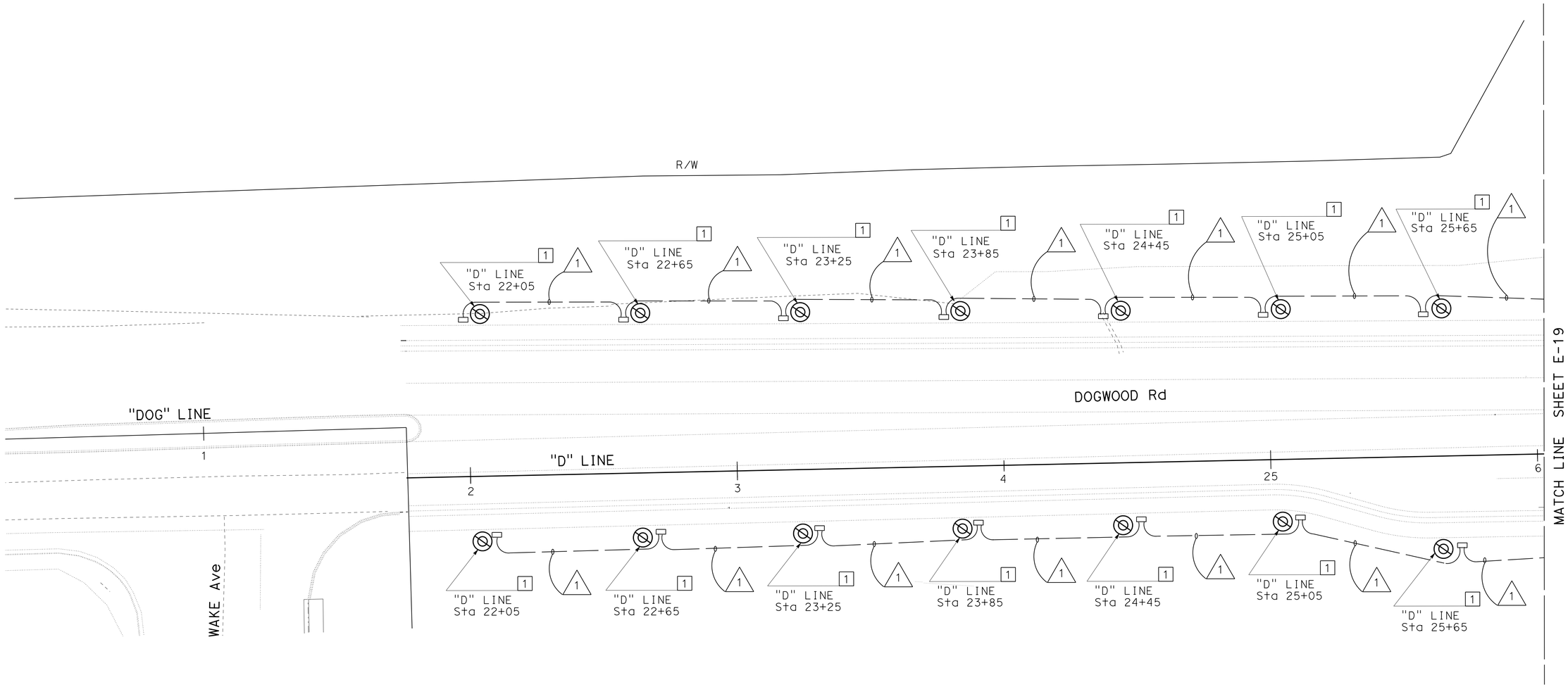


## NOTES (TSO):

1 - SEE SHEET SES-1 FOR LIGHTING STANDARD DETAILS.

ROUTE 8/DOGWOOD ROAD

# LIGHTING (CITY STREET)

*APPROVED FOR ELECTRICAL WORK ONLY*

SCALE: 1"= 20'

**E-18**

STATE OF CALIFORNIA - DEPARTMENT OF TRANSPORTATION
Caltrans
TRAFFIC ELECTRICAL

FUNCTIONAL SUPERVISOR: RAJPREET SINGH
CALCULATED-DESIGNED BY: DANNY MCCLURE
CHECKED BY: HECTOR SANTAMARIA
REVISED BY
DATE REVISED

DATE PLOTTED => 11-APR-2014
TIME PLOTTED => 13:14
LAST REVISION 12-09-13

| Dist | COUNTY | ROUTE | POST MILES TOTAL PROJECT | SHEET No. | TOTAL SHEETS |
|---|---|---|---|---|---|
| 11 | Imp | 8 | R38.8/R39.1 | 131 | 225 |

REGISTERED ELECTRICAL ENGINEER 11-19-13 DATE

04-07-14
PLANS APPROVAL DATE

REGISTERED PROFESSIONAL ENGINEER DANNY D. McCLURE No. 16074 Exp. 12-31-15 ELECTRICAL STATE OF CALIFORNIA

*THE STATE OF CALIFORNIA OR ITS OFFICERS OR AGENTS SHALL NOT BE RESPONSIBLE FOR THE ACCURACY OR COMPLETENESS OF SCANNED COPIES OF THIS PLAN SHEET.*

## CONDUIT NOTES(TSO):

1. - 2"C, 4#8 (LTG).
2. - 2"C, 2#8 (LTG).
3. - 2"C, SERVICE CONDUCTORS BY IID.

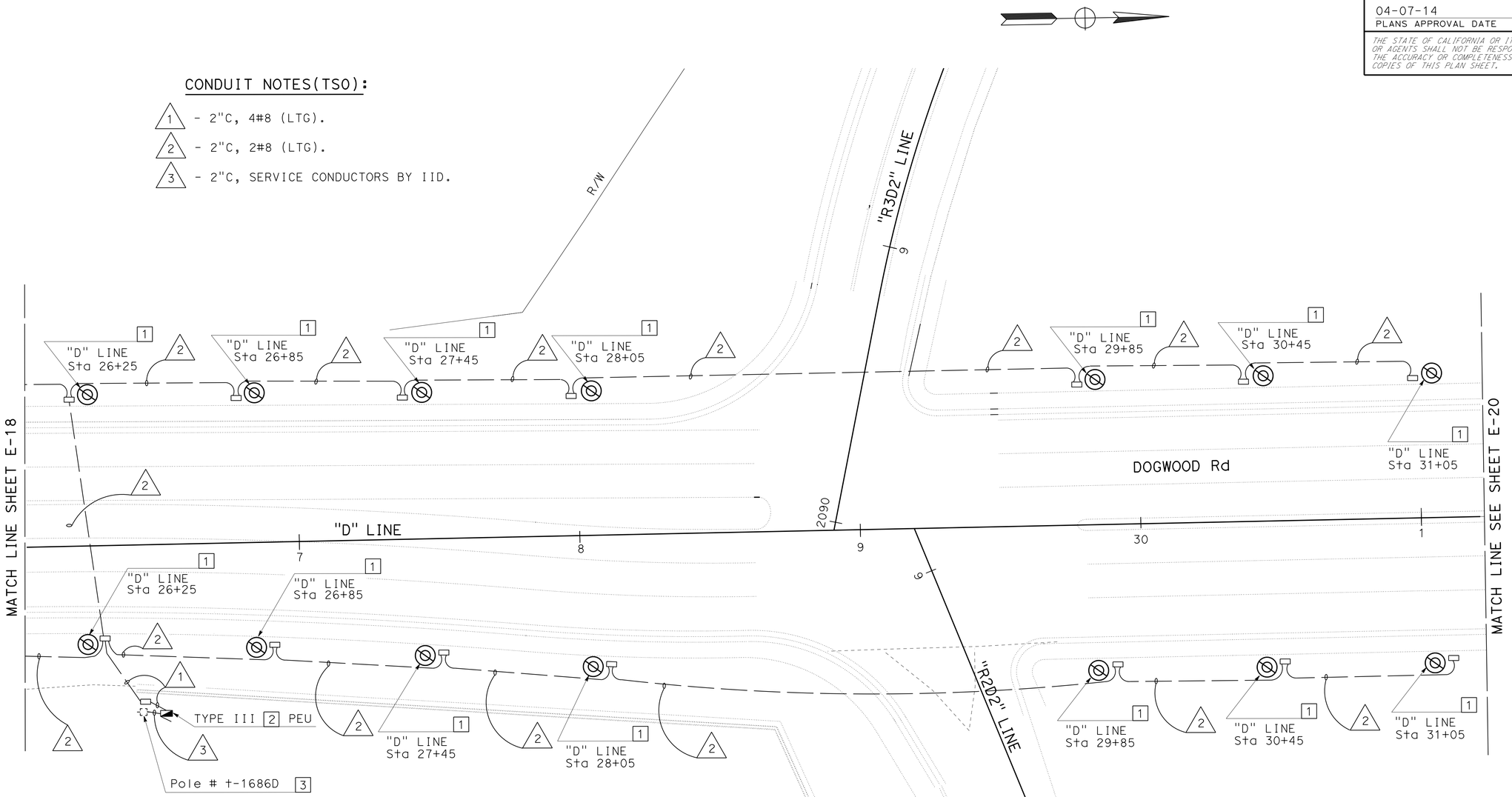


## NOTES (TSO):

1. - SEE SHEET SES-1 "ELEVATION OFF THE BRIDGE" FOR LIGHTING STANDARD DETAILS.
2. - SEE WIRING DIAGRAM "M" ON SHEET E-21.
   ADD TYPE 5 PEC FOR SIDEWALK LIGHTING.
3. - INSTALL TYPE H RISER PER IID REQUIREMENTS.

ROUTE 8/DOGWOOD ROAD

# LIGHTING (CITY STREET)

*APPROVED FOR ELECTRICAL WORK ONLY*

SCALE: 1"= 20'

E-19

STATE OF CALIFORNIA - DEPARTMENT OF TRANSPORTATION
Caltrans® TRAFFIC ELECTRICAL

FUNCTIONAL SUPERVISOR: RAJPREET SINGH
CALCULATED-DESIGNED BY: DANNY MCCLURE
CHECKED BY: HECTOR SANTAMARIA
REVISED BY / DATE REVISED

LAST REVISION 12-09-13 | DATE PLOTTED => 11-APR-2014 | TIME PLOTTED => 13:14

| Dist | COUNTY | ROUTE | POST MILES TOTAL PROJECT | SHEET No. | TOTAL SHEETS |
|---|---|---|---|---|---|
| 11 | Imp | 8 | R38.8/R39.1 | 132 | 225 |

Danny D. McClure 11-19-13
REGISTERED ELECTRICAL ENGINEER DATE

04-07-14
PLANS APPROVAL DATE

REGISTERED PROFESSIONAL ENGINEER DANNY D. McCLURE No. 16074 Exp. 12-31-15 ELECTRICAL STATE OF CALIFORNIA

*THE STATE OF CALIFORNIA OR ITS OFFICERS OR AGENTS SHALL NOT BE RESPONSIBLE FOR THE ACCURACY OR COMPLETENESS OF SCANNED COPIES OF THIS PLAN SHEET.*

## CONDUIT NOTE(TSO):

1 - 2", 2#8 (LTG).

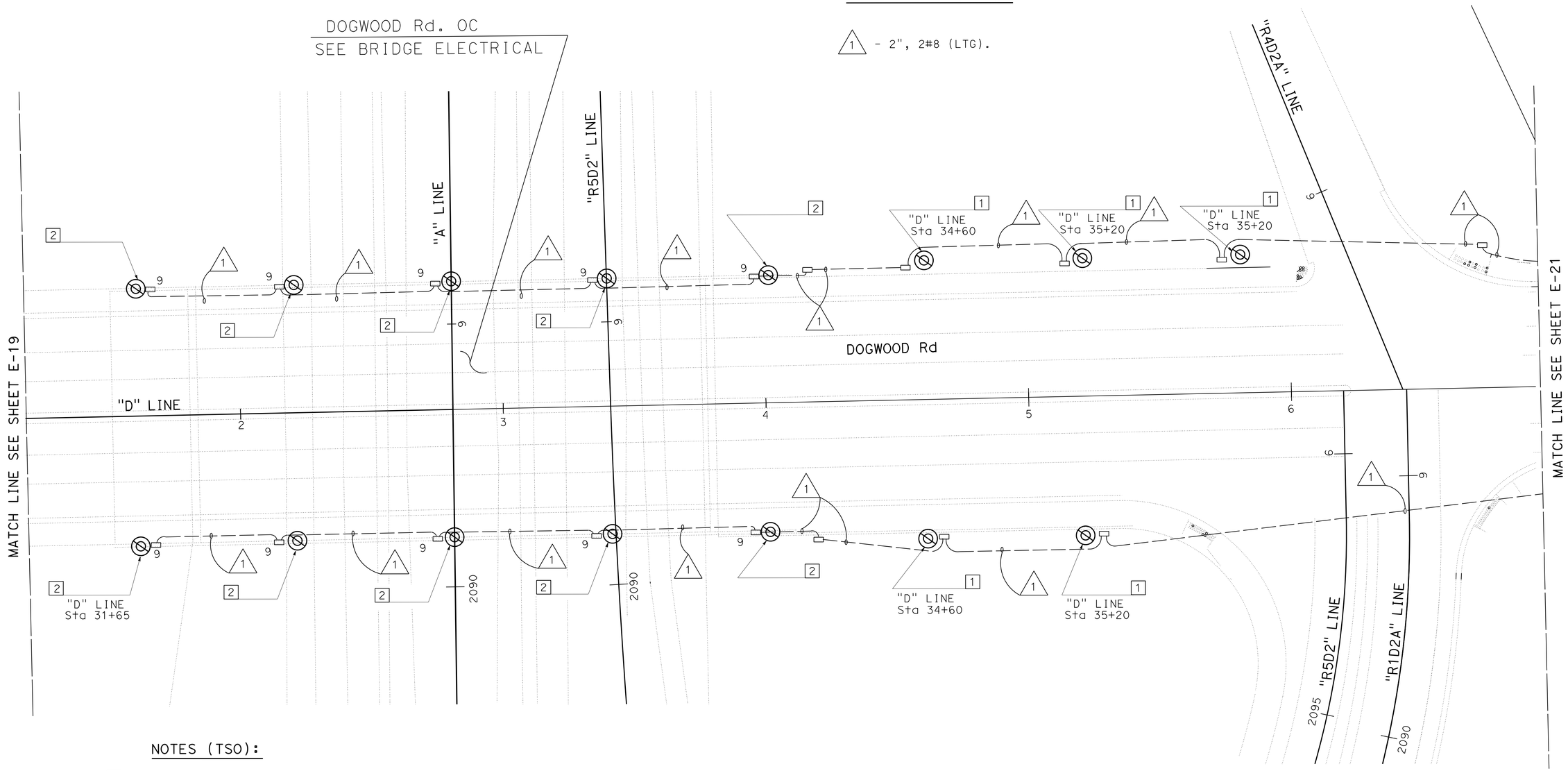


## NOTES (TSO):

1 - SEE SHEET SES-1 (ELEVATION OFF THE BRIDGE) FOR LIGHTING STANDARD DETAILS.

2 - SEE BRIDGE STRUCTURAL PLAN FOR LIGHTING ANCHORING DETAILS.
SEE SHEET SES-1 (ELEVATION ON THE BRIDGE) FOR LIGHTING STANDARD DETAILS.
SEE SHEET E-10 FOR BRIDGE ELECTRICAL DETAILS.

ROUTE 8/DOGWOOD ROAD

# LIGHTING (CITY STREET)

*APPROVED FOR ELECTRICAL WORK ONLY*

SCALE: 1"= 20'

**E-20**

STATE OF CALIFORNIA - DEPARTMENT OF TRANSPORTATION
Caltrans® TRAFFIC ELECTRICAL

FUNCTIONAL SUPERVISOR: RAJPREET SINGH
CALCULATED-DESIGNED BY: DANNY MCCLURE
CHECKED BY: HECTOR SANTAMARIA
REVISED BY
DATE REVISED

LAST REVISION 12-09-13
DATE PLOTTED => 11-APR-2014
TIME PLOTTED => 13:14

| Dist | COUNTY | ROUTE | POST MILES TOTAL PROJECT | SHEET No. | TOTAL SHEETS |
|---|---|---|---|---|---|
| 11 | Imp | 8 | R38.8/R39.1 | 133 | 225 |

REGISTERED ELECTRICAL ENGINEER 11-19-13 DATE

04-07-14
PLANS APPROVAL DATE

REGISTERED PROFESSIONAL ENGINEER DANNY D. McCLURE No. 16074 Exp. 12-31-15 ELECTRICAL STATE OF CALIFORNIA

*THE STATE OF CALIFORNIA OR ITS OFFICERS OR AGENTS SHALL NOT BE RESPONSIBLE FOR THE ACCURACY OR COMPLETENESS OF SCANNED COPIES OF THIS PLAN SHEET.*

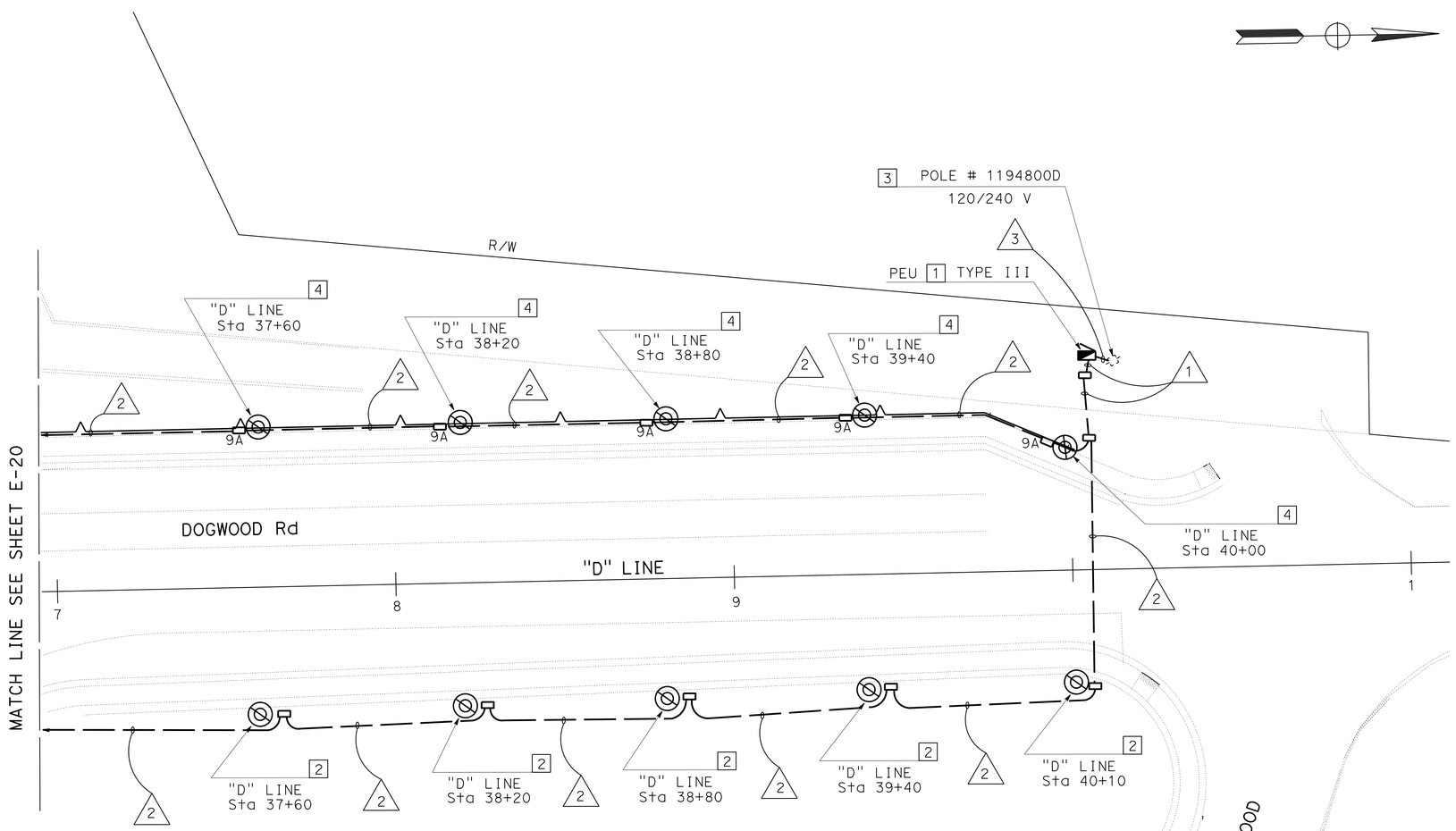


## CIRCUIT BREAKERS

MAIN-2P-100 AMP

A-SP-15 AMP

B-SP-15 AMP

C, D } 2P-20 AMP

E, F } 2P-20 AMP

CON = CONTACTOR

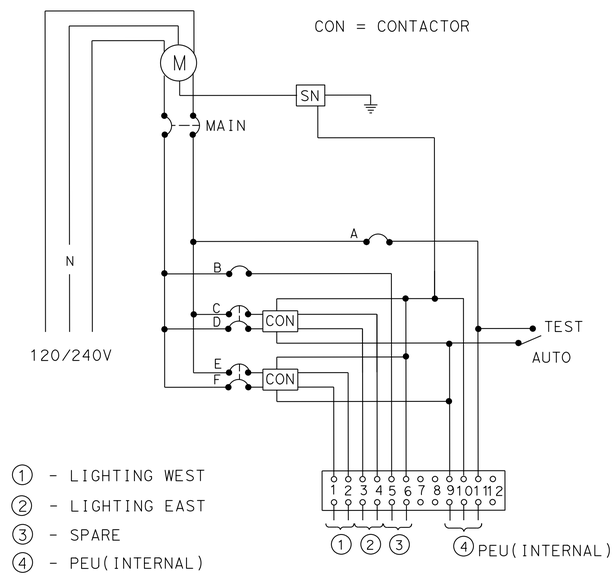


1 - LIGHTING WEST
2 - LIGHTING EAST
3 - SPARE
4 - PEU(INTERNAL)

SD WIRING DIAGRAM "M"

(TYPE III SERVICE EQUIPMENT ENCLOSURE
SEE RSP ES-2C & RSP ES-2F)

## CONDUIT NOTES(TSO):

1 - 2"C, 4#8 (LTG).

2 - 2"C, 2#8 (LTG).

3 - 2"C, SERVICE CONDUCTORS BY IID.

## NOTES (TSO):

1 - SEE WIRING DIAGRAM "M" ON THIS SHEET.
ADD TYPE 5 PEC FOR SIDEWALK LIGHTING.

2 - SEE SHEET SES-1 (ELEVATION OFF THE BRIDGE) FOR LIGHTING STANDARD DETAILS.

3 - INSTALL TYPE H RISER PER IID REQUIREMENTS.

4 - POLE HEIGHT = 10'-0".
SEE SHEET C-8 (ELEVATION AT RETAINING WALL) FOR LIGHTING STANDARD DETAILS.
SEE SHEET E-22 FOR BARRIER ELECTRICAL DETAILS.
SEE SHEET SES-1 (ELEVATION ON THE BRIDGE) FOR LIGHTING STANDARD DETAILS.

ROUTE 8/DOGWOOD ROAD

# LIGHTING (CITY STREET)

*APPROVED FOR ELECTRICAL WORK ONLY*

SCALE: 1"= 20'

**E-21**

STATE OF CALIFORNIA - DEPARTMENT OF TRANSPORTATION
Caltrans® TRAFFIC ELECTRICAL

FUNCTIONAL SUPERVISOR: RAJPREET SINGH
CALCULATED-DESIGNED BY: DANNY MCCLURE
CHECKED BY: HECTOR SANTAMARIA
REVISED BY
DATE REVISED

LAST REVISION 12-09-13
DATE PLOTTED => 11-APR-2014
TIME PLOTTED => 13:14

| Dist | COUNTY | ROUTE | POST MILES TOTAL PROJECT | SHEET No. | TOTAL SHEETS |
|---|---|---|---|---|---|
| 11 | Imp | 8 | R38.8/R39.1 | 134 | 225 |

REGISTERED ELECTRICAL ENGINEER — DATE 11-19-13

04-07-14
PLANS APPROVAL DATE

REGISTERED PROFESSIONAL ENGINEER — DANNY D. McCLURE — No. 16074 — Exp. 12-31-15 — ELECTRICAL — STATE OF CALIFORNIA

*THE STATE OF CALIFORNIA OR ITS OFFICERS OR AGENTS SHALL NOT BE RESPONSIBLE FOR THE ACCURACY OR COMPLETENESS OF SCANNED COPIES OF THIS PLAN SHEET.*

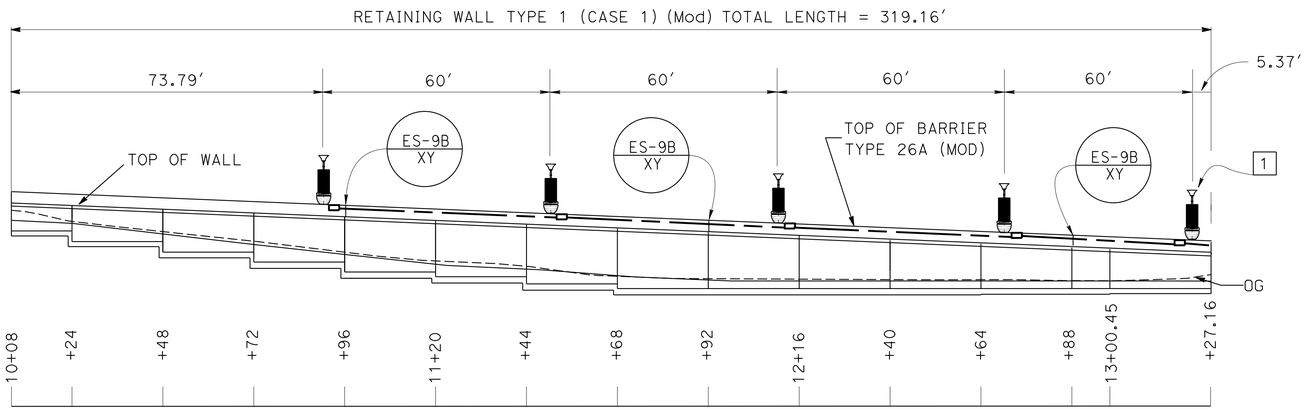


## CONDUIT NOTE:

1 - 2"C - LIGHTING (CITY STREET)

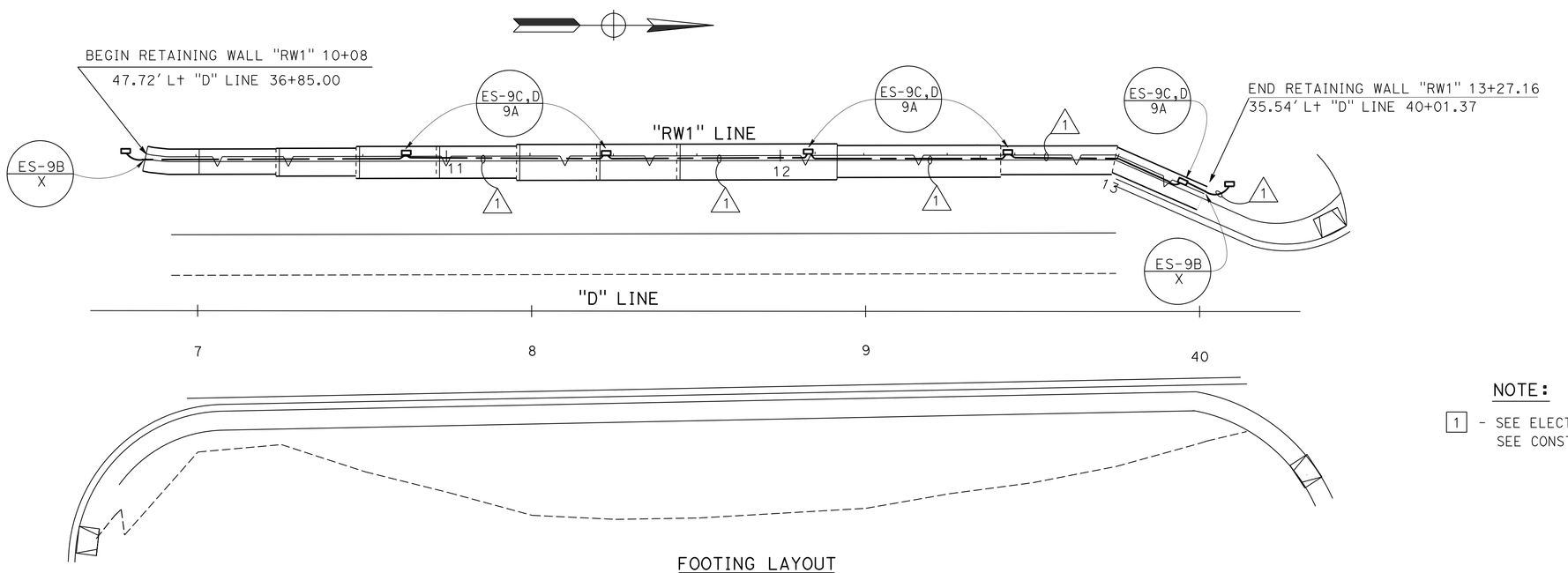


## NOTE:

1 - SEE ELECTRICAL PLAN SHEET E-21.
SEE CONSTRUCTION DETAIL PLAN C-8.

FOOTING LAYOUT
SCALE: 1" = 20′

**RETAINING WALL "RW1"**

# ELECTRICAL DETAIL (RETAINING WALL "RW1")

**E-22**

*APPROVED FOR ELECTRICAL WORK ONLY*

SCALE AS SHOWN

STATE OF CALIFORNIA - DEPARTMENT OF TRANSPORTATION
Caltrans® **TRAFFIC ELECTRICAL**

CALCULATED-DESIGNED BY: DANNY MCCLURE
CHECKED BY: HECTOR SANTAMARIA
FUNCTIONAL SUPERVISOR: RAJPREET SINGH
REVISED BY / DATE REVISED

LAST REVISION 12-09-13 | DATE PLOTTED => 11-APR-2014 | TIME PLOTTED => 13:14

| DIST | COUNTY | ROUTE | POST MILES TOTAL PROJECT | SHEET No. | TOTAL SHEETS |
|---|---|---|---|---|---|
| 11 | Imp | 8 | R38.8/R39.1 | 135 | 225 |

REGISTERED CIVIL ENGINEER — DATE 7-31-13

04-07-14
PLANS APPROVAL DATE

*The State of California or its officers or agents shall not be responsible for the accuracy or completeness of electronic copies of this plan sheet.*

REGISTERED PROFESSIONAL ENGINEER — AJMAN MALAK — No. C73369 — Exp. 12-31-2014 — CIVIL — STATE OF CALIFORNIA

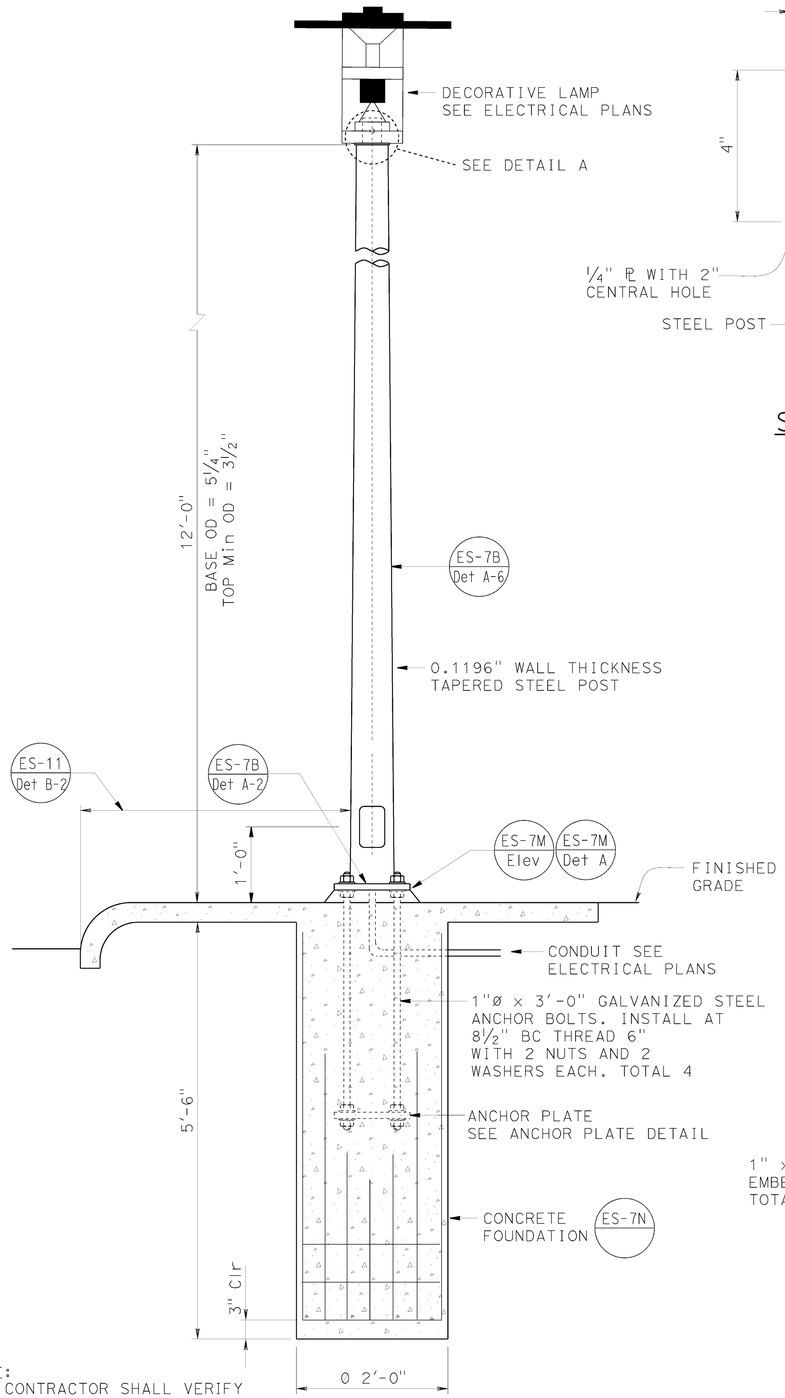


NOTE:
THE CONTRACTOR SHALL VERIFY ALL CONTROLLING FIELD DIMENSIONS BEFORE ORDERING OR FABRICATING ANY MATERIAL.

ELEVATION OFF THE BRIDGE

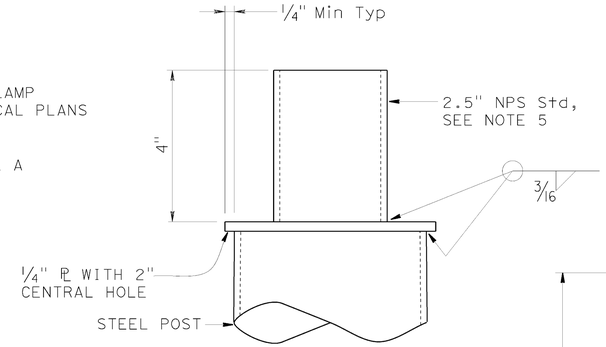


SLIP FIT INSERT
DETAIL A

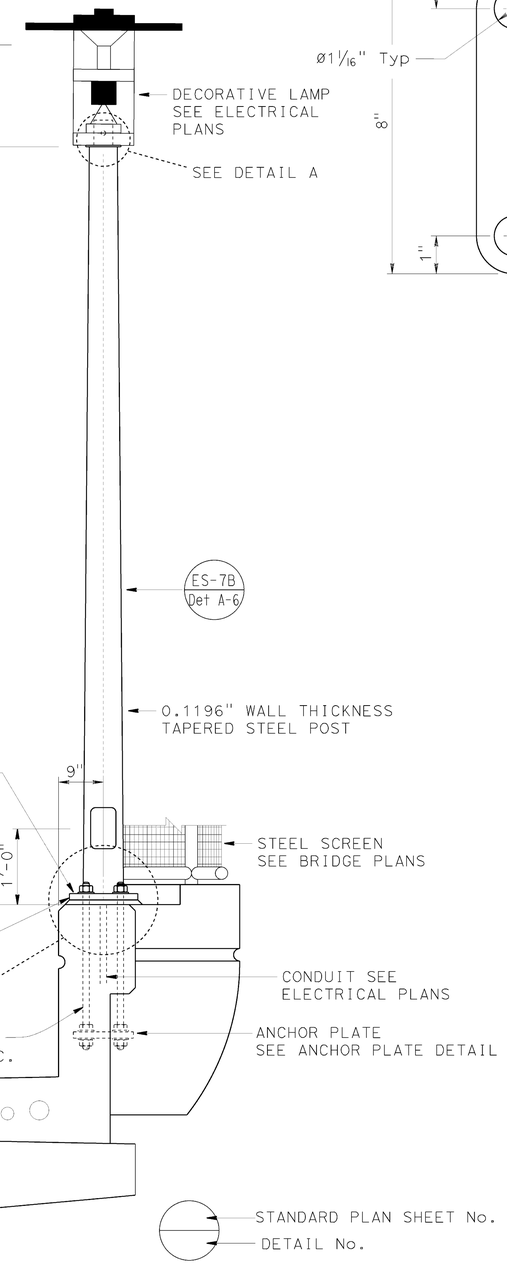


ELEVATION ON THE BRIDGE

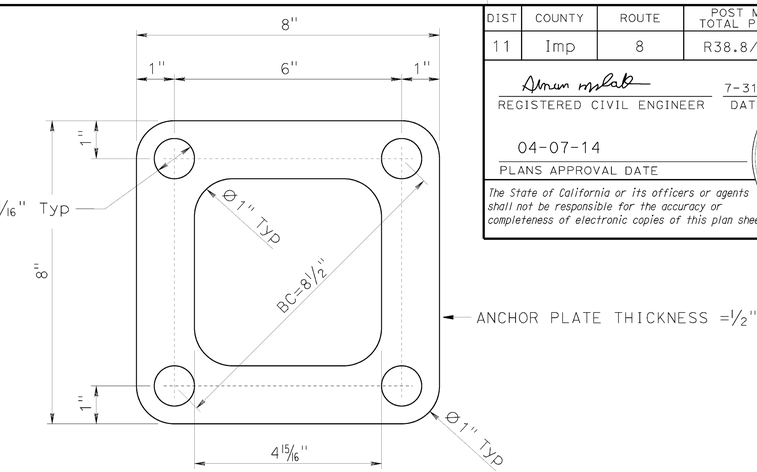


ANCHOR PLATE
DETAIL

STANDARD PLAN SHEET No.
DETAIL No.

NO SCALE

GENERAL NOTES:

SPECIFICATIONS

AASHTO Standard Specifications for Structural Supports for Highway Signs, Luminaires and Traffic Signals, Fifth Edition.

LOADING

Wind Loadings: 100 MPH

UNIT STRESSES

Structural steel:
fy = 55,000 psi (Tapered steel post and Anchor bolts)
fy = 50,000 psi unless otherwise noted.

Reinforced concrete:
fc = 3,600 psi
fy = 60,000 psi

NOTES:

1. See "ELECTRICAL PLANS" for pole locations.
2. During pole erection the post shall be raked as necessary with the use of leveling nuts to provide a plumb pole axis.
3. Foundation design is based on AASHTO Standard Specifications for Structural Supports for Highway Signs, Luminaires, and Traffic Signals, Fifth Edition (LTS-5) article 13.6 Broms' approximate procedure assuming a cohessionless material. The angle of Internal friction used is 30° and unit weight of soil used is 120 lb/ft³.
4. For details not shown, see "2010 STANDARD PLANS".
5. Contractor shall verify the exact dimensions for the slip fit insert before fabrication so that all parts will fit.
6. Contractor shall verify with the Engineer anchor bolt size and bolt circle required for the electrolier before constructing CIDH pile.
7. Decorative lamp shall not weigh more than 50 Lbs and not have an effective pressure area greater than 2.5 ft².
8. All steel shall be galvanized after fabrication.

| BRANCH CHIEF | DAVID NEUMANN | DESIGN | BY A MALAK | CHECKED A HOUGH |
|---|---|---|---|---|
| | | DETAILS | BY H NGUYEN | CHECKED A MALAK |
| | | QUANTITIES | BY | CHECKED |

STATE OF CALIFORNIA
DEPARTMENT OF TRANSPORTATION

DIVISION OF ENGINEERING SERVICES
DESIGN AND TECHNICAL SERVICES
SPECIAL DESIGNS BRANCH

BRIDGE NO. N/A
POST MILE R38.8/R39.1

# DECORATIVE LIGHTING POLE
## POLE DETAILS

SES-1

STRUCTURES DESIGN SPECIAL DESIGN SHEET (ENGLISH) (REV. 09-01-10)

ORIGINAL SCALE IN INCHES FOR REDUCED PLANS 0 1 2 3

UNIT:
PROJECT NUMBER & PHASE: 1100000743-1
CONTRACT NO.: 11-263301

DISREGARD PRINTS BEARING EARLIER REVISION DATES — REVISION DATES 2/19/13

SHEET 1 OF 1

FILE => 11-263301ses1.dgn

USERNAME => s128478 DATE PLOTTED => 02-DEC-2013 TIME PLOTTED => 14:28

## M

| | |
|---|---|
| Maint | MAINTENANCE |
| Max | MAXIMUM |
| MB | METAL BEAM |
| MBB | METAL BEAM BARRIER |
| MBGR | METAL BEAM GUARD RAILING |
| Med | MEDIAN |
| MGS | MIDWEST GUARDRAIL SYSTEM |
| MH | MANHOLE |
| Min | MINIMUM |
| Misc | MISCELLANEOUS |
| Misc I & S | MISCELLANEOUS IRON AND STEEL |
| Mkr | MARKER |
| Mod | MODIFIED, |
| | MODIFY |
| Mon | MONUMENT |
| MP | METAL PLATE |
| MPGR | METAL PLATE GUARD RAILING |
| MR | MOVEMENT RATING |
| MSE | MECHANICALLY STABILIZED EMBANKMENT |
| Mt | MOUNTAIN, MOUNT |
| Mtl | MATERIAL |
| MVP | MAINTENANCE VEHICLE PULLOUT |

## N

| | |
|---|---|
| N | NORTH |
| NB | NORTHBOUND |
| No. | NUMBER (MUST HAVE PERIOD) |
| Nos. | NUMBERS (MUST HAVE PERIOD) |
| NPS | NOMINAL PIPE SIZE |
| NS | NEAR SIDE |
| NSP | NEW STANDARD PLAN |
| NTS | NOT TO SCALE |

## O

| | |
|---|---|
| Oblr | OBLITERATE |
| OC | OVERCROSSING |
| OD | OUTSIDE DIAMETER |
| OF | OUTSIDE FACE |
| OG | ORIGINAL GROUND |
| OGAC | OPEN GRADED ASPHALT CONCRETE |
| OGFC | OPEN GRADED FRICTION COURSE |
| OH | OVERHEAD |
| OHWM | ORDINARY HIGH WATER MARK |
| O-O | OUT TO OUT |
| Opp | OPPOSITE |
| OSD | OVERSIDE DRAIN |

## P

| | |
|---|---|
| P | PAGE |
| PAP | PERFORATED ALUMINUM PIPE |
| PB | PULL BOX |
| PC | POINT OF CURVATURE, |
| | PRECAST |
| PCC | POINT OF COMPOUND CURVE, |
| | PORTLAND CEMENT CONCRETE |
| PCMS | PORTABLE CHANGEABLE MESSAGE SIGN |
| PCP | PERFORATED CONCRETE PIPE, |
| | PRESTRESSED CONCRETE PIPE |
| PCVC | POINT OF COMPOUND VERTICAL CURVE |
| PEC | PERMIT TO ENTER AND CONSTRUCT |
| Ped | PEDESTRIAN |
| Ped OC | PEDESTRIAN OVERCROSSING |
| Ped UC | PEDESTRIAN UNDERCROSSING |
| Perm Mtl | PERMEABLE MATERIAL |

## P continued

| | |
|---|---|
| PG | PROFILE GRADE |
| PI | POINT OF INTERSECTION |
| PJP | PARTIAL JOINT PENETRATION |
| Pkwy | PARKWAY |
| ℙ,PL | PLATE |
| P/L | PROPERTY LINE |
| PM | POST MILE, |
| | TIME FROM NOON TO MIDNIGHT |
| PN | PAVING NOTCH |
| POC | POINT OF HORIZONTAL CURVE |
| POT | POINT OF TANGENT |
| POVC | POINT OF VERTICAL CURVE |
| PP | PIPE PILE, |
| | PLASTIC PIPE, |
| | POWER POLE |
| PPL | PREFORMED PERMEABLE LINER |
| PPP | PERFORATED PLASTIC PIPE |
| PRC | POINT OF REVERSE CURVE |
| PRF | PAVEMENT REINFORCING FABRIC |
| PRVC | POINT OF REVERSE VERTICAL CURVE |
| PS&E | PLANS, SPECIFICATIONS AND ESTIMATES |
| PS, P/S | PRESTRESSED |
| PSP | PERFORATED STEEL PIPE |
| PT | POINT OF TANGENCY |
| PVC | POLYVINYL CHLORIDE |
| Pvmt | PAVEMENT |

## Q

| | |
|---|---|
| Qty | QUANTITY |

## R

| | |
|---|---|
| R | RADIUS |
| R & D | REMOVE AND DISPOSE |
| R & S | REMOVE AND SALVAGE |
| R/C | RATE OF CHANGE |
| RCA | REINFORCED CONCRETE ARCH |
| RCB | REINFORCED CONCRETE BOX |
| RCP | REINFORCED CONCRETE PIPE |
| RCPA | REINFORCED CONCRETE PIPE ARCH |
| Rd | ROAD |
| Reinf | REINFORCED, |
| | REINFORCEMENT, |
| | REINFORCING |
| Rel | RELOCATE |
| Repl | REPLACEMENT |
| Ret | RETAINING |
| Rev | REVISED, REVISION |
| Rdwy | ROADWAY |
| RHMA | RUBBERIZED HOT MIX ASPHALT |
| Riv | RIVER |
| RM | ROAD-MIXED |
| RP | RADIUS POINT, |
| | REFERENCE POINT |
| RR | RAILROAD |
| RSP | ROCK SLOPE PROTECTION, |
| | REVISED STANDARD PLAN |
| Rt | RIGHT |
| Rte | ROUTE |
| RW | REDWOOD, |
| | RETAINING WALL |
| R/W | RIGHT OF WAY |
| Rwy | RAILWAY |

## S

| | |
|---|---|
| S | SOUTH, |
| | SUPPLEMENT |
| SAE | STRUCTURE APPROACH EMBANKMENT |
| Salv | SALVAGE |
| SAPP | STRUCTURAL ALUMINUM PLATE PIPE |
| SB | SOUTHBOUND |
| SC | SAND CUSHION |
| SCSP | SLOTTED CORRUGATED STEEL PIPE |
| SD | STORM DRAIN |
| Sec | SECOND, |
| | SECTION |
| Sep | SEPARATION |
| SG | SUBGRADE |
| Shld | SHOULDER |
| Sht | SHEET |
| Sim | SIMILAR |
| ℄ | STATION LINE |
| SM | SELECTED MATERIAL |
| Spec | SPECIAL, |
| | SPECIFICATIONS |
| SPP | SLOTTED PLASTIC PIPE |
| SS | SLOPE STAKE |
| SSBM | STRAP AND SADDLE BRACKET METHOD |
| SSD | STRUCTURAL SECTION DRAIN |
| SSPA | STRUCTURAL STEEL PLATE ARCH |
| SSPP | STRUCTURAL STEEL PLATE PIPE |
| SSPPA | STRUCTURAL STEEL PLATE PIPE ARCH |
| SSRP | STEEL SPIRAL RIB PIPE |
| St | STREET |
| Sta | STATION |
| STBB | SINGLE THRIE BEAM BARRIER |
| Std | STANDARD |
| Str | STRUCTURE |
| Surf | SURFACING |
| SW | SIDEWALK, |
| | SOUND WALL |
| Swr | SEWER |
| Sym | SYMMETRICAL |
| S4S | SURFACE 4 SIDES |

## T

| | |
|---|---|
| T | SEMI-TANGENT |
| Tan | TANGENT |
| TBB | THRIE BEAM BARRIER |
| Tbr | TIMBER |
| TC | TOP OF CURB |
| TCB | TRAFFIC CONTROL BOX |
| TCE | TEMPORARY CONSTRUCTION EASEMENT |
| Tel | TELEPHONE |
| Temp | TEMPORARY |
| TG | TOP OF GRADE |
| Tot | TOTAL |
| TP | TELEPHONE POLE |
| TPB | TREATED PERMEABLE BASE |
| TPM | TREATED PERMEABLE MATERIAL |
| Trans | TRANSITION |

## T continued

| | |
|---|---|
| TS | TRANSVERSE, |
| | TRAFFIC SIGNAL, |
| | TUBULAR STEEL |
| Typ | TYPICAL |

## U

| | |
|---|---|
| UC | UNDERCROSSING |
| UD | UNDERDRAIN |
| UG | UNDERGROUND |
| UON | UNLESS OTHERWISE NOTED |
| UP | UNDERPASS |

## V

| | |
|---|---|
| V | VALVE, |
| | DESIGN SPEED |
| Var | VARIABLE, |
| | VARIES |
| VC | VERTICAL CURVE |
| VCP | VITRIFIED CLAY PIPE |
| Vert | VERTICAL |
| Via | VIADUCT |
| Vol | VOLUME |

## W

| | |
|---|---|
| W | WEST, |
| | WIDTH |
| WB | WESTBOUND |
| WH | WEEP HOLE |
| WM | WIRE MESH |
| WS | WATER SURFACE |
| WSP | WELDED STEEL PIPE |
| Wt | WEIGHT |
| WV | WATER VALVE |
| WW | WINGWALL |
| WWLOL | WINGWALL LAYOUT LINE |

## X

| | |
|---|---|
| X Sec | CROSS SECTION |
| Xing | CROSSING |

## Y

| | |
|---|---|
| Yr | YEAR |
| Yrs | YEARS |

| Dist | COUNTY | ROUTE | POST MILES TOTAL PROJECT | SHEET No. | TOTAL SHEETS |
|---|---|---|---|---|---|
| 11 | Imp | 8 | R38.8/R39.1 | 136 | 225 |

Grace M. Tsushima
REGISTERED CIVIL ENGINEER

July 19, 2013
PLANS APPROVAL DATE

REGISTERED PROFESSIONAL ENGINEER
Grace M. Tsushima
No. C49814
Exp. 9-30-14
CIVIL
STATE OF CALIFORNIA

*THE STATE OF CALIFORNIA OR ITS OFFICERS OR AGENTS SHALL NOT BE RESPONSIBLE FOR THE ACCURACY OR COMPLETENESS OF SCANNED COPIES OF THIS PLAN SHEET.*

TO ACCOMPANY PLANS DATED 04-07-14

### UNIT OF MEASUREMENT SYMBOLS:

Some of the symbols used in the project plan quantity tables and in the Bid Item List are:

TABLE A

| SYMBOL USED | DEFINITIONS |
|---|---|
| ACRE | ACRE |
| CF | CUBIC FOOT |
| CY | CUBIC YARD |
| EA | EACH |
| GAL | GALLON |
| LB | POUND |
| LF | LINEAR FOOT |
| SQFT | SQUARE FOOT |
| SQYD | SQUARE YARD |
| STA | 100 FEET |
| TAB | TABLET |
| TON | 2,000 POUNDS |

Some of the symbols used in the plans other than in the project plan quantity tables are:

TABLE B

| SYMBOL USED | DEFINITIONS |
|---|---|
| ksi | KIPS PER SQUARE INCH |
| ksf | KIPS PER SQUARE FOOT |
| psi | POUNDS PER SQUARE INCH |
| psf | POUNDS PER SQUARE FOOT |
| $lb/ft^3$, pcf | POUNDS PER CUBIC FOOT |
| tsf | TONS PER SQUARE FOOT |
| mph, MPH * | MILES PER HOUR |
| ø | NOMINAL DIAMETER |
| oz | OUNCE |
| lb | POUND |
| kip | 1,000 POUNDS |
| cal | CALORIE |
| ft | FOOT OR FEET |
| gal | GALLON |

* For use on a sign panel only

STATE OF CALIFORNIA
DEPARTMENT OF TRANSPORTATION

# ABBREVIATIONS (SHEET 2 OF 2)

NO SCALE

RSP A10B DATED JULY 19, 2013 SUPERSEDES STANDARD PLAN A10B DATED MAY 20, 2011 - PAGE 2 OF THE STANDARD PLANS BOOK DATED 2010.

**REVISED STANDARD PLAN RSP A10B**

**2010 REVISED STANDARD PLAN RSP A10B**

6-7-13

| Dist | COUNTY | ROUTE | POST MILES TOTAL PROJECT | SHEET No. | TOTAL SHEETS |
|---|---|---|---|---|---|
| 11 | Imp | 8 | R38.8/R39.1 | 137 | 225 |

REGISTERED CIVIL ENGINEER

July 19, 2013
PLANS APPROVAL DATE

REGISTERED PROFESSIONAL ENGINEER Roberta L. McLaughlin No. C40375 Exp. 3-31-15 CIVIL STATE OF CALIFORNIA

*THE STATE OF CALIFORNIA OR ITS OFFICERS OR AGENTS SHALL NOT BE RESPONSIBLE FOR THE ACCURACY OR COMPLETENESS OF SCANNED COPIES OF THIS PLAN SHEET.*

TO ACCOMPANY PLANS DATED 04-07-14

## EXIT RAMP NEUTRAL AREA (GORE) TREATMENT

DETAIL 36

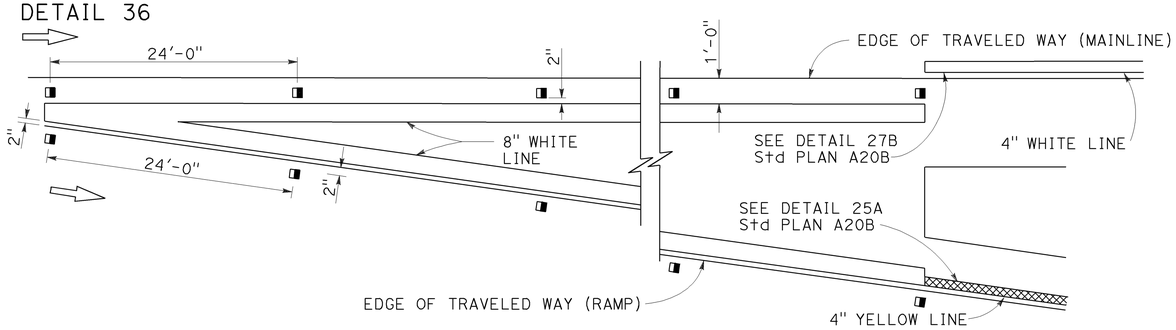


## ENTRANCE RAMP NEUTRAL AREA (MERGE) TREATMENT

DETAIL 36A

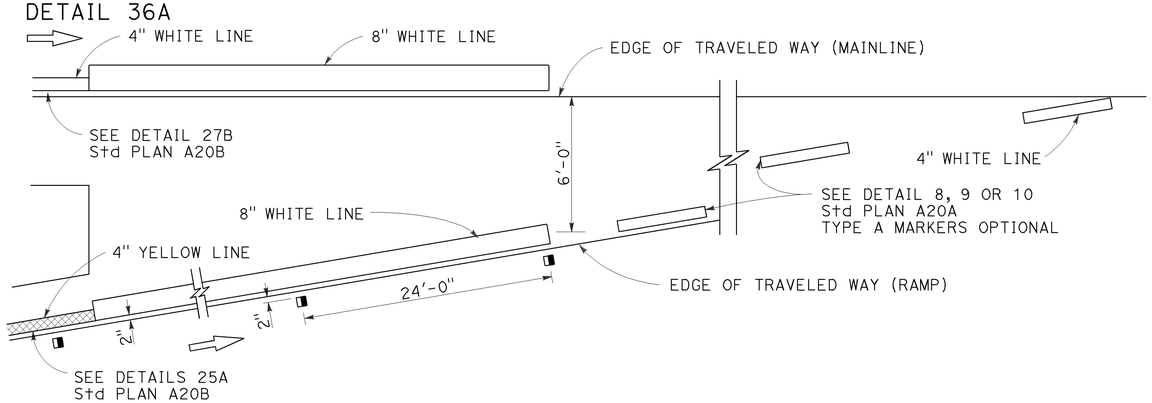


## ENTRANCE RAMP NEUTRAL AREA (ACCELERATION LANE) TREATMENT

DETAIL 36B

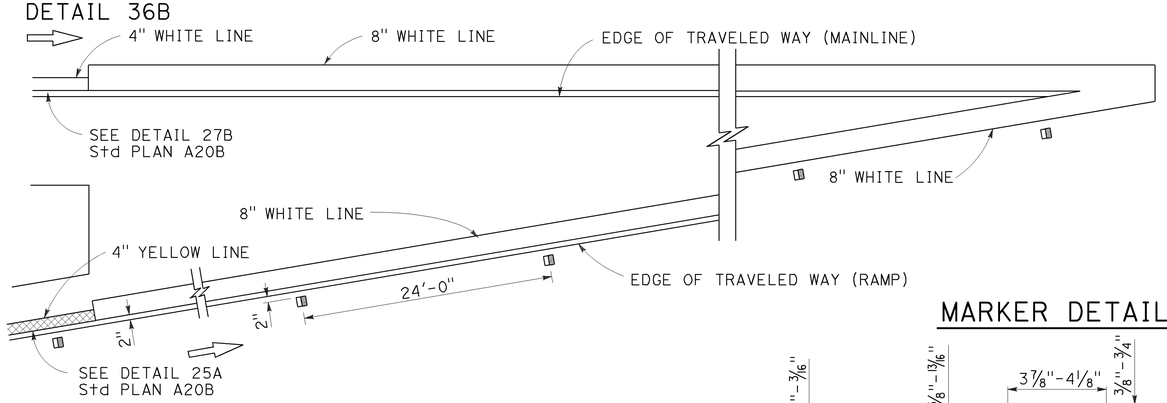


## MARKER DETAILS

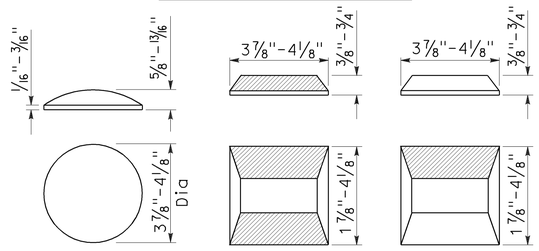


RETROREFLECTIVE FACE

**LEGEND:**

MARKERS

- ○ TYPE A WHITE NON-REFLECTIVE
- ⊟ TYPE C RED-CLEAR RETROREFLECTIVE
- ◨ TYPE G ONE-WAY CLEAR RETROREFLECTIVE

## LANE DROP AT EXIT RAMPS

DETAIL 37

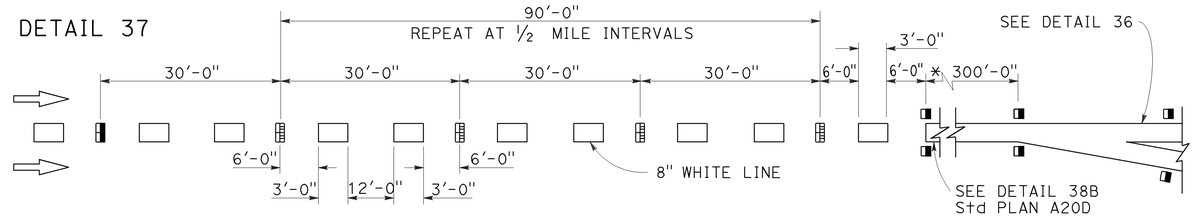


DETAIL 37A

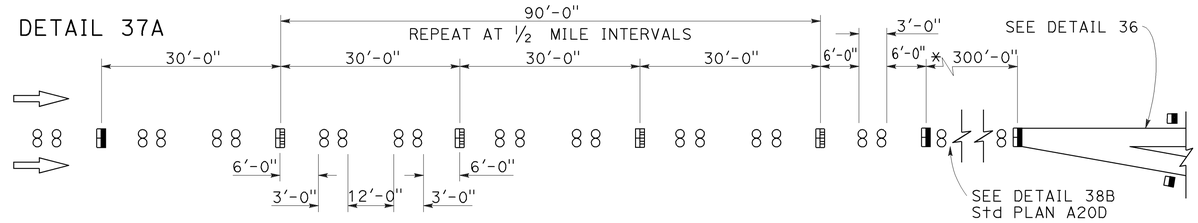


* The solid channelizing line shown may be omitted on short auxiliary lanes where weaving length is critical.

## LANE DROP AT INTERSECTIONS

DETAIL 37B

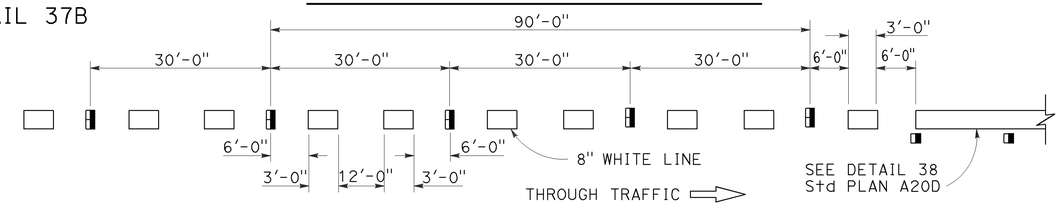


DETAIL 37C

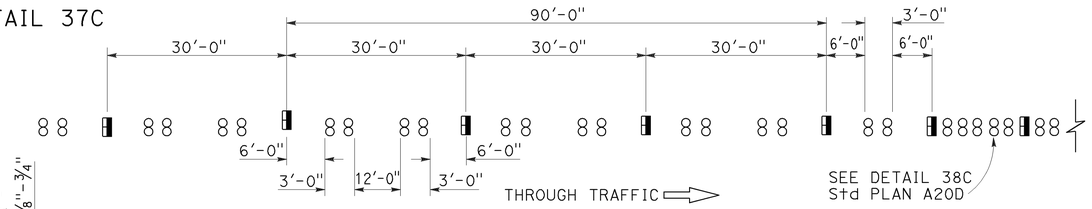


STATE OF CALIFORNIA
DEPARTMENT OF TRANSPORTATION

# PAVEMENT MARKERS AND TRAFFIC LINE TYPICAL DETAILS

NO SCALE

RSP A20C DATED JULY 19, 2013 SUPERSEDES STANDARD PLAN A20C DATED MAY 20, 2011 - PAGE 11 OF THE STANDARD PLANS BOOK DATED 2010.

**REVISED STANDARD PLAN RSP A20C**

**2010 REVISED STANDARD PLAN RSP A20C**

4-29-13

| Dist | COUNTY | ROUTE | POST MILES TOTAL PROJECT | SHEET No. | TOTAL SHEETS |
|---|---|---|---|---|---|
| 11 | Imp | 8 | R38.8/R39.1 | 138 | 225 |

REGISTERED CIVIL ENGINEER

April 20, 2012
PLANS APPROVAL DATE

REGISTERED PROFESSIONAL ENGINEER
Roberta L. McLaughlin
No. C40375
Exp. 3-31-13
CIVIL
STATE OF CALIFORNIA

*THE STATE OF CALIFORNIA OR ITS OFFICERS OR AGENTS SHALL NOT BE RESPONSIBLE FOR THE ACCURACY OR COMPLETENESS OF SCANNED COPIES OF THIS PLAN SHEET.*

TO ACCOMPANY PLANS DATED 04-07-14

**2010 REVISED STANDARD PLAN RSP A24A**

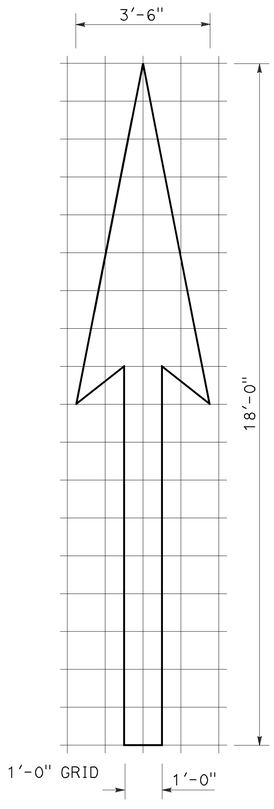


A=25 ft$^2$

TYPE I 18'-0" ARROW

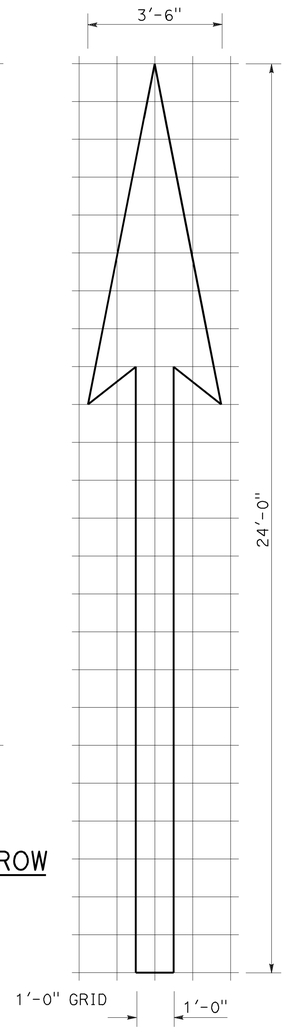


A=31 ft$^2$

TYPE I 24'-0" ARROW

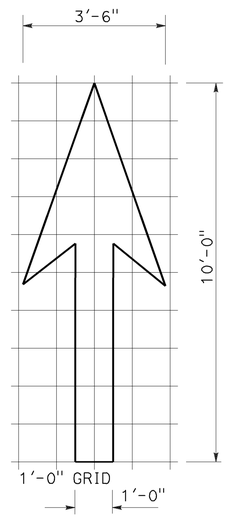


A=14 ft$^2$

TYPE I 10'-0" ARROW

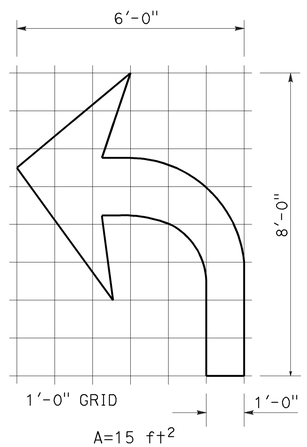


A=15 ft$^2$

TYPE IV (L) ARROW

(For Type IV (R) arrow, use mirror image)

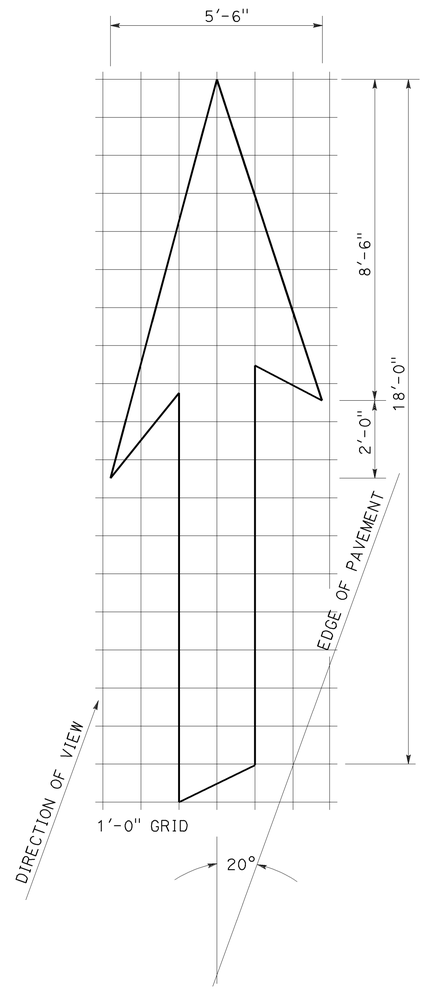


A=42 ft$^2$

TYPE VI ARROW

Right lane drop arrow
(For left lane, use mirror image)

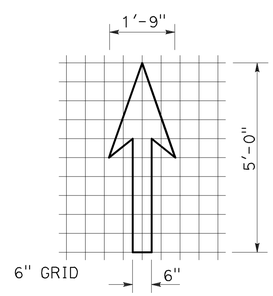


A=3.5 ft$^2$

BIKE LANE ARROW

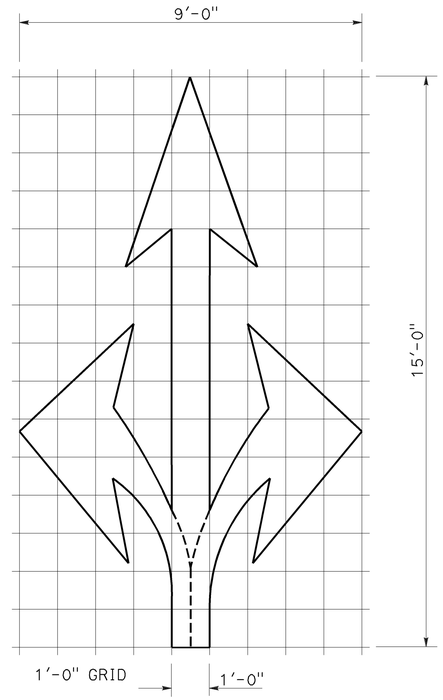


A=36 ft$^2$

TYPE VIII ARROW

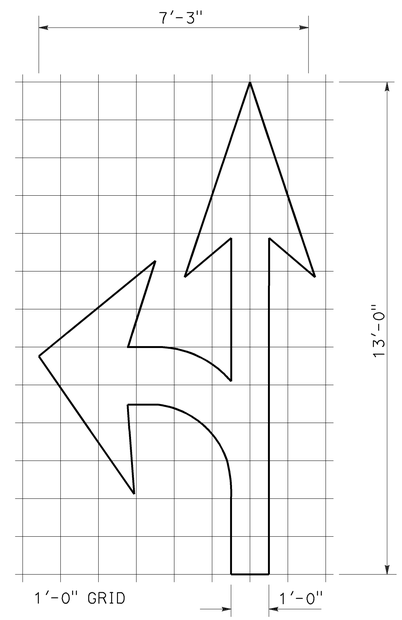


A=27 ft$^2$

TYPE VII (L) ARROW

(For Type VII (R) arrow, use mirror image)

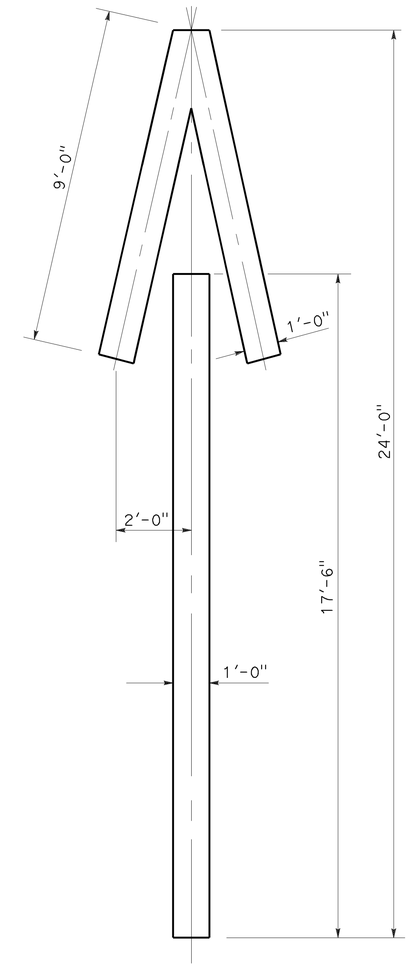


A=33 ft$^2$

TYPE V ARROW

NOTE:
Minor variations in dimensions may be accepted by the Engineer.

STATE OF CALIFORNIA
DEPARTMENT OF TRANSPORTATION

# PAVEMENT MARKINGS ARROWS

NO SCALE

RSP A24A DATED APRIL 20, 2012 SUPERSEDES STANDARD PLAN A24A DATED MAY 20, 2011 - PAGE 13 OF THE STANDARD PLANS BOOK DATED 2010.

**REVISED STANDARD PLAN RSP A24A**

3-14-12

| Dist | COUNTY | ROUTE | POST MILES TOTAL PROJECT | SHEET No. | TOTAL SHEETS |
|---|---|---|---|---|---|
| 11 | Imp | 8 | R38.8/R39.1 | 139 | 225 |

REGISTERED CIVIL ENGINEER

July 20, 2012
PLANS APPROVAL DATE

REGISTERED PROFESSIONAL ENGINEER
Roberta L. McLaughlin
No. C40375
Exp. 3-31-13
CIVIL
STATE OF CALIFORNIA

*THE STATE OF CALIFORNIA OR ITS OFFICERS OR AGENTS SHALL NOT BE RESPONSIBLE FOR THE ACCURACY OR COMPLETENESS OF SCANNED COPIES OF THIS PLAN SHEET.*

TO ACCOMPANY PLANS DATED 04-07-14

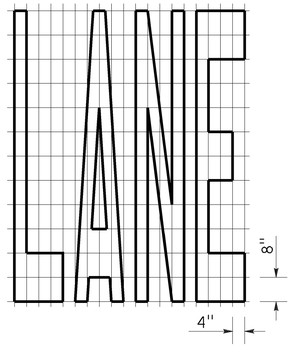


A=24 ft$^2$

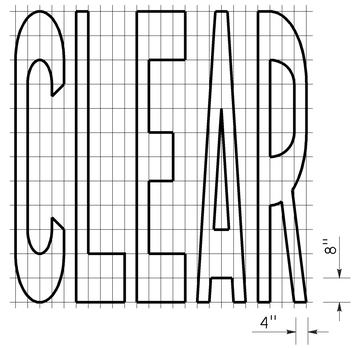


A=27 ft$^2$

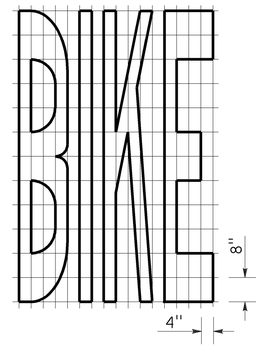


A=21 ft$^2$

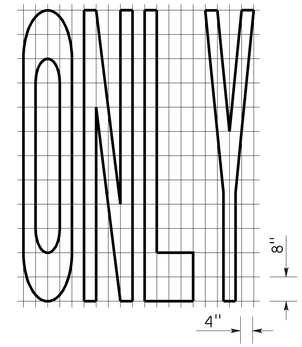


A=22 ft$^2$

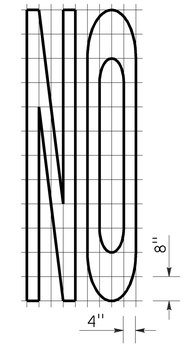


A=14 ft$^2$

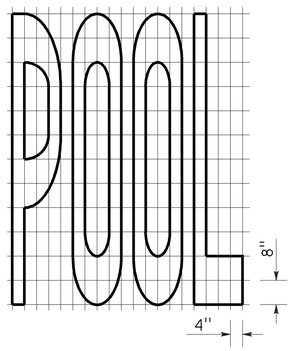


A=23 ft$^2$

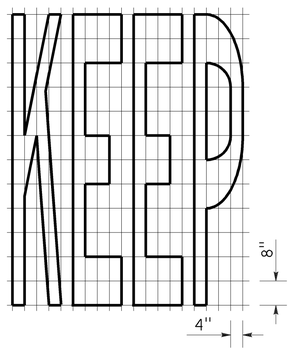


A=24 ft$^2$

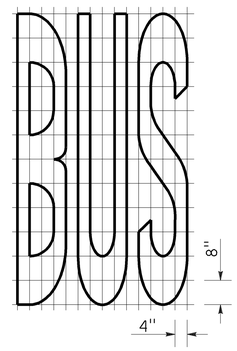


A=20 ft$^2$

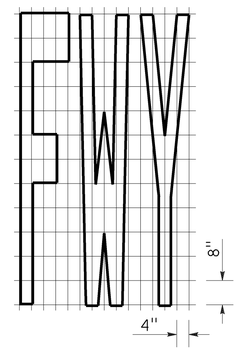


A=16 ft$^2$

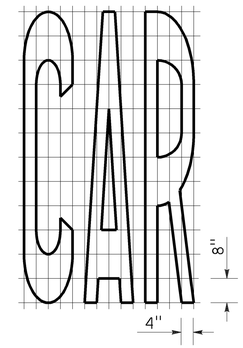


A=17 ft$^2$

| WORD MARKINGS | | | |
|---|---|---|---|
| ITEM | ft$^2$ | ITEM | ft$^2$ |
| LANE | 24 | NO | 14 |
| POOL | 23 | BIKE | 21 |
| CAR | 17 | BUS | 20 |
| CLEAR | 27 | ONLY | 22 |
| KEEP | 24 | FWY | 16 |

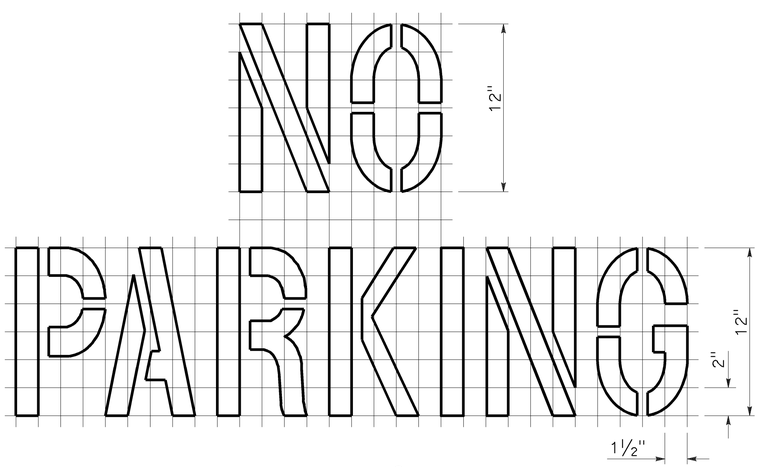


A=2 ft$^2$
See Notes 6 and 7

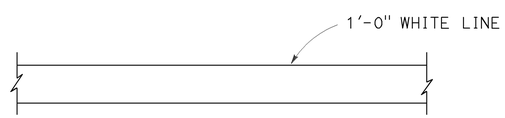


LIMIT LINE (STOP LINE)

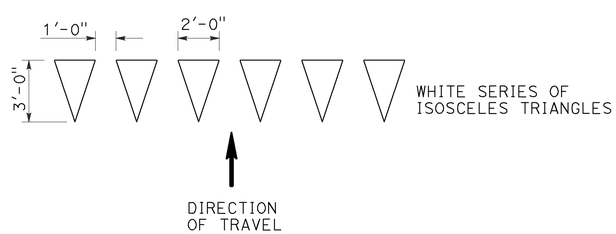


YIELD LINE

NOTES:

1. If a message consists of more than one word, it should read "UP", i.e., the first word should be nearest the driver.
2. The space between words should be at least four times the height of the characters for low speed roads, but not more than ten times the height of the characters. The space may be reduced appropriately where there is limited space because of local conditions.
3. Minor variations in dimensions may be accepted by the Engineer.
4. Portions of a letter, number or symbol may be separated by connecting segments not to exceed 2" in width.
5. The words "NO PARKING" pavement marking is to be used for parking facilities. For typical locations of markings, see Standard Plans A90A and A90B.
6. The words "NO PARKING", shall be painted in white letters no less than 1'-0" high on a contrasting background and located so that it is visible to traffic enforcement officials.

STATE OF CALIFORNIA
DEPARTMENT OF TRANSPORTATION

# PAVEMENT MARKINGS WORDS, LIMIT AND YIELD LINES

NO SCALE

RSP A24E DATED JULY 20, 2012 SUPERSEDES STANDARD PLAN A24E
DATED MAY 20, 2011 - PAGE 17 OF THE STANDARD PLANS BOOK DATED 2010.

**REVISED STANDARD PLAN RSP A24E**

**2010 REVISED STANDARD PLAN RSP A24E**

6-12-12

| Dist | COUNTY | ROUTE | POST MILES TOTAL PROJECT | SHEET No. | TOTAL SHEETS |
|---|---|---|---|---|---|
| 11 | Imp | 8 | R38.8/R39.1 | 140 | 225 |

Randell D. Hiatt
REGISTERED CIVIL ENGINEER

July 19, 2013
PLANS APPROVAL DATE

REGISTERED PROFESSIONAL ENGINEER
Randell D. Hiatt
No. C50200
Exp. 6-30-15
CIVIL
STATE OF CALIFORNIA

*THE STATE OF CALIFORNIA OR ITS OFFICERS OR AGENTS SHALL NOT BE RESPONSIBLE FOR THE ACCURACY OR COMPLETENESS OF SCANNED COPIES OF THIS PLAN SHEET.*

TO ACCOMPANY PLANS DATED 04-07-14

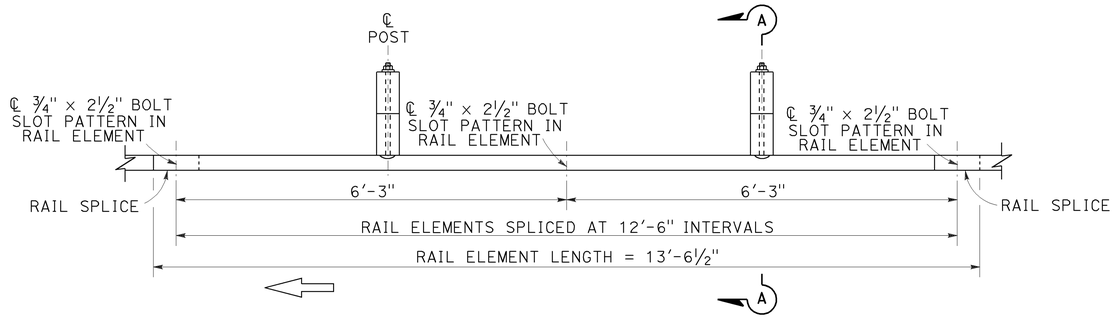


PLAN

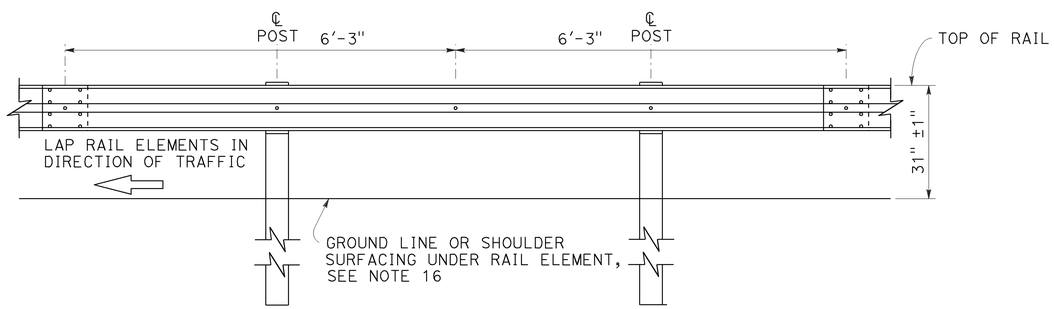


ELEVATION

## MIDWEST GUARDRAIL SYSTEM WITH WOOD POST AND BLOCKS

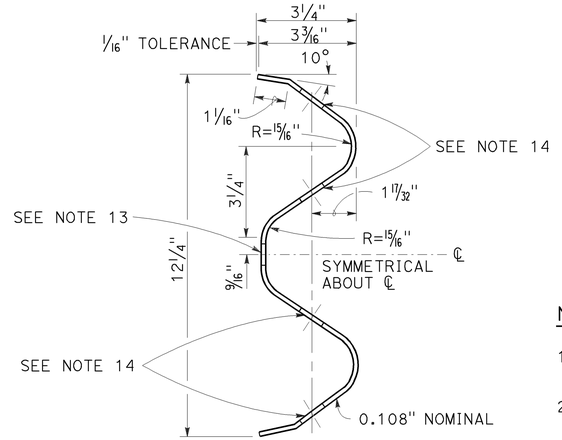


SECTION THRU RAIL ELEMENT

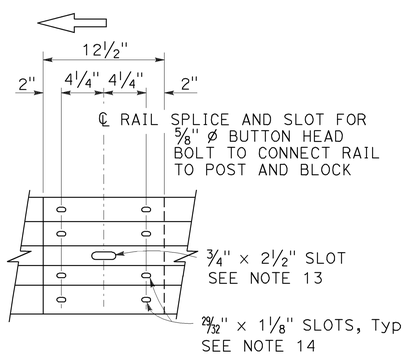


ELEVATION

## RAIL ELEMENT SPLICE DETAIL

a) Connect the over lapped end of the rail elements with ⅝" ø × 1⅜" button head oval shoulder splice bolts inserted into the 29⁄32" × 1⅛" slots and bolted together with ⅝" ø recessed hex nuts. Recess of hex nut points toward rail element. A total of 8 bolts and nuts are to be used at each rail splice connection.

b) The ends of the rail elements are to be overlapped in the direction of traffic (see details).

c) Where end cap is to be attached to the end of a rail element, a total of 4 of the above described splice bolts and nuts are to be used.

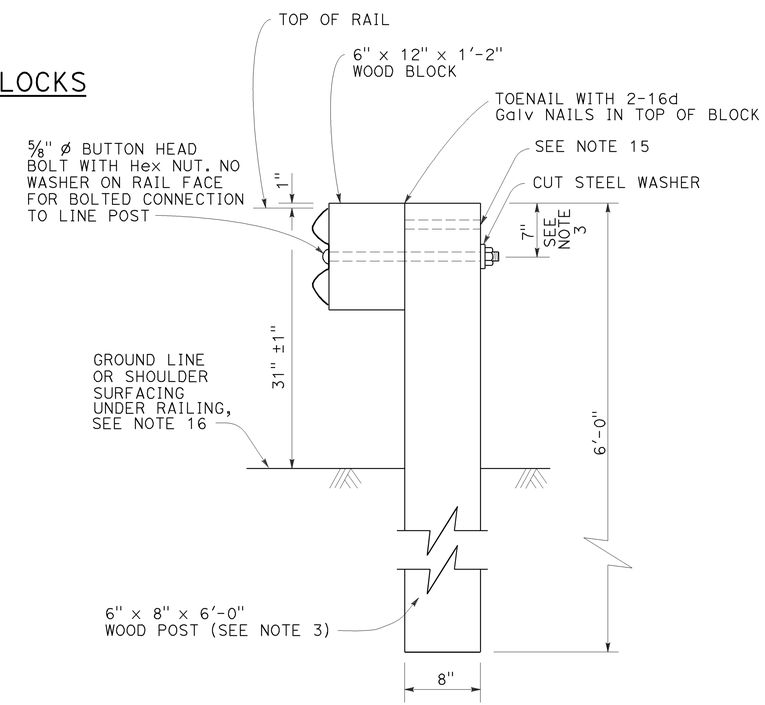


SECTION A-A

TYPICAL WOOD LINE POST INSTALLATION

See Note 4

## NOTES:

1. For details of steel post installations, see Revised Standard Plan RSP A77L2.
2. For details of standard hardware used to construct MGS, see Revised Standard Plan RSP A77M1.
3. For details of wood posts and wood blocks used to construct MGS, see Revised Standard Plan RSP A77N1.
4. For additional installation details, see Revised Standard Plan RSP A77N3.
5. MGS post spacing to be 6'-3" center to center, except as otherwise noted.
6. For MGS typical layouts, see the A77P, A77Q and A77R Series of Standard Plans.
7. If railing is connected to terminal system end treatment, use 31" height terminal system end treatment.
8. For MGS end anchor details, see Revised Standard Plans RSP A77S1 and RSP A77T2.
9. For details of MGS transition to bridge railing, see Revised Standard Plan RSP A77U4.
10. For additional details of MSG connection to bridge railing, see Revised Standard Plans RSP A77U1, RSP A77U2 and RSP A77V1.
11. For MGS connection details to abutments and walls, see Revised Standard Plan RSP A77U3.
12. For typical MGS delineation and dike positioning details, see Revised Standard Plan RSP A77N4.
13. Slotted hole for bolted connection of rail element to block and post. See "Section Thru Rail Element".
14. Slotted holes for splice bolts to overlap ends of rail element. See "Section Thru Rail Element".
15. Additional hole in uppermost portion of line post is for potential future adjustments of railing height. See Revised Standard Plan RSP A77N1.
16. Install posts in soil.

STATE OF CALIFORNIA
DEPARTMENT OF TRANSPORTATION

# MIDWEST GUARDRAIL SYSTEM STANDARD RAILING SECTION (WOOD POST WITH WOOD BLOCK)

NO SCALE

RSP A77L1 DATED JULY 19, 2013 SUPPLEMENTS STANDARD PLANS BOOK DATED 2010.

**REVISED STANDARD PLAN RSP A77L1**

**2010 REVISED STANDARD PLAN RSP A77L1**

7-3-13

| Dist | COUNTY | ROUTE | POST MILES TOTAL PROJECT | SHEET No. | TOTAL SHEETS |
|---|---|---|---|---|---|
| 11 | Imp | 8 | R38.8/R39.1 | 141 | 225 |

Randell D. Hiatt
REGISTERED CIVIL ENGINEER

July 19, 2013
PLANS APPROVAL DATE

REGISTERED PROFESSIONAL ENGINEER
Randell D. Hiatt
No. C50200
Exp. 6-30-15
CIVIL
STATE OF CALIFORNIA

*THE STATE OF CALIFORNIA OR ITS OFFICERS OR AGENTS SHALL NOT BE RESPONSIBLE FOR THE ACCURACY OR COMPLETENESS OF SCANNED COPIES OF THIS PLAN SHEET.*

TO ACCOMPANY PLANS DATED 04-07-14

**2010 REVISED STANDARD PLAN RSP A77L2**

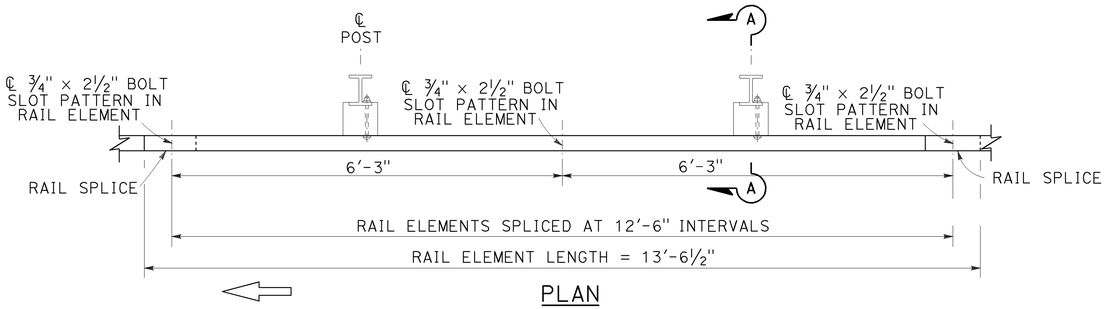


PLAN

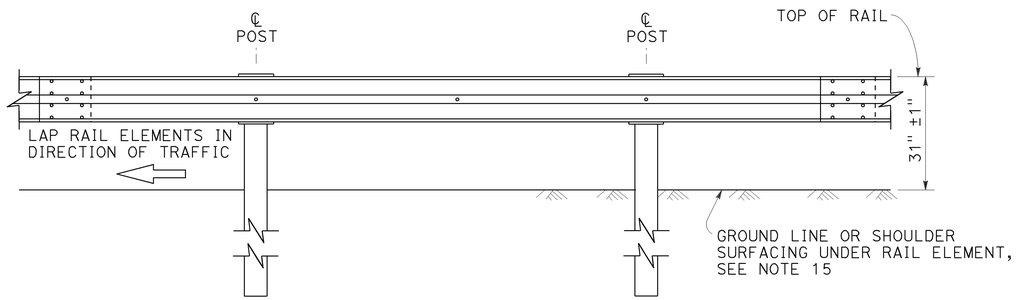


ELEVATION

## MIDWEST GUARDRAIL SYSTEM WITH STEEL POSTS AND NOTCHED WOOD OR NOTCHED RECYCLED PLASTIC BLOCKS

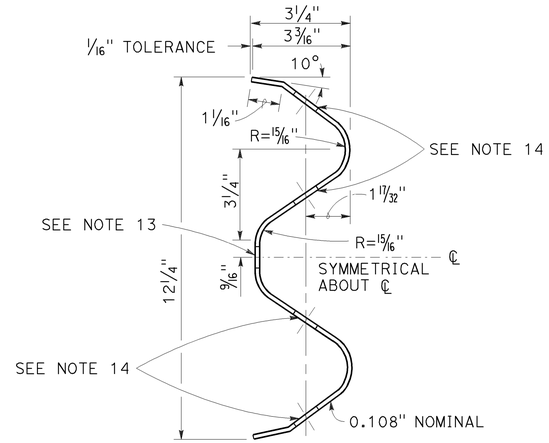


SECTION THRU RAIL ELEMENT

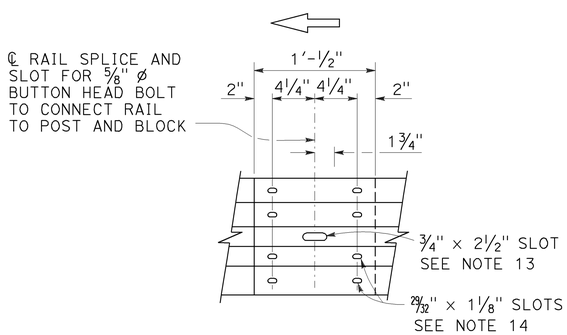


ELEVATION

## RAIL ELEMENT SPLICE DETAIL

a) Connect the over lapped end of the rail elements with ⅝" ø × 1⅜" button head oval shoulder splice bolts inserted into the 29⁄32" × 1⅛" slots and bolted together with ⅝" ø recessed hex nuts. Recess of hex nut points toward rail element. A total of 8 bolts and nuts are to be used at each rail splice connection.

b) The ends of the rail elements are to be overlapped in the direction of traffic (see details).

c) Where end cap is to be attached to the end of a rail element, a total of 4 of the above described splice bolts and nuts are to be used.

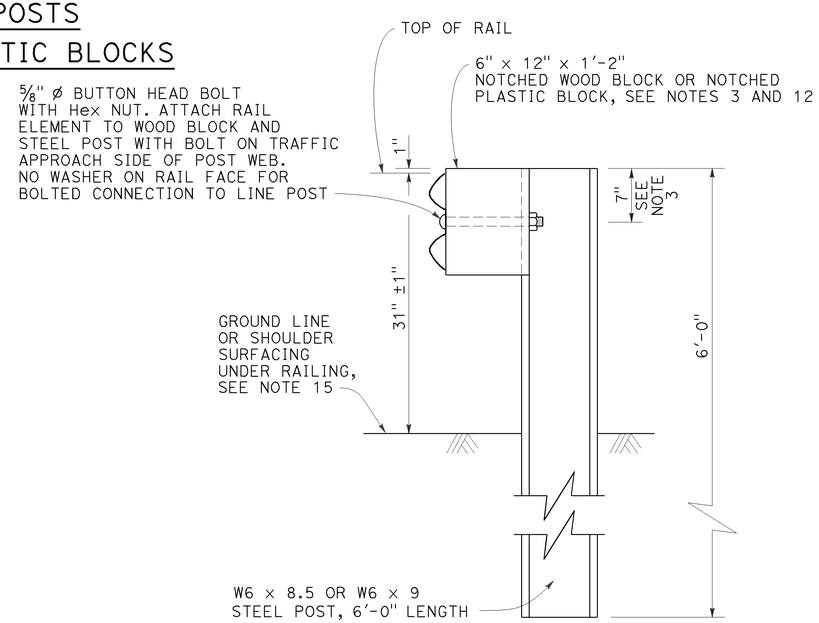


SECTION A-A

## TYPICAL STEEL LINE POST INSTALLATION

See Note 4

## NOTES:

1. For details of wood post installations, see Revised Standard Plan RSP A77L1.
2. For details of standard hardware used to construct MGS, see Revised Standard Plan RSP A77M1.
3. For details of steel posts and notched wood blocks used to construct MGS, see Revised Standard Plan RSP A77N2.
4. For additional installation details, see Revised Standard Plan RSP A77N3.
5. MGS post spacing to be 6'-3" center to center, except as otherwise noted.
6. For MGS typical layouts, see the A77P, A77Q and A77R Series of Standard Plans.
7. If railing is connected to terminal system end treatment, use 31" height terminal system end treatment.
8. For MGS end anchor details, see Revised Standard Plans RSP A77S1 and RSP A77T2.
9. For details of MGS transition to bridge railing, see Revised Standard Plan RSP A77U4.
10. For additional details of MGS connection to bridge railings, see Revised Standard Plans RSP A77U1, RSP A77U2 and RSP A77V1.
11. For dike positioning and MGS delineation details, see Revised Standard Plan RSP A77N4.
12. Notched face of block faces steel post.
13. Slotted hole for bolted connection of rail element to block and post. See "Section Thru Rail Element".
14. Slotted holes for splice bolts to overlap ends of rail element. See "Section Thru Rail Element".
15. Install posts in soil.

STATE OF CALIFORNIA
DEPARTMENT OF TRANSPORTATION

# MIDWEST GUARDRAIL SYSTEM STANDARD RAILING SECTION (STEEL POST WITH NOTCHED WOOD OR NOTCHED RECYCLED PLASTIC BLOCK)

NO SCALE

RSP A77L2 DATED JULY 19, 2013 SUPPLEMENTS THE STANDARD PLANS BOOK DATED 2010.

**REVISED STANDARD PLAN RSP A77L2**

| Dist | COUNTY | ROUTE | POST MILES TOTAL PROJECT | SHEET No. | TOTAL SHEETS |
|---|---|---|---|---|---|
| 11 | Imp | 8 | R38.8/R39.1 | 142 | 225 |

Randell D. Hiatt
REGISTERED CIVIL ENGINEER

July 19, 2013
PLANS APPROVAL DATE

REGISTERED PROFESSIONAL ENGINEER
Randell D. Hiatt
No. C50200
Exp. 6-30-15
CIVIL
STATE OF CALIFORNIA

*THE STATE OF CALIFORNIA OR ITS OFFICERS OR AGENTS SHALL NOT BE RESPONSIBLE FOR THE ACCURACY OR COMPLETENESS OF SCANNED COPIES OF THIS PLAN SHEET.*

TO ACCOMPANY PLANS DATED 04-07-14

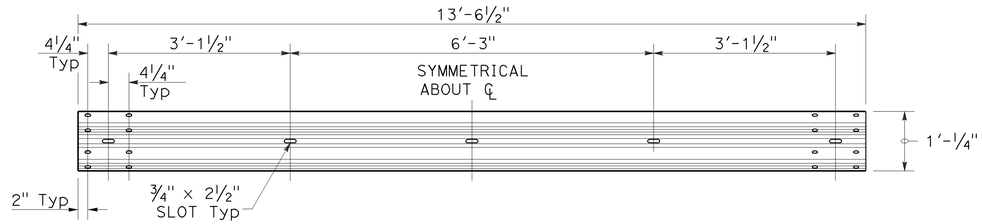


TYPICAL RAIL ELEMENT

NOTE:

1. Slotted holes for splice bolts to overlap ends of rail element.

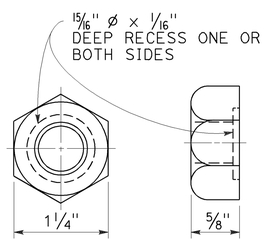


⅝" Ø RECESS NUT

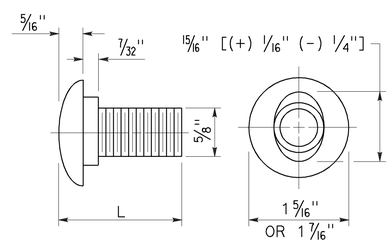


⅝" Ø BUTTON HEAD BOLT

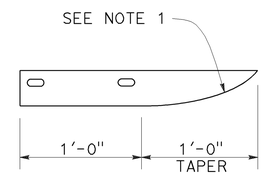


PLAN

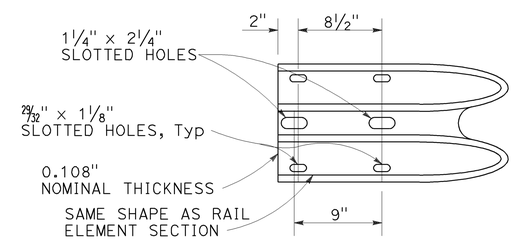


ELEVATION

END CAP
(TYPE A)

BUTTON HEAD BOLT

| L | THREAD LENGTH |
|---|---|
| 1⅜" | FULL THREAD LENGTH |
| 2" | FULL THREAD LENGTH |
| 10" | 4" Min THREAD LENGTH |
| 18" | 4" Min THREAD LENGTH |
| 20" | 4" Min THREAD LENGTH |
| 22" | 4" Min THREAD LENGTH |
| 26" | 4" Min THREAD LENGTH |
| 36" | 4" Min THREAD LENGTH |
| ** 2¾" | 2" Min THREAD LENGTH |
| ** 19" | 4" Min THREAD LENGTH |

** For nested rail applications.

STATE OF CALIFORNIA
DEPARTMENT OF TRANSPORTATION

# MIDWEST GUARDRAIL SYSTEM STANDARD HARDWARE

NO SCALE

RSP A77M1 DATED JULY 19, 2013 SUPPLEMENTS THE STANDARD PLANS BOOK DATED 2010.

**REVISED STANDARD PLAN RSP A77M1**

**2010 REVISED STANDARD PLAN RSP A77M1**

7-3-13

| Dist | COUNTY | ROUTE | POST MILES TOTAL PROJECT | SHEET No. | TOTAL SHEETS |
|---|---|---|---|---|---|
| 11 | Imp | 8 | R38.8/R39.1 | 143 | 225 |

Randell D. Hiatt
REGISTERED CIVIL ENGINEER

July 19, 2013
PLANS APPROVAL DATE

REGISTERED PROFESSIONAL ENGINEER
Randell D. Hiatt
No. C50200
Exp. 6-30-15
CIVIL
STATE OF CALIFORNIA

*THE STATE OF CALIFORNIA OR ITS OFFICERS OR AGENTS SHALL NOT BE RESPONSIBLE FOR THE ACCURACY OR COMPLETENESS OF SCANNED COPIES OF THIS PLAN SHEET.*

TO ACCOMPANY PLANS DATED 04-07-14

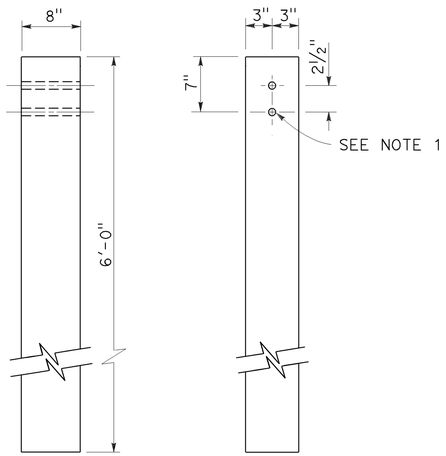


SIDE FRONT

6" x 8" WOOD POST
See Note 3

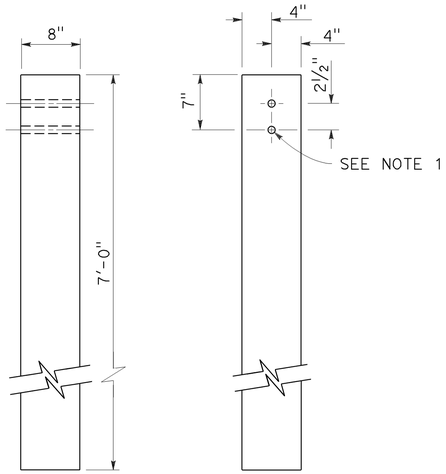


SIDE FRONT

8" x 8" WOOD POST
See Note 4

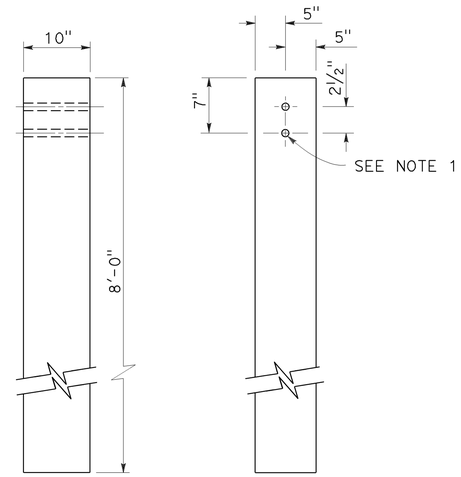


SIDE FRONT

10" x 10" WOOD POST
See Note 5

## NOTES:

1. All holes in wood posts and blocks shall be ¾" Dia ± 1/16".
2. Dimensions shown for wood post are nominal.
3. This post and block combination used for standard line post sections of MGS.
4. This post and 8" x 12" block combination used for line post sections of MGS on narrow roadways.
5. This post and 8" x 12" block combination is typically used where strengthened line post sections of MGS are warranted to shield fixed objects.
6. See Revised Standard Plan RSP A77L3 for use of 6" x 8" and 8" x 8" wood blocks.

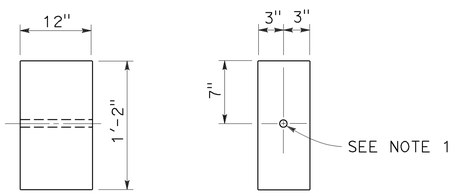


SIDE FRONT

6" x 12" WOOD BLOCK
See Note 3

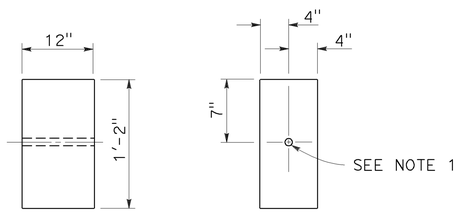


SIDE FRONT

8" x 12" WOOD BLOCK

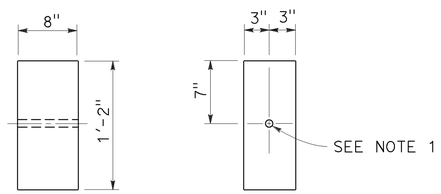


SIDE FRONT

6" x 8" WOOD BLOCK
Only for use with metal beam guard rail see Note 6

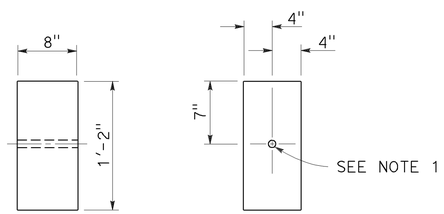


SIDE FRONT

8" x 8" WOOD BLOCK
Only for use with metal beam guard rail see Note 6

STATE OF CALIFORNIA
DEPARTMENT OF TRANSPORTATION

# MIDWEST GUARDRAIL SYSTEM WOOD POST AND WOOD BLOCK DETAILS

NO SCALE

RSP A77N1 DATED JULY 19, 2013 SUPPLEMENTS THE STANDARD PLANS BOOK DATED 2010.

**REVISED STANDARD PLAN RSP A77N1**

**2010 REVISED STANDARD PLAN RSP A77N1**

7-3-13

| Dist | COUNTY | ROUTE | POST MILES TOTAL PROJECT | SHEET No. | TOTAL SHEETS |
|---|---|---|---|---|---|
| 11 | Imp | 8 | R38.8/R39.1 | 144 | 225 |

Randell D. Hiatt
REGISTERED CIVIL ENGINEER

July 19, 2013
PLANS APPROVAL DATE

REGISTERED PROFESSIONAL ENGINEER
Randell D. Hiatt
No. C50200
Exp. 6-30-15
CIVIL
STATE OF CALIFORNIA

*THE STATE OF CALIFORNIA OR ITS OFFICERS OR AGENTS SHALL NOT BE RESPONSIBLE FOR THE ACCURACY OR COMPLETENESS OF SCANNED COPIES OF THIS PLAN SHEET.*

TO ACCOMPANY PLANS DATED 04-07-14

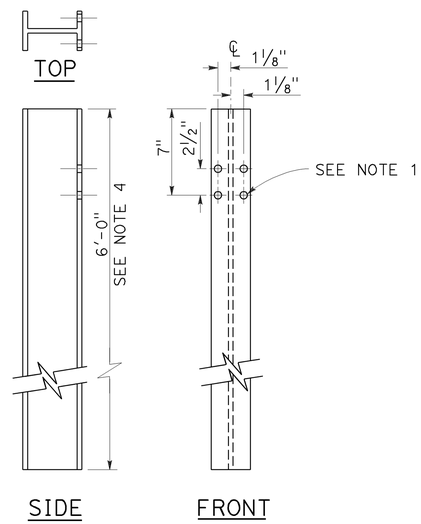


W6 x 9 OR W6 x 8.5
STEEL POST
See Note 4

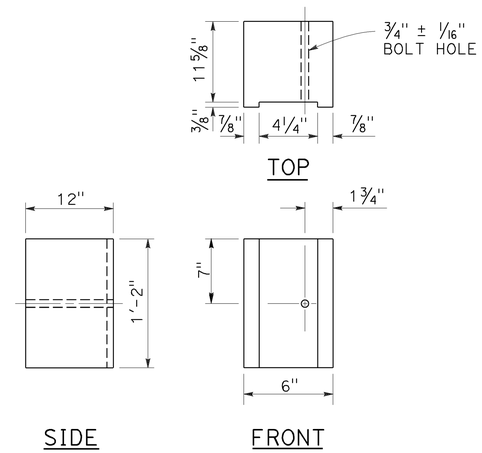


6" x 12"
NOTCHED WOOD BLOCK
See Notes 2 and 3

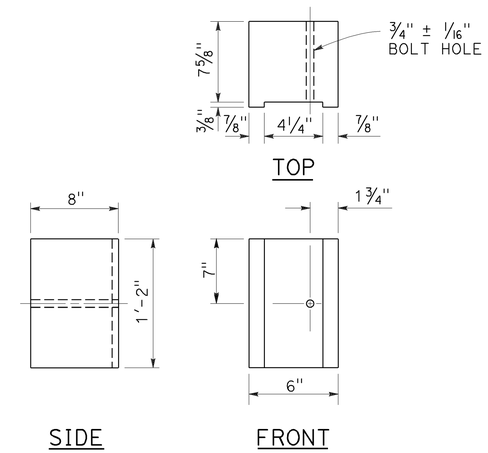


6" x 8"
NOTCHED WOOD BLOCK
Only for use with metal beam guard railing. See Note 5

## NOTES:

1. All holes in steel post shall be 13/16" Dia maximum.
2. Dimensions shown for wood block are nominal.
3. Notched face of block faces steel post.
4. 6'-0" length posts to be used for typical roadway installation. 7'-0" length posts to be used for narrow roadway installation. See Revised Standard Plan RSP A77N3.
5. See Revised Standard Plan RSP A77L3 for use of 6" x 8" and 8" x 8" notched wood blocks.
6. This post and 8" x 12" block combination to be used for line post sections of MGS on narrow roadways and where strengthened line post sections of MGS are warranted to shield fixed objects.

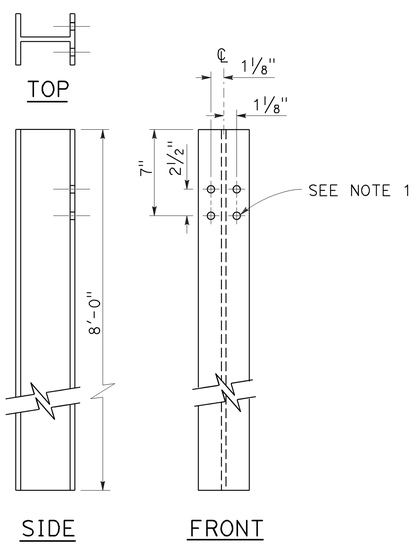


W6 x 15
STEEL POST
See Note 6

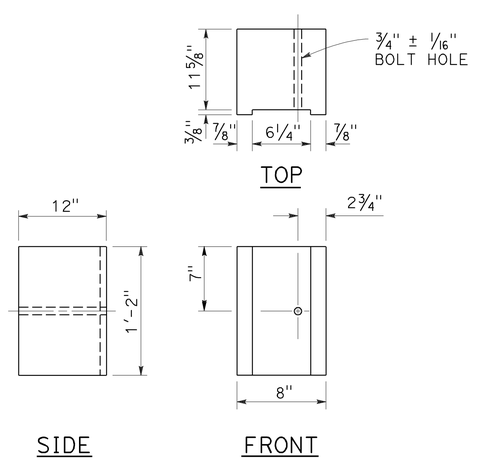


8" x 12"
NOTCHED WOOD BLOCK
See Notes 2 and 3

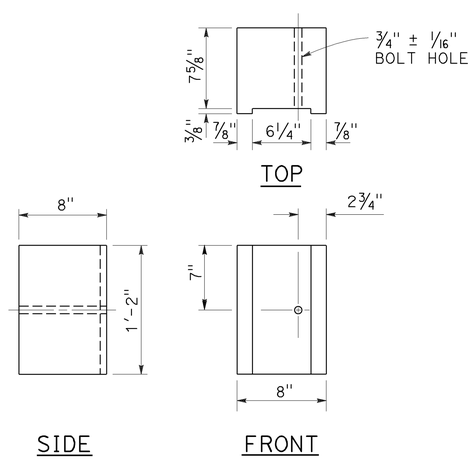


8" x 8"
NOTCHED WOOD BLOCK
Only for use with metal beam guard railing. See Note 5

STATE OF CALIFORNIA
DEPARTMENT OF TRANSPORTATION

# MIDWEST GUARDRAIL SYSTEM STEEL POST AND NOTCHED WOOD BLOCK DETAILS

NO SCALE

RSP A77N2 DATED JULY 19, 2013 SUPPLEMENTS THE STANDARD PLANS BOOK DATED 2010.

**REVISED STANDARD PLAN RSP A77N2**

**2010 REVISED STANDARD PLAN RSP A77N2**

7-3-13

| Dist | COUNTY | ROUTE | POST MILES TOTAL PROJECT | SHEET No. | TOTAL SHEETS |
|---|---|---|---|---|---|
| 11 | Imp | 8 | R38.8/R39.1 | 145 | 225 |

Randell D. Hiatt
REGISTERED CIVIL ENGINEER

July 19, 2013
PLANS APPROVAL DATE

REGISTERED PROFESSIONAL ENGINEER
Randell D. Hiatt
No. C50200
Exp. 6-30-15
CIVIL
STATE OF CALIFORNIA

*THE STATE OF CALIFORNIA OR ITS OFFICERS OR AGENTS SHALL NOT BE RESPONSIBLE FOR THE ACCURACY OR COMPLETENESS OF SCANNED COPIES OF THIS PLAN SHEET.*

TO ACCOMPANY PLANS DATED 04-07-14

**2010 REVISED STANDARD PLAN RSP A77N3**

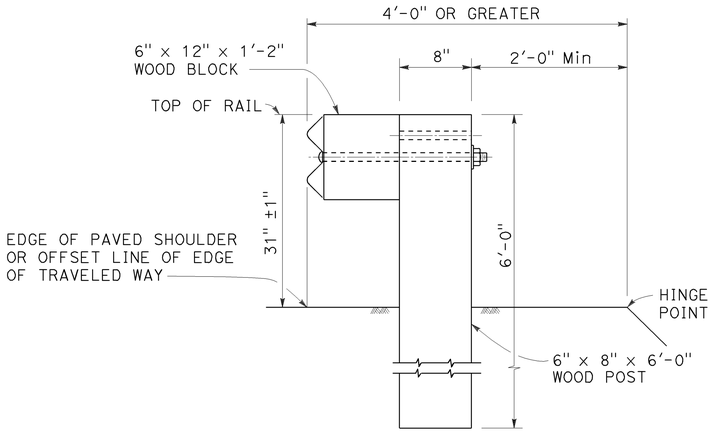


DETAIL A

TYPICAL ROADWAY INSTALLATION

See Note 1

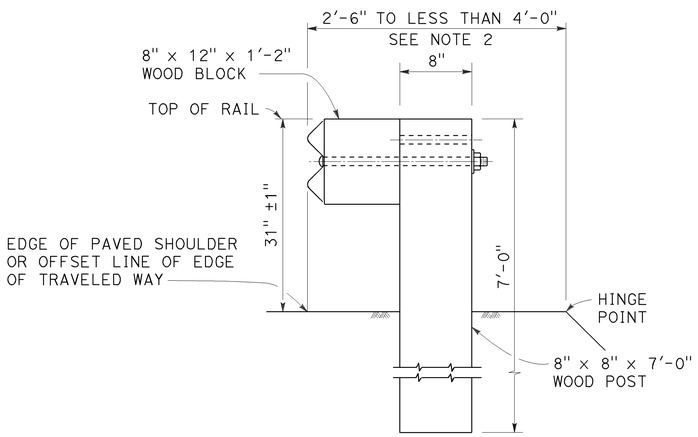


DETAIL B

NARROW ROADWAY INSTALLATION

See Note 1

## POST EMBEDMENT

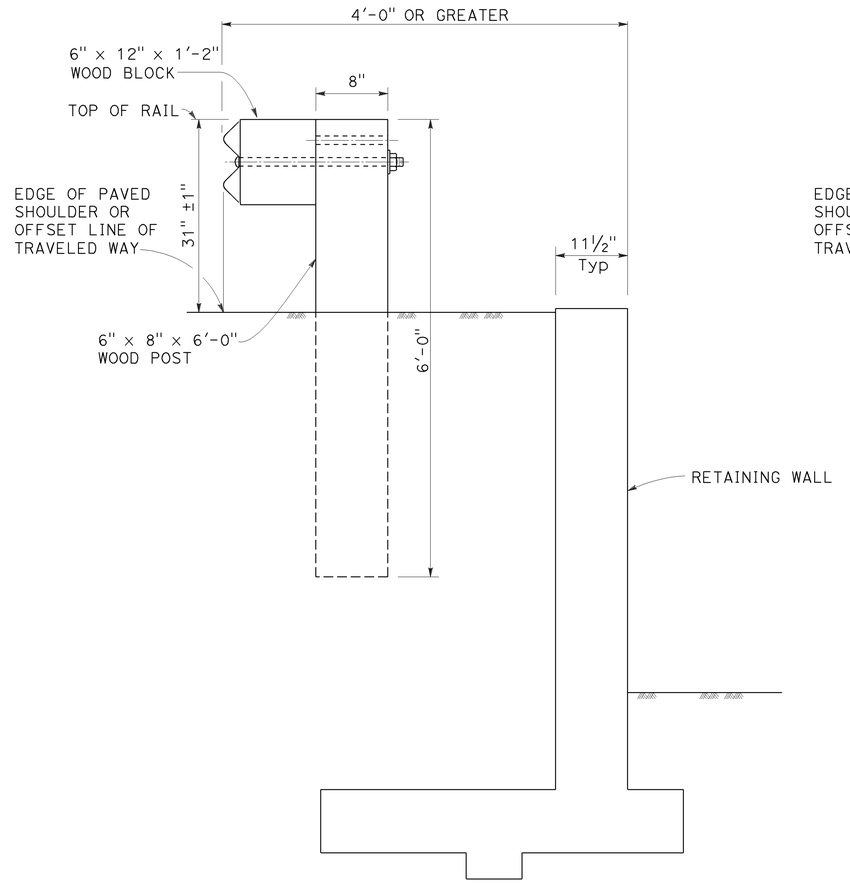


DETAIL C

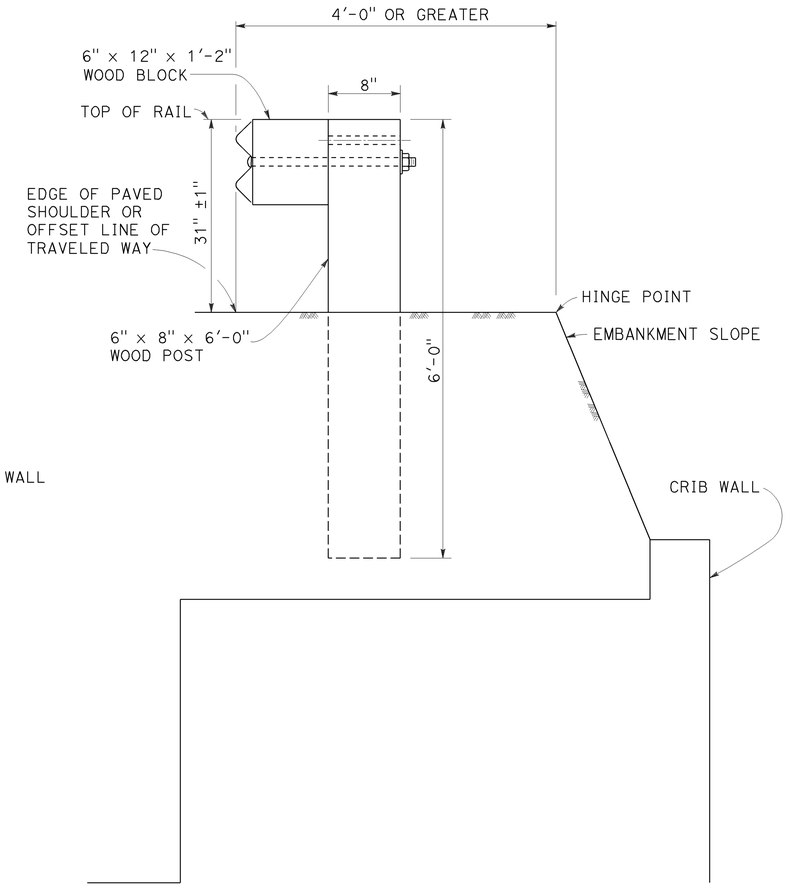


DETAIL D

## INSTALLATION AT EARTH RETAINING WALLS

NOTES:

1. These installation details also applicable to steel line post installations. For Detail A, C, and D, where steel line post installations are constructed, W6 x 8.5 or W6 x 9 steel post, 6'-0" in length, with 6" x 12" x 1'-2" notched wood blocks or notched recycled plastic blocks are to be used in place of the size of wood post and wood block shown. For Detail B, where steel line post installations are constructed, or W6 x 15 steel post, 8'-0" in length, with 8" x 12" x 1'-2" notched wood blocks or notched recycled plastic blocks are to be used in place of the size of wood post and wood block shown. For additional installation details, see Revised Standard Plan RSP A77L1 and RSP A77L2.
2. Where the distance between the face of the rail and the hinge point is less than 2'-6", see the Project Plans for special details.
3. For dike positioning with MGS installations, see Revised Standard Plan RSP A77N4.

STATE OF CALIFORNIA
DEPARTMENT OF TRANSPORTATION

# MIDWEST GUARDRAIL SYSTEM TYPICAL LINE POST EMBEDMENT AND HINGE POINT OFFSET DETAILS

NO SCALE

RSP A77N3 DATED JULY 19, 2013 SUPPLEMENTS THE STANDARD PLANS BOOK DATED 2010.

**REVISED STANDARD PLAN RSP A77N3**

| Dist | COUNTY | ROUTE | POST MILES TOTAL PROJECT | SHEET No. | TOTAL SHEETS |
|---|---|---|---|---|---|
| 11 | Imp | 8 | R38.8/R39.1 | 146 | 225 |

Randell D. Hiatt
REGISTERED CIVIL ENGINEER

July 19, 2013
PLANS APPROVAL DATE

REGISTERED PROFESSIONAL ENGINEER
Randell D. Hiatt
No. C50200
Exp. 6-30-15
CIVIL
STATE OF CALIFORNIA

THE STATE OF CALIFORNIA OR ITS OFFICERS OR AGENTS SHALL NOT BE RESPONSIBLE FOR THE ACCURACY OR COMPLETENESS OF SCANNED COPIES OF THIS PLAN SHEET.

TO ACCOMPANY PLANS DATED 04-07-14

## NOTES:

1. When necessary to place dike more than 7" in front of face of MGS, only Type C dike may be used. For dike details, see Revised Standard Plan RSP A87B.
2. For standard railing post embedment, see Revised Standard Plan RSP A77N3.
3. MGS delineation to be used where shown on the Project Plans.
4. When dike or curb is placed under MGS, the maximum height of the dike or curb shall be 6". Mountable dike should not be used. For dike and curb details, see Revised Standard Plans RSP A87A and RSP A87B.
5. For details of typical distance between the face of rail and hinge point, see Revised Standard Plan RSP A77N3.
6. For steel line posts, use 1/4 - 20 self-tapping screws in 0.22" diameter holes or 1/4" bolts in 9/32" diameter holes.

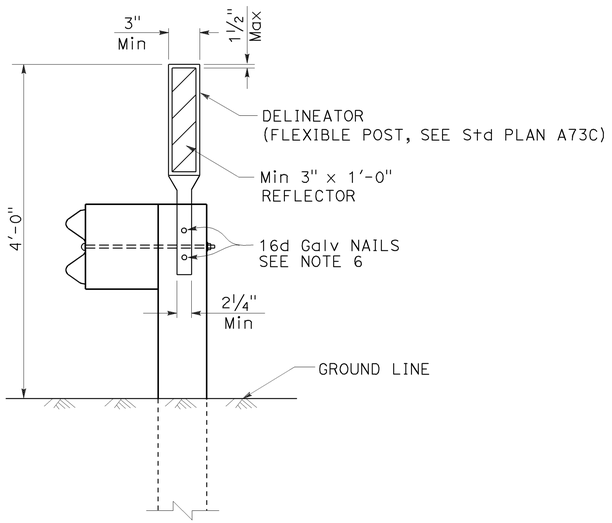


## MGS DELINEATION

See Note 3

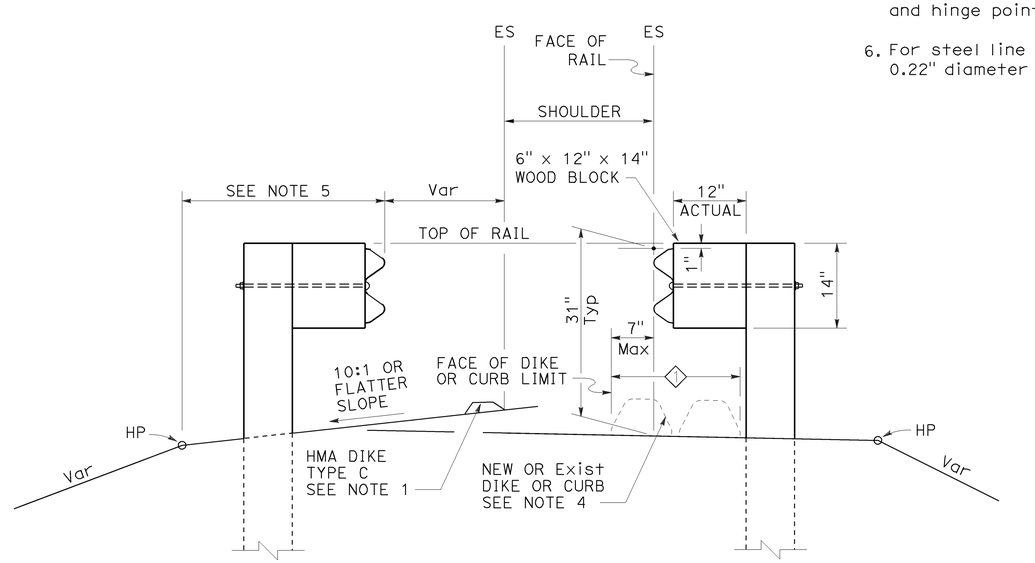


## DIKE POSITIONING

See Note 1

1 PERMISSIBLE DIKE OR CURB PLACEMENT AREA

STATE OF CALIFORNIA
DEPARTMENT OF TRANSPORTATION

# MIDWEST GUARDRAIL SYSTEM TYPICAL RAILING DELINEATION AND DIKE POSITIONING DETAILS

NO SCALE

RSP A77N4 DATED JULY 19, 2013 SUPPLEMENTS THE STANDARD PLANS BOOK DATED 2010.

**REVISED STANDARD PLAN RSP A77N4**

2010 REVISED STANDARD PLAN RSP A77N4

7-10-13

| Dist | COUNTY | ROUTE | POST MILES TOTAL PROJECT | SHEET No. | TOTAL SHEETS |
|---|---|---|---|---|---|
| 11 | Imp | 8 | R38.8/R39.1 | 147 | 225 |

Randell D. Hiatt
REGISTERED CIVIL ENGINEER

July 19, 2013
PLANS APPROVAL DATE

REGISTERED PROFESSIONAL ENGINEER
Randell D. Hiatt
No. C50200
Exp. 6-30-15
CIVIL
STATE OF CALIFORNIA

*THE STATE OF CALIFORNIA OR ITS OFFICERS OR AGENTS SHALL NOT BE RESPONSIBLE FOR THE ACCURACY OR COMPLETENESS OF SCANNED COPIES OF THIS PLAN SHEET.*

TO ACCOMPANY PLANS DATED 04-07-14

**2010 REVISED STANDARD PLAN RSP A77Q1**

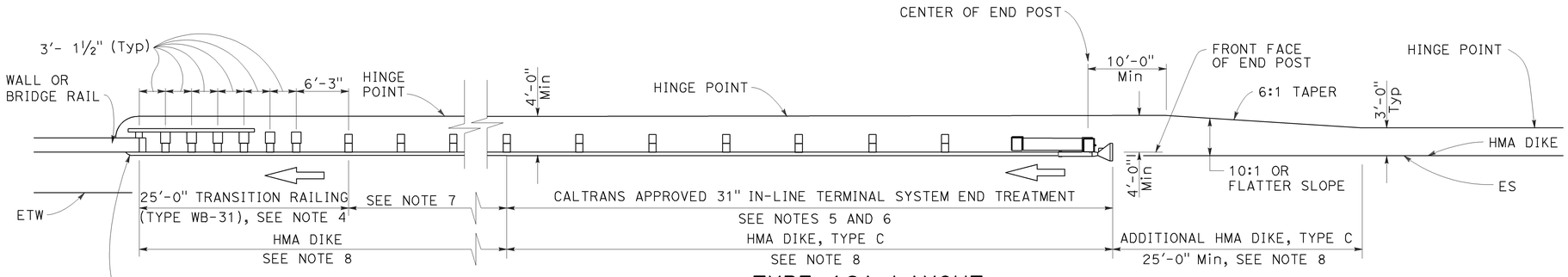


## TYPE 12A LAYOUT

(MGS installation at structure approach with
31" In-line end treatment at traffic approach end of railing)
See Notes 9

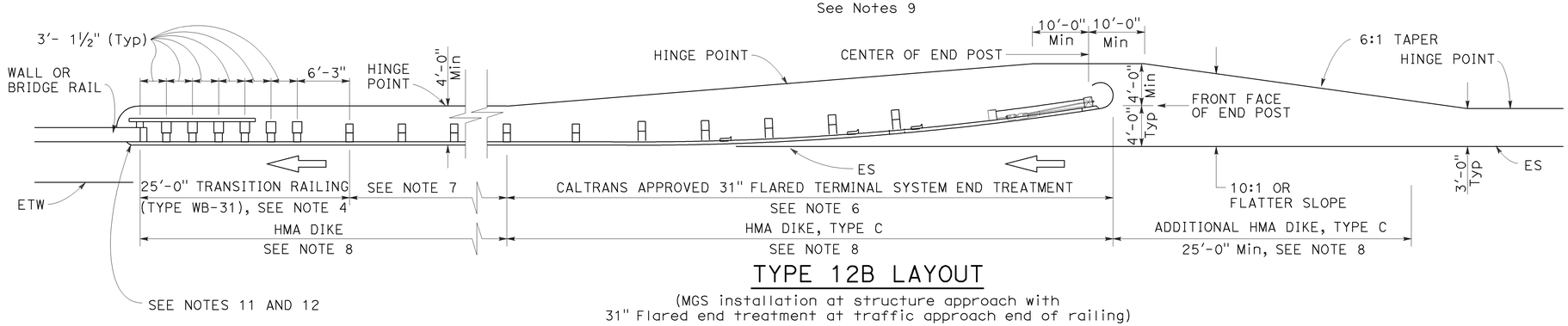


## TYPE 12B LAYOUT

(MGS installation at structure approach with
31" Flared end treatment at traffic approach end of railing)
See Notes 9

## NOTES:

1. Line post, blocks and hardware to be used are shown on Revised Standard Plans RSP A77L1, RSP A77L2, RSP A77M1, RSP A77N1 and RSP A77N2.
2. MGS post spacing to be 6'-3" center to center, except as otherwise noted.
3. Except as noted, line posts are 6" x 8" x 6'-0" wood with 6" x 12" x 1'-2" wood blocks. W6 x 8.5 or W6 x 9 steel posts, 6'-0" in length, with 6" x 12" x 1'-2" notched wood blocks or plastic blocks may be used for 6" x 8" x 6'-0" wood posts with 6" x 12" x 1'-2" wood blocks where applicable and when specified.
4. For Transition Railing (Type WB-31) details for Types 12A and 12B Layouts, see Revised Standard Plan RSP A77U4.
5. 31" in-line terminal system end treatments are used where site conditions will not accommodate a 31" flared end treatment.
6. The type 31" of terminal system end treatment to be used will be shown on the Project Plans.
7. Dependent on site conditions (embankment height, side slopes, or other fixed objects), it may be advisable to construct additional guard railing (a length equal to multiples of 12'-6" with 6'-3" post spacing) between the transition railing and end treatment. A 12.5 degree angle of departure can be drawn on the Project Plans from the edge of traveled way through the outer most point of the fixed object to determine the additional length of railing needed.
8. Where placement of dike is required with guard railing installations, see Revised Standard Plan RSP A77N4 for dike positioning details.
9. Type 12A or Type 12B Layouts are typically used:
   a. To the right of approaching traffic, at the end of a structure, on two-lane conventional highway where the roadbed width across the structure is less than 40 feet.
   b. To the left of approaching traffic, at the end of a structure, on two-lane conventional highway where the roadbed width across the structure is less than 40 feet.
   c. To the right of approaching traffic at the end of each structure on multilane freeways or expressways with separate adjacent or parallel bridges.
   d. To the right of approaching traffic at the end of the structure on multilane freeways or expressways with decked median on the bridge.
10. See Revised Standard Plan RSP A77Q3 for typical layout used left of approaching traffic at the ends of each structure on multilane freeways or expressways with separate adjacent or parallel bridges.
11. For additional details of typical connections to bridge rail, see Connection Detail AA on Revised Standard Plans RSP A77U1 and RSP A77U2 and Connection Detail FF on Revised Standard Plans RSP A77V1 and RSP A77V2.
12. For additional details of a typical connection to walls or abutments, see Revised Standard Plan RSP A77U3.

STATE OF CALIFORNIA
DEPARTMENT OF TRANSPORTATION

# MIDWEST GUARDRAIL SYSTEM TYPICAL LAYOUTS FOR STRUCTURE APPROACH

NO SCALE

RSP A77Q1 DATED JULY 19, 2013 SUPPLEMENTS THE STANDARD PLANS BOOK DATED 2010.

**REVISED STANDARD PLAN RSP A77Q1**

| Dist | COUNTY | ROUTE | POST MILES TOTAL PROJECT | SHEET No. | TOTAL SHEETS |
|---|---|---|---|---|---|
| 11 | Imp | 8 | R38.8/R39.1 | 148 | 225 |

Randell D. Hiatt
REGISTERED CIVIL ENGINEER

July 19, 2013
PLANS APPROVAL DATE

REGISTERED PROFESSIONAL ENGINEER
Randell D. Hiatt
No. C50200
Exp. 6-30-15
CIVIL
STATE OF CALIFORNIA

*THE STATE OF CALIFORNIA OR ITS OFFICERS OR AGENTS SHALL NOT BE RESPONSIBLE FOR THE ACCURACY OR COMPLETENESS OF SCANNED COPIES OF THIS PLAN SHEET.*

TO ACCOMPANY PLANS DATED 04-07-14

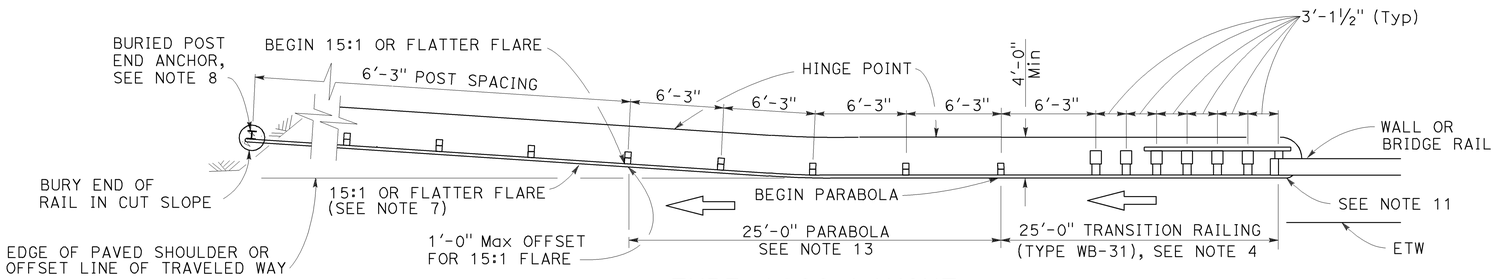


## TYPE 12CC LAYOUT

(MGS installation at structure departure with a
Buried end anchor treatment at trailing end of railing)
See Notes 9 and 10

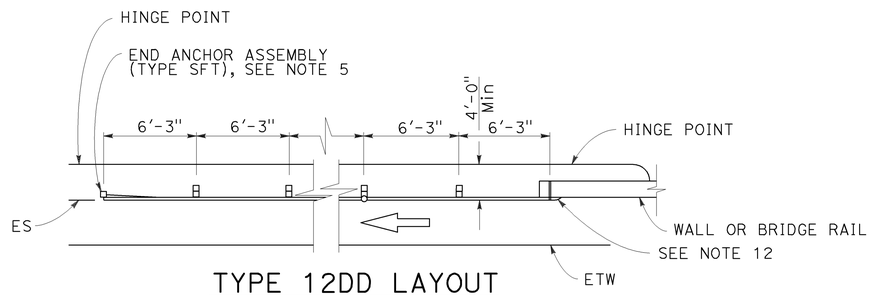


## TYPE 12DD LAYOUT

(MGS installation at structure departure
With end anchor assembly at trailing end of railing)
See Notes 6 and 9

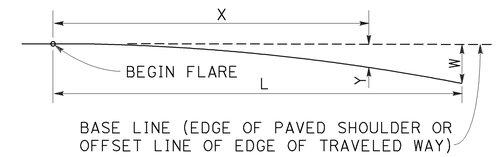


$$Y = \frac{WX^2}{L^2}$$

Y = OFFSET FROM BASE LINE
W = MAXIMUM OFFSET
X = DISTANCE ALONG BASE LINE
L = LENGTH OF FLARE

## PARABOLIC FLARE OFFSETS

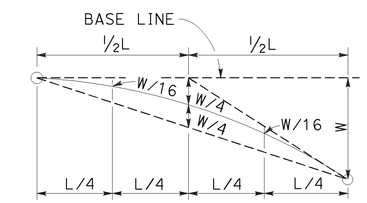


## TYPICAL PARABOLIC LAYOUT

### NOTES:

1. Line post, blocks and hardware to be used are shown on Revised Standard Plans RSP A77L1, RSP A77L2, RSP A77M1, RSP A77N1 and RSP A77N2.
2. MSG post spacing to be 6'-3" center to center, except as otherwise noted.
3. Except as noted, line posts are 6" x 8" x 6'-0" wood with 6" x 12" x 1'-2" wood blocks. W6 x 8.5 or W6 x 9 steel posts, 6'-0" in length, with 6" x 12" x 1'-2" notched wood blocks or notched recycled plastic blocks may be used for 6" x 8" x 6'-0" wood line posts with 6" x 12" x 1'-2" wood blocks where applicable and when specified.
4. For Transition Railing (Type WB-31) details for Type 12CC Layout, see Revised Standard Plan RSP A77U4.
5. For details of End Anchor Assembly (Type SFT) used with Type 12DD Layout, see Revised Standard Plan RSP A77S1.
6. Type 12DD layout is typically used to the right of traffic departing a structure on two-way conventional highways where the roadbed width across the structure is equal to or greater than 40 feet and MGS is recommended (embankment height, side slopes, other fixed objects). Length of railing to be equal to multiples of 12'-6". For MGS connection details to bridge rail, see Revised Standard Plans RSP A77U1 and RSP A77V1. For MGS connection details to wall, see Revised Standard Plan RSP A77U3.
7. The 15:1 or flatter flare for Type 12CC Layout is based on the edge of the paved shoulder or offset line of edge of the traveled way. The length of MGS within the 15:1 or flatter flare is based on site conditions and should be a length equal to multiples of 12'-6".
8. For details of the buried post end anchor used with Type 12CC Layout, see Revised Standard Plan RSP A77T2.
9. Where placement of dike is required with MGS installations, see Revised Standard Plan RSP A77N4 for dike positioning details.
10. Type 12CC Layout is typically used to the right of traffic departing a structure on two-way conventional highways where the roadbed width across the structure is less than 40 feet.
11. For additional details of a typical connection to bridge rail for Layout Type 12CC, see Connection Detail CC on Revised Standard Plan RSP A77U2 and Connection Detail HH on Revised Standard Plan RSP A77V2.
12. For additional details of a typical connection to bridge rail for Layout Type 12DD, see Connection Detail BB on Revised Standard Plan RSP A77U1 and Connection Detail GG on Revised Standard Plan RSP A77V1.
13. For typical flare offsets for 25'-0" length parabola with maximum offset of 1'-0", see Revised Standard Plan RSP A77P1.

STATE OF CALIFORNIA
DEPARTMENT OF TRANSPORTATION

# MIDWEST GUARDRAIL SYSTEM TYPICAL LAYOUTS FOR STRUCTURE DEPARTURE

NO SCALE

RSP A77Q5 DATED JULY 19, 2013 SUPPLEMENTS THE STANDARD PLANS BOOK DATED 2010.

**REVISED STANDARD PLAN RSP A77Q5**

**2010 REVISED STANDARD PLAN RSP A77Q5**

6-20-13

| Dist | COUNTY | ROUTE | POST MILES TOTAL PROJECT | SHEET No. | TOTAL SHEETS |
|---|---|---|---|---|---|
| 11 | Imp | 8 | R38.8/R39.1 | 149 | 225 |

Randell D. Hiatt
REGISTERED CIVIL ENGINEER

July 19, 2013
PLANS APPROVAL DATE

REGISTERED PROFESSIONAL ENGINEER
Randell D. Hiatt
No. C50200
Exp. 6-30-15
CIVIL
STATE OF CALIFORNIA

*THE STATE OF CALIFORNIA OR ITS OFFICERS OR AGENTS SHALL NOT BE RESPONSIBLE FOR THE ACCURACY OR COMPLETENESS OF SCANNED COPIES OF THIS PLAN SHEET.*

TO ACCOMPANY PLANS DATED 04-07-14

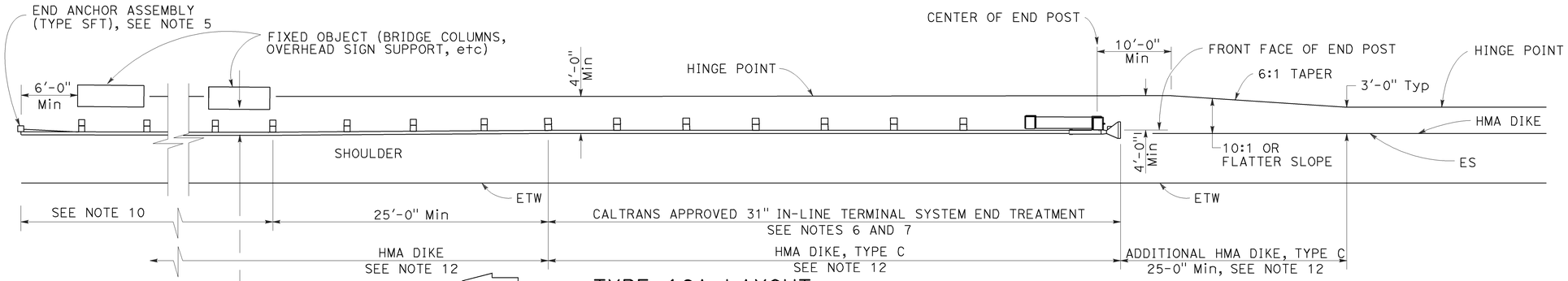


## TYPE 16A LAYOUT

(MGS installation at roadside fixed object or objects with 31" in-line end treatment at traffic approach end of railing)
See Notes 11 and 12

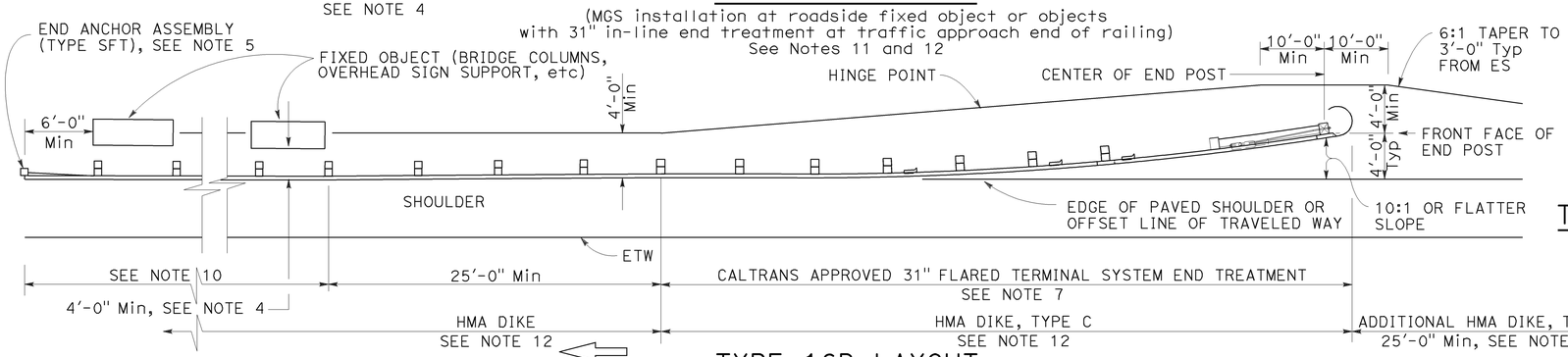


## TYPE 16B LAYOUT

(MGS installation at roadside fixed object or objects with 31' flared end treatment at traffic approach end of railing)
See Notes 11 and 12

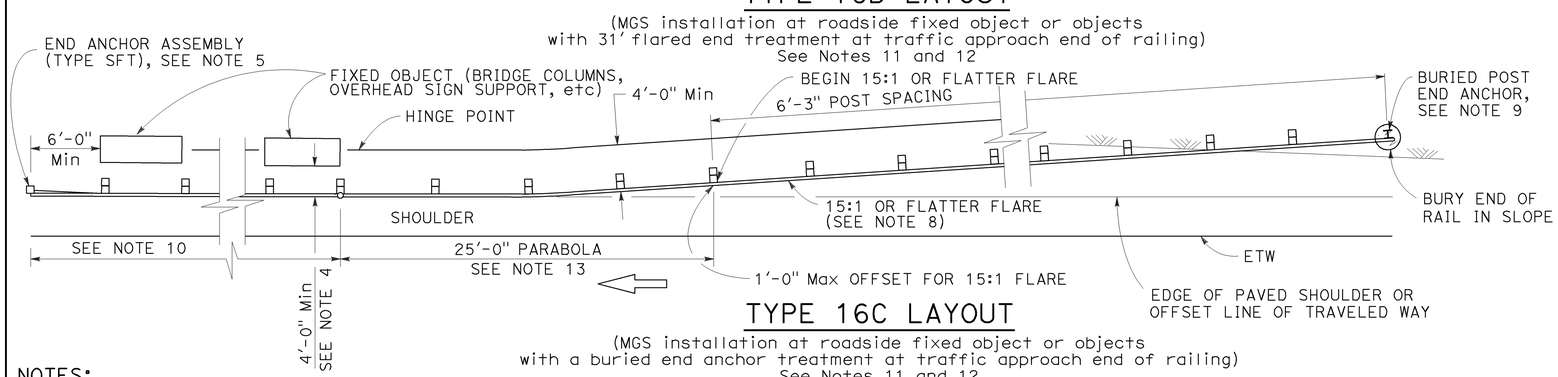


## TYPE 16C LAYOUT

(MGS installation at roadside fixed object or objects with a buried end anchor treatment at traffic approach end of railing)
See Notes 11 and 12

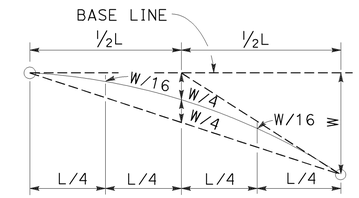


## TYPIC AL PARABOLIC LAYOUT

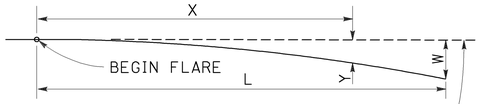


BASE LINE (EDGE OF PAVED SHOULDER OR OFFSET LINE OF EDGE OF TRAVELED WAY)

$$Y = \frac{WX^2}{L^2}$$

Y = OFFSET FROM BASE LINE
W = MAXIMUM OFFSET
X = DISTANCE ALONG BASE LINE
L = LENGTH OF FLARE

## PARABOLIC FLARE OFFSETS

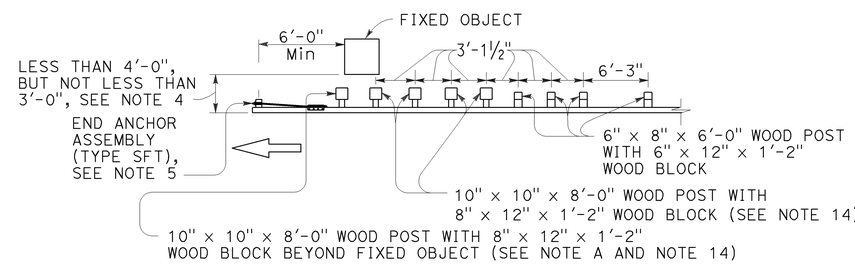


**NOTE A:** For a series of fixed objects (bridge columns, overhead sign supports, etc.) additional 10" x 10" x 8'-0" wood post with 8" x 12" x 1'-2" wood blocks at 3'-1½" center to center spacing are to be used between fixed objects.

## STRENGTHENED MIDWEST GUARDRAIL SYSTEM SECTIONS FOR FIXED OBJECT

Use strengthened MGS sections with Types 16A, 16B or 16C layouts where minimum clearance between the face of the railing and fixed object(s) is less than 4'-0", but not less than 3'-0". See Note 4

## NOTES:

1. Line post, blocks and hardware to be used are shown on Revised Standard Plans RSP A77L1, RSP A77L2, RSP A77M1, RSP A77N1 and RSP A77N2.
2. MGS post spacing to be 6'-3" center to center, except as otherwise noted.
3. Except as noted, line posts are 6" x 8" x 6'-0" wood with 6" x 12" x 1'-2" wood blocks. W6 x 8.5 or W6 x 9 steel posts, 6'-0" in length, with 6" x 12" x 1'-2" notched wood blocks or notched recycled plastic blocks may be used for 6" x 8" x 6'-0" wood line posts with 6" x 12" x 1'-2" wood blocks where applicable and when specified.
4. A 4'-0" minimum clearance is required between the face of the railing and the face of a fixed object located directly behind MGS sections with post spacing of 6'-3". Construct MGS as shown in the detail "Strengthened Midwest Guardrail System Sections for Fixed Object" on this plan, where the clearance between the face of the railing and the face of a fixed object is less than 4'-0", but not less than 3'-0". Where the clearance is less than 3'-0", a concrete wall or barrier should be constructed to shield the fixed object(s).
5. For End Anchor Assembly (Type SFT) details, see Revised Standard Plan RSP A77S1.
6. 31" in-line terminal system end treatments are used where site conditions will not accommodate a 31" flared end treatment.
7. The type of 31" terminal system to be used will be shown on the Project Plans.
8. The 15:1 or flatter flare used with Type 16C Layout is based on the edge of the paved shoulder or offset line of edge of the traveled way. The length of MGS within the 15:1 or flatter flare is based on site conditions and should be a length equal to multiples of 12'-6".
9. For details of the Buried Post End Anchor used with Type 16C Layout, see Revised Standard Plan RSP A77T2.
10. As site conditions dictate, construct additional MGS to shield fixed object(s). Additional MGS length equal to multiples of 12'-6". Post spacing at 6'-3" except as specified in Note 4.
11. Layout Types 16A, 16B or 16C are typically used where MGS is recommended to shield roadside fixed object(s) and a crashworthy 31" end treatment is required for only one direction of traffic.
12. Where placement of dike is required with MGS, see Revised Standard Plan RSP A77N4 for dike positioning details.
13. For typical flare offsets for 25'-0" length parabola with maximum offset of 1'-0", see Revised Standard Plan RSP A77P1.
14. W6 x 15 steel post, 8'-0" in length, with 8" x 12" x 1'-2" notched wood block or notched recycled plastic blocks may be used in place of the 10" x 10" x 8'-0" wood post with 8" x 12" x 1'-2" wood block shown in the detail "Strengthened Midwest Guardrail System Sections for Fixed Object".

STATE OF CALIFORNIA
DEPARTMENT OF TRANSPORTATION

# MIDWEST GUARDRAIL SYSTEM TYPICAL LAYOUTS FOR ROADSIDE FIXED OBJECTS

NO SCALE

RSP A77R3 DATED JULY 19, 2013 SUPPLEMENTS THE STANDARD PLANS BOOK DATED 2010.

**REVISED STANDARD PLAN RSP A77R3**

**2010 REVISED STANDARD PLAN RSP A77R3**

6-20-13

| Dist | COUNTY | ROUTE | POST MILES TOTAL PROJECT | SHEET No. | TOTAL SHEETS |
|---|---|---|---|---|---|
| 11 | Imp | 8 | R38.8/R39.1 | 150 | 225 |

Randell D. Hiatt
REGISTERED CIVIL ENGINEER

July 19, 2013
PLANS APPROVAL DATE

REGISTERED PROFESSIONAL ENGINEER
Randell D. Hiatt
No. C50200
Exp. 6-30-15
CIVIL
STATE OF CALIFORNIA

*THE STATE OF CALIFORNIA OR ITS OFFICERS OR AGENTS SHALL NOT BE RESPONSIBLE FOR THE ACCURACY OR COMPLETENESS OF SCANNED COPIES OF THIS PLAN SHEET.*

TO ACCOMPANY PLANS DATED 04-07-14

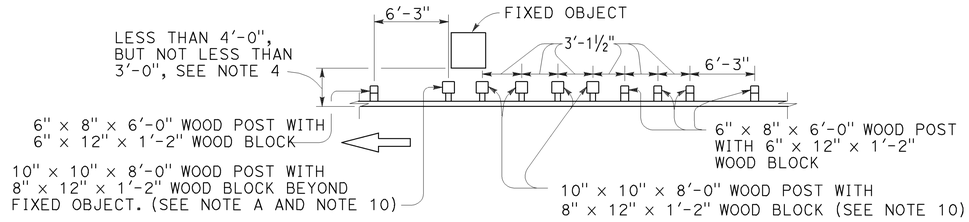


**NOTE A:** For a series of fixed objects (bridge columns, overhead sign supports, etc.) additional 10" x 10" x 8'-0" wood post with 8" x 12" x 1'-2" wood blocks at 3'-1½" center to center spacing are to be used between fixed object(s).

## STRENGTHENED MIDWEST GUARDRAIL SYSTEM SECTIONS FOR FIXED OBJECT

Use strengthened MGS sections with layout Types 16D or 16E where minimum clearance between the face of the MGS and fixed object(s) is less than 4'-0", but not less than 3'-0". See Note 4.

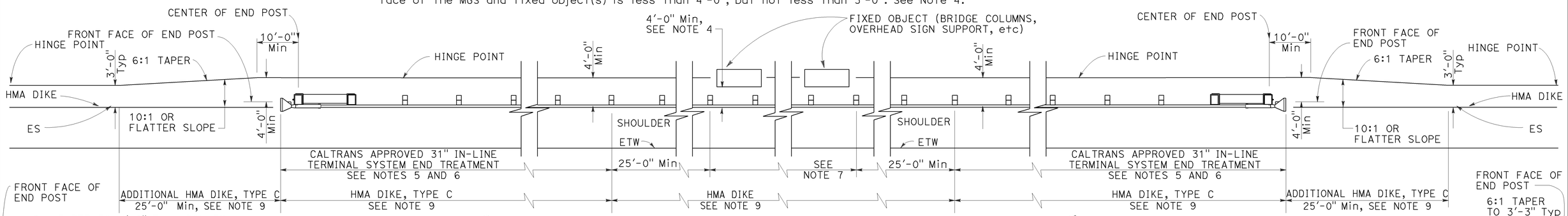


## TYPE 16D LAYOUT

(Guard railing installation at roadside fixed object or objects with 31" in-line end treatment at each end of railing)
See Note 8

## TYPE 16E LAYOUT

(MGS installation at roadside fixed object or objects with 31" flared end treatment at each end of railing)
See Note 8

### NOTES:

1. Line post, blocks and hardware to be used are shown on Revised Standard Plans RSP A77L1, RSP A77L2, RSP A77M1, RSP A77N1 and RSP A77N2.
2. MGS post spacing to be 6'-3" center to center, except as otherwise noted.
3. Except as noted, line posts are 6" x 8" x 6'-0" wood with 6" x 12" x 1'-2" wood blocks. W6 x 8.5 or W6 x 9 steel posts, 6'-0" in length, with 6" x 12" x 1'-2" notched wood blocks or notched recycled plastic blocks may be used for 6" x 8" x 6'-0" wood line posts with 6" x 12" x 1'-2" wood blocks where applicable and when specified.
4. A 4'-0" minimum clearance is required between the face of the railing and the face of a fixed object located directly behind MGS sections with post spacing at 6'-3". Construct MGS as shown in the detail "Strengthened Midwest Guardrail System Sections for Fixed Object". on this plan, where the clearance between the face of the railing and the face of a fixed object is less than 4'-0", but not less than 3'-0". Where the clearance is less than 3'-0", a concrete wall or barrier should be constructed to shield the fixed object(s).
5. 31" in-line terminal system end treatments are used where site conditions will not accommodate a 31" flared end treatment.
6. The type of 31" terminal system to be used will be shown on the Project Plans.
7. As site conditions dictate, construct additional MGS to shield fixed object(s). Additional MGS length equal to multiples of 12'-6". Post spacing at 6'-3", except as specified in Note 4.
8. Layout Types 16D through 16L, shown on the A77R Series of Standard Plans, are typically used where MGS is recommended to shield roadside fixed object(s) and a crashworthy 31" end treatment is required for both directions of traffic.
9. Where placement of dike is required with MGS, see Revised Standard Plan RSP A77N4 for dike positioning details.
10. W6 x 15 steel post, 8'-0" in length, with 8" x 12" x 1'-2" notched wood block or notched recycled plastic block may be used in place of the 10" x 10" x 8'-0" wood post with 8" x 12" x 1'-2" wood block shown in the detail "Strengthened Midwest Guardrail System Sections for Fixed Object".

STATE OF CALIFORNIA
DEPARTMENT OF TRANSPORTATION

# MIDWEST GUARDRAIL SYSTEM TYPICAL LAYOUTS FOR ROADSIDE FIXED OBJECTS

NO SCALE

RSP A77R4 DATED JULY 19, 2013 SUPPLEMENTS THE STANDARD PLANS BOOK DATED 2010.

**REVISED STANDARD PLAN RSP A77R4**

**2010 REVISED STANDARD PLAN RSP A77R4**

6-12-13

| Dist | COUNTY | ROUTE | POST MILES TOTAL PROJECT | SHEET No. | TOTAL SHEETS |
|---|---|---|---|---|---|
| 11 | Imp | 8 | R38.8/R39.1 | 151 | 225 |

Randell D. Hiatt
REGISTERED CIVIL ENGINEER

July 19, 2013
PLANS APPROVAL DATE

REGISTERED PROFESSIONAL ENGINEER
Randell D. Hiatt
No. C50200
Exp. 6-30-15
CIVIL
STATE OF CALIFORNIA

*THE STATE OF CALIFORNIA OR ITS OFFICERS OR AGENTS SHALL NOT BE RESPONSIBLE FOR THE ACCURACY OR COMPLETENESS OF SCANNED COPIES OF THIS PLAN SHEET.*

TO ACCOMPANY PLANS DATED 04-07-14

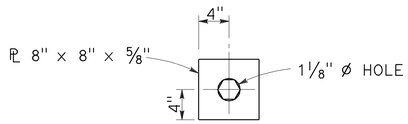


DETAIL "A"
CABLE CONNECTION END PLATE

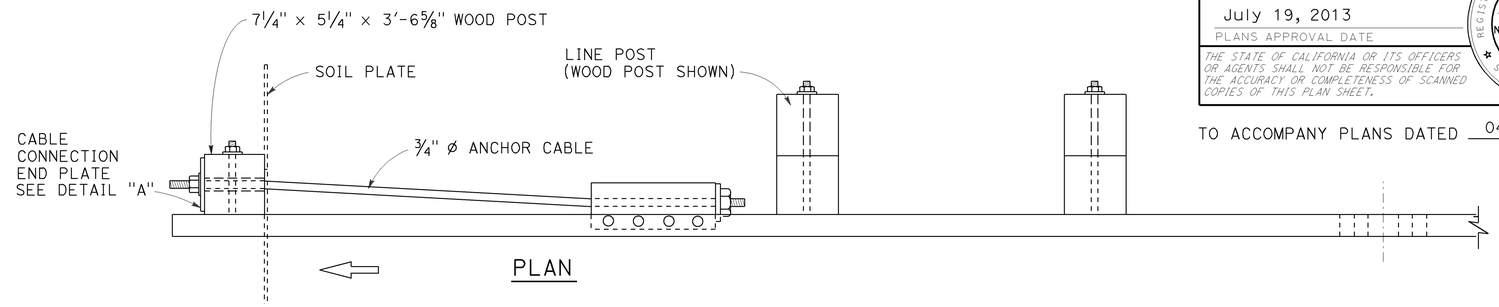


PLAN

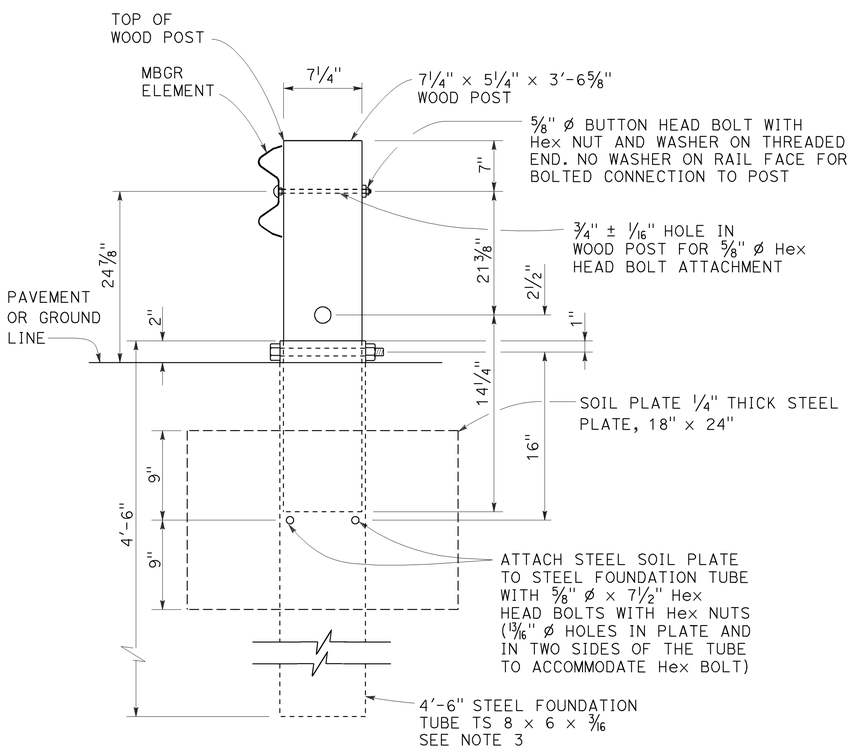


SECTION A-A

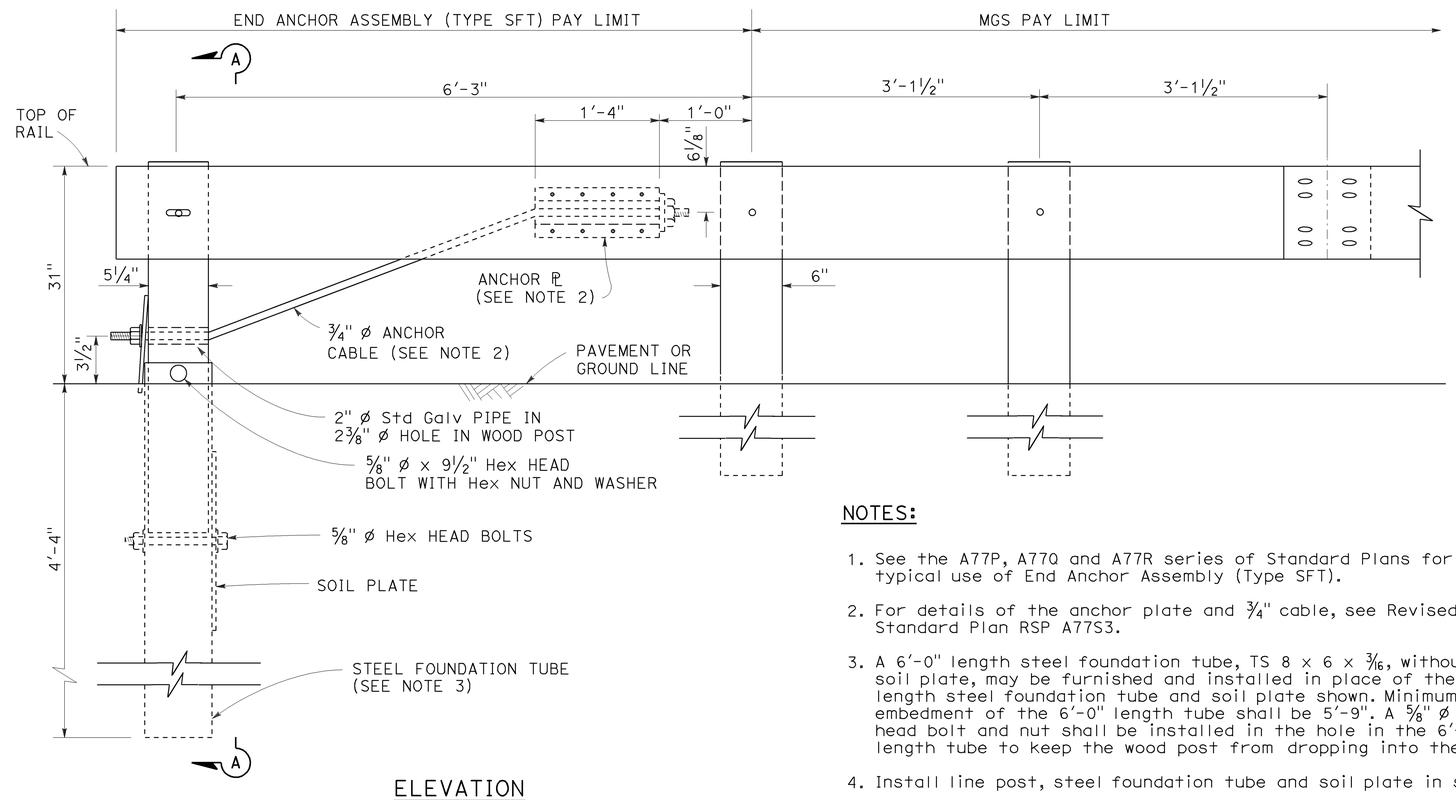


ELEVATION

END ANCHOR ASSEMBLY (TYPE SFT)
See Note 1

NOTES:

1. See the A77P, A77Q and A77R series of Standard Plans for typical use of End Anchor Assembly (Type SFT).
2. For details of the anchor plate and 3/4" cable, see Revised Standard Plan RSP A77S3.
3. A 6'-0" length steel foundation tube, TS 8 x 6 x 3/16, without a soil plate, may be furnished and installed in place of the 4'-6" length steel foundation tube and soil plate shown. Minimum embedment of the 6'-0" length tube shall be 5'-9". A 5/8" ø Hex head bolt and nut shall be installed in the hole in the 6'-0" length tube to keep the wood post from dropping into the tube.
4. Install line post, steel foundation tube and soil plate in soil.

STATE OF CALIFORNIA
DEPARTMENT OF TRANSPORTATION

# MIDWEST GUARDRAIL SYSTEM END ANCHOR ASSEMBLY (TYPE SFT)

NO SCALE

RSP A77S1 DATED JULY 19, 2013 SUPPLEMENTS THE STANDARD PLANS BOOK DATED 2010.

**REVISED STANDARD PLAN RSP A77S1**

**2010 REVISED STANDARD PLAN RSP A77S1**

| Dist | COUNTY | ROUTE | POST MILES TOTAL PROJECT | SHEET No. | TOTAL SHEETS |
|---|---|---|---|---|---|
| 11 | Imp | 8 | R38.8/R39.1 | 152 | 225 |

Randell D. Hiatt
REGISTERED CIVIL ENGINEER

July 19, 2013
PLANS APPROVAL DATE

REGISTERED PROFESSIONAL ENGINEER
Randell D. Hiatt
No. C50200
Exp. 6-30-15
CIVIL
STATE OF CALIFORNIA

*THE STATE OF CALIFORNIA OR ITS OFFICERS OR AGENTS SHALL NOT BE RESPONSIBLE FOR THE ACCURACY OR COMPLETENESS OF SCANNED COPIES OF THIS PLAN SHEET.*

TO ACCOMPANY PLANS DATED 04-07-14

**2010 REVISED STANDARD PLAN RSP A77S3**

NOTE:

See Revised Standard Plans RSP A77S1, RSP A77S2 and RSP A77T1 for typical use of anchor cable and anchor plate.

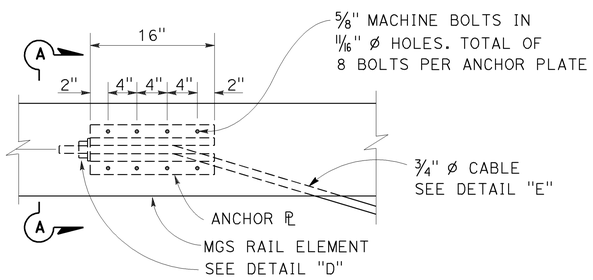


ANCHOR PLATE DETAIL
(MGS shown, TBB similar)

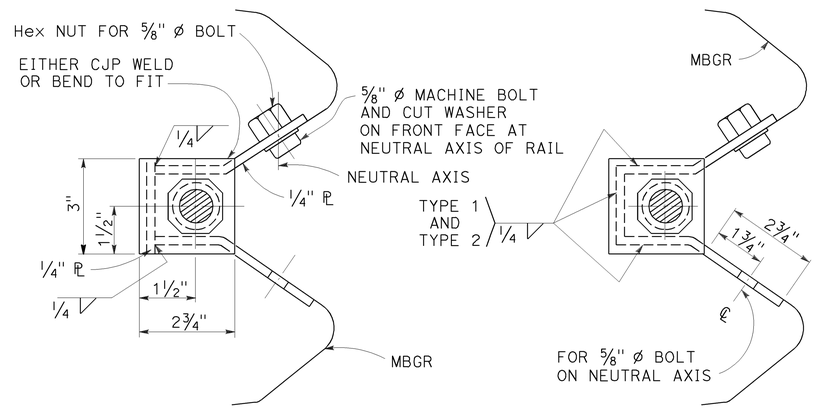


NOTE:
Dimensioning applies to both types.

SECTION A-A
(ALTERNATIVE TYPE 1)

SECTION A-A
(ALTERNATIVE TYPE 2)

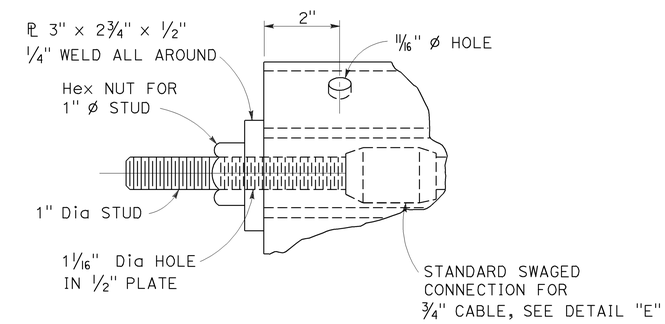


DETAIL "D"

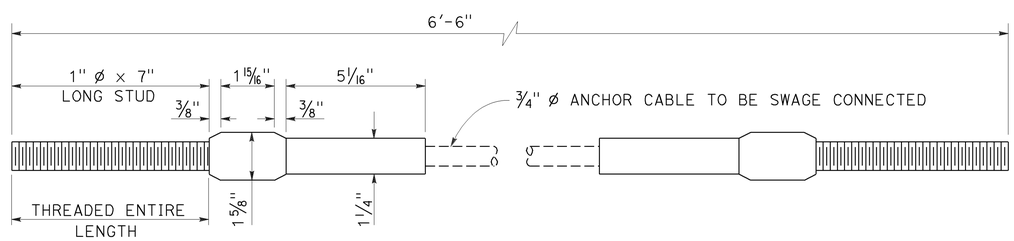


ANCHOR CABLE WITH
SWAGED FITTING AND STUD
DETAIL "E"

STATE OF CALIFORNIA
DEPARTMENT OF TRANSPORTATION

# METAL RAILING ANCHOR CABLE AND ANCHOR PLATE DETAILS

NO SCALE

RSP A77S3 DATED JULY 19, 2013 SUPPLEMENTS THE STANDARD PLANS BOOK DATED 2010.

**REVISED STANDARD PLAN RSP A77S3**

7-3-13

| Dist | COUNTY | ROUTE | POST MILES TOTAL PROJECT | SHEET No. | TOTAL SHEETS |
|---|---|---|---|---|---|
| 11 | Imp | 8 | R38.8/R39.1 | 153 | 225 |

Randell D. Hiatt
REGISTERED CIVIL ENGINEER

July 19, 2013
PLANS APPROVAL DATE

REGISTERED PROFESSIONAL ENGINEER
Randell D. Hiatt
No. C50200
Exp. 6-30-15
CIVIL
STATE OF CALIFORNIA

*THE STATE OF CALIFORNIA OR ITS OFFICERS OR AGENTS SHALL NOT BE RESPONSIBLE FOR THE ACCURACY OR COMPLETENESS OF SCANNED COPIES OF THIS PLAN SHEET.*

TO ACCOMPANY PLANS DATED 04-07-14

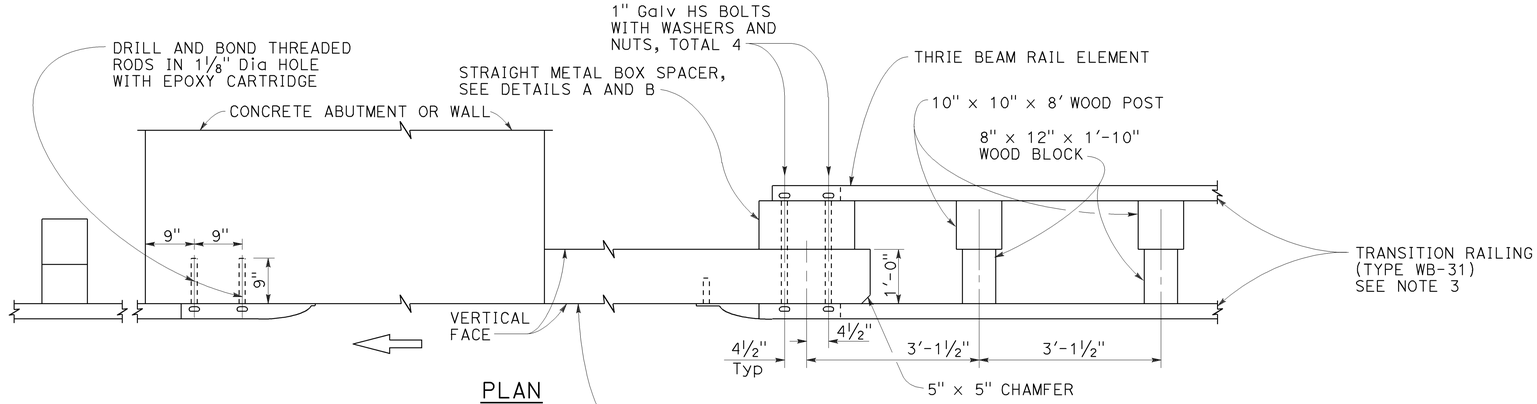


PLAN

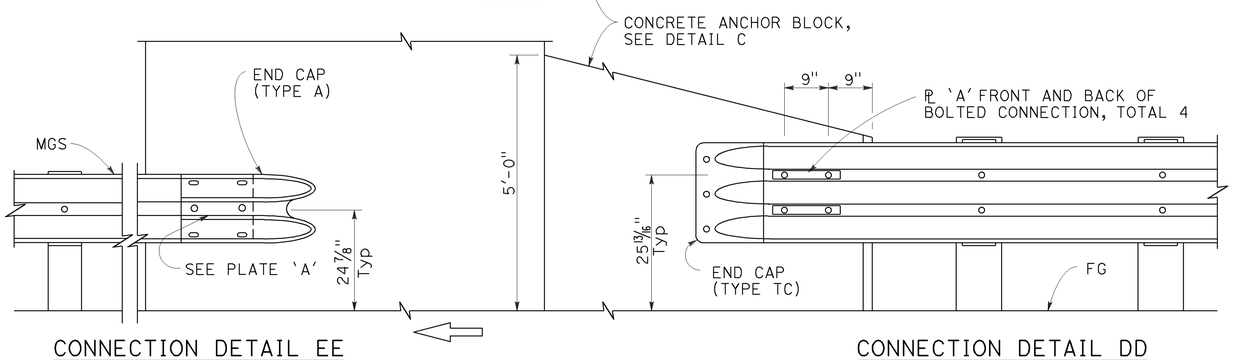


CONNECTION DETAIL EE
See Note 5

CONNECTION DETAIL DD
See Note 4

ELEVATION

## MIDWEST GUARDRAIL SYSTEM CONNECTION TO ABUTMENT OR WALL

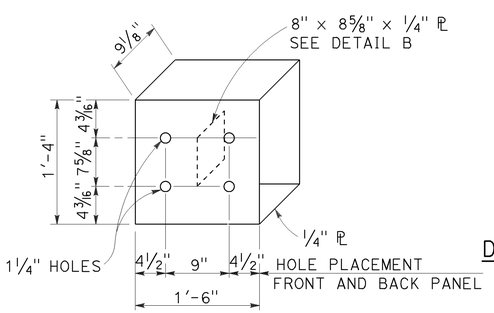


DETAIL A

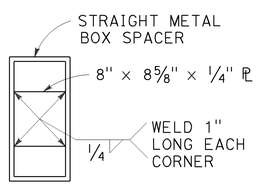


DETAIL B

STRAIGHT METAL BOX SPACER

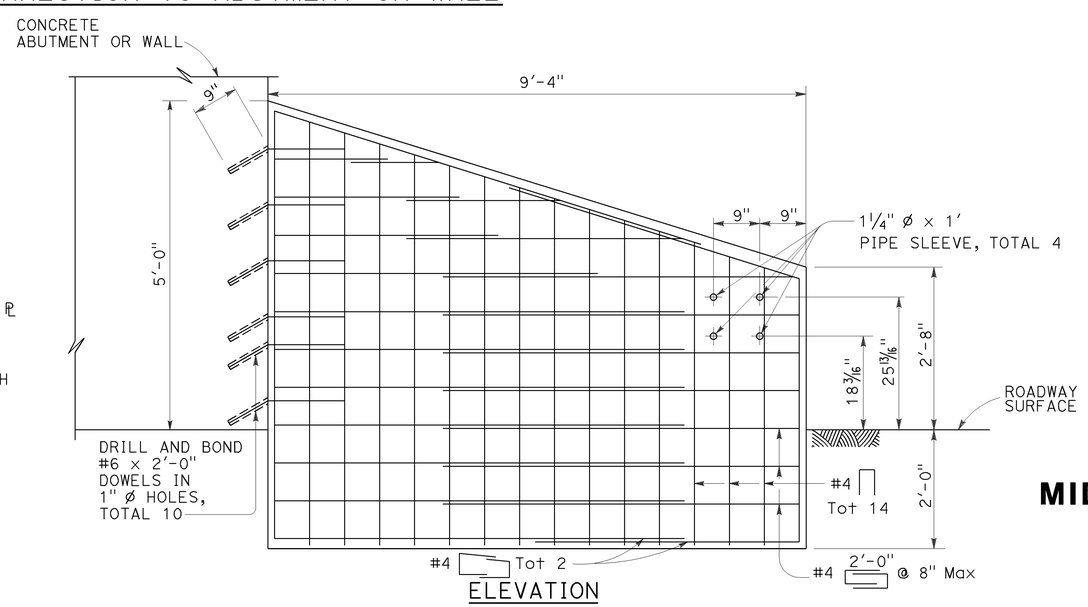


ELEVATION

ANCHOR BLOCK FOR TRANSITION RAILING CONNECTION

DETAIL C

## NOTES:

1. These connection details apply to abutments and walls.
2. Additional details of posts, blocks and hardware are shown on Revised Standard Plans RSP A77M1, RSP A77N1 and RSP A77N2.
3. For additional details of Transition Railing (Type WB-31), see Revised Standard Plan RSP A77U4. Transition Railing (Type WB-31) transitions the 12 gauge MGS railing section to a heavier gage nested thrie beam railingsection which is connected to the concrete anchor block.
4. For typical use of Connection Details DD, see Layout Types 12A and 12B on Revised Standard Plan RSP A77Q1 and Layout Types 12C and 12D on Revised Standard Plan RSP A77Q2.
5. For typical use of Connection Detail EE, see Layout Type 12D on Revised Standard Plan RSP A77Q2 and Layout Type 12DD on Revised Standard Plan RSP A77Q5.

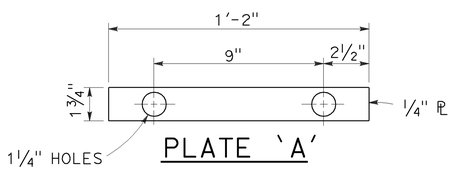


PLATE 'A'

STATE OF CALIFORNIA
DEPARTMENT OF TRANSPORTATION

# MIDWEST GUARDRAIL SYSTEM CONNECTIONS TO ABUTMENTS AND WALLS

NO SCALE

RSP A77U3 DATED JULY 19, 2013 SUPPLEMENTS THE STANDARD PLANS BOOK DATED 2010.

**REVISED STANDARD PLAN RSP A77U3**

**2010 REVISED STANDARD PLAN RSP A77U3**

7-8-13

| Dist | COUNTY | ROUTE | POST MILES TOTAL PROJECT | SHEET No. | TOTAL SHEETS |
|---|---|---|---|---|---|
| 11 | Imp | 8 | R38.8/R39.1 | 154 | 225 |

Randell D. Hiatt
REGISTERED CIVIL ENGINEER

July 19, 2013
PLANS APPROVAL DATE

REGISTERED PROFESSIONAL ENGINEER
Randell D. Hiatt
No. C50200
Exp. 6-30-15
CIVIL
STATE OF CALIFORNIA

*THE STATE OF CALIFORNIA OR ITS OFFICERS OR AGENTS SHALL NOT BE RESPONSIBLE FOR THE ACCURACY OR COMPLETENESS OF SCANNED COPIES OF THIS PLAN SHEET.*

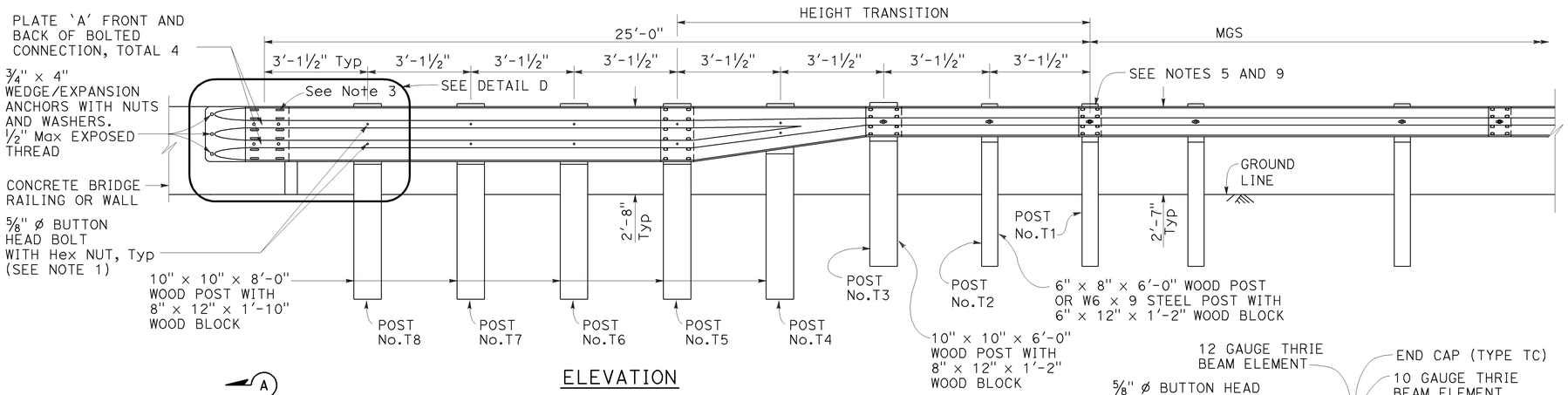


ELEVATION

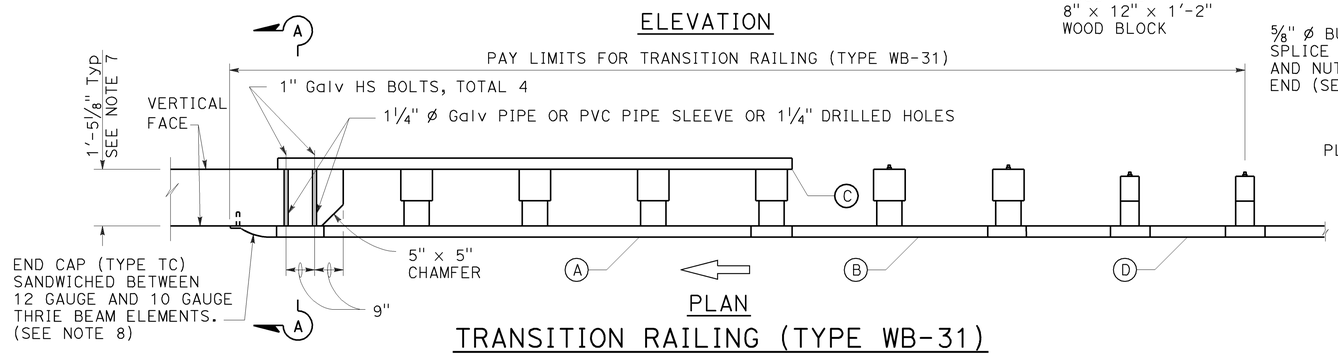


PLAN

TRANSITION RAILING (TYPE WB-31)

(No Blockout Attachment)

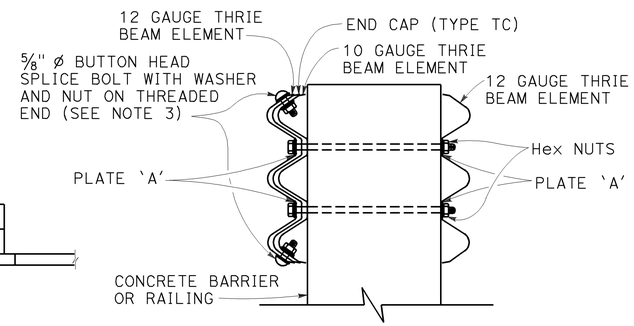


SECTION A-A

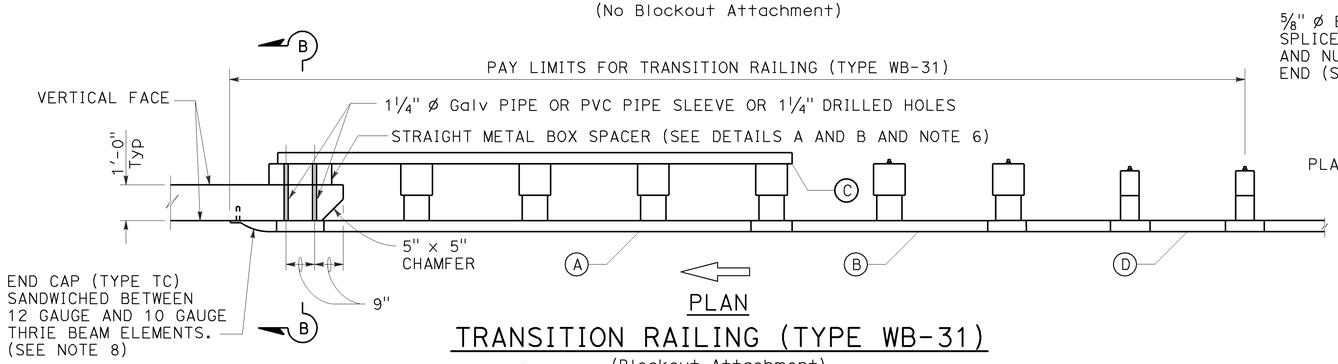


PLAN

TRANSITION RAILING (TYPE WB-31)

(Blockout Attachment)

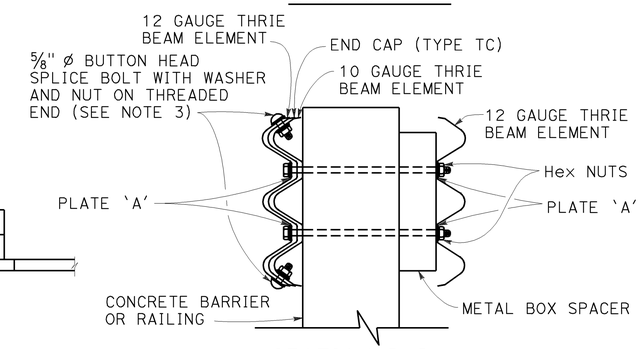


SECTION B-B

## LEGEND:

(A) NESTED THRIE BEAM ELEMENTS (ONE 12 GAUGE ELEMENT NESTED OVER ONE 10 GAUGE ELEMENT).

(B) ONE ASYMMETRICAL 10 GAUGE "W" BEAM TO THRIE BEAM ELEMENT.

(C) ONE 12 GAUGE THRIE BEAM ELEMENT.

(D) ONE 10 GAUGE "W" BEAM RAIL ELEMENT (7'-3 1/2"LENGTH)

10 GAUGE = 0.138" THICK
12 GAUGE = 0.108" THICK

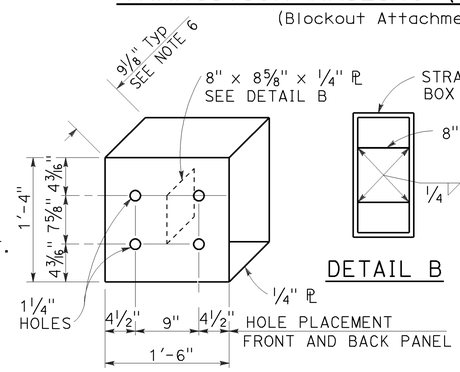


DETAIL A

STRAIGHT METAL BOX SPACER

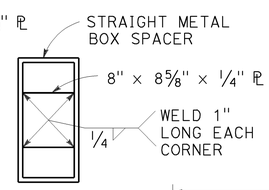


DETAIL B

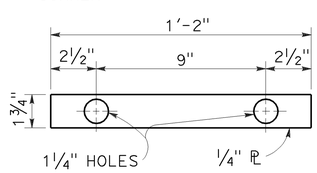


DETAIL C

PLATE 'A'

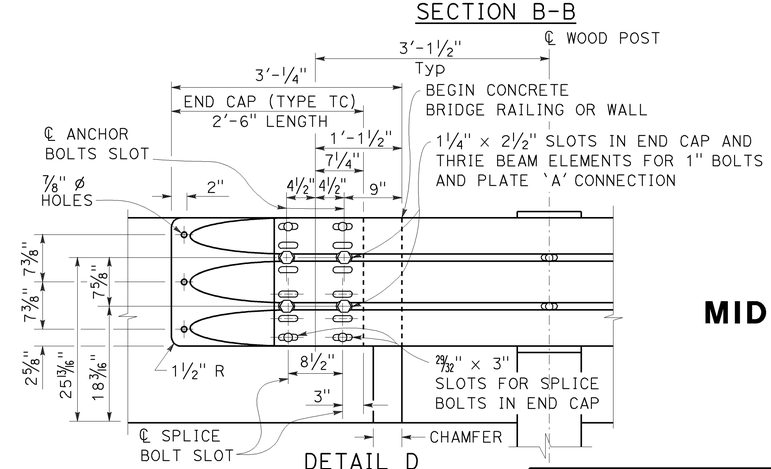


DETAIL D

## NOTES:

TO ACCOMPANY PLANS DATED 04-07-14

1. Use 5/8" ø Button head bolts and hex nuts for connections to posts. No washer on rail face for bolted connections to post.

2. The nested rail elements, end cap, and 'W' beam to thrie beam element may be spliced together prior to bolting the elements to the wood post and concrete barrier or railing.

3. Exterior splice bolt holes for rail element splices at Post No. T5 and the connection to the concrete barrier or railing shall be the standard 29/32" x 1 1/8" slot size. Interior splice bolt holes at these locations may be increased up to 1 1/4" ø. Only the top 4 and the bottom 4 splice bolts with washers and nuts are required for rail splices at Post No. T5 and the connection to the concrete barrier or railing.

4. The top elevation of Posts No. T2 through No. T7 shall not project more than 1" above the top elevation of the rail element.

5. Typically, the railing connected to Transition Railing (Type WB-31) will be either standard railing section of MGS with height transition ratio of 150:1 or a Caltrans approved 31" end treatment attached to Post No. T1.

6. The depth of the metal box spacer varies from the 9 1/8" to 1 1/2" and is dependent on the width of the concrete railing or wall. The combined dimension for the depth of the metal box spacer plus the width of railing or wall is typically 21 1/8". Where the space between the backside of the concrete railing or wall and the rear thrie beam element is less than 1 1/2", metal plates similar to Plate 'A' are to be used as spacers.

7. Where the width of the concrete railing or wall is greater than 17 1/8", wood blocks are to be used to fill the space created between the backside of Posts No. T4 through No. T7 and the rear thrie beam element. These wood blocks shall be 8" in width and 1'-2" in length. The dimension between the front thrie beam element and the rear thrie beam element is to match the width of the concrete railing or wall.

8. End cap may be installed over 12 gauge and 10 gauge thrie beam elements where transition railing is installed on the departure end of bridge railing.

9. Conform standard railing section height to 31" at Post No. T1 using height transition ratio of 150:1.

STATE OF CALIFORNIA
DEPARTMENT OF TRANSPORTATION

# MIDWEST GUARDRAIL SYSTEM TRANSITION RAILING (TYPE WB-31)

NO SCALE

RSP A77U4 DATED JULY 19, 2013 SUPPLEMENTS THE STANDARD PLANS BOOK DATED 2010.

**REVISED STANDARD PLAN RSP A77U4**

**2010 REVISED STANDARD PLAN RSP A77U4**

7-8-13

| Dist | COUNTY | ROUTE | POST MILES TOTAL PROJECT | SHEET No. | TOTAL SHEETS |
|---|---|---|---|---|---|
| 11 | Imp | 8 | R38.8/R39.1 | 155 | 225 |

Randell D. Hiatt
REGISTERED CIVIL ENGINEER

July 19, 2013
PLANS APPROVAL DATE

REGISTERED PROFESSIONAL ENGINEER
Randell D. Hiatt
No. C50200
Exp. 6-30-15
CIVIL
STATE OF CALIFORNIA

*THE STATE OF CALIFORNIA OR ITS OFFICERS OR AGENTS SHALL NOT BE RESPONSIBLE FOR THE ACCURACY OR COMPLETENESS OF SCANNED COPIES OF THIS PLAN SHEET.*

TO ACCOMPANY PLANS DATED 04-07-14

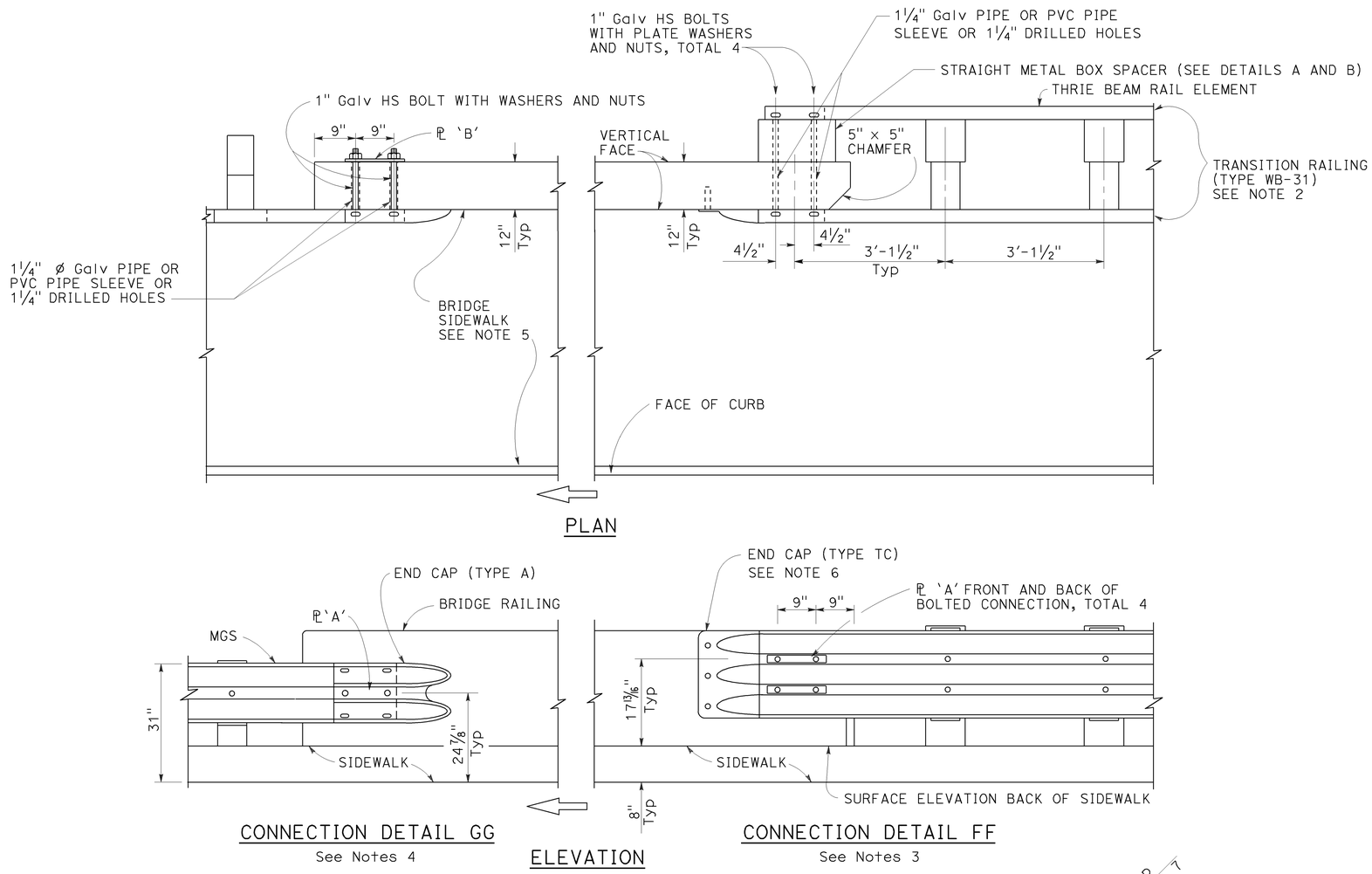


MIDWEST GUARDRAIL SYSTEM CONNECTION TO BRIDGE RAILING WITH SIDEWALKS

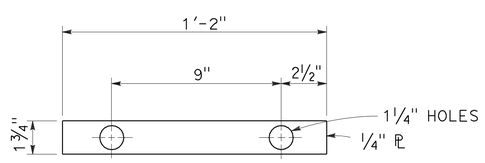


PLATE 'A'

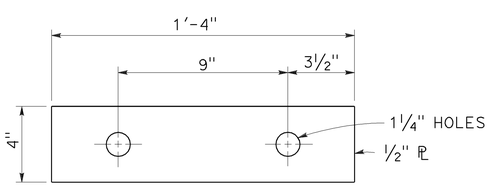


PLATE 'B'
(For backside of connection SB)

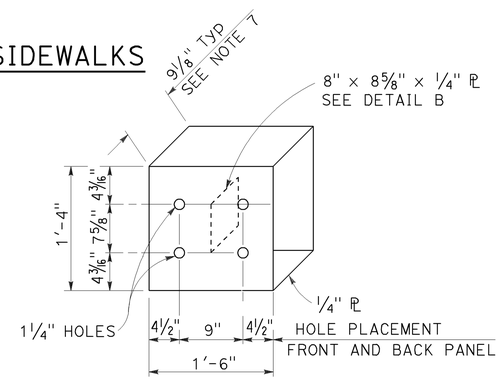


DETAIL A

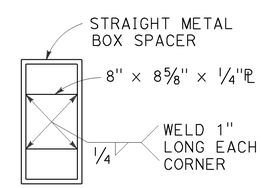


DETAIL B

STRAIGHT METAL BOX SPACER

## NOTES:

1. See Revised Standard Plan RSP A77V2 for additional connection details to bridges with sidewalks.
2. For additional details of Transition Railing (Type WB-31), see Revised Standard Plan RSP A77U4. Transition Railing (Type WB-31) transitions the 12 gauge MGS railing section to a heavier gage nested thrie beam railing section which is connected to the concrete bridge railing.
3. For typical use of Connection Detail FF, see Layout Types 12A and 12B on Revised Standard Plan RSP A77Q1.
4. For typical use of Connection Detail GG, see Layout Type 12D on Revised Standard Plan RSP A77Q2 and Layout Type 12DD on Revised Standard Plan RSP A77Q5.
5. Where the bridge sidewalk is not continued beyond the end of the bridge railing, the portion of the sidewalk beyond each end of the bridge railing shall be transitioned down from the top elevation of the sidewalk, for its entire width, to the finished grade of the adjacent roadbed. The longitudinal slope of each sidewalk elevation transition shall not exceed 8.33 percent.
6. For details of End Cap (Type TC), see Revised Standard Plan RSP A77U4.
7. See Revised Standard Plan RSP A77U4 for additional details regarding depth dimension for straight metal box spacer.

STATE OF CALIFORNIA
DEPARTMENT OF TRANSPORTATION

# MIDWEST GUARDRAIL SYSTEM CONNECTIONS TO BRIDGE RAILINGS WITH SIDEWALKS DETAILS No. 1

NO SCALE

RSP A77V1 DATED JULY 19, 2013 SUPPLEMENTS THE STANDARD PLANS BOOK DATED 2010.

**REVISED STANDARD PLAN RSP A77V1**

2010 REVISED STANDARD PLAN RSP A77V1

7-8-13

| Dist | COUNTY | ROUTE | POST MILES TOTAL PROJECT | SHEET No. | TOTAL SHEETS |
|---|---|---|---|---|---|
| 11 | Imp | 8 | R38.8/R39.1 | 156 | 225 |

Randell D. Hiatt
REGISTERED CIVIL ENGINEER

July 19, 2013
PLANS APPROVAL DATE

REGISTERED PROFESSIONAL ENGINEER
Randell D. Hiatt
No. C50200
Exp. 6-30-15
CIVIL
STATE OF CALIFORNIA

*THE STATE OF CALIFORNIA OR ITS OFFICERS OR AGENTS SHALL NOT BE RESPONSIBLE FOR THE ACCURACY OR COMPLETENESS OF SCANNED COPIES OF THIS PLAN SHEET.*

TO ACCOMPANY PLANS DATED 04-07-14

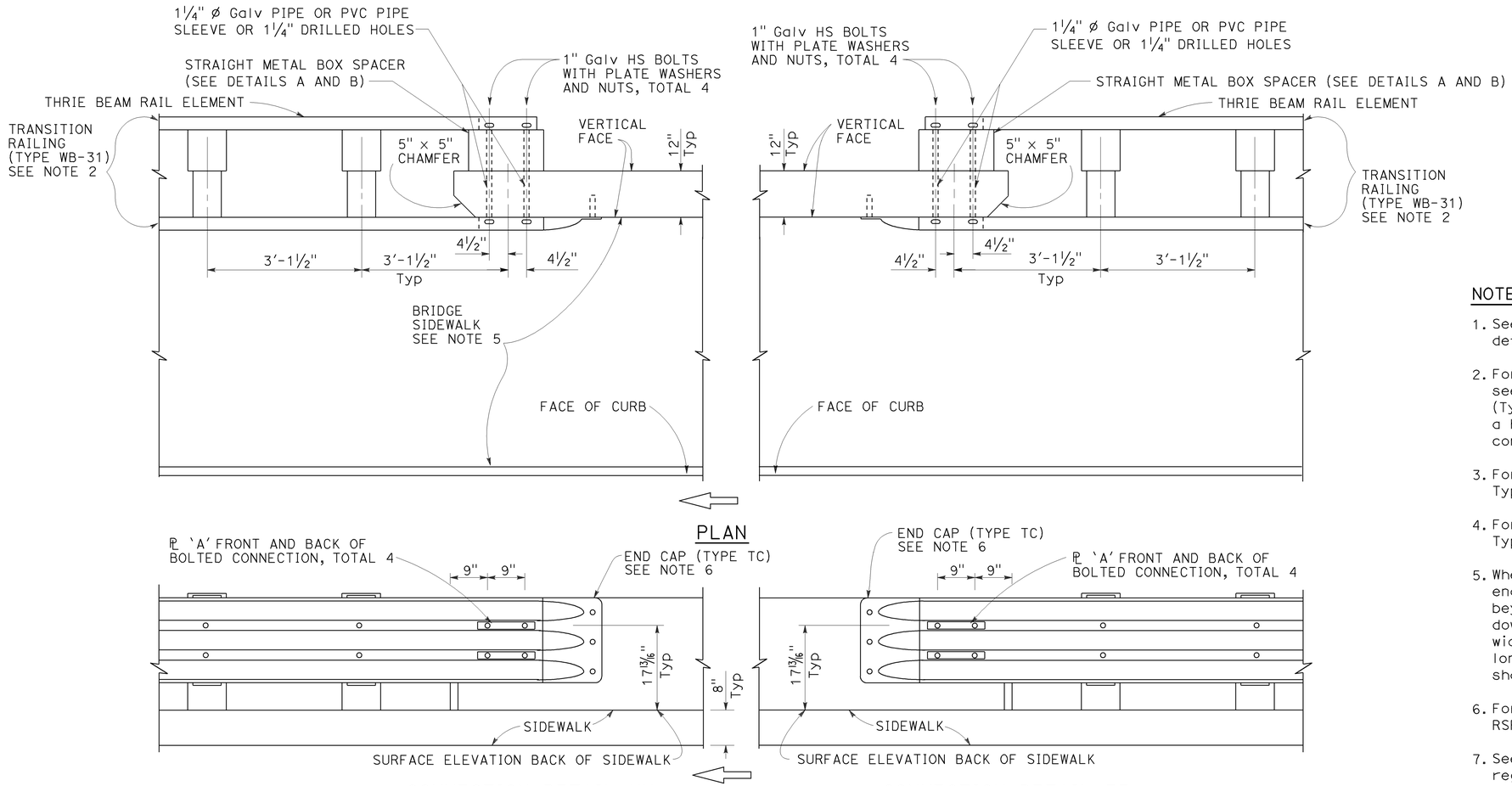


## MIDWEST GUARDRAIL SYSTEM CONNECTION TO BRIDGE RAILING WITH SIDEWALKS

## NOTES:

1. See Revised Standard Plan RSP A77V1 for additional connection details to bridges with sidewalks.
2. For additional details of Transition Railing (Type WB-31), see Revised Standard Plan RSP A77U4. Transition Railing (Type WB-31) transitions the 12 gauge MGS railing section to a heavier gage nested thrie beam railing section which is connected to the concrete bridge railing.
3. For typical use of Connection Detail FF, see Layout Types 12A and 12B on Revised Standard Plan RSP A77Q1.
4. For typical use of Connection Detail HH, see Layout Types 12AA and 12BB on Revised Standard Plan RSP A77Q4.
5. Where the bridge sidewalk is not continued beyond the end of the bridge railing, the portion of the sidewalk beyond each end of the bridge railing shall be transitioned down from the top elevation of the sidewalk, for its entire width, to the finished grade of the adjacent roadbed. The longitudinal slope of each sidewalk elevation transition shall not exceed 8.33 percent.
6. For details of End Cap (Type TC), see Revised Standard Plan RSP A77U4.
7. See Revised Standard Plan RSP A77U4 for additional details regarding depth dimension for straight metal box spacer.

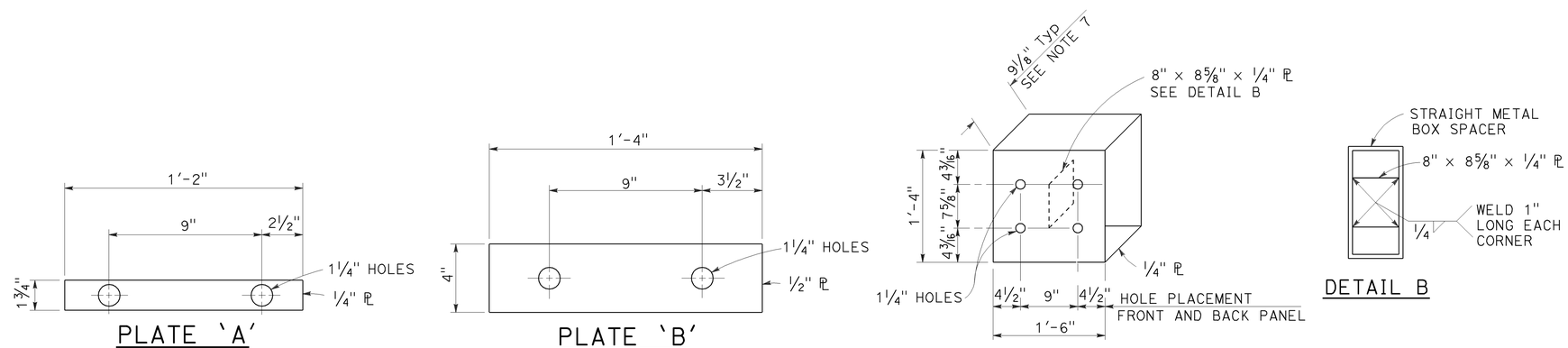


## STRAIGHT METAL BOX SPACER

STATE OF CALIFORNIA
DEPARTMENT OF TRANSPORTATION

# MIDWEST GUARDRAIL SYSTEM CONNECTIONS TO BRIDGE RAILINGS WITH SIDEWALKS DETAILS No. 2

NO SCALE

RSP A77V2 DATED JULY 19, 2013 SUPPLEMENTS THE STANDARD PLANS BOOK DATED 2010.

**REVISED STANDARD PLAN RSP A77V2**

**2010 REVISED STANDARD PLAN RSP A77V2**

6-20-13

| Dist | COUNTY | ROUTE | POST MILES TOTAL PROJECT | SHEET No. | TOTAL SHEETS |
|---|---|---|---|---|---|
| 11 | Imp | 8 | R38.8/R39.1 | 157 | 225 |

REGISTERED CIVIL ENGINEER

October 19, 2012
PLANS APPROVAL DATE

REGISTERED PROFESSIONAL ENGINEER Glenn DeCou No. C34547 Exp. 9-30-13 CIVIL STATE OF CALIFORNIA

*THE STATE OF CALIFORNIA OR ITS OFFICERS OR AGENTS SHALL NOT BE RESPONSIBLE FOR THE ACCURACY OR COMPLETENESS OF SCANNED COPIES OF THIS PLAN SHEET.*

TO ACCOMPANY PLANS DATED 04-07-14

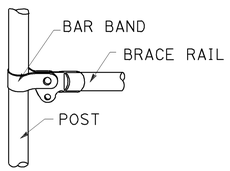


BRACE RAIL

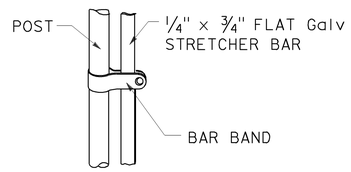


STRETCHER BAR

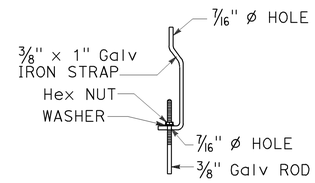


TRUSS TIGHTENER

## NOTES:

1. All material for abutment connection to be galvanized.
2. The chain link fabric shall be replaced by barbed wire strands at 12" maximum centers between the double posts.
3. When the width of the culvert makes it necessary to anchor a post to the top of the culvert, a cast iron shoe or other device approved by the Engineer shall be used.
4. Fencing over stream and around headwall may also use Barbed Wire or Wire Mesh fencing with either wood post or steel post installation.
5. See Standard Plan A85 for Chain Link fence dimensions. See Standard Plan A86 for Barbed Wire and Wire Mesh fence dimensions and for wood post and steel post installation.

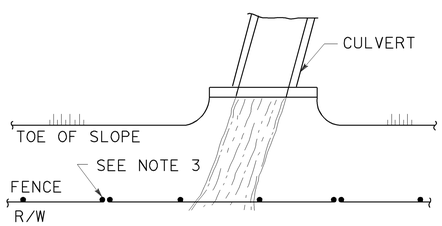


PLAN

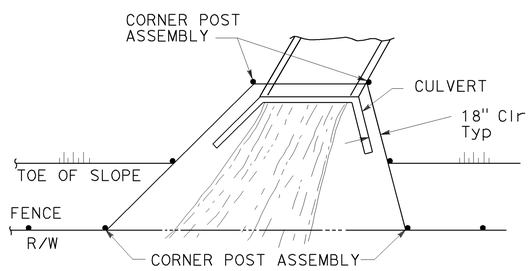


PLAN

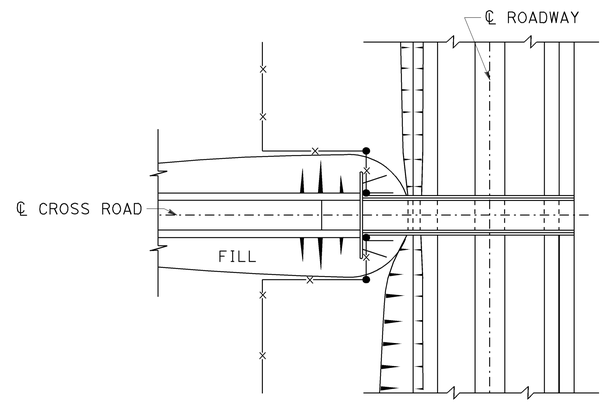


PLAN OF ROADWAY - OVERCROSSING

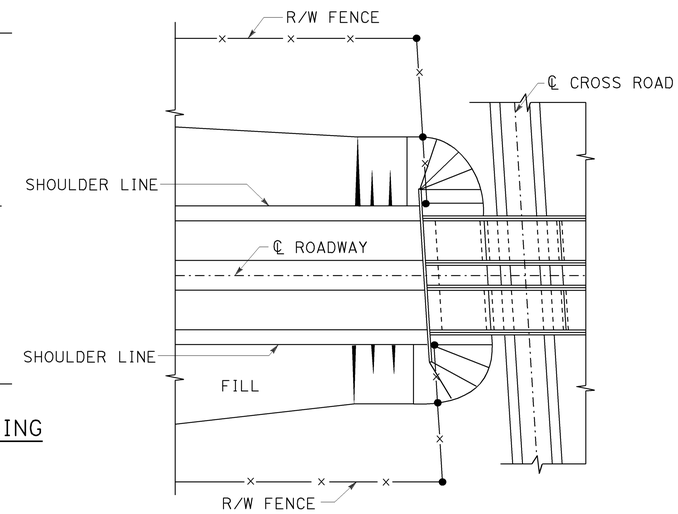


PLAN OF ROADWAY - UNDERCROSSING

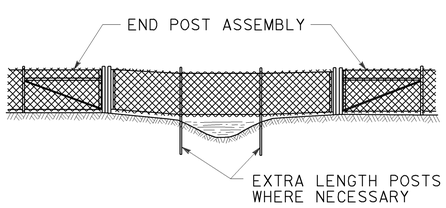


ELEVATION

INSTALLATION OVER STREAM

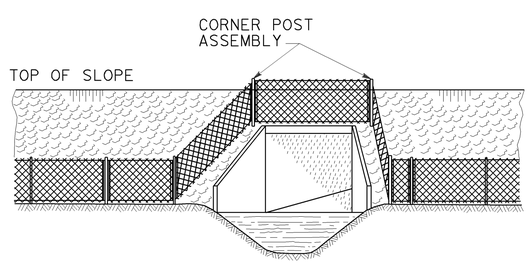


ELEVATION

INSTALLATION AROUND HEADWALL

See Note 4

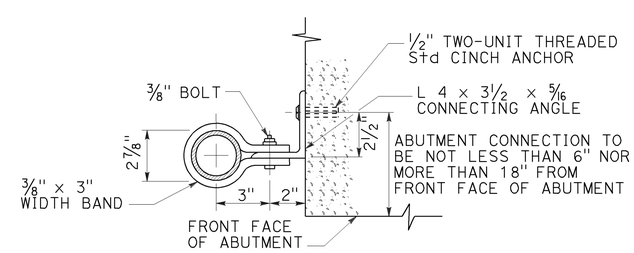


ABUTMENT CONNECTION

TYPICAL INSTALLATION AT BRIDGES

STATE OF CALIFORNIA
DEPARTMENT OF TRANSPORTATION

# CHAIN LINK FENCE DETAILS

NO SCALE

RSP A85B DATED OCTOBER 19, 2012 SUPERSEDES STANDARD PLAN A85B DATED MAY 20, 2011 - PAGE 114 OF THE STANDARD PLANS BOOK DATED 2010.

**REVISED STANDARD PLAN RSP A85B**

**2010 REVISED STANDARD PLAN RSP A85B**

7-19-12

| Dist | COUNTY | ROUTE | POST MILES TOTAL PROJECT | SHEET No. | TOTAL SHEETS |
|---|---|---|---|---|---|
| 11 | Imp | 8 | R38.8/R39.1 | 158 | 225 |

REGISTERED CIVIL ENGINEER

July 19, 2013
PLANS APPROVAL DATE

REGISTERED PROFESSIONAL ENGINEER Michael Janzen No. 44788 Exp. 03-31-14 CIVIL STATE OF CALIFORNIA

*THE STATE OF CALIFORNIA OR ITS OFFICERS OR AGENTS SHALL NOT BE RESPONSIBLE FOR THE ACCURACY OR COMPLETENESS OF SCANNED COPIES OF THIS PLAN SHEET.*

TO ACCOMPANY PLANS DATED 04-07-14

**2010 REVISED STANDARD PLAN RSP A87A**

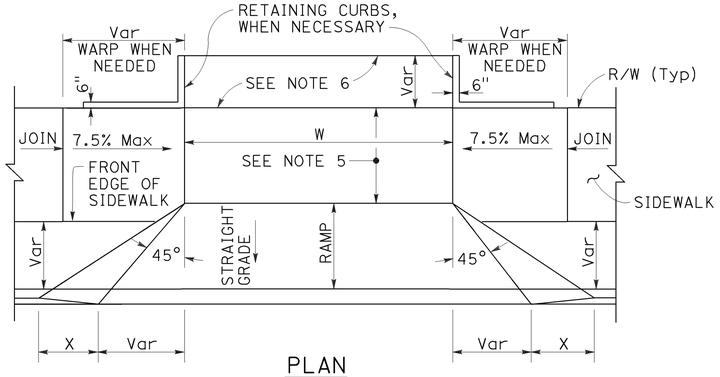


PLAN

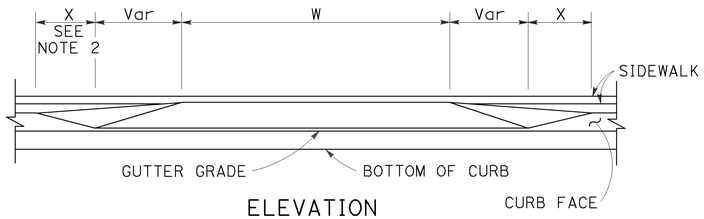


ELEVATION

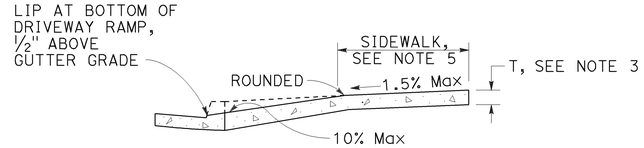


CASE A

Typical driveway, sidewalk not depressed

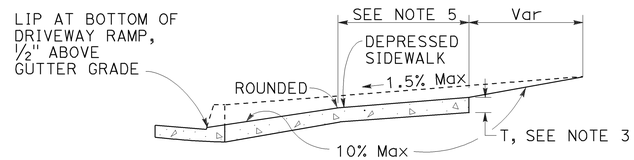


CASE B

Driveway with depressed sidewalk

SECTIONS

## DRIVEWAYS

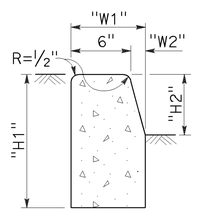


TYPE A1 CURBS

See Table A

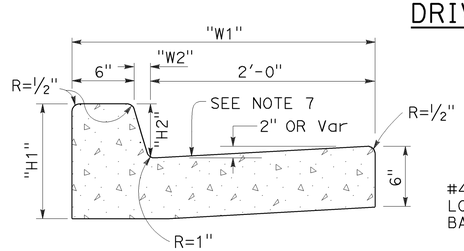


TYPE A2 CURBS

See Table A

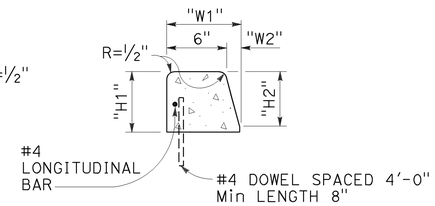


TYPE A3 CURBS

Superimposed on existing pavement
See Table A

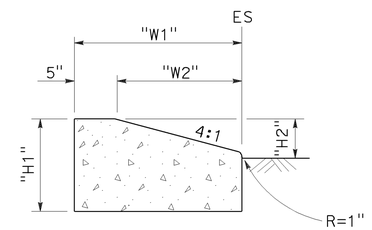


TYPE D CURBS

See Table A

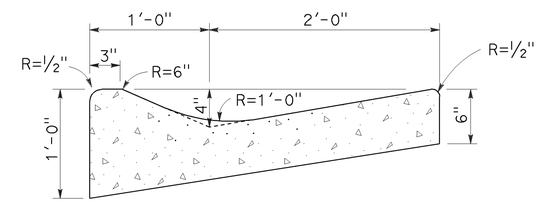


TYPE E CURB

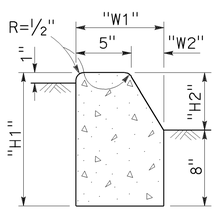


TYPE B1 CURBS

See Table A

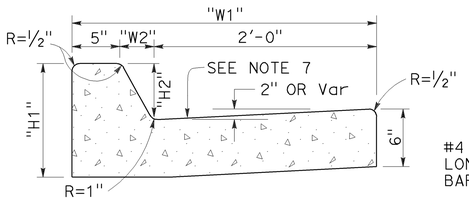


TYPE B2 CURBS

See Table A

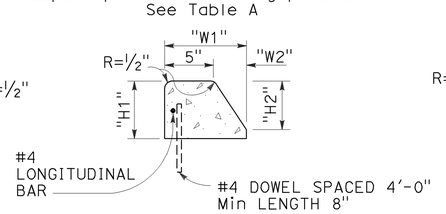


TYPE B3 CURBS

Superimposed on existing pavement
See Table A

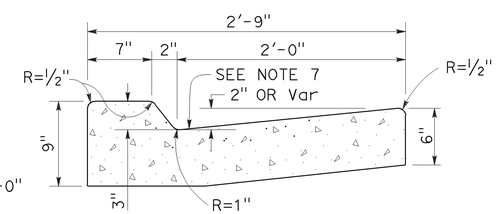


TYPE B4 CURBS

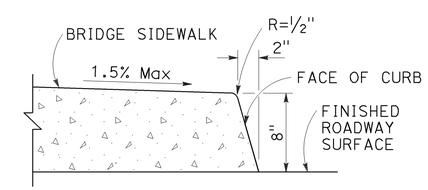


TYPE H CURB

On Bridges

## CURBS

### TABLE A

| CURB TYPE | DIMENSIONS | | | |
|---|---|---|---|---|
| | "H1" | "H2" | "W1" | "W2" |
| A1-6 | 1'-2" | 6" | 7½" | 1½" |
| A1-8 | 1'-4" | 8" | 8" | 2" |
| A2-6 | 1'-0" | 6" | 2'-7½" | 1½" |
| A2-8 | 1'-2" | 8" | 2'-8" | 2" |
| A3-6 | 6" | 5" | 7¼" | 1¼" |
| A3-8 | 8" | 7" | 7¾" | 1¾" |
| B1-4 | 1'-0" | 4" | 7½" | 2½" |
| B1-6 | 1'-2" | 6" | 9" | 4" |
| B2-4 | 10" | 4" | 2'-7½" | 2½" |
| B2-6 | 1'-0" | 6" | 2'-9" | 4" |
| B3-4 | 4" | 3" | 7" | 2" |
| B3-6 | 6" | 5" | 8½" | 3½" |
| D-4 | 10" | 4" | 1'-6" | 1'-1" |
| D-6 | 1'-0" | 6" | 2'-2" | 1'-9" |

### CURB QUANTITIES

| TYPE | CUBIC YARDS PER LINEAR FOOT |
|---|---|
| A1-6 | 0.02585 |
| A1-8 | 0.03084 |
| A2-6 | 0.05903 |
| A2-8 | 0.06379 |
| A3-6 | 0.01036 |
| A3-8 | 0.01435 |
| B1-4 | 0.02185 |
| B1-6 | 0.02930 |
| B2-4 | 0.05515 |
| B2-6 | 0.06171 |
| B3-4 | 0.00641 |
| B3-6 | 0.01074 |
| B4 | 0.05709 |
| D-4 | 0.04083 |
| D-6 | 0.06804 |
| E | 0.06661 |

### NOTES:

1. Case A driveway section typically applies.
2. X=3'-0" except for curb heights over 10" where 4:1 slopes shall be used on curb slope.
3. Sidewalk and ramp thickness "T" at driveway shall be 4" for residental and 6" for commercial.
4. Difference in slope of the driveway ramp and the slope of a line between the gutter and a point on the roadway 5'-0" from gutter line shall not exceed 15%. Reduce driveway ramp slope, not gutter slope, where required.
5. Minimum width of clear passageway for sidewalk shall be 4'-2".
6. Retaining curbs and acquisition of construction easement may be necessary for narrow sidewalks or curb heights in excess of 6".
7. Across the pedestrian route at curb ramp locations, the gutter pan slope shall not exceed 1" of depth for each 2'-0" of width.

STATE OF CALIFORNIA
DEPARTMENT OF TRANSPORTATION

# CURBS AND DRIVEWAYS

NO SCALE

RSP A87A DATED JULY 19, 2013 SUPERSEDES STANDARD PLAN A87A
DATED MAY 20, 2011 - PAGE 119 OF THE STANDARD PLANS BOOK DATED 2010.

**REVISED STANDARD PLAN RSP A87A**

| Dist | COUNTY | ROUTE | POST MILES TOTAL PROJECT | SHEET No. | TOTAL SHEETS |
|---|---|---|---|---|---|
| 11 | Imp | 8 | R38.8/R39.1 | 159 | 225 |

REGISTERED CIVIL ENGINEER

July 19, 2013
PLANS APPROVAL DATE

REGISTERED PROFESSIONAL ENGINEER
Michael Janzen
No. 44788
Exp. 03-31-14
CIVIL
STATE OF CALIFORNIA

*THE STATE OF CALIFORNIA OR ITS OFFICERS OR AGENTS SHALL NOT BE RESPONSIBLE FOR THE ACCURACY OR COMPLETENESS OF SCANNED COPIES OF THIS PLAN SHEET.*

TO ACCOMPANY PLANS DATED 04-07-14

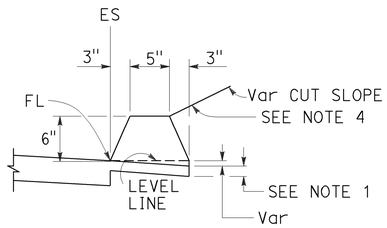


TYPE A
See Note 3

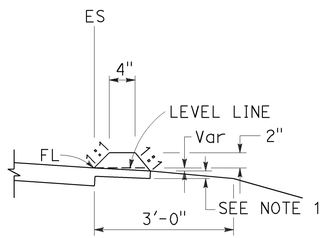


TYPE C

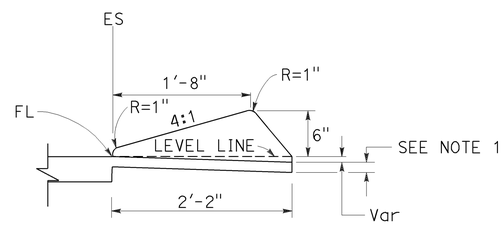


TYPE D

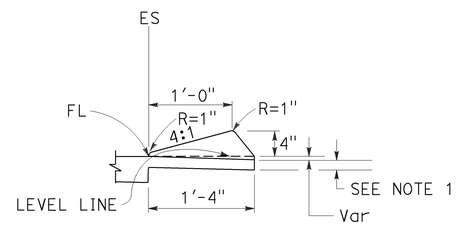


TYPE E

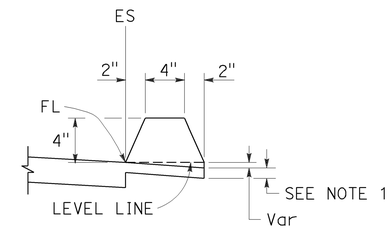


TYPE F
See Note 5

## DIKES

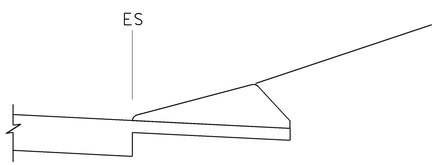


CASE C-1
Cut Slope

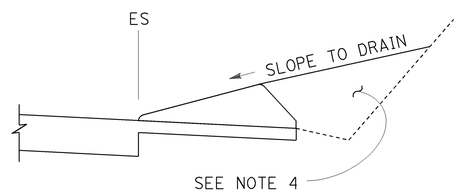


CASE C-2
Cut Slope

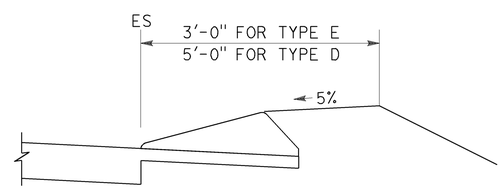


CASE F

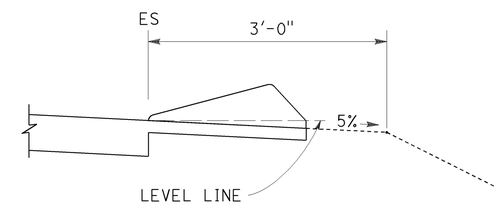


CASE R
See Note 2

## TYPE D AND E BACKFILL DETAILS

### NOTES:

1. For HMA shoulders only, extend top layer of HMA placed on the shoulder under dike with no joint at the ES. For projects with OGFC shoulders, do not extend OGFC under dike. See project plans for modified dike detail.
2. Case R applies to retrofit only projects where restrictive conditions do not provide enough width for Case F backfill.
3. Type A dike only to be used where restrictive slope conditions do not provide enough width to use Type D or Type E dike.
4. Fill and compact with excavated material to top of dike.
5. Use Type F dike, where dike is required with guard railing installations. See Revised Standard Plan RSP A77N4 for dike positioning details.

### DIKE QUANTITIES

| TYPE | CUBIC YARDS PER LINEAR FOOT |
|---|---|
| A | 0.0135 |
| C | 0.0038 |
| D | 0.0293 |
| E | 0.0130 |
| F | 0.0066 |

Quantities based on 5% cross slope.

STATE OF CALIFORNIA
DEPARTMENT OF TRANSPORTATION

# HOT MIX ASPHALT DIKES

NO SCALE

RSP A87B DATED JULY 19, 2013 SUPERSEDES STANDARD PLAN A87B DATED MAY 20, 2011 - PAGE 120 OF THE STANDARD PLANS BOOK DATED 2010.

**REVISED STANDARD PLAN RSP A87B**

**2010 REVISED STANDARD PLAN RSP A87B**

6-27-13

| Dist | COUNTY | ROUTE | POST MILES TOTAL PROJECT | SHEET No. | TOTAL SHEETS |
|---|---|---|---|---|---|
| 11 | Imp | 8 | R38.8/R39.1 | 160 | 225 |

REGISTERED CIVIL ENGINEER

July 19, 2013
PLANS APPROVAL DATE

REGISTERED PROFESSIONAL ENGINEER Hector David Cordova No. C41957 Exp. 3-31-14 CIVIL STATE OF CALIFORNIA

*THE STATE OF CALIFORNIA OR ITS OFFICERS OR AGENTS SHALL NOT BE RESPONSIBLE FOR THE ACCURACY OR COMPLETENESS OF SCANNED COPIES OF THIS PLAN SHEET.*

TO ACCOMPANY PLANS DATED 04-07-14

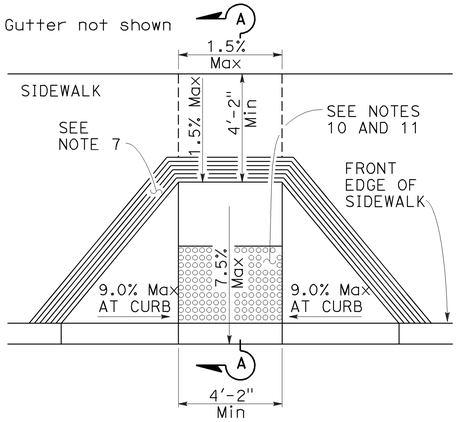


CASE A

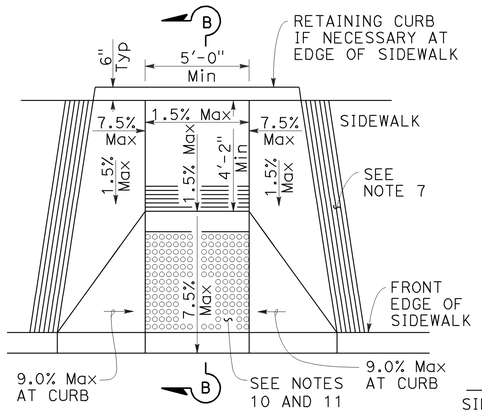


CASE B

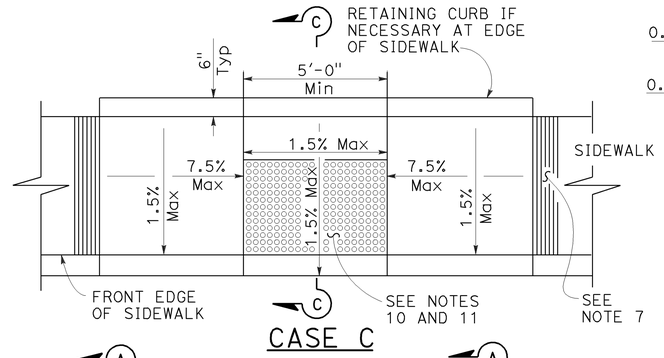


CASE C

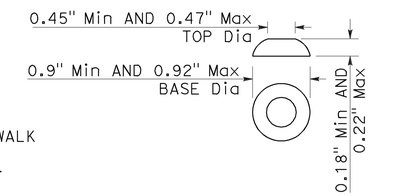


RAISED TRUNCATED DOME

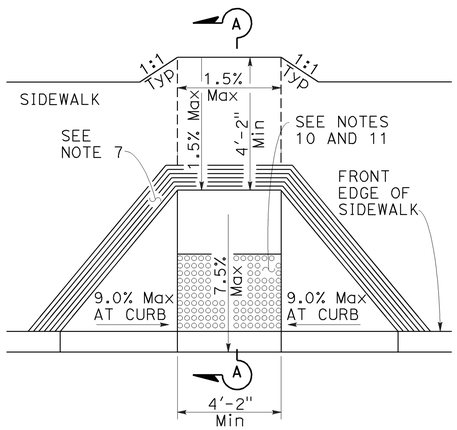


CASE D

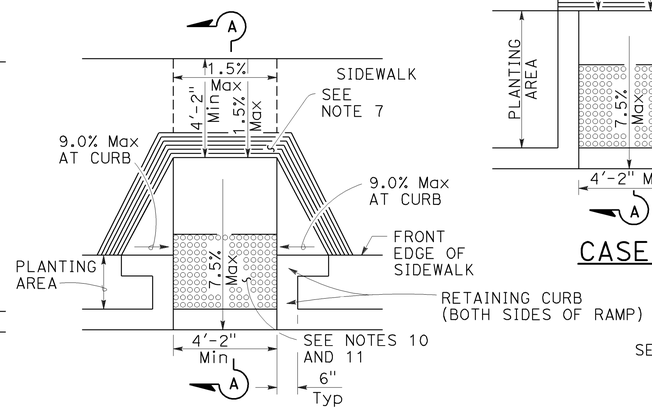


CASE E

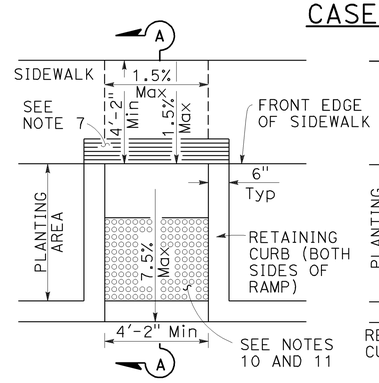


CASE F

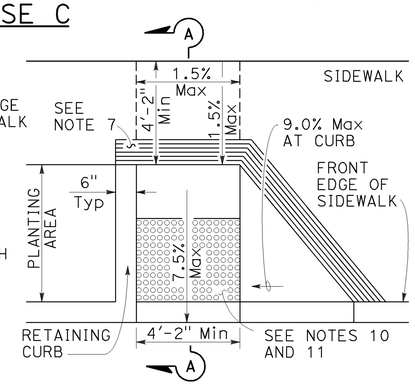


CASE G

See Note 4

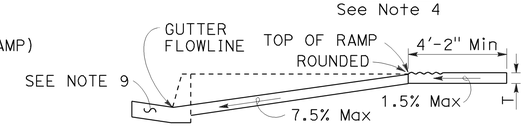


SECTION A-A

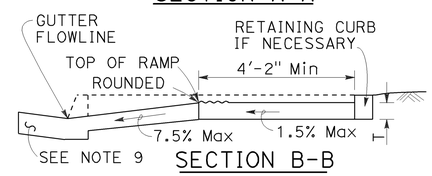


SECTION B-B

Depress entire sidewalk as required

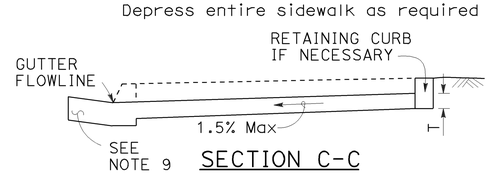


SECTION C-C

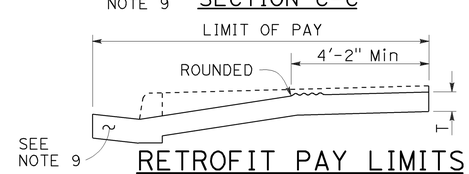


RETROFIT PAY LIMITS

Existing curb and sidewalk

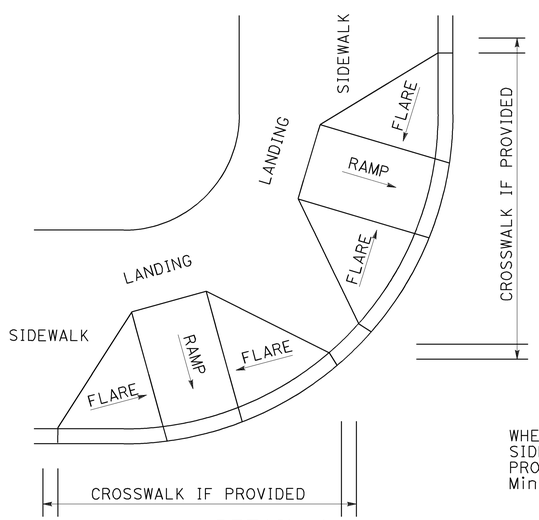


DETAIL A

TYPICAL TWO-RAMP CORNER INSTALLATION

See Note 1

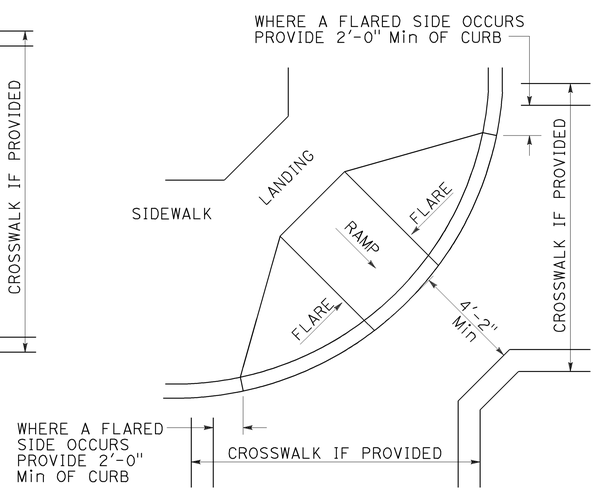


DETAIL B

TYPICAL ONE-RAMP CORNER INSTALLATION

See Notes 1 and 3

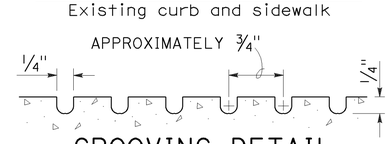


GROOVING DETAIL

## NOTES:

1. As site conditions dictate, Case A through Case G curb ramps may be used for corner installations similar to those shown in Detail A and Detail B. The case of curb ramps used in Detail A do not have to be the same. Case A through Case G curb ramps also may be used at mid block locations, as site conditions dictate.
2. If distance from curb to back of sidewalk is too short to accommodate ramp and 4'-2" platform (landing) as shown in Case A, the sidewalk may be depressed longitudinally as in Case B, or C or may be widened as in Case D.
3. When ramp is located in center of curb return, crosswalk configuration must be similar to that shown for Detail B.
4. As site conditions dictate, the retaining curb side and the flared side of the Case G ramp shall be constructed in reversed position.
5. If located on a curve, the sides of the ramp need not be parallel, but the minimum width of the ramp shall be 4'-2".
6. Side slope of ramp flares vary uniformly from a maximum of 9.0% at curb to conform with longitudinal sidewalk slope adjacent to top of the ramp, except in Case C and Case F.
7. The curb ramp shall be outlined, as shown, with a 1'-0" wide border with 1/4" grooves approximately 3/4" on center. See grooving detail.
8. Transitions from ramps and landing to walks, gutters or streets shall be flush (no lip) and free of abrupt changes.
9. Counter slopes of adjoining gutters and road surfaces immediately adjacent to and within 24 inches of the curb ramp shall not be steeper than 1:20 (5.0%). Gutter pan slope shall not exceed 1" of depth for each 2'-0" of width.
10. Curb ramps shall have a detectable warning surface that extends the full width and 3'-0" depth of the ramp. Detectable Warning Surfaces shall conform to the details on this plan and the requirements in the Standard Specifications.
11. The edge of the detectable warning surface nearest the street shall be between 6" and 8" from the gutter flowline.
12. Sidewalk and ramp thickness, "T", shall be 3 1/2" minimum.
13. Utility pull boxes, manholes, vaults and all other utility facilities within the boundaries of the curb ramp will be relocated or adjusted to grade by the owner prior to, or in conjunction with, curb ramp construction.
14. Detectable warning surface may have to be cut to allow removal of utility covers while maintaining full detectable warning width and depth.

RAISED TRUNCATED DOME PATTERN (IN-LINE)

DETECTABLE WARNING SURFACE

See Note 10

STATE OF CALIFORNIA
DEPARTMENT OF TRANSPORTATION

# CURB RAMP DETAILS

NO SCALE

RSP A88A DATED JULY 19, 2013 SUPERSEDES STANDARD PLAN A88A
DATED MAY 20, 2011 - PAGE 121 OF THE STANDARD PLANS BOOK DATED 2010.

**REVISED STANDARD PLAN RSP A88A**

**2010 REVISED STANDARD PLAN RSP A88A**

7-8-13

| DIST | COUNTY | ROUTE | POST MILES TOTAL PROJECT | SHEET No. | TOTAL SHEETS |
|---|---|---|---|---|---|
| 11 | Imp | 8 | R38.8/R39.1 | 161 | 225 |

REGISTERED CIVIL ENGINEER

January 20, 2012
PLANS APPROVAL DATE

REGISTERED PROFESSIONAL ENGINEER Cornelis M. Hakim No. C55610 Exp. 12-31-12 CIVIL STATE OF CALIFORNIA

*THE STATE OF CALIFORNIA OR ITS OFFICERS OR AGENTS SHALL NOT BE RESPONSIBLE FOR THE ACCURACY OR COMPLETENESS OF SCANNED COPIES OF THIS PLAN SHEET.*

TO ACCOMPANY PLANS DATED 04-07-14

**2010 REVISED STANDARD PLAN RSP P74**

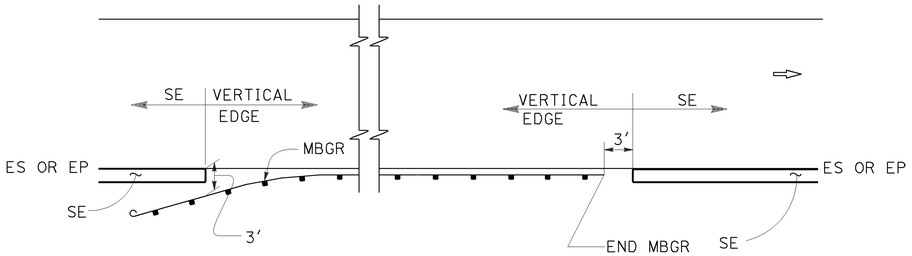


MBGR

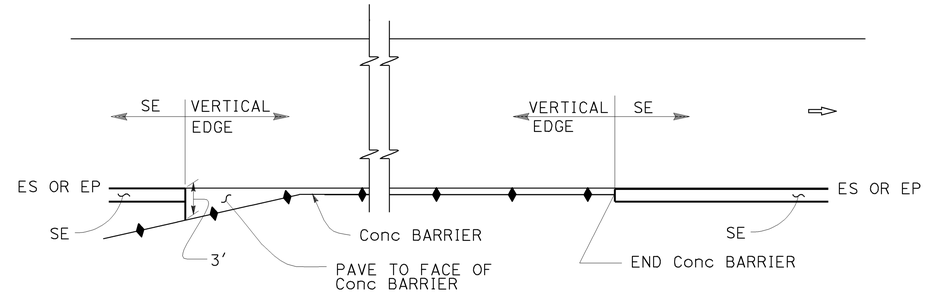


CONCRETE BARRIER

## ABBREVIATIONS:

SE SAFETY EDGE

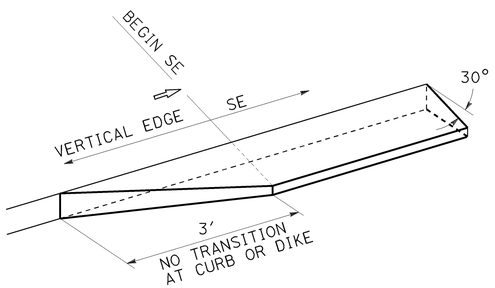


TRANSITION DETAIL FOR CONCRETE ONLY

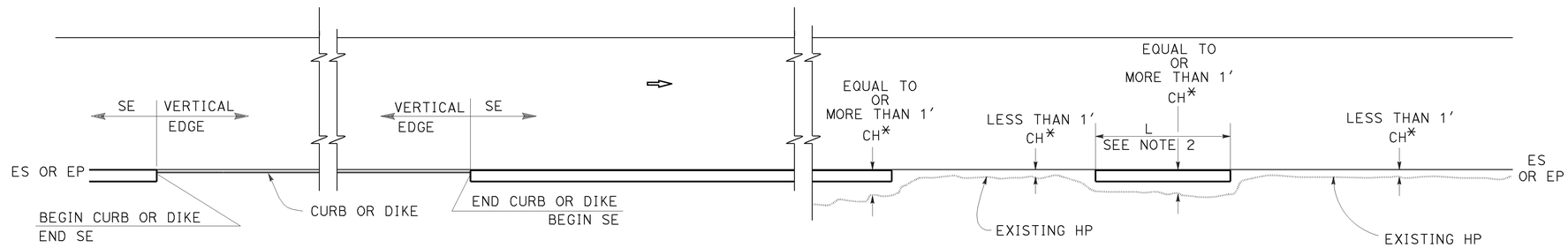


CURB OR DIKE

NARROW SIDE SLOPE

* CH = Distance from ES or EP to existing HP.

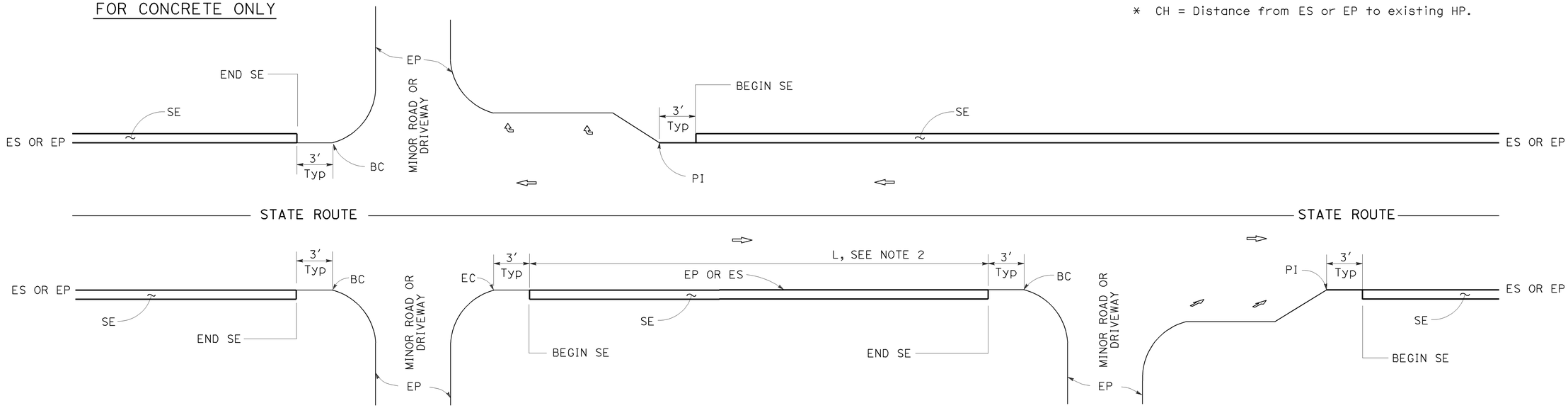


INTERSECTION

MINOR ROADWAY OR DRIVEWAY

DRIVEWAY AND INTERSECTION

## NOTES:

1. For details not shown, see Revised Standard Plans RSP P75 and RSP P76.
2. Safety edge is optional when L is less than 30′.

STATE OF CALIFORNIA
DEPARTMENT OF TRANSPORTATION

# PAVEMENT EDGE TREATMENTS

NO SCALE

RSP P74 DATED JANUARY 20, 2012 SUPPLEMENTS THE STANDARD PLANS BOOK DATED 2010.

**REVISED STANDARD PLAN RSP P74**

01-05-12

| DIST | COUNTY | ROUTE | POST MILES TOTAL PROJECT | SHEET No. | TOTAL SHEETS |
|---|---|---|---|---|---|
| 11 | Imp | 8 | R38.8/R39.1 | 162 | 225 |

REGISTERED CIVIL ENGINEER

January 20, 2012
PLANS APPROVAL DATE

REGISTERED PROFESSIONAL ENGINEER Cornelis M. Hakim No. C55610 Exp. 12-31-12 CIVIL STATE OF CALIFORNIA

*THE STATE OF CALIFORNIA OR ITS OFFICERS OR AGENTS SHALL NOT BE RESPONSIBLE FOR THE ACCURACY OR COMPLETENESS OF SCANNED COPIES OF THIS PLAN SHEET.*

TO ACCOMPANY PLANS DATED 04-07-14

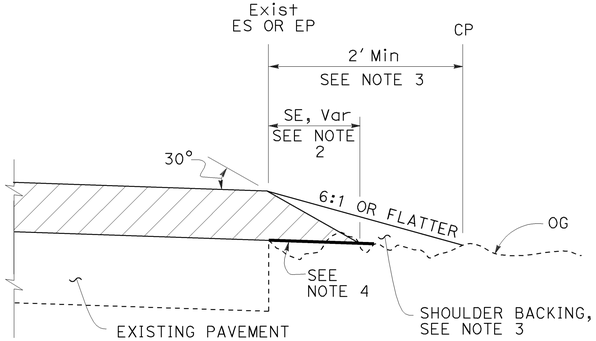


CASE A
Safety Edge

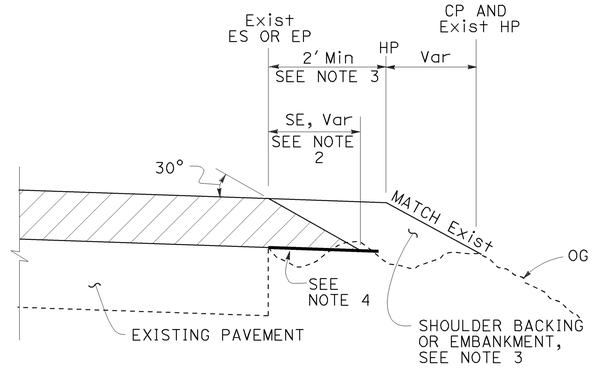


CASE B
Safety Edge

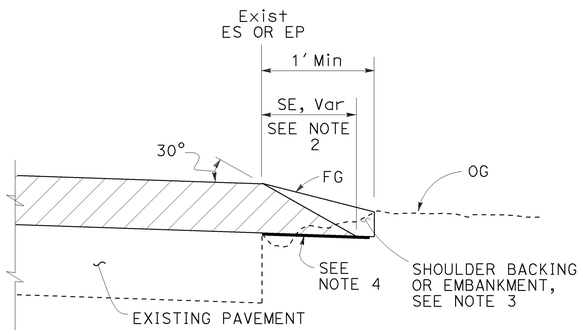


CASE C
Safety Edge

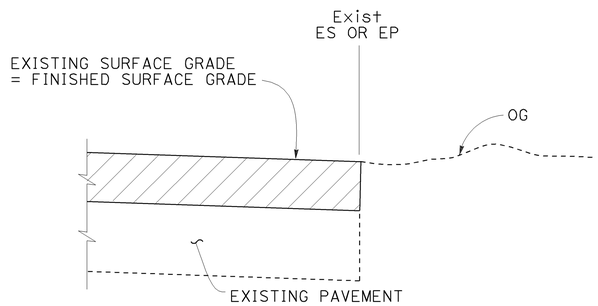


CASE D
Vertical Edge

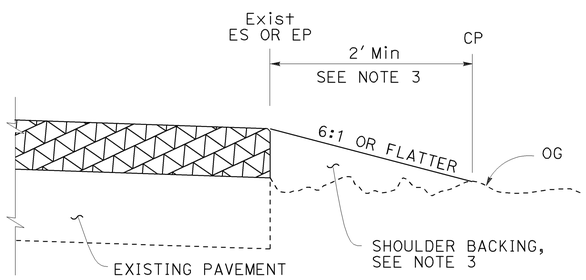


CASE E
Vertical Edge

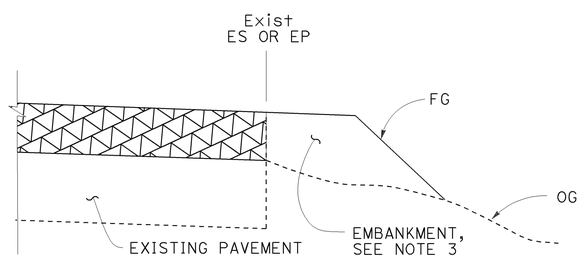


CASE F
Vertical Edge
* See Table A and Revised Std Plan RSP P74

## LEGEND:

- HMA OVERLAY
- HMA OR CONCRETE OVERLAY
- CONCRETE OVERLAY

## ABBREVIATIONS:

SE SAFETY EDGE
TT TOTAL THICKNESS OF SE

## TABLE A
## EDGE TREATMENT FOR VARIOUS OVERLAY THICKNESS AND CONDITIONS

| | OVERLAY THICKNESS | |
|---|---|---|
| FIELD CONDITION | LESS THAN 0.15' | 0.15' OR MORE |
| Exist SLOPE 6:1 OR FLATTER | CASE E | CASE A |
| Exist SLOPE 3:1 TO 6:1 | CASE E | CASE B |
| Exist SLOPE STEEPER THAN 3:1 | CASE F | CASE F |
| CUT SECTION (REPLACE, COLD PLANE, MILL PAVEMENT) | CASE D | CASE C |

## ADDITIONAL HMA OR CONCRETE QUANTITIES FOR SE/SIDE/MILE

| TYPICAL CROSS SECTION | TT | TOTAL ADDITIONAL MATERIAL FOR SE/SIDE/MILE | | |
|---|---|---|---|---|
| | | HMA (TON) | CONCRETE (CY)* | CONCRETE (CY)** |
| TT | 0.15' | NA | NA | NA |
| | 0.20' | 13.7 | NA | NA |
| | 0.30' | 30.9 | NA | NA |
| | 0.40' | 54.9 | NA | NA |
| | 0.45' | 69.4 | NA | NA |
| TT 0.43' | 0.50' | 84.2 | NA | NA |
| | 0.60' | 113.9 | NA | NA |
| | 0.70' | 143.6 | 70.9 | 94.2 |
| | 0.80' | 173.3 | 85.6 | 112.2 |
| | 0.90' | 203.0 | 100.3 | 130.2 |
| | 1.00' | 232.7 | 114.9 | 148.2 |
| | 1.10' | 262.4 | 129.6 | 166.2 |
| | 1.20' | 292.1 | 144.3 | 184.2 |

* For Detail "A"
** For Optional Detail "A"

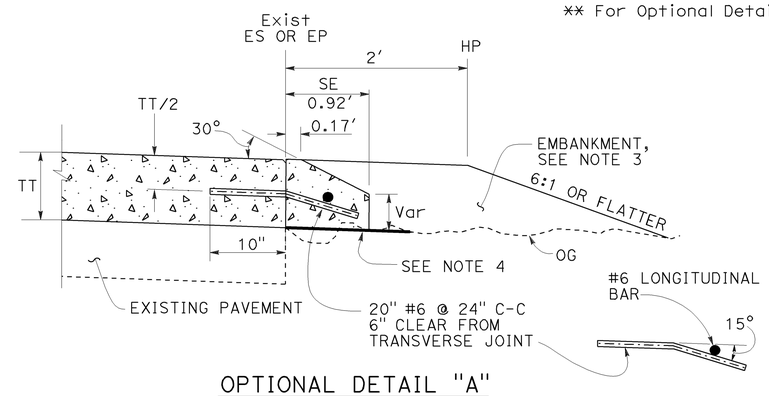


OPTIONAL DETAIL "A"
For concrete overlay
See Note 5

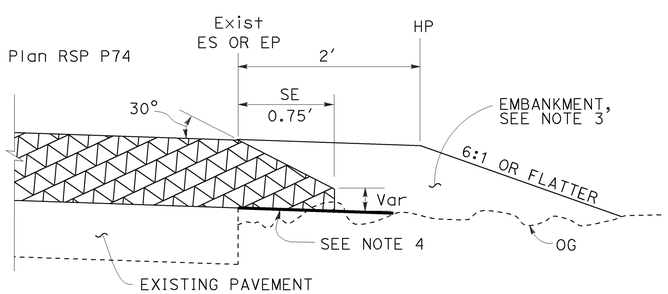


DETAIL "A"
For HMA overlay thickness more than 0.43' or concrete overlay

## NOTES:

1. For limits of safety edge and vertical edge treatments, see Revised Standard Plan RSP P74.
2. Details shown for HMA overlay thickness less than 0.43'. See Detail "A" for HMA overlay thickness more than 0.43' or concrete overlay.
3. For locations and limits of shoulder backing or embankment see project plans.
4. Grade existing ground to place safety edge. 1' minimum width
5. Safety edge transverse joint must match overlay transverse joint. End of #6 longitudinal bar must be 2" ±½" clear from transverse joint.
6. Safety edge is not needed in the area of MBGR, barrier, right turn lane and acceleration lane. See Revised Standard Plan RSP P74.

STATE OF CALIFORNIA
DEPARTMENT OF TRANSPORTATION

# PAVEMENT EDGE TREATMENTS-OVERLAYS

NO SCALE

RSP P75 DATED JANUARY 20, 2012 SUPPLEMENTS THE STANDARD PLANS BOOK DATED 2010.

**REVISED STANDARD PLAN RSP P75**

**2010 REVISED STANDARD PLAN RSP P75**

| DIST | COUNTY | ROUTE | POST MILES TOTAL PROJECT | SHEET No. | TOTAL SHEETS |
|---|---|---|---|---|---|
| 11 | Imp | 8 | R38.8/R39.1 | 163 | 225 |

REGISTERED CIVIL ENGINEER

January 20, 2012
PLANS APPROVAL DATE

REGISTERED PROFESSIONAL ENGINEER
Cornelis M. Hakim
No. C55610
Exp. 12-31-12
CIVIL
STATE OF CALIFORNIA

*THE STATE OF CALIFORNIA OR ITS OFFICERS OR AGENTS SHALL NOT BE RESPONSIBLE FOR THE ACCURACY OR COMPLETENESS OF SCANNED COPIES OF THIS PLAN SHEET.*

TO ACCOMPANY PLANS DATED 04-07-14

## LEGEND:

- HMA PAVEMENT
- HMA OR CONCRETE PAVEMENT
- CONCRETE PAVEMENT

## ABBREVIATIONS:

SE SAFETY EDGE
TT TOTAL THICKNESS OF SE
HW HINGE WIDTH, DISTANCE FROM ES OR EP TO HP

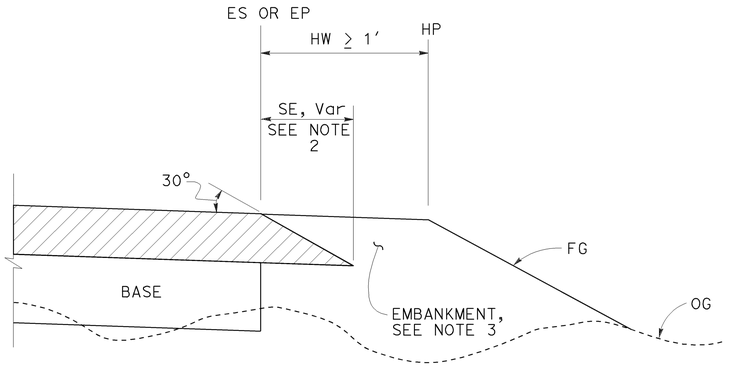


### CASE K
Safety Edge - Fill Section, HW ≥ 1′

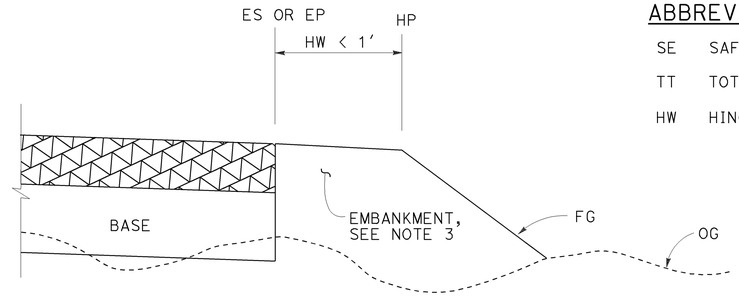


### CASE L
Vertical Edge - Fill Section, HW < 1′

## FILL SECTION

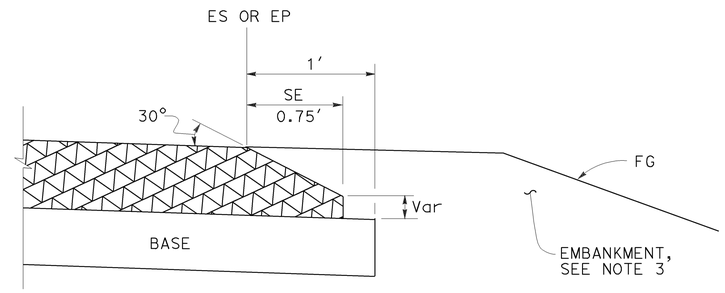


### DETAIL "B"
For HMA pavement thickness
more than 0.43′ or concrete pavement

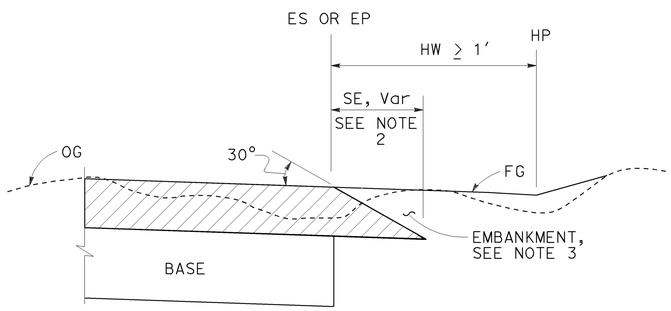


### CASE M
Safety Edge - Cut Section, HW ≥ 1′

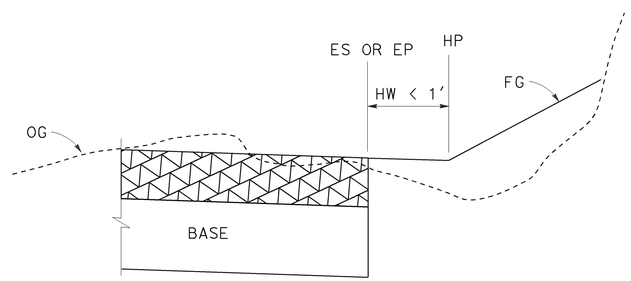


### CASE N
Vertical Edge - Cut Section, HW < 1′

## CUT SECTION

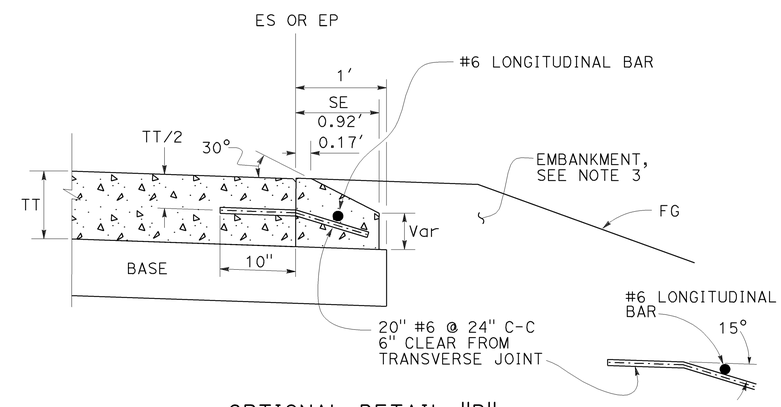


### OPTIONAL DETAIL "B"
For concrete pavement
See Note 4

## NOTES:

1. For limits of safety edge and vertical edge treatments, see Revised Standard Plan RSP P74
2. Details shown for HMA pavement thickness less than 0.43′. See Detail "B" for HMA pavement thickness more than 0.43′ or concrete pavement.
3. For locations and limits of embankment see project plans.
4. Safety edge transverse joint must match pavement transverse joint. End of #6 longitudinal bar must be 2" ±½" clear from transverse joint.
5. Safety edge is not needed in the area of MBGR, barrier, right turn lane and acceleration lane. See Revised Standard Plan RSP P74.

STATE OF CALIFORNIA
DEPARTMENT OF TRANSPORTATION

# PAVEMENT EDGE TREATMENTS-NEW CONSTRUCTION

NO SCALE

RSP P76 DATED JANUARY 20, 2012 SUPPLEMENTS THE STANDARD PLANS BOOK DATED 2010.

**REVISED STANDARD PLAN RSP P76**

**2010 REVISED STANDARD PLAN RSP P76**

01-09-12

TO ACCOMPANY PLANS DATED _____

| Dist | COUNTY | ROUTE | POST MILES TOTAL PROJECT | SHEET No. | TOTAL SHEETS |
|---|---|---|---|---|---|
| 11 | Imp | 8 | R38.8/R39.1 | 164 | 225 |

REGISTERED CIVIL ENGINEER

October 19, 2012
PLANS APPROVAL DATE

Glenn DeCou No. C34547 Exp. 9-30-13 CIVIL STATE OF CALIFORNIA REGISTERED PROFESSIONAL ENGINEER

*THE STATE OF CALIFORNIA OR ITS OFFICERS OR AGENTS SHALL NOT BE RESPONSIBLE FOR THE ACCURACY OR COMPLETENESS OF SCANNED COPIES OF THIS PLAN SHEET.*

04-07-14

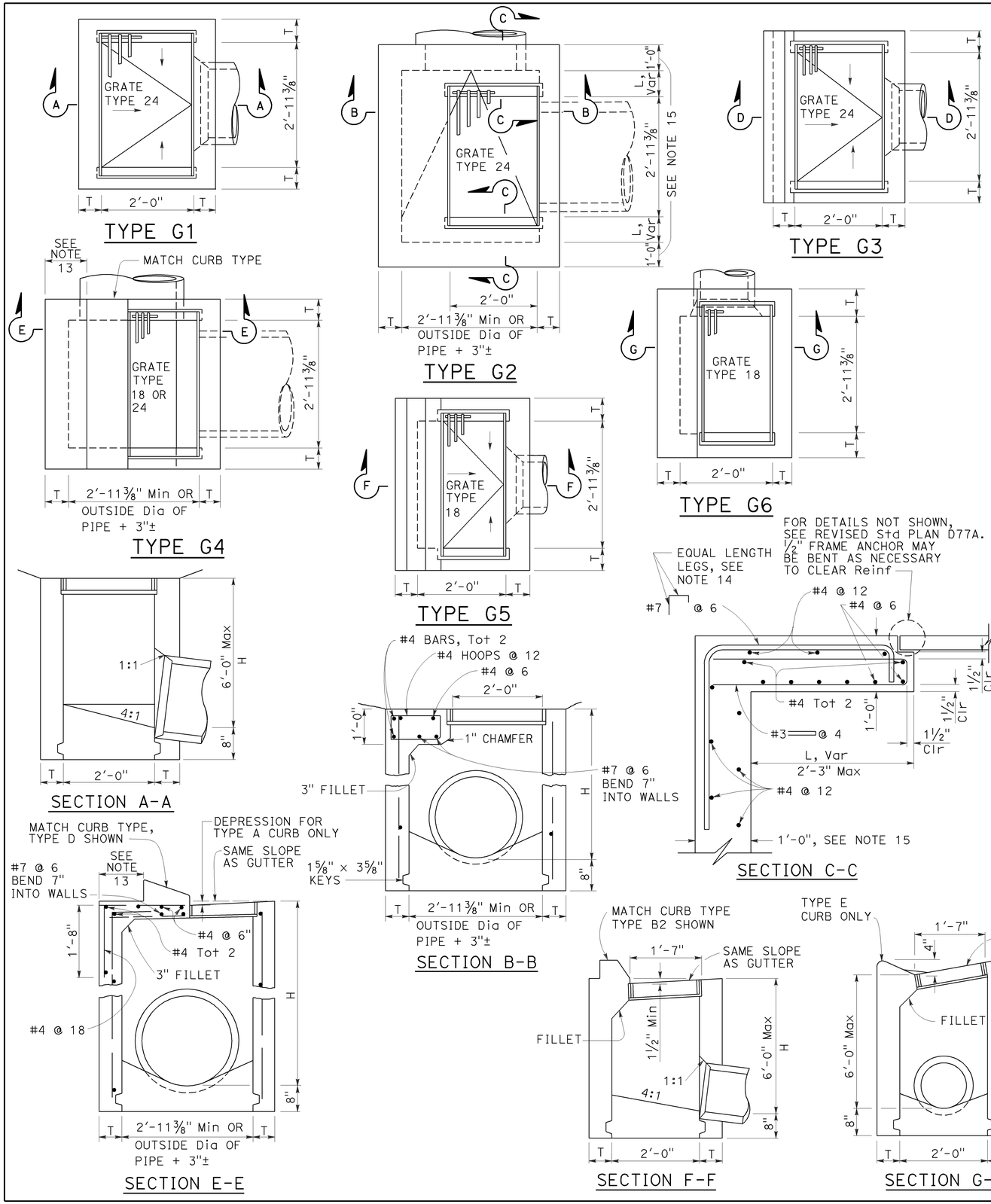


## NOTES:

1. "H" is the difference in elevation between the outlet pipe flow line and the normal gutter grade line undepressed.
2. For "T" wall thickness, see Table A below.
3. Wall reinforcing not required when "H" is 8'-0" or less and the unsupported width or length is 7'-0" or less. Walls exceeding these limits shall be reinforced with #4 bars @ 1'-6" ± centers placed 1½" clear to inside of box unless otherwise shown.
4. Inlet bottom reinforcing not required. See Standard Plan D74C for alternative reinforced bottom and alternative half round bottom.
5. Steps-None required where "H" is less than 2'-6". Where "H" is 2'-6" or more, install steps with lowest rung 1'-0" above the floor and highest rung not more than 6" below top of inlet. The distance between steps shall not exceed 1'-0" and shall be uniform throughout the length of the wall. Place steps in the wall without an opening. Steps inserts may be substituted for the bar steps. Step inserts shall comply with State Industrial Safety requirements. See Standard Plan D74C for step details.
6. Details shown apply to both metal and concrete pipe.
7. Pipe(s) can be placed in any wall.
8. Curb section shall match adjacent curb.
9. Basin floors shall have wood trowel finish and a minimum slope of 12:3 from all directions toward outlet pipe.
10. Set inlet so that grate bars are parallel to direction of principal surface flow.
11. See Revised Standard Plans D77A and D77B for grate and frame details and weights of miscellaneous iron and steel.
12. See Standard Plan D78A for gutter depression details.
13. This dimenison will vary with different grates, curbs types, box width and wall thickness.
14. Bar may be rotated as necessary to clear opening. Where "L" is 6" or less, bar may be omitted.
15. Where "L" is 6" or less, wall thickness shall be as shown in Table A.
16. Cast-in-place inlets to be formed around all pipes/stubs intersecting the inlet, and concrete poured in one continuous operation. Precast inlets shall have mortared connections conforming to details for Type GCP Inlet shown on Standard Plan D75B. See Standard Specifications for mortar composition.

TABLE A

| CONCRETE QUANTITIES | | | | |
|---|---|---|---|---|
| TYPE | H=3'-0" TO 8'-0" (T=6") | | H=8'-1" TO 20'-0" (T=8") | |
| | H=3'-0" (CY) | ADDITIONAL PCC PER FOOT (CY) | H=8'-1" (CY) | ADDITIONAL PCC PER FOOT (CY) |
| G-1 | 0.95 | 0.220 | See Note A | SEE NOTE A |
| G-2* | 1.31 | 0.255 | 3.50 | 0.357 |
| G-3 | 1.03 | 0.220 | See Note A | SEE NOTE A |
| G-4* (TYPE 24) | 1.27 | 0.255 | 3.48 | 0.357 |
| G-4* (TYPE 18) | 1.30 | 0.255 | 3.50 | 0.357 |
| G-5 | 1.02 | 0.220 | SEE NOTE A | SEE NOTE A |
| G-6 | 1.04 | 0.220 | SEE NOTE A | SEE NOTE A |

TABLE BASED ON 8" FLOOR SLAB. NO DEDUCTIONS ARE TO BE MADE TO THESE QUANTITIES BECAUSE OF PIPE OPENINGS, DIFFERENT FLOOR ALTERNATIVES OR DIFFERENT CURB TYPES. * QUANTITIES FOR TYPE G-2 AND G-4 INLETS BASED ON THE MINIMUM INTERIOR DIMENSIONS.

NOTE A:

Maximum allowable height 6'-0".

STATE OF CALIFORNIA
DEPARTMENT OF TRANSPORTATION

# DRAINAGE INLETS

NO SCALE

RSP D73 DATED OCTOBER 19, 2012 SUPERSEDES STANDARD PLAN D73 DATED MAY 20, 2011 - PAGE 156 OF THE STANDARD PLANS BOOK DATED 2010.

**REVISED STANDARD PLAN RSP D73**

**2010 REVISED STANDARD PLAN RSP D73**

7-19-12

| Dist | COUNTY | ROUTE | POST MILES TOTAL PROJECT | SHEET No. | TOTAL SHEETS |
|---|---|---|---|---|---|
| 11 | Imp | 8 | R38.8/R39.1 | 165 | 225 |

Raymond Don Tsztoo
REGISTERED CIVIL ENGINEER

April 19, 2013
PLANS APPROVAL DATE

REGISTERED PROFESSIONAL ENGINEER
Raymond Don Tsztoo
No. C37332
Exp. 6-30-14
CIVIL
STATE OF CALIFORNIA

*THE STATE OF CALIFORNIA OR ITS OFFICERS OR AGENTS SHALL NOT BE RESPONSIBLE FOR THE ACCURACY OR COMPLETENESS OF SCANNED COPIES OF THIS PLAN SHEET.*

TO ACCOMPANY PLANS DATED 04-07-14

**2010 REVISED STANDARD PLAN RSP D77B**

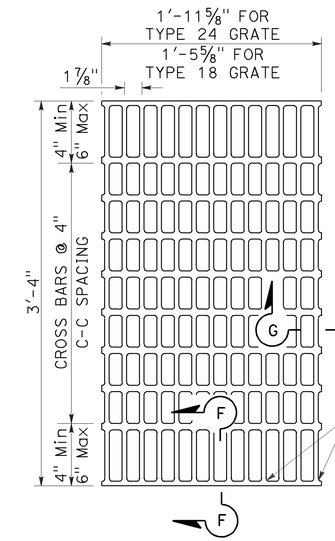


NOTES:

Bearing bars to be 3½" × ¼" bars on 1⅞" centers.

⅜"± ø Cross bars may be fillet welded, resistance welded or electroforged to bearing bars.

Weight of Type 24 grate = 141 LBS.

Weight of Type 18 grate = 107 LBS. (Type 24 grate shown).

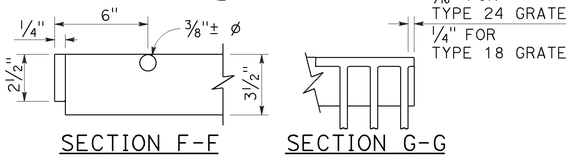


SECTION F-F SECTION G-G

## TYPE 18-10 AND 24-13 GRATE

(Welded Steel)

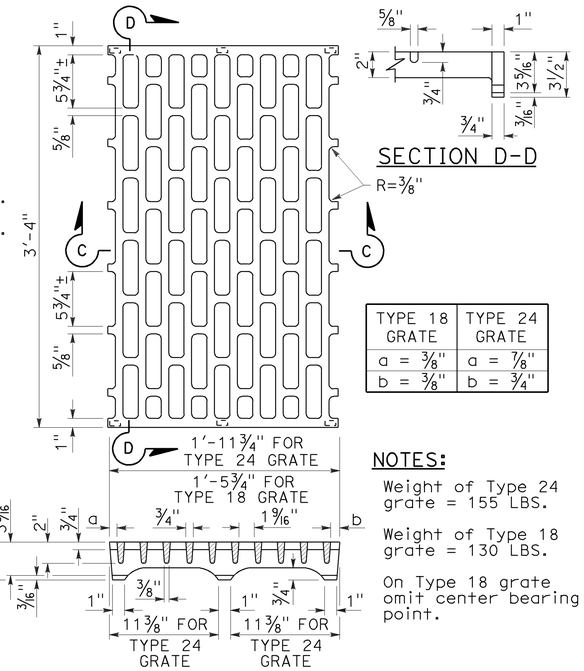


| TYPE 18 GRATE | TYPE 24 GRATE |
|---|---|
| a = ⅜" | a = ⅞" |
| b = ⅜" | b = ¾" |

NOTES:

Weight of Type 24 grate = 155 LBS.

Weight of Type 18 grate = 130 LBS.

On Type 18 grate omit center bearing point.

SECTION C-C

## TYPE 18-8C AND 24-10C GRATE

(Cast ductile iron)

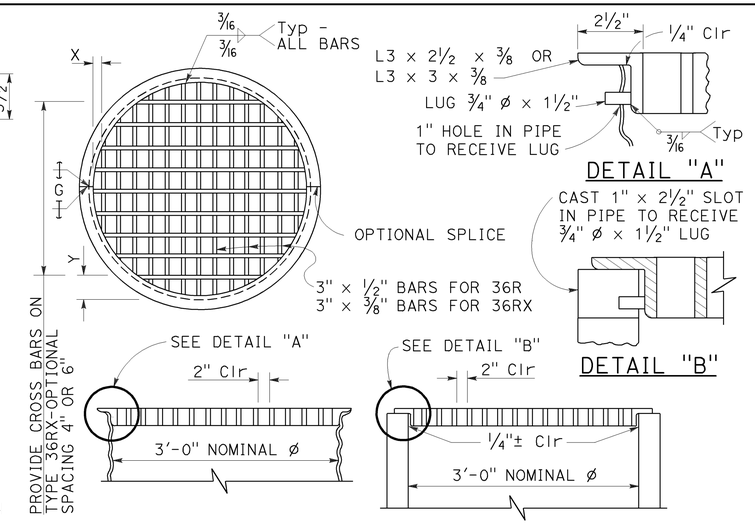


DETAIL "A"

DETAIL "B"

## TYPE 36R AND 36RX GRATE DETAILS

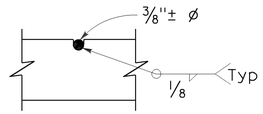


⅜"± ø Cross bars may be fillet welded, resistance welded or electroforged to bearing bars.

CROSS BAR DETAIL TYPE 36RX GRATE (WELDED STEEL)

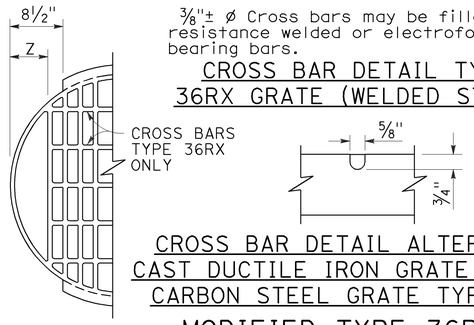


CROSS BAR DETAIL ALTERNATIVE CAST DUCTILE IRON GRATE OR CAST CARBON STEEL GRATE TYPE 36RX

## MODIFIED TYPE 36R AND 36RX GRATE FOR ODI INLET

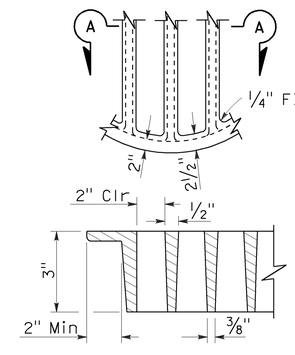


SECTION A-A

## ALTERNATIVE CAST DUCTILE IRON GRATE OR CAST CARBON STEEL GRATE TYPE 36R AND 36RX

BASIS FOR Misc IRON AND STEEL FINAL PAY WEIGHTS FOR DRAINAGE INLETS

| INLET TYPE | GRATE TYPE | No. OF GRATES | WEIGHT LB |
|---|---|---|---|
| GDO (SEE NOTE 4) | 24-10C | 2 | 391 |
| | 24-10S | 2 | 456 |
| | 24-12X | 2 | 473 |
| | 24-13 | 2 | 374 |
| GO,GOL,G1,G2, G3,G4 (TYPE 24) | 24-10C | 1 | 202 |
| | 24-10S | 1 | 229 |
| | 24-12X | 1 | 239 |
| | 24-13 | 1 | 188 |
| G4 (TYPE 18) G5,G6 | 18-8S | 1 | 187 |
| | 18-9X | 1 | 187 |
| | 18-10 | 1 | 149 |
| GT1,GT2 | 18-8S | 2 | 374 |
| | 18-9X | 2 | 374 |
| | 18-10 | 2 | 298 |
| GT3,GT4 | 24-10C | 2 | 404 |
| | 24-10S | 2 | 458 |
| | 24-12X | 2 | 478 |
| | 24-13 | 2 | 376 |
| ODI | 36RX (Mod) | 1 | 196 |
| GMP,GCP,GCPI | 36RX | 1 | 215 |
| ODI | 36R (Mod) | 1 | 220 |
| GMP,GCP,GCPI | 36R | 1 | 236 |
| TRASH RACK | | | 22 |
| GRATE CHAIN | | | 3 |

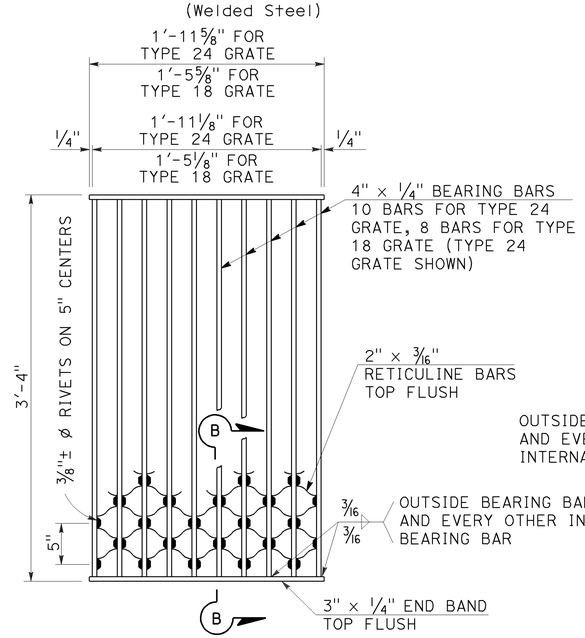


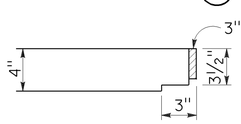


NOTES:

Weight of Type 24 grate = 182 LBS.
Weight of Type 18 grate = 145 LBS.

SECTION B-B

## TYPE 18-8S AND 24-10S GRATE

(Welded Steel) Reticuline type

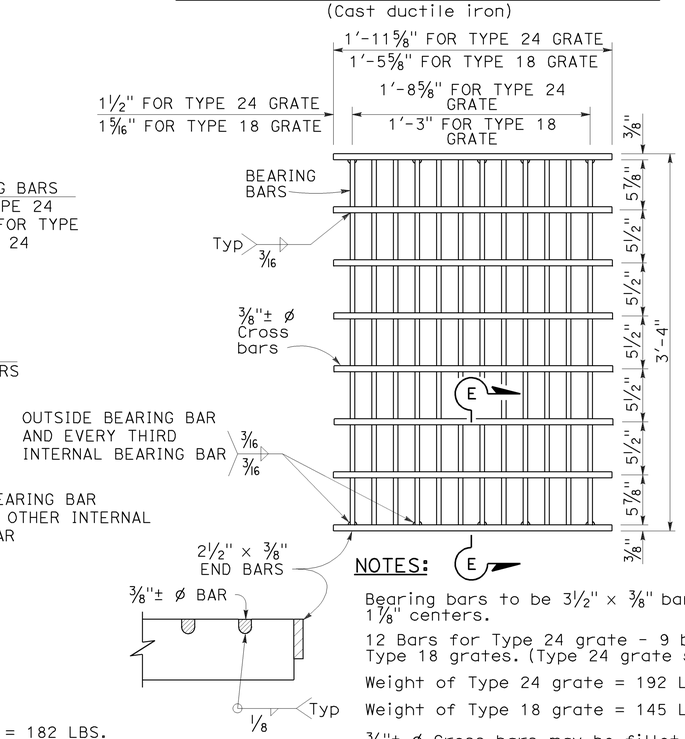


NOTES:

Bearing bars to be 3½" × ⅜" bars on 1⅞" centers.

12 Bars for Type 24 grate - 9 bars for Type 18 grates. (Type 24 grate shown).

Weight of Type 24 grate = 192 LBS.

Weight of Type 18 grate = 145 LBS.

⅜"± ø Cross bars may be fillet welded, resistance welded or electroforged to bearing bars.

SECTION E-E

## TYPE 18-9X AND 24-12X GRATE

(Welded Steel)

NOTES:

1. When alternative grates are allowed - Final pay based on alternative with the lesser weight.
2. Use frame shown on Standard Plan D74A, D74B or RSP D77A as appropriate.
3. When Type 24-10S, 24-12X or 24-13 grates are used with GDO Inlets, a ¼" × 3½" × 3'-4⅞" steel bar shall be welded across the center of inlet frame to separate the individual grates.
4. See Revised Standard Plan RSP D77A for connecting chain to welded grate and frame. When chain is required, do not use cast ductile iron grate.

GRATE BAR SPACING TABLE

| TYPE | No. OF BARS | CLEAR BAR SPACING | X | Y 4" SPACING | Y 6" SPACING | Z |
|---|---|---|---|---|---|---|
| 36R | 13 | 2" | 2⅛" | - | - | - |
| 36RX (STEEL) | 15 | 2" | 9/16" | 3¾" | 5¾" | - |
| 36RX (CAST) | 13 | 2" | 2⅛" | 3¾" | 5¾" | - |
| 36R Mod | 12 | 2" | 2⅛" | - | - | 5" |
| 36RX Mod (STEEL) | 13 | 2" | 9/16" | 3¾" | 5¾" | 5 11/16" |
| 36RX Mod (CAST) | 12 | 2" | 2⅛" | 3¾" | 5¾" | 5" |

STATE OF CALIFORNIA
DEPARTMENT OF TRANSPORTATION

# GRATE DETAILS No. 2

NO SCALE

RSP D77B DATED APRIL 19, 2013 SUPERSEDES RSP D77B DATED JULY 20, 2012 AND STANDARD PLAN D77B DATED MAY 20, 2011 - PAGE 165 OF THE STANDARD PLANS BOOK DATED 2010.

**REVISED STANDARD PLAN RSP D77B**

4-4-13

| Dist | COUNTY | ROUTE | POST MILES TOTAL PROJECT | SHEET No. | TOTAL SHEETS |
|---|---|---|---|---|---|
| 11 | Imp | 8 | R38.8/R39.1 | 166 | 225 |

Gregory A. Balzer
LICENSED LANDSCAPE ARCHITECT

July 19, 2013
PLANS APPROVAL DATE

*THE STATE OF CALIFORNIA OR ITS OFFICERS OR AGENTS SHALL NOT BE RESPONSIBLE FOR THE ACCURACY OR COMPLETENESS OF SCANNED COPIES OF THIS PLAN SHEET.*

LICENSED LANDSCAPE ARCHITECT — Gregory A. Balzer — 2576 — 02-28-15 Renewal Date — 7-19-13 Date — STATE OF CALIFORNIA

TO ACCOMPANY PLANS DATED 04-07-14

## A

| | |
|---|---|
| AB | AGGREGATE BASE |
| ABS | ACRYLONITRILE-BUTADIENE-STYRENE |
| AC | ASPHALT CONCRETE |
| ACC | ARMOR-CLAD CONDUCTORS |
| Adj | ADJACENT/ADJUSTABLE |
| AIC | AUXILIARY IRRIGATION CONTROLLER |
| Alt | ALTERNATIVE |
| AMEND | AMENDMENT |
| ARV | AIR RELEASE VALVE |
| AUTO | AUTOMATIC |
| AUX | AUXILIARY |
| AVB | ATMOSPHERIC VACUUM BREAKER |

## B

| | |
|---|---|
| B&B | BALLED AND BURLAPPED |
| B/B | BRASS/BRONZE |
| B/B/PL | BRASS/BRONZE/PLASTIC |
| B/PL | BRASS/PLASTIC |
| BFM | BONDED FIBER MATRIX |
| Bit Ctd | BITUMINOUS COATED |
| BP | BOOSTER PUMP |
| BPA | BACKFLOW PREVENTER ASSEMBLY |
| BPE | BACKFLOW PREVENTER ENCLOSURE |
| BV | BALL VALVE |

## C

| | |
|---|---|
| C | CONDUIT |
| CAP | CORRUGATED ALUMINUM PIPE |
| CARV | COMBINATION AIR RELEASE VALVE |
| CB | COUPLING BAND |
| CCA | CAM COUPLER ASSEMBLY |
| CEC | CONTROLLER ENCLOSURE CABINET |
| CHDPE | CORRUGATED HIGH DENSITY POLYETHYLENE |
| CL | CHAIN LINK |
| CNC | CONTROL AND NEUTRAL CONDUCTORS |
| Conc | CONCRETE |
| CP | COPPER PIPE |
| CS | COMPOST SOCK |
| CSP | CORRUGATED STEEL PIPE |
| CST | CENTER STRIP |
| CV | CHECK VALVE |

## D

| | |
|---|---|
| Dia | DIAMETER |
| DIP | DUCTILE IRON PIPE |
| DIT | DRIP IRRIGATION TUBING |
| DG | DECOMPOSED GRANITE |
| DN | DIAMETER NOMINAL |
| DVA | DRIP VALVE ASSEMBLY |

## E

| | |
|---|---|
| EC | EROSION CONTROL |
| ECTC | EROSION CONTROL TECHNOLOGY COUNCIL |
| Elect | ELECTRIC/ELECTRICAL |
| Elev | ELEVATION |
| ELL | ELBOW |
| ENCL | ENCLOSURE |
| EP | EDGE OF PAVEMENT |
| ES | EDGE OF SHOULDER |
| EST | END STRIP |
| ESTB | ESTABLISHMENT |
| ETW | EDGE OF TRAVELED WAY |

## F

| | |
|---|---|
| F | FULL CIRCLE |
| F/P | FULL/PART CIRCLE |
| FCV | FLOW CONTROL VALVE |
| FERT | FERTILIZER |
| FG | FINISHED GRADE |
| FH | FLEXIBLE HOSE |
| FIPT | FEMALE IRON PIPE THREAD |
| FIS | FERTILIZER INJECTOR SYSTEM |
| FL | FLOW LINE |
| FR | FIBER ROLL |
| FS | FLOW SENSOR |
| FSC | FLOW SENSOR CABLE |
| FV | FLUSH VALVE |

## G

| | |
|---|---|
| Galv | GALVANIZED |
| GARV | GARDEN VALVE |
| GARVA | GARDEN VALVE ASSEMBLY |
| GM | GRAVEL MULCH |
| GPH | GALLONS PER HOUR |
| GPM | GALLONS PER MINUTE |
| GSP | GALVANIZED STEEL PIPE |
| GV | GATE VALVE |

## H

| | |
|---|---|
| H | HALF CIRCLE |
| HDPE | HIGH DENSITY POLYETHYLENE |
| HP | HORSEPOWER/HINGE POINT |
| HPL | HIGH PRESSURE LINE |
| Hwy | HIGHWAY |

## I

| | |
|---|---|
| IC | IRRIGATION CONTROLLER |
| ICC | IRRIGATION CONTROLLER(S) IN CONTROLLER ENCLOSURE CABINET |
| ID | INSIDE DIAMETER |
| IFS | IRRIGATION FILTRATION SYSTEM |
| IPS | IRON PIPE SIZE |
| IPT | IRON PIPE THREAD |
| Irr | IRRIGATION |

## L

| | |
|---|---|
| L | LENGTH |

## M

| | |
|---|---|
| Max | MAXIMUM |
| MBGR | METAL BEAM GUARD RAILING |
| MCV | MANUAL CONTROL VALVE |
| MIC | MASTER IRRIGATION CONTROLLER |
| Min | MINIMUM |
| MIPT | MALE IRON PIPE THREAD |
| Misc | MISCELLANEOUS |
| Mtl | MATERIAL |
| MVP | MAINTENANCE VEHICLE PULLOUT |

## N

| | |
|---|---|
| NCN | NO COMMON NAME |
| NL | NOZZLE LINE |
| No. | NUMBER |
| NPT | NATIONAL PIPE THREAD |

## O

| | |
|---|---|
| O/C | ON CENTER |
| OD | OUTSIDE DIAMETER |
| OL | OVERLAP |

## P

| | |
|---|---|
| P | PART CIRCLE |
| PB | PULL BOX |
| PCC | PORTLAND CEMENT CONCRETE |
| PE | POLYETHYLENE |
| Pkt | PACKET |
| PL | PLASTIC |
| PLS | PURE LIVE SEED |
| PLT | PLANT/PLANTING |
| PLT ESTB | PLANT ESTABLISHMENT |
| PM | POST MILE |
| PR | PRESSURE RATED |
| PRLV | PRESSURE RELIEF VALVE |
| PRV | PRESSURE REGULATING VALVE |
| PVC | POLYVINYL CHLORIDE |
| Pvmt | PAVEMENT |

## Q

| | |
|---|---|
| Q | QUARTER CIRCLE |
| QCV | QUICK COUPLING VALVE |

## R

| | |
|---|---|
| R | RADIUS |
| RCP | REINFORCED CONCRETE PIPE |
| RCV | REMOTE CONTROL VALVE |
| RCVM | REMOTE CONTROL VALVE (MASTER) |
| RCVMF | REMOTE CONTROL VALVE (MASTER) W/FLOW SENSOR |
| RCVP | REMOTE CONTROL VALVE W/PRESSURE REGULATOR |
| RCW | RECYCLED WATER |
| RECP | ROLLED EROSION CONTROL PRODUCT |
| REQ | REQUIRED |
| RICS | REMOTE IRRIGATION CONTROL SYSTEM |
| R/W | RIGHT OF WAY |

## S

| | |
|---|---|
| S | SLIP |
| SCH | SCHEDULE |
| SF | STATE-FURNISHED |
| Shld | SHOULDER |
| Sq | SQUARE |
| SST | SIDE STRIP |
| Sta | STATION |
| Std | STANDARD |
| SW | SIDEWALK/SOUND WALL |

## T

| | |
|---|---|
| T | THIRD CIRCLE/THREAD |
| TLS | TRUCK LOADING STANDPIPE |
| TQ | THREE QUARTER CIRCLE |
| TRM | TURF REINFORCEMENT MAT |
| TT | TWO-THIRDS CIRCLE |
| TWSA | TREE WELL SPRINKLER ASSEMBLY |
| Typ | TYPICAL |

## U

| | |
|---|---|
| UG | UNDERGROUND |

## W

| | |
|---|---|
| W | WIDTH |
| W/ | WITH |
| WM | WATER METER |
| WS | WYE STRAINER |
| WSA | WYE STRAINER ASSEMBLY |
| WSP | WELDED STEEL PIPE |
| WWM | WELDED WIRE MESH |

**NOTE:**

For additional abbreviations, see Standard Plans A10A and A10B.

STATE OF CALIFORNIA
DEPARTMENT OF TRANSPORTATION

# LANDSCAPE AND EROSION CONTROL ABBREVIATIONS

NO SCALE

RSP H1 DATED JULY 19, 2013 SUPERSEDES STANDARD PLAN H1 DATED MAY 20, 2011 - PAGE 218 OF THE STANDARD PLANS BOOK DATED 2010.

**REVISED STANDARD PLAN RSP H1**

**2010 REVISED STANDARD PLAN RSP H1**

6-28-13

| Dist | COUNTY | ROUTE | POST MILES TOTAL PROJECT | SHEET No. | TOTAL SHEETS |
|---|---|---|---|---|---|
| 11 | Imp | 8 | R38.8/R39.1 | 167 | 225 |

LICENSED LANDSCAPE ARCHITECT

JULY 19, 2013
PLANS APPROVAL DATE

*THE STATE OF CALIFORNIA OR ITS OFFICERS OR AGENTS SHALL NOT BE RESPONSIBLE FOR THE ACCURACY OR COMPLETENESS OF SCANNED COPIES OF THIS PLAN SHEET.*

Gregory A. Balzer 2576 — 02-28-15 Renewal Date — 7-19-13 Date — LICENSED LANDSCAPE ARCHITECT — STATE OF CALIFORNIA

TO ACCOMPANY PLANS DATED 04-07-14

| EXISTING | NEW | ITEM DESCRIPTION |
|---|---|---|
| | | WATER METER (WM) |
| | | BACKFLOW PREVENTER ASSEMBLY (BPA) |
| | | BACKFLOW PREVENTER ENCLOSURE (BPE) |
| | | BOOSTER PUMP (BP) |
| | | TRUCK LOADING STANDPIPE (TLS) |
| | FS | FLOW SENSOR (FS) |
| X | X | MASTER IRRIGATION CONTROLLER (MIC) |
| | | AUXILIARY IRRIGATION CONTROLLER (AIC) |
| | | IRRIGATION CONTROLLER (IC)<br>IRRIGATION CONTROLLER (IC) (BATTERY)<br>IRRIGATION CONTROLLER (IC) (SOLAR)<br>IRRIGATION CONTROLLER (IC) (TWO WIRE) |
| | | IRRIGATION CONTROLLER(S) IN CONTROLLER ENCLOSURE CABINET (ICC) |
| acc | ACC | ARMOR-CLAD CONDUCTORS (ACC) |
| cnc | CNC | CONTROL AND NEUTRAL CONDUCTORS (CNC) |
| | | IRRIGATION CONDUIT |
| | | EXTEND IRRIGATION CROSSOVER |
| dip | DIP | DUCTILE IRON PIPE (SUPPLY LINE) (MAIN) (DIP) |
| | | GALVANIZED STEEL PIPE (SUPPLY LINE) (MAIN) (GSP) |
| | | GALVANIZED STEEL PIPE (SUPPLY LINE) (LATERAL) (GSP) |
| | | PLASTIC PIPE (SUPPLY LINE) (MAIN) |
| | | PLASTIC PIPE (SUPPLY LINE) (LATERAL) |
| cp | CP | COPPER PIPE (SUPPLY LINE) |
| dit | DIT | DRIP IRRIGATION TUBING |
| | | REMOTE CONTROL VALVE (RCV)<br>REMOTE CONTROL VALVE (MASTER) (RCVM)<br>REMOTE CONTROL VALVE (MASTER) W/FLOW METER (RCVMF) |
| P | P | REMOTE CONTROL VALVE W/PRESSURE REGULATOR (RCVP) |
| | | EXISTING MANUAL CONTROL VALVE (MCV) |
| | V | DRIP VALVE ASSEMBLY (DVA) |
| | Y | WYE STRAINER ASSEMBLY (WSA) |

| EXISTING | NEW | ITEM DESCRIPTION |
|---|---|---|
| | | GATE VALVE (GV) |
| | | BALL VALVE (BV) |
| | | QUICK COUPLING VALVE (QCV) |
| | | CAM COUPLER ASSEMBLY (CCA) |
| | | GARDEN VALVE ASSEMBLY (GARVA) |
| | | PRESSURE REGULATING VALVE (PRV) |
| | | PRESSURE RELIEF VALVE (PRLV) |
| | | FLOW CONTROL VALVE (FCV) |
| | | COMBINATION AIR RELEASE VALVE (CARV) |
| | | CHECK VALVE (CV) |
| | | FLUSH VALVE (FV) |
| | | EXISTING NOZZLE LINE W/TURNING UNION |
| | | EXISTING IRRIGATION SYSTEM |
| | | EXISTING IRRIGATION SYSTEM TO BE REMOVED |
| | | CHAIN LINK GATE |
| | | QUICK COUPLING VALVE W/SPRINKLER PROTECTOR |
| 3 | 3 | SPRINKLER W/SPRINKLER PROTECTOR |
| | C | CONNECT TO EXISTING SYSTEM |
| | | CAP |
| | | CAP EXISTING |
| | \\\FR\\\ | FIBER ROLL |
| | \\\CS\\\ | COMPOST SOCK |

RCV SIZE
IRRIGATION CONTROLLER
CONTROLLER STATION
VALVE IN PARALLEL (IF APPLICABLE)
GPM
QUANTITY OF SPRINKLERS (WHEN SHOWN)

* 2½"-A-2b-40-60

## VALVE CODE

* VALVE CODES FOR EXISTING VALVES ARE SHOWN IN A DASHED ENCLOSURE.

STATE OF CALIFORNIA
DEPARTMENT OF TRANSPORTATION

# LANDSCAPE AND EROSION CONTROL SYMBOLS

NO SCALE

RSP H2 DATED JULY 19, 2013 SUPERSEDES STANDARD PLAN H2 DATED MAY 20, 2011 - PAGE 219 OF THE STANDARD PLANS BOOK DATED 2010.

**REVISED STANDARD PLAN RSP H2**

**2010 REVISED STANDARD PLAN RSP H2**

6-28-13

| Dist | COUNTY | ROUTE | POST MILES TOTAL PROJECT | SHEET No. | TOTAL SHEETS |
|---|---|---|---|---|---|
| 11 | Imp | 8 | R38.8/R39.1 | 168 | 225 |

REGISTERED CIVIL ENGINEER

July 19, 2013
PLANS APPROVAL DATE

REGISTERED PROFESSIONAL ENGINEER
Gurinderpal Bhullar
No. C48815
Exp. 9-30-14
CIVIL
STATE OF CALIFORNIA

THE STATE OF CALIFORNIA OR ITS OFFICERS OR AGENTS SHALL NOT BE RESPONSIBLE FOR THE ACCURACY OR COMPLETENESS OF SCANNED COPIES OF THIS PLAN SHEET.

TO ACCOMPANY PLANS DATED 04-07-14

2010 REVISED STANDARD PLAN RSP T9

## TABLE 1

### TAPER LENGTH CRITERIA AND CHANNELIZING DEVICE SPACING

| SPEED (S) | MINIMUM TAPER LENGTH * FOR WIDTH OF OFFSET 12 FEET (W) | | | | MAXIMUM CHANNELIZING DEVICE SPACING | | |
|---|---|---|---|---|---|---|---|
| | | | | | X | Y | Z ** |
| | TANGENT 2L | MERGING L | SHIFTING L/2 | SHOULDER L/3 | TAPER | TANGENT | CONFLICT |
| mph | ft | ft | ft | ft | ft | ft | ft |
| 20 | 160 | 80 | 40 | 27 | 20 | 40 | 10 |
| 25 | 250 | 125 | 63 | 42 | 25 | 50 | 12 |
| 30 | 360 | 180 | 90 | 60 | 30 | 60 | 15 |
| 35 | 490 | 245 | 123 | 82 | 35 | 70 | 17 |
| 40 | 640 | 320 | 160 | 107 | 40 | 80 | 20 |
| 45 | 1080 | 540 | 270 | 180 | 45 | 90 | 22 |
| 50 | 1200 | 600 | 300 | 200 | 50 | 100 | 25 |
| 55 | 1320 | 660 | 330 | 220 | 55 | 110 | 27 |
| 60 | 1440 | 720 | 360 | 240 | 60 | 120 | 30 |
| 65 | 1560 | 780 | 390 | 260 | 65 | 130 | 32 |
| 70 | 1680 | 840 | 420 | 280 | 70 | 140 | 35 |

* - For other offsets, use the following merging taper length formula for L:
For speed of 40 mph or less, $L = WS^2/60$
For speed of 45 mph or more, $L = WS$

Where: L = Taper length in feet
W = Width of offset in feet
S = Posted speed limit, off-peak 85th-percentile speed prior to work starting, or the anticipated operating speed in mph

** - Use for taper and tangent sections where there are no pavement markings or where there is a conflict between existing pavement markings and channelizers (CA).

## TABLE 2

### LONGITUDINAL BUFFER SPACE AND FLAGGER STATION SPACING

| SPEED * | Min D ** | DOWNGRADE Min D *** | | |
|---|---|---|---|---|
| | | -3% | -6% | -9% |
| mph | ft | ft | ft | ft |
| 20 | 115 | 116 | 120 | 126 |
| 25 | 155 | 158 | 165 | 173 |
| 30 | 200 | 205 | 215 | 227 |
| 35 | 250 | 257 | 271 | 287 |
| 40 | 305 | 315 | 333 | 354 |
| 45 | 360 | 378 | 400 | 427 |
| 50 | 425 | 446 | 474 | 507 |
| 55 | 495 | 520 | 553 | 593 |
| 60 | 570 | 598 | 638 | 686 |
| 65 | 645 | 682 | 728 | 785 |
| 70 | 730 | 771 | 825 | 891 |

* - Speed is posted speed limit, off-peak 85th-percentile speed prior to work starting, or the anticipated operating speed in mph

** - Longitudinal buffer space or flagger station spacing

*** - Use on sustained downgrade steeper than -3 percent and longer than 1 mile.

## TABLE 3

### ADVANCE WARNING SIGN SPACING

| ROAD TYPE | DISTANCE BETWEEN SIGNS * | | |
|---|---|---|---|
| | A | B | C |
| | ft | ft | ft |
| URBAN - 25 mph OR LESS | 100 | 100 | 100 |
| URBAN - MORE THAN 25 mph TO 40 mph | 250 | 250 | 250 |
| URBAN - MORE THAN 40 mph | 350 | 350 | 350 |
| RURAL | 500 | 500 | 500 |
| EXPRESSWAY / FREEWAY | 1000 | 1500 | 2640 |

* - The distances are approximate, are intended for guidance purposes only, and should be applied with engineering judgment. These distances should be adjusted by the Engineer for field conditions, if necessary, by increasing or decreasing the recommmended distances.

STATE OF CALIFORNIA
DEPARTMENT OF TRANSPORTATION

# TRAFFIC CONTROL SYSTEM TABLES FOR LANE AND RAMP CLOSURES

NO SCALE

RSP T9 DATED JULY 19, 2013 SUPERSEDES RSP T9 DATED APRIL 19, 2013 THAT SUPPLEMENTS THE STANDARD PLANS BOOK DATED 2010.

**REVISED STANDARD PLAN RSP T9**

| Dist | COUNTY | ROUTE | POST MILES TOTAL PROJECT | SHEET No. | TOTAL SHEETS |
|---|---|---|---|---|---|
| 11 | Imp | 8 | R38.8/R39.1 | 169 | 225 |

REGISTERED CIVIL ENGINEER

April 19, 2013
PLANS APPROVAL DATE

REGISTERED PROFESSIONAL ENGINEER Gurinderpal Bhullar No. C48815 Exp. 9-30-14 CIVIL STATE OF CALIFORNIA

*THE STATE OF CALIFORNIA OR ITS OFFICERS OR AGENTS SHALL NOT BE RESPONSIBLE FOR THE ACCURACY OR COMPLETENESS OF SCANNED COPIES OF THIS PLAN SHEET.*

TO ACCOMPANY PLANS DATED 04-07-14

## NOTES:

See Revised Standard Plan RSP T9 for tables.

Use cone spacing X for taper segment, Y for tangent segment or Z for conflict situations, as approriate, per Table 1, unless X, Y, or Z cone spacing is shown on this sheet.

Unless otherwise specified in the special provisions, all temporary warning signs shall have black legend on fluorescent orange background.

California codes are designated by (CA). Otherwise, Federal (MUTCD) codes are shown.

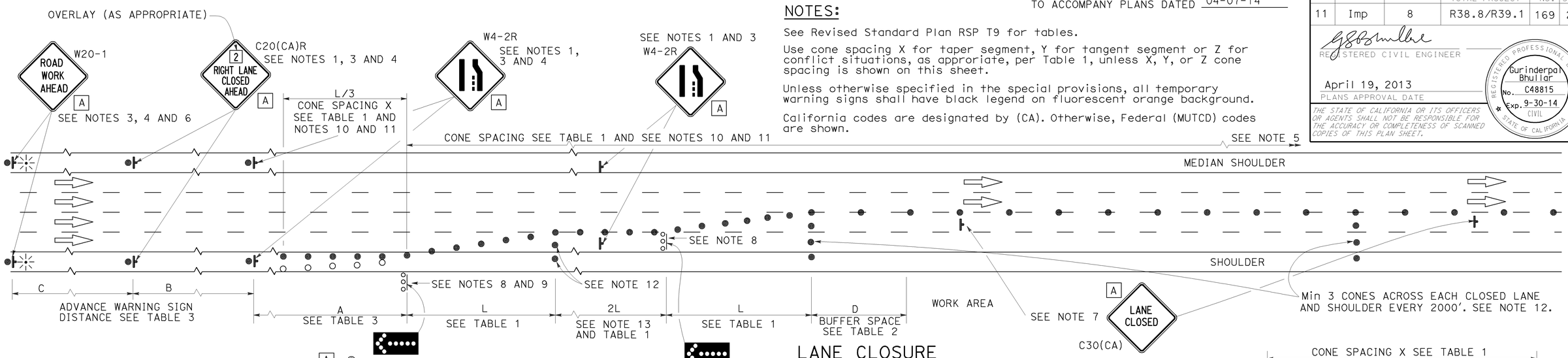


## LANE CLOSURE

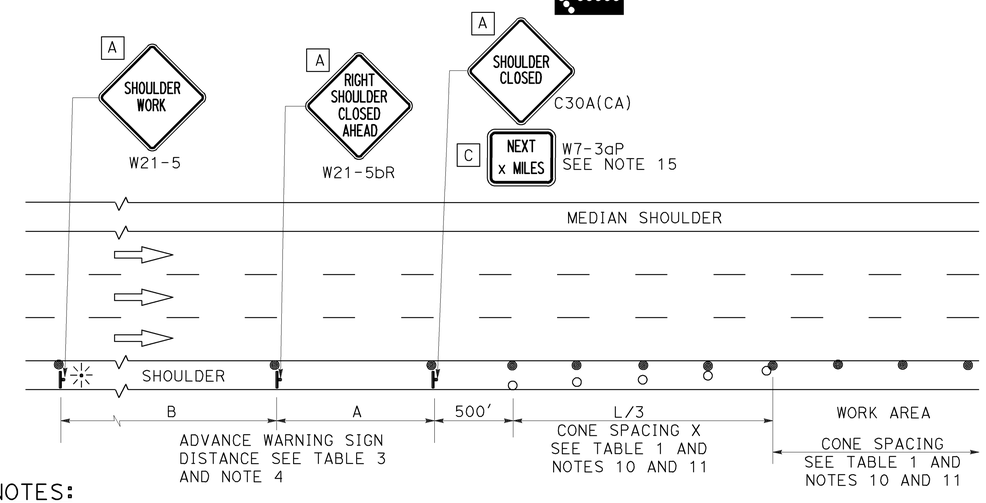


## SHOULDER CLOSURE

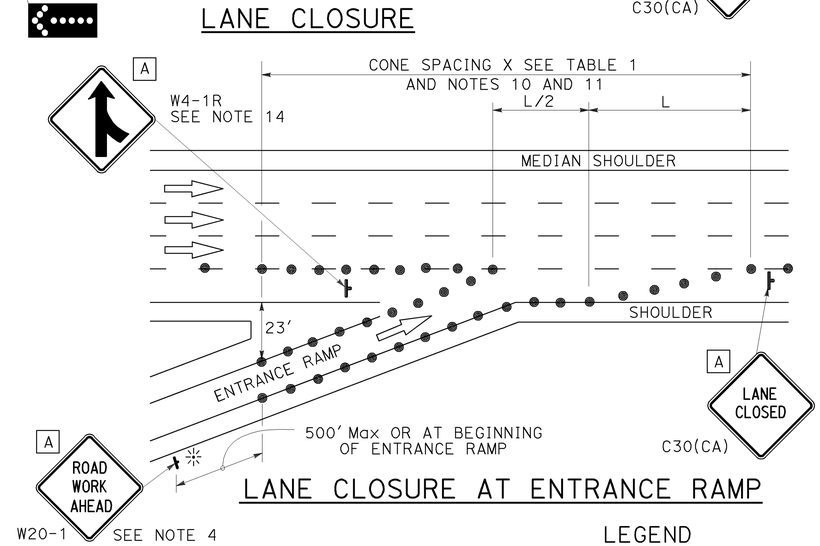


## LANE CLOSURE AT ENTRANCE RAMP

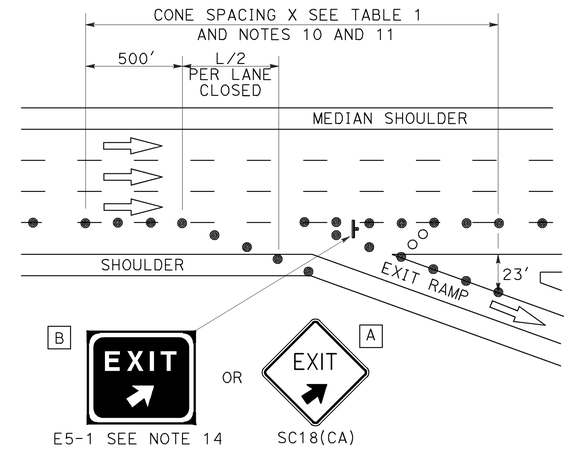


## LANE CLOSURE AT EXIT RAMP

## NOTES:

1. Median lane closures shall conform to the details as shown except that C20(CA)L and W4-2L signs shall be used.
2. At least one person shall be assigned to provide full time maintenance of traffic control devices for lane closures.
3. Duplicate sign installations are not required:
   a) On opposite shoulder if at least one-half of the available lanes remain open to traffic.
   b) In the median if the width of the median shoulder is less than 8' and the outside lanes are to be closed.
4. Each advance warning sign on each side of the roadway shall be equipped with at least two flags for daytime closure. Each flag shall be at least 16" x 16" in size and shall be orange or fluorescent red-orange in color. Flashing beacons shall be placed at the locations indicated for lane closure during hours of darkness.
5. A G20-2 "END ROAD WORK" sign, with minimum size of 48" x 24" as appropriate, shall be placed at the end of the lane closure unless the end of work area is obvious or ends within a larger project's limits.
6. If the W20-1 sign would follow within 2000' of a stationary W20-1 or G20-1 "ROAD WORK NEXT _____ MILES", use a C20(CA) sign for the first advance warning sign.
7. Place a C30(CA) sign every 2000' throughout length of lane closure.
8. One flashing arrow sign for each lane closed. The flashing arrow signs shall be Type I.
9. A minimum 1500' of sight distance shall be provided where possible for vehicles approaching the first flashing arrow sign. Lane closures shall not begin at top of crest vertical curve or on a horizontal curve.
10. All cones used for lane closures during the hours of darkness shall be fitted with retroreflective bands (or sleeves) as specified in the specifications.
11. Portable delineators, placed at one-half the spacing indicated for traffic cones may be used instead of cones for daytime closures only.
12. Unless otherwise specified in the special provisions, a minimum of 3 cones shall be placed transversely across each closed lane and shoulder at each location where a taper across a traffic lane ends and every 2000' as shown on the "Lane Closure" detail. Two Type II barricades may be used instead of the 3 cones. The transverse alignment of the cones or barricades on the closed shoulder may be shifted from the transverse alignment to provide access to the work.
13. Unless otherwise specified in the special provisions, the 2L tangent shown along lane lines shall be used between the L tapers required for each closed traffic lane.
14. Unless otherwise specified in the special provisions, the E5-1 or SC18(CA) and W4-1 signs shall be used as shown.
15. A W7-3aP "NEXT____ MILES" plaque must be used if theshoulder closure extends beyond the distance that can be perceived by road users.

## LEGEND

- TRAFFIC CONE
- TRAFFIC CONE (OPTIONAL TAPER)
- TEMPORARY TRAFFIC CONTROL SIGN
- FLASHING ARROW SIGN (FAS)
- FAS SUPPORT OR TRAILER
- PORTABLE FLASHING BEACON

## SIGN PANEL SIZE (Min)

| | |
|---|---|
| A | 48" x 48" |
| B | 72" x 60" |
| C | 36" x 30" |

STATE OF CALIFORNIA
DEPARTMENT OF TRANSPORTATION

# TRAFFIC CONTROL SYSTEM FOR LANE CLOSURE ON FREEWAYS AND EXPRESSWAYS

NO SCALE

RSP T10 DATED APRIL 19, 2013 SUPERSEDES STANDARD PLAN T10 DATED MAY 20, 2011 - PAGE 237 OF THE STANDARD PLANS BOOK DATED 2010.

**REVISED STANDARD PLAN RSP T10**

**2010 REVISED STANDARD PLAN RSP T10**

12-18-12

TO ACCOMPANY PLANS DATED 04-07-14

| Dist | COUNTY | ROUTE | POST MILES TOTAL PROJECT | SHEET No. | TOTAL SHEETS |
|---|---|---|---|---|---|
| 11 | Imp | 8 | R38.8/R39.1 | 170 | 225 |

REGISTERED CIVIL ENGINEER

April 19, 2013
PLANS APPROVAL DATE

REGISTERED PROFESSIONAL ENGINEER Gurinderpal Bhullar No. C48815 Exp. 9-30-14 CIVIL STATE OF CALIFORNIA

*THE STATE OF CALIFORNIA OR ITS OFFICERS OR AGENTS SHALL NOT BE RESPONSIBLE FOR THE ACCURACY OR COMPLETENESS OF SCANNED COPIES OF THIS PLAN SHEET.*

**NOTES:** See Revised Standard Plan RSP T9 for tables.

Use cone spacing X for taper segment, Y for tangent segment or Z for conflict situations, as approriate, per Table 1, unless X, Y, or Z cone spacing is shown on this sheet.

Unless otherwise specified in the special provisions, all temporary warning signs shall have black legend on fluorescent orange background.

California codes are designated by (CA). Otherwise, Federal (MUTCD) codes are shown.

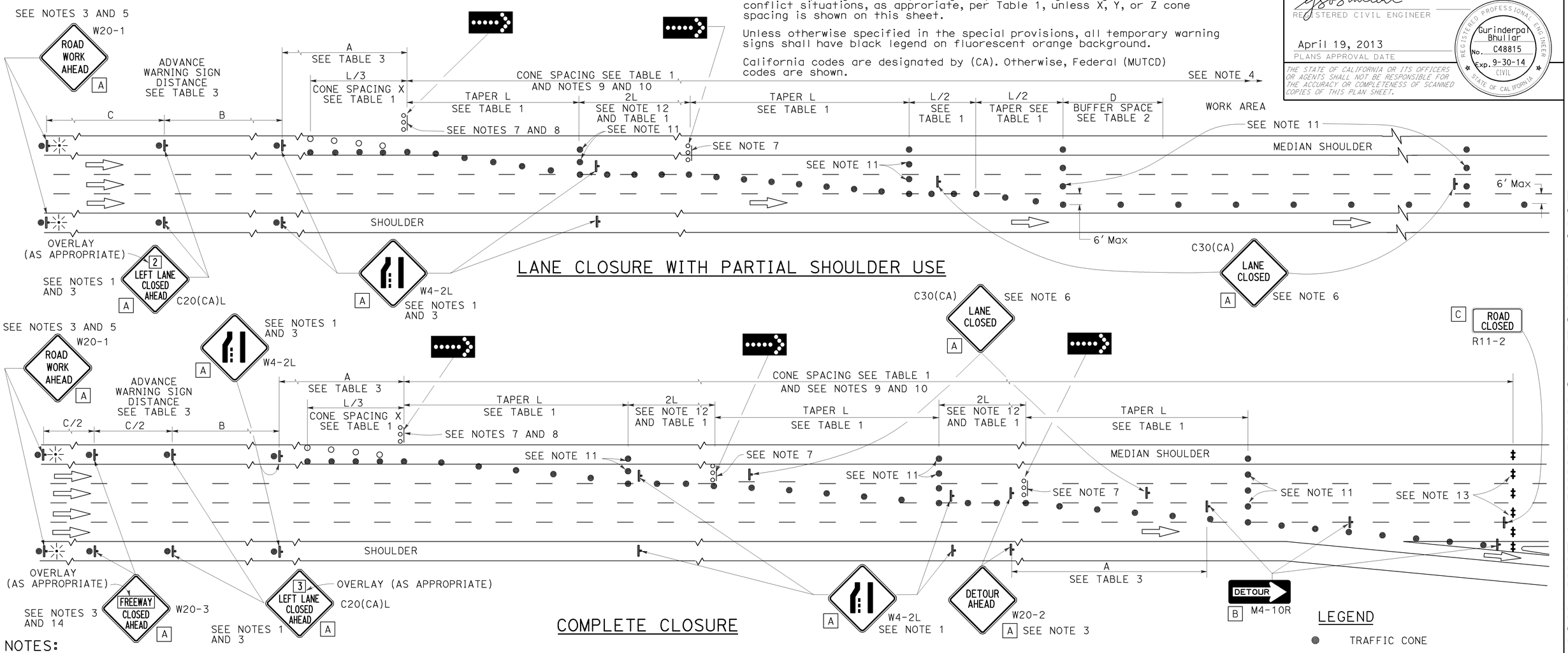


## LANE CLOSURE WITH PARTIAL SHOULDER USE

## COMPLETE CLOSURE

## NOTES:

1. Lane closures on the right side using partial median shoulder as a traffic lane shall conform to the details as shown except that C20(CA)R and W4-2R signs shall be used.
2. At least one person shall be assigned to provide full time maintenance of traffic control devices for lane closures.
3. Each advance warning sign on each side of the roadway shall be equipped with at least two flags for daytime closure. Each flag shall be at least 16" X 16" in size and shall be orange or fluorescent red-orange in color. Flashing beacons shall be placed at the locations indicated for lane closure during hours of darkness.
4. A G20-2 "END ROAD WORK" sign, with minimum size of 48" x 24" as appropriate, shall be placed at the end of the lane closure unless the end of work area is obvious or ends within a larger project's limits.
5. If the W20-1 sign would follow within 2000' of a stationary W20-1 or G20-1 "ROAD WORK NEXT ___ MILES", use a C20(CA) sign for the first advance warning sign.
6. Place a C30(CA) sign every 2000' throughout length of lane closure.
7. One flashing arrow sign for each lane closed. The flashing arrow signs shall be Type I.
8. A minimum 1500' of sight distance shall be provided where possible for vehicles approaching the first flashing arrow sign. Lane closures shall not begin at the top of crest vertical curve or on a horizontal curve.
9. All cones used for lane closures during the hours of darkness shall be fitted with retroreflective bands (or sleeves) as specified in the specifications.
10. Portable delineators, placed at one-half the spacing indicated for traffic cones, may be used instead of cones for daytime closures only.
11. Unless otherwise specified in the special provisions, a minimum of 3 cones shall be placed transversely across each closed lane and shoulder at each location where a taper across a traffic lane ends and every 2000' as shown on the "Lane Closure With Partial Shoulder Use" detail. Two Type II barricades may be used instead of the 3 cones. The transverse alignment of the cones or barricades on the closed shoulder may be shifted from the transverse alignment to provide access to the work.
12. Unless otherwise specified in the special provisions, the 2L tangent shown along lane lines shall be used between the L tapers required for each closed traffic lane.
13. A minimum of Two Type II or III barricades shall be placed across each closed lane and shoulder at the location shown and every 2000' within the complete closure area. Within the complete closure area, the transverse alignment of the barricades on the closed shoulder may be shifted from the transverse alignment to provide access to the work.
14. When specified in the special provisions, a W20-2 "DETOUR AHEAD" sign is to be used in place of the W20-3 "FREEWAY CLOSED AHEAD" sign.

## SIGN PANEL SIZE (Min)

| | |
|---|---|
| A | 48" x 48" |
| B | 48" x 18" |
| C | 48" x 30" |

## LEGEND

- TRAFFIC CONE
- TRAFFIC CONE (OPTIONAL TAPER)
- TEMPORARY TRAFFIC CONTROL SIGN
- FLASHING ARROW SIGN (FAS)
- FAS SUPPORT OR TRAILER
- PORTABLE FLASHING BEACON

STATE OF CALIFORNIA
DEPARTMENT OF TRANSPORTATION

# TRAFFIC CONTROL SYSTEM FOR LANE CLOSURES ON FREEWAYS AND EXPRESSWAYS

NO SCALE

RSP T10A DATED APRIL 19, 2013 SUPERSEDES STANDARD PLAN T10A DATED MAY 20, 2011 - PAGE 238 OF THE STANDARD PLANS BOOK DATED 2010.

**REVISED STANDARD PLAN RSP T10A**

**2010 REVISED STANDARD PLAN RSP T10A**

12-18-12

| Dist | COUNTY | ROUTE | POST MILES TOTAL PROJECT | SHEET No. | TOTAL SHEETS |
|---|---|---|---|---|---|
| 11 | Imp | 8 | R38.8/R39.1 | 171 | 225 |

REGISTERED CIVIL ENGINEER

April 19, 2013
PLANS APPROVAL DATE

REGISTERED PROFESSIONAL ENGINEER
Gurinderpal Bhullar
No. C48815
Exp. 9-30-14
CIVIL
STATE OF CALIFORNIA

THE STATE OF CALIFORNIA OR ITS OFFICERS OR AGENTS SHALL NOT BE RESPONSIBLE FOR THE ACCURACY OR COMPLETENESS OF SCANNED COPIES OF THIS PLAN SHEET.

TO ACCOMPANY PLANS DATED 04-07-14

## NOTES:

See Revised Standard Plan RSP T9 for tables.

Use cone spacing X for taper segment, Y for tangent segment or Z for conflict situations, as approriate, per Table 1, unless X, Y, or Z cone spacing is shown on this sheet.

Unless otherwise specified in the special provisions, all temporary warning signs shall have black legend on fluorescent orange background.

California codes are designated by (CA). Otherwise, Federal (MUTCD) codes are shown.

## TYPICAL LANE CLOSURE WITH REVERSIBLE CONTROL

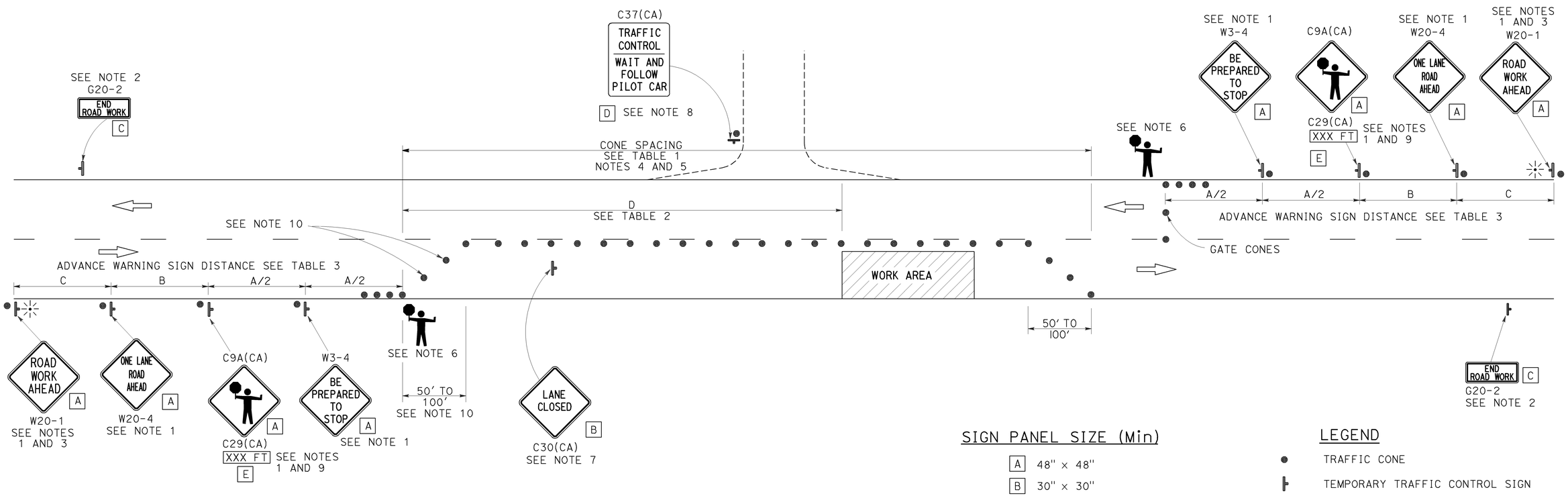


## SIGN PANEL SIZE (Min)

| | |
|---|---|
| A | 48" × 48" |
| B | 30" × 30" |
| C | 36" × 18" |
| D | 36" × 42" |
| E | 20" × 7" |

## LEGEND

- TRAFFIC CONE
- TEMPORARY TRAFFIC CONTROL SIGN
- PORTABLE FLASHING BEACON
- FLAGGER

## NOTES:

1. Each advance warning sign in each direction of travel shall be equipped with at least two flags for daytime closure. Each flag shall be at least 16" x 16" in size and shall be orange or fluorescent red-orange in color. Flashing beacons shall be placed at the locations indicated for lane closure during hours of darkness.
2. A G20-2 "END ROAD WORK" sign, as appropriate, shall be placed at the end of the lane control unless the end of work area is obvious, or ends within a larger project's limits.
3. If the W20-1 sign would follow within 2000' of a stationary W20-1 or G20-1 "ROAD WORK NEXT _____ MILES", use a W20-4 sign for the first advance warning sign.
4. All cones used for lane closures during the hours of darkness shall be fitted with retroreflective bands (or sleeves) as specified in the specifications.
5. Portable delineators, placed at one-half the spacing indicated for traffic cones, may be used instead of cones for daytime closures only.
6. Additional advance flaggers may be required. Flagger should stand in a conspicuous place, be visible to approaching traffic as well as approaching vehicles after the first vehicle has stopped. During the hours of darkness, the flagging-station and flagger shall be illuminated and clearly visible to approaching traffic. The illumination footprint of the lighting on the ground shall be at least 20' in diameter. Place a minimum of four cones at 50' intervals in advance of flagger station as shown.
7. Place C30(CA) "LANE CLOSED" sign at 500' to 1000' intervals throughout extended work areas. They are optional if the work area is visible from the flagger station.
8. When a pilot car is used, place a C37(CA) "TRAFFIC CONTROL-WAIT AND FOLLOW PILOT CAR" sign with black legend on white background at all intersections, driveways and alleys without a flagger within traffic control area. Signs shall be clean and visible at all times. Where traffic can not be effectively self-regulated, at least one flagger shall be used at each intersection within traffic control area.
9. An optional C29(CA) sign may be placed below the C9A(CA) sign.
10. Either traffic cones or barricades shall be placed on the taper. Barricades shall be Type I, II, or III.

STATE OF CALIFORNIA
DEPARTMENT OF TRANSPORTATION

# TRAFFIC CONTROL SYSTEM FOR LANE CLOSURE ON TWO LANE CONVENTIONAL HIGHWAYS

NO SCALE

RSP T13 DATED APRIL 19, 2013 SUPERSEDES STANDARD PLAN T13 DATED MAY 20, 2011 - PAGE 241 OF THE STANDARD PLANS BOOK DATED 2010.

**REVISED STANDARD PLAN RSP T13**

**2010 REVISED STANDARD PLAN RSP T13**

4-2-13

| Dist | COUNTY | ROUTE | POST MILES TOTAL PROJECT | SHEET No. | TOTAL SHEETS |
|---|---|---|---|---|---|
| 11 | Imp | 8 | R38.8/R39.1 | 172 | 225 |

REGISTERED CIVIL ENGINEER

April 19, 2013
PLANS APPROVAL DATE

REGISTERED PROFESSIONAL ENGINEER Gurinderpal Bhullar No. C48815 Exp. 9-30-14 CIVIL STATE OF CALIFORNIA

THE STATE OF CALIFORNIA OR ITS OFFICERS OR AGENTS SHALL NOT BE RESPONSIBLE FOR THE ACCURACY OR COMPLETENESS OF SCANNED COPIES OF THIS PLAN SHEET.

TO ACCOMPANY PLANS DATED 04-07-14

# TYPICAL RAMP CLOSURES

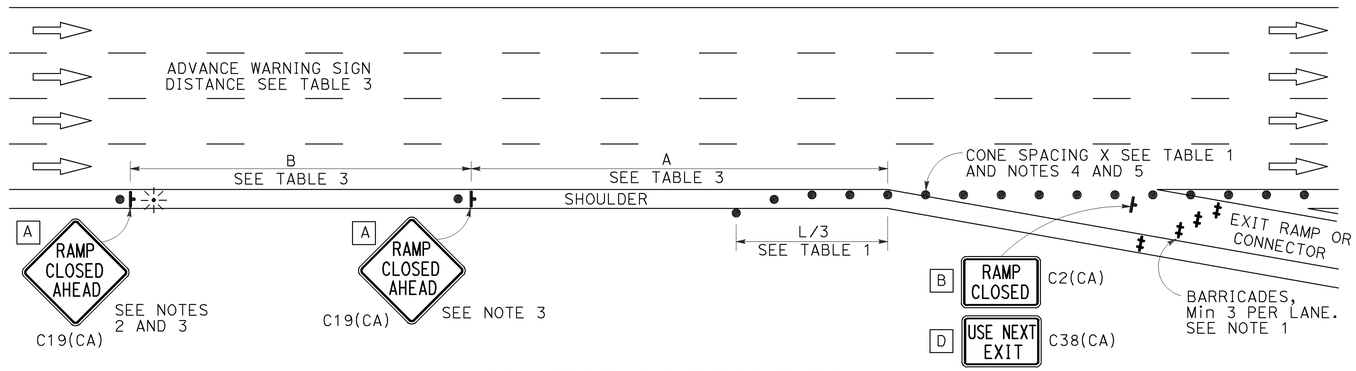


## EXIT RAMP OR CONNECTOR

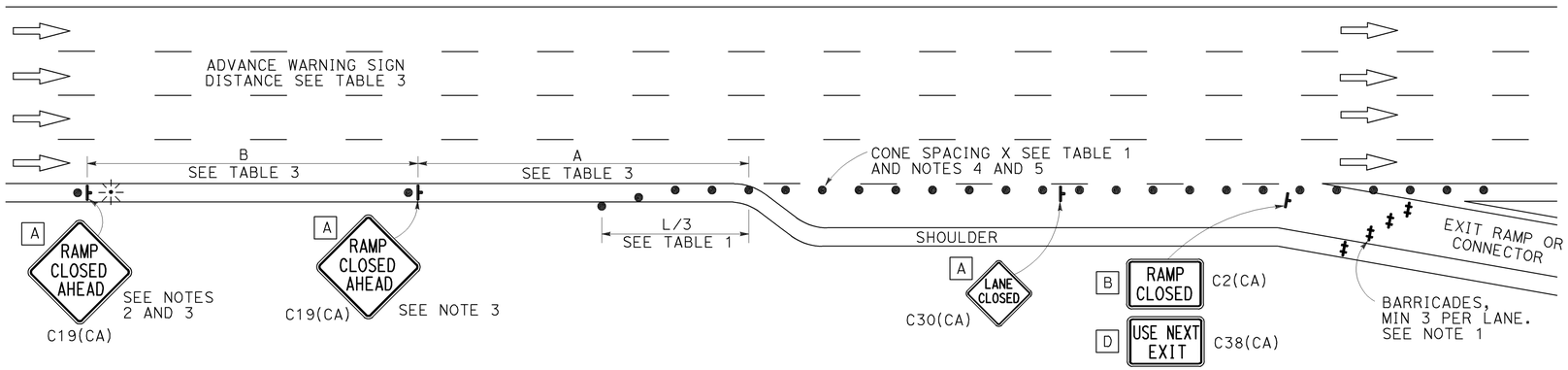


## EXIT RAMP OR CONNECTOR WITH ADDITIONAL LANE

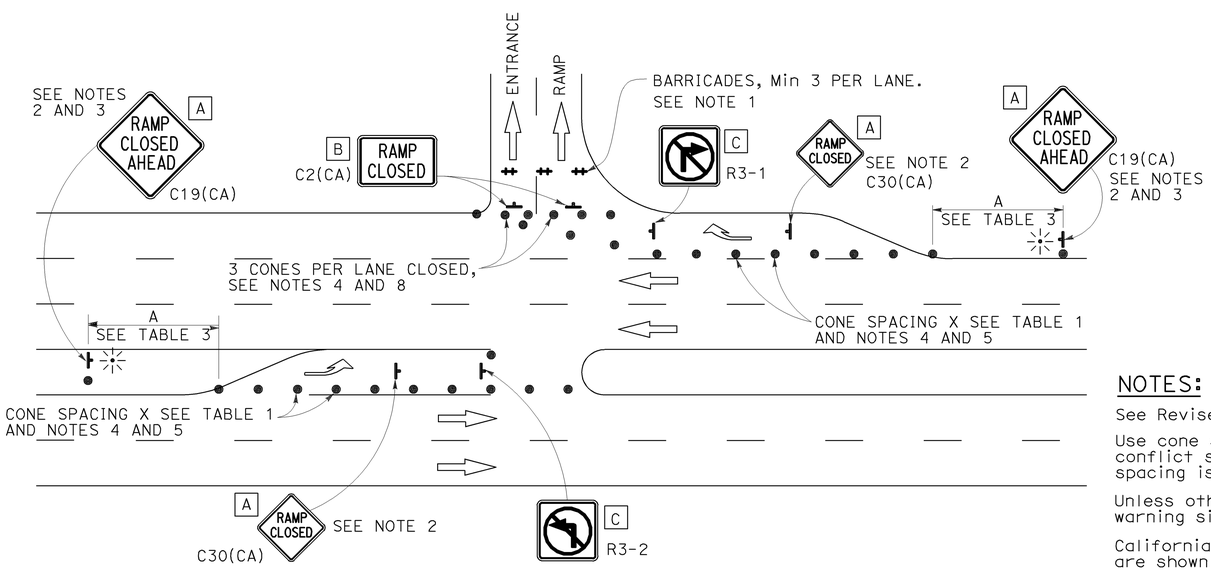


## ENTRANCE RAMP WITH TURNING POCKETS

## SIGN PANEL SIZE (Min)

| | |
|---|---|
| A | 48" × 48" |
| B | 48" × 30" |
| C | 36" × 36" |
| D | 48" × 36" |

## LEGEND

- ● TRAFFIC CONE
- ⊢ TEMPORARY TRAFFIC CONTROL SIGN
- ‡ BARRICADES
- ✳ PORTABLE FLASHING BEACON

## NOTES:

1. Barricades shall be Type I, II, or III for closures lasting one week or less and Type III for closures lasting longer than one week.
2. In addition to placing the C19(CA) "RAMP CLOSED AHEAD" and C30(CA) "RAMP CLOSED" signs, black on orange overlay plates with the word "CLOSED" may be mounted, as directed by the Engineer, on all guide signs that refer to the closed ramp. The letter size on the overlay shall be the same as the guide sign.
3. Each advance C19(CA) "RAMP CLOSED AHEAD" sign shall be equipped with at least two flags for daytime closure. Each flag shall be at least 16" × 16" in size and shall be orange or fluorescent red-orange in color. A flashing beacon shall be placed on top of the first C19(CA) sign during hours of darkness.
4. All cones used for ramp closures during the hours of darkness shall be fitted with retroreflective bands (or sleeves) as specified in the specifications.
5. Portable delineators, placed at one-half the spacing indicated for traffic cones, may be used instead of cones for daytime ramp closures only.
6. At least one person shall be assigned to provide full time maintenance of traffic control devices, unless otherwise directed by the Engineer.
7. The existing "EXIT" signs shall be covered during ramp closures.
8. A minimum of 3 cones shall be placed transversely across each closed lane and shoulder.

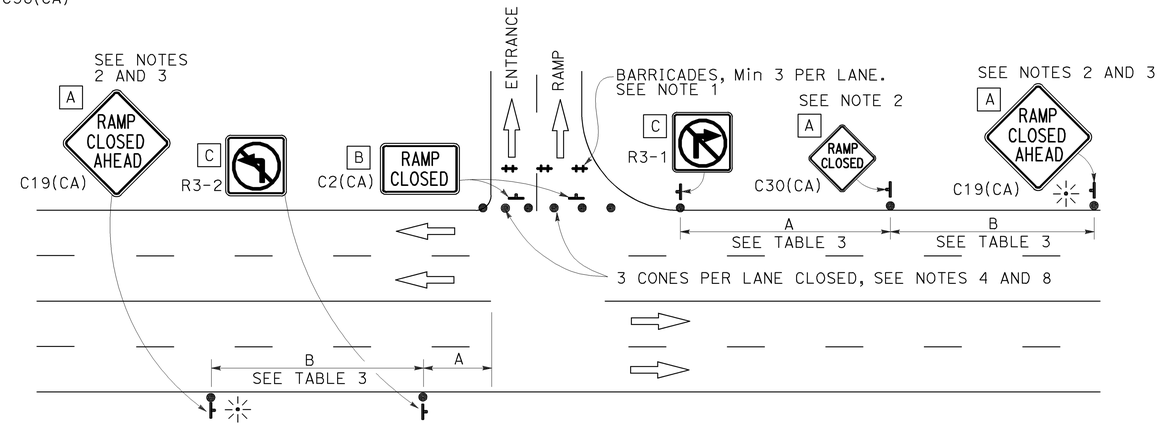


## ENTRANCE RAMP WITHOUT TURNING POCKETS

## NOTES:

See Revised Standard Plan RSP T9 for tables.

Use cone spacing X for taper segment, Y for tangent segment or Z for conflict situations, as approriate, per Table 1, unless X, Y, or Z cone spacing is shown on this sheet.

Unless otherwise specified in the special provisions, all temporary warning signs shall have black legend on fluorescent orange background.

California codes are designated by (CA). Otherwise, Federal (MUTCD) codes are shown.

STATE OF CALIFORNIA
DEPARTMENT OF TRANSPORTATION

# TRAFFIC CONTROL SYSTEM FOR RAMP CLOSURE

NO SCALE

RSP T14 DATED APRIL 19, 2013 SUPERSEDES STANDARD PLAN T14 DATED MAY 20, 2011 - PAGE 242 OF THE STANDARD PLANS BOOK DATED 2010.

**REVISED STANDARD PLAN RSP T14**

**2010 REVISED STANDARD PLAN RSP T14**

12-18-12

| Dist | COUNTY | ROUTE | POST MILES TOTAL PROJECT | SHEET No. | TOTAL SHEETS |
|---|---|---|---|---|---|
| 11 | Imp | 8 | R38.8/R39.1 | 173 | 225 |

REGISTERED CIVIL ENGINEER

April 20, 2012
PLANS APPROVAL DATE

REGISTERED PROFESSIONAL ENGINEER Gary Wang No. C58298 Exp. 6-30-12 CIVIL STATE OF CALIFORNIA

*THE STATE OF CALIFORNIA OR ITS OFFICERS OR AGENTS SHALL NOT BE RESPONSIBLE FOR THE ACCURACY OR COMPLETENESS OF SCANNED COPIES OF THIS PLAN SHEET.*

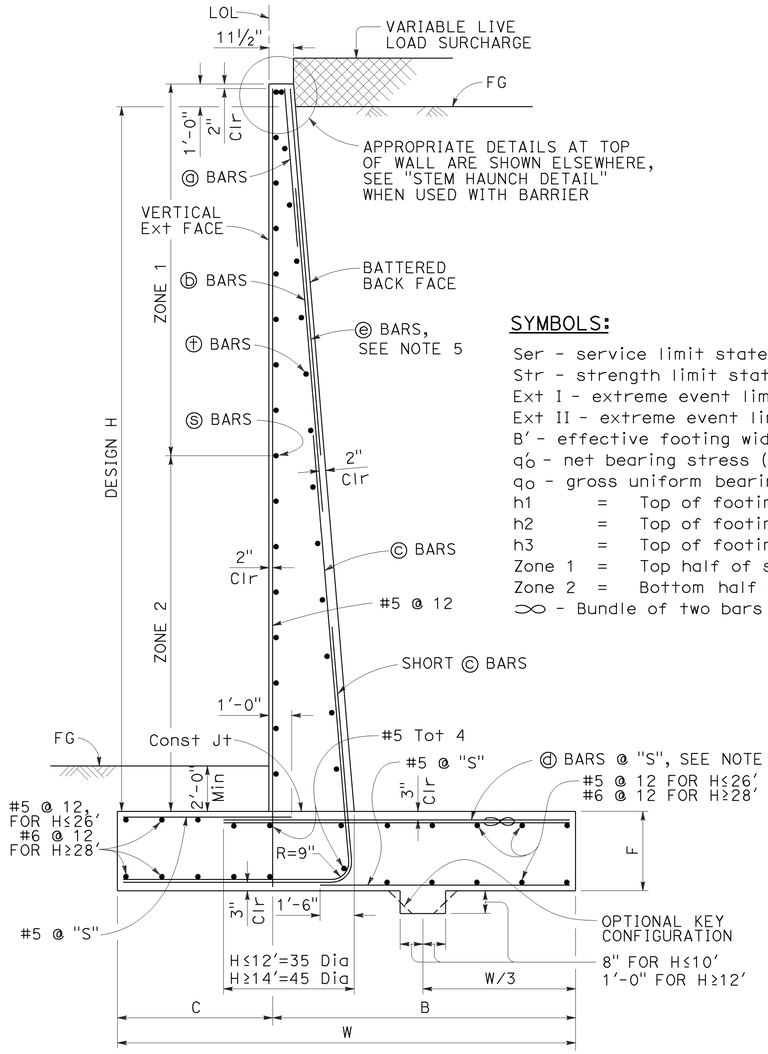


## TYPICAL SECTION

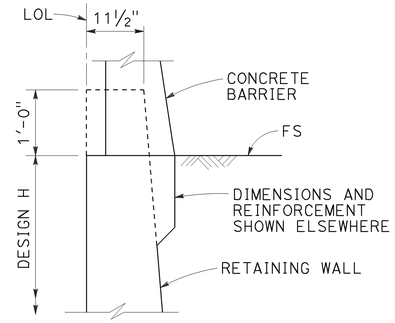


## STEM HAUNCH DETAIL

## DESIGN CONDITIONS:

Design H may be exceeded by 6" before going to the next size. Special footing design is required where foundation material is incapable of supporting bearing stress listed in the table.

## SYMBOLS:

Ser - service limit state I
Str - strength limit state I
Ext I - extreme event limit state I
Ext II - extreme event limit state II
B' - effective footing width (ft)
$q'_o$ - net bearing stress (ksf), OG assumed to be FG at toe
$q_o$ - gross uniform bearing stress (ksf)
h1 = Top of footing to top of short ⓒ bar
h2 = Top of footing to top of ⓒ bar
h3 = Top of footing to top of ⓑ bar
Zone 1 = Top half of stem height
Zone 2 = Bottom half of stem height
∞ - Bundle of two bars

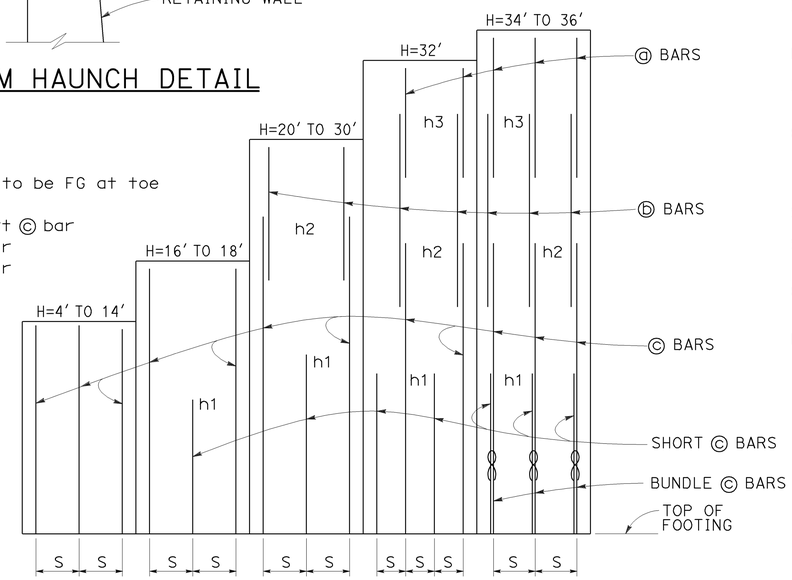


## ELEVATION

## DESIGN NOTES:

TO ACCOMPANY PLANS DATED 04-07-14

DESIGN: AASHTO LRFD Bridge Design Specifications, 4th Edition with California Amendments

LS: Varied surcharge on level ground surface

DC: Stem Architectural Treatment of thickness up to 6" of concrete (75 psf) considered

CT: 54 kip transverse force applied at He = 32", distributed over 10 feet at the top of wall and 1 : 1 distribution down and outward. Distribution below footing taken no less than 40'.

SEISMIC: $k_h = 0.2$, $k_v = 0.0$

SOIL: $\phi = 34°$, $\gamma = 120$ pcf

REINFORCED CONCRETE: f'c = 3,600 psi
fy = 60,000 psi

LOAD COMBINATIONS AND LIMIT STATES:

| | |
|---|---|
| Service I | Q = 1.00DC+1.00EV+1.00EH+1.00LS |
| Strength I | Q = αDC+βEV+ηEH+1.75LS |
| Extreme I | Q = 1.00DC+1.00EV+1.00EH+1.00EQD+1.00EQE |
| Extreme II | Q = 1.00DC+1.00EV+1.00EH+1.00CT |

Where:

| | |
|---|---|
| Q: | Force Effects |
| α: | 1.25 or 0.90, Whichever Controls Design |
| β: | 1.35 or 1.00, Whichever Controls Design |
| η: | 1.50 or 0.90, Whichever Controls Design |
| DC: | Dead Load of Structure Components |
| EH: | Horizontal Earth Fill Pressure |
| EV: | Vertical Earth Pressure from Earth Fill Weight |
| LS: | Live Load Surcharge |
| EQE: | Seismic Earth Pressure |
| EQD: | Soil and Structural and Nonstructural Components Inertia |
| CT: | Vehicular Collision Force |

## TABLE OF REINFORCING STEEL, DIMENSIONS AND DATA

| DESIGN H | 4' | 6' | 8' | 10' | 12' | 14' | 16' | 18' | 20' | 22' | 24' | 26' | 28' | 30' | 32' | 34' | 36' |
|---|---|---|---|---|---|---|---|---|---|---|---|---|---|---|---|---|---|
| W | 6'-10" | 7'-0" | 7'-3" | 7'-7" | 8'-4" | 9'-7" | 10'-9" | 12'-0" | 13'-3" | 14'-6" | 15'-9" | 17'-1" | 18'-5" | 19'-10" | 21'-2" | 22'-7" | 24'-0" |
| C | 2'-2" | 2'-3" | 2'-3" | 2'-4" | 2'-6" | 3'-0" | 3'-6" | 4'-0" | 4'-6" | 5'-0" | 5'-5" | 6'-0" | 6'-6" | 7'-2" | 7'-8" | 8'-2" | 9'-0" |
| B | 4'-8" | 4'-9" | 5'-0" | 5'-3" | 5'-10" | 6'-7" | 7'-3" | 8'-0" | 8'-9" | 9'-6" | 10'-4" | 11'-1" | 11'-11" | 12'-8" | 13'-6" | 14'-5" | 15'-0" |
| F | 1'-4" | 1'-4" | 1'-4" | 1'-4" | 1'-6" | 1'-8" | 1'-8" | 1'-9" | 1'-9" | 1'-11" | 2'-2" | 2'-5" | 2'-10" | 3'-3" | 3'-6" | 4'-0" | 4'-3" |
| BATTER | ½: 12 | ½: 12 | ½: 12 | ½: 12 | ½: 12 | ½: 12 | ½: 12 | ½: 12 | ½: 12 | ½: 12 | ⅝: 12 | ⅝: 12 | ¾: 12 | ⅞: 12 | 1 : 12 | 1 : 12 | 1 : 12 |
| SPACING "S" | 9" | 9" | 9" | 9" | 9" | 7" | 6" | 5" | 6" | 6" | 6" | 6" | 6" | 6" | 6" | 10" | 8" |
| ⓐ BARS | - | - | - | - | - | - | - | - | - | - | - | - | - | - | #7 | #7 | #6 |
| ⓑ BARS | - | - | - | - | - | - | - | - | #7 | #7 | #7 | #7 | #7 | #7 | #9 | #9 | #8 |
| ⓒ BARS | #6 | #6 | #6 | #6 | #6 | #6 | #7 | #7 | #8 | #9 | #9 | #10 | #10 | #10 | #11 | #11 | #11 |
| ⓓ BARS | #5 | #5 | #6 | #6 | #6 | #6 | #9 | #8 | #8 | #9 | #9 | #10 | #10 | #10 | #11 | #11 | #11 |
| h1 | - | - | - | - | - | - | 5'-9" | 5'-10" | 8'-0" | 9'-0" | 10'-1" | 11'-0" | 12'-1" | 13'-0" | 13'-0" | 12'-7" | 11'-6" |
| h2 | - | - | - | - | - | - | - | - | 10'-5" | 13'-0" | 14'-7" | 17'-6" | 19'-0" | 20'-5" | 19'-0" | 18'-0" | 20'-2" |
| h3 | - | - | - | - | - | - | - | - | - | - | - | - | - | - | 21'-2" | 21'-10" | 24'-0" |
| ZONE 1 ⓢ BARS | #5 @ 18 | #5 @ 18 | #5 @ 18 | #5 @ 18 | #5 @ 18 | #5 @ 18 | #5 @ 18 | #5 @ 18 | #5 @ 18 | #5 @ 18 | #5 @ 12 | #5 @ 12 | #5 @ 12 | #5 @ 12 | #5 @ 12 | #5 @ 12 | #5 @ 12 |
| ZONE 2 ⓢ BARS | #5 @ 18 | #5 @ 18 | #5 @ 18 | #5 @ 18 | #5 @ 18 | #5 @ 18 | #5 @ 12 | #5 @ 12 | #5 @ 12 | #5 @ 12 | #5 @ 12 | #5 @ 12 | #6 @ 12 | #6 @ 12 | #6 @ 12 | #7 @ 12 | #7 @ 12 |
| ZONE 1 ⓣ BARS | #4 @ 18 | #4 @ 18 | #4 @ 18 | #4 @ 18 | #4 @ 18 | #4 @ 18 | #4 @ 18 | #4 @ 18 | #4 @ 18 | #4 @ 18 | #4 @ 12 | #4 @ 12 | #4 @ 18 | #4 @ 12 | #4 @ 12 | #4 @ 12 | #4 @ 12 |
| ZONE 2 ⓣ BARS | #4 @ 18 | #4 @ 18 | #4 @ 18 | #4 @ 18 | #4 @ 18 | #4 @ 18 | #4 @ 18 | #4 @ 18 | #4 @ 18 | #4 @ 18 | #4 @ 12 | #4 @ 12 | #4 @ 12 | #4 @ 12 | #5 @ 12 | #5 @ 12 | #5 @ 12 |
| Ser: B', $q'_o$ | 6.8, 0.7 | 6.5, 1.0 | 6.2, 1.3 | 6.0, 1.6 | 6.3, 2.0 | 7.5, 2.1 | 8.6, 2.2 | 9.8, 2.3 | 11.0, 2.4 | 12.1, 2.5 | 13.2, 2.8 | 14.4, 2.9 | 15.5, 3.1 | 16.8, 3.3 | 18.0, 3.5 | 19.2, 3.7 | 20.6, 3.7 |
| Str: B', $q_o$ | 6.6, 1.6 | 5.0, 1.8 | 3.6, 2.3 | 3.0, 3.3 | 3.2, 4.0 | 4.3, 3.8 | 5.3, 3.7 | 6.4, 3.7 | 7.4, 3.8 | 8.2, 4.1 | 9.0, 4.4 | 9.9, 4.6 | 10.7, 4.9 | 11.7, 5.2 | 12.6, 5.4 | 13.6, 5.8 | 14.6, 5.9 |
| Ext I: B', $q_o$ | 5.2, 1.1 | 4.7, 1.5 | 3.9, 2.2 | 3.1, 3.4 | 2.8, 4.8 | 3.2, 5.3 | 3.6, 5.7 | 4.1, 6.1 | 4.6, 6.4 | 5.0, 6.9 | 5.3, 7.6 | 5.8, 8.1 | 6.1, 8.9 | 6.7, 9.4 | 7.1, 10.0 | 7.5, 10.7 | 8.2, 10.9 |
| Ext II: B', $q_o$ | 2.6, 2.2 | 2.7, 2.6 | 2.8, 3.1 | 2.9, 3.6 | 3.7, 3.6 | 5.2, 3.3 | 6.7, 3.1 | 8.3, 3.0 | 9.8, 3.0 | 11.2, 3.1 | 12.5, 3.2 | 13.9, 3.4 | 15.2, 3.6 | 16.7, 3.8 | 18.0, 4.0 | 19.3, 4.2 | 20.8, 4.3 |

## NOTES:

1. For details not shown and drainage notes see RSP B3-5
2. For wall stem joint details see B0-3/3-3 and B0-3/3-4
3. At ⓒ bars:
   H ≤ 6', no splices are allowed within 1'-8" above the top of footing.
   H > 6', no splices are allowed within H/4 above the top of footing.
4. Bundle ⓓ bars for H = 34' & 36'.
5. Provide #6 @ 10" x 15'-0" ⓔ bars over a distance of 8'-0" measured from all expansion joints, begin wall and end wall locations. For H ≤ 14', hook ⓔ bar into footing and reduce bar length as needed to maintain Min Clr cover.

STATE OF CALIFORNIA
DEPARTMENT OF TRANSPORTATION

# RETAINING WALL TYPE 1 (CASE 1)

NO SCALE

RSP B3-1A DATED APRIL 20, 2012 SUPPLEMENTS THE STANDARD PLANS BOOK DATED 2010.

**REVISED STANDARD PLAN RSP B3-1A**

**2010 REVISED STANDARD PLAN RSP B3-1A**

2-22-12

| Dist | COUNTY | ROUTE | POST MILES TOTAL PROJECT | SHEET No. | TOTAL SHEETS |
|---|---|---|---|---|---|
| 11 | Imp | 8 | R38.8/R39.1 | 174 | 225 |

Gary Wang
REGISTERED CIVIL ENGINEER

April 20, 2012
PLANS APPROVAL DATE

REGISTERED PROFESSIONAL ENGINEER
Gary Wang
No. C58298
Exp. 6-30-12
CIVIL
STATE OF CALIFORNIA

*THE STATE OF CALIFORNIA OR ITS OFFICERS OR AGENTS SHALL NOT BE RESPONSIBLE FOR THE ACCURACY OR COMPLETENESS OF SCANNED COPIES OF THIS PLAN SHEET.*

TO ACCOMPANY PLANS DATED 04-07-14

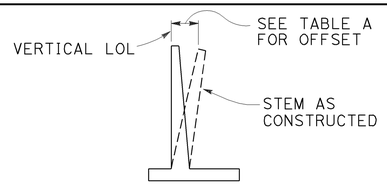


## APPROXIMATE WALL OFFSET VALUES

Values for offseting forms to be determined by the Engineer.

TABLE A

| H | OFFSET |
|---|---|
| 4'-12' | H/200 |
| 14'-16' | H/160 |
| 18'-20' | H/140 |
| 22'-24' | H/130 |
| 26'-36' | 2½" |

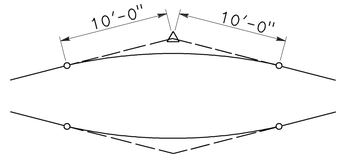


## 20'-0" VC AT TOP OF WALL SLOPE CHANGE

Where shown on the plans

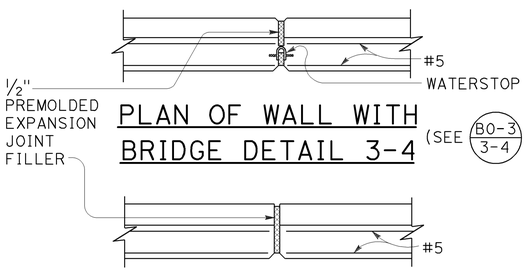


## PLAN OF WALL WITH BRIDGE DETAIL 3-4

(SEE B0-3 / 3-4)

## PLAN OF WALL WITH EXPANSION JOINT ONLY

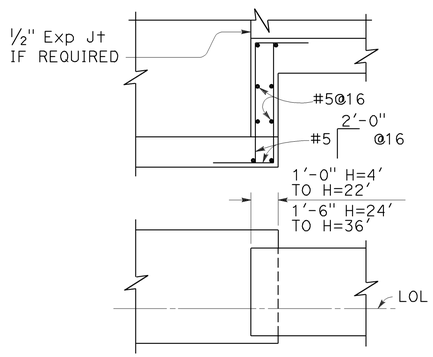


## FOOTING STEP

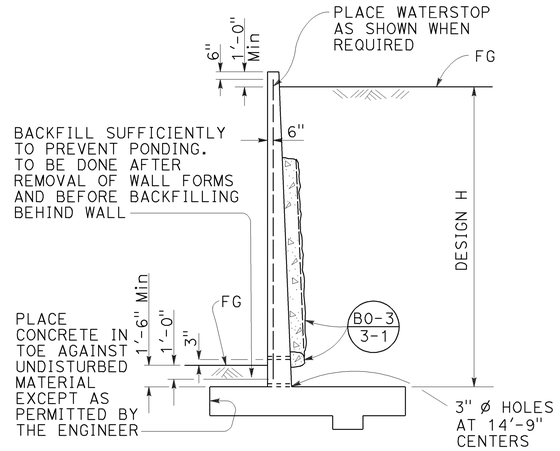


## DESIGN AND DRAINAGE

## DESIGN CONDITIONS:

Design "H" may be exceeded by 6" before going to the next size. Special footing design is required where foundation material is incapable of supporting bearing stress listed in table

Return wall not required unless shown elsewhere

## DESIGN NOTES:

DESIGN: AASHTO LRFD Bridge Design Specifications, 4th edition with California Amendments

LIVE LOAD: Surcharge on level ground surface

SOIL: $\phi$ = 34°
$\gamma$ = 120 pcf

REINFORCED CONCRETE: fy = 60,000 psi
fc' = 3,600 psi

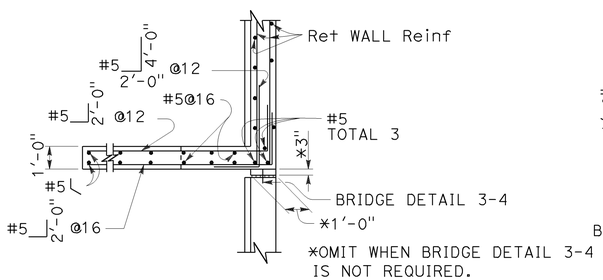


## PLAN
(For return wall Type "A")

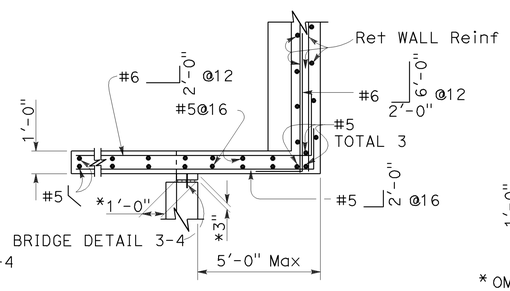


## PLAN
(For return wall Type "B")

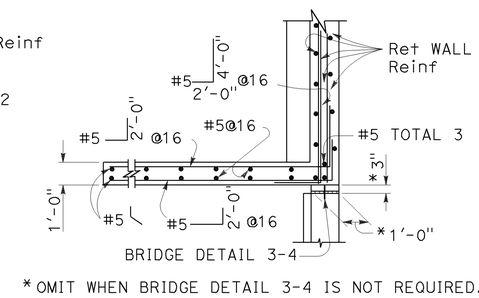


* OMIT WHEN BRIDGE DETAIL 3-4 IS NOT REQUIRED.

## PLAN
(For return wall Type "C")

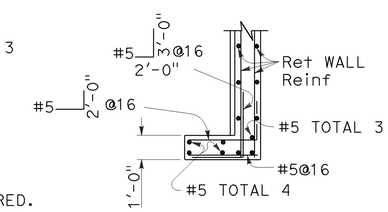


## PLAN
(For return wall Type "D")

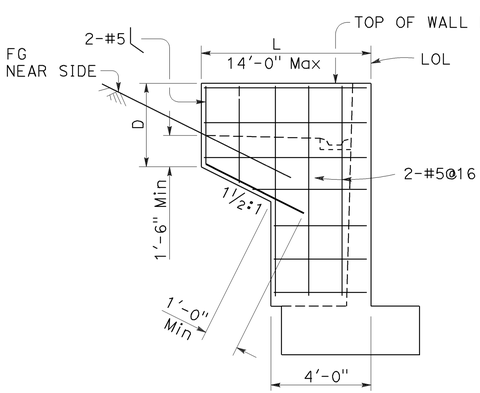


ELEVATION

## RETURN WALL TYPE "A"

Use where H=8' or less

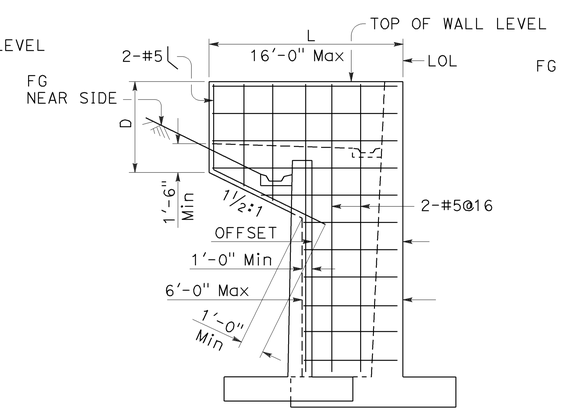


ELEVATION

## RETURN WALL TYPE "B"

Use where H=10' or more on offset walls

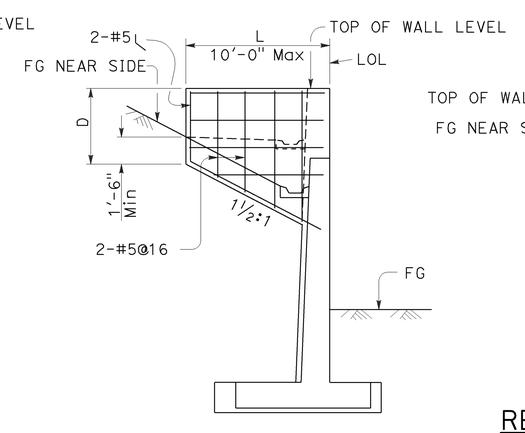


ELEVATION

## RETURN WALL TYPE "C"

Use where H=10' or more on straight walls

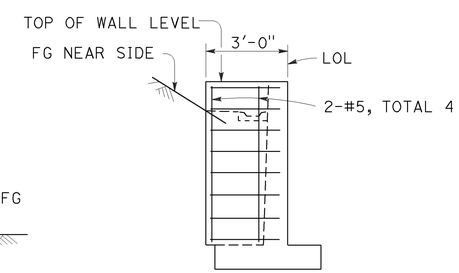


ELEVATION

## RETURN WALL TYPE "D"

Use where H=6' or less

STATE OF CALIFORNIA
DEPARTMENT OF TRANSPORTATION

# RETAINING WALL DETAILS No. 1

NO SCALE

RSP B3-5 DATED APRIL 20, 2012 SUPERSEDES STANDARD PLAN B3-5
DATED MAY 20, 2011 - PAGE 277 OF THE STANDARD PLANS BOOK DATED 2010.

**REVISED STANDARD PLAN RSP B3-5**

**2010 REVISED STANDARD PLAN RSP B3-5**

| Dist | COUNTY | ROUTE | POST MILES TOTAL PROJECT | SHEET No. | TOTAL SHEETS |
|---|---|---|---|---|---|
| 11 | Imp | 8 | R38.8/R39.1 | 175 | 225 |

REGISTERED CIVIL ENGINEER

July 19, 2013
PLANS APPROVAL DATE

REGISTERED PROFESSIONAL ENGINEER Marc Friedheim No. C57968 Exp. 6-30-14 CIVIL STATE OF CALIFORNIA

THE STATE OF CALIFORNIA OR ITS OFFICERS OR AGENTS SHALL NOT BE RESPONSIBLE FOR THE ACCURACY OR COMPLETENESS OF SCANNED COPIES OF THIS PLAN SHEET.

TO ACCOMPANY PLANS DATED 04-07-14

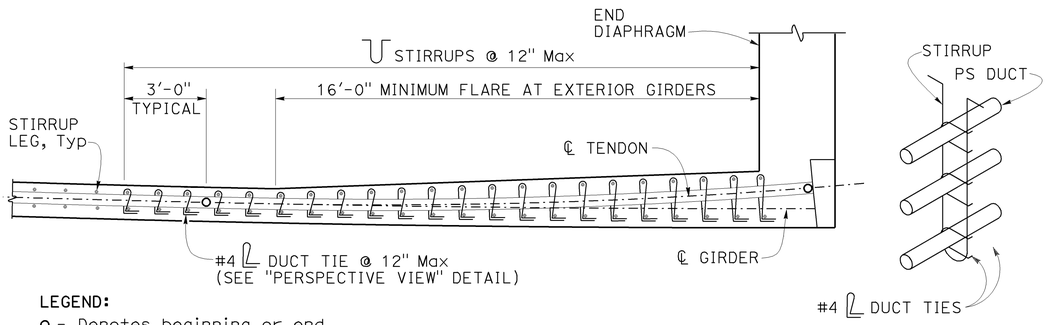


**LEGEND:**

o - Denotes beginning or end of tendon horizontal angle change (BC, EC or PCC)

PLAN

PERSPECTIVE VIEW

## DUCT TIES AT TENDON HORIZONTAL ANGLE CHANGES
## DETAIL 5-1

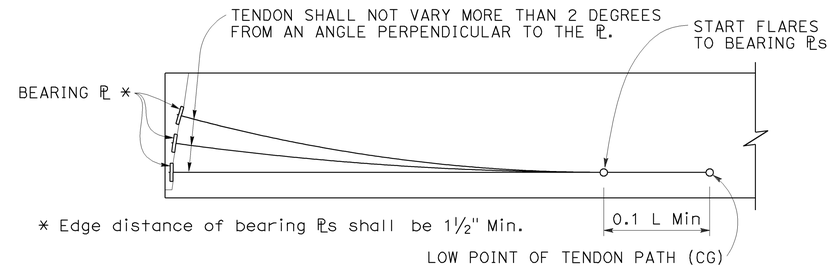


* Edge distance of bearing ℙs shall be 1½" Min.

## ELEVATION - BEARING PLATE AND PRESTRESSING PATH
## DETAIL 5-2

### NOTES FOR DETAIL 5-1

1. Tendon horizontal angle change at end diaphragm shown. Duct tie placement similar for other locations where tendon horizontal angle changes occur. For curved girders place duct ties at tendon angle changes where ℄ tendon radius is smaller than ℄ girder radius.
2. Adjacent duct ties may be staggered to facilitate placement if stirrup spacing is less than 12 inches.
3. Place closed end of duct ties toward inside of tendon curve.
4. Wrap duct ties around both stirrup legs.
5. Individual duct ties may only be used to anchor one duct.

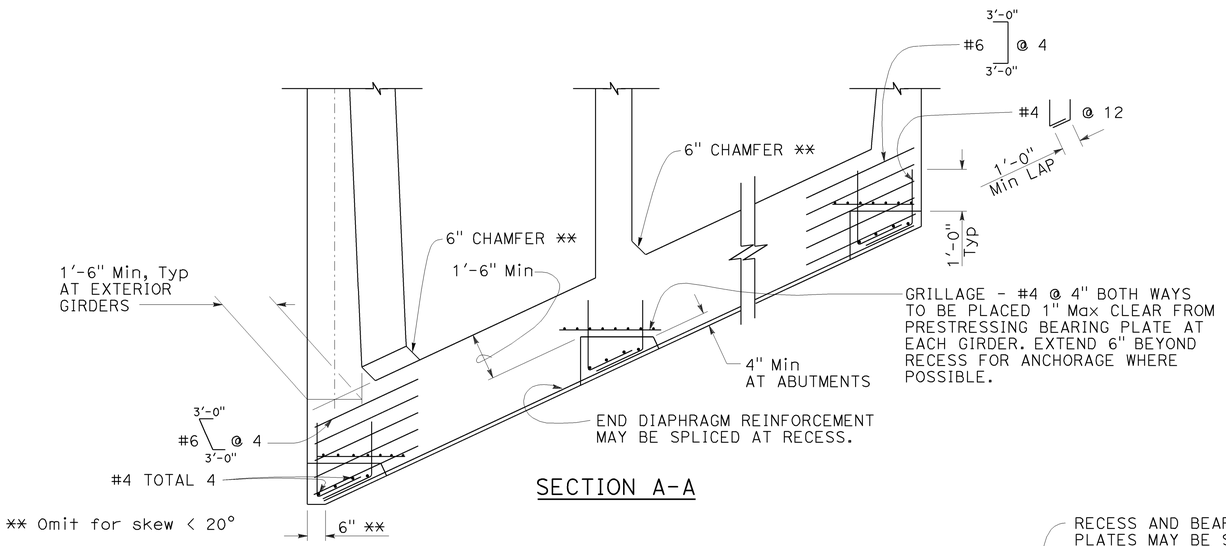


SECTION A-A

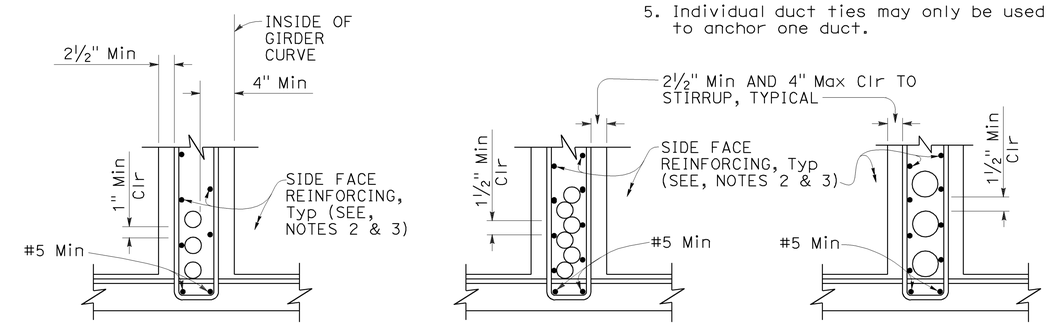


DUCTS 4½" OD AND LESS FOR HORIZONTAL CURVE RADIUS ≤ 2000'

DUCTS 4½" OD AND LESS

DUCTS OVER 4½" OD

## CLEARANCE REQUIREMENTS FOR DUCTS
## DETAIL 5-4

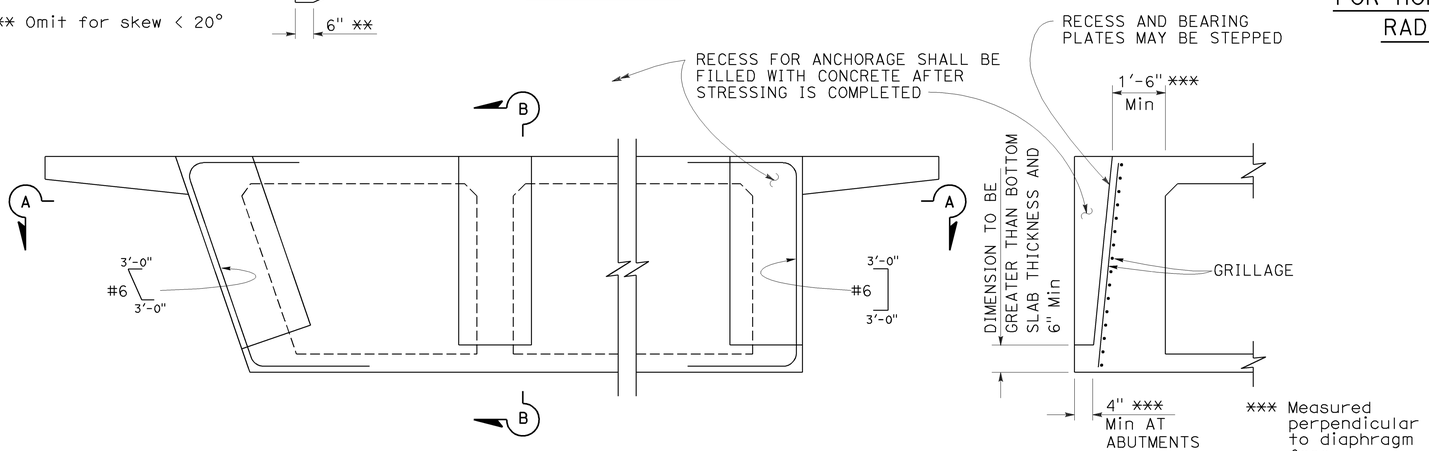


## PRESTRESS ANCHORAGE DETAILS AT END DIAPHRAGMS
## DETAIL 5-3

SECTION B-B

### NOTES FOR DETAIL 5-4:

1. ⊔ Stirrups may also be used.
2. For additional details, see Standard Plan B7-1, and Project Plans.
3. Bar reinforcing which interferes with prestressing ducts may be adjusted as approved by the Engineer.

STATE OF CALIFORNIA
DEPARTMENT OF TRANSPORTATION

# CAST-IN-PLACE POST-TENSIONED GIRDER DETAILS

NO SCALE

RSP B8-5 DATED JULY 19, 2013 SUPERSEDES STANDARD PLAN B8-5 DATED MAY 20, 2011 - PAGE 291 OF THE STANDARD PLANS BOOK DATED 2010.

**REVISED STANDARD PLAN RSP B8-5**

**2010 REVISED STANDARD PLAN RSP B8-5**

4-17-13

| Dist | COUNTY | ROUTE | POST MILES TOTAL PROJECT | SHEET No. | TOTAL SHEETS |
|---|---|---|---|---|---|
| 11 | Imp | 8 | R38.8/R39.1 | 176 | 225 |

REGISTERED CIVIL ENGINEER

July 19, 2013
PLANS APPROVAL DATE

REGISTERED PROFESSIONAL ENGINEER
Tillat Satter
No. C42892
Exp. 3-31-14
CIVIL
STATE OF CALIFORNIA

*THE STATE OF CALIFORNIA OR ITS OFFICERS OR AGENTS SHALL NOT BE RESPONSIBLE FOR THE ACCURACY OR COMPLETENESS OF SCANNED COPIES OF THIS PLAN SHEET.*

TO ACCOMPANY PLANS DATED 04-07-14

**2010 REVISED STANDARD PLAN RSP B11-54**

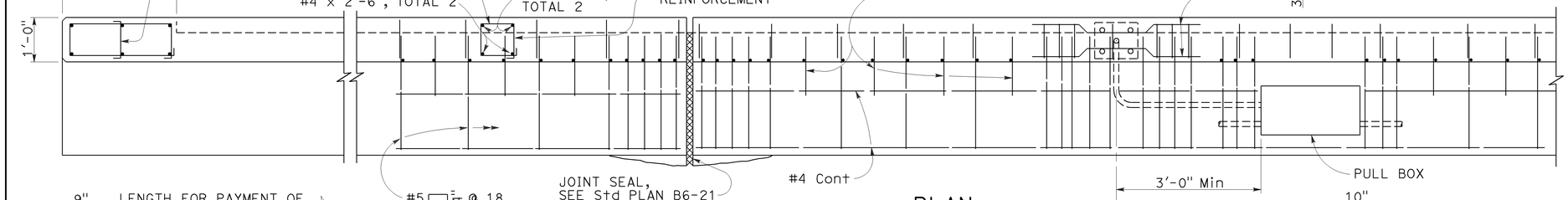


## PLAN

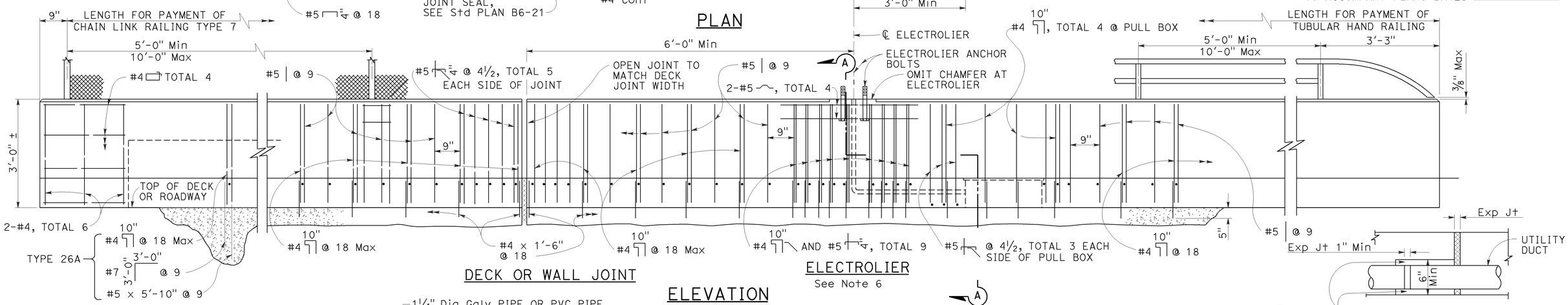


## DECK OR WALL JOINT

## ELEVATION

## ELECTROLIER

See Note 6

## UTILITY DUCT EXPANSION JOINT

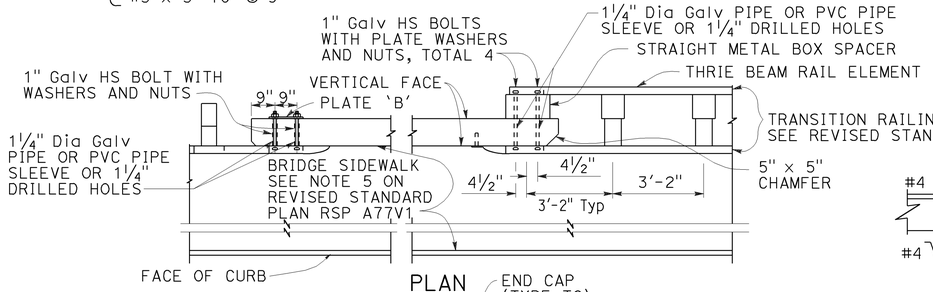


## PLAN

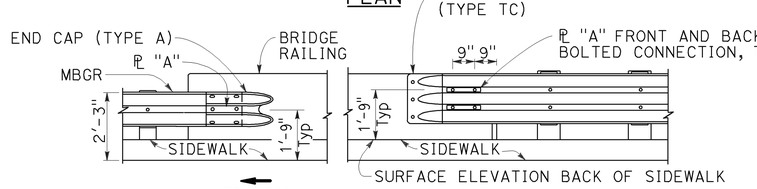


## ELEVATION

## METAL RAILING CONNECTION TO BRIDGE RAILING

See Note 9

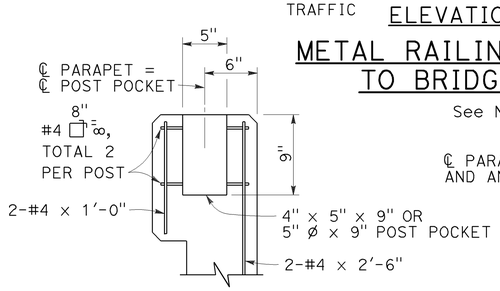


## POST ANCHORAGE DETAIL

Applies to Chain Link Railing Type 7 and Tubular Hand Railing. See respective Standard Plans for additional details.

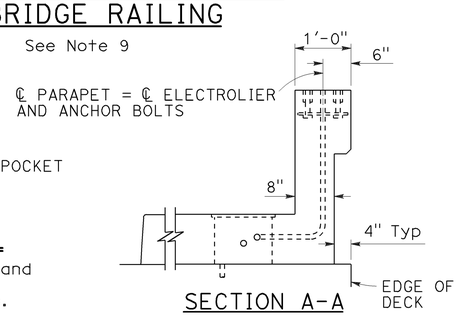


## SECTION A-A

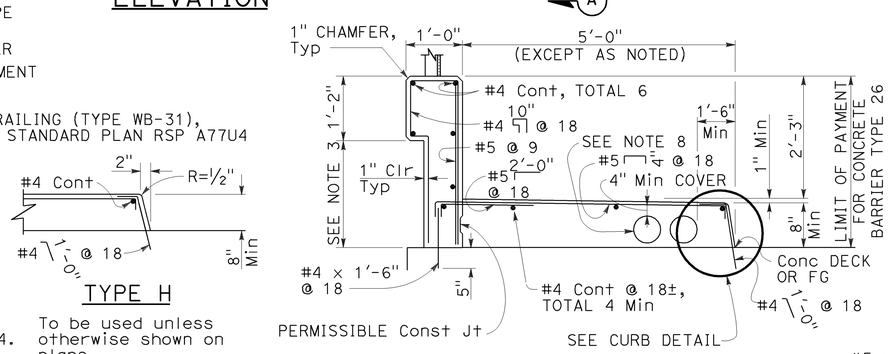


## TYPE 26

On bridge deck




## TYPE H

To be used unless otherwise shown on plans.

## CURB DETAIL

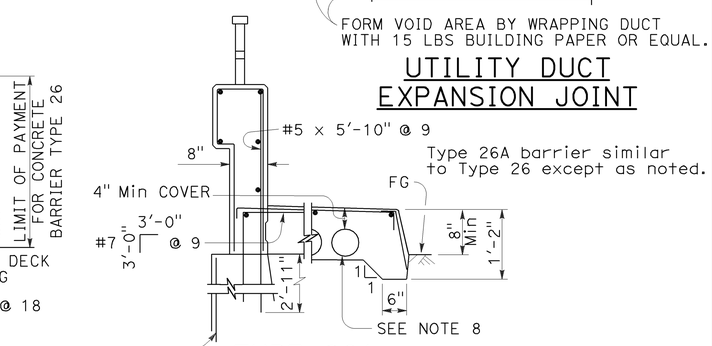


## TYPE 26A

Off bridge deck

## NOTES:

1. For Chain Link Railing notes and details not shown, see Standard Plan B11-52.
2. For Hand Railing notes and details not shown, see Standard Plan B11-51.
3. Dimensions will vary with cross slope and with certain thicknesses of surfacing. See Project Plans.
4. Walls are to be backfilled before railing is placed.
5. Clearance to reinforcing steel in curb and railing to be 1" except as noted. Longitudinal reinforcement to stop at all expansion joints.
6. See Project Plans for electrolier locations and pull box type.
7. For electrical details, see Standard Plans ES-9A, ES-9B, ES-9C, ES-9D, and ES-9E.
8. A maximum of five - 4" and a minimum of two - 4" round openings for future utilities. Openings are to be sealed at ends and extended 8" minimum past end of sidewalk if not used. Duct forms are to be tied down. Minimum of 6" from face of rail to utility opening.
9. For typical metal railing connection details not shown, see Revised Standard Plans RSP A77K1 and RSP A77K2.
10. This barrier is to be used only for speeds of 45 MPH or less. For speeds greater than 45 MPH, pedestrians should be protected by a separation traffic barrier.

STATE OF CALIFORNIA
DEPARTMENT OF TRANSPORTATION

# CONCRETE BARRIER TYPE 26

NO SCALE

RSP B11-54 DATED JULY 19, 2013 SUPERSEDES STANDARD PLAN B11-54 DATED MAY 20, 2011 - PAGE 296 OF THE STANDARD PLANS BOOK DATED 2010.

**REVISED STANDARD PLAN RSP B11-54**

6-27-13

| Dist | COUNTY | ROUTE | POST MILES TOTAL PROJECT | SHEET No. | TOTAL SHEETS |
|---|---|---|---|---|---|
| 11 | Imp | 8 | R38.8/R39.1 | 177 | 225 |

REGISTERED CIVIL ENGINEER

July 19, 2013
PLANS APPROVAL DATE

REGISTERED PROFESSIONAL ENGINEER
Stanley P. Johnson
No. C57793
Exp. 3-31-14
CIVIL
STATE OF CALIFORNIA

*THE STATE OF CALIFORNIA OR ITS OFFICERS OR AGENTS SHALL NOT BE RESPONSIBLE FOR THE ACCURACY OR COMPLETENESS OF SCANNED COPIES OF THIS PLAN SHEET.*

TO ACCOMPANY PLANS DATED 04-07-14

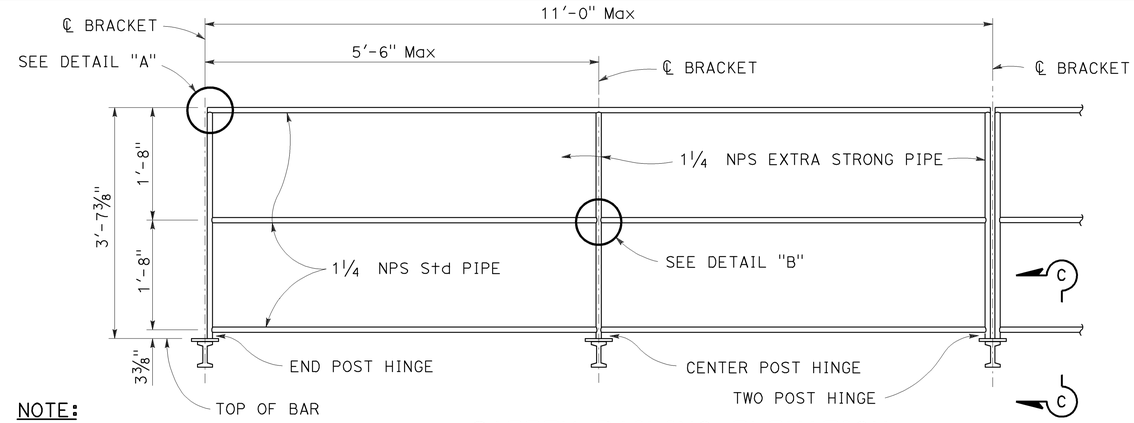


**NOTE:**
Chain assembly behind (see detail this page)

## SAFETY RAILING ELEVATION

**NOTE:**
See Standard Plans S101 and S105 and S109 for walkway bracket spacing.

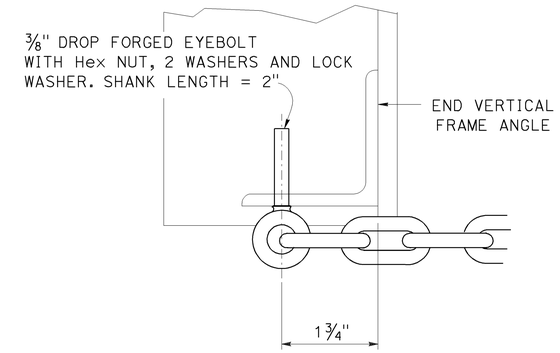


## SECTION D-D

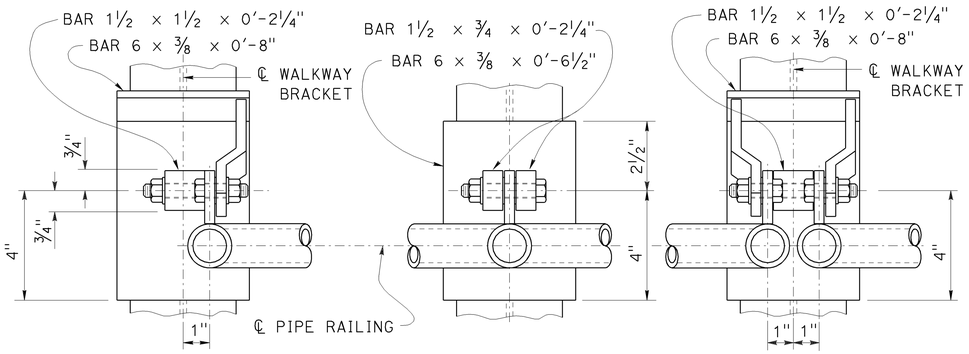


END POST — CENTER POST — TWO POST

## WELDED HINGE - PLAN

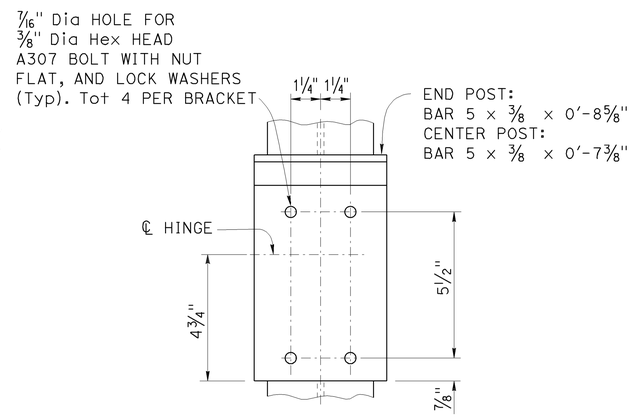


## TYPICAL BOLTED (ALTERNATIVE)

## HINGED CONNECTION

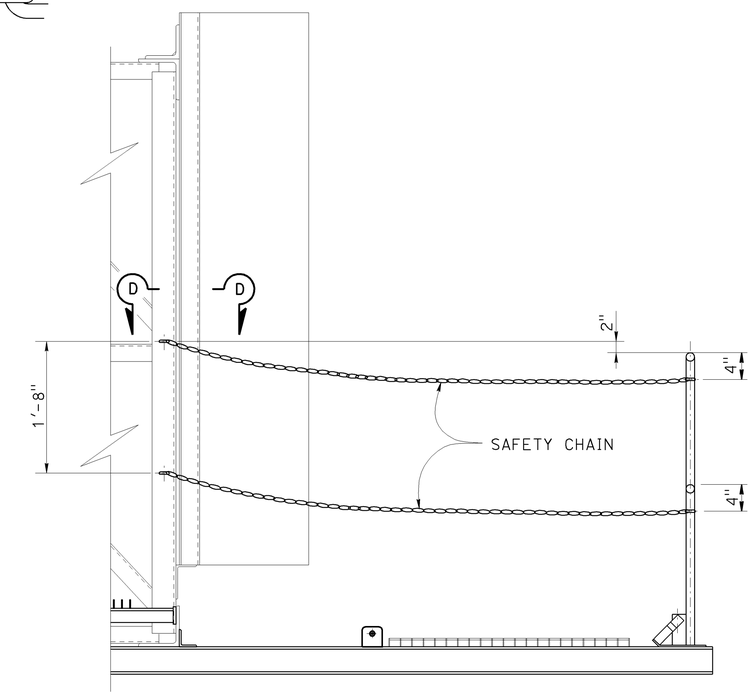


## CHAIN ASSEMBLY

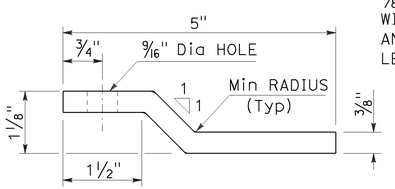


## PLAN - KICKER BAR

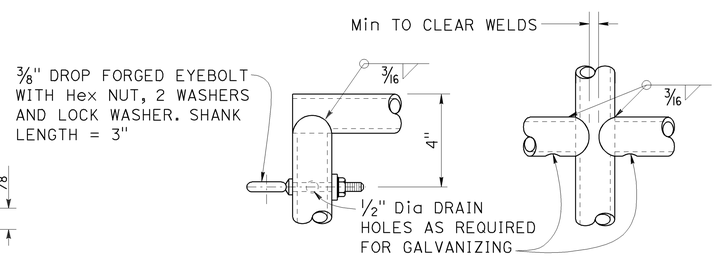


## DETAIL "A" — DETAIL "B"

**NOTE:**
Alternative venting methods may be used if approved by the Engineer.

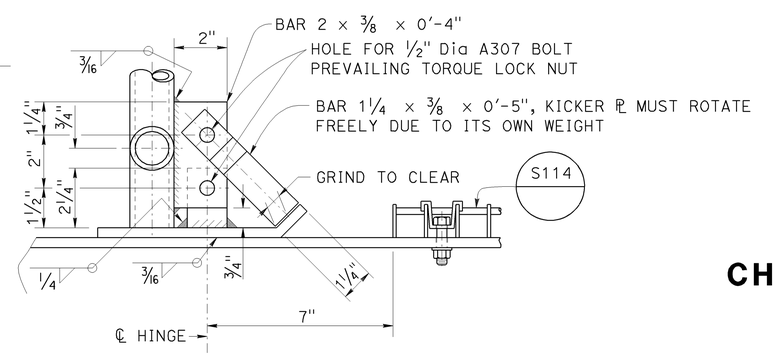


## SECTION C-C
## ELEVATION VIEW

STATE OF CALIFORNIA
DEPARTMENT OF TRANSPORTATION

# OVERHEAD SIGN-TRUSS SINGLE POST TYPE WALKWAY SAFETY RAILING DETAILS CHANGEABLE MESSAGE SIGNS MODEL 500 AND 510

NO SCALE

RSP S140 DATED JULY 19, 2013 SUPERSEDES STANDARD PLAN S140 DATED MAY 20, 2011 - PAGE 422 OF THE STANDARD PLANS BOOK DATED 2010.

**REVISED STANDARD PLAN RSP S140**

**2010 REVISED STANDARD PLAN RSP S140**

7-11-13

| Dist | COUNTY | ROUTE | POST MILES TOTAL PROJECT | SHEET No. | TOTAL SHEETS |
|---|---|---|---|---|---|
| 11 | Imp | 8 | R38.8/R39.1 | 178 | 225 |

REGISTERED CIVIL ENGINEER

July 19, 2013
PLANS APPROVAL DATE

REGISTERED PROFESSIONAL ENGINEER
Stanley P. Johnson
No. C57793
Exp. 3-31-14
CIVIL
STATE OF CALIFORNIA

*THE STATE OF CALIFORNIA OR ITS OFFICERS OR AGENTS SHALL NOT BE RESPONSIBLE FOR THE ACCURACY OR COMPLETENESS OF SCANNED COPIES OF THIS PLAN SHEET.*

TO ACCOMPANY PLANS DATED 04-07-14

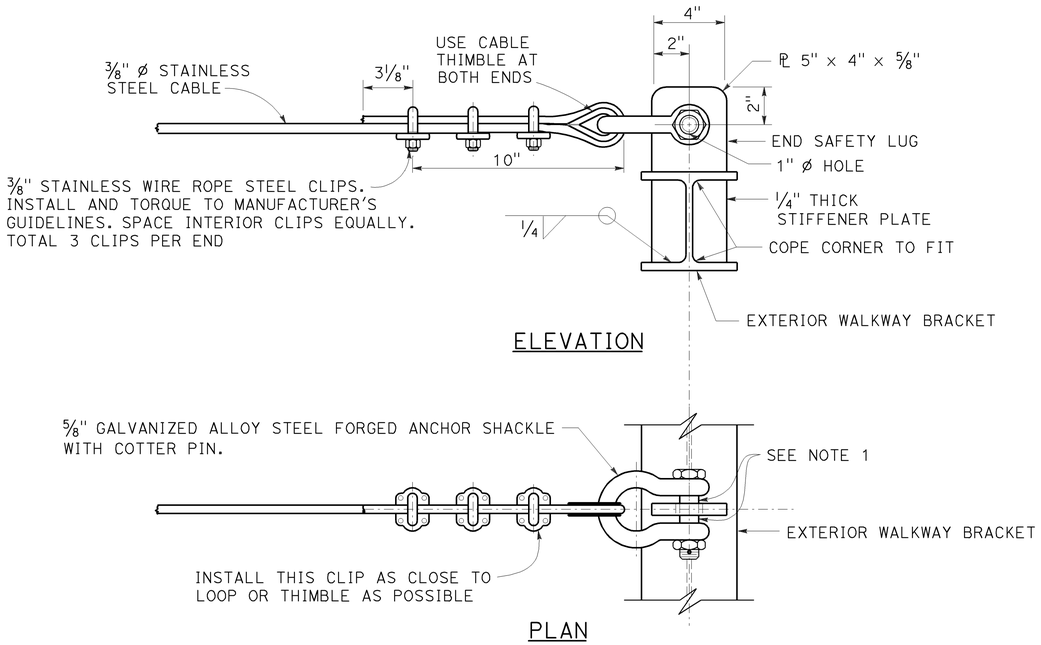


## END SAFETY CABLE DETAIL

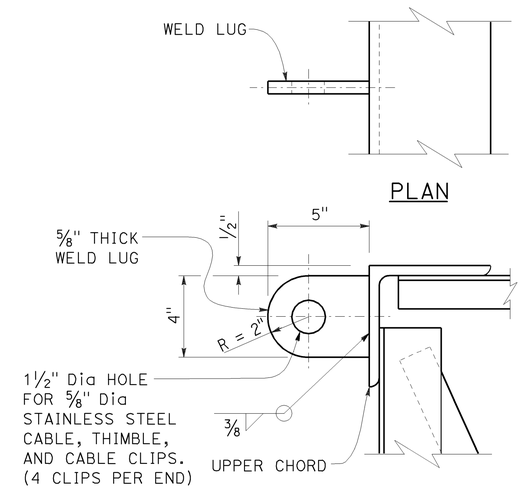


## BACKSIDE WELD LUG DETAIL

**NOTE:** Backside weld lug shall be installed only for projects requiring backside walkways.

**NOTES:**

1. Place an equal amount of washers on each side to align cable with end lug without restricting shakle bolt rotation or contacting cable.
2. For walkway grating details, see Standard Plan S114.

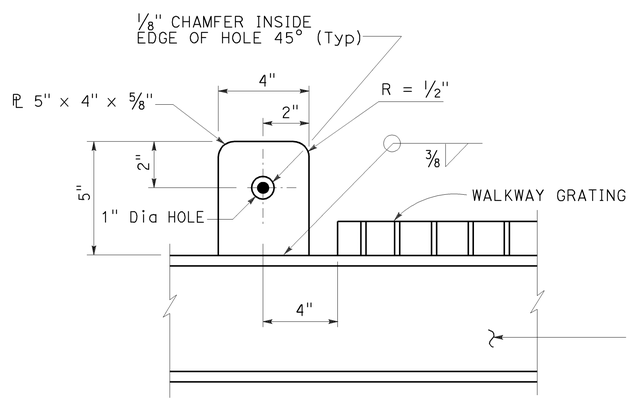


## INTERIOR SAFETY LUG DETAIL

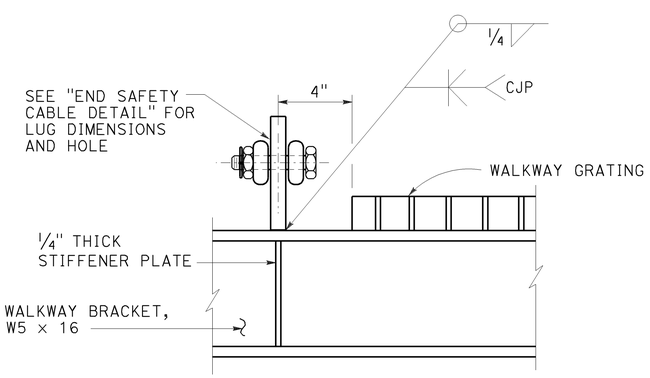


## END SAFETY LUG DETAIL

STATE OF CALIFORNIA
DEPARTMENT OF TRANSPORTATION

# OVERHEAD SIGN-TRUSS SINGLE POST TYPE SAFETY CABLE ANCHORAGE DETAILS CHANGEABLE MESSAGE SIGNS MODEL 500 AND 510

NO SCALE

RSP S141 DATED JULY 19, 2013 SUPERSEDES STANDARD PLAN S141
DATED MAY 20, 2011 - PAGE 423 OF THE STANDARD PLANS BOOK DATED 2010.

**REVISED STANDARD PLAN RSP S141**

**2010 REVISED STANDARD PLAN RSP S141**

7-11-13

| Dist | COUNTY | ROUTE | POST MILES TOTAL PROJECT | SHEET No. | TOTAL SHEETS |
|---|---|---|---|---|---|
| 11 | Imp | 8 | R38.8/R39.1 | 179 | 225 |

Theresa Gabriel
REGISTERED ELECTRICAL ENGINEER

July 19, 2013
PLANS APPROVAL DATE

REGISTERED PROFESSIONAL ENGINEER Theresa Aziz Gabriel No. E15129 Exp. 6-30-14 ELECTRICAL STATE OF CALIFORNIA

*THE STATE OF CALIFORNIA OR ITS OFFICERS OR AGENTS SHALL NOT BE RESPONSIBLE FOR THE ACCURACY OR COMPLETENESS OF SCANNED COPIES OF THIS PLAN SHEET.*

TO ACCOMPANY PLANS DATED 04-07-14

## LEGEND:

| | |
|---|---|
| AB | ABANDON. IF APPLIED TO CONDUIT, REMOVE CONDUCTORS |
| BC | INSTALL PULL BOX IN EXISTING CONDUIT RUN |
| BP | PEDESTRIAN BARRICADE, TYPE AS INDICATED ON PLAN |
| CB | INSTALL CONDUIT INTO EXISTING PULL BOX |
| CC | CONNECT NEW AND EXISTING CONDUIT. REMOVE EXISTING CONDUCTORS AND INSTALL CONDUCTORS AS INDICATED |
| CF | CONDUIT TO REMAIN FOR FUTURE USE. REMOVE CONDUCTORS. INSTALL PULL TAPE |
| DH | DETECTOR HANDHOLE |
| FA | FOUNDATION TO BE ABANDONED |
| IS | INSTALL SIGN ON SIGNAL MAST ARM |
| NS | NO SLIP BASE ON STANDARD |
| PEC | PHOTOELECTRIC CONTROL |
| PEU | PHOTOELECTRIC UNIT |
| RC | EQUIPMENT OR MATERIAL TO BE REMOVED AND BECOME THE PROPERTY OF THE CONTRACTOR |
| RE | REMOVE ELECTROLIER, FUSES AND BALLAST. TAPE ENDS OF CONDUCTORS |
| RL | RELOCATE EQUIPMENT |
| RR | REMOVE AND REUSE EQUIPMENT |
| RS | REMOVE AND SALVAGE EQUIPMENT |
| SC | SPLICE NEW TO EXISTING CONDUCTORS |
| SD | SERVICE DISCONNECT |
| TSP | TELEPHONE SERVICE POINT |

## ABBREVIATIONS

| | |
|---|---|
| APS | ACCESSIBLE PEDESTRIAN SIGNAL |
| BBS | BATTERY BACKUP SYSTEM |
| BC | BOLT CIRCLE |
| BPB | BICYCLE PUSH BUTTON |
| C | CONDUIT |
| CB | CIRCUIT BREAKER |
| CCTV | CLOSED CIRCUIT TELEVISION |
| Ckt | CIRCUIT |
| CMS | CHANGEABLE MESSAGE SIGN |
| Ctid | CALTRANS IDENTIFICATION |
| Comm | COMMUNICATION |
| DLC | LOOP DETECTOR LEAD-IN CABLE |
| EMS | EXTINGUISHABLE MESSAGE SIGN |
| EVUC | EMERGENCY VEHICLE UNIT CABLE |
| EVUD | EMERGENCY VEHICLE UNIT DETECTOR |
| FB | FLASHING BEACON |
| FBCA | FLASHING BEACON CONTROL ASSEMBLY |
| FBS | FLASHING BEACON WITH SLIP BASE |
| FO | FIBER OPTIC |
| G | EQUIPMENT GROUNDING CONDUCTOR |
| GB | GROUND BUS |
| GFCI | GROUND FAULT CIRCUIT INTERRUPTER |
| HAR | HIGHWAY ADVISORY RADIO |
| Hex | HEXAGONAL |
| HPS | HIGH PRESSURE SODIUM |
| IISNS | INTERNALLY ILLUMINATED STREET NAME SIGN |
| ISL | INDUCTION SIGN LIGHTING |
| LED | LIGHT EMITTING DIODE |
| LMA | LUMINAIRE MAST ARM |
| LPS | LOW PRESSURE SODIUM |
| Ltg | LIGHTING |
| Lum | LUMINAIRE |
| M | METERED |
| MAT | MAST ARM MOUNTING TOP ATTACHMENT |
| MAS | MAST ARM MOUNTING SIDE ATTACHMENT |
| M/M | MULTIPLE TO MULTIPLE TRANSFORMER |
| Mtg | MOUNTING |
| MV | MERCURY VAPOR LIGHTING FIXTURE |
| MVDS | MICROWAVE VEHICLE DETECTION SYSTEM |
| N | NEUTRAL (GROUNDED CONDUCTOR) |
| NB | NEUTRAL BUS |
| NC | NORMALLY CLOSE |
| NO | NORMALLY OPEN |
| P | CIRCUIT BREAKER'S POLE |
| PB | PULL BOX |
| PBA | PUSH BUTTON ASSEMBLY |
| PEC | PHOTOELECTRIC CONTROL |
| Ped | PEDESTRIAN |
| PEU | PHOTOELECTRIC UNIT |
| PT | CONDUIT WITH PULL TAPE |
| RE | RELOCATED EQUIPMENT |
| RM | RAMP METERING |
| RWIS | ROADSIDE WEATHER INFORMATION SYSTEM |
| SB | SLIP BASE |
| SIC | SIGNAL INTERCONNECT CABLE |
| Sig | SIGNAL |
| SMA | SIGNAL MAST ARM |
| SNS | STREET NAME SIGN |
| SP | SERVICE POINT |
| TDC | TELEPHONE DEMARCATION CABINET |
| TMS | TRAFFIC MONITORING STATION |
| TOS | TRAFFIC OPERATIONS SYSTEM |
| Veh | VEHICLE |
| VIVDS | VIDEO IMAGE VEHICLE DETECTION SYSTEM |
| WIM | WEIGH-IN-MOTION |
| Xfmr | TRANSFORMER |

## SOFFIT AND WALL MOUNTED LUMINAIRES

PENDANT, 70 W HPS UNLESS OTHERWISE SPECIFIED

FLUSH, 70 W HPS UNLESS OTHERWISE SPECIFIED

WALL SURFACE, 70 W HPS UNLESS OTHERWISE SPECIFIED

EXISTING SOFFIT OR WALL LUMINAIRE TO REMAIN UNMODIFIED

EXISTING SOFFIT OR WALL LUMINAIRE TO BE MODIFIED AS SPECIFIED

**NOTE:**

Arrow indicates "street side" of luminaire.

COMMONLY USED SYMBOLS FOR UNITED STATES CUSTOMARY UNITS OF MEASUREMENT:

| SYMBOL USED | DEFINITIONS |
|---|---|
| Ω | OHMS |
| min | MINUTE |
| s | SECOND |
| bps | BITS PER SECOND |
| Bps | BYTES PER SECOND |
| A | AMPERE |
| V | VOLT |
| V(dc) | VOLT (DIRECT CURRENT) |
| V(ac) | VOLT (ALTERNATING CURRENT) |
| FC | FOOT - CANDLE |
| W | WATTS |
| VA | VOLT-AMPERE |
| M | MEGA |
| k | KILO |
| m | MILLI |
| μ | MICRO |
| P | PICO |
| Hz | HERTZ |

## MISCELLANEOUS ELECTROLIERS

| NEW | EXISTING | |
|---|---|---|
| | | LUMINAIRE ON WOOD POLE |
| | | NON-STANDARD ELECTROLIER (SEE PROJECT NOTES OR PROJECT PLANS) |
| | | CITY ELECTROLIER |
| | | ELECTROLIER FOUNDATION (FUTURE INSTALLATION) |

**NOTES:**

1. HPS luminaires shall be 310 W HPS when installed on Type 21, 21D, 30, 31 and 32 Standards, unless otherwise specified. HPS luminaires shall be 200 W when installed on other type standards or poles, unless otherwise specified.
2. LED luminaires shall be 235 W when installed on Type 21, 21D, 30, 31 and 32 Standards, unless otherwise specified. LED luminaires shall be 165 W when installed on other type standards or poles, unless otherwise specified.
3. Luminaires shall be the cutoff type, ANSI Type III medium cutoff lighting distribution, unless otherwise specified.

## STANDARD ELECTROLIER

| NEW | EXISTING | STANDARD TYPE |
|---|---|---|
| | | 15 |
| | | 15D |
| | | 15 STRUCTURE |
| | | 15D STRUCTURE |
| | | 21 |
| | | 21D |
| | | 21 STRUCTURE |
| | | 21D STRUCTURE |
| | | 30 |
| | | 31 |
| | | 32 |

STATE OF CALIFORNIA
DEPARTMENT OF TRANSPORTATION

# ELECTRICAL SYSTEMS (LEGEND AND ABBREVIATIONS)

NO SCALE

RSP ES-1A DATED JULY 19, 2013 SUPERSEDES STANDARD PLAN ES-1A DATED MAY 20, 2011 - PAGE 425 OF THE STANDARD PLANS BOOK DATED 2010.

**REVISED STANDARD PLAN RSP ES-1A**

**2010 REVISED STANDARD PLAN RSP ES-1A**

| Dist | COUNTY | ROUTE | POST MILES TOTAL PROJECT | SHEET No. | TOTAL SHEETS |
|---|---|---|---|---|---|
| 11 | Imp | 8 | R38.8/R39.1 | 180 | 225 |

Theresa Gabriel
REGISTERED ELECTRICAL ENGINEER

July 19, 2013
PLANS APPROVAL DATE

REGISTERED PROFESSIONAL ENGINEER
Theresa Aziz Gabriel
No. E15129
Exp. 6-30-14
ELECTRICAL
STATE OF CALIFORNIA

*THE STATE OF CALIFORNIA OR ITS OFFICERS OR AGENTS SHALL NOT BE RESPONSIBLE FOR THE ACCURACY OR COMPLETENESS OF SCANNED COPIES OF THIS PLAN SHEET.*

TO ACCOMPANY PLANS DATED 04-07-14

## CONDUIT

| NEW | EXISTING | |
|---|---|---|
| | | LIGHTING CONDUIT, UNLESS OTHERWISE INDICATED OR NOTED |
| | | TRAFFIC SIGNAL CONDUIT |
| C | c | COMMUNICATION CONDUIT |
| T | t | TELEPHONE CONDUIT |
| F | f | FIRE ALARM CONDUIT |
| FO | fo | FIBER OPTIC CONDUIT |
| | | CONDUIT TERMINATION |
| R | r | CONDUIT RISER ATTACHED TO THE STRUCTURE OR SERVICE POLE |

## SERVICE EQUIPMENT

| NEW | EXISTING | |
|---|---|---|
| OH | oh | OVERHEAD LINES |
| U | U | WOOD POLE, "U" INDICATES UTILITY OWNED |
| | | POLE GUY WITH ANCHOR |
| | | UTILITY TRANSFORMER - GROUND MOUNTED |
| III | III | SERVICE EQUIPMENT ENCLOSURE TYPE. DOOR INDICATES FRONT OF ENCLOSURE |
| T | t | TELEPHONE DEMARCATION CABINET |

## POLE-MOUNTED SERVICE DESIGNATION

TYPE H SERVICE, 28'-10" — TYPE OF INSTALLATION AND POLE HEIGHT ABOVE GRADE

## FLASHING BEACON

| NEW | EXISTING | |
|---|---|---|
| R | R | FLASHING BEACON (ONE VEHICLE SIGNAL HEAD WITH BACKPLATE AND VISOR) "R" INDICATES RED INDICATION, "Y" INDICATES YELLOW INDICATION |
| Y Y | Y Y | FLASHING BEACON WITH TYPE 15-FBS STANDARD AND A SIGN. |
| R R | R R | FLASHING BEACON WITH TYPES 9, 9A OR 9B SIGN UNLESS OTHERWISE SPECIFIED OR INDICATED |

## SIGNAL EQUIPMENT

| NEW | EXISTING | |
|---|---|---|
| C | C | PEDESTRIAN SIGNAL HEAD "C" INDICATES COUNTDOWN PEDESTRIAN HEAD |
| | | PUSH BUTTON ASSEMBLY POST |
| | | PEDESTRIAN BARRICADE |
| | | VEHICLE SIGNAL HEAD (WITH BACKPLATE AND 3-SECTIONS: RED, YELLOW AND GREEN) |
| | | VEHICLE SIGNAL HEAD WITH ANGLE VISOR |
| PV | PV | MODIFICATIONS OF BASIC SYMBOL: "L" INDICATES ALL NON-ARROW SECTIONS LOUVERED "LG" INDICATES LOUVERED GREEN SECTION ONLY "PV" INDICATES ALL 12" SECTIONS PROGRAMMED VISIBILITY "8" INDICATES ALL 8" SECTIONS (ONLY WHEN SPECIFIED) |
| | | VEHICLE SIGNAL HEAD CONSISTING OF RED, YELLOW AND GREEN LEFT ARROW SECTIONS |
| | | VEHICLE SIGNAL HEAD CONSISTING OF RED AND YELLOW SECTIONS WITH AN UP GREEN ARROW SECTION |
| | | VEHICLE SIGNAL HEAD (5 SECTION) CONSISTING OF RED, YELLOW AND GREEN SECTIONS WITH YELLOW AND GREEN RIGHT ARROW SECTIONS |
| | | TYPE 15TS STANDARD WITH VEHICLE SIGNAL HEAD AND LUMINAIRE |
| | | TYPE 21TS STANDARD WITH VEHICLE SIGNAL HEAD AND LUMINAIRE |
| | | STANDARD WITH LUMINAIRE AND SIGNAL MAST ARMS AND ATTACHED VEHICLE SIGNAL HEADS |
| | | TYPE 1 STANDARD WITH ATTACHED VEHICLE SIGNAL HEADS |
| | | STANDARD WITH A SIGNAL MAST ARM, ATTACHED VEHICLE SIGNAL HEADS AND INTERNALLY ILLUMINATED STREET NAME SIGN |
| | | CONTROLLER ASSEMBLY. DOOR INDICATES FRONT OF CABINET |

## SIGNAL EQUIPMENT Cont

| NEW | EXISTING | |
|---|---|---|
| | | GUARD POST |
| | | TYPE 1 STANDARD WITH RAMP METERING SIGN |
| | | OPTICAL DETECTOR FOR THE EMERGENCY VEHICLE DETECTION SYSTEM |

### NOTES:

1. All signal sections shall be 12" unless shown otherwise.
2. Signal heads shall be provided with backplates unless shown otherwise.

## ILLUMINATED OVERHEAD SIGN

| NEW | EXISTING | |
|---|---|---|
| | | SINGLE POST, SINGLE ILLUMINATED SIGN, BALANCED BUTTERFLY |
| | | SINGLE POST, DOUBLE ILLUMINATED SIGN, BALANCED BUTTERFLY |
| | | SINGLE POST, SINGLE ILLUMINATED SIGN, FULL CANTILEVER |
| | | DOUBLE POST, SINGLE ILLUMINATED SIGN |
| | | SINGLE ILLUMINATED SIGN MOUNTED ON STRUCTURE |
| | | DOUBLE POST, SINGLE ILLUMINATED SIGN WITH ELECTROLIER |

STATE OF CALIFORNIA
DEPARTMENT OF TRANSPORTATION

# ELECTRICAL SYSTEMS (LEGEND AND ABBREVIATIONS)

NO SCALE

RSP ES-1B DATED JULY 19, 2013 SUPERSEDES STANDARD PLAN ES-1B DATED MAY 20, 2011 - PAGE 426 OF THE STANDARD PLANS BOOK DATED 2010.

**REVISED STANDARD PLAN RSP ES-1B**

**2010 REVISED STANDARD PLAN RSP ES-1B**

7-15-13

| Dist | COUNTY | ROUTE | POST MILES TOTAL PROJECT | SHEET No. | TOTAL SHEETS |
|---|---|---|---|---|---|
| 11 | Imp | 8 | R38.8/R39.1 | 181 | 225 |

Theresa Gabriel
REGISTERED ELECTRICAL ENGINEER

July 19, 2013
PLANS APPROVAL DATE

REGISTERED PROFESSIONAL ENGINEER
Theresa Aziz Gabriel
No. E15129
Exp. 6-30-14
ELECTRICAL
STATE OF CALIFORNIA

*THE STATE OF CALIFORNIA OR ITS OFFICERS OR AGENTS SHALL NOT BE RESPONSIBLE FOR THE ACCURACY OR COMPLETENESS OF SCANNED COPIES OF THIS PLAN SHEET.*

TO ACCOMPANY PLANS DATED 04-07-14

# EQUIPMENT IDENTIFICATION

## ILLUMINATED SIGN IDENTIFICATION NUMBER:

SIGN No. 12345
10 ISL SCI 1.0

- SIGN NUMBER - PLACE ON POST OR STRUCTURE
- TRANSFORMER RATING (kVA)
- LIGHTING CONTROL TYPE
- NUMBER AND TYPE OF FIXTURES

DO NOT PLACE ON STANDARD OR STRUCTURE

## ELECTROLIER OR EQUIPMENT IDENTIFICATION NUMBER:

12345 - 15'-0"

- MAST ARM LENGTH, IF SHOWN. DO NOT PLACE ON STANDARD OR STRUCTURE
- EQUIPMENT NUMBER - PLACE ON STANDARD OR STRUCTURE. EXISTING EQUIPMENT NUMBERS ARE SHOWN IN PARENTHESIS

## CONDUIT AND CONDUCTOR IDENTIFICATION:

1½"C, 2#10, 15#14, 2 DLC, 12P#18 (PAIR)

- NUMBER AND SIZE OF CONDUCTORS AND CABLES
- SIZE OF CONDUIT IN INCHES

| | |
|---|---|
| ø1, ø2, ø2P, etc. | TRAFFIC PHASE IDENTIFICATION FOR SIGNAL FACES, DETECTORS AND PHASE DIAGRAMS |
| 1 2 3 | LEGEND NUMBERS |
| A B C | EQUIPMENT, SIGNAL POLES, INSTALLATION OR ITEMS |
| 1 2 3 | CONDUIT RUN NUMBERS |

## SIGNAL AND LIGHTING STANDARD (TYPICAL DESIGNATION):

19A - 3 - 100

- WIND VELOCITY = 100 mph
- CASE 3 ARM LOADING
- STANDARD TYPE
- STANDARD PLAN SHEET NUMBER
- DETAIL, NUMBER, SECTION, TYPE OR ELEVATION

# MISCELLANEOUS EQUIPMENT

| NEW | EXISTING | |
|---|---|---|
| CMS | cms | CHANGEABLE MESSAGE SIGN |
| | | CLOSED CIRCUIT TELEVISION CAMERA |
| | | HIGHWAY ADVISORY RADIO POLE AND ANTENNA |
| EMS | ems | EXTINGUISHABLE MESSAGE SIGN |
| M V | m v | DETECTION DEVICE<br>M = MICROWAVE SENSOR<br>V = VIDEO IMAGE SENSOR |

# WIRING DIAGRAM LEGEND

| | |
|---|---|
| ---- | EXTERNAL CONDUCTOR |
| —— | CONDUCTOR OR BUS |
| | TIE POINT |
| | CONTACTOR COIL |
| | CONTACTOR, NO CONTACT |
| | TERMINAL BLOCKS |
| | CONTACTOR, NC CONTACT |
| | ENCLOSURE BOND |
| | GROUNDING ELECTRODE |
| | CIRCUIT BREAKER |
| | RECEPTACLE |

# PULL BOXES

| NEW | EXISTING | |
|---|---|---|
| | | PULL BOX, No. 5 UNLESS OTHERWISE INDICATED OR NOTED |
| 3 | 9A(21) | PULL BOX, ADDITIONAL DESIGNATIONS OR DESCRIPTIONS |

3 No. 3½ PULL BOX
5 No. 5 PULL BOX
6 No. 6 PULL BOX
7 No. 7 (CEILING PULL BOX)
8 No. 8 (PENDANT SOFFIT PULL BOX)
9 No. 9 PULL BOX
9A No. 9A PULL BOX

(C) COMMUNICATIONS PULL BOX
(E) PULL BOX WITH EXTENSION
(S) SPRINKLER CONTROL PULL BOX
(21) ANCHOR BOLTS AND CONDUIT FOR FUTURE INSTALLATION OF TYPE 21 STANDARD
(T) TRAFFIC PULL BOX

# VEHICLE DETECTORS

5 J 9 U

- VEHICLE DETECTOR DESIGNATION
- U = UPPER
  L = LOWER
- SLOT NUMBER IN INPUT FILE
- INPUT FILE (I OR J)
- PHASE

| NEW | EXISTING | |
|---|---|---|
| | | TYPE A DETECTOR LOOP. OUTLINE OF SAWCUT SHOWN |
| | | TYPE B DETECTOR LOOP. OUTLINE OF SAWCUT SHOWN |
| | | TYPE C DETECTOR LOOP. OUTLINE OF SAWCUT SHOWN |
| | | TYPE D DETECTOR LOOP. OUTLINE OF SAWCUT SHOWN |
| | | TYPE E DETECTOR LOOP. OUTLINE OF SAWCUT SHOWN |
| | | TYPE Q DETECTOR LOOP. OUTLINE OF SAWCUT SHOWN |
| | | MAGNETIC DETECTOR |
| DH | dh | DETECTOR HANDHOLE |
| | | MICROWAVE OR VIDEO DETECTION ZONE |

STATE OF CALIFORNIA
DEPARTMENT OF TRANSPORTATION

# ELECTRICAL SYSTEMS (LEGEND AND ABBREVIATIONS)

NO SCALE

RSP ES-1C DATED JULY 19, 2013 SUPERSEDES STANDARD PLAN ES-1C DATED MAY 20, 2011 - PAGE 427 OF THE STANDARD PLANS BOOK DATED 2010.

**REVISED STANDARD PLAN RSP ES-1C**

**2010 REVISED STANDARD PLAN RSP ES-1C**

7-11-13

| Dist | COUNTY | ROUTE | POST MILES TOTAL PROJECT | SHEET No. | TOTAL SHEETS |
|---|---|---|---|---|---|
| 11 | Imp | 8 | R38.8/R39.1 | 182 | 225 |

Theresa Gabriel
REGISTERED ELECTRICAL ENGINEER

July 19, 2013
PLANS APPROVAL DATE

REGISTERED PROFESSIONAL ENGINEER
Theresa Aziz Gabriel
No. E15129
Exp. 6-30-14
ELECTRICAL
STATE OF CALIFORNIA

*THE STATE OF CALIFORNIA OR ITS OFFICERS OR AGENTS SHALL NOT BE RESPONSIBLE FOR THE ACCURACY OR COMPLETENESS OF SCANNED COPIES OF THIS PLAN SHEET.*

TO ACCOMPANY PLANS DATED 04-07-14

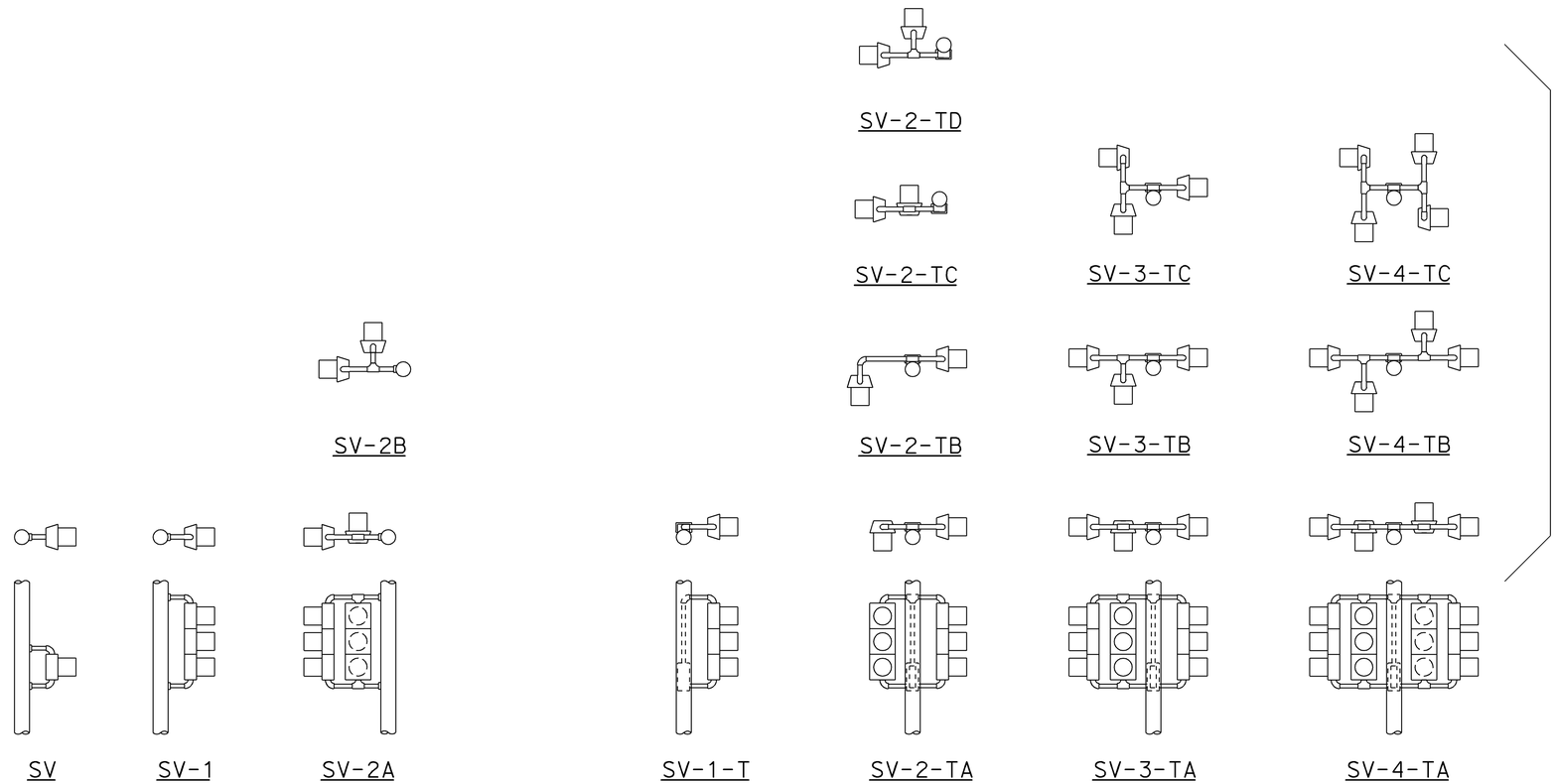


SIDE MOUNTINGS

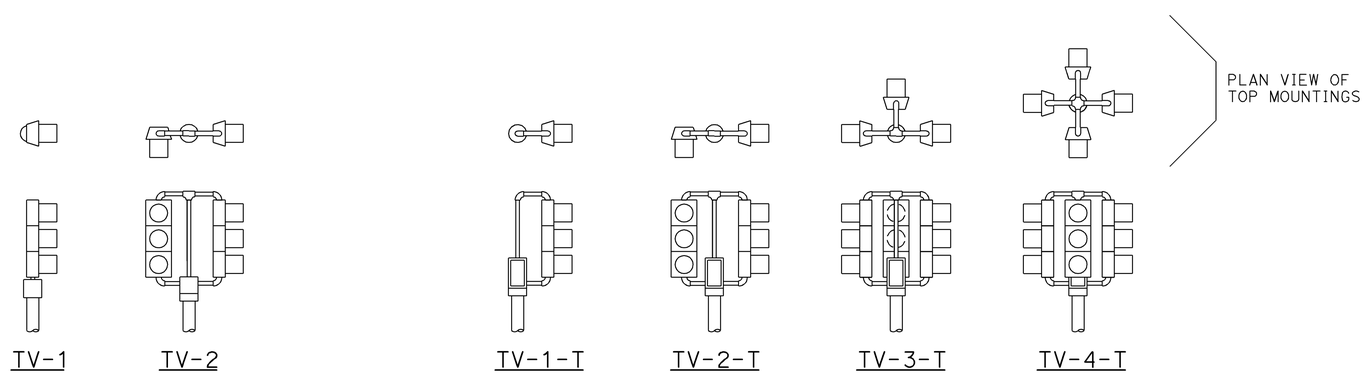


TOP MOUNTINGS

## ABBREVIATIONS:

| | |
|---|---|
| SV | SIDE MOUNTED VEHICLE SIGNALS |
| T | TERMINAL COMPARTMENT |
| TV | TOP MOUNTED VEHICLE SIGNALS |
| 1, 2, 3, 4 | NUMBER OF SIGNAL FACES (3 - SECTION, UNLESS OTHERWISE INDICATED) |
| A, B, C, D | CONFIGURATION OF SIGNALS |

## NOTES:

1. Mountings shall be oriented to provide maximum horizontal clearance to adjacent roadway.
2. Bracket arms shall be long enough to permit proper alignment of signals and backplate installation.
3. See Standard Plans ES-4D and ES-4E for attachment fitting details.

STATE OF CALIFORNIA
DEPARTMENT OF TRANSPORTATION

# ELECTRICAL SYSTEMS (VEHICULAR SIGNAL HEADS AND MOUNTINGS)

NO SCALE

RSP ES-4A DATED JULY 19, 2013 SUPERSEDES STANDARD PLAN ES-4A DATED MAY 20, 2011 - PAGE 443 OF THE STANDARD PLANS BOOK DATED 2010.

**REVISED STANDARD PLAN RSP ES-4A**

**2010 REVISED STANDARD PLAN RSP ES-4A**

7-9-13

| Dist | COUNTY | ROUTE | POST MILES TOTAL PROJECT | SHEET No. | TOTAL SHEETS |
|---|---|---|---|---|---|
| 11 | Imp | 8 | R38.8/R39.1 | 183 | 225 |

Theresa Gabriel
REGISTERED ELECTRICAL ENGINEER

July 19, 2013
PLANS APPROVAL DATE

REGISTERED PROFESSIONAL ENGINEER
Theresa Aziz Gabriel
No. E15129
Exp. 6-30-14
ELECTRICAL
STATE OF CALIFORNIA

*THE STATE OF CALIFORNIA OR ITS OFFICERS OR AGENTS SHALL NOT BE RESPONSIBLE FOR THE ACCURACY OR COMPLETENESS OF SCANNED COPIES OF THIS PLAN SHEET.*

TO ACCOMPANY PLANS DATED 04-07-14

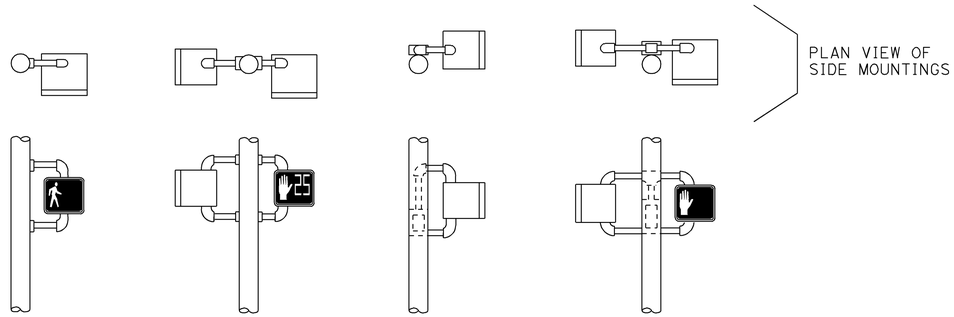


SP-1 SP-2 SP-1-T SP-2-T

SIDE MOUNTINGS

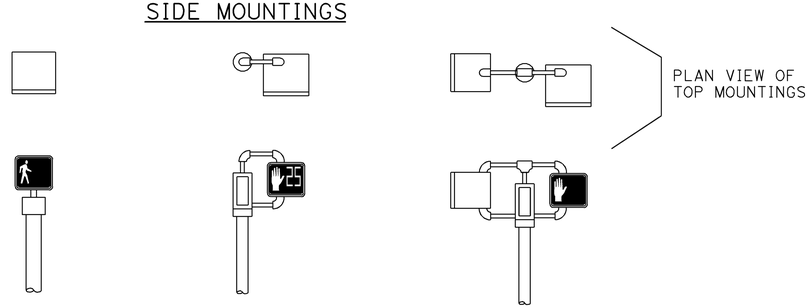


TP-1 TP-1-T TP-2-T

TOP MOUNTINGS

PEDESTRIAN SIGNALS AND MOUNTINGS

DETAIL A

PERSON WALKING INTERVAL FLASHING UPRAISED HAND INTERVAL STEADY UPRAISED HAND INTERVAL

PEDESTRIAN SIGNAL MODULE WITH COUNTDOWN

DETAIL B

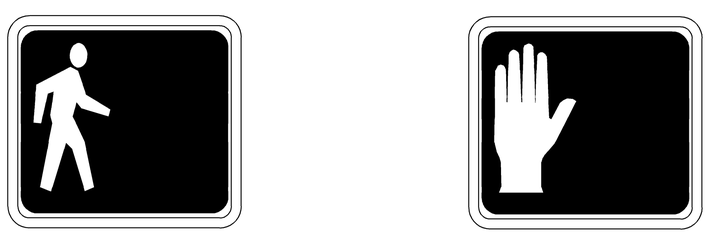

PERSON WALKING INTERVAL STEADY UPRAISED HAND INTERVAL

PEDESTRIAN SIGNAL MODULE WITHOUT COUNTDOWN

DETAIL C

## NOTES:

1. Mounting shall be oriented to provide maximum horizontal clearance to adjacent roadway.
2. Bracket arms shall be long enough to permit proper alignment of signals.
3. See Standard Plan ES-4D for attachment fittings details.

## ABBREVIATIONS:

| | |
|---|---|
| 1, 2 | NUMBER OF SIGNAL FACES |
| SP | SIDE MOUNTED PEDESTRIAN SIGNAL |
| T | TERMINAL COMPARTMENT |
| TP | TOP MOUNTED PEDESTRIAN SIGNAL |

RAMP METERING SIGN

DETAIL D

STATE OF CALIFORNIA
DEPARTMENT OF TRANSPORTATION

# ELECTRICAL SYSTEMS (PEDESTRIAN SIGNAL AND RAMP METERING SIGN)

NO SCALE

RSP ES-4B DATED JULY 19, 2013 SUPERSEDES STANDARD PLAN ES-4B DATED MAY 20, 2011 - PAGE 444 OF THE STANDARD PLANS BOOK DATED 2010.

**REVISED STANDARD PLAN RSP ES-4B**

**2010 REVISED STANDARD PLAN RSP ES-4B**

7-9-13

| Dist | COUNTY | ROUTE | POST MILES TOTAL PROJECT | SHEET No. | TOTAL SHEETS |
|---|---|---|---|---|---|
| 11 | Imp | 8 | R38.8/R39.1 | 184 | 225 |

Theresa Gabriel
REGISTERED ELECTRICAL ENGINEER

July 19, 2013
PLANS APPROVAL DATE

REGISTERED PROFESSIONAL ENGINEER
Theresa Aziz Gabriel
No. E15129
Exp. 6-30-14
ELECTRICAL
STATE OF CALIFORNIA

*THE STATE OF CALIFORNIA OR ITS OFFICERS OR AGENTS SHALL NOT BE RESPONSIBLE FOR THE ACCURACY OR COMPLETENESS OF SCANNED COPIES OF THIS PLAN SHEET.*

TO ACCOMPANY PLANS DATED 04-07-14

## VISORS

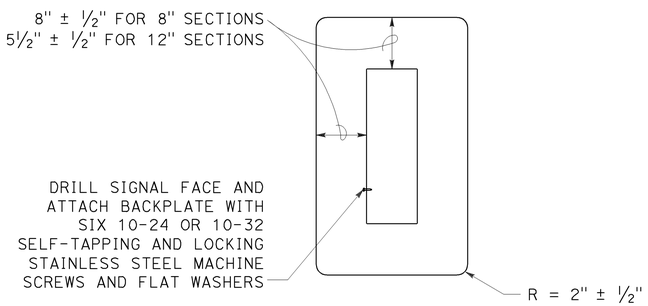


8" AND 12" SECTIONS

## BACKPLATE

1/16" minimum thickness
3001-14 aluminum or plastic
when specified

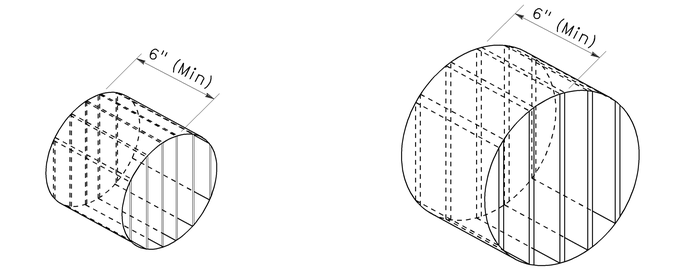


ISOMETRIC VIEW

ISOMETRIC VIEW

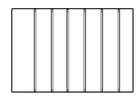

SECTION A-A

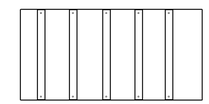

SECTION B-B

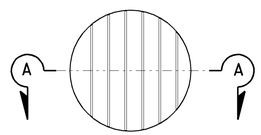


8" DIAMETER
FRONT VIEW

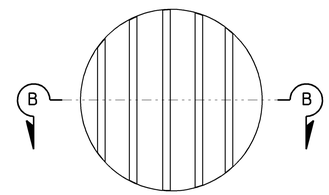


12" DIAMETER
FRONT VIEW

## DIRECTIONAL LOUVER

Directional louvers shall be oriented as directed by the Engineer and secured in place with one plated brass machine screw and nut.

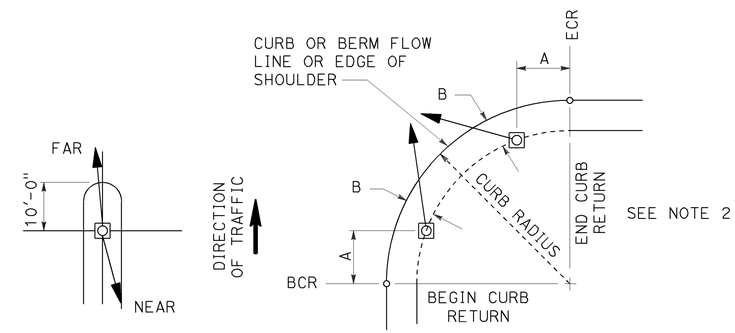


**NOTES:**

1. Typical signal pole placement unless dimensioned on plans.
2. For A and B dimensions, see Pole Schedule, or as directed by the Engineer.

## SIGNAL STANDARD PLACEMENT DIMENSIONS AND EQUIPMENT LOCATIONS

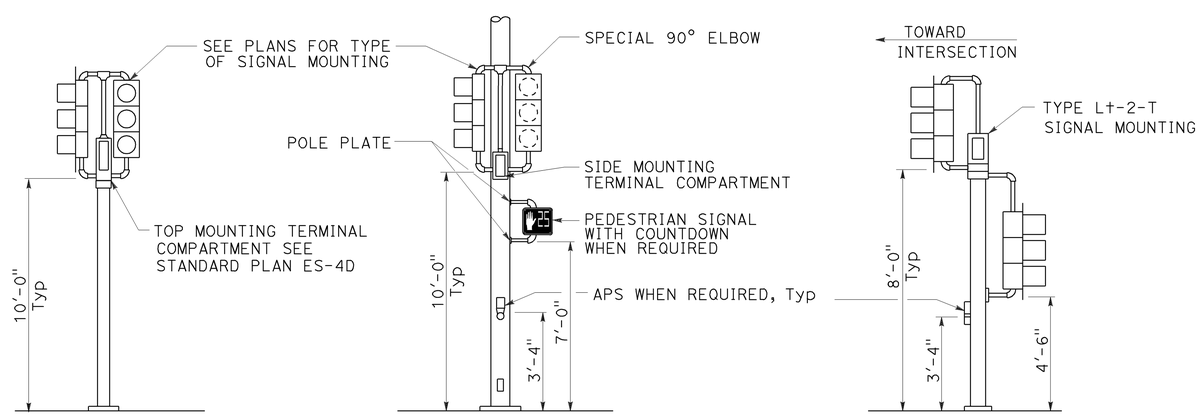


TOP MOUNTED SIGNALS (TV)

Type 1-A, 1-B, 1-C and 1-D standard as indicated on the plans

SIDE MOUNTED SIGNALS (SV AND SP)

Normally used on standards with luminaire or signal mast arm

LEFT TURN LANE SIGNAL

Type 1-A, 1-B, 1-C and 1-D standard as indicated on plans

## TYPICAL SIGNAL INSTALLATIONS

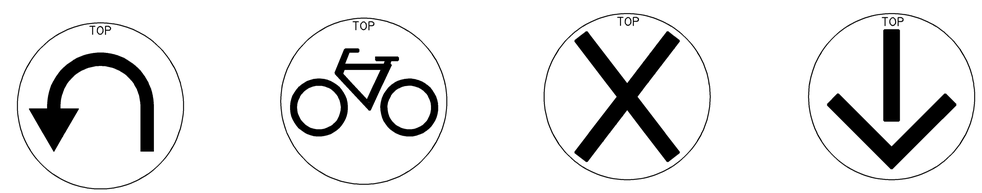


U-TURN

BICYCLE

LANE CONTROL

LANE CONTROL

## SIGNAL FACES

STATE OF CALIFORNIA
DEPARTMENT OF TRANSPORTATION

# ELECTRICAL SYSTEMS (VEHICULAR SIGNAL HEADS AND MOUNTINGS)

NO SCALE

RSP ES-4C DATED JULY 19, 2013 SUPERSEDES STANDARD PLAN ES-04C DATED MAY 20, 2011 - PAGE 445 OF THE STANDARD PLANS BOOK DATED 2010.

**REVISED STANDARD PLAN RSP ES-4C**

**2010 REVISED STANDARD PLAN RSP ES-4C**

7-10-13

| Dist | COUNTY | ROUTE | POST MILES TOTAL PROJECT | SHEET No. | TOTAL SHEETS |
|---|---|---|---|---|---|
| 11 | Imp | 8 | R38.8/R39.1 | 185 | 225 |

Theresa Gabriel
REGISTERED ELECTRICAL ENGINEER

July 19, 2013
PLANS APPROVAL DATE

REGISTERED PROFESSIONAL ENGINEER
Theresa Aziz Gabriel
No. E15129
Exp. 6-30-14
ELECTRICAL
STATE OF CALIFORNIA

*THE STATE OF CALIFORNIA OR ITS OFFICERS OR AGENTS SHALL NOT BE RESPONSIBLE FOR THE ACCURACY OR COMPLETENESS OF SCANNED COPIES OF THIS PLAN SHEET.*

TO ACCOMPANY PLANS DATED 04-07-14

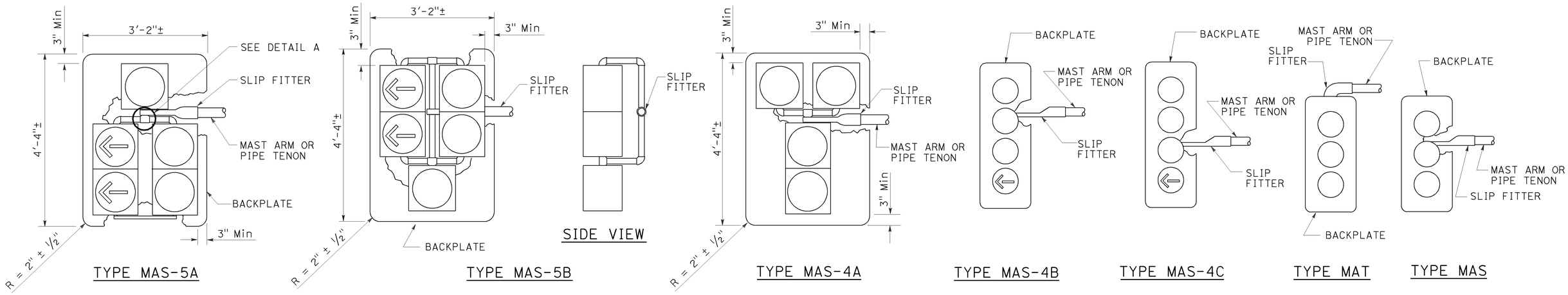


MAST ARM MOUNTINGS

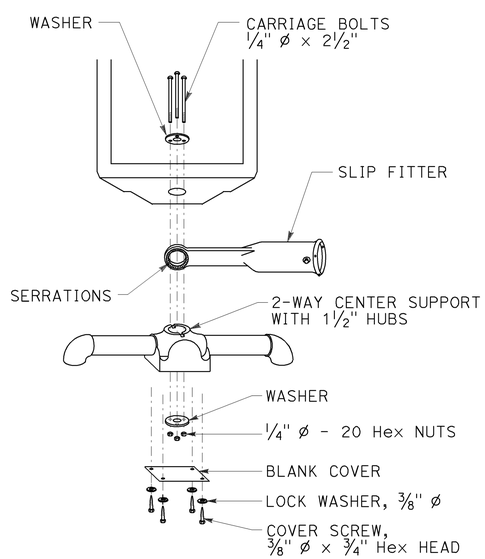


DETAIL A

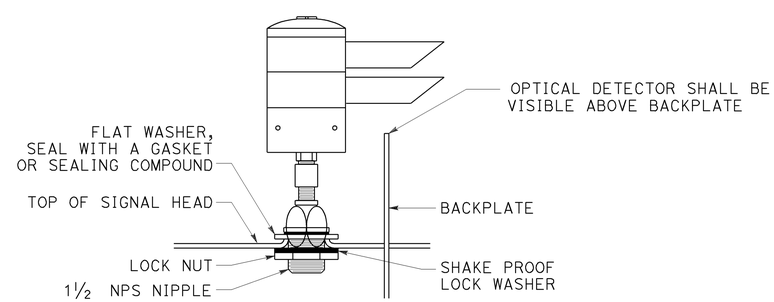


OPTICAL DETECTOR MOUNTING FOR EMERGENCY VEHICLE DETECTION SYSTEM

DETAIL B

STATE OF CALIFORNIA
DEPARTMENT OF TRANSPORTATION

# ELECTRICAL SYSTEMS (VEHICULAR SIGNAL HEADS AND OPTICAL DETECTOR MOUNTING)

NO SCALE

RSP ES-4E DATED JULY 19, 2013 SUPERSEDES STANDARD PLAN ES-4E DATED MAY 20, 2011 - 447 OF THE STANDARD PLANS BOOK DATED 2010.

**REVISED STANDARD PLAN RSP ES-4E**

**2010 REVISED STANDARD PLAN RSP ES-4E**

7-9-13

| Dist | COUNTY | ROUTE | POST MILES TOTAL PROJECT | SHEET No. | TOTAL SHEETS |
|---|---|---|---|---|---|
| 11 | Imp | 8 | R38.8/R39.1 | 186 | 225 |

Theresa Gabriel
REGISTERED ELECTRICAL ENGINEER

July 19, 2013
PLANS APPROVAL DATE

REGISTERED PROFESSIONAL ENGINEER Theresa Aziz Gabriel No. E15129 Exp. 6-30-14 ELECTRICAL STATE OF CALIFORNIA

*THE STATE OF CALIFORNIA OR ITS OFFICERS OR AGENTS SHALL NOT BE RESPONSIBLE FOR THE ACCURACY OR COMPLETENESS OF SCANNED COPIES OF THIS PLAN SHEET.*

TO ACCOMPANY PLANS DATED 04-07-14

**2010 REVISED STANDARD PLAN RSP ES-5B**

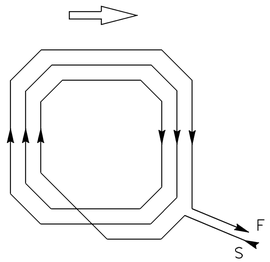


WINDING DETAIL

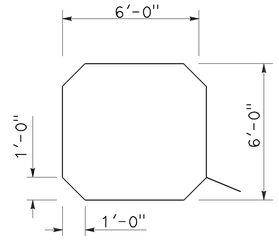


SAWCUT DETAIL

TYPE A LOOP DETECTOR CONFIGURATION

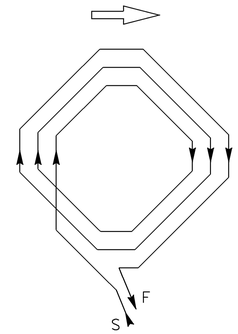


WINDING DETAIL

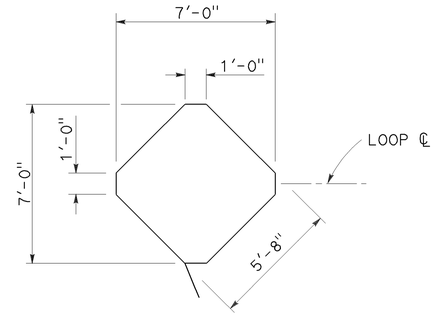


SAWCUT DETAIL

TYPE B LOOP DETECTOR CONFIGURATION

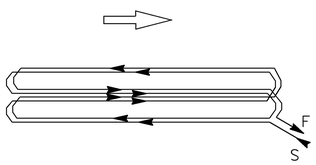


WINDING DETAIL

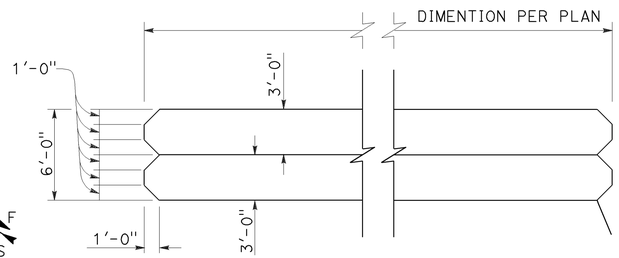


SAWCUT DETAIL

TYPE C LOOP DETECTOR CONFIGURATION

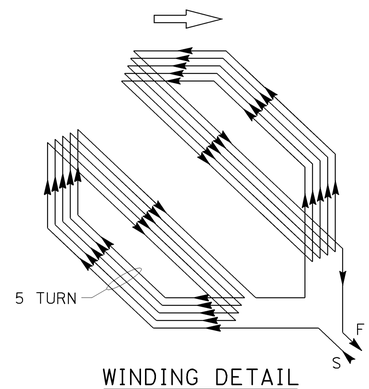


WINDING DETAIL

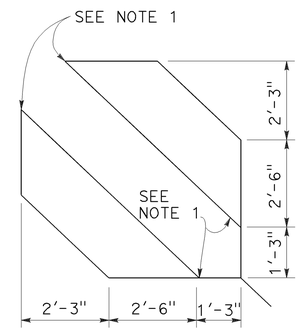


SAWCUT DETAIL

TYPE D LOOP DETECTOR CONFIGURATION

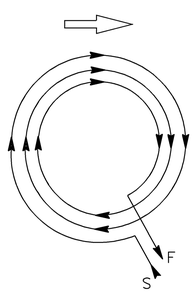


WINDING DETAIL

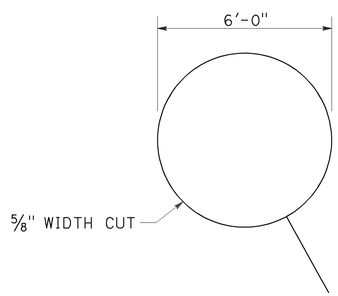


SAWCUT DETAIL

TYPE E LOOP DETECTOR CONFIGURATION

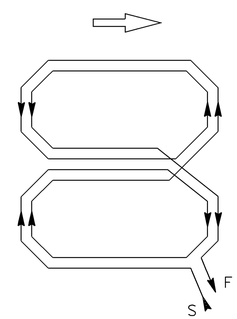


WINDING DETAIL

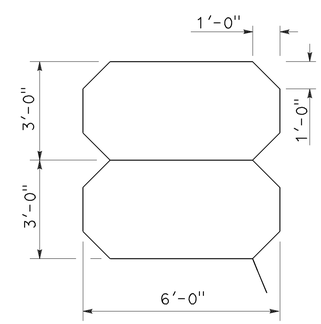


SAWCUT DETAIL

TYPE Q LOOP DETECTOR CONFIGURATION

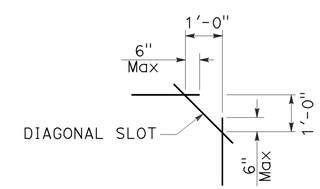


PLAN VIEW OF DIAGONAL SLOT AT CORNERS

NOTES:

1. Round corners of acute angle sawcuts to prevent damage to conductors.
2. Typical distance separating loops from edge to edge is 10' for Type A, B, D and E installation in single lane.

STATE OF CALIFORNIA
DEPARTMENT OF TRANSPORTATION

# ELECTRICAL SYSTEMS (DETECTORS)

NO SCALE

RSP ES-5B DATED JULY 19, 2013 SUPERSEDES STANDARD PLAN ES-5B DATED MAY 20, 2011 - PAGE 449 OF THE STANDARD PLANS BOOK DATED 2010.

**REVISED STANDARD PLAN RSP ES-5B**

| Dist | COUNTY | ROUTE | POST MILES TOTAL PROJECT | SHEET No. | TOTAL SHEETS |
|---|---|---|---|---|---|
| 11 | Imp | 8 | R38.8/R39.1 | 187 | 225 |

Theresa Gabriel
REGISTERED ELECTRICAL ENGINEER

July 19, 2013
PLANS APPROVAL DATE

REGISTERED PROFESSIONAL ENGINEER
Theresa Aziz Gabriel
No. E15129
Exp. 6-30-14
ELECTRICAL
STATE OF CALIFORNIA

*THE STATE OF CALIFORNIA OR ITS OFFICERS OR AGENTS SHALL NOT BE RESPONSIBLE FOR THE ACCURACY OR COMPLETENESS OF SCANNED COPIES OF THIS PLAN SHEET.*

TO ACCOMPANY PLANS DATED 04-07-14

**2010 REVISED STANDARD PLAN RSP ES-5C**

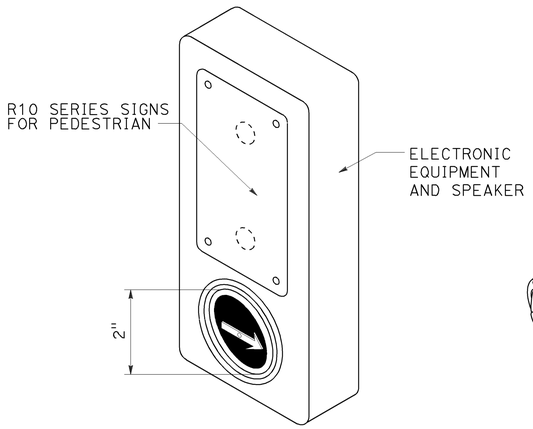


ACCESSIBLE PEDESTRIAN SIGNAL

DETAIL A
(See note 1 to 4)

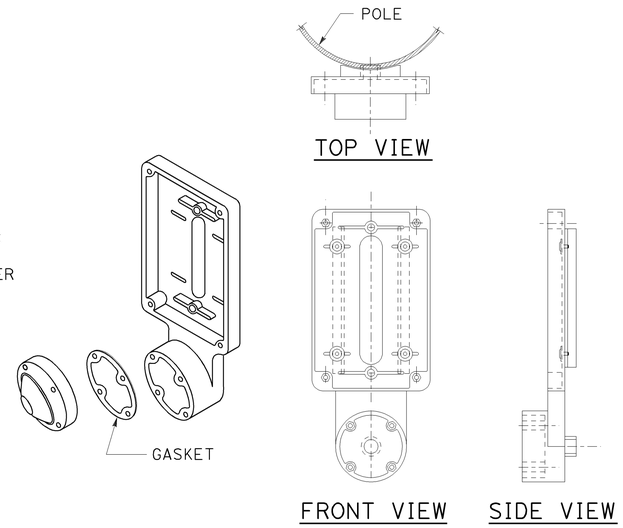


TYPE B PUSH BUTTON ASSEMBLY

DETAIL B
(See note 1 to 4)

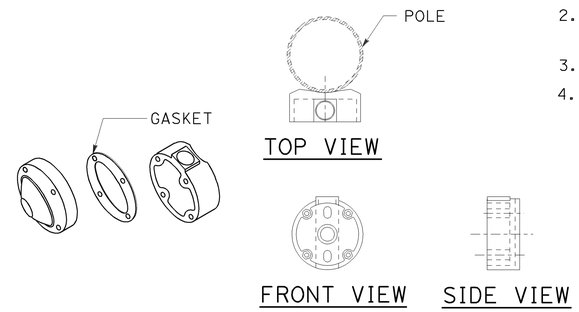


TYPE C PUSH BUTTON ASSEMBLY

DETAIL C
(See note 1 to 4)

NOTES:

1. Back casting shape to fit curvature of pole.
2. Provide cover fitting for top of post, when PBA is mounted on push button assembly post.
3. Install push button on crosswalk side of standard.
4. Use R10 series regulatory signs and plaques for pedestrian and bicycle facilities.

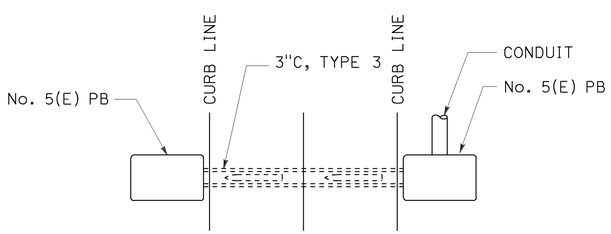


PLAN

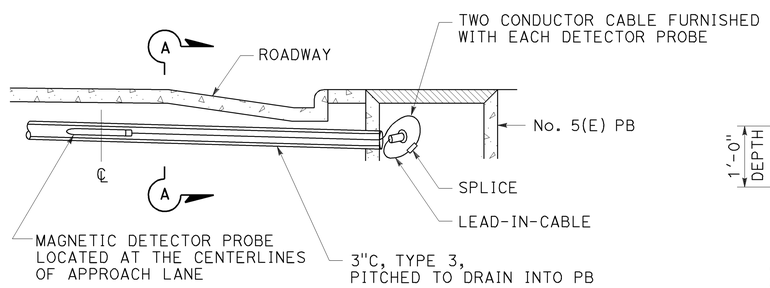


ELEVATION

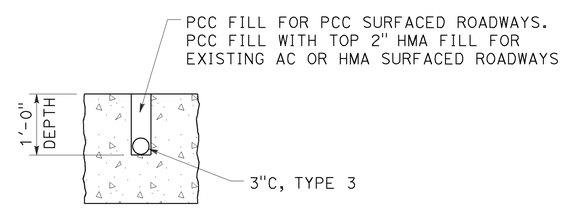


SECTION A-A

MAGNETIC VEHICLE DETECTOR

INSTALLATION DETAILS

DETAIL D

STATE OF CALIFORNIA
DEPARTMENT OF TRANSPORTATION

# ELECTRICAL SYSTEMS (ACCESSIBLE PEDESTRIAN SIGNAL, PUSH BUTTON ASSEMBLIES AND MAGNETIC VEHICLE DETECTOR)

NO SCALE

RSP ES-5C DATED JULY 19, 2013 SUPERSEDES STANDARD PLAN ES-5C
DATED MAY 20, 2011 - PAGE 450 OF THE STANDARD PLANS BOOK DATED 2010.

**REVISED STANDARD PLAN RSP ES-5C**

7-9-13

| Dist | COUNTY | ROUTE | POST MILES TOTAL PROJECT | SHEET No. | TOTAL SHEETS |
|---|---|---|---|---|---|
| 11 | Imp | 8 | R38.8/R39.1 | 188 | 225 |

Theresa Gabriel
REGISTERED ELECTRICAL ENGINEER

July 19, 2013
PLANS APPROVAL DATE

REGISTERED PROFESSIONAL ENGINEER Theresa Aziz Gabriel No. E15129 Exp. 6-30-14 ELECTRICAL STATE OF CALIFORNIA

*THE STATE OF CALIFORNIA OR ITS OFFICERS OR AGENTS SHALL NOT BE RESPONSIBLE FOR THE ACCURACY OR COMPLETENESS OF SCANNED COPIES OF THIS PLAN SHEET.*

TO ACCOMPANY PLANS DATED 04-07-14

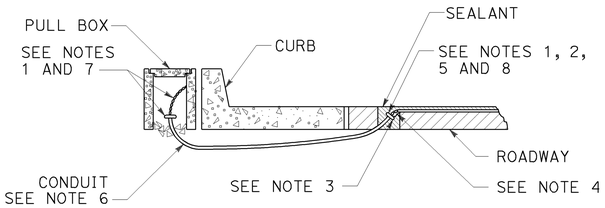


TYPE A
CURB TERMINATION DETAIL

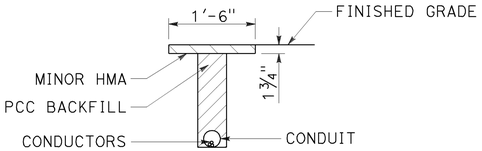


"T" TRENCH
DETAIL T

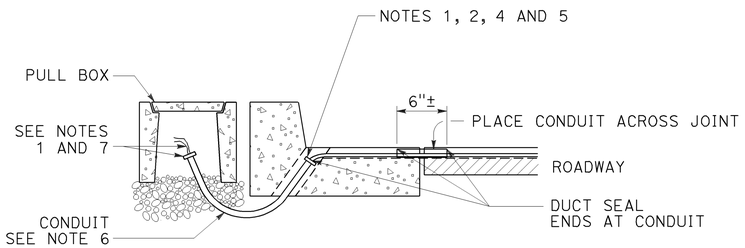


CROSS SECTION

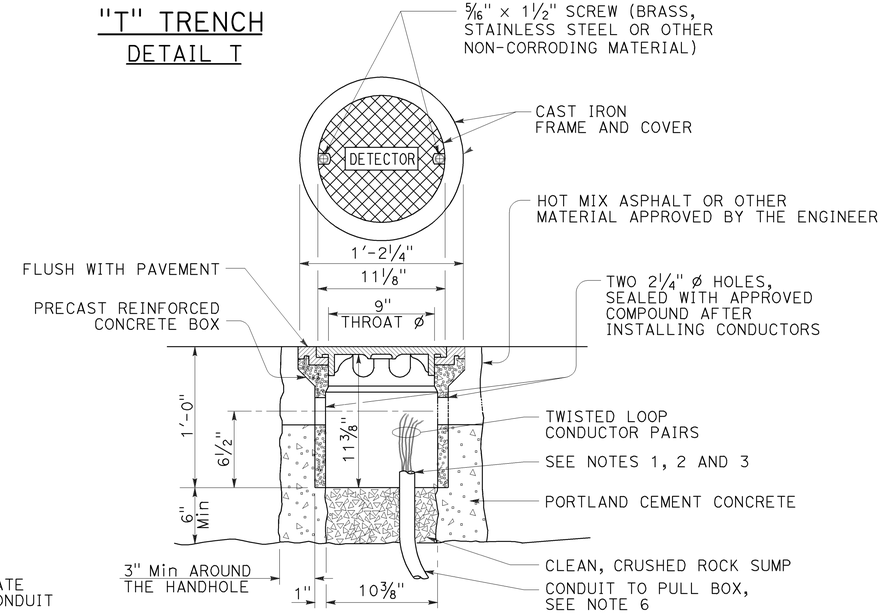


DETECTOR HANDHOLE DETAIL

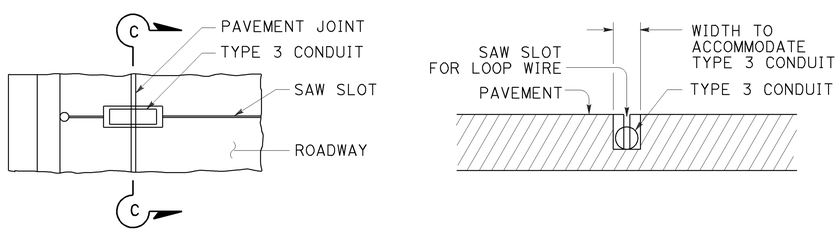


PLAN VIEW

SECTION C-C

TYPE B
CURB TERMINATION DETAIL

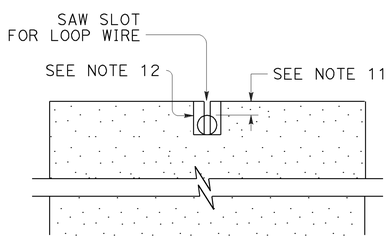


SECTION A-A

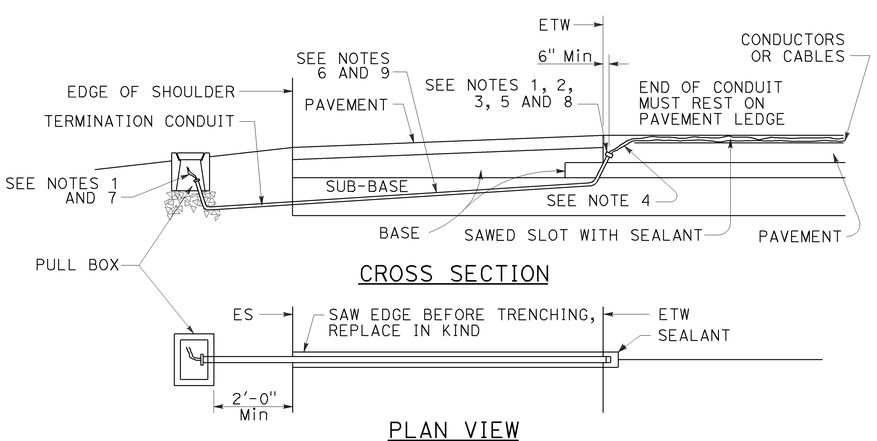


CROSS SECTION

PLAN VIEW

SHOULDER TERMINATION DETAILS

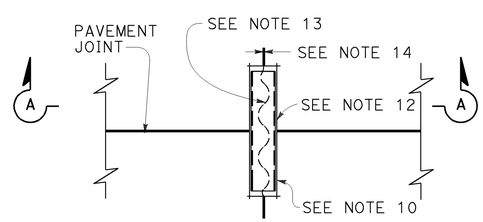


PLAN VIEW

TYPICAL LOOP LEAD-IN DETAIL AT PAVEMENT JOINT

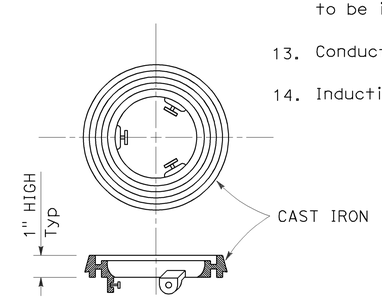


LOCKING GRADE RING

## NOTES:

1. Bushing shall be used at end of conduit.
2. Tape detector conductors or cables 3" each side of bushings.
3. Install duct seal compound to each end of termination conduit before installing sealant.
4. Round all sharp edges where detector conductors or cables have to pass.
5. End of conduit shall be 3⅛" below roadway surface.
6. Conduit size / Loop conductors
   - 1"C minimum — 1 to 2 pairs
   - 1½"C minimum — 3 to 4 pairs
   - 2"C minimum — 5 or more pairs
7. Splice detector conductors or cables to detector lead-in-cable.
8. Location of detector handhole when shown on plans.
9. When the shoulder and traveled way are paved with the same material and there is no joint between them, the conduit shall extend only 2'-0" into the shoulder pavement.
10. ¾"C, Type 3 conduit 6" long minimum, plug both ends with duct compound to keep out sealant.
11. ½" Minimum between top of conduit and pavement surface.
12. Sawcut shall not exceed 1" in width and ⅛" longer than conduit to be installed.
13. Conductors with ½" minimum slack inside conduit.
14. Inductive loop detector saw slot.

STATE OF CALIFORNIA
DEPARTMENT OF TRANSPORTATION

# ELECTRICAL SYSTEMS (CURB TERMINATION AND HANDHOLE)

NO SCALE

RSP ES-5D DATED JULY 19, 2013 SUPERSEDES STANDARD PLAN ES-5D DATED MAY 20, 2011 - PAGE 451 OF THE STANDARD PLANS BOOK DATED 2010.

**REVISED STANDARD PLAN RSP ES-5D**

**2010 REVISED STANDARD PLAN RSP ES-5D**

7-9-13

| Dist | COUNTY | ROUTE | POST MILES TOTAL PROJECT | SHEET No. | TOTAL SHEETS |
|---|---|---|---|---|---|
| 11 | Imp | 8 | R38.8/R39.1 | 189 | 225 |

REGISTERED CIVIL ENGINEER

July 19, 2013
PLANS APPROVAL DATE

REGISTERED PROFESSIONAL ENGINEER
Stanley P. Johnson
No. C57793
Exp. 3-31-14
CIVIL
STATE OF CALIFORNIA

*THE STATE OF CALIFORNIA OR ITS OFFICERS OR AGENTS SHALL NOT BE RESPONSIBLE FOR THE ACCURACY OR COMPLETENESS OF SCANNED COPIES OF THIS PLAN SHEET.*

TO ACCOMPANY PLANS DATED 04-07-14

**2010 REVISED STANDARD PLAN RSP ES-7A**

## NOTES:

1. For additional notes, details and data for Type 15TS and Type 21TS Standards, see Standard Plan ES-6A.
2. Handhole shall be located on the downstream side of traffic.

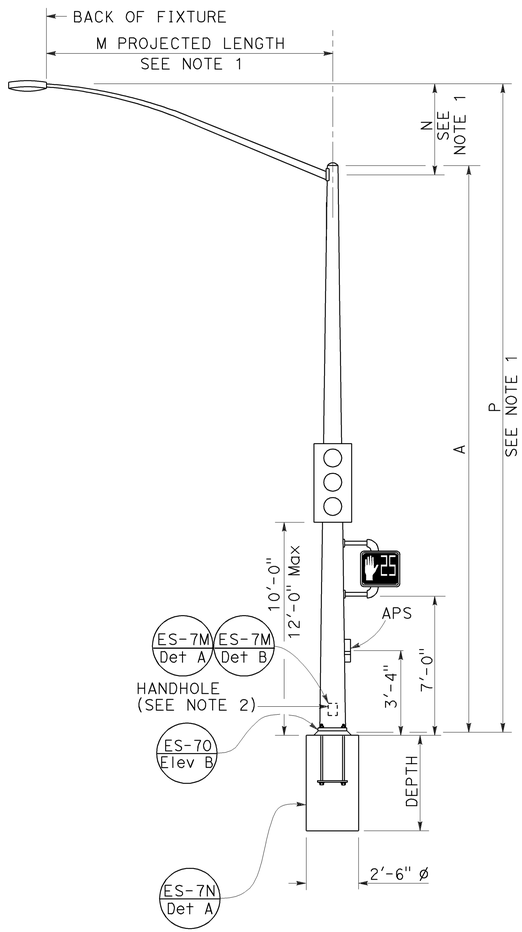


TYPE 15TS AND 21TS STANDARD

ELEVATION A

(See Note 1)

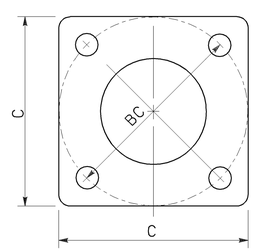


BASE PLATE

TYPE 15TS AND 21TS

DETAIL A

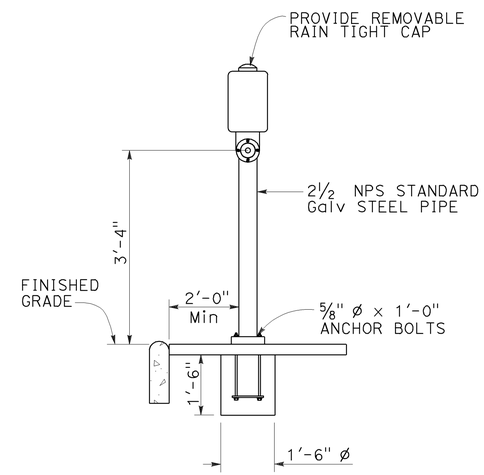


ELEVATION

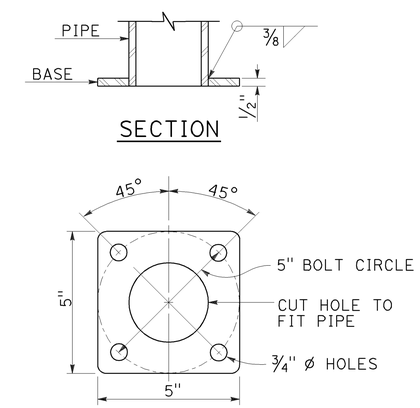


BASE PLATE

PBA POST

PUSH BUTTON ASSEMBLY POST

DETAIL B

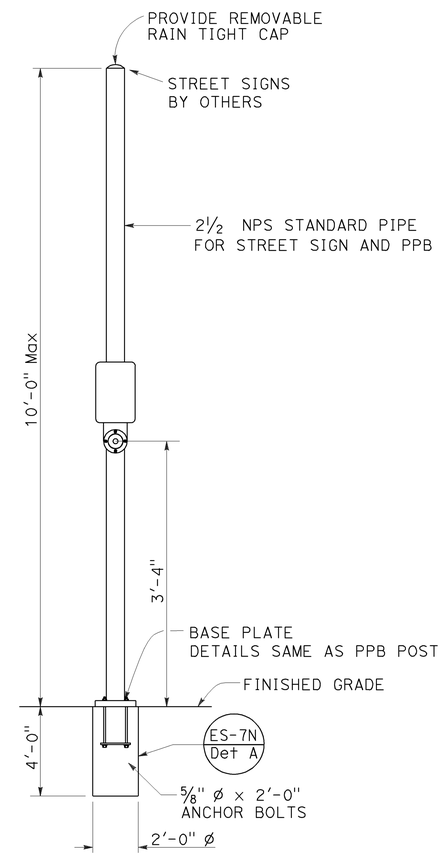


COMBINED STREET SIGN
PUSH BUTTON ASSEMBLY POST

DETAIL C

| POLE TYPE | POLE DATA | | | | BASE PLATE DATA | | | | CIDH |
|---|---|---|---|---|---|---|---|---|---|
| | A HEIGHT | Min OD BASE | Min OD TOP | WALL THICKNESS | C | BC = BOLT CIRCLE | THICKNESS | ANCHOR BOLT SIZE | DEPTH |
| 15TS | 30'-0" | 8" | 3 11/16" | 0.1793" | 1'-1½" | 1'-0" | 2" | 1½" ø x 42" | 7'-6" |
| 21TS | 35'-0" | 9⅜" | 3 9/16" | | 1'-3" | 1'-2" | | | 8'-6" |

STATE OF CALIFORNIA
DEPARTMENT OF TRANSPORTATION

# ELECTRICAL SYSTEMS (SIGNAL AND LIGHTING STANDARD, TYPE TS, AND PUSH BUTTON ASSEMBLY POST)

NO SCALE

RSP ES-7A DATED JULY 19, 2013 SUPERSEDES STANDARD PLAN ES-7A DATED MAY 20, 2011 - PAGE 462 OF THE STANDARD PLANS BOOK DATED 2010.

**REVISED STANDARD PLAN RSP ES-7A**

| Dist | COUNTY | ROUTE | POST MILES TOTAL PROJECT | SHEET No. | TOTAL SHEETS |
|---|---|---|---|---|---|
| 11 | Imp | 8 | R38.8/R39.1 | 190 | 225 |

REGISTERED CIVIL ENGINEER

July 19, 2013
PLANS APPROVAL DATE

REGISTERED PROFESSIONAL ENGINEER
Stanley P. Johnson
No. C57793
Exp. 3-31-14
CIVIL
STATE OF CALIFORNIA

THE STATE OF CALIFORNIA OR ITS OFFICERS OR AGENTS SHALL NOT BE RESPONSIBLE FOR THE ACCURACY OR COMPLETENESS OF SCANNED COPIES OF THIS PLAN SHEET.

TO ACCOMPANY PLANS DATED 04-07-14

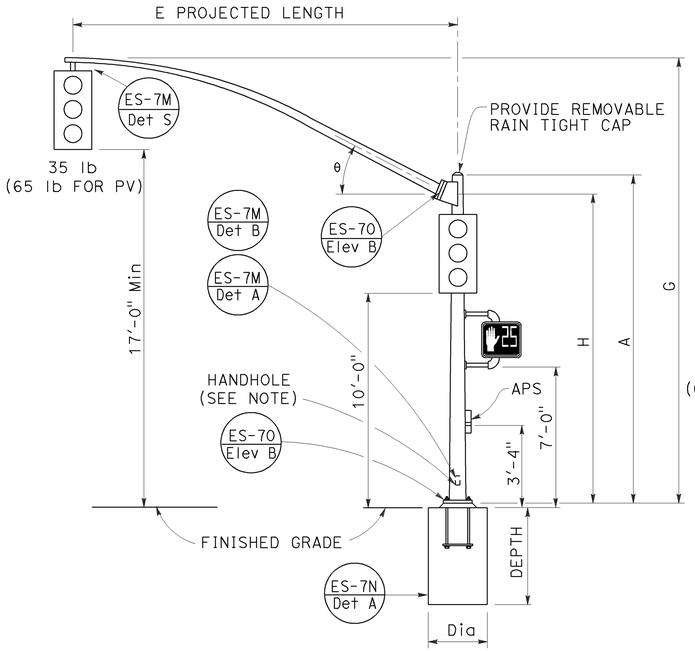


TYPE 16-1-100, 18-1-100

ELEVATION A

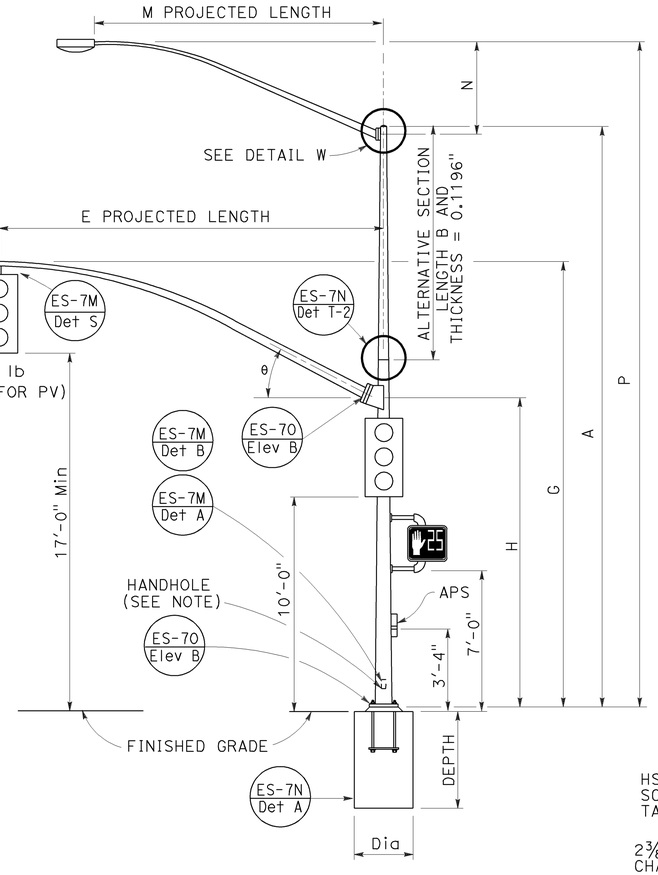


TYPE 19-1-100, 19A-1-100

ELEVATION B

Δ = LUMINAIRE MAST ARM SKEW -90° TO +90°
DEFAULT 0°

NOTE:

Handhole shall be located on the downstream side of traffic.

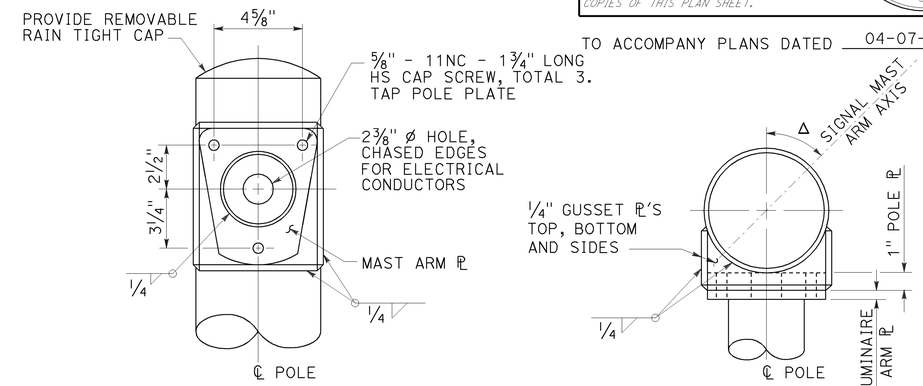


DETAIL W-1 DETAIL W-2

LUMINAIRE MAST ARM CONNECTION

DETAIL W

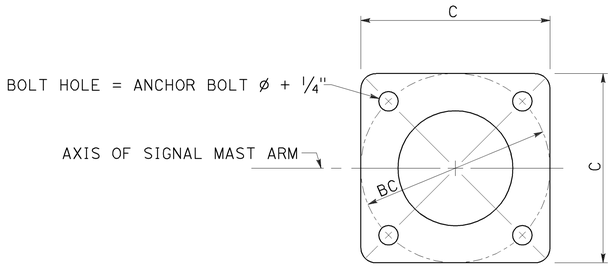


BASE PLATE

DETAIL D

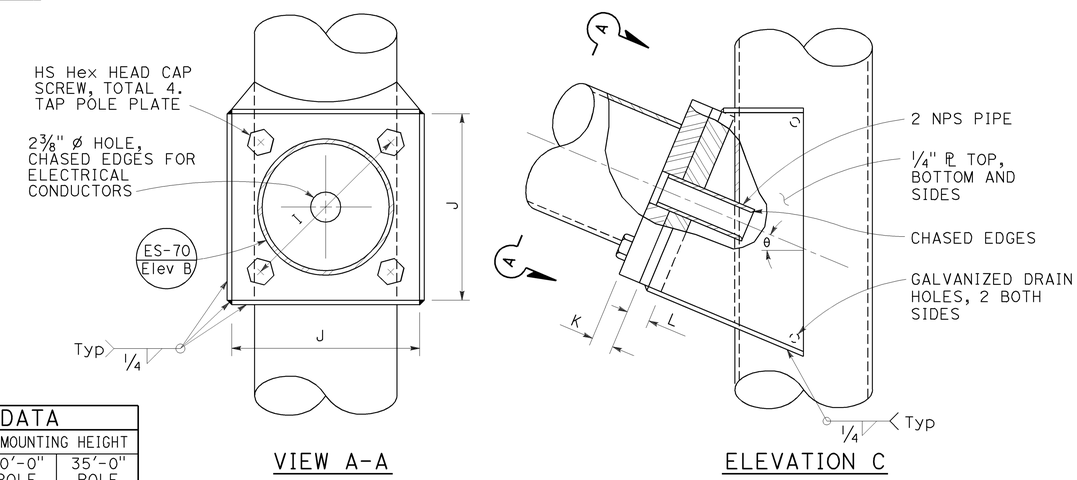


VIEW A-A ELEVATION C

SIGNAL MAST ARM CONNECTION

DETAIL C

| SIGNAL MAST ARM DATA | | | | | | | | | | |
|---|---|---|---|---|---|---|---|---|---|---|
| E PROJECTED LENGTH | G MOUNTING HEIGHT | H | Min OD AT POLE | THICKNESS | I BOLT CIRCLE | HS CAP SCREWS | J PLATE SIZE | K MAST ARM ℄ THICKNESS | L POLE ℄ THICKNESS | θ |
| 15'-0" | 21'-8"± | 17'-6" | 7⅜" | 0.1196" | 12" | 1¼"-7NC-3" | 1'-0" | 1¼" | 1½" | 23° |
| 20'-0" | | | | | | | | | | |
| 25'-0" | 22'-8"± | 16'-0" | | | | | | | | |
| 30'-0" | 23'-0"± | | 8" | | | | | | | |

| LUMINAIRE MAST ARM DATA | | | | | |
|---|---|---|---|---|---|
| M PROJECTED LENGTH | N RISE | Min OD AT POLE | THICKNESS | P MOUNTING HEIGHT | |
| | | | | 30'-0" POLE | 35'-0" POLE |
| 6'-0" | 2'-0"± | 3¼" | 0.1196" | 31'-6"± | 36'-6"± |
| 8'-0" | 2'-6"± | 3½" | | 32'-0"± | 37'-0"± |
| 10'-0" | 3'-3"± | 3⅞" | | 32'-9"± | 37'-9"± |
| 12'-0" | 4'-3"± | | | 33'-9"± | 38'-9"± |
| 15'-0" | 4'-9"± | 4¼" | | 34'-3"± | 39'-3"± |

| POLE TYPE | LOAD CASE | WIND VELOCITY (mph) | POLE DATA | | | | | | BASE PLATE DATA | | | | LUMINAIRE MAST ARM | SIGNAL MAST ARM | CIDH PILE FOUNDATION | | |
|---|---|---|---|---|---|---|---|---|---|---|---|---|---|---|---|---|---|
| | | | A HEIGHT | Min OD | | THICKNESS | ALTERNATIVE SECTION | | | C | BC = BOLT CIRCLE | THICKNESS | ANCHOR BOLT SIZE | | | DIAMETER | DEPTH | REINFORCED |
| | | | | BASE | TOP | | B LENGTH | BOTTOM | TOP | | | | | | | | | |
| 16-1-100 | 1 | 100 | 18'-6" | 10¾" | 8 1/16" | 0.1793" | None | | | 1'-5½" | 1'-5½" | 3" | 1½" Ø × 42" | NONE | 15'-0", [20'-0"] | 2'-6" | 9'-0" | YES |
| 18-1-100 | | | 17'-0" | | 8 5/16" | | None | | | | | | | NONE | | | | |
| 19-1-100 | | | 30'-0" | | 6 7/16" | | 10'-0" | 7⅞" | 6 7/16" | | | | | 6'-15' [12'-0"] | 25'-0", [30'-0"] | | | |
| 19A-1-100 | | | 35'-0" | | 5 11/16" | | 15'-0" | | 5 11/16" | | | | | 6'-15' [15'-0"] | | | | |

[ ] INDICATES MAST ARM LENGTH TO BE USED UNLESS OTHERWISE NOTED ON PLANS.

STATE OF CALIFORNIA
DEPARTMENT OF TRANSPORTATION

# ELECTRICAL SYSTEMS (SIGNAL AND LIGHTING STANDARD, CASE 1 SIGNAL MAST ARM LOADING, WIND VELOCITY = 100 MPH AND SIGNAL MAST ARM LENGTHS 15' TO 30')

NO SCALE

RSP ES-7C DATED JULY 19, 2013 SUPERSEDES STANDARD PLAN ES-7C
DATED MAY 20, 2011 - PAGE 464 OF THE STANDARD PLANS BOOK DATED 2010.

**REVISED STANDARD PLAN RSP ES-7C**

**2010 REVISED STANDARD PLAN RSP ES-7C**

6-18-13

| Dist | COUNTY | ROUTE | POST MILES TOTAL PROJECT | SHEET No. | TOTAL SHEETS |
|---|---|---|---|---|---|
| 11 | Imp | 8 | R38.8/R39.1 | 191 | 225 |

REGISTERED CIVIL ENGINEER

July 19, 2013
PLANS APPROVAL DATE

REGISTERED PROFESSIONAL ENGINEER Stanley P. Johnson No. C57793 Exp. 3-31-14 CIVIL STATE OF CALIFORNIA

*THE STATE OF CALIFORNIA OR ITS OFFICERS OR AGENTS SHALL NOT BE RESPONSIBLE FOR THE ACCURACY OR COMPLETENESS OF SCANNED COPIES OF THIS PLAN SHEET.*

TO ACCOMPANY PLANS DATED 04-07-14

**NOTE:**
Handhole shall be located on the downstream side of traffic.

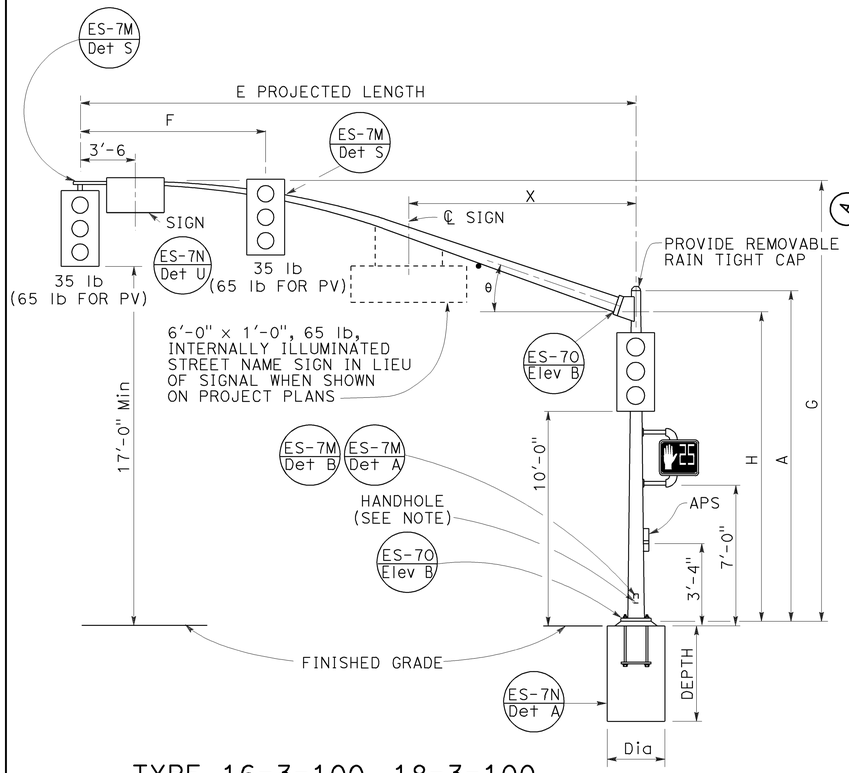


TYPE 16-3-100, 18-3-100, 23-3-100, 27-3-100
ELEVATION A

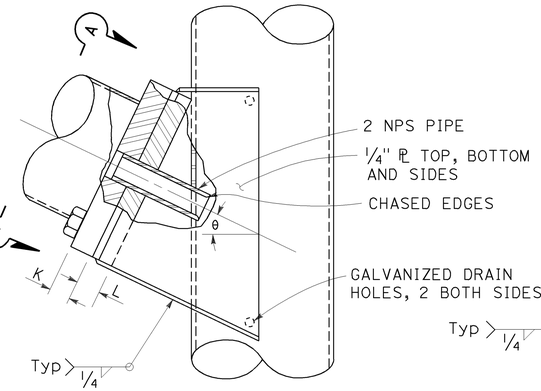


ELEVATION C

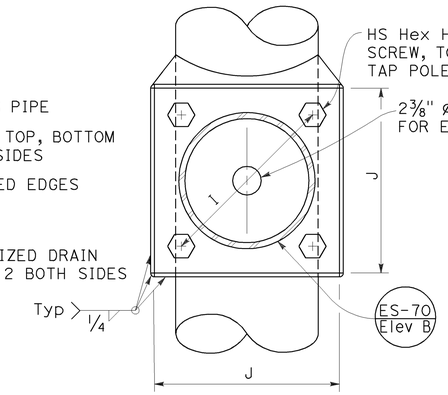


VIEW A-A

SIGNAL MAST ARM CONNECTION
DETAIL A

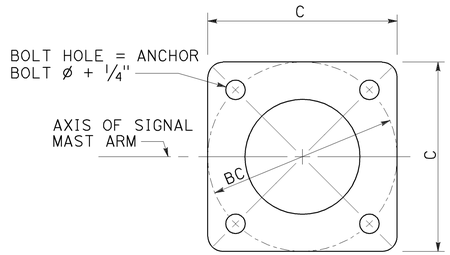


BASE PLATE
DETAIL B

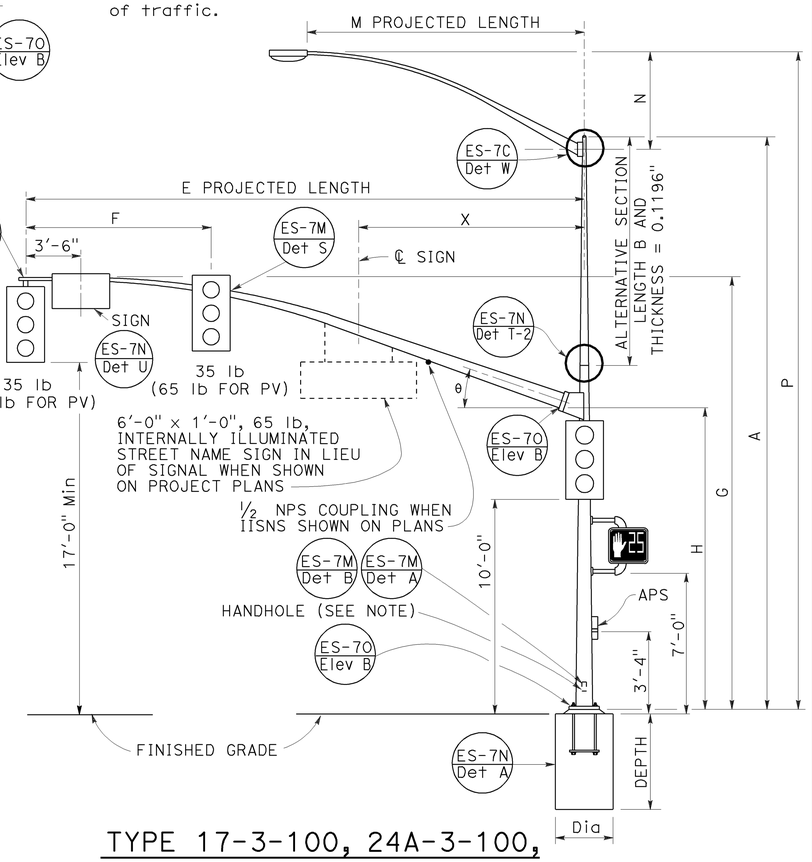


TYPE 17-3-100, 24A-3-100, 19-3-100, 26-3-100, 19A-3-100, 26A-3-100, 24-3-100
ELEVATION B

SIGNAL MAST ARM DATA

| E PROJECTED LENGTH | F Min SPACING | G MOUNTING HEIGHT | H | Min OD AT POLE | THICKNESS | I BOLT CIRCLE | HS CAP SCREWS | J PLATE SIZE | K MAST ARM ℙ THICKNESS | L POLE ℙ THICKNESS | θ | X Max |
|---|---|---|---|---|---|---|---|---|---|---|---|---|
| 15'-0" | 8'-0" | 21'-8"± | 17'-6" | 7 3/8" | 0.1793" | 12" | 1 1/4"-7NC-3" | 1'-0" | 1 1/4" | 1 1/2" | 23° | - |
| 20'-0" | | 21'-8"± | | 7 3/8" | | | | | | | | |
| 25'-0" | 12'-0" | 22'-8"± | 16'-0" | 7 3/8" | 0.2391" | | | | | | | 10'-6" |
| 30'-0" | | 23'-0"± | | 8" | | | | | | | | |
| 35'-0" | 14'-0" | | | 8 3/4" | | 13" | | 1'-1" | 1 1/2" | 1 3/4" | 21° | |
| 40'-0" | 15'-0" | | | 9 3/8" | | | | | | | 15° | 13'-0" |
| 45'-0" | | 23'-8"± | | 10 1/16" | | | | | | | | |

LUMINAIRE MAST ARM DATA

| M PROJECTED LENGTH | N RISE | Min OD AT POLE | THICKNESS | P MOUNTING HEIGHT 30'-0" POLE | P MOUNTING HEIGHT 35'-0" POLE |
|---|---|---|---|---|---|
| 6'-0" | 2'-0"± | 3 1/4" | 0.1196" | 31'-6"± | 36'-6"± |
| 8'-0" | 2'-6"± | 3 1/2" | | 32'-0"± | 37'-0"± |
| 10'-0" | 3'-3"± | 3 7/8" | | 32'-9"± | 37'-9"± |
| 12'-0" | 4'-3"± | | | 33'-9"± | 38'-9"± |
| 15'-0" | 4'-9"± | 4 1/4" | | 34'-3"± | 39'-3"± |

| POLE TYPE | LOAD CASE | WIND VELOCITY (mph) | POLE DATA A HEIGHT | Min OD BASE | Min OD TOP | THICKNESS | ALTERNATIVE SECTION B LENGTH | BOTTOM | TOP | BASE PLATE DATA C | BC = BOLT CIRCLE | THICKNESS | ANCHOR BOLT SIZE | LUMINAIRE MAST ARM | SIGNAL MAST ARM | CIDH PILE FOUNDATION DIAMETER | DEPTH | REINFORCED |
|---|---|---|---|---|---|---|---|---|---|---|---|---|---|---|---|---|---|---|
| 16-3-100 | 3 | 100 | 18'-6" | 10 3/4" | 8 1/16" | 0.1793" | NONE | | | 1'-5 1/2" | 1'-5 1/2" | 3" | 1 1/2" ø x 42" | NONE | 15'-0", [20'-0"] | 3'-0" | 8'-6" | YES |
| 17-3-100 | | | 30'-0" | | 6 7/16" | | 10'-0" | 7 7/8" | 6 7/16" | | | | | 6'-15' [12'-0"] | | | | |
| 18-3-100 | | | 17'-0" | 1'-0" | 8 5/16" | 0.2391" | NONE | | | 1'-7" | | | 2" ø x 42" | NONE | 25'-0", [30'-0"] | | 9'-6" | |
| 19-3-100 | | | 30'-0" | | 7 11/16" | | 10'-0" | 9 1/8" | 7 11/16" | | | | | 6'-15' [12'-0"] | | | 11'-0" | |
| 19A-3-100 | | | 35'-0" | | 6 15/16" | | 15'-0" | | 6 15/16" | | | | | 6'-15' [15'-0"] | | | | |
| 23-3-100 | | | 17'-0" | | 9 9/16" | | NONE | | | | | | | NONE | 35'-0" | | | |
| 24-3-100 | | | 30'-0" | | 7 11/16" | | 10'-0" | 9 1/8" | 7 11/16" | | | | | 6'-15' [12'-0"] | | | | |
| 24A-3-100 | | | 35'-0" | | 6 15/16" | | 15'-0" | | 6 15/16" | | | | | 6'-15' [15'-0"] | | | | |
| 26-3-100 | | | 30'-0" | 1'-2" | 7 13/16" | 0.3125" | 10'-0" | 9 1/4" | 7 13/16" | 1'-11" | 1'-9" | | 2 1/2" ø x 42" | 6'-15' [12'-0"] | 40'-0", [45'-0"] | 3'-6" | 12'-0" | |
| 26A-3-100 | | | 35'-0" | | 7 1/16" | | 15'-0" | | 7 1/16" | | | | | 6'-15' [15'-0"] | | | | |
| 27-3-100 | | | 17'-0" | | 9 11/16" | | NONE | | | | | | | NONE | | | | |

[ ] INDICATES MAST ARM LENGTH TO BE USED UNLESS OTHERWISE NOTED ON PLANS.

STATE OF CALIFORNIA
DEPARTMENT OF TRANSPORTATION

# ELECTRICAL SYSTEMS (SIGNAL AND LIGHTING STANDARD, CASE 3 SIGNAL MAST ARM LOADING, WIND VELOCITY=100 MPH AND SIGNAL MAST ARM LENGTHS 15' TO 45')

NO SCALE

RSP 7E DATED JULY 19, 2013 SUPERSEDES STANDARD PLAN 7E
DATED MAY 20, 2011 - PAGE 466 OF THE STANDARD PLANS BOOK DATED 2010.

**REVISED STANDARD PLAN RSP ES-7E**

**2010 REVISED STANDARD PLAN RSP ES-7E**

6-17-13

| Dist | COUNTY | ROUTE | POST MILES TOTAL PROJECT | SHEET No. | TOTAL SHEETS |
|---|---|---|---|---|---|
| 11 | Imp | 8 | R38.8/R39.1 | 192 | 225 |

REGISTERED CIVIL ENGINEER

July 19, 2013
PLANS APPROVAL DATE

REGISTERED PROFESSIONAL ENGINEER Stanley P. Johnson No. C57793 Exp. 3-31-14 CIVIL STATE OF CALIFORNIA

THE STATE OF CALIFORNIA OR ITS OFFICERS OR AGENTS SHALL NOT BE RESPONSIBLE FOR THE ACCURACY OR COMPLETENESS OF SCANNED COPIES OF THIS PLAN SHEET.

**NOTE:**

TO ACCOMPANY PLANS DATED 04-07-14

1. Handhole shall be located on the downstream side of traffic.

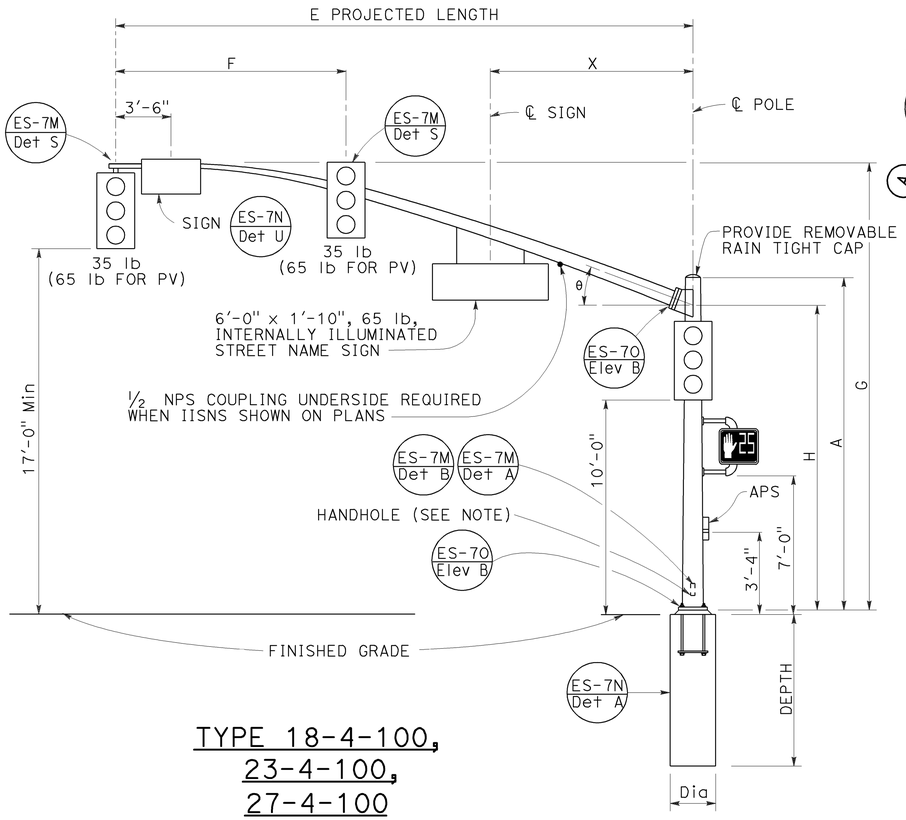


TYPE 18-4-100,
23-4-100,
27-4-100
ELEVATION A

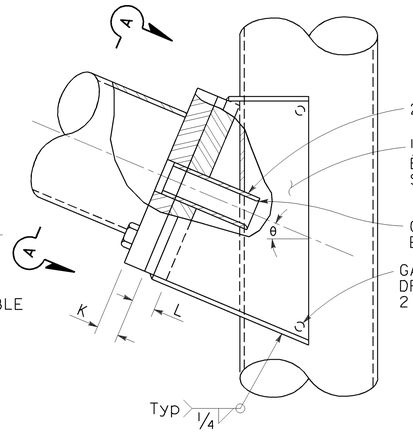


ELEVATION C

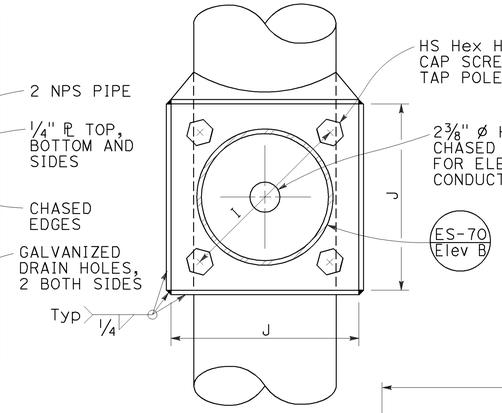


VIEW A-A

SIGNAL MAST ARM CONNECTION
DETAIL A

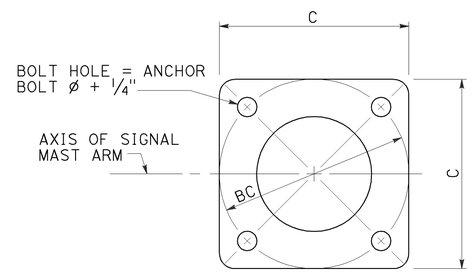


BASE PLATE
DETAIL B

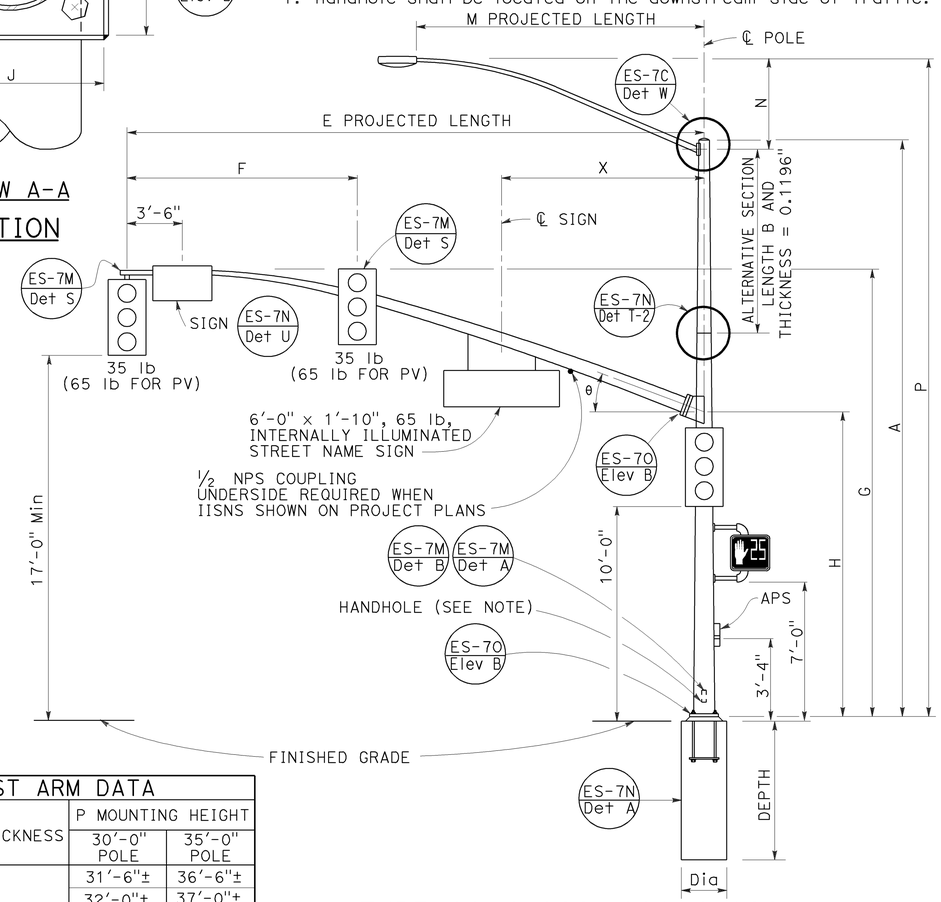


TYPE 19-4-100, 19A-4-100,
24-4-100, 24A-4-100,
26-4-100, 26A-4-100
ELEVATION B

| SIGNAL MAST ARM DATA | | | | | | | | | | | | |
|---|---|---|---|---|---|---|---|---|---|---|---|---|
| E PROJECTED LENGTH | F Min SPACING | G MOUNTING HEIGHT | H | Min OD AT POLE | THICKNESS | I BOLT CIRCLE | HS CAP SCREWS | J PLATE SIZE | K MAST ARM ℄ THICKNESS | L POLE ℄ THICKNESS | θ | X Max |
| 25'-0" | 10'-0" | 22'-8"± | 16'-0" | 7⅜" | 0.2391" | 12" | 1¼"-7NC-3" | 1'-0" | 1¼" | 1½" | 23° | 10'-6" |
| 30'-0" | 12'-0" | 23'-0"± | | 8" | | | | | | | | |
| 35'-0" | 14'-0" | | | 8 11/16" | | 13½" | | 1'-1½" | 1½" | 1¾" | 21° | |
| 40'-0" | 15'-0" | | | 9⅜" | | | | | | | 15° | 13'-0" |
| 45'-0" | | 23'-8"± | | 10¼" | | | | | | | | |

| LUMINAIRE MAST ARM DATA | | | | | |
|---|---|---|---|---|---|
| M PROJECTED LENGTH | N RISE | Min OD AT POLE | THICKNESS | P MOUNTING HEIGHT | |
| | | | | 30'-0" POLE | 35'-0" POLE |
| 6'-0" | 2'-0"± | 3¼" | 0.1196" | 31'-6"± | 36'-6"± |
| 8'-0" | 2'-6"± | 3½" | | 32'-0"± | 37'-0"± |
| 10'-0" | 3'-3"± | 3⅞" | | 32'-9"± | 37'-9"± |
| 12'-0" | 4'-3"± | | | 33'-9"± | 38'-9"± |
| 15'-0" | 4'-9"± | 4¼" | | 34'-3"± | 39'-3"± |

| POLE TYPE | LOAD CASE | WIND VELOCITY (mph) | POLE DATA | | | | | | | BASE PLATE DATA | | | | LUMINAIRE MAST ARM | SIGNAL MAST ARM | CIDH PILE FOUNDATION | | |
|---|---|---|---|---|---|---|---|---|---|---|---|---|---|---|---|---|---|---|
| | | | A HEIGHT | Min OD BASE | Min OD TOP | THICKNESS | ALTERNATIVE SECTION B LENGTH | ALTERNATIVE SECTION BOTTOM | ALTERNATIVE SECTION TOP | C | BC = BOLT CIRCLE | THICKNESS | ANCHOR BOLT SIZE | | | Dia | DEPTH | REINFORCED |
| 18-4-100 | 4 | 100 | 17'-0" | 12⅛" | 9 9/16" | 0.3125" | NONE | | | 1'-7" | 1'-5½" | 3" | 2" Ø x 42" | NONE | 25'-0", 30'-0" | 3'-0" | 11'-0" | YES |
| 19-4-100 | | | 30'-0" | | 7 11/16" | | 10'-0" | 9⅛" | 7 11/16" | | | | | 6'-15' 12'-0" | | | | |
| 19A-4-100 | | | 35'-0" | | 6 15/16" | | 15'-0' | | 6 15/16" | | | | | 6'-15' 15'-0" | | | | |
| 23-4-100 | | | 17'-0" | | 9 9/16" | | NONE | | | | | | | NONE | 35'-0" | | | |
| 24-4-100 | | | 30'-0" | | 7 11/16" | | 10'-0" | 9⅛" | 7 11/16" | | | | | 6'-15' 12'-0" | | | | |
| 24A-4-100 | | | 35'-0" | | 6 15/16" | | 15'-0" | | 6 15/16" | | | | | 6'-15' 15'-0" | | | | |
| 26-4-100 | | | 30'-0" | 14" | 8 3/16" | | 10'-0" | 9⅝" | 8 3/16" | 23" | 21" | | 2½" Ø x 42" | 6'-15' 12'-0" | 40'-0", 45'-0" | 3'-6" | 12'-0" | |
| 26A-4-100 | | | 35'-0" | | 7 7/16" | | 15'-0" | | 7 7/16" | | | | | 6'-15' 15'-0" | | | | |
| 27-4-100 | | | 17'-0" | | 10 1/16" | | NONE | | | | | | | NONE | | | | |

INDICATES MAST ARM LENGTH TO BE USED UNLESS OTHERWISE NOTED ON PLANS.

STATE OF CALIFORNIA
DEPARTMENT OF TRANSPORTATION

# ELECTRICAL SYSTEMS (SIGNAL AND LIGHTING STANDARD, CASE 4 SIGNAL MAST ARM LOADING, WIND VELOCITY=100 MPH AND SIGNAL MAST ARM LENGTHS 25' TO 45')

NO SCALE

RSP ES-7F DATED JULY 19, 2013 SUPERSEDES STANDARD PLAN ES-7F
DATED MAY 20, 2011 - PAGE 467 OF THE STANDARD PLANS BOOK DATED 2010.

# REVISED STANDARD PLAN RSP ES-7F

2010 REVISED STANDARD PLAN RSP ES-7F

6-18-13

| Dist | COUNTY | ROUTE | POST MILES TOTAL PROJECT | SHEET No. | TOTAL SHEETS |
|---|---|---|---|---|---|
| 11 | Imp | 8 | R38.8/R39.1 | 193 | 225 |

REGISTERED CIVIL ENGINEER

July 19, 2013
PLANS APPROVAL DATE

REGISTERED PROFESSIONAL ENGINEER
Stanley P. Johnson
No. C57793
Exp. 3-31-14
CIVIL
STATE OF CALIFORNIA

*THE STATE OF CALIFORNIA OR ITS OFFICERS OR AGENTS SHALL NOT BE RESPONSIBLE FOR THE ACCURACY OR COMPLETENESS OF SCANNED COPIES OF THIS PLAN SHEET.*

TO ACCOMPANY PLANS DATED 04-07-14

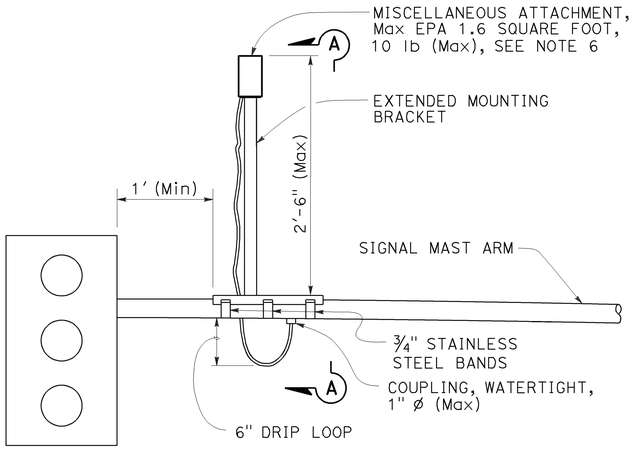


SIGNAL MAST ARM MOUNT

DETAIL A

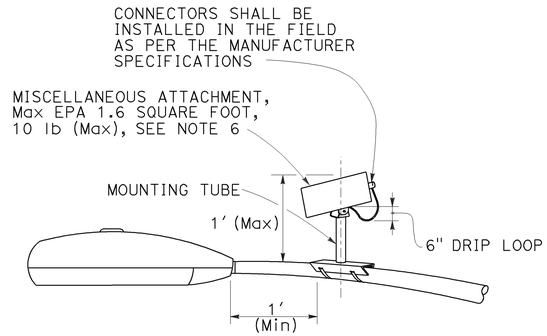


LUMINAIRE MAST ARM MOUNT

DETAIL B

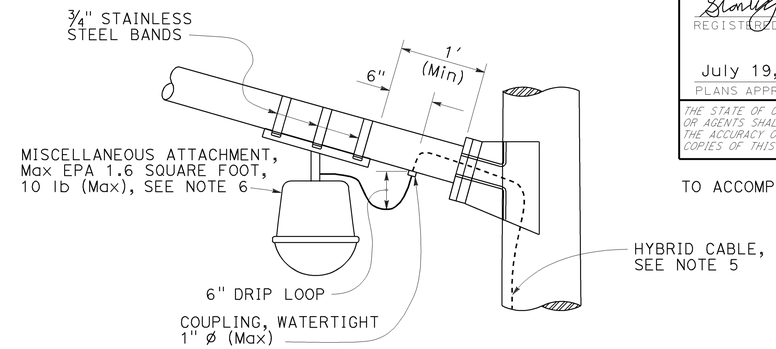


LUMINAIRE MAST ARM MOUNT

DETAIL C

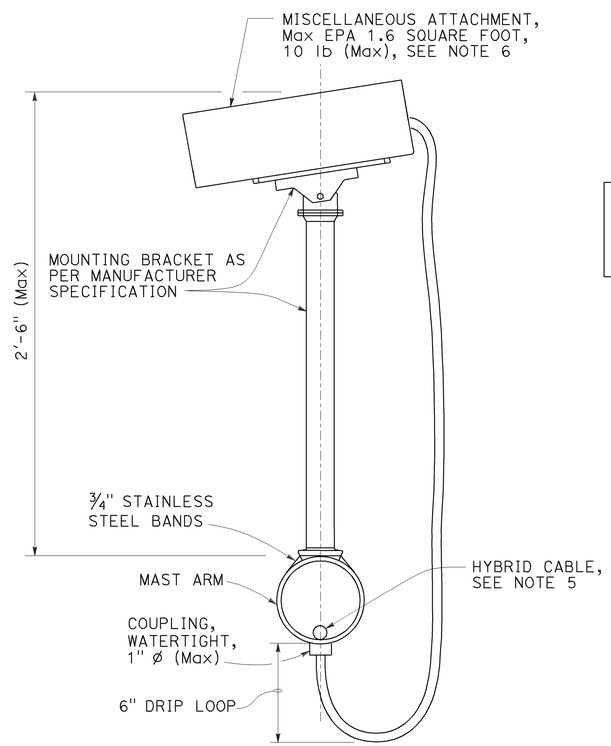


SECTION A-A

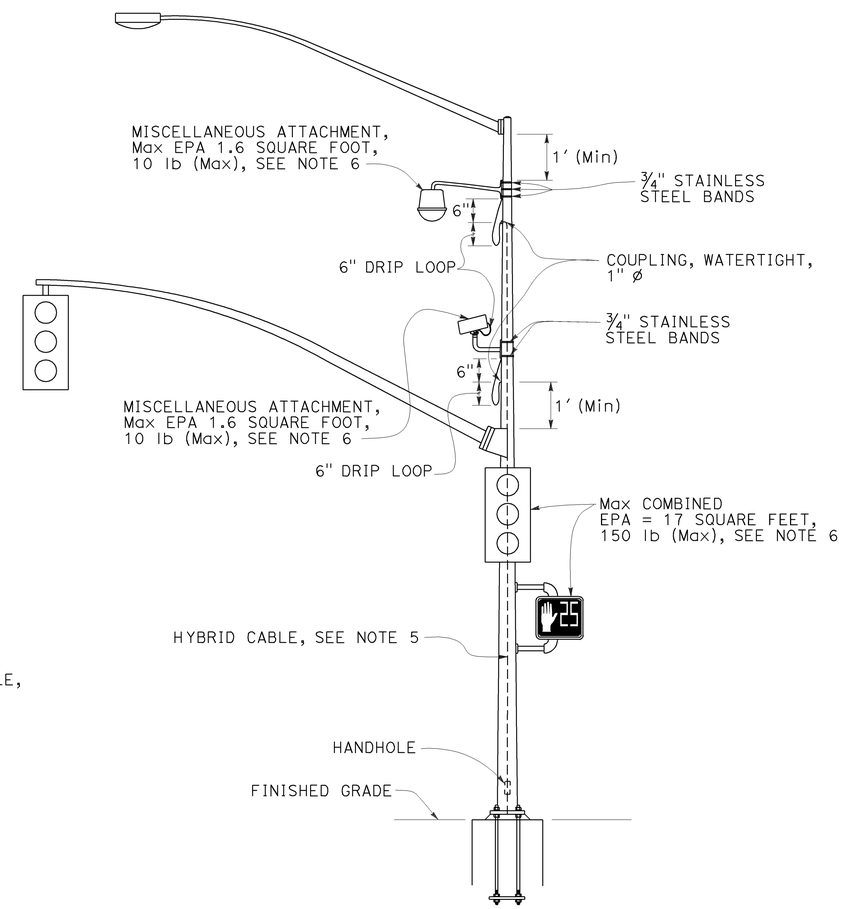


SIGNAL POLE MOUNT

DETAIL D

NOTES:

1. Exact mounting location of miscellaneous attachment and bracket shall be approved by the Engineer per manufacturer's recommendation.
2. Location of cable entrances on signal pole shall be a minimum of 1′ from any flange or base plate.
3. Hybrid cable entrances on signal pole shall be drilled for weathertight coupling as required.
4. Hybrid cable shall have a drip loop at the entrance into signal pole, luminaire mast arm and signal mast arm.
5. A single hybrid cable shall run continuous and shall not be twisted from the miscellaneous attachment to the controller cabinet. No splices shall be allowed.
6. Use the manufacturer's Effective Projected Area (EPA) for miscellaneous attachment. The maximum EPA for each miscellaneous attachment shall be 1.6 square feet.
7. Maximum of two miscellaneous attachments per traffic signal structure.
8. Maximum of one miscellaneous attachment per mast arm.
9. Miscellaneous attachment shall be mounted using clamping devices.

STATE OF CALIFORNIA
DEPARTMENT OF TRANSPORTATION

# ELECTRICAL SYSTEMS (SIGNAL AND LIGHTING, MISCELLANEOUS ATTACHMENT)

NO SCALE

RSP ES-7R DATED JULY 19, 2013 SUPERSEDES STANDARD PLAN ES-7R
DATED MAY 20, 2011 - PAGE 479 OF THE STANDARD PLANS BOOK DATED 2010.

**REVISED STANDARD PLAN RSP ES-7R**

**2010 REVISED STANDARD PLAN RSP ES-7R**

6-17-13

| DIST | COUNTY | ROUTE | POST MILES TOTAL PROJECT | SHEET NO. | TOTAL SHEETS |
|---|---|---|---|---|---|
| 11 | Imp | 8 | R38.8/R39.1 | 194 | 225 |

Theresa Gabriel
REGISTERED ELECTRICAL ENGINEER

July 19, 2013
PLANS APPROVAL DATE

REGISTERED PROFESSIONAL ENGINEER Theresa Aziz Gabriel No. E15129 Exp. 6-30-14 ELECTRICAL STATE OF CALIFORNIA

*THE STATE OF CALIFORNIA OR ITS OFFICERS OR AGENTS SHALL NOT BE RESPONSIBLE FOR THE ACCURACY OR COMPLETENESS OF SCANNED COPIES OF THIS PLAN SHEET.*

TO ACCOMPANY PLANS DATED 04-07-14

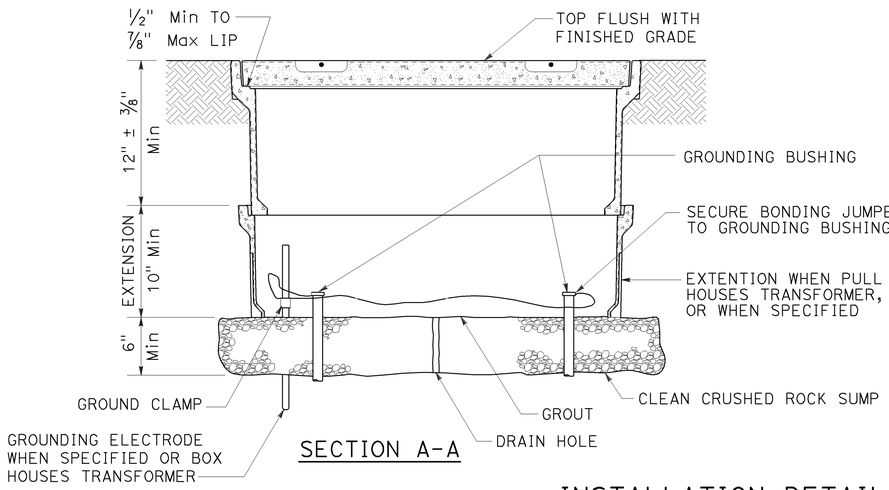


SECTION A-A

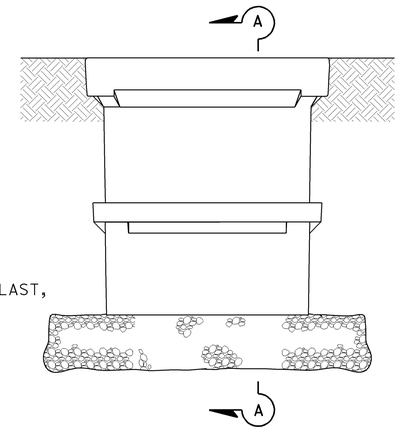


SIDE VIEW

## INSTALLATION DETAILS

### DETAIL A

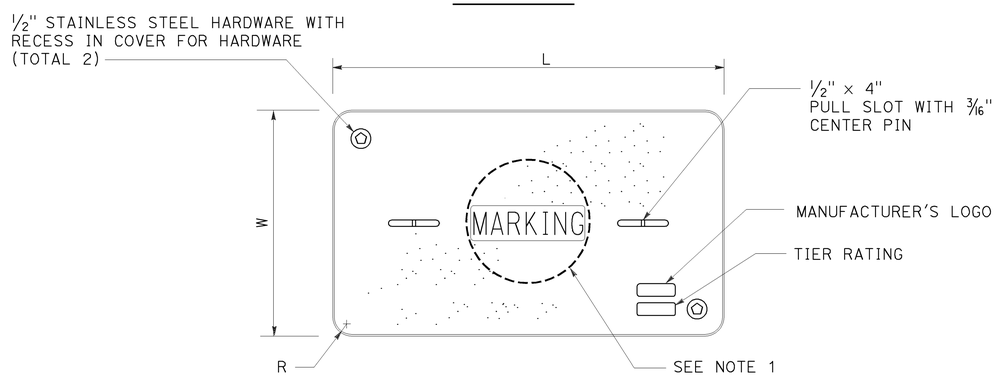


COVER TOP VIEW

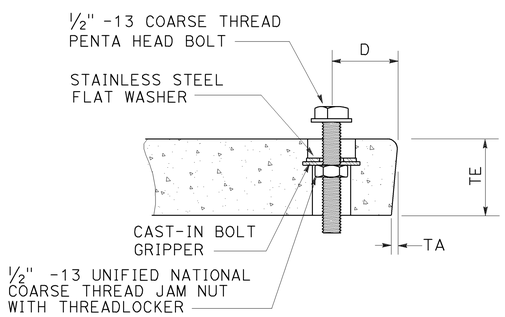


TYPICAL COVER CAPTIVE BOLT

OR SIMILAR

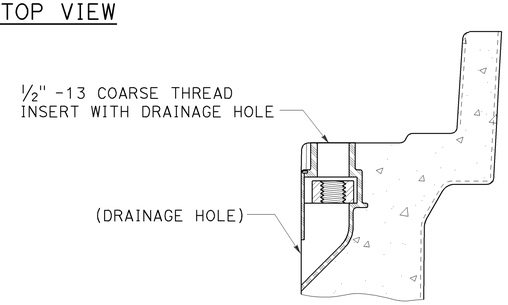


TYPICAL THREADED INSERT

OR SIMILAR

| DIMENSION TABLE | | | | | | | | | | |
|---|---|---|---|---|---|---|---|---|---|---|
| PULL BOX | PULL BOX | | | COVER | | | | | | |
| | MINIMUM DEPTH BOX | MINIMUM DEPTH EXTENSION | MAXIMUM WEIGHT | L | W | R | TE | TA | D | MAXIMUM WEIGHT |
| No. 3½ | 12" | N/A | 40 lb | 1′ - 3⅜" | 10⅛" | 1⅜" | 2" | ⅛" | 1¾" | 30 lb |
| No. 5 | 12" | 10" | 55 lb | 1′ - 11¼" | 1′ - 1¾" | 1⅜" | 2" | ⅛" | 1¾" | 60 lb |
| No. 6 | 12" | 10" | 70 lb | 2′ - 6½" | 1′ - 5½" | 1⅜" | 2" | ⅛" | 2" | 85 lb |

## NOTES:

1. Pull box covers shall be marked as follows: "SERVICE" Service circuits between service point and service disconnect; "SPRINKLER-CONTROL" sprinkler control circuits, 50 V or less; "CALTRANS" on all pull boxes, except pull boxes marked "SPRINKLER-CONTROL"; and "TELEPHONE" Telephone service;
   - A) No. 3½ pull box.
     - 1) "SIGNAL" - Traffic signal circuits with or without lighting or sign lighting circuits.
     - 2) "LIGHTING" - Lighting or sign lighting circuits where voltage is under 600 V.
   - B) No. 5, 6, 9 or 9A pull box.
     - 1) "TRAFFIC SIGNAL" - Traffic signal circuits with or without lighting or sign lighting circuits.
     - 2) "LIGHTING" - Lighting or sign lighting circuits where voltage is under 600 V.
     - 3) "LIGHTING-HIGH VOLTAGE" - Lighting or sign lighting circuits where voltage is above 600 V.
     - 4) "IRRIGATION" - Circuits to irrigation controller 120 V or more.
     - 5) "RAMP METER" - Ramp meter circuits.
     - 6) "COUNT STATION" - Count or speed monitor circuits.
     - 7) "COMMUNICATIONS" - Communication circuits.
     - 8) "TOS COMMUNICATIONS" - TOS communication line.
     - 9) "TOS POWER" - TOS power.
     - 10) "TDC POWER" - Telephone demarcation cabinet power.
     - 11) "CCTV" - Closed circuit television circuits.
     - 12) "TMS" - Traffic monitoring station circuits.
     - 13) "CMS" - Changeable message sign circuits.
     - 14) "HAR" - Highway advisory radio circuits.
     - 15) "BOOSTER PUMP" - Booster pump circuit.
2. The nominal dimensions of the opening in which the cover sets shall be the same as the cover dimensions except the length and width dimensions shall be ⅛" greater.
3. Covers and boxes shall be interchangeable with California standard male and female gages. When interchanged with a standard male or female gage, the top surfaces shall be flush within ⅛". Top outside radius of covers and pull boxes shall have a ⅛" radius.
4. Pull box extension may be another pull box as long as the bottom edge of the pull box can fit into the cover opening.
5. All dimensions for the cover for non-traffic pull box are nominal values.

STATE OF CALIFORNIA
DEPARTMENT OF TRANSPORTATION

# ELECTRICAL SYSTEMS (NON-TRAFFIC PULL BOX)

NO SCALE

RSP ES-8A DATED JULY 19, 2013 SUPERSEDES RSP ES-8A DATED JANUARY 20, 2012 THAT SUPPLEMENTS THE STANDARD PLANS BOOK DATED 2010.

**REVISED STANDARD PLAN RSP ES-8A**

**2010 REVISED STANDARD PLAN RSP ES-8A**

7-15-13

| Dist | COUNTY | ROUTE | POST MILES TOTAL PROJECT | SHEET No. | TOTAL SHEETS |
|---|---|---|---|---|---|
| 11 | Imp | 8 | R38.8/R39.1 | 195 | 225 |

Theresa Gabriel
REGISTERED ELECTRICAL ENGINEER

July 19, 2013
PLANS APPROVAL DATE

REGISTERED PROFESSIONAL ENGINEER
Theresa Aziz Gabriel
No. E15129
Exp. 6-30-14
ELECTRICAL
STATE OF CALIFORNIA

*THE STATE OF CALIFORNIA OR ITS OFFICERS OR AGENTS SHALL NOT BE RESPONSIBLE FOR THE ACCURACY OR COMPLETENESS OF SCANNED COPIES OF THIS PLAN SHEET.*

TO ACCOMPANY PLANS DATED 04-07-14

**2010 REVISED STANDARD PLAN RSP ES-10A**

## ISOFOOTCANDLE CURVE - MINIMUM

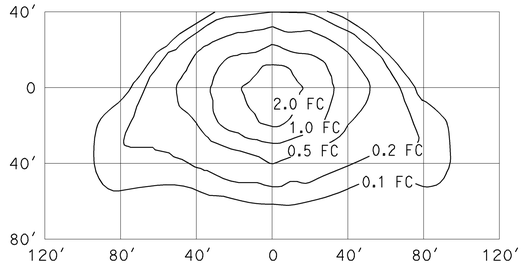


### TYPE III MEDIUM CUTOFF

Cutoff Luminaire
34′ Mounting Height
Lamp operated at 22,000 lm
200-W high pressure sodium lamp
ANSI Designation S66

## ISOFOOTCANDLE CURVE - MINIMUM

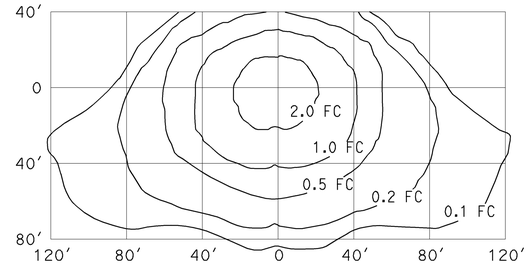


### TYPE III MEDIUM CUTOFF

Cutoff Luminaire
40′ Mounting Height
Lamp operated at 37,000 lm
310-W high pressure sodium lamp
ANSI Designation S67

## ISOFOOTCANDLE CURVE - MINIMUM

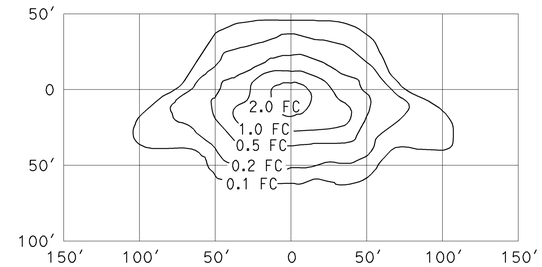


### TYPE III MEDIUM CUTOFF

Cutoff Luminaire
30′ Mounting Height
Lamp operated at 16,000 lm
150-W high pressure sodium lamp
ANSI Designation S55

## ISOFOOTCANDLE CURVE - MINIMUM

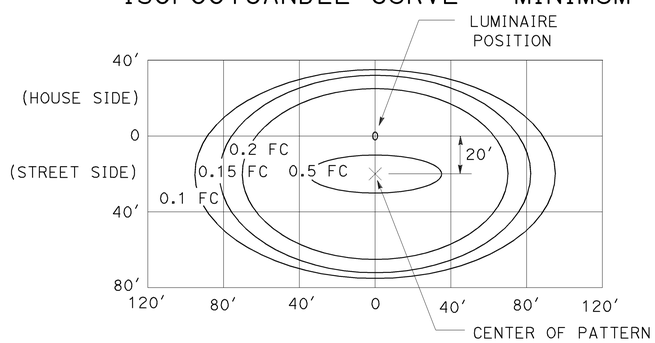


### LED LUMINAIRE ROADWAY 1

165-W at 34′ Mounting Height

## ISOFOOTCANDLE CURVE - MINIMUM

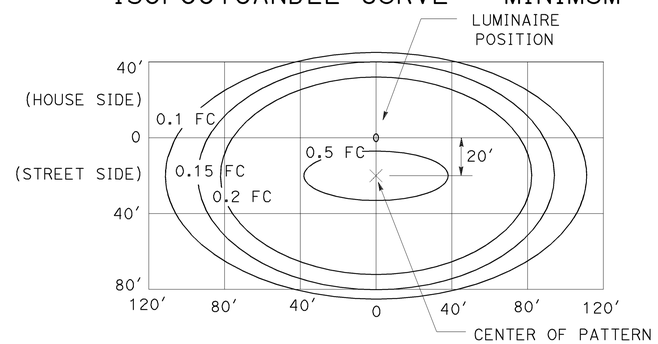


### LED LUMINAIRE ROADWAY 2

235-W at 40′ Mounting Height

## ISOFOOTCANDLE CURVE - MINIMUM

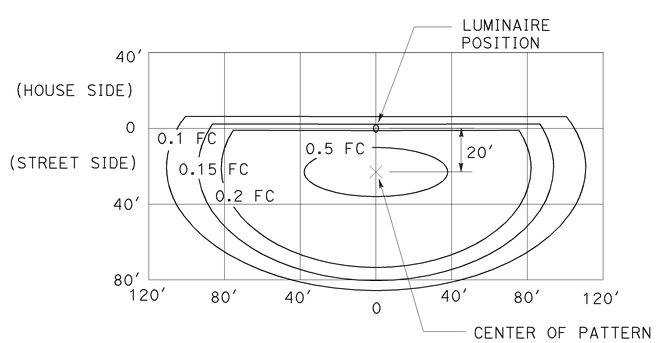


### LED LUMINAIRE ROADWAY 3

235-W at 40′ Mounting Height
with back side control

## ISOFOOTCANDLE CURVE - MINIMUM

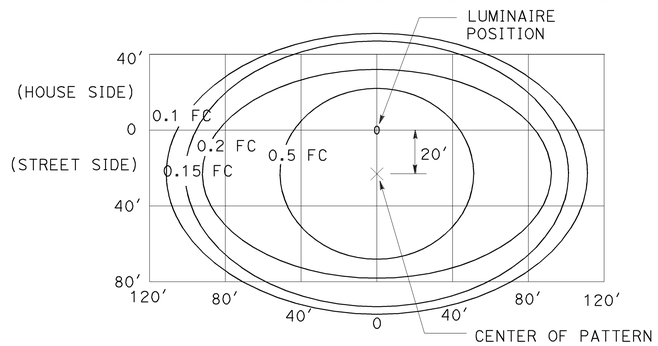


### LED LUMINAIRE ROADWAY 4

300-W at 40′ Mounting Height

## ISOFOOTCANDLE CURVE - MINIMUM

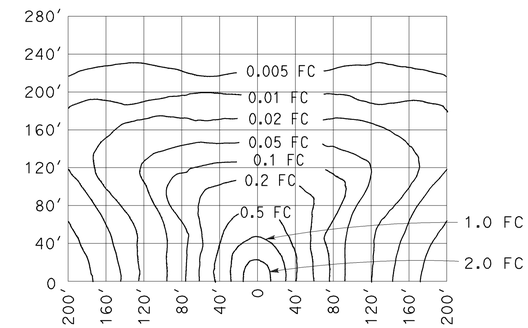


### LOW PRESSURE SODIUM LUMINAIRE

40′ Mounting Height
Lamp operated at 33,000 lm
180-W low pressure sodium lamp

STATE OF CALIFORNIA
DEPARTMENT OF TRANSPORTATION

# ELECTRICAL SYSTEMS (ISOFOOTCANDLE DIAGRAMS)

NO SCALE

RSP ES-10A DATED JULY 19, 2013 SUPERSEDES RSP ES-10A DATED JULY 20, 2012 THAT SUPPLEMENTS THE STANDARD PLANS BOOK DATED 2010.

**REVISED STANDARD PLAN RSP ES-10A**

| Dist | COUNTY | ROUTE | POST MILES TOTAL PROJECT | SHEET No. | TOTAL SHEETS |
|---|---|---|---|---|---|
| 11 | Imp | 8 | R38.8/R39.1 | 196 | 225 |

REGISTERED CIVIL ENGINEER

July 19, 2013
PLANS APPROVAL DATE

REGISTERED PROFESSIONAL ENGINEER
Stanley P. Johnson
No. C57793
Exp. 3-31-14
CIVIL
STATE OF CALIFORNIA

*THE STATE OF CALIFORNIA OR ITS OFFICERS OR AGENTS SHALL NOT BE RESPONSIBLE FOR THE ACCURACY OR COMPLETENESS OF SCANNED COPIES OF THIS PLAN SHEET.*

TO ACCOMPANY PLANS DATED 04-07-14

| STANDARD TYPE | SETBACK (DIMENSION A) |
|---|---|
| 32 | 30'-0" (Min) |
| 31 | 20'-0" (Min) |
| 15, 15D, 15-SB, 21, 21D, 30 | ARM LENGTH (Min) |

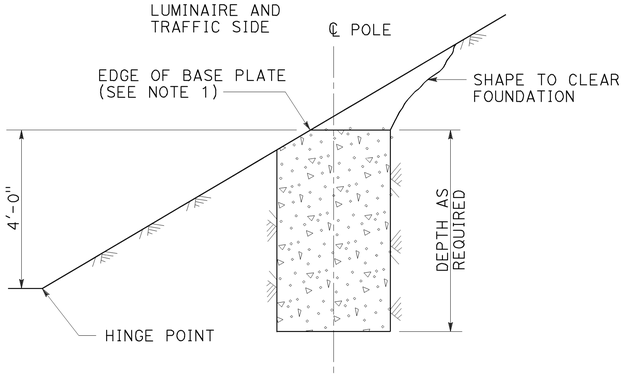


CUT SLOPES
STEEPER THAN 4:1,
LESS THAN 2:1
DETAIL A-1
See Note 2 and 3

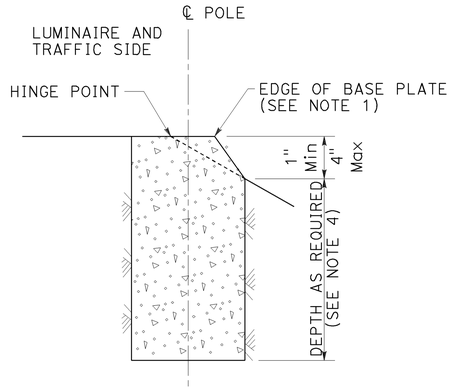


FILL SLOPES
STEEPER THAN 4:1,
LESS THAN 2:1
DETAIL A-2
See Note 2 and 3

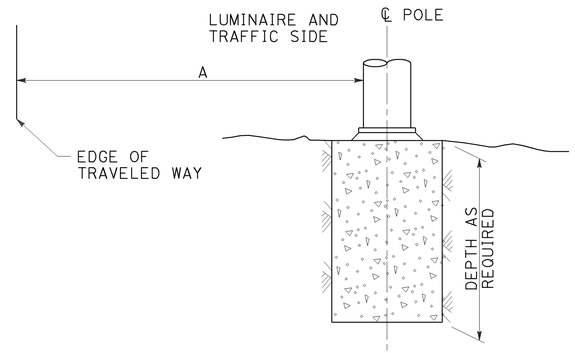


FLAT SECTIONS, CUT OR FILL SLOPES
4:1 OR FLATTER
DETAIL A-3
See Note 2

FOUNDATIONS ADJACENT TO ALL ROADWAYS EXCEPT
IN SIDEWALK, MEDIAN AND ISLAND AREAS
DETAIL A

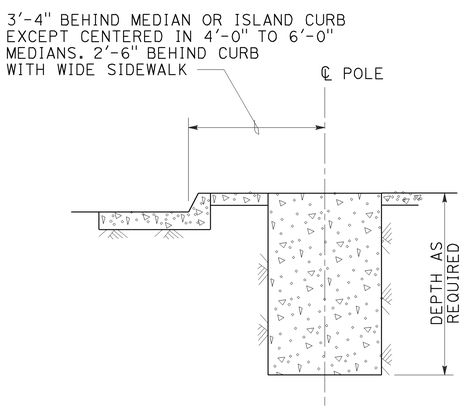


MEDIAN, ISLAND
OR WIDE SIDEWALK
DETAIL B-1
7' Wide and wider

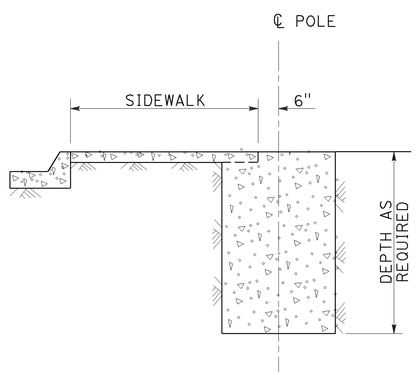


NARROW SIDEWALK
DETAIL B-2
Less than 7' wide

FOUNDATIONS IN SIDEWALK, MEDIAN AND ISLAND AREAS
DETAIL B

NOTES:

1. Where a portion of the foundation is above grade, the top edges shall have a 1" chamfer.
2. Slopes shall be horizontal to vertical ratio (Horizontal : Vertical).
3. Horizontal setbacks on cut and fill slopes steeper than 4:1 shall not exceed the distance shown for flat sections.
4. CIDH embedment depth shall be increased beyond standard depths by the diameter of the CIDH.

STATE OF CALIFORNIA
DEPARTMENT OF TRANSPORTATION

# ELECTRICAL SYSTEMS (FOUNDATION INSTALLATIONS)

NO SCALE

RSP ES-11 DATED JULY 19, 2013 SUPERSEDES STANDARD PLAN ES-11
DATED MAY 20, 2011 - PAGE 488 OF THE STANDARD PLANS BOOK DATED 2010.

**REVISED STANDARD PLAN RSP ES-11**

**2010 REVISED STANDARD PLAN RSP ES-11**

7-9-13

| DIST | COUNTY | ROUTE | POST MILES TOTAL PROJECT | SHEET No. | TOTAL SHEETS |
|---|---|---|---|---|---|
| 11 | IMP | 8 | R38.8/R39.1 | 197 | 225 |

REGISTERED CIVIL ENGINEER — DATE 02-13-13

04-07-14
PLANS APPROVAL DATE

REGISTERED PROFESSIONAL ENGINEER — EDWARD B. MU — No. C72567 — Exp. 06-30-14 — CIVIL — STATE OF CALIFORNIA

*The State of California or its officers or agents shall not be responsible for the accuracy or completeness of electronic copies of this plan sheet.*

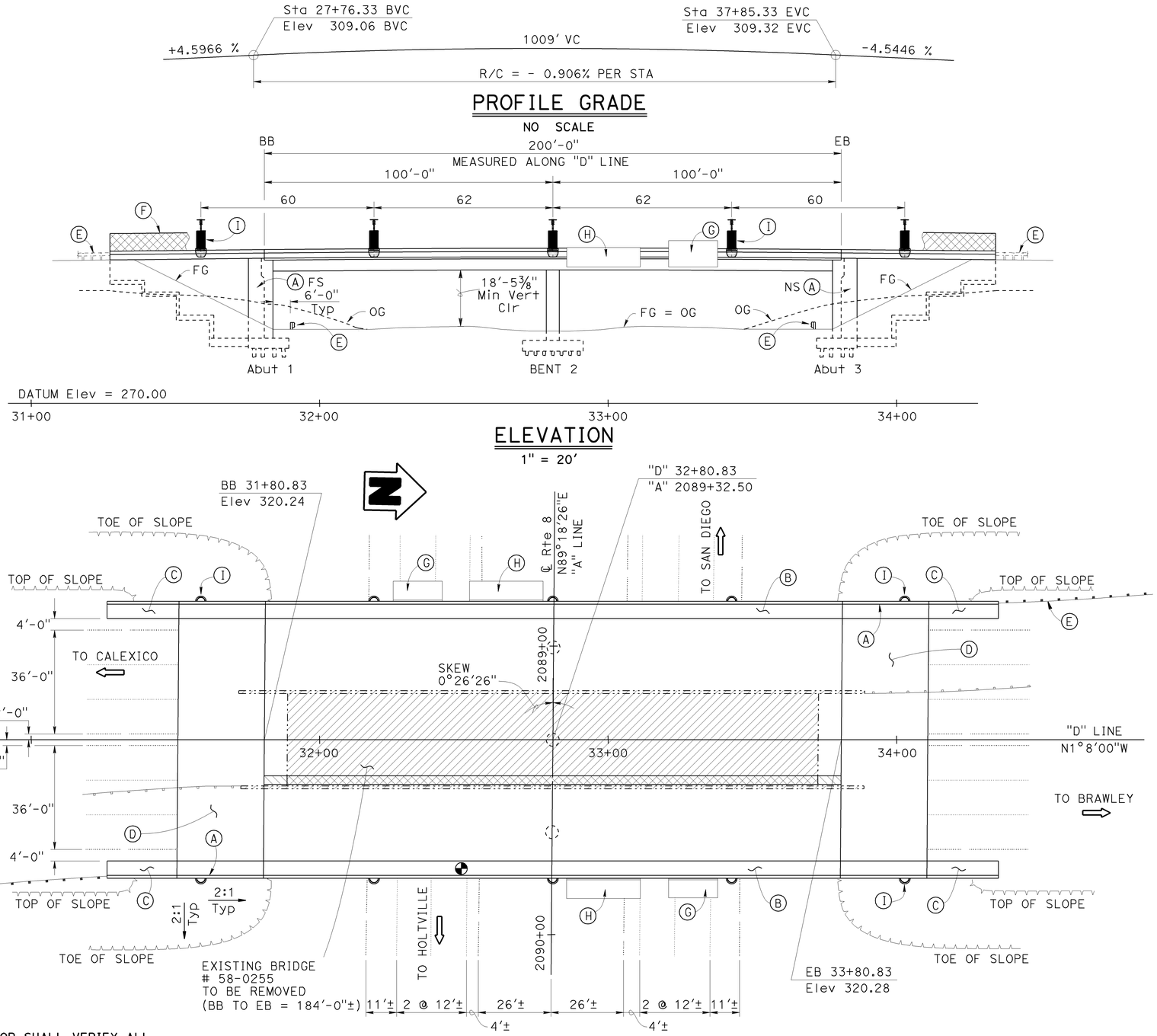


NOTE:
THE CONTRACTOR SHALL VERIFY ALL CONTROLLING FIELD DIMENSIONS BEFORE ORDERING OR FABRICATING ANY MATERIAL.

DOGWOOD ROAD UC #58-0351

QUANTITIES

| | | |
|---|---|---|
| BRIDGE REMOVAL | LUMP | SUM |
| STRUCTURE EXCAVATION (BRIDGE) | 3,350 | CY |
| STRUCTURE EXCAVATION (TYPE D) | 300 | CY |
| STRUCTURE BACKFILL (BRIDGE) | 3,300 | CY |
| 3" SUPPLY LINE (BRIDGE) | 320 | LF |
| FURNISH PILING (CLASS 140) (ALTERNATIVE V) | 25,583 | LF |
| DRIVE PILE (CLASS 140) (ALTERNATIVE V) | 336 | EA |
| PRESTRESSING CAST-IN-PLACE CONCRETE | LUMP | SUM |
| STRUCTURAL CONCRETE, BRIDGE FOOTING | 760 | CY |
| STRUCTURAL CONCRETE, BRIDGE | 2,080 | CY |
| STRUCTURAL CONCRETE, APPROACH SLAB (TYPE N) | 215 | CY |
| RANDOM FLUTE TEXTURE | 1,320 | SQFT |
| JOINT SEAL (MR 1½") | 190 | LF |
| BAR REINFORCING STEEL (BRIDGE) | 719,000 | LB |
| HEADED BAR REINFORCEMENT | 445 | EA |
| WELDED STEEL PIPE CASING (BRIDGE) | 125 | LF |
| BRIDGE DECK DRAINAGE SYSTEM | 4,100 | LB |
| PERFORATED STEEL SCREEN (SCONCE) | 10 | EA |
| CHAIN LINK RAILING (TYPE 7) | 614 | LF |
| CONCRETE BARRIER (TYPE 26 MODIFIED) | 520 | LF |
| CONCRETE BARRIER (TYPE 26A MODIFIED) | 94 | LF |

## LEGEND:

- Existing Structure
- New Structure
- Bridge Removal
- Closure Pour
- Location of Minimum Vertical Clearance
- Traffic Direction

## NOTES:

(A) Paint "Br No. 58-0351" and "Dogwood Road OC"

(B) Concrete Barrier, Type 26 (Mod)

(C) Concrete Barrier, Type 26A (Mod)

(D) Structure Approach, Type N(30S)

(E) MGS, see "ROAD PLANS"

(F) Chain Link Railing, Type 7

(G) Bridge Mounted Sign, see "ROAD PLANS"

(H) Changeable Message Sign, see "ROAD PLANS"

(I) Electrolier, see "ROAD PLANS"

HOWARD NG
DESIGN ENGINEER

| | BY | CHECKED | | |
|---|---|---|---|---|
| DESIGN | EDWARD B. MU | JASON FANG | LOAD & RESISTANCE FACTOR DESIGN | LIVE LOADING: HL93 W/"LOW-BOY"; PERMIT DESIGN VEHICLE |
| DETAILS | A. ONG/LAN T. TRAN | JASON FANG | LAYOUT: EDWARD B. MU | CHECKED: JASON FANG |
| QUANTITIES | EDWARD B. MU | MOHAMMAD MUQTADIR | SPECIFICATIONS: MARY KOPSA | PLANS AND SPECS COMPARED: MARY KOPSA |

ORIGINAL SCALE IN INCHES FOR REDUCED PLANS 0 1 2 3

STATE OF CALIFORNIA
DEPARTMENT OF TRANSPORTATION

DIVISION OF ENGINEERING SERVICES
STRUCTURE DESIGN
DESIGN BRANCH 20

BRIDGE NO. 58-0351
POST MILE R39.0

# DOGWOOD ROAD OC (REPLACE)
## GENERAL PLAN NO. 1

UNIT: 3622
PROJECT NUMBER & PHASE: 1100000743-1
CONTRACT NO.: 11-263301

DISREGARD PRINTS BEARING EARLIER REVISION DATES
REVISION DATES: 07/31/13 08/19/13 05/30/13

SHEET 1 OF 29

USERNAME => s136853 DATE PLOTTED => 19-SEP-2013 TIME PLOTTED => 09:48

STRUCTURES DESIGN GENERAL PLAN SHEET (ENGLISH) (REV.09-01-10)

FILE => 58-0351-a-gp01.dgn

| DIST | COUNTY | ROUTE | POST MILES TOTAL PROJECT | SHEET No. | TOTAL SHEETS |
|---|---|---|---|---|---|
| 11 | IMP | 8 | R38.8/R39.1 | 198 | 225 |

REGISTERED CIVIL ENGINEER 02-13-13 DATE

04-07-14
PLANS APPROVAL DATE

REGISTERED PROFESSIONAL ENGINEER EDWARD B. MU No. C72567 Exp. 06-30-14 CIVIL STATE OF CALIFORNIA

*The State of California or its officers or agents shall not be responsible for the accuracy or completeness of electronic copies of this plan sheet.*

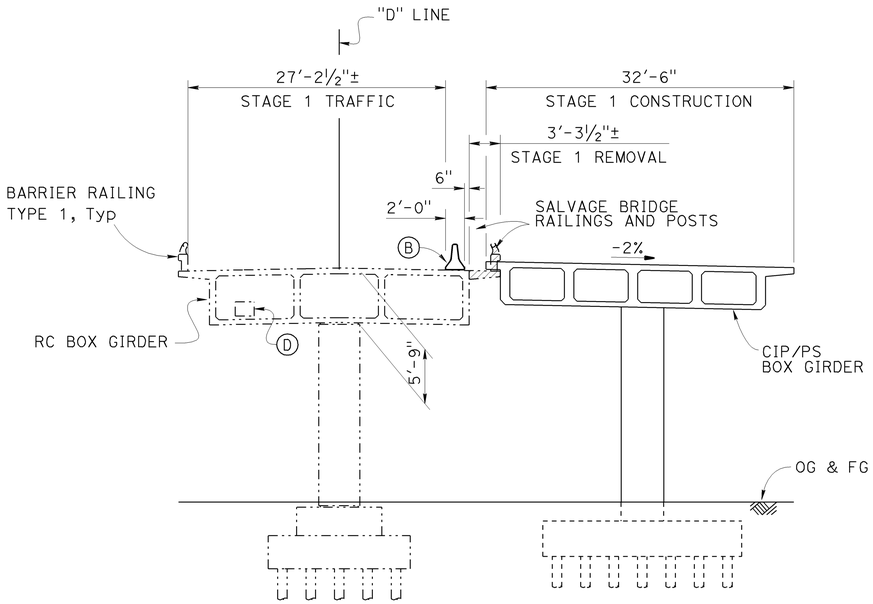


## TYPICAL SECTION - STAGE 1

⅛" = 1'-0"

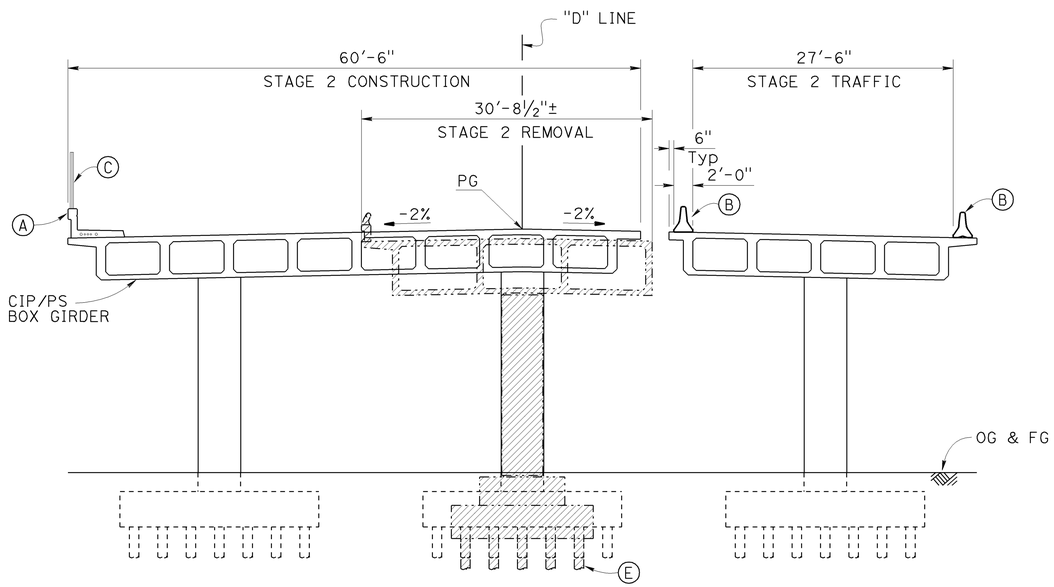


## TYPICAL SECTION - STAGE 2

⅛" = 1'-0"

NOTE:
THE CONTRACTOR SHALL VERIFY ALL CONTROLLING FIELD DIMENSIONS BEFORE ORDERING OR FABRICATING ANY MATERIAL.

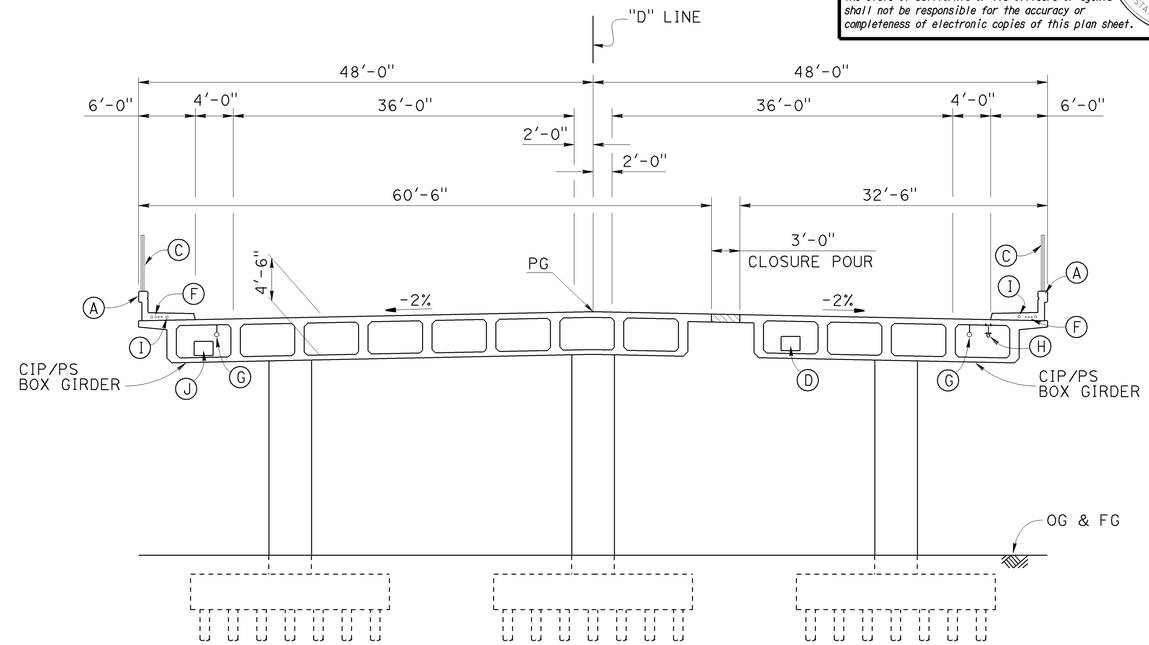


## TYPICAL SECTION - FINAL

⅛" = 1'-0"

## NOTES:

- (A) Concrete Barrier, Type 26 (Mod)
- (B) Temporary Railing, Type K. Attachment detail, see "MISCELLANEOUS DETAILS" sheet
- (C) Chain Link Railing, Type 7
- (D) Exist AT&T Fiber Optic Cable to be relocated to the new structure, see "ROAD PLANS"
- (E) Cut existing piles 3 ft below the bottom of the existing footing and drive Alternative "V" steel pipe piles in between the existing piles
- (F) 1-3"ø, 3-2"ø Conduits for Communication, Signal, Sign and Lighting, see "ROAD PLANS"
- (G) Drain Pipe, Type D-1 (B7-8)
- (H) 3"ø Water Supply Line (B14-4)
- (I) 3"ø Sprinkler Control Conduit, see "ROAD PLANS"
- (J) Future Utility opening (B7-10)

## LEGEND:

- Indicates New Structure
- Indicates Existing Structure
- Concrete Removal (Br No. 58-0255)
- Closure Pour

HOWARD NG
DESIGN ENGINEER

| | | | | |
|---|---|---|---|---|
| DESIGN | BY EDWARD B. MU | CHECKED JASON FANG | LOAD & RESISTANCE FACTOR DESIGN | LIVE LOADING: HL93 W/"LOW-BOY"; PERMIT DESIGN VEHICLE |
| DETAILS | BY A. ONG/LAN T. TRAN | CHECKED JASON FANG | LAYOUT BY EDWARD B. MU | CHECKED JASON FANG |
| QUANTITIES | BY EDWARD B. MU | CHECKED MOHAMMAD MUQTADIR | SPECIFICATIONS BY MARY KOPSA | PLANS AND SPECS COMPARED MARY KOPSA |

STATE OF CALIFORNIA
DEPARTMENT OF TRANSPORTATION

DIVISION OF ENGINEERING SERVICES
STRUCTURE DESIGN
DESIGN BRANCH 20

BRIDGE NO. 58-0351
POST MILE R39.0

# DOGWOOD ROAD OC (REPLACE)
# GENERAL PLAN NO. 2

ORIGINAL SCALE IN INCHES FOR REDUCED PLANS 0 1 2 3

UNIT: 3622
PROJECT NUMBER & PHASE: 1100000743-1
CONTRACT NO.: 11-263301

DISREGARD PRINTS BEARING EARLIER REVISION DATES
REVISION DATES 01/31/13 09/09/13 05/30/13
SHEET 2 OF 29

USERNAME => s136853 DATE PLOTTED => 19-SEP-2013 TIME PLOTTED => 09:48

STRUCTURES DESIGN GENERAL PLAN SHEET (ENGLISH) (REV.09-01-10)

FILE => 58-0351-a-gp02.dgn

| DIST | COUNTY | ROUTE | POST MILES TOTAL PROJECT | SHEET No. | TOTAL SHEETS |
|---|---|---|---|---|---|
| 11 | IMP | 8 | R38.8/R39.1 | 199 | 225 |

REGISTERED CIVIL ENGINEER 02-13-13 DATE

04-07-14
PLANS APPROVAL DATE

REGISTERED PROFESSIONAL ENGINEER EDWARD B. MU No. C72567 Exp. 06-30-14 CIVIL STATE OF CALIFORNIA

*The State of California or its officers or agents shall not be responsible for the accuracy or completeness of electronic copies of this plan sheet.*

## INDEX TO PLANS


| NO. | TITLE |
|---|---|
| 1. | GENERAL PLAN NO. 1 |
| 2. | GENERAL PLAN NO. 2 |
| 3. | INDEX TO PLANS |
| 4. | DECK CONTOURS |
| 5. | FOUNDATION PLAN |
| 6. | ABUTMENT LAYOUT |
| 7. | ABUTMENT DETAILS NO. 1 |
| 8. | ABUTMENT DETAILS NO. 2 |
| 9. | ABUTMENT DETAILS NO. 3 |
| 10. | RETAINING WALL DETAILS NO. 1 |
| 11. | RETAINING WALL DETAILS NO. 2 |
| 12. | BENT LAYOUT |
| 13. | BENT DETAILS |
| 14. | TYPICAL SECTION |
| 15. | GIRDER LAYOUT-RIGHT |
| 16. | GIRDER LAYOUT-LEFT |
| 17. | GIRDER REINFORCEMENT-RIGHT |
| 18. | GIRDER REINFORCEMENT-LEFT |
| 19. | SCONCE DETAILS |
| 20. | PERFORATED STEEL SCREEN ENCLOSURE-SCONCE |
| 21. | DECK DRAINAGE |
| 22. | STRUCTURE APPROACH TYPE N(30S) |
| 23. | STRUCTURE APPROACH DRAINAGE DETAILS |
| 24. | MISCELLANEOUS DETAILS |
| 25. | LOG OF TEST BORINGS 1 OF 5 |
| 26. | LOG OF TEST BORINGS 2 OF 5 |
| 27. | LOG OF TEST BORINGS 3 OF 5 |
| 28. | LOG OF TEST BORINGS 4 OF 5 |
| 29. | LOG OF TEST BORINGS 5 OF 5 |


## STANDARD PLANS DATED 2010

| | | |
|---|---|---|
| | A10A | ABBREVIATIONS (SHEET 1 OF 2) |
| RSP | A10B | ABBREVIATIONS (SHEET 2 OF 2) |
| | A10C | LINES AND SYMBOLS (SHEET 1 OF 3) |
| | A10D | LINES AND SYMBOLS (SHEET 2 OF 3) |
| | A10E | LINES AND SYMBOLS (SHEET 3 OF 3) |
| | A62B | LIMITS OF PAYMENT FOR EXCAVATION AND BACKFILL BRIDGE SURCHARGE AND WALL |
| | A62C | LIMITS OF PAYMENT FOR EXCAVATION AND BACKFILL BRIDGE |
| | B0-1 | BRIDGE DETAILS |
| | B0-3 | BRIDGE DETAILS |
| | B0-5 | BRIDGE DETAILS |
| | B0-13 | BRIDGE DETAILS |
| | B2-5 | PILE DETAILS CLASS 90 AND CLASS 140 |
| RSP | B3-1A | RETAINING WALL TYPE 1 (CASE 1) |
| RSP | B3-5 | RETAINING WALL DETAILS NO. 1 |
| | B6-21 | JOINT SEALS (MAXIMUM MOVEMENT RATING=2") |
| | B7-1 | BOX GIRDER DETAILS |
| | B7-6 | DECK DRAINS TYPES D-1 AND D-2 |
| | B7-8 | DECK DRAINAGE DETAILS |
| | B7-10 | UTILITY OPENING, BOX GIRDER |
| RSP | B8-5 | CAST-IN-PLACE PRESTRESSED GIRDER DETAILS |
| | B11-52 | CHAIN LINK RAILING TYPE 7 |
| RSP | B11-54 | CONCRETE BARRIER TYPE 26 |
| | B14-3 | COMMUNICATION AND SPRINKLER CONTROL CONDUITS (CONDUITS LESS THAN 4") |
| | B14-4 | WATER SUPPLY LINE (BRIDGE) (PIPE SIZES LESS THAN 4") |
| | B14-5 | WATER SUPPLY LINE (DETAILS) (PIPE SIZES LESS THAN 4") |
| | T3A | TEMPORARY RAILING (TYPE K) |
| | T3B | TEMPORARY RAILING (TYPE K) |

STANDARD PLAN SHEET NO.

DETAIL NO.

## GENERAL NOTES

## LOAD AND RESISTANCE FACTOR DESIGN

DESIGN: AASHTO LRFD Bridge Design Specifications, 4th edition and the Caltrans Amendments, preface dated November 2011, except that geotechnical design of deep foundations, earth retaining systems, and brigde (incl. barrier and railing) details taken from Standard Plans 2010 and Standard Bridge Details XS sheets are designed using Bridge Design Specifications. ('96 AASHTO w/ Revisions by Caltrans)

SEISMIC DESIGN: Caltrans Seismic Design Criteria (SDC), Version 1.6 dated November 2010.

DEAD LOAD: Includes 35 PSF future wearing surface.

LIVE LOADING: HL93 and permit design load.

SEISMIC LOADING: Soil Profile: $V_{S30}$ = 755 ft/sec
Moment Magnitude = 7.0
Peak Ground Acceleration = 0.70g
(See Modified ARS Curve)

REINFORCED CONCRETE: $f_y$ = 60 ksi
$f'_c$ = 3.6 ksi
n = 8

PRESTRESSED CONCRETE: See "PRESTRESSING NOTES" on "GIRDER LAYOUT-RIGHT" and "GIRDER LAYOUT-LEFT" sheets.

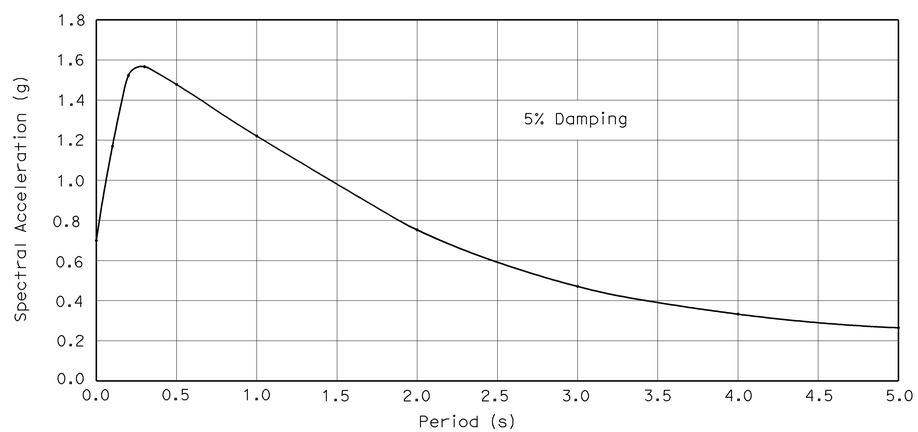


## MODIFIED ARS CURVE

## PILE DATA TABLE

| SUPPORT LOCATION | PILE TYPE | REQUIRED NOMINAL RESISTANCE (KIPS) PER PILE | | DESIGN TIP ELEVATION (FT) | SPECIFIED TIP ELEVATION (FT) |
|---|---|---|---|---|---|
| | | COMPRESSION | TENSION | | |
| ABUTMENT 1 | CLASS 140 ALT "V" PILES | 200 Kips | 0 | 214.3 Ft (a) | 214.3 Ft |
| BENT 2 RIGHT | CLASS 140 ALT "V" PILES | 140 Kips | 50 Kips | 219.3 Ft (a)<br>248.8 Ft (b) | 219.3 Ft |
| BENT 2 MIDDLE | CLASS 140 ALT "V" PILES | 140 Kips | 30 Kips | 219.3 Ft (a)<br>248.8 Ft (b) | 219.3 Ft |
| BENT 2 LEFT | CLASS 140 ALT "V" PILES | 140 Kips | 30 Kips | 219.3 Ft (a)<br>248.8 Ft (b) | 219.3 Ft |
| ABUTMENT 3 | CLASS 140 ALT "V" PILES | 200 Kips | 0 | 204.7 Ft (a) | 204.7 Ft |

Note: Design tip elevations are controlled by:
(a) Compression (b) Tension

| | | | |
|---|---|---|---|
| DESIGN | BY EDWARD B. MU | CHECKED JASON FANG | |
| DETAILS | BY ANTONETTE L. ONG | CHECKED JASON FANG | |
| QUANTITIES | BY EDWARD B. MU | CHECKED MOHAMMAD MUQTADIR | |

STATE OF CALIFORNIA
DEPARTMENT OF TRANSPORTATION

DIVISION OF ENGINEERING SERVICES
STRUCTURE DESIGN
DESIGN BRANCH 20

BRIDGE NO. 58-0351
POST MILE R39.0

# DOGWOOD ROAD OC (REPLACE)

# INDEX TO PLANS

STRUCTURES DESIGN DETAIL SHEET (ENGLISH) (REV. 09-01-10)

ORIGINAL SCALE IN INCHES FOR REDUCED PLANS 0 1 2 3

UNIT: 3622
PROJECT NUMBER & PHASE: 1100000743-1
CONTRACT NO.: 11-263301

DISREGARD PRINTS BEARING EARLIER REVISION DATES

REVISION DATES 02/01/13 07/31/13 02/01/13

SHEET 3 OF 29

FILE => 58-0351-g-itp.dgn

USERNAME => s136853 DATE PLOTTED => 19-SEP-2013 TIME PLOTTED => 09:48

| DIST | COUNTY | ROUTE | POST MILES TOTAL PROJECT | SHEET No. | TOTAL SHEETS |
|---|---|---|---|---|---|
| 11 | IMP | 8 | R38.8/R39.1 | 200 | 225 |

REGISTERED CIVIL ENGINEER 02-13-13 DATE

04-07-14
PLANS APPROVAL DATE

REGISTERED PROFESSIONAL ENGINEER EDWARD B. MU No. C72567 Exp. 06-30-14 CIVIL STATE OF CALIFORNIA

*The State of California or its officers or agents shall not be responsible for the accuracy or completeness of electronic copies of this plan sheet.*

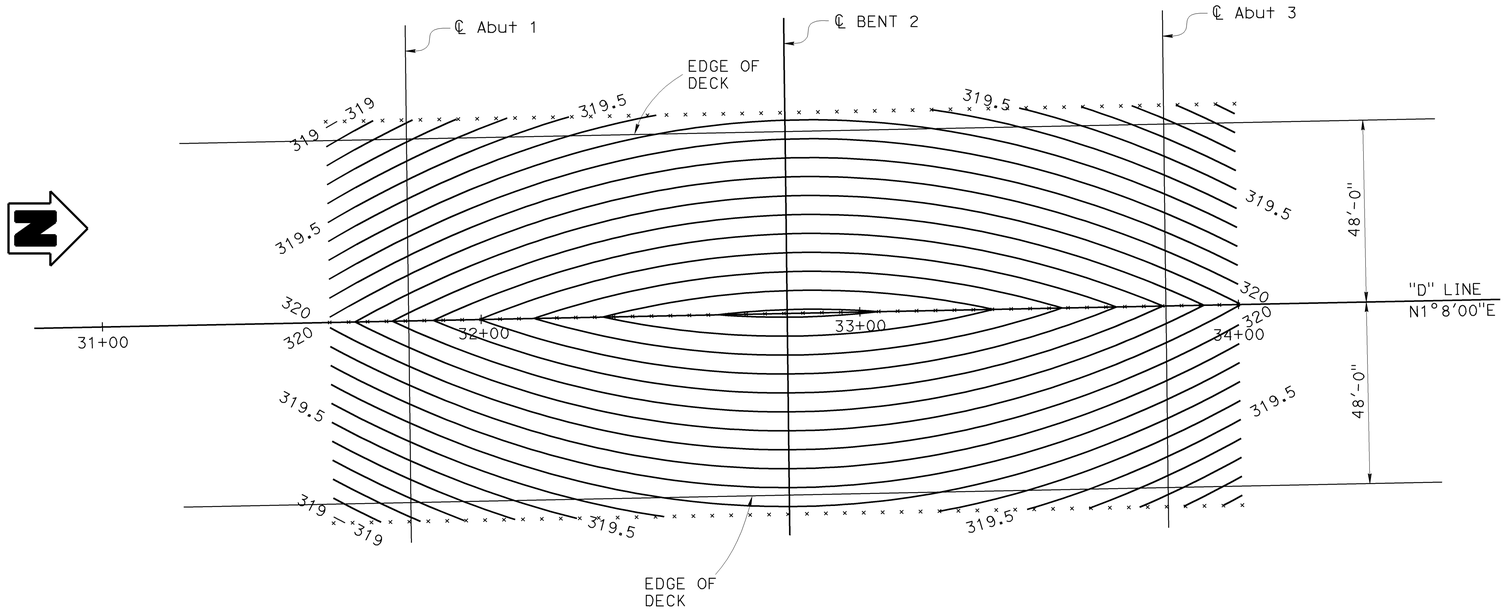


## PLAN

1" = 20'

## NOTES:

1. X Indicates 5 feet intervals along Station Line
2. Contours do not include Camber
3. Contour Interval = 0.1'

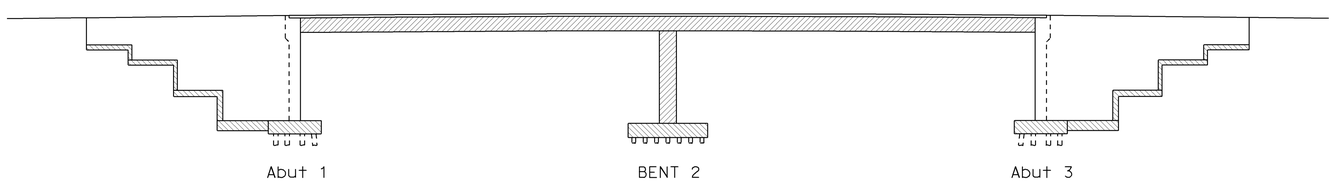


Structural Concrete, Bridge (f'c = 5.0 ksi at 28 days)

Structural Concrete, Bridge

Structural Concrete, Bridge Footing

## CONCRETE STRENGTH AND TYPE LIMITS

1" = 20'-0"

## NOTE:

Intermediate Wingwall shown on "ABUTMENT DETAILS NO. 3" sheet is Structural Concrete, Bridge

| | BY | CHECKED |
|---|---|---|
| DESIGN | EDWARD B. MU | JASON FANG |
| DETAILS | ANTONETTE L. ONG | JASON FANG |
| QUANTITIES | EDWARD B. MU | MOHAMMAD MUQTADIR |

STATE OF CALIFORNIA
DEPARTMENT OF TRANSPORTATION

DIVISION OF ENGINEERING SERVICES
STRUCTURE DESIGN
DESIGN BRANCH 20

BRIDGE NO. 58-0351
POST MILE R39.0

# DOGWOOD ROAD OC (REPLACE)
# DECK CONTOURS

STRUCTURES DESIGN DETAIL SHEET (ENGLISH) (REV. 09-01-10)

ORIGINAL SCALE IN INCHES FOR REDUCED PLANS 0 1 2 3

UNIT: 3622
PROJECT NUMBER & PHASE: 1100000743-1
CONTRACT NO.: 11-263301

DISREGARD PRINTS BEARING EARLIER REVISION DATES

REVISION DATES 02/14/13 12/28/12 02/13/13

SHEET 4 OF 29

FILE => 58-0351-d-dc01.dgn

USERNAME => s136853 DATE PLOTTED => 19-SEP-2013 TIME PLOTTED => 09:49