DIST	COUNTY	ROUTE	POST MILES TOTAL PROJECT	SHEET No.	TOTAL SHEETS
11	SD	08	R38.8/R39.1	201	225

09-12-13
REGISTERED CIVIL ENGINEER DATE

EDWARD B. MU
No. C72567
Exp. 06-30-14
CIVIL
REGISTERED PROFESSIONAL ENGINEER
STATE OF CALIFORNIA

04-07-14
PLANS APPROVAL DATE

The State of California or its officers or agents shall not be responsible for the accuracy or completeness of electronic copies of this plan sheet.

CURVE DATA				
No.	R	Δ	T	L
(1)	3000.00	03°12′41"	84.09′	168.14′

(A) STA. 32+80.83 "DGWD1R1" LINE =
STA. 2089+32.50 "8IMPA1′ LINE

(B) STA. 33+40.87 "DGWD1R1" LINE =
STA. 2089+32.10 "R5D2" LINE

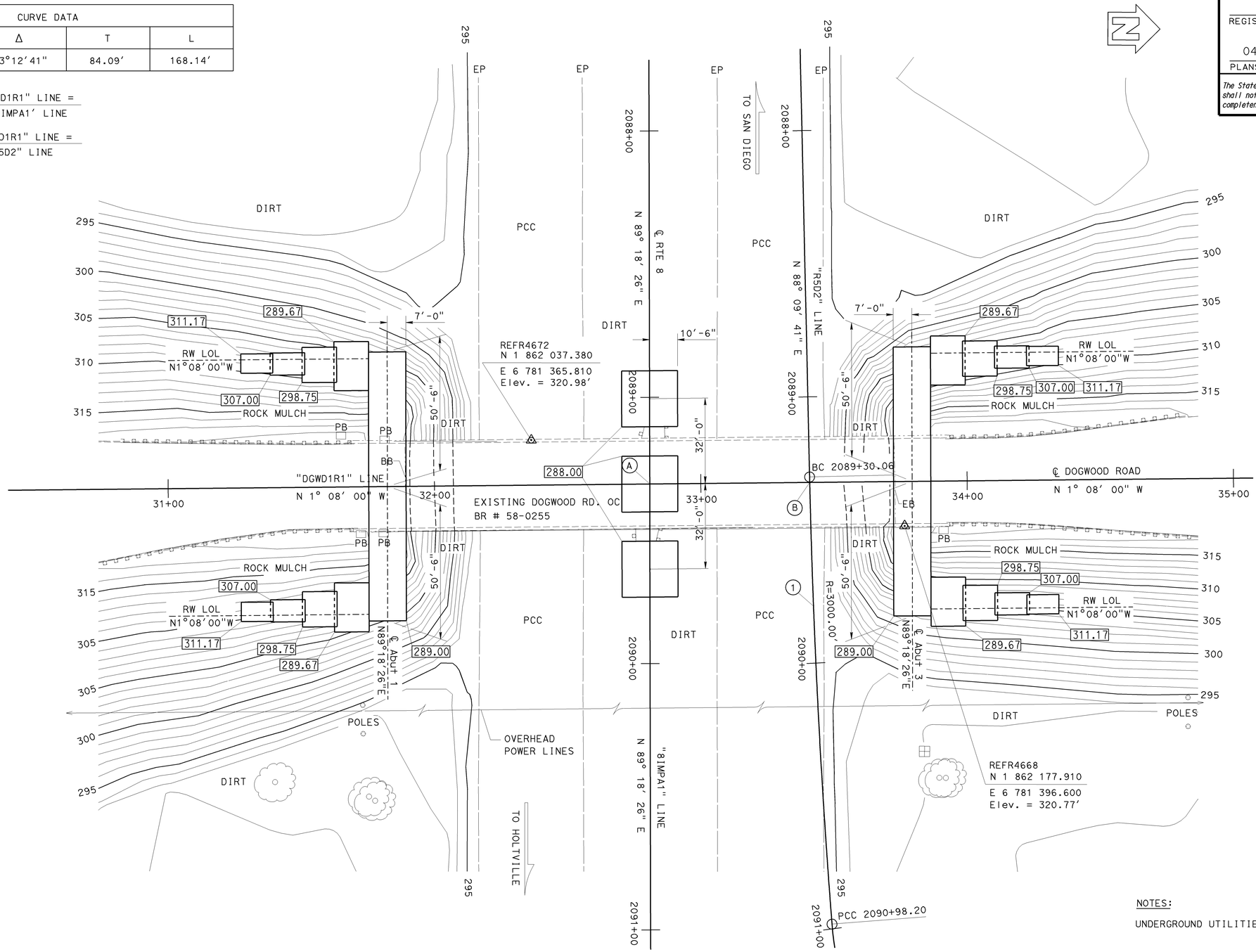

SURVEY CONTROL

REFR4668

CHSLD " X " IN BOLT
95.65′ Lt. ℄ Rte 8
Sta. 2089+48.45
N 1 862 177.910
E 6 781 396.600
Elev. = 320.77′

REFR4672

CHSLD "X" IN BOLT
44.49′ Rt. ℄ Rte 8
Sta. 2089+15.97
N 1 862 037.380
E 6 781 365.810
Elev. = 320.98′

NOTES:

UNDERGROUND UTILITIES AS SHOWN ARE APPROXIMATE

PRELIMINARY INVESTIGATION SECTION						DESIGN	BY EDWARD B. MU	CHECKED JASON FANG
SCALE 1"=20′	VERT.DATUM NAVD 88 + 328.08′	PHOTOGRAMMETRY AS OF: X				DETAILS	BY ANTONETTE L. ONG	CHECKED JASON FANG
	HORZ.DATUM NAD 83 (1991.35)	SURVEYED	BY C.STEWART / T.PHUNG	CHECKED	BY C. STEWART 5/2012	QUANTITIES	BY EDWARD B. MU	CHECKED MOHAMMAD MUQTADIR
	ALIGNMENT TIES Dist. Traverse Sheet	DRAFTED	BY S. ABASSY 5/2012	CHECKED	BY S. ALIVIO 5/2012			

STATE OF CALIFORNIA
DEPARTMENT OF TRANSPORTATION

DIVISION OF ENGINEERING SERVICES
STRUCTURE DESIGN
DESIGN BRANCH 20

BRIDGE NO. 58-0351
POST MILE 38.96

DOGWOOD RD. OC (REPLACE)
FOUNDATION PLAN

STRUCTURES FOUNDATION PLAN SHEET (ENGLISH) (REV. 09-01-10)

ORIGINAL SCALE IN INCHES FOR REDUCED PLANS 0 1 2 3

UNIT: 3622
PROJECT NUMBER & PHASE: 11 000000743-1 CONTRACT NO.: 11-263301

DISREGARD PRINTS BEARING EARLIER REVISION DATES →

REVISION DATES				SHEET	OF
05/31/12	09/06/12	09/13/2013	09/12/13	5	29

FILE => 58-0351-e-fdp101.dgn

DIST	COUNTY	ROUTE	POST MILES TOTAL PROJECT	SHEET No.	TOTAL SHEETS
11	IMP	8	R38.8/R39.1	202	225

REGISTERED CIVIL ENGINEER — DATE 02-13-13

PLANS APPROVAL DATE 04-07-14

EDWARD B. MU
No. C72567
Exp. 06-30-14
CIVIL
REGISTERED PROFESSIONAL ENGINEER
STATE OF CALIFORNIA

The State of California or its officers or agents shall not be responsible for the accuracy or completeness of electronic copies of this plan sheet.

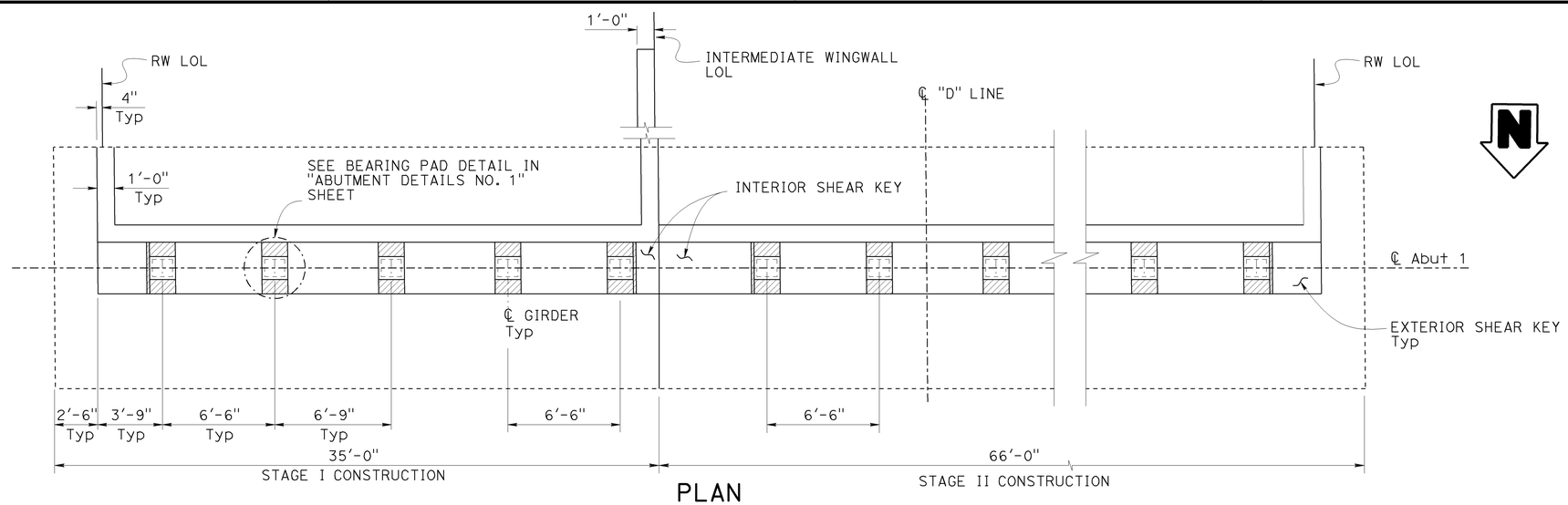

PLAN
1/4" = 1'

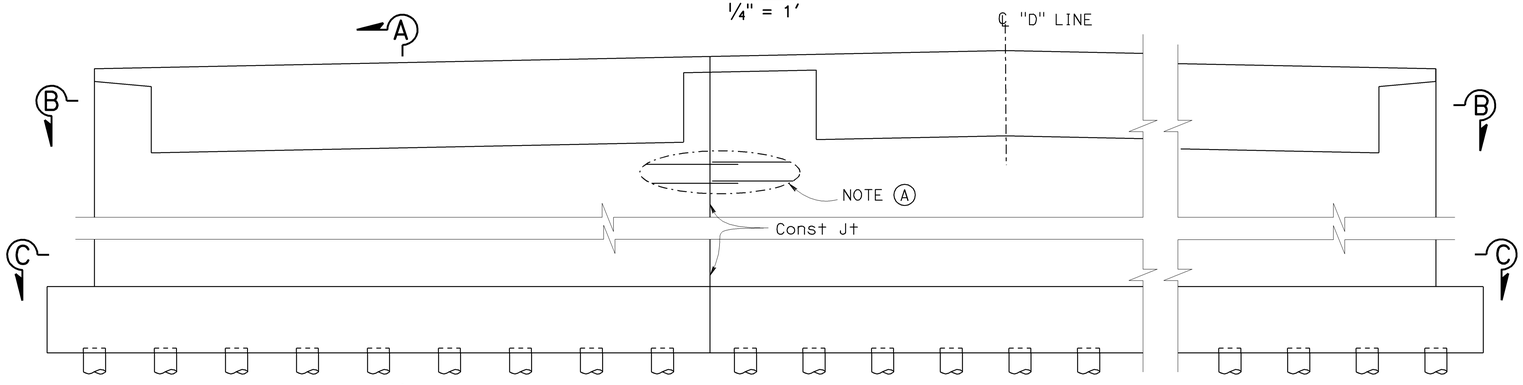

ELEVATION
1/4" = 1'-0"

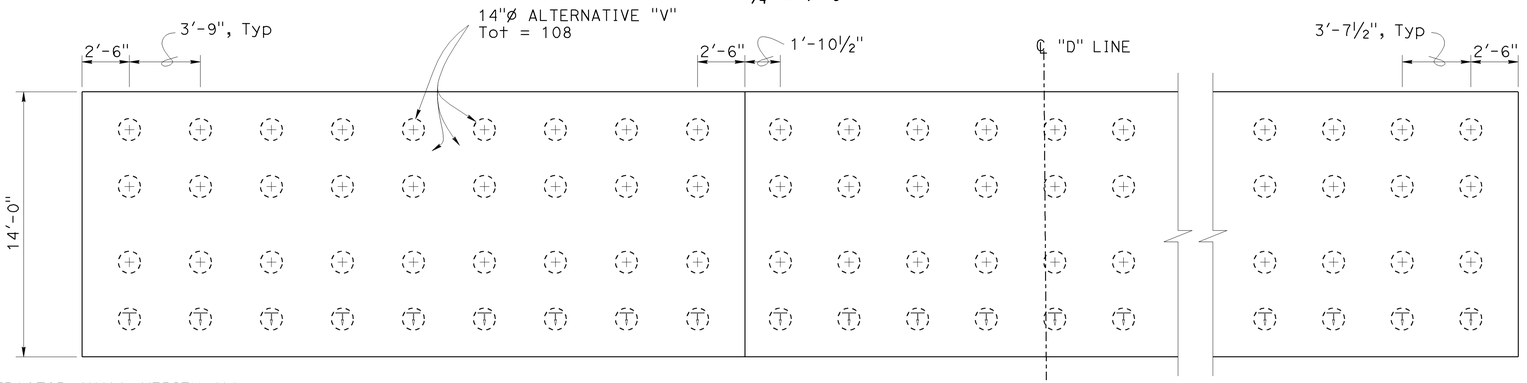

NOTE:
THE CONTRACTOR SHALL VERIFY ALL CONTROLLING FIELD DIMENSIONS BEFORE ORDERING OR FABRICATING ANY MATERIAL.

FOOTING PLAN
1/4" = 1'-0"

LEGEND:

- Expanded Polystyrene
- (T) Battered (1:9) Piles
- (+) Vertical Piles

NOTES:

1. For Bearing Pad Detail, see "ABUTMENT DETAILS NO. 1" sheet
2. Abutment 1 shown, Abutment 3 similar

NOTES:

(A) Splice horizontal reinforcement at construction joint
(B) For Section "A-A", see "ABUTMENT DETAILS NO. 1" sheet
(C) For Section "B-B" and Section "C-C", see "ABUTMENT DETAILS NO. 2" sheet

	BY	CHECKED
DESIGN	EDWARD B. MU	JASON FANG
DETAILS	ANTONETTE L. ONG	JASON FANG
QUANTITIES	EDWARD B. MU	MOHAMMAD MUQTADIR

STATE OF CALIFORNIA
DEPARTMENT OF TRANSPORTATION

DIVISION OF ENGINEERING SERVICES
STRUCTURE DESIGN
DESIGN BRANCH 20

BRIDGE NO. 58-0351
POST MILE R39.0

DOGWOOD ROAD OC (REPLACE)
ABUTMENT LAYOUT

STRUCTURES DESIGN DETAIL SHEET (ENGLISH) (REV. 09-01-10)

ORIGINAL SCALE IN INCHES FOR REDUCED PLANS 0 1 2 3

UNIT: 3622
PROJECT NUMBER & PHASE: 1100000743-1
CONTRACT NO.: 11-263301

DISREGARD PRINTS BEARING EARLIER REVISION DATES →

REVISION DATES				SHEET	OF
05/30/13	08/19/13		12/19/12	6	29

FILE => 58-0351-f-a01_to1.dgn

USERNAME => s136853 DATE PLOTTED => 19-SEP-2013 TIME PLOTTED => 09:49

DIST	COUNTY	ROUTE	POST MILES TOTAL PROJECT	SHEET No.	TOTAL SHEETS
11	IMP	8	R38.8/R39.1	203	225

REGISTERED CIVIL ENGINEER — DATE 02-13-13

EDWARD B. MU No. C72567 Exp. 06-30-14 CIVIL — REGISTERED PROFESSIONAL ENGINEER — STATE OF CALIFORNIA

04-07-14
PLANS APPROVAL DATE

The State of California or its officers or agents shall not be responsible for the accuracy or completeness of electronic copies of this plan sheet.

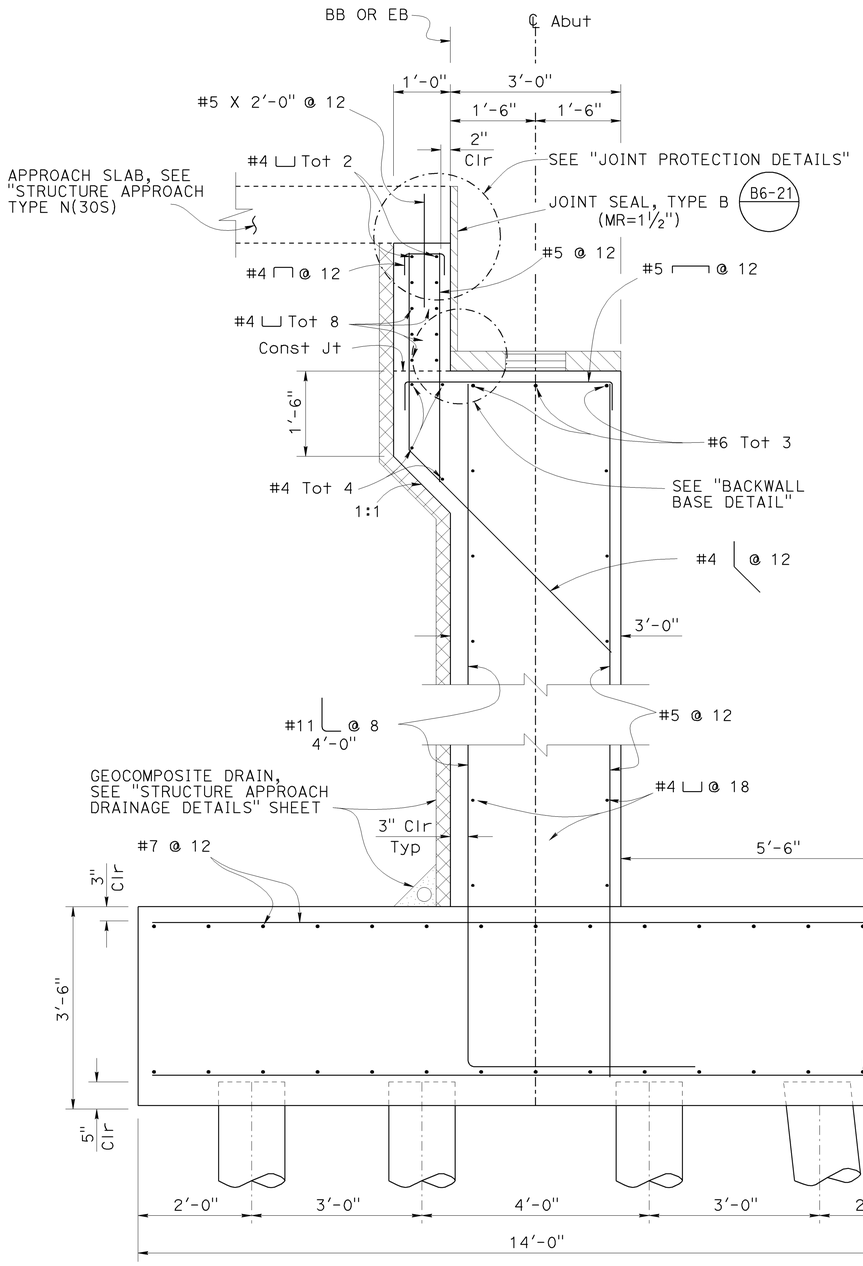

TYPICAL SECTION

¾" = 1'-0"

NOTE:
THE CONTRACTOR SHALL VERIFY ALL CONTROLLING FIELD DIMENSIONS BEFORE ORDERING OR FABRICATING ANY MATERIAL.

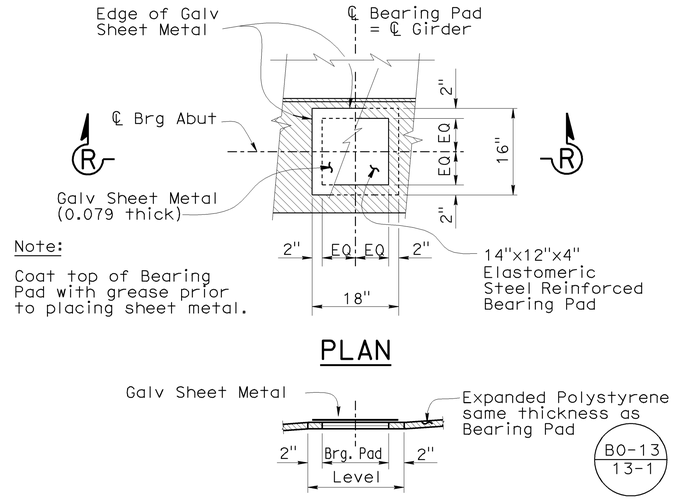

PLAN

SECTION R-R

BEARING PAD DETAIL

No Scale
Details typical at all bearing pads

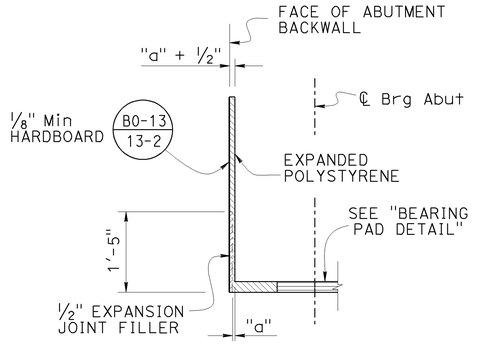

BACKWALL BASE DETAIL

No Scale

NOTE:
For "a" dimension, see "JOINT SEALS" (MAXIMUM MOVEMENT RATING = 2") sheet. B6-21

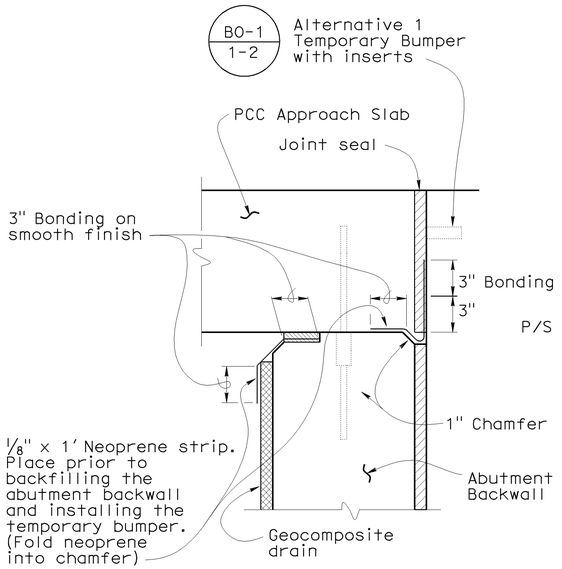

JOINT PROTECTION DETAIL

No Scale

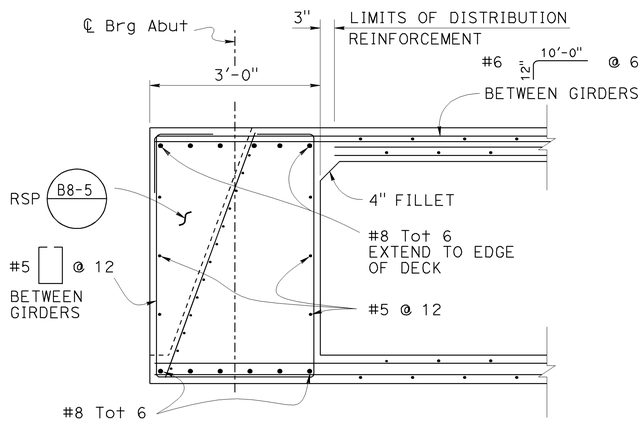

END DIAPHRAGM

B8-5

¾" = 1'-0"

DESIGN	BY EDWARD B. MU	CHECKED JASON FANG	STATE OF CALIFORNIA DEPARTMENT OF TRANSPORTATION	DIVISION OF ENGINEERING SERVICES STRUCTURE DESIGN DESIGN BRANCH 20	BRIDGE NO. 58-0351	DOGWOOD ROAD OC (REPLACE)	
DETAILS	BY ANTONETTE L. ONG	CHECKED JASON FANG			POST MILE R39.0	ABUTMENT DETAILS NO. 1	
QUANTITIES	BY EDWARD B. MU	CHECKED MOHAMMAD MUQTADIR					

STRUCTURES DESIGN DETAIL SHEET (ENGLISH) (REV. 09-01-10)

ORIGINAL SCALE IN INCHES FOR REDUCED PLANS 0 1 2 3

UNIT: 3622
PROJECT NUMBER & PHASE: 1100000743-1
CONTRACT NO.: 11-263301

DISREGARD PRINTS BEARING EARLIER REVISION DATES →

REVISION DATES				SHEET	OF
07/31/13		12/19/12	02/07/13	7	29

FILE => 58-0351-f-a01df01.dgn

USERNAME => s1368653 DATE PLOTTED => 19-SEP-2013 TIME PLOTTED => 09:49

DIST	COUNTY	ROUTE	POST MILES TOTAL PROJECT	SHEET No.	TOTAL SHEETS
11	IMP	8	R38.8/R39.1	204	225

REGISTERED CIVIL ENGINEER — DATE 02-13-13

EDWARD B. MU No. C72567 Exp. 06-30-14 CIVIL — REGISTERED PROFESSIONAL ENGINEER — STATE OF CALIFORNIA

04-07-14
PLANS APPROVAL DATE

The State of California or its officers or agents shall not be responsible for the accuracy or completeness of electronic copies of this plan sheet.

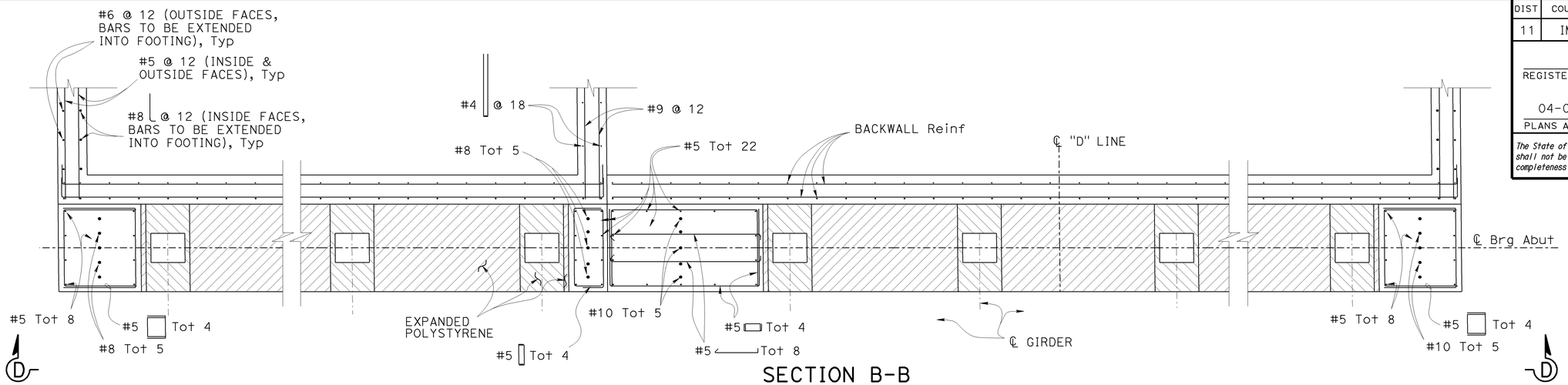

SECTION B-B
½" = 1'-0"

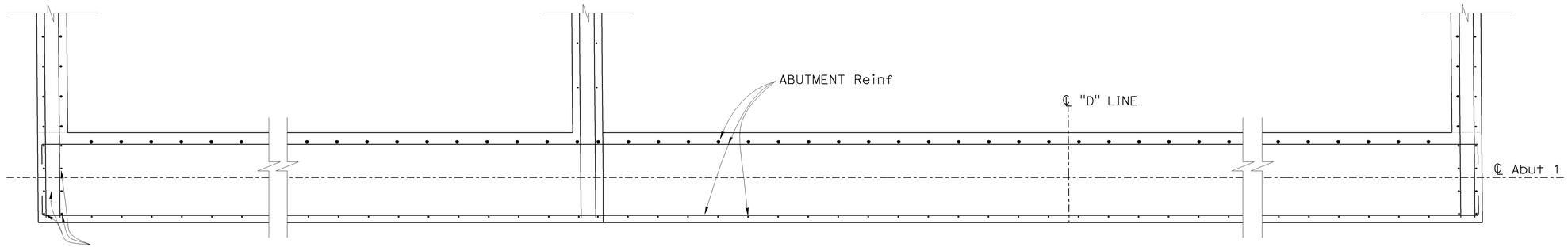

SECTION C-C
½" = 1'-0"

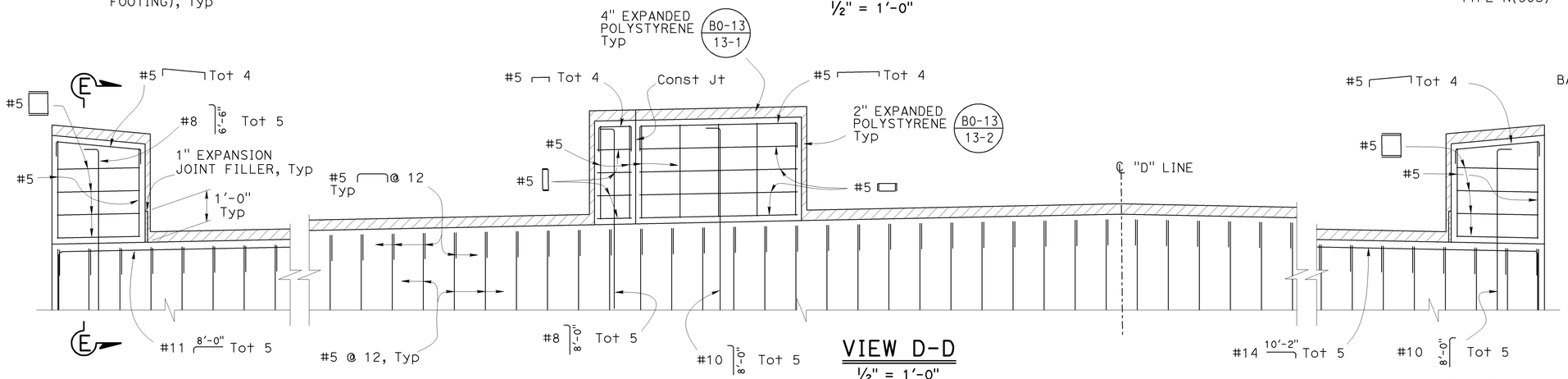

VIEW D-D
½" = 1'-0"

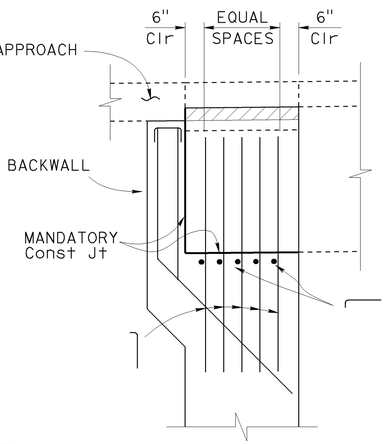

SECTION E-E
½" = 1'-0"

NOTE:
THE CONTRACTOR SHALL VERIFY ALL CONTROLLING FIELD DIMENSIONS BEFORE ORDERING OR FABRICATING ANY MATERIAL.

NOTES:
1. Mandatory construction joint to be smoothly finished and lined with 15 lbs construction paper
2. Abutment 1 shown, and Abutment 3 similar

DESIGN	BY EDWARD B. MU	CHECKED JASON FANG	STATE OF CALIFORNIA DEPARTMENT OF TRANSPORTATION
DETAILS	BY ANTONETTE L. ONG	CHECKED JASON FANG	
QUANTITIES	BY EDWARD B. MU	CHECKED MOHAMMAD MUQTADIR	

DIVISION OF ENGINEERING SERVICES STRUCTURE DESIGN
DESIGN BRANCH 20

BRIDGE NO. 58-0351
POST MILE R39.0

DOGWOOD ROAD OC (REPLACE)
ABUTMENT DETAILS NO. 2

STRUCTURES DESIGN DETAIL SHEET (ENGLISH) (REV. 09-01-10)

ORIGINAL SCALE IN INCHES FOR REDUCED PLANS 0 1 2 3

UNIT: 3622
PROJECT NUMBER & PHASE: 1100000743-1
CONTRACT NO.: 11-263301

DISREGARD PRINTS BEARING EARLIER REVISION DATES →

REVISION DATES			SHEET	OF
12/19/12	01/31/13	11/05/12	8	29

FILE => 58-0351-f-a02dt02.dgn

USERNAME => s136853 DATE PLOTTED => 19-SEP-2013 TIME PLOTTED => 09:49

DIST	COUNTY	ROUTE	POST MILES TOTAL PROJECT	SHEET No.	TOTAL SHEETS
11	IMP	8	R38.8/R39.1	205	225

REGISTERED CIVIL ENGINEER — DATE 02-13-13

PLANS APPROVAL DATE 04-07-14

REGISTERED PROFESSIONAL ENGINEER — EDWARD B. MU — No. C72567 — Exp. 06-30-14 — CIVIL — STATE OF CALIFORNIA

The State of California or its officers or agents shall not be responsible for the accuracy or completeness of electronic copies of this plan sheet.

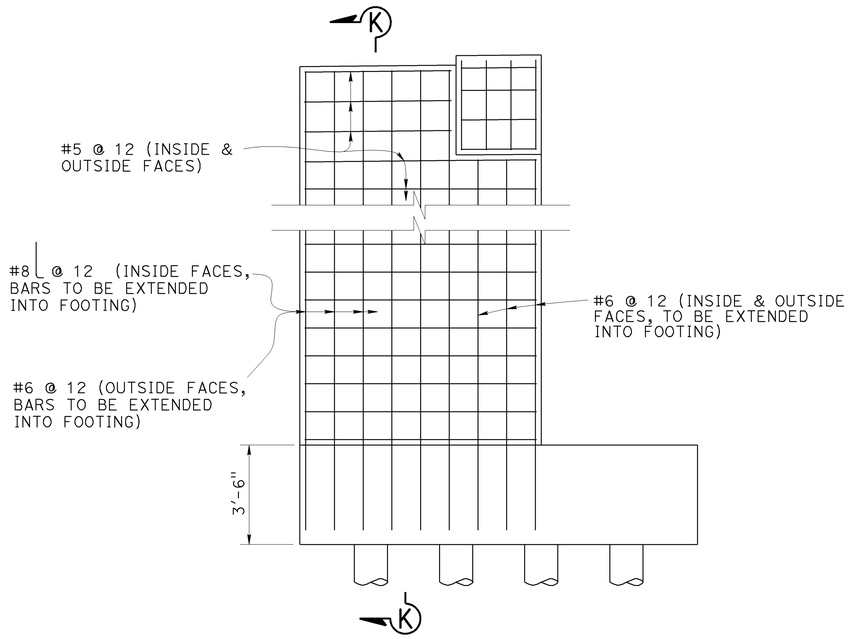

RETURN WALL REINFORCEMENT

3/8" = 1'-0"

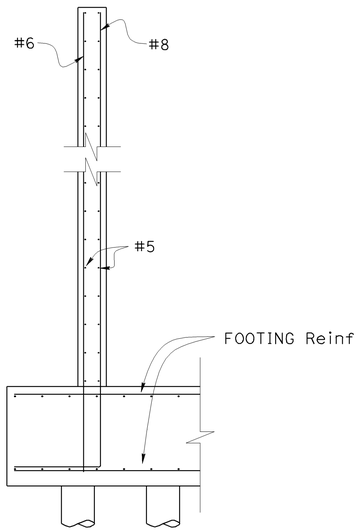

SECTION K-K

3/8" = 1'-0"

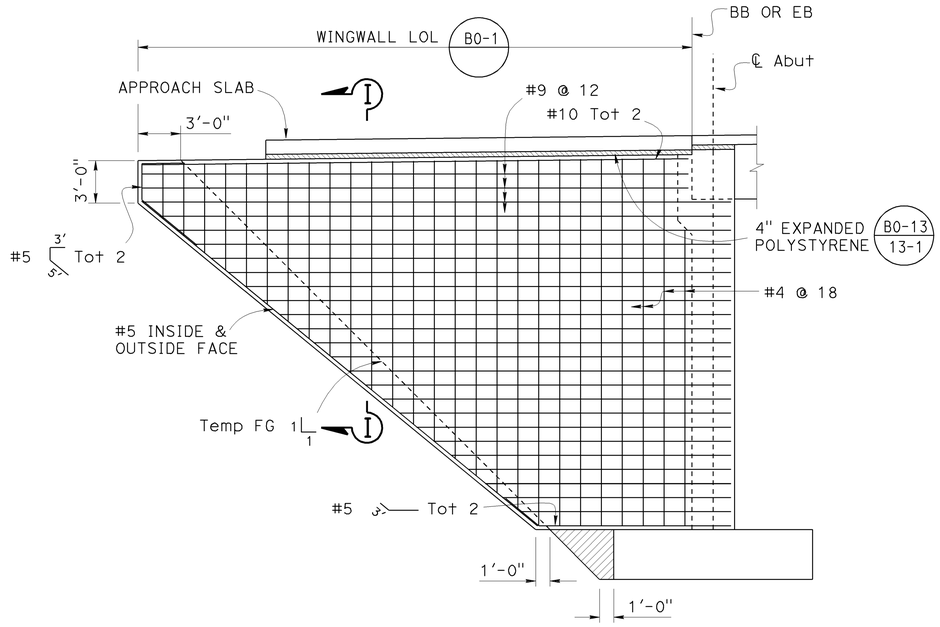

INTERMEDIATE WINGWALL-RIGHT ABUTMENT

3/16" = 1'-0"

(ABUTMENT 1 SHOWN, ABUTMENT 3 SIMILAR)

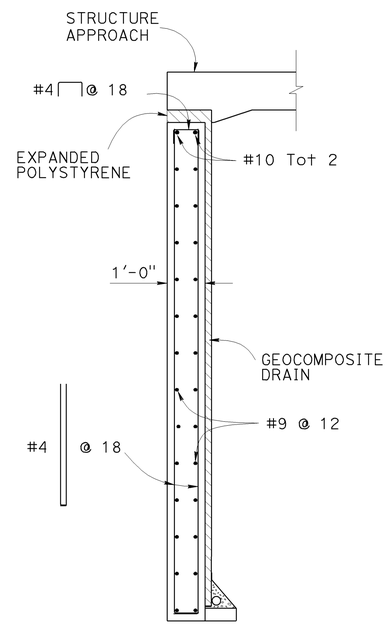

SECTION I-I

1/2" = 1'-0"

B0-1

NOTE:
THE CONTRACTOR SHALL VERIFY ALL CONTROLLING FIELD DIMENSIONS BEFORE ORDERING OR FABRICATING ANY MATERIAL.

LEGEND:

Indicates structure backfill

DESIGN	BY EDWARD B. MU	CHECKED JASON FANG	STATE OF CALIFORNIA DEPARTMENT OF TRANSPORTATION	DIVISION OF ENGINEERING SERVICES STRUCTURE DESIGN DESIGN BRANCH 20	BRIDGE NO. 58-0351
DETAILS	BY ANTONETTE L. ONG	CHECKED JASON FANG			POST MILE R39.0
QUANTITIES	BY EDWARD B. MU	CHECKED MOHAMMAD MUQTADIR			

DOGWOOD ROAD OC (REPLACE)

ABUTMENT DETAILS NO. 3

STRUCTURES DESIGN DETAIL SHEET (ENGLISH) (REV. 09-01-10)

ORIGINAL SCALE IN INCHES FOR REDUCED PLANS 0 1 2 3

UNIT: 3622
PROJECT NUMBER & PHASE: 1100000743-1
CONTRACT NO.: 11-263301

DISREGARD PRINTS BEARING EARLIER REVISION DATES

REVISION DATES				SHEET	OF
11/05/12	12/19/12		09/25/13	9	29

FILE => 58-0351-f-a03dt03.dgn

USERNAME => s136853 DATE PLOTTED => 19-SEP-2013 TIME PLOTTED => 09:49

DIST	COUNTY	ROUTE	POST MILES TOTAL PROJECT	SHEET No.	TOTAL SHEETS
11	IMP	8	R38.8/R39.1	206	225

REGISTERED CIVIL ENGINEER — 02-13-13 DATE

EDWARD B. MU No. C72567 Exp. 06-30-14 CIVIL — REGISTERED PROFESSIONAL ENGINEER — STATE OF CALIFORNIA

04-07-14
PLANS APPROVAL DATE

The State of California or its officers or agents shall not be responsible for the accuracy or completeness of electronic copies of this plan sheet.

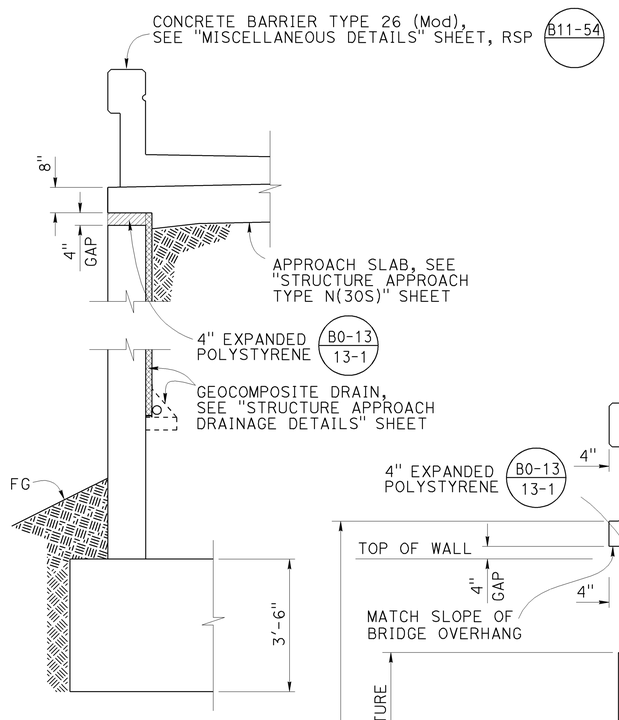

SECTION A-A
½" = 1'-0"

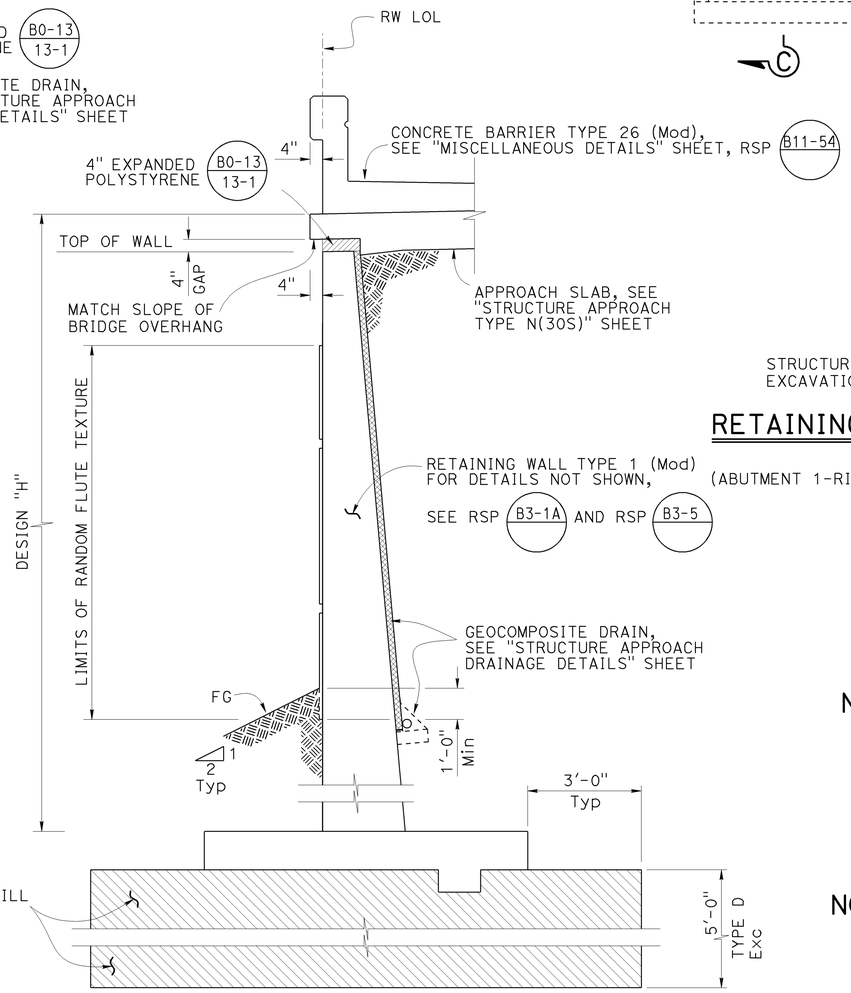

SECTION B-B
NO SCALE

NOTE:
THE CONTRACTOR SHALL VERIFY ALL CONTROLLING FIELD DIMENSIONS BEFORE ORDERING OR FABRICATING ANY MATERIAL.

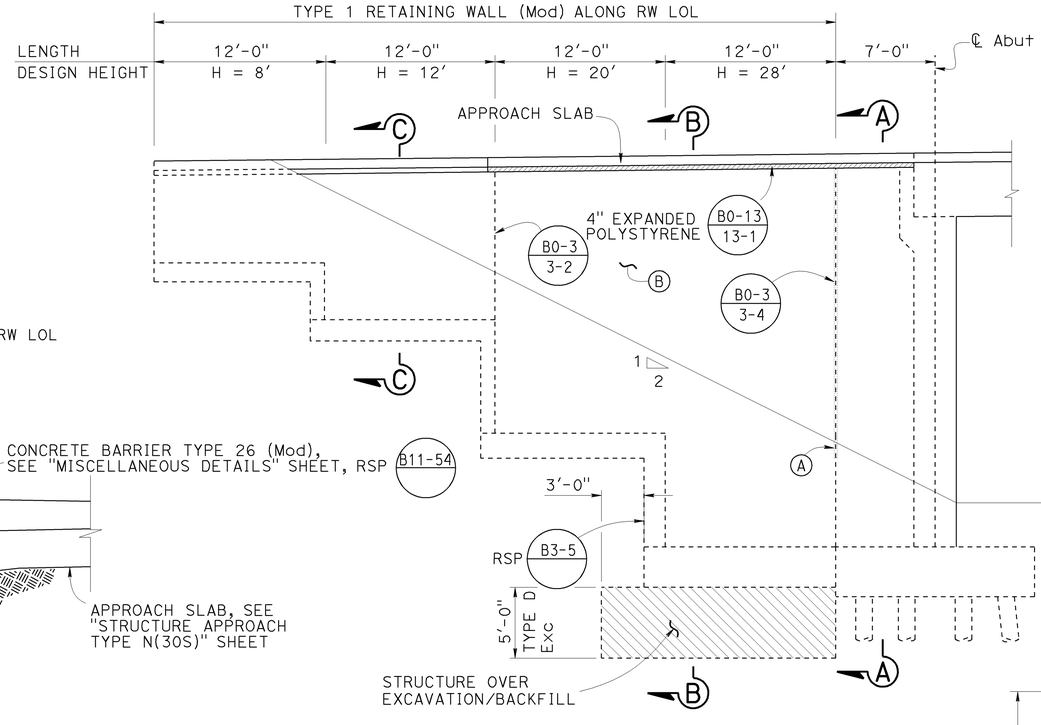

RETAINING WALL ELEVATION
3/16" = 1'-0"
(ABUTMENT 1-RIGHT SHOWN, THE REST SIMILAR)

B0-3 RSP B3-1A RSP B3-5

NOTES:

Ⓐ Extend Waterstop 12" below FG

Ⓑ Random Flute Texture, see "RETAINING WALL DETAILS NO. 2" sheet

NOTES:

1. Structure over Excavation and Backfill for H = 28' Retaining Wall Footing only.
2. Structure Backfill for over Excavation compacted to 95% relative compaction.
3. Structure over Excavation below bottom of footing will be Type D Structure Excavation.

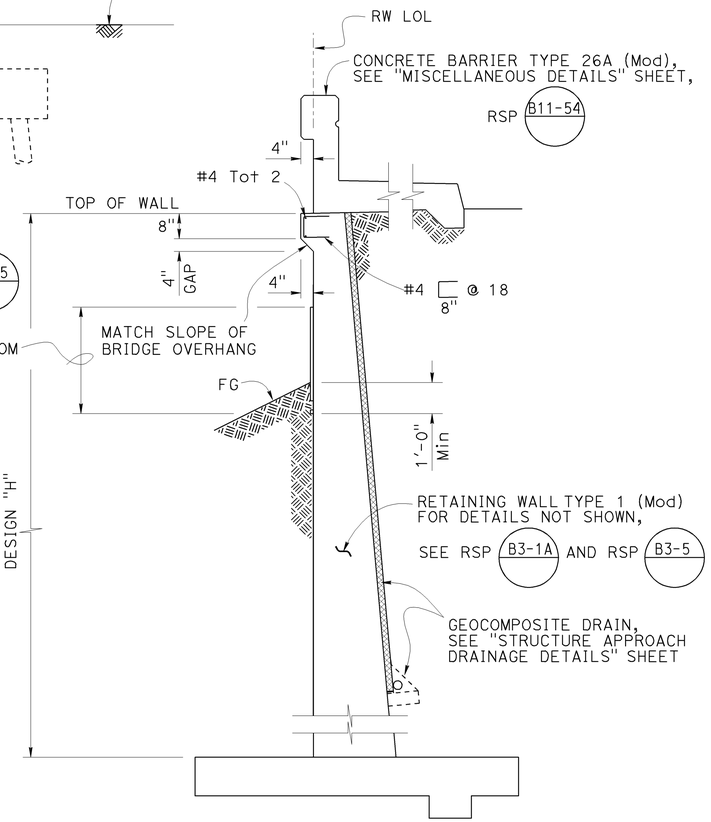

SECTION C-C
NO SCALE

DESIGN	BY	EDWARD B. MU	CHECKED	JASON FANG	STATE OF CALIFORNIA DEPARTMENT OF TRANSPORTATION	DIVISION OF ENGINEERING SERVICES STRUCTURE DESIGN DESIGN BRANCH 20	BRIDGE NO. 58-0351 / POST MILE R39.0
DETAILS	BY	ANTONETTE L. ONG	CHECKED	JASON FANG			
QUANTITIES	BY	EDWARD B. MU	CHECKED	MOHAMMAD MUQTADIR			

DOGWOOD ROAD OC (REPLACE)

RETAINING WALL DETAILS NO. 1

STRUCTURES DESIGN DETAIL SHEET (ENGLISH) (REV. 09-01-10)

ORIGINAL SCALE IN INCHES FOR REDUCED PLANS 0 1 2 3

UNIT: 3622
PROJECT NUMBER & PHASE: 1100000743-1
CONTRACT NO.: 11-263301

DISREGARD PRINTS BEARING EARLIER REVISION DATES →

REVISION DATES				SHEET	OF
08/19/13		09/09/13	09/09/13	10	29

FILE => 58-0351-g-rwdt01.dgn

USERNAME => s136853 DATE PLOTTED => 19-SEP-2013 TIME PLOTTED => 09:49

DIST	COUNTY	ROUTE	POST MILES TOTAL PROJECT	SHEET No.	TOTAL SHEETS
11	IMP	8	R38.8/R39.1	207	225

REGISTERED CIVIL ENGINEER — DATE 02-13-13

EDWARD B. MU No. C72567 Exp. 06-30-14 CIVIL — REGISTERED PROFESSIONAL ENGINEER — STATE OF CALIFORNIA

04-07-14
PLANS APPROVAL DATE

The State of California or its officers or agents shall not be responsible for the accuracy or completeness of electronic copies of this plan sheet.

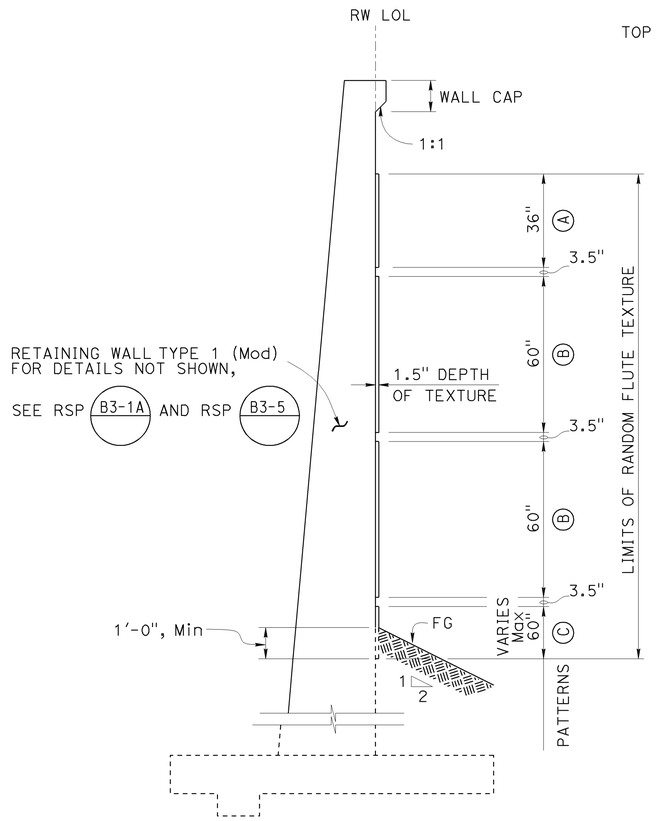

SECTION A-A

NO SCALE

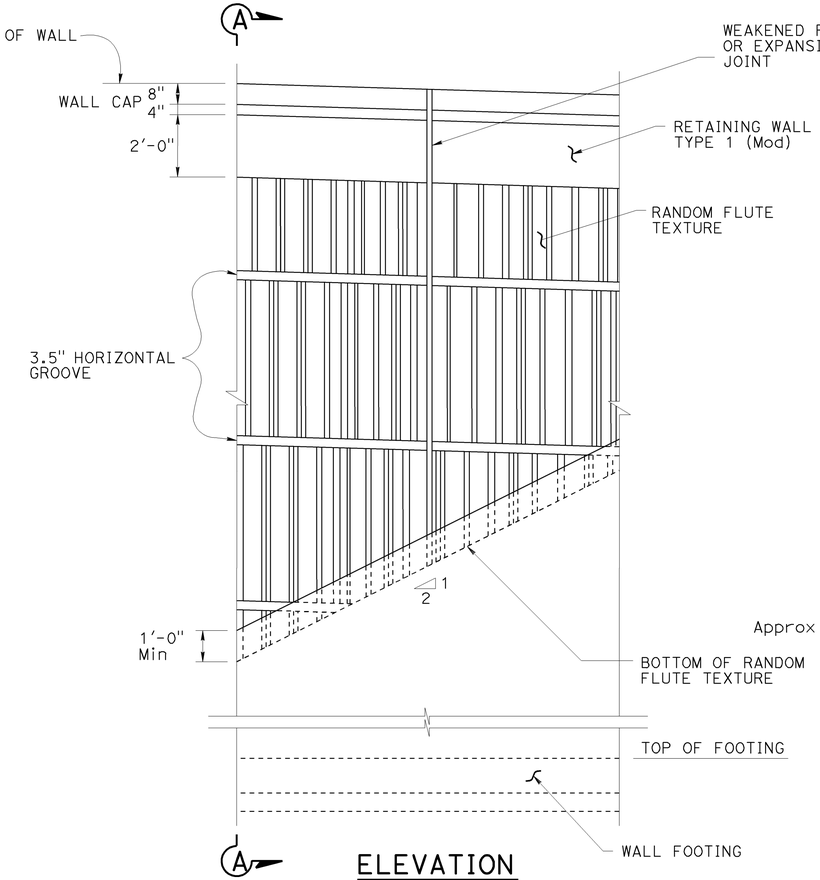

ELEVATION

NO SCALE

(ABUTMENT 3-RIGHT SHOWN, THE REST SIMILAR)

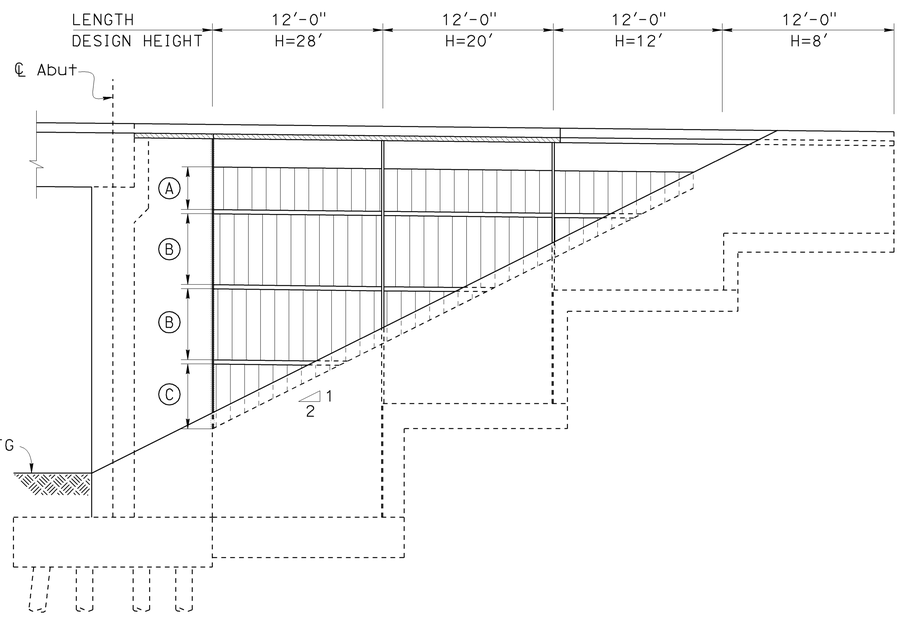

RETAINING WALL ELEVATION

3/16" = 1'-0"

(ABUTMENT 3-RIGHT SHOWN, THE REST SIMILAR)

ARCHITECTURAL TREATMENT DETAIL

NO SCALE

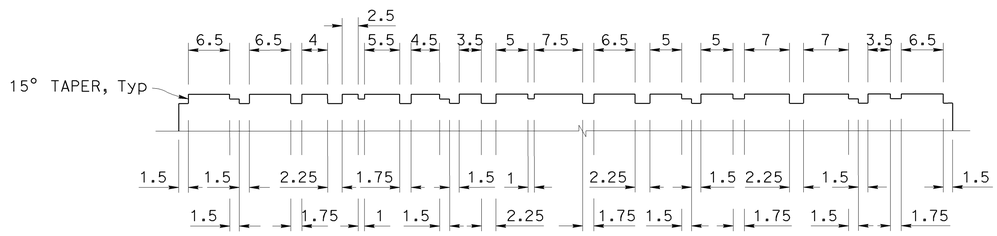

ALL DIMENSIONS ON THIS DETAIL ARE INCHES

RANDOM FLUTE TEXTURE DETAIL

NO SCALE

TYPICAL PATTERN COMBINATIONS FOR RETAINING WALL

DESIGN H	28 Ft	20 Ft	12 Ft	8 Ft
PATTERNS	(A) + (B) + (B) + (C) TO (A) + (B) + (C)	(A) + (B) + (C) TO (A) + (C)	(A) + (C) TO (C)	N/A

NOTE:
THE CONTRACTOR SHALL VERIFY ALL CONTROLLING FIELD DIMENSIONS BEFORE ORDERING OR FABRICATING ANY MATERIAL.

DESIGN	BY EDWARD B. MU	CHECKED JASON FANG	STATE OF CALIFORNIA DEPARTMENT OF TRANSPORTATION	DIVISION OF ENGINEERING SERVICES STRUCTURE DESIGN DESIGN BRANCH 20	BRIDGE NO. 58-0351
DETAILS	BY ANTONETTE L. ONG	CHECKED JASON FANG			POST MILE R39.0
QUANTITIES	BY EDWARD B. MU	CHECKED MOHAMMAD MUQTADIR			

DOGWOOD ROAD OC (REPLACE)

RETAINING WALL DETAILS NO. 2

STRUCTURES DESIGN DETAIL SHEET (ENGLISH) (REV. 09-01-10)

ORIGINAL SCALE IN INCHES FOR REDUCED PLANS 0 1 2 3

UNIT: 3622
PROJECT NUMBER & PHASE: 1100000743-1
CONTRACT NO.: 11-263301

DISREGARD PRINTS BEARING EARLIER REVISION DATES

REVISION DATES				SHEET	OF
08/19/13		02/07/13	08/07/13	11	29

FILE => 58-0351-g-rwdt02.dgn

USERNAME => s136853 DATE PLOTTED => 19-SEP-2013 TIME PLOTTED => 09:49

DIST	COUNTY	ROUTE	POST MILES TOTAL PROJECT	SHEET No.	TOTAL SHEETS
11	IMP	8	R38.8/R39.1	208	225

REGISTERED CIVIL ENGINEER — DATE 02-13-13

EDWARD B. MU No. C72567 Exp. 06-30-14 CIVIL — REGISTERED PROFESSIONAL ENGINEER — STATE OF CALIFORNIA

PLANS APPROVAL DATE 04-07-14

The State of California or its officers or agents shall not be responsible for the accuracy or completeness of electronic copies of this plan sheet.

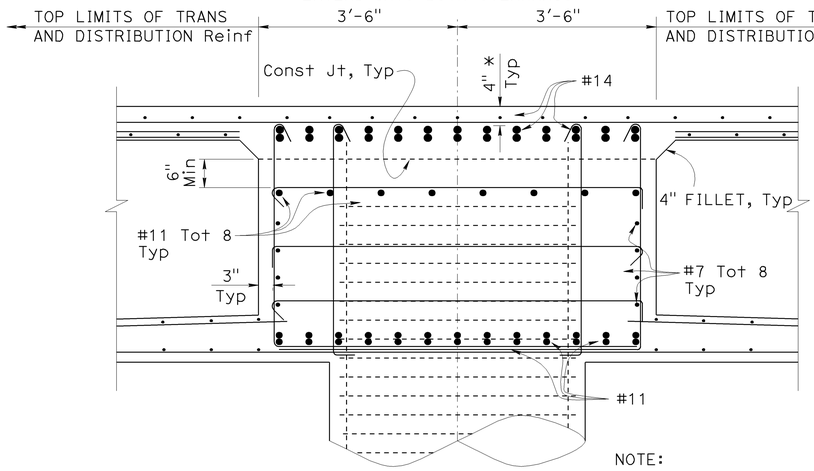

NOTE:

* Clearance to main cap reinforcement

SECTION A-A

3/4" = 1'-0"

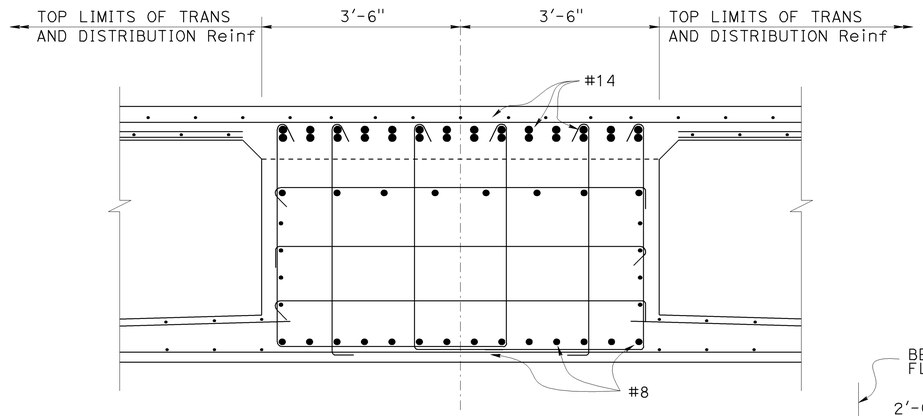

SECTION B-B

3/4" = 1'-0"

NOTE: For details not shown, see "SECTION A-A"

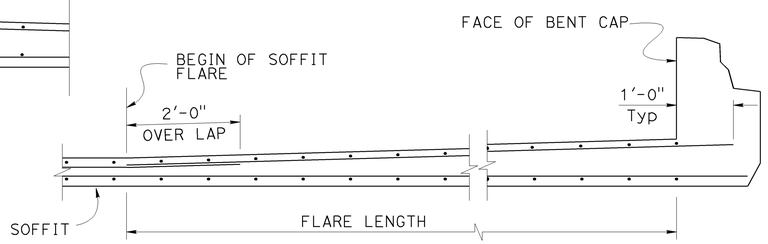

BOTTOM SLAB FLARE DETAILS

3/4" = 1'-0"

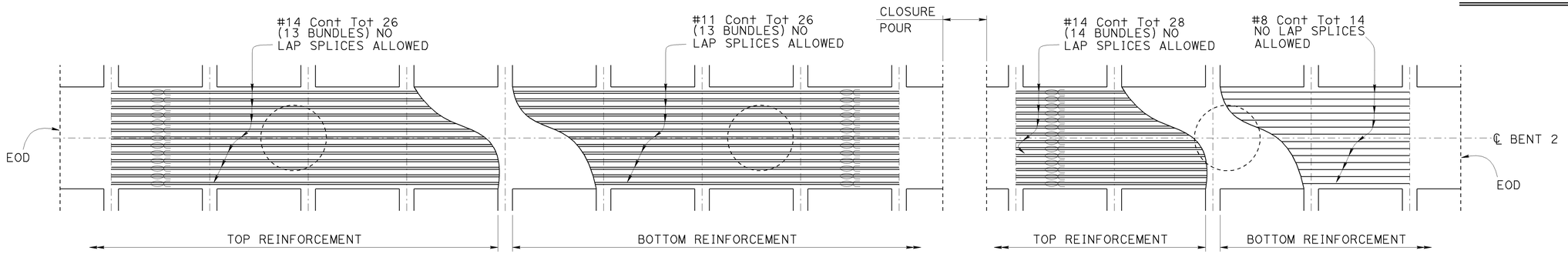

PLAN

1/4" = 1'

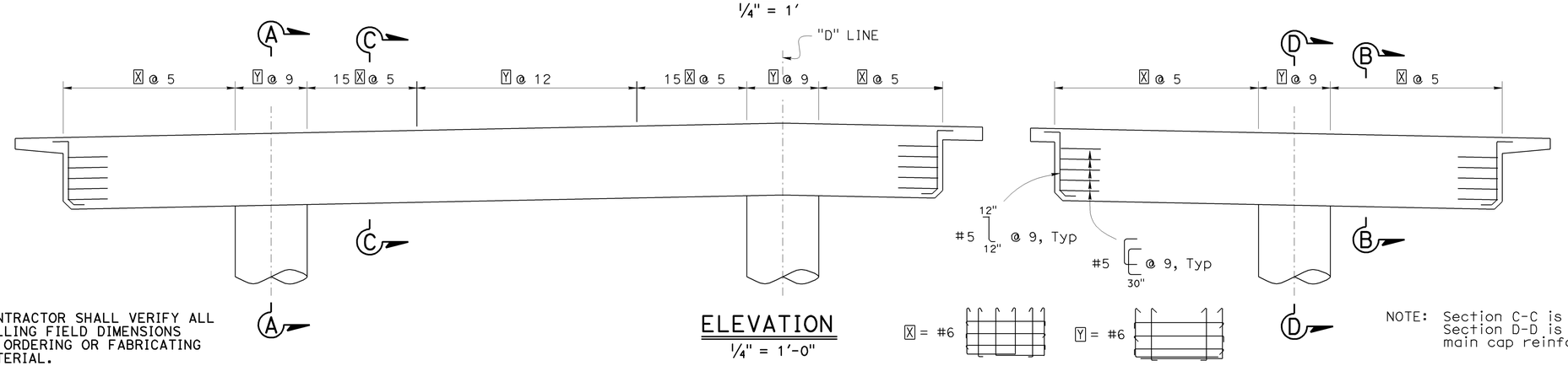

ELEVATION

1/4" = 1'-0"

X = #6

Y = #6

NOTE: Section C-C is similar to Section B-B, and Section D-D is similar to Section A-A, except main cap reinforcement

NOTE:
THE CONTRACTOR SHALL VERIFY ALL CONTROLLING FIELD DIMENSIONS BEFORE ORDERING OR FABRICATING ANY MATERIAL.

NOTES:

1. Utility opening not shown
2. Only staggered "Ultimate" butt splices are allowed in main reinforcement

LEGEND:

Denotes bundled reinforcement

	BY	CHECKED
DESIGN	EDWARD B. MU	JASON FANG
DETAILS	ANTONETTE L. ONG	JASON FANG
QUANTITIES	EDWARD B. MU	MOHAMMAD MUQTADIR

STATE OF CALIFORNIA
DEPARTMENT OF TRANSPORTATION

DIVISION OF ENGINEERING SERVICES
STRUCTURE DESIGN
DESIGN BRANCH 20

BRIDGE NO. 58-0351
POST MILE R39.0

DOGWOOD ROAD OC (REPLACE)

BENT LAYOUT

STRUCTURES DESIGN DETAIL SHEET (ENGLISH) (REV. 09-01-10)

ORIGINAL SCALE IN INCHES FOR REDUCED PLANS 0 1 2 3

UNIT: 3622
PROJECT NUMBER & PHASE: 11 000000743-1 CONTRACT NO.: 11-263301

DISREGARD PRINTS BEARING EARLIER REVISION DATES

REVISION DATES			SHEET	OF
10/17/12	11/05/12	12/19/12	12	29

FILE => 58-0351-h-b01.dgn

USERNAME => s136853 DATE PLOTTED => 19-SEP-2013 TIME PLOTTED => 09:49

DIST	COUNTY	ROUTE	POST MILES TOTAL PROJECT	SHEET No.	TOTAL SHEETS
11	IMP	8	R38.8/R39.1	209	225

REGISTERED CIVIL ENGINEER — DATE 02-13-13

PLANS APPROVAL DATE 04-07-14

REGISTERED PROFESSIONAL ENGINEER — EDWARD B. MU — No. C72567 — Exp. 06-30-14 — CIVIL — STATE OF CALIFORNIA

The State of California or its officers or agents shall not be responsible for the accuracy or completeness of electronic copies of this plan sheet.

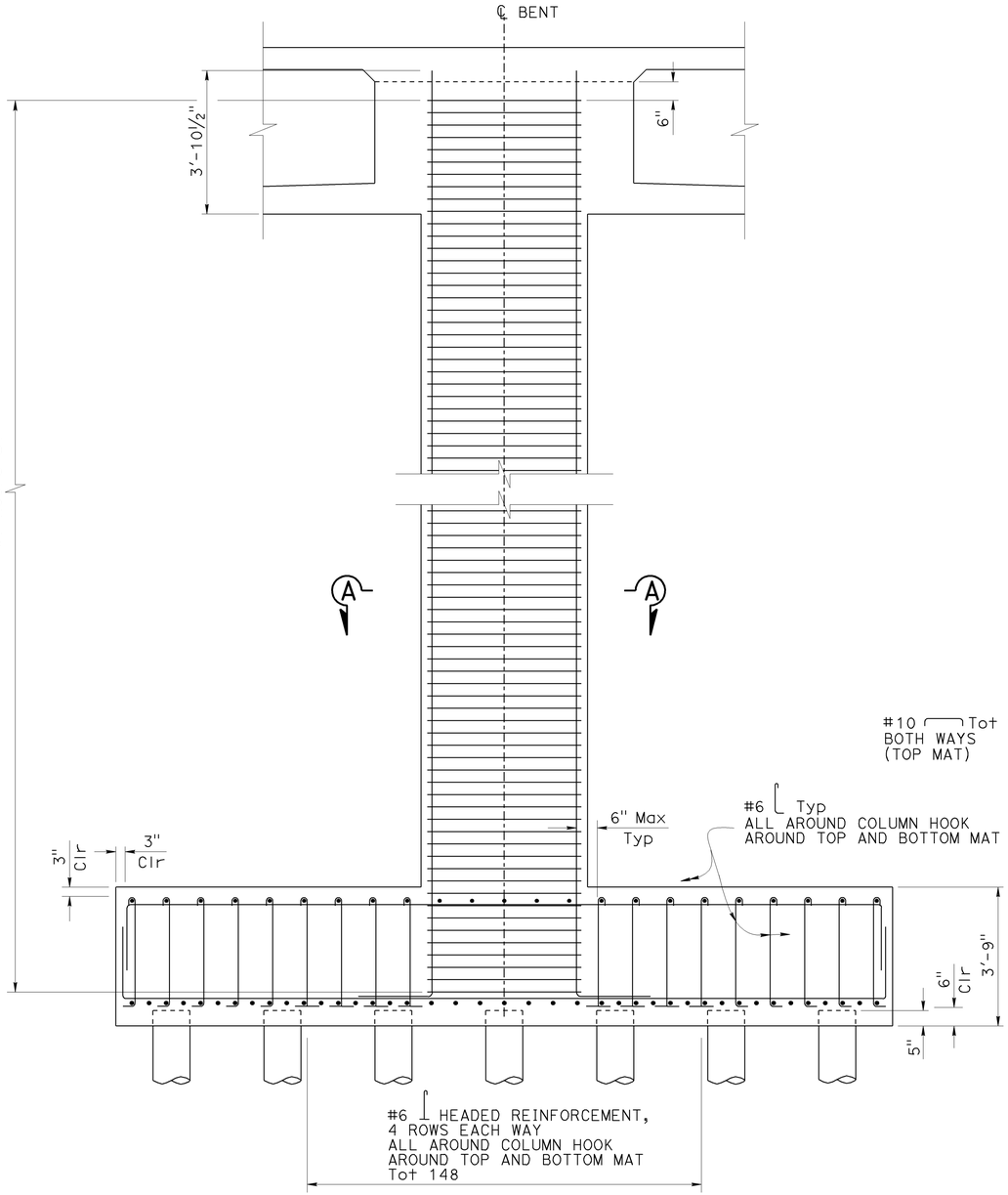

ELEVATION

½" = 1'-0"

NOTE:
THE CONTRACTOR SHALL VERIFY ALL CONTROLLING FIELD DIMENSIONS BEFORE ORDERING OR FABRICATING ANY MATERIAL.

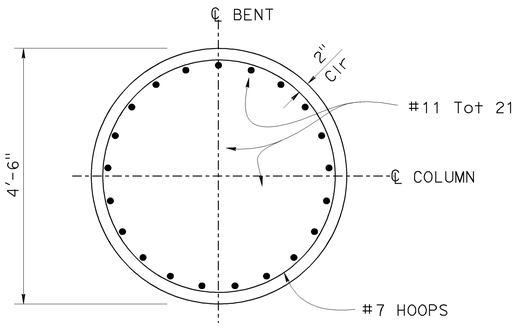

SECTION A-A LEFT 2 COLUMNS

¾" = 1'-0"

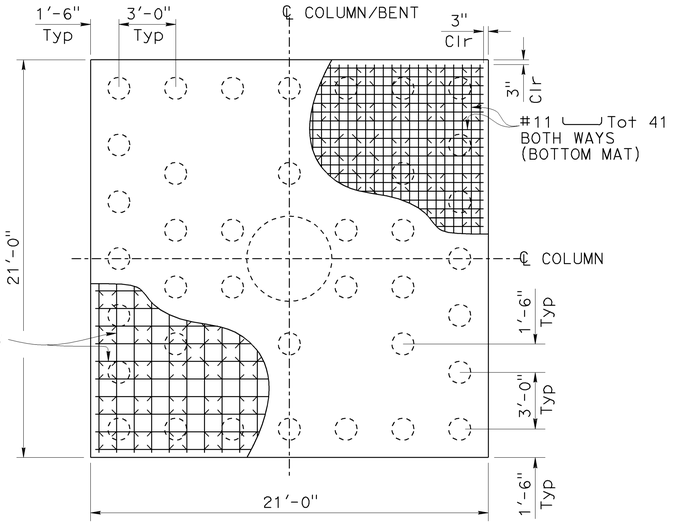

FOOTING PLAN-LEFT BRIDGE

¼" = 1'-0"

NOTE: FOOTING REINFORCEMENT LEFT BRIDGE SHOWN, RIGHT BRIDGE SIMILAR.

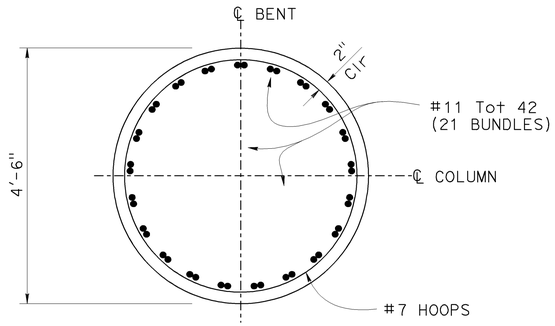

SECTION A-A RIGHT COLUMN

¾" = 1'-0"

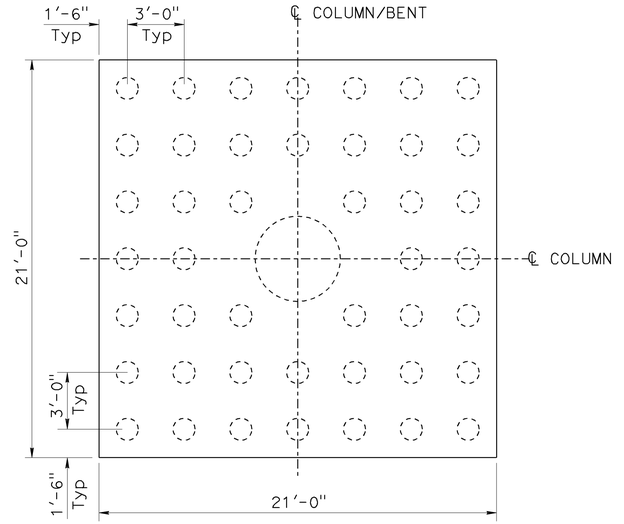

FOOTING PLAN-RIGHT BRIDGE

¼" = 1'-0"

NOTES:

1. No splices allowed in main column reinforcement
2. All hoops shall be ultimate butt spliced continuously
3. Hoops maybe be adjusted for installation of prestress ducts as approved by the engineer
4. Column reinforcement may be bent as required to allow for placement of prestressing ducts as approved by the engineer

DESIGN	BY EDWARD B. MU	CHECKED JASON FANG	STATE OF CALIFORNIA DEPARTMENT OF TRANSPORTATION	DIVISION OF ENGINEERING SERVICES STRUCTURE DESIGN DESIGN BRANCH 20	BRIDGE NO. 58-0351
DETAILS	BY ANTONETTE L. ONG	CHECKED JASON FANG			POST MILE R39.0
QUANTITIES	BY EDWARD B. MU	CHECKED MOHAMMAD MUQTADIR			

DOGWOOD ROAD OC (REPLACE)

BENT DETAILS

STRUCTURES DESIGN DETAIL SHEET (ENGLISH) (REV. 09-01-10)

ORIGINAL SCALE IN INCHES FOR REDUCED PLANS 0 1 2 3

UNIT: 3622
PROJECT NUMBER & PHASE: 11 000000743-1 CONTRACT NO.: 11-263301

DISREGARD PRINTS BEARING EARLIER REVISION DATES →

REVISION DATES				SHEET	OF
11/30/12	12/19/12		11/30/13	13	29

FILE => 58-0351-h-b01dt01.dgn

USERNAME => s136853 DATE PLOTTED => 19-SEP-2013 TIME PLOTTED => 09:49

DIST	COUNTY	ROUTE	POST MILES TOTAL PROJECT	SHEET No.	TOTAL SHEETS
11	IMP	8	R38.8/R39.1	210	225

REGISTERED CIVIL ENGINEER — DATE 02-13-13

PLANS APPROVAL DATE 04-07-14

REGISTERED PROFESSIONAL ENGINEER — EDWARD B. MU — No. C72567 — Exp. 06-30-14 — CIVIL — STATE OF CALIFORNIA

The State of California or its officers or agents shall not be responsible for the accuracy or completeness of electronic copies of this plan sheet.

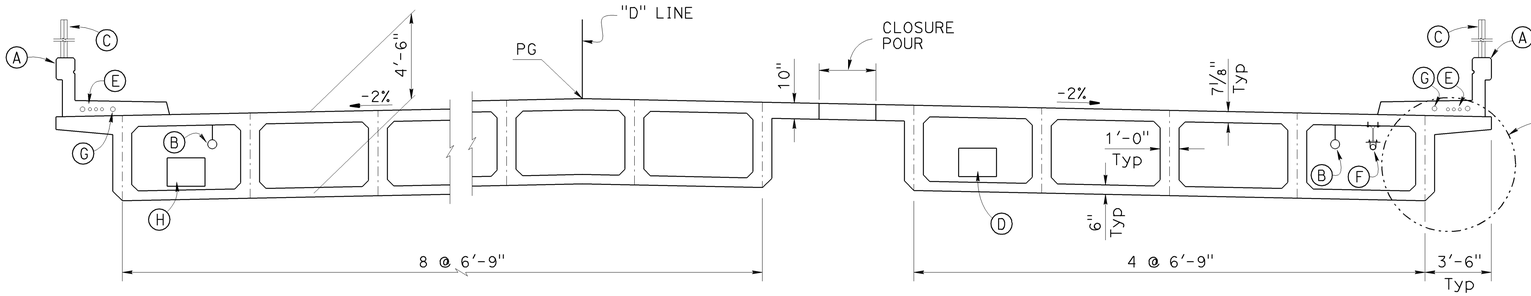

TYPICAL SECTION

¼" = 1'-0"

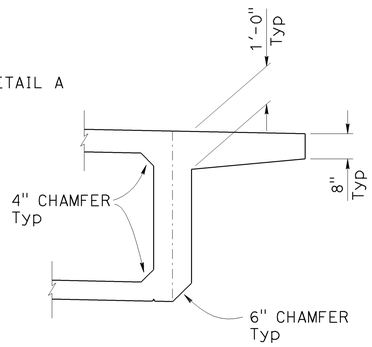

DETAIL A

½" = 1'-0"

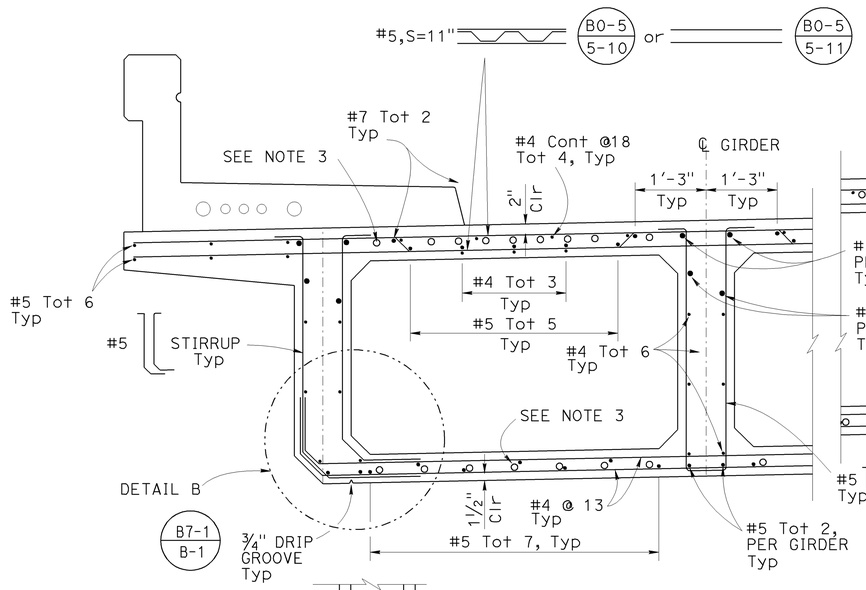

PART TYPICAL SECTION

B0-5 B7-1 RSP B11-54

¾"= 1'-0"

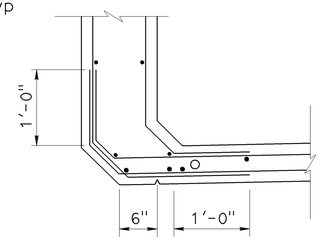

DETAIL B

1" = 1'-0"

NOTE:
THE CONTRACTOR SHALL VERIFY ALL CONTROLLING FIELD DIMENSIONS BEFORE ORDERING OR FABRICATING ANY MATERIAL.

NOTES:

1. Falsework shall be removed as soon as permitted by the specifications. Closure Pours shall not be placed sooner than 60 days after the falsework has been released.
2. For additional top and bottom girder reinforcement, see "GIRDER REINFORCEMENT-RIGHT" sheet and "GIRDER REINFORCEMENT-LEFT" sheet
3. Left bridge reinforcement shown, right bridge similar.

NOTES:

- (A) Concrete Barrier, Type 26 (Mod)
- (B) Drain pipe, Type D-1 (B7-8)
- (C) Chain Link Railing, Type 7
- (D) Exist AT&T Fiber Optic Cable to be relocated to the new structure, see "ROAD PLANS"
- (E) 1-3"ø, 3-2"ø Conduits for Communication, Signal, Sign and Lighting, see "ROAD PLANS"
- (F) 3"ø Water Supply Line (B14-4)
- (G) 3"ø Sprinkler Control Conduit, see "ROAD PLANS"
- (H) Future Utility opening

DESIGN	BY EDWARD B. MU	CHECKED JASON FANG	STATE OF CALIFORNIA DEPARTMENT OF TRANSPORTATION
DETAILS	BY ANTONETTE L. ONG	CHECKED JASON FANG	
QUANTITIES	BY EDWARD B. MU	CHECKED MOHAMMAD MUQTADIR	

DIVISION OF ENGINEERING SERVICES STRUCTURE DESIGN
DESIGN BRANCH 20

BRIDGE NO. 58-0351
POST MILE R39.0

DOGWOOD ROAD OC (REPLACE)

TYPICAL SECTION

STRUCTURES DESIGN DETAIL SHEET (ENGLISH) (REV. 09-01-10)

ORIGINAL SCALE IN INCHES FOR REDUCED PLANS 0 1 2 3

UNIT: 3622
PROJECT NUMBER & PHASE: 1100000743-1
CONTRACT NO.: 11-263301

DISREGARD PRINTS BEARING EARLIER REVISION DATES →

REVISION DATES 12/09/12 02/07/13 05/30/13

SHEET 14 OF 29

FILE => 58-0351-k-ts01.dgn

USERNAME => s136853 DATE PLOTTED => 19-SEP-2013 TIME PLOTTED => 09:49

DIST	COUNTY	ROUTE	POST MILES TOTAL PROJECT	SHEET No.	TOTAL SHEETS
11	IMP	8	R38.8/R39.1	211	225

REGISTERED CIVIL ENGINEER — 02-13-13 DATE

04-07-14
PLANS APPROVAL DATE

EDWARD B. MU
No. C72567
Exp. 06-30-14
CIVIL
REGISTERED PROFESSIONAL ENGINEER
STATE OF CALIFORNIA

The State of California or its officers or agents shall not be responsible for the accuracy or completeness of electronic copies of this plan sheet.

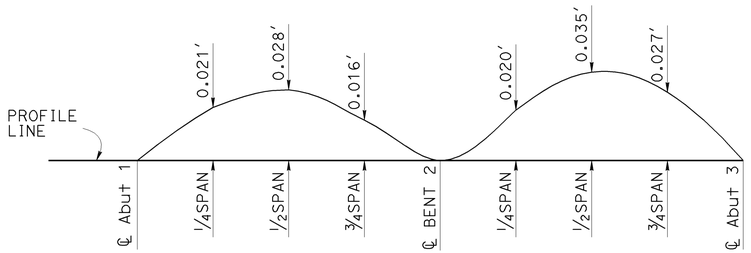

CAMBER DIAGRAM

NO SCALE

DOES NOT INCLUDE ALLOWANCE FOR FALSEWORK SETTLEMENT

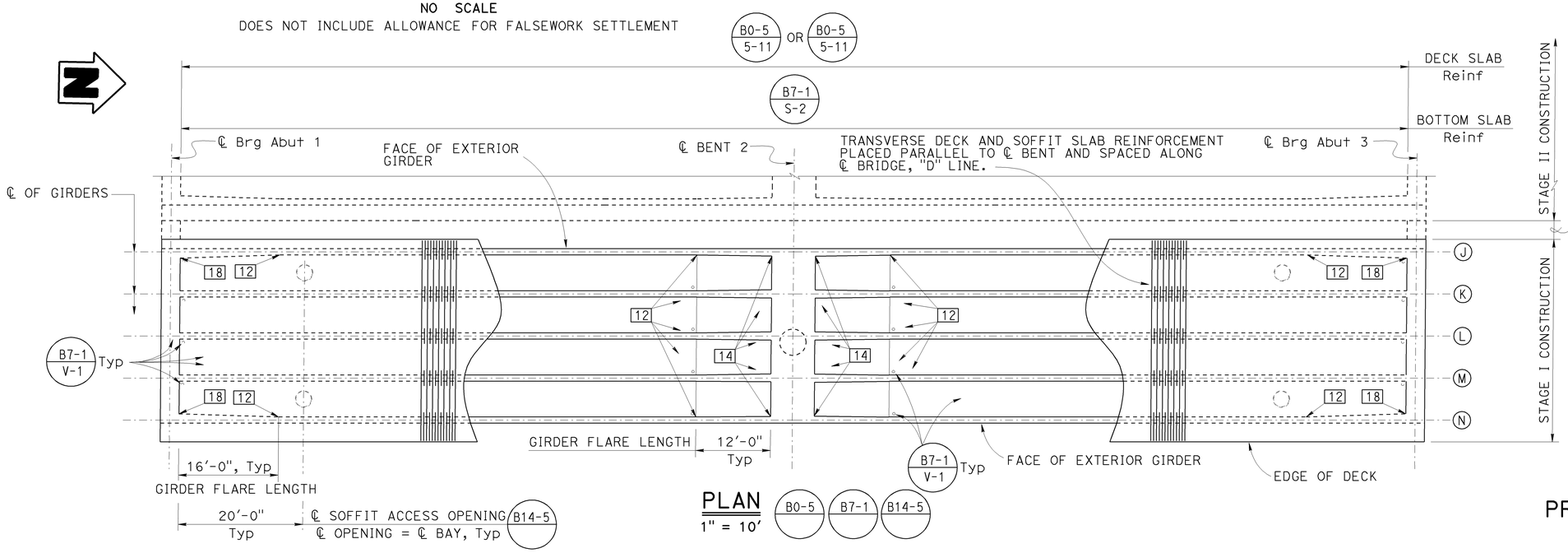

PLAN

1" = 10'

B0-5 B7-1 B14-5

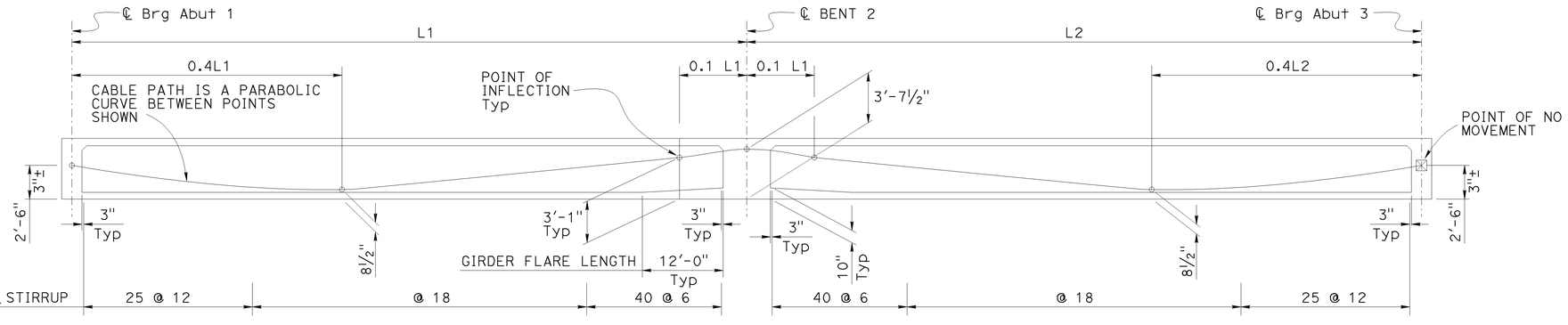

LONGITUDINAL SECTION

NO SCALE

(THE RIGHT SHOWN, THE LEFT SIMILAR)

NOTE:
THE CONTRACTOR SHALL VERIFY ALL CONTROLLING FIELD DIMENSIONS BEFORE ORDERING OR FABRICATING ANY MATERIAL.

LEGEND:

XX — Indicates girder stem width in inches

☒ Indicates point of no movement

PRESTRESSING NOTES (STAGE I)

270 KSI Low Relaxation Strand:

P_{jack} = 4500 kips

Anchor Set = 3/8"

Total Number of Girders = 5

Distribution of prestress force (Pjack) between girders shall not exceed the ratio of 3:2. Maximum final force variation between girders shall not exceed 725 kips.

Concrete: f'_c = 5000 psi @ 28 days

f'_{ci} = 4500 psi @ time of stressing

Contractor shall submit elongation calculations based on initial stress at

☒ = 0.8827 times jacking stress.

One end stressing to be performed from Abutment 1.

☒ Theoretical point of no movement,

μ Friction curvature = 0.15

k Friction wobble = 0.0002/ft

DESIGN	BY EDWARD B. MU	CHECKED JASON FANG	STATE OF CALIFORNIA DEPARTMENT OF TRANSPORTATION	DIVISION OF ENGINEERING SERVICES STRUCTURE DESIGN DESIGN BRANCH 20	BRIDGE NO. 58-0351
DETAILS	BY ANTONETTE L. ONG	CHECKED JASON FANG			POST MILE R39.0
QUANTITIES	BY EDWARD B. MU	CHECKED MOHAMMAD MUQTADIR			

DOGWOOD ROAD OC (REPLACE)

GIRDER LAYOUT-RIGHT

STRUCTURES DESIGN DETAIL SHEET (ENGLISH) (REV. 09-01-10)

ORIGINAL SCALE IN INCHES FOR REDUCED PLANS 0 1 2 3

UNIT: 3622
PROJECT NUMBER & PHASE: 1100000743-1 CONTRACT NO.: 11-263301

DISREGARD PRINTS BEARING EARLIER REVISION DATES →

REVISION DATES				SHEET	OF
12/19/12	02/01/13		11/05/12	15	29

FILE => 58-0351-1-g_1001R.dgn

USERNAME => s136853 DATE PLOTTED => 19-SEP-2013 TIME PLOTTED => 09:49

DIST	COUNTY	ROUTE	POST MILES TOTAL PROJECT	SHEET No.	TOTAL SHEETS
11	IMP	8	R38.8/R39.1	212	225

REGISTERED CIVIL ENGINEER — DATE 02-13-13

PLANS APPROVAL DATE 04-07-14

REGISTERED PROFESSIONAL ENGINEER — EDWARD B. MU — No. C72567 — Exp. 06-30-14 — CIVIL — STATE OF CALIFORNIA

The State of California or its officers or agents shall not be responsible for the accuracy or completeness of electronic copies of this plan sheet.

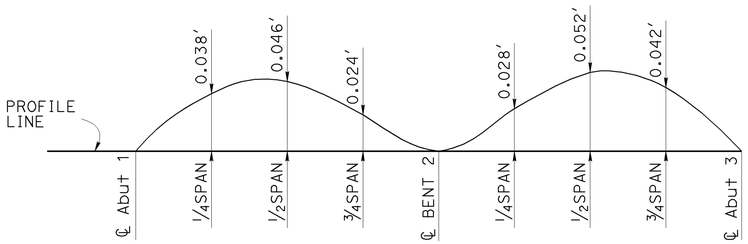

CAMBER DIAGRAM

NO SCALE

DOES NOT INCLUDE ALLOWANCE FOR FALSEWORK SETTLEMENT

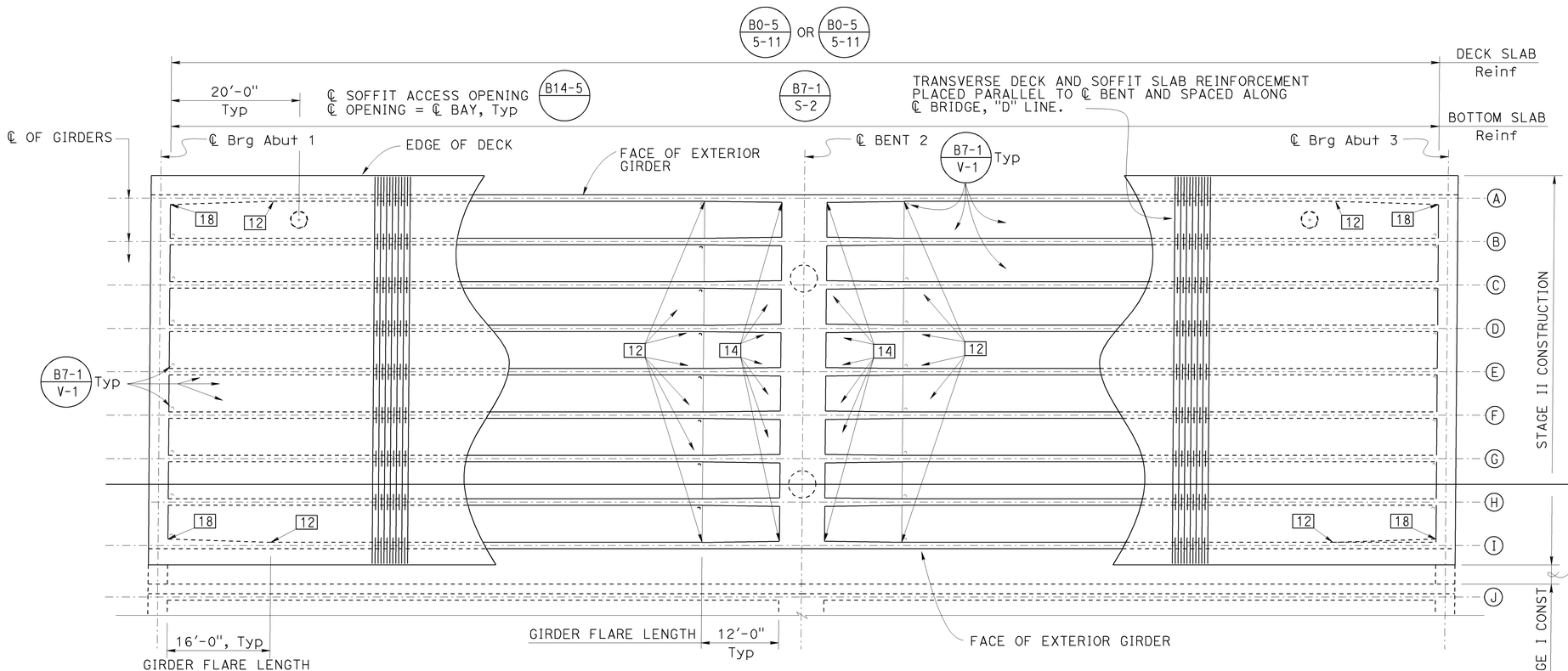

PLAN

1" = 10'

B0-5 B7-1

PRESTRESSING NOTES (STAGE II)

270 KSI Low Relaxation Strand:

P_{jack} = 7200 kips

Anchor Set = 3/8"

Total Number of Girders = 9

Distribution of prestress force (Pjack) between girders shall not exceed the ratio of 3:2. Maximum final force variation between girders shall not exceed 725 kips.

Concrete: f'_c = 5000 psi @ 28 days

f'_{ci} = 4500 psi @ time of stressing

Contractor shall submit elongation calculations based on initial stress at

☒ = 0.8827 times jacking stress.

One end stressing to be performed from Abutment 1.

☒ Theoretical point of no movement,

μ Friction curvature = 0.15

k Friction wobble = 0.0002/ft

LEGEND:

[XX] Indicates girder stem width in inches

NOTE:
THE CONTRACTOR SHALL VERIFY ALL CONTROLLING FIELD DIMENSIONS BEFORE ORDERING OR FABRICATING ANY MATERIAL.

DESIGN	BY EDWARD B. MU	CHECKED JASON FANG	STATE OF CALIFORNIA DEPARTMENT OF TRANSPORTATION
DETAILS	BY ANTONETTE L. ONG	CHECKED JASON FANG	
QUANTITIES	BY EDWARD B. MU	CHECKED MOHAMMAD MUQTADIR	

DIVISION OF ENGINEERING SERVICES STRUCTURE DESIGN
DESIGN BRANCH 20

BRIDGE NO. 58-0351
POST MILE R39.0

DOGWOOD ROAD OC (REPLACE)

GIRDER LAYOUT-LEFT

STRUCTURES DESIGN DETAIL SHEET (ENGLISH) (REV. 09-01-10)

ORIGINAL SCALE IN INCHES FOR REDUCED PLANS 0 1 2 3

UNIT: 3622
PROJECT NUMBER & PHASE: 1100000743-1
CONTRACT NO.: 11-263301

DISREGARD PRINTS BEARING EARLIER REVISION DATES →

REVISION DATES 11/05/12 12/19/12 02/11/13

SHEET 16 OF 29

FILE => 58-0351-1-g_1002L.dgn

DATE PLOTTED => 19-SEP-2013 TIME PLOTTED => 09:49
USERNAME => s136853

DIST	COUNTY	ROUTE	POST MILES TOTAL PROJECT	SHEET No.	TOTAL SHEETS
11	IMP	8	R38.8/R39.1	213	225

REGISTERED CIVIL ENGINEER — DATE 02-13-13

PLANS APPROVAL DATE 04-07-14

REGISTERED PROFESSIONAL ENGINEER — EDWARD B. MU — No. C72567 — Exp. 06-30-14 — CIVIL — STATE OF CALIFORNIA

The State of California or its officers or agents shall not be responsible for the accuracy or completeness of electronic copies of this plan sheet.

NOTES:

1. Reinforcement shown is in addition to that shown on "TYPICAL SECTION" sheet
2. All bars are evenly spaced within the limits shown
3. Bar splices when required shall conform to "SERVICE SPLICE" specifications

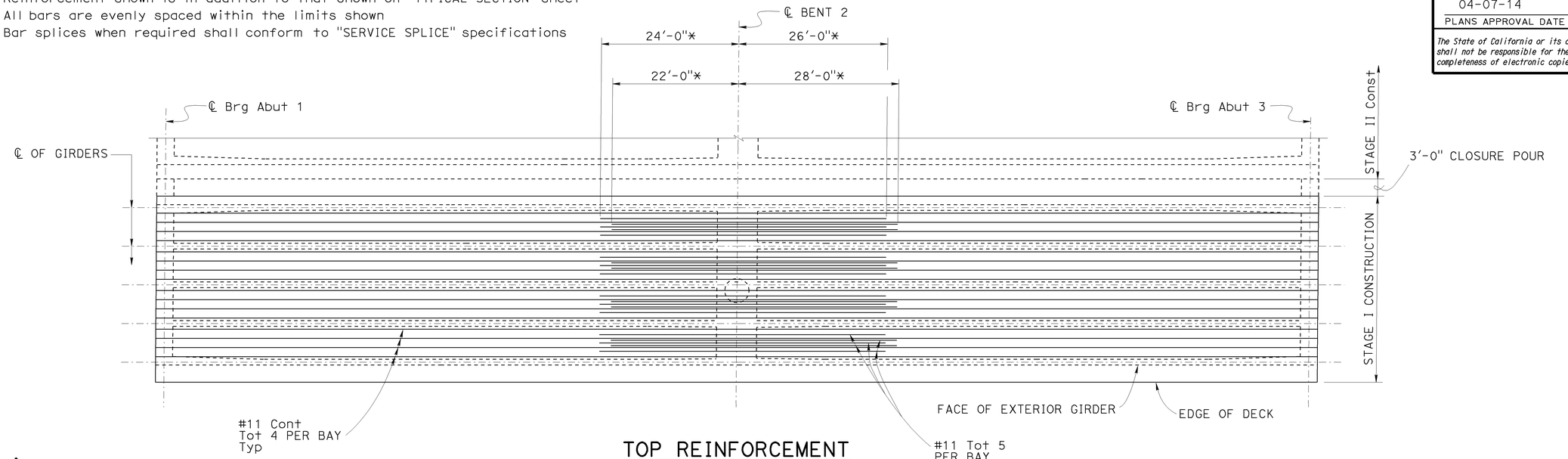

TOP REINFORCEMENT

1" = 10′

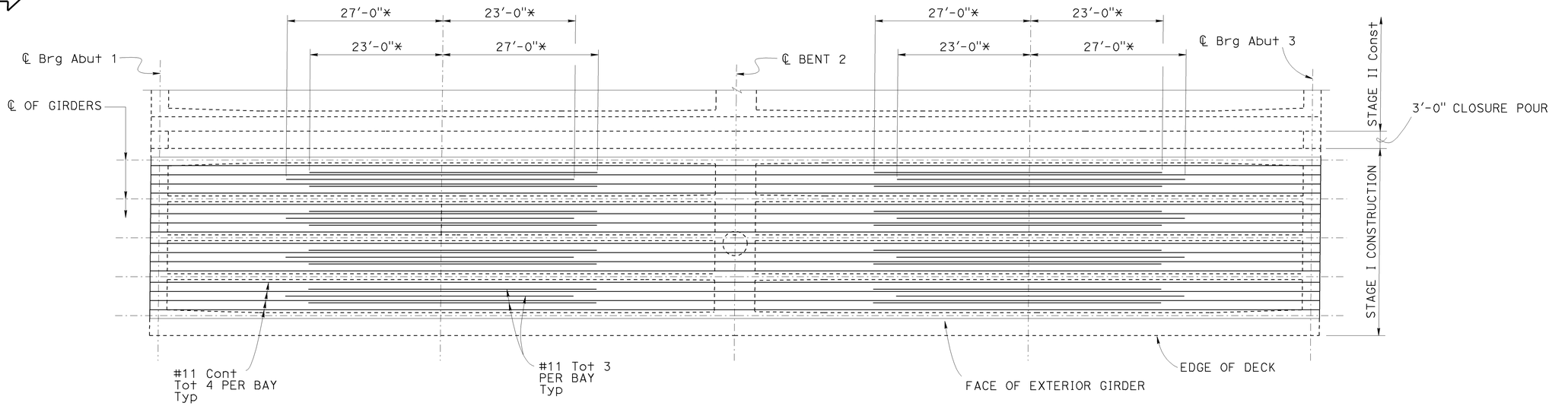

BOTTOM REINFORCEMENT

1" = 10′

NOTE:
THE CONTRACTOR SHALL VERIFY ALL CONTROLLING FIELD DIMENSIONS BEFORE ORDERING OR FABRICATING ANY MATERIAL.

NOTE:

* No splice zone for all reinforcement

DESIGN	BY EDWARD B. MU	CHECKED JASON FANG	STATE OF CALIFORNIA DEPARTMENT OF TRANSPORTATION	DIVISION OF ENGINEERING SERVICES STRUCTURE DESIGN DESIGN BRANCH 20	BRIDGE NO. 58-0351
DETAILS	BY ANTONETTE L. ONG	CHECKED JASON FANG			POST MILE R39.0
QUANTITIES	BY EDWARD B. MU	CHECKED MOHAMMAD MUQTADIR			

DOGWOOD ROAD OC (REPLACE)

GIRDER REINFORCEMENT-RIGHT

STRUCTURES DESIGN DETAIL SHEET (ENGLISH) (REV. 09-01-10)

ORIGINAL SCALE IN INCHES FOR REDUCED PLANS 0 1 2 3

UNIT: 3622
PROJECT NUMBER & PHASE: 1100000743-1
CONTRACT NO.: 11-263301

DISREGARD PRINTS BEARING EARLIER REVISION DATES →

REVISION DATES				SHEET	OF
09/14/12	11/05/12	12/19/12		17	29

FILE => 58-0351-o-gir_rf01R.dgn

USERNAME => s136853 DATE PLOTTED => 19-SEP-2013 TIME PLOTTED => 09:49

DIST	COUNTY	ROUTE	POST MILES TOTAL PROJECT	SHEET No.	TOTAL SHEETS
11	IMP	8	R38.8/R39.1	214	225

REGISTERED CIVIL ENGINEER — 02-13-13 DATE

04-07-14
PLANS APPROVAL DATE

REGISTERED PROFESSIONAL ENGINEER — EDWARD B. MU — No. C72567 — Exp. 06-30-14 — CIVIL — STATE OF CALIFORNIA

The State of California or its officers or agents shall not be responsible for the accuracy or completeness of electronic copies of this plan sheet.

NOTES:

1. Reinforcement shown is in addition to that shown on "TYPICAL SECTION" sheet
2. All bars are evenly spaced within the limits shown
3. Bar splices when required shall conform to "SERVICE SPLICE" specifications

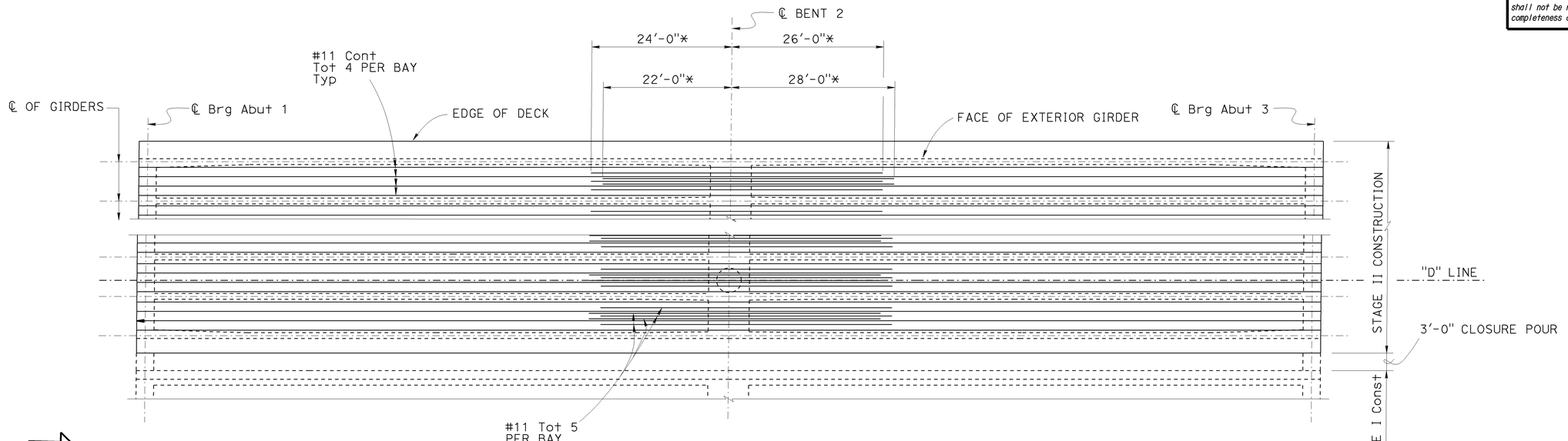

TOP REINFORCEMENT

1" = 10'

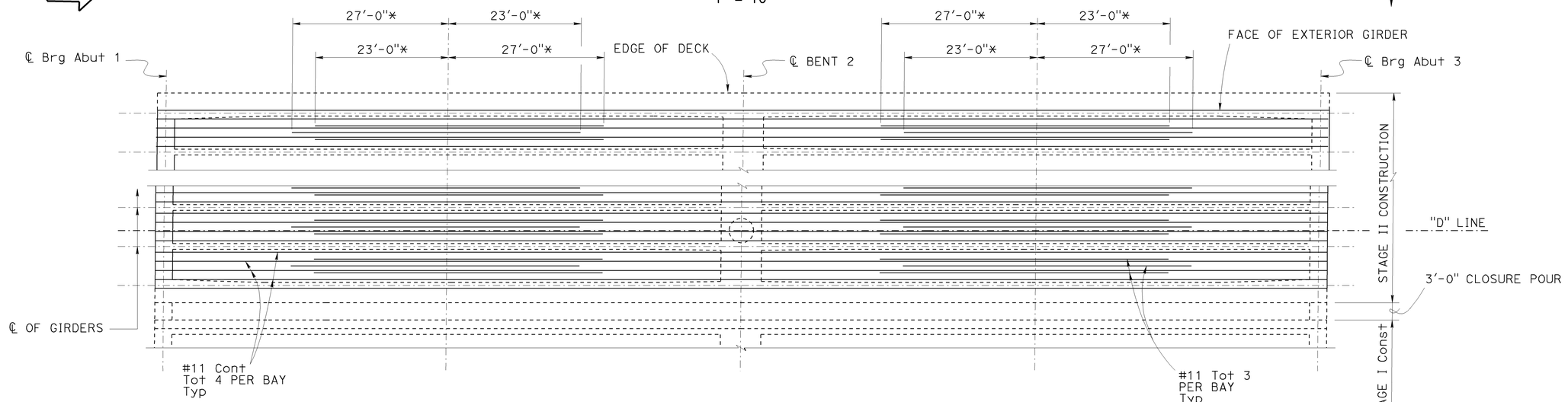

BOTTOM REINFORCEMENT

1" = 10'

NOTE:
THE CONTRACTOR SHALL VERIFY ALL CONTROLLING FIELD DIMENSIONS BEFORE ORDERING OR FABRICATING ANY MATERIAL.

NOTE:

* No splice zone for all reinforcement

DESIGN	BY EDWARD B. MU	CHECKED JASON FANG	STATE OF CALIFORNIA DEPARTMENT OF TRANSPORTATION	DIVISION OF ENGINEERING SERVICES STRUCTURE DESIGN DESIGN BRANCH 20	BRIDGE NO. 58-0351 / POST MILE R39.0
DETAILS	BY ANTONETTE L. ONG	CHECKED JASON FANG			
QUANTITIES	BY EDWARD B. MU	CHECKED MOHAMMAD MUQTADIR			

DOGWOOD ROAD OC (REPLACE)
GIRDER REINFORCEMENT-LEFT

STRUCTURES DESIGN DETAIL SHEET (ENGLISH) (REV. 09-01-10)

ORIGINAL SCALE IN INCHES FOR REDUCED PLANS 0 1 2 3

UNIT: 3622
PROJECT NUMBER & PHASE: 1100000743-1
CONTRACT NO.: 11-263301

DISREGARD PRINTS BEARING EARLIER REVISION DATES →

REVISION DATES				SHEET	OF
09/14/12	11/05/12	12/19/12		18	29

FILE => 58-0351-o-gir_rf02L.dgn

USERNAME => s136653 DATE PLOTTED => 19-SEP-2013 TIME PLOTTED => 09:49

DIST	COUNTY	ROUTE	POST MILES TOTAL PROJECT	SHEET No.	TOTAL SHEETS
11	IMP	8	R38.8/R39.1	215	225

REGISTERED CIVIL ENGINEER — DATE 02-13-13

EDWARD B. MU No. C72567 Exp. 06-30-14 CIVIL — REGISTERED PROFESSIONAL ENGINEER — STATE OF CALIFORNIA

04-07-14
PLANS APPROVAL DATE

The State of California or its officers or agents shall not be responsible for the accuracy or completeness of electronic copies of this plan sheet.

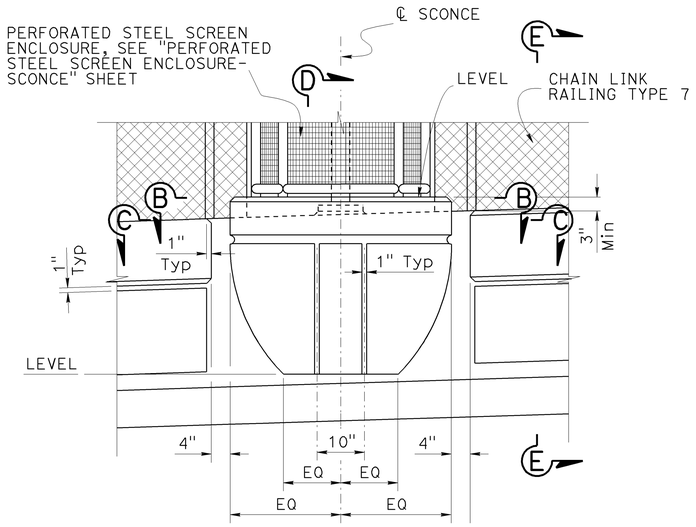

ELEVATION
3/4" = 1'-0"

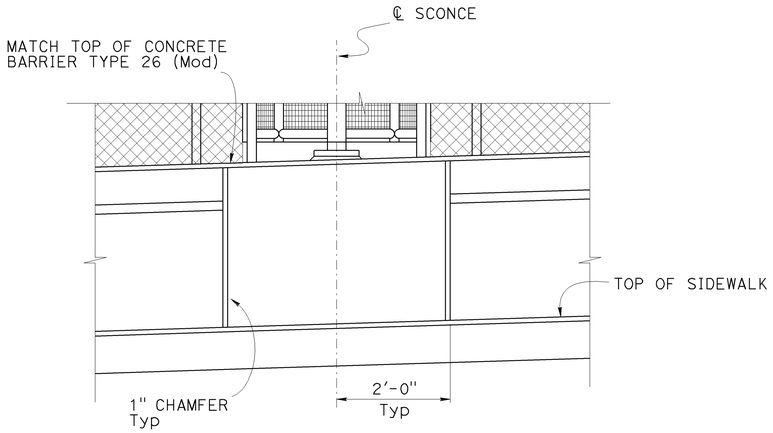

VIEW A-A
3/4" = 1'-0"

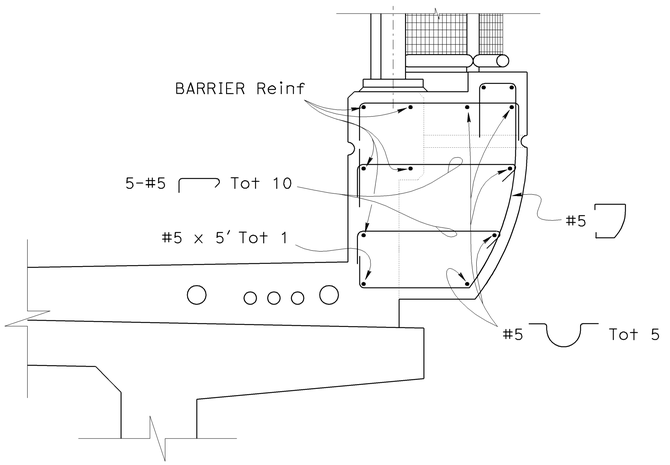

SECTION D-D
1" = 1'-0"

FOR ELECTROLIER ANCHOR, INSTALL 1"ø x 24" GALVANIZED ASTM F1554 GRADE 55 ANCHOR BOLTS (HOT DIP GALVANIZED COATING), Tot 4
EMBEDMENT DEPTH = 20"
BOLT CIRCLE DIAMETER = 8½"

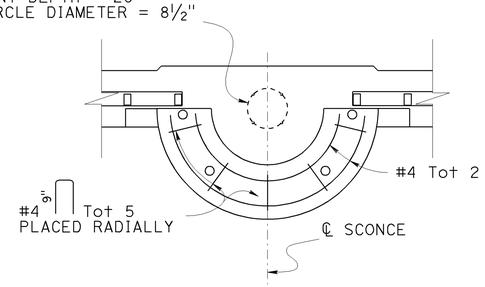

SECTION B-B
3/4" = 1'-0"

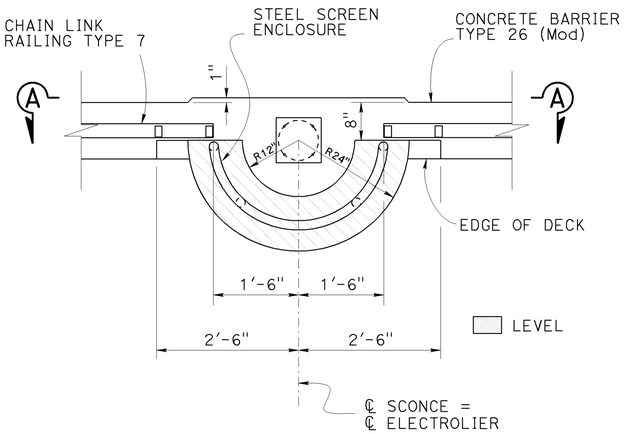

PLAN
3/4" = 1'

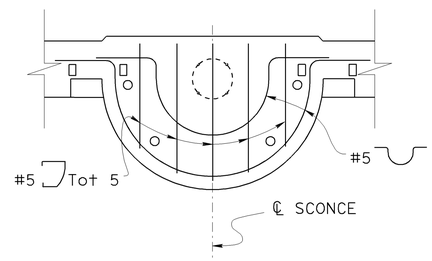

SECTION C-C
3/4" = 1'-0"

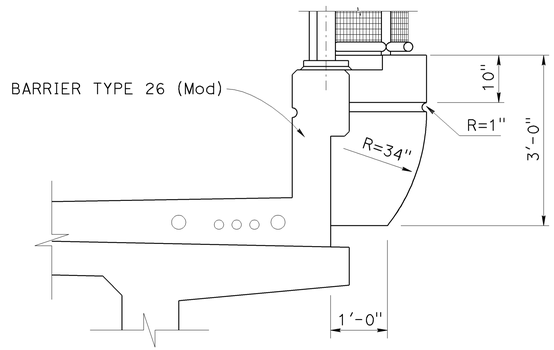

SECTION E-E
3/4" = 1'-0"

NOTE:
THE CONTRACTOR SHALL VERIFY ALL CONTROLLING FIELD DIMENSIONS BEFORE ORDERING OR FABRICATING ANY MATERIAL.

NOTE:
For details not shown, see "ROAD PLANS"

DESIGN	BY TIM MANN/EDWARD B. MU	CHECKED HOMA IRANINEJADIAN	STATE OF CALIFORNIA DEPARTMENT OF TRANSPORTATION	DIVISION OF ENGINEERING SERVICES STRUCTURE DESIGN DESIGN BRANCH 20	BRIDGE NO. 58-0351 / POST MILE R39.0
DETAILS	BY ANTONETTE L. ONG	CHECKED HOMA IRANINEJADIAN			
QUANTITIES	BY EDWARD B. MU	CHECKED HOMA IRANINEJADIAN			

DOGWOOD ROAD OC (REPLACE)
SCONCE DETAIL

STRUCTURES DESIGN DETAIL SHEET (ENGLISH) (REV. 09-01-10)

ORIGINAL SCALE IN INCHES FOR REDUCED PLANS 0 1 2 3

UNIT: 3622
PROJECT NUMBER & PHASE: 1100000743-1 CONTRACT NO.: 11-263301

DISREGARD PRINTS BEARING EARLIER REVISION DATES

REVISION DATES				SHEET	OF
08/19/13		05/30/13	08/01/13	19	29

FILE => 58-0351-p-light sconce-dt01.dgn

USERNAME => s136653 DATE PLOTTED => 19-SEP-2013 TIME PLOTTED => 09:49

DIST	COUNTY	ROUTE	POST MILES TOTAL PROJECT	SHEET No.	TOTAL SHEETS
11	IMP	8	R38.8/R39.1	216	225

02-13-13
REGISTERED CIVIL ENGINEER DATE

04-07-14
PLANS APPROVAL DATE

EDWARD B. MU
No. C72567
Exp. 06-30-14
CIVIL
REGISTERED PROFESSIONAL ENGINEER
STATE OF CALIFORNIA

The State of California or its officers or agents shall not be responsible for the accuracy or completeness of electronic copies of this plan sheet.

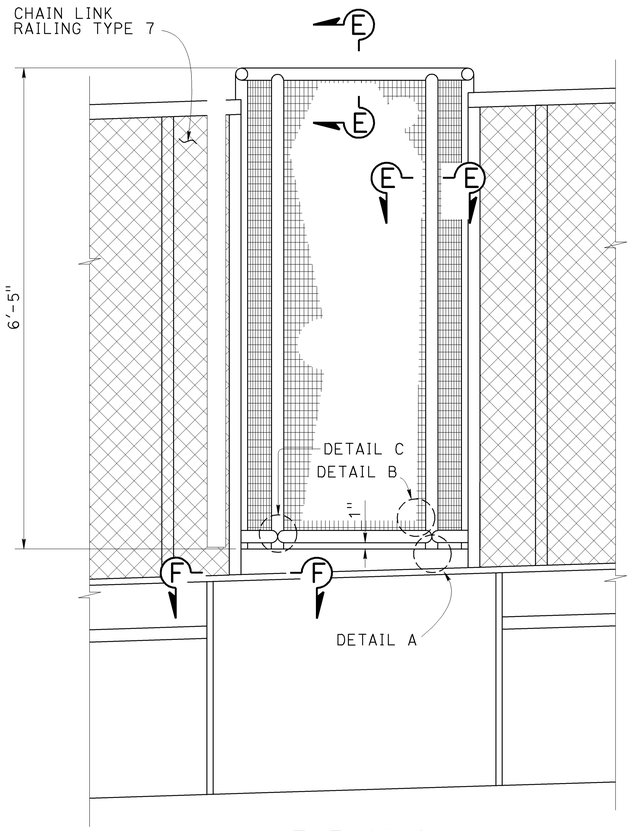

ELEVATION
1" = 1'-0"

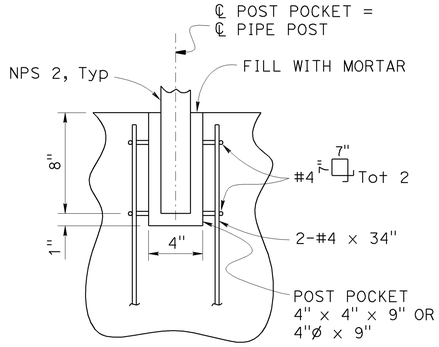

DETAIL A
NO SCALE
POST ANCHORAGE DETAIL

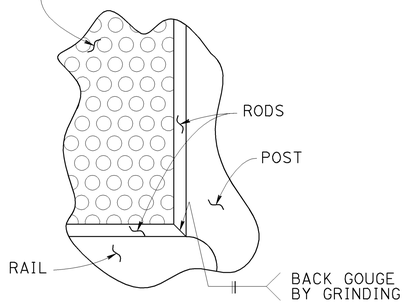

DETAIL B
NO SCALE

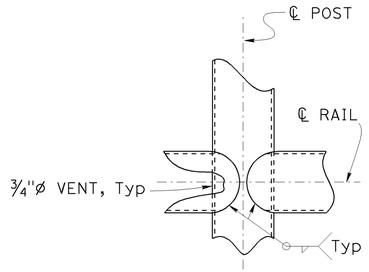

DETAIL C
NO SCALE
TYPICAL WELDS AT POST AND RAILS

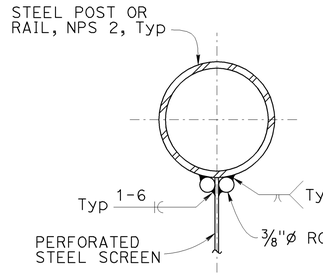

SECTION E-E
NO SCALE

3/8" THICK BASE PLATE (ASTM A36) WITH HOLES FOR 1/2"ø CAST IN PLACE ASTM F1554 GRADE 55 ANCHOR BOLTS WITH STANDARD HEX NUTS AND OVERSIZED WASHERS. FOR BOLTS = 6" LEVEL BASE PLATE WITH 1/2"± MORTAR PAD.

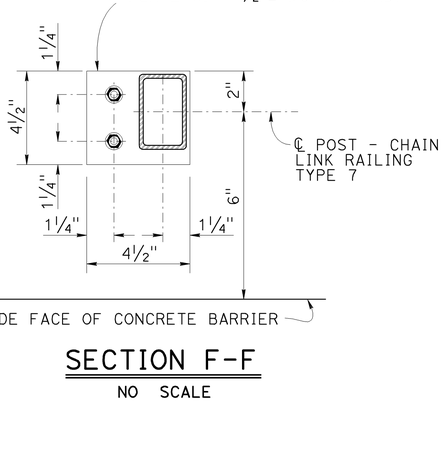

SECTION F-F
NO SCALE

3/4" EXPANDED POLYSTYRENE. PLACED ONLY AROUND POST ADJACENT TO CHAIN LINK RAILING TYPE 7 POST.

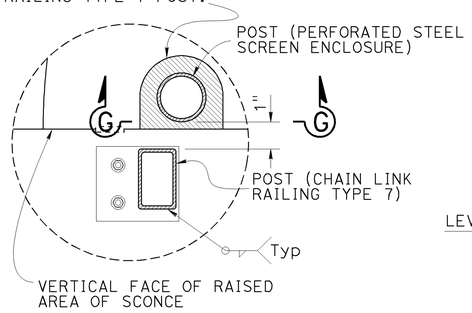

DETAIL D
NO SCALE

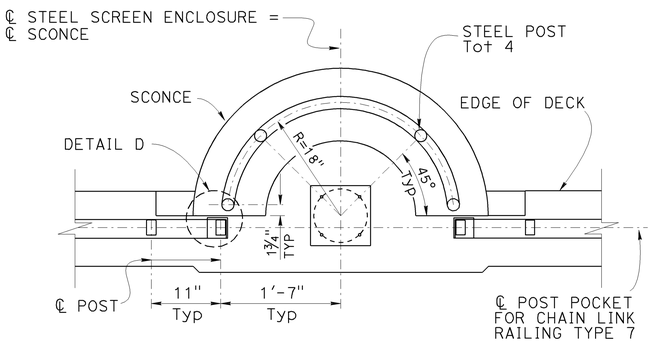

PLAN
1" = 1'

NOTE:
THE CONTRACTOR SHALL VERIFY ALL CONTROLLING FIELD DIMENSIONS BEFORE ORDERING OR FABRICATING ANY MATERIAL.

NOTES:

1. Perforated Steel Screen enclosure to be galvanized after fabrication (Hot Dip Galvanized Coating).
2. Posts shall be vertical. Rails shall be level.
3. Top Rail shall be continuous.
4. Alternative details may be submitted by Contractor for Engineers approval.
5. For Concrete Barrier details and reinforcement not shown, see "MISCELLANEOUS DETAILS" sheet and Standard Plan RSP B11-54.
6. All Perforated Steel Screen Post and Rails are NPS standard weight ASTM A53, Type E, Grade B.
7. For Chain Link Railing Type 7 details not shown, see Standard Plan B11-52.

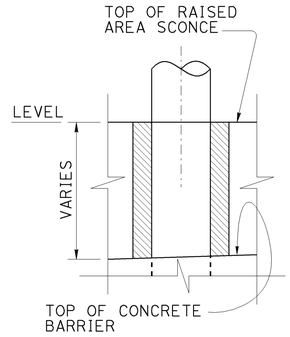

SECTION G-G
NO SCALE

NOTE:
For details not shown, see "ROAD PLANS"

DESIGN	BY TIM MANN/EDWARD B. MU	CHECKED HOMA IRANINEJADIAN	STATE OF CALIFORNIA DEPARTMENT OF TRANSPORTATION	DIVISION OF ENGINEERING SERVICES STRUCTURE DESIGN DESIGN BRANCH 20	BRIDGE NO. 58-0351
DETAILS	BY ANTONETTE L. ONG	CHECKED HOMA IRANINEJADIAN			POST MILE R39.0
QUANTITIES	BY EDWARD B. MU	CHECKED HOMA IRANINEJADIAN			

DOGWOOD ROAD OC (REPLACE)
PERFORATED STEEL SCREEN ENCLOSURE-SCONCE

STRUCTURES DESIGN DETAIL SHEET (ENGLISH) (REV. 09-01-10)

ORIGINAL SCALE IN INCHES FOR REDUCED PLANS 0 1 2 3

UNIT: 3622
PROJECT NUMBER & PHASE: 1100000743-1 CONTRACT NO.: 11-263301

DISREGARD PRINTS BEARING EARLIER REVISION DATES →

REVISION DATES			SHEET	OF
02/07/13	08/07/13	08/19/13	20	29

FILE => 58-0351-p-light screen-dt01.dgn

USERNAME => s136853 DATE PLOTTED => 19-SEP-2013 TIME PLOTTED => 09:49

DIST	COUNTY	ROUTE	POST MILES TOTAL PROJECT	SHEET No.	TOTAL SHEETS
11	IMP	8	R38.8/R39.1	217	225

02-13-13
REGISTERED CIVIL ENGINEER DATE

04-07-14
PLANS APPROVAL DATE

REGISTERED PROFESSIONAL ENGINEER
EDWARD B. MU
No. C72567
Exp. 06-30-14
CIVIL
STATE OF CALIFORNIA

The State of California or its officers or agents shall not be responsible for the accuracy or completeness of electronic copies of this plan sheet.

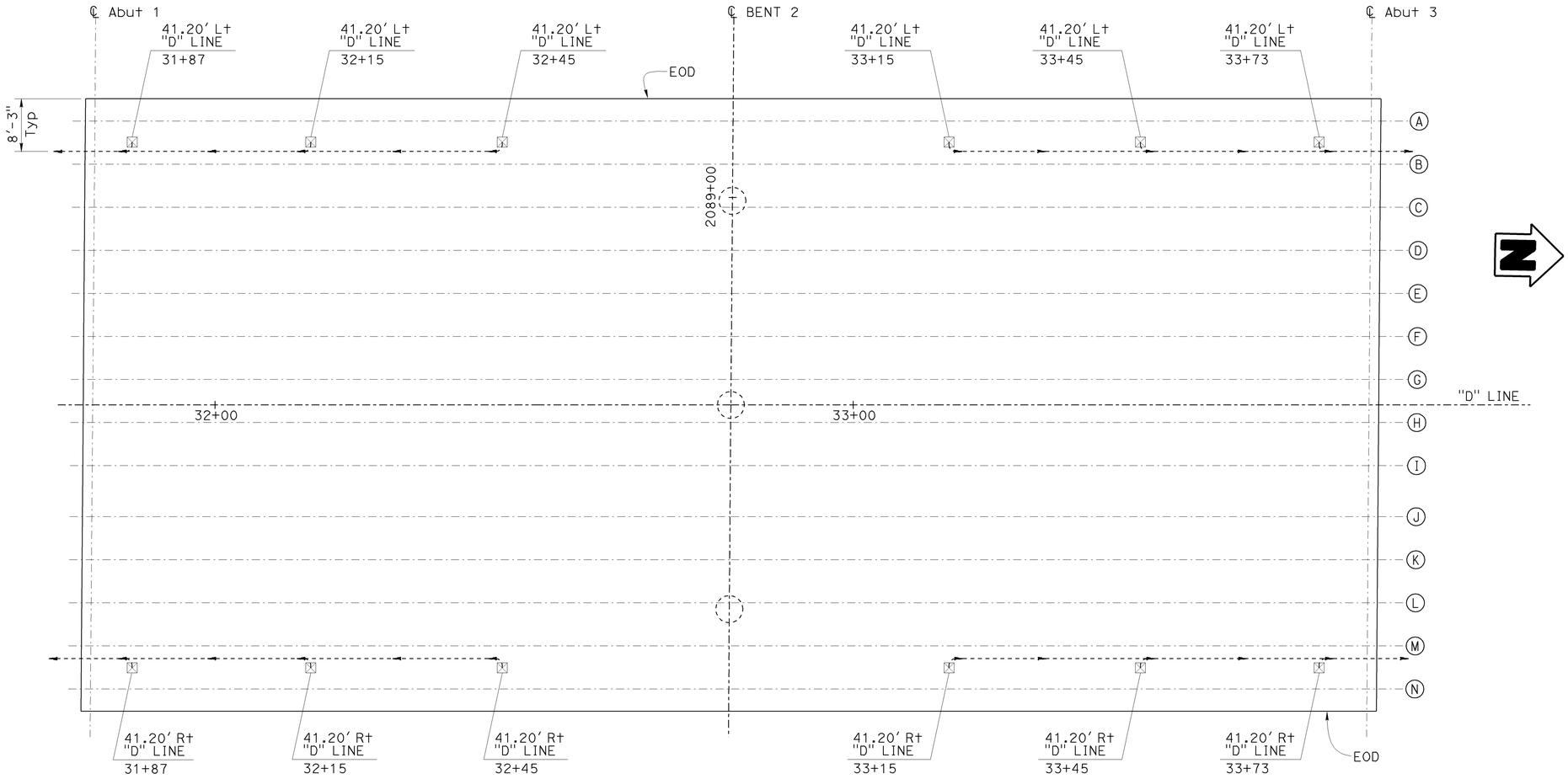

DECK DRAINAGE LAYOUT

1" = 10'-0"

B7-6 B7-8 B7-10

NOTES:

1. For deck drains, station or offset locates at center of drain.
2. Drainage pipe supported on pipe hangers, see B14-5
3. For drainage beyond bridge, see "ROAD PLANS".

LEGEND:

---►--- Indicates deck drainage pipe and direction of flow.

☒ Indicates deck drain Type D-1.

NOTE:
THE CONTRACTOR SHALL VERIFY ALL CONTROLLING FIELD DIMENSIONS BEFORE ORDERING OR FABRICATING ANY MATERIAL.

DESIGN	BY EDWARD B. MU	CHECKED JASON FANG	STATE OF CALIFORNIA DEPARTMENT OF TRANSPORTATION
DETAILS	BY ANTONETTE L. ONG	CHECKED JASON FANG	
QUANTITIES	BY EDWARD B. MU	CHECKED MOHAMMAD MUQTADIR	

DIVISION OF ENGINEERING SERVICES
STRUCTURE DESIGN
DESIGN BRANCH 20

BRIDGE NO. 58-0351
POST MILE R39.0

DOGWOOD ROAD OC (REPLACE)
DECK DRAINAGE

STRUCTURES DESIGN DETAIL SHEET (ENGLISH) (REV. 09-01-10)

ORIGINAL SCALE IN INCHES FOR REDUCED PLANS 0 1 2 3

UNIT: 3622
PROJECT NUMBER & PHASE: 1100000743-1 CONTRACT NO.: 11-263301

DISREGARD PRINTS BEARING EARLIER REVISION DATES ►

REVISION DATES			SHEET	OF
12/09/12	02/07/13	02/11/13	21	29

FILE => 58-0351-r-dd01.dgn

USERNAME => s136853 DATE PLOTTED => 19-SEP-2013 TIME PLOTTED => 09:49

DIST	COUNTY	ROUTE	POST MILES TOTAL PROJECT	SHEET No.	TOTAL SHEETS
11	IMP	8	R38.8/R39.1	218	225

REGISTERED CIVIL ENGINEER — DATE 02-13-13

PLANS APPROVAL DATE 04-07-14

EDWARD B. MU No. C72567 Exp. 06-30-14 CIVIL — REGISTERED PROFESSIONAL ENGINEER — STATE OF CALIFORNIA

The State of California or its officers or agents shall not be responsible for the accuracy or completeness of electronic copies of this plan sheet.

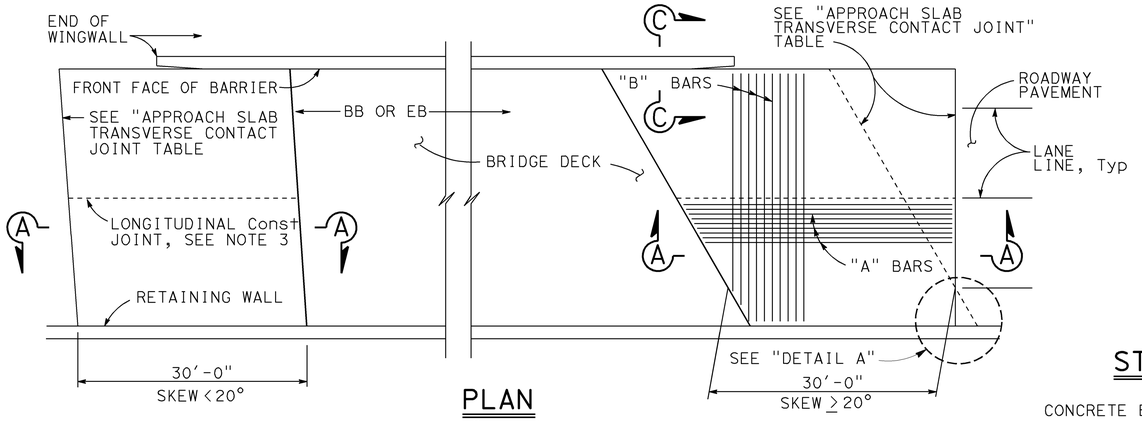

PLAN
1" = 10'

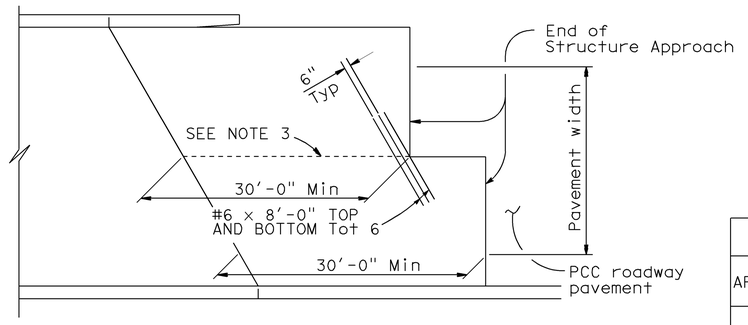

STRUCTURE APPROACH - END STAGGER DETAIL
No Scale

APPROACH SLAB TRANSVERSE CONTACT JOINT		
APPROACH SKEW	WITH AC ROADWAY PAVEMENT	WITH PCC ROADWAY PAVEMENT
< 20°	PARALLEL TO FACE OF PN	PARALLEL TO FACE OF PN
20° - 45°	PARALLEL TO FACE OF PN USE "DETAIL A"	STAGGER LINES 24' TO 36' APART
> 45°	PARALLEL TO FACE OF PN USE "DETAIL A"	STAGGER AT EACH LANE LINE

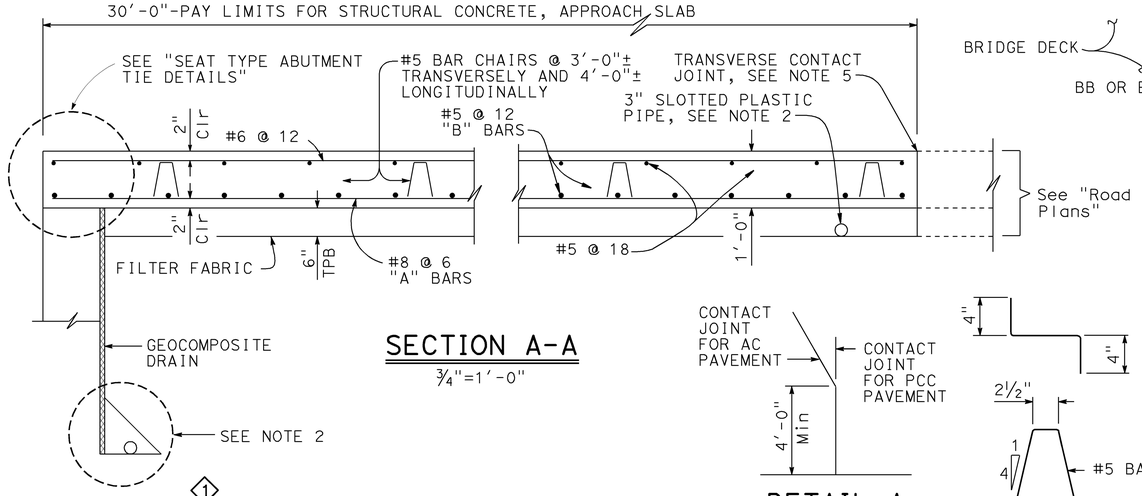

SECTION A-A
¾"=1'-0"

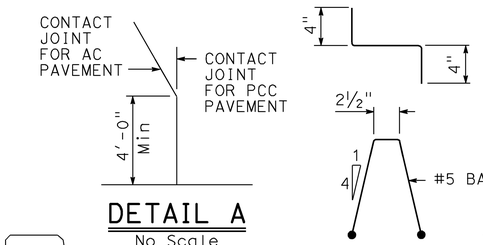

DETAIL A
No Scale

BAR CHAIR DETAIL
1½"=1'-0"

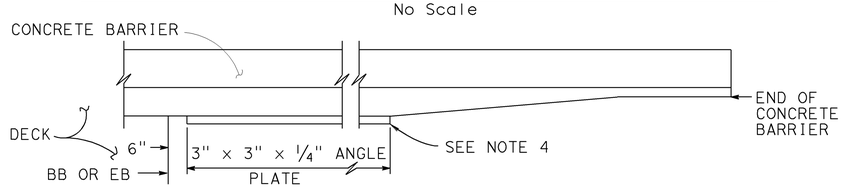

EDGE ANGLE DETAIL
½"=1'-0"

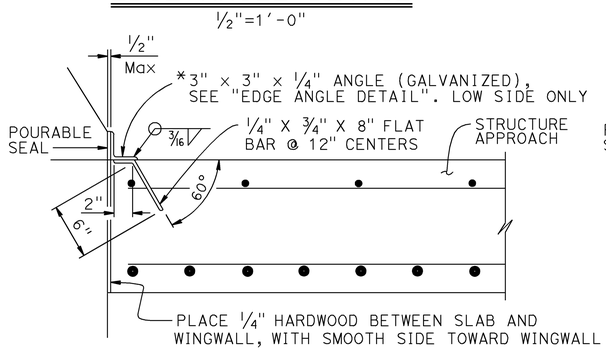

*(TO BE USED WITH CONCRETE BARRIER WITH VERTICAL FACE)

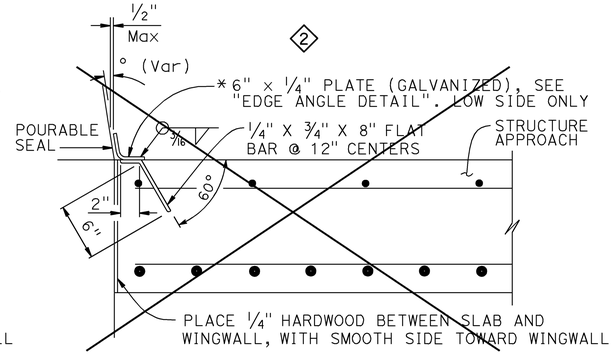

*(TO BE USED WITH CONCRETE BARRIER WITH SLOPING FACE)

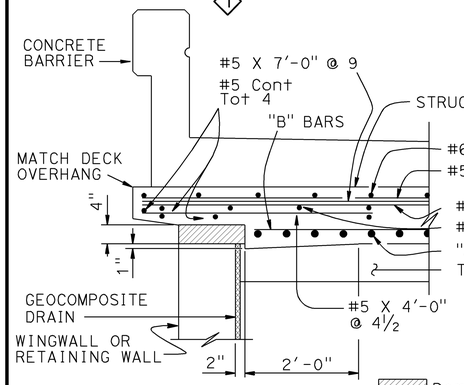

TYPE E-1

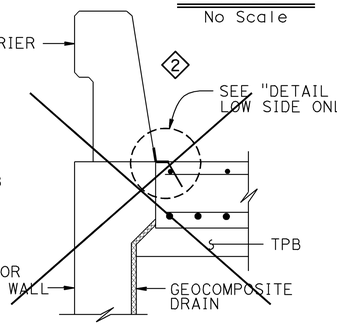

TYPE E-2

Remove all polystyrene

SECTION C-C
¾"=1'-0"

(Type E-1 to be used, unless otherwise shown on plans)

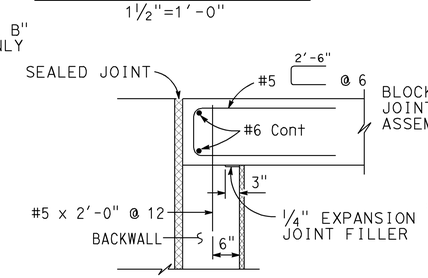

MR ≤ 2"

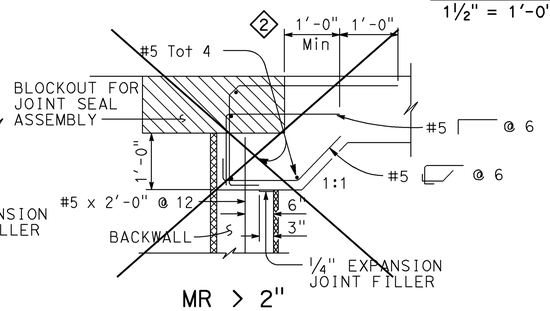

MR > 2"

SEAT TYPE ABUTMENT TIE DETAILS (SEE NOTE 1)
¾"=1'-0"

NOTES:
1. For details not shown, see Structure Plans. For MR ≤ 2", adjust bar reinforcement to clear a sawcut for sealed joint, when required
2. For drainage details, see "STRUCTURE APPROACH DRAINAGE DETAILS" sheet
3. Longitudinal construction joints, when permitted by the Engineer, shall be located on lane lines
4. End angle or plate at beginning of barrier transition, end of wingwall or end of structure approach as applicable
5. For transverse contact joint with new PCC paving, refer to Standard Plan P10
6. At the Contractor's option, approach slab transverse reinforcement may be placed parallel to paving notch. Spacing of transverse reinforcement is measured along ℄ roadway

REVISED STANDARD DRAWING

FILE NO. xs3-120

APPROVAL DATE July 2011

1 MODIFIED DETAIL

2 DELETED DETAIL

STATE OF CALIFORNIA
DEPARTMENT OF TRANSPORTATION

DIVISION OF ENGINEERING SERVICES

BRIDGE NO. 58-0351

POST MILE R39.0

DOGWOOD ROAD OC (REPLACE)

STRUCTURE APPROACH TYPE N(30S)

DS OSD 2147A (ENGLISH STANDARD DRAWING "XS" BORDER REV. (02-02-11)

ORIGINAL SCALE IN INCHES FOR REDUCED PLANS 0 1 2 3

UNIT: 3622
PROJECT NUMBER & PHASE: 1100000743-1
CONTRACT NO.: 11-263301

DISREGARD PRINTS BEARING EARLIER REVISION DATES

REVISION DATES			SHEET	OF
12/19/12		09/04/12 11/05/12	22	29

FILE => 58-0351-s-sa.dgn

USERNAME => s136853 DATE PLOTTED => 19-SEP-2013 TIME PLOTTED => 09:43

DIST	COUNTY	ROUTE	POST MILES TOTAL PROJECT	SHEET No.	TOTAL SHEETS
11	IMP	8	R38.8/R39.1	219	225

REGISTERED CIVIL ENGINEER 02-13-13 DATE

04-07-14
PLANS APPROVAL DATE

REGISTERED PROFESSIONAL ENGINEER
EDWARD B. MU
No. C72567
Exp. 06-30-14
CIVIL
STATE OF CALIFORNIA

The State of California or its officers or agents shall not be responsible for the accuracy or completeness of electronic copies of this plan sheet.

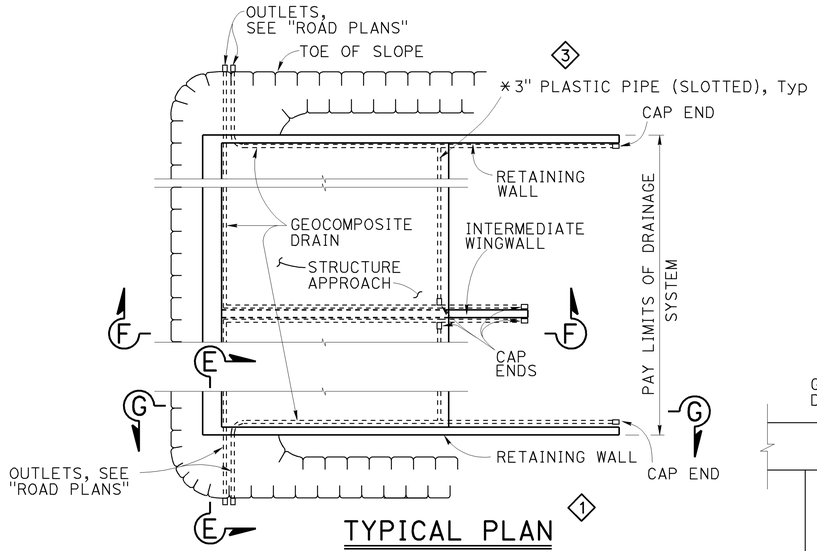

TYPICAL PLAN

1" = 10'

* FOR PIPE LAYOUT AT STAGGERED END, SEE "DETAIL B"

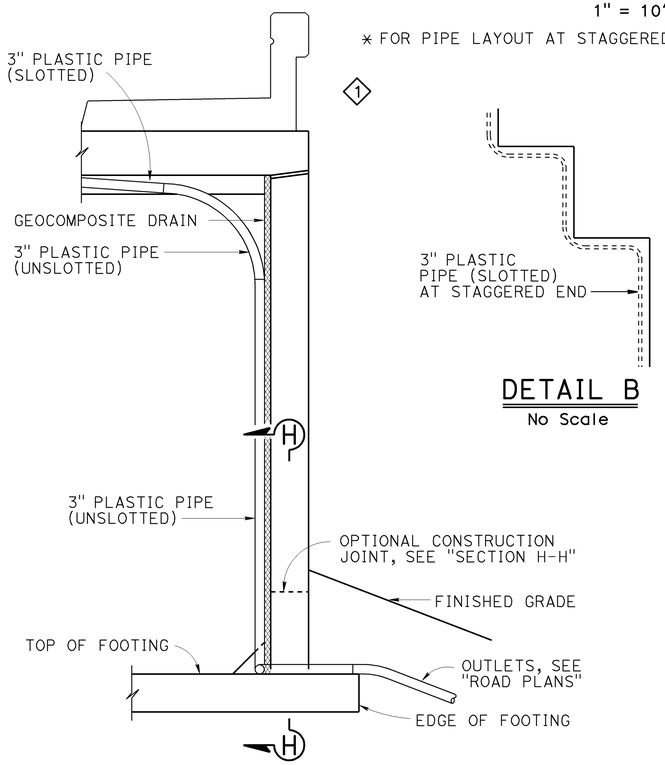

DETAIL B

No Scale

SECTION E-E

½" = 1'-0"

NOTE: Bends and junctions in 3" plastic pipe are 30" radius Min 3

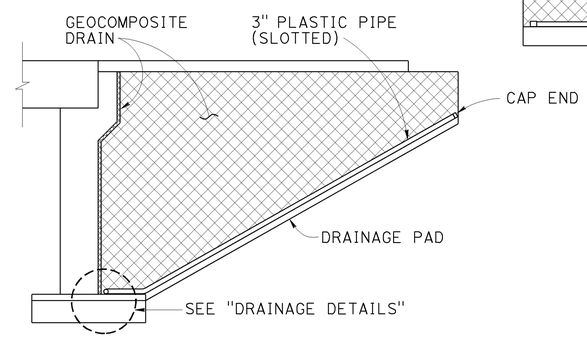

INTERMEDIATE WINGWALL 1

SECTION F-F

NO SCALE

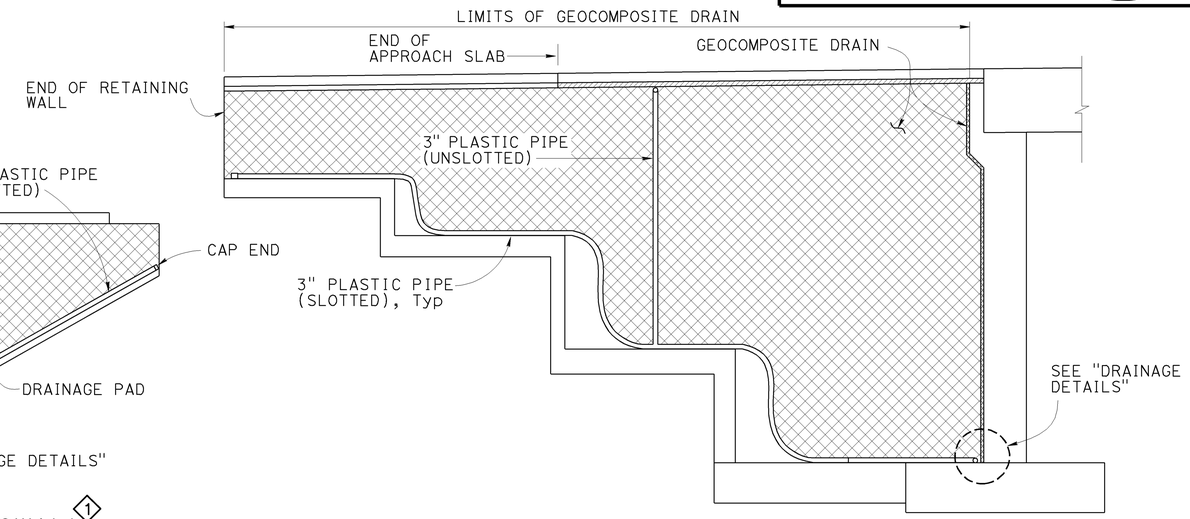

RETAINING WALL WINGWALL DRAINAGE DETAILS 1

SECTION G-G

NO SCALE

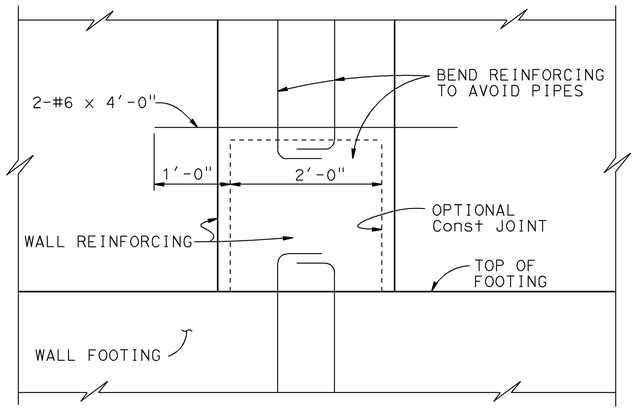

SECTION H-H

1" = 1'-0"

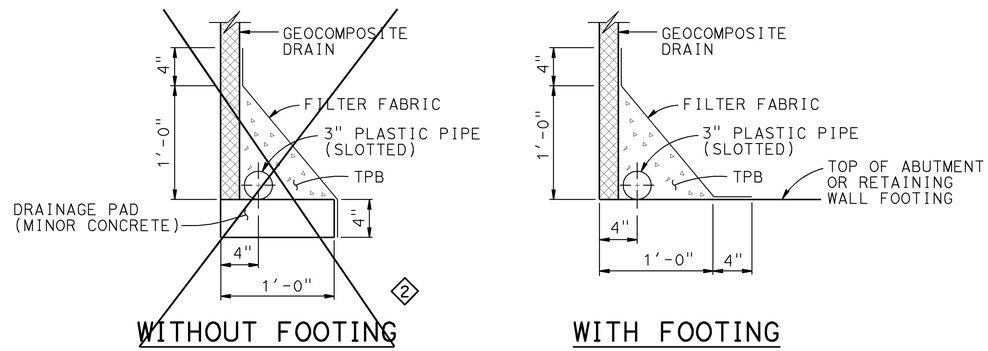

WITHOUT FOOTING

WITH FOOTING

DRAINAGE DETAILS

1½" = 1'-0"

REVISED STANDARD DRAWING						
FILE NO. xs3-110	APPROVAL DATE July 2011	1 MODIFIED DETAIL 2 DELETED DETAIL	3 REVISED NOTE	STATE OF CALIFORNIA DEPARTMENT OF TRANSPORTATION	DIVISION OF ENGINEERING SERVICES	BRIDGE NO. 58-0351 POST MILE R39.0

DOGWOOD ROAD OC (REPLACE)

STRUCTURE APPROACH DRAINAGE DETAILS

DS OSD 2147A (ENGLISH STANDARD DRAWING "XS" BORDER REV. (02-02-11)

ORIGINAL SCALE IN INCHES FOR REDUCED PLANS 0 1 2 3

UNIT: 3622
PROJECT NUMBER & PHASE: 1100000743-1 CONTRACT NO.: 11-263301

DISREGARD PRINTS BEARING EARLIER REVISION DATES

REVISION DATES 12/19/12 08/02/13 11/05/12

SHEET 23 OF 29

FILE => 58-0351-s-sadd.dgn

USERNAME => s136853 DATE PLOTTED => 19-SEP-2013 TIME PLOTTED => 09:49

DIST	COUNTY	ROUTE	POST MILES TOTAL PROJECT	SHEET No.	TOTAL SHEETS
11	IMP	8	R38.8/R39.1	220	225

02-13-13
REGISTERED CIVIL ENGINEER DATE

04-07-14
PLANS APPROVAL DATE

REGISTERED PROFESSIONAL ENGINEER
EDWARD B. MU
No. C72567
Exp. 06-30-14
CIVIL
STATE OF CALIFORNIA

The State of California or its officers or agents shall not be responsible for the accuracy or completeness of electronic copies of this plan sheet.

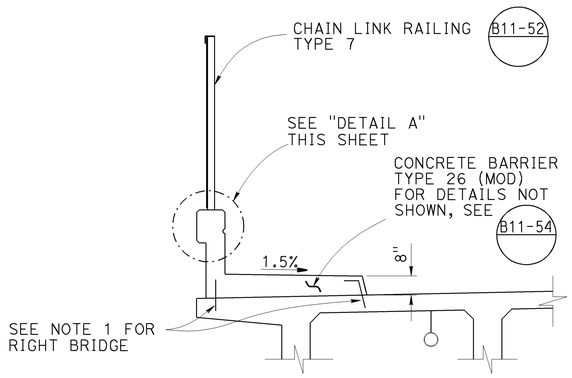

CONCRETE BARRIER ON LEFT BRIDGE

3/8" = 1'-0"

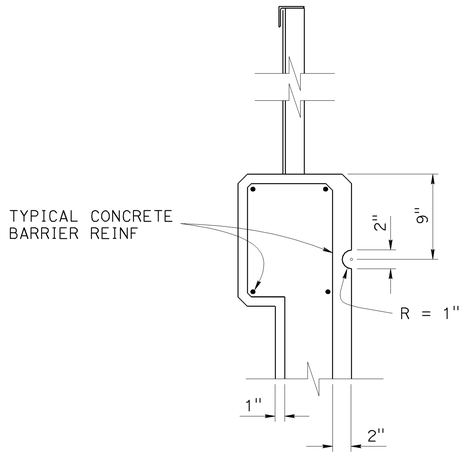

DETAIL A

1½" = 1'-0"

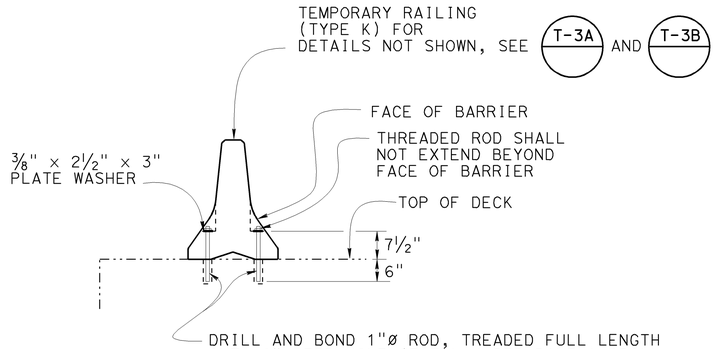

TYPE K RAILING ATTACHMENT DETAIL

NO SCALE

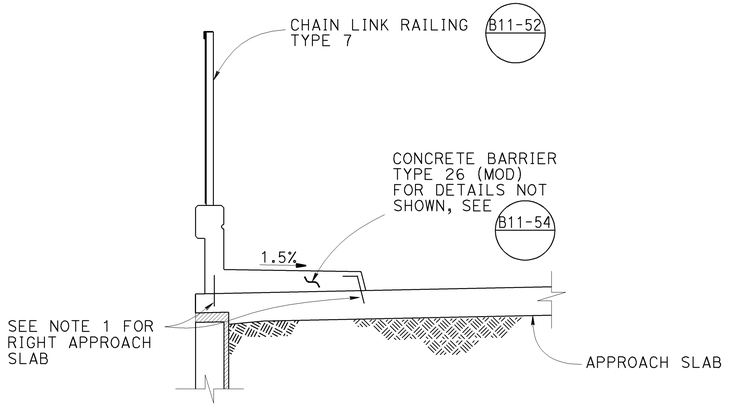

CONCRETE BARRIER ON LEFT APPROACH SLAB

3/8" = 1'-0"

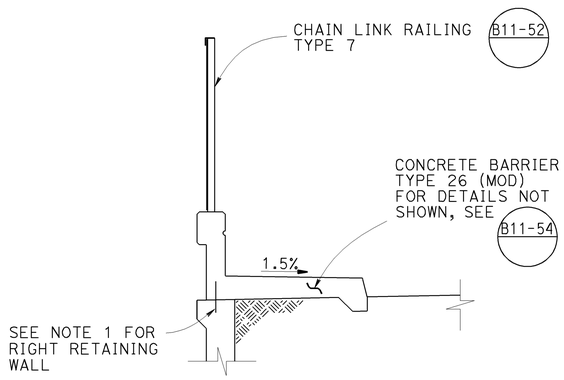

CONCRETE BARRIER ON LEFT RETAINING WALL

3/8" = 1'-0"

NOTE:
THE CONTRACTOR SHALL VERIFY ALL CONTROLLING FIELD DIMENSIONS BEFORE ORDERING OR FABRICATING ANY MATERIAL.

NOTE:

1. On Right Bridge/Approach Slab/Retaining Wall, use dowels with same rebar size and spacing as shown on B11-54, drill and bond into 5" deep hole.

LEGEND:

▨ Indicates expanded polystyrene

DESIGN	BY EDWARD B. MU	CHECKED JASON FANG	STATE OF CALIFORNIA DEPARTMENT OF TRANSPORTATION	DIVISION OF ENGINEERING SERVICES STRUCTURE DESIGN DESIGN BRANCH 20	BRIDGE NO. 58-0351
DETAILS	BY ANTONETTE L. ONG	CHECKED JASON FANG			POST MILE R39.0
QUANTITIES	BY EDWARD B. MU	CHECKED MOHAMMAD MUQTADIR			

DOGWOOD ROAD OC (REPLACE)
MISCELLANEOUS DETAILS

STRUCTURES DESIGN DETAIL SHEET (ENGLISH) (REV. 09-01-10)

ORIGINAL SCALE IN INCHES FOR REDUCED PLANS 0 1 2 3

UNIT: 3622
PROJECT NUMBER & PHASE: 1100000743-1
CONTRACT NO.: 11-263301

DISREGARD PRINTS BEARING EARLIER REVISION DATES →

REVISION DATES				SHEET	OF
02/01/13		11/07/12	12/19/12	24	29

FILE => 58-0351-u-miscdt01.dgn

USERNAME => s136853 DATE PLOTTED => 14-FEB-2013 TIME PLOTTED => 15:16

DIST	COUNTY	ROUTE	POST MILES TOTAL PROJECT	SHEET No.	TOTAL SHEETS
11	IMP	8	R38.8/R39.1	221	225

REGISTERED CIVIL ENGINEER — 11-8-12 DATE

04-07-14
PLANS APPROVAL DATE

REGISTERED PROFESSIONAL ENGINEER — David T-M Liao — No. C059838 — Exp. 12-31-13 — CIVIL — STATE OF CALIFORNIA

The State of California or its officers or agents shall not be responsible for the accuracy or completeness of electronic copies of this plan sheet.

This LOTB sheet was prepared in accordance with the Caltrans Soil & Rock Logging, Classification, & Presentation Manual (2010 Edition).

See 2010 Standard Plans A10F and A10G for Soil Legend, and A10H for Rock Legend.

BENCH MARK

Benchmark: BM 8-38.85
Brass disk in freeway median
N: 1862068.16
E: 6781137.17
Elevation: 294.9′
Vertical Datum: NAVD 88

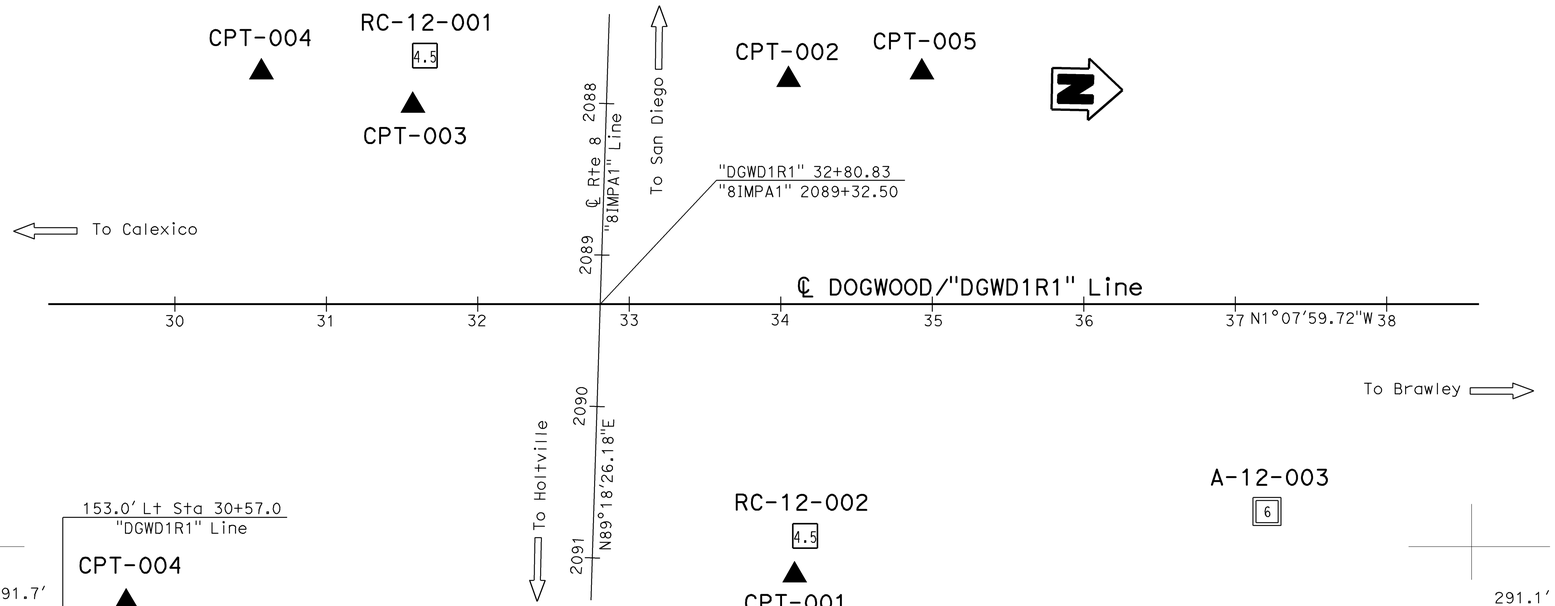

PLAN
1" = 50′

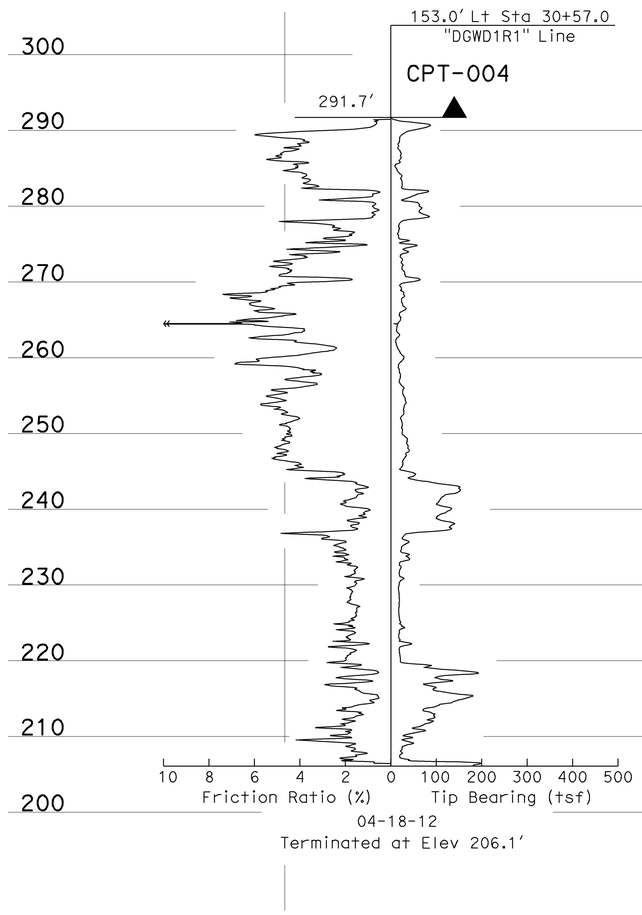

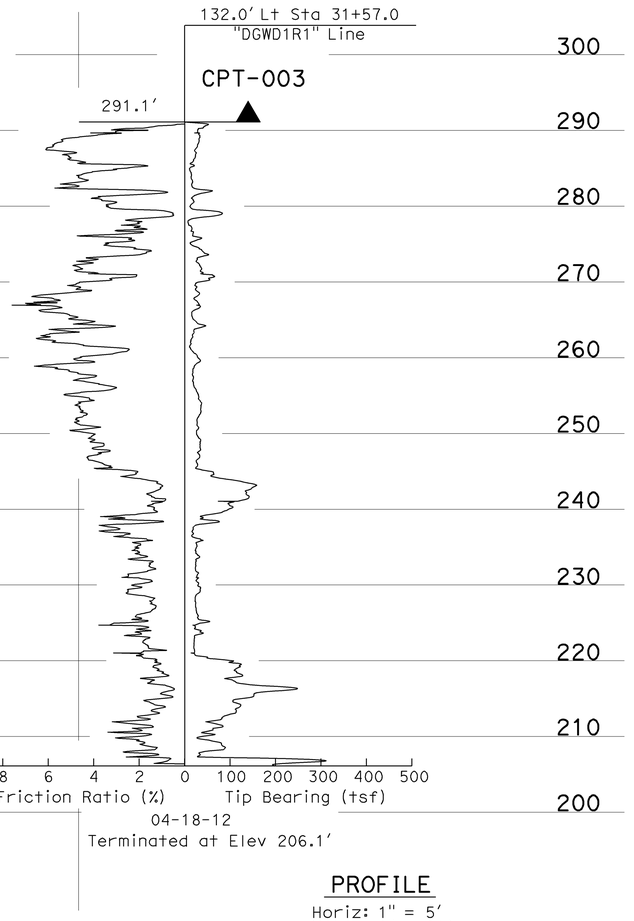

31+00

PROFILE
Horiz: 1" = 5′
Vert: 1" = 10′

ENGINEERING SERVICES	MATERIALS AND GEOTECHNICAL SERVICES		STATE OF CALIFORNIA DEPARTMENT OF TRANSPORTATION	DIVISION OF ENGINEERING SERVICES STRUCTURE DESIGN DESIGN BRANCH 20	BRIDGE NO. 58-0351	DOGWOOD ROAD OC (REPLACE)
FUNCTIONAL SUPERVISOR NAME: M. DeSalvatore	DRAWN BY: F. Nguyen	FIELD INVESTIGATION BY: T-M Liao			POST MILE R 39.0	LOG OF TEST BORINGS 1 OF 5
	CHECKED BY: E. Neupert					

OGS CIVIL LOG OF TEST BORINGS SHEET

ORIGINAL SCALE IN INCHES FOR REDUCED PLANS 0 1 2 3

UNIT: 3622
PROJECT NUMBER & PHASE: 1100000743-1 CONTRACT NO.: 11-263301

DISREGARD PRINTS BEARING EARLIER REVISION DATES →

REVISION DATES				SHEET	OF
09/28/12	10/15/12	10/24/12		25	29

FILE => 58-0351-z-1tb01.dgn

USERNAME => s136853 DATE PLOTTED => 14-FEB-2013 TIME PLOTTED => 15:16

DIST	COUNTY	ROUTE	POST MILES TOTAL PROJECT	SHEET No.	TOTAL SHEETS
11	IMP	8	R38.8/R39.1	222	225

REGISTERED CIVIL ENGINEER — DATE 11-8-12

04-07-14
PLANS APPROVAL DATE

REGISTERED PROFESSIONAL ENGINEER — David T-M Liao — No. C059838 — Exp. 12-31-13 — CIVIL — STATE OF CALIFORNIA

The State of California or its officers or agents shall not be responsible for the accuracy or completeness of electronic copies of this plan sheet.

This LOTB sheet was prepared in accordance with the Caltrans Soil & Rock Logging, Classification, & Presentation Manual (2010 Edition).

See 2010 Standard Plans A10F and A10G for Soil Legend, and A10H for Rock Legend.

FOR PLAN VIEW, SEE
"LOG OF TEST BORINGS 1 OF 5"

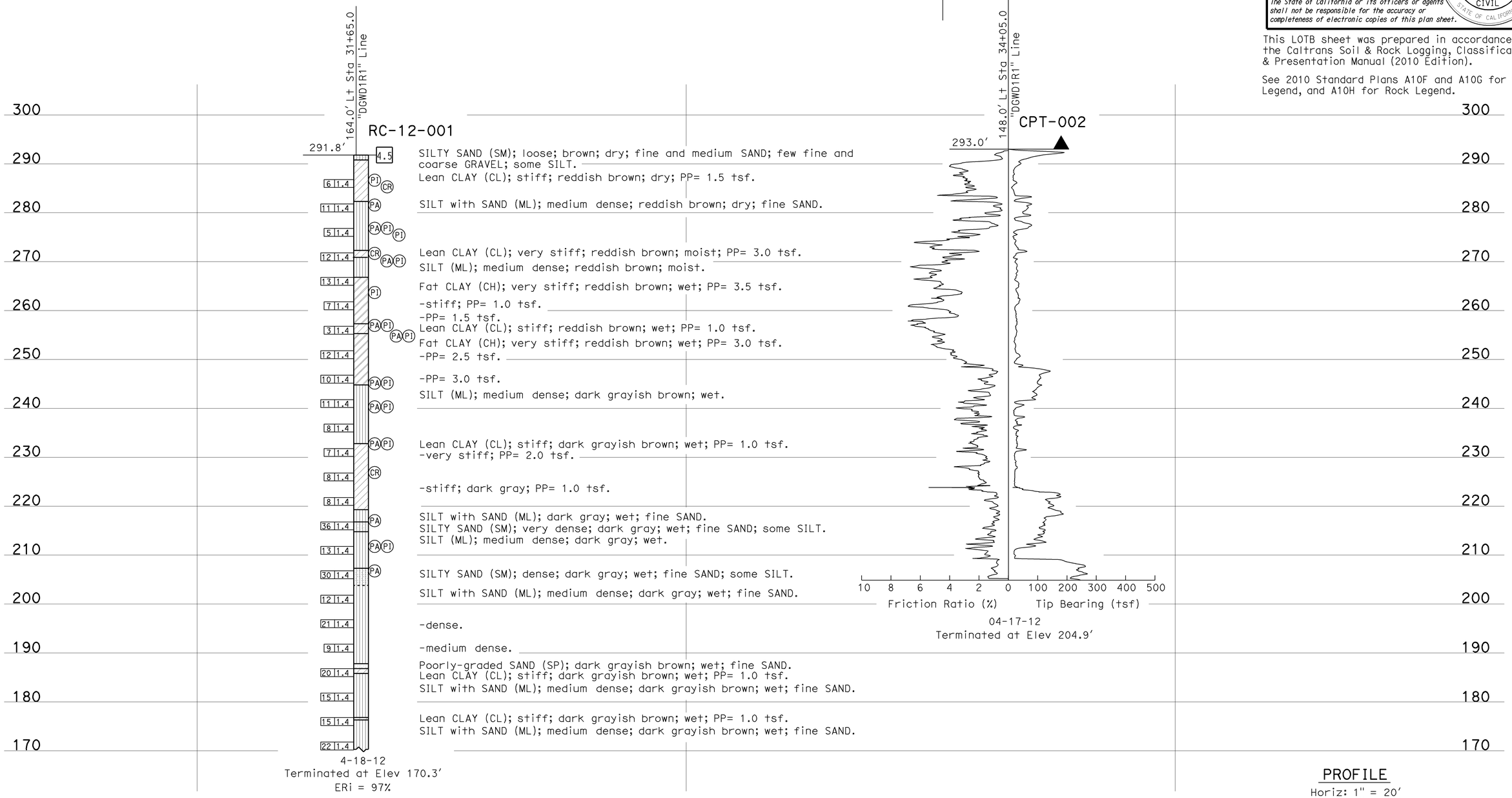

PROFILE
Horiz: 1" = 20'
Vert: 1" = 10'

ENGINEERING SERVICES	MATERIALS AND GEOTECHNICAL SERVICES	STATE OF CALIFORNIA DEPARTMENT OF TRANSPORTATION	DIVISION OF ENGINEERING SERVICES STRUCTURE DESIGN DESIGN BRANCH 20	BRIDGE NO. 58-0351	DOGWOOD ROAD OC (REPLACE)
FUNCTIONAL SUPERVISOR: M. DeSalvatore	DRAWN BY: F. Nguyen; CHECKED BY: E. Neupert	FIELD INVESTIGATION BY: T-M Liao		POST MILE R 39.0	LOG OF TEST BORINGS 2 OF 5

OGS CIVIL LOG OF TEST BORINGS SHEET

ORIGINAL SCALE IN INCHES FOR REDUCED PLANS 0 1 2 3

UNIT: 3622
PROJECT NUMBER & PHASE: 1100000743-1
CONTRACT NO.: 11-263301

DISREGARD PRINTS BEARING EARLIER REVISION DATES →

REVISION DATES				SHEET	OF
09/25/12	10/18/12			26	29

FILE => 58-0351-z-1tb02.dgn

USERNAME => s136853 DATE PLOTTED => 14-FEB-2013 TIME PLOTTED => 15:16

DIST	COUNTY	ROUTE	POST MILES TOTAL PROJECT	SHEET No.	TOTAL SHEETS
11	IMP	8	R38.8/R39.1	223	225

REGISTERED CIVIL ENGINEER — 11-8-12 DATE

04-07-14
PLANS APPROVAL DATE

REGISTERED PROFESSIONAL ENGINEER — David T-M Liao — No. C059838 — Exp. 12-31-13 — CIVIL — STATE OF CALIFORNIA

The State of California or its officers or agents shall not be responsible for the accuracy or completeness of electronic copies of this plan sheet.

This LOTB sheet was prepared in accordance with the Caltrans Soil & Rock Logging, Classification, & Presentation Manual (2010 Edition).

See 2010 Standard Plans A10F and A10G for Soil Legend, and A10H for Rock Legend.

FOR PLAN VIEW, SEE
"LOG OF TEST BORINGS 1 OF 5"

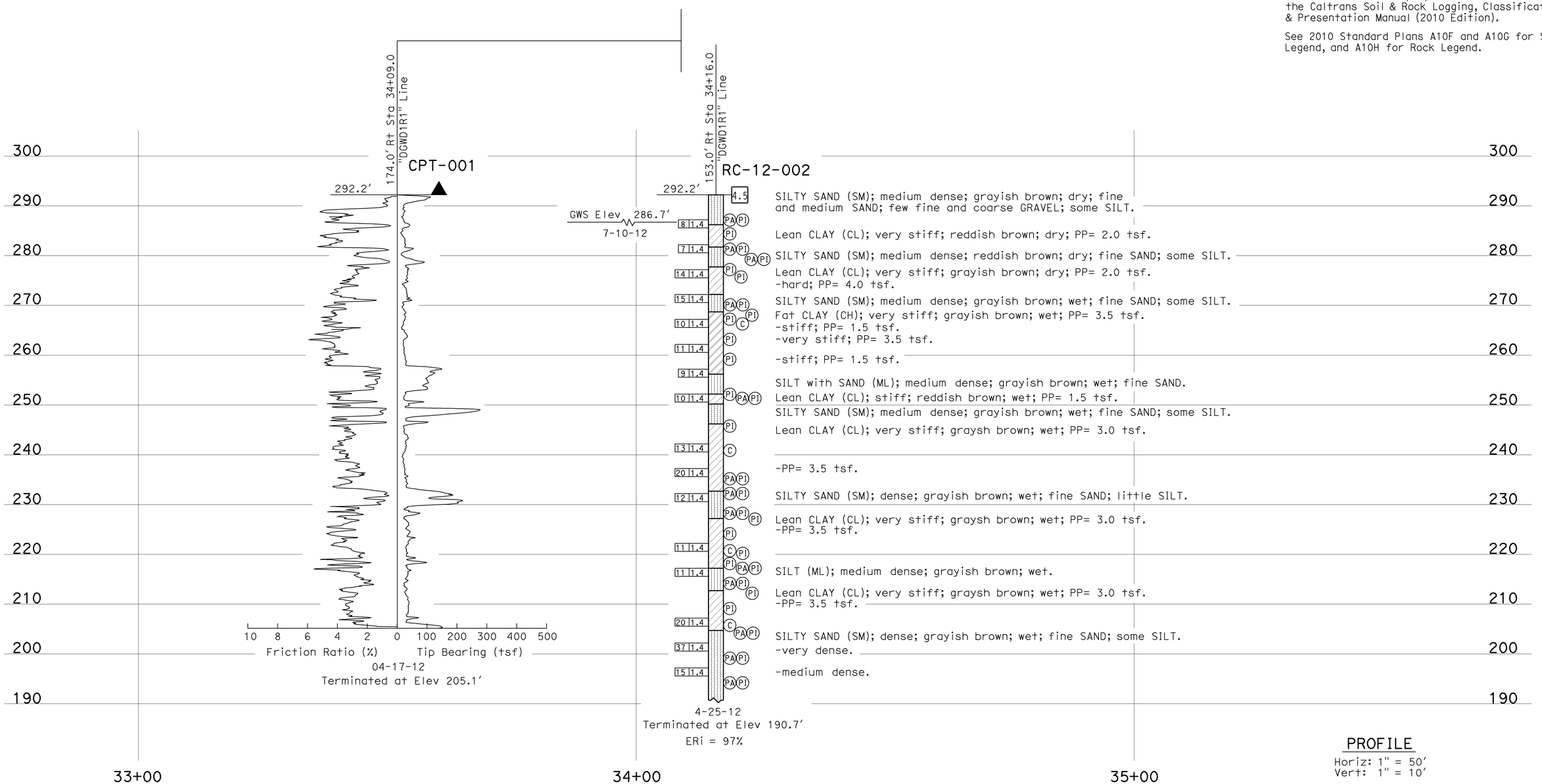

PROFILE
Horiz: 1" = 50'
Vert: 1" = 10'

ENGINEERING SERVICES	MATERIALS AND GEOTECHNICAL SERVICES		STATE OF CALIFORNIA DEPARTMENT OF TRANSPORTATION	DIVISION OF ENGINEERING SERVICES STRUCTURE DESIGN DESIGN BRANCH 20	BRIDGE NO. 58-0351	DOGWOOD ROAD OC (REPLACE)
FUNCTIONAL SUPERVISOR NAME: M. DeSalvatore	DRAWN BY: F. Nguyen	FIELD INVESTIGATION BY: T-M Liao			POST MILE R 39.0	LOG OF TEST BORINGS 3 OF 5
	CHECKED BY: E. Neupert					

OGS CIVIL LOG OF TEST BORINGS SHEET

ORIGINAL SCALE IN INCHES FOR REDUCED PLANS 0 1 2 3

UNIT: 3622
PROJECT NUMBER & PHASE: 1100000743-1 CONTRACT NO.: 11-263301

DISREGARD PRINTS BEARING EARLIER REVISION DATES →

REVISION DATES				SHEET	OF
09/25/12				27	29

FILE => 58-0351-z-1tb03.dgn

USERNAME => s136853 DATE PLOTTED => 14-FEB-2013 TIME PLOTTED => 15:16

DIST	COUNTY	ROUTE	POST MILES TOTAL PROJECT	SHEET No.	TOTAL SHEETS
11	IMP	8	R38.8/R39.1	224	225

REGISTERED CIVIL ENGINEER — 11-8-12 DATE

04-07-14
PLANS APPROVAL DATE

REGISTERED PROFESSIONAL ENGINEER — David T-M Liao — No. C059838 — Exp. 12-31-13 — CIVIL — STATE OF CALIFORNIA

The State of California or its officers or agents shall not be responsible for the accuracy or completeness of electronic copies of this plan sheet.

This LOTB sheet was prepared in accordance with the Caltrans Soil & Rock Logging, Classification, & Presentation Manual (2010 Edition).

See 2010 Standard Plans A10F and A10G for Soil Legend, and A10H for Rock Legend.

FOR PLAN VIEW, SEE
"LOG OF TEST BORINGS 1 OF 5"

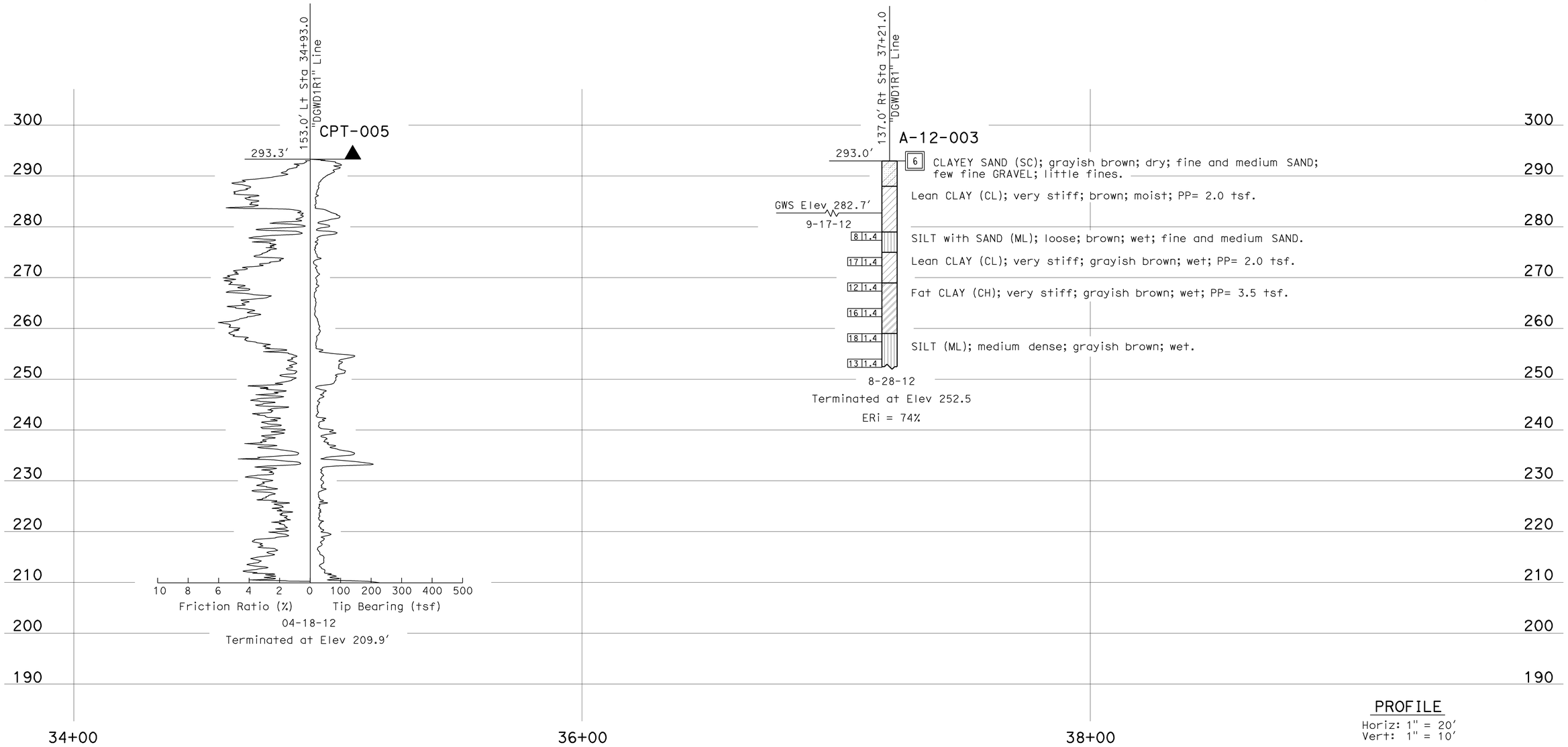

PROFILE
Horiz: 1" = 20'
Vert: 1" = 10'

ENGINEERING SERVICES	MATERIALS AND GEOTECHNICAL SERVICES	STATE OF CALIFORNIA DEPARTMENT OF TRANSPORTATION	DIVISION OF ENGINEERING SERVICES STRUCTURE DESIGN DESIGN BRANCH 20	BRIDGE NO. 58-0351	DOGWOOD ROAD OC (REPLACE)
FUNCTIONAL SUPERVISOR NAME: M. DeSalvatore	DRAWN BY: F. Nguyen; CHECKED BY: E. Neupert; FIELD INVESTIGATION BY: T-M Liao			POST MILE R 39.0	LOG OF TEST BORINGS 4 OF 5

OGS CIVIL LOG OF TEST BORINGS SHEET

ORIGINAL SCALE IN INCHES FOR REDUCED PLANS 0 1 2 3

UNIT: 3622
PROJECT NUMBER & PHASE: 1100000743-1 CONTRACT NO.: 11-263301

DISREGARD PRINTS BEARING EARLIER REVISION DATES →

REVISION DATES				SHEET	OF
09/25/12	10/18/12			28	29

FILE => 58-0351-z-ltb04.dgn

USERNAME => s136853 DATE PLOTTED => 14-FEB-2013 TIME PLOTTED => 15:16

FED. ROAD DIV. NO.	STATE	PROJ. NO.	FISCAL YEAR	SHEET NO.	TOTAL SHEETS
7	CAL.				

DIST.	COUNTY	ROUTE	SECTION	SHEET NO.	TOTAL SHEETS
11	Imp	8	REV. 6-1-65	180	196

DISTRICT ENGINEER — CIVIL ENGINEER — LICENSE 5085

DATE APPROVED October 11, 1965

BRIDGE DEPARTMENT

BM # 21C-3 Elev. 461.18
Brass disk in 2½" iron pipe 12.2' Lt. 809 + 33 "C"

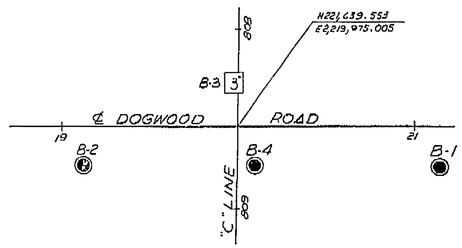

PLAN
Scale: 1"=40'

AS BUILT PLANS
Contract No. 11-038024
Date Completed 7--67
Document No. A 0000035

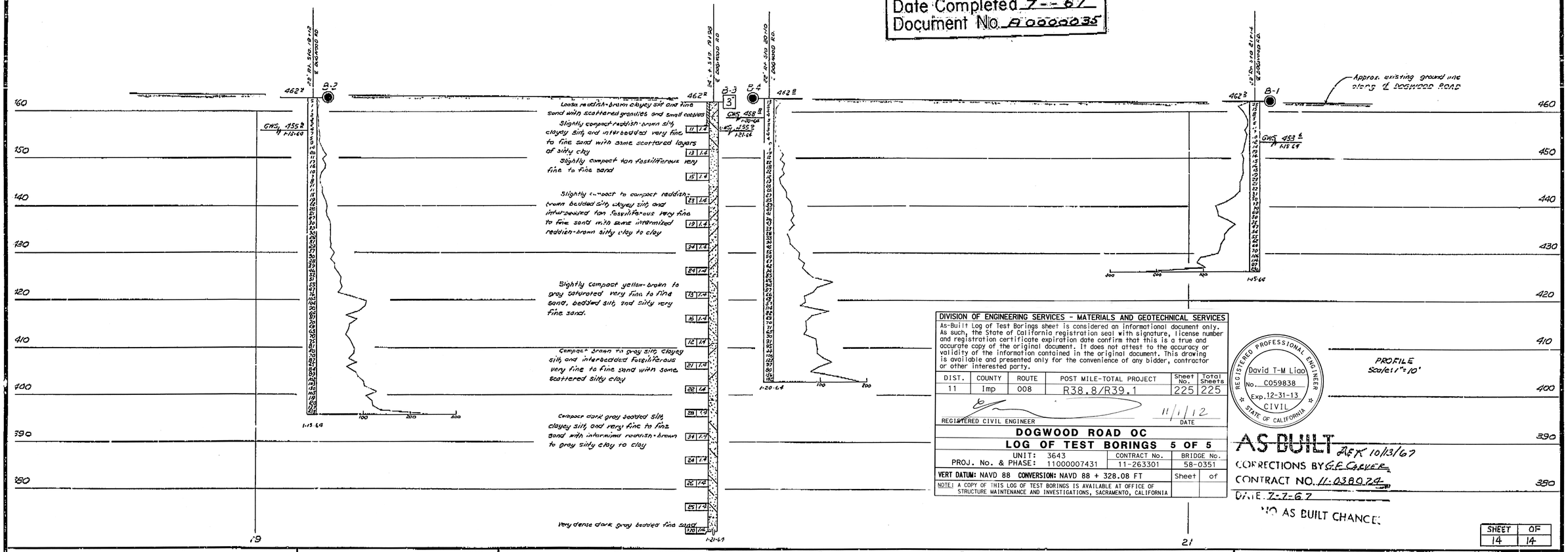

PROFILE
Scale: 1"=10'

DIVISION OF ENGINEERING SERVICES - MATERIALS AND GEOTECHNICAL SERVICES

As-Built Log of Test Borings sheet is considered an informational document only. As such, the State of California registration seal with signature, license number and registration certificate expiration date confirm that this is a true and accurate copy of the original document. It does not attest to the accuracy or validity of the information contained in the original document. This drawing is available and presented only for the convenience of any bidder, contractor or other interested party.

DIST.	COUNTY	ROUTE	POST MILE-TOTAL PROJECT	Sheet No.	Total Sheets
11	Imp	008	R38.8/R39.1	225	225

REGISTERED CIVIL ENGINEER — DATE 11/1/12

REGISTERED PROFESSIONAL ENGINEER — David T-M Liao — No. C059838 — Exp. 12-31-13 — CIVIL — STATE OF CALIFORNIA

DOGWOOD ROAD OC

LOG OF TEST BORINGS 5 OF 5

UNIT: 3643	CONTRACT No. 11-263301	BRIDGE No. 58-0351
PROJ. No. & PHASE: 11000007431		
VERT DATUM: NAVD 88 CONVERSION: NAVD 88 + 328.08 FT	Sheet	of
NOTE: A COPY OF THIS LOG OF TEST BORINGS IS AVAILABLE AT OFFICE OF STRUCTURE MAINTENANCE AND INVESTIGATIONS, SACRAMENTO, CALIFORNIA		

AS BUILT AEK 10/13/67
CORRECTIONS BY G.E. GACKLER
CONTRACT NO. 11-038024
DATE 7-7-67
NO AS BUILT CHANGE

SHEET	OF
14	14

FIELD STUDY	by D. Crawford	12-14-64
DRAWN	by V.L. Bjorn	1-31-64
CHECKED	by F.J. Shirley	1-31-64

Approved Recommended by [signature] Engineering Geologist

180

CLASSIFICATION OF MATERIAL BASED ON STANDARD GRADE SIZE LIMITS

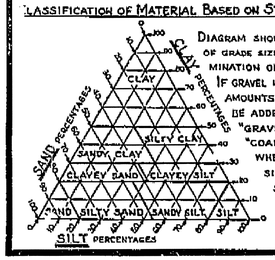

DIAGRAM SHOWING THE BASIS FOR ESTIMATES OF GRADE SIZE DISTRIBUTION USED IN DETERMINATION OF CLASS NAMES.

IF GRAVEL IS PRESENT IN APPRECIABLE AMOUNTS THE TERM "GRAVELLY" MAY BE ADDED TO THE CLASS NAME, VIZ. "GRAVELLY SAND." THE TERMS "COARSE", "MEDIUM" AND "FINE" WHEN USED TO DESCRIBE SAND, SILT AND GRAVEL REFER TO STANDARD GRADE SIZE LIMITS.

LEGEND OF EARTH MATERIALS

- GRAVEL
- SAND
- SILT
- CLAY
- SANDY CLAY OR CLAYEY SAND
- SANDY SILT OR SILTY SAND
- SILTY CLAY OR CLAYEY SILT
- PEAT AND/OR ORGANIC MATTER
- FILL MATERIAL
- IGNEOUS ROCK
- SEDIMENTARY ROCK
- METAMORPHIC ROCK

LEGEND OF BORING OPERATIONS

- PENETROMETER
- 2½" CONE PENETROMETER
- SAMPLER BORING (DRY)
- ROTARY BORING (WET)
- AUGER BORING (DRY)
- JET BORING
- CORE BORING
- TEST PIT

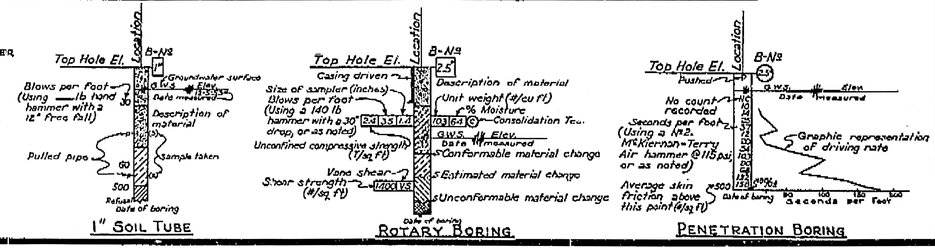

NOTE

Classification of earth material as shown on this sheet is based upon field inspection and is not to be construed to imply mechanical analysis.

STATE OF CALIFORNIA
DEPARTMENT OF PUBLIC WORKS
DIVISION OF HIGHWAYS

DOGWOOD ROAD OVERCROSSING

LOG OF TEST BORINGS

SCALE As Noted	BRIDGE 58-255	FILE	DRAWING 58255-10

PREL. DRAWING NO. P- [illegible]