Dist	COUNTY	ROUTE	POST MILES TOTAL PROJECT	SHEET No.	TOTAL SHEETS
11	SD	15	0.5/M4.0	1	116

STATE OF CALIFORNIA

DEPARTMENT OF TRANSPORTATION

NH-015(017)E

PROJECT PLANS FOR CONSTRUCTION ON

STATE HIGHWAY

IN SAN DIEGO COUNTY IN SAN DIEGO FROM 0.1 MILE NORTH OF MAIN STREET UNDERCROSSING TO 0.4 MILE SOUTH OF LANDIS STREET PEDESTRIAN OVERCROSSING

TO BE SUPPLEMENTED BY STANDARD PLANS DATED MAY 2006

INDEX OF PLANS

SHEET NO.	DESCRIPTION
1	TITLE AND LOCATION MAP
2-12	TYPICAL CROSS SECTIONS
13-27	LAYOUT
28-32	CONSTRUCTION DETAILS
33	TEMPORARY WATER POLUTION CONTROL QUANTITIES
34-43	UTILITY PLAN
44-45	CONSTRUCTION AREA SIGNS
46-63	TRAFFIC HANDLING PLAN
64-67	PAVEMENT DELINEATION DETAILS AND QUANTITIES
68-70	SIGN PLAN AND QUANTITIES
71-78	SUMMARY OF QUANTITIES
79-86	ELECTRICAL PLANS
87-116	REVISED AND NEW STANDARD PLANS

THE STANDARD PLANS LIST APPLICABLE TO THIS CONTRACT IS INCLUDED IN THE NOTICE TO BIDDERS AND SPECIAL PROVISIONS BOOK.

LOCATION MAP

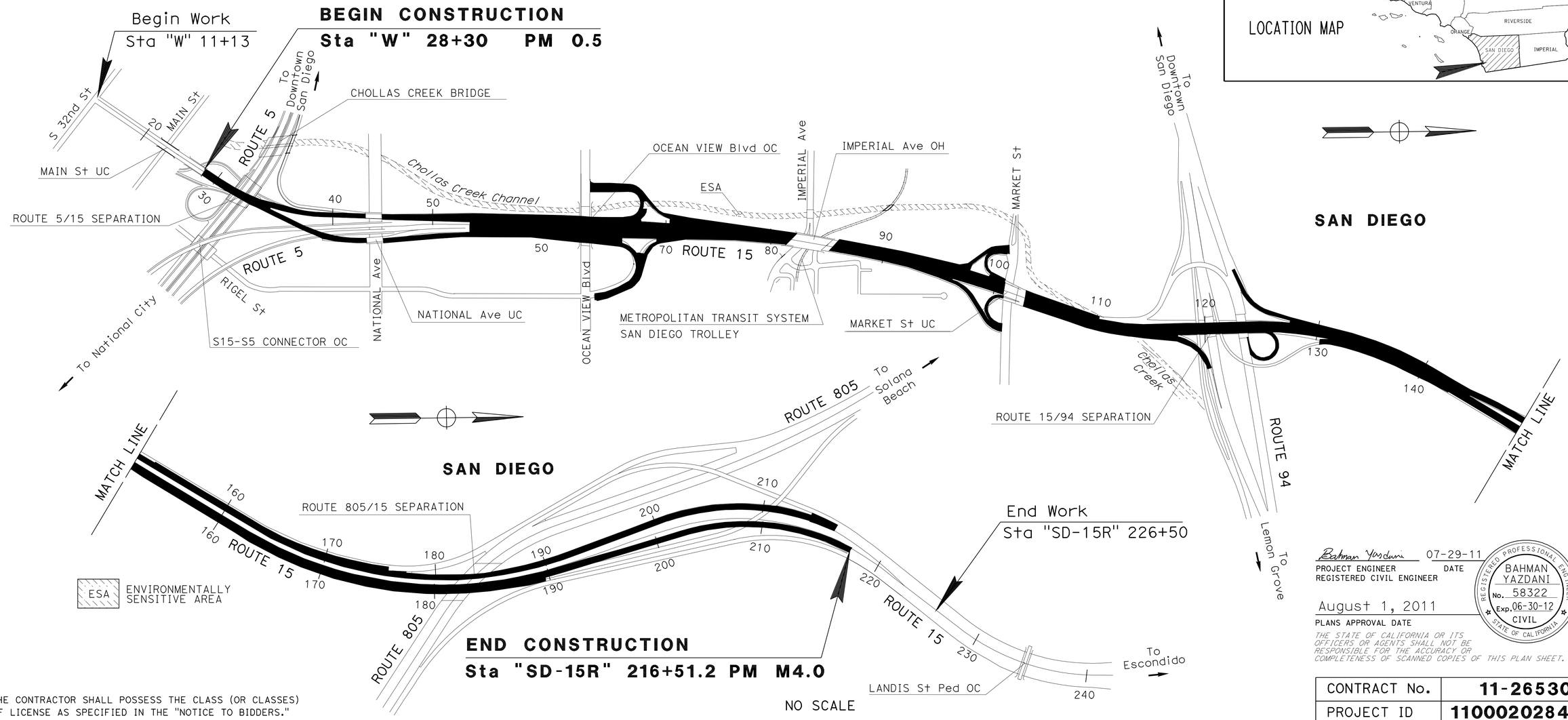

THE CONTRACTOR SHALL POSSESS THE CLASS (OR CLASSES) OF LICENSE AS SPECIFIED IN THE "NOTICE TO BIDDERS."

Bahman Yazdani 07-29-11
PROJECT ENGINEER DATE
REGISTERED CIVIL ENGINEER

August 1, 2011
PLANS APPROVAL DATE

REGISTERED PROFESSIONAL ENGINEER BAHMAN YAZDANI No. 58322 Exp. 06-30-12 CIVIL STATE OF CALIFORNIA

THE STATE OF CALIFORNIA OR ITS OFFICERS OR AGENTS SHALL NOT BE RESPONSIBLE FOR THE ACCURACY OR COMPLETENESS OF SCANNED COPIES OF THIS PLAN SHEET.

CONTRACT No.	11-265304
PROJECT ID	1100020284

PROJECT MANAGER BRUCE LAMBERT
DESIGN ENGINEER BAHMAN YAZDANI

LAST REVISION 08-30-11 DATE PLOTTED => 29-SEP-2011 TIME PLOTTED => 13:15

Dist	COUNTY	ROUTE	POST MILES TOTAL PROJECT	SHEET No.	TOTAL SHEETS
11	SD	15	0.5/M4.0	2	116

Bahman Yazdani 07-29-11
REGISTERED CIVIL ENGINEER DATE

08-01-11
PLANS APPROVAL DATE

REGISTERED PROFESSIONAL ENGINEER BAHMAN YAZDANI No. 58322 Exp 06-30-12 CIVIL STATE OF CALIFORNIA

THE STATE OF CALIFORNIA OR ITS OFFICERS OR AGENTS SHALL NOT BE RESPONSIBLE FOR THE ACCURACY OR COMPLETENESS OF SCANNED COPIES OF THIS PLAN SHEET.

NOTES:

1. DIMENSIONS OF PAVEMENT STRUCTURES (STRUCTURAL SECTIONS) ARE SUBJECT TO TOLERANCES SPECIFIED IN THE STANDARD SPECIFICATIONS.
2. FOG SEAL COAT SHALL BE APPLIED TO ALL HMA SURFACES EXCEPT TRAVELED WAY.
3. FOR LOCATIONS OF REPLACE CONCRETE PAVEMENT, SEE LAYOUTS AND SUMMARY OF QUANTITIES.
4. FINAL HMA SURFACE TO MATCH THE SURFACE OF GROUND PCC PAVEMENT.
5. SEE LAYOUT AND QUANTITIES SHEETS FOR LOCATIONS OF MBGR WORK AND DIKE WORK.
6. TYPE "A" PAVEMENT MARKERS FOR EXISTING IRRIGATION CROSSOVERS TO BE REPLACED.
7. RHMA-G = RUBBERIZED HOT MIX ASPHALT (GAP GRADED)
8. SEE CONSTRUCTION DETAIL SHEETS FOR LIMITS OF WORK AT LOCATIONS OF EXISTING INDUCTIVE LOOPS.
9. COLD PLANE UP TO 2" AWAY FROM EXISTING DIKE WHERE EXISTING DIKE REMAIN INPLACE.

DESIGN DESIGNATION:

2008 ADT	=	83,000
2008 DHV	=	12,920
2030 ADT	=	97,980
2030 DHV	=	15,160
D%	=	53% SB
TRUCK %	=	3.0% OF ADT
V (SPEED)	=	(70 mph)

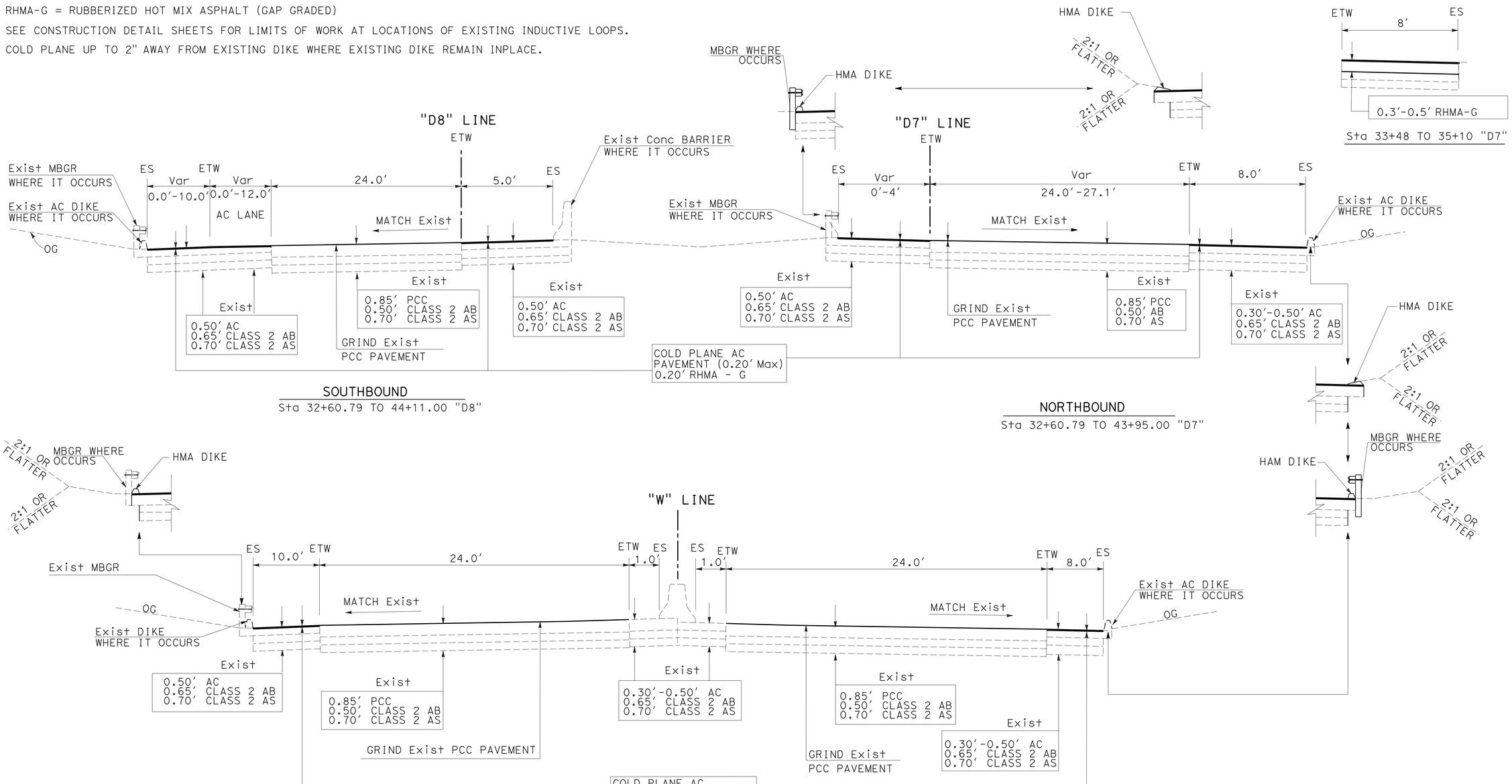

TYPICAL CROSS SECTIONS

NO SCALE

X-1

ROUTE 15

STATE OF CALIFORNIA - DEPARTMENT OF TRANSPORTATION
DESIGN
Caltrans

FUNCTIONAL SUPERVISOR: CHRIS M THOMAS
CALCULATED-DESIGNED BY: BAHMAN YAZDANI
CHECKED BY: RICARDO PADILA
REVISED BY / DATE REVISED

LAST REVISION 09-01-11 | DATE PLOTTED => 27-SEP-2011 | TIME PLOTTED => 16:08

Dist	COUNTY	ROUTE	POST MILES TOTAL PROJECT	SHEET No.	TOTAL SHEETS
11	SD	15	0.5/M4.0	3	116

Bahman Yazdani 07-29-11
REGISTERED CIVIL ENGINEER DATE

08-01-11
PLANS APPROVAL DATE

REGISTERED PROFESSIONAL ENGINEER
BAHMAN YAZDANI
No. 58322
Exp. 06-30-12
CIVIL
STATE OF CALIFORNIA

THE STATE OF CALIFORNIA OR ITS OFFICERS OR AGENTS SHALL NOT BE RESPONSIBLE FOR THE ACCURACY OR COMPLETENESS OF SCANNED COPIES OF THIS PLAN SHEET.

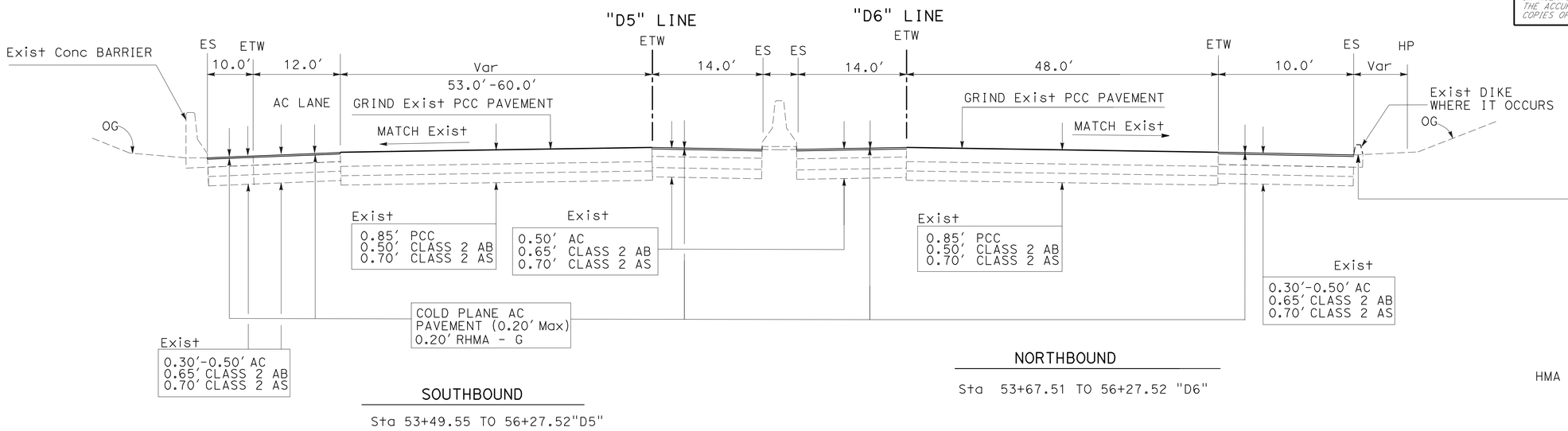

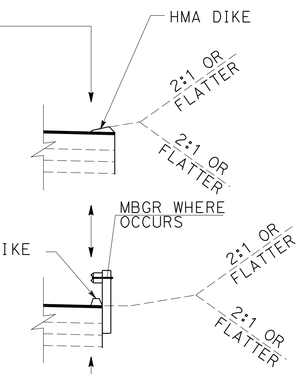

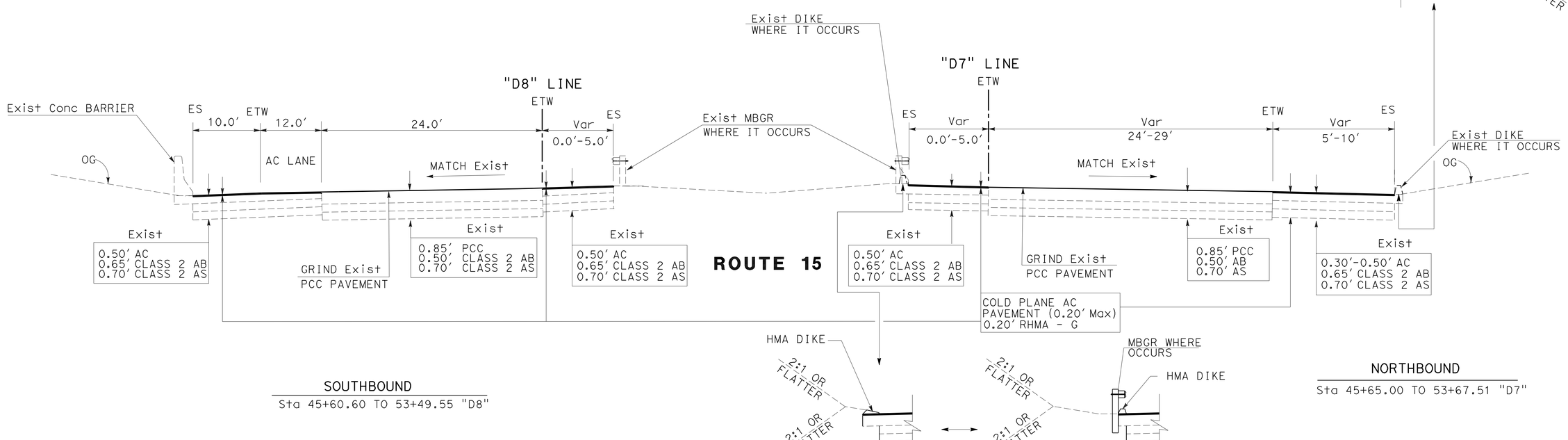

TYPICAL CROSS SECTIONS

NO SCALE

X-2

STATE OF CALIFORNIA - DEPARTMENT OF TRANSPORTATION
Caltrans
DESIGN

FUNCTIONAL SUPERVISOR: CHRIS M THOMAS
CALCULATED-DESIGNED BY: BAHMAN YAZDANI
CHECKED BY: RICARDO PADILA
REVISED BY
DATE REVISED

LAST REVISION 09-01-11
DATE PLOTTED => 27-SEP-2011
TIME PLOTTED => 16:08

Dist	COUNTY	ROUTE	POST MILES TOTAL PROJECT	SHEET No.	TOTAL SHEETS
11	SD	15	0.5/M4.0	4	116

Bahman Yazdani 07-29-11
REGISTERED CIVIL ENGINEER DATE

08-01-11
PLANS APPROVAL DATE

REGISTERED PROFESSIONAL ENGINEER
BAHMAN YAZDANI
No. 58322
Exp 06-30-12
CIVIL
STATE OF CALIFORNIA

THE STATE OF CALIFORNIA OR ITS OFFICERS OR AGENTS SHALL NOT BE RESPONSIBLE FOR THE ACCURACY OR COMPLETENESS OF SCANNED COPIES OF THIS PLAN SHEET.

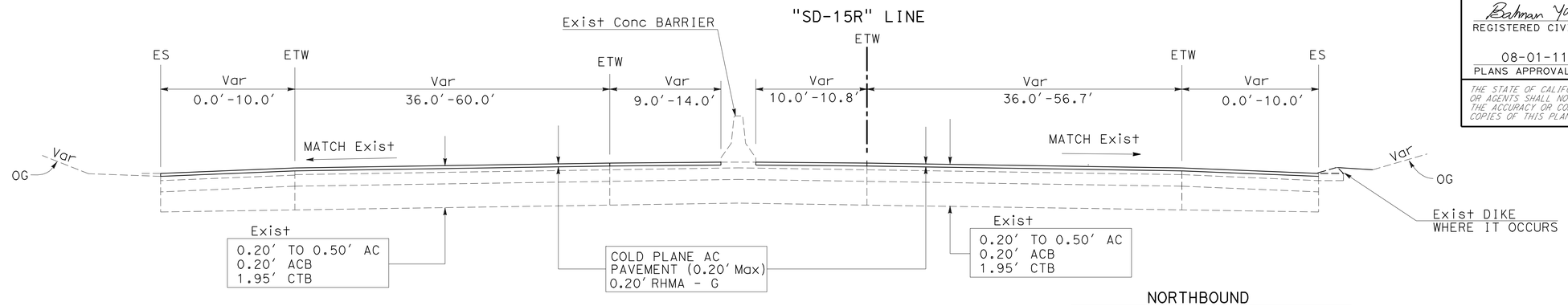

SOUTHBOUND

Sta 67+90.85 TO 75+16.63 "SD-15R"

NORTHBOUND

Sta 67+90.85 TO 75+16.63 "SD-15R"

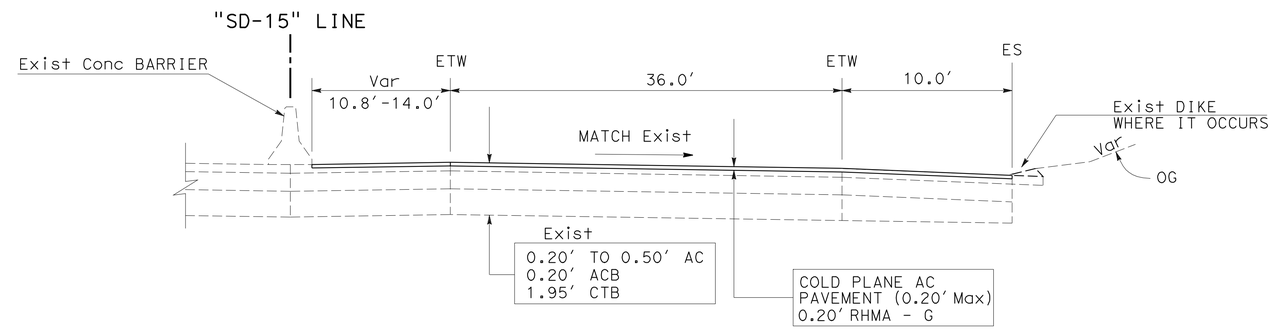

ROUTE 15 (NORTHBOUND)

Sta 64+83.50 TO 67+90.85 "SD-15"

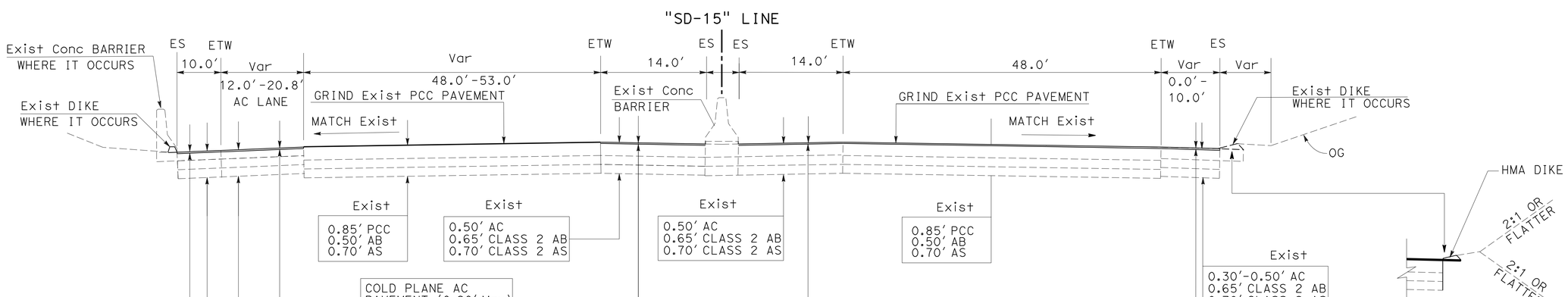

SOUTHBOUND

Sta 56+27.52 TO 67+90.85 "SD-15"

NORTHBOUND

Sta 56+27.52 TO 64+83.50 "SD-15"

ROUTE 15

TYPICAL CROSS SECTIONS

NO SCALE

X-3

REVISED BY | DATE REVISED
BAHMAN YAZDANI | RICARDO PADILA
CALCULATED-DESIGNED BY | CHECKED BY
FUNCTIONAL SUPERVISOR | CHRIS M THOMAS

STATE OF CALIFORNIA - DEPARTMENT OF TRANSPORTATION
Caltrans
DESIGN

LAST REVISION 09-02-11 | DATE PLOTTED => 27-SEP-2011 | TIME PLOTTED => 16:08

Dist	COUNTY	ROUTE	POST MILES TOTAL PROJECT	SHEET No.	TOTAL SHEETS
11	SD	15	0.5/M4.0	5	116

Bahman Yazdani 07-29-11
REGISTERED CIVIL ENGINEER DATE

08-01-11
PLANS APPROVAL DATE

REGISTERED PROFESSIONAL ENGINEER
BAHMAN YAZDANI
No. 58322
Exp 06-30-12
CIVIL
STATE OF CALIFORNIA

THE STATE OF CALIFORNIA OR ITS OFFICERS OR AGENTS SHALL NOT BE RESPONSIBLE FOR THE ACCURACY OR COMPLETENESS OF SCANNED COPIES OF THIS PLAN SHEET.

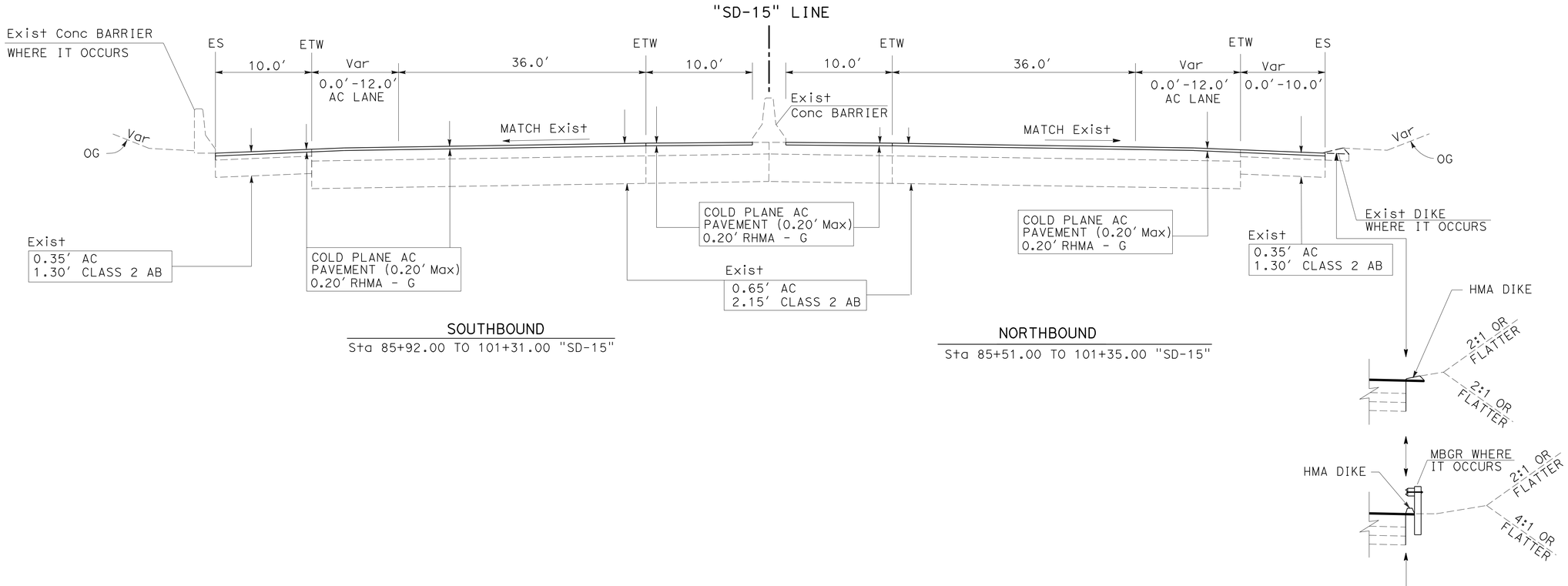

SOUTHBOUND
Sta 85+92.00 TO 101+31.00 "SD-15"

NORTHBOUND
Sta 85+51.00 TO 101+35.00 "SD-15"

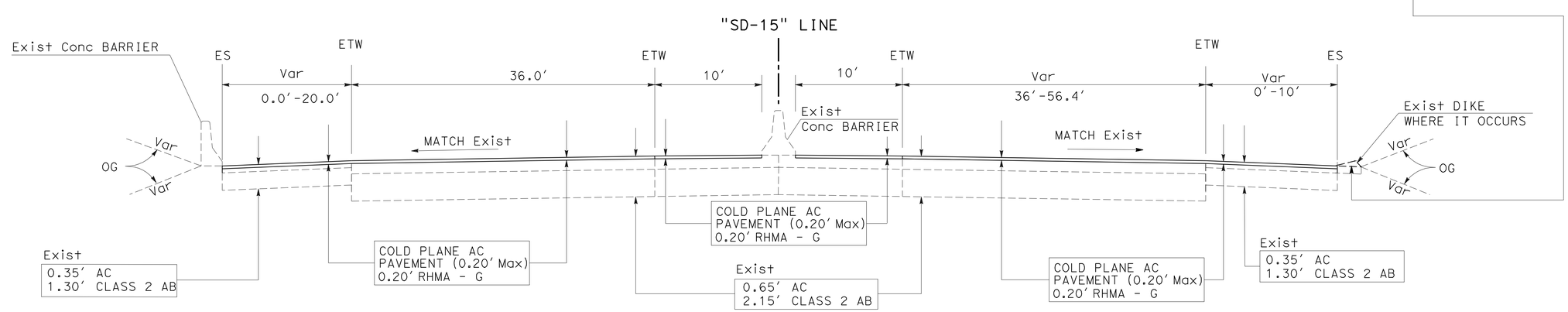

SOUTHBOUND
Sta 75+16.63 TO 82+22.00 "SD-15"

NORTHBOUND
Sta 75+16.63 TO 81+86.00 "SD-15"

TYPICAL CROSS SECTIONS

NO SCALE

X-4

ROUTE 15

STATE OF CALIFORNIA - DEPARTMENT OF TRANSPORTATION
Caltrans
DESIGN

FUNCTIONAL SUPERVISOR: CHRIS M THOMAS
CALCULATED-DESIGNED BY: BAHMAN YAZDANI
CHECKED BY: RICARDO PADILA
REVISED BY
DATE REVISED

LAST REVISION 09-02-11
DATE PLOTTED => 27-SEP-2011
TIME PLOTTED => 16:08

Dist	COUNTY	ROUTE	POST MILES TOTAL PROJECT	SHEET No.	TOTAL SHEETS
11	SD	15	0.5/M4.0	6	116

Bahman Yazdani 07-29-11
REGISTERED CIVIL ENGINEER DATE

08-01-11
PLANS APPROVAL DATE

REGISTERED PROFESSIONAL ENGINEER BAHMAN YAZDANI No. 58322 Exp. 06-30-12 CIVIL STATE OF CALIFORNIA

THE STATE OF CALIFORNIA OR ITS OFFICERS OR AGENTS SHALL NOT BE RESPONSIBLE FOR THE ACCURACY OR COMPLETENESS OF SCANNED COPIES OF THIS PLAN SHEET.

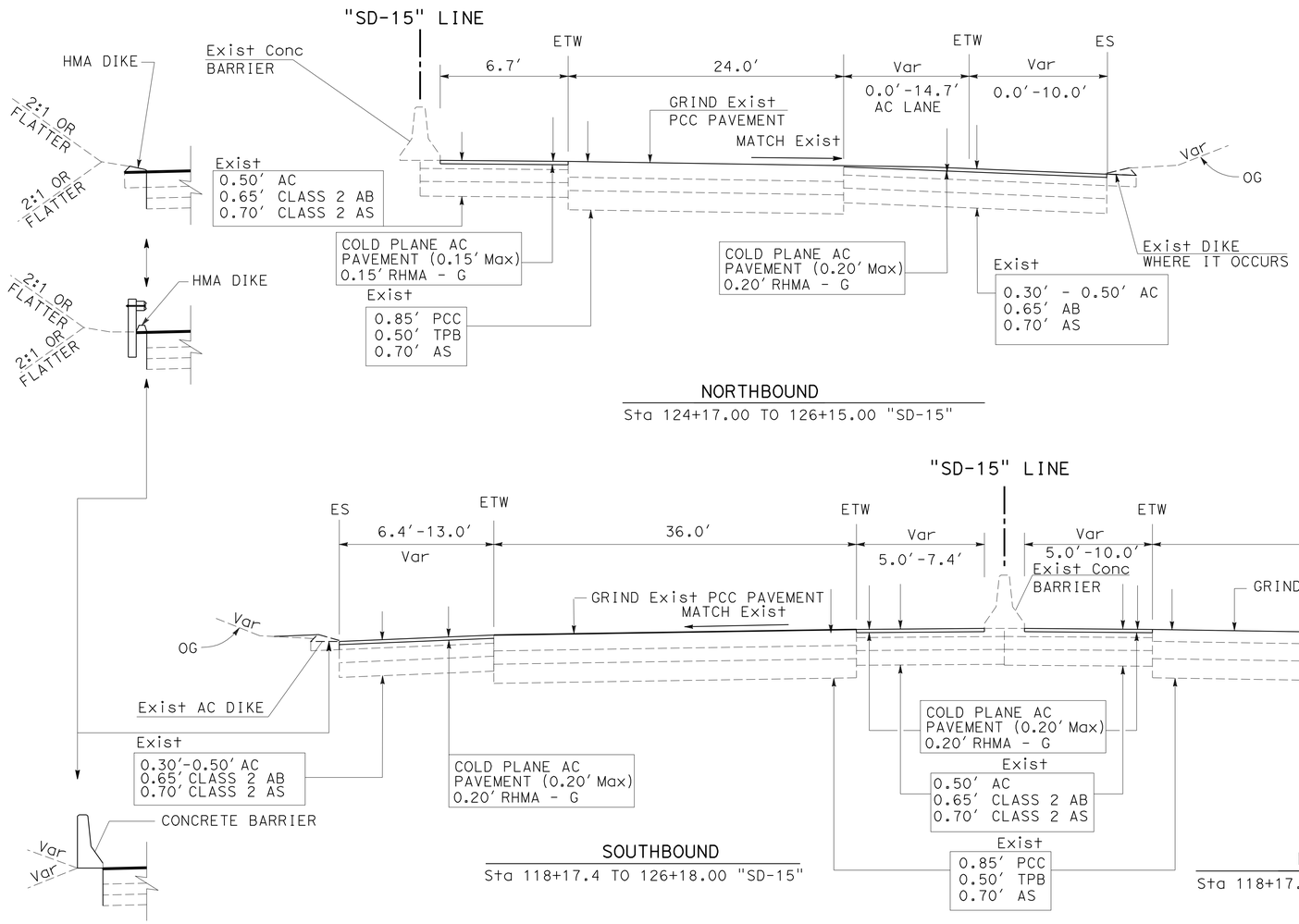

NORTHBOUND
Sta 124+17.00 TO 126+15.00 "SD-15"

SOUTHBOUND
Sta 118+17.4 TO 126+18.00 "SD-15"

NORTHBOUND
Sta 118+17.40 TO 124+17.00 "SD-15"

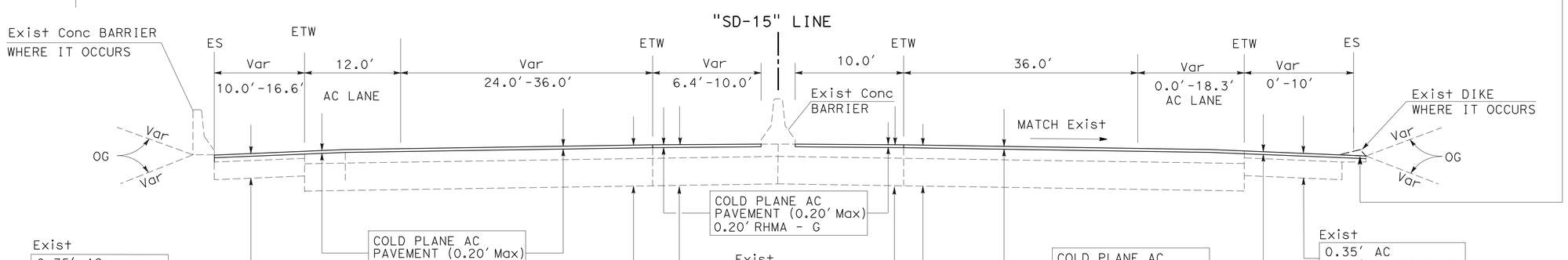

SOUTHBOUND
Sta 103+36.60 TO 118+17.40 "SD-15"

NORTHBOUND
Sta 103+42.00 TO 118+17.40 "SD-15"

TYPICAL CROSS SECTIONS

NO SCALE

X-5

ROUTE 15

STATE OF CALIFORNIA - DEPARTMENT OF TRANSPORTATION
Caltrans® DESIGN

FUNCTIONAL SUPERVISOR: CHRIS M THOMAS
CALCULATED-DESIGNED BY: BAHMAN YAZDANI
CHECKED BY: RICARDO PADILA
REVISED BY
DATE REVISED

LAST REVISION 09-02-11 | DATE PLOTTED => 27-SEP-2011 | TIME PLOTTED => 16:09

Dist	COUNTY	ROUTE	POST MILES TOTAL PROJECT	SHEET No.	TOTAL SHEETS
11	SD	15	0.5/M4.0	7	116

Bahman Yazdani 07-29-11
REGISTERED CIVIL ENGINEER DATE

08-01-11
PLANS APPROVAL DATE

REGISTERED PROFESSIONAL ENGINEER
BAHMAN YAZDANI
No. 58322
Exp. 06-30-12
CIVIL
STATE OF CALIFORNIA

THE STATE OF CALIFORNIA OR ITS OFFICERS OR AGENTS SHALL NOT BE RESPONSIBLE FOR THE ACCURACY OR COMPLETENESS OF SCANNED COPIES OF THIS PLAN SHEET.

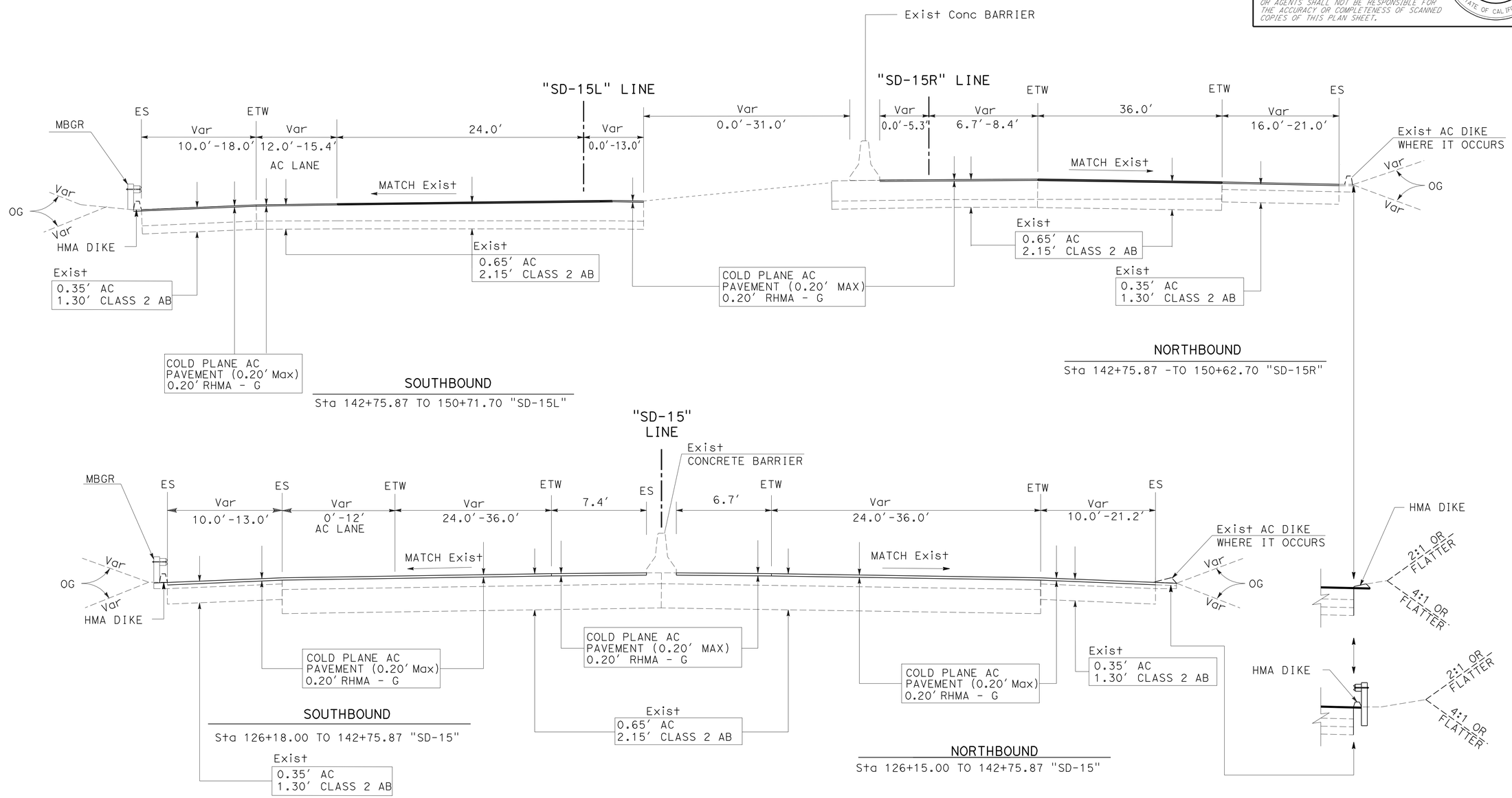

ROUTE 15

TYPICAL CROSS SECTIONS

NO SCALE

X-6

STATE OF CALIFORNIA - DEPARTMENT OF TRANSPORTATION
DESIGN
Caltrans

FUNCTIONAL SUPERVISOR: CHRIS M THOMAS
CALCULATED-DESIGNED BY: BAHMAN YAZDANI
CHECKED BY: RICARDO PADILA
REVISED BY
DATE REVISED

LAST REVISION 09-02-11
DATE PLOTTED => 27-SEP-2011
TIME PLOTTED => 16:09

Dist	COUNTY	ROUTE	POST MILES TOTAL PROJECT	SHEET No.	TOTAL SHEETS
11	SD	15	0.5/M4.0	8	116

Bahman Yazdani 07-29-11
REGISTERED CIVIL ENGINEER DATE

08-01-11
PLANS APPROVAL DATE

REGISTERED PROFESSIONAL ENGINEER BAHMAN YAZDANI No. 58322 Exp 06-30-12 CIVIL STATE OF CALIFORNIA

THE STATE OF CALIFORNIA OR ITS OFFICERS OR AGENTS SHALL NOT BE RESPONSIBLE FOR THE ACCURACY OR COMPLETENESS OF SCANNED COPIES OF THIS PLAN SHEET.

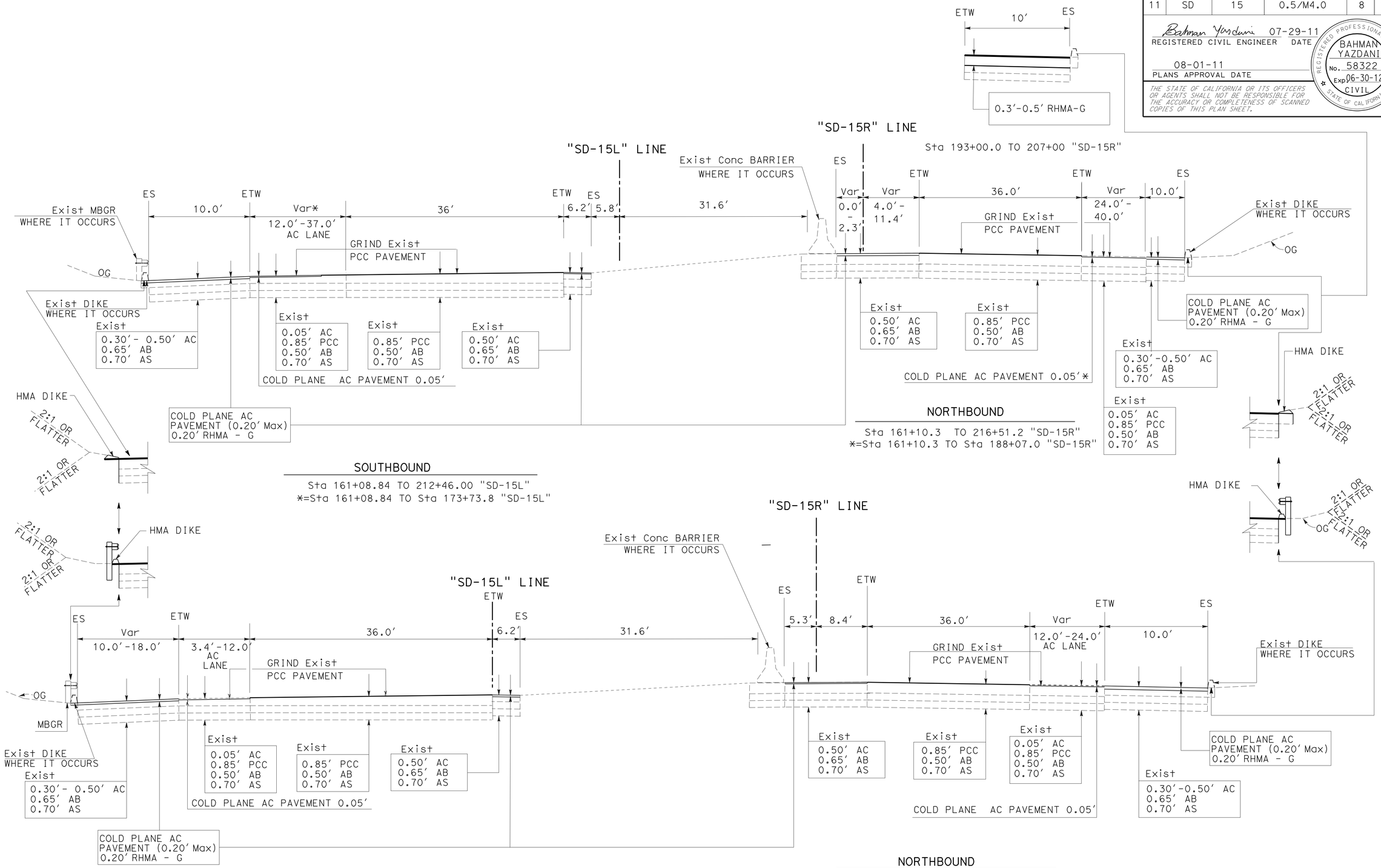

ROUTE 15

TYPICAL CROSS SECTIONS

NO SCALE

X-7

STATE OF CALIFORNIA - DEPARTMENT OF TRANSPORTATION
Caltrans
DESIGN

FUNCTIONAL SUPERVISOR: CHRIS M THOMAS
CALCULATED-DESIGNED BY: BAHMAN YAZDANI
CHECKED BY: RICARDO PADILA
REVISED BY
DATE REVISED

LAST REVISION: DATE PLOTTED => 27-SEP-2011
09-02-11 TIME PLOTTED => 16:09

Dist	COUNTY	ROUTE	POST MILES TOTAL PROJECT	SHEET No.	TOTAL SHEETS
11	SD	15	0.5/M4.0	9	116

Bahman Yazdani 07-29-11
REGISTERED CIVIL ENGINEER DATE

08-01-11
PLANS APPROVAL DATE

REGISTERED PROFESSIONAL ENGINEER BAHMAN YAZDANI No. 58322 Exp 06-30-12 CIVIL STATE OF CALIFORNIA

THE STATE OF CALIFORNIA OR ITS OFFICERS OR AGENTS SHALL NOT BE RESPONSIBLE FOR THE ACCURACY OR COMPLETENESS OF SCANNED COPIES OF THIS PLAN SHEET.

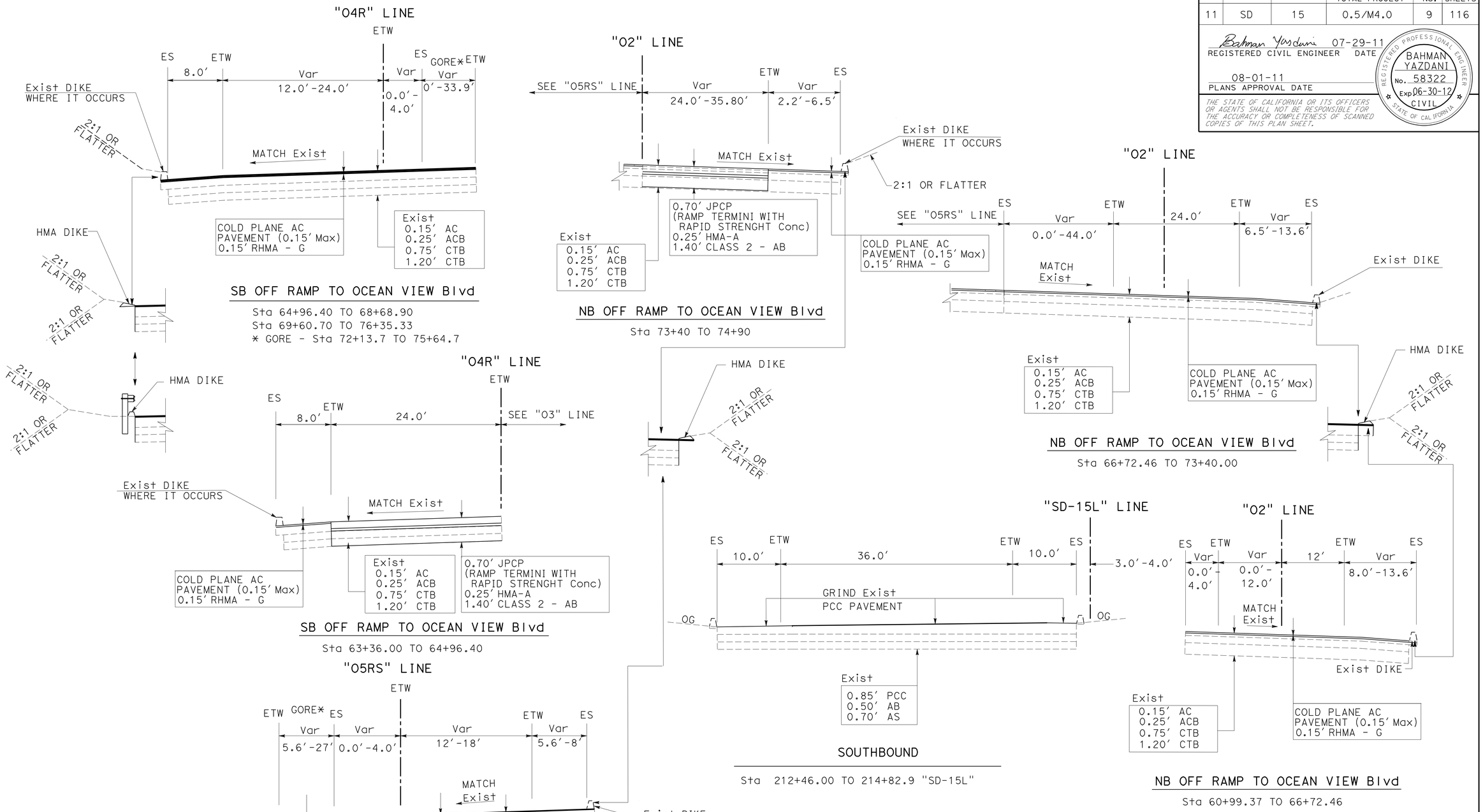

ROUTE 15

TYPICAL CROSS SECTIONS

NO SCALE

X-8

REVISED BY	DATE REVISED
BAHMAN YAZDANI	RICARDO PADILA
CALCULATED-DESIGNED BY	CHECKED BY
FUNCTIONAL SUPERVISOR	CHRIS M THOMAS

STATE OF CALIFORNIA - DEPARTMENT OF TRANSPORTATION

Caltrans®

DESIGN

LAST REVISION 09-02-11 | DATE PLOTTED => 29-SEP-2011 | TIME PLOTTED => 13:17

Dist	COUNTY	ROUTE	POST MILES TOTAL PROJECT	SHEET No.	TOTAL SHEETS
11	SD	15	0.5/M4.0	10	116

Bahman Yazdani 07-29-11
REGISTERED CIVIL ENGINEER DATE

08-01-11
PLANS APPROVAL DATE

REGISTERED PROFESSIONAL ENGINEER
BAHMAN YAZDANI
No. 58322
Exp. 06-30-12
CIVIL
STATE OF CALIFORNIA

THE STATE OF CALIFORNIA OR ITS OFFICERS OR AGENTS SHALL NOT BE RESPONSIBLE FOR THE ACCURACY OR COMPLETENESS OF SCANNED COPIES OF THIS PLAN SHEET.

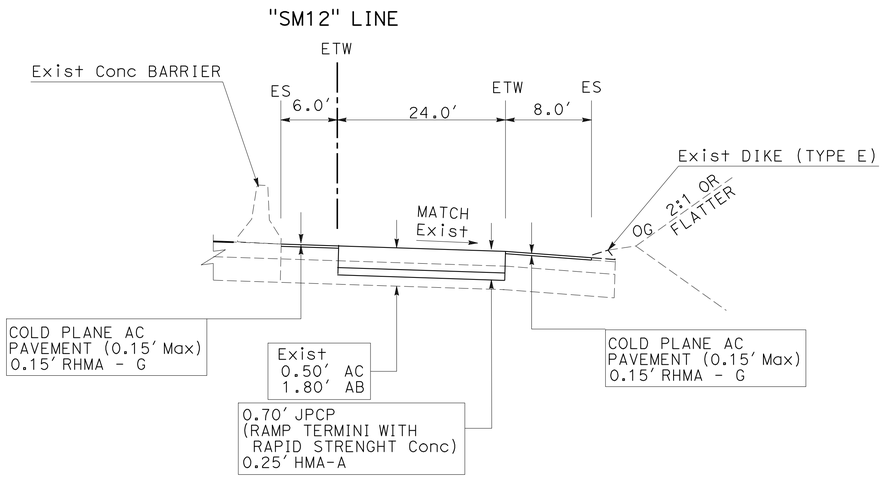

SB OFF RAMP TO MARKET STREET

Sta 108+32.00 TO 110+00.00

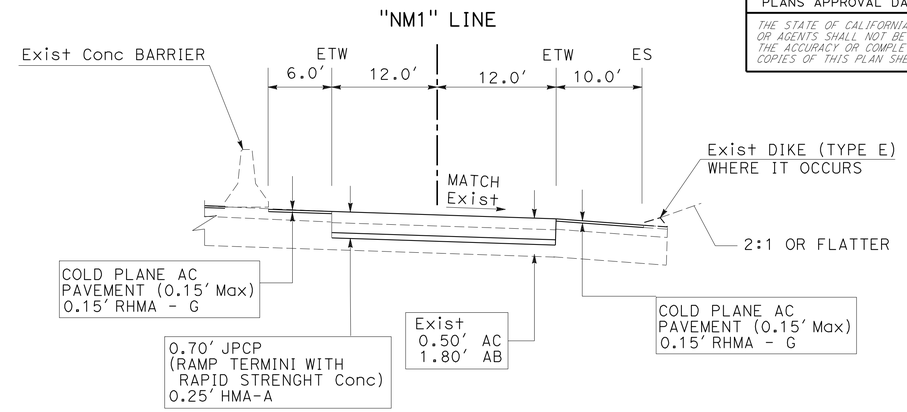

NB OFF RAMP TO MARKET STREET

Sta 101+83.00 TO 103+45.93

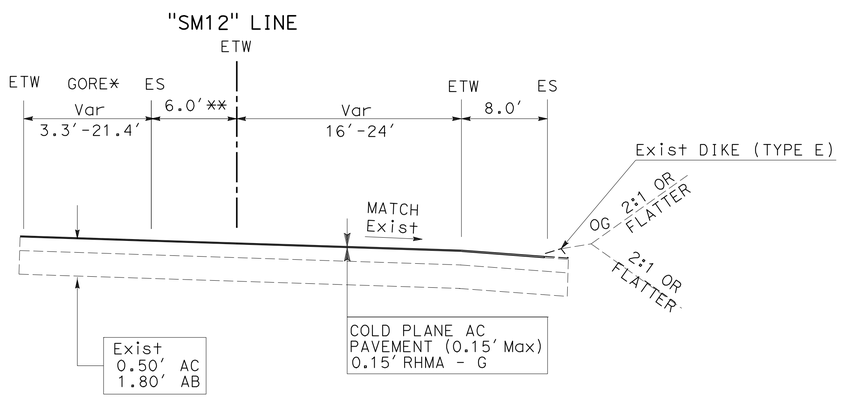

SB OFF RAMP TO MARKET STREET

Sta 104+35.00 TO 108+32.00
*= Sta 104+35.00 TO 105+87.40
**= Sta 104+35.00 TO 105+87.40 = 0.0'

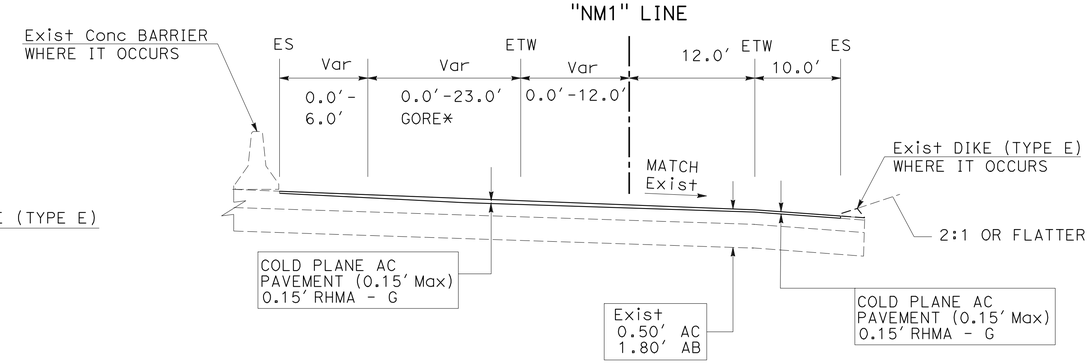

NB OFF RAMP TO MARKET STREET

Sta 94+02.99 TO 101+83.00
*=Sta 94+02.99 TO 96+73.00

TYPICAL CROSS SECTIONS

NO SCALE

X-9

STATE OF CALIFORNIA - DEPARTMENT OF TRANSPORTATION
Caltrans
DESIGN

FUNCTIONAL SUPERVISOR: CHRIS M THOMAS
CALCULATED-DESIGNED BY: BAHMAN YAZDANI
CHECKED BY: RICARDO PADILA
REVISED BY
DATE REVISED

LAST REVISION 09-02-11
DATE PLOTTED => 29-SEP-2011
TIME PLOTTED => 13:18

Dist	COUNTY	ROUTE	POST MILES TOTAL PROJECT	SHEET No.	TOTAL SHEETS
11	SD	15	0.5/M4.0	11	116

Bahman Yazdani 07-29-11
REGISTERED CIVIL ENGINEER DATE

08-01-11
PLANS APPROVAL DATE

REGISTERED PROFESSIONAL ENGINEER
BAHMAN YAZDANI
No. 58322
Exp 06-30-12
CIVIL
STATE OF CALIFORNIA

THE STATE OF CALIFORNIA OR ITS OFFICERS OR AGENTS SHALL NOT BE RESPONSIBLE FOR THE ACCURACY OR COMPLETENESS OF SCANNED COPIES OF THIS PLAN SHEET.

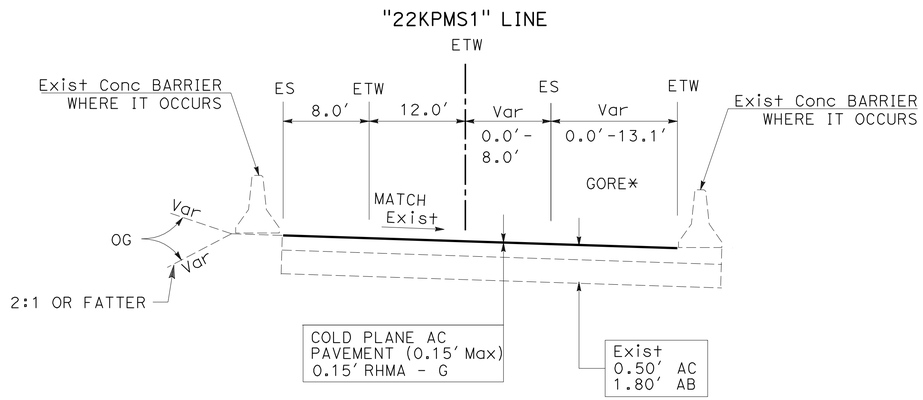

SB ON RAMP FROM MARKET St

Sta 91+77.99 TO 102+00.00
*= Sta 91+78.50 TO 97+14.00

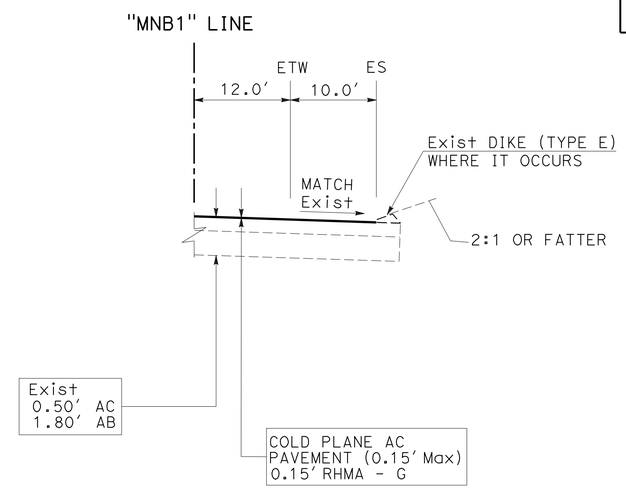

NB ON RAMP FROM MARKET St

Sta 103+42.00 TO 107+77.53

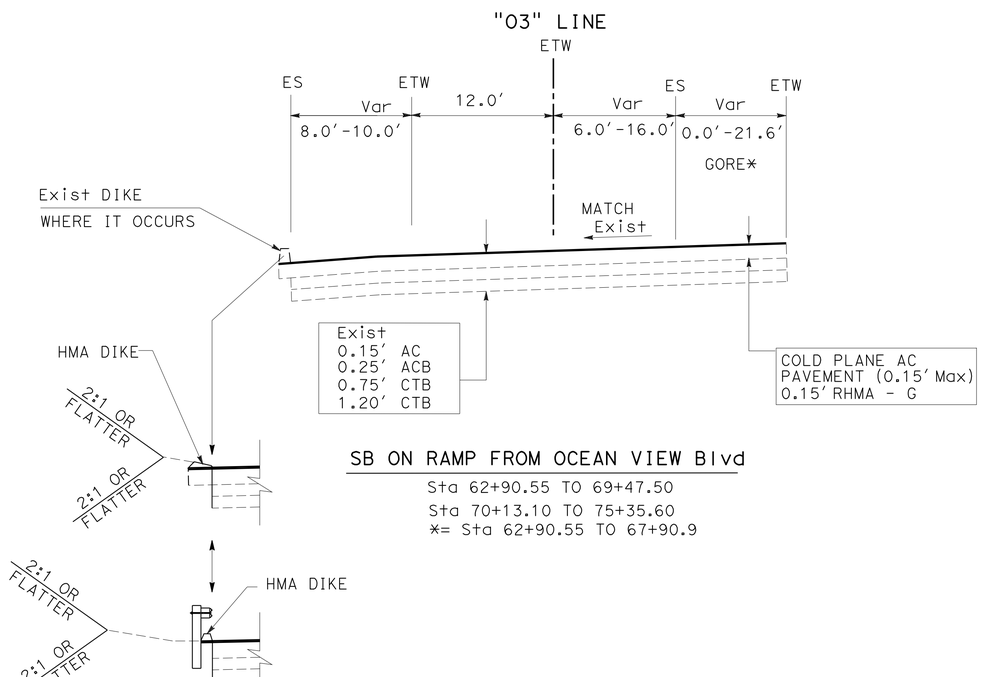

SB ON RAMP FROM OCEAN VIEW Blvd

Sta 62+90.55 TO 69+47.50
Sta 70+13.10 TO 75+35.60
*= Sta 62+90.55 TO 67+90.9

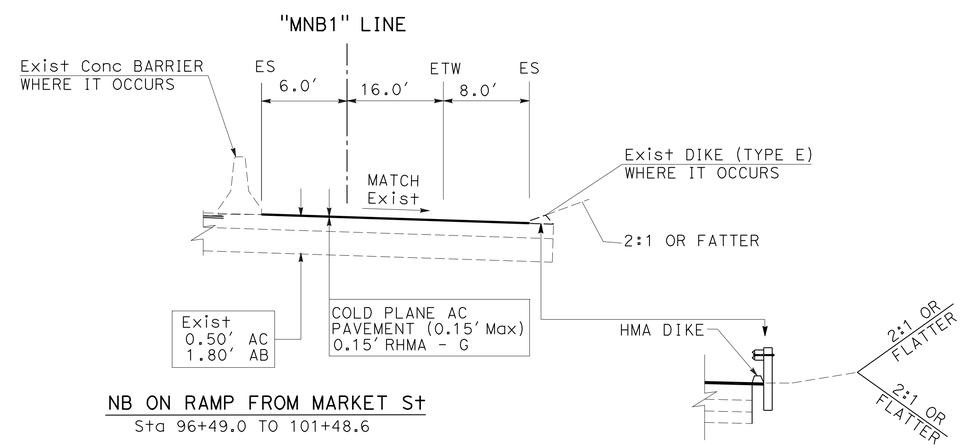

NB ON RAMP FROM MARKET St

Sta 96+49.0 TO 101+48.6

TYPICAL CROSS SECTIONS

NO SCALE

X-10

STATE OF CALIFORNIA - DEPARTMENT OF TRANSPORTATION
Caltrans®
DESIGN

FUNCTIONAL SUPERVISOR: CHRIS M THOMAS
CALCULATED-DESIGNED BY: BAHMAN YAZDANI
CHECKED BY: RICARDO PADILA
REVISED BY
DATE REVISED

LAST REVISION 09-02-11
DATE PLOTTED => 27-SEP-2011
TIME PLOTTED => 16:09

Dist	COUNTY	ROUTE	POST MILES TOTAL PROJECT	SHEET No.	TOTAL SHEETS
11	SD	15	0.5/M4.0	12	116

Bahman Yazdani 07-29-11
REGISTERED CIVIL ENGINEER DATE

08-01-11
PLANS APPROVAL DATE

REGISTERED PROFESSIONAL ENGINEER BAHMAN YAZDANI No. 58322 Exp. 06-30-12 CIVIL STATE OF CALIFORNIA

THE STATE OF CALIFORNIA OR ITS OFFICERS OR AGENTS SHALL NOT BE RESPONSIBLE FOR THE ACCURACY OR COMPLETENESS OF SCANNED COPIES OF THIS PLAN SHEET.

"WN10" LINE

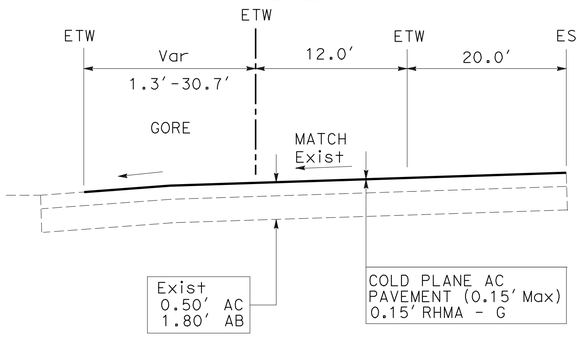

NB Rte 15 ON FROM RAMP TO Rte 94 EB

Sta 212+32.30 TO 217+35.54

"94SE1" LINE

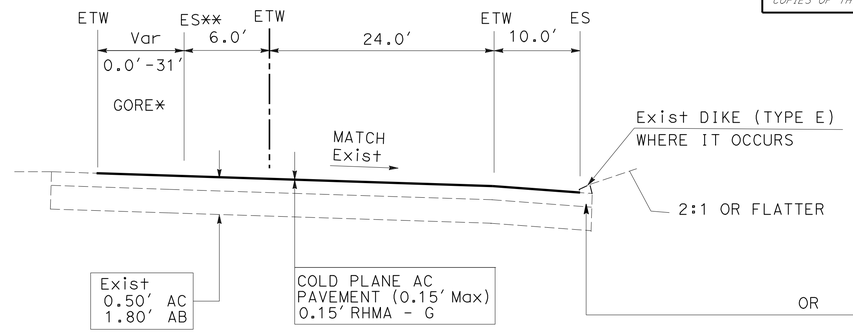

NB Rte 15 OFF RAMP TO Rte 94 EB

Sta 195+92.62 TO 204+29.80
*= Sta 197+88.00 TO 200+18.00
**= Sta 200+18.00 TO 204+29.80

OR

Sta 203+42.3 TO 204+29.8

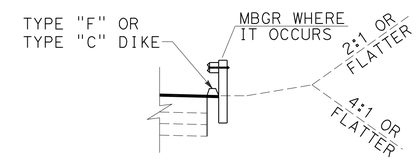

"NWX1" LINE

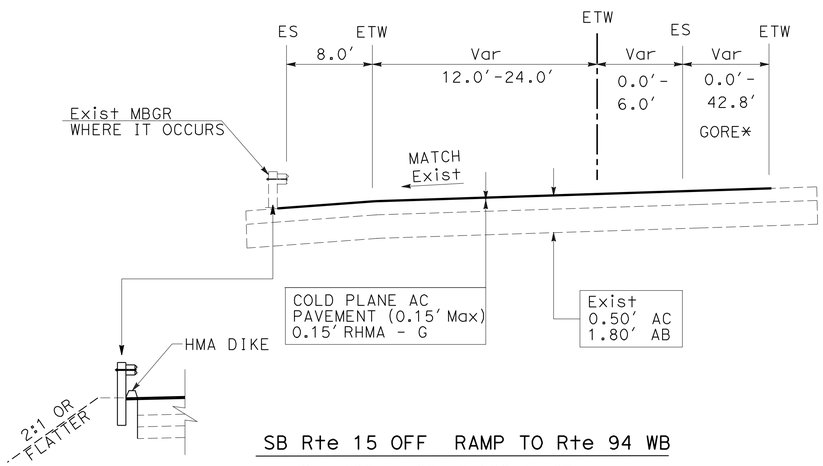

SB Rte 15 OFF RAMP TO Rte 94 WB

Sta 196+45.90 TO 208+43.90
*= Sta 203+70.90 TO 208+43.90

"15SW1" LINE

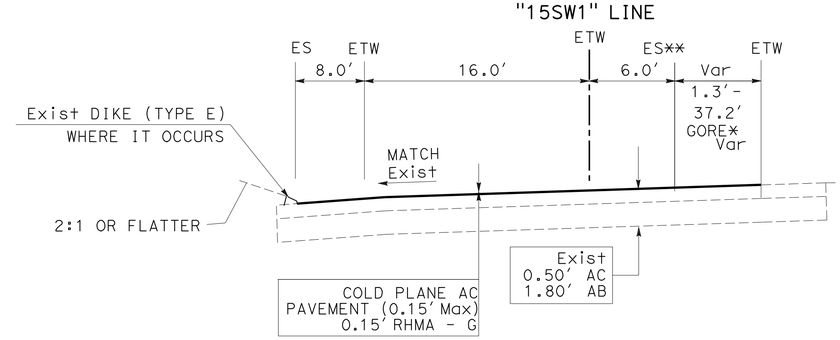

NB Rte 15 OFF RAMP TO Rte 94 WB

Sta 202+44.00 to 209+26.42
*= Sta 208+31.00 TO 209+26.42
**= Sta 203+75.00 TO 208+31.00

TYPICAL CROSS SECTIONS

NO SCALE

X-11

REVISED BY | DATE REVISED
BAHMAN YAZDANI | RICARDO PADILA
CALCULATED-DESIGNED BY | CHECKED BY
FUNCTIONAL SUPERVISOR | CHRIS M THOMAS

STATE OF CALIFORNIA - DEPARTMENT OF TRANSPORTATION
Caltrans
DESIGN

LAST REVISION 09-02-11 | DATE PLOTTED => 27-SEP-2011 | TIME PLOTTED => 16:09

Dist	COUNTY	ROUTE	POST MILES TOTAL PROJECT	SHEET No.	TOTAL SHEETS
11	SD	15	0.5/M4.0	13	116

Bahman Yazdani 07-29-11
REGISTERED CIVIL ENGINEER DATE

08-01-11
PLANS APPROVAL DATE

REGISTERED PROFESSIONAL ENGINEER BAHMAN YAZDANI No. 58322 Exp 06-30-12 CIVIL STATE OF CALIFORNIA

THE STATE OF CALIFORNIA OR ITS OFFICERS OR AGENTS SHALL NOT BE RESPONSIBLE FOR THE ACCURACY OR COMPLETENESS OF SCANNED COPIES OF THIS PLAN SHEET.

NOTES:

1. FOR ACCURATE RIGHT OF WAY DATA, CONTACT RIGHT OF WAY ENGINEERING AT THE DISTRICT OFFICE.
2. SEE CONSTRUCTION DETAIL SHEETS FOR ANCHOR BLOCK DETAILS AND CONNECTIONS.
3. SEE SUMMARY OF QUANTITIES AND CONSTRUCTION DETAILS FOR LOCATIONS AND TYPICAL PLACEMENT OF TEMPORARY RAILING (TYPE K), TEMPORARY CRASH CUSHIONS, AND TRAFFIC PLASTIC DRUMS.

LEGEND:

- GRIND Exist PCC PAVEMENT
- COLD PLANE AC PAVEMENT RHMA (GAP GRADED)
- COLD PLANE AC PAVEMENT GRIND EXISTING PCC PAVEMENT
- PCC RAMP TERMINI
- METAL BEAM GUARD RAIL
- REPLACE AC SURFACING
- ESA — ENVIRONMENTALLY SENSITIVE AREA
- Exist IRRIGATION CROSSOVER
- RHMA = RUBBERIZED HOT MIX ASPHALT

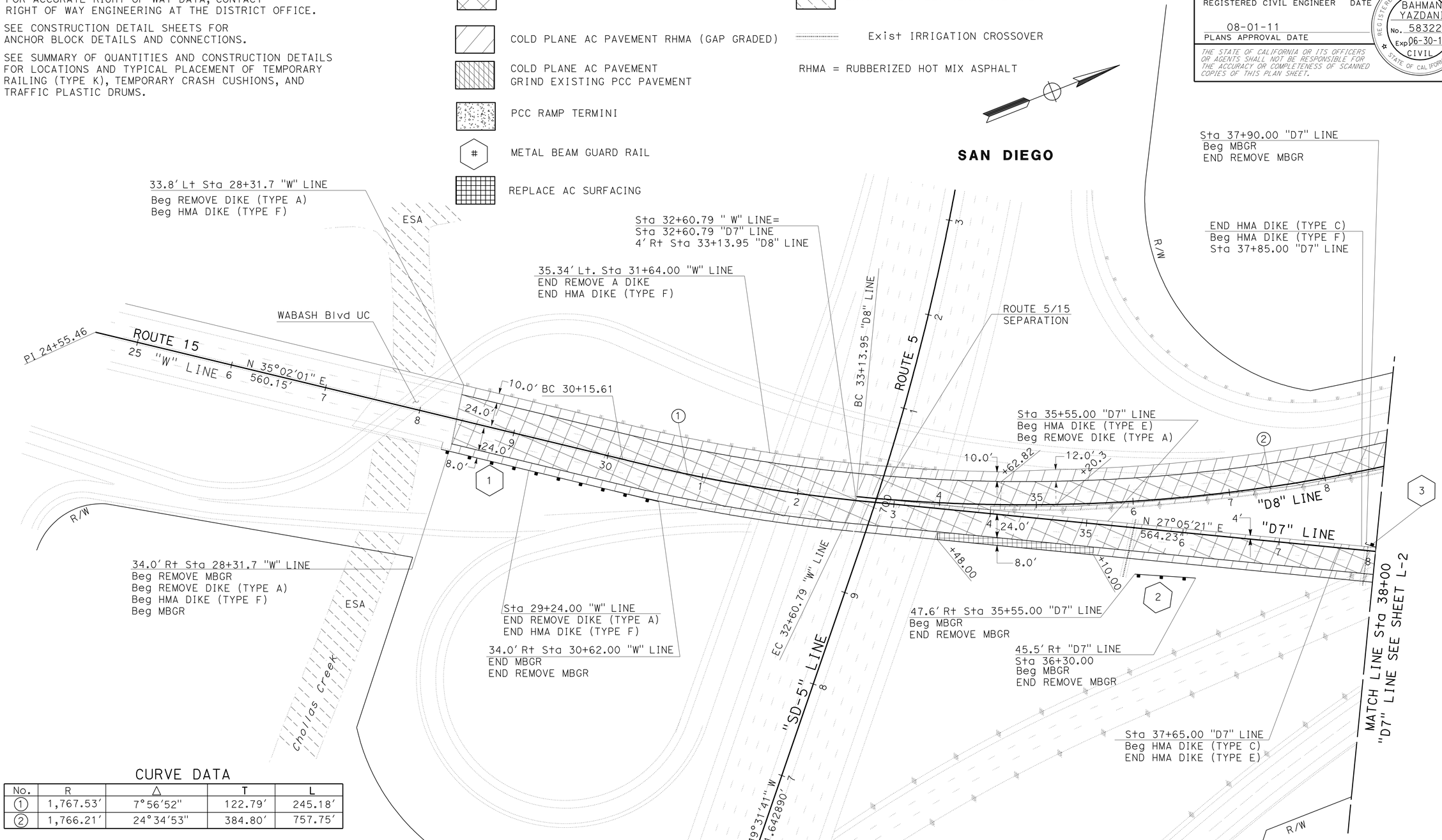

CURVE DATA

No.	R	Δ	T	L
1	1,767.53'	7°56'52"	122.79'	245.18'
2	1,766.21'	24°34'53"	384.80'	757.75'

LAYOUT

SCALE: 1" = 50'

L-1

STATE OF CALIFORNIA - DEPARTMENT OF TRANSPORTATION
Caltrans® PROJECT DEVELOPMENT

FUNCTIONAL SUPERVISOR: CHRIS M THOMAS
CALCULATED-DESIGNED BY: BAHMAN YAZDANI
CHECKED BY: RICARDO PADILLA
REVISED BY
DATE REVISED

LAST REVISION 09-02-11
DATE PLOTTED => 27-SEP-2011
TIME PLOTTED => 16:09

Dist	COUNTY	ROUTE	POST MILES TOTAL PROJECT	SHEET No.	TOTAL SHEETS
11	SD	15	0.5/M4.0	14	116

Bahman Yazdani 07-29-11
REGISTERED CIVIL ENGINEER DATE

08-01-11
PLANS APPROVAL DATE

REGISTERED PROFESSIONAL ENGINEER BAHMAN YAZDANI No. 58322 Exp. 06-30-12 CIVIL STATE OF CALIFORNIA

THE STATE OF CALIFORNIA OR ITS OFFICERS OR AGENTS SHALL NOT BE RESPONSIBLE FOR THE ACCURACY OR COMPLETENESS OF SCANNED COPIES OF THIS PLAN SHEET.

NOTE:

FOR ACCURATE RIGHT OF WAY DATA, CONTACT RIGHT OF WAY ENGINEERING AT THE DISTRICT OFFICE.

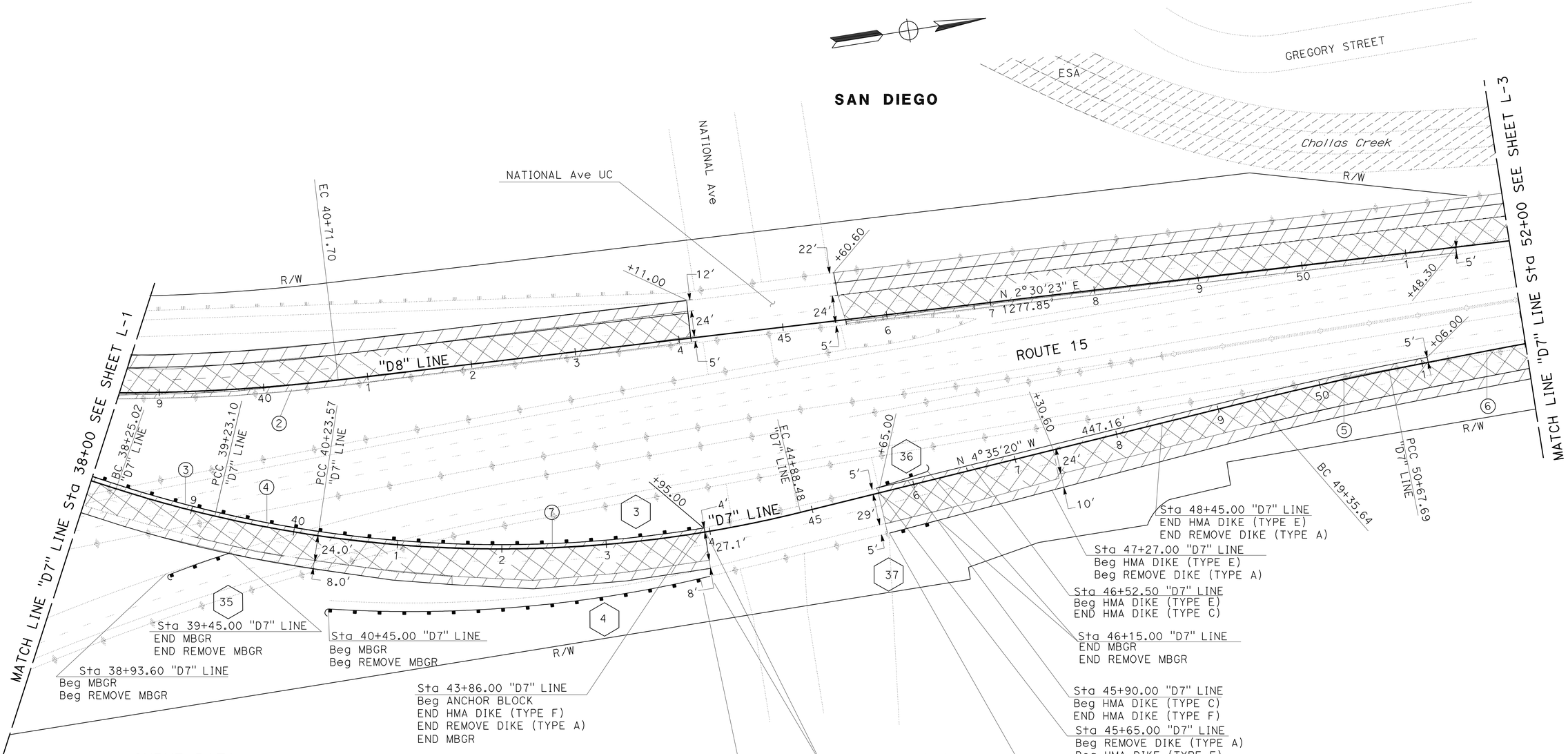

CURVE DATA

No.	R	Δ	T	L
2	1,766.21′	24°34′53"	384.80′	757.75′
3	1,200.60′	4°40′51"	49.07′	98.09′
4	1,200.66′	4°47′39"	50.26′	100.47′
5	3,003.39′	2°31′09"	66.03′	132.05′
6	10,986.55′	1°33′49"	149.92′	299.82′
7	1,200.02′	21°44′51"	230.52′	455.49′

LAYOUT L-2

SCALE: 1" = 50′

STATE OF CALIFORNIA - DEPARTMENT OF TRANSPORTATION
Caltrans® PROJECT DEVELOPMENT

FUNCTIONAL SUPERVISOR: CHRIS M THOMAS
CALCULATED-DESIGNED BY: BAHMAN YAZDANI
CHECKED BY: RICARDO PADILLA
REVISED BY
DATE REVISED

LAST REVISION 09-02-11
DATE PLOTTED => 27-SEP-2011
TIME PLOTTED => 16:09

Dist	COUNTY	ROUTE	POST MILES TOTAL PROJECT	SHEET No.	TOTAL SHEETS
11	SD	15	0.5/M4.0	15	116

Bahman Yazdani 07-29-11
REGISTERED CIVIL ENGINEER DATE

08-01-11
PLANS APPROVAL DATE

REGISTERED PROFESSIONAL ENGINEER BAHMAN YAZDANI No. 58322 Exp. 06-30-12 CIVIL STATE OF CALIFORNIA

THE STATE OF CALIFORNIA OR ITS OFFICERS OR AGENTS SHALL NOT BE RESPONSIBLE FOR THE ACCURACY OR COMPLETENESS OF SCANNED COPIES OF THIS PLAN SHEET.

NOTE:

FOR ACCURATE RIGHT OF WAY DATA, CONTACT RIGHT OF WAY ENGINEERING AT THE DISTRICT OFFICE.

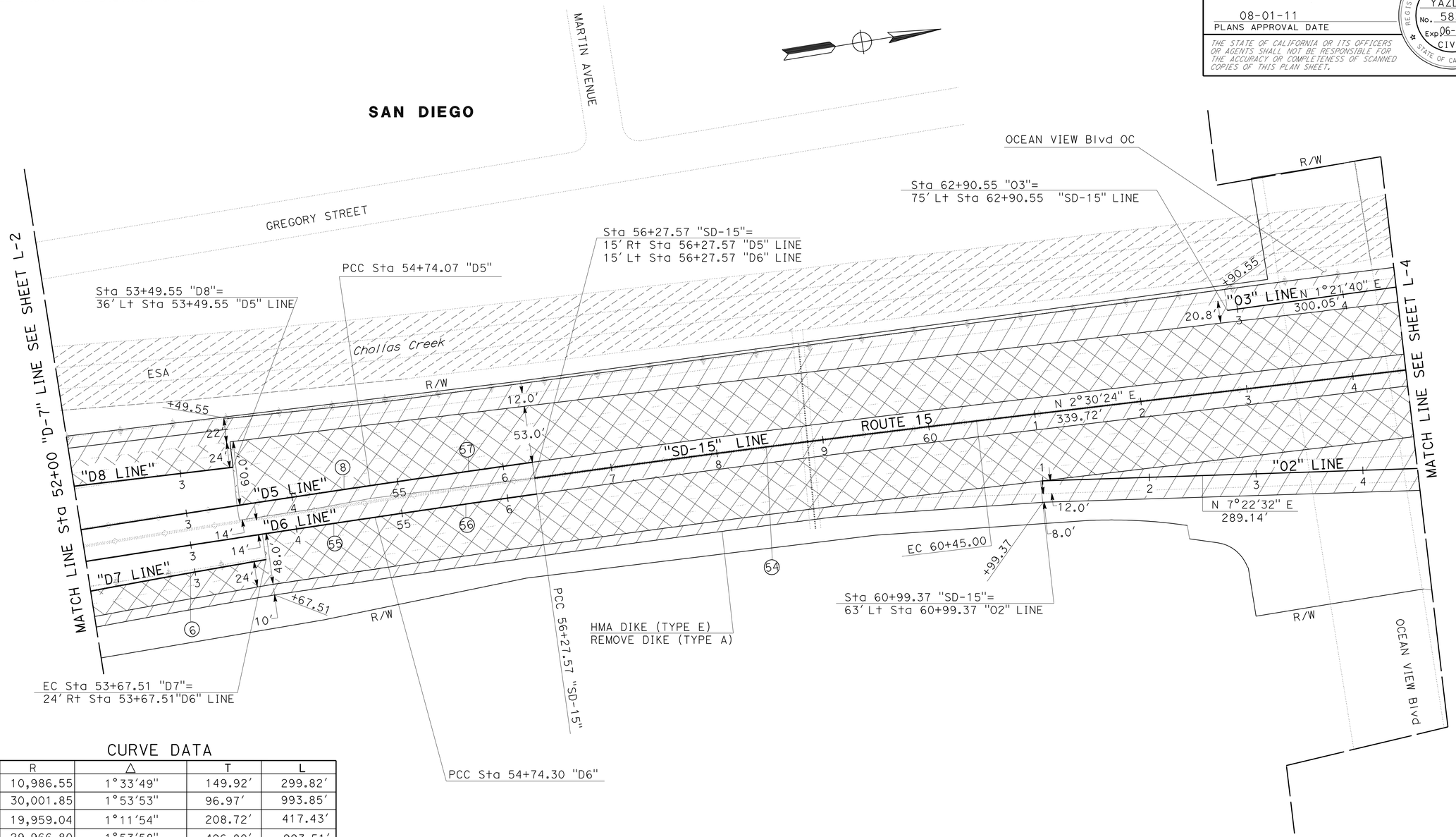

CURVE DATA

No.	R	Δ	T	L
6	10,986.55	1°33'49"	149.92'	299.82'
8	30,001.85	1°53'53"	96.97'	993.85'
54	19,959.04	1°11'54"	208.72'	417.43'
55	29,966.80	1°53'58"	496.80'	993.51'
56	20,047.85	0°26'17"	76.63'	153.26'
57	20,109.25	0°26'14"	76.75'	153.50'

LAYOUT

SCALE: 1" = 50'

L-3

STATE OF CALIFORNIA - DEPARTMENT OF TRANSPORTATION
Caltrans PROJECT DEVELOPMENT

FUNCTIONAL SUPERVISOR: CHRIS M THOMAS
CALCULATED-DESIGNED BY: BAHMAN YAZDANI
CHECKED BY: RICARDO PADILLA
REVISED BY
DATE REVISED

LAST REVISION 09-02-11
DATE PLOTTED => 27-SEP-2011
TIME PLOTTED => 16:09

Dist	COUNTY	ROUTE	POST MILES TOTAL PROJECT	SHEET No.	TOTAL SHEETS
11	SD	15	0.5/M4.0	16	116

Bahman Yazdani 07-29-11
REGISTERED CIVIL ENGINEER DATE

08-01-11
PLANS APPROVAL DATE

REGISTERED PROFESSIONAL ENGINEER BAHMAN YAZDANI No. 58322 Exp. 06-30-12 CIVIL STATE OF CALIFORNIA

THE STATE OF CALIFORNIA OR ITS OFFICERS OR AGENTS SHALL NOT BE RESPONSIBLE FOR THE ACCURACY OR COMPLETENESS OF SCANNED COPIES OF THIS PLAN SHEET.

NOTE:

FOR ACCURATE RIGHT OF WAY DATA, CONTACT RIGHT OF WAY ENGINEERING AT THE DISTRICT OFFICE.

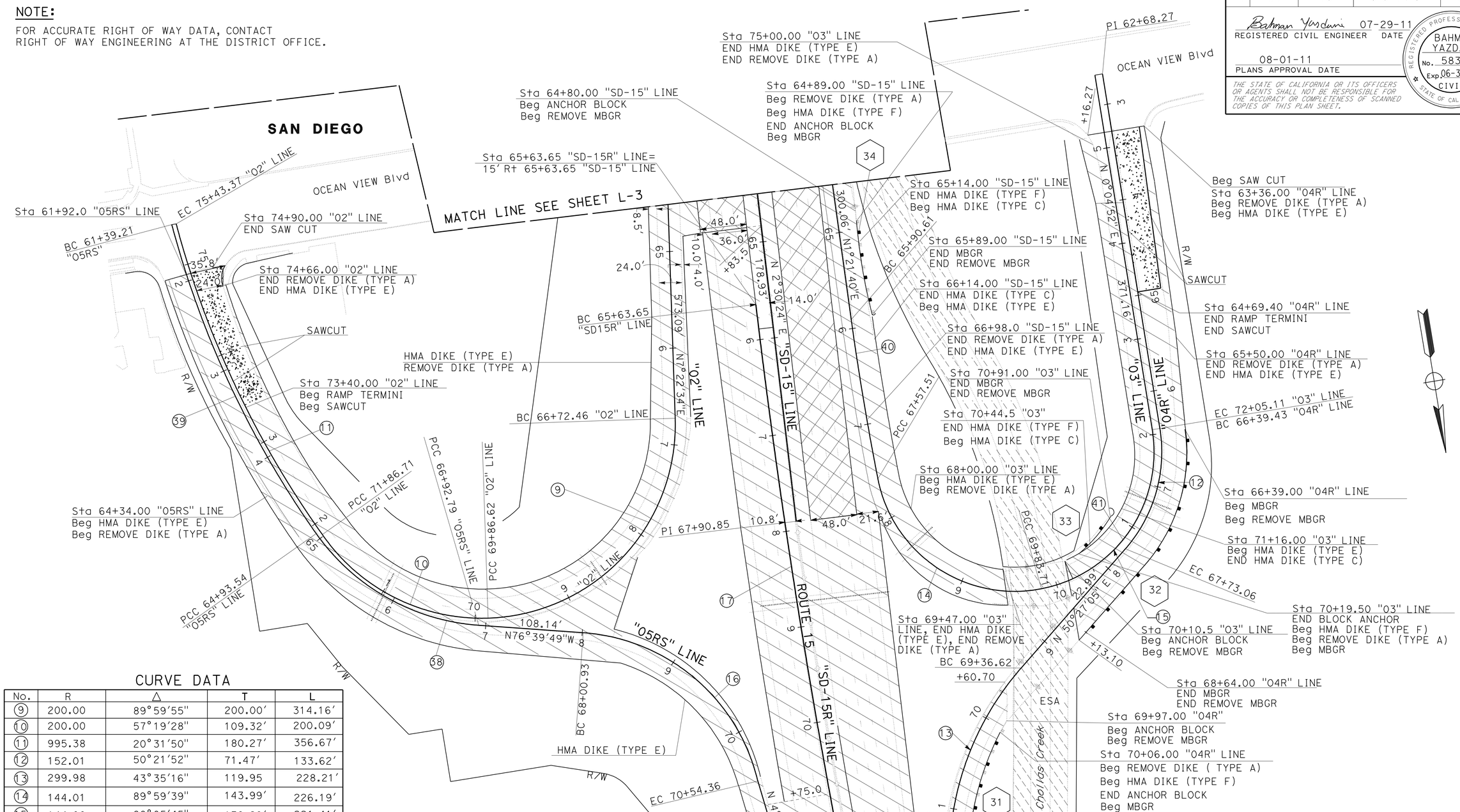

CURVE DATA

No.	R	Δ	T	L
9	200.00	89°59'55"	200.00'	314.16'
10	200.00	57°19'28"	109.32'	200.09'
11	995.38	20°31'50"	180.27'	356.67'
12	152.01	50°21'52"	71.47'	133.62'
13	299.98	43°35'16"	119.95	228.21'
14	144.01	89°59'39"	143.99'	226.19'
15	144.00	88°05'45"	139.29'	221.41'
16	199.99	72°36'14"	146.92'	253.43'
17	8001.44	4°20'56"	303.82'	607.34'
38	225.00	50°44'21"	106.69'	199.25'
39	995.93	20°18'11"	179.04'	354.33'
40	2998.75	3°11'20"	83.47'	166.91'
41	144.00	88°05'45"	139.29'	221.41'

LAYOUT L-4

STATE OF CALIFORNIA - DEPARTMENT OF TRANSPORTATION
Caltrans PROJECT DEVELOPMENT

FUNCTIONAL SUPERVISOR: CHRIS M THOMAS
CALCULATED-DESIGNED BY: BAHMAN YAZDANI
CHECKED BY: RICARDO PADILLA
REVISED BY
DATE REVISED

LAST REVISION 09-02-11
DATE PLOTTED => 27-SEP-2011
TIME PLOTTED => 16:09

Dist	COUNTY	ROUTE	POST MILES TOTAL PROJECT	SHEET No.	TOTAL SHEETS
11	SD	15	0.5/M4.0	17	116

Bahman Yazdani 07-29-11
REGISTERED CIVIL ENGINEER DATE

08-01-11
PLANS APPROVAL DATE

REGISTERED PROFESSIONAL ENGINEER
BAHMAN YAZDANI
No. 58322
Exp. 06-30-12
CIVIL
STATE OF CALIFORNIA

THE STATE OF CALIFORNIA OR ITS OFFICERS OR AGENTS SHALL NOT BE RESPONSIBLE FOR THE ACCURACY OR COMPLETENESS OF SCANNED COPIES OF THIS PLAN SHEET.

NOTE:

FOR ACCURATE RIGHT OF WAY DATA, CONTACT
RIGHT OF WAY ENGINEERING AT THE DISTRICT OFFICE.

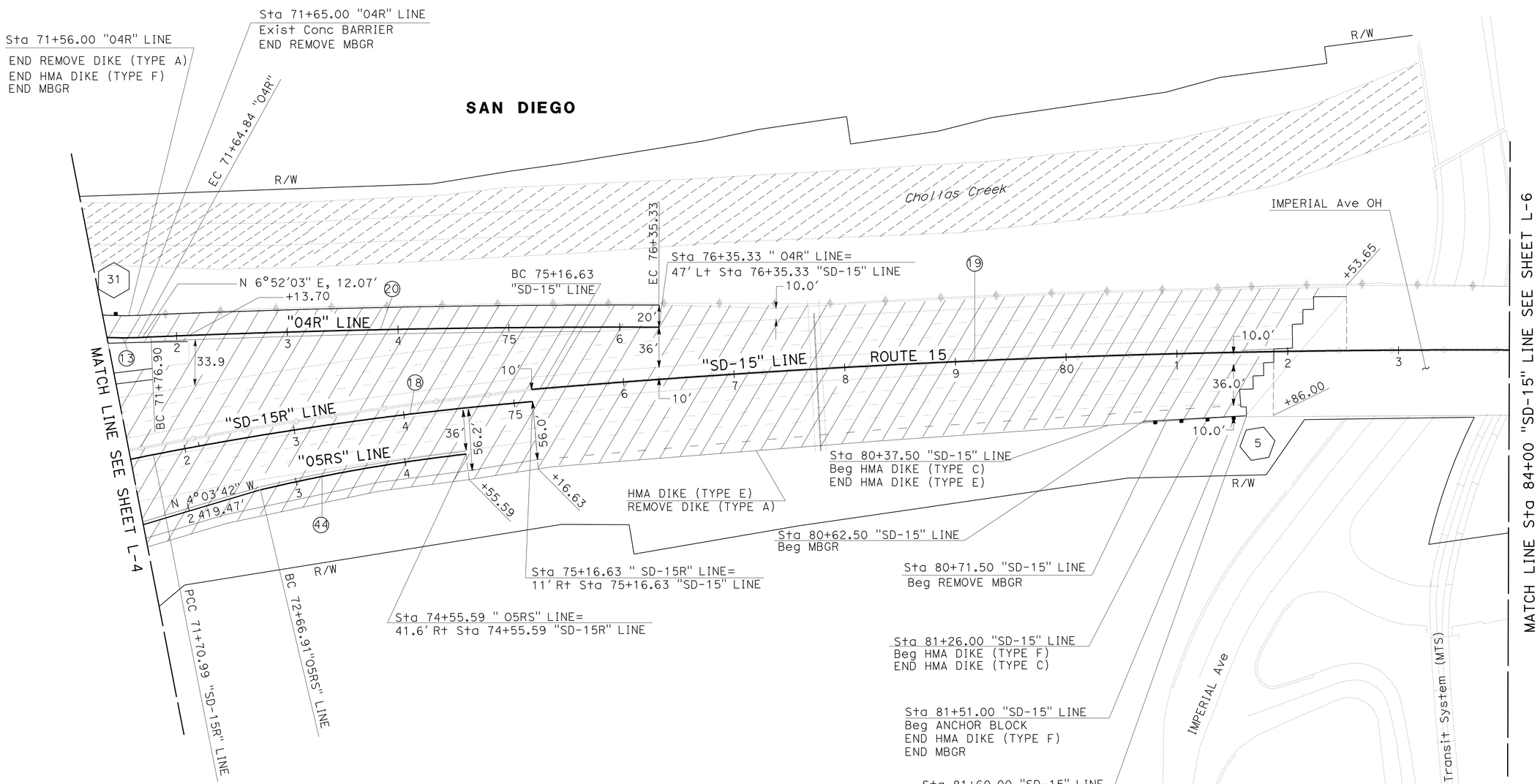

CURVE DATA

No.	R	Δ	T	L
44	1,550.08'	6°58'28"	94.46'	188.69'
18	3,153.85'	6°16'45"	172.99'	345.64'
19	10,000.12'	17°29'43"	1,538.55'	3,053.55'
20	10,049.93'	2°36'49"	229.25'	458.43'
13	299.98'	43°35'16"	199.95'	228.21'

SCALE 1" = 50'

LAYOUT L-5

STATE OF CALIFORNIA - DEPARTMENT OF TRANSPORTATION
Caltrans® PROJECT DEVELOPMENT

FUNCTIONAL SUPERVISOR: CHRIS M THOMAS
CALCULATED-DESIGNED BY: BAHMAN YAZDANI
CHECKED BY: RICARDO PADILLA
REVISED BY
DATE REVISED

LAST REVISION 09-02-11
DATE PLOTTED => 27-SEP-2011
TIME PLOTTED => 16:10

Dist	COUNTY	ROUTE	POST MILES TOTAL PROJECT	SHEET No.	TOTAL SHEETS
11	SD	15	0.5/M4.0	18	116

Bahman Yazdani 07-29-11
REGISTERED CIVIL ENGINEER DATE

08-01-11
PLANS APPROVAL DATE

REGISTERED PROFESSIONAL ENGINEER
BAHMAN YAZDANI
No. 58322
Exp 06-30-12
CIVIL
STATE OF CALIFORNIA

THE STATE OF CALIFORNIA OR ITS OFFICERS OR AGENTS SHALL NOT BE RESPONSIBLE FOR THE ACCURACY OR COMPLETENESS OF SCANNED COPIES OF THIS PLAN SHEET.

NOTE:

FOR ACCURATE RIGHT OF WAY DATA, CONTACT RIGHT OF WAY ENGINEERING AT THE DISTRICT OFFICE.

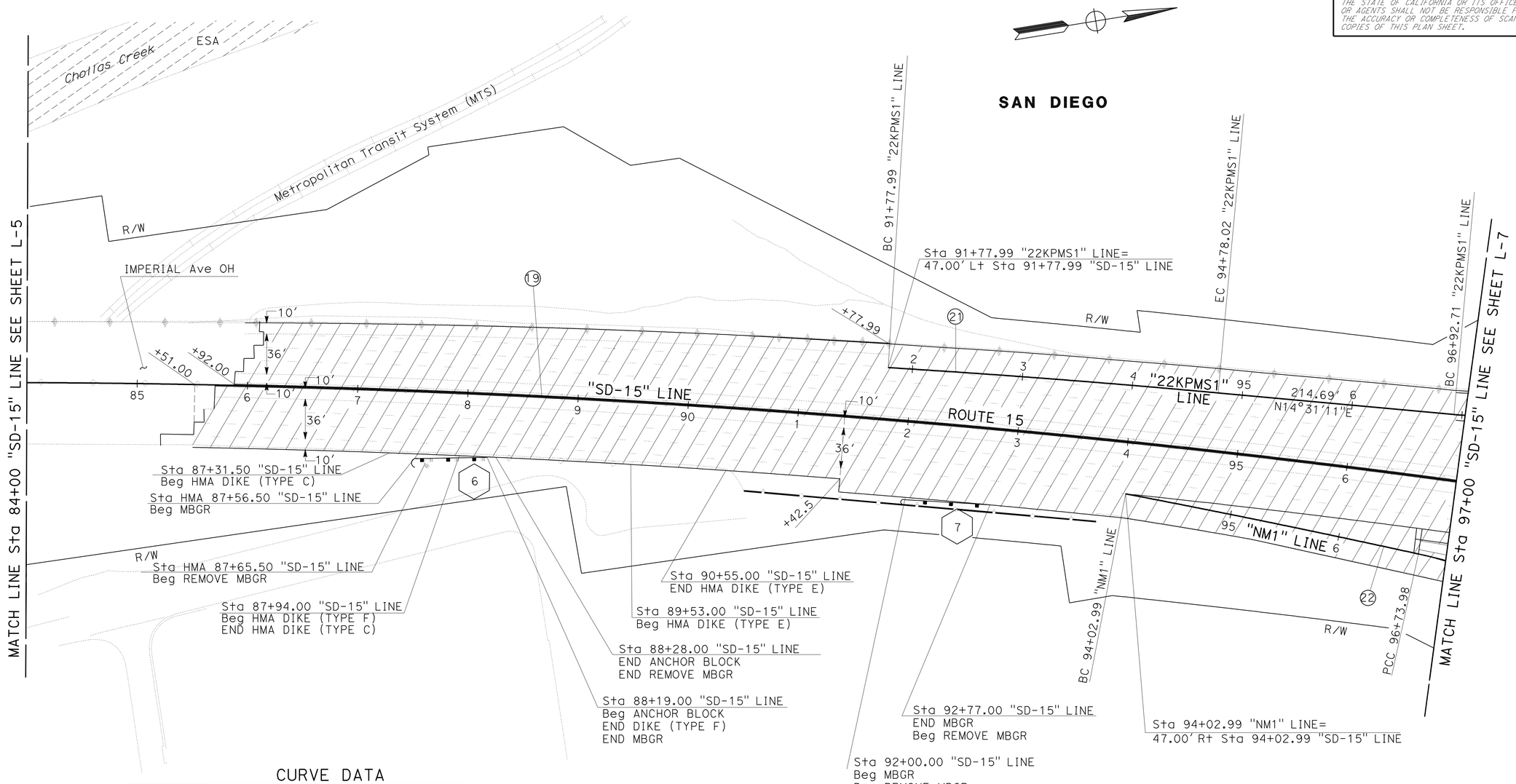

CURVE DATA

No.	R	Δ	T	L
19	10,000.12'	17°29'43"	1,538.75'	3,053.55'
21	10,055.87'	1°42'34"	150.02'	300.03'
22	9,974.10'	1°33'24"	135.50'	270.99'

SCALE: 1" = 50'

LAYOUT

L-6

STATE OF CALIFORNIA - DEPARTMENT OF TRANSPORTATION
Caltrans PROJECT DEVELOPMENT

FUNCTIONAL SUPERVISOR: CHRIS M THOMAS
CALCULATED-DESIGNED BY: BAHMAN YAZDANI
CHECKED BY: RICARDO PADILLA
REVISED BY
DATE REVISED

LAST REVISION 09-02-11
DATE PLOTTED => 27-SEP-2011
TIME PLOTTED => 16:10

Dist	COUNTY	ROUTE	POST MILES TOTAL PROJECT	SHEET No.	TOTAL SHEETS
11	SD	15	0.5/M4.0	19	116

Bahman Yazdani 07-29-11
REGISTERED CIVIL ENGINEER DATE

08-01-11
PLANS APPROVAL DATE

REGISTERED PROFESSIONAL ENGINEER BAHMAN YAZDANI No. 58322 Exp. 06-30-12 CIVIL STATE OF CALIFORNIA

THE STATE OF CALIFORNIA OR ITS OFFICERS OR AGENTS SHALL NOT BE RESPONSIBLE FOR THE ACCURACY OR COMPLETENESS OF SCANNED COPIES OF THIS PLAN SHEET.

NOTE:

FOR ACCURATE RIGHT OF WAY DATA, CONTACT RIGHT OF WAY ENGINEERING AT THE DISTRICT OFFICE.

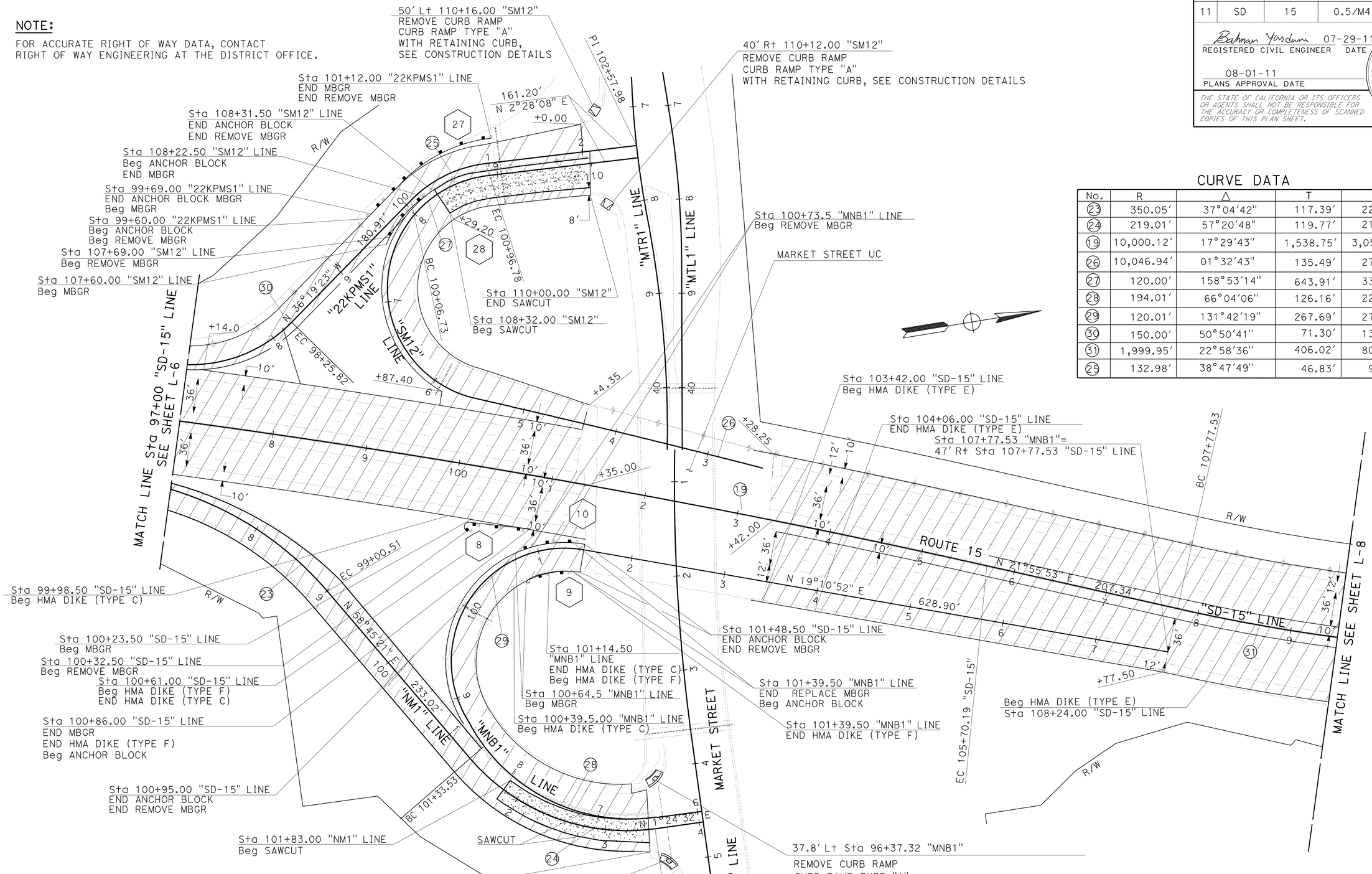

CURVE DATA

No.	R	Δ	T	L
23	350.05'	37°04'42"	117.39'	226.53'
24	219.01'	57°20'48"	119.77'	219.20'
19	10,000.12'	17°29'43"	1,538.75'	3,053.55'
26	10,046.94'	01°32'43"	135.49'	270.97'
27	120.00'	158°53'14"	643.91'	332.77'
28	194.01'	66°04'06"	126.16'	223.72'
29	120.01'	131°42'19"	267.69'	275.86'
30	150.00'	50°50'41"	71.30'	133.11'
31	1,999.95'	22°58'36"	406.02'	802.02'
25	132.98'	38°47'49"	46.83'	90.05'

SCALE: 1" = 50'

LAYOUT

L-7

STATE OF CALIFORNIA - DEPARTMENT OF TRANSPORTATION
Caltrans PROJECT DEVELOPMENT

FUNCTIONAL SUPERVISOR: CHRIS M THOMAS
CALCULATED-DESIGNED BY: BAHMAN YAZDANI
CHECKED BY: RICARDO PADILLA
REVISED BY / DATE REVISED

LAST REVISION 09-02-11
DATE PLOTTED => 27-SEP-2011
TIME PLOTTED => 16:10

Dist	COUNTY	ROUTE	POST MILES TOTAL PROJECT	SHEET No.	TOTAL SHEETS
11	SD	15	0.5/M4.0	20	116

Bahman Yazdani 07-29-11
REGISTERED CIVIL ENGINEER DATE

08-01-11
PLANS APPROVAL DATE

REGISTERED PROFESSIONAL ENGINEER BAHMAN YAZDANI No. 58322 Exp. 06-30-12 CIVIL STATE OF CALIFORNIA

THE STATE OF CALIFORNIA OR ITS OFFICERS OR AGENTS SHALL NOT BE RESPONSIBLE FOR THE ACCURACY OR COMPLETENESS OF SCANNED COPIES OF THIS PLAN SHEET.

NOTE:

FOR ACCURATE RIGHT OF WAY DATA, CONTACT RIGHT OF WAY ENGINEERING AT THE DISTRICT OFFICE.

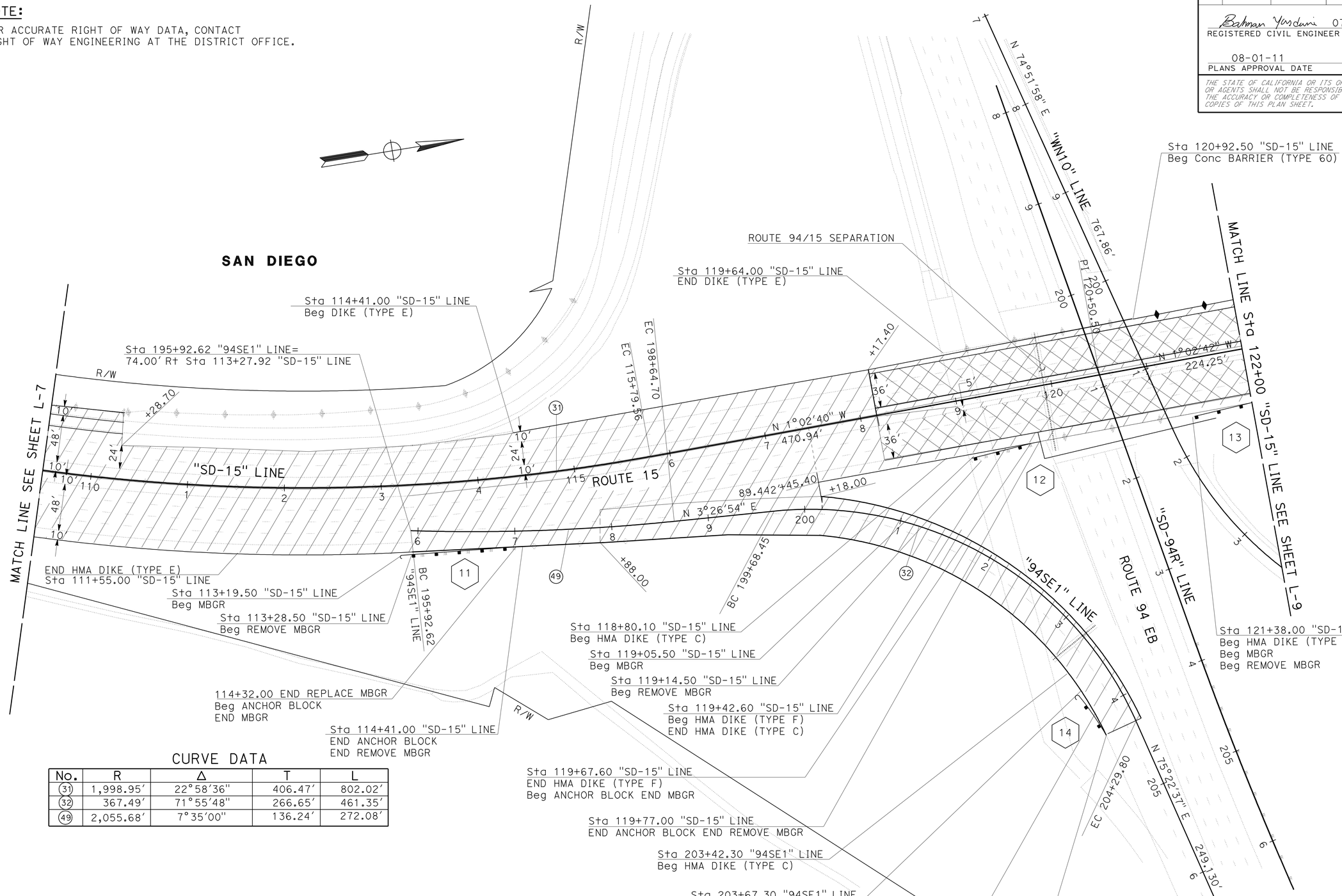

CURVE DATA

No.	R	Δ	T	L
31	1,998.95′	22°58′36″	406.47′	802.02′
32	367.49′	71°55′48″	266.65′	461.35′
49	2,055.68′	7°35′00″	136.24′	272.08′

LAYOUT

SCALE: 1" = 50′

L-8

STATE OF CALIFORNIA - DEPARTMENT OF TRANSPORTATION
Caltrans® PROJECT DEVELOPMENT

FUNCTIONAL SUPERVISOR: CHRIS M THOMAS
CALCULATED-DESIGNED BY: BAHMAN YAZDANI
CHECKED BY: RICARDO PADILLA
REVISED BY
DATE REVISED

LAST REVISION 09-02-11
DATE PLOTTED => 27-SEP-2011
TIME PLOTTED => 16:10

Dist	COUNTY	ROUTE	POST MILES TOTAL PROJECT	SHEET No.	TOTAL SHEETS
11	SD	15	0.5/M4.0	21	116

Bahman Yazdani 07-29-11
REGISTERED CIVIL ENGINEER DATE

08-01-11
PLANS APPROVAL DATE

REGISTERED PROFESSIONAL ENGINEER BAHMAN YAZDANI No. 58322 Exp. 06-30-12 CIVIL STATE OF CALIFORNIA

THE STATE OF CALIFORNIA OR ITS OFFICERS OR AGENTS SHALL NOT BE RESPONSIBLE FOR THE ACCURACY OR COMPLETENESS OF SCANNED COPIES OF THIS PLAN SHEET.

NOTE:

FOR ACCURATE RIGHT OF WAY DATA, CONTACT RIGHT OF WAY ENGINEERING AT THE DISTRICT OFFICE.

SAN DIEGO

CURVE DATA

No.	R	Δ	T	L
34	2,999.95′	32°37′15"	877.84′	1,708.00′
35	400.00′	50°7′48"	187.07′	349.97′
52	130.01′	89°59′47"	130.00′	204.20′
50	129.99′	78°3′45"	105.38′	177.11′
51	130.00′	90°0′08"	130.00′	204.20′
53	3,251.82′	6°18′01"	178.97′	357.58′

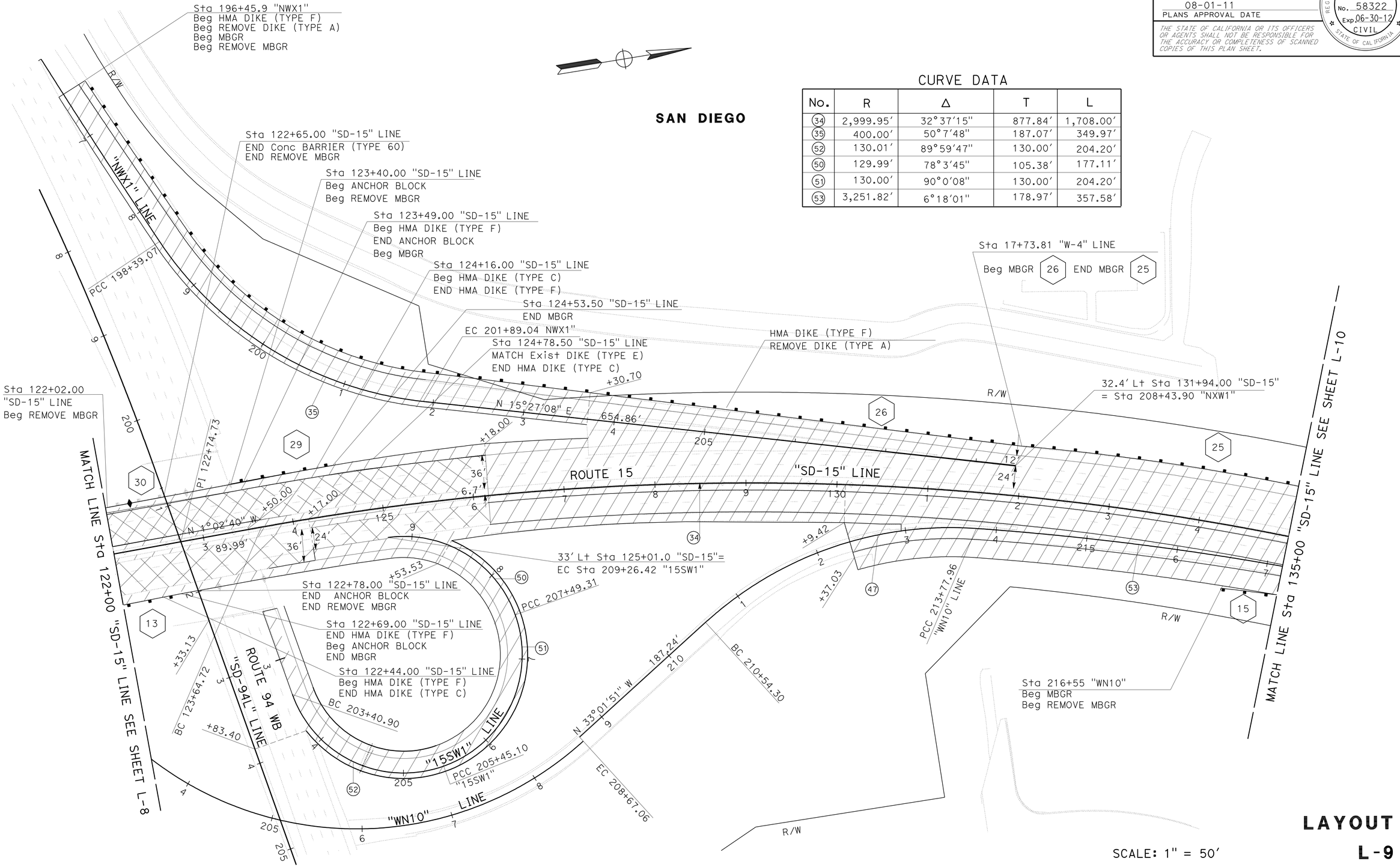

SCALE: 1" = 50′

LAYOUT

L-9

STATE OF CALIFORNIA - DEPARTMENT OF TRANSPORTATION
Caltrans® PROJECT DEVELOPMENT

FUNCTIONAL SUPERVISOR: CHRIS M THOMAS
CALCULATED-DESIGNED BY: BAHMAN YAZDANI
CHECKED BY: RICARDO PADILLA
REVISED BY
DATE REVISED

LAST REVISION 09-02-11
DATE PLOTTED => 27-SEP-2011
TIME PLOTTED => 16:10

Dist	COUNTY	ROUTE	POST MILES TOTAL PROJECT	SHEET No.	TOTAL SHEETS
11	SD	15	0.5/M4.0	22	116

Bahman Yazdani 07-29-11
REGISTERED CIVIL ENGINEER DATE

08-01-11
PLANS APPROVAL DATE

REGISTERED PROFESSIONAL ENGINEER BAHMAN YAZDANI No. 58322 Exp. 06-30-12 CIVIL STATE OF CALIFORNIA

THE STATE OF CALIFORNIA OR ITS OFFICERS OR AGENTS SHALL NOT BE RESPONSIBLE FOR THE ACCURACY OR COMPLETENESS OF SCANNED COPIES OF THIS PLAN SHEET.

NOTE:

FOR ACCURATE RIGHT OF WAY DATA, CONTACT RIGHT OF WAY ENGINEERING AT THE DISTRICT OFFICE.

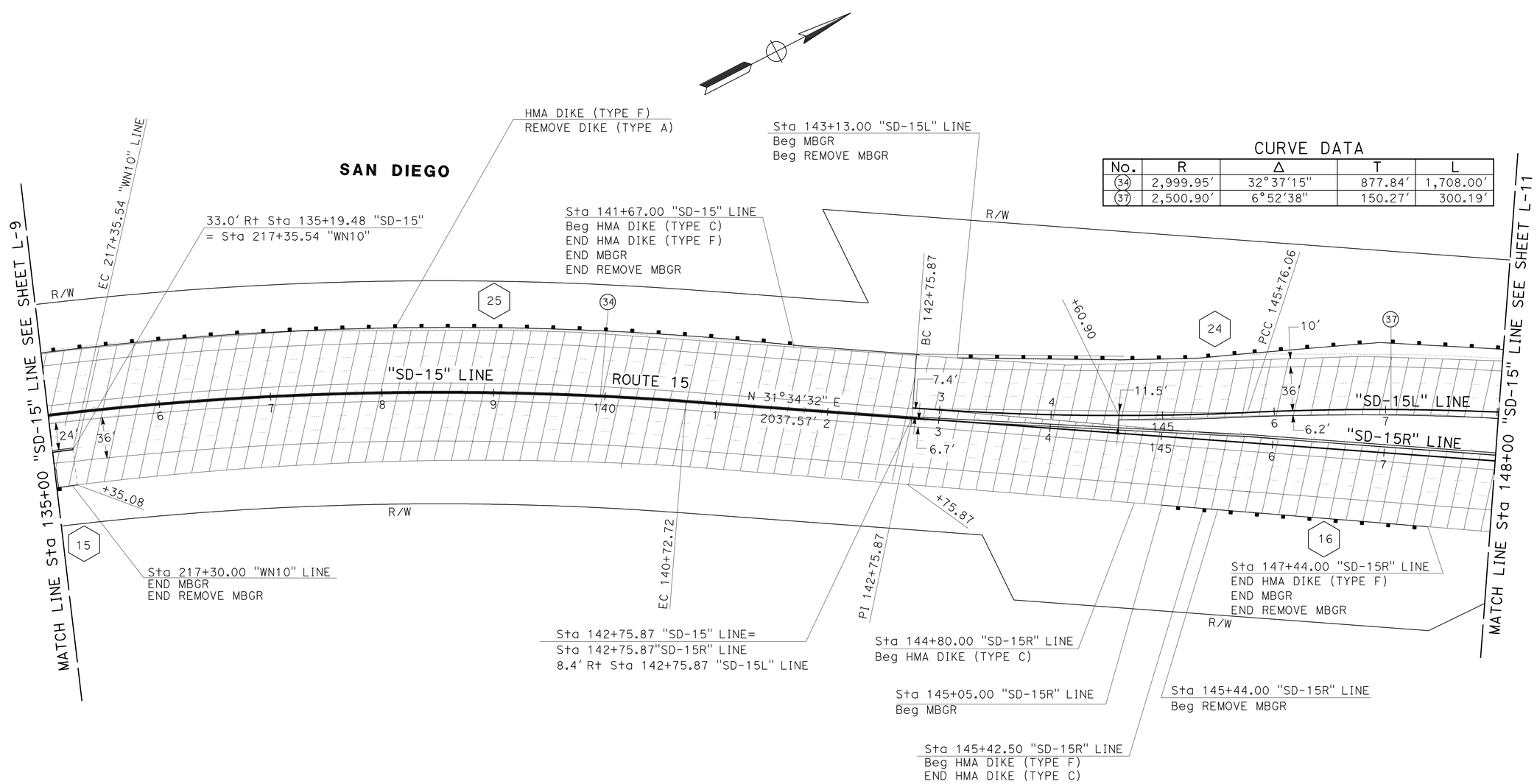

CURVE DATA

No.	R	Δ	T	L
34	2,999.95'	32°37'15"	877.84'	1,708.00'
37	2,500.90'	6°52'38"	150.27'	300.19'

SCALE: 1" = 50'

LAYOUT

L-10

REVISED BY | DATE REVISED
BAHMAN YAZDANI | RICARDO PADILA
CALCULATED-DESIGNED BY | CHECKED BY
FUNCTIONAL SUPERVISOR | CHRIS M THOMAS

STATE OF CALIFORNIA - DEPARTMENT OF TRANSPORTATION
Caltrans® PROJECT DEVELOPMENT

LAST REVISION 09-02-11 | DATE PLOTTED => 27-SEP-2011 | TIME PLOTTED => 16:10

Dist	COUNTY	ROUTE	POST MILES TOTAL PROJECT	SHEET No.	TOTAL SHEETS
11	SD	15	0.5/M4.0	23	116

Bahman Yazdani 07-29-11
REGISTERED CIVIL ENGINEER DATE

08-01-11
PLANS APPROVAL DATE

REGISTERED PROFESSIONAL ENGINEER BAHMAN YAZDANI No. 58322 Exp. 06-30-12 CIVIL STATE OF CALIFORNIA

THE STATE OF CALIFORNIA OR ITS OFFICERS OR AGENTS SHALL NOT BE RESPONSIBLE FOR THE ACCURACY OR COMPLETENESS OF SCANNED COPIES OF THIS PLAN SHEET.

NOTE:

FOR ACCURATE RIGHT OF WAY DATA, CONTACT
RIGHT OF WAY ENGINEERING AT THE DISTRICT OFFICE.

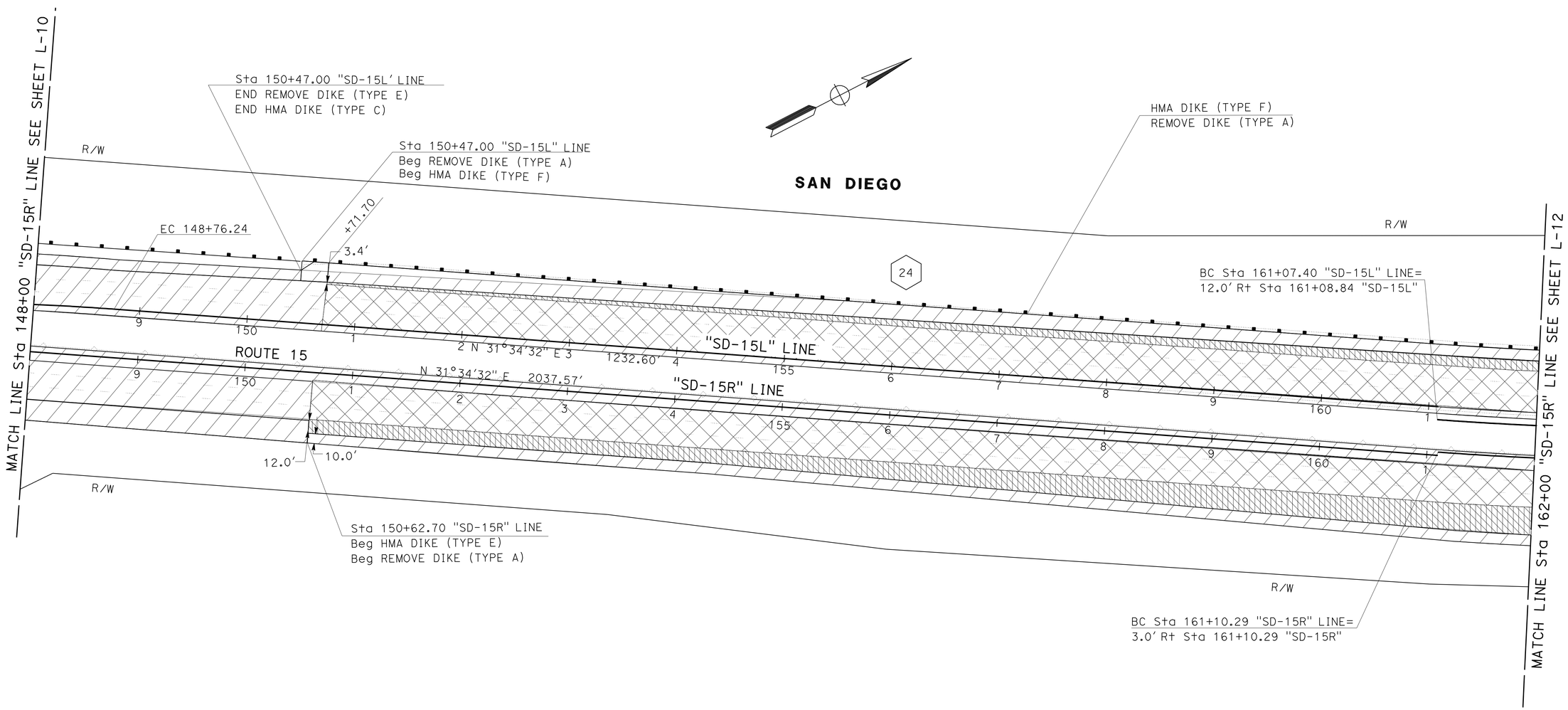

SCALE: 1" = 50'

LAYOUT
L-11

STATE OF CALIFORNIA - DEPARTMENT OF TRANSPORTATION
Caltrans® PROJECT DEVELOPMENT

FUNCTIONAL SUPERVISOR: CHRIS M THOMAS
CALCULATED-DESIGNED BY: BAHMAN YAZDANI
CHECKED BY: RICARDO PADILLA
REVISED BY
DATE REVISED

LAST REVISION 09-02-11 | DATE PLOTTED => 27-SEP-2011 | TIME PLOTTED => 16:10

Dist	COUNTY	ROUTE	POST MILES TOTAL PROJECT	SHEET No.	TOTAL SHEETS
11	SD	15	0.5/M4.0	24	116

Bahman Yazdani 07-29-11
REGISTERED CIVIL ENGINEER DATE

08-01-11
PLANS APPROVAL DATE

REGISTERED PROFESSIONAL ENGINEER
BAHMAN YAZDANI
No. 58322
Exp. 06-30-12
CIVIL
STATE OF CALIFORNIA

THE STATE OF CALIFORNIA OR ITS OFFICERS OR AGENTS SHALL NOT BE RESPONSIBLE FOR THE ACCURACY OR COMPLETENESS OF SCANNED COPIES OF THIS PLAN SHEET.

NOTE:

FOR ACCURATE RIGHT OF WAY DATA, CONTACT RIGHT OF WAY ENGINEERING AT THE DISTRICT OFFICE.

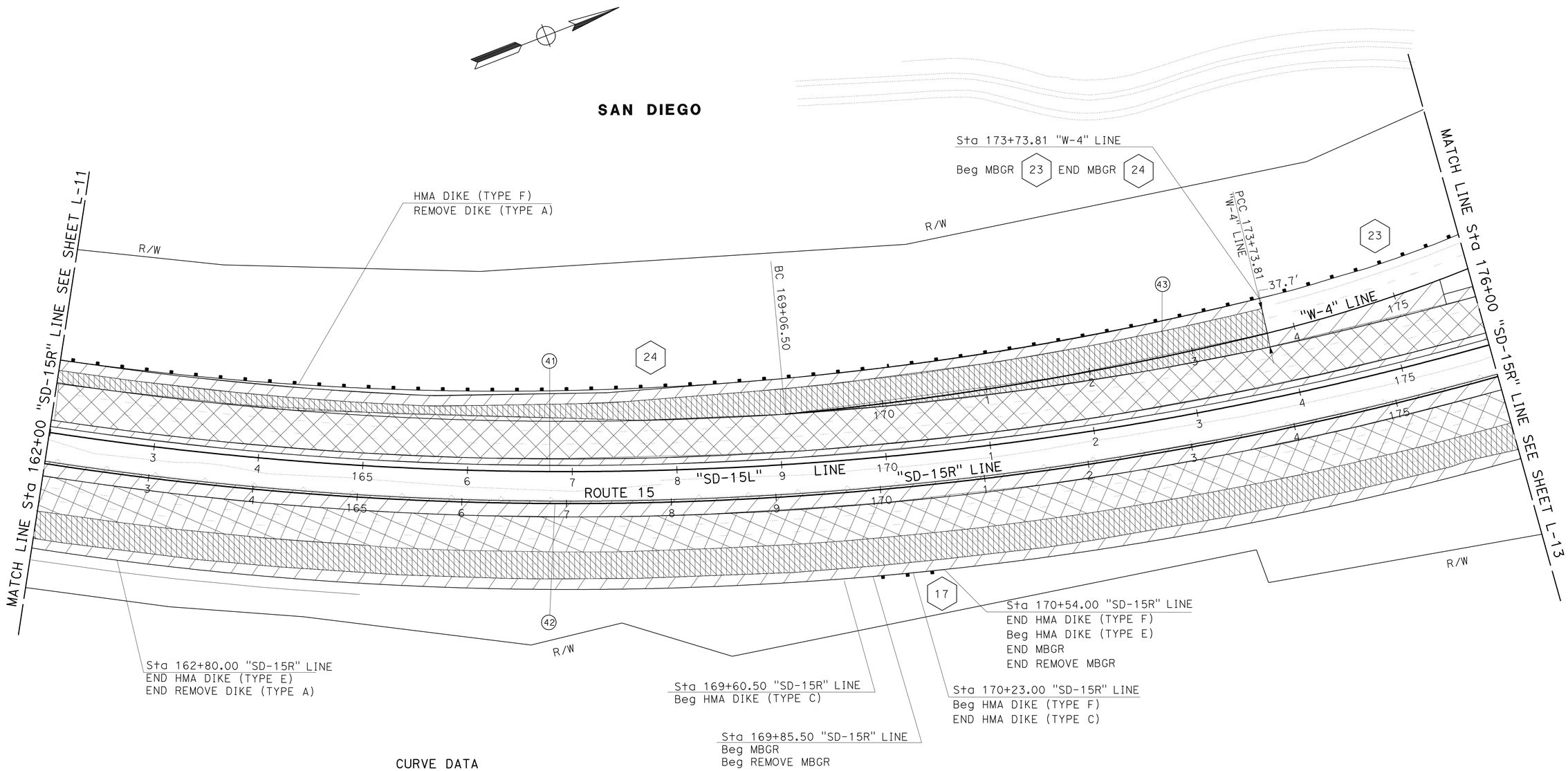

CURVE DATA

No.	R	Δ	T	L
41	3,270.00′	51°25′40″	1,574.72′	2,935.10′
42	3,300.02′	34°34′12″	1,026.90′	1,991.11′
43	3,200.24′	08°21′59″	234.07′	467.31′

LAYOUT

L-12

SCALE: 1" = 50′

STATE OF CALIFORNIA - DEPARTMENT OF TRANSPORTATION
Caltrans

FUNCTIONAL SUPERVISOR: CHRIS M THOMAS
CALCULATED-DESIGNED BY: BAHMAN YAZDANI
CHECKED BY: RICARDO PADILLA
REVISED BY
DATE REVISED

LAST REVISION 09-02-11
DATE PLOTTED => 27-SEP-2011
TIME PLOTTED => 16:10

Dist	COUNTY	ROUTE	POST MILES TOTAL PROJECT	SHEET No.	TOTAL SHEETS
11	SD	15	0.5/M4.0	25	116

Bahman Yazdani 07-29-11
REGISTERED CIVIL ENGINEER DATE

08-01-11
PLANS APPROVAL DATE

REGISTERED PROFESSIONAL ENGINEER BAHMAN YAZDANI No. 58322 Exp. 06-30-12 CIVIL STATE OF CALIFORNIA

THE STATE OF CALIFORNIA OR ITS OFFICERS OR AGENTS SHALL NOT BE RESPONSIBLE FOR THE ACCURACY OR COMPLETENESS OF SCANNED COPIES OF THIS PLAN SHEET.

NOTE:

FOR ACCURATE RIGHT OF WAY DATA, CONTACT RIGHT OF WAY ENGINEERING AT THE DISTRICT OFFICE.

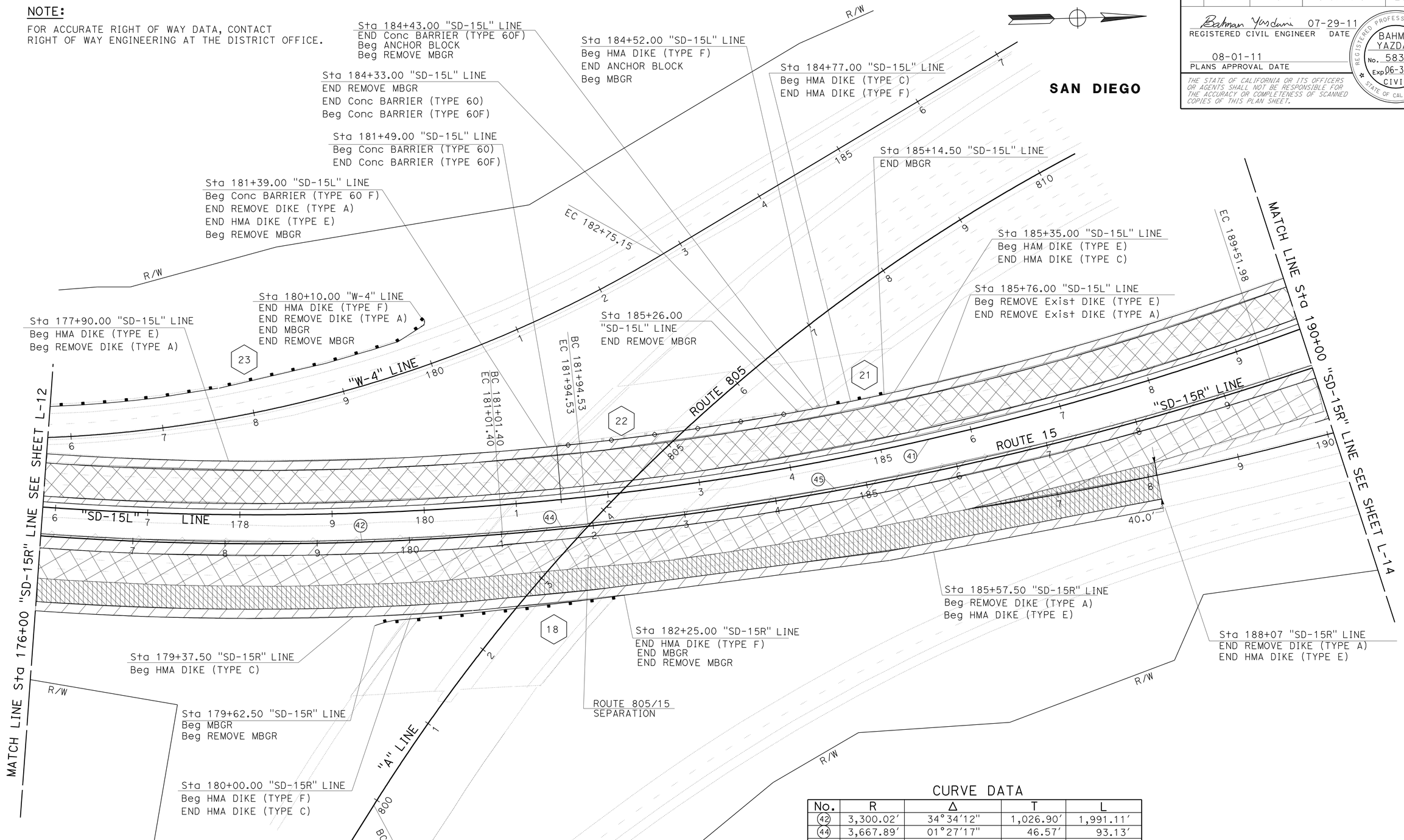

CURVE DATA

No.	R	Δ	T	L
42	3,300.02′	34°34′12"	1,026.90′	1,991.11′
44	3,667.89′	01°27′17"	46.57′	93.13′
45	3,650.29′	11°53′21"	380.09′	757.45′
41	3,270.00′	51°25′40"	1,574.72′	2,935.10′

SCALE: 1" = 50′

LAYOUT L-13

STATE OF CALIFORNIA - DEPARTMENT OF TRANSPORTATION
Caltrans PROJECT DEVELOPMENT

FUNCTIONAL SUPERVISOR: CHRIS M THOMAS
CALCULATED-DESIGNED BY: BAHMAN YAZDANI
CHECKED BY: RICARDO PADILLA
REVISED BY
DATE REVISED

LAST REVISION 09-02-11
DATE PLOTTED => 27-SEP-2011
TIME PLOTTED => 16:10

Dist	COUNTY	ROUTE	POST MILES TOTAL PROJECT	SHEET No.	TOTAL SHEETS
11	SD	15	0.5/M4.0	26	116

Bahman Yazdani 07-29-11
REGISTERED CIVIL ENGINEER DATE

08-01-11
PLANS APPROVAL DATE

REGISTERED PROFESSIONAL ENGINEER
BAHMAN YAZDANI
No. 58322
Exp. 06-30-12
CIVIL
STATE OF CALIFORNIA

THE STATE OF CALIFORNIA OR ITS OFFICERS OR AGENTS SHALL NOT BE RESPONSIBLE FOR THE ACCURACY OR COMPLETENESS OF SCANNED COPIES OF THIS PLAN SHEET.

NOTE:

FOR ACCURATE RIGHT OF WAY DATA, CONTACT
RIGHT OF WAY ENGINEERING AT THE DISTRICT OFFICE.

CURVE DATA

No.	R	Δ	T	L
47	2,000.00′	59°6′03"	1,133.87′	2,063.02′
48	2,000.00′	55°35′44"	1,054.38′	1,940.65′
41	3,270.00′	51°25′40"	1,574.72′	2,935.10′

SAN DIEGO

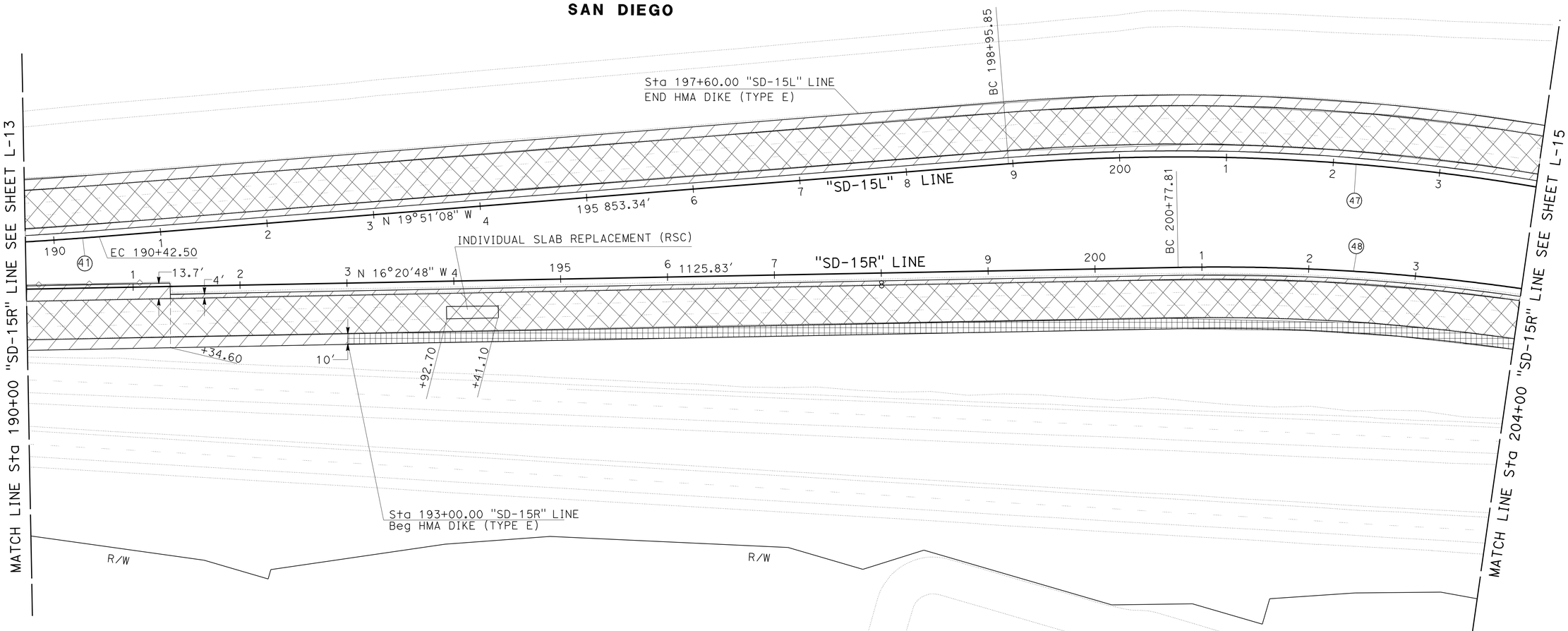

SCALE: 1" = 50′

LAYOUT
L-14

STATE OF CALIFORNIA - DEPARTMENT OF TRANSPORTATION
Caltrans® PROJECT DEVELOPMENT

FUNCTIONAL SUPERVISOR: CHRIS M THOMAS
CALCULATED-DESIGNED BY: BAHMAN YAZDANI
CHECKED BY: RICARDO PADILLA
REVISED BY
DATE REVISED

LAST REVISION 09-02-11
DATE PLOTTED => 27-SEP-2011
TIME PLOTTED => 16:10

Dist	COUNTY	ROUTE	POST MILES TOTAL PROJECT	SHEET No.	TOTAL SHEETS
11	SD	15	0.5/M4.0	27	116

Bahman Yazdani 07-29-11
REGISTERED CIVIL ENGINEER DATE

08-01-11
PLANS APPROVAL DATE

REGISTERED PROFESSIONAL ENGINEER BAHMAN YAZDANI No. 58322 Exp. 06-30-12 CIVIL STATE OF CALIFORNIA

THE STATE OF CALIFORNIA OR ITS OFFICERS OR AGENTS SHALL NOT BE RESPONSIBLE FOR THE ACCURACY OR COMPLETENESS OF SCANNED COPIES OF THIS PLAN SHEET.

NOTE:

FOR ACCURATE RIGHT OF WAY DATA, CONTACT RIGHT OF WAY ENGINEERING AT THE DISTRICT OFFICE.

CURVE DATA

No.	R	Δ	T	L
47	2,000.00′	59°6′03″	1,133.87′	2,063.02′
48	2,000.00′	55°35′44″	1,054.38′	1,940.65′

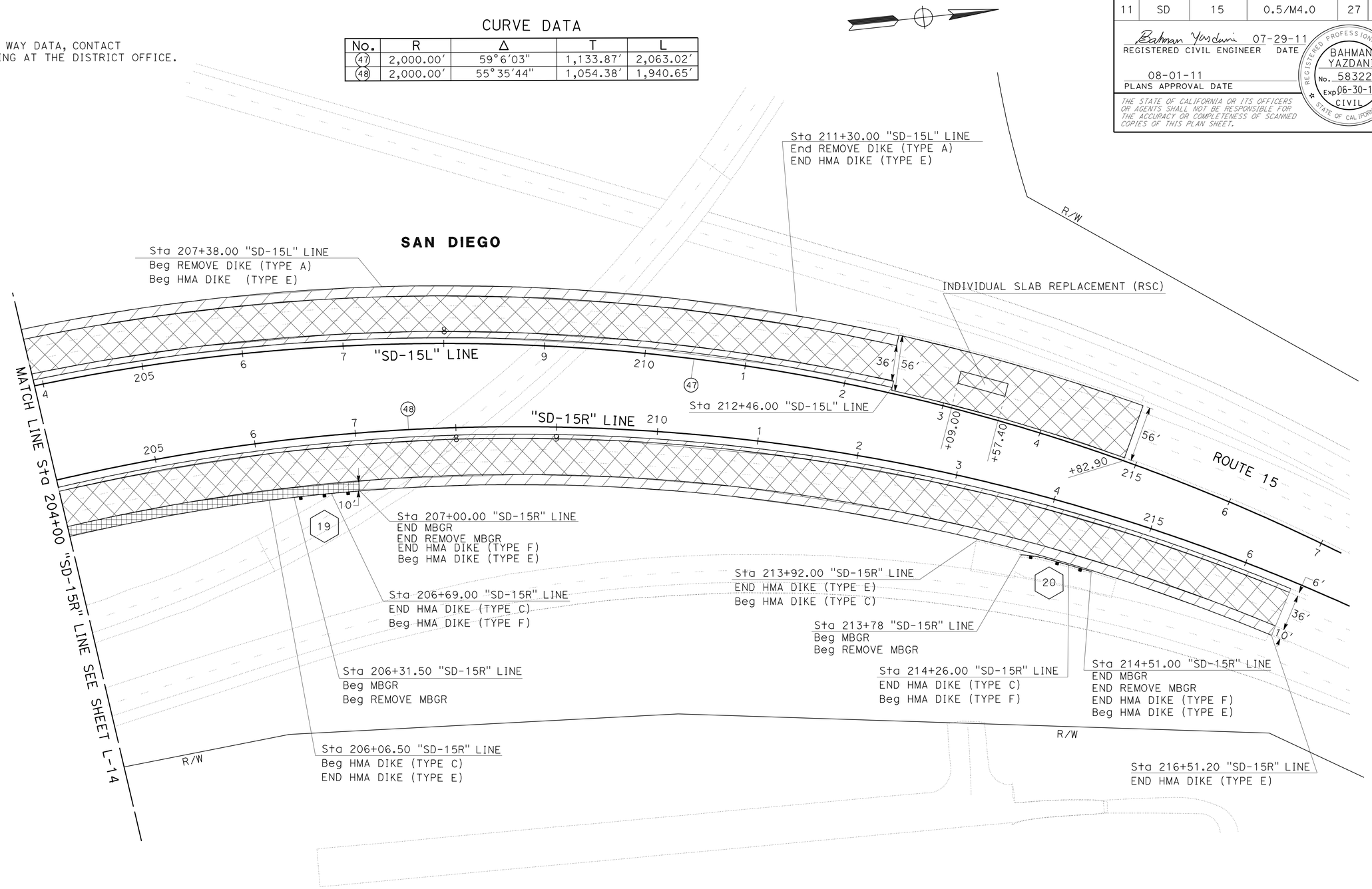

LAYOUT

SCALE: 1" = 50′

L-15

STATE OF CALIFORNIA - DEPARTMENT OF TRANSPORTATION
Caltrans PROJECT DEVELOPMENT

FUNCTIONAL SUPERVISOR: CHRIS M THOMAS
CALCULATED-DESIGNED BY: BAHMAN YAZDANI
CHECKED BY: RICARDO PADILLA
REVISED BY
DATE REVISED

LAST REVISION 09-02-11
DATE PLOTTED => 27-SEP-2011
TIME PLOTTED => 16:10

Dist	COUNTY	ROUTE	POST MILES TOTAL PROJECT	SHEET No.	TOTAL SHEETS
11	SD	15	0.5/M4.0	28	116

Bahman Yazdani 07-29-11
REGISTERED CIVIL ENGINEER DATE

08-01-11
PLANS APPROVAL DATE

REGISTERED PROFESSIONAL ENGINEER
BAHMAN YAZDANI
No. 58322
Exp. 06-30-12
CIVIL
STATE OF CALIFORNIA

THE STATE OF CALIFORNIA OR ITS OFFICERS OR AGENTS SHALL NOT BE RESPONSIBLE FOR THE ACCURACY OR COMPLETENESS OF SCANNED COPIES OF THIS PLAN SHEET.

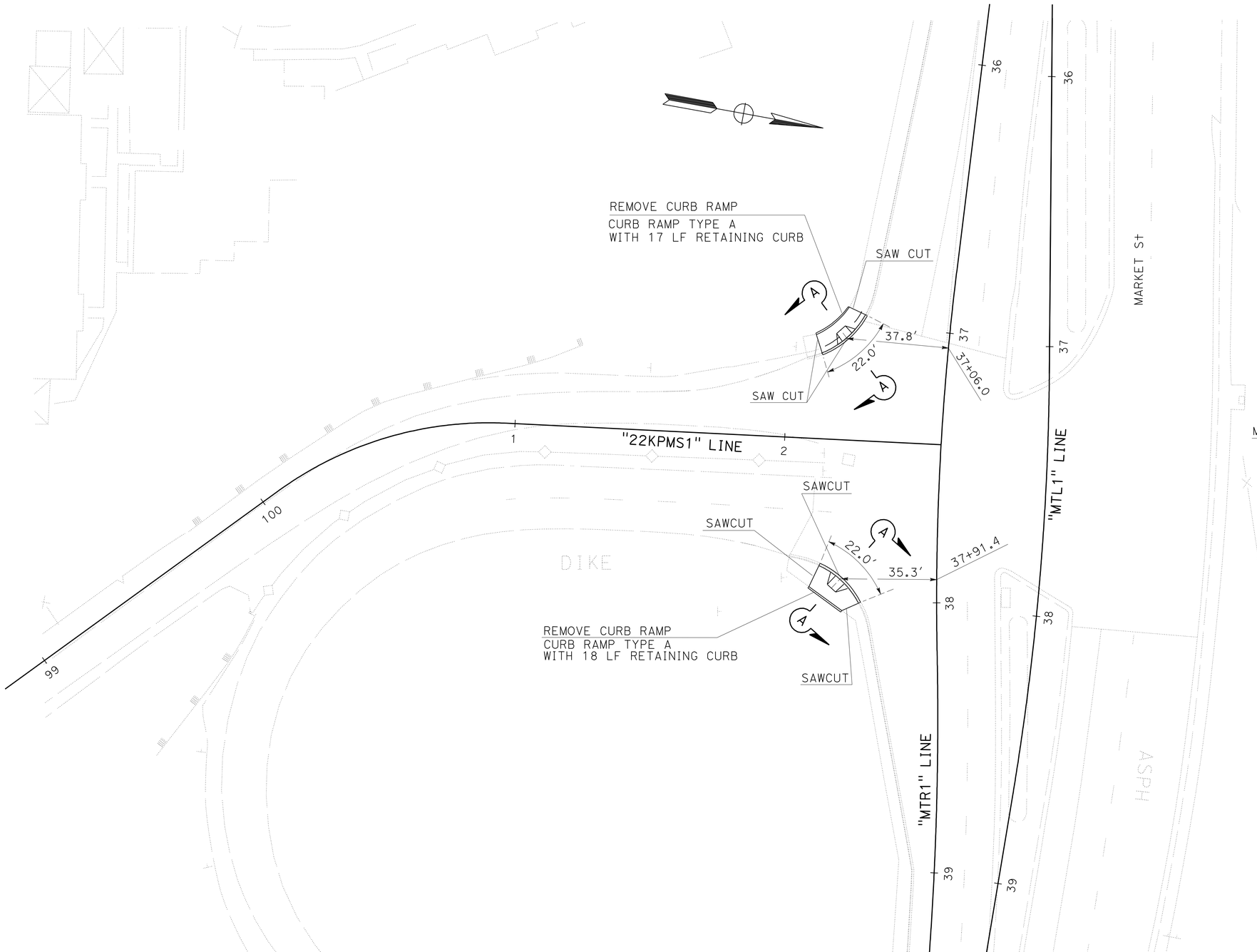

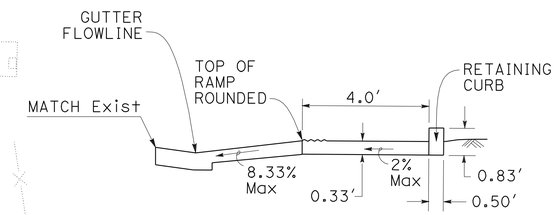

SECTION A-A
NO SCALE

CURB RAMPS

SCALE: 1" = 20'

CONSTRUCTION DETAILS

SCALE AS SHOWN

C-1

REVISED BY	DATE REVISED

CALCULATED-DESIGNED BY	CHECKED BY
BAHMAN YAZDANI	RICARDO PADILLA

FUNCTIONAL SUPERVISOR: BRUCE LAMBERT

STATE OF CALIFORNIA - DEPARTMENT OF TRANSPORTATION
Caltrans
DESIGN

LAST REVISION 09-13-11
DATE PLOTTED => 27-SEP-2011
TIME PLOTTED => 16:11

Dist	COUNTY	ROUTE	POST MILES TOTAL PROJECT	SHEET No.	TOTAL SHEETS
11	SD	15	0.5/M4.0	29	116

Bahman Yazdani 07-29-11
REGISTERED CIVIL ENGINEER DATE

08-01-11
PLANS APPROVAL DATE

REGISTERED PROFESSIONAL ENGINEER
BAHMAN YAZDANI
No. 58322
Exp 06-30-12
CIVIL
STATE OF CALIFORNIA

THE STATE OF CALIFORNIA OR ITS OFFICERS OR AGENTS SHALL NOT BE RESPONSIBLE FOR THE ACCURACY OR COMPLETENESS OF SCANNED COPIES OF THIS PLAN SHEET.

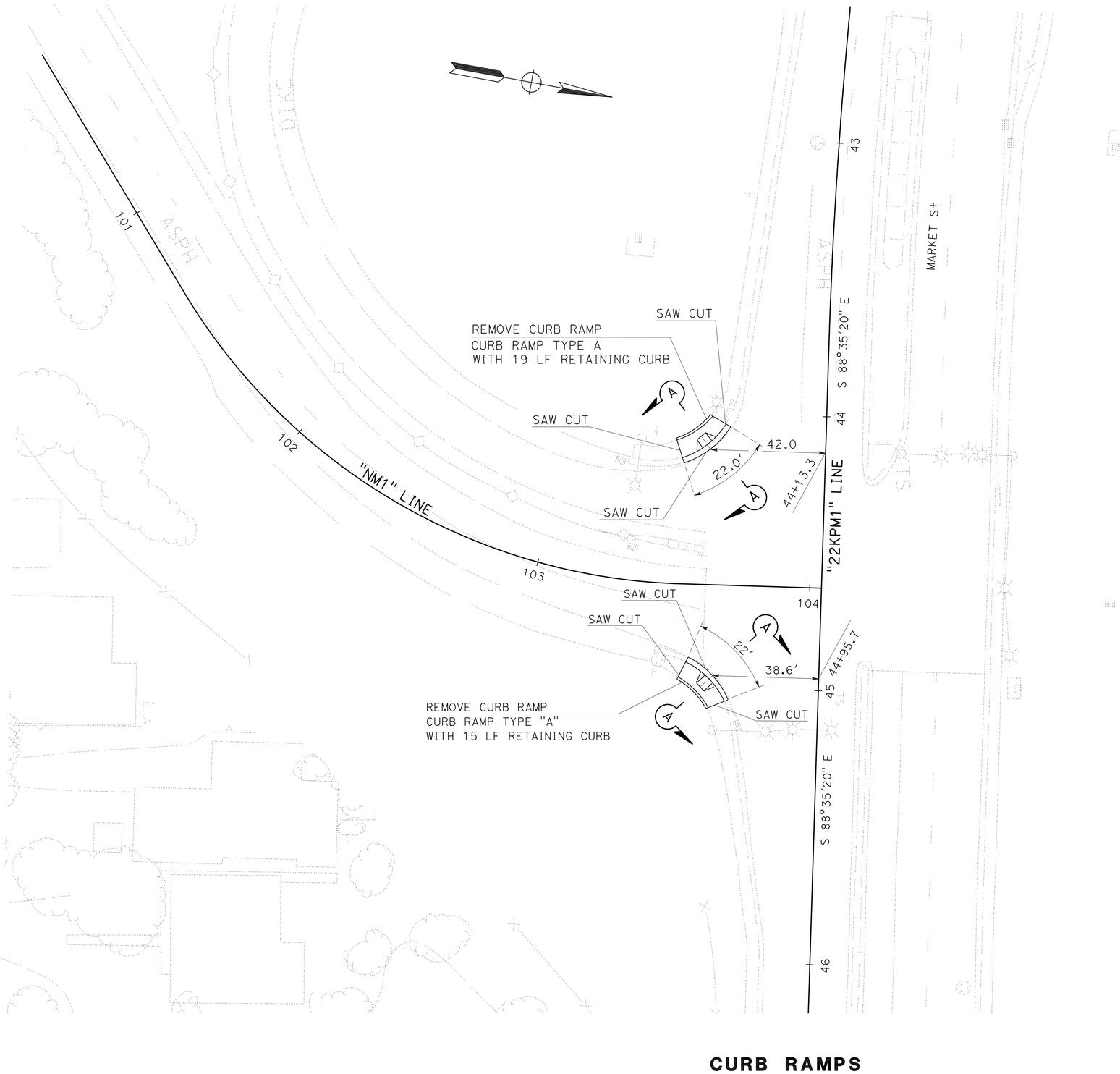

CURB RAMPS

SCALE: 1" = 20'

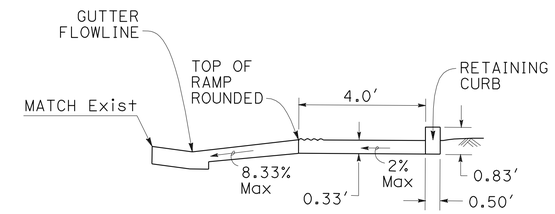

SECTION A-A

NO SCALE

CONSTRUCTION DETAILS

SCALE AS SHOWN

C-2

REVISED BY	DATE REVISED

CALCULATED-DESIGNED BY: BAHMAN YAZDANI
CHECKED BY: RICARDO PADILLA
FUNCTIONAL SUPERVISOR: BRUCE LAMBERT

STATE OF CALIFORNIA - DEPARTMENT OF TRANSPORTATION
Caltrans®
DESIGN

LAST REVISION 09-13-11
DATE PLOTTED => 27-SEP-2011
TIME PLOTTED => 16:11

Dist	COUNTY	ROUTE	POST MILES TOTAL PROJECT	SHEET No.	TOTAL SHEETS
11	SD	15	0.5/M4.0	30	116

Bahman Yazdani 07-29-11
REGISTERED CIVIL ENGINEER DATE

08-01-11
PLANS APPROVAL DATE

REGISTERED PROFESSIONAL ENGINEER BAHMAN YAZDANI No. 58322 Exp. 06-30-12 CIVIL STATE OF CALIFORNIA

THE STATE OF CALIFORNIA OR ITS OFFICERS OR AGENTS SHALL NOT BE RESPONSIBLE FOR THE ACCURACY OR COMPLETENESS OF SCANNED COPIES OF THIS PLAN SHEET.

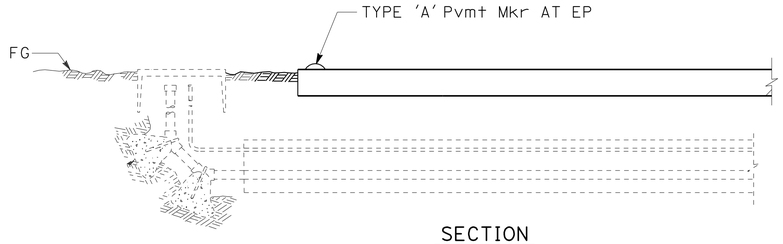

SECTION

Exist IRRIGATION CROSSOVER

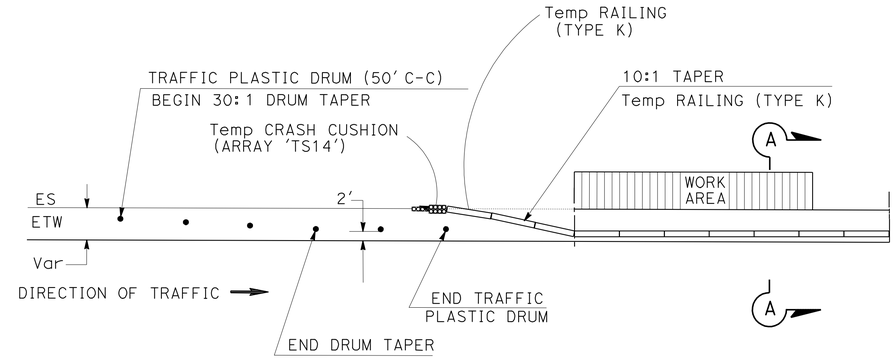

TYPICAL PLACEMENT OF TEMPORARY RAILING (TYPE K)

LEGEND:

- NO JOINT SEAL WORK

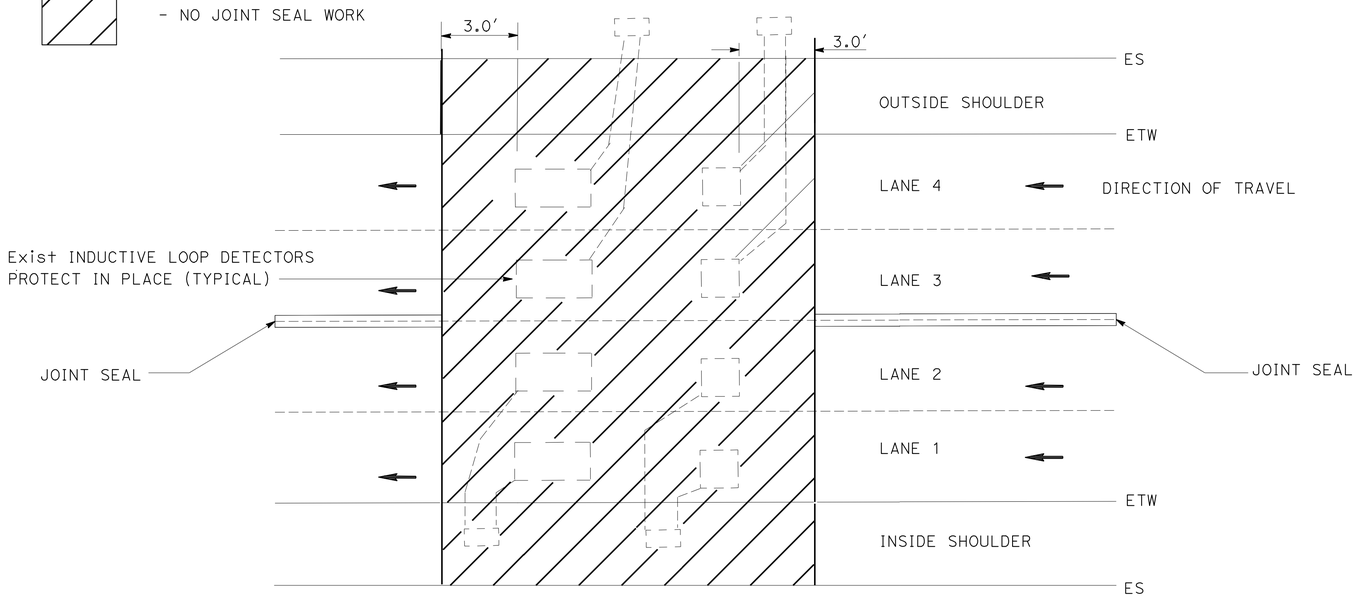

Exist INDUCTIVE LOOP

ROUTE 15

NB & SB - Sta 56+90 "SD-15" LINE
NB & SB - Sta 147+00 "SD-15R" LINE

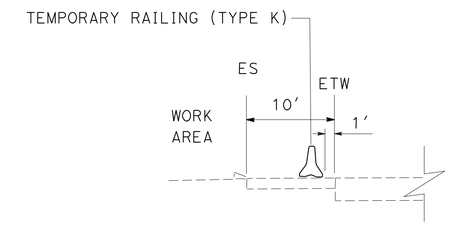

SECTION A-A

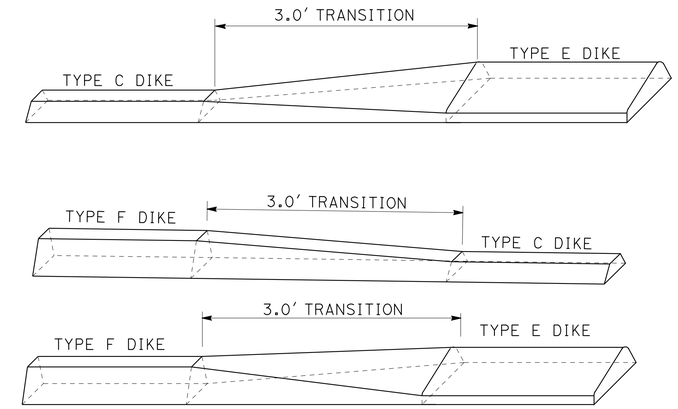

DIKE TRANSITION DETAILS

CONSTRUCTION DETAILS

NO SCALE

C-3

REVISED BY	DATE REVISED

CALCULATED-DESIGNED BY	CHECKED BY
BAHMAN YAZDANI	RICARDO PADILA

FUNCTIONAL SUPERVISOR: CHRIS M THOMAS

STATE OF CALIFORNIA - DEPARTMENT OF TRANSPORTATION
DESIGN
Caltrans

LAST REVISION 09-02-11 | DATE PLOTTED => 27-SEP-2011 | TIME PLOTTED => 16:11

Dist	COUNTY	ROUTE	POST MILES TOTAL PROJECT	SHEET No.	TOTAL SHEETS
11	SD	15	0.5/M4.0	31	116

Bahman Yazdani 07-29-11
REGISTERED CIVIL ENGINEER DATE

08-01-11
PLANS APPROVAL DATE

REGISTERED PROFESSIONAL ENGINEER BAHMAN YAZDANI No. 58322 Exp 06-30-12 CIVIL STATE OF CALIFORNIA

THE STATE OF CALIFORNIA OR ITS OFFICERS OR AGENTS SHALL NOT BE RESPONSIBLE FOR THE ACCURACY OR COMPLETENESS OF SCANNED COPIES OF THIS PLAN SHEET.

LEGEND:

REPAIR SPALLED CONCRETE

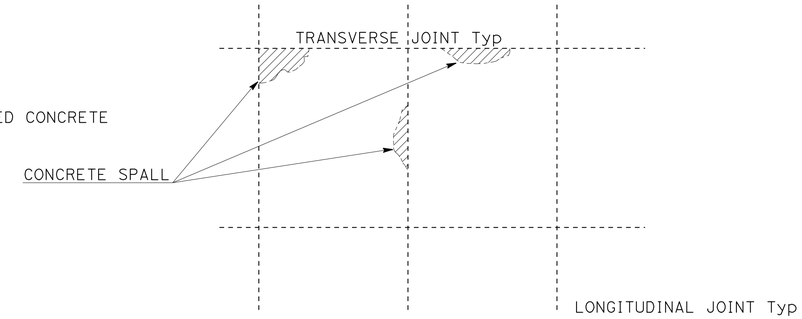

PLAN

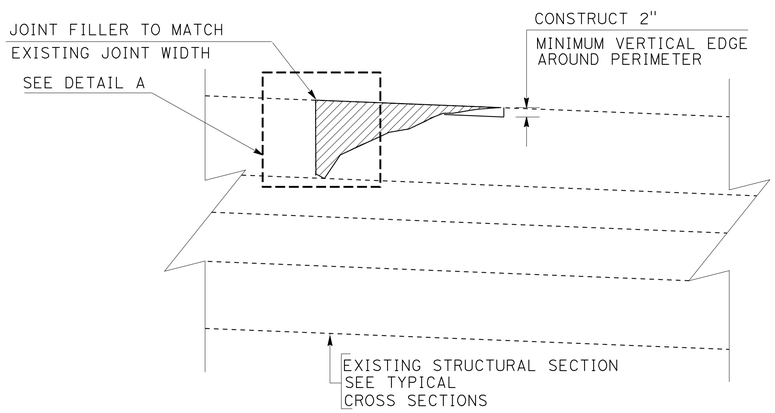

ELEVATION

REPAIR SPALLED JOINTS

(TYPICAL)

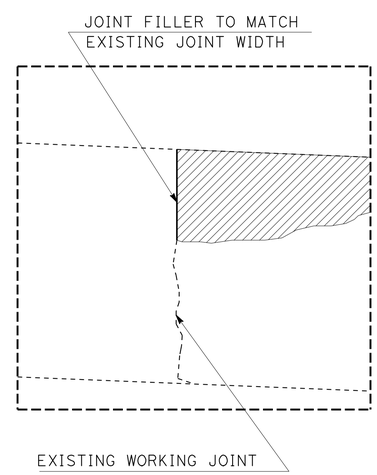

DETAIL A

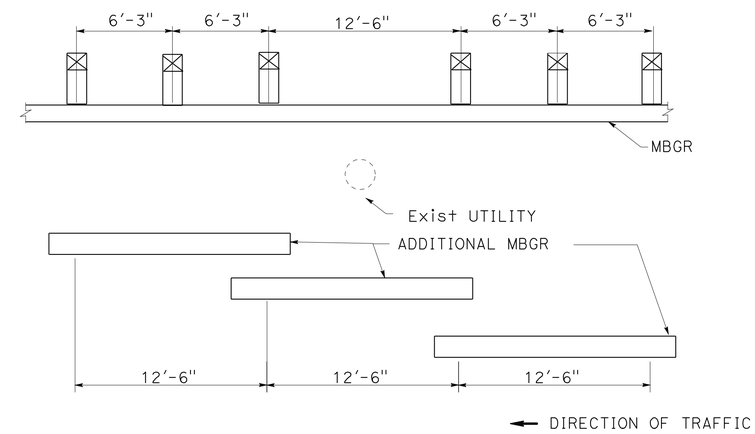

ONE POST OMITTED AT EXISTING UTILITY LOCATIONS (SPLICE AT POST)

DOUBLE MBGR

CONSTRUCTION DETAILS

NO SCALE

C-4

STATE OF CALIFORNIA - DEPARTMENT OF TRANSPORTATION
Caltrans
DESIGN

FUNCTIONAL SUPERVISOR: CHRIS M THOMAS
CALCULATED-DESIGNED BY: BAHMAN YAZDANI
CHECKED BY: RICARDO PADILA
REVISED BY
DATE REVISED

LAST REVISION 09-02-11
DATE PLOTTED => 27-SEP-2011
TIME PLOTTED => 16:11

Dist	COUNTY	ROUTE	POST MILES TOTAL PROJECT	SHEET No.	TOTAL SHEETS
11	SD	15	0.5/M4.0	32	116

Bahman Yazdani 07-29-11
REGISTERED CIVIL ENGINEER DATE

08-01-11
PLANS APPROVAL DATE

REGISTERED PROFESSIONAL ENGINEER BAHMAN YAZDANI No. 58322 Exp. 06-30-12 CIVIL STATE OF CALIFORNIA

THE STATE OF CALIFORNIA OR ITS OFFICERS OR AGENTS SHALL NOT BE RESPONSIBLE FOR THE ACCURACY OR COMPLETENESS OF SCANNED COPIES OF THIS PLAN SHEET.

NOTES:

1. FOR DETAILS NOT SHOWN, SEE REVISED STANDARD PLANS A77J4.
2. DEPENDENT DIMENSIONS WILL BE VERIFIED IN THE FIELD BEFORE FABRICATING ANY END CONNECTION TO CONFORM WITH EXISTING PAVED CONDITIONS.
3. ALL PLATES AND BOLTS ARE GALVANIZED.

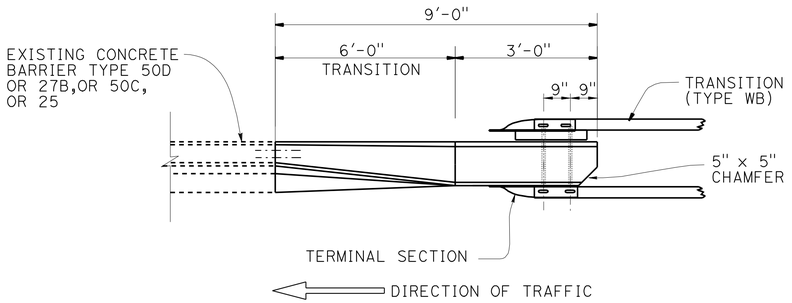

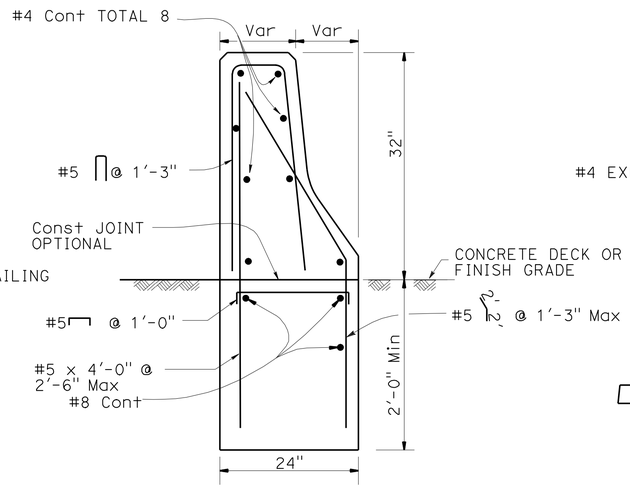

SECTION B-B

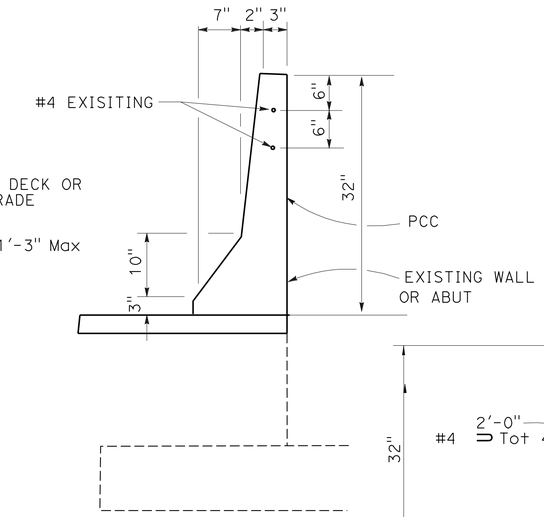

Exist CONCRETE BARRIER
TYPE 50D

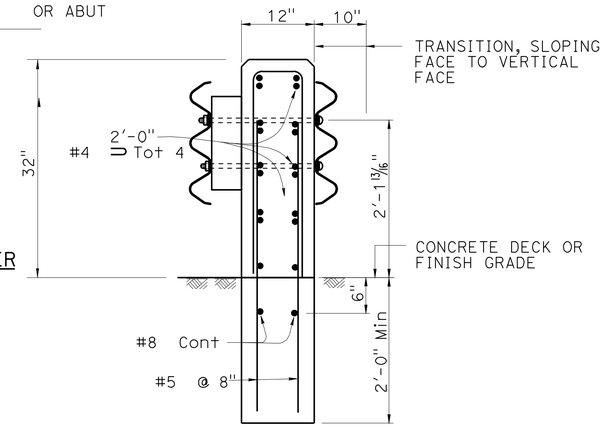

SECTION A-A

PLAN

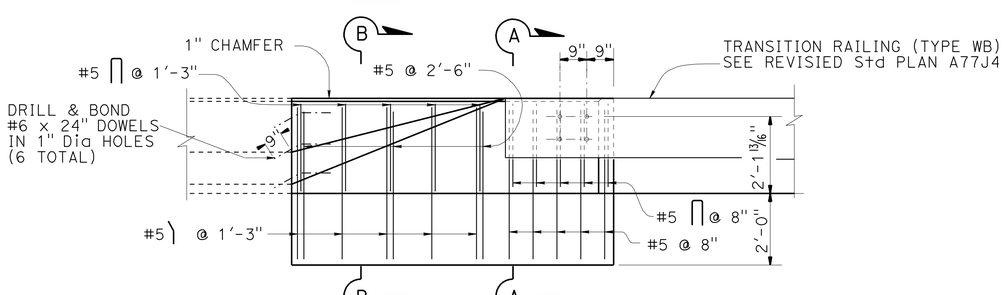

ELEVATION

ANCHOR BLOCK

NB 15 "D-7" FROM Sta 43+86.0 TO Sta 43+95.0
NB 15 "D-7" FROM Sta 43+86.0 TO Sta 43+95.0
NB 15 "SD-15" FROM Sta 81+51.0 TO Sta 81+60.0
NB 15 "SD-15" FROM Sta 88+19.0 TO Sta 88+28.0
NB 15 "SD-15" FROM Sta 100+86.0 TO Sta 100+95.0
NB 15 "MNB1" FROM Sta 101+39.5 TO Sta 101+48.5
NB 15 "MNB1" FROM Sta 101+39.5 TO Sta 101+48.5
NB 15 "SD-15" FROM Sta 114+32.0 TO Sta 114+41.0
NB 15 "SD-15" FROM Sta 119+67.6 TO Sta 119+77.0
NB 15 "SD-15" FROM Sta 122+69 TO Sta 122+78
SB 15 "SM12" FROM Sta 108+22.5 TO 108+31.5
SB 15 "22KPMS1" FROM Sta 99+60.0 TO Sta 99+69.0
SB 15 "04R" FROM Sta 70+06.0 TO 70+15.0
SB 15 "04R" FROM Sta 71+56.0 TO 71+65.0
SB 15 "03" FROM Sta 70+10.5 TO 70+19.5
SB 15 "SD-15" FROM Sta 64+80 TO 64+89
SB 15 "SD-15L" FROM Sta 184+43 TO 184+52
SB 15 "SD-15" FROM Sta 123+40 TO 123+49

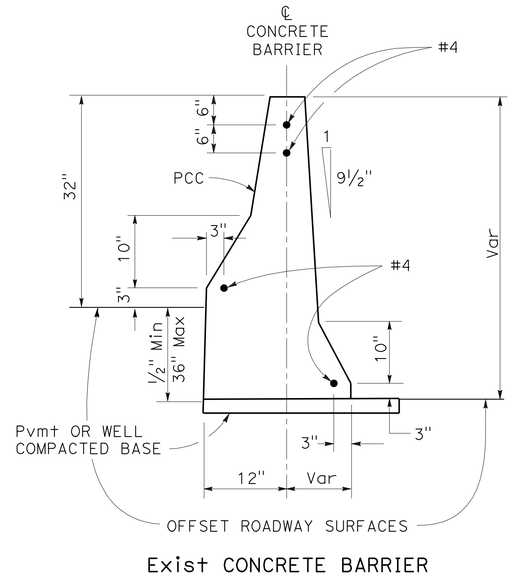

Exist CONCRETE BARRIER
TYPE 50C

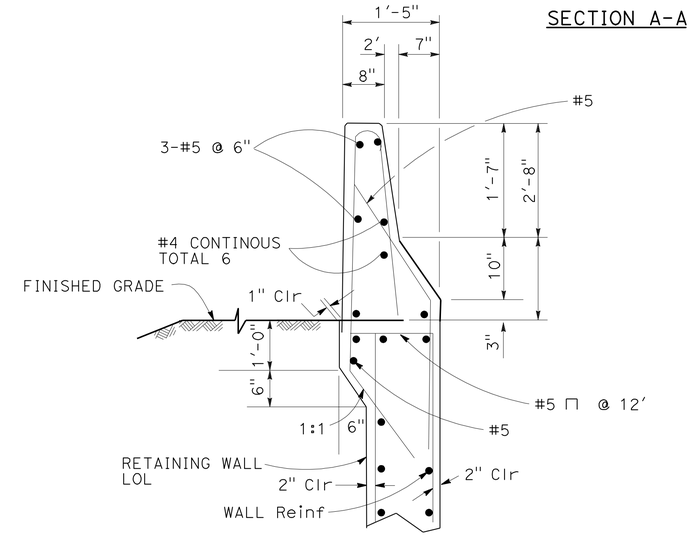

Exist TYPE 27B

CONSTRUCTION DETAILS

NO SCALE

C-5

STATE OF CALIFORNIA - DEPARTMENT OF TRANSPORTATION
Caltrans DESIGN
FUNCTIONAL SUPERVISOR BRUCE LAMBERT
BAHMAN YAZDANI DEBORAH YOST
CALCULATED-DESIGNED BY CHECKED BY
REVISED BY DATE REVISED

LAST REVISION 09-14-11
DATE PLOTTED => TIME PLOTTED => 16:11

Dist	COUNTY	ROUTE	POST MILES TOTAL PROJECT	SHEET No.	TOTAL SHEETS
11	SD	15	0.5/M4.0	33	116

Bahman Yazdani 07-29-11
REGISTERED CIVIL ENGINEER DATE

08-01-11
PLANS APPROVAL DATE

REGISTERED PROFESSIONAL ENGINEER
BAHMAN YAZDANI
No. 58322
Exp. 06-30-12
CIVIL
STATE OF CALIFORNIA

THE STATE OF CALIFORNIA OR ITS OFFICERS OR AGENTS SHALL NOT BE RESPONSIBLE FOR THE ACCURACY OR COMPLETENESS OF SCANNED COPIES OF THIS PLAN SHEET.

TEMPORARY WATER POLLUTION CONTROL QUANTITIES

DIRECTION	ROUTE	SIDE	LINE	STATION	TEMPORARY DRAINAGE INLET PROTECTION (TYPE 3A) EA	TEMPORARY DRAINAGE INLET PROTECTION (TYPE 3B) EA
NB	15	R+	"SD-15"	56+00.00	1	
NB	15	R+	"SD-15"	59+60.84		1
NB	15	R+	"O2"	64+76.70	1	
NB	15	R+	"O2"	64+79.92	1	
NB	15	R+	"SD-15R"	68+40.20		1
NB	15	R+	"SD-15R"	71+14.55	1	
NB	15	R+	"SD-15R"	71+51.97	1	
NB	15	R+	"SD-15R"	71+89.57	1	
NB	15	R+	"SD-15"	75+74.01	1	
NB	15	R+	"SD-15"	77+94.74	1	
NB	15	R+	"SD-15"	90+38.99	1	
NB	15	R+	"SD-15"	91+23.89	1	
NB	15	R+	"NM1"	95+85.04	1	
NB	15	R+	"SD-15"	96+75.52	1	
NB	15	R+	"NM1"	96+62.23	1	
NB	15	R+	"SD-15"	104+9.77	1	
NB	15	R+	"SD-15"	107+70.83	1	
NB	15	R+	"SD-15"	109+19.77	1	
NB	15	R+	"SD-15"	116+9.37	1	
NB	15	R+	"SD-15"	118+17.00	1	
NB	15	R+	"SD-15"	121+42.17	1	
NB	15	R+	"SD-15"	122+28.75	1	
NB	15	R+	"SD-15"	124+55.18	1	
NB	15	R+	"SD-15"	125+92.77	1	
NB	15	R+	"SD-15"	125+97.54		1
NB	15	R+	"SD-15"	134+58.00	1	
NB	15	R+	"WN10"	216+76.41	1	
NB	15	R+	"SD-15"	138+48.97	1	
NB	15	R+	"SD-15"	142+19.97	1	
NB	15	R+	"SD-15R"	151+76.07	1	
NB	15	L+	"SD-15R"	160+39.82	1	
NB	15	L+	"SD-15R"	160+49.67	1	
NB	15	L+	"SD-15R"	160+53.17	1	
NB	15	L+	"SD-15R"	162+76.71	1	
NB	15	L+	"SD-15R"	162+79.16	1	
NB	15	L+	"SD-15R"	162+90.10	1	
NB	15	L+	"SD-15R"	172+53.85	1	
NB	15	L+	"SD-15R"	172+66.12	1	
NB	15	R+	"SD-15R"	182+96.51	1	
NB	15	R+	"SD-15R"	187+22.01	1	
NB	15	R+	"SD-15R"	190+62.52	1	
NB	15	R+	"SD-15R"	190+65.33	1	
NB	15	R+	"SD-15R"	197+56.96	1	
NB	15	R+	"SD-15R"	202+88.28	1	
NB	15	R+	"SD-15R"	206+28.10	1	
NB	15	R+	"SD-15R"	207+61.93	1	
NB	15	R+	"SD-15R"	215+86.47	1	
NB	15	R+	"SD-15R"	216+61.32	1	
				SUBTOTAL	45	3
				SUB TOTAL 1	48	

TEMPORARY WATER POLLUTION CONTROL QUANTITIES

DIRECTION	ROUTE	SIDE	LINE	STATION	TEMPORARY DRAINAGE INLET PROTECTION (TYPE 3A) EA
SB	15	L+	"SD-15"	55+29.39	1
SB	15	L+	"SD-15"	59+47.78	1
SB	15	L+	"SD-15"	68+61.14	1
SB	15	L+	"SD-15"	90+34.83	1
SB	15	L+	"SD-15"	90+61.97	1
SB	15	L+	"SD-15"	90+84.91	1
SB	15	L+	"SD-15"	107+9.52	1
SB	94	L+	"SD-15"	109+16.23	1
SB	15	L+	"SD-15"	111+93.62	1
SB	15	L+	"SD-15"	114+19.11	1
SB	15	L+	"SD-15"	114+49.57	1
SB	15	L+	"SD-15"	114+81.90	1
SB	15	L+	"SD-15"	116+4.23	1
SB	15	L+	"SD-15"	117+47.19	1
SB	15	L+	"SD-15"	121+44.94	1
SB	15	L+	"SD-15"	121+51.74	1
SB	15	L+	"SD-15"	124+55.20	1
SB	15	L+	"SD-15"	128+42.00	1
SB	15	L+	"SD-15"	128+58.00	1
SB	15	L+	"NWX1"	204+82.19	1
SB	15	L+	"SD-15"	134+57.87	1
SB	15	L+	"SD-15"	138+48.95	1
SB	15	L+	"SD-15"	140+47.07	1
SB	15	L+	"SD-15"	142+17.11	1
SB	15	L+	"SD-15"	142+67.61	1
SB	15	R+	"SD-15L"	151+76.70	1
SB	15	L+	"SD-15L"	151+76.90	1
SB	15	L+	"SD-15L"	160+42.99	1
SB	15	L+	"SD-15L"	162+69.93	1
SB	15	L+	"SD-15L"	169+40.24	1
SB	15	L+	"SD-15L"	186+42.10	1
SB	15	R+	"SD-15L"	190+32.74	1
SB	15	L+	"SD-15L"	191+10.61	1
SB	15	L+	"SD-15L"	197+75.50	1
SB	15	L+	"SD-15L"	206+53.31	1
				SUB TOTAL 2	35
				SUB TOTAL 1	48
				TOTAL	83

TEMPORARY WATER POLUTION CONTROL QUANTITIES

WPCQ-1

STATE OF CALIFORNIA - DEPARTMENT OF TRANSPORTATION
Caltrans
DESIGN

FUNCTIONAL SUPERVISOR: CHRIS M THOMAS
CALCULATED-DESIGNED BY: BAHMAN YAZDANI
CHECKED BY: RICARDO PADILA
REVISED BY
DATE REVISED

LAST REVISION 09-02-11
DATE PLOTTED => 27-SEP-2011
TIME PLOTTED => 16:11

Dist	COUNTY	ROUTE	POST MILES TOTAL PROJECT	SHEET No.	TOTAL SHEETS
11	SD	15	0.5/M4.0	34	116

Simon Tse 07-29-11
REGISTERED CIVIL ENGINEER DATE

08-01-11
PLANS APPROVAL DATE

REGISTERED PROFESSIONAL ENGINEER SIMON TSE No. C66401 Exp. 6-30-12 CIVIL STATE OF CALIFORNIA

THE STATE OF CALIFORNIA OR ITS OFFICERS OR AGENTS SHALL NOT BE RESPONSIBLE FOR THE ACCURACY OR COMPLETENESS OF SCANNED COPIES OF THIS PLAN SHEET.

NOTES:

1. LOCATION OF UTILITY FACILITIES SHOWN ON THESE PLANS WERE OBTAINED EITHER FROM THE OWNER'S RECORDS AND/OR FROM STATE SURVEYS.
2. LOCATION OF UTILITY LINES SHOWN ON THESE PLANS ARE APPROXIMATE. THE CONTRACTOR IS TO FIELD VERIFY OR POTHOLE IN ORDER TO DETERMINE EXACT LOCATION.
3. FOR ACCURATE RIGHT OF WAY DATA, CONTACT RIGHT OF WAY ENGINEERING AT THE DISTRICT OFFICE.

LEGEND:

SYMBOL	EXISTING UTILITY	OWNER
CABLE LINE	—---tv—— ——— ———---tv——	COX CABLE
CABLE OVERHEAD LINE	—--- tv —— ——— ———---(on)—	COX CABLE
ELECTRIC UNDERGROUND LINE	——— -e——— ———-e—	SDG&E
WATER LINE	- ——w——— ——— ———w—	CITY OF SAN DIEGO
TELEPHONE UNDER GROUND LINE	———--t——— ———--t—	ATT
GAS LINE	———-g———-———-g—	SDG&E
SEWER LINE	———--s———--———--s-	CITY OF SAN DIEGO

ABBREVIATIONS:

HPG	HIGH PRESSURE GAS
RCSC	REINFORCED CONCRETE STEEL CYLINDER
DIP	DUCTILE IRON PIPE

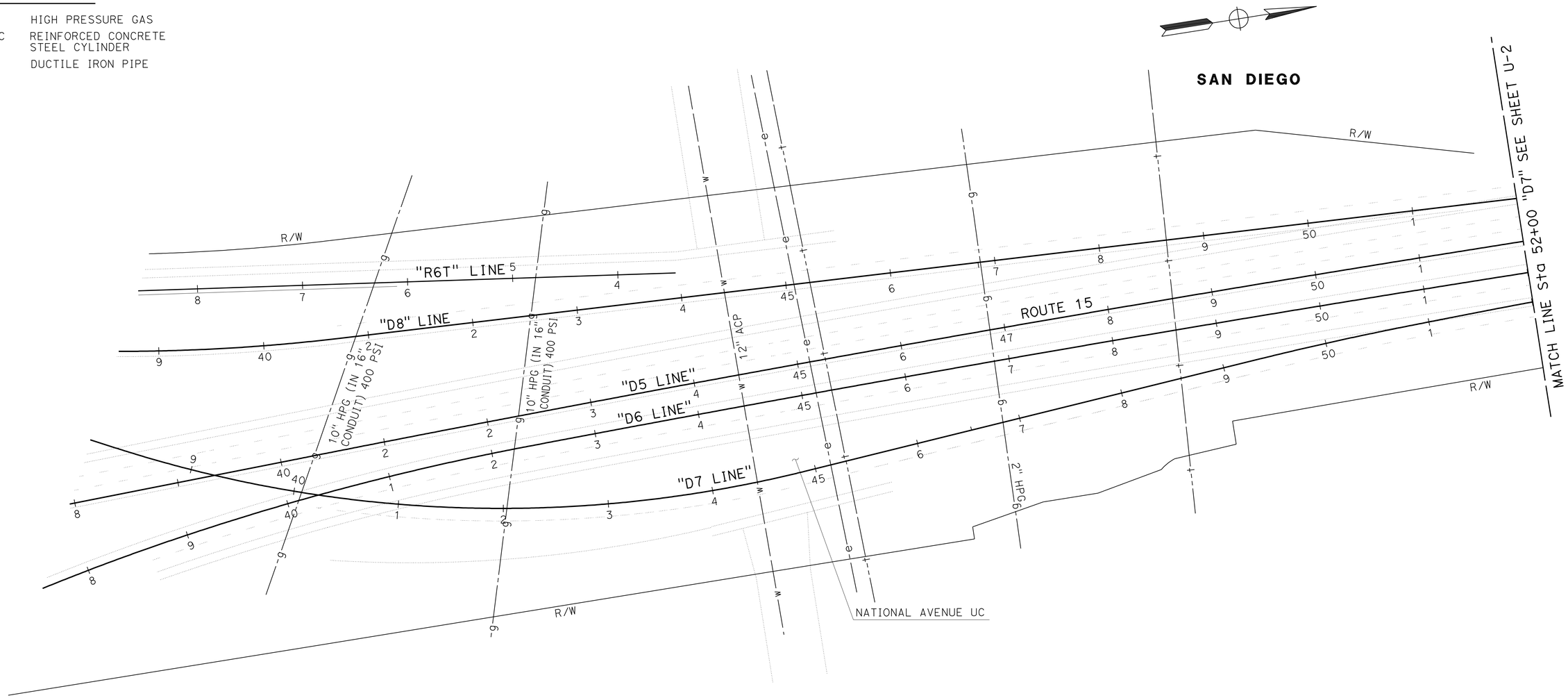

THIS PLAN ACCURATE FOR UTILITY INFORMATION ONLY.

UTILITY PLAN

SCALE: 1" = 50'

U-1

STATE OF CALIFORNIA - DEPARTMENT OF TRANSPORTATION
Caltrans PROJECT DEVELOPMENT

FUNCTIONAL SUPERVISOR: ABU-BAKR AL-JAFRI
CALCULATED-DESIGNED BY: ANH HOANG
CHECKED BY: SIMON TSE
REVISED BY
DATE REVISED

LAST REVISION 09-14-11
DATE PLOTTED => 27-SEP-2011
TIME PLOTTED => 16:11

Dist	COUNTY	ROUTE	POST MILES TOTAL PROJECT	SHEET No.	TOTAL SHEETS
11	SD	15	0.5/M4.0	35	116

REGISTERED CIVIL ENGINEER DATE 07-29-11

PLANS APPROVAL DATE 08-01-11

REGISTERED PROFESSIONAL ENGINEER SIMON TSE No. C66401 Exp. 6-30-12 CIVIL STATE OF CALIFORNIA

THE STATE OF CALIFORNIA OR ITS OFFICERS OR AGENTS SHALL NOT BE RESPONSIBLE FOR THE ACCURACY OR COMPLETENESS OF SCANNED COPIES OF THIS PLAN SHEET.

NOTES:

1. LOCATION OF UTILITY FACILITIES SHOWN ON THESE PLANS WERE OBTAINED EITHER FROM THE OWNER'S RECORDS AND/OR FROM STATE SURVEYS.
2. LOCATION OF UTILITY LINES SHOWN ON THESE PLANS ARE APPROXIMATE. THE CONTRACTOR IS TO FIELD VERIFY OR POTHOLE IN ORDER TO DETERMINE EXACT LOCATION.
3. FOR ACCURATE RIGHT OF WAY DATA, CONTACT RIGHT OF WAY ENGINEERING AT THE DISTRICT OFFICE.

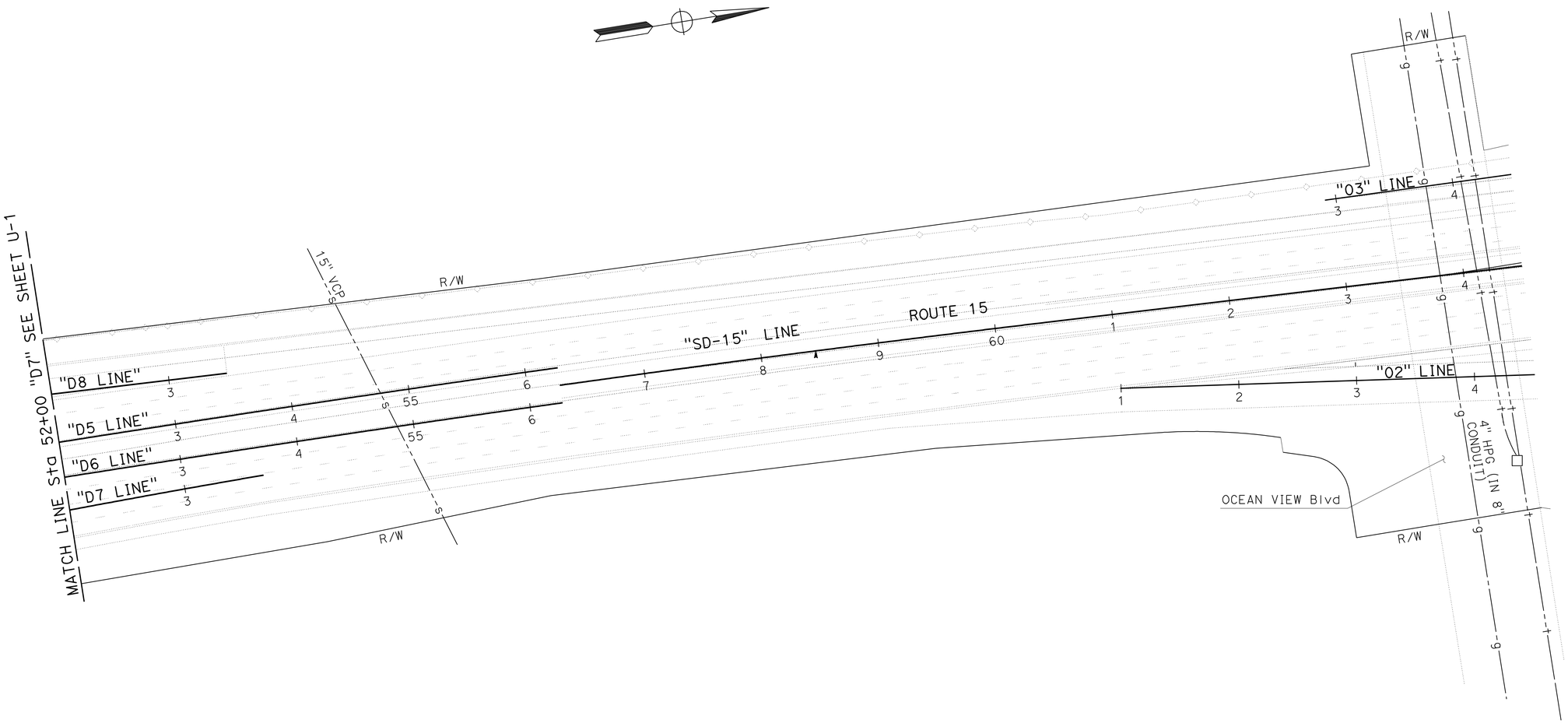

THIS PLAN ACCURATE FOR UTILITY INFORMATION ONLY.

SCALE: 1" = 50'

UTILITY PLAN

U-2

STATE OF CALIFORNIA - DEPARTMENT OF TRANSPORTATION

Caltrans PROJECT DEVELOPMENT

FUNCTIONAL SUPERVISOR: ABU-BAKR AL-JAFRI

CALCULATED-DESIGNED BY: ANH HOANG

CHECKED BY: SIMON TSE

REVISED BY

DATE REVISED

LAST REVISION 09-14-11

DATE PLOTTED => 27-SEP-2011

TIME PLOTTED => 16:11

Dist	COUNTY	ROUTE	POST MILES TOTAL PROJECT	SHEET No.	TOTAL SHEETS
11	SD	15	0.5/M4.0	36	116

Simon Tse 07-29-11
REGISTERED CIVIL ENGINEER DATE

08-01-11
PLANS APPROVAL DATE

REGISTERED PROFESSIONAL ENGINEER
SIMON TSE
No. C66401
Exp. 6-30-12
CIVIL
STATE OF CALIFORNIA

THE STATE OF CALIFORNIA OR ITS OFFICERS OR AGENTS SHALL NOT BE RESPONSIBLE FOR THE ACCURACY OR COMPLETENESS OF SCANNED COPIES OF THIS PLAN SHEET.

NOTES:

1. LOCATION OF UTILITY FACILITIES SHOWN ON THESE PLANS WERE OBTAINED EITHER FROM THE OWNER'S RECORDS AND/OR FROM STATE SURVEYS.
2. LOCATION OF UTILITY LINES SHOWN ON THESE PLANS ARE APPROXIMATE. THE CONTRACTOR IS TO FIELD VERIFY OR POTHOLE IN ORDER TO DETERMINE EXACT LOCATION.
3. FOR ACCURATE RIGHT OF WAY DATA, CONTACT RIGHT OF WAY ENGINEERING AT THE DISTRICT OFFICE.

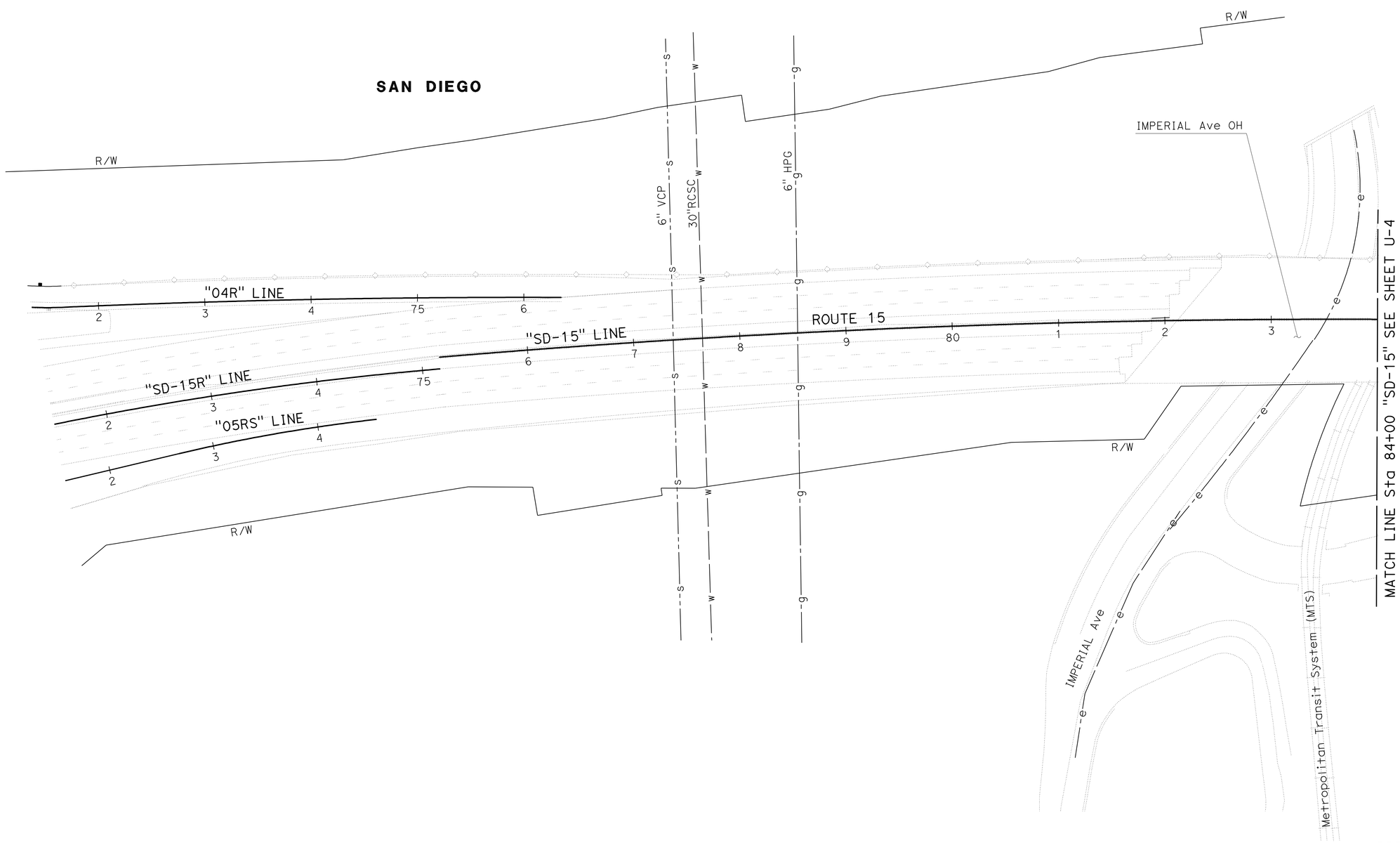

THIS PLAN ACCURATE FOR UTILITY INFORMATION ONLY.

SCALE: 1" = 50'

UTILITY PLAN

U-3

REVISED BY | DATE REVISED
ANH HOANG | SIMON TSE
CALCULATED-DESIGNED BY | CHECKED BY
FUNCTIONAL SUPERVISOR
ABU-BAKR AL-JAFRI

STATE OF CALIFORNIA - DEPARTMENT OF TRANSPORTATION
Caltrans PROJECT DEVELOPMENT

LAST REVISION 09-14-11 | DATE PLOTTED => 27-SEP-2011 | TIME PLOTTED => 16:11

Dist	COUNTY	ROUTE	POST MILES TOTAL PROJECT	SHEET No.	TOTAL SHEETS
11	SD	15	0.5/M4.0	37	116

Simon Tse 07-29-11
REGISTERED CIVIL ENGINEER DATE

08-01-11
PLANS APPROVAL DATE

REGISTERED PROFESSIONAL ENGINEER
SIMON TSE
No. C66401
Exp. 6-30-12
CIVIL
STATE OF CALIFORNIA

THE STATE OF CALIFORNIA OR ITS OFFICERS OR AGENTS SHALL NOT BE RESPONSIBLE FOR THE ACCURACY OR COMPLETENESS OF SCANNED COPIES OF THIS PLAN SHEET.

NOTES:

1. LOCATION OF UTILITY FACILITIES SHOWN ON THESE PLANS WERE OBTAINED EITHER FROM THE OWNER'S RECORDS AND/OR FROM STATE SURVEYS.
2. LOCATION OF UTILITY LINES SHOWN ON THESE PLANS ARE APPROXIMATE. THE CONTRACTOR IS TO FIELD VERIFY OR POTHOLE IN ORDER TO DETERMINE EXACT LOCATION.
3. FOR ACCURATE RIGHT OF WAY DATA, CONTACT RIGHT OF WAY ENGINEERING AT THE DISTRICT OFFICE.

SAN DIEGO

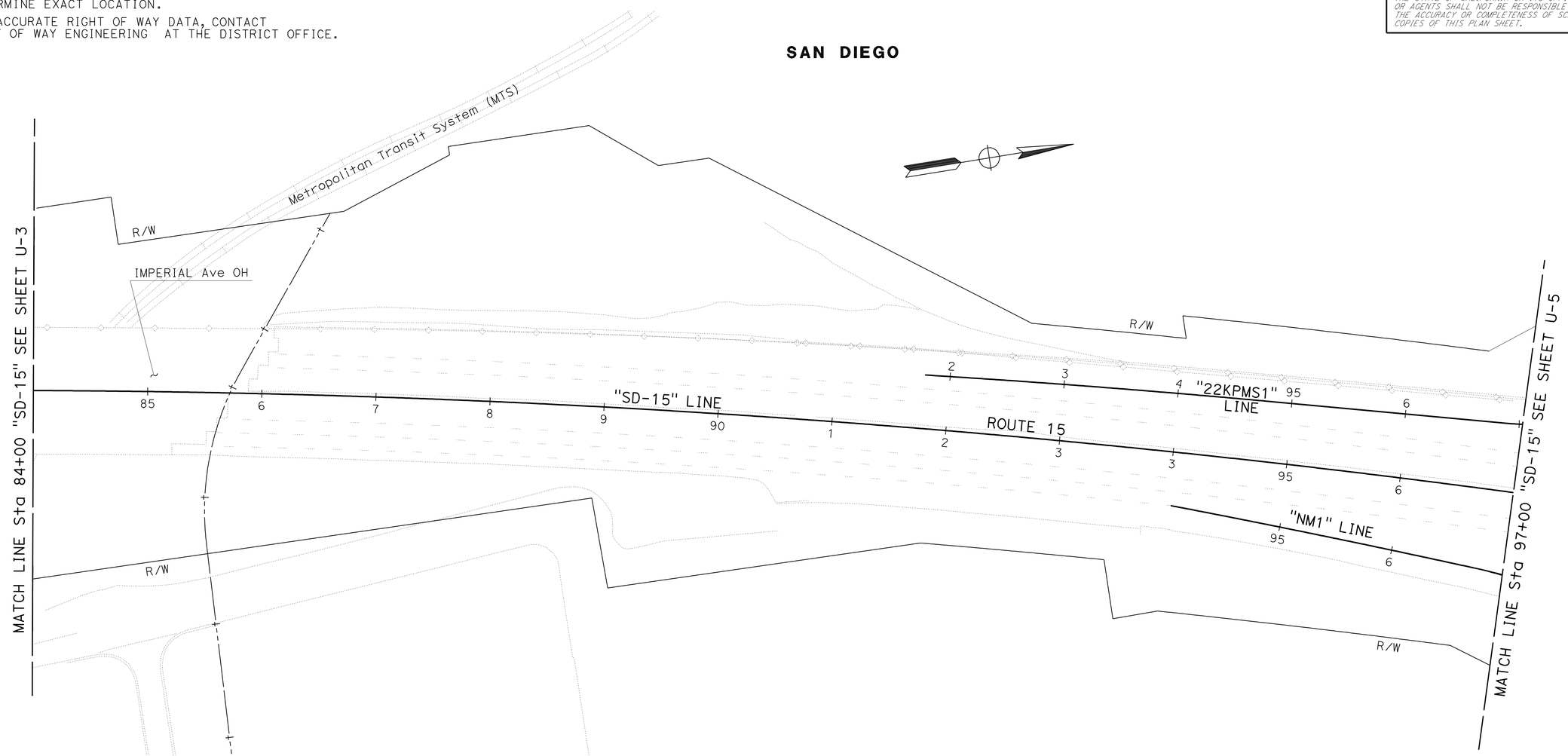

THIS PLAN ACCURATE FOR UTILITY INFORMATION ONLY.

SCALE: 1" = 50'

UTILITY PLAN

U-4

STATE OF CALIFORNIA - DEPARTMENT OF TRANSPORTATION
Caltrans PROJECT DEVELOPMENT

FUNCTIONAL SUPERVISOR: ABU-BAKR AL-JAFRI
CALCULATED-DESIGNED BY: ANH HOANG
CHECKED BY: SIMON TSE
REVISED BY
DATE REVISED

LAST REVISION 09-14-11
DATE PLOTTED => 27-SEP-2011
TIME PLOTTED => 16:11

Dist	COUNTY	ROUTE	POST MILES TOTAL PROJECT	SHEET No.	TOTAL SHEETS
11	SD	15	0.5/M4.0	38	116

REGISTERED CIVIL ENGINEER 07-29-11 DATE

08-01-11
PLANS APPROVAL DATE

REGISTERED PROFESSIONAL ENGINEER SIMON TSE No. C66401 Exp. 6-30-12 CIVIL STATE OF CALIFORNIA

THE STATE OF CALIFORNIA OR ITS OFFICERS OR AGENTS SHALL NOT BE RESPONSIBLE FOR THE ACCURACY OR COMPLETENESS OF SCANNED COPIES OF THIS PLAN SHEET.

NOTES:

1. LOCATION OF UTILITY FACILITIES SHOWN ON THESE PLANS WERE OBTAINED EITHER FROM THE OWNER'S RECORDS AND/OR FROM STATE SURVEYS.
2. LOCATION OF UTILITY LINES SHOWN ON THESE PLANS ARE APPROXIMATE. THE CONTRACTOR IS TO FIELD VERIFY OR POTHOLE IN ORDER TO DETERMINE EXACT LOCATION.
3. FOR ACCURATE RIGHT OF WAY DATA, CONTACT RIGHT OF WAY ENGINEERING AT THE DISTRICT OFFICE.

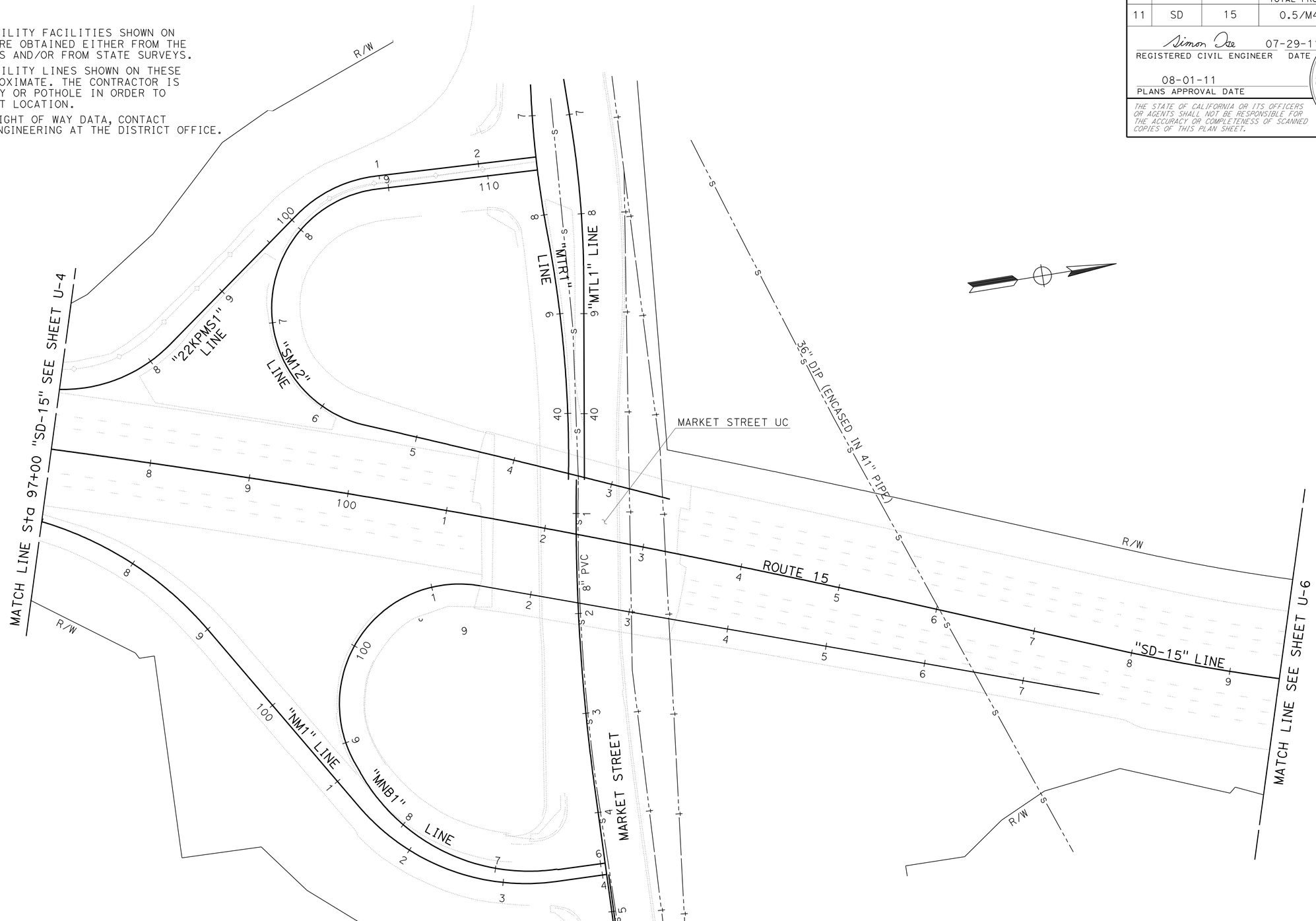

THIS PLAN ACCURATE FOR UTILITY INFORMATION ONLY.

SCALE: 1" = 50'

UTILITY PLAN

U-5

STATE OF CALIFORNIA - DEPARTMENT OF TRANSPORTATION
Caltrans PROJECT DEVELOPMENT

FUNCTIONAL SUPERVISOR: ABU-BAKR AL-JAFRI
CALCULATED-DESIGNED BY: ANH HOANG
CHECKED BY: SIMON TSE
REVISED BY
DATE REVISED

LAST REVISION 09-14-11
DATE PLOTTED => 27-SEP-2011
TIME PLOTTED => 16:11

Dist	COUNTY	ROUTE	POST MILES TOTAL PROJECT	SHEET No.	TOTAL SHEETS
11	SD	15	0.5/M4.0	39	116

Simon Tse 07-29-11
REGISTERED CIVIL ENGINEER DATE

08-01-11
PLANS APPROVAL DATE

REGISTERED PROFESSIONAL ENGINEER SIMON TSE No. C66401 Exp. 6-30-12 CIVIL STATE OF CALIFORNIA

THE STATE OF CALIFORNIA OR ITS OFFICERS OR AGENTS SHALL NOT BE RESPONSIBLE FOR THE ACCURACY OR COMPLETENESS OF SCANNED COPIES OF THIS PLAN SHEET.

NOTES:

1. LOCATION OF UTILITY FACILITIES SHOWN ON THESE PLANS WERE OBTAINED EITHER FROM THE OWNER'S RECORDS AND/OR FROM STATE SURVEYS.
2. LOCATION OF UTILITY LINES SHOWN ON THESE PLANS ARE APPROXIMATE. THE CONTRACTOR IS TO FIELD VERIFY OR POTHOLE IN ORDER TO DETERMINE EXACT LOCATION.
3. FOR ACCURATE RIGHT OF WAY DATA, CONTACT RIGHT OF WAY ENGINEERING AT THE DISTRICT OFFICE.

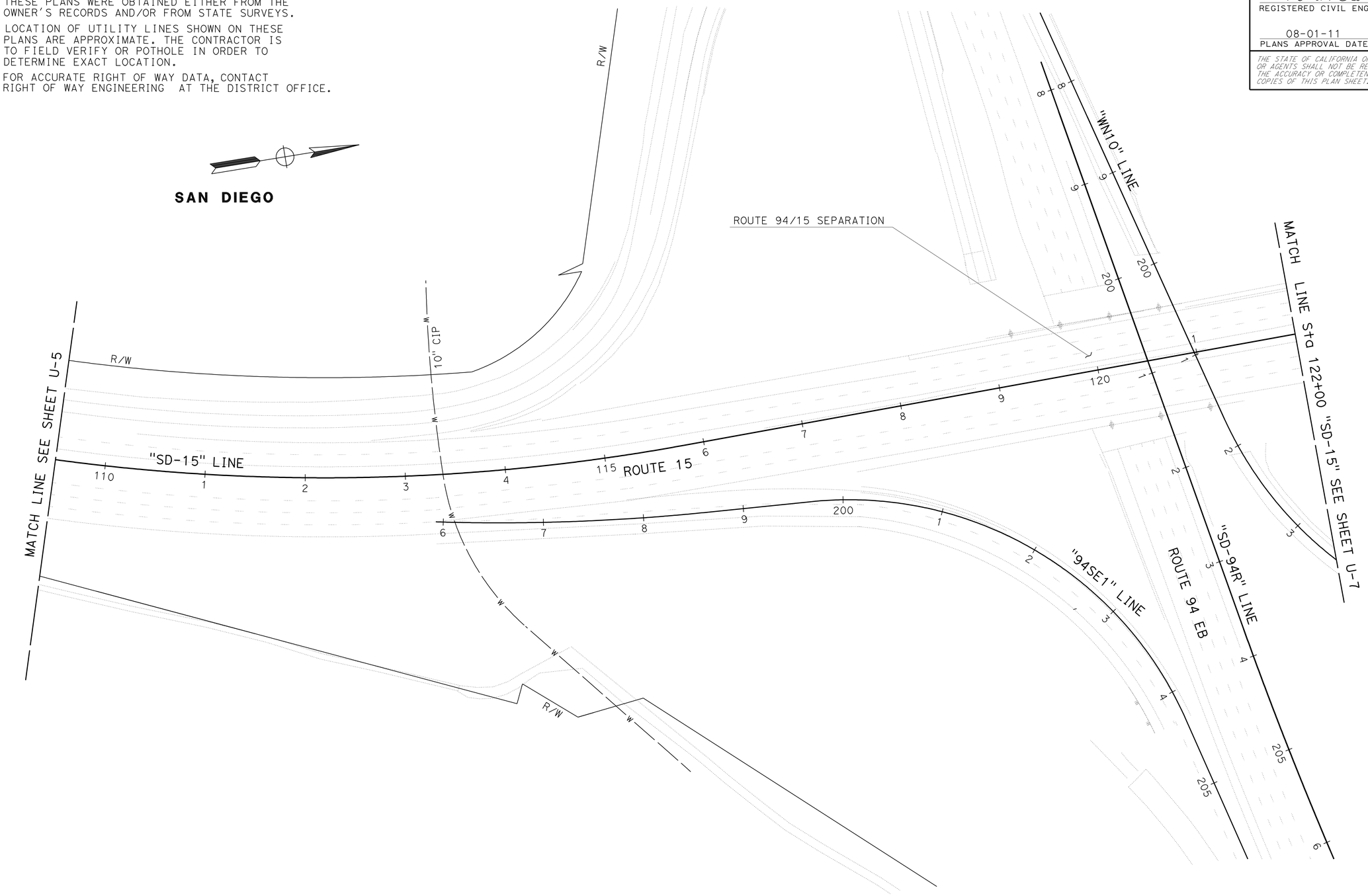

THIS PLAN ACCURATE FOR UTILITY INFORMATION ONLY.

SCALE: 1" = 50'

UTILITY PLAN

U-6

STATE OF CALIFORNIA - DEPARTMENT OF TRANSPORTATION
Caltrans PROJECT DEVELOPMENT

FUNCTIONAL SUPERVISOR: ABU-BAKR AL-JAFRI
CALCULATED-DESIGNED BY: ANH HOANG
CHECKED BY: SIMON TSE
REVISED BY
DATE REVISED

LAST REVISION 09-14-11
DATE PLOTTED => 27-SEP-2011
TIME PLOTTED => 16:12

Dist	COUNTY	ROUTE	POST MILES TOTAL PROJECT	SHEET No.	TOTAL SHEETS
11	SD	15	0.5/M4.0	40	116

Simon Tse 07-29-11
REGISTERED CIVIL ENGINEER DATE

08-01-11
PLANS APPROVAL DATE

REGISTERED PROFESSIONAL ENGINEER
SIMON TSE
No. C66401
Exp. 6-30-12
CIVIL
STATE OF CALIFORNIA

THE STATE OF CALIFORNIA OR ITS OFFICERS OR AGENTS SHALL NOT BE RESPONSIBLE FOR THE ACCURACY OR COMPLETENESS OF SCANNED COPIES OF THIS PLAN SHEET.

NOTES:

1. LOCATION OF UTILITY FACILITIES SHOWN ON THESE PLANS WERE OBTAINED EITHER FROM THE OWNER'S RECORDS AND/OR FROM STATE SURVEYS.
2. LOCATION OF UTILITY LINES SHOWN ON THESE PLANS ARE APPROXIMATE. THE CONTRACTOR IS TO FIELD VERIFY OR POTHOLE IN ORDER TO DETERMINE EXACT LOCATION.
3. FOR ACCURATE RIGHT OF WAY DATA, CONTACT RIGHT OF WAY ENGINEERING AT THE DISTRICT OFFICE.

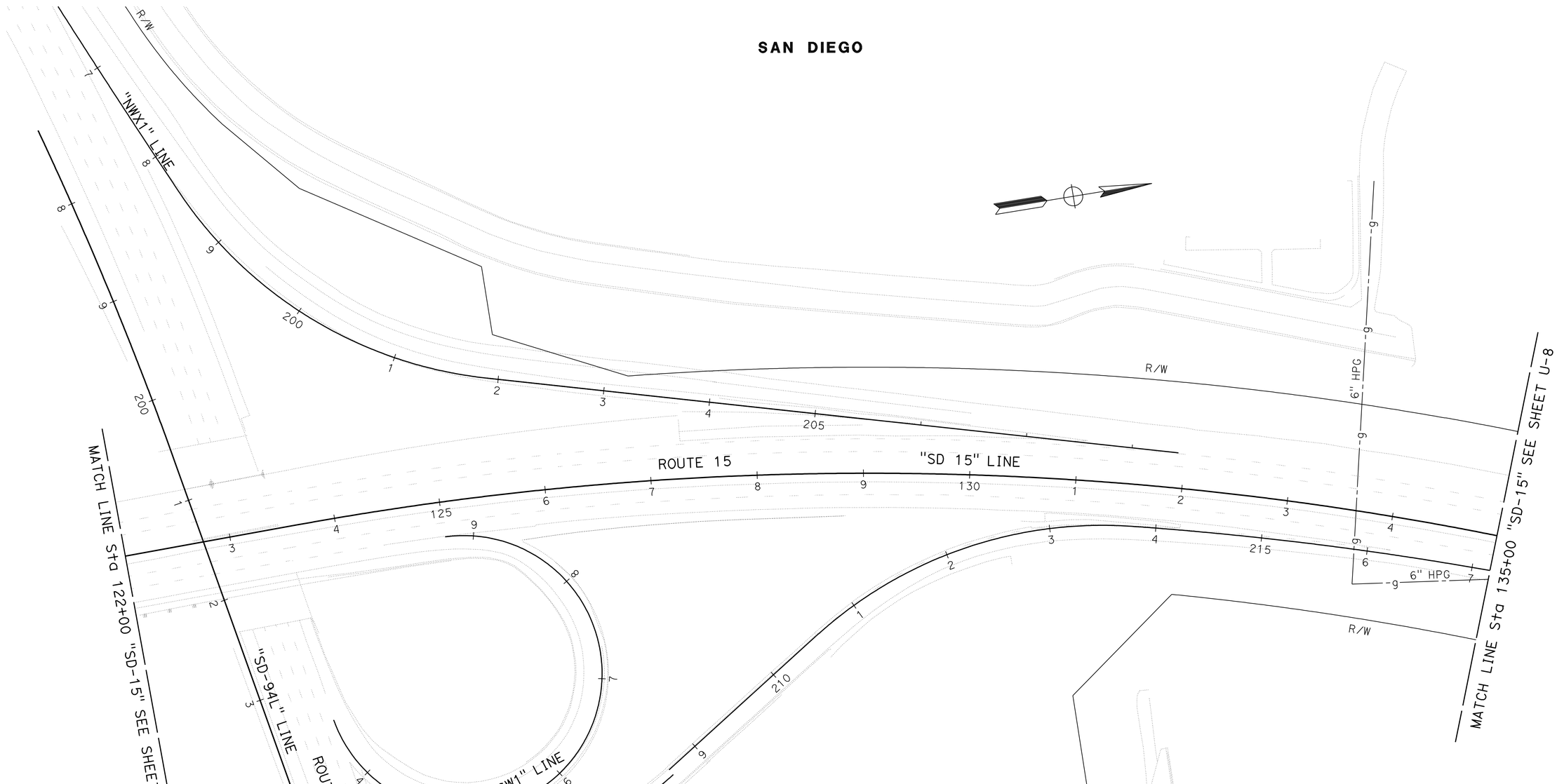

THIS PLAN ACCURATE FOR UTILITY INFORMATION ONLY.

SCALE: 1" = 50'

UTILITY PLAN

U-7

STATE OF CALIFORNIA - DEPARTMENT OF TRANSPORTATION
Caltrans PROJECT DEVELOPMENT

FUNCTIONAL SUPERVISOR: ABU-BAKR AL-JAFRI
CALCULATED-DESIGNED BY: ANH HOANG
CHECKED BY: SIMON TSE
REVISED BY
DATE REVISED

LAST REVISION 09-14-11
DATE PLOTTED => 27-SEP-2011
TIME PLOTTED => 16:12

Dist	COUNTY	ROUTE	POST MILES TOTAL PROJECT	SHEET No.	TOTAL SHEETS
11	SD	15	0.5/M4.0	41	116

Simon Tse 07-29-11
REGISTERED CIVIL ENGINEER DATE

08-01-11
PLANS APPROVAL DATE

REGISTERED PROFESSIONAL ENGINEER
SIMON TSE
No. C66401
Exp. 6-30-12
CIVIL
STATE OF CALIFORNIA

THE STATE OF CALIFORNIA OR ITS OFFICERS OR AGENTS SHALL NOT BE RESPONSIBLE FOR THE ACCURACY OR COMPLETENESS OF SCANNED COPIES OF THIS PLAN SHEET.

NOTES:

1. LOCATION OF UTILITY FACILITIES SHOWN ON THESE PLANS WERE OBTAINED EITHER FROM THE OWNER'S RECORDS AND/OR FROM STATE SURVEYS.
2. LOCATION OF UTILITY LINES SHOWN ON THESE PLANS ARE APPROXIMATE. THE CONTRACTOR IS TO FIELD VERIFY OR POTHOLE IN ORDER TO DETERMINE EXACT LOCATION.
3. FOR ACCURATE RIGHT OF WAY DATA, CONTACT RIGHT OF WAY ENGINEERING AT THE DISTRICT OFFICE.

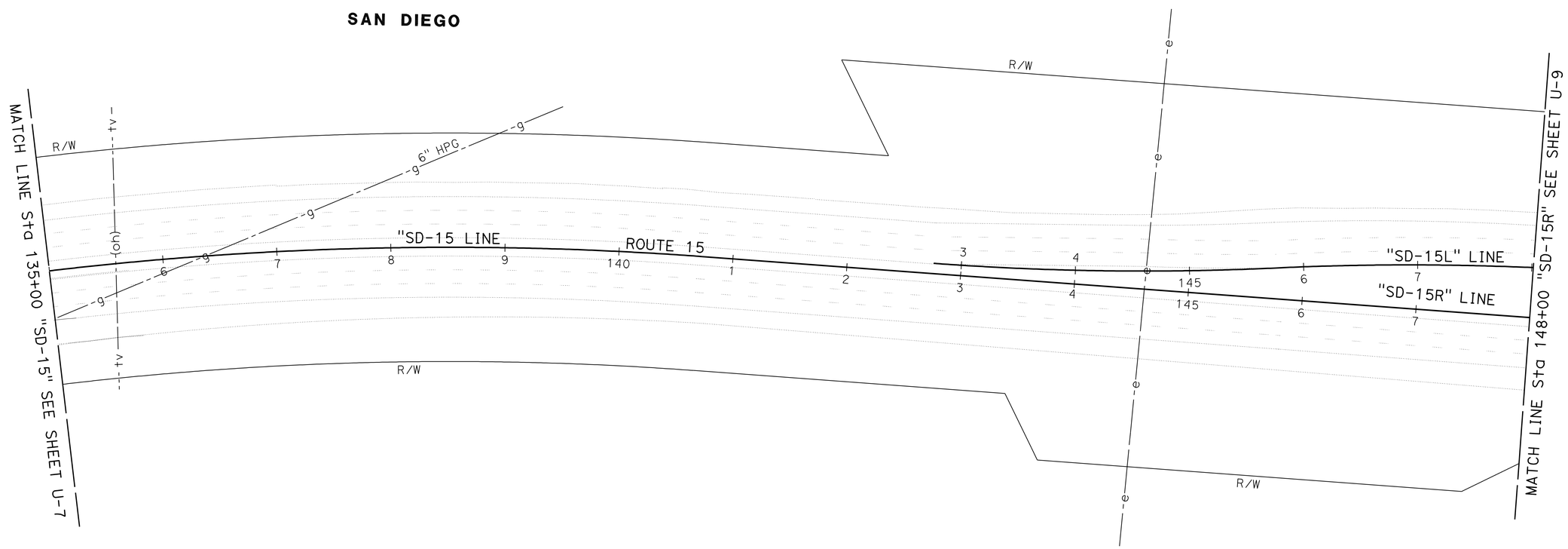

UTILITY PLAN

THIS PLAN ACCURATE FOR UTILITY INFORMATION ONLY.

SCALE: 1" = 50'

U-8

STATE OF CALIFORNIA - DEPARTMENT OF TRANSPORTATION
Caltrans PROJECT DEVELOPMENT

FUNCTIONAL SUPERVISOR: ABU-BAKR AL-JAFRI
CALCULATED-DESIGNED BY: ANH HOANG
CHECKED BY: SIMON TSE
REVISED BY
DATE REVISED

LAST REVISION 09-14-11
DATE PLOTTED => 27-SEP-2011
TIME PLOTTED => 16:12

Dist	COUNTY	ROUTE	POST MILES TOTAL PROJECT	SHEET No.	TOTAL SHEETS
11	SD	15	0.5/M4.0	42	116

Simon Tse 07-29-11
REGISTERED CIVIL ENGINEER DATE

08-01-11
PLANS APPROVAL DATE

REGISTERED PROFESSIONAL ENGINEER
SIMON TSE
No. C66401
Exp. 6-30-12
CIVIL
STATE OF CALIFORNIA

THE STATE OF CALIFORNIA OR ITS OFFICERS OR AGENTS SHALL NOT BE RESPONSIBLE FOR THE ACCURACY OR COMPLETENESS OF SCANNED COPIES OF THIS PLAN SHEET.

NOTES:

1. LOCATION OF UTILITY FACILITIES SHOWN ON THESE PLANS WERE OBTAINED EITHER FROM THE OWNER'S RECORDS AND/OR FROM STATE SURVEYS.
2. LOCATION OF UTILITY LINES SHOWN ON THESE PLANS ARE APPROXIMATE. THE CONTRACTOR IS TO FIELD VERIFY OR POTHOLE IN ORDER TO DETERMINE EXACT LOCATION.
3. FOR ACCURATE RIGHT OF WAY DATA, CONTACT RIGHT OF WAY ENGINEERING AT THE DISTRICT OFFICE.

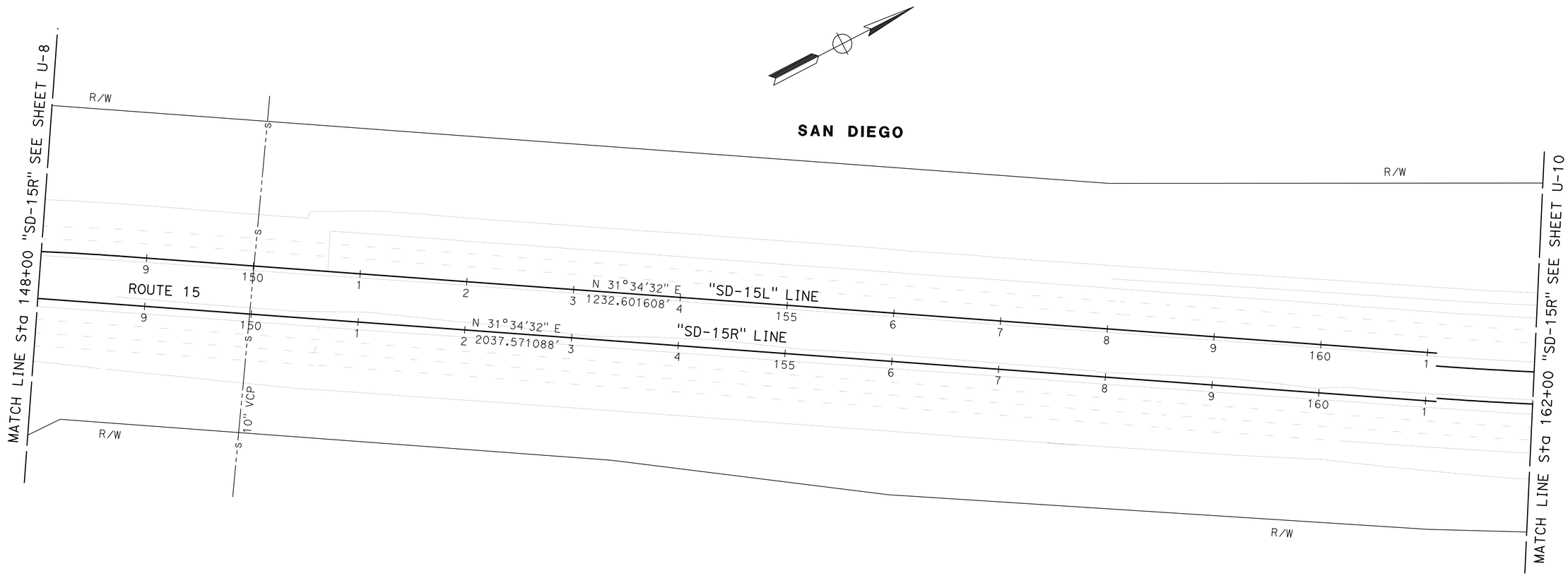

UTILITY PLAN

THIS PLAN ACCURATE FOR UTILITY INFORMATION ONLY.

SCALE: 1" = 50'

U-9

STATE OF CALIFORNIA - DEPARTMENT OF TRANSPORTATION
Caltrans PROJECT DEVELOPMENT

FUNCTIONAL SUPERVISOR: ABU-BAKR AL-JAFRI
CALCULATED-DESIGNED BY: ANH HOANG
CHECKED BY: SIMON TSE
REVISED BY
DATE REVISED

LAST REVISION 09-14-11
DATE PLOTTED => 27-SEP-2011
TIME PLOTTED => 16:12

Dist	COUNTY	ROUTE	POST MILES TOTAL PROJECT	SHEET No.	TOTAL SHEETS
11	SD	15	0.5/M4.0	43	116

Simon Tse 07-29-11
REGISTERED CIVIL ENGINEER DATE

08-01-11
PLANS APPROVAL DATE

REGISTERED PROFESSIONAL ENGINEER
SIMON TSE
No. C66401
Exp. 6-30-12
CIVIL
STATE OF CALIFORNIA

THE STATE OF CALIFORNIA OR ITS OFFICERS OR AGENTS SHALL NOT BE RESPONSIBLE FOR THE ACCURACY OR COMPLETENESS OF SCANNED COPIES OF THIS PLAN SHEET.

NOTES:

1. LOCATION OF UTILITY FACILITIES SHOWN ON THESE PLANS WERE OBTAINED EITHER FROM THE OWNER'S RECORDS AND/OR FROM STATE SURVEYS.
2. LOCATION OF UTILITY LINES SHOWN ON THESE PLANS ARE APPROXIMATE. THE CONTRACTOR IS TO FIELD VERIFY OR POTHOLE IN ORDER TO DETERMINE EXACT LOCATION.
3. FOR ACCURATE RIGHT OF WAY DATA, CONTACT RIGHT OF WAY ENGINEERING AT THE DISTRICT OFFICE.

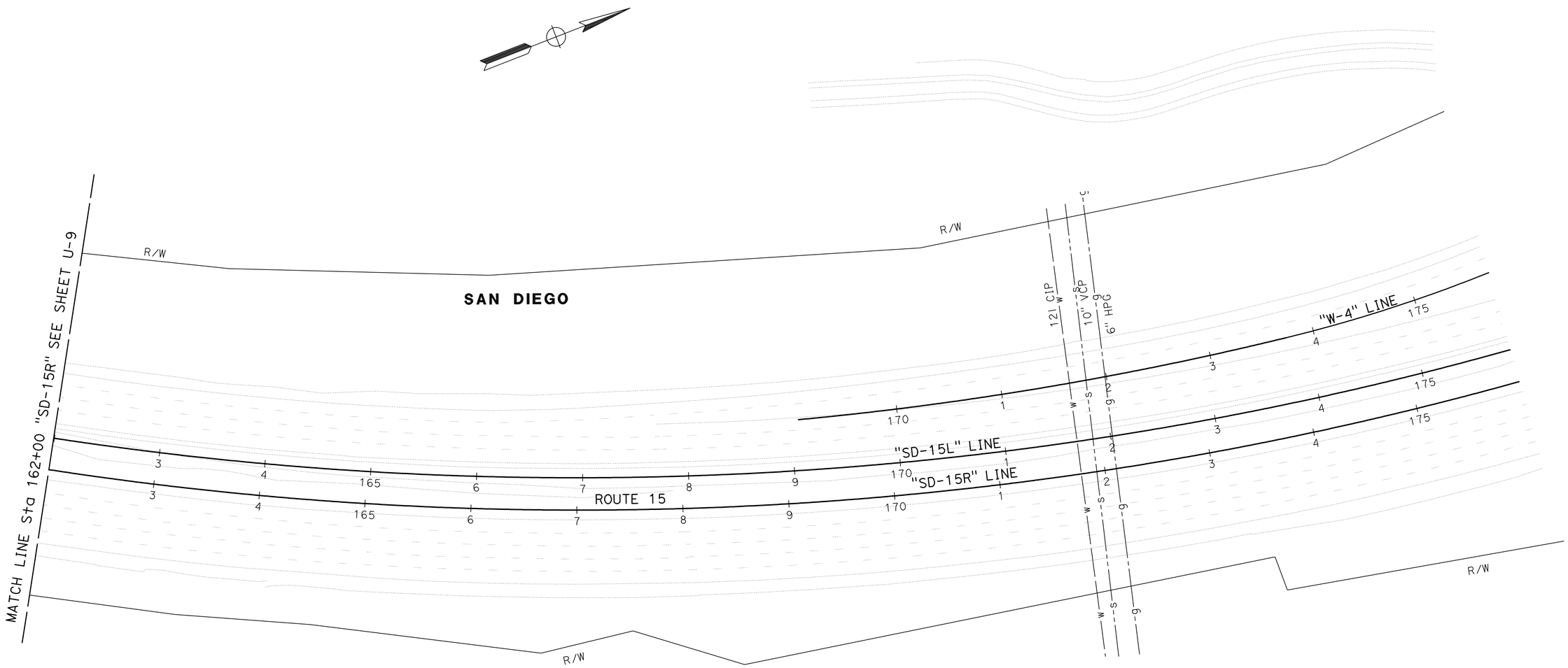

UTILITY PLAN

THIS PLAN ACCURATE FOR UTILITY INFORMATION ONLY.

SCALE: 1" = 50'

U-10

STATE OF CALIFORNIA - DEPARTMENT OF TRANSPORTATION
Caltrans PROJECT DEVELOPMENT

FUNCTIONAL SUPERVISOR: ABU-BAKR AL-JAFRI
CALCULATED-DESIGNED BY: ANH HOANG
CHECKED BY: SIMON TSE
REVISED BY
DATE REVISED

LAST REVISION 09-14-11
DATE PLOTTED => 27-SEP-2011
TIME PLOTTED => 16:12

Dist	COUNTY	ROUTE	POST MILES TOTAL PROJECT	SHEET No.	TOTAL SHEETS
11	SD	15	0.5/M4.0	44	116

REGISTERED CIVIL ENGINEER 07-29-11 DATE

08-01-11
PLANS APPROVAL DATE

REGISTERED PROFESSIONAL ENGINEER SHAHIN ADIBI No. 54839 Exp. 06-30-12 CIVIL STATE OF CALIFORNIA

THE STATE OF CALIFORNIA OR ITS OFFICERS OR AGENTS SHALL NOT BE RESPONSIBLE FOR THE ACCURACY OR COMPLETENESS OF SCANNED COPIES OF THIS PLAN SHEET.

NOTES:

1. EXACT LOCATION OF CONSTRUCTION AREA SIGNS SHALL BE DETERMINED BY THE ENGINEER.
2. FEDERAL MANUAL ON UNIFORM TRAFFIC CONTROL DEVICES (MUTCD) SIGN CODES ARE SHOWN UNLESS DESIGNATED BY (CA), INDICATING CALIFORNIA MUTCD.
3. SEE TRAFFIC HANDLING PLANS FOR ADDITIONAL CONSTRUCTION AREA SIGNS.
4. EXISTING UTILITIES ARE NOT SHOWN ON THESE PLAN SHEETS. THE CONTRACTOR SHALL VERIFY LOCATIONS OF EXISTING UTILITIES AND ADJUST THE FIELD LOCATION OF SIGN POSTS IN CONSULTATION WITH THE ENGINEER.

LEGEND:

X = CONSTRUCTION AREA SIGNS

→ = DIRECTION OF TRAFFIC

CONSTRUCTION AREA SIGNS

SIGN No.	TYPE	PANEL SIZE (In)x(In)	No. OF POST AND SIZE (In)x(In)	No. OF SIGNS
1	C40 (CA)	108 X 42	2-4 X 6 (s)	2
2	G20-2	48 X 24	1-4 X 4 (s)	14
3	W20-1	48 X 48	1-4 X 6 (s)	11
4	SC6-4 (CA)	48 X 60	PORTABLE	17
			TOTAL	44

(s) DENOTES STATIONARY MOUNTED SIGN

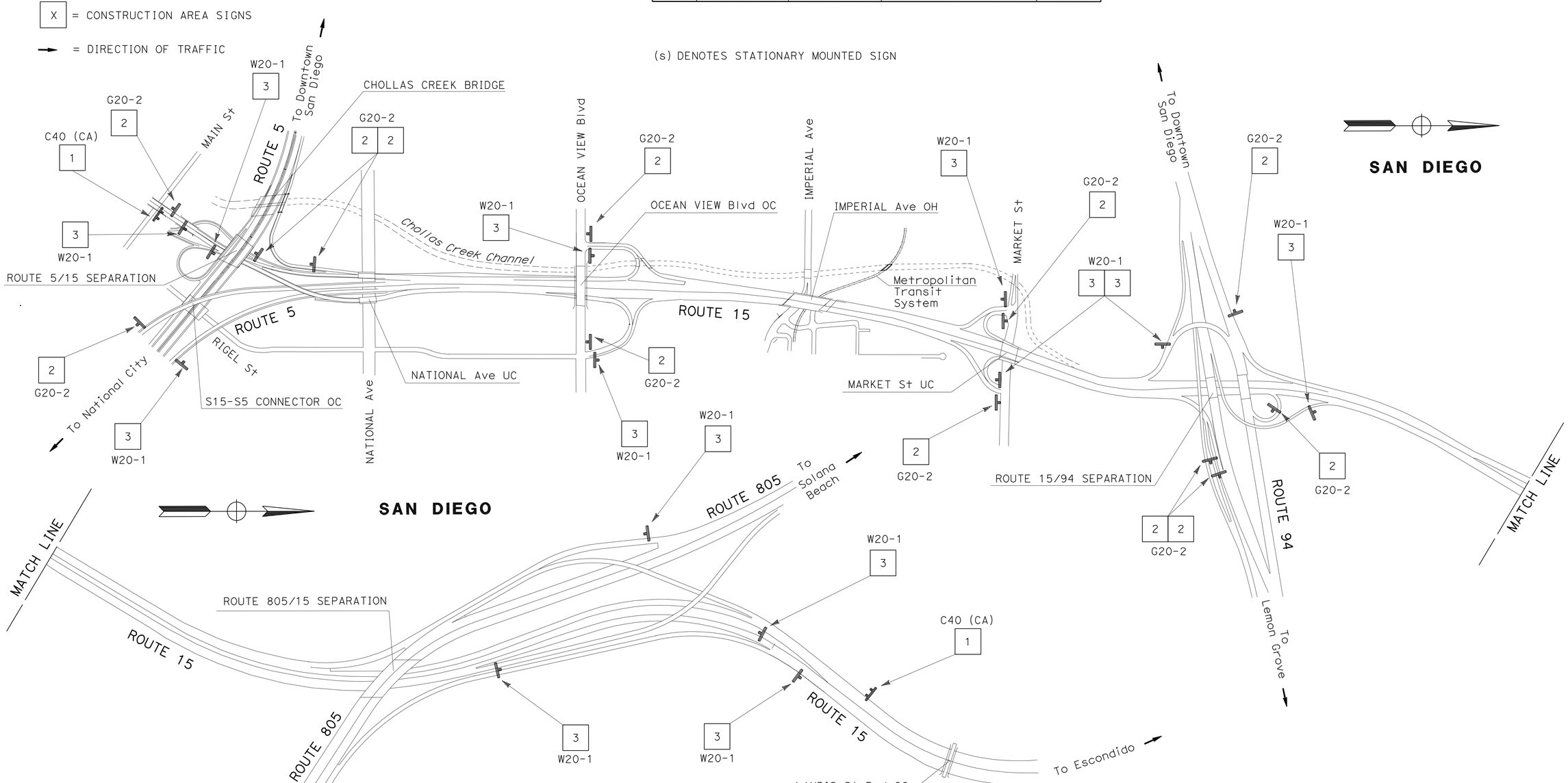

THIS PLAN ACCURATE FOR CONSTRUCTION AREA SIGN WORK ONLY.

CONSTRUCTION AREA SIGNS

NO SCALE

CS-1

STATE OF CALIFORNIA - DEPARTMENT OF TRANSPORTATION
Caltrans® TRAFFIC DESIGN

FUNCTIONAL SUPERVISOR: CAMILLE ABOU-FADEL
CALCULATED-DESIGNED BY: RYAN CHAO
CHECKED BY: SHAHIN ADIBI
REVISED BY / DATE REVISED

LAST REVISION 09-14-11
DATE PLOTTED => 27-SEP-2011
TIME PLOTTED => 16:12

Dist	COUNTY	ROUTE	POST MILES TOTAL PROJECT	SHEET No.	TOTAL SHEETS
11	SD	15	0.5/M4.0	45	116

07-29-11
REGISTERED CIVIL ENGINEER DATE

08-01-11
PLANS APPROVAL DATE

REGISTERED PROFESSIONAL ENGINEER
SHAHIN ADIBI
No. 54839
Exp. 06-30-12
CIVIL
STATE OF CALIFORNIA

THE STATE OF CALIFORNIA OR ITS OFFICERS OR AGENTS SHALL NOT BE RESPONSIBLE FOR THE ACCURACY OR COMPLETENESS OF SCANNED COPIES OF THIS PLAN SHEET.

TYPICAL- PLACEMENT OF SC6-4 (CA) CONSTRUCTION AREA SIGNS

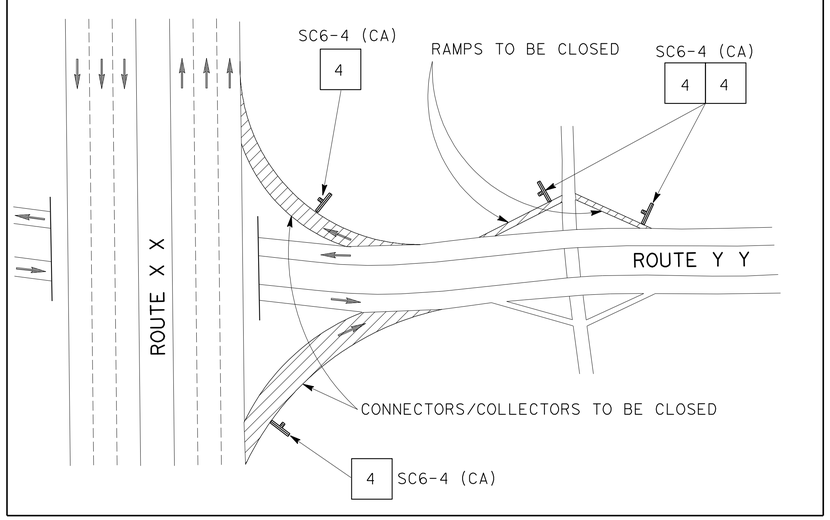

CONSTRUCTION AREA SIGNS

NO SCALE

CS-2

STATE OF CALIFORNIA - DEPARTMENT OF TRANSPORTATION
Caltrans®
TRAFFIC DESIGN

FUNCTIONAL SUPERVISOR: CAMILLE ABOU-FADEL

CALCULATED-DESIGNED BY: RYAN CHAO
CHECKED BY: SHAHIN ADIBI

REVISED BY
DATE REVISED

LAST REVISION 09-02-11
DATE PLOTTED => 27-SEP-2011
TIME PLOTTED => 16:12

Dist	COUNTY	ROUTE	POST MILES TOTAL PROJECT	SHEET No.	TOTAL SHEETS
11	SD	15	0.5/M4.0	46	116

REGISTERED CIVIL ENGINEER DATE 07-29-11

08-01-11
PLANS APPROVAL DATE

REGISTERED PROFESSIONAL ENGINEER SHAHIN ADIBI No. 54839 Exp. 06-30-12 CIVIL STATE OF CALIFORNIA

THE STATE OF CALIFORNIA OR ITS OFFICERS OR AGENTS SHALL NOT BE RESPONSIBLE FOR THE ACCURACY OR COMPLETENESS OF SCANNED COPIES OF THIS PLAN SHEET.

NOTES:

1. EXACT LOCATION OF CONSTRUCTION AREA SIGNS SHALL BE DETERMINED BY THE ENGINEER.
2. FEDERAL MANUAL ON UNIFORM TRAFFIC CONTROL DEVICES (MUTCD) SIGN CODES ARE SHOWN UNLESS DESIGNATED BY (CA), INDICATING CALIFORNIA MUTCD.
3. ROTATE ARROW ON SC9 (CA) PANEL TO REFLECT DIRECTION OF DETOUR.
4. SEE CONSTRUCTION AREA SIGN PLAN FOR ADDITIONAL CONSTRUCTION AREA SIGNS.
5. EXISTING UTILITIES ARE NOT SHOWN ON THESE PLAN SHEETS. THE CONTRACTOR SHALL VERIFY LOCATIONS OF EXISTING UTILITIES AND ADJUST THE FIELD LOCATION OF THE SIGN POSTS IN CONSULTATION WITH THE ENGINEER.

LEGEND:

XX = CONSTRUCTION AREA SIGNS

SPCL = SPECIAL CONSTRUCTION AREA SIGN

Caps = CAPITAL LETTERING

→ = DETOUR DIRECTION OF TRAVEL

ESA = ENVIRONMENTALLY SENSITIVE AREA

SIGN #7

SPCL-1 8" Caps

15 NORTH
USE
DETOUR

72" 72"

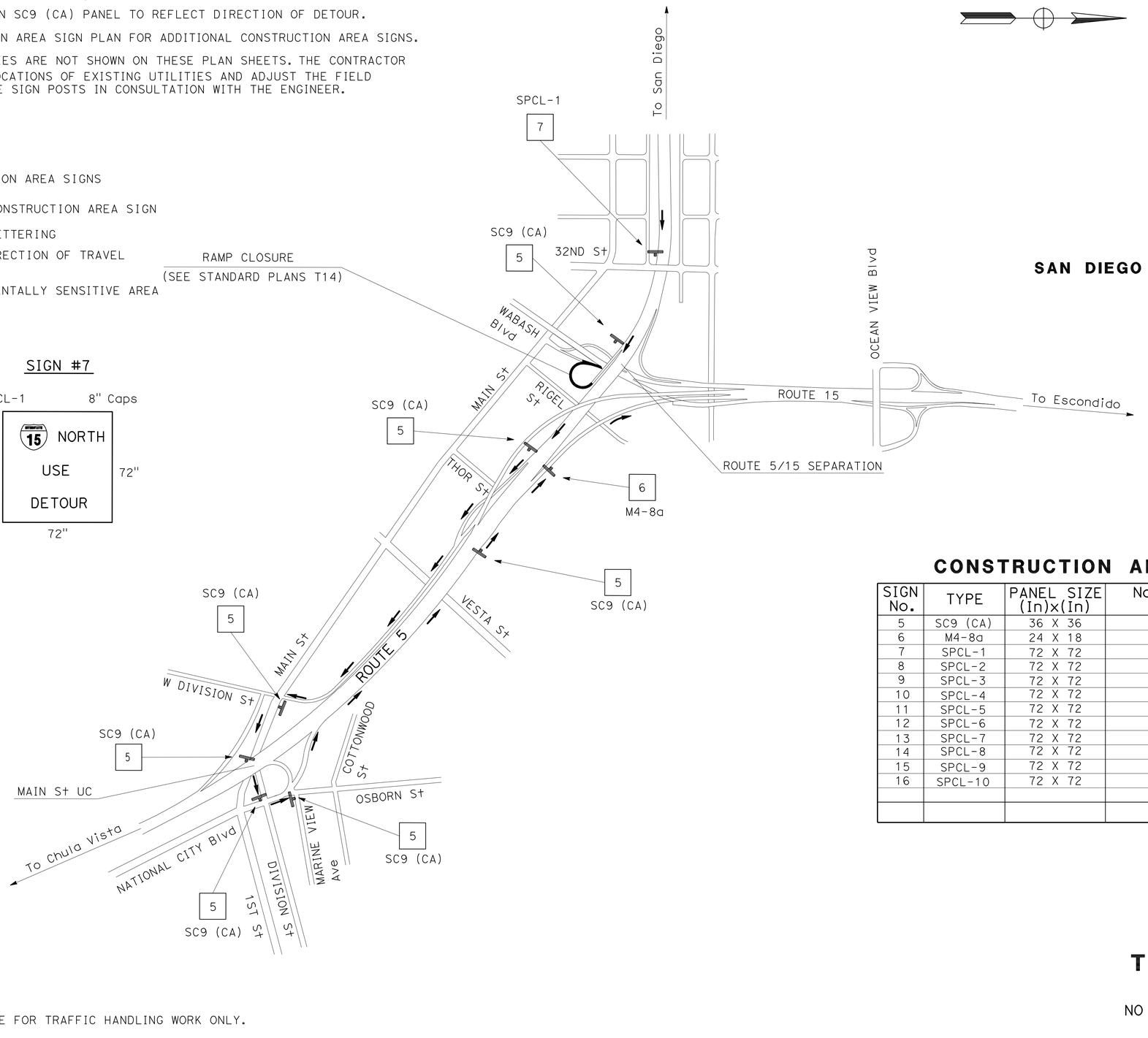

SAN DIEGO

CONSTRUCTION AREA SIGNS

SIGN No.	TYPE	PANEL SIZE (In)x(In)	No. OF POSTS AND SIZE	No. OF SIGNS
5	SC9 (CA)	36 X 36	PORTABLE	145
6	M4-8a	24 X 18	PORTABLE	19
7	SPCL-1	72 X 72	PORTABLE	3
8	SPCL-2	72 X 72	PORTABLE	1
9	SPCL-3	72 X 72	PORTABLE	2
10	SPCL-4	72 X 72	PORTABLE	1
11	SPCL-5	72 X 72	PORTABLE	1
12	SPCL-6	72 X 72	PORTABLE	3
13	SPCL-7	72 X 72	PORTABLE	1
14	SPCL-8	72 X 72	PORTABLE	1
15	SPCL-9	72 X 72	PORTABLE	3
16	SPCL-10	72 X 72	PORTABLE	3
			TOTAL	183

SB Rte 5 CONNECTOR TO NB Rte 15

TRAFFIC HANDLING PLAN

NO SCALE

TH-1

THIS PLAN ACCURATE FOR TRAFFIC HANDLING WORK ONLY.

STATE OF CALIFORNIA - DEPARTMENT OF TRANSPORTATION
Caltrans TRAFFIC DESIGN

FUNCTIONAL SUPERVISOR: CAMILLE ABOU-FADEL
CALCULATED-DESIGNED BY: SHAHIN ADIBI
CHECKED BY: RYAN CHAO
REVISED BY / DATE REVISED

LAST REVISION 09-14-11
DATE PLOTTED => 27-SEP-2011
TIME PLOTTED => 16:12

Dist	COUNTY	ROUTE	POST MILES TOTAL PROJECT	SHEET No.	TOTAL SHEETS
11	SD	15	0.5/M4.0	47	116

REGISTERED CIVIL ENGINEER 07-29-11 DATE

08-01-11
PLANS APPROVAL DATE

REGISTERED PROFESSIONAL ENGINEER
SHAHIN ADIBI
No. 54839
Exp. 06-30-12
CIVIL
STATE OF CALIFORNIA

THE STATE OF CALIFORNIA OR ITS OFFICERS OR AGENTS SHALL NOT BE RESPONSIBLE FOR THE ACCURACY OR COMPLETENESS OF SCANNED COPIES OF THIS PLAN SHEET.

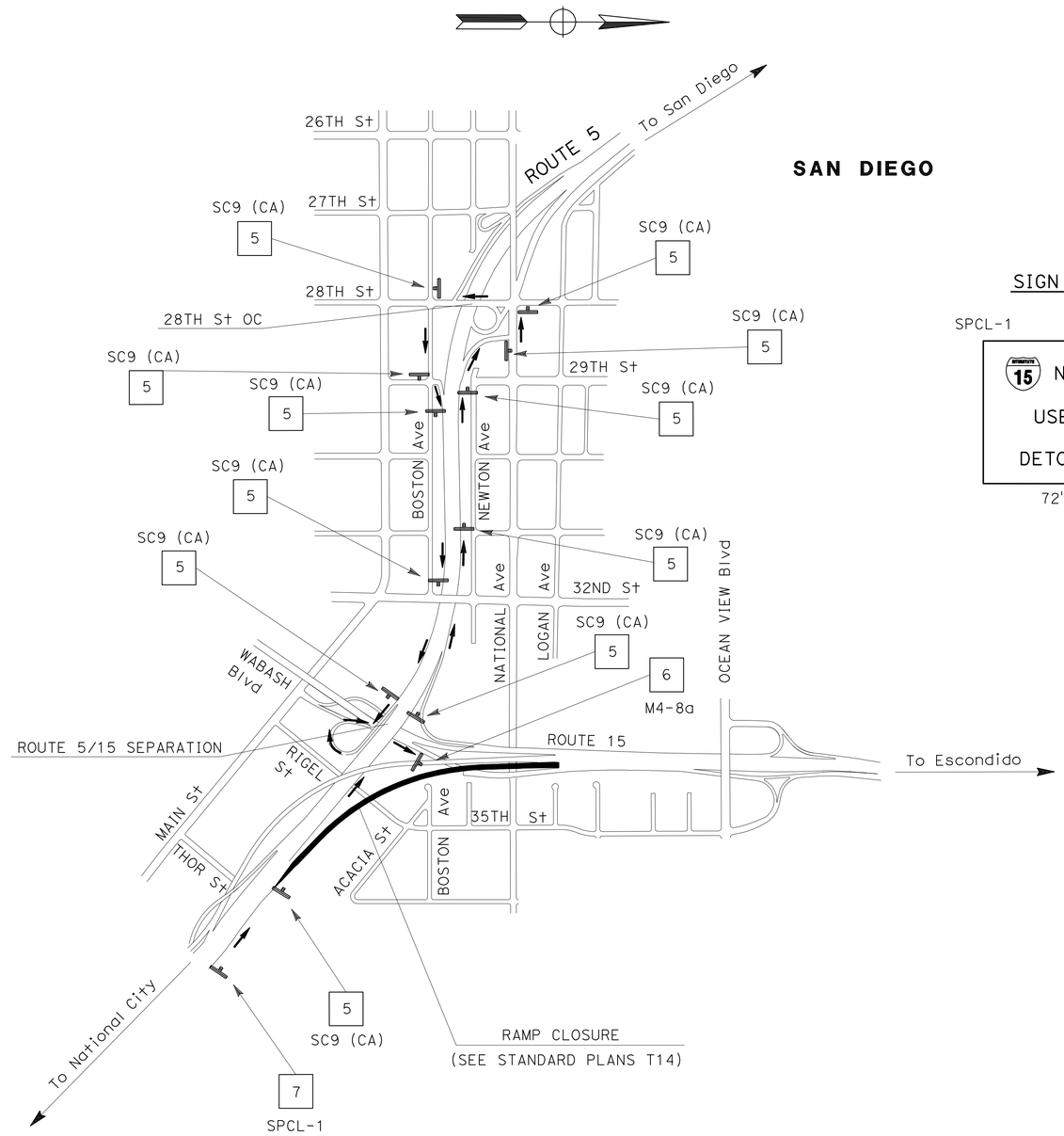

SIGN #7

SPCL-1 8" Caps

15 NORTH
USE
DETOUR

72" 72"

NB Rte 5 CONNECTOR TO NB Rte 15

TRAFFIC HANDLING PLAN

NO SCALE

TH-2

THIS PLAN ACCURATE FOR TRAFFIC HANDLING WORK ONLY.

STATE OF CALIFORNIA - DEPARTMENT OF TRANSPORTATION
Caltrans
TRAFFIC DESIGN

FUNCTIONAL SUPERVISOR: CAMILLE ABOU-FADEL
CALCULATED-DESIGNED BY: RYAN CHAO
CHECKED BY: SHAHIN ADIBI
REVISED BY
DATE REVISED

LAST REVISION 09-15-11
DATE PLOTTED => 27-SEP-2011
TIME PLOTTED => 16:12

Dist	COUNTY	ROUTE	POST MILES TOTAL PROJECT	SHEET No.	TOTAL SHEETS
11	SD	15	0.5/M4.0	48	116

07-29-11
REGISTERED CIVIL ENGINEER DATE

08-01-11
PLANS APPROVAL DATE

REGISTERED PROFESSIONAL ENGINEER
SHAHIN ADIBI
No. 54839
Exp. 06-30-12
CIVIL
STATE OF CALIFORNIA

THE STATE OF CALIFORNIA OR ITS OFFICERS OR AGENTS SHALL NOT BE RESPONSIBLE FOR THE ACCURACY OR COMPLETENESS OF SCANNED COPIES OF THIS PLAN SHEET.

SIGN #8

SPCL-2 8" Caps

94 EAST
USE
DETOUR

72" × 72"

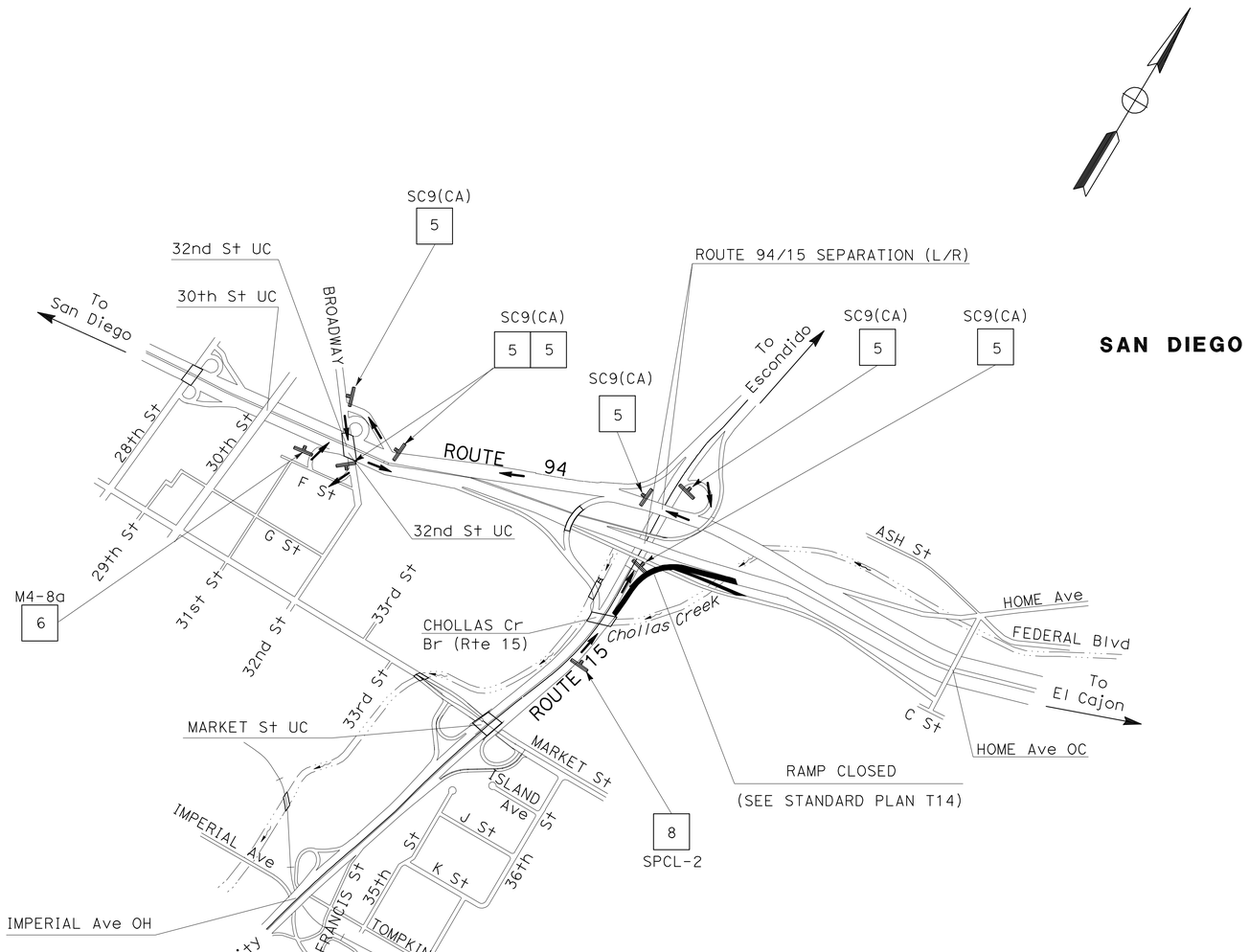

NB Rte 15 CONNECTOR TO EB Rte 94 & HOME Ave

TRAFFIC HANDLING PLAN

NO SCALE

TH-3

THIS PLAN ACCURATE FOR TRAFFIC HANDLING WORK ONLY.

STATE OF CALIFORNIA - DEPARTMENT OF TRANSPORTATION
Caltrans
TRAFFIC DESIGN

FUNCTIONAL SUPERVISOR: CAMILLE ABOU-FADEL
CALCULATED-DESIGNED BY: SHAHIN ADIBI
CHECKED BY: RYAN CHAO
REVISED BY
DATE REVISED

LAST REVISION 09-14-11
DATE PLOTTED => 27-SEP-2011
TIME PLOTTED => 16:12

Dist	COUNTY	ROUTE	POST MILES TOTAL PROJECT	SHEET No.	TOTAL SHEETS
11	SD	15	0.5/M4.0	49	116

REGISTERED CIVIL ENGINEER DATE 07-29-11

08-01-11
PLANS APPROVAL DATE

REGISTERED PROFESSIONAL ENGINEER SHAHIN ADIBI No. 54839 Exp. 06-30-12 CIVIL STATE OF CALIFORNIA

THE STATE OF CALIFORNIA OR ITS OFFICERS OR AGENTS SHALL NOT BE RESPONSIBLE FOR THE ACCURACY OR COMPLETENESS OF SCANNED COPIES OF THIS PLAN SHEET.

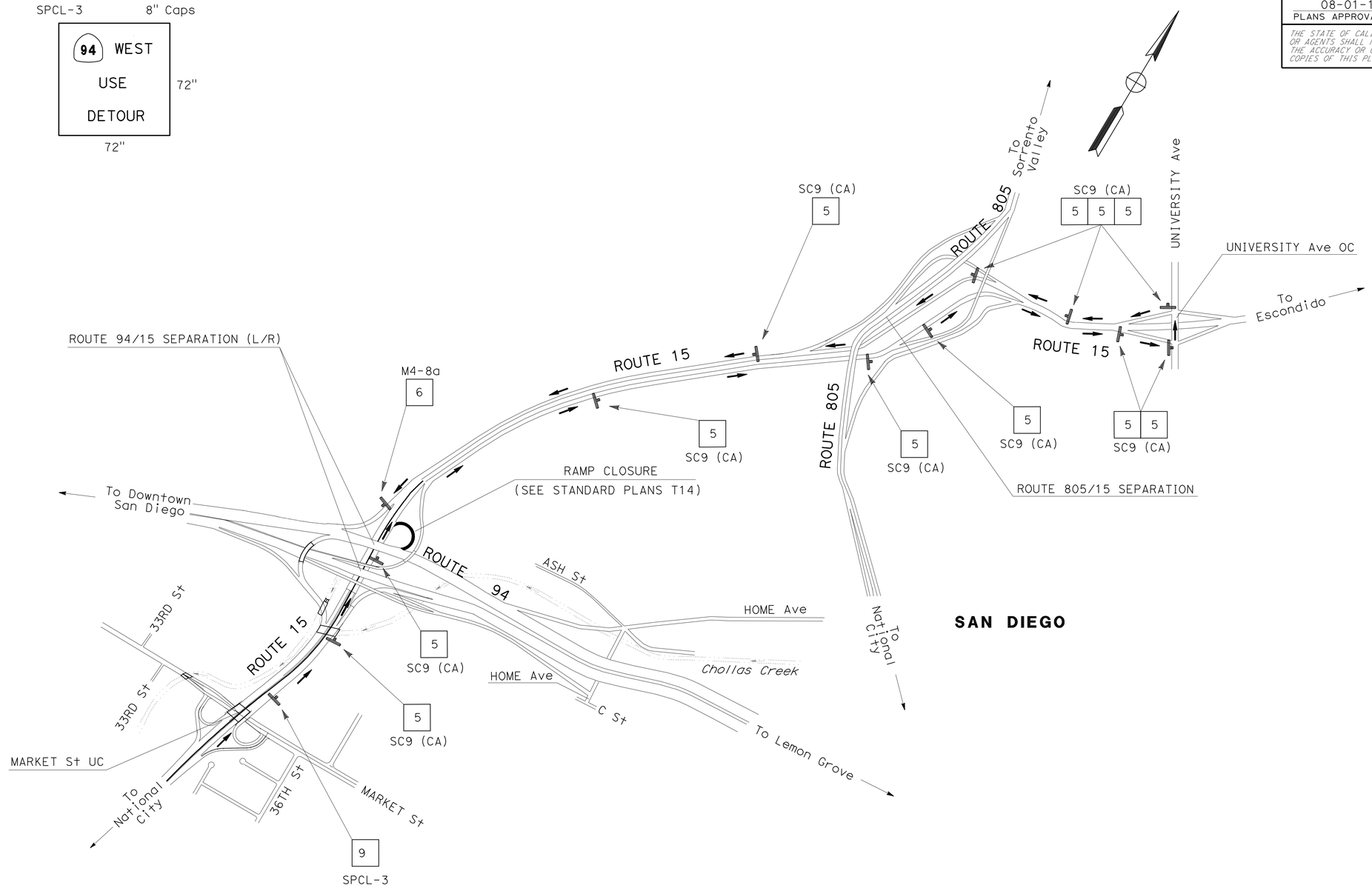

NB Rte 15 CONNECTOR TO WB Rte 94

TRAFFIC HANDLING PLAN

NO SCALE

TH-4

THIS PLAN ACCURATE FOR TRAFFIC HANDLING WORK ONLY.

STATE OF CALIFORNIA - DEPARTMENT OF TRANSPORTATION
Caltrans
TRAFFIC DESIGN

FUNCTIONAL SUPERVISOR: CAMILLE ABOU-FADEL
CALCULATED-DESIGNED BY: RYAN CHAO
CHECKED BY: SHAHIN ADIBI
REVISED BY
DATE REVISED

LAST REVISION 09-15-11
DATE PLOTTED => 27-SEP-2011
TIME PLOTTED => 16:12

Dist	COUNTY	ROUTE	POST MILES TOTAL PROJECT	SHEET No.	TOTAL SHEETS
11	SD	15	0.5/M4.0	50	116

07-29-11
REGISTERED CIVIL ENGINEER DATE

08-01-11
PLANS APPROVAL DATE

REGISTERED PROFESSIONAL ENGINEER
SHAHIN ADIBI
No. 54839
Exp. 06-30-12
CIVIL
STATE OF CALIFORNIA

THE STATE OF CALIFORNIA OR ITS OFFICERS OR AGENTS SHALL NOT BE RESPONSIBLE FOR THE ACCURACY OR COMPLETENESS OF SCANNED COPIES OF THIS PLAN SHEET.

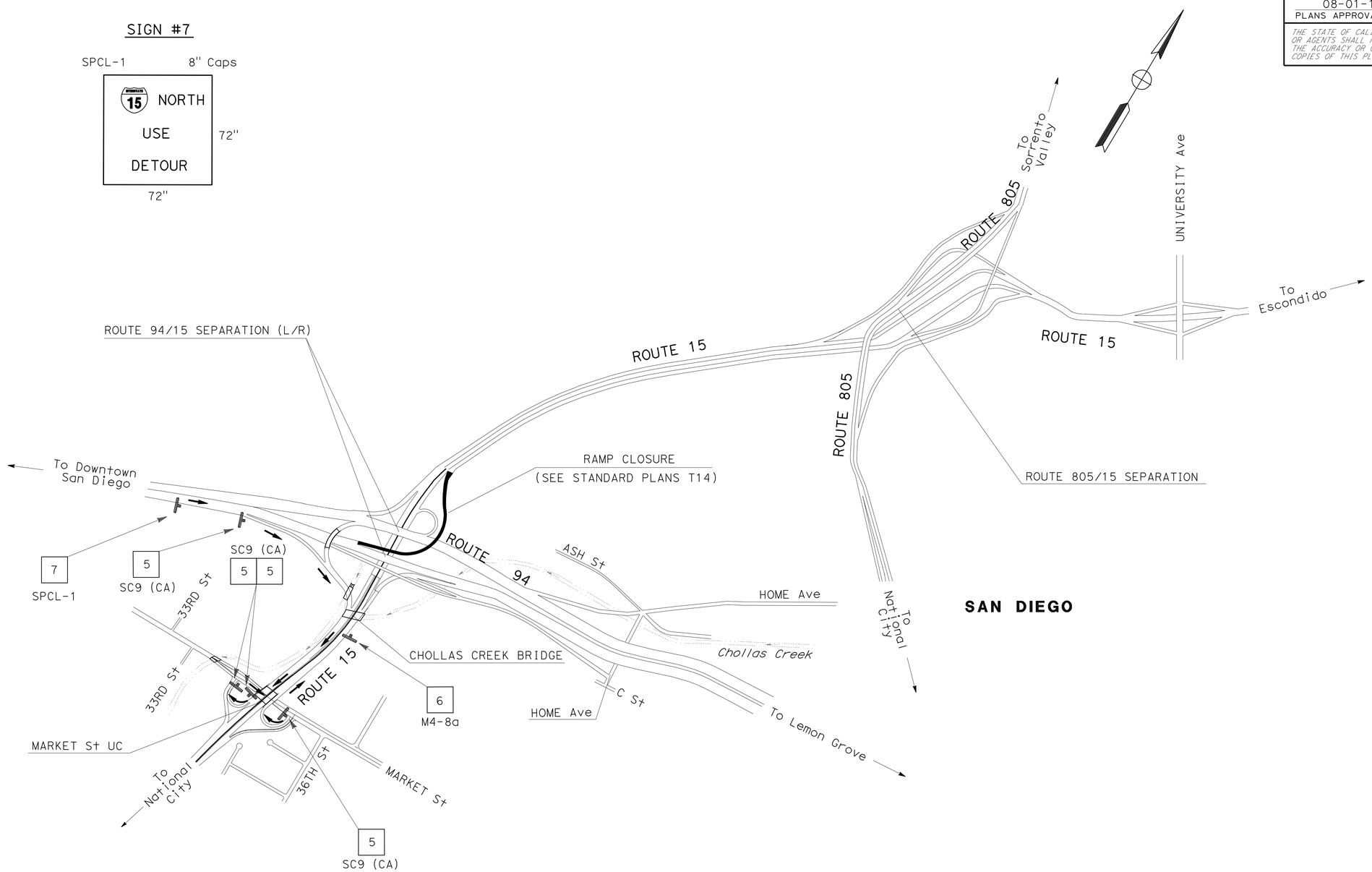

EB Rte 94 CONNECTOR TO NB Rte 15

TRAFFIC HANDLING PLAN

NO SCALE

TH-5

THIS PLAN ACCURATE FOR TRAFFIC HANDLING WORK ONLY.

REVISED BY	DATE REVISED

CALCULATED-DESIGNED BY	RYAN CHAO
CHECKED BY	SHAHIN ADIBI
FUNCTIONAL SUPERVISOR	CAMILLE ABOU-FADEL

STATE OF CALIFORNIA - DEPARTMENT OF TRANSPORTATION
Caltrans
TRAFFIC DESIGN

LAST REVISION 09-15-11
DATE PLOTTED => 27-SEP-2011
TIME PLOTTED => 16:13

Dist	COUNTY	ROUTE	POST MILES TOTAL PROJECT	SHEET No.	TOTAL SHEETS
11	SD	15	0.5/M4.0	51	116

REGISTERED CIVIL ENGINEER 07-29-11 DATE

08-01-11
PLANS APPROVAL DATE

REGISTERED PROFESSIONAL ENGINEER
SHAHIN ADIBI
No. 54839
Exp. 06-30-12
CIVIL
STATE OF CALIFORNIA

THE STATE OF CALIFORNIA OR ITS OFFICERS OR AGENTS SHALL NOT BE RESPONSIBLE FOR THE ACCURACY OR COMPLETENESS OF SCANNED COPIES OF THIS PLAN SHEET.

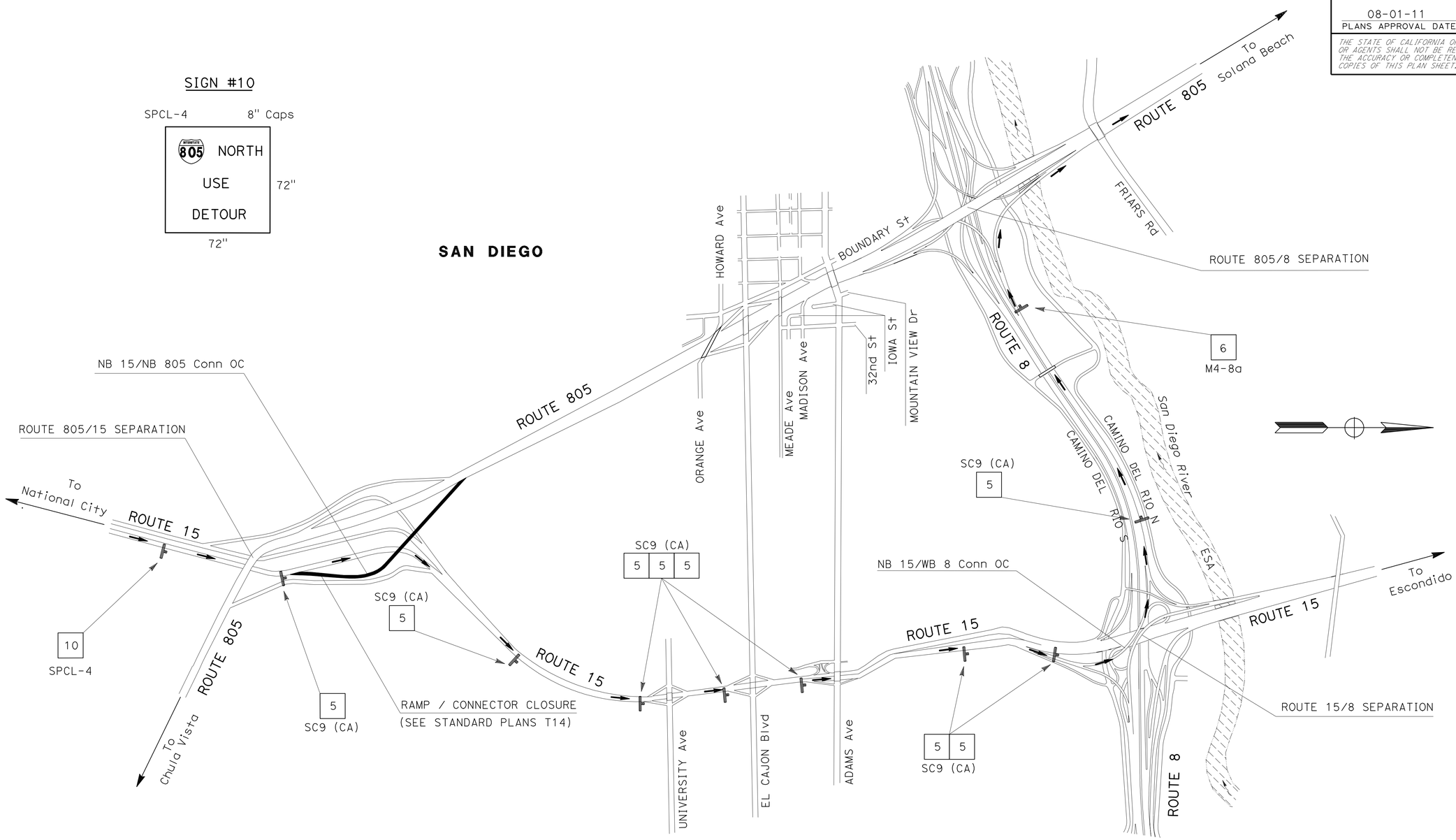

NB Rte 15 CONNECTOR TO NB Rte 805

TRAFFIC HANDLING PLAN

NO SCALE

TH-6

THIS PLAN ACCURATE FOR TRAFFIC HANDLING WORK ONLY.

STATE OF CALIFORNIA - DEPARTMENT OF TRANSPORTATION
Caltrans® **TRAFFIC DESIGN**

FUNCTIONAL SUPERVISOR: CAMILLE ABOU-FADEL
CALCULATED-DESIGNED BY: SHAHIN ADIBI
CHECKED BY: RYAN CHAO
REVISED BY
DATE REVISED

LAST REVISION 09-15-11
DATE PLOTTED => 27-SEP-2011
TIME PLOTTED => 16:13

Dist	COUNTY	ROUTE	POST MILES TOTAL PROJECT	SHEET No.	TOTAL SHEETS
11	SD	15	0.5/M4.0	52	116

REGISTERED CIVIL ENGINEER 07-29-11 DATE

08-01-11
PLANS APPROVAL DATE

REGISTERED PROFESSIONAL ENGINEER
SHAHIN ADIBI
No. 54839
Exp. 06-30-12
CIVIL
STATE OF CALIFORNIA

THE STATE OF CALIFORNIA OR ITS OFFICERS OR AGENTS SHALL NOT BE RESPONSIBLE FOR THE ACCURACY OR COMPLETENESS OF SCANNED COPIES OF THIS PLAN SHEET.

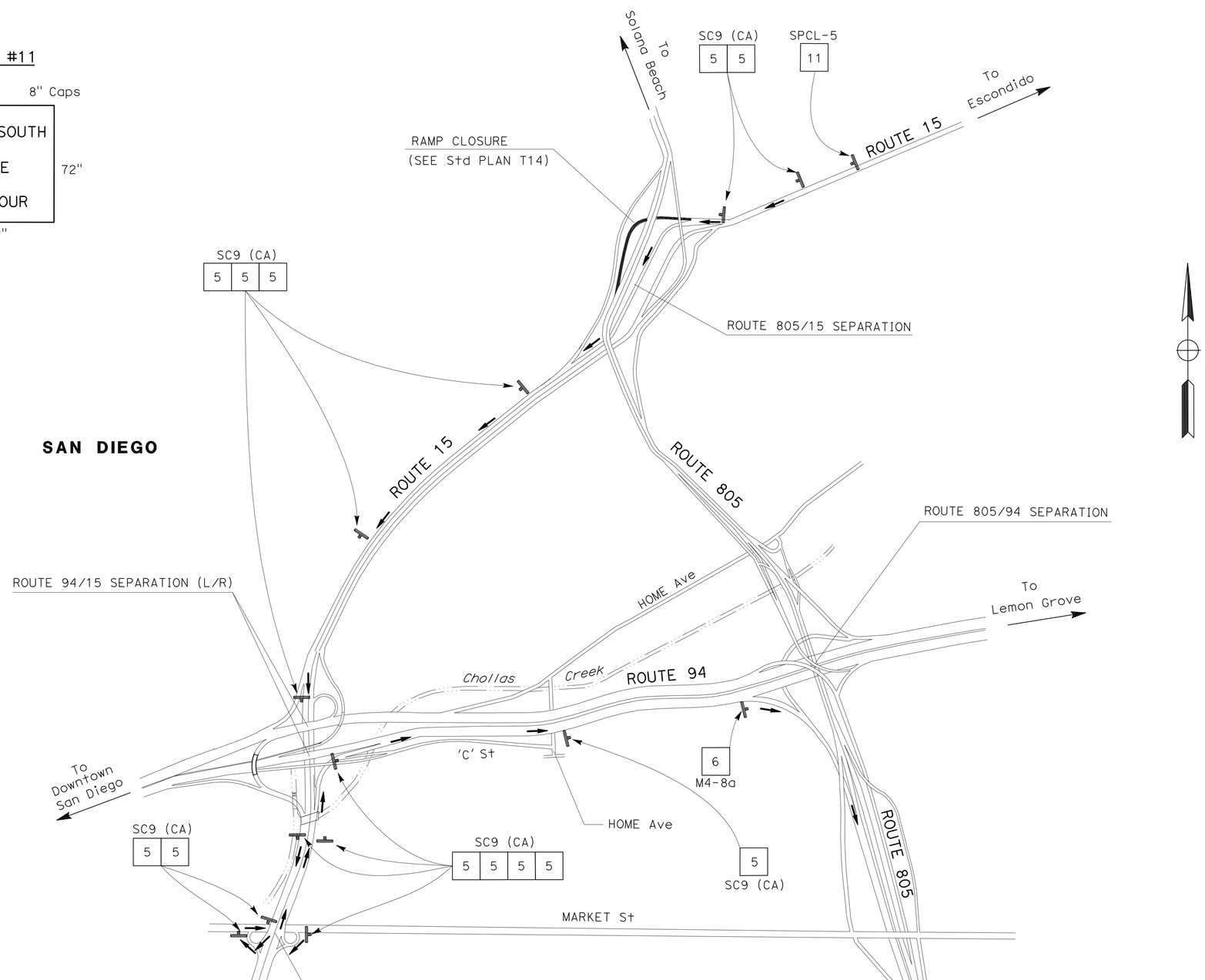

SB Rte 15 CONNECTOR TO SB Rte 805

TRAFFIC HANDLING PLAN

NO SCALE

TH-7

THIS PLAN ACCURATE FOR TRAFFIC HANDLING WORK ONLY.

STATE OF CALIFORNIA - DEPARTMENT OF TRANSPORTATION
Caltrans
TRAFFIC DESIGN

FUNCTIONAL SUPERVISOR: CAMILLE ABOU-FADEL
CALCULATED-DESIGNED BY: SHAHIN ADIBI
CHECKED BY: RYAN CHAO
REVISED BY
DATE REVISED

LAST REVISION 09-14-11
DATE PLOTTED => 27-SEP-2011
TIME PLOTTED => 16:13

Dist	COUNTY	ROUTE	POST MILES TOTAL PROJECT	SHEET No.	TOTAL SHEETS
11	SD	15	0.5/M4.0	53	116

REGISTERED CIVIL ENGINEER 07-29-11 DATE

08-01-11
PLANS APPROVAL DATE

REGISTERED PROFESSIONAL ENGINEER SHAHIN ADIBI No. 54839 Exp. 06-30-12 CIVIL STATE OF CALIFORNIA

THE STATE OF CALIFORNIA OR ITS OFFICERS OR AGENTS SHALL NOT BE RESPONSIBLE FOR THE ACCURACY OR COMPLETENESS OF SCANNED COPIES OF THIS PLAN SHEET.

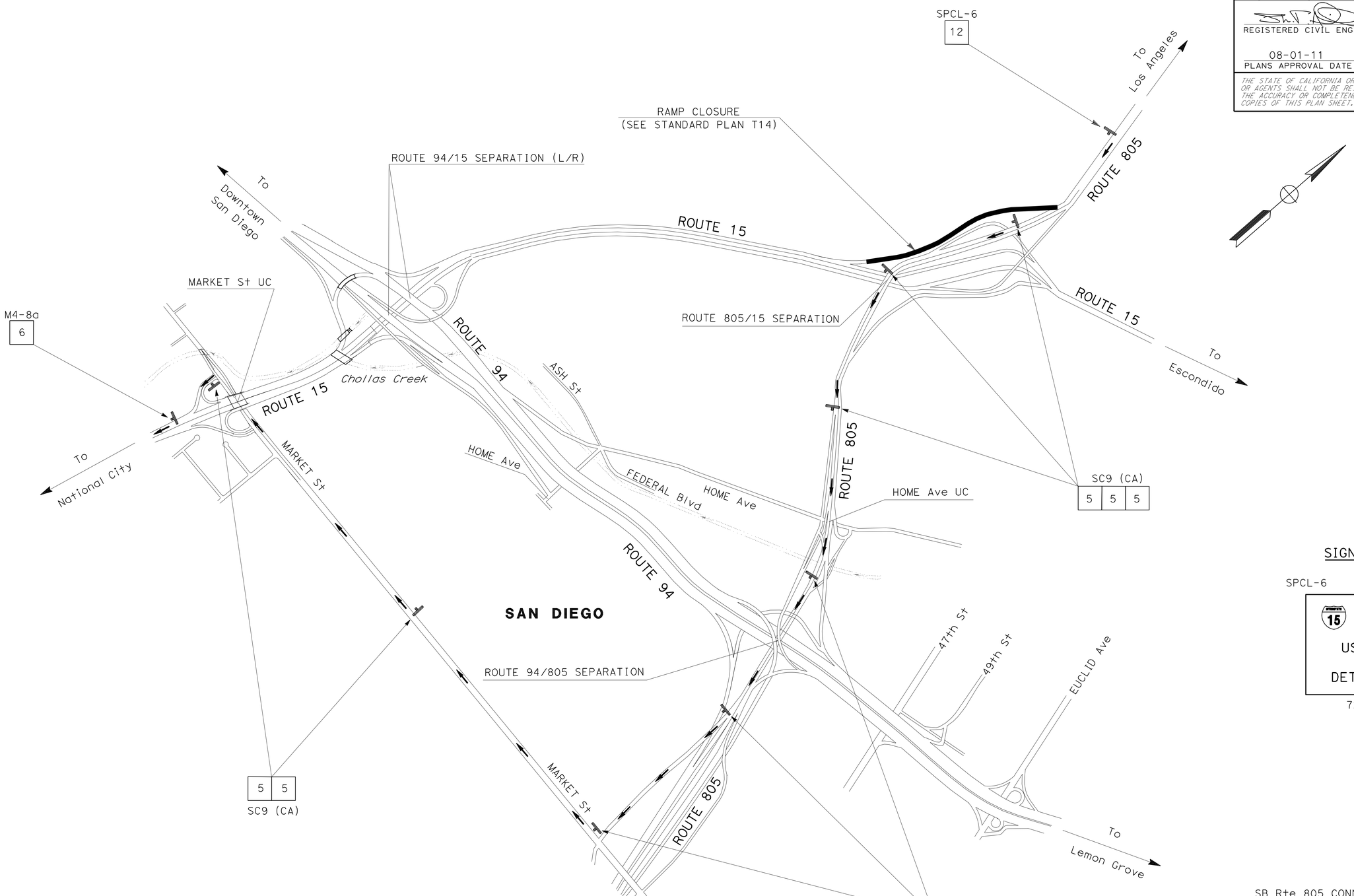

SIGN #12

SPCL-6 8" Caps

15 SOUTH
USE
DETOUR

72" 72"

SB Rte 805 CONNECTOR TO SB Rte 15

TRAFFIC HANDLING PLAN

NO SCALE

TH-8

THIS PLAN ACCURATE FOR TRAFFIC HANDLING WORK ONLY.

REVISED BY	DATE REVISED
RYAN CHAO	SHAHIN ADIBI
CALCULATED-DESIGNED BY	CHECKED BY
FUNCTIONAL SUPERVISOR	CAMILLE ABOU-FADEL

STATE OF CALIFORNIA - DEPARTMENT OF TRANSPORTATION
Caltrans
TRAFFIC DESIGN

LAST REVISION 09-15-11
DATE PLOTTED => 27-SEP-2011
TIME PLOTTED => 16:13

Dist	COUNTY	ROUTE	POST MILES TOTAL PROJECT	SHEET No.	TOTAL SHEETS
11	SD	15	0.5/M4.0	54	116

REGISTERED CIVIL ENGINEER DATE 07-29-11

08-01-11
PLANS APPROVAL DATE

REGISTERED PROFESSIONAL ENGINEER
SHAHIN ADIBI
No. 54839
Exp. 06-30-12
CIVIL
STATE OF CALIFORNIA

THE STATE OF CALIFORNIA OR ITS OFFICERS OR AGENTS SHALL NOT BE RESPONSIBLE FOR THE ACCURACY OR COMPLETENESS OF SCANNED COPIES OF THIS PLAN SHEET.

SIGN #9

SPCL-3 8" Caps

94 WEST
USE
DETOUR

72"
72"

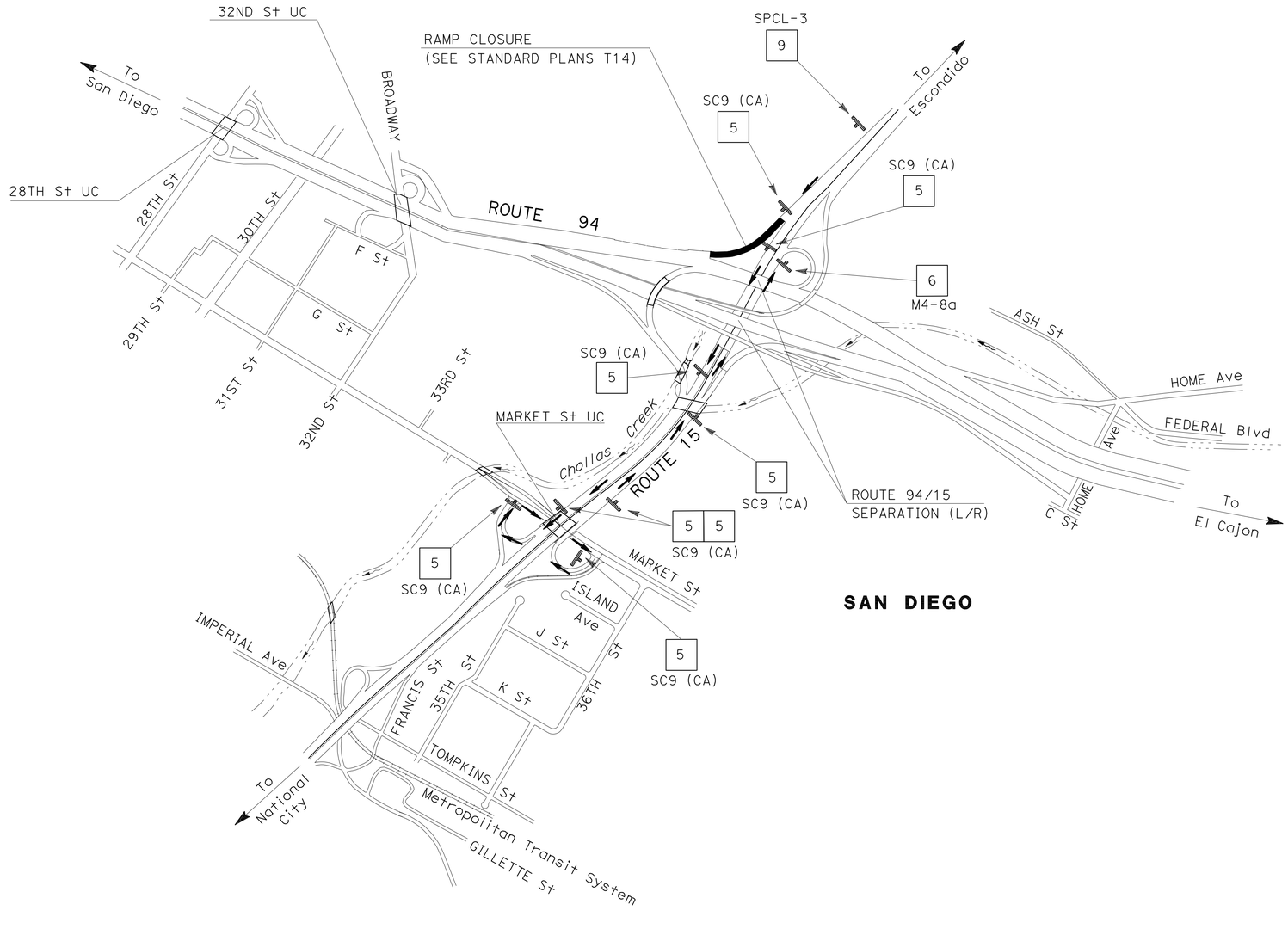

SB Rte 15 CONNECTOR TO WB Rte 94

TRAFFIC HANDLING PLAN

NO SCALE

TH-9

THIS PLAN ACCURATE FOR TRAFFIC HANDLING WORK ONLY.

STATE OF CALIFORNIA - DEPARTMENT OF TRANSPORTATION
Caltrans
TRAFFIC DESIGN

FUNCTIONAL SUPERVISOR: CAMILLE ABOU-FADEL
CALCULATED-DESIGNED BY: SHAHIN ADIBI
CHECKED BY: RYAN CHAO
REVISED BY
DATE REVISED

LAST REVISION 09-15-11
DATE PLOTTED => 27-SEP-2011
TIME PLOTTED => 16:13

Dist	COUNTY	ROUTE	POST MILES TOTAL PROJECT	SHEET No.	TOTAL SHEETS
11	SD	15	0.5/M4.0	55	116

REGISTERED CIVIL ENGINEER 07-29-11 DATE

08-01-11
PLANS APPROVAL DATE

REGISTERED PROFESSIONAL ENGINEER
SHAHIN ADIBI
No. 54839
Exp. 06-30-12
CIVIL
STATE OF CALIFORNIA

THE STATE OF CALIFORNIA OR ITS OFFICERS OR AGENTS SHALL NOT BE RESPONSIBLE FOR THE ACCURACY OR COMPLETENESS OF SCANNED COPIES OF THIS PLAN SHEET.

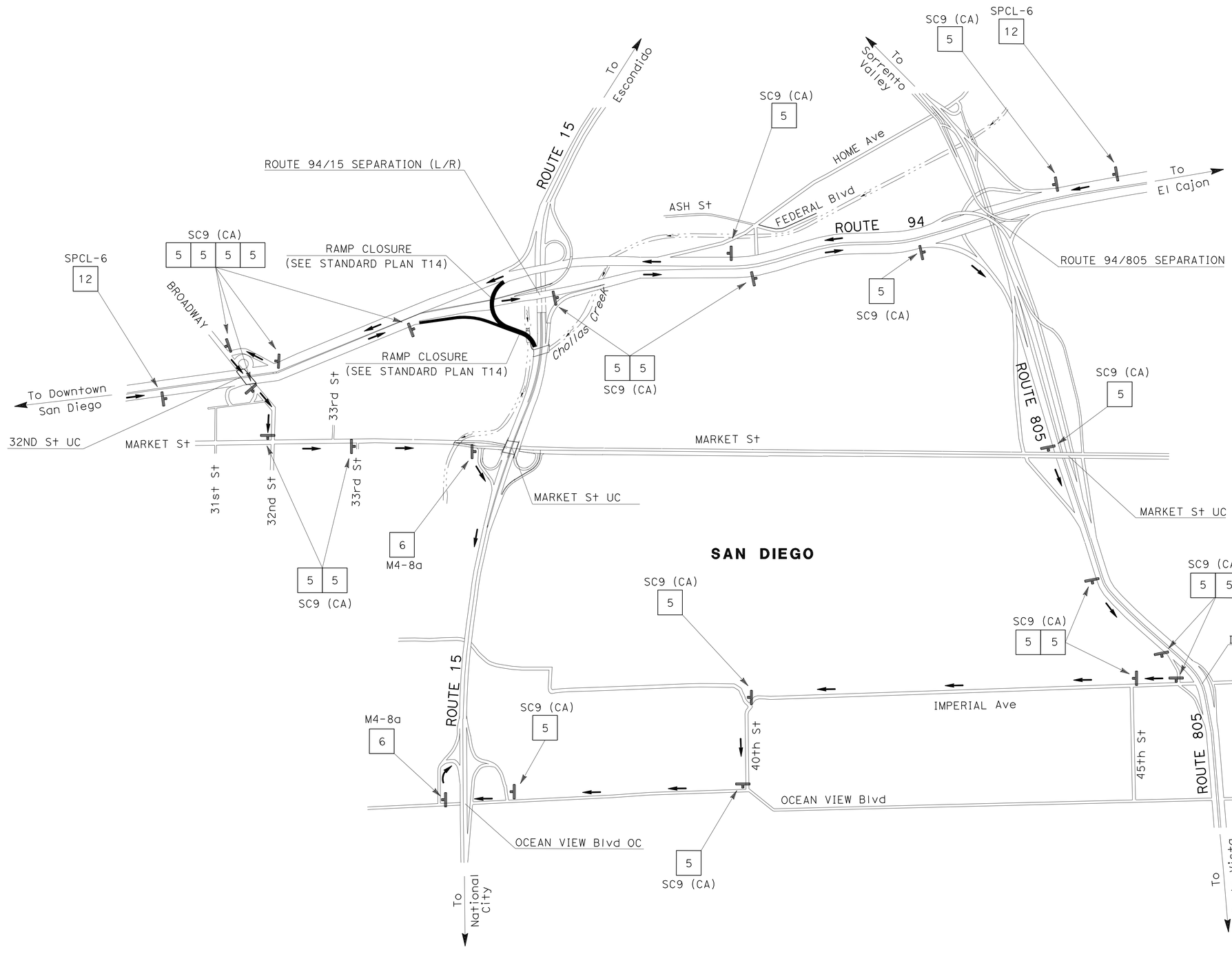

SIGN #12

SPCL-6 8" Caps

15 SOUTH
USE
DETOUR

72" 72"

EB Rte 94 CONNECTOR TO SB Rte 15

WB Rte 94 CONNECTOR TO SB Rte 15

TRAFFIC HANDLING PLAN

NO SCALE

TH-10

THIS PLAN ACCURATE FOR TRAFFIC HANDLING WORK ONLY.

STATE OF CALIFORNIA - DEPARTMENT OF TRANSPORTATION
Caltrans
TRAFFIC DESIGN

FUNCTIONAL SUPERVISOR: CAMILLE ABOU-FADEL
CALCULATED-DESIGNED BY: RYAN CHAO
CHECKED BY: SHAHIN ADIBI
REVISED BY
DATE REVISED

LAST REVISION 09-15-11
DATE PLOTTED => 27-SEP-2011
TIME PLOTTED => 16:13

Dist	COUNTY	ROUTE	POST MILES TOTAL PROJECT	SHEET No.	TOTAL SHEETS
11	SD	15	0.5/M4.0	56	116

REGISTERED CIVIL ENGINEER 07-29-11 DATE

08-01-11
PLANS APPROVAL DATE

REGISTERED PROFESSIONAL ENGINEER
SHAHIN ADIBI
No. 54839
Exp. 06-30-12
CIVIL
STATE OF CALIFORNIA

THE STATE OF CALIFORNIA OR ITS OFFICERS OR AGENTS SHALL NOT BE RESPONSIBLE FOR THE ACCURACY OR COMPLETENESS OF SCANNED COPIES OF THIS PLAN SHEET.

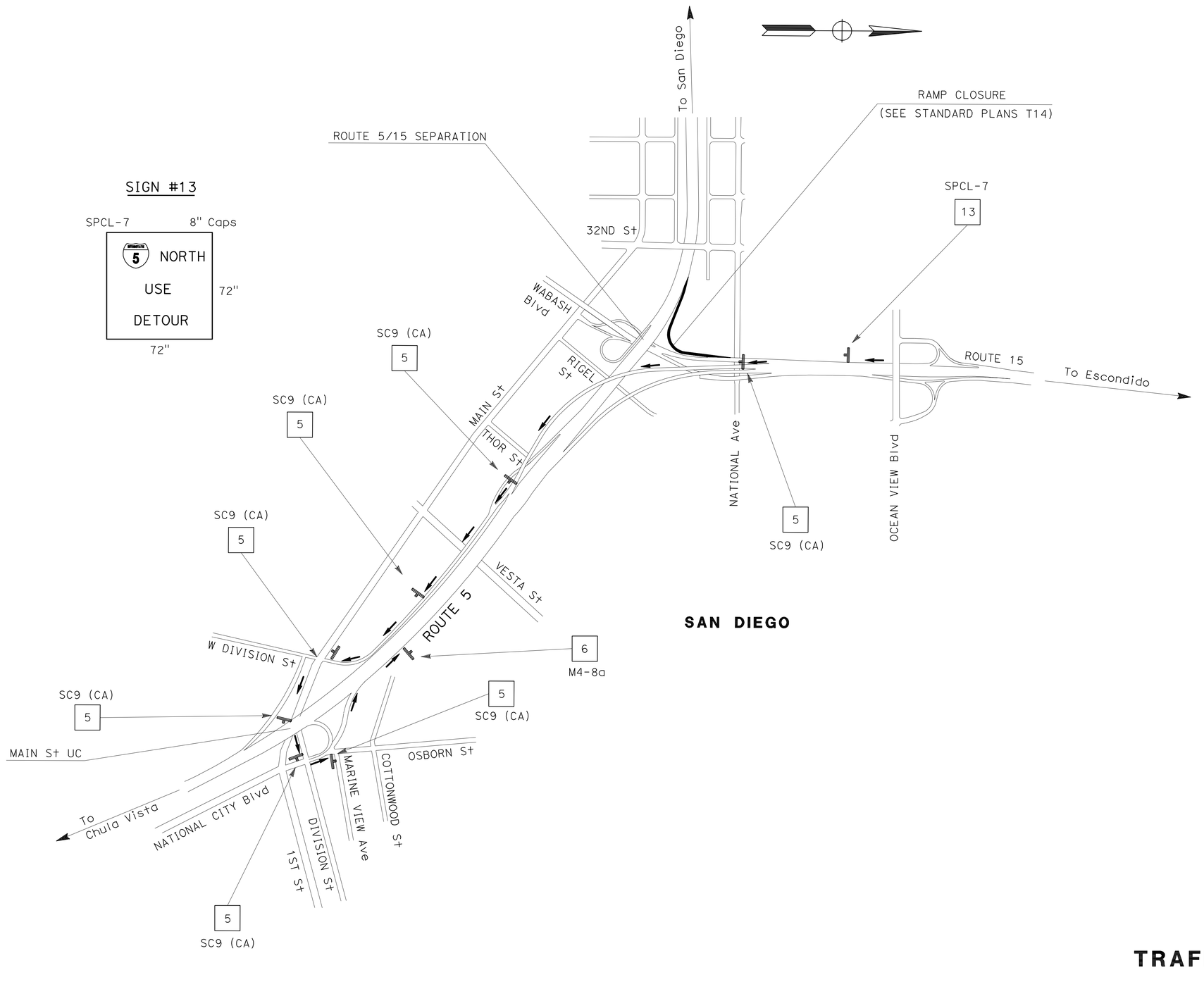

SB Rte 15 CONNECTOR TO NB Rte 5

TRAFFIC HANDLING PLAN

NO SCALE

TH-11

THIS PLAN ACCURATE FOR TRAFFIC HANDLING WORK ONLY.

STATE OF CALIFORNIA - DEPARTMENT OF TRANSPORTATION
Caltrans
TRAFFIC DESIGN

FUNCTIONAL SUPERVISOR: CAMILLE ABOU-FADEL
CALCULATED-DESIGNED BY: SHAHIN ADIBI
CHECKED BY:
REVISED BY: RYAN CHAO
DATE REVISED:

LAST REVISION 09-02-11
DATE PLOTTED => 27-SEP-2011
TIME PLOTTED => 16:13

Dist	COUNTY	ROUTE	POST MILES TOTAL PROJECT	SHEET No.	TOTAL SHEETS
11	SD	15	0.5/M4.0	57	116

07-29-11
REGISTERED CIVIL ENGINEER DATE

08-01-11
PLANS APPROVAL DATE

REGISTERED PROFESSIONAL ENGINEER
SHAHIN ADIBI
No. 54839
Exp. 06-30-12
CIVIL
STATE OF CALIFORNIA

THE STATE OF CALIFORNIA OR ITS OFFICERS OR AGENTS SHALL NOT BE RESPONSIBLE FOR THE ACCURACY OR COMPLETENESS OF SCANNED COPIES OF THIS PLAN SHEET.

SIGN #14

SPCL-8 8" Caps

5 SOUTH
USE
DETOUR

72" 72"

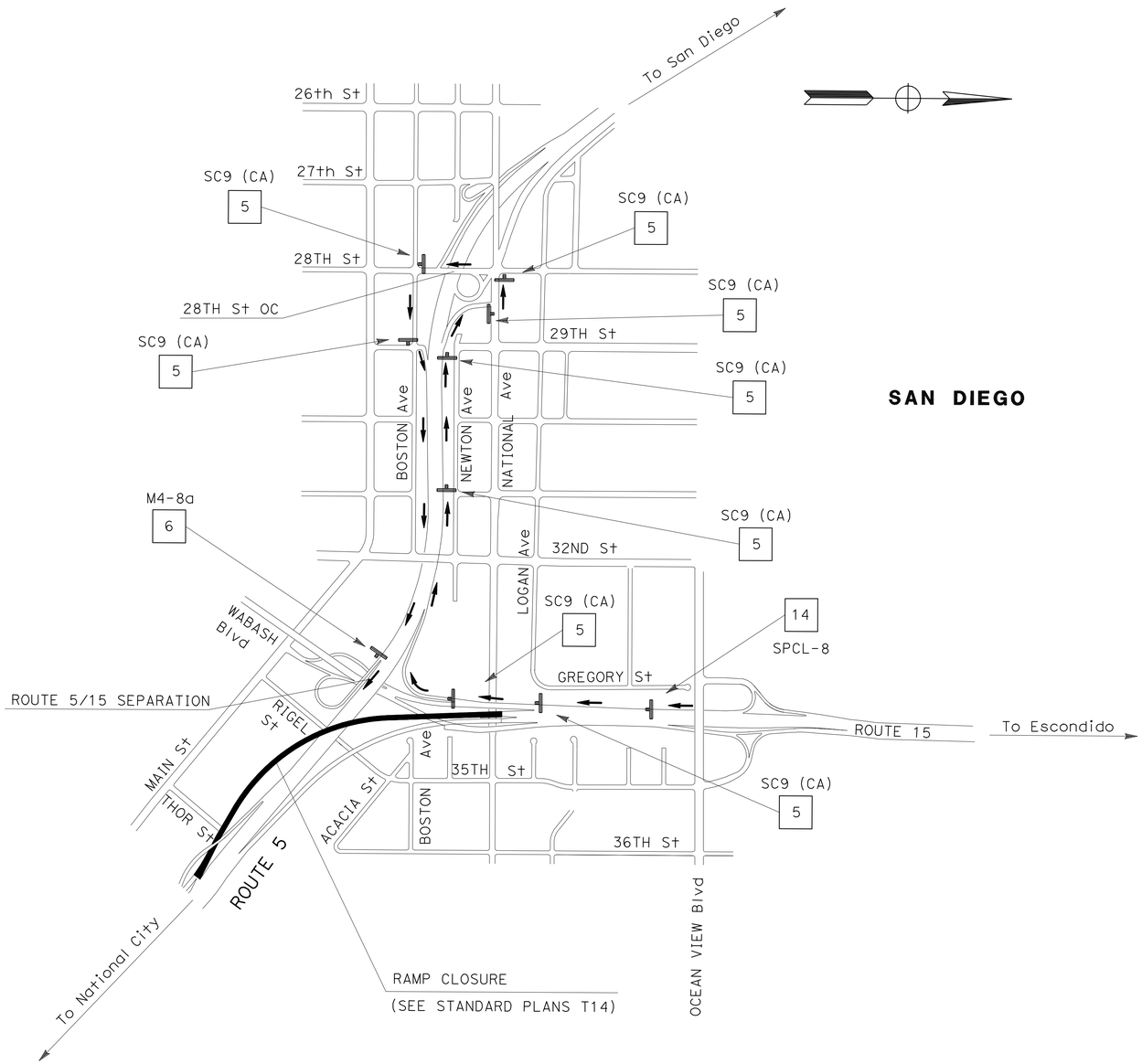

SAN DIEGO

SB Rte 15 CONNECTOR TO SB Rte 5

TRAFFIC HANDLING PLAN

NO SCALE

TH-12

THIS PLAN ACCURATE FOR TRAFFIC HANDLING WORK ONLY.

STATE OF CALIFORNIA - DEPARTMENT OF TRANSPORTATION
Caltrans
TRAFFIC DESIGN

FUNCTIONAL SUPERVISOR: CAMILLE ABOU-FADEL
CALCULATED-DESIGNED BY: SHAHIN ADIBI
CHECKED BY: RYAN CHAO
REVISED BY
DATE REVISED

LAST REVISION 09-15-11
DATE PLOTTED => 27-SEP-2011
TIME PLOTTED => 16:13

Dist	COUNTY	ROUTE	POST MILES TOTAL PROJECT	SHEET No.	TOTAL SHEETS
11	SD	15	0.5/M4.0	58	116

07-29-11
REGISTERED CIVIL ENGINEER DATE

08-01-11
PLANS APPROVAL DATE

REGISTERED PROFESSIONAL ENGINEER
SHAHIN ADIBI
No. 54839
Exp. 06-30-12
CIVIL
STATE OF CALIFORNIA

THE STATE OF CALIFORNIA OR ITS OFFICERS OR AGENTS SHALL NOT BE RESPONSIBLE FOR THE ACCURACY OR COMPLETENESS OF SCANNED COPIES OF THIS PLAN SHEET.

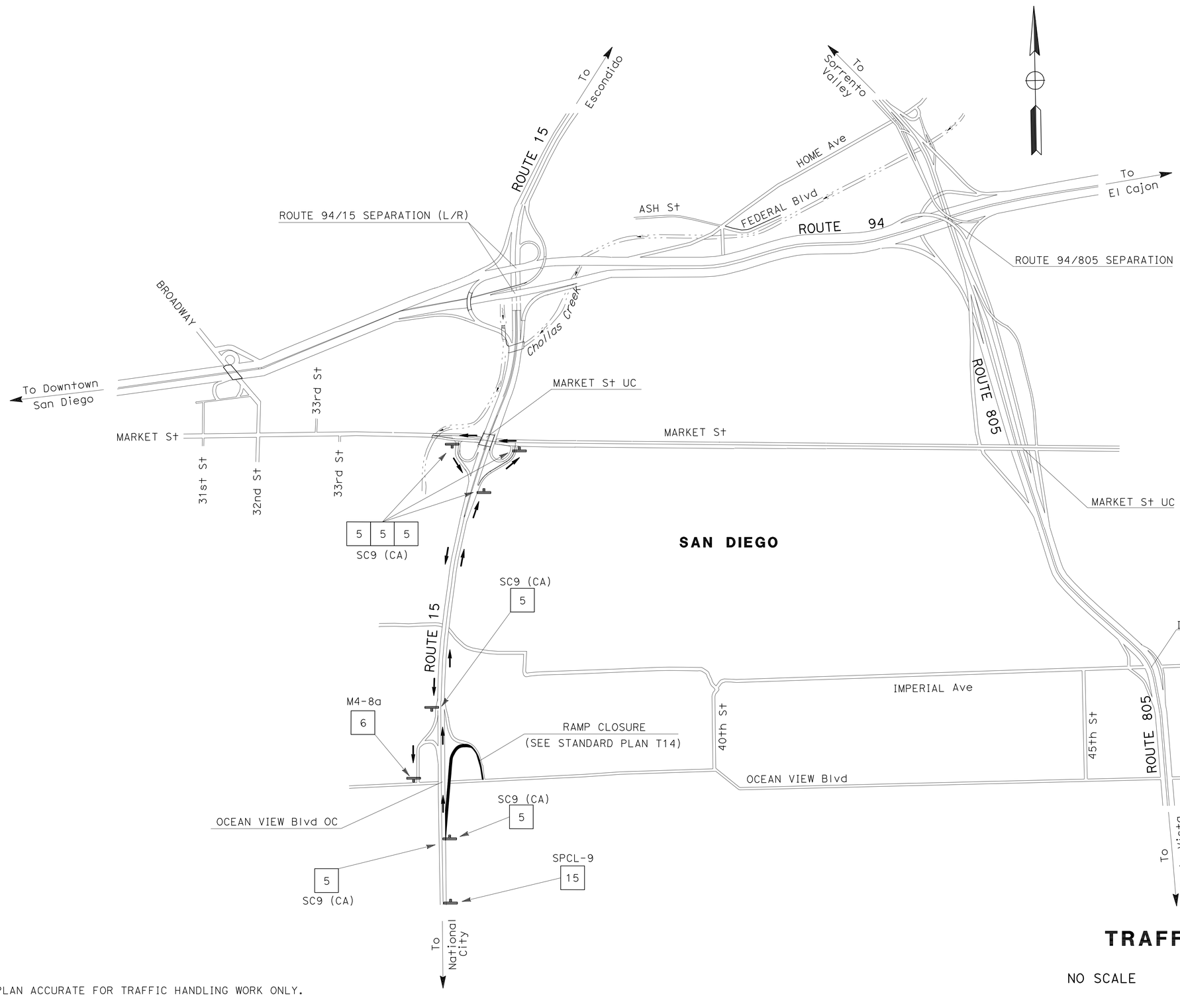

SIGN #15

SPCL-9 8" Caps

OCEANVIEW
BLVD
USE
DETOUR

72"

72"

NB Rte 15 OFF-RAMP TO OCEANVIEW Blvd

TRAFFIC HANDLING PLAN

NO SCALE

TH-13

THIS PLAN ACCURATE FOR TRAFFIC HANDLING WORK ONLY.

REVISED BY	DATE REVISED

CALCULATED-DESIGNED BY	CHECKED BY
RYAN CHAO	SHAHIN ADIBI

FUNCTIONAL SUPERVISOR: CAMILLE ABOU-FADEL

STATE OF CALIFORNIA - DEPARTMENT OF TRANSPORTATION
Caltrans
TRAFFIC DESIGN

LAST REVISION 09-15-11
DATE PLOTTED => 27-SEP-2011
TIME PLOTTED => 16:13

Dist	COUNTY	ROUTE	POST MILES TOTAL PROJECT	SHEET No.	TOTAL SHEETS
11	SD	15	0.5/M4.0	59	116

07-29-11
REGISTERED CIVIL ENGINEER DATE

08-01-11
PLANS APPROVAL DATE

REGISTERED PROFESSIONAL ENGINEER
SHAHIN ADIBI
No. 54839
Exp. 06-30-12
CIVIL
STATE OF CALIFORNIA

THE STATE OF CALIFORNIA OR ITS OFFICERS OR AGENTS SHALL NOT BE RESPONSIBLE FOR THE ACCURACY OR COMPLETENESS OF SCANNED COPIES OF THIS PLAN SHEET.

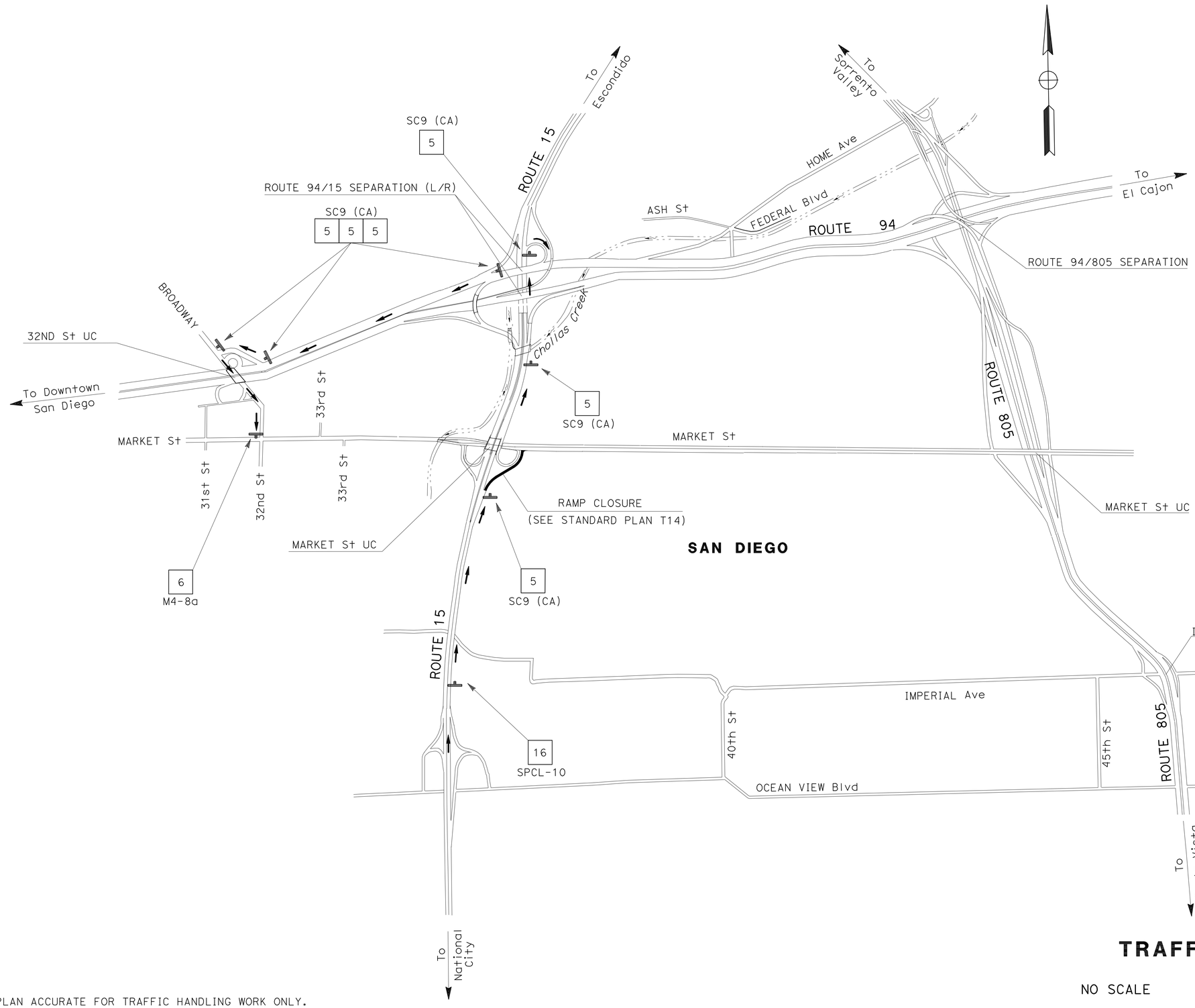

SIGN #16

SPCL-10 8" Caps

MARKET ST.
USE
DETOUR

72"

72"

NB Rte 15 OFF-RAMP TO MARKET St

THIS PLAN ACCURATE FOR TRAFFIC HANDLING WORK ONLY.

NO SCALE

TRAFFIC HANDLING PLAN

TH-14

STATE OF CALIFORNIA - DEPARTMENT OF TRANSPORTATION
Caltrans
TRAFFIC DESIGN

FUNCTIONAL SUPERVISOR: CAMILLE ABOU-FADEL
CALCULATED-DESIGNED BY: SHAHIN ADIBI
CHECKED BY
REVISED BY: RYAN CHAO
DATE REVISED

LAST REVISION 09-15-11
DATE PLOTTED => 27-SEP-2011
TIME PLOTTED => 16:13

Dist	COUNTY	ROUTE	POST MILES TOTAL PROJECT	SHEET No.	TOTAL SHEETS
11	SD	15	0.5/M4.0	60	116

07-29-11
REGISTERED CIVIL ENGINEER DATE

08-01-11
PLANS APPROVAL DATE

REGISTERED PROFESSIONAL ENGINEER
SHAHIN ADIBI
No. 54839
Exp. 06-30-12
CIVIL
STATE OF CALIFORNIA

THE STATE OF CALIFORNIA OR ITS OFFICERS OR AGENTS SHALL NOT BE RESPONSIBLE FOR THE ACCURACY OR COMPLETENESS OF SCANNED COPIES OF THIS PLAN SHEET.

SIGN #15

SPCL-9 8" Caps

OCEANVIEW
BLVD
USE
DETOUR

72" 72"

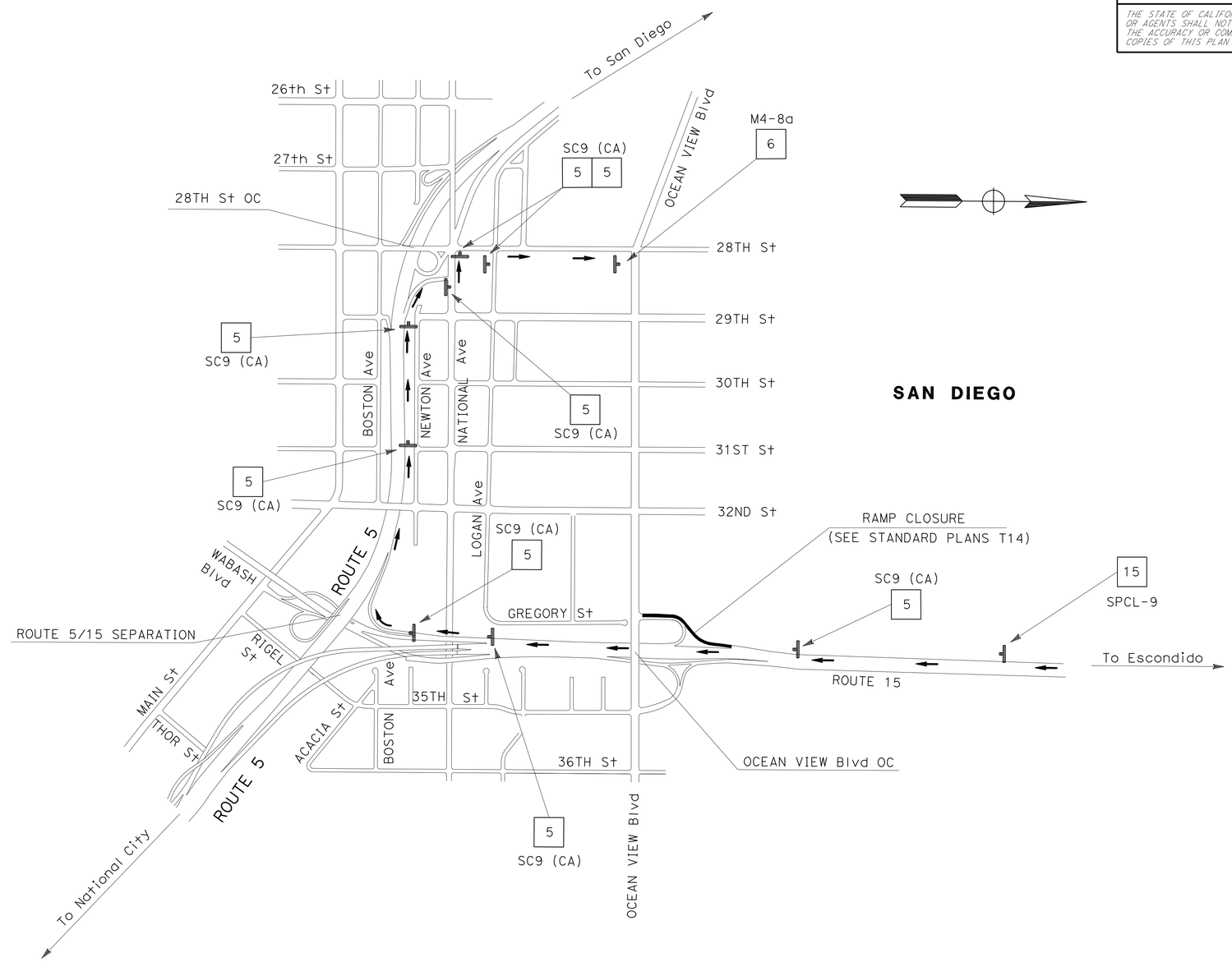

SB Rte 15 OFF-RAMP TO OCEANVIEW Blvd

PRIMARY DETOUR

TRAFFIC HANDLING PLAN

NO SCALE

TH-15

THIS PLAN ACCURATE FOR TRAFFIC HANDLING WORK ONLY.

STATE OF CALIFORNIA - DEPARTMENT OF TRANSPORTATION
Caltrans® **TRAFFIC DESIGN**

FUNCTIONAL SUPERVISOR: CAMILLE ABOU-FADEL

CALCULATED-DESIGNED BY: RYAN CHAO
CHECKED BY: SHAHIN ADIBI

REVISED BY | DATE REVISED

LAST REVISION 09-15-11
DATE PLOTTED => 27-SEP-2011
TIME PLOTTED => 16:13

Dist	COUNTY	ROUTE	POST MILES TOTAL PROJECT	SHEET No.	TOTAL SHEETS
11	SD	15	0.5/M4.0	61	116

REGISTERED CIVIL ENGINEER DATE 07-29-11

08-01-11
PLANS APPROVAL DATE

REGISTERED PROFESSIONAL ENGINEER
SHAHIN ADIBI
No. 54839
Exp. 06-30-12
CIVIL
STATE OF CALIFORNIA

THE STATE OF CALIFORNIA OR ITS OFFICERS OR AGENTS SHALL NOT BE RESPONSIBLE FOR THE ACCURACY OR COMPLETENESS OF SCANNED COPIES OF THIS PLAN SHEET.

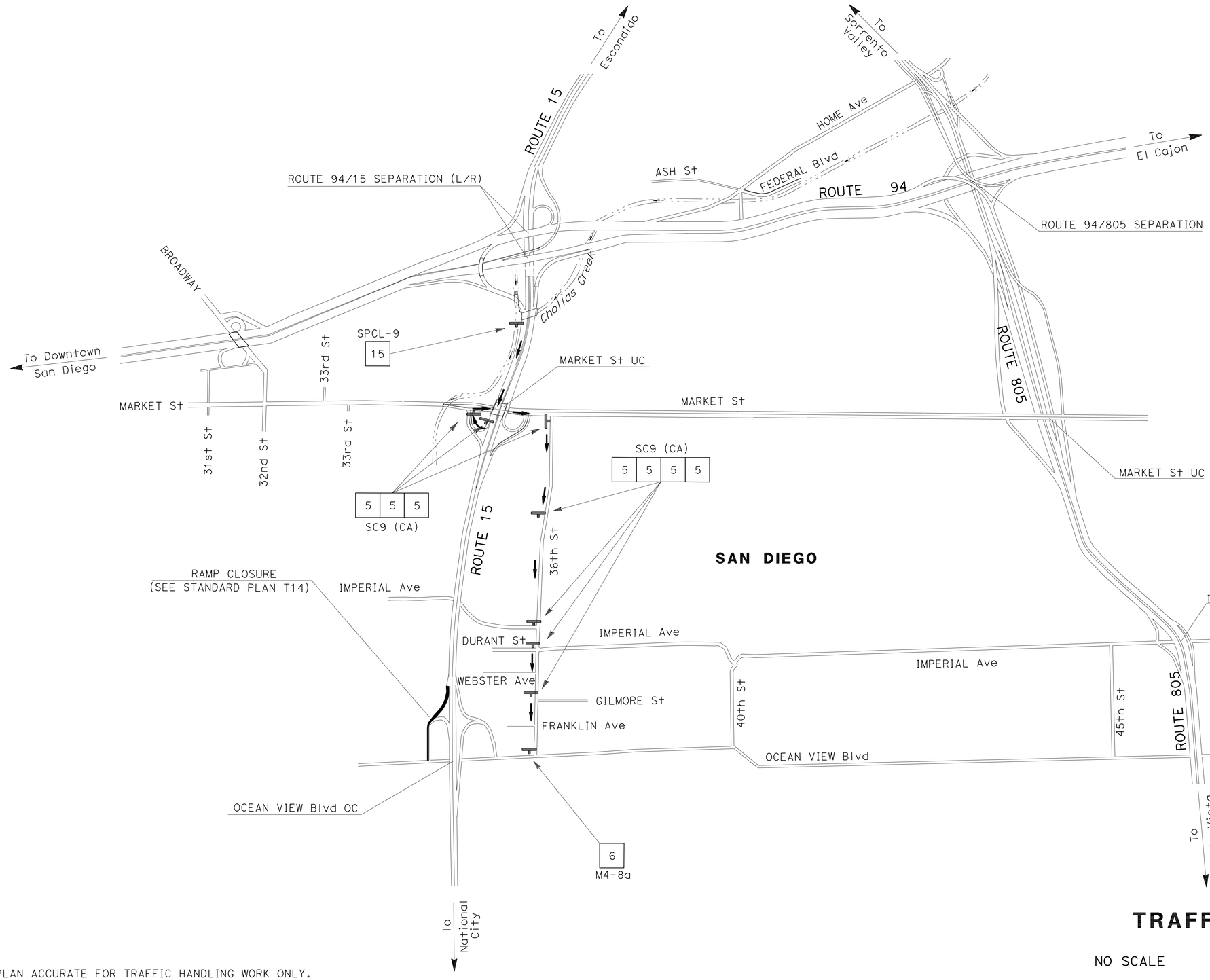

SIGN #15

SPCL-9 8" Caps

OCEANVIEW
BLVD
USE
DETOUR

72"

72"

SB Rte 15 OFF-RAMP TO OCEANVIEW Blvd
SECONDARY DETOUR

TRAFFIC HANDLING PLAN

NO SCALE

TH-16

THIS PLAN ACCURATE FOR TRAFFIC HANDLING WORK ONLY.

REVISED BY	DATE REVISED

CALCULATED-DESIGNED BY	CHECKED BY
RYAN CHAO	SHAHIN ADIBI

FUNCTIONAL SUPERVISOR
CAMILLE ABOU-FADEL

STATE OF CALIFORNIA - DEPARTMENT OF TRANSPORTATION
Caltrans
TRAFFIC DESIGN

LAST REVISION 09-15-11
DATE PLOTTED => 27-SEP-2011
TIME PLOTTED => 16:13

Dist	COUNTY	ROUTE	POST MILES TOTAL PROJECT	SHEET No.	TOTAL SHEETS
11	SD	15	0.5/M4.0	62	116

REGISTERED CIVIL ENGINEER DATE 07-29-11

08-01-11
PLANS APPROVAL DATE

REGISTERED PROFESSIONAL ENGINEER SHAHIN ADIBI No. 54839 Exp. 06-30-12 CIVIL STATE OF CALIFORNIA

THE STATE OF CALIFORNIA OR ITS OFFICERS OR AGENTS SHALL NOT BE RESPONSIBLE FOR THE ACCURACY OR COMPLETENESS OF SCANNED COPIES OF THIS PLAN SHEET.

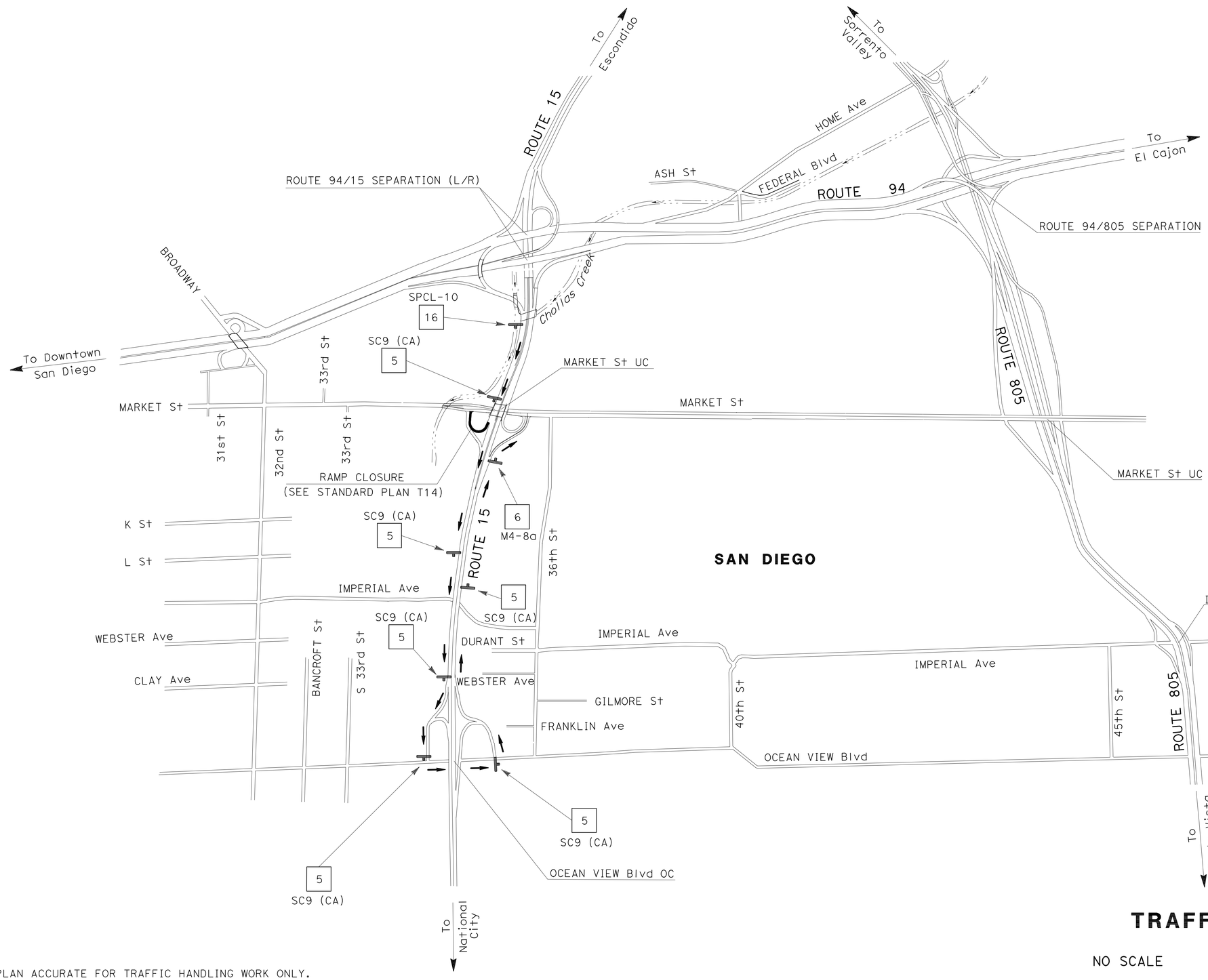

SIGN #16

SPCL-10 8" Caps

MARKET ST.
USE
DETOUR

72" × 72"

SB Rte 15 OFF-RAMP TO MARKET St

PRIMARY DETOUR

TRAFFIC HANDLING PLAN

NO SCALE

TH-17

THIS PLAN ACCURATE FOR TRAFFIC HANDLING WORK ONLY.

STATE OF CALIFORNIA - DEPARTMENT OF TRANSPORTATION
Caltrans
TRAFFIC DESIGN

FUNCTIONAL SUPERVISOR: CAMILLE ABOU-FADEL
CALCULATED-DESIGNED BY: RYAN CHAO
CHECKED BY: SHAHIN ADIBI
REVISED BY
DATE REVISED

LAST REVISION 09-15-11
DATE PLOTTED => 27-SEP-2011
TIME PLOTTED => 16:14

Dist	COUNTY	ROUTE	POST MILES TOTAL PROJECT	SHEET No.	TOTAL SHEETS
11	SD	15	0.5/M4.0	63	116

REGISTERED CIVIL ENGINEER DATE 07-29-11

PLANS APPROVAL DATE 08-01-11

REGISTERED PROFESSIONAL ENGINEER SHAHIN ADIBI No. 54839 Exp. 06-30-12 CIVIL STATE OF CALIFORNIA

THE STATE OF CALIFORNIA OR ITS OFFICERS OR AGENTS SHALL NOT BE RESPONSIBLE FOR THE ACCURACY OR COMPLETENESS OF SCANNED COPIES OF THIS PLAN SHEET.

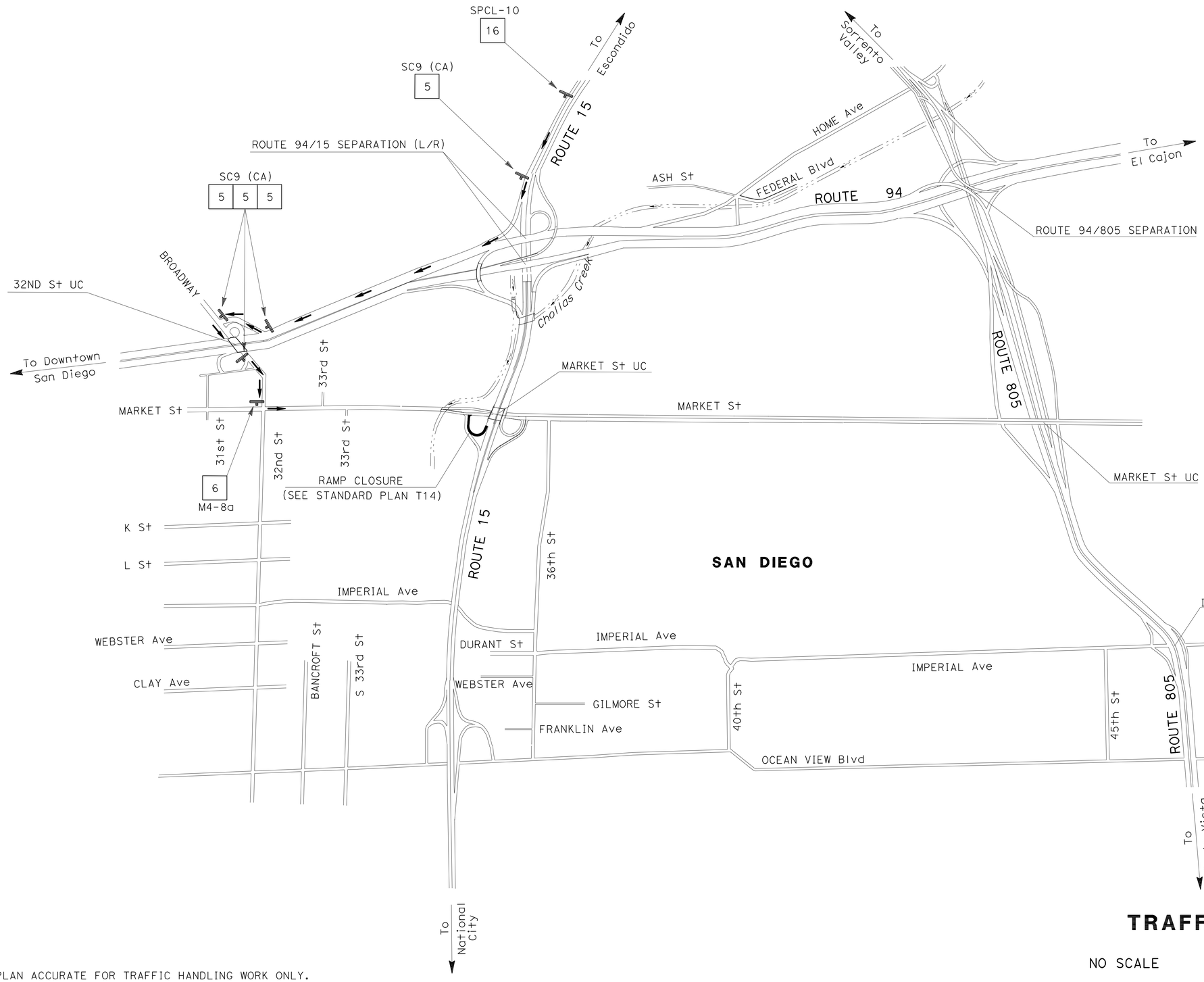

SIGN #16

SPCL-10 8" Caps

MARKET ST.
USE
DETOUR

72"

72"

SB Rte 15 OFF-RAMP TO MARKET St

SECONDARY DETOUR

TRAFFIC HANDLING PLAN

NO SCALE

TH-18

THIS PLAN ACCURATE FOR TRAFFIC HANDLING WORK ONLY.

STATE OF CALIFORNIA - DEPARTMENT OF TRANSPORTATION

Caltrans® **TRAFFIC DESIGN**

FUNCTIONAL SUPERVISOR: CAMILLE ABOU-FADEL

CALCULATED-DESIGNED BY: RYAN CHAO

CHECKED BY: SHAHIN ADIBI

REVISED BY

DATE REVISED

LAST REVISION 09-15-11

DATE PLOTTED => 27-SEP-2011

TIME PLOTTED => 16:14

Dist	COUNTY	ROUTE	POST MILES TOTAL PROJECT	SHEET No.	TOTAL SHEETS
11	SD	15	0.5/M4.0	64	116

REGISTERED CIVIL ENGINEER 07-29-11 DATE

08-01-11
PLANS APPROVAL DATE

REGISTERED PROFESSIONAL ENGINEER SHAHIN ADIBI No. 54839 Exp. 06-30-12 CIVIL STATE OF CALIFORNIA

THE STATE OF CALIFORNIA OR ITS OFFICERS OR AGENTS SHALL NOT BE RESPONSIBLE FOR THE ACCURACY OR COMPLETENESS OF SCANNED COPIES OF THIS PLAN SHEET.

NOTE: 1. ALL PAVEMENT DELINEATION SHALL BE REPLACED IN KIND UNLESS INDICATED OTHERWISE.

DETAIL 11/13 COMBINATION

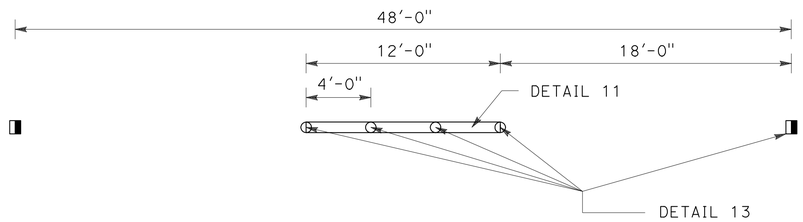

DETAIL 8/10 COMBINATION

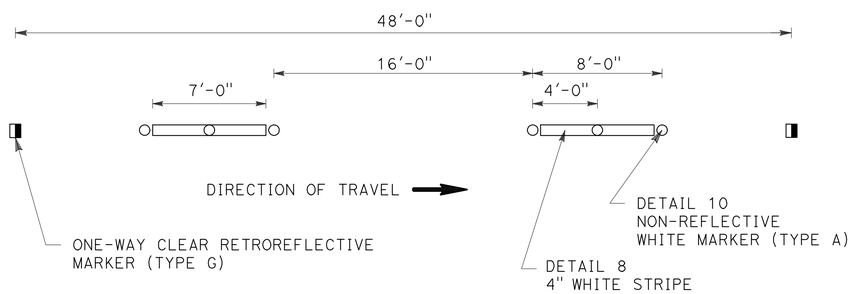

DETAIL 27B (Mod)

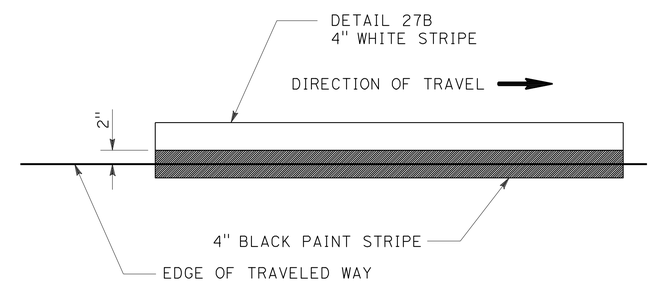

DETAIL 25 (Mod)

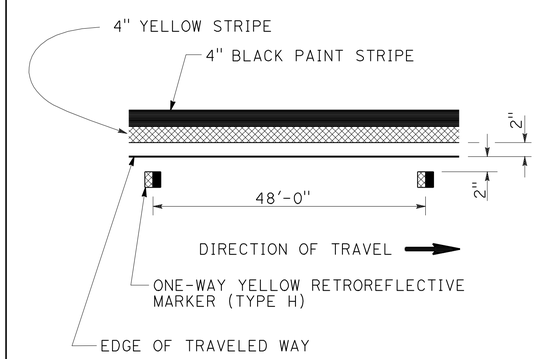

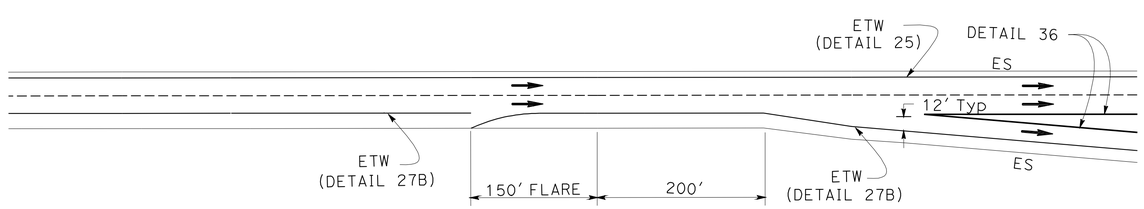

RIGHT EDGELINE FLARE DETAIL

[FOR USE ON ALL EXIT RAMPS EXCEPT WHERE LANE(S) TRAP OFF]

PAVEMENT DELINEATION DETAILS

NO SCALE

PDD-1

STATE OF CALIFORNIA - DEPARTMENT OF TRANSPORTATION
Caltrans® TRAFFIC DESIGN

FUNCTIONAL SUPERVISOR: CAMILLE ABOU-FADEL
CALCULATED-DESIGNED BY: RYAN CHAO
CHECKED BY: SHAHIN ADIBI
REVISED BY
DATE REVISED

LAST REVISION 09-15-11
DATE PLOTTED => 27-SEP-2011
TIME PLOTTED => 16:14

Dist	COUNTY	ROUTE	POST MILES TOTAL PROJECT	SHEET No.	TOTAL SHEETS
11	SD	15	0.5/M4.0	65	116

REGISTERED CIVIL ENGINEER 07-29-11 DATE

08-01-11
PLANS APPROVAL DATE

REGISTERED PROFESSIONAL ENGINEER SHAHIN ADIBI No. 54839 Exp. 06-30-12 CIVIL STATE OF CALIFORNIA

THE STATE OF CALIFORNIA OR ITS OFFICERS OR AGENTS SHALL NOT BE RESPONSIBLE FOR THE ACCURACY OR COMPLETENESS OF SCANNED COPIES OF THIS PLAN SHEET.

NOTE: 1. ALL PAVEMENT DELINEATION SHALL BE REPLACED IN KIND UNLESS INDICATED OTHERWISE.

PAVEMENT DELINEATION QUANTITIES

PAVEMENT MARKER SUMMARY / TRAFFIC STRIPE SUMMARY

ROUTE	DESCRIPTION	FROM STATION	TO STATION	DETAIL	NON-REFLECTIVE (EA)	RETROREFLECTIVE (EA)			PAINT (LF)	THERMOPLASTIC (LF)					REMARKS
										4"	8"	8"	4"	4"	
					TYPE A	TYPE C	TYPE G	TYPE H	(1-COAT)	BROKEN	BROKEN	SOLID	SOLID	BROKEN	
					WHITE	RED-CLEAR	CLEAR	YELLOW		36-12	12-3			17-7	
15	NB - MAIN LANE	28+31.7	216+51.2	11/13	2,792		686			33,464					
				11/14	48	16				576					
				25				375					17,960		
				27B									15,870		
				27B(Mod)					440*				440		
				36			116					2,755			
				36A			34					780			
				8										290	
				37		32	358				5,770				
				38			12					260			
				38B			69					800			
				25(Mod)				16	730*				730		BRIDGE
				27B(Mod)					745*				745		BRIDGE
				11/13	112		29			1,320					BRIDGE
	SB - MAIN LANE	28+31.7	214+82.9	11/13	2,540		624			30,464					
				11/14	48	16				576					
				25				366					17,520		
				25(Mod)				6	235*				235		
				27B									16,630		
				27B(Mod)					2,500*				2,500		
				36			155					3,690			
				36A			24					560			
				8										480	
				37		24	279				4,455				
				38			38					880			
				38B			69					805			
				25(Mod)				16	740*				740		BRIDGE
				27B(Mod)					740*				740		BRIDGE
				11/13	112		29			1,340					BRIDGE
				SUB TOTAL	5,652		3,389		6,130*	67,740	10,225	10,530	74,110	770	

* = BLACK PAINTED TRAFFIC STRIPE

REMOVE YELLOW PAINTED TRAFFIC STRIPE (HAZARDOUS WASTE)

ROUTE	DESCRIPTION	FROM STATION	TO STATION	DETAIL	LENGTH (LF)	REMARKS
15	NB - MAINLANE	28+31.7	216+51.2	25(Mod)	730	REMOVAL ON BRIDGES ONLY
15	SB - MAINLANE / RAMP	28+31.7	214+82.9	25(Mod)	905	REMOVAL ON BRIDGES ONLY
				TOTAL	1,635	

REMOVE PAVEMENT MARKERS (N)

ROUTE	DESCRIPTION	FROM STATION	TO STATION	NON-REFLECTIVE (EA)	RETROREFLECTIVE (EA)
				TYPE A	TYPE C, G, H
15	NB/SB - MAINLANE/BRIDGES	28+31.7	216+51.2	5,652	3,405
15	NB/SB - RAMPS/BRIDGES	28+31.7	214+82.9	286	386
			TOTAL	5,938	3,791

(N) - NOT A SEPARATE PAY ITEM, FOR INFORMATION ONLY.

PAVEMENT DELINEATION QUANTITIES

PDQ-1

REVISED BY | DATE REVISED
RYAN CHAO | SHAHIN ADIBI
CALCULATED-DESIGNED BY | CHECKED BY
FUNCTIONAL SUPERVISOR | CAMILLE ABOU-FADEL

STATE OF CALIFORNIA - DEPARTMENT OF TRANSPORTATION
Caltrans TRAFFIC DESIGN

LAST REVISION 09-15-11 | DATE PLOTTED => 27-SEP-2011 | TIME PLOTTED => 16:14

Dist	COUNTY	ROUTE	POST MILES TOTAL PROJECT	SHEET No.	TOTAL SHEETS
11	SD	15	0.5/M4.0	66	116

REGISTERED CIVIL ENGINEER 07-29-11 DATE

08-01-11
PLANS APPROVAL DATE

REGISTERED PROFESSIONAL ENGINEER SHAHIN ADIBI No. 54839 Exp. 06-30-12 CIVIL STATE OF CALIFORNIA

THE STATE OF CALIFORNIA OR ITS OFFICERS OR AGENTS SHALL NOT BE RESPONSIBLE FOR THE ACCURACY OR COMPLETENESS OF SCANNED COPIES OF THIS PLAN SHEET.

NOTE: 1. ALL PAVEMENT DELINEATION SHALL BE REPLACED IN KIND UNLESS INDICATED OTHERWISE.

PAVEMENT DELINEATION QUANTITIES

PAVEMENT MARKER SUMMARY / TRAFFIC STRIPE SUMMARY

ROUTE	DESCRIPTION	FROM STATION	TO STATION	DETAIL	NON-REFLECTIVE (EA)	RETROREFLECTIVE (EA)			PAINT (LF)	THERMOPLASTIC (LF)					REMARKS
					TYPE A	TYPE C	TYPE G	TYPE H	(1-COAT)	4"	8"	8"	4"	4"	
										BROKEN	BROKEN	SOLID	SOLID	BROKEN	
					WHITE	RED-CLEAR	CLEAR	YELLOW		36-12	12-3			17-7	
15	NB - RAMPS	28+31.7	216+51.2	11/13	52		14			620					Rte 94 CONNECTOR RAMP
				25A				120					2,860		
				27B									5,960		
				27				23	1075*				2,150		L = 1,075'
				8/10	216		37							1705	
				38			4					80			
				38B			28					315			
	SB - RAMPS	28+31.7	214+82.9	25A				92					2,185		
				25A(Mod)				8	165*				165		OCEAN VIEW Blvd RAMP - BRIDGE
				27B									4,220		
				27B(Mod)					165*				165		OCEAN VIEW Blvd RAMP - BRIDGE
				27				14	615*				1,230		L = 615'
				8/10	18		4							135	
				36A			8					175			
				38			18					415			
				38B			16					170			
	SB & NB				34										IRRIGATION CROSSOVER SB & NB
				SUB TOTAL - PDQ 2	320	386			2,020*	620	0	1,155	18,935	1,840	
				SUB TOTAL - PDQ 1	5,652	3,405			6,130*	67,740	10,225	10,530	74,110	770	
				TOTAL	5,972	3,791			8,150*	68,360	10,225	11,685	93,045	2,610	

* = BLACK PAINTED TRAFFIC STRIPE

REMOVE PAINTED TRAFFIC STRIPE

ROUTE	DESCRIPTION	FROM STATION	TO STATION	DETAIL	LENGTH (LF)	REMARKS
15	NB - MAINLANE / RAMP	28+31.7	216+51.2	11	35	NATIONAL Ave UC ONLY *
				27B(Mod)	1490	ALL BRIDGES
				25(Mod)	730	ALL BRIDGES (BLACK STRIPE)
15	SB - MAINLANE / RAMP	28+31.7	214+82.9	11	35	NATIONAL Ave UC ONLY *
				27B(Mod)	1810	ALL BRIDGES
				25(Mod)	905	ALL BRIDGES (BLACK STRIPE)
				TOTAL	5,005	

* ALL OTHER BRIDGES ARE STRIPED WITH DETAIL 13 (TYPE A, TYGE G MARKERS) ONLY.

PAVEMENT DELINEATION QUANTITIES

PDQ-2

REVISED BY | DATE REVISED
RYAN CHAO | SHAHIN ADIBI
CALCULATED-DESIGNED BY | CHECKED BY
FUNCTIONAL SUPERVISOR | CAMILLE ABOU-FADEL

STATE OF CALIFORNIA - DEPARTMENT OF TRANSPORTATION
Caltrans TRAFFIC DESIGN

LAST REVISION 09-15-11 | DATE PLOTTED => 27-SEP-2011 | TIME PLOTTED => 16:14

Dist	COUNTY	ROUTE	POST MILES TOTAL PROJECT	SHEET No.	TOTAL SHEETS
11	SD	15	0.5/M4.0	67	116

REGISTERED CIVIL ENGINEER 07-29-11 DATE

08-01-11
PLANS APPROVAL DATE

REGISTERED PROFESSIONAL ENGINEER
SHAHIN ADIBI
No. 54839
Exp. 06-30-12
CIVIL
STATE OF CALIFORNIA

THE STATE OF CALIFORNIA OR ITS OFFICERS OR AGENTS SHALL NOT BE RESPONSIBLE FOR THE ACCURACY OR COMPLETENESS OF SCANNED COPIES OF THIS PLAN SHEET.

NOTE: 1. ALL PAVEMENT DELINEATION SHALL BE REPLACED IN KIND UNLESS INDICATED OTHERWISE.

THERMOPLASTIC PAVEMENT MARKING

Rte	LOCATION	DIRECTION	FROM STATION	TO STATION	TYPE I-24' SQFT	TYPE II (L) SQFT	TYPE III (L) SQFT	TYPE III (R) SQFT	TYPE V SQFT	TYPE III (B) SQFT	TYPE VI SQFT	SIGNAL SQFT	AHEAD SQFT	SQFT	12" LIMIT LINE SQFT
15	NB OFF - OCEAN VIEW Blvd	NB	28+31.7	216+51.2		90		84	66			64	62		35
	NB OFF - OCEAN VIEW Blvd				62										
	NB OFF - MARKET STREET						84	84				32	31		35
	NB ON - MARKET STREET				31										
	NB OFF - Rte 94 EAST														
	NB OFF - Rte 94 WEST														20
	SB OFF - Rte 94 WEST	SB	28+31.7	214+82.9										33	23
	SB OFF - MARKET STREET						42	42		73		32	31		33
	SB ON - MARKET STREET				31										
	SB OFF - OCEAN VIEW Blvd						84	84	33			32	31		25
	SB ON - OCEAN VIEW Blvd														
	Rte 94/15 Sep (WB) TO Rte 805/15 Sep										126				
	Rte 805/15 Sep TO PM M4.0										126				
				SUB TOTAL	124	90	210	294	99	73	252	160	155	33	171
				TOTAL	1,661										

PAVEMENT DELINEATION QUANTITIES

PDQ-3

REVISED BY | DATE REVISED
RYAN CHAO | SHAHIN ADIBI
CALCULATED-DESIGNED BY | CHECKED BY
FUNCTIONAL SUPERVISOR
CAMILLE ABOU-FADEL

STATE OF CALIFORNIA - DEPARTMENT OF TRANSPORTATION
Caltrans® TRAFFIC DESIGN

LAST REVISION 09-15-11 | DATE PLOTTED => 27-SEP-2011 | TIME PLOTTED => 16:14

Dist	COUNTY	ROUTE	POST MILES TOTAL PROJECT	SHEET No.	TOTAL SHEETS
11	SD	15	0.5/M4.0	68	116

REGISTERED CIVIL ENGINEER DATE 07-29-11

08-01-11
PLANS APPROVAL DATE

REGISTERED PROFESSIONAL ENGINEER SHAHIN ADIBI No. 54839 Exp. 06-30-12 CIVIL STATE OF CALIFORNIA

THE STATE OF CALIFORNIA OR ITS OFFICERS OR AGENTS SHALL NOT BE RESPONSIBLE FOR THE ACCURACY OR COMPLETENESS OF SCANNED COPIES OF THIS PLAN SHEET.

LEGEND:

S/S
(XX) = INSTALL SIGN (STRAP AND SADDLE BRACKET METHOD)

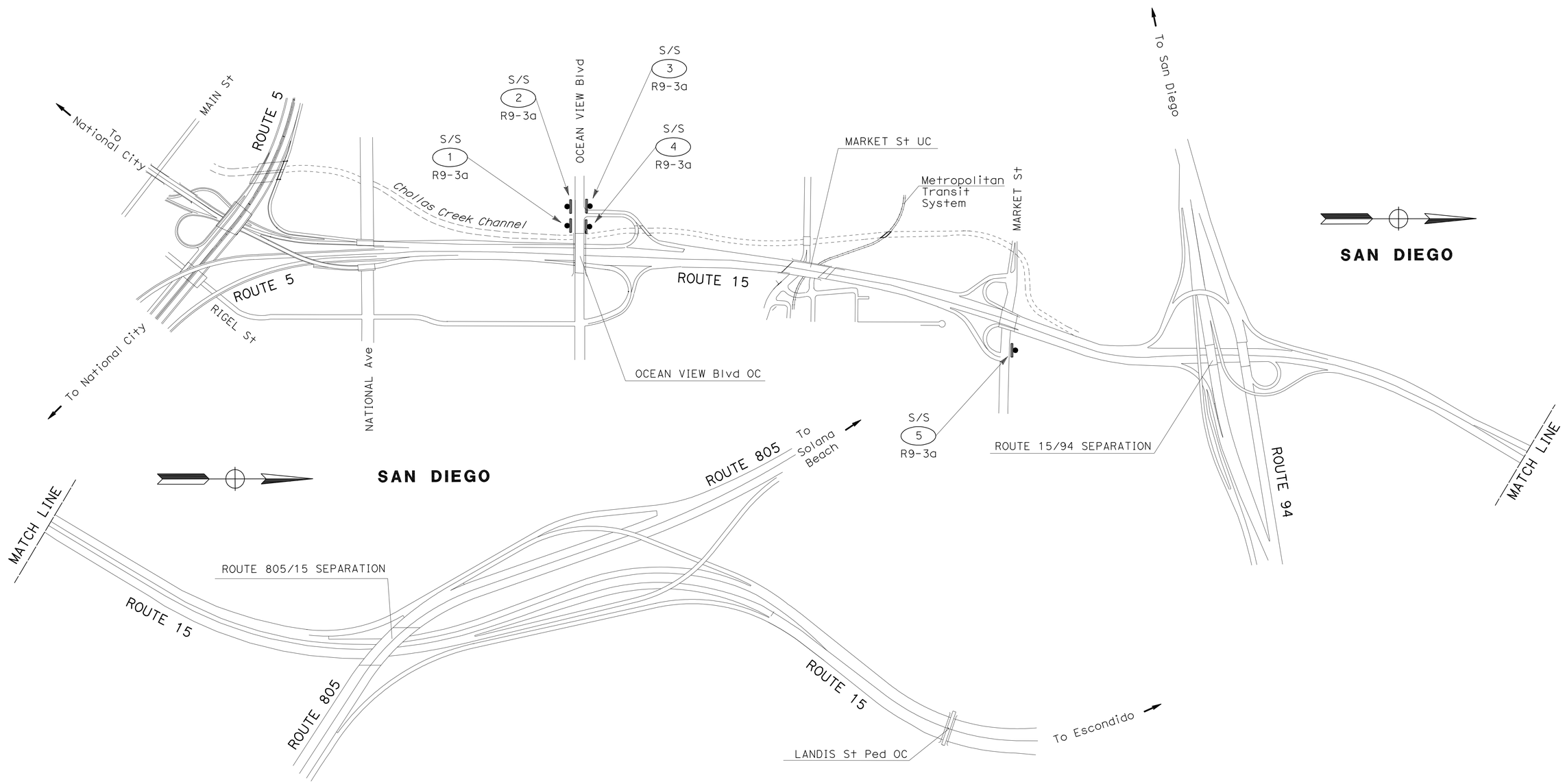

THIS PLAN ACCURATE FOR SIGN WORK ONLY.

NO SCALE

SIGN PLAN

S-1

STATE OF CALIFORNIA - DEPARTMENT OF TRANSPORTATION
Caltrans
TRAFFIC DESIGN

FUNCTIONAL SUPERVISOR: CAMILLE ABOU-FADEL
CALCULATED-DESIGNED BY: SHAHIN ADIBI
CHECKED BY: RYAN CHAO
REVISED BY
DATE REVISED

LAST REVISION 09-15-11
DATE PLOTTED => 27-SEP-2011
TIME PLOTTED => 16:14

Dist	COUNTY	ROUTE	POST MILES TOTAL PROJECT	SHEET No.	TOTAL SHEETS
11	SD	15	0.5/M4.0	69	116

REGISTERED CIVIL ENGINEER 07-29-11 DATE

08-01-11
PLANS APPROVAL DATE

REGISTERED PROFESSIONAL ENGINEER
SHAHIN ADIBI
No. 54839
Exp. 06-30-12
CIVIL
STATE OF CALIFORNIA

THE STATE OF CALIFORNIA OR ITS OFFICERS OR AGENTS SHALL NOT BE RESPONSIBLE FOR THE ACCURACY OR COMPLETENESS OF SCANNED COPIES OF THIS PLAN SHEET.

NOTES:

1. FEDERAL MANUAL ON UNIFORM TRAFFIC CONTROL DEVICES (MUTCD) SIGN CODES ARE SHOWN UNLESS DESIGNATED BY (CA) INDICATING STANDARD CALIFORNIA SIGN SPECIFICATIONS.
2. EXACT LOCATIONS OF SIGNS SHALL BE DETERMINED BY THE ENGINEER.
3. REFER TO "FURNISH ROADSIDE SIGN PANEL" CHART FOR FURTHER INFORMATION.

ROADSIDE SIGN QUANTITIES

SIGN No.	ROUTE	CODE	PANEL SIZE Horiz	PANEL SIZE Vert	D	C	E	Min POST LENGTH	POST SIZE 4X4	POST SIZE 4X6	POST SIZE 6X6	POST SIZE 6X8	INSTALL SIGN (STRAP & SADDLE BRACKET METHOD)	REMARKS
			INCHES X INCHES		Ft	Ft	Ft	Ft	INCHES X INCHES				EA	
1	15	R9-3a	24x24										1	ATTACH TO EXISTING SIGNAL POLE
2	15	R9-3a	24x24										1	ATTACH TO EXISTING SIGNAL POLE
3	15	R9-3a	24x24										1	ATTACH TO EXISTING SIGNAL POLE
4	15	R9-3a	24x24										1	ATTACH TO EXISTING SIGNAL POLE
5	15	R9-3a	24x24										1	ATTACH TO EXISTING SIGNAL POLE
												TOTAL	5	

REVISED BY | DATE REVISED
RYAN CHAO | SHAHIN ADIBI
CALCULATED-DESIGNED BY | CHECKED BY
FUNCTIONAL SUPERVISOR
CAMILLE ABOU-FADEL

STATE OF CALIFORNIA - DEPARTMENT OF TRANSPORTATION
Caltrans
TRAFFIC DESIGN

SIGN QUANTITIES

SQ-1

LAST REVISION 09-15-11 | DATE PLOTTED => 27-SEP-2011 | TIME PLOTTED => 16:14

Dist	COUNTY	ROUTE	POST MILES TOTAL PROJECT	SHEET No.	TOTAL SHEETS
11	SD	15	0.5/M4.0	70	116

REGISTERED CIVIL ENGINEER 07-29-11 DATE

08-01-11
PLANS APPROVAL DATE

REGISTERED PROFESSIONAL ENGINEER SHAHIN ADIBI No. 54839 Exp. 06-30-12 CIVIL STATE OF CALIFORNIA

THE STATE OF CALIFORNIA OR ITS OFFICERS OR AGENTS SHALL NOT BE RESPONSIBLE FOR THE ACCURACY OR COMPLETENESS OF SCANNED COPIES OF THIS PLAN SHEET.

NOTES:

1. FEDERAL MANUAL ON UNIFORM TRAFFIC CONTROL DEVICES (MUTCD) SIGN CODES ARE SHOWN UNLESS DESIGNATED BY (CA) INDICATING STANDARD CALIFORNIA SIGN SPECIFICATIONS.
2. PROTECTIVE OVERLAY DESIGNATIONS ARE AS FOLLOWS: SOC-SPRAY-ON COATING, SF-STANDARD FILM, AND PF-PREMIUM FILM.
3. REFER TO "ROADSIDE SIGN QUANTITIES" CHART FOR FURTHER INFORMATION.
4. GREEN - Grn, WHITE - Wht, BLACK - Blk, BLUE - Blu, YELLOW - Ylw, BROWN - Brn, RED - Red, ORANGE - Org

FURNISH ROADSIDE SIGN PANEL

SIGN No.	CODE	PANEL SIZE Horiz (INCHES X INCHES)	PANEL SIZE Vert (INCHES X INCHES)	BACKGROUND SHEETING COLOR	BACKGROUND RETRO-REFLECTIVE ASTM TYPE	LEGEND SHEETING COLOR	LEGEND REFLECTIVE ASTM TYPE	LEGEND BLACK (NON-REFLECTIVE)	SIGN PANEL SINGLE SHEET ALUMINUM (SQFT) UNFRAMED 0.063 INCHES	PROTECTIVE OVERLAY SOC	PROTECTIVE OVERLAY SF	PROTECTIVE OVERLAY PF	REMARKS
1	R9-3a	24 X 24		Wht	IV	Red/Blk	IV	X	4			X	
2	R9-3a	24 X 24		Wht	IV	Red/Blk	IV	X	4			X	
3	R9-3a	24 X 24		Wht	IV	Red/Blk	IV	X	4			X	
4	R9-3a	24 X 24		Wht	IV	Red/Blk	IV	X	4			X	
5	R9-3a	24 X 24		Wht	IV	Red/Blk	IV	X	4			X	
								TOTAL	20				

SIGN QUANTITIES

SQ-2

STATE OF CALIFORNIA - DEPARTMENT OF TRANSPORTATION
Caltrans TRAFFIC DESIGN

FUNCTIONAL SUPERVISOR: CAMILLE ABOU-FADEL
CALCULATED-DESIGNED BY: RYAN CHAO
CHECKED BY: SHAHIN ADIBI
REVISED BY
DATE REVISED

LAST REVISION 09-15-11
DATE PLOTTED => 27-SEP-2011
TIME PLOTTED => 16:14

Dist	COUNTY	ROUTE	POST MILES TOTAL PROJECT	SHEET No.	TOTAL SHEETS
11	SD	15	0.5/M4.0	71	116

Bahman Yazdani 07-29-11
REGISTERED CIVIL ENGINEER DATE

08-01-11
PLANS APPROVAL DATE

REGISTERED PROFESSIONAL ENGINEER BAHMAN YAZDANI No. 58322 Exp 06-30-12 CIVIL STATE OF CALIFORNIA

THE STATE OF CALIFORNIA OR ITS OFFICERS OR AGENTS SHALL NOT BE RESPONSIBLE FOR THE ACCURACY OR COMPLETENESS OF SCANNED COPIES OF THIS PLAN SHEET.

GRIND EXISTING CONCRETE PAVEMENT

ROUTE	LINE	STATION Beg	STATION END	WIDTH (LF) (N)	SQYD	REMARK
NORTH 15	"W"	28+31.70	32+60.79	24.0	1,144	
NORTH 15	"D7"	32+60.79	40+23.57	24.0	2,034	
NORTH 15	"D7"	40+23.57	43+95.00	26.0	1,073	AT Sta 40+23.57 W=24′, Sta 43+95.00 W=27.1′, Avg W=26.0′
NORTH 15	"D7"	45+65.00	47+30.60	29.0	534	
NORTH 15	"D7"	47+30.60	53+67.51	24.0	1,698	
NORTH 15	"D6"	53+67.50	56+27.57	48.0	1,387	
NORTH 15	"SD-15"	56+27.57	64+83.50	48.0	4,565	
NORTH 15	"SD-15"	118+17.40	124+17.00	36.0	2,398	
NORTH 15	"SD-15"	124+17.00	126+15.00	24.0	528	
NORTH 15	"SD-15R"	150+62.70	216+51.20	36.0	26,354	
NORTH 15	"SD-15R"	150+62.70	188+07.00	23.9	9,943	Sta 150+62.70 W=12′, Sta 188+07.00 W=40.0′, Avg W=21.4′
SOUTH 15	"W"	28+31.70	32+60.79	24.0	1,144	
SOUTH 15	"D8"	33+13.95	44+11.00	24.0	2,925	
SOUTH 15	"D8"	45+60.60	53+49.55	24.0	2,104	
SOUTH 15	"D5"	53+49.55	56+27.57	56.5	1,745	W=60′ AT Sta 53+49.55 W=53′ AT Sta 56+27.52
SOUTH 15	"SD-15"	56+27.57	67+90.85	50.5	6,528	W=53′ AT Sta 56+27.52 W=48′ AT Sta 67+90.85
SOUTH 15	"SD-15"	118+17.40	126+18.00	36.0	3,202	
SOUTH 15	"SD-15L"	150+71.70	212+46.00	36.0	24,697	
SOUTH 15	"SD-15L"	212+46.00	214+82.90	56.0	1,474	
SOUTH 15	"SD-15L"	150+71.70	173+73.80	13.5	3,453	W=3.4′ AT Sta 150+71.70 W=37.0′ AT Sta 173+73.80
				TOTAL	98,993	

SEAL JOINT (EXISTING CONCRETE PAVEMENT)

ROUTE	LINE	LOCATION Beg	LOCATION END	LANE	LONGITUDINAL JOINT (LF)	TRANSVERSE JOINT (LF)
NORTH 15	"W"	28+31.70	32+60.79			762.8
NORTH 15	"D7"	32+60.79	40+23.57			1,356.1
NORTH 15	"D7"	40+23.57	43+95.00			715.3
NORTH 15	"D7"	45+65.00	47+30.60			355.7
NORTH 15	"D7"	47+30.60	53+67.51			1,132.3
NORTH 15	"D6"	53+67.50	56+27.57	2-3*	260.0	924.7
NORTH 15	"SD-15"	56+27.52	64+83.50	2-3*	856.0	3,043.5
NORTH 15	"SD-15"	118+17.40	124+17.00	2-3*	599.6	1,598.9
NORTH 15	"SD-15"	124+17.00	126+15.00	2-3*	198.0	352.0
NORTH 15	"SD-15R"	150+62.70	216+51.20	2-3*	6,588.5	17,569.3
NORTH 15	"SD-15R"	150+62.70	188+07.00			6,628.8
NORTH 15	"NM1"	101+83.00	103+56.00			307.6
NORTH 15	"O2"	73+40.00	74+90.00			277.8
SOUTH 15	"W"	28+31.70	32+60.79			762.8
SOUTH 15	"D8"	33+13.95	44+11.00			1,950.3
SOUTH 15	"D8"	45+60.60	53+49.55			1,402.6
SOUTH 15	"D5"	53+49.55	56+27.57	2-3*	278.0	1,163.6
SOUTH 15	"SD-15"	56+27.52	67+90.85	2-3*	1,163.3	4,351.7
SOUTH 15	"SD-15"	118+17.40	126+18.00	2-3*	800.6	2,134.9
SOUTH 15	"SD-15L"	150+71.70	212+46.00	2-3*	6,174.3	16,464.8
SOUTH 15	"SD-15L"	212+46.00	214+82.90	2-3*	236.9	982.7
SOUTH 15	"SD-15L"	150+71.70	173+73.80			2,302.1
SOUTH 15	"O4R"	63+36.00	64+96.40			347.5
SOUTH 15	"SM12"	108+32.00	110+00.00			298.7
				SUB TOTAL	17,155.2	67,186.6
				TOTAL	84,341.9	

* LONGITUDINAL JOINT TO BE SEALED BETWEEN LANES 2 AND 3

DOWEL BAR (DRILL AND BOND)

ROUTE	STATION	LINE	LANE	EA
SOUTH 15	213+09.00 TO 213+57.40	"SD-15L"	3	24
NORTH 15	193+92.70 TO 194+41.10	"SD-15R"	2	24
			TOTAL	48

REPLACE AC SURFACING

ROUTE	STATION		LINE	VOLUME (CY)
NORTH 15	33+48.00	35+10.00	"D7"	24
NORTH 15	193+00.00	207+00.00	"SD-15R"	259
			TOTAL	283

RAMP TERMINI

LOCATION	STATION		LINE	Avg WIDTH (FT)	HMA (TYPE A) (TON)	JOINTED PLAIN CONCRETE PAVEMENT (RAMP TERMINI WITH RAPID STRENGTH CONCRETE) (CY)	CLASS 2 AGGREGATE BASE (CY)	ROADWAY EXCAVATION (CY)
NB 15 OFF TO MARKET STREET	101+83.00	103+56.00	"NM1"	24.0	73.0	115.3	0.0	153.8
NB 15 OFF TO OCEAN VIEW Blvd	73+40.00	74+90.00	"O2"	25.0	66.0	104.2	194.4	333.3
SB 15 OFF TO OCEAN VIEW Blvd	63+36.00	64+96.40	"O4R"	29.3	82.5	130.3	243.3	417.0
SB 15 OFF TO MARKET STREET	108+32.00	110+00.00	"SM12"	24.0	70.9	112.0	0.0	149.3
				TOTAL	292.5	461.8	437.7	1,053.5

INDIVIDUAL SLAB REPLACEMENT (RSC)

ROUTE	STATION	LINE	LANE	No. OF PANELS (N)	CY
SOUTH 15	213+09.00 TO 213+57.40	"SD-15L"	3	4	18.3
NORTH 15	193+92.70 TO 194+41.10	"SD-15R"	2	4	18.3
				TOTAL	36.6

(N) NOT A SEPARATE PAY ITEM. FOR INFORMATION ONLY.

SUMMARY OF QUANTITIES

Q-1

REVISED BY | DATE REVISED
BAHMAN YAZDANI | RICARDO PADILA
CALCULATED-DESIGNED BY | CHECKED BY
FUNCTIONAL SUPERVISOR
CHRIS M THOMAS
STATE OF CALIFORNIA - DEPARTMENT OF TRANSPORTATION
Caltrans
DESIGN

LAST REVISION 09-02-11 | DATE PLOTTED => 27-SEP-2011 | TIME PLOTTED => 16:14

Dist	COUNTY	ROUTE	POST MILES TOTAL PROJECT	SHEET No.	TOTAL SHEETS
11	SD	15	0.5/M4.0	72	116

Bahman Yazdani 07-29-11
REGISTERED CIVIL ENGINEER DATE

08-01-11
PLANS APPROVAL DATE

REGISTERED PROFESSIONAL ENGINEER BAHMAN YAZDANI No. 58322 Exp 06-30-12 CIVIL STATE OF CALIFORNIA

THE STATE OF CALIFORNIA OR ITS OFFICERS OR AGENTS SHALL NOT BE RESPONSIBLE FOR THE ACCURACY OR COMPLETENESS OF SCANNED COPIES OF THIS PLAN SHEET.

CONCRETE BARRIER

DIRECTION	Rte	LINE		STATION	(TYPE 60)	(TYPE 60F)
					LF	LF
SB	15	SD-15L	L+	181+39.00 TO 184+43.00	284.0	20
SB	15	SD-15	L+	120+92.50 TO 122+65.00	172.5	
				TOTALS	456.5	20

METAL BEAM GUARD RAILING

MBGR No.	SHEET No.	DIRECTION	Rte	LINE		STATION		LAYOUT TYPE (N)	REMOVE MBGR	MBGR	ALTER -NATIVE FLARED TERMINAL SYSTEM	END ANCHOR ASSEMBLY (TYPE SFT)	TRANSITION RAILING (TYPE WB)	GURAD RAILING DELINEATOR	BURIED POST END ANCHOR (N)	MINOR CONCRETE (MINOR STRUCTURE)	END CAP (TYPE A)	REMARKS
									LF	LF	EA	EA	EA	EA	EA	CY	EA	
1	L-1	NB	15	W	R+	28+31.70	30+62.00	12DD	230.3	230.3	-	1	-	5	-	-	1	
2	L-1	NB	15	D7	R+	35+55.00	36+30.00	16B	75.0	37.5	1	1	-	2	-	-	-	
3	L-1,2	NB	15	D7	L+	37+90.00	43+95.00	12B	605.0	533.5	1	-	1	12	-	1.6	-	
4	L-2	NB	15	D7	R+	40+45.00	43+95.00	12B	350.0	278.5	1	-	1	2	-	1.6	-	
5	L-5	NB	15	SD-15	R+	80+62.50	81+60.00	12C	88.5	63.5	-	-	1	2	1	1.6	-	
6	L-6	NB	15	SD-15	R+	87+56.50	88+28.00	12B	62.5	37.5	1	-	1	2	-	1.6	-	
7	L-6	NB	15	SD-15	R+	92+00.00	92+75.00	16B	75.0	37.5	1	1	-	2	-	-	-	
8	L-7	NB	15	SD-15	R+	100+23.50	100+95.00	12B	62.5	0.0	1	-	1	2	-	1.6	-	
9	L-7	NB	15	MNB1	R+	100+64.50	101+48.50	12B	75.0	12.5	1	-	1	2	-	1.6	-	ON RAMP Rte NB15 FROM MARKET STREET
10	L-7	NB	15	MNB1	L+	100+64.50	101+48.50	12B	75.0	12.5	1	-	1	2	-	1.6	-	ON RAMP Rte NB 15 FROM MARKET STREET
11	L-8	NB	15	SD-15	R+	113+19.50	114+41.00	12B	112.5	50.0	1	-	1	3	-	1.6	-	
12	L-8	NB	15	SD-15	R+	119+05.50	119+77.00	12B	62.5	0.0	1	-	1	2	-	2.1	-	
13	L-8,9	NB	15	SD-15	R+	121+38.00	122+78.00	12B	140.0	68.5	1	-	1	5	-	2.1	-	
14	L-8	EB	94	94SE1	R+	203+67.30	204+29.80	16B	62.5	31.0	1	1	-	4	-	-	-	ON RAMP Rte EB 94 FROM Rte NB 15
15	L-9,10	WB	94	WN10	R+	216+55.00	217+30.00	16B	75.0	37.5	1	1	-	4	-	-	-	ON RAMP Rte NB 15 FROM Rte WB 94
16	L-10	NB	15	SD-15R	R+	145+05.00	147+44.00	16C	200.0	239.0	-	1	-	6	1	-	-	
17	L-12	NB	15	SD-15R	R+	169+85.50	170+54.00	16B	68.5	31.0	1	1	-	4	-	-	-	
18	L-13	NB	15	SD-15R	R+	179+62.50	182+25.00	16B	262.5	225.0	1	1	-	7	-	-	-	
19	L-15	NB	15	SD-15R	R+	206+31.50	207+00.00	16B	68.5	31.0	1	1	-	4	-	-	-	
20	L-15	NB	15	SD-15R	R+	213+78.00	214+51.00	16B	73.0	35.5	1	1	-	4	-	-	-	
																-	-	
21	L-13	SB	15	SD-15L	L+	184+43.00	185+14.50	12C	62.5	37.5	-	-	1	4	1	1.6	-	
22	L-13	SB	15	SD-15L	L+	181+39.00	184+33.00		294.0	0.0	-	-	-	-	-	-	-	
23	L-12,13	SB	805	W-4	L+	173+78.80	180+10.00	16B	631.2	593.7	1	-	-	13	-	-	-	
24	L-10-12	SB	15	SD-15L	L+	143+13.00	173+78.80	16B	3,065.8	3,065.8	-	1	-	62	-	-	-	
25	L-9,10	SB	15	SD-15L	L+	131+94.00	141+67.00	16B	973.0	935.5	1	-	-	20	-	-	-	
26	L-9	WB	94	NWX1	L+	196+45.90	208+43.90	16B	1,198.0	1,198.0	-	1	-	24	-	-	-	
27	L-7	SB	15	22KPMS1	L+	99+60.00	101+12.00	12B	152.0	80.5	1	-	1	3	-	1.6	-	ON RAMP Rte SB 15 FROM MARKET STREET
28	L-7	SB	15	SM12	L+	107+60.00	108+31.50	12B	62.5	0.0	1	-	1	4	-	1.6	-	OFF RAMP Rte SB 15 TO MARKET STREET
29	L-9	SB	15	SD-15	L+	123+40.00	124+53.50	12C	104.5	79.5	-	-	1	4	1	2.1	-	
30	L-9	SB	15	SD-15	L+	122+02.00	122+65.00		63.0	0.0	-	-	-	-	-	-	-	
31	L-4,5	SB	15	O4R	L+	69+97.00	71+65.00	12D	168.0	100.0	-	-	2	3	-	3.2	1	OFF RAMP Rte SB 15 TO OCEAN VIEW Blvd
32	L-4	SB	15	O4R	L+	66+39.00	68+64.00	12DD	225.0	225.0	-	1	-	7	-	-	1	OFF RAMP Rte SB 15 TO OCEAN VIEW Blvd
33	L-4	SB	15	O3	L+	70+19.50	70+91.00	12B	62.5	0.0	1	-	1	3	-	1.6	-	ON RAMP Rte SB 15 FROM OCEAN VIEW Blvd
34	L-4	SB	15	SD-15	L+	64+80.00	65+89.00	12B	100.0	37.5	1	-	1	3	-	1.6	-	
35	L-2	NB	15	D7	R+	38+93.60	39+45.00	16B	62.5	25.0	1	1	-	3	-	-	-	
36	L-1,2	NB	15	D7	L+	45+65.00	46+15.00	12DD	50.0	50.0	-	1	-	2	-	-	1	
37	L-2	NB	15	D7	R+	45+65.00	46+15.00	12DD	50.0	50.0	-	1	-	2	-	-	1	
								TOTALS	10,148.3	8,432.3	24	16	18	233	4	30.3	6	

SUMMARY OF QUANTITIES

Q-2

STATE OF CALIFORNIA - DEPARTMENT OF TRANSPORTATION
Caltrans® DESIGN

FUNCTIONAL SUPERVISOR: CHRIS M THOMAS
CALCULATED-DESIGNED BY: BAHMAN YAZDANI
CHECKED BY: RICARDO PADILA
REVISED BY
DATE REVISED

LAST REVISION 09-02-11
DATE PLOTTED => 27-SEP-2011
TIME PLOTTED => 16:15

Dist	COUNTY	ROUTE	POST MILES TOTAL PROJECT	SHEET No.	TOTAL SHEETS
11	SD	15	0.5/M4.0	73	116

Bahman Yazdani 07-29-11
REGISTERED CIVIL ENGINEER DATE

08-01-11
PLANS APPROVAL DATE

REGISTERED PROFESSIONAL ENGINEER BAHMAN YAZDANI No. 58322 Exp. 06-30-12 CIVIL STATE OF CALIFORNIA

THE STATE OF CALIFORNIA OR ITS OFFICERS OR AGENTS SHALL NOT BE RESPONSIBLE FOR THE ACCURACY OR COMPLETENESS OF SCANNED COPIES OF THIS PLAN SHEET.

ROADWAY QUANTITIES

LOCATION			LINE	MAIN LANE (N)		RAMP (N) WIDTH (LF)		AC LANE WIDTH(LF)(N)		SHOULDER WIDTH (LF) (N)				GORE AREA (LF) (N)		COLD PLANE AC PAVEMENT	RUBBERIZED HOT MIX ASPHALT (GAP GRADED)	TACK COAT	ASPHALTIC EMULSION (FOG SEAL COAT)	REMARKS
										INSIDE		OUTSIDE								
DIRECTION	Beg Sta	END Sta		Beg	END	Beg	END	Beg	END	Beg	END	Beg	END	Beg	END	SQYD	TON	TON	TON	
NB Rte 15	32+60.79	34+00.00	"D7"							0.0	4.0					31	4	0.007	0.010	NB-MEDIAN - Avg W=2.0′
	34+00.00	43+96.00	"D7"							4.0	4.0					443	56	0.105	0.140	NB-MEDIAN
	45+65.50	51+06.00	"D7"							5.0	5.0					300	38	0.071	0.095	NB-MEDIAN
	53+67.51	56+27.57	"D6"							14.0	14.0					404	51	0.096	0.128	NB-MEDIAN
	56+27.57	65+63.65	"SD-15"							14.0	14.0					1,456	184	0.345	0.460	NB-MEDIAN
	65+63.65	67+90.85	"SD-15"							14.0	10.8					313	40	0.074	0.099	NB-MEDIAN - Avg W=12.4′
	67+90.85	75+16.63	"SD-15R"							10.8	10.0					814	103	0.193	0.258	NB-MEDIAN
	75+16.63	81+86.00	"SD-15"							10.0	10.0					744	94	0.176	0.235	NB-MEDIAN
	85+71.00	101+35.00	"SD-15"							10.0	10.0					1,738	220	0.412	0.549	NB-MEDIAN
	103+42.00	118+17.40	"SD-15"							10.0	10.0					1,639	208	0.389	0.518	NB-MEDIAN
	118+17.40	119+00.00	"SD-15"							10.0	5.0					69	9	0.016	0.022	NB-MEDIAN - Avg W=7.5′
	119+00.00	123+50.00	"SD-15"							5.0	5.0					250	32	0.059	0.079	NB-MEDIAN
	123+50.00	124+17.00	"SD-15"							6.4	6.4					47	6	0.011	0.015	NB-MEDIAN
	124+17.00	126+15.00	"SD-15"							6.7	6.7					147	19	0.035	0.047	NB-MEDIAN
	126+15.00	142+75.87	"SD-15"							6.7	6.7					1,236	157	0.293	0.391	NB-MEDIAN
	142+75.87	145+76.10	"SD-15R"							6.7	13.0					329	42	0.078	0.104	NB-MEDIAN - Avg W=9.9′
	145+76.10	150+62.70	"SD-15R"							13.0	13.7					722	91	0.171	0.228	NB-MEDIAN - Avg W=13.4′
	150+62.70	191+34.60	"SD-15R"							13.7	13.7					6,198	785	1.470	0.354	NB-MEDIAN
	191+34.60	216+51.20	"SD-15R"							4.0	4.0					1,118	142	0.265	5.692	NB-MEDIAN
	28+31.70	32+60.79	"W"									8.0	8.0			381	48	0.090	0.121	NB-RIGHT SHOULDER
	32+60.79	33+48.00	"D7"									8.0	8.0			78	10	0.018	0.025	NB-RIGHT SHOULDER
	33+48.00	35+10.00	"D7"									8.0	8.0						0.046	NB-RIGHT SHOULDER - AC SURFACING
	35+10.00	43+95.00	"D7"									8.0	8.0			787	100	0.187	0.249	NB-RIGHT SHOULDER
	45+65.50	47+30.60	"D7"									5.0	5.0			92	12	0.022	0.029	NB-RIGHT SHOULDER
	47+30.60	53+67.50	"D7"									10.0	10.0			708	90	0.168	0.224	NB-RIGHT SHOULDER
	53+67.51	56+27.57	"D6"									10.0	10.0			289	37	0.069	0.091	NB-RIGHT SHOULDER
	56+27.57	60+99.37	"SD-15"									9.8	9.8			515	65	0.122	0.163	NB-RIGHT SHOULDER
	64+83.50	67+90.85	"SD-15"									10.0	10.0			342	43	0.081	0.108	NB-RIGHT SHOULDER
	67+90.85	70+75.00	"SD-15R"									9.8	9.8			310	39	0.074	0.098	NB-RIGHT SHOULDER
	74+55.59	75+16.63	"SD-15R"									10.0	10.0			68	9	0.016	0.021	NB-RIGHT SHOULDER
	75+16.63	81+86.00	"SD-15"									10.0	10.0			744	94	0.176	0.235	NB-RIGHT SHOULDER
	85+51.00	94+02.99	"SD-15"									10.0	10.0			947	120	0.225	0.299	NB-RIGHT SHOULDER
	96+70.00	101+35.00	"SD-15"									10.0	10.0			517	65	0.123	0.163	NB-RIGHT SHOULDER
	107+77.50	113+27.90	"SD-15"									10.0	10.0			612	77	0.145	0.193	NB-RIGHT SHOULDER
	117+46.00	118+17.40	"SD-15"									10.0	10.0			79	10	0.019	0.025	NB-RIGHT SHOULDER
	118+17.40	125+01.00	"SD-15"									10.0	10.0			760	96	0.180	0.240	NB-RIGHT SHOULDER
	125+73.00	126+15.00	"SD-15"									10.0	10.0			47	6	0.011	0.015	NB-RIGHT SHOULDER
	126+15.00	130+16.40	"SD-15"									10.0	10.0			446	56	0.106	0.141	NB-RIGHT SHOULDER - Avg W=17.9′
	135+18.40	142+75.87	"SD-15"									21.2	16.1			1,507	191	0.357	0.476	NB-RIGHT SHOULDER - Avg W=18.6
	142+75.87	150+62.70	"SD-15R"									16.1	21.0			1,622	205	0.385	0.513	NB-RIGHT SHOULDER -
	150+62.70	188+07.00	"SD-15R"									10.0	10.0			4,160	527	0.987	1.316	NB-RIGHT SHOULDER -
	188+07.00	193+00.00	"SD-15R"									10.0	10.0			548	69	0.130	0.173	NB-RIGHT SHOULDER -
	193+00.00	207+00.00	"SD-15R"									10.0	10.0						0.492	NB-RIGHT SHOULDER - AC SURFACING
	207+00.00	216+51.20	"SD-15R"									10.0	10.0			1,057	134	0.251	0.334	NB-RIGHT SHOULDER
															SUB TOTAL 1	34,612	4,384	8.208	11.482	

(N) NOT A SEPARATE PAY ITEM, FOR INFORMATION ONLY.

SUMMARY OF QUANTITIES

Q-3

STATE OF CALIFORNIA - DEPARTMENT OF TRANSPORTATION
Caltrans®
DESIGN

FUNCTIONAL SUPERVISOR: CHRIS M THOMAS
CALCULATED-DESIGNED BY: BAHMAN YAZDANI
CHECKED BY: RICARDO PADILA
REVISED BY
DATE REVISED

LAST REVISION DATE PLOTTED => 27-SEP-2011
09-02-11 TIME PLOTTED => 16:15

Dist	COUNTY	ROUTE	POST MILES TOTAL PROJECT	SHEET No.	TOTAL SHEETS
11	SD	15	0.5/M4.0	74	116

Bahman Yazdani 07-29-11
REGISTERED CIVIL ENGINEER DATE

08-01-11
PLANS APPROVAL DATE

REGISTERED PROFESSIONAL ENGINEER BAHMAN YAZDANI No. 58322 Exp. 06-30-12 CIVIL STATE OF CALIFORNIA

THE STATE OF CALIFORNIA OR ITS OFFICERS OR AGENTS SHALL NOT BE RESPONSIBLE FOR THE ACCURACY OR COMPLETENESS OF SCANNED COPIES OF THIS PLAN SHEET.

ROADWAY QUANTITIES

DIRECTION	LOCATION Beg Sta	LOCATION END Sta	LINE	MAIN LANE (N) Beg	MAIN LANE (N) END	RAMP (N) WIDTH (LF) Beg	RAMP (N) WIDTH (LF) END	AC LANE WIDTH(LF)(N) Beg	AC LANE WIDTH(LF)(N) END	SHOULDER WIDTH (LF) (N) RIGHT Beg	SHOULDER WIDTH (LF) (N) RIGHT END	SHOULDER WIDTH (LF) (N) LEFT Beg	SHOULDER WIDTH (LF) (N) LEFT END	GORE AREA (N) Beg	GORE AREA (N) END	COLD PLANE AC PAVEMENT SQYD	RUBBERIZED HOT MIX ASPHALT (GAP GRADED) TON	TACK COAT TON	ASPHALTIC EMULSION (FOG SEAL COAT) TON	REMARKS
NB 15	64+83.50	67+90.85	"SD-15"	36.0	36.0											1,229	156	0.292		NB-MAIN LANE
	67+90.85	74+55.59	"SD-15R"	36.0	36.0											2,659	337	0.631		NB-MAIN LANE
	74+55.59	75+16.60	"SD-15R"	56.7	56.7											384	49	0.091		NB-MAIN LANE
	75+16.60	81+86.00	"SD-15"	56.7	36.0											3,447	437	0.818		NB-MAIN LANE - Avg W=46.4′
	85+51.00	101+35.00	"SD-15"	36.0	36.0											6,336	803	1.503		NB-MAIN LANE
	103+42.00	118+17.40	"SD-15"	36.0	36.0											5,902	748	1.400		NB-MAIN LANE
	126+18.00	135+18.40	"SD-15"	24.0	24.0											2,401	304	0.569		NB-MAIN LANE
	135+18.40	142+75.87	"SD-15"	36.0	36.0											3,030	384	0.719		NB-MAIN LANE
	142+75.90	150+62.70	"SD-15R"	36.0	36.0											3,147	399	0.746		NB-MAIN LANE
																				NB-MAIN LANE
	70+75.00	74+55.60	"O5RS"											27.0	1.0	507	48	0.120	0.160	NB-GORE AREA - Avg W=12.0′
	94+02.99	96+73.00	"NM1"											0.0	23.0	345	33	0.082	0.109	NB-GORE AREA - Avg W=11.5′
	197+88.00	200+18.00	"94SE1"											0.0	31.0	388	37	0.092	0.123	NB-GORE AREA - Avg W=15.2′
	208+31.00	209+26.40	"15SW1"											1.3	37.2	132	13	0.031	0.042	NB-GORE AREA - Avg W=12.4′
	212+32.30	217+35.50	"WN10"											30.7	1.3	435	41	0.103	0.138	NB-GORE AREA - Avg W=7.8′
	91+42.50	94+02.99	"SD-15"					12.0	12.0							347	44	0.082		NB AC LANE
	103+42.00	107+77.60	"SD-15"					18.3	0.0							443	56	0.105		NB AC LANE - Avg W=9.2′
	107+77.60	113+27.90	"SD-15"					12.0	12.0							734	93	0.174		NB AC LANE
	124+17.00	125+00.00	"SD-15"					14.7	14.7							136	17	0.032		NB AC LANE
	150+62.70	188+07.00	"SD-15R"					12.0	24.0							8,903				NB AC LANE - Avg W=21.4′, DEPTH= 0.05′
	60+99.37	73+40.00	"O2"			12.0	24.0									2,481	236	0.588	0.000	NB 15 OFF TO OCEAN VIEW Blvd -Rt SHOULDER Avg W=18.0′
	60+99.37	66+72.46	"O2"							8.0	13.6					592	56	0.140	0.187	NB 15 OFF TO OCEAN VIEW Blvd - Rt SHOULDER Avg W=9.0′
	62+39.80	69+86.62	"O2"									0.0	44.0			747	71	0.177	0.236	NB 15 OFF TO OCEAN VIEW Blvd - Lt SHOULDER Avg W=8.0′
	66+72.46	74+90.00	"O2"							13.6	2.2					727	69	0.172	0.230	NB 15 OFF TO OCEAN VIEW Blvd 13.6′ TO 2.2′
	61+92.00	74+55.60	"O5RS"			12.0	18.0			5.6	8.0	2.6	4.0			3,384	321	0.802	0.448	NB 15 ON FROM OCEAN VIEW Blvd - MAIN LANE W=14.0′ Rt SHOULDER Avg W=6.8′, Lt SHOULDER Avg W=3.3′
	94+02.99	99+00.51	"NM1"			12.0	24.0									995	95	0.236	0.000	NB 15 OFF TO MARKET STREET
	99+00.51	101+83.00	"NM1"			24.0	24.0									753	72	0.179	0.000	NB 15 OFF TO MARKET STREET
	94+02.99	96+73.00	"NM1"							9.8	9.8	0.0	6.0			385	37	0.091	0.122	NB 15 OFF TO MARKET STREET
	96+73.00	103+45.93	"NM1"							9.8	9.8	6.0	6.0			1,184	112	0.281	0.374	NB 15 OFF TO MARKET STREET
	96+49.00	101+48.60	"MNB1"			16.0	16.0			7.8	7.8	6.0	6.0			1,656	157	0.393	0.243	NB 15 ON FROM MARKET STREET
	103+42.00	107+77.53	"MNB1"			12.0	12.0			9.8	9.8					1,057	100	0.251	0.150	NB 15 ON FROM MARKET STREET
	195+92.62	204+29.80	"94SE1"			24.0	24.0			9.8	9.8					3,147	299	0.746	0.289	NB 15 OFF TO 94 EB
	200+18.00	204+29.80	"94SE1"									6.0	6.0			275	26	0.065	0.087	NB 15 OFF TO 94 EB
	202+44.00	209+26.42	"15SW1"			16.0	16.0					7.8	7.8			1,807	172	0.429	0.188	NB 15 OFF TO 94 WB
	203+75.00	208+31.00	"15SW1"							6.0	6.0					304	29	0.072	0.096	NB 15 OFF TO 94 WB
	212+32.30	217+35.54	"WN10"			12.0	12.0			20.0	20.0					1,789	170	0.424	0.354	NB 15 ON FROM 94 EB
															SUB TOTAL 2	62,188	6,018	12,637	3.576	

(N) NOT A SEPARATE PAY ITEM, FOR INFORMATION ONLY.

SUMMARY OF QUANTITIES

Q-4

REVISED BY | DATE REVISED
BAHMAN YAZDANI | RICARDO PADILA
CALCULATED-DESIGNED BY | CHECKED BY
FUNCTIONAL SUPERVISOR: CHRIS M THOMAS
STATE OF CALIFORNIA - DEPARTMENT OF TRANSPORTATION
Caltrans
DESIGN

LAST REVISION 09-02-11 | DATE PLOTTED => 27-SEP-2011 | TIME PLOTTED => 16:15

Dist	COUNTY	ROUTE	POST MILES TOTAL PROJECT	SHEET No.	TOTAL SHEETS
11	SD	15	0.5/M4.0	75	116

Bahman Yazdani 07-29-11
REGISTERED CIVIL ENGINEER DATE

08-01-11
PLANS APPROVAL DATE

REGISTERED PROFESSIONAL ENGINEER BAHMAN YAZDANI No. 58322 Exp 06-30-12 CIVIL STATE OF CALIFORNIA

THE STATE OF CALIFORNIA OR ITS OFFICERS OR AGENTS SHALL NOT BE RESPONSIBLE FOR THE ACCURACY OR COMPLETENESS OF SCANNED COPIES OF THIS PLAN SHEET.

ROADWAY QUANTITIES

LOCATION			LINE	MAIN LANE (N)		RAMP (N) WIDTH (LF)		AC LANE WIDTH(LF)(N)		SHOULDER WIDTH (LF) (N)				GORE AREA (LF) (N)		COLD PLANE AC PAVEMENT	RUBBERIZED HOT MIX ASPHALT (GAP GRADED)	TACK COAT	ASPHALTIC EMULSION (FOG SEAL COAT)	REMARKS
										INSIDE		OUTSIDE								
DIRECTION	Beg Sta	END Sta		Beg	END	Beg	END	Beg	END	Beg	END	Beg	END	Beg	END	SQYD	TON	TON	TON	
SB Rte 15	33+13.95	44+11.00	"D8"							5.0	5.0					609	77	0.145	0.193	SB-MEDIAN
	45+60.60	51+48.30	"D8"							5.0	5.0					327	41	0.077	0.103	SB-Rt SHOULDER
	53+49.55	56+27.57	"D5"							14.0	14.0					432	55	0.103	0.137	SB-MEDIAN
	56+27.57	67+90.85	"SD-15"							14.0	14.0					1,810	229	0.429	0.572	SB-MEDIAN
	67+90.85	75+16.63	"SD-15R"							14.0	9.0					927	117	0.220	0.293	SB-MEDIAN - Avg=11.5′
	75+16.63	82+22.00	"SD-15"							10.0	10.0					784	99	0.186	0.248	SB-MEDIAN
	85+92.00	101+31.00	"SD-15"							10.0	10.0					1,710	217	0.406	0.541	SB-MEDIAN
	103+36.60	115+79.60	"SD-15"							10.0	10.0					1,381	175	0.328	0.437	SB-MEDIAN
	115+79.60	118+17.40	"SD-15"							10.0	6.4					217	27	0.051	0.069	SB-MEDIAN - Avg=8.2′
	118+17.40	119+00.00	"SD-15"							6.4	5.0					52	7	0.012	0.017	SB-MEDIAN - Avg=5.7′
	119+00.00	123+50.00	"SD-15"							5.0	5.0					250	32	0.059	0.079	SB-MEDIAN
	123+50.00	126+18.00	"SD-15"							7.4	7.4					220	28	0.052	0.070	SB-MEDIAN
	126+18.00	142+75.87	"SD-15"							7.4	7.4					1,363	173	0.323	0.431	SB-MEDIAN
	142+75.87	144+60.90	"SD-15L"							0.0	13.0					236	30	0.056	0.075	SB-MEDIAN - Avg= 11.5′
	144+60.90	150+71.70	"SD-15L"							8.0	6.2					421	53	0.100	0.133	SB-MEDIAN
	150+71.70	161+08.84	"SD-15L"							6.2	6.2					714	91	0.169	0.226	SB-MEDIAN
	161+07.40	212+46.00	"SD-15L"							6.2	6.2					3,540	448	0.840	1.119	SB-MEDIAN
	28+31.70	32+60.79	"W"									10.0	10.0			477	60	0.113	0.151	SB-Lt SHOULDER-
	33+13.95	35+20.30	"D8"									10.0	10.0			229	29	0.054	0.072	SB-Lt SHOULDER-
	45+60.60	53+49.55	"D8"									10.0	10.0			877	111	0.208	0.277	SB-Lt SHOULDER-
	53+49.55	56+27.57	"D5"									10.0	10.0			309	39	0.073	0.098	SB-Lt SHOULDER-
	56+27.57	62+90.55	"SD-15"									10.0	10.0			737	93	0.175	0.233	SB-Lt SHOULDER-
	67+90.85	72+13.70	"SD-15R"									10.0	10.0			470	60	0.111	0.149	SB-Lt SHOULDER-
	76+35.33	77+37.30	"SD-15"									20.0	10.0			170	22	0.040	0.054	SB-Lt SHOULDER-
	77+37.30	82+22.00	"SD-15"									10.0	10.0			539	68	0.128	0.170	SB-Lt SHOULDER-
	85+92.00	91+77.99	"SD-15"									10.0	10.0			651	82	0.154	0.206	SB-Lt SHOULDER-
	97+45.40	101+31.00	"SD-15"									10.0	10.0			428	54	0.102	0.135	SB-Lt SHOULDER-
	103+36.60	110+28.70	"SD-15"									10.0	10.0			769	97	0.182	0.243	SB-Lt SHOULDER-
	114+41.20	118+17.40	"SD-15"									10.0	16.6			556	70	0.132	0.176	SB-Lt SHOULDER- Avg W=13.3′
	118+17.40	126+18.00	"SD-15"									6.4	13.0			863	109	0.205	0.273	SB-Lt SHOULDER- Avg W=9.7′
	126+18.00	127+30.70	"SD-15"									13.0	10.4			147	19	0.035	0.046	SB-Lt SHOULDER- Avg W=11.7′
	131+94.00	142+75.87	"SD-15"									10.0	10.0			1,202	152	0.285	0.380	SB-Lt SHOULDER-
	142+75.87	150+47.00	"SD-15L"									10.0	10.0			857	109	0.203	0.271	SB-Lt SHOULDER-
	150+47.00	150+71.70	"SD-15L"									10.0	18.0			45	6	0.011	0.014	SB-Lt SHOULDER- Avg=16.4′
	150+71.70	161+08.84	"SD-15L"									18.0	10.0			1,613	204	0.383	0.510	SB-Lt SHOULDER- Avg=10.0′
	161+08.84	212+46.00	"SD-15L"									10.0	10.0			5,708	723	1.354	1.805	SB-Lt SHOULDER-
															SUB TOTAL 3	31,640	4,008	7.504	10.005	

(N) NOT A SEPARATE PAY ITEM, FOR INFORMATION ONLY.

REVISED BY | DATE REVISED
BAHMAN YAZDANI | RICARDO PADILA
CALCULATED-DESIGNED BY | CHECKED BY
FUNCTIONAL SUPERVISOR | CHRIS M THOMAS
STATE OF CALIFORNIA - DEPARTMENT OF TRANSPORTATION
Caltrans
DESIGN

SUMMARY OF QUANTITIES

Q-5

LAST REVISION 09-02-11 | DATE PLOTTED => 27-SEP-2011 | TIME PLOTTED => 16:15

Dist	COUNTY	ROUTE	POST MILES TOTAL PROJECT	SHEET No.	TOTAL SHEETS
11	SD	15	0.5/M4.0	76	116

Bahman Yazdani 07-29-11
REGISTERED CIVIL ENGINEER DATE

08-01-11
PLANS APPROVAL DATE

REGISTERED PROFESSIONAL ENGINEER BAHMAN YAZDANI No. 58322 Exp 06-30-12 CIVIL STATE OF CALIFORNIA

THE STATE OF CALIFORNIA OR ITS OFFICERS OR AGENTS SHALL NOT BE RESPONSIBLE FOR THE ACCURACY OR COMPLETENESS OF SCANNED COPIES OF THIS PLAN SHEET.

ROADWAY QUANTITIES

DIRECTION	LOCATION		LINE	MAIN LANE (N)		RAMP (N) WIDTH (LF)		AC LANE WIDTH(LF)(N)		SHOULDER WIDTH (LF) (N)				GORE AREA (N)		COLD PLANE AC PAVEMENT	RUBBERIZED HOT MIX ASPHALT (GAP GRADED)	TACK COAT	ASPHALTIC EMULSION (FOG SEAL COAT)	REMARKS
										INSIDE		OUTSIDE								
	Beg Sta	END Sta		Beg	END	Beg	END	Beg	END	Beg	END	Beg	END	Beg	END	SQYD	TON	TON	TON	
SB 15	67+90.90	75+16.60	"SD-15R"	60.0	36.0											3,870	490	0.918		SB-MAIN LANE - Avg W=48′
	75+16.60	82+22.00	"SD-15"	36.0	36.0											2,822	357	0.669		SB-MAIN LANE
	85+92.00	101+31.00	"SD-15"	36.0	36.0											6,156	780	1.460		SB-MAIN LANE
	103+36.60	110+28.70	"SD-15"	36.0	36.0											2,768	351	0.657		SB-MAIN LANE
	110+28.70	118+17.40	"SD-15"	24.0	24.0											2,103	266	0.499		SB-MAIN LANE
	126+18.00	127+30.70	"SD-15"	36.0	36.0											451	57	0.107		SB-MAIN LANE
	127+30.70	142+75.87	"SD-15"	24.0	24.0											4,120	522	0.977		SB-MAIN LANE
	142+75.87	150+71.70	"SD-15L"	24.0	24.0											2,122	269	0.503		SB-MAIN LANE
	62+90.55	67+90.90	"O3"											0.0	21.6	417	40	0.099	0.132	SB-GORE AREA - Avg W=7.5′
	72+13.70	76+35.33	"O4R"											33.9	0.0	794	75	0.188	0.251	SB-GORE AREA - Avg W=17.5′
	91+78.50	97+14.00	"22KPMS1"											0.0	13.1	381	36	0.090	0.120	SB-GORE AREA - Avg W=6.4′
	104+35.00	105+87.40	"SM12"											3.3	21.4	176	17	0.042	0.056	SB-GORE AREA - Avg W=10.4
	113+30.00	114+41.20	"SD-15"											3.4	24.7	151	14	0.036	0.048	SB-GORE AREA - Avg W=12.2′
	203+70.80	208+43.90	"NWX1"											42.8	0.0	831	79	0.197	0.263	SB-GORE AREA - Avg W=15.8′
	35+20.30	44+11.00	"D8"					12.0	12.0							1,188	150	0.282		SB-AC LANE
	45+60.60	56+27.57	"D8"/"SD-15"					12.0	12.0							1,423	180	0.337		SB AC LANE
	56+27.52	62+90.55	"SD-15"					12.0	20.8							1,208	153	0.287		SB AC LANE -Avg W=16.4′
	85+92.00	91+78.50	"SD-15"					0.0	12.0							391	50	0.093		SB-AC LANE - Avg W=6.0′
	103+36.60	110+28.70	"SD-15"					12.0	12.0							923	117	0.219		SB-AC LANE
	131+94.00	142+75.90	"SD-15"					12.0	12.0							1,443	183	0.342		SB-AC LANE
	142+75.90	150+71.70	"SD-15L"					12.0	15.4							1,238	157	0.294		SB-AC lane - Avg W=14.0′
	150+71.70	173+73.80	"SD-15L"					3.4	24.0							3,461				SB-AC lane - Avg W=11.9′ - DEPTH = 0.05′
	69+60.70	76+35.33	"O4R"			12.0	12.0			4.0	0.0	8.0	8.0			1,799	171	0.427	0.213	SB 15 OFF TO OCEAN VIEW Blvd
	63+36.00	68+68.90	"O4R"									8.0	8.0			474	45	0.112	0.112	SB 15 OFF TO OOCEAN VIEW Blvd
	64+96.40	68+68.90	"O4R"			24.0	12.0									886	84	0.210	0.000	SB 15 OFF TO OCEAN VIEW Blvd - Avg W=21.4′
	70+13.10	75+35.60	"O3"			12.0	12.0					8.0	8.0			1,161	110	0.275	0.110	SB 15 ON RAMP FROM OCEAN VIEW Blvd
	70+13.10	75+35.60	"O3"							8.0	16.0					505	48	0.120	0.120	SB 15 ON RAMP FROM OCEAN VIEW Blvd - Avg W=8.7′
	62+90.55	69+47.50	"O3"			12.0	12.0			10.0	10.0	10.0	10.0			2,336	222	0.381	0.346	SB 15 ON RAMP FROM OCEAN VIEW Blvd
	67+90.90	69+47.50	"O3"							10.0	14.0					209	20	0.237	0.050	SB 15 ON RAMP FROM OCEAN VIEW Blvd - Avg W=12.0′
	196+45.90	198+39.00	"NWX1"			20.0	24.0			6.0	6.0	8.0	8.0			772	73	0.183	0.071	SB 15 OFF TO WB 94 - Avg W=22.0′
	198+39.00	201+89.00	"NWX1"			24.0	24.0			6.0	6.0	8.0	8.0			1,478	140	0.350	0.129	SB 15 OFF TO WB 94
	201+89.00	208+43.90	"NWX1"			24.0	12.0			6.0	0.0	8.0	8.0			2,329	221	0.552	0.242	SB 15 OFF TO WB 94 - Avg W=18.0′
	91+77.99	102+00.00	"22KPMS1"			12.0	12.0					8.0	8.0			2,271	216	0.539	0.215	SB 15 ON RAMP FROM MARKET STREET
	91+77.99	102+00.00	"22KPMS1"							0.0	8.0					568	54	0.135	0.135	SB 15 ON RAMP FROM MARKET STREET - Avg W=5.0
	104+35.00	108+32.00	"SM12"			16.0	24.0									970	92	0.230	0.000	SB 15 OFF TO MARKET STREET - Avg W=22.0′
	104+35.00	110+00.00	"SM12"									8.0	8.0			502	48	0.119	0.119	SB 15 OFF TO MARKET STREET
	105+87.40	110+00.00	"SM12"							6.0	6.0					275	26	0.025	0.065	SB 15 OFF TO MARKET STREET
											SUB TOTAL 1					34,612	4,384	8.208	11.482	
											SUB TOTAL 2					62,188	6,018	12.637	3.576	
											SUB TOTAL 3					31,640	4,008	7.504	10.005	
											SUB TOTAL 4					54,970	5,914	10.222	3.440	
											TOTAL					183,410	20,324*	38.571	28.502	

(N) NOT A SEPARATE PAY ITEM, FOR INFORMATION ONLY.

* - FOR ADDIATIONAL QUANTITIES SEE HMA DIKE TABLE.

SUMMARY OF QUANTITIES

Q-6

REVISED BY | DATE REVISED

BAHMAN YAZDANI | RICARDO PADILA

CALCULATED-DESIGNED BY | CHECKED BY

FUNCTIONAL SUPERVISOR: CHRIS M THOMAS

STATE OF CALIFORNIA - DEPARTMENT OF TRANSPORTATION

Caltrans® DESIGN

LAST REVISION 09-02-11 | DATE PLOTTED => 27-SEP-2011 TIME PLOTTED => 16:15

Dist	COUNTY	ROUTE	POST MILES TOTAL PROJECT	SHEET No.	TOTAL SHEETS
11	SD	15	0.5/M4.0	77	116

Bahman Yazdani 07-29-11
REGISTERED CIVIL ENGINEER DATE

08-01-11
PLANS APPROVAL DATE

REGISTERED PROFESSIONAL ENGINEER BAHMAN YAZDANI No. 58322 Exp. 06-30-12 CIVIL STATE OF CALIFORNIA

THE STATE OF CALIFORNIA OR ITS OFFICERS OR AGENTS SHALL NOT BE RESPONSIBLE FOR THE ACCURACY OR COMPLETENESS OF SCANNED COPIES OF THIS PLAN SHEET.

HMA DIKE

DIRECTION	Rte	SIDE	LINE	Beg STATION	END STATION	TYPE	PLACE HMA DIKE (LF)	MINOR HMA HMA DIKE (TON)	RUBBERIZED HOT MIX ASPHALT (GAP GRADED) RHMA DIKE PAD (TON)	REMOVE AC DIKE LENGTH (LF)	REMARKS
NB	15	R+	"W"	28+31.70	29+24.00	F	92.3	1.2	1.7	92.3	NB Rte 15
NB	15	L+	"D7"	35+55.00	37+65.00	E	210.0	5.2	3.9	210.0	NB Rte 15
NB	15	L+	"D7"	37+65.00	37+85.00	C	20.0	0.1	0.2	20.0	NB Rte 15
NB	15	L+	"D7"	37+85.00	43+86.00	F	601.0	7.5	11.2	601.0	NB Rte 15
NB	15	L+	"D7"	45+65.00	45+90.00	F	25.0	0.3	0.2	25.0	NB Rte 15
NB	15	L+	"D7"	45+90.00	46+52.50	C	62.5	0.5	0.6	62.5	NB Rte 15
NB	15	L+	"D7"	46+52.50	48+45.00	E	192.5	4.8	3.6	192.5	NB Rte 15
NB	15	R+	"D7"/"SD-15"	47+27.00	60+99.37	E	1,372.4	33.9	25.7	1,372.4	NB Rte 15
NB	15	R+	"O2"	60+99.37	74+66.00	E	1,366.6	33.8	19.2	1,366.6	NB 15 OFF TO OCEAN VIEW Blvd
NB	15	R+	"O5RS"	64+34.00	74+55.59	E	1,021.6	25.2	14.3	1,021.6	NB 15 ON FROM OCEAN VIEW Blvd
NB	15	R+	"SD-15R"/"SD-15"	74+55.59	80+37.50	E	581.9	14.4	10.9	581.9	NB Rte 15
NB	15	R+	"SD-15"	80+37.50	81+26.00	C	88.5	0.6	0.8	88.5	NB Rte 15
NB	15	R+	"SD-15"	81+26.00	81+51.00	F	25.0	0.3	0.2	25.0	NB Rte 15
NB	15	R+	"SD-15"	87+31.50	87+94.00	C	62.5	0.5	0.6	62.5	NB Rte 15
NB	15	R+	"SD-15"	87+94.00	88+19.00	F	25.0	0.3	0.2	25.0	NB Rte 15
NB	15	R+	"SD-15"	89+53.00	90+55.00	E	113.0	2.8	2.1	113.0	NB Rte 15
NB	15	R+	"SD-15"	99+98.50	100+61.00	C	62.5	0.5	0.6	62.5	NB Rte 15
NB	15	R+	"SD-15"	100+61.00	100+86.00	F	25.0	0.3	0.2	25.0	NB Rte 15
NB	15	R+	"MNB1"	100+39.50	101+14.50	C	75.0	0.5	0.5	62.5	NB 15 ON FROM MARKET STREET
NB	15	R+	"MNB1"	101+14.50	101+39.50	F	25.0	0.3	0.2	25.0	NB 15 ON FROM MARKET STREET
NB	15	R+	"SD-15"	103+42.00	104+06.00	E	64.0	1.6	1.2	64.0	NB Rte 15
NB	15	R+	"SD-15"	108+24.00	111+55.00	E	331.0	8.2	6.2	331.0	NB Rte 15
NB	15	R+	"94SE1"	203+42.30	204+04.80	C	62.5	0.5	0.4	62.5	NB 15 OFF TO 94 EB
NB	15	R+	"94SE1"	204+04.80	204+29.80	F	25.0	0.3	0.2	25.0	NB 15 OFF TO 94 EB
NB	15	R+	"SD-15"	118+80.10	119+42.60	C	62.5	0.5	0.6	62.5	NB Rte 15
NB	15	R+	"SD-15"	119+42.60	119+67.60	F	25.0	0.3	0.2	25.0	NB Rte 15
NB	15	R+	"SD-15"	121+38.00	122+44.00	C	106.0	0.8	1.0	106.0	NB Rte 15
NB	15	R+	"SD-15"	122+44.00	122+69.00	F	25.0	0.3	0.2	25.0	NB Rte 15
NB	15	R+	"SD-15"	144+80.00	145+42.50	C	62.5	0.5	0.6	62.5	NB Rte 15
NB	15	R+	"SD-15"	145+42.50	147+44.00	F	201.5	2.5	1.9	201.5	NB Rte 15
NB	15	R+	"SD-15R"	150+62.70	162+80.00	E	1,217.3	30.1	22.8	1,217.3	NB Rte 15
NB	15	R+	"SD-15R"	169+60.50	170+23.00	C	62.5	0.5	0.6	62.5	NB Rte 15
NB	15	R+	"SD-15R"	170+23.00	170+54.00	F	31.0	0.4	0.3	31.0	NB Rte 15
NB	15	R+	"SD-15R"	179+37.50	180+00.00	C	62.5	0.5	0.6	62.5	NB Rte 15
NB	15	R+	"SD-15R"	180+00.00	182+25.00	F	225.0	2.8	2.1	225.0	NB Rte 15
NB	15	R+	"SD-15R"	185+57.50	188+07.00	E	249.5	6.2	4.7	249.5	NB Rte 15
NB	15	R+	"SD-15R"	193+00.00	206+06.50	E	1,306.5	32.3	24.5	1,306.5	NB Rte 15
NB	15	R+	"SD-15R"	206+06.50	206+69.00	C	62.5	0.5	0.6	62.5	NB Rte 15
NB	15	R+	"SD-15R"	206+69.00	207+00.00	F	31.0	0.4	0.3	31.0	NB Rte 15
NB	15	R+	"SD-15R"	207+00.00	213+92.00	E	692.0	17.1	13.0	692.0	NB Rte 15
NB	15	R+	"SD-15R"	213+92.00	214+26.00	C	34.0	0.2	0.3	34.0	NB Rte 15
NB	15	R+	"SD-15R"	214+26.00	214+51.00	F	25.0	0.3	0.2	25.0	NB Rte 15
NB	15	R+	"SD-15R"	214+51.00	216+51.20	E	200.2	4.9	3.7	200.2	NB Rte 15
SB	15	L+	"SD-15L"	207+38.00	211+30.00	E	392.0	9.7	7.3	392.0	SB Rte 15
SB	15	L+	"SD-15L"	185+76.00	197+60.00	E	1,184.0	29.2	22.2	1,184.0	SB Rte 15
SB	15	L+	"SD-15L"	185+35.00	185+76.00	E	41.0	1.0	0.8	41.0	SB Rte 15
SB	15	L+	"SD-15L"	184+77.00	185+35.00	C	58.0	0.4	0.5	58.0	SB Rte 15
SB	15	L+	"SD-15L"	184+52.00	184+77.00	F	25.0	0.3	0.2	25.0	SB Rte 15
SB	15	L+	"SD-15L"	177+90.00	181+39.00	E	349.0	8.6	6.5	349.0	SB Rte 15
SB	15	L+	"W-4"	173+73.80	180+10.00	F	636.2	8.0		636.2	SB Rte 805
SB	15	L+	"SD-15L"	150+47.00	173+73.80	F	2,326.8	29.2	21.9	2,326.8	SB Rte 15
SB	15	L+	"SD-15"	141+67.00	150+47.00	C	880.0	6.4	8.3	880.0	SB Rte 15
SB	15	L+	"SD-15"	131+94.00	141+67.00	F	973.0	12.2	9.2	973.0	SB Rte 15
WB	94	L+	"NWX1"	196+45.90	208+43.90	F	1,198.0	15.0	8.5	1,198.0	WB Rte 94
SB	15	L+	"SD-15"	124+16.00	124+78.50	C	62.5	0.5	0.6	62.5	SB Rte 15
SB	15	L+	"SD-15"	123+49.00	124+16.00	F	67.0	0.8	0.6	67.0	SB Rte 15
SB	15	L+	"O4R"	70+06.00	71+56.00	F	150.0	1.9	1.1	159.0	SB 15 OFF TO OCEAN VIEW Blvd
SB	15	L+	"O4R"	63+36.00	65+50.00	E	214.0	5.3	3.0	214.0	SB 15 OFF TO OCEAN VIEW Blvd
SB	15	L+	"O3"	68+00.00	69+47.00	E	147.0	3.6	2.1	147.0	SB 15 ON RAMP FROM OCEAN VIEW Blvd
SB	15	L+	"O3"	70+19.50	70+44.50	F	25.0	0.3	0.2	25.0	SB 15 ON RAMP FROM OCEAN VIEW Blvd
SB	15	L+	"O3"	70+44.50	71+16.00	C	71.5	0.5	0.5	71.5	SB 15 ON RAMP FROM OCEAN VIEW Blvd
SB	15	L+	"O3"	71+16.00	75+00.00	E	384.0	9.5	5.4	384.0	SB 15 ON RAMP FROM OCEAN VIEW Blvd
SB	15	L+	"SD-15"	66+14.00	66+98.00	E	84.0	2.1	1.2	84.0	SB Rte 15
SB	15	L+	"SD-15"	65+14.00	66+14.00	C	100.0	0.7	0.9	100.0	SB Rte 15
SB	15	L+	"SD-15"	64+80.00	65+14.00	F	34.0	0.4	0.2	25.0	SB Rte 15
SB	15	L+	"W"	28+31.70	31+64.00	F	332.3	4.2	3.1	332.3	SB Rte 15
						TOTAL	20,945.6	394.1	287.8*	20,945.6	

* - FOR ADDIATIONAL QUANTITIES SEE ROADWAY QUANTITIES.

REMOVE CONCRETE

SHEET	Sta	(CY)	REMARKS
L-7	103+60 "NM1"	2.8	CURB RAMP
L-7	96+33 "MNB1"	3.6	CURB RAMP
L-7	110+12 "SM12"	3.0	CURB RAMP
L-7	110+16 "SM12"	3.6	CURB RAMP
	TOTAL	13.0	

MINOR CONCRETE MISCELLANEOUS CONSTRUCTION

SHEET	Sta	(CY)	REMARKS
L-7	103+60 "NM1"	3.0	CURB RAMP
L-7	96+33 "MNB1"	3.8	CURB RAMP
L-7	110+12 "SM12"	3.2	CURB RAMP
L-7	110+16 "SM12"	3.8	CURB RAMP
	TOTAL	13.8	

SUMMARY OF QUANTITIES

Q-7

REVISED BY | DATE REVISED
BAHMAN YAZDANI | RICARDO PADILA
CALCULATED-DESIGNED BY | CHECKED BY
FUNCTIONAL SUPERVISOR: CHRIS M THOMAS
STATE OF CALIFORNIA - DEPARTMENT OF TRANSPORTATION
Caltrans DESIGN

LAST REVISION 09-16-11 | DATE PLOTTED => 27-SEP-2011 | TIME PLOTTED => 16:15

Dist	COUNTY	ROUTE	POST MILES TOTAL PROJECT	SHEET No.	TOTAL SHEETS
11	SD	15	0.5/M4.0	78	116

Bahman Yazdani 07-29-11
REGISTERED CIVIL ENGINEER DATE

08-01-11
PLANS APPROVAL DATE

REGISTERED PROFESSIONAL ENGINEER
BAHMAN YAZDANI
No. 58322
Exp 06-30-12
CIVIL
STATE OF CALIFORNIA

THE STATE OF CALIFORNIA OR ITS OFFICERS OR AGENTS SHALL NOT BE RESPONSIBLE FOR THE ACCURACY OR COMPLETENESS OF SCANNED COPIES OF THIS PLAN SHEET.

REPAIR SPALLED JOINTS

ROUTE	STATION	LANE	AREA SQYD
NORTH 15	179+23.9 "SD-15R"	1	1.0
NORTH 15	187+95.0 "SD-15R"	1	1.0
NORTH 15	188+54.9 "SD-15R"	1	1.0
NORTH 15	192+86.5 "SD-15R"	1	1.0
NORTH 15	193+29.4 "SD-15R"	1	1.0
NORTH 15	197+64.5 "SD-15R"	1	1.0
NORTH 15	197+83.9 "SD-15R"	1	1.0
NORTH 15	200+76.4 "SD-15R"	2	1.0
NORTH 15	213+83.6 "SD-15R"	1	1.0
SOUTH 15	64+80.9 "SD-15"	2	1.0
SOUTH 15	150+92.6 "SD-15L"	1 & 2	2.0
SOUTH 15	152+81.8 "SD-15L"	3	1.0
SOUTH 15	153+88.1 "SD-15L"	3	1.0
SOUTH 15	156+01.9 "SD-15L"	1 & 2	2.0
SOUTH 15	156+19.7 "SD-15L"	1	1.0
SOUTH 15	164+60.1 "SD-15L"	2	1.0
SOUTH 15	165+82.6 "SD-15L"	1	1.0
SOUTH 15	170+25.2 "SD-15L"	1	1.0
SOUTH 15	175+87.5 "SD-15L"	1	1.0
SOUTH 15	179+62.0 "SD-15L"	1	1.0
SOUTH 15	184+62.0 "SD-15L"	1	1.0
SOUTH 15	184+81.0 "SD-15L"	1	1.0
SOUTH 15	189+57.0 "SD-15L"	1	1.0
SOUTH 15	193+97.8 "SD-15L"	1	1.0
		TOTAL	26.0

MBGR LOCATION	SHEET No.	DIRECTION	Rte	LINE		STATION FROM	STATION TO	TEMPORARY RAILING (TYPE K) LF	TEMPORARY CRASH CUSHION MODULE TYPE	TEMPORARY CRASH CUSHION MODULE EACH	TRAFFIC PLASTIC DRUM EACH
3	L-1,2	NB	15	D7	L†	42+95.00	43+95.00	100	TS-14	14	6
4	L-2	NB	15	D7	R†	42+95.00	43+95.00	100	TS-14	14	6
5	L-5	NB	15	SD-15	R†	80+60.00	81+60.00	100	TS-14	14	6
6	L-6	NB	15	SD-15	R†	87+28.00	88+28.00	100	TS-14	14	6
8	L-7	NB	15	SD-15	R†	99+95.00	100+95.00	100	TS-14	14	6
9	L-7	NB	15	MNB1	R†	100+48.50	101+48.50	100	TS-14	14	6
10	L-7	NB	15	MNB1	L†	100+48.50	101+48.50	100	TS-14	14	6
11	L-8	NB	15	SD-15	R†	113+41.00	114+41.00	100	TS-14	14	6
12	L-8	NB	15	SD-15	R†	118+77.00	119+77.00	100	TS-14	14	6
13	L-8,9	NB	15	SD-15	R†	121+78.00	122+78.00	100	TS-14	14	6
21	L-13	SB	15	SD-15L	L†	181+20.00	185+40.00	420	TS-14	14	6
27	L-7	SB	15	22KPMS1	L†	99+60.00	100+60.00	100	TS-14	14	6
28	L-7	SB	15	SM12	L†	107+32.00	108+32.00	100	TS-14	14	6
29	L-9	SB	15	SD-15	L†	123+40.00	125+60.00	220	TS-14	14	6
31	L-4,5	SB	15	O4R	L†	69+97.00	71+77.00	180	TS-14	14	6
33	L-4	SB	15	O3	L†	70+10.50	71+10.50	100	TS-14	14	6
34	L-4	SB	15	O3	L†	64+80.00	65+80.00	100	TS-14	14	6
							TOTALS	2,220		238	102

SUMMARY OF QUANTITIES

Q-8

STATE OF CALIFORNIA - DEPARTMENT OF TRANSPORTATION
DESIGN
Caltrans

FUNCTIONAL SUPERVISOR: CHRIS M THOMAS
CALCULATED-DESIGNED BY: BAHMAN YAZDANI
CHECKED BY: RICARDO PADILA
REVISED BY
DATE REVISED

LAST REVISION 09-16-11
DATE PLOTTED => 27-SEP-2011
TIME PLOTTED => 16:15

Dist	COUNTY	ROUTE	POST MILES TOTAL PROJECT	SHEET No.	TOTAL SHEETS
11	SD	15	0.5/M4.0	79	116

Enrique P. Bernal 07-29-11
REGISTERED ELECTRICAL ENGINEER DATE

08-01-11
PLANS APPROVAL DATE

REGISTERED PROFESSIONAL ENGINEER
ENRIQUE P. BERNAL
No. 15675
Exp. 6-30-12
ELECTRICAL
STATE OF CALIFORNIA

THE STATE OF CALIFORNIA OR ITS OFFICERS OR AGENTS SHALL NOT BE RESPONSIBLE FOR THE ACCURACY OR COMPLETENESS OF SCANNED COPIES OF THIS PLAN SHEET.

CONDUIT NOTES:

- N C / 9 -Exist 1½"C, 2 dlc, 2 sic.
- 10 -Exist 1½"C, 2 dlc.
- 11 -Exist 1½"C, 4 dlc.
- 12 -Exist 2"C, 2 dlc, 1 12csc.
- 13 -Exist 1½"C, 3 dlc, 2 sic, 2#8(ltg).
- N C / 14 -Exist 1½"C, mt.
- 15 -Exist 1½"C, 2 sic.
- 16 -Exist 1½"C, 1 dlc.

EXISTING SCHEDULES

SEE SHEET E-2

LEGEND

N C = EXISTING CONDUIT NO CHANGE.
VIS = VIDEO IMAGE SENSOR.
VDU = VIDEO DETECTION UNIT.

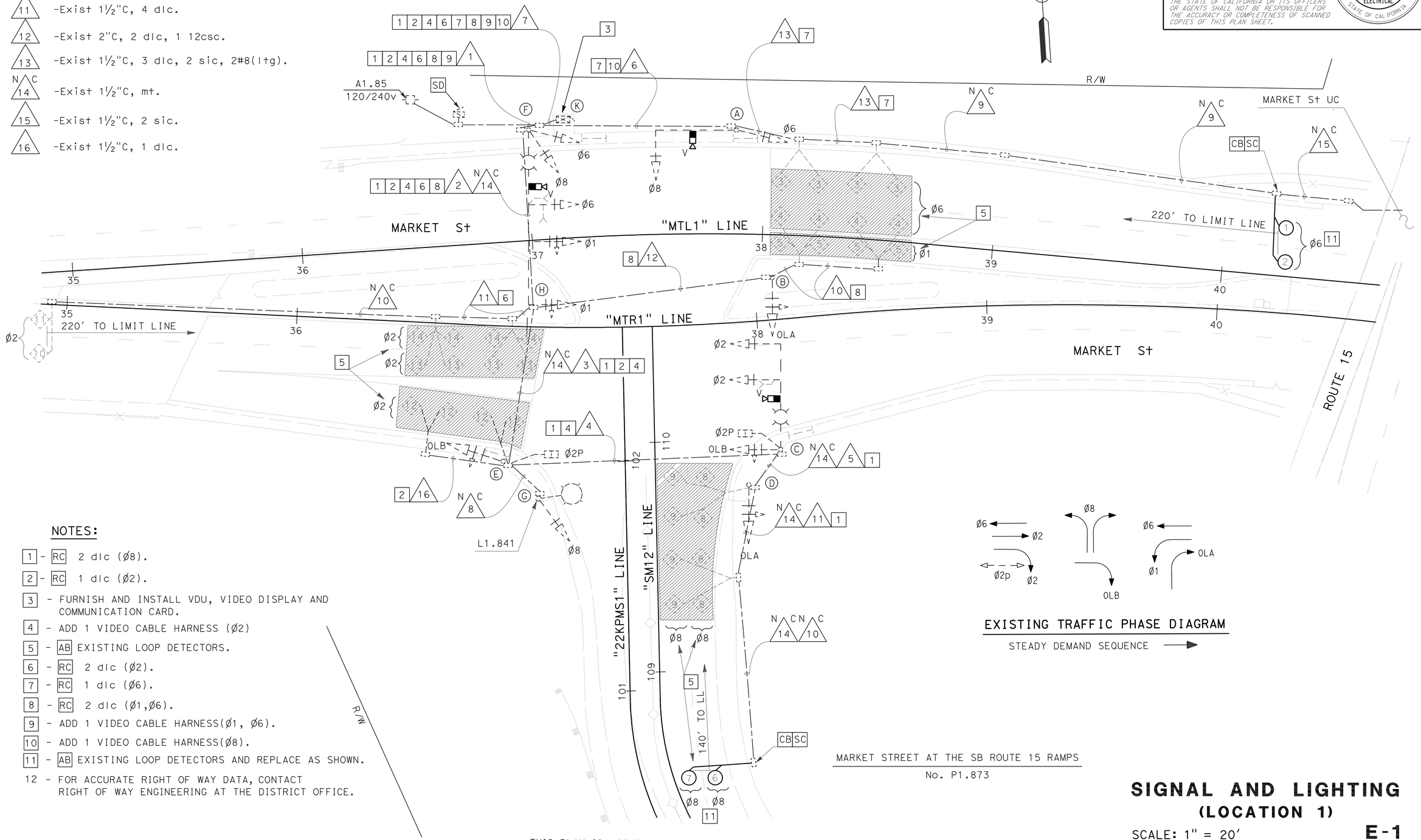

EXISTING TRAFFIC PHASE DIAGRAM

STEADY DEMAND SEQUENCE

NOTES:

1 - RC 2 dlc (Ø8).
2 - RC 1 dlc (Ø2).
3 - FURNISH AND INSTALL VDU, VIDEO DISPLAY AND COMMUNICATION CARD.
4 - ADD 1 VIDEO CABLE HARNESS (Ø2)
5 - AB EXISTING LOOP DETECTORS.
6 - RC 2 dlc (Ø2).
7 - RC 1 dlc (Ø6).
8 - RC 2 dlc (Ø1,Ø6).
9 - ADD 1 VIDEO CABLE HARNESS(Ø1, Ø6).
10 - ADD 1 VIDEO CABLE HARNESS(Ø8).
11 - AB EXISTING LOOP DETECTORS AND REPLACE AS SHOWN.
12 - FOR ACCURATE RIGHT OF WAY DATA, CONTACT RIGHT OF WAY ENGINEERING AT THE DISTRICT OFFICE.

MARKET STREET AT THE SB ROUTE 15 RAMPS
No. P1.873

THIS PLAN IS ACCURATE FOR ELECTRICAL WORK ONLY

SIGNAL AND LIGHTING
(LOCATION 1)

SCALE: 1" = 20'

E-1

STATE OF CALIFORNIA - DEPARTMENT OF TRANSPORTATION
Caltrans® TRAFFIC ELECTRICAL

FUNCTIONAL SUPERVISOR: DALE J. WILSON
CALCULATED-DESIGNED BY: ANTONIO A. RODRIGUEZ
CHECKED BY: ENRIQUE BERNAL
REVISED BY / DATE REVISED

LAST REVISION 09-16-11
DATE PLOTTED => 27-SEP-2011
TIME PLOTTED => 16:15

Dist	COUNTY	ROUTE	POST MILES TOTAL PROJECT	SHEET No.	TOTAL SHEETS
11	SD	15	0.5/M4.0	80	116

Enrique P. Bernal 07-29-11
REGISTERED ELECTRICAL ENGINEER DATE

08-01-11
PLANS APPROVAL DATE

REGISTERED PROFESSIONAL ENGINEER
ENRIQUE P. BERNAL
No. 15675
Exp. 6-30-12
ELECTRICAL
STATE OF CALIFORNIA

THE STATE OF CALIFORNIA OR ITS OFFICERS OR AGENTS SHALL NOT BE RESPONSIBLE FOR THE ACCURACY OR COMPLETENESS OF SCANNED COPIES OF THIS PLAN SHEET.

EXISTING CONDUIT AND CONDUCTOR SCHEDULE

AWG SIZE OR CABLE TYPE	PHASE	POLE OR CIRCUIT	EXISTING CONDUIT SIZE AND RUN SCHEDULE								
			3-3" (1)	3" (2)	3" (3)	3" (4)	2" (5)	3" (6)	3-3" (7)	2" (8)	
		POLE - A	1 1					1 1	1 1		
3CSC / 12CSC		B		1 1					1 1		
		C	1 1	1 1	1 1	1 1		1 1	1 1		
		D		1	1	1	1 1		1		
		E	1 1	1 1	1 1			1 1	1 1		
		F						1	1		
		G		1	1	1			1	1	
		H		1	1				1		
		J									
TOTAL CABLES		3CSC/12CSC	3 6	3 6	2 4	1 2	1	3 5	4 8	1	
10		LIGHTING	2	2	2	2		4		2	
14		PEU						3	2		
TYPE B DLC	Ø1	LOOP DETECTOR	1	1					1		
	Ø2	LOOP DETECTOR		4	1		1		5		
	Ø6	LOOP DETECTOR	4	2					6		
	Ø8	LOOP DETECTOR		4	4	4	4		4		
EVC			3	1	1	1			3		
SIC								2	2		
TOTAL CONDUCTORS/CABLES			19	23	14	10	6	17	35	4	

EXISTING POLE AND EQUIPMENT SCHEDULE

Loc	STANDARD			PLACEMENT DIMENSIONS		SIGNAL MOUNTING AND PLACEMENT				LPS LUMINAIRE	REMARKS
	TYPE			A	B	VEHICLE		PEDESTRIAN			
		SMA	LMA	FT	FT	POLE	MASTARM	SIGNAL	P.P.B.		
(A)	23-4-80	35′	—	—	7	SV-1-T Ø6	mas Ø8	—	—	180 w	—
(B)	1-A (10′)	—	—	—	5	TV-1-T ØLA	—	—	—	—	—
(C)	26-4-80	45′	15′	4	5	SV-1-T ØLB	mas Ø2 mas Ø2	SP-1-T Ø2P	Ø2P →	180 w	—
(D)	1-A (10′)	—	—	8	5	TV-1-T ØLA	—	—	—	—	—
(E)	1-A (10′)	—	—	3	5	TV-1-T ØLB	—	SP-1-T Ø2P	Ø2P ←	—	—
(F)	29-5-80	50′	15′	—	7	SV-2-T Ø8 Ø6	mat Ø1 mas Ø6	—	—	180 w	peu
(G)	15	—	12′	ECR	7	SV-1-T Ø8	—	—	—	—	—
(H)	1-A (10′)	—	—	—	—	TV-1-T Ø1	—	—	—	—	—
(K)	MODEL 170 CONTROLLER ASSEMBLY (TYPE 332 CABINET)										

MARKET STREET AT THE SB ROUTE 15 RAMPS
SIGNAL No P1.873

SIGNAL AND LIGHTING
(LOCATION 1)

E-2

STATE OF CALIFORNIA - DEPARTMENT OF TRANSPORTATION
Caltrans® TRAFFIC ELECTRICAL

FUNCTIONAL SUPERVISOR: DALE J. WILSON
CALCULATED-DESIGNED BY: ANTONIO A. RODRIGUEZ
CHECKED BY: ENRIQUE BERNAL
REVISED BY
DATE REVISED

LAST REVISION 09-16-11
DATE PLOTTED => 27-SEP-2011
TIME PLOTTED => 16:15

Dist	COUNTY	ROUTE	POST MILES TOTAL PROJECT	SHEET No.	TOTAL SHEETS
11	SD	15	0.5/M4.0	81	116

Enrique P. Bernal 07-29-11
REGISTERED ELECTRICAL ENGINEER DATE

08-01-11
PLANS APPROVAL DATE

REGISTERED PROFESSIONAL ENGINEER
ENRIQUE P. BERNAL
No. 15675
Exp. 6-30-12
ELECTRICAL
STATE OF CALIFORNIA

THE STATE OF CALIFORNIA OR ITS OFFICERS OR AGENTS SHALL NOT BE RESPONSIBLE FOR THE ACCURACY OR COMPLETENESS OF SCANNED COPIES OF THIS PLAN SHEET.

EXISTING SCHEDULES

SEE SHEET E-4

EXISTING TRAFFIC PHASE DIAGRAM

STEADY DEMAND SEQUENCE

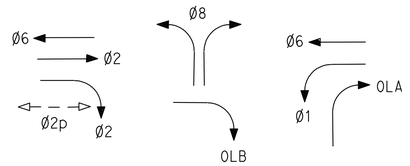

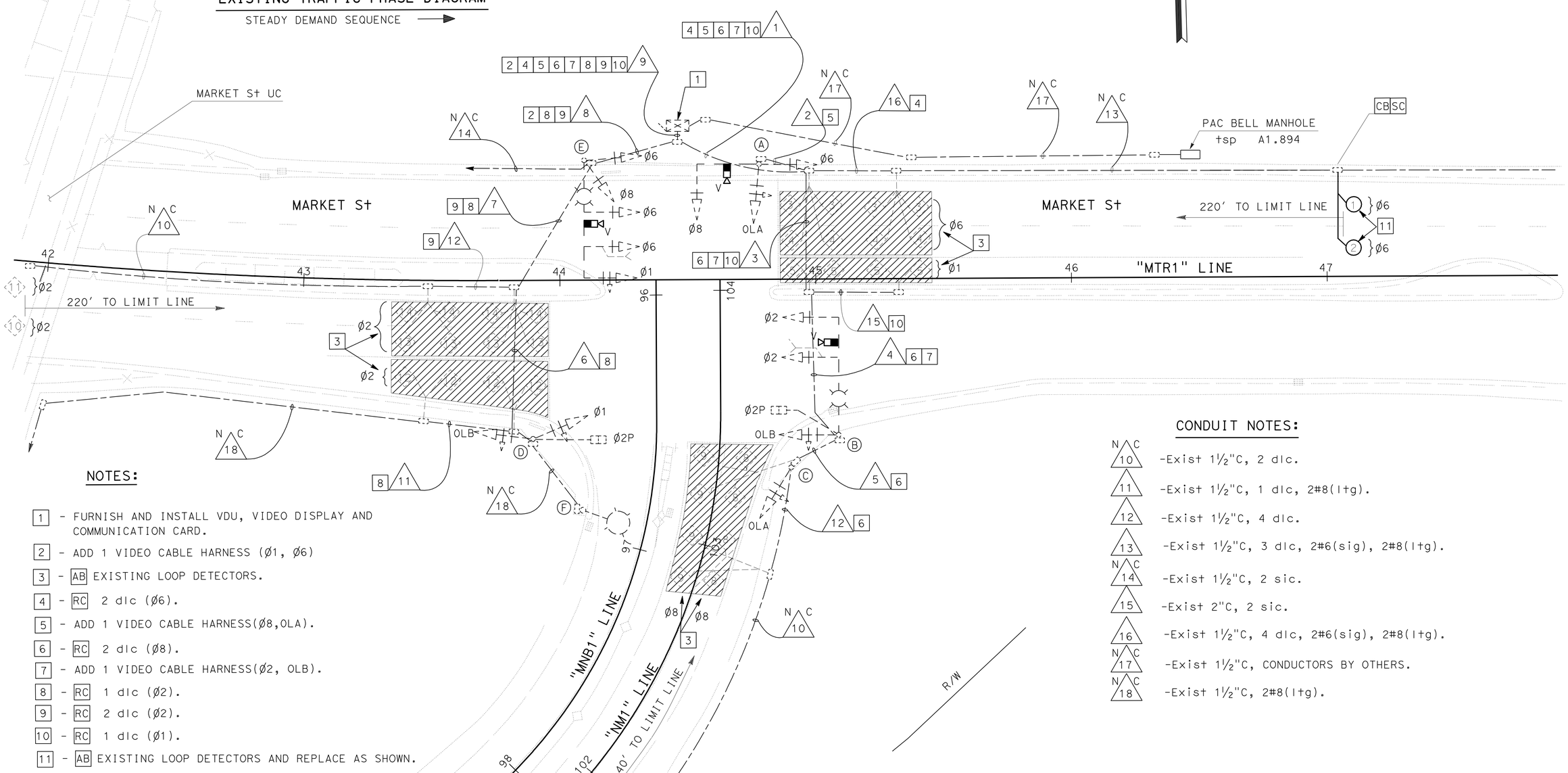

NOTES:

1 - FURNISH AND INSTALL VDU, VIDEO DISPLAY AND COMMUNICATION CARD.

2 - ADD 1 VIDEO CABLE HARNESS (Ø1, Ø6)

3 - AB EXISTING LOOP DETECTORS.

4 - RC 2 dlc (Ø6).

5 - ADD 1 VIDEO CABLE HARNESS(Ø8,OLA).

6 - RC 2 dlc (Ø8).

7 - ADD 1 VIDEO CABLE HARNESS(Ø2, OLB).

8 - RC 1 dlc (Ø2).

9 - RC 2 dlc (Ø2).

10 - RC 1 dlc (Ø1).

11 - AB EXISTING LOOP DETECTORS AND REPLACE AS SHOWN.

12 - FOR ACCURATE RIGHT OF WAY DATA, CONTACT RIGHT OF WAY ENGINEERING AT THE DISTRICT OFFICE.

CONDUIT NOTES:

N C 10 -Exist 1½"C, 2 dlc.

11 -Exist 1½"C, 1 dlc, 2#8(ltg).

12 -Exist 1½"C, 4 dlc.

13 -Exist 1½"C, 3 dlc, 2#6(sig), 2#8(ltg).

N C 14 -Exist 1½"C, 2 sic.

15 -Exist 2"C, 2 sic.

16 -Exist 1½"C, 4 dlc, 2#6(sig), 2#8(ltg).

N C 17 -Exist 1½"C, CONDUCTORS BY OTHERS.

N C 18 -Exist 1½"C, 2#8(ltg).

MARKET STREET AT THE NB ROUTE 15 RAMPS

No. P1.876

THIS PLAN IS ACCURATE FOR ELECTRICAL WORK ONLY

SIGNAL AND LIGHTING
(LOCATION 2)

SCALE: 1" = 20'

E-3

REVISED BY | DATE REVISED
ANTONIO A. RODRIGUEZ | ENRIQUE BERNAL
CALCULATED-DESIGNED BY | CHECKED BY
FUNCTIONAL SUPERVISOR | DALE J. WILSON

STATE OF CALIFORNIA - DEPARTMENT OF TRANSPORTATION
Caltrans® TRAFFIC ELECTRICAL

LAST REVISION 09-16-11 | DATE PLOTTED => 27-SEP-2011 | TIME PLOTTED => 16:15

Dist	COUNTY	ROUTE	POST MILES TOTAL PROJECT	SHEET No.	TOTAL SHEETS
11	SD	15	0.5/M4.0	82	116

Enrique P. Bernal 07-29-11
REGISTERED ELECTRICAL ENGINEER DATE

08-01-11
PLANS APPROVAL DATE

REGISTERED PROFESSIONAL ENGINEER
ENRIQUE P. BERNAL
No. 15675
Exp. 6-30-12
ELECTRICAL
STATE OF CALIFORNIA

THE STATE OF CALIFORNIA OR ITS OFFICERS OR AGENTS SHALL NOT BE RESPONSIBLE FOR THE ACCURACY OR COMPLETENESS OF SCANNED COPIES OF THIS PLAN SHEET.

EXISTING CONDUIT AND CONDUCTOR SCHEDULE

AWG SIZE OR CABLE TYPE	PHASE	POLE OR CIRCUIT	EXISTING CONDUIT SIZE AND RUN SCHEDULE								
			2-3" 1	2" 2	3" 3	3" 4	2" 5	3" 6	2-3" 7	2-3" 8	3-2" 9
		POLE - A	1	1							1
3CSC		B	1 1		1	1 1	1				1 1
		C	1		1	1	1				1
		D						1 1	1 1	1 1	1 1
		E								1 1	1 1
		F									
12CSC											
TOTAL CABLES		3CSC/12CSC	1 3	1	1 2	1 2	1	1 1	1 1	2 2	2 5
		LIGHTING	2		2	2		2	2	2	
10		SIGNAL POWER	2								2
14		PEU	3							3	
TYPE B DLC	Ø1	LOOP DETECTOR	1		1						1
	Ø2	LOOP DETECTOR						1	5	5	
	Ø3	LOOP DETECTOR									
	Ø4	LOOP DETECTOR									
	Ø5	LOOP DETECTOR	4								
	Ø6	LOOP DETECTOR	4								
	Ø7	LOOP DETECTOR									
	Ø8	LOOP DETECTOR			4	4	4				
	CS	LOOP DETECTOR									
EVC			2		2	2				1	3
SIC										2	2
TOTAL CONDUCTORS/CABLES			22	1	12	11	5	5	9	17	15

EXISTING POLE AND EQUIPMENT SCHEDULE

Loc	STANDARD			PLACEMENT DIMENSIONS		SIGNAL MOUNTING AND PLACEMENT				LPS LUMINAIRE
	TYPE			A	B	VEHICLE		PEDESTRIAN		
		SMA	LMA	FT	FT	POLE	MASTARM	SIGNAL	P.P.B.	
A	18-4-80	25′	15′	—	7	SV-2-TS OLA Ø6	mas Ø6	—	—	—
B	26-4-80	45′	15′	5	7	SV-1-T OLB	mas Ø2 mas Ø2	SP-1-T	Ø2P →	180 w
C	1-A (10′)	—	—	6	7	TP-1-T OLA	—	—		180 w
D	1-A (10′)	—	—	6	7	TV-2-T OLB Ø1	—	SP-1-T	Ø2P →	—
E	26-4-60	45′	12′	—	5	SV-2-TD Ø6 Ø8	mas Ø6 mas Ø6 mas Ø1			180 w
F	15	—	15′	ECR	7	—	—			—
G	MODEL 170 CONTROLLER ASSEMBLY (TYPE 332 CABINET)									

MARKET STREET AT THE NB ROUTE 15 RAMPS

SIGNAL P1.876

SIGNAL AND LIGHTING
(LOCATION 2)

E-4

STATE OF CALIFORNIA - DEPARTMENT OF TRANSPORTATION
Caltrans® TRAFFIC ELECTRICAL

FUNCTIONAL SUPERVISOR: DALE J. WILSON
CALCULATED-DESIGNED BY: ANTONIO A. RODRIGUEZ
CHECKED BY: ENRIQUE BERNAL
REVISED BY
DATE REVISED

LAST REVISION 09-16-11
DATE PLOTTED => 27-SEP-2011
TIME PLOTTED => 16:16

Dist	COUNTY	ROUTE	POST MILES TOTAL PROJECT	SHEET No.	TOTAL SHEETS
11	SD	15	0.5/M4.0	83	116

Enrique P. Bernal 07-29-11
REGISTERED ELECTRICAL ENGINEER DATE

08-01-11
PLANS APPROVAL DATE

REGISTERED PROFESSIONAL ENGINEER
ENRIQUE P. BERNAL
No. 15675
Exp. 06-30-12
ELECTRICAL
STATE OF CALIFORNIA

THE STATE OF CALIFORNIA OR ITS OFFICERS OR AGENTS SHALL NOT BE RESPONSIBLE FOR THE ACCURACY OR COMPLETENESS OF SCANNED COPIES OF THIS PLAN SHEET.

INDUCTIVE LOOP DETECTORS

ROUTE	POST MILE	EXISTING FACILITIES	INTERSECTIONS OR RAMPS	DIRECTIONS	LOCATION AND QUANTITY OF LOOP DETECTORS (N)							INDUCTIVE LOOP DETECTORS (EA)	REMARKS
					LANES					ADVANCE LOOPS			
					#1	#2	#3	#4	#5	#1	#2		
15	1.1	P1.128	TRAFFIC SIGNAL OCEANVIEW Blvd. AT THE NB Rte 15 RAMPS	NB	2(4-3-RT) 2(4-2-RT)	2(4-3-RT) 2(4-1-RT)						8	TYPE E AND D PREFORMED LOOPS SEE DETAIL"TS2" ON SHEET E-6
15	1.1	P1.133	TRAFFIC SIGNAL OCEANVIEW Blvd. AT THE SB Rte 15 RAMPS	SB	2(4-4-RT) 2(4-2-RT)	2(5-3-RT) 2(5-1-RT)						8	TYPE E AND D PREFORMED LOOPS SEE DETAIL"TS1" ON SHEET E-6
15	1.12	U1.124	COUNT STATION AT OCEANVIEW Blvd.	SB			1	1	1			3	TYPE A LOOP DETECTORS SEE DETAIL "B" THIS SHEET SEE DETAIL"TMS1" ON SHEET E-6
15	2.22	U2.226	COUNT STATION AT RTE 94	SB	1	1						2	TYPE A LOOP DETECTORS SEE DETAIL "B" THIS SHEET SEE DETAIL"TMS2" ON SHEET E-7
15	2.22	U2.226	COUNT STATION AT Rte 94	NB	1	1	1					3	TYPE A LOOP DETECTORS SEE DETAIL "B" THIS SHEET SEE DETAIL"TMS2" ON SHEET E-7
15	2.22	U2.226	COUNT STATION AT Rte 94	NB				1	1			2	TYPE A LOOP DETECTORS SEE DETAIL "B" THIS SHEET SEE DETAIL"TMS2" ON SHEET E-7
15	2.31	Z3.137	RAMP METER NW CONNECTOR AT Rte 94	WB	5	5						10	TYPE E LOOP DETECTORS SEE DETAIL"RM1" ON SHEET E-8
15	2.37	Z3.259	RAMP METER SW CONNECTOR AT Rte 94	WB	6							6	TYPE E LOOP DETECTORS SEE DETAIL"RM2" ON SHEET E-8
15	2.7	U2.700	TRAFFIC MONITORING STATION NORTH OF Rte 94	NB	2	2	2					6	TYPE E LOOP DETECTORS SEE DETAIL"TMS3" ON SHEET E-8
15	2.7	U2.700	TRAFFIC MONITORING STATION NORTH OF Rte 94	SB	2	2	2					6	TYPE E LOOP DETECTORS SEE DETAIL"TMS3" ON SHEET E-8
											TOTAL	54	

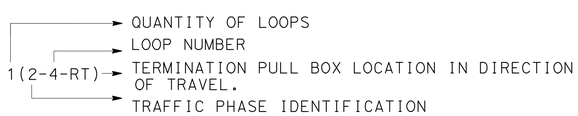

LOOP IDENTIFICATION
TRAFFIC SIGNAL

INDUCTIVE LOOP PLACEMENT DETAIL "B" (COUNT STATION/SPEED MONITORING)

(PLACE IN CENTER OF LANE, TYPICAL)

INDUCTIVE LOOP DETECTOR

NO SCALE

E-5

STATE OF CALIFORNIA - DEPARTMENT OF TRANSPORTATION
Caltrans® TRAFFIC ELECTRICAL

FUNCTIONAL SUPERVISOR: DALE WILSON
CALCULATED-DESIGNED BY: ANTONIO A. RODRIGUEZ
CHECKED BY: ENRIQUE P. BERNAL
REVISED BY
DATE REVISED

LAST REVISION 09-16-11
DATE PLOTTED => 27-SEP-2011
TIME PLOTTED => 16:16

Dist	COUNTY	ROUTE	POST MILES TOTAL PROJECT	SHEET No.	TOTAL SHEETS
11	SD	15	0.5/M4.0	84	116

Enrique P. Bernal 07-29-11
REGISTERED ELECTRICAL ENGINEER DATE

08-01-11
PLANS APPROVAL DATE

REGISTERED PROFESSIONAL ENGINEER
ENRIQUE P. BERNAL
No. 15675
Exp. 06-30-12
ELECTRICAL
STATE OF CALIFORNIA

THE STATE OF CALIFORNIA OR ITS OFFICERS OR AGENTS SHALL NOT BE RESPONSIBLE FOR THE ACCURACY OR COMPLETENESS OF SCANNED COPIES OF THIS PLAN SHEET.

NOTES:

1 - AB Exist LOOPS AND REPLACE AS SHOWN. SEE DETAIL "B" ON SHEET E-5.

2 - AB Exist LOOPS AND REPLACE AS SHOWN. ALL LOOPS ARE PREFORMED.

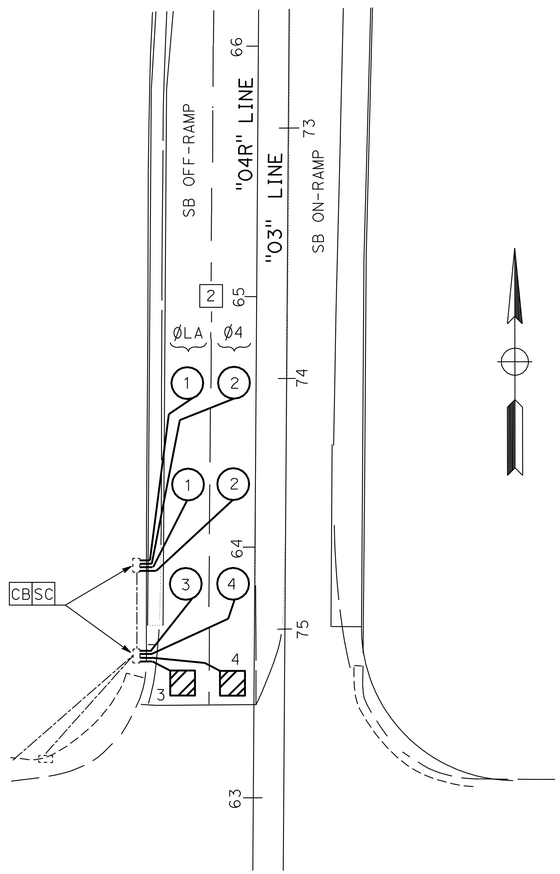

DETAIL "TS1"

ROUTE 15/SB RAMPS
AT OCEANVIEW Blvd
SIGNAL No. P1.133

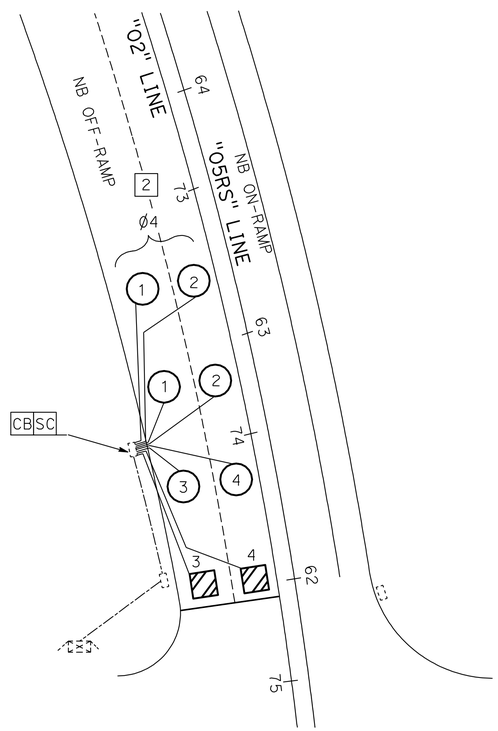

DETAIL "TS2"

ROUTE 15/NB RAMPS
AT OCEANVIEW Blvd
SIGNAL No. P1.128

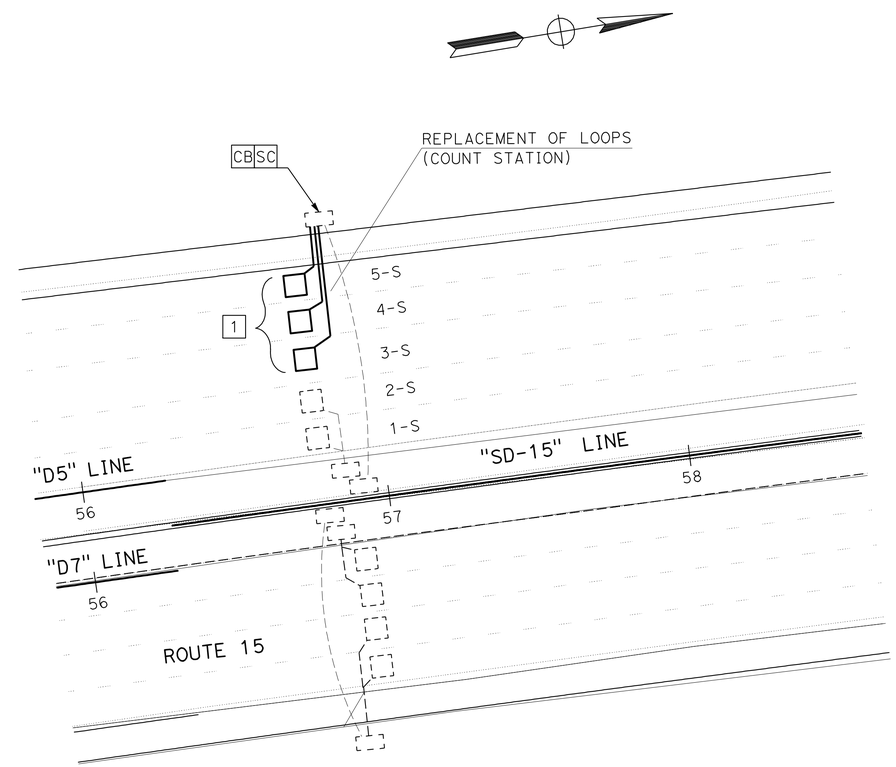

DETAIL "TMS1"

ROUTE 15
AT OCEANVIEW Blvd
U1.124

THIS PLAN IS ACCURATE FOR ELECTRICAL WORK ONLY.

INDUCTIVE LOOP DETECTOR

NO SCALE

E-6

STATE OF CALIFORNIA - DEPARTMENT OF TRANSPORTATION
Caltrans® TRAFFIC ELECTRICAL

FUNCTIONAL SUPERVISOR: DALE WILSON
CALCULATED-DESIGNED BY: ANTONIO A. RODRIGUEZ
CHECKED BY: ENRIQUE BERNAL
REVISED BY
DATE REVISED

LAST REVISION 09-16-11
DATE PLOTTED => 27-SEP-2011
TIME PLOTTED => 16:16

Dist	COUNTY	ROUTE	POST MILES TOTAL PROJECT	SHEET No.	TOTAL SHEETS
11	SD	15	0.5/M4.0	85	116

Enrique P. Bernal 07-29-11
REGISTERED ELECTRICAL ENGINEER DATE

08-01-11
PLANS APPROVAL DATE

REGISTERED PROFESSIONAL ENGINEER
ENRIQUE P. BERNAL
No. 15675
Exp. 06-30-12
ELECTRICAL
STATE OF CALIFORNIA

THE STATE OF CALIFORNIA OR ITS OFFICERS OR AGENTS SHALL NOT BE RESPONSIBLE FOR THE ACCURACY OR COMPLETENESS OF SCANNED COPIES OF THIS PLAN SHEET.

NOTES:

1 - AB Exist LOOPS AND REPLACE AS SHOWN SEE "DETAIL B" ON SHEET E-5.

2. FOR ACCURATE RIGHT OF WAY DATA, CONTACT RIGHT OF WAY ENGINEERING AT THE DISTRICT OFFICE.

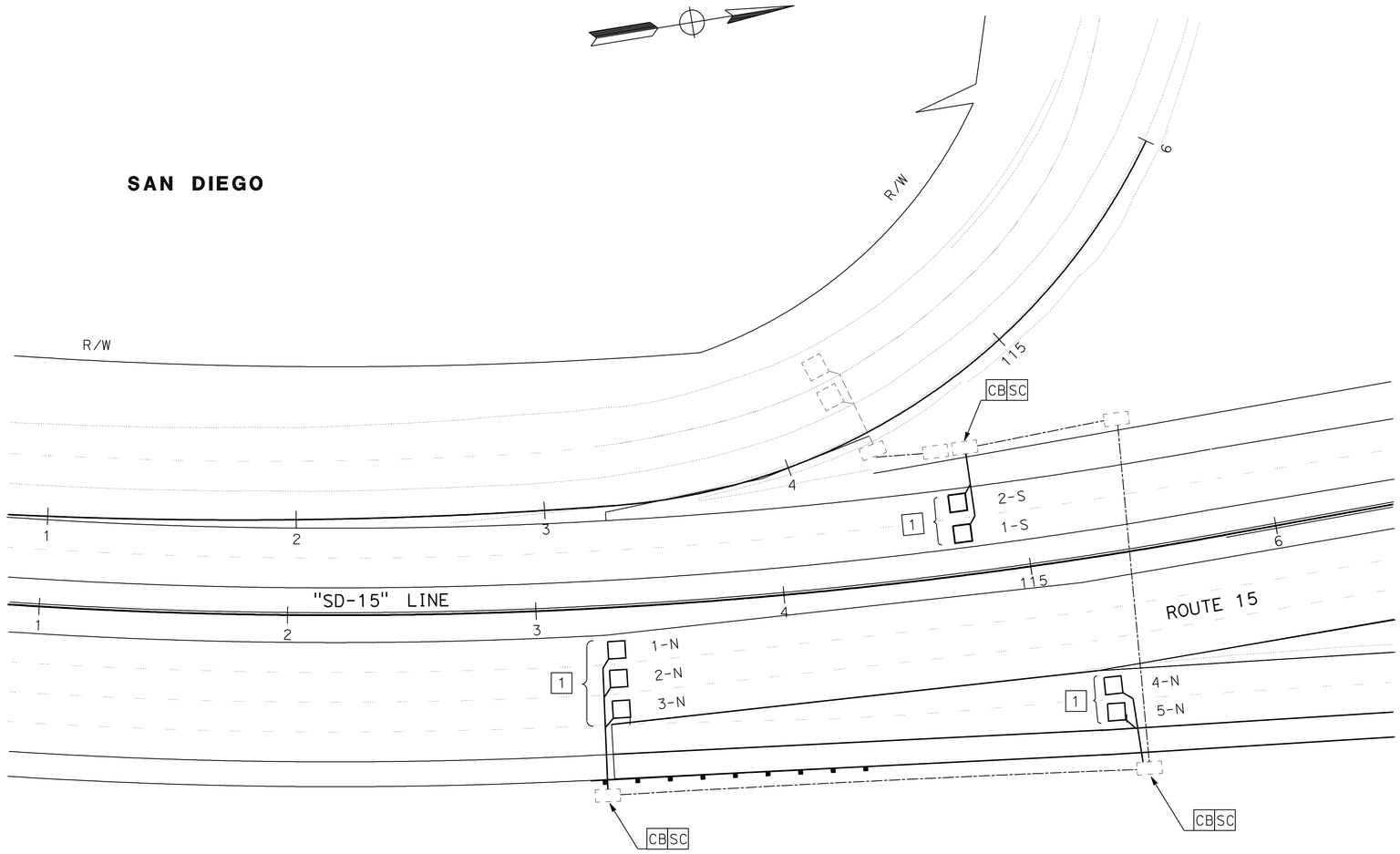

DETAIL "TMS2"

NO SCALE

ROUTE 15 AT SB, NB AND NB OFF RAMP

U2.226

THIS PLAN IS ACCURATE FOR ELECTRICAL WORK ONLY.

INDUCTIVE LOOP DETECTOR

NO SCALE

E-7

REVISED BY | DATE REVISED

ANTONIO A. RODRIGUEZ | ENRIQUE BERNAL

CALCULATED-DESIGNED BY | CHECKED BY

FUNCTIONAL SUPERVISOR | DALE WILSON

STATE OF CALIFORNIA - DEPARTMENT OF TRANSPORTATION

Caltrans® TRAFFIC ELECTRICAL

LAST REVISION 09-16-11 | DATE PLOTTED => 27-SEP-2011 | TIME PLOTTED => 16:16

Dist	COUNTY	ROUTE	POST MILES TOTAL PROJECT	SHEET No.	TOTAL SHEETS
11	SD	15	0.5/M4.0	86	116

Enrique P. Bernal 07-29-11
REGISTERED ELECTRICAL ENGINEER DATE

08-01-11
PLANS APPROVAL DATE

REGISTERED PROFESSIONAL ENGINEER
ENRIQUE P. BERNAL
No. 15675
Exp. 06-30-12
ELECTRICAL
STATE OF CALIFORNIA

THE STATE OF CALIFORNIA OR ITS OFFICERS OR AGENTS SHALL NOT BE RESPONSIBLE FOR THE ACCURACY OR COMPLETENESS OF SCANNED COPIES OF THIS PLAN SHEET.

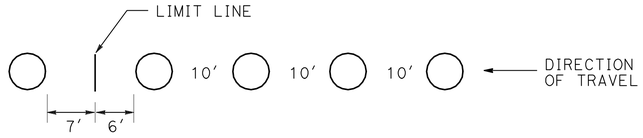

DETAIL "A"

LOOP PLACEMENT FOR RM (TYPICAL)
CENTER IN LANE

NOTES:

1 - AB Exist LOOPS AND REPLACE AS SHOWN. SEE "DETAIL C".

2 - AB Exist LOOPS AND REPLACE AS SHOWN. SEE "DETAIL A".

3 - AB Exist LOOPS AND REPLACE AS SHOWN.

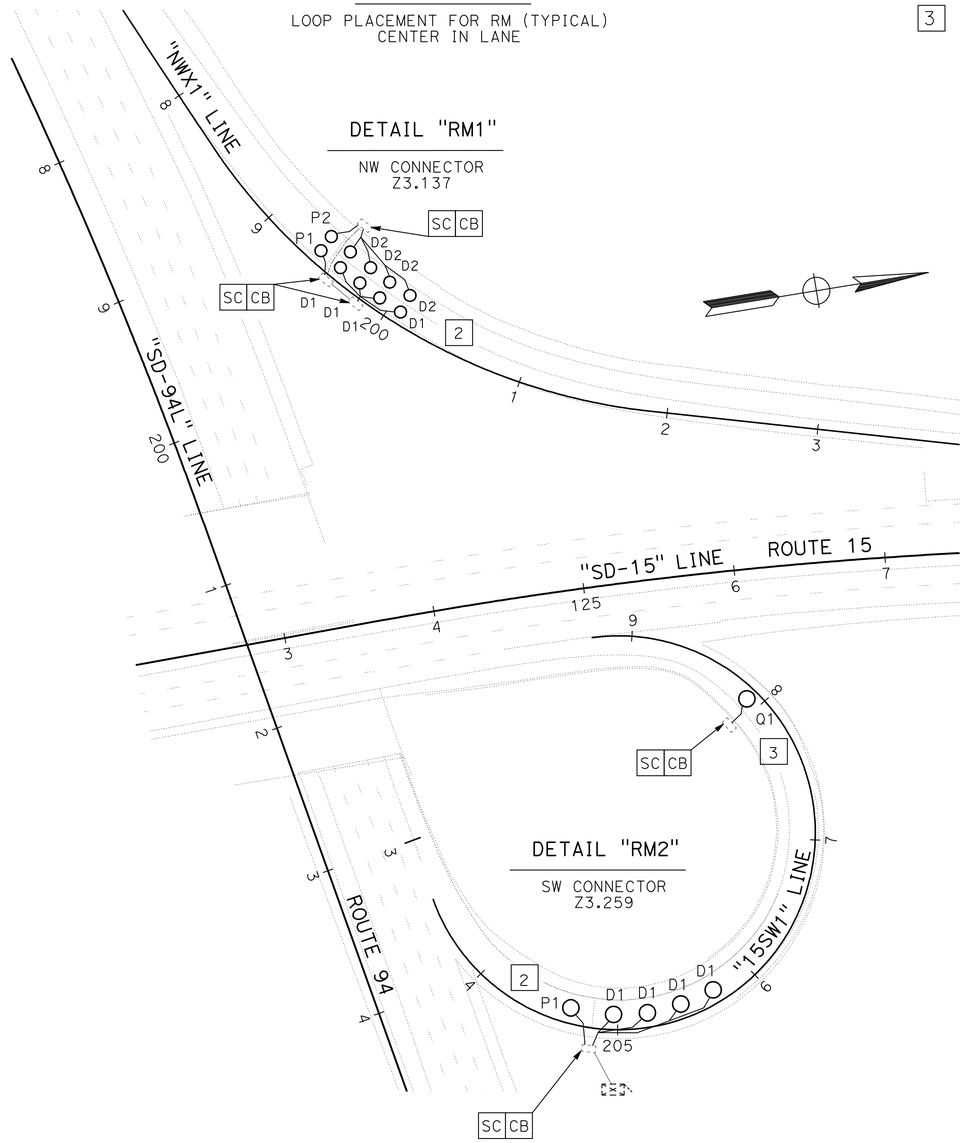

DETAIL "RM1"

NW CONNECTOR
Z3.137

DETAIL "RM2"

SW CONNECTOR
Z3.259

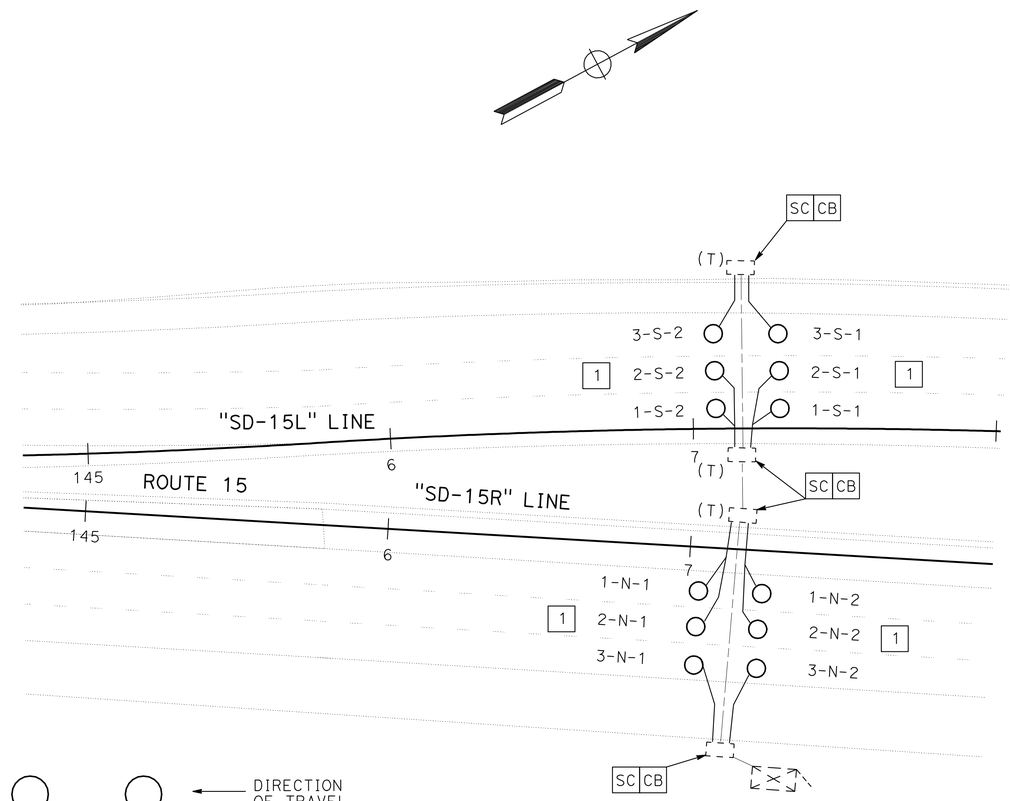

DETAIL "TMS3"

U2.700

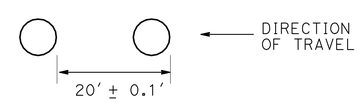

DETAIL "C"

LOOP PLACEMENT(TYPICAL)
CENTER IN LANE

THIS PLAN IS ACCURATE FOR ELECTRICAL WORK ONLY.

INDUCTIVE LOOP DETECTOR

NO SCALE

E-8

STATE OF CALIFORNIA - DEPARTMENT OF TRANSPORTATION
Caltrans® TRAFFIC ELECTRICAL

FUNCTIONAL SUPERVISOR: DALE WILSON
CALCULATED-DESIGNED BY: ANTONIO A. RODRIGUEZ
CHECKED BY: ENRIQUE BERNAL
REVISED BY / DATE REVISED

LAST REVISION 09-02-11 | DATE PLOTTED => 27-SEP-2011 | TIME PLOTTED => 16:16

DIST	COUNTY	ROUTE	POST MILES TOTAL PROJECT	SHEET NO.	TOTAL SHEETS
11	SD	15	0.5/M4.0	87	116

REGISTERED CIVIL ENGINEER

June 6, 2008
PLANS APPROVAL DATE

REGISTERED PROFESSIONAL ENGINEER
Donald E. Howe
No. C46402
Exp. 3-31-09
CIVIL
STATE OF CALIFORNIA

The State of California or its officers or agents shall not be responsible for the accuracy or completeness of electronic copies of this plan sheet.

To accompany plans dated 08-01-11

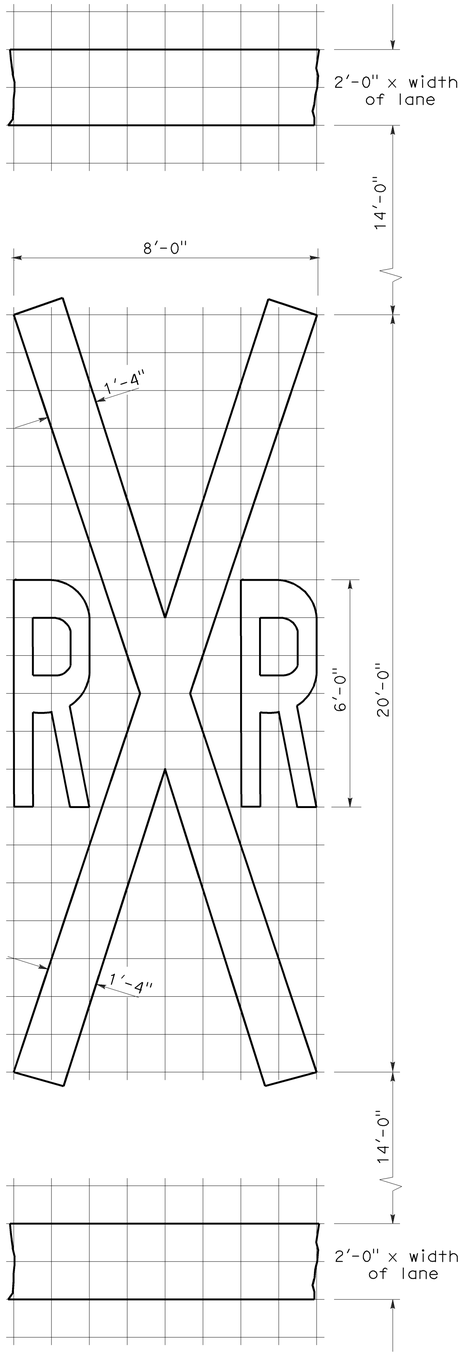

1'-0" GRID
A=70 sq ft ✳

RAILROAD CROSSING SYMBOL

✳70 sq ft DOES NOT INCLUDE THE 2'-0" x VARIABLE WIDTH TRANSVERSE LINES.

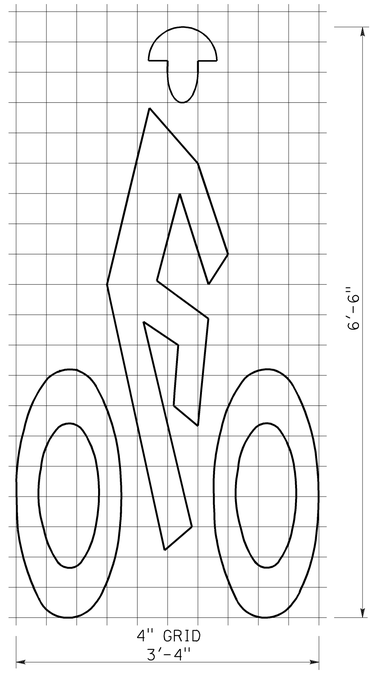

A=7 sq ft

BIKE LANE SYMBOL

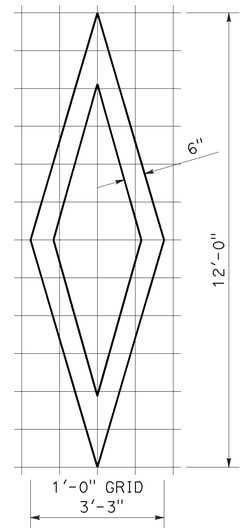

A=11 sq ft

DIAMOND SYMBOL

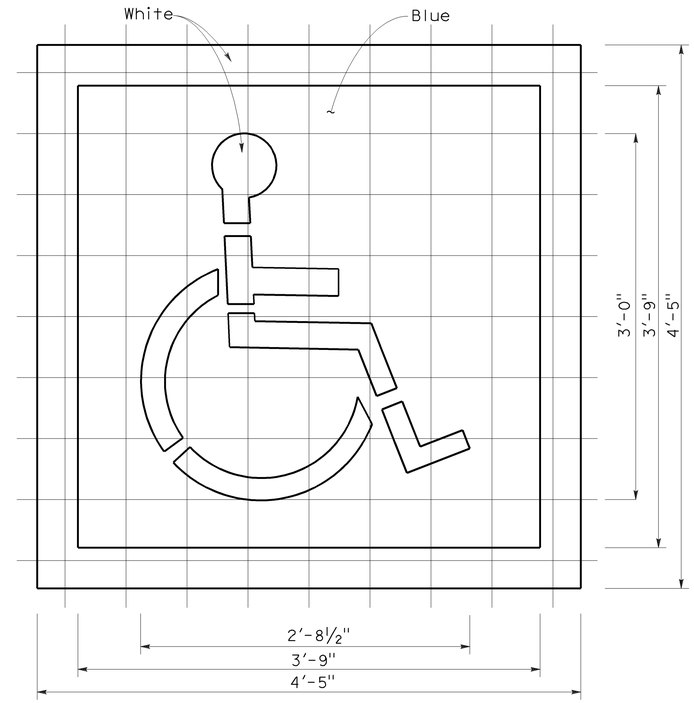

6" GRID
A (White) =9 sq ft
A (Blue) =14 sq ft

INTERNATIONAL SYMBOL OF ACCESSIBILITY MARKING

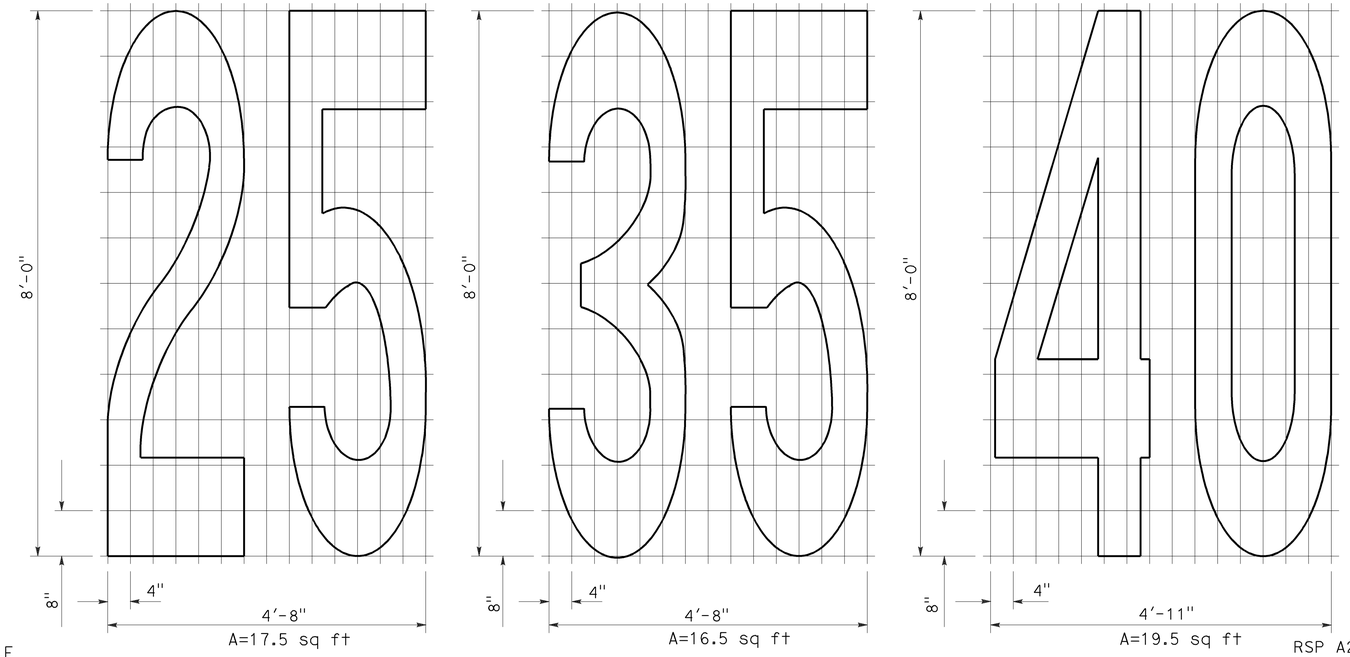

A=17.5 sq ft
A=16.5 sq ft
A=19.5 sq ft

NUMERALS

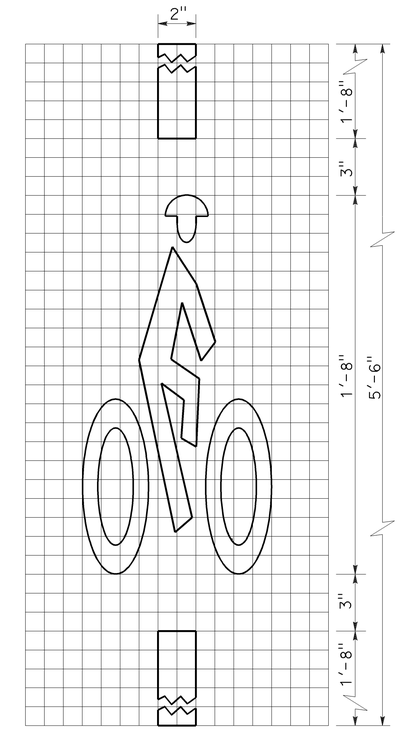

1" GRID
10"
A=2 sq ft

BICYCLE LOOP DETECTOR SYMBOL

NOTE:

1. Minor variations in dimensions may be accepted by the Engineer.

STATE OF CALIFORNIA
DEPARTMENT OF TRANSPORTATION

PAVEMENT MARKINGS SYMBOLS AND NUMERALS

NO SCALE

RSP A24C DATED JUNE 6, 2008 SUPERSEDES STANDARD PLAN A24C DATED MAY 1, 2006 - PAGE 11 OF THE STANDARD PLANS BOOK DATED MAY 2006.

REVISED STANDARD PLAN RSP A24C

2006 REVISED STANDARD PLAN RSP A24C

5-27-08

DIST	COUNTY	ROUTE	POST MILES TOTAL PROJECT	SHEET NO.	TOTAL SHEETS
11	SD	15	0.5/M4.0	88	116

Randell D. Hiatt
REGISTERED CIVIL ENGINEER

June 6, 2008
PLANS APPROVAL DATE

REGISTERED PROFESSIONAL ENGINEER
Randell D. Hiatt
No. C50200
Exp. 6-30-09
CIVIL
STATE OF CALIFORNIA

The State of California or its officers or agents shall not be responsible for the accuracy or completeness of electronic copies of this plan sheet.

To accompany plans dated 08-01-11

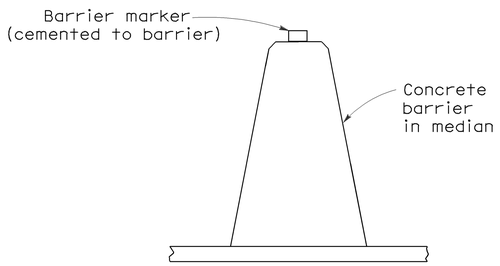

CONCRETE BARRIER TYPE 60 DELINEATION

See Notes 7 and 8

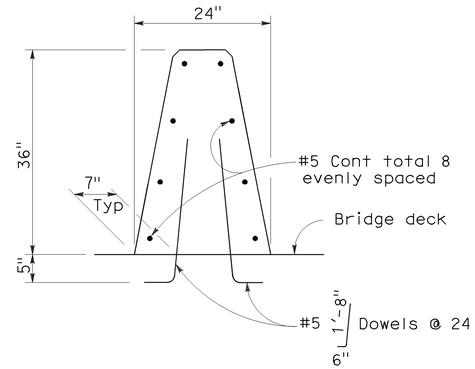

CONCRETE BARRIER TYPE 60A

Details similar to Type 60 except as noted.

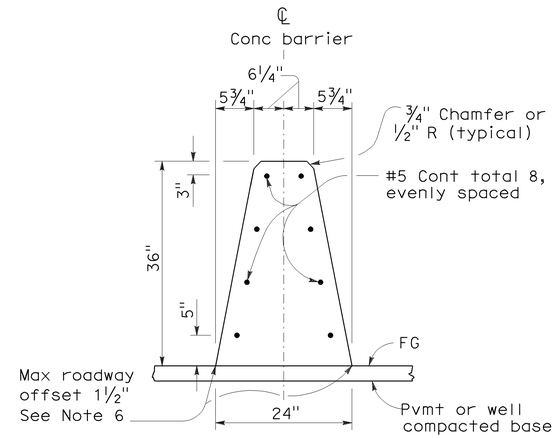

CONCRETE BARRIER TYPE 60

NOTES:

1. See Standard Plan A76B for details of Concrete Barrier Type 60 end anchors, connection to structures and transitions to Concrete Barrier Type 50 and Concrete Barrier Type 60S.
2. See Standard Plan A76C for Concrete Barrier Type 60 transitions at bridge column and sign pedestals.
3. Where glare screen is required on Concrete Barrier Type 60, use Concrete Barrier Type 60G.
4. Where the concrete barrier is added to the face of existing concrete structure, match existing weep holes.
5. Expansion joints in concrete barrier shall be located at all deck, pavement and principal wall joints. Expansion joint filler material shall be the same size as joint or ½" minimum.
6. Where roadway offset is greater than 1½", see Concrete Barrier Type 60C.
7. Barrier delineation to be used when required by the Special Provisions.
8. Spacing of barrier markers to match spacing of raised pavement markers on the adjacent median edgeline pavement delineation.
9. Reinforcing stirrup not required for roadway offsets less than 1'-0".
10. For roadway surfaces offset greater than 1½" to 3", no rebars required. For roadway surfaces offset greater than 3" to 8" use two #4 rebars at 3" above the lower roadway surface. For roadway surfaces offset greater than 8" to 12", use two #4 rebars at 3" above the lower roadway surface and two #4 rebars at 8" above the lower roadway surface. For roadway surfaces offset greater than 12" to 36", use two #4 rebars at 3" above the lower roadway surface and two #4 rebars at every 8" increment vertical spacing above the first two #4 rebars.

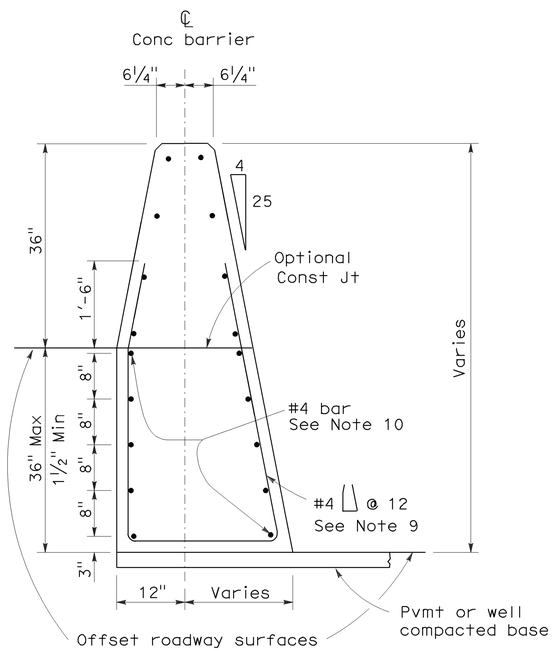

CONCRETE BARRIER TYPE 60C

Details similar to Type 60 except as noted.
Concrete barrier end anchor when necessary.
36" roadway surfaces offset shown.

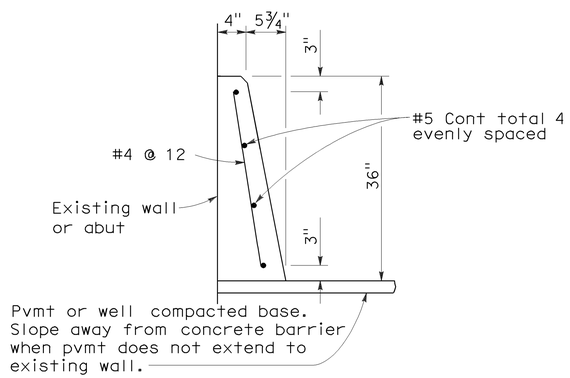

CONCRETE BARRIER TYPE 60D

STATE OF CALIFORNIA
DEPARTMENT OF TRANSPORTATION

CONCRETE BARRIER TYPE 60

NO SCALE

RSP A76A DATED JUNE 6, 2008 SUPERSEDES STANDARD PLAN A76A
DATED MAY 1, 2006 - PAGE 29 OF THE STANDARD PLANS BOOK DATED MAY 2006.

REVISED STANDARD PLAN RSP A76A

2006 REVISED STANDARD PLAN RSP A76A

5-21-08

Dist	COUNTY	ROUTE	POST MILES TOTAL PROJECT	SHEET No.	TOTAL SHEETS
11	SD	15	0.5/M4.0	89	116

Randell D. Hiatt
REGISTERED CIVIL ENGINEER

May 20, 2011
PLANS APPROVAL DATE

REGISTERED PROFESSIONAL ENGINEER
Randell D. Hiatt
No. C50200
Exp. 6-30-11
CIVIL
STATE OF CALIFORNIA

The State of California or its officers or agents shall not be responsible for the accuracy or completeness of electronic copies of this plan sheet.

To accompany plans dated 08-01-11

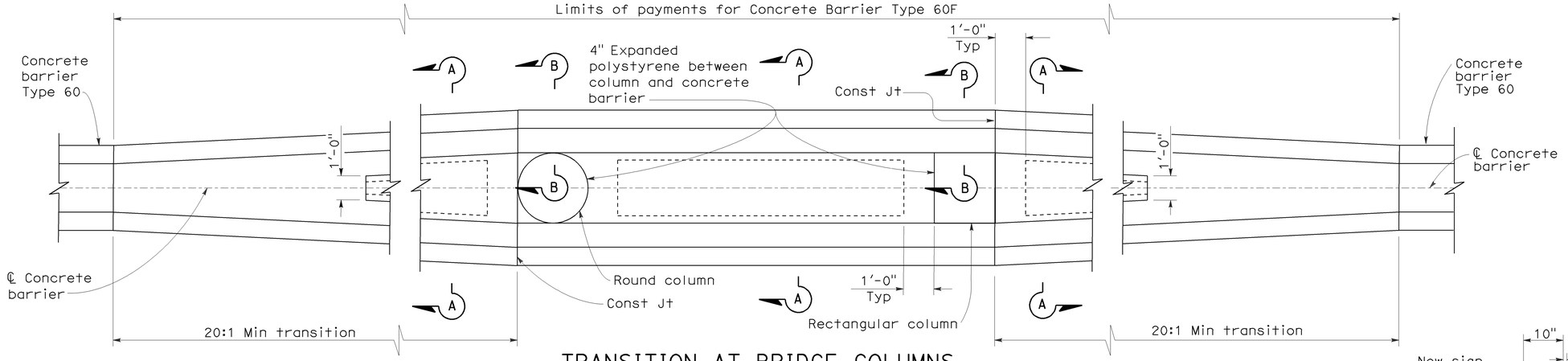

TRANSITION AT BRIDGE COLUMNS

CONCRETE BARRIER TYPE 60F
SEE NOTE 7

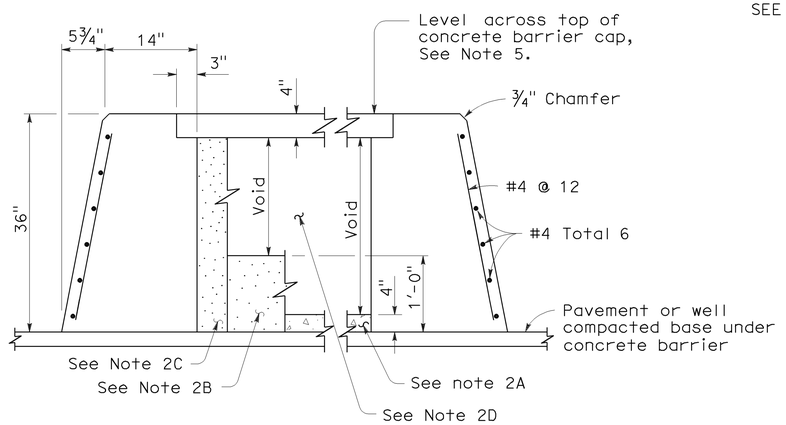

SECTION A-A

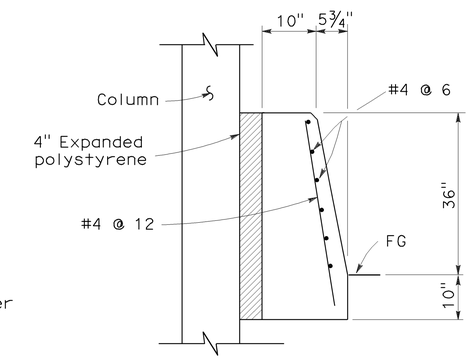

SECTION B-B

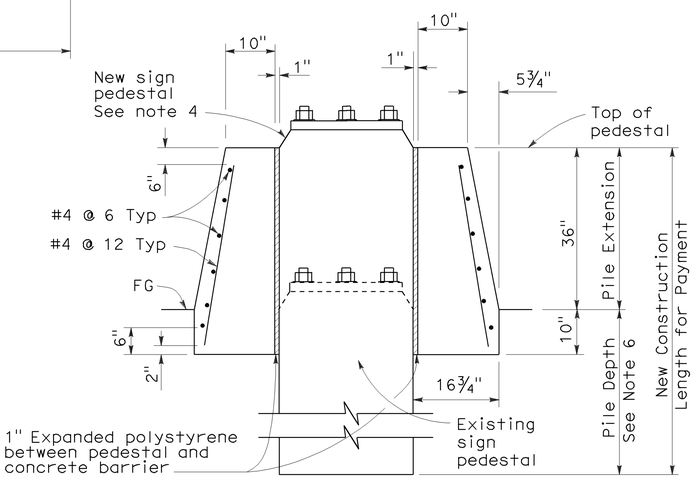

SECTION C-C

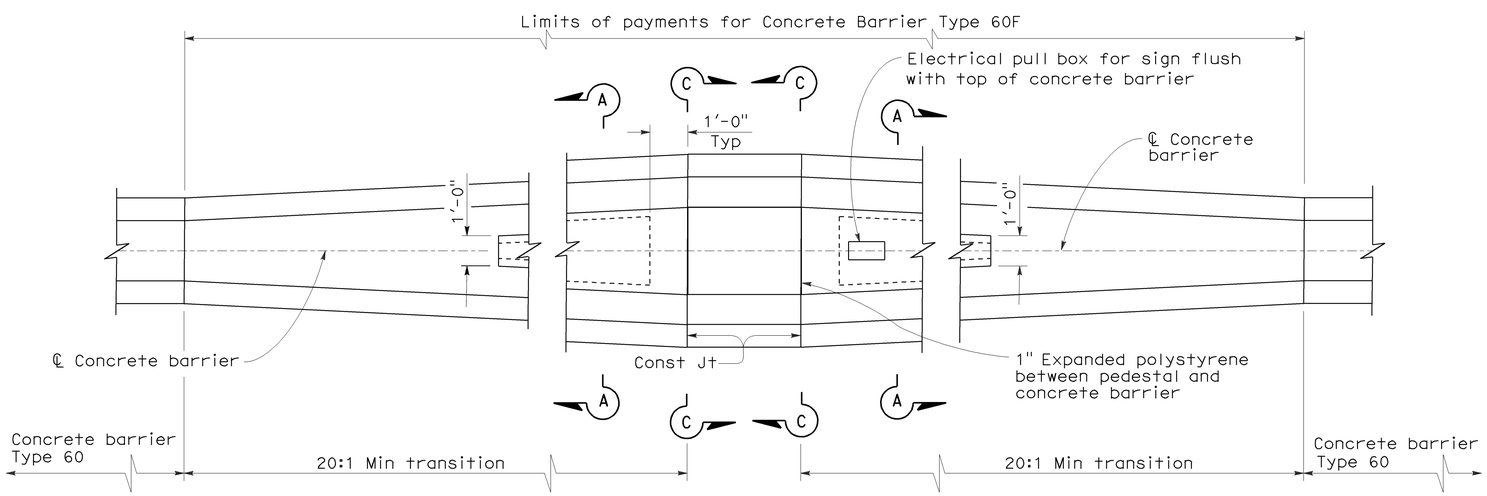

TRANSITION AT SIGN PEDESTAL

CONCRETE BARRIER TYPE 60F
SEE NOTE 7

NOTES:

1. See Revised Standard Plan RSP A76A for Concrete Barrier Type 60.
2. Contractor options for fill between concrete barrier walls:
   A. Place 4" PCC at base between concrete barrier walls.
   B. Place 1'-0" of granular material at base between walls.
   C. Place granular material from base to bottom of 4" cap.
   D. Monolithic concrete with foam blockouts is not permitted.
3. Reinforcing steel shall extend continuous through construction joints.
4. See "Overhead Sign" plans for sign pedestal elevations on new construction.
5. Adjust height of concrete barrier wall on low side of offset or superelevated roadways to provide level grade across top of concrete barrier cap.
6. See Overhead Signs Standard Plan Pile Foundation Tables.
7. All locations with limited shoulder width available for barrier, see Revised Standard Plan RSP A76F for use of Concrete Barrier Type 60GE.

STATE OF CALIFORNIA
DEPARTMENT OF TRANSPORTATION

CONCRETE BARRIER TYPE 60F

NO SCALE

RSP A76C DATED MAY 20, 2011 SUPERSEDES STANDARD PLAN A76C
DATED MAY 1, 2006 - PAGE 31 OF THE STANDARD PLANS BOOK DATED MAY 2006.

REVISED STANDARD PLAN RSP A76C

2006 REVISED STANDARD PLAN RSP A76C

4-6-11

Dist	COUNTY	ROUTE	POST MILES TOTAL PROJECT	SHEET No.	TOTAL SHEETS
11	SD	15	0.5/M4.0	90	116

Randell D. Hiatt
REGISTERED CIVIL ENGINEER

May 20, 2011
PLANS APPROVAL DATE

REGISTERED PROFESSIONAL ENGINEER Randell D. Hiatt No. C50200 Exp. 6-30-11 CIVIL STATE OF CALIFORNIA

The State of California or its officers or agents shall not be responsible for the accuracy or completeness of electronic copies of this plan sheet.

To accompany plans dated 08-01-11

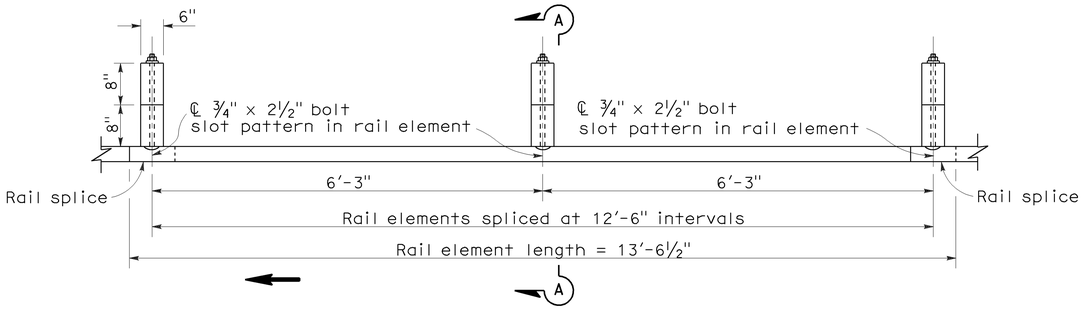

PLAN

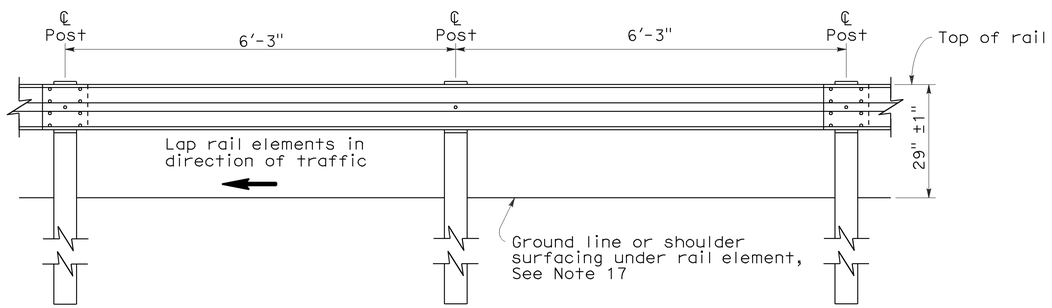

ELEVATION

METAL BEAM GUARD RAILING WITH WOOD POST AND BLOCKS

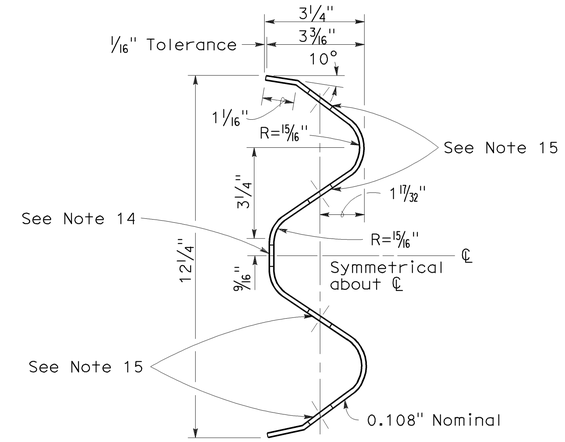

SECTION THRU RAIL ELEMENT

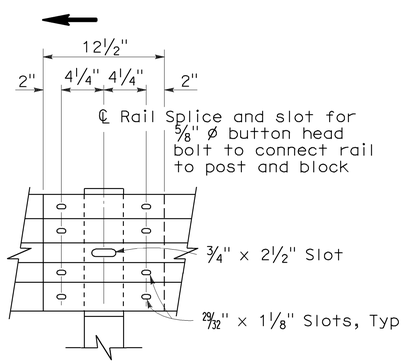

ELEVATION

RAIL ELEMENT SPLICE DETAIL

a) Connect the over lapped end of the rail elements with ⅝" ø x 1⅜" button head oval shoulder splice bolts inserted into the 29⁄32" x 1⅛" slots and bolted together with ⅝" ø recessed hex nuts. Recess of hex nut points toward rail element. A total of 8 bolts and nuts are to be used at each rail splice connection.

b) The ends of the rail elements are to be overlapped in the direction of traffic (see details).

c) Where end cap is to be attached to the end of a rail element, a total of 4 of the above described splice bolts and nuts are to be used.

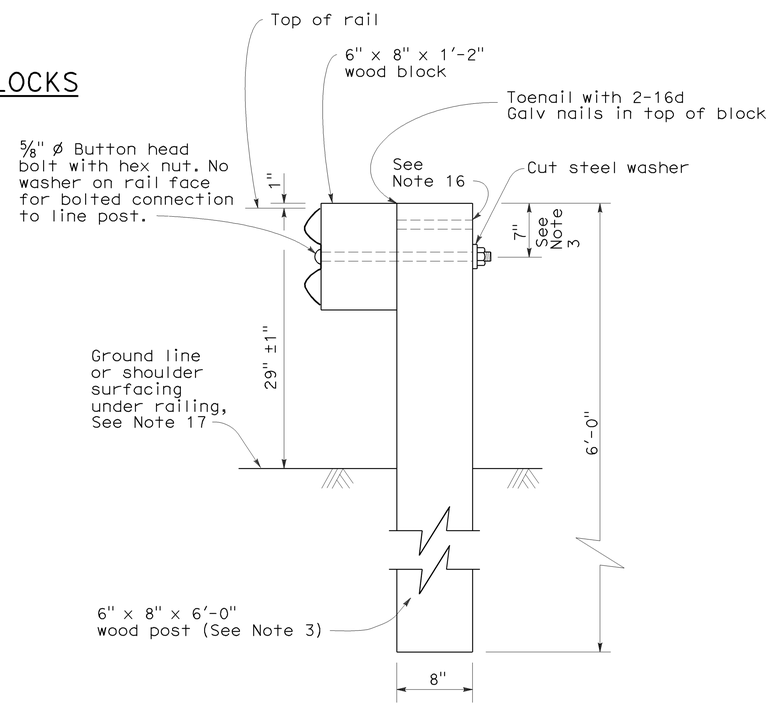

SECTION A-A

TYPICAL WOOD LINE POST INSTALLATION

See Note 4

NOTES:

1. For details of steel post installations, see Standard Plan A77A2.
2. For details of standard hardware used to construct guard railing, see Standard Plan A77B1.
3. For details of wood posts and wood blocks used to construct guard railing, see Standard Plan A77C1.
4. For additional installation details, see Standard Plan A77C3.
5. Guard railing post spacing to be 6'-3" center to center, except as otherwise noted.
6. For guard railing typical layouts, see the A77E, A77F and A77G Series of Standard Plans.
7. For terminal system end treatment details, see the A77L Series of Standard Plans. To connect railing to terminal system end treatment, transition the top of railing height at a ratio of 120:1 to terminal system end treatment height plus one 12'-6" standard railing section at the transitioned height for a horizontal connection to the end treatment.
8. For guard railing end anchor details, see Standard Plans A77H1 and A77I2.
9. For details of guard railing transition to bridge railing, see Standard Plan A77J4.
10. For additional details of guard railing connection to bridge railings, see Standard Plans A77J1, A77J2 and A77K1.
11. For guard railing connection details to abutments and walls, see Standard Plan A77J3.
12. Direction of adjacent traffic indicated by ➡.
13. For typical guard railing delineation and dike positioning details, see Standard Plan A77C4.
14. Slotted hole for bolted connection of rail element to block and post. See "Section Thru Rail Element".
15. Slotted holes for splice bolts to overlap ends of rail element. See "Section Thru Rail Element".
16. Additional hole in uppermost portion of line post is for potential future adjustments of railing height. See Standard Plan A77C1.
17. Install posts in soil.

STATE OF CALIFORNIA
DEPARTMENT OF TRANSPORTATION

METAL BEAM GUARD RAILING STANDARD RAILING SECTION (WOOD POST WITH WOOD BLOCK)

NO SCALE

RSP A77A1 DATED MAY 20, 2011 SUPERSEDES STANDARD PLAN A77A1
DATED MAY 1, 2006 - PAGE 41 OF THE STANDARD PLANS BOOK DATED MAY 2006.

REVISED STANDARD PLAN RSP A77A1

2006 REVISED STANDARD PLAN RSP A77A1

3-10-11

To accompany plans dated 08-01-11

Dist	COUNTY	ROUTE	POST MILES TOTAL PROJECT	SHEET No.	TOTAL SHEETS
11	SD	15	0.5/M4.0	91	116

Randell D. Hiatt
REGISTERED CIVIL ENGINEER

May 20, 2011
PLANS APPROVAL DATE

REGISTERED PROFESSIONAL ENGINEER
Randell D. Hiatt
No. C50200
Exp. 6-30-11
CIVIL
STATE OF CALIFORNIA

The State of California or its officers or agents shall not be responsible for the accuracy or completeness of electronic copies of this plan sheet.

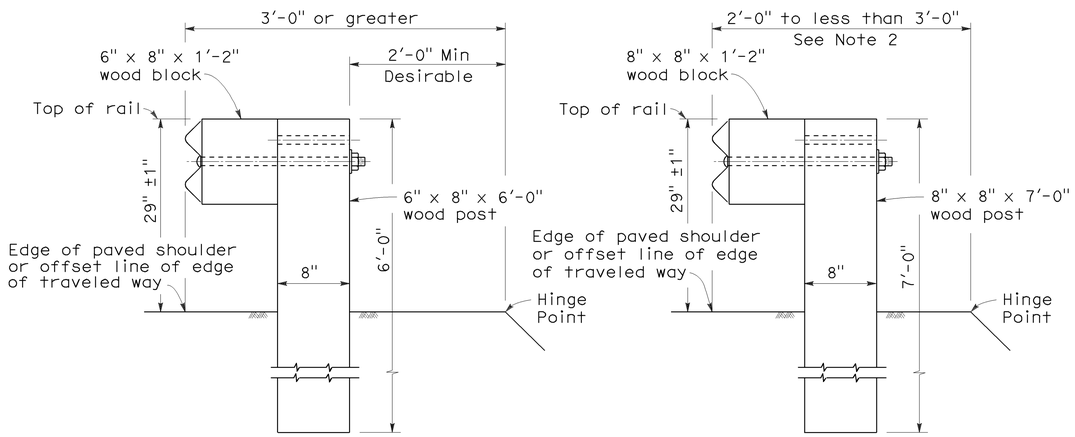

DETAIL A
TYPICAL ROADWAY INSTALLATION
See Note 1

DETAIL B
NARROW ROADWAY INSTALLATION
See Note 1

POST EMBEDMENT

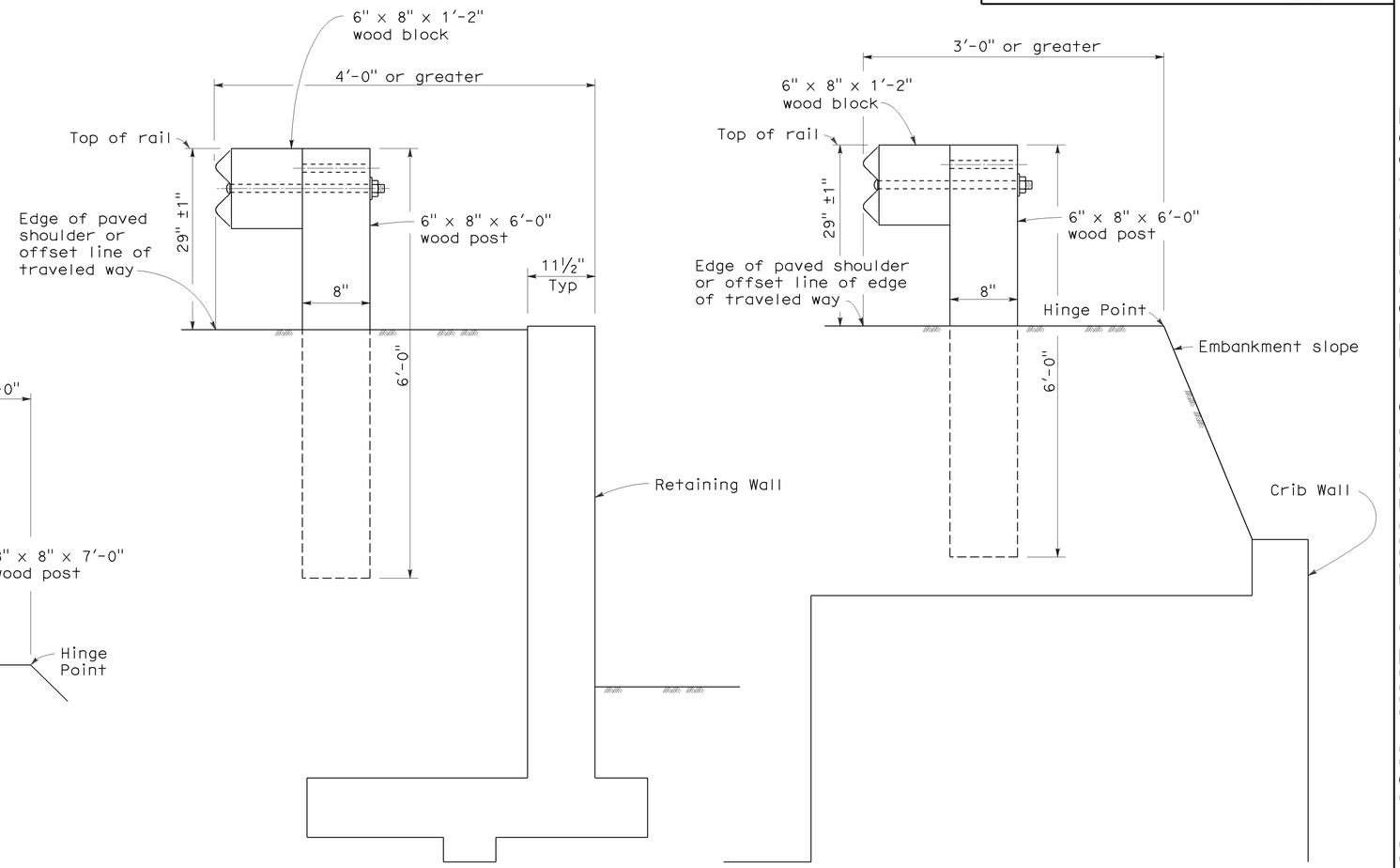

DETAIL C

DETAIL D

INSTALLATION AT EARTH RETAINING WALLS

NOTES:

1. These installation details also applicable to steel line post installations. For Detail A, C, and D, where steel line post installations are constructed, W6 x 9 steel post, 6'-0" in length, with 6" x 8" x 1'-2" notched wood blocks or notched recycled plastic blocks are to be used in place of the size of wood post and wood block shown. For Detail B, where steel line post installations are constructed, W6 x 9 steel post, 7'-0" in length, with 6" x 8" x 1'-2" notched wood blocks or notched recycled plastic blocks are to be used in place of the size of wood post and wood block shown. For additional installation details, see Standard Plans A77A1 and A77A2.
2. Where the distance between the face of the rail and the hinge point is less than 2'-0", see the Project Plans for special details.
3. For dike positioning with guard railing installations, see Standard Plan A77C4.

STATE OF CALIFORNIA
DEPARTMENT OF TRANSPORTATION

METAL BEAM GUARD RAILING TYPICAL LINE POST EMBEDMENT AND HINGE POINT OFFSET DETAILS

NO SCALE

RSP A77C3 DATED MAY 20, 2011 SUPERSEDES STANDARD PLAN A77C3
DATED MAY 1, 2006 - PAGE 46 OF THE STANDARD PLANS BOOK DATED MAY 2006.

REVISED STANDARD PLAN RSP A77C3

2006 REVISED STANDARD PLAN RSP A77C3

3-10-11

Dist	COUNTY	ROUTE	POST MILES TOTAL PROJECT	SHEET No.	TOTAL SHEETS
11	SD	15	0.5/M4.0	92	116

Randell D. Hiatt
REGISTERED CIVIL ENGINEER

May 20, 2011
PLANS APPROVAL DATE

REGISTERED PROFESSIONAL ENGINEER
Randell D. Hiatt
No. C50200
Exp. 6-30-11
CIVIL
STATE OF CALIFORNIA

The State of California or its officers or agents shall not be responsible for the accuracy or completeness of electronic copies of this plan sheet.

To accompany plans dated 08-01-11

NOTES:

1. When necessary to place dike in front of face of guard railing, only Type C dike may be used. For dike details, see Standard Plan A87B.
2. For standard railing post embedment, see Standard Plans A77C3.
3. Guard railing delineation to be used where shown on the Project Plans.
4. When dike or curb is placed under guard railing, the maximum height of the dike or curb shall be 4". Mountable dike should not be used. For dike and curb details, see Standard Plans A87A and A87B.
5. For details of typical distance between the face of rail and hinge point, see Standard Plan A77C3.
6. For steel line posts, use 1/4 - 20 self-tapping screws in 0.22" diameter holes or 1/4" bolts in 9/32" diameter holes.

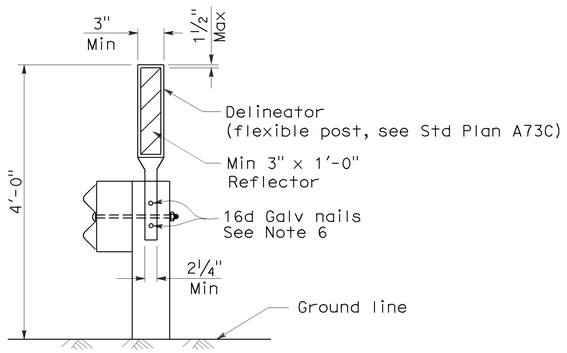

GUARD RAILING DELINEATION

See Note 3

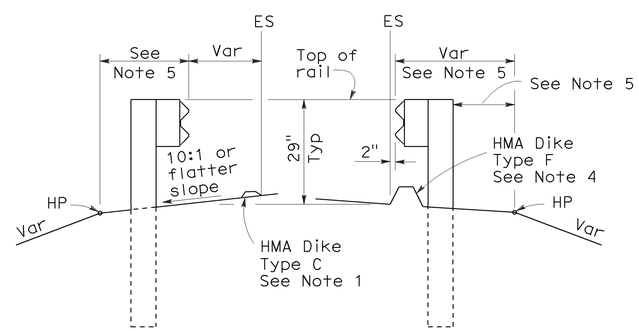

DIKE POSITIONING

See Note 1

STATE OF CALIFORNIA
DEPARTMENT OF TRANSPORTATION

METAL BEAM GUARD RAILING TYPICAL RAILING DELINEATION AND DIKE POSITIONING DETAILS

NO SCALE

RSP A77C4 DATED MAY 20, 2011 SUPERSEDES RSP A77C4 DATED JUNE 6, 2008 AND STANDARD PLAN A77C4 DATED MAY 1, 2006 - PAGE 47 OF THE STANDARD PLANS BOOK DATED MAY 2006.

REVISED STANDARD PLAN RSP A77C4

2006 REVISED STANDARD PLAN RSP A77C4

3-10-11

DIST	COUNTY	ROUTE	POST MILES TOTAL PROJECT	SHEET NO.	TOTAL SHEETS
11	SD	15	0.5/M4.0	93	116

Randell D. Hiatt
REGISTERED CIVIL ENGINEER

June 6, 2008
PLANS APPROVAL DATE

REGISTERED PROFESSIONAL ENGINEER
Randell D. Hiatt
No. C50200
Exp. 6-30-09
CIVIL
STATE OF CALIFORNIA

The State of California or its officers or agents shall not be responsible for the accuracy or completeness of electronic copies of this plan sheet.

To accompany plans dated 08-01-11

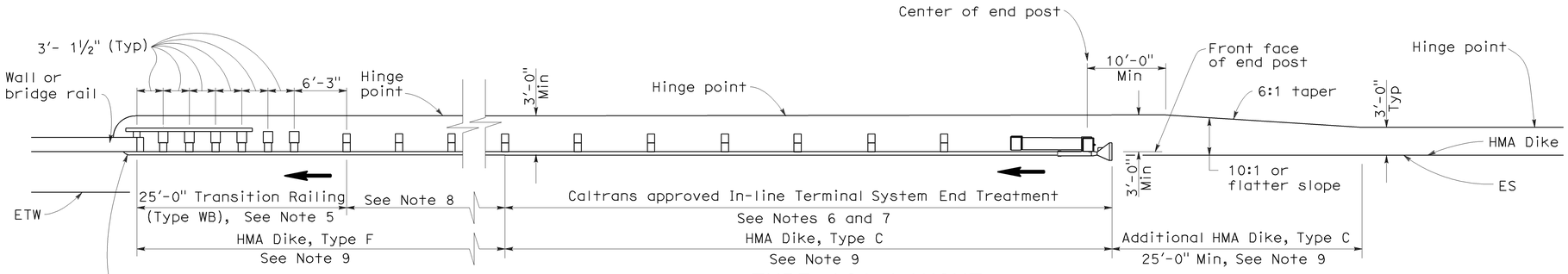

TYPE 12A LAYOUT

(GUARD RAILING INSTALLATION AT STRUCTURE APPROACH WITH AN IN-LINE END TREATMENT AT TRAFFIC APPROACH END OF RAILING)
See Notes 10

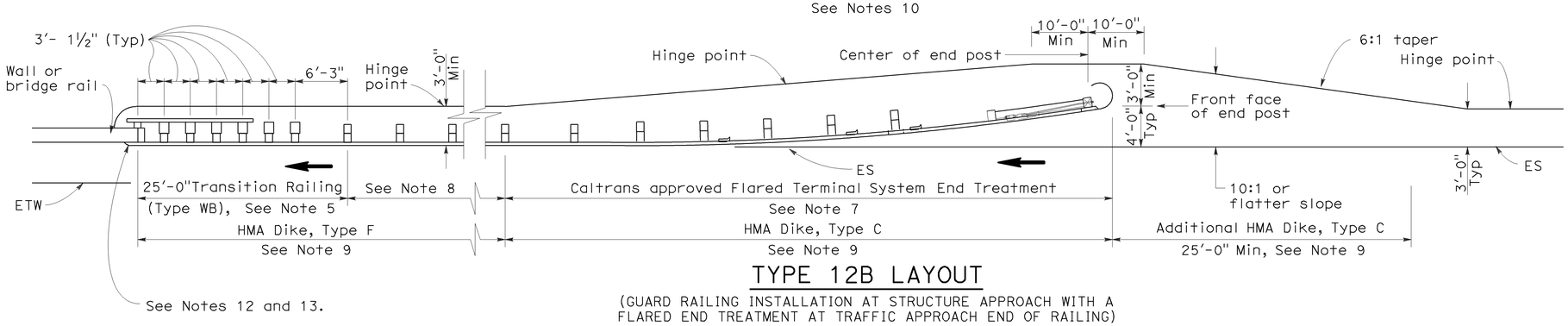

TYPE 12B LAYOUT

(GUARD RAILING INSTALLATION AT STRUCTURE APPROACH WITH A FLARED END TREATMENT AT TRAFFIC APPROACH END OF RAILING)
See Notes 10

NOTES:

1. Line post, blocks and hardware to be used are shown on Standard Plans A77A1, A77A2, A77B1, A77C1 and A77C2.
2. Guard rail post spacing to be 6'-3" center to center, except as otherwise noted.
3. Except as noted, line posts are 6" x 8" x 6'-0" wood with 6" x 8" x 1'-2" wood blocks. W6 x 9 steel posts, 6'-0" in length, with 6" x 8" x 1'-2" notched wood blocks or plastic blocks may be used for 6" x 8" x 6'-0" wood posts with 6" x 8" x 1'-2" wood blocks where applicable and when specified.
4. Direction of adjacent traffic indicated by ➡.
5. For Transition Railing (Type WB) details for Types 12A and 12B Layouts, see Standard Plan A77J4.
6. In-line Terminal System End Treatments are used where site conditions will not accommodate a flared end treatment.
7. The type of terminal system end treatment to be used will be shown on the Project Plans.
8. Dependent on site conditions (embankment height, side slopes, or other fixed objects), it may be advisable to construct additional guard railing (a length equal to multiples of 12'-6" with 6'-3" post spacing) between the transition railing and end treatment.
9. Where placement of dike is required with guard railing installations, see Revised Standard Plan RSP A77C4 for dike positioning details.
10. Type 12A or Type 12B Layouts are typically used:
    a. To the right of approaching traffic, at the end of a structure, on two-lane conventional highway where the roadbed width across the structure is less than 40 feet.
    b. To the left of approaching traffic, at the end of a structure, on two-lane conventional highway where the roadbed width across the structure is less than 40 feet.
    c. To the right of approaching traffic at the end of each structure on multilane freeways or expressways with separate adjacent or parallel bridges.
    d. To the right of approaching traffic at the end of the structure on multilane freeways or expressways with decked median on the bridge.
11. See Revised Standard Plan RSP A77F3 for typical layout used left of approaching traffic at the ends of each structure on multilane freeways or expressways with separate adjacent or parallel bridges.
12. For additional details of typical connections to bridge rail, see Connection Detail AA on Revised Standard Plans RSP A77J1 and RSP A77J2 and Connection Detail FF on Standard Plans A77K1 and A77K2.
13. For additional details of a typical connection to walls or abutments, see Standard Plan A77J3.

STATE OF CALIFORNIA
DEPARTMENT OF TRANSPORTATION

METAL BEAM GUARD RAILING TYPICAL LAYOUTS FOR STRUCTURE APPROACH

NO SCALE

RSP A77F1 DATED JUNE 6, 2008 SUPERSEDES STANDARD PLAN A77F1
DATED MAY 1, 2006 - PAGE 54 OF THE STANDARD PLANS BOOK DATED MAY 2006.

REVISED STANDARD PLAN RSP A77F1

2006 REVISED STANDARD PLAN RSP A77F1

DIST	COUNTY	ROUTE	POST MILES TOTAL PROJECT	SHEET NO.	TOTAL SHEETS
11	SD	15	0.5/M4.0	94	116

Randell D. Hiatt
REGISTERED CIVIL ENGINEER

June 6, 2008
PLANS APPROVAL DATE

REGISTERED PROFESSIONAL ENGINEER Randell D. Hiatt No. C50200 Exp. 6-30-09 CIVIL STATE OF CALIFORNIA

The State of California or its officers or agents shall not be responsible for the accuracy or completeness of electronic copies of this plan sheet.

To accompany plans dated 08-01-11

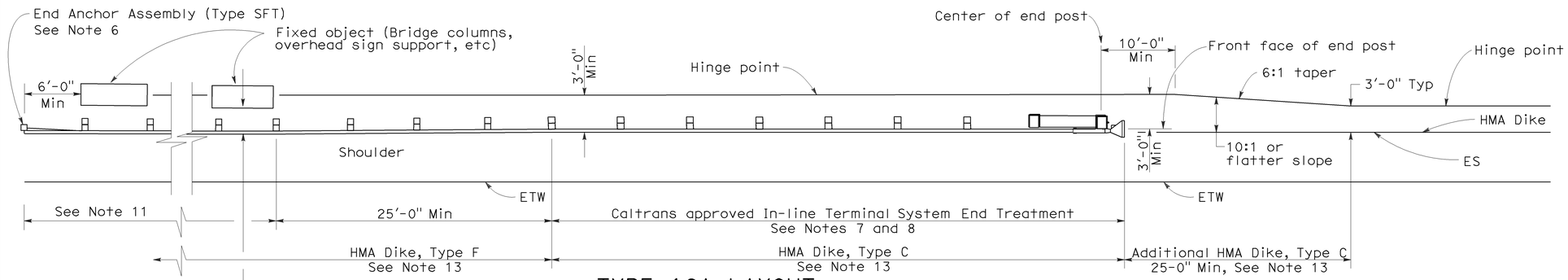

TYPE 16A LAYOUT

(GUARD RAILING INSTALLATION AT ROADSIDE FIXED OBJECT OR OBJECTS WITH AN IN-LINE END TREATMENT AT TRAFFIC APPROACH END OF RAILING)
See Notes 12 and 13

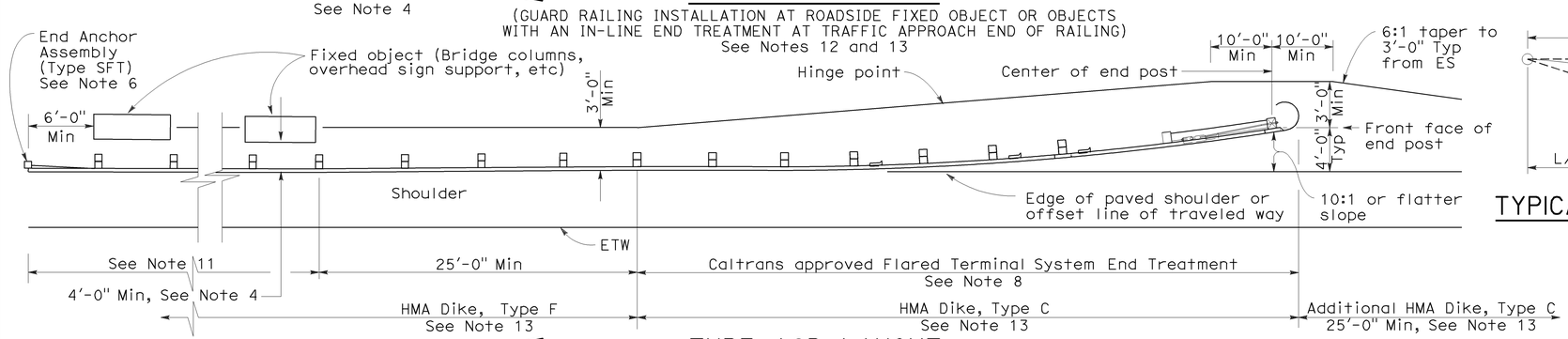

TYPE 16B LAYOUT

(GUARD RAILING INSTALLATION AT ROADSIDE FIXED OBJECT OR OBJECTS WITH A FLARED END TREATMENT AT TRAFFIC APPROACH END OF RAILING)
See Notes 12 and 13

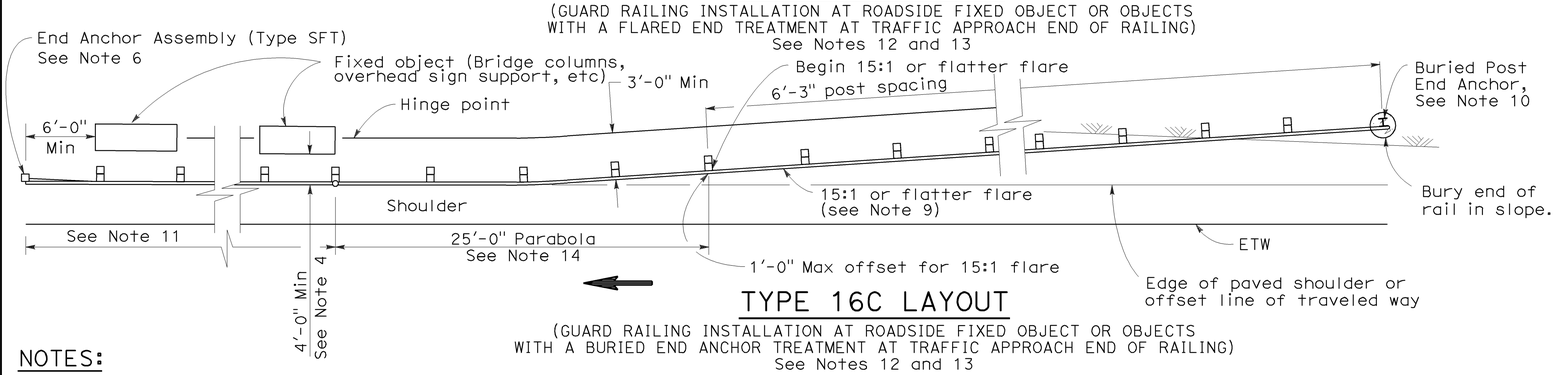

TYPE 16C LAYOUT

(GUARD RAILING INSTALLATION AT ROADSIDE FIXED OBJECT OR OBJECTS WITH A BURIED END ANCHOR TREATMENT AT TRAFFIC APPROACH END OF RAILING)
See Notes 12 and 13

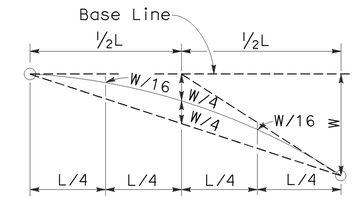

TYPICAL PARABOLIC LAYOUT

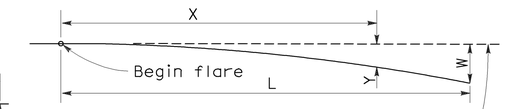

Base Line (Edge of paved shoulder or offset line of edge of traveled way)

$$Y = \frac{WX^2}{L^2}$$

Y = Offset from base line
W = Maximum offset
X = Distance along base line
L = Length of flare

PARABOLIC FLARE OFFSETS

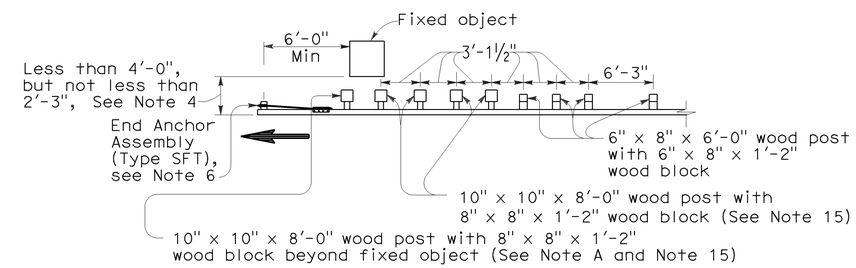

NOTE A: For a series of fixed objects (bridge columns, overhead sign supports, etc.) additional 10" x 10" x 8'-0" wood post with 8" x 8" x 1'-2" wood blocks at 3'-1½" center to center spacing are to be used between fixed objects.

STRENGTHENED RAILING SECTIONS FOR FIXED OBJECT

Use strengthened railing sections with Types 16A, 16B or 16C Layouts where minimum clearance between the face of the guard railing and fixed object(s) is less than 4'-0", but not less than 2'-3". See Note 4

NOTES:

1. Line post, blocks and hardware to be used are shown on Revised Standard Plans A77A1, A77A2, A77B1, A77C1 and A77C2.
2. Guard railing post spacing to be 6'-3" center to center, except as otherwise noted.
3. Except as noted, line posts are 6" x 8" x 6'-0" wood with 6" x 8" x 1'-2" wood blocks. W6 x 9 steel posts, 6'-0" in length, with 6" x 8" x 1'-2" notched wood blocks or notched recycled plastic blocks may be used for 6" x 8" x 6'-0" wood line posts with 6" x 8" x 1'-2" wood blocks where applicable and when specified.
4. A 4'-0" minimum clearance is required between the face of the railing and the face of a fixed object located directly behind standard guard railing sections with post spacing of 6'-3". Construct guard railing as shown in the detail "Strengthened Railing Sections for Fixed Objects" on this plan, where the clearance between the face of the railing and the face of a fixed object is less than 4'-0", but not less than 2'-3". Where the clearance is less than 2'-3", a concrete wall or barrier should be constructed to shield the fixed object(s).
5. Direction of adjacent traffic indicated by ⟶.
6. For End Anchor Assembly (Type SFT) details, see Standard Plan A77H1.
7. In-line Terminal System End Treatments are used where site conditions will not accommodate a flared end treatment.
8. The type of terminal system to be used will be shown on the Project Plans.
9. The 15:1 or flatter flare used with Type 16C Layout is based on the edge of the paved shoulder or offset line of edge of the traveled way. The length of guard railing within the 15:1 or flatter flare is based on site conditions and should be a length equal to multiples of 12'-6".
10. For details of the Buried Post End Anchor used with Type 16C Layout, see Standard Plan A77I2.
11. As site conditions dictate, construct additional guard railing to shield fixed object(s). Additional guard railing length equal to multiples of 12'-6". Post spacing at 6'-3" except as specified in Note 4.
12. Layout Types 16A, 16B or 16C are typically used where guard railing is recommended to shield roadside fixed object(s) and a crashworthy end treatment is required for only one direction of traffic.
13. Where placement of dike is required with guard railing, see Revised Standard Plan RSP A77C4 for dike positioning details.
14. For typical flare offsets for 25'-0" length parabola with maximum offset of 1'-0", see Revised Standard Plan RSP A77E1.
15. W6 x 15 steel post, 8'-0" in length, with 8" x 8" x 1'-2" notched wood block or notched recycled plastic blocks may be used in place of the 10" x 10" x 8'-0" wood post with 8" x 8" x 1'-2" wood block shown in the "Strengthened Railing Sections Detail".

STATE OF CALIFORNIA
DEPARTMENT OF TRANSPORTATION

METAL BEAM GUARD RAILING TYPICAL LAYOUTS FOR ROADSIDE FIXED OBJECTS

NO SCALE

RSP A77G3 DATED JUNE 6, 2008 SUPERSEDES STANDARD PLAN A77G3 DATED MAY 1, 2006 - PAGE 61 OF THE STANDARD PLANS BOOK DATED MAY 2006.

REVISED STANDARD PLAN RSP A77G3

2006 REVISED STANDARD PLAN RSP A77G3

12-10-07

Dist	COUNTY	ROUTE	POST MILES TOTAL PROJECT	SHEET No.	TOTAL SHEETS
11	SD	15	0.5/M4.0	95	116

Randell D. Hiatt
REGISTERED CIVIL ENGINEER

May 20, 2011
PLANS APPROVAL DATE

REGISTERED PROFESSIONAL ENGINEER
Randell D. Hiatt
No. C50200
Exp. 6-30-11
CIVIL
STATE OF CALIFORNIA

The State of California or its officers or agents shall not be responsible for the accuracy or completeness of electronic copies of this plan sheet.

To accompany plans dated 08-01-11

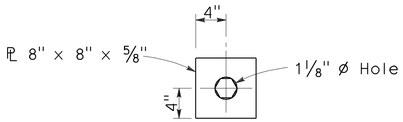

DETAIL A
CABLE CONNECTION
END PLATE

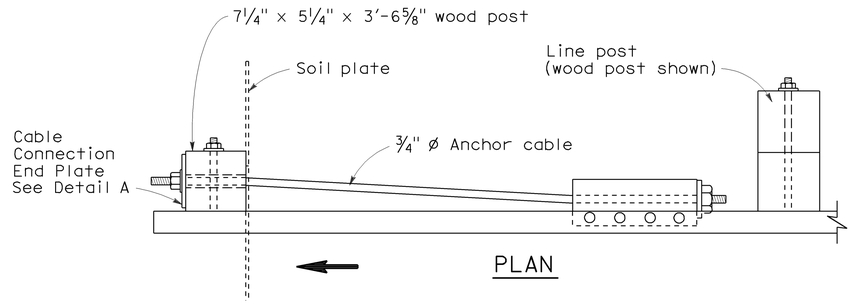

PLAN

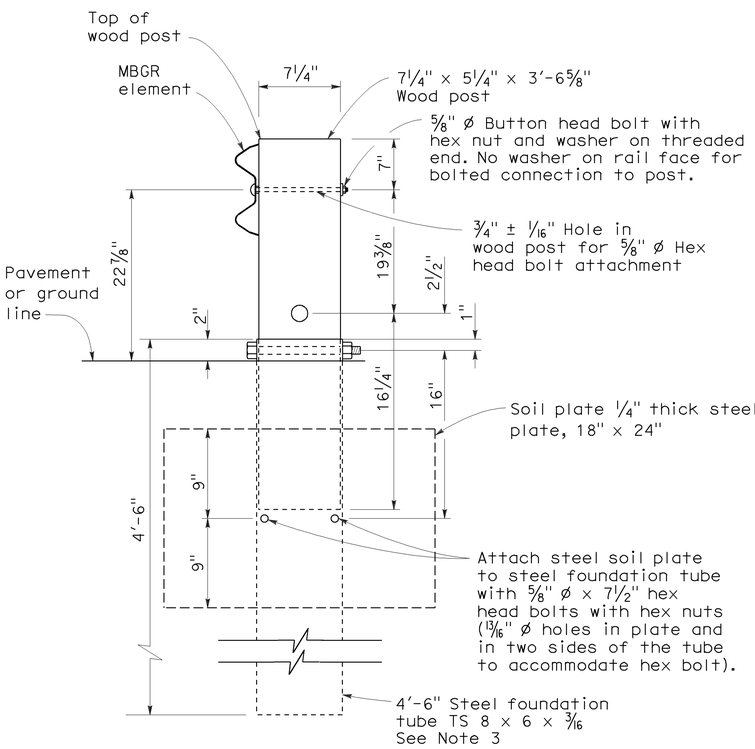

SECTION A-A

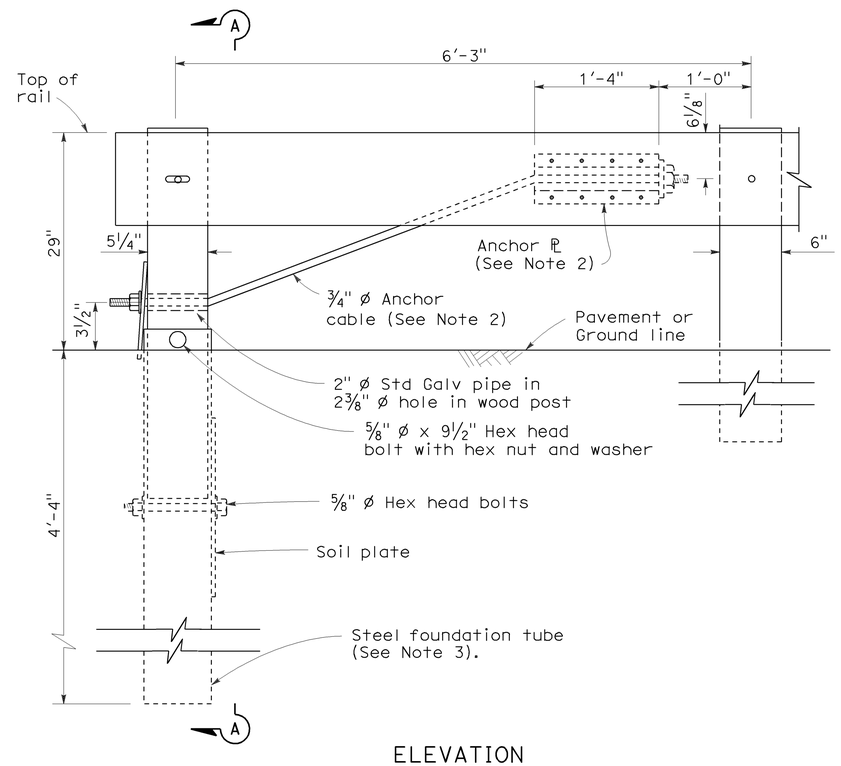

ELEVATION
END ANCHOR
ASSEMBLY (TYPE SFT)
See Note 1

NOTES:

1. See the A77E, A77F and A77G series of Standard Plans for typical use of End Anchor Assembly (Type SFT).
2. For details of the anchor plate and 3/4" cable, see Standard Plan A77H3.
3. A 6'-0" length steel foundation tube, TS 8 x 6 x 3/16, without a soil plate, may be furnished and installed in place of the 4'-6" length steel foundation tube and soil plate shown. Minimum embedment of the 6'-0" length tube shall be 5'-9". A 5/8" Ø hex head bolt and nut shall be installed in the hole in the 6'-0" length tube to keep the wood post from dropping into the tube.
4. Direction of traffic indicated by ⟹.
5. Install line post, steel foundation tube and soil plate in soil.

STATE OF CALIFORNIA
DEPARTMENT OF TRANSPORTATION

METAL RAILING END ANCHOR ASSEMBLY (TYPE SFT)

NO SCALE

RSP A77H1 DATED MAY 20, 2011 SUPERSEDES STANDARD PLAN A77H1
DATED MAY 1, 2006 - PAGE 67 OF THE STANDARD PLANS BOOK DATED MAY 2006.

REVISED STANDARD PLAN RSP A77H1

2006 REVISED STANDARD PLAN RSP A77H1

3-10-07

Dist	COUNTY	ROUTE	POST MILES TOTAL PROJECT	SHEET No.	TOTAL SHEETS
11	SD	15	0.5/M4.0	96	116

Randell D. Hiatt
REGISTERED CIVIL ENGINEER

May 20, 2011
PLANS APPROVAL DATE

REGISTERED PROFESSIONAL ENGINEER
Randell D. Hiatt
No. C50200
Exp. 6-30-11
CIVIL
STATE OF CALIFORNIA

The State of California or its officers or agents shall not be responsible for the accuracy or completeness of electronic copies of this plan sheet.

To accompany plans dated 08-01-11

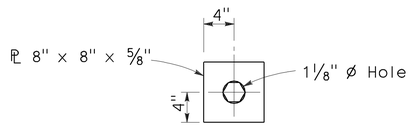

DETAIL A
CABLE CONNECTION
END PLATE

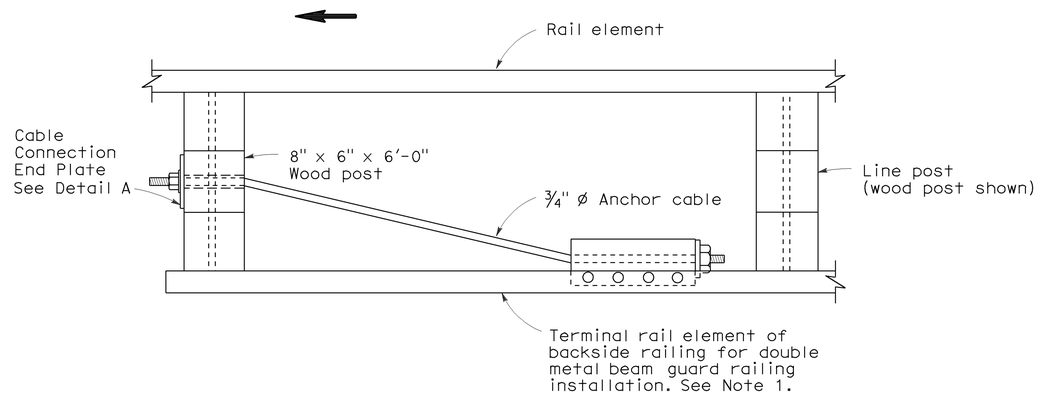

PLAN

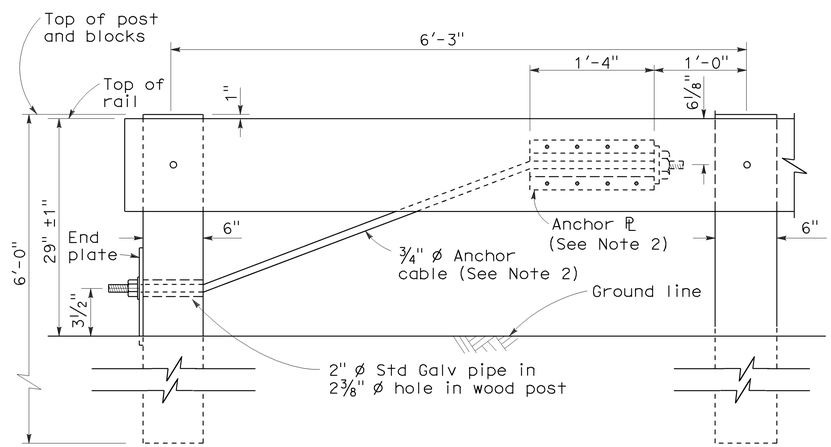

ELEVATION
RAIL TENSIONING
ASSEMBLY
See Note 1

NOTES:

1. See Standard Plan A77F3 and Standard Plan A77G1 for typical use of rail tensioning assembly.
2. For details of the anchor plate and 3/4" cable, see Standard Plan A77H3.
3. Direction of traffic indicated by ⟶.

STATE OF CALIFORNIA
DEPARTMENT OF TRANSPORTATION

METAL RAILING
RAIL TENSIONING ASSEMBLY

NO SCALE

RSP A77H2 DATED MAY 20, 2011 SUPERSEDES STANDARD PLAN A77H2
DATED MAY 1, 2006 - PAGE 68 OF THE STANDARD PLANS BOOK DATED MAY 2006.

REVISED STANDARD PLAN RSP A77H2

2006 REVISED STANDARD PLAN RSP A77H2

3-10-11

Dist	COUNTY	ROUTE	POST MILES TOTAL PROJECT	SHEET No.	TOTAL SHEETS
11	SD	15	0.5/M4.0	97	116

Randell D. Hiatt
REGISTERED CIVIL ENGINEER

May 20, 2011
PLANS APPROVAL DATE

REGISTERED PROFESSIONAL ENGINEER
Randell D. Hiatt
No. C50200
Exp. 6-30-11
CIVIL
STATE OF CALIFORNIA

The State of California or its officers or agents shall not be responsible for the accuracy or completeness of electronic copies of this plan sheet.

To accompany plans dated 08-01-11

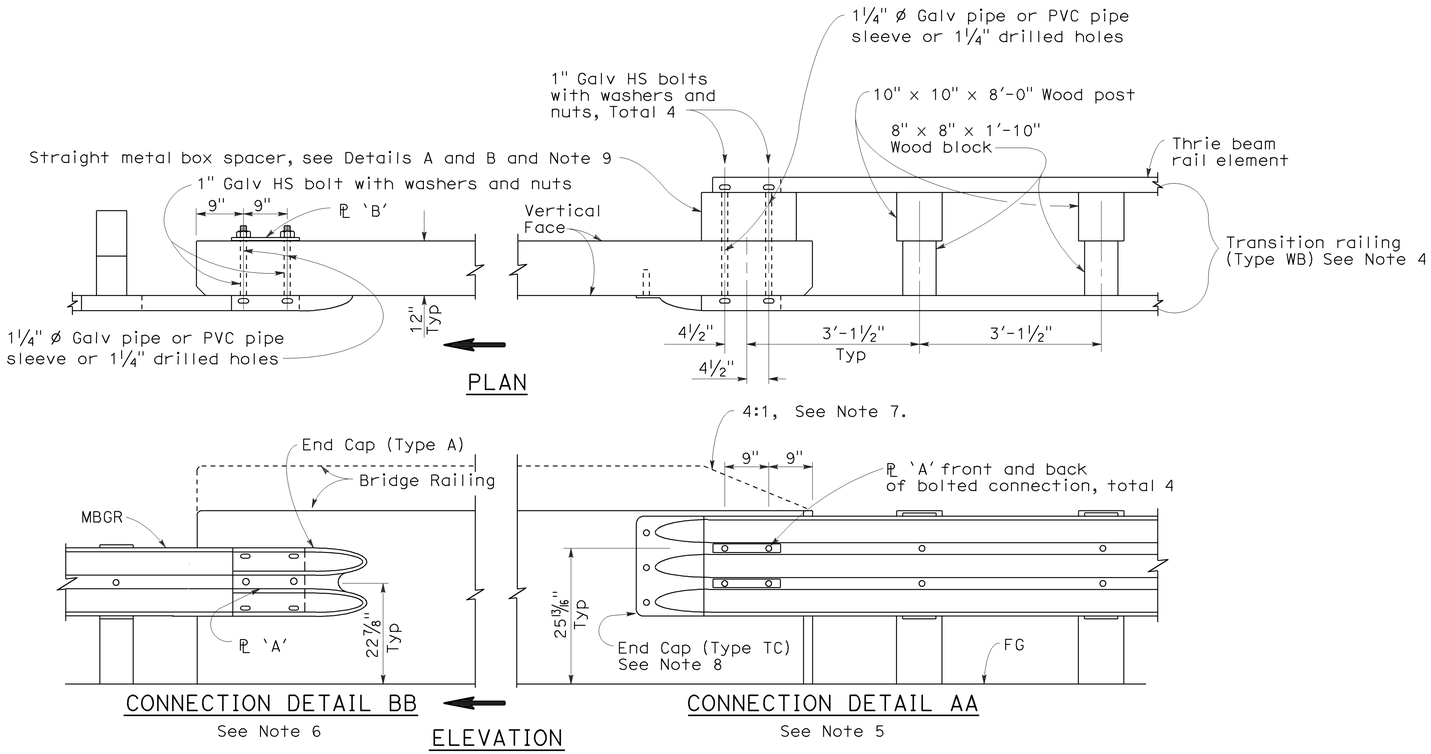

GUARD RAILING CONNECTION TO BRIDGE RAILING WITHOUT SIDEWALK

NOTES:

1. See Revised Standard Plan RSP A77J2 for additional connection details to bridges without sidewalks.
2. Additional details of posts, blocks and hardware are shown on Standard Plan A77B1, A77C1 and A77C2.
3. Direction of adjacent traffic indicated by ➡.
4. For additional details of Transition Railing (Type WB), see Standard Plan A77J4. Transition Railing (Type WB) transitions the 12 gage w-beam standard railing section of guard railing to a heavier gage nested thrie beam railing section which is connected to the concrete bridge railing.
5. For typical use of Connection Detail AA, see Layout Types 12A and 12B on Revised Standard Plan RSP A77F1, Layout Types 12C and 12D on Standard Plan A77F2, and Layout Type 12E on Revised Standard Plan RSP A77F3.
6. For typical use of Connection Detail BB, see Layout Type 12D (structure departure railing connection) on Standard Plan A77F2 and Layout Type 12DD on Standard Plan A77F5.
7. Where the height of the bridge railing exceeds the height of the thrie beam railing by more than 1" at Connection Detail AA, taper the top of the end of the bridge railing at 4:1 to match the top elevation of the thrie beam rail.
8. For details of End Cap (Type TC), see Standard Plan A77J4.
9. See Standard Plan A77J4 for additional details regarding depth dimension for straight metal box spacer.

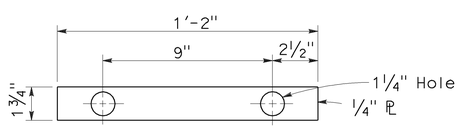

PLATE 'A'

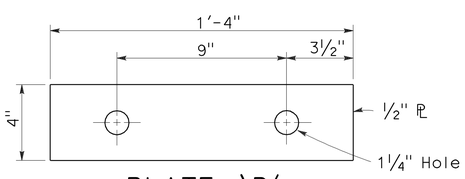

PLATE 'B'
(For backside of connection BB)

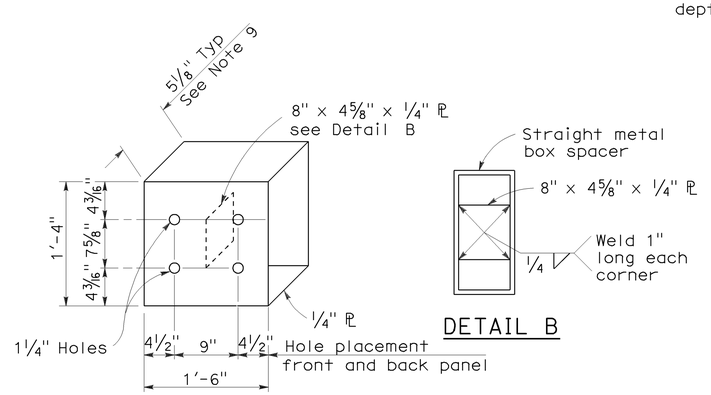

DETAIL A

DETAIL B

STRAIGHT METAL BOX SPACER

STATE OF CALIFORNIA
DEPARTMENT OF TRANSPORTATION

METAL BEAM GUARD RAILING CONNECTIONS TO BRIDGE RAILINGS WITHOUT SIDEWALKS DETAILS No.1

NO SCALE

RSP A77J1 DATED MAY 20, 2011 SUPERSEDES RSP A77J1 DATED JUNE 6, 2008 AND STANDARD PLAN A77J1 DATED MAY 1, 2006 - PAGE 72 OF THE STANDARD PLANS BOOK DATED MAY 2006.

REVISED STANDARD PLAN RSP A77J1

2006 REVISED STANDARD PLAN RSP A77J1

3-10-11

DIST	COUNTY	ROUTE	POST MILES TOTAL PROJECT	SHEET NO.	TOTAL SHEETS
11	SD	15	0.5/M4.0	98	116

Randell D. Hiatt
REGISTERED CIVIL ENGINEER

June 6, 2008
PLANS APPROVAL DATE

REGISTERED PROFESSIONAL ENGINEER
Randell D. Hiatt
No. C50200
Exp. 6-30-09
CIVIL
STATE OF CALIFORNIA

The State of California or its officers or agents shall not be responsible for the accuracy or completeness of electronic copies of this plan sheet.

To accompany plans dated 08-01-11

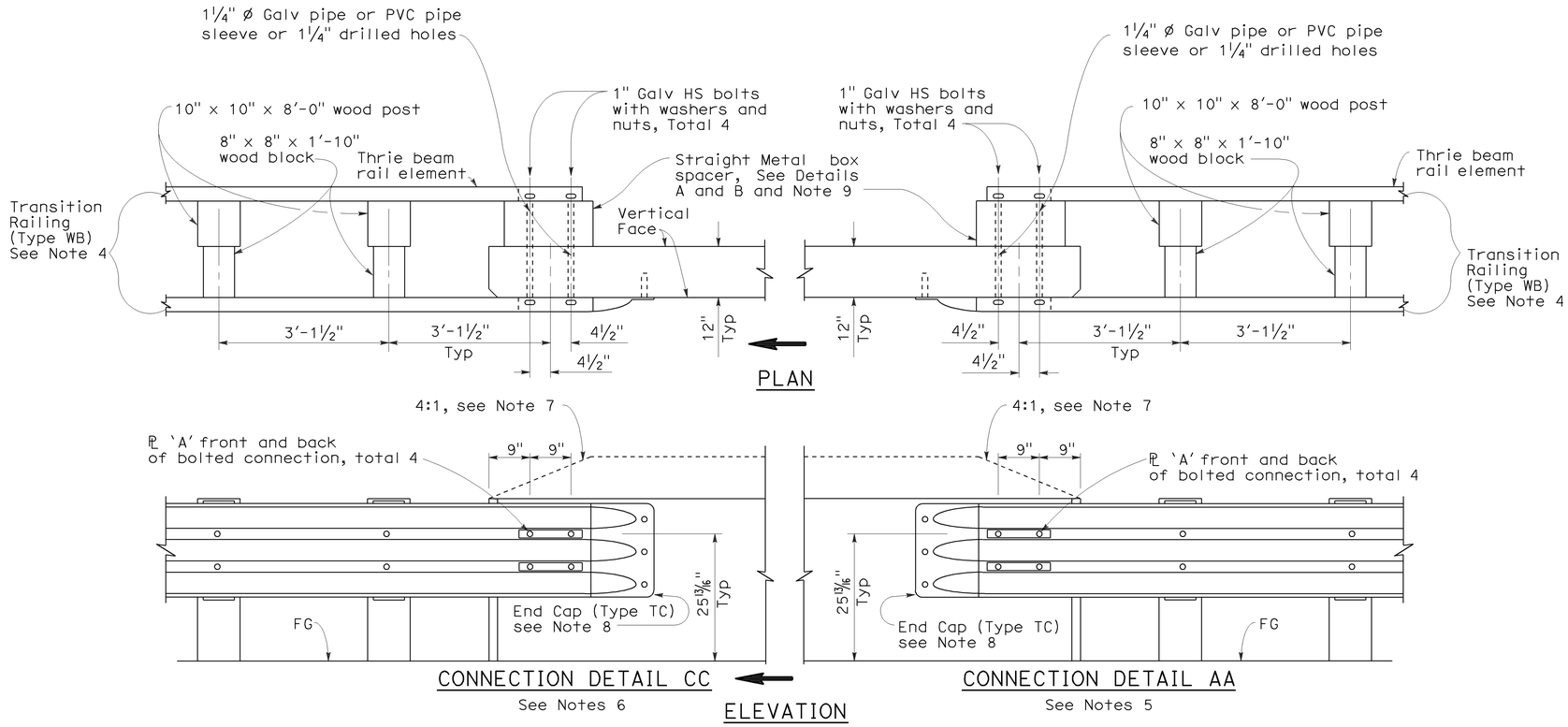

GUARD RAILING CONNECTION TO BRIDGE RAILING WITHOUT SIDEWALK

NOTES:

1. See Revised Standard Plan RSP A77J1 for additional connection details to bridges without sidewalks.
2. Additional details of posts, blocks and hardware are shown on Standard Plan A77B1, A77C1 and A77C2.
3. Direction of adjacent traffic indicated by ⟹.
4. For additional details of Transition Railing (Type WB), see Standard Plan A77J4. Transition Railing (Type WB) transitions the 12 gage w-beam standard railing section of guard railing to a heavier gage nested thrie beam railing section which is connected to the concrete bridge railing.
5. For typical use of Connection Detail AA, see Layout Types 12A and 12B on Revised Standard Plan RSP A77F1, Layout Types 12C and 12D on Standard Plan A77F2, and Layout Type 12E on Revised Standard Plan RSP A77F3.
6. For typical use of Connection Detail CC, see Layout Types 12AA and 12BB on Standard Plan A77F4 and Layout Type 12CC on Standard Plan A77F5.
7. Where the height of the bridge railing exceeds the height of the thrie beam railing by more than 1" at Connection Detail AA and connection Detail CC, taper the top of the end of the bridge railing at 4:1 to match the top elevation of the thrie beam railing.
8. For details of End Cap (Type TC), see Standard Plans A77J4.
9. See Standard Plans A77J4 for additional details regarding depth dimension for straight metal box spacer.

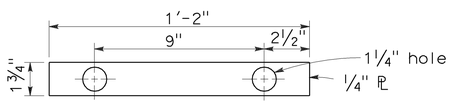

PLATE 'A'

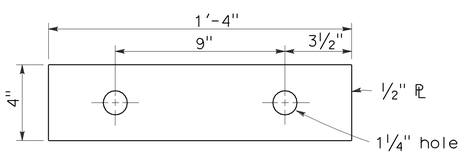

PLATE 'B'
(For backside of connection BB)

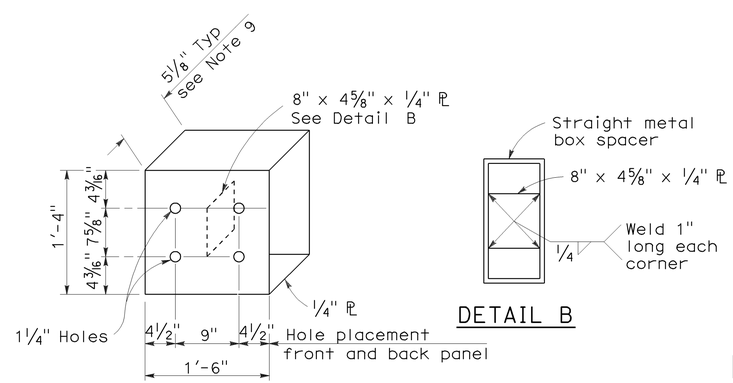

DETAIL A

DETAIL B

STRAIGHT METAL BOX SPACER

STATE OF CALIFORNIA
DEPARTMENT OF TRANSPORTATION

METAL BEAM GUARD RAILING CONNECTIONS TO BRIDGE RAILINGS WITHOUT SIDEWALKS DETAILS No.2

NO SCALE

RSP A77J2 DATED JUNE 6, 2008 SUPERSEDES STANDARD PLAN A77J2 DATED MAY 1, 2006 - PAGE 73 OF THE STANDARD PLANS BOOK DATED MAY 2006.

REVISED STANDARD PLAN RSP A77J2

2006 REVISED STANDARD PLAN RSP A77J2

12-10-07

Dist	COUNTY	ROUTE	POST MILES TOTAL PROJECT	SHEET No.	TOTAL SHEETS
11	SD	15	0.5/M4.0	99	116

Randell D. Hiatt
REGISTERED CIVIL ENGINEER

May 20, 2011
PLANS APPROVAL DATE

REGISTERED PROFESSIONAL ENGINEER
Randell D. Hiatt
No. C50200
Exp. 6-30-11
CIVIL
STATE OF CALIFORNIA

The State of California or its officers or agents shall not be responsible for the accuracy or completeness of electronic copies of this plan sheet.

To accompany plans dated 08-01-11

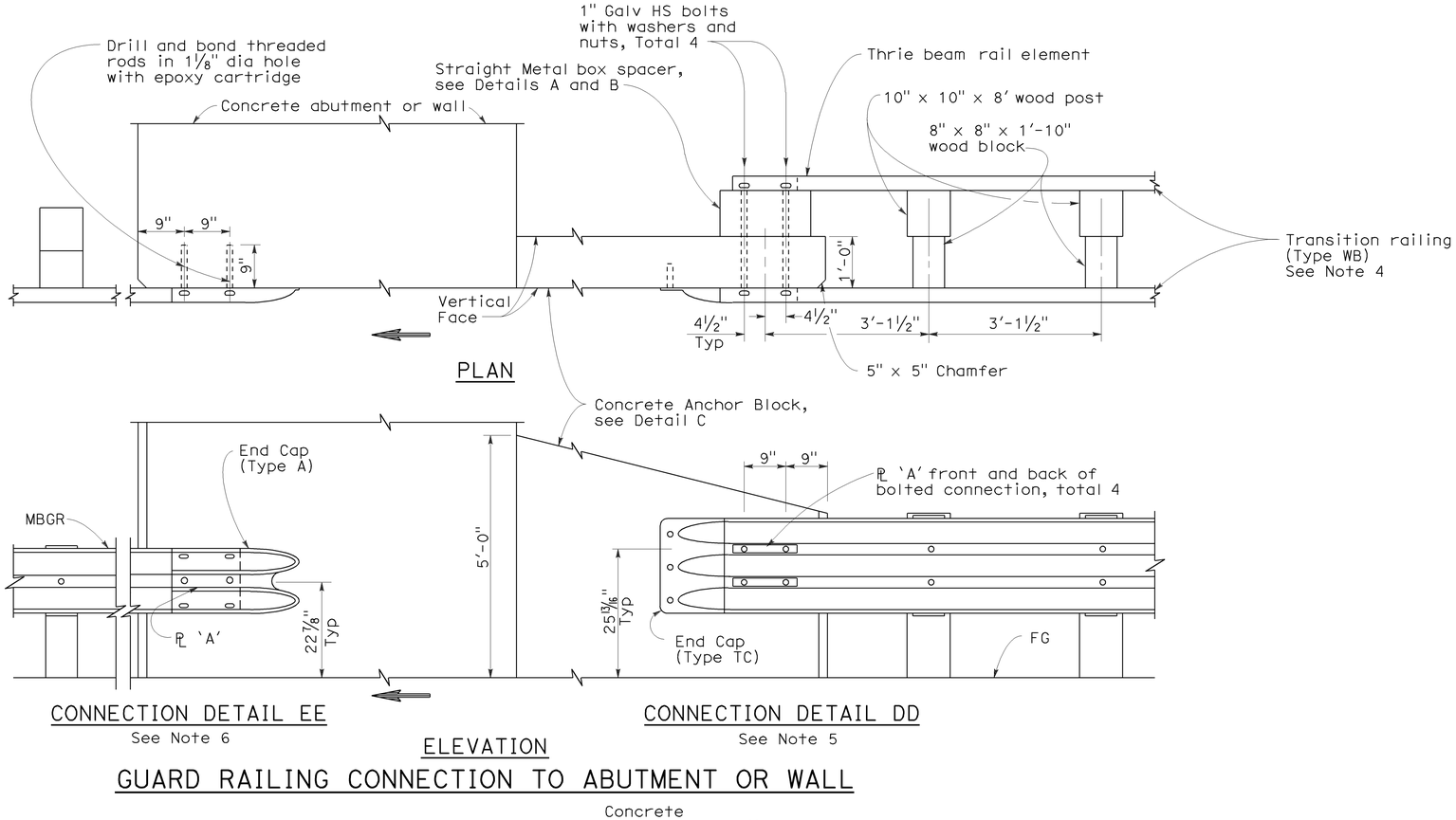

GUARD RAILING CONNECTION TO ABUTMENT OR WALL

NOTES:

1. These connection details apply to abutments and walls.
2. Additional details of posts, blocks and hardware are shown on Standard Plans A77B1, A77C1 and A77C2.
3. Direction of adjacent traffic indicated by ➡.
4. For additional details of Transition Railing (Type WB), see Standard Plan A77J4 Transition Railing (Type WB) transitions the 12 gage w-beam standard railing section of guard railing to a heavier gage nested thrie beam railing section which is connected to the concrete anchor block.
5. For typical use of Connection Details DD, See Layout Types 12A and 12B on Standard Plan A77F1 and Layout Types 12C and 12D on Standard Plan A77F2.
6. For typical use of Connection Detail EE, see Layout Type 12D on Standard Plan A77F2 and Layout Type 12DD on Standard Plan A77F5.

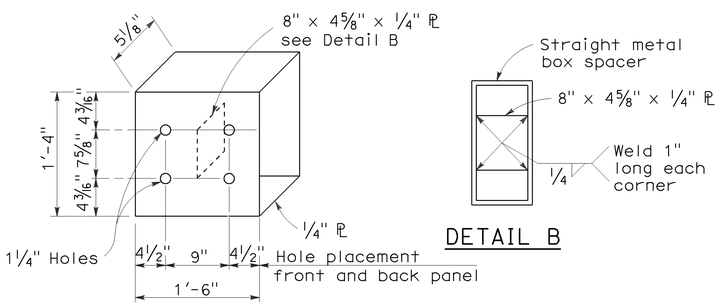

DETAIL A

STRAIGHT METAL BOX SPACER

DETAIL B

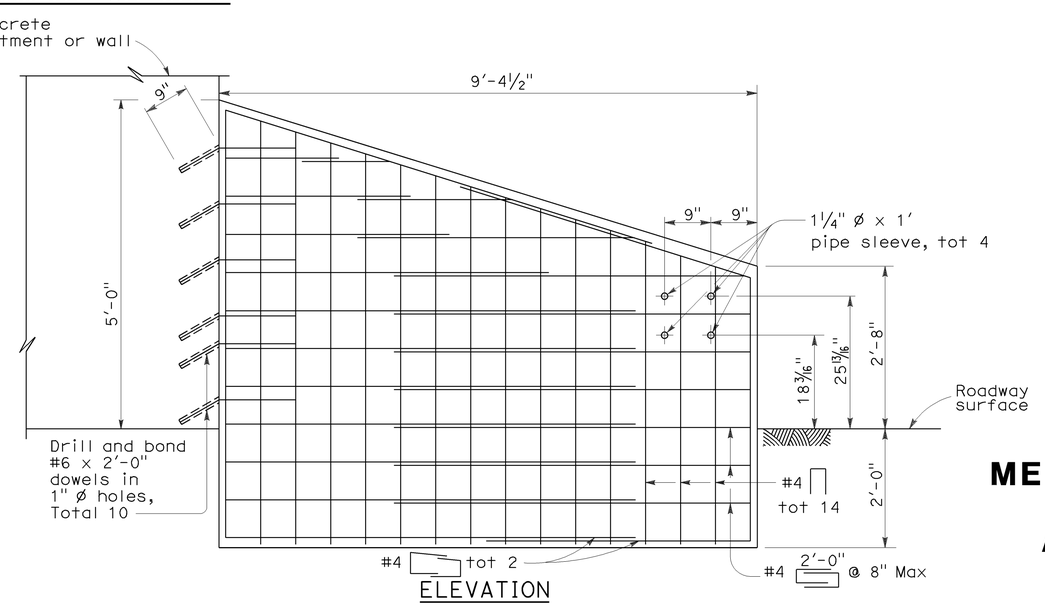

ELEVATION

ANCHOR BLOCK FOR TRANSITION RAILING CONNECTION

DETAIL C

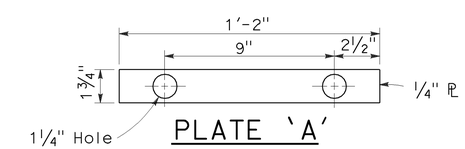

PLATE 'A'

STATE OF CALIFORNIA
DEPARTMENT OF TRANSPORTATION

METAL BEAM GUARD RAILING CONNECTIONS TO ABUTMENTS AND WALLS

NO SCALE

RSP A77J3 DATED MAY 20, 2011 SUPERSEDES STANDARD PLAN A77J3 DATED MAY 1, 2006 - PAGE 74 OF THE STANDARD PLANS BOOK DATED MAY 2006.

REVISED STANDARD PLAN RSP A77J3

2006 REVISED STANDARD PLAN RSP A77J3

3-10-11

Dist	COUNTY	ROUTE	POST MILES TOTAL PROJECT	SHEET No.	TOTAL SHEETS
11	SD	15	0.5/M4.0	100	116

Randell D. Hiatt
REGISTERED CIVIL ENGINEER

May 20, 2011
PLANS APPROVAL DATE

To accompany plans dated 08-01-11

REGISTERED PROFESSIONAL ENGINEER Randell D. Hiatt No. C50200 Exp. 6-30-11 CIVIL STATE OF CALIFORNIA

The State of California or its officers or agents shall not be responsible for the accuracy or completeness of electronic copies of this plan sheet.

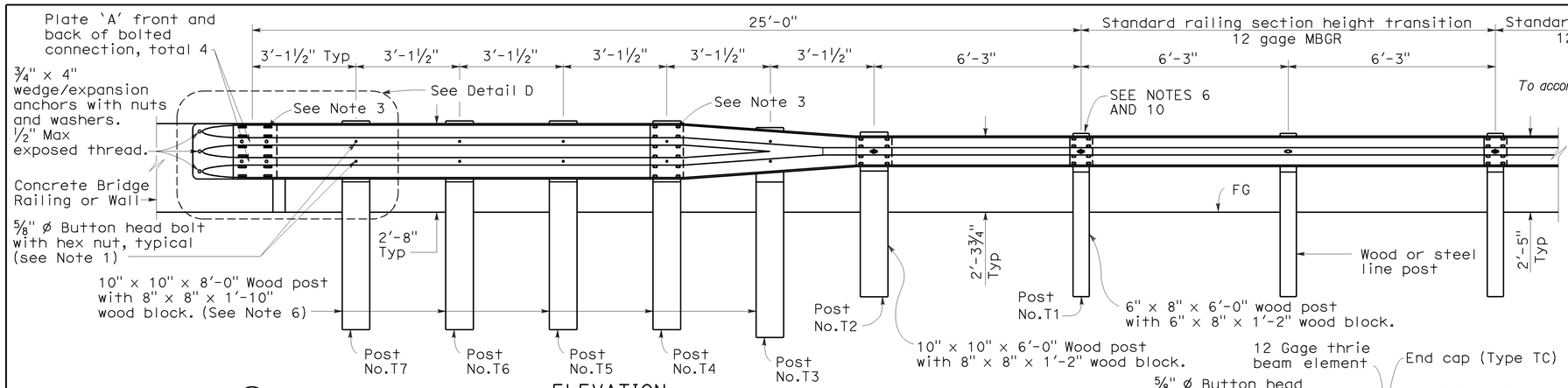

ELEVATION

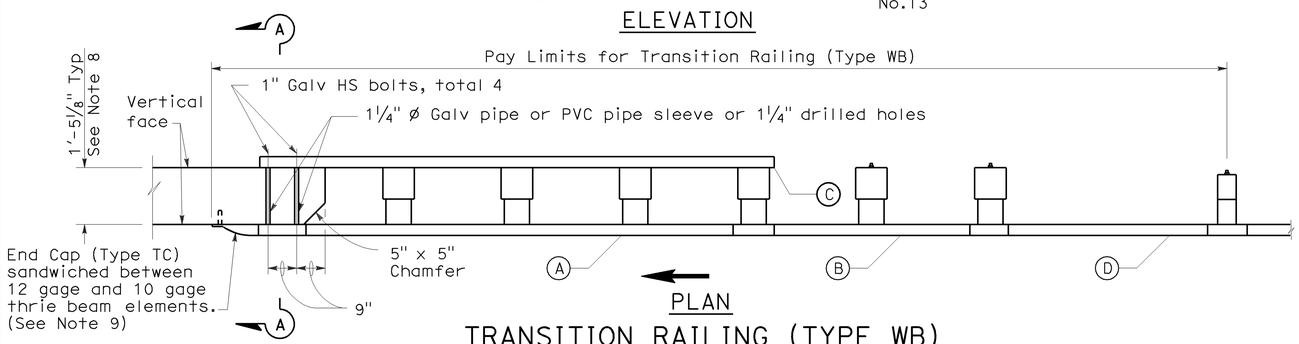

PLAN

TRANSITION RAILING (TYPE WB)

(No Blockout Attachment)

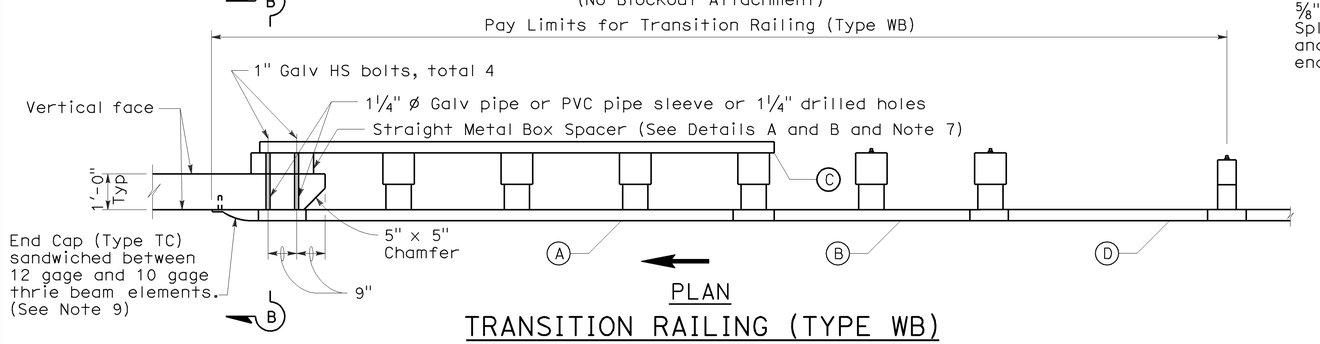

PLAN

TRANSITION RAILING (TYPE WB)

(Blockout Attachment)

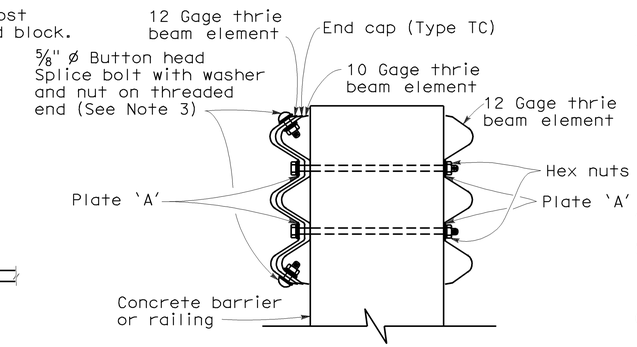

SECTION A-A

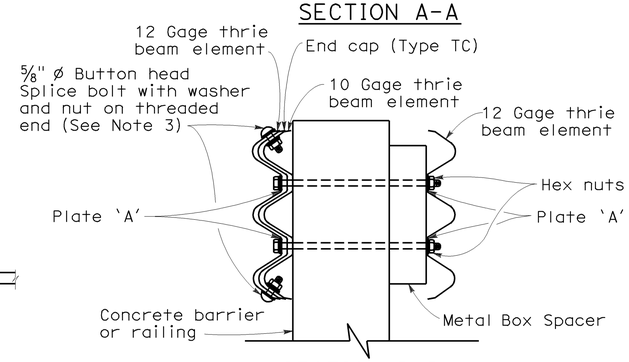

SECTION B-B

LEGEND

(A) Nested thrie beam elements (one 12 gage element nested over one 10 gage element).

(B) One 10 gage "W" beam to thrie beam element.

(C) One 12 gage thrie beam element.

(D) One 10 gage "W" beam rail element (7'-3½" length)

10 gage = 0.135" thick

12 gage = 0.108" thick

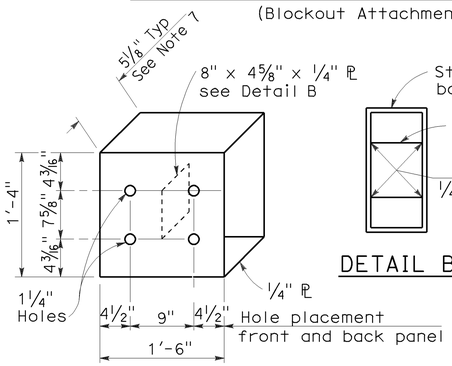

DETAIL A

STRAIGHT METAL BOX SPACER

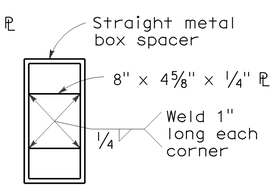

DETAIL B

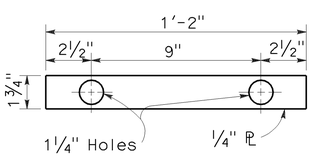

DETAIL C

PLATE 'A'

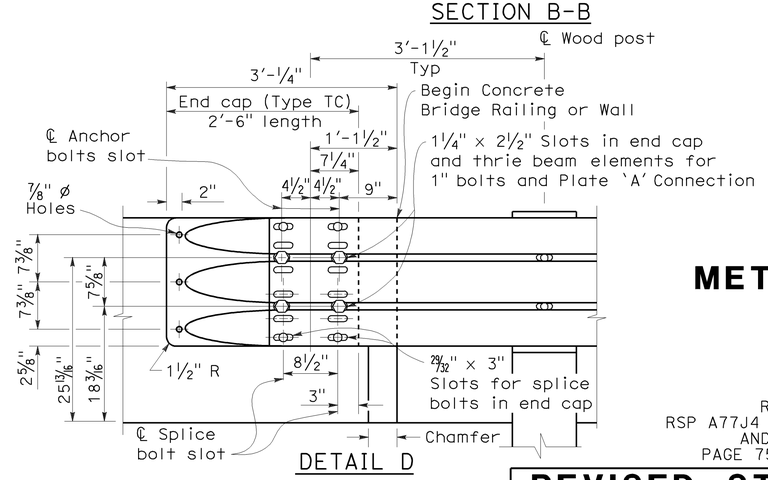

DETAIL D

NOTES:

1. Use ⅝" ø Button head bolts and hex nuts for connections to posts. No washer on rail face for bolted connections to post.
2. The nested rail elements, end cap, and 'W' beam to thrie beam element may be spliced together prior to bolting the elements to the wood post and concrete barrier or railing.
3. Exterior splice bolt holes for rail element splices at Post No. T4 and the connection to the concrete barrier or railing shall be the standard 29⁄32" x 1⅛" slot size. Interior splice bolt holes at these locations may be increased up to 1¼" ø. Only the top 2 and the bottom 2 splice bolts with washers and nuts are required for rail splices at Post No. T4 and the connection to the concrete barrier or railing.
4. Direction of adjacent traffic indicated by ➡.
5. The top elevation of Posts No. T2 through No. T7 shall not project more than 1" above the top elevation of the rail element.
6. Typically, the railing connected to Transition Railing (Type WB) will be either standard railing section of metal beam guard railing with height transition ratio of 120:1 or an approved Caltrans end treatment attached to Post No. T1.
7. The depth of the metal box spacer varies from the 5⅛" to 1½" and is dependent on the width of the concrete railing or wall. The combined dimension for the depth of the metal box spacer plus the width of railing or wall is typically 17⅛". Where the space between the backside of the concrete railing or wall and the rear thrie beam element is less than 1½", metal plates similar to Plate 'A' are to be used as spacers.
8. Where the width of the concrete railing or wall is greater than 17⅛", wood blocks are to be used to fill the space created between the backside of Posts No. T4 through No. T7 and the rear thrie beam element. These wood blocks shall be 8" in width and 1'-2" in length. The dimension between the front thrie beam element and the rear thrie beam element is to match the width of the concrete railing or wall.
9. End cap may be installed over 12 gage and 10 gage thrie beam elements where transition railing is installed on the departure end of bridge railing.
10. Conform standard railing section height to 2'-3¾" at Post No. T1 using height transition ratio of 120:1.

STATE OF CALIFORNIA
DEPARTMENT OF TRANSPORTATION

METAL BEAM GUARD RAILING TRANSITION RAILING (TYPE WB)

NO SCALE

RSP A77J4 DATED MAY 20, 2011 SUPERSEDES
RSP A77J4 DATED JUNE 5, 2009, RSP A77J4 DATED JUNE 6, 2008
AND STANDARD PLAN A77J4 DATED MAY 1, 2006 -
PAGE 75 OF THE STANDARD PLANS BOOK DATED MAY 2006.

REVISED STANDARD PLAN RSP A77J4

2006 REVISED STANDARD PLAN RSP A77J4

5-14-09

DIST	COUNTY	ROUTE	POST MILES TOTAL PROJECT	SHEET NO.	TOTAL SHEETS
11	SD	15	0.5/M4.0	101	116

REGISTERED CIVIL ENGINEER

November 17, 2006
PLANS APPROVAL DATE

REGISTERED PROFESSIONAL ENGINEER Michael Janzen No. 44788 Exp. 03-31-08 CIVIL STATE OF CALIFORNIA

The State of California or its officers or agents shall not be responsible for the accuracy or completeness of electronic copies of this plan sheet.

To accompany plans dated 08-01-11

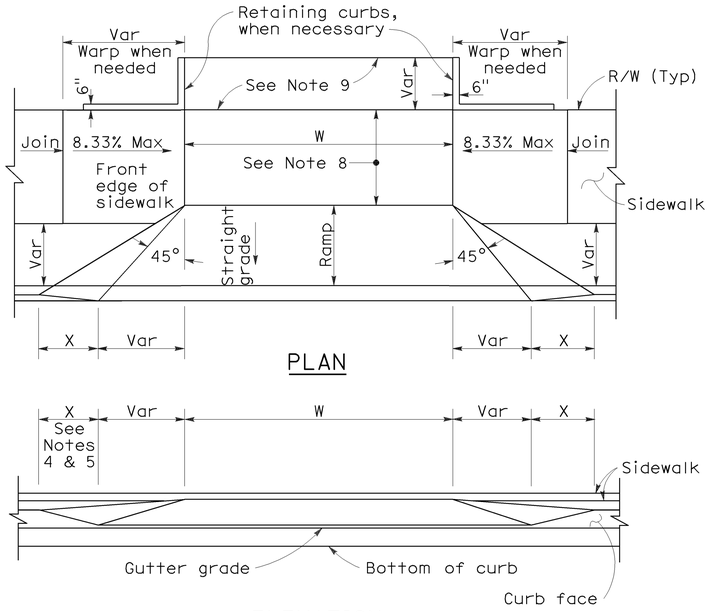

PLAN

ELEVATION

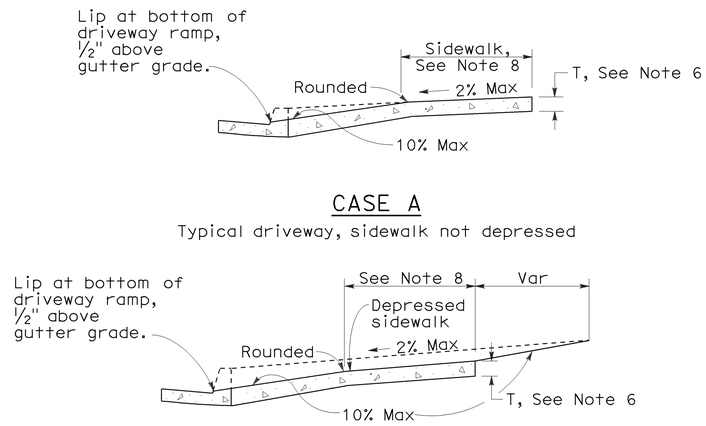

CASE A

Typical driveway, sidewalk not depressed

CASE B

Driveway with depressed sidewalk

SECTIONS

CURB QUANTITIES

TYPE	CUBIC YARDS PER LINEAR FOOT
A1-6	0.02585
A1-8	0.03084
A2-6	0.05903
A2-8	0.06379
A3-6	0.01036
A3-8	0.01435
B1-4	0.02185
B1-6	0.02930
B2-4	0.05515
B2-6	0.06171
B3-4	0.00641
B3-6	0.01074
B4	0.05709
D-4	0.04083
D-6	0.06804
E	0.06661

TABLE A

CURB TYPE	DIMENSIONS "H1"	"H2"	"W1"	"W2"
A1-6	1'-2"	6"	7½"	1½"
A1-8	1'-4"	8"	8"	2"
A2-6	1'-0"	6"	2'-7½"	1½"
A2-8	1'-2"	8"	2'-8"	2"
A3-6	6"	5"	7¼"	1¼"
A3-8	8"	7"	7¾"	1¾"
B1-4	1'-0"	4"	7½"	2½"
B1-6	1'-2"	6"	9"	4"
B2-4	10"	4"	2'-7½"	2½"
B2-6	1'-0"	6"	2'-9"	4"
B3-4	4"	3"	7"	2"
B3-6	6"	5"	8½"	3½"
D-4	10"	4"	1'-6"	1'-1"
D-6	1'-0"	6"	2'-2"	1'-8"

DRIVEWAYS

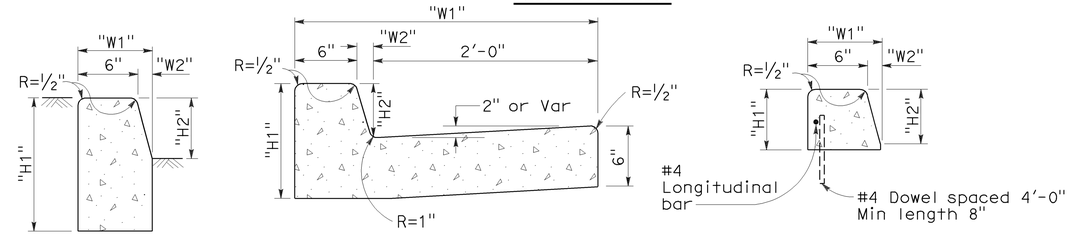

TYPE A1 CURBS
See Table A

TYPE A2 CURBS
See Table A

TYPE A3 CURBS
Superimposed on existing pavement
See Table A

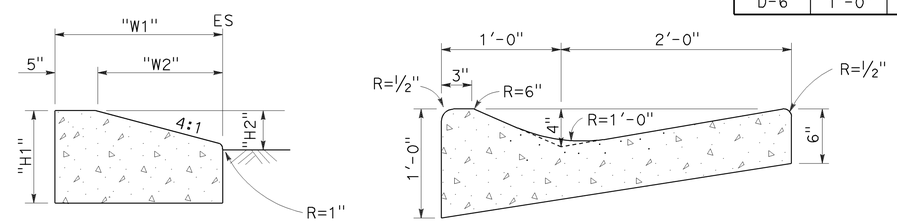

TYPE D CURBS
See Table A

TYPE E CURB

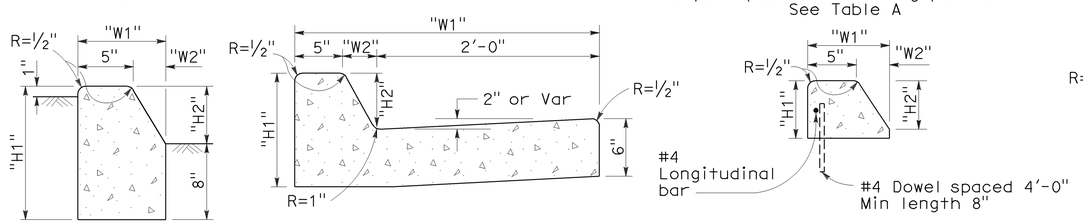

TYPE B1 CURBS
See Table A

TYPE B2 CURBS
See Table A

TYPE B3 CURBS
Superimposed on existing pavement
See Table A

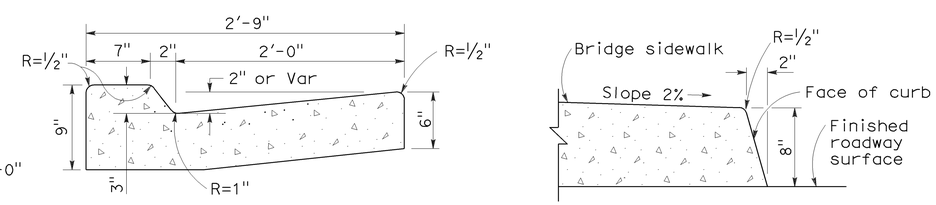

TYPE B4 CURBS

TYPE H CURB
On Bridges

CURBS

NOTES:

1. Case A driveway section typically applies.
2. Use Case B driveway section when ramp slopes would exceed 10% in Case A.
3. Use Case B driveway section when sidewalk cross slope would exceed 2% in Case A.
4. X=3'-0" except for curb heights over 10" where 4:1 slopes shall be used on curb slope.
5. X is a variable when sidewalk is located where wheelchairs may traverse the surface. Slopes shall not exceed 8.33%.
6. Sidewalk and ramp thickness "T" at driveway shall be 4" for residental and 6" for commercial.
7. Difference in slope of the driveway ramp and the slope of a line between the gutter and a point on the roadway 5'-0" from gutter line shall not exceed 15%. Reduce driveway ramp slope, not gutter slope, where required.
8. Minimum width of clear passageway for sidewalk shall be 4'-0".
9. Retaining curbs and acquisition of construction easement may be necessary for narrow sidewalks or curb heights in excess of 6".
10. Across the pedestrian route at curb ramp locations, the gutter pan slope shall not exceed 1" of depth for each 2'-0" of width.

STATE OF CALIFORNIA
DEPARTMENT OF TRANSPORTATION

CURBS AND DRIVEWAYS

NO SCALE

RSP A87A DATED NOVEMBER 17, 2006 SUPERSEDES STANDARD PLAN A87A DATED MAY 1, 2006 - PAGE 113 OF THE STANDARD PLANS BOOK DATED MAY 2006.

REVISED STANDARD PLAN RSP A87A

2006 REVISED STANDARD PLAN RSP A87A

10-25-06

DIST	COUNTY	ROUTE	POST MILES TOTAL PROJECT	SHEET NO.	TOTAL SHEETS
11	SD	15	0.5/M4.0	102	116

REGISTERED CIVIL ENGINEER

September 1, 2006
PLANS APPROVAL DATE

REGISTERED PROFESSIONAL ENGINEER Hector David Cordova No. C41957 Exp. 3-31-08 CIVIL STATE OF CALIFORNIA

The State of California or its officers or agents shall not be responsible for the accuracy or completeness of electronic copies of this plan sheet.

To accompany plans dated 08-01-11

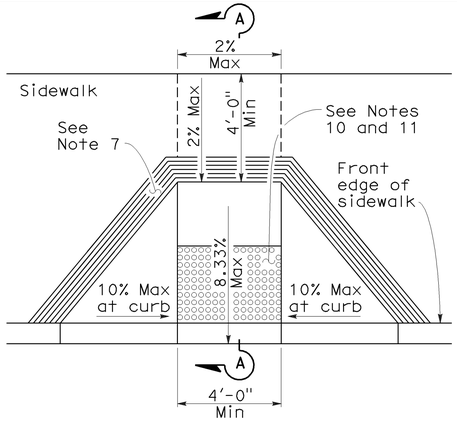

CASE A

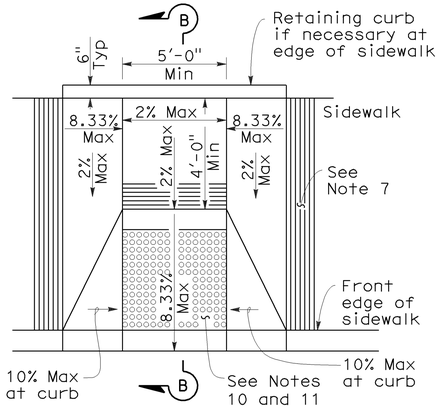

CASE B

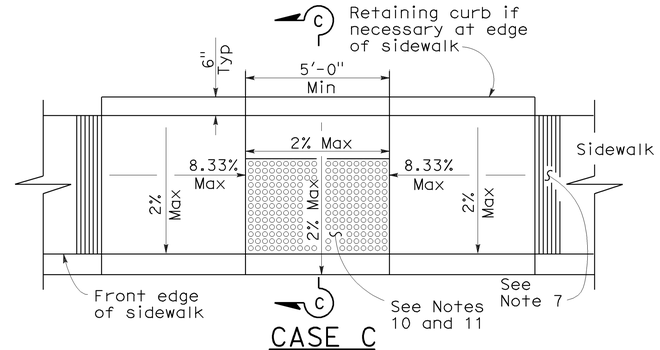

CASE C

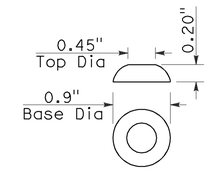

RAISED TRUNCATED DOME

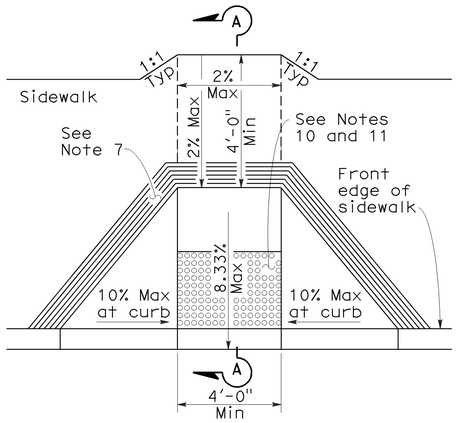

CASE D

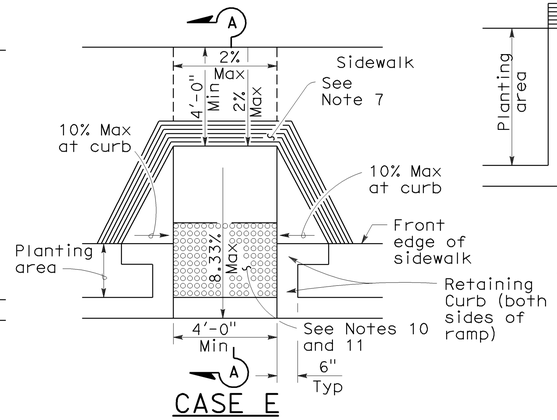

CASE E

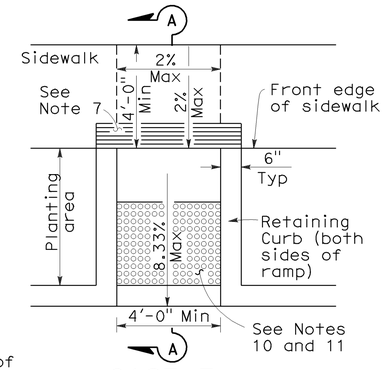

CASE F

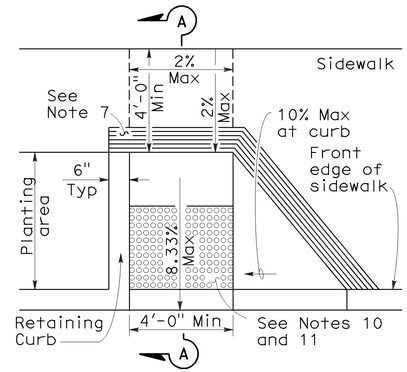

CASE G
See Note 4

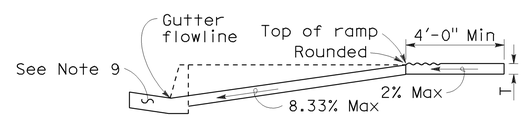

SECTION A-A

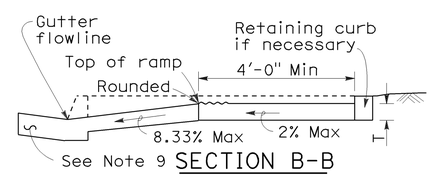

SECTION B-B
Depress entire sidewalk as required

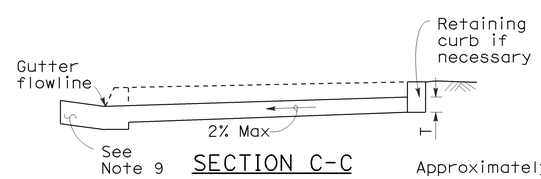

SECTION C-C

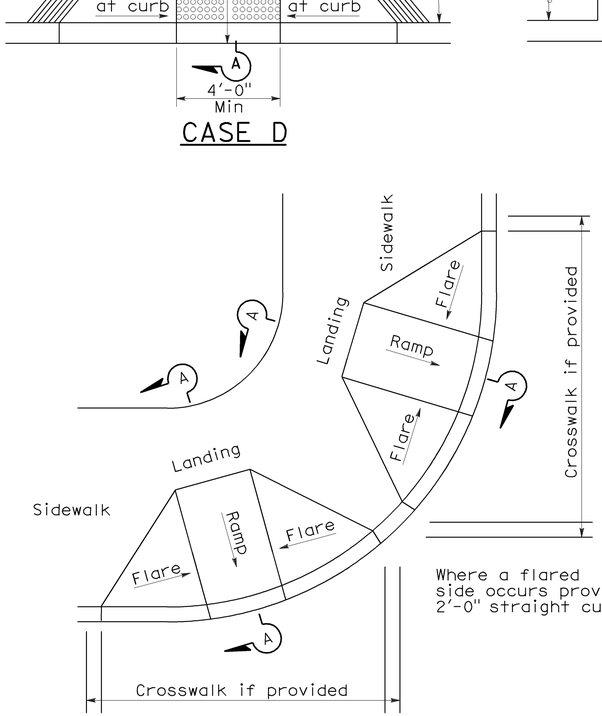

DETAIL A

TYPICAL TWO-RAMP CORNER INSTALLATION
See Note 1

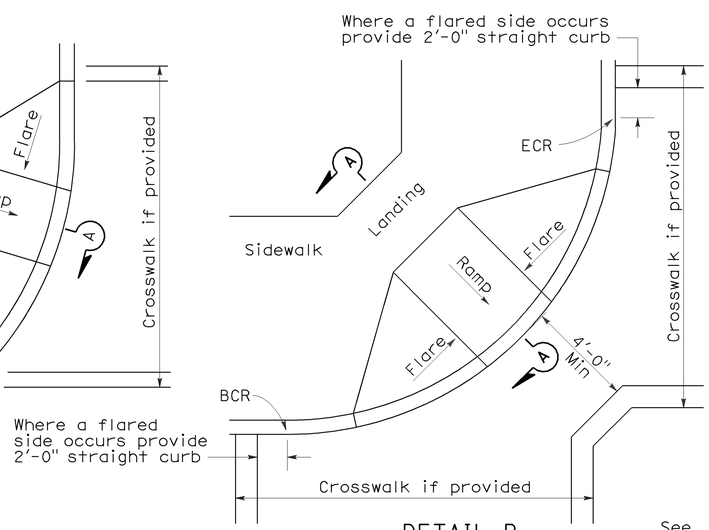

DETAIL B

TYPICAL ONE-RAMP CORNER INSTALLATION
See Notes 1 and 3

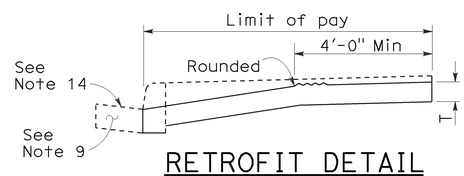

RETROFIT DETAIL
Existing curb and sidewalk

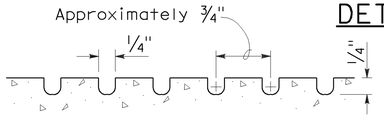

GROOVING DETAIL

NOTES:

1. As site conditions dictate, Case A through Case G curb ramps may be used for corner installations similar to those shown in Detail A and Detail B. The case of curb ramps used in Detail A do not have to be the same. Case A through Case G curb ramps also may be used at mid block locations, as site conditions dictate.
2. If distance from curb to back of sidewalk is too short to accommodate ramp and 4'-0" platform (landing) as shown in Case A, the sidewalk may be depressed longitudinally as in Case B, or C or may be widened as in Case D.
3. When ramp is located in center of curb return, crosswalk configuration must be similar to that shown for Detail B.
4. As site conditions dictate, the retaining curb side and the flared side of the Case G ramp shall be constructed in reversed position.
5. If located on a curve, the sides of the ramp need not be parallel, but the minimum width of the ramp shall be 4'-0".
6. Side slope of ramp flares vary uniformly from a maximum of 10% at curb to conform with longitudinal sidewalk slope adjacent to top of the ramp, except in Case C and Case F.
7. The curb ramp shall be outlined, as shown, with a 1'-0" wide border with 1/4" grooves approximately 3/4" on center. See grooving detail.
8. Transitions from ramps and landing to walks, gutters or streets shall be flush and free of abrupt changes.
9. Maximum slopes of adjoining gutters, the road surface immediately adjacent to the curb ramp or accessible route shall not exceed 5 percent within 4'-0" of the top and bottom of the curb ramp.
10. Curb ramps shall have a detectable warning surface that extends the full width and 3'-0" depth of the ramp. Detectable Warning Surfaces shall conform to the details on this plan and the requirements in the Special Provisions.
11. The edge of the detectable warning surface nearest the street shall be between 6" and 8" from the gutter flowline.
12. Sidewalk and ramp thickness, "T", shall be 3½" minimum.
13. Utility pull boxes, manholes, vaults and all other utility facilities within the boundaries of the curb ramp will be relocated or adjusted to grade by the owner prior to, or in conjunction with, curb ramp construction.
14. For retrofit conditions, removal and replacement of curb apron will be at the Contractor's option, unless otherwise shown on project plans.

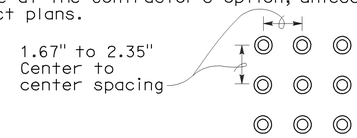

RAISED TRUNCATED DOME PATTERN (IN-LINE)

DETECTABLE WARNING SURFACE
See Note 10

STATE OF CALIFORNIA
DEPARTMENT OF TRANSPORTATION

CURB RAMP DETAILS

NO SCALE

RSP A88A DATED SEPTEMBER 1, 2006 SUPERSEDES STANDARD PLAN A88A DATED MAY 1, 2006 - PAGE 115 OF THE STANDARD PLANS BOOK DATED MAY 2006.

REVISED STANDARD PLAN RSP A88A

2006 REVISED STANDARD PLAN RSP A88A

8-3-06

DIST	COUNTY	ROUTE	POST MILES TOTAL PROJECT	SHEET NO.	TOTAL SHEETS
11	SD	15	0.5/M4.0	103	116

William K. Farnbach
REGISTERED CIVIL ENGINEER

May 15, 2009
PLANS APPROVAL DATE

REGISTERED PROFESSIONAL ENGINEER William K. Farnbach No. C49042 Exp. 9-30-10 CIVIL STATE OF CALIFORNIA

The State of California or its officers or agents shall not be responsible for the accuracy or completeness of electronic copies of this plan sheet.

To accompany plans dated 08-01-11

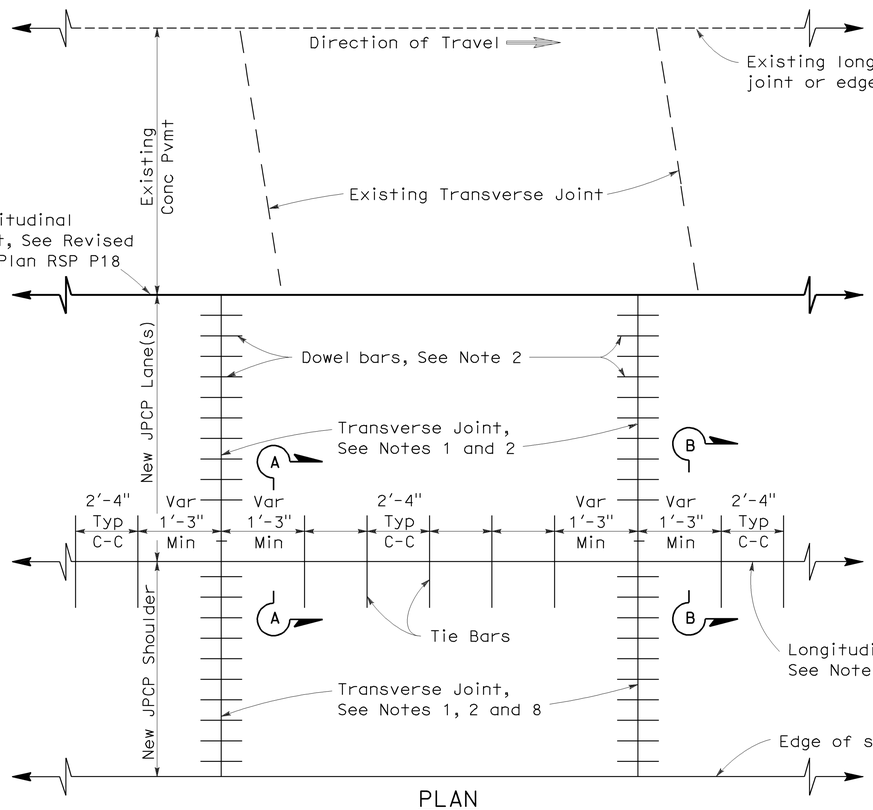

PLAN
LANE/SHOULDER ADDITION OR RECONSTRUCTION
See Notes 6 and 7

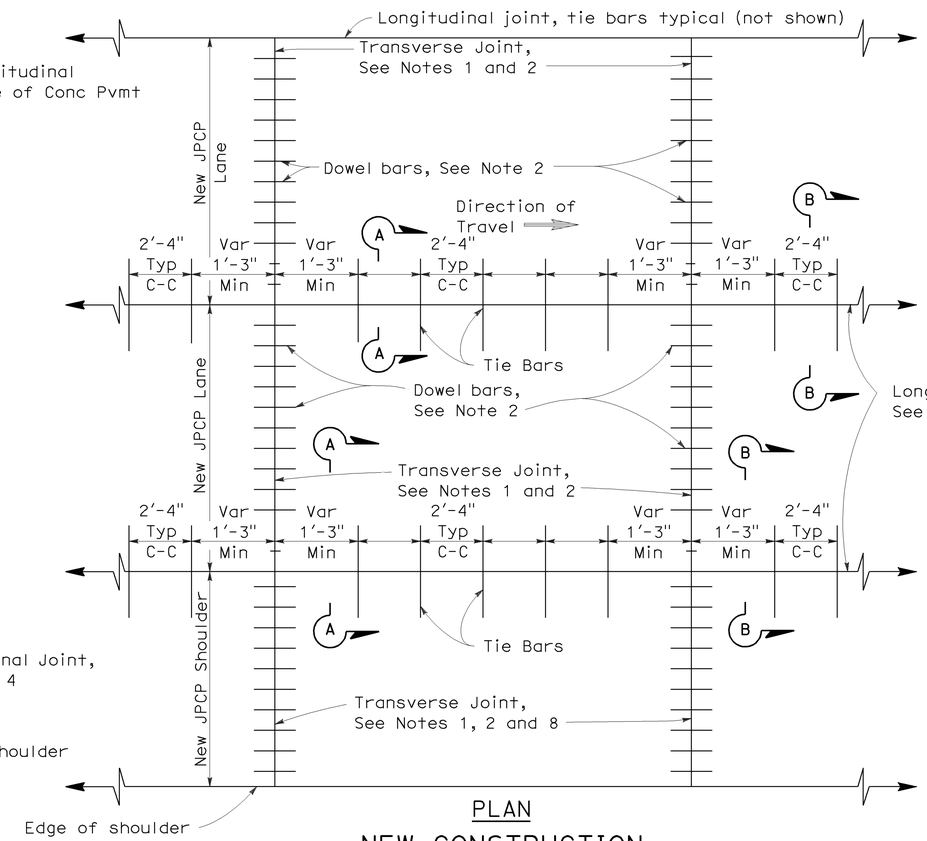

PLAN
NEW CONSTRUCTION
See Notes 6 and 7

NOTES:

1. Transverse joints shall be constructed at right angles to the longitudinal pavement joints in new jointed plain concrete pavement and spaced at successive repeated intervals of 12', 15', 13' and 14'.
2. For transverse joint and dowel bar details not shown, See Revised Standard Plan RSP P10.
3. Construct longitudinal contraction joints as shown in Section A-A when more than one lane or shoulder widths are placed at one time. If constructing one lane at a time, use longitudinal construction joint, as shown in Section B-B.
4. For additional longitudinal joint details, see Revised Standard Plan RSP P18.
5. If fresh concrete is placed adjacent to existing concrete, the top corner of the new hardened concrete does not need to be rounded to the 1/4" radius as shown.
6. Joint spacing patterns do not apply to intersections.
7. Details can also apply to inside widening.
8. Dowel bars may be omitted from shoulders when the shoulder cross slope is not the same as the adjacent traffic lane.

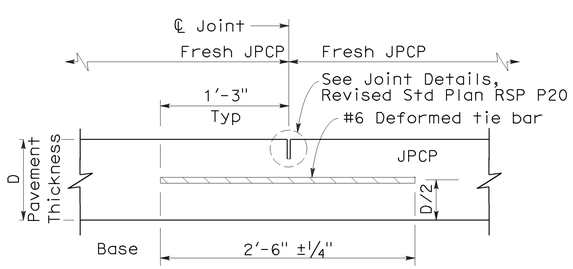

SECTION A-A
LONGITUDINAL CONTRACTION JOINT

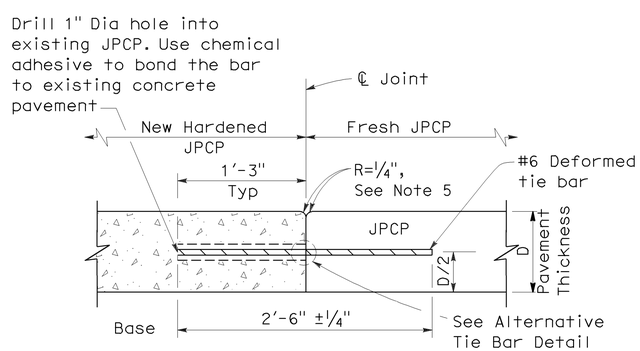

SECTION B-B
LONGITUDINAL CONSTRUCTION JOINT

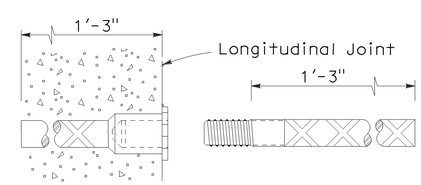

ALTERNATIVE TIE BAR SPLICE DETAIL
(Splice Coupler)

TIE BAR DETAILS

STATE OF CALIFORNIA
DEPARTMENT OF TRANSPORTATION

JOINTED PLAIN CONCRETE PAVEMENT

NO SCALE

RSP P1 DATED MAY 15, 2009 SUPERSEDES STANDARD PLAN P1
DATED MAY 1, 2006 - PAGE 119 OF THE STANDARD PLANS BOOK DATED MAY 2006.

REVISED STANDARD PLAN RSP P1

2006 REVISED STANDARD PLAN RSP P1

5-8-09

DIST	COUNTY	ROUTE	POST MILES TOTAL PROJECT	SHEET NO.	TOTAL SHEETS
11	SD	15	0.5/M4.0	104	116

REGISTERED CIVIL ENGINEER

May 15, 2009
PLANS APPROVAL DATE

REGISTERED PROFESSIONAL ENGINEER William K. Farnbach No. C49042 Exp. 9-30-10 CIVIL STATE OF CALIFORNIA

The State of California or its officers or agents shall not be responsible for the accuracy or completeness of electronic copies of this plan sheet.

To accompany plans dated 08-01-11

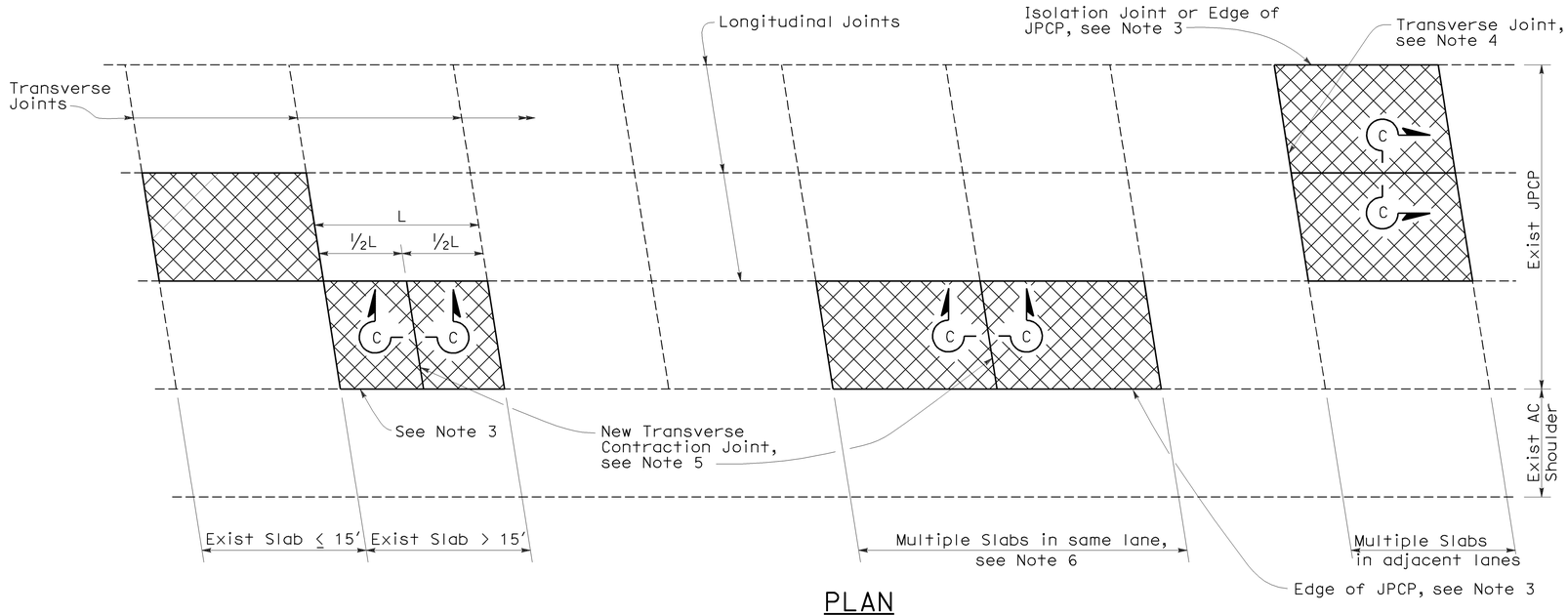

PLAN

NOTES:

1. For details not shown, see Revised Standard Plan RSP P10.
2. Where the existing outer shoulder pavement is asphalt concrete pavement, the "a" dimension shall be 1′-0" and the "b" dimension shall be 2′-0".
3. Side forms shall be used where edge of pavement is adjacent to asphalt concrete.
4. For detail, see Transverse Construction Joint for existing concrete pavement detail on Revised Standard Plan RSP P10.
5. Transverse joint to match skew of existing joint. Omit dowel bars.
6. This Standard Plan only applicable when replacing multiple slabs in the same lane is less than 100′.

LEGEND

Replace Concrete Pavement (See Slab Layout Detail)

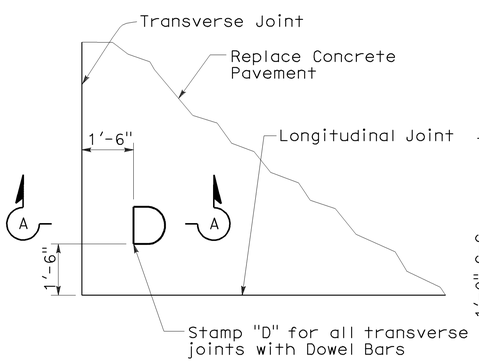

DOWEL STAMP DETAIL

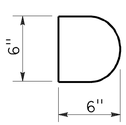

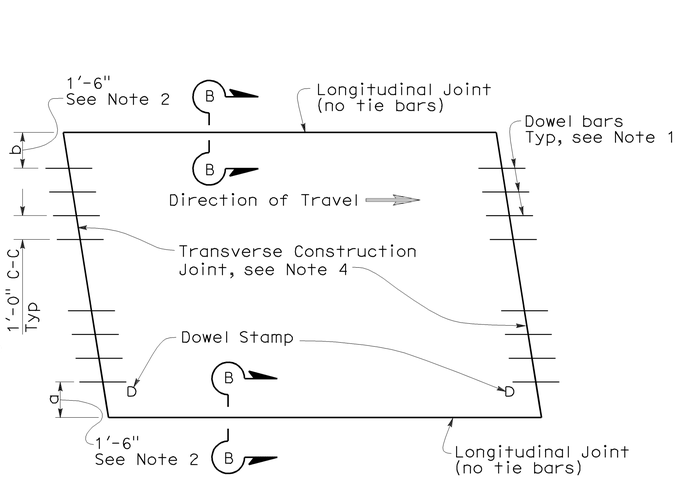

TYPE I
(traffic lane lines match longitudinal joints)

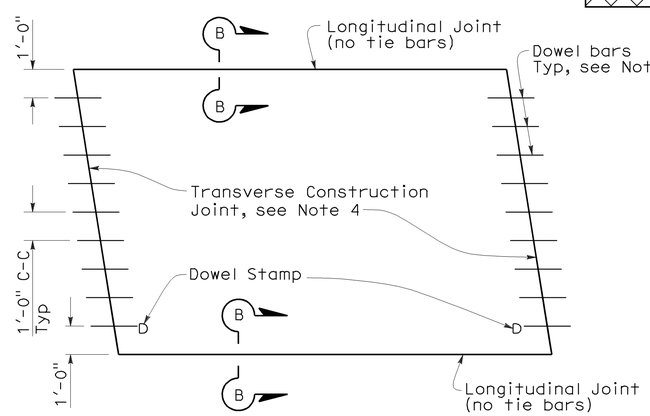

TYPE II
(traffic lane lines do not match longitudinal joints)

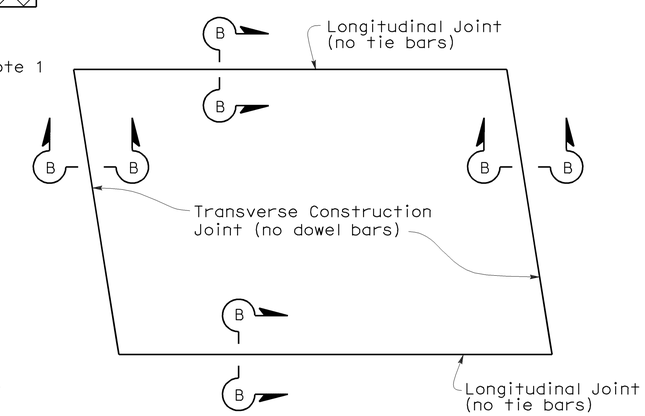

TYPE III
(for short term repairs < 5 yrs design life or for slab replacements with a cracking and seating operation)

SLAB LAYOUT

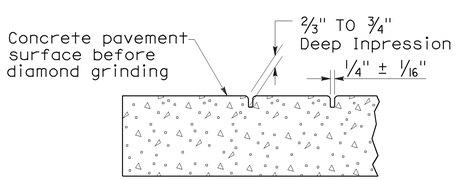

SECTION A-A

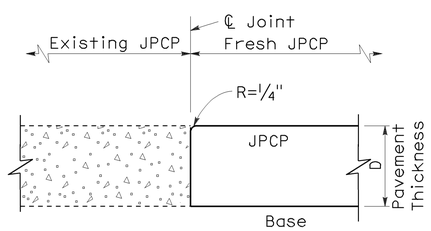

SECTION B-B

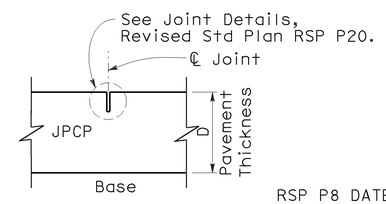

SECTION C-C

STATE OF CALIFORNIA
DEPARTMENT OF TRANSPORTATION

JOINTED PLAIN CONCRETE PAVEMENT-INDIVIDUAL SLAB REPLACEMENT

NO SCALE

RSP P8 DATED MAY 15, 2009 SUPERSEDES RSP P8 DATED SEPTEMBER 1, 2006 AND STANDARD PLAN P8 DATED MAY 1, 2006 - PAGE 123 OF THE STANDARD PLANS BOOK DATED MAY 2006.

REVISED STANDARD PLAN RSP P8

2006 REVISED STANDARD PLAN RSP P8

5-8-09

DIST	COUNTY	ROUTE	POST MILES TOTAL PROJECT	SHEET NO.	TOTAL SHEETS
11	SD	15	0.5/M4.0	105	116

William K. Farnbach
REGISTERED CIVIL ENGINEER

May 15, 2009
PLANS APPROVAL DATE

REGISTERED PROFESSIONAL ENGINEER William K. Farnbach No. C49042 Exp. 9-30-10 CIVIL STATE OF CALIFORNIA

The State of California or its officers or agents shall not be responsible for the accuracy or completeness of electronic copies of this plan sheet.

To accompany plans dated 08-01-11

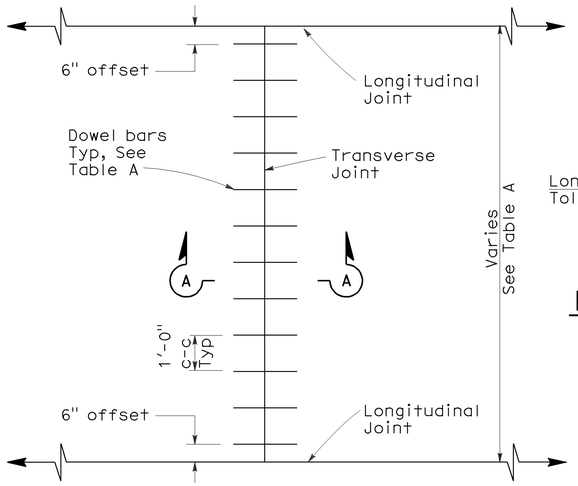

TRANSVERSE JOINT DOWEL BAR LAYOUT

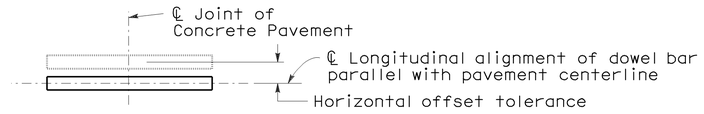

PLAN

HORIZONTAL OFFSET TOLERANCE

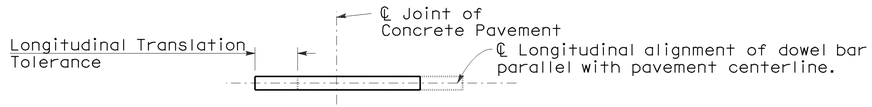

PLAN

LONGITUDINAL TRANSLATION TOLERANCE

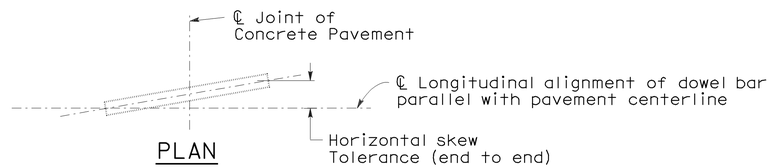

PLAN

HORIZONTAL SKEW TOLERANCE

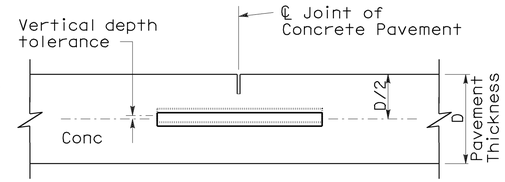

ELEVATION

VERTICAL DEPTH TOLERANCE

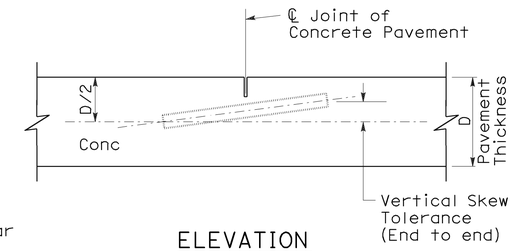

ELEVATION

VERTICAL SKEW TOLERANCE

NOTES:

1. See Revised Standard Plan RSP P1 for typical dowel bar placement and locations.
2. 1½" Dia smooth dowel bars are to be used with a pavement thickness, D, equal to or greater than 0.70 feet. For pavement thickness, D, less than 0.70 feet, use 1¼" Dia smooth dowel bars.
3. For widths not shown, see Project Plans.
4. If fresh concrete pavement is placed adjacent to existing concrete pavement, the top corner of the existing concrete pavement does not need to be rounded to the ¼" radius, as shown.

TABLE A (See Note 3)

Dowel Bar Transverse Spacing Table	
Width between Longitudinal Joints	Number of Dowels between Longitudinal Joints
14'-0"	14
13'-0"	13
12'-0"	12
11'-0"	11
10'-0"	10
8'-0"	8
5'-0"	5
4'-0"	4

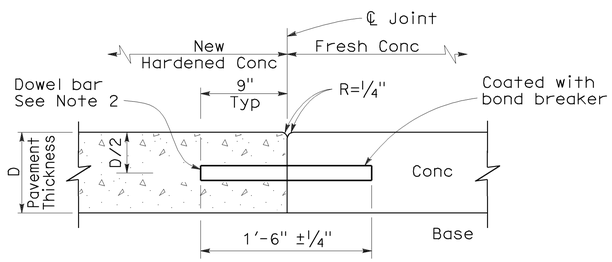

SECTION A-A

TRANSVERSE CONSTRUCTION JOINT DETAIL

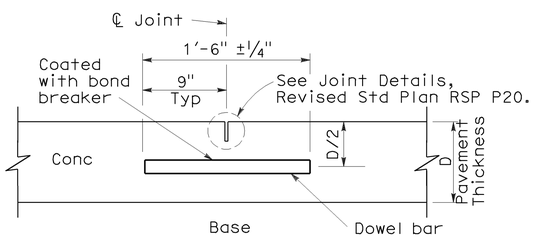

TRANSVERSE CONTRACTION JOINT

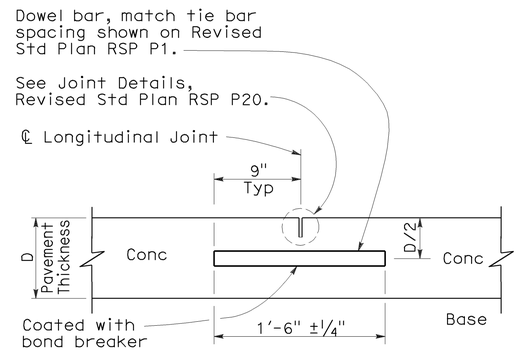

LONGITUDINAL CONTRACTION JOINT WITH DOWEL BARS

(See Revised Std Plan RSP P18)

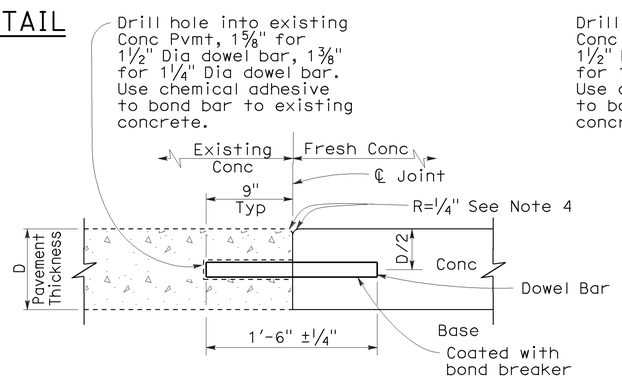

TRANSVERSE CONSTRUCTION JOINT FOR EXISTING CONCRETE PAVEMENT

(Drill and bond locations)

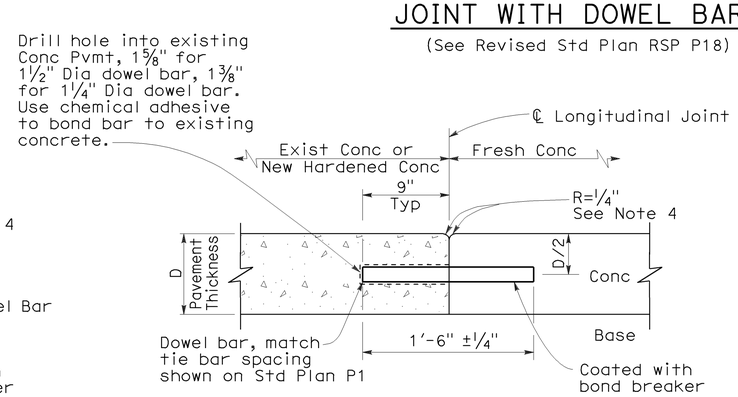

LONGITUDINAL CONSTRUCTION JOINT WITH DOWEL BARS

(See Revised Std Plan RSP P18)

STATE OF CALIFORNIA
DEPARTMENT OF TRANSPORTATION

CONCRETE PAVEMENT-DOWEL BAR DETAILS

NO SCALE

RSP P10 DATED MAY 15, 2009 SUPERSEDES STANDARD PLAN P10 DATED MAY 1, 2006 - PAGE 124 OF THE STANDARD PLANS BOOK DATED MAY 2006.

REVISED STANDARD PLAN RSP P10

2006 REVISED STANDARD PLAN RSP P10

5-8-09

DIST	COUNTY	ROUTE	POST MILES TOTAL PROJECT	SHEET NO.	TOTAL SHEETS
11	SD	15	0.5/M4.0	106	116

William K. Farnbach
REGISTERED CIVIL ENGINEER

May 15, 2009
PLANS APPROVAL DATE

REGISTERED PROFESSIONAL ENGINEER
William K. Farnbach
No. C49042
Exp. 9-30-10
CIVIL
STATE OF CALIFORNIA

The State of California or its officers or agents shall not be responsible for the accuracy or completeness of electronic copies of this plan sheet.

To accompany plans dated 08-01-11

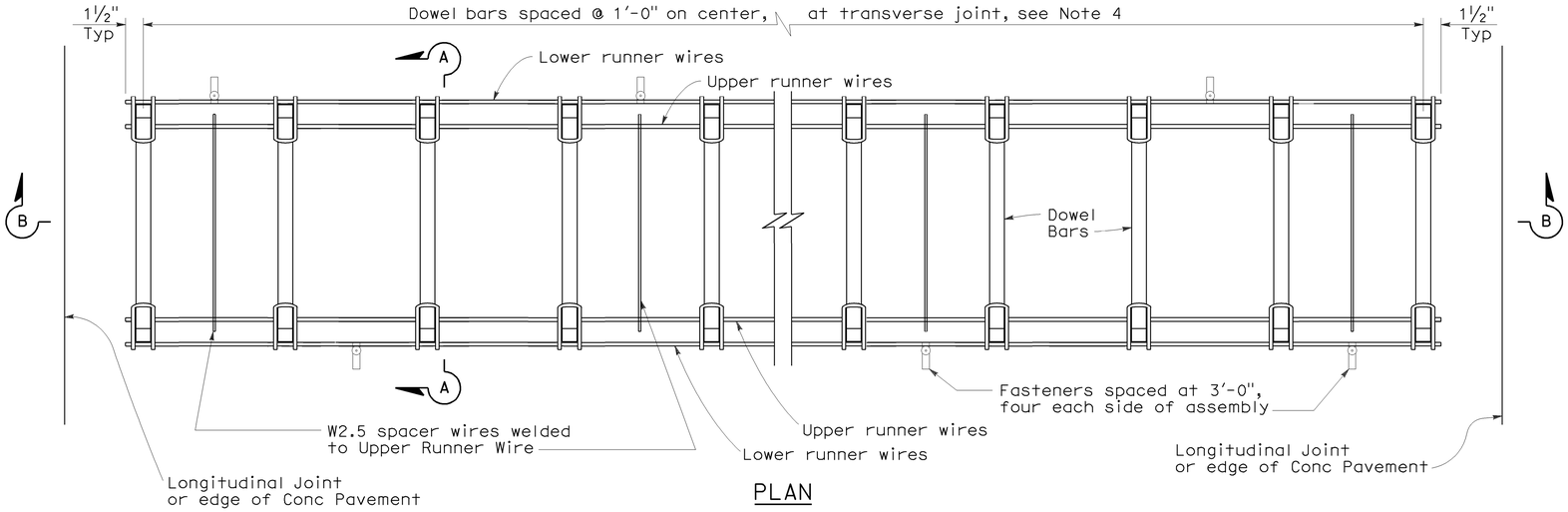

PLAN

DOWEL BAR BASKET (TRANSVERSE JOINT)

See Note 1

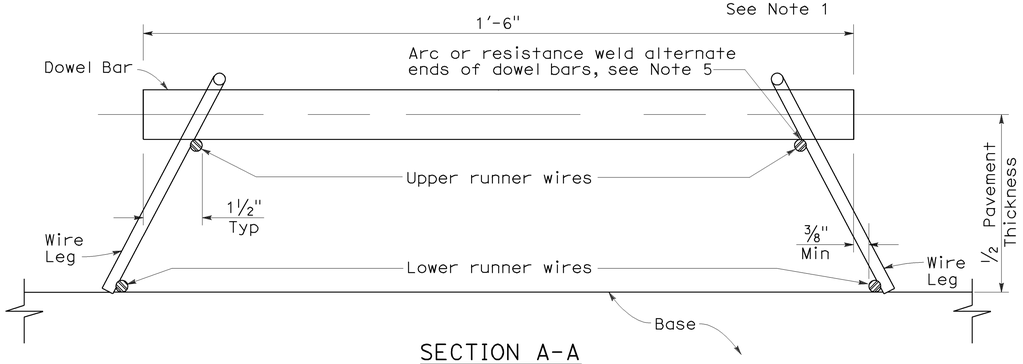

SECTION A-A

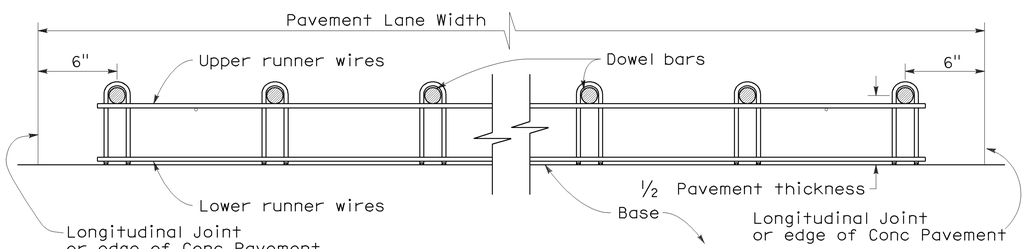

SECTION B-B

See Note 1

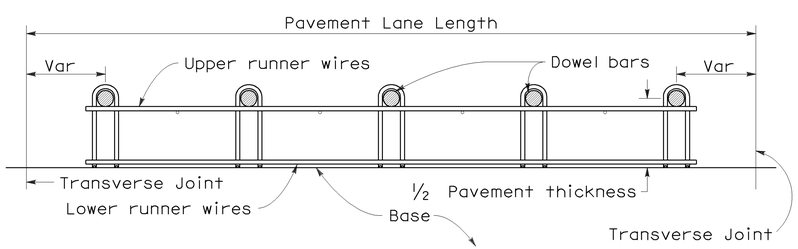

SECTION C-C

See Notes 1 and 4

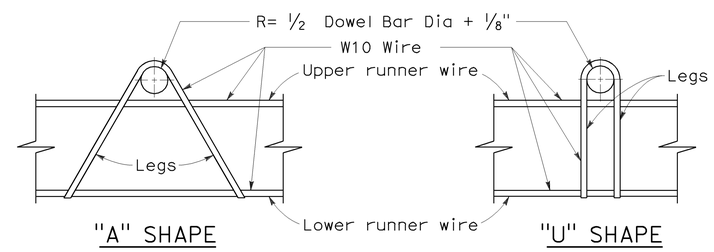

"A" SHAPE "U" SHAPE

ASSEMBLY FRAME DETAILS

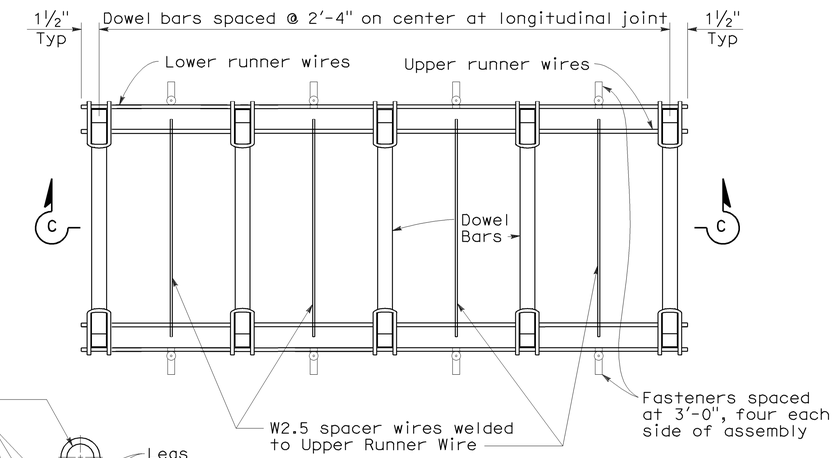

PLAN

DOWEL BAR BASKET (LONGITUDINAL JOINT)

See Note 1

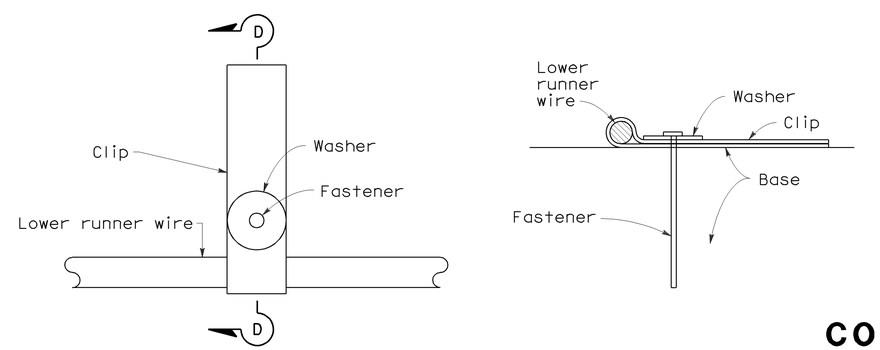

PLAN SECTION D-D

FASTENER DETAIL

NOTES:

1. "U" frame shape assembly shown. "U" frame shape or "A" frame shape are acceptable.
2. Wire sizes shown are minimum required.
3. All wire intersections are to be resistance welded.
4. Use tie bar spacing for longitudinal dowel bar locations. See Revised Std Plans RSPs P1, P2, and P3 for tie bar requirements.
5. Weld may be at top or bottom of dowel bar.

STATE OF CALIFORNIA
DEPARTMENT OF TRANSPORTATION

CONCRETE PAVEMENT-DOWEL BAR BASKET DETAILS

NO SCALE

RSP P12 DATED MAY 15, 2009 SUPERSEDES RSP P12 DATED NOVEMBER 17, 2006 AND STANDARD PLAN P12 DATED MAY 1, 2006 - PAGE 125 OF THE STANDARD PLANS BOOK DATED MAY 2006.

REVISED STANDARD PLAN RSP P12

2006 REVISED STANDARD PLAN RSP P12

5-8-09

NOTE:

1. Tie bars, dowel bars, and reinforcement are not shown in joint seal details, see Revised Standard Plans RSP P1, RSP P3, RSP P10, RSP P35, RSP P45, or RSP P46 as applicable.

DIST	COUNTY	ROUTE	POST MILES TOTAL PROJECT	SHEET NO.	TOTAL SHEETS
11	SD	15	0.5/M4.0	107	116

William K. Farnbach
REGISTERED CIVIL ENGINEER

May 15, 2009
PLANS APPROVAL DATE

REGISTERED PROFESSIONAL ENGINEER William K. Farnbach No. C49042 Exp. 9-30-10 CIVIL STATE OF CALIFORNIA

The State of California or its officers or agents shall not be responsible for the accuracy or completeness of electronic copies of this plan sheet.

To accompany plans dated 08-01-11

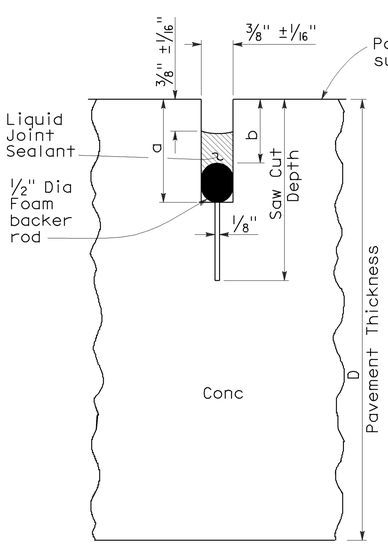

LIQUID SEALANT

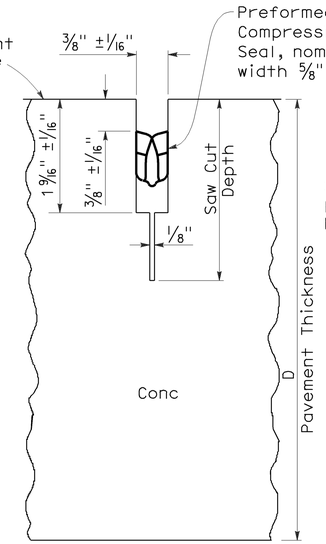

COMPRESSION SEAL

TYPE A1

Transverse Contraction Joints

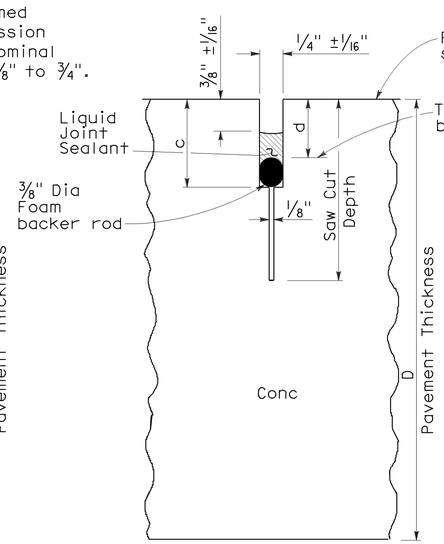

LIQUID SEALANT

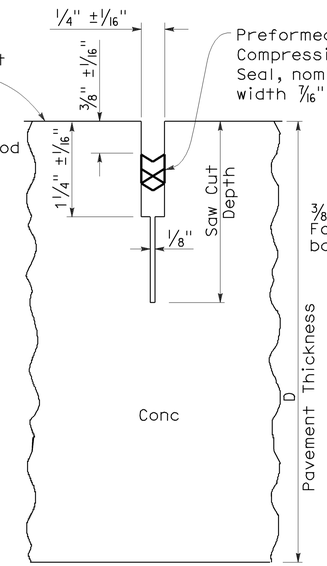

COMPRESSION SEAL

TYPE A2

Longitudinal Contraction Joints

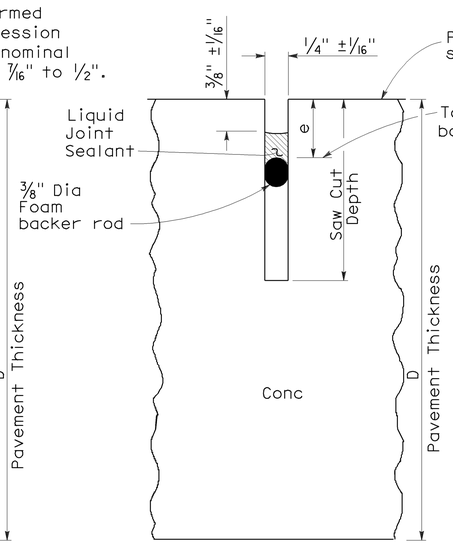

LIQUID SEALANT

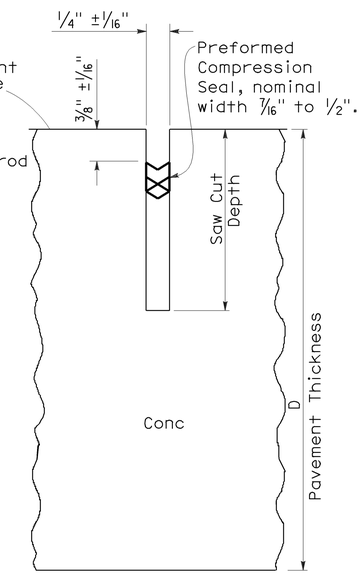

COMPRESSION SEAL

TYPE B

Longitudinal or Transverse Contraction Joint

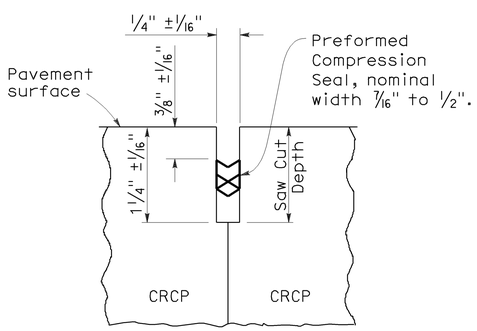

COMPRESSION SEAL

TYPE C

Transverse and Longitudinal Construction Joints (For CRCP)

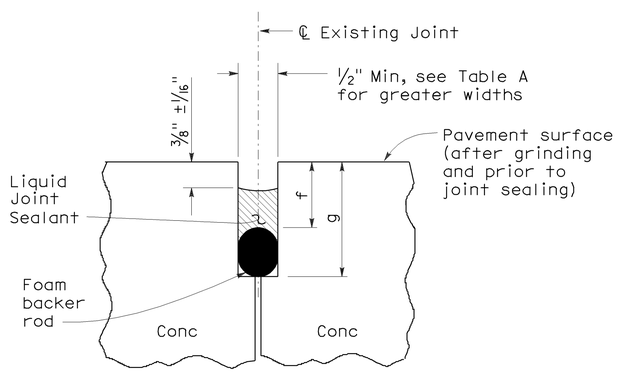

LIQUID SEALANT

TYPE R

Retrofit Transverse and Longitudinal Joints

LIQUID SEALANT RESERVOIR DEPTH

LIQUID SEALANT MATERIAL	3/8" Joint Width Type A1		1/4" Joint Width Type A2		1/4" Joint Width Type B
	DIMENSION		DIMENSION		DIMENSION
	a	b	c	d	e
SILCONE	1" ±1/16"	5/8" ±1/16"	15/16" ±1/16"	9/16" ±1/16"	9/16" ±1/16"
ASPHALT RUBBER	1 3/16" ±1/16"	3/4" ±1/16"	1 1/16" ±1/16"	11/16" ±1/16"	11/16" ±1/16"

TABLE A (TYPE R JOINT)

Sawn Joint Width	Backer Rod Diameter ± 1/16"	DIMENSION "f"	DIMENSION "g"
1"	1 5/16"	7/8"	2 1/4"
7/8"	1 3/16"	13/16"	2"
3/4"	1"	3/4"	1 3/4"
5/8"	7/8"	11/16"	1 1/2"
1/2"	11/16"	5/8"	1 1/4"

STATE OF CALIFORNIA
DEPARTMENT OF TRANSPORTATION

CONCRETE PAVEMENT-JOINT DETAILS

NO SCALE

RSP P20 DATED MAY 15, 2009 SUPERSEDES STANDARD PLAN P20
DATED MAY 1, 2006 - PAGE 128 OF THE STANDARD PLANS BOOK DATED MAY 2006.

REVISED STANDARD PLAN RSP P20

2006 REVISED STANDARD PLAN RSP P20

5-8-09

DIST	COUNTY	ROUTE	POST MILES TOTAL PROJECT	SHEET NO.	TOTAL SHEETS
11	SD	15	0.5/M4.0	108	116

Randell D. Hiatt
REGISTERED CIVIL ENGINEER

June 6, 2008
PLANS APPROVAL DATE

REGISTERED PROFESSIONAL ENGINEER
Randell D. Hiatt
No. C50200
Exp. 6-30-09
CIVIL
STATE OF CALIFORNIA

The State of California or its officers or agents shall not be responsible for the accuracy or completeness of electronic copies of this plan sheet.

To accompany plans dated 08-01-11

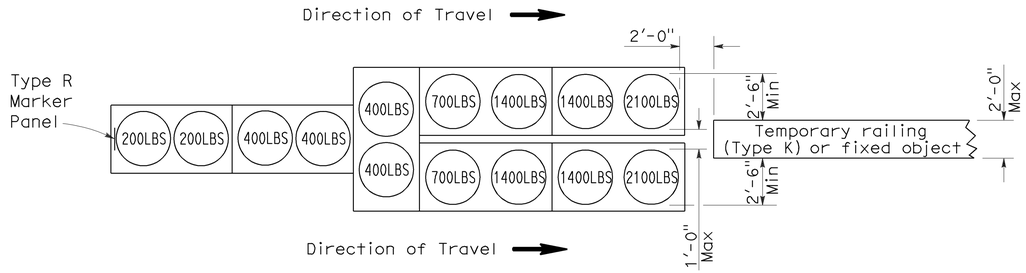

ARRAY 'TU14'

Approach speed 45 mph or more

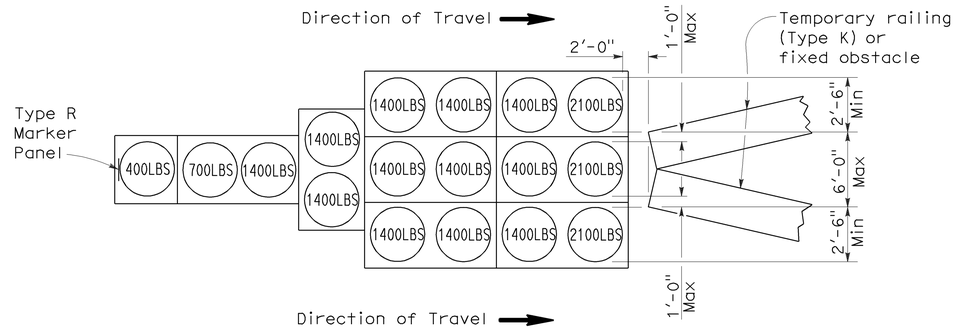

ARRAY 'TU17'

Approach speed less than 45 mph

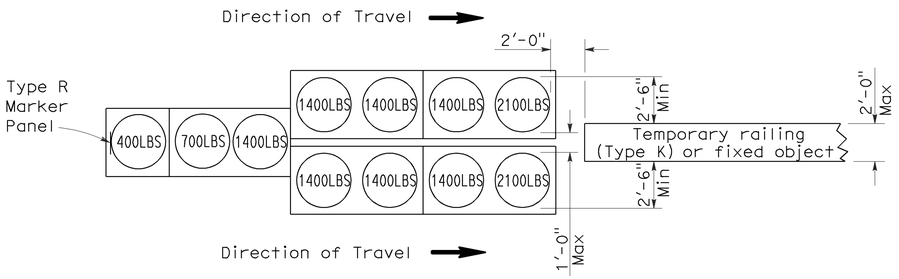

ARRAY 'TU11'

Approach speed less than 45 mph

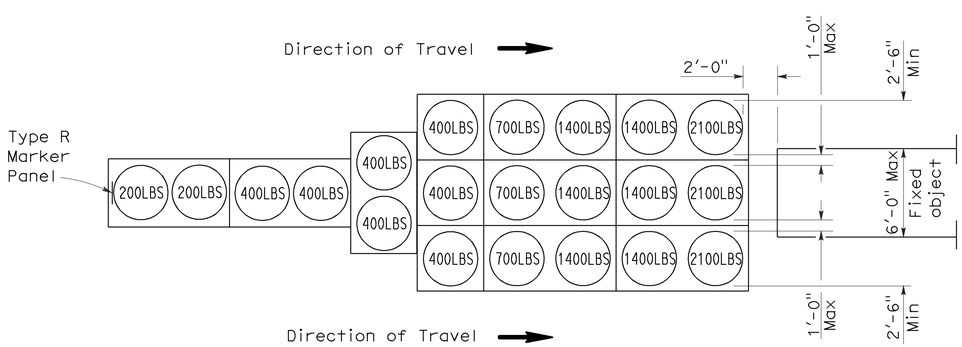

ARRAY 'TU21'

Approach speed 45 mph or more

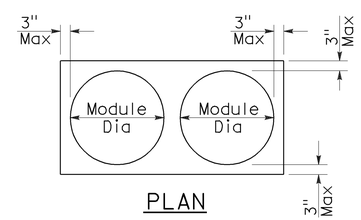

PLAN

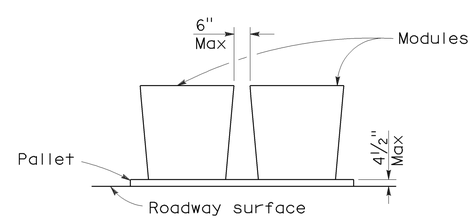

ELEVATION

CRASH CUSHION PALLET DETAIL

See Note 7

NOTES:

1. (XXX) Indicates sand filled module location and weight of sand in pounds for each module. Module spacing is based on the greater diameter of the module.
2. All sand weights are nominal.
3. Temporary crash cushion arrays shall not encroach on the traveled way.
4. Place the top of Type R marker panel 1" below the module lid.
5. Refer to Standard Plan A73B for marker details.
6. Approach speeds indicated conform to NCHRP 350 Report criteria.
7. Use of pallets is optional.

STATE OF CALIFORNIA
DEPARTMENT OF TRANSPORTATION

TEMPORARY CRASH CUSHION, SAND FILLED (UNIDIRECTIONAL)

NO SCALE

RSP T1A DATED JUNE 6, 2008 SUPERSEDES STANDARD PLAN T1A
DATED MAY 1, 2006 - PAGE 211 OF THE STANDARD PLANS BOOK DATED MAY 2006.

REVISED STANDARD PLAN RSP T1A

2006 REVISED STANDARD PLAN RSP T1A

DIST	COUNTY	ROUTE	POST MILES TOTAL PROJECT	SHEET NO.	TOTAL SHEETS
11	SD	15	0.5/M4.0	109	116

Randell D. Hiatt
REGISTERED CIVIL ENGINEER

June 6, 2008
PLANS APPROVAL DATE

REGISTERED PROFESSIONAL ENGINEER
Randell D. Hiatt
No. C50200
Exp. 6-30-09
CIVIL
STATE OF CALIFORNIA

The State of California or its officers or agents shall not be responsible for the accuracy or completeness of electronic copies of this plan sheet.

To accompany plans dated 08-01-11

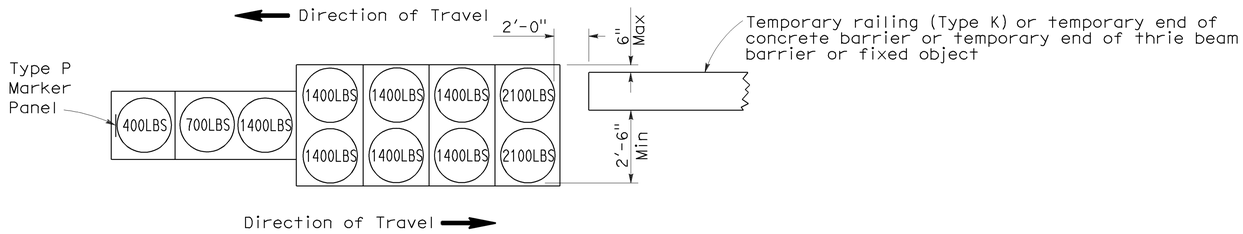

ARRAY 'TB11'

Approach speed less than 45 mph

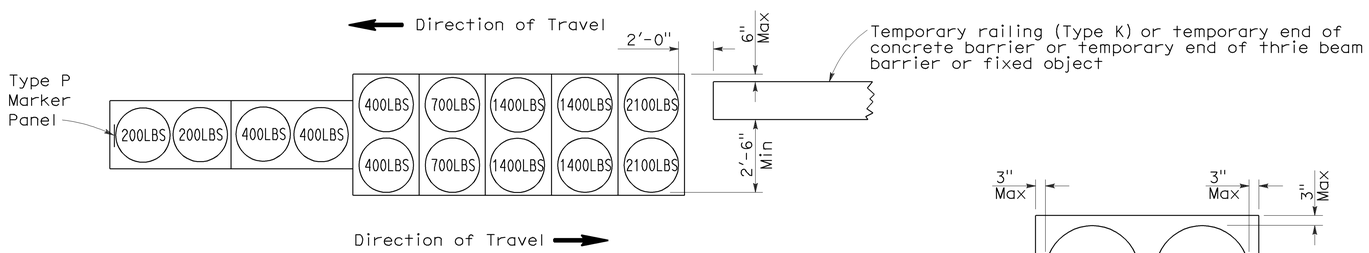

ARRAY 'TB14'

Approach speed 45 mph or more

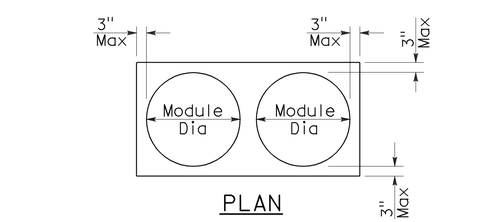

PLAN

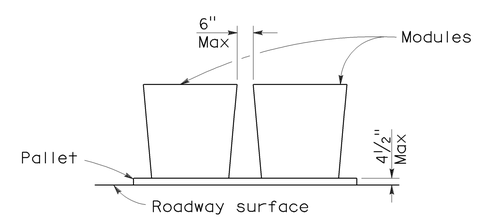

ELEVATION

CRASH CUSHION PALLET DETAIL

See Note 7

NOTES:

1. (XXX) Indicates sand filled module location and weight of sand in pounds for each module. Module spacing is based on the greater diameter of the module.
2. All sand weights are nominal.
3. Temporary crash cushion arrays shall not encroach on the traveled way.
4. Place the Type P marker panel so that the bottom of the panel rests upon the pallet.
5. Refer to Standard Plan A73B for marker details.
6. Approach speeds indicated conform to NCHRP 350 Report criteria.
7. Use of pallets is optional.

STATE OF CALIFORNIA
DEPARTMENT OF TRANSPORTATION

TEMPORARY CRASH CUSHION, SAND FILLED (BIDIRECTIONAL)

NO SCALE

RSP T1B DATED JUNE 6, 2008 SUPERSEDES STANDARD PLAN T1B
DATED MAY 1, 2006 - PAGE 212 OF THE STANDARD PLANS BOOK DATED MAY 2006.

REVISED STANDARD PLAN RSP T1B

2006 REVISED STANDARD PLAN RSP T1B

5-15-08

DIST	COUNTY	ROUTE	POST MILES TOTAL PROJECT	SHEET NO.	TOTAL SHEETS
11	SD	15	0.5/M4.0	110	116

Randell D. Hiatt
REGISTERED CIVIL ENGINEER

June 6, 2008
PLANS APPROVAL DATE

REGISTERED PROFESSIONAL ENGINEER
Randell D. Hiatt
No. C50200
Exp. 6-30-09
CIVIL
STATE OF CALIFORNIA

The State of California or its officers or agents shall not be responsible for the accuracy or completeness of electronic copies of this plan sheet.

To accompany plans dated 08-01-11

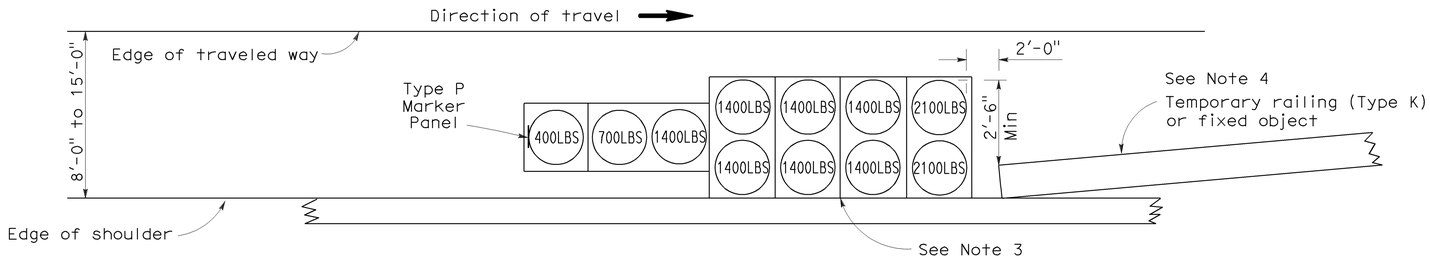

ARRAY 'TS11'

Approach speed less than 45 mph
See Note 9

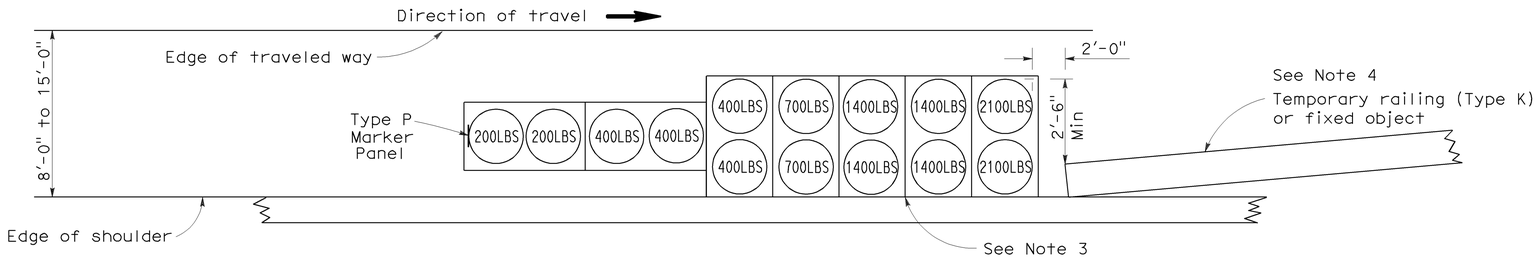

ARRAY 'TS14'

Approach speed 45 mph or more
See Note 9

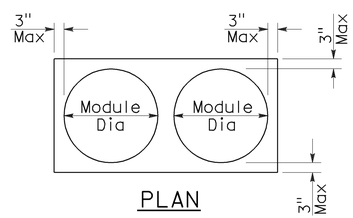

PLAN

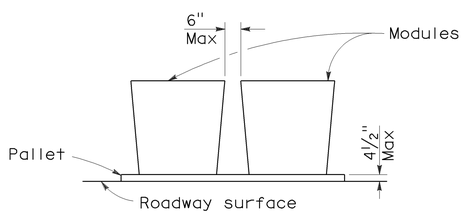

ELEVATION

CRASH CUSHION PALLET DETAIL

See Note 11

NOTES:

1. (XXX) Indicates sand filled module location and weight of sand in pounds for each module. Module spacing is based on the greater diameter of the module.
2. All sand weights are nominal.
3. The temporary crash cushion arrays shown on this plan shall be used only in locations where there will be traffic on one side of the temporary crash cushion array.
4. If the fixed object or approach end of the temporary railing is less than 15'-0" from the edge of traveled way, a temporary crash cushion is required in a construction or work zone.
5. Temporary crash cushion arrays shall not encroach on the traveled way.
6. Arrays for median shoulders shall conform to details shown on this plan for outside shoulders.
7. Place the Type P marker panel so that the bottom of the panel rests upon the pallet and faces traffic.
8. Refer to Standard Plan A73B for marker details.
9. For shoulder widths less than 8'-0", appropriate approved crash cushion protection, other than sand filled modules, shall be provided at fixed objects and at approach ends of temporary railing. The specific type of crash cushion shall be as shown on the project plans or as specified in the Special Provisions, or if not shown on the project plans or specified in the Special Provisions, shall be as approved by the Engineer.
10. Approach speeds indicated conform to NCHRP 350 Report criteria.
11. Use of pallets is optional.

STATE OF CALIFORNIA
DEPARTMENT OF TRANSPORTATION

TEMPORARY CRASH CUSHION, SAND FILLED (SHOULDER INSTALLATIONS)

NO SCALE

RSP T2 DATED JUNE 6, 2008 SUPERSEDES STANDARD PLAN T2
DATED MAY 1, 2006 - PAGE 213 OF THE STANDARD PLANS BOOK DATED MAY 2006.

REVISED STANDARD PLAN RSP T2

2006 REVISED STANDARD PLAN RSP T2

5-15-08

Dist	COUNTY	ROUTE	POST MILES TOTAL PROJECT	SHEET No.	TOTAL SHEETS
11	SD	15	0.5/M4.0	111	116

Randell D. Hiatt
REGISTERED CIVIL ENGINEER

May 20, 2011
PLANS APPROVAL DATE

REGISTERED PROFESSIONAL ENGINEER
Randell D. Hiatt
No. C50200
Exp. 6-30-11
CIVIL
STATE OF CALIFORNIA

The State of California or its officers or agents shall not be responsible for the accuracy or completeness of electronic copies of this plan sheet.

To accompany plans dated 08-01-11

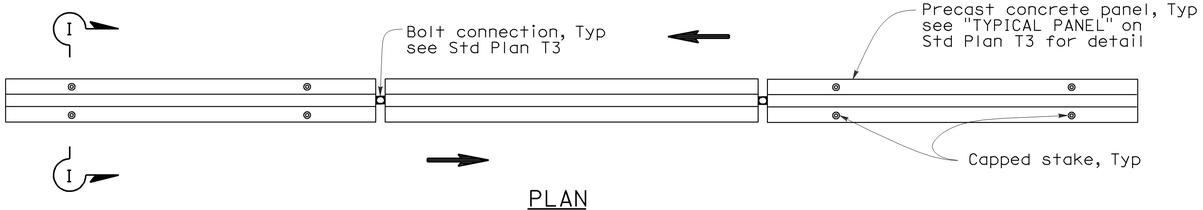

PLAN

RAILING STAKING CONFIGURATION FOR TWO-WAY TRAFFIC

See Note 1

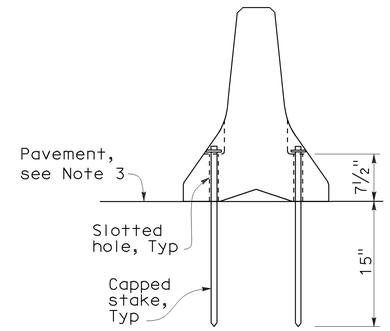

SECTION I-I

NOTES:

1. Where Type K Temporary Railing is placed as a temporary or long term barrier in two-way traffic on highways with less than 24" from the edge of traveled way, use four capped stakes per every other panel with end panels staked.
2. Where Type K Temporary Railing is placed 3" to 24" from the edge of an excavation on highways, use two capped stakes per panel along the traffic side.
3. Staked Type K Temporary Railing must be supported by at least 4" thick concrete, hot mix asphalt or existing asphalt concrete pavement.
4. The minimum yield strength for the washer must be 60,000 psi.
5. Direction of adjacent traffic indicated by ⟹.

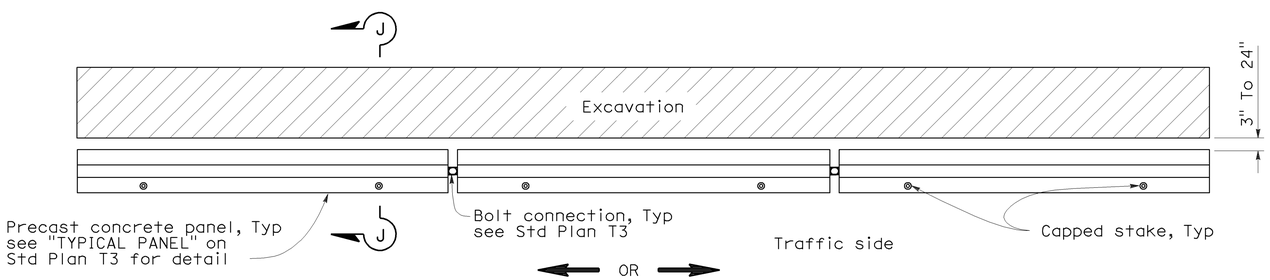

PLAN

RAILING STAKING CONFIGURATION ADJACENT TO AN EXCAVATION

See Note 2

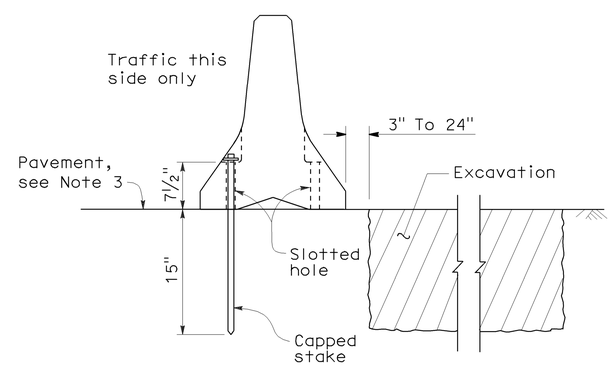

SECTION J-J

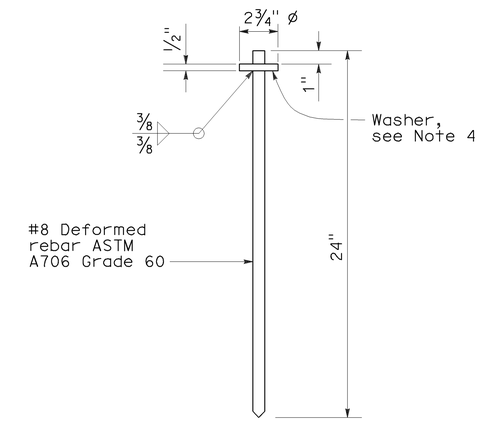

CAPPED STAKE DETAIL

STATE OF CALIFORNIA
DEPARTMENT OF TRANSPORTATION

TEMPORARY RAILING (TYPE K)

NO SCALE

NSP T3A DATED MAY 20, 2011 SUPPLEMENTS
THE STANDARD PLANS BOOK DATED MAY 2006.

NEW STANDARD PLAN NSP T3A

2006 NEW STANDARD PLAN NSP T3A

DIST	COUNTY	ROUTE	POST MILES TOTAL PROJECT	SHEET NO.	TOTAL SHEETS
11	SD	15	0.5/M4.0	112	116

LICENSED LANDSCAPE ARCHITECT

August 15, 2008
PLANS APPROVAL DATE

LICENSED LANDSCAPE ARCHITECT — Robert B. Schott — Signature — 11-04-08 Renewal Date — 08-11-08 Date — STATE OF CALIFORNIA

The State of California or its officers or agents shall not be responsible for the accuracy or completeness of electronic copies of this plan sheet.

To accompany plans dated 08-01-11

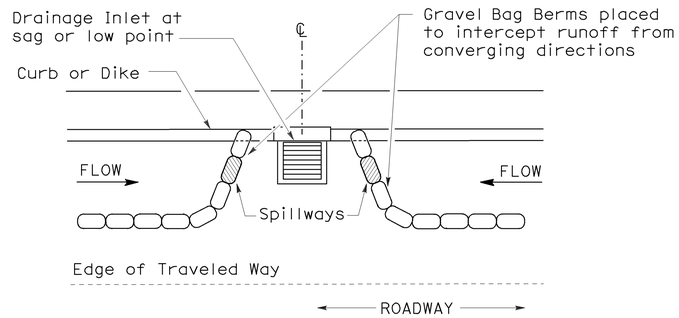

PLAN

CONFIGURATION FOR SAG POINT INLET (GRAVEL BAG BERM)

GRAVEL BAG BERM (TYPE 3A) SPACING TABLE

SLOPE OF ROADWAY (PERCENT)	1 to 3.9	4 to 5.9	6 to 7.9	8 to 10	10+
INTERVAL BETWEEN BERM	100′	75′	50′	25′	12′

For slope of less than 1%, install barriers only if erosion/sediment is prevalent

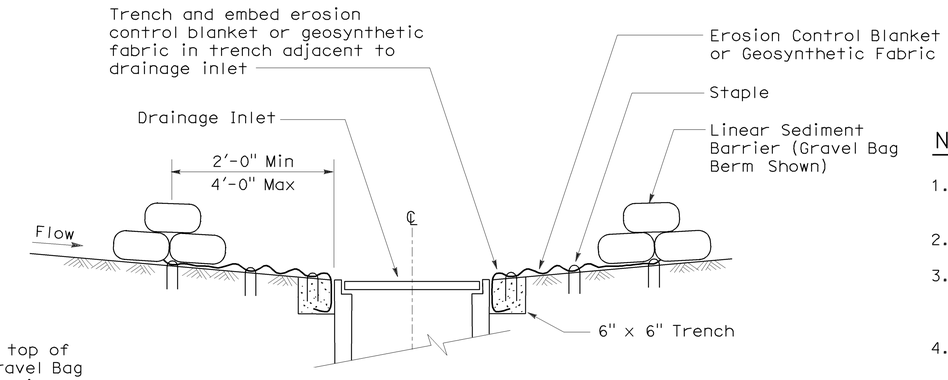

SECTION A-A

NOTES:

1. Place safety cones adjacent to drainage inlet protection.
2. Dimensions may vary to fit field conditions.
3. Install a minimum of 3 gravel bag berms upstream of each drainage inlet to be protected.
4. Position erosion control blanket or geosynthetic fabric at edge of concrete apron and secure in trench.
5. Erosion control blanket or geosynthetic fabric is not required if the area adjacent to the drainage inlet is vegetated or paved.

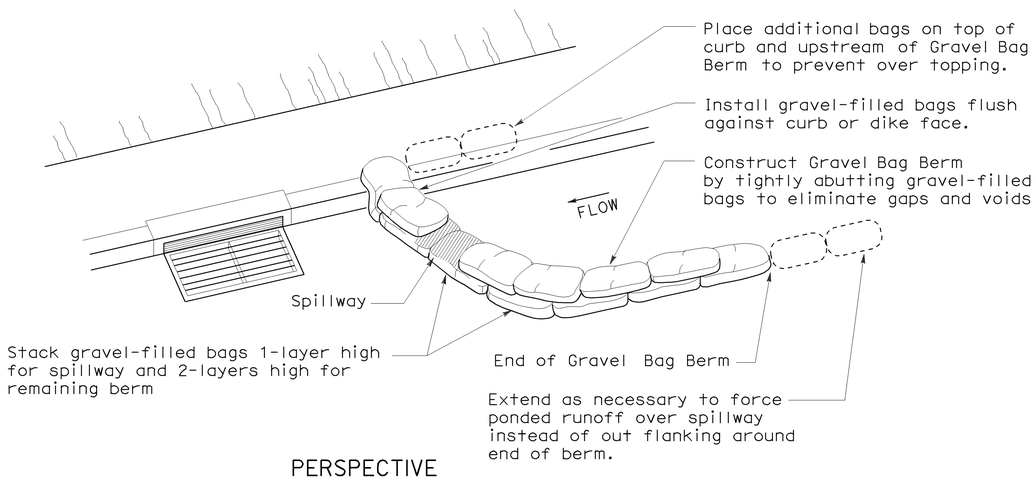

PERSPECTIVE

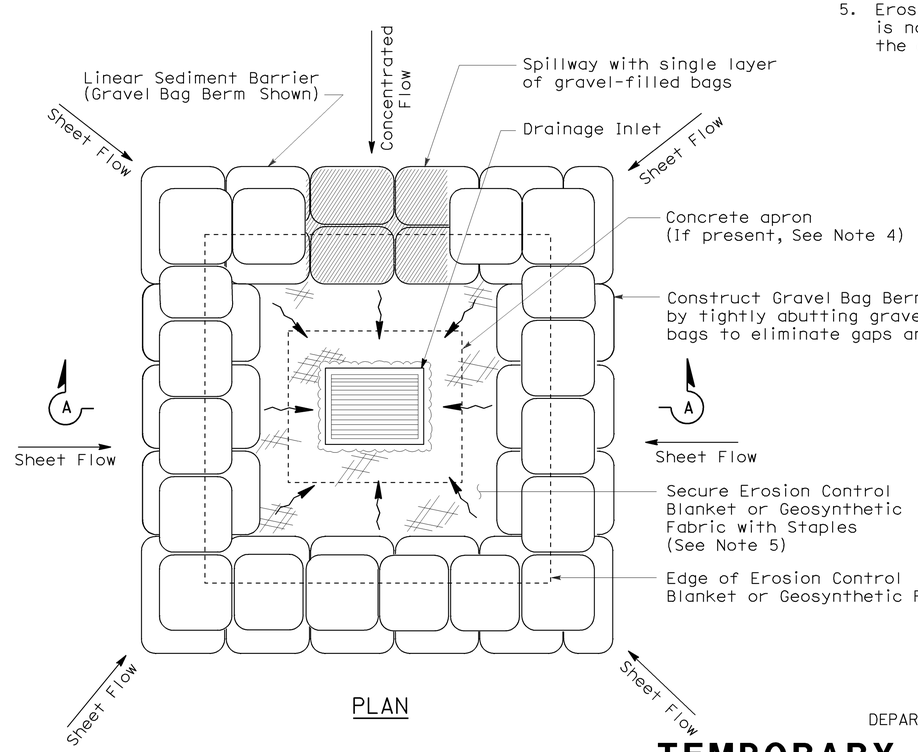

PLAN

TEMPORARY DRAINAGE INLET PROTECTION (TYPE 3B)

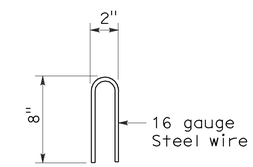

STAPLE DETAIL

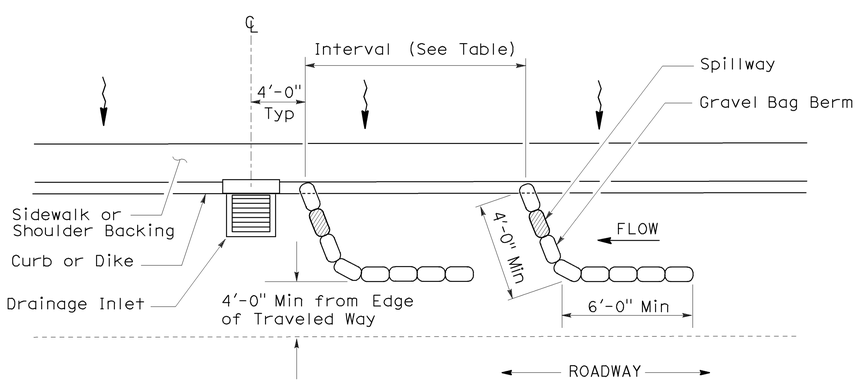

PLAN

TEMPORARY DRAINAGE INLET PROTECTION (TYPE 3A) (GRAVEL BAG BERM)

STATE OF CALIFORNIA
DEPARTMENT OF TRANSPORTATION

TEMPORARY WATER POLLUTION CONTROL DETAILS (TEMPORARY DRAINAGE INLET PROTECTION)

NO SCALE

NSP T62 DATED AUGUST 15, 2008 SUPPLEMENTS THE STANDARD PLANS BOOK DATED MAY 2006.

NEW STANDARD PLAN NSP T62

2006 NEW STANDARD PLAN NSP T62

7-11-08

DIST	COUNTY	ROUTE	POST MILES TOTAL PROJECT	SHEET NO.	TOTAL SHEETS
11	SD	15	0.5/M4.0	113	116

REGISTERED ELECTRICAL ENGINEER

October 5, 2007
PLANS APPROVAL DATE

REGISTERED PROFESSIONAL ENGINEER Jeffery G. McRae No. E14512 Exp. 6-30-08 ELECTRICAL STATE OF CALIFORNIA

The State of California or its officers or agents shall not be responsible for the accuracy or completeness of electronic copies of this plan sheet.

To accompany plans dated 08-01-11

2006 REVISED STANDARD PLAN RSP ES-1A

ELECTROLIERS

STANDARD TYPES
15, 15D
15 STRUCTURE
21, 21D STRUCTURE
30
31
32
35
36-20A

High mast light pole

Double Arm lighting standard

Existing electrolier

Electrolier foundation (Future installation)

NOTES:

1. Luminaires shall be 310 W HPS when installed on Type 21, 21D, 30, 31, 32, 35 and 36-20A Standards, unless otherwise specified. Luminaires shall be 200 W HPS when installed on other type standards or poles, unless otherwise specified.
2. Luminaires shall be the cutoff type, ANSI Type III medium cutoff lighting distribution, unless otherwise specified.
3. Variations noted adjacent to symbol on project plans.

Electrolier (see project notes or project plans)

Luminaire on wood pole

STANDARD NOTES:

- AB — Abandon. If applied to conduit, remove conductors.
- BC — Install pull box in existing conduit run.
- BP — Pedestrian barricade, type as indicated on plan.
- CB — Install conduit into existing pull box.
- CC — Connect new and existing conduit. Remove existing conductors and install conductors as indicated.
- CF — Conduit to remain for future use. Remove conductors. Install pull wire or rope.
- DH — Detector handhole.
- FA — Foundation to be abandoned.
- IS — Install sign on signal mast arm.
- NS — No slip base on standard.
- PEC — Photoelectric control.
- PEU — Photoelectric unit.
- RC — Equipment or material to be removed and become the property of the Contractor.
- RE — Remove electrolier, fuses and ballast. Tape ends of conductors.
- RL — Relocate equipment.
- RR — Remove and reuse equipment.
- RS — Remove and salvage equipment.
- SC — Splice new to existing conductors.
- SD — Service disconnect.
- SF — Standard to remain for future use. Remove luminaire, pole conductors, fuses and ballast.
- TSP — Telephone service point.

ABBREVIATIONS AND EQUIPMENT DESIGNATIONS

PROPOSED	EXISTING	
BBS	bbs	Battery backup system
BC	bc	Bolt circle
C	C	Conduit
CCTV	cctv	Closed circuit television
CKT	ckt	Circuit
CMS	cms	Changeable message sign
DLC	dlc	Loop detector lead-in cable
EMS	ems	Extinguishable message sign
EVC	evc	Emergency vehicle cable
EVD	evd	Emergency vehicle detector
FB	fb	Flashing beacon
FBCA	fbca	Flashing beacon control assembly
FBS	fbs	Flashing beacon with slip base
FO	fo	Fiber optic
G	G	Ground (Equipment Grounding Conductor)
GFCI	GFCI	Ground fault circuit interrupt
HAR	har	Highway advisory radio
HEX	hex	Hexagonal
HPS	hps	High pressure sodium
IISNS	iisns	Internally illuminated street name sign
ISL	isl	Induction sign lighting
LED	led	Light emitting diode
LMA	lma	Luminaire mast arm
LPS	lps	Low pressure sodium
LTG	ltg	Lighting
LUM	lum	Luminaire
MAT	mat	Mast arm mounting vehicle signal faces, top attachment
MAS	mas	Mast arm mounting vehicle signal faces, side attachment
MAS-4A	mas-4A	Mast arm mounting vehicle signal faces, side attachment - 4 signal section
MAS-4B	mas-4B	
MAS-4C	mas-4C	
MAS-5A	mas-5A	Mast arm mounting vehicle signal faces, side attachment - 5 signal section
MAS-5B	mas-5B	
MC	mc	Mercury contactor
M/M	m/m	Multiple to multiple transformer
MT	mt	Conduit with pull wire or rope only
MTG	mtg	Mounting
	mv	Mercury vapor lighting fixture
N	N	Neutral (Grounded Conductor)
NC	NC	Normally closed
NO	NO	Normally open
PB	pb	Pull box
PEC	pec	Photoelectric control (Type I, II, III, IV or V as shown)
PED	ped	Pedestrian
PEU	peu	Photoelectric unit
PPB	ppb	Pedestrian push button
RL		Relocated equipment
RM	rm	Ramp metering
SB	sb	Slip base
SIC	sic	Signal interconnect cable
SIG	sig	Signal
SMA	sma	Signal mast arm
SNS	sns	Street name sign
SP	sp	Service point
TDC	tdc	Telephone demarcation cabinet
TMS	tms	Traffic monitoring station
TOS	tos	Traffic Operations System
VEH	veh	Vehicle
XFMR	xfmr	Transformer
COMM	comm	Communication
RWIS	rwis	Roadway weather information system

SOFFIT AND WALL MOUNTED LUMINAIRES

Pendant, 70 W HPS unless otherwise specified.

Flush, 70 W HPS unless otherwise specified.

Wall surface, 70 W HPS unless otherwise specified.

Existing soffit or wall luminaire to remain unmodified.

Existing soffit or wall luminaire to be modified as specified.

NOTE:

Arrow indicates "street side" of luminaire.

STATE OF CALIFORNIA
DEPARTMENT OF TRANSPORTATION

ELECTRICAL SYSTEMS (SYMBOLS AND ABBREVIATIONS)

NO SCALE

RSP ES-1A DATED OCTOBER 5, 2007 SUPERSEDES STANDARD PLAN ES-1A DATED MAY 1, 2006 - PAGE 400 OF THE STANDARD PLANS BOOK DATED MAY 2006.

REVISED STANDARD PLAN RSP ES-1A

DIST	COUNTY	ROUTE	POST MILES TOTAL PROJECT	SHEET NO.	TOTAL SHEETS
11	SD	15	0.5/M4.0	114	116

REGISTERED ELECTRICAL ENGINEER

October 5, 2007
PLANS APPROVAL DATE

REGISTERED PROFESSIONAL ENGINEER Jeffery G. McRae No. E14512 Exp. 6-30-08 ELECTRICAL STATE OF CALIFORNIA

The State of California or its officers or agents shall not be responsible for the accuracy or completeness of electronic copies of this plan sheet.

To accompany plans dated 08-01-11

CONDUIT

PROPOSED	EXISTING	
		Lighting Conduit, unless otherwise indicated or noted
		Traffic signal conduit
C	c	Communication conduit
T	t	Telephone conduit
F	f	Fire alarm conduit
FO	fo	Fiber optic conduit
		Conduit termination (RSP ES-9A C)
R	r	Conduit riser in/on structure or service pole

SERVICE EQUIPMENT

PROPOSED	EXISTING	
OH	oh	Overhead lines
U	U	Wood pole "U" indicates utility owned
		Pole guy with anchor
		Utility transformer - ground mounted
III		Service equipment enclosure type
		Service equipment enclosure door indicates front of enclosure
T	t	Telephone demarcation cabinet

POLE-MOUNTED SERVICE DESIGNATION

Type of installation

TYPE H SERVICE - 28'-10" ← Pole height above grade

ILLUMINATED OVERHEAD SIGN

PROPOSED	EXISTING	
		Overhead sign - Single post
		Overhead sign - Two post
		Overhead sign - Mounted on structure
		Overhead sign with electrolier

SIGNAL EQUIPMENT

PROPOSED	EXISTING	
		Pedestrian signal face
		Pedestrian push button post
		Pedestrian barricade
		Vehicle signal face (with backplate, 3-Section: red, yellow and green)
		Vehicle signal face with angle visors
PV	PV	Modifications of basic symbols: "L" Indicates all non-arrow sections louvered "LG" Indicates louvered green section only "PV" indicates 12" programmed visibility sections "8" indicates all 8" sections (only when specified)
		Type 15TS and Vehicle signal face
		Vehicle signal face with red, yellow and green left arrow sections
		Vehicle signal face with red and yellow sections and up green arrow
		Vehicle signal face (5 Section) with red, yellow and green sections and yellow and green right arrows
		Type 1 Standard and attached vehicle signal faces
		Standard with signal mast arm only and attached vehicle signal faces and internally illuminated street name sign
		Type 33 Standard, Left-turn vehicle signal face and sign
		Standard with luminaire and signal mast arms and attached vehicle signal faces
		Cantilever flashing beacon Type 9 Frame, with a sign unless otherwise specified or indicated
		Type 15-FBS Standard with two vehicle signal face sections with lens, backplate and visor with a sign
R	Y	Flashing beacon. One vehicle signal face section with lens, backplate and visor. "R" indicates red indication, "Y" indicates yellow indication
		Controller assembly. Door indicates front of cabinet

SIGNAL EQUIPMENT Cont

PROPOSED	EXISTING	
		Guard post
		Type 1 Standard with "Meter On" sign
		Emergency Vehicle detector

NOTES:

1. All signal sections shall be 12" unless shown otherwise.
2. Signal heads shall be provided with backplates unless shown otherwise.
3. Signal indication shall be LED.

STATE OF CALIFORNIA
DEPARTMENT OF TRANSPORTATION

ELECTRICAL SYSTEMS (SYMBOLS AND ABBREVIATIONS)

NO SCALE

RSP ES-1B DATED OCTOBER 5, 2007 SUPERCEDES STANDARD PLAN ES-1B DATED MAY 1, 2006 - PAGE 401 OF THE STANDARD PLANS BOOK DATED MAY 2006.

REVISED STANDARD PLAN RSP ES-1B

2006 REVISED STANDARD PLAN RSP ES-1B

7-10-07

DIST	COUNTY	ROUTE	POST MILES TOTAL PROJECT	SHEET NO.	TOTAL SHEETS
11	SD	15	0.5/M4.0	115	116

REGISTERED ELECTRICAL ENGINEER

October 5, 2007
PLANS APPROVAL DATE

REGISTERED PROFESSIONAL ENGINEER Jeffery G. McRae No. E14512 Exp. 6-30-08 ELECTRICAL STATE OF CALIFORNIA

The State of California or its officers or agents shall not be responsible for the accuracy or completeness of electronic copies of this plan sheet.

To accompany plans dated 08-01-11

EQUIPMENT IDENTIFICATION

ILLUMINATED SIGN IDENTIFICATION NUMBER:

Sign No. 12345 — Sign number - Place on post or structure

10 ISL SCI 1.0

- 1.0 — Transformer rating (kVA)
- SCI — Lighting control type
- ISL — Number and type of fixtures

Do NOT place on standard or structure

ELECTROLIER OR EQUIPMENT IDENTIFICATION NUMBER:

12345 - 15'-0"

- 15'-0" — Mast arm length, if shown. Do not place on standard or structure.
- 12345 — Equipment number - Place on standard or structure. Existing equipment numbers are shown in parenthesis

CONDUIT AND CONDUCTOR IDENTIFICATION:

1½"C, 2#10, 15#14, 2 DLC

- 2#10, 15#14, 2 DLC — Number and size of conductors and cables
- 1½"C — Size of conduit in inches

Ø1, Ø2, Ø2P, etc.	Traffic phase identification for signal faces, detectors and phase diagrams
1 2 3	Project note numbers
A B C	Equipment description, installation or item numbers
1 2 3	Conduit run numbers

SIGNAL AND LIGHTING STANDARD (TYPICAL DESIGNATION):

19A - 3 - 100

- 100 — Wind velocity = 100 mph
- 3 — Case 3 arm loading
- 19A — Standard type
- Standard Plan sheet number
- Detail number or letter

MISCELLANEOUS EQUIPMENT

PROPOSED	EXISTING	
CMS	cms	Changeable message sign
		Closed circuit television camera
		Highway advisory radio pole and antenna
EMS	ems	Extinguishable message sign
M V	m v	Detection device M = Microwave sensor V = Video image sensor

WIRING DIAGRAM LEGEND

P	Pole
CB	Circuit breaker
A	Ampere
V	Volt
M	Metered
UM	Unmetered
NB	Neutral bus
GB	Ground bus
G	Equipment grounding conductor
N	Grounded conductor (Neutral)

- External conductor
- Conductor or bus
- Tie point
- Contactor coil
- Contactor, Contact NO
- Terminal blocks
- Contactor, Contact NC
- Enclosure bond
- Grounding electrode
- Circuit breaker
- Receptacle

PULL BOXES

PROPOSED EXISTING

Pull box-No. 5 unless otherwise indicated or noted.

3 — 9A(21)

Pull box-Additional designations or descriptions

3 = No. 3½ pull box
5 = No. 5 pull box
6 = No. 6 pull box
7 = No. 7 (Ceiling pull box)
8 = No. 8 (Pendant soffit pull box)
9 = No. 9 pull box
9A = No. 9A pull box

(C) = Communications pull box
(E) = Pull box with extension
(S) = Sprinkler control pull box
(21) = Anchor bolts and conduit for future installation of Type 21 Standard
(T) = Traffic pull box

VEHICLE DETECTORS

5 J 9 U

- U = Upper
- L = Lower
- Slot number in input file
- Input file (I or J)
- Phase

PROPOSED	EXISTING	
		Type A detector loop. Outline of sawcut shown.
		Type B detector loop. Outline of sawcut shown.
		Type C detector loop. Outline of sawcut shown.
		Type D detector loop. Outline of sawcut shown.
		Type E detector loop. Outline of sawcut shown.
		Type Q detector loop. Outline of sawcut shown.
		Magnetic detector
DH	dh	Detector handhole
		Microwave or video detection zone

STATE OF CALIFORNIA
DEPARTMENT OF TRANSPORTATION

ELECTRICAL SYSTEMS (SYMBOLS AND ABBREVIATIONS)

NO SCALE

RSP ES-1C DATED OCTOBER 5, 2007 SUPERCEDES STANDARD PLAN ES-1C DATED MAY 1, 2006 - PAGE 402 OF THE STANDARD PLANS BOOK DATED MAY 2006.

REVISED STANDARD PLAN RSP ES-1C

2006 REVISED STANDARD PLAN RSP ES-1C

7-10-07

DIST	COUNTY	ROUTE	POST MILES TOTAL PROJECT	SHEET NO.	TOTAL SHEETS
11	SD	15	0.5/M4.0	116	116

REGISTERED ELECTRICAL ENGINEER

October 5, 2007
PLANS APPROVAL DATE

REGISTERED PROFESSIONAL ENGINEER Jeffery G. McRae No. E14512 Exp. 6-30-08 ELECTRICAL STATE OF CALIFORNIA

The State of California or its officers or agents shall not be responsible for the accuracy or completeness of electronic copies of this plan sheet.

To accompany plans dated 08-01-11

LOOP INSTALLATION PROCEDURE

1. Loops shall be centered in lanes.
2. Saw slots in pavement for loop conductors as shown in details.
3. Distance between side of loop and a lead-in saw cut from adjacent detectors shall be 2'-0" minimum. Distance between lead-in saw cuts shall be 6" minimum.
4. Bottom of saw slot shall be smooth with no sharp edges.
5. Slots shall be washed until clean, blown out and thoroughly dried before installing loop conductors.
6. Adjacent loops on the same sensor unit channel shall be wound in opposite directions.
7. Identify and tag loop circuit pairs in the pull box with loop number, start (S) and finish (F) of conductor. Identify and tag lead-in-cable with sensor number and phase.
8. Install loop conductor in slot using a 3/16" to 1/4" thick wood paddle. Hold loop conductors with wood paddles (at the bottom of the sawed slot) during sealant placement.
9. No more than 2 twisted pairs shall be installed in one sawed slot.
10. Allow additional 5'-0" of slack length of conductor for the lead-in run to pull box.
11. The additional length of each conductor for each loop shall be twisted together into a pair (6 turns per 3'-4" minimum) before being placed in the slot and conduit leading to pull box.
12. Test each loop circuit for continuity, circuit resistance and insulation resistance at the pull box before filling slots.
13. Fill slots as shown in details.
14. Splice loop conductors to lead-in-cable. Splices shall be soldered.
15. End of lead-in-cable and Type 2 loop conductor shall be waterproofed prior to installing in conduit to prevent moisture from entering the cable.
16. Lead-in-cable shall not be spliced between the pull box and the controller cabinet terminals.
17. Test each loop circuit for continuity, circuit resistance and insulation resistance at the controller cabinet location.
18. Where loop conductors are not to be spliced to a lead-in-cable, the ends of the conductors shall be taped and waterproofed with electrical insulating coating.

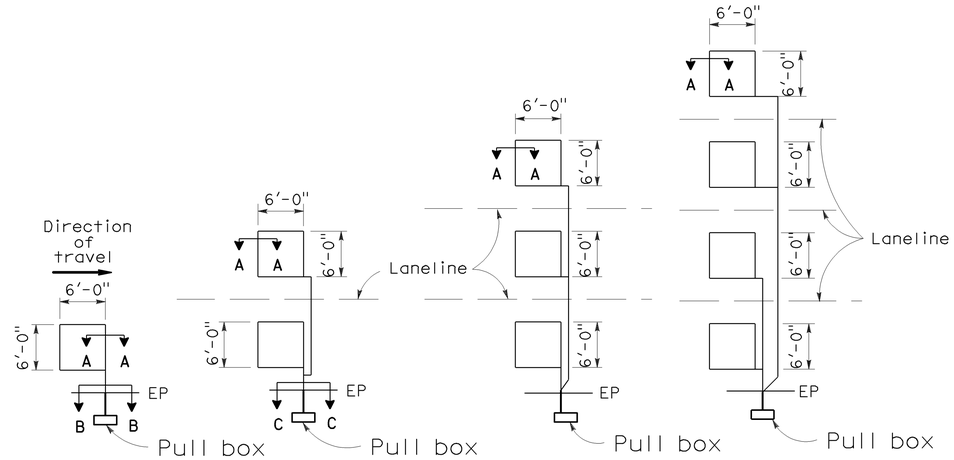

TYPE 1A INSTALLATION | TYPE 2A INSTALLATION | TYPE 3A INSTALLATION | TYPE 4A INSTALLATION

SAWCUT DETAILS

(Type A loop detector configurations illustrated)

1. 1A thru 4A = 1 Type A loop configuration in each lane.
2. 1B thru 4B = 1 Type B loop configuration in each lane.
3. 1C = 1 Type C loop configuration entering lanes as required.
4. 1D thru 4D = 1 Type D loop configuration in each lane.
5. 1E thru 4E = 1 Type E loop configuration in each lane.
6. 1Q thru 4Q = 1 Type Q loop configuration in each lane. (Use Type A, B, C, D, E or Q loop detector configurations only when specified or shown on plans)

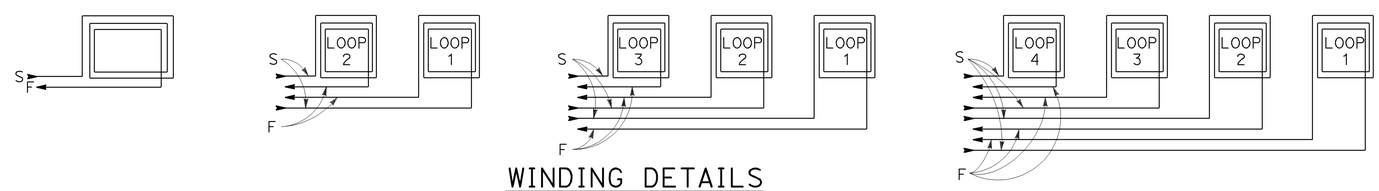

WINDING DETAILS

See Notes 6 and 7

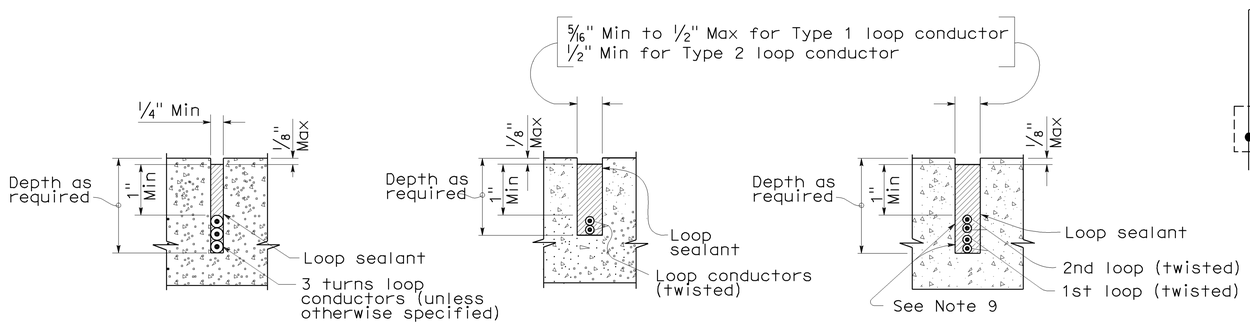

SECTION A-A | SECTION B-B | SECTION C-C

SLOT DETAILS - TYPE 1 AND TYPE 2 LOOP CONDUCTOR

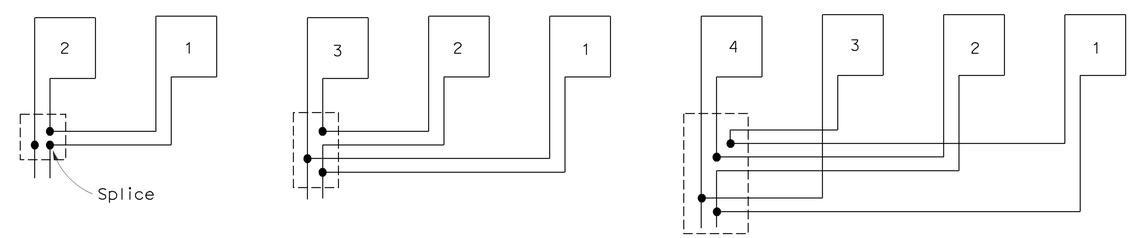

TYPICAL LOOP CONNECTIONS

(Dashed lines represent the pull box)

STATE OF CALIFORNIA
DEPARTMENT OF TRANSPORTATION

ELECTRICAL SYSTEMS (DETECTORS)

NO SCALE

RSP ES-5A DATED OCTOBER 5, 2007 SUPERCEDES STANDARD PLAN ES-5A DATED MAY 1, 2006 - PAGE 423 OF THE STANDARD PLANS BOOK DATED MAY 2006.

REVISED STANDARD PLAN RSP ES-5A

2006 REVISED STANDARD PLAN RSP ES-5A

8-17-07