Dist	COUNTY	ROUTE	POST MILES TOTAL PROJECT	SHEET No.	TOTAL SHEETS
11	SD	5,56	R30.4/R32.8, 0.0/9.2	101	177

Enrique P Bernal 03-28-12
REGISTERED ELECTRICAL ENGINEER DATE

6-4-12
PLANS APPROVAL DATE

REGISTERED PROFESSIONAL ENGINEER
ENRIQUE P. BERNAL
No. 15675
Exp. 6-30-12
ELECTRICAL
STATE OF CALIFORNIA

THE STATE OF CALIFORNIA OR ITS OFFICERS OR AGENTS SHALL NOT BE RESPONSIBLE FOR THE ACCURACY OR COMPLETENESS OF SCANNED COPIES OF THIS PLAN SHEET.

CONDUIT NOTES:

N 1 C - Exist 3"C, 2-3CSC, 2-12CSC, 2#8 (ltg), 2#2 (SWITCH PEDESTAL), 1 evc, VIDEO CABLE HARNESS.

N 2 C - Exist 3"C, 1-3CSC, 1-12CSC, 4#14 (peu), 2#8 (ltg), 1 evc, 1 sic, VIDEO CABLE HARNESS.

N 3 C - 2 Exist 3"C, 3-3CSC, 3-12CSC, 2#6 (sig), 2#8 (ltg), 6 dlc, 2 evc, 1 sic, 2 VIDEO CABLE HARNESS.

N 4 C - Exist 3"C, 4-3CSC, 4-12CSC.
- Exist 2"C, 2#6 (sig), 8 dlc, 3 evc, 2 sic, 3 VIDEO CABLE HARNESS.

N 5 C - Exist 3"C, 2-3CSC, 2-12CSC.
- Exist 2"C, 11 dlc, 2 sic.

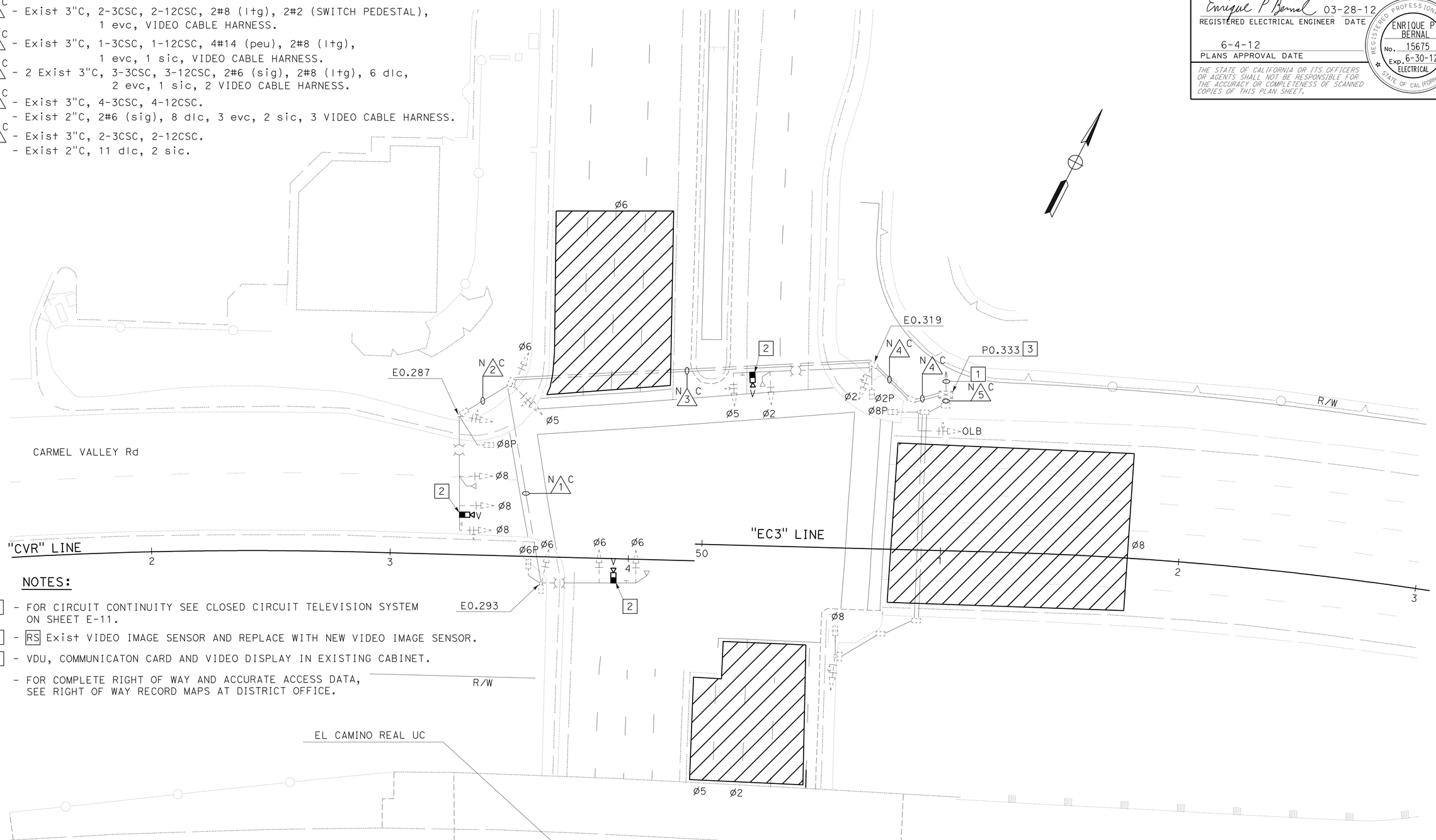

NOTES:

1 - FOR CIRCUIT CONTINUITY SEE CLOSED CIRCUIT TELEVISION SYSTEM ON SHEET E-11.

2 - RS Exist VIDEO IMAGE SENSOR AND REPLACE WITH NEW VIDEO IMAGE SENSOR.

3 - VDU, COMMUNICATON CARD AND VIDEO DISPLAY IN EXISTING CABINET.

4 - FOR COMPLETE RIGHT OF WAY AND ACCURATE ACCESS DATA, SEE RIGHT OF WAY RECORD MAPS AT DISTRICT OFFICE.

P0.333
Rte 56 WB RAMPS
AT EL CAMINO REAL

MODIFY SIGNAL AND LIGHTING (LOCATION 1)

SCALE: 1" = 20'

E-58

APPROVED FOR ELECTRICAL WORK ONLY

STATE OF CALIFORNIA - DEPARTMENT OF TRANSPORTATION
Caltrans® TRAFFIC ELECTRICAL

FUNCTIONAL SUPERVISOR: BRIAN T PECUS
CALCULATED-DESIGNED BY: HENRY TSUI
CHECKED BY: ENRIQUE BERNAL
REVISED BY
DATE REVISED

LAST REVISION 03-31-12
DATE PLOTTED => 31-AUG-2012
TIME PLOTTED => 13:38

Dist	COUNTY	ROUTE	POST MILES TOTAL PROJECT	SHEET No.	TOTAL SHEETS
11	SD	5,56	R30.4/R32.8, 0.0/9.2	102	177

Enrique P Bernal 03-28-12
REGISTERED ELECTRICAL ENGINEER DATE

6-4-12
PLANS APPROVAL DATE

REGISTERED PROFESSIONAL ENGINEER
ENRIQUE P. BERNAL
No. 15675
Exp. 6-30-12
ELECTRICAL
STATE OF CALIFORNIA

THE STATE OF CALIFORNIA OR ITS OFFICERS OR AGENTS SHALL NOT BE RESPONSIBLE FOR THE ACCURACY OR COMPLETENESS OF SCANNED COPIES OF THIS PLAN SHEET.

NOTES:

1 - RC EXISTING SP-1-T AND REPLACE WITH SP-1-T.

2 - RC EXISTING ppb AND REPLACE WITH PPB (LEFT).

3 - RC EXISTING ppb AND REPLACE WITH PPB (RIGHT).

4 - FOR COMPLETE RIGHT OF WAY AND ACCURATE ACCESS DATA, SEE RIGHT OF WAY RECORD MAPS AT DISTRICT OFFICE.

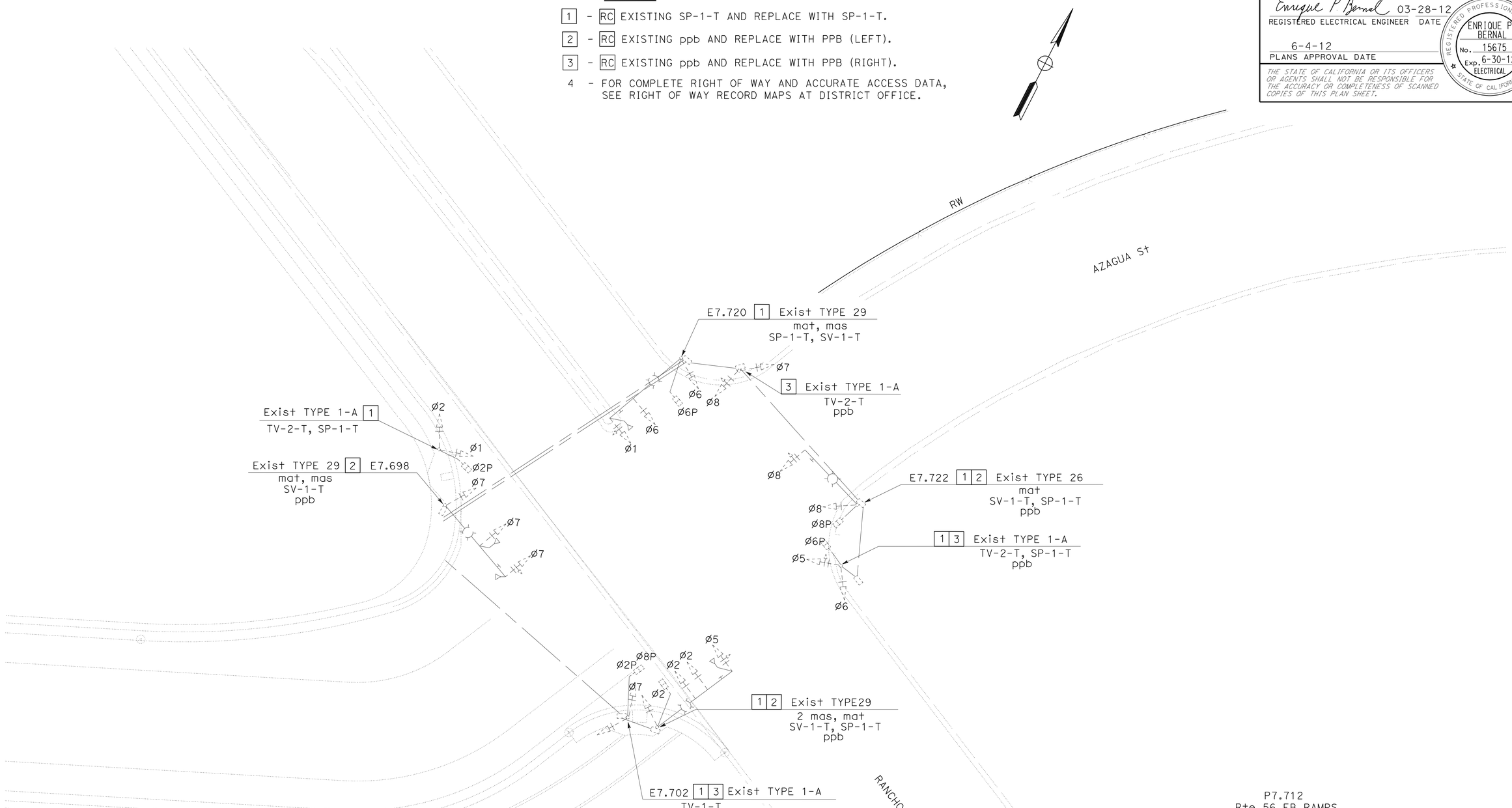

P7.712
Rte 56 EB RAMPS
AT RANCHO PENASQUITOS Blvd

MODIFY SIGNAL AND LIGHTING
(LOCATION 2)

APPROVED FOR ELECTRICAL WORK ONLY

SCALE: 1" = 20'

E-59

STATE OF CALIFORNIA - DEPARTMENT OF TRANSPORTATION
Caltrans® **TRAFFIC ELECTRICAL**

FUNCTIONAL SUPERVISOR: BRIAN T PECUS
CALCULATED-DESIGNED BY: HENRY TSUI
CHECKED BY: ENRIQUE BERNAL
REVISED BY
DATE REVISED

LAST REVISION 03-31-12 | DATE PLOTTED => 31-AUG-2012 | TIME PLOTTED => 13:38

Dist	COUNTY	ROUTE	POST MILES TOTAL PROJECT	SHEET No.	TOTAL SHEETS
11	SD	5,56	R30.4/R32.8, 0.0/9.2	103	177

Enrique P Bernal 03-28-12
REGISTERED ELECTRICAL ENGINEER DATE

6-4-12
PLANS APPROVAL DATE

REGISTERED PROFESSIONAL ENGINEER ENRIQUE P. BERNAL No. 15675 Exp. 6-30-12 ELECTRICAL STATE OF CALIFORNIA

THE STATE OF CALIFORNIA OR ITS OFFICERS OR AGENTS SHALL NOT BE RESPONSIBLE FOR THE ACCURACY OR COMPLETENESS OF SCANNED COPIES OF THIS PLAN SHEET.

NOTES:

1 - SEE CAMERA CABLE CROSS SECTION ON THIS SHEET.

2 - SEE TABLE "A" FOR CONNECTOR 1 ASSIGNMENT.

3 - SEE TABLE "B" FOR CONNECTOR 2 ASSIGNMENT.

4 - SEE TABLE "C" FOR CONNECTOR 3 ASSIGNMENT.

5 - MIn 40" OF SLACK IS REQUIRED FROM CAMERA CABLE TO THE CONNECTORS.

6 - SEE TABLE "D" FOR CONNECTOR ASSIGNMENT.

7 - THE CONTRACTOR SHALL VERIFY THE LENGTH OF CAMERA CABLE AT EACH LOCATION AS SHOWN IN ELECTRICAL PLANS. A SLACK OF 80" IS REQUIRED AT EACH LOCATION.

CIRCULAR PLASTIC CONNECTOR (CPC), FEMALE

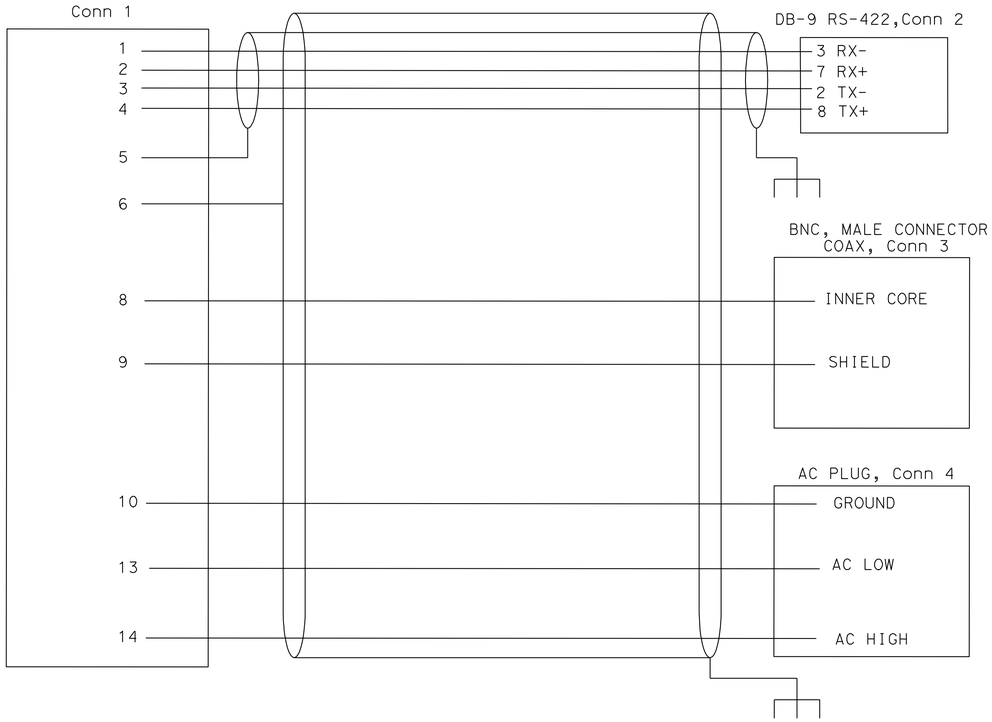

TABLE "D":

CPC PIN DESCRIPTION
PIN 1 - 22 AWG,RS-422
PIN 2 - 22 AWG,RS-422
PIN 3 - 22 AWG,RS-422
PIN 4 - 22 AWG,RS-422
PIN 5 - DATA GROUND
PIN 6 - OVERALL SHIELD
PIN 8 - RG-59,CORE WIRE
PIN 9 - RG-59,SHIELD
PIN 10 - 18 AWG,AC Gnd
PIN 13 - AC LOW
PIN 14 - AC HIGH

TABLE "A":

Conn 1 DESCRIPTION

PIN	FUNCTION	WIRE COLOR	WIRE GAUGE
1	CAMERA CONTROL RX-	BLACK	26 AWG
2	CAMERA CONTROL RX+	WHITE	26 AWG
3	CAMERA CONTROL TX-	GREEN	26 AWG
4	CAMERA CONTROL TX+	RED	26 AWG
8	VIDEO SIGNAL COAX INNER CORE	BARE	
9	VIDEO SIGNAL COAX SHIELD	WHITE/BLACK	22 AWG
10	CAMERA POWER,GROUND	YELLOW	18 AWG
13	CAMERA POWER,AC LOW	BLUE	18 AWG
14	CAMERA POWER,AC HIGH	BROWN	18 AWG

TABLE "B":

Conn 2 DESCRIPTION

DB-9 PIN	Conn 1 POSITION	FUNCTION	WIRE COLOR	WIRE GAUGE
3	1	CAMERA CONTROL RX-	BLACK	22 AWG
7	2	CAMERA CONTROL RX+	WHITE	22 AWG
2	3	CAMERA CONTROL TX-	GREEN	22 AWG
8	4	CAMERA CONTROL TX+	RED	22 AWG

TABLE "C":

Conn 3 DESCRIPTION

PIN	FUNCTION
CENTER	VIDEO SIGNAL INNER CORE,COAX
SHIELD	VIDEO SIGNAL SHIELD,COAX

CONNECTOR DESCRIPTIONS

CONNECTOR	TYPE	FUNCTION	LOCATION
Conn 1	CPC	CONTROL,VIDEO,POWER	POLE TOP 2
Conn 2	DB-9	CAMERA CONTROL	CCTV CABINET 3
Conn 3	BNC,MALE	VIDEO	CCTV CABINET 4
Conn 4	AC PLUG,3 PRONG	CAMERA POWER	CCTV CABINET

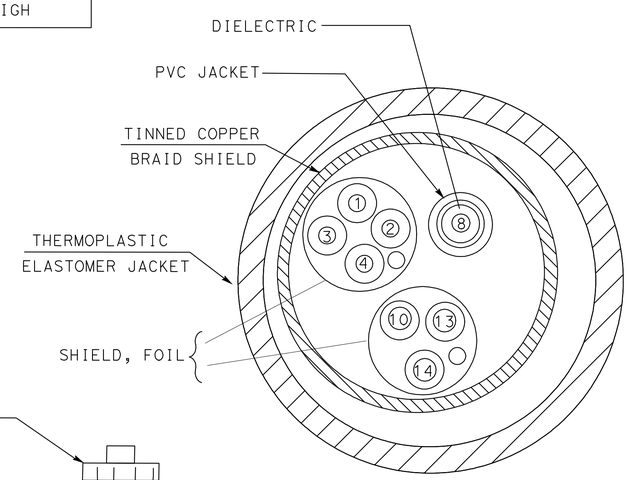

CAMERA CABLE CROSS SECTION 6

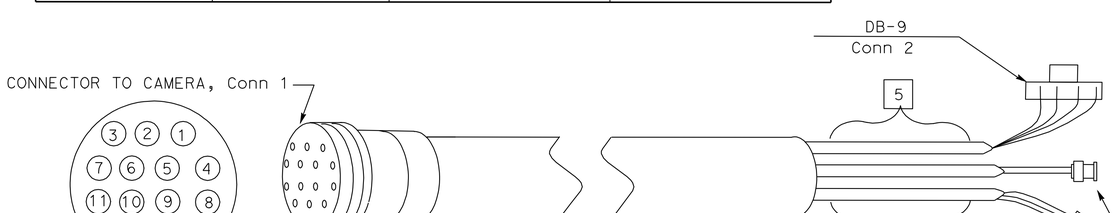

CONNECTOR 1
PIN ASSIGNMENT (PLAN VIEW) 2

"CAMERA CABLE"

APPROVED FOR ELECTRICAL WORK ONLY

CLOSED CIRCUIT TELEVISION SYSTEM
(ELECTRICAL DETAILS)

NO SCALE

E-60

STATE OF CALIFORNIA - DEPARTMENT OF TRANSPORTATION
Caltrans TRAFFIC ELECTRICAL

FUNCTIONAL SUPERVISOR: BRIAN T PECUS
CALCULATED-DESIGNED BY: HENRY TSUI
CHECKED BY: ENRIQUE BERNAL
REVISED BY
DATE REVISED

LAST REVISION 03-31-12
DATE PLOTTED => 31-AUG-2012
TIME PLOTTED => 13:38

Dist	COUNTY	ROUTE	POST MILES TOTAL PROJECT	SHEET No.	TOTAL SHEETS
11	SD	5,56	R30.4/R32.8, 0.0/9.2	104	177

Enrique P Bernal 03-28-12
REGISTERED ELECTRICAL ENGINEER DATE

6-4-12
PLANS APPROVAL DATE

REGISTERED PROFESSIONAL ENGINEER
ENRIQUE P. BERNAL
No. 15675
Exp. 6-30-12
ELECTRICAL
STATE OF CALIFORNIA

THE STATE OF CALIFORNIA OR ITS OFFICERS OR AGENTS SHALL NOT BE RESPONSIBLE FOR THE ACCURACY OR COMPLETENESS OF SCANNED COPIES OF THIS PLAN SHEET.

NOTES:

1 - THE CONTRACTOR SHALL VERIFY ALL CONTROLLING FIELD DIMENSIONS BEFORE ORDERING OR FABRICATING MATERIAL.

2 - BACK MOUNTING BOARD (0.5" THICK AND GRADE ACX PLYWOOD).

3 - DRILL 2" Ø HOLE THROUGH SHELF FOR POWER CABLES.

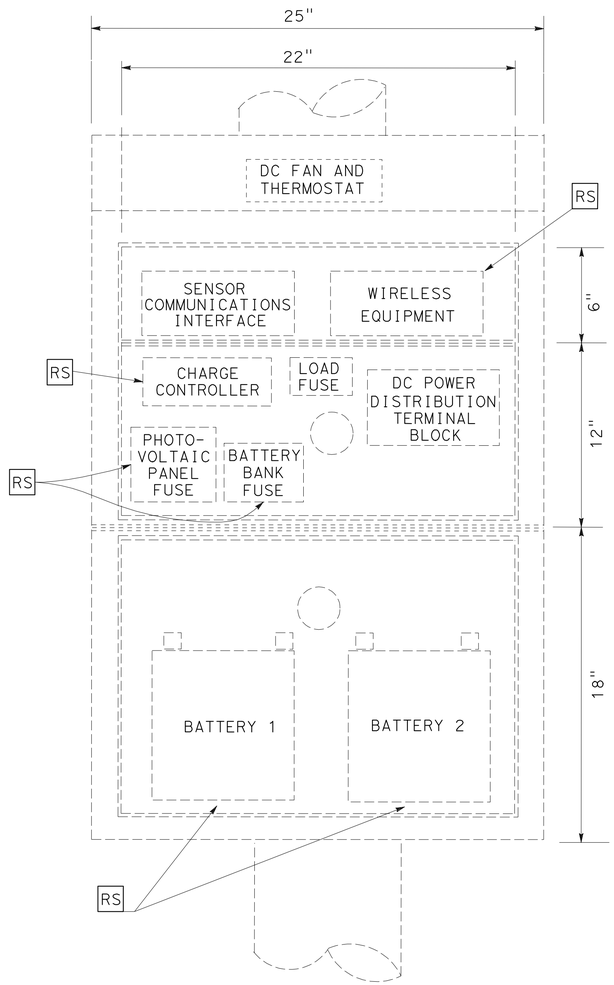

FRONT
(INTERIOR)
REMOVAL EQUIPMENT LAYOUT

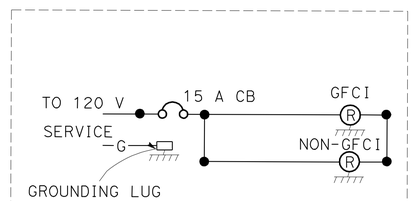

WIRING DIAGRAM

DETAIL "MVDS-Exist"

Exist POLE MOUNTED CABINET
U32.826

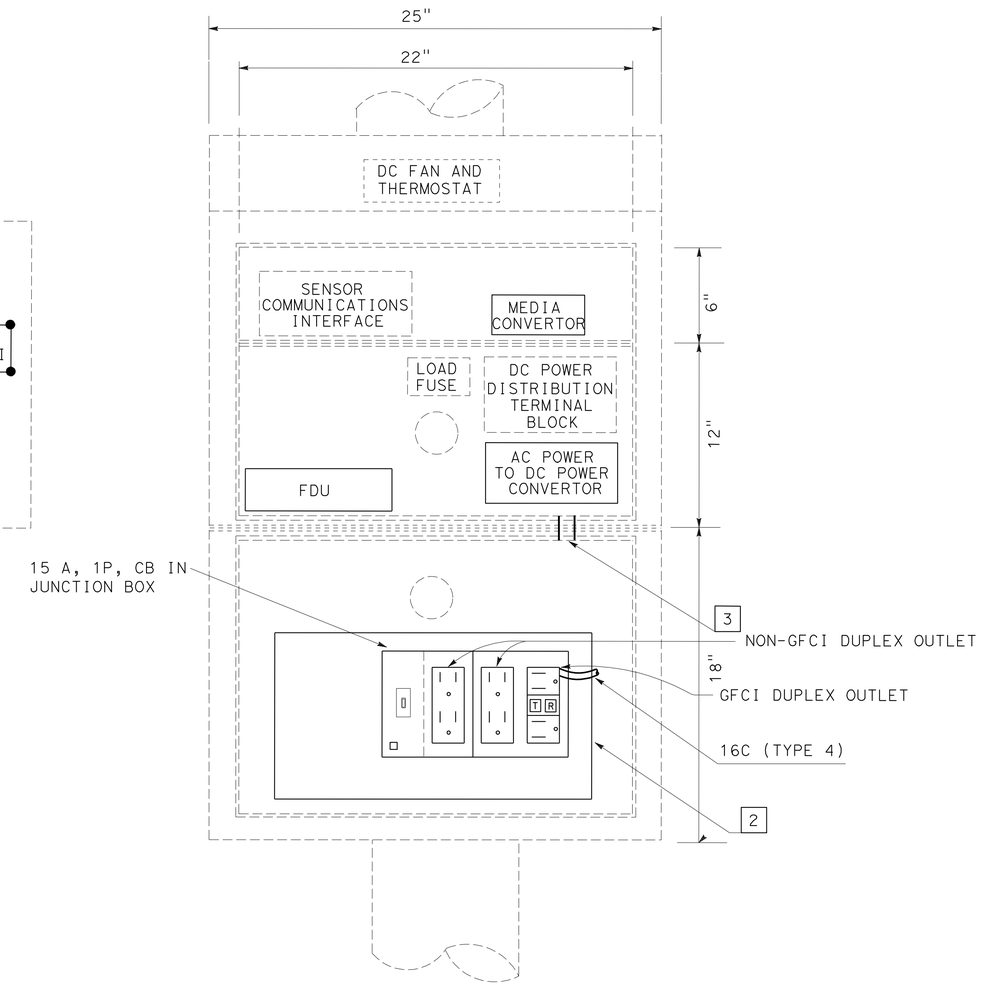

FRONT
(INTERIOR)
INSTALL EQUIPMENT LAYOUT

CLOSED CIRCUIT TELEVISION SYSTEM
(ELECTRICAL DETAILS)

APPROVED FOR ELECTRICAL WORK ONLY

NO SCALE

E-61

STATE OF CALIFORNIA - DEPARTMENT OF TRANSPORTATION
Caltrans® TRAFFIC ELECTRICAL

FUNCTIONAL SUPERVISOR: BRIAN T PECUS
CALCULATED-DESIGNED BY: HENRY TSUI
CHECKED BY: ENRIQUE BERNAL
REVISED BY
DATE REVISED

LAST REVISION 03-31-12
DATE PLOTTED => 31-AUG-2012
TIME PLOTTED => 13:38

Dist	COUNTY	ROUTE	POST MILES TOTAL PROJECT	SHEET No.	TOTAL SHEETS
11	SD	5,56	R30.4/R32.8, 0.0/9.2	105	177

Enrique P Bernal 03-28-12
REGISTERED ELECTRICAL ENGINEER DATE

6-4-12
PLANS APPROVAL DATE

REGISTERED PROFESSIONAL ENGINEER
ENRIQUE P. BERNAL
No. 15675
Exp. 6-30-12
ELECTRICAL
STATE OF CALIFORNIA

THE STATE OF CALIFORNIA OR ITS OFFICERS OR AGENTS SHALL NOT BE RESPONSIBLE FOR THE ACCURACY OR COMPLETENESS OF SCANNED COPIES OF THIS PLAN SHEET.

NOTES:

1. - EIA RACK
2. - 30 A, 250 V, TWIST-LOCK BULK POWER CONNECTOR.
3. - FIBER DISTRIBUTION UNIT FOR F0144 DISTRIBUTION CABLE.
4. - FIBER DISTRIBUTION UNIT FOR F0144 BACKBONE CABLE.
5. - EXISTING FIBER DISTRIBUTION UNIT FOR F084 DISTRIBUTION CABLE.
6. - EXISTING FIBER DISTRIBUTION UNIT FOR F084 BACKBONE CABLE.

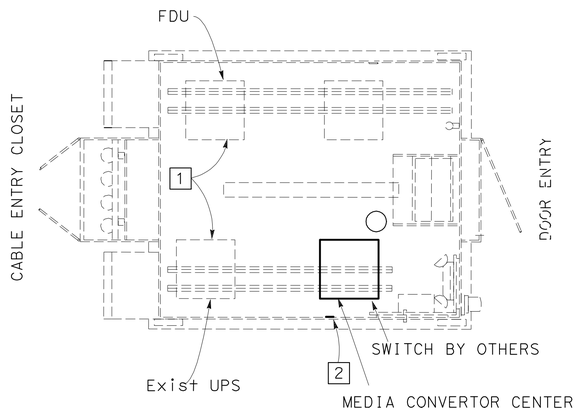

Exist HUB CABINET EQUIPMENT PLACEMENT

DETAIL "HUB 06"

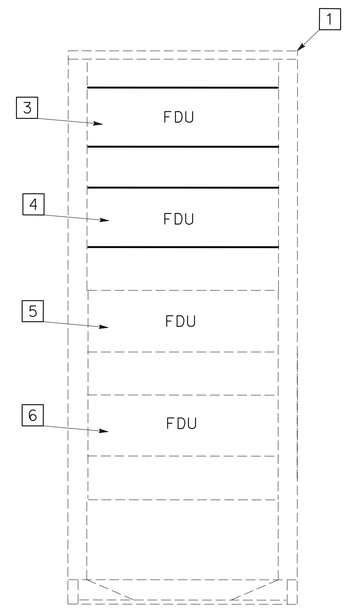

FIBER DISTRIBUTION UNIT (FDU)

FRONT VIEW

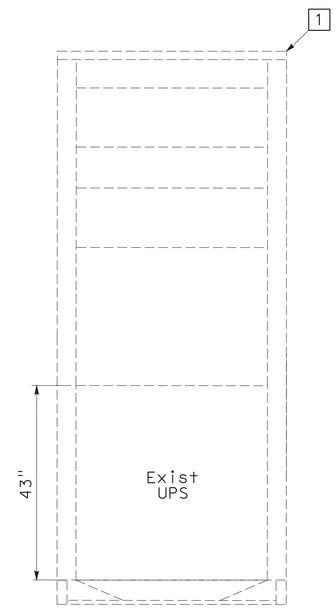

UPS

FRONT VIEW

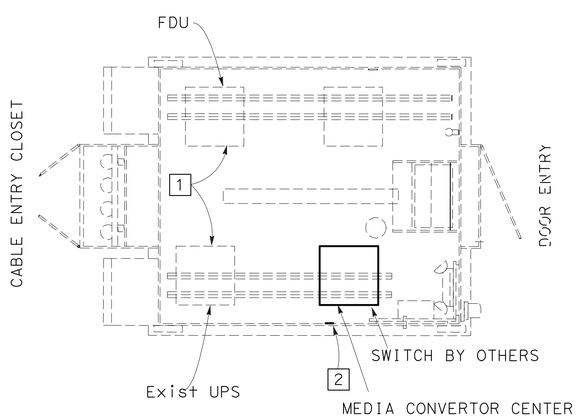

Exist HUB CABINET EQUIPMENT PLACEMENT

DETAIL "HUB 07"

APPROVED FOR ELECTRICAL WORK ONLY

CLOSED CIRCUIT TELEVISION SYSTEM
(ELECTRICAL DETAILS)

NO SCALE

E-62

STATE OF CALIFORNIA - DEPARTMENT OF TRANSPORTATION
Caltrans® TRAFFIC ELECTRICAL

FUNCTIONAL SUPERVISOR: BRIAN T PECUS
CALCULATED-DESIGNED BY: ENRIQUE BERNAL
CHECKED BY: HENRY TSUI
REVISED BY
DATE REVISED

LAST REVISION 03-31-12
DATE PLOTTED => 31-AUG-2012
TIME PLOTTED => 13:38

Dist	COUNTY	ROUTE	POST MILES TOTAL PROJECT	SHEET No.	TOTAL SHEETS
11	SD	5,56	R30.4/R32.8, 0.0/9.2	106	177

Enrique P Bernal 03-28-12
REGISTERED ELECTRICAL ENGINEER DATE

6-4-12
PLANS APPROVAL DATE

REGISTERED PROFESSIONAL ENGINEER ENRIQUE P. BERNAL No. 15675 Exp. 6-30-12 ELECTRICAL STATE OF CALIFORNIA

THE STATE OF CALIFORNIA OR ITS OFFICERS OR AGENTS SHALL NOT BE RESPONSIBLE FOR THE ACCURACY OR COMPLETENESS OF SCANNED COPIES OF THIS PLAN SHEET.

NOTES(TSO):

1 - FOR EQUIPMENT CONNECTIVITY IN CABINETS SEE ELECTRICAL DETAILS "COMPONENT DIAGRAM"

2 - SEE DETAIL "HUB07" ON E-62 FOR EQUIPMENT LOCATION IN HUB CABINET.

3 - SEE DETAIL "Exist RM" ON E-76 FOR EQUIPMENT LOCATION IN RM CABINET.

4 - SEE DETAIL "Exist MVDS" ON E-72 IN POLE-MOUNTED CABINET.

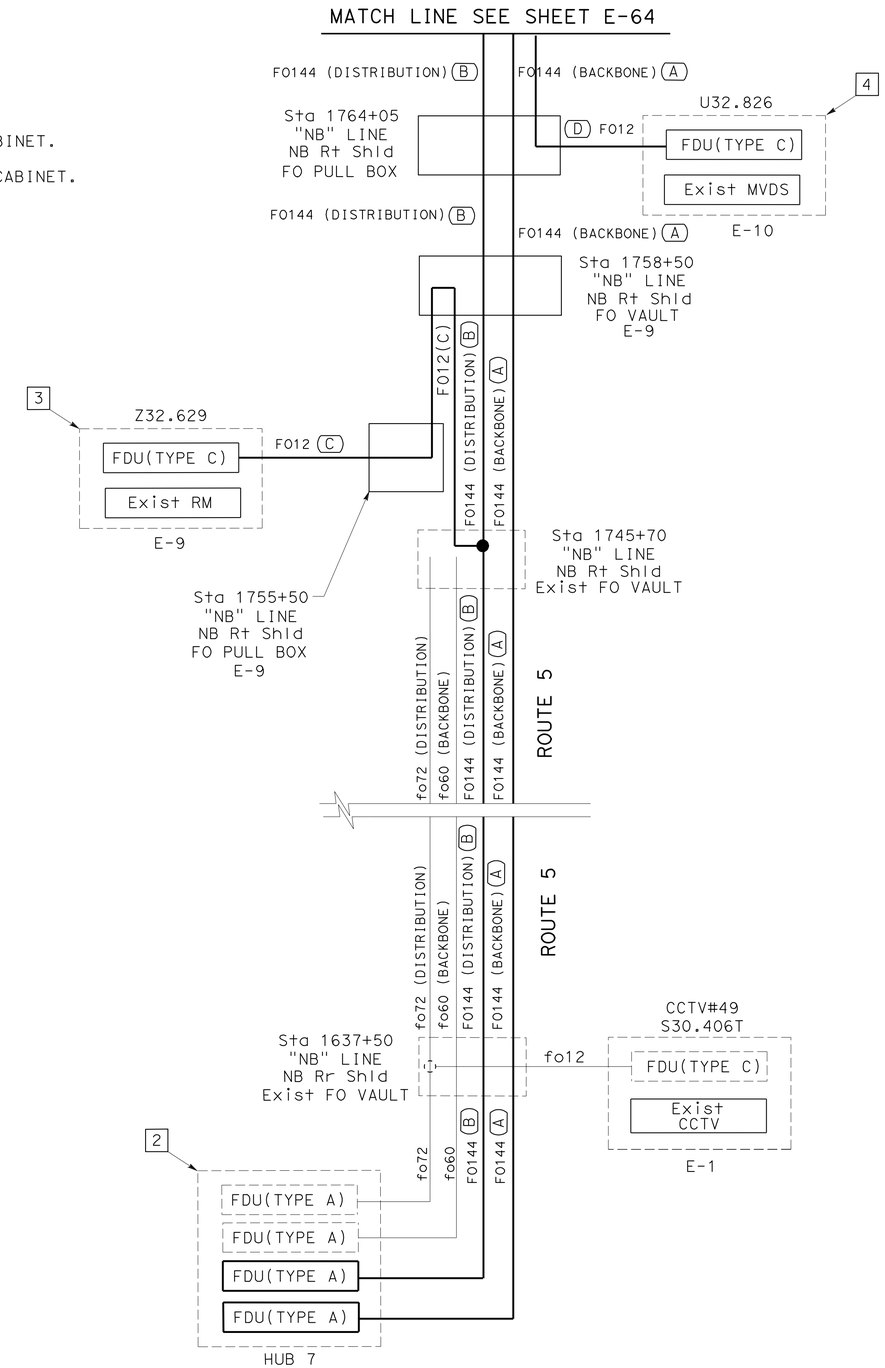

COMMUNICATION CIRCUIT DIAGRAM

LEGEND(TSO):

CABLE SPLICE SEE FO SPLICE DETAILS.

A - H7/H6-FO144(BB)-5/56/15

B - H7/H6-FO144(DB)-5/56/15

C - Z32.629-FO12-CONNECTOR56N/5S

D - U32.826-FO12-CONNECTOR5N/56E

- EXISTING CABLE SPLICE

APPROVED FOR ELECTRICAL WORK ONLY

CLOSED CIRCUIT TELEVISION SYSTEM
(ELECTRICAL DETAILS)

NO SCALE

E-63

STATE OF CALIFORNIA - DEPARTMENT OF TRANSPORTATION
Caltrans® TRAFFIC ELECTRICAL

FUNCTIONAL SUPERVISOR: BRIAN T PECUS
CALCULATED-DESIGNED BY: HENRY TSUI
CHECKED BY: ENRIQUE BERNAL
REVISED BY
DATE REVISED

LAST REVISION 03-31-12
DATE PLOTTED => 31-AUG-2012
TIME PLOTTED => 13:38

Dist	COUNTY	ROUTE	POST MILES TOTAL PROJECT	SHEET No.	TOTAL SHEETS
11	SD	5,56	R30.4/R32.8, 0.0/9.2	107	177

REGISTERED ELECTRICAL ENGINEER 03-28-12 DATE

PLANS APPROVAL DATE 6-4-12

REGISTERED PROFESSIONAL ENGINEER ENRIQUE P. BERNAL No. 15675 Exp. 6-30-12 ELECTRICAL STATE OF CALIFORNIA

THE STATE OF CALIFORNIA OR ITS OFFICERS OR AGENTS SHALL NOT BE RESPONSIBLE FOR THE ACCURACY OR COMPLETENESS OF SCANNED COPIES OF THIS PLAN SHEET.

NOTES(TSO):

1 - FOR EQUIPMENT CONNECTIVITY IN CABINETS SEE ELECTRICAL DETAILS "COMPONENT DIAGRAM"

2 - SEE DETAIL "SIG-SYSA" ON E-73 FOR EQUIPMENT LOCATION IN SIG CABINET.

3 - SEE DETAIL "RM-SYSA" ON E-73 FOR EQUIPMENT LOCATION IN RM CABINET.

4 - SEE DETAIL "CCTV" ON E-70 FOR EQUIPMENT LOCATION IN CCTV CABINET.

5 - SEE DETAIL "SIG-B" ON E-74 FOR EQUIPMENT LOCATION IN SIG CABINET.

6 - SEE DETAIL "SIG-SYSC" ON E-75 FOR EQUIPMENT LOCATION IN SIG CABINET.

7 - SEE DETAIL "RM-SYSC" ON E-75 FOR EQUIPMENT LOCATION IN RM CABINET.

8 - SEE DETAIL "SIG-A" ON E-74 FOR EQUIPMENT LOCATION IN SIG CABINET.

9 - SEE DETAIL "SIG-SYSB" ON E-71 FOR EQUIPMENT LOCATION IN SIG CABINET.

10 - SEE DETAIL "CCTV-SYSA" ON E-71 FOR EQUIPMENT LOCATION IN CCTV CABINET.

11 - SEE DETAIL "Exist RM" ON E-76 FOR EQUIPMENT LOCATION IN RM CABINET.

LEGEND(TSO):

- ● CABLE SPLICE SEE FO SPLICE DETAILS.
- (A) - H7/H6-FO144(BB)-5/56/15
- (B) - H7/H6-FO144(DB)-5/56/15
- (C) - Z32.893-FO12-CARMELVALLEY
- (D) - U32.826-FO12-CONNECTOR5N/56E
- (E) - Z32.903-FO12-CARMELVALLEY
- (F) - Z32.893/P32.893-OCC-CARMELVALLEY
- (G) - Z32.903/P32.944-OCC-CARMELVALLEY
- (H) - P0.333-FO12-ELCAMINOREAL
- (I) - Z0.320-FO12-ELCAMINOREAL
- (J) - Z0.320/P0.318-OCC-ELCAMINOREAL
- (K) - P0.785-FO12-CARMELCREEK
- (L) - CCTV133-FO12-CARMELCREEK
- (M) - CCTV133/P0.786-OCC-CARMELCREEK
- (N) - Z0.853-FO12-CARMELCREEK

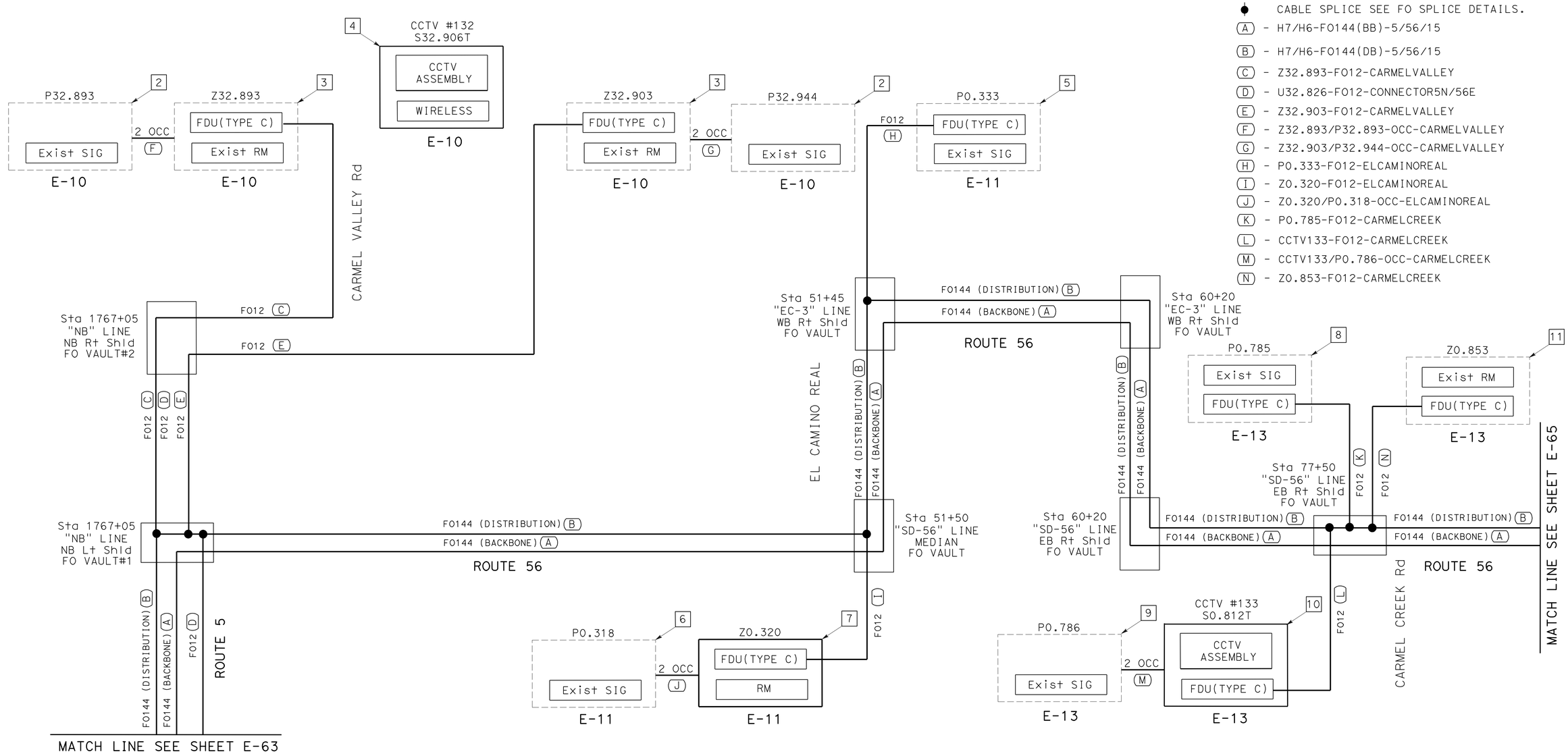

COMMUNICATION CIRCUIT DIAGRAM

CLOSED CIRCUIT TELEVISION SYSTEM
(ELECTRICAL DETAILS)

APPROVED FOR ELECTRICAL WORK ONLY

NO SCALE

E-64

STATE OF CALIFORNIA - DEPARTMENT OF TRANSPORTATION
Caltrans TRAFFIC ELECTRICAL

FUNCTIONAL SUPERVISOR: BRIAN T PECUS
CALCULATED-DESIGNED BY: ENRIQUE BERNAL
CHECKED BY
REVISED BY: HENRY TSUI
DATE REVISED

LAST REVISION 03-31-12 | DATE PLOTTED => 31-AUG-2012 | TIME PLOTTED => 13:38

Dist	COUNTY	ROUTE	POST MILES TOTAL PROJECT	SHEET No.	TOTAL SHEETS
11	SD	5,56	R30.4/R32.8, 0.0/9.2	108	177

Enrique P Bernal 03-28-12
REGISTERED ELECTRICAL ENGINEER DATE

6-4-12
PLANS APPROVAL DATE

REGISTERED PROFESSIONAL ENGINEER ENRIQUE P. BERNAL No. 15675 Exp. 6-30-12 ELECTRICAL STATE OF CALIFORNIA

THE STATE OF CALIFORNIA OR ITS OFFICERS OR AGENTS SHALL NOT BE RESPONSIBLE FOR THE ACCURACY OR COMPLETENESS OF SCANNED COPIES OF THIS PLAN SHEET.

NOTES:

1 - FOR EQUIPMENT CONNECTIVITY IN CABINETS SEE ELECTRICAL DETAILS "COMPONENT DIAGRAM"

2 - SEE DETAIL "Exist RM" ON E-76 FOR EQUIPMENT LOCATION IN RM CABINET.

3 - SEE DETAIL "TMS-SYS" ON E-77 FOR EQUIPMENT LOCATION IN TMS CABINET.

4 - SEE DETAIL "Exist RM" ON E-76 FOR EQUIPMENT LOCATION IN RM CABINET.

5 - SEE DETAIL "CCTV" ON E-70 FOR EQUIPMENT LOCATION IN CCTV CABINET.

6 - SEE DETAIL "SIG-A" ON E-74 FOR EQUIPMENT LOCATION IN SIG CABINET.

7 - SEE DETAIL "SIG-SYSD" ON E-78 FOR EQUIPMENT LOCATION IN SIG CABINET.

8 - SEE DETAIL "COM-SIG" ON E-78 FOR EQUIPMENT LOCATION IN COMMUNICATION CABINET.

LEGEND(TSO):

● CABLE SPLICE SEE FO SPLICE DETAILS.

(A) - H7/H6-FO144(BB)-5/56/15
(B) - H7/H6-FO144(DB)-5/56/15
(C) - Z0.890-FO12-CARMELCREEK
(D) - U1.289-FO12-CARMELCOUNTRY
(E) - Z1.833-FO12-CARMELCOUNTRY
(F) - CCTV134-FO12-CARMELCOUNTRY
(G) - P1.774-FO12-CARMELCOUNTRY
(H) - P1.795-FO12-CARMELCOUNTRY
(I) - COM/P1.795-OCC-CARMELCOUNTRY
(J) - Z1.890-FO12-CARMELCOUNTRY

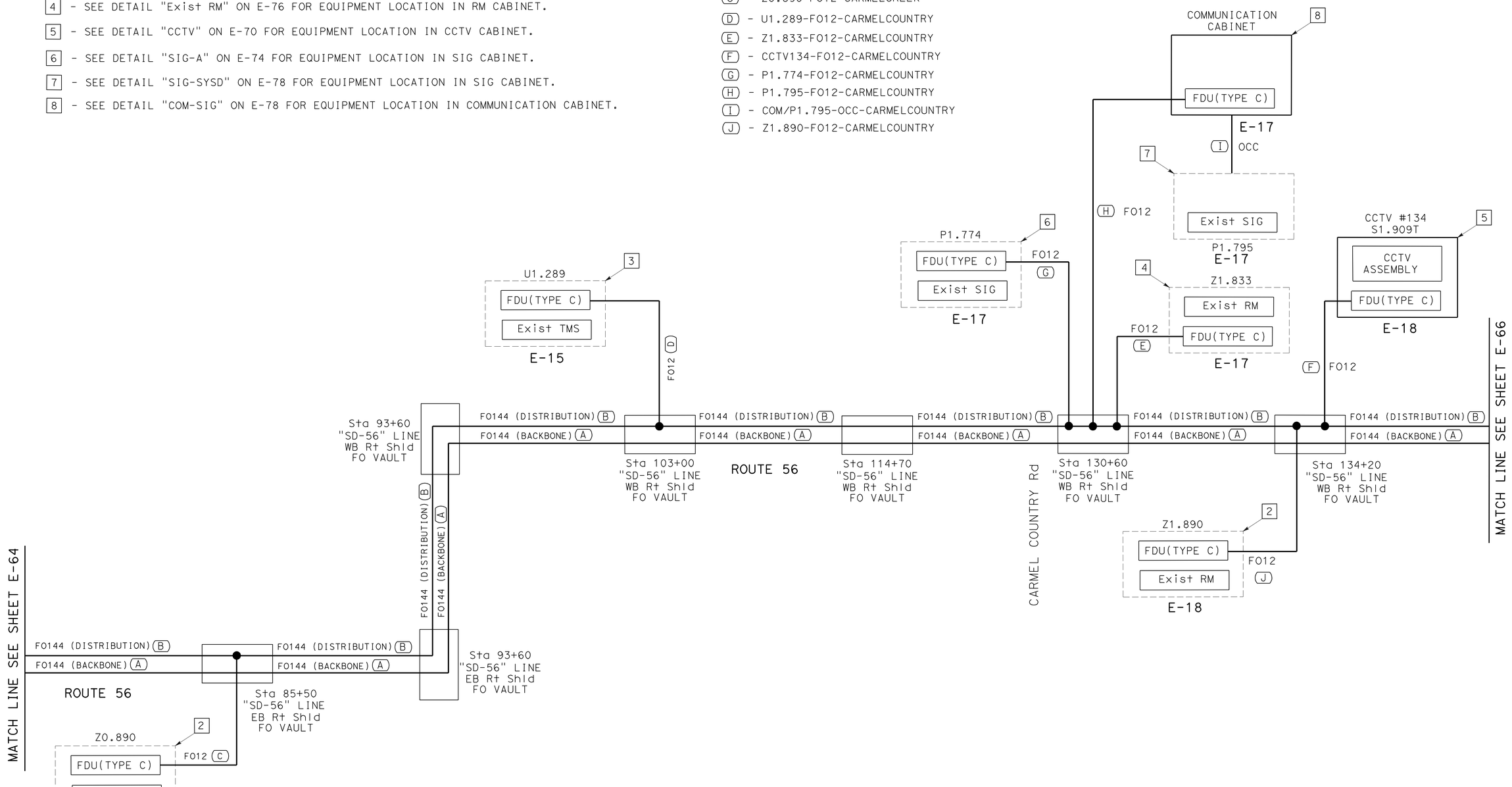

COMMUNICATION CIRCUIT DIAGRAM

APPROVED FOR ELECTRICAL WORK ONLY

CLOSED CIRCUIT TELEVISION SYSTEM (ELECTRICAL DETAILS)

NO SCALE

E-65

STATE OF CALIFORNIA - DEPARTMENT OF TRANSPORTATION
Caltrans TRAFFIC ELECTRICAL

FUNCTIONAL SUPERVISOR: BRIAN T PECUS
CALCULATED-DESIGNED BY: HENRY TSUI
CHECKED BY: ENRIQUE BERNAL
REVISED BY
DATE REVISED

LAST REVISION 03-31-12 DATE PLOTTED => 31-AUG-2012 TIME PLOTTED => 13:38

Dist	COUNTY	ROUTE	POST MILES TOTAL PROJECT	SHEET No.	TOTAL SHEETS
11	SD	5,56	R30.4/R32.8, 0.0/9.2	109	177

Enrique P Bernal 03-28-12
REGISTERED ELECTRICAL ENGINEER DATE

6-4-12
PLANS APPROVAL DATE

REGISTERED PROFESSIONAL ENGINEER ENRIQUE P. BERNAL No. 15675 Exp. 6-30-12 ELECTRICAL STATE OF CALIFORNIA

THE STATE OF CALIFORNIA OR ITS OFFICERS OR AGENTS SHALL NOT BE RESPONSIBLE FOR THE ACCURACY OR COMPLETENESS OF SCANNED COPIES OF THIS PLAN SHEET.

NOTES:

1 - FOR EQUIPMENT CONNECTIVITY IN CABINETS SEE ELECTRICAL DETAILS "COMPONENT DIAGRAM"

[2] - SEE DETAIL "Exist RM" ON E-76 FOR EQUIPMENT LOCATION IN RM CABINET.

[3] - SEE DETAIL "TMS-SYS" ON E-77 FOR EQUIPMENT LOCATION IN TMS CABINET.

[4] - SEE DETAIL "CMS-SYS" ON E-72 FOR EQUIPMENT LOCATION IN CMS CABINET.

[5] - SEE DETAIL "Exist RM" ON E-76 FOR EQUIPMENT LOCATION IN RM CABINET.

[6] - SEE DETAIL "SIG-A" ON E-74 FOR EQUIPMENT LOCATION IN SIG CABINET.

[7] - SEE DETAIL "CCTV-SYSA" ON E-71 FOR EQUIPMENT LOCATION IN CCTV CABINET.

[8] - SEE DETAIL "SIG-SYSB" ON E-71 FOR EQUIPMENT LOCATION IN SIG CABINET.

[9] - SEE DETAIL "Exist RM" ON E-76 FOR EQUIPMENT LOCATION IN RM CABINET.

LEGEND(TSO):

● CABLE SPLICE SEE FO SPLICE DETAILS.

(A) - H7/H6-FO144(BB)-5/56

(B) - H7/H6-FO144(DB)-5/56

(C) - Z3.187-FO12-CARMELVALLEY

(D) - U2.367-FO12-OLDCARMELVALLEY

(E) - I2.611-FO12-OLDCARMELVALLEY

(F) - Z2.908-FO12-CARMELVALLEY

(G) - P3.068-FO12-CARMELVALLY

(H) - CCTV135-FO12-CARMELVALLEY

(I) - CCTV135/P3.081-OCC-CARMELVALLEY

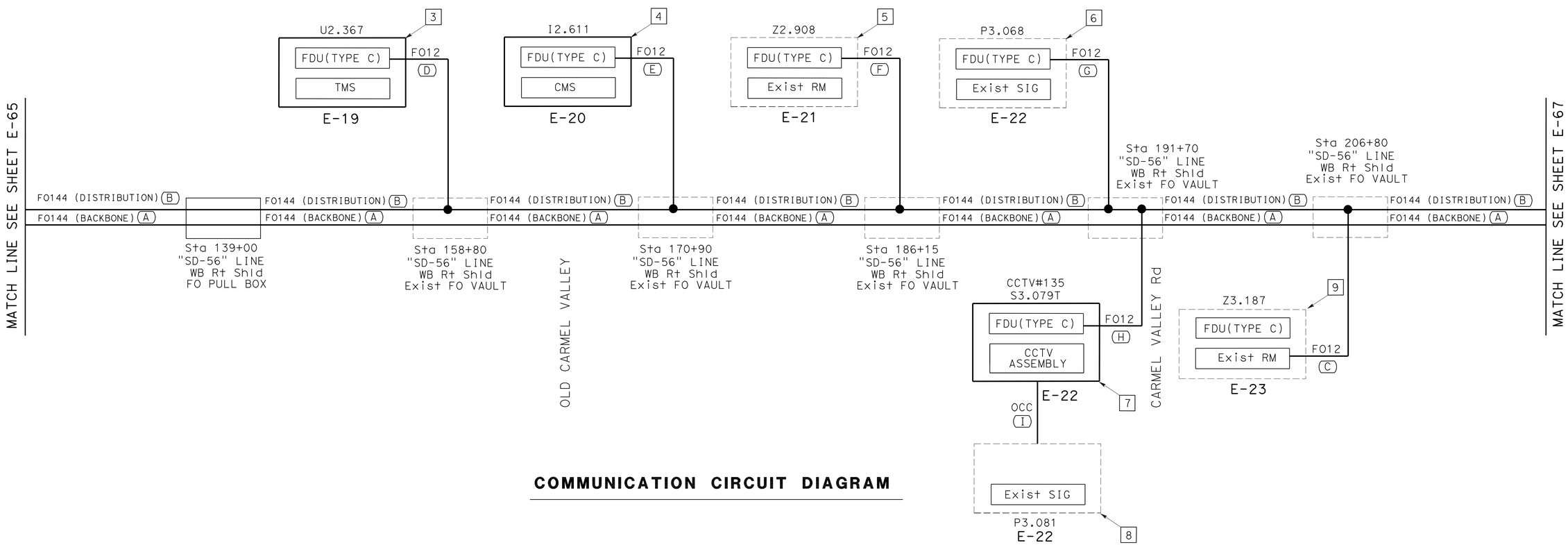

COMMUNICATION CIRCUIT DIAGRAM

APPROVED FOR ELECTRICAL WORK ONLY

NO SCALE

CLOSED CIRCUIT TELEVISION SYSTEM
(ELECTRICAL DETAILS)

E-66

STATE OF CALIFORNIA - DEPARTMENT OF TRANSPORTATION
Caltrans® TRAFFIC ELECTRICAL

FUNCTIONAL SUPERVISOR: BRIAN T PECUS
CALCULATED-DESIGNED BY: HENRY TSUI
CHECKED BY: ENRIQUE BERNAL
REVISED BY
DATE REVISED

LAST REVISION 03-31-12
DATE PLOTTED => 31-AUG-2012
TIME PLOTTED => 13:39

Dist	COUNTY	ROUTE	POST MILES TOTAL PROJECT	SHEET No.	TOTAL SHEETS
11	SD	5,56	R30.4/R32.8, 0.0/9.2	110	177

Enrique P Bernal 03-28-12
REGISTERED ELECTRICAL ENGINEER DATE

6-4-12
PLANS APPROVAL DATE

REGISTERED PROFESSIONAL ENGINEER ENRIQUE P. BERNAL No. 15675 Exp. 6-30-12 ELECTRICAL STATE OF CALIFORNIA

THE STATE OF CALIFORNIA OR ITS OFFICERS OR AGENTS SHALL NOT BE RESPONSIBLE FOR THE ACCURACY OR COMPLETENESS OF SCANNED COPIES OF THIS PLAN SHEET.

NOTES:

1 - FOR EQUIPMENT CONNECTIVITY IN CABINETS SEE ELECTRICAL DETAILS "COMPONENT DIAGRAM"

2 - SEE DETAIL "TMS-SYS" ON E-77 FOR EQUIPMENT LOCATION IN TMS CABINET.

3 - SEE DETAIL "CCTV" ON E-70 FOR EQUIPMENT LOCATION IN CCTV CABINET.

4 - SEE DETAIL "Exist TMS-SYS" ON E-77 FOR EQUIPMENT LOCATION IN TMS CABINET.

5 - SEE DETAIL "TMS-SYS" ON E-77 FOR EQUIPMENT LOCATION IN TMS CABINET.

LEGEND(TSO):

● CABLE SPLICE SEE FO SPLICE DETAILS.

(A) - H7/H6-FO144(BB)-5/56

(B) - H7/H6-FO144(DB)-5/56

(C) - U3.588-FO12-CARMELVALLEY

(D) - U3.922-FO12-CARMELVALLEY

(E) - CCTV136-FO12-RANCHOSANTEFE

(F) - U4.519-FO12-RANCHOSANTEFE

(G) - CCTV137-FO12-VEHICULAR

(H) - U4.899-FO12-VEHICULAR

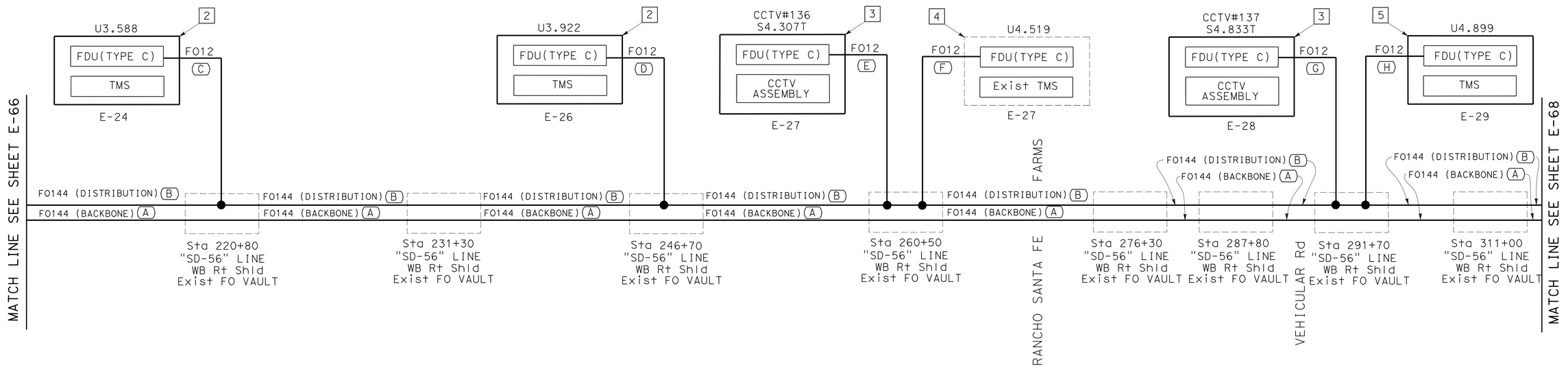

COMMUNICATION CIRCUIT DIAGRAM

CLOSED CIRCUIT TELEVISION SYSTEM
(ELECTRICAL DETAILS)

APPROVED FOR ELECTRICAL WORK ONLY

NO SCALE

E-67

STATE OF CALIFORNIA - DEPARTMENT OF TRANSPORTATION
Caltrans® TRAFFIC ELECTRICAL

FUNCTIONAL SUPERVISOR: BRIAN T PECUS
CALCULATED-DESIGNED BY: ENRIQUE BERNAL
CHECKED BY: HENRY TSUI
REVISED BY
DATE REVISED

LAST REVISION 03-31-12
DATE PLOTTED => 31-AUG-2012
TIME PLOTTED => 13:39

Dist	COUNTY	ROUTE	POST MILES TOTAL PROJECT	SHEET No.	TOTAL SHEETS
11	SD	5,56	R30.4/R32.8, 0.0/9.2	111	177

Enrique P Bernal 03-28-12
REGISTERED ELECTRICAL ENGINEER DATE

6-4-12
PLANS APPROVAL DATE

REGISTERED PROFESSIONAL ENGINEER ENRIQUE P. BERNAL No. 15675 Exp. 6-30-12 ELECTRICAL STATE OF CALIFORNIA

THE STATE OF CALIFORNIA OR ITS OFFICERS OR AGENTS SHALL NOT BE RESPONSIBLE FOR THE ACCURACY OR COMPLETENESS OF SCANNED COPIES OF THIS PLAN SHEET.

NOTES:

1 - FOR EQUIPMENT CONNECTIVITY IN CABINETS SEE ELECTRICAL DETAILS "COMPONENT DIAGRAM"

2 - SEE DETAIL "TMS-SYS" ON E-77 FOR EQUIPMENT LOCATION IN TMS CABINET.

3 - SEE DETAIL "Exist RM" ON E-76 FOR EQUIPMENT LOCATION IN RM CABINET.

4 - SEE DETAIL "CCTV" ON E-70 FOR EQUIPMENT LOCATION IN CCTV CABINET.

5 - SEE DETAIL "SIG-B" ON E-74 FOR EQUIPMENT LOCATION IN SIG CABINET.

6 - SEE DETAIL "RM-SYSA" ON E-73 FOR EQUIPMENT LOCATION IN RM CABINET.

7 - SEE DETAIL "SIG-SYSA" ON E-73 FOR EQUIPMENT LOCATION IN SIG CABINET.

8 - SEE DETAIL "CCTV" ON E-70 FOR EQUIPMENT LOCATION IN CCTV CABINET.

9 - SEE DETAIL "CMS-SYS" ON E-72 FOR EQUIPMENT LOCATION IN CMS CABINET.

10 - SEE DETAIL "TMS-SYS" ON E-77 FOR EQUIPMENT LOCATION IN TMS CABINET.

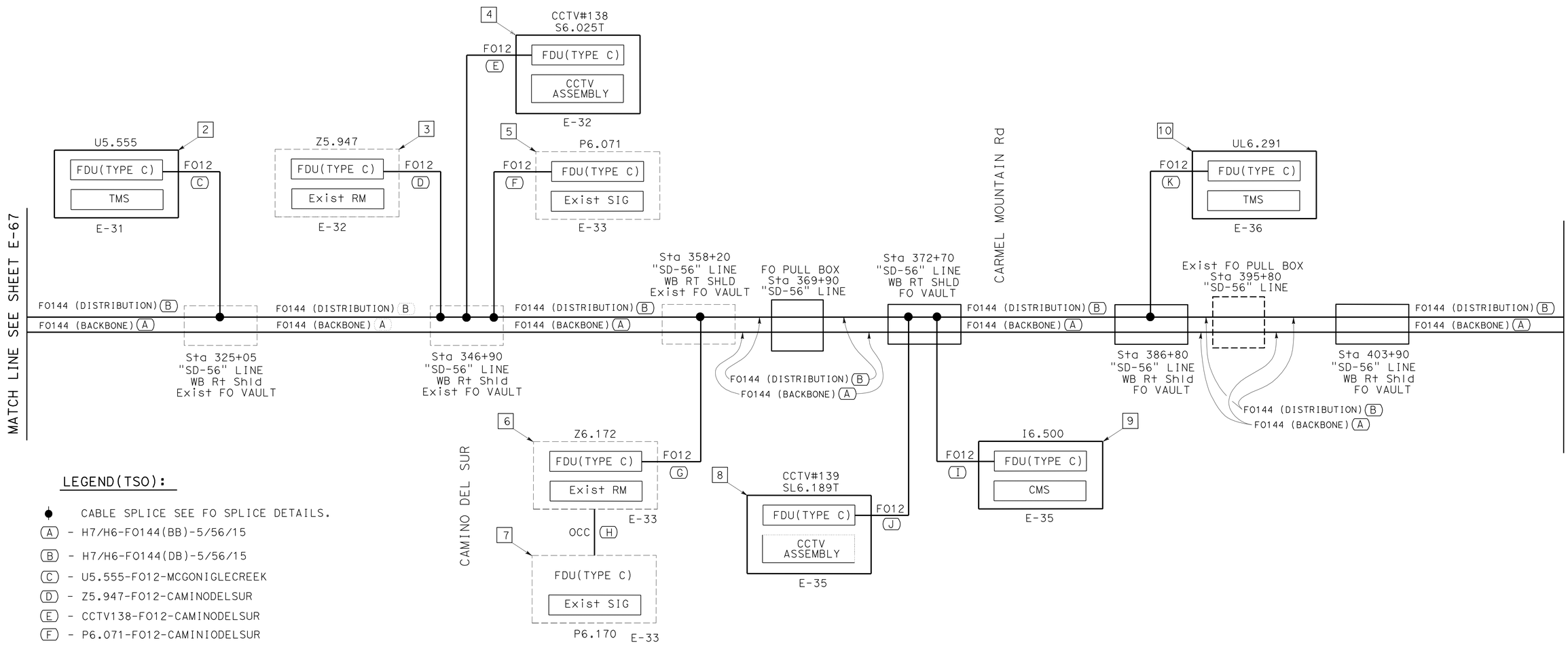

LEGEND(TSO):

- CABLE SPLICE SEE FO SPLICE DETAILS.
- (A) - H7/H6-FO144(BB)-5/56/15
- (B) - H7/H6-FO144(DB)-5/56/15
- (C) - U5.555-FO12-MCGONIGLECREEK
- (D) - Z5.947-FO12-CAMINODELSUR
- (E) - CCTV138-FO12-CAMINODELSUR
- (F) - P6.071-FO12-CAMINIODELSUR
- (G) - Z6.172-FO12-CAMINODELSUR
- (H) - Z6.172/P6.170-OCC-CAMINODELSUR
- (I) - I6.500-FO12-CARMELMOUNTAIN
- (J) - CCTV139-FO12-CARMELMOUNTAIN
- (K) - UL6.291-FO12-PENASQUITOS OPENSPACE

APPROVED FOR ELECTRICAL WORK ONLY

CLOSED CIRCUIT TELEVISION SYSTEM
(ELECTRICAL DETAILS)

NO SCALE

E-68

STATE OF CALIFORNIA - DEPARTMENT OF TRANSPORTATION
Caltrans® TRAFFIC ELECTRICAL

FUNCTIONAL SUPERVISOR: BRIAN T PECUS
CALCULATED-DESIGNED BY: ENRIQUE BERNAL
CHECKED BY: HENRY TSUI
REVISED BY
DATE REVISED

LAST REVISION 03-31-12
DATE PLOTTED => 31-AUG-2012
TIME PLOTTED => 13:39

Dist	COUNTY	ROUTE	POST MILES TOTAL PROJECT	SHEET No.	TOTAL SHEETS
11	SD	5,56	R30.4/R32.8, 0.0/9.2	112	177

Enrique P Bernal 03-28-12
REGISTERED ELECTRICAL ENGINEER DATE

6-4-12
PLANS APPROVAL DATE

REGISTERED PROFESSIONAL ENGINEER ENRIQUE P. BERNAL No. 15675 Exp. 6-30-12 ELECTRICAL STATE OF CALIFORNIA

THE STATE OF CALIFORNIA OR ITS OFFICERS OR AGENTS SHALL NOT BE RESPONSIBLE FOR THE ACCURACY OR COMPLETENESS OF SCANNED COPIES OF THIS PLAN SHEET.

NOTES (TSO):

1 - FOR EQUIPMENT CONNECTIVITY IN CABINETS SEE ELECTRICAL DETAILS "COMPONENT DIAGRAM"

2 - SEE DETAIL "CCTV-SYSA" ON E-71 FOR EQUIPMENT LOCATION IN CCTV CABINET.

3 - SEE DETAIL "SIG-SYSB" ON E-71 FOR EQUIPMENT LOCATION IN SIG CABINET.

4 - SEE DETAIL "RM-SYSA" ON E-73 FOR EQUIPMENT LOCATION IN RM CABINET.

5 - SEE DETAIL "SIG-SYSA" ON E-71 FOR EQUIPMENT LOCATION IN SIG CABINET.

6 - SEE DETAIL "Exist RM" ON E-76 FOR EQUIPMENT LOCATION IN RM CABINET.

7 - SEE DETAIL "TMS-SYS" ON E-77 FOR EQUIPMENT LOCATION IN TMS CABINET.

8 - SEE DETAIL "HUB6" ON E-62 FOR EQUIPMENT LOCATION IN HUB CABINET.

9 - SEE DETAIL "COM-SIG" ON E-78 FOR EQUIPMENT LOCATION IN COMMUNICATION CABINET.

10 - SEE DETAIL "SIG-SYSD" ON E-78 FOR EQUIPMENT LOCATION IN SIG CABINET.

11 - SEE DETAIL "RM" ON E-76 FOR EQUIPMENT LOCATION IN RM CABINET.

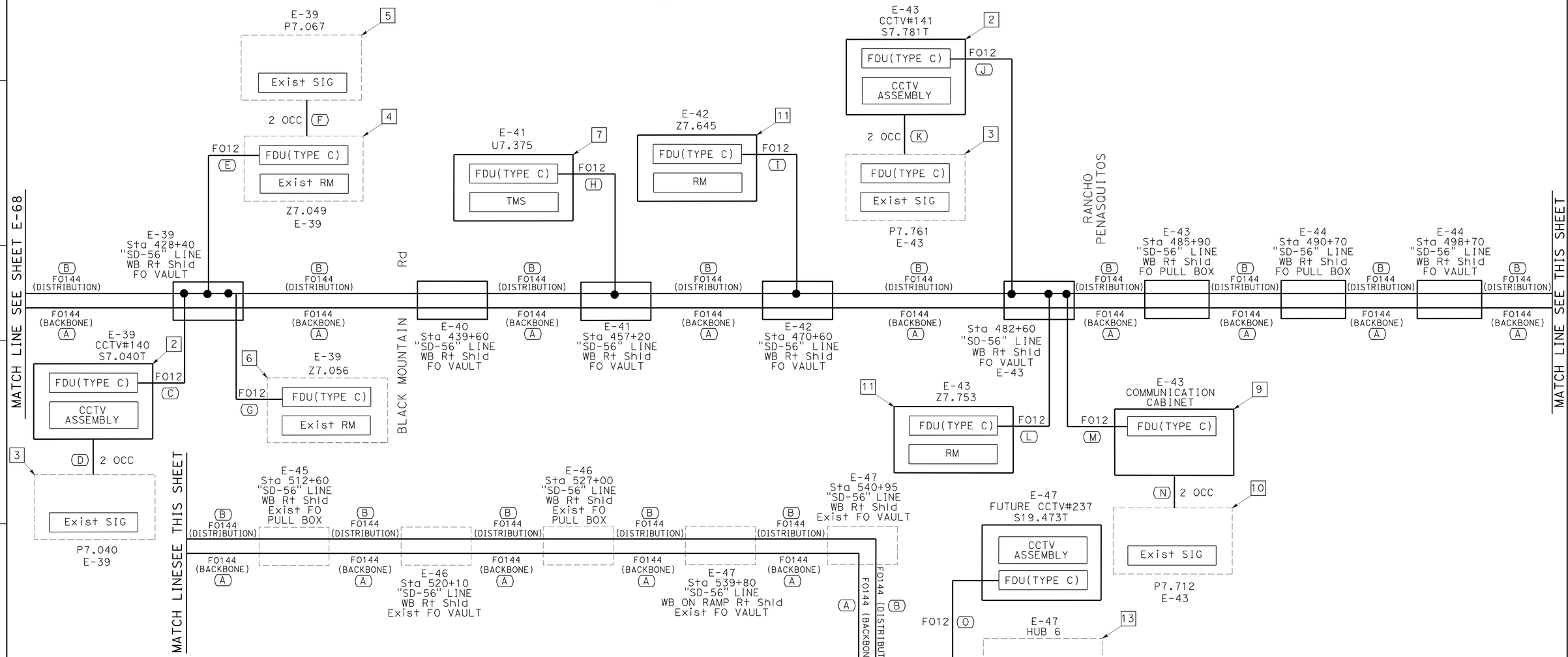

LEGEND(TSO):

- ● CABLE SPLICE SEE FO SPLICE DETAILS.
- (A) - H7/H6-FO144(BB)-5/56/15
- (B) - H7/H6-FO144(DB)-5/56/15
- (C) - CCTV140-FO12-BLACKMOUNTAIN
- (D) - CCTV140/P7.404-OCC-BLACKMOUNTAIN
- (E) - Z7.049-FO12-BLACKMOUNTAIN
- (F) - Z7.049/P7.067-OCC-BLACKMOUNTAIN
- (G) - Z7.056-FO12-BLACKMOUNTAIN
- (H) - U7.375-FO12-SALMONRIVER
- (I) - Z7.645-FO12-CARMELMOUNTAIN
- (J) - CCTV141-FO12-CARMELMOUNTAIN
- (K) - CCTV141/P7.761-OCC-RANCHOPENASQUITOS
- (L) - Z7.753-FO12-RANCHOPENASQUITOS
- (M) - COM-FO12-RANCHOPENASQUITOS
- (N) - COM/P7.712-OCC-RANCHOPENASQUITOS
- (O) - CCTV237-FO12-HUB6

APPROVED FOR ELECTRICAL WORK ONLY

CLOSED CIRCUIT TELEVISION SYSTEM
(ELECTRICAL DETAILS)

NO SCALE

E-69

STATE OF CALIFORNIA - DEPARTMENT OF TRANSPORTATION
Caltrans TRAFFIC ELECTRICAL

FUNCTIONAL SUPERVISOR: BRIAN T PECUS
CALCULATED-DESIGNED BY: HENRY TSUI
CHECKED BY: ENRIQUE BERNAL
REVISED BY
DATE REVISED

LAST REVISION 03-31-12
DATE PLOTTED => 31-AUG-2012
TIME PLOTTED => 13:39

Dist	COUNTY	ROUTE	POST MILES TOTAL PROJECT	SHEET No.	TOTAL SHEETS
11	SD	5,56	R30.4/R32.8, 0.0/9.2	113	177

Enrique P Bernal 03-28-12
REGISTERED ELECTRICAL ENGINEER DATE

6-4-12
PLANS APPROVAL DATE

REGISTERED PROFESSIONAL ENGINEER ENRIQUE P. BERNAL No. 15675 Exp. 6-30-12 ELECTRICAL STATE OF CALIFORNIA

THE STATE OF CALIFORNIA OR ITS OFFICERS OR AGENTS SHALL NOT BE RESPONSIBLE FOR THE ACCURACY OR COMPLETENESS OF SCANNED COPIES OF THIS PLAN SHEET.

NOTES:

1. THE CONTRACTOR SHALL VERIFY ALL CONTROLLING FIELD DIMENSIONS BEFORE ORDERING OR FABRICATING MATERIAL.
2. GFCI RECEPTACLES ARE FOR MAINTENANCE EQUIPMENT ONLY.
3. CONSTRUCT FOUNDATION PER Std PLAN ES-3C.

4 SHELF REQUIRED FOR EQUIPMENT.

5 MEDIA CONVERTOR AND FDU NOT REQUIRED FOR CCTV #132.

LEGEND:

- SURGE PROTECTOR
- CIRCUIT BREAKER
- HT — RELAY COIL - HIGH TEMPERATURE
- HT — RELAY CONTACT - NORMALLY CLOSED
- W\GFC1 — WITH GROUND FAULT CURRENT INTERRUPT
- 8 — WIRE SIZE, IF NOT INDICATED SHALL BE #12 AWG
- F — FAN
- L — INDICATOR LAMP
- R — DUPLEX RECEPTACLE (MODEL 334 CABINET)
- THERMOSTATIC CONTROL
- THERMO — ADJUSTABLE CALIBRATED THERMOSTAT
- TBO — TERMINAL BLOCK O
- NETWORK PORT
- FIBER OPTIC TRANSMITTER/RECEIVER

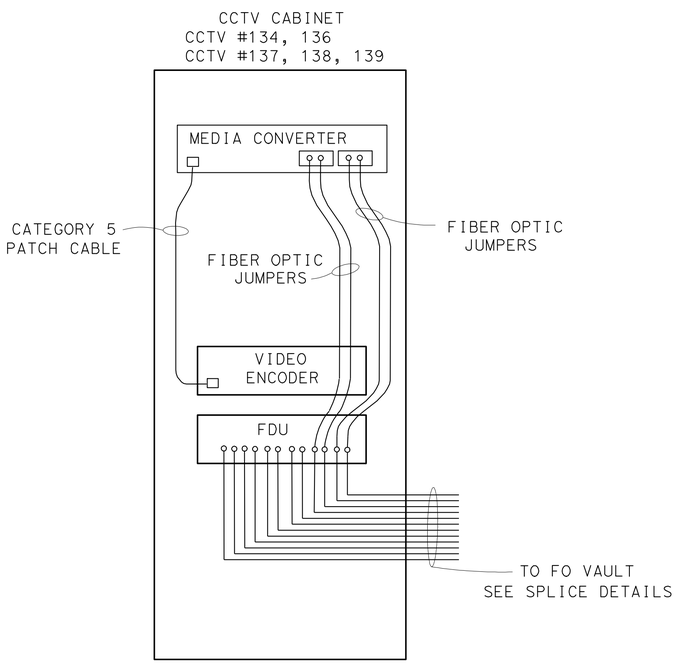

CCTV CABINET
COMPONET DIAGRAM (TYPICAL)

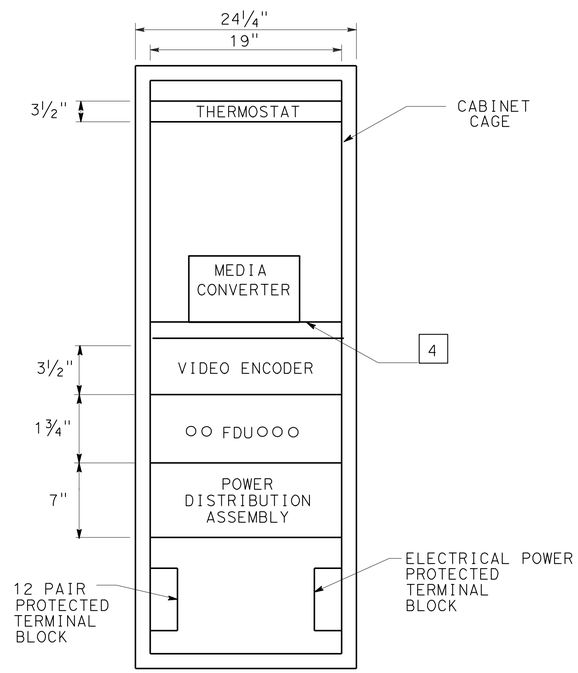

CCTV CABINET
DETAIL AND EQUIPMENT PLACEMENT 5
DETAIL "CCTV" (TYPICAL)

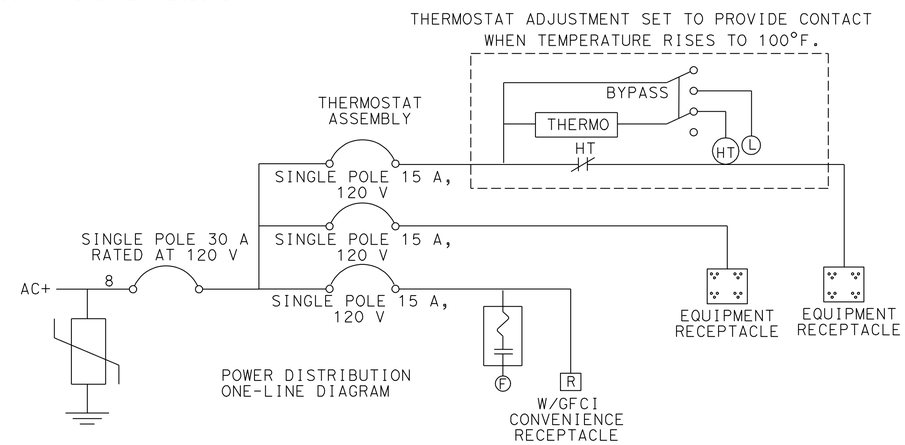

CCTV CABINET
POWER DISTRIBUTION ASSEMBLY

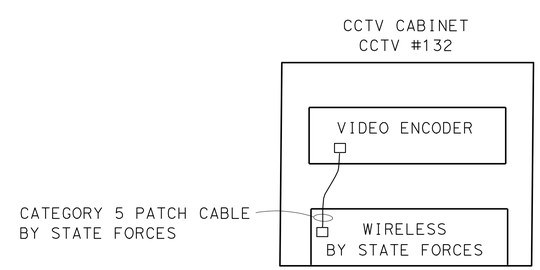

CCTV CABINET (WIRELESS)
COMPONENT DIAGRAM

APPROVED FOR ELECTRICAL WORK ONLY

CLOSED CIRCUIT TELEVISION SYSTEM
(ELECTRICAL DETAILS)

NO SCALE

E-70

STATE OF CALIFORNIA - DEPARTMENT OF TRANSPORTATION
Caltrans® TRAFFIC ELECTRICAL

FUNCTIONAL SUPERVISOR: BRIAN T PECUS
CALCULATED-DESIGNED BY: HENRY TSUI
CHECKED BY: ENRIQUE BERNAL
REVISED BY
DATE REVISED

LAST REVISION 03-31-12
DATE PLOTTED => 31-AUG-2012
TIME PLOTTED => 13:39

Dist	COUNTY	ROUTE	POST MILES TOTAL PROJECT	SHEET No.	TOTAL SHEETS
11	SD	5,56	R30.4/R32.8, 0.0/9.2	114	177

Enrique P Bernal 03-28-12
REGISTERED ELECTRICAL ENGINEER DATE

6-4-12
PLANS APPROVAL DATE

REGISTERED PROFESSIONAL ENGINEER ENRIQUE P. BERNAL No. 15675 Exp. 6-30-12 ELECTRICAL STATE OF CALIFORNIA

THE STATE OF CALIFORNIA OR ITS OFFICERS OR AGENTS SHALL NOT BE RESPONSIBLE FOR THE ACCURACY OR COMPLETENESS OF SCANNED COPIES OF THIS PLAN SHEET.

NOTES:

1. SHELF REQUIRED FOR EQUIPMENT.
2. LABEL CABLE END IN EACH CABINET. THE LABEL NAME SHALL CORRESPOND TO THE TERMINATION IN THE SIGNAL CABINET.
3. 110 PUNCH BLOCK WITH MODULAR CONNECTION. TERMINATE OCC PER ANSI/TIA 568 DIAGRAM T568B. PLACE REAR OF CABINET.
4. THE CONTRACTOR SHALL VERIFY ALL CONTROLLLING FIELD DIMENSIONS BEFORE ORDERING AND INSTALLING EQUIPMENT.
5. 12 PAIR TERMINAL BLOCK, TBO(S/F).
6. THIS SHEET DEMONSTRATES TYPICAL EQUIPMENT CONECTIONS. REFER TO SHEETS E-1 TO E-47 FOR CONTRACT WORK REQUIRED.
7. INSTALL SECU IN MODEL 170 CONTROLLER SLOT.
8. FOR CCTV CABINET POWER DISTRIBUTION ASSEMBLY SEE SHEET E-70.

LEGEND:

- FIBER OPTIC TRANSMITTER/RECEIVER
- NETWORK PORT
- SERIAL CONNECTION
- SECU — SERIAL ETHERNET CONVERSION UNIT
- MODULAR CONNECTION

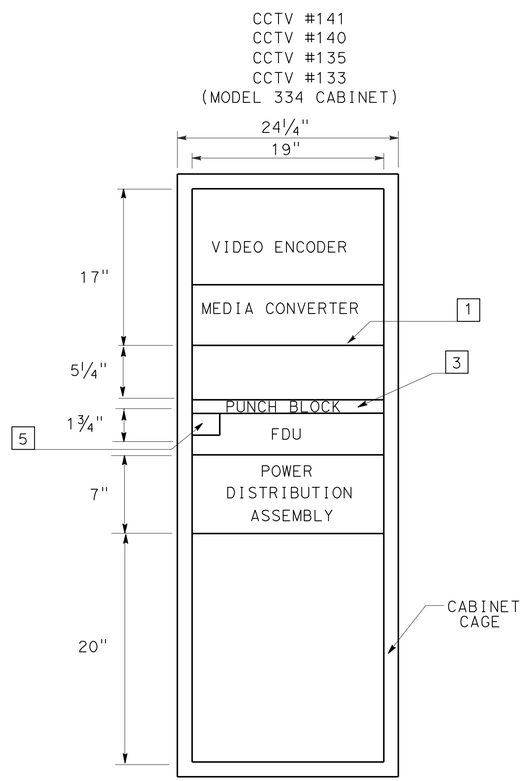

CCTV CABINET EQUIPMENT PLACEMENT

DETAIL "CCTV-SYSA"

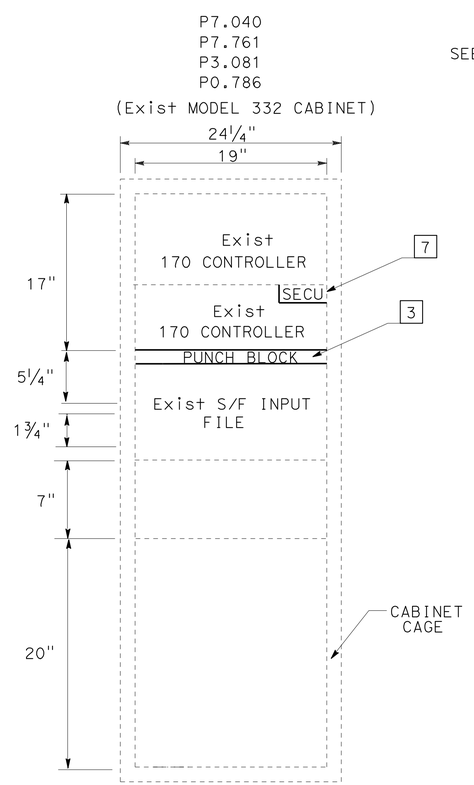

Exist TRAFFIC SIGNAL CABINET EQUIPMENT PLACEMENT

DETAIL "SIG-SYSB"

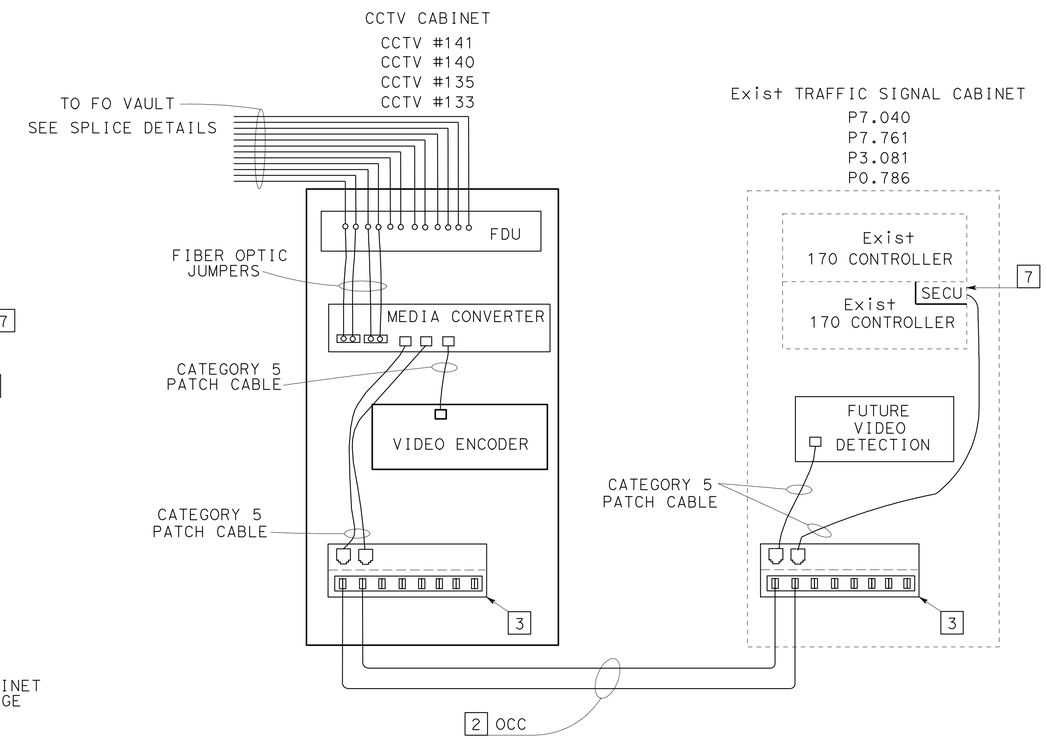

CCTV CABINET TO Exist TRAFFIC SIGNAL CABINET

COMPONENT DIAGRAM

APPROVED FOR ELECTRICAL WORK ONLY

CLOSED CIRCUIT TELEVISION SYSTEM (ELECTRICAL DETAILS)

NO SCALE

E-71

STATE OF CALIFORNIA - DEPARTMENT OF TRANSPORTATION
Caltrans TRAFFIC ELECTRICAL

FUNCTIONAL SUPERVISOR: BRIAN T PECUS
CALCULATED-DESIGNED BY: HENRY TSUI
CHECKED BY: ENRIQUE BERNAL
REVISED BY / DATE REVISED

LAST REVISION 03-31-12 | DATE PLOTTED => 31-AUG-2012 | TIME PLOTTED => 13:39

Dist	COUNTY	ROUTE	POST MILES TOTAL PROJECT	SHEET No.	TOTAL SHEETS
11	SD	5,56	R30.4/R32.8, 0.0/9.2	115	177

Enrique P Bernal 03-28-12
REGISTERED ELECTRICAL ENGINEER DATE

6-4-12
PLANS APPROVAL DATE

REGISTERED PROFESSIONAL ENGINEER
ENRIQUE P. BERNAL
No. 15675
Exp. 6-30-12
ELECTRICAL
STATE OF CALIFORNIA

THE STATE OF CALIFORNIA OR ITS OFFICERS OR AGENTS SHALL NOT BE RESPONSIBLE FOR THE ACCURACY OR COMPLETENESS OF SCANNED COPIES OF THIS PLAN SHEET.

NOTES:

1 - SHELF REQUIRED FOR EQUIPMENT.

2 - 8 PAIR TERMINAL BLOCK, TBO.

3 - REMOVE BLANK PANEL AND REPLACE WITH FDU.

4 - INSTALL SECU IN MODEL 170 CONTROLLER CARD SLOT.

5 - THE CONTRACTOR SHALL VERIFY ALL CONTROLLING FIELD DIMENSIONS BEFORE ORDERING AND INSTALLING EQUIPMENT.

6 - THIS SHEET DEMONSTRATES TYPICAL EQUIPMENT CONNECTIONS. REFER TO SHEETS E-1 TO E-47 FOR CONTRACT WORK REQUIRED.

LEGEND:

SECU - SERIAL TO ETHERNET CONVERSION UNIT

TBO - TERMINAL BLOCK O

- FIBER OPTIC TRANSMITTER/RECEIVER

- NETWORK PORT

- SERIAL CONNECTION

CIA - CONTROL ISOLATION ASSEMBLY

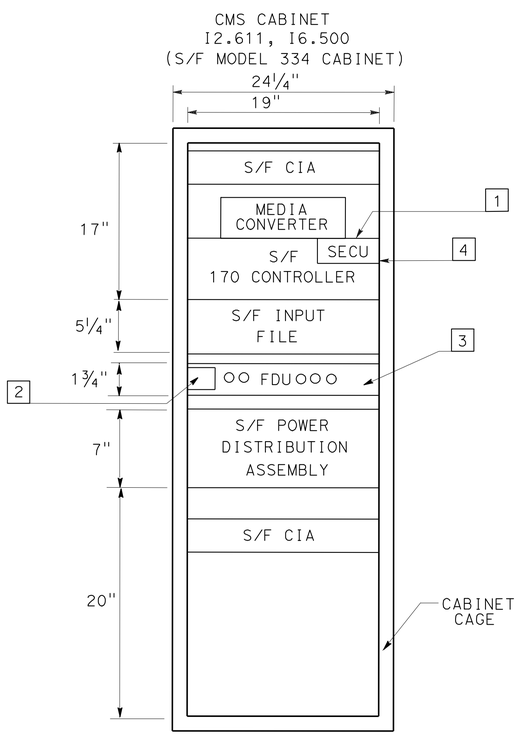

CMS CABINET EQUIPMENT PLACEMENT

DETAIL "CMS-SYS"

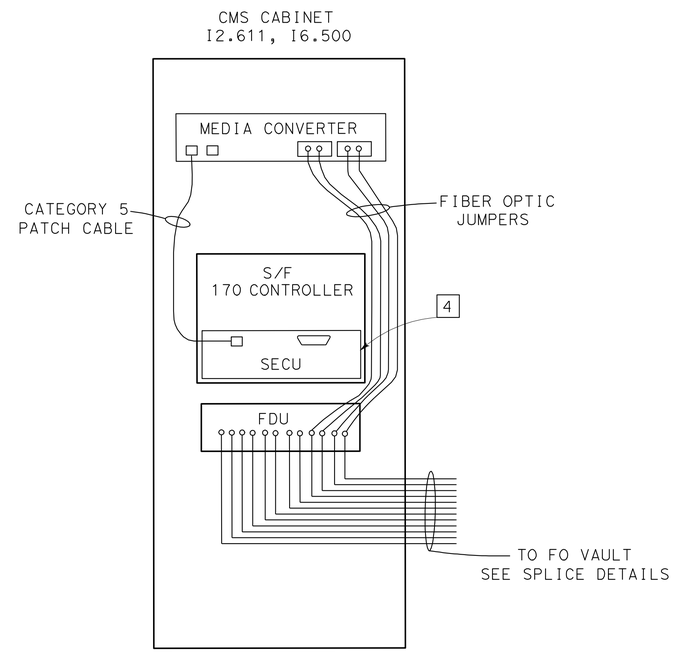

CMS CABINET

COMPONENT DIAGRAM

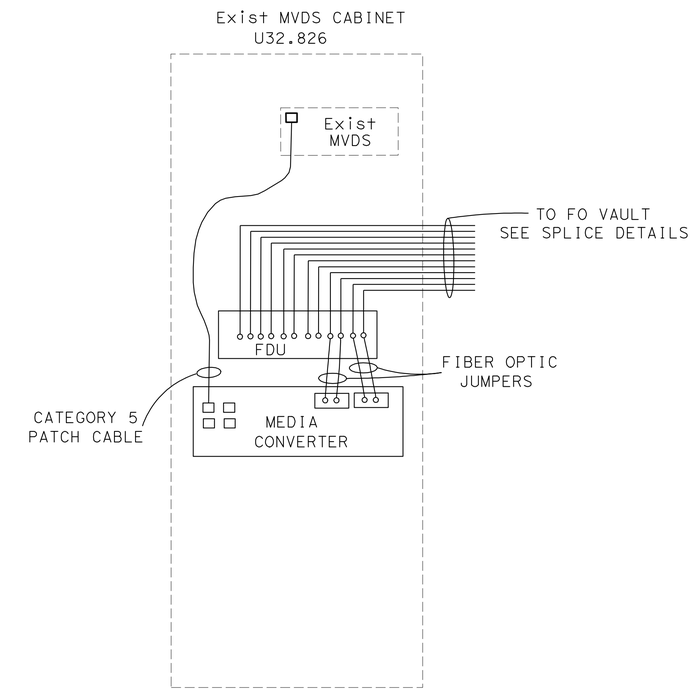

Exist MVDS

COMPONENT DIAGRAM

APPROVED FOR ELECTRICAL WORK ONLY

NO SCALE

CLOSED CIRCUIT TELEVISION SYSTEM
(ELECTRICAL DETAILS)

E-72

STATE OF CALIFORNIA - DEPARTMENT OF TRANSPORTATION
Caltrans® TRAFFIC ELECTRICAL

FUNCTIONAL SUPERVISOR: BRIAN T PECUS
CALCULATED-DESIGNED BY: ENRIQUE BERNAL
CHECKED BY
REVISED BY: HENRY TSUI
DATE REVISED

LAST REVISION 03-31-12 | DATE PLOTTED => 31-AUG-2012 | TIME PLOTTED => 13:39

Dist	COUNTY	ROUTE	POST MILES TOTAL PROJECT	SHEET No.	TOTAL SHEETS
11	SD	5,56	R30.4/R32.8, 0.0/9.2	116	177

Enrique P Bernal 03-28-12
REGISTERED ELECTRICAL ENGINEER DATE

6-4-12
PLANS APPROVAL DATE

REGISTERED PROFESSIONAL ENGINEER ENRIQUE P. BERNAL No. 15675 Exp. 6-30-12 ELECTRICAL STATE OF CALIFORNIA

THE STATE OF CALIFORNIA OR ITS OFFICERS OR AGENTS SHALL NOT BE RESPONSIBLE FOR THE ACCURACY OR COMPLETENESS OF SCANNED COPIES OF THIS PLAN SHEET.

NOTES:

1 - SELF REQUIRED FOR EQUIPMENT.

2 - LABEL CABLE END IN EACH CABINET. THE LABEL NAME SHALL CORRESPOND TO THE TERMINATION IN THE SIGNAL CABINET.

3 - 110 PUNCH BLOCK WITH MODULAR CONNECTION. TERMINATE OCC PER ANSI/TIA 568 DIAGRAM T568B. PLACE IN REAR OF CABINET.

4 - INSTALL SECU IN MODEL 170 CONTROLLER CARD SLOT.

5 - ONE Exist MODEL 170 CONTROLLER AND SECU NOT REQUIRED FOR P7.067 AND P32.944.

6 - THIS SHEET DEMONSTRATES TYPICAL EQUIPMENT CONECTIONS. REFER TO SHEETS E-1 TO E-47 FOR CONTRACT WORK REQUIRED.

7 - THE CONTRACTOR SHALL VERIFY ALL CONTROLLLING FIELD DIMENSIONS BEFORE ORDERING AND INSTALLING EQUIPMENT.

LEGEND:

- FIBER OPTIC TRANSMITTER/RECEIVER
- NETWORK PORT
- SERIAL CONNECTION
- SECU - SERIAL ETHERNET CONVERSION UNIT
- MODULAR CONNECTION

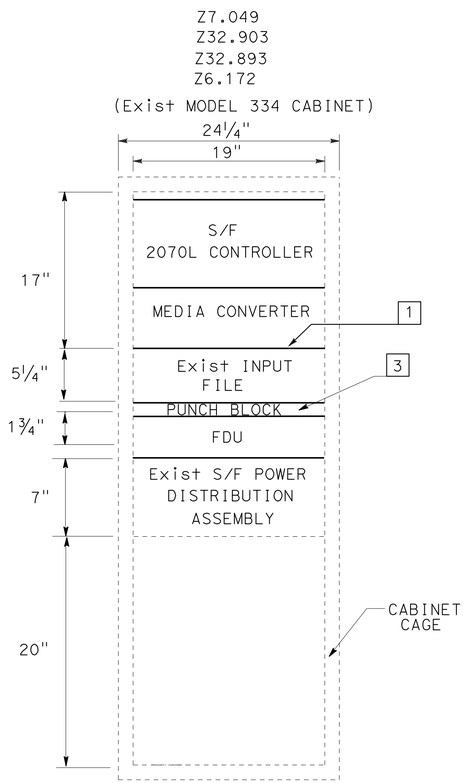

Exist RM CABINET EQUIPMENT PLACEMENT

DETAIL "RM-SYSA"

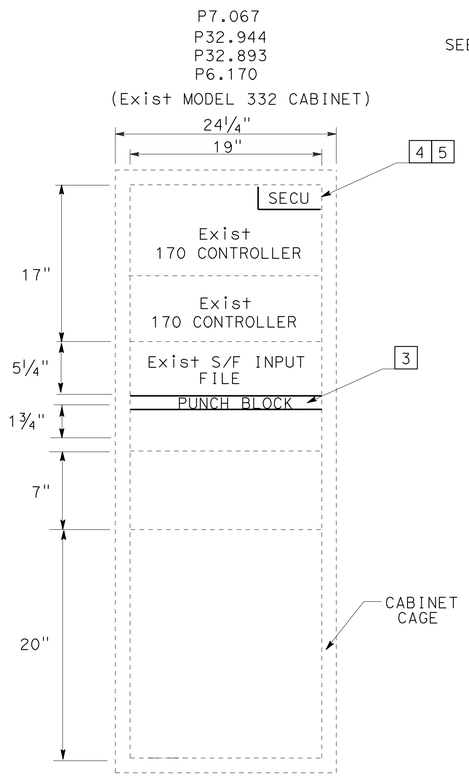

Exist TRAFFIC SIGNAL CABINET EQUIPMENT PLACEMENT

DETAIL "SIG-SYSA"

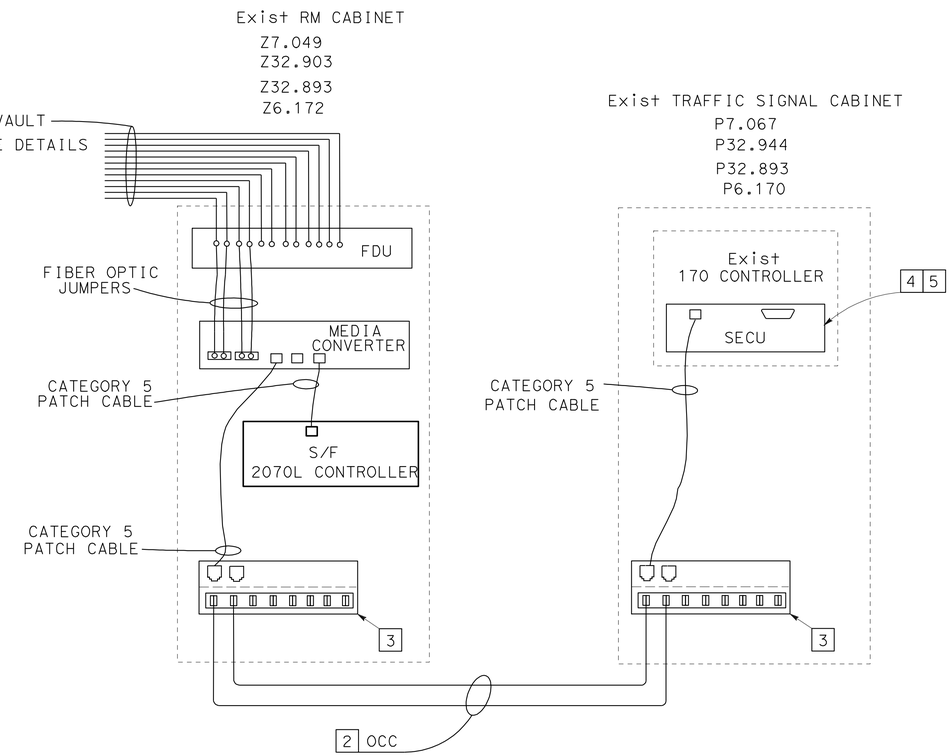

Exist RM CABINET TO Exist TRAFFIC SIGNAL CABINET

COMPONENT DIAGRAM

APPROVED FOR ELECTRICAL WORK ONLY

CLOSED CIRCUIT TELEVISION SYSTEM
(ELECTRICAL DETAILS)

NO SCALE

E-73

STATE OF CALIFORNIA - DEPARTMENT OF TRANSPORTATION
Caltrans® TRAFFIC ELECTRICAL

FUNCTIONAL SUPERVISOR: BRIAN T PECUS
CALCULATED-DESIGNED BY: HENRY TSUI
CHECKED BY: ENRIQUE BERNAL
REVISED BY
DATE REVISED

LAST REVISION DATE PLOTTED => 31-AUG-2012
04-01-12 TIME PLOTTED => 13:40

Dist	COUNTY	ROUTE	POST MILES TOTAL PROJECT	SHEET No.	TOTAL SHEETS
11	SD	5,56	R30.4/R32.8, 0.0/9.2	117	177

Enrique P Bernal 03-28-12
REGISTERED ELECTRICAL ENGINEER DATE

6-4-12
PLANS APPROVAL DATE

REGISTERED PROFESSIONAL ENGINEER
ENRIQUE P. BERNAL
No. 15675
Exp. 6-30-12
ELECTRICAL
STATE OF CALIFORNIA

THE STATE OF CALIFORNIA OR ITS OFFICERS OR AGENTS SHALL NOT BE RESPONSIBLE FOR THE ACCURACY OR COMPLETENESS OF SCANNED COPIES OF THIS PLAN SHEET.

NOTES:

1 - SHELF REQUIRED FOR EQUIPMENT.

2 - THE CONTRACTOR SHALL VERIFY ALL CONTROLLING FIELD DIMENSIONS BEFORE ORDERING AND INSTALLING EQUIPMENT.

3 - REMOVE BLANK PANEL AND REPLACE WITH FDU.

LEGEND:

○○ - FIBER OPTIC TRANSMITTER/RECEIVER

□ - NETWORK PORT

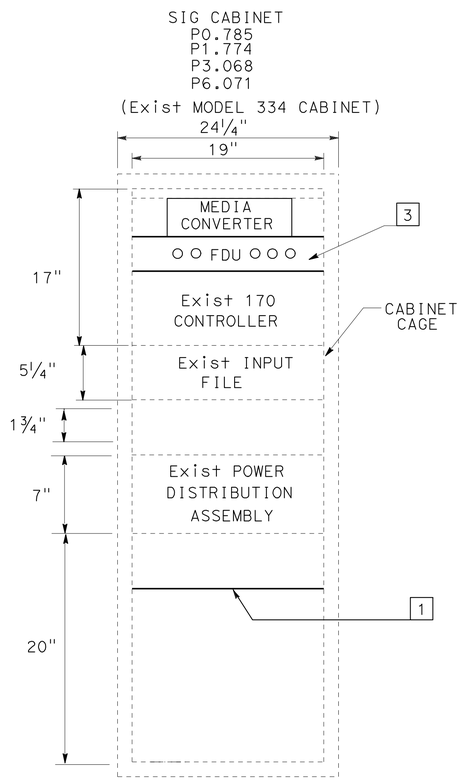

Exist TRAFFIC SIGNAL CABINET EQUIPMENT PLACEMENT

DETAIL "SIG-A" (TYPICAL)

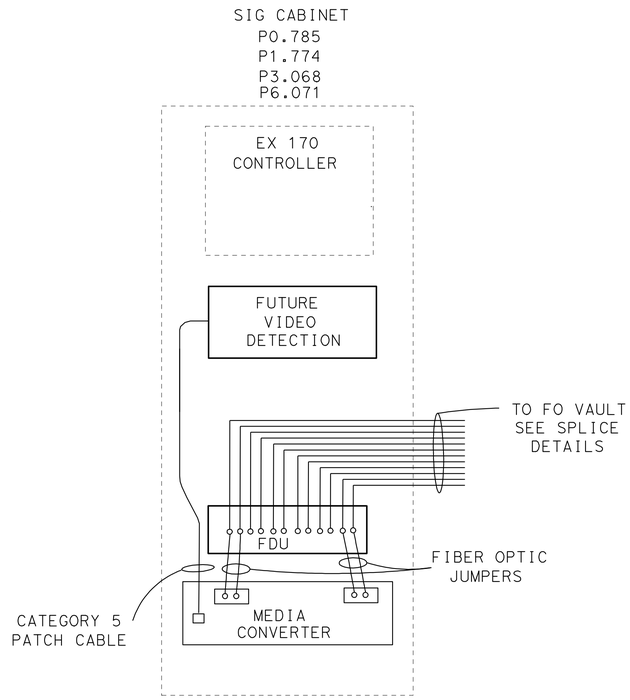

Exist TRAFFIC SIGNAL CABINET

COMPONENT DIAGRAM

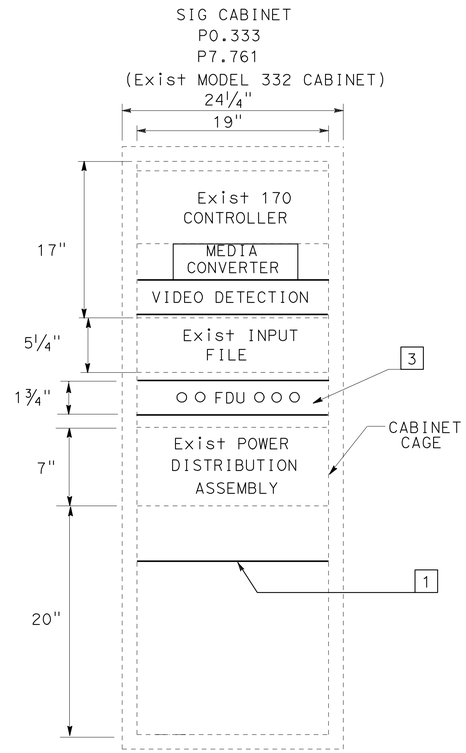

Exist TRAFFIC SIGNAL CABINET EQUIPMENT PLACEMENT

DETAIL "SIG-B" (TYPICAL)

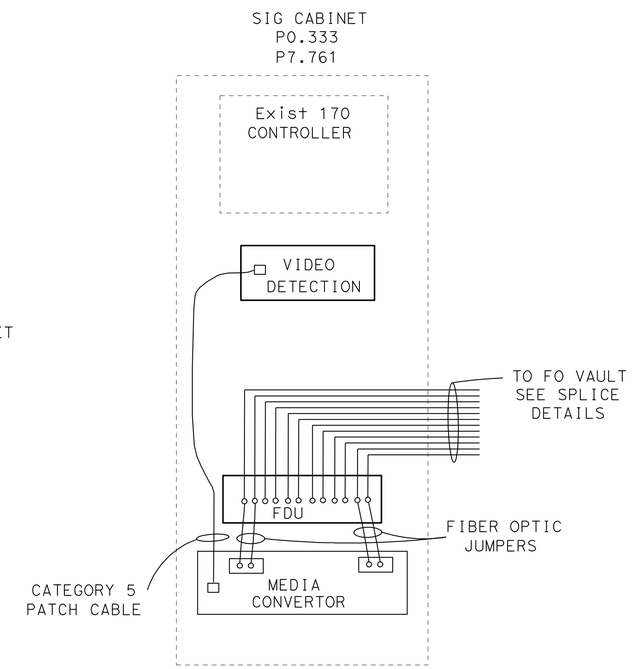

Exist TRAFFIC SIGNAL CABINET

COMPONENT DIAGRAM

CLOSED CIRCUIT TELEVISION SYSTEM (ELECTRICAL DETAILS)

APPROVED FOR ELECTRICAL WORK ONLY

NO SCALE

E-74

STATE OF CALIFORNIA - DEPARTMENT OF TRANSPORTATION
Caltrans TRAFFIC ELECTRICAL

FUNCTIONAL SUPERVISOR: BRIAN T PECUS
CALCULATED-DESIGNED BY: HENRY TSUI
CHECKED BY: ENRIQUE BERNAL
REVISED BY
DATE REVISED

LAST REVISION 03-31-12
DATE PLOTTED => 31-AUG-2012
TIME PLOTTED => 13:40

Dist	COUNTY	ROUTE	POST MILES TOTAL PROJECT	SHEET No.	TOTAL SHEETS
11	SD	5,56	R30.4/R32.8, 0.0/9.2	118	177

Enrique P Bernal 03-28-12
REGISTERED ELECTRICAL ENGINEER DATE

6-4-12
PLANS APPROVAL DATE

REGISTERED PROFESSIONAL ENGINEER ENRIQUE P. BERNAL No. 15675 Exp. 6-30-12 ELECTRICAL STATE OF CALIFORNIA

THE STATE OF CALIFORNIA OR ITS OFFICERS OR AGENTS SHALL NOT BE RESPONSIBLE FOR THE ACCURACY OR COMPLETENESS OF SCANNED COPIES OF THIS PLAN SHEET.

NOTES:

1 - SELF REQUIRED FOR EQUIPMENT.

2 - LABEL CABLE END IN EACH CABINET. THE LABEL NAME SHALL CORRESPOND TO THE TERMINATION IN THE SIGNAL CABINET.

3 - 110 PUNCH BLOCK WITH MODULAR CONNECTION. TERMINATE OCC PER ANSI/TIA 568 DIAGRAM T568B. PLACE IN REAR OF CABINET.

4 - INSTALL SECU IN MODEL 170 CONTROLLER CARD SLOT.

5 - 12 PAIR TERMINAL BLOCK, TBO(S/F).

6 - THIS SHEET DEMONSTRATES TYPICAL EQUIPMENT CONECTIONS. REFER TO SHEETS E-1 TO E-47 FOR CONTRACT WORK REQUIRED.

7 - THE CONTRACTOR SHALL VERIFY ALL CONTROLLLING FIELD DIMENSIONS BEFORE ORDERING AND INSTALLING EQUIPMENT.

LEGEND:

- FIBER OPTIC TRANSMITTER/RECEIVER
- NETWORK PORT
- SERIAL CONNECTION
- SECU - SERIAL ETHERNET CONVERSION UNIT
- MODULAR CONNECTION

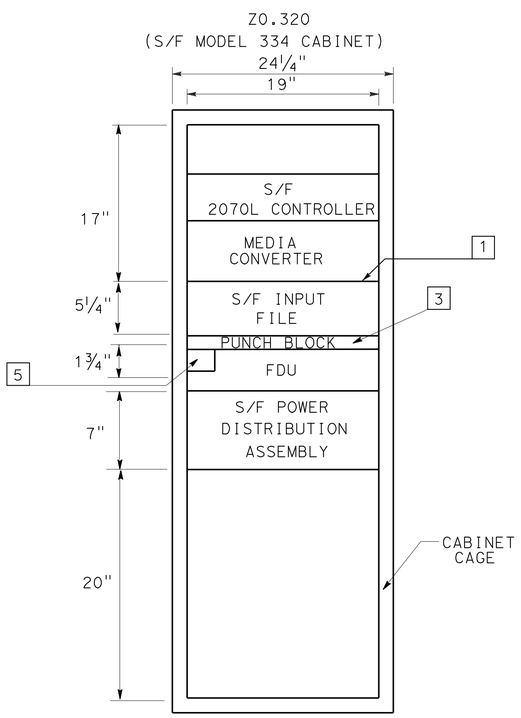

RM CABINET EQUIPMENT PLACEMENT

DETAIL "RM-SYSC"

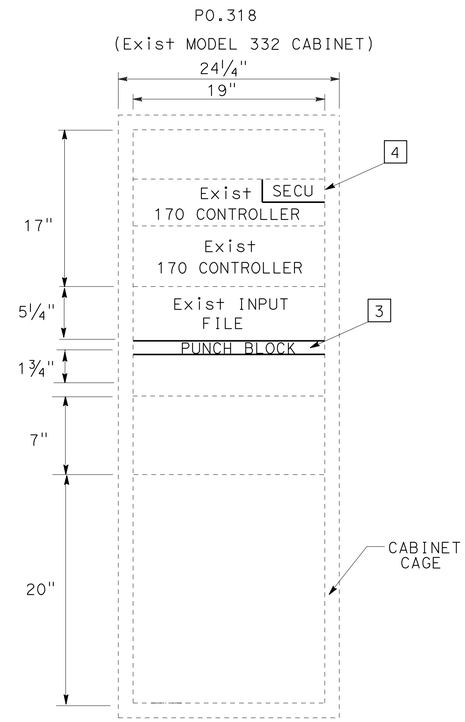

Exist TRAFFIC SIGNAL CABINET EQUIPMENT PLACEMENT

DETAIL "SIG-SYSC"

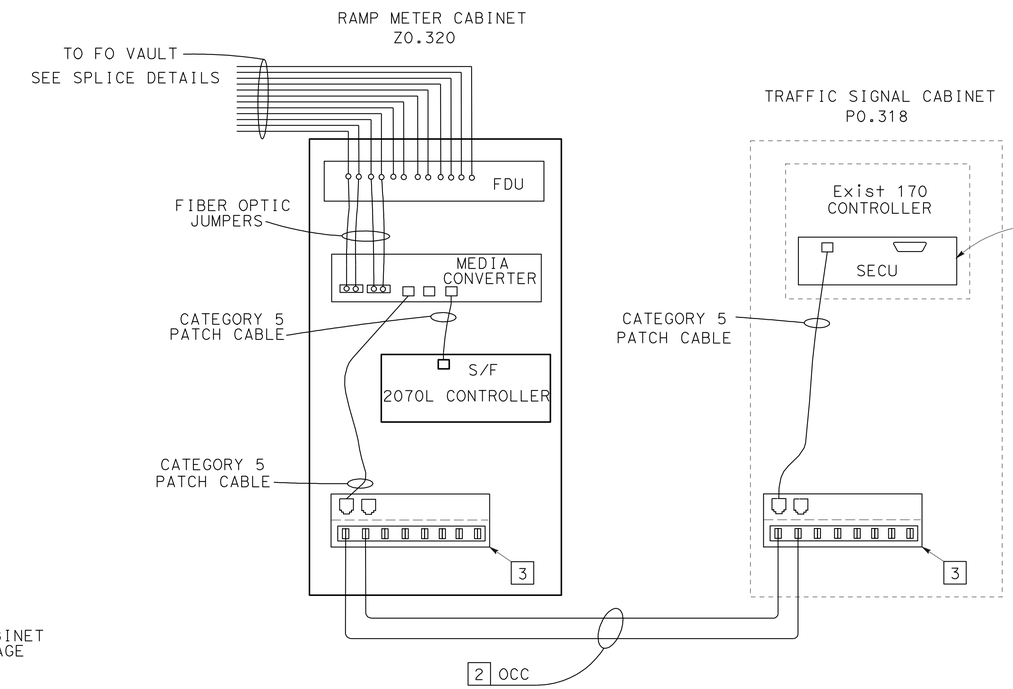

RM CABINET TO Exist TRAFFIC SIGNAL CABINET

COMPONENT DIAGRAM

APPROVED FOR ELECTRICAL WORK ONLY

CLOSED CIRCUIT TELEVISION SYSTEM (ELECTRICAL DETAILS)

NO SCALE

E-75

STATE OF CALIFORNIA - DEPARTMENT OF TRANSPORTATION
Caltrans TRAFFIC ELECTRICAL
FUNCTIONAL SUPERVISOR: BRIAN T PECUS
CALCULATED-DESIGNED BY: HENRY TSUI
CHECKED BY: ENRIQUE BERNAL
REVISED BY
DATE REVISED

LAST REVISION 04-01-12
DATE PLOTTED => 31-AUG-2012
TIME PLOTTED => 13:40

Dist	COUNTY	ROUTE	POST MILES TOTAL PROJECT	SHEET No.	TOTAL SHEETS
11	SD	5,56	R30.4/R32.8, 0.0/9.2	119	177

Enrique P Bernal 03-28-12
REGISTERED ELECTRICAL ENGINEER DATE

6-4-12
PLANS APPROVAL DATE

REGISTERED PROFESSIONAL ENGINEER ENRIQUE P. BERNAL No. 15675 Exp. 6-30-12 ELECTRICAL STATE OF CALIFORNIA

THE STATE OF CALIFORNIA OR ITS OFFICERS OR AGENTS SHALL NOT BE RESPONSIBLE FOR THE ACCURACY OR COMPLETENESS OF SCANNED COPIES OF THIS PLAN SHEET.

NOTES:

1 -SHELF REQUIRED FOR EQUIPMENT.

2 -THE CONTRACTOR SHALL VERIFY ALL CONTROLLING FIELD DIMENSIONS BEFORE ORDERING AND INSTALLING EQUIPMENT.

3 -REMOVE BLANK PANEL AND REPLACE WITH FDU.

LEGEND:

- FIBER OPTIC TRANSMITTER/RECEIVER
- NETWORK PORT

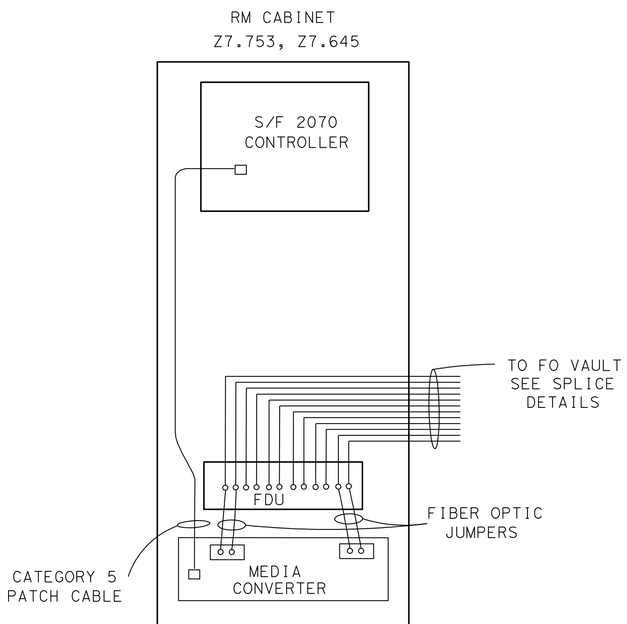

RM CABINET

COMPONENT DIAGRAM

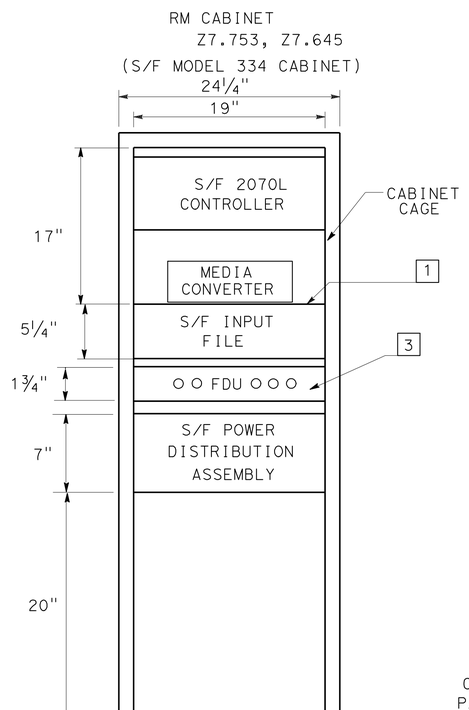

RM CABINET EQUIPMENT PLACEMENT

DETAIL "RM" (TYPICAL)

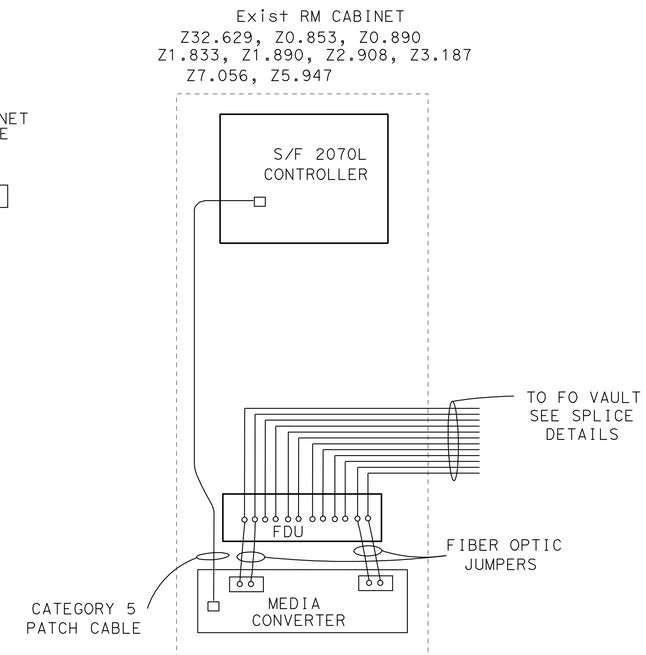

Exist RM CABINET

COMPONENT DIAGRAM

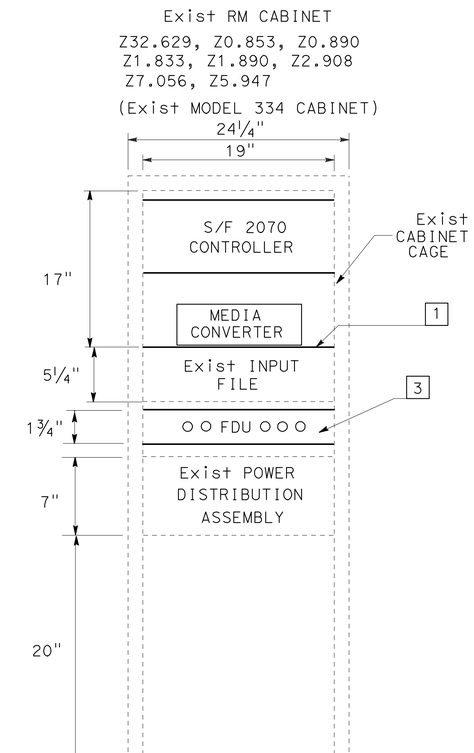

Exist RM CABINET EQUIPMENT PLACEMENT

DETAIL "Exist RM" (TYPICAL)

CLOSED CIRCUIT TELEVISION SYSTEM
(ELECTRICAL DETAILS)

APPROVED FOR ELECTRICAL WORK ONLY

NO SCALE

E-76

STATE OF CALIFORNIA - DEPARTMENT OF TRANSPORTATION
Caltrans TRAFFIC ELECTRICAL

FUNCTIONAL SUPERVISOR: BRIAN T PECUS
CALCULATED-DESIGNED BY: HENRY TSUI
CHECKED BY: ENRIQUE BERNAL
REVISED BY
DATE REVISED

LAST REVISION 04-01-12
DATE PLOTTED => 31-AUG-2012
TIME PLOTTED => 13:40

Dist	COUNTY	ROUTE	POST MILES TOTAL PROJECT	SHEET No.	TOTAL SHEETS
11	SD	5,56	R30.4/R32.8, 0.0/9.2	120	177

Enrique P Bernal 03-28-12
REGISTERED ELECTRICAL ENGINEER DATE

6-4-12
PLANS APPROVAL DATE

REGISTERED PROFESSIONAL ENGINEER ENRIQUE P. BERNAL No. 15675 Exp. 6-30-12 ELECTRICAL STATE OF CALIFORNIA

THE STATE OF CALIFORNIA OR ITS OFFICERS OR AGENTS SHALL NOT BE RESPONSIBLE FOR THE ACCURACY OR COMPLETENESS OF SCANNED COPIES OF THIS PLAN SHEET.

NOTES:

1. SHELF REQUIRED FOR EQUIPMENT.
2. THE CONTRACTOR SHALL VERIFY ALL CONTROLLING FIELD DIMENSIONS BEFORE ORDERING AND INSTALLING EQUIPMENT.
3. REMOVE BLANK PANEL AND REPLACE WITH FDU.

LEGEND:

- FIBER OPTIC TRANSMITTER/RECEIVER
- NETWORK PORT

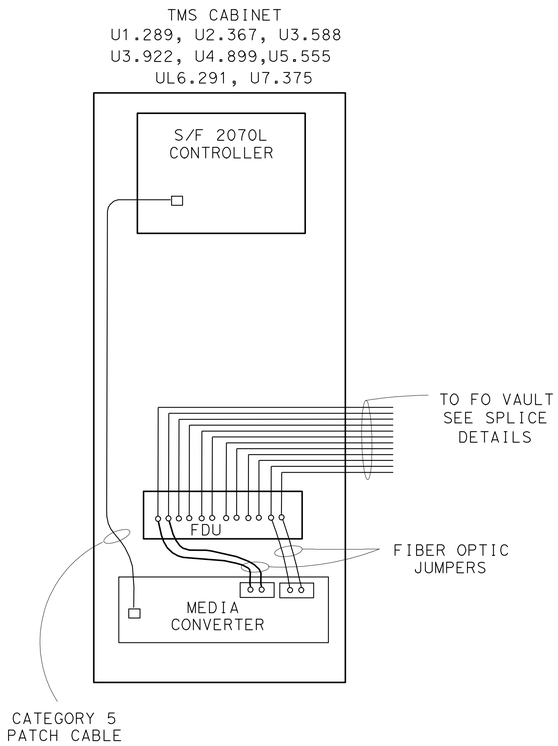

TMS CABINET

COMPONENT DIAGRAM

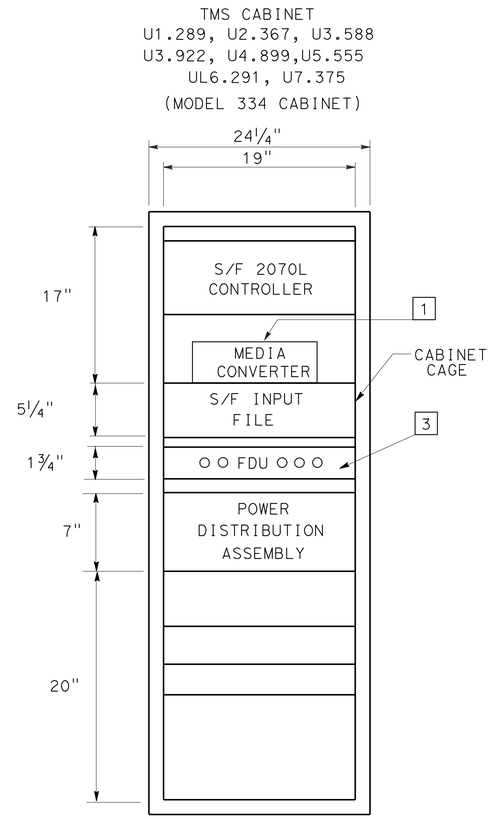

TMS CABINET EQUIPMENT PLACEMENT

DETAIL "TMS-SYS"
(TYPICAL)

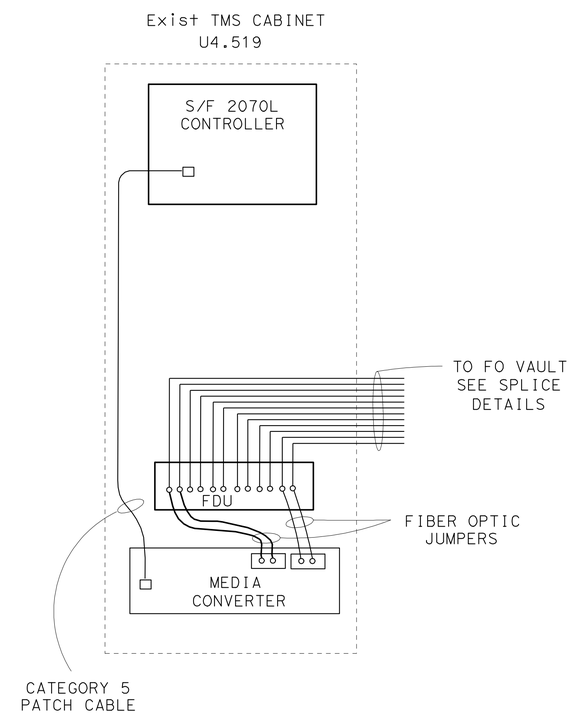

Exist TMS CABINET

COMPONENT DIAGRAM

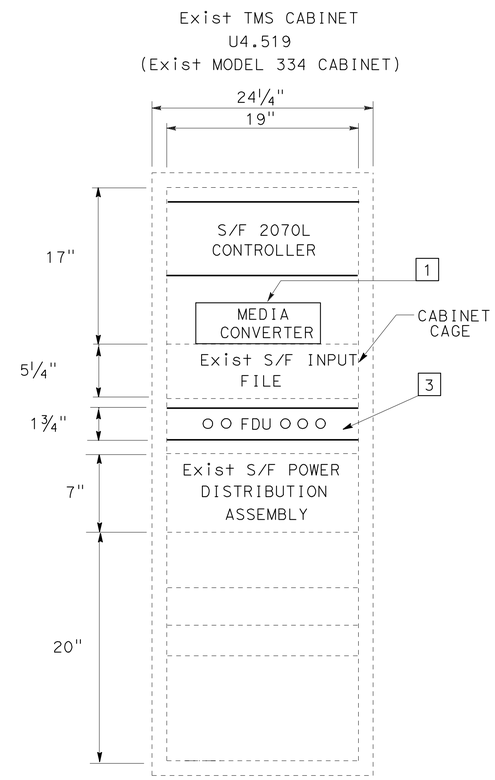

Exist TMS CABINET EQUIPMENT PLACEMENT

DETAIL "Exist TMS-SYS"
(TYPICAL)

APPROVED FOR ELECTRICAL WORK ONLY

CLOSED CIRCUIT TELEVISION SYSTEM
(ELECTRICAL DETAILS)

NO SCALE

E-77

REVISED BY	DATE REVISED

CALCULATED-DESIGNED BY	CHECKED BY
HENRY TSUI	ENRIQUE BERNAL

FUNCTIONAL SUPERVISOR: BRIAN T PECUS

STATE OF CALIFORNIA - DEPARTMENT OF TRANSPORTATION
Caltrans® TRAFFIC ELECTRICAL

LAST REVISION 04-01-12 | DATE PLOTTED => 31-AUG-2012 | TIME PLOTTED => 13:40

Dist	COUNTY	ROUTE	POST MILES TOTAL PROJECT	SHEET No.	TOTAL SHEETS
11	SD	5,56	R30.4/R32.8, 0.0/9.2	121	177

Enrique P Bernal 03-28-12
REGISTERED ELECTRICAL ENGINEER DATE

6-4-12
PLANS APPROVAL DATE

REGISTERED PROFESSIONAL ENGINEER ENRIQUE P. BERNAL No. 15675 Exp. 6-30-12 ELECTRICAL STATE OF CALIFORNIA

THE STATE OF CALIFORNIA OR ITS OFFICERS OR AGENTS SHALL NOT BE RESPONSIBLE FOR THE ACCURACY OR COMPLETENESS OF SCANNED COPIES OF THIS PLAN SHEET.

NOTES:

1 - SHELF REQUIRED FOR EQUIPMENT.

2 - LABEL CABLE END IN EACH CABINET. THE LABEL NAME SHALL CORRESPOND TO THE TERMINATION IN THE SIGNAL CABINET.

3 - 110 PUNCH BLOCK WITH RJ45 CONNECTION. TERMINATE OCC PER EIA/TIA 568B. PLACE REAR OF CABINET.

4 - THE CONTRACTOR SHALL VERIFY ALL CONTROLLLING FIELD DIMENSIONS BEFORE ORDERING AND INSTALLING EQUIPMENT.

5 - 12 PAIR TERMINAL BLOCK, TBO.

6 - THIS SHEET DEMONSTRATES TYPICAL EQUIPMENT CONECTIONS. REFER TO SHEETS E-1 TO E-47 FOR CONTRACT WORK REQUIRED.

7 - INSTALL SECU IN MODEL 170 CONTROLLER SLOT.

8 - FOR COMMUNICATION CABINET POWER DISTRIBUTION ASSEMBLY SIMILAR TO CCTV SEE SHEET E-71.

9 - CONSTRUCT FOUNDATION PER Std PLAN ES-3C.

LEGEND:

- FIBER OPTIC TRANSMITTER/RECEIVER
- NETWORK PORT
- SERIAL CONNECTION
- SECU - SERIAL ETHERNET CONVERSION UNIT
- RJ45 CONNECTION

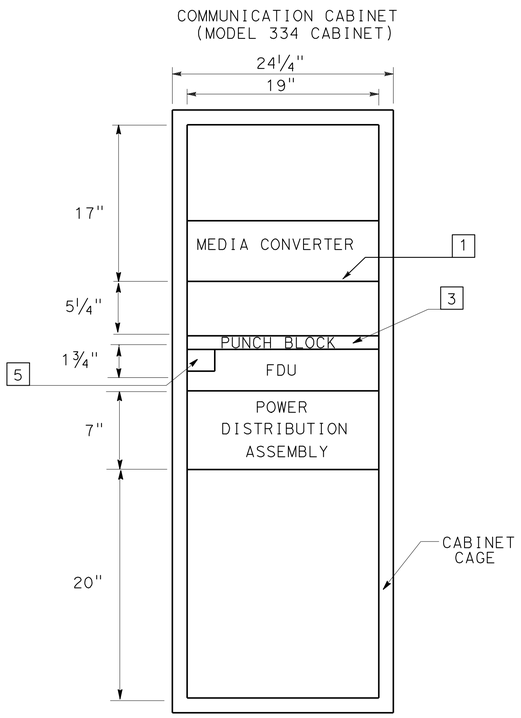

COMMUNICATION CABINET EQUIPMENT PLACEMENT

DETAIL "COM-SIG"

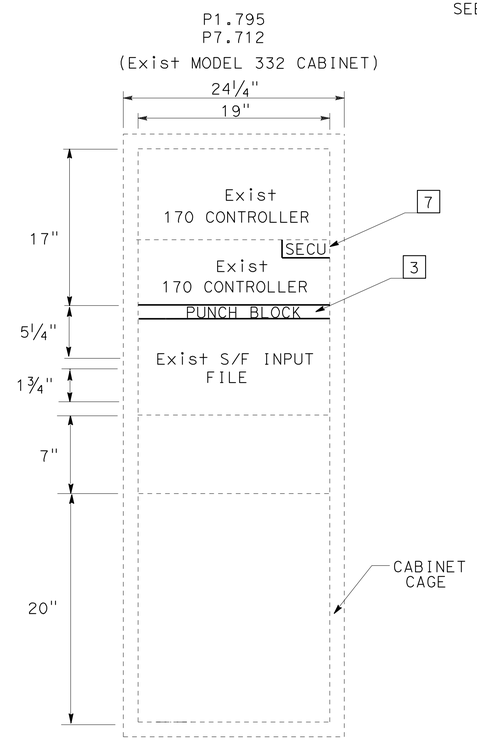

Exist TRAFFIC SIGNAL CABINET EQUIPMENT PLACEMENT

DETAIL "SIG-SYSD"

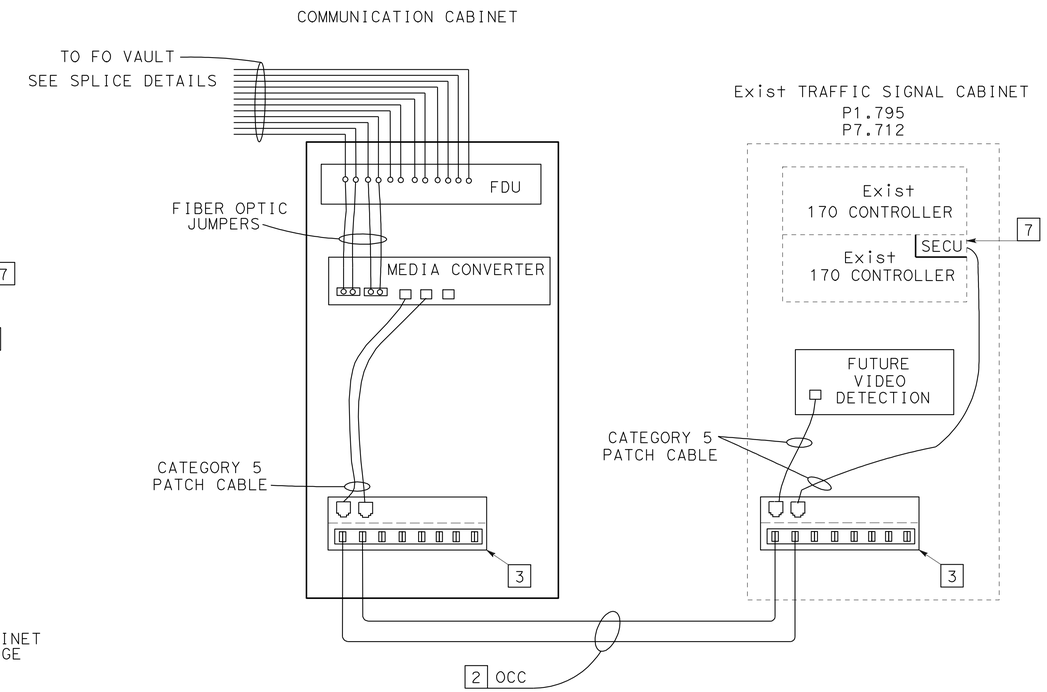

COMMUNICATION CABINET TO Exist TRAFFIC SIGNAL CABINET

COMPONENT DIAGRAM

APPROVED FOR ELECTRICAL WORK ONLY

NO SCALE

CLOSED CIRCUIT TELEVISION SYSTEM (ELECTRICAL DETAILS)

E-78

STATE OF CALIFORNIA - DEPARTMENT OF TRANSPORTATION
Caltrans® TRAFFIC ELECTRICAL

FUNCTIONAL SUPERVISOR: BRIAN T PECUS
CALCULATED-DESIGNED BY: HENRY TSUI
CHECKED BY: ENRIQUE BERNAL
REVISED BY
DATE REVISED

LAST REVISION 04-01-12
DATE PLOTTED => 31-AUG-2012
TIME PLOTTED => 13:40

Dist	COUNTY	ROUTE	POST MILES TOTAL PROJECT	SHEET No.	TOTAL SHEETS
11	SD	5,56	R30.4/R32.8, 0.0/9.2	122	177

Enrique P Bernal 03-28-12
REGISTERED ELECTRICAL ENGINEER DATE

6-4-12
PLANS APPROVAL DATE

REGISTERED PROFESSIONAL ENGINEER
ENRIQUE P. BERNAL
No. 15675
Exp. 6-30-12
ELECTRICAL
STATE OF CALIFORNIA

THE STATE OF CALIFORNIA OR ITS OFFICERS OR AGENTS SHALL NOT BE RESPONSIBLE FOR THE ACCURACY OR COMPLETENESS OF SCANNED COPIES OF THIS PLAN SHEET.

CONDUIT NOTE:

1 - MDCS(8)-TWO 4"C (FIBERGLASS-COMMUNICATION CONDUIT (SEE CLOSED CIRCUIT TELEVISION SYSTEM)

NOTE:

1 - FOR CONDUIT SUPPORT DETAILS SEE SES-2.

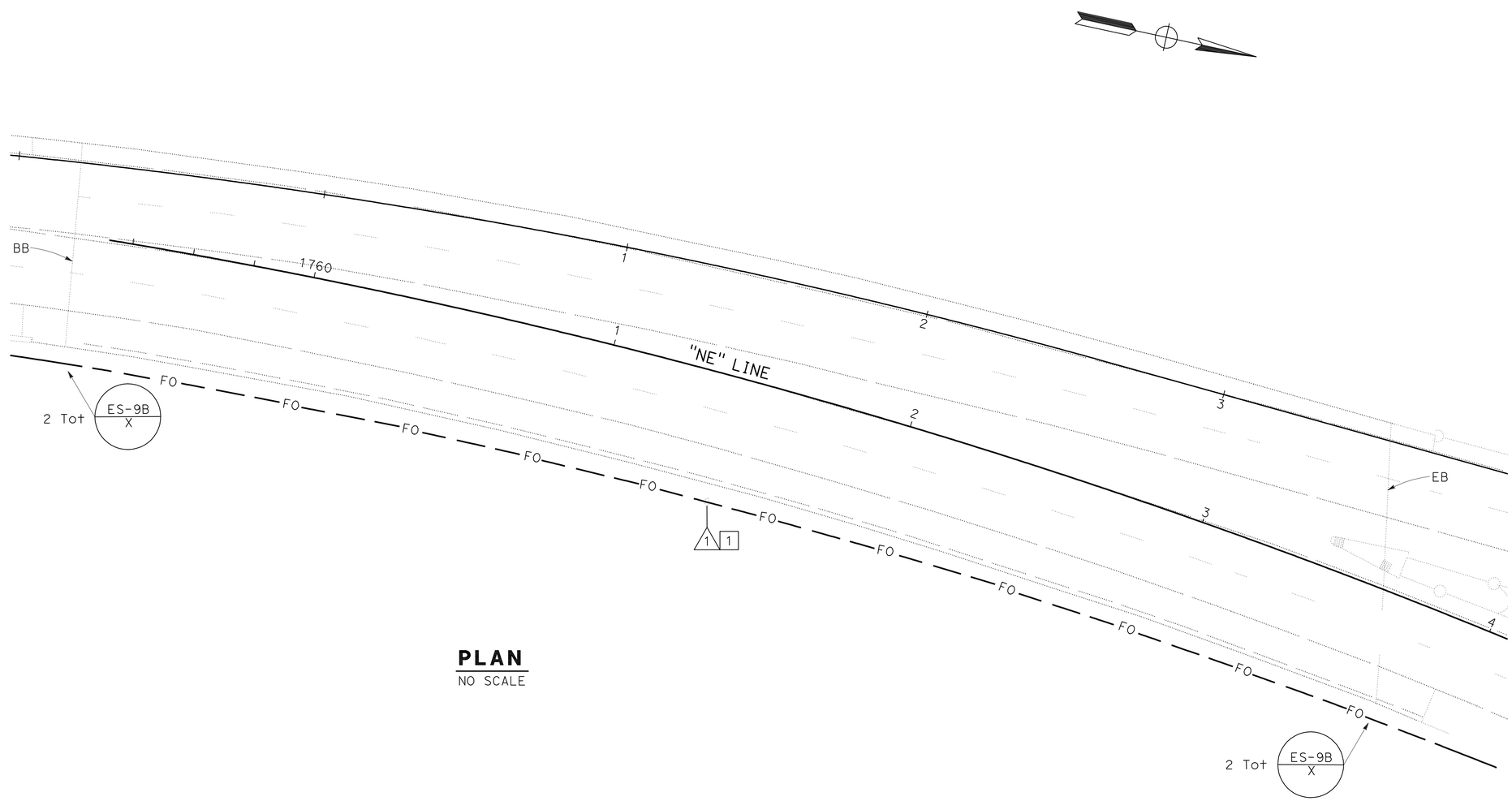

PLAN
NO SCALE

BRIDGE No.57-0590G
CARMEL VALLEY CREEK BRIDGE CONNECTOR

BRIDGE ELECTRICAL

APPROVED FOR ELECTRICAL WORK ONLY

NO SCALE

E-79

STATE OF CALIFORNIA - DEPARTMENT OF TRANSPORTATION
Caltrans® **TRAFFIC ELECTRICAL**

FUNCTIONAL SUPERVISOR: BRIAN T PECUS
CALCULATED-DESIGNED BY: ENRIQUE BERNAL
CHECKED BY: HENRY TSUI
REVISED BY
DATE REVISED

LAST REVISION 04-01-12
DATE PLOTTED => 31-AUG-2012
TIME PLOTTED => 13:40

Dist	COUNTY	ROUTE	POST MILES TOTAL PROJECT	SHEET No.	TOTAL SHEETS
11	SD	5,56	R30.4/R32.8, 0.0/9.2	123	177

Enrique P Bernal 03-28-12
REGISTERED ELECTRICAL ENGINEER DATE

6-4-12
PLANS APPROVAL DATE

REGISTERED PROFESSIONAL ENGINEER
ENRIQUE P. BERNAL
No. 15675
Exp. 6-30-12
ELECTRICAL
STATE OF CALIFORNIA

THE STATE OF CALIFORNIA OR ITS OFFICERS OR AGENTS SHALL NOT BE RESPONSIBLE FOR THE ACCURACY OR COMPLETENESS OF SCANNED COPIES OF THIS PLAN SHEET.

CONDUIT NOTE:

1 - MDCS(8)-TWO 4"C (FIBERGLASS-COMMUNICATION CONDUIT), (SEE CLOSED CIRCUIT TELEVISION SYSTEM)

NOTE:

1 - FOR CONDUIT SUPPORT DETAILS SEE SES-2.

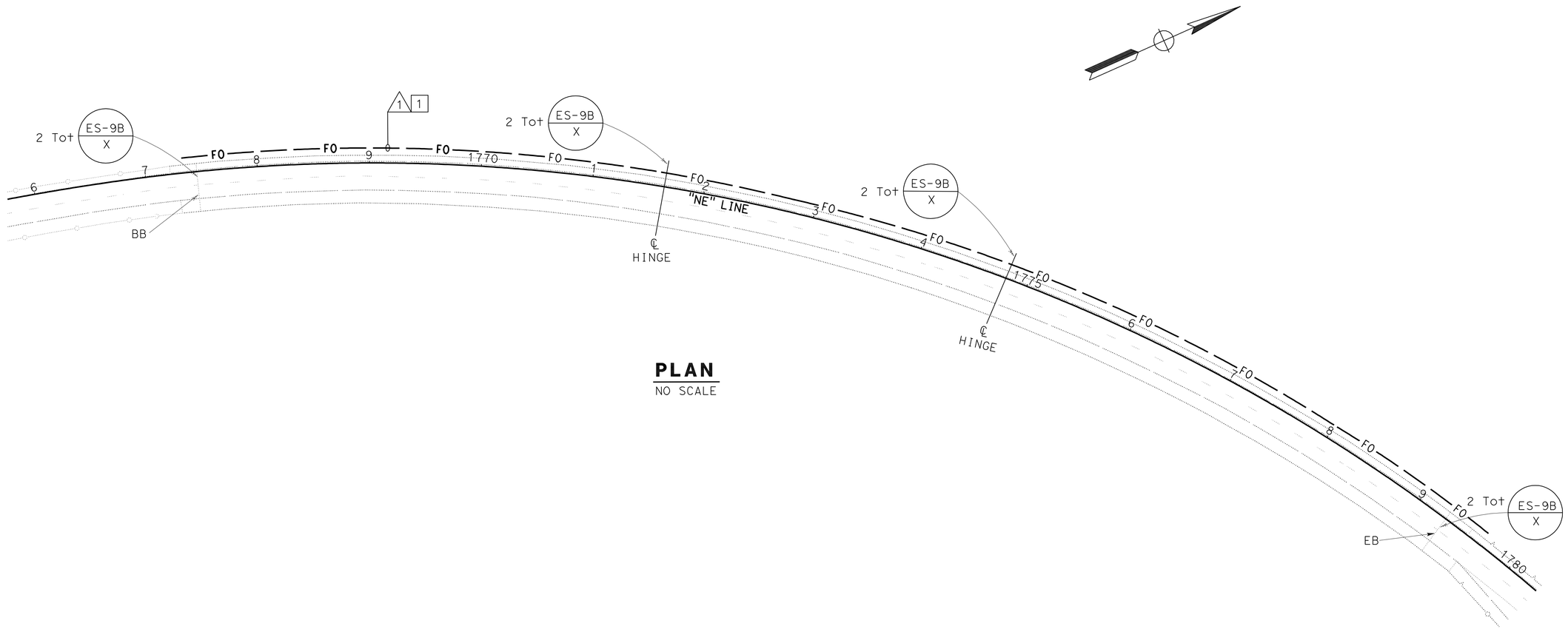

PLAN
NO SCALE

BRIDGE No.57-0990G
CARMEL VALLEY CREEK CONNECTOR

APPROVED FOR ELECTRICAL WORK ONLY

BRIDGE ELECTRICAL

NO SCALE

E-80

STATE OF CALIFORNIA - DEPARTMENT OF TRANSPORTATION
Caltrans® TRAFFIC ELECTRICAL

FUNCTIONAL SUPERVISOR: BRIAN T PECUS
CALCULATED-DESIGNED BY: HENRY TSUI
CHECKED BY: ENRIQUE BERNAL
REVISED BY
DATE REVISED

LAST REVISION 04-01-12
DATE PLOTTED => 31-AUG-2012
TIME PLOTTED => 13:40

Dist	COUNTY	ROUTE	POST MILES TOTAL PROJECT	SHEET No.	TOTAL SHEETS
11	SD	5,56	R30.4/R32.8, 0.0/9.2	124	177

Enrique P Bernal 03-28-12
REGISTERED ELECTRICAL ENGINEER DATE

6-4-12
PLANS APPROVAL DATE

REGISTERED PROFESSIONAL ENGINEER
ENRIQUE P. BERNAL
No. 15675
Exp. 6-30-12
ELECTRICAL
STATE OF CALIFORNIA

THE STATE OF CALIFORNIA OR ITS OFFICERS OR AGENTS SHALL NOT BE RESPONSIBLE FOR THE ACCURACY OR COMPLETENESS OF SCANNED COPIES OF THIS PLAN SHEET.

CONDUIT NOTE:

1 - MDCS(8)-TWO 4"C (FIBERGLASS COMMUNICATION CONDUIT),(SEE CLOSED CIRCUIT TELEVISION SYSTEM).

NOTE:

1 - FOR CONDUIT SUPPORT DETAILS SEE SES-2.

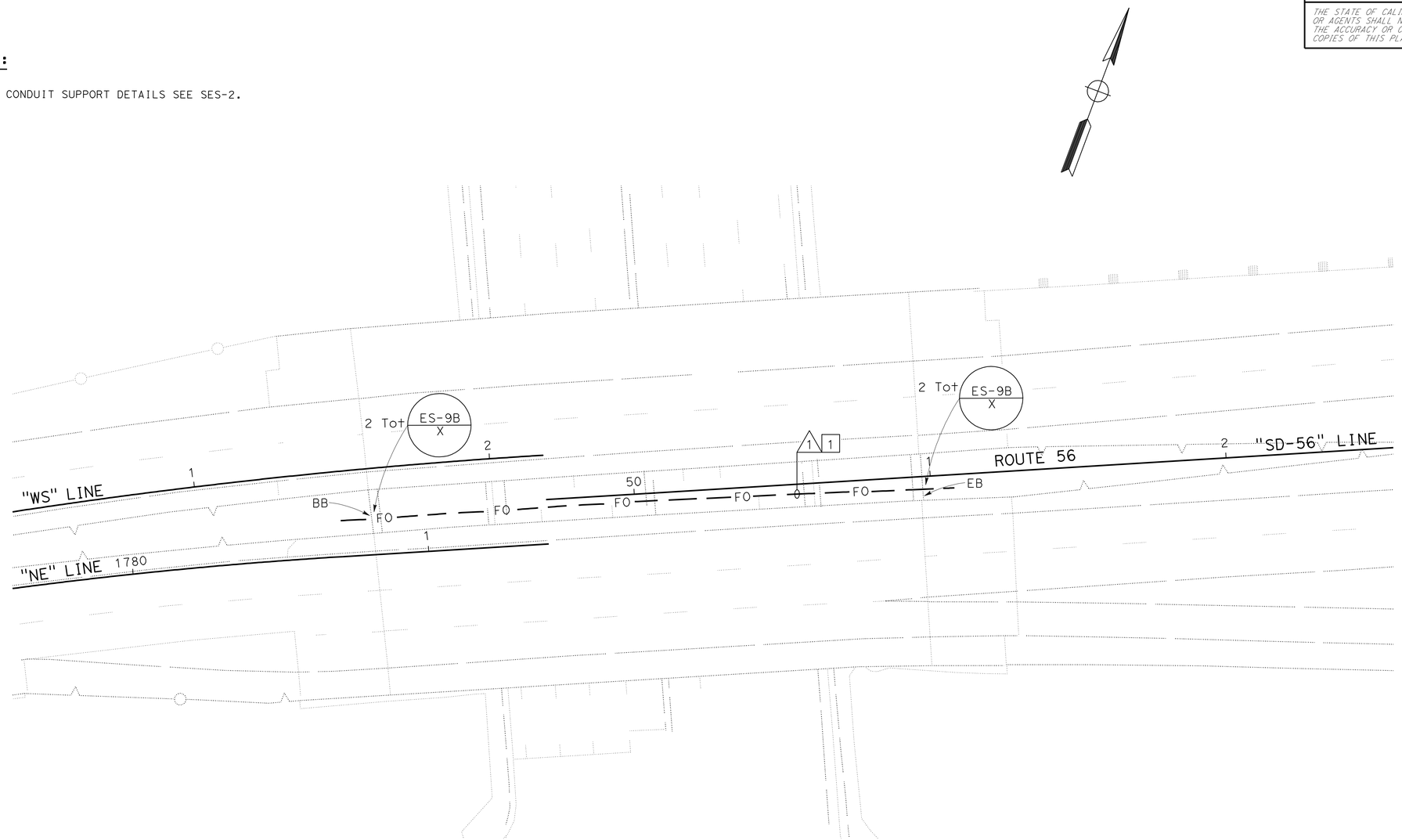

BRIDGE No.57-1004R
EL CAMINO REAL UNDERCROSS

APPROVED FOR ELECTRICAL WORK ONLY

BRIDGE ELECTRICAL

NO SCALE

E-81

STATE OF CALIFORNIA - DEPARTMENT OF TRANSPORTATION
Caltrans
TRAFFIC ELECTRICAL

FUNCTIONAL SUPERVISOR: BRIAN T PECUS
CALCULATED-DESIGNED BY: HENRY TSUI
CHECKED BY: ENRIQUE BERNAL
REVISED BY
DATE REVISED

LAST REVISION 04-01-12
DATE PLOTTED => 31-AUG-2012
TIME PLOTTED => 13:41

Dist	COUNTY	ROUTE	POST MILES TOTAL PROJECT	SHEET No.	TOTAL SHEETS
11	SD	5,56	R30.4/R32.8, 0.0/9.2	125	177

Enrique P Bernal 03-28-12
REGISTERED ELECTRICAL ENGINEER DATE

6-4-12
PLANS APPROVAL DATE

REGISTERED PROFESSIONAL ENGINEER
ENRIQUE P. BERNAL
No. 15675
Exp. 6-30-12
ELECTRICAL
STATE OF CALIFORNIA

THE STATE OF CALIFORNIA OR ITS OFFICERS OR AGENTS SHALL NOT BE RESPONSIBLE FOR THE ACCURACY OR COMPLETENESS OF SCANNED COPIES OF THIS PLAN SHEET.

CONDUIT NOTE:

1 - MDCS(8)-TWO 4"C (FIBERGLASS-COMMUNICATION CONDUIT), (SEE CLOSED CIRCUIT TELEVISION SYSTEM).

NOTE:

1 - FOR CONDUIT SUPPORT DETAILS SEE SES-2.

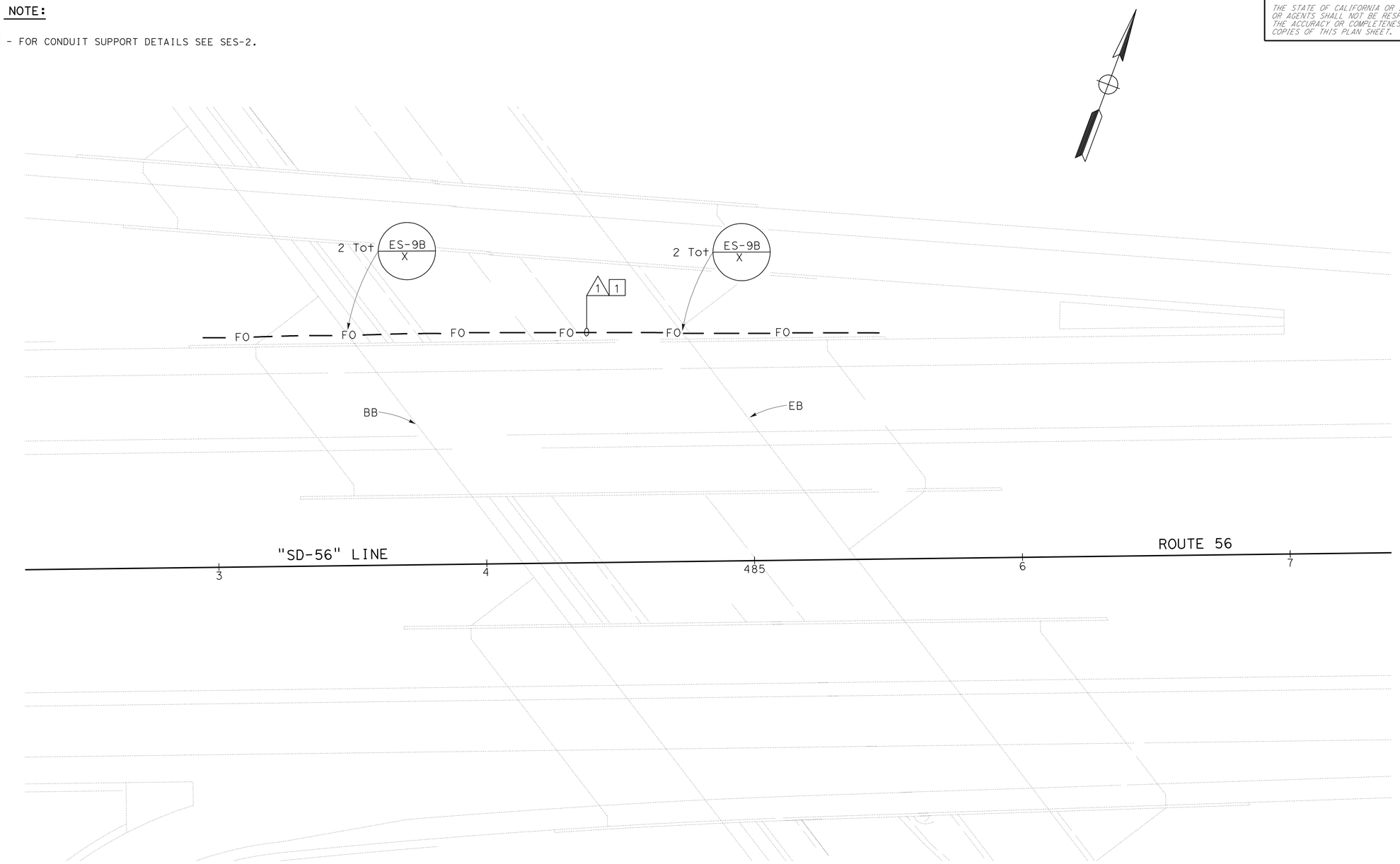

BRIDGE No.57-1009L
RANCHO PENASQUITOS UNDERCROSS

BRIDGE ELECTRICAL

NO SCALE

E-82

APPROVED FOR ELECTRICAL WORK ONLY

STATE OF CALIFORNIA - DEPARTMENT OF TRANSPORTATION
Caltrans
TRAFFIC ELECTRICAL

FUNCTIONAL SUPERVISOR: BRIAN T PECUS
CALCULATED-DESIGNED BY: ENRIQUE BERNAL
CHECKED BY
REVISED BY
DATE REVISED

LAST REVISION 04-01-12
DATE PLOTTED => 31-AUG-2012
TIME PLOTTED => 13:41

Dist	COUNTY	ROUTE	POST MILES TOTAL PROJECT	SHEET No.	TOTAL SHEETS
11	SD	5,56	R30.4/R32.8, 0.0/9.2	126	177

Enrique P Bernal 03-28-12
REGISTERED ELECTRICAL ENGINEER DATE

6-4-12
PLANS APPROVAL DATE

REGISTERED PROFESSIONAL ENGINEER
ENRIQUE P. BERNAL
No. 15675
Exp. 6-30-12
ELECTRICAL
STATE OF CALIFORNIA

THE STATE OF CALIFORNIA OR ITS OFFICERS OR AGENTS SHALL NOT BE RESPONSIBLE FOR THE ACCURACY OR COMPLETENESS OF SCANNED COPIES OF THIS PLAN SHEET.

COLOR CODES FOR BUFFER TUBES AND FIBERS:

1. BLUE (BL)
2. ORANGE (OR)
3. GREEN (GR)
4. BROWN (BR)
5. SLATE (SL)
6. WHITE (WT)
7. RED (RD)
8. BLACK (BK)
9. YELLOW (YL)
10. VIOLET (VL)
11. ROSE (RS)
12. AQUA (AQ)

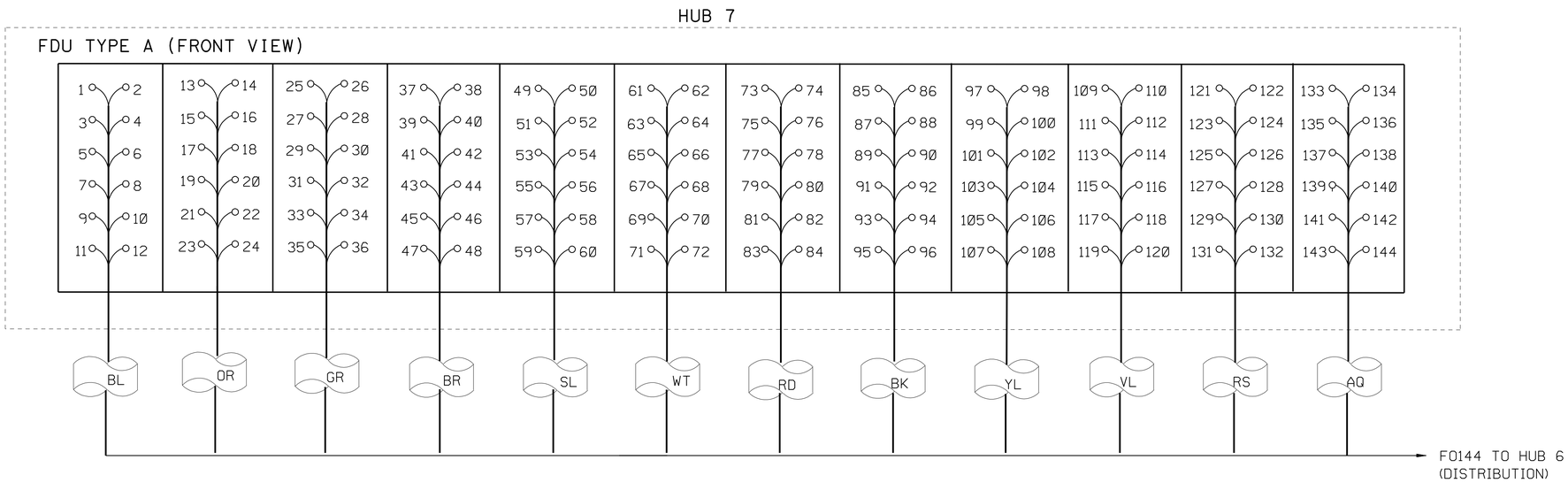

FDU TO FIBER CABLE TERMINATION DETAIL

SAME DETAIL FOR F0144 (BACKBONE)

LEGEND

- SPLICE OF TWO FIBER
- CUT END OF FIBER, NOT SPLICED
- SC FEMALE CONNECTOR ON AN FDU PANEL
- SC MALE CONNECTOR ON AN SMFO PATCHCORD

APPROVED FOR ELECTRICAL WORK ONLY

CLOSED CIRCUIT TELEVISION SYSTEM
(ELECTRICAL DETAILS)

SCALE: 1" = 50'

E-83

REVISED BY | DATE REVISED
HENRY TSUI | ENRIQUE BERNAL
CALCULATED-DESIGNED BY | CHECKED BY
FUNCTIONAL SUPERVISOR
BRIAN T PECUS

STATE OF CALIFORNIA - DEPARTMENT OF TRANSPORTATION
Caltrans® TRAFFIC ELECTRICAL

LAST REVISION 04-01-12 | DATE PLOTTED => 31-AUG-2012 | TIME PLOTTED => 13:41

Dist	COUNTY	ROUTE	POST MILES TOTAL PROJECT	SHEET No.	TOTAL SHEETS
11	SD	5,56	R30.4/R32.8, 0.0/9.2	127	177

Enrique P Bernal 03-28-12
REGISTERED ELECTRICAL ENGINEER DATE

6-4-12
PLANS APPROVAL DATE

REGISTERED PROFESSIONAL ENGINEER
ENRIQUE P. BERNAL
No. 15675
Exp. 6-30-12
ELECTRICAL
STATE OF CALIFORNIA

THE STATE OF CALIFORNIA OR ITS OFFICERS OR AGENTS SHALL NOT BE RESPONSIBLE FOR THE ACCURACY OR COMPLETENESS OF SCANNED COPIES OF THIS PLAN SHEET.

COLOR CODES FOR BUFFER TUBES AND FIBERS:

1. BLUE (BL)
2. ORANGE (OR)
3. GREEN (GR)
4. BROWN (BR)
5. SLATE (SL)
6. WHITE (WT)
7. RED (RD)
8. BLACK (BK)
9. YELLOW (YL)
10. VIOLET (VL)
11. ROSE (RS)
12. AQUA (AQ)

NOTES (TSO):

1 - THIS SHEET DOES NOT SHOW ALL THE EX AND NEW FO VAULT/PULL BOXES. SEE CIRCUIT DIAGRAMS AND ELECTRICAL PLANS.

2 - FO144 (DISTRIBUTION) SHOWN ONLY. SAME DETAIL FOR FO144 (BACKBONE).

3 - TERMINATE FO144 ON FDU, SEE SHEET E-83 FOR FIBER TERMINATION LAYOUT.

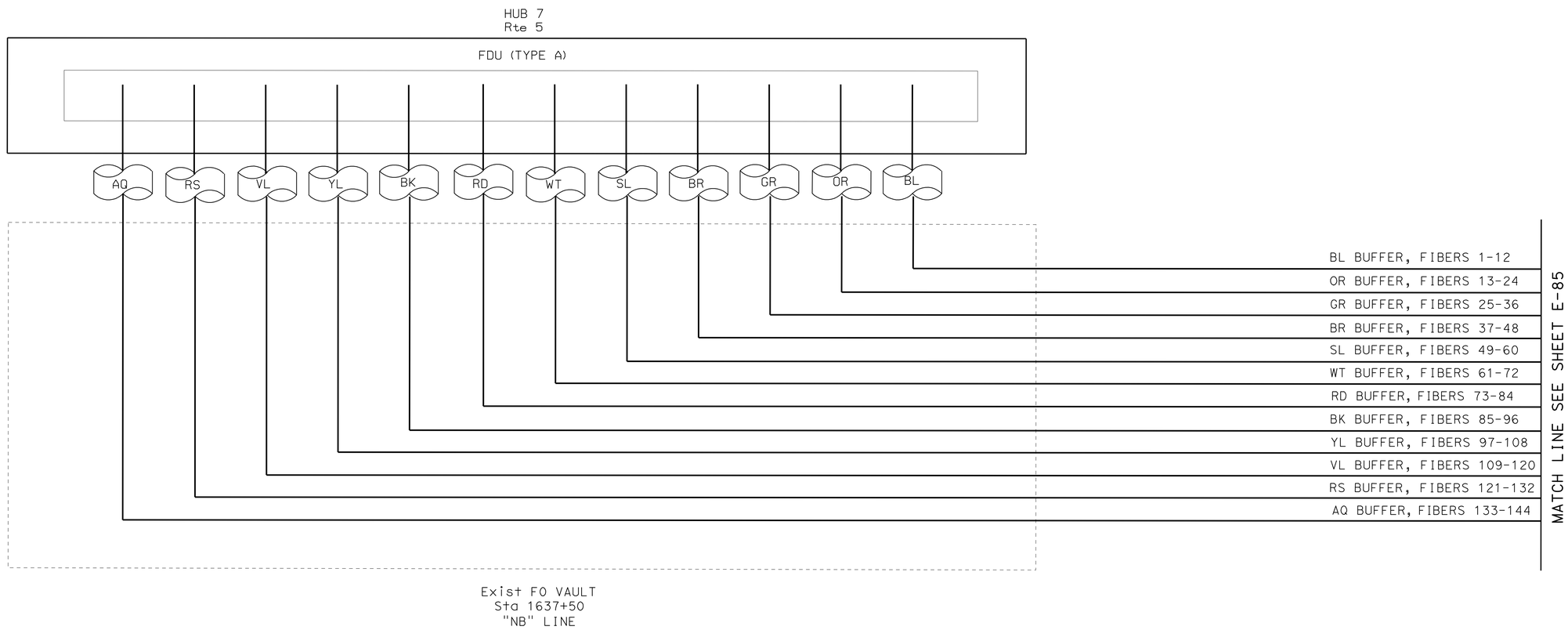

LEGEND

- SPLICE OF TWO FIBER
- CUT END OF FIBER, NOT SPLICED
- SC FEMALE CONNECTOR ON AN FDU PANEL
- SC MALE CONNECTOR ON AN SMFO PATCHCORD

APPROVED FOR ELECTRICAL WORK ONLY

CLOSED CIRCUIT TELEVISION SYSTEM
(ELECTRICAL DETAILS)

SCALE: 1" = 50'

E-84

STATE OF CALIFORNIA - DEPARTMENT OF TRANSPORTATION
Caltrans® TRAFFIC ELECTRICAL

FUNCTIONAL SUPERVISOR: BRIAN T PECUS
CALCULATED-DESIGNED BY: HENRY TSUI
CHECKED BY: ENRIQUE BERNAL
REVISED BY
DATE REVISED

LAST REVISION 04-01-12
DATE PLOTTED => 31-AUG-2012
TIME PLOTTED => 13:41

Dist	COUNTY	ROUTE	POST MILES TOTAL PROJECT	SHEET No.	TOTAL SHEETS
11	SD	5,56	R30.4/R32.8, 0.0/9.2	128	177

Enrique P Bernal 03-28-12
REGISTERED ELECTRICAL ENGINEER DATE

6-4-12
PLANS APPROVAL DATE

REGISTERED PROFESSIONAL ENGINEER ENRIQUE P. BERNAL No. 15675 Exp. 6-30-12 ELECTRICAL STATE OF CALIFORNIA

THE STATE OF CALIFORNIA OR ITS OFFICERS OR AGENTS SHALL NOT BE RESPONSIBLE FOR THE ACCURACY OR COMPLETENESS OF SCANNED COPIES OF THIS PLAN SHEET.

COLOR CODES FOR BUFFER TUBES AND FIBERS:

1. BLUE (BL)
2. ORANGE (OR)
3. GREEN (GR)
4. BROWN (BR)
5. SLATE (SL)
6. WHITE (WT)
7. RED (RD)
8. BLACK (BK)
9. YELLOW (YL)
10. VIOLET (VL)
11. ROSE (RS)
12. AQUA (AQ)

NOTES (TSO):

1 - THIS SHEET DOES NOT SHOW ALL THE EX AND NEW FO VAULT/PULL BOXES. SEE CIRCUIT DIAGRAMS AND ELECTRICAL PLANS.

2 - FO144 (DISTRIBUTION) SHOWN ONLY.

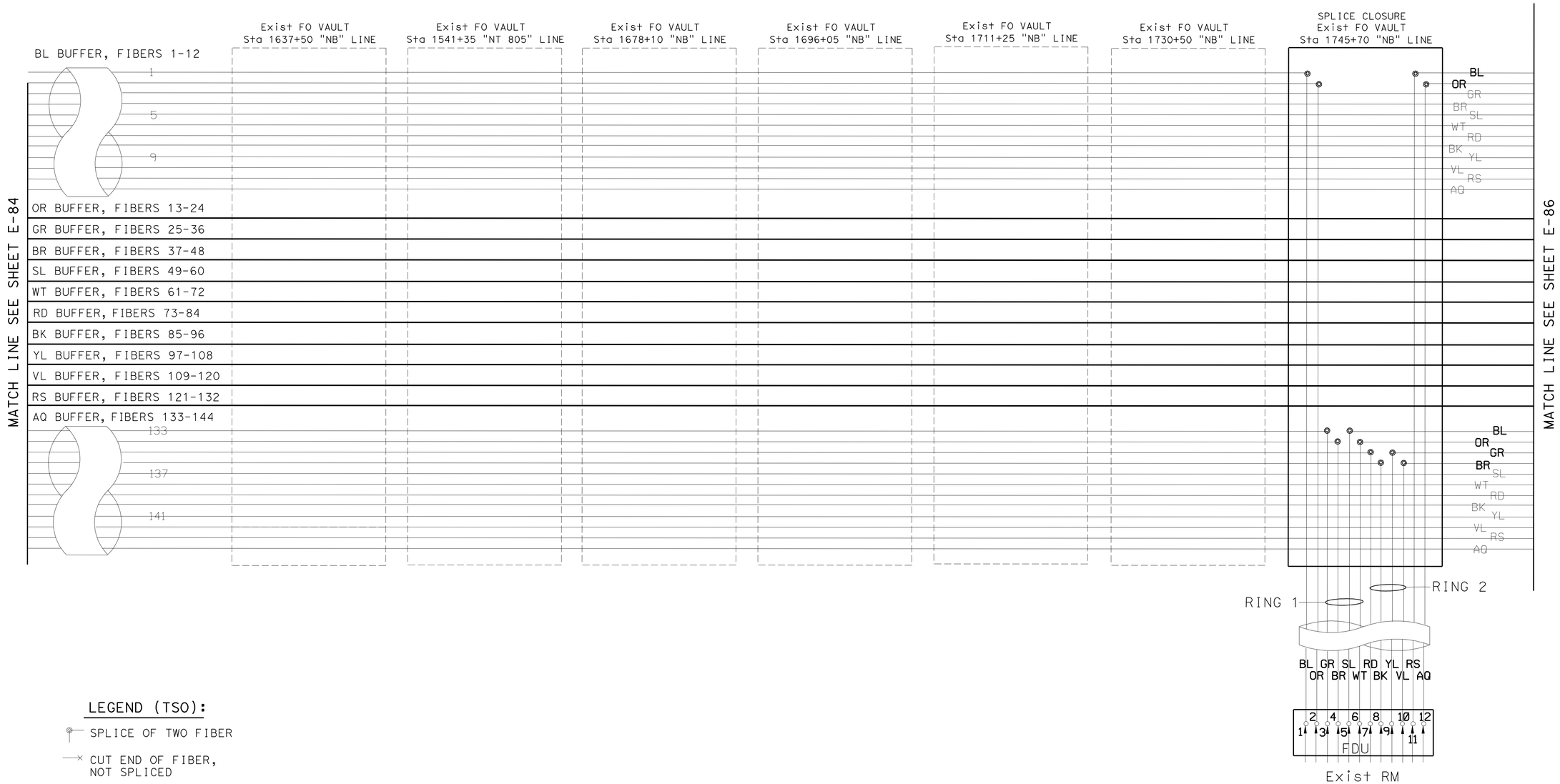

LEGEND (TSO):

- SPLICE OF TWO FIBER
- CUT END OF FIBER, NOT SPLICED
- SC FEMALE CONNECTOR ON AN FDU PANEL
- SC MALE CONNECTOR ON AN SMFO PATCHCORD

APPROVED FOR ELECTRICAL WORK ONLY

CLOSED CIRCUIT TELEVISION SYSTEM
(ELECTRICAL DETAILS)

SCALE: 1" = 50'

E-85

STATE OF CALIFORNIA - DEPARTMENT OF TRANSPORTATION
Caltrans TRAFFIC ELECTRICAL

FUNCTIONAL SUPERVISOR: BRIAN T PECUS
CALCULATED-DESIGNED BY: HENRY TSUI
CHECKED BY: ENRIQUE BERNAL
REVISED BY
DATE REVISED

LAST REVISION 04-01-12
DATE PLOTTED => 31-AUG-2012
TIME PLOTTED => 13:41

Dist	COUNTY	ROUTE	POST MILES TOTAL PROJECT	SHEET No.	TOTAL SHEETS
11	SD	5,56	R30.4/R32.8, 0.0/9.2	129	177

Enrique P Bernal 03-28-12
REGISTERED ELECTRICAL ENGINEER DATE

6-4-12
PLANS APPROVAL DATE

REGISTERED PROFESSIONAL ENGINEER ENRIQUE P. BERNAL No. 15675 Exp. 6-30-12 ELECTRICAL STATE OF CALIFORNIA

THE STATE OF CALIFORNIA OR ITS OFFICERS OR AGENTS SHALL NOT BE RESPONSIBLE FOR THE ACCURACY OR COMPLETENESS OF SCANNED COPIES OF THIS PLAN SHEET.

COLOR CODES FOR BUFFER TUBES AND FIBERS:

1. BLUE (BL)
2. ORANGE (OR)
3. GREEN (GR)
4. BROWN (BR)
5. SLATE (SL)
6. WHITE (WT)
7. RED (RD)
8. BLACK (BK)
9. YELLOW (YL)
10. VIOLET (VL)
11. ROSE (RS)
12. AQUA (AQ)

NOTES (TSO):

1 - THIS SHEET DOES NOT SHOW ALL THE EX AND NEW FO VAULT/PULL BOXES. SEE CIRCUIT DIAGRAMS AND ELECTRICAL PLANS.

2 - FO144 (DISTRIBUTION) SHOWN ONLY.

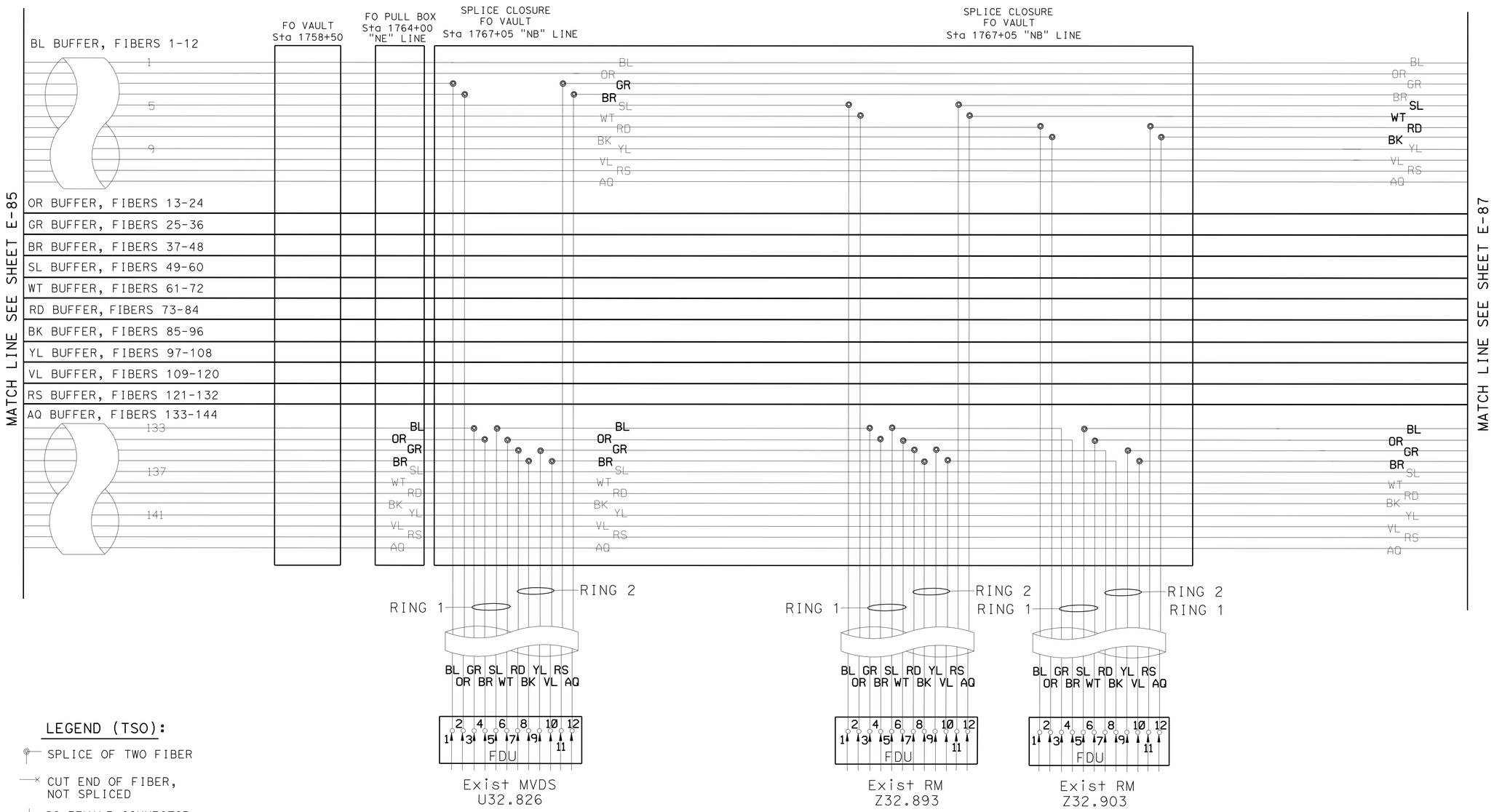

LEGEND (TSO):

- SPLICE OF TWO FIBER
- CUT END OF FIBER, NOT SPLICED
- SC FEMALE CONNECTOR ON AN FDU PANEL
- SC MALE CONNECTOR ON AN SMFO PATCHCORD

APPROVED FOR ELECTRICAL WORK ONLY

CLOSED CIRCUIT TELEVISION SYSTEM (ELECTRICAL DETAILS)

SCALE: 1" = 50'

E-86

STATE OF CALIFORNIA - DEPARTMENT OF TRANSPORTATION
Caltrans TRAFFIC ELECTRICAL

FUNCTIONAL SUPERVISOR: BRIAN T PECUS
CALCULATED-DESIGNED BY: HENRY TSUI
CHECKED BY: ENRIQUE BERNAL
REVISED BY
DATE REVISED

LAST REVISION 04-01-12
DATE PLOTTED => 31-AUG-2012
TIME PLOTTED => 13:41

Dist	COUNTY	ROUTE	POST MILES TOTAL PROJECT	SHEET No.	TOTAL SHEETS
11	SD	5,56	R30.4/R32.8, 0.0/9.2	130	177

Enrique P Bernal 03-28-12
REGISTERED ELECTRICAL ENGINEER DATE

6-4-12
PLANS APPROVAL DATE

REGISTERED PROFESSIONAL ENGINEER ENRIQUE P. BERNAL No. 15675 Exp. 6-30-12 ELECTRICAL STATE OF CALIFORNIA

THE STATE OF CALIFORNIA OR ITS OFFICERS OR AGENTS SHALL NOT BE RESPONSIBLE FOR THE ACCURACY OR COMPLETENESS OF SCANNED COPIES OF THIS PLAN SHEET.

COLOR CODES FOR BUFFER TUBES AND FIBERS:

1. BLUE (BL)
2. ORANGE (OR)
3. GREEN (GR)
4. BROWN (BR)
5. SLATE (SL)
6. WHITE (WT)
7. RED (RD)
8. BLACK (BK)
9. YELLOW (YL)
10. VIOLET (VL)
11. ROSE (RS)
12. AQUA (AQ)

NOTES (TSO):

1 - THIS SHEET DOES NOT SHOW ALL THE EX AND NEW FO VAULT/PULL BOXES. SEE CIRCUIT DIAGRAMS AND ELECTRICAL PLANS.

2 - FO144 (DISTRIBUTION) SHOWN ONLY.

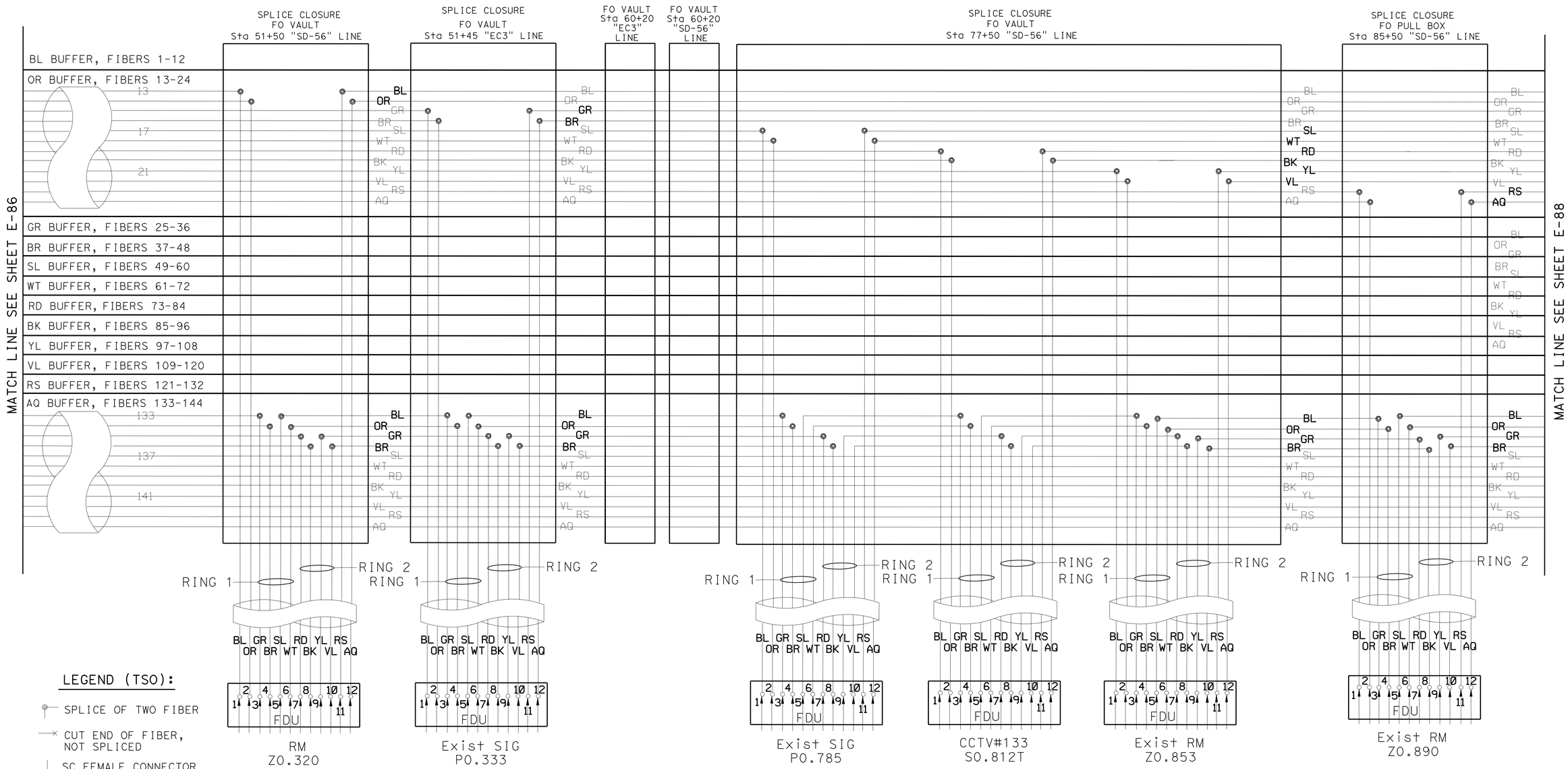

LEGEND (TSO):

- SPLICE OF TWO FIBER
- CUT END OF FIBER, NOT SPLICED
- SC FEMALE CONNECTOR ON AN FDU PANEL
- SC MALE CONNECTOR ON AN SMFO PATCHCORD

CLOSED CIRCUIT TELEVISION SYSTEM
(ELECTRICAL DETAILS)

APPROVED FOR ELECTRICAL WORK ONLY

SCALE: 1" = 50'

E-87

STATE OF CALIFORNIA - DEPARTMENT OF TRANSPORTATION
Caltrans TRAFFIC ELECTRICAL

FUNCTIONAL SUPERVISOR: BRIAN T PECUS
CALCULATED-DESIGNED BY: HENRY TSUI
CHECKED BY: ENRIQUE BERNAL
REVISED BY
DATE REVISED

LAST REVISION 04-01-12
DATE PLOTTED => 31-AUG-2012
TIME PLOTTED => 13:41

Dist	COUNTY	ROUTE	POST MILES TOTAL PROJECT	SHEET No.	TOTAL SHEETS
11	SD	5,56	R30.4/R32.8, 0.0/9.2	131	177

Enrique P Bernal 03-28-12
REGISTERED ELECTRICAL ENGINEER DATE

6-4-12
PLANS APPROVAL DATE

REGISTERED PROFESSIONAL ENGINEER ENRIQUE P. BERNAL No. 15675 Exp. 6-30-12 ELECTRICAL STATE OF CALIFORNIA

THE STATE OF CALIFORNIA OR ITS OFFICERS OR AGENTS SHALL NOT BE RESPONSIBLE FOR THE ACCURACY OR COMPLETENESS OF SCANNED COPIES OF THIS PLAN SHEET.

COLOR CODES FOR BUFFER TUBES AND FIBERS:

1. BLUE (BL)
2. ORANGE (OR)
3. GREEN (GR)
4. BROWN (BR)
5. SLATE (SL)
6. WHITE (WT)
7. RED (RD)
8. BLACK (BK)
9. YELLOW (YL)
10. VIOLET (VL)
11. ROSE (RS)
12. AQUA (AQ)

NOTES (TSO):

1 - THIS SHEET DOES NOT SHOW ALL THE EX AND NEW FO VAULT/PULL BOXES. SEE CIRCUIT DIAGRAMS AND ELECTRICAL PLANS.

2 - FO144 (DISTRIBUTION) SHOWN ONLY.

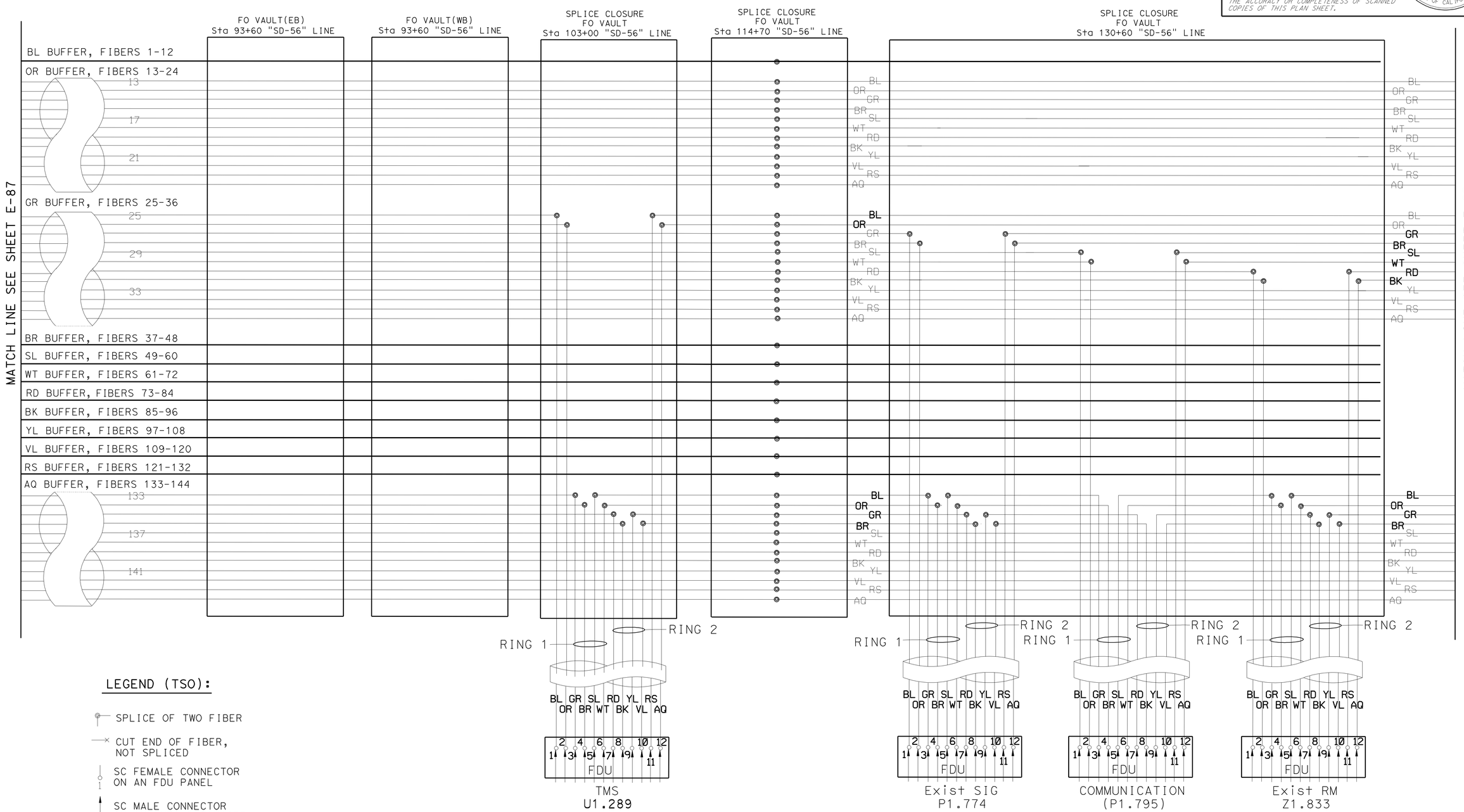

LEGEND (TSO):

- SPLICE OF TWO FIBER
- CUT END OF FIBER, NOT SPLICED
- SC FEMALE CONNECTOR ON AN FDU PANEL
- SC MALE CONNECTOR ON AN SMFO PATCHCORD

APPROVED FOR ELECTRICAL WORK ONLY

CLOSED CIRCUIT TELEVISION SYSTEM
(ELECTRICAL DETAILS)

SCALE: 1" = 50'

E-88

REVISED BY | DATE REVISED
HENRY TSUI | ENRIQUE BERNAL
CALCULATED-DESIGNED BY | CHECKED BY
FUNCTIONAL SUPERVISOR
BRIAN T PECUS

STATE OF CALIFORNIA - DEPARTMENT OF TRANSPORTATION
Caltrans® TRAFFIC ELECTRICAL

LAST REVISION 04-01-12 | DATE PLOTTED => 31-AUG-2012 | TIME PLOTTED => 13:41

Dist	COUNTY	ROUTE	POST MILES TOTAL PROJECT	SHEET No.	TOTAL SHEETS
11	SD	5,56	R30.4/R32.8, 0.0/9.2	132	177

Enrique P Bernal 03-28-12
REGISTERED ELECTRICAL ENGINEER DATE

6-4-12
PLANS APPROVAL DATE

REGISTERED PROFESSIONAL ENGINEER ENRIQUE P. BERNAL No. 15675 Exp. 6-30-12 ELECTRICAL STATE OF CALIFORNIA

THE STATE OF CALIFORNIA OR ITS OFFICERS OR AGENTS SHALL NOT BE RESPONSIBLE FOR THE ACCURACY OR COMPLETENESS OF SCANNED COPIES OF THIS PLAN SHEET.

COLOR CODES FOR BUFFER TUBES AND FIBERS:

1. BLUE (BL)
2. ORANGE (OR)
3. GREEN (GR)
4. BROWN (BR)
5. SLATE (SL)
6. WHITE (WT)
7. RED (RD)
8. BLACK (BK)
9. YELLOW (YL)
10. VIOLET (VL)
11. ROSE (RS)
12. AQUA (AQ)

NOTES (TSO):

1 - THIS SHEET DOES NOT SHOW ALL THE EX AND NEW FO VAULT/PULL BOXES. SEE CIRCUIT DIAGRAMS AND ELECTRICAL PLANS.

2 - FO144 (DISTRIBUTION) SHOWN ONLY.

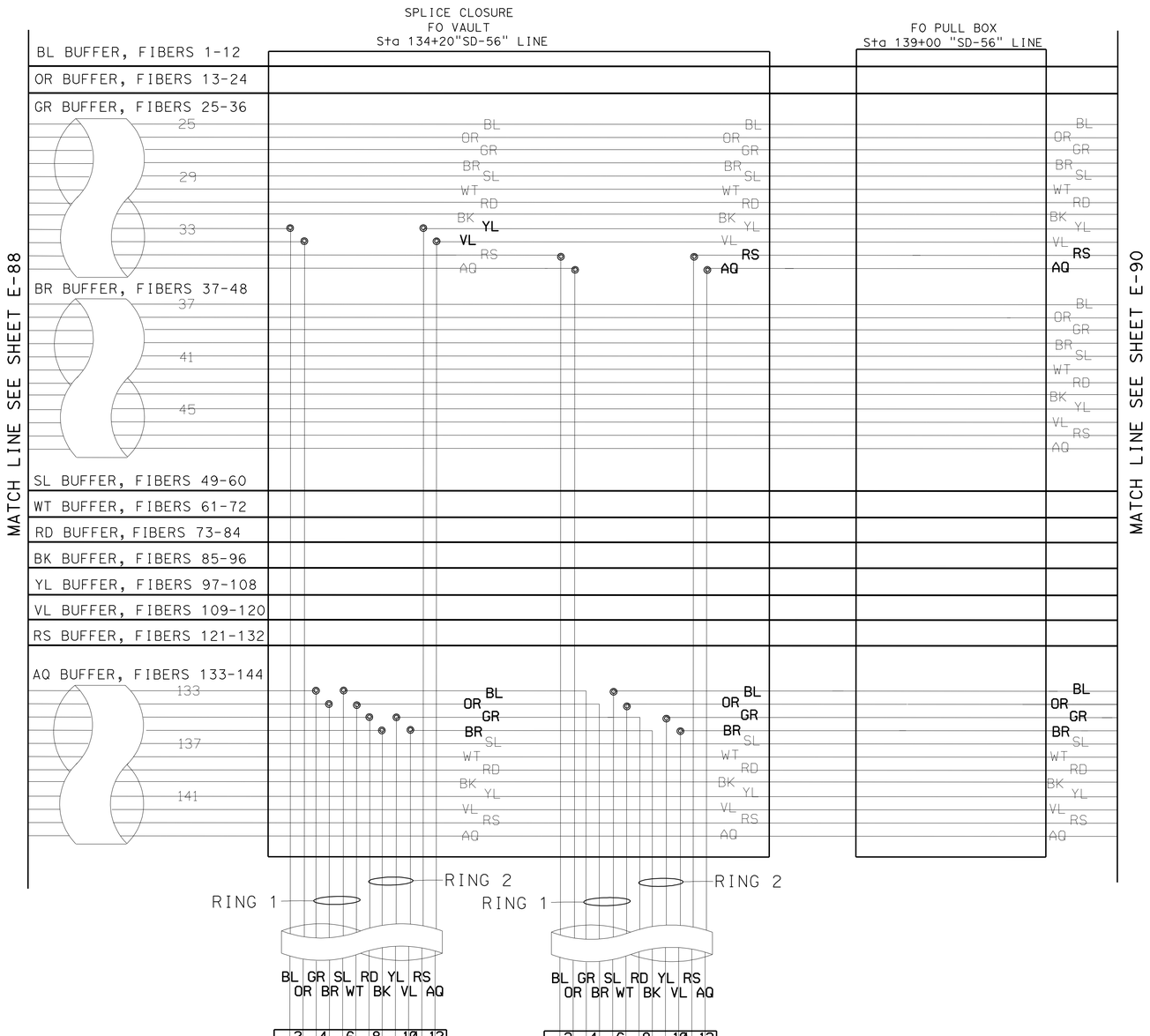

LEGEND (TSO):

- SPLICE OF TWO FIBER
- CUT END OF FIBER, NOT SPLICED
- SC FEMALE CONNECTOR ON AN FDU PANEL
- SC MALE CONNECTOR ON AN SMFO PATCHCORD

APPROVED FOR ELECTRICAL WORK ONLY

CLOSED CIRCUIT TELEVISION SYSTEM
(ELECTRICAL DETAILS)

SCALE: 1" = 50'

E-89

STATE OF CALIFORNIA - DEPARTMENT OF TRANSPORTATION
Caltrans TRAFFIC ELECTRICAL

FUNCTIONAL SUPERVISOR: BRIAN T PECUS
CALCULATED-DESIGNED BY: HENRY TSUI
CHECKED BY: ENRIQUE BERNAL
REVISED BY
DATE REVISED

LAST REVISION 04-01-12
DATE PLOTTED => 31-AUG-2012
TIME PLOTTED => 13:41

Dist	COUNTY	ROUTE	POST MILES TOTAL PROJECT	SHEET No.	TOTAL SHEETS
11	SD	5,56	R30.4/R32.8, 0.0/9.2	133	177

Enrique P Bernal 03-28-12
REGISTERED ELECTRICAL ENGINEER DATE

6-4-12
PLANS APPROVAL DATE

REGISTERED PROFESSIONAL ENGINEER ENRIQUE P. BERNAL No. 15675 Exp. 6-30-12 ELECTRICAL STATE OF CALIFORNIA

THE STATE OF CALIFORNIA OR ITS OFFICERS OR AGENTS SHALL NOT BE RESPONSIBLE FOR THE ACCURACY OR COMPLETENESS OF SCANNED COPIES OF THIS PLAN SHEET.

COLOR CODES FOR BUFFER TUBES AND FIBERS:

1. BLUE (BL)
2. ORANGE (OR)
3. GREEN (GR)
4. BROWN (BR)
5. SLATE (SL)
6. WHITE (WT)
7. RED (RD)
8. BLACK (BK)
9. YELLOW (YL)
10. VIOLET (VL)
11. ROSE (RS)
12. AQUA (AQ)

NOTES (TSO):

1 - THIS SHEET DOES NOT SHOW ALL THE EX AND NEW FO VAULT/PULL BOXES. SEE CIRCUIT DIAGRAMS AND ELECTRICAL PLANS.

2 - FO144 (DISTRIBUTION) SHOWN ONLY.

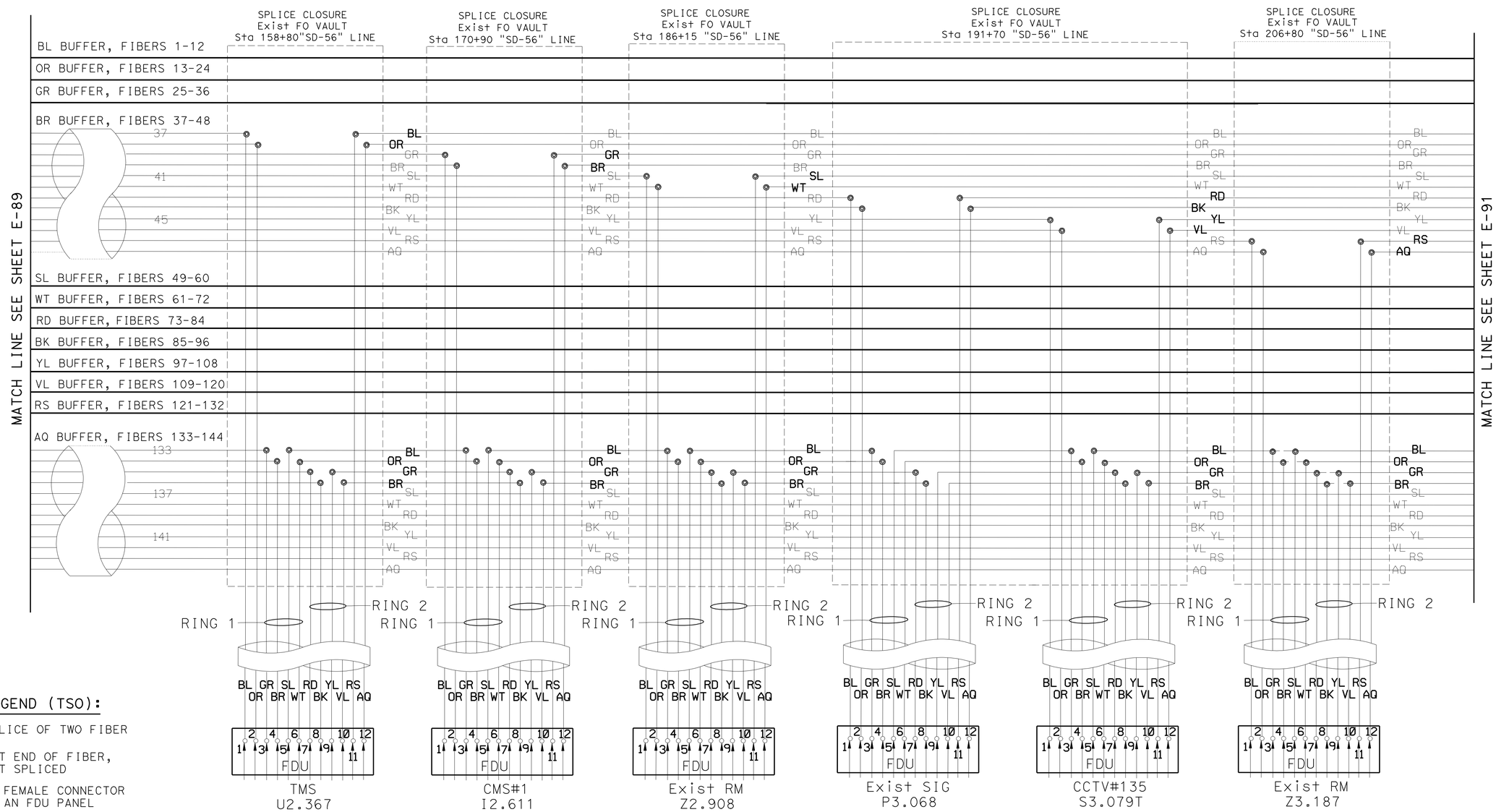

LEGEND (TSO):

- SPLICE OF TWO FIBER
- CUT END OF FIBER, NOT SPLICED
- SC FEMALE CONNECTOR ON AN FDU PANEL
- SC MALE CONNECTOR ON AN SMFO PATCHCORD

CLOSED CIRCUIT TELEVISION SYSTEM (ELECTRICAL DETAILS)

APPROVED FOR ELECTRICAL WORK ONLY

SCALE: 1" = 50'

E-90

STATE OF CALIFORNIA - DEPARTMENT OF TRANSPORTATION
Caltrans TRAFFIC ELECTRICAL

FUNCTIONAL SUPERVISOR: BRIAN T PECUS
CALCULATED-DESIGNED BY: ENRIQUE BERNAL
CHECKED BY: HENRY TSUI
REVISED BY
DATE REVISED

LAST REVISION 04-01-12
DATE PLOTTED => 31-AUG-2012
TIME PLOTTED => 13:41

Dist	COUNTY	ROUTE	POST MILES TOTAL PROJECT	SHEET No.	TOTAL SHEETS
11	SD	5,56	R30.4/R32.8, 0.0/9.2	134	177

Enrique P Bernal 03-28-12
REGISTERED ELECTRICAL ENGINEER DATE

6-4-12
PLANS APPROVAL DATE

REGISTERED PROFESSIONAL ENGINEER ENRIQUE P. BERNAL No. 15675 Exp. 6-30-12 ELECTRICAL STATE OF CALIFORNIA

THE STATE OF CALIFORNIA OR ITS OFFICERS OR AGENTS SHALL NOT BE RESPONSIBLE FOR THE ACCURACY OR COMPLETENESS OF SCANNED COPIES OF THIS PLAN SHEET.

COLOR CODES FOR BUFFER TUBES AND FIBERS:

1. BLUE (BL)
2. ORANGE (OR)
3. GREEN (GR)
4. BROWN (BR)
5. SLATE (SL)
6. WHITE (WT)
7. RED (RD)
8. BLACK (BK)
9. YELLOW (YL)
10. VIOLET (VL)
11. ROSE (RS)
12. AQUA (AQ)

NOTES (TSO):

1 - THIS SHEET DOES NOT SHOW ALL THE EX AND NEW FO VAULT/PULL BOXES. SEE CIRCUIT DIAGRAMS AND ELECTRICAL PLANS.

2 - FO144 (DISTRIBUTION) SHOWN ONLY.

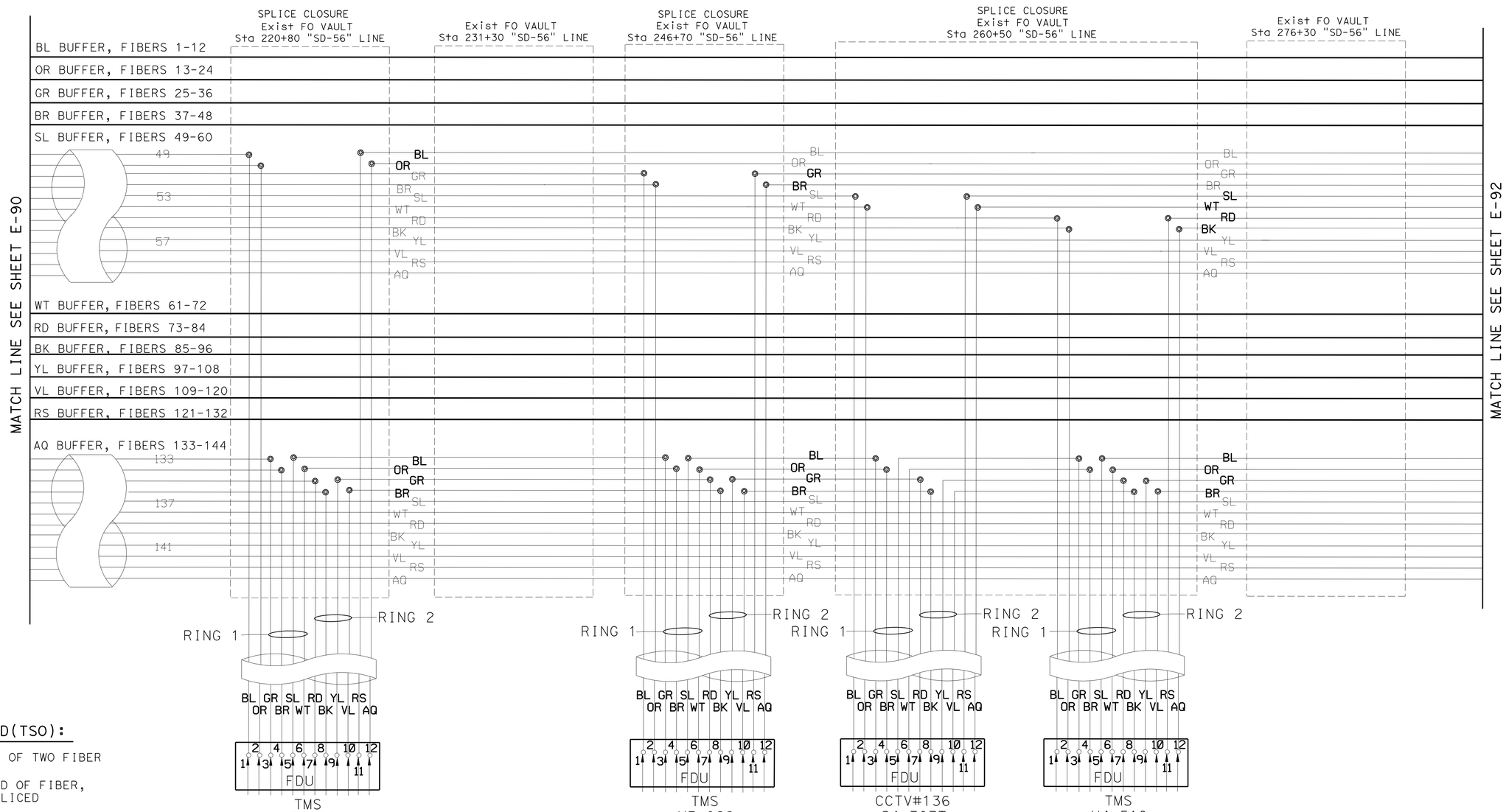

LEGEND(TSO):

- SPLICE OF TWO FIBER
- CUT END OF FIBER, NOT SPLICED
- SC FEMALE CONNECTOR ON AN FDU PANEL
- SC MALE CONNECTOR ON AN SMFO PATCHCORD

CLOSED CIRCUIT TELEVISION SYSTEM
(ELECTRICAL DETAILS)

APPROVED FOR ELECTRICAL WORK ONLY

SCALE: 1" = 50'

E-91

STATE OF CALIFORNIA - DEPARTMENT OF TRANSPORTATION
Caltrans® TRAFFIC ELECTRICAL

FUNCTIONAL SUPERVISOR: BRIAN T PECUS
CALCULATED-DESIGNED BY: HENRY TSUI
CHECKED BY: ENRIQUE BERNAL
REVISED BY
DATE REVISED

LAST REVISION 04-01-12
DATE PLOTTED => 31-AUG-2012
TIME PLOTTED => 13:42

Dist	COUNTY	ROUTE	POST MILES TOTAL PROJECT	SHEET No.	TOTAL SHEETS
11	SD	5,56	R30.4/R32.8, 0.0/9.2	135	177

Enrique P Bernal 03-28-12
REGISTERED ELECTRICAL ENGINEER DATE

6-4-12
PLANS APPROVAL DATE

REGISTERED PROFESSIONAL ENGINEER ENRIQUE P. BERNAL No. 15675 Exp. 6-30-12 ELECTRICAL STATE OF CALIFORNIA

THE STATE OF CALIFORNIA OR ITS OFFICERS OR AGENTS SHALL NOT BE RESPONSIBLE FOR THE ACCURACY OR COMPLETENESS OF SCANNED COPIES OF THIS PLAN SHEET.

COLOR CODES FOR BUFFER TUBES AND FIBERS:

1. BLUE (BL)
2. ORANGE (OR)
3. GREEN (GR)
4. BROWN (BR)
5. SLATE (SL)
6. WHITE (WT)
7. RED (RD)
8. BLACK (BK)
9. YELLOW (YL)
10. VIOLET (VL)
11. ROSE (RS)
12. AQUA (AQ)

NOTES (TSO):

1 - THIS SHEET DOES NOT SHOW ALL THE EX AND NEW FO VAULT/PULL BOXES. SEE CIRCUIT DIAGRAMS AND ELECTRICAL PLANS.

2 - FO144 (DISTRIBUTION) SHOWN ONLY.

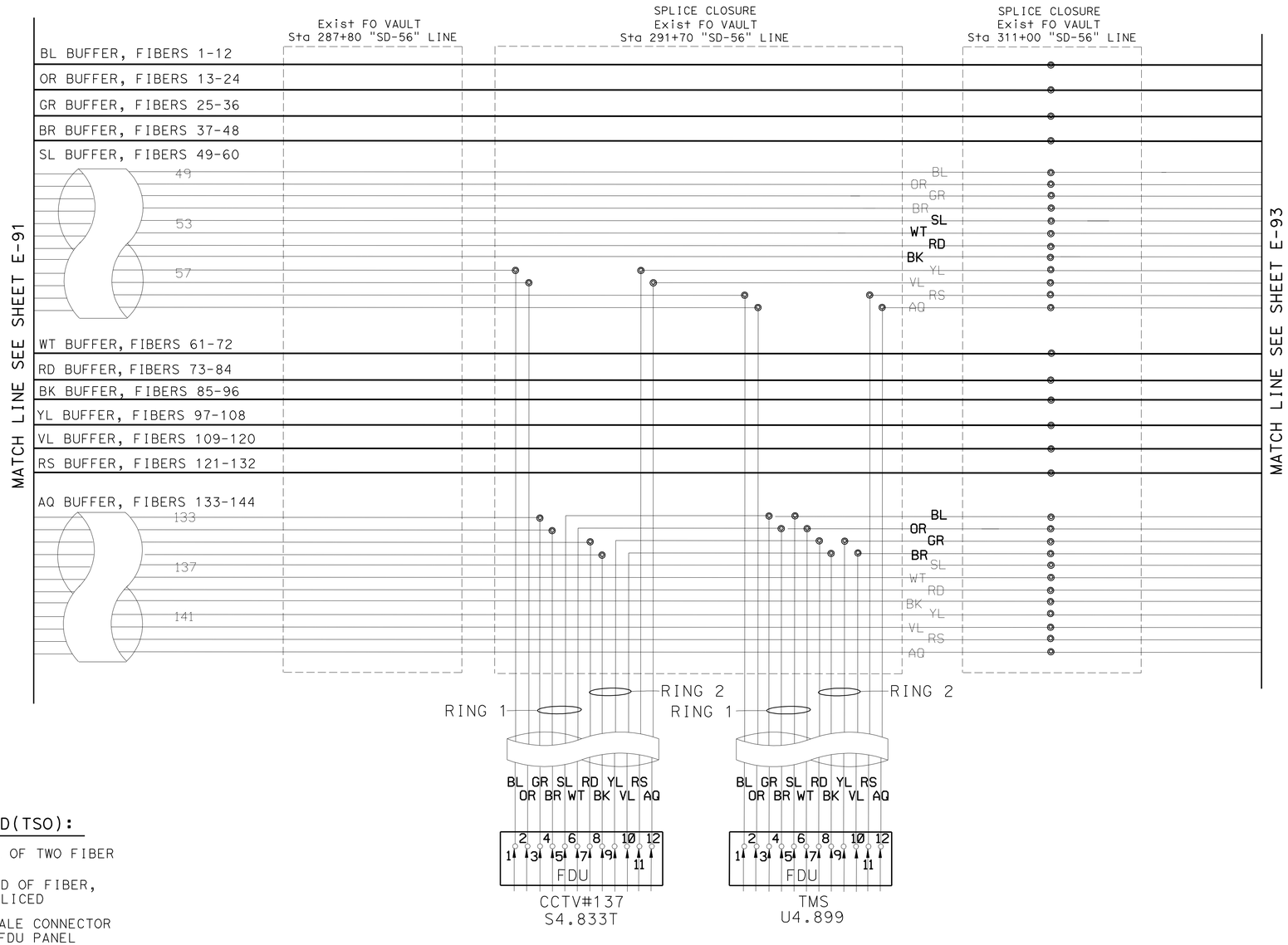

LEGEND(TSO):

- SPLICE OF TWO FIBER
- CUT END OF FIBER, NOT SPLICED
- SC FEMALE CONNECTOR ON AN FDU PANEL
- SC MALE CONNECTOR ON AN SMFO PATCHCORD

APPROVED FOR ELECTRICAL WORK ONLY

CLOSED CIRCUIT TELEVISION SYSTEM (ELECTRICAL DETAILS)

SCALE: 1" = 50'

E-92

STATE OF CALIFORNIA - DEPARTMENT OF TRANSPORTATION
Caltrans TRAFFIC ELECTRICAL

FUNCTIONAL SUPERVISOR: BRIAN T PECUS
CALCULATED-DESIGNED BY: ENRIQUE BERNAL
CHECKED BY
REVISED BY: HENRY TSUI
DATE REVISED

LAST REVISION 04-01-12
DATE PLOTTED => 31-AUG-2012
TIME PLOTTED => 13:42

Dist	COUNTY	ROUTE	POST MILES TOTAL PROJECT	SHEET No.	TOTAL SHEETS
11	SD	5,56	R30.4/R32.8, 0.0/9.2	136	177

Enrique P Bernal 03-28-12
REGISTERED ELECTRICAL ENGINEER DATE

6-4-12
PLANS APPROVAL DATE

REGISTERED PROFESSIONAL ENGINEER ENRIQUE P. BERNAL No. 15675 Exp. 6-30-12 ELECTRICAL STATE OF CALIFORNIA

THE STATE OF CALIFORNIA OR ITS OFFICERS OR AGENTS SHALL NOT BE RESPONSIBLE FOR THE ACCURACY OR COMPLETENESS OF SCANNED COPIES OF THIS PLAN SHEET.

COLOR CODES FOR BUFFER TUBES AND FIBERS:

1. BLUE (BL)
2. ORANGE (OR)
3. GREEN (GR)
4. BROWN (BR)
5. SLATE (SL)
6. WHITE (WT)
7. RED (RD)
8. BLACK (BK)
9. YELLOW (YL)
10. VIOLET (VL)
11. ROSE (RS)
12. AQUA (AQ)

NOTES (TSO):

1 - THIS SHEET DOES NOT SHOW ALL THE EX AND NEW FO VAULT/PULL BOXES. SEE CIRCUIT DIAGRAMS AND ELECTRICAL PLANS.

2 - FO144 (DISTRIBUTION) SHOWN ONLY.

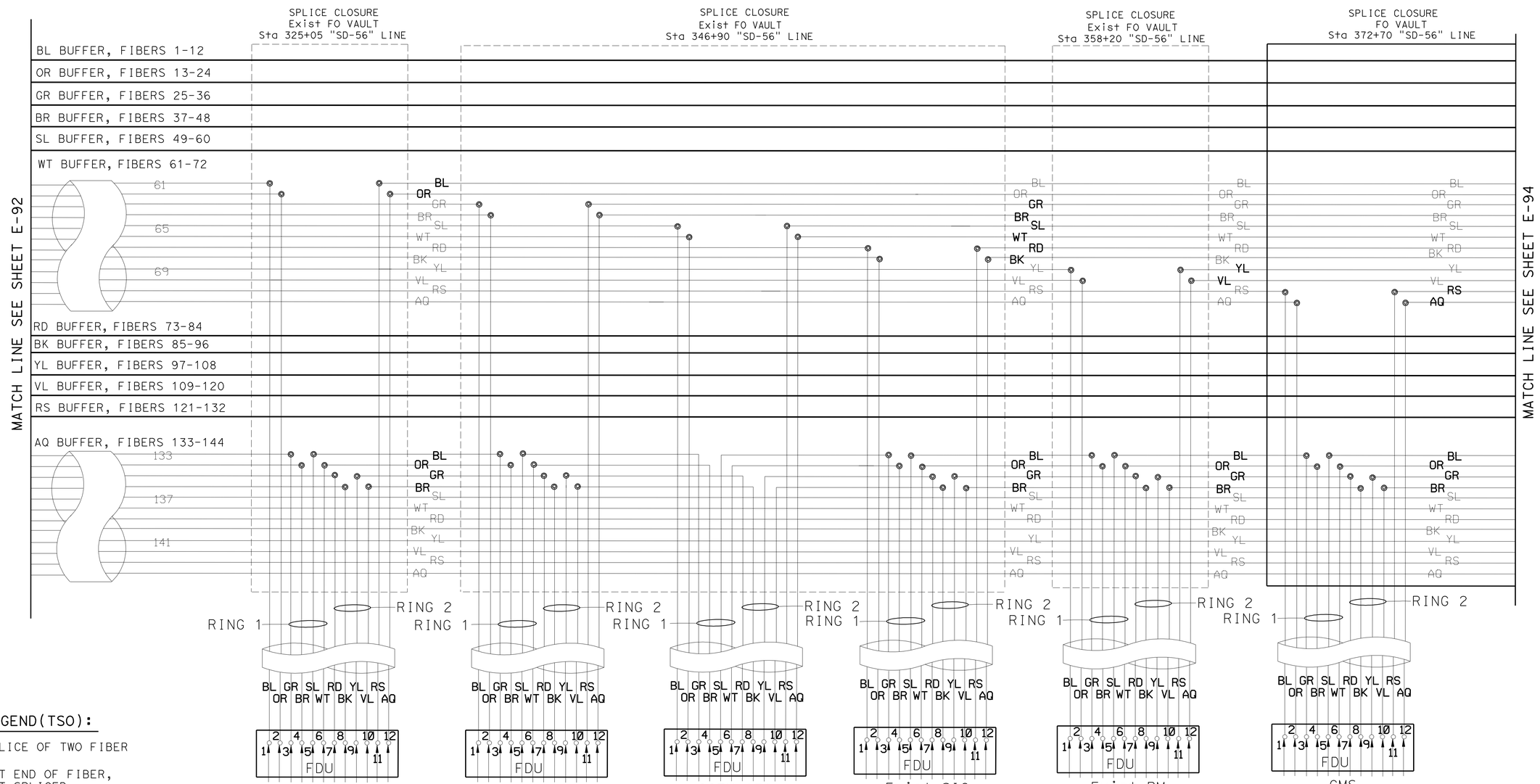

LEGEND(TSO):

- SPLICE OF TWO FIBER
- CUT END OF FIBER, NOT SPLICED
- SC FEMALE CONNECTOR ON AN FDU PANEL
- SC MALE CONNECTOR ON AN SMFO PATCHCORD

CLOSED CIRCUIT TELEVISION SYSTEM (ELECTRICAL DETAILS)

APPROVED FOR ELECTRICAL WORK ONLY

SCALE: 1" = 50'

E-93

STATE OF CALIFORNIA - DEPARTMENT OF TRANSPORTATION
Caltrans TRAFFIC ELECTRICAL

FUNCTIONAL SUPERVISOR: BRIAN T PECUS
CALCULATED-DESIGNED BY: HENRY TSUI
CHECKED BY: ENRIQUE BERNAL
REVISED BY
DATE REVISED

LAST REVISION 04-01-12
DATE PLOTTED => 31-AUG-2012
TIME PLOTTED => 13:42

Dist	COUNTY	ROUTE	POST MILES TOTAL PROJECT	SHEET No.	TOTAL SHEETS
11	SD	5,56	R30.4/R32.8, 0.0/9.2	137	177

Enrique P Bernal 03-28-12
REGISTERED ELECTRICAL ENGINEER DATE

6-4-12
PLANS APPROVAL DATE

REGISTERED PROFESSIONAL ENGINEER ENRIQUE P. BERNAL No. 15675 Exp. 6-30-12 ELECTRICAL STATE OF CALIFORNIA

THE STATE OF CALIFORNIA OR ITS OFFICERS OR AGENTS SHALL NOT BE RESPONSIBLE FOR THE ACCURACY OR COMPLETENESS OF SCANNED COPIES OF THIS PLAN SHEET.

COLOR CODES FOR BUFFER TUBES AND FIBERS:

1. BLUE (BL)
2. ORANGE (OR)
3. GREEN (GR)
4. BROWN (BR)
5. SLATE (SL)
6. WHITE (WT)
7. RED (RD)
8. BLACK (BK)
9. YELLOW (YL)
10. VIOLET (VL)
11. ROSE (RS)
12. AQUA (AQ)

NOTES (TSO):

1 - THIS SHEET DOES NOT SHOW ALL THE EX AND NEW FO VAULT/PULL BOXES. SEE CIRCUIT DIAGRAMS AND ELECTRICAL PLANS.

2 - FO144 (DISTRIBUTION) SHOWN ONLY.

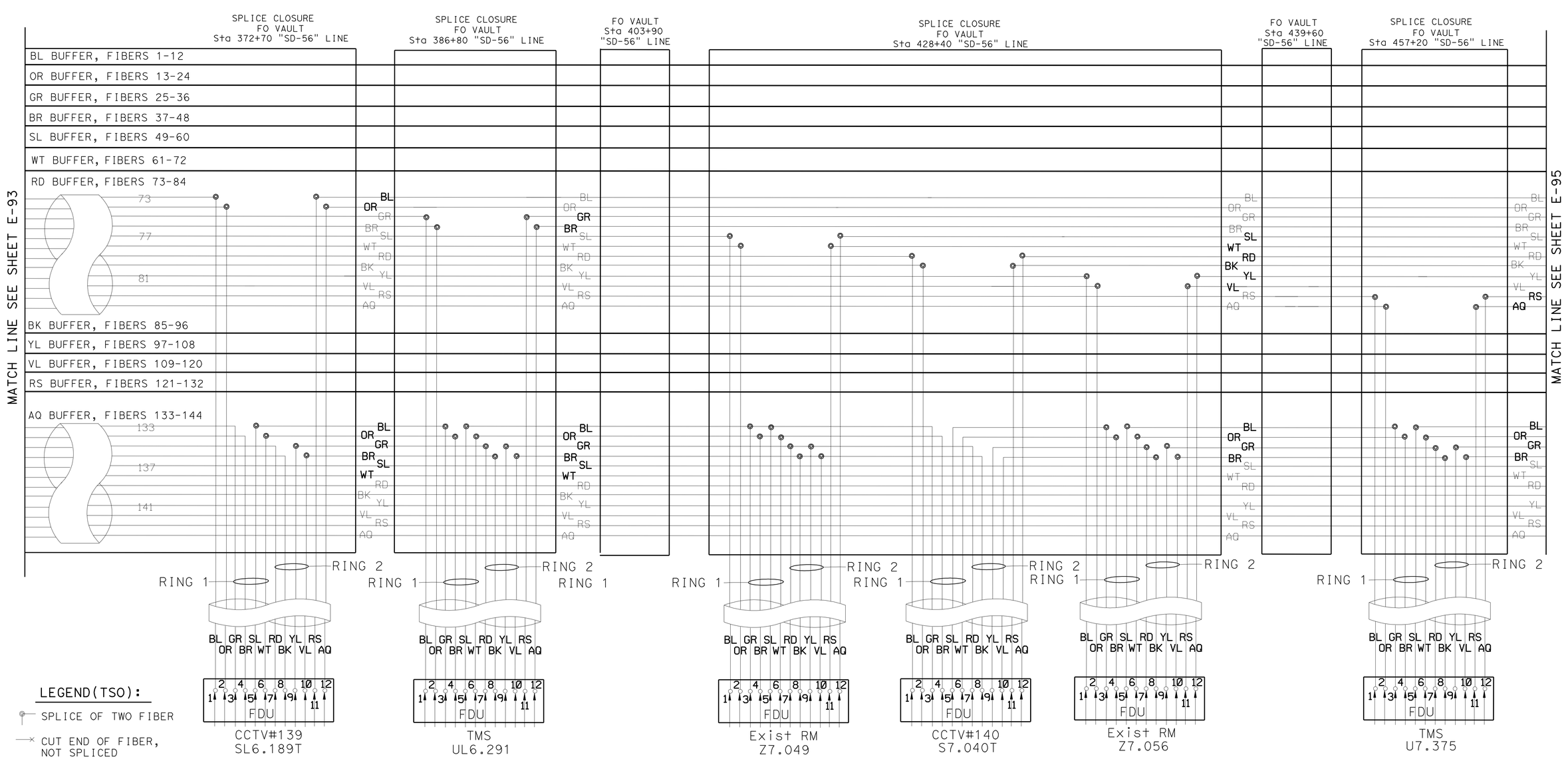

LEGEND(TSO):

- SPLICE OF TWO FIBER
- CUT END OF FIBER, NOT SPLICED
- SC FEMALE CONNECTOR ON AN FDU PANEL
- SC MALE CONNECTOR ON AN SMFO PATCHCORD

APPROVED FOR ELECTRICAL WORK ONLY

SCALE: 1" = 50'

CLOSED CIRCUIT TELEVISION SYSTEM (ELECTRICAL DETAILS)

E-94

STATE OF CALIFORNIA - DEPARTMENT OF TRANSPORTATION
Caltrans TRAFFIC ELECTRICAL

FUNCTIONAL SUPERVISOR: BRIAN T PECUS
CALCULATED-DESIGNED BY: HENRY TSUI
CHECKED BY: ENRIQUE BERNAL
REVISED BY
DATE REVISED

LAST REVISION 04-01-12
DATE PLOTTED => 31-AUG-2012
TIME PLOTTED => 13:42

Dist	COUNTY	ROUTE	POST MILES TOTAL PROJECT	SHEET No.	TOTAL SHEETS
11	SD	5,56	R30.4/R32.8, 0.0/9.2	138	177

Enrique P Bernal 03-28-12
REGISTERED ELECTRICAL ENGINEER DATE

6-4-12
PLANS APPROVAL DATE

REGISTERED PROFESSIONAL ENGINEER ENRIQUE P. BERNAL No. 15675 Exp. 6-30-12 ELECTRICAL STATE OF CALIFORNIA

THE STATE OF CALIFORNIA OR ITS OFFICERS OR AGENTS SHALL NOT BE RESPONSIBLE FOR THE ACCURACY OR COMPLETENESS OF SCANNED COPIES OF THIS PLAN SHEET.

COLOR CODES FOR BUFFER TUBES AND FIBERS:

1. BLUE (BL)
2. ORANGE (OR)
3. GREEN (GR)
4. BROWN (BR)
5. SLATE (SL)
6. WHITE (WT)
7. RED (RD)
8. BLACK (BK)
9. YELLOW (YL)
10. VIOLET (VL)
11. ROSE (RS)
12. AQUA (AQ)

NOTES (TSO):

1 - THIS SHEET DOES NOT SHOW ALL THE EX AND NEW FO VAULT/PULL BOXES. SEE CIRCUIT DIAGRAMS AND ELECTRICAL PLANS.

2 - FO144 (DISTRIBUTION) SHOWN ONLY.

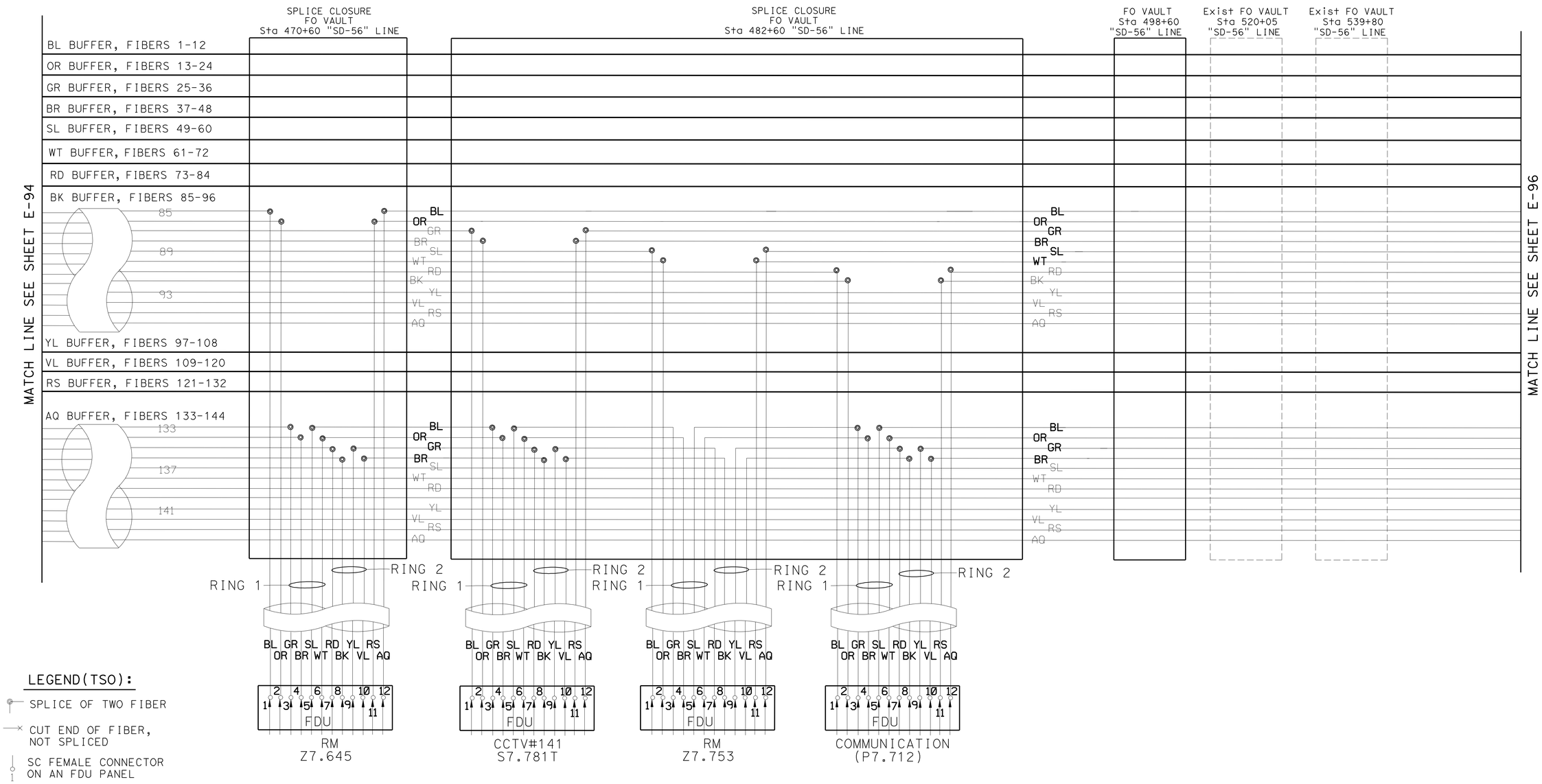

LEGEND(TSO):

- SPLICE OF TWO FIBER
- CUT END OF FIBER, NOT SPLICED
- SC FEMALE CONNECTOR ON AN FDU PANEL
- SC MALE CONNECTOR ON AN SMFO PATCHCORD

CLOSED CIRCUIT TELEVISION SYSTEM
(ELECTRICAL DETAILS)

APPROVED FOR ELECTRICAL WORK ONLY

SCALE: 1" = 50'

E-95

STATE OF CALIFORNIA - DEPARTMENT OF TRANSPORTATION
Caltrans TRAFFIC ELECTRICAL

FUNCTIONAL SUPERVISOR: BRIAN T PECUS
CALCULATED-DESIGNED BY: ENRIQUE BERNAL
CHECKED BY: HENRY TSUI
REVISED BY
DATE REVISED

LAST REVISION 04-01-12
DATE PLOTTED => 31-AUG-2012
TIME PLOTTED => 13:42

Dist	COUNTY	ROUTE	POST MILES TOTAL PROJECT	SHEET No.	TOTAL SHEETS
11	SD	5,56	R30.4/R32.8, 0.0/9.2	139	177

Enrique P Bernal 03-28-12
REGISTERED ELECTRICAL ENGINEER DATE

6-4-12
PLANS APPROVAL DATE

REGISTERED PROFESSIONAL ENGINEER ENRIQUE P. BERNAL No. 15675 Exp. 6-30-12 ELECTRICAL STATE OF CALIFORNIA

THE STATE OF CALIFORNIA OR ITS OFFICERS OR AGENTS SHALL NOT BE RESPONSIBLE FOR THE ACCURACY OR COMPLETENESS OF SCANNED COPIES OF THIS PLAN SHEET.

COLOR CODES FOR BUFFER TUBES AND FIBERS:

1. BLUE (BL)
2. ORANGE (OR)
3. GREEN (GR)
4. BROWN (BR)
5. SLATE (SL)
6. WHITE (WT)
7. RED (RD)
8. BLACK (BK)
9. YELLOW (YL)
10. VIOLET (VL)
11. ROSE (RS)
12. AQUA (AQ)

NOTES (TSO):

1 - THIS SHEET DOES NOT SHOW ALL THE EX AND NEW FO VAULT/PULL BOXES. SEE CIRCUIT DIAGRAMS AND ELECTRICAL PLANS.

2 - FO144 (DISTRIBUTION) SHOWN ONLY. SAME DETAIL FOR FO144 (BACKBONE).

3 - TERMINATE FO144 ON FDU, SEE SHEET E-98 FOR FIBER TERMINATION LAYOUT.

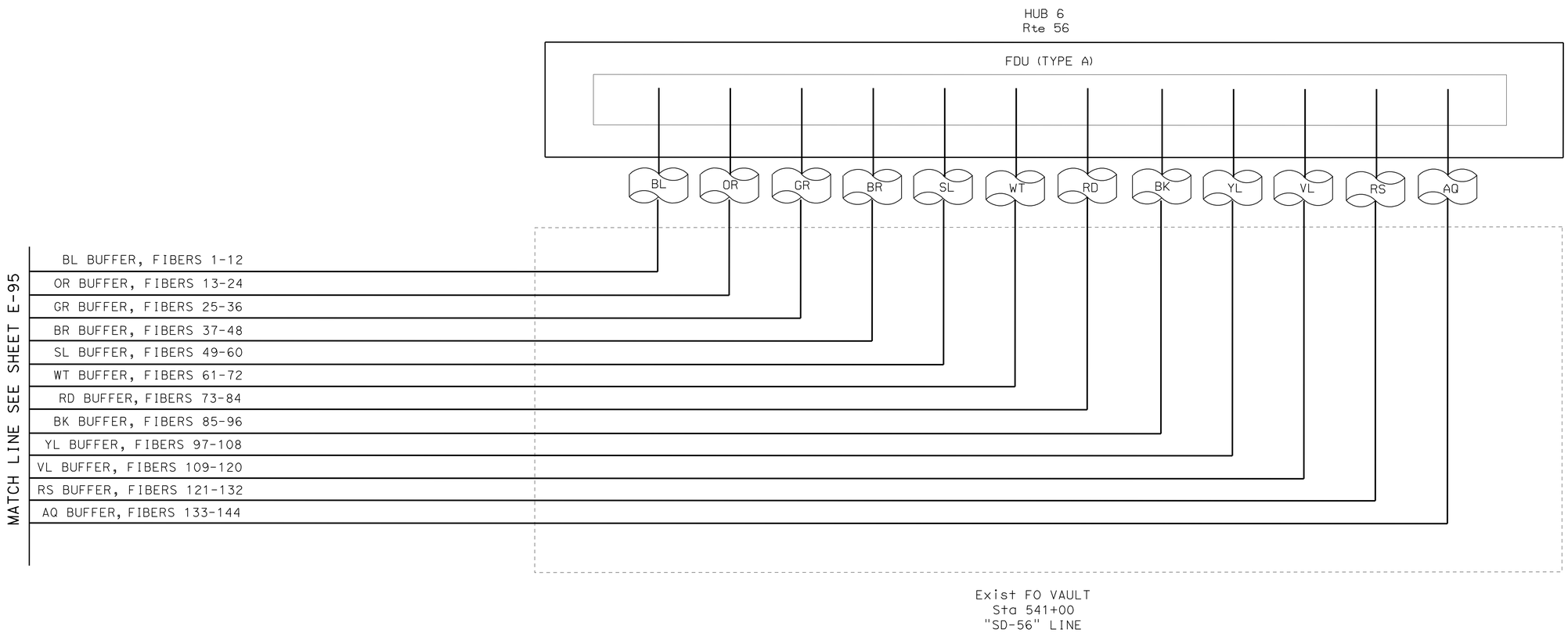

LEGEND(TSO):

- SPLICE OF TWO FIBER
- CUT END OF FIBER, NOT SPLICED
- SC FEMALE CONNECTOR ON AN FDU PANEL
- SC MALE CONNECTOR ON AN SMFO PATCHCORD

APPROVED FOR ELECTRICAL WORK ONLY

CLOSED CIRCUIT TELEVISION SYSTEM
(ELECTRICAL DETAILS)

SCALE: 1" = 50'

E-96

STATE OF CALIFORNIA - DEPARTMENT OF TRANSPORTATION
Caltrans® TRAFFIC ELECTRICAL

FUNCTIONAL SUPERVISOR: BRIAN T PECUS
CALCULATED-DESIGNED BY: HENRY TSUI
CHECKED BY: ENRIQUE BERNAL
REVISED BY
DATE REVISED

LAST REVISION 04-01-12
DATE PLOTTED => 31-AUG-2012
TIME PLOTTED => 13:42

Dist	COUNTY	ROUTE	POST MILES TOTAL PROJECT	SHEET No.	TOTAL SHEETS
11	SD	5,56	R30.4/R32.8, 0.0/9.2	140	177

Enrique P Bernal 03-28-12
REGISTERED ELECTRICAL ENGINEER DATE

6-4-12
PLANS APPROVAL DATE

REGISTERED PROFESSIONAL ENGINEER
ENRIQUE P. BERNAL
No. 15675
Exp. 6-30-12
ELECTRICAL
STATE OF CALIFORNIA

THE STATE OF CALIFORNIA OR ITS OFFICERS OR AGENTS SHALL NOT BE RESPONSIBLE FOR THE ACCURACY OR COMPLETENESS OF SCANNED COPIES OF THIS PLAN SHEET.

COLOR CODES FOR BUFFER TUBES AND FIBERS:

1. BLUE (BL)
2. ORANGE (OR)
3. GREEN (GR)
4. BROWN (BR)
5. SLATE (SL)
6. WHITE (WT)
7. RED (RD)
8. BLACK (BK)
9. YELLOW (YL)
10. VIOLET (VL)
11. ROSE (RS)
12. AQUA (AQ)

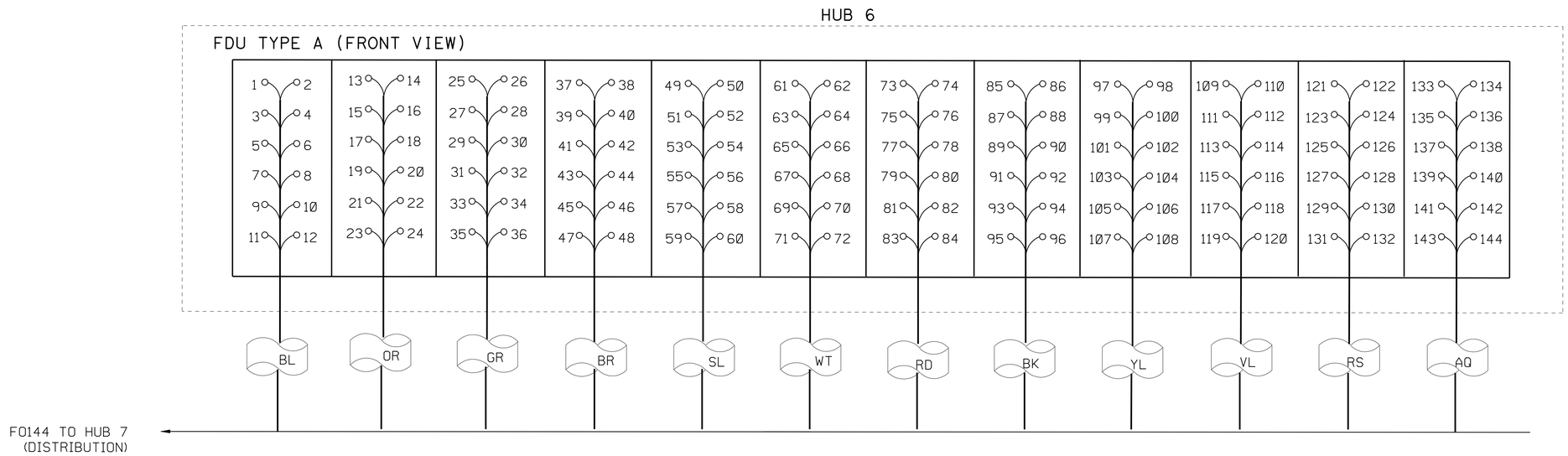

FDU TO FIBER CABLE TERMINATION DETAIL

SAME DETAIL FOR F0144 (BACKBONE)

LEGEND(TSO):

- SPLICE OF TWO FIBER
- CUT END OF FIBER, NOT SPLICED
- SC FEMALE CONNECTOR ON AN FDU PANEL
- SC MALE CONNECTOR ON AN SMFO PATCHCORD

APPROVED FOR ELECTRICAL WORK ONLY

CLOSED CIRCUIT TELEVISION SYSTEM
(ELECTRICAL DETAILS)

SCALE: 1" = 50'

E-97

HENRY TSUI — ENRIQUE BERNAL — BRIAN T PECUS

REVISED BY — DATE REVISED — CALCULATED-DESIGNED BY — CHECKED BY — FUNCTIONAL SUPERVISOR

STATE OF CALIFORNIA - DEPARTMENT OF TRANSPORTATION
Caltrans TRAFFIC ELECTRICAL

LAST REVISION 04-01-12 | DATE PLOTTED => 31-AUG-2012 | TIME PLOTTED => 13:42

Dist	COUNTY	ROUTE	POST MILES TOTAL PROJECT	SHEET No.	TOTAL SHEETS
11	SD	5,56	R30.4/R32.8, 0.0/9.2	141	177

Enrique P Bernal 03-28-12
REGISTERED ELECTRICAL ENGINEER DATE

6-4-12
PLANS APPROVAL DATE

REGISTERED PROFESSIONAL ENGINEER
ENRIQUE P. BERNAL
No. 15675
Exp. 6-30-12
ELECTRICAL
STATE OF CALIFORNIA

THE STATE OF CALIFORNIA OR ITS OFFICERS OR AGENTS SHALL NOT BE RESPONSIBLE FOR THE ACCURACY OR COMPLETENESS OF SCANNED COPIES OF THIS PLAN SHEET.

Exist RM-Z32.629
FDU POSITION NUMBER

1	2	3	4	5	6	7	8	9	10	11	12
HUB 7		RING 1				RING 2				HUB 6	
		HUB 7		MVDS U32.826		HUB 7		MVDS U32.826			
1	2	133	134	3	4	135	136	7	8	1	2

Exist MVDS-U32.826
FDU POSITION NUMBER

1	2	3	4	5	6	7	8	9	10	11	12
HUB 7		RING 1				RING 2				HUB 6	
		RM Z32.629		RM Z32.893		RM Z32.629		RM Z32.893			
3	4	5	6	3	4	9	10	7	8	3	4

Exist RM-Z32.893
FDU POSITION NUMBER

1	2	3	4	5	6	7	8	9	10	11	12
HUB 7		RING 1				RING 2				HUB 6	
		MVDS U32.826		RM Z32.903		RM Z32.826		RM Z32.903			
5	6	5	6	3	4	9	10	7	8	5	6

Exist RM-Z32.903
FDU POSITION NUMBER

1	2	3	4	5	6	7	8	9	10	11	12
HUB 7		RING 1				RING 2				HUB 6	
		RM Z32.893		RM Z0.320		RM Z32.893		RM Z0.320			
7	8	5	6	3	4	9	10	7	8	7	8

APPROVED FOR ELECTRICAL WORK ONLY

CLOSED CIRCUIT TELEVISION SYSTEM
(ELECTRICAL DETAILS)

SCALE: 1" = 50'

E-98

REVISED BY | DATE REVISED
HENRY TSUI | ENRIQUE BERNAL
CALCULATED-DESIGNED BY | CHECKED BY
FUNCTIONAL SUPERVISOR
BRIAN T PECUS

STATE OF CALIFORNIA - DEPARTMENT OF TRANSPORTATION
Caltrans® TRAFFIC ELECTRICAL

LAST REVISION 04-01-12
DATE PLOTTED => 31-AUG-2012
TIME PLOTTED => 13:42

Dist	COUNTY	ROUTE	POST MILES TOTAL PROJECT	SHEET No.	TOTAL SHEETS
11	SD	5,56	R30.4/R32.8, 0.0/9.2	142	177

Enrique P Bernal 03-28-12
REGISTERED ELECTRICAL ENGINEER DATE

6-4-12
PLANS APPROVAL DATE

REGISTERED PROFESSIONAL ENGINEER
ENRIQUE P. BERNAL
No. 15675
Exp. 6-30-12
ELECTRICAL
STATE OF CALIFORNIA

THE STATE OF CALIFORNIA OR ITS OFFICERS OR AGENTS SHALL NOT BE RESPONSIBLE FOR THE ACCURACY OR COMPLETENESS OF SCANNED COPIES OF THIS PLAN SHEET.

Exist RM-Z0.320
FDU POSITION NUMBER

1	2	3	4	5	6	7	8	9	10	11	12
HUB 7		RING 1				RING 2				HUB 6	
		RM Z32.903		SIG P0.333		RM Z32.903		SIG P0.333			
13	14	5	6	3	4	9	10	7	8	13	14

Exist SIG-P0.333
FDU POSITION NUMBER

1	2	3	4	5	6	7	8	9	10	11	12
HUB 7		RING 1				RING 2				HUB 6	
		RM Z0.320		SIG P0.785		RM Z0.320		SIG P0.785			
15	16	5	6	3	4	9	10	7	8	15	16

Exist SIG-P0.785
FDU POSITION NUMBER

1	2	3	4	5	6	7	8	9	10	11	12
HUB 7		RING 1				RING 2				HUB 6	
		SIG P0.333		CCTV #133 S0.812T		SIG P0.333		CCTV #133 S0.812T			
17	18	5	6	3	4	9	10	7	8	17	18

CCTV#133-S0.812T
FDU POSITION NUMBER

1	2	3	4	5	6	7	8	9	10	11	12
HUB 7		RING 1				RING 2				HUB 6	
		SIG P0.785		RM Z0.853		SIG P0.785		RM Z0.853			
19	20	5	6	3	4	9	10	7	8	19	20

Exist RM-Z0.853
FDU POSITION NUMBER

1	2	3	4	5	6	7	8	9	10	11	12
HUB 7		RING 1				RING 2				HUB 6	
		CCTV #133 S0.812T		RM Z0.890		CCTV #133 S0.812T		RM Z0.890			
21	22	5	6	3	4	9	10	7	8	21	22

Exist RM-Z0.890
FDU POSITION NUMBER

1	2	3	4	5	6	7	8	9	10	11	12
HUB 7		RING 1				RING 2				HUB 6	
		RM Z0.853		TMS U1.289		RM Z0.853		TMS U1.289			
23	24	5	6	3	4	9	10	7	8	23	24

APPROVED FOR ELECTRICAL WORK ONLY

CLOSED CIRCUIT TELEVISION SYSTEM
(ELECTRICAL DETAILS)

SCALE: 1" = 50'

E-99

STATE OF CALIFORNIA - DEPARTMENT OF TRANSPORTATION
Caltrans® TRAFFIC ELECTRICAL

FUNCTIONAL SUPERVISOR: BRIAN T PECUS
CALCULATED-DESIGNED BY: HENRY TSUI
CHECKED BY: ENRIQUE BERNAL
REVISED BY
DATE REVISED

LAST REVISION 04-01-12
DATE PLOTTED => 31-AUG-2012
TIME PLOTTED => 13:42

Dist	COUNTY	ROUTE	POST MILES TOTAL PROJECT	SHEET No.	TOTAL SHEETS
11	SD	5,56	R30.4/R32.8, 0.0/9.2	143	177

Enrique P Bernal 03-28-12
REGISTERED ELECTRICAL ENGINEER DATE

6-4-12
PLANS APPROVAL DATE

REGISTERED PROFESSIONAL ENGINEER
ENRIQUE P. BERNAL
No. 15675
Exp. 6-30-12
ELECTRICAL
STATE OF CALIFORNIA

THE STATE OF CALIFORNIA OR ITS OFFICERS OR AGENTS SHALL NOT BE RESPONSIBLE FOR THE ACCURACY OR COMPLETENESS OF SCANNED COPIES OF THIS PLAN SHEET.

Exist TMS-U1.289
FDU POSITION NUMBER

1	2	3	4	5	6	7	8	9	10	11	12
HUB 7		RING 1				RING 2				HUB 6	
		RM Z0.890		SIG P1.774		RM Z0.890		SIG P1.774			
25	26	5	6	3	4	9	10	7	8	25	26

Exist SIG-P1.774
FDU POSITION NUMBER

1	2	3	4	5	6	7	8	9	10	11	12
HUB 7		RING 1				RING 2				HUB 6	
		TMS U1.289		COM P1.795		TMS U1.289		COM P1.795			
27	28	5	6	3	4	9	10	7	8	27	28

COMMUNICATION (P1.795)
FDU POSITION NUMBER

1	2	3	4	5	6	7	8	9	10	11	12
HUB 7		RING 1				RING 2				HUB 6	
		SIG P1.774		RM Z1.833		SIG P1.774		RM Z1.833			
29	30	5	6	3	4	9	10	7	8	29	30

Exist RM-Z1.833
FDU POSITION NUMBER

1	2	3	4	5	6	7	8	9	10	11	12
HUB 7		RING 1				RING 2				HUB 6	
		COM P1.795		CCTV#134 S1.909T		COM P1.795		CCTV #134 S1.909T			
31	32	5	6	3	4	9	10	7	8	31	32

CCTV#134-S1.909T
FDU POSITION NUMBER

1	2	3	4	5	6	7	8	9	10	11	12
HUB 7		RING 1				RING 2				HUB 6	
		RM Z1.833		RM Z1.890		RM Z1.833		RM Z1.890			
33	34	5	6	3	4	9	10	7	8	33	34

Exist RM-Z1.890
FDU POSITION NUMBER

1	2	3	4	5	6	7	8	9	10	11	12
HUB 7		RING 1				RING 2				HUB 6	
		CCTV #134 S1.909T		TMS U2.367		CCTV #134 S1.909T		TMS U2.367			
35	36	5	6	3	4	9	10	7	8	35	36

CLOSED CIRCUIT TELEVISION SYSTEM
(ELECTRICAL DETAILS)

APPROVED FOR ELECTRICAL WORK ONLY

SCALE: 1" = 50'

E-100

REVISED BY | DATE REVISED
HENRY TSUI | ENRIQUE BERNAL
CALCULATED-DESIGNED BY | CHECKED BY
FUNCTIONAL SUPERVISOR | BRIAN T PECUS
STATE OF CALIFORNIA - DEPARTMENT OF TRANSPORTATION
Caltrans® TRAFFIC ELECTRICAL

LAST REVISION 04-01-12 | DATE PLOTTED => 31-AUG-2012 | TIME PLOTTED => 13:42

Dist	COUNTY	ROUTE	POST MILES TOTAL PROJECT	SHEET No.	TOTAL SHEETS
11	SD	5,56	R30.4/R32.8, 0.0/9.2	144	177

Enrique P Bernal 03-28-12
REGISTERED ELECTRICAL ENGINEER DATE

6-4-12
PLANS APPROVAL DATE

REGISTERED PROFESSIONAL ENGINEER
ENRIQUE P. BERNAL
No. 15675
Exp. 6-30-12
ELECTRICAL
STATE OF CALIFORNIA

THE STATE OF CALIFORNIA OR ITS OFFICERS OR AGENTS SHALL NOT BE RESPONSIBLE FOR THE ACCURACY OR COMPLETENESS OF SCANNED COPIES OF THIS PLAN SHEET.

TMS-U2.367
FDU POSITION NUMBER

1	2	3	4	5	6	7	8	9	10	11	12
HUB 7		RING 1				RING 2				HUB 6	
		RM Z0.890		CMS I2.611		RM Z0.890		CMS I2.611			
37	38	5	6	3	4	9	10	7	8	37	38

CMS-I2.611
FDU POSITION NUMBER

1	2	3	4	5	6	7	8	9	10	11	12
HUB 7		RING 1				RING 2				HUB 6	
		TMS U2.367		RM Z2.908		TMS U2.367		RM Z2.908			
39	40	5	6	3	4	9	10	7	8	39	40

Exist RM-Z2.908
FDU POSITION NUMBER

1	2	3	4	5	6	7	8	9	10	11	12
HUB 7		RING 1				RING 2				HUB 6	
		CMS I2.611		SIG P3.068		CMS I2.611		SIG P3.068			
41	42	5	6	3	4	9	10	7	8	41	42

Exist SIG-P3.068
FDU POSITION NUMBER

1	2	3	4	5	6	7	8	9	10	11	12
HUB 7		RING 1				RING 2				HUB 6	
		RM Z2.908		CCTV #135 S3.079T		RM Z2.908		CCTV #135 S3.079T			
43	44	5	6	3	4	9	10	7	8	43	44

CCTV#135-S3.079T
FDU POSITION NUMBER

1	2	3	4	5	6	7	8	9	10	11	12
HUB 7		RING 1				RING 2				HUB 6	
		SIG P3.068		RM Z3.187		SIG P3.068		RM Z3.187			
45	46	5	6	3	4	9	10	7	8	45	46

Exist RM-Z3.187
FDU POSITION NUMBER

1	2	3	4	5	6	7	8	9	10	11	12
HUB 7		RING 1				RING 2				HUB 6	
		CCTV #135 S3.079T		TMS U3.588		CCTV #135 S3.079T		TMS U3.588			
47	48	5	6	3	4	9	10	7	8	47	48

APPROVED FOR ELECTRICAL WORK ONLY

CLOSED CIRCUIT TELEVISION SYSTEM
(ELECTRICAL DETAILS)

SCALE: 1" = 50'

E-101

REVISED BY | DATE REVISED
HENRY TSUI | ENRIQUE BERNAL
CALCULATED-DESIGNED BY | CHECKED BY
FUNCTIONAL SUPERVISOR | BRIAN T PECUS
STATE OF CALIFORNIA - DEPARTMENT OF TRANSPORTATION
Caltrans® TRAFFIC ELECTRICAL

LAST REVISION 04-01-12 | DATE PLOTTED => 31-AUG-2012 | TIME PLOTTED => 13:42

Dist	COUNTY	ROUTE	POST MILES TOTAL PROJECT	SHEET No.	TOTAL SHEETS
11	SD	5,56	R30.4/R32.8, 0.0/9.2	145	177

Enrique P Bernal 03-28-12
REGISTERED ELECTRICAL ENGINEER DATE

6-4-12
PLANS APPROVAL DATE

REGISTERED PROFESSIONAL ENGINEER
ENRIQUE P. BERNAL
No. 15675
Exp. 6-30-12
ELECTRICAL
STATE OF CALIFORNIA

THE STATE OF CALIFORNIA OR ITS OFFICERS OR AGENTS SHALL NOT BE RESPONSIBLE FOR THE ACCURACY OR COMPLETENESS OF SCANNED COPIES OF THIS PLAN SHEET.

TMS-U3.588
FDU POSITION NUMBER

1	2	3	4	5	6	7	8	9	10	11	12
HUB 7		RING 1				RING 2				HUB 6	
		RM Z3.187		TMS U3.922		RM Z3.187		TMS U3.922			
49	50	5	6	3	4	9	10	7	8	49	50

TMS-U3.922
FDU POSITION NUMBER

1	2	3	4	5	6	7	8	9	10	11	12
HUB 7		RING 1				RING 2				HUB 6	
		TMS U3.588		CCTV #136 S4.307T		TMS U3.588		CCTV #136 S4.307T			
51	52	5	6	3	4	9	10	7	8	51	52

CCTV#136-S4.307T
FDU POSITION NUMBER

1	2	3	4	5	6	7	8	9	10	11	12
HUB 7		RING 1				RING 2				HUB 6	
		TMS U3.922		TMS U4.519		TMS U3.922		TMS P3.068			
53	54	5	6	3	4	9	10	7	8	53	54

TMS-U4.519
FDU POSITION NUMBER

1	2	3	4	5	6	7	8	9	10	11	12
HUB 7		RING 1				RING 2				HUB 6	
		CCTV #136 S4.307T		CCTV #137 S4.833T		CCTV #136 S4.307T		CCTV #137 S4.833T			
55	56	5	6	3	4	9	10	7	8	57	58

CCTV#137-S4.833T
FDU POSITION NUMBER

1	2	3	4	5	6	7	8	9	10	11	12
HUB 7		RING 1				RING 2				HUB 6	
		TMS U4.519		TMS U4.899		TMS U4.519		TMS U4.899			
57	58	5	6	3	4	9	10	7	8	57	58

TMS-U4.899
FDU POSITION NUMBER

1	2	3	4	5	6	7	8	9	10	11	12
HUB 7		RING 1				RING 2				HUB 6	
		CCTV #137 S4.833T		TMS U5.555		CCTV #137 S4.833T		TMS U5.555			
59	60	5	6	3	4	9	10	7	8	59	60

CLOSED CIRCUIT TELEVISION SYSTEM
(ELECTRICAL DETAILS)

APPROVED FOR ELECTRICAL WORK ONLY

SCALE: 1" = 50'

E-102

REVISED BY | DATE REVISED
HENRY TSUI | ENRIQUE BERNAL
CALCULATED-DESIGNED BY | CHECKED BY
FUNCTIONAL SUPERVISOR | BRIAN T PECUS

STATE OF CALIFORNIA - DEPARTMENT OF TRANSPORTATION
Caltrans® TRAFFIC ELECTRICAL

LAST REVISION 04-01-12 | DATE PLOTTED => 31-AUG-2012 | TIME PLOTTED => 13:42

Dist	COUNTY	ROUTE	POST MILES TOTAL PROJECT	SHEET No.	TOTAL SHEETS
11	SD	5,56	R30.4/R32.8, 0.0/9.2	146	177

Enrique P Bernal 03-28-12
REGISTERED ELECTRICAL ENGINEER DATE

6-4-12
PLANS APPROVAL DATE

REGISTERED PROFESSIONAL ENGINEER
ENRIQUE P. BERNAL
No. 15675
Exp. 6-30-12
ELECTRICAL
STATE OF CALIFORNIA

THE STATE OF CALIFORNIA OR ITS OFFICERS OR AGENTS SHALL NOT BE RESPONSIBLE FOR THE ACCURACY OR COMPLETENESS OF SCANNED COPIES OF THIS PLAN SHEET.

TMS-U5.555 FDU POSITION NUMBER											
1	2	3	4	5	6	7	8	9	10	11	12
HUB 7		RING 1				RING 2				HUB 6	
		TMS U4.899		RM Z5.947		TMS U4.899		RM Z5.947			
61	62	5	6	3	4	9	10	7	8	61	62

RM-Z5.947 FDU POSITION NUMBER											
1	2	3	4	5	6	7	8	9	10	11	12
HUB 7		RING 1				RING 2				HUB 6	
		TMS U5.555		CCTV #138 S6.025T		TMS U5.555		CCTV #138 S6.025T			
63	64	5	6	3	4	9	10	7	8	63	64

CCTV#138-S6.025T FDU POSITION NUMBER											
1	2	3	4	5	6	7	8	9	10	11	12
HUB 7		RING 1				RING 2				HUB 6	
		RM Z5.947		SIG P6.071		RM Z5.947		SIG P6.071			
65	66	5	6	3	4	9	10	7	8	65	66

Exist SIG-P6.071 FDU POSITION NUMBER											
1	2	3	4	5	6	7	8	9	10	11	12
HUB 7		RING 1				RING 2				HUB 6	
		CCTV #138 S6.025T		RM Z6.172		CCTV #138 S6.025T		RM Z6.172			
67	68	5	6	3	4	9	10	7	8	67	68

Exist RM-Z6.172 FDU POSITION NUMBER											
1	2	3	4	5	6	7	8	9	10	11	12
HUB 7		RING 1				RING 2				HUB 6	
		SIG P6.071		CMS I6.500		SIG P6.071		CMS I6.500			
69	70	5	6	3	4	9	10	7	8	69	70

CMS-I6.500 FDU POSITION NUMBER											
1	2	3	4	5	6	7	8	9	10	11	12
HUB 7		RING 1				RING 2				HUB 6	
		RM Z6.172		CCTV #139 SL6.189T		RM Z6.172		CCTV #139 SL6.189T			
71	72	5	6	3	4	9	10	7	8	71	72

CLOSED CIRCUIT TELEVISION SYSTEM
(ELECTRICAL DETAILS)

APPROVED FOR ELECTRICAL WORK ONLY

SCALE: 1" = 50'

E-103

REVISED BY | DATE REVISED
HENRY TSUI | ENRIQUE BERNAL
CALCULATED-DESIGNED BY | CHECKED BY
FUNCTIONAL SUPERVISOR | BRIAN T PECUS

STATE OF CALIFORNIA - DEPARTMENT OF TRANSPORTATION
Caltrans TRAFFIC ELECTRICAL

LAST REVISION 04-01-12 | DATE PLOTTED => 31-AUG-2012 | TIME PLOTTED => 13:43

Dist	COUNTY	ROUTE	POST MILES TOTAL PROJECT	SHEET No.	TOTAL SHEETS
11	SD	5,56	R30.4/R32.8, 0.0/9.2	147	177

Enrique P Bernal 03-28-12
REGISTERED ELECTRICAL ENGINEER DATE

6-4-12
PLANS APPROVAL DATE

REGISTERED PROFESSIONAL ENGINEER
ENRIQUE P. BERNAL
No. 15675
Exp. 6-30-12
ELECTRICAL
STATE OF CALIFORNIA

THE STATE OF CALIFORNIA OR ITS OFFICERS OR AGENTS SHALL NOT BE RESPONSIBLE FOR THE ACCURACY OR COMPLETENESS OF SCANNED COPIES OF THIS PLAN SHEET.

CCTV#139-SL6.189T
FDU POSITION NUMBER

1	2	3	4	5	6	7	8	9	10	11	12
HUB 7		RING 1				RING 2				HUB 6	
		CMS I6.500		TMS UL6.291		CMS I6.500		TMS UL6.291			
73	74	5	6	3	4	9	10	7	8	73	74

TMS-UL6.291
FDU POSITION NUMBER

1	2	3	4	5	6	7	8	9	10	11	12
HUB 7		RING 1				RING 2				HUB 6	
		CCTV #139 SL6.189T		RM S6.025T		CCTV #139 SL6.189T		RM S6.025T			
75	76	5	6	3	4	9	10	7	8	75	76

Exist RM-Z7.049
FDU POSITION NUMBER

1	2	3	4	5	6	7	8	9	10	11	12
HUB 7		RING 1				RING 2				HUB 6	
		TMS UL6.291		CCTV #140 S7.049T		TMS UL6.291		CCTV #140 S7.049T			
77	78	5	6	3	4	9	10	7	8	77	78

CCTV#140-S7.040T
FDU POSITION NUMBER

1	2	3	4	5	6	7	8	9	10	11	12
HUB 7		RING 1				RING 2				HUB 6	
		RM Z7.049		RM Z7.056		RM Z7.049		RM Z7.056			
79	80	5	6	3	4	9	10	7	8	79	80

Exist RM-Z7.056
FDU POSITION NUMBER

1	2	3	4	5	6	7	8	9	10	11	12
HUB 7		RING 1				RING 2				HUB 6	
		CCTV #140 S7.040T		TMS U7.375		CCTV #140 S7.040T		TMS U7.375			
81	82	5	6	3	4	9	10	7	8	81	82

TMS-U7.375
FDU POSITION NUMBER

1	2	3	4	5	6	7	8	9	10	11	12
HUB 7		RING 1				RING 2				HUB 6	
		RM Z7.056		RM Z7.645		RM Z7.056		RM Z7.645			
83	84	5	6	3	4	9	10	7	8	83	84

CLOSED CIRCUIT TELEVISION SYSTEM
(ELECTRICAL DETAILS)

APPROVED FOR ELECTRICAL WORK ONLY

SCALE: 1" = 50'

E-104

REVISED BY | DATE REVISED
HENRY TSUI | ENRIQUE BERNAL
CALCULATED-DESIGNED BY | CHECKED BY
FUNCTIONAL SUPERVISOR | BRIAN T PECUS

STATE OF CALIFORNIA - DEPARTMENT OF TRANSPORTATION
Caltrans® TRAFFIC ELECTRICAL

LAST REVISION 04-01-12 | DATE PLOTTED => 31-AUG-2012 | TIME PLOTTED => 13:43

Dist	COUNTY	ROUTE	POST MILES TOTAL PROJECT	SHEET No.	TOTAL SHEETS
11	SD	5,56	R30.4/R32.8, 0.0/9.2	148	177

Enrique P Bernal 03-28-12
REGISTERED ELECTRICAL ENGINEER DATE

6-4-12
PLANS APPROVAL DATE

REGISTERED PROFESSIONAL ENGINEER
ENRIQUE P. BERNAL
No. 15675
Exp. 6-30-12
ELECTRICAL
STATE OF CALIFORNIA

THE STATE OF CALIFORNIA OR ITS OFFICERS OR AGENTS SHALL NOT BE RESPONSIBLE FOR THE ACCURACY OR COMPLETENESS OF SCANNED COPIES OF THIS PLAN SHEET.

Z7.645
FDU POSITION NUMBER

1	2	3	4	5	6	7	8	9	10	11	12
HUB 7		RING 1				RING 2				HUB 6	
		TMS U7.375		CCTV #141 S7.781T		TMS U7.375		CCTV #141 S7.781T			
85	86	5	6	3	4	9	10	7	8	85	86

CCTV#141-S7.781T
FDU POSITION NUMBER

1	2	3	4	5	6	7	8	9	10	11	12
HUB 7		RING 1				RING 2				HUB 6	
		RM Z7.645		RM Z7.753		RM Z7.645		RM Z7.753			
87	88	5	6	3	4	9	10	7	8	87	88

RM-Z7.753
FDU POSITION NUMBER

1	2	3	4	5	6	7	8	9	10	11	12
HUB 7		RING 1				RING 2				HUB 6	
		CCTV #141 S7.781T		COM P7.761		CCTV #141 S7.781T		COM P7.761			
89	90	5	6	3	4	9	10	7	8	89	90

COMMUNICATION CABINET (P7.712)
FDU POSITION NUMBER

1	2	3	4	5	6	7	8	9	10	11	12
HUB 7		RING 1				RING 2				HUB 6	
		RM Z7.753		HUB 6		RM Z7.753		HUB 6			
91	92	5	6	3	4	9	10	7	8	91	92

APPROVED FOR ELECTRICAL WORK ONLY

CLOSED CIRCUIT TELEVISION SYSTEM
(ELECTRICAL DETAILS)

SCALE: 1" = 50'

E-105

STATE OF CALIFORNIA - DEPARTMENT OF TRANSPORTATION
Caltrans TRAFFIC ELECTRICAL

FUNCTIONAL SUPERVISOR: BRIAN T PECUS
CALCULATED-DESIGNED BY: HENRY TSUI
CHECKED BY: ENRIQUE BERNAL
REVISED BY
DATE REVISED

LAST REVISION 04-01-12
DATE PLOTTED => 31-AUG-2012
TIME PLOTTED => 13:43

DIST	COUNTY	ROUTE	POST MILES TOTAL PROJECT	SHEET No.	TOTAL SHEETS
11	SD	5,56	R30.4/R32.8, 0.0/9.2	149	177

REGISTERED CIVIL ENGINEER — DATE 4-3-12

6-4-12
PLANS APPROVAL DATE

REGISTERED PROFESSIONAL ENGINEER GENARO M. DORIA No. C63583 Exp. 9/30/12 CIVIL STATE OF CALIFORNIA

The State of California or its officers or agents shall not be responsible for the accuracy or completeness of electronic copies of this plan sheet.

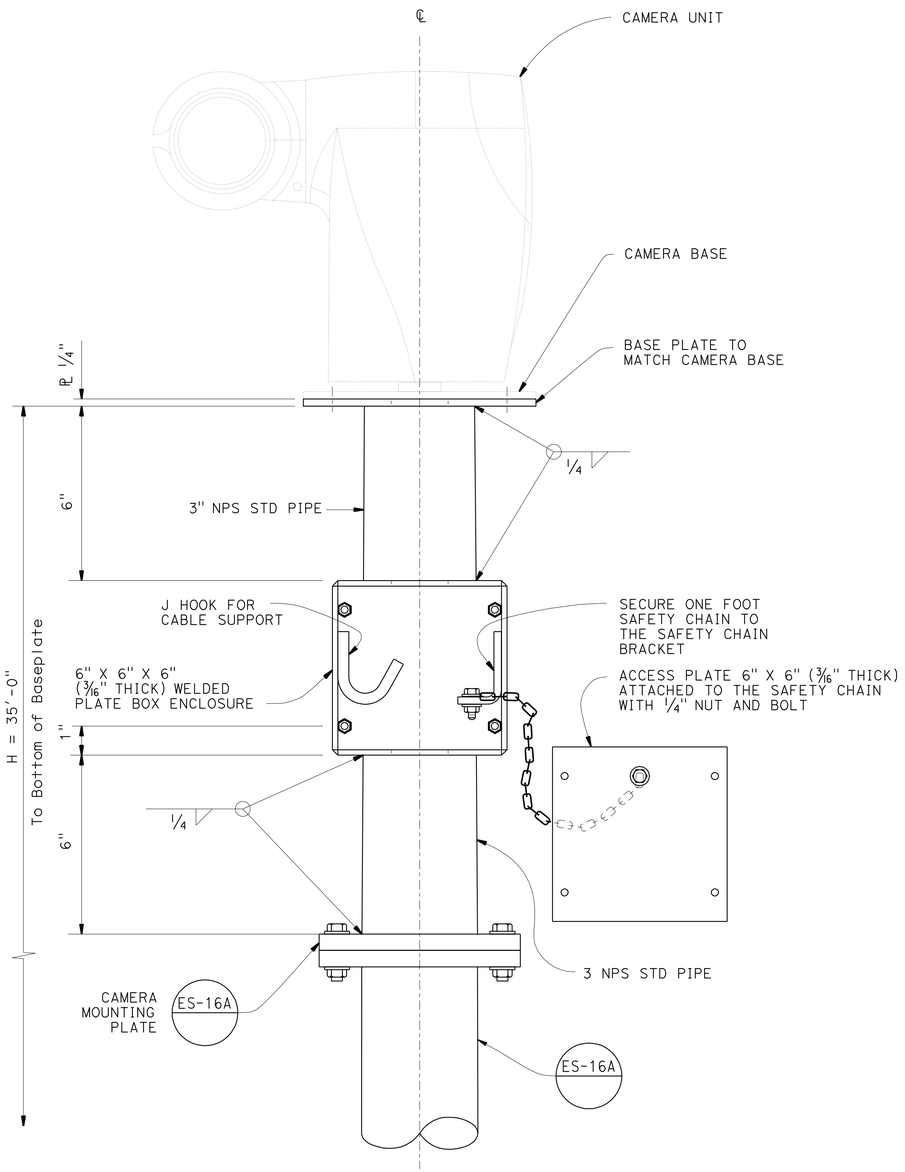

DETAIL A
MODIFIED CCTV 35 POLE

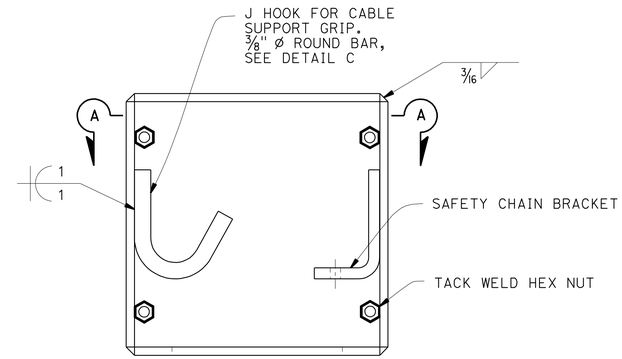

DETAIL B
BOX ENCLOSURE

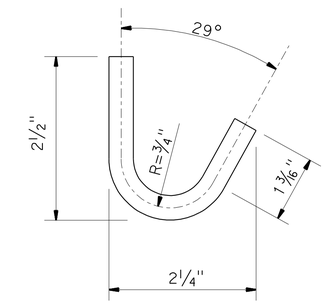

DETAIL C
J HOOK

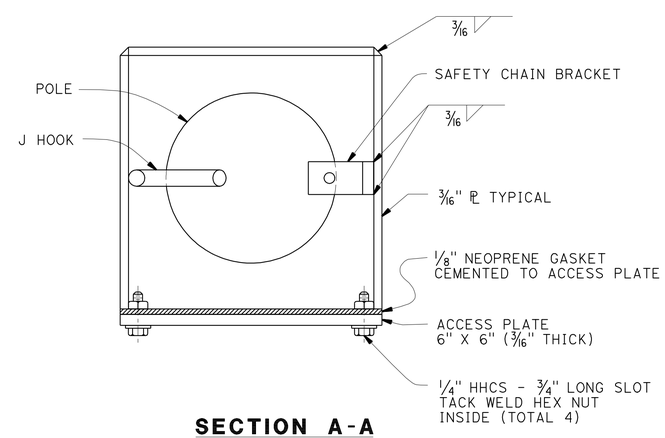

SECTION A-A

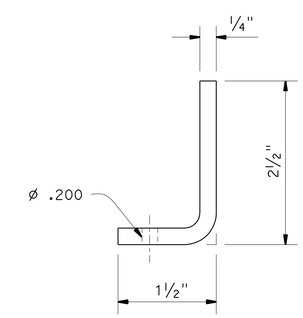

DETAIL D
SAFETY CHAIN BRACKET

Notes:

1. For details not shown, See "2006 Standard Plans ES-16A" and "2006 Revised Standard Plans".

THE CONTRACTOR SHALL VERIFY ALL CONTROLLING FIELD DIMENSIONS BEFORE ORDERING OR FABRICATING ANY MATERIAL.

	BY	CHECKED
DESIGN	G DORIA	L WARREN
DETAILS	D W JUSTICE Jr	G DORIA
QUANTITIES	X	X

STATE OF CALIFORNIA
DEPARTMENT OF TRANSPORTATION

DIVISION OF ENGINEERING SERVICES
STRUCTURE DESIGN
SPECIAL DESIGN BRANCH

BRIDGE NO. 57-1005
POST MILE 0.8

CLOSED CIRCUIT TELEVISION SYSTEM
CAMERA MOUNTING DETAILS

SES-1

STRUCTURES DESIGN SPECIAL DESIGN SHEET (ENGLISH) (REV. 09-01-10)

ORIGINAL SCALE IN INCHES FOR REDUCED PLANS 0 1 2 3

UNIT: 3625
PROJECT NUMBER & PHASE: 1100000239
CONTRACT NO.: 11-269301

DISREGARD PRINTS BEARING EARLIER REVISION DATES 11/9/11

SHEET 1 OF 3

FILE => 11-269301kmsc01.dgn

USERNAME => s128843 DATE PLOTTED => 31-AUG-2012 TIME PLOTTED => 13:37

DIST	COUNTY	ROUTE	POST MILES TOTAL PROJECT	SHEET No.	TOTAL SHEETS
11	SD	5,56	R30.4/R32.8, 0.0/9.2	150	177

REGISTERED CIVIL ENGINEER 4-3-12 DATE

6-4-12
PLANS APPROVAL DATE

REGISTERED PROFESSIONAL ENGINEER GENARO M. DORIA No. C63583 Exp. 9/30/12 CIVIL STATE OF CALIFORNIA

The State of California or its officers or agents shall not be responsible for the accuracy or completeness of electronic copies of this plan sheet.

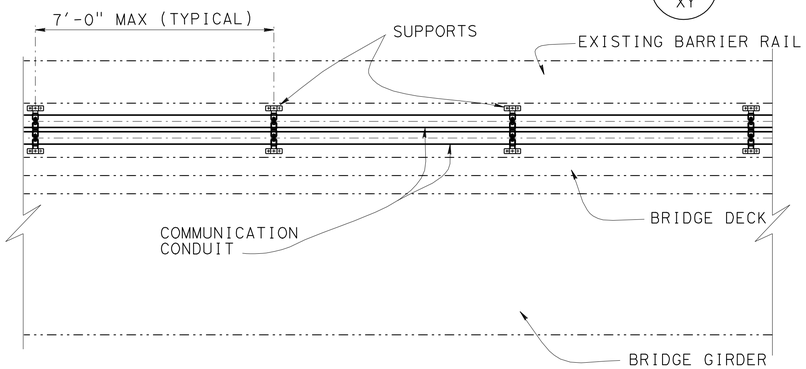

ELEVATION
COMMUNICATION CONDUIT

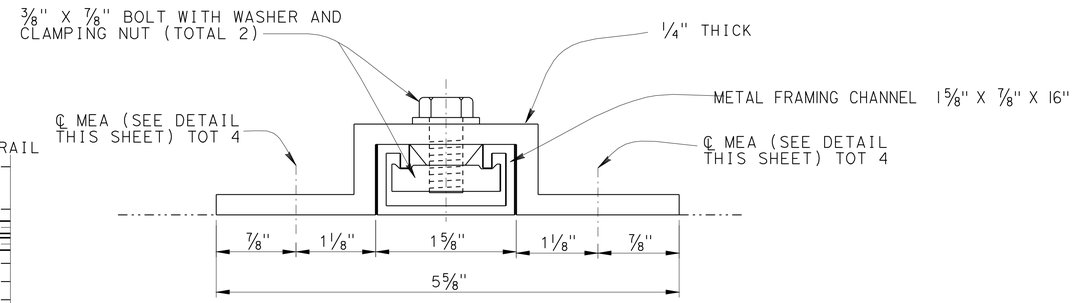

SECTION B

NOTES:

1. All steel shall be galvanized after fabrication.
2. ---·---·--- Indicates existing.
3. Seal utilities at abutment with concrete or mortar, after tightly wrapping utility with two layers of 15 lb building paper.
4. Details to be used on Bridge No.s 57-0590G, 57-0990G, 57-1004R and 57-1009L. See "Roadway Plans" for Fiber Optic locations.

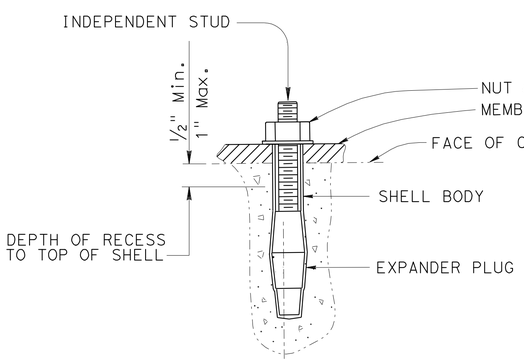

TYPICAL SHELL-TYPE MEA

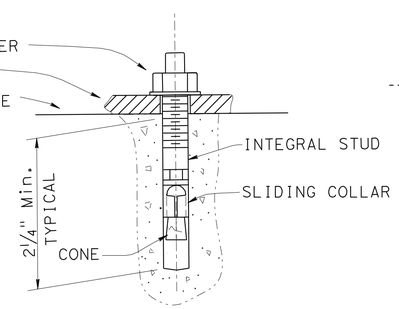

TYPICAL STUD TYPE MEA

MECHANICAL EXPANSION ANCHOR BOLTS (MEA)

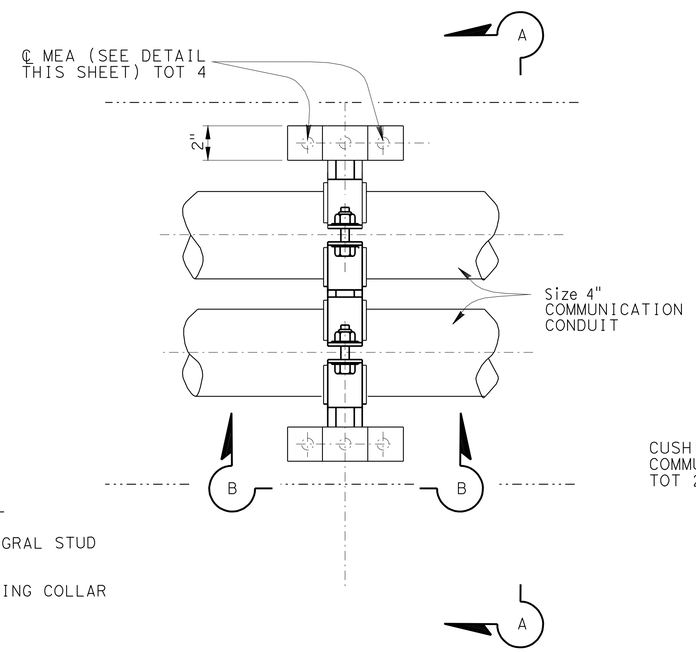

ELEVATION

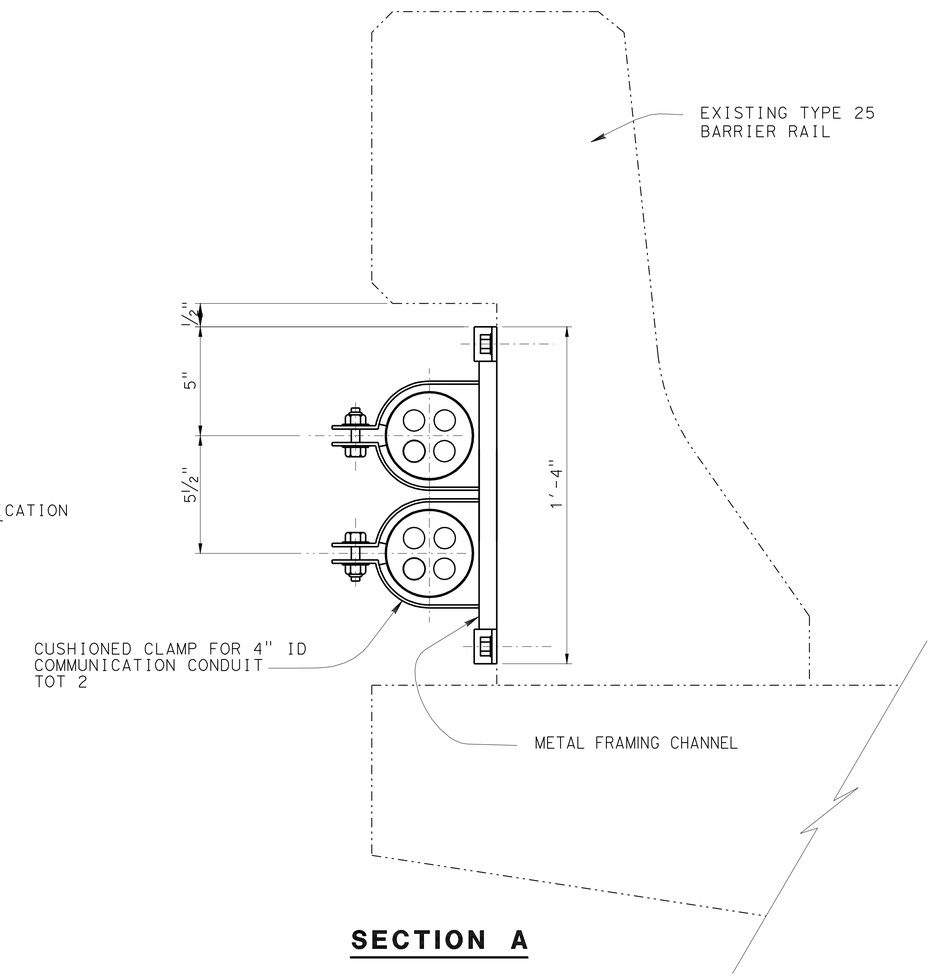

SECTION A

CONDUIT SUPPORT DETAILS

Spaced at 7'-0" MAXIMUM

THE CONTRACTOR SHALL VERIFY ALL CONTROLLING FIELD DIMENSIONS BEFORE ORDERING OR FABRICATING ANY MATERIAL.

NO SCALE

	BY	CHECKED
DESIGN	G DORIA	L WARREN
DETAILS	P C WELLS	G DORIA
QUANTITIES	G DORIA	L WARREN

STATE OF CALIFORNIA
DEPARTMENT OF TRANSPORTATION

DIVISION OF ENGINEERING SERVICES
STRUCTURE DESIGN
SPECIAL DESIGN BRANCH

BRIDGE NO. VAR
POST MILE VAR

FIBER OPTIC COMMUNICATIONS SYSTEM
MISCELLANEOUS DETAILS

SES-2

STRUCTURES DESIGN SPECIAL DESIGN SHEET (ENGLISH) (REV. 09-01-10)

ORIGINAL SCALE IN INCHES FOR REDUCED PLANS 0 1 2 3

UNIT: 3625
PROJECT NUMBER & PHASE: 1100000239
CONTRACT NO.: 11-269301

DISREGARD PRINTS BEARING EARLIER REVISION DATES

REVISION DATES 11/9/11

SHEET 2 OF 3

FILE => 11-269301kmsc02.dgn

USERNAME => s128843 DATE PLOTTED => 31-AUG-2012 TIME PLOTTED => 13:37

DIST	COUNTY	ROUTE	POST MILES TOTAL PROJECT	SHEET No.	TOTAL SHEETS
11	SD	5,56	R30.4/R32.8, 0.0/9.2	151	177

REGISTERED CIVIL ENGINEER — DATE 4-3-12

6-4-12
PLANS APPROVAL DATE

REGISTERED PROFESSIONAL ENGINEER GENARO M. DORIA No. C63583 Exp. 9/30/12 CIVIL STATE OF CALIFORNIA

The State of California or its officers or agents shall not be responsible for the accuracy or completeness of electronic copies of this plan sheet.

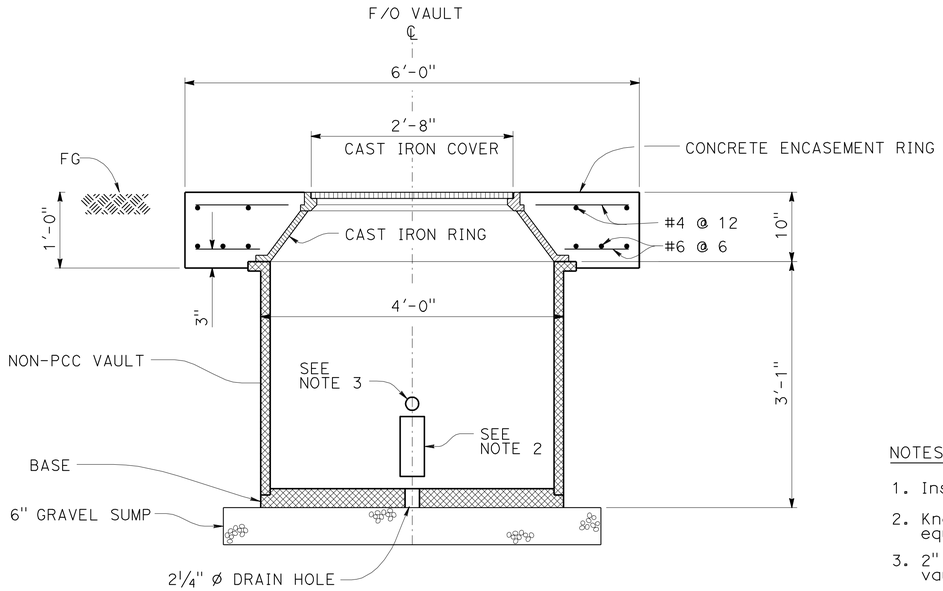

SECTION A-A

NO SCALE

NOTES:

1. Install per manufacturer's recommendation.
2. Knockout for mdcs (8) provide two equally spaced around vault.
3. 2" knockout (total 4) equally spaced around vault.
4. Details to ve used at Bridge locations 57-0590G, 57-0990G, 57-1004R and 57-1009L. See "ROADWAY PLANS" for Fiber Optic Vault locations.

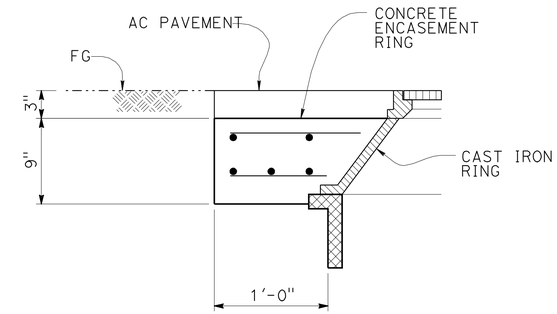

DETAIL A

NO SCALE
(VAULT INSIDE OF PULLOUT)

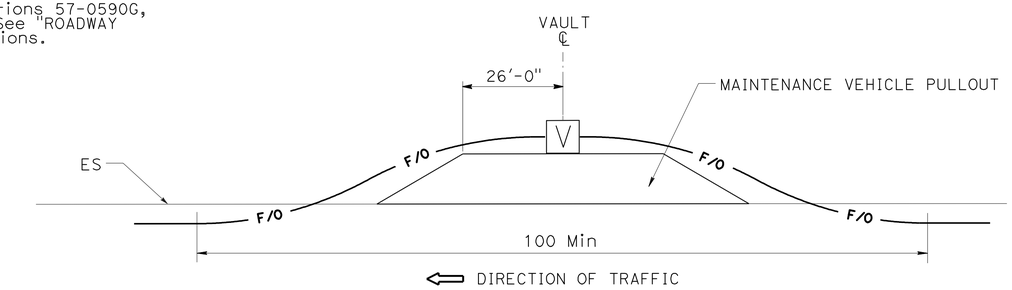

FIBER OPTIC VAULT INSTALLATION DETAIL (TYPICAL)

NO SCALE
(OUTSIDE OF PULLOUT)
NOTE: SEE DETAIL "A"

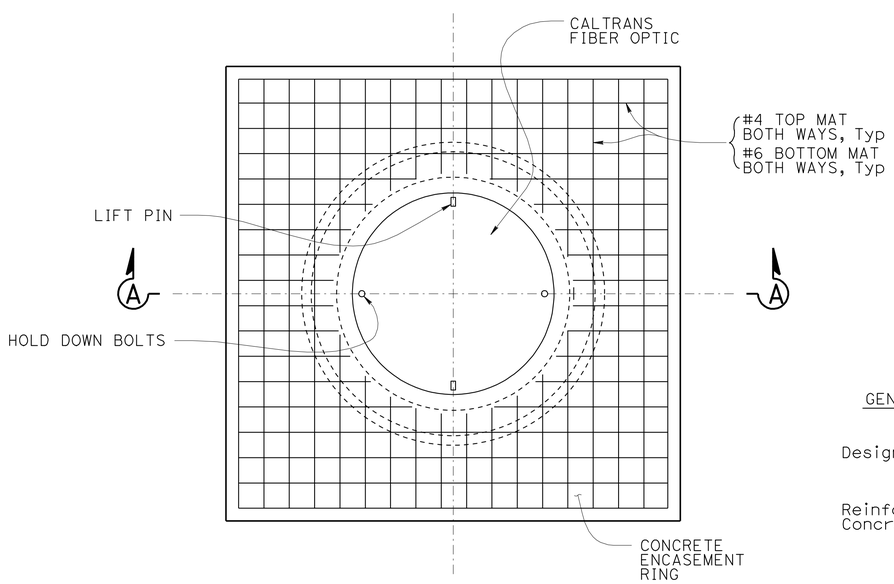

PLAN

NO SCALE

GENERAL NOTES:

Design : CALTRANS BRIDGE DESIGN SPECIFICATIONS APRIL 2000 (LFD)

Reinforced Concrete : fy = 60 psi (Yield strength of reinforcement)
f'c = 3600 psi (Concrete compressive strength at 28 days)
n = 8

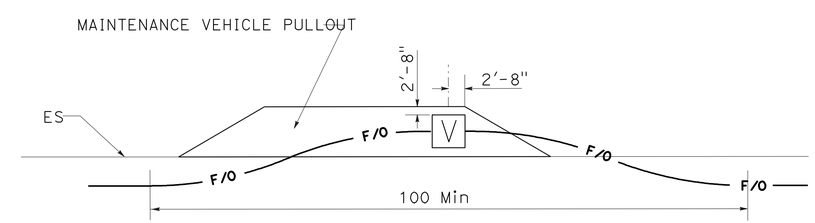

FIBER OPTIC VAULT INSTALLATION DETAIL (TYPICAL)

NO SCALE
(INSIDE OF PULLOUT)

THE CONTRACTOR SHALL VERIFY ALL CONTROLLING FIELD DIMENSIONS BEFORE ORDERING OR FABRICATING ANY MATERIAL.

	BY	CHECKED
DESIGN	GENARO DORIA	JOEL MAGANA
DETAILS	P C WELLS	GENARO DORIA
QUANTITIES	X	X

STATE OF CALIFORNIA
DEPARTMENT OF TRANSPORTATION

DIVISION OF ENGINEERING SERVICES
STRUCTURE DESIGN
SPECIAL DESIGN BRANCH

BRIDGE NO. VAR
POST MILE VAR

FIBER OPTIC COMMUNICATION SYSTEM
FIBER OPTIC VAULT DETAILS

SES-3

STRUCTURES DESIGN SPECIAL DESIGN SHEET (ENGLISH) (REV. 09-01-10)

ORIGINAL SCALE IN INCHES FOR REDUCED PLANS 0 1 2 3

UNIT: 3619
PROJECT NUMBER & PHASE: 1100000239
CONTRACT NO.: 11-269301

DISREGARD PRINTS BEARING EARLIER REVISION DATES

REVISION DATES 11-7-11

SHEET 3 OF 3

FILE => 11-269301kmsc03.dgn

USERNAME => s128843 DATE PLOTTED => 31-AUG-2012 TIME PLOTTED => 13:37

DIST	COUNTY	ROUTE	POST MILES TOTAL PROJECT	A BUI No.	TOTAL SHEETS
11	SD	5,56	R30.4/R32.8, 0.0/9.2	152	177

REGISTERED CIVIL ENGINEER 4-3-12 DATE

6-4-12
PLANS APPROVAL DATE

REGISTERED PROFESSIONAL ENGINEER JEFF WOODY No. 41260 Exp. 3-31-13 CIVIL STATE OF CALIFORNIA

The State of California or its officers or agents shall not be responsible for the accuracy or completeness of electronic copies of this plan sheet.

NOTES:

1. During pole installation, the post shall be raked as necessary with the use of leveling nuts to provide a plumb pole axis.
2. Wind Loadings (3-second gust): 100 mph
3. Unit Stresses (Structural Steel):
   a. fy = 55,000 psi (tapered steel tube and anchor bolts)
   b. fy = 50,000 psi (unless otherwise noted)
4. Unit Stresses (Reinforced Concrete):
   a. f'c = 3,625 psi
   b. fy = 60,000 psi
5. Mounting area to be perpendicular to traffic.

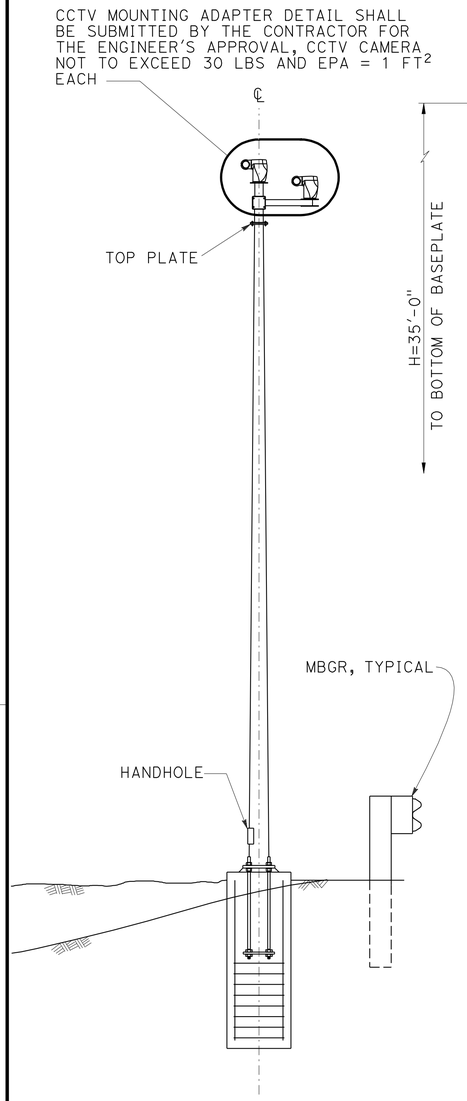

ELEVATION

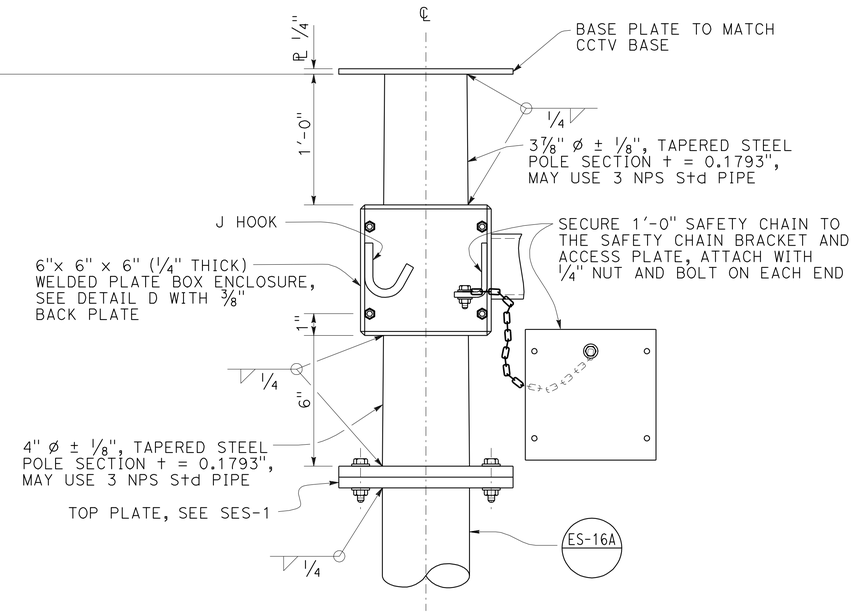

DETAIL C
CLOSED CIRCUIT TELEVISION MOUNTING ADAPTER

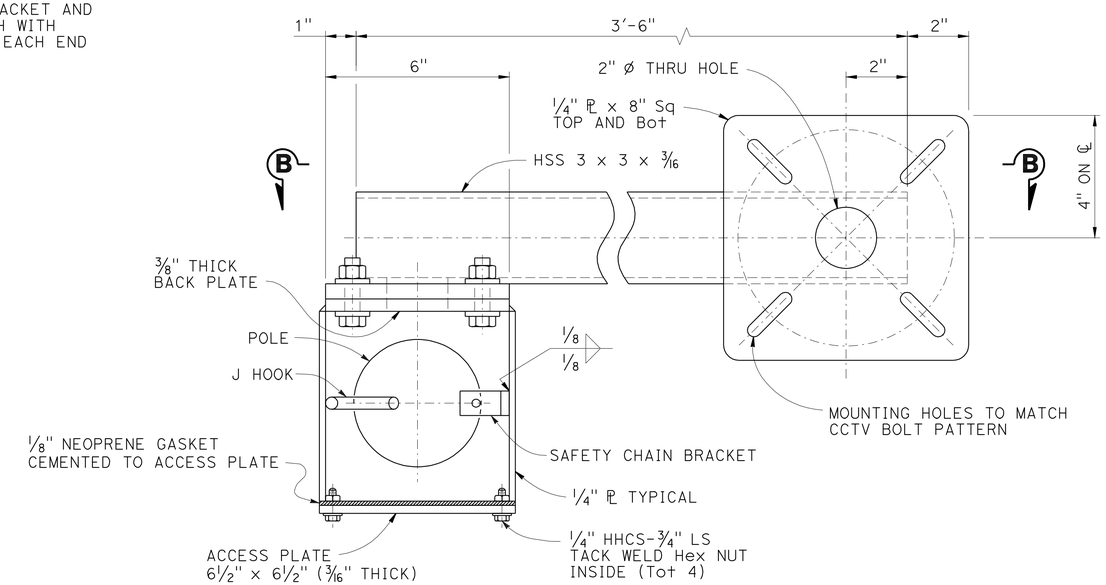

SECTION A-A

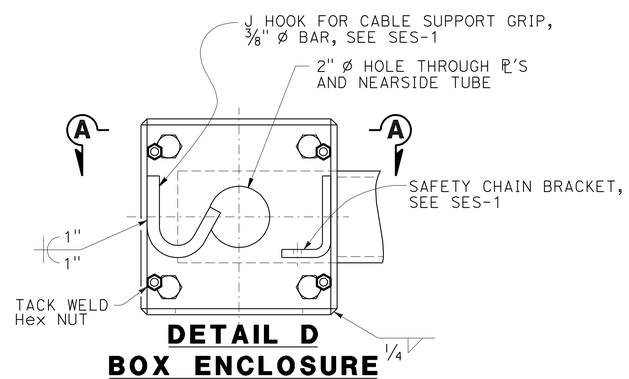

DETAIL D
BOX ENCLOSURE

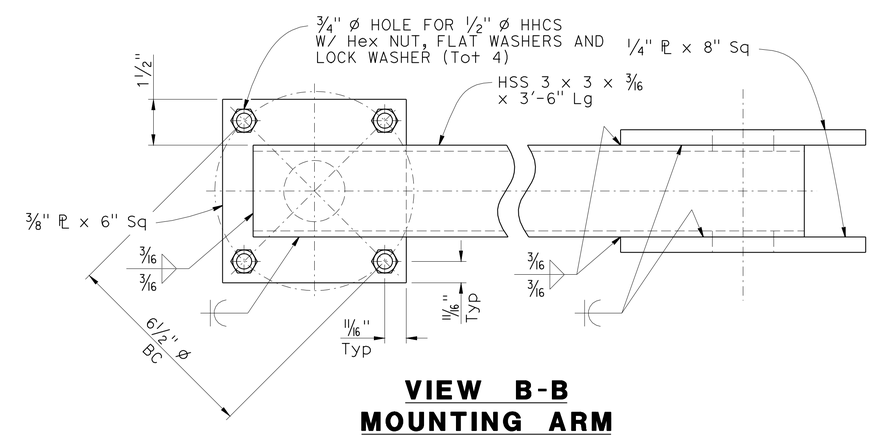

VIEW B-B
MOUNTING ARM

NOTE:
THE CONTRACTOR SHALL VERIFY ALL CONTROLLING FIELD DIMENSIONS BEFORE ORDERING OR FABRICATING ANY MATERIAL.

NO SCALE

DESIGN	BY J WOODY	CHECKED A BUI	
DETAILS	BY D W JUSTICE Jr	CHECKED J WOODY	
QUANTITIES	BY X	CHECKED X	

STATE OF CALIFORNIA
DEPARTMENT OF TRANSPORTATION

DIVISION OF ENGINEERING SERVICES
STRUCTURE DESIGN
SPECIAL DESIGN BRANCH

BRIDGE NO. N/A
POST MILE Varies

CLOSED CIRCUIT TELEVISION SYSTEM
CANTILEVERED ARM DETAILS

SES-4

STRUCTURES DESIGN SPECIAL DESIGN SHEET (ENGLISH) (REV. 09-01-10)

ORIGINAL SCALE IN INCHES FOR REDUCED PLANS 0 1 2 3

UNIT: 3619
PROJECT NUMBER & PHASE: 110000239-1
CONTRACT NO.: 1-269301

DISREGARD PRINTS BEARING EARLIER REVISION DATES

REVISION DATES 3-29-12

SHEET 4 OF 4

FILE => 11-269301kmsco4.dgn

USERNAME => s128843 DATE PLOTTED => 31-AUG-2012 TIME PLOTTED => 13:37

Dist	COUNTY	ROUTE	POST MILES TOTAL PROJECT	SHEET No.	TOTAL SHEETS
11	SD	5,56	R30.4/R32.8, 0.0/9.2	153	177

Randell D. Hiatt
REGISTERED CIVIL ENGINEER

May 20, 2011
PLANS APPROVAL DATE

REGISTERED PROFESSIONAL ENGINEER
Randell D. Hiatt
No. C50200
Exp. 6-30-11
CIVIL
STATE OF CALIFORNIA

The State of California or its officers or agents shall not be responsible for the accuracy or completeness of electronic copies of this plan sheet.

To accompany plans dated 6-4-12

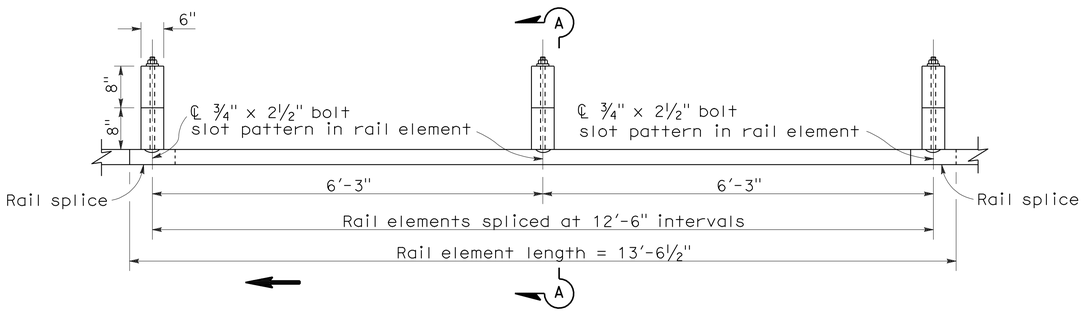

PLAN

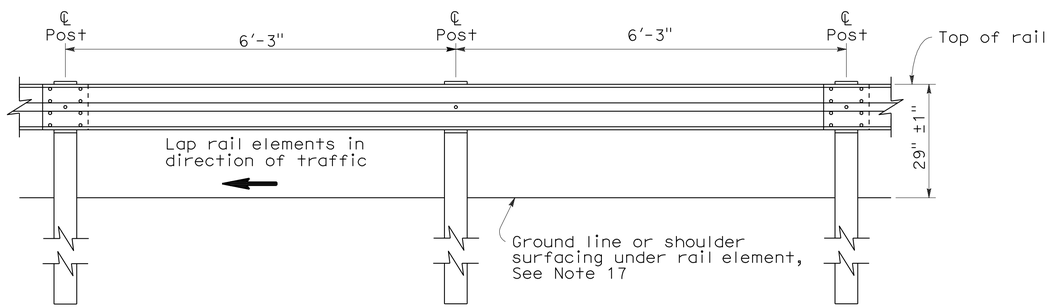

ELEVATION

METAL BEAM GUARD RAILING WITH WOOD POST AND BLOCKS

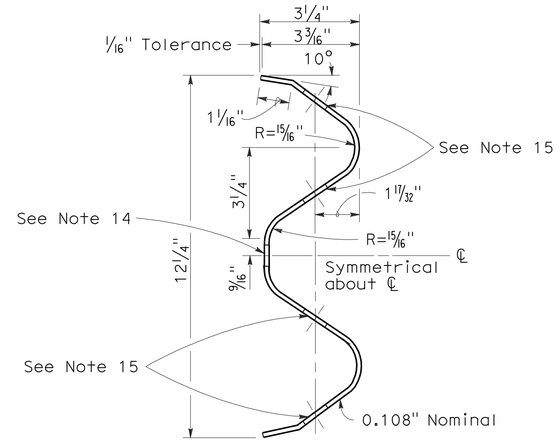

SECTION THRU RAIL ELEMENT

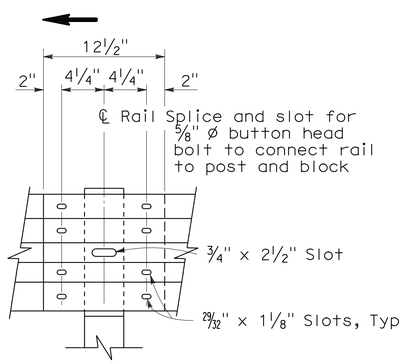

ELEVATION

RAIL ELEMENT SPLICE DETAIL

a) Connect the over lapped end of the rail elements with ⅝" ø x 1⅜" button head oval shoulder splice bolts inserted into the 29⁄32" x 1⅛" slots and bolted together with ⅝" ø recessed hex nuts. Recess of hex nut points toward rail element. A total of 8 bolts and nuts are to be used at each rail splice connection.

b) The ends of the rail elements are to be overlapped in the direction of traffic (see details).

c) Where end cap is to be attached to the end of a rail element, a total of 4 of the above described splice bolts and nuts are to be used.

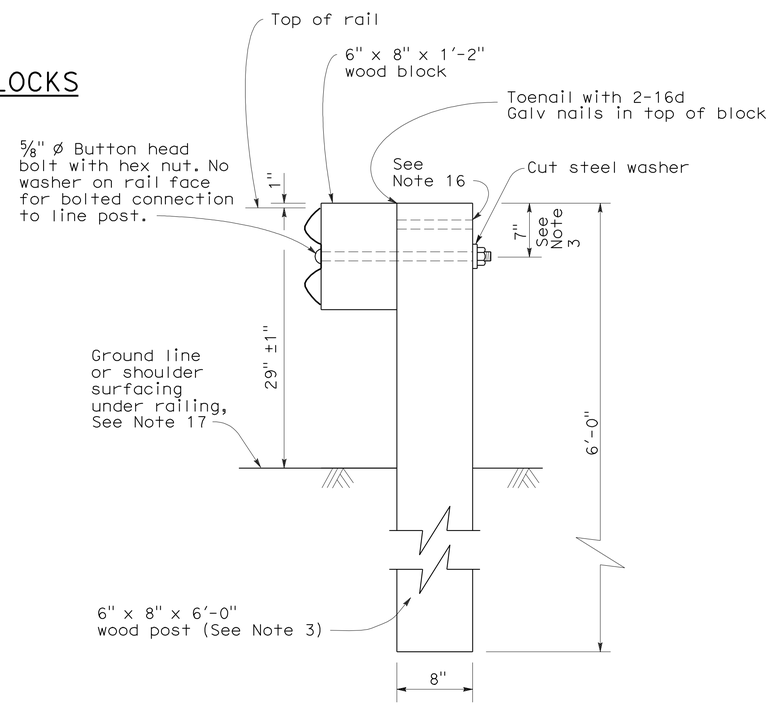

SECTION A-A

TYPICAL WOOD LINE POST INSTALLATION

See Note 4

NOTES:

1. For details of steel post installations, see Standard Plan A77A2.
2. For details of standard hardware used to construct guard railing, see Standard Plan A77B1.
3. For details of wood posts and wood blocks used to construct guard railing, see Standard Plan A77C1.
4. For additional installation details, see Standard Plan A77C3.
5. Guard railing post spacing to be 6'-3" center to center, except as otherwise noted.
6. For guard railing typical layouts, see the A77E, A77F and A77G Series of Standard Plans.
7. For terminal system end treatment details, see the A77L Series of Standard Plans. To connect railing to terminal system end treatment, transition the top of railing height at a ratio of 120:1 to terminal system end treatment height plus one 12'-6" standard railing section at the transitioned height for a horizontal connection to the end treatment.
8. For guard railing end anchor details, see Standard Plans A77H1 and A77I2.
9. For details of guard railing transition to bridge railing, see Standard Plan A77J4.
10. For additional details of guard railing connection to bridge railings, see Standard Plans A77J1, A77J2 and A77K1.
11. For guard railing connection details to abutments and walls, see Standard Plan A77J3.
12. Direction of adjacent traffic indicated by ➡.
13. For typical guard railing delineation and dike positioning details, see Standard Plan A77C4.
14. Slotted hole for bolted connection of rail element to block and post. See "Section Thru Rail Element".
15. Slotted holes for splice bolts to overlap ends of rail element. See "Section Thru Rail Element".
16. Additional hole in uppermost portion of line post is for potential future adjustments of railing height. See Standard Plan A77C1.
17. Install posts in soil.

STATE OF CALIFORNIA
DEPARTMENT OF TRANSPORTATION

METAL BEAM GUARD RAILING STANDARD RAILING SECTION (WOOD POST WITH WOOD BLOCK)

NO SCALE

RSP A77A1 DATED MAY 20, 2011 SUPERSEDES STANDARD PLAN A77A1 DATED MAY 1, 2006 - PAGE 41 OF THE STANDARD PLANS BOOK DATED MAY 2006.

REVISED STANDARD PLAN RSP A77A1

2006 REVISED STANDARD PLAN RSP A77A1

3-10-11

Dist	COUNTY	ROUTE	POST MILES TOTAL PROJECT	SHEET No.	TOTAL SHEETS
11	SD	5,56	R30.4/R32.8, 0.0/9.2	154	177

Randell D. Hiatt
REGISTERED CIVIL ENGINEER

May 20, 2011
PLANS APPROVAL DATE

REGISTERED PROFESSIONAL ENGINEER
Randell D. Hiatt
No. C50200
Exp. 6-30-11
CIVIL
STATE OF CALIFORNIA

The State of California or its officers or agents shall not be responsible for the accuracy or completeness of electronic copies of this plan sheet.

To accompany plans dated 6-4-12

NOTES:

1. When necessary to place dike in front of face of guard railing, only Type C dike may be used. For dike details, see Standard Plan A87B.
2. For standard railing post embedment, see Standard Plans A77C3.
3. Guard railing delineation to be used where shown on the Project Plans.
4. When dike or curb is placed under guard railing, the maximum height of the dike or curb shall be 4". Mountable dike should not be used. For dike and curb details, see Standard Plans A87A and A87B.
5. For details of typical distance between the face of rail and hinge point, see Standard Plan A77C3.
6. For steel line posts, use ¼ - 20 self-tapping screws in 0.22" diameter holes or ¼" bolts in 9/32" diameter holes.

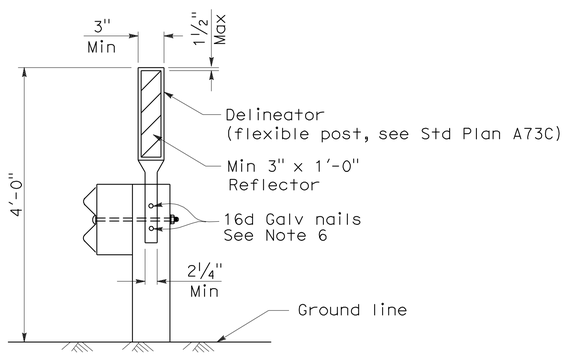

GUARD RAILING DELINEATION

See Note 3

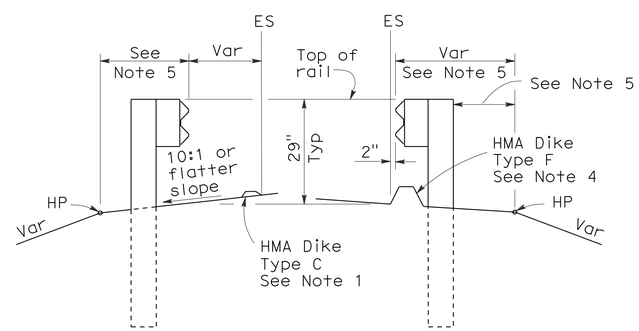

DIKE POSITIONING

See Note 1

STATE OF CALIFORNIA
DEPARTMENT OF TRANSPORTATION

METAL BEAM GUARD RAILING TYPICAL RAILING DELINEATION AND DIKE POSITIONING DETAILS

NO SCALE

RSP A77C4 DATED MAY 20, 2011 SUPERSEDES RSP A77C4 DATED JUNE 6, 2008 AND STANDARD PLAN A77C4 DATED MAY 1, 2006 - PAGE 47 OF THE STANDARD PLANS BOOK DATED MAY 2006.

REVISED STANDARD PLAN RSP A77C4

2006 REVISED STANDARD PLAN RSP A77C4

3-10-11

DIST	COUNTY	ROUTE	POST MILES TOTAL PROJECT	SHEET NO.	TOTAL SHEETS
11	SD	5,56	R30.4/R32.8, 0.0/9.2	155	177

Randell D. Hiatt
REGISTERED CIVIL ENGINEER

June 6, 2008
PLANS APPROVAL DATE

REGISTERED PROFESSIONAL ENGINEER
Randell D. Hiatt
No. C50200
Exp. 6-30-09
CIVIL
STATE OF CALIFORNIA

The State of California or its officers or agents shall not be responsible for the accuracy or completeness of electronic copies of this plan sheet.

To accompany plans dated 6-4-12

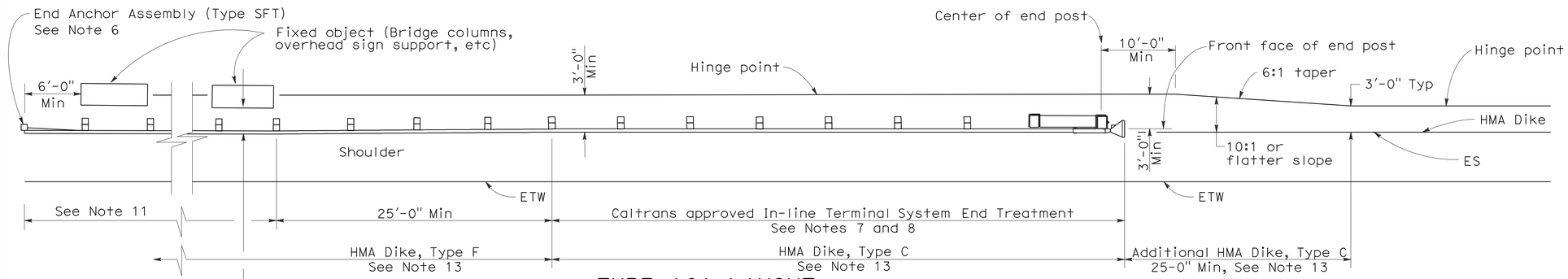

TYPE 16A LAYOUT

(GUARD RAILING INSTALLATION AT ROADSIDE FIXED OBJECT OR OBJECTS WITH AN IN-LINE END TREATMENT AT TRAFFIC APPROACH END OF RAILING)
See Notes 12 and 13

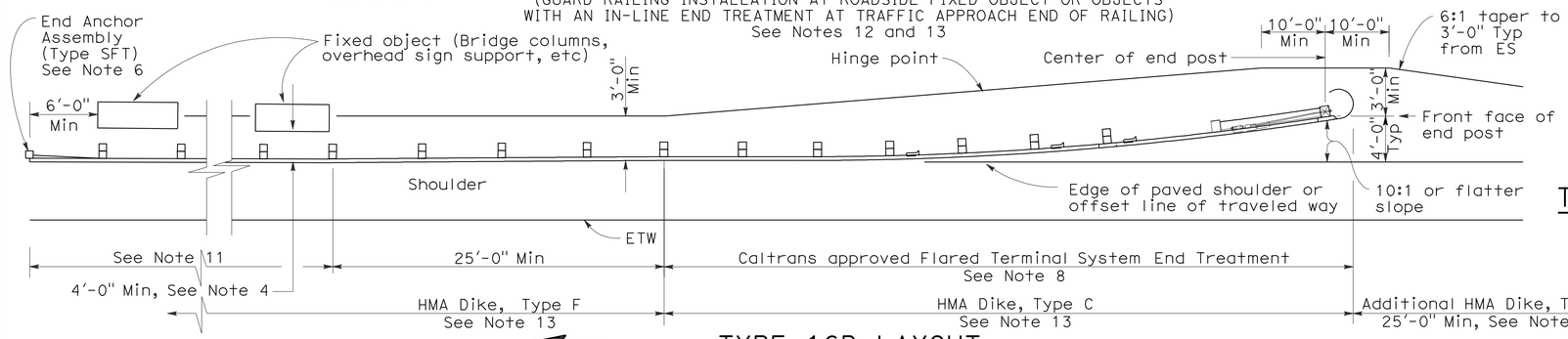

TYPE 16B LAYOUT

(GUARD RAILING INSTALLATION AT ROADSIDE FIXED OBJECT OR OBJECTS WITH A FLARED END TREATMENT AT TRAFFIC APPROACH END OF RAILING)
See Notes 12 and 13

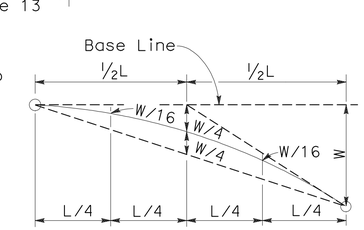

TYPICAL PARABOLIC LAYOUT

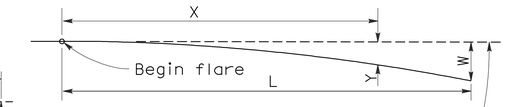

Base Line (Edge of paved shoulder or offset line of edge of traveled way)

$$Y = \frac{WX^2}{L^2}$$

Y = Offset from base line
W = Maximum offset
X = Distance along base line
L = Length of flare

PARABOLIC FLARE OFFSETS

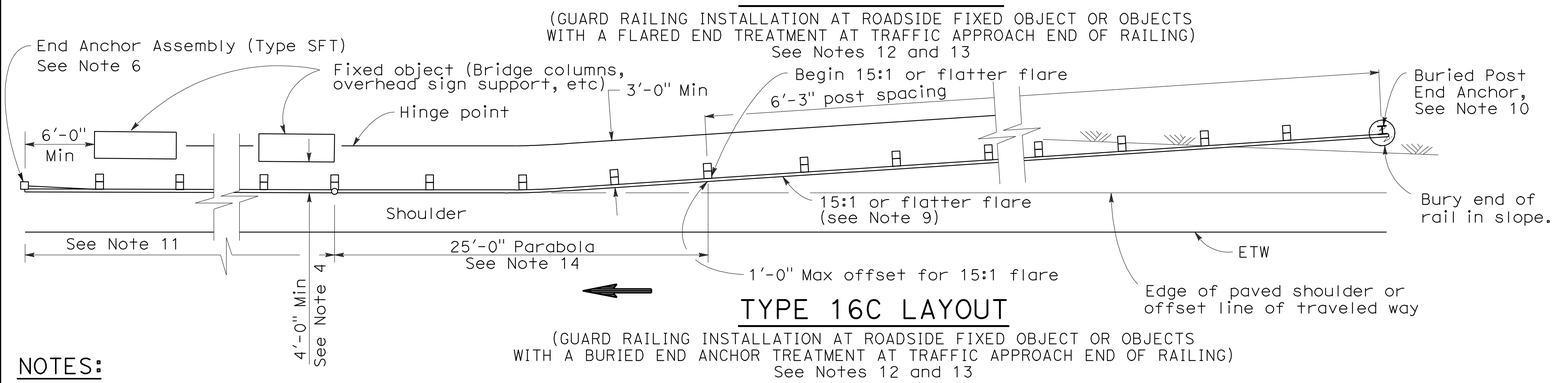

TYPE 16C LAYOUT

(GUARD RAILING INSTALLATION AT ROADSIDE FIXED OBJECT OR OBJECTS WITH A BURIED END ANCHOR TREATMENT AT TRAFFIC APPROACH END OF RAILING)
See Notes 12 and 13

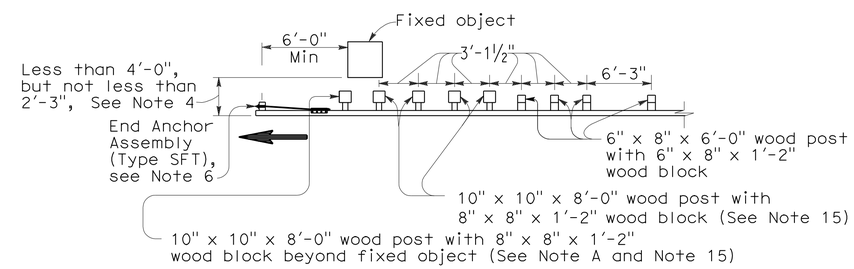

NOTE A: For a series of fixed objects (bridge columns, overhead sign supports, etc.) additional 10" x 10" x 8'-0" wood post with 8" x 8" x 1'-2" wood blocks at 3'-1½" center to center spacing are to be used between fixed objects.

STRENGTHENED RAILING SECTIONS FOR FIXED OBJECT

Use strengthened railing sections with Types 16A, 16B or 16C Layouts where minimum clearance between the face of the guard railing and fixed object(s) is less than 4'-0", but not less than 2'-3". See Note 4

NOTES:

1. Line post, blocks and hardware to be used are shown on Revised Standard Plans A77A1, A77A2, A77B1, A77C1 and A77C2.
2. Guard railing post spacing to be 6'-3" center to center, except as otherwise noted.
3. Except as noted, line posts are 6" x 8" x 6'-0" wood with 6" x 8" x 1'-2" wood blocks. W6 x 9 steel posts, 6'-0" in length, with 6" x 8" x 1'-2" notched wood blocks or notched recycled plastic blocks may be used for 6" x 8" x 6'-0" wood line posts with 6" x 8" x 1'-2" wood blocks where applicable and when specified.
4. A 4'-0" minimum clearance is required between the face of the railing and the face of a fixed object located directly behind standard guard railing sections with post spacing of 6'-3". Construct guard railing as shown in the detail "Strengthened Railing Sections for Fixed Objects" on this plan, where the clearance between the face of the railing and the face of a fixed object is less than 4'-0", but not less than 2'-3". Where the clearance is less than 2'-3", a concrete wall or barrier should be constructed to shield the fixed object(s).
5. Direction of adjacent traffic indicated by ⟶.
6. For End Anchor Assembly (Type SFT) details, see Standard Plan A77H1.
7. In-line Terminal System End Treatments are used where site conditions will not accommodate a flared end treatment.
8. The type of terminal system to be used will be shown on the Project Plans.
9. The 15:1 or flatter flare used with Type 16C Layout is based on the edge of the paved shoulder or offset line of edge of the traveled way. The length of guard railing within the 15:1 or flatter flare is based on site conditions and should be a length equal to multiples of 12'-6".
10. For details of the Buried Post End Anchor used with Type 16C Layout, see Standard Plan A77I2.
11. As site conditions dictate, construct additional guard railing to shield fixed object(s). Additional guard railing length equal to multiples of 12'-6". Post spacing at 6'-3" except as specified in Note 4.
12. Layout Types 16A, 16B or 16C are typically used where guard railing is recommended to shield roadside fixed object(s) and a crashworthy end treatment is required for only one direction of traffic.
13. Where placement of dike is required with guard railing, see Revised Standard Plan RSP A77C4 for dike positioning details.
14. For typical flare offsets for 25'-0" length parabola with maximum offset of 1'-0", see Revised Standard Plan RSP A77E1.
15. W6 x 15 steel post, 8'-0" in length, with 8" x 8" x 1'-2" notched wood block or notched recycled plastic blocks may be used in place of the 10" x 10" x 8'-0" wood post with 8" x 8" x 1'-2" wood block shown in the "Strengthened Railing Sections Detail".

STATE OF CALIFORNIA
DEPARTMENT OF TRANSPORTATION

METAL BEAM GUARD RAILING TYPICAL LAYOUTS FOR ROADSIDE FIXED OBJECTS

NO SCALE

RSP A77G3 DATED JUNE 6, 2008 SUPERSEDES STANDARD PLAN A77G3 DATED MAY 1, 2006 - PAGE 61 OF THE STANDARD PLANS BOOK DATED MAY 2006.

REVISED STANDARD PLAN RSP A77G3

2006 REVISED STANDARD PLAN RSP A77G3

12-10-07

Dist	COUNTY	ROUTE	POST MILES TOTAL PROJECT	SHEET No.	TOTAL SHEETS
11	SD	5,56	R30.4/R32.8, 0.0/9.2	156	177

Randell D. Hiatt
REGISTERED CIVIL ENGINEER

May 20, 2011
PLANS APPROVAL DATE

REGISTERED PROFESSIONAL ENGINEER
Randell D. Hiatt
No. C50200
Exp. 6-30-11
CIVIL
STATE OF CALIFORNIA

The State of California or its officers or agents shall not be responsible for the accuracy or completeness of electronic copies of this plan sheet.

To accompany plans dated 6-4-12

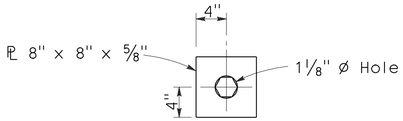

DETAIL A
CABLE CONNECTION
END PLATE

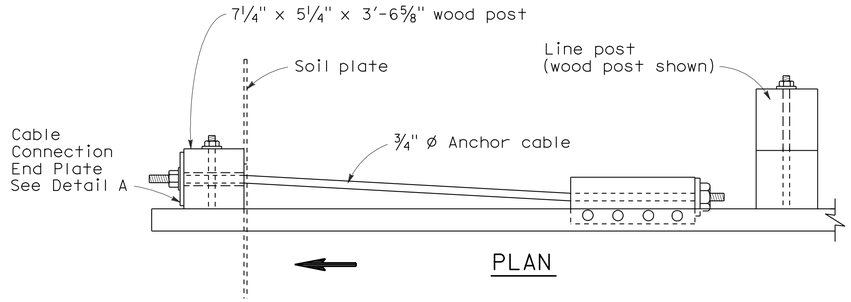

PLAN

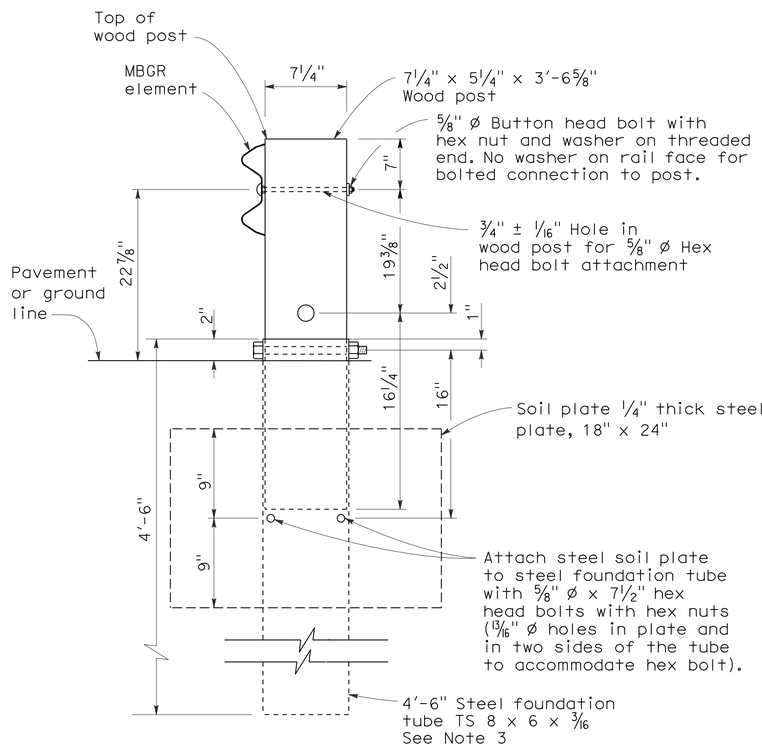

SECTION A-A

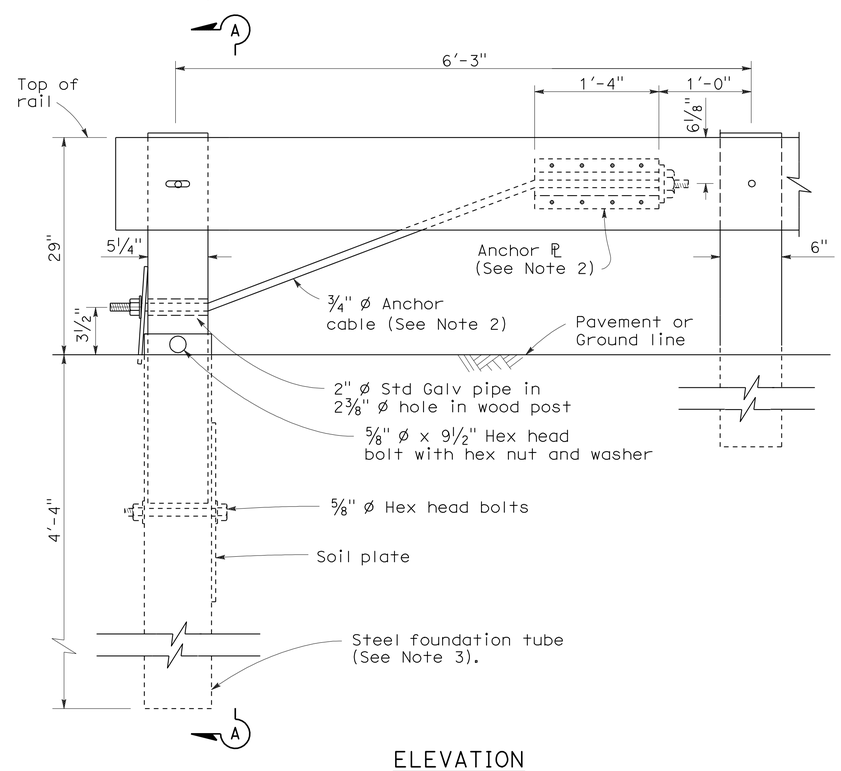

ELEVATION
END ANCHOR
ASSEMBLY (TYPE SFT)
See Note 1

NOTES:

1. See the A77E, A77F and A77G series of Standard Plans for typical use of End Anchor Assembly (Type SFT).
2. For details of the anchor plate and 3/4" cable, see Standard Plan A77H3.
3. A 6'-0" length steel foundation tube, TS 8 x 6 x 3/16, without a soil plate, may be furnished and installed in place of the 4'-6" length steel foundation tube and soil plate shown. Minimum embedment of the 6'-0" length tube shall be 5'-9". A 5/8" Ø hex head bolt and nut shall be installed in the hole in the 6'-0" length tube to keep the wood post from dropping into the tube.
4. Direction of traffic indicated by ⟹.
5. Install line post, steel foundation tube and soil plate in soil.

STATE OF CALIFORNIA
DEPARTMENT OF TRANSPORTATION

METAL RAILING END ANCHOR ASSEMBLY (TYPE SFT)

NO SCALE

RSP A77H1 DATED MAY 20, 2011 SUPERSEDES STANDARD PLAN A77H1
DATED MAY 1, 2006 - PAGE 67 OF THE STANDARD PLANS BOOK DATED MAY 2006.

REVISED STANDARD PLAN RSP A77H1

2006 REVISED STANDARD PLAN RSP A77H1

DIST	COUNTY	ROUTE	POST MILES TOTAL PROJECT	SHEET NO.	TOTAL SHEETS
11	SD	5,56	R30.4/R32.8, 0.0/9.2	157	177

Randell D. Hiatt
REGISTERED CIVIL ENGINEER

June 6, 2008
PLANS APPROVAL DATE

REGISTERED PROFESSIONAL ENGINEER
Randell D. Hiatt
No. C50200
Exp. 6-30-09
CIVIL
STATE OF CALIFORNIA

The State of California or its officers or agents shall not be responsible for the accuracy or completeness of electronic copies of this plan sheet.

To accompany plans dated 6-4-12

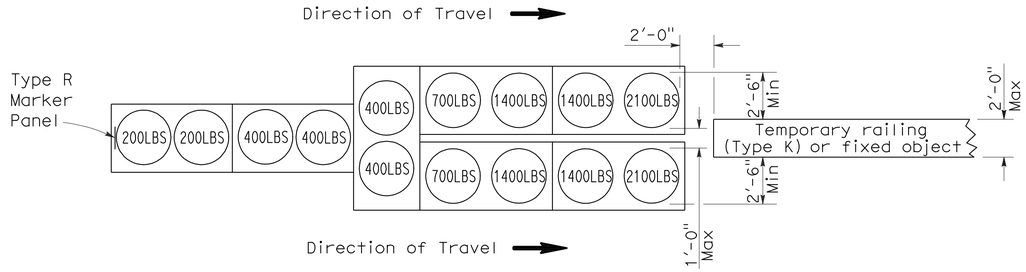

ARRAY 'TU14'

Approach speed 45 mph or more

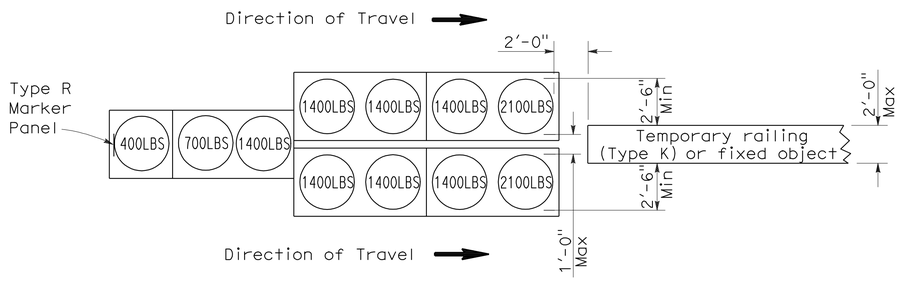

ARRAY 'TU11'

Approach speed less than 45 mph

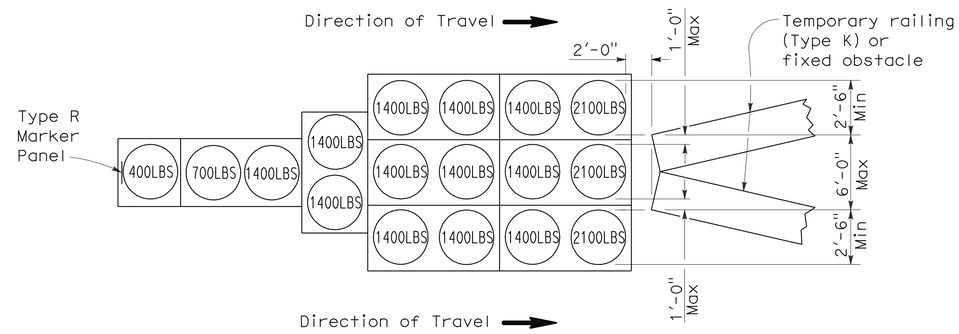

ARRAY 'TU17'

Approach speed less than 45 mph

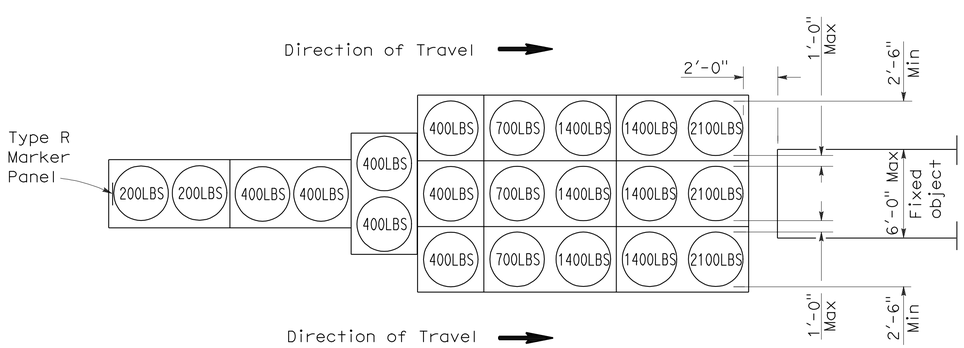

ARRAY 'TU21'

Approach speed 45 mph or more

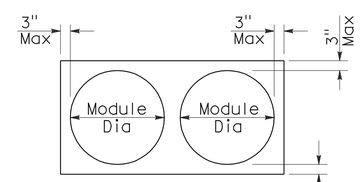

PLAN

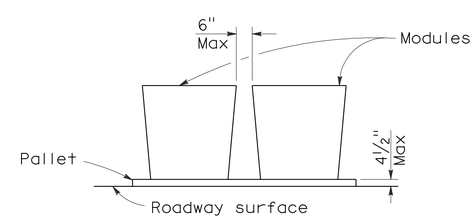

ELEVATION

CRASH CUSHION PALLET DETAIL

See Note 7

NOTES:

1. (XXX) Indicates sand filled module location and weight of sand in pounds for each module. Module spacing is based on the greater diameter of the module.
2. All sand weights are nominal.
3. Temporary crash cushion arrays shall not encroach on the traveled way.
4. Place the top of Type R marker panel 1" below the module lid.
5. Refer to Standard Plan A73B for marker details.
6. Approach speeds indicated conform to NCHRP 350 Report criteria.
7. Use of pallets is optional.

STATE OF CALIFORNIA
DEPARTMENT OF TRANSPORTATION

TEMPORARY CRASH CUSHION, SAND FILLED (UNIDIRECTIONAL)

NO SCALE

RSP T1A DATED JUNE 6, 2008 SUPERSEDES STANDARD PLAN T1A
DATED MAY 1, 2006 - PAGE 211 OF THE STANDARD PLANS BOOK DATED MAY 2006.

REVISED STANDARD PLAN RSP T1A

2006 REVISED STANDARD PLAN RSP T1A

DIST	COUNTY	ROUTE	POST MILES TOTAL PROJECT	SHEET NO.	TOTAL SHEETS
11	SD	5,56	R30.4/R32.8, 0.0/9.2	158	177

Randell D. Hiatt
REGISTERED CIVIL ENGINEER

June 6, 2008
PLANS APPROVAL DATE

REGISTERED PROFESSIONAL ENGINEER
Randell D. Hiatt
No. C50200
Exp. 6-30-09
CIVIL
STATE OF CALIFORNIA

The State of California or its officers or agents shall not be responsible for the accuracy or completeness of electronic copies of this plan sheet.

To accompany plans dated 6-4-12

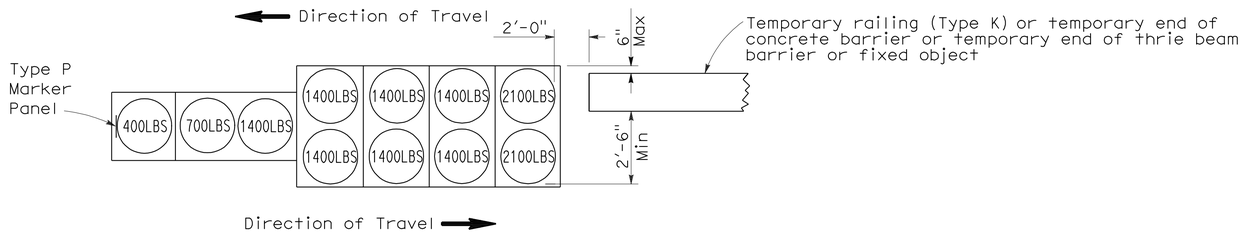

ARRAY 'TB11'

Approach speed less than 45 mph

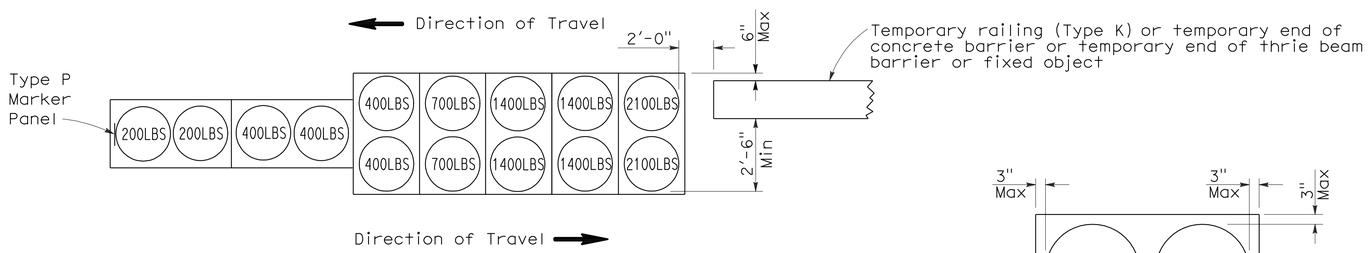

ARRAY 'TB14'

Approach speed 45 mph or more

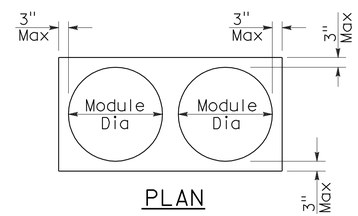

PLAN

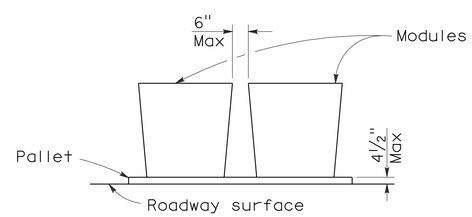

ELEVATION

CRASH CUSHION PALLET DETAIL

See Note 7

NOTES:

1. (XXX) Indicates sand filled module location and weight of sand in pounds for each module. Module spacing is based on the greater diameter of the module.
2. All sand weights are nominal.
3. Temporary crash cushion arrays shall not encroach on the traveled way.
4. Place the Type P marker panel so that the bottom of the panel rests upon the pallet.
5. Refer to Standard Plan A73B for marker details.
6. Approach speeds indicated conform to NCHRP 350 Report criteria.
7. Use of pallets is optional.

STATE OF CALIFORNIA
DEPARTMENT OF TRANSPORTATION

TEMPORARY CRASH CUSHION, SAND FILLED (BIDIRECTIONAL)

NO SCALE

RSP T1B DATED JUNE 6, 2008 SUPERSEDES STANDARD PLAN T1B
DATED MAY 1, 2006 - PAGE 212 OF THE STANDARD PLANS BOOK DATED MAY 2006.

REVISED STANDARD PLAN RSP T1B

2006 REVISED STANDARD PLAN RSP T1B

5-15-08

DIST	COUNTY	ROUTE	POST MILES TOTAL PROJECT	SHEET NO.	TOTAL SHEETS
11	SD	5,56	R30.4/R32.8, 0.0/9.2	159	177

Randell D. Hiatt
REGISTERED CIVIL ENGINEER

June 6, 2008
PLANS APPROVAL DATE

REGISTERED PROFESSIONAL ENGINEER
Randell D. Hiatt
No. C50200
Exp. 6-30-09
CIVIL
STATE OF CALIFORNIA

The State of California or its officers or agents shall not be responsible for the accuracy or completeness of electronic copies of this plan sheet.

To accompany plans dated 6-4-12

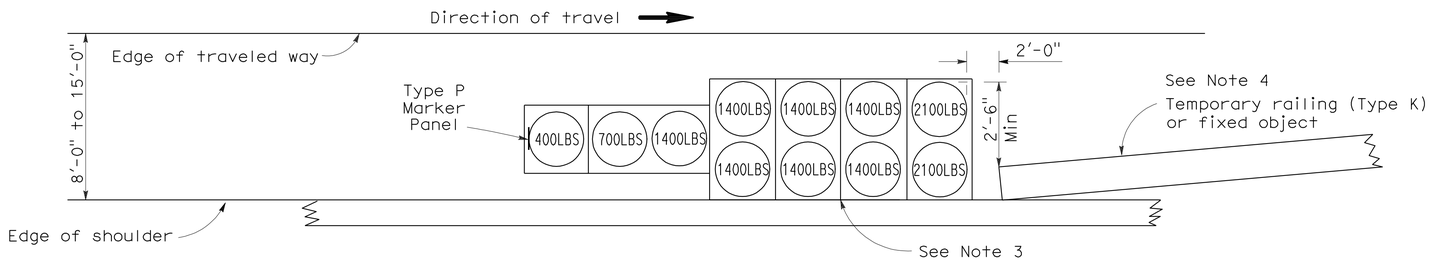

ARRAY 'TS11'

Approach speed less than 45 mph
See Note 9

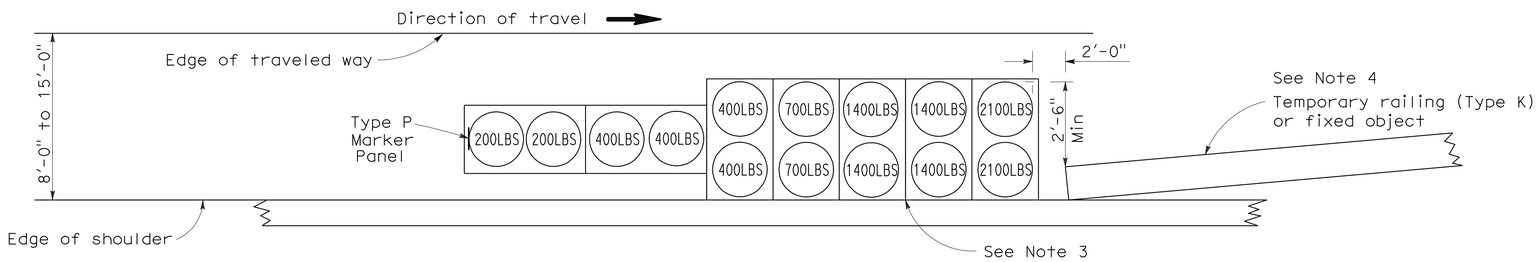

ARRAY 'TS14'

Approach speed 45 mph or more
See Note 9

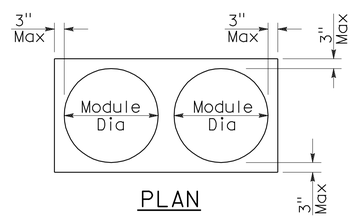

PLAN

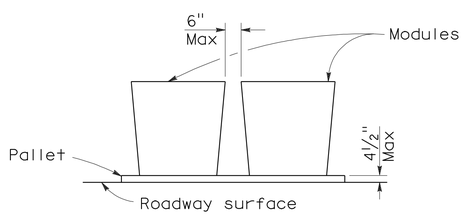

ELEVATION

CRASH CUSHION PALLET DETAIL

See Note 11

NOTES:

1. (XXX) Indicates sand filled module location and weight of sand in pounds for each module. Module spacing is based on the greater diameter of the module.
2. All sand weights are nominal.
3. The temporary crash cushion arrays shown on this plan shall be used only in locations where there will be traffic on one side of the temporary crash cushion array.
4. If the fixed object or approach end of the temporary railing is less than 15'-0" from the edge of traveled way, a temporary crash cushion is required in a construction or work zone.
5. Temporary crash cushion arrays shall not encroach on the traveled way.
6. Arrays for median shoulders shall conform to details shown on this plan for outside shoulders.
7. Place the Type P marker panel so that the bottom of the panel rests upon the pallet and faces traffic.
8. Refer to Standard Plan A73B for marker details.
9. For shoulder widths less than 8'-0", appropriate approved crash cushion protection, other than sand filled modules, shall be provided at fixed objects and at approach ends of temporary railing. The specific type of crash cushion shall be as shown on the project plans or as specified in the Special Provisions, or if not shown on the project plans or specified in the Special Provisions, shall be as approved by the Engineer.
10. Approach speeds indicated conform to NCHRP 350 Report criteria.
11. Use of pallets is optional.

STATE OF CALIFORNIA
DEPARTMENT OF TRANSPORTATION

TEMPORARY CRASH CUSHION, SAND FILLED (SHOULDER INSTALLATIONS)

NO SCALE

RSP T2 DATED JUNE 6, 2008 SUPERSEDES STANDARD PLAN T2
DATED MAY 1, 2006 - PAGE 213 OF THE STANDARD PLANS BOOK DATED MAY 2006.

REVISED STANDARD PLAN RSP T2

2006 REVISED STANDARD PLAN RSP T2

Dist	COUNTY	ROUTE	POST MILES TOTAL PROJECT	SHEET No.	TOTAL SHEETS
11	SD	5,56	R30.4/R32.8, 0.0/9.2	160	177

Randell D. Hiatt
REGISTERED CIVIL ENGINEER

May 20, 2011
PLANS APPROVAL DATE

REGISTERED PROFESSIONAL ENGINEER
Randell D. Hiatt
No. C50200
Exp. 6-30-11
CIVIL
STATE OF CALIFORNIA

The State of California or its officers or agents shall not be responsible for the accuracy or completeness of electronic copies of this plan sheet.

To accompany plans dated 6-4-12

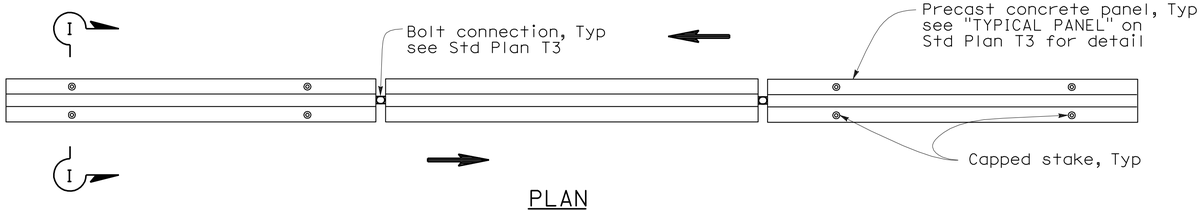

PLAN

RAILING STAKING CONFIGURATION FOR TWO-WAY TRAFFIC

See Note 1

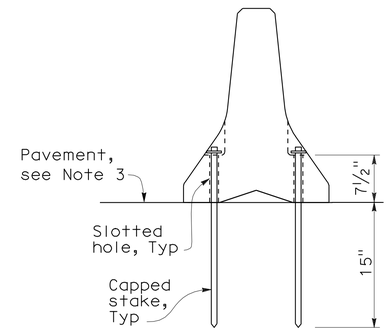

SECTION I-I

NOTES:

1. Where Type K Temporary Railing is placed as a temporary or long term barrier in two-way traffic on highways with less than 24" from the edge of traveled way, use four capped stakes per every other panel with end panels staked.
2. Where Type K Temporary Railing is placed 3" to 24" from the edge of an excavation on highways, use two capped stakes per panel along the traffic side.
3. Staked Type K Temporary Railing must be supported by at least 4" thick concrete, hot mix asphalt or existing asphalt concrete pavement.
4. The minimum yield strength for the washer must be 60,000 psi.
5. Direction of adjacent traffic indicated by ⟹.

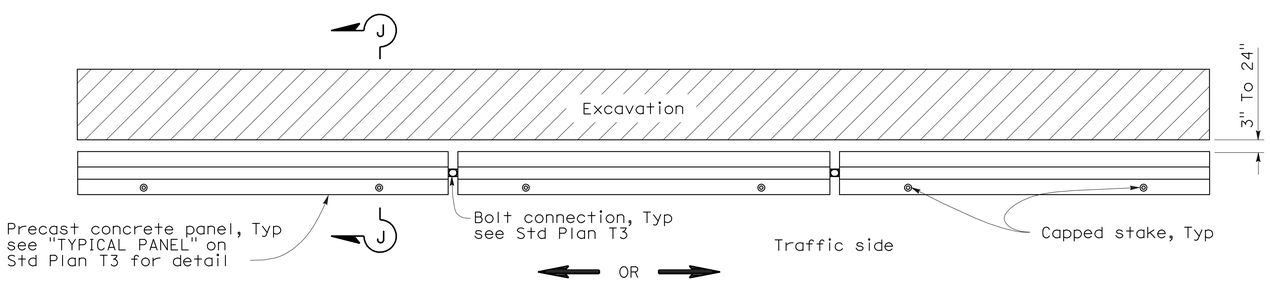

PLAN

RAILING STAKING CONFIGURATION ADJACENT TO AN EXCAVATION

See Note 2

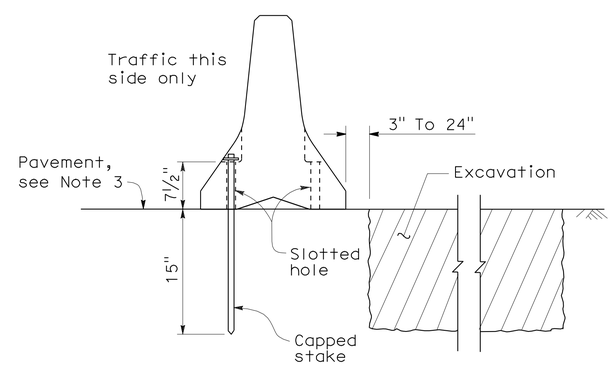

SECTION J-J

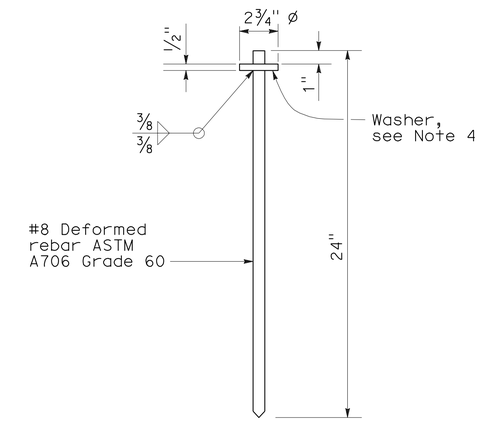

CAPPED STAKE DETAIL

STATE OF CALIFORNIA
DEPARTMENT OF TRANSPORTATION

TEMPORARY RAILING (TYPE K)

NO SCALE

NSP T3A DATED MAY 20, 2011 SUPPLEMENTS THE STANDARD PLANS BOOK DATED MAY 2006.

NEW STANDARD PLAN NSP T3A

2006 NEW STANDARD PLAN NSP T3A

DIST	COUNTY	ROUTE	POST MILES TOTAL PROJECT	SHEET NO.	TOTAL SHEETS
11	SD	5,56	R30.4/R32.8, 0.0/9.2	161	177

REGISTERED CIVIL ENGINEER

November 17, 2006
PLANS APPROVAL DATE

REGISTERED PROFESSIONAL ENGINEER
Greg W. Edwards
No. C36386
Exp. 6-30-08
CIVIL
STATE OF CALIFORNIA

The State of California or its officers or agents shall not be responsible for the accuracy or completeness of electronic copies of this plan sheet.

To accompany plans dated 6-4-12

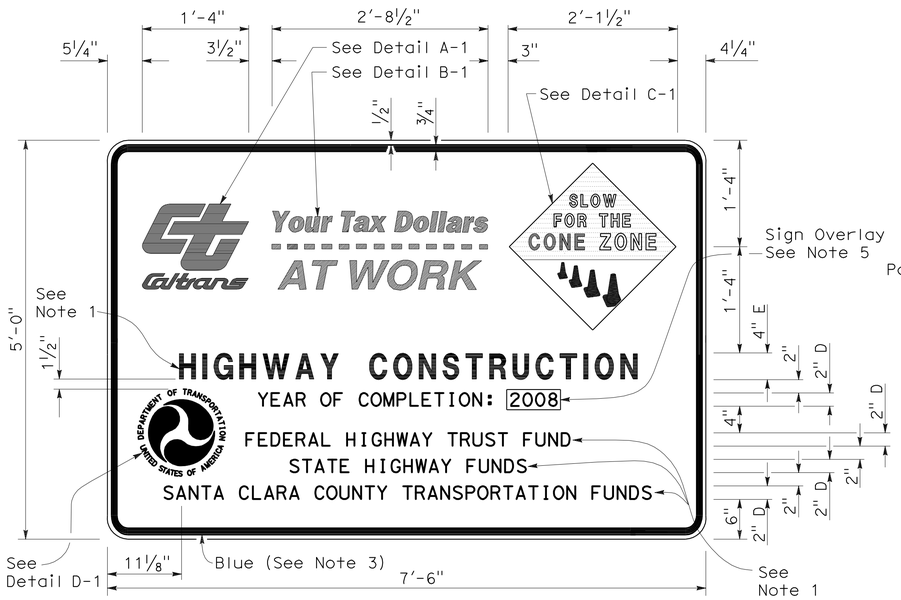

TYPE 1

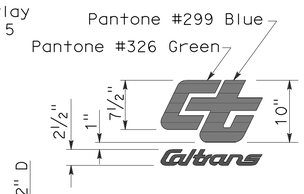

DETAIL A-1

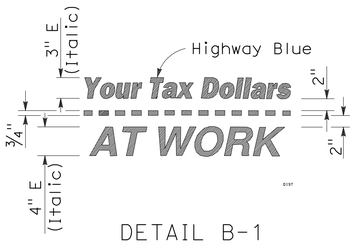

DETAIL B-1
(See Note 3)

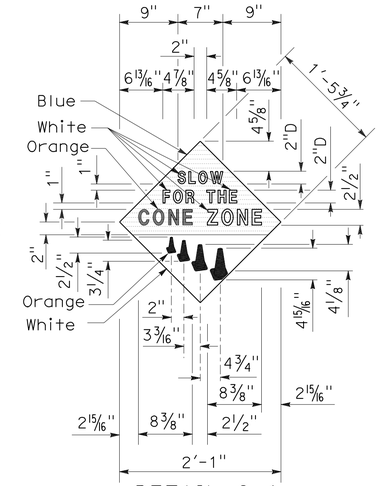

DETAIL C-1
(See Note 4)

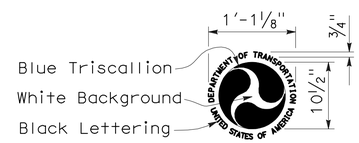

DETAIL D-1
(See Note 6)

NOTES:

1. The sign messages shown for type of project and fund types are examples only. See the Special Provisions for the applicable type of project and fund type messages to be used.
2. Except as otherwise shown, the legend of sign shall be black on a white background (non-reflective).
3. The border of the signs and details "B-1" and "B-2" shall be blue (non-reflective).
4. The diamond in details "C-1" and "C-2" shall be blue for the background of message, " SLOW FOR THE CONE ZONE", and white background for the orange cones. The color and type of font for the "SLOW FOR THE CONE ZONE" message shall be: "SLOW" white D; "FOR THE" white D; "CONE" orange Arial font; "ZONE" white Arial font.
5. Year of completion of project construction shown on the overlay is an example only. See the Special Provisions.
6. Use when the Project involves Federal Highway Trust Fund.

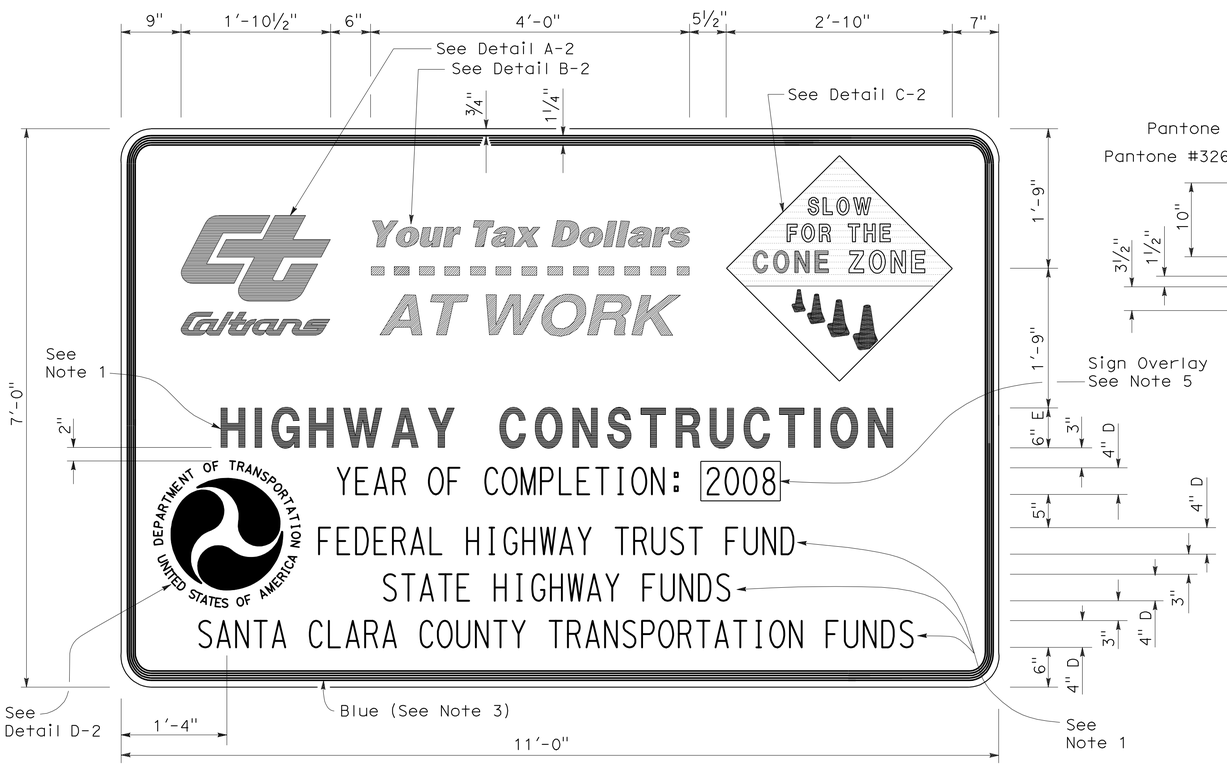

TYPE 2

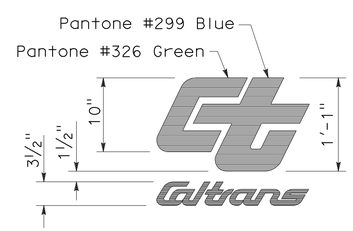

DETAIL A-2

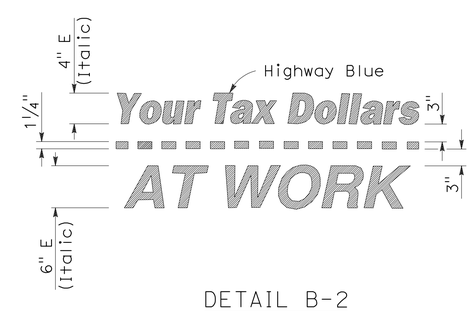

DETAIL B-2
(See Note 3)

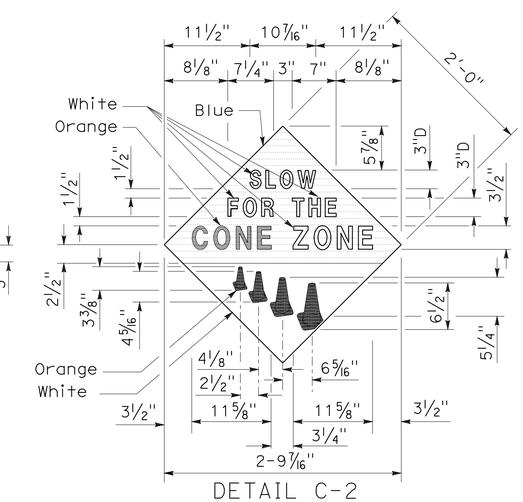

DETAIL C-2
(See Note 4)

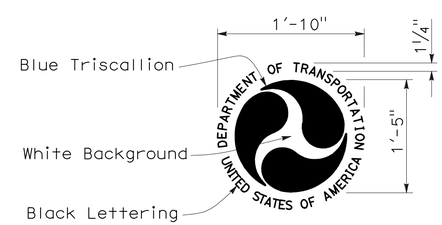

DETAIL D-2
(See Note 6)

STATE OF CALIFORNIA
DEPARTMENT OF TRANSPORTATION

CONSTRUCTION PROJECT FUNDING IDENTIFICATION SIGNS

NO SCALE

RSP T7 DATED NOVEMBER 17, 2006 SUPERSEDES STANDARD PLAN T7
DATED MAY 1, 2006 - PAGE 217 OF THE STANDARD PLANS BOOK DATED MAY 2006.

REVISED STANDARD PLAN RSP T7

2006 REVISED STANDARD PLAN RSP T7

9-7-06

DIST	COUNTY	ROUTE	POST MILES TOTAL PROJECT	SHEET NO.	TOTAL SHEETS
11	SD	5,56	R30.4/R32.8, 0.0/9.2	162	177

LICENSED LANDSCAPE ARCHITECT

August 15, 2008
PLANS Approval DATE

The State of California or its officers or agents shall not be responsible for the accuracy or completeness of electronic copies of this plan sheet.

LICENSED LANDSCAPE ARCHITECT
Robert B. Schott 3889
Signature
11-04-08
Renewal Date
08-11-08
Date
STATE OF CALIFORNIA

To accompany plans dated 6-4-12

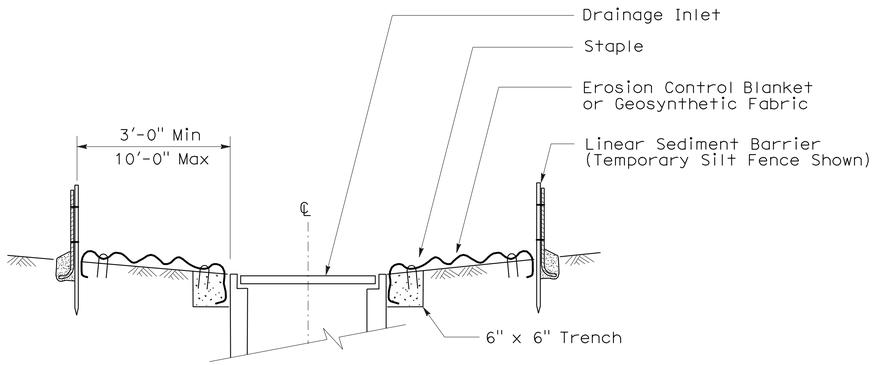

SECTION A-A

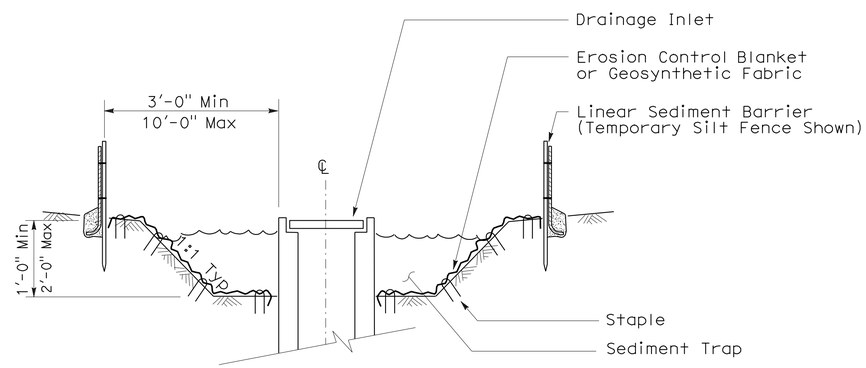

SECTION B-B

NOTES:

1. See Standard Plan T51 for Temporary Silt Fence.
2. Dimensions may vary to fit field conditions.

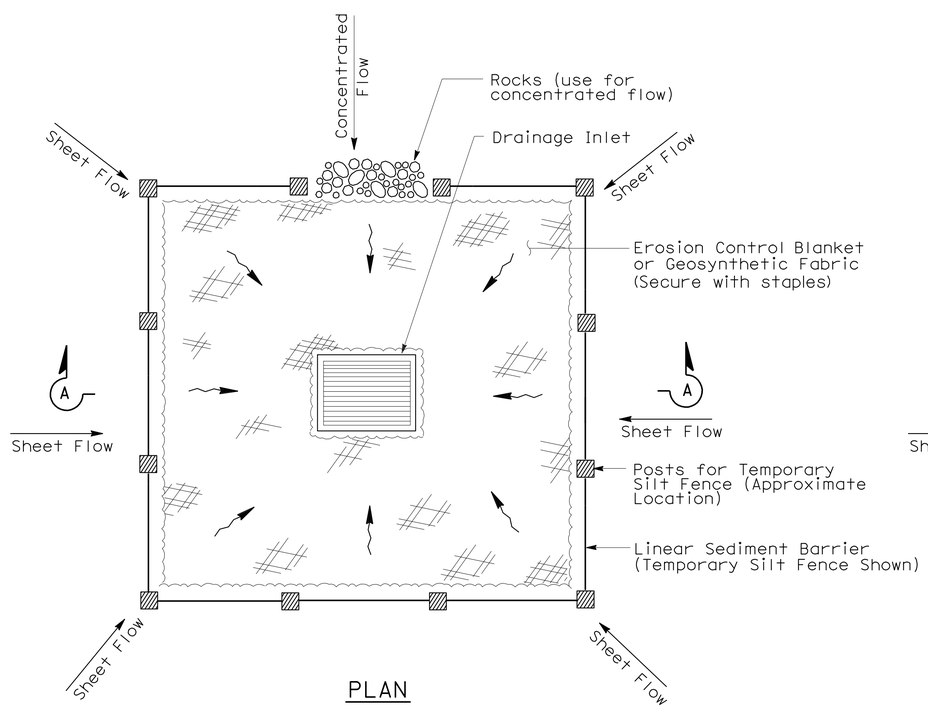

PLAN

TEMPORARY DRAINAGE INLET PROTECTION (TYPE 1)

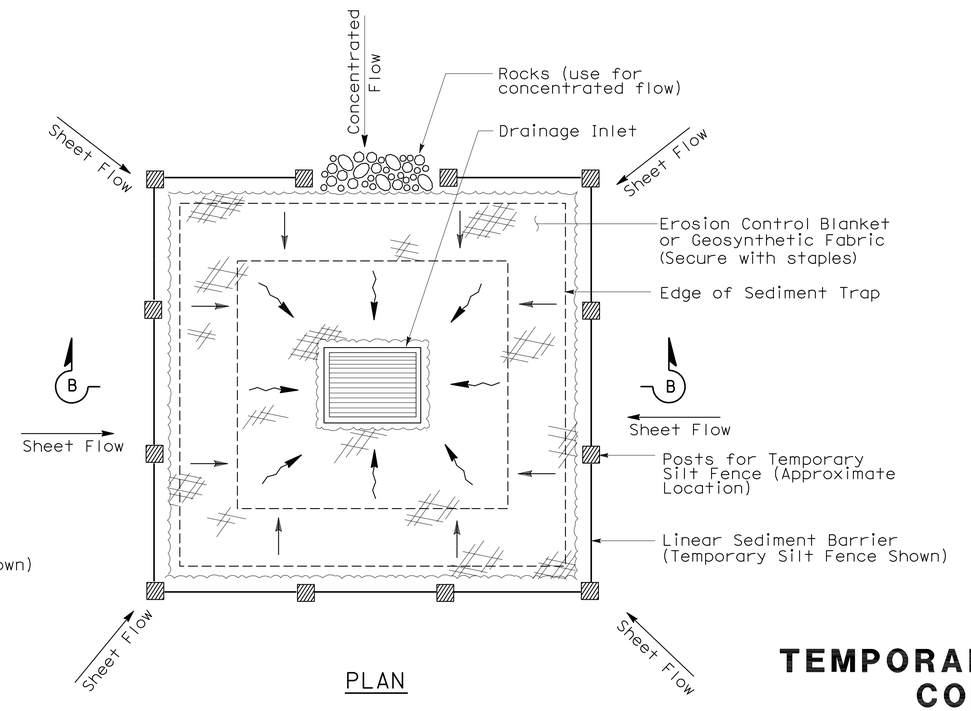

PLAN

TEMPORARY DRAINAGE INLET PROTECTION (TYPE 2) (EXCAVATED SEDIMENT TRAP)

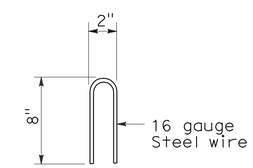

STAPLE DETAIL

STATE OF CALIFORNIA
DEPARTMENT OF TRANSPORTATION

TEMPORARY WATER POLLUTION CONTROL DETAILS (TEMPORARY DRAINAGE INLET PROTECTION)

NO SCALE

NSP T61 DATED AUGUST 15, 2008 SUPPLEMENTS THE STANDARD PLANS BOOK DATED MAY 2006.

NEW STANDARD PLAN NSP T61

2006 NEW STANDARD PLAN NSP T61

7-11-08

DIST	COUNTY	ROUTE	POST MILES TOTAL PROJECT	SHEET NO.	TOTAL SHEETS
11	SD	5,56	R30.4/R32.8, 0.0/9.2	163	177

LICENSED LANDSCAPE ARCHITECT

August 15, 2008
PLANS APPROVAL DATE

The State of California or its officers or agents shall not be responsible for the accuracy or completeness of electronic copies of this plan sheet.

LICENSED LANDSCAPE ARCHITECT — Robert B. Schott — Signature — 11-04-08 Renewal Date — 08-11-08 Date — STATE OF CALIFORNIA

To accompany plans dated 6-4-12

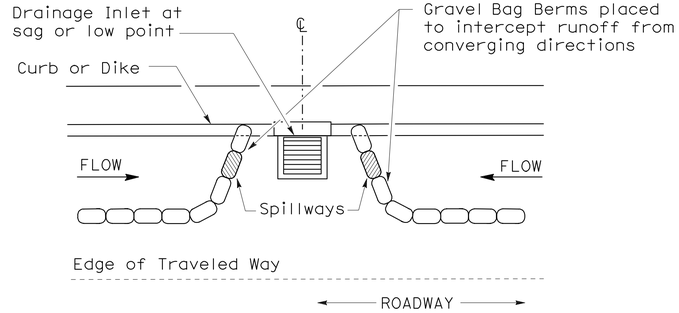

PLAN

CONFIGURATION FOR SAG POINT INLET (GRAVEL BAG BERM)

GRAVEL BAG BERM (TYPE 3A) SPACING TABLE

SLOPE OF ROADWAY (PERCENT)	1 to 3.9	4 to 5.9	6 to 7.9	8 to 10	10+
INTERVAL BETWEEN BERM	100′	75′	50′	25′	12′

For slope of less than 1%, install barriers only if erosion/sediment is prevalent

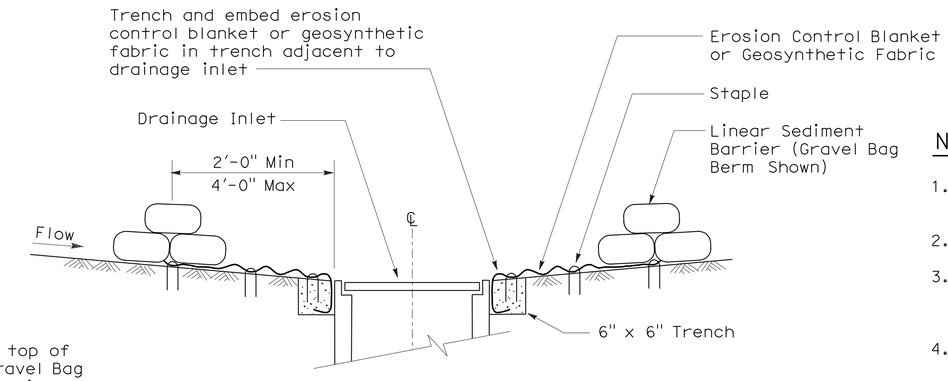

SECTION A-A

NOTES:

1. Place safety cones adjacent to drainage inlet protection.
2. Dimensions may vary to fit field conditions.
3. Install a minimum of 3 gravel bag berms upstream of each drainage inlet to be protected.
4. Position erosion control blanket or geosynthetic fabric at edge of concrete apron and secure in trench.
5. Erosion control blanket or geosynthetic fabric is not required if the area adjacent to the drainage inlet is vegetated or paved.

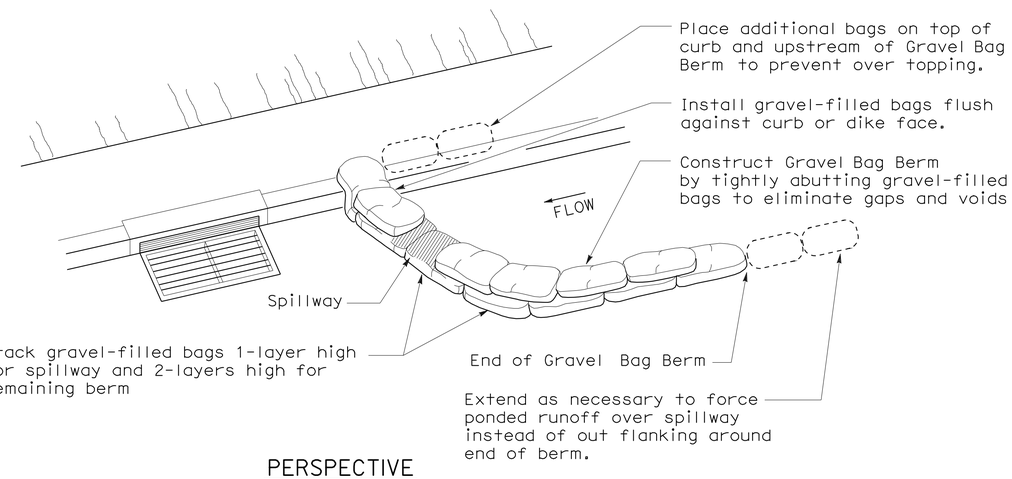

PERSPECTIVE

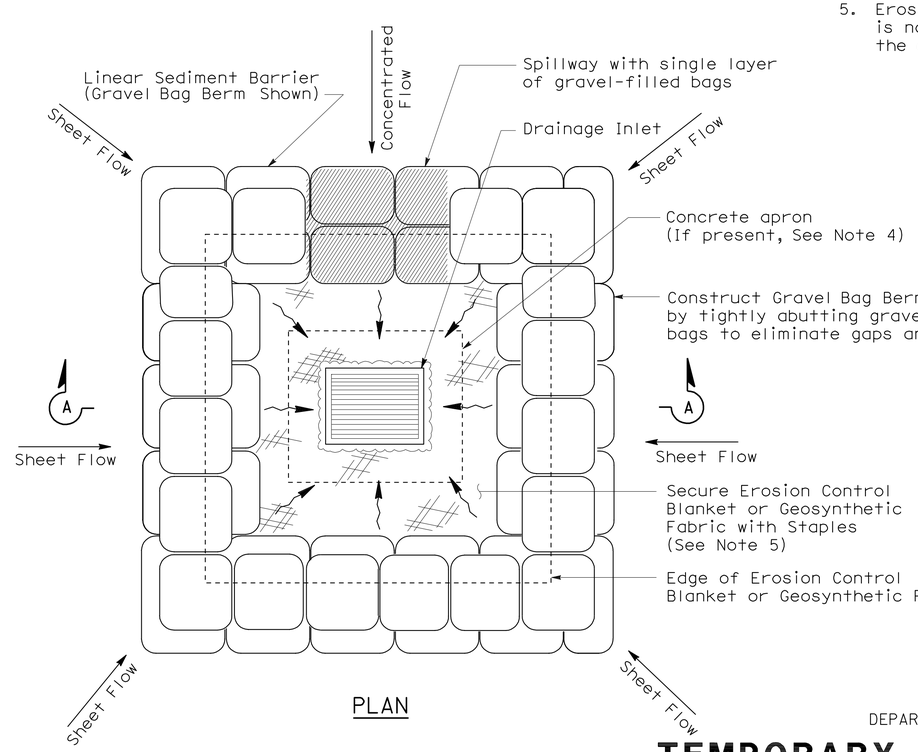

PLAN

TEMPORARY DRAINAGE INLET PROTECTION (TYPE 3B)

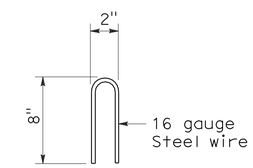

STAPLE DETAIL

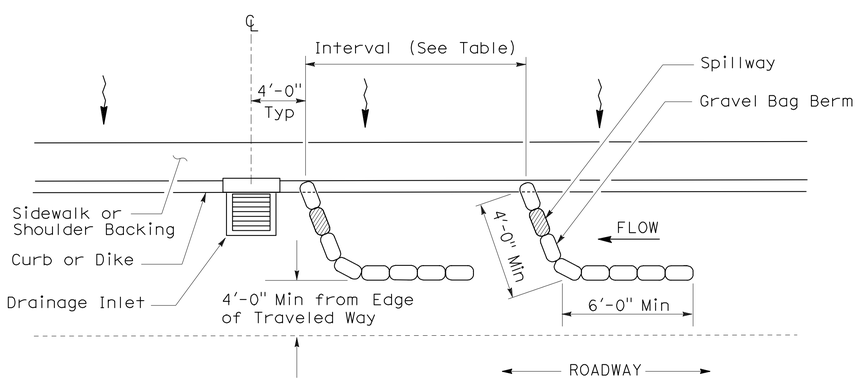

PLAN

TEMPORARY DRAINAGE INLET PROTECTION (TYPE 3A) (GRAVEL BAG BERM)

STATE OF CALIFORNIA
DEPARTMENT OF TRANSPORTATION

TEMPORARY WATER POLLUTION CONTROL DETAILS (TEMPORARY DRAINAGE INLET PROTECTION)

NO SCALE

NSP T62 DATED AUGUST 15, 2008 SUPPLEMENTS THE STANDARD PLANS BOOK DATED MAY 2006.

NEW STANDARD PLAN NSP T62

2006 NEW STANDARD PLAN NSP T62

DIST	COUNTY	ROUTE	POST MILES TOTAL PROJECT	SHEET NO.	TOTAL SHEETS
11	SD	5,56	R30.4/R32.8, 0.0/9.2	164	177

LICENSED LANDSCAPE ARCHITECT

August 15, 2008
PLANS APPROVAL DATE

The State of California or its officers or agents shall not be responsible for the accuracy or completeness of electronic copies of this plan sheet.

LICENSED LANDSCAPE ARCHITECT — Robert B. Schott — Signature — 11-04-08 Renewal Date — 08-11-08 Date — STATE OF CALIFORNIA

To accompany plans dated 6-4-12

FLEXIBLE SEDIMENT BARRIER SPACING TABLE

SLOPE OF ROADWAY (PERCENT)	0 to 0.9	1 to 1.9	2 to 2.9	3 to 4	5+
INTERVAL BETWEEN BARRIERS	50′	35′	30′	25′	20′
ANGLE FROM FACE OF CURB	70°	70°	70°	45°	45°
SUGGESTED BARRIER LENGTH	6′	6′	6′	6′	6′

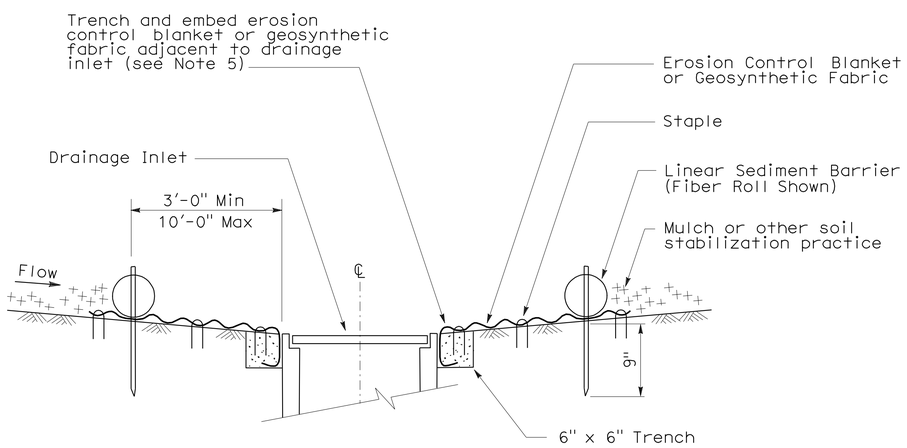

SECTION A-A

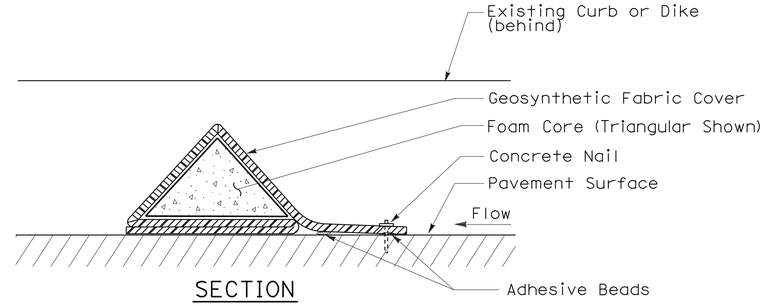

SECTION

FLEXIBLE SEDIMENT BARRIER DETAIL (FOAM BARRIER SHOWN)

NOTES:

1. See Standard Plan T51 for Temporary Silt Fence.
2. Dimensions may vary to fit field conditions.
3. Install a minimum of 3 flexible sediment barriers upstream of each drainage inlet to be protected.
4. Position erosion control blanket or geosynthetic fabric at edge of concrete apron and secure in trench.
5. Erosion control blanket or geosynthetic fabric is not required if the area adjacent to the drainage inlet is vegetated.

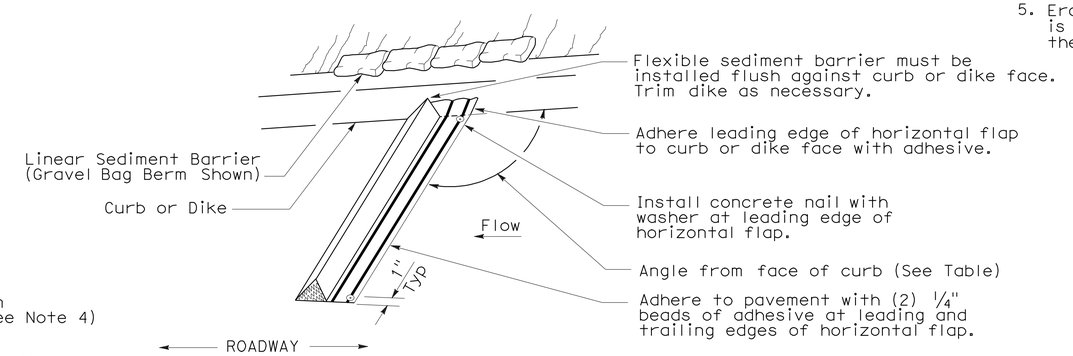

PERSPECTIVE

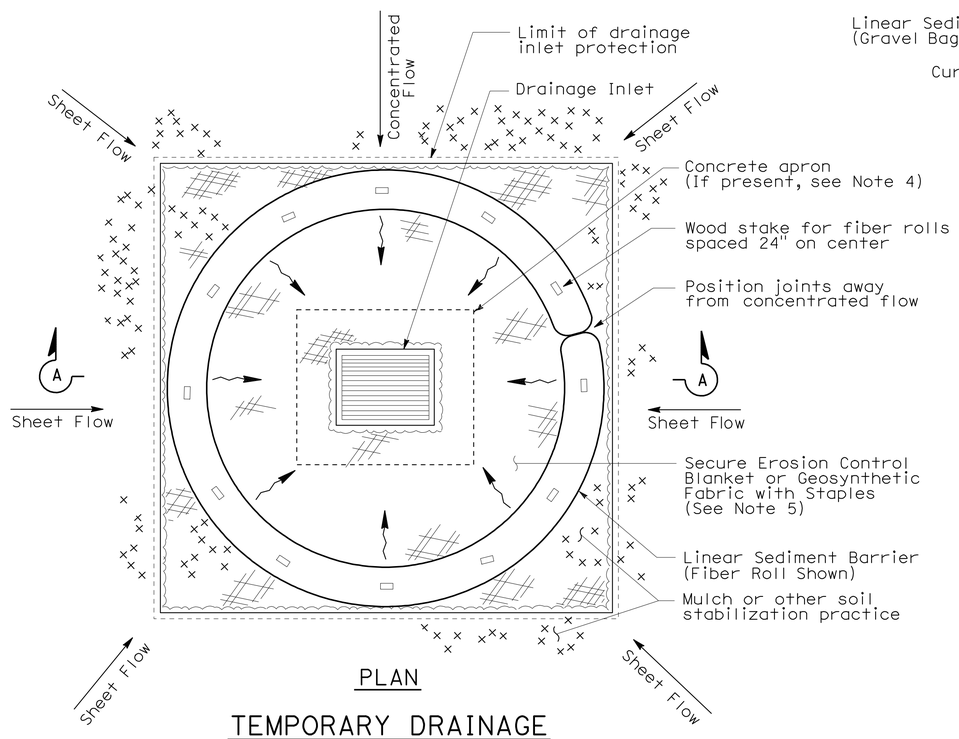

PLAN

TEMPORARY DRAINAGE INLET PROTECTION (TYPE 4A)

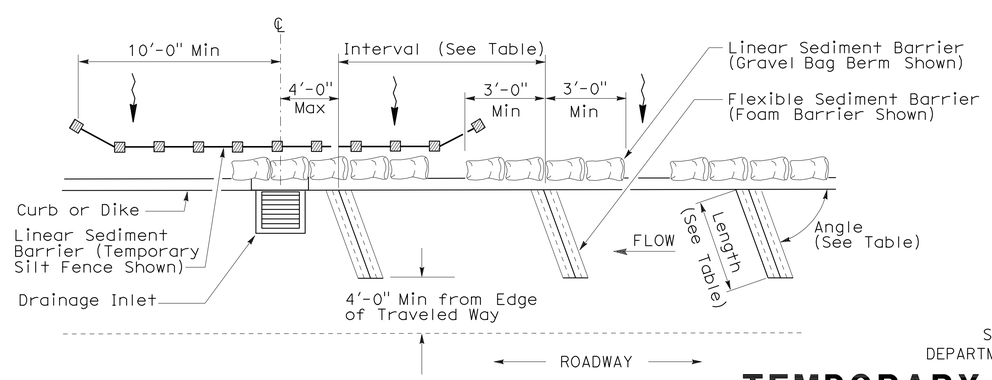

PLAN

TEMPORARY DRAINAGE INLET PROTECTION (TYPE 4B) FLEXIBLE SEDIMENT BARRIER

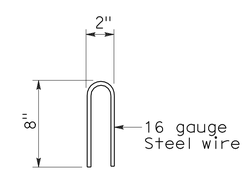

STAPLE DETAIL

STATE OF CALIFORNIA
DEPARTMENT OF TRANSPORTATION

TEMPORARY WATER POLLUTION CONTROL DETAILS (TEMPORARY DRAINAGE INLET PROTECTION)

NO SCALE

NSP T63 DATED AUGUST 15, 2008 SUPPLEMENTS THE STANDARD PLANS BOOK DATED MAY 2006.

NEW STANDARD PLAN NSP T63

2006 NEW STANDARD PLAN NSP T63

7-11-08

DIST	COUNTY	ROUTE	POST MILES TOTAL PROJECT	SHEET NO.	TOTAL SHEETS
11	SD	5,56	R30.4/R32.8, 0.0/9.2	165	177

LICENSED LANDSCAPE ARCHITECT

August 15, 2008
PLANS APPROVAL DATE

LICENSED LANDSCAPE ARCHITECT — Robert B. Schott — Signature 11-04-08 Renewal Date — 08-11-08 Date — STATE OF CALIFORNIA

The State of California or its officers or agents shall not be responsible for the accuracy or completeness of electronic copies of this plan sheet.

To accompany plans dated 6-4-12

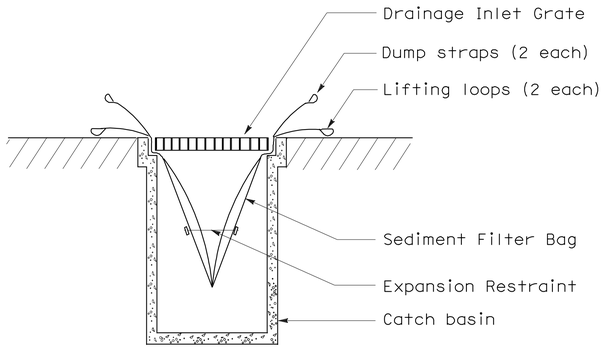

SECTION B-B

SEDIMENT FILTER BAG DETAIL

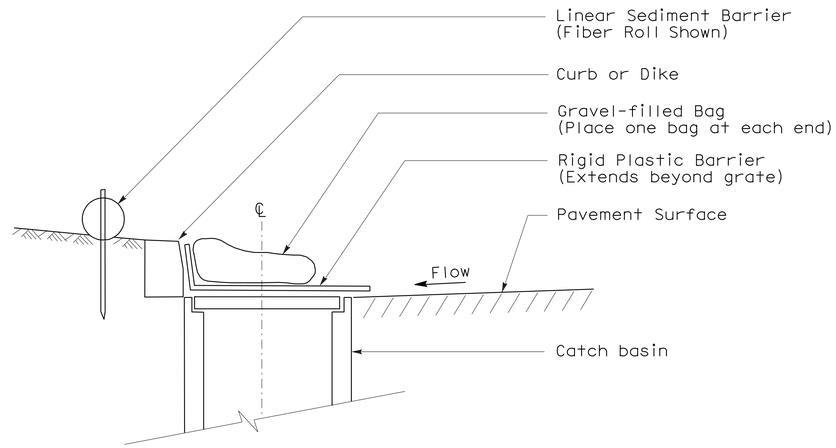

SECTION

TEMPORARY DRAINAGE INLET PROTECTION (TYPE 6A) (CATCH BASIN WITH GRATE)

NOTES:

1. See Standard Plan T51 for Temporary Silt Fence.
2. Dimensions may vary to fit field conditions.

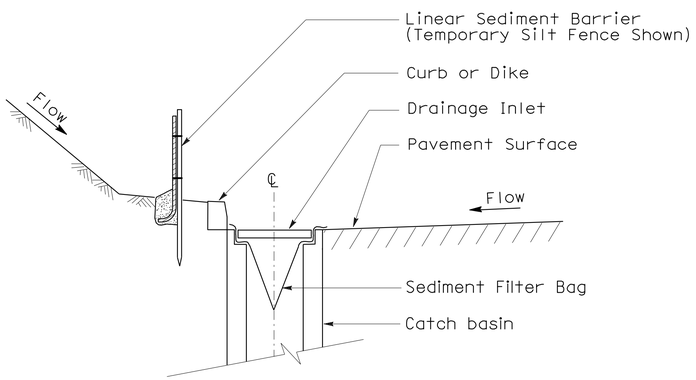

SECTION A-A

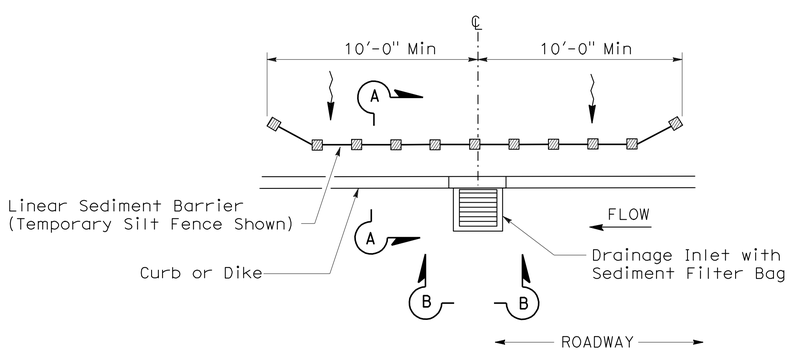

PLAN

TEMPORARY DRAINAGE INLET PROTECTION (TYPE 5) (SEDIMENT FILTER BAG)

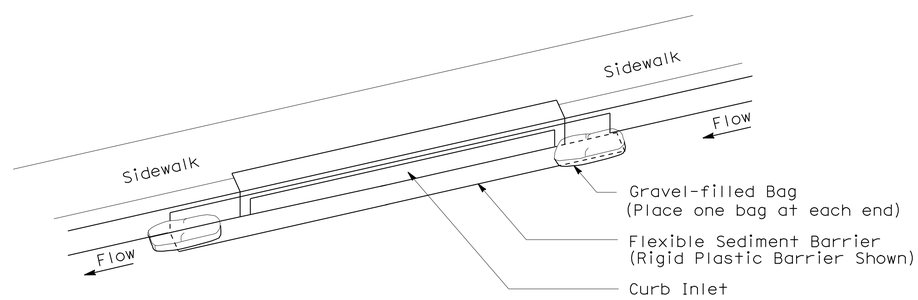

PERSPECTIVE

TEMPORARY DRAINAGE INLET PROTECTION (TYPE 6B) (CURB INLET WITHOUT GRATE)

STATE OF CALIFORNIA
DEPARTMENT OF TRANSPORTATION

TEMPORARY WATER POLLUTION CONTROL DETAILS (TEMPORARY DRAINAGE INLET PROTECTION)

NO SCALE

NSP T64 DATED AUGUST 15, 2008 SUPPLEMENTS THE STANDARD PLANS BOOK DATED MAY 2006.

NEW STANDARD PLAN NSP T64

2006 NEW STANDARD PLAN NSP T64

7-11-08

DIST	COUNTY	ROUTE	POST MILES TOTAL PROJECT	SHEET NO.	TOTAL SHEETS
11	SD	5,56	R30.4/R32.8, 0.0/9.2	166	177

REGISTERED ELECTRICAL ENGINEER

October 5, 2007
PLANS APPROVAL DATE

REGISTERED PROFESSIONAL ENGINEER Jeffery G. McRae No. E14512 Exp. 6-30-08 ELECTRICAL STATE OF CALIFORNIA

The State of California or its officers or agents shall not be responsible for the accuracy or completeness of electronic copies of this plan sheet.

To accompany plans dated 6-4-12

ELECTROLIERS

STANDARD TYPES
15, 15D
15 STRUCTURE
21, 21D STRUCTURE
30
31
32
35
36-20A

High mast light pole

Double Arm lighting standard

Existing electrolier

Electrolier foundation (Future installation)

NOTES:

1. Luminaires shall be 310 W HPS when installed on Type 21, 21D, 30, 31, 32, 35 and 36-20A Standards, unless otherwise specified. Luminaires shall be 200 W HPS when installed on other type standards or poles, unless otherwise specified.
2. Luminaires shall be the cutoff type, ANSI Type Ⅲ medium cutoff lighting distribution, unless otherwise specified.
3. Variations noted adjacent to symbol on project plans.

Electrolier (see project notes or project plans)

Luminaire on wood pole

STANDARD NOTES:

- AB — Abandon. If applied to conduit, remove conductors.
- BC — Install pull box in existing conduit run.
- BP — Pedestrian barricade, type as indicated on plan.
- CB — Install conduit into existing pull box.
- CC — Connect new and existing conduit. Remove existing conductors and install conductors as indicated.
- CF — Conduit to remain for future use. Remove conductors. Install pull wire or rope.
- DH — Detector handhole.
- FA — Foundation to be abandoned.
- IS — Install sign on signal mast arm.
- NS — No slip base on standard.
- PEC — Photoelectric control.
- PEU — Photoelectric unit.
- RC — Equipment or material to be removed and become the property of the Contractor.
- RE — Remove electrolier, fuses and ballast. Tape ends of conductors.
- RL — Relocate equipment.
- RR — Remove and reuse equipment.
- RS — Remove and salvage equipment.
- SC — Splice new to existing conductors.
- SD — Service disconnect.
- SF — Standard to remain for future use. Remove luminaire, pole conductors, fuses and ballast.
- TSP — Telephone service point.

ABBREVIATIONS AND EQUIPMENT DESIGNATIONS

PROPOSED	EXISTING	
BBS	bbs	Battery backup system
BC	bc	Bolt circle
C	C	Conduit
CCTV	cctv	Closed circuit television
CKT	ckt	Circuit
CMS	cms	Changeable message sign
DLC	dlc	Loop detector lead-in cable
EMS	ems	Extinguishable message sign
EVC	evc	Emergency vehicle cable
EVD	evd	Emergency vehicle detector
FB	fb	Flashing beacon
FBCA	fbca	Flashing beacon control assembly
FBS	fbs	Flashing beacon with slip base
FO	fo	Fiber optic
G	G	Ground (Equipment Grounding Conductor)
GFCI	GFCI	Ground fault circuit interrupt
HAR	har	Highway advisory radio
HEX	hex	Hexagonal
HPS	hps	High pressure sodium
IISNS	iisns	Internally illuminated street name sign
ISL	isl	Induction sign lighting
LED	led	Light emitting diode
LMA	lma	Luminaire mast arm
LPS	lps	Low pressure sodium
LTG	ltg	Lighting
LUM	lum	Luminaire
MAT	mat	Mast arm mounting vehicle signal faces, top attachment
MAS	mas	Mast arm mounting vehicle signal faces, side attachment
MAS-4A	mas-4A	Mast arm mounting vehicle signal faces, side attachment - 4 signal section
MAS-4B	mas-4B	
MAS-4C	mas-4C	
MAS-5A	mas-5A	Mast arm mounting vehicle signal faces, side attachment - 5 signal section
MAS-5B	mas-5B	
MC	mc	Mercury contactor
M/M	m/m	Multiple to multiple transformer
MT	mt	Conduit with pull wire or rope only
MTG	mtg	Mounting
	mv	Mercury vapor lighting fixture
N	N	Neutral (Grounded Conductor)
NC	NC	Normally closed
NO	NO	Normally open
PB	pb	Pull box
PEC	pec	Photoelectric control (Type Ⅰ, Ⅱ, Ⅲ, Ⅳ or Ⅴ as shown)
PED	ped	Pedestrian
PEU	peu	Photoelectric unit
PPB	ppb	Pedestrian push button
RL		Relocated equipment
RM	rm	Ramp metering
SB	sb	Slip base
SIC	sic	Signal interconnect cable
SIG	sig	Signal
SMA	sma	Signal mast arm
SNS	sns	Street name sign
SP	sp	Service point
TDC	tdc	Telephone demarcation cabinet
TMS	tms	Traffic monitoring station
TOS	tos	Traffic Operations System
VEH	veh	Vehicle
XFMR	xfmr	Transformer
COMM	comm	Communication
RWIS	rwis	Roadway weather information system

SOFFIT AND WALL MOUNTED LUMINAIRES

Pendant, 70 W HPS unless otherwise specified.

Flush, 70 W HPS unless otherwise specified.

Wall surface, 70 W HPS unless otherwise specified.

Existing soffit or wall luminaire to remain unmodified.

Existing soffit or wall luminaire to be modified as specified.

NOTE:

Arrow indicates "street side" of luminaire.

STATE OF CALIFORNIA
DEPARTMENT OF TRANSPORTATION

ELECTRICAL SYSTEMS (SYMBOLS AND ABBREVIATIONS)

NO SCALE

RSP ES-1A DATED OCTOBER 5, 2007 SUPERSEDES STANDARD PLAN ES-1A DATED MAY 1, 2006 - PAGE 400 OF THE STANDARD PLANS BOOK DATED MAY 2006.

REVISED STANDARD PLAN RSP ES-1A

2006 REVISED STANDARD PLAN RSP ES-1A

DIST	COUNTY	ROUTE	POST MILES TOTAL PROJECT	SHEET NO.	TOTAL SHEETS
11	SD	5,56	R30.4/R32.8, 0.0/9.2	167	177

REGISTERED ELECTRICAL ENGINEER

October 5, 2007
PLANS APPROVAL DATE

REGISTERED PROFESSIONAL ENGINEER Jeffery G. McRae No. E14512 Exp. 6-30-08 ELECTRICAL STATE OF CALIFORNIA

The State of California or its officers or agents shall not be responsible for the accuracy or completeness of electronic copies of this plan sheet.

To accompany plans dated 6-4-12

CONDUIT

PROPOSED	EXISTING	
		Lighting Conduit, unless otherwise indicated or noted
		Traffic signal conduit
C	c	Communication conduit
T	t	Telephone conduit
F	f	Fire alarm conduit
FO	fo	Fiber optic conduit
		Conduit termination (RSP ES-9A C)
R	r	Conduit riser in/on structure or service pole

SERVICE EQUIPMENT

PROPOSED	EXISTING	
OH	oh	Overhead lines
U	U	Wood pole "U" indicates utility owned
		Pole guy with anchor
		Utility transformer - ground mounted
III		Service equipment enclosure type
		Service equipment enclosure door indicates front of enclosure
T	t	Telephone demarcation cabinet

POLE-MOUNTED SERVICE DESIGNATION

Type of installation

TYPE H SERVICE - 28'-10" ← Pole height above grade

ILLUMINATED OVERHEAD SIGN

PROPOSED	EXISTING	
		Overhead sign - Single post
		Overhead sign - Two post
		Overhead sign - Mounted on structure
		Overhead sign with electrolier

SIGNAL EQUIPMENT

PROPOSED	EXISTING	
		Pedestrian signal face
		Pedestrian push button post
		Pedestrian barricade
		Vehicle signal face (with backplate, 3-Section: red, yellow and green)
		Vehicle signal face with angle visors
PV	PV	Modifications of basic symbols: "L" indicates all non-arrow sections louvered "LG" indicates louvered green section only "PV" indicates 12" programmed visibility sections "8" indicates all 8" sections (only when specified)
		Type 15TS and Vehicle signal face
		Vehicle signal face with red, yellow and green left arrow sections
		Vehicle signal face with red and yellow sections and up green arrow
		Vehicle signal face (5 Section) with red, yellow and green sections and yellow and green right arrows
		Type 1 Standard and attached vehicle signal faces
		Standard with signal mast arm only and attached vehicle signal faces and internally illuminated street name sign
		Type 33 Standard, Left-turn vehicle signal face and sign
		Standard with luminaire and signal mast arms and attached vehicle signal faces
		Cantilever flashing beacon Type 9 Frame, with a sign unless otherwise specified or indicated
		Type 15-FBS Standard with two vehicle signal face sections with lens, backplate and visor with a sign
R	Y	Flashing beacon. One vehicle signal face section with lens, backplate and visor. "R" indicates red indication, "Y" indicates yellow indication
		Controller assembly. Door indicates front of cabinet

SIGNAL EQUIPMENT Cont

PROPOSED	EXISTING	
		Guard post
		Type 1 Standard with "Meter On" sign
		Emergency Vehicle detector

NOTES:

1. All signal sections shall be 12" unless shown otherwise.
2. Signal heads shall be provided with backplates unless shown otherwise.
3. Signal indication shall be LED.

STATE OF CALIFORNIA
DEPARTMENT OF TRANSPORTATION

ELECTRICAL SYSTEMS (SYMBOLS AND ABBREVIATIONS)

NO SCALE

RSP ES-1B DATED OCTOBER 5, 2007 SUPERCEDES STANDARD PLAN ES-1B DATED MAY 1, 2006 - PAGE 401 OF THE STANDARD PLANS BOOK DATED MAY 2006.

REVISED STANDARD PLAN RSP ES-1B

2006 REVISED STANDARD PLAN RSP ES-1B

DIST	COUNTY	ROUTE	POST MILES TOTAL PROJECT	SHEET NO.	TOTAL SHEETS
11	SD	5,56	R30.4/R32.8, 0.0/9.2	168	177

REGISTERED ELECTRICAL ENGINEER

October 5, 2007
PLANS APPROVAL DATE

REGISTERED PROFESSIONAL ENGINEER Jeffery G. McRae No. E14512 Exp. 6-30-08 ELECTRICAL STATE OF CALIFORNIA

The State of California or its officers or agents shall not be responsible for the accuracy or completeness of electronic copies of this plan sheet.

To accompany plans dated 6-4-12

2006 REVISED STANDARD PLAN RSP ES-1C

EQUIPMENT IDENTIFICATION

ILLUMINATED SIGN IDENTIFICATION NUMBER:

Sign No. 12345 — Sign number - Place on post or structure

10 ISL SCI 1.0

- 1.0 — Transformer rating (kVA)
- SCI — Lighting control type
- ISL — Number and type of fixtures

Do NOT place on standard or structure

ELECTROLIER OR EQUIPMENT IDENTIFICATION NUMBER:

12345 - 15'-0"

- 15'-0" — Mast arm length, if shown. Do not place on standard or structure.
- 12345 — Equipment number - Place on standard or structure. Existing equipment numbers are shown in parenthesis

CONDUIT AND CONDUCTOR IDENTIFICATION:

1½"C, 2#10, 15#14, 2 DLC

- 2#10, 15#14, 2 DLC — Number and size of conductors and cables
- 1½"C — Size of conduit in inches

Ø1, Ø2, Ø2P, etc.	Traffic phase identification for signal faces, detectors and phase diagrams
1 2 3	Project note numbers
A B C	Equipment description, installation or item numbers
1 2 3	Conduit run numbers

SIGNAL AND LIGHTING STANDARD (TYPICAL DESIGNATION):

19A - 3 - 100

- 100 — Wind velocity = 100 mph
- 3 — Case 3 arm loading
- 19A — Standard type
- Standard Plan sheet number
- Detail number or letter

MISCELLANEOUS EQUIPMENT

PROPOSED	EXISTING	
CMS	cms	Changeable message sign
		Closed circuit television camera
		Highway advisory radio pole and antenna
EMS	ems	Extinguishable message sign
M V	m v	Detection device M = Microwave sensor V = Video image sensor

WIRING DIAGRAM LEGEND

P	Pole
CB	Circuit breaker
A	Ampere
V	Volt
M	Metered
UM	Unmetered
NB	Neutral bus
GB	Ground bus
G	Equipment grounding conductor
N	Grounded conductor (Neutral)

- External conductor
- Conductor or bus
- Tie point
- Contactor coil
- Contactor, Contact NO
- Terminal blocks
- Contactor, Contact NC
- Enclosure bond
- Grounding electrode
- Circuit breaker
- Receptacle

PULL BOXES

PROPOSED EXISTING

Pull box-No. 5 unless otherwise indicated or noted.

3 — 9A(21)

Pull box-Additional designations or descriptions

3 = No. 3½ pull box
5 = No. 5 pull box
6 = No. 6 pull box
7 = No. 7 (Ceiling pull box)
8 = No. 8 (Pendant soffit pull box)
9 = No. 9 pull box
9A = No. 9A pull box

(C) = Communications pull box
(E) = Pull box with extension
(S) = Sprinkler control pull box
(21) = Anchor bolts and conduit for future installation of Type 21 Standard
(T) = Traffic pull box

VEHICLE DETECTORS

5 J 9 U

- U — U = Upper, L = Lower
- 9 — Slot number in input file
- J — Input file (I or J)
- 5 — Phase

PROPOSED	EXISTING	
		Type A detector loop. Outline of sawcut shown.
		Type B detector loop. Outline of sawcut shown.
		Type C detector loop. Outline of sawcut shown.
		Type D detector loop. Outline of sawcut shown.
		Type E detector loop. Outline of sawcut shown.
		Type Q detector loop. Outline of sawcut shown.
		Magnetic detector
DH	dh	Detector handhole
		Microwave or video detection zone

STATE OF CALIFORNIA
DEPARTMENT OF TRANSPORTATION

ELECTRICAL SYSTEMS (SYMBOLS AND ABBREVIATIONS)

NO SCALE

RSP ES-1C DATED OCTOBER 5, 2007 SUPERCEDES STANDARD PLAN ES-1C DATED MAY 1, 2006 - PAGE 402 OF THE STANDARD PLANS BOOK DATED MAY 2006.

REVISED STANDARD PLAN RSP ES-1C

DIST	COUNTY	ROUTE	POST MILES TOTAL PROJECT	SHEET NO.	TOTAL SHEETS
11	SD	5,56	R30.4/R32.8, 0.0/9.2	169	177

Jeffery G. McRae
REGISTERED ELECTRICAL ENGINEER

October 5, 2007
PLANS APPROVAL DATE

REGISTERED PROFESSIONAL ENGINEER
Jeffery G. McRae
No. E14512
Exp. 6-30-08
ELECTRICAL
STATE OF CALIFORNIA

The State of California or its officers or agents shall not be responsible for the accuracy or completeness of electronic copies of this plan sheet.

To accompany plans dated 6-4-12

2006 REVISED STANDARD PLAN RSP ES-2C

NOTES-TYPE III SERVICE EQUIPMENT ENCLOSURES:

1. Service equipment enclosure and metering equipment shall meet the requirements of the service utility. The meter area shall have a sealable, lockable, weathertight cover that can be removed without the use of tools.

2. Service equipment enclosures shall be factory wired and conform to NEMA standards.

3. Dimensions of service equipment enclosures shall meet the requirements of the service utility.

4. The dead front panels on Type III service equipment enclosures shall have a continuous stainless steel or aluminum piano hinge. The panel in front of the breakers shall be secured with a latch or captive screws. No live parts shall be mounted on the dead front panel.

5. The exterior door shall have provisions for padlocking. The padlock hole shall be a minimum diameter of 7/16".

6. Enclosures housing transformers of more than one kVA shall have effective screened ventilation louver of not less than 50 square inches. Screen shall be stainless steel No. 304, with a No. 10 size mesh. Framed screen shall be secured with at least four bolts.

7. Fasteners on the exterior of the enclosure shall be vandal-resistant and shall not be removable from the exterior. Exterior screws, nuts, bolts and washers shall be stainless steel.

8. Landing lugs for incoming service conductors shall be compatible with either copper or aluminum conductors sized to suit the conductors shown on the plan. Landing lugs shall be copper or tin-plated aluminum. Neutral bus shall be rated for 125 A and be suitable for copper or aluminum conductors unless otherwise specified. The terminal shall include but not be limited to:

   a) Incoming terminals (landing lugs)
   b) Neutral lugs
   c) Solid neutral terminal strip

9. At least 6 standard single pole circuit breaker spaces, 3/4" nominal, shall be provided for branch circuits. Circuit breaker interiors shall be copper. Interiors of enclosure shall accept plug-in or cable-in/cable-out circuit breakers.

10. Control wiring shall be 600 V, 14 stranded machine tool wire. Where subject to flexing, 19 strand wire shall be used.

11. Main bus shall be rated for 125 A and shall be tin-plated copper.

12. A plastic laminated wiring diagram shall be provided with brass mounting eyelets and attached to the inside of the enclosure and the wiring diagram shall be affixed to the interior with a UL or ETL approved method.

13. An engraved phenolic nameplate on the dead front panel indicating the function of each circuit or device shall be installed with stainless steel rivets or stainless steel screws:

    a) Adjacent to the breaker or device with character size a minimum of 1/8".

    b) At the top of the exterior door panel indicating State system number, voltage level and number of phases with character size a minimum of 3/16".

14. The plan shows the approximate location of devices within the enclosure. Components may be rearranged, however, the "working" clearances within the service equipment enclosure shall be maintained.

15. In unpaved areas a raised portland cement concrete pad 2'-0" x 4" x width of foundation shall be constructed in front of new service equipment enclosure installation. Pad shall be set to elevation of foundation.

16. Foundation shall extend 2" minimum beyond edge of service equipment enclosure.

17. Internal bus, where shown, is typical only. Alternative design of proposed service equipment enclosure shall be submitted to the Engineer for approval.

18. Plug-in circuit breakers may be mounted in the vertical or horizontal position. Cable-in/cable-out circuit breakers shall be mounted in the vertical position.

19. Type III-AF and Type III-BF service equipment enclosures shall have the meter viewing windows located on the front side of the service equipment enclosures.

20. Type III-AR and Type III-BR service equipment enclosures shall be similarly constructed as Type III-AF and Type III-BF respectively, except the meter viewing windows shall be located on the back side of the service equipment enclosures.

21. Minimum clearance shall be required for front and back of service equipment enclosure per National Electrical Code, Article 110.26, "Spaces About Electric Equipment (600 Volts, Nominal, or Less)."

STATE OF CALIFORNIA
DEPARTMENT OF TRANSPORTATION

ELECTRICAL SYSTEMS (SERVICE EQUIPMENT NOTES TYPE III SERIES)

NO SCALE

RSP ES-2C DATED OCTOBER 5, 2007 SUPERCEDES STANDARD PLAN ES-2C DATED MAY 1, 2006 - PAGE 405 OF THE STANDARD PLANS BOOK DATED MAY 2006.

REVISED STANDARD PLAN RSP ES-2C

DIST	COUNTY	ROUTE	POST MILES TOTAL PROJECT	SHEET NO.	TOTAL SHEETS
11	SD	5,56	R30.4/R32.8, 0.0/9.2	170	177

REGISTERED ELECTRICAL ENGINEER

June 6, 2008
PLANS APPROVAL DATE

REGISTERED PROFESSIONAL ENGINEER Jeffery G. McRae No. E14512 Exp. 6-30-10 ELECTRICAL STATE OF CALIFORNIA

The State of California or its officers or agents shall not be responsible for the accuracy or completeness of electronic copies of this plan sheet.

To accompany plans dated 6-4-12

VISORS

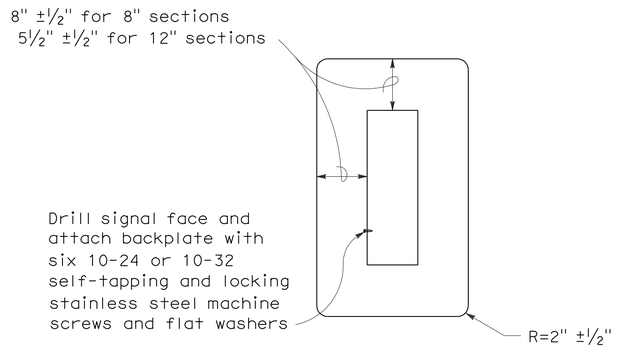

8" AND 12" SECTIONS

BACKPLATE

1/16" minimum thickness
3001-14 aluminum, or plastic when specified

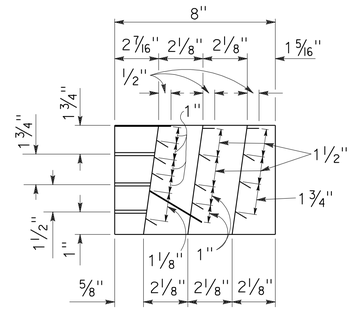

SECTION A-A

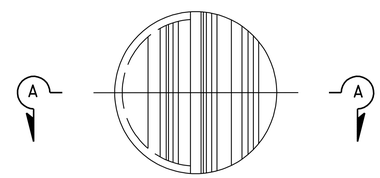

FRONT VIEW

DIRECTIONAL LOUVER

Directional louvers shall be oriented as directed by the Engineer and secured in place with one plated brass machine screw and nut.

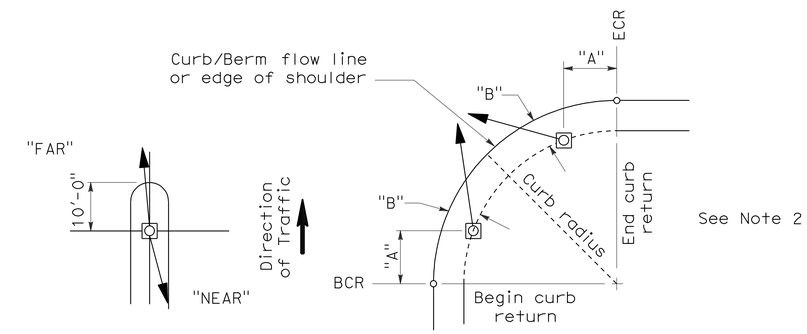

NOTES:

1. Typical signal pole placement unless dimensioned on plans.
2. For "A" and "B" dimensions, see Pole Schedule, or as directed by the Engineer.

SIGNAL STANDARD PLACEMENT DIMENSIONS AND EQUIPMENT LOCATIONS

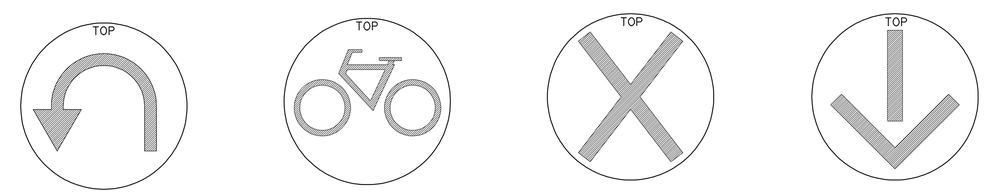

U-TURN SIGNAL FACE | BICYCLE SIGNAL FACE | LANE CONTROL SIGNAL FACE | LANE CONTROL SIGNAL FACE

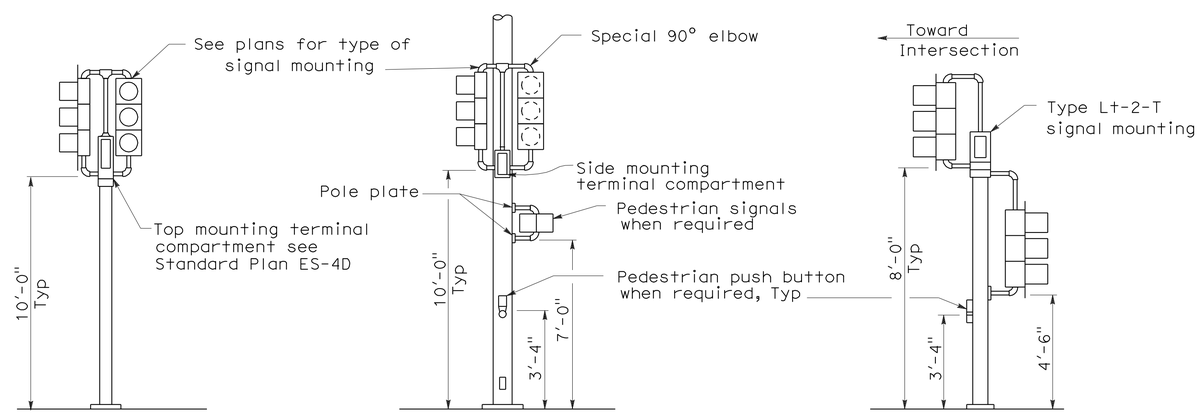

TOP MOUNTED SIGNALS (TV)

Type 1-A, 1-B, 1-C and 1-D standard as indicated on the plans

SIDE MOUNTED SIGNALS (SV AND SP)

Normally used on standards with luminaire or signal mast arm

LEFT TURN LANE SIGNAL

Type 1-A, 1-B, 1-C and 1-D standard as indicated on plans

TYPICAL SIGNAL INSTALLATIONS

STATE OF CALIFORNIA
DEPARTMENT OF TRANSPORTATION

ELECTRICAL SYSTEMS (SIGNAL HEADS AND MOUNTINGS)

NO SCALE

RSP ES-4C DATED JUNE 6, 2008 SUPERSEDES STANDARD PLAN ES-4C DATED MAY 1, 2006 - PAGE 420 OF THE STANDARD PLANS BOOK DATED MAY 2006.

REVISED STANDARD PLAN RSP ES-4C

2006 REVISED STANDARD PLAN RSP ES-4C

5-19-08

DIST	COUNTY	ROUTE	POST MILES TOTAL PROJECT	SHEET NO.	TOTAL SHEETS
11	SD	5,56	R30.4/R32.8, 0.0/9.2	171	177

REGISTERED ELECTRICAL ENGINEER

June 6, 2008
PLANS APPROVAL DATE

REGISTERED PROFESSIONAL ENGINEER Jeffery G. McRae No. E14512 Exp. 6-30-10 ELECTRICAL STATE OF CALIFORNIA

The State of California or its officers or agents shall not be responsible for the accuracy or completeness of electronic copies of this plan sheet.

To accompany plans dated 6-4-12

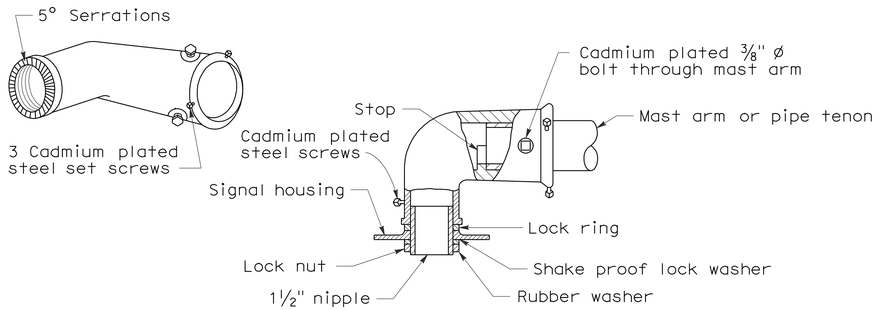

MAST ARM MOUNTING - TYPE "MAT"

For 2 NPS pipe, see Note 1.

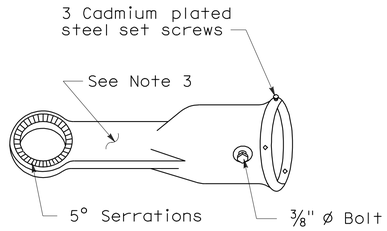

MAST ARM MOUNTING - TYPE "MAS"

For 2 NPS pipe. See Note 1.

SIGNAL SLIP FITTERS

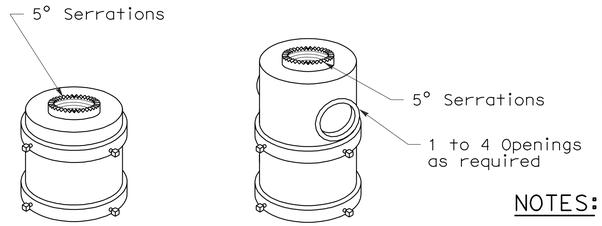

For one mounting For mulitiple mountings

TOP MOUNTINGS

For 4 NPS pipe, see Note 2.

NOTES:

1. After mast arm signal has been plumbed and secured, drill 7/16" hole through mast arm tenon in line with slip fitter hole. Place a cadmium plated ⅜" ø galvanized bolt with washer under bolt head through hole and secure with washer, nut, and locknut. Seal openings between mast arm mountings and mast arm with mastic.
2. (a) Threaded top mounted slip fitter openings shall be 1½ NPS.
   (b) Serrations in fittings shall match those on bottom of signal heads or in lock ring.
   (c) Top opening shall be offset when backplate is used.
3. Wireway shall have a cross section area of 0.95 square inch minimum. Minimum width of ½".

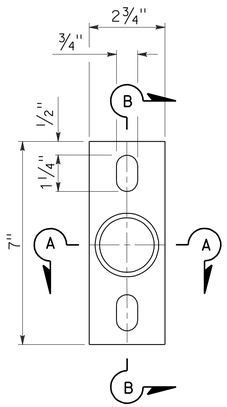

POLE PLATE

For side mountings

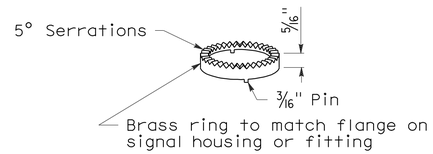

LOCK RING

Use where locking ring is not integral with signal housing or fitting.

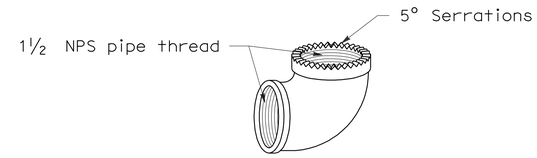

SPECIAL 90° ELBOW

One for each signal head, except those with special slip fitter mounting

MISCELLANEOUS MOUNTING HARDWARE

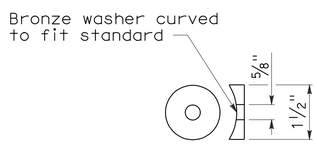

DETAIL "C"

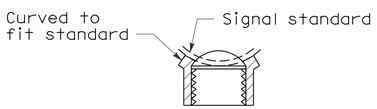

SECTION A-A

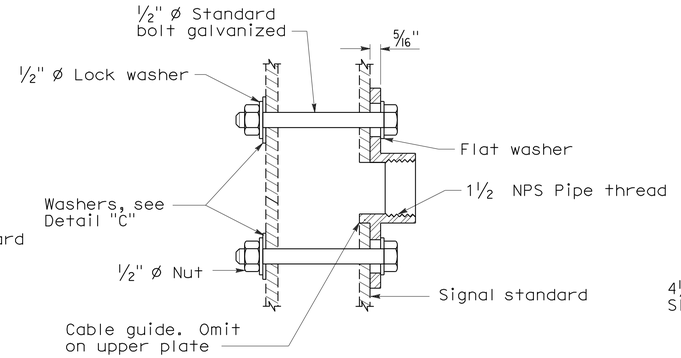

SECTION B-B

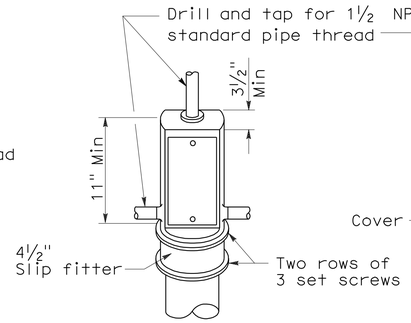

TOP MOUNTING

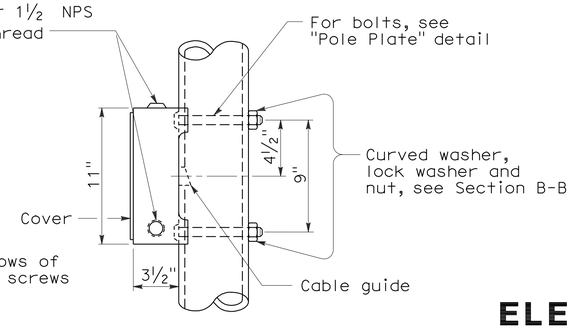

SIDE MOUNTING

TERMINAL COMPARTMENTS

STATE OF CALIFORNIA
DEPARTMENT OF TRANSPORTATION

ELECTRICAL SYSTEMS (SIGNAL HEADS AND MOUNTINGS)

NO SCALE

RSP ES-4D DATED June 6, 2008 SUPERSEDES STANDARD PLAN ES-4D
DATED MAY 1, 2006 - PAGE 421 OF THE STANDARD PLANS BOOK DATED MAY 2006.

REVISED STANDARD PLAN RSP ES-4D

2006 REVISED STANDARD PLAN RSP ES-4D

5-19-08

DIST	COUNTY	ROUTE	POST MILES TOTAL PROJECT	SHEET NO.	TOTAL SHEETS
11	SD	5,56	R30.4/R32.8, 0.0/9.2	172	177

REGISTERED ELECTRICAL ENGINEER

October 5, 2007
PLANS APPROVAL DATE

REGISTERED PROFESSIONAL ENGINEER Jeffery G. McRae No. E14512 Exp. 6-30-08 ELECTRICAL STATE OF CALIFORNIA

The State of California or its officers or agents shall not be responsible for the accuracy or completeness of electronic copies of this plan sheet.

To accompany plans dated 6-4-12

LOOP INSTALLATION PROCEDURE

1. Loops shall be centered in lanes.
2. Saw slots in pavement for loop conductors as shown in details.
3. Distance between side of loop and a lead-in saw cut from adjacent detectors shall be 2'-0" minimum. Distance between lead-in saw cuts shall be 6" minimum.
4. Bottom of saw slot shall be smooth with no sharp edges.
5. Slots shall be washed until clean, blown out and thoroughly dried before installing loop conductors.
6. Adjacent loops on the same sensor unit channel shall be wound in opposite directions.
7. Identify and tag loop circuit pairs in the pull box with loop number, start (S) and finish (F) of conductor. Identify and tag lead-in-cable with sensor number and phase.
8. Install loop conductor in slot using a 3/16" to 1/4" thick wood paddle. Hold loop conductors with wood paddles (at the bottom of the sawed slot) during sealant placement.
9. No more than 2 twisted pairs shall be installed in one sawed slot.
10. Allow additional 5'-0" of slack length of conductor for the lead-in run to pull box.
11. The additional length of each conductor for each loop shall be twisted together into a pair (6 turns per 3'-4" minimum) before being placed in the slot and conduit leading to pull box.
12. Test each loop circuit for continuity, circuit resistance and insulation resistance at the pull box before filling slots.
13. Fill slots as shown in details.
14. Splice loop conductors to lead-in-cable. Splices shall be soldered.
15. End of lead-in-cable and Type 2 loop conductor shall be waterproofed prior to installing in conduit to prevent moisture from entering the cable.
16. Lead-in-cable shall not be spliced between the pull box and the controller cabinet terminals.
17. Test each loop circuit for continuity, circuit resistance and insulation resistance at the controller cabinet location.
18. Where loop conductors are not to be spliced to a lead-in-cable, the ends of the conductors shall be taped and waterproofed with electrical insulating coating.

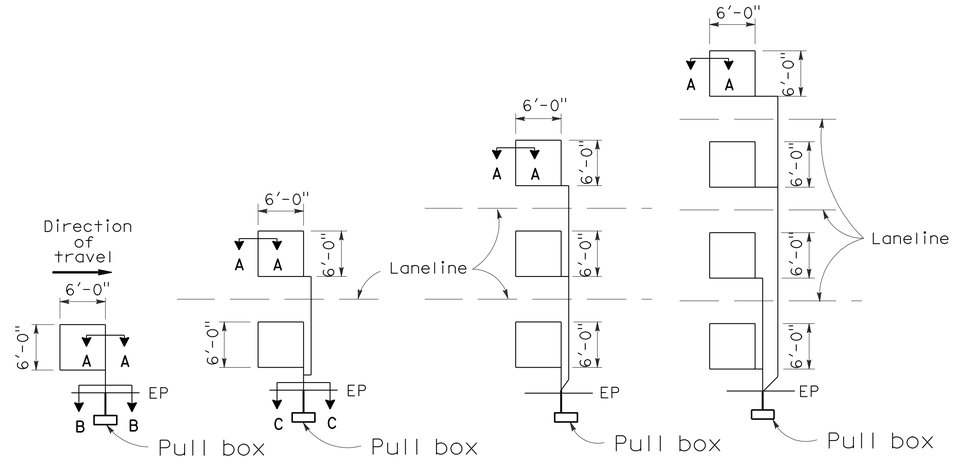

TYPE 1A INSTALLATION | TYPE 2A INSTALLATION | TYPE 3A INSTALLATION | TYPE 4A INSTALLATION

SAWCUT DETAILS

(Type A loop detector configurations illustrated)

1. 1A thru 4A = 1 Type A loop configuration in each lane.
2. 1B thru 4B = 1 Type B loop configuration in each lane.
3. 1C = 1 Type C loop configuration entering lanes as required.
4. 1D thru 4D = 1 Type D loop configuration in each lane.
5. 1E thru 4E = 1 Type E loop configuration in each lane.
6. 1Q thru 4Q = 1 Type Q loop configuration in each lane. (Use Type A, B, C, D, E or Q loop detector configurations only when specified or shown on plans)

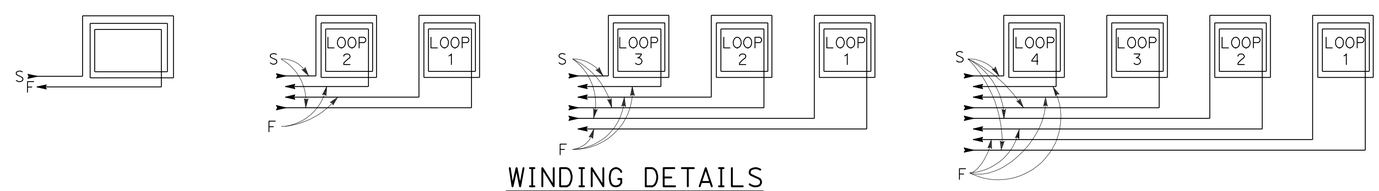

WINDING DETAILS

See Notes 6 and 7

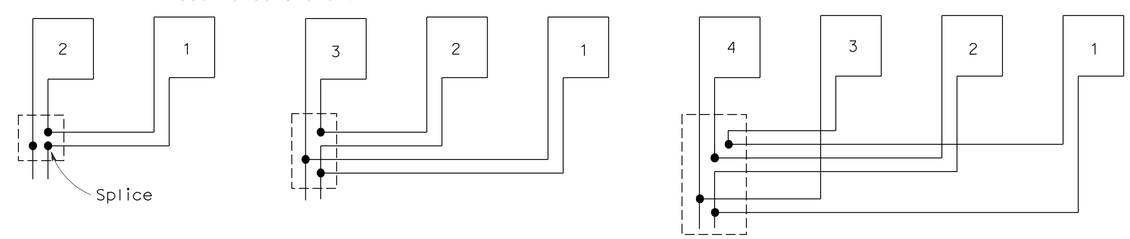

TYPICAL LOOP CONNECTIONS

(Dashed lines represent the pull box)

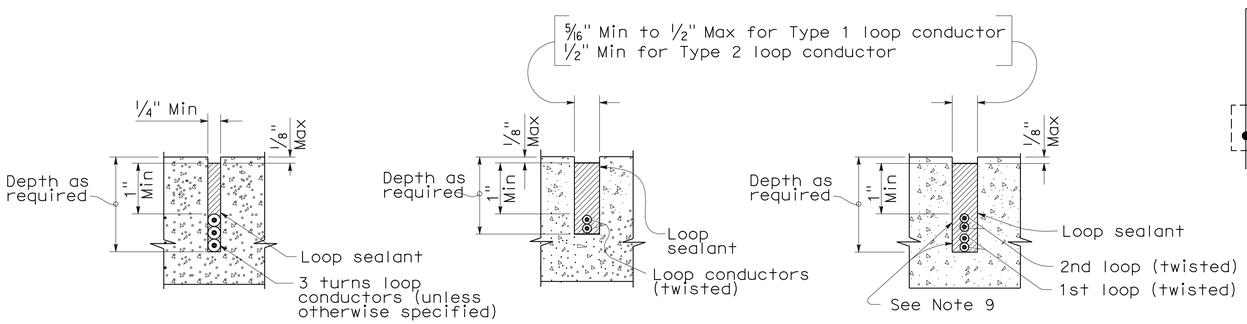

SECTION A-A | SECTION B-B | SECTION C-C

SLOT DETAILS - TYPE 1 AND TYPE 2 LOOP CONDUCTOR

STATE OF CALIFORNIA
DEPARTMENT OF TRANSPORTATION

ELECTRICAL SYSTEMS (DETECTORS)

NO SCALE

RSP ES-5A DATED OCTOBER 5, 2007 SUPERCEDES STANDARD PLAN ES-5A DATED MAY 1, 2006 - PAGE 423 OF THE STANDARD PLANS BOOK DATED MAY 2006.

REVISED STANDARD PLAN RSP ES-5A

2006 REVISED STANDARD PLAN RSP ES-5A

DIST	COUNTY	ROUTE	POST MILES TOTAL PROJECT	SHEET NO.	TOTAL SHEETS
11	SD	5,56	R30.4/R32.8, 0.0/9.2	173	177

REGISTERED CIVIL ENGINEER

October 5, 2007
PLANS APPROVAL DATE

REGISTERED PROFESSIONAL ENGINEER
Stanley P. Johnson
No. C57793
Exp. 3-31-08
CIVIL
STATE OF CALIFORNIA

The State of California or its officers or agents shall not be responsible for the accuracy or completeness of electronic copies of this plan sheet.

To accompany plans dated 6-4-12

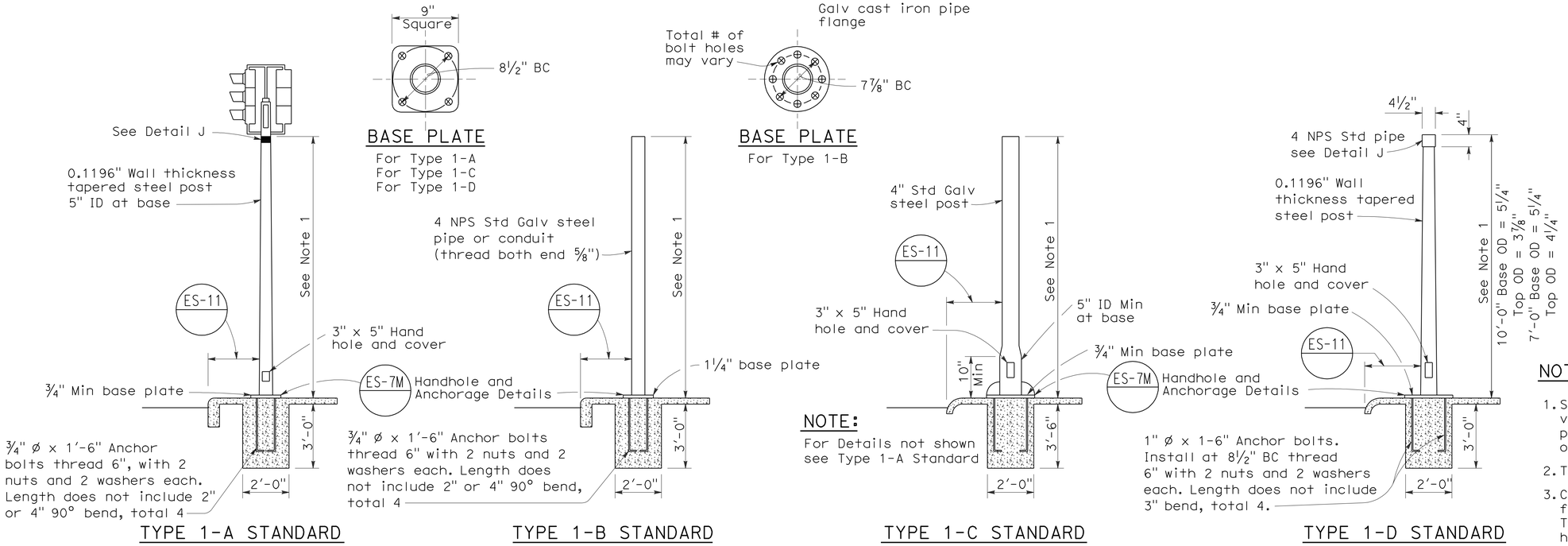

TYPE 1 SIGNAL STANDARDS

NOTES:

1. Standards shall be 10'-0" ± 2" for vehicle signals and 7'-0" ± 2" for pedestrian signals unless otherwise noted on plans.
2. Top of standards shall be 4½" OD.
3. Conduits shall extend 2" maximum above finished surface of foundation and for Types 1-A, 1-C and 1-D shall be sloped toward handhole.
4. Anchor bolts shall be bonded to conduit or grounding conductor.
5. Conduit between standard and adjacent pull box shall be 2" minimum.
6. Paint numbers on roadway side facing traffic when electrolier or post is left of direction of traffic.

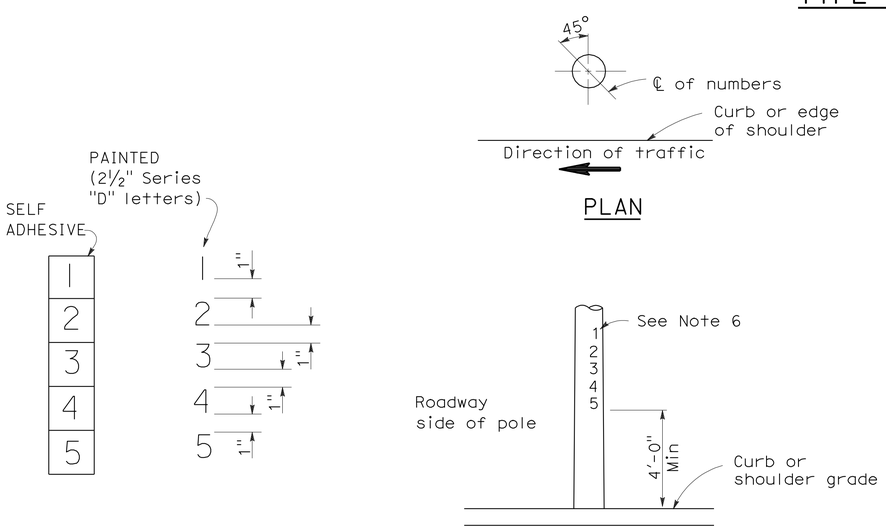

NUMBER DETAIL

TYPICAL NUMBER FORMAT

LOCATION OF EQUIPMENT NUMBERS ON STANDARDS AND POSTS

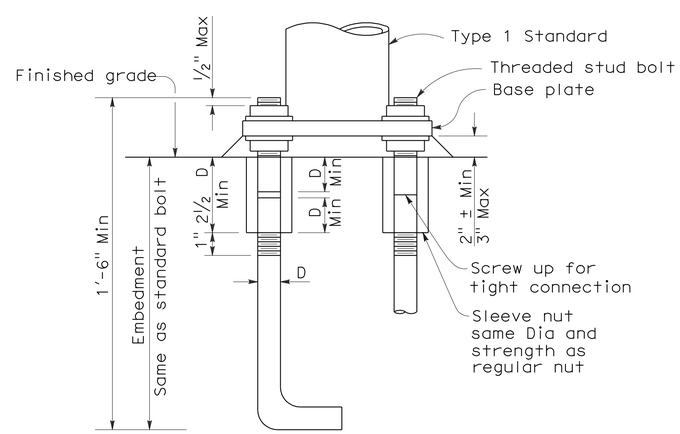

ANCHOR BOLTS WITH SLEEVE NUTS

Sleeve nuts to be used only when shown or specified on Project Plans

D = Diameter of anchor bolt

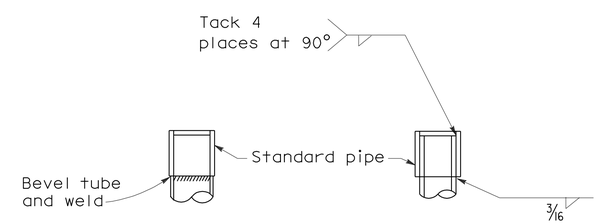

DETAIL J

Tube may be inserted into pipe or butted as required

STATE OF CALIFORNIA
DEPARTMENT OF TRANSPORTATION

ELECTRICAL SYSTEMS (SIGNAL AND LIGHTING STANDARD TYPE 1 STANDARD AND EQUIPMENT NUMBERING)

NO SCALE

RSP ES-7B DATED OCTOBER 5, 2007 SUPERCEDES STANDARD PLAN ES-7B DATED MAY 1, 2006 - PAGE 438 OF THE STANDARD PLANS BOOK DATED MAY 2006.

REVISED STANDARD PLAN RSP ES-7B

2006 REVISED STANDARD PLAN RSP ES-7B

7-10-07

DIST	COUNTY	ROUTE	POST MILES TOTAL PROJECT	SHEET NO.	TOTAL SHEETS
11	SD	5,56	R30.4/R32.8, 0.0/9.2	174	177

REGISTERED ELECTRICAL ENGINEER

January 20, 2012
PLANS APPROVAL DATE

REGISTERED PROFESSIONAL ENGINEER Jeffery G. McRae No. E14512 Exp. 6-30-12 ELECTRICAL STATE OF CALIFORNIA

The State of California or its officers or agents shall not be responsible for the accuracy or completeness of electronic copies of this plan sheet.

To accompany plans dated 6-4-12

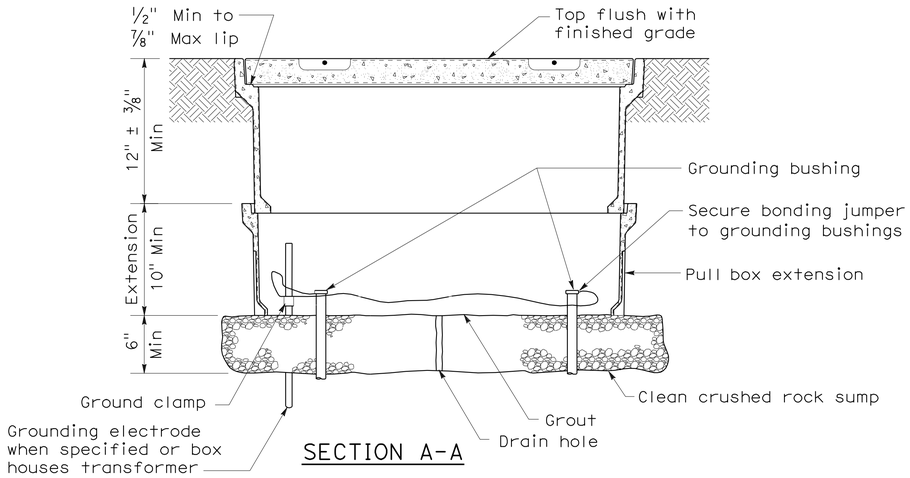

SECTION A-A

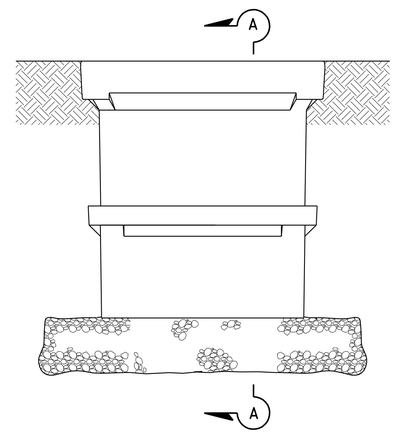

SIDE VIEW

INSTALLATION DETAILS

DETAIL A

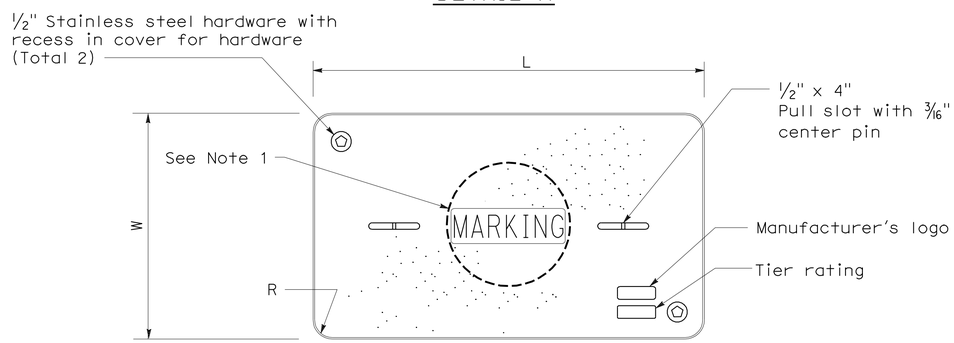

COVER TOP VIEW

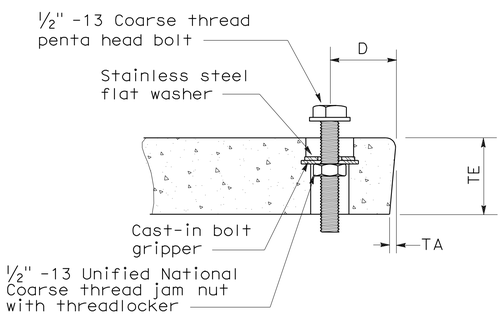

TYPICAL COVER CAPTIVE BOLT

(Or similar)

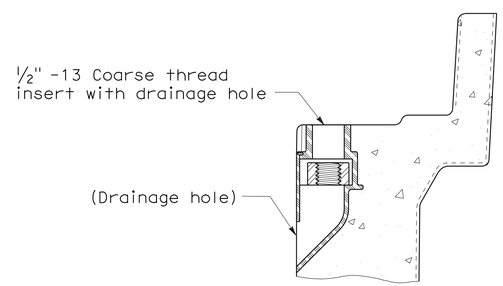

TYPICAL THREADED INSERT

(Or similar)

DIMENSION TABLE										
PULL BOX	PULL BOX			COVER						
	Minimum Depth Box	Minimum Depth Extension	Maximum Weight	L	W	R	TE	TA	D	Maximum Weight
No. 3 1/2	12"	N/A	40 lb	1' - 3 3/8"	10 1/8"	1 3/8"	2"	1/8"	1 3/4"	30 lb
No. 5	12"	10"	55 lb	1' - 11 1/4"	1' - 1 3/4"	1 3/8"	2"	1/8"	1 3/4"	60 lb
No. 6	12"	10"	70 lb	2' - 6 1/2"	1' - 5 1/2"	1 3/8"	2"	1/8"	2"	85 lb

NOTES ON PULL BOXES:

1. Pull box covers must be marked as follows: "SERVICE" Service circuits between service point and service disconnect; "SPRINKLER-CONTROL" sprinkler control circuits, 50 V or less; "CALTRANS" on all pull boxes, except pull boxes marked "SPRINKLER-CONTROL"; and "TELEPHONE" Telephone service;

   A) No. 3 1/2 pull box.
      1) "SIGNAL" - Traffic signal circuits with or without street or sign lighting circuits.
      2) "ST LIGHTING" - Street or sign lighting circuits where voltage is under 600 V.

   B) No. 5, 6, 9 or 9A pull box.
      1) "TRAFFIC SIGNAL" - Traffic signal circuits with or without street or sign lighting circuits.
      2) "STREET LIGHTING" - Street or sign lighting circuits where voltage is under 600 V.
      3) "STREET LIGHTING-HIGH VOLTAGE" - Street or sign lighting circuits where voltage is above 600 V.
      4) "IRRIGATION" - Circuits to irrigation controller 120 V or more.
      5) "RAMP METER" - Ramp meter circuits.
      6) "COUNT STATION" - Count or speed monitor circuits.
      7) "COMMUNICATIONS" - Communication circuits.
      8) "TOS COMMUNICATIONS" - TOS communication line.
      9) "TOS POWER" -TOS power.
      10) "TDC POWER" - Telephone demarcation cabinet power.
      11) "CCTV" - Closed circuit television circuits.
      12) "TMS" - Traffic monitoring station circuits.
      13) "CMS" - Changeable message sign circuits.
      14) "HAR" - Highway advisory radio circuits.

2. The nominal dimensions of the opening in which the cover sets must be the same as the cover dimensions (L and W) plus 1/8" or greater.

3. Covers and boxes must be interchangeable with California Standard. When interchanged with a standard, the top surfaces must be flush within 1/8". Top outside radius of covers and pull boxes must have a 1/8" radius.

4. Pull box extension may be another pull box as long as the bottom edge of the pull box can fit into the cover opening.

STATE OF CALIFORNIA
DEPARTMENT OF TRANSPORTATION

ELECTRICAL SYSTEMS (PULL BOX)

NO SCALE

NSP ES-8A DATED JANUARY 20, 2012 SUPPLEMENTS THE STANDARD PLANS BOOK DATED MAY 2006.

NEW STANDARD PLAN NSP ES-8A

2006 NEW STANDARD PLAN NSP ES-8A

9-28-11

DIST	COUNTY	ROUTE	POST MILES TOTAL PROJECT	SHEET NO.	TOTAL SHEETS
11	SD	5,56	R30.4/R32.8, 0.0/9.2	175	177

REGISTERED ELECTRICAL ENGINEER

January 20, 2012
PLANS APPROVAL DATE

REGISTERED PROFESSIONAL ENGINEER Jeffery G. McRae No. E14512 Exp. 6-30-12 ELECTRICAL STATE OF CALIFORNIA

The State of California or its officers or agents shall not be responsible for the accuracy or completeness of electronic copies of this plan sheet.

To accompany plans dated 6-4-12

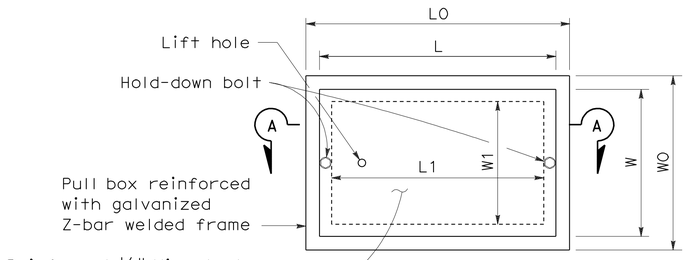

TOP VIEW

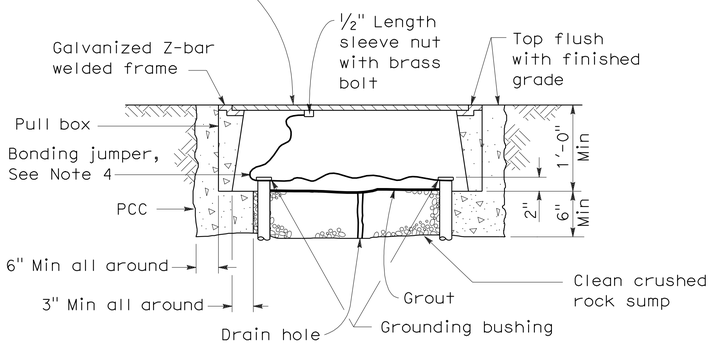

SECTION A-A

No. 3½(T), No. 5(T) AND No. 6(T) TRAFFIC PULL BOX

NOTES ON PULL BOXES:

1. Traffic pull box shall be provided with steel cover and special concrete footing. Steel cover shall have embossed non-skid pattern.
2. Steel reinforcing shall be as regularly used in the standard products of the respective manufacturer.
3. Pull box covers must be marked as follows: "SERVICE" Service circuits between service point and service disconnect; "SPRINKLER-CONTROL" Sprinkler control circuits, 50 V or less; "CALTRANS" On all pull boxes, except pull boxes marked "SPRINKLER-CONTROL"; and "TELEPHONE" Telephone service.
   A) No. 3½(T) pull box.
      1) "SIGNAL" - Traffic signal circuits with or without street or sign lighting circuits.
      2) "ST LIGHTING" - Street or sign lighting circuits where voltage is under 600 V.
   B) No. 5(T) or 6(T) pull box.
      1) "TRAFFIC SIGNAL" - Traffic signal circuits with or without street or sign lighting circuits.
      2) "STREET LIGHTING" - Street or sign lighting circuits where voltage is under 600 V.
      3) "STREET LIGHTING-HIGH VOLTAGE" - Street or sign lighting circuits where voltage is above 600 V.
      4) "IRRIGATION" - Circuits to irrigation controller 120 V or more.
      5) "RAMP METER" - Ramp meter circuits.
      6) "COUNT STATION" - Count or speed monitor circuits.
      7) "COMMUNICATION" - Communication circuits.
      8) "TOS COMMUNICATIONS" - TOS communications line.
      9) "TOS POWER" - TOS power.
      10) "TDC POWER" - Telephone demarcation cabinet power.
      11) "CCTV" - Closed circuit television circuits.
      12) "TMS" - Traffic monitoring station circuits.
      13) "CMS" - Changeable message sign circuits.
      14) "HAR" - Highway advisory radio circuits.
4. Bonding jumper for metal covers shall be 3' long, minimum.
5. The nominal dimensions of the opening in which the cover sets must be the same as the cover dimensions except the length and width dimensions shall be ⅛" greater.
6. Covers and boxes must be interchangeable with California standard male and female gages. When interchanged with a standard male or female gage, the top surfaces must be flush within ⅛".

DIMENSION TABLE

PULL BOX	BOX						COVER				
	Minimum * Thickness	Minimum Depth Box and Extension	WO	LO	L1	W1	L **	W **	R	Edge Thickness	Edge Taper
No. 3½(T)	1½"	1'-0"	1'-5"± 1"	1'-8⅞"±	1'-2½"±	10⅝"± 1"	1'-8"±	1'-1¾"±	0"	½"	None
No. 5(T)	1¾"	1'-0"	1'-11½"± 1"	2'-5½"±	1'-7"±	1'-1"± 1"	2'-3"±	1'-4"±	0"	½"	None
No. 6(T)	2"	1'-0"	2'-6"± 1"	2'-11½"±	1'-11½"±	1'-5"± 1"	2'-9"±	1'-8"±	0"	½"	None

* Excluding conduit web ** Top dimension

STATE OF CALIFORNIA
DEPARTMENT OF TRANSPORTATION

ELECTRICAL SYSTEMS (TRAFFIC RATED PULL BOX)

NO SCALE

NSP ES-8B DATED JANUARY 20, 2012 SUPPLEMENTS THE STANDARD PLANS BOOK DATED MAY 2006.

NEW STANDARD PLAN NSP ES-8B

2006 NEW STANDARD PLAN NSP ES-8B

9-28-11

DIST	COUNTY	ROUTE	POST MILES TOTAL PROJECT	SHEET NO.	TOTAL SHEETS
11	SD	5,56	R30.4/R32.8, 0.0/9.2	176	177

REGISTERED ELECTRICAL ENGINEER

July 20, 2012
PLANS APPROVAL DATE

REGISTERED PROFESSIONAL ENGINEER
Jeffery G. McRae
No. E14512
Exp. 6-30-14
ELECTRICAL
STATE OF CALIFORNIA

The State of California or its officers or agents shall not be responsible for the accuracy or completeness of electronic copies of this plan sheet.

To accompany plans dated 6-4-12

ISOFOOTCANDLE CURVE - MINIMUM

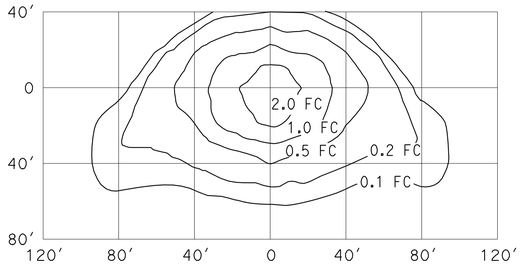

TYPE III MEDIUM CUTOFF

Cutoff Luminaire
34′ Mounting Height
Lamp operated at 22,000 lm
200-W high pressure sodium lamp
ANSI Designation S66

ISOFOOTCANDLE CURVE - MINIMUM

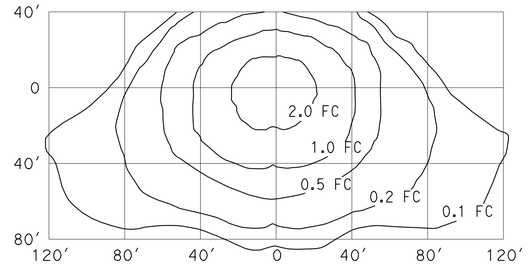

TYPE III MEDIUM CUTOFF

Cutoff Luminaire
40′ Mounting Height
Lamp operated at 37,000 lm
310-W high pressure sodium lamp
ANSI Designation S67

ISOFOOTCANDLE CURVE - MINIMUM

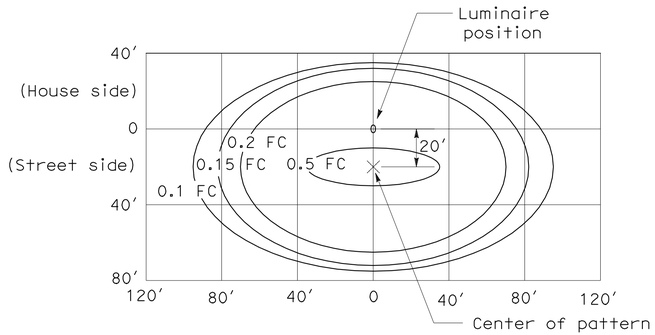

LED LUMINAIRE ROADWAY 1

200-W HPS Equivalent at 34′ Mounting Height

ISOFOOTCANDLE CURVE - MINIMUM

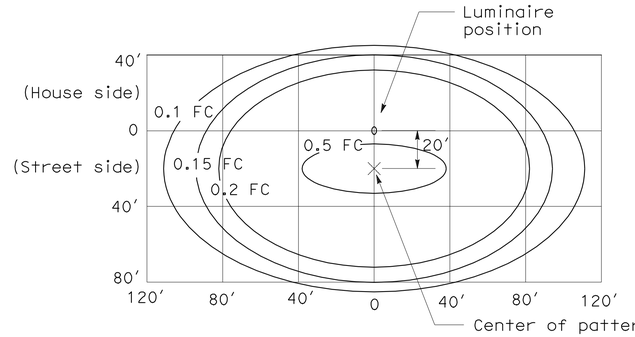

LED LUMINAIRE ROADWAY 2

310-W HPS Equivalent at 40′ Mounting Height

ISOFOOTCANDLE CURVE - MINIMUM

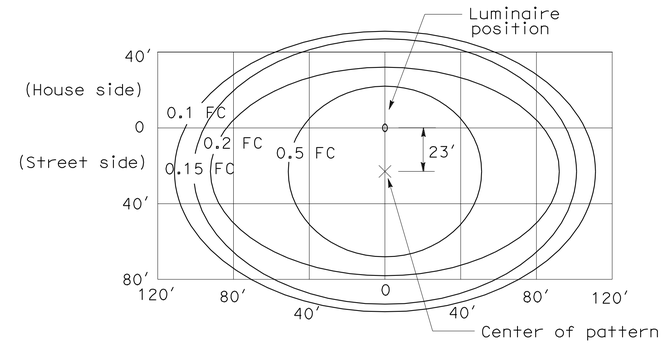

LED LUMINAIRE ROADWAY 4

400-W HPS Equivalent at 40′ Mounting Height

ISOFOOTCANDLE CURVE - MINIMUM

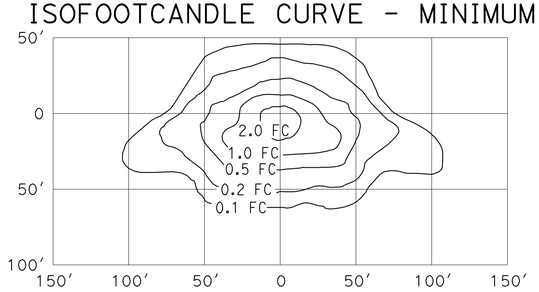

TYPE III MEDIUM CUTOFF

Cutoff Luminaire
30′ Mounting Height
Lamp operated at 16,000 lm
150-W high pressure sodium lamp
ANSI Designation S55

ISOFOOTCANDLE CURVE - MINIMUM

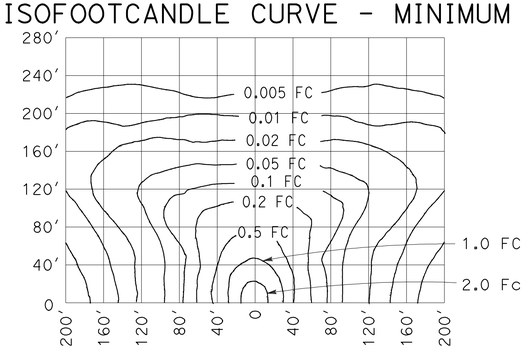

LOW PRESSURE SODIUM LUMINAIRE

40′ Mounting Height
Lamp operated at 33,000 lm
180-W low pressure sodium lamp

STATE OF CALIFORNIA
DEPARTMENT OF TRANSPORTATION

ELECTRICAL SYSTEMS (ISOFOOTCANDLE DIAGRAMS)

NO SCALE

NSP ES-10A DATED JULY 20, 2012 SUPPLEMENTS THE STANDARD PLANS BOOK DATED MAY 2006.

NEW STANDARD PLAN NSP ES-10A

2006 NEW STANDARD PLAN NSP ES-10A

2-16-12

DIST	COUNTY	ROUTE	POST MILES TOTAL PROJECT	SHEET NO.	TOTAL SHEETS
11	SD	5,56	R30.4/R32.8, 0.0/9.2	177	177

Jeffery G. McRae
REGISTERED ELECTRICAL ENGINEER

July 20, 2012
PLANS APPROVAL DATE

REGISTERED PROFESSIONAL ENGINEER
Jeffery G. McRae
No. E14512
Exp. 6-30-14
ELECTRICAL
STATE OF CALIFORNIA

The State of California or its officers or agents shall not be responsible for the accuracy or completeness of electronic copies of this plan sheet.

To accompany plans dated 6-4-12

ISOFOOTCANDLE CURVE - MINIMUM

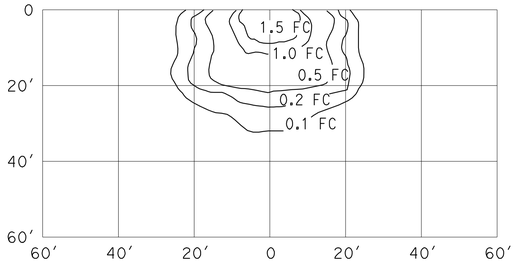

WALL LUMINAIRE
15′ Mounting Height
Lamp operated at 5,800 lm
70-W high pressure sodium lamp
ANSI Designation S62

ISOFOOTCANDLE CURVE - MINIMUM

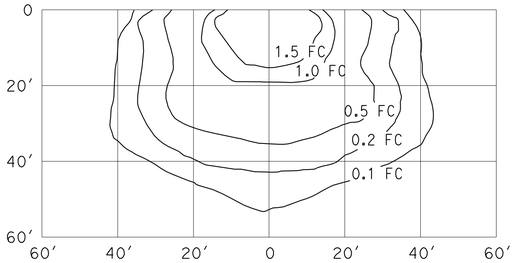

WALL LUMINAIRE
15′ Mounting Height
Lamp operated at 9,500 lm
100-W high pressure sodium lamp
ANSI Designation S54

ISOFOOTCANDLE CURVE - MINIMUM

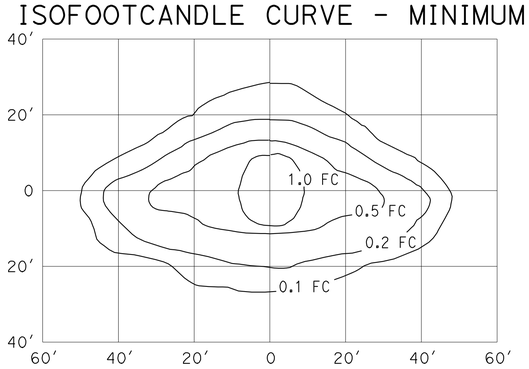

PENDANT SOFFIT LUMINAIRE
TYPE III SHORT
17′ Mounting Height
Lamp operated at 5,800 lm
70-W high pressure sodium lamp
ANSI Designation S62

ISOFOOTCANDLE CURVE - MINIMUM

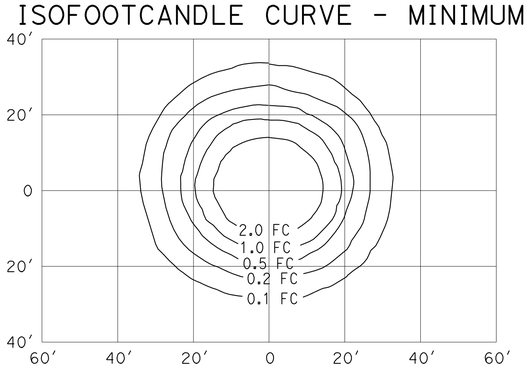

PENDANT SOFFIT LUMINAIRE
17′ Mounting Height
Lamp operated at 5,800 lm
70-W high pressure sodium lamp
ANSI Designation S62

ISOFOOTCANDLE CURVE - MINIMUM

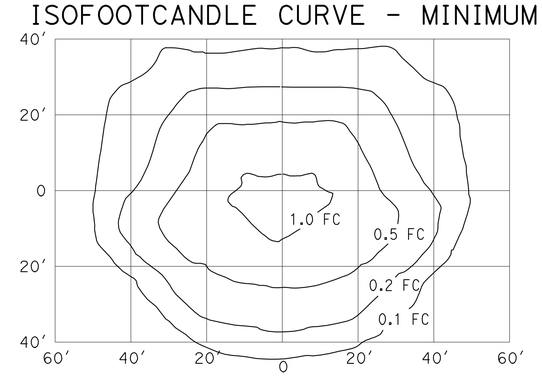

FLUSH SOFFIT LUMINAIRE
17′ Mounting Height
Lamp operated at 5,800 lm
70-W high pressure sodium lamp
ANSI Designation S62

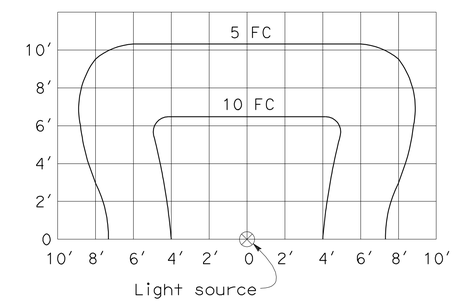

SIGN LIGHTING FIXTURE
ISOFOOTCANDLE DIAGRAM

NOTES:

1. Curves represent the minimum footcandle (FC) of initial illumination on a 10′-0" x 20′-0" panel.
2. The FC shown are with the fixture attached to the light fixture mounting channel which places the center of the source 4′-8" in front of panel and 1′-0" below the bottom edge.
3. Applicable lamp: 85-W fluorescent phosphor coated induction lamp.

STATE OF CALIFORNIA
DEPARTMENT OF TRANSPORTATION

ELECTRICAL SYSTEMS (ISOFOOTCANDLE DIAGRAMS)

NO SCALE

NSP ES-10B DATED JULY 20, 2012 SUPPLEMENTS THE STANDARD PLANS BOOK DATED MAY 2006.

NEW STANDARD PLAN NSP ES-10B

2006 NEW STANDARD PLAN NSP ES-10B