Dist	COUNTY	ROUTE	POST MILES TOTAL PROJECT	SHEET No.	TOTAL SHEETS
11	SD	76	23.1/23.5	1	83

ACSTP-ACBRSTP-P076(025)E

STATE OF CALIFORNIA

DEPARTMENT OF TRANSPORTATION

PROJECT PLANS FOR CONSTRUCTION ON

STATE HIGHWAY

IN SAN DIEGO COUNTY AT PALA FROM 0.1 MILE WEST TO 0.3 MILE EAST OF PALA CREEK BRIDGE

TO BE SUPPLEMENTED BY STANDARD PLANS DATED MAY 2006

INDEX OF PLANS

SHEET No.	DESCRIPTION
1	TITLE AND LOCATION MAP
2-3	TYPICAL CROSS SECTIONS
4-5	LAYOUTS
6	PROFILES
7-14	CONSTRUCTION DETAILS
15-16	TEMPORARY WATER POLLUTION CONTROL PLANS AND DETAILS
17-19	EROSION CONTROL
20-21	CONTOUR GRADING
22-23	DRAINAGE PLANS, PROFILES, DETAILS AND QUANTITIES
24-25	UTILITY PLANS
26-28	STAGE CONSTRUCTION PLANS
29	CONSTRUCTION AREA SIGNS
30-31	PAVEMENT DELINEATION PLANS, DETAILS AND QUANTITIES
32-33	SUMMARY OF QUANTITIES
34-39	HIGHWAY PLANTING PLANS, DETAILS AND QUANTITIES
40-41	ELECTRICAL PLANS
42-64	REVISED STANDARD PLANS

STRUCTURE PLANS

65-83	PALA CREEK BRIDGE Br No. 57-1200

THE STANDARD PLANS LIST APPLICABLE TO THIS CONTRACT IS INCLUDED IN THE NOTICE TO BIDDERS AND SPECIAL PROVISIONS BOOK.

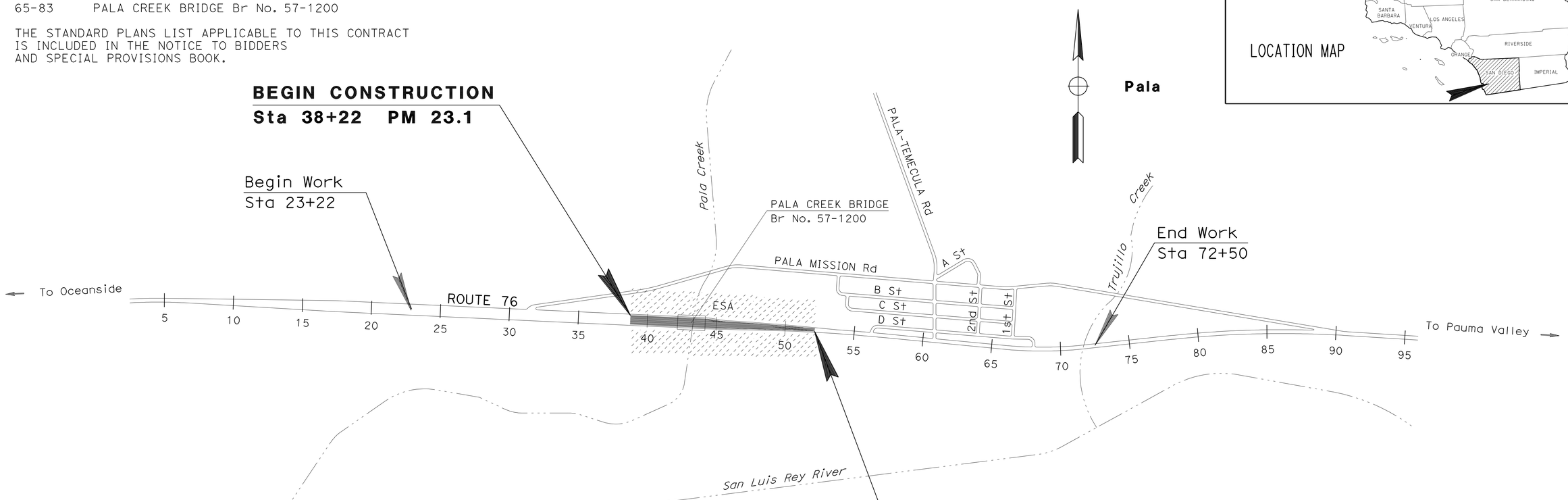

ESA ENVIRONMENTALLY SENSITIVE AREA

THE CONTRACTOR SHALL POSSESS THE CLASS (OR CLASSES) OF LICENSE AS SPECIFIED IN THE "NOTICE TO BIDDERS."

NO SCALE

Michael S. Bettega 12-14-09
PROJECT ENGINEER DATE
REGISTERED CIVIL ENGINEER

June 7, 2010
PLANS APPROVAL DATE

REGISTERED PROFESSIONAL ENGINEER MICHAEL S. BETTEGA No. C 34348 Exp. 9/30/11 CIVIL STATE OF CALIFORNIA

THE STATE OF CALIFORNIA OR ITS OFFICERS OR AGENTS SHALL NOT BE RESPONSIBLE FOR THE ACCURACY OR COMPLETENESS OF SCANNED COPIES OF THIS PLAN SHEET.

PROJECT MANAGER BRUCE LAMBERT

DESIGN ENGINEER GETACHEW ESHETE

CONTRACT No.	11-273404
PROJECT ID	1100000263

LAST REVISION 12-16-09 DATE PLOTTED => 30-JUN-2010 TIME PLOTTED => 12:52

Dist	COUNTY	ROUTE	POST MILES TOTAL PROJECT	SHEET No.	TOTAL SHEETS
11	SD	76	23.1/23.5	2	83

REGISTERED CIVIL ENGINEER 12-14-09 DATE

6-7-10
PLANS APPROVAL DATE

REGISTERED PROFESSIONAL ENGINEER MICHAEL S. BETTEGA No. C 34348 Exp. 9/30/11 CIVIL STATE OF CALIFORNIA

THE STATE OF CALIFORNIA OR ITS OFFICERS OR AGENTS SHALL NOT BE RESPONSIBLE FOR THE ACCURACY OR COMPLETENESS OF SCANNED COPIES OF THIS PLAN SHEET.

NOTES:

1. DIMENSIONS OF THE STRUCTURAL SECTIONS ARE SUBJECT TO TOLERANCES SPECIFIED IN THE StaNDARD SPECIFICATIONS.
2. SUPERELEVATION AS SHOWN OR AS DIRECTED BY THE ENGINEER.
3. FOR EXACT LOCATION AND TYPE OF HMA DIKE SEE LAYOUTS AND SUMMARY OF QUANTITIES SHEETS.

DESIGN DESIGNATION

AADT (2009)	11,500
AADT (2030)	29,000
DHV (2030)	2,030
D	7.5%
T	14%

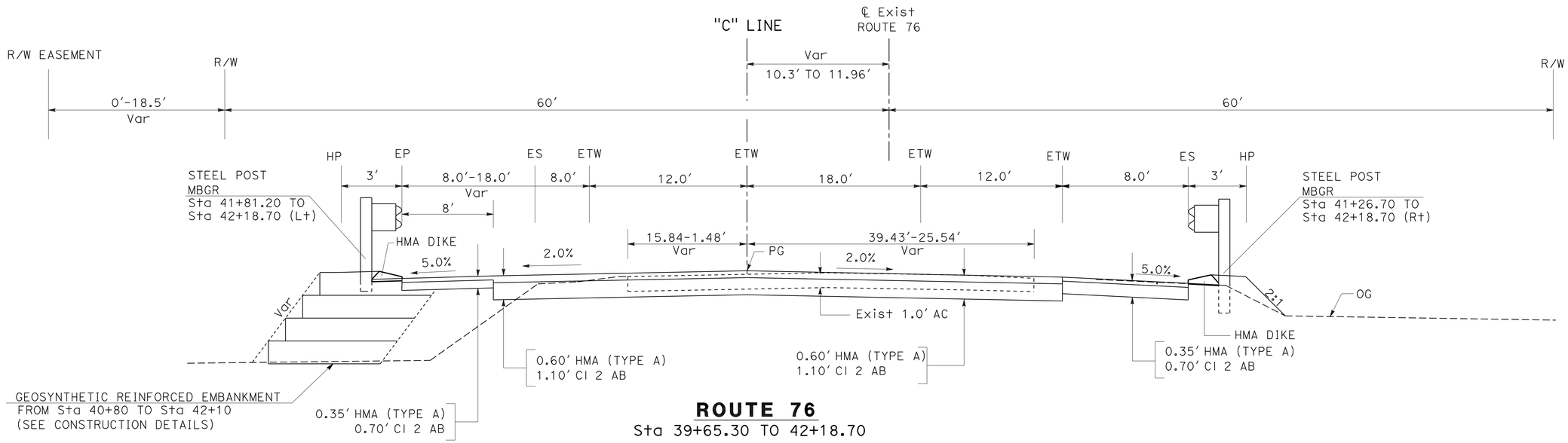

ROUTE 76
Sta 39+65.30 TO 42+18.70

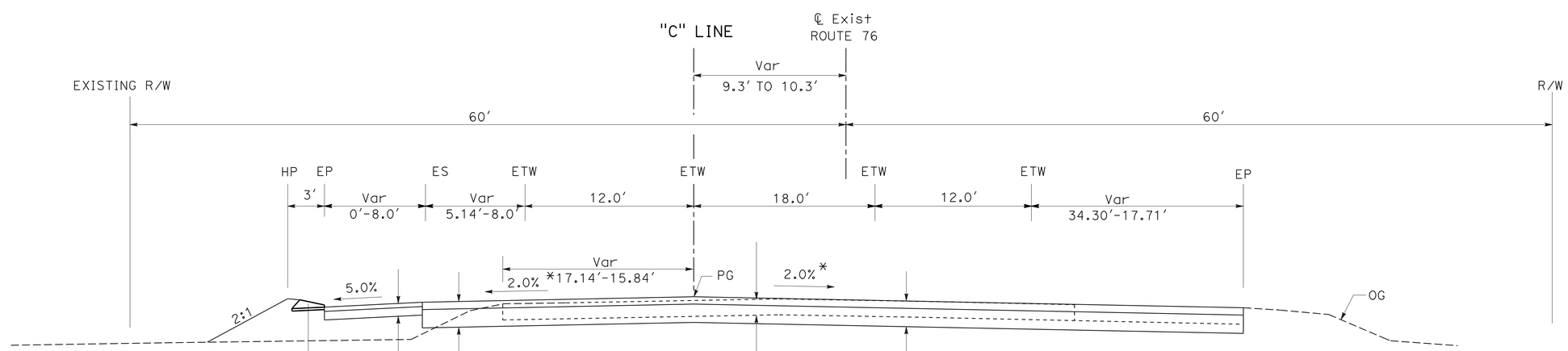

ROUTE 76
Sta 38+22.31 TO 39+65.30

* FOR CROSS SLOPES AT STA 38+22.31 AND STA 38+82.51 SEE CONSTRUCTION DETAILS

TYPICAL CROSS SECTIONS

NO SCALE

X-1

REVISED BY | DATE REVISED
TRIET LY | MIKE BETTEGA
CALCULATED-DESIGNED BY | CHECKED BY
FUNCTIONAL SUPERVISOR | GETACHEW ESHETE

STATE OF CALIFORNIA - DEPARTMENT OF TRANSPORTATION
Caltrans
06-DESIGN

LAST REVISION 12-16-09 | DATE PLOTTED => 10-JUN-2010 | TIME PLOTTED => 14:08

Dist	COUNTY	ROUTE	POST MILES TOTAL PROJECT	SHEET No.	TOTAL SHEETS
11	SD	76	23.1/23.5	3	83

Michael S. Bettega 12-14-09
REGISTERED CIVIL ENGINEER DATE

6-7-10
PLANS APPROVAL DATE

REGISTERED PROFESSIONAL ENGINEER MICHAEL S. BETTEGA No. C 34348 Exp. 9/30/11 CIVIL STATE OF CALIFORNIA

THE STATE OF CALIFORNIA OR ITS OFFICERS OR AGENTS SHALL NOT BE RESPONSIBLE FOR THE ACCURACY OR COMPLETENESS OF SCANNED COPIES OF THIS PLAN SHEET.

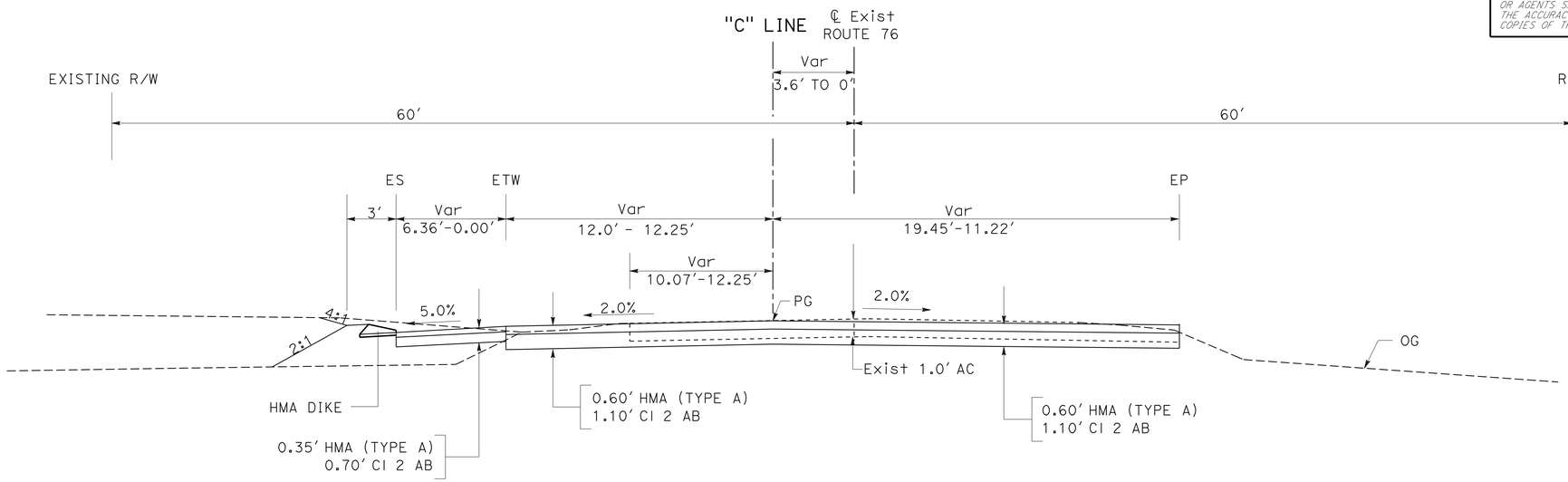

ROUTE 76

Sta 51+37.38 TO 54+17.51

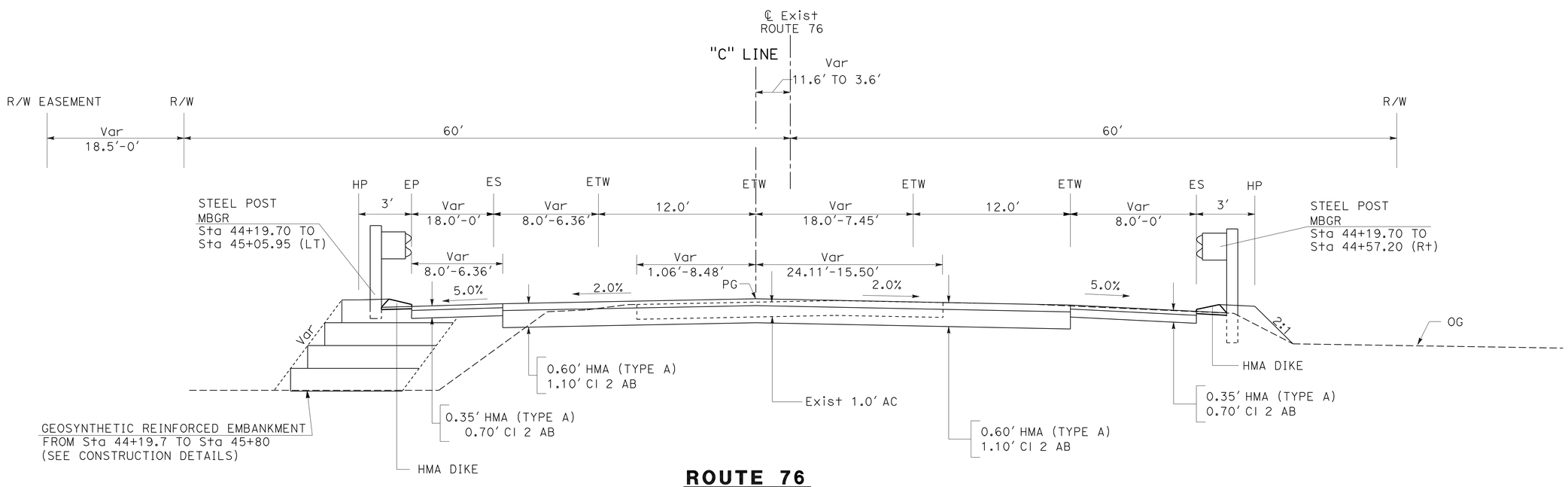

ROUTE 76

Sta 44+19.70 TO 51+37.38

TYPICAL CROSS SECTIONS

NO SCALE

X-2

REVISED BY | DATE REVISED
TRIET LY | MIKE BETTEGA
CALCULATED-DESIGNED BY | CHECKED BY
FUNCTIONAL SUPERVISOR | GETACHEW ESHETE

STATE OF CALIFORNIA - DEPARTMENT OF TRANSPORTATION
Caltrans
06-DESIGN

LAST REVISION 12-16-09 | DATE PLOTTED => 10-JUN-2010 | TIME PLOTTED => 14:08

Dist	COUNTY	ROUTE	POST MILES TOTAL PROJECT	SHEET No.	TOTAL SHEETS
11	SD	76	23.1/23.5	4	83

Michael S. Bettega 12-14-09
REGISTERED CIVIL ENGINEER DATE

6-7-10
PLANS APPROVAL DATE

REGISTERED PROFESSIONAL ENGINEER MICHAEL S. BETTEGA No. C 34348 Exp. 9/30/11 CIVIL STATE OF CALIFORNIA

THE STATE OF CALIFORNIA OR ITS OFFICERS OR AGENTS SHALL NOT BE RESPONSIBLE FOR THE ACCURACY OR COMPLETENESS OF SCANNED COPIES OF THIS PLAN SHEET.

NOTES:

1. FOR ACCURATE RIGHT OF WAY AND ACCESS DATA, CONTACT RIGHT OF WAY ENGINEERING AT THE DISTRICT OFFICE.
2. ELEVATIONS ARE BASED ON NAVD88.
3. BEARING AND DISTANCES ARE BASED ON NAD83 HPGN.

LEGEND

- REMOVE EXISTING BRIDGE (SEE STRUCTURE PLANS)
- TEMPORARY CONSTRUCTION EASEMENT
- ROCK SLOPE PROTECTION (SEE CONSTRUCTION DETAIL SHEETS)
- ESA — ENVIRONMENTALLY SENSITIVE AREA
- OVERSIDE DRAINS (SEE CONSTRUCTION DETAIL SHEETS)
- PERMANENT EASEMENT
- IRRIGATION CROSSOVER
- —×—TATF—×— MAINTAIN EXISTING TEMPORARY ARROYO TOAD FENCE (SEE CONSTRUCTION DETAIL SHEETS)

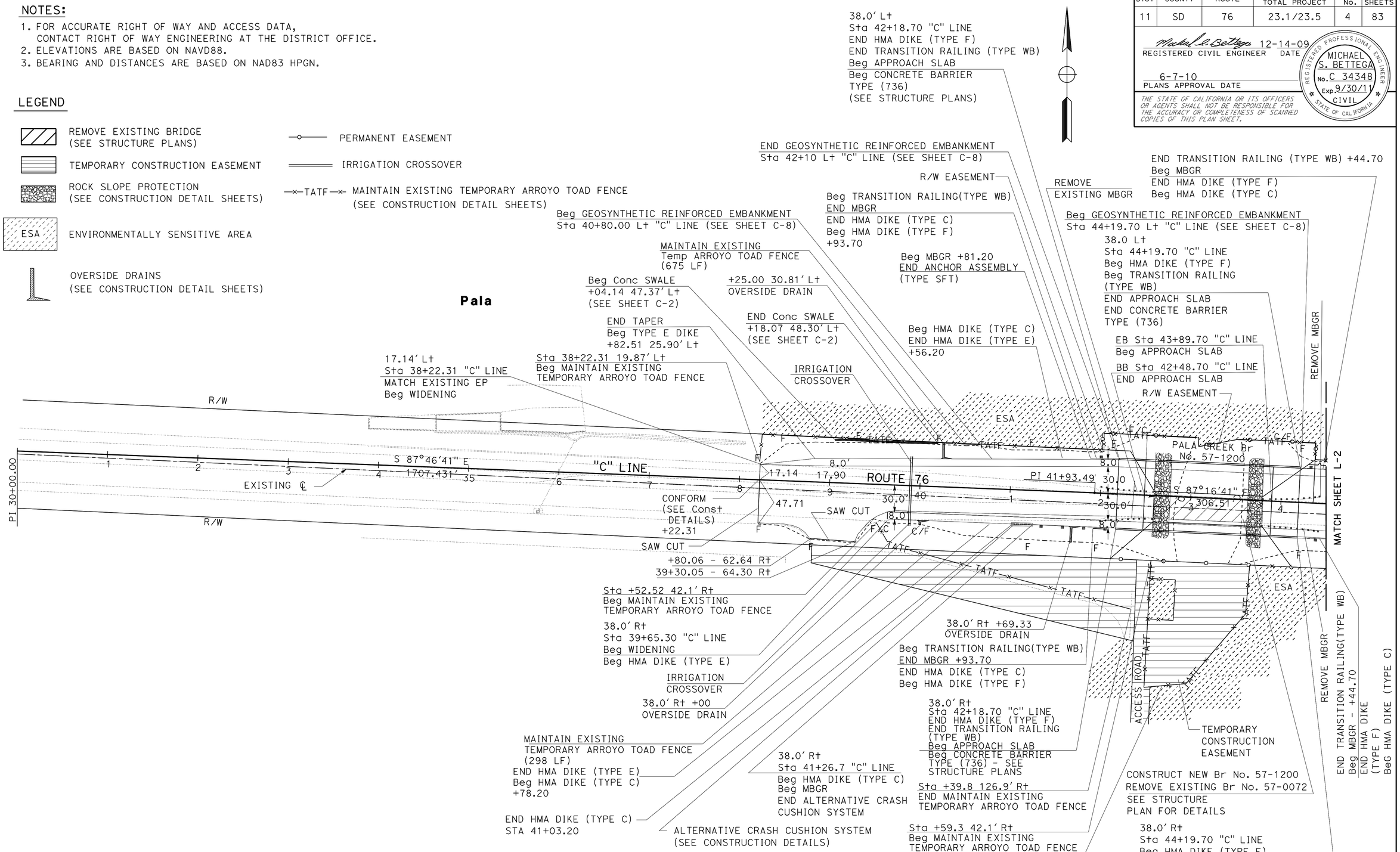

LAYOUT

SCALE: 1" = 50'

L-1

REVISED BY	DATE REVISED
TRIET LY	MIKE BETTEGA

CALCULATED-DESIGNED BY / CHECKED BY

FUNCTIONAL SUPERVISOR: GETACHEW ESHETE

STATE OF CALIFORNIA - DEPARTMENT OF TRANSPORTATION

Caltrans® **06-DESIGN**

LAST REVISION 05-17-10 | DATE PLOTTED => 10-JUN-2010 | TIME PLOTTED => 14:31

Dist	COUNTY	ROUTE	POST MILES TOTAL PROJECT	SHEET No.	TOTAL SHEETS
11	SD	76	23.1/23.5	5	83

REGISTERED CIVIL ENGINEER 12-14-09 DATE

6-7-10
PLANS APPROVAL DATE

REGISTERED PROFESSIONAL ENGINEER MICHAEL S. BETTEGA No. C 34348 Exp. 9/30/11 CIVIL STATE OF CALIFORNIA

THE STATE OF CALIFORNIA OR ITS OFFICERS OR AGENTS SHALL NOT BE RESPONSIBLE FOR THE ACCURACY OR COMPLETENESS OF SCANNED COPIES OF THIS PLAN SHEET.

NOTE:

FOR ACCURATE RIGHT OF WAY AND ACCESS DATA,
CONTACT RIGHT OF WAY ENGINEERING AT THE DISTRICT OFFICE.

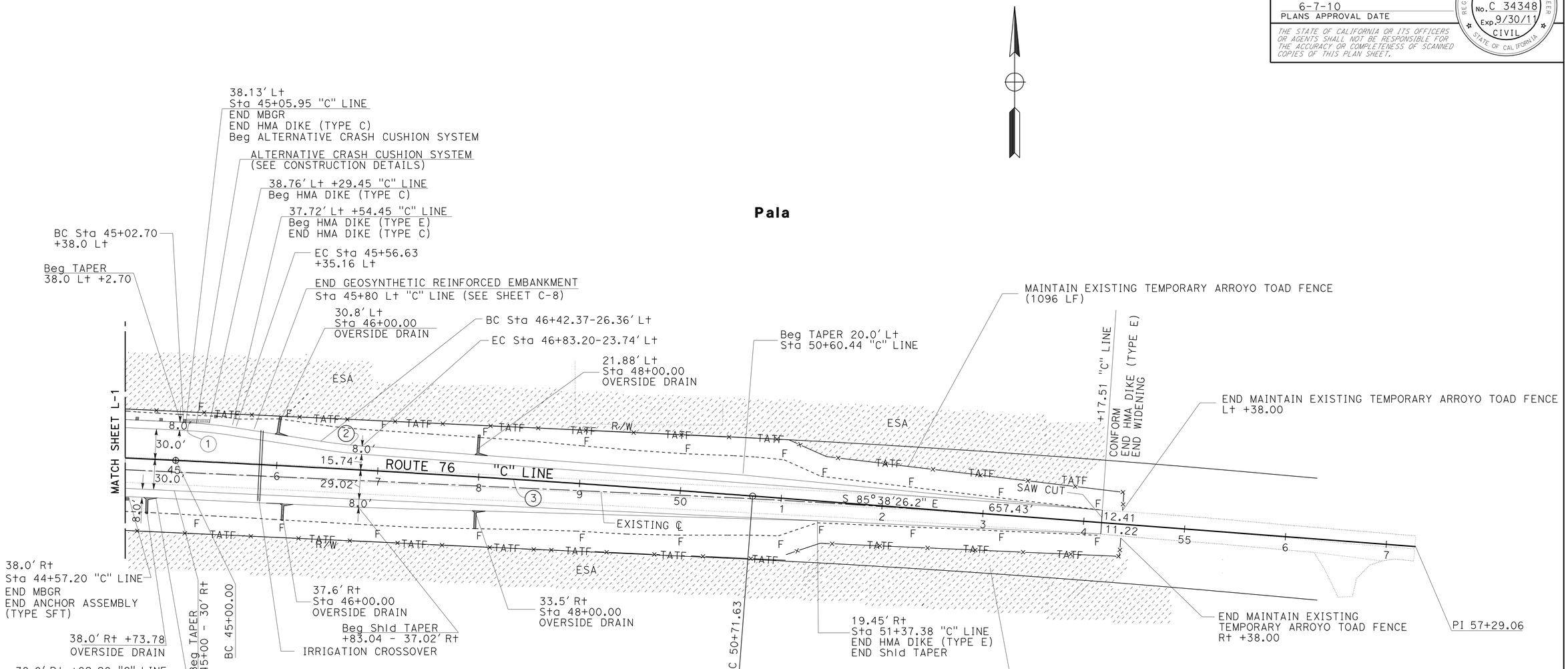

CURVE DATA

No.	R	Δ	T	L
1	500.00'	6°12'17.1"	27.10'	53.98'
2	500.00'	4°34'21.0"	19.96'	40.02'
3	20000.00'	1°38'15.3"	285.83'	571.62'

LAYOUT

SCALE: 1" = 50' **L-2**

STATE OF CALIFORNIA - DEPARTMENT OF TRANSPORTATION
Caltrans
06-DESIGN

FUNCTIONAL SUPERVISOR: GETACHEW ESHETE
CALCULATED-DESIGNED BY: TRIET LY
CHECKED BY: MIKE BETTEGA
REVISED BY
DATE REVISED

LAST REVISION 05-17-10
DATE PLOTTED => 10-JUN-2010
TIME PLOTTED => 14:31

Dist	COUNTY	ROUTE	POST MILES TOTAL PROJECT	SHEET No.	TOTAL SHEETS
11	SD	76	23.1/23.5	6	83

Michael S. Bettega 12-14-09
REGISTERED CIVIL ENGINEER DATE

6-7-10
PLANS APPROVAL DATE

REGISTERED PROFESSIONAL ENGINEER MICHAEL S. BETTEGA No. C 34348 Exp. 9/30/11 CIVIL STATE OF CALIFORNIA

THE STATE OF CALIFORNIA OR ITS OFFICERS OR AGENTS SHALL NOT BE RESPONSIBLE FOR THE ACCURACY OR COMPLETENESS OF SCANNED COPIES OF THIS PLAN SHEET.

NOTE:

1. ELEVATIONS ARE BASED ON NAVD88 DATUM.

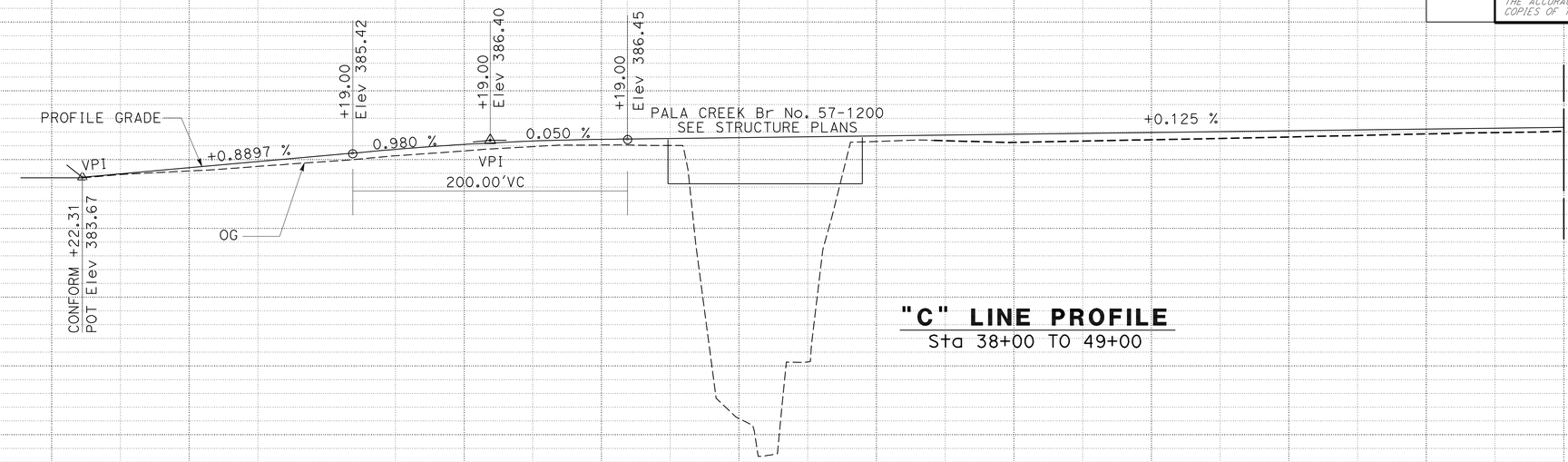

"C" LINE PROFILE

Sta 38+00 TO 49+00

StaTION	38+00	50	39+00	50	40+00	50	41+00	50	42+00	50	43+00	50	44+00	50	45+00	50	46+00	50	47+00	50	48+00	50	49+00	TOTAL
CY Exc	5408																							
CY Emb	4670																							

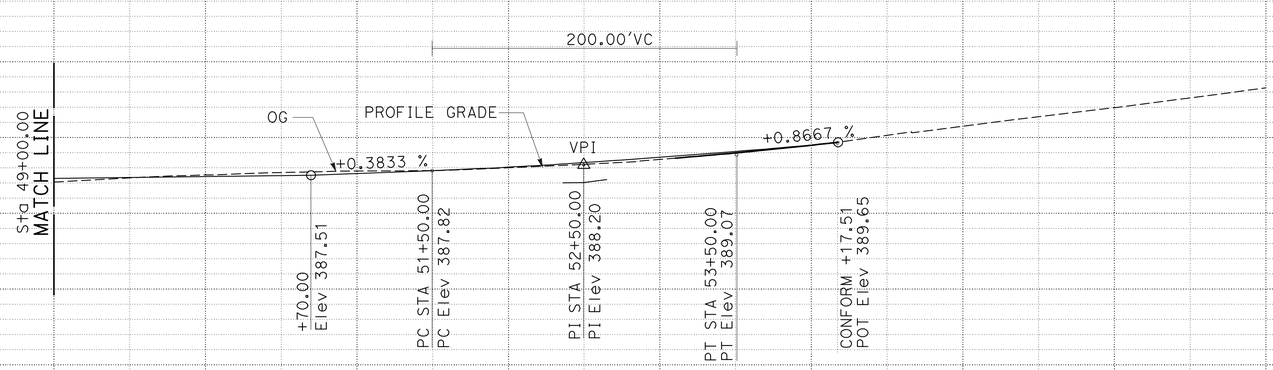

"C" LINE PROFILE

Sta 49+00 TO 57+00

StaTION	49+00	50	50+00	50	51+00	50	52+00	50	53+00	50	54+00	50	55+00	50	56+00	50	57+00	50	TOTAL
CY Exc	1122																		
CY Emb	512																		

PROFILE

SCALE: Horiz 1" = 50'
Vert 1" = 5'

P-1

STATE OF CALIFORNIA - DEPARTMENT OF TRANSPORTATION
Caltrans®
06-DESIGN

FUNCTIONAL SUPERVISOR: GETACHEW ESHETE
CALCULATED-DESIGNED BY: TRIET LY
CHECKED BY: MIKE BETTEGA
REVISED BY
DATE REVISED

LAST REVISION 05-17-10
DATE PLOTTED => 10-JUN-2010
TIME PLOTTED => 14:08

Dist	COUNTY	ROUTE	POST MILES TOTAL PROJECT	SHEET No.	TOTAL SHEETS
11	SD	76	23.1/23.5	7	83

REGISTERED CIVIL ENGINEER 12-14-09 DATE

6-7-10
PLANS APPROVAL DATE

REGISTERED PROFESSIONAL ENGINEER MICHAEL S. BETTEGA No. C 34348 Exp. 9/30/11 CIVIL STATE OF CALIFORNIA

THE STATE OF CALIFORNIA OR ITS OFFICERS OR AGENTS SHALL NOT BE RESPONSIBLE FOR THE ACCURACY OR COMPLETENESS OF SCANNED COPIES OF THIS PLAN SHEET.

THRUST BLOCK DETAIL

INSTALLATION	TYPE FITTING	INSTALLATION	TYPE FITTING
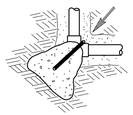	90° ELL	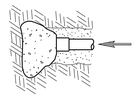	DEAD END
	BEND 45° 22.5° 11.25°		GATE VALVE
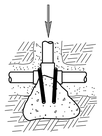	TEE	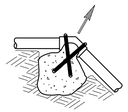	VERTICAL BEND (TYPE I) 45° 22.5° 11.25°
		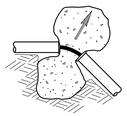	OR VERTICAL BEND (TYPE II) 45° 22.5° 11.25°

NOTES:

Min 1 CF PCC FOR PIPE 1½" AND SMALLER.
Min 2 CF PCC FOR PIPE 2" AND LARGER.
USE #3 REINFORCING BAR WHERE SHOWN.

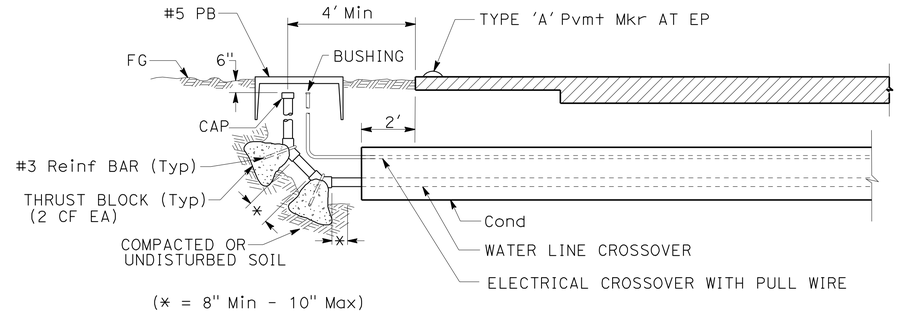

SECTION

IRRIGATION CROSSOVER
(MODIFIED)

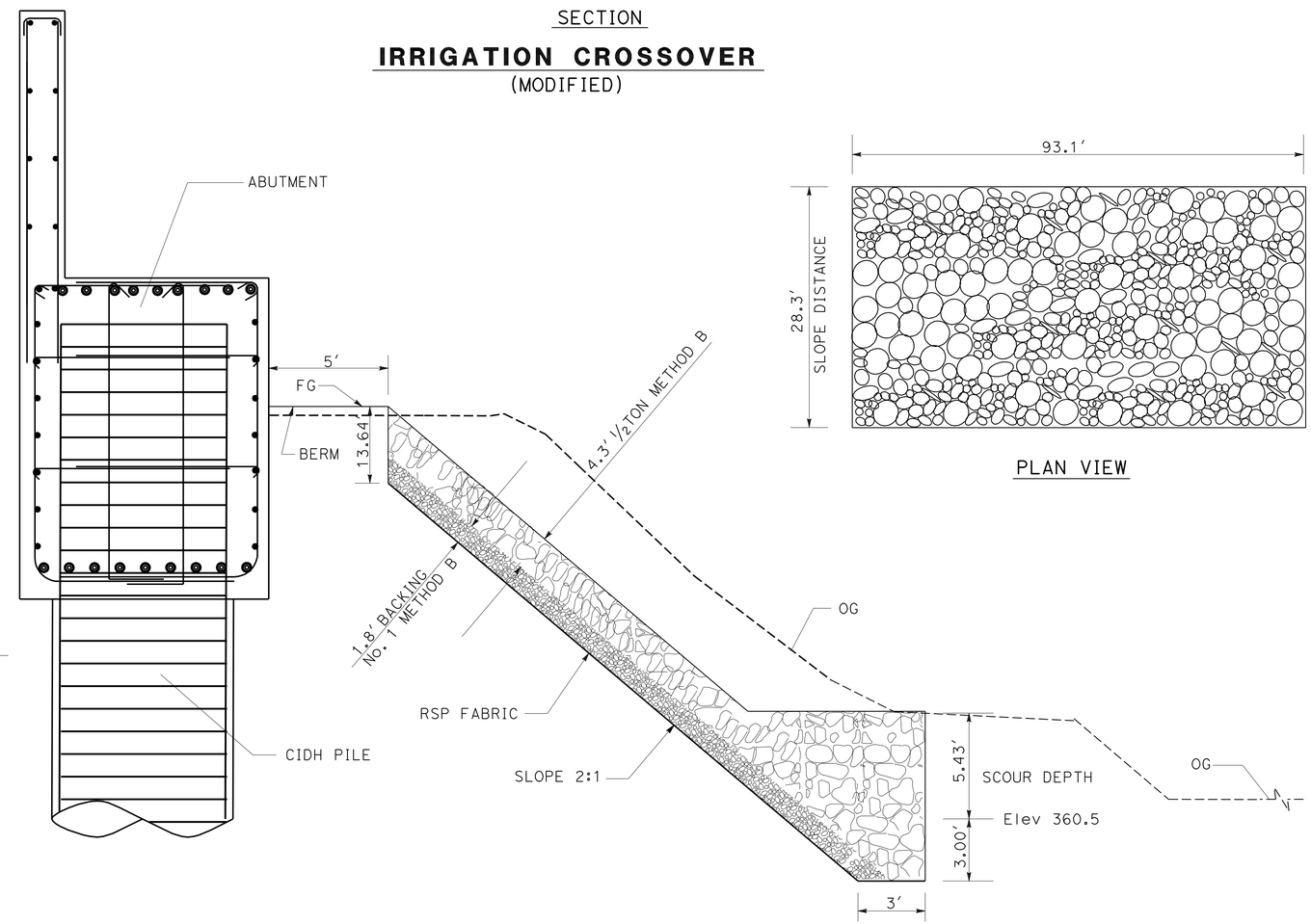

PLAN VIEW

ROCK SLOPE PROTECTION AT ABUTMENTS

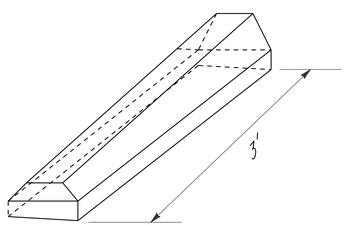

HMA DIKE TRANSITION
TYPE C TO TYPE F

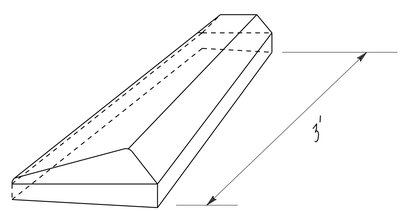

HMA DIKE TRANSITION
TYPE E TO TYPE C

CONSTRUCTION DETAILS

NO SCALE

C-1

STATE OF CALIFORNIA - DEPARTMENT OF TRANSPORTATION
Caltrans
06-DESIGN

FUNCTIONAL SUPERVISOR: GETACHEW ESHETE
TRIET LY
MIKE BETTEGA
CALCULATED-DESIGNED BY
CHECKED BY
REVISED BY
DATE REVISED

LAST REVISION 12-16-09
DATE PLOTTED => 10-JUN-2010
TIME PLOTTED => 14:11

Dist	COUNTY	ROUTE	POST MILES TOTAL PROJECT	SHEET No.	TOTAL SHEETS
11	SD	76	23.1/23.5	8	83

Michael S. Bettega 12-14-09
REGISTERED CIVIL ENGINEER DATE

6-7-10
PLANS APPROVAL DATE

REGISTERED PROFESSIONAL ENGINEER
MICHAEL S. BETTEGA
No. C 34348
Exp. 9/30/11
CIVIL
STATE OF CALIFORNIA

THE STATE OF CALIFORNIA OR ITS OFFICERS OR AGENTS SHALL NOT BE RESPONSIBLE FOR THE ACCURACY OR COMPLETENESS OF SCANNED COPIES OF THIS PLAN SHEET.

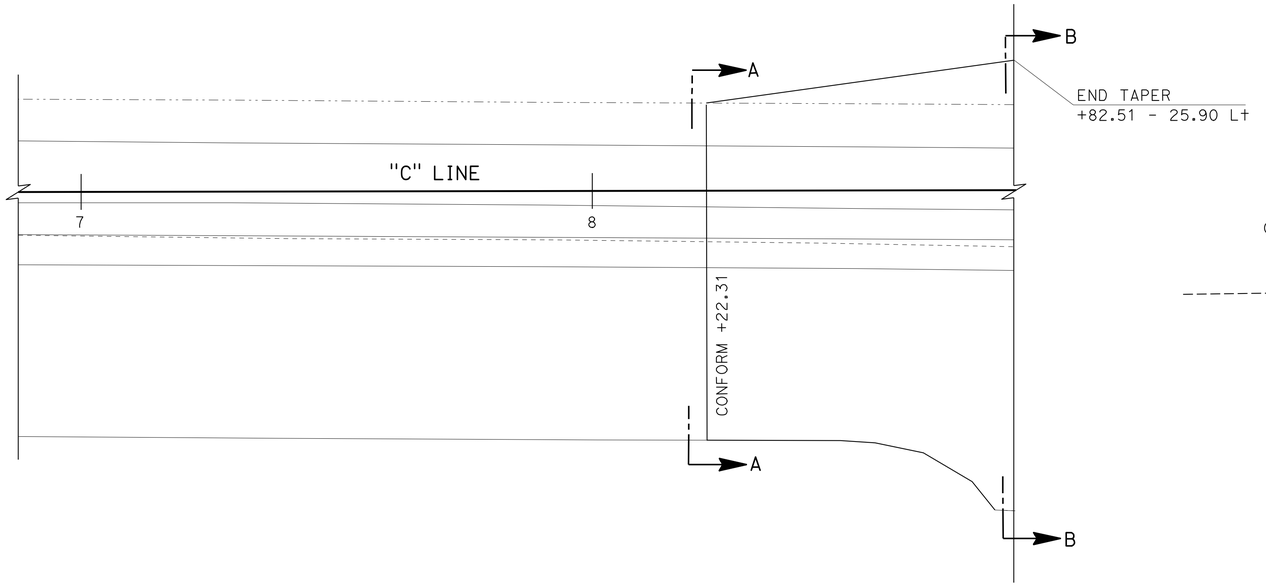

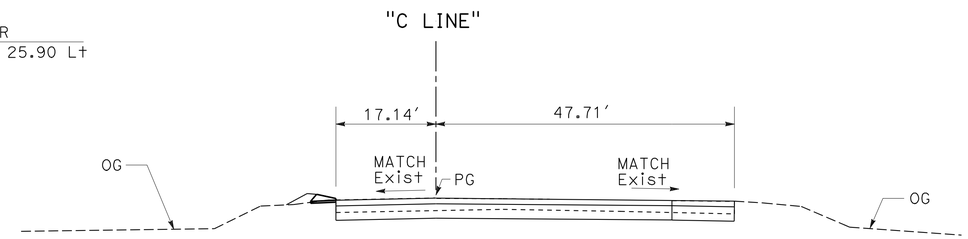

SECTION A-A

ROUTE 76
STA 38+22.31

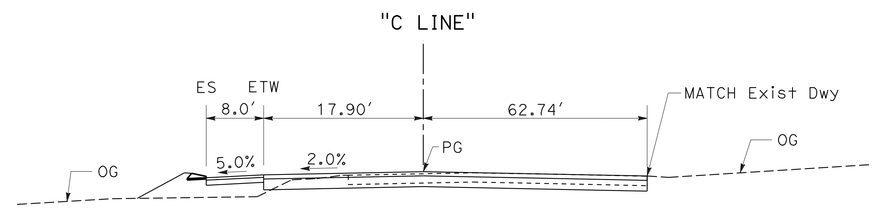

SECTION B-B

ROUTE 76
STA 38+82.51

CONFORM DETAIL

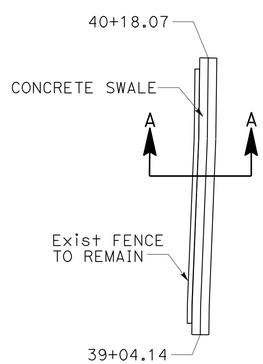

PLAN

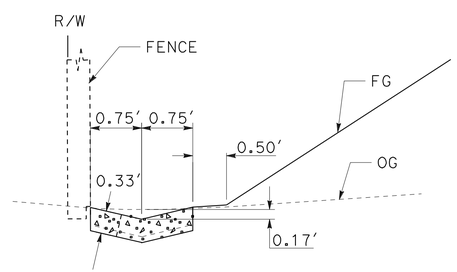

SECTION A-A

CONCRETE SWALE

CONSTRUCTION DETAILS

NO SCALE

C-2

STATE OF CALIFORNIA - DEPARTMENT OF TRANSPORTATION
Caltrans
06-DESIGN

FUNCTIONAL SUPERVISOR: GETACHEW ESHETE
CALCULATED-DESIGNED BY: TRIET LY
CHECKED BY: MIKE BETTEGA
REVISED BY
DATE REVISED

LAST REVISION 12-16-09
DATE PLOTTED => 10-JUN-2010
TIME PLOTTED => 14:08

Dist	COUNTY	ROUTE	POST MILES TOTAL PROJECT	SHEET No.	TOTAL SHEETS
11	SD	76	23.1/23.5	9	83

REGISTERED CIVIL ENGINEER DATE 12-14-09

PLANS APPROVAL DATE 6-7-10

REGISTERED PROFESSIONAL ENGINEER MICHAEL S. BETTEGA No. C 34348 Exp. 9/30/11 CIVIL STATE OF CALIFORNIA

THE STATE OF CALIFORNIA OR ITS OFFICERS OR AGENTS SHALL NOT BE RESPONSIBLE FOR THE ACCURACY OR COMPLETENESS OF ELECTRONIC COPIES OF THIS PLAN SHEET.

NOTES:

1. INSTALL Temp ARROYO TOAD FENCE BY FIRST DRIVING POSTS.
2. POSTS AT JOINTS AND END POSTS SHALL BE DRIVEN TIGHTLY TOGETHER. THE TOPS OF THE POSTS SHALL BE SECURED TO EACH OTHER WITH WIRE.
3. POSTS TO OVERLAP AND FENCE FABRIC TO FOLD AROUND EACH POST ONE FULL TURN. SECURE FABRIC WITH 4 STAPLES FOR EACH POST. DIMENSIONS SHOWN ARE TYPICAL.
4. FOR EACH END POST, FENCE FABRIC SHALL BE FOLDED AROUND TWO POSTS ONE FULL TURN AND SECURED WITH 4 STAPLES.

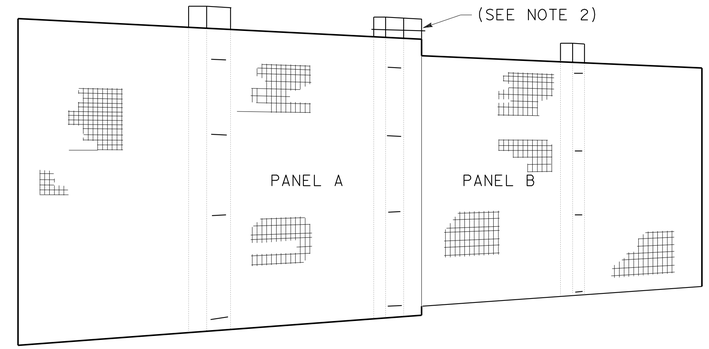

TOAD FENCE PANELS AT JOINTS

PERSPECTIVE

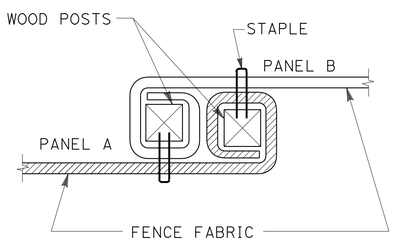

POST AT JOINTS

PLAN

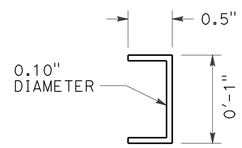

STAPLE DETAIL

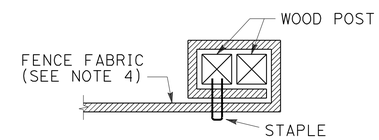

END POST DETAIL

PLAN

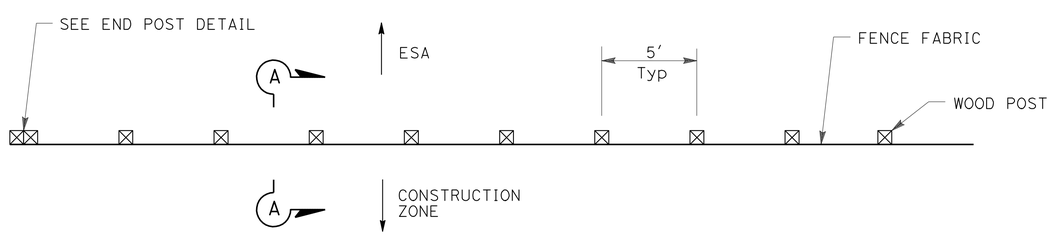

MAINTAIN EXISTING TEMPORARY ARROYO TOAD FENCE

PLAN

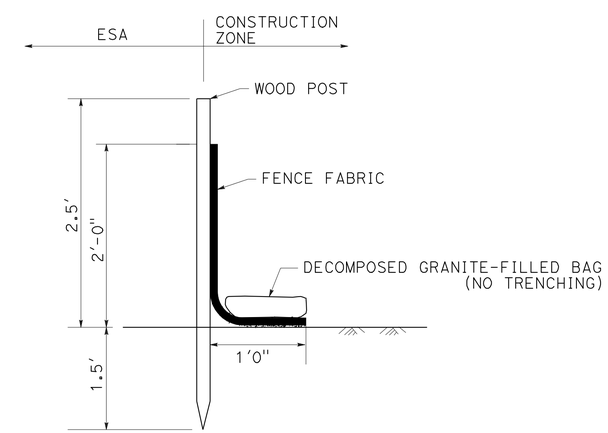

SECTION A-A

CONSTRUCTION DETAILS

NO SCALE

C-3

STATE OF CALIFORNIA - DEPARTMENT OF TRANSPORTATION

Caltrans 06-DESIGN

FUNCTIONAL SUPERVISOR: GETACHEW ESHETE

CALCULATED-DESIGNED BY: MIKE BETTEGA

CHECKED BY: TRIET LY

REVISED BY

DATE REVISED

LAST REVISION 05-17-10

DATE PLOTTED => 10-JUN-2010

TIME PLOTTED => 14:09

Dist	COUNTY	ROUTE	POST MILES TOTAL PROJECT	SHEET No.	TOTAL SHEETS
11	SD	76	23.1/23.5	10	83

Michael S. Bettega 12-14-09
REGISTERED CIVIL ENGINEER DATE

6-7-10
PLANS APPROVAL DATE

REGISTERED PROFESSIONAL ENGINEER
MICHAEL S. BETTEGA
No. C 34348
Exp. 9/30/11
CIVIL
STATE OF CALIFORNIA

THE STATE OF CALIFORNIA OR ITS OFFICERS OR AGENTS SHALL NOT BE RESPONSIBLE FOR THE ACCURACY OR COMPLETENESS OF SCANNED COPIES OF THIS PLAN SHEET.

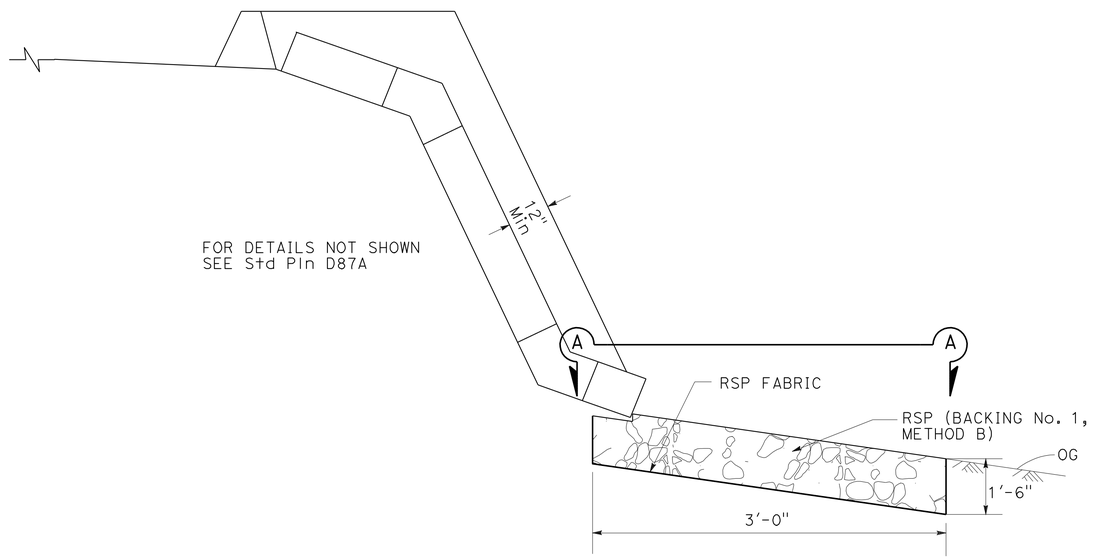

OVERSIDE DRAIN

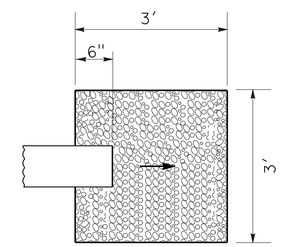

SECTION A-A

CONSTRUCTION DETAIL

NO SCALE

C-4

STATE OF CALIFORNIA - DEPARTMENT OF TRANSPORTATION
Caltrans
06-DESIGN

FUNCTIONAL SUPERVISOR: GETACHEW ESHETE

CALCULATED-DESIGNED BY: TRIET LY
CHECKED BY: MIKE BETTEGA

REVISED BY
DATE REVISED

LAST REVISION 12-17-09
DATE PLOTTED => 10-JUN-2010
TIME PLOTTED => 14:09

Dist	COUNTY	ROUTE	POST MILES TOTAL PROJECT	SHEET No.	TOTAL SHEETS
11	SD	76	23.1/23.5	11	83

REGISTERED CIVIL ENGINEER 12-14-09 DATE

6-7-10
PLANS APPROVAL DATE

REGISTERED PROFESSIONAL ENGINEER MICHAEL S. BETTEGA No. C 34348 Exp. 9/30/11 CIVIL STATE OF CALIFORNIA

THE STATE OF CALIFORNIA OR ITS OFFICERS OR AGENTS SHALL NOT BE RESPONSIBLE FOR THE ACCURACY OR COMPLETENESS OF SCANNED COPIES OF THIS PLAN SHEET.

NOTES:

1. INSTALLATION TO COMPLY WITH MANUFACTURER INSTRUCTIONS. FOR ALL ACCESSORIES TO QUADGUARD SYSTEM AND ADDITIONAL INFORMATION SEE MANUFACTURER'S DETAILS.
2. PROVISION SHALL BE MADE FOR REAR FENDER PANELS TO SLIDE REARWARD UPON IMPACT 2.5 FEET Min.
3. END CAP (TYPE A). FOR ADDITIONAL DETAILS SEE CONNECTION DETAIL EE ON STANDARD PLAN A77J3

LEGEND:

1. QUADGUARD CARTRIDGE
2. DIAPHRAGM
3. FENDER PANEL
4. MONORAIL
5. NOSE ASSEMBLY
6. Conc BACKUP

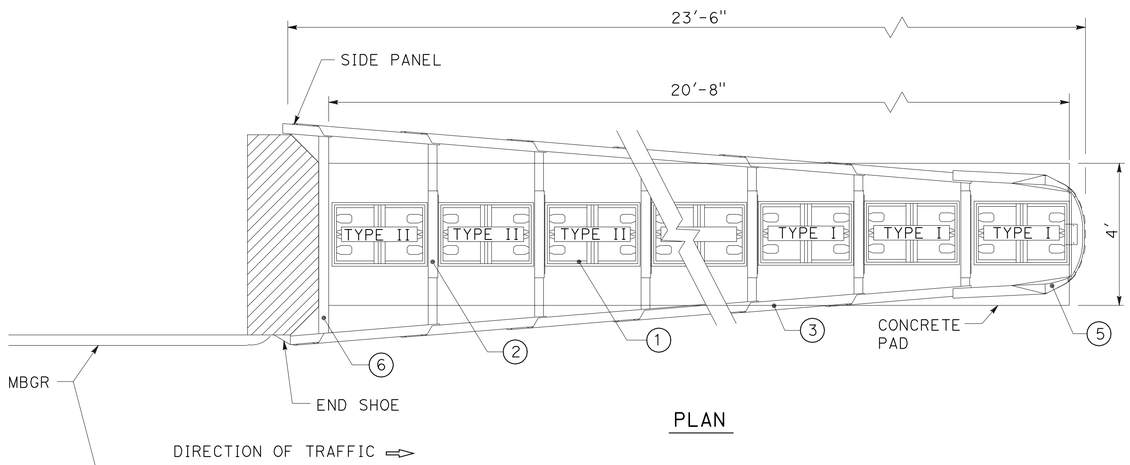

PLAN

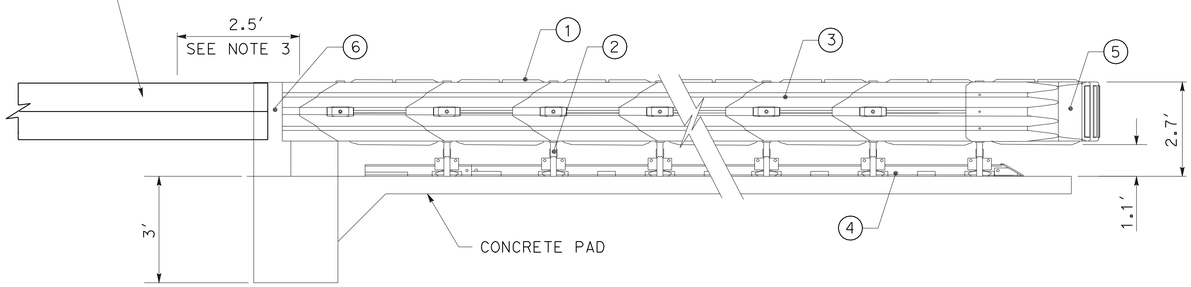

ELEVATION

CRASH CUSHION SYSTEM (TYPE QUADGUARD)

(MODEL No. QS2406Y)

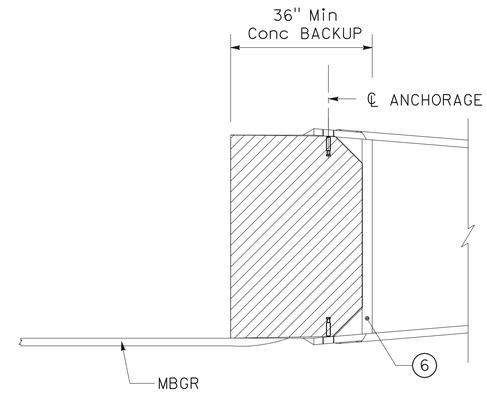

CONCRETE BACKUP DETAIL

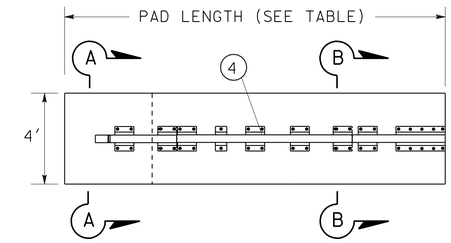

PLAN

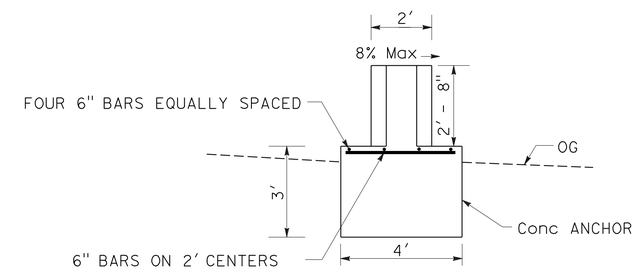

SECTION A-A

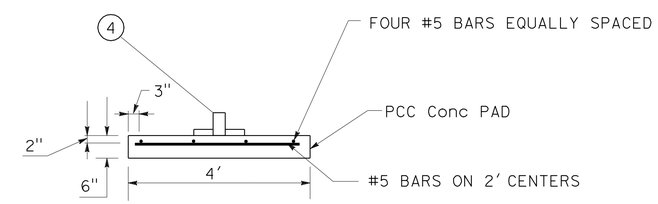

SECTION B-B

CONCRETE PAD DETAILS

PROPOSED No. BAYS	MODEL	SYSTEM LENGTH	EFFECTIVE LENGTH	CONCRETE PAD LENGTH
		LF	LF	LF
6	QS2406Y	23'-6"	20'-8"	20'-6"

ALTERNATIVE CRASH CUSHION SYSTEM

CONSTRUCTION DETAILS

NO SCALE

C-5

STATE OF CALIFORNIA - DEPARTMENT OF TRANSPORTATION
06-DESIGN
Caltrans

FUNCTIONAL SUPERVISOR: GETACHEW ESHETE
CALCULATED-DESIGNED BY: MIKE BETTEGA
CHECKED BY: TRIET LY
REVISED BY
DATE REVISED

LAST REVISION 12-17-09
DATE PLOTTED => 10-JUN-2010
TIME PLOTTED => 14:09

Dist	COUNTY	ROUTE	POST MILES TOTAL PROJECT	SHEET No.	TOTAL SHEETS
11	SD	76	23.1/23.5	12	83

REGISTERED CIVIL ENGINEER 12-14-09 DATE

6-7-10
PLANS APPROVAL DATE

REGISTERED PROFESSIONAL ENGINEER MICHAEL S. BETTEGA No. C 34348 Exp. 9/30/11 CIVIL STATE OF CALIFORNIA

THE STATE OF CALIFORNIA OR ITS OFFICERS OR AGENTS SHALL NOT BE RESPONSIBLE FOR THE ACCURACY OR COMPLETENESS OF SCANNED COPIES OF THIS PLAN SHEET.

NOTE:

FOR DETAILS NOT SHOWN, REFER TO MANUFACTURER'S INSTALLATION MANUAL

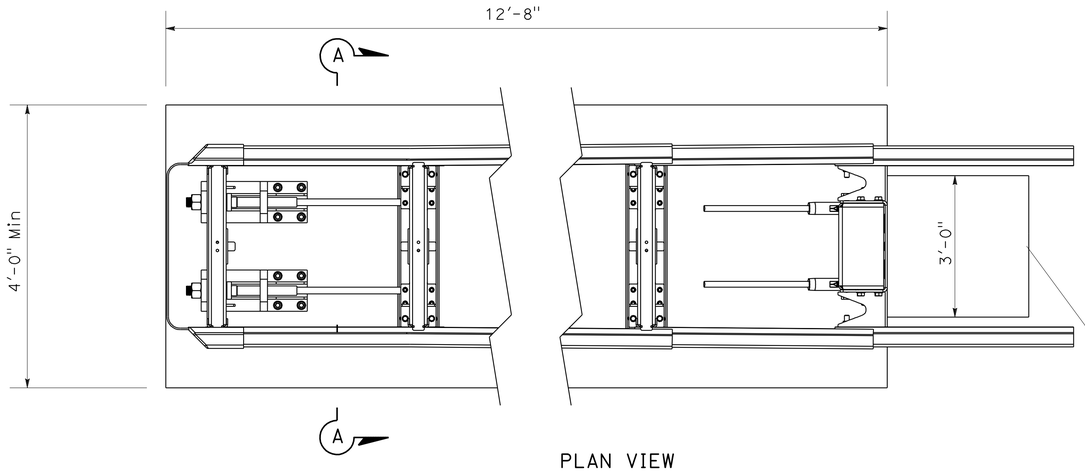

PLAN VIEW

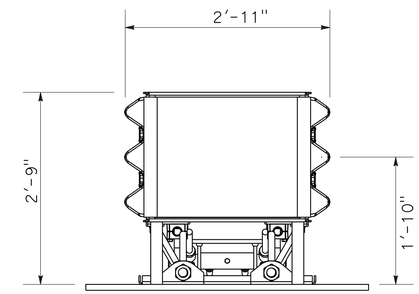

SECTION A-A

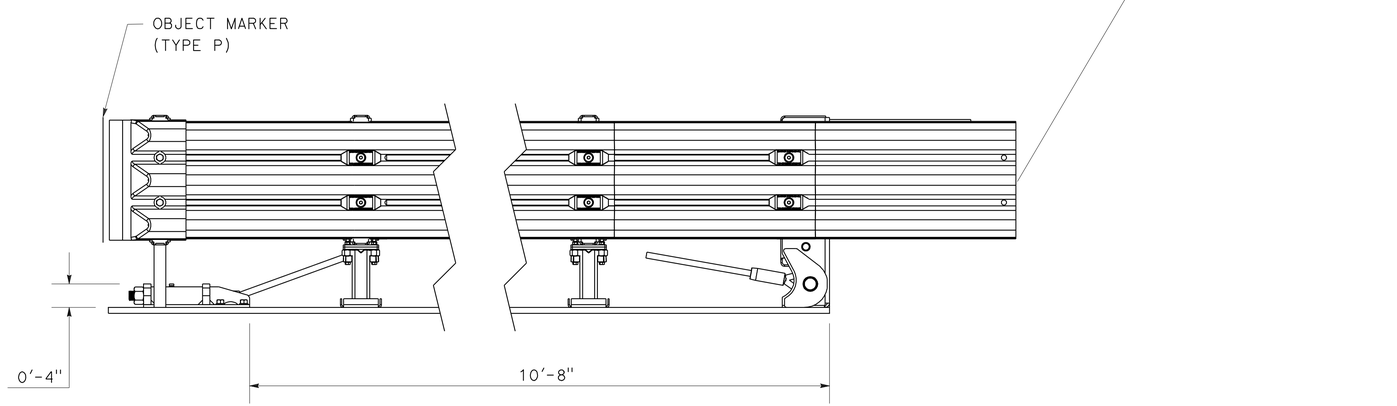

ELEVATION

CRASH CUSHION (TYPE TAU-II)
ALTERNATIVE CRASH CUSHION SYSTEM

CONSTRUCTION DETAILS

NO SCALE

C-6

STATE OF CALIFORNIA - DEPARTMENT OF TRANSPORTATION
Caltrans
06-DESIGN

FUNCTIONAL SUPERVISOR: GETACHEW ESHETE
CALCULATED-DESIGNED BY: MIKE BETTEGA
CHECKED BY: TRIET LY
REVISED BY
DATE REVISED

LAST REVISION 12-17-09
DATE PLOTTED => 10-JUN-2010
TIME PLOTTED => 14:09

Dist	COUNTY	ROUTE	POST MILES TOTAL PROJECT	SHEET No.	TOTAL SHEETS
11	SD	76	23.1/23.5	13	83

Michael S. Bettega 12-14-09
REGISTERED CIVIL ENGINEER DATE

6-7-10
PLANS APPROVAL DATE

REGISTERED PROFESSIONAL ENGINEER MICHAEL S. BETTEGA No. C 34348 Exp. 9/30/11 CIVIL STATE OF CALIFORNIA

THE STATE OF CALIFORNIA OR ITS OFFICERS OR AGENTS SHALL NOT BE RESPONSIBLE FOR THE ACCURACY OR COMPLETENESS OF SCANNED COPIES OF THIS PLAN SHEET.

NOTE:

1. "FOR DETAILS NOT SHOWN, REFER TO MANUFACTURER'S INSTALLATION MANUAL"

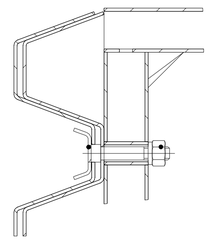

DETAIL B

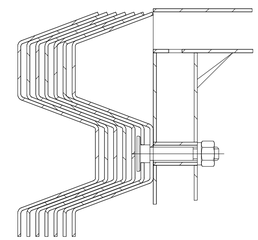

DETAIL A

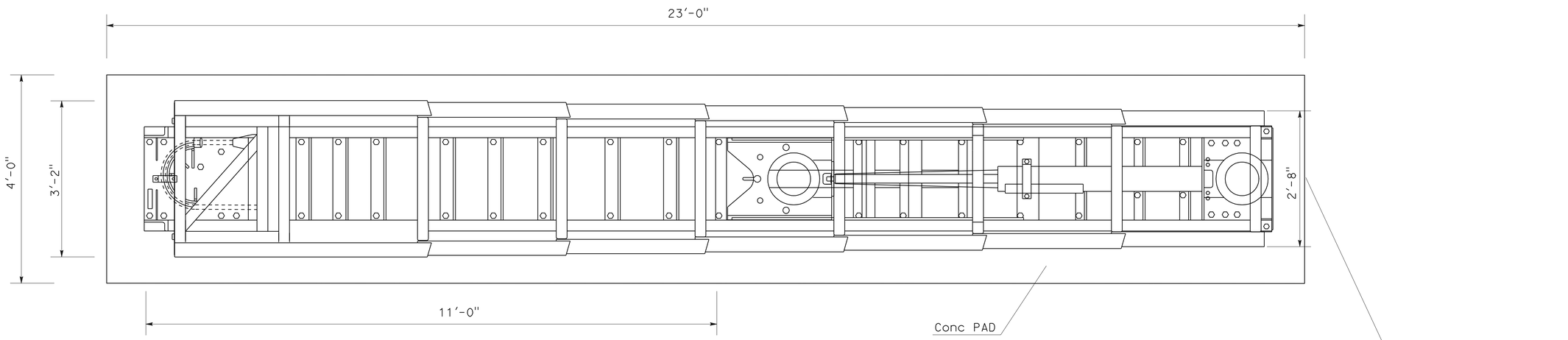

PLAN VIEW

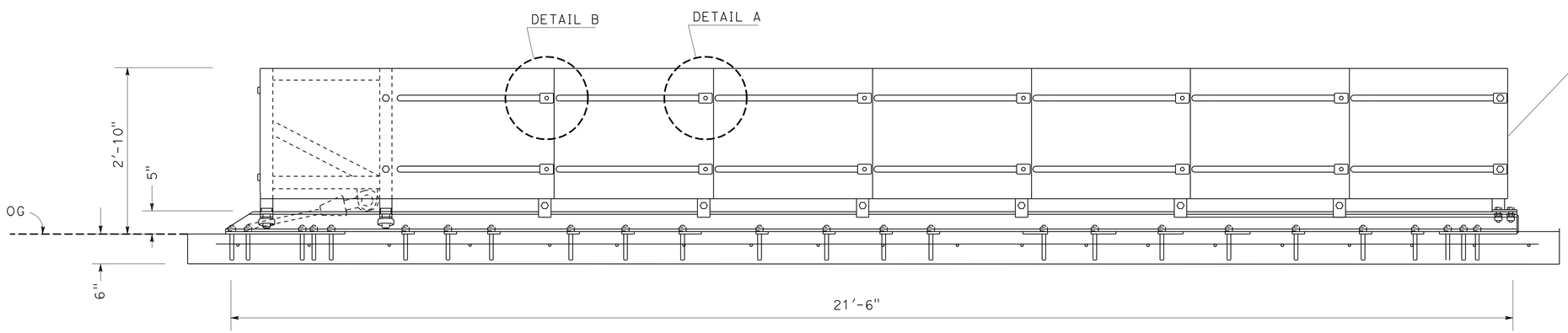

ELEVATION

CRASH CUSHION (TYPE SMART MODEL SCI-100GM)
ALTERNATIVE CRASH CUSHION SYSTEM

CONSTRUCTION DETAILS

NO SCALE

C-7

STATE OF CALIFORNIA - DEPARTMENT OF TRANSPORTATION
Caltrans
06-DESIGN

FUNCTIONAL SUPERVISOR: GETACHEW ESHETE
CALCULATED-DESIGNED BY: MIKE BETTEGA
CHECKED BY: TRIET LY
REVISED BY
DATE REVISED

LAST REVISION 12-17-09
DATE PLOTTED => 10-JUN-2010
TIME PLOTTED => 14:09

Dist	COUNTY	ROUTE	POST MILES TOTAL PROJECT	SHEET No.	TOTAL SHEETS
11	SD	76	23.1/23.5	14	83

REGISTERED CIVIL ENGINEER 12-14-09 DATE

6-7-10
PLANS APPROVAL DATE

REGISTERED PROFESSIONAL ENGINEER MICHAEL S. BETTEGA No. C 34348 Exp. 9/30/11 CIVIL STATE OF CALIFORNIA

THE STATE OF CALIFORNIA OR ITS OFFICERS OR AGENTS SHALL NOT BE RESPONSIBLE FOR THE ACCURACY OR COMPLETENESS OF SCANNED COPIES OF THIS PLAN SHEET.

NOTE:

1. GEOSYNTHETIC REINFORCEMENT REQUIRES MINIMUM LONG TERM DESIGN STRENGTH OF 450 POUNDS PER FOOT AT 10% TOTAL STRAIN

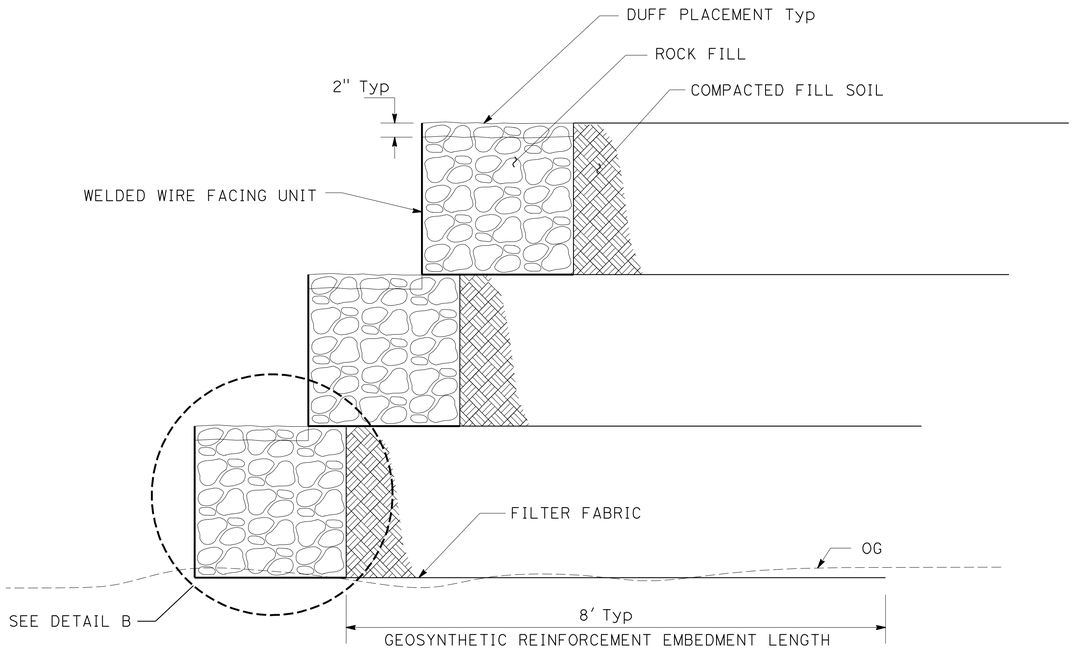

DETAIL A

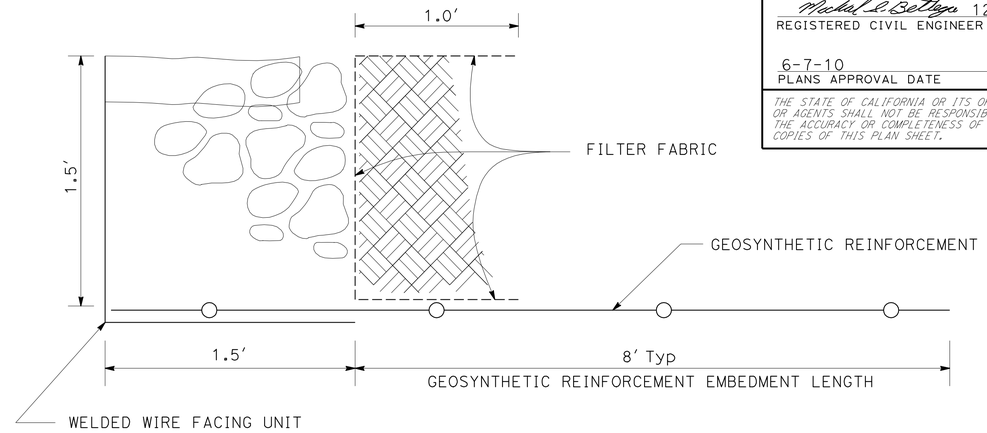

DETAIL B

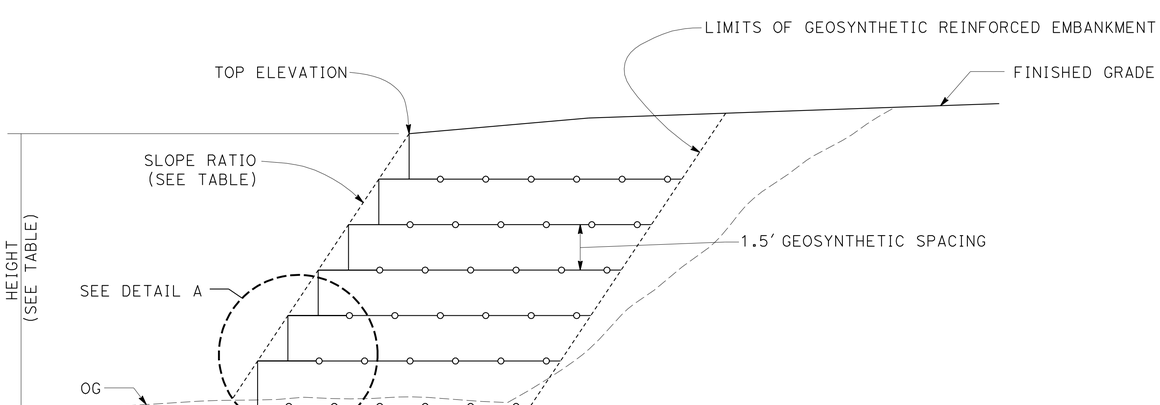

GEOSYNTHETIC REINFORCED EMBANKMENT

Sta 40+80.0 TO Sta 42+10 Lt "C" LINE
Sta 44+19.7 TO Sta 45+80 Lt "C" LINE

GEOSYNTHETIC REINFORCED EMBANKMENT TABLE

STATION	TOP ELEVATION	HEIGHT	SLOPE RATIO
40+80	385.35'	7.5'	1.5 : 1
41+00	385.46'	7.5'	1.0 : 1
41+20	385.56'	7.5'	1.0 : 1
41+40	385.64'	7.5'	0.8 : 1
41+50	385.67'	7.5'	0.8 : 1
41+60	385.37'	7.5'	0.8 : 1
41+80	385.26'	7.5'	0.8 : 1
42+00	385.28'	7.5'	0.8 : 1
42+10	385.29'	7.5'	1.5 : 1
44+19.7	385.55'	7.5'	1.5 : 1
44+35	385.57'	7.5' *	0.8 : 1
44+40	385.58'	7.5' *	0.8 : 1
44+50	385.59'	7.5' *	0.8 : 1
44+60	385.60'	7.5' *	0.8 : 1
44+80	385.63'	7.5' *	0.8 : 1
45+00	385.65'	7.5' *	0.8 : 1
45+20	385.68'	7.5' *	0.8 : 1
45+40	385.73'	7.5' *	1.0 : 1
45+50	385.76'	7.5' *	1.0 : 1
45+60	386.27'	7.5' *	1.0 : 1
45+80	386.34'	7.5' *	1.5 : 1

* THE BOTTOM TWO WELDED WIRE FACING UNITS WILL BE STACKED WITH THEIR FACINGS FLUSH TO EACH OTHER.
THE BOTTOM WELDED WIRE FACING UNIT WILL BE PARTIALLY BELOW ORIGINAL GROUND.

CONSTRUCTION DETAILS

NO SCALE

C-8

STATE OF CALIFORNIA - DEPARTMENT OF TRANSPORTATION
Caltrans
06-DESIGN

FUNCTIONAL SUPERVISOR: GETACHEW ESHETE
CALCULATED-DESIGNED BY: MIKE BETTEGA
CHECKED BY: TRIET LY
REVISED BY
DATE REVISED

LAST REVISION DATE PLOTTED => 10-JUN-2010
TIME PLOTTED => 14:45
05-17-10

Dist	COUNTY	ROUTE	POST MILES TOTAL PROJECT	SHEET No.	TOTAL SHEETS
11	SD	76	23.1/23.5	15	83

Michael S. Bettega 12-14-09
REGISTERED CIVIL ENGINEER DATE

6-7-10
PLANS APPROVAL DATE

REGISTERED PROFESSIONAL ENGINEER MICHAEL S. BETTEGA No. C 34348 Exp. 9/30/11 CIVIL STATE OF CALIFORNIA

THE STATE OF CALIFORNIA OR ITS OFFICERS OR AGENTS SHALL NOT BE RESPONSIBLE FOR THE ACCURACY OR COMPLETENESS OF SCANNED COPIES OF THIS PLAN SHEET.

NOTE:

FOR ACCURATE RIGHT OF WAY AND ACCESS DATA, CONTACT RIGHT OF WAY ENGINEERING AT THE DISTRICT OFFICE.

LEGEND

TEMPORARY CONSTRUCTION ENTRANCE (TYPE 1)

ESA — ENVIRONMENTALLY SENSITIVE AREA

TEMPORARY HYDRAULIC MULCH

TFR — TEMPORARY FIBER ROLL

ABBREVIATION

THM - TEMPORARY HYDRAULIC MULCH

Pala

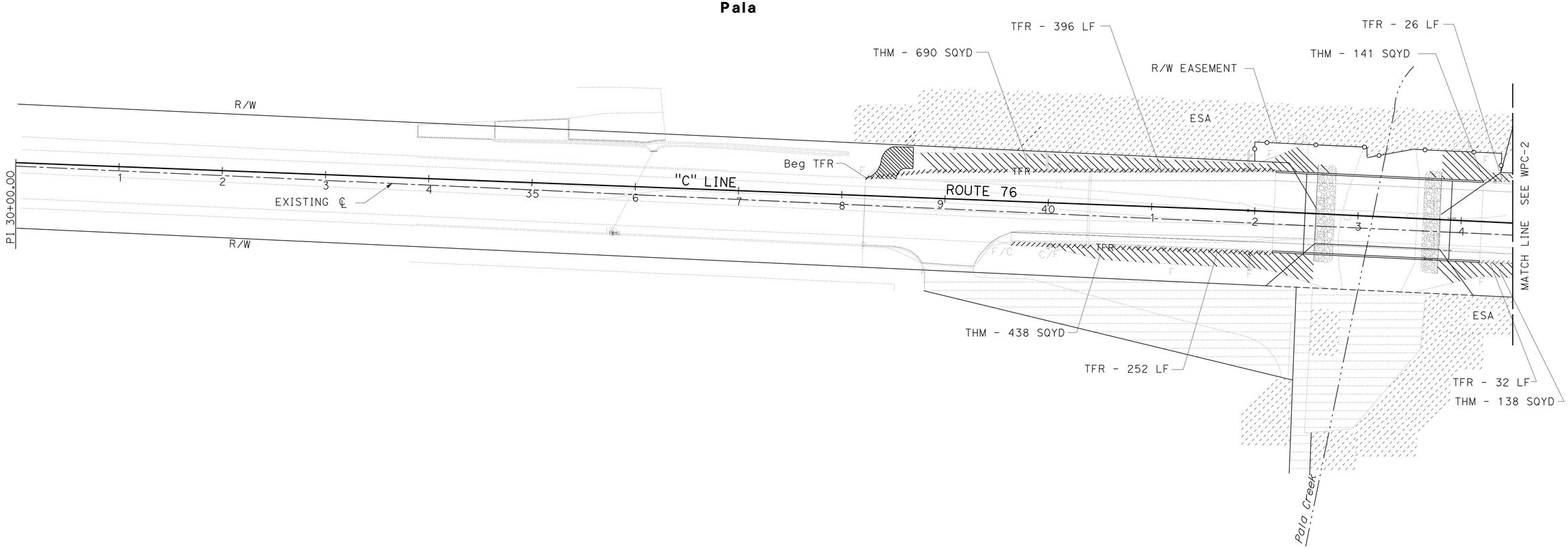

TEMPORARY WATER POLLUTION CONTROL PLAN

SCALE: 1" = 50'

WPC-1

THIS PLAN ACCURATE FOR TEMPORARY WATER POLLUTION CONTROL WORK ONLY

STATE OF CALIFORNIA - DEPARTMENT OF TRANSPORTATION
Caltrans
06-DESIGN

FUNCTIONAL SUPERVISOR: GETACHEW ESHETE
CALCULATED-DESIGNED BY: TRIET LY
CHECKED BY: MIKE BETTEGA
REVISED BY
DATE REVISED

LAST REVISION 05-17-10
DATE PLOTTED => 10-JUN-2010
TIME PLOTTED => 14:45

Dist	COUNTY	ROUTE	POST MILES TOTAL PROJECT	SHEET No.	TOTAL SHEETS
11	SD	76	23.1/23.5	16	83

REGISTERED CIVIL ENGINEER 12-14-09 DATE

6-7-10
PLANS APPROVAL DATE

REGISTERED PROFESSIONAL ENGINEER MICHAEL S. BETTEGA No. C 34348 Exp. 9/30/11 CIVIL STATE OF CALIFORNIA

THE STATE OF CALIFORNIA OR ITS OFFICERS OR AGENTS SHALL NOT BE RESPONSIBLE FOR THE ACCURACY OR COMPLETENESS OF SCANNED COPIES OF THIS PLAN SHEET.

NOTE:

FOR ACCURATE RIGHT OF WAY AND ACCESS DATA,
CONTACT RIGHT OF WAY ENGINEERING AT THE DISTRICT OFFICE.

Pala

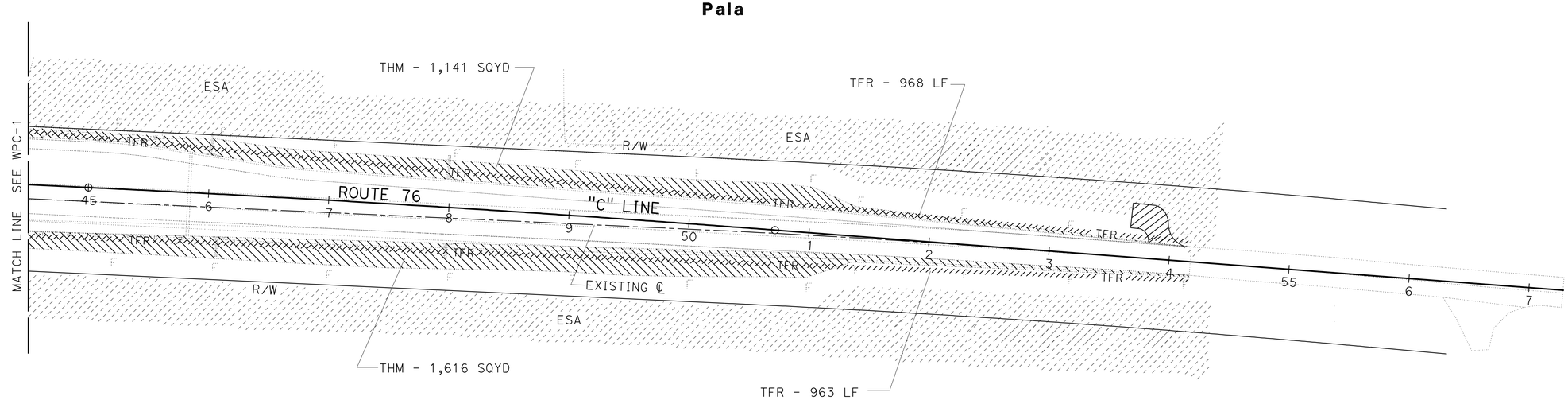

WATER POLLUTION CONTROL WORK			
SHEET NUMBER	TEMPORARY FIBER ROLL	TEMPORARY Const ENTRANCE (TYPE 1)	TEMPORARY HYDRAULIC MULCH
	LF	EA	SQYD
WPC-1	706	1	1407
WPC-2	1931	1	2757
TOTAL	2637	2	4164

THIS PLAN ACCURATE FOR TEMPORARY WATER POLLUTION CONTROL WORK ONLY

TEMPORARY WATER POLLUTION CONTROL PLAN AND QUANTITIES

SCALE: 1" = 50'

WPC-2

STATE OF CALIFORNIA - DEPARTMENT OF TRANSPORTATION
Caltrans
06-DESIGN

FUNCTIONAL SUPERVISOR: GETACHEW ESHETE
CALCULATED-DESIGNED BY: TRIET LY
CHECKED BY: MIKE BETTEGA
REVISED BY
DATE REVISED

LAST REVISION 05-17-10
DATE PLOTTED => 10-JUN-2010
TIME PLOTTED => 14:46

Dist	COUNTY	ROUTE	POST MILES TOTAL PROJECT	SHEET No.	TOTAL SHEETS
11	SD	76	23.1/23.5	17	83

REGISTERED CIVIL ENGINEER DATE 12-14-09

6-7-10
PLANS APPROVAL DATE

REGISTERED PROFESSIONAL ENGINEER MICHAEL S. BETTEGA No. C 34348 Exp. 9/30/11 CIVIL STATE OF CALIFORNIA

THE STATE OF CALIFORNIA OR ITS OFFICERS OR AGENTS SHALL NOT BE RESPONSIBLE FOR THE ACCURACY OR COMPLETENESS OF SCANNED COPIES OF THIS PLAN SHEET.

NOTES:

1. FOR ACCURATE RIGHT OF WAY AND ACCESS DATA, CONTACT RIGHT OF WAY ENGINEERING AT THE DISTRICT OFFICE.
2. APPLY EROSION CONTROL (COMPOST BLANKET TO A MINIMUM DEPTH OF 1")

LEGEND

EROSION CONTROL TYPE 1 - ROADSIDE SLOPES

FR FIBER ROLLS

EROSION CONTROL (HYDROSEED)(TYPE 1)
EROSION CONTROL (COMPOST BLANKET)

EROSION CONTROL TYPE 2 - STREAMBED AREA

WILLOW, POPULUS AND BACCHARIS CUTTINGS (SEE PLANTING PLANS)

EROSION CONTROL (HYDROSEED)(TYPE 2)

ABBREVIATION

EC - EROSION CONTROL

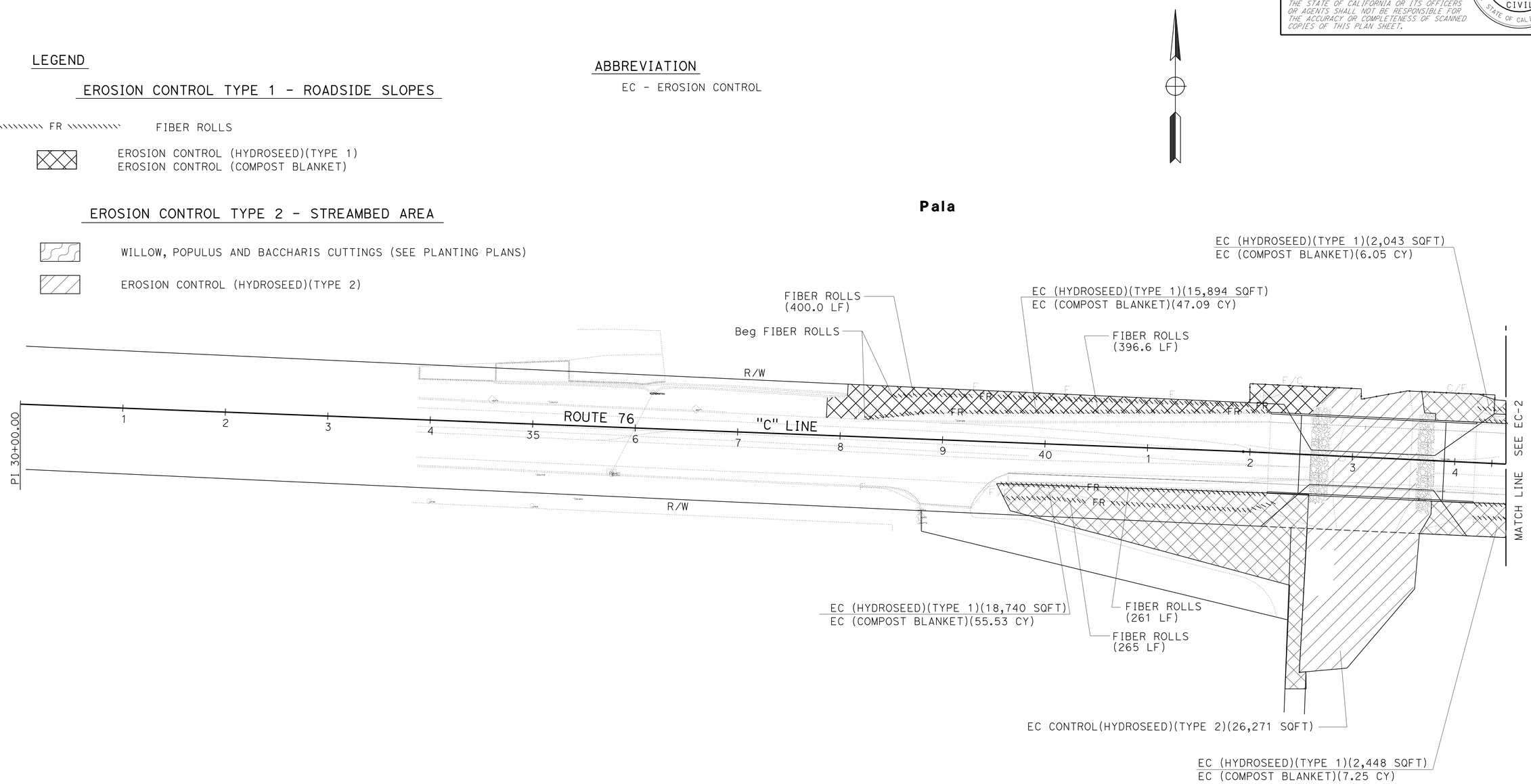

THIS PLAN ACCURATE FOR EROSION CONTROL WORK ONLY

EROSION CONTROL PLAN

SCALE: 1" = 50'

EC-1

STATE OF CALIFORNIA - DEPARTMENT OF TRANSPORTATION
Caltrans
06-DESIGN

FUNCTIONAL SUPERVISOR: GETACHEW ESHETE

CALCULATED-DESIGNED BY: TRIET LY
CHECKED BY: MIKE BETTEGA

REVISED BY
DATE REVISED

LAST REVISION 05-17-10
DATE PLOTTED => 10-JUN-2010
TIME PLOTTED => 14:46

Dist	COUNTY	ROUTE	POST MILES TOTAL PROJECT	SHEET No.	TOTAL SHEETS
11	SD	76	23.1/23.5	18	83

REGISTERED CIVIL ENGINEER DATE 12-14-09

6-7-10
PLANS APPROVAL DATE

REGISTERED PROFESSIONAL ENGINEER MICHAEL S. BETTEGA No. C 34348 Exp. 9/30/11 CIVIL STATE OF CALIFORNIA

THE STATE OF CALIFORNIA OR ITS OFFICERS OR AGENTS SHALL NOT BE RESPONSIBLE FOR THE ACCURACY OR COMPLETENESS OF SCANNED COPIES OF THIS PLAN SHEET.

NOTE:

1. FOR ACCURATE RIGHT OF WAY AND ACCESS DATA, CONTACT RIGHT OF WAY ENGINEERING AT THE DISTRICT OFFICE.

Pala

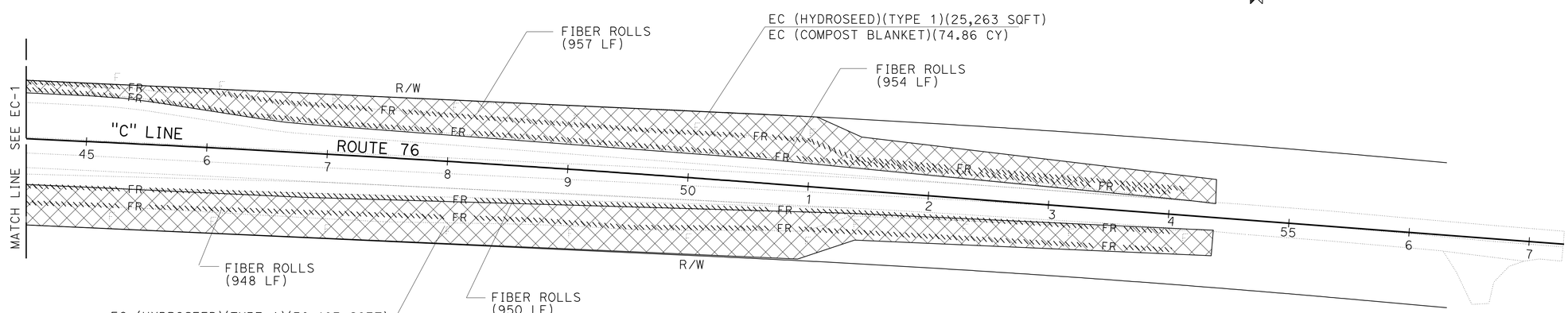

THIS PLAN ACCURATE FOR EROSION CONTROL WORK ONLY

EROSION CONTROL PLAN

SCALE: 1" = 50'

EC-2

REVISED BY	DATE REVISED

TRIET LY — MIKE BETTEGA

CALCULATED-DESIGNED BY / CHECKED BY

FUNCTIONAL SUPERVISOR: GETACHEW ESHETE

STATE OF CALIFORNIA - DEPARTMENT OF TRANSPORTATION

Caltrans® 06-DESIGN

LAST REVISION 05-17-10 | DATE PLOTTED => 10-JUN-2010 | TIME PLOTTED => 14:46

Dist	COUNTY	ROUTE	POST MILES TOTAL PROJECT	SHEET No.	TOTAL SHEETS
11	SD	76	23.1/23.5	19	83

Michael S. Bettega 12-14-09
REGISTERED CIVIL ENGINEER DATE

6-7-10
PLANS APPROVAL DATE

REGISTERED PROFESSIONAL ENGINEER MICHAEL S. BETTEGA No. C 34348 Exp. 9/30/11 CIVIL STATE OF CALIFORNIA

THE STATE OF CALIFORNIA OR ITS OFFICERS OR AGENTS SHALL NOT BE RESPONSIBLE FOR THE ACCURACY OR COMPLETENESS OF SCANNED COPIES OF THIS PLAN SHEET.

EROSION CONTROL QUANTITIES

SHEET NUMBER	EROSION CONTROL (N)		EROSION CONTROL (COMPOST BLANKET)	FIBER ROLLS	EROSION CONTROL (HYDROSEED)	
	TYPE 1	TYPE 2			TYPE 1	TYPE 2
	ACRE	ACRE	CY	LF	SQFT	SQFT
EROSION CONTROL TYPE 1 - ROADSIDE SLOPES (N)						
EC-1	0.90	-	115.92	1323	39125	-
EC-2	1.28	-	164.95	3809	55666	-
EROSION CONTROL TYPE 2 - STREAMBED AREA (N)						
EC-1	-	0.61	-	-	-	26271
EC-2	-	-	-	-	-	-
SUBTOTAL	2.18	0.61	280.87	5132	94791	26271
TOTAL	2.79		280.87	5132	121062	

(N) - NOT A SEPARATE PAY ITEM, FOR INFORMATION ONLY.

EROSION CONTROL (HYDROSEED) COMPONENT QUANTITIES SUMMARY (N)

	AREA ACRE	TACKIFIER (PLANT BASED) LB	FIBER LB	HUMATE LB	PURE LIVE SEED (TYPE 1) LB	PURE LIVE SEED (TYPE 2) LB
EC(HYDROSEED)(TYPE 1)	2.18	10.9	3924	981	56.7	
EC(HYDROSEED)(TYPE 2)	0.61	122.0	1098	274.5		5.5
TOTAL	2.79	132.9	5002	1255.5	56.7	5.5

(N) - NOT A SEPARATE PAY ITEM, FOR INFORMATION ONLY.

EROSION CONTROL QUANTITIES

ECQ-1

STATE OF CALIFORNIA - DEPARTMENT OF TRANSPORTATION
Caltrans
06-DESIGN

FUNCTIONAL SUPERVISOR: GETACHEW ESHETE
CALCULATED-DESIGNED BY: TRIET LY
CHECKED BY: MIKE BETTEGA
REVISED BY
DATE REVISED

LAST REVISION 05-17-10
DATE PLOTTED => 14-JUN-2010
TIME PLOTTED => 06:56

Dist	COUNTY	ROUTE	POST MILES TOTAL PROJECT	SHEET No.	TOTAL SHEETS
11	SD	76	23.1/23.5	20	83

REGISTERED CIVIL ENGINEER 12-14-09 DATE

6-7-10
PLANS APPROVAL DATE

REGISTERED PROFESSIONAL ENGINEER
MICHAEL S. BETTEGA
No. C 34348
Exp. 9/30/11
CIVIL
STATE OF CALIFORNIA

THE STATE OF CALIFORNIA OR ITS OFFICERS OR AGENTS SHALL NOT BE RESPONSIBLE FOR THE ACCURACY OR COMPLETENESS OF SCANNED COPIES OF THIS PLAN SHEET.

NOTE:

1. FOR ACCURATE RIGHT OF WAY AND ACCESS DATA, CONTACT RIGHT OF WAY ENGINEERING AT THE DISTRICT OFFICE.

Pala

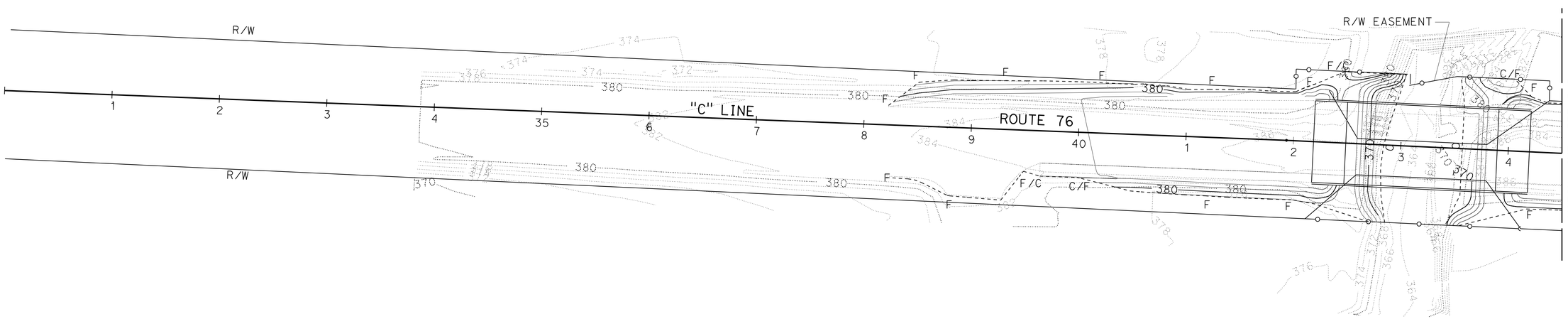

THIS PLAN ACCURATE FOR CONTOUR GRADING WORK ONLY

CONTOUR GRADING

SCALE: 1" = 50'

G-1

STATE OF CALIFORNIA - DEPARTMENT OF TRANSPORTATION
Caltrans
06-DESIGN

FUNCTIONAL SUPERVISOR: GETACHEW ESHETE
CALCULATED-DESIGNED BY: TRIET LY
CHECKED BY: MIKE BETTEGA
REVISED BY
DATE REVISED

LAST REVISION 05-17-10
DATE PLOTTED => 10-JUN-2010
TIME PLOTTED => 14:46

Dist	COUNTY	ROUTE	POST MILES TOTAL PROJECT	SHEET No.	TOTAL SHEETS
11	SD	76	23.1/23.5	21	83

Michael S. Bettega 12-14-09
REGISTERED CIVIL ENGINEER DATE

6-7-10
PLANS APPROVAL DATE

REGISTERED PROFESSIONAL ENGINEER
MICHAEL S. BETTEGA
No. C 34348
Exp. 9/30/11
CIVIL
STATE OF CALIFORNIA

THE STATE OF CALIFORNIA OR ITS OFFICERS OR AGENTS SHALL NOT BE RESPONSIBLE FOR THE ACCURACY OR COMPLETENESS OF SCANNED COPIES OF THIS PLAN SHEET.

NOTE:

1. FOR ACCURATE RIGHT OF WAY AND ACCESS DATA, CONTACT RIGHT OF WAY ENGINEERING AT THE DISTRICT OFFICE.

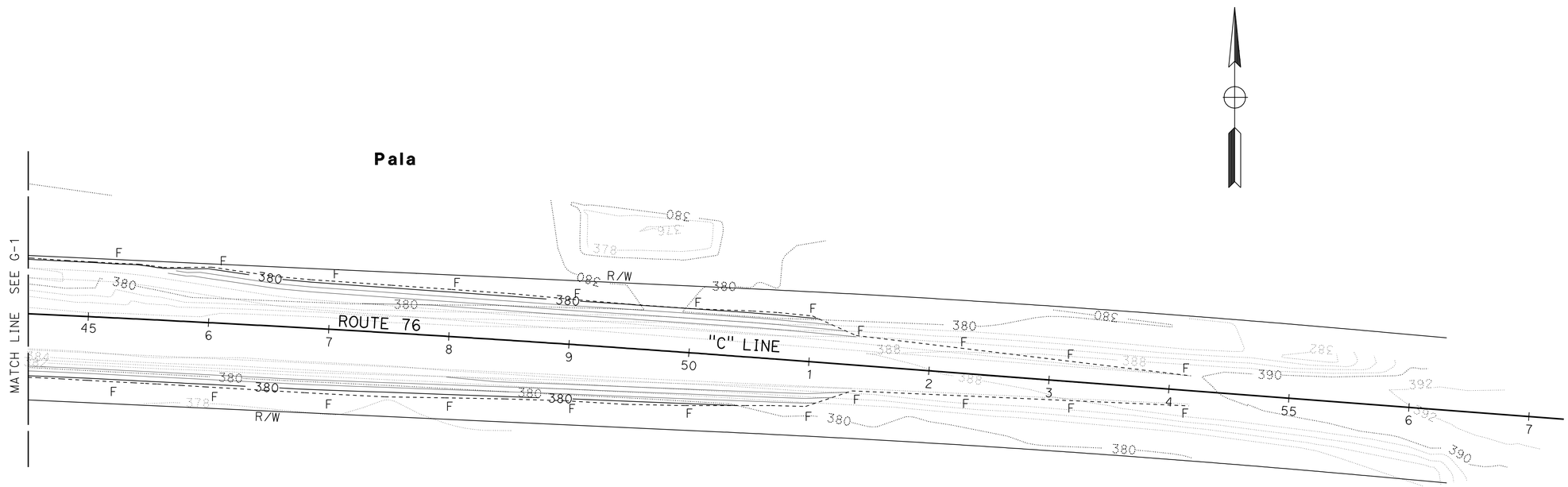

THIS PLAN ACCURATE FOR CONTOUR GRADING WORK ONLY.

CONTOUR GRADING

SCALE: 1" = 50'

G-2

STATE OF CALIFORNIA - DEPARTMENT OF TRANSPORTATION
Caltrans
06-DESIGN

FUNCTIONAL SUPERVISOR: GETACHEW ESHETE

CALCULATED-DESIGNED BY: TRIET LY
CHECKED BY: MIKE BETTEGA

REVISED BY
DATE REVISED

LAST REVISION 12-21-09
DATE PLOTTED => 10-JUN-2010
TIME PLOTTED => 14:46

Dist	COUNTY	ROUTE	POST MILES TOTAL PROJECT	SHEET No.	TOTAL SHEETS
11	SD	76	23.1/23.5	22	83

Michael S. Bettega 12-14-09
REGISTERED CIVIL ENGINEER DATE

6-7-10
PLANS APPROVAL DATE

REGISTERED PROFESSIONAL ENGINEER
MICHAEL S. BETTEGA
No. C 34348
Exp. 9/30/11
CIVIL
STATE OF CALIFORNIA

THE STATE OF CALIFORNIA OR ITS OFFICERS OR AGENTS SHALL NOT BE RESPONSIBLE FOR THE ACCURACY OR COMPLETENESS OF SCANNED COPIES OF THIS PLAN SHEET.

NOTE:

1. FOR ACCURATE RIGHT OF WAY AND ACCESS DATA, CONTACT RIGHT OF WAY ENGINEERING AT THE DISTRICT OFFICE.

LEGEND

DRAINAGE SYSTEM NUMBER

DRAINAGE UNIT

ROCK SLOPE PROTECTION

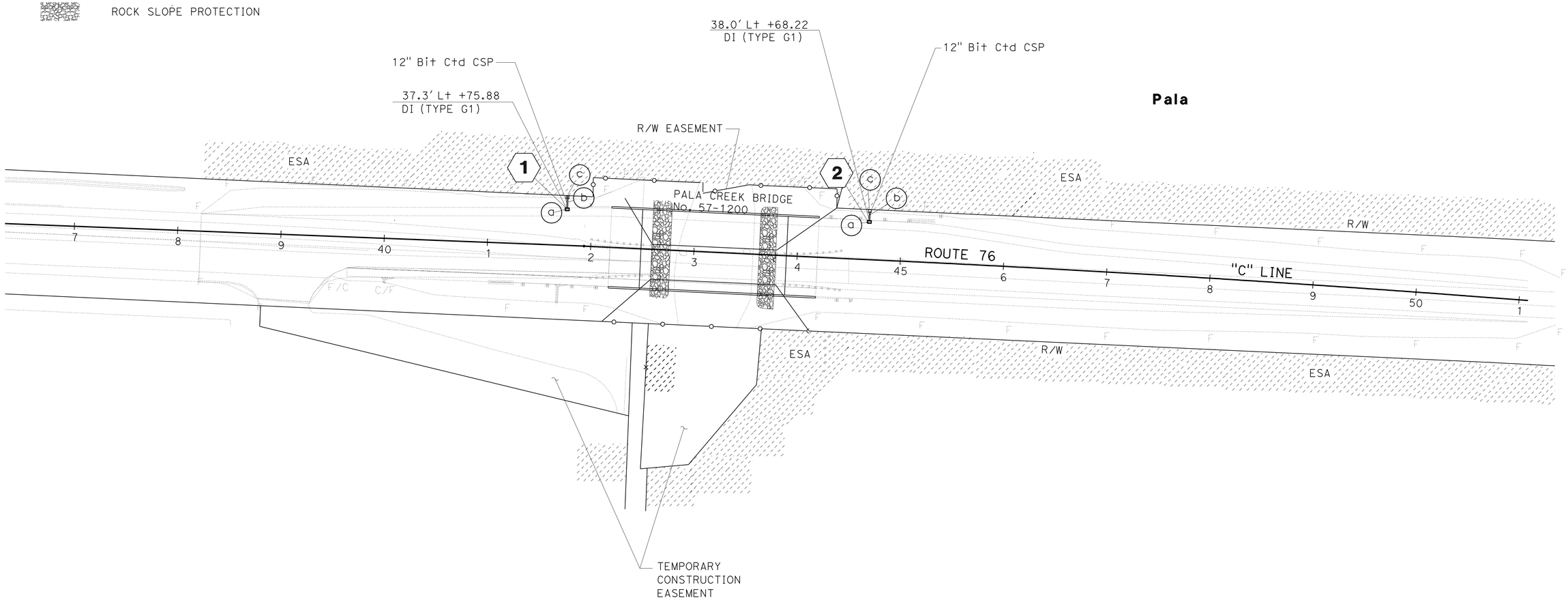

THIS PLAN ACCURATE FOR DRAINAGE WORK ONLY

DRAINAGE PLAN

SCALE: 1" = 50'

D-1

STATE OF CALIFORNIA - DEPARTMENT OF TRANSPORTATION
Caltrans
06-DESIGN

FUNCTIONAL SUPERVISOR: GETACHEW ESHETE

CALCULATED-DESIGNED BY: TRIET LY
CHECKED BY: MIKE BETTEGA

REVISED BY
DATE REVISED

LAST REVISION 05-17-10
DATE PLOTTED => 10-JUN-2010
TIME PLOTTED => 14:46

Dist	COUNTY	ROUTE	POST MILES TOTAL PROJECT	SHEET No.	TOTAL SHEETS
11	SD	76	23.1/23.5	23	83

Michael S. Bettega 12-14-09
REGISTERED CIVIL ENGINEER DATE

6-7-10
PLANS APPROVAL DATE

REGISTERED PROFESSIONAL ENGINEER MICHAEL S. BETTEGA No. C 34348 Exp. 9/30/11 CIVIL STATE OF CALIFORNIA

THE STATE OF CALIFORNIA OR ITS OFFICERS OR AGENTS SHALL NOT BE RESPONSIBLE FOR THE ACCURACY OR COMPLETENESS OF SCANNED COPIES OF THIS PLAN SHEET.

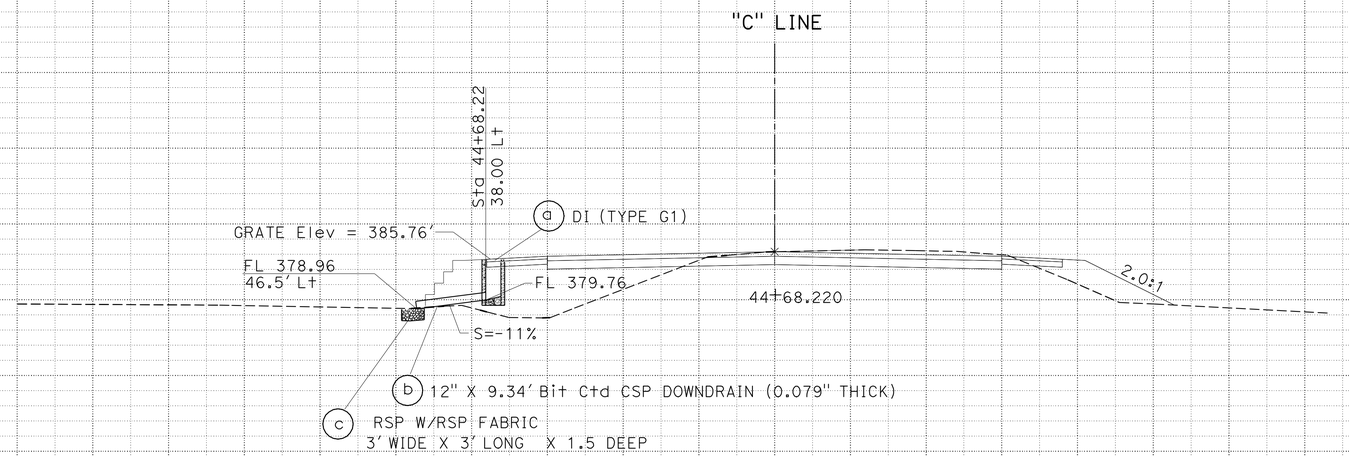

DRAINAGE SYSTEM No. 2

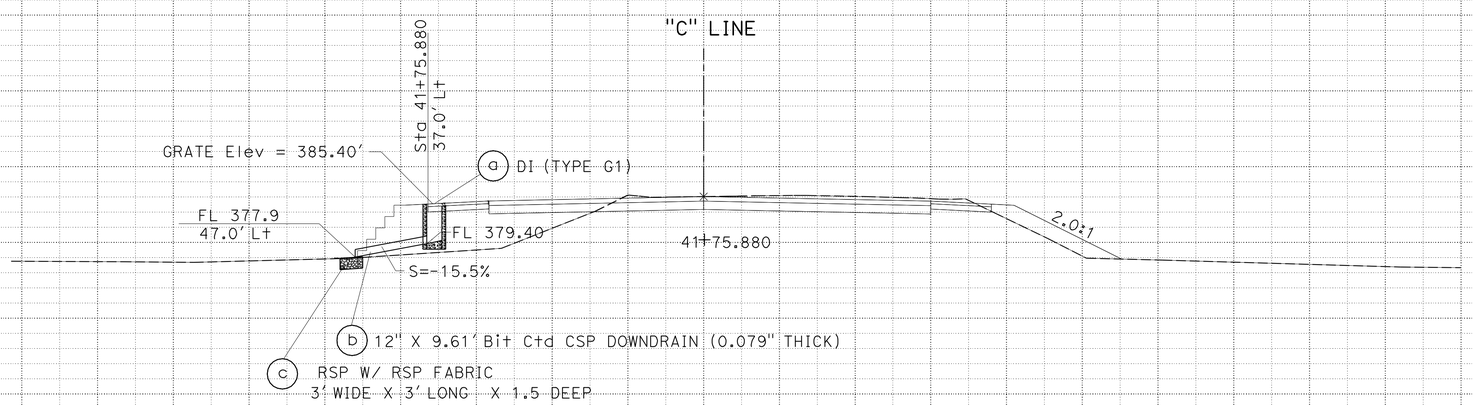

DRAINAGE SYSTEM No. 1

DRAINAGE PROFILE

SCALE: Horiz 1" = 10'
Vert 1" = 10'

DP-1

STATION		TOTAL
CY	Exc	
	Emb	

STATE OF CALIFORNIA - DEPARTMENT OF TRANSPORTATION
Caltrans®
06-DESIGN
FUNCTIONAL SUPERVISOR: GETACHEW ESHETE
CALCULATED-DESIGNED BY: TRIET LY
CHECKED BY: MIKE BETTEGA
REVISED BY
DATE REVISED

LAST REVISION 05-17-10 | DATE PLOTTED => 10-JUN-2010 | TIME PLOTTED => 14:46

Dist	COUNTY	ROUTE	POST MILES TOTAL PROJECT	SHEET No.	TOTAL SHEETS
11	SD	76	23.1/23.5	24	83

Michael S. Bettega 12-14-09
REGISTERED CIVIL ENGINEER DATE

6-7-10
PLANS APPROVAL DATE

REGISTERED PROFESSIONAL ENGINEER
MICHAEL S. BETTEGA
No. C 34348
Exp. 9/30/11
CIVIL
STATE OF CALIFORNIA

THE STATE OF CALIFORNIA OR ITS OFFICERS OR AGENTS SHALL NOT BE RESPONSIBLE FOR THE ACCURACY OR COMPLETENESS OF SCANNED COPIES OF THIS PLAN SHEET.

NOTES:

1. FOR ACCURATE RIGHT OF WAY AND ACCESS DATA, CONTACT RIGHT OF WAY ENGINEERING AT THE DISTRICT OFFICE.
2. LOCATIONS OF UTILITY FACILITIES SHOWN WERE OBTAINED FROM OWNER'S RECORDS AND/OR STATE SURVEYS.

LEGEND	UTILITIES	OWNER
—e—	BURIED ELECTRIC LINE	SAN DIEGO GAS AND ELECTRIC
—t—	OVERHEAD TELEPHONE LINE	AT&T
—o——o—	PERMANENT EASEMENT	

Pala

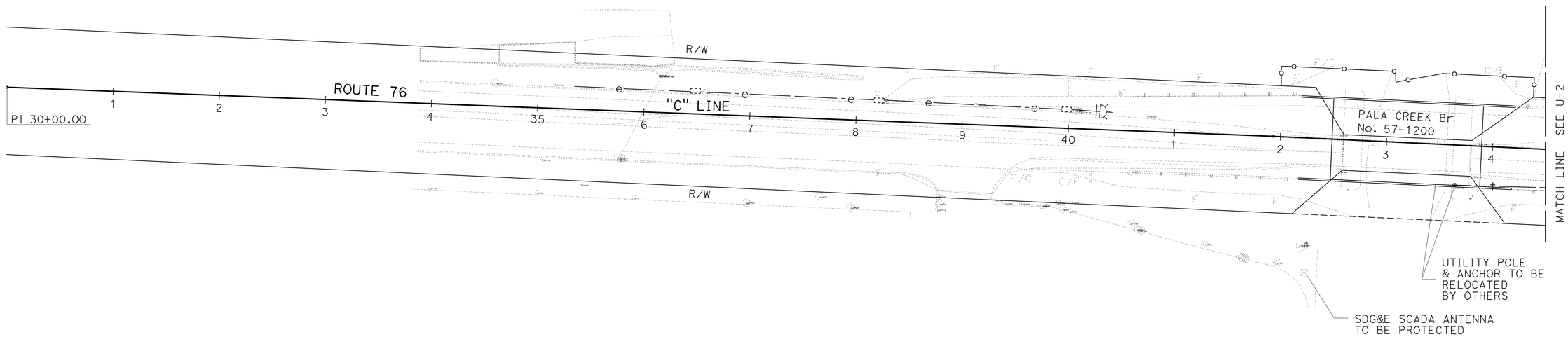

THIS PLAN ACCURATE FOR UTILITY INFORMATION ONLY

UTILITIES

SCALE: 1" = 50'

U-1

STATE OF CALIFORNIA - DEPARTMENT OF TRANSPORTATION
Caltrans
06-DESIGN

FUNCTIONAL SUPERVISOR: GETACHEW ESHETE
CALCULATED-DESIGNED BY: TRIET LY
CHECKED BY: MIKE BETTEGA
REVISED BY
DATE REVISED

LAST REVISION 05-17-10
DATE PLOTTED => 10-JUN-2010
TIME PLOTTED => 14:46

Dist	COUNTY	ROUTE	POST MILES TOTAL PROJECT	SHEET No.	TOTAL SHEETS
11	SD	76	23.1/23.5	25	83

Michael S. Bettega 12-14-09
REGISTERED CIVIL ENGINEER DATE

6-7-10
PLANS APPROVAL DATE

REGISTERED PROFESSIONAL ENGINEER
MICHAEL S. BETTEGA
No. C 34348
Exp. 9/30/11
CIVIL
STATE OF CALIFORNIA

THE STATE OF CALIFORNIA OR ITS OFFICERS OR AGENTS SHALL NOT BE RESPONSIBLE FOR THE ACCURACY OR COMPLETENESS OF SCANNED COPIES OF THIS PLAN SHEET.

NOTES:

1. FOR ACCURATE RIGHT OF WAY AND ACCESS DATA, CONTACT RIGHT OF WAY ENGINEERING AT THE DISTRICT OFFICE.
2. LOCATIONS OF UTILITY FACILITIES SHOWN WERE OBTAINED FROM OWNER'S RECORDS AND/OR STATE SURVEYS.

Pala

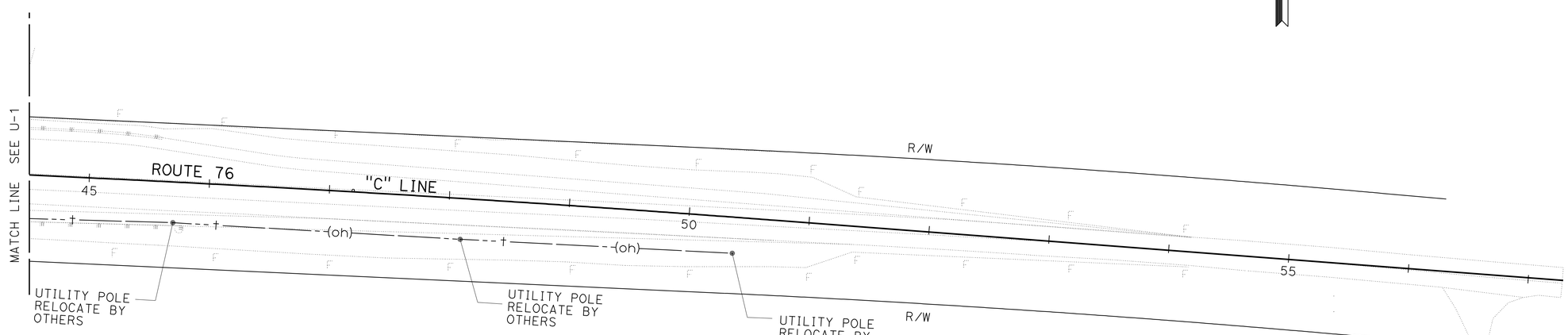

THIS PLAN ACCURATE FOR UTILITY INFORMATION ONLY

UTILITIES

SCALE: 1" = 50'

U-2

STATE OF CALIFORNIA - DEPARTMENT OF TRANSPORTATION
Caltrans
06-DESIGN

FUNCTIONAL SUPERVISOR: GETACHEW ESHETE
CALCULATED-DESIGNED BY: TRIET LY
CHECKED BY: MIKE BETTEGA
REVISED BY
DATE REVISED

LAST REVISION 12-21-09
DATE PLOTTED => 10-JUN-2010
TIME PLOTTED => 14:46

Dist	COUNTY	ROUTE	POST MILES TOTAL PROJECT	SHEET No.	TOTAL SHEETS
11	SD	76	23.1/23.5	26	83

Hassan Taha 12-10-09
REGISTERED CIVIL ENGINEER DATE

6-7-10
PLANS APPROVAL DATE

REGISTERED PROFESSIONAL ENGINEER HASSAN M. TAHA No. 60130 Exp 06/30/10 CIVIL STATE OF CALIFORNIA

THE STATE OF CALIFORNIA OR ITS OFFICERS OR AGENTS SHALL NOT BE RESPONSIBLE FOR THE ACCURACY OR COMPLETENESS OF SCANNED COPIES OF THIS PLAN SHEET.

NOTES:

1. LOCATIONS OF CONSTRUCTION AREA SIGNS SHOWN ARE APPROXIMATE, EXACT LOCATIONS TO BE DETERMINED BY THE ENGINEER.
2. SEE STAGE CONSTRUCTION AND TRAFFIC HANDLING PLANS FOR ADDITIONAL CONSTRUCTION AREA SIGNS.
3. FOR ADDITIONAL SIGN SPECIFICATIONS REFER TO CALIFORNIA MUTCD (MANUAL ON UNIFORM TRAFFIC CONTROL DEVICES). (CA) INDICATES STANDARD CALIFORNIA SIGN.
4. EXISTING UTILITIES ARE NOT SHOWN ON THESE PLANS. THE CONTRACTOR SHALL VERIFY LOCATIONS OF EXISTING UTILITIES AND ADJUST SIGN LOCATION PER THE DETERMINATION OF THE ENGINEER.

LEGEND:

/ CONSTRUCTION AREA SIGN (ONE POST/ TWO POST)

(x) CONSTRUCTION AREA SIGNS No.

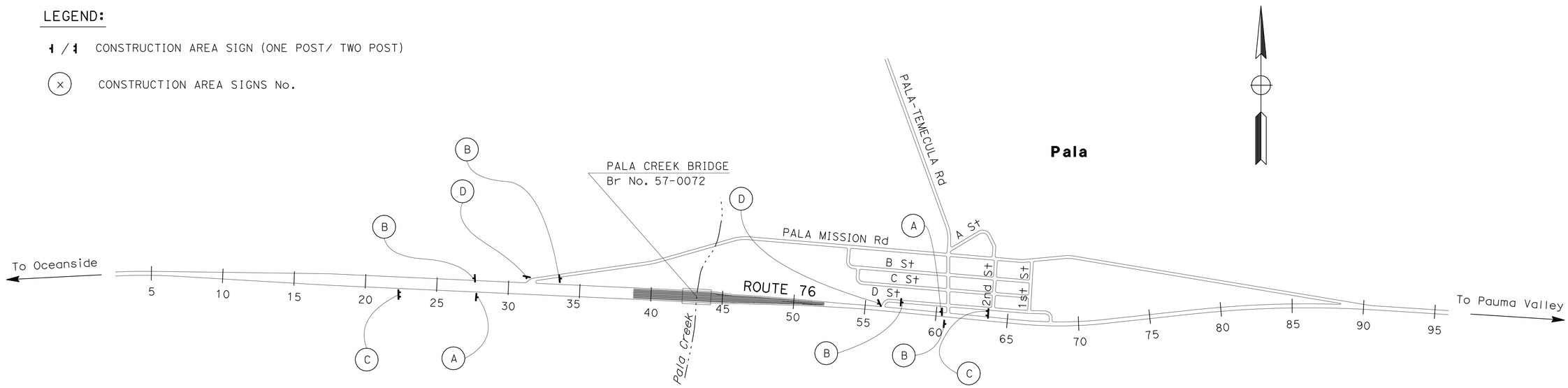

TYPICAL- PLACEMENT OF TRAFFIC PLASTIC DRUM

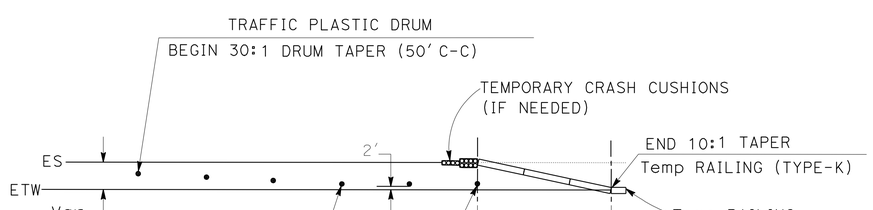

STATIONARY CONSTRUCTION AREA SIGNS

SIGN No.	SIGN CODE	SIGN MESSAGE	PANEL SIZE (In)	No. OF POST AND SIZE (In)	No. OF SIGNS
A	C23(CA)	ROAD WORK AHEAD	48" x 48"	1 - 6" x 6"	2
B	C14(CA)	END ROAD WORK	48" x 24"	1 - 4" x 4"	4
C	C40(CA)	TRAFFIC FINES ARE DOUBLED IN CONSTRUCTION ZONES	72" x 36"	2 - 4" x 6"	2
D	C23(CA)	ROAD WORK AHEAD	30" x 30"	1 - 4" x 4"	2

THIS PLAN ACCURATE FOR CONSTRUCTION AREA SIGN WORK ONLY

CONSTRUCTION AREA SIGNS

NO SCALE

CS-1

REVISED BY	DATE REVISED

CALCULATED-DESIGNED BY	CHECKED BY
MUNIR ASSAF	HASSAN TAHA

SUPERVISING ENGINEER: MOHAMMED QATAMI

STATE OF CALIFORNIA - DEPARTMENT OF TRANSPORTATION
Caltrans 06-TRAFFIC DESIGN

LAST REVISION 12-22-09 | DATE PLOTTED => 10-JUN-2010 | TIME PLOTTED => 14:42

Dist	COUNTY	ROUTE	POST MILES TOTAL PROJECT	SHEET No.	TOTAL SHEETS
11	SD	76	23.1/23.5	27	83

Hassan Taha 12-10-09
REGISTERED CIVIL ENGINEER DATE

6-7-10
PLANS APPROVAL DATE

REGISTERED PROFESSIONAL ENGINEER HASSAN M. TAHA No. 60130 Exp 06/30/10 CIVIL STATE OF CALIFORNIA

THE STATE OF CALIFORNIA OR ITS OFFICERS OR AGENTS SHALL NOT BE RESPONSIBLE FOR THE ACCURACY OR COMPLETENESS OF SCANNED COPIES OF THIS PLAN SHEET.

LEGEND

- DIRECTION OF TRAFFIC OR DIRECTION OF DETOUR
- TEMPORARY RAILING (TYPE K)
- CHANNELIZER (SURFACE MOUNTED)
- TRAFFIC PLASTIC DRUMS
- (C-C) CENTER TO CENTER
- Temp CRASH CUSHION
- XX TEMPORARY TRAFFIC STRIPE DETAIL No.
- CONSTRUCTION AREA SIGN (ONE POST/ TWO POST)
- X CONSTRUCTION AREA SIGNS No.
- CONSTRUCTION AREA

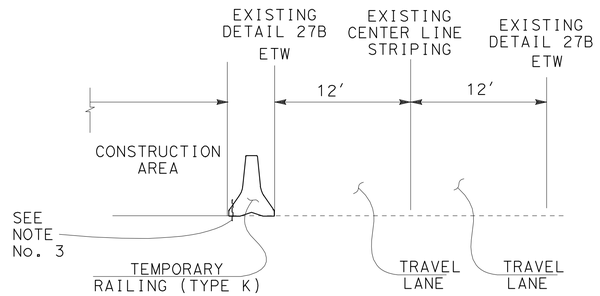

SECTION A-A

TEMPORARY RAILING (TYPE K) PLACEMENT

NO SCALE

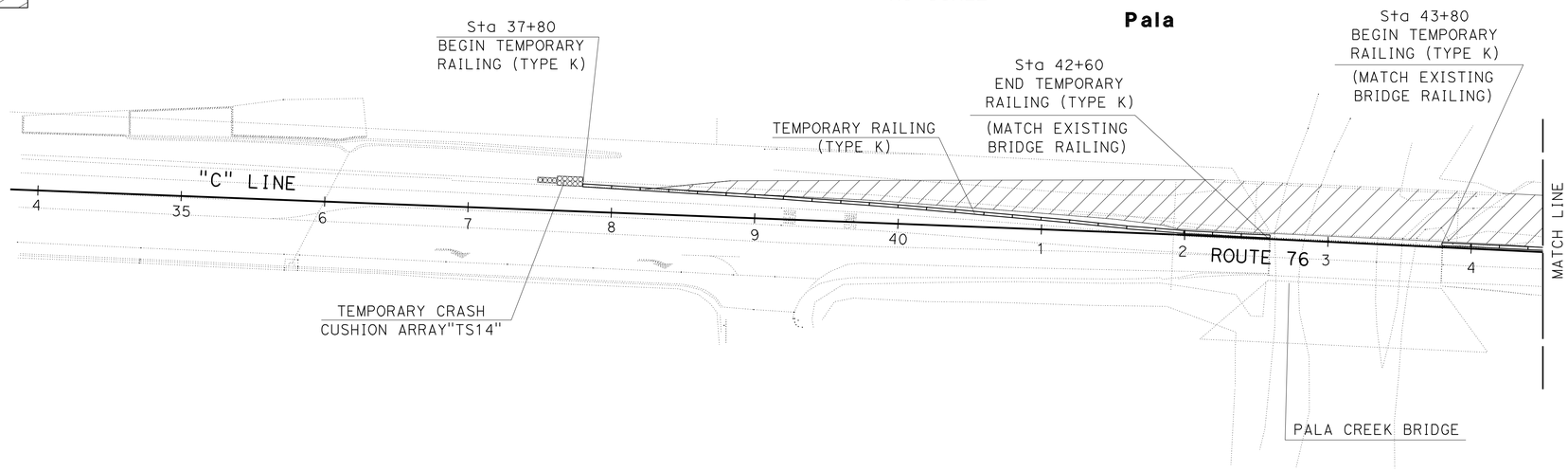

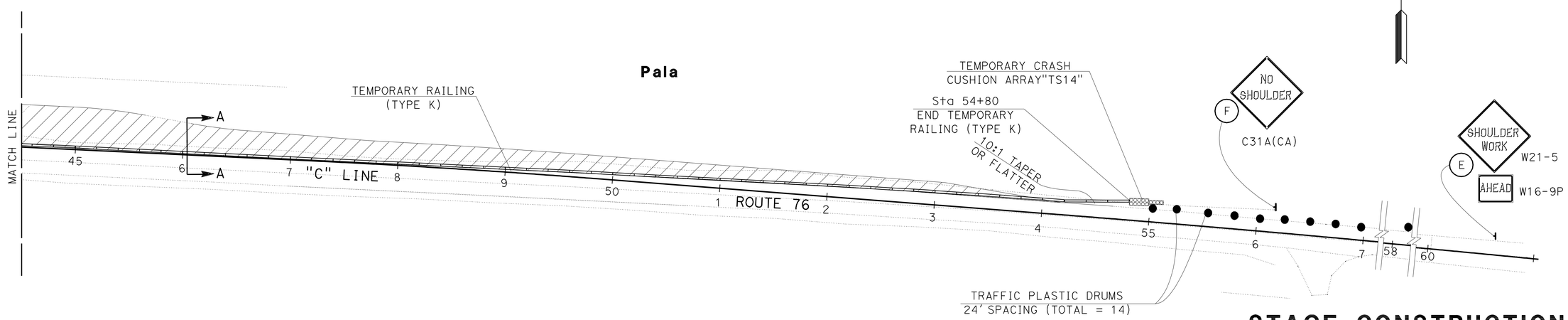

NOTES:

1. LOCATIONS OF CONSTRUCTION AREA SIGNS SHOWN ARE APPROXIMATE, EXACT LOCATIONS TO BE DETERMINED BY THE ENGINEER.
2. FOR ADDITIONAL STATIONARY MOUNTED CONSTRUCTION AREA SIGNS SEE CS-1 SHEET.
3. REFER TO SHEET T3 OF THE STANDARD PLANS FOR PINNING DETAILS OF THE TEMPORARY RAILING TYPE K.
4. FOR ADDITIONAL SIGN SPECIFICATIONS REFER TO CALIFORNIA MUTCD (MANUAL ON UNIFORM TRAFFIC CONTROL DEVICES). (CA) INDICATES STANDARD CALIFORNIA SIGN.
5. EXISTING UTILITIES ARE NOT SHOWN ON THESE PLANS. THE CONTRACTOR SHALL VERIFY LOCATIONS OF EXISTING UTILITIES AND ADJUST SIGN LOCATION PER THE DETERMINATION OF THE ENGINEER.

THIS PLAN IS ACCURATE FOR STAGE CONSTRUCTION AND TRAFFIC HANDLING WORK ONLY

STAGE CONSTRUCTION AND TRAFFIC HANDLING PLAN (STAGE 1)

SCALE: 1" = 50'

SC-1

REVISED BY	DATE REVISED
MUNIR ASSAF	HASSAN TAHA
CALCULATED-DESIGNED BY	CHECKED BY
FUNCTIONAL SUPERVISOR	MOHAMMED QATAMI

STATE OF CALIFORNIA - DEPARTMENT OF TRANSPORTATION
Caltrans 06-TRAFFIC DESIGN

LAST REVISION 12-22-09 | DATE PLOTTED => 10-JUN-2010 | TIME PLOTTED => 14:42

Dist	COUNTY	ROUTE	POST MILES TOTAL PROJECT	SHEET No.	TOTAL SHEETS
11	SD	76	23.1/23.5	28	83

Hassan Taha 12-10-09
REGISTERED CIVIL ENGINEER DATE

6-7-10
PLANS APPROVAL DATE

REGISTERED PROFESSIONAL ENGINEER HASSAN M. TAHA No. 60130 Exp 06/30/10 CIVIL STATE OF CALIFORNIA

THE STATE OF CALIFORNIA OR ITS OFFICERS OR AGENTS SHALL NOT BE RESPONSIBLE FOR THE ACCURACY OR COMPLETENESS OF SCANNED COPIES OF THIS PLAN SHEET.

LEGEND

CONSTRUCTION AREA

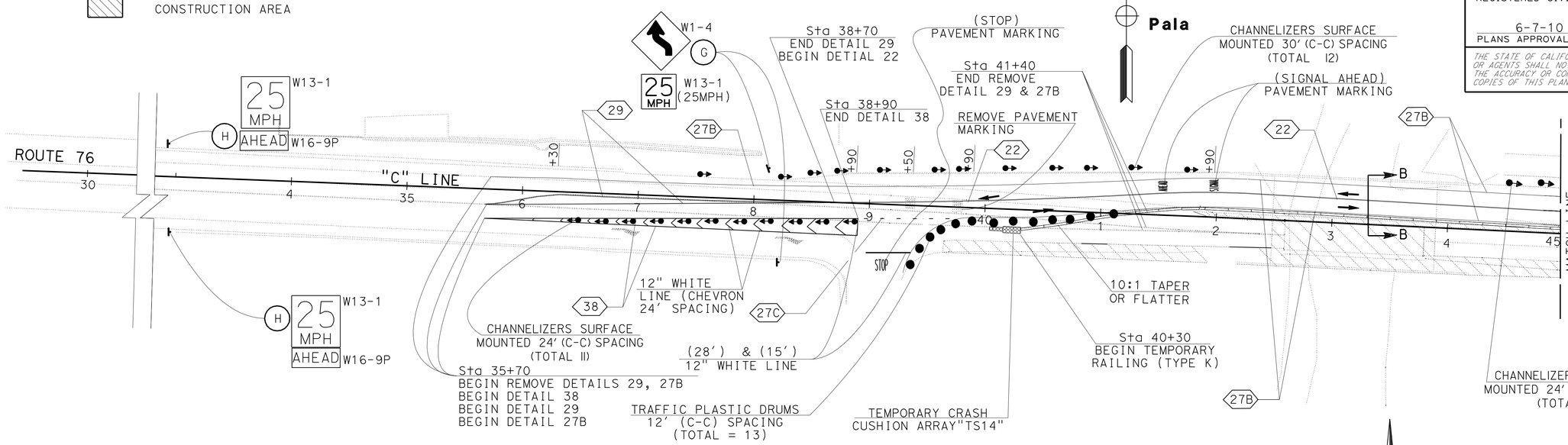

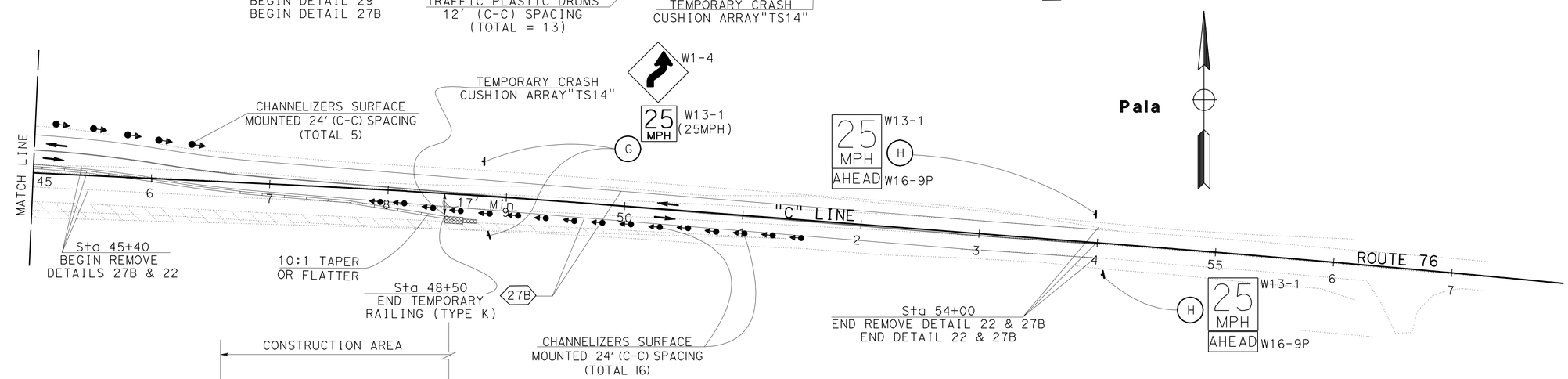

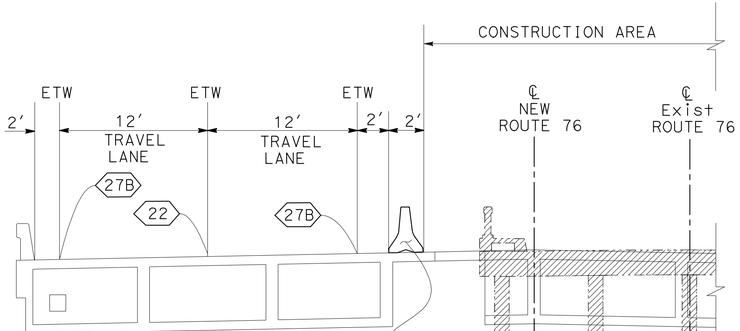

SECTION B-B

TEMPORARY RAILING (TYPE K) PLACEMENT

NO SCALE

THIS PLAN ACCURATE FOR STAGE CONSTRUCTION AND TRAFFIC HANDLING WORK ONLY

STAGE CONSTRUCTION AND TRAFFIC HANDLING PLAN (STAGE 2)

SCALE: 1" = 50'

SC-2

STATE OF CALIFORNIA - DEPARTMENT OF TRANSPORTATION
Caltrans 06-TRAFFIC DESIGN

FUNCTIONAL SUPERVISOR: MOHAMMED QATAMI
CALCULATED-DESIGNED BY: MUNIR ASSAF
CHECKED BY: HASSAN TAHA
REVISED BY / DATE REVISED

LAST REVISION 12-22-09
DATE PLOTTED => 10-JUN-2010
TIME PLOTTED => 14:42

Dist	COUNTY	ROUTE	POST MILES TOTAL PROJECT	SHEET No.	TOTAL SHEETS
11	SD	76	23.1/23.5	29	83

Hassan Taha 12-10-09
REGISTERED CIVIL ENGINEER DATE

6-7-10
PLANS APPROVAL DATE

REGISTERED PROFESSIONAL ENGINEER HASSAN M. TAHA No. 60130 Exp 06/30/10 CIVIL STATE OF CALIFORNIA

THE STATE OF CALIFORNIA OR ITS OFFICERS OR AGENTS SHALL NOT BE RESPONSIBLE FOR THE ACCURACY OR COMPLETENESS OF SCANNED COPIES OF THIS PLAN SHEET.

STATIONARY MOUNTED CONSTRUCTION AREA SIGNS

SHEET No.	SIGN No.	SIGN CODE	PANEL SIZE (In)	No. OF POST AND SIZE (In)	DESCRIPTION	No. OF SIGNS
SC-1	F	C31A(CA)	48" X 48"	1 - 6" X 6"	NO SHOULDER	1
	E	W21-5	36" X 36"	1 - 6" X 6"	SHOULDER WORK	1
		W16-9P	36" X 20"		AHEAD	
SC-2	G	W1-4	48" X 48"	1 - 6" X 6"	REVERSE CURVE (SYMBOL)	4
		W13-1	24" X 24"		SPEED LIMIT 25 MPH	
	H	W13-1	24" X 24"	1 - 6" X 6"	SPEED LIMIT 25 MPH	4
		W16-9P	24" X 10"		AHEAD	

FOR ADDITIONAL CONSTRUCTION AREA SIGNS SEE SHEET CS-1

TEMPORARY RAILING (TYPE K)

SHEET No.	LOCATION	LF
SC-1	Sta 37+80 TO 42+60	480
	Sta 43+80 TO 54+80	1100
SC-2	Sta 40+30 TO 48+50	820
TOTAL		2400

CHANNELIZER (SURFACE MOUNTED)

SHEET No.	EA
SC-2	46
TOTAL	46

TRAFFIC PLASTIC DRUM

SHEET No.	(EA)
SC-1	14
SC-2	13
TOTAL	27

TEMPORARY CRASH CUSHION MODULE

SHEET No.	EA	TYPE
SC-1	28	TS14
SC-2	28	TS14
TOTAL	56	

PAVEMENT DELINEATION (STAGE CONSTRUCTION)

SHEET No.	LOCATION	DETAIL No.	TEMPORARY PAVEMENT MARKER	REMOVE PAVEMENT MARKER (N)	TEMPORARY TRAFFIC STRIPE (PAINT) (4")	TEMPORARY TRAFFIC STRIPE (PAINT) (8")	REMOVE PAINTED TRAFFIC STRIPE	REMOVE THERMOPLASTIC TRAFFIC STRIPE	TEMPORARY PAVEMENT MARKING (PAINT) DESCRIPTION	TEMPORARY PAVEMENT MARKING (PAINT) SQFT	REMOVE THERMOPLASTIC PAVEMENT MARKING
			EA	EA	LF	LF	LF	LF		SQFT	SQFT
SC-2	Sta 35+70 TO Sta 54+00	27B			1830		1830				
	Sta 35+70 TO Sta 38+70	29	28	28	600		1200				
	Sta 35+70 TO Sta 38+90	38	14	14		320	640		12" CHEVRON LINE	130	130
	Sta 35+70 TO Sta 38+90	38	14	14		320	640		SIGNAL, AHEAD	63	126
	Sta 38+90 TO Sta 39+90	27C			100		25		LIMIT LINE (28') & (15')	43	43
	Sta 38+70 TO Sta 54+00	22	130	130	1530		3060		STOP	22	22
	Sta 39+40 TO Sta 54+00	27B			1460		1460				
	Sta 35+70 TO Sta 41+40	27B					570				
	Sta 45+40 TO Sta 54+00	27B					860				
	Sta 45+40 TO Sta 54+00	22		74				1720			
	Sta 35+70 TO Sta 41+40	29		50				2280			
SUBTOTAL			186		5520	640	10285	4000		258	321
TOTAL			186		6160		10285	4000		258	321

(N) NOT A SEPARATE PAY ITEM. FOR INFORMATION ONLY

STAGE CONSTRUCTION QUANTITIES

SCQ-1

STATE OF CALIFORNIA - DEPARTMENT OF TRANSPORTATION
Caltrans 06-TRAFFIC DESIGN
FUNCTIONAL SUPERVISOR MOHAMMED QATAMI
CALCULATED-DESIGNED BY MUNIR ASSAF
CHECKED BY HASSAN TAHA
REVISED BY
DATE REVISED

LAST REVISION 12-22-09 DATE PLOTTED => 10-JUN-2010 TIME PLOTTED => 14:42

Dist	COUNTY	ROUTE	POST MILES TOTAL PROJECT	SHEET No.	TOTAL SHEETS
11	SD	76	23.1/23.5	30	83

Hassan Taha 12-10-09
REGISTERED CIVIL ENGINEER DATE

6-7-10
PLANS APPROVAL DATE

REGISTERED PROFESSIONAL ENGINEER HASSAN M.TAHA No. 60130 Exp. 06/30/10 CIVIL STATE OF CALIFORNIA

THE STATE OF CALIFORNIA OR ITS OFFICERS OR AGENTS SHALL NOT BE RESPONSIBLE FOR THE ACCURACY OR COMPLETENESS OF SCANNED COPIES OF THIS PLAN SHEET.

LEGEND

- XX — TRAFFIC STRIPE PAVEMENT DELINEATION DETAIL NUMBER
- CHANGE OF TRAFFIC STRIPING DETAIL
- ROADSIDE SIGN
- RELOCATE ROADSIDE SIGN
- REMOVE ROADSIDE SIGN
- THERMOPLASTIC PAVEMENT MARKING (TYPE III ARROW)
- SIGNAL/AHEAD — THERMOPLASTIC PAVEMENT MARKING (SIGNAL, AHEAD)
- OBJECT MARKER (TYPE K, P , L-1...)
- DELINEATORS (CLASS 1,TYPE F)
- XX — ROADSIDE SIGN NUMBER

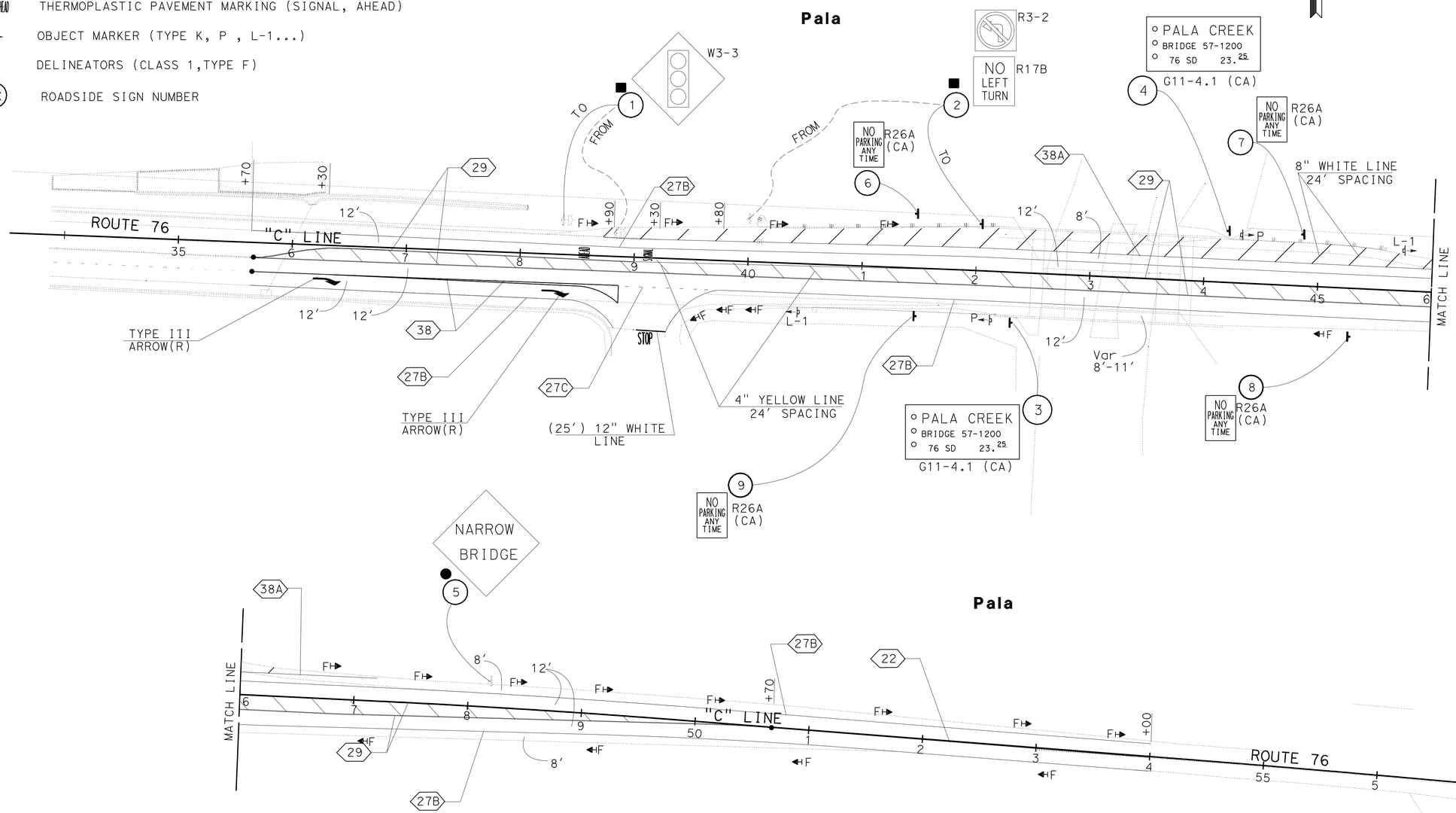

PAVEMENT DELINEATION AND SIGN PLAN

SCALE: 1" = 50'

PD-1

THIS PLAN ACCURATE FOR PAVEMENT DELINEATION AND SIGN WORK ONLY

REVISED BY	DATE REVISED

CALCULATED-DESIGNED BY: MUNIR ASSAF
CHECKED BY: HASSAN TAHA
FUNCTIONAL SUPERVISOR: MOHAMMED QATAMI

STATE OF CALIFORNIA - DEPARTMENT OF TRANSPORTATION
Caltrans
06-TRAFFIC DESIGN

LAST REVISION 12-28-09 | DATE PLOTTED => 10-JUN-2010 | TIME PLOTTED => 14:42

Dist	COUNTY	ROUTE	POST MILES TOTAL PROJECT	SHEET No.	TOTAL SHEETS
11	SD	76	23.1/23.5	31	83

Hassan Taha 12-10-09
REGISTERED CIVIL ENGINEER DATE

6-7-10
PLANS APPROVAL DATE

REGISTERED PROFESSIONAL ENGINEER HASSAN M. TAHA No. 60130 Exp. 06/30/10 CIVIL STATE OF CALIFORNIA

THE STATE OF CALIFORNIA OR ITS OFFICERS OR AGENTS SHALL NOT BE RESPONSIBLE FOR THE ACCURACY OR COMPLETENESS OF SCANNED COPIES OF THIS PLAN SHEET.

PAVEMENT DELINEATION QUANTITIES

LOCATION	DIRECTION	DETAIL No.	PAVEMENT MARKER (RETROREFLECTIVE) TYPE D	TYPE G	TYPE H	4" THERMOPLASTIC TRAFFIC STRIPE	8" THERMO-PLASTIC TRAFFIC STRIPE	4" THERMOPLASTIC TRAFFIC STRIPE (BROKEN 12-3)	THERMOPLASTIC PAVEMENT MARKING DESCRIPTION	SQFT
			EA	EA	EA	LF	LF	LF		
Sta 35+70 TO Sta 54+00 ROUTE 76	WB	27B				1830				
Sta 35+70 TO Sta 50+70 ROUTE 76	EB/WB	29	128			6000			(2) TYPE III (R) ARROW	84
Sta 35+70 TO Sta 38+90 ROUTE 76	EB	38		14			335			
Sta 35+70 TO Sta 38+90 ROUTE 76	EB	38		14			320		1-SIGNAL, 1-AHEAD (WB)	63
Sta 38+90 TO Sta 39+90 ROUTE 76	EB	27C						100		
Sta 35+70 TO Sta 54+00 ROUTE 76	EB	27B				1830			12" WHITE LINE, 1-STOP	47
Sta 50+70 TO Sta 54+00 ROUTE 76	EB/WB	22	30			660				
Sta 35+70 TO Sta 50+70 ROUTE 76	EB/WB	4" YELLOW							4" DIAGONAL LINE (YELLOW)	190
Sta 38+90 TO Sta 47+00 ROUTE 76	WB	38A					810		8" DIAGONAL LINE (WHITE)	260
SUB-TOTAL			158	28		10320	1465	100		644
TOTAL			186			10320	1465	100		644

ROADSIDE SIGN QUANTITIES

SHEET No.	SIGN No.	SIGN CODE	SIGN MESSAGE	No. OF POST AND POST SIZE	PANEL SIZE Horiz X Vert	SIGN MATERIAL: SINGLE FACED	DOUBLE FACED	BACKGROUND: SHEETING COLOR	RETROREFLECTIVITY ASTM TYPE	LEGEND: SHEETING COLOR	RETROREFLECTIVITY ASTM TYPE	PROTECTIVE OVERLAY: STANDARD FILM	PREMIUM FILM	FURNISH SINGLE SHEET ALUMINUM SIGN (0.08" UNFRAMED)	REMOVE ROADSIDE SIGN	ROADSIDE SIGN ONE POST	RELOCATE ROADSIDE SIGN
														SQFT	EA	EA	EA
PD-1	1	W3-3	SIGNAL AHEAD SYMBOL														** 1
	2	R3-2	NO LEFT TURN SYMBOL														1
		R17B	NO LEFT TURN														
	3	G11-4.1(CA)	INVENTORY MARKER, PALA CREEK, BRIDGE 57-1200, 76 SD, 23.25	1- 4" x 4"	44" X 18"	X		WHITE	IV	BLACK			X	5.5		1	
	4	G11-4.1(CA)	INVENTORY MARKER, PALA CREEK, BRIDGE 57-1200, 76 SD, 23.25	1- 4" x 4"	44" X 18"	X		WHITE	IV	BLACK			X	5.5		1	
	5	W5-2	NARROW BRIDGE												1		
	6	R26A(CA)	NO PARKING ANY TIME	1- 4" x 4"	24" X 30"	X		WHITE	IV	RED	VII		X	5		1	
	7	R26A(CA)	NO PARKING ANY TIME	1- 4" x 4"	24" X 30"	X		WHITE	IV	RED	VII		X	5		1	
	8	R26A(CA)	NO PARKING ANY TIME	1- 4" x 4"	24" X 30"	X		WHITE	IV	RED	VII		X	5		1	
	9	R26A(CA)	NO PARKING ANY TIME	1- 4" x 4"	24" X 30"	X		WHITE	IV	RED	VII		X	5		1	
SUBTOTAL														31	1	6	1
TOTAL														31	1	6	1

** UNIT PAYMENT IS NOT INCLUDED IN THE SHEET TOTAL. FOR THE UNIT PAYMENT REFER TO ELECTRICAL PLANS.

DELINEATORS AND MARKERS

SHEET No.	DIRECTION	DELINEATOR (CLASS 1) TYPE (F)	OBJECT MARKER TYPE (L-1)	TYPE (P)
		EA	EA	EA
PD-1	EB	8	1	1
	WB	12	1	1
SUBTOTAL		20	2	2
TOTAL		20	4	

PAVEMENT DELINEATION AND SIGN QUANTITIES

PDQ-1

REVISED BY | DATE REVISED
MUNIR ASSAF | HASSAN TAHA
CALCULATED-DESIGNED BY | CHECKED BY
FUNCTIONAL SUPERVISOR: MOHAMMED QATAMI
STATE OF CALIFORNIA - DEPARTMENT OF TRANSPORTATION
Caltrans 06-TRAFFIC DESIGN

LAST REVISION 12-28-09 | DATE PLOTTED => 10-JUN-2010 | TIME PLOTTED => 14:42

Dist	COUNTY	ROUTE	POST MILES TOTAL PROJECT	SHEET No.	TOTAL SHEETS
11	SD	76	23.1/23.5	32	83

REGISTERED CIVIL ENGINEER DATE 12-14-09

PLANS APPROVAL DATE 6-7-10

REGISTERED PROFESSIONAL ENGINEER MICHAEL S. BETTEGA No. C 34348 Exp. 9/30/11 CIVIL STATE OF CALIFORNIA

THE STATE OF CALIFORNIA OR ITS OFFICERS OR AGENTS SHALL NOT BE RESPONSIBLE FOR THE ACCURACY OR COMPLETENESS OF SCANNED COPIES OF THIS PLAN SHEET.

METAL BEAM GUARD RAILING

LOCATION	Sta TO Sta	TRANSITION RAILING (TYPE WB)	MBGR (STEEL POST)	END ANCHOR ASSEMBLY (TYPE SFT)	ALTERNATIVE CRASH CUSHION SYSTEM	REMOVE MBGR
		EA	LF	EA	EA	LF
"C" LINE	41+81.20 TO 41+93.70 (L+)	1	12.5	1		
"C" LINE	41+26.70 TO 41+93.70 (R+)	1	67.00		1	
"C" LINE	44+44.70 TO 45+05.95 (L+)	1	61.25		1	
"C" LINE	44+44.70 TO 44+57.20 (R+)	1	12.5	1		
"C" LINE	41+98.62 TO 42+62.10 (L+)					63.6
"C" LINE	41+97.08 TO 42+62.09 (R+)					65.3
"C" LINE	43+78.09 TO 44+43.27 (L+)					65.5
"C" LINE	43+78.85 TO 44+43.37 (R+)					64.6
TOTAL		4	153.25	2	2	259.0

PLACE HOT MIX ASPHALT DIKE

LOCATION	Sta TO Sta	(TYPE C) LF	(TYPE E) LF	(TYPE F) LF
"C" LINE	38+82.51 TO 41+56.20 (L+)		273.69	
"C" LINE	41+56.20 TO 41+93.70 (L+)	37.50		
"C" LINE	41+93.71 TO 42+18.70 (L+)			24.99
"C" LINE	39+65.30 TO 40+78.20 (R+)		112.90	
"C" LINE	40+78.20 TO 41+03.20 (R+)	25		
"C" LINE	41+26.70 TO 41+93.70 (R+)	67		
"C" LINE	41+93.70 TO 42+18.70 (R+)			25
"C" LINE	44+19.70 TO 44+38.95 (L+)			19.25
"C" LINE	44+38.95 TO 45+05.95 (L+)	67		
"C" LINE	45+29.45 TO 45+54.45 (L+)	25		
"C" LINE	45+54.45 TO 54+17.51 (L+)		863.06	
"C" LINE	44+19.70 TO 44+44.70 (R+)			25
"C" LINE	44+44.70 TO 44+82.20 (R+)	37.50		
"C" LINE	44+82.20 TO 51+37.38 (R+)		655.18	
SUB TOTAL		259.00	1904.83	94.24
TOTAL		2258.07		

ROCK SLOPE PROTECTION

LOCATION	Sta TO Sta	(BACKING No.1, METHOD B)	(1/2 TON, METHOD B)	FABRIC
		CY	CY	SQYD
"C" LINE	42+59.20 TO 42+79.20	250	658	597
"C" LINE	43+59.20 TO 43+79.20	250	658	597
"C" LINE	40+25.00 (L+)	0.5		3
"C" LINE	40+00.00 (R+)	0.5		3
"C" LINE	41+69.33 (R+)	0.5		3
"C" LINE	44+73.78 (R+)	0.5		3
"C" LINE	46+00.00 (L+)	0.5		3
"C" LINE	46+00.00 (R+)	0.5		3
"C" LINE	48+00.00 (L+)	0.5		3
"C" LINE	48+00.00 (R+)	0.5		3
TOTAL		504*	1316	1218*

* SEE DRAINAGE QUANTITY TABLE FOR ADDITIONAL QUANTITIES

ROADWAY QUANTITIES

LOCATION	ROADWAY EXCAVATION	EMBANKMENT (N)	CLASS 2 AGGREGATE BASE	HOT MIX ASPHALT (TYPE A)	TACK COAT	ASPHALTIC EMULSION (FOG SEAL COAT)
	CY	CY	CY	TON	TON	TON
MAIN LINE	6530	5182	2904	3127	3.4	0.68
HMA Misc AREAS				2.64		
HMA DIKE				53		
TOTAL	6530	5182	2904	3182.64	3.4	0.68

(N) NOT A SEPARATE PAY ITEM. FOR INFORMATION ONLY

MINOR CONCRETE (MISCELLANEOUS CONSTRUCTION)

LOCATION	Sta TO Sta	CY
"C" LINE	39+04.14 TO 40+18.07 (L+)	2.09
	TOTAL	2.09

SUMMARY OF QUANTITIES

Q-1

REVISED BY	DATE REVISED

TRIET LY — MIKE BETTEGA

CALCULATED-DESIGNED BY — CHECKED BY

FUNCTIONAL SUPERVISOR — GETACHEW ESHETE

STATE OF CALIFORNIA - DEPARTMENT OF TRANSPORTATION

Caltrans

06-DESIGN

LAST REVISION 05-17-10 — DATE PLOTTED => 10-JUN-2010 — TIME PLOTTED => 14:42

Dist	COUNTY	ROUTE	POST MILES TOTAL PROJECT	SHEET No.	TOTAL SHEETS
11	SD	76	23.1/23.5	33	83

Michael S. Bettega 12-14-09
REGISTERED CIVIL ENGINEER DATE

6-7-10
PLANS APPROVAL DATE

REGISTERED PROFESSIONAL ENGINEER MICHAEL S. BETTEGA No. C 34348 Exp. 9/30/11 CIVIL STATE OF CALIFORNIA

THE STATE OF CALIFORNIA OR ITS OFFICERS OR AGENTS SHALL NOT BE RESPONSIBLE FOR THE ACCURACY OR COMPLETENESS OF SCANNED COPIES OF THIS PLAN SHEET.

OVERSIDE DRAIN

LOCATION	Sta	12" ENTRANCE TAPER	12" Bit Ctd CORRUGATED STEEL PIPE DOWNDRAIN (0.079" THICK)	12" ANCHOR ASSEMBLY
		EA	LF	EA
"C" LINE	40+25.00 (Lt)	1	17	2
"C" LINE	40+00.00 (Rt)	1	17	2
"C" LINE	41+69.33 (Rt)	1	17	2
"C" LINE	44+73.78 (Rt)	1	15	1
"C" LINE	46+00.00 (Lt)	1	16	2
"C" LINE	46+00.00 (Rt)	1	16	2
"C" LINE	48+00.00 (Lt)	1	17	2
"C" LINE	48+00.00 (Rt)	1	18	2
TOTAL		8	133*	15

* SEE DRAINAGE QUANTITY TABLE FOR ADDITIONAL QUANTITIES

MAINTAIN EXISTING TEMPORARY ARROYO TOAD FENCE

SHEET No.	LENGTH (LF)
L-1	1494
L-2	2163
TOTAL	3657

GEOSYNTHETIC REINFORCED EMBANKMENT / DUFF

LOCATION	Sta TO Sta	SQFT	EMBANKMENT(N) (CY)	ROCKFILL(N) (CY)	SQYD
"C" LINE	40+80.0 TO 42+10 (Lt)	975	289	55	109
"C" LINE	44+19.7 TO 45+80.0 (Lt)	1203	357	67	134
	TOTAL	2178	-	-	243

(N) NOT A SEPARATE PAY ITEM. FOR INFORMATION ONLY

PLACE HMA (Misc AREA)

STATIONING	SHEET No.	AREA	HMA
		SQYD	TON
40+25.00 Lt & Rt	L-1	1.60	0.66
41+69.33 Rt	L-1	0.80	0.33
44+73.78 Rt	L-2	0.80	0.33
46+00.00 Lt & Rt	L-2	1.60	0.66
48+00.00 Lt & Rt	L-2	1.60	0.66
TOTAL		6.4	2.64 *

* SEE ROADWAY QUANTITIES TABLE FOR ADDITIONAL QUANTITIES

DRAINAGE

DRAINAGE SYSTEM No.	DRAINAGE UNIT	STRUCTURE TYPE	MINOR CONCRETE (MINOR STRUCTURE)	DESIGN H (N)	INLET FRAME & GRATE (N) TYPE 24-12x	MISCELLANEOUS IRON & STEEL	12" Bit Ctd CSP DOWNDRAIN (0.079" THICK)	RSP (BACKING No. 1 METHOD B)	RSP FABRIC
			CY	FT	EA	lb	LF	CY	SQYD
1	a	G1	1.61	6.00	1	239			
	b						8.5		
	c							0.5	3
2	a	G1	1.61	6.00	1	239			
	b						9.7		
	c							0.5	3
SHEET TOTAL			3.22			478	18.2**	1.0*	6*

(N) NOT A SEPARATE PAY ITEM. FOR INFORMATION ONLY
* SEE ROCK SLOPE PROTECTION QUANTITY TABLE FOR ADDITIONAL QUANTITIES
** SEE OVERSIDE DRAIN QUANTITY TABLE FOR ADDITIONAL QUANTITIES

IRRIGATION CROSSOVER

SHEET	LOCATION: LINE	LOCATION: STATION	SIDE: Rt	SIDE: Lt	8" CORRUGATED HIGH DENSITY POLYETHELENE PIPE CONDUIT	WATER LINE CROSSOVER (N)	SPRINKLER CONTROL CROSSOVER (N)
					LENGTH	SIZE	SIZE
			Rt	Lt	LF	In	In
L-1	"C"	39+90	X	X	80	3	2
L-2	"C"	45+85	X	X	70	3	2
TOTAL					150		

(N) - NOT A SEPARATE PAY ITEM. FOR INFORMATION ONLY

SUMMARY OF QUANTITIES

Q-2

REVISED BY	DATE REVISED	TRIET LY	MIKE BETTEGA	CALCULATED-DESIGNED BY	CHECKED BY	FUNCTIONAL SUPERVISOR	GETACHEW ESHETE

STATE OF CALIFORNIA - DEPARTMENT OF TRANSPORTATION
Caltrans 06-DESIGN

LAST REVISION 05-17-10 | DATE PLOTTED => 10-JUN-2010 | TIME PLOTTED => 14:42

Dist	COUNTY	ROUTE	POST MILES TOTAL PROJECT	SHEET No.	TOTAL SHEETS
11	SD	76	23.1/23.5	34	83

12-10-09
LICENSED LANDSCAPE ARCHITECT DATE

6-7-10
PLANS APPROVAL DATE

LICENSED LANDSCAPE ARCHITECT MARLENE J. GROS No. 2310 STATE OF CALIFORNIA
Signature 09-30-11 Renewal Date 12-10-09 Date

THE STATE OF CALIFORNIA OR ITS OFFICERS OR AGENTS SHALL NOT BE RESPONSIBLE FOR THE ACCURACY OR COMPLETENESS OF SCANNED COPIES OF THIS PLAN SHEET.

NOTE:

FOR ACCURATE RIGHT OF WAY AND ACCESS DATA,
CONTACT RIGHT OF WAY ENGINEERING AT THE DISTRICT OFFICE.

LEGEND

TEMPORARY CONSTRUCTION EASEMENT

Pala

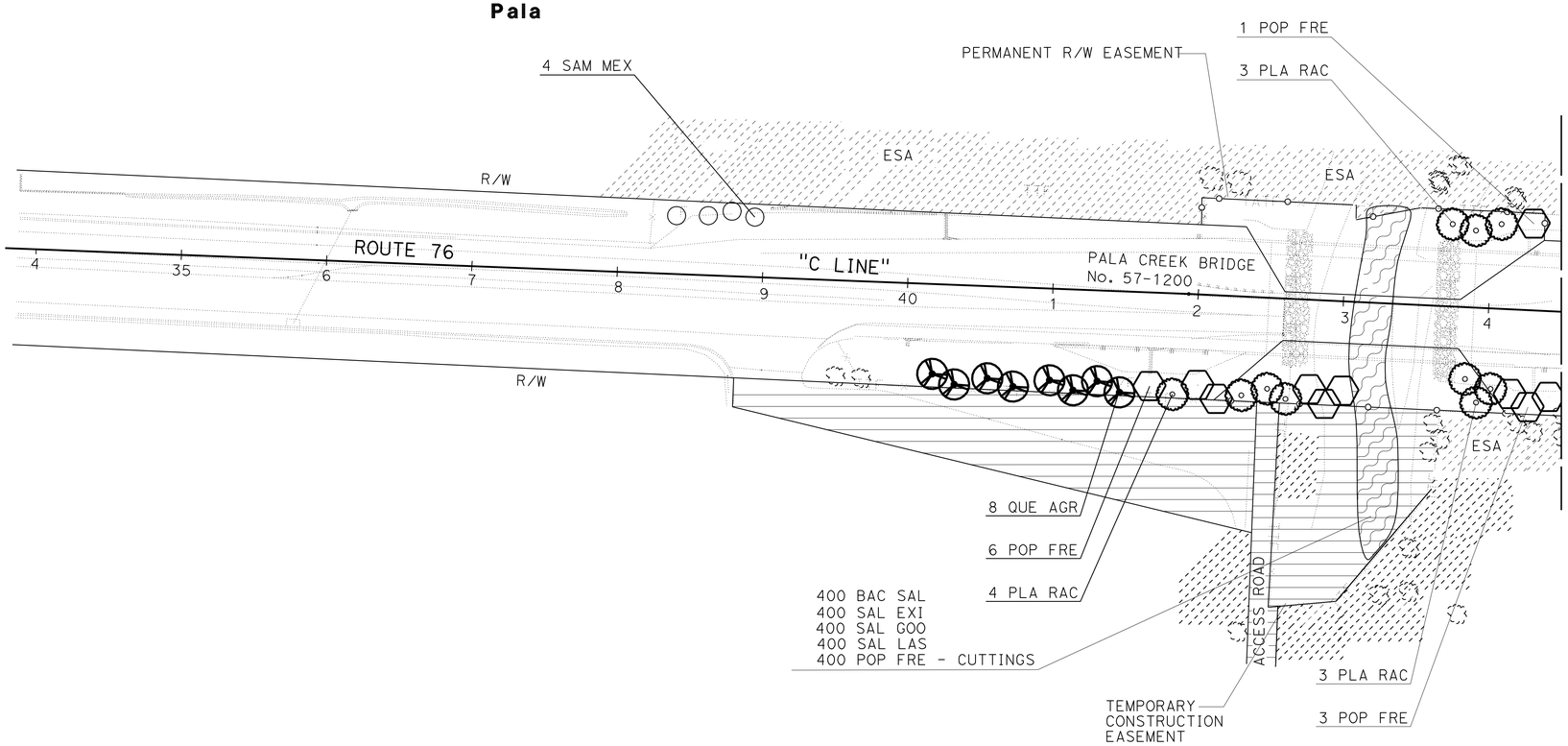

THIS PLAN ACCURATE FOR PLANTING WORK ONLY

PLANTING PLAN

SCALE: 1" = 50'

PP-1

STATE OF CALIFORNIA - DEPARTMENT OF TRANSPORTATION
Caltrans
LANDSCAPE ARCHITECTURE

FUNCTIONAL SUPERVISOR: STEPHEN ALVAREZ
CALCULATED-DESIGNED BY: MARLENE GROS
CHECKED BY: KENNY MAH
REVISED BY
DATE REVISED

LAST REVISION 05-17-10
DATE PLOTTED => 10-JUN-2010
TIME PLOTTED => 14:43

Dist	COUNTY	ROUTE	POST MILES TOTAL PROJECT	SHEET No.	TOTAL SHEETS
11	SD	76	23.1/23.5	35	83

12-10-09
LICENSED LANDSCAPE ARCHITECT DATE

6-7-10
PLANS APPROVAL DATE

LICENSED LANDSCAPE ARCHITECT
MARLENE J. GROS No. 2370
Signature
09-30-11
Renewal Date
12-10-09
Date
STATE OF CALIFORNIA

THE STATE OF CALIFORNIA OR ITS OFFICERS OR AGENTS SHALL NOT BE RESPONSIBLE FOR THE ACCURACY OR COMPLETENESS OF SCANNED COPIES OF THIS PLAN SHEET.

NOTE:

FOR ACCURATE RIGHT OF WAY AND ACCESS DATA,
CONTACT RIGHT OF WAY ENGINEERING AT THE DISTRICT OFFICE.

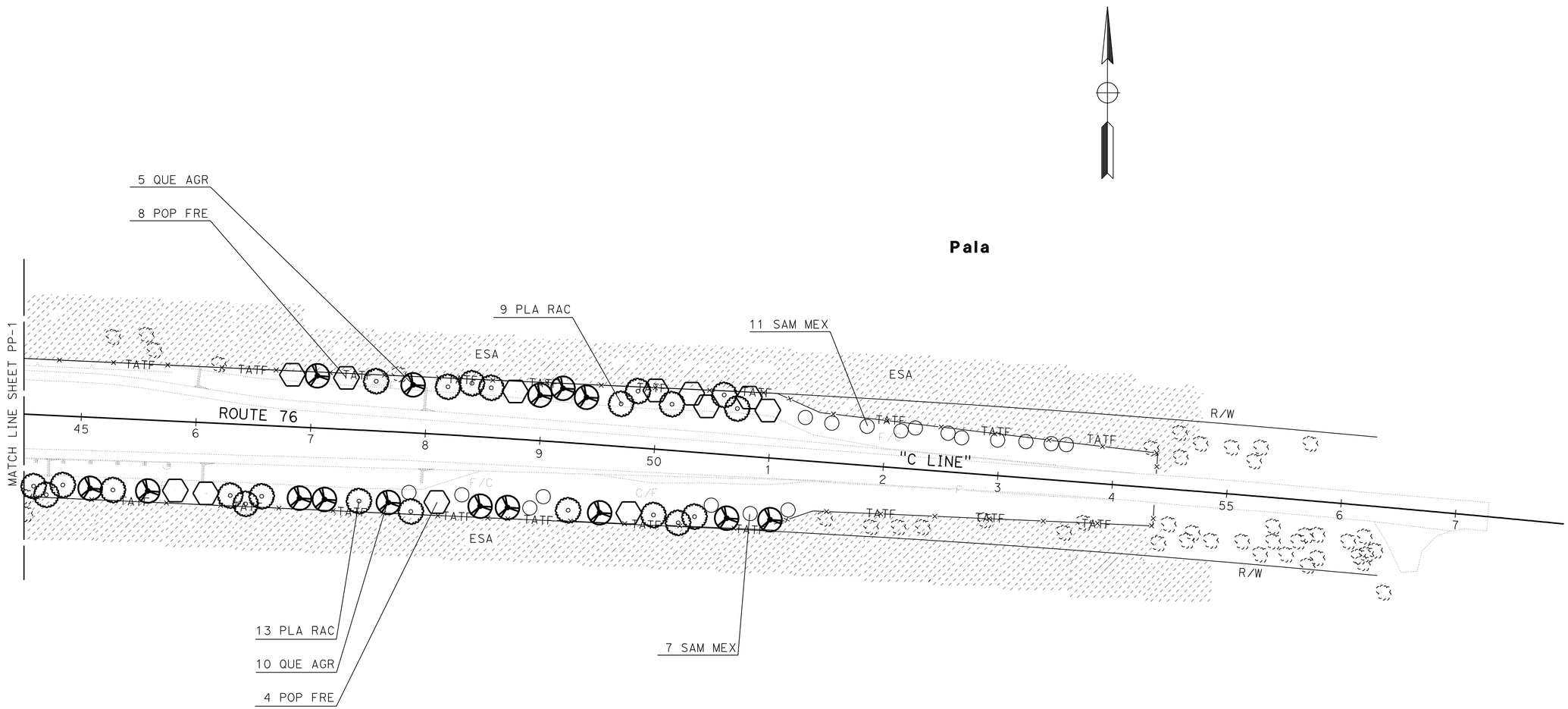

THIS PLAN ACCURATE FOR PLANTING WORK ONLY

PLANTING PLAN

SCALE: 1" = 50'

PP-2

STATE OF CALIFORNIA - DEPARTMENT OF TRANSPORTATION
Caltrans
LANDSCAPE ARCHITECTURE

FUNCTIONAL SUPERVISOR: STEPHEN ALVAREZ

CALCULATED-DESIGNED BY: MARLENE GROS
CHECKED BY: KENNY MAH

REVISED BY
DATE REVISED

LAST REVISION 05-17-10
DATE PLOTTED => 10-JUN-2010
TIME PLOTTED => 14:43

BORDER LAST REVISED 4/11/2008

RELATIVE BORDER SCALE IS IN INCHES 0 1 2 3

USERNAME => trlim
DGN FILE => b27340ti002.dgn

CU 06261

EA 273401

Dist	COUNTY	ROUTE	POST MILES TOTAL PROJECT	SHEET No.	TOTAL SHEETS
11	SD	76	23.1/23.5	36	83

12-10-09
LICENSED LANDSCAPE ARCHITECT DATE

6-7-10
PLANS APPROVAL DATE

LICENSED LANDSCAPE ARCHITECT MARLENE J. GROS No. 2370 Signature 09-30-11 Renewal Date 12-10-09 Date STATE OF CALIFORNIA

THE STATE OF CALIFORNIA OR ITS OFFICERS OR AGENTS SHALL NOT BE RESPONSIBLE FOR THE ACCURACY OR COMPLETENESS OF SCANNED COPIES OF THIS PLAN SHEET.

ABBREVIATIONS:

AMEND — AMENDMENT
B&B — BALLED AND BURLAPPED
Dia — DIAMETER
EA — EACH
Oz — OUNCE
Ft — FOOT/FEET
SQFT — SQUARE FOOT
CF — CUBIC FOOT
SQYD — SQUARE YARD
CY — CUBIC YARD
Max — MAXIMUM
Min — MINIMUM
NCN — NO COMMON NAME
No. — NUMBER
Pkt — PACKET
PLT ESTB — PLANT ESTABLISHMENT
Pvmt — PAVEMENT
R/W — RIGHT OF WAY
SF — STATE-FURNISHED
TAB — TABLET(S)
TRVD — TRAVELED

PLANT LIST AND PLANTING SPECIFICATIONS

PLANT GROUP	PLANT No.	SYMBOL	BOTANICAL NAME	COMMON NAME	SIZE	QUANTITY EACH	HOLE SIZE (INCH) Dia	HOLE SIZE (INCH) DEPTH	BASIN TYPE	IRON SULFATE ①	SOIL Amend ①	COMMERCIAL FERTILIZER ① PLANTING	COMMERCIAL FERTILIZER ① PLT ESTB	BASIN MULCH (CY)	STAKING	PLANTING LIMITS MINIMUM DISTANCE (Ft) FROM TRVD WAY	Pvmt	FENCE	WALL	PAVED DITCH	EARTH DITCH	ON CENTER (Ft)	REMARKS
U	1		PLATANUS RACEMOSA	WESTERN SYCAMORE	No. 15	32	②	②	II	1/2 LB	-	5 Pkt	1/2 LB	0.065	-	30	-	15	15	15	15	④	TREE ⑧
	2		POPULUS FREMONTII	BLACK COTTONWOOD	No. 15	21	②	②	II	1/2 LB	-	5 Pkt	1/2 LB	0.065	-	30	-	15	15	15	15	④	TREE ⑧
	3		QUERCUS AGRIFOLIA	COAST LIVE OAK	No. 15	23	②	②	II	1/2 LB	-	5 Pkt	1/2 LB	0.065	-	30	-	15	15	15	15	④	TREE ⑧
	4		SAMBUCUS MEXICANA	ELDERBERRY	No. 15	22	②	②	II	1/2 LB	-	5 Pkt	1/2 LB	0.065	-	20	-	15	15	15	15	④	TREE ⑧
H	6		BACCHARIS SALICIFOLIA	MULEFAT	CUTTINGS	400	-	-	-	-	-	-	-	-	-	-	2.5	2	2	2	2	4.5	SHRUB
	7		POPULUS FREMONTII	BLACK COTTONWOOD	CUTTINGS	400	-	-	-	-	-	-	-	-	-	30	-	15	15	15	15	4.5	TREE
W	8		SALIX EXIGUA	SANDBAR WILLOW	WILLOW CUTTINGS	400	-	-	-	-	-	-	-	-	-	4.5	4.5	3	2	3	3.5	4.5	SHRUB
	10		SALIX GOODDINGII	BLACK WILLOW	WILLOW CUTTINGS	400	-	-	-	-	-	-	-	-	-	4.5	4.5	3	2	3	3.5	4.5	SHRUB
	11		SALIX LASIOLEPIS	ARROYO WILLOW	WILLOW CUTTINGS	400	-	-	-	-	-	-	-	-	-	4.5	4.5	3	2	3	3.5	4.5	SHRUB

NOTE:

UNDERLINED PORTIONS OF BOTANICAL NAMES INDICATE ABBREVIATIONS USED ON PLANTING PLANS.

APPLICABLE WHEN CIRCLED:

① - QUANTITIES SHOWN ARE 'PER PLANT' UNLESS SHOWN AS SQFT APPLICATION RATES
② - SUFFICIENT TO RECEIVE ROOT BALL
3 - DOES NOT APPLY TO MULCH AREAS
④ - AS SHOWN ON PLANS
5 - UNLESS OTHERWISE SHOWN ON PLANS
6 - SEE DETAIL
7 - SEE SPECIAL PROVISIONS
⑧ - SEE WATERING BAG DETAIL

LEGEND:

Exist TREES TO BE REMOVED (SYMBOL DIAMETER VARIES)

Exist TREES TO REMAIN (SYMBOL DIAMETER VARIES)

ESA — ENVIRONMENTALLY SENSITIVE AREA (ESA)

PLANT LIST
PL-1

REVISED BY | DATE REVISED
MARLENE GROS | KENNY MAH
CALCULATED-DESIGNED BY | CHECKED BY
FUNCTIONAL SUPERVISOR: STEPHEN ALVAREZ
STATE OF CALIFORNIA - DEPARTMENT OF TRANSPORTATION
Caltrans LANDSCAPE ARCHITECTURE

LAST REVISION 12-28-09 | DATE PLOTTED => 10-JUN-2010 | TIME PLOTTED => 14:40

Dist	COUNTY	ROUTE	POST MILES TOTAL PROJECT	SHEET No.	TOTAL SHEETS
11	SD	76	23.1/23.5	37	83

12-10-09
LICENSED LANDSCAPE ARCHITECT DATE

6-7-10
PLANS APPROVAL DATE

LICENSED LANDSCAPE ARCHITECT MARLENE J. GROS No. 2310 Signature 09-30-11 Renewal Date 12-10-09 Date STATE OF CALIFORNIA

THE STATE OF CALIFORNIA OR ITS OFFICERS OR AGENTS SHALL NOT BE RESPONSIBLE FOR THE ACCURACY OR COMPLETENESS OF SCANNED COPIES OF THIS PLAN SHEET.

NOTE:

FOR ACCURATE RIGHT OF WAY AND ACCESS DATA,
CONTACT RIGHT OF WAY ENGINEERING AT THE DISTRICT OFFICE.

LEGEND:

TEMPORARY CONSTRUCTION EASEMENT

TREE REMOVAL (N)	
SHEET	EACH
PR-1	40
PR-2	54
TOTAL	94

(N) NOT A SEPARATE PAY ITEM,
FOR INFORMATION ONLY.

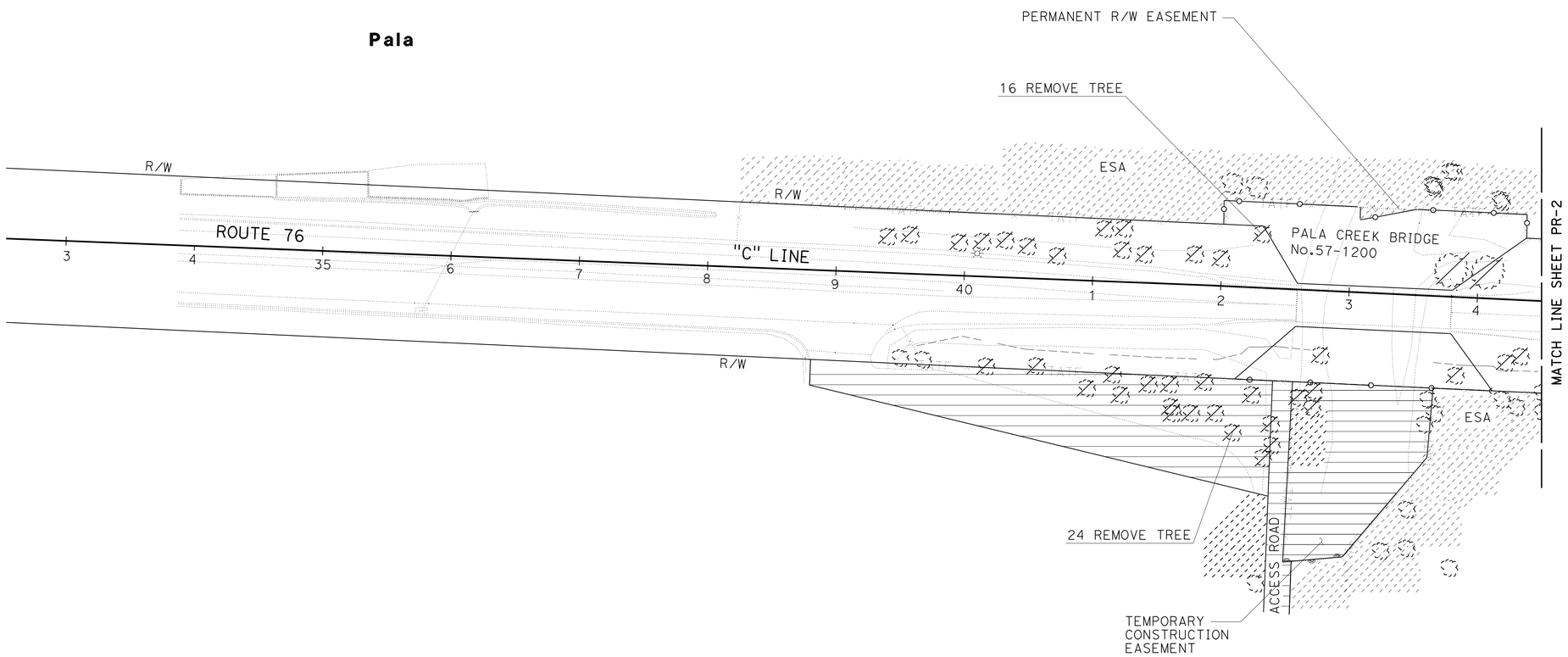

PLANT REMOVAL PLAN

SCALE: 1" = 50'

THIS PLAN ACCURATE FOR PLANT REMOVAL WORK ONLY.

PR-1

REVISED BY
DATE REVISED

MARLENE GROS
KENNY MAH

CALCULATED-DESIGNED BY
CHECKED BY

FUNCTIONAL SUPERVISOR
STEPHEN ALVAREZ

STATE OF CALIFORNIA - DEPARTMENT OF TRANSPORTATION
Caltrans
LANDSCAPE ARCHITECTURE

LAST REVISION 05-17-10
DATE PLOTTED => 10-JUN-2010
TIME PLOTTED => 14:40

Dist	COUNTY	ROUTE	POST MILES TOTAL PROJECT	SHEET No.	TOTAL SHEETS
11	SD	76	23.1/23.5	38	83

LICENSED LANDSCAPE ARCHITECT 12-10-09 DATE

6-7-10
PLANS APPROVAL DATE

LICENSED LANDSCAPE ARCHITECT MARLENE J. GROS No. 2310 STATE OF CALIFORNIA
Signature
09-30-11
Renewal Date
12-10-09
Date

THE STATE OF CALIFORNIA OR ITS OFFICERS OR AGENTS SHALL NOT BE RESPONSIBLE FOR THE ACCURACY OR COMPLETENESS OF SCANNED COPIES OF THIS PLAN SHEET.

NOTE:

FOR ACCURATE RIGHT OF WAY AND ACCESS DATA,
CONTACT RIGHT OF WAY ENGINEERING AT THE DISTRICT OFFICE.

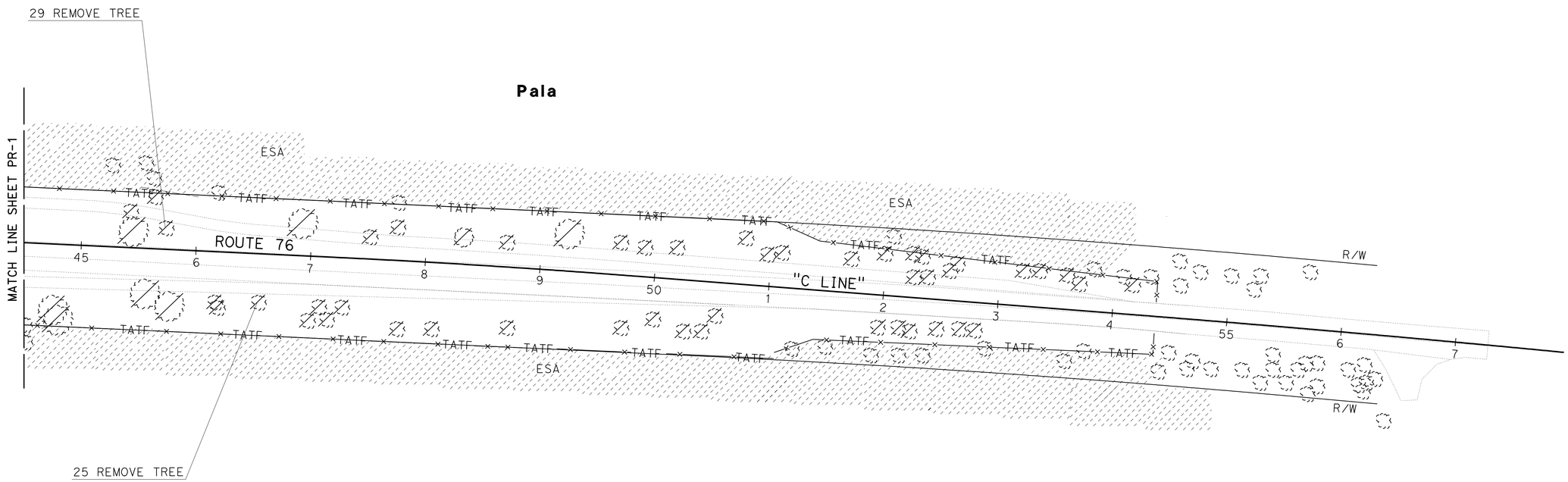

PLANT REMOVAL PLAN

SCALE: 1" = 50'

PR-2

THIS PLAN ACCURATE FOR PLANT REMOVAL WORK ONLY.

STATE OF CALIFORNIA - DEPARTMENT OF TRANSPORTATION
Caltrans
LANDSCAPE ARCHITECTURE

FUNCTIONAL SUPERVISOR: STEPHEN ALVAREZ

CALCULATED-DESIGNED BY: MARLENE GROS
CHECKED BY: KENNY MAH

REVISED BY
DATE REVISED

LAST REVISION 05-17-10 | DATE PLOTTED => 14-JUN-2010 | TIME PLOTTED => 07:02

Dist	COUNTY	ROUTE	POST MILES TOTAL PROJECT	SHEET No.	TOTAL SHEETS
11	SD	76	23.1/23.5	39	83

12-10-09
LICENSED LANDSCAPE ARCHITECT DATE

6-7-10
PLANS APPROVAL DATE

LICENSED LANDSCAPE ARCHITECT
MARLENE J. GROS No. 2310
Signature
09-30-11
Renewal Date
12-10-09
Date
STATE OF CALIFORNIA

THE STATE OF CALIFORNIA OR ITS OFFICERS OR AGENTS SHALL NOT BE RESPONSIBLE FOR THE ACCURACY OR COMPLETENESS OF SCANNED COPIES OF THIS PLAN SHEET.

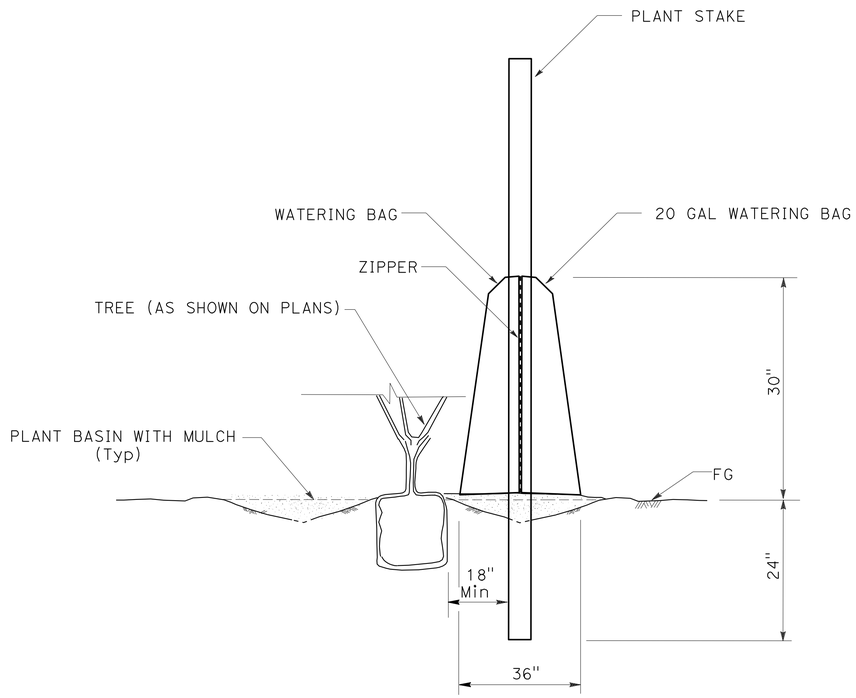

SECTION A-A

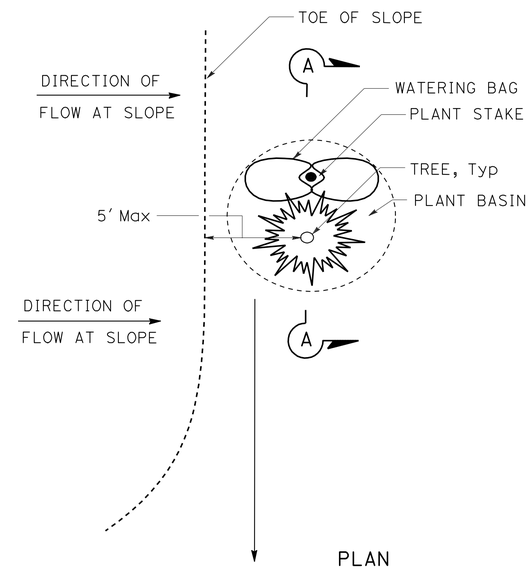

PLAN

WATERING BAG INSTALLATION

LANDSCAPE DETAILS

NO SCALE

LD-1

STATE OF CALIFORNIA - DEPARTMENT OF TRANSPORTATION
Caltrans® LANDSCAPE ARCHITECTURE

FUNCTIONAL SUPERVISOR: STEPHEN ALVAREZ
CALCULATED-DESIGNED BY: MARLENE GROS
CHECKED BY: KENNY MAH
REVISED BY
DATE REVISED

LAST REVISION 12-28-09
DATE PLOTTED => 10-JUN-2010
TIME PLOTTED => 14:40

Dist	COUNTY	ROUTE	POST MILES TOTAL PROJECT	SHEET No.	TOTAL SHEETS
11	SD	76	23.1/23.5	40	83

REGISTERED ELECTRICAL ENGINEER 12-15-09 DATE

6-7-10
PLANS APPROVAL DATE

REGISTERED PROFESSIONAL ENGINEER
OMAR MENDOZA
No. 17982
Exp. 12/31/10
ELECTRICAL
STATE OF CALIFORNIA

THE STATE OF CALIFORNIA OR ITS OFFICERS OR AGENTS SHALL NOT BE RESPONSIBLE FOR THE ACCURACY OR COMPLETENESS OF SCANNED COPIES OF THIS PLAN SHEET.

NOTES:

1 Exist 120/240 V, 1Ø, 3-WIRE, TYPE III-AF SERVICE EQUIPMENT ENCLOSURE WITH THE FOLLOWING CIRCUITS:

CTID No. 115707600233600

AMPERES	VOLTS	POLES	LOAD	METER	PHOTOELECTRIC CONTROL TYPE
100	240	2	MAIN BREAKER	YES	——
50	120	1	TRAFFIC SIGNALS	YES	——
15	120	1	TDC	YES	——
15	120	1	FLASHING BEACON	YES	——
15	120	1	CONTROL	YES	——
30	240	2	LTG	YES	III

2 RL TYPE 1-A FB AND W3-3 SIGN.

3 Approx 785′ TO SERVICE EQUIPMENT ENCLOSURE LOCATED ON THE SOUTH WEST QUADRANT OF ROUTE 76 AND PALA Rd.

4. FOR ACCURATE RIGHT OF WAY AND ACCESS DATA, CONTACT RIGHT OF WAY ENGINEERING AT THE DISTRICT OFFICE.

Pala

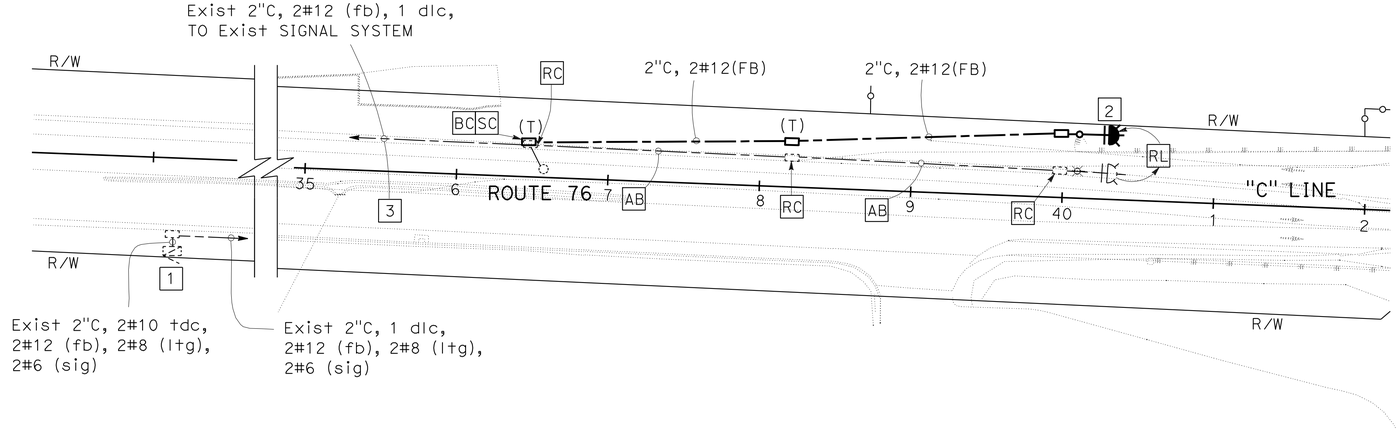

RELOCATE FLASHING BEACON

SCALE: 1" = 50′

THIS PLAN IS ACCURATE FOR ELECTRICAL WORK ONLY.

E-1

STATE OF CALIFORNIA - DEPARTMENT OF TRANSPORTATION
Caltrans 06-ELECTRICAL DESIGN

FUNCTIONAL SUPERVISOR: ALI BAKHDOUD
CALCULATED-DESIGNED BY: HASHIM KHALID
CHECKED BY: OMAR MENDOZA
REVISED BY
DATE REVISED

LAST REVISION 12-28-09
DATE PLOTTED => 10-JUN-2010
TIME PLOTTED => 14:48

Dist	COUNTY	ROUTE	POST MILES TOTAL PROJECT	SHEET No.	TOTAL SHEETS
11	SD	76	23.1/23.5	41	83

REGISTERED ELECTRICAL ENGINEER 12-15-09 DATE

6-7-10
PLANS APPROVAL DATE

REGISTERED PROFESSIONAL ENGINEER
OMAR MENDOZA
No. 17982
Exp. 12/31/10
ELECTRICAL
STATE OF CALIFORNIA

THE STATE OF CALIFORNIA OR ITS OFFICERS OR AGENTS SHALL NOT BE RESPONSIBLE FOR THE ACCURACY OR COMPLETENESS OF SCANNED COPIES OF THIS PLAN SHEET.

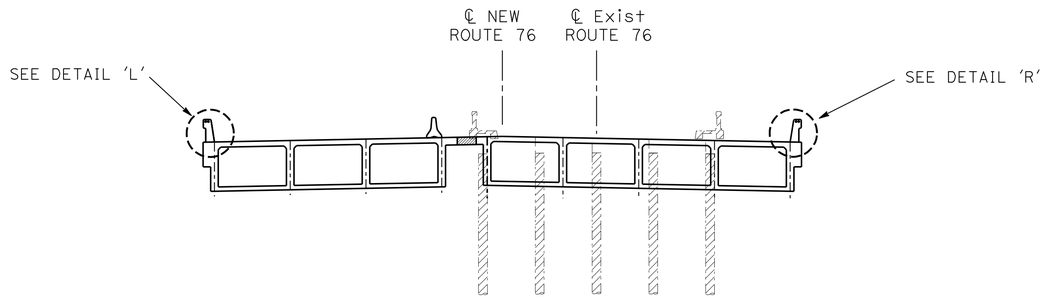

TYPICAL SECTION
SCALE: 1" = 10'

CONDUIT NOTES (TSO):

1 - 2"C, MT. (LIGHTING CONDUIT-BRIDGE)

2 - 2"C, MT. (SPRINKLER CONTROL CONDUIT-BRIDGE)

Pala

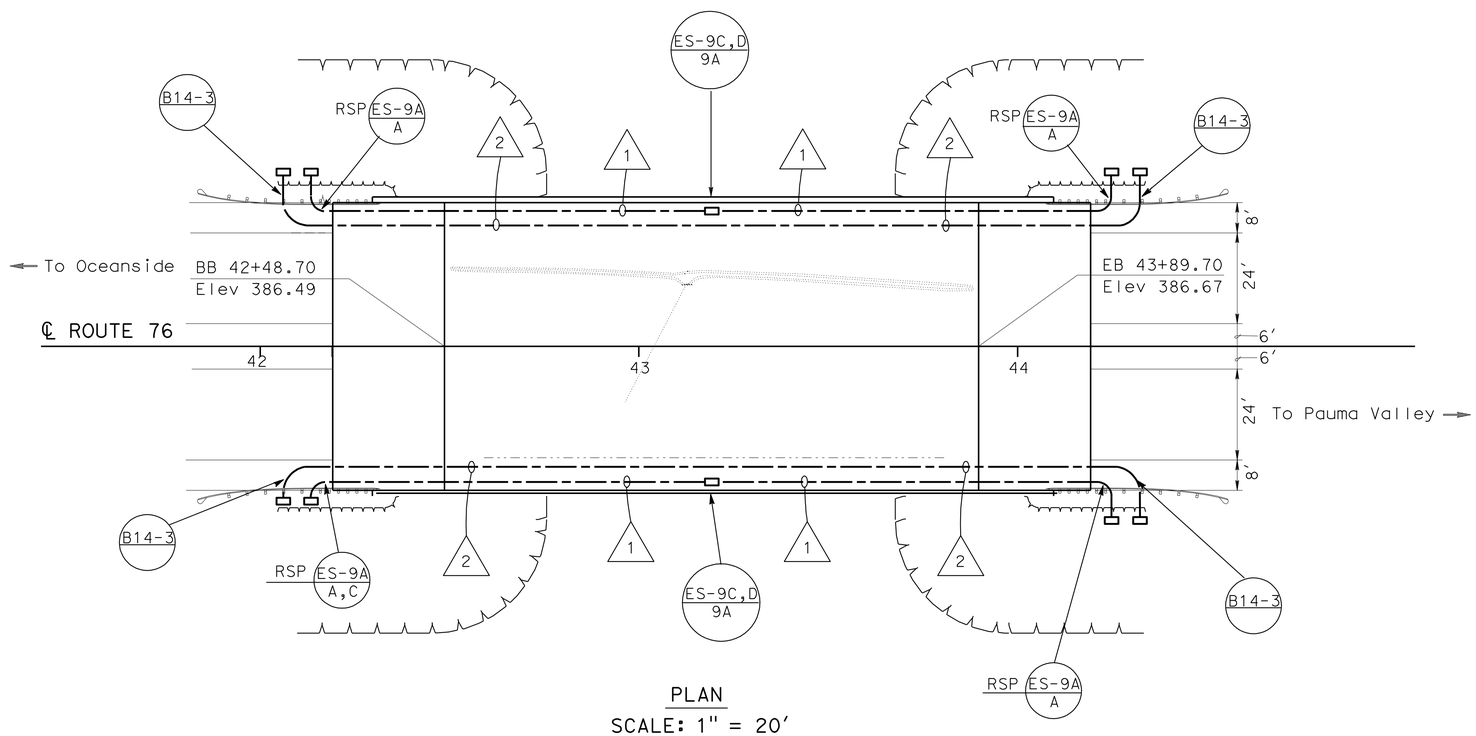

PLAN
SCALE: 1" = 20'
BRIDGE No. 57-1200

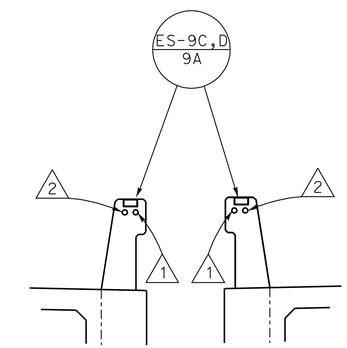

DETAIL 'L'
(Typ)
NO SCALE

DETAIL 'R'
(Typ)
NO SCALE

SPRINKLER CONTROL CONDUIT (BRIDGE)
LIGHTING CONDUIT (BRIDGE)

SCALE AS NOTED

E-2

THIS PLAN IS ACCURATE FOR ELECTRICAL WORK ONLY.

STATE OF CALIFORNIA - DEPARTMENT OF TRANSPORTATION
Caltrans 06-ELECTRICAL DESIGN

FUNCTIONAL SUPERVISOR: ALI BAKHDOUD
CALCULATED-DESIGNED BY: HASHIM KHALID
CHECKED BY: OMAR MENDOZA
REVISED BY
DATE REVISED

LAST REVISION DATE PLOTTED => 10-JUN-2010
12-28-09 TIME PLOTTED => 14:48

DIST	COUNTY	ROUTE	POST MILES TOTAL PROJECT	SHEET NO.	TOTAL SHEETS
11	SD	76	23.1/23.5	42	83

Randell D. Hiatt
REGISTERED CIVIL ENGINEER

June 6, 2008
PLANS APPROVAL DATE

REGISTERED PROFESSIONAL ENGINEER
Randell D. Hiatt
No. C50200
Exp. 6-30-09
CIVIL
STATE OF CALIFORNIA

The State of California or its officers or agents shall not be responsible for the accuracy or completeness of electronic copies of this plan sheet.

To accompany plans dated 6-7-10

NOTES:

1. When necessary to place dike in front of face of guard railing, only Type C dike may be used. For dike details, see Standard Plan A87B.
2. For standard railing post embedment, see Standard Plans A77C3.
3. Guard railing delineation to be used where shown on the Project Plans.
4. When dike or curb is placed under guard railing, the maximum height of the dike or curb shall be 4". Mountable dike should not be used. For dike and curb details, see Revised Standard Plans RSP A87A and Standard Plan A87B.
5. For details of typical distance between the face of rail and hinge point, see Standard Plan A77C3.

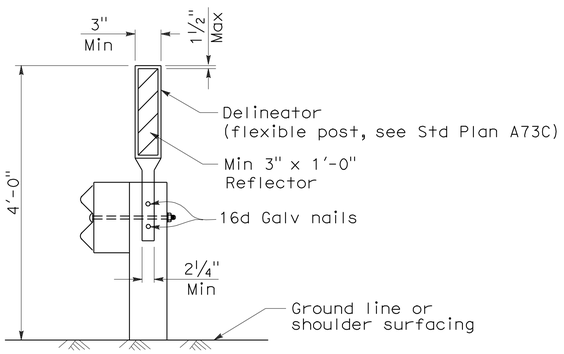

GUARD RAILING DELINEATION

See Note 3

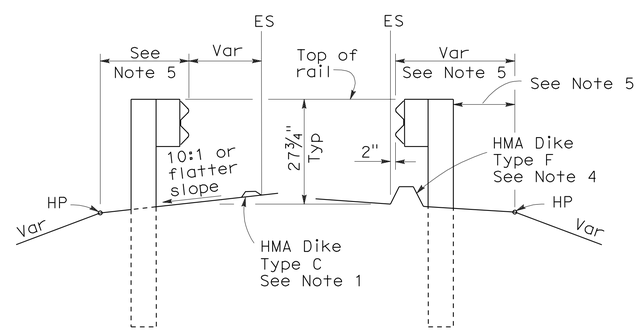

DIKE POSITIONING

See Note 1

STATE OF CALIFORNIA
DEPARTMENT OF TRANSPORTATION

METAL BEAM GUARD RAILING TYPICAL RAILING DELINEATION AND DIKE POSITIONING DETAILS

NO SCALE

RSP A77C4 DATED JUNE 6, 2008 SUPERSEDES STANDARD PLAN A77C4
DATED MAY 1, 2006 - PAGE 47 OF THE STANDARD PLANS BOOK DATED MAY 2006.

REVISED STANDARD PLAN RSP A77C4

2006 REVISED STANDARD PLAN RSP A77C4

12-10-07

DIST	COUNTY	ROUTE	POST MILES TOTAL PROJECT	SHEET NO.	TOTAL SHEETS
11	SD	76	23.1/23.5	43	83

Randell D. Hiatt
REGISTERED CIVIL ENGINEER

June 6, 2008
PLANS APPROVAL DATE

REGISTERED PROFESSIONAL ENGINEER
Randell D. Hiatt
No. C50200
Exp. 6-30-09
CIVIL
STATE OF CALIFORNIA

The State of California or its officers or agents shall not be responsible for the accuracy or completeness of electronic copies of this plan sheet.

To accompany plans dated 6-7-10

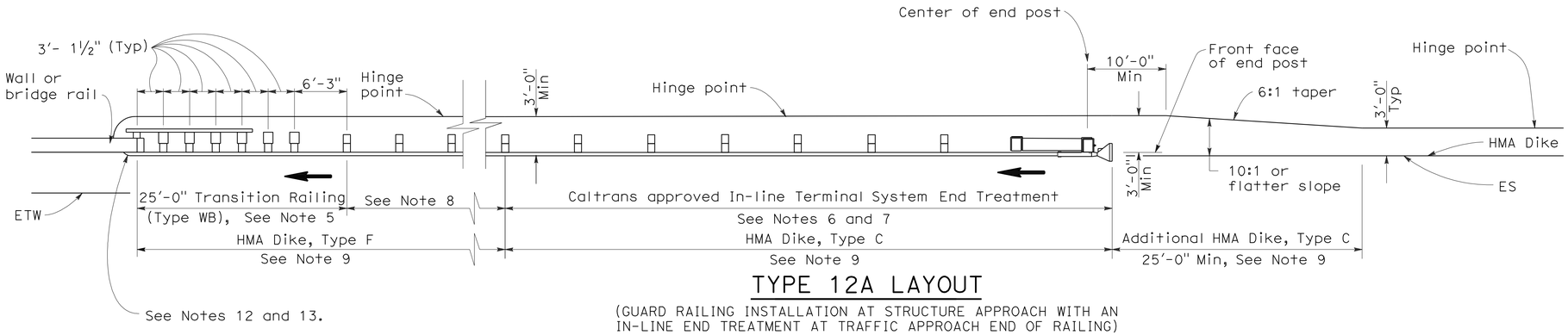

TYPE 12A LAYOUT

(GUARD RAILING INSTALLATION AT STRUCTURE APPROACH WITH AN IN-LINE END TREATMENT AT TRAFFIC APPROACH END OF RAILING)
See Notes 10

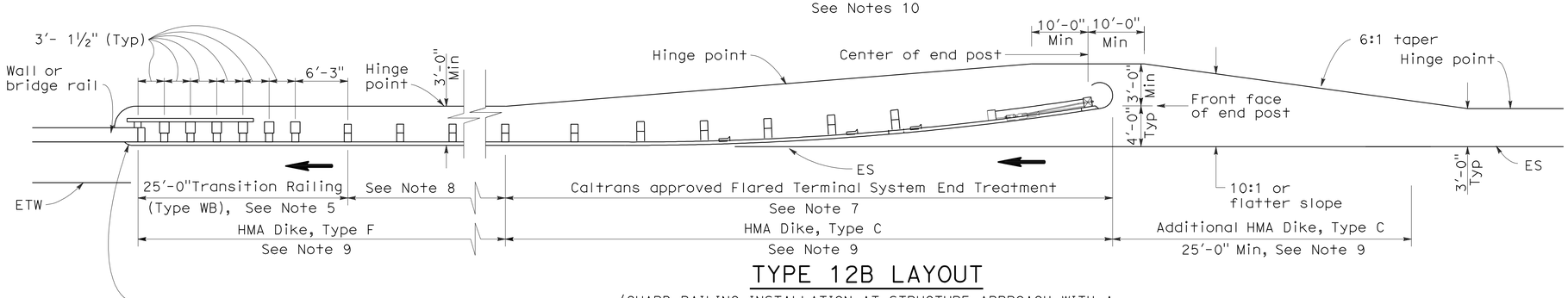

TYPE 12B LAYOUT

(GUARD RAILING INSTALLATION AT STRUCTURE APPROACH WITH A FLARED END TREATMENT AT TRAFFIC APPROACH END OF RAILING)
See Notes 10

NOTES:

1. Line post, blocks and hardware to be used are shown on Standard Plans A77A1, A77A2, A77B1, A77C1 and A77C2.
2. Guard rail post spacing to be 6'-3" center to center, except as otherwise noted.
3. Except as noted, line posts are 6" x 8" x 6'-0" wood with 6" x 8" x 1'-2" wood blocks. W6 x 9 steel posts, 6'-0" in length, with 6" x 8" x 1'-2" notched wood blocks or plastic blocks may be used for 6" x 8" x 6'-0" wood posts with 6" x 8" x 1'-2" wood blocks where applicable and when specified.
4. Direction of adjacent traffic indicated by ⟶.
5. For Transition Railing (Type WB) details for Types 12A and 12B Layouts, see Standard Plan A77J4.
6. In-line Terminal System End Treatments are used where site conditions will not accommodate a flared end treatment.
7. The type of terminal system end treatment to be used will be shown on the Project Plans.
8. Dependent on site conditions (embankment height, side slopes, or other fixed objects), it may be advisable to construct additional guard railing (a length equal to multiples of 12'-6" with 6'-3" post spacing) between the transition railing and end treatment.
9. Where placement of dike is required with guard railing installations, see Revised Standard Plan RSP A77C4 for dike positioning details.
10. Type 12A or Type 12B Layouts are typically used:
    a. To the right of approaching traffic, at the end of a structure, on two-lane conventional highway where the roadbed width across the structure is less than 40 feet.
    b. To the left of approaching traffic, at the end of a structure, on two-lane conventional highway where the roadbed width across the structure is less than 40 feet.
    c. To the right of approaching traffic at the end of each structure on multilane freeways or expressways with separate adjacent or parallel bridges.
    d. To the right of approaching traffic at the end of the structure on multilane freeways or expressways with decked median on the bridge.
11. See Revised Standard Plan RSP A77F3 for typical layout used left of approaching traffic at the ends of each structure on multilane freeways or expressways with separate adjacent or parallel bridges.
12. For additional details of typical connections to bridge rail, see Connection Detail AA on Revised Standard Plans RSP A77J1 and RSP A77J2 and Connection Detail FF on Standard Plans A77K1 and A77K2.
13. For additional details of a typical connection to walls or abutments, see Standard Plan A77J3.

STATE OF CALIFORNIA
DEPARTMENT OF TRANSPORTATION

METAL BEAM GUARD RAILING TYPICAL LAYOUTS FOR STRUCTURE APPROACH

NO SCALE

RSP A77F1 DATED JUNE 6, 2008 SUPERSEDES STANDARD PLAN A77F1
DATED MAY 1, 2006 - PAGE 54 OF THE STANDARD PLANS BOOK DATED MAY 2006.

REVISED STANDARD PLAN RSP A77F1

2006 REVISED STANDARD PLAN RSP A77F1

12-10-07

DIST	COUNTY	ROUTE	POST MILES TOTAL PROJECT	SHEET NO.	TOTAL SHEETS
11	SD	76	23.1/23.5	44	83

Randell D. Hiatt
REGISTERED CIVIL ENGINEER

June 6, 2008
PLANS APPROVAL DATE

REGISTERED PROFESSIONAL ENGINEER
Randell D. Hiatt
No. C50200
Exp. 6-30-09
CIVIL
STATE OF CALIFORNIA

The State of California or its officers or agents shall not be responsible for the accuracy or completeness of electronic copies of this plan sheet.

To accompany plans dated 6-7-10

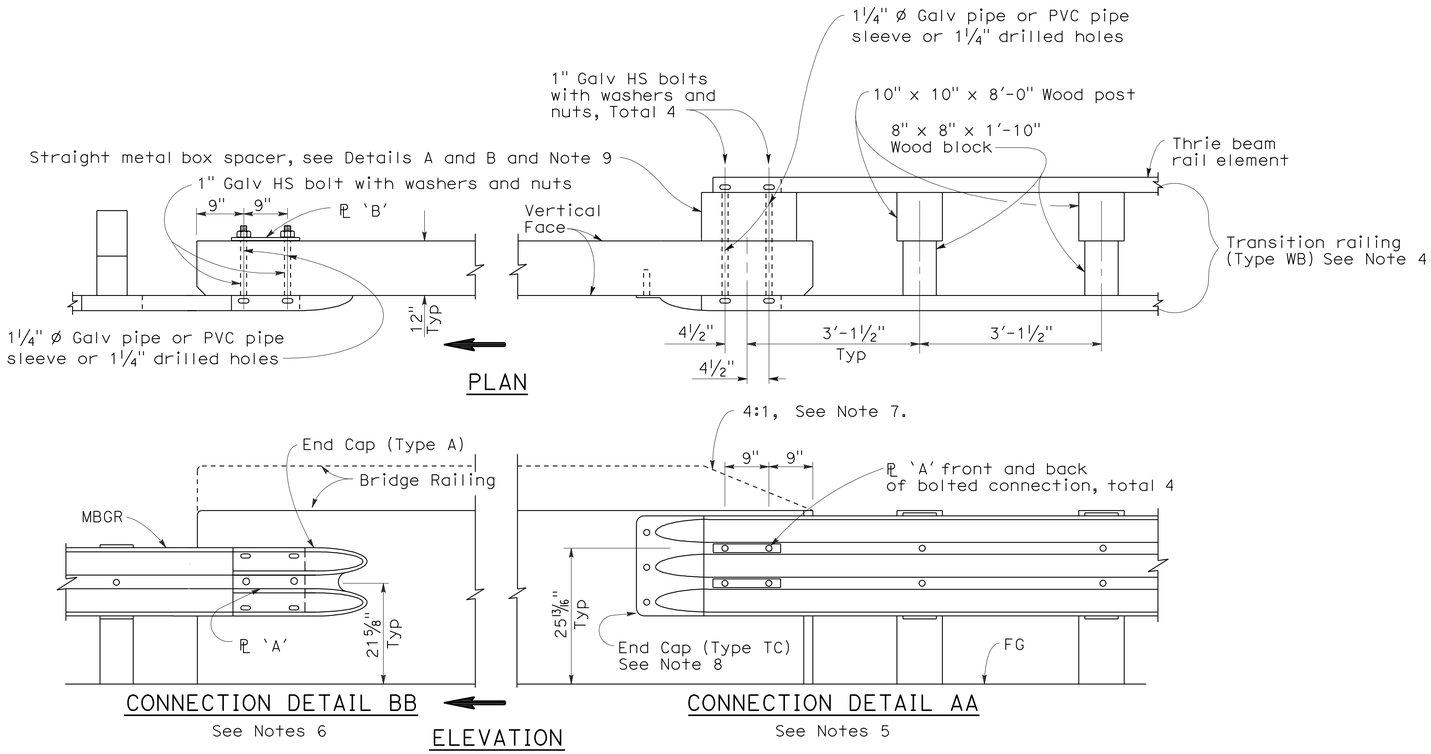

GUARD RAILING CONNECTION TO BRIDGE RAILING WITHOUT SIDEWALK

NOTES:

1. See Revised Standard Plan RSP A77J2 for additional connection details to bridges without sidewalks.
2. Additional details of posts, blocks and hardware are shown on Standard Plan A77B1, A77C1 and A77C2.
3. Direction of adjacent traffic indicated by ➡.
4. For additional details of Transition Railing (Type WB), see Standard Plan A77J4. Transition Railing (Type WB) transitions the 12 gage w-beam standard railing section of guard railing to a heavier gage nested thrie beam railing section which is connected to the concrete bridge railing.
5. For typical use of Connection Detail AA, see Layout Types 12A and 12B on Revised Standard Plan RSP A77F1, Layout Types 12C and 12D on Standard Plan A77F2, and Layout Type 12E on Revised Standard Plan RSP A77F3.
6. For typical use of Connection Detail BB, see Layout Type 12D (structure departure railing connection) on Standard Plan A77F2 and Layout Type 12DD on Standard Plan A77F5.
7. Where the height of the bridge railing exceeds the height of the thrie beam railing by more than 1" at Connection Detail AA, taper the top of the end of the bridge railing at 4:1 to match the top elevation of the thrie beam rail.
8. For details of End Cap (Type TC), see Standard Plan A77J4.
9. See Standard Plan A77J4 for additional details regarding depth dimension for straight metal box spacer.

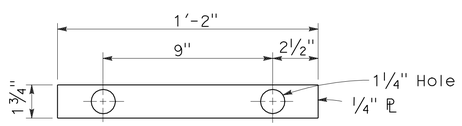

PLATE 'A'

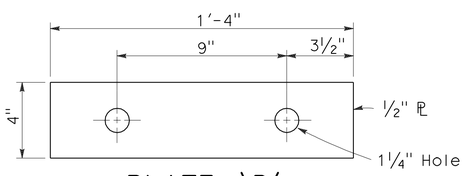

PLATE 'B'
(For backside of connection BB)

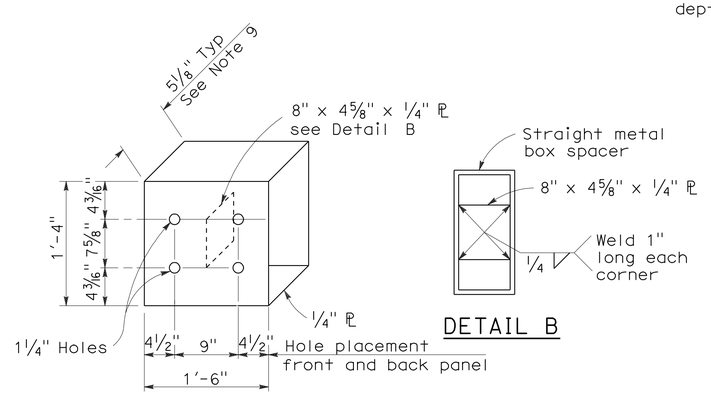

DETAIL A

STRAIGHT METAL BOX SPACER

STATE OF CALIFORNIA
DEPARTMENT OF TRANSPORTATION

METAL BEAM GUARD RAILING CONNECTIONS TO BRIDGE RAILINGS WITHOUT SIDEWALKS DETAILS No.1

NO SCALE

RSP A77J1 DATED JUNE 6, 2008 SUPERSEDES STANDARD PLAN A77J1 DATED MAY 1, 2006 - PAGE 72 OF THE STANDARD PLANS BOOK DATED MAY 2006.

REVISED STANDARD PLAN RSP A77J1

2006 REVISED STANDARD PLAN RSP A77J1

12-10-07

DIST	COUNTY	ROUTE	POST MILES TOTAL PROJECT	SHEET NO.	TOTAL SHEETS
11	SD	76	23.1/23.5	45	83

Randell D. Hiatt
REGISTERED CIVIL ENGINEER

June 6, 2008
PLANS APPROVAL DATE

REGISTERED PROFESSIONAL ENGINEER
Randell D. Hiatt
No. C50200
Exp. 6-30-09
CIVIL
STATE OF CALIFORNIA

The State of California or its officers or agents shall not be responsible for the accuracy or completeness of electronic copies of this plan sheet.

To accompany plans dated 6-7-10

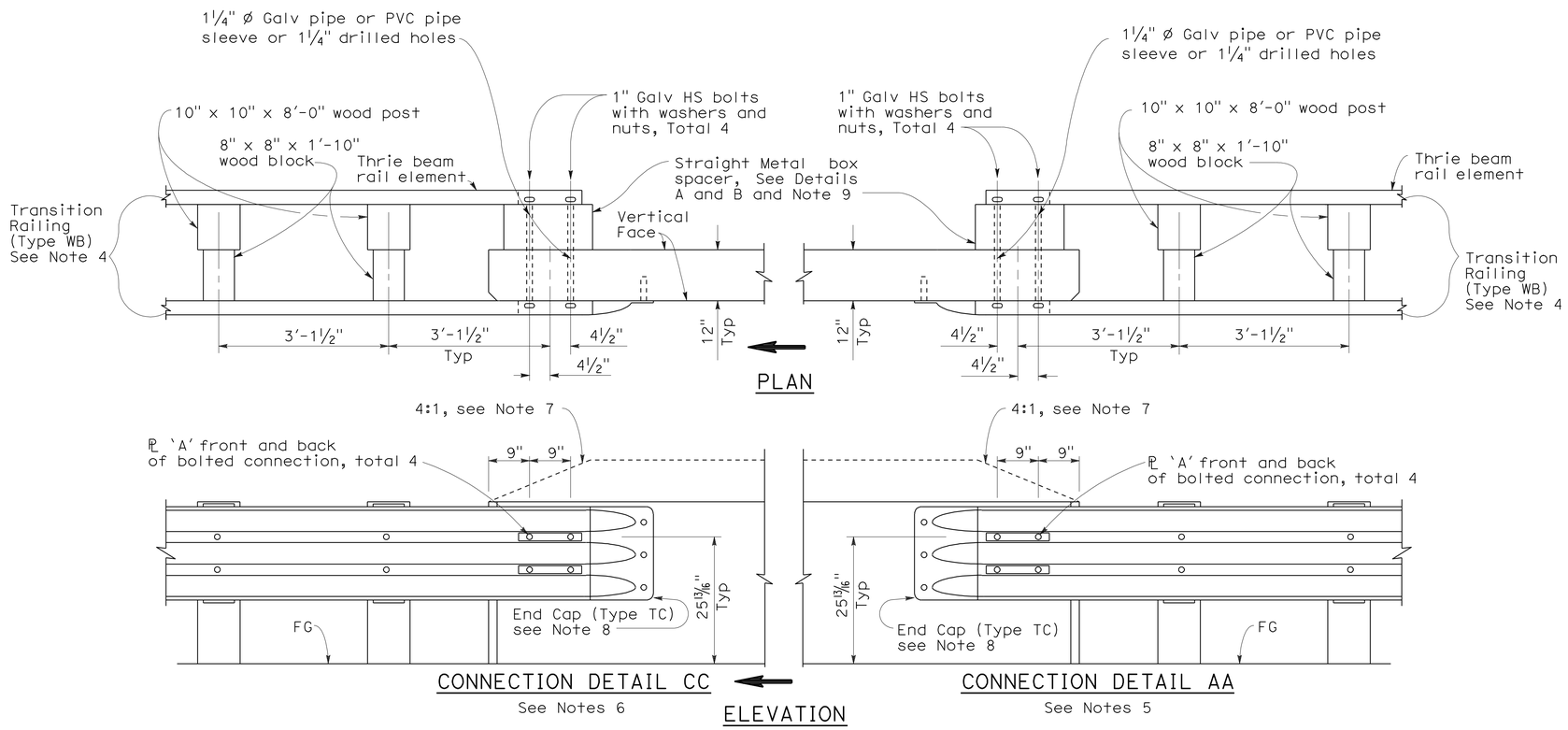

GUARD RAILING CONNECTION TO BRIDGE RAILING WITHOUT SIDEWALK

NOTES:

1. See Revised Standard Plan RSP A77J1 for additional connection details to bridges without sidewalks.
2. Additional details of posts, blocks and hardware are shown on Standard Plan A77B1, A77C1 and A77C2.
3. Direction of adjacent traffic indicated by ⟹.
4. For additional details of Transition Railing (Type WB), see Standard Plan A77J4. Transition Railing (Type WB) transitions the 12 gage w-beam standard railing section of guard railing to a heavier gage nested thrie beam railing section which is connected to the concrete bridge railing.
5. For typical use of Connection Detail AA, see Layout Types 12A and 12B on Revised Standard Plan RSP A77F1, Layout Types 12C and 12D on Standard Plan A77F2, and Layout Type 12E on Revised Standard Plan RSP A77F3.
6. For typical use of Connection Detail CC, see Layout Types 12AA and 12BB on Standard Plan A77F4 and Layout Type 12CC on Standard Plan A77F5.
7. Where the height of the bridge railing exceeds the height of the thrie beam railing by more than 1" at Connection Detail AA and connection Detail CC, taper the top of the end of the bridge railing at 4:1 to match the top elevation of the thrie beam railing.
8. For details of End Cap (Type TC), see Standard Plans A77J4.
9. See Standard Plans A77J4 for additional details regarding depth dimension for straight metal box spacer.

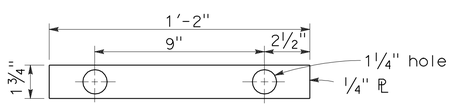

PLATE 'A'

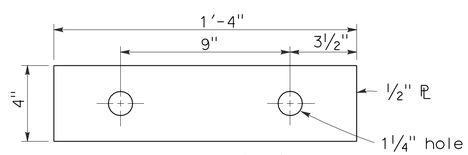

PLATE 'B'
(For backside of connection BB)

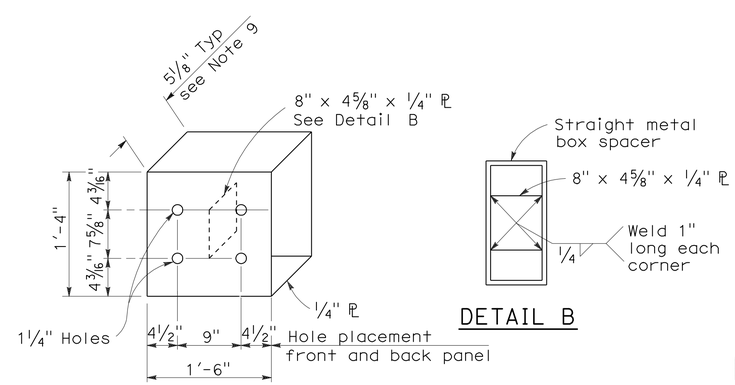

DETAIL A

DETAIL B

STRAIGHT METAL BOX SPACER

STATE OF CALIFORNIA
DEPARTMENT OF TRANSPORTATION

METAL BEAM GUARD RAILING CONNECTIONS TO BRIDGE RAILINGS WITHOUT SIDEWALKS DETAILS No.2

NO SCALE

RSP A77J2 DATED JUNE 6, 2008 SUPERSEDES STANDARD PLAN A77J2 DATED MAY 1, 2006 - PAGE 73 OF THE STANDARD PLANS BOOK DATED MAY 2006.

REVISED STANDARD PLAN RSP A77J2

2006 REVISED STANDARD PLAN RSP A77J2

12-10-07

DIST	COUNTY	ROUTE	POST MILES TOTAL PROJECT	SHEET NO.	TOTAL SHEETS
11	SD	76	23.1/23.5	46	83

Randell D. Hiatt
REGISTERED CIVIL ENGINEER

June 5, 2009
PLANS APPROVAL DATE

REGISTERED PROFESSIONAL ENGINEER
Randell D. Hiatt
No. C50200
Exp. 6-30-09
CIVIL
STATE OF CALIFORNIA

The State of California or its officers or agents shall not be responsible for the accuracy or completeness of electronic copies of this plan sheet.

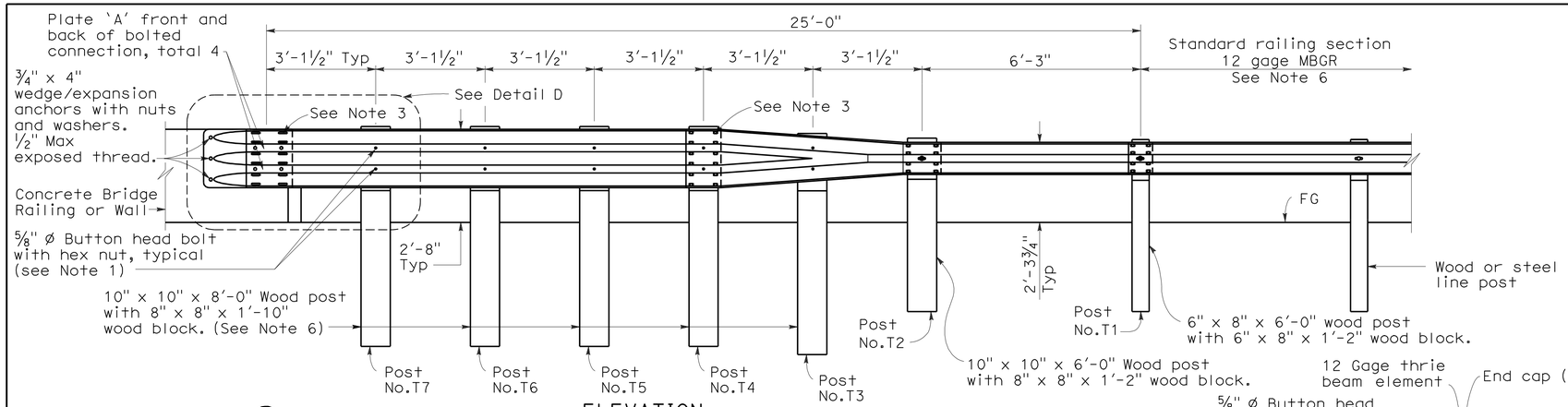

ELEVATION

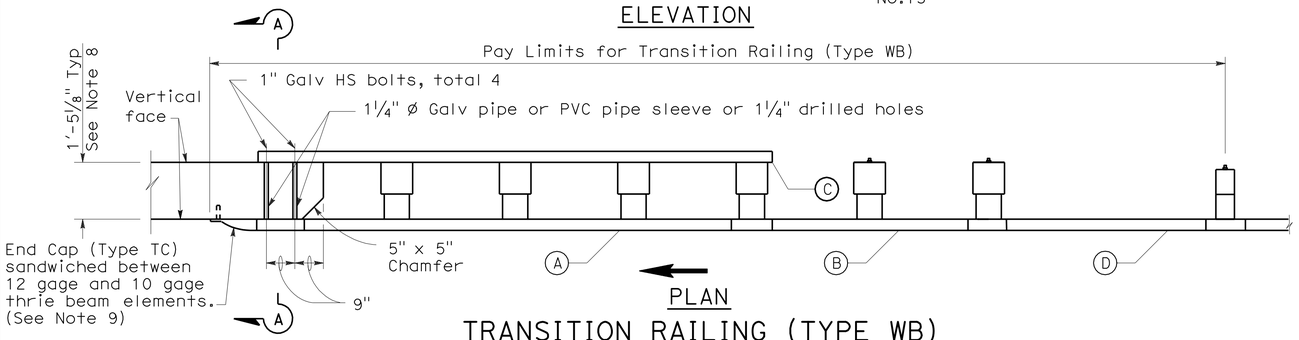

PLAN

TRANSITION RAILING (TYPE WB)

(No Blockout Attachment)

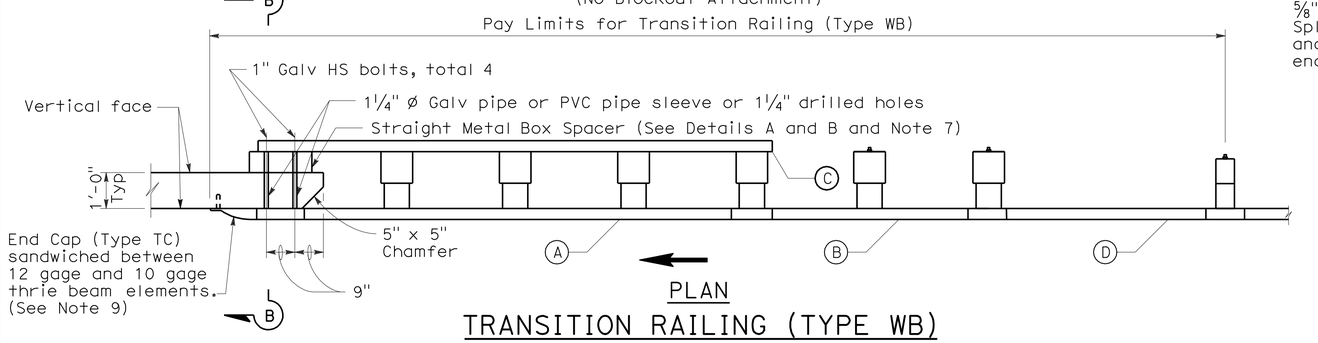

PLAN

TRANSITION RAILING (TYPE WB)

(Blockout Attachment)

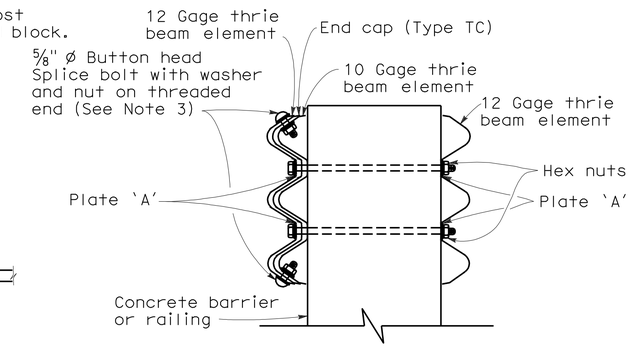

SECTION A-A

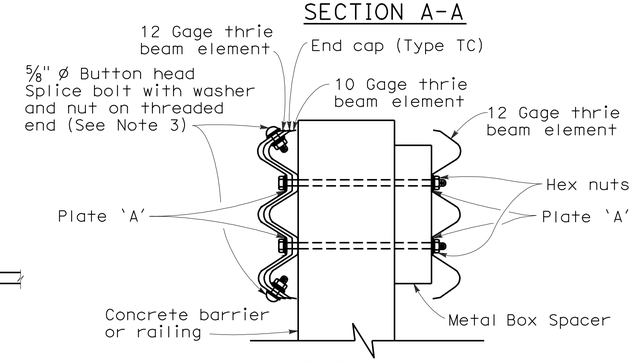

SECTION B-B

LEGEND

(A) Nested thrie beam elements (one 12 gage element nested over one 10 gage element).

(B) One 10 gage "W" beam to thrie beam element.

(C) One 12 gage thrie beam element.

(D) One 10 gage "W" beam rail element (7'-3½" length)

10 gage = 0.135" thick

12 gage = 0.108" thick

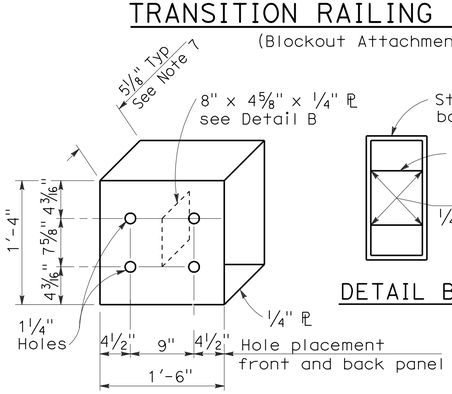

DETAIL A

STRAIGHT METAL BOX SPACER

DETAIL B

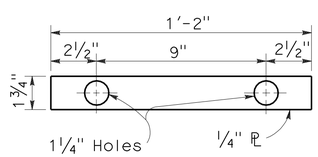

DETAIL C

PLATE 'A'

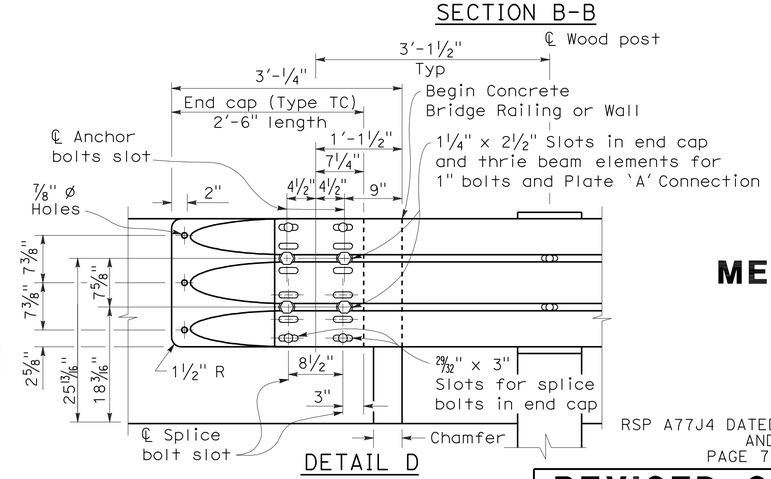

DETAIL D

NOTES:

To accompany plans dated 6-7-10

1. Use 5/8 " ø Button head bolts and hex nuts for connections to posts. No washer on rail face for bolted connections to post.
2. The nested rail elements, end cap, and 'W' beam to thrie beam element may be spliced together prior to bolting the elements to the wood post and concrete barrier or railing.
3. Exterior splice bolt holes for rail element splices at Post No.T4 and the connection to the concrete barrier or railing shall be the standard 29/32 " x 1 1/8 " slot size. Interior splice bolt holes at these locations may be increased up to 1 1/4 " ø. Only the top 2 and the bottom 2 splice bolts with washers and nuts are required for rail splices at Post No.T4 and the connection to the concrete barrier or railing.
4. Direction of adjacent traffic indicated by →.
5. The top elevation of Post Nos.T2 through T7 shall not project more than 1" above the top elevation of the rail element.
6. Typically, the railing connected to Transition Railing (Type WB) will be either standard railing section of metal beam guard railing or an approved Caltrans end treatment attached to Post No.T1.
7. The depth of the metal box spacer varies from the 5 1/8 " to 1 1/2 " and is dependent on the width of the concrete railing or wall. The combined dimension for the depth of the metal box spacer plus the width of railing or wall is typically 17 1/8 ". Where the space between the backside of the concrete railing or wall and the rear thrie beam element is less than 1 1/2 ", metal plates similar to Plate 'A' are to be used as spacers.
8. Where the width of the concrete railing or wall is greater than 17 1/8 ", wood blocks are to be used to fill the space created between the backside of Posts No.4 through No.7 and the rear thrie beam element. These wood blocks shall be 8" in width and 1'-2" in length. The dimension between the front thrie beam element and the rear thrie beam element is to match the width of the concrete railing or wall.
9. End cap may be installed over 12 gage and 10 gage thrie beam elements where transition railing is installed on the departure end of bridge railing.

STATE OF CALIFORNIA
DEPARTMENT OF TRANSPORTATION

METAL BEAM GUARD RAILING TRANSITION RAILING (TYPE WB)

NO SCALE

RSP A77J4 DATED JUNE 5, 2009 SUPERSEDES RSP A77J4 DATED JUNE 6, 2008 AND STANDARD PLAN A77J4 DATED MAY 1, 2006 - PAGE 75 OF THE STANDARD PLANS BOOK DATED MAY 2006.

REVISED STANDARD PLAN RSP A77J4

2006 REVISED STANDARD PLAN RSP A77J4

5-14-09

DIST	COUNTY	ROUTE	POST MILES TOTAL PROJECT	SHEET NO.	TOTAL SHEETS
11	SD	76	23.1/23.5	47	83

William K. Farnbach
REGISTERED CIVIL ENGINEER

May 15, 2009
PLANS APPROVAL DATE

REGISTERED PROFESSIONAL ENGINEER
William K. Farnbach
No. C49042
Exp. 9-30-10
CIVIL
STATE OF CALIFORNIA

The State of California or its officers or agents shall not be responsible for the accuracy or completeness of electronic copies of this plan sheet.

To accompany plans dated 6-7-10

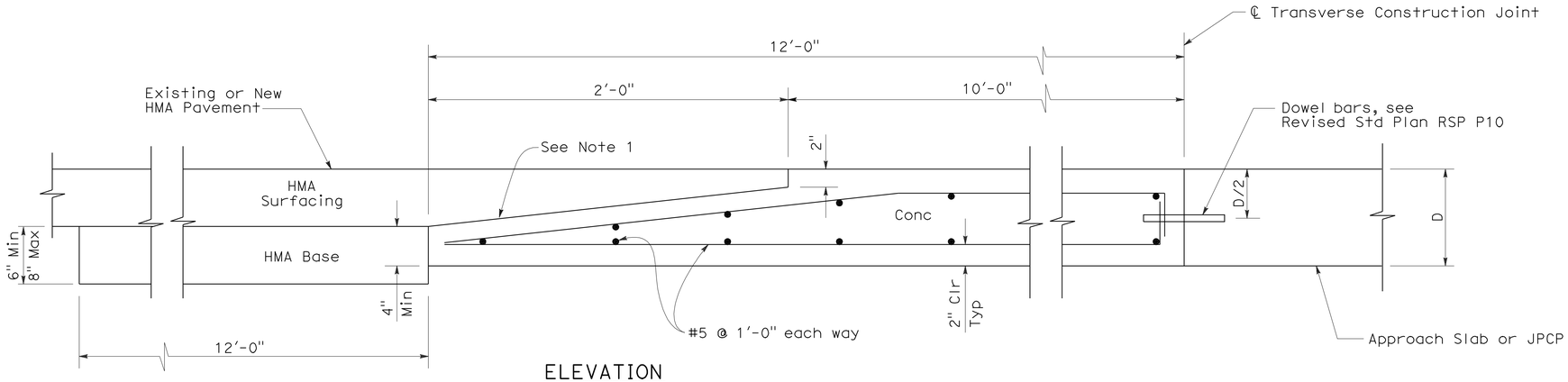

ELEVATION

CONCRETE PAVEMENT TO HOT MIXED ASPHALT PAVEMENT TRANSITION PANEL

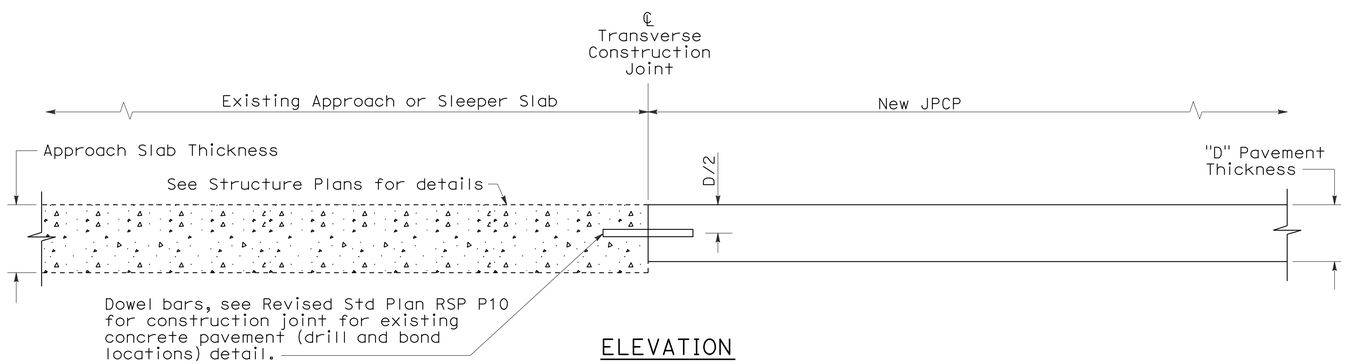

ELEVATION

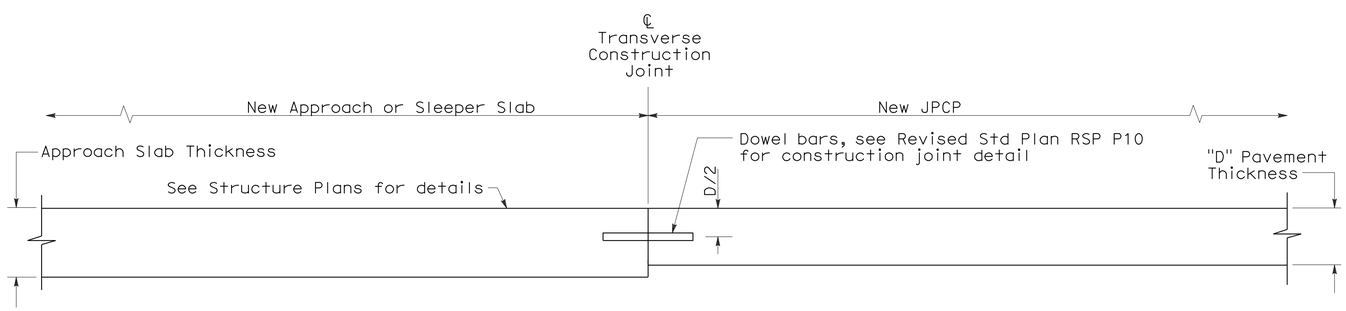

ELEVATION

CONCRETE PAVEMENT TRANSITION TO APPROACH OR SLEEPER SLAB

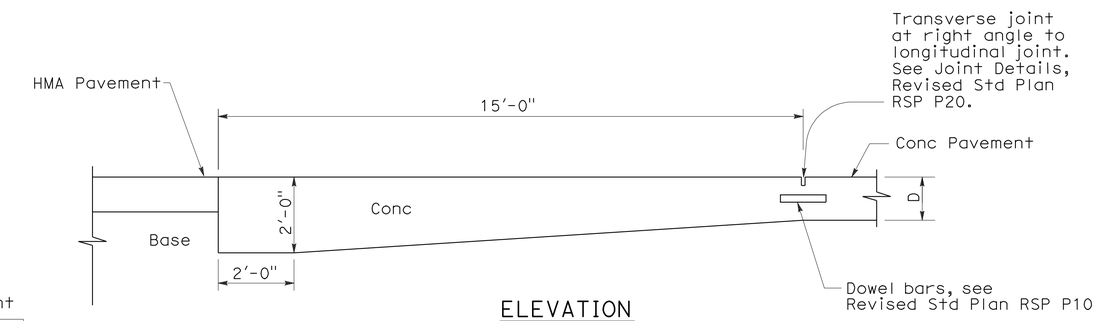

ELEVATION

PAVEMENT END ANCHOR

NOTE:

1. Heavy broom finish.

STATE OF CALIFORNIA
DEPARTMENT OF TRANSPORTATION

JOINTED PLAIN CONCRETE PAVEMENT-END PANEL PAVEMENT TRANSITIONS

NO SCALE

RSP P30 DATED MAY 15, 2009 SUPERSEDES STANDARD PLAN P30
DATED MAY 1, 2006 - PAGE 129 OF THE STANDARD PLANS BOOK DATED MAY 2006.

REVISED STANDARD PLAN RSP P30

2006 REVISED STANDARD PLAN RSP P30

5-8-09

DIST	COUNTY	ROUTE	POST MILES TOTAL PROJECT	SHEET NO.	TOTAL SHEETS
11	SD	76	23.1/23.5	48	83

Raymond Don Tsztoo
REGISTERED CIVIL ENGINEER

June 6, 2008
PLANS APPROVAL DATE

REGISTERED PROFESSIONAL ENGINEER
Raymond Don Tsztoo
No. C37332
Exp. 6-30-08
CIVIL
STATE OF CALIFORNIA

The State of California or its officers or agents shall not be responsible for the accuracy or completeness of electronic copies of this plan sheet.

To accompany plans dated 6-7-10

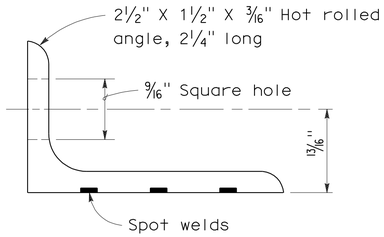

ANGLE

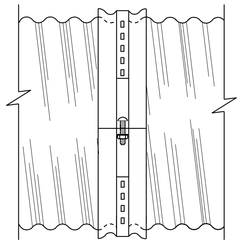

SIDE VIEW
ANGLE

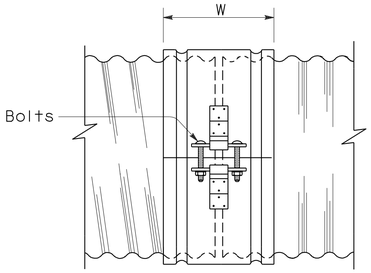

SIDE VIEW
SINGLE BAR AND STRAP

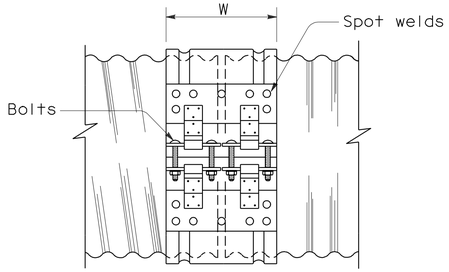

SIDE VIEW
DOUBLE BAR AND STRAP

NOTES:

1. All ferrous metal coupling band connection hardware shall be galvanized or electroplated in accordance with the Standard Specifications.
2. Dimensions and thicknesses shown are minimum.
3. Spot welds shall develop minimum required strength of strap.
4. Fillet welds of equivalent strength may be substituted for spot welds or rivets.
5. Dimension depends upon whether end condition is lips up or lips down.

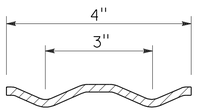

SECTION

H-4 HUGGER BAND

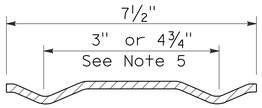

SECTION

H-7 HUGGER BAND

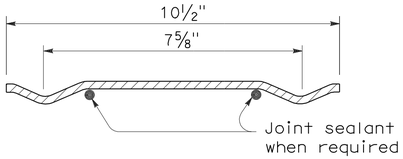

SECTION

H-10 HUGGER BAND

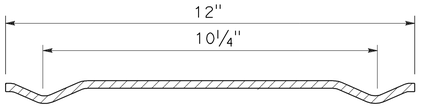

SECTION

H-12 HUGGER BAND

HUGGER COUPLING BANDS

STATE OF CALIFORNIA
DEPARTMENT OF TRANSPORTATION

CORRUGATED METAL PIPE COUPLING DETAILS No. 4 HUGGER COUPLING BANDS

NO SCALE

RSP D97D DATED JUNE 6, 2008 SUPERSEDES STANDARD PLAN D97D
DATED MAY 1, 2006 - PAGE 186 OF THE STANDARD PLANS BOOK DATED MAY 2006.

REVISED STANDARD PLAN RSP D97D

2006 REVISED STANDARD PLAN RSP D97D

3-24-08

DIST	COUNTY	ROUTE	POST MILES TOTAL PROJECT	SHEET NO.	TOTAL SHEETS
11	SD	76	23.1/23.5	49	83

Raymond Don Tsztoo
REGISTERED CIVIL ENGINEER

June 6, 2008
PLANS APPROVAL DATE

REGISTERED PROFESSIONAL ENGINEER
Raymond Don Tsztoo
No. C37332
Exp. 6-30-08
CIVIL
STATE OF CALIFORNIA

The State of California or its officers or agents shall not be responsible for the accuracy or completeness of electronic copies of this plan sheet.

To accompany plans dated 6-7-10

ANNULAR AND HELICAL PROFILE

COUPLING TYPE	PIPE CORRUGATION	PIPE SIZE	W OR A	PIPE WALL THICKNESS		BAND THICKNESS		BAR AND STRAP (CSP ONLY)			ANGLE						
											DIMENSIONS		BOLTS (No.- Dia)		RIVETS ANGLE TO BAND		SPOT WELDS ANGLE TO BAND
				CSP	CAP	CSP	CAP	STRAP THICKNESS	BOLTS Dia	BAR Dia	CSP	CAP	CSP	CAP	CSP	CAP	CSP
TWO PIECE INTEGRAL FLANGE	1½′ × ¼″	6″	7″	0.064″-0.168″		0.052″							3-⅜″				
	1½′ × ¼″	8″-10″	7″	0.064″-0.168″	0.060″-0.164″	0.064″	0.060″						3-⅜″	3-⅜″			
ANNULAR	2⅔″ × ½″	THROUGH 24″	12″	0.064″-0.168″	0.060″-0.164″	0.064″	0.060″				2″ × 2″ × 3⁄16″	2″ × 2″ × 3⁄16″	3-½″	3-½″	3-⅜″	3-⅜″	3-½″
HUGGER	2⅔″ × ½″ REROLLED END	THROUGH 24″	10½″	0.064″-0.168″		0.064″		0.079″	½″	⅞″							

SPIRAL RIB PROFILE

COUPLING TYPE	PIPE CORRUGATION	PIPE SIZE	W	PIPE WALL THICKNESS		BAND THICKNESS		BAR AND STRAP (SSRP ONLY)			ANGLE						
											DIMENSIONS		BOLTS (No.- Dia)		RIVETS ANGLE TO BAND		SPOT WELDS ANGLE TO BAND
				SSRP	ASRP	SSRP	ASRP	STRAP THICKNESS	BOLTS Dia	BAR Dia	SSRP	ASRP	SSRP	ASRP	SSRP	ASRP	SSRP
ANNULAR	2⅔″ × ½″ * REROLLED END	24″	12″	0.064″-0.168″	0.060″-0.164″	0.064″	0.060″				2″ × 2″ × 3⁄16″	2″ × 2″ × 3⁄16″	3-½″	3-½″	3-⅜″	3-⅜″	3-½″
HUGGER	2⅔″ × ½″ * REROLLED END	24″	10½″	0.064″-0.168″		0.064″		0.079″	½″	⅞″							

* See Note 12.

12. All profiles of Spiral Rib Pipe (¾″ × ¾″ ribs at 7½″ pitch and ¾″ × 1″ ribs at 11½″ pitch in both steel and aluminum and ¾″ × 1″ ribs at 8½″ pitch in steel only) shall be manufactured with rerolled ends. Corrugation profile of the rerolled ends shall be 2⅔″ × ½″ annual corrugations with a minimum of two full corrugations at each end.

NOTES:

1. All ferrous metal coupling band connection hardware shall be galvanized or electro-plated in accordance with the Standard Specifications.
2. For helically corrugated coupling bands, the connection angles may be oriented parallel to the pipe axis, provided connecting holes are slotted lengthwise sufficiently to allow adjustment for the helix angle.
3. Tension strap may be connected to band with either spot welds or fillet welds that develop minimum required strength of strap.
4. Use 1¼″ gage line dimension on attached angle leg for rivets and spot welds.
5. Band thickness shall not be less than:
   a. 3 standard thicknesses lighter than the thickness of the pipe for Corrugated Steel Pipe.
   b. 2 standard thicknesses lighter than the thickness of the pipe and in no case lighter than 0.060″ for Corrugated Aluminum Pipe.
6. Dimensions, thicknesses and strengths shown are minimum.
7. For pipe arches use same width band as for round pipe of equal periphery.
8. Fillet welds of equivalent strenght may be substituted for spot welds or rivets.
9. Spot welds shall develop minimum required strength of strap.
10. Pipe with rerolled ends having at least two 2⅔″ × ½″ annular corrugations at each end with or without an upturned flange may be connected with any of the annular coupling bands shown for pipe of the same diameter and wall thickness and having 2⅔″ × ½″ corrugations.
11. For downdrain applications, two piece integral flange couplers shall have factory applied sleeve type rubber gaskets with a minimum length of 7″ measured along the length of the pipe.

STATE OF CALIFORNIA
DEPARTMENT OF TRANSPORTATION

CORRUGATED METAL PIPE COUPLING DETAILS No. 7 DOWNDRAIN

NO SCALE

RSP D97G DATED JUNE 6, 2008 SUPERSEDES STANDARD PLAN D97G
DATED MAY 1, 2006 - PAGE 189 OF THE STANDARD PLANS BOOK DATED MAY 2006.

REVISED STANDARD PLAN RSP D97G

2006 REVISED STANDARD PLAN RSP D97G

4-4-08

DIST	COUNTY	ROUTE	POST MILES TOTAL PROJECT	SHEET NO.	TOTAL SHEETS
11	SD	76	23.1/23.5	50	83

LICENSED LANDSCAPE ARCHITECT

June 5, 2009
PLANS APPROVAL DATE

The State of California or its officers or agents shall not be responsible for the accuracy or completeness of electronic copies of this plan sheet.

LICENSED LANDSCAPE ARCHITECT — Gregory A. Balzer — 2016 — 10 (Renewal) — 2-28-11 (Renewal Date) — 5-14-09 (Date) — STATE OF CALIFORNIA

To accompany plans dated 6-7-10

A

AB	aggregate base
ABS	acrylonitrile-butadiene-styrene
AC	asphalt concrete
Adj	adjacent/adjustable
AIC	auxiliary irrigation controller
Alt	alternative
AMEND	amendment
ARV	air release valve
AUTO	automatic
AUX	auxiliary
AVB	atmospheric vacuum breaker

B

B&B	balled and burlapped
B/B	brass/bronze
B/B/PL	brass/bronze/plastic
B/PL	brass/plastic
BFM	bonded fiber matrix
Bit Ctd	bituminous coated
BP	booster pump
BPA	backflow preventer assembly
BPAE	backflow preventer assembly in enclosure
BPE	backflow preventer enclosure
BV	ball valve

C

CAP	corrugated aluminum pipe
CARV	combination air release valve
CCA	cam coupler assembly
CEC	controller enclosure cabinet
CHDPE	corrugated high density polyethylene
CL	chain link
CNC	control and neutral conductors
Conc	concrete
Cond	conduit
CSP	corrugated steel pipe
CST	center strip
CV	check valve

D

Dia	diameter
DIP	ductile iron pipe
DN	diameter nominal

E

EA	each
Elect	electric/electrical
Elev	elevation
ENCL	enclosure
EP	edge of pavement
ES	edge of shoulder
EST	end strip
ESTB	establishment
ETW	edge of traveled way

F

F	full circle
F/P	full/part circle
FAU	filter assembly unit
FCV	flow control valve
FERT	fertilizer
FG	finished grade
FIPT	female iron pipe thread
FIS	fertilizer injector system
FL	flow line
FM	flow monitor
FS	flow sensor
Ft	foot/feet
FV	flush valve

G

GAL	Gallon(s)
Galv	galvanized
GARV	garden valve
GPH	gallons per hour
GPM	gallons per minute
GSP	galvanized steel pipe
GV	gate valve

H

H	half circle
HB	hose bib
HDPE	high density polyethylene
HP	horsepower/hinge point
HPL	high pressure line
Hwy	highway

I

IC	irrigation controller
ICC	irrigation controller(s) in controller enclosure cabinet
ID	inside diameter
In	inches
IFS	irrigation filtration system
IPS	iron pipe size
IPT	iron pipe thread
Irr	irrigation

L

L	length
LF	linear foot

M

Max	maximum
MBGR	metal beam guard railing
MCV	manual control valve
MIC	master irrigation controller
Min	minimum
MIPT	male iron pipe thread
Misc	miscellaneous
Mtl	material
MVP	maintenance vehicle pullout

N

NCN	no common name
NL	nozzle line
No.	number
NPT	national pipe thread

O

O/C	on center
OD	outside diameter
Oz	ounce

P

P	part circle
PB	pull box
PCC	portland cement concrete
PE	polyethylene
Pkt	packet
PL	plastic
PLT	plant/planting
PLT ESTB	plant establishment
PM	post mile
PR	pressure rated
PRLV	pressure relief valve
PSFM	polymer stabilized fiber matrix
PSI	pounds per square inch
PRV	pressure reducing valve
PVC	polyvinyl chloride
Pvmt	pavement

Q

Q	quarter circle
QCV	quick coupling valve

R

R	radius
RCP	reinforced concrete pipe
RCV	remote control valve
RCVM	remote control valve (master)
RCVMF	remote control valve (master) w/ flow meter
RCW	recycled/reclaimed water
RECP	rolled erosion control product
REQ	required
R/W	right of way

S

S	slip
SCC	sprinkler control conduit
SCH	schedule
SF	state-furnished
Shld	shoulder
SQFT	square foot/feet
SQYD	square yard(s)
SST	side strip
Sta	station
Std	standard
SW	sidewalk/sound wall

T

T	third circle/thread
TLS	truck loading standpipe
TQ	three quarter circle
TRM	turf reinforcement mat
TRVD	traveled
TT	two third circle
Typ	typical

U

UG	underground

V

VAU	valve assembly unit

W

W	width
W/	with
WM	water meter
WS	wye strainer
WSP	welded steel pipe
WWM	welded wire mesh

NOTE:

FOR ADDITIONAL ABBREVIATIONS, SEE STANDARD PLANS A10A AND A10B.

STATE OF CALIFORNIA
DEPARTMENT OF TRANSPORTATION

PLANTING AND IRRIGATION ABBREVIATIONS

NO SCALE

RSP H1 DATED JUNE 5, 2009 SUPERSEDES STANDARD PLAN H1
DATED MAY 1, 2006 - PAGE 201 OF THE STANDARD PLANS BOOK DATED MAY 2006.

REVISED STANDARD PLAN RSP H1

2006 REVISED STANDARD PLAN RSP H1

DIST	COUNTY	ROUTE	POST MILES TOTAL PROJECT	SHEET NO.	TOTAL SHEETS
11	SD	76	23.1/23.5	51	83

LICENSED LANDSCAPE ARCHITECT

June 5, 2009
PLANS APPROVAL DATE

The State of California or its officers or agents shall not be responsible for the accuracy or completeness of electronic copies of this plan sheet.

LICENSED LANDSCAPE ARCHITECT — Gregory A. Balzer — 2016 — 10 Expiration — 2-28-11 Renewal Date — 5-14-09 Date — STATE OF CALIFORNIA

To accompany plans dated 6-7-10

EXISTING	PROPOSED	ITEM DESCRIPTION
		WATER METER (WM)
		BACKFLOW PREVENTER ASSEMBLY (BPA)
		BACKFLOW PREVENTER ASSEMBLY IN ENCLOSURE (BPAE)
		BACKFLOW PREVENTER ENCLOSURE (BPE)
		BOOSTER PUMP (BP)
		TRUCK LOADING STANDPIPE (TLS)
	FS	FLOW SENSOR (FS)
X	X	MASTER IRRIGATION CONTROLLER (MIC)
		AUXILIARY IRRIGATION CONTROLLER (AIC)
		IRRIGATION CONTROLLER (IC)/ IRRIGATION CONTROLLER (IC) (BATTERY) IRRIGATION CONTROLLER (IC) (SOLAR)
		IRRIGATION CONTROLLER(S) IN CONTROLLER ENCLOSURE CABINET (ICC)
		CONTROL AND NEUTRAL CONDUCTORS (CNC)
SCC	SCC	SPRINKLER CONTROL CONDUIT (SCC)
		IRRIGATION CROSSOVER
		EXTEND IRRIGATION CROSSOVER
		IRRIGATION SLEEVE
dip	DIP	DUCTILE IRON PIPE (SUPPLY LINE) (MAIN) (DIP)
		GALVANIZED STEEL PIPE (SUPPLY LINE) (MAIN) (GSP)
		GALVANIZED STEEL PIPE (SUPPLY LINE) (LATERAL) (GSP)
		PLASTIC PIPE (PR 200) (SUPPLY LINE) (MAIN)
		PLASTIC PIPE (PR 200) (SUPPLY LINE) (LATERAL)
		PLASTIC PIPE (IRRIGATION LINE)
		REMOTE CONTROL VALVE (RCV) REMOTE CONTROL VALVE (MASTER) (RCVM) REMOTE CONTROL VALVE (MASTER) W/FLOW METER (RCVMF)
		MANUAL CONTROL VALVE (MCV)
		VALVE ASSEMBLY UNIT (VAU)
		WYE STRAINER (WS)
		FILTER ASSEMBLY UNIT (FAU)
		GATE VALVE (GV)
		BALL VALVE (BV)

EXISTING	PROPOSED	ITEM DESCRIPTION
		QUICK COUPLING VALVE (QCV)
		CAM COUPLER ASSEMBLY (CCA)
		PRESSURE REDUCING VALVE (PRV)
		PRESSURE RELIEF VALVE (PRLV)
		FLOW CONTROL VALVE (FCV)
		COMBINATION AIR RELEASE VALVE (CARV)
		CHECK VALVE (CV)
		FLUSH VALVE (FV)
		NOZZLE LINE W/TURNING UNION
		IRRIGATION SYSTEM
		IRRIGATION SYSTEM TO BE REMOVED
		CHAIN LINK GATE
		QUICK COUPLING VALVE W/SPRINKLER PROTECTOR
3	3	SPRINKLER W/SPRINKLER PROTECTOR
	C	CONNECT TO EXISTING SYSTEM
		CAP
		CAP EXISTING

VALVE CODE

RCV SIZE
IRRIGATION CONTROLLER
CONTROLLER STATION
VALVE IN PARALLEL (IF APPLICABLE)
GPM
QUANTITY OF SPRINKLERS (WHEN SHOWN)

* 2½"-A-2b-40 -60

MCV SIZE
VALVE NUMBER
GPM
QUANTITY OF TYPE SPRINKLERS (WHEN SHOWN)

* 2"-3-30 -50

* VALVE CODES FOR EXISTING VALVES ARE SHOWN IN A DASHED ENCLOSURE.

STATE OF CALIFORNIA
DEPARTMENT OF TRANSPORTATION

PLANTING AND IRRIGATION SYMBOLS

NO SCALE

RSP H2 DATED JUNE 5, 2009 SUPERSEDES RSP H2 DATED MARCH 7, 2008 AND STANDARD PLAN H2 DATED MAY 1, 2006 - PAGE 202 OF THE STANDARD PLANS BOOK DATED MAY 2006.

REVISED STANDARD PLAN RSP H2

2006 REVISED STANDARD PLAN RSP H2

DIST	COUNTY	ROUTE	POST MILES TOTAL PROJECT	SHEET NO.	TOTAL SHEETS
11	SD	76	23.1/23.5	52	83

LICENSED LANDSCAPE ARCHITECT

April 3, 2009
PLANS APPROVAL DATE

The State of California or its officers or agents shall not be responsible for the accuracy or completeness of electronic copies of this plan sheet.

LICENSED LANDSCAPE ARCHITECT
Gregory A. Balzer 3598
Signature
02-28-11
Renewal Date
03-04-09
Date
STATE OF CALIFORNIA

To accompany plans dated 6-7-10

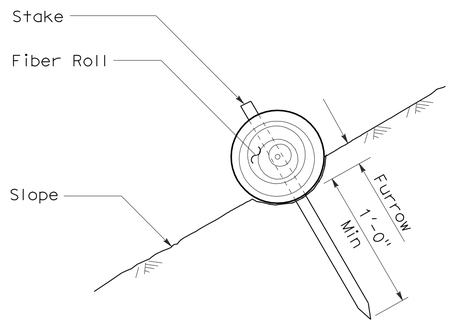

SECTION

FIBER ROLL
(TYPE 1)

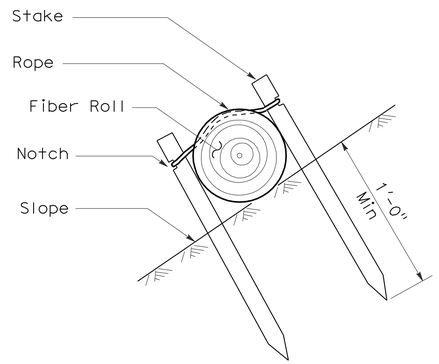

SECTION

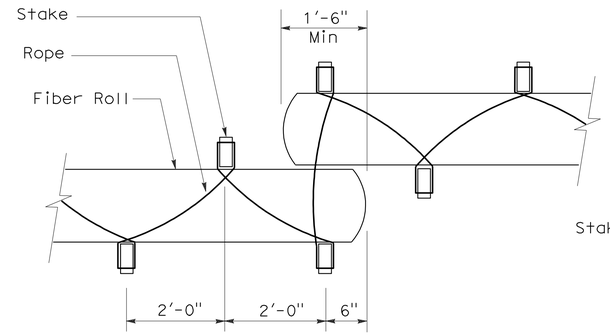

PLAN

FIBER ROLL
(TYPE 2)

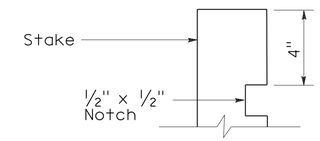

ELEVATION

STAKE NOTCH DETAIL

NOTES:

1. Fiber roll spacing varies depending upon slope inclination.
2. Installations shown in the perspectives are for slope inclination of 10:1 and steeper.

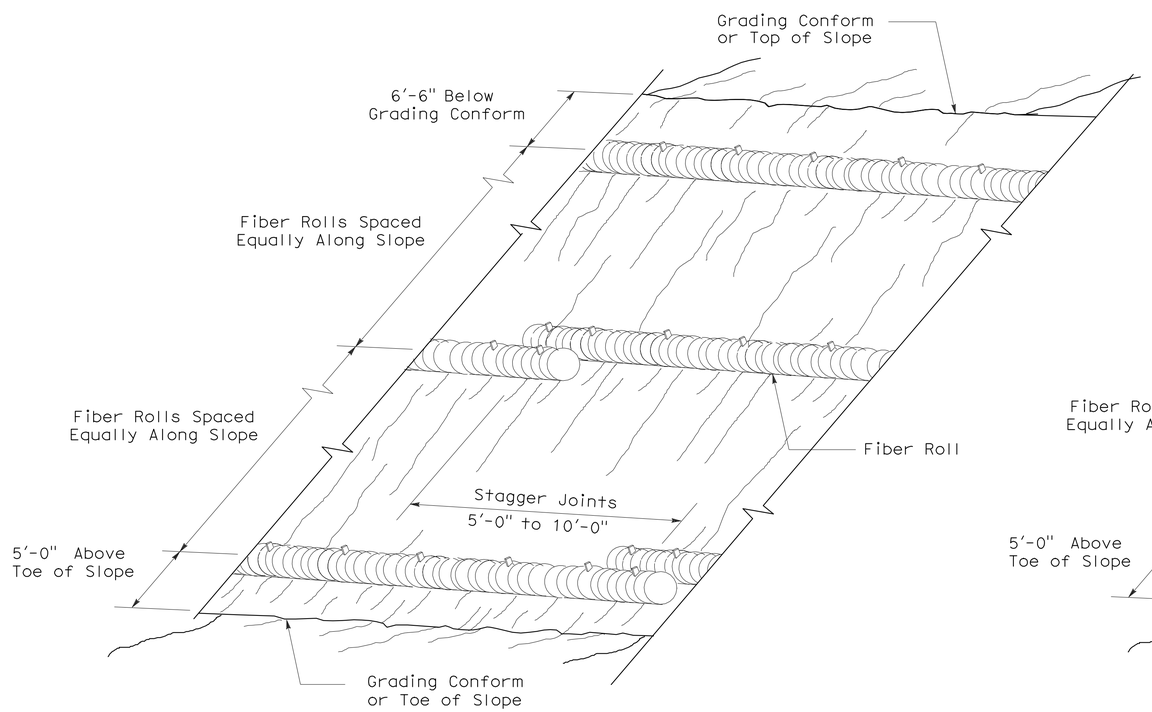

PERSPECTIVE

FIBER ROLL (TYPE 1)

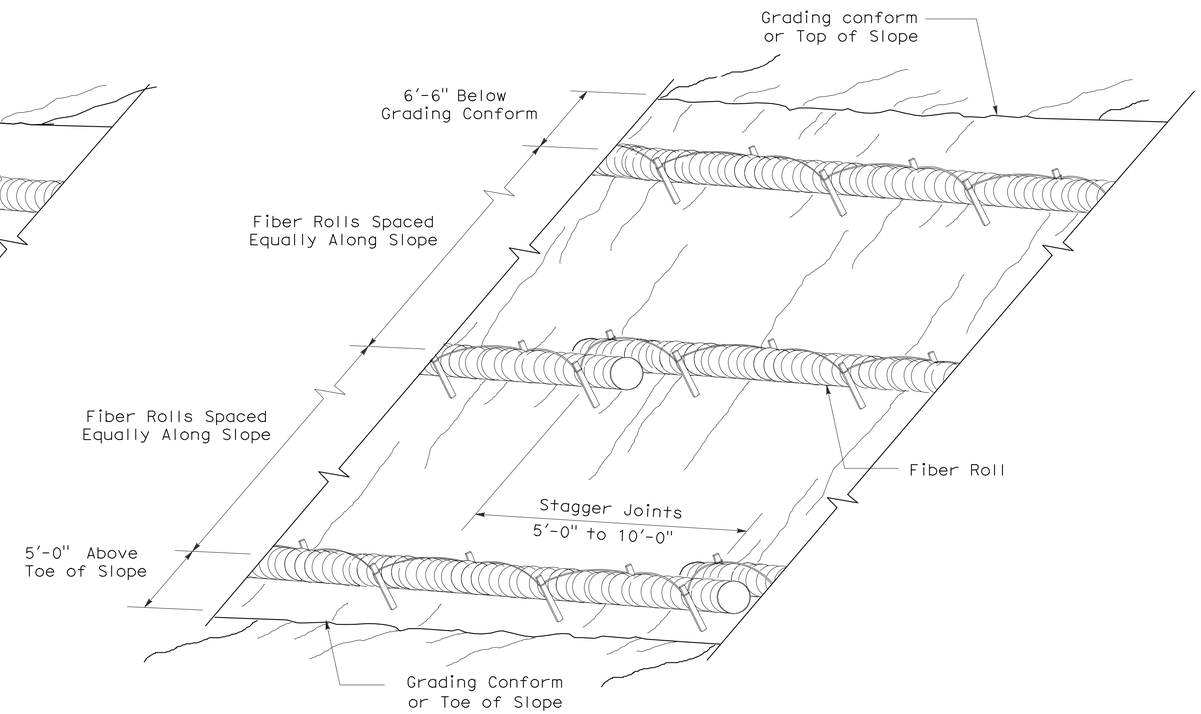

PERSPECTIVE

FIBER ROLL (TYPE 2)

STATE OF CALIFORNIA
DEPARTMENT OF TRANSPORTATION

EROSION CONTROL DETAILS (FIBER ROLL)

NO SCALE

RNSP H51 DATED APRIL 3, 2009 SUPERSEDES NSP H51 DATED DECEMBER 1, 2006 THAT SUPPLEMENTS THE STANDARD PLANS BOOK DATED MAY 2006.

REVISED NEW STANDARD PLAN RNSP H51

2006 REVISED NEW STANDARD PLAN RNSP H51

3-4-09

DIST	COUNTY	ROUTE	POST MILES TOTAL PROJECT	SHEET NO.	TOTAL SHEETS
11	SD	76	23.1/23.5	53	83

Randell D. Hiatt
REGISTERED CIVIL ENGINEER

June 6, 2008
PLANS APPROVAL DATE

REGISTERED PROFESSIONAL ENGINEER
Randell D. Hiatt
No. C50200
Exp. 6-30-09
CIVIL
STATE OF CALIFORNIA

The State of California or its officers or agents shall not be responsible for the accuracy or completeness of electronic copies of this plan sheet.

To accompany plans dated 6-7-10

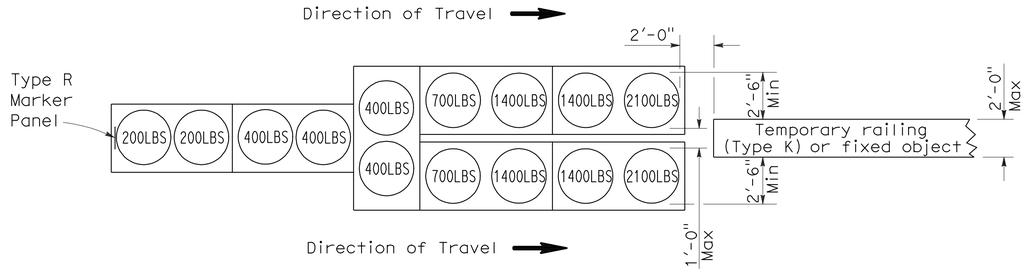

ARRAY `TU14'

Approach speed 45 mph or more

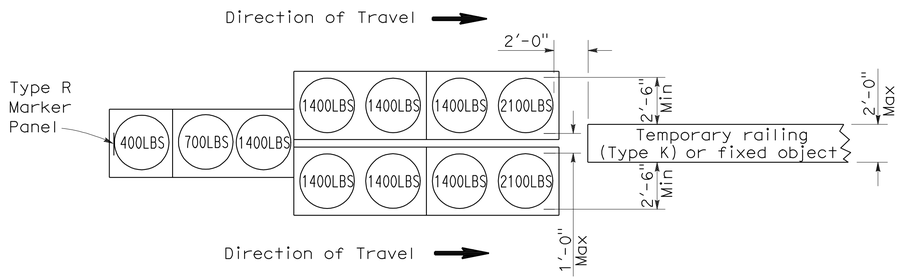

ARRAY `TU11'

Approach speed less than 45 mph

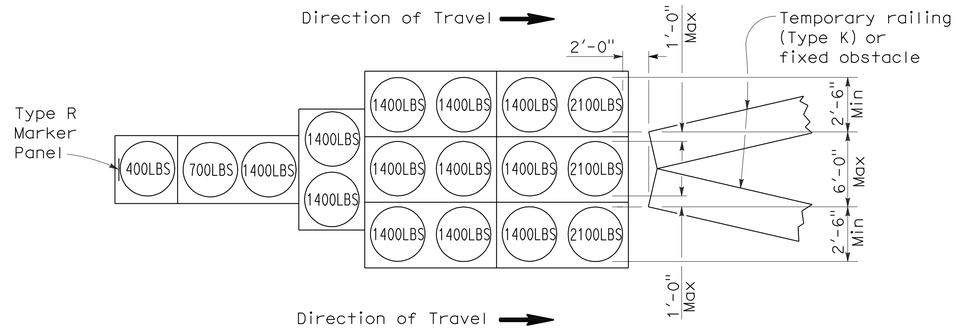

ARRAY `TU17'

Approach speed less than 45 mph

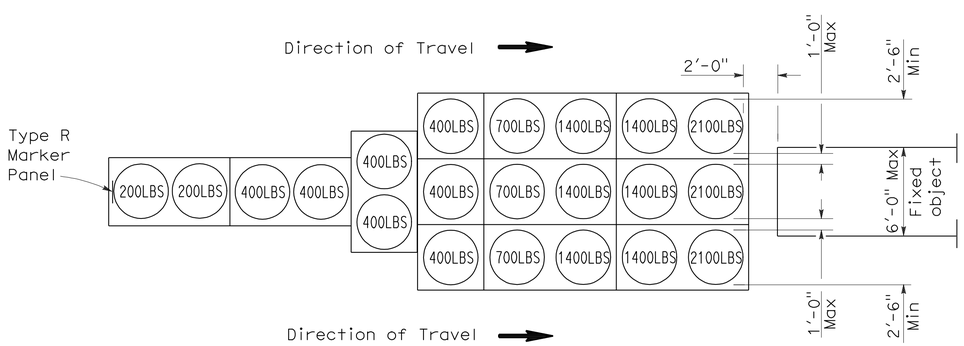

ARRAY `TU21'

Approach speed 45 mph or more

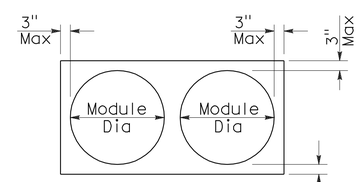

PLAN

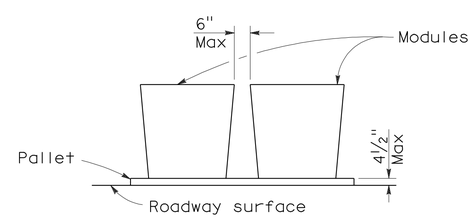

ELEVATION

CRASH CUSHION PALLET DETAIL

See Note 7

NOTES:

1. (XXX) Indicates sand filled module location and weight of sand in pounds for each module. Module spacing is based on the greater diameter of the module.
2. All sand weights are nominal.
3. Temporary crash cushion arrays shall not encroach on the traveled way.
4. Place the top of Type R marker panel 1" below the module lid.
5. Refer to Standard Plan A73B for marker details.
6. Approach speeds indicated conform to NCHRP 350 Report criteria.
7. Use of pallets is optional.

STATE OF CALIFORNIA
DEPARTMENT OF TRANSPORTATION

TEMPORARY CRASH CUSHION, SAND FILLED (UNIDIRECTIONAL)

NO SCALE

RSP T1A DATED JUNE 6, 2008 SUPERSEDES STANDARD PLAN T1A
DATED MAY 1, 2006 - PAGE 211 OF THE STANDARD PLANS BOOK DATED MAY 2006.

REVISED STANDARD PLAN RSP T1A

2006 REVISED STANDARD PLAN RSP T1A

DIST	COUNTY	ROUTE	POST MILES TOTAL PROJECT	SHEET NO.	TOTAL SHEETS
11	SD	76	23.1/23.5	54	83

Randell D. Hiatt
REGISTERED CIVIL ENGINEER

June 6, 2008
PLANS APPROVAL DATE

REGISTERED PROFESSIONAL ENGINEER
Randell D. Hiatt
No. C50200
Exp. 6-30-09
CIVIL
STATE OF CALIFORNIA

The State of California or its officers or agents shall not be responsible for the accuracy or completeness of electronic copies of this plan sheet.

To accompany plans dated 6-7-10

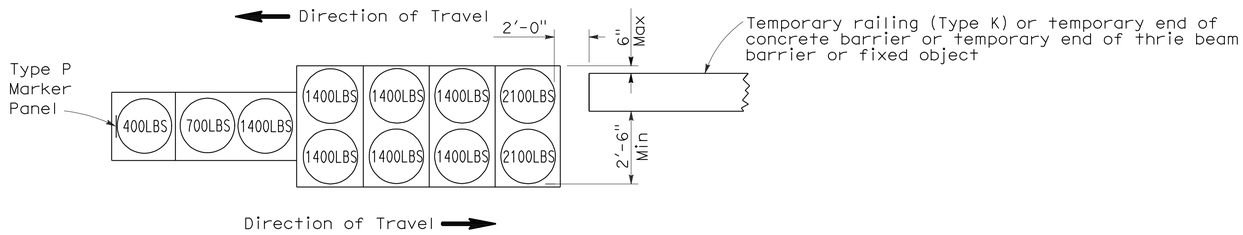

ARRAY 'TB11'

Approach speed less than 45 mph

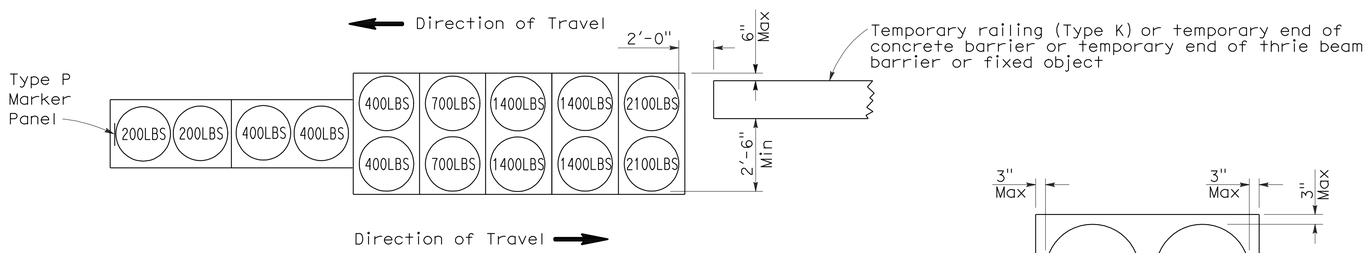

ARRAY 'TB14'

Approach speed 45 mph or more

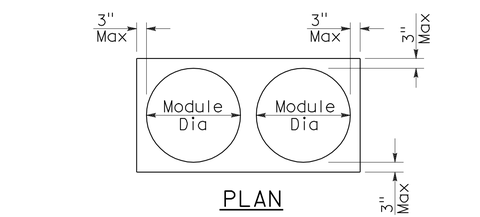

PLAN

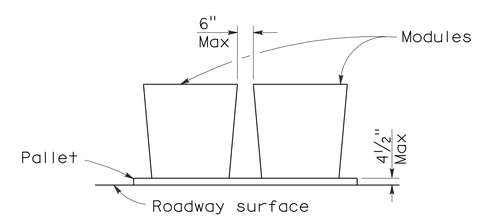

ELEVATION

CRASH CUSHION PALLET DETAIL

See Note 7

NOTES:

1. (XXX) Indicates sand filled module location and weight of sand in pounds for each module. Module spacing is based on the greater diameter of the module.
2. All sand weights are nominal.
3. Temporary crash cushion arrays shall not encroach on the traveled way.
4. Place the Type P marker panel so that the bottom of the panel rests upon the pallet.
5. Refer to Standard Plan A73B for marker details.
6. Approach speeds indicated conform to NCHRP 350 Report criteria.
7. Use of pallets is optional.

STATE OF CALIFORNIA
DEPARTMENT OF TRANSPORTATION

TEMPORARY CRASH CUSHION, SAND FILLED (BIDIRECTIONAL)

NO SCALE

RSP T1B DATED JUNE 6, 2008 SUPERSEDES STANDARD PLAN T1B
DATED MAY 1, 2006 - PAGE 212 OF THE STANDARD PLANS BOOK DATED MAY 2006.

REVISED STANDARD PLAN RSP T1B

2006 REVISED STANDARD PLAN RSP T1B

5-15-08

DIST	COUNTY	ROUTE	POST MILES TOTAL PROJECT	SHEET NO.	TOTAL SHEETS
11	SD	76	23.1/23.5	55	83

Randell D. Hiatt
REGISTERED CIVIL ENGINEER

June 6, 2008
PLANS APPROVAL DATE

REGISTERED PROFESSIONAL ENGINEER
Randell D. Hiatt
No. C50200
Exp. 6-30-09
CIVIL
STATE OF CALIFORNIA

The State of California or its officers or agents shall not be responsible for the accuracy or completeness of electronic copies of this plan sheet.

To accompany plans dated 6-7-10

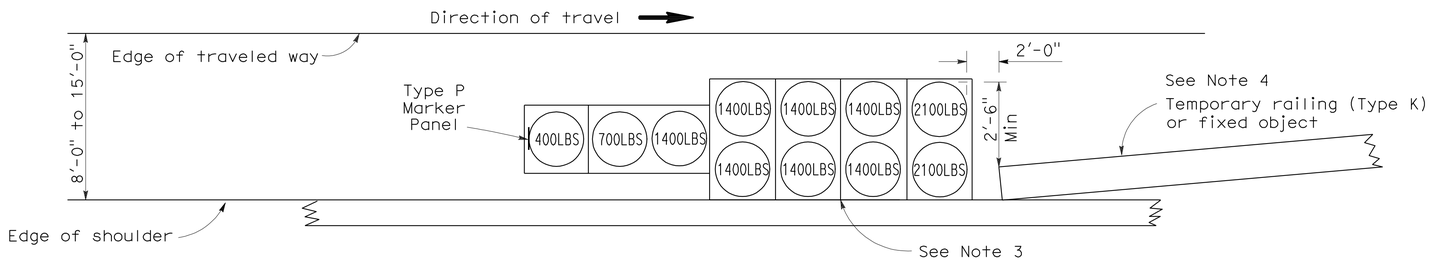

ARRAY 'TS11'

Approach speed less than 45 mph
See Note 9

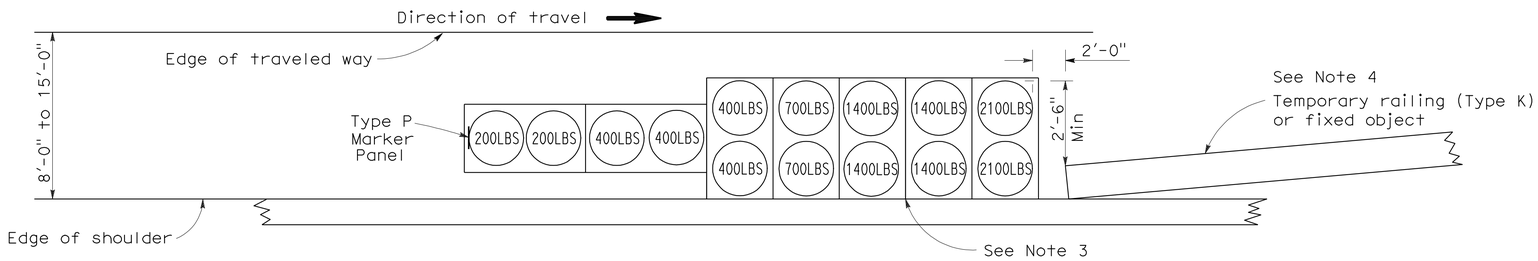

ARRAY 'TS14'

Approach speed 45 mph or more
See Note 9

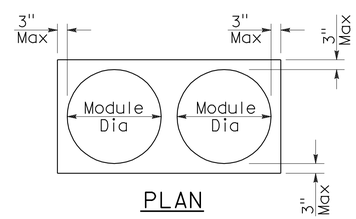

PLAN

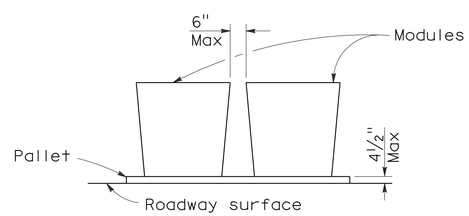

ELEVATION

CRASH CUSHION PALLET DETAIL

See Note 11

NOTES:

1. (XXX) Indicates sand filled module location and weight of sand in pounds for each module. Module spacing is based on the greater diameter of the module.
2. All sand weights are nominal.
3. The temporary crash cushion arrays shown on this plan shall be used only in locations where there will be traffic on one side of the temporary crash cushion array.
4. If the fixed object or approach end of the temporary railing is less than 15'-0" from the edge of traveled way, a temporary crash cushion is required in a construction or work zone.
5. Temporary crash cushion arrays shall not encroach on the traveled way.
6. Arrays for median shoulders shall conform to details shown on this plan for outside shoulders.
7. Place the Type P marker panel so that the bottom of the panel rests upon the pallet and faces traffic.
8. Refer to Standard Plan A73B for marker details.
9. For shoulder widths less than 8'-0", appropriate approved crash cushion protection, other than sand filled modules, shall be provided at fixed objects and at approach ends of temporary railing. The specific type of crash cushion shall be as shown on the project plans or as specified in the Special Provisions, or if not shown on the project plans or specified in the Special Provisions, shall be as approved by the Engineer.
10. Approach speeds indicated conform to NCHRP 350 Report criteria.
11. Use of pallets is optional.

STATE OF CALIFORNIA
DEPARTMENT OF TRANSPORTATION

TEMPORARY CRASH CUSHION, SAND FILLED (SHOULDER INSTALLATIONS)

NO SCALE

RSP T2 DATED JUNE 6, 2008 SUPERSEDES STANDARD PLAN T2
DATED MAY 1, 2006 - PAGE 213 OF THE STANDARD PLANS BOOK DATED MAY 2006.

REVISED STANDARD PLAN RSP T2

2006 REVISED STANDARD PLAN RSP T2

5-15-08

DIST	COUNTY	ROUTE	POST MILES TOTAL PROJECT	SHEET NO.	TOTAL SHEETS
11	SD	76	23.1/23.5	56	83

REGISTERED CIVIL ENGINEER

November 17, 2006
PLANS APPROVAL DATE

REGISTERED PROFESSIONAL ENGINEER
Greg W. Edwards
No. C36386
Exp. 6-30-08
CIVIL
STATE OF CALIFORNIA

The State of California or its officers or agents shall not be responsible for the accuracy or completeness of electronic copies of this plan sheet.

To accompany plans dated 6-7-10

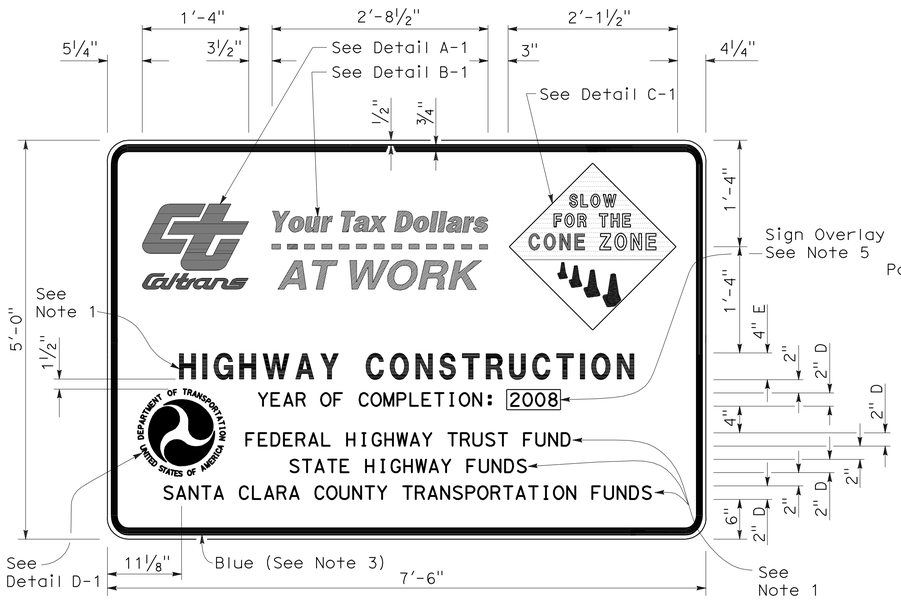

TYPE 1

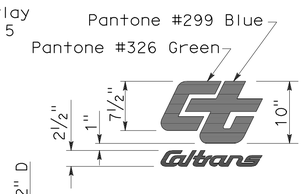

DETAIL A-1

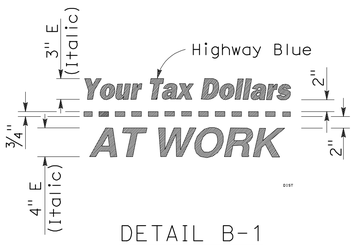

DETAIL B-1
(See Note 3)

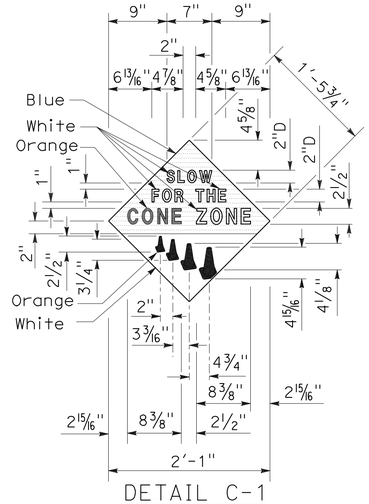

DETAIL C-1
(See Note 4)

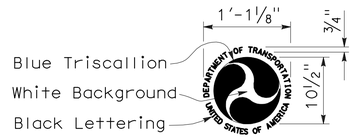

DETAIL D-1
(See Note 6)

NOTES:

1. The sign messages shown for type of project and fund types are examples only. See the Special Provisions for the applicable type of project and fund type messages to be used.
2. Except as otherwise shown, the legend of sign shall be black on a white background (non-reflective).
3. The border of the signs and details "B-1" and "B-2" shall be blue (non-reflective).
4. The diamond in details "C-1" and "C-2" shall be blue for the background of message, " SLOW FOR THE CONE ZONE", and white background for the orange cones. The color and type of font for the "SLOW FOR THE CONE ZONE" message shall be: "SLOW" white D; "FOR THE" white D; "CONE" orange Arial font; "ZONE" white Arial font.
5. Year of completion of project construction shown on the overlay is an example only. See the Special Provisions.
6. Use when the Project involves Federal Highway Trust Fund.

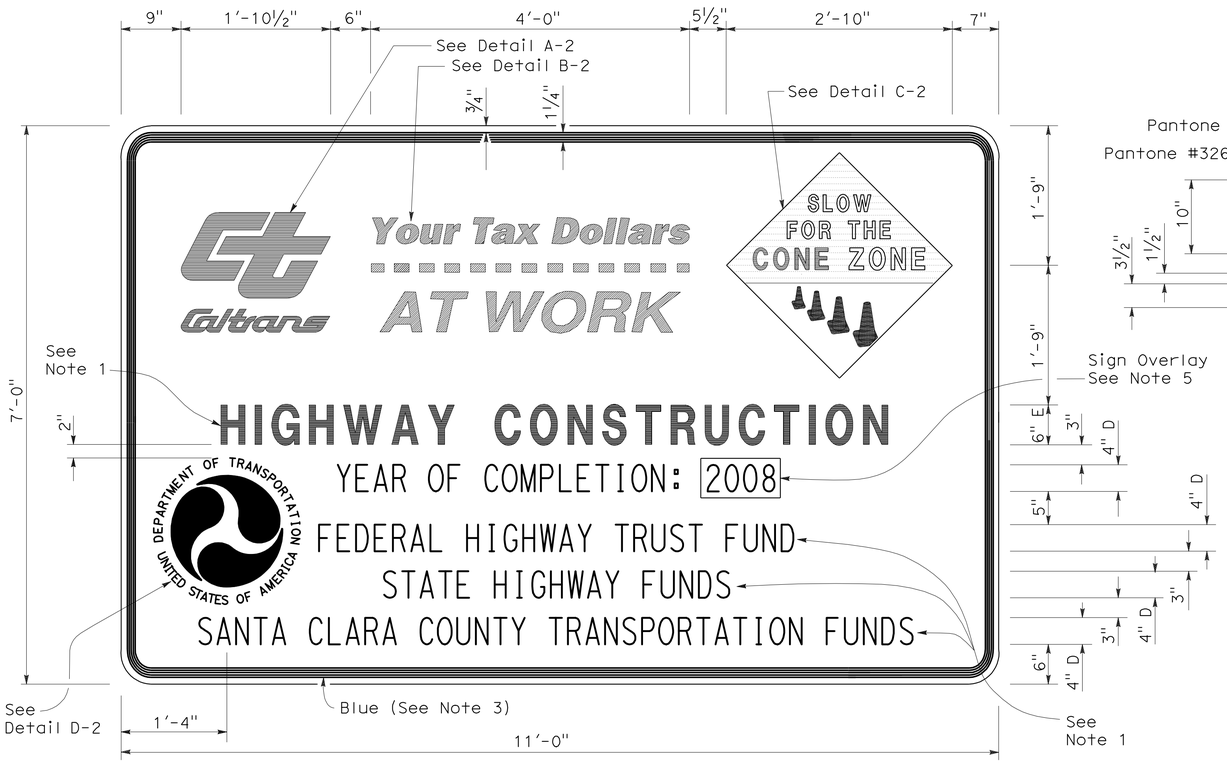

TYPE 2

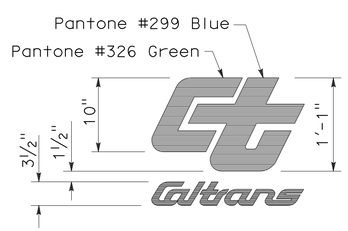

DETAIL A-2

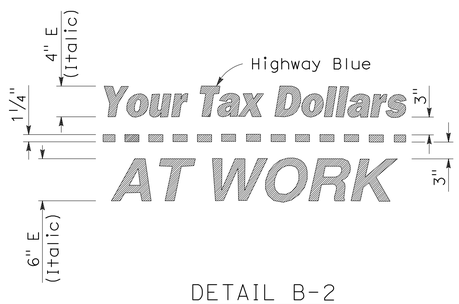

DETAIL B-2
(See Note 3)

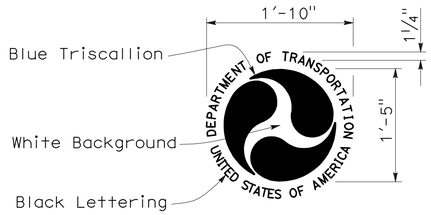

DETAIL D-2
(See Note 6)

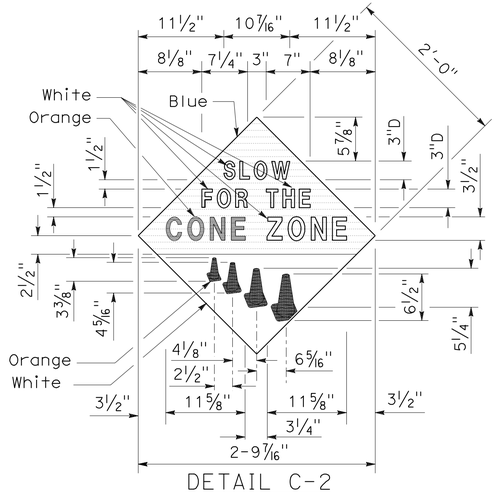

DETAIL C-2
(See Note 4)

STATE OF CALIFORNIA
DEPARTMENT OF TRANSPORTATION

CONSTRUCTION PROJECT FUNDING IDENTIFICATION SIGNS

NO SCALE

RSP T7 DATED NOVEMBER 17, 2006 SUPERSEDES STANDARD PLAN T7
DATED MAY 1, 2006 - PAGE 217 OF THE STANDARD PLANS BOOK DATED MAY 2006.

REVISED STANDARD PLAN RSP T7

2006 REVISED STANDARD PLAN RSP T7

9-7-06

DIST	COUNTY	ROUTE	POST MILES TOTAL PROJECT	SHEET NO.	TOTAL SHEETS
11	SD	76	23.1/23.5	57	83

LICENSED LANDSCAPE ARCHITECT

April 3, 2009
PLANS APPROVAL DATE

LICENSED LANDSCAPE ARCHITECT — ROBERT B. SCHOTT — Signature — 11-30-10 Renewal Date — 2-25-09 Date — STATE OF CALIFORNIA

The State of California or its officers or agents shall not be responsible for the accuracy or completeness of electronic copies of this plan sheet.

To accompany plans dated 6-7-10

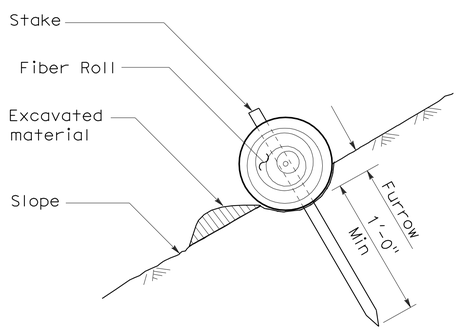

SECTION

TEMPORARY FIBER ROLL (TYPE 1)

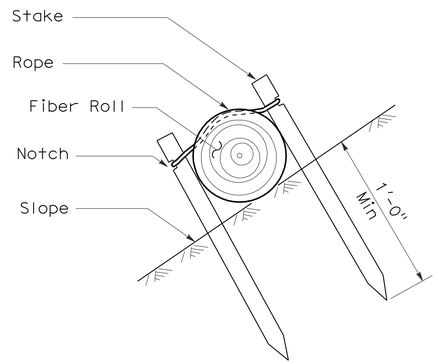

SECTION

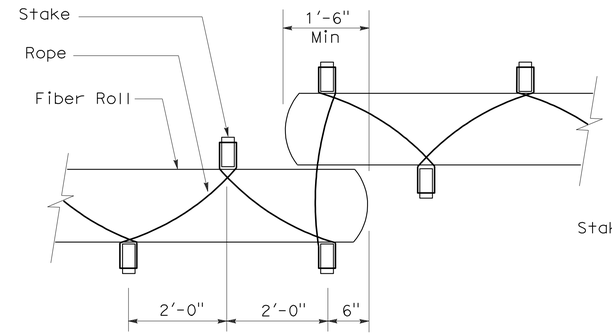

PLAN

TEMPORARY FIBER ROLL (TYPE 2)

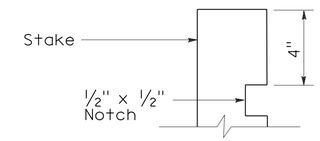

ELEVATION

STAKE NOTCH DETAIL

NOTES:

1. Temporary fiber roll spacing varies depending upon slope inclination.
2. Installations shown in the perspectives are for slope inclination of 10:1 and steeper.

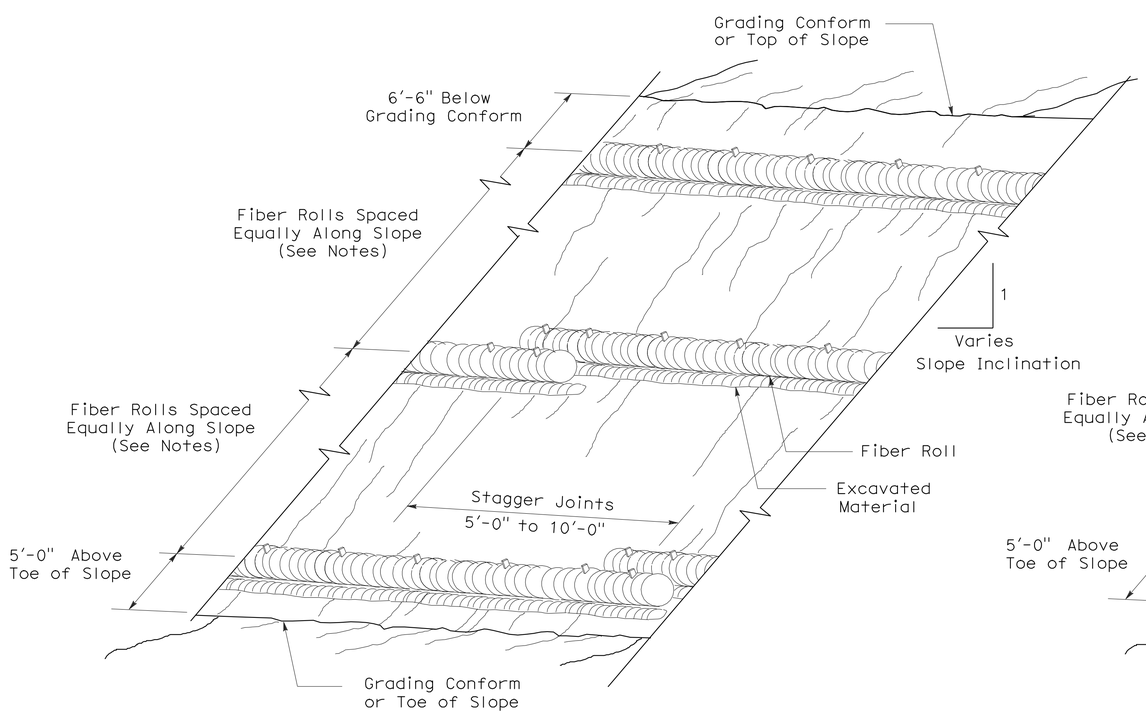

PERSPECTIVE

TEMPORARY FIBER ROLL (TYPE 1)

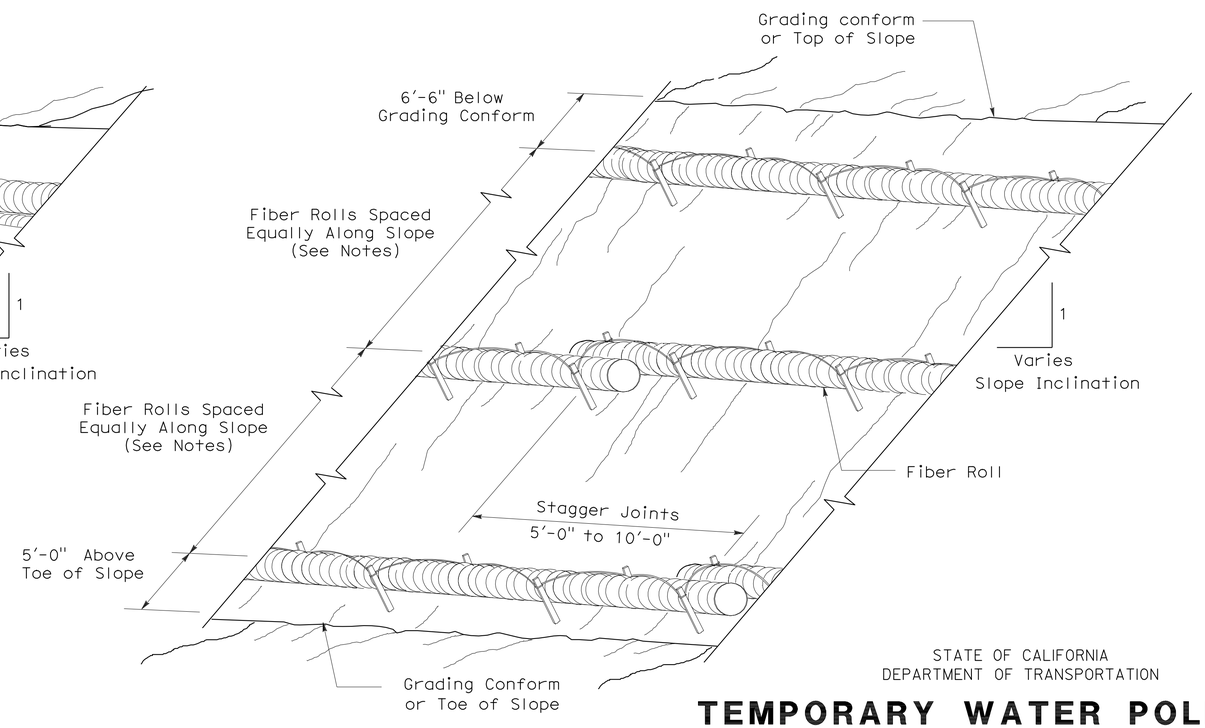

PERSPECTIVE

TEMPORARY FIBER ROLL (TYPE 2)

STATE OF CALIFORNIA
DEPARTMENT OF TRANSPORTATION

TEMPORARY WATER POLLUTION CONTROL DETAILS (TEMPORARY FIBER ROLL)

NO SCALE

RSP T56 DATED APRIL 3, 2009 SUPERSEDES STANDARD PLAN T56
DATED MAY 1, 2006 - PAGE 232 OF THE STANDARD PLANS BOOK DATED MAY 2006.

REVISED STANDARD PLAN RSP T56

2006 REVISED STANDARD PLAN RSP T56

2-23-09

DIST	COUNTY	ROUTE	POST MILES TOTAL PROJECT	SHEET NO.	TOTAL SHEETS
11	SD	76	23.1/23.5	58	83

REGISTERED CIVIL ENGINEER

October 5, 2007
PLANS APPROVAL DATE

REGISTERED PROFESSIONAL ENGINEER Efthymios Delis No. C51434 Exp. 6-30-08 CIVIL STATE OF CALIFORNIA

The State of California or its officers or agents shall not be responsible for the accuracy or completeness of electronic copies of this plan sheet.

To accompany plans dated 6-7-10

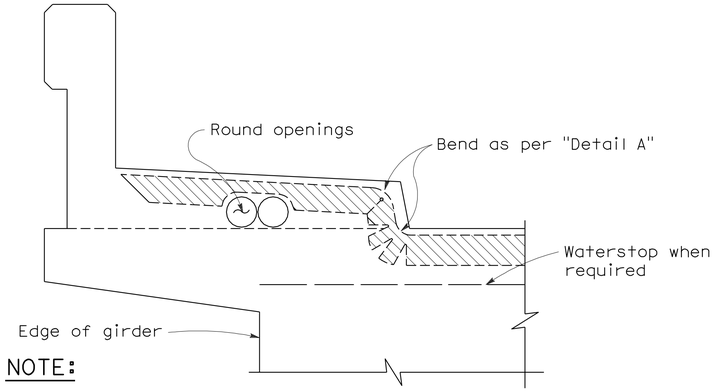

NOTE:

Type "B" seal shown. Type "A" seals to comform to the general path of seal shown, cuts for bending not required. Bend Type "A" seals 3" up into curb or barrier rail on only the low end of the seal.

CONCRETE BARRIER AND SIDEWALK

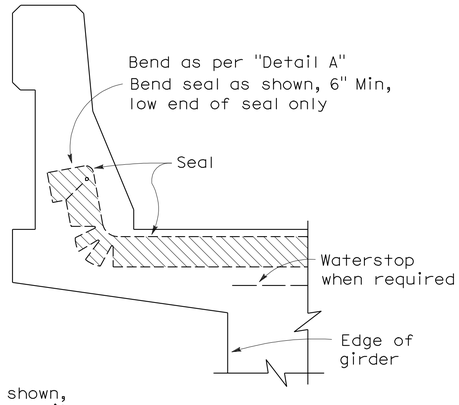

CONCRETE BARRIER

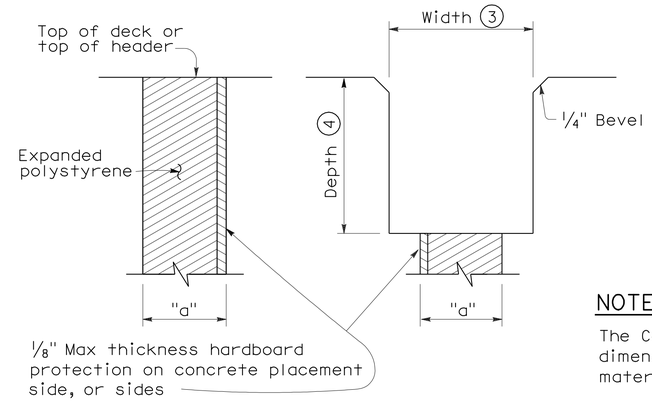

FORMING DETAIL SAWCUT DETAIL

NOTE:

The Contractor shall verify all controlling field dimensions before ordering or fabricatiing any material.

JOINT SEALS DETAILS

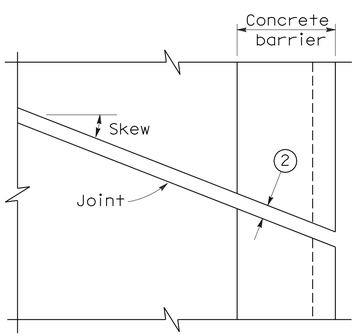

PLAN OF JOINT (SKEW ≤ 20°)

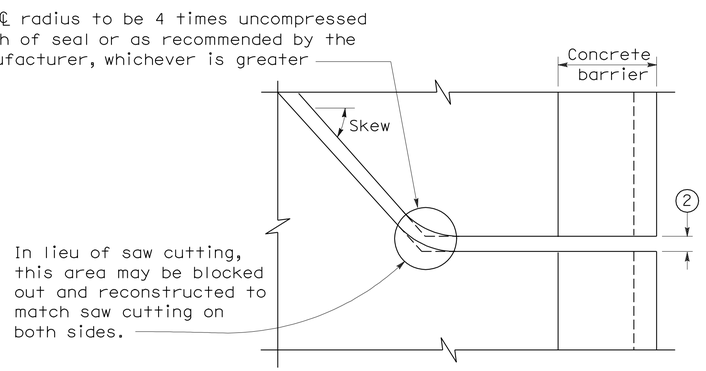

PLAN OF JOINT (SKEW > 20°)

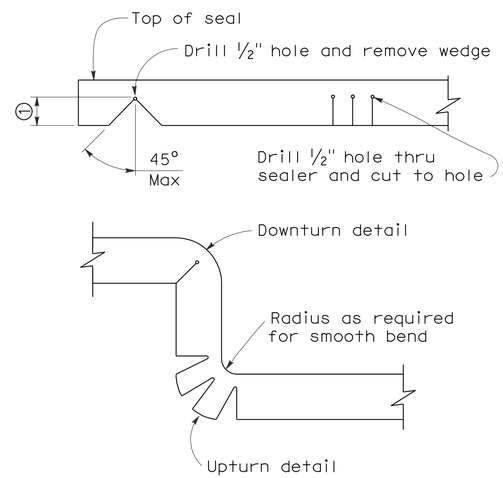

DETAIL A

NOTES:

1. Make smooth cuts from the bottom of seal to 1½" clear of top leaving at least one complete cell between the top of the cut and top of the seal. When necessary cut back of seal to clear conduit and round openings.
2. Opening in barrier to match width of sawn deck joint.
3. Sawcut groove widths shall be as ordered by the Engineer.
4. Depth of sawcut: Type A - Depth to be 2" minimum.
   Type B - Depth to be equal to or greater than the depth of seal measured along the contact surface, when compressed to minimum width position (W_2) plus dimensions shown.
5. MR (movement rating) as shown on other plan sheets.
6. Other depths must be approved by the Engineer.

DIMENSIONS "a" OF JOINT REQUIRED

Movement Rating (MR) (5)	Bridge Type	"a" Dimension Deck Concrete Placed		
		Winter	Fall-Spring	Summer
2"	All except CIP/PS	1½"	1¼"	¾"
	CIP/PS	1¼"	1"	½"
1½"	All except CIP/PS	1¼"	1"	½"
	CIP/PS	1"	¾"	½"
1"	All except CIP/PS	1"	¾"	½"
	CIP/PS	¾"	½"	½"
½"	All except CIP/PS	¾"	¾"	½"
	CIP/PS	½"	½"	½"

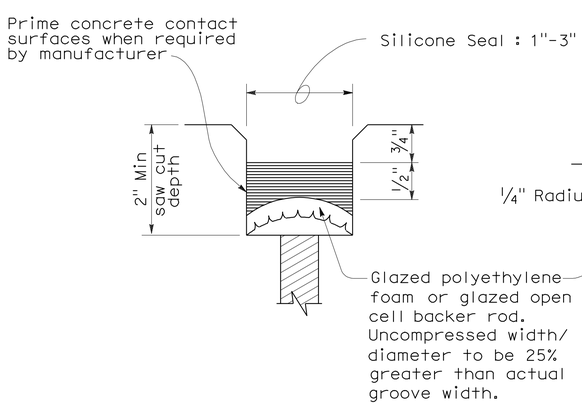

TYPE A SEAL

Movement rating : Silicone = 1" Max

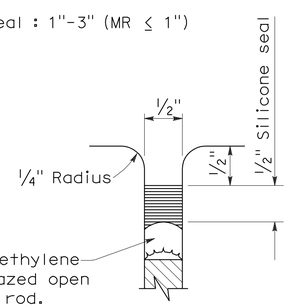

TYPE AL SEAL

Longitudinal joints only

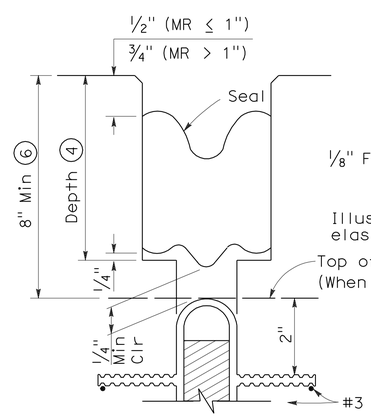

TYPE B JOINT SEAL
IN MINIMUM WIDTH POSITION (W_2)

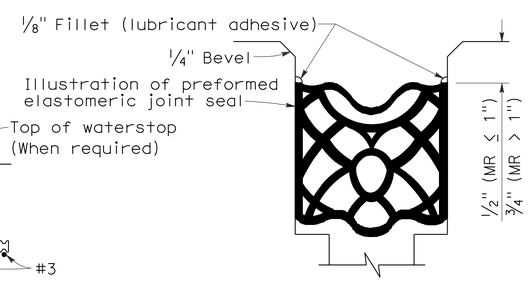

TYPE B SEAL

Movement Rating ≤ 2"

STATE OF CALIFORNIA
DEPARTMENT OF TRANSPORTATION

JOINT SEALS (MAXIMUM MOVEMENT RATING = 2")

NO SCALE

RSP B6-21 DATED OCTOBER 5, 2007 SUPERSEDES STANDARD PLAN B6-21 DATED MAY 1, 2006 - PAGE 258 OF THE STANDARD PLANS BOOK DATED MAY 2006.

REVISED STANDARD PLAN RSP B6-21

2006 REVISED STANDARD PLAN RSP B6-21

5-8-07

DIST	COUNTY	ROUTE	POST MILES TOTAL PROJECT	SHEET NO.	TOTAL SHEETS
11	SD	76	23.1/23.5	59	83

REGISTERED ELECTRICAL ENGINEER

October 5, 2007
PLANS APPROVAL DATE

REGISTERED PROFESSIONAL ENGINEER
Jeffery G. McRae
No. E14512
Exp. 6-30-08
ELECTRICAL
STATE OF CALIFORNIA

The State of California or its officers or agents shall not be responsible for the accuracy or completeness of electronic copies of this plan sheet.

To accompany plans dated 6-7-10

ELECTROLIERS

STANDARD TYPES
15, 15D
15 STRUCTURE
21, 21D STRUCTURE
30
31
32
35
36-20A

High mast light pole

Double Arm lighting standard

Existing electrolier

Electrolier foundation (Future installation)

NOTES:

1. Luminaires shall be 310 W HPS when installed on Type 21, 21D, 30, 31, 32, 35 and 36-20A Standards, unless otherwise specified. Luminaires shall be 200 W HPS when installed on other type standards or poles, unless otherwise specified.
2. Luminaires shall be the cutoff type, ANSI Type Ⅲ medium cutoff lighting distribution, unless otherwise specified.
3. Variations noted adjacent to symbol on project plans.

Electrolier (see project notes or project plans)

Luminaire on wood pole

STANDARD NOTES:

- AB — Abandon. If applied to conduit, remove conductors.
- BC — Install pull box in existing conduit run.
- BP — Pedestrian barricade, type as indicated on plan.
- CB — Install conduit into existing pull box.
- CC — Connect new and existing conduit. Remove existing conductors and install conductors as indicated.
- CF — Conduit to remain for future use. Remove conductors. Install pull wire or rope.
- DH — Detector handhole.
- FA — Foundation to be abandoned.
- IS — Install sign on signal mast arm.
- NS — No slip base on standard.
- PEC — Photoelectric control.
- PEU — Photoelectric unit.
- RC — Equipment or material to be removed and become the property of the Contractor.
- RE — Remove electrolier, fuses and ballast. Tape ends of conductors.
- RL — Relocate equipment.
- RR — Remove and reuse equipment.
- RS — Remove and salvage equipment.
- SC — Splice new to existing conductors.
- SD — Service disconnect.
- SF — Standard to remain for future use. Remove luminaire, pole conductors, fuses and ballast.
- TSP — Telephone service point.

ABBREVIATIONS AND EQUIPMENT DESIGNATIONS

PROPOSED	EXISTING	
BBS	bbs	Battery backup system
BC	bc	Bolt circle
C	C	Conduit
CCTV	cctv	Closed circuit television
CKT	ckt	Circuit
CMS	cms	Changeable message sign
DLC	dlc	Loop detector lead-in cable
EMS	ems	Extinguishable message sign
EVC	evc	Emergency vehicle cable
EVD	evd	Emergency vehicle detector
FB	fb	Flashing beacon
FBCA	fbca	Flashing beacon control assembly
FBS	fbs	Flashing beacon with slip base
FO	fo	Fiber optic
G	G	Ground (Equipment Grounding Conductor)
GFCI	GFCI	Ground fault circuit interrupt
HAR	har	Highway advisory radio
HEX	hex	Hexagonal
HPS	hps	High pressure sodium
IISNS	iisns	Internally illuminated street name sign
ISL	isl	Induction sign lighting
LED	led	Light emitting diode
LMA	lma	Luminaire mast arm
LPS	lps	Low pressure sodium
LTG	ltg	Lighting
LUM	lum	Luminaire
MAT	mat	Mast arm mounting vehicle signal faces, top attachment
MAS	mas	Mast arm mounting vehicle signal faces, side attachment
MAS-4A	mas-4A	Mast arm mounting vehicle signal faces, side attachment - 4 signal section
MAS-4B	mas-4B	
MAS-4C	mas-4C	
MAS-5A	mas-5A	Mast arm mounting vehicle signal faces, side attachment - 5 signal section
MAS-5B	mas-5B	
MC	mc	Mercury contactor
M/M	m/m	Multiple to multiple transformer
MT	mt	Conduit with pull wire or rope only
MTG	mtg	Mounting
	mv	Mercury vapor lighting fixture
N	N	Neutral (Grounded Conductor)
NC	NC	Normally closed
NO	NO	Normally open
PB	pb	Pull box
PEC	pec	Photoelectric control (Type Ⅰ, Ⅱ, Ⅲ, Ⅳ or Ⅴ as shown)
PED	ped	Pedestrian
PEU	peu	Photoelectric unit
PPB	ppb	Pedestrian push button
RL		Relocated equipment
RM	rm	Ramp metering
SB	sb	Slip base
SIC	sic	Signal interconnect cable
SIG	sig	Signal
SMA	sma	Signal mast arm
SNS	sns	Street name sign
SP	sp	Service point
TDC	tdc	Telephone demarcation cabinet
TMS	tms	Traffic monitoring station
TOS	tos	Traffic Operations System
VEH	veh	Vehicle
XFMR	xfmr	Transformer
COMM	comm	Communication
RWIS	rwis	Roadway weather information system

SOFFIT AND WALL MOUNTED LUMINAIRES

Pendant, 70 W HPS unless otherwise specified.

Flush, 70 W HPS unless otherwise specified.

Wall surface, 70 W HPS unless otherwise specified.

Existing soffit or wall luminaire to remain unmodified.

Existing soffit or wall luminaire to be modified as specified.

NOTE:

Arrow indicates "street side" of luminaire.

STATE OF CALIFORNIA
DEPARTMENT OF TRANSPORTATION

ELECTRICAL SYSTEMS (SYMBOLS AND ABBREVIATIONS)

NO SCALE

RSP ES-1A DATED OCTOBER 5, 2007 SUPERSEDES STANDARD PLAN ES-1A
DATED MAY 1, 2006 - PAGE 400 OF THE STANDARD PLANS BOOK DATED MAY 2006.

REVISED STANDARD PLAN RSP ES-1A

2006 REVISED STANDARD PLAN RSP ES-1A

DIST	COUNTY	ROUTE	POST MILES TOTAL PROJECT	SHEET NO.	TOTAL SHEETS
11	SD	76	23.1/23.5	60	83

REGISTERED ELECTRICAL ENGINEER

October 5, 2007
PLANS APPROVAL DATE

REGISTERED PROFESSIONAL ENGINEER Jeffery G. McRae No. E14512 Exp. 6-30-08 ELECTRICAL STATE OF CALIFORNIA

The State of California or its officers or agents shall not be responsible for the accuracy or completeness of electronic copies of this plan sheet.

To accompany plans dated 6-7-10

2006 REVISED STANDARD PLAN RSP ES-1B

CONDUIT

PROPOSED	EXISTING	
		Lighting Conduit, unless otherwise indicated or noted
		Traffic signal conduit
C	c	Communication conduit
T	t	Telephone conduit
F	f	Fire alarm conduit
FO	fo	Fiber optic conduit
		Conduit termination (RSP ES-9A C)
R	r	Conduit riser in/on structure or service pole

SERVICE EQUIPMENT

PROPOSED	EXISTING	
OH	oh	Overhead lines
U	U	Wood pole "U" indicates utility owned
		Pole guy with anchor
		Utility transformer - ground mounted
III		Service equipment enclosure type
		Service equipment enclosure door indicates front of enclosure
T	t	Telephone demarcation cabinet

POLE-MOUNTED SERVICE DESIGNATION

Type of installation

TYPE H SERVICE - 28'-10" ← Pole height above grade

ILLUMINATED OVERHEAD SIGN

PROPOSED	EXISTING	
		Overhead sign - Single post
		Overhead sign - Two post
		Overhead sign - Mounted on structure
		Overhead sign with electrolier

SIGNAL EQUIPMENT

PROPOSED	EXISTING	
		Pedestrian signal face
		Pedestrian push button post
		Pedestrian barricade
		Vehicle signal face (with backplate, 3-Section: red, yellow and green)
		Vehicle signal face with angle visors
PV	PV	Modifications of basic symbols: "L" indicates all non-arrow sections louvered "LG" indicates louvered green section only "PV" indicates 12" programmed visibility sections "8" indicates all 8" sections (only when specified)
		Type 15TS and Vehicle signal face
		Vehicle signal face with red, yellow and green left arrow sections
		Vehicle signal face with red and yellow sections and up green arrow
		Vehicle signal face (5 Section) with red, yellow and green sections and yellow and green right arrows
		Type 1 Standard and attached vehicle signal faces
		Standard with signal mast arm only and attached vehicle signal faces and internally illuminated street name sign
		Type 33 Standard, Left-turn vehicle signal face and sign
		Standard with luminaire and signal mast arms and attached vehicle signal faces
		Cantilever flashing beacon Type 9 Frame, with a sign unless otherwise specified or indicated
		Type 15-FBS Standard with two vehicle signal face sections with lens, backplate and visor with a sign
R	Y	Flashing beacon. One vehicle signal face section with lens, backplate and visor. "R" indicates red indication, "Y" indicates yellow indication
		Controller assembly. Door indicates front of cabinet

SIGNAL EQUIPMENT Cont

PROPOSED	EXISTING	
		Guard post
		Type 1 Standard with "Meter On" sign
		Emergency Vehicle detector

NOTES:

1. All signal sections shall be 12" unless shown otherwise.
2. Signal heads shall be provided with backplates unless shown otherwise.
3. Signal indication shall be LED.

STATE OF CALIFORNIA
DEPARTMENT OF TRANSPORTATION

ELECTRICAL SYSTEMS (SYMBOLS AND ABBREVIATIONS)

NO SCALE

RSP ES-1B DATED OCTOBER 5, 2007 SUPERCEDES STANDARD PLAN ES-1B DATED MAY 1, 2006 - PAGE 401 OF THE STANDARD PLANS BOOK DATED MAY 2006.

REVISED STANDARD PLAN RSP ES-1B

7-10-07

DIST	COUNTY	ROUTE	POST MILES TOTAL PROJECT	SHEET NO.	TOTAL SHEETS
11	SD	76	23.1/23.5	61	83

REGISTERED ELECTRICAL ENGINEER

October 5, 2007
PLANS APPROVAL DATE

REGISTERED PROFESSIONAL ENGINEER
Jeffery G. McRae
No. E14512
Exp. 6-30-08
ELECTRICAL
STATE OF CALIFORNIA

The State of California or its officers or agents shall not be responsible for the accuracy or completeness of electronic copies of this plan sheet.

To accompany plans dated 6-7-10

EQUIPMENT IDENTIFICATION

ILLUMINATED SIGN IDENTIFICATION NUMBER:

Sign No. 12345 — Sign number - Place on post or structure

10 ISL SCI 1.0

- 1.0 — Transformer rating (kVA)
- SCI — Lighting control type
- ISL — Number and type of fixtures

Do NOT place on standard or structure

ELECTROLIER OR EQUIPMENT IDENTIFICATION NUMBER:

12345 - 15'-0"

- 15'-0" — Mast arm length, if shown. Do not place on standard or structure.
- 12345 — Equipment number - Place on standard or structure. Existing equipment numbers are shown in parenthesis

CONDUIT AND CONDUCTOR IDENTIFICATION:

1½"C, 2#10, 15#14, 2 DLC

- 2#10, 15#14, 2 DLC — Number and size of conductors and cables
- 1½"C — Size of conduit in inches

Ø1, Ø2, Ø2P, etc.	Traffic phase identification for signal faces, detectors and phase diagrams
1 2 3	Project note numbers
A B C	Equipment description, installation or item numbers
1 2 3	Conduit run numbers

SIGNAL AND LIGHTING STANDARD (TYPICAL DESIGNATION):

19A - 3 - 100

- 100 — Wind velocity = 100 mph
- 3 — Case 3 arm loading
- 19A — Standard type
- Standard Plan sheet number
- Detail number or letter

MISCELLANEOUS EQUIPMENT

PROPOSED	EXISTING	
CMS	cms	Changeable message sign
		Closed circuit television camera
		Highway advisory radio pole and antenna
EMS	ems	Extinguishable message sign
M V	m v	Detection device M = Microwave sensor V = Video image sensor

WIRING DIAGRAM LEGEND

P	Pole
CB	Circuit breaker
A	Ampere
V	Volt
M	Metered
UM	Unmetered
NB	Neutral bus
GB	Ground bus
G	Equipment grounding conductor
N	Grounded conductor (Neutral)

- External conductor
- Conductor or bus
- Tie point
- Contactor coil
- Contactor, Contact NO
- Terminal blocks
- Contactor, Contact NC
- Enclosure bond
- Grounding electrode
- Circuit breaker
- Receptacle

PULL BOXES

PROPOSED	EXISTING	
		Pull box-No. 5 unless otherwise indicated or noted.
3	9A(21)	Pull box-Additional designations or descriptions

3 = No. 3½ pull box
5 = No. 5 pull box
6 = No. 6 pull box
7 = No. 7 (Ceiling pull box)
8 = No. 8 (Pendant soffit pull box)
9 = No. 9 pull box
9A = No. 9A pull box

(C) = Communications pull box
(E) = Pull box with extension
(S) = Sprinkler control pull box
(21) = Anchor bolts and conduit for future installation of Type 21 Standard
(T) = Traffic pull box

VEHICLE DETECTORS

5 J 9 U

- U = Upper
- L = Lower
- Slot number in input file
- Input file (I or J)
- Phase — Vehicle detector designation

PROPOSED	EXISTING	
		Type A detector loop. Outline of sawcut shown.
		Type B detector loop. Outline of sawcut shown.
		Type C detector loop. Outline of sawcut shown.
		Type D detector loop. Outline of sawcut shown.
		Type E detector loop. Outline of sawcut shown.
		Type Q detector loop. Outline of sawcut shown.
		Magnetic detector
DH	dh	Detector handhole
		Microwave or video detection zone

STATE OF CALIFORNIA
DEPARTMENT OF TRANSPORTATION

ELECTRICAL SYSTEMS (SYMBOLS AND ABBREVIATIONS)

NO SCALE

RSP ES-1C DATED OCTOBER 5, 2007 SUPERCEDES STANDARD PLAN ES-1C DATED MAY 1, 2006 - PAGE 402 OF THE STANDARD PLANS BOOK DATED MAY 2006.

REVISED STANDARD PLAN RSP ES-1C

2006 REVISED STANDARD PLAN RSP ES-1C

DIST	COUNTY	ROUTE	POST MILES TOTAL PROJECT	SHEET NO.	TOTAL SHEETS
11	SD	76	23.1/23.5	62	83

REGISTERED CIVIL ENGINEER

October 5, 2007
PLANS APPROVAL DATE

REGISTERED PROFESSIONAL ENGINEER
Stanley P. Johnson
No. C57793
Exp. 3-31-08
CIVIL
STATE OF CALIFORNIA

The State of California or its officers or agents shall not be responsible for the accuracy or completeness of electronic copies of this plan sheet.

To accompany plans dated 6-7-10

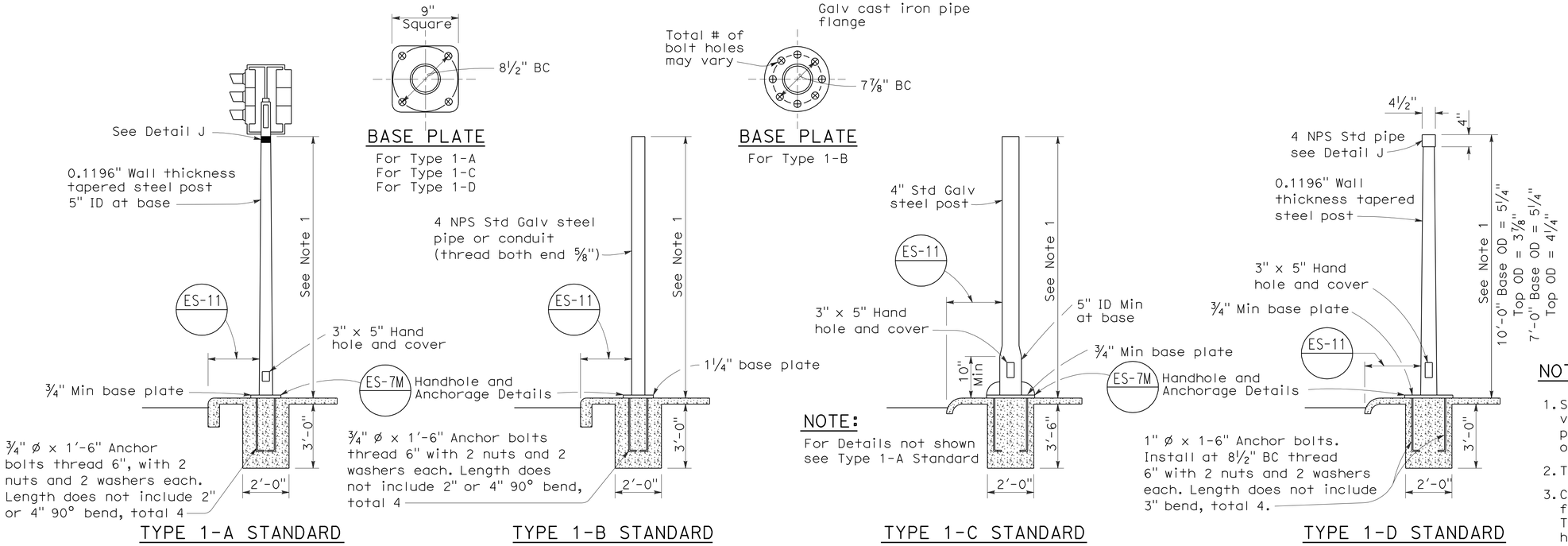

TYPE 1 SIGNAL STANDARDS

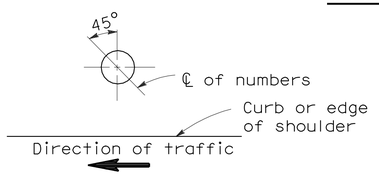

PLAN

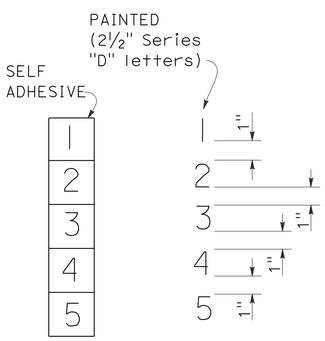

NUMBER DETAIL

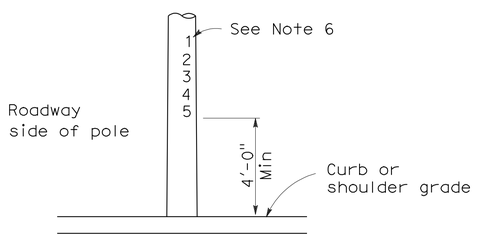

TYPICAL NUMBER FORMAT

LOCATION OF EQUIPMENT NUMBERS ON STANDARDS AND POSTS

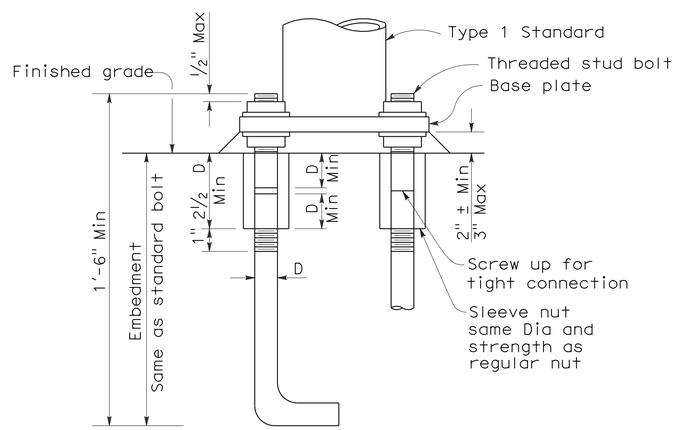

ANCHOR BOLTS WITH SLEEVE NUTS

Sleeve nuts to be used only when shown or specified on Project Plans

D = Diameter of anchor bolt

NOTES:

1. Standards shall be 10'-0" ± 2" for vehicle signals and 7'-0" ± 2" for pedestrian signals unless otherwise noted on plans.
2. Top of standards shall be 4½" OD.
3. Conduits shall extend 2" maximum above finished surface of foundation and for Types 1-A, 1-C and 1-D shall be sloped toward handhole.
4. Anchor bolts shall be bonded to conduit or grounding conductor.
5. Conduit between standard and adjacent pull box shall be 2" minimum.
6. Paint numbers on roadway side facing traffic when electrolier or post is left of direction of traffic.

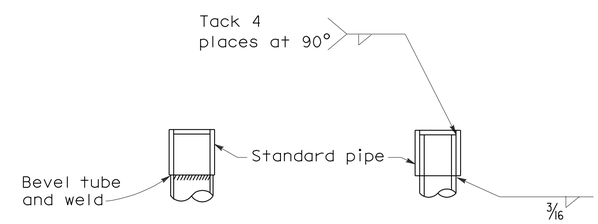

DETAIL J

Tube may be inserted into pipe or butted as required

STATE OF CALIFORNIA
DEPARTMENT OF TRANSPORTATION

ELECTRICAL SYSTEMS (SIGNAL AND LIGHTING STANDARD TYPE 1 STANDARD AND EQUIPMENT NUMBERING)

NO SCALE

RSP ES-7B DATED OCTOBER 5, 2007 SUPERCEDES STANDARD PLAN ES-7B DATED MAY 1, 2006 - PAGE 438 OF THE STANDARD PLANS BOOK DATED MAY 2006.

REVISED STANDARD PLAN RSP ES-7B

2006 REVISED STANDARD PLAN RSP ES-7B

DIST	COUNTY	ROUTE	POST MILES TOTAL PROJECT	SHEET NO.	TOTAL SHEETS
11	SD	76	23.1/23.5	63	83

REGISTERED ELECTRICAL ENGINEER

October 5, 2007
PLANS APPROVAL DATE

REGISTERED PROFESSIONAL ENGINEER
Jeffery G. McRae
No. E14512
Exp. 6-30-08
ELECTRICAL
STATE OF CALIFORNIA

The State of California or its officers or agents shall not be responsible for the accuracy or completeness of electronic copies of this plan sheet.

To accompany plans dated 6-7-10

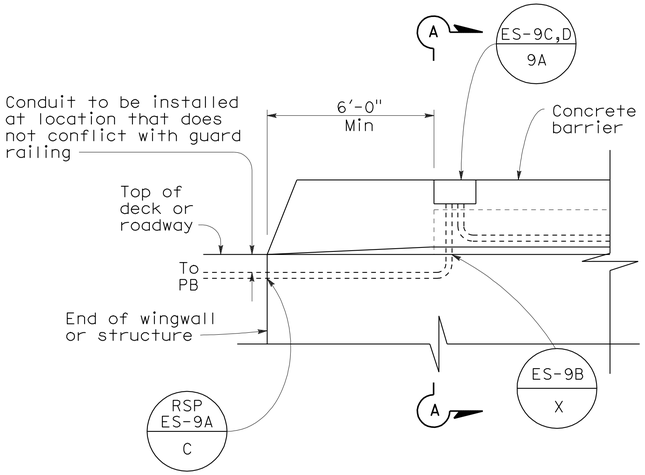

SIDEVIEW

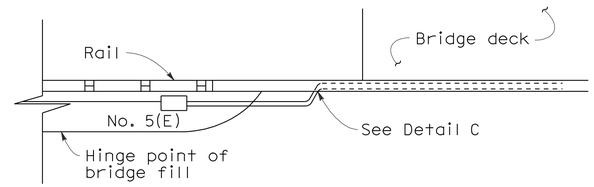

TOP VIEW

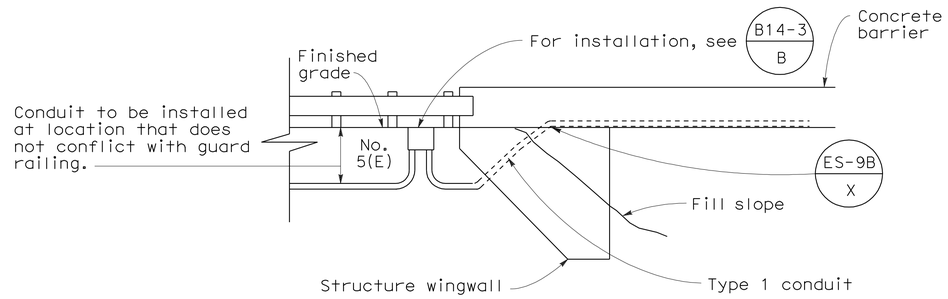

SIDE VIEW
DETAIL I
CONDUIT TERMINATION

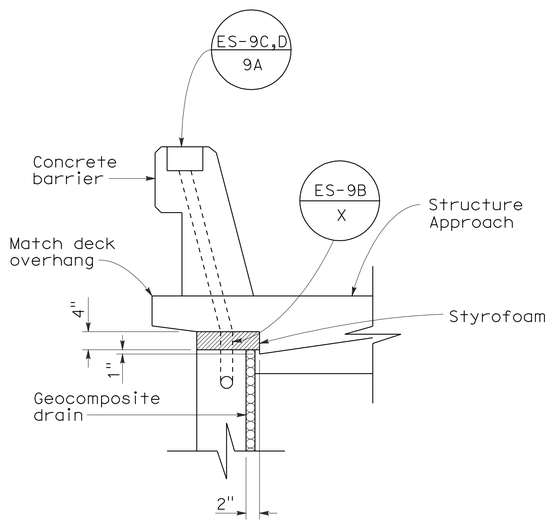

SECTION A-A

DETAIL A
CONDUIT TERMINATION

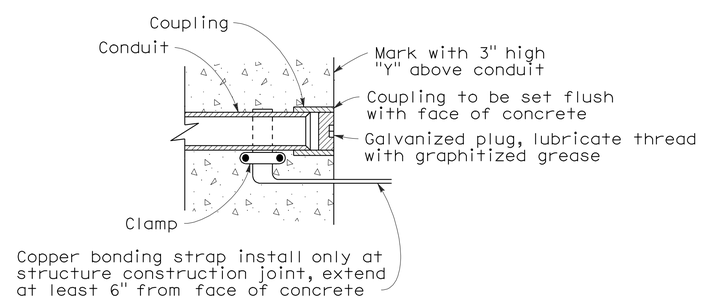

DETAIL C
CONDUIT TERMINATION

STATE OF CALIFORNIA
DEPARTMENT OF TRANSPORTATION

ELECTRICAL SYSTEMS (ELECTRICAL DETAILS STRUCTURE INSTALLATIONS)

NO SCALE

RSP ES-9A DATED OCTOBER 5, 2007 SUPERCEDES STANDARD PLAN ES-9A
DATED MAY 1, 2006 - PAGE 454 OF THE STANDARD PLANS BOOK DATED MAY 2006.

REVISED STANDARD PLAN RSP ES-9A

2006 REVISED STANDARD PLAN RSP ES-9A

DIST	COUNTY	ROUTE	POST MILES TOTAL PROJECT	SHEET NO.	TOTAL SHEETS
11	SD	76	23.1/23.5	64	83

REGISTERED ELECTRICAL ENGINEER

October 5, 2007
PLANS APPROVAL DATE

The State of California or its officers or agents shall not be responsible for the accuracy or completeness of electronic copies of this plan sheet.

REGISTERED PROFESSIONAL ENGINEER Jeffery G. McRae No. E14512 Exp. 6-30-08 ELECTRICAL STATE OF CALIFORNIA

To accompany plans dated 6-7-10

2006 REVISED STANDARD PLAN RSP ES-9C

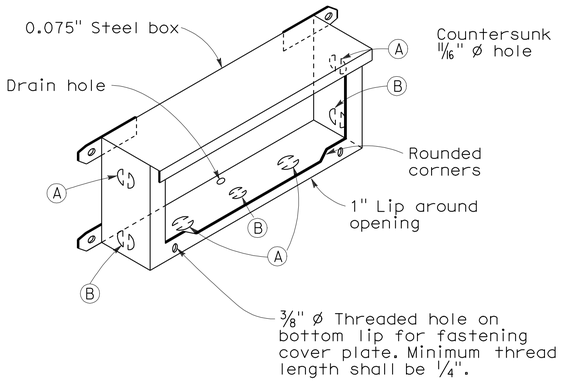

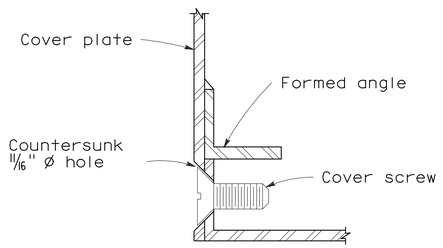

DETAIL J

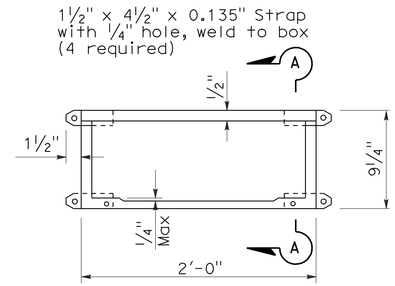

PLAN

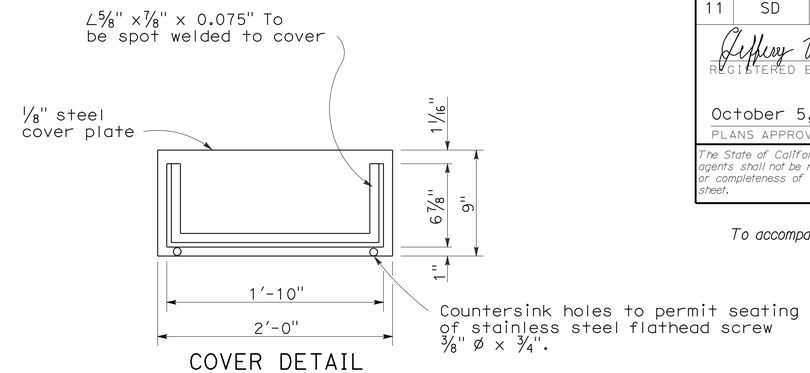

COVER DETAIL

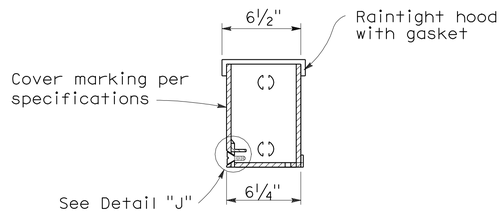

SECTION A-A

INSTALLATION NOTE:

Box shall be parallel to top of railing. Close cover box during pouring with 1/4" plywood of sufficient size to provide 1:1 chamfer on 3 sides of cover. Upper edge of plywood shall fit against lower edge of raintight hood.

No. 9 STRUCTURE PULL BOX

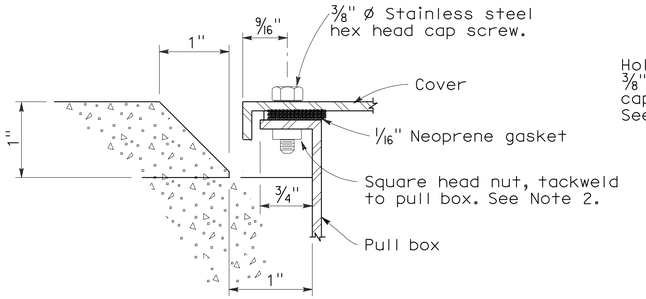

SECTION C-C

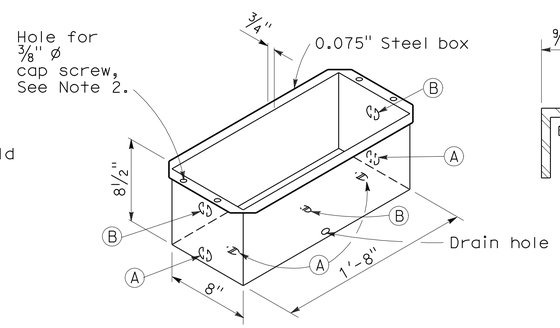

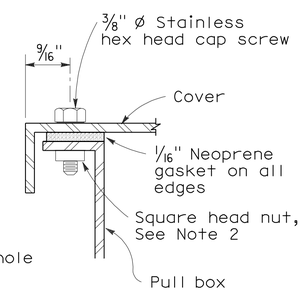

DETAIL A

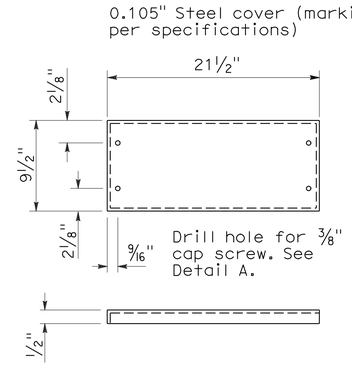

COVER DETAIL

NOTES: No. 9 and 9A Pull Box

1. Corner joints shall be lapped and secured by spot welding or riveting.
2. Where cap screws are used to attach cover to box, either of the following methods of providing adequate threading may be used:
   a. Tack weld square nut to bottom of flange (Total 4), or
   b. Tack weld a 1/4" x 5/8" x 8" bar beneath flange (Total 2).
3. Pound knockouts flat after punching.
4. Multiple size knockouts shall not be permitted.
5. Pull box covers shall be marked as shown on Standard Plan ES-8.

No. 9A STRUCTURE PULL BOX

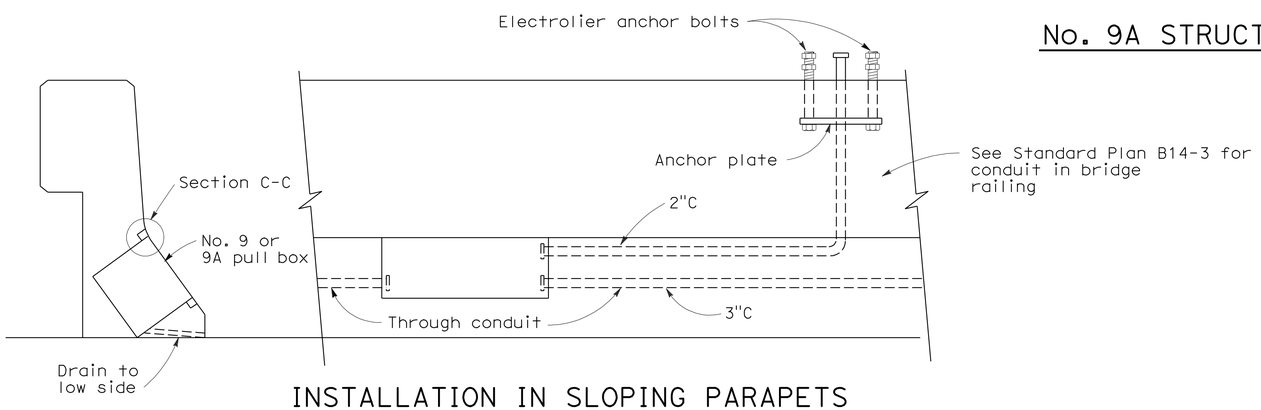

INSTALLATION IN SLOPING PARAPETS

For reinforcement in area of electrolier, see railing sheets. For electrolier anchor bolts, see Standard Plan ES-6B.

KNOCKOUT SCHEDULE
No. 9 AND 9A PULL BOX

(A) 2"C, 1 each end, 2 on bottom.

(B) 3"C, 1 each end, 1 on bottom.

STATE OF CALIFORNIA
DEPARTMENT OF TRANSPORTATION

ELECTRICAL SYSTEMS (ELECTRICAL DETAILS STRUCTURE INSTALLATIONS)

NO SCALE

RSP ES-9C DATED OCTOBER 5, 2007 SUPERCEDES STANDARD PLAN ES-9C DATED MAY 1, 2006 - PAGE 456 OF THE STANDARD PLANS BOOK DATED MAY 2006.

REVISED STANDARD PLAN RSP ES-9C

7-26-07

DIST	COUNTY	ROUTE	POST MILES TOTAL PROJECT	SHEET No	TOTAL SHEETS
11	SD	76	23.1/23.5	65	83

REGISTERED CIVIL ENGINEER 7-28-09 DATE

6-7-10
PLANS APPROVAL DATE

The State of California or its officers or agents shall not be responsible for the accuracy or completeness of electronic copies of this plan sheet.

REGISTERED PROFESSIONAL ENGINEER Daryoush Tavatli No. 56183 Exp. 12-31-10 CIVIL STATE OF CALIFORNIA

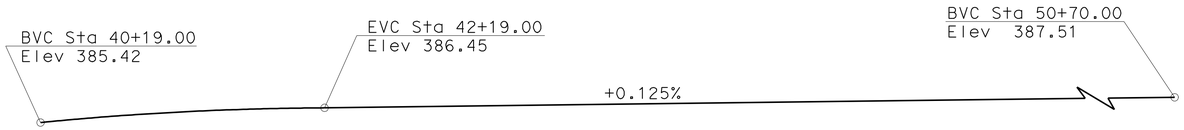

PROFILE GRADE

NO SCALE

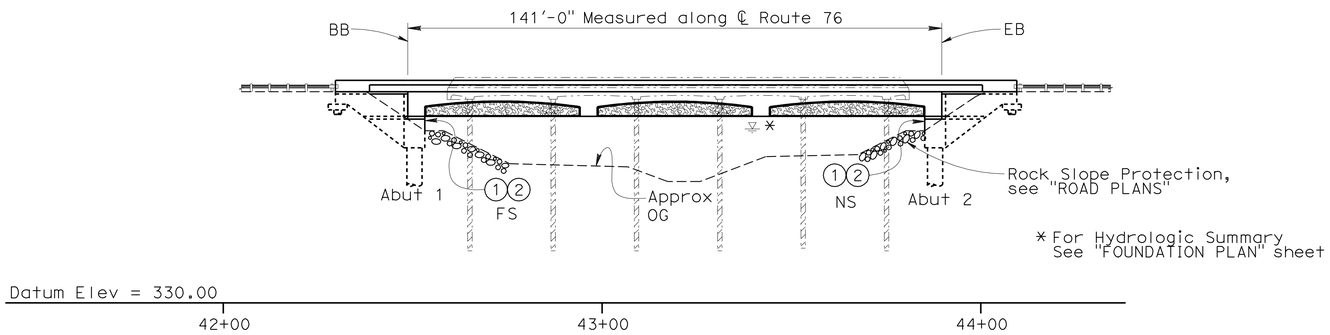

ELEVATION

1" = 20'-0"

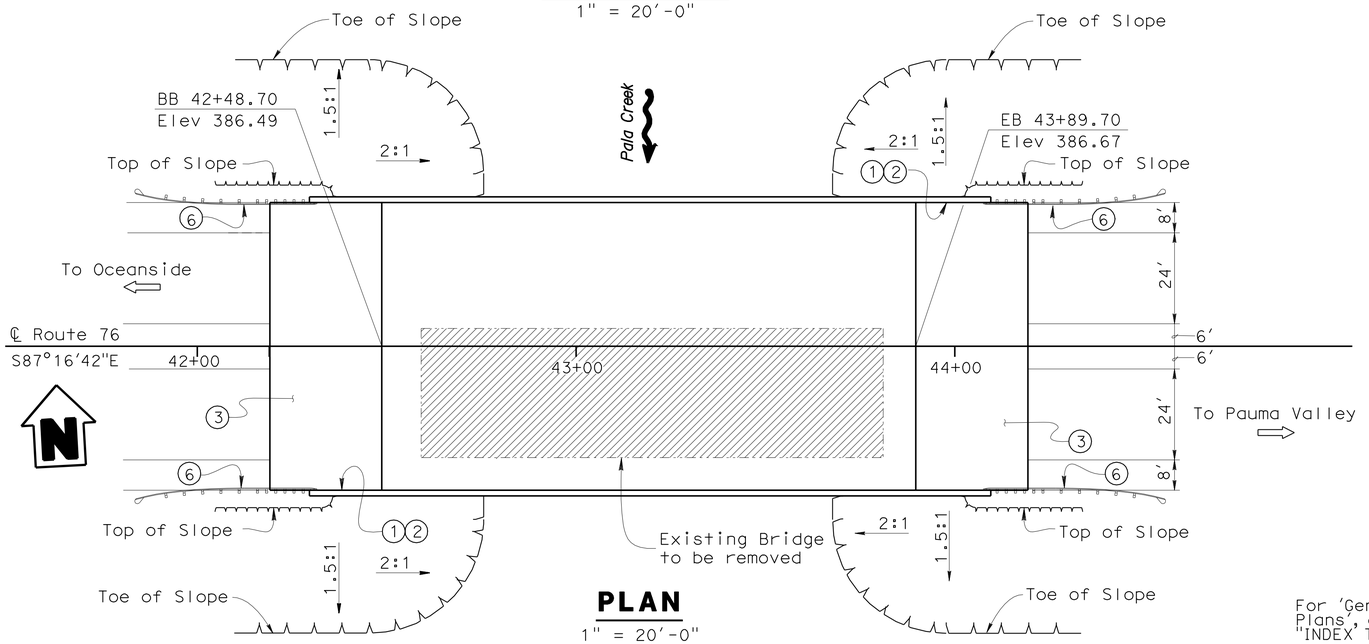

PLAN

1" = 20'-0"

NOTES:

1. - PAINT "Br No. 57-1200"
2. - PAINT "PALA CREEK Br"
3. - STRUCTURE APPROACH TYPE N(30S)
4. - CONCRETE BARRIER TYPE 736
5. - TEMPORARY RAILING (TYPE K), SEE "ROAD PLANS"
6. - MBGR, SEE "ROAD PLANS"
7. - 2 - 2" CONDUITS FOR LIGHTING AND SPRINKLER CONTROL SEE "ROAD PLANS"
8. - 3" SUPPLY LINE
9. - FUTURE UTILITY OPENING

—— - INDICATES NEW CONCRETE

- - - - - INDICATES EXISTING CONCRETE

▨ - INDICATES BRIDGE REMOVAL

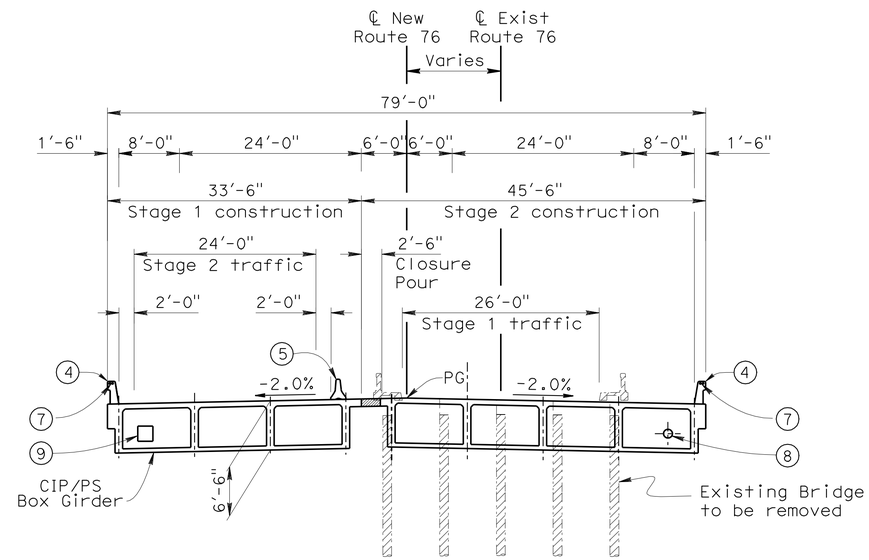

TYPICAL SECTION

1" = 10'-0"

QUANTITIES

BRIDGE REMOVAL	LUMP	SUM
STRUCTURE EXCAVATION (BRIDGE)	490	CY
STRUCTURE BACKFILL (BRIDGE)	160	CY
3" SUPPLY LINE (BRIDGE)	210	LF
24" CAST-IN-DRILLED-HOLE CONCRETE PILING	66	LF
48" CAST-IN-DRILLED-HOLE CONCRETE PILING	642	LF
PRESTRESSING CAST-IN-PLACE CONCRETE	LUMP	SUM
STRUCTURAL CONCRETE, BRIDGE FOOTING	6	CY
STRUCTURAL CONCRETE, BRIDGE	1,220	CY
STRUCTURAL CONCRETE, APPROACH SLAB (TYPE N)	170	CY
BUSH HAMMER TEXTURE	950	SQFT
JOINT SEAL (MR 2")	158	LF
BAR REINFORCING STEEL (BRIDGE)	340,000	LB
24" WELDED STEEL PIPE CASING (BRIDGE)	80	LF
CONCRETE BARRIER (TYPE 736)	379	LF
2" SPRINKLER CONTROLLER CONDUIT	450	LF
2" LIGHTING CONDUIT	450	LF

For 'General Notes', 'Index to Plans', and 'Standard Plans' see "INDEX TO PLAN" sheet

Ramin Rashedi
DESIGN ENGINEER

	BY	CHECKED			
DESIGN	Junxia Wu	Haitao Liu	LOAD AND RESISTANCE FACTOR DESIGN	LIVE LOADING: HL93 AND LOWBOY TRUCK AND PERMIT DESIGN LOAD	
DETAILS	Jaime Ramirez	D. Tavatli	LAYOUT	Junxia Wu	D. Tavatli
QUANTITIES	D. Tavatli	K. Doll	SPECIFICATIONS	K. Ellingson	PLANS AND SPECS COMPARED K. Ellingson

STATE OF CALIFORNIA
DEPARTMENT OF TRANSPORTATION

DIVISION OF ENGINEERING SERVICES
STRUCTURE DESIGN
DESIGN BRANCH 11

BRIDGE NO. 57-1200
POST MILE 23.2

PALA CREEK BRIDGE
GENERAL PLAN

STRUCTURES DESIGN GENERAL PLAN SHEET (ENGLISH) (REV. 10/25/05)

ORIGINAL SCALE IN INCHES FOR REDUCED PLANS 0 1 2 3

CU 11308
EA 273401

DISREGARD PRINTS BEARING EARLIER REVISION DATES

REVISION DATES: 4-30-08 2-25-09 4-13-09 7-21-08 8-15-08 8-21-08 10-20-08 11-4-08 1-22-09

SHEET 1 OF 19

FILE => 57-1200-a-gp01.dgn

USERNAME => trostrk DATE PLOTTED => 10-JUN-2010 TIME PLOTTED => 14:19

DIST	COUNTY	ROUTE	POST MILES TOTAL PROJECT	SHEET No	TOTAL SHEETS
11	SD	76	23.1/23.5	66	83

REGISTERED CIVIL ENGINEER 7-28-09 DATE

6-7-10
PLANS APPROVAL DATE

The State of California or its officers or agents shall not be responsible for the accuracy or completeness of electronic copies of this plan sheet.

REGISTERED PROFESSIONAL ENGINEER
Daryoush Tavatli
No. 56183
Exp. 12-31-10
CIVIL
STATE OF CALIFORNIA

INDEX TO PLANS

Sheet No.	Title
1	GENERAL PLAN
2	INDEX TO PLANS
3	DECK CONTOURS
4	FOUNDATION PLAN
5	ABUTMENT DETAILS NO. 1
6	ABUTMENT DETAILS NO. 2
7	ABUTMENT DETAILS NO. 3
8	ABUTMENT PILE DETAILS
9	TYPICAL SECTION
10	GIRDER LAYOUT
11	BOTTOM SLAB REINFORCEMENT
12	ARCHITECTURAL TREATMENT DETAILS NO. 1
13	ARCHITECTURAL TREATMENT DETAILS NO. 2
14	STRUCTURE APPROACH TYPE N(30S)
15	STRUCTURE APPROACH DRAINAGE DETAILS
16	LOG OF TEST BORINGS 1 OF 4
17	LOG OF TEST BORINGS 2 OF 4
18	LOG OF TEST BORINGS 3 OF 4
19	LOG OF TEST BORINGS 4 OF 4

STANDARD PLANS
Dated May 2006

A10A	ACRONYMS AND ABBREVIATIONS (A-L)
A10B	ACRONYMS AND ABBREVIATIONS (M-Z)
A10C	SYMBOLS (SHEET 1 OF 2)
A10D	SYMBOLS (SHEET 2 OF 2)
A62C	LIMITS OF PAYMENT FOR EXCAVATION AND BACKFILL - BRIDGE
A76A	CONCRETE BARRIER TYPE 60
B0-1	BRIDGE DETAILS
B0-3	BRIDGE DETAILS
B0-5	BRIDGE DETAILS
B0-13	BRIDGE DETAILS
B2-3	16" AND 24" CAST-IN-DRILLED-HOLE CONCRETE PILE
RSP B6-21	JOINT SEALS (MAXIMUM MOVEMENT RATING = 2")
B7-1	BOX GIRDER DETAILS
B7-10	UTILITY OPENING BOX GIRDER
B8-5	CAST-IN-PLACE PRESTRESSED GIRDER DETAILS
RSP B11-56	CONCRETE BARRIER TYPE 736
B14-4	WATER SUPPLY LINE (BRIDGE)
B14-5	WATER SUPPLY LINE (DETAILS)

Standard Plan Sheet No.

Detail No.

PILE DATA

Location	Pile Type	Design Loading (Service)	Cut-off Elev	Design Tip Elevation	Specified Tip Elevation
Abut 1	48 CIDH	915 Kips	372.25 ft	292.0	292.0
Abut 2	48 CIDH	915 Kips	372.40 ft	292.0	292.0
Wingwall 1	24 CIDH	20 Kips	381.40 ft	365.0	365.0
Wingwall 2	24 CIDH	20 Kips	381.65 ft	365.0	365.0

Design Tip Elevation is controlled by the following demands:
(1) Compression (2) Lateral Capacity (3) Scour Potential Exist to Elev:374′ @ Abutment 1, 2

GENERAL NOTES
LOAD AND RESISTANCE FACTOR DESIGN

DESIGN:
AASHTO LRFD Bridge Design Specification, third Edition with interims through 2006 and the Caltrans amendment V3.06.01

SEISMIC DESIGN:
Caltrans Seismic Design Criteria (SDC), Version 1.4 dated June 2006

DEAD LOAD:
Includes 35 psf for future wearing surface.

LIVE LOADING:
HL93 and permit design load.

SEISMIC LOADING:
SDC ARS Curve for Soil Profile D (M=7.5±0.25)
(Peak Rock Acceleration = 0.6g)

CONCRETE:
fy = 60 ksi
f′c = 5 ksi
n = 9
See prestressing notes.

STRUCTURAL STEEL:
fy = 36 ksi

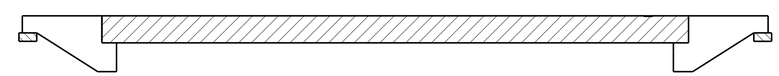

Structural Concrete, Bridge (3,600 psi @ 28 days)
Structural Concrete, Bridge Footing (3,600 psi @ 28 days)
Structural Concrete, Bridge (5,000 psi at 28 days)

CONCRETE STRENGTH AND TYPE LIMITS
No Scale

	BY	CHECKED
DESIGN	Junxia Wu	Haitao Liu
DETAILS	Jaime Ramirez	D. Tavatli
QUANTITIES	D. Tavatli	K. Doll

STATE OF CALIFORNIA
DEPARTMENT OF TRANSPORTATION

DIVISION OF ENGINEERING SERVICES
STRUCTURE DESIGN
DESIGN BRANCH 11

BRIDGE NO. 57-1200
POST MILE 23.2

PALA CREEK BRIDGE
INDEX TO PLANS

STRUCTURES DESIGN DETAIL SHEET (ENGLISH) (REV. 10/25/05)

ORIGINAL SCALE IN INCHES FOR REDUCED PLANS 0 1 2 3

CU 11308
EA 273401

DISREGARD PRINTS BEARING EARLIER REVISION DATES

REVISION DATES: 5-28-08 4-15-09 8-14-08 10-20-08 10/24/08 11-18-08 12/5-08 2-26-09 4-13-09

SHEET 2 OF 19

FILE => 57-1200-a-itp.dgn

USERNAME => trstrk DATE PLOTTED => 10-JUN-2010 TIME PLOTTED => 14:19

DIST	COUNTY	ROUTE	POST MILES TOTAL PROJECT	SHEET No	TOTAL SHEETS
11	SD	76	23.1/23.5	67	83

REGISTERED CIVIL ENGINEER — DATE 7-28-09

6-7-10
PLANS APPROVAL DATE

REGISTERED PROFESSIONAL ENGINEER — Daryoush Tavatli — No. 56183 — Exp. 12-31-10 — CIVIL — STATE OF CALIFORNIA

The State of California or its officers or agents shall not be responsible for the accuracy or completeness of electronic copies of this plan sheet.

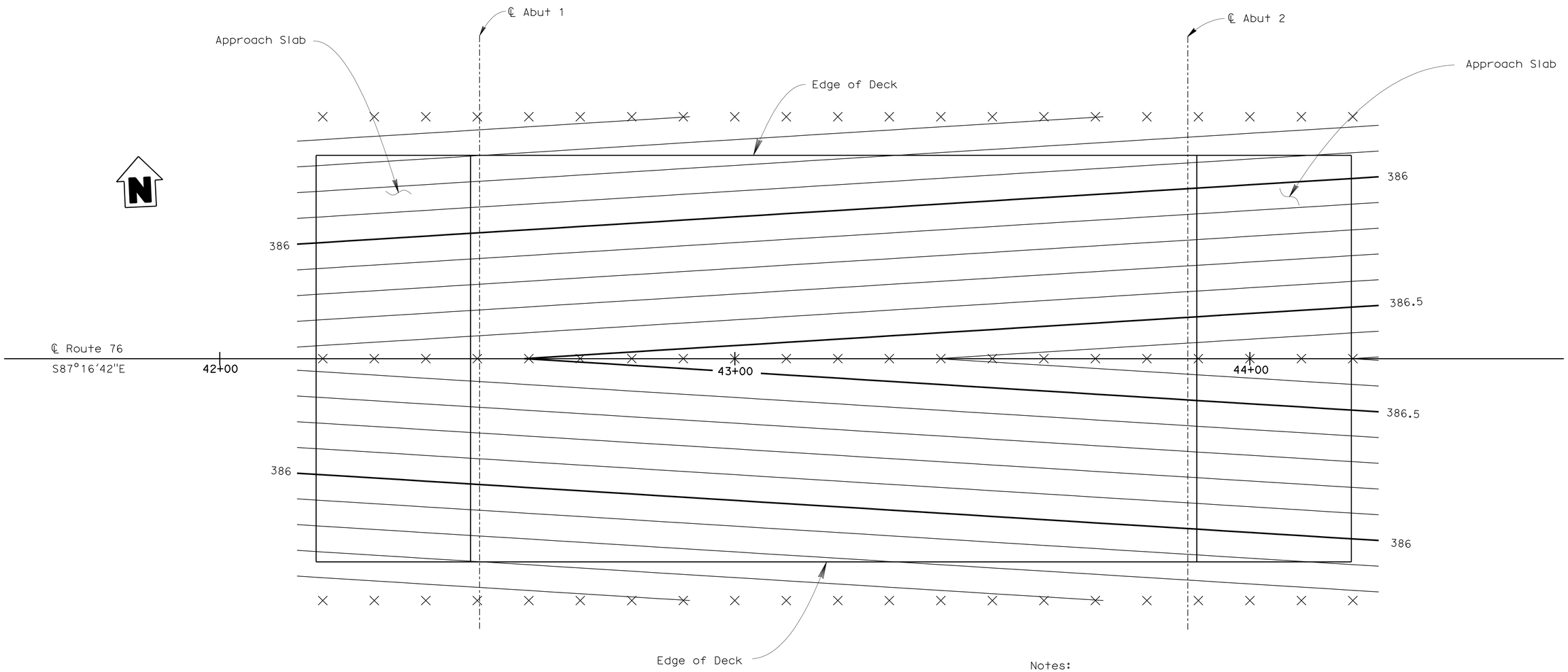

Notes:

Contours are at 0.1 ft intervals

X - Indicates 10' intervals along station line

Contours do not include camber

DECK CONTOURS

1" = 10'-0"

DESIGN	BY Junxia Wu	CHECKED Haitao Liu	
DETAILS	BY L. Goldthwait	CHECKED D. Tavatli	
QUANTITIES	BY D. Tavatli	CHECKED K. Doll	

STATE OF CALIFORNIA
DEPARTMENT OF TRANSPORTATION

DIVISION OF ENGINEERING SERVICES
STRUCTURE DESIGN
DESIGN BRANCH 11

BRIDGE NO. 57-1200
POST MILE 23.2

PALA CREEK BRIDGE
DECK CONTOURS

STRUCTURES DESIGN DETAIL SHEET (ENGLISH) (REV. 10/25/05)

ORIGINAL SCALE IN INCHES FOR REDUCED PLANS 0 1 2 3

CU 11308
EA 273401

DISREGARD PRINTS BEARING EARLIER REVISION DATES

REVISION DATES: 6-5-08, 7-8-08, 7-18-08, 8-11-08, 2-26-09, 7-22-09

SHEET 3 OF 19

FILE => 57-1200-d-dc01.dgn

USERNAME => trsttk DATE PLOTTED => 10-JUN-2010 TIME PLOTTED => 14:13

DIST	COUNTY	ROUTE	POST MILES TOTAL PROJECT	SHEET No	TOTAL SHEETS
11	SD	76	23.1/23.5	68	83

REGISTERED CIVIL ENGINEER — DATE 7-28-09

6-7-10
PLANS APPROVAL DATE

REGISTERED PROFESSIONAL ENGINEER — Daryoush Tavatli — No. 56183 — Exp. 12-31-10 — CIVIL — STATE OF CALIFORNIA

The State of California or its officers or agents shall not be responsible for the accuracy or completeness of electronic copies of this plan sheet.

SURVEY CONTROL

SD 6 69 (Not Shown On Plan)
Fnd San Siego Co. Engr's Disk STAMP 'SD 6 69 1993"
8,686.73 FT Bearing S50°12'46"W From
Sta. 7+04.50 ℄ Rte 76
N 2,071,814.47
E 6,297,457.24
Elev. = 318.88

TE 248 (Not Shown On Plan)
Fnd "MON "TE 248" San Diego Co. Engr's Disk in Boulder
10,722.85 FT Bearing S73°03'17"E From
Sta. 77+96.17 ℄ Rte 76
N 2,073,987.41
E 6,321,465.83
Elev. = 724.13

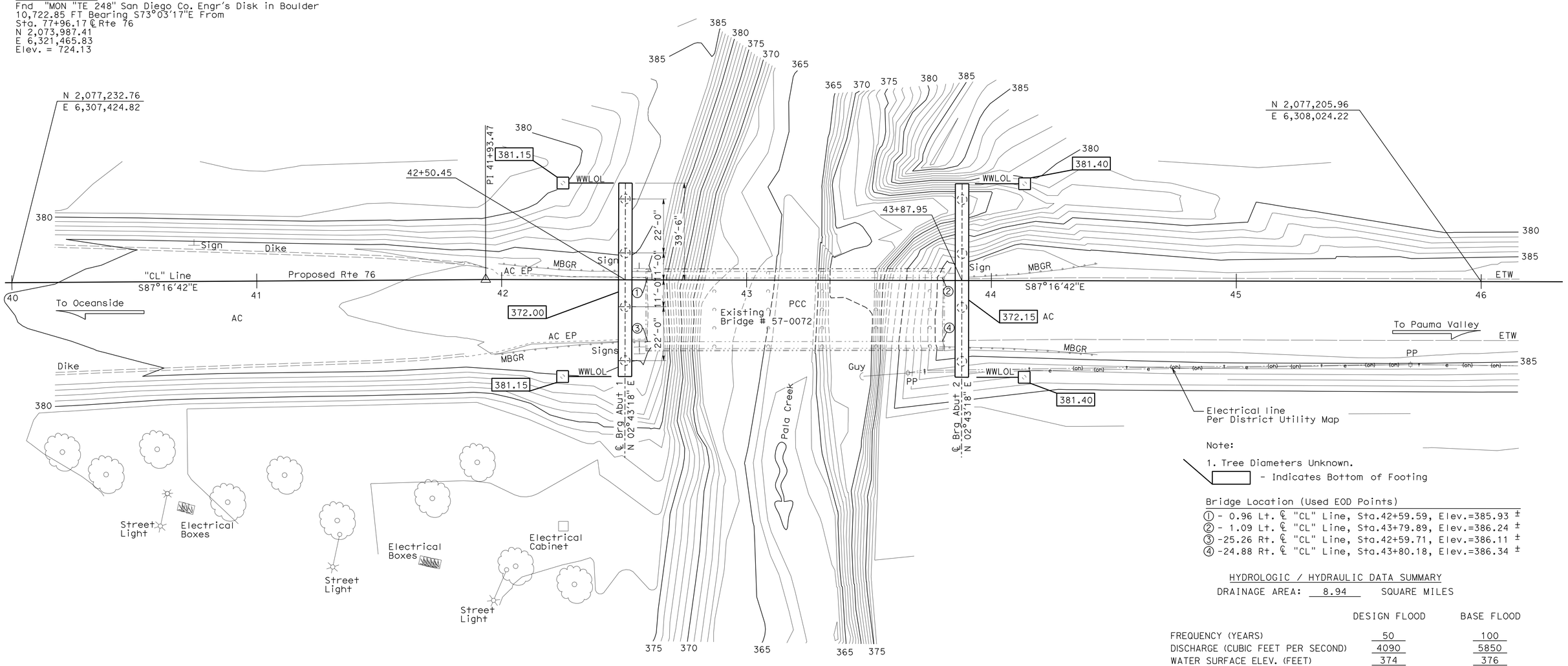

Note:

1. Tree Diameters Unknown.

▭ - Indicates Bottom of Footing

Bridge Location (Used EOD Points)

① - 0.96 Lt. ℄ "CL" Line, Sta.42+59.59, Elev.=385.93 ±
② - 1.09 Lt. ℄ "CL" Line, Sta.43+79.89, Elev.=386.24 ±
③ -25.26 Rt. ℄ "CL" Line, Sta.42+59.71, Elev.=386.11 ±
④ -24.88 Rt. ℄ "CL" Line, Sta.43+80.18, Elev.=386.34 ±

HYDROLOGIC / HYDRAULIC DATA SUMMARY

DRAINAGE AREA: 8.94 SQUARE MILES

	DESIGN FLOOD	BASE FLOOD
FREQUENCY (YEARS)	50	100
DISCHARGE (CUBIC FEET PER SECOND)	4090	5850
WATER SURFACE ELEV. (FEET)	374	376

FLOOD PLAIN DATA ARE BASED UPON INFORMATION AVAILABLE WHEN THE PLANS WERE PREPARED AND ARE SHOWN TO MEET FEDERAL REQUIREMENTS. THE ACCURACY OF SAID INFORMATION IS NOT WARRANTED BY THE STATE AND INTERESTED OR AFFECTED PARTIES SHOULD MAKE THEIR OWN INVESTIGATIONS.

PRELIMINARY INVESTIGATION SECTION

SCALE	VERT.DATUM NAVD88	PHOTOGRAMMETRY AS OF: X			
1"=20'	HORZ.DATUM NAD83 1991.35)	SURVEYED	BY District	CHECKED	BY T.Gillett 02/2008
ALIGNMENT TIES Dist.Traverse Sheet		DRAFTED	BY T.Zolnikova 02/2008	CHECKED	BY J.Pallares 02/2008

	BY	CHECKED
DESIGN	Junxia Wu	Haitao Liu
DETAILS	Jaime Ramirez	D. Tavatli
QUANTITIES	D. Tavatli	K. Doll

STATE OF CALIFORNIA
DEPARTMENT OF TRANSPORTATION

DIVISION OF ENGINEERING SERVICES
STRUCTURE DESIGN
DESIGN BRANCH 11

BRIDGE NO. 57-1200
POST MILE 23.2

PALA CREEK BRIDGE (REPLACE)
FOUNDATION PLAN

STRUCTURES FOUNDATION PLAN SHEET (ENGLISH) (REV. 10/25/05)

ORIGINAL SCALE IN INCHES FOR REDUCED PLANS 0 1 2 3

CU 11308
EA 273401

DISREGARD PRINTS BEARING EARLIER REVISION DATES

REVISION DATES: 03/05/08 8-21-08 11-4-08 12/8/08 2/26/09 4-15-09 7-21-09

SHEET 4 OF 19

FILE => 57-1200-e-fp101.dgn

USERNAME => trstrk DATE PLOTTED => 10-JUN-2010 TIME PLOTTED => 14:19

DIST	COUNTY	ROUTE	POST MILES TOTAL PROJECT	SHEET No	TOTAL SHEETS
11	SD	76	23.1/23.5	69	83

REGISTERED CIVIL ENGINEER — DATE 7-28-09

6-7-10
PLANS APPROVAL DATE

The State of California or its officers or agents shall not be responsible for the accuracy or completeness of electronic copies of this plan sheet.

REGISTERED PROFESSIONAL ENGINEER — Daryoush Tavatli — No. 56183 — Exp. 12-31-10 — CIVIL — STATE OF CALIFORNIA

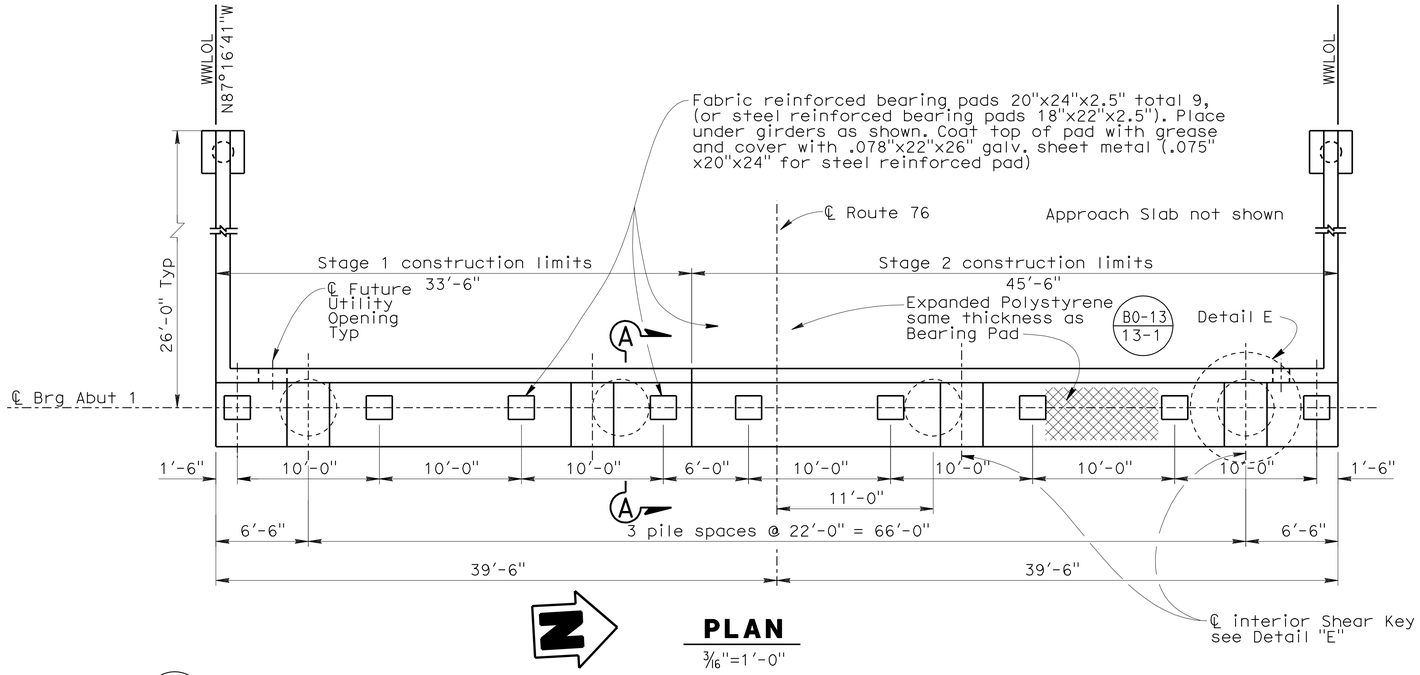

PLAN

3/16"=1'-0"

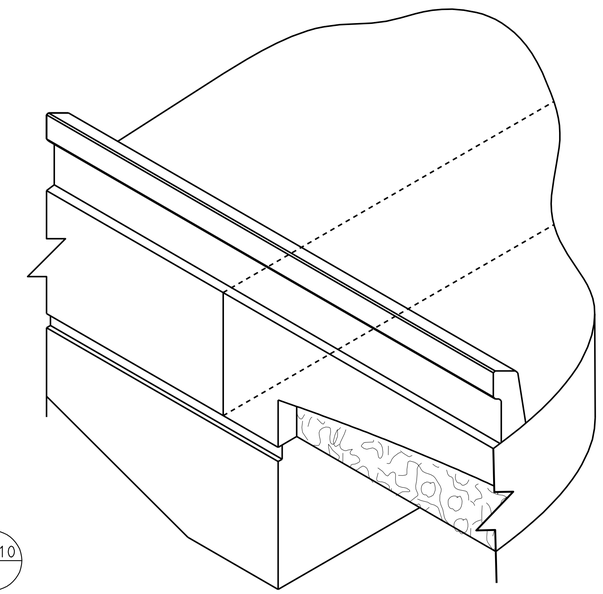

VIEW H

1/4"=1'-0"

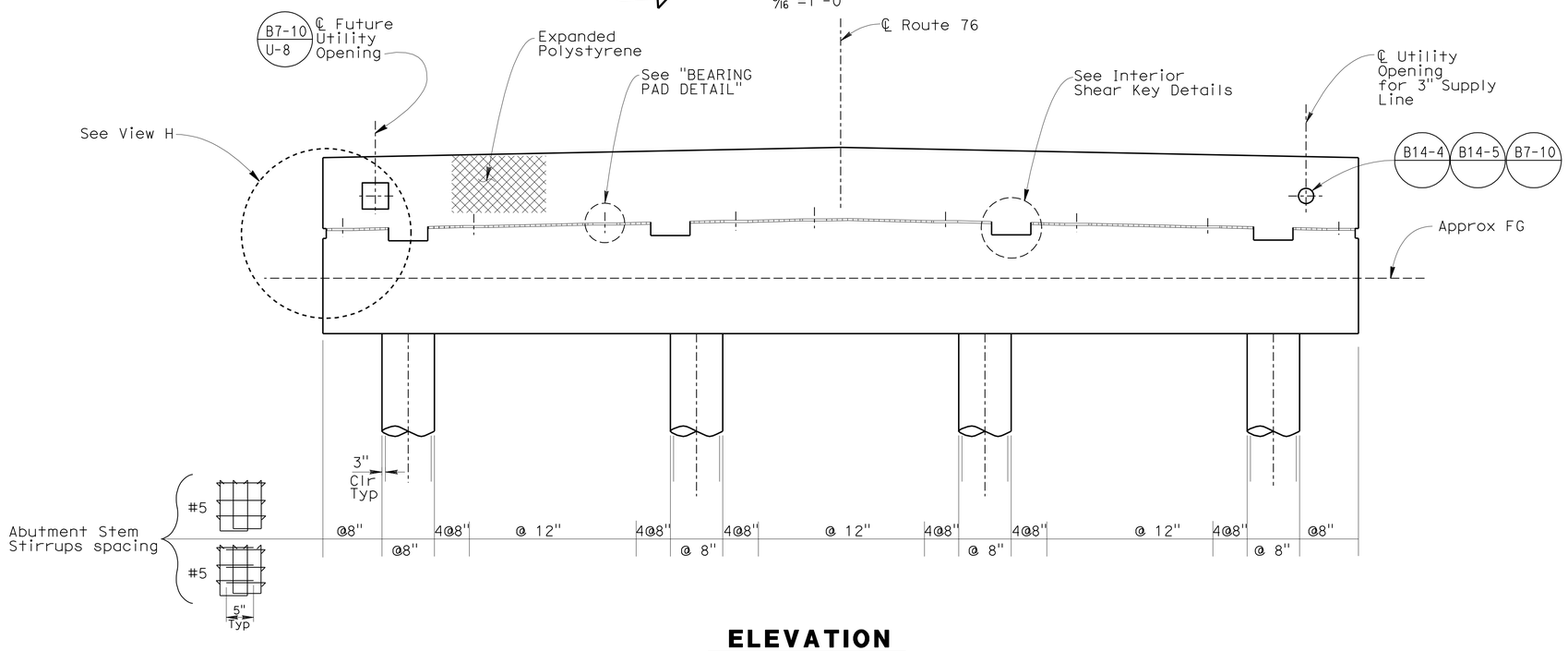

ELEVATION

3/16"=1'-0"

NOTES:

Abutment 1 shown
Abutment 2 similar

For 'Detail E' see "ABUTMENT DETAILS NO.3" sheet

For 'Section A-A' see "ABUTMENT DETAILS NO.2" sheet

For 'Bearing Pad Detail' see "ABUTMENT DETAILS NO.2" sheet

LEGEND:

- Indicates 4'-0" ø Piles

	BY	CHECKED
DESIGN	Junxia Wu	Haitao Liu
DETAILS	Jaime Ramirez	D. Tavatli
QUANTITIES	D. Tavatli	K. Doll

STATE OF CALIFORNIA
DEPARTMENT OF TRANSPORTATION

DIVISION OF ENGINEERING SERVICES
STRUCTURE DESIGN
DESIGN BRANCH 11

BRIDGE NO. 57-1200
POST MILE 23.2

PALA CREEK BRIDGE
ABUTMENT DETAILS NO. 1

STRUCTURES DESIGN DETAIL SHEET (ENGLISH) (REV. 10/25/05)

ORIGINAL SCALE IN INCHES FOR REDUCED PLANS 0 1 2 3

CU 11308
EA 273401

DISREGARD PRINTS BEARING EARLIER REVISION DATES

REVISION DATES: 5-28-08 1-28-09 2-26-09 4-13-09 4-15-09 8-18-08 8-22-08 10-20-08 11-4-08

SHEET 5 OF 19

FILE => 57-1200-f-a01dt01.dgn

USERNAME => ttstrk DATE PLOTTED => 10-JUN-2010 TIME PLOTTED => 14:19

DIST	COUNTY	ROUTE	POST MILES TOTAL PROJECT	SHEET No	TOTAL SHEETS
11	SD	76	23.1/23.5	70	83

REGISTERED CIVIL ENGINEER — DATE 7-28-09

6-7-10
PLANS APPROVAL DATE

The State of California or its officers or agents shall not be responsible for the accuracy or completeness of electronic copies of this plan sheet.

REGISTERED PROFESSIONAL ENGINEER — Daryoush Tavatli No. 56183 Exp. 12-31-10 CIVIL — STATE OF CALIFORNIA

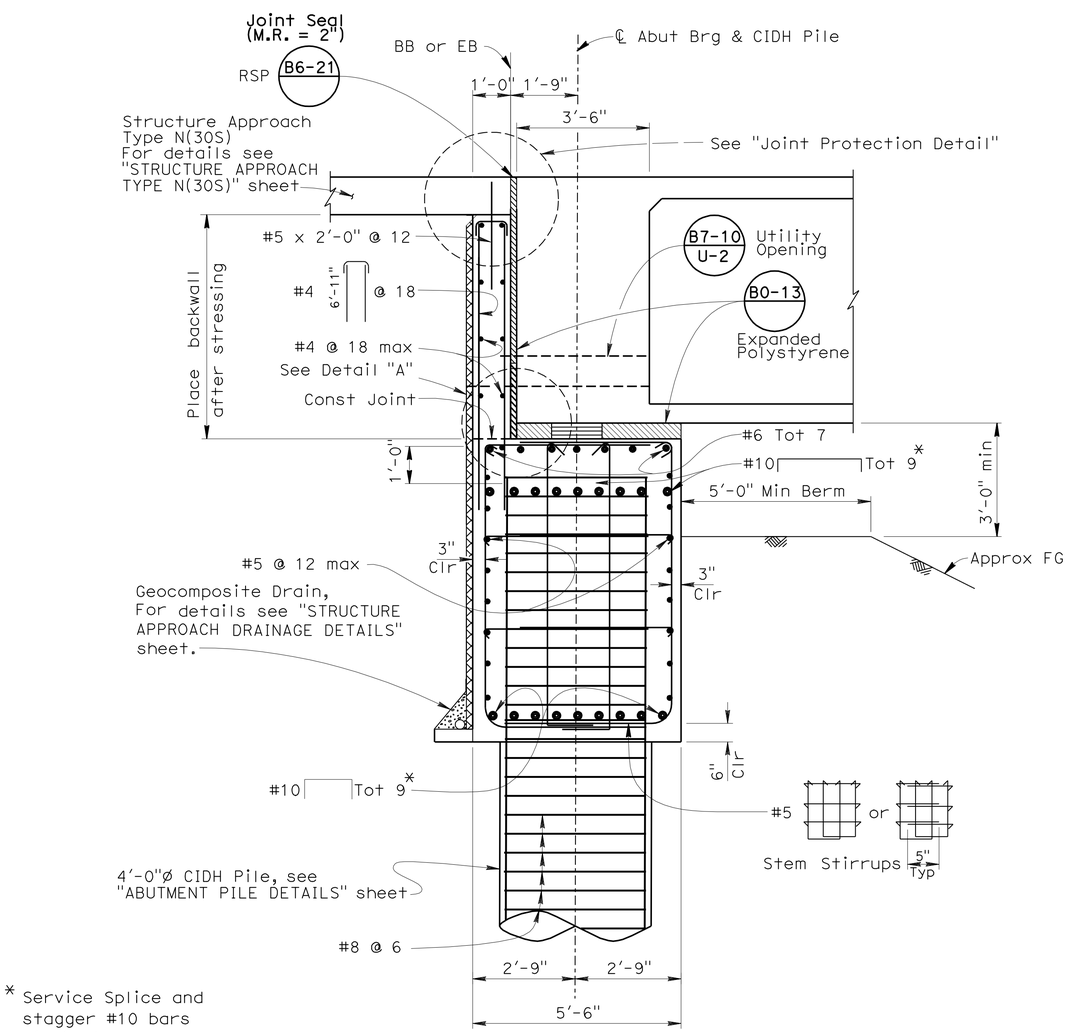

* Service Splice and stagger #10 bars within Closure pour.

SECTION A-A

½"=1'-0"

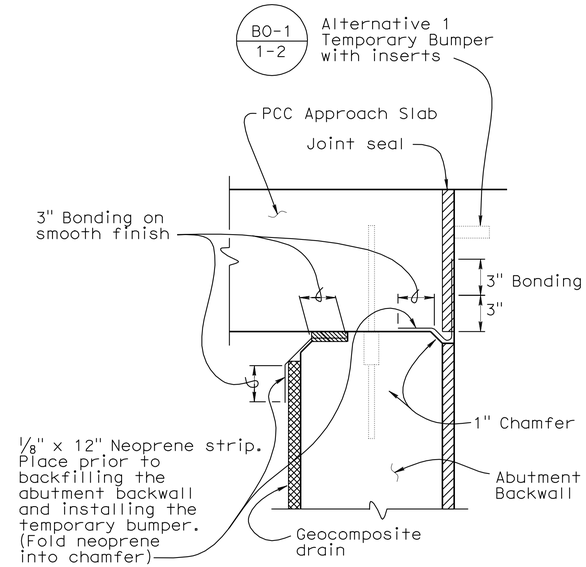

JOINT PROTECTION DETAIL

No Scale

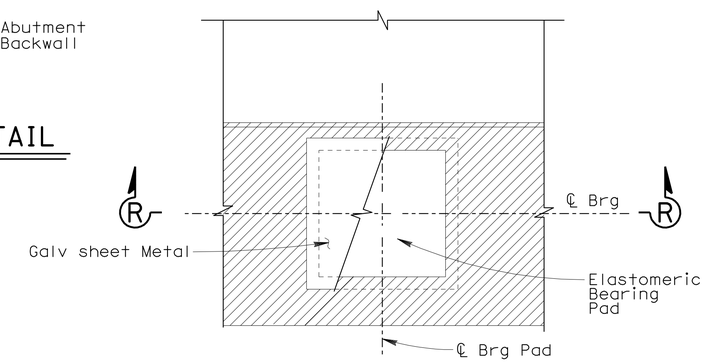

PLAN

No Scale

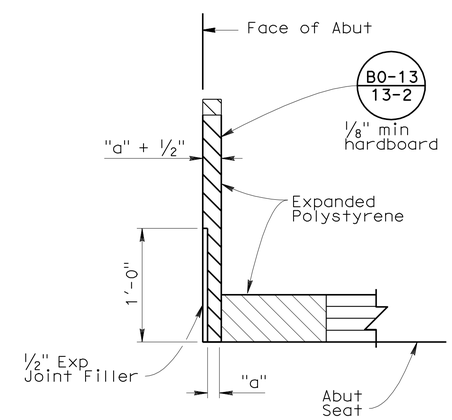

DETAIL A

No Scale

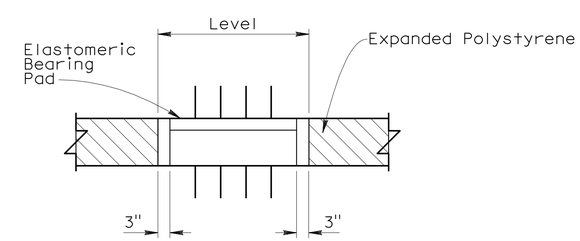

SECTION R-R

BEARING PAD DETAIL

No Scale

	BY	CHECKED
DESIGN	Junxia Wu	Haitao Liu
DETAILS	Jaime Ramirez	D. Tavatli
QUANTITIES	D. Tavatli	K. Doll

STATE OF CALIFORNIA
DEPARTMENT OF TRANSPORTATION

DIVISION OF ENGINEERING SERVICES
STRUCTURE DESIGN
DESIGN BRANCH 11

BRIDGE NO. 57-1200
POST MILE 23.2

PALA CREEK BRIDGE
ABUTMENT DETAILS NO. 2

STRUCTURES DESIGN DETAIL SHEET (ENGLISH) (REV. 10/25/05)

ORIGINAL SCALE IN INCHES FOR REDUCED PLANS 0 1 2 3

CU 11308
EA 273401

DISREGARD PRINTS BEARING EARLIER REVISION DATES

REVISION DATES: 6-19-08 7-23-08 8-15-08 8-18-08 11-18-08 2-26-09 4-15-09 7-23-09

SHEET 6 OF 19

FILE => 57-1200-f-a01dt02.dgn

USERNAME => trstrk DATE PLOTTED => 10-JUN-2010 TIME PLOTTED => 14:20

DIST	COUNTY	ROUTE	POST MILES TOTAL PROJECT	SHEET No	TOTAL SHEETS
11	SD	76	23.1/23.5	71	83

REGISTERED CIVIL ENGINEER 7-28-09 DATE

6-7-10
PLANS APPROVAL DATE

The State of California or its officers or agents shall not be responsible for the accuracy or completeness of electronic copies of this plan sheet.

REGISTERED PROFESSIONAL ENGINEER Daryoush Tavatli No. 56183 Exp. 12-31-10 CIVIL STATE OF CALIFORNIA

For Structure Approach Details see "STRUCTURE APPROACH TYPE N(30S)" sheet. Barrier not shown.

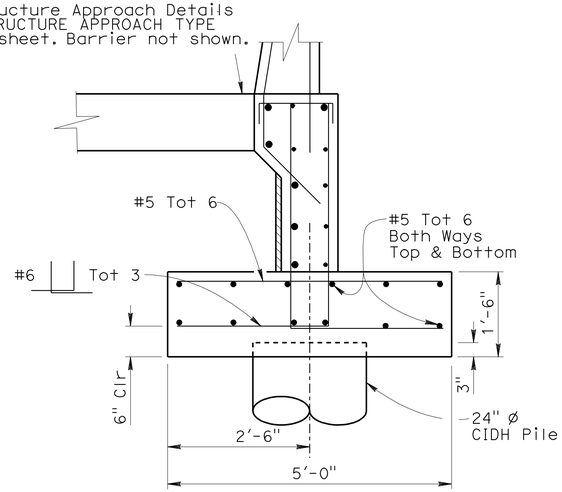

SECTION B-B (B2-3)

3/4"=1'-0"

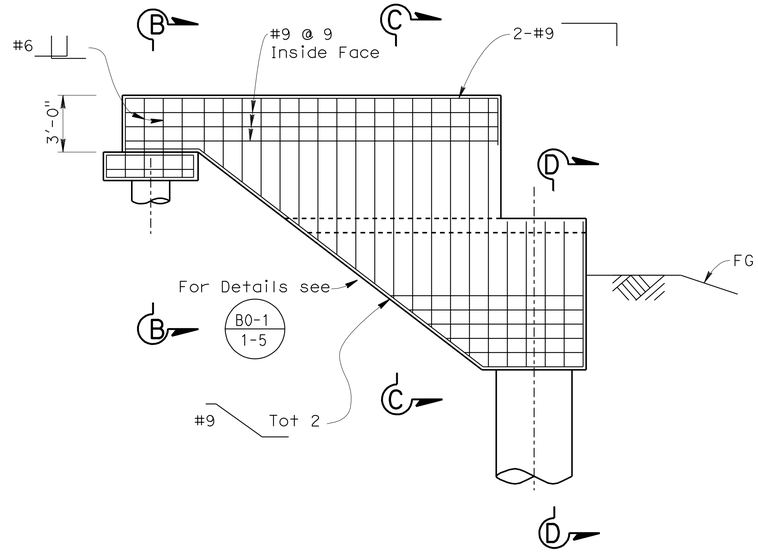

WINGWALL ELEVATION

1/4"=1'-0"

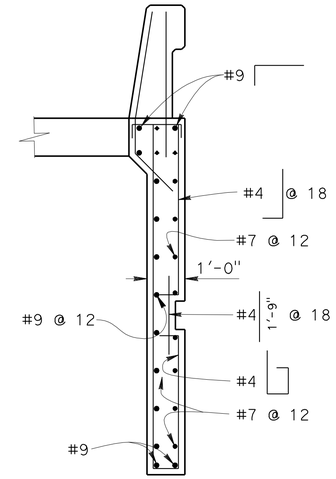

SECTION C-C

1/2"=1'-0"

Note:

For details not shown see "STRUCTURE APPROACH TYPE N(30S)" sheet

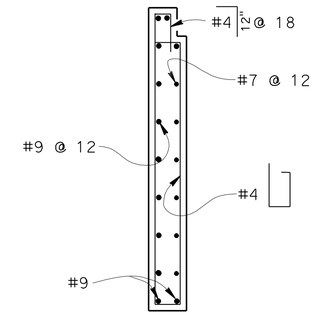

SECTION D-D

1/2"=1'-0"

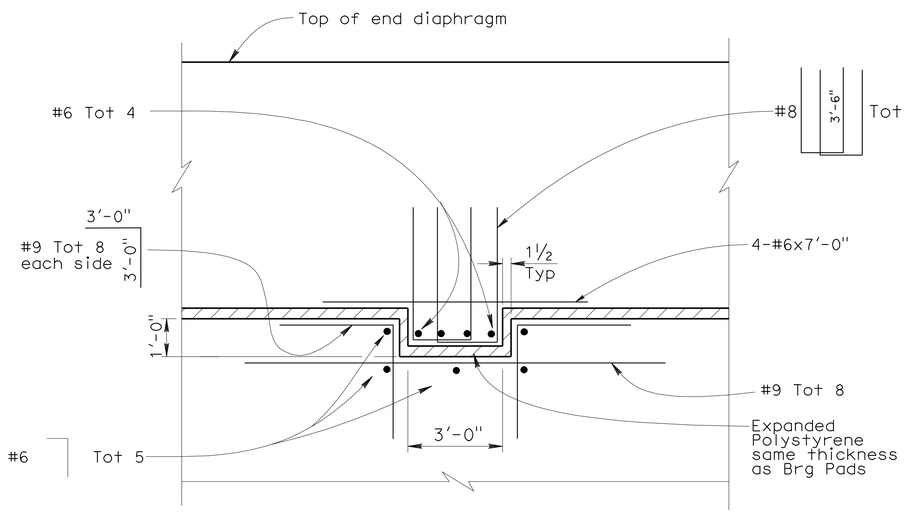

SECTION H-H

1/2" = 1'-0"

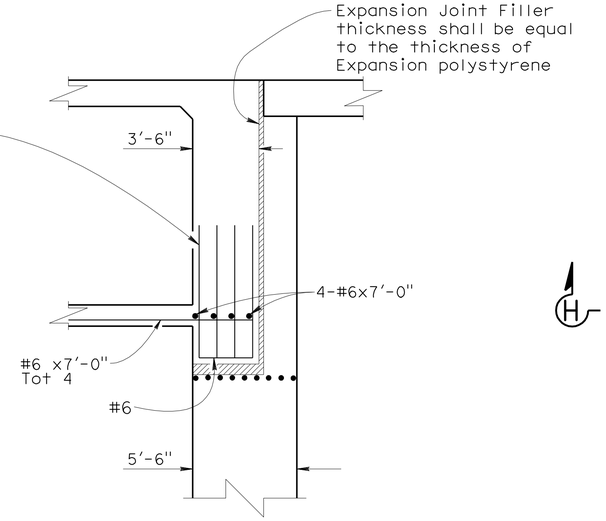

SECTION J-J

1/4 "=1'-0"

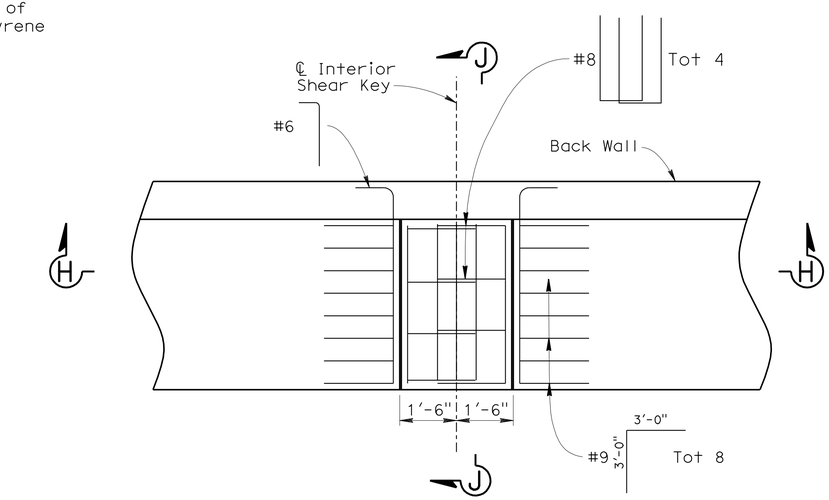

PLAN

DETAIL "E"

1/2"=1'-0"

DESIGN	BY Junxia Wu	CHECKED Haitao Liu	
DETAILS	BY Jaime Ramirez	CHECKED D. Tavatli	
QUANTITIES	BY D. Tavatli	CHECKED K. Doll	

STATE OF CALIFORNIA
DEPARTMENT OF TRANSPORTATION

DIVISION OF ENGINEERING SERVICES
STRUCTURE DESIGN
DESIGN BRANCH 11

BRIDGE NO. 57-1200
POST MILE 23.2

PALA CREEK BRIDGE
ABUTMENT DETAILS NO. 3

STRUCTURES DESIGN DETAIL SHEET (ENGLISH) (REV. 10/25/05)

ORIGINAL SCALE IN INCHES FOR REDUCED PLANS 0 1 2 3

CU 11308
EA 273401

DISREGARD PRINTS BEARING EARLIER REVISION DATES

REVISION DATES: 7-23-08 4-15-09 8-18-08 5-28-08 10-20-08 11-18-08 1-21-09 2-26-09 4-13-09

SHEET 7 OF 19

FILE => 57-1200-f-a01dt03.dgn

USERNAME => trmikest DATE PLOTTED => 14-JUN-2010 TIME PLOTTED => 07:03

DIST	COUNTY	ROUTE	POST MILES TOTAL PROJECT	SHEET No	TOTAL SHEETS
11	SD	76	23.1/23.5	72	83

REGISTERED CIVIL ENGINEER 7-28-09 DATE

6-7-10
PLANS APPROVAL DATE

REGISTERED PROFESSIONAL ENGINEER Daryoush Tavatli No. 56183 Exp. 12-31-10 CIVIL STATE OF CALIFORNIA

The State of California or its officers or agents shall not be responsible for the accuracy or completeness of electronic copies of this plan sheet.

NOTES:

1. All reinforcement splices and hoop fabrication in the piles shall conform to Ultimate Splice Requirements
2. For Additional Pile Data, see 'Pile Data Table' on "INDEX TO PLANS" sheet.

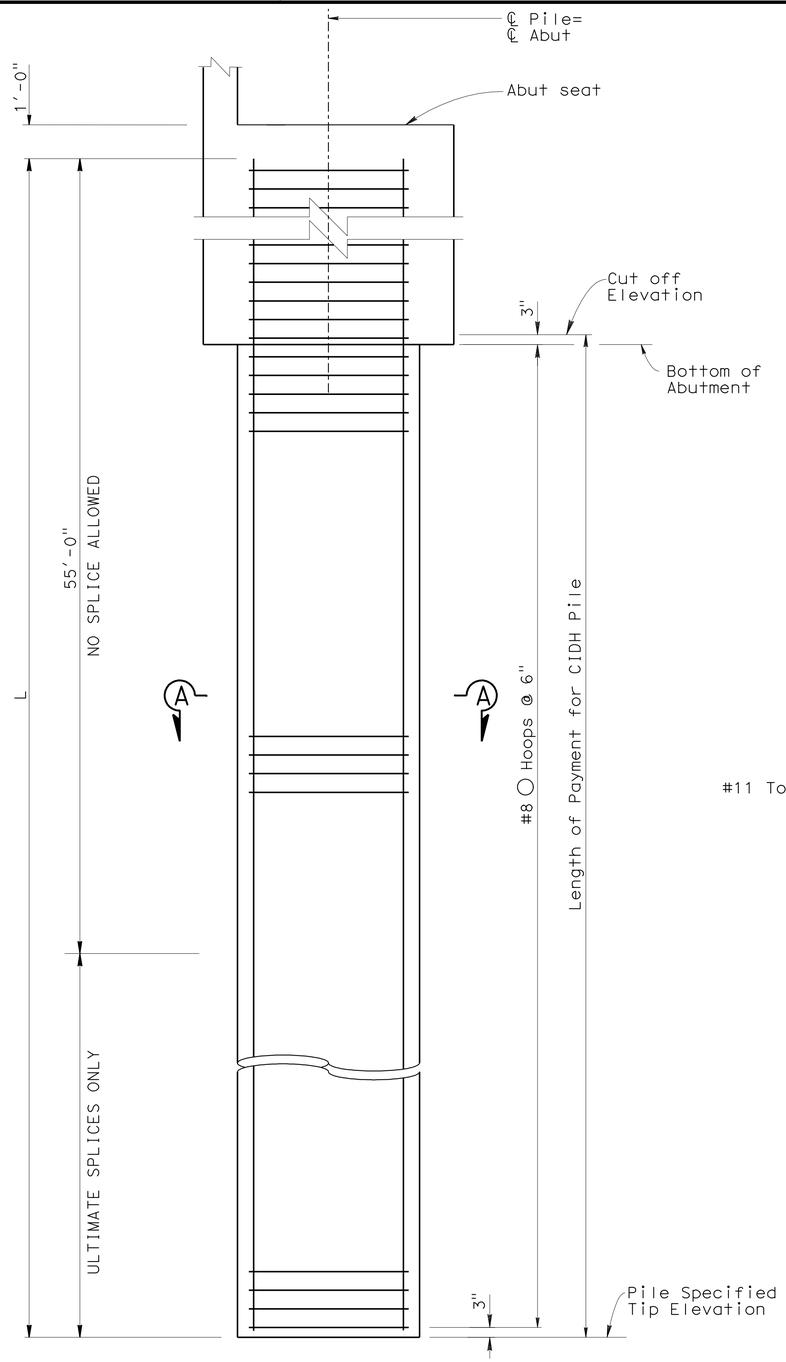

ELEVATION
NO SCALE

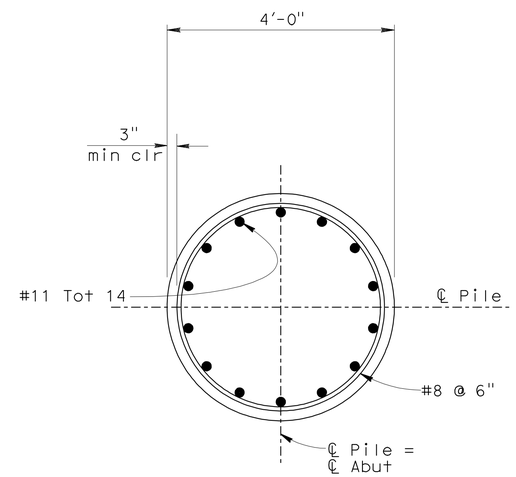

SECTION A-A
3/4"=1'-0"

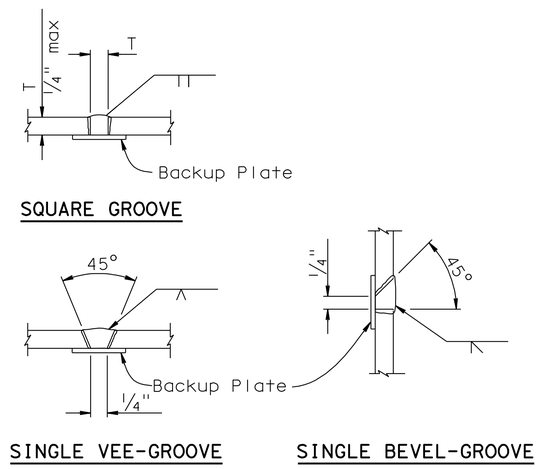

PILE WELDING DETAIL-BUTT JOINTS

Notes:
1. Single Vee-Groove And Square Groove Permitted for all positions.
2. Single Bevel-Groove permitted for horizontal joints only

DESIGN	BY Junxia Wu	CHECKED Haitao Liu	
DETAILS	BY Jaime Ramirez	CHECKED D. Tavatli	
QUANTITIES	BY D. Tavatli	CHECKED K. Doll	

STATE OF CALIFORNIA
DEPARTMENT OF TRANSPORTATION

DIVISION OF ENGINEERING SERVICES
STRUCTURE DESIGN
DESIGN BRANCH 11

BRIDGE NO. 57-1200
POST MILE 23.2

PALA CREEK BRIDGE
ABUTMENT PILE DETAILS

STRUCTURES DESIGN DETAIL SHEET (ENGLISH) (REV. 10/25/05)

ORIGINAL SCALE IN INCHES FOR REDUCED PLANS 0 1 2 3

CU 11308
EA 273401

DISREGARD PRINTS BEARING EARLIER REVISION DATES

REVISION DATES: 5-23-08 8-15-08 8-18-08 8-27-08 11-4-08 1-21-09 2-26-09 4-15-09

SHEET 8 OF 19

FILE => 57-1200-f-a01dt03a.dgn

USERNAME => trmikest DATE PLOTTED => 14-JUN-2010 TIME PLOTTED => 07:09

DIST	COUNTY	ROUTE	POST MILES TOTAL PROJECT	SHEET No	TOTAL SHEETS
11	SD	76	23.1/23.5	73	83

Daryoush Tavatli 7-28-09
REGISTERED CIVIL ENGINEER DATE

6-7-10
PLANS APPROVAL DATE

REGISTERED PROFESSIONAL ENGINEER
Daryoush Tavatli
No. 56183
Exp. 12-31-10
CIVIL
STATE OF CALIFORNIA

The State of California or its officers or agents shall not be responsible for the accuracy or completeness of electronic copies of this plan sheet.

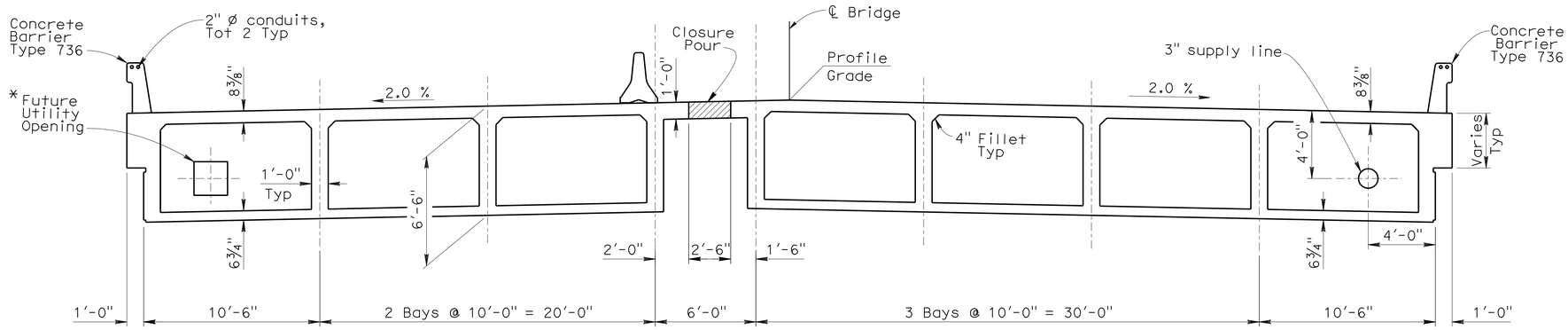

TYPICAL SECTION

1/4"=1'-0"

* - For location see Opening for 3" Supply Line

FALSEWORK RELEASE

Alternative 1:

Falsework shall be released as soon as permitted by the specifications. Closure pour shall not be placed sooner than 60 days after the falsework had been released.

Alternative 2:

Falsework shall not be released less than 28 days after the last concrete has been placed. Closure pour shall not be placed sooner than 14 days after the falsework has been released.

When Falsework Release Alternative 2 is used, camber values are 0.75 times those shown.

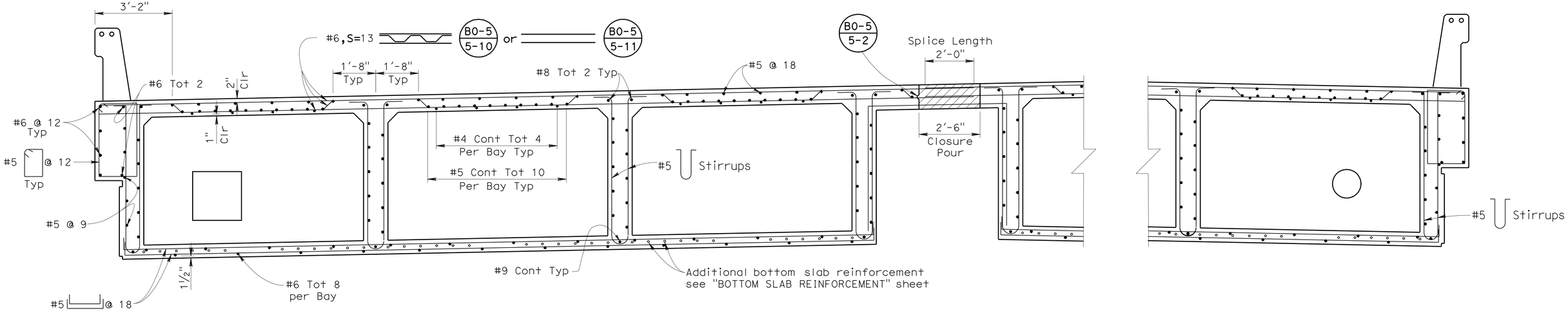

PART TYPICAL SECTION (B7-1)

1/2"=1'-0"

DESIGN	BY Junxia Wu	CHECKED Haitao Liu	
DETAILS	BY Jaime Ramirez	CHECKED D. Tavatli	
QUANTITIES	BY D. Tavatli	CHECKED K. Doll	

STATE OF CALIFORNIA
DEPARTMENT OF TRANSPORTATION

DIVISION OF ENGINEERING SERVICES
STRUCTURE DESIGN
DESIGN BRANCH 11

BRIDGE NO. 57-1200
POST MILE 23.2

PALA CREEK BRIDGE
TYPICAL SECTION

STRUCTURES DESIGN DETAIL SHEET (ENGLISH) (REV. 10/25/05)

ORIGINAL SCALE IN INCHES FOR REDUCED PLANS 0 1 2 3

CU 11308
EA 273401

DISREGARD PRINTS BEARING EARLIER REVISION DATES

REVISION DATES: 4-28-08, 7-18-08, 7-23-08, 8-15-08, 11-4-08, 1-22-09, 2-26-09, 4-13-09, 7-21-09

FILE => 57-1200-k-ts01.dgn

USERNAME => trmikes1 DATE PLOTTED => 14-JUN-2010 TIME PLOTTED => 07:03

DIST	COUNTY	ROUTE	POST MILES TOTAL PROJECT	SHEET No	TOTAL SHEETS
11	SD	76	23.1/23.5	74	83

REGISTERED CIVIL ENGINEER 7-28-09 DATE

6-7-10
PLANS APPROVAL DATE

The State of California or its officers or agents shall not be responsible for the accuracy or completeness of electronic copies of this plan sheet.

REGISTERED PROFESSIONAL ENGINEER Daryoush Tavatli No. 56183 Exp. 12-31-10 CIVIL STATE OF CALIFORNIA

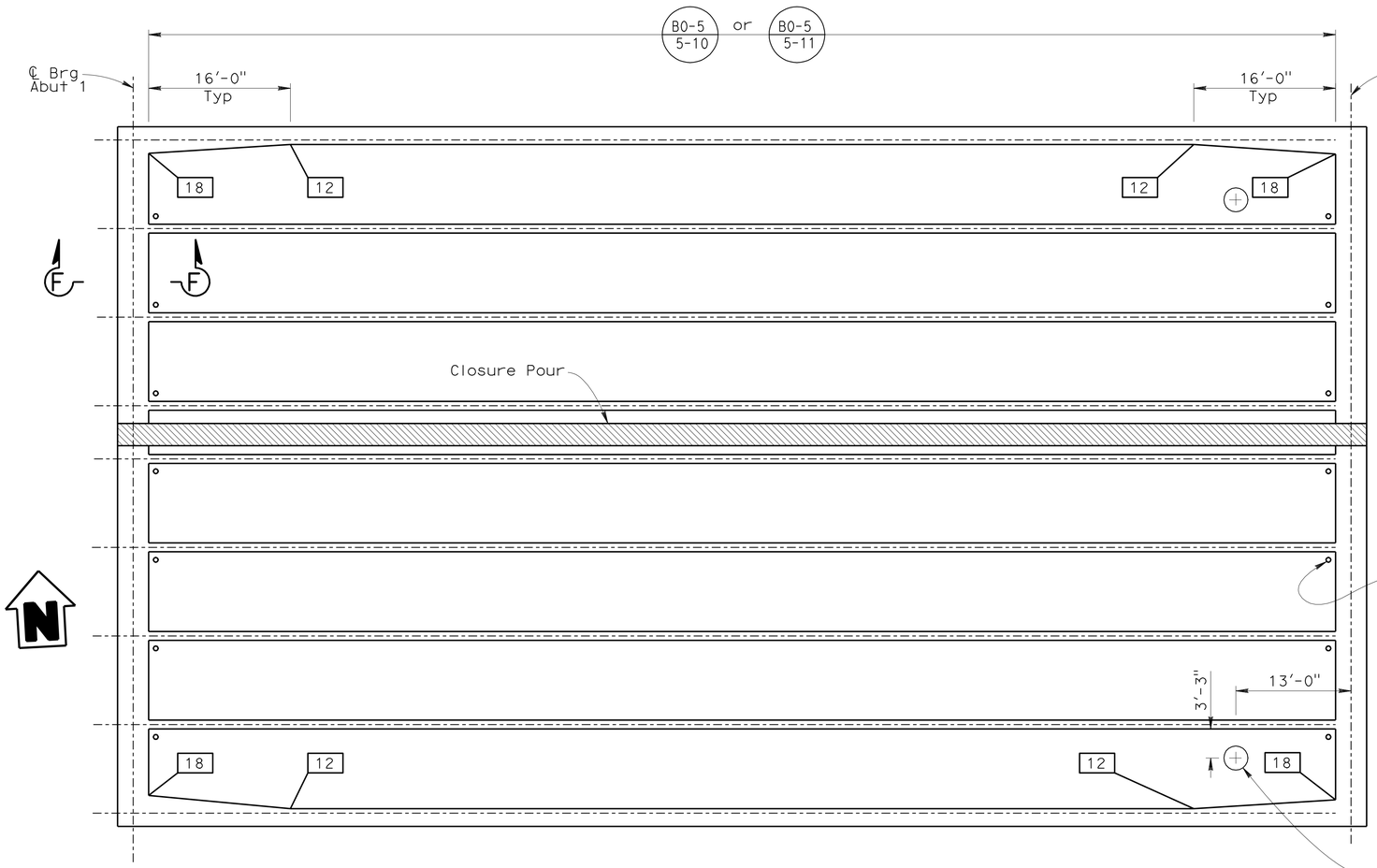

PLAN

B7-1 V-1

1/8" = 1'-0"

PRESTRESSING NOTES

270 KSI Low Relaxation Strand:

P_{jack} = 20845 kips

Anchor Set = 3/8 in

Total Number of Girders = 9

Distribution of prestress force (Pjack) between girders shall not exceed the ratio of 3:2. Maximum final force variation between girders shall not exceed 725 kips.

Concrete: f'_c = 5000 psi @ 28 days

f'_{ci} = 3500 psi @ time of stressing

Contractor shall submit elongation calculations based on initial stress at

⊠ = 0.951 times jacking stress.

One end stressing shall be performed at either end

XX Denotes Girder Stem width in inches

Notes:

For Section F-F see "BOTTOM SLAB REINFORCEMENT" sheet

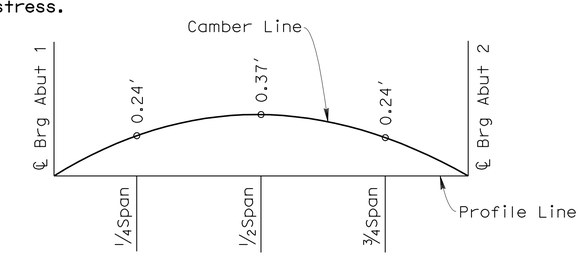

Does not include allowance for Falsework settlement

CAMBER DIAGRAM

No Scale

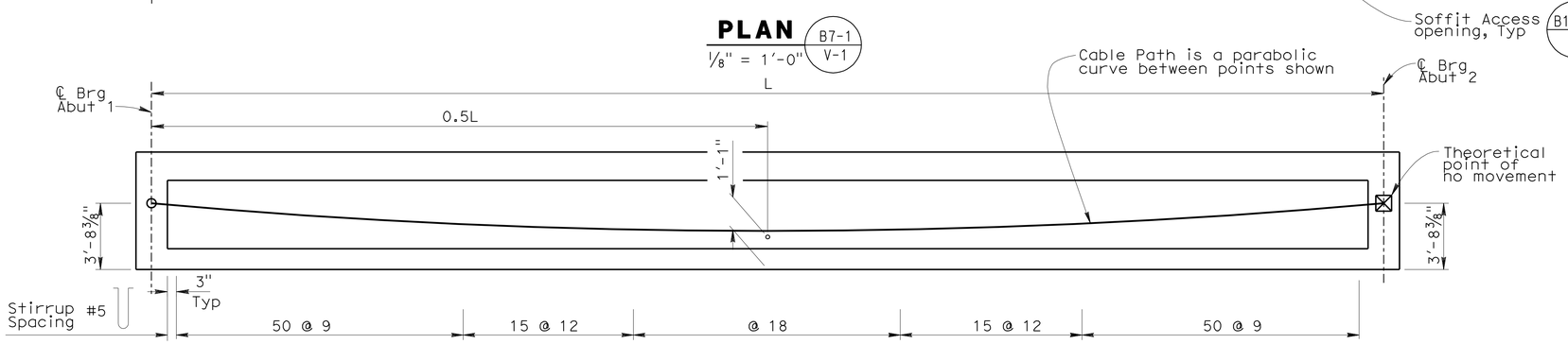

TYPICAL LONGITUDINAL SECTION

B0-5 B7-1 B8-5 B14-5

No Scale

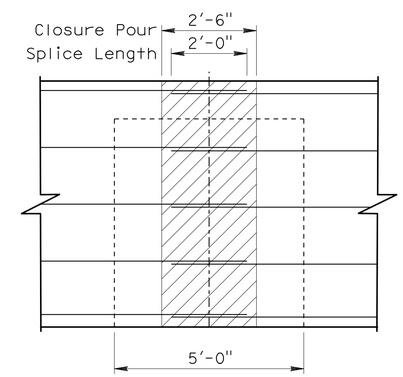

END DIAPHRAM CLOSURE POUR DETAIL

1/2" = 1'-0"

DESIGN	BY Junxia Wu	CHECKED Haitao Liu	
DETAILS	BY Jaime Ramirez	CHECKED D. Tavatli	
QUANTITIES	BY D. Tavatli	CHECKED K. Doll	

STATE OF CALIFORNIA DEPARTMENT OF TRANSPORTATION

DIVISION OF ENGINEERING SERVICES STRUCTURE DESIGN DESIGN BRANCH 11

BRIDGE NO. 57-1200 POST MILE 23.2

PALA CREEK BRIDGE
GIRDER LAYOUT

STRUCTURES DESIGN DETAIL SHEET (ENGLISH) (REV. 10/25/05)

ORIGINAL SCALE IN INCHES FOR REDUCED PLANS 0 1 2 3

CU 11308
EA 273401

DISREGARD PRINTS BEARING EARLIER REVISION DATES

REVISION DATES: 6-5-08 7-27-09 8-18-08 10-20-08 11-18-08 1-21-09 1-22-09 2-26-09 7-21-09

SHEET 10 OF 19

FILE => 57-1200-1-g_1o01.dgn

USERNAME => trmikest DATE PLOTTED => 14-JUN-2010 TIME PLOTTED => 07:03

DIST	COUNTY	ROUTE	POST MILES TOTAL PROJECT	SHEET No	TOTAL SHEETS
11	SD	76	23.1/23.5	75	83

REGISTERED CIVIL ENGINEER 7-28-09 DATE

6-7-10
PLANS APPROVAL DATE

REGISTERED PROFESSIONAL ENGINEER
Daryoush Tavatli
No. 56183
Exp. 12-31-10
CIVIL
STATE OF CALIFORNIA

The State of California or its officers or agents shall not be responsible for the accuracy or completeness of electronic copies of this plan sheet.

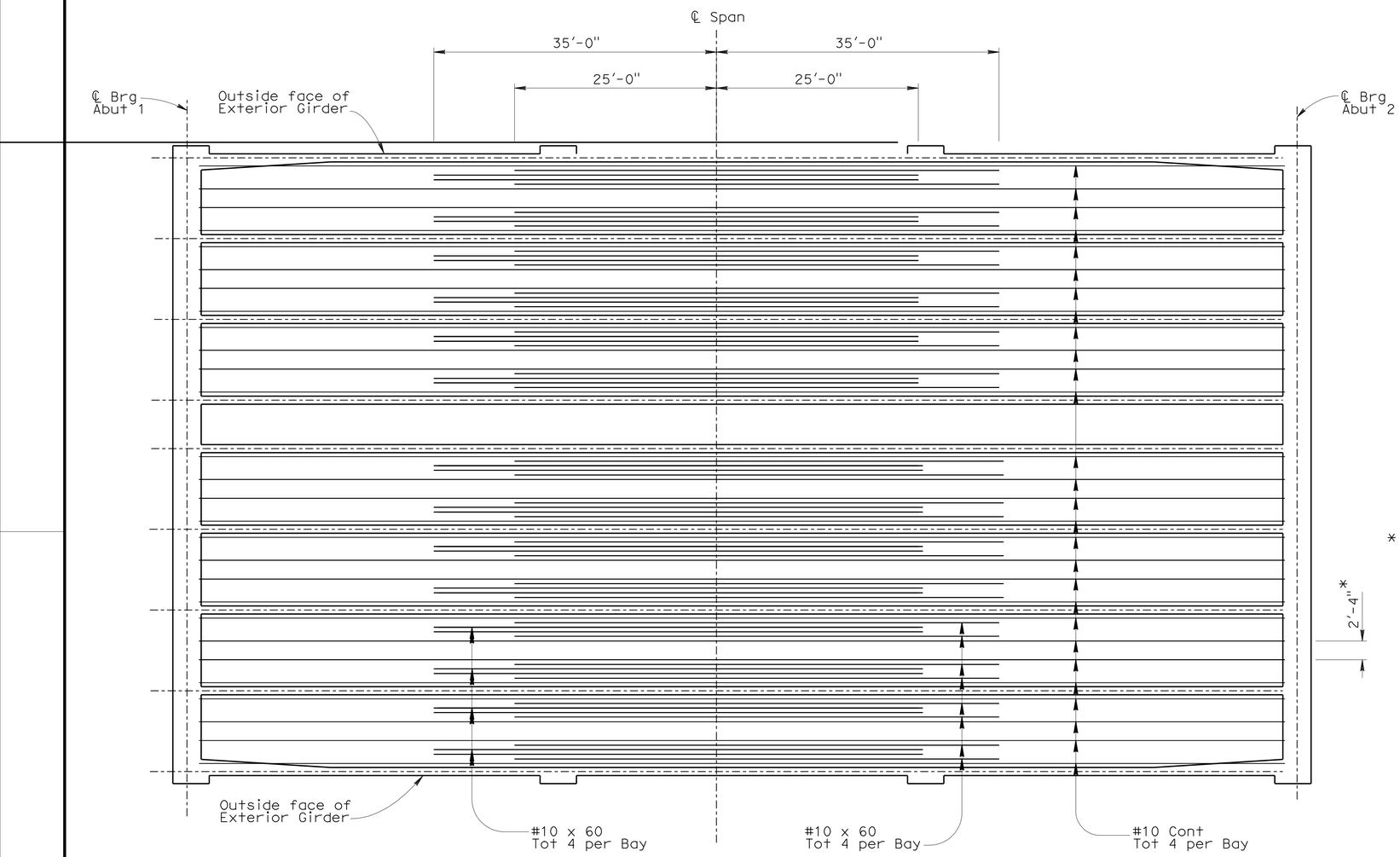

N

BOTTOM SLAB REINFORCEMENT

1/8" = 1'-0"

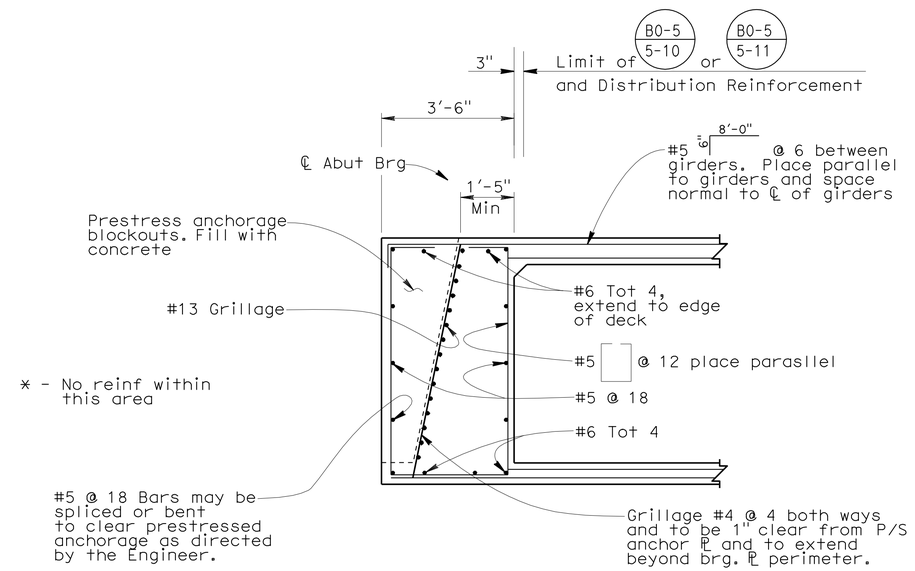

SECTION F-F

B8-5

1/2" = 1'-0"

DESIGN	BY Junxia Wu	CHECKED Haitao Liu	
DETAILS	BY Jaime Ramirez	CHECKED D. Tavatli	
QUANTITIES	BY D. Tavatli	CHECKED K. Doll	

STATE OF CALIFORNIA
DEPARTMENT OF TRANSPORTATION

DIVISION OF ENGINEERING SERVICES
STRUCTURE DESIGN
DESIGN BRANCH 11

BRIDGE NO. 57-1200
POST MILE 23.2

PALA CREEK BRIDGE
BOTTOM SLAB REINFORCEMENT

STRUCTURES DESIGN DETAIL SHEET (ENGLISH) (REV. 10/25/05)

ORIGINAL SCALE IN INCHES FOR REDUCED PLANS 0 1 2 3

CU 11308
EA 273401

DISREGARD PRINTS BEARING EARLIER REVISION DATES

REVISION DATES: 6-18-08 7-21-09 8-14-08 10/23/08 11-18-08 1-21-09 2-26-09 1-21-09 7-28-09

SHEET 11 OF 19

FILE => 57-1200-m-gbot01.dgn

USERNAME => trmikesl DATE PLOTTED => 14-JUN-2010 TIME PLOTTED => 07:09

DIST	COUNTY	ROUTE	POST MILES TOTAL PROJECT	SHEET No	TOTAL SHEETS
11	SD	76	23.1/23.5	76	83

REGISTERED CIVIL ENGINEER 7-28-09 DATE

6-7-10
PLANS APPROVAL DATE

REGISTERED PROFESSIONAL ENGINEER Daryoush Tavatli No. 56183 Exp. 12-31-10 CIVIL STATE OF CALIFORNIA

The State of California or its officers or agents shall not be responsible for the accuracy or completeness of electronic copies of this plan sheet.

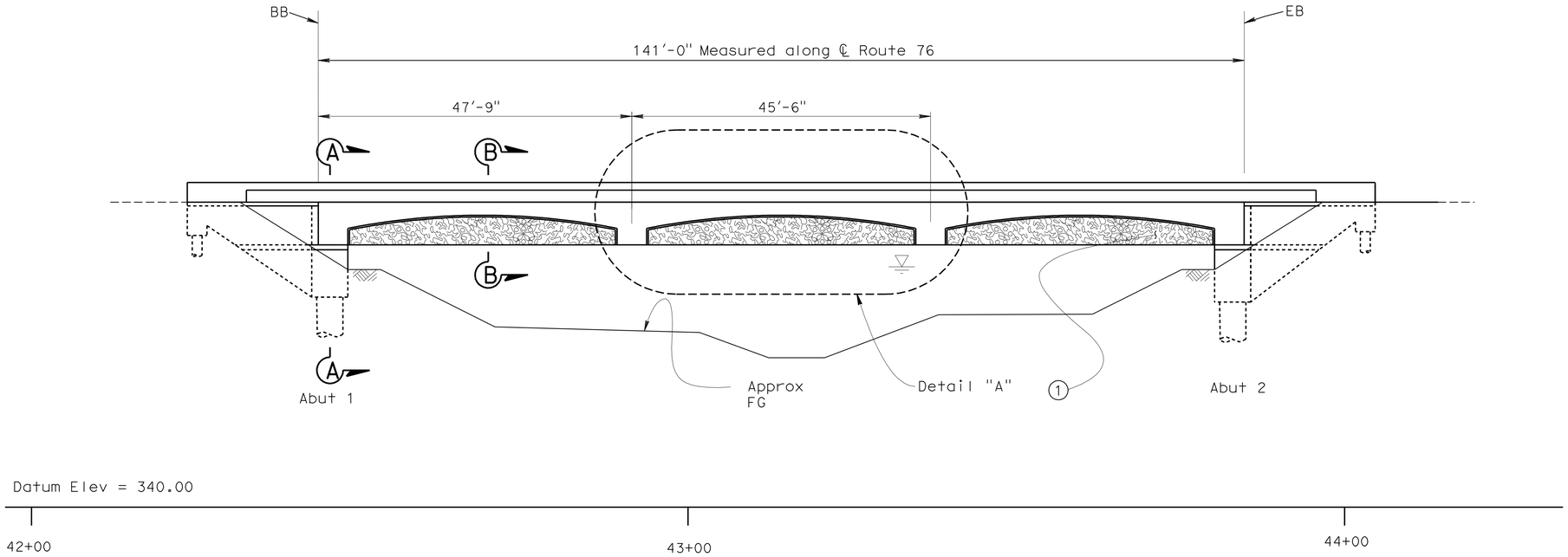

ELEVATION

1"=10'

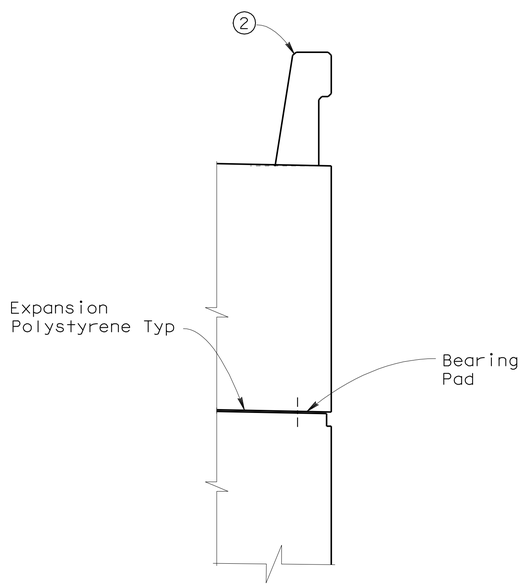

SECTION A-A

1/2"=1'-0"

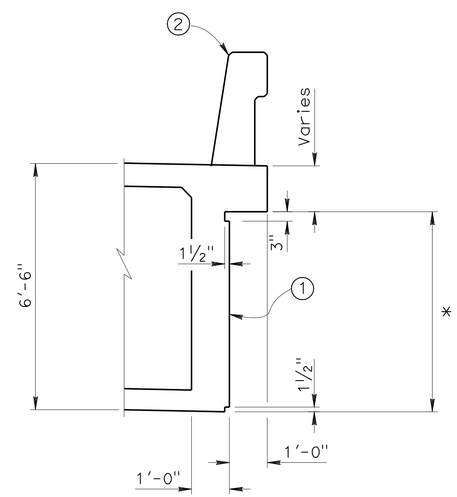

SECTION B-B

1/2"=1'-0"

Notes:

1 - Bush Hammer Texture

2 - Heavy sand blast Texture on Barrier (over entire Barrier) Type 736

* - Indicates Limits of Payment for Bush Hammer Texture

For Detail 'A', see "ARCHITECTURAL TREATMENT DETAIL NO. 2" sheet

	BY	CHECKED
DESIGN	Junxia Wu	Haitao Liu
DETAILS	Jaime Ramirez	D. Tavatli
QUANTITIES	D. Tavatli	K. Doll

STATE OF CALIFORNIA
DEPARTMENT OF TRANSPORTATION

DIVISION OF ENGINEERING SERVICES
STRUCTURE DESIGN
DESIGN BRANCH 11

BRIDGE NO. 57-1200
POST MILE 23.2

PALA CREEK BRIDGE
ARCHITECTURAL TREATMENT DETAILS NO. 1

STRUCTURES DESIGN DETAIL SHEET (ENGLISH) (REV. 10/25/05)

ORIGINAL SCALE IN INCHES FOR REDUCED PLANS 0 1 2 3

CU 11308
EA 273401

DISREGARD PRINTS BEARING EARLIER REVISION DATES

REVISION DATES: 5-23-08 | 8-15-08 | 8-22-08 | 8-29-08 | 2-26-09 | 4-13-09 | 4-20-09 | 4-21-09 | 7-21-09

SHEET 12 OF 19

FILE => 57-1200-n-arch_treatment_1.dgn

USERNAME => s135318 DATE PLOTTED => 10-JUN-2010 TIME PLOTTED => 14:22

DIST	COUNTY	ROUTE	POST MILES TOTAL PROJECT	SHEET No	TOTAL SHEETS
11	SD	76	23.1/23.5	77	83

REGISTERED CIVIL ENGINEER 7-28-09 DATE

6-7-10
PLANS APPROVAL DATE

The State of California or its officers or agents shall not be responsible for the accuracy or completeness of electronic copies of this plan sheet.

REGISTERED PROFESSIONAL ENGINEER
Daryoush Tavatli
No. 56183
Exp. 12-31-10
CIVIL
STATE OF CALIFORNIA

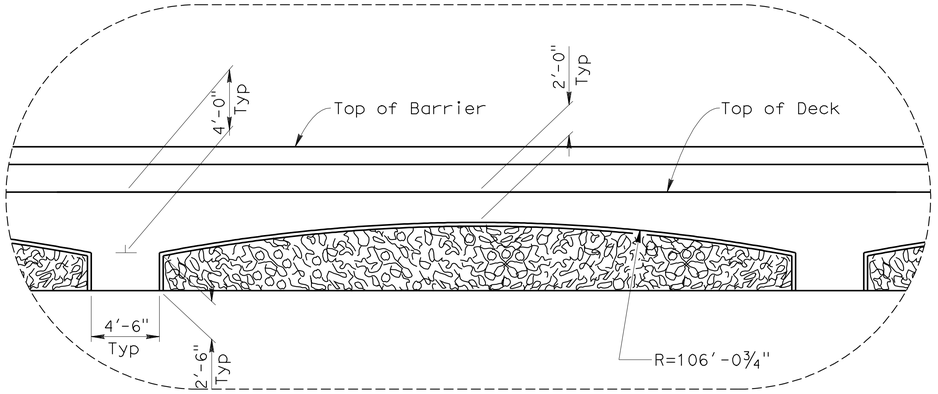

DETAIL "A"

1"=5'

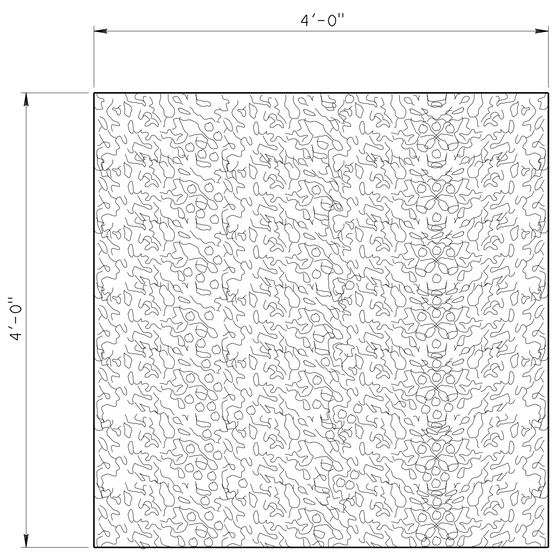

TEST PANEL

1½"=1'-0"

Notes:

Test Panel to be approved
by District Landscape Architect.

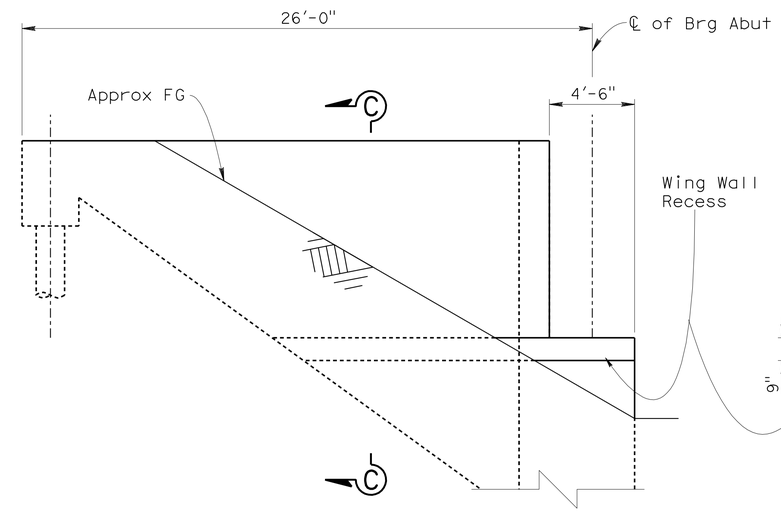

TYPICAL WINGWALL ELEVATION

Not to Scale

SECTION C-C

Not to Scale

DESIGN	BY Junxia Wu	CHECKED Haitao Liu	
DETAILS	BY Jaime Ramirez	CHECKED D. Tavatli	
QUANTITIES	BY D. Tavatli	CHECKED K. Doll	

STATE OF CALIFORNIA
DEPARTMENT OF TRANSPORTATION

DIVISION OF ENGINEERING SERVICES
STRUCTURE DESIGN
DESIGN BRANCH 11

BRIDGE NO. 57-1200
POST MILE 23.2

PALA CREEK BRIDGE
ARCHITECTURAL TREATMENT DETAILS NO. 2

STRUCTURES DESIGN DETAIL SHEET (ENGLISH) (REV. 10/25/05)

ORIGINAL SCALE IN INCHES FOR REDUCED PLANS 0 1 2 3

CU 11308
EA 273401

DISREGARD PRINTS BEARING EARLIER REVISION DATES

REVISION DATES: 8-26-08 8-28-08 2-26-09 4-18-09 7-22-09

SHEET 13 OF 19

FILE => 57-1200-n-arch_treatment_2.dgn

USERNAME => s135318 DATE PLOTTED => 10-JUN-2010 TIME PLOTTED => 14:22

RELEASED 11-4-97

DIST.	COUNTY	ROUTE	POST MILES TOTAL PROJECT	SHEET NO.	TOTAL SHEETS
11	SD	76	23.1/23.5	78	83

REGISTERED ENGINEER - CIVIL 7-28-09

6-7-10
PLANS APPROVAL DATE

REGISTERED PROFESSIONAL ENGINEER Daryoush Tavatli No. 56183 Exp. 12-31-08 CIVIL STATE OF CALIFORNIA

The State of California or its officers or agents shall not be responsible for the accuracy or completeness of electronic copies of this plan sheet.

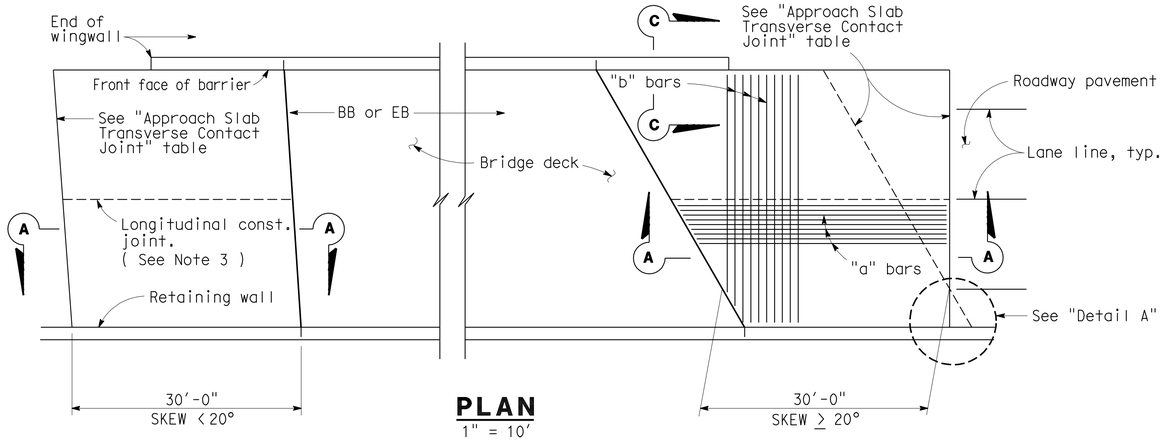

PLAN
1" = 10'

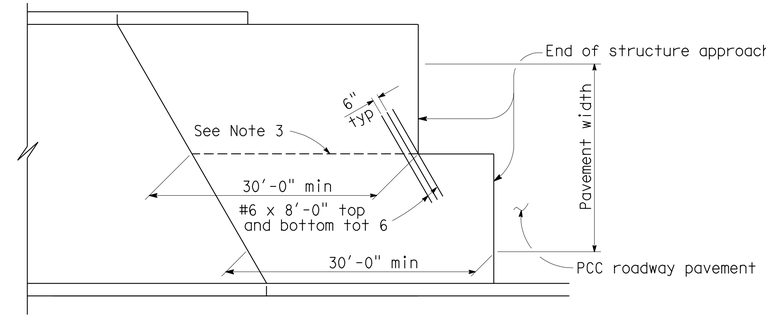

STRUCTURE APPROACH - END STAGGER DETAIL
No Scale

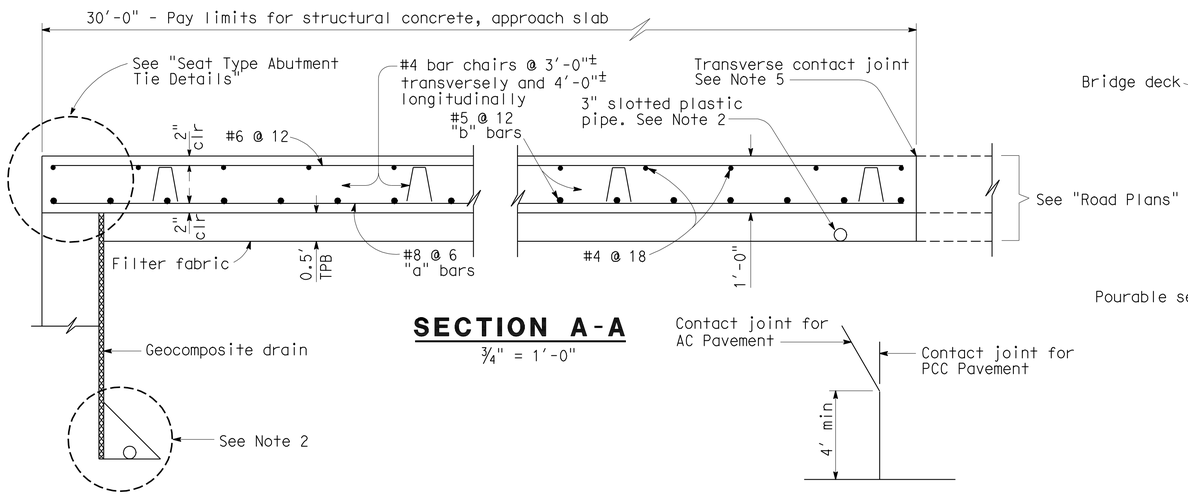

SECTION A-A
¾" = 1'-0"

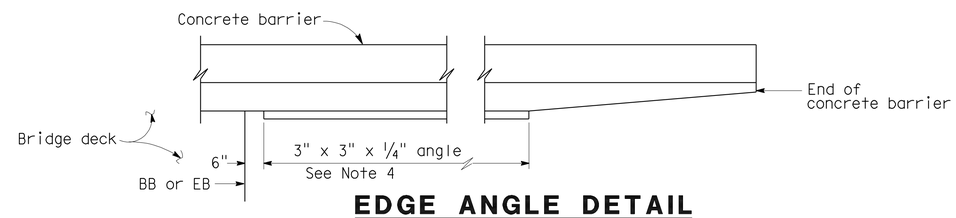

EDGE ANGLE DETAIL
½" = 1'-0"

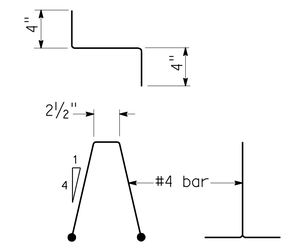

BAR CHAIR DETAIL
1½" = 1'-0"

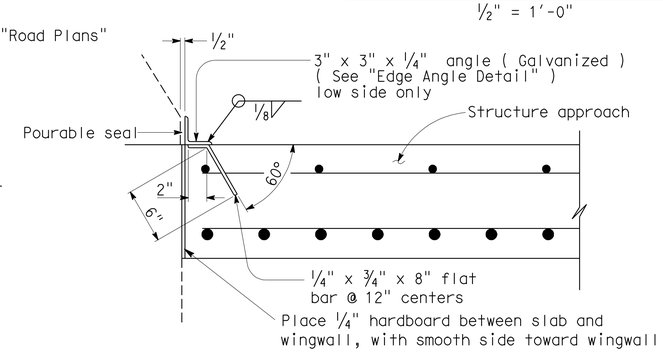

DETAIL B
1½" = 1'-0"

DETAIL A
No Scale

APPROACH SLAB TRANSVERSE CONTACT JOINT		
APPROACH SKEW	WITH AC ROADWAY PAVEMENT	WITH PCC ROADWAY PAVEMENT
< 20°	Parallel to face of paving notch	Parallel to face of paving notch
20 - 45°	Parallel to face of P N use (Detail A)	Stagger lines 24' to 36' apart.
> 45°	Parallel to face of P N use (Detail A)	Stagger at each lane line.

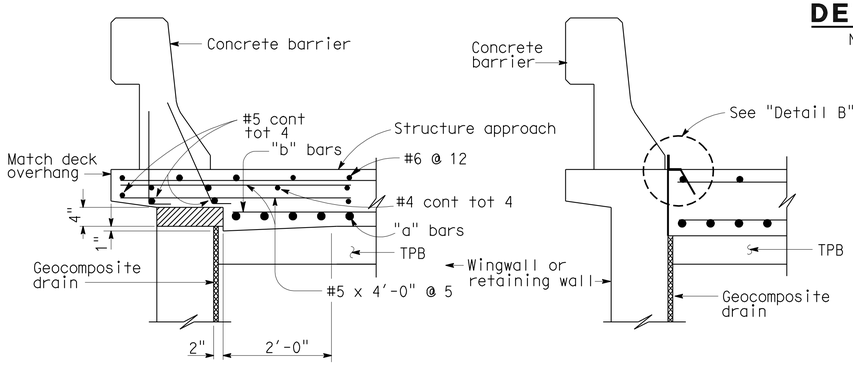

TYPE E-1 TYPE E-2

SECTION C-C
¾" = 1'-0"

(Type E-1 to be used, unless otherwise shown on plans.)

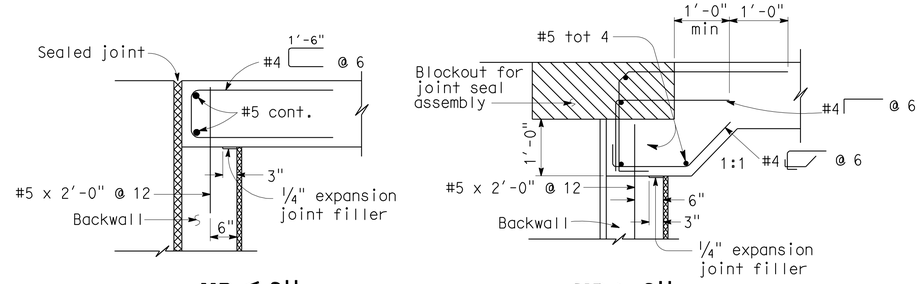

MR ≤ 2" MR > 2"

SEAT TYPE ABUTMENT TIE DETAILS (SEE NOTE 1)
¾" = 1'-0"

NOTES:

1. For details not shown, see Structure Plans. For MR ≤ 2", adjust bar reinforcement to clear a sawcut for sealed joint, when required.
2. For drainage details, see "Structure Approach Drainage Details" sheet.
3. Longitudinal construction joints, when permitted by Engineer, shall be located on lane lines.
4. End angle at beginning of barrier transition, end of wingwall or end of structure approach as applicable.
5. For transverse contact joint with new PCC paving, refer to Standard Plan A35-A.
6. At the contractor's option, approach slab transverse reinforcement may be placed parallel to paving notch. Spacing of transverse reinforcement is measured along ℄ roadway.

Remove all polystyrene.

STANDARD DRAWING				
FILE NO. XS 22-18	DESIGN	BY M. TRAFFALIS	CHECKED E. THORKILDSEN	APPROVAL RECOMMENDED BY
DESIGN DATE 8/92	DETAILS	BY R. YEE	CHECKED E. THORKILDSEN	DESIGN SUPERVISOR
	SUBMITTED BY M. HA			

DS OSD 2147A (CADD 4/89)

ORIGINAL SCALE IN INCHES FOR REDUCED PLANS 0 1 2 3

STATE OF CALIFORNIA DEPARTMENT OF TRANSPORTATION

DIVISION OF STRUCTURES STRUCTURE DESIGN 11

CU 11308
EA 273401

BRIDGE NO. 57-1200
POST MILE 23.2

PALA CREEK BRIDGE
STRUCTURE APPROACH TYPE N(30S)

DISREGARD PRINTS BEARING EARLIER REVISION DATES → 7-24-08 2-26-09

REVISION DATES (PRELIMINARY STAGE ONLY) SHEET 14 OF 19

FILE => 57-1200-s-asat9s.dgn

XS22I8.DGN VI=1

USERNAME => s135318 DATE PLOTTED => 10-JUN-2010 TIME PLOTTED => 14:29

RELEASED 11-4-97

DIST.	COUNTY	ROUTE	POST MILES TOTAL PROJECT	SHEET NO.	TOTAL SHEETS
11	SD	76	23.1/23.5	79	83

REGISTERED ENGINEER - CIVIL 7-28-09

6-7-10
PLANS APPROVAL DATE

REGISTERED PROFESSIONAL ENGINEER Daryoush Tavatli No. 56183 Exp. 12-31-10 CIVIL STATE OF CALIFORNIA

The State of California or its officers or agents shall not be responsible for the accuracy or completeness of electronic copies of this plan sheet.

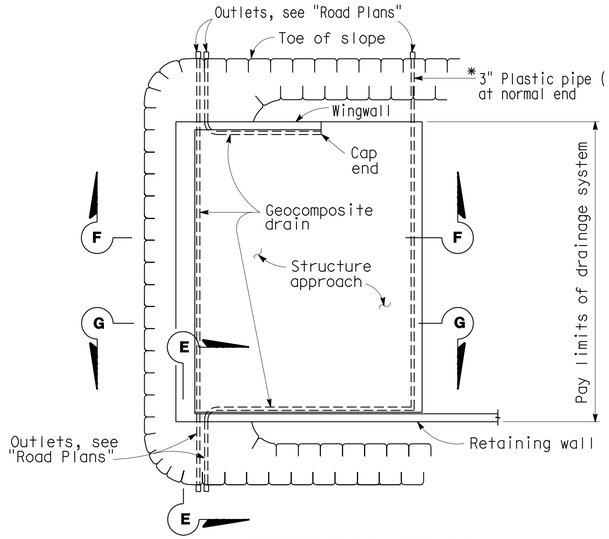

TYPICAL PLAN

1" = 10'

* For pipe layout at staggered end, see "Detail B."

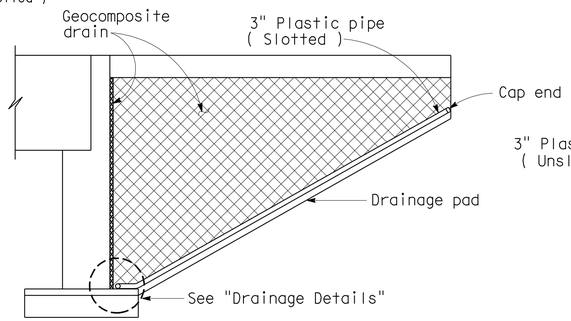

CANTILEVER WINGWALL SECTION F-F

1/4" = 1'-0"

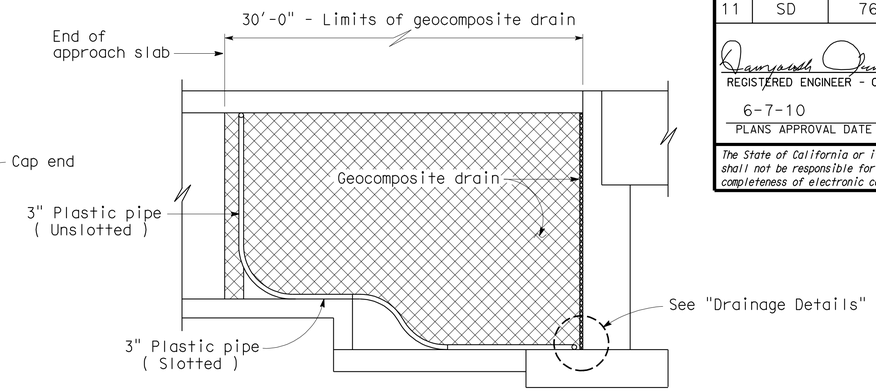

RETAINING WALL WINGWALL SECTION G-G

1/4" = 1'-0"

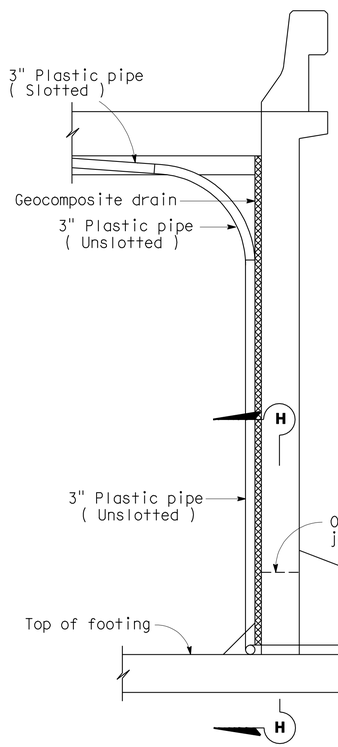

SECTION E-E

1/2" = 1'-0"

Note: Bends and junctions in 3" plastic pipe are 30" radius min.

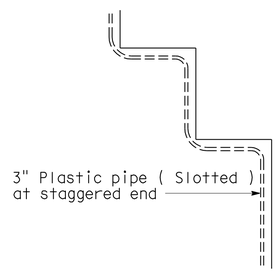

DETAIL B

No Scale

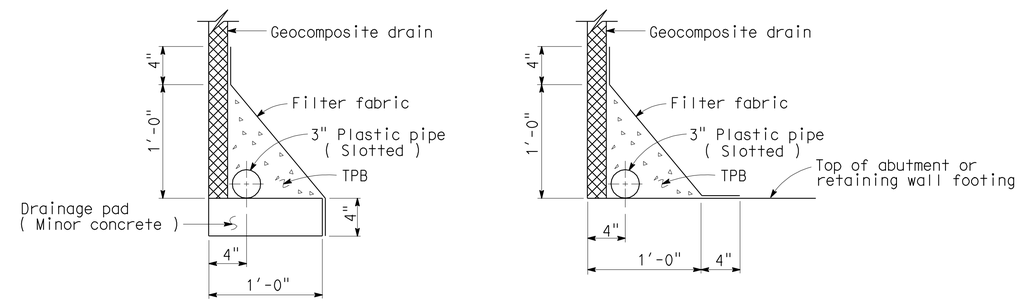

WITHOUT FOOTING WITH FOOTING

DRAINAGE DETAILS

1 1/2" = 1'-0"

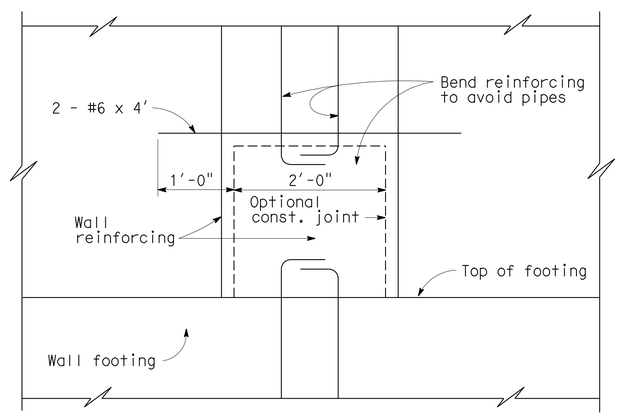

SECTION H-H

1" = 1'-0"

STANDARD DRAWING				
FILE NO. XS 22-17	DESIGN	BY M. TRAFFALIS	CHECKED E. THORKILDSEN	APPROVAL RECOMMENDED BY
DESIGN DATE 8/92	DETAILS	BY R. YEE	CHECKED E. THORKILDSEN	DESIGN SUPERVISOR
	SUBMITTED BY M. HA			

DS OSD 2147A (CADD 7/97)

ORIGINAL SCALE IN INCHES FOR REDUCED PLANS 0 1 2 3

STATE OF CALIFORNIA DEPARTMENT OF TRANSPORTATION

DIVISION OF STRUCTURES STRUCTURE DESIGN 11

CU 11308
EA 273401

BRIDGE NO. 57-1200
POST MILE 23.2

PALA CREEK BRIDGE

STRUCTURE APPROACH DRAINAGE DETAILS

DISREGARD PRINTS BEARING EARLIER REVISION DATES → 7-24-08 2-26-09

REVISION DATES (PRELIMINARY STAGE ONLY)

SHEET 15 OF 19

FILE => 57-1200-s-sadd.dgn

XS22I7.DGN V(=)

USERNAME => s135318 DATE PLOTTED => 10-JUN-2010 TIME PLOTTED => 14:29

DIST	COUNTY	ROUTE	POST MILES TOTAL PROJECT	SHEET No	TOTAL SHEETS
11	SD	76	23.1/23.5	80	83

REGISTERED CIVIL ENGINEER 2-4-09

6-7-10
PLANS APPROVAL DATE

The State of California or its officers or agents shall not be responsible for the accuracy or completeness of electronic copies of this plan sheet.

REGISTERED PROFESSIONAL ENGINEER Farzad Qmehr No. C42392 Exp. 3-31-10 CIVIL STATE OF CALIFORNIA

This LOTB sheet was prepared in accordance with the Caltrans Soil & Rock Logging, Classification, & Presentation Manual (June 2007).

BENCH MARK

SURVEY CONTROL

SD 6 69 (Not Shown On Plan)
Fnd San Siego Co. Engr's Disk STAMP "SD 6 69 1993"
8,686.73' Bearing S50°12'46"W from Sta 7+04.50 ℄ Rte 76
N 2,071,814.47
E 6,297,457.24
Elev = 318.88'

TE 248 (Not Shown On Plan)
Fnd "MONTE 248" San Diego Co. Engr's Disk in Boulder
10,722.85' Bearing S73°03'17"E from Sta 77+96.17 ℄ Rte 76
N 2,073,987.41
E 6,321,465.83
Elev = 724.13'

Vertical Datum is NAVD 88

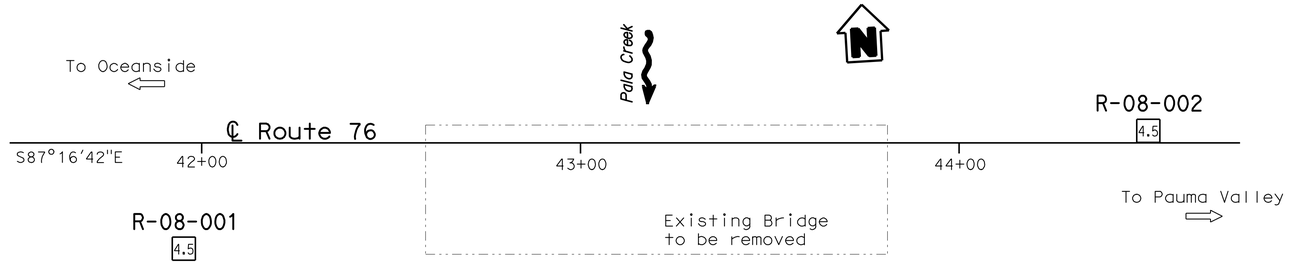

PLAN
1" = 20'

NOTES:

1. Test borings utilized an auto hammer truck mounted ACKER rig to advance the sampler. Penetrations shown on the Log of Test Borings (LOTB) sheet were recorded in the field.
2. Top of boring elevations were measured utilizing a level.
3. A permanent piezometer was installed in borehole R-08-002. No piezometer was installed in borehole R-08-001.
4. Ground water level indicated on the LOTB sheets reflect the measured ground water elevation in the borehole on the specified date. Ground water surface elevations are subject to seasonal fluctuations & may be encountered at higher or lower elevations depending on conditions at time of construction.
5. Surface water may be encountered depending on the conditions at the time of construction in Pala Creek.
6. Soil consistency classifications are based on SPT values corrected for hammer efficiency (N_{60}).
7. Soil and rock colors were determined using Munsell Color Charts (1994, Revised Edition).
8. Soil samples were tested for corrositivity from elevations of approximately 381' to 330' for Boring R-08-001, and 381' to 350' for Boring R-08-002. The corrositivity testing symbol (CR) is only placed in the middle of the range of testing to minimize cluttering of the LOTB.

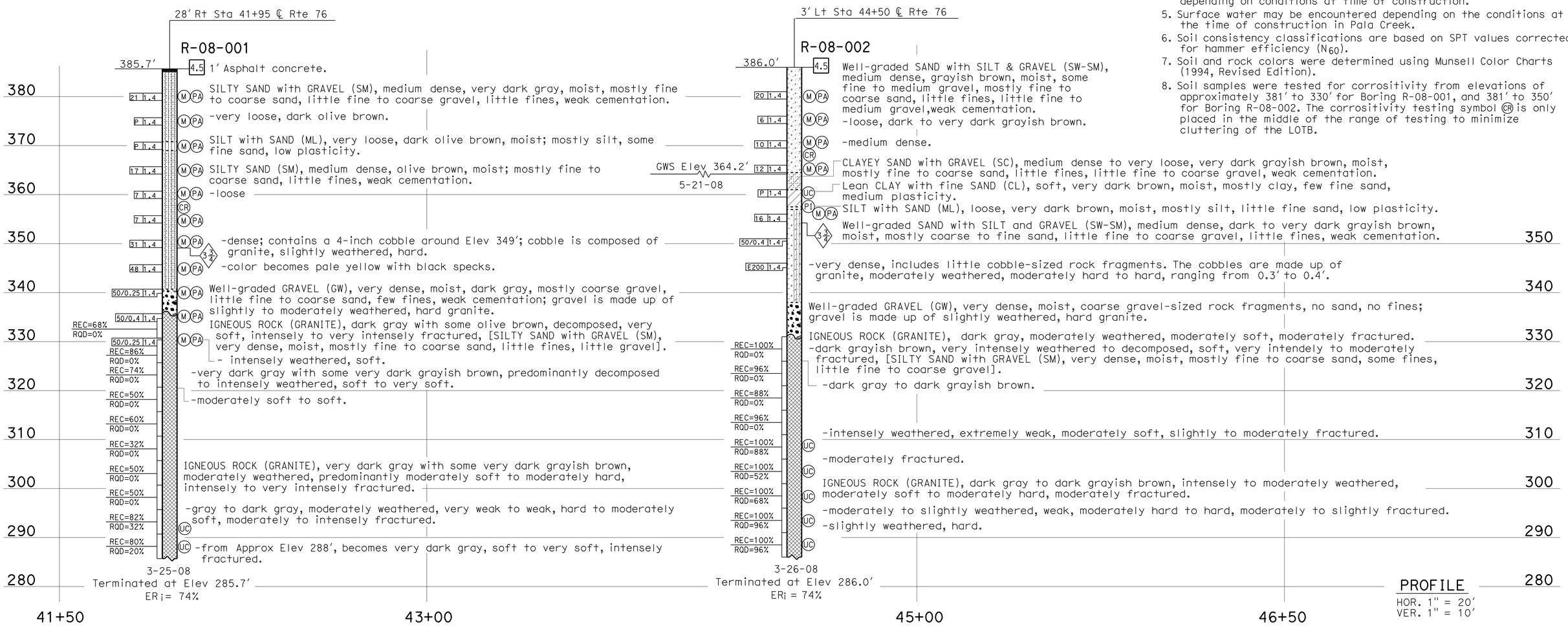

PROFILE
HOR. 1" = 20'
VER. 1" = 10'

ENGINEERING SERVICES	GEOTECHNICAL SERVICES	STATE OF CALIFORNIA DEPARTMENT OF TRANSPORTATION	DIVISION OF ENGINEERING SERVICES STRUCTURE DESIGN DESIGN BRANCH 11	BRIDGE NO. 57-1200 POST MILES 23.2	PALA CREEK BRIDGE (REPLACE) LOG OF TEST BORINGS 1 OF 4
FUNCTIONAL SUPERVISOR NAME: A. Perez-Cobo	DRAWN BY: I.G-Remmen, 12/08 CHECKED BY: S. Logeswaran	FIELD INVESTIGATION BY: F. Qmehr			

OGS CIVIL LOG OF TEST BORINGS SHEET

ORIGINAL SCALE IN INCHES FOR REDUCED PLANS 0 1 2 3

CU 11308
EA 273401

DISREGARD PRINTS BEARING EARLIER REVISION DATES

REVISION DATES: 01-26-09 02-04-09 07-27-09

SHEET 16 OF 19

FILE => 57-1200-z-ltb1of4.dgn

USERNAME => trrright DATE PLOTTED => 10-JUN-2010 TIME PLOTTED => 14:32

DIST	COUNTY	ROUTE	POST MILES TOTAL PROJECT	SHEET No	TOTAL SHEETS
11	SD	76	23.1/23.5	81	83

REGISTERED CIVIL ENGINEER 2-4-09 DATE

6-7-10
PLANS APPROVAL DATE

REGISTERED PROFESSIONAL ENGINEER
Farzad Omehr
No. C42392
Exp. 3-31-10
CIVIL
STATE OF CALIFORNIA

The State of California or its officers or agents shall not be responsible for the accuracy or completeness of electronic copies of this plan sheet.

REFERENCE: CALTRANS SOIL & ROCK LOGGING, CLASSIFICATION, AND PRESENTATION MANUAL (JUNE 2007)

CEMENTATION

Description	Criteria
Weak	Crumbles or breaks with handling or little finger pressure.
Moderate	Crumbles or breaks with considerable finger pressure.
Strong	Will not crumble or break with finger pressure.

CONSISTENCY OF COHESIVE SOILS

Description	Unconfined Compressive Strength (tsf)	Pocket Penetrometer Measurement (tsf)	Torvane Measurement (tsf)	Field Approximation
Very Soft	< 0.25	< 0.25	< 0.12	Easily penetrated several inches by fist
Soft	0.25 to 0.50	0.25 to 0.50	0.12 to 0.25	Easily penetrated several inches by thumb
Medium Stiff	0.50 to 1.0	0.50 to 1.0	0.25 to 0.50	Penetrated several inches by thumb with moderate effort
Stiff	1 to 2	1 to 2	0.50 to 1.0	Readily indented by thumb but penetrated only with great effort
Very Stiff	2 to 4	2 to 4	1.0 to 2.0	Readily indented by thumbnail
Hard	> 4.0	> 4.0	> 2.0	Indented by thumbnail with difficulty

BOREHOLE IDENTIFICATION

Symbol	Hole Type	Description
Size	A	Auger Boring
Size	R P	Rotary drilled boring Rotary percussion boring (air)
Size	R	Rotary drilled diamond core
Size	HD HA	Hand driven (1-inch soil tube) Hand Auger
●	D	Dynamic Cone Penetration Boring
▲	CPT	Cone Penetration Test (ASTM D 5778-95)
⬚	O	Other

Note: Size in inches.

PLASTICITY OF FINE-GRAINED SOILS

Description	Criteria
Nonplastic	A 1/8-inch thread cannot be rolled at any water content.
Low	The thread can barely be rolled and the lump cannot be formed when drier than the plastic limit.
Medium	The thread is easy to roll and not much time is required to reach the plastic limit. The thread cannot be rerolled after reaching the plastic limit. The lump crumbles when drier than the plastic limit.
High	It takes considerable time rolling and kneading to reach the plastic limit. The thread can be rerolled several times after reaching the plastic limit. The lump can be formed without crumbling when drier than the plastic limit.

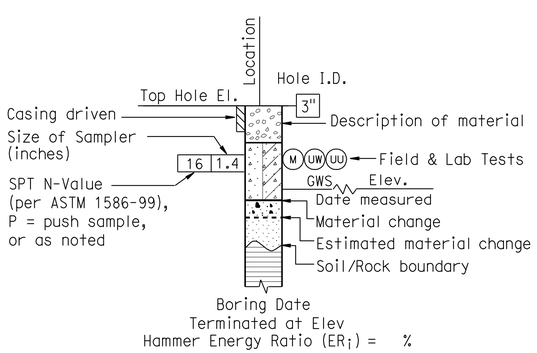

ROTARY BORING

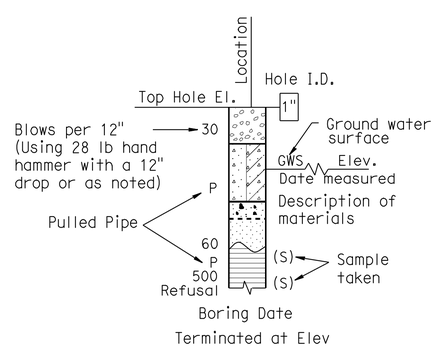

HAND BORING

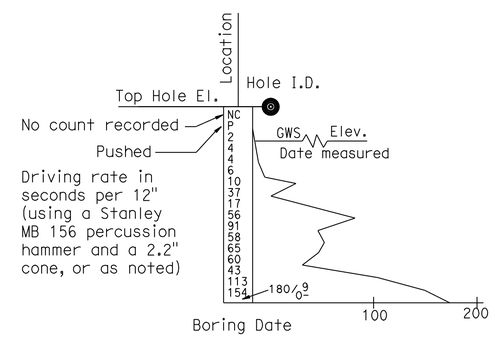

DYNAMIC CONE PENETRATION BORING

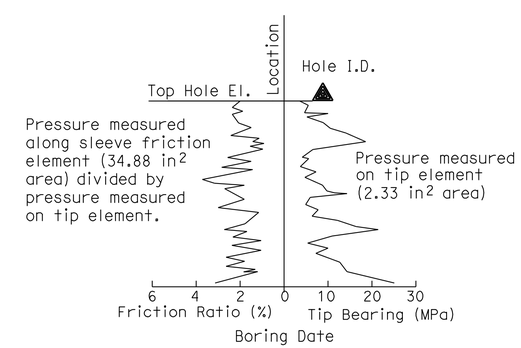

CONE PENETRATION TEST (CPT) SOUNDING

ENGINEERING SERVICES	GEOTECHNICAL SERVICES	STATE OF CALIFORNIA DEPARTMENT OF TRANSPORTATION	DIVISION OF ENGINEERING SERVICES STRUCTURE DESIGN DESIGN BRANCH 11	BRIDGE NO. 57-1200 / POST MILE 23.2	PALA CREEK BRIDGE (REPLACE) LOG OF TEST BORINGS 2 OF 4
	PREPARED BY: I.G-Remmen, 2/09				

GS LOTB SOIL LEGEND

ORIGINAL SCALE IN INCHES FOR REDUCED PLANS 0 1 2 3

CU 11308
EA 273401

DISREGARD PRINTS BEARING EARLIER REVISION DATES

REVISION DATES: 02-04-09 2-24-09 2-26-09 7-23-09

SHEET 17 OF 19

FILE => 57-1200-z-ltb2of4.dgn

USERNAME => trrichf DATE PLOTTED => 10-JUN-2010 TIME PLOTTED => 14:33

REFERENCE: CALTRANS SOIL & ROCK LOGGING, CLASSIFICATION, AND PRESENTATION MANUAL (JUNE 2007)

DIST	COUNTY	ROUTE	POST MILES TOTAL PROJECT	SHEET No	TOTAL SHEETS
11	SD	76	23.1/23.5	82	83

REGISTERED CIVIL ENGINEER 2-4-09 DATE

6-7-10
PLANS APPROVAL DATE

REGISTERED PROFESSIONAL ENGINEER Farzad Omehr No. C42392 Exp. 3-31-10 CIVIL STATE OF CALIFORNIA

The State of California or its officers or agents shall not be responsible for the accuracy or completeness of electronic copies of this plan sheet.

GROUP SYMBOLS AND NAMES

Graphic/Symbol	Group Names	Graphic/Symbol	Group Names
GW	Well-graded GRAVEL Well-graded GRAVEL with SAND	CL	Lean CLAY Lean CLAY with SAND Lean CLAY with GRAVEL SANDY lean CLAY SANDY lean CLAY with GRAVEL GRAVELLY lean CLAY GRAVELLY lean CLAY with SAND
GP	Poorly graded GRAVEL Poorly graded GRAVEL with SAND		
GW-GM	Well-graded GRAVEL with SILT Well-graded GRAVEL with SILT and SAND	CL-ML	SILTY CLAY SILTY CLAY with SAND SILTY CLAY with GRAVEL SANDY SILTY CLAY SANDY SILTY CLAY with GRAVEL GRAVELLY SILTY CLAY GRAVELLY SILTY CLAY with SAND
GW-GC	Well-graded GRAVEL with CLAY (or SILTY CLAY) Well-graded GRAVEL with CLAY and SAND (or SILTY CLAY and SAND)		
GP-GM	Poorly graded GRAVEL with SILT Poorly graded GRAVEL with SILT and SAND	ML	SILT SILT with SAND SILT with GRAVEL SANDY SILT SANDY SILT with GRAVEL GRAVELLY SILT GRAVELLY SILT with SAND
GP-GC	Poorly graded GRAVEL with CLAY (or SILTY CLAY) Poorly graded GRAVEL with CLAY and SAND (or SILTY CLAY and SAND)		
GM	SILTY GRAVEL SILTY GRAVEL with SAND	OL	ORGANIC lean CLAY ORGANIC lean CLAY with SAND ORGANIC lean CLAY with GRAVEL SANDY ORGANIC lean CLAY SANDY ORGANIC lean CLAY with GRAVEL GRAVELLY ORGANIC lean CLAY GRAVELLY ORGANIC lean CLAY with SAND
GC	CLAYEY GRAVEL CLAYEY GRAVEL with SAND		
GC-GM	SILTY, CLAYEY GRAVEL SILTY, CLAYEY GRAVEL with SAND	OL	ORGANIC SILT ORGANIC SILT with SAND ORGANIC SILT with GRAVEL SANDY ORGANIC SILT SANDY ORGANIC SILT with GRAVEL GRAVELLY ORGANIC SILT GRAVELLY ORGANIC SILT with SAND
SW	Well-graded SAND Well-graded SAND with GRAVEL		
SP	Poorly graded SAND Poorly graded SAND with GRAVEL	CH	Fat CLAY Fat CLAY with SAND Fat CLAY with GRAVEL SANDY fat CLAY SANDY fat CLAY with GRAVEL GRAVELLY fat CLAY GRAVELLY fat CLAY with SAND
SW-SM	Well-graded SAND with SILT Well-graded SAND with SILT and GRAVEL		
SW-SC	Well-graded SAND with CLAY (or SILTY CLAY) Well-graded SAND with CLAY and GRAVEL (or SILTY CLAY and GRAVEL)	MH	Elastic SILT Elastic SILT with SAND Elastic SILT with GRAVEL SANDY elastic SILT SANDY elastic SILT with GRAVEL GRAVELLY elastic SILT GRAVELLY elastic SILT with SAND
SP-SM	Poorly graded SAND with SILT Poorly graded SAND with SILT and GRAVEL		
SP-SC	Poorly graded SAND with CLAY (or SILTY CLAY) Poorly graded SAND with CLAY and GRAVEL (or SILTY CLAY and GRAVEL)	OH	ORGANIC fat CLAY ORGANIC fat CLAY with SAND ORGANIC fat CLAY with GRAVEL SANDY ORGANIC fat CLAY SANDY ORGANIC fat CLAY with GRAVEL GRAVELLY ORGANIC fat CLAY GRAVELLY ORGANIC fat CLAY with SAND
SM	SILTY SAND SILTY SAND with GRAVEL		
SC	CLAYEY SAND CLAYEY SAND with GRAVEL	OH	ORGANIC elastic SILT ORGANIC elastic SILT with SAND ORGANIC elastic SILT with GRAVEL SANDY ORGANIC elastic SILT SANDY ORGANIC elastic SILT with GRAVEL GRAVELLY ORGANIC elastic SILT GRAVELLY ORGANIC elastic SILT with SAND
SC-SM	SILTY, CLAYEY SAND SILTY, CLAYEY SAND with GRAVEL		
PT	PEAT	OL/OH	ORGANIC SOIL ORGANIC SOIL with SAND ORGANIC SOIL with GRAVEL SANDY ORGANIC SOIL SANDY ORGANIC SOIL with GRAVEL GRAVELLY ORGANIC SOIL GRAVELLY ORGANIC SOIL with SAND
	COBBLES COBBLES and BOULDERS BOULDERS		

FIELD AND LABORATORY TESTING

- (C) Consolidation (ASTM D 2435)
- (CL) Collapse Potential (ASTM D 5333)
- (CP) Compaction Curve (CTM 216)
- (CR) Corrosivity Testing (CTM 643, CTM 422, CTM 417)
- (CU) Consolidated Undrained Triaxial (ASTM D 4767)
- (DS) Direct Shear (ASTM D 3080)
- (EI) Expansion Index (ASTM D 4829)
- (M) Moisture Content (ASTM D 2216)
- (OC) Organic Content-% (ASTM D 2974)
- (P) Permeability (CTM 220)
- (PA) Particle Size Analysis (ASTM D 422)
- (PI) Plasticity Index (AASHTO T 90) Liquid Limit (AASHTO T 89)
- (PL) Point Load Index (ASTM D 5731)
- (PM) Pressure Meter
- (PP) Pocket Penetrometer
- (R) R-Value (CTM 301)
- (SE) Sand Equivalent (CTM 217)
- (SG) Specific Gravity (AASHTO T 100)
- (SL) Shrinkage Limit (ASTM D 427)
- (SW) Swell Potential (ASTM D 4546)
- (TV) Pocket Torvane
- (UC) Unconfined Compression-Soil (ASTM D 2166) Unconfined Compression-Rock (ASTM D 2938)
- (UU) Unconsolidated Undrained Triaxial (ASTM D 2850)
- (UW) Unit Weight (ASTM D 4767)
- (VS) Vane Shear (AASHTO T 223)

APPARENT DENSITY OF COHESIONLESS SOILS

Description	SPT N_{60} (Blows / 12 inches)
Very loose	0 - 4
Loose	5 - 10
Medium Dense	11 - 30
Dense	31 - 50
Very Dense	> 50

MOISTURE

Description	Criteria
Dry	Absence of moisture, dusty, dry to the touch
Moist	Damp but no visible water
Wet	Visible free water, usually soil is below water table

PERCENT OR PROPORTION OF SOILS

Description	Criteria
Trace	Particles are present but estimated to be less than 5%
Few	5 to 10%
Little	15 to 25%
Some	30 to 45%
Mostly	50 to 100%

PARTICLE SIZE

Description		Size
Boulder		> 12"
Cobble		3" to 12"
Gravel	Coarse	3/4" to 3"
	Fine	No. 4 to 3/4"
Sand	Coarse	No. 10 to No. 4
	Medium	No. 40 to No. 10
	Fine	No. 200 to No. 40

ENGINEERING SERVICES

GEOTECHNICAL SERVICES
PREPARED BY: I.G-Remmen, 2/09

STATE OF CALIFORNIA DEPARTMENT OF TRANSPORTATION

DIVISION OF ENGINEERING SERVICES STRUCTURE DESIGN
DESIGN BRANCH 11

BRIDGE NO. 57-1200
POST MILE 23.2

PALA CREEK BRIDGE (REPLACE)
LOG OF TEST BORINGS 3 OF 4

GS LOTB SOIL LEGEND

ORIGINAL SCALE IN INCHES FOR REDUCED PLANS 0 1 2 3

CU 11308
EA 273401

DISREGARD PRINTS BEARING EARLIER REVISION DATES

REVISION DATES: 02-04-09 2-24-09 2-26-09 7-27-09

SHEET 18 OF 19

FILE => 57-1200-z-ltb3of4.dgn

USERNAME => trrright DATE PLOTTED => 10-JUN-2010 TIME PLOTTED => 14:33

DIST	COUNTY	ROUTE	POST MILES TOTAL PROJECT	SHEET No	TOTAL SHEETS
11	SD	76	23.1/23.5	83	83

REGISTERED CIVIL ENGINEER 2-4-09 DATE

6-7-10
PLANS APPROVAL DATE

The State of California or its officers or agents shall not be responsible for the accuracy or completeness of electronic copies of this plan sheet.

REGISTERED PROFESSIONAL ENGINEER Farzad Qmehr No. C42392 Exp. 3-31-10 CIVIL STATE OF CALIFORNIA

REFERENCE: CALTRANS SOIL & ROCK LOGGING, CLASSIFICATION, AND PRESENTATION MANUAL (JUNE 2007)

PERCENT CORE RECOVERY (REC) & ROCK QUALITY DESIGNATION (RQD)

$$REC = \frac{\sum \text{Length of the recovered core pieces (inches)}}{\text{Total length of core run (inches)}} \times 100\%$$

$$RQD = \frac{\sum \text{Length of intact core pieces} \geq 4''}{\text{Total length of core run (inches)}} \times 100\%$$

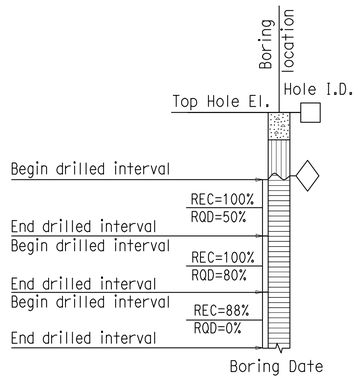

RELATIVE STRENGTH OF INTACT ROCK

Term	Uniaxial Compressive Strength (PSI)
Extremely Strong	> 30,000
Very Strong	14,500 - 30,000
Strong	7,000 - 14,500
Medium Strong	3,500 - 7,000
Weak	700 - 3,500
Very Weak	150 - 700
Extremely Weak	< 150

BEDDING SPACING

Description	Thickness / Spacing
Massive	Greater than 10 ft
Very thickly bedded	3 to 10 ft
Thickly bedded	1 to 3 ft
Moderately bedded	3-5/8" to 1 ft
Thinly bedded	1-1/4" to 3-5/8"
Very thinly bedded	3/8" to 1-1/4"
Laminated	Less than 3/8"

LEGEND OF ROCK MATERIALS

- IGNEOUS ROCK
- SEDIMENTARY ROCK
- METAMORPHIC ROCK

ROCK HARDNESS

Description	Criteria
Extremely Hard	Specimen cannot be scratched with a pocket knife or sharp pick; can only be chipped with repeated heavy hammer blows.
Very Hard	Specimen cannot be scratched with a pocket knife or sharp pick. Breaks with repeated heavy hammer blows.
Hard	Specimen can be scratched with a pocket knife or sharp pick with difficulty (heavy pressure). Heavy hammer blows required to break specimen.
Moderately Hard	Specimen can be scratched with pocket knife or sharp pick with light or moderate pressure. Core breaks with moderate hammer pressure.
Moderately Soft	Specimen can be grooved 1/6" deep with a pocket knife or sharp pick with moderate or heavy pressure. Breaks with light hammer blow or heavy manual pressure.
Soft	Specimen can be grooved or gouged easily by a pocket knife or sharp pick with light pressure, can be scratched with fingernail. Breaks with light to moderate manual pressure.
Very Soft	Specimen can be readily indented, grooved or gouged with fingernail, or carved with a pocket knife. Breaks with light manual pressure.

FRACTURE DENSITY

Description	Observed Fracture Density
Unfractured	No fractures.
Very slightly fractured	Lengths greater than 3 feet.
Slightly fractured	Lengths from 1 to 3 feet with few lengths less than 1 foot or greater than 3 feet.
Moderately fractured	Lengths mostly in 4" to 1 foot range with most lengths about 8"
Intensely fractured	Lengths average from 1 to 4" with scattered fragmented intervals with lengths less than 4"
Very intensely fractured	Mostly chips and fragments with a few scattered short core lengths.

Combination descriptors (such as "Very intensely to intensely fractured") are used where equal distribution of both fracture density characteristics is present over a significant interval or exposure, or where characteristics are "in between" the descriptor definitions. Only two adjacent descriptors may be combined.

WEATHERING DESCRIPTORS FOR INTACT ROCK

Description	Diagnostic features					General Characteristics
	Chemical Weathering-Discoloration and/or oxidation		Mechanical Weathering-Grain boundary conditions (disaggregation) primarily for granitics and some coarse-grained sediments	Texture and Solutioning		
	Body of Rock	Fracture Surfaces		Texture	Solutioning	
Fresh	No discoloration, not oxidized.	No discoloration or oxidation.	No separation, intact (tight).	No change.	No solutioning.	Hammer rings when crystalline rocks are struck.
Slightly Weathered	Discoloration or oxidation is limited to surface of, or short distance from, fractures; some feldspar crystals are dull.	Minor to complete discoloration or oxidation of most surfaces.	No visible separation, intact (tight).	Preserved.	Minor leaching of some soluble minerals may be noted.	Hammer rings when crystalline rocks are struck. Body of rock not weakened.
Moderately Weathered	Discoloration or oxidation extends from fractures usually throughout; Fe-Mg minerals are "rusty," feldspar crystals are "cloudy."	All fracture surfaces are discolored or oxidized.	Partial separation of boundaries visible.	Generally preserved.	Soluble minerals may be mostly leached.	Hammer does not ring when rock is struck. Body of rock is slightly weakened.
Intensely Weathered	Discoloration or oxidation throughout; all feldspars and Fe-Mg minerals are altered to clay to some extent; or chemical alteration produces in-situ disaggregation, see grain boundary conditions.	All fracture surfaces are discolored or oxidized, surfaces friable.	Partial separation, rock is friable; in semiarid conditions granitics are disaggregated.	Texture altered by chemical disintegration (hydration, argillation).	Leaching of soluble minerals may be complete.	Dull sound when struck with hammer, usually can be broken with moderate to heavy manual pressure or by light hammer blow without reference to planes of weakness such as incipient or hairline fractures, or veinlets. Rock is significantly weakened.
Decomposed	Discolored or oxidized throughout, but resistant minerals such as quartz may be unaltered; all feldspars and Fe-Mg minerals are completely altered to clay.		Complete separation of grain boundaries (disaggregated).	Resembles a soil, partial or complete remnant rock structure may be preserved; leaching of soluble minerals usually complete.		Can be granulated by hand. Resistant minerals such as quartz may be present as "stringers" or "dikes."

Combination descriptors (such as "slightly weathered to fresh") are permissible where equal distribution of both weathering characteristics is present over significant intervals or where characteristics present are "in between" the diagnostic feature. However, combination descriptors should not be used where significant, identifiable zones can be delineated. Only two adjacent descriptors may be combined. "Very intensely weathered" is the combination descriptor for "intensely weathered to decomposed."

ENGINEERING SERVICES	GEOTECHNICAL SERVICES	STATE OF CALIFORNIA DEPARTMENT OF TRANSPORTATION	DIVISION OF ENGINEERING SERVICES STRUCTURE DESIGN DESIGN BRANCH 11	BRIDGE NO. 57-1200 POST MILE 23.2	PALA CREEK BRIDGE (REPLACE) LOG OF TEST BORINGS 4 OF 4
	PREPARED BY: I.G-Remmen, 2/09		CU 11308 EA 273401	DISREGARD PRINTS BEARING EARLIER REVISION DATES → 02-04-09 2-24-09 2-26-09 7-27-09	SHEET 19 OF 19

GS LOTB ROCK LEGEND

ORIGINAL SCALE IN INCHES FOR REDUCED PLANS 0 1 2 3

FILE => 57-1200-z-ltb4of4.dgn

USERNAME => trrichf DATE PLOTTED => 10-JUN-2010 TIME PLOTTED => 14:33