Dist	COUNTY	ROUTE	POST MILES TOTAL PROJECT	SHEET No.	TOTAL SHEETS
11	Imp	98	21.8/31.3	1	25

ACSTP-P098(024)E

STATE OF CALIFORNIA
DEPARTMENT OF TRANSPORTATION

PROJECT PLANS FOR CONSTRUCTION ON
STATE HIGHWAY

IN IMPERIAL COUNTY
IN AND NEAR CALEXICO FROM 0.2 MILE WEST OF WESTSIDE MAIN CANAL BRIDGE TO KLOKE ROAD

TO BE SUPPLEMENTED BY STANDARD PLANS DATED 2010

INDEX OF PLANS

SHEET NO.	DESCRIPTION
1	TITLE AND LOCATION MAP
2	TYPICAL CROSS SECTIONS
3-11	CONSTRUCTION DETAILS
12	CONSTRUCTION AREA SIGNS
13-14	PAVEMENT DELINEATION DETAILS AND QUANTITIES
15-16	SUMMARY OF QUANTITIES
17-19	ELECTRICAL PLANS
20-21	TRAFFIC CONTROL SYSTEM
22-25	REVISED STANDARD PLANS

THE STANDARD PLANS LIST APPLICABLE TO THIS CONTRACT IS INCLUDED IN THE NOTICE TO BIDDERS AND SPECIAL PROVISIONS BOOK.

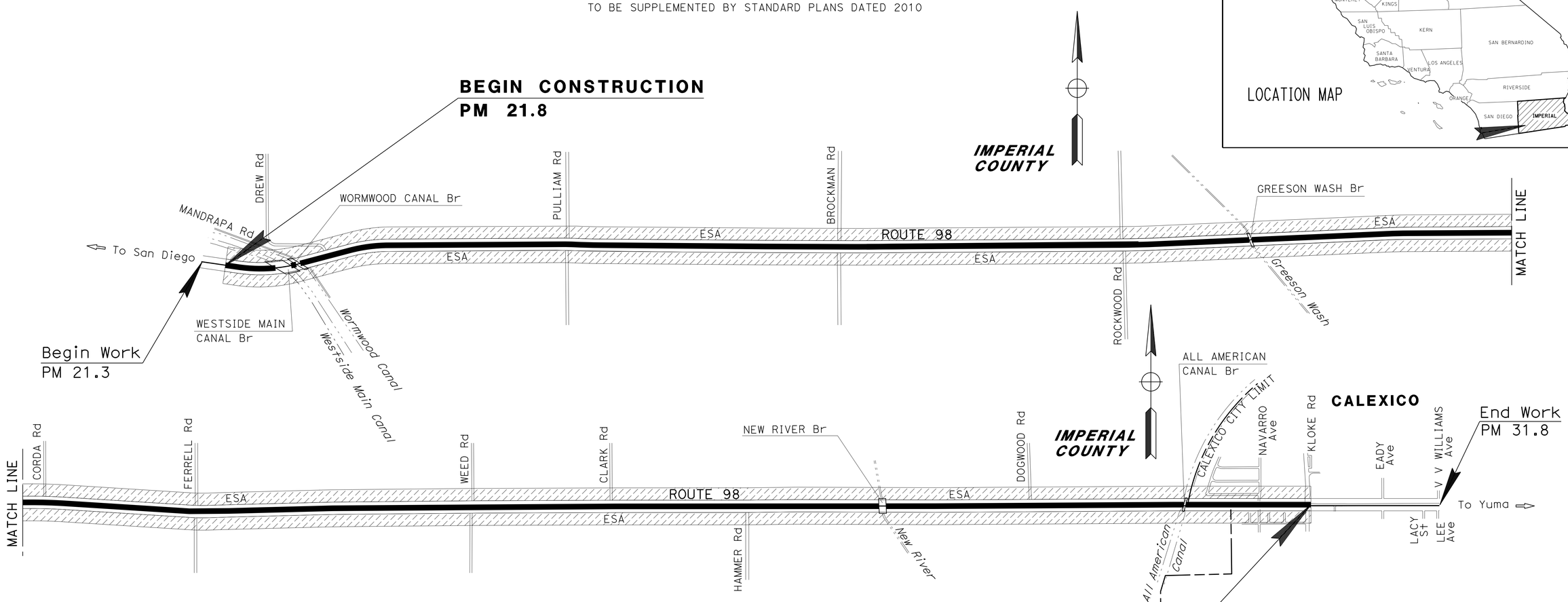

K.A. Mamdani 09-26-12
PROJECT ENGINEER DATE
REGISTERED CIVIL ENGINEER

12-03-12
PLANS APPROVAL DATE

REGISTERED PROFESSIONAL ENGINEER
KAZIM MAMDANI
No. C53426
Exp. 06-30-13
CIVIL
STATE OF CALIFORNIA

THE STATE OF CALIFORNIA OR ITS OFFICERS OR AGENTS SHALL NOT BE RESPONSIBLE FOR THE ACCURACY OR COMPLETENESS OF SCANNED COPIES OF THIS PLAN SHEET.

PROJECT MANAGER BRUCE LAMBERT
DESIGN ENGINEER KAZIM MAMDANI

THE CONTRACTOR SHALL POSSESS THE CLASS (OR CLASSES) OF LICENSE AS SPECIFIED IN THE "NOTICE TO BIDDERS."

NO SCALE

CONTRACT No.	11-275204
PROJECT ID	1100020349

LAST REVISION 10-02-12
DATE PLOTTED => 17-DEC-2012
TIME PLOTTED => 14:34

Dist	COUNTY	ROUTE	POST MILES TOTAL PROJECT	SHEET No.	TOTAL SHEETS
11	Imp	98	21.8/31.3	2	25

K.A. Mamdani 09-26-12
REGISTERED CIVIL ENGINEER DATE

12-03-12
PLANS APPROVAL DATE

REGISTERED PROFESSIONAL ENGINEER
KAZIM MAMDANI
No. C53426
Exp. 06-30-13
CIVIL
STATE OF CALIFORNIA

THE STATE OF CALIFORNIA OR ITS OFFICERS OR AGENTS SHALL NOT BE RESPONSIBLE FOR THE ACCURACY OR COMPLETENESS OF SCANNED COPIES OF THIS PLAN SHEET.

NOTES:

1. DIMENSIONS OF THE PAVEMENT STRUCTURES (STRUCTURAL SECTIONS) ARE SUBJECT TO TOLERANCES SPECIFIED IN THE STANDARD SPECIFICATIONS.
2. EXISTING UTILITY FACILITIES HAVE NOT BEEN PLOTTED ON THESE PLANS.
3. FOG SEAL COAT SHALL BE APPLIED TO ALL HMA SURFACES EXCEPT TRAVELED WAYS.
4. FOR LOCATION AND TYPE OF REMOVE AC DIKE, HMA DIKE, AND METAL BEAM GUARD RAILING, SEE SUMMARY OF QUANTITIES.
5. FOR ACCURATE RIGHT OF WAY DATA, CONTACT RIGHT OF WAY ENGINEERING AT THE DISTRICT OFFICE.

* ESA IS FROM R/W TO HP IN AREAS OF MBGR AND DIKE WORK

RHMA RUBBERIZED HOT MIX ASPHALT

DESIGN DESIGNATION (ROUTE 98)						
LOCATION (PM)	ADT (2009)	ADT (2030)	DHV	D	T	V
PM 21.8-30.2	1,800	2,600	200	63.5%	12.2%	65 MPH
PM 30.2-31.3	4,400	6,800	430	62.3%	5.1%	40 MPH

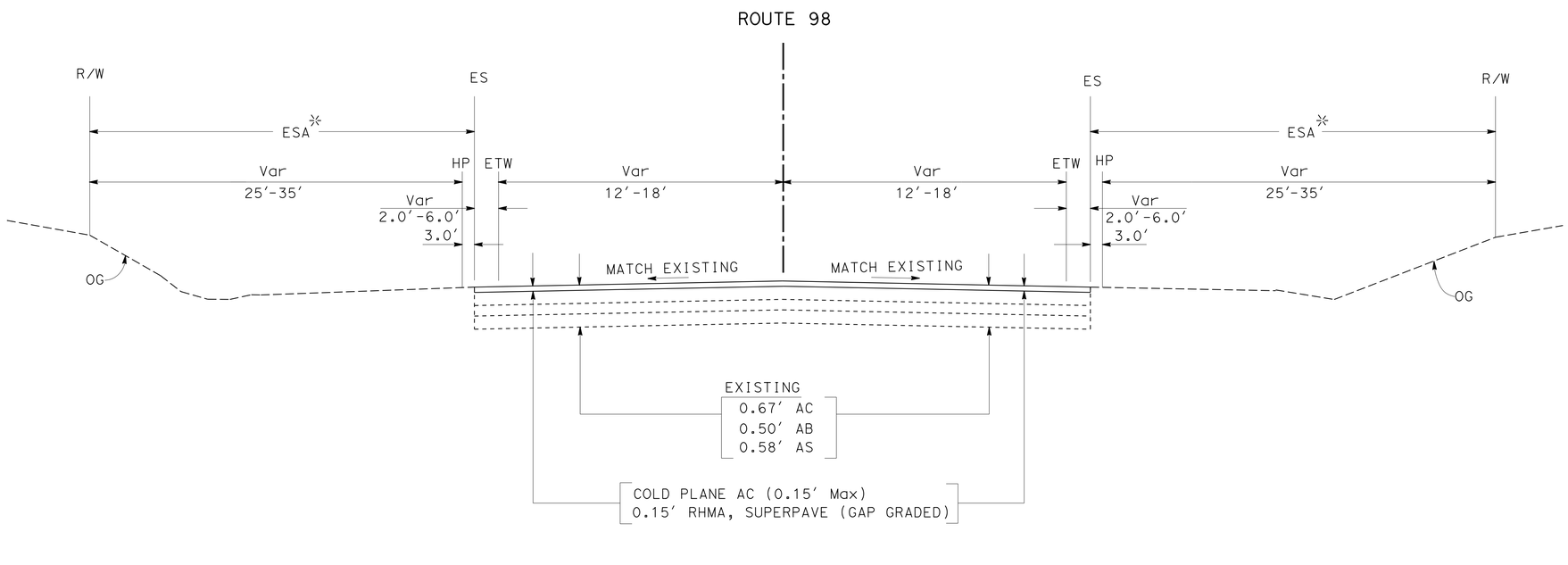

ROUTE 98

PM 21.8 - 31.3

(EXCLUDING BRIDGE LOCATIONS)

PM 22.024 - 22.053

PM 22.070 - 22.079

PM 25.557 - 25.569

PM 29.708 - 29.734

PM 30.807 - 30.815

TYPICAL CROSS SECTIONS

NO SCALE

X-1

STATE OF CALIFORNIA - DEPARTMENT OF TRANSPORTATION
Caltrans PROJECT DEVELOPMENT

FUNCTIONAL SUPERVISOR: KAZIM MAMDANI
CALCULATED-DESIGNED BY: AJMAL ZULALI
CHECKED BY: KAZIM MAMDANI
REVISED BY
DATE REVISED

LAST REVISION 11-28-12
DATE PLOTTED => 17-DEC-2012
TIME PLOTTED => 13:21

Dist	COUNTY	ROUTE	POST MILES TOTAL PROJECT	SHEET No.	TOTAL SHEETS
11	Imp	98	21.8/31.3	3	25

K.A. Mamdani 09-26-12
REGISTERED CIVIL ENGINEER DATE

12-03-12
PLANS APPROVAL DATE

REGISTERED PROFESSIONAL ENGINEER KAZIM MAMDANI No. C53426 Exp. 06-30-13 CIVIL STATE OF CALIFORNIA

THE STATE OF CALIFORNIA OR ITS OFFICERS OR AGENTS SHALL NOT BE RESPONSIBLE FOR THE ACCURACY OR COMPLETENESS OF SCANNED COPIES OF THIS PLAN SHEET.

NOTE:

FOR ACCURATE RIGHT OF WAY DATA, CONTACT RIGHT OF WAY ENGINEERING AT THE DISTRICT OFFICE.

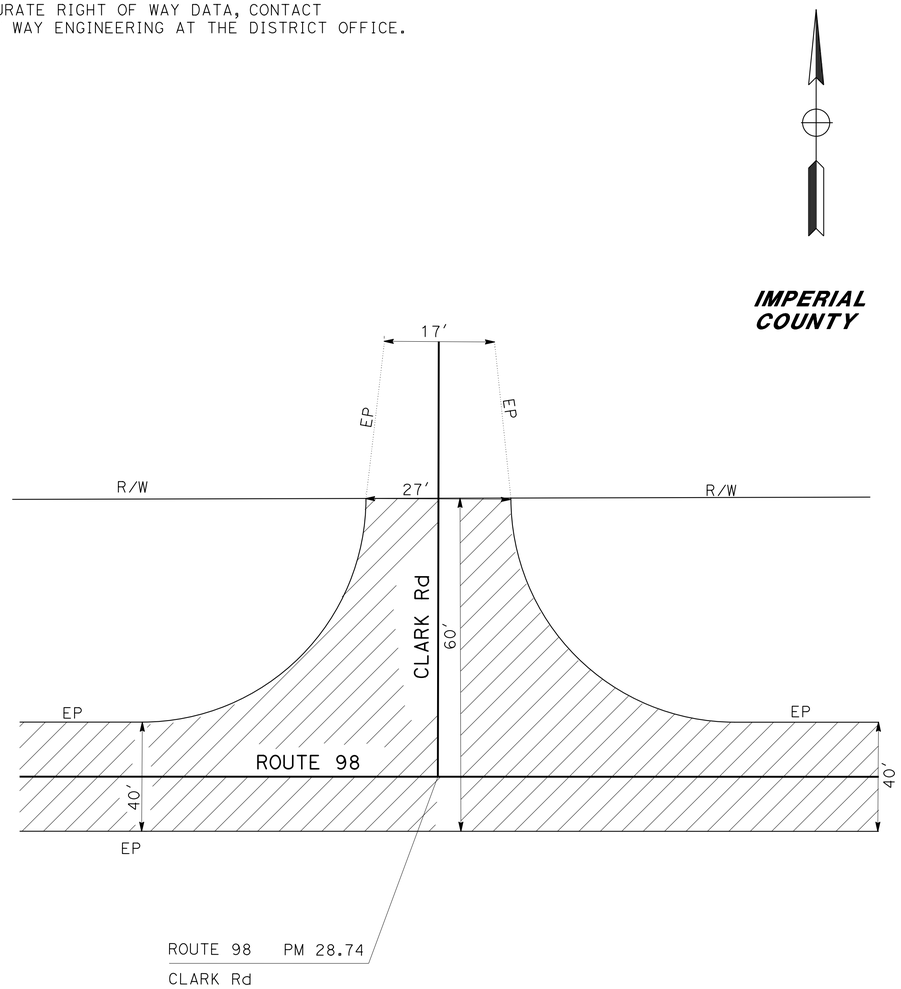

CLARK Rd AND ROUTE 98 INTERSECTION

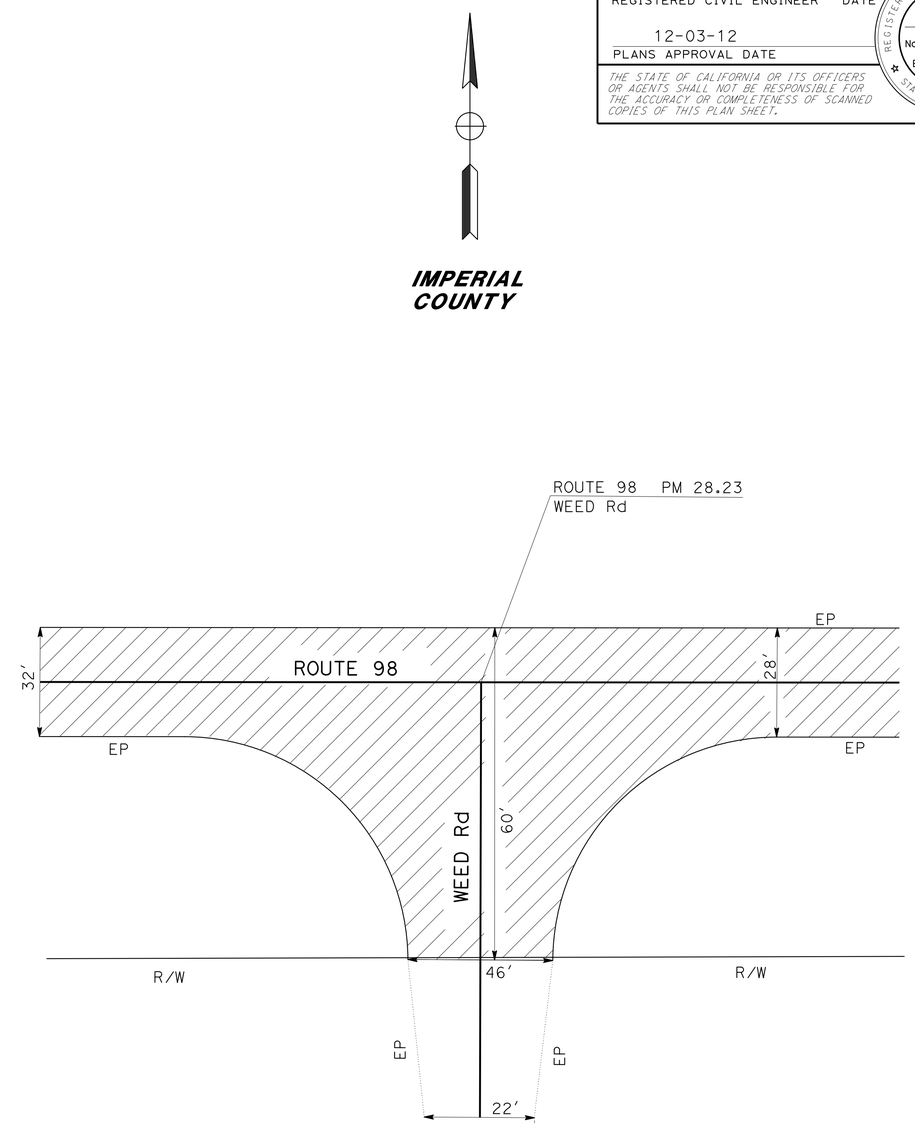

WEED Rd AND ROUTE 98 INTERSECTION

LEGEND:

COLD PLANE AC (0.15' Max)
0.15' RHMA, SUPERPAVE (GAP GRADED)

DETECTABLE WARNING SURFACE
(W=5', L=3')

CONSTRUCTION DETAILS

NO SCALE

C-1

STATE OF CALIFORNIA - DEPARTMENT OF TRANSPORTATION
Caltrans PROJECT DEVELOPMENT

FUNCTIONAL SUPERVISOR: KAZIM MAMDANI
CALCULATED-DESIGNED BY: JIM ALSHEIKH
CHECKED BY: KAZIM MAMDANI
REVISED BY
DATE REVISED

LAST REVISION 11-28-12
DATE PLOTTED => 17-DEC-2012
TIME PLOTTED => 13:21

Dist	COUNTY	ROUTE	POST MILES TOTAL PROJECT	SHEET No.	TOTAL SHEETS
11	Imp	98	21.8/31.3	4	25

K.A. Mamdani 09-26-12
REGISTERED CIVIL ENGINEER DATE

12-03-12
PLANS APPROVAL DATE

REGISTERED PROFESSIONAL ENGINEER KAZIM MAMDANI No. C53426 Exp. 06-30-13 CIVIL STATE OF CALIFORNIA

THE STATE OF CALIFORNIA OR ITS OFFICERS OR AGENTS SHALL NOT BE RESPONSIBLE FOR THE ACCURACY OR COMPLETENESS OF SCANNED COPIES OF THIS PLAN SHEET.

NOTE:

FOR ACCURATE RIGHT OF WAY DATA, CONTACT RIGHT OF WAY ENGINEERING AT THE DISTRICT OFFICE.

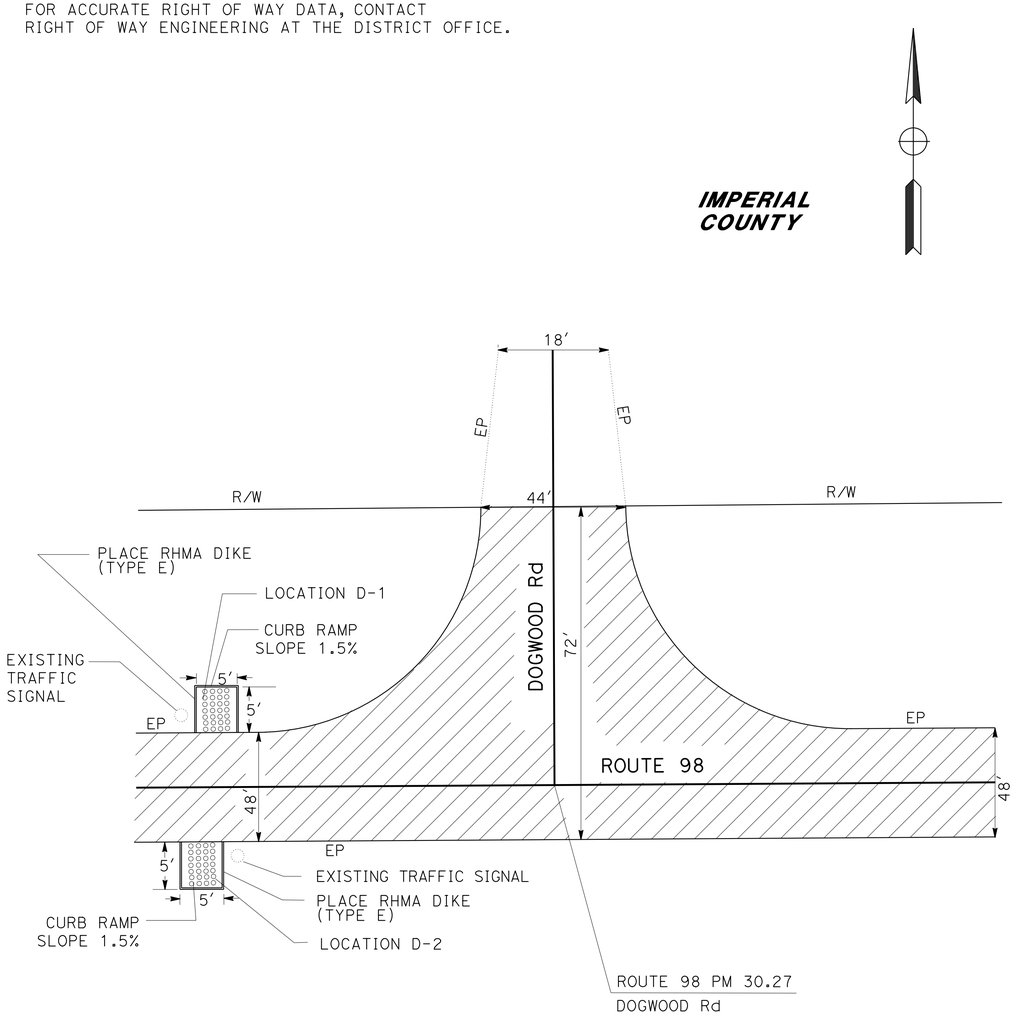

DOGWOOD Rd AND ROUTE 98 INTERSECTION

RHMA RUBBERIZED HOT MIX ASPHALT

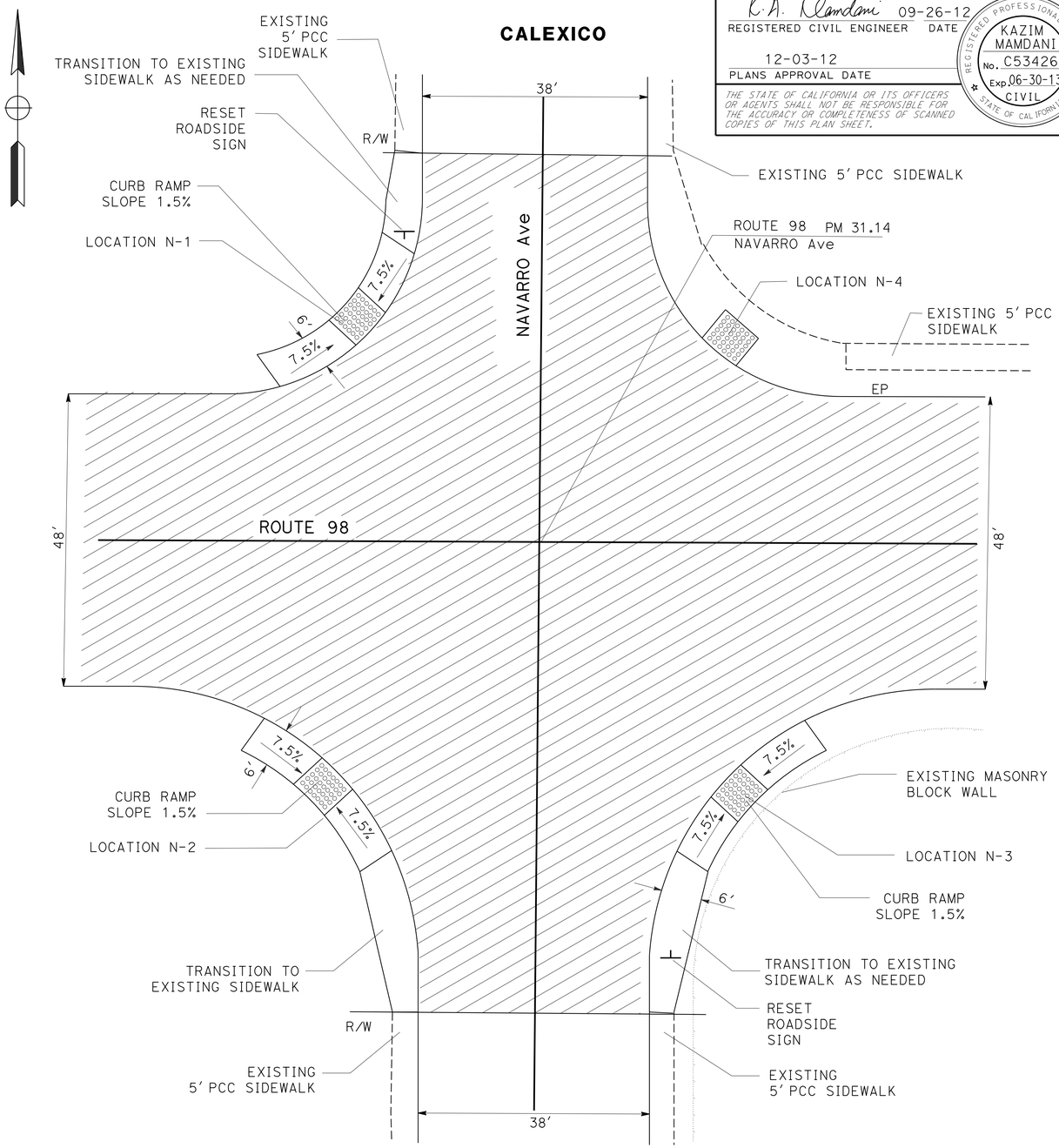

NAVARRO Ave AND ROUTE 98 INTERSECTION

CASE C CURB RAMP (MODIFIED)

CONSTRUCTION DETAILS

NO SCALE

C-2

STATE OF CALIFORNIA - DEPARTMENT OF TRANSPORTATION
Caltrans PROJECT DEVELOPMENT

FUNCTIONAL SUPERVISOR: KAZIM MAMDANI
CALCULATED-DESIGNED BY: JIM ALSHEIKH
CHECKED BY: KAZIM MAMDANI
REVISED BY
DATE REVISED

LAST REVISION 11-28-12
DATE PLOTTED => 17-DEC-2012
TIME PLOTTED => 13:21

Dist	COUNTY	ROUTE	POST MILES TOTAL PROJECT	SHEET No.	TOTAL SHEETS
11	Imp	98	21.8/31.3	5	25

K.A. Mamdani 09-26-12
REGISTERED CIVIL ENGINEER DATE

12-03-12
PLANS APPROVAL DATE

REGISTERED PROFESSIONAL ENGINEER KAZIM MAMDANI No. C53426 Exp. 06-30-13 CIVIL STATE OF CALIFORNIA

THE STATE OF CALIFORNIA OR ITS OFFICERS OR AGENTS SHALL NOT BE RESPONSIBLE FOR THE ACCURACY OR COMPLETENESS OF SCANNED COPIES OF THIS PLAN SHEET.

NOTE:

FOR ACCURATE RIGHT OF WAY DATA, CONTACT RIGHT OF WAY ENGINEERING AT THE DISTRICT OFFICE.

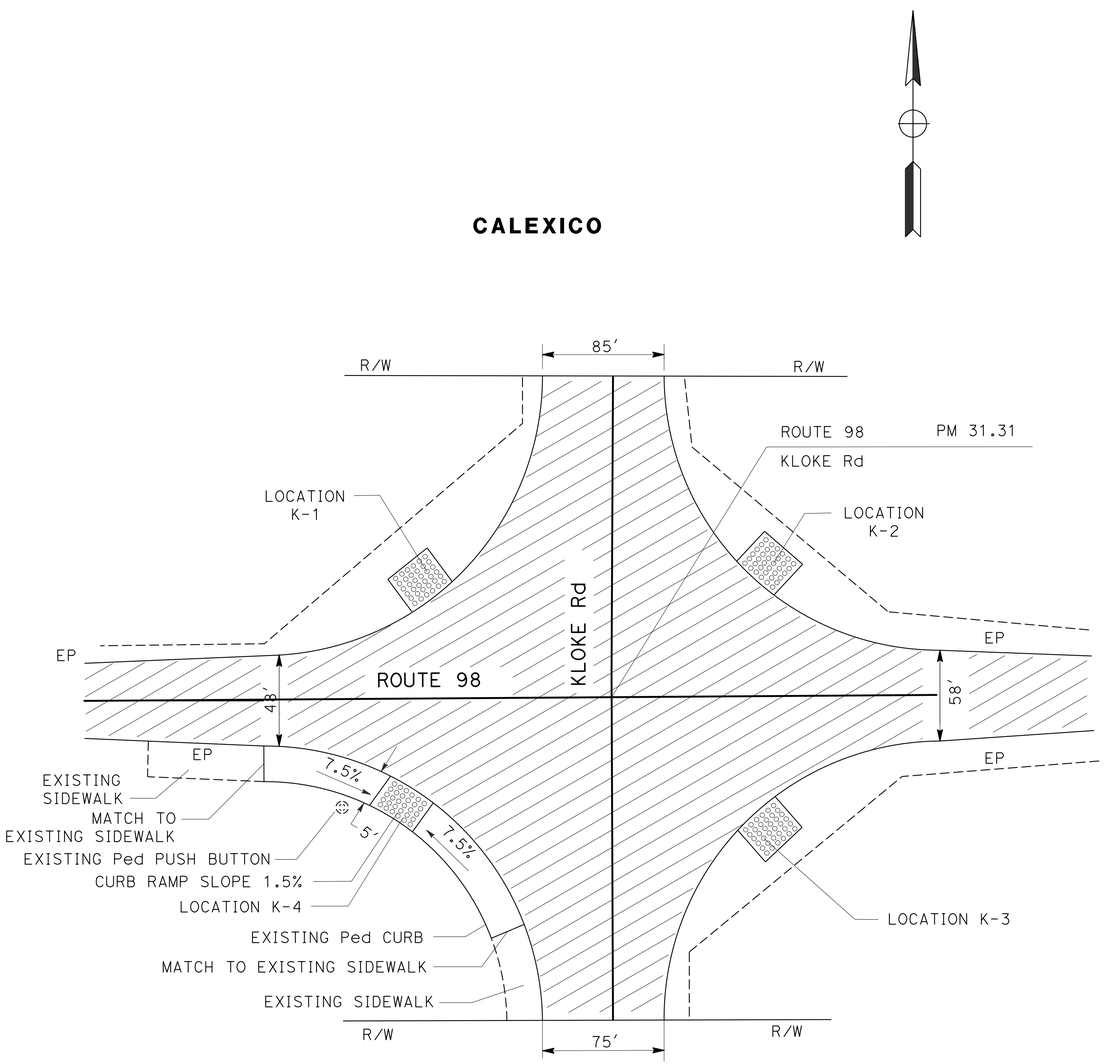

KLOKE Rd AND ROUTE 98 INTERSECTION

CASE C CURB RAMP (MODIFIED)

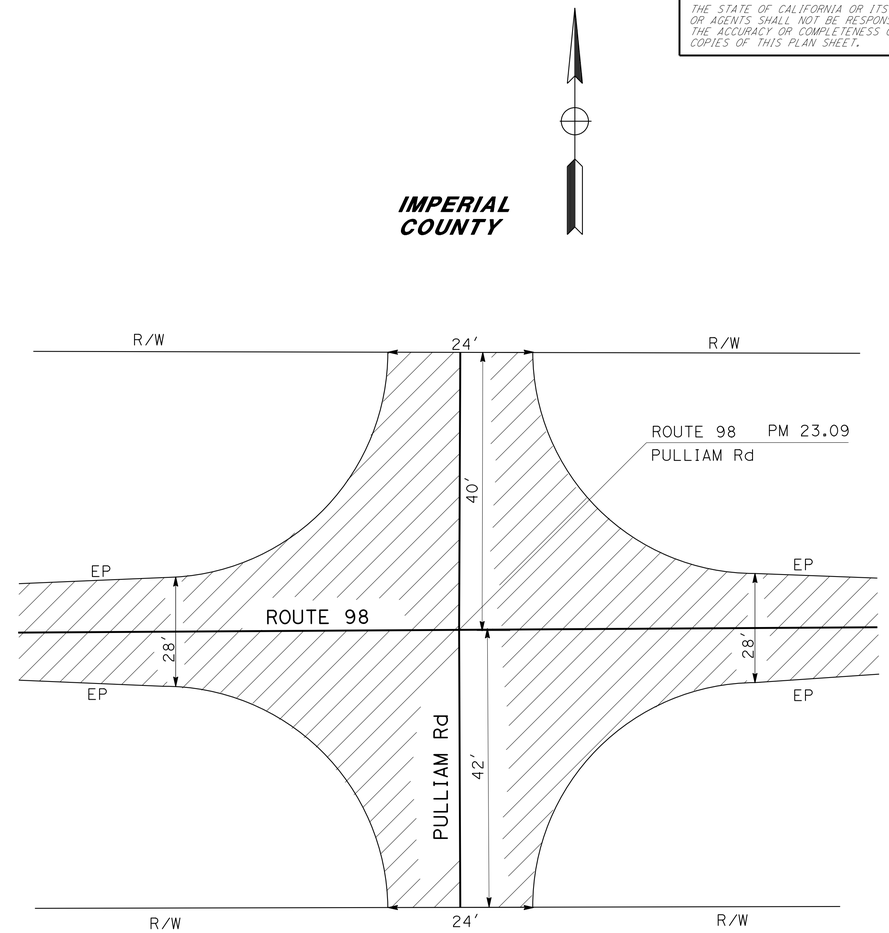

PULLIAM Rd AND ROUTE 98 INTERSECTION

CONSTRUCTION DETAILS

NO SCALE

C-3

STATE OF CALIFORNIA - DEPARTMENT OF TRANSPORTATION
Caltrans PROJECT DEVELOPMENT

FUNCTIONAL SUPERVISOR: KAZIM MAMDANI
CALCULATED-DESIGNED BY: JIM ALSHEIKH
CHECKED BY: KAZIM MAMDANI
REVISED BY
DATE REVISED

LAST REVISION 11-28-12
DATE PLOTTED => 17-DEC-2012
TIME PLOTTED => 13:22

Dist	COUNTY	ROUTE	POST MILES TOTAL PROJECT	SHEET No.	TOTAL SHEETS
11	Imp	98	21.8/31.3	6	25

K.A. Mamdani 09-26-12
REGISTERED CIVIL ENGINEER DATE

12-03-12
PLANS APPROVAL DATE

REGISTERED PROFESSIONAL ENGINEER KAZIM MAMDANI No. C53426 Exp. 06-30-13 CIVIL STATE OF CALIFORNIA

THE STATE OF CALIFORNIA OR ITS OFFICERS OR AGENTS SHALL NOT BE RESPONSIBLE FOR THE ACCURACY OR COMPLETENESS OF SCANNED COPIES OF THIS PLAN SHEET.

NOTE:

FOR ACCURATE RIGHT OF WAY DATA, CONTACT RIGHT OF WAY ENGINEERING AT THE DISTRICT OFFICE.

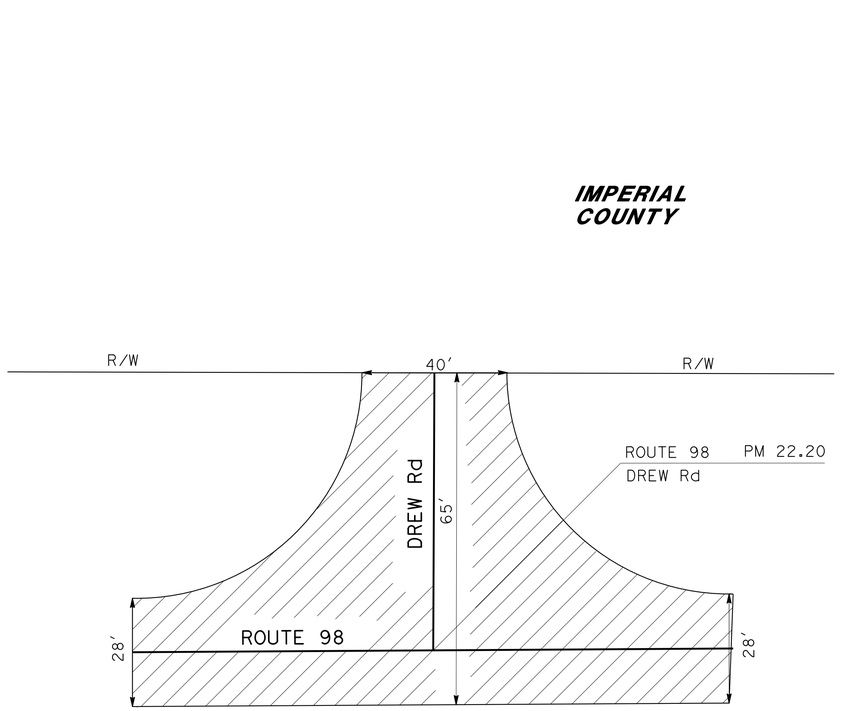

DREW Rd AND ROUTE 98 INTERSECTION

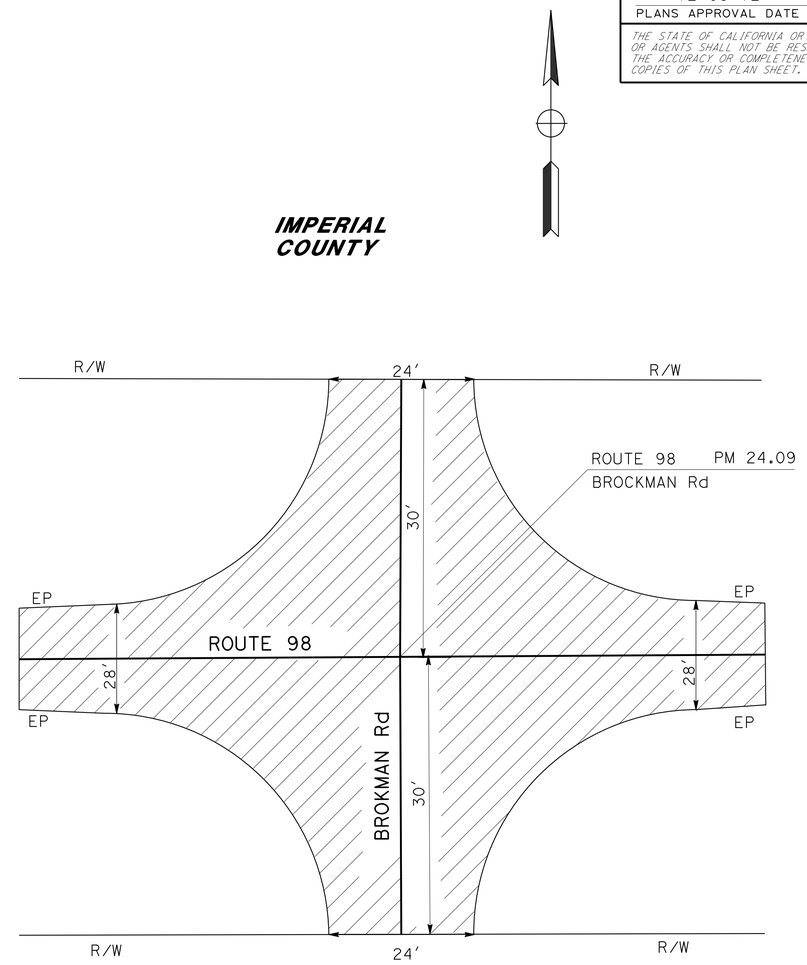

BROCKMAN Rd AND ROUTE 98 INTERSECTION

CONSTRUCTION DETAILS

NO SCALE

C-4

STATE OF CALIFORNIA - DEPARTMENT OF TRANSPORTATION
Caltrans PROJECT DEVELOPMENT

FUNCTIONAL SUPERVISOR: KAZIM MAMDANI
CALCULATED-DESIGNED BY: JIM ALSHEIKH
CHECKED BY: KAZIM MAMDANI
REVISED BY
DATE REVISED

LAST REVISION 10-02-12
DATE PLOTTED => 17-DEC-2012
TIME PLOTTED => 13:22

Dist	COUNTY	ROUTE	POST MILES TOTAL PROJECT	SHEET No.	TOTAL SHEETS
11	Imp	98	21.8/31.3	7	25

K.A. Mamdani 09-26-12
REGISTERED CIVIL ENGINEER DATE

12-03-12
PLANS APPROVAL DATE

REGISTERED PROFESSIONAL ENGINEER
KAZIM MAMDANI
No. C53426
Exp. 06-30-13
CIVIL
STATE OF CALIFORNIA

THE STATE OF CALIFORNIA OR ITS OFFICERS OR AGENTS SHALL NOT BE RESPONSIBLE FOR THE ACCURACY OR COMPLETENESS OF SCANNED COPIES OF THIS PLAN SHEET.

NOTE:

FOR ACCURATE RIGHT OF WAY DATA, CONTACT
RIGHT OF WAY ENGINEERING AT THE DISTRICT OFFICE.

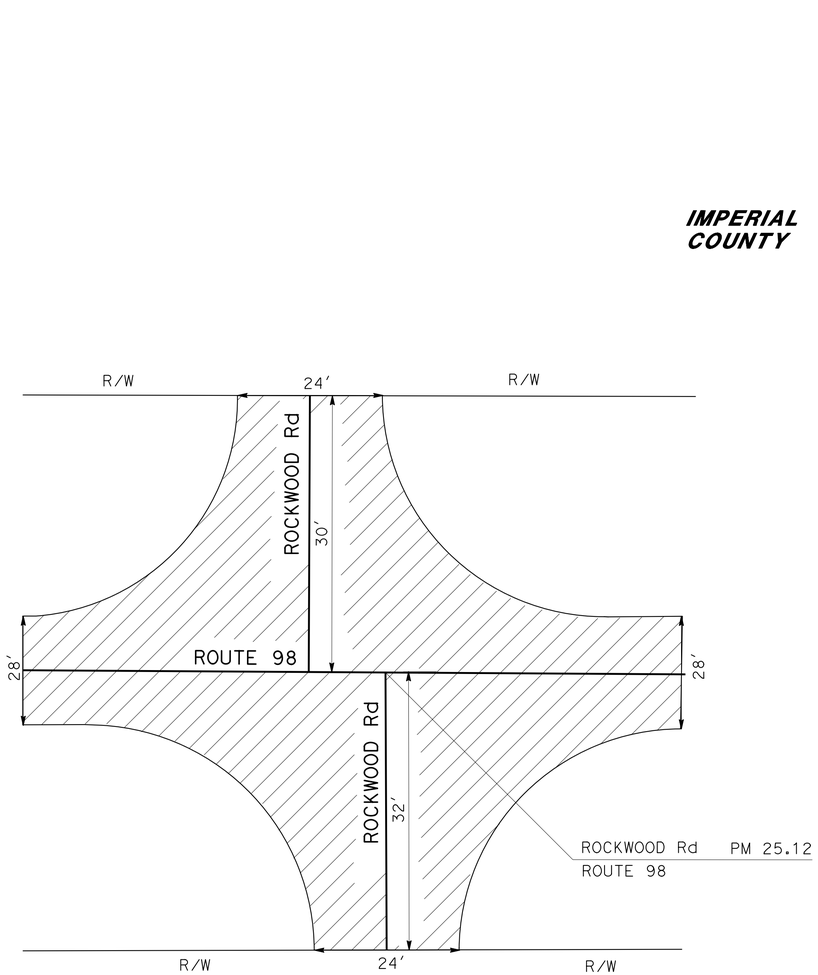

ROCKWOOD Rd AND ROUTE 98 INTERSECTION

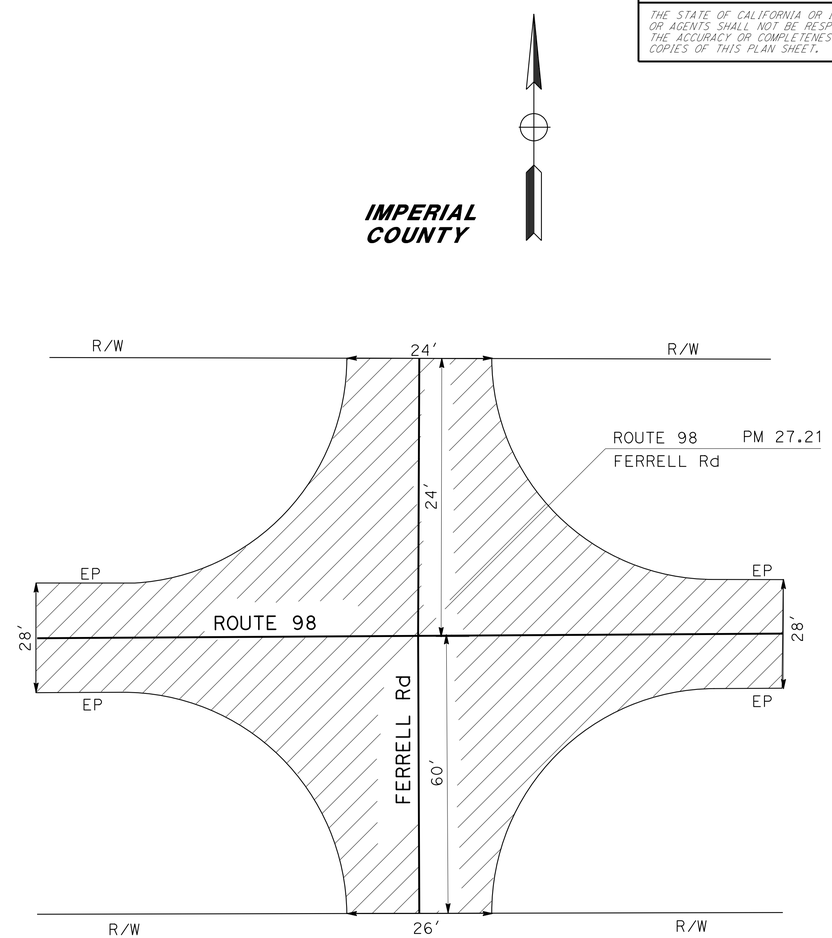

FERRELL Rd AND ROUTE 98 INTERSECTION

CONSTRUCTION DETAILS

NO SCALE

C-5

STATE OF CALIFORNIA - DEPARTMENT OF TRANSPORTATION
Caltrans PROJECT DEVELOPMENT

FUNCTIONAL SUPERVISOR: KAZIM MAMDANI
CALCULATED-DESIGNED BY: JIM ALSHEIKH
CHECKED BY: KAZIM MAMDANI
REVISED BY
DATE REVISED

LAST REVISION 10-02-12
DATE PLOTTED => 17-DEC-2012
TIME PLOTTED => 13:22

Dist	COUNTY	ROUTE	POST MILES TOTAL PROJECT	SHEET No.	TOTAL SHEETS
11	Imp	98	21.8/31.3	8	25

K.A. Mamdani 09-26-12
REGISTERED CIVIL ENGINEER DATE

12-03-12
PLANS APPROVAL DATE

REGISTERED PROFESSIONAL ENGINEER
KAZIM MAMDANI
No. C53426
Exp. 06-30-13
CIVIL
STATE OF CALIFORNIA

THE STATE OF CALIFORNIA OR ITS OFFICERS OR AGENTS SHALL NOT BE RESPONSIBLE FOR THE ACCURACY OR COMPLETENESS OF SCANNED COPIES OF THIS PLAN SHEET.

NOTE:

FOR ACCURATE RIGHT OF WAY DATA, CONTACT
RIGHT OF WAY ENGINEERING AT THE DISTRICT OFFICE.

IMPERIAL COUNTY

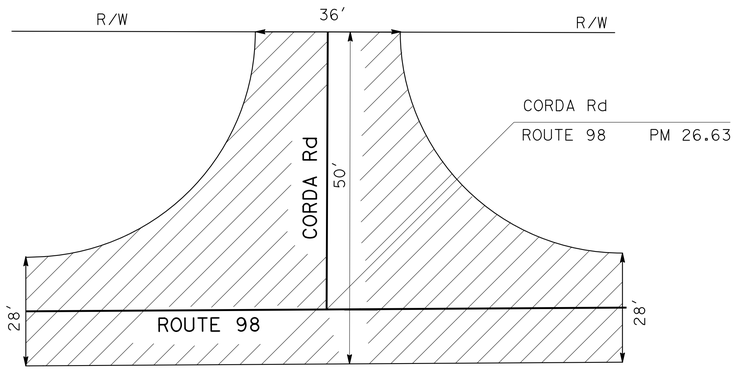

CORDA Rd AND ROUTE 98 INTERSECTION

IMPERIAL COUNTY

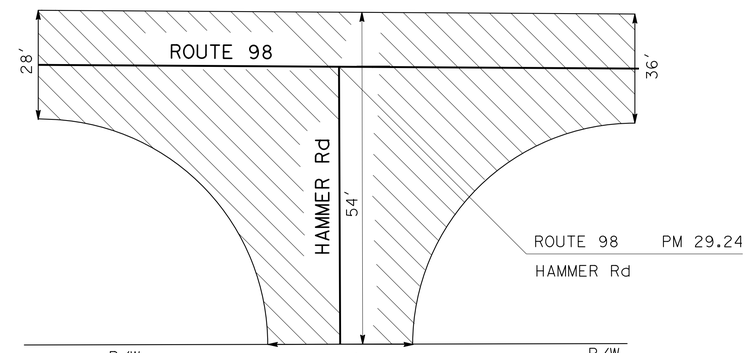

HAMMER Rd AND ROUTE 98 INTERSECTION

CONSTRUCTION DETAILS

NO SCALE

C-6

STATE OF CALIFORNIA - DEPARTMENT OF TRANSPORTATION
Caltrans PROJECT DEVELOPMENT

FUNCTIONAL SUPERVISOR: KAZIM MAMDANI
CALCULATED-DESIGNED BY: JIM ALSHEIKH
CHECKED BY: KAZIM MAMDANI
REVISED BY
DATE REVISED

LAST REVISION 10-02-12
DATE PLOTTED => 17-DEC-2012
TIME PLOTTED => 13:22

Dist	COUNTY	ROUTE	POST MILES TOTAL PROJECT	SHEET No.	TOTAL SHEETS
11	Imp	98	21.8/31.3	9	25

K.A. Mamdani 09-26-12
REGISTERED CIVIL ENGINEER DATE

12-03-12
PLANS APPROVAL DATE

REGISTERED PROFESSIONAL ENGINEER KAZIM MAMDANI No. C53426 Exp. 6-30-13 CIVIL STATE OF CALIFORNIA

THE STATE OF CALIFORNIA OR ITS OFFICERS OR AGENTS SHALL NOT BE RESPONSIBLE FOR THE ACCURACY OR COMPLETENESS OF SCANNED COPIES OF THIS PLAN SHEET.

NOTES:

1. ALL PLATES AND BOLTS ARE GALVANIZED
2. CUT AND REMOVE PORTION OF CONCRETE BARRIER, AND BAGR AS REQUIRED

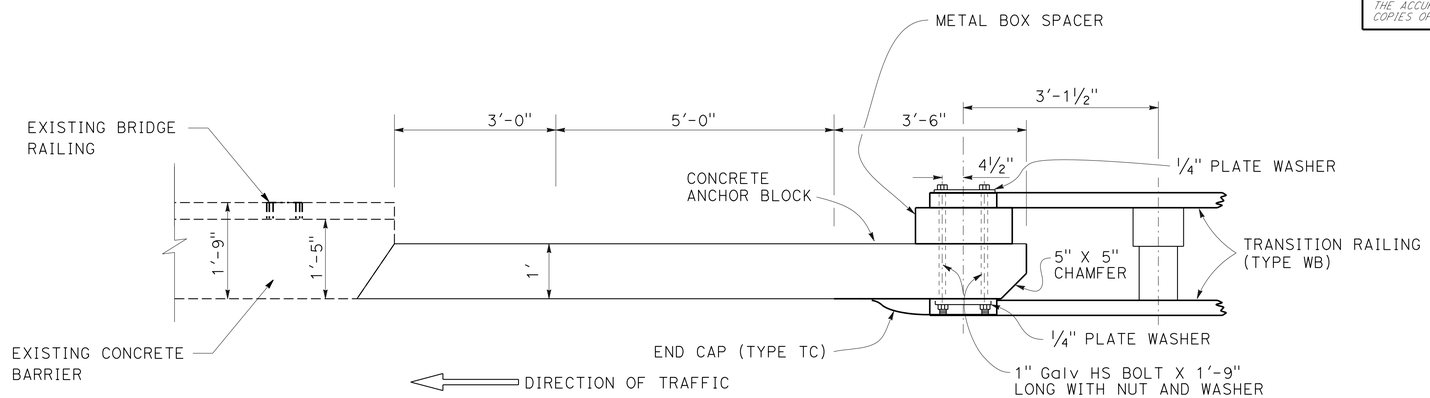

PLAN

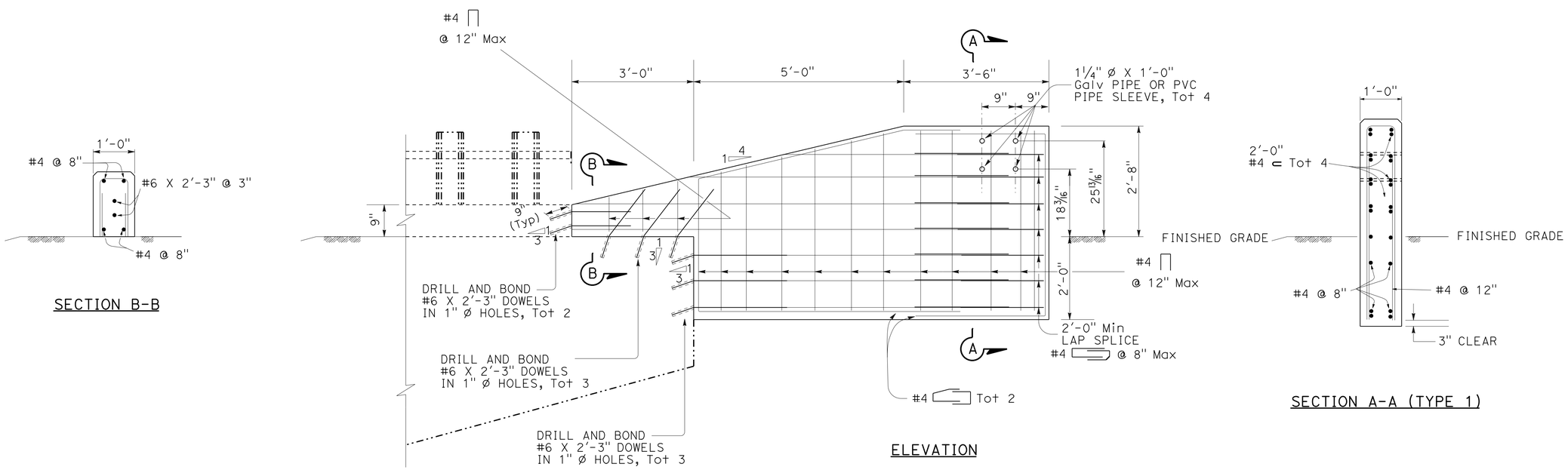

ANCHOR BLOCK, TYPE 1

(TO BE INSTALLED WITH MBGR Nos. 1, 4 & 6)

CONSTRUCTION DETAILS

NO SCALE

C-7

REVISED BY | DATE REVISED
AJMAL ZULALI | KAZIM MAMDANI
CALCULATED-DESIGNED BY | CHECKED BY
FUNCTIONAL SUPERVISOR | KAZIM MAMDANI
STATE OF CALIFORNIA - DEPARTMENT OF TRANSPORTATION
DESIGN
Caltrans

LAST REVISION 10-02-12 | DATE PLOTTED => 17-DEC-2012 | TIME PLOTTED => 13:22

Dist	COUNTY	ROUTE	POST MILES TOTAL PROJECT	SHEET No.	TOTAL SHEETS
11	Imp	98	21.8/31.3	10	25

K.A. Mamdani 09-26-12
REGISTERED CIVIL ENGINEER DATE

12-03-12
PLANS APPROVAL DATE

REGISTERED PROFESSIONAL ENGINEER KAZIM MAMDANI No. C53426 Exp. 06-30-13 CIVIL STATE OF CALIFORNIA

THE STATE OF CALIFORNIA OR ITS OFFICERS OR AGENTS SHALL NOT BE RESPONSIBLE FOR THE ACCURACY OR COMPLETENESS OF SCANNED COPIES OF THIS PLAN SHEET.

NOTES:

1. ALL PLATES AND BOLTS ARE GALVANIZED
2. CUT AND REMOVE PORTION OF CONCRETE BARRIER, AND BAGR AS REQUIRED

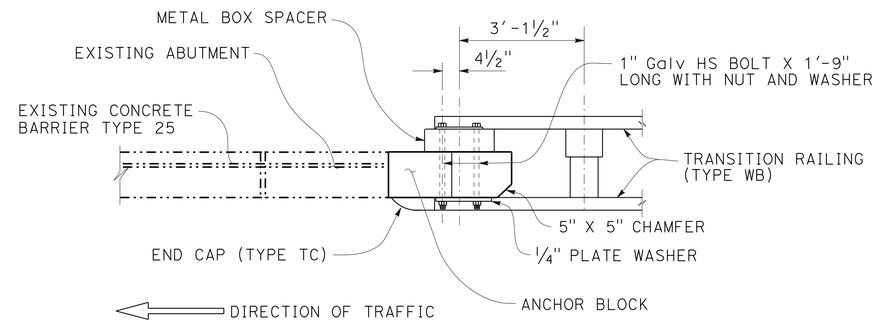

PLAN

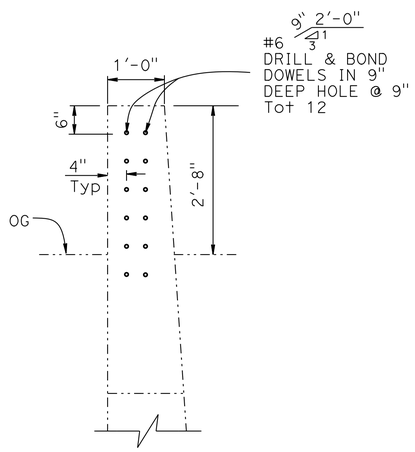

SECTION B-B

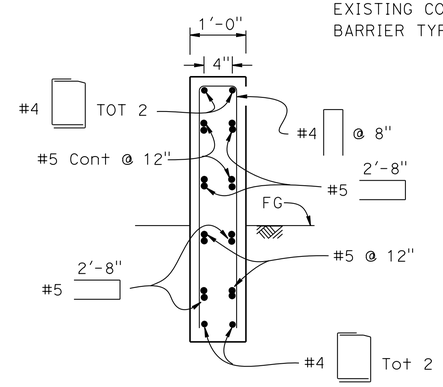

SECTION A-A

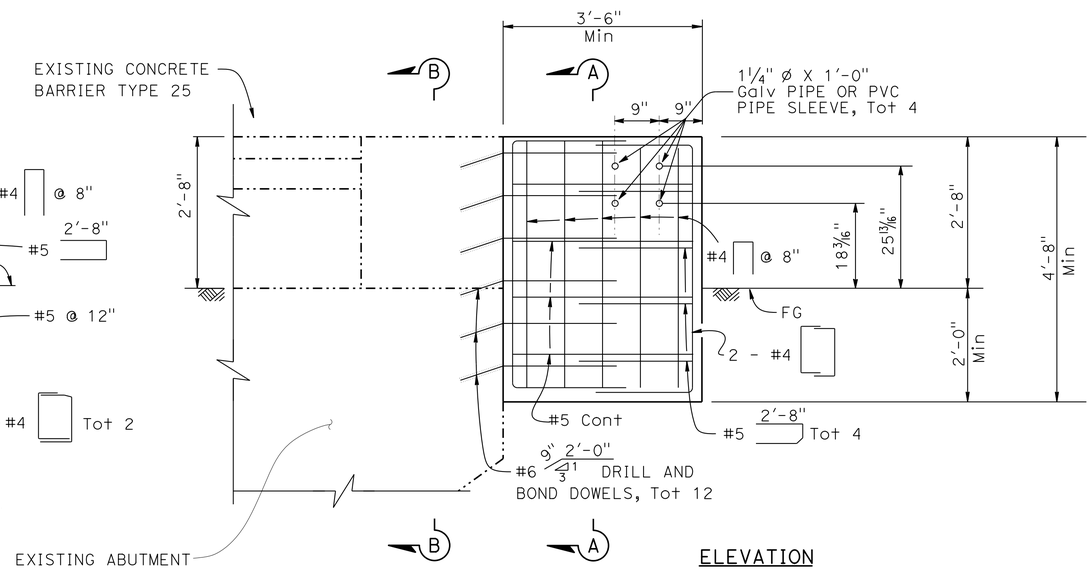

ELEVATION

ANCHOR BLOCK, TYPE 2

(TO BE INSTALLED WITH MBGR Nos. 9, 10, 11, 12, 13, 14, 15, & 16)

CONSTRUCTION DETAILS

NO SCALE

C-8

STATE OF CALIFORNIA - DEPARTMENT OF TRANSPORTATION
Caltrans PROJECT DEVELOPMENT

FUNCTIONAL SUPERVISOR: KAZIM MAMDANI
CALCULATED-DESIGNED BY: AJMAL ZULALI
CHECKED BY: KAZIM MAMDANI
REVISED BY
DATE REVISED

LAST REVISION 10-02-12
DATE PLOTTED => 17-DEC-2012
TIME PLOTTED => 13:22

Dist	COUNTY	ROUTE	POST MILES TOTAL PROJECT	SHEET No.	TOTAL SHEETS
11	Imp	98	21.8/31.3	11	25

K.A. Mamdani 09-26-12
REGISTERED CIVIL ENGINEER DATE

12-03-12
PLANS APPROVAL DATE

REGISTERED PROFESSIONAL ENGINEER KAZIM MAMDANI No. C53426 Exp. 06-30-13 CIVIL STATE OF CALIFORNIA

THE STATE OF CALIFORNIA OR ITS OFFICERS OR AGENTS SHALL NOT BE RESPONSIBLE FOR THE ACCURACY OR COMPLETENESS OF SCANNED COPIES OF THIS PLAN SHEET.

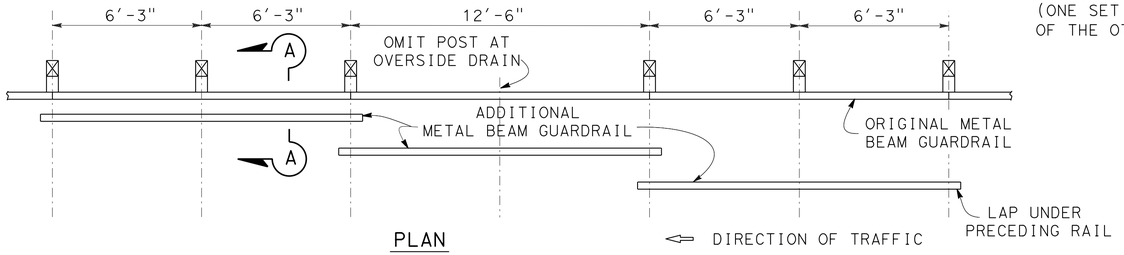

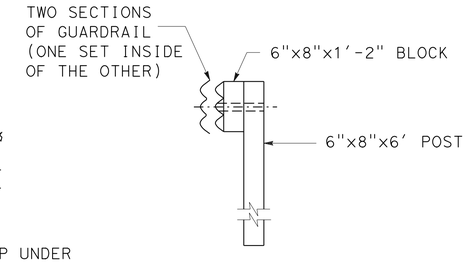

METAL BEAM GUARDRAIL
ONE POST OMITTED FOR OVERSIDE DRAIN

MBGR Nos. 14, 15 AND 16

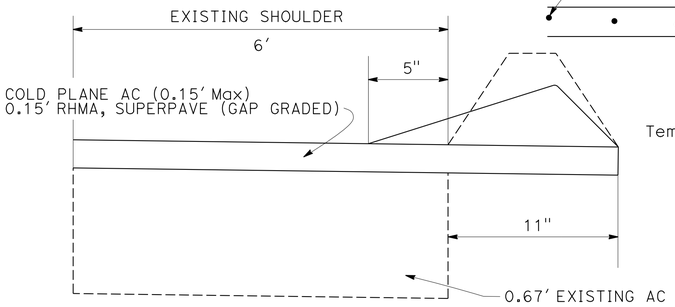

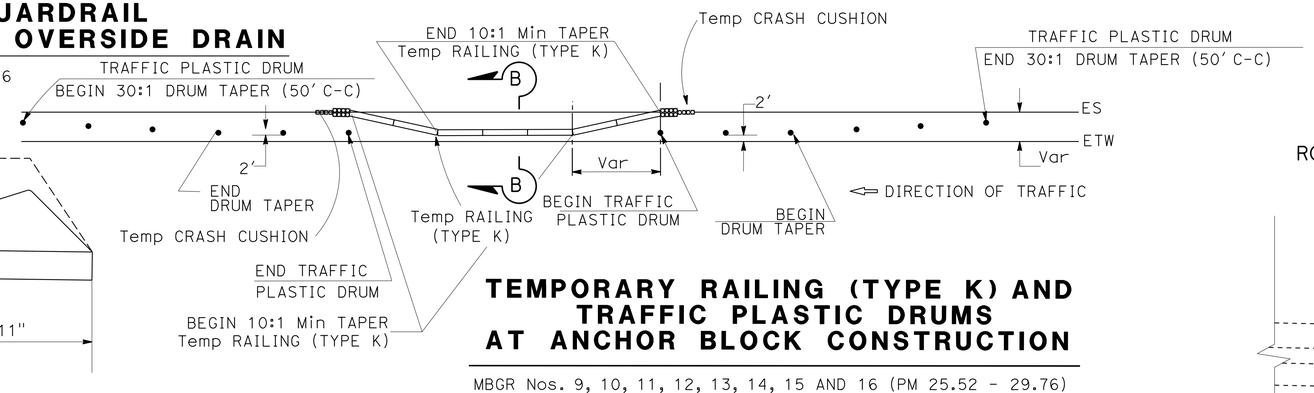

TEMPORARY RAILING (TYPE K) AND TRAFFIC PLASTIC DRUMS AT ANCHOR BLOCK CONSTRUCTION

MBGR Nos. 9, 10, 11, 12, 13, 14, 15 AND 16 (PM 25.52 - 29.76)

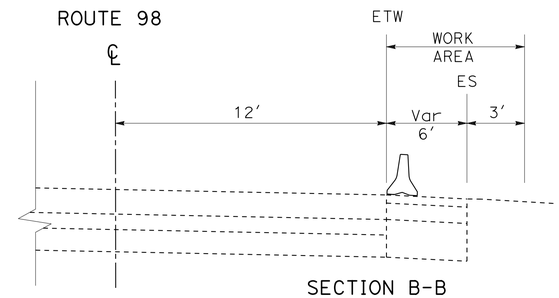

REPLACEMENT OF TYPE A DIKE TO TYPE E DIKE

(SEE SUMMARY OF QUANTITIES FOR LOCATIONS)

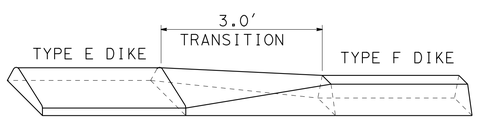

DIKE TRANSITION

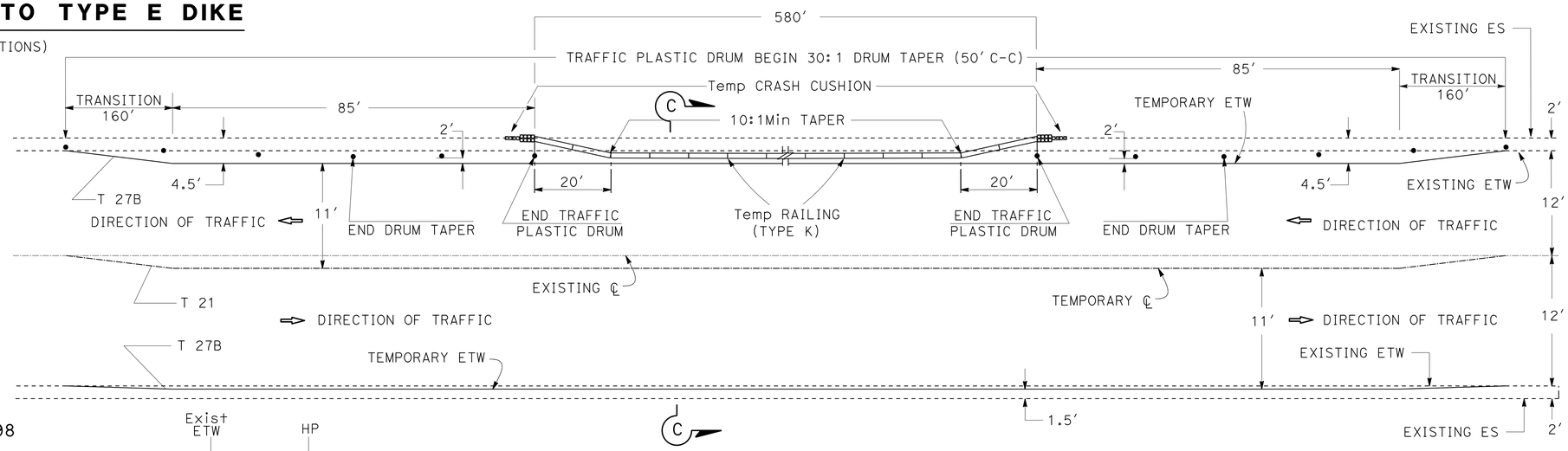

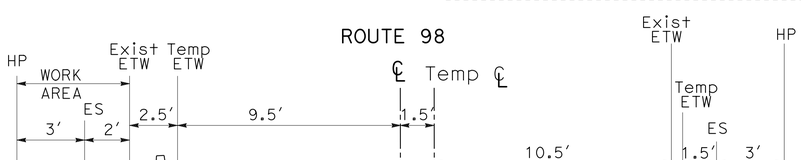

TEMPORARY RAILING (TYPE K) AND TRAFFIC PLASTIC DRUMS AT ANCHOR BLOCK CONSTRUCTION

MBGR Nos. 1, 4 AND 6 (PM 21.95 - 22.15)

CONSTRUCTION DETAILS

NO SCALE

C-9

REVISED BY | DATE REVISED
AJMAL ZULALI | KAZIM MAMDANI
CALCULATED-DESIGNED BY | CHECKED BY
FUNCTIONAL SUPERVISOR | KAZIM MAMDANI

STATE OF CALIFORNIA - DEPARTMENT OF TRANSPORTATION
Caltrans PROJECT DEVELOPMENT

LAST REVISION 11-28-12 | DATE PLOTTED => 17-DEC-2012 | TIME PLOTTED => 13:22

Dist	COUNTY	ROUTE	POST MILES TOTAL PROJECT	SHEET No.	TOTAL SHEETS
11	Imp	98	21.8/31.3	12	25

09-27-12
REGISTERED CIVIL ENGINEER DATE

12-03-12
PLANS APPROVAL DATE

REGISTERED PROFESSIONAL ENGINEER
SHAHIN T. ADIBI
No. 54839
Exp. 06-30-14
CIVIL
STATE OF CALIFORNIA

THE STATE OF CALIFORNIA OR ITS OFFICERS OR AGENTS SHALL NOT BE RESPONSIBLE FOR THE ACCURACY OR COMPLETENESS OF SCANNED COPIES OF THIS PLAN SHEET.

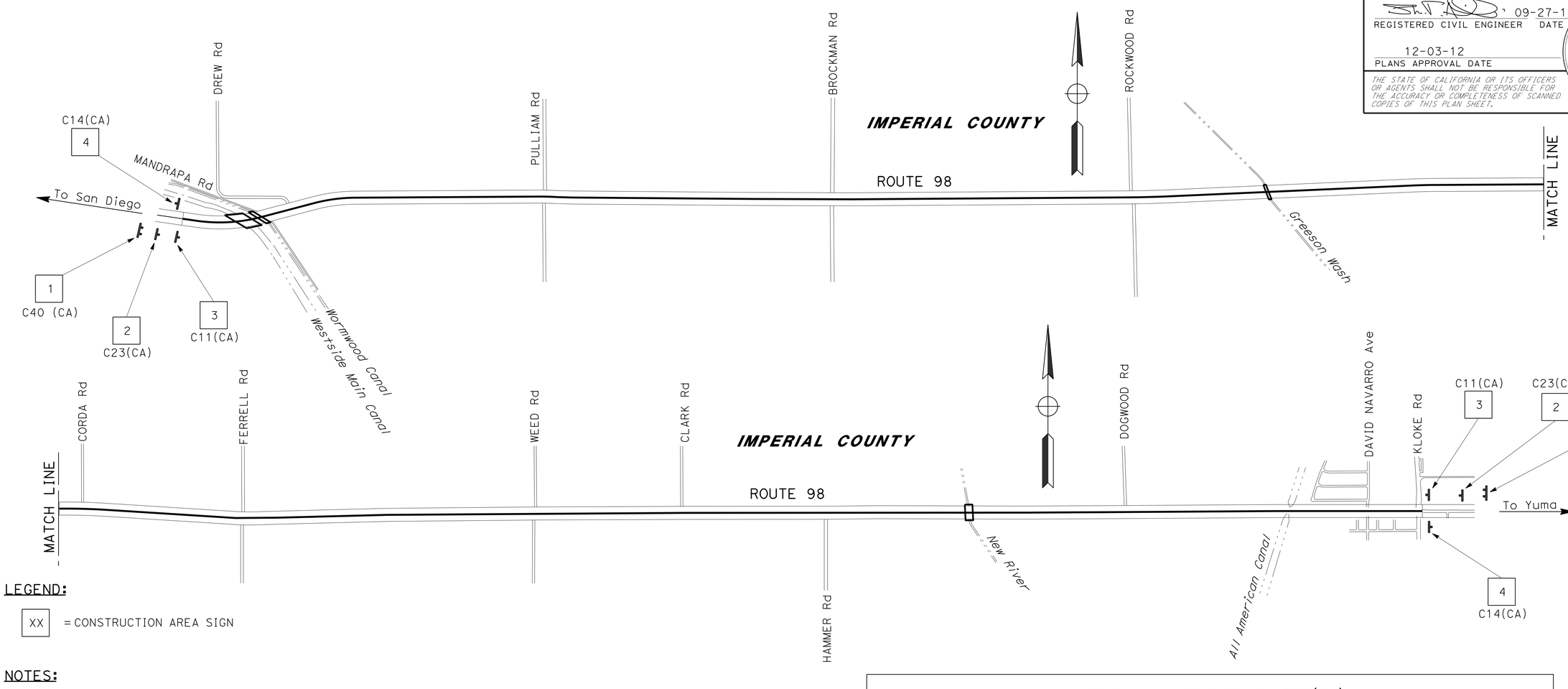

LEGEND:

XX = CONSTRUCTION AREA SIGN

NOTES:

1). EXACT LOCATION OF THE CONSTRUCTION AREA SIGNS TO BE DETERMINED BY THE ENGINEER.

2). EXISTING UTILITIES ARE NOT SHOWN ON THESE PLAN SHEETS. THE CONTRACTOR SHALL VERIFY LOCATIONS OF EXISTING UTILITIES AND AVOID IMPACTING THESE EXISITING UTILITIES BY ADJUSTING THE FIELD LOCATION OF THE SIGN POST IN CONSULTATION WITH THE ENGINEER.

CONSTRUCTION AREA SIGNS

SIGN No.	SIGN CODE		PANEL SIZE	SIGN MESSAGE	No. OF POSTS AND SIZE	No. OF SIGNS
	FEDERAL	CALIFORNIA				
1		C40(CA)	72" x 36"	TRAFFIC FINES DOUBLED IN CONSTRUCTION ZONES	2 - 4 X 6	2
2		C23(CA)	48" x 48"	ROAD WORK AHEAD	1 - 4 X 6	21
3		C11(CA)	48" X 24"	ROAD WORK NEXT 10 MILES	1 - 4 X 6	2
4		C14(CA)	48" X 24"	END ROAD WORK	1 - 4 X 6	2

TYPICAL- PLACEMENT OF C23(CA)
CONSTRUCTION AREA SIGNS FOR PAVED CROSS STREETS NOT SHOWN ON ABOVE MAP

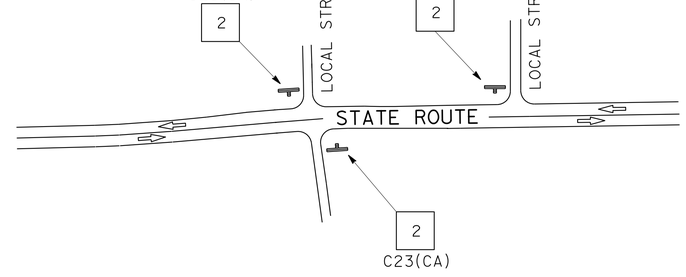

APPROVED FOR CONSTRUCTION AREA SIGN WORK ONLY

CONSTRUCTION AREA SIGNS

NO SCALE

CS-1

STATE OF CALIFORNIA - DEPARTMENT OF TRANSPORTATION
Caltrans® TRAFFIC DESIGN

FUNCTIONAL SUPERVISOR: CAMILLE ABOUFADEL
CALCULATED-DESIGNED BY: DON LUONG
CHECKED BY: SHAHIN ADIBI
REVISED BY
DATE REVISED

LAST REVISION 10-05-12
DATE PLOTTED => 17-DEC-2012
TIME PLOTTED => 13:22

Dist	COUNTY	ROUTE	POST MILES TOTAL PROJECT	SHEET No.	TOTAL SHEETS
11	Imp	98	21.8/31.3	13	25

REGISTERED CIVIL ENGINEER 09-27-12 DATE

12-03-12
PLANS APPROVAL DATE

REGISTERED PROFESSIONAL ENGINEER SHAHIN T. ADIBI No. 54839 Exp. 06-30-14 CIVIL STATE OF CALIFORNIA

THE STATE OF CALIFORNIA OR ITS OFFICERS OR AGENTS SHALL NOT BE RESPONSIBLE FOR THE ACCURACY OR COMPLETENESS OF SCANNED COPIES OF THIS PLAN SHEET.

DETAIL 19 (Mod)

TYPICAL

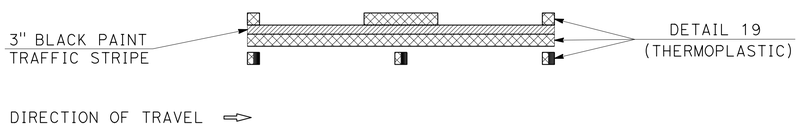

DETAIL 29 (Mod)

TYPICAL

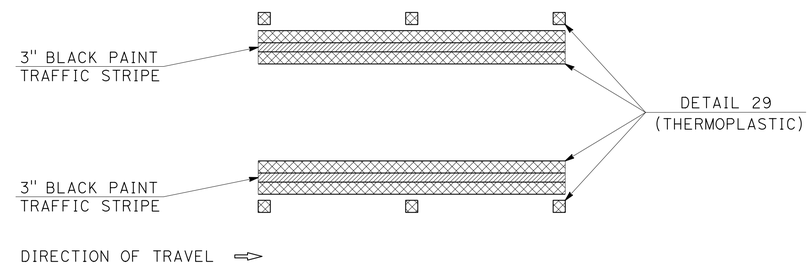

DETAIL 22 (Mod)

TYPICAL

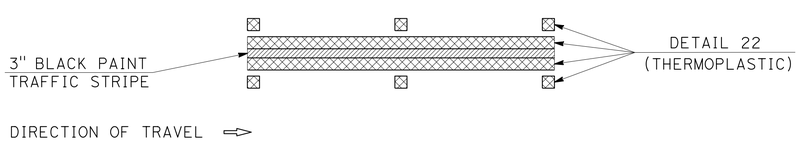

AIRCRAFT ENFORCEMENT MARKING

TYPE 1

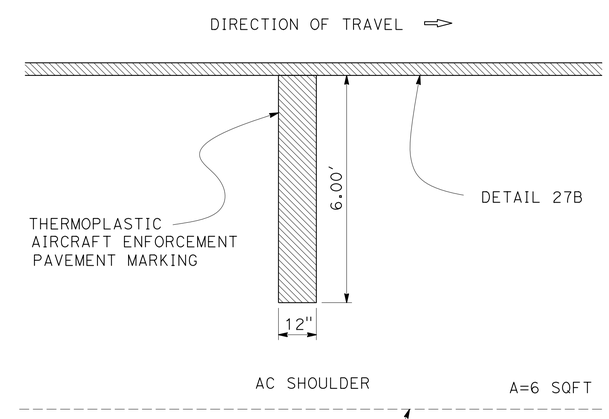

AIRCRAFT ENFORCEMENT MARKING

TYPE 2

(FOR NARROW Shld APPLICATIONS)

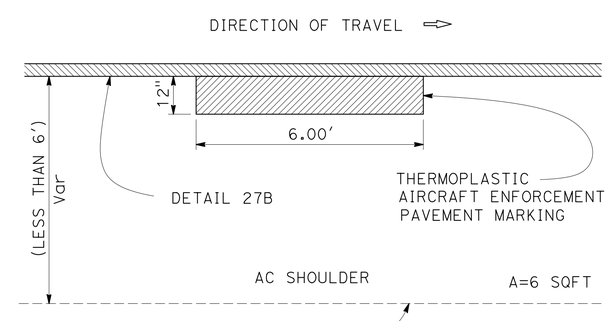

DETAIL 27B (Mod)

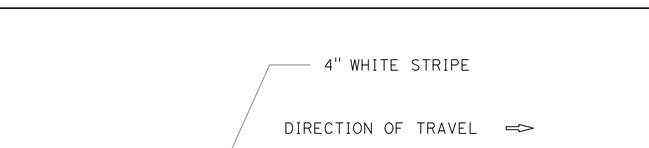

PAVEMENT DELINEATION DETAILS

NO SCALE

PDD-1

STATE OF CALIFORNIA - DEPARTMENT OF TRANSPORTATION
Caltrans® TRAFFIC DESIGN

FUNCTIONAL SUPERVISOR: CAMILLE ABOUFADEL
CALCULATED-DESIGNED BY: DON LUONG
CHECKED BY: SHAHIN ADIBI
REVISED BY
DATE REVISED

LAST REVISION 10-05-12
DATE PLOTTED => 17-DEC-2012
TIME PLOTTED => 13:22

Dist	COUNTY	ROUTE	POST MILES TOTAL PROJECT	SHEET No.	TOTAL SHEETS
11	Imp	98	21.8/31.3	14	25

REGISTERED CIVIL ENGINEER 09-27-12 DATE

12-03-12
PLANS APPROVAL DATE

REGISTERED PROFESSIONAL ENGINEER SHAHIN T. ADIBI No. 54839 Exp. 06-30-14 CIVIL STATE OF CALIFORNIA

THE STATE OF CALIFORNIA OR ITS OFFICERS OR AGENTS SHALL NOT BE RESPONSIBLE FOR THE ACCURACY OR COMPLETENESS OF SCANNED COPIES OF THIS PLAN SHEET.

REMOVE TRAFFIC STRIPE (N)

ROUTE	LOCATION	DETAIL/TYPE	PAINTED TRAFFIC STRIPE (LF)	THERMOPLASTIC TRAFFIC STRIPE (LF)	THERMOPLASTIC PAVEMENT MARKING (SQFT)
98	PM 21.8 - 31.3	27B, 27B (Mod)	98,213		
		38		3,228	
		TYPE III, TYPE IV ARROWS, "STOP", "AHEAD", "SIGNAL", 12" LIMIT LINE & AIRCRAFT MARKINGS			1,023

REMOVE YELLOW TRAFFIC STRIPE (N)

ROUTE	LOCATION	DETAIL/TYPE	(LF)
Imp 98	PM 21.8 - PM 31.3	6, 19, 22 & 29	40,509

REMOVE PAVEMENT MARKER (N)

ROUTE	LOCATION	D	G	H
Imp 98	PM 21.8 - 31.3	1,813	69	230

PAVEMENT DELINEATION QUANTITIES

LOCATION	ROUTE	DIRECTION	DETAIL No.	PAINT TRAFFIC STRIPE (1-COAT) 3" BLACK SOLID (LF)	THERMOPLASTIC TRAFFIC STRIPE 4" SOLID (LF)	THERMOPLASTIC TRAFFIC STRIPE 4" BROKEN 36-12 (LF)	THERMOPLASTIC TRAFFIC STRIPE 8" SOLID (LF)	THERMOPLASTIC PAVEMENT MARKING (SQFT)	PAVEMENT MARKER (RETROREFLECTIVE) TYPE D (EA)	PAVEMENT MARKER (RETROREFLECTIVE) TYPE G (EA)	PAVEMENT MARKER (RETROREFLECTIVE) TYPE H (EA)	DESCRIPTION/COMMENTS
PM 21.8 - PM 31.3	Imp 98	EB/WB	6			31,358			655			
			19 (Mod)	5,477	5,477	5,477			116		230	
			22 (Mod)	11,991	23,982				1,002			
			27B		97,717							
			27B (Mod)	496	496							
			29 (Mod)	920	1,840				42			
			38				1,614			69		
								519				TYPE III & TYPE IV ARROWS
								342				"STOP", "AHEAD" & "SIGNAL"
								108				12" WIDE LIMIT LINE
		EB						54				TYPE 1 & TYPE 2 AIRCRAFT MARKING
SUBTOTAL				18,884	129,512	36,835	1,614	1,023	1,815	69	230	
TOTAL				18,884	129,512	36,835	1,614	1,023	2,114			

TEMPORARY TRAFFIC STRIPE (PAINT)

ROUTE	LOCATION FROM PM	LOCATION TO PM	DIRECTION	(LF)	DETAIL	COMMENTS
98	21.95	22.15	EB	1070	DETAIL 27B	
			WB	1070	DETAIL 27B	
			-	1070	21	CENTER LINE
			EB	1070	DETAIL 27B	
			WB	1070	DETAIL 27B	
			-	1070	21	CENTER LINE
TOTAL				6,420		

ALL PAVEMENT DELINEATION TO BE REPLACED IN-KIND
(N) = NOT A SEPARATE PAY ITEM, FOR INFORMATION ONLY.

PAVEMENT DELINEATION QUANTITIES

PDQ-1

STATE OF CALIFORNIA - DEPARTMENT OF TRANSPORTATION
Caltrans® TRAFFIC DESIGN

FUNCTIONAL SUPERVISOR: CAMILLE ABOUFADEL
CALCULATED-DESIGNED BY: DON LUONG
CHECKED BY: SHAHIN ADIBI
REVISED BY
DATE REVISED

LAST REVISION 10-05-12
DATE PLOTTED => 17-DEC-2012
TIME PLOTTED => 13:22

Dist	COUNTY	ROUTE	POST MILES TOTAL PROJECT	SHEET No.	TOTAL SHEETS
11	Imp	98	21.8/31.3	15	25

K.A. Mamdani 09-26-12
REGISTERED CIVIL ENGINEER DATE

12-03-12
PLANS APPROVAL DATE

REGISTERED PROFESSIONAL ENGINEER KAZIM MAMDANI No. C53426 Exp. 06-30-13 CIVIL STATE OF CALIFORNIA

THE STATE OF CALIFORNIA OR ITS OFFICERS OR AGENTS SHALL NOT BE RESPONSIBLE FOR THE ACCURACY OR COMPLETENESS OF SCANNED COPIES OF THIS PLAN SHEET.

ROADWAY QUANTITIES (TRAVELED WAY & SHOULDER)

LOCATION BEGIN PM	LOCATION END PM	LOCATION DIRECTION EB/WB	LENGTH LF(N)	TRAVELED WAY WIDTH LF(N)	SHOULDER WIDTH EB LF(N)	SHOULDER WIDTH WB LF(N)	AREA SQFT(N)	COLD PLANE AC PAVEMENT SQYD	RUBBERIZED HOT MIX ASPHALT, SUPERPAVE (GAP GRADED) TON	VOLUME CY(N)	TACK COAT TON	ASPHALTIC EMULSION (FOG SEAL COAT) TON	REMARKS INTERSECTIONS
21.800	22.024	EB/WB	1,182.72	24.00	2	2	33,116.16	3,679.57	367.96	183.98	0.57	0.08	
22.053	22.070	EB/WB	89.76	24.00	2	2	2,513.28	279.25	27.93	13.96	0.04	0.01	
22.079	22.182	EB/WB	543.84	24.00	2	2	15,227.52	1,691.95	169.19	84.60	0.26	0.04	
22.182	22.212	EB/WB	158.40	-	-	-	5,915.20	657.24	65.72	32.86	0.10	0.01	DREW Rd INTERSECTION
22.212	23.079	EB/WB	4,577.76	24.00	2	2	128,177.28	14,241.92	1,424.19	712.10	2.21	0.32	
23.079	23.100	EB/WB	110.88	-	-	-	4,400.64	488.96	48.90	24.45	0.08	0.01	PULLIAM Rd INTERSECTION
23.100	24.083	EB/WB	5,192.20	24.00	2	2	145,381.60	16,153.51	1,615.35	807.68	2.50	0.36	
24.083	24.096	EB/WB	68.64	-	-	-	2,929.92	325.55	32.55	16.28	0.05	0.01	BROCKMAN Rd INTERSECTION
24.096	25.110	EB/WB	5,353.92	24.00	2	2	149,909.76	16,656.64	1,665.66	832.83	2.58	0.38	
25.110	25.133	EB/WB	120.00	-	-	-	4,176.00	464.00	46.40	23.20	0.07	0.01	ROCKWOOD Rd INTERSECTION
25.133	25.557	EB/WB	2,238.72	24.00	2	2	62,684.16	6,964.91	696.49	348.25	1.08	0.16	
25.569	26.626	EB/WB	5,580.96	24.00	2	2	156,266.88	17,362.99	1,736.30	868.15	2.69	0.39	
26.626	26.640	EB/WB	73.92	-	-	-	2,597.76	288.64	28.86	14.43	0.04	0.01	CORDA Rd INTERSECTION
26.640	27.210	EB/WB	3,009.60	24.00	2	2	84,268.80	9,363.20	936.32	468.16	1.45	0.21	
27.210	27.226	EB/WB	85.00	-	-	-	3,724.00	413.78	41.38	20.69	0.06	0.01	FERRELL Rd INTERSECTION
27.226	28.180	EB/WB	5,037.12	24.00	2	2	141,039.36	15,671.04	1,567.10	783.55	2.43	0.35	
28.180	28.212	EB/WB	168.96	24.00	6	2	5,406.72	600.75	60.07	30.04	0.09	0.02	
28.212	28.250	EB/WB	200.64	-	-	-	6,897.92	766.44	76.64	38.32	0.12	0.01	WEED Rd INTERSECTION
28.250	28.650	EB/WB	2,112.00	24.00	2	2	59,136.00	6,570.67	657.07	328.53	1.02	0.15	
28.650	28.725	EB/WB	396.00	36.00	2	2	15,840.00	1,760.00	176.00	88.00	0.27	0.03	
28.725	28.759	EB/WB	179.52	-	-	-	4,999.56	555.51	55.55	27.78	0.09	0.01	CLARK Rd INTERSECTION
28.759	28.900	EB/WB	744.48	36.00	2	2	29,779.20	3,308.80	330.88	165.44	0.51	0.05	
28.900	29.231	EB/WB	1,747.68	24.00	2	2	48,935.04	5,437.23	543.72	271.86	0.84	0.12	
29.231	29.263	EB/WB	168.96	-	-	-	5,666.88	629.65	62.97	31.48	0.10	0.01	HAMMER Rd INTERSECTION
29.263	29.708	EB/WB	2,349.60	24.00	6	6	84,585.60	9,398.40	939.84	469.92	1.46	0.50	
29.734	30.100	EB/WB	1,932.48	24.00	6	6	69,569.28	7,729.92	772.99	386.50	1.20	0.41	
30.100	30.254	EB/WB	813.12	36.00	6	6	39,029.76	4,336.64	433.66	216.83	0.67	0.17	
30.254	30.285	EB/WB	163.68	-	-	-	8,912.64	990.29	99.03	49.51	0.15	0.03	DOGWOOD Rd INTERSECTION
30.285	30.400	EB/WB	607.20	36.00	6	6	29,145.60	3,238.40	323.84	161.92	0.50	0.13	
30.400	30.807	EB/WB	2,148.96	24.00	6	6	77,362.56	8,595.84	859.58	429.79	1.33	0.45	
30.815	30.867	EB/WB	274.56	24.00	6	6	9,884.16	1,098.24	109.82	54.91	0.17	0.06	
30.867	31.125	EB/WB	1,362.24	36.00	6	6	65,387.52	7,265.28	726.53	363.26	1.13	0.29	
31.125	31.147	EB/WB	121.44	-	-	-	7,463.12	829.24	82.92	41.46	0.13	0.03	NAVARRO Rd INTERSECTION
31.147	31.275	EB/WB	675.84	36.00	6	6	32,440.32	3,604.48	360.45	180.22	0.56	0.14	
31.275	31.300	EB/WB	132.00	-	-	-	9,566.00	1,062.89	106.29	53.14	0.16	0.03	KLOKE Rd INTERSECTION
TOTAL								172,481.82	*17,248.15		*26.71	*5.00	

(N) NOT A PAY ITEM, FOR INFORMATION ONLY

* FOR ADDITIONAL QUANTITIES, SEE DIKE QUANTITIES TABLE.

DIKE QUANTITIES

DIRECTION EB/WB	LOCATION POST MILE BEGIN PM	LOCATION POST MILE END PM	REMOVE AC DIKE TYPE	REMOVE AC DIKE LENGTH LF	PLACE RHMA DIKE TYPE E LENGTH (LF)	PLACE RHMA DIKE TYPE F LENGTH (LF)	RUBBERIZED HOT MIX ASPHALT, SUPERPAVE (GAP GRADED) TON	ASPHALTIC EMULSION (FOG SEAL COAT) TON	TACK COAT TON	SHOULDER PAD UNDER DIKE RUBBERIZED HOT MIX ASPHALT, SUPERPAVE (GAP GRADED) TON
EB	29.341	29.487	E	770	770		20.02	0.02	0.02	7.84
WB	29.553	29.695	A	750	750		19.50	0.02	0.02	11.11
EB	29.695	29.708	F	65		65	0.86	-	-	0.48
WB	29.695	29.708	F	65		65	0.86	-	-	0.48
EB	29.734	29.747	F	65		65	0.86	-	-	0.48
WB	29.734	29.747	F	65		65	0.86	-	-	0.48
EB	29.752	29.804	E	275	275		7.15	0.01	0.01	4.07
WB	29.752	29.979	A	1,200	1,200		31.20	0.03	0.03	12.22
EB	30.259	30.288	A	150	150		3.90	0.01	-	1.53
WB	30.259	30.263	A	20	20		0.52	-	-	0.20
WB	30.271	30.366	A	504	504		13.10	0.01	0.01	5.13
WB	30.750	30.807	A	300	300		7.80	0.01	0.01	3.06
WB	30.815	31.100	A	1,505	1,505		39.13	0.04	0.03	15.33
WB	31.163	31.286	A	650	650		8.58	0.02	0.01	6.62
TOTAL				6,384	6,124	260	154.34*	0.17*	0.14*	69.03*

* FOR ADDITIONAL QUANTITIES, SEE ROADWAY QUANTITIES (TRAVELLED WAY & SHOULDER) TABLE.

MINOR CONCRETE (CURB RAMP)

LOCATION	LENGTH LF(N)	WIDTH LF(N)	THICKNESS LF(N)	MINOR CONCRETE CY	REMOVE CONCRETE CURB AND SIDEWALK SQYD	DETECTABLE WARNING SURFACE SQFT
N-1	55	6	0.33	4.1	-	15
N-2	55	6	0.33	4.1	-	15
N-3	55	6	0.33	4.1	-	15
N-4	-	-	-	-	-	15
K-1	-	-	-	-	-	15
K-2	-	-	-	-	-	15
K-3	-	-	-	-	-	15
K-4	55	5	0.33	3.4	30.6	15
D-1	5	5	0.33	0.3	-	15
D-2	5	5	0.33	0.3	-	15
TOTAL				16.3	30.6	150

RESET ROADSIDE SIGN

LOCATION	EA
N-1	1
N-3	1
TOTAL	2

TRAFFIC HANDLING

EB/WB	POSTMILE	TEMPORARY RAILING (TYPE K) (LF)	TRAFFIC PLASTIC DRUM (EA)	ALTERNATIVE TEMPORARY CRASH CUSHION (EA)
EB	21.98 TO 22.11	580	12	2
WB	21.98 TO 22.11	580	12	2
EB	25.55 TO 25.68	370	12	2
WB	25.55 TO 25.68	370	12	2
EB	29.68 TO 29.76	500	12	2
WB	29.68 TO 29.76	500	12	2
TOTAL		2,900	72	12

SUMMARY OF QUANTITIES
Q-1

REVISED BY | DATE REVISED
AJMAL ZULALI | KAZIM MAMDANI
CALCULATED-DESIGNED BY | CHECKED BY
FUNCTIONAL SUPERVISOR: KAZIM MAMDANI

STATE OF CALIFORNIA - DEPARTMENT OF TRANSPORTATION
Caltrans PROJECT DEVELOPMENT

LAST REVISION 11-28-12 | DATE PLOTTED => 17-DEC-2012 | TIME PLOTTED => 13:22

Dist	COUNTY	ROUTE	POST MILES TOTAL PROJECT	SHEET No.	TOTAL SHEETS
11	Imp	98	21.8/31.3	16	25

K.A. Mamdani 09-26-12
REGISTERED CIVIL ENGINEER DATE

12-03-12
PLANS APPROVAL DATE

REGISTERED PROFESSIONAL ENGINEER KAZIM MAMDANI No. C53426 Exp. 06-30-13 CIVIL STATE OF CALIFORNIA

THE STATE OF CALIFORNIA OR ITS OFFICERS OR AGENTS SHALL NOT BE RESPONSIBLE FOR THE ACCURACY OR COMPLETENESS OF SCANNED COPIES OF THIS PLAN SHEET.

METAL BEAM GUARD RAILING

⬡ MBGR No.	DIRECTION	LAYOUT	POSTMILE FROM	POSTMILE TO	EXISTING MBGR (N) (LF)	REMOVE METAL BEAM GUARD RAILING (LF)	METAL BEAM GUARD RAILING (LF)	ALTERNATIVE FLARED TERMINAL SYSTEM (EA)	FLARED TERMINAL SYSTEM (TYPE X-TENSION) (EA)	TRANSITION RAILING (TYPE WB) (EA)	TREATED WOOD WASTE (LB)	MINOR CONCRETE (MINOR STRUCTURE) (CY)	ANCHOR BLOCK (N)	GUARD RAILING DELINEATOR (EA)	ALTERNATIVE CRASH CUSHION (EA) *	REMARKS
1	EB	12B	21.998	22.026	66.00	66.00	150	1		1	1227	1.48	TYPE 1	16		APPROACHING WESTSIDE MAIN CANAL Br
2	EB		22.053	22.058	27.00	27.00					496				1	TRAILING WESTSIDE MAIN CANAL Br
3	WB		22.050	22.055	37.00	37.00					680				1	APPROACHING WESTSIDE MAIN CANAL Br
4	WB	12BB	22.005	22.026	65.00	65.00	100		1	1	1195	1.48	TYPE 1	11		TRAILING WESTSIDE MAIN CANAL Br
5	EB		22.064	22.070	40.00	40.00					735				1	APPROACHING WORMWOOD CANAL Br
6	EB	12BB	22.078	22.083	27.00	27.00					496	1.48	TYPE 1	3	1	TRAILING WORMWOOD CANAL Br
6A	EB	11E	22.089	22.108			100	2			-			8		EAST OF MANDRAPA Rd
7	WB		22.073	22.081	27.00	27.00					498				1	APPROACHING WORMWOOD CANAL Br
8	WB		22.060	22.065	27.00	27.00					498				1	TRAILING WORMWOOD CANAL Br
9	EB	12B	25.529	25.557	63.00	63.00	150	1		1	1158	0.60	TYPE 2	16		APPROACHING GREESON WASH Br
10	EB	12BB	25.571	25.593	63.00	63.00	100	1		1	1158	0.60	TYPE 2	11		TRAILING GREESON WASH Br
11	WB	12B	25.571	25.590	64.00	64.00	100		1	1	1177	0.60	TYPE 2	11		APPROACHING GREESON WASH Br
12	WB	12BB	25.529	25.557	64.00	64.00	150	1		1	1177	0.60	TYPE 2	16		TRAILING GREESON WASH Br
13	EB	12B	29.676	29.705	64.00	64.00	150	1		1	1177	0.60	TYPE 2	16		APPROACHING NEW RIVER Br
14	EB	12BB	29.731	29.765	64.00	64.00	180	1		1	1177	0.60	TYPE 2	18		TRAILING NEW RIVER Br
15	WB	12B	29.731	29.765	64.00	64.00	180	1		1	1177	0.60	TYPE 2	18		APPROACHING NEW RIVER Br
16	WB	12BB	29.676	29.705	64.00	64.00	150	1		1	1177	0.60	TYPE 2	16		TRAILING NEW RIVER Br
				TOTAL		826	1510	10	2	10	15,203	9.24		160	6	

(N) NOT A PAY ITEM, FOR INFORMATION ONLY

DELINEATOR TO BE PLACED AT EVERY 12 FT MAXIMUM SPACING OF NEW MBGR.

* MAXIMUM LENGTH OF CRASH CUSHIONS MUST NOT BE GREATER THAN 30'

SUMMARY OF QUANTITIES
Q-2

REVISED BY | DATE REVISED

AJMAL ZULALI | KAZIM MAMDANI

CALCULATED-DESIGNED BY | CHECKED BY

FUNCTIONAL SUPERVISOR: KAZIM MAMDANI

STATE OF CALIFORNIA - DEPARTMENT OF TRANSPORTATION
Caltrans® PROJECT DEVELOPMENT

LAST REVISION 10-05-12 | DATE PLOTTED => 17-DEC-2012 | TIME PLOTTED => 13:22

Dist	COUNTY	ROUTE	POST MILES TOTAL PROJECT	SHEET No.	TOTAL SHEETS
11	Imp	98	21.8/31.3	17	25

Enrique P. Bernal 09-28-12
REGISTERED ELECTRICAL ENGINEER DATE

12-03-12
PLANS APPROVAL DATE

REGISTERED PROFESSIONAL ENGINEER ENRIQUE P.BERNAL No. E15675 Exp. 06-30-14 ELECTRICAL STATE OF CALIFORNIA

THE STATE OF CALIFORNIA OR ITS OFFICERS OR AGENTS SHALL NOT BE RESPONSIBLE FOR THE ACCURACY OR COMPLETENESS OF SCANNED COPIES OF THIS PLAN SHEET.

NOTE:

1 - SC AND CB TO Exist PULL BOX.

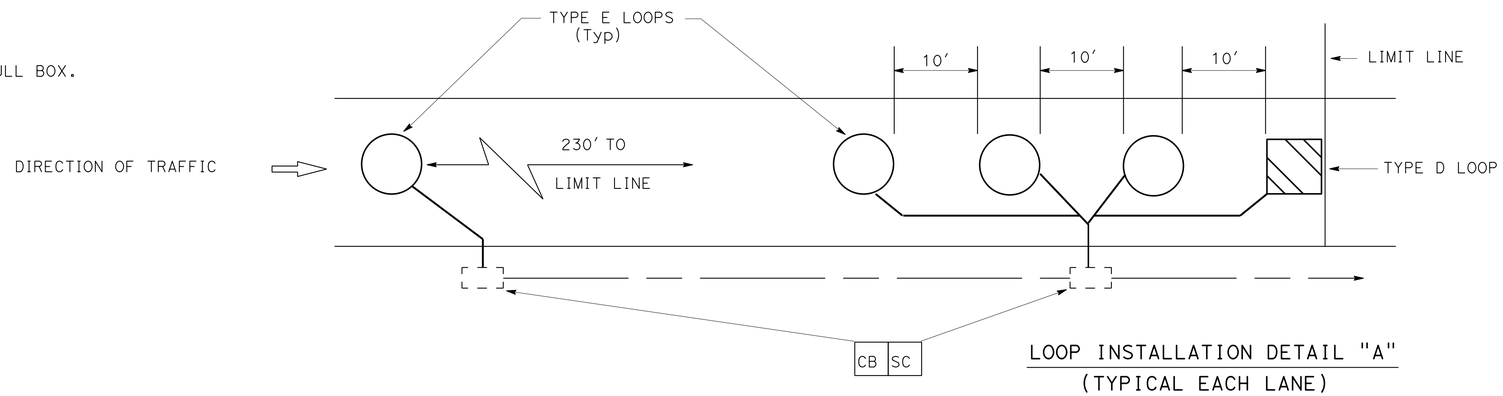

LOOP INSTALLATION DETAIL "A"
(TYPICAL EACH LANE)

INDUCTIVE LOOP DETECTORS

ROUTE	POST MILE	EXISTING FACILITIES	INTERSECTIONS OR RAMPS	DIRECTIONS	LOCATION AND QUANTITY OF LOOP DETECTORS (N) 1									INDUCTIVE LOOP DETECTORS (EA)	REMARKS
						THROUGH LANES				INTERMEDITE LOOPS		ADVANCE LOOPS			
					LEFT TURN	#1	#2	#3	#4	#1	#2	#1	#2		
98	28.740	U28.7	COUNT STATION ROUTE 98 AND CLARK Rd	EB		1-E1-L†								1	TYPE E LOOP DETECTORS SEE DETAIL "B" ON THIS SHEET
98	28.740	U28.7	COUNT STATION ROUTE 98 AND CLARK Rd	WB		1-W1-R†								1	TYPE E LOOP DETECTORS SEE DETAIL "B" ON THIS SHEET
98	31.120	P31.303	TRAFFIC SIGNAL ROUTE 98 AND KLOKE Rd	EB	4(5-2-R†)	4(2-3-R†)						1(2-1-R†)		9	SEE DETAIL "A" ON THIS SHEET
98	31.120	P31.303	TRAFFIC SIGNAL ROUTE 98 AND KLOKE Rd	WB	2(1-8-R†)	2(6-9-R†)	2(6-10-R†)							6	SEE DETAIL "A" ON THIS SHEET
98	31.120	P31.303	TRAFFIC SIGNAL ROUTE 98 AND KLOKE Rd	SB		2(4-11-R†)	2(4-12-R†)	2(4-13-R†)	2(4-14-R†)					8	SEE DETAIL "A" ON THIS SHEET
98	31.120	P31.303	TRAFFIC SIGNAL ROUTE 98 AND KLOKE Rd	NB		2(8-4-R†)	2(8-5-R†)	2(8-6-R†)						6	SEE DETAIL "A" ON THIS SHEET
													TOTAL	31	

(N)= NOT A SEPARATE PAY ITEM, FOR INFORMATION ONLY.

1(2-4-R†)
- QUANTITY OF LOOPS
- LOOP NUMBER
- TERMINATION PULL BOX LOCATION IN DIRECTION OF TRAVEL
- TRAFFIC PHASE IDENTIFICATION

LOOP IDENTIFICATION
TRAFFIC SIGNAL

1-E1-R†
- QUANTITY OF LOOPS
- LOOP CIRCUIT NUMBER
- TERMINATION PULL BOX LOCATION IN DIRECTION OF TRAVEL

LOOP IDENTIFICATION
COUNT STATION

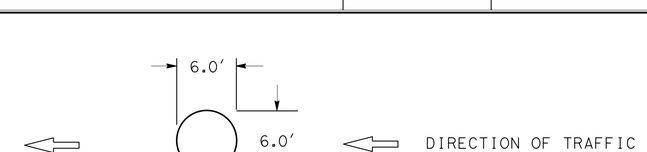

INDUCTIVE LOOP PLACEMENT DETAIL "B" (COUNT STATION/SPEED MONITORING)
(PLACE IN CENTER OF LANE, TYPICAL)

APPROVED FOR ELECTRICAL WORK ONLY

NO SCALE

INDUCTIVE LOOP DETECTOR

E-1

STATE OF CALIFORNIA - DEPARTMENT OF TRANSPORTATION
Caltrans® TRAFFIC ELECTRICAL

FUNCTIONAL SUPERVISOR: BRIAN PECUS
CALCULATED-DESIGNED BY: ENRIQUE P. BERNAL
CHECKED BY: ANTONIO A. RODRIGUEZ
REVISED BY / DATE REVISED

LAST REVISION 11-28-12 | DATE PLOTTED => 17-DEC-2012 | TIME PLOTTED => 13:22

Dist	COUNTY	ROUTE	POST MILES TOTAL PROJECT	SHEET No.	TOTAL SHEETS
11	Imp	98	21.8/31.3	18	25

Enrique P Bernal 09-28-12
REGISTERED ELECTRICAL ENGINEER DATE

12-03-12
PLANS APPROVAL DATE

REGISTERED PROFESSIONAL ENGINEER
ENRIQUE P.BERNAL
No. E15675
Exp. 06-30-14
ELECTRICAL
STATE OF CALIFORNIA

THE STATE OF CALIFORNIA OR ITS OFFICERS OR AGENTS SHALL NOT BE RESPONSIBLE FOR THE ACCURACY OR COMPLETENESS OF SCANNED COPIES OF THIS PLAN SHEET.

NOTE:

FOR ACCURATE RIGHT OF WAY DATA, CONTACT RIGHT OF WAY ENGINEERING AT THE DISTRICT OFFICE.

EXISTING TRAFFIC PHASE DIAGRAM
STEADY DEMAND SEQUENCE →

LEGEND

N △ C = EXISTING CONDUIT NO CHANGE

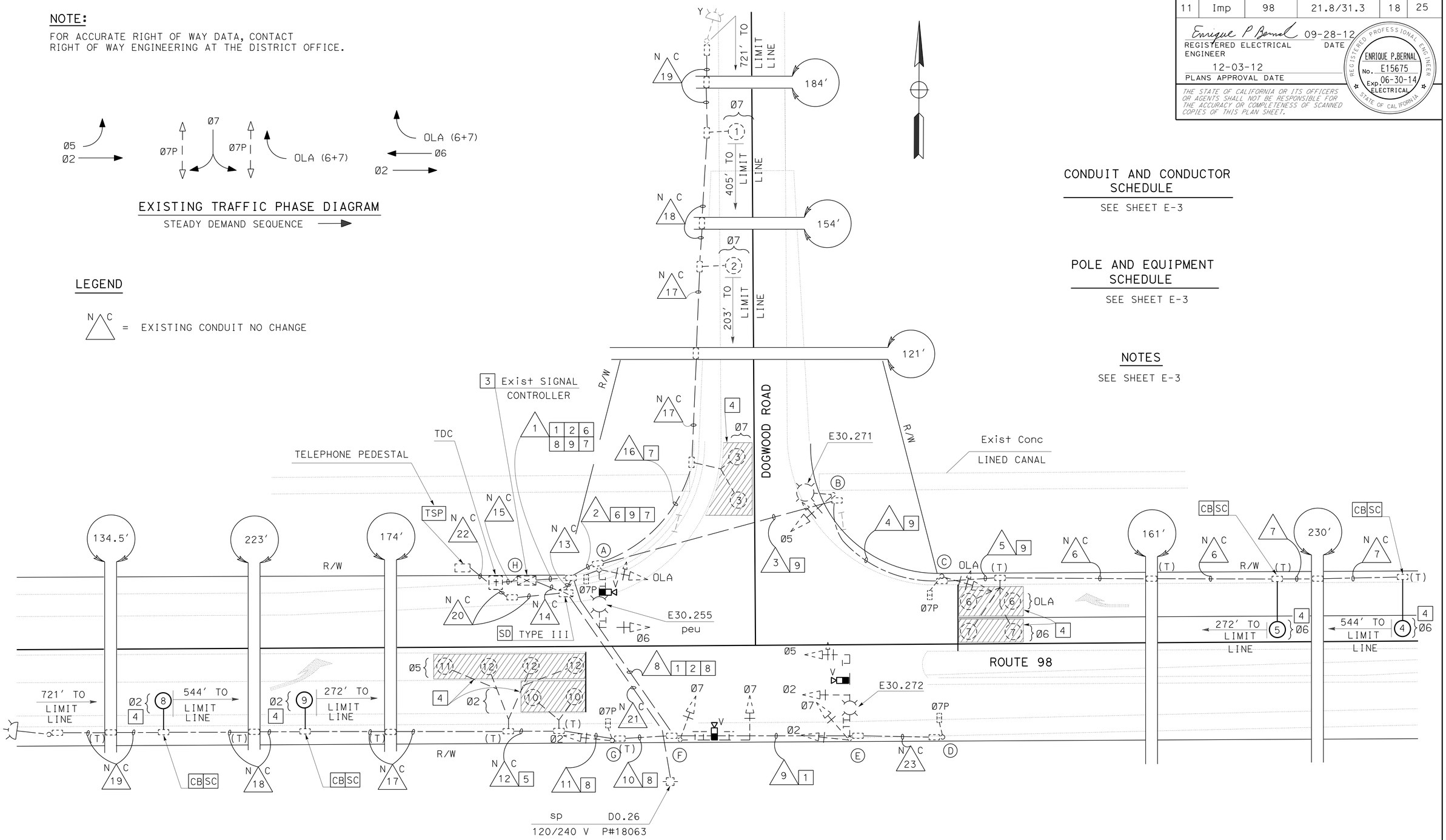

CONDUIT AND CONDUCTOR SCHEDULE

SEE SHEET E-3

POLE AND EQUIPMENT SCHEDULE

SEE SHEET E-3

NOTES

SEE SHEET E-3

ROUTE 98/DOGWOOD ROAD
TRAFFIC SIGNAL P30.165

APPROVED FOR ELECTRICAL WORK ONLY

SIGNAL AND LIGHTING

SCALE: 1"=20'

E-2

STATE OF CALIFORNIA - DEPARTMENT OF TRANSPORTATION
Caltrans® TRAFFIC ELECTRICAL

FUNCTIONAL SUPERVISOR: BRIAN PECUS
CALCULATED-DESIGNED BY: ANTONIO A. RODRIGUEZ
CHECKED BY: ENRIQUE BERNAL
REVISED BY / DATE REVISED

LAST REVISION 11-28-12 | DATE PLOTTED => 18-DEC-2012 | TIME PLOTTED => 11:19

BORDER LAST REVISED 7/2/2010 | USERNAME => s127400 | DGN FILE => 1100020349ua002.dgn | RELATIVE BORDER SCALE IS IN INCHES 0 1 2 3 | UNIT 2833 | PROJECT NUMBER & PHASE 11000203491

Dist	COUNTY	ROUTE	POST MILES TOTAL PROJECT	SHEET No.	TOTAL SHEETS
11	Imp	98	21.8/31.3	19	25

Enrique P Bernal 09-28-12
REGISTERED ELECTRICAL ENGINEER DATE

12-03-12
PLANS APPROVAL DATE

REGISTERED PROFESSIONAL ENGINEER
ENRIQUE P.BERNAL
No. E15675
Exp. 06-30-14
ELECTRICAL
STATE OF CALIFORNIA

THE STATE OF CALIFORNIA OR ITS OFFICERS OR AGENTS SHALL NOT BE RESPONSIBLE FOR THE ACCURACY OR COMPLETENESS OF SCANNED COPIES OF THIS PLAN SHEET.

CONDUIT AND CONDUCTOR SCHEDULE *

AWG SIZE OR CABLE TYPE	PHASE	POLE OR CIRCUIT	CONDUIT SIZE AND RUN															
			3-78 (1)	2-78 (2)	78 (3)	53 (4)	53 (5)	53 NC (6)	53 NC (7)	2-78 (8)	53 (9)	53 (10)	53 (11)	53 NC (12)	53 NC (13)	53 NC (14)	53 NC (15)	53 (16)
No. 14 CABLES		POLE - A	1 2	1 2														
3CSC		B	1	1	1													
		C	1 1	1 1	1 1	1												
		D	1 1							1 1	1 1							
		E	2							2	2							
		F	1							1								
		G	1 1							1 1		1 1						
12CSC																		
TOTAL CABLES-3CSC/12CSC			4 9	2 4	1 2	1 1				2 5	1 3	1 1						
6		SIGNAL POWER														2		
8		LIGHTING		2	2	2				2	2				2			
14		PEU		3											3			
8		FB		2						2		2	2	2	4			2
TYPE B DLC	ØLA	LOOP DETECTOR	1	1	1	1	1											
	Ø2	LOOP DETECTOR	2							3		3	3	2				
	Ø5	LOOP DETECTOR	3							2		2	2	2				
	Ø6	LOOP DETECTOR	3	3	3	3	3	2	1									
	Ø7	LOOP DETECTOR	3	3														3
EVC			3	1						2	1							
SIC																	1	
TOTAL CONDUCTORS/CABLES			28	21	9	8	4	2	1	18	7	9	7	6	9	2	1	5

* ALL CONDUIT AND CONDUCTORS SHOWN ARE EXISTING.

CONDUIT NOTES:

NC (17) - Exist 53C, 2 dlc, 2#8-(fb)

NC (18) - Exist 53C, 1 dlc, 2#8-(fb)

NC (19) - Exist 53C, 2#8-(fb)

NC (20) - Exist 27C, 2#8-(fb)

NC (21) - Exist 53C, (CONDUCTORS BY OTHERS)

NC (22) - Exist 53C, (CABLE BY OTHERS)

NC (23) - Exist 53C, 1 12csc, 1 3csc

NOTES:

1 - ADD 1 VIDEO CABLE HARNESS (Ø2, Ø5).

2 - ADD 1 VIDEO CABLE HARNESS (Ø7).

3 - FURNISH AND INSTALL VDU, VIDEO DISPLAY AND COMMUNICATION CARD.

4 - AB EXISTING LOOP DETECTORS.

5 - RC 2 dlc Ø5.

6 - ADD 1 VIDEO CABLE HARNESS (ØLA, Ø6).

7 - RC 1 DLC (Ø7).

8 - RC 3 DLC (Ø2, Ø5).

9 - RC 2 DLC (ØLA,Ø6).

10 - SEE ES-7R FOR VIS MOUNTING DETAILS.

POLE AND EQUIPMENT SCHEDULE **

LOC	STANDARD TYPE	STANDARD SMA	STANDARD LMA	PLACEMENT DIMENSIONS A ft	PLACEMENT DIMENSIONS B ft	SIGNAL MOUNTING AND PLACEMENT VEHICLE POLE	VEHICLE MASTARM	PEDESTRIAN SIGNAL	PEDESTRIAN P.P.B.	HPS LUMINAIRE	REMARKS
A	17-3-100	20′	12′	Exist		SV-1-T	MAS	SP-1-T	Ø7P←	200 W	SNS
B	15	—	12′	Exist		SV-1-T	—	—	—	200 W	
C	1-A (10′)	—	—	Exist		TV-1-T	—	SP-1-T	Ø7P→	—	
D	1-A (7′)	—	—	Exist		—	—	TP-1-T	Ø7P←		
E	19-4-100	30′	12′	Exist		SV-2-TD	MAT MAS	—	—	200 W	SNS
F	18-3-100	20′	—	Exist		SV-1-T	MAS	—	—	—	SNS
G	1-A(10′)	—	—	Exist		TV-1-T	—	SP-1-T	Ø7P→	—	
H	MODEL 170 CONTROLLER ASSEMBLY (TYPE 332 CABINET).										

** ALL POLES AND EQUIPMENT SHOWN ARE EXISTING.

APPROVED FOR ELECTRICAL WORK ONLY

SIGNAL AND LIGHTING

NO SCALE

E-3

STATE OF CALIFORNIA - DEPARTMENT OF TRANSPORTATION
Caltrans TRAFFIC ELECTRICAL

FUNCTIONAL SUPERVISOR: BRIAN PECUS
CALCULATED-DESIGNED BY: ANTONIO A. RODRIGUEZ
CHECKED BY: ENRIQUE BERNAL
REVISED BY
DATE REVISED

LAST REVISION 11-28-12 | DATE PLOTTED => 17-DEC-2012 | TIME PLOTTED => 13:22

Dist	COUNTY	ROUTE	POST MILES TOTAL PROJECT	SHEET No.	TOTAL SHEETS
11	Imp	98	21.8/31.3	20	25

REGISTERED CIVIL ENGINEER 12-7-12 DATE

12-03-12
PLANS APPROVAL DATE

REGISTERED PROFESSIONAL ENGINEER Gurinderpal Bhullar No. C48815 Exp 9-30-14 CIVIL STATE OF CALIFORNIA

THE STATE OF CALIFORNIA OR ITS OFFICERS OR AGENTS SHALL NOT BE RESPONSIBLE FOR THE ACCURACY OR COMPLETENESS OF SCANNED COPIES OF THIS PLAN SHEET.

NOTES:

Unless otherwise specified in the special provisions, all temporary warning signs shall have black legend on orange background.

California code are designated by (CA). Otherwise, Federal (MUTCD) codes are shown.

TYPICAL LANE CLOSURE WITH REVERSIBLE CONTROL

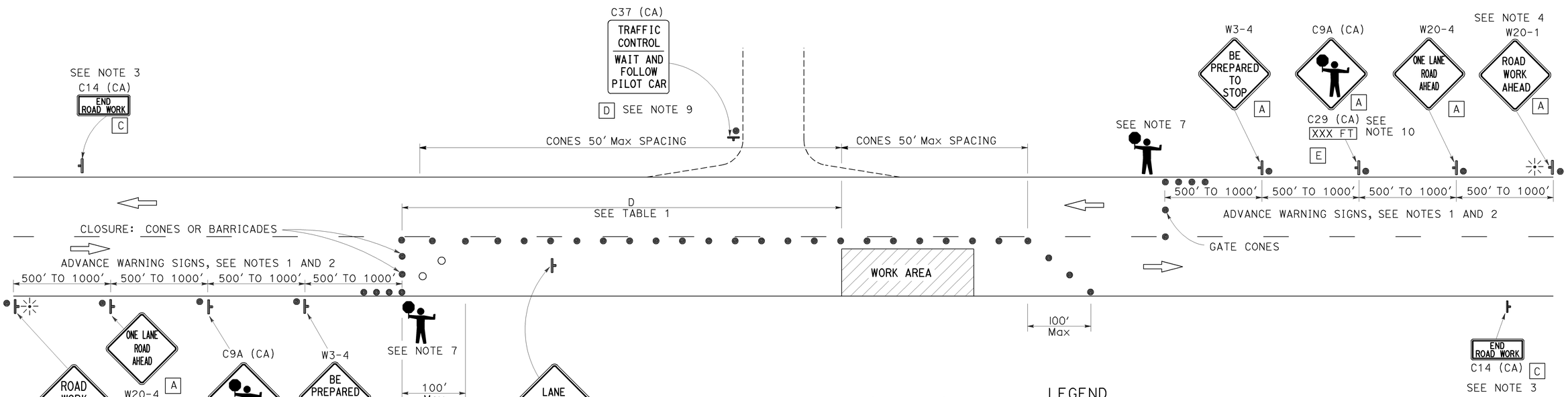

SIGN PANEL SIZE (MINIMUM)

- A: 48" x 48" - SPEED OF 45 mph OR MORE; 36" x 36" - SPEED LESS THAN 45 mph
- B: 30" x 30"
- C: 36" x 18"
- D: 36" x 42"
- E: 36" x 9"

LEGEND

- TRAFFIC CONE
- TRAFFIC CONE (OPTIONAL TAPER)
- TEMPORARY SIGN
- PORTABLE FLASHING BEACON
- FLAGGER

TABLE 1

APPROACH SPEED	MINIMUM D	DOWNGRADE MINIMUM D *		
		-3%	-6%	-9%
mph	ft	ft	ft	ft
25 AND BELOW	155	158	165	173
30	200	205	215	227
35	250	257	271	287
40	305	315	333	354
45	360	378	400	427
50	425	446	474	507
55	495	520	553	593
60	570	598	638	686
65	645	682	728	785

* USE ON SUSTAINED DOWNGRADE STEEPER THAN -3 PERCENT AND LONGER THAN 1 MILE.

NOTES:

1. Where approach speeds are low, advance warning signs may be placed at 300' spacing, and closer in urban areas.
2. Each advance warning sign in each direction of travel shall be equipped with at least two flags for daytime closure. Each flag shall be at least 16" x 16" in size and shall be orange or fluorescent red-orange in color. Flashing beacons shall be placed at the locations indicated for lane closure during hours of darkness.
3. A C14 (CA) "END ROAD WORK" sign, as appropriate, shall be placed at the end of the lane control unless the end of work area is obvious, or ends within a larger project's limits.
4. If the W20-1 sign would follow within 2000' of a stationary W20-1 or C11 (CA) "ROAD WORK NEXT _____MILES", use a W20-4 sign for the first advance warning sign.
5. All cones used for lane closures during the hours of darkness shall be fitted with retroreflective bands (or sleeves) as specified in the specifications.
6. Portable delineators, placed at one-half the spacing indicated for traffic cones, may be used instead of cones for daytime closures only.
7. Additional advance flaggers may be required. Flagger should stand in a conspicuous place, be visible to approaching traffic as well as approaching vehicles after the first vehicle has stopped. During the hours of darkness, the flagging-station and flagger shall be illuminated and clearly visible to approaching traffic. The illumination footprint of the lighting on the ground shall be at least 20' in diameter. Place a minimum of four cones at 50' intervals in advance of flagger station as shown.
8. Place C30 (CA) "LANE CLOSED" sign at 500' to 1000' intervals throughout extended work areas. They are optional if the work area is visible from the flagger station.
9. When a pilot car is used, place a C37 (CA) "TRAFFIC CONTROL-WAIT AND FOLLOW PILOT CAR" sign at all intersections within traffic control area. Signs shall be clean and visible at all times.
10. An optional C29 (CA) sign may be placed below the C9A (CA) sign.
11. Traffic cones or barricades may be placed on the optional taper as shown, barricades shall be Type I, II, or III.

STATE OF CALIFORNIA
DEPARTMENT OF TRANSPORTATION

TRAFFIC CONTROL SYSTEM FOR LANE CLOSURE ON TWO LANE CONVENTIONAL HIGHWAYS

NO SCALE

TCS-1

STATE OF CALIFORNIA - DEPARTMENT OF TRANSPORTATION
Caltrans

FUNCTIONAL SUPERVISOR | CALCULATED-DESIGNED BY | CHECKED BY | REVISED BY | DATE REVISED

LAST REVISION 12-13-12 | DATE PLOTTED => 10-DEC-2012 | TIME PLOTTED => 09:45

Dist	COUNTY	ROUTE	POST MILES TOTAL PROJECT	SHEET No.	TOTAL SHEETS
11	Imp	98	21.8/31.3	21	25

REGISTERED CIVIL ENGINEER 12-7-12 DATE

12-03-12
PLANS APPROVAL DATE

REGISTERED PROFESSIONAL ENGINEER Gurinderpal Bhullar No. C48815 Exp. 9-30-14 CIVIL STATE OF CALIFORNIA

THE STATE OF CALIFORNIA OR ITS OFFICERS OR AGENTS SHALL NOT BE RESPONSIBLE FOR THE ACCURACY OR COMPLETENESS OF SCANNED COPIES OF THIS PLAN SHEET.

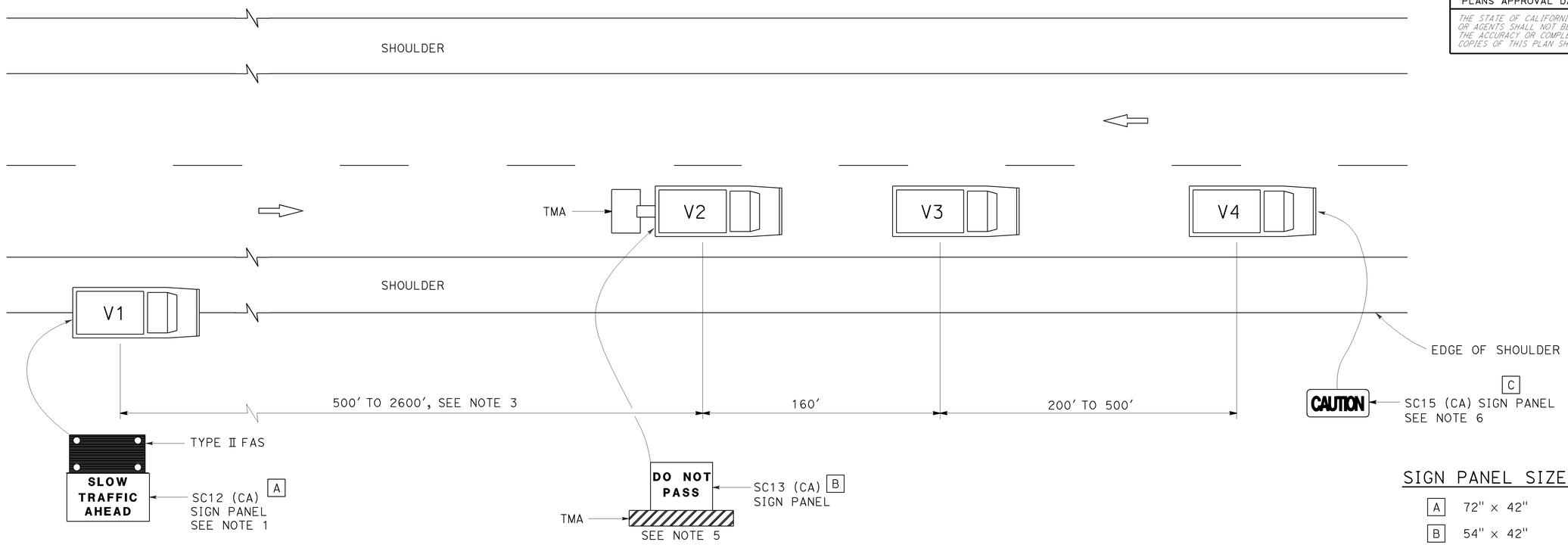

SIGN PANEL SIZE (Min)

A	72" × 42"
B	54" × 42"
C	54" × 24"

LEGEND

V1	SIGN VEHICLE
V2	SHADOW VEHICLE
V3	WORK/APPLICATION VEHICLE
V4	SIGN VEHICLE
TMA	TRUCK-MOUNTED ATTENUATOR
	FLASHING ARROW SIGN (FAS) IN FLASHING CAUTION MODE

NOTES:

1. Either a changeable message sign or a SC12 (CA) "SLOW TRAFFIC AHEAD" sign shall be mounted on the rear of sign vehicle V1. A Type II flashing arrow sign may be used with the SC12 (CA) sign panel.
2. Sign vehicle V1 should be positioned where highly visible when shoulders are not available.
3. If traffic queues develop, sign vehicle V1 should be positioned upstream from the end of queue.
4. Vehicle-mounted sign panels shall be Type III, IV VII, VIII or IX retroreflective sheeting, black on white, black on orange, or black on fluorescent orange, with 6" minimum series D letters per Caltrans sign specifications.
5. Gross Vehicle Weight of shadow vehicle shall be a minimum of 20,000 pounds and shall be equipped with a truck-mounted attenuator. The sign panel shown shall be mounted on the rear of shadow vehicle V2. The message "LANE CLOSED" may be used in place of the "DO NOT PASS" message.
6. The sign panel shown shall be mounted on the front of sign vehicle V4, facing opposing traffic.
7. All vehicles shall be equipped with flashing or rotating amber lights.
8. Sign vehicle V4 will not be required when the work and vehicles V2 and V3 are 2' or more from the centerline of the highway during the work or application operations.
9. All vehicles used for lane closures shall be equipped with two-way radios and the vehicle operators shall maintain communication during the work or application operation.
10. When multiple work vehicles are used in close proximity to each other, only one shadow vehicle is required and spacing between work vehicles shall be minimized in order to deter traffic from entering the closed lane.

STATE OF CALIFORNIA
DEPARTMENT OF TRANSPORTATION

TRAFFIC CONTROL SYSTEM FOR MOVING LANE CLOSURE ON TWO LANE HIGHWAYS

NO SCALE

TCS-2

STATE OF CALIFORNIA - DEPARTMENT OF TRANSPORTATION
Caltrans

FUNCTIONAL SUPERVISOR
CALCULATED-DESIGNED BY
CHECKED BY
REVISED BY
DATE REVISED

LAST REVISION 12-13-12
DATE PLOTTED => 10-DEC-2012
TIME PLOTTED => 09:45

Dist	COUNTY	ROUTE	POST MILES TOTAL PROJECT	SHEET No.	TOTAL SHEETS
11	Imp	98	21.8/31.3	22	25

REGISTERED CIVIL ENGINEER

April 20, 2012
PLANS APPROVAL DATE

REGISTERED PROFESSIONAL ENGINEER
Roberta L. McLaughlin
No. C40375
Exp. 3-31-13
CIVIL
STATE OF CALIFORNIA

THE STATE OF CALIFORNIA OR ITS OFFICERS OR AGENTS SHALL NOT BE RESPONSIBLE FOR THE ACCURACY OR COMPLETENESS OF SCANNED COPIES OF THIS PLAN SHEET.

TO ACCOMPANY PLANS DATED 12-03-12

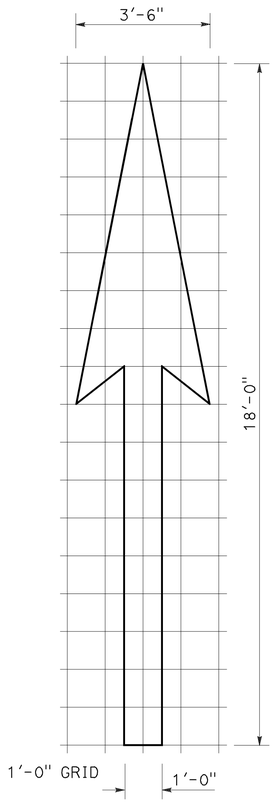

A=25 ft^2

TYPE I 18'-0" ARROW

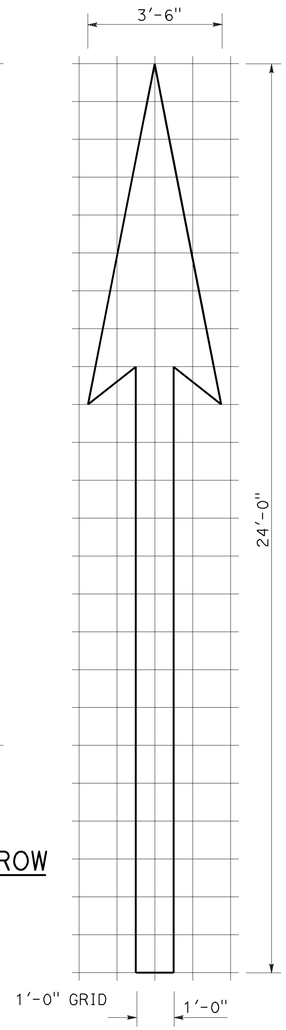

A=31 ft^2

TYPE I 24'-0" ARROW

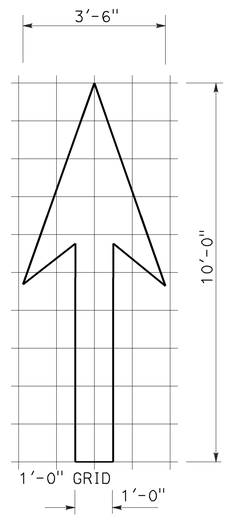

A=14 ft^2

TYPE I 10'-0" ARROW

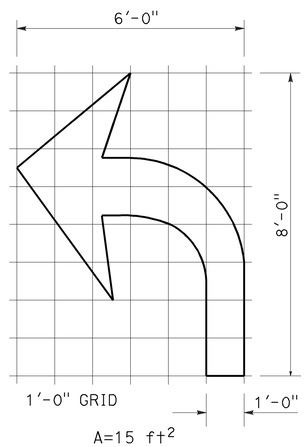

A=15 ft^2

TYPE IV (L) ARROW

(For Type IV (R) arrow, use mirror image)

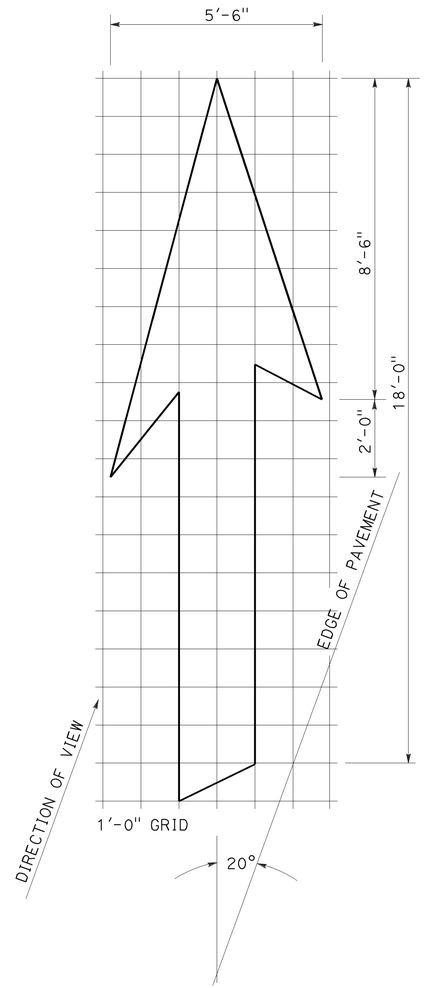

A=42 ft^2

TYPE VI ARROW

Right lane drop arrow
(For left lane, use mirror image)

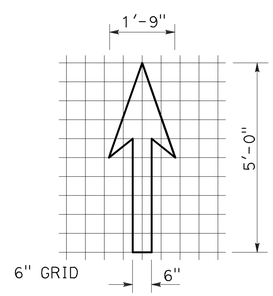

A=3.5 ft^2

BIKE LANE ARROW

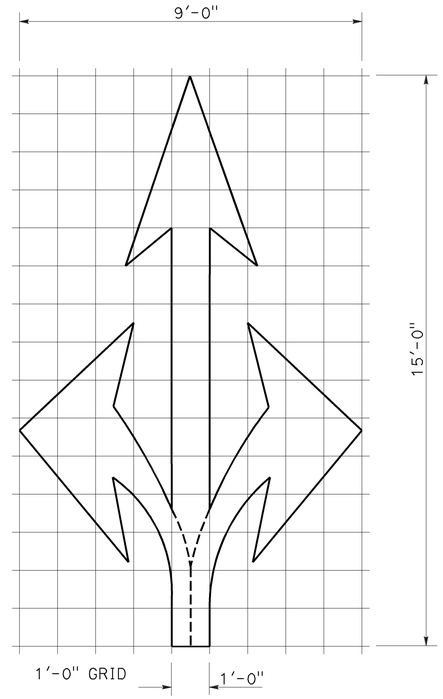

A=36 ft^2

TYPE VIII ARROW

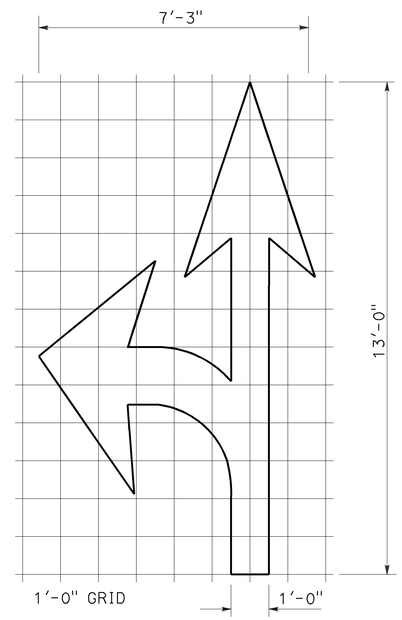

A=27 ft^2

TYPE VII (L) ARROW

(For Type VII (R) arrow, use mirror image)

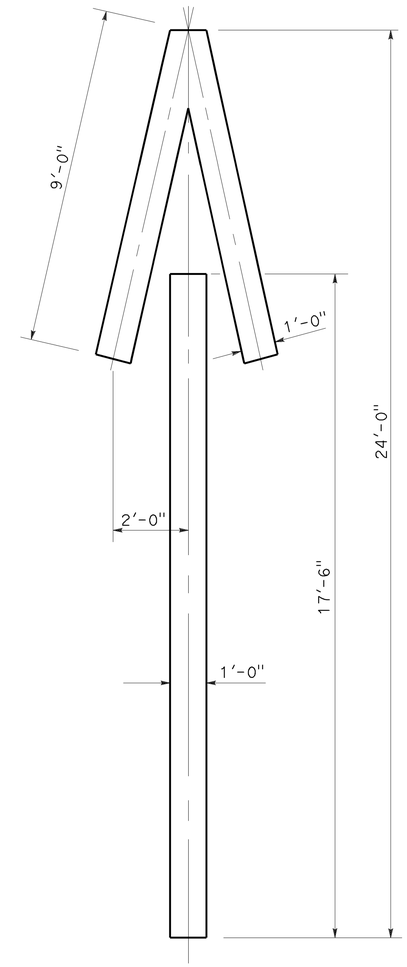

A=33 ft^2

TYPE V ARROW

NOTE:
Minor variations in dimensions may be accepted by the Engineer.

STATE OF CALIFORNIA
DEPARTMENT OF TRANSPORTATION

PAVEMENT MARKINGS ARROWS

NO SCALE

RSP A24A DATED APRIL 20, 2012 SUPERSEDES STANDARD PLAN A24A DATED MAY 20, 2011 - PAGE 13 OF THE STANDARD PLANS BOOK DATED 2010.

REVISED STANDARD PLAN RSP A24A

2010 REVISED STANDARD PLAN RSP A24A

3-14-12

Dist	COUNTY	ROUTE	POST MILES TOTAL PROJECT	SHEET No.	TOTAL SHEETS
11	Imp	98	21.8/31.3	23	25

REGISTERED CIVIL ENGINEER

July 20, 2012
PLANS APPROVAL DATE

REGISTERED PROFESSIONAL ENGINEER
Roberta L. McLaughlin
No. C40375
Exp. 3-31-13
CIVIL
STATE OF CALIFORNIA

THE STATE OF CALIFORNIA OR ITS OFFICERS OR AGENTS SHALL NOT BE RESPONSIBLE FOR THE ACCURACY OR COMPLETENESS OF SCANNED COPIES OF THIS PLAN SHEET.

TO ACCOMPANY PLANS DATED 12-03-12

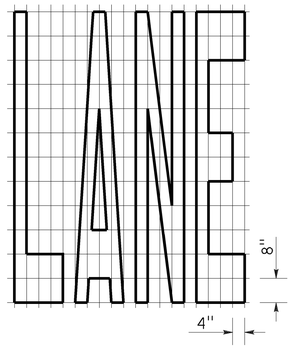

A=24 ft^2

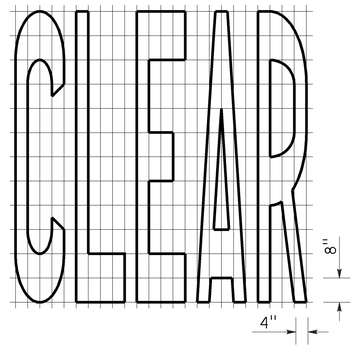

A=27 ft^2

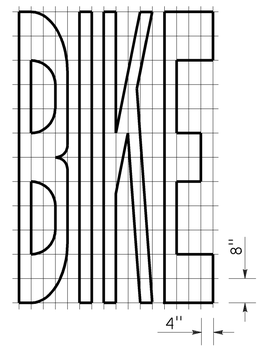

A=21 ft^2

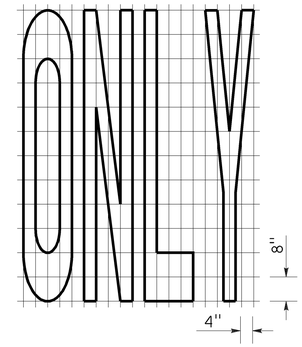

A=22 ft^2

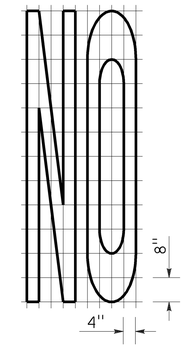

A=14 ft^2

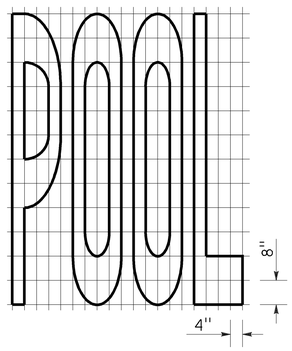

A=23 ft^2

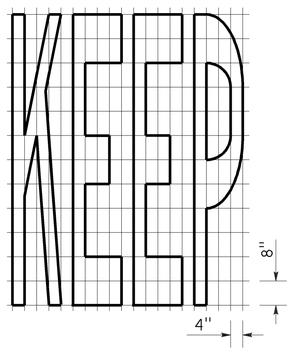

A=24 ft^2

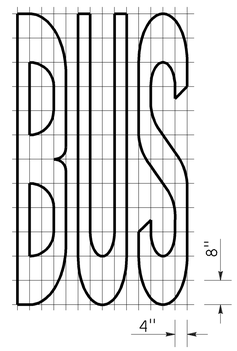

A=20 ft^2

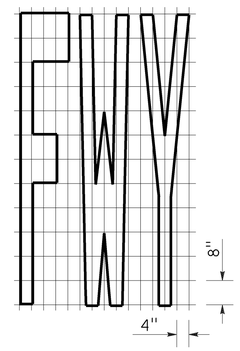

A=16 ft^2

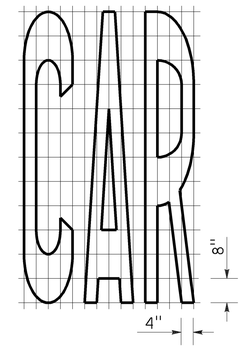

A=17 ft^2

WORD MARKINGS			
ITEM	ft^2	ITEM	ft^2
LANE	24	NO	14
POOL	23	BIKE	21
CAR	17	BUS	20
CLEAR	27	ONLY	22
KEEP	24	FWY	16

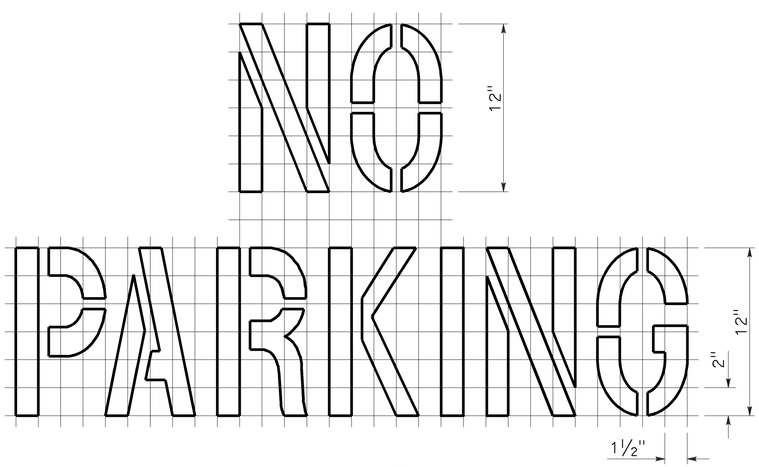

A=2 ft^2
See Notes 6 and 7

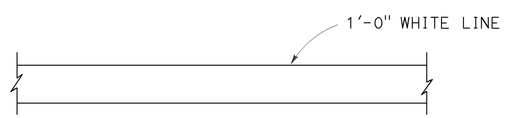

LIMIT LINE (STOP LINE)

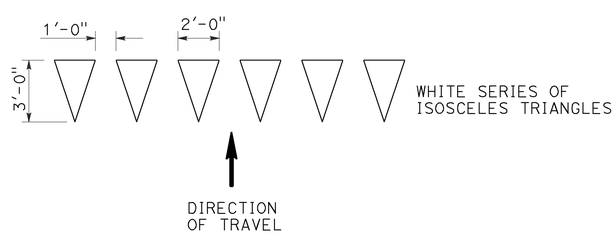

YIELD LINE

NOTES:

1. If a message consists of more than one word, it should read "UP", i.e., the first word should be nearest the driver.
2. The space between words should be at least four times the height of the characters for low speed roads, but not more than ten times the height of the characters. The space may be reduced appropriately where there is limited space because of local conditions.
3. Minor variations in dimensions may be accepted by the Engineer.
4. Portions of a letter, number or symbol may be separated by connecting segments not to exceed 2" in width.
5. The words "NO PARKING" pavement marking is to be used for parking facilities. For typical locations of markings, see Standard Plans A90A and A90B.
6. The words "NO PARKING", shall be painted in white letters no less than 1'-0" high on a contrasting background and located so that it is visible to traffic enforcement officials.

STATE OF CALIFORNIA
DEPARTMENT OF TRANSPORTATION

PAVEMENT MARKINGS WORDS, LIMIT AND YIELD LINES

NO SCALE

RSP A24E DATED JULY 20, 2012 SUPERSEDES STANDARD PLAN A24E
DATED MAY 20, 2011 - PAGE 17 OF THE STANDARD PLANS BOOK DATED 2010.

REVISED STANDARD PLAN RSP A24E

2010 REVISED STANDARD PLAN RSP A24E

6-12-12

DIST	COUNTY	ROUTE	POST MILES TOTAL PROJECT	SHEET NO.	TOTAL SHEETS
11	Imp	98	21.8/31.3	24	25

REGISTERED ELECTRICAL ENGINEER

January 20, 2012
PLANS APPROVAL DATE

REGISTERED PROFESSIONAL ENGINEER Jeffery G. McRae No. E14512 Exp. 6-30-12 ELECTRICAL STATE OF CALIFORNIA

THE STATE OF CALIFORNIA OR ITS OFFICERS OR AGENTS SHALL NOT BE RESPONSIBLE FOR THE ACCURACY OR COMPLETENESS OF SCANNED COPIES OF THIS PLAN SHEET.

TO ACCOMPANY PLANS DATED 12-03-12

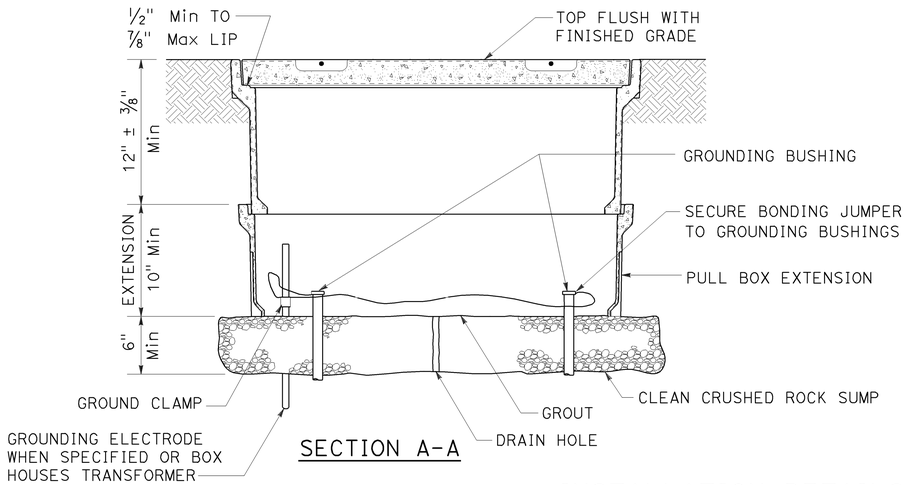

SECTION A-A

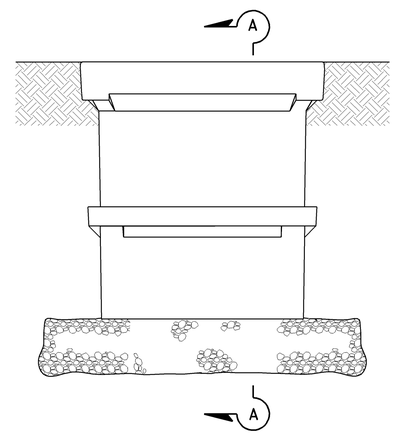

SIDE VIEW

INSTALLATION DETAILS

DETAIL A

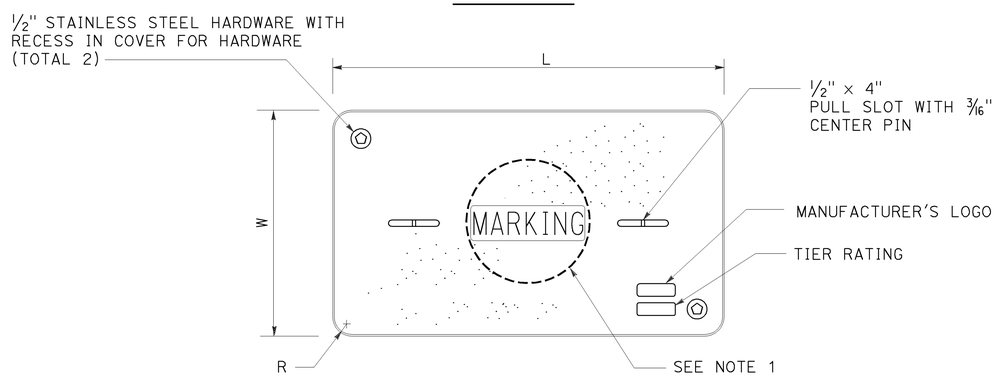

COVER TOP VIEW

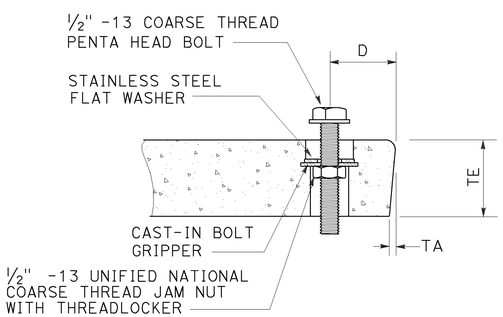

TYPICAL COVER CAPTIVE BOLT

OR SIMILAR

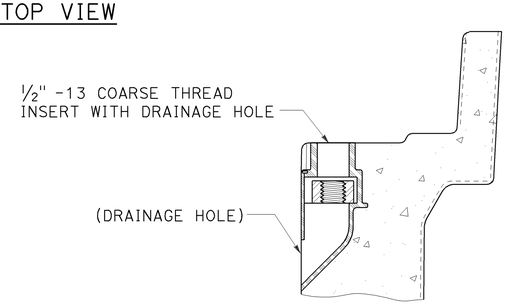

TYPICAL THREADED INSERT

OR SIMILAR

DIMENSION TABLE										
PULL BOX	PULL BOX			COVER						
	MINIMUM DEPTH BOX	MINIMUM DEPTH EXTENSION	MAXIMUM WEIGHT	L	W	R	TE	TA	D	MAXIMUM WEIGHT
No. 3½	12"	N/A	40 lb	1′ - 3⅜"	10⅛"	1⅜"	2"	⅛"	1¾"	30 lb
No. 5	12"	10"	55 lb	1′ - 11¼"	1′ - 1¾"	1⅜"	2"	⅛"	1¾"	60 lb
No. 6	12"	10"	70 lb	2′ - 6½"	1′ - 5½"	1⅜"	2"	⅛"	2"	85 lb

NOTES ON PULL BOXES:

1. Pull box covers must be marked as follows: "SERVICE" Service circuits between service point and service disconnect; "SPRINKLER-CONTROL" sprinkler control circuits, 50 V or less; "CALTRANS" on all pull boxes, except pull boxes marked "SPRINKLER-CONTROL"; and "TELEPHONE" Telephone service;

   A) No. 3½ pull box.
      1) "SIGNAL" - Traffic signal circuits with or without street or sign lighting circuits.
      2) "ST LIGHTING" - Street or sign lighting circuits where voltage is under 600 V.

   B) No. 5, 6, 9 or 9A pull box.
      1) "TRAFFIC SIGNAL" - Traffic signal circuits with or without street or sign lighting circuits.
      2) "STREET LIGHTING" - Street or sign lighting circuits where voltage is under 600 V.
      3) "STREET LIGHTING-HIGH VOLTAGE" - Street or sign lighting circuits where voltage is above 600 V.
      4) "IRRIGATION" - Circuits to irrigation controller 120 V or more.
      5) "RAMP METER" - Ramp meter circuits.
      6) "COUNT STATION" - Count or speed monitor circuits.
      7) "COMMUNICATIONS" - Communication circuits.
      8) "TOS COMMUNICATIONS" - TOS communication line.
      9) "TOS POWER" - TOS power.
      10) "TDC POWER" - Telephone demarcation cabinet power.
      11) "CCTV" - Closed circuit television circuits.
      12) "TMS" - Traffic monitoring station circuits.
      13) "CMS" - Changeable message sign circuits.
      14) "HAR" - Highway advisory radio circuits.

2. The nominal dimensions of the opening in which the cover sets must be the same as the cover dimensions (L and W) plus ⅛" or greater.
3. Covers and boxes must be interchangeable with California Standard. When interchanged with a standard, the top surfaces must be flush within ⅛". Top outside radius of covers and pull boxes must have a ⅛" radius.
4. Pull box extension may be another pull box as long as the bottom edge of the pull box can fit into the cover opening.

STATE OF CALIFORNIA
DEPARTMENT OF TRANSPORTATION

ELECTRICAL SYSTEMS (PULL BOX)

NO SCALE

RSP ES-8A DATED JANUARY 20, 2012 SUPPLEMENTS THE STANDARD PLANS BOOK DATED 2010.

REVISED STANDARD PLAN RSP ES-8A

2010 REVISED STANDARD PLAN RSP ES-8A

01-09-12

DIST	COUNTY	ROUTE	POST MILES TOTAL PROJECT	SHEET NO.	TOTAL SHEETS
11	Imp	98	21.8/31.3	25	25

REGISTERED ELECTRICAL ENGINEER

January 20, 2012
PLANS APPROVAL DATE

REGISTERED PROFESSIONAL ENGINEER
Jeffery G. McRae
No. E14512
Exp. 6-30-12
ELECTRICAL
STATE OF CALIFORNIA

THE STATE OF CALIFORNIA OR ITS OFFICERS OR AGENTS SHALL NOT BE RESPONSIBLE FOR THE ACCURACY OR COMPLETENESS OF SCANNED COPIES OF THIS PLAN SHEET.

TO ACCOMPANY PLANS DATED 12-03-12

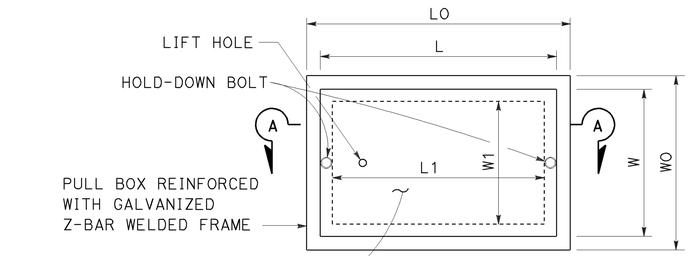

TOP VIEW

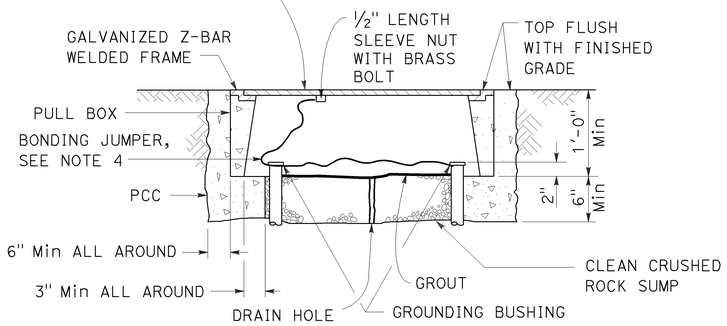

SECTION A-A

No. 3½(T), No. 5(T) AND No. 6(T) TRAFFIC PULL BOX

NOTES ON PULL BOXES:

1. Traffic pull box shall be provided with steel cover and special concrete footing. Steel cover shall have embossed non-skid pattern.
2. Steel reinforcing shall be as regularly used in the standard products of the respective manufacturer.
3. Pull box covers must be marked as follows: "SERVICE" Service circuits between service point and service disconnect; "SPRINKLER-CONTROL" Sprinkler control circuits, 50 V or less; "CALTRANS" On all pull boxes, except pull boxes marked "SPRINKLER-CONTROL"; and "TELEPHONE" Telephone service.
   A) No. 3½(T) pull box.
      1) "SIGNAL" - Traffic signal circuits with or without street or sign lighting circuits.
      2) "ST LIGHTING" - Street or sign lighting circuits where voltage is under 600 V.
   B) No. 5(T) or 6(T) pull box.
      1) "TRAFFIC SIGNAL" - Traffic signal circuits with or without street or sign lighting circuits.
      2) "STREET LIGHTING" - Street or sign lighting circuits where voltage is under 600 V.
      3) "STREET LIGHTING-HIGH VOLTAGE" - Street or sign lighting circuits where voltage is above 600 V.
      4) "IRRIGATION" - Circuits to irrigation controller 120 V or more.
      5) "RAMP METER" - Ramp meter circuits.
      6) "COUNT STATION" - Count or speed monitor circuits.
      7) "COMMUNICATION" - Communication circuits.
      8) "TOS COMMUNICATIONS" - TOS communications line.
      9) "TOS POWER" - TOS power.
      10) "TDC POWER" - Telephone demarcation cabinet power.
      11) "CCTV" - Closed circuit television circuits.
      12) "TMS" - Traffic monitoring station circuits.
      13) "CMS" - Changeable message sign circuits.
      14) "HAR" - Highway advisory radio circuits.
4. Bonding jumper for metal covers shall be 3' long, minimum.
5. The nominal dimensions of the opening in which the cover sets must be the same as the cover dimensions except the length and width dimensions shall be ⅛" greater.
6. Covers and boxes must be interchangeable with California standard male and female gages. When interchanged with a standard male or female gage, the top surfaces must be flush within ⅛".

DIMENSION TABLE

PULL BOX	BOX						COVER				
	MINIMUM * THICKNESS	MINIMUM DEPTH BOX AND EXTENSION	WO	LO	L1	W1	L **	W **	R	EDGE THICKNESS	EDGE TAPER
No. 3½(T)	1½"	1'-0"	1'-5"± 1"	1'-8⅞"±	1'-2½"±	10⅝"± 1"	1'-8"±	1'-1¾"±	0"	½"	NONE
No. 5(T)	1¾"	1'-0"	1'-11½"± 1"	2'-5½"±	1'-7"±	1'-1"± 1"	2'-3"±	1'-4"±	0"	½"	NONE
No. 6(T)	2"	1'-0"	2'-6"± 1"	2'-11½"±	1'-11½"±	1'-5"± 1"	2'-9"±	1'-8"±	0"	½"	NONE

* EXCLUDING CONDUIT WEB ** TOP DIMENSION

STATE OF CALIFORNIA
DEPARTMENT OF TRANSPORTATION

ELECTRICAL SYSTEMS (TRAFFIC RATED PULL BOX)

NO SCALE

RSP ES-8B DATED JANUARY 20, 2012 SUPPLEMENTS THE STANDARD PLANS BOOK DATED 2010.

REVISED STANDARD PLAN RSP ES-8B

2010 REVISED STANDARD PLAN RSP ES-8B