Dist	COUNTY	ROUTE	POST MILES TOTAL PROJECT	SHEET No.	TOTAL SHEETS
11	SD	67	R0.0/R5.9	101	204

REGISTERED CIVIL ENGINEER 05-13-14 DATE

07-28-14
PLANS APPROVAL DATE

REGISTERED PROFESSIONAL ENGINEER SHAHIN ADIBI No. 54839 Exp. 06-30-14 CIVIL STATE OF CALIFORNIA

THE STATE OF CALIFORNIA OR ITS OFFICERS OR AGENTS SHALL NOT BE RESPONSIBLE FOR THE ACCURACY OR COMPLETENESS OF SCANNED COPIES OF THIS PLAN SHEET.

ROADSIDE SIGN QUANTITIES

SIGN No.	CODE	SHEET No.	PANEL SIZE (N) HORIZ	PANEL SIZE (N) VERT	D	C	E	Min POST LENGTH	POST SIZE (N) 4 x 6	POST SIZE (N) 6 x 6	INSTALL ROADSIDE SIGN PANEL ON EXISTING POST	INSTALL SIGN (MAST-ARM HANGER METHOD)	INSTALL SIGN (STRAP & SADDLE BRACKET METHOD)	REMOVE Ped BARRICADE	SIGN POST SUPPORT SYSTEM	ROADSIDE SIGN-ONE POST	REMOVE ROADSIDE SIGN	TREATED WOOD WASTE	RESET ROADSIDE SIGN	REMARKS
			INCHES x INCHES		Ft	Ft	Ft	Ft	INCHES x INCHES		EA	EA	EA	EA	EA	EA	EA	EA	EA	
401	G84-2(4) (CA)	S-4								X							1	138		L=16' (ONE-POST)
402	G84-2(4) (CA)	S-4	54x48		4.0	7.0	5.0	16.0		X					1	1				
403	R61-9	S-4							X								1	72		L=14' (ONE-POST)
404	R61-9	S-4	36x30		2.5	7.0	4.5	14.0	X						1	1				
405	W4-1R	S-4								X							1	155		L=18' (ONE-POST)
406	W4-1R	S-4	48x48		5.7	7.0	5.0	17.7		X					1	1				
501	W4-1R	S-5								X							1	155		L=18' (ONE-POST)
502	W4-1R	S-5	48x48		5.7	7.0	5.0	17.7		X					1	1				
503	G84-2(4) (CA)	S-5								X							1	138		L=16' (ONE-POST)
504	G84-2(4) (CA)	S-5	54x48		4.0	7.0	5.0	16.0		X					1	1				
601	G84-2(5) (CA)	S-6								X							1	138		L=16' (ONE-POST)
602	G84-2(5) (CA)	S-6	54x48		4.0	7.0	5.0	16.0		X					1	1				
603	W4-1R	S-6								X							1	155		L=18' (ONE-POST)
604	W4-1R	S-6	48x48		5.7	7.0	5.0	17.7		X					1	1				
605	W4-1R	S-6								X							1	155		L=18' (ONE-POST)
606	W4-1R	S-6	48x48		5.7	7.0	5.0	17.7		X					1	1				
607	G92 (CA)	S-6																	1	
	G28-1 (CA)																			
	G48 (CA)																			
	G44 (CA)																			
608	G85-3 (CA)	S-6																	1	
									SUB TOTAL SQ-2		0	0	0	0	8	8	8	1,106	2	
									SUB TOTAL SQ-1		2	5	18	4	2	4	2	293	0	
										TOTAL	2	5	18	4	10	12	10	1,399*	2	

* - FOR ADDITIONAL QUANTITIES SEE MIDWEST GUARDRAIL SYSTEM AND TBB QUANTITIES.

RESET MILEPOST MARKER

ROUTE	LOCATION	DIRECTION	POSTMILE	EA
67	MAINLANE	NB	4.04	1
			TOTAL	1

SIGN QUANTITIES
SQ-2

REVISED BY | DATE REVISED
RYAN CHAO | SHAHIN ADIBI
CALCULATED-DESIGNED BY | CHECKED BY
FUNCTIONAL SUPERVISOR
CAMILLE ABOUFADEL

STATE OF CALIFORNIA - DEPARTMENT OF TRANSPORTATION
Caltrans
TRAFFIC DESIGN

LAST REVISION 03-27-14 | DATE PLOTTED => 30-JUL-2014 | TIME PLOTTED => 10:28

Dist	COUNTY	ROUTE	POST MILES TOTAL PROJECT	SHEET No.	TOTAL SHEETS
11	SD	67	R0.0/R5.9	102	204

REGISTERED CIVIL ENGINEER 05-13-14 DATE

07-28-14
PLANS APPROVAL DATE

REGISTERED PROFESSIONAL ENGINEER SHAHIN ADIBI No. 54839 Exp. 06-30-14 CIVIL STATE OF CALIFORNIA

THE STATE OF CALIFORNIA OR ITS OFFICERS OR AGENTS SHALL NOT BE RESPONSIBLE FOR THE ACCURACY OR COMPLETENESS OF SCANNED COPIES OF THIS PLAN SHEET.

NOTES:
1. FEDERAL (MUTCD) SIGN CODES ARE SHOWN UNLESS DESIGNATED BY (CA) INDICATING STANDARD CALIFORNIA SIGN SPECIFICATIONS.
2. REFER TO "ROADSIDE SIGN QUANTITIES" CHART FOR FURTHER INFORMATION.
3. FY - FLUORESCENT YELLOW

FURNISH ROADSIDE SIGN PANEL

SIGN No.	CODE	PANEL SIZE Horiz (INCHES X INCHES)	PANEL SIZE Vert (INCHES X INCHES)	BACKGROUND SHEETING COLOR	BACKGROUND RETRO-REFLECTIVE ASTM TYPE	LEGEND SHEETING COLOR	LEGEND REFLECTIVE ASTM TYPE	LEGEND BLACK (NON-REFLECTIVE)	SIGN PANEL SINGLE SHEET ALUMINUM (SQFT) UNFRAMED 0.080"	UNFRAMED 0.063"	FRAMED 0.080"	PROTECTIVE OVERLAY PREMIUM FILM
101	G84-2 (9) (CA)	54x48		GREEN	XI	WHITE	XI		18.00			X
106	R9-3a	24x24		WHITE	XI	RED/BLACK	XI	X		4.00		X
107	R9-3a	24x24		WHITE	XI	RED/BLACK	XI	X		4.00		X
108	R9-3a	24x24		WHITE	XI	RED/BLACK	XI	X		4.00		X
109	R9-3a	24x24		WHITE	XI	RED/BLACK	XI	X		4.00		X
110	R9-3a	24x24		WHITE	XI	RED/BLACK	XI	X		4.00		X
111	R9-3a	24x24		WHITE	XI	RED/BLACK	XI	X		4.00		X
112	R9-3a	24x24		WHITE	XI	RED/BLACK	XI	X		4.00		X
113	R9-3a	24x24		WHITE	XI	RED/BLACK	XI	X		4.00		X
114	W4-3R	48x48		FY	XI	BLACK		X	16.00			X
201	G7-1 (CA)	126x24		GREEN	XI	WHITE	XI				21.00	X
202	G7-1 (CA)	114x24		GREEN	XI	WHITE	XI				19.00	X
203	G7-1 (CA)	114x24		GREEN	XI	WHITE	XI				19.00	X
204	G7-1 (CA)	126x24		GREEN	XI	WHITE	XI				21.00	X
205	R6-1L	36x12		BLACK	XI	WHITE/BLACK	XI	X		3.00		X
206	R6-1R	36x12		BLACK	XI	WHITE/BLACK	XI	X		3.00		X
207	R6-1R	36x12		BLACK	XI	WHITE/BLACK	XI	X		3.00		X
208	R6-1L	36x12		BLACK	XI	WHITE/BLACK	XI	X		3.00		X
209	R73-2 (CA)	36x36		WHITE	XI	BLACK		X		9.00		X
210	R73-2 (CA)	36x36		WHITE	XI	BLACK		X		9.00		X
211	R3-8	30x30		WHITE	XI	BLACK		X		6.25		X
212	R9-3a	24x24		WHITE	XI	RED/BLACK	XI	X		4.00		X
213	R9-3a	24x24		WHITE	XI	RED/BLACK	XI	X		4.00		X
214	R9-3a	24x24		WHITE	XI	RED/BLACK	XI	X		4.00		X
215	R9-3a	24x24		WHITE	XI	RED/BLACK	XI	X		4.00		X
216	SPCL-1	36x24		ORANGE	XI	BLACK	XI	X		6.00		X
217	SPCL-1	36x24		ORANGE	XI	BLACK	XI	X		6.00		X
302	W4-1R	48x48		FY	XI	BLACK		X	16.00			X
304	G84-2(3) (CA)	54x48		GREEN	XI	WHITE	XI		18.00			X
402	G84-2(4) (CA)	54x48		GREEN	XI	WHITE	XI		18.00			X
404	R61-9	36x30		WHITE	XI	BLACK		X		7.50		X
406	W4-1R	48x48		FY	XI	BLACK		X	16.00			X
502	W4-1R	48x48		FY	XI	BLACK		X	16.00			X
504	G84-2(4) (CA)	54x48		GREEN	XI	WHITE	XI		18.00			X
602	G84-2(5) (CA)	54x48		GREEN	XI	WHITE	XI		18.00			X
604	W4-1R	48x48		FY	XI	BLACK		X	16.00			X
606	W4-1R	48x48		FY	XI	BLACK		X	16.00			X
							TOTAL		186.00	103.75	80.00	

NOTES:
1. FEDERAL (MUTCD) SIGN CODES ARE SHOWN UNLESS DESIGNATED BY (CA) INDICATING STANDARD CALIFORNIA SIGN SPECIFICATIONS.
2. MINIMUM POST LENGTHS WERE CALCULATED ASSUMING A LEVEL GROUND SURFACE FROM THE EP. ENSURE "C" DIMENSION IS MET. POST LENGTHS MAY VARY DUE TO SITE CONDITIONS.
3. EXACT LOCATIONS OF SIGNS AND POSTS SHALL BE DETERMINED BY THE ENGINEER.

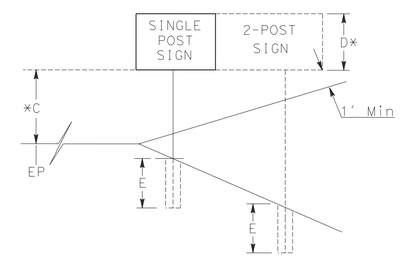

*TO BOTTOM OF LOWER PANEL ON MULTIPLE SIGN INSTALLATIONS.

SIGN QUANTITIES
SQ-3

STATE OF CALIFORNIA - DEPARTMENT OF TRANSPORTATION
Caltrans® TRAFFIC DESIGN
FUNCTIONAL SUPERVISOR: CAMILLE ABOUFADEL
CALCULATED-DESIGNED BY: RYAN CHAO
CHECKED BY: SHAHIN ADIBI
REVISED BY
DATE REVISED

LAST REVISION 03-27-14
DATE PLOTTED => 30-JUL-2014
TIME PLOTTED => 10:28

Dist	COUNTY	ROUTE	POST MILES TOTAL PROJECT	SHEET No.	TOTAL SHEETS
11	SD	67	R0.0/R5.9	103	204

Bahman Yazdani 05-14-14
REGISTERED CIVIL ENGINEER DATE

07-28-14
PLANS APPROVAL DATE

REGISTERED PROFESSIONAL ENGINEER BAHMAN YAZDANI No. C58322 Exp. 06-30-14 CIVIL STATE OF CALIFORNIA

THE STATE OF CALIFORNIA OR ITS OFFICERS OR AGENTS SHALL NOT BE RESPONSIBLE FOR THE ACCURACY OR COMPLETENESS OF SCANNED COPIES OF THIS PLAN SHEET.

REMOVE CONCRETE

LOCATION	SHEET	DIRECTION	ROUTE	LINE	SIDE	STATION		Conc.		CURB		RAISED ISLAND		REMARKS
								SQFT(N)	CY	LF(N)	CY	SQFT(N)	CY	
	L-1	NB	67	"SN-MAG"	R+	35+50.00	36+07.60	0.00	-	57.60	3.4			Exist CURBS (TYPE A2-6)
	L-2	NB	67	"BWY-1"	R+	54+02.50	55+55.90			153.40	9.1			Exist CURBS (TYPE A2-6)
CURB RAMP #1	C-3	NB	67	"CR-1"	R+	9+86.71	10+28.23	314.30	3.9	41.25	2.0			Exist G2 CURBS
	L-2	NB	67	"BWY-2"	R+	50+66.90	52+15.58	0.00		148.68	8.8			Exist CURBS (TYPE A2-6)
CURB RAMP #2	C-4	NB	67	"CR-2"	R+	10+07.55	10+29.55	174.04	2.1	22.00	1.1			Exist G2 CURBS
	L-12	NB	67	"B-6"	R+	179+20.50	179+78.90			58.40	3.4			Exist CURBS (TYPE A2-6)
	L-12	NB	67	"EN-WOOD"	L+	177+50.30	179+83.10			232.80	13.7			Exist CURBS (TYPE A2-6)
Conc PEDESTRIAN REFUGE #2	C-7	NB	67	"J-1"	R+	23+22.34	32+28.19	36.00	0.4	5.00	0.3			Exist CURBS (TYPE A2-6)
	L-12	SB	67	"EN-W"	R+	174+37.20	180+48.90			611.70	36.1			Exist CURBS (TYPE A2-6)
	L-5	SB	67	"B-6"	L+	85+25.90	86+20.00			94.10	5.6			Exist CURBS (TYPE A2-6)
	L-2/L-3	SB	67	"NW-RWY"	R+	50+47.05	62+43.52			1196.47	70.6			Exist CURBS (TYPE A2-6)
	L-2	SB	67	"NS-MAG"	L+	43+08.55	44+27.28			118.73	7.0			Exist CURBS (TYPE A2-6)
	L-2	SB	67	"NS-MAG"	L+	42+56.87	48+74.62			617.75	36.5			Exist CURBS (TYPE A2-6)
CURB RAMP #3	C-5	SB	67	"CR-3"	R+	10+07.00	10+28.00	88.4	1.1	21.00	1.2			SB Rte 67 OFF RAMP TO FLETCHER PARK WAY
CURB RAMP #4	C-6	SB	67	"CR-4"	L+	10+06.00	10+26.18	87.44	1.1	20.18	1.2			SB Rte 67 OFF RAMP TO FLETCHER PARK WAY
PEDESTRIAN PASSAGEWAY #1	C-8		67	"M"	R+	10+31.60	10+47.17	28.95	0.4			41.7	0.5	MAPLEVIEW
PEDESTRIAN PASSAGEWAY #2	C-8		67	"M"	R+	10+91.03	11+05.11	53.68	0.7	26.37	0.6			MAPLEVIEW
PEDESTRIAN PASSAGEWAY #3	C-9	SB	67	"B6-R"	L+	322+52.98	322+70.84	81.52	1.0	39.62	1.2			MAPLEVIEW
PEDESTRIAN PASSAGEWAY #3	C-9	SB	67	"B6-R"	L+	322+52.98	322+70.84			163.1	10.1			MAPLEVIEW
PEDESTRIAN PASSAGEWAY #4	C10	NB	67	"B6-R"	R+	322+89.93	323+02.86	137.72	1.7	22.41	0.5	23.9	0.3	MAPLEVIEW
RASIED ISLAND	C-11	NB	67	"B6-R"	R+	321+99.90	322+18.18					67.6	0.8	MAPLEVIEW
PEDESTRIAN PASSAGEWAY #5	C-11		67	"M"	L+	9+75.76	10+10.68	104.47	1.3					MAPLEVIEW
Exist RAILING AT END POST		SB	67	"B-6"	L+	174+97.93	175+04.60	1.11	0.10					
Exist RAILING AT END POST		SB	67	"B-6"	R+	174+93.33	175+00.00	1.11	0.10					
							SUBTOTAL		13.8		212.3		1.6	
							TOTAL			227.8				

MINOR CONCRETE (CURB AND CURB RAMP)

CURB RAMP #	SHEET	DIRECTION	ROUTE	LINE	SIDE	STATION		Conc.		CURB		RAISED ISLAND		RETAINING CURB		DETECTABLE WARNING SURFACE	PRE/POST CONSTRUCTION SURVEYS	ROADWAY EXCAVATION	HMA (TYPE A)	REMARKS
								SQFT(N)	CY	LF(N)	CY	LF(N)	CY	LF(N)	CY	SQFT	EA	CY	TON	
CURB RAMP #1	C-3	NB	67	"BFDFL1"	R+	9+86.71	10+28.23	356.13	4.4	41.25	2.0	-		11.2	0.2	15.0	1	0.9	1.8	Exist H CURBS
CURB RAMP #2	C-4	NB	67	"BFDFL2"	R+	10+07.55	10+29.55	174.04	2.1	22.00	1.1					12.0	1	0.5	0.9	Exist H CURBS
CURB RAMP #3	C-5	SB	67	"CR-3"	R+	10+07.00	10+28.00	88.40	1.1	21.00	1.2			14.3	0.2	15.0	1	0.3	0.5	SB Rte 67 OFF RAMP TO FLETCHER PARK WAY
CURB RAMP #4	C-6	SB	67	"CR-4"	L+	10+06.00	10+26.18	87.44	1.1	20.18	1.2			22.6	0.3	15.0	1	0.4	0.9	SB Rte 67 OFF RAMP TO FLETCHER PARK WAY
Conc. PEDESTRIAN REFUGE #2	C-7	NB	67	"J-1"	R+	23+22.34	32+28.19	27.50	0.3	5.00	0.3			17.0	0.3	15.0	1			NB Rte 67 OFF RAMP TO WOODSIDE Ave
Conc. PEDESTRIAN REFUGE #1	C-7	NB	67	"WS-RIV"	L+	236+91.72	236+94.94	27.50	0.3	5.00	0.3			17.0	0.3	12.0	1			NB Rte 67 OFF RAMP TO WOODSIDE Ave
PEDESTRIAN PASSAGEWAY #1	C-8		67	"M"	R+	10+31.60	10+47.17	70.60	0.9	105.67	2.3	138.1	1.7			50.5				MAPLEVIEW
PEDESTRIAN PASSAGEWAY #2	C-8		67	"M"	R+	10+91.03	11+05.11	53.68	0.7	26.37	0.6					33.8				MAPLEVIEW
PEDESTRIAN PASSAGEWAY #3	C-9	SB	67	"B6-R"	L+	322+52.98	322+70.84	81.52	1.0	163.10	9.0	1776.6	21.9	39.62	0.6					MAPLEVIEW
PEDESTRIAN PASSAGEWAY #4	C10	NB	67	"B6-R"	R+	322+89.93	323+02.86	129.82	1.6	22.54	0.5	10.1	0.1	23.9	0.4	31.0				MAPLEVIEW
RASIED ISLAND	C-11	NB	67	"B6-R"	R+	321+99.90	322+18.18					77.1	1.0							MAPLEVIEW
PEDESTRIAN PASSAGEWAY #5	C-11		67	"M"	L+	9+75.76	10+10.68	149.23	1.8	12.00	0.3	362.3	4.5	29.92	0.5	28.5				MAPLEVIEW
CURB RAMP #5	C-12	SB	67	"WG"	R+	23+02.00	67+13.23	89.25	2.5									2.5		
CURB RAMP #6	C-13	SB	67	"WG"	R+	63+04.45	63+19.45	121.50	3.2									3.2		
							SUBTOTAL		21.1		18.8		29.2		2.8	227.8	6	7.8	4.1	
							TOTAL			71.7						227.8	6	7.8*	4.1**	

* = FOR ADDITIONAL QUANTITIES SEE ROADWAY QUANTITIES AND MISCELLANEOUS ROADWAY QUANTITIES.
** = FOR ADDITIONAL QUANTITIES SEE ROADWAY QUANTITIES, MISCELLANEOUS ROADWAY QUANTITIES AND DIG OUTS QUANTITIES.
(N) = NOT A SEPARATE PAY ITEM, FOR INFORMATION ONLY.

SUMMARY OF QUANTITIES
Q-1

REVISED BY | DATE REVISED
BAHMAN YAZDANI | RICARDO PADILLA
CALCULATED-DESIGNED BY | CHECKED BY
FUNCTIONAL SUPERVISOR: LAURA ESPINOZA
STATE OF CALIFORNIA - DEPARTMENT OF TRANSPORTATION
Caltrans®
DESIGN

LAST REVISION 03-08-14 | DATE PLOTTED => 30-JUL-2014 TIME PLOTTED => 10:28

Dist	COUNTY	ROUTE	POST MILES TOTAL PROJECT	SHEET No.	TOTAL SHEETS
11	SD	67	R0.0/R5.9	104	204

Bahman Yazdani 05-14-14
REGISTERED CIVIL ENGINEER DATE

07-28-14
PLANS APPROVAL DATE

REGISTERED PROFESSIONAL ENGINEER BAHMAN YAZDANI No. C58322 Exp. 06-30-14 CIVIL STATE OF CALIFORNIA

THE STATE OF CALIFORNIA OR ITS OFFICERS OR AGENTS SHALL NOT BE RESPONSIBLE FOR THE ACCURACY OR COMPLETENESS OF SCANNED COPIES OF THIS PLAN SHEET.

CONCRETE BARRIER

LOCATION	STATION BEGIN sta(FT)	STATION END sta(FT)	LINE	CONCRETE BARRIER (TYPE 60) (LF)
SB 67	286+00.00	287+78.78	"B-6"/"SW-W"	178.8
			TOTAL	178.8

Conc. FILLER BLOCK

LOCATION	STATION BEGIN sta(FT)	STATION END sta(FT)	LINE	MINOR CONCRETE (MINOR STRUCTURE) (CY)
SB 67	287+83.78	288+21.16	"SW-W"	22.8
			TOTAL	22.8 **

MIDWEST GUARDRAIL SYSTEM

MGS No.	DIRECTION	LINE		BEGIN	END	REMOVE GUARDRAIL	MGS	MGS (7' POST)	LAYOUT TYPE	ALTERNATIVE FLARED TERMININAL SYSTEM	ALTERNATIVE IN-LINE TERMINAL SYSTEM	END ANCHOR ASSMBLY (TYPE SFT)	TRANSITION RAILING (TYPE WB-31)	GUARD RAILING DELINEATOR	TREATED WOOD WASTE	MINOR CONCRETE (MINOR STRUCTURE)	REMARKS
				Sta	Sta	(LF)	(LF)	(LF)	(N)	(EA)	(EA)	(EA)	(EA)	(EA)	(LB)	(CY)	
1	NB	"SN-MAG"	R+	41+66.20	42+53.70	62.5	50.0	-	16A	-	1	1	-	3	821.0	-	
2	NB	"SN-MAG"	R+	47+09.75	49+00.00	62.5	118.8		12B	1			1	7	821.0	1.6	
3	NB	"SN-MAG"	L+	47+09.75	49+00.00	62.5	118.8		12A		1		1	7	821.0	1.6	
4	NB	"BWY-1"	R+	50+84.40	55+50.90	375.5		443.8	12DD			1		10	4553.0	0.6	
5	NB	"BWY-2"	R+	58+39.05	59+57.80	81.3		81.3	16B	1		1		4	1045.0		
6	NB	"B-6"	R+	65+97.40	66+81.40	81.3	12.5		12B	1			1	4	1045.0	1.6	
7	NB	"B-6"	R+	82+01.80	83+89.30	81.3		150.0	16B	1		1		4	1045.0		
8	NB	"B-6"	R+	146+44.75	147+29.50	62.5	18.8		12A		1		1	3	821.0	0.6	
9	NB	"B-6"	R+	166+46.75	173+90.50	743.8	718.8		12C				1	3	8956.8		
10	NB	"B-6"	R+	186+56.25	188+43.75			150.0	16A		1	1		7			
11	NB	"B-6"	R+	206+12.50	207+75.00		125.0		16B	1		1		7			
12	NB	"WS-RIV"	R+	228+63.70	236+19.60		631.3		11A		1	1		20			
13	NB	"B-6"	R+	237+83.60	239+42.60	62.5		87.5	12B	1			1	4	1045.0	1.6	
14	NB	"WS-W"/"WG"	R+	280+36.00	59+37.18	668.8		962.5	11B	1		1		20	8061.1		
15	NB	"B-6"	R+	284+50.40	285+34.40	62.5	12.5		12B	1			1	4	1045.0	1.6	
16	WB	"WG"	L+	57+91.80	63+21.10	125.0		456.3	12A		1		1	5	1567.4	1.6	
17	NB	"B-6"	R+	290+31.60	306+84.30	62.5		1,568.7	12A		1		1	10	821.0	1.6	
18	NB	"B-6"/"B6-R"	R+	308+24.03	320+33.78	1,237.5		1,200.0	12DD			1		22	14853.4	0.6	
19	NB	"B6-R"	R+	333+84.48	341+44.30	62.5	768.8		12A		1		1	20	821.0	1.6	
20	SB	"B-6"/"B6-R"	L+	340+58.80	341+42.80	62.5	12.5		12B	1			1	4	821.0	1.6	
21	SB	"B-6"/"B6-R"	L+	308+92.70	319+14.20	62.5		906.3	12A		1		1	20	821.0	1.6	
22A	SB	"SW-W"	L+	287+70.69	289+03.09	126.7									1567.4		REMOVE EXISTING GR
22B	SB	"B-6"/"SW-W"	L+	286+00.00	286+62.50	62.5									821.0		REMOVE EXISTING GR
23	SB	"NW-W"	R+	285+88.20	287+70.60	181.3	118.8		12B	1			1	8	1642.1	1.6	
24	SB	"NW-W"/"WG"	L+	286+02.60	70+83.17	40.6		318.8	12A		1		1	8	821.0	1.6	
25	SB	"WG"	L+	66+87.50	68+02.75			43.8	12A		1		1	4	671.8	1.6	
26	SB	"B-6"	R+	241+22.00	246+63.83	62.5		470.3	12A		1		1	20	821.0	1.6	
27	SB	"B-6"	L+	221+41.00	222+84.75		106.3		16B	1		1		3			
28	SB	"B-6"	L+	216+19.00	217+62.75		106.3		16B	1		1		3			
29	SB	"B-6"	L+	175+04.60	176+88.60	62.5		112.5	12A		1		1	3	821.0	1.6	
30	SB	"B-6"	L+	166+84.90	167+66.15	75.0	43.8		16A		1	1		3	970.3		
31	SB	"B-6"	L+	155+90.80	156+72.05	62.5	43.8		16A		1	1		3	821.0		
32	SB	"B-6"	L+	154+53.80	155+16.30	62.5			12B	1			1	3	821.0		
33	SB	"B-6"	L+	130+90.50	131+71.75	62.5	18.8		12A		1		1	3	821.0		
34	SB	"B-6"	L+	67+32.50	79+91.65	1,268.8		1,206.3	12B	1			1	20	15226.6	0.6	
35	SB	"NW-BWY"/"B-6"	L+	52+31.37	66+85.05	150.8	1,447.4		12DD			1		20	1866.0	0.6	
36	SB	"NS-MAG"	R+	50+62.62	56+96.40	106.3		599.8	12A		1		1	8	1194.2	1.6	
37	SB	"NS-MAG"	R+	43+08.74	48+63.24			554.5	12DD			1		8			
38	SB	"NS-MAG"	L+	39+48.64	42+61.14	252.2	275.0		16A		1	1		4	3060.2		
39	SB	"NS-MAG"	R+	40+05.00	40+80.30	75.3			12A		1		1	4	970.3	9.6	
40	NB	"B-6"	R+	133+38.50	134+63.50	81.3	87.5		16B	1		1		4	1045.0		
					TOTAL	6,752.4	4,834.9	9,312.1		15	19	17	22	313	83,746.1*	38.2**	

* - FOR ADDITIONAL QUANTITIES SEE TBB AND ROADSIDE SIGN QUANTITIES.
** - FOR ADDITIONAL QUANTITIES SEE Conc. FILLER BLOCK, TBB AND DRAINAGE QUANTITIES.
(N) = NOT A SEPARATE PAY ITEM, FOR INFORMATION ONLY.

SUMMARY OF QUANTITIES

Q-2

REVISED BY | DATE REVISED
BAHMAN YAZDANI | RICARDO PADILLA
CALCULATED-DESIGNED BY | CHECKED BY
FUNCTIONAL SUPERVISOR
LAURA ESPINOZA
STATE OF CALIFORNIA - DEPARTMENT OF TRANSPORTATION
Caltrans®
DESIGN

LAST REVISION 04-22-14 | DATE PLOTTED => 30-JUL-2014 TIME PLOTTED => 10:28

Dist	COUNTY	ROUTE	POST MILES TOTAL PROJECT	SHEET No.	TOTAL SHEETS
11	SD	67	R0.0/R5.9	105	204

Bahman Yazdani 05-14-14
REGISTERED CIVIL ENGINEER DATE

07-28-14
PLANS APPROVAL DATE

REGISTERED PROFESSIONAL ENGINEER BAHMAN YAZDANI No. C58322 Exp. 06-30-14 CIVIL STATE OF CALIFORNIA

THE STATE OF CALIFORNIA OR ITS OFFICERS OR AGENTS SHALL NOT BE RESPONSIBLE FOR THE ACCURACY OR COMPLETENESS OF SCANNED COPIES OF THIS PLAN SHEET.

ROADWAY QUANTITIES

LOCATION DIRECTION	LOCATION Beg Sta	LOCATION END Sta	LINE	MAIN LANE AVERAGE WIDTH FT	L+ SHOULDER (N) AVERAGE WIDTH FT	R+ SHOULDER (N) AVERAGE WIDTH FT	GORE AREA (N) AVERAGE WIDTH FT	COLD PLANE AC PAVEMENT SQYD	ROADWAY EXCAVATION CY	RHMA (GAP GRADED) TON	HMA (TYPE A)	TACK COAT TON	ASPHALTIC EMULSION (FOG SEAL COAT) TON	REMARKS
NB Rte 67	33+86.90	37+64.00	"SN-MAG"	24.0				1,005.60		134.08	100.56	0.25		
	38+05.00	49+02.20	"SN-MAG"	32.8				4,002.91		533.72	400.29	1.00		
	50+67.50	58+15.04	"SN-MAG"	20.8				1,723.95		229.86	172.40	0.43		
	973+79.31	980+12.83	"NW-12"	24.0				1,689.39		225.25		0.42		CONNECTOR EB 8/NB67
	981+84.33	989+29.42	"NW-12"	24.0				1,989.36		265.25		0.50		CONNECTOR EB 8/NB67
	50+84.00	55+86.00	"BWY-1"	27.9				1,554.59		155.46		0.39		Rte 67 OFF - RAMP TO GRAVES Ave
	50+26.21	61+52.24	"BWY-2"	14.7				1,839.25		183.93		0.46		Rte 67 ON - RAMP FROM GRAVES Ave
	58+15.04	61+52.24	"B-6"	37.4				1,401.36		186.85	140.14	0.35		
	61+52.24	66+85.05	"B-6"	39.3				2,329.33		310.58	232.93	0.58		
	67+38.73	82+27.69	"B-6"	35.7				5,912.69		788.36	591.27	1.48		
	82+27.69	92+04.00	"B-6"	35.8				3,882.14		517.62	388.21	0.97		
	92+04.00	173+90.54	"B-6"	29.4				26,701.46		3,560.20		6.68		
	175+00.00	239+49.82	"B-6"	24.0					2,006.61	2,293.27	1,719.95	4.30		ROADWAY EXCAVATION
	177+55.27	182+28.16	"EN-WOOD"	13.3				696.89		92.92		0.17		Rte 67 ON - RAMP FROM WOODSIDE Ave
	228+88.71	236+94.70	"WS-RIV"	20.8				1,864.92		186.49		0.47		Rte 67 OFF - RAMP TO RIVERFORD Rd
	240+95.00	285+38.00	"B-6"	24.9				12,291.96		1,638.93		3.07		
	243+13.24	253+28.71	"SE-RIV"	13.4				1,515.00		151.50		0.38		Rte 67 ON RAMP FROM RIVERFORD Rd
	278+38.86	290+55.98	WS-W	20.6				2,782.57		278.26		0.70		Rte 67 OFF RAMP TO WINTER GARDEN Blvd
	286+36.58	307+06.73	"B-6"	24.4				5,604.49		747.27	560.45	1.40		
	308+36.00	317+50.00	"B6"/"B6-R"	39.5				4,006.50		534.20	400.65	1.00		
	317+50.00	322+07.74	"B6-R"	14.6				741.11		98.81	74.11	0.19		R+ TURN LANE TO MAPLEVIEW STREET
	317+50.00	321+64.10	"B6-R"	13.4				616.35		82.18	61.64	0.15		L+ TURN LANE TO MAPLEVIEW STREET
	322+49.53	341+59.60	"B6-R"	20.1				4,272.57		569.68	427.26	1.07		
								733.08		73.31		0.18		OFF RAMP TO VINE STREET
								554.51		55.45		0.14		ON RAMP FROM VINE STREET
	33+86.90	37+64.00	"SN-MAG"		4.0			167.60		22.35		0.04	0.03	
	35+50.00	36+07.60	"SN-MAG"		2.8			0.00		2.35	3.52	0.00	0.00	REPLACE CURB WITH AC PAVEMENT
	38+05.00	49+02.20	"SN-MAG"		6.5			789.28		105.24		0.20	0.13	
	50+67.50	53+62.00	"SN-MAG"		6.4			209.15		27.89		0.05	0.03	
	973+79.31	980+12.83	"NW-12"		8.5			600.15		80.02		0.15	0.10	CONNECTOR EB 8/NB67
	981+84.33	989+29.42	"NW-12"		10.5			865.81		115.44		0.22	0.14	CONNECTOR EB 8/NB67
	51+48.72	54+04.28	"BWY-1"		2.3			64.82		6.48		0.02	0.01	Rte 67 OFF - RAMP TO GRAVES Ave
	52+42.27	55+03.75	"BWY-2"		4.1			119.69		11.97		0.03	0.02	Rte 67 ON - RAMP FROM GRAVES Ave
	58+15.04	66+85.00	"B-6"		11.8			1,139.32		151.91		0.28	0.19	
	67+38.73	92+04.00	"B-6"		13.8			3,775.94		503.46		0.94	0.63	
	175+00.00	239+49.82	"B-6"		4.7			3,386.35		451.51		0.85	0.56	
	177+51.53	179+78.18	"EN-WOOD"		3.6			90.45		9.05		0.02	0.02	Rte 67 ON RAMP FROM WOODSIDE Ave
	177+51.53	179+78.18	"EN-WOOD"		2.5					20.99		0.02	0.01	REPLACE CURB WITH AC PAVEMENT
	231+91.40	236+94.70	"WS-RIV"		2.1			118.25		11.82		0.03	0.02	Rte 67 OFF RAMP TO RIVERFORD Rd
	240+95.00	285+38.00	"B-6"		5.0			2,482.26		330.97		0.62	0.41	
	243+13.24	247+63.90	"SE-RIV"		2.1			106.00		10.60		0.03	0.02	Rte 67 ON RAMP FROM RIVERFORD Rd
	282+51.26	289+20.00	"WS-W"		2.0			148.61		14.86		0.04	0.02	Rte 67 OFF RAMP TO GARDEN VIEW Blvd
	286+36.58	307+06.73	"B-6"		4.3			996.41		132.85		0.25	0.17	
	308+36.00	321+00.00	"B6"/"B6-R"		3.1			432.41		57.65		0.11	0.07	
	322+49.53	329+24.51	"B6-R"		6.2			466.15		62.15		0.12	0.08	
	329+24.51	336+88.80	"B6-R"		13.6			1,158.56		154.47		0.29	0.19	
							SUBTOTAL 1	106,829.21	2,006.61	16,177.44	5,273.37	31.03	2.87	

(N) = NOT A SEPARATE PAY ITEM, FOR INFORMATION ONLY.

SUMMARY OF QUANTITIES

Q-3

STATE OF CALIFORNIA - DEPARTMENT OF TRANSPORTATION
Caltrans® DESIGN

FUNCTIONAL SUPERVISOR: LAURA ESPINOZA
CALCULATED-DESIGNED BY: BAHMAN YAZDANI
CHECKED BY: RICARDO PADILLA
REVISED BY
DATE REVISED

LAST REVISION 04-16-14
DATE PLOTTED => 30-JUL-2014
TIME PLOTTED => 10:28

Dist	COUNTY	ROUTE	POST MILES TOTAL PROJECT	SHEET No.	TOTAL SHEETS
11	SD	67	R0.0/R5.9	106	204

Bahman Yazdani 05-14-14
REGISTERED CIVIL ENGINEER DATE

07-28-14
PLANS APPROVAL DATE

REGISTERED PROFESSIONAL ENGINEER
BAHMAN YAZDANI
No. C58322
Exp. 06-30-14
CIVIL
STATE OF CALIFORNIA

THE STATE OF CALIFORNIA OR ITS OFFICERS OR AGENTS SHALL NOT BE RESPONSIBLE FOR THE ACCURACY OR COMPLETENESS OF SCANNED COPIES OF THIS PLAN SHEET.

ROADWAY QUANTITIES

LOCATION			LINE	MAIN LANE	L+ SHOULDER (N)	R+ SHOULDER (N)	GORE AREA (N)	COLD PLANE AC PAVEMENT	ROADWAY EXCAVATION	RHMA (GAP GRADED)	HMA (TYPE A)	TACK COAT	ASPHALTIC EMULSION (FOG SEAL COAT)	REMARKS
DIRECTION	Beg Sta	END Sta		AVERAGE WIDTH FT	AVERAGE WIDTH FT	AVERAGE WIDTH FT	AVERAGE WIDTH FT	SQYD	CY	TON		TON	TON	
NB Rte 67	35+17.22	37+64.00	"SN-MAG"			5.5		150.81		20.11	-	0.04	0.03	
	35+50.00	36+07.60	"SN-MAG"			2.8		0.00		2.35	3.52	0.00	0.00	REPLACE CURB WITH AC PAVEMENT
	38+11.90	39+90.20	"SN-MAG"			5.4		107.79		14.37		0.03	0.02	
	41+10.40	48+86.60	"SN-MAG"			5.5		476.31		63.51		0.12	0.08	
	52+02.50	55+01.30	"SN-MAG"			3.4		112.80		15.04		0.03	0.02	
	973+79.31	980+12.83	"NW-12"			10.1		711.20		94.83		0.18	0.12	CONNECTOR EB 8/NB67
	981+84.33	984+87.32	"NW-12"			11.2		378.04		50.40		0.09	0.06	CONNECTOR EB 8/NB67
	54+05.50	55+55.00	"BWY-1"			2.8		0.00		6.20	9.30	0.01	0.01	REPLACE CURB WITH AC PAVEMENT
	50+79.10	55+54.36	"BWY-1"			2.7		141.94		14.19		0.04	0.02	Rte 67 OFF RAMP TO GRAVES Ave
	50+68.35	61+52.24	"BWY-2"			7.6		918.33		91.83		0.23	0.15	Rte 67 ON RAMP FROM GRAVES Ave
	50+66.90	52+15.58	"BWY-2"			2.8		0.00		6.06	9.09	0.01	0.01	REPLACE CURB WITH AC PAVEMENT
	61+52.24	66+85.00	"B-6"			10.0		592.41		78.99		0.15	0.10	
	67+38.73	82+27.69	"B-6"			9.4		1,561.74		208.23		0.39	0.26	
	85+46.02	92+04.00	"B-6"			10.0		728.09		97.08		0.18	0.12	
	175+00.00	181+34.40	"B-6"			10.0		704.89		93.99		0.18	0.12	
	178+00.00	182+28.16	"EN-WOOD"			8.0		380.59		50.74		0.10	0.06	Rte 67 ON RAMP FROM WOODSIDE Ave
	182+28.16	228+88.71	"B-6"			10.0		5,178.39		690.45		1.29	0.86	
	228+88.71	236+94.70	"WS-RIV"			7.9		704.86		93.98		0.18	0.12	Rte 67 OFF RAMP TO RIVERFORD.
	231+91.40	239+49.82	"B-6"			10.0		846.83		112.91		0.21	0.14	
	240+95.00	247+63.90	"B-6"			10.0		743.22		99.10		0.19	0.12	
	243+13.24	253+28.71	SE-RIV7			8.0		900.60		90.06		0.23	0.15	Rte 67 ON RAMP FROM RIVERFORD.
	253+28.71	278+38.86	"B-6"			9.6		2,663.67		355.16		0.67	0.44	
	278+38.86	290+34.52	"WS-W"			7.7		1,027.58		102.76		0.26	0.17	Rte 67 OFF RAMP TO GARDEN VIEW Blvd
	286+49.60	307+00.00	"B-6"			11.0		2,502.69		333.69		0.63	0.42	
	308+28.27	322+07.74	'B6"/"B6-R"			11.5		1,766.36		235.51		0.44	0.29	
	323+21.00	331+19.14	"B6-R"			8.8		776.74		103.57		0.19	0.13	
	335+34.46	341+59.60	"B6-R"			8.6		599.56		79.94		0.15	0.10	
	39+90.20	41+10.40	"SN-MAG"				9.57	127.85		17.05		0.03	0.02	
	51+41.85	52+02.50	"SN-MAG"				12.93	87.13		11.62		0.02	0.01	
	53+62.00	55+70.40	"SN-MAG"				19.35	448.11		59.75		0.11	0.07	W=7.0/ to 31.0'
	53+76.60	55+86.00	BWY-1				13.48	313.57		31.36		0.08	0.05	Rte 67 OFF RAMP TO GRAVES Ave
	55+03.75	61+52.24	BWY-2				12.74	917.87		91.79		0.23	0.15	Rte 67 ON RAMP FROM GRAVES Ave
	82+27.69	85+46.02	"B-6"				10.69	378.01		50.40		0.09	0.06	
	228+88.71	231+91.40	"B-6"				13.47	452.93		60.39		0.11	0.08	
	247+63.90	253+28.71	"B-6"				7.64	479.40		63.92		0.12	0.08	
	278+38.96	281+59.18	"B-6"				13.47	479.15		63.89		0.12	0.08	
							SUBTOTAL 2	28,359.45	0.00	3,655.20	21.91	7.12	4.74	

(N) = NOT A SEPARATE PAY ITEM, FOR INFORMATION ONLY.

SUMMARY OF QUANTITIES
Q-4

REVISED BY | DATE REVISED
BAHMAN YAZDANI | RICARDO PADILLA
CALCULATED-DESIGNED BY | CHECKED BY
FUNCTIONAL SUPERVISOR: LAURA ESPINOZA
STATE OF CALIFORNIA - DEPARTMENT OF TRANSPORTATION
Caltrans
DESIGN

LAST REVISION 12-20-13 | DATE PLOTTED => 30-JUL-2014 | TIME PLOTTED => 10:28

Dist	COUNTY	ROUTE	POST MILES TOTAL PROJECT	SHEET No.	TOTAL SHEETS
11	SD	67	R0.0/R5.9	107	204

Bahman Yazdani 05-14-14
REGISTERED CIVIL ENGINEER DATE

07-28-14
PLANS APPROVAL DATE

REGISTERED PROFESSIONAL ENGINEER BAHMAN YAZDANI No. C58322 Exp. 06-30-14 CIVIL STATE OF CALIFORNIA

THE STATE OF CALIFORNIA OR ITS OFFICERS OR AGENTS SHALL NOT BE RESPONSIBLE FOR THE ACCURACY OR COMPLETENESS OF SCANNED COPIES OF THIS PLAN SHEET.

ROADWAY QUANTITIES

DIRECTION	LOCATION Beg Sta	LOCATION END Sta	LINE	MAIN LANE AVERAGE WIDTH FT	L+ SHOULDER (N) AVERAGE WIDTH FT	R+ SHOULDER (N) AVERAGE WIDTH FT	COLD PLANE AC PAVEMENT SQYD	ROADWAY EXCAVATION CY	RHMA (GAP GRADED) TON	HMA (TYPE A) TON	TACK COAT TON	ASPHALTIC EMULSION (FOG SEAL COAT) TON	REMARKS
SB Rte 67	33+87.30	43+08.55	"NS-MAG"	28.0			2,864.71		381.96	286.47	0.72		Rte 67 OFF RAMP TO MAGNOLIA Ave
	43+08.55	48+77.02	"NS-MAG"	12.7			800.01		106.67	80.00	0.20		Rte 67 OFF RAMP TO MAGNOLIA Ave
	971+94.13	978+53.74	"DC"	30.1			2,209.04		294.54		0.55		Rte 67 OFF RAMP TO WB Rte 8
	980+33.71	987+68.08	"DC"	36.8			3,006.77		400.90		0.75		Rte 67 OFF RAMP TO WB Rte 8
	50+64.06	57+61.85	"NS-MAG"	12.2			948.60		94.86		0.24		Rte 67 OFF RAMP TO MAGNOLIA Ave
	58+15.04	66+27.25	"B6"	46.9			4,234.56		564.61		1.06		
	50+42.37	66+27.25	"NW-BWY"	19.9			3,512.03		351.20		0.88		Rte 67 OFF RAMP TO FLETCHER PARK WAY
	66+27.25	66+85.05	"B-6"	50.2			322.12		42.95	32.21	0.08		
	67+38.73	92+04.00	"B-6"	45.3			12,406.77		1,654.24	1,240.68	3.10		
	92+04.00	154+70.77	"B-6"	31.3			21,766.72		2,902.23		5.44		
	154+70.77	173+90.54	"B-6"	34.0			7,241.89		965.58		1.81		
	175+27.25	182+78.17	"B-6"	24.2				235.45	269.08	201.81	0.50		ROADWAY EXCAVATION
	174+20.00	182+78.17	"EN-W"	19.6			1,866.95		186.70		0.47		Rte 67 OFF RAMP TO WOODSIDE Ave
	182+78.17	228+89.13	"B-6"	25.0				1,491.49	1,704.56	1,278.42	3.20		ROADWAY EXCAVATION
	228+89.13	239+49.82	"B-6"	24.0				329.99	377.13	282.85	0.71		ROADWAY EXCAVATION
	228+89.13	241+00.00	"NW-RIV"	15.4			2,078.08		207.81		0.52		Rte 67 ON RAMP FROM RIVERFORD ROAD
	240+12.94	250+88.71	"EN-R"	13.1			1,560.87		156.09		0.39		Rte 67 OFF RAMPTO RIVERFORD ROAD
	241+10.80	250+88.71	"B-6"	25.0			2,720.23		362.70	272.02	0.68		
	250+88.71	285+00.00	"B-6"	26.3			9,953.86		1,327.18	995.39	2.49		
	276+38.87	284+55.67	"NW-W"	12.0			1,089.07		108.91		0.27		Rte 67 ON RAMP FROM SB GARDENVIEW Blvd
	285+88.46	288+57.25	"NW-W"	12.0			358.39		35.84		0.09		Rte 67 ON RAMP FROM SB GARDENVIEW Blvd
	286+03.87	299+20.00	"B6"-"SW-W"	16.2			2,373.06		237.31		0.59		Rte 67 ON RAMP FROM NB GARDENVIEW Blvd
	286+03.87	307+30.20	"B-6"	24.0			5,681.75		757.57	568.17	1.42		
	308+58.12	321+44.78	"B6"/"B6-R"	27.1			3,877.67		517.02	387.77	0.97		
	321+90.00	341+59.60	"B6-R"	26.7			5,835.56		778.07	583.56	1.46		
	43+08.55	48+77.02	"NS-MAG"		7.6		482.25		64.30		0.12	0.08	Rte 67 OFF RAMP TO MAGNOLIA Ave
	43+08.55	44+27.28	"NS-MAG"		2.8		0.00		4.84	7.26	0.01	0.01	
	971+94.13	978+53.74	"DC"		6.7		492.78		65.70		0.12	0.08	Rte 67 OFF RAMP TO WB Rte 8
	980+33.71	987+68.08	"DC"		10.3		837.14		111.62		0.21	0.14	Rte 67 OFF RAMP TO WB Rte 8
	50+64.06	57+61.85	"NS-MAG"		9.2		717.15		95.62		0.18	0.12	Rte 67 OFF RAMP TO MAGNOLIA Ave
	58+15.04	62+80.46	"B-6"		12.6		653.08		87.08		0.16	0.11	
	50+52.83	66+27.25	"NW-BWY"		6.1		1,068.88		106.89		0.27	0.18	Rte 67 OFF RAMP TO FLETCHER PARK WAY
	66+27.25	66+85.05	"B-6"		9.8		63.14		8.42		0.02	0.01	
	67+38.73	85+25.86	"B-6"		10.0		1,983.74		264.50		0.50	0.33	
	85+25.86	92+04.00	"B-6"		9.6		722.91		96.39		0.18	0.12	
	175+27.25	180+40.72	"B-6"		10.0		570.52		76.07		0.14	0.10	
	174+32.00	182+78.17	"EN-W"		7.6		712.99		95.07		0.18	0.12	Rte 67 OFF RAMP TO WOODSIDE Ave
	182+78.17	228+89.13	"B-6"		10.7		5,491.29		732.17		1.37	0.92	
	234+16.36	239+49.82	"B-6"		10.2		606.92		80.92		0.15	0.10	
	228+89.13	240+72.00	"NW-RIV"		8.1		1,061.39		106.14		0.27	0.18	Rte 67 ON RAMP FEOM RIVERFORD ROAD
	240+20.62	250+88.71	"EN-R"		9.9		1,174.62		117.46		0.29	0.20	
	241+10.80	247+99.00	"B-6"		10.0		764.67		101.96		0.19	0.13	
	250+88.71	276+38.87	"B-6"		10.0		2,833.51		377.80		0.71	0.47	
	276+38.87	284+55.67	"NW-W"		8.0		726.04		72.60		0.18	0.12	Rte 67 ON RAMP FROM SB GARDENVIEW Blvd
	285+88.46	288+57.25	"NW-W"		8.0		238.92		23.89		0.06	0.04	Rte 67 ON RAMP FROM SB GARDENVIEW Blvd
	281+56.97	285+00.00	"B-6"		10.0		381.14		50.82		0.10	0.06	
	286+03.87	288+41.66	"WG"		7.8		206.42		20.64		0.05	0.03	Rte 67 ON RAMP FROM NB GARDENVIEW Blvd
					SUBTOTAL 3		118,498.22	2,056.93	17,546.60	6,216.60	34.04	3.64	

SUMMARY OF QUANTITIES
Q-5

STATE OF CALIFORNIA - DEPARTMENT OF TRANSPORTATION
Caltrans® DESIGN

FUNCTIONAL SUPERVISOR: LAURA ESPINOZA
CALCULATED-DESIGNED BY: BAHMAN YAZDANI
CHECKED BY: RICARDO PADILLA
REVISED BY
DATE REVISED

LAST REVISION 12-20-13
DATE PLOTTED => 30-JUL-2014
TIME PLOTTED => 10:28

Dist	COUNTY	ROUTE	POST MILES TOTAL PROJECT	SHEET No.	TOTAL SHEETS
11	SD	67	R0.0/R5.9	108	204

Bahman Yazdani 05-14-14
REGISTERED CIVIL ENGINEER DATE

07-28-14
PLANS APPROVAL DATE

REGISTERED PROFESSIONAL ENGINEER BAHMAN YAZDANI No. C58322 Exp. 06-30-14 CIVIL STATE OF CALIFORNIA

THE STATE OF CALIFORNIA OR ITS OFFICERS OR AGENTS SHALL NOT BE RESPONSIBLE FOR THE ACCURACY OR COMPLETENESS OF SCANNED COPIES OF THIS PLAN SHEET.

ROADWAY QUANTITIES

LOCATION DIRECTION	LOCATION Beg Sta	LOCATION END Sta	LINE	MAIN LANE AVERAGE WIDTH FT	L+ SHOULDER (N) AVERAGE WIDTH FT	R+ SHOULDER (N) AVERAGE WIDTH FT	GORE AREA (N) AVERAGE WIDTH FT	COLD PLANE AC PAVEMENT SQYD	ROADWAY EXCAVATION CY	RHMA (GAP GRADED) TON	HMA (TYPE A)	TACK COAT TON	ASPHALTIC EMULSION (FOG SEAL COAT) TON	REMARKS
SB Rte 67	289+31.75	307+30.20	"B-6"		10.0			1,998.28		266.44	-	0.50	0.33	
	308+58.12	320+48.00	B6/"B6-R"		10.0			1,322.09		176.28		0.33	0.22	
	321+90.00	341+59.60	"B6-R"		7.8			1,704.94		227.32		0.43	0.28	
	42+56.58	48+77.02	NS-MAG			2.8		0.00		25.28	37.92	0.05	0.03	Rte 67 OFF RAMP TO MAGNOLLA Ave
	971+94.13	978+53.74	"DC"			7.5		553.00		73.73		0.14	0.09	Rte 67 OFF RAMP TO WB Rte 8
	980+33.71	987+68.08	"DC"			8.1		662.60		88.35		0.17	0.11	Rte 67 OFF RAMP TO WB Rte 8
	58+15.04	66+27.25	"Rte-67"			8.1		734.04		73.40		0.18	0.12	
	50+47.05	62+43.52	"NW-BWY"			2.8		0.00		48.75	73.12	0.09	0.06	Rte 67 OFF RAMP TO FLETCHER PARK WAY
	66+27.25	66+85.05	"B-6"			10.1		64.81		4.32		0.02	0.01	
	67+38.73	92+04.00	"B-6"			12.1		3,307.95		220.53		0.83	0.55	
	175+27.25	182+78.17	"B-6"			4.9		411.83		27.46		0.10	0.07	
	174+37.20	180+48.90	"EN-W"			2.8		0.00		24.92	37.38	0.05	0.03	Rte 67 OFF RAMP TO WOODSIDE Ave
	182+78.17	228+89.13	"B-6"			5.0		2,553.24		170.22		0.64	0.43	
	228+89.13	239+49.82	"B-6"			4.8		563.52		37.57		0.14	0.09	
	240+12.94	246+58.86	"EN-R"			6.1		436.08		43.61		0.11	0.07	
	241+10.80	285+00.00	"B-6"			5.1		2,482.57		331.01		0.62	0.41	
	283+33.05	284+55.67	"NW-W"			4.0		54.50		5.45		0.01	0.01	Rte 67 ON RAMP FROM NB WINTER GARDEN Blvd
	285+88.46	288+30.52	"NW-W"			4.0		107.58		7.17		0.03	0.02	Rte 67 ON RAMP FROM NB WINTER GARDEN Blvd
	289+46.52	298+67.35	"B-6"-"SW-W"			3.6		363.24		36.32		0.09	0.06	Rte 67 ON RAMP FROM NB WINTER GARDEN Blvd
	286+03.87	307+23.66	"B-6"			4.9		1,165.12		155.35		0.29	0.19	
	308+66.50	320+92.00	"B6"/"B6-R"			5.2		701.52		93.54		0.18	0.12	
	327+43.10	329+22.32	"B6-R"			3.1		61.03		8.14		0.02	0.01	
	41+47.46	43+08.55	NS-MAG				16.50	295.26		39.37		0.07	0.05	
	62+80.46	64+52.11	"B-6"				7.43	141.74		18.90		0.04	0.02	
	180+40.77	182+78.17	"B-6"				7.49	197.54		26.34		0.05	0.03	
	231+72.63	234+16.36	"B-6"				11.96	323.84		43.18		0.08	0.05	
	247+99.00	250+88.71	"B-6"				12.49	402.13		53.62		0.10	0.07	
	277+91.95	282+23.72	"B-6"				7.01	336.23		44.83		0.08	0.06	
	286+03.87	289+46.52	"B-6"				12.02	457.44		60.99		0.11	0.08	
	9+61.28	12+27.70	"M"	57.58				1704.44		227.26	170.44	0.43	0.28	MAPLEVIEW AND Rte 67
						SUBTOTAL 4		23,106.57	0.00	2,659.63	318.86	5.96	3.97	
						SUBTOTAL 3		118,498.22	2,056.93	17,546.60	6,216.60	34.04	3.64	
						SUBTOTAL 2		28,359.45	0.00	3,655.20	21.91	7.12	4.74	
						SUBTOTAL 1		106,829.21	2,006.61	16,177.44	5,273.37	31.03	2.87	
						TOTAL		276,793.44	4,063.54***	40,038.86*	11,830.75**	78.15	15.22	

* - FOR ADDITIONAL QUANTITIES SEE HMA DIKE AND SAFETY EDGE QUANTITIES.

** - FOR ADDITIONAL QUANTITIES SEE MINOR CONCRETE (CURB AND CURB RAMP), DIG OUTS QUANTITIES AND MISCELLANEOUS ROADWAY QUANTITIES.

*** - FOR ADDITIONAL QUANTITIES SEE MINOR CONCRETE (CURB AND CURB RAMP) QUANTITIES AND MISCELLANEOUS ROADWAY QUANTITIES.

(N) = NOT A SEPARATE PAY ITEM, FOR INFORMATION ONLY.

SUMMARY OF QUANTITIES

Q-6

REVISED BY | DATE REVISED
BAHMAN YAZDANI | RICARDO PADILLA
CALCULATED-DESIGNED BY | CHECKED BY
FUNCTIONAL SUPERVISOR: LAURA ESPINOZA
STATE OF CALIFORNIA - DEPARTMENT OF TRANSPORTATION
Caltrans®
DESIGN

LAST REVISION 02-19-14 | DATE PLOTTED => 30-JUL-2014 TIME PLOTTED => 10:28

Dist	COUNTY	ROUTE	POST MILES TOTAL PROJECT	SHEET No.	TOTAL SHEETS
11	SD	67	R0.0/R5.9	109	204

Bahman Yazdani 05-14-14
REGISTERED CIVIL ENGINEER DATE

07-28-14
PLANS APPROVAL DATE

REGISTERED PROFESSIONAL ENGINEER BAHMAN YAZDANI No. C58322 Exp. 06-30-14 CIVIL STATE OF CALIFORNIA

THE STATE OF CALIFORNIA OR ITS OFFICERS OR AGENTS SHALL NOT BE RESPONSIBLE FOR THE ACCURACY OR COMPLETENESS OF SCANNED COPIES OF THIS PLAN SHEET.

HMA DIKE

DIRECTION	Rte	SIDE	LINE	Beg Sta	END Sta	EXIST DIKE TYPE	PLACE HMA DIKE (TYPE A) (LF)	PLACE HMA DIKE (TYPE E) (LF)	PLACE HMA DIKE (TYPE C) (LF)	PLACE HMA DIKE (TYPE F) (LF)	MINOR HMA HMA DIKE (TON)	RHMA (GAP GRADED) RHMA DIKE PAD (TON)	REMOVE AC DIKE (LF)
NB	67	L+	"SN-MAG"	35+32.96	46+75.00	F	-	1,142.0	-	-	29.69	22.5	1,142.0
NB	67	R+	"SN-MAG"	35+50.00	36+07.60			57.6			1.50	1.1	
NB	67	R+	"SN-MAG"	36+07.60	36+76.30	A			68.7		0.52	0.7	68.7
NB	67	R+	"SN-MAG"	36+76.30	37+63.80	A				87.5	1.16	0.9	87.5
NB	67	R+	"SN-MAG"	38+11.90	39+90.00	A		178.1			4.63	3.5	178.1
NB	67	R+	"SN-MAG"	41+08.00	41+41.20	E		33.2			0.86	0.7	33.2
NB	67	R+	"SN-MAG"	41+41.20	42+03.70	E			62.5		0.48	0.6	62.5
NB	67	R+	"SN-MAG"	42+03.70	42+53.70	E				50.0	0.66	0.5	50.0
NB	67	R+	"SN-MAG"	42+53.70	46+75.00	E		421.3			10.95	8.3	421.3
NB	67	R+	"SN-MAG"	46+75.00	47+37.50	E			62.5		0.48	0.6	62.5
NB	67	R+	"SN-MAG"	47+37.50	48+91.00	F				153.5	2.03	1.5	153.5
NB	67	R+	"BWY-1"	50+84.00	54+82.50	F				375.5	4.96	3.7	375.5
NB	67	R+	"BWY-1"	54+96.20	55+50.90					54.7	0.72	0.5	0.0
NB	67	R+	"BWY-2"	50+66.90	58+14.05	F				747.2	19.43	14.7	747.2
NB	67	R+	"BWY-2"	58+76.55	59+57.80	E		81.3			2.11	1.6	81.3
NB	67	R+	"BWY-2"	59+57.80	65+72.40	E		614.6			15.98	12.1	614.6
NB	67	R+	"NW-12"	981+97.20	984+87.32	E		290.1			7.54	5.7	290.1
NB	67	R+	"B-6"	65+72.40	66+34.90	E			62.5		0.48	0.6	62.5
NB	67	R+	"B-6"	66+34.90	66+72.40	A				37.5	0.98	0.4	37.5
NB	67	R+	"B-6"	67+38.00	68+50.00	A		112.0			2.91	1.1	112.0
NB	67	R+	"B-6"	69+14.00	70+00.00			86.0			2.24	0.9	
NB	67	R+	"B-6"	78+08.10	81+76.80	A		368.7			9.59	7.3	368.7
NB	67	R+	"B-6"	81+76.80	82+39.30	A			62.5		0.47	0.6	62.5
NB	67	R+	"B-6"	82+39.30	83+89.30	A	150.0				4.05	2.0	150.0
NB	67	R+	"B-6"	83+89.30	85+50.20	A		13.0			0.34	0.3	13.0
NB	67	R+	"B-6"	85+50.20	92+04.00	A		653.8			17.00	12.9	653.8
NB	67	R+	"B-6"	175+00.00	179+78.90	E		478.9			12.45	9.4	478.9
NB	67	L+	"EN-WOOD"	177+50.30	179+83.10	E		232.8			6.05	4.6	232.8
NB	67	R+	"EN-WOOD"/"B-6"	177+50.30	198+22.90	E		2,072.6			53.89	40.8	2,072.6
NB	67	R+	"B-6"	207+89.00	209+89.00	E		200.0			5.20	3.9	200.0
NB	67	R+	"B-6"	223+75.70	228+63.70	E		488.0			12.69	9.6	488.0
NB	67	R+	"B-6"	228+63.70	229+38.70	E			75.0		0.57	1.5	75.0
NB	67	R+	"B-6"	231+91.40	237+43.60	E		552.2			14.36	10.9	552.2
NB	67	R+	"WS-RIV"	229+38.70	236+19.67	A	681.0				18.39	9.2	681.0
NB	67	R+	"B-6"	237+43.60	238+21.10	E			77.5		0.59	0.8	77.5
NB	67	R+	"B-6"	238+21.10	239+33.60	E				112.5	1.49	1.1	112.5
NB	67	R+	"B-6"	240+95.00	247+63.90	F		668.9			17.39	13.2	668.9
NB	67	R+	"SE-RIV"	243+14.90	250+85.50	F		770.6			20.04	15.2	770.6
NB	67	R+	"B-6"	274+77.45	280+11.00	E		533.5			13.87	7.9	533.5
NB	67	R+	"WS-W"	280+11.00	280+73.50	A			62.5		0.48	0.6	62.5
NB	67	R+	"WS-W"	280+73.50	295+55.98	A	1,482.5				40.03	20.1	1,482.5
NB	67	R+	"WG"	57+65.64	59+00.00	E		134.4			3.49	2.6	134.4
NB	67	R+	"WG"	57+91.80	58+41.80	A			50.0		0.38	0.5	50.0
NB	67	R+	"WG"	58+41.80	63+12.10	A	470.3				12.70	6.4	470.3
NB	67	R+	"B-6"	290+31.60	290+81.60	A			50.0		0.38	0.5	50.0
NB	67	R+	"B-6"	290+81.60	304+75.80	A	1,394.2				37.64	18.9	1,394.2
NB	67	R+	"B6-R"	333+84.48	335+31.20	A	316.6				8.55	4.3	316.6
						SUB TOTAL 1	4,494.6	10,183.6	633.7	1,618.4	422.3	287.5	116,731.9

(N) = NOT A SEPARATE PAY ITEM, FOR INFORMATION ONLY.

SUMMARY OF QUANTITIES

Q-7

REVISED BY | DATE REVISED

BAHMAN YAZDANI | RICARDO PADILLA

CALCULATED-DESIGNED BY | CHECKED BY

FUNCTIONAL SUPERVISOR: LAURA ESPINOZA

STATE OF CALIFORNIA - DEPARTMENT OF TRANSPORTATION

Caltrans

DESIGN

LAST REVISION 01-18-14 | DATE PLOTTED => 30-JUL-2014 TIME PLOTTED => 10:28

Dist	COUNTY	ROUTE	POST MILES TOTAL PROJECT	SHEET No.	TOTAL SHEETS
11	SD	67	R0.0/R5.9	110	204

Bahman Yazdani 05-14-14
REGISTERED CIVIL ENGINEER DATE

07-28-14
PLANS APPROVAL DATE

REGISTERED PROFESSIONAL ENGINEER
BAHMAN YAZDANI
No. C58322
Exp. 06-30-14
CIVIL
STATE OF CALIFORNIA

THE STATE OF CALIFORNIA OR ITS OFFICERS OR AGENTS SHALL NOT BE RESPONSIBLE FOR THE ACCURACY OR COMPLETENESS OF SCANNED COPIES OF THIS PLAN SHEET.

HMA DIKE

DIRECTION	Rte	SIDE	LINE	Beg Sta	END Sta	EXIST DIKE TYPE	PLACE HMA DIKE (TYPE A) (LF)	PLACE HMA DIKE (TYPE E) (LF)	PLACE HMA DIKE (TYPE C) (LF)	PLACE HMA DIKE (TYPE F) (LF)	MINOR HMA HMA DIKE TON	RHMA (GAP GRADED) DIKE PAD TON	REMOVE AC DIKE TON
SB	67	R+	"NS-MAG"	42+56.87	48+74.62	A	-	617.8	-	-	16.1	12.2	436.0
SB	67	L+	"NS-MAG"	43+08.74	48+63.24	A	554.5				15.0	7.5	554.5
SB	67	L+	"NW-BWY"	50+54.40	52+31.37	A		177.0			4.6	3.5	177.0
SB	67	L+	"NW-BWY"	52+31.37	62+80.31	A	1,048.9				28.3	14.2	1,048.9
SB	67	R+	"NW-BWY"	50+47.05	62+43.52	F		1,196.5			31.1	23.6	
SB	67	R+	"NS-MAG"	50+71.62	51+68.92	A	97.3				2.6	1.3	97.3
SB	67	R+	"NS-MAG"	56+96.40	57+58.90	F			62.5		0.5	0.6	62.5
SB	67	L+	"NS-MAG"	57+58.90	62+62.62	F		503.7			13.1	9.9	503.7
SB	67	L+	"B-6"	80+00.00	80+40.00	A			40.0		0.3	0.4	40.0
SB	67	L+	"B-6"	80+40.00	86+20.00	A		580.0			15.1	11.4	580.0
SB	67	L+	"B-6"	85+25.90	91+68.12	A		642.2			16.7	12.7	594.9
SB	67	R+	"EN-W"	174+20.00	180+48.90	F		628.9			16.4	12.4	628.9
SB	67	L+	"EN-W"	174+37.20	180+48.90			611.7			15.9	12.1	611.7
SB	67	L+	"B-6"	178+87.50	180+48.90	E		161.4			4.2	3.2	161.4
SB	67	L+	"B-6"	192+78.00	207+77.60	E		1,499.6			39.0	29.5	1,499.6
SB	67	L+	"B-6"	224+19.00	230+88.27	E		669.3			17.4	13.2	669.3
SB	67	L+	"NW-RIV"	230+88.27	237+84.54	F		696.3			18.1	13.7	696.3
SB	67	L+	"NW-RIV"	237+84.54	241+00.00	F		315.5			8.2	6.2	315.5
SB	67	L+	"EN-R"	240+40.00	253+67.50	F		1,327.5			34.5	26.2	1,327.5
SB	67	R+	"EN-R"	240+24.70	245+44.70	F		520.0			13.5	10.2	520.0
SB	67	L+	"NW-W"	280+22.28	284+43.00	A		420.7			10.9	8.3	420.7
SB	67	L+	"NW-W"/"WG"	286+11.60	70+45.67	A	343.8				9.3	4.7	343.8
SB	67	R+	"WG"	70+45.67	70+83.17	F			37.5		0.3	0.4	37.5
SB	67	L+	"WG"	70+83.17	70+93.50	F		10.3			0.3	0.2	10.3
SB	67	R+	"WG"	66+96.50	68+02.75	F				106.3	1.4	1.1	106.3
SB	67	L+	"WG"	69+46.20	70+70.00	F		123.8			3.2	2.4	123.8
SB	67	L+	"B-6"	292+17.10	307+00.00	F		1,482.9			38.6	29.2	1,482.9
SB	67	L+	"B-6"/"B6-R"	309+01.70	318+64.20	A	962.5				26.0	13.1	962.5
SB	67	L+	"B-6"	318+64.20	319+54.20	A			90.0		0.7	0.9	90.0
SB	67	L+	"B6-R"	321+91.00	340+18.80	F		1,827.8			47.5	36.0	1,827.8
SB	67	L+	"B6-R"	340+18.80	340+96.30	A			77.5		0.6	0.8	77.5
SUB TOTAL 2							3,007.1	14,012.8	307.5	106.3	449.3	321.0	16,008.1
SUB TOTAL 1							4,494.6	10,183.6	633.7	1,618.4	422.3	287.5	16,731.9
TOTAL							7,501.6	24,196.4**	941.2	1,724.7	871.6**	608.6*	32,740.0**

* - FOR ADDITIONAL QUANTITIES SEE SAFETY EDGE AND ROADWAY QUANTITIES.
** - FOR ADDITIONAL QUANTITIES SEE OVERSIDE DRAIN/ENTRANCE TAPER QUANTITIES.

(N) = NOT A SEPARATE PAY ITEM, FOR INFORMATION ONLY.

SUMMARY OF QUANTITIES

Q-8

REVISED BY | DATE REVISED
BAHMAN YAZDANI | RICARDO PADILLA
CALCULATED-DESIGNED BY | CHECKED BY
FUNCTIONAL SUPERVISOR: LAURA ESPINOZA
STATE OF CALIFORNIA - DEPARTMENT OF TRANSPORTATION
Caltrans
DESIGN

LAST REVISION 02-28-14 | DATE PLOTTED => 30-JUL-2014 | TIME PLOTTED => 10:28

Dist	COUNTY	ROUTE	POST MILES TOTAL PROJECT	SHEET No.	TOTAL SHEETS
11	SD	67	R0.0/R5.9	111	204

Bahman Yazdani 05-14-14
REGISTERED CIVIL ENGINEER DATE

07-28-14
PLANS APPROVAL DATE

REGISTERED PROFESSIONAL ENGINEER BAHMAN YAZDANI No. C58322 Exp. 06-30-14 CIVIL STATE OF CALIFORNIA

THE STATE OF CALIFORNIA OR ITS OFFICERS OR AGENTS SHALL NOT BE RESPONSIBLE FOR THE ACCURACY OR COMPLETENESS OF SCANNED COPIES OF THIS PLAN SHEET.

MISCELLANEOUS ROADWAY QUANTITIES

DIRECTION	BEGIN	END	LINE	AVERAGE WIDTH	AREA (N)	HMA (TYPE A)	MINOR CONCRETE (EXPOSED AGGREATE)	JPCP (RSC)	CLASS 2 AB	ROADWAY EXCAVATION	ROADWAY EXCAVATION (TYPE Z-2) (AERIALLY DEPOSITED LEAD)	REMARKS
	Sta	Sta		LF	SQYD	TON	CY	CY	CY	CY	CY	
NB	69+14.00	70+00.00	"B-6"	-	111.44	20.0			21.0	30		MAINTENANCE VEHICLE PULLOUT
NB	178+60.50	179+27.50	"B-6"	13.9	103.23		17.2			19.0		BEYOND GORE PAVING
NB	231+91.40	235+16.17	"B-6"	13.1	471.93		78.7			87.0		BEYOND GORE PAVING
NB	246+45.42	247+63.90	"B-6"	19.7	259.02		43.2			48.0		BEYOND GORE PAVING
NB	281+59.18	282+50.07	"B-6"	22.0	222.67		37.1			41.0		BEYOND GORE PAVING
NB	317+50.00	321+96.50	"B6-R"	24.0	1190.67			714.4		874.0		PCC PAVEMENT
SB	51+46.37	52+31.37	"NW-BWY"		111.44	20.0			21.0	30.0		MAINTENANCE VEHICLE PULLOUT
SB	178+87.50	180+00.00	"B-6"	22.4	279.87		46.6				52.0	BEYOND GORE PAVING
SB	234+16.75	235+62.33	"B-6"	17.6	285.44		47.6				53.0	BEYOND GORE PAVING
SB	246+63.83	248+00.00	"B-6"	17.6	266.26		44.4				49.0	BEYOND GORE PAVING
SB	282+23.72	283+87.56	"B-6"	23.1	420.16		70.0				78.0	BEYOND GORE PAVING
SB	289+45.00	289+62.00	"B-6"	32.8	61.99		10.3			12.0		BEYOND GORE PAVING
SB	288+35.00	297+60.00	"SW-W"	4.0	411.11	150.7			60.3	329.0		WIDENING AT SB ON RAMP FROM NB WINNTER GARDEN BLVD.
					TOTAL	190.7*	395.1	714.4	102.3	1470.0**	232.0	

* - FOR ADDITIONAL QUANTITIES SEE ROADWAY, DIG OUTS AND MINOR CONCRETE (CURB AND CURB RAMP) QUANTITIES.
** - FOR ADDITIONAL QUANTITIES SEE ROADWAY AND MINOR CONCRETE (CURB AND CURB RAMP) QUANTITIES.

PAVEMENT MARKER

DIRECTION			Sta	PAVEMENT MARKER NON-REFLECTIVE (EA)
NB	R+/L+	"NS-MAG"	38+57.0	2
NB	R+/L+	"EN-12"	38+61.0	2
NB	R+/L+	"NW-12"	973+14.0	2
NB	R+/L+	"BWY-1"	53+28.0	2
NB	R+/L+	"BWY-1"	52+62.0	2
			TOTAL	10*****

***** - FOR ADDITIONAL QUANTITIES SEE PAVEMENT DELINEATION QUANTITIES.

TBB

TBB NO.	DIRECTION	LINE	SIDE	STATION BEGIN	STATION END	REMOVE BARRIER	Dbl TBB	TRANSITION RAILING (TYPE DTB)	TREATED WOOD WASTE*****	MINOR CONCRETE (MINOR STRUCTURE)****	REMARKS
				Sta	Sta	(LF)	(LF)	(EA)	(LB)	(CY)	
1	NB	"B-6"	L+	238+92.60	239+42.60	50.0	16.0	1	671.8	0.7	
2	NB	"B-6"	L+	284+66.40	285+16.40	50.0	16.0	1	671.8	0.7	
3	NB	"B-6"	L+	306+53.00	307+03.00	50.0	16.0	1	671.8	0.7	
4	SB	"B-6"	L+	308+77.20	312+05.00	62.5	293.8	1	671.8	0.7	
5	SB	"B-6"	R+	241+16.50	241+66.50	50.0	16.0	1	671.8	0.7	
6	SB	"B-6"	R+	175+00.00	175+50.00	50.0	16.0	1	671.8	0.7	
					TOTAL	312.5	373.8	6	4,030.6	4.2	

*** - FOR ADDITIONAL QUANTITIES SEE MIDWEST GUARDRAIL SYSTEM, DRAINAGE AND CONCRETE FILLER BLOCK QUANTITIES.
**** - FOR ADDITIONAL QUANTITIES SEE MIDWEST GUARDRAIL SYSTEM AND ROADSIDE QUANTITIES.
(N) = NOT A SEPARATE PAY ITEM, FOR INFORMATION ONLY.

SUMMARY OF QUANTITIES

Q-9

REVISED BY | DATE REVISED
BAHMAN YAZDANI | RICARDO PADILLA
CALCULATED-DESIGNED BY | CHECKED BY
FUNCTIONAL SUPERVISOR: LAURA ESPINOZA
STATE OF CALIFORNIA - DEPARTMENT OF TRANSPORTATION
Caltrans® DESIGN

LAST REVISION 04-28-14 | DATE PLOTTED => 30-JUL-2014 TIME PLOTTED => 10:28

Dist	COUNTY	ROUTE	POST MILES TOTAL PROJECT	SHEET No.	TOTAL SHEETS
11	SD	67	R0.0/R5.9	112	204

Bahman Yazdani 05-14-14
REGISTERED CIVIL ENGINEER DATE

07-28-14
PLANS APPROVAL DATE

REGISTERED PROFESSIONAL ENGINEER BAHMAN YAZDANI No. C58322 Exp. 06-30-14 CIVIL STATE OF CALIFORNIA

THE STATE OF CALIFORNIA OR ITS OFFICERS OR AGENTS SHALL NOT BE RESPONSIBLE FOR THE ACCURACY OR COMPLETENESS OF SCANNED COPIES OF THIS PLAN SHEET.

SAFETY EDGE

DIRECTION			Beg Sta	END Sta	RHMA * (GAP GRADED) (TON)	SAFETY EDGE (N) (LF)
SB	Lt	"SW-W"	288+41.67	299+05.08	2.8	1063.4
				TOTAL	2.8	

* - FOR ADDITIONAL QUANTITIES SEE HMA DIKE AND ROADWAY QUANTITIES.

IMPORTED BORROW

	DIRECTION		Beg Sta	END Sta	LENGTH (FT)	AREA (N) (SQFT)	VOLUME (CY)	COMMENTS
NB	Rt	"SN-MAG"	38+11.90	39+90.00	178.1	0.28	1.85	BEHIND TYPE E DIKE
NB	Rt	"SN-MAG"	67+38.00	68+50.00	112.0	0.28	1.16	BEHIND TYPE E DIKE
NB	Rt	"B-6"	78+08.10	81+76.80	368.7	0.28	3.82	BEHIND TYPE E DIKE
NB	Rt	"B-6"	83+89.30	85+50.20	160.9	0.28	1.67	BEHIND TYPE E DIKE
NB	Rt	"B-6"	85+50.20	92+04.00	653.8	0.28	6.78	BEHIND TYPE E DIKE
SB	Lt	"NW-BWY"	50+54.40	52+31.37	177.0	0.28	1.84	BEHIND TYPE E DIKE
SB	Lt	"B-6"	80+40.00	86+20.00	580.0	0.28	6.01	BEHIND TYPE E DIKE
SB	Lt	"B-6"	85+25.90	91+68.12	642.2	0.28	6.66	BEHIND TYPE E DIKE
SB	Lt	"NW-W"	280+22.28	284+43.00	420.7	0.28	4.36	BEHIND TYPE E DIKE
						TOTAL	34.15	

DIG OUTS

DIRECTION	Rte	LANE # (N)	LOCATION Beg Sta	LOCATION END Sta	LINE	WIDTH (FT)	HMA (TYPE A) TONE	REPLACE AC SURFACING (CY)	REMARK
NB	SR 67	2	67+38.00	91+83.43	"B-6"	12.0	1,304.2	652.1	
SB	SR 67	2	241+10.80	285+00.00	"B-6"	12.0	2,340.9	1,170.5	
SB	SR 67	2	286+09.00	307+23.66	"B-6"	12.0	2,255.6	1,127.8	
						TOTAL	5,900.8**	2,950.4	

TRAFFIC CONTROL SYSTEM

LOCATION	Rte	LINE	SIDE	BEGIN STATION	END STATION	TEMPRORARY RAILING (TYPE K) LF	TEMPRORARY CRASH CUSHION MODULE TYPE	TEMPRORARY CRASH CUSHION MODULE (EA)	TEMPRORARY ALTERNATIVE CRASH CUSHION SYSTEM (EA)	ALTERNATIVE CRASH CUSHION	TRAFFIC PLASTIC DRUM (EA)	
NB	67	"SN-MAG"	Rt	48+00.00	49+00.00	100	-	-	1		6	CONSTRUCT ANCHOR BLOCK
NB	67	"SN-MAG"/"BWY-1"	Lt	48+10.00	50+90.00	280			1		6	CONSTRUCT ANCHOR BLOCK
NB	67	"B-6"	Rt	65+52.00	66+92.00	140	TS-14	14			6	CONSTRUCT ANCHOR BLOCK
NB	67	"B-6"	Rt	145+90.00	147+30.00	140	TS-14	14			6	CONSTRUCT ANCHOR BLOCK
NB	67	"B-6"	Rt	178+10.00	179+50.00	140	TS-14	14			6	DRAINAGE INLET
NB	67	"B-6"	Rt	177+90.00	179+50.00	160						DRAINAGE INLET
NB	67	"B-6"	Rt	225+60.00	227+00.00	140	TS-14	14			6	DRAINAGE INLET
NB	67	"B-6"	Rt	230+85.00	232+05.00	120	TU-21	21			8	DRAINAGE INLET
NB	67	"WS-RIV"	Lt	230+85.00	232+05.00	120						DRAINAGE INLET
NB	67	"B-6"	Rt	231+90.00	235+20.00						14	BEYOND GORE PAVING
NB	67	"B-6"	Rt	238+03.00	239+43.00	140	TS-14	14			6	CONSTRUCT ANCHOR BLOCK
NB	67	"B-6"	Lt	238+43.00	239+43.00	100			1		6	CONSTRUCT ANCHOR BLOCK
NB	67	"B-6"	Rt	246+45.00	247+64.00						6	BEYOND GORE PAVING
NB	67	"B-6"	Rt	281+60.00	282+50.00						6	BEYOND GORE PAVING
NB	67	"B-6"	Rt	284+35.00	285+35.00	100	TS-14	14			6	CONSTRUCT ANCHOR BLOCK
NB	67	"B-6"	Lt	284+35.00	285+35.00	100			1		6	CONSTRUCT ANCHOR BLOCK
NB	67	"WG"	Lt	62+22.00	63+22.00	100			1		6	CONSTRUCT ANCHOR BLOCK
NB	67	"B-6"	Rt	305+44.00	308+24.00	280	TS-14	14			6	CONSTRUCT ANCHOR BLOCK
NB	67	"B-6"	Lt	305+84.00	306+84.00	100			1		6	CONSTRUCT ANCHOR BLOCK
NB	67	"B6-R"	Rt	340+05.00	341+45.00	140	TS-14	14			6	CONSTRUCT ANCHOR BLOCK
SB	67	"B6-R"	Lt	340+43.00	341+43.00	100			1		6	CONSTRUCT ANCHOR BLOCK
SB	67	"B-6"	Lt	308+92.00	310+32.00	140	TS-14	14			6	CONSTRUCT ANCHOR BLOCK
SB	67	"B-6"	Rt	308+92.00	309+92.00	100			1		6	CONSTRUCT ANCHOR BLOCK
SB	67	"NW-W"	Rt	285+88.00	286+88.00	100			1		6	CONSTRUCT ANCHOR BLOCK
SB	67	"NW-W"	Lt	285+88.00	286+88.00	100			1		6	CONSTRUCT ANCHOR BLOCK
SB	67	"B-6"	Lt	289+45.00	289+59.00						6	BEYOND GORE PAVING
SB	67	"WG"	Rt	69+46.00	69+58.00						6	BEYOND GORE PAVING
SB	67	"WG"	Lt	66+87.00	67+87.00	100			1		6	CONSTRUCT ANCHOR BLOCK
SB	67	"B-6"	Lt	282+23.00	283+58.00						6	BEYOND GORE PAVING
SB	67	"B-6"	Lt	246+87.00	248+00.00						6	BEYOND GORE PAVING
SB	67	"B-6"	Lt	241+22.00	242+62.00	140	TS-14	14			6	CONSTRUCT ANCHOR BLOCK
SB	67	"B-6"	Rt	241+22.00	242+22.00	100			1		6	CONSTRUCT ANCHOR BLOCK
SB	67	"B-6"	Lt	234+16.00	235+62.00						6	BEYOND GORE PAVING
SB	67	"B-6"	Lt	178+87.00	180+10.00						6	BEYOND GORE PAVING
SB	67	"B-6"	Lt	175+04.00	176+44.00	140	TS-14	14			6	CONSTRUCT ANCHOR BLOCK
SB	67	"B-6"	Rt	175+04.00	176+04.00	100			1		6	CONSTRUCT ANCHOR BLOCK
SB	67	"B-6"	Lt	66+80.00	68+60.00	180	TS-14	14			6	CONSTRUCT ANCHOR BLOCK
SB	67	"NS-MAG"	Rt	50+62.00	51+62.00	100			1		6	CONSTRUCT ANCHOR BLOCK
SB	67	"NS-MAG"	Rt	40+10.00	41+70.00	160			1		3	DRAINAGE INLET
SB	67	"B-6"/"SW-W"	Lt	285+86.00	298+92.00	1,300			1	1	2	WIDENING / Conc. BARRIER
					TOTAL	5,260		189	16	1	231	

** - FOR ADDITIONAL QUANTITIES SEE MISCELLANEOUS ROADWAY, MINOR CONCRETE (CURB AND CURB RAMP) AND ROADWAY QUANTITIES.
(N) = NOT A SEPARATE PAY ITEM, FOR INFORMATION ONLY.

SUMMARY OF QUANTITIES
Q-10

REVISED BY | DATE REVISED
BAHMAN YAZDANI | RICARDO PADILLA
CALCULATED-DESIGNED BY | CHECKED BY
FUNCTIONAL SUPERVISOR | LAURA ESPINOZA
STATE OF CALIFORNIA - DEPARTMENT OF TRANSPORTATION
Caltrans
DESIGN

LAST REVISION 04-19-14 | DATE PLOTTED => 30-JUL-2014 | TIME PLOTTED => 10:28

Dist	COUNTY	ROUTE	POST MILES TOTAL PROJECT	SHEET No.	TOTAL SHEETS
11	SD	67	R0.0/R5.9	113	204

Bahman Yazdani 05-14-14
REGISTERED CIVIL ENGINEER DATE

07-28-14
PLANS APPROVAL DATE

REGISTERED PROFESSIONAL ENGINEER BAHMAN YAZDANI No. C58322 Exp. 06-30-14 CIVIL STATE OF CALIFORNIA

THE STATE OF CALIFORNIA OR ITS OFFICERS OR AGENTS SHALL NOT BE RESPONSIBLE FOR THE ACCURACY OR COMPLETENESS OF SCANNED COPIES OF THIS PLAN SHEET.

RUMBLE STRIP

DIRECTION	Rte	LOCATION		LINE	LANE LENGTH (N)	SHOULDER RUMBLE STRIP (HMA, GROUND -IN INDENTATION)	REMARK
		Beg Sta	END Sta		FT	STA	
NB	67	35+32.90	37+64.00	"SN-MAG"	462.2	4.6	R+ SHOULDER
NB	67	38+11.90	39+90.20	"SN-MAG"	356.6	3.6	R+ SHOULDER
NB	67	41+10.40	48+86.60	"SN-MAG"	1552.4	15.5	R+ SHOULDER
NB	67	52+02.50	55+01.30	"SN-MAG"	597.6	6.0	R+ SHOULDER
NB	67	61+52.24	66+81.40	"B-6"	1058.3	10.6	R+ SHOULDER
NB	67	67+38.00	82+27.69	"B-6"	2979.4	29.8	R+ SHOULDER
NB	67	85+46.02	91+83.43	"B-6"	1274.8	12.7	R+ SHOULDER
NB	67	175+00.00	179+00.00	"B-6"	800.0	8.0	R+ SHOULDER
NB	67	182+28.16	228+63.70	"B-6"	9271.1	92.7	R+ SHOULDER
NB	67	231+91.40	239+49.82	"B-6"	1516.8	15.2	R+ SHOULDER
NB	67	240+95.00	247+63.90	"B-6"	1337.8	13.4	R+ SHOULDER
NB	67	253+28.71	278+38.88	"B-6"	5020.3	50.2	R+ SHOULDER
NB	67	286+49.60	307+00.00	"B-6"	4100.8	41.0	R+ SHOULDER
NB	67	308+28.20	322+02.70	"B-6"/"B6-R"	2749.0	27.5	R+ SHOULDER
NB	67	323+21.00	331+19.14	"B-6R"	1596.3	16.0	R+ SHOULDER
NB	67	335+34.46	341+59.60	"B-6R"	1250.3	12.5	R+ SHOULDER
NB	67	38+05.00	47+00.00	"SN-MAG"	1790.0	17.9	L+ SHOULDER
NB	67	50+67.00	55+00.00	"SN-MAG"	866.0	8.7	L+ SHOULDER
NB	67	67+38.73	173+90.54	"B-6"	21303.6	213.0	L+ SHOULDER
NB	67	175+00.00	239+49.82	"B-6"	12899.6	129.0	L+ SHOULDER
NB	67	240+95.00	285+38.00	"B-6"	8886.0	88.9	L+ SHOULDER
NB	67	286+36.58	307+06.73	"B-6"	4140.3	41.4	L+ SHOULDER
SB	67	43+08.55	48+77.02	"NS-MAG"	1136.9	11.4	L+ SHOULDER
SB	67	50+64.06	57+61.85	"NS-MAG"	1395.6	14.0	L+ SHOULDER
SB	67	58+15.04	62+80.46	"B-6"	930.8	9.3	L+ SHOULDER
SB	67	67+38.73	80+55.69	"B-6"	2633.9	26.3	L+ SHOULDER
SB	67	85+25.86	91+83.43	"B-6"	1315.1	13.2	L+ SHOULDER
SB	67	175+27.50	180+40.00	"B-6"	1025.0	10.3	L+ SHOULDER
SB	67	182+78.17	228+89.13	"B-6"	9221.9	92.2	L+ SHOULDER
SB	67	234+16.36	239+49.82	"B-6"	1066.9	10.7	L+ SHOULDER
SB	67	241+10.80	247+99.00	"B-6"	1376.4	13.8	L+ SHOULDER
SB	67	250+88.71	276+38.87	"B-6"	5100.3	51.0	L+ SHOULDER
SB	67	281+57.00	285+00.00	"B-6"	686.0	6.9	L+ SHOULDER
SB	67	289+31.75	307+30.20	"B-6"	3596.9	36.0	L+ SHOULDER
SB	67	308+58.12	320+48.00	"B-6"/"B6-R"	2379.8	23.8	L+ SHOULDER
SB	67	321+90.00	341+59.60	"B-6R"	3939.2	39.4	L+ SHOULDER
SB	67	58+15.04	66+85.05	"B-6"	1740.0	17.4	R+ SHOULDER
SB	67	67+38.73	173+90.54	"B-6"	21303.6	213.0	R+ SHOULDER
SB	67	175+27.27	239+49.82	"B-6"	12845.1	128.5	R+ SHOULDER
SB	67	240+12.94	285+00.00	"B-6"	8974.1	89.7	R+ SHOULDER
SB	67	286+03.87	307+23.66	"B-6"	4239.6	42.4	R+ SHOULDER
SB	67	308+66.50	320+92.00	"B-6"/"B6-R"	2451.0	24.5	R+ SHOULDER
SB	67	308+66.50	320+92.00	"B-6"/"B6-R"	2451.0	24.5	R+ SHOULDER
					TOTAL	1,756.2	

(N) = NOT A SEPARATE PAY ITEM, FOR INFORMATION ONLY.

OVERSIDE DRAINS / ENTRANCE TAPER

DIRECTION	SIDE	LINE	STATION	PLACE HMA DIKE (TYPE E)	MINOR HMA	PLACE HMA (MISC AREA)	REMOVE AC DIKE	REMARKS
				(LF)	(TON)	(SQYD)	(LF)	
NB	R+	"B-6"	178+08.00	14.3	0.94	2.2	14.3	HMA OVERSIDE DRAIN (Mod)
NB	R+	"B-6"	188+39.20	14.3	0.94	2.2	14.3	HMA OVERSIDE DRAIN (Mod)
NB	R+	"B-6"	228+13.00	14.3	0.94	2.2	14.3	ENTRANCE TAPER (MOUNTABLE DIKE TYPE 1)
NB	R+	"B-6"	270+45.81	14.3	0.94	2.2	14.3	HMA OVERSIDE DRAIN (Mod)
NB	R+	"B-6"	270+75.84	14.3	0.94	2.2	14.3	HMA OVERSIDE DRAIN (Mod)
NB	R+	"B-6"	281+52.25	14.3	0.94	2.2	14.3	HMA OVERSIDE DRAIN (Mod)
SB	L+	"B-6"	239+49.00	14.3	0.94	2.2	14.3	HMA OVERSIDE DRAIN (Mod)
SB	L+	"B-6"	307+00.00	14.3	0.94	2.2	14.3	ENTRANCE TAPER (MOUNTABLE DIKE TYPE 1)
SB	L+	"B6-R"	322+23.30	14.3	0.94	2.2	14.3	HMA OVERSIDE DRAIN (Mod)
SB	L+	"B6-R"	322+54.40	14.3	0.94	2.2	14.3	HMA OVERSIDE DRAIN (Mod)
SB	L+	"B6-R"	322+87.40	14.3	0.94	2.2	14.3	HMA OVERSIDE DRAIN (Mod)
			TOTAL	157.3*	10.3*	23.8	157.3*	

* - FOR ADDITIONAL QUANTITIES SEE HMA DIKE TABLE.

SUMMARY OF QUANTITIES

Q-11

STATE OF CALIFORNIA - DEPARTMENT OF TRANSPORTATION
Caltrans® DESIGN

FUNCTIONAL SUPERVISOR: LAURA ESPINOZA
CALCULATED-DESIGNED BY: BAHMAN YAZDANI
CHECKED BY: RICARDO PADILLA
REVISED BY
DATE REVISED

LAST REVISION 03-15-14
DATE PLOTTED => 30-JUL-2014
TIME PLOTTED => 10:28

Dist	COUNTY	ROUTE	POST MILES TOTAL PROJECT	SHEET No.	TOTAL SHEETS
11	SD	67	R0.0/R5.9	114	204

Joseph Rand 05-14-14
REGISTERED ELECTRICAL ENGINEER DATE

07-28-14
PLANS APPROVAL DATE

REGISTERED PROFESSIONAL ENGINEER JOSEPH RAND No. 11131 Exp. 06-30-15 ELECTRICAL STATE OF CALIFORNIA

THE STATE OF CALIFORNIA OR ITS OFFICERS OR AGENTS SHALL NOT BE RESPONSIBLE FOR THE ACCURACY OR COMPLETENESS OF SCANNED COPIES OF THIS PLAN SHEET.

NOTES

1 - AB ALL CONDUITS AND DETECTOR LOOPS, UNLESS OTHERWISE NOTED
2 - RC ALL PULL BOXES AND DETECTOR HANDHOLES UNLESS OTHERWISE NOTED
3 - RC TYPE 1-A AND APPURTENANCES FA
4 - CONDUIT OR PULL BOXES TO REMAIN IN PLACE
5 - RS 170 CONTROLLER ASSEMBLY
6 - ADVANCE LOOPS TO REMAIN
7 - SIGNAL STANDARD AND APURTENANCES TO REMAIN IN PLACE
8 - TYPE III SERVICE EQUIPMENT ENCLOSURE TO REMAIN
9 - TYPE II SERVICE EQUIPMENT ENCLOSURE TO REMAIN
10 - FOR ACCURATE RIGHT OF WAY DATA, CONTACT RIGHT OF WAY ENGINEERING AT THE DISTRICT OFFICE.

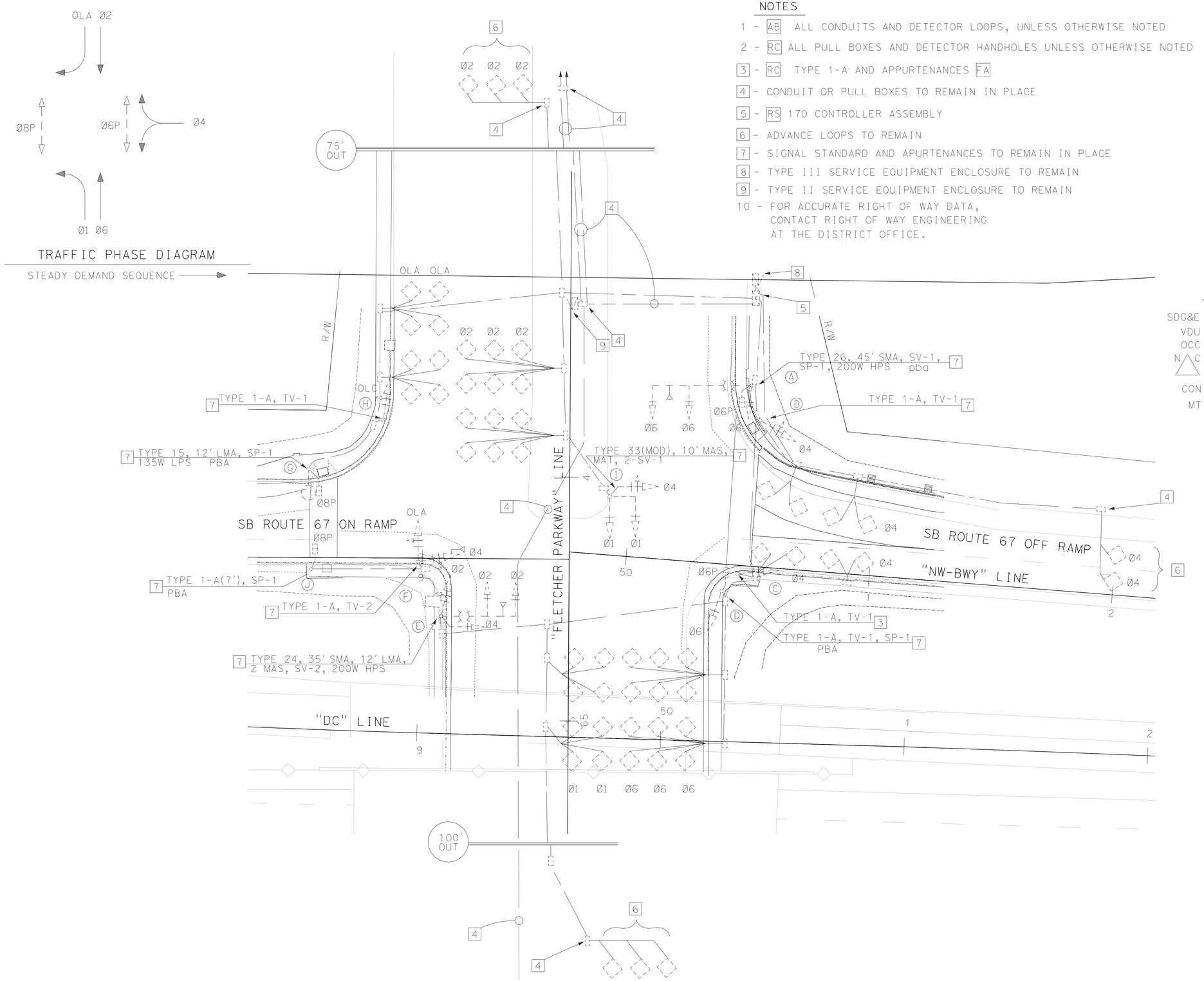

LEGEND

SDG&E = SAN DIEGO GAS AND ELECTRIC COMPANY
VDU = VEHICLE DETECTION UNIT
OCC = OUTDOOR CATEGORY 6 CABLE
N C = EXISTING CONDUIT TO REMAIN-NO CHANGE
CON = CONTACTOR
MT = EMPTY CONDUIT WITH PULL ROPE

ROUTE 67 AT FLETCHER SB OFF-RAMP
SIGNAL P0.323

SIGNAL AND LIGHTING
(Exist & REMOVE)
(LOCATION 1)

SCALE: 1" = 20'

E-1

APPROVED FOR ELECTRICAL WORK ONLY

STATE OF CALIFORNIA - DEPARTMENT OF TRANSPORTATION
Caltrans® **TRAFFIC ELECTRICAL**

FUNCTIONAL SUPERVISOR: RAJPREET SINGH
CALCULATED-DESIGNED BY: JOSEPH RAND
CHECKED BY: RAJPREET SINGH
REVISED BY
DATE REVISED

LAST REVISION 05-06-14
DATE PLOTTED => 30-JUL-2014
TIME PLOTTED => 10:28

Dist	COUNTY	ROUTE	POST MILES TOTAL PROJECT	SHEET No.	TOTAL SHEETS
11	SD	67	R0.0/R5.9	115	204

REGISTERED ELECTRICAL ENGINEER — DATE 05-14-14

07-28-14
PLANS APPROVAL DATE

REGISTERED PROFESSIONAL ENGINEER — JOSEPH RAND No. 11131 Exp. 06-30-15 ELECTRICAL — STATE OF CALIFORNIA

THE STATE OF CALIFORNIA OR ITS OFFICERS OR AGENTS SHALL NOT BE RESPONSIBLE FOR THE ACCURACY OR COMPLETENESS OF SCANNED COPIES OF THIS PLAN SHEET.

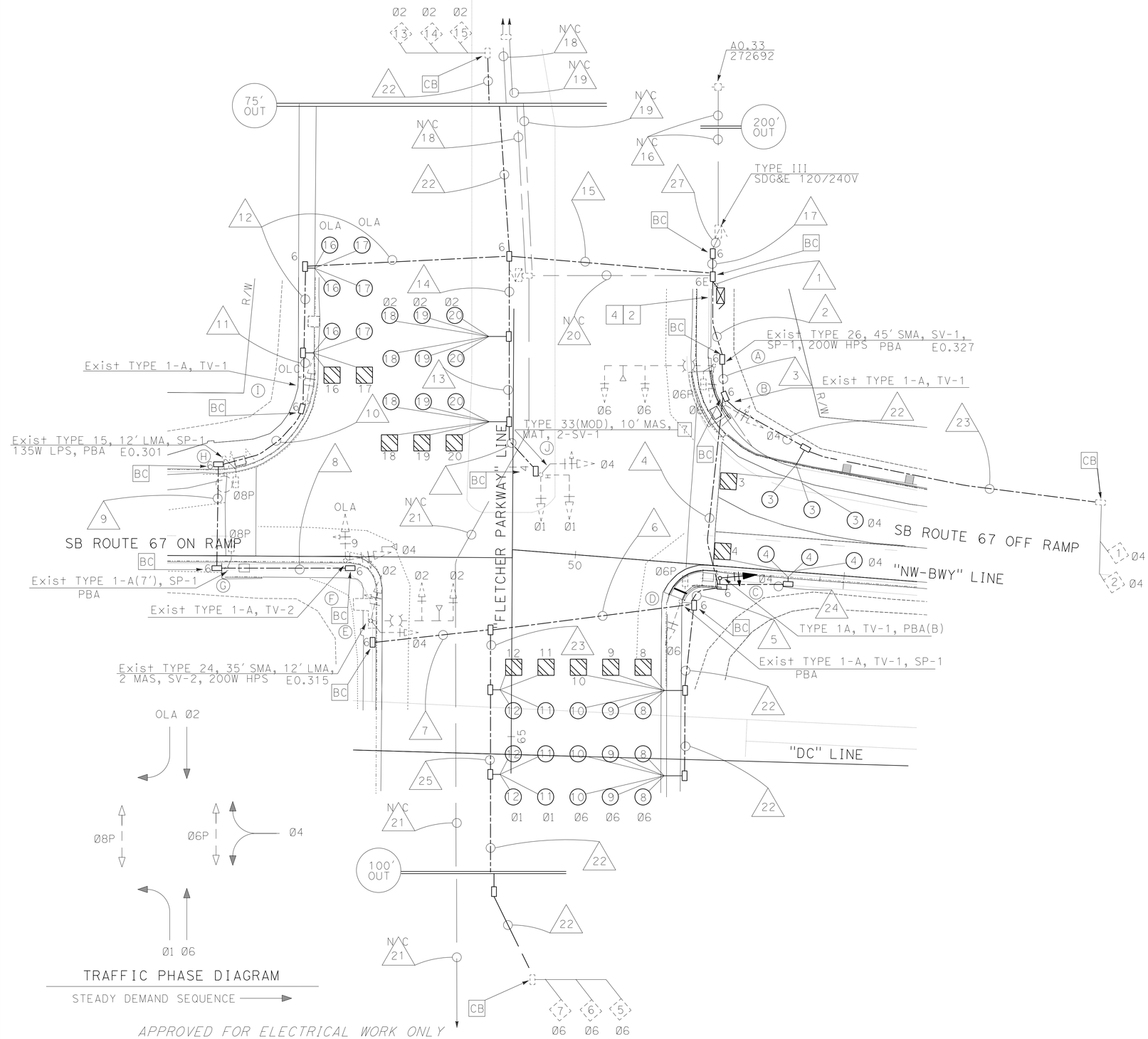

NOTES:

1 - FOR ACCURATE RIGHT OF WAY DATA, CONTACT RIGHT OF WAY ENGINEERING AT THE DISTRICT OFFICE.

2 - STATE FURNISHED MODEL 170 CONTROLLER ASSEMBLY

3 - SEE CONDUIT AND CONDUCTOR SCHEDULE ON SHEET E-3

4 - FURNISH AND INSTALL BATTERIES AND EXTERNAL BBS CABINET. SEE SHEET E-19 FOR DETAILS.

5 - SEE CONDUIT NOTES ON SHEET E-3

ROUTE 67 AT FLETCHER SB OFF-RAMP
SIGNAL P0.323

SIGNAL AND LIGHTING
(LOCATION 1)

SCALE: 1" = 20'

E-2

REVISED BY	DATE REVISED
JOSEPH RAND	RAJPREET SINGH
CALCULATED-DESIGNED BY	CHECKED BY
FUNCTIONAL SUPERVISOR	RAJPREET SINGH

STATE OF CALIFORNIA - DEPARTMENT OF TRANSPORTATION
Caltrans® **TRAFFIC ELECTRICAL**

LAST REVISION 05-19-14 | DATE PLOTTED => 30-JUL-2014 | TIME PLOTTED => 10:28

Dist	COUNTY	ROUTE	POST MILES TOTAL PROJECT	SHEET No.	TOTAL SHEETS
11	SD	67	R0.0/R5.9	116	204

REGISTERED ELECTRICAL ENGINEER 05-14-14 DATE

07-28-14
PLANS APPROVAL DATE

REGISTERED PROFESSIONAL ENGINEER
JOSEPH RAND
No. 11131
Exp. 06-30-15
ELECTRICAL
STATE OF CALIFORNIA

THE STATE OF CALIFORNIA OR ITS OFFICERS OR AGENTS SHALL NOT BE RESPONSIBLE FOR THE ACCURACY OR COMPLETENESS OF SCANNED COPIES OF THIS PLAN SHEET.

CONDUIT AND CONDUCTOR SCHEDULE

AWG SIZE OR CABLE TYPE	PHASE	POLE OR CIRCUIT	CONDUIT SIZE AND RUN 2-3" (1)	3" (2)	3" (3)	3" (4)	3" (5)	3" (6)	3" (7)	3" (8)	3" (9)	3" (10)	3" (11)	3" (12)	3" (13)	3" (14)	3" (15)
3CSC / 12CSC		POLE - A	1 1	1 1													
		B	1	1	1												
		C	1 1	1 1	1 1	1											
		D	1 1	1 1	1 1	1 1	1										
		E	1	1	1	1	1	1	1								
		F	1							1	1	1	1	1			
		G	1								1	1	1	1			
		H	1									1	1	1			
		I	1										1	1			1
		J	1												1	1	1
TOTAL 3CSC / 12CSC			5 8	3 5	2 4	2 3	1 2	1	1	1	1 1	2 1	2 2	2 2	1	1	2
14		PEU	3	3													
8		LIGHTING	2	2	2	2	2	2	2			2					
8		SIG CONTROLLER	2														
TYPE B DLC	Ø1		2	2	2	2	2	2									
	Ø2		6														6
	Ø4		4	4	4	1											
	Ø6		3	3	3	3	3	3									
	OLA		2											2			2
EV-C			3	1	1	1	1	1	1	1	1	1	1	2			
VIDEO CABLE HARNESS																	
TOTAL CONDUCTORS / CABLES			40	23	18	14	11	9	4	2	3	6	5	8	1	1	10

CONDUIT NOTES:

- N/C 16 - Exist 2"C, 3#2(SDG&E)
- 17 - 3"C, 2#8(Ltg), 3#14(PEU), 2#8(SIGNAL)
- N/C 18 - Exist 1½"C, 2#6(Ltg)
- N/C 19 - Exist 2"C, 1 sic(interconnect)
- N/C 20 - Exist 3"C, 1 sic(interconnect)
- N/C 21 - Exist 1½"C, 2#8(Ltg)
- 22 - 2"C, 3 DLC
- 23 - 2"C, 2 DLC
- 24 - 2"C, 1 DLC
- 25 - 2"C, 5 DLC
- 26 - 3"C, 1-12CSC,
- 27 - Exist 3"C, MT, ADD: 2#8(Ltg), 3#14(PEU), 2#8(SIGNAL)

ROUTE 67 AT FLETCHER SB OFF-RAMP
SIGNAL P0.323

SIGNAL AND LIGHTING
(LOCATION 1)

E-3

REVISED BY | DATE REVISED
JOSEPH RAND | RAJPREET SINGH
CALCULATED-DESIGNED BY | CHECKED BY
FUNCTIONAL SUPERVISOR | RAJPREET SINGH
STATE OF CALIFORNIA - DEPARTMENT OF TRANSPORTATION
Caltrans® TRAFFIC ELECTRICAL

LAST REVISION 05-06-14 | DATE PLOTTED => 30-JUL-2014 | TIME PLOTTED => 10:28

Dist	COUNTY	ROUTE	POST MILES TOTAL PROJECT	SHEET No.	TOTAL SHEETS
11	SD	67	R0.0/R5.9	117	204

REGISTERED ELECTRICAL ENGINEER 05-14-14 DATE

07-28-14
PLANS APPROVAL DATE

THE STATE OF CALIFORNIA OR ITS OFFICERS OR AGENTS SHALL NOT BE RESPONSIBLE FOR THE ACCURACY OR COMPLETENESS OF SCANNED COPIES OF THIS PLAN SHEET.

REGISTERED PROFESSIONAL ENGINEER
JOSEPH RAND
No. 11131
Exp. 06-30-15
ELECTRICAL
STATE OF CALIFORNIA

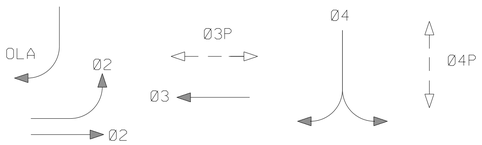

TRAFFIC PHASE DIAGRAM

STEADY DEMAND SEQUENCE

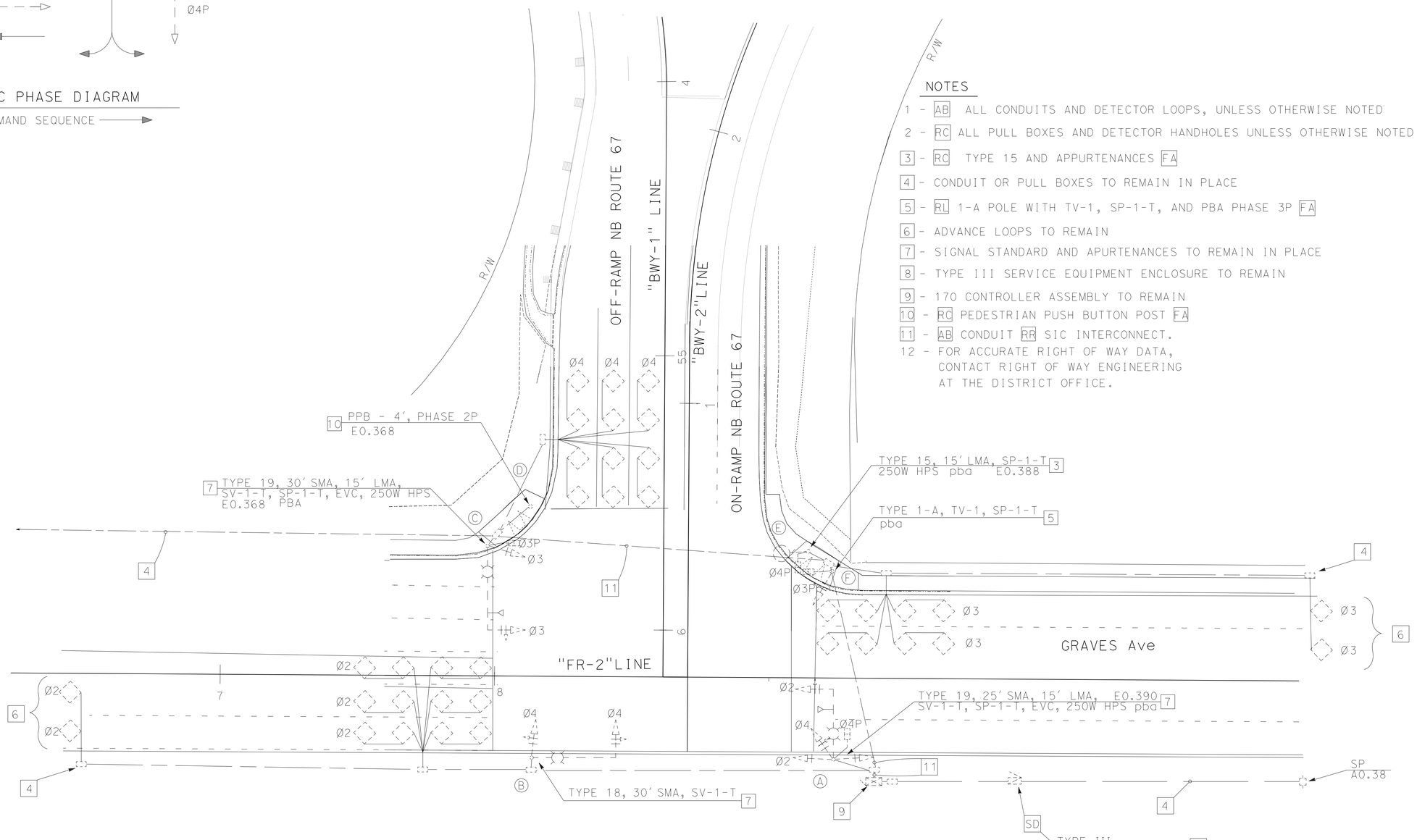

NOTES

1 - AB ALL CONDUITS AND DETECTOR LOOPS, UNLESS OTHERWISE NOTED
2 - RC ALL PULL BOXES AND DETECTOR HANDHOLES UNLESS OTHERWISE NOTED
3 - RC TYPE 15 AND APPURTENANCES FA
4 - CONDUIT OR PULL BOXES TO REMAIN IN PLACE
5 - RL 1-A POLE WITH TV-1, SP-1-T, AND PBA PHASE 3P FA
6 - ADVANCE LOOPS TO REMAIN
7 - SIGNAL STANDARD AND APURTENANCES TO REMAIN IN PLACE
8 - TYPE III SERVICE EQUIPMENT ENCLOSURE TO REMAIN
9 - 170 CONTROLLER ASSEMBLY TO REMAIN
10 - RC PEDESTRIAN PUSH BUTTON POST FA
11 - AB CONDUIT RR SIC INTERCONNECT.
12 - FOR ACCURATE RIGHT OF WAY DATA, CONTACT RIGHT OF WAY ENGINEERING AT THE DISTRICT OFFICE.

EXISTING FACILITIES
ROUTE 67 AT GRAVE Ave ON & OFF-RAMP
SIGNAL P0.376

SIGNAL AND LIGHTING

(Exist & REMOVE)
(LOCATION 2)

SCALE: 1" = 20'

E-4

APPROVED FOR ELECTRICAL WORK ONLY

STATE OF CALIFORNIA - DEPARTMENT OF TRANSPORTATION
Caltrans® **TRAFFIC ELECTRICAL**

FUNCTIONAL SUPERVISOR: RAJPREET SINGH
CALCULATED-DESIGNED BY: JOSEPH RAND
CHECKED BY: RAJPREET SINGH
REVISED BY / DATE REVISED

LAST REVISION 05-19-14
DATE PLOTTED => 30-JUL-2014
TIME PLOTTED => 10:28

Dist	COUNTY	ROUTE	POST MILES TOTAL PROJECT	SHEET No.	TOTAL SHEETS
11	SD	67	R0.0/R5.9	118	204

REGISTERED ELECTRICAL ENGINEER 05-14-14 DATE

07-28-14
PLANS APPROVAL DATE

THE STATE OF CALIFORNIA OR ITS OFFICERS OR AGENTS SHALL NOT BE RESPONSIBLE FOR THE ACCURACY OR COMPLETENESS OF SCANNED COPIES OF THIS PLAN SHEET.

REGISTERED PROFESSIONAL ENGINEER JOSEPH RAND No. 11131 Exp. 06-30-15 ELECTRICAL STATE OF CALIFORNIA

TRAFFIC PHASE DIAGRAM

STEADY DEMAND SEQUENCE

NOTES

1 - FOR ACCURATE RIGHT OF WAY DATA, CONTACT RIGHT OF WAY ENGINEERING AT THE DISTRICT OFFICE.

2 - RE 1-A POLE WITH tv-1, sp-1-t ADD: 2-PBA(B)

3 - FURNISH AND INSTALL COMMUNICATION CARD, VDU. AND VIDEO DISPLAY INSIDE 332 CABINET.

CONDUIT AND CONDUCTOR SCHEDULE

AWG SIZE OR CABLE TYPE	PHASE	POLE OR CIRCUIT	CONDUIT SIZE AND RUN 2-3" (1)	3" (2)	3" (3)	3" (4)	3" (5)	3" (6)
3CSC / 12CSC		POLE - A	1 / 1	1 / 1				
		B	/ 1	/	1			
		C	1 / 1			1 / 1	1 / 1	1 / 1
		D	1			1 / 1	1 / 1	
		E	1				1 / 1	
		F	1 / 1				1 / 1	1 / 1
TOTAL 3CSC / 12CSC			5 / 4	1 / 1	1	2 / 1	4 / 2	4 / 2
14		PEU		3				
8		LIGHTING		2	2	2	2	2
8		SIG CONTROLLER	2					
TYPE B DLC	Ø2		1		1			
	Ø3		1					1
	Ø4							
EVC			3	1	1	1		1
SIC			1					
OCC								
VIDEO CABLE HARNESS			3	1	1	1		1
TOTAL CONDUCTORS / CABLES			20	9	6	7	8	11

CONDUIT NOTES:

7 - 2"C, 1 DLC

8 - 2"C, 1-3 CSC

9 - 2"C, 2#8(Lt g), 3#14(PEU), 2#8(SIGNAL)

10 - 2"C, REUSE 1 SIC

11 - Exist 1½"C, 2#8(Lt g), 3#14(PEU), 2#8(SIGNAL)

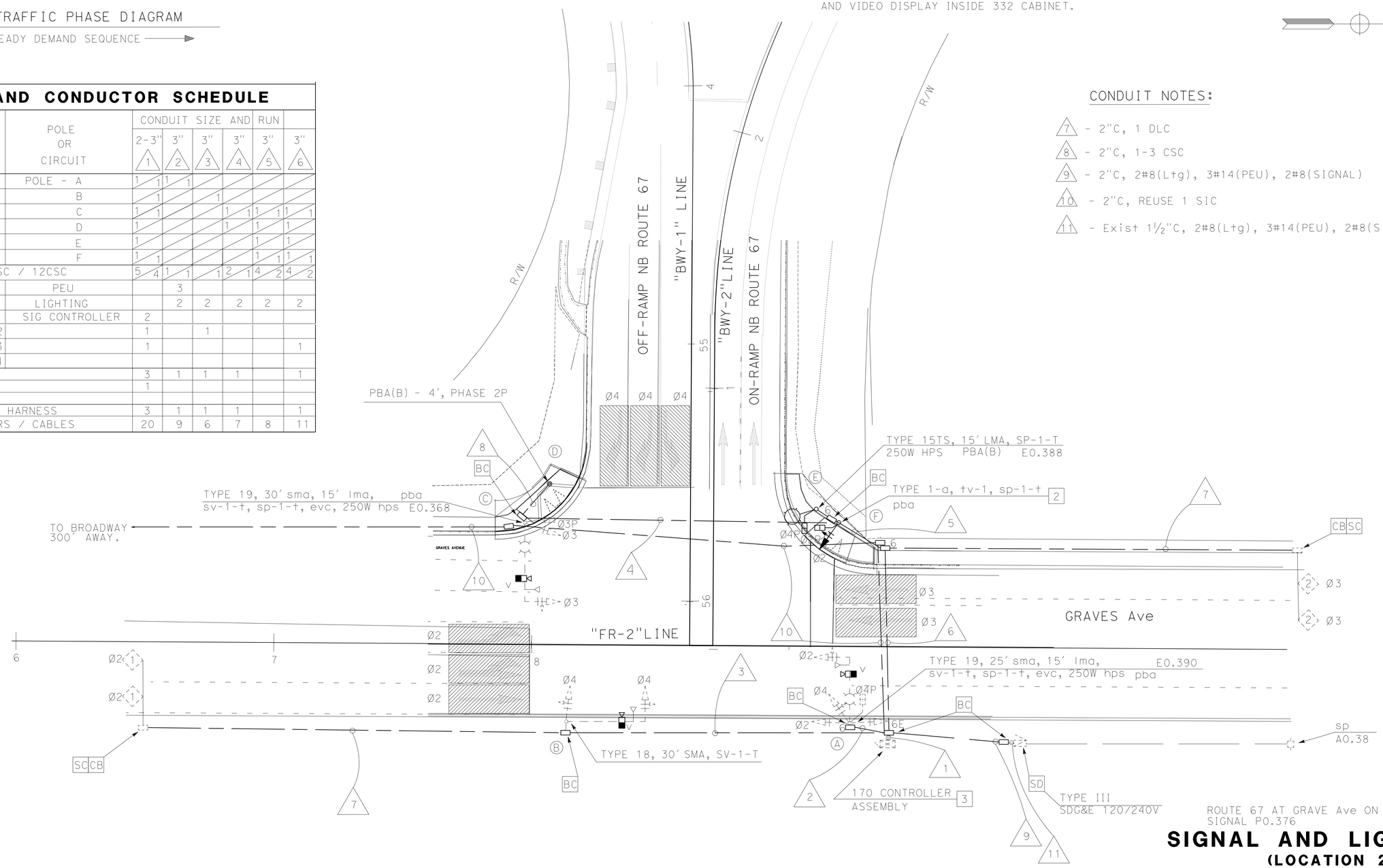

ROUTE 67 AT GRAVE Ave ON & OFF-RAMP
SIGNAL P0.376

SIGNAL AND LIGHTING
(LOCATION 2)

SCALE: 1" = 20'

E-5

APPROVED FOR ELECTRICAL WORK ONLY

STATE OF CALIFORNIA - DEPARTMENT OF TRANSPORTATION
Caltrans® **TRAFFIC ELECTRICAL**

FUNCTIONAL SUPERVISOR: RAJPREET SINGH
CALCULATED-DESIGNED BY: JOSEPH RAND
CHECKED BY: RAJPREET SINGH
REVISED BY / DATE REVISED

LAST REVISION 05-19-14
DATE PLOTTED => 30-JUL-2014
TIME PLOTTED => 10:28

Dist	COUNTY	ROUTE	POST MILES TOTAL PROJECT	SHEET No.	TOTAL SHEETS
11	SD	67	R0.0/R5.9	119	204

REGISTERED ELECTRICAL ENGINEER — 05-14-14 DATE

07-28-14
PLANS APPROVAL DATE

REGISTERED PROFESSIONAL ENGINEER — JOSEPH RAND No. 11131 Exp. 06-30-15 ELECTRICAL — STATE OF CALIFORNIA

THE STATE OF CALIFORNIA OR ITS OFFICERS OR AGENTS SHALL NOT BE RESPONSIBLE FOR THE ACCURACY OR COMPLETENESS OF SCANNED COPIES OF THIS PLAN SHEET.

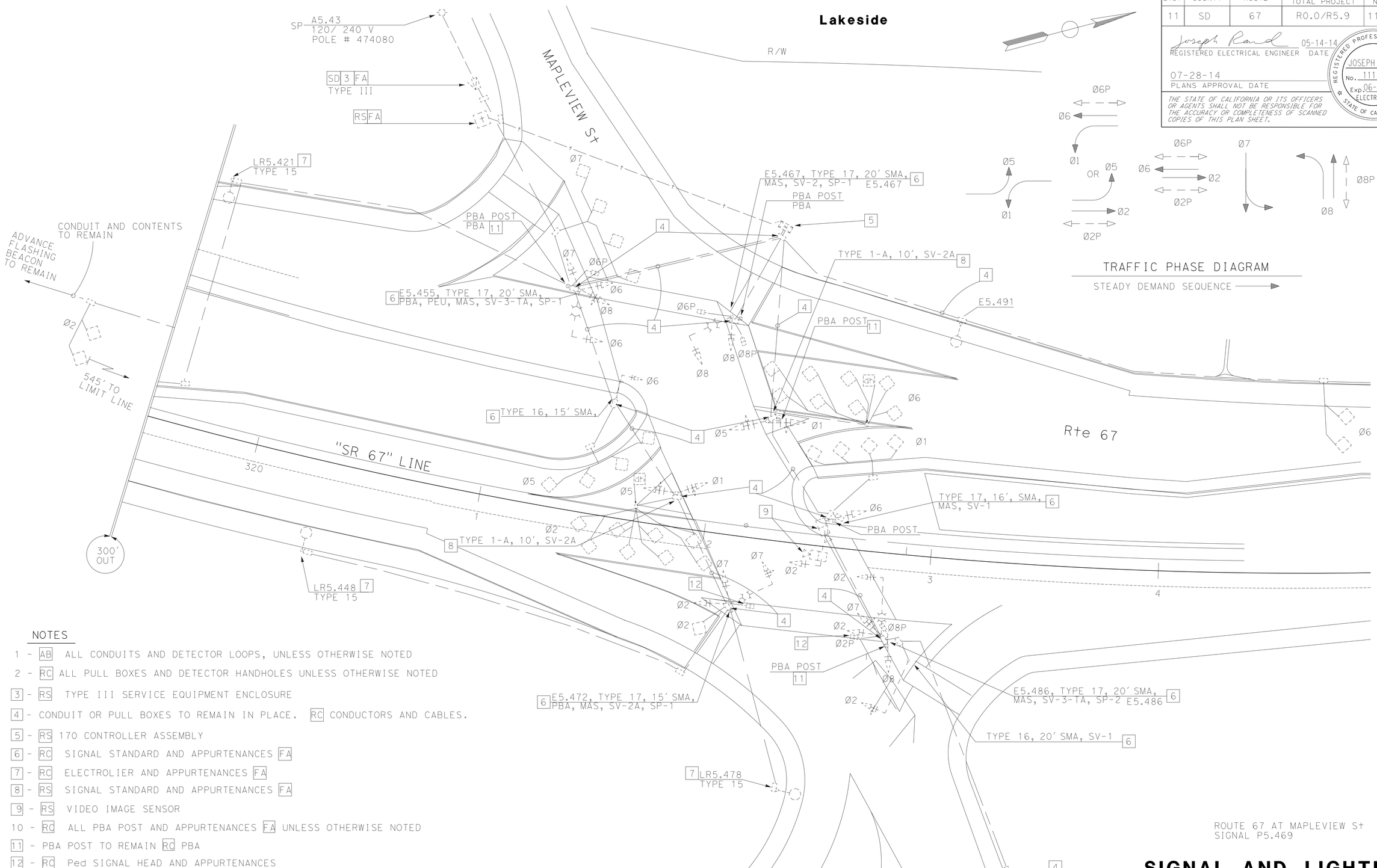

NOTES

1 - AB ALL CONDUITS AND DETECTOR LOOPS, UNLESS OTHERWISE NOTED
2 - RC ALL PULL BOXES AND DETECTOR HANDHOLES UNLESS OTHERWISE NOTED
3 - RS TYPE III SERVICE EQUIPMENT ENCLOSURE
4 - CONDUIT OR PULL BOXES TO REMAIN IN PLACE. RC CONDUCTORS AND CABLES.
5 - RS 170 CONTROLLER ASSEMBLY
6 - RC SIGNAL STANDARD AND APPURTENANCES FA
7 - RC ELECTROLIER AND APPURTENANCES FA
8 - RS SIGNAL STANDARD AND APPURTENANCES FA
9 - RS VIDEO IMAGE SENSOR
10 - RC ALL PBA POST AND APPURTENANCES FA UNLESS OTHERWISE NOTED
11 - PBA POST TO REMAIN RC PBA
12 - RC Ped SIGNAL HEAD AND APPURTENANCES
13 - FOR ACCURATE RIGHT OF WAY DATA, CONTACT RIGHT OF WAY ENGINEERING AT THE DISTRICT OFFICE.

APPROVED FOR ELECTRICAL WORK ONLY

ROUTE 67 AT MAPLEVIEW St
SIGNAL P5.469

SIGNAL AND LIGHTING
(Exist & REMOVE)
(LOCATION 3)

SCALE: 1" = 20'

E-6

REVISED BY	DATE REVISED
JOSEPH RAND	RAJPREET SINGH
CALCULATED-DESIGNED BY	CHECKED BY
FUNCTIONAL SUPERVISOR	RAJPREET SINGH

STATE OF CALIFORNIA - DEPARTMENT OF TRANSPORTATION
Caltrans® TRAFFIC ELECTRICAL

LAST REVISION 05-06-14 | DATE PLOTTED => 30-JUL-2014 | TIME PLOTTED => 10:28

Dist	COUNTY	ROUTE	POST MILES TOTAL PROJECT	SHEET No.	TOTAL SHEETS
11	SD	67	R0.0/R5.9	120	204

Joseph Rand 05-14-14
REGISTERED ELECTRICAL ENGINEER DATE

07-28-14
PLANS APPROVAL DATE

REGISTERED PROFESSIONAL ENGINEER
JOSEPH RAND
No. 11131
Exp. 06-30-15
ELECTRICAL
STATE OF CALIFORNIA

THE STATE OF CALIFORNIA OR ITS OFFICERS OR AGENTS SHALL NOT BE RESPONSIBLE FOR THE ACCURACY OR COMPLETENESS OF SCANNED COPIES OF THIS PLAN SHEET.

CONDUIT NOTES:

1 - SEE SHEET E-10

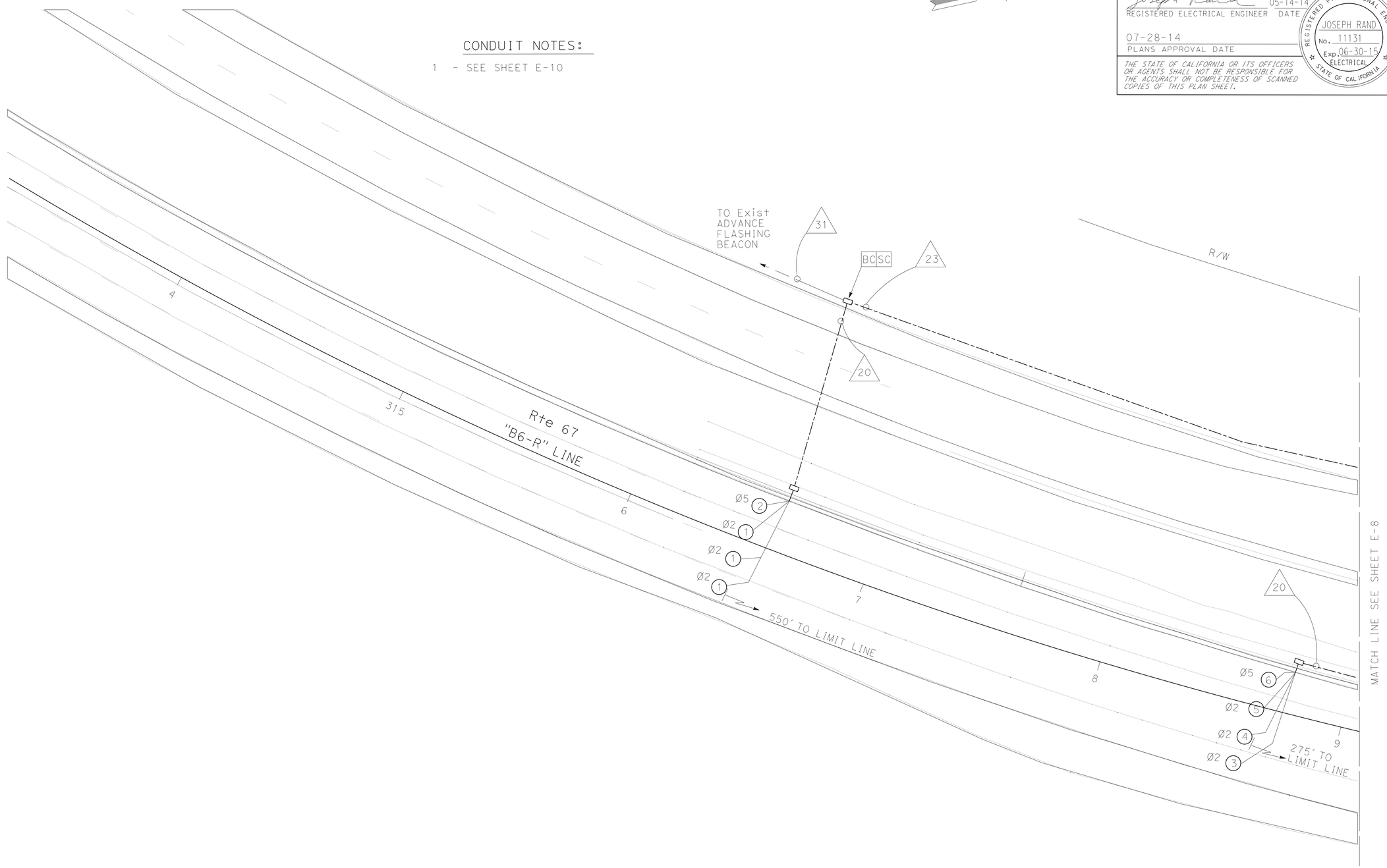

APPROVED FOR ELECTRICAL WORK ONLY

SIGNAL AND LIGHTING
(LOCATION 3)

SCALE: 1" = 20'

E-7

REVISED BY	DATE REVISED
JOSEPH RAND	RAJPREET SINGH
CALCULATED-DESIGNED BY	CHECKED BY
FUNCTIONAL SUPERVISOR	RAJPREET SINGH

STATE OF CALIFORNIA - DEPARTMENT OF TRANSPORTATION
Caltrans® **TRAFFIC ELECTRICAL**

LAST REVISION 05-06-14 | DATE PLOTTED => 30-JUL-2014 | TIME PLOTTED => 10:28

Dist	COUNTY	ROUTE	POST MILES TOTAL PROJECT	SHEET No.	TOTAL SHEETS
11	SD	67	R0.0/R5.9	121	204

Joseph Rand 05-14-14
REGISTERED ELECTRICAL ENGINEER DATE

07-28-14
PLANS APPROVAL DATE

REGISTERED PROFESSIONAL ENGINEER JOSEPH RAND No. 11131 Exp. 06-30-15 ELECTRICAL STATE OF CALIFORNIA

THE STATE OF CALIFORNIA OR ITS OFFICERS OR AGENTS SHALL NOT BE RESPONSIBLE FOR THE ACCURACY OR COMPLETENESS OF SCANNED COPIES OF THIS PLAN SHEET.

NOTES:

1 - FOR ACCURATE RIGHT OF WAY DATA, CONTACT RIGHT OF WAY ENGINEERING AT THE DISTRICT OFFICE.

2 - EQUIPMENT AND POLE SCHEDULE SEE SHEET E-10

NOTES:

SEE SHEET E-10

CONDUIT NOTES:

SEE SHEET E-10

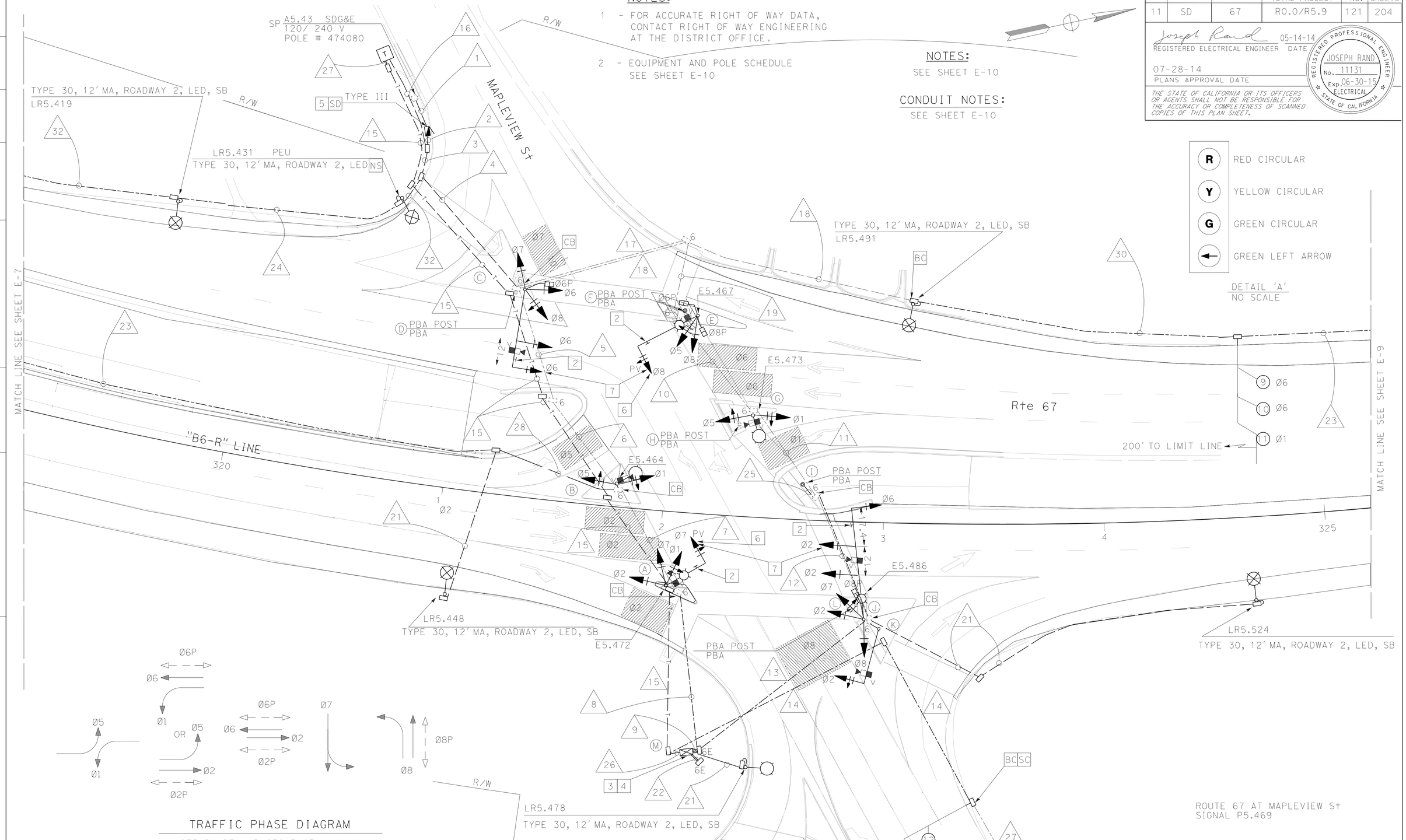

APPROVED FOR ELECTRICAL WORK ONLY

SIGNAL AND LIGHTING
(LOCATION 3)

SCALE: 1" = 20'

E-8

STATE OF CALIFORNIA - DEPARTMENT OF TRANSPORTATION
Caltrans® TRAFFIC ELECTRICAL

FUNCTIONAL SUPERVISOR: RAJPREET SINGH
CALCULATED-DESIGNED BY: JOSEPH RAND
CHECKED BY: RAJPREET SINGH
REVISED BY / DATE REVISED

LAST REVISION 05-06-14 | DATE PLOTTED => 30-JUL-2014 | TIME PLOTTED => 10:28

BORDER LAST REVISED 7/2/2010 | USERNAME => s127284 | DGN FILE => 1100000276ua008.dgn | RELATIVE BORDER SCALE IS IN INCHES 0 1 2 3 | CU 11393 | PROJECT NUMBER & PHASE | 11000002761

Dist	COUNTY	ROUTE	POST MILES TOTAL PROJECT	SHEET No.	TOTAL SHEETS
11	SD	67	R0.0/R5.9	122	204

REGISTERED ELECTRICAL ENGINEER 05-14-14 DATE

07-28-14
PLANS APPROVAL DATE

REGISTERED PROFESSIONAL ENGINEER JOSEPH RAND No. 11131 Exp. 06-30-15 ELECTRICAL STATE OF CALIFORNIA

THE STATE OF CALIFORNIA OR ITS OFFICERS OR AGENTS SHALL NOT BE RESPONSIBLE FOR THE ACCURACY OR COMPLETENESS OF SCANNED COPIES OF THIS PLAN SHEET.

CIRCUIT BREAKERS

MAIN-2P-100 A
A-1P-15 A SPARE
B-1P-30 A
C-1P-15 A
D-1P-15 A
E-1P-15 A
F, G } 2P-30 A

NOTES (TSO):

1 - FOR ACCURATE RIGHT OF WAY DATA, CONTACT RIGHT OF WAY ENGINEERING AT THE DISTRICT OFFICE.

2 - TYPE 15-FBS.

CONDUIT NOTES:

SEE SHEET E-10

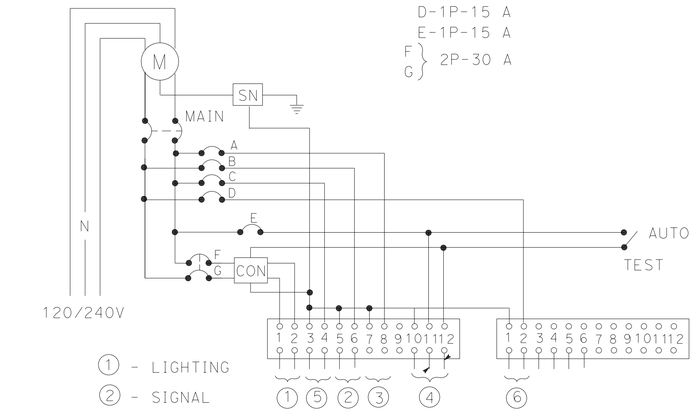

1 - LIGHTING
2 - SIGNAL
3 - SPARE
4 - PEU
5 - FB
6 - TDC

WIRING DIAGRAM "A"

TYPE III-BF SERVICE EQUIPMENT ENCLOSURE SEE ES-2C AND ES-2E
CON = CONTACTOR

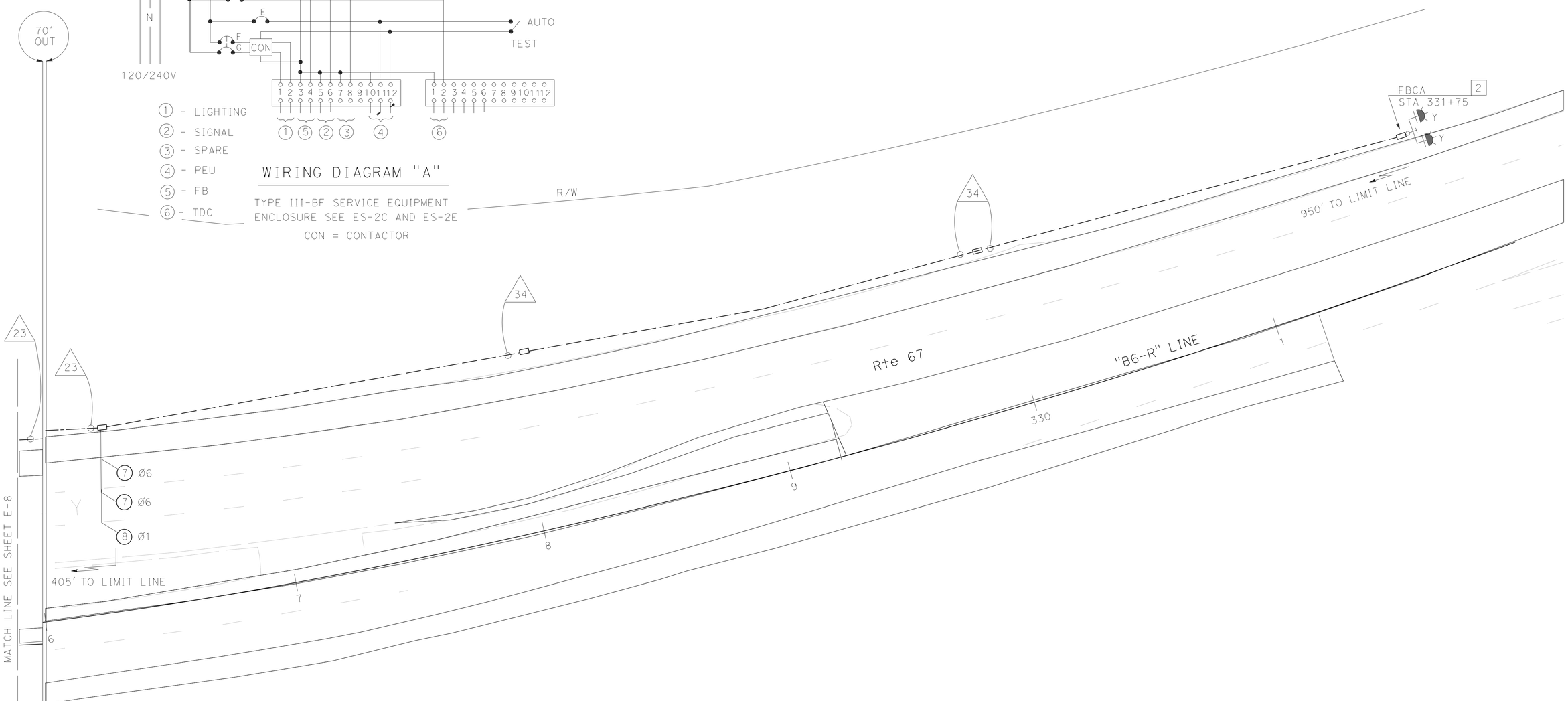

SIGNAL AND LIGHTING
(LOCATION 3)

SCALE: 1" = 20'

E-9

APPROVED FOR ELECTRICAL WORK ONLY

STATE OF CALIFORNIA - DEPARTMENT OF TRANSPORTATION
Caltrans® TRAFFIC ELECTRICAL

FUNCTIONAL SUPERVISOR: RAJPREET SINGH
CALCULATED-DESIGNED BY: JOSEPH RAND
CHECKED BY: RAJPREET SINGH
REVISED BY
DATE REVISED

LAST REVISION 05-06-14
DATE PLOTTED => 30-JUL-2014
TIME PLOTTED => 10:28

Dist	COUNTY	ROUTE	POST MILES TOTAL PROJECT	SHEET No.	TOTAL SHEETS
11	SD	67	R0.0/R5.9	123	204

REGISTERED ELECTRICAL ENGINEER 05-14-14 DATE

07-28-14
PLANS APPROVAL DATE

REGISTERED PROFESSIONAL ENGINEER JOSEPH RAND No. 11131 Exp. 06-30-15 ELECTRICAL STATE OF CALIFORNIA

THE STATE OF CALIFORNIA OR ITS OFFICERS OR AGENTS SHALL NOT BE RESPONSIBLE FOR THE ACCURACY OR COMPLETENESS OF SCANNED COPIES OF THIS PLAN SHEET.

EQUIPMENT AND POLE SCHEDULE 1

Loc	STANDARD TYPE	SMA (FT)	LMA (FT)	PLACEMENT DIMENSIONS A (FT)	PLACEMENT DIMENSIONS B (FT)	SIGNAL MOUNTING AND PLACEMENT VEHICLE POLE	VEHICLE MASTARM	PEDESTRIAN APS SIGNAL	PEDESTRIAN APS PPB	REMARKS
A	17A-2-100	20	12	*	*	SV-3-TA	1 MAT	SP-1-T	–	165 W LED VIS
B	15TS	–	12	*	*	SV-2-TA	–	–	–	165 W LED VIS
C	24-4-100	35	–	*	*	SV-3-TA	1 MAS 1 MAT	SP-1-T	–	NO LUMINAIRE VIS
D	Exist PPB POST (3')	–	–	*	*	–	–	–	Ø6P →	– **
E	19-1-100	30	12	*	*	SV-2-T	1 MAT	SP-2-T	–	165 W LED VIS
F	PPB POST (3')	–	–	*	*	–	–	–	← Ø6P Ø8P →	–
G	15TS	–	12	*	*	SV-2-TA	–	–	–	165 W LED VIS
H	Exist PPB POST (3')	–	–	*	*	–	–	–	← Ø8P Ø8P →	– **
I	PPB POST (3')	–	–	*	*	–	–	–	↔ Ø8P	–
J	29-5-100	50	15	*	*	SV-3-TA	2 MAS 1 MAT	SP-2-T	–	165 W LED VIS
K	19-2-100	25	–	*	*	–	1 MAT	–	–	NO LUMINAIRE VIS
L	Exist PPB POST (3')	–	–	*	*	–	–	–	← Ø8P Ø8P →	– **
M	STATE FURNISHED MODEL 170 CONTROLLER ASSEMBLY WITH BBS EXTERNAL CABINET									

* - SEE SHEET E-11 FOR POLE PLACEMENT

** - RC PBA, REPLACE WITH APS PBA

CONDUIT AND CONDUCTOR SCHEDULE

AWG SIZE OR CABLE TYPE	PHASE	POLE OR CIRCUIT	CONDUIT SIZE AND RUN EX 3" 5	EX 3" 6	EX 3" 7	2-3" 8	3-3" 9	EX 3" 10	EX 3" 11	2-3" * 12	3" 13
3CSC / 12CSC		POLE - A				1 1	1 1				
		B			2 2		2				
		C	1 2	1 2	1 2	1 2	1 2				
		D					2 2	2 2	2 2	2 2	2 2
		E					1 2		1 2	1 2	1 2
		F					1			1	1
		G					2 2				2 2
		H					1				1
		I					1		1	1	1
		J					1			1	1
		K					2 2				2 2
		L									1
		M									1
TOTAL 3CSC / 12CSC			1 2	1 2	1 4	2 5	8 12	2 2	3 5	5 5	10 11
9 CSC(APS)							2	1	1	1	2
14		PEU									
8		LIGHTING	2	2	2	2		2	2	2	2
8		SIG CONTROLLER	2	2	2	2	2				
12		TDC	2	2	2	2	2				
TYPE B DLC	Ø1						1	1	1	1	1
	Ø2		2	2	3	3	3				
	Ø5		1	1	1	1	1				
	Ø6						3	3	3	3	3
EVC			1	1	1	2	4	1	1	1	2
SIC											
OCC											1
VIDEO CABLE HARNESS			1	1	2	3	7	1	2	2	4
TOTAL CONDUCTORS / CABLES			14	14	18	22	45	13	18	20	36

* - Exist 1-3", ADD 1-3"

NOTES:

1. - ALL NEW CONDUCTORS AND CABLES.
2. - DETAIL 'U', ES-7N REQUIRED
3. - FURNISH AND INSTALL COMMUNICATION CARD, VDU. AND VIDEO DISPLAY INSIDE 332 CABINET.
4. - FURNISH AND INSTALL BATTERIES AND EXTERNAL BBS CABINET. SEE SHEET E-19 FOR DETAILS.
5. - SEE WIRING DIAGRAM ON SHEET E-9
6. - 4-SECTION SIGNAL HEAD, SEE DETAIL 'A' SHEET E-8
7. - COIL EVC IN RED SECTION OF SIGNAL HEAD. LEAVE 3' OF SLACK.

CONDUIT NOTES

1. - 2"C, MT, (CONDUCTORS BY SDG&E)
2. - 3"C, 2#8(Ltg), 3#14(PEU), 2#8(FB), 2#8(SIGNAL), 2#12(TDC)
3. - 2"C, 2#8(Ltg), 3#14(PEU), 2#8(FB), 2#8(SIGNAL)
4. - 2"C, 2#8(Ltg), 2#8(FB), 2#8(SIGNAL), 2 DLC
14. - 2"C, 1 OCC(INTERCONNECT), 2 DLC
15. - 2"C, 1 SIC(TEL)
16. - 1"C, 2#12(TDC)
17. - Exist 3"C (MT)
18. - Exist 2"C MT, ADD: 2#8(Ltg), 2#8(FB)
19. - Exist 2-3"C, MT, ADD: 5 DLC
20. - 2"C, 2 DLC
21. - 2"C, 2#8(Ltg)
22. - 2-3"C, MT
23. - 2"C, 2#8(FB), 2 DLC
24. - 2"C, 2#8(Ltg), 2#8(FB), 2 DLC
25. - 2"C, 2-9CSC(APS)
26. - 2"C, 1 OCC(INTERCONNECT), 1 SIC(TEL), 2DLC
27. - 1"C, 1 SIC(TEL)
28. - 2"C, 2#8(Ltg), 2 DLC
29. - 2"C, 4 DLC
30. - 2"C, 2#8(FB), 5 DLC
31. NC - Exist 2"C, 2#8(FB)
32. - 2"C, 2#8(Ltg), 3#14(PEU), 2#8(FB), 4 DLC
33. - Exist 1½"C, ADD: 1 OCC(INTERCONNECT)
34. - 2"C, 2#8(FB)

SIGNAL AND LIGHTING
(LOCATION 3)

E-10

REVISED BY | DATE REVISED
JOSEPH RAND | RAJPREET SINGH
CALCULATED-DESIGNED BY | CHECKED BY
FUNCTIONAL SUPERVISOR | RAJPREET SINGH

STATE OF CALIFORNIA - DEPARTMENT OF TRANSPORTATION
Caltrans® TRAFFIC ELECTRICAL

LAST REVISION 05-07-14 | DATE PLOTTED => 30-JUL-2014 TIME PLOTTED => 10:28

Dist	COUNTY	ROUTE	POST MILES TOTAL PROJECT	SHEET No.	TOTAL SHEETS
11	SD	67	R0.0/R5.9	124	204

Joseph Rand 05-14-14
REGISTERED ELECTRICAL ENGINEER DATE

07-28-14
PLANS APPROVAL DATE

REGISTERED PROFESSIONAL ENGINEER
JOSEPH RAND
No. 11131
Exp. 06-30-15
ELECTRICAL
STATE OF CALIFORNIA

THE STATE OF CALIFORNIA OR ITS OFFICERS OR AGENTS SHALL NOT BE RESPONSIBLE FOR THE ACCURACY OR COMPLETENESS OF SCANNED COPIES OF THIS PLAN SHEET.

ROUTE 67 AT MAPLEVIEW St
SIGNAL P5.469

SIGNAL AND LIGHTING
(LOCATION 3)
(ELECTRICAL DETAIL)

SCALE: 1"=10'

E-11

APPROVED FOR ELECTRICAL WORK ONLY

STATE OF CALIFORNIA - DEPARTMENT OF TRANSPORTATION
Caltrans® **TRAFFIC ELECTRICAL**

FUNCTIONAL SUPERVISOR: RAJPREET SINGH
CALCULATED-DESIGNED BY: JOSEPH RAND
CHECKED BY: RAJPREET SINGH
REVISED BY
DATE REVISED

LAST REVISION 05-06-14
DATE PLOTTED => 30-JUL-2014
TIME PLOTTED => 10:28

Dist	COUNTY	ROUTE	POST MILES TOTAL PROJECT	SHEET No.	TOTAL SHEETS
11	SD	67	R0.0/R5.9	125	204

REGISTERED ELECTRICAL ENGINEER 05-14-14 DATE

07-28-14
PLANS APPROVAL DATE

REGISTERED PROFESSIONAL ENGINEER
JOSEPH RAND
No. 11131
Exp. 06-30-15
ELECTRICAL
STATE OF CALIFORNIA

THE STATE OF CALIFORNIA OR ITS OFFICERS OR AGENTS SHALL NOT BE RESPONSIBLE FOR THE ACCURACY OR COMPLETENESS OF SCANNED COPIES OF THIS PLAN SHEET.

NOTES:

1 - FOR ACCURATE RIGHT OF WAY DATA, CONTACT RIGHT OF WAY ENGINEERING AT THE DISTRICT OFFICE.

2 - AB EXISTING LOOP DETECTOR AS NOTED

3 - SEE E-18 FOR OTHER LOCATIONS OF DETECTOR LOOP.

CONDUIT NOTES:

N C 1 - Exist 1½"C, 1 DLC, 2#10(L+g)

N C 2 - Exist 1½"C, 2#10(L+g)

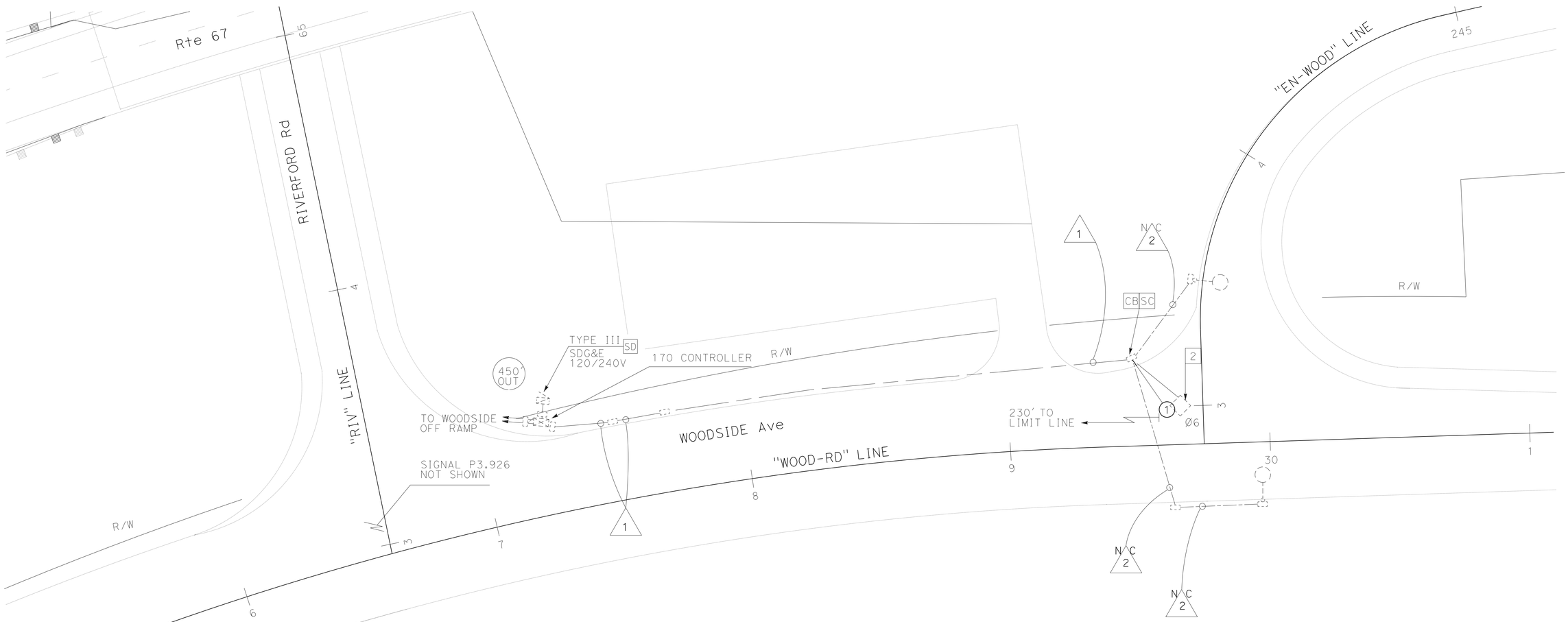

ROUTE 67 AT RIVERFORD Rd ON-RAMP
SIGNAL P3.926

DETECTOR LOOP

E-12

SCALE: 1"=20'

APPROVED FOR ELECTRICAL WORK ONLY

STATE OF CALIFORNIA - DEPARTMENT OF TRANSPORTATION
Caltrans® **TRAFFIC ELECTRICAL**

FUNCTIONAL SUPERVISOR: RAJPREET SINGH
CALCULATED-DESIGNED BY: JOSEPH RAND
CHECKED BY: RAJPREET SINGH
REVISED BY
DATE REVISED

LAST REVISION 05-06-14
DATE PLOTTED => 30-JUL-2014
TIME PLOTTED => 10:28

Dist	COUNTY	ROUTE	POST MILES TOTAL PROJECT	SHEET No.	TOTAL SHEETS
11	SD	67	R0.0/R5.9	126	204

REGISTERED ELECTRICAL ENGINEER 05-14-14 DATE

07-28-14
PLANS APPROVAL DATE

THE STATE OF CALIFORNIA OR ITS OFFICERS OR AGENTS SHALL NOT BE RESPONSIBLE FOR THE ACCURACY OR COMPLETENESS OF SCANNED COPIES OF THIS PLAN SHEET.

REGISTERED PROFESSIONAL ENGINEER
JOSEPH RAND
No. 11131
Exp. 06-30-15
ELECTRICAL
STATE OF CALIFORNIA

NOTES:

1 - FOR ACCURATE RIGHT OF WAY DATA, CONTACT RIGHT OF WAY ENGINEERING AT THE DISTRICT OFFICE.

2 - AB LOOP DETECTOR AS NOTED

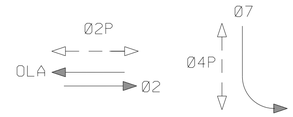

TRAFFIC PHASE DIAGRAM

STEADY DEMAND SEQUENCE

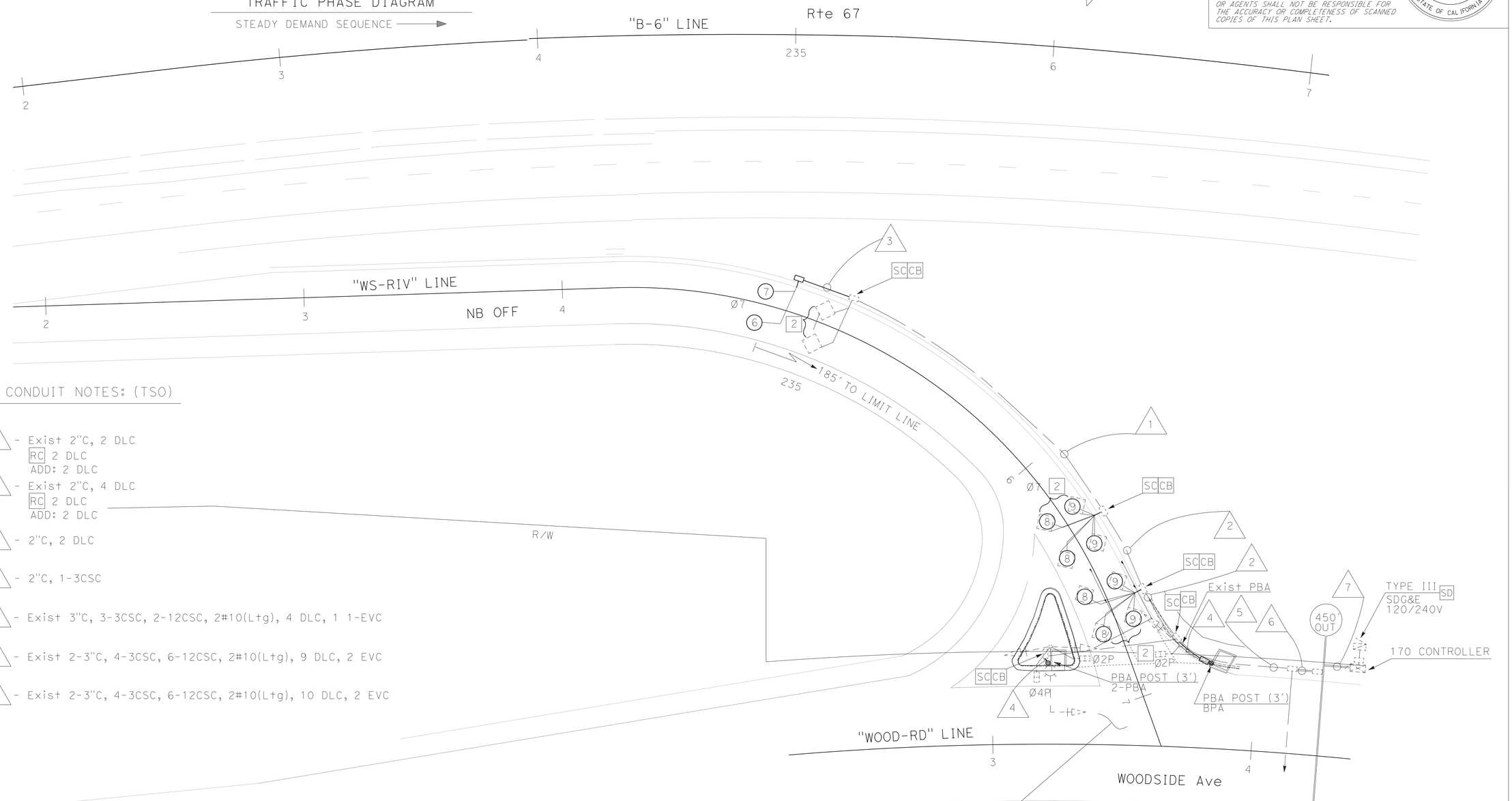

CONDUIT NOTES: (TSO)

1 - Exist 2"C, 2 DLC
RC 2 DLC
ADD: 2 DLC

2 - Exist 2"C, 4 DLC
RC 2 DLC
ADD: 2 DLC

3 - 2"C, 2 DLC

4 - 2"C, 1-3CSC

5 - Exist 3"C, 3-3CSC, 2-12CSC, 2#10(Ltg), 4 DLC, 1 1-EVC

6 - Exist 2-3"C, 4-3CSC, 6-12CSC, 2#10(Ltg), 9 DLC, 2 EVC

7 - Exist 2-3"C, 4-3CSC, 6-12CSC, 2#10(Ltg), 10 DLC, 2 EVC

ROUTE 67 AT WOODSIDE Ave
SIGNAL P3.926

MODIFY SIGNAL AND LIGHTING

SCALE: 1"=20'

E-13

APPROVED FOR ELECTRICAL WORK ONLY

STATE OF CALIFORNIA - DEPARTMENT OF TRANSPORTATION
Caltrans® **TRAFFIC ELECTRICAL**

FUNCTIONAL SUPERVISOR: RAJPREET SINGH
CALCULATED-DESIGNED BY: JOSEPH RAND
CHECKED BY: RAJPREET SINGH
REVISED BY
DATE REVISED

LAST REVISION 05-06-14
DATE PLOTTED => 30-JUL-2014
TIME PLOTTED => 10:29

Dist	COUNTY	ROUTE	POST MILES TOTAL PROJECT	SHEET No.	TOTAL SHEETS
11	SD	67	R0.0/R5.9	127	204

Joseph Rand 05-14-14
REGISTERED ELECTRICAL ENGINEER DATE

07-28-14
PLANS APPROVAL DATE

REGISTERED PROFESSIONAL ENGINEER JOSEPH RAND No. 11131 Exp. 06-30-15 ELECTRICAL STATE OF CALIFORNIA

THE STATE OF CALIFORNIA OR ITS OFFICERS OR AGENTS SHALL NOT BE RESPONSIBLE FOR THE ACCURACY OR COMPLETENESS OF SCANNED COPIES OF THIS PLAN SHEET.

NOTE:

1 - FOR ACCURATE RIGHT OF WAY DATA, CONTACT RIGHT OF WAY ENGINEERING AT THE DISTRICT OFFICE.

2 - RC LIGHT STANDARD AND APPURTANCES FA

CONDUIT NOTES:

1 - 2"C, 2#8(L+g)

2 - Exist 1½"C, 2#8(L+g)

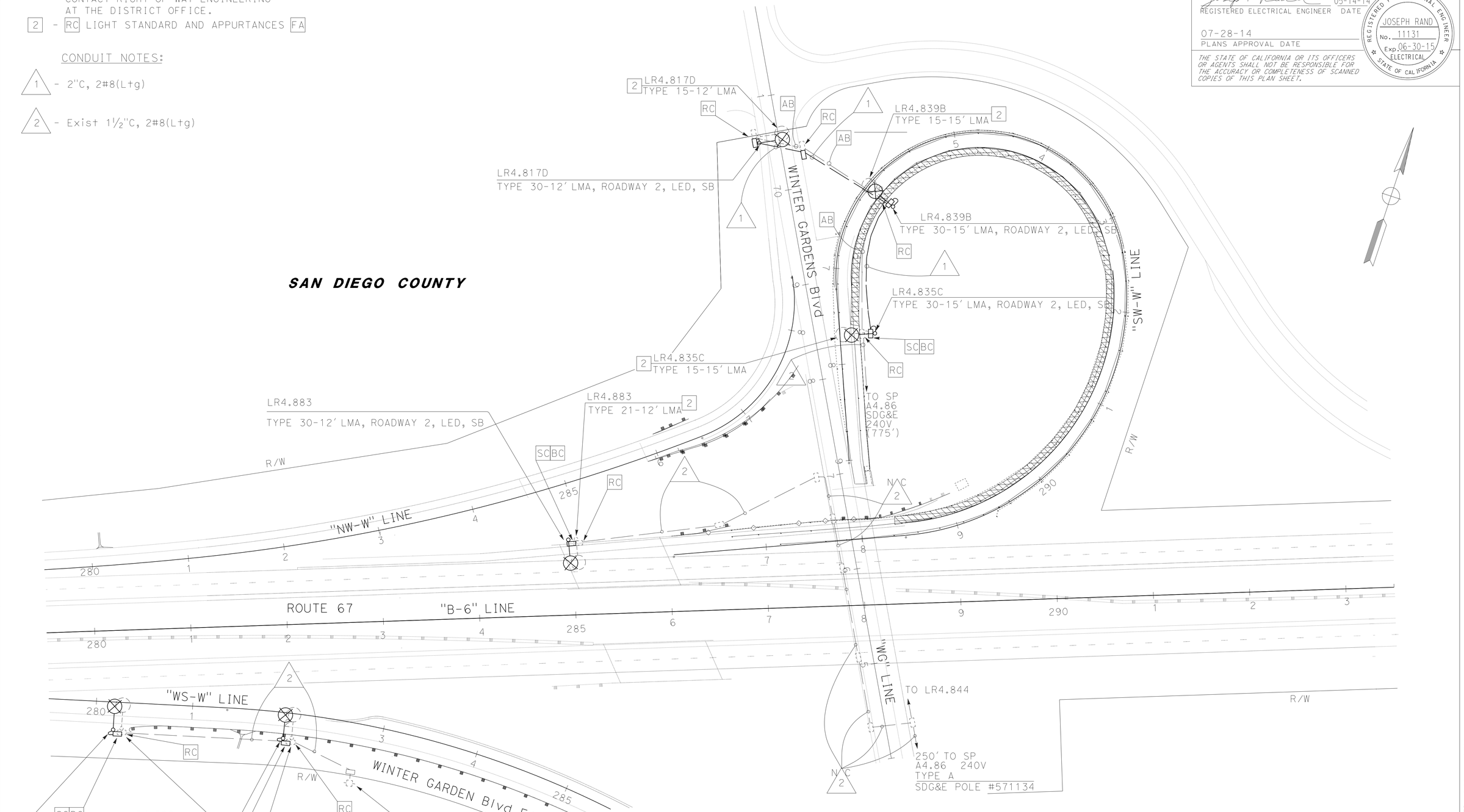

APPROVED FOR ELECTRICAL WORK ONLY

MODIFY LIGHTING

SCALE: 1"=50'

E-14

STATE OF CALIFORNIA - DEPARTMENT OF TRANSPORTATION

TRAFFIC ELECTRICAL

FUNCTIONAL SUPERVISOR: RAJPREET SINGH

CALCULATED-DESIGNED BY: JOSEPH RAND

CHECKED BY: RAJPREET SINGH

REVISED BY / DATE REVISED

LAST REVISION 05-07-14 | DATE PLOTTED => 30-JUL-2014 | TIME PLOTTED => 10:29

BORDER LAST REVISED 7/2/2010 | USERNAME => s127284 | DGN FILE => 1100000276ua014.dgn | RELATIVE BORDER SCALE IS IN INCHES 0 1 2 3 | UNIT 2833 | PROJECT NUMBER & PHASE 11000002761

Dist	COUNTY	ROUTE	POST MILES TOTAL PROJECT	SHEET No.	TOTAL SHEETS
11	SD	67	R0.0/R5.9	128	204

Joseph Rand 05-14-14
REGISTERED ELECTRICAL ENGINEER DATE

07-28-14
PLANS APPROVAL DATE

REGISTERED PROFESSIONAL ENGINEER
JOSEPH RAND
No. 11131
Exp. 06-30-15
ELECTRICAL
STATE OF CALIFORNIA

THE STATE OF CALIFORNIA OR ITS OFFICERS OR AGENTS SHALL NOT BE RESPONSIBLE FOR THE ACCURACY OR COMPLETENESS OF SCANNED COPIES OF THIS PLAN SHEET.

NOTES:

1 - FOR ACCURATE RIGHT OF WAY DATA, CONTACT RIGHT OF WAY ENGINEERING AT THE DISTRICT OFFICE.

2 - RC ELECTROLIER AND APURTNANCES FA

CONDUIT NOTES:

1 - Exist 2"C, 3#8(Ltg)(SIGN)(SIGNPEU)

2 - Exist 1 1/2"C, 3#8(Ltg)(SIGN)(SIGNPEU)

3 - Exist 1 1/2"C, 2#8(Ltg)

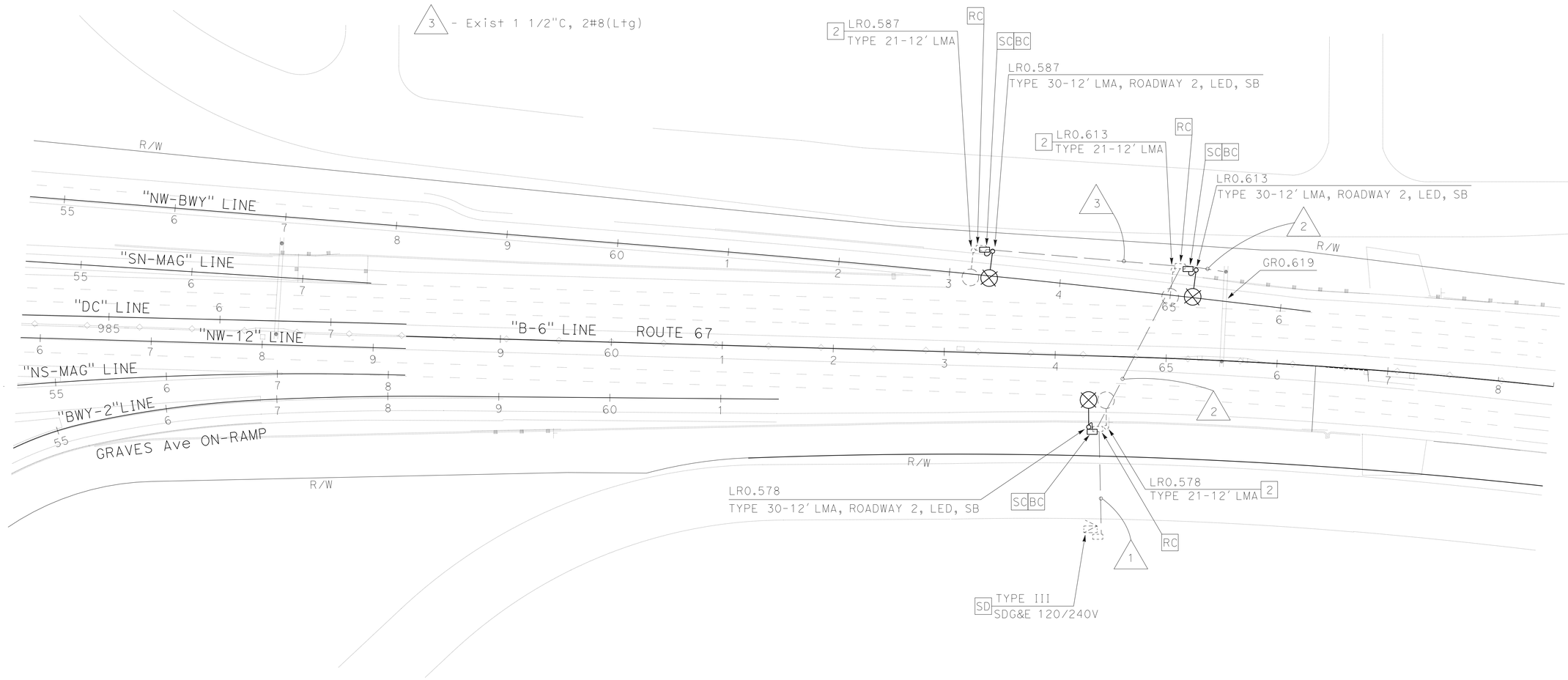

THIS PLAN IS ACCURATE FOR ELECTRICAL WORK ONLY

MODIFY LIGHTING

SCALE 1" = 50'

E-15

STATE OF CALIFORNIA - DEPARTMENT OF TRANSPORTATION
Caltrans® **TRAFFIC ELECTRICAL**

FUNCTIONAL SUPERVISOR: RAJPREET SINGH
CALCULATED-DESIGNED BY: JOSEPH RAND
CHECKED BY: RAJPREET SINGH
REVISED BY
DATE REVISED

LAST REVISION 05-06-14
DATE PLOTTED => 30-JUL-2014
TIME PLOTTED => 10:29

Dist	COUNTY	ROUTE	POST MILES TOTAL PROJECT	SHEET No.	TOTAL SHEETS
11	SD	67	R0.0/R5.9	129	204

REGISTERED ELECTRICAL ENGINEER 05-14-14 DATE

07-28-14
PLANS APPROVAL DATE

REGISTERED PROFESSIONAL ENGINEER JOSEPH RAND No. 11131 Exp. 06-30-15 ELECTRICAL STATE OF CALIFORNIA

THE STATE OF CALIFORNIA OR ITS OFFICERS OR AGENTS SHALL NOT BE RESPONSIBLE FOR THE ACCURACY OR COMPLETENESS OF SCANNED COPIES OF THIS PLAN SHEET.

CONDUIT NOTES:

1 - Exist 1½"C, 2#10 (ILtg)

NC 2 - Exist 2"C, 2#10 (Ltg)

NOTES:

1 - FOR ACCURATE RIGHT OF WAY DATA, CONTACT RIGHT OF WAY ENGINEERING AT DISTRICT OFFICE.

2 - RC ELECTROLIER AND APURTNANCES FA

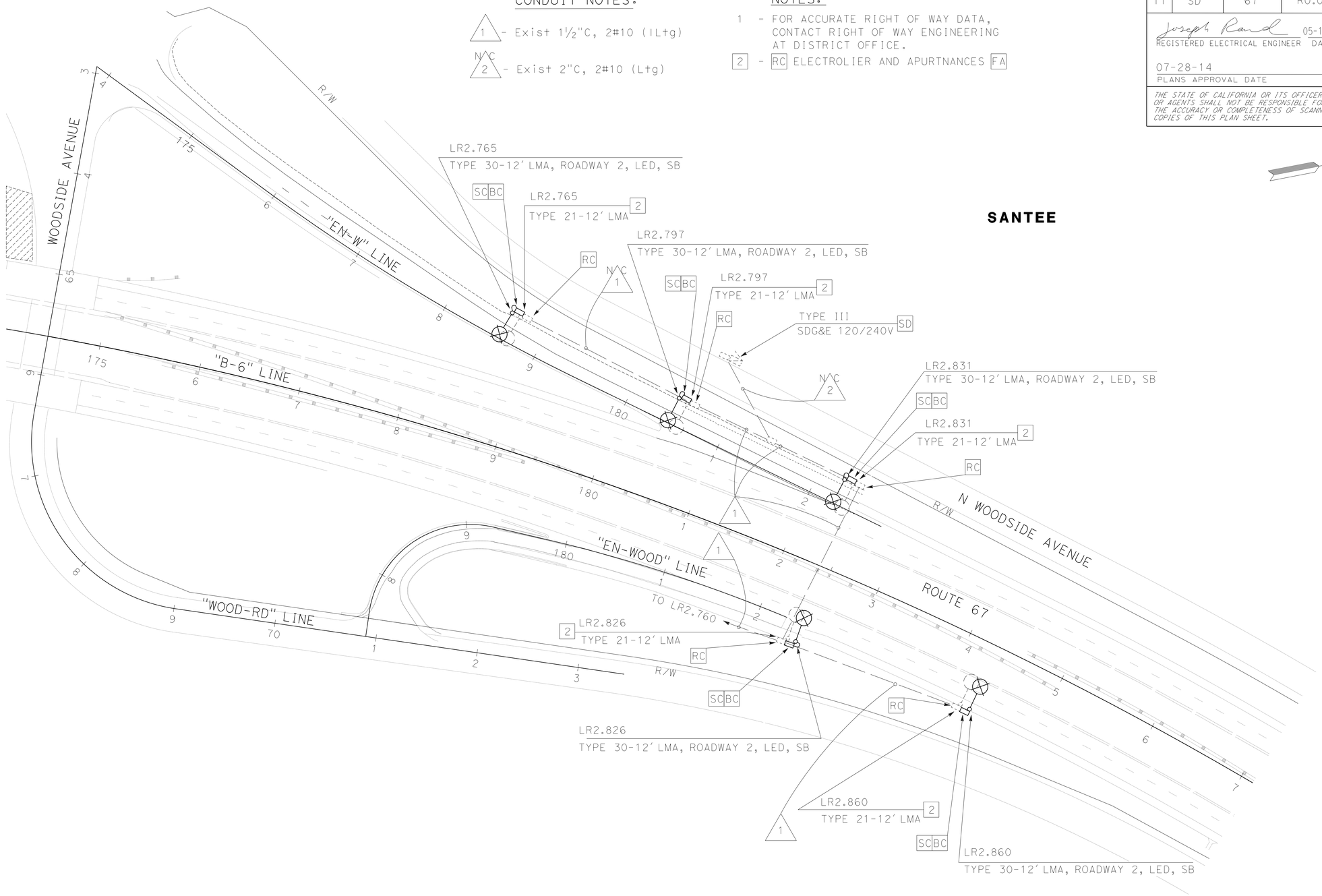

THIS PLAN IS ACCURATE FOR ELECTRICAL WORK ONLY

MODIFY LIGHTING

SCALE 1" = 50'

E-16

STATE OF CALIFORNIA - DEPARTMENT OF TRANSPORTATION

Caltrans® **TRAFFIC ELECTRICAL**

FUNCTIONAL SUPERVISOR: RAJPREET SINGH

CALCULATED-DESIGNED BY: JOSEPH RAND

CHECKED BY: RAJPREET SINGH

REVISED BY / DATE REVISED

LAST REVISION 05-06-14 | DATE PLOTTED => 30-JUL-2014 | TIME PLOTTED => 10:29

Dist	COUNTY	ROUTE	POST MILES TOTAL PROJECT	SHEET No.	TOTAL SHEETS
11	SD	67	R0.0/R5.9	130	204

REGISTERED ELECTRICAL ENGINEER 05-14-14 DATE

07-28-14
PLANS APPROVAL DATE

REGISTERED PROFESSIONAL ENGINEER JOSEPH RAND No. 11131 Exp. 06-30-15 ELECTRICAL STATE OF CALIFORNIA

THE STATE OF CALIFORNIA OR ITS OFFICERS OR AGENTS SHALL NOT BE RESPONSIBLE FOR THE ACCURACY OR COMPLETENESS OF SCANNED COPIES OF THIS PLAN SHEET.

CONDUIT NOTES:

1 - Exist 1½"C, 2#8(sign), 2#8(ltg), 3#14(peu)

2 - Exist 1½"C, 2#8(ltg)

3 - Exist 1½"C, 2#8(sign), 2#8(ltg)

NOTES:

1 - FOR ACCURATE RIGHT OF WAY DATA, CONTACT RIGHT OF WAY ENGINEERING AT THE DISTRICT OFFICE.

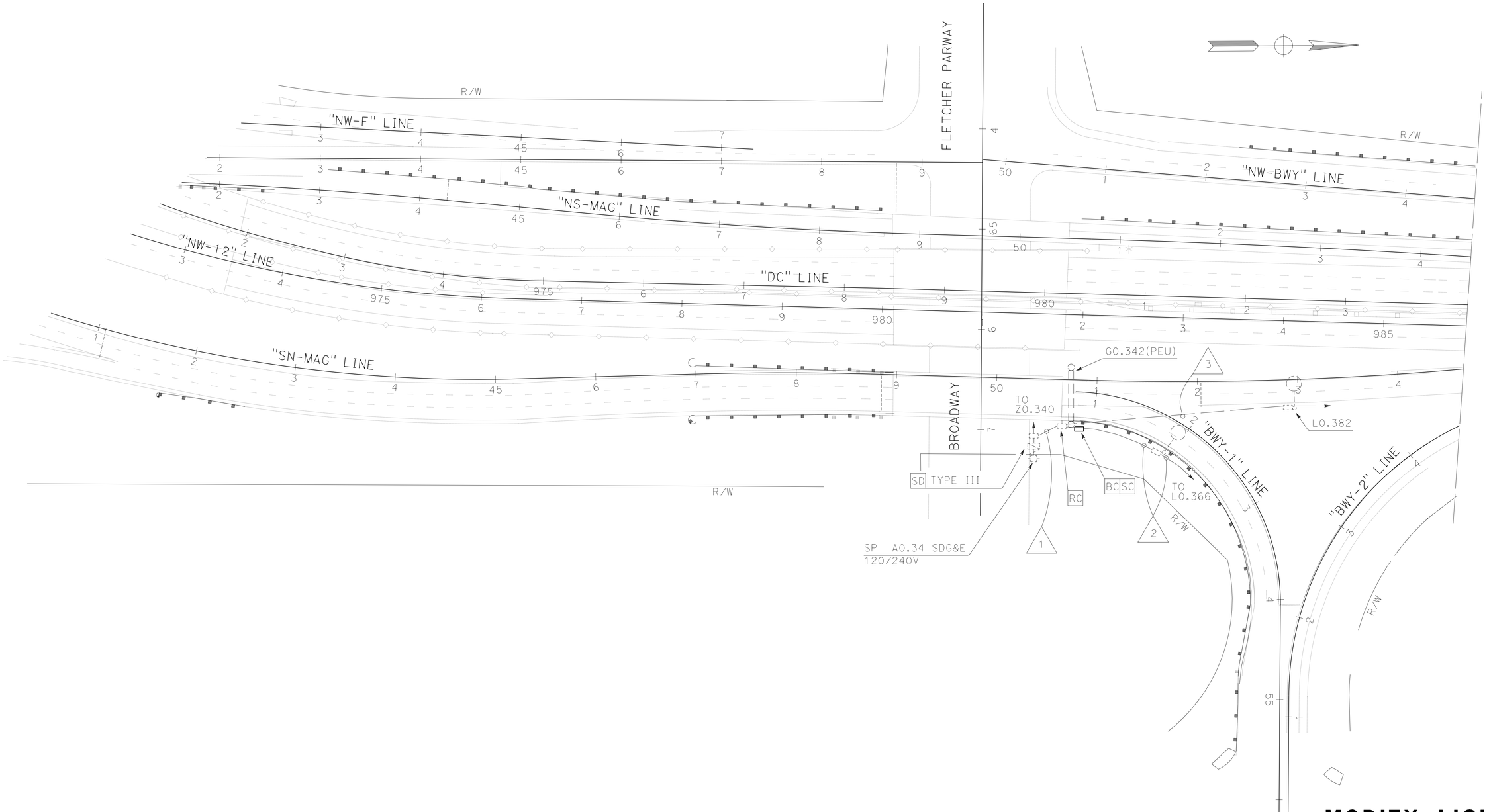

MODIFY LIGHTING

SCALE 1" = 50'

E-17

APPROVED FOR ELECTRICAL WORK ONLY

STATE OF CALIFORNIA - DEPARTMENT OF TRANSPORTATION

Caltrans® **TRAFFIC ELECTRICAL**

FUNCTIONAL SUPERVISOR: RAJPREET SINGH

CALCULATED-DESIGNED BY: JOSEPH RAND

CHECKED BY: RAJPREET SINGH

REVISED BY / DATE REVISED

LAST REVISION 05-07-14 | DATE PLOTTED => 30-JUL-2014 | TIME PLOTTED => 10:29

Dist	COUNTY	ROUTE	POST MILES TOTAL PROJECT	SHEET No.	TOTAL SHEETS
11	SD	67	R0.0/R5.9	131	204

REGISTERED ELECTRICAL ENGINEER 05-14-14 DATE

07-28-14
PLANS APPROVAL DATE

REGISTERED PROFESSIONAL ENGINEER JOSEPH RAND No. 11131 Exp. 06-30-15 ELECTRICAL STATE OF CALIFORNIA

THE STATE OF CALIFORNIA OR ITS OFFICERS OR AGENTS SHALL NOT BE RESPONSIBLE FOR THE ACCURACY OR COMPLETENESS OF SCANNED COPIES OF THIS PLAN SHEET.

NOTE:

1 - AB EXISTING LOOPS AND REPLACE WITH TYPE 'E' LOOPS AS SHOWN ON THIS TABLE.

2 - SEE E-12 FOR OTHER LOCATIONS OF DETECTOR LOOP.

DETECTOR LOOP 1

ROUTE	PM	LOCATION OF DETECTOR LOOP CENTERED IN LANE (N)							TYPE E DETECTOR LOOP (EA)
		LOCATION	FACILITY	DIRECTION	COUNT STATION LOOPS				
					LANE #1	LANE #2	LANE #3	LANE #4	
67	1.09	BRADLEY Ave SEE "DETAIL B"	COUNT STATION U1.093	NB	1	1	1		3
				SB	1	1	1		3
67	1.619	N/O 52/67 CONNECTOR SEE "DETAIL D"	COUNT STATION U1.621	NB	2	2	2	2	8
				SB	2	2	2	2	8
67	2.333	S/O 52/67 CONNECTOR SEE "DETAIL C & D"	COUNT STATION U2.325	NB	2	2	2	2	8
				SB	2	2	2		6
67	4.747	WINTER GARDEN Blvd SEE "DETAIL A"	COUNT STATION U24.756	NB	1	1			2
				SB	1	1			2
								TOTAL =	40

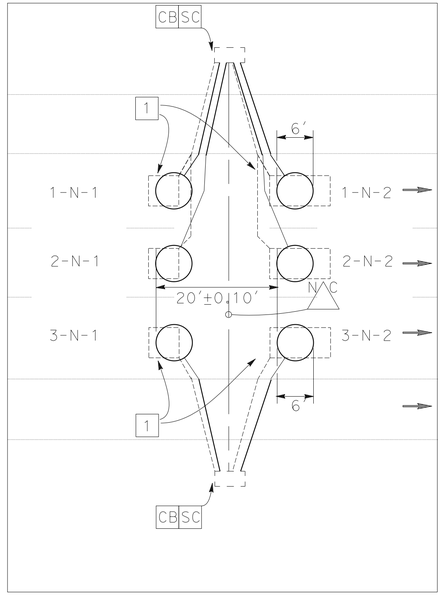

DETAIL C (Typ)

NO SCALE

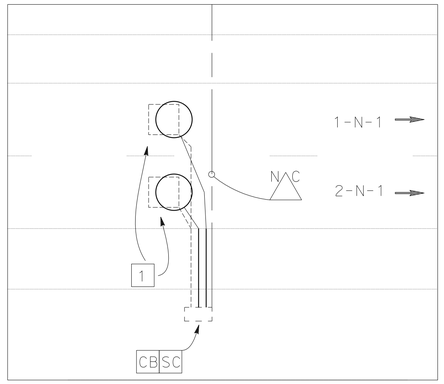

DETAIL A (Typ)

NO SCALE

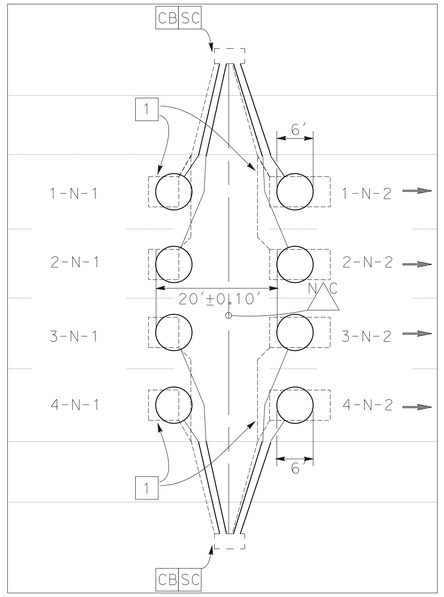

DETAIL D (Typ)

NO SCALE

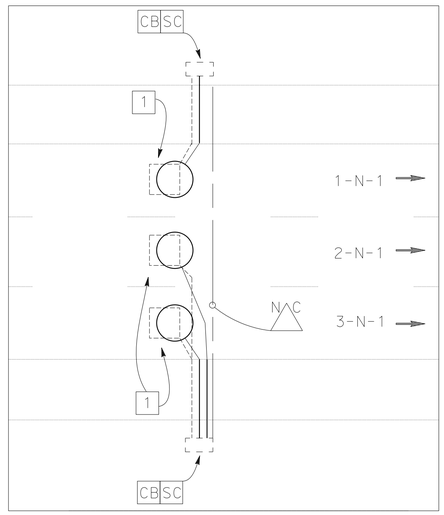

DETAIL B (Typ)

NO SCALE

LANE NUMBER
DIRECTION OF TRAVEL
LOOP NUMBER IN DIRECTION OF TRAVEL

2-N-1 (TYPICAL)

MAINLINE LOOP DETECTOR IDENTIFICATION

APPROVED FOR ELECTRICAL WORK ONLY

DETECTOR LOOP

NO SCALE

E-18

STATE OF CALIFORNIA - DEPARTMENT OF TRANSPORTATION
Caltrans® TRAFFIC ELECTRICAL

FUNCTIONAL SUPERVISOR: RAJREET SINGH
CALCULATED-DESIGNED BY: JOSEPH RAND
CHECKED BY: RAJPREET SINGH
REVISED BY / DATE REVISED

LAST REVISION 05-07-14 | DATE PLOTTED => 30-JUL-2014 | TIME PLOTTED => 10:29

Dist	COUNTY	ROUTE	POST MILES TOTAL PROJECT	SHEET No.	TOTAL SHEETS
11	SD	67	R0.0/R5.9	132	204

REGISTERED ELECTRICAL ENGINEER 05-14-14 DATE

07-28-14
PLANS APPROVAL DATE

REGISTERED PROFESSIONAL ENGINEER JOSEPH RAND No. 11131 Exp. 06-30-15 ELECTRICAL STATE OF CALIFORNIA

THE STATE OF CALIFORNIA OR ITS OFFICERS OR AGENTS SHALL NOT BE RESPONSIBLE FOR THE ACCURACY OR COMPLETENESS OF SCANNED COPIES OF THIS PLAN SHEET.

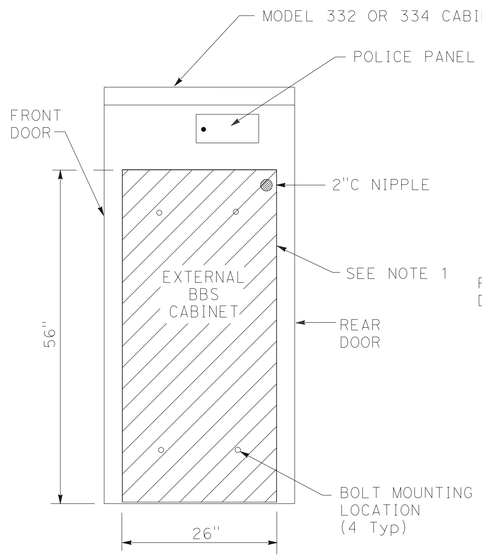

SIDE VIEW

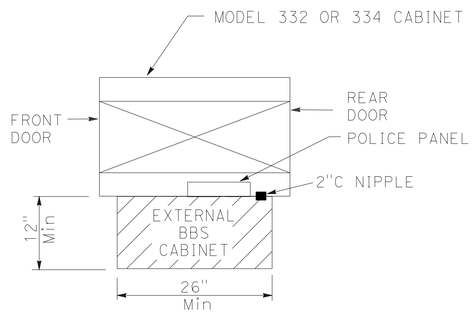

TOP VIEW

EXTERNAL BBS CABINET MOUNTED TO THE MODEL 332 OR 334 CABINET

NOTES:

1. MOUNT THE EXTERNAL BBS CABINET TO THE MODEL 332 OR 334 CABINET WITH FOUR TO EIGHT 18-8 STAINLESS STEEL, FULLY THREADED, 3/8"-16 X 1", HEX HEAD BOLTS, EACH WITH TWO 18-8 STAINLESS STEEL, 1" OD, ROUND FLAT WASHERS (DESIGNED FOR 3/8" BOLTS) AND ONE STAINLESS STEEL, K-LOCK HEX NUT. OBTAIN THE ENGINEER'S APPROVAL OF THE BOLT MOUNTING LOCATIONS PRIOR TO BBS CABINET INSTALLATION.
2. THE ANCHOR BOLTS MUST BE 3/4" Dia X 15" WITH A 2"-90 DEGREE BEND. EXTERNAL BBS CABINET ANCHOR BOLT LOCATION MUST BE PER MANUFACTURER'S RECOMMENDATION. OBTAIN THE ENGINEER'S APPROVAL OF THE ANCHOR BOLT LOCATION PRIOR TO CONSTRUCTING THE FOUNDATION.
3. VERIFY THE DIMENSIONS OF THE BBS CABINET AND OBTAIN THE ENGINEER'S APPROVAL OF NECESSARY CHANGES PRIOR TO CONSTRUCTING THE FOUNDATION
4. ALL DIMENSIONS ARE NOMINAL.

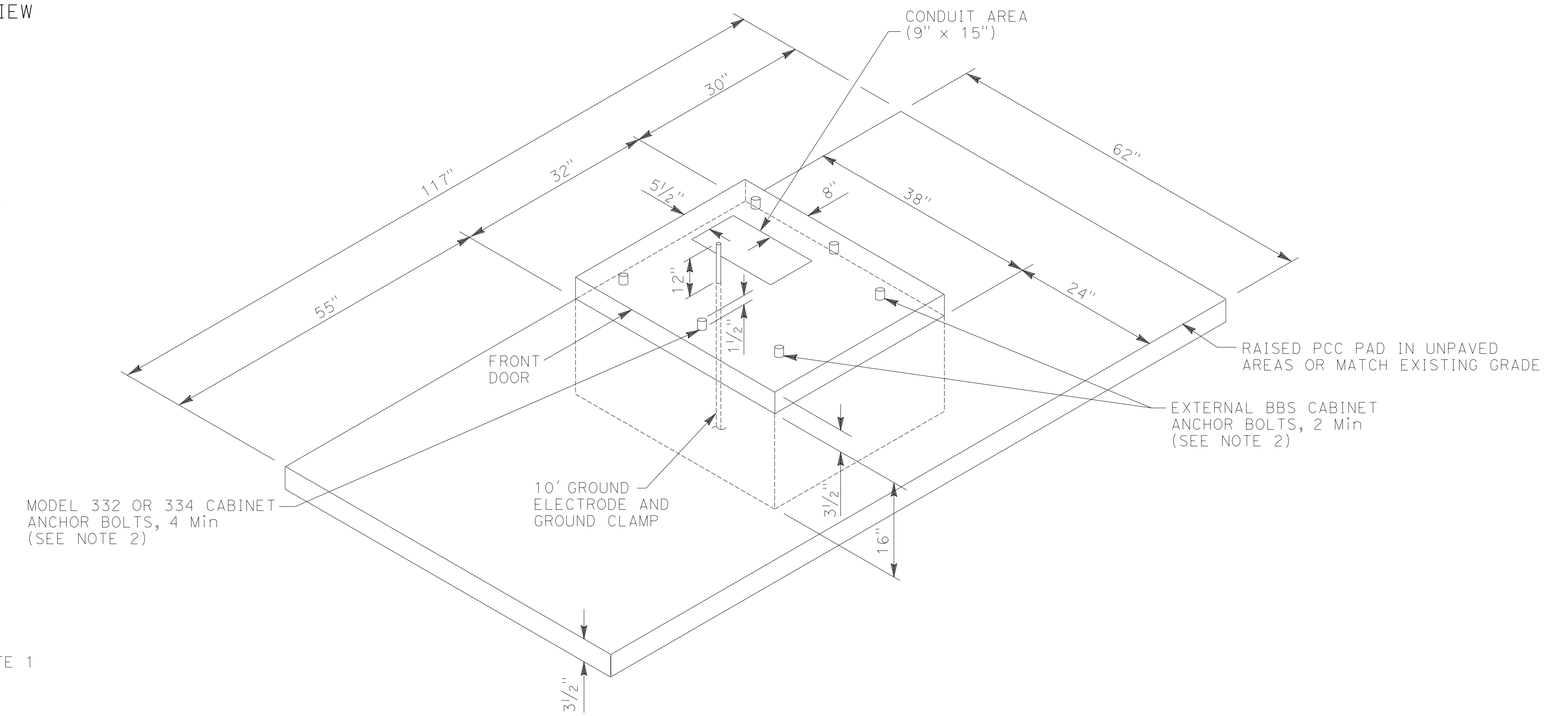

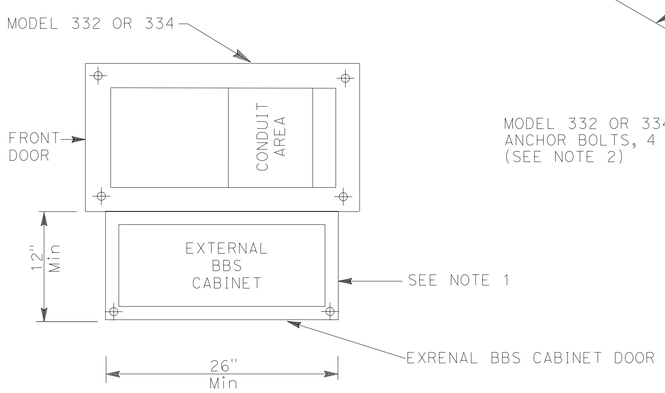

BASE PLAN FOR BBS MOUNTED TO THE MODEL 332 OR 334 CABINET

(FOR DIMENSIONS AND DETAILS NOT SHOWN, SEE SHEET A6-1 TO A6-4, CABINET HOUSING DETAILS OF THE TRANSPORTATION ELECTRICAL EQUIPMENT SPECIFICATION (TEES))

MODIFIED MODEL 332 AND 334 CABINET FOUNDATION DETAIL FOR BATTERY BACKUP SYSTEM (BBS)

(FOR DIMENSIONS AND DETAILS NOT SHOWN AND ADDITIONAL NOTES, SEE STANDARD PLAN ES-3C FOR MODEL 332 AND 334 CABINES)

APPROVED FOR ELECTRICAL WORK ONLY

SIGNAL AND LIGHTING
(BBS FORNDATION DETAILS)

NO SCALE

E-19

STATE OF CALIFORNIA - DEPARTMENT OF TRANSPORTATION
Caltrans® TRAFFIC ELECTRICAL

CALCULATED-DESIGNED BY	JOSEPH RAND	REVISED BY	
CHECKED BY	RAJPREET SINGH	DATE REVISED	
FUNCTIONAL SUPERVISOR	RAJPREET SINGH		

LAST REVISION 05-07-14 | DATE PLOTTED => 30-JUL-2014 | TIME PLOTTED => 10:29

M

Maint	MAINTENANCE
Max	MAXIMUM
MB	METAL BEAM
MBB	METAL BEAM BARRIER
MBGR	METAL BEAM GUARD RAILING
Med	MEDIAN
MGS	MIDWEST GUARDRAIL SYSTEM
MH	MANHOLE
Min	MINIMUM
Misc	MISCELLANEOUS
Misc I & S	MISCELLANEOUS IRON AND STEEL
Mkr	MARKER
Mod	MODIFIED,
	MODIFY
Mon	MONUMENT
MP	METAL PLATE
MPGR	METAL PLATE GUARD RAILING
MR	MOVEMENT RATING
MSE	MECHANICALLY STABILIZED EMBANKMENT
Mt	MOUNTAIN, MOUNT
Mtl	MATERIAL
MVP	MAINTENANCE VEHICLE PULLOUT

N

N	NORTH
NB	NORTHBOUND
No.	NUMBER (MUST HAVE PERIOD)
Nos.	NUMBERS (MUST HAVE PERIOD)
NPS	NOMINAL PIPE SIZE
NS	NEAR SIDE
NSP	NEW STANDARD PLAN
NTS	NOT TO SCALE

O

Oblr	OBLITERATE
OC	OVERCROSSING
OD	OUTSIDE DIAMETER
OF	OUTSIDE FACE
OG	ORIGINAL GROUND
OGAC	OPEN GRADED ASPHALT CONCRETE
OGFC	OPEN GRADED FRICTION COURSE
OH	OVERHEAD
OHWM	ORDINARY HIGH WATER MARK
O-O	OUT TO OUT
Opp	OPPOSITE
OSD	OVERSIDE DRAIN

P

P	PAGE
PAP	PERFORATED ALUMINUM PIPE
PB	PULL BOX
PC	POINT OF CURVATURE,
	PRECAST
PCC	POINT OF COMPOUND CURVE,
	PORTLAND CEMENT CONCRETE
PCMS	PORTABLE CHANGEABLE MESSAGE SIGN
PCP	PERFORATED CONCRETE PIPE,
	PRESTRESSED CONCRETE PIPE
PCVC	POINT OF COMPOUND VERTICAL CURVE
PEC	PERMIT TO ENTER AND CONSTRUCT
Ped	PEDESTRIAN
Ped OC	PEDESTRIAN OVERCROSSING
Ped UC	PEDESTRIAN UNDERCROSSING
Perm Mtl	PERMEABLE MATERIAL

P continued

PG	PROFILE GRADE
PI	POINT OF INTERSECTION
PJP	PARTIAL JOINT PENETRATION
Pkwy	PARKWAY
ℙ,PL	PLATE
P/L	PROPERTY LINE
PM	POST MILE,
	TIME FROM NOON TO MIDNIGHT
PN	PAVING NOTCH
POC	POINT OF HORIZONTAL CURVE
POT	POINT OF TANGENT
POVC	POINT OF VERTICAL CURVE
PP	PIPE PILE,
	PLASTIC PIPE,
	POWER POLE
PPL	PREFORMED PERMEABLE LINER
PPP	PERFORATED PLASTIC PIPE
PRC	POINT OF REVERSE CURVE
PRF	PAVEMENT REINFORCING FABRIC
PRVC	POINT OF REVERSE VERTICAL CURVE
PS&E	PLANS, SPECIFICATIONS AND ESTIMATES
PS, P/S	PRESTRESSED
PSP	PERFORATED STEEL PIPE
PT	POINT OF TANGENCY
PVC	POLYVINYL CHLORIDE
Pvmt	PAVEMENT

Q

Qty	QUANTITY

R

R	RADIUS
R & D	REMOVE AND DISPOSE
R & S	REMOVE AND SALVAGE
R/C	RATE OF CHANGE
RCA	REINFORCED CONCRETE ARCH
RCB	REINFORCED CONCRETE BOX
RCP	REINFORCED CONCRETE PIPE
RCPA	REINFORCED CONCRETE PIPE ARCH
Rd	ROAD
Reinf	REINFORCED,
	REINFORCEMENT,
	REINFORCING
Rel	RELOCATE
Repl	REPLACEMENT
Ret	RETAINING
Rev	REVISED, REVISION
Rdwy	ROADWAY
RHMA	RUBBERIZED HOT MIX ASPHALT
Riv	RIVER
RM	ROAD-MIXED
RP	RADIUS POINT,
	REFERENCE POINT
RR	RAILROAD
RSP	ROCK SLOPE PROTECTION,
	REVISED STANDARD PLAN
Rt	RIGHT
Rte	ROUTE
RW	REDWOOD,
	RETAINING WALL
R/W	RIGHT OF WAY
Rwy	RAILWAY

S

S	SOUTH,
	SUPPLEMENT
SAE	STRUCTURE APPROACH EMBANKMENT
Salv	SALVAGE
SAPP	STRUCTURAL ALUMINUM PLATE PIPE
SB	SOUTHBOUND
SC	SAND CUSHION
SCSP	SLOTTED CORRUGATED STEEL PIPE
SD	STORM DRAIN
Sec	SECOND,
	SECTION
Sep	SEPARATION
SG	SUBGRADE
Shld	SHOULDER
Sht	SHEET
Sim	SIMILAR
℄	STATION LINE
SM	SELECTED MATERIAL
Spec	SPECIAL,
	SPECIFICATIONS
SPP	SLOTTED PLASTIC PIPE
SS	SLOPE STAKE
SSBM	STRAP AND SADDLE BRACKET METHOD
SSD	STRUCTURAL SECTION DRAIN
SSPA	STRUCTURAL STEEL PLATE ARCH
SSPP	STRUCTURAL STEEL PLATE PIPE
SSPPA	STRUCTURAL STEEL PLATE PIPE ARCH
SSRP	STEEL SPIRAL RIB PIPE
St	STREET
Sta	STATION
STBB	SINGLE THRIE BEAM BARRIER
Std	STANDARD
Str	STRUCTURE
Surf	SURFACING
SW	SIDEWALK,
	SOUND WALL
Swr	SEWER
Sym	SYMMETRICAL
S4S	SURFACE 4 SIDES

T

T	SEMI-TANGENT
Tan	TANGENT
TBB	THRIE BEAM BARRIER
Tbr	TIMBER
TC	TOP OF CURB
TCB	TRAFFIC CONTROL BOX
TCE	TEMPORARY CONSTRUCTION EASEMENT
Tel	TELEPHONE
Temp	TEMPORARY
TG	TOP OF GRADE
Tot	TOTAL
TP	TELEPHONE POLE
TPB	TREATED PERMEABLE BASE
TPM	TREATED PERMEABLE MATERIAL
Trans	TRANSITION

T continued

TS	TRANSVERSE,
	TRAFFIC SIGNAL,
	TUBULAR STEEL
Typ	TYPICAL

U

UC	UNDERCROSSING
UD	UNDERDRAIN
UG	UNDERGROUND
UON	UNLESS OTHERWISE NOTED
UP	UNDERPASS

V

V	VALVE,
	DESIGN SPEED
Var	VARIABLE,
	VARIES
VC	VERTICAL CURVE
VCP	VITRIFIED CLAY PIPE
Vert	VERTICAL
Via	VIADUCT
Vol	VOLUME

W

W	WEST,
	WIDTH
WB	WESTBOUND
WH	WEEP HOLE
WM	WIRE MESH
WS	WATER SURFACE
WSP	WELDED STEEL PIPE
Wt	WEIGHT
WV	WATER VALVE
WW	WINGWALL
WWLOL	WINGWALL LAYOUT LINE

X

X Sec	CROSS SECTION
Xing	CROSSING

Y

Yr	YEAR
Yrs	YEARS

Dist	COUNTY	ROUTE	POST MILES TOTAL PROJECT	SHEET No.	TOTAL SHEETS
11	SD	67	R0.0/R5.9	133	204

Grace M. Tsushima
REGISTERED CIVIL ENGINEER

July 19, 2013
PLANS APPROVAL DATE

REGISTERED PROFESSIONAL ENGINEER
Grace M. Tsushima
No. C49814
Exp. 9-30-14
CIVIL
STATE OF CALIFORNIA

THE STATE OF CALIFORNIA OR ITS OFFICERS OR AGENTS SHALL NOT BE RESPONSIBLE FOR THE ACCURACY OR COMPLETENESS OF SCANNED COPIES OF THIS PLAN SHEET.

TO ACCOMPANY PLANS DATED 07-28-14

UNIT OF MEASUREMENT SYMBOLS:

Some of the symbols used in the project plan quantity tables and in the Bid Item List are:

TABLE A

SYMBOL USED	DEFINITIONS
ACRE	ACRE
CF	CUBIC FOOT
CY	CUBIC YARD
EA	EACH
GAL	GALLON
LB	POUND
LF	LINEAR FOOT
SQFT	SQUARE FOOT
SQYD	SQUARE YARD
STA	100 FEET
TAB	TABLET
TON	2,000 POUNDS

Some of the symbols used in the plans other than in the project plan quantity tables are:

TABLE B

SYMBOL USED	DEFINITIONS
ksi	KIPS PER SQUARE INCH
ksf	KIPS PER SQUARE FOOT
psi	POUNDS PER SQUARE INCH
psf	POUNDS PER SQUARE FOOT
lb/ft^3, pcf	POUNDS PER CUBIC FOOT
tsf	TONS PER SQUARE FOOT
mph, MPH *	MILES PER HOUR
ø	NOMINAL DIAMETER
oz	OUNCE
lb	POUND
kip	1,000 POUNDS
cal	CALORIE
ft	FOOT OR FEET
gal	GALLON

* For use on a sign panel only

STATE OF CALIFORNIA
DEPARTMENT OF TRANSPORTATION

ABBREVIATIONS (SHEET 2 OF 2)

NO SCALE

RSP A10B DATED JULY 19, 2013 SUPERSEDES STANDARD PLAN A10B DATED MAY 20, 2011 - PAGE 2 OF THE STANDARD PLANS BOOK DATED 2010.

REVISED STANDARD PLAN RSP A10B

2010 REVISED STANDARD PLAN RSP A10B

6-7-13

Dist	COUNTY	ROUTE	POST MILES TOTAL PROJECT	SHEET No.	TOTAL SHEETS
11	SD	67	R0.0/R5.9	134	204

REGISTERED CIVIL ENGINEER

July 19, 2013
PLANS APPROVAL DATE

REGISTERED PROFESSIONAL ENGINEER Roberta L. McLaughlin No. C40375 Exp. 3-31-15 CIVIL STATE OF CALIFORNIA

THE STATE OF CALIFORNIA OR ITS OFFICERS OR AGENTS SHALL NOT BE RESPONSIBLE FOR THE ACCURACY OR COMPLETENESS OF SCANNED COPIES OF THIS PLAN SHEET.

TO ACCOMPANY PLANS DATED 07-28-14

EXIT RAMP NEUTRAL AREA (GORE) TREATMENT

DETAIL 36

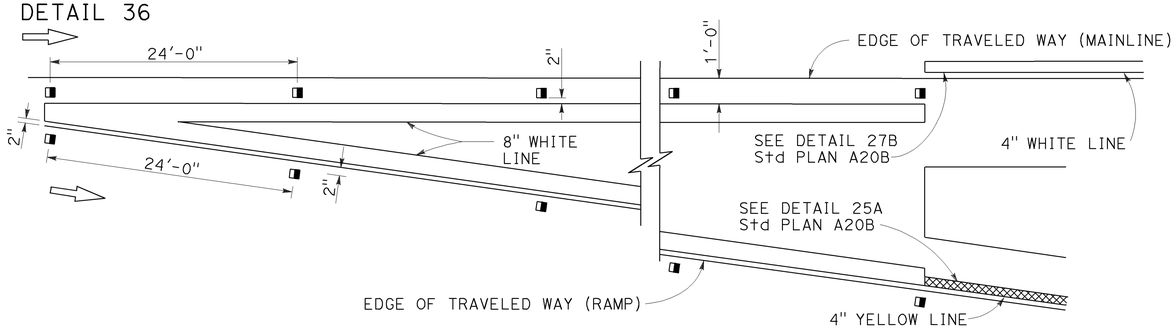

ENTRANCE RAMP NEUTRAL AREA (MERGE) TREATMENT

DETAIL 36A

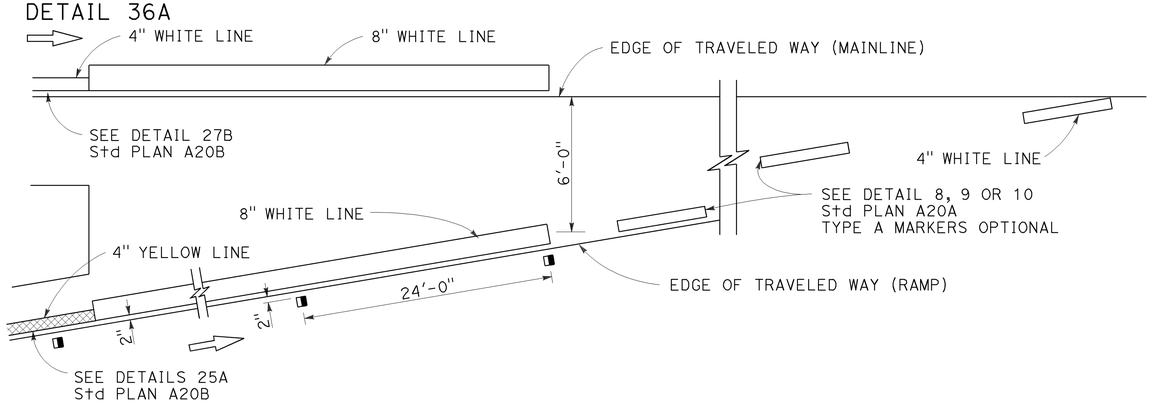

ENTRANCE RAMP NEUTRAL AREA (ACCELERATION LANE) TREATMENT

DETAIL 36B

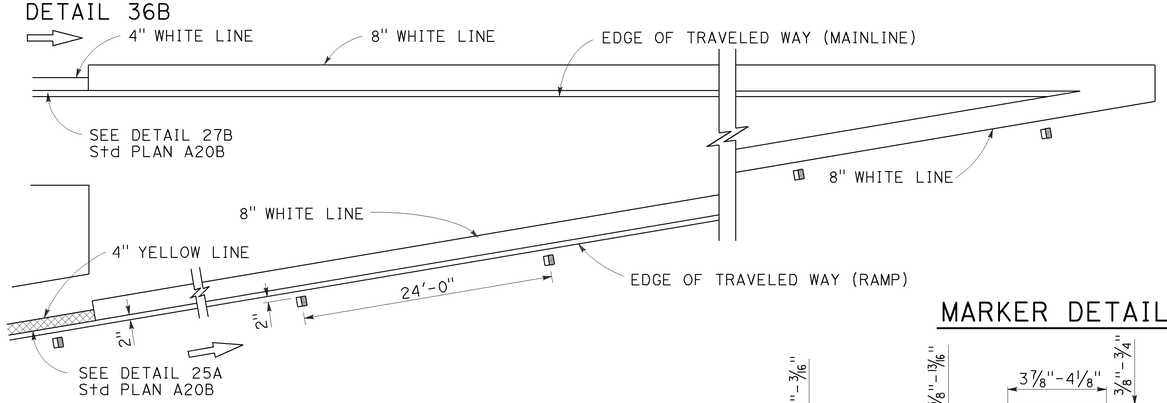

MARKER DETAILS

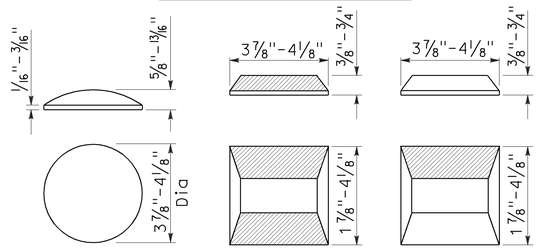

RETROREFLECTIVE FACE

LEGEND:

MARKERS

- ○ TYPE A WHITE NON-REFLECTIVE
- ⊟ TYPE C RED-CLEAR RETROREFLECTIVE
- ◨ TYPE G ONE-WAY CLEAR RETROREFLECTIVE

LANE DROP AT EXIT RAMPS

DETAIL 37

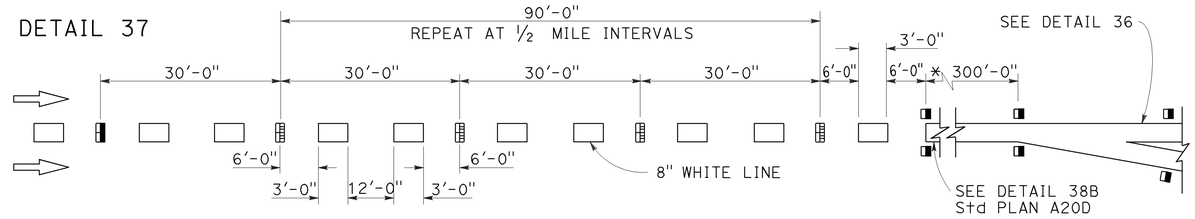

DETAIL 37A

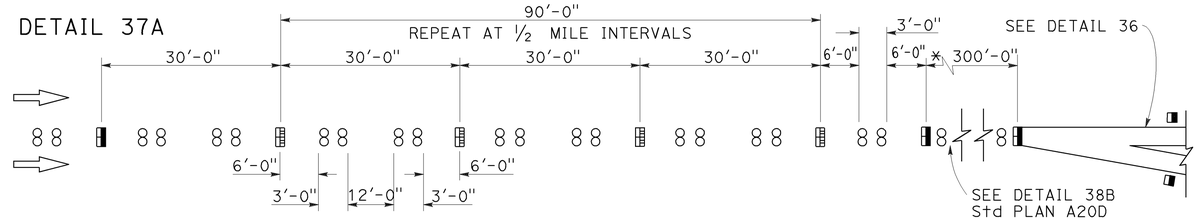

* The solid channelizing line shown may be omitted on short auxiliary lanes where weaving length is critical.

LANE DROP AT INTERSECTIONS

DETAIL 37B

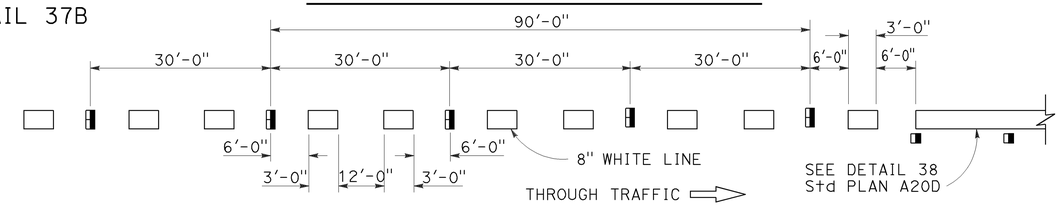

DETAIL 37C

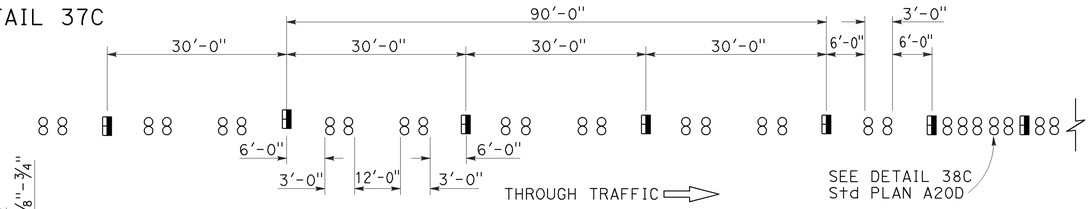

STATE OF CALIFORNIA
DEPARTMENT OF TRANSPORTATION

PAVEMENT MARKERS AND TRAFFIC LINE TYPICAL DETAILS

NO SCALE

RSP A20C DATED JULY 19, 2013 SUPERSEDES STANDARD PLAN A20C DATED MAY 20, 2011 - PAGE 11 OF THE STANDARD PLANS BOOK DATED 2010.

REVISED STANDARD PLAN RSP A20C

2010 REVISED STANDARD PLAN RSP A20C

4-29-13

Dist	COUNTY	ROUTE	POST MILES TOTAL PROJECT	SHEET No.	TOTAL SHEETS
11	SD	67	R0.0/R5.9	135	204

REGISTERED CIVIL ENGINEER

April 20, 2012
PLANS APPROVAL DATE

REGISTERED PROFESSIONAL ENGINEER
Roberta L. McLaughlin
No. C40375
Exp. 3-31-13
CIVIL
STATE OF CALIFORNIA

THE STATE OF CALIFORNIA OR ITS OFFICERS OR AGENTS SHALL NOT BE RESPONSIBLE FOR THE ACCURACY OR COMPLETENESS OF SCANNED COPIES OF THIS PLAN SHEET.

TO ACCOMPANY PLANS DATED 07-28-14

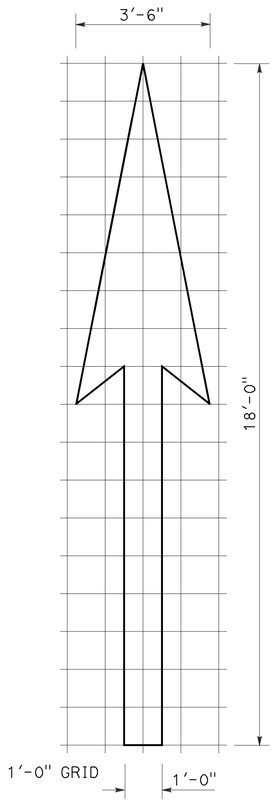

A=25 ft^2

TYPE I 18'-0" ARROW

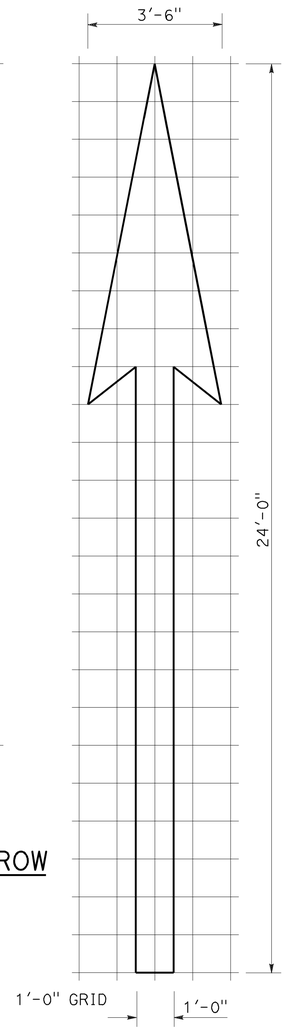

A=31 ft^2

TYPE I 24'-0" ARROW

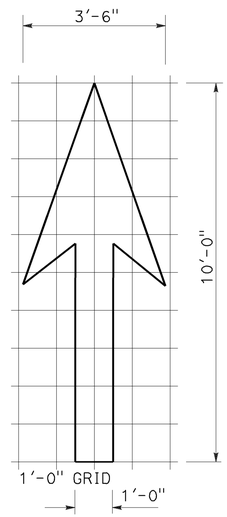

A=14 ft^2

TYPE I 10'-0" ARROW

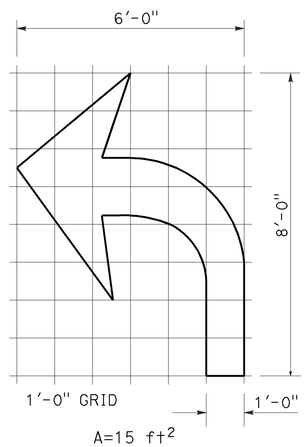

A=15 ft^2

TYPE IV (L) ARROW

(For Type IV (R) arrow, use mirror image)

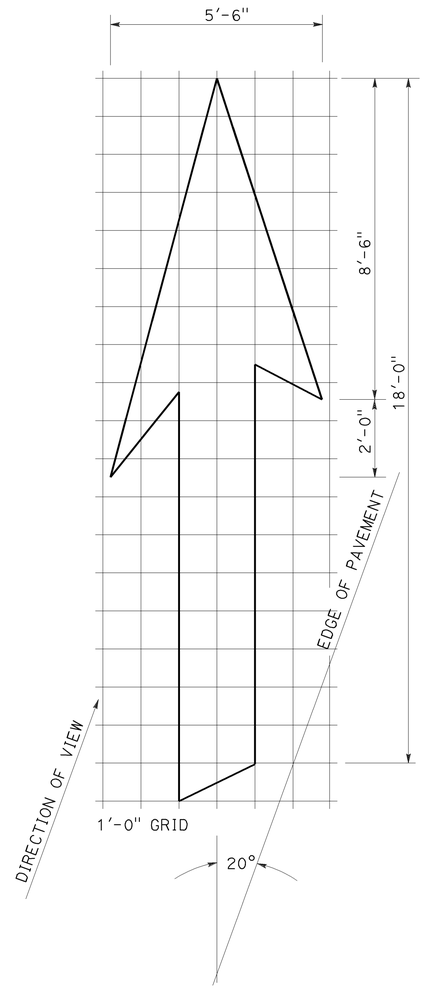

A=42 ft^2

TYPE VI ARROW

Right lane drop arrow
(For left lane, use mirror image)

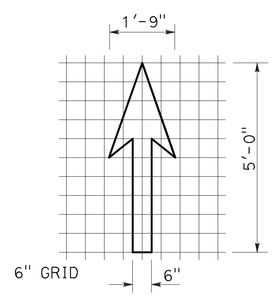

A=3.5 ft^2

BIKE LANE ARROW

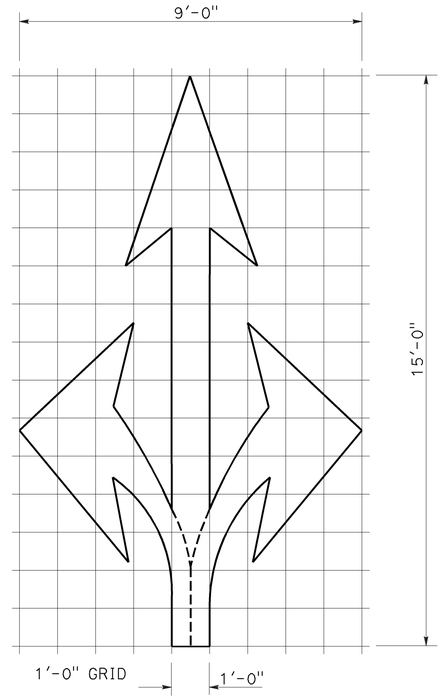

A=36 ft^2

TYPE VIII ARROW

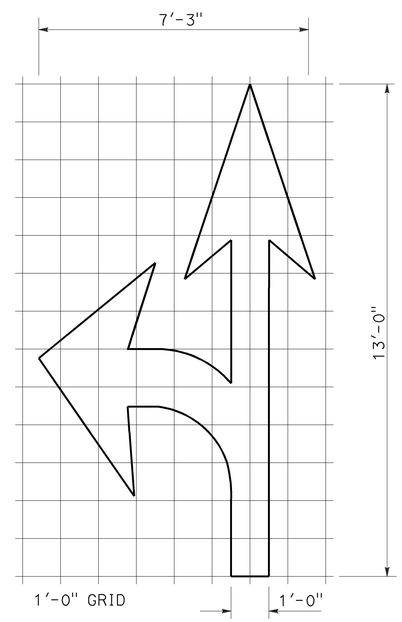

A=27 ft^2

TYPE VII (L) ARROW

(For Type VII (R) arrow, use mirror image)

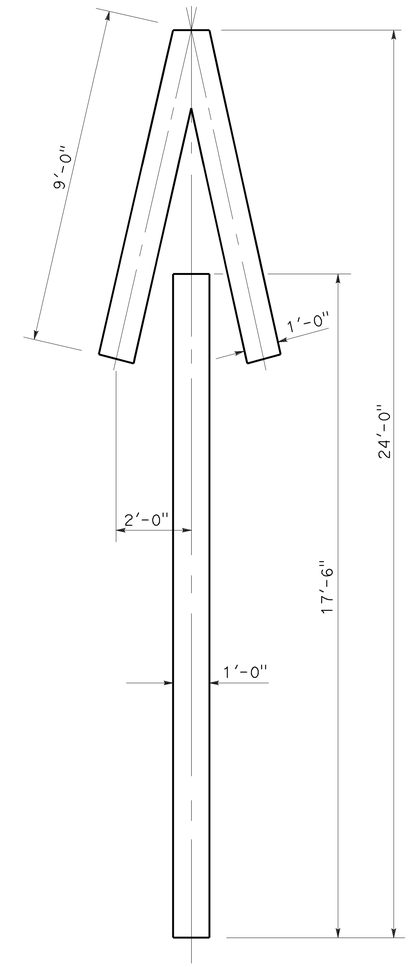

A=33 ft^2

TYPE V ARROW

NOTE:
Minor variations in dimensions may be accepted by the Engineer.

STATE OF CALIFORNIA
DEPARTMENT OF TRANSPORTATION

PAVEMENT MARKINGS ARROWS

NO SCALE

RSP A24A DATED APRIL 20, 2012 SUPERSEDES STANDARD PLAN A24A DATED MAY 20, 2011 - PAGE 13 OF THE STANDARD PLANS BOOK DATED 2010.

REVISED STANDARD PLAN RSP A24A

2010 REVISED STANDARD PLAN RSP A24A

3-14-12

Dist	COUNTY	ROUTE	POST MILES TOTAL PROJECT	SHEET No.	TOTAL SHEETS
11	SD	67	R0.0/R5.9	136	204

REGISTERED CIVIL ENGINEER

October 19, 2012
PLANS APPROVAL DATE

REGISTERED PROFESSIONAL ENGINEER
Roberta L. McLaughlin
No. C40375
Exp. 3-31-13
CIVIL
STATE OF CALIFORNIA

THE STATE OF CALIFORNIA OR ITS OFFICERS OR AGENTS SHALL NOT BE RESPONSIBLE FOR THE ACCURACY OR COMPLETENESS OF SCANNED COPIES OF THIS PLAN SHEET.

NOTE: TO ACCOMPANY PLANS DATED 07-28-14

Minor variations in dimensions may be accepted by the Engineer.

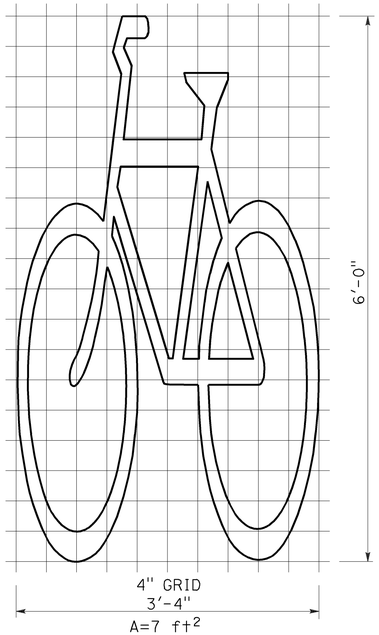

BIKE LANE SYMBOL WITHOUT PERSON

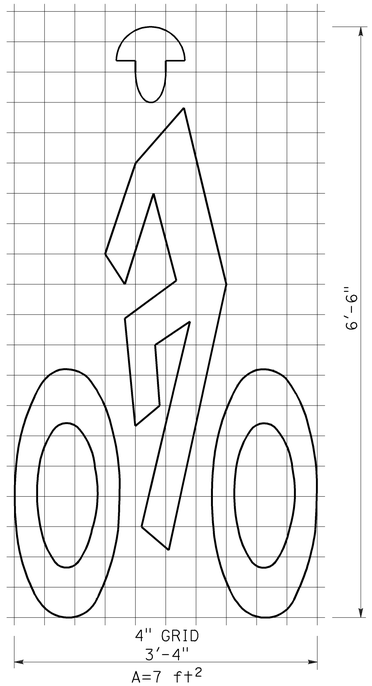

BIKE LANE SYMBOL WITH PERSON

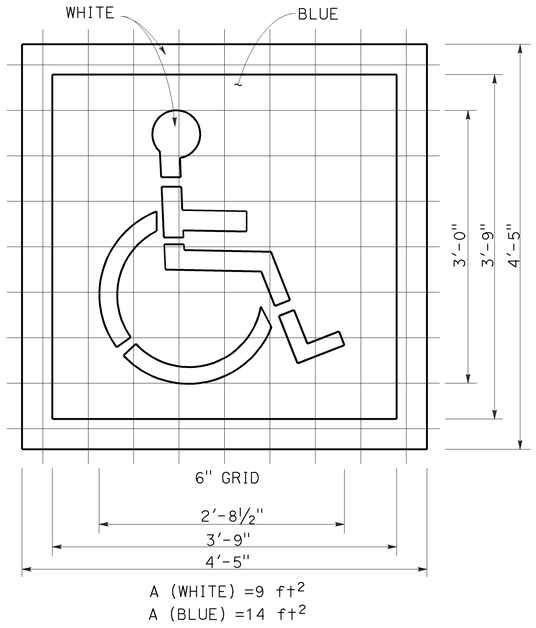

INTERNATIONAL SYMBOL OF ACCESSIBILITY (ISA) MARKING

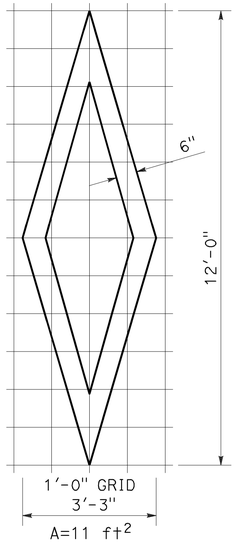

DIAMOND SYMBOL

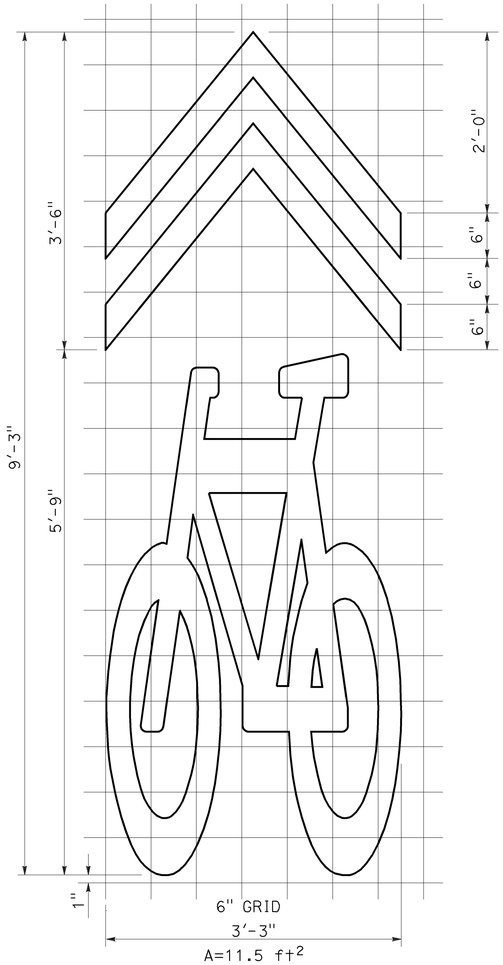

SHARED ROADWAY BICYCLE MARKING

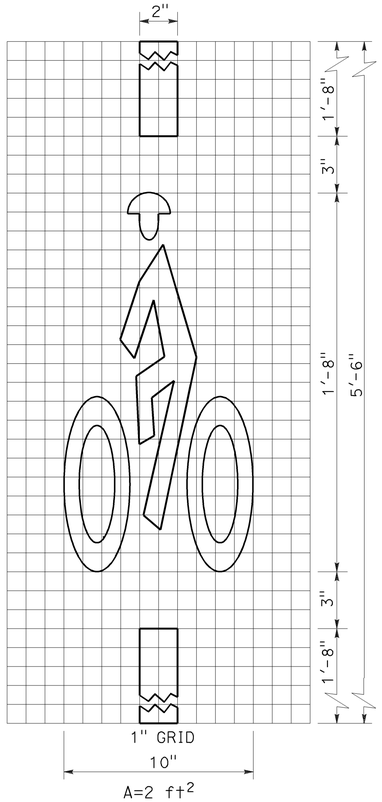

BICYCLE LOOP DETECTOR SYMBOL

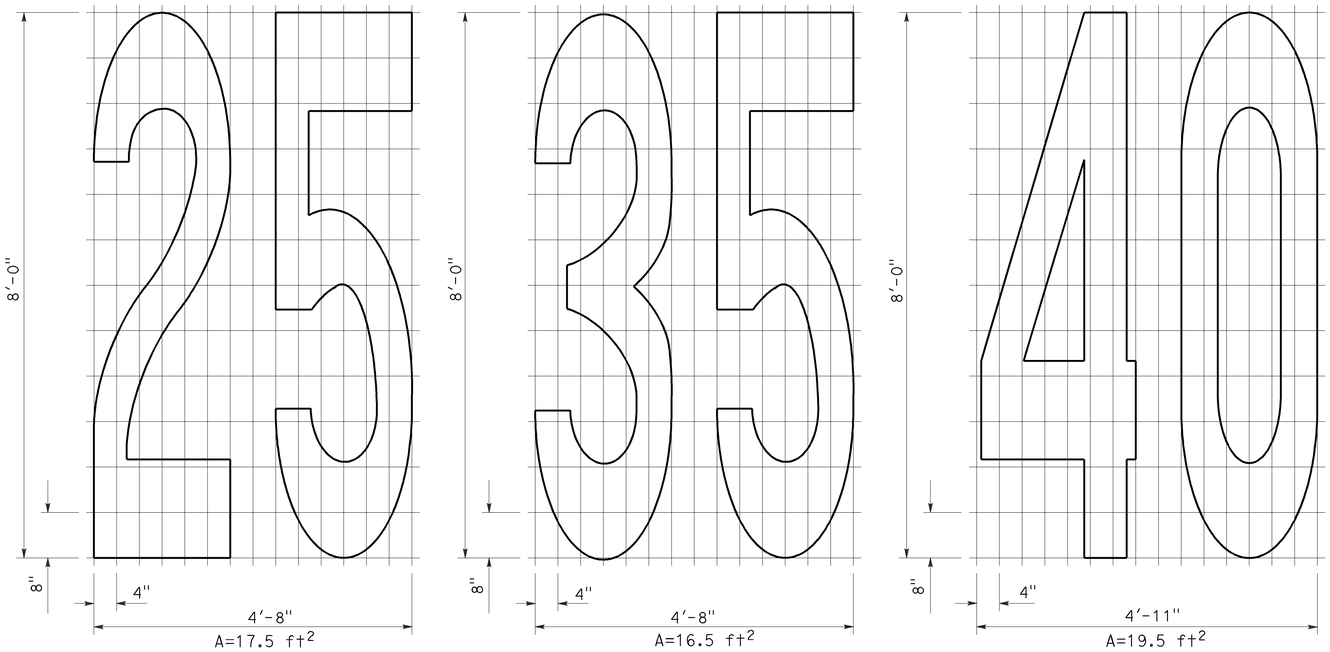

NUMERALS

STATE OF CALIFORNIA
DEPARTMENT OF TRANSPORTATION

PAVEMENT MARKINGS SYMBOLS AND NUMERALS

NO SCALE

RSP A24C DATED OCTOBER 19, 2012 SUPERSEDES STANDARD PLAN A24C DATED MAY 20, 2011 - PAGE 15 OF THE STANDARD PLANS BOOK DATED 2010.

REVISED STANDARD PLAN RSP A24C

2010 REVISED STANDARD PLAN RSP A24C

6-28-12

Dist	COUNTY	ROUTE	POST MILES TOTAL PROJECT	SHEET No.	TOTAL SHEETS
11	SD	67	R0.0/R5.9	137	204

REGISTERED CIVIL ENGINEER

July 20, 2012
PLANS APPROVAL DATE

REGISTERED PROFESSIONAL ENGINEER
Roberta L. McLaughlin
No. C40375
Exp. 3-31-13
CIVIL
STATE OF CALIFORNIA

THE STATE OF CALIFORNIA OR ITS OFFICERS OR AGENTS SHALL NOT BE RESPONSIBLE FOR THE ACCURACY OR COMPLETENESS OF SCANNED COPIES OF THIS PLAN SHEET.

TO ACCOMPANY PLANS DATED 07-28-14

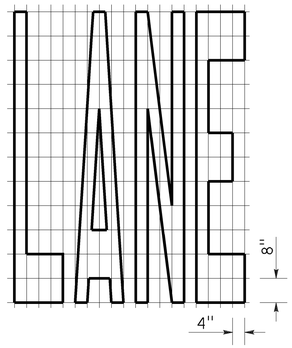

A=24 ft^2

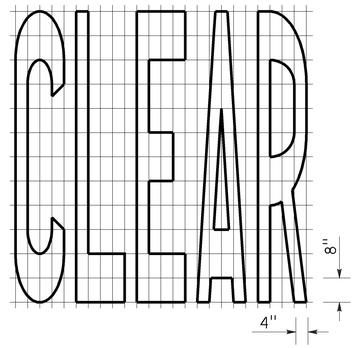

A=27 ft^2

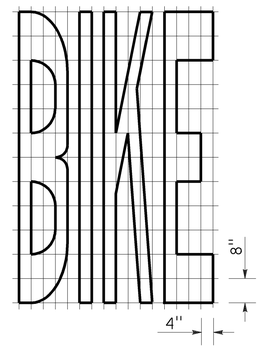

A=21 ft^2

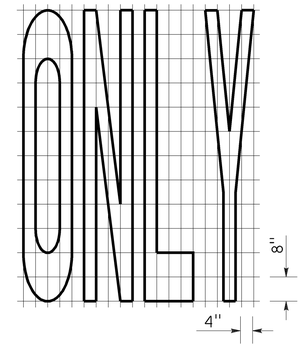

A=22 ft^2

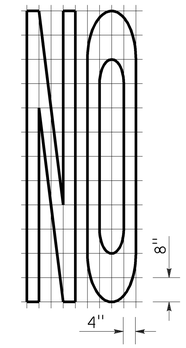

A=14 ft^2

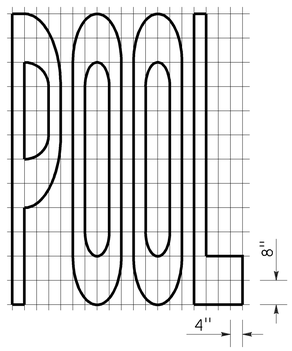

A=23 ft^2

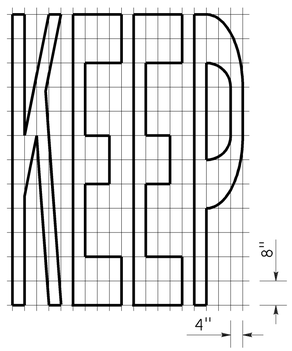

A=24 ft^2

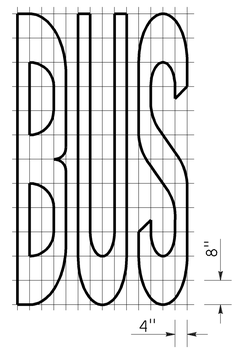

A=20 ft^2

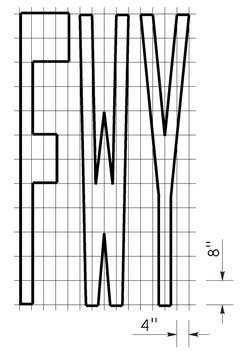

A=16 ft^2

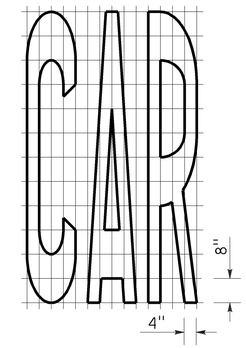

A=17 ft^2

WORD MARKINGS			
ITEM	ft^2	ITEM	ft^2
LANE	24	NO	14
POOL	23	BIKE	21
CAR	17	BUS	20
CLEAR	27	ONLY	22
KEEP	24	FWY	16

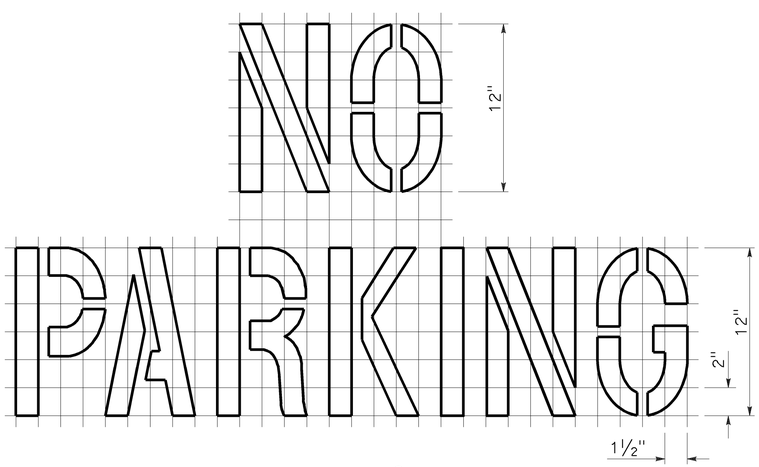

A=2 ft^2
See Notes 6 and 7

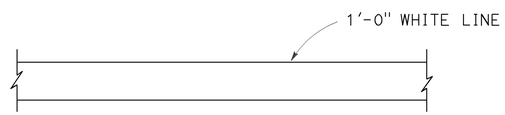

LIMIT LINE (STOP LINE)

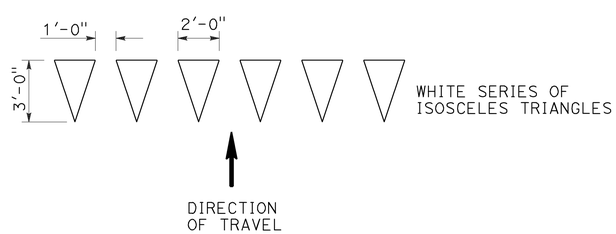

YIELD LINE

NOTES:

1. If a message consists of more than one word, it should read "UP", i.e., the first word should be nearest the driver.
2. The space between words should be at least four times the height of the characters for low speed roads, but not more than ten times the height of the characters. The space may be reduced appropriately where there is limited space because of local conditions.
3. Minor variations in dimensions may be accepted by the Engineer.
4. Portions of a letter, number or symbol may be separated by connecting segments not to exceed 2" in width.
5. The words "NO PARKING" pavement marking is to be used for parking facilities. For typical locations of markings, see Standard Plans A90A and A90B.
6. The words "NO PARKING", shall be painted in white letters no less than 1'-0" high on a contrasting background and located so that it is visible to traffic enforcement officials.

STATE OF CALIFORNIA
DEPARTMENT OF TRANSPORTATION

PAVEMENT MARKINGS WORDS, LIMIT AND YIELD LINES

NO SCALE

RSP A24E DATED JULY 20, 2012 SUPERSEDES STANDARD PLAN A24E
DATED MAY 20, 2011 - PAGE 17 OF THE STANDARD PLANS BOOK DATED 2010.

REVISED STANDARD PLAN RSP A24E

2010 REVISED STANDARD PLAN RSP A24E

6-12-12

Dist	COUNTY	ROUTE	POST MILES TOTAL PROJECT	SHEET No.	TOTAL SHEETS
11	SD	67	R0.0/R5.9	138	204

REGISTERED CIVIL ENGINEER

July 20, 2012
PLANS APPROVAL DATE

REGISTERED PROFESSIONAL ENGINEER
Roberta L. McLaughlin
No. C40375
Exp. 3-31-13
CIVIL
STATE OF CALIFORNIA

THE STATE OF CALIFORNIA OR ITS OFFICERS OR AGENTS SHALL NOT BE RESPONSIBLE FOR THE ACCURACY OR COMPLETENESS OF SCANNED COPIES OF THIS PLAN SHEET.

TO ACCOMPANY PLANS DATED 07-28-14

2010 REVISED STANDARD PLAN RSP A24F

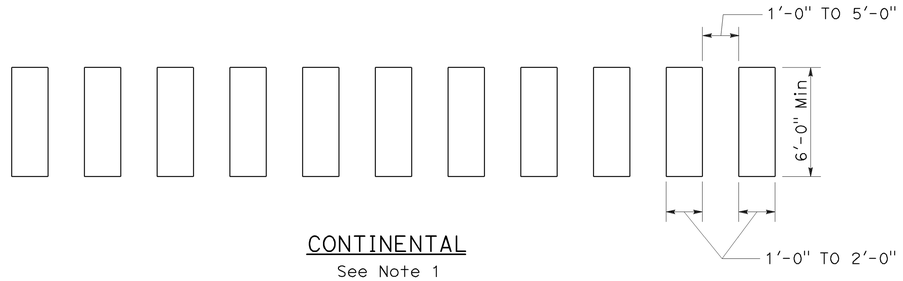

CONTINENTAL
See Note 1

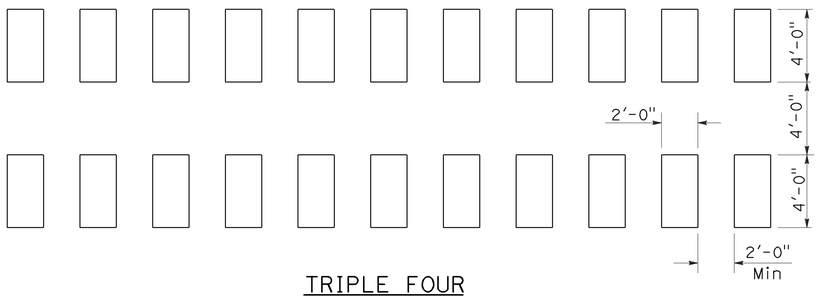

TRIPLE FOUR
See Note 1

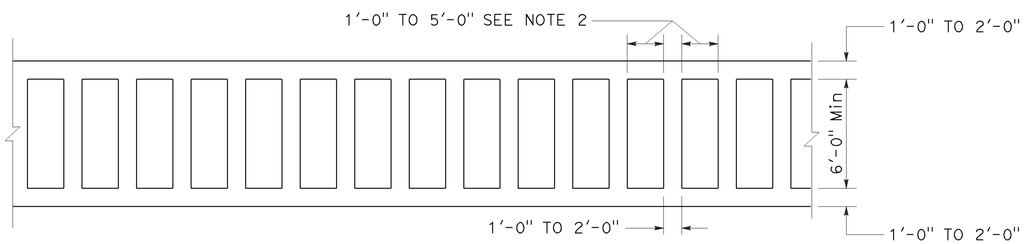

LADDER

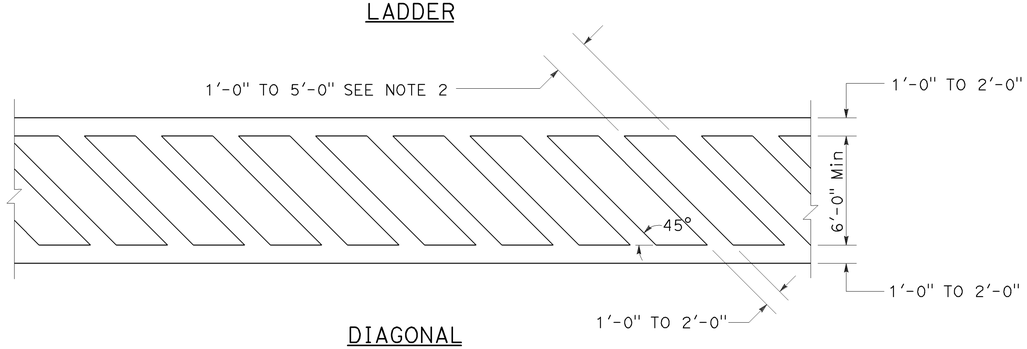

DIAGONAL

HIGHER VISIBILITY CROSSWALKS

NOTES:

1. Spaces between markings should be placed in wheel tracks of each lane.
2. Spacings not to exceed 2.5 times width of longitudinal line.
3. All crosswalk markings must be white except for those near schools must be yellow.

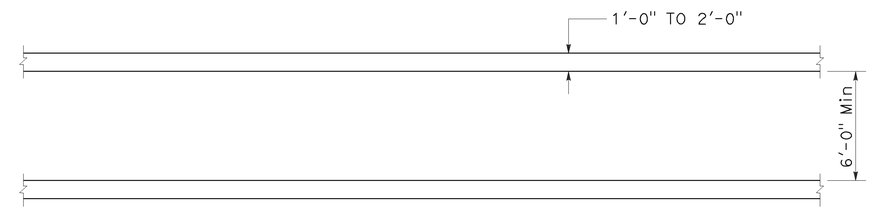

BASIC

STATE OF CALIFORNIA
DEPARTMENT OF TRANSPORTATION

PAVEMENT MARKINGS CROSSWALKS

NO SCALE

RSP A24F DATED JULY 20, 2012 SUPPLEMENTS THE STANDARD PLANS BOOK DATED 2010.

REVISED STANDARD PLAN RSP A24F

Dist	COUNTY	ROUTE	POST MILES TOTAL PROJECT	SHEET No.	TOTAL SHEETS
11	SD	67	R0.0/R5.9	139	204

REGISTERED CIVIL ENGINEER

July 18, 2014
PLANS APPROVAL DATE

REGISTERED PROFESSIONAL ENGINEER
Carl M. Duan
No. C59976
Exp. 6-30-16
CIVIL
STATE OF CALIFORNIA

THE STATE OF CALIFORNIA OR ITS OFFICERS OR AGENTS SHALL NOT BE RESPONSIBLE FOR THE ACCURACY OR COMPLETENESS OF SCANNED COPIES OF THIS PLAN SHEET.

TO ACCOMPANY PLANS DATED 07-28-14

2010 REVISED STANDARD PLAN RSP A62DA

DESIGN NOTES:

Design: AASHTO LRFD Bridge Design Specifications, 4th edition with California Amendments. ACPA DESIGN DATA 1, October 2007. INDIRECT DESIGN METHOD

Soil: w Fe = 162 pcf Installation Type 1
w Fe = 168 pcf Installation Types 2 & 3
w = Unit weight of soil (pcf)
Fe = Soil-structure interaction factor

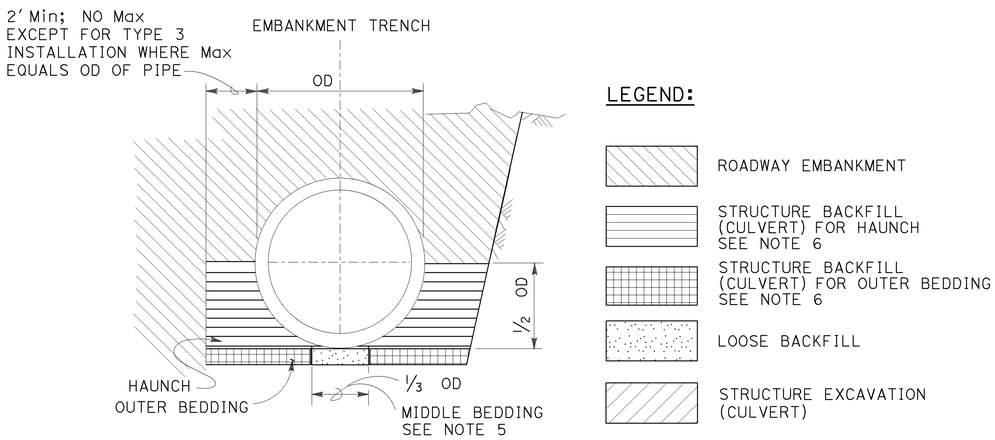

BACKFILL

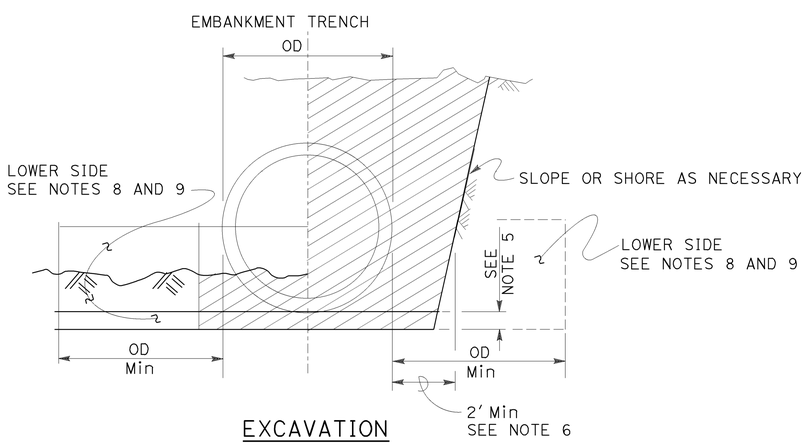

EXCAVATION

INSTALLATION TYPE 1:

The haunch and outer bedding shall be compacted to a minimum 90 percent relative compaction. In addition, the minimum sand equivalent in these areas shall be 30 and the maximum percentage passing the No. 200 sieve size shall be 12.

INSTALLATION TYPE 2:

The haunch and outer bedding shall be compacted to a minimum 90 percent relative compaction. In addition, the minimum sand equivalent in these areas shall be 25.

INSTALLATION TYPE 3:

The haunch and outer bedding shall be compacted to a minimum 85 percent relative compaction. 90 percent relative compaction will be required where the fill over the pipe is less than 4′-0″ or ½ OD. In addition, the minimum sand equivalent in these areas shall be 25 and the material shall not contain rocks, broken concrete, or other solid material exceeding 3″ in greatest dimension.

INSTALLATION TYPE 1

MINIMUM CLASS AND D-LOAD	COVER	
	60″ Dia AND SMALLER	OVER 60″ Dia TO 120″ Dia Max
CLASS II 1000D	14.9′	12.9′
CLASS III 1350D	15.0′ - 21.9′	13.0′ - 18.9′
CLASS III SPECIAL 1700D	22.0′ - 27.9′	19.0′ - 24.9′
CLASS IV 2000D	28.0′ - 32.9′	25.0′ - 29.9′
CLASS IV SPECIAL 2500D	33.0′ - 41.9′	30.0′ - 38.9′
CLASS V 3000D	42.0′ - 49.9′	39.0′ - 46.9′
CLASS V SPECIAL 3600D	50.0′ - 60.0′	47.0′ - 58.0′

INSTALLATION TYPE 2

MINIMUM CLASS AND D-LOAD	COVER	
	60″ Dia AND SMALLER	OVER 60″ Dia TO 120″ Dia Max
CLASS II 1000D	11.9′	9.9′
CLASS III 1350D	12.0′ - 15.9′	10.0′ - 14.9′
CLASS III SPECIAL 1700D	16.0′ - 20.9′	15.0′ - 19.9′
CLASS IV 2000D	21.0′ - 24.9′	20.0′ - 23.9′
CLASS IV SPECIAL 2500D	25.0′ - 31.9′	24.0′ - 30.9′
CLASS V 3000D	32.0′ - 37.9′	31.0′ - 37.9′
CLASS V SPECIAL 3600D	38.0′ - 46.0′	38.0′ - 46.0′

INSTALLATION TYPE 3

MINIMUM CLASS AND D-LOAD	COVER	
	60″ Dia AND SMALLER	OVER 60″ Dia TO 120″ Dia Max
CLASS II 1000D	8.9′	5.9′
CLASS III 1350D	9.0′ - 11.9′	6.0′ - 10.9′
CLASS III SPECIAL 1700D	12.0′ - 15.9′	11.0′ - 13.9′
CLASS IV 2000D	16.0′ - 18.9′	14.0′ - 17.9′
CLASS IV SPECIAL 2500D	19.0′ - 24.9′	18.0′ - 22.9′
CLASS V 3000D	25.0′ - 29.9′	23.0′ - 28.9′
CLASS V SPECIAL 3600D	30.0′ - 36.0′	29.0′ - 35.0′

NOTES:

1. Unless otherwise shown on the plans or specified in the special provision, the Contractor shall have the option of selecting the class of RCP and the type of installation to be used, provided the height of cover does not exceed the value shown for the RCP selected.
   Example: 24″ RCP culvert with maximum cover of 24′-0″ the options are:
   a) Class III Special or stronger with Installation Type 1.
   b) Class IV or stronger with Installation Type 2.
   c) Class IV Special or stronger with Installation Type 3.
   Cover is defined as the maximum vertical distance from top of the pipe to finished grade within the length of any given culvert.
2. The class of RCP and Installation Type selected shall be the same throughout the length of any given culvert.
3. The "length of any culvert" is defined as the culvert between:
   a) Successive drainage structure (inlets, junction boxes, headwalls, etc.).
   b) A drainage structure and the inlet or outlet end of the culvert.
   c) The inlet and outlet end of the culvert when there are no intervening drainage structures.
4. Oval and arch shaped RCP shall not be used.
5. Bedding depth: 1/25 OD Min, not less than 3″.
6. Slurry cement backfill may be substituted for backfill in the outer bedding and haunch areas. If slurry is used, the outer and middle beddings shall be omitted. Prior to installation, the soil under the middle ⅓ of the outside diameter of the pipe shall be softened by scarifying or other means to a minimum depth of 1/25 OD, but not less than 3″. Where slurry cement backfill is used, clear distance to trench wall may be reduced as set forth in the Standard Specifications.
7. Backfill shall be placed full width of excavation except where dimensions are shown for backfill width or thickness. Dimensions shown are minimum.
8. Lower side shall be suitable material as determined by the Engineer. Otherwise it shall be considered unsuitable as set forth in of the Standard Specifications. See Note 9.
9. Where the pipe is placed in a trench, if the trench walls are sloped at 5 vertical to 1 horizontal or steeper for at least 90 percent of the trench height or up to not less than 12″ from the grading plane, the firmness of the soil in the lower side need not be considered.
10. Non-reinforced precast concrete pipe sizes 3′-0″ or smaller may be placed under installation Types 1, 2 or 3.

STATE OF CALIFORNIA
DEPARTMENT OF TRANSPORTATION

EXCAVATION AND BACKFILL CONCRETE PIPE CULVERTS INDIRECT DESIGN METHOD

NO SCALE

RSP A62DA DATED JULY 18, 2014 SUPERSEDES STANDARD PLAN A62DA DATED MAY 20, 2011 - PAGE 24 OF THE STANDARD PLANS BOOK DATED 2010.

REVISED STANDARD PLAN RSP A62DA

Dist	COUNTY	ROUTE	POST MILES TOTAL PROJECT	SHEET No.	TOTAL SHEETS
11	SD	67	R0.0/R5.9	140	204

Randell D. Hiatt
REGISTERED CIVIL ENGINEER

July 19, 2013
PLANS APPROVAL DATE

REGISTERED PROFESSIONAL ENGINEER
Randell D. Hiatt
No. C50200
Exp. 6-30-15
CIVIL
STATE OF CALIFORNIA

THE STATE OF CALIFORNIA OR ITS OFFICERS OR AGENTS SHALL NOT BE RESPONSIBLE FOR THE ACCURACY OR COMPLETENESS OF SCANNED COPIES OF THIS PLAN SHEET.

TO ACCOMPANY PLANS DATED 07-28-14

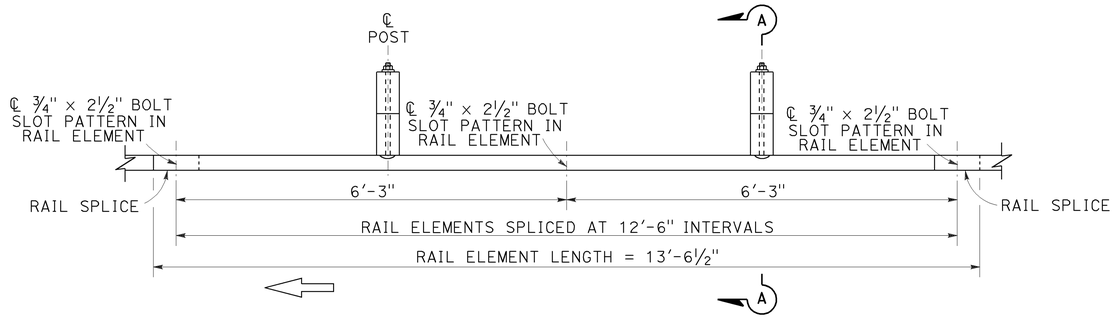

PLAN

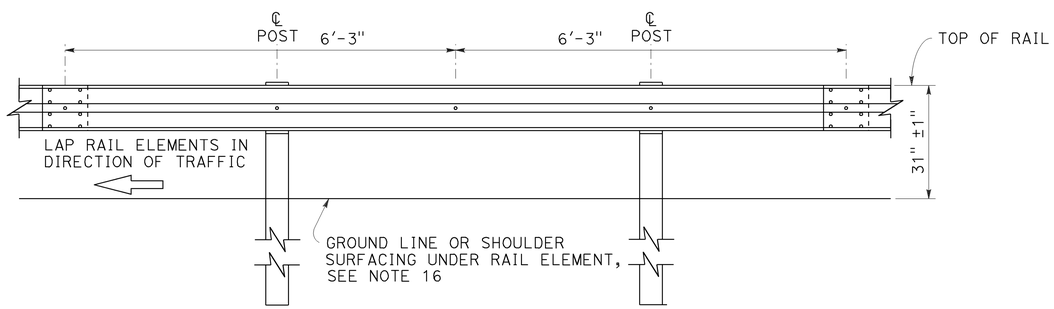

ELEVATION

MIDWEST GUARDRAIL SYSTEM WITH WOOD POST AND BLOCKS

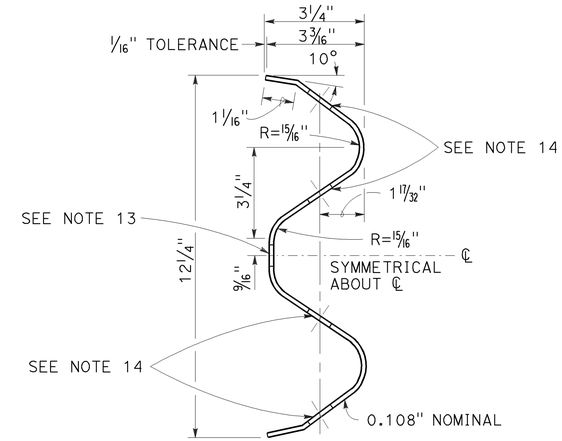

SECTION THRU RAIL ELEMENT

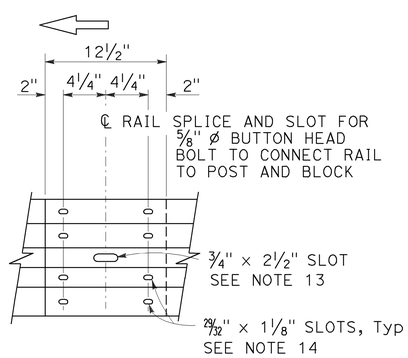

ELEVATION

RAIL ELEMENT SPLICE DETAIL

a) Connect the over lapped end of the rail elements with ⅝" ø × 1⅜" button head oval shoulder splice bolts inserted into the 29⁄32" × 1⅛" slots and bolted together with ⅝" ø recessed hex nuts. Recess of hex nut points toward rail element. A total of 8 bolts and nuts are to be used at each rail splice connection.

b) The ends of the rail elements are to be overlapped in the direction of traffic (see details).

c) Where end cap is to be attached to the end of a rail element, a total of 4 of the above described splice bolts and nuts are to be used.

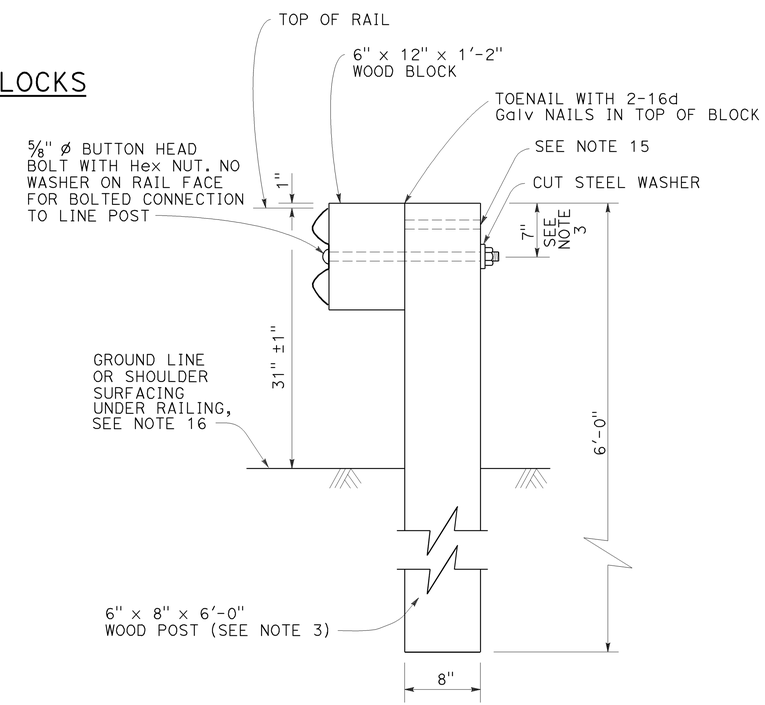

SECTION A-A

TYPICAL WOOD LINE POST INSTALLATION

See Note 4

NOTES:

1. For details of steel post installations, see Revised Standard Plan RSP A77L2.
2. For details of standard hardware used to construct MGS, see Revised Standard Plan RSP A77M1.
3. For details of wood posts and wood blocks used to construct MGS, see Revised Standard Plan RSP A77N1.
4. For additional installation details, see Revised Standard Plan RSP A77N3.
5. MGS post spacing to be 6'-3" center to center, except as otherwise noted.
6. For MGS typical layouts, see the A77P, A77Q and A77R Series of Standard Plans.
7. If railing is connected to terminal system end treatment, use 31" height terminal system end treatment.
8. For MGS end anchor details, see Revised Standard Plans RSP A77S1 and RSP A77T2.
9. For details of MGS transition to bridge railing, see Revised Standard Plan RSP A77U4.
10. For additional details of MSG connection to bridge railing, see Revised Standard Plans RSP A77U1, RSP A77U2 and RSP A77V1.
11. For MGS connection details to abutments and walls, see Revised Standard Plan RSP A77U3.
12. For typical MGS delineation and dike positioning details, see Revised Standard Plan RSP A77N4.
13. Slotted hole for bolted connection of rail element to block and post. See "Section Thru Rail Element".
14. Slotted holes for splice bolts to overlap ends of rail element. See "Section Thru Rail Element".
15. Additional hole in uppermost portion of line post is for potential future adjustments of railing height. See Revised Standard Plan RSP A77N1.
16. Install posts in soil.

STATE OF CALIFORNIA
DEPARTMENT OF TRANSPORTATION

MIDWEST GUARDRAIL SYSTEM STANDARD RAILING SECTION (WOOD POST WITH WOOD BLOCK)

NO SCALE

RSP A77L1 DATED JULY 19, 2013 SUPPLEMENTS STANDARD PLANS BOOK DATED 2010.

REVISED STANDARD PLAN RSP A77L1

2010 REVISED STANDARD PLAN RSP A77L1

Dist	COUNTY	ROUTE	POST MILES TOTAL PROJECT	SHEET No.	TOTAL SHEETS
11	SD	67	R0.0/R5.9	141	204

Randell D. Hiatt
REGISTERED CIVIL ENGINEER

July 19, 2013
PLANS APPROVAL DATE

REGISTERED PROFESSIONAL ENGINEER
Randell D. Hiatt
No. C50200
Exp. 6-30-15
CIVIL
STATE OF CALIFORNIA

THE STATE OF CALIFORNIA OR ITS OFFICERS OR AGENTS SHALL NOT BE RESPONSIBLE FOR THE ACCURACY OR COMPLETENESS OF SCANNED COPIES OF THIS PLAN SHEET.

TO ACCOMPANY PLANS DATED 07-28-14

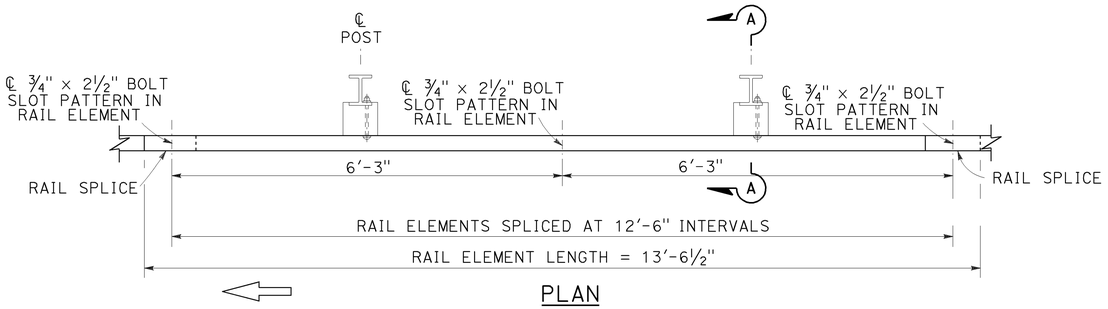

PLAN

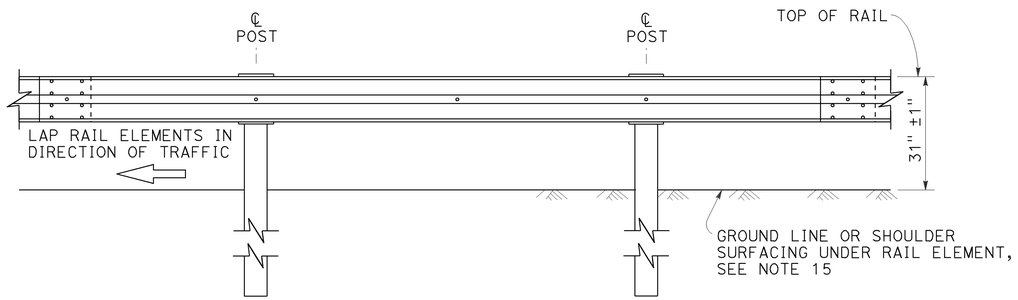

ELEVATION

MIDWEST GUARDRAIL SYSTEM WITH STEEL POSTS AND NOTCHED WOOD OR NOTCHED RECYCLED PLASTIC BLOCKS

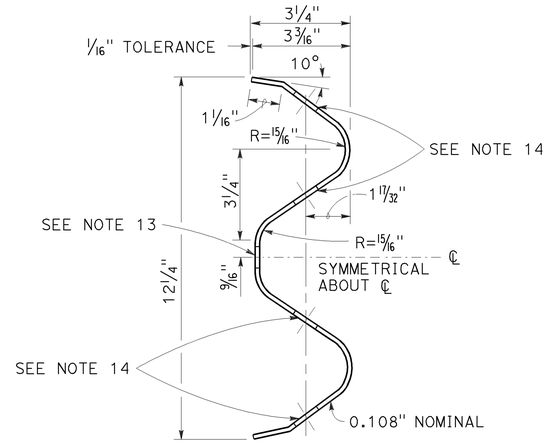

SECTION THRU RAIL ELEMENT

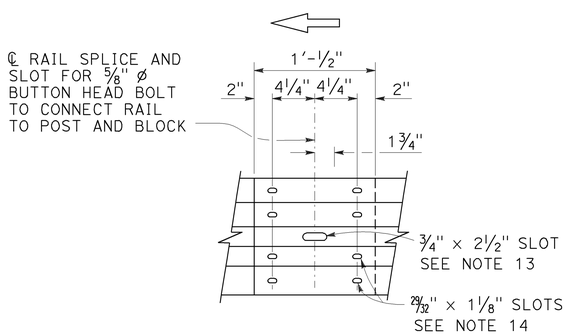

ELEVATION

RAIL ELEMENT SPLICE DETAIL

a) Connect the over lapped end of the rail elements with ⅝" ø × 1⅜" button head oval shoulder splice bolts inserted into the 29⁄32" × 1⅛" slots and bolted together with ⅝" ø recessed hex nuts. Recess of hex nut points toward rail element. A total of 8 bolts and nuts are to be used at each rail splice connection.

b) The ends of the rail elements are to be overlapped in the direction of traffic (see details).

c) Where end cap is to be attached to the end of a rail element, a total of 4 of the above described splice bolts and nuts are to be used.

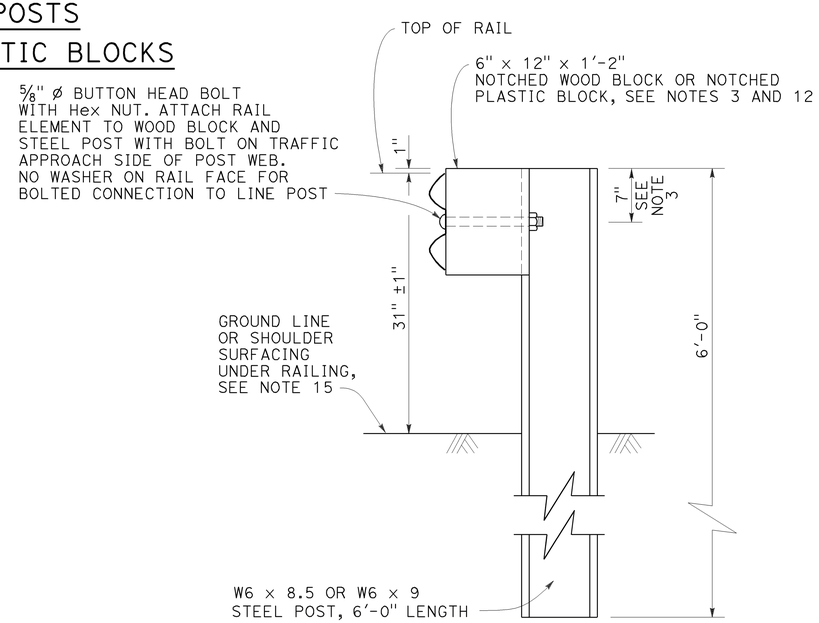

SECTION A-A

TYPICAL STEEL LINE POST INSTALLATION

See Note 4

NOTES:

1. For details of wood post installations, see Revised Standard Plan RSP A77L1.
2. For details of standard hardware used to construct MGS, see Revised Standard Plan RSP A77M1.
3. For details of steel posts and notched wood blocks used to construct MGS, see Revised Standard Plan RSP A77N2.
4. For additional installation details, see Revised Standard Plan RSP A77N3.
5. MGS post spacing to be 6'-3" center to center, except as otherwise noted.
6. For MGS typical layouts, see the A77P, A77Q and A77R Series of Standard Plans.
7. If railing is connected to terminal system end treatment, use 31" height terminal system end treatment.
8. For MGS end anchor details, see Revised Standard Plans RSP A77S1 and RSP A77T2.
9. For details of MGS transition to bridge railing, see Revised Standard Plan RSP A77U4.
10. For additional details of MGS connection to bridge railings, see Revised Standard Plans RSP A77U1, RSP A77U2 and RSP A77V1.
11. For dike positioning and MGS delineation details, see Revised Standard Plan RSP A77N4.
12. Notched face of block faces steel post.
13. Slotted hole for bolted connection of rail element to block and post. See "Section Thru Rail Element".
14. Slotted holes for splice bolts to overlap ends of rail element. See "Section Thru Rail Element".
15. Install posts in soil.

STATE OF CALIFORNIA
DEPARTMENT OF TRANSPORTATION

MIDWEST GUARDRAIL SYSTEM STANDARD RAILING SECTION (STEEL POST WITH NOTCHED WOOD OR NOTCHED RECYCLED PLASTIC BLOCK)

NO SCALE

RSP A77L2 DATED JULY 19, 2013 SUPPLEMENTS THE STANDARD PLANS BOOK DATED 2010.

REVISED STANDARD PLAN RSP A77L2

2010 REVISED STANDARD PLAN RSP A77L2

7-3-13

Dist	COUNTY	ROUTE	POST MILES TOTAL PROJECT	SHEET No.	TOTAL SHEETS
11	SD	67	R0.0/R5.9	142	204

Randell D. Hiatt
REGISTERED CIVIL ENGINEER

July 19, 2013
PLANS APPROVAL DATE

REGISTERED PROFESSIONAL ENGINEER
Randell D. Hiatt
No. C50200
Exp. 6-30-15
CIVIL
STATE OF CALIFORNIA

THE STATE OF CALIFORNIA OR ITS OFFICERS OR AGENTS SHALL NOT BE RESPONSIBLE FOR THE ACCURACY OR COMPLETENESS OF SCANNED COPIES OF THIS PLAN SHEET.

TO ACCOMPANY PLANS DATED 07-28-14

2010 REVISED STANDARD PLAN RSP A77L3

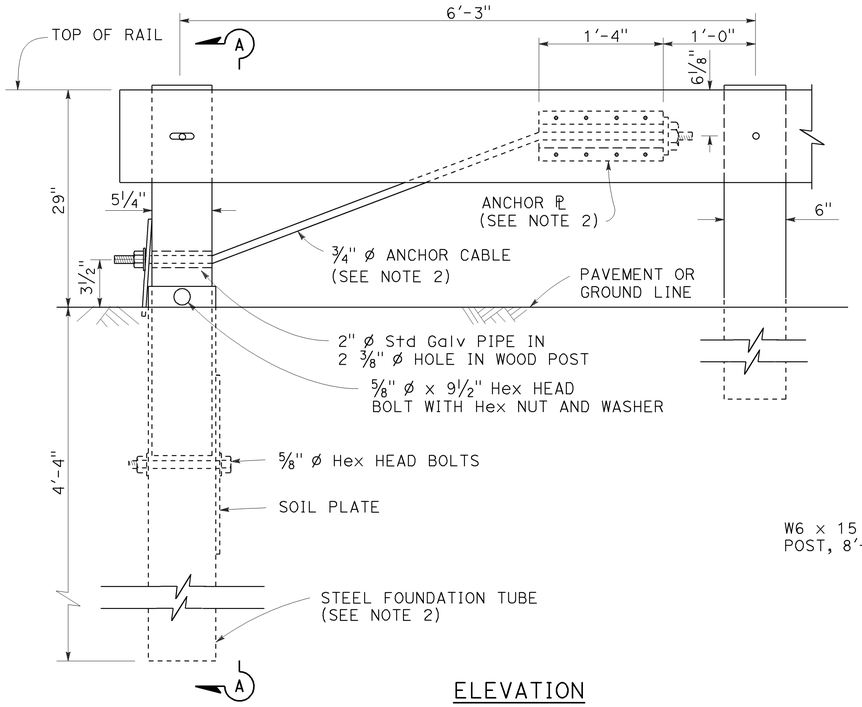

ELEVATION
END ANCHOR
ASSEMBLY (TYPE SFT)

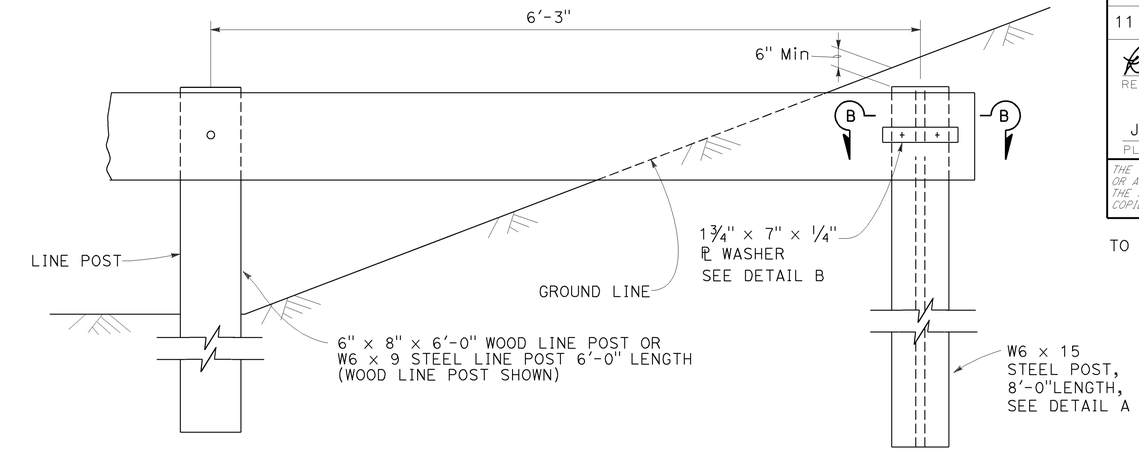

BURIED POST END ANCHOR

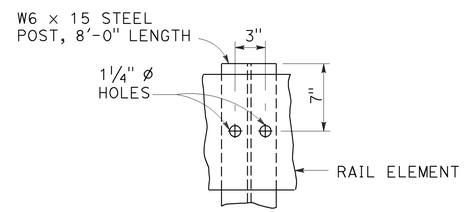

DETAIL A

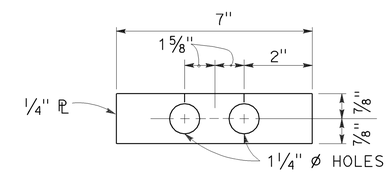

DETAIL B

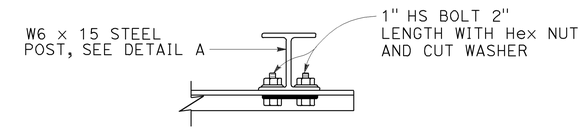

SECTION B-B

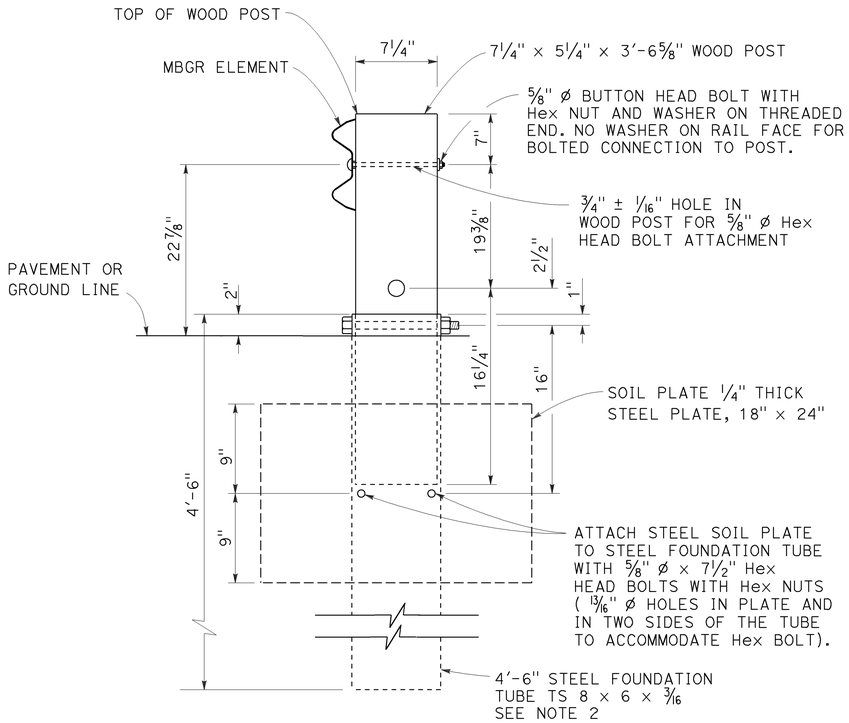

SECTION A-A

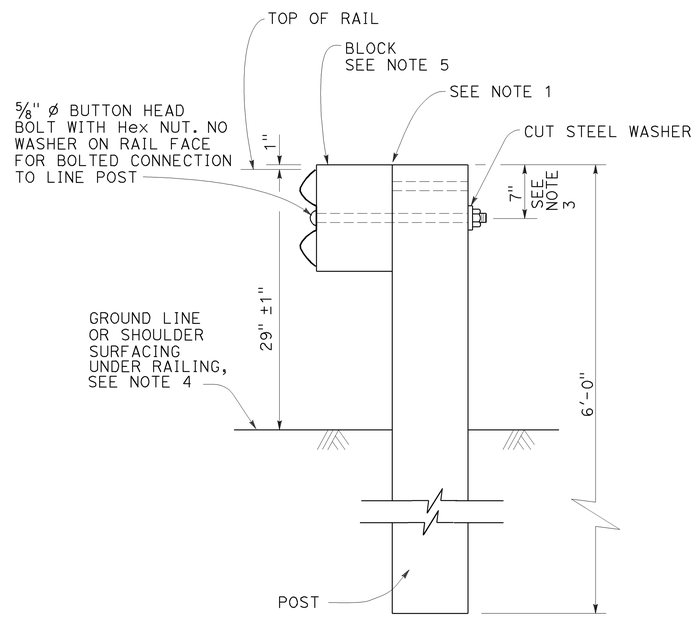

TYPICAL LINE
POST INSTALLATION

NOTES:

1. For wood post and wood block, toenail with 2-16d Galv nails in top of block. For steel post and notched wood or plastic block, notched face of block faces steel post.
2. A 6'-0" Length steel foundation tube, TS 8 x 6 x 3/16, without a soil plate, may be furnished and installed in place of the 4'-6" length steel foundation tube and soil plate shown, Minimum embadment of the 6'-0" length tube shall be 5'-9". A 5/8" ø Hex head bolt and nut shall be installed in the hole in the 6'-0" length tube to keep the wood post from dropping into the tube.
3. To connect railing to 27" terminal system end treatment, transition the top of railing height at a ratio of 120:1 to terminal system end treatment height plus one 12'-6" standard railing section at the transitioned height for a horizontal connection to the end treatment.
4. Install posts in soil.
5. See Revised Standard Plans RSP A77N1 and RSP A77N2 for details.
6. Holes excavation in the slope to construct the buried post end anchor shall be backfilled with selected earth, placed in layers approximately 1'-0" thick. Each layer shall be moistened and thoroughly compacted.

STATE OF CALIFORNIA
DEPARTMENT OF TRANSPORTATION

METAL BEAM GUARD RAILING RECONSTRUCT INSTALLATION

NO SCALE

RSP A77L3 DATED JULY 19, 2013 SUPPLEMENTS THE STANDARD PLANS BOOK DATED 2010.

REVISED STANDARD PLAN RSP A77L3

7-16-13

Dist	COUNTY	ROUTE	POST MILES TOTAL PROJECT	SHEET No.	TOTAL SHEETS
11	SD	67	R0.0/R5.9	143	204

Randell D. Hiatt
REGISTERED CIVIL ENGINEER

July 19, 2013
PLANS APPROVAL DATE

REGISTERED PROFESSIONAL ENGINEER
Randell D. Hiatt
No. C50200
Exp. 6-30-15
CIVIL
STATE OF CALIFORNIA

THE STATE OF CALIFORNIA OR ITS OFFICERS OR AGENTS SHALL NOT BE RESPONSIBLE FOR THE ACCURACY OR COMPLETENESS OF SCANNED COPIES OF THIS PLAN SHEET.

TO ACCOMPANY PLANS DATED 07-28-14

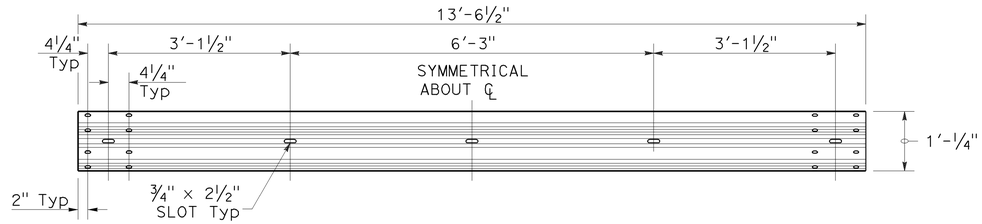

TYPICAL RAIL ELEMENT

NOTE:

1. Slotted holes for splice bolts to overlap ends of rail element.

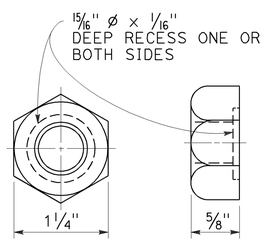

⅝" ø RECESS NUT

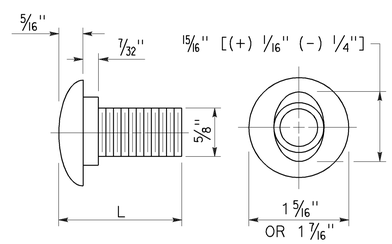

⅝" ø BUTTON HEAD BOLT

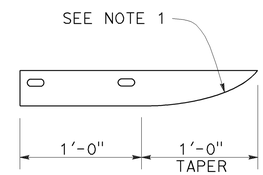

PLAN

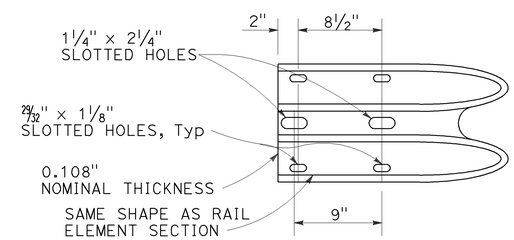

ELEVATION

END CAP
(TYPE A)

BUTTON HEAD BOLT

L	THREAD LENGTH
1⅜"	FULL THREAD LENGTH
2"	FULL THREAD LENGTH
10"	4" Min THREAD LENGTH
18"	4" Min THREAD LENGTH
20"	4" Min THREAD LENGTH
22"	4" Min THREAD LENGTH
26"	4" Min THREAD LENGTH
36"	4" Min THREAD LENGTH
** 2¾"	2" Min THREAD LENGTH
** 19"	4" Min THREAD LENGTH

** For nested rail applications.

STATE OF CALIFORNIA
DEPARTMENT OF TRANSPORTATION

MIDWEST GUARDRAIL SYSTEM STANDARD HARDWARE

NO SCALE

RSP A77M1 DATED JULY 19, 2013 SUPPLEMENTS THE STANDARD PLANS BOOK DATED 2010.

REVISED STANDARD PLAN RSP A77M1

2010 REVISED STANDARD PLAN RSP A77M1

7-3-13

Dist	COUNTY	ROUTE	POST MILES TOTAL PROJECT	SHEET No.	TOTAL SHEETS
11	SD	67	R0.0/R5.9	144	204

Randell D. Hiatt
REGISTERED CIVIL ENGINEER

July 19, 2013
PLANS APPROVAL DATE

REGISTERED PROFESSIONAL ENGINEER
Randell D. Hiatt
No. C50200
Exp. 6-30-15
CIVIL
STATE OF CALIFORNIA

THE STATE OF CALIFORNIA OR ITS OFFICERS OR AGENTS SHALL NOT BE RESPONSIBLE FOR THE ACCURACY OR COMPLETENESS OF SCANNED COPIES OF THIS PLAN SHEET.

TO ACCOMPANY PLANS DATED 07-28-14

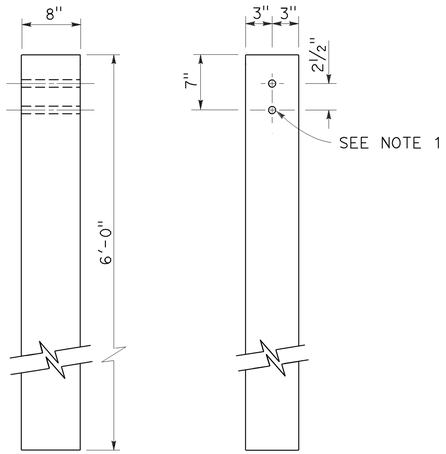

SIDE FRONT

6" x 8" WOOD POST
See Note 3

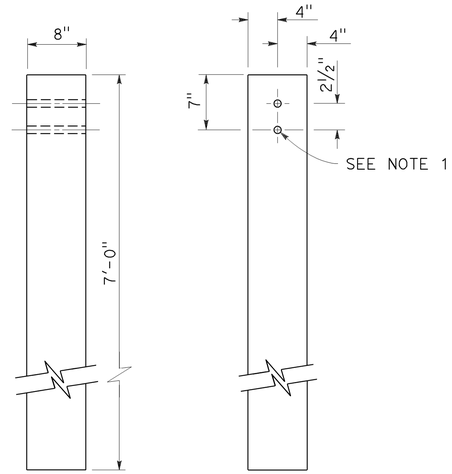

SIDE FRONT

8" x 8" WOOD POST
See Note 4

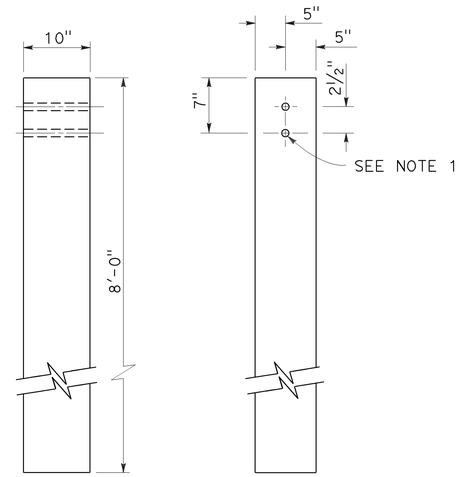

SIDE FRONT

10" x 10" WOOD POST
See Note 5

NOTES:

1. All holes in wood posts and blocks shall be ¾" Dia ± 1/16".
2. Dimensions shown for wood post are nominal.
3. This post and block combination used for standard line post sections of MGS.
4. This post and 8" x 12" block combination used for line post sections of MGS on narrow roadways.
5. This post and 8" x 12" block combination is typically used where strengthened line post sections of MGS are warranted to shield fixed objects.
6. See Revised Standard Plan RSP A77L3 for use of 6" x 8" and 8" x 8" wood blocks.

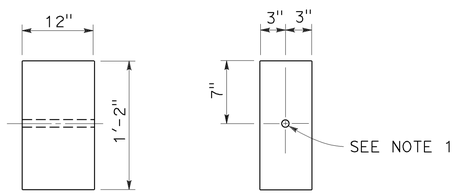

SIDE FRONT

6" x 12" WOOD BLOCK
See Note 3

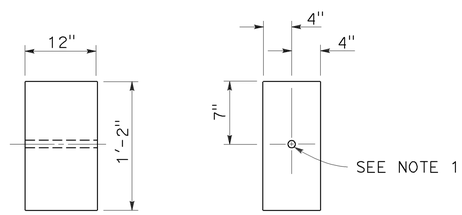

SIDE FRONT

8" x 12" WOOD BLOCK

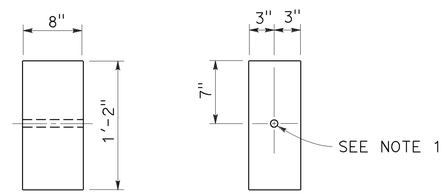

SIDE FRONT

6" x 8" WOOD BLOCK
Only for use with metal beam guard rail see Note 6

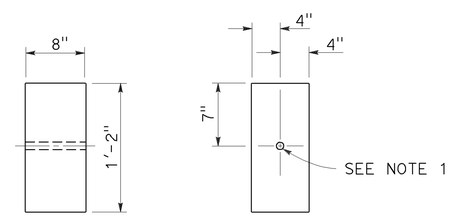

SIDE FRONT

8" x 8" WOOD BLOCK
Only for use with metal beam guard rail see Note 6

STATE OF CALIFORNIA
DEPARTMENT OF TRANSPORTATION

MIDWEST GUARDRAIL SYSTEM WOOD POST AND WOOD BLOCK DETAILS

NO SCALE

RSP A77N1 DATED JULY 19, 2013 SUPPLEMENTS THE STANDARD PLANS BOOK DATED 2010.

REVISED STANDARD PLAN RSP A77N1

2010 REVISED STANDARD PLAN RSP A77N1

7-3-13

Dist	COUNTY	ROUTE	POST MILES TOTAL PROJECT	SHEET No.	TOTAL SHEETS
11	SD	67	R0.0/R5.9	145	204

Randell D. Hiatt
REGISTERED CIVIL ENGINEER

November 15, 2013
PLANS APPROVAL DATE

REGISTERED PROFESSIONAL ENGINEER
Randell D. Hiatt
No. C50200
Exp. 6-30-15
CIVIL
STATE OF CALIFORNIA

THE STATE OF CALIFORNIA OR ITS OFFICERS OR AGENTS SHALL NOT BE RESPONSIBLE FOR THE ACCURACY OR COMPLETENESS OF SCANNED COPIES OF THIS PLAN SHEET.

TO ACCOMPANY PLANS DATED 07-28-14

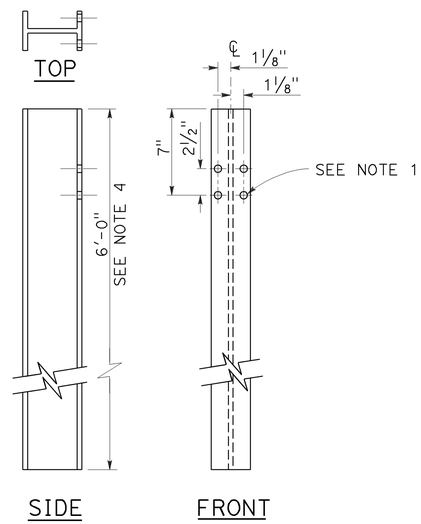

W6 x 9 OR W6 x 8.5
STEEL POST
See Note 4

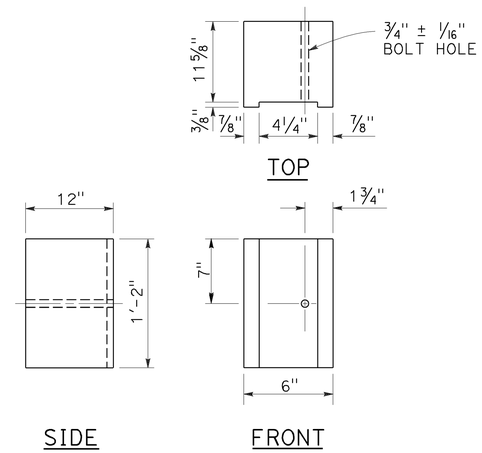

6" x 12"
NOTCHED WOOD BLOCK
See Notes 2 and 3

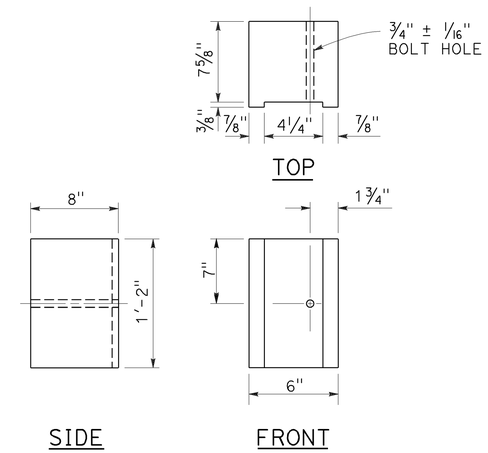

6" x 8"
NOTCHED WOOD BLOCK
Only for use with metal beam guard railing. See Note 5

NOTES:

1. All holes in steel post shall be 13/16" Dia maximum.
2. Dimensions shown for wood block are nominal.
3. Notched face of block faces steel post.
4. 6'-0" length posts to be used for typical roadway installation. See Revised Standard Plan RSP A77N3.
5. See Revised Standard Plan RSP A77L3 for use of 6" x 8" and 8" x 8" notched wood blocks.
6. This post and 8" x 12" block combination to be used for line post sections of MGS on narrow roadways and where strengthened line post sections of MGS are warranted to shield fixed objects.

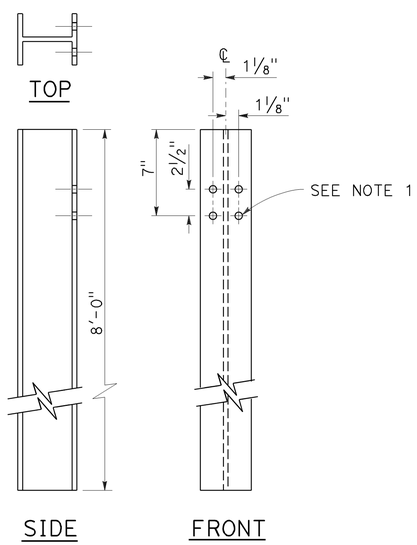

W6 x 15
STEEL POST
See Note 6

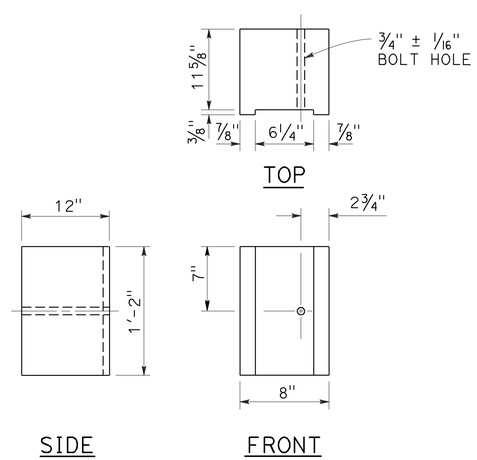

8" x 12"
NOTCHED WOOD BLOCK
See Notes 2 and 3

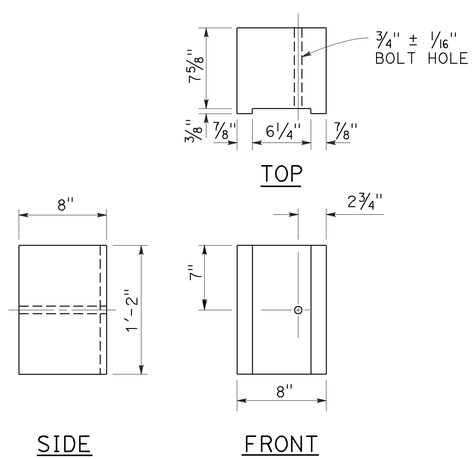

8" x 8"
NOTCHED WOOD BLOCK
Only for use with metal beam guard railing. See Note 5

STATE OF CALIFORNIA
DEPARTMENT OF TRANSPORTATION

MIDWEST GUARDRAIL SYSTEM STEEL POST AND NOTCHED WOOD BLOCK DETAILS

NO SCALE

RSP A77N2 DATED NOVEMBER 15, 2013 SUPERSEDES RSP A77N2
DATED JULY 19, 2013 THAT SUPPLEMENTS THE STANDARD PLANS BOOK DATED 2010.

REVISED STANDARD PLAN RSP A77N2

2010 REVISED STANDARD PLAN RSP A77N2

10-29-13

Dist	COUNTY	ROUTE	POST MILES TOTAL PROJECT	SHEET No.	TOTAL SHEETS
11	SD	67	R0.0/R5.9	146	204

Randell D. Hiatt
REGISTERED CIVIL ENGINEER

July 19, 2013
PLANS APPROVAL DATE

REGISTERED PROFESSIONAL ENGINEER
Randell D. Hiatt
No. C50200
Exp. 6-30-15
CIVIL
STATE OF CALIFORNIA

THE STATE OF CALIFORNIA OR ITS OFFICERS OR AGENTS SHALL NOT BE RESPONSIBLE FOR THE ACCURACY OR COMPLETENESS OF SCANNED COPIES OF THIS PLAN SHEET.

TO ACCOMPANY PLANS DATED 07-28-14

2010 REVISED STANDARD PLAN RSP A77N3

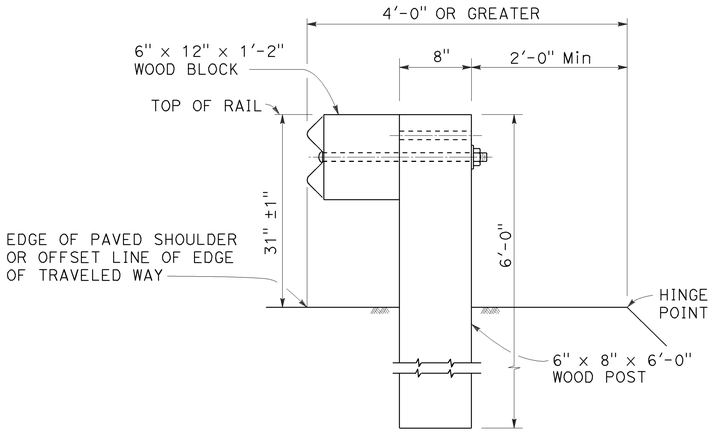

DETAIL A

TYPICAL ROADWAY INSTALLATION

See Note 1

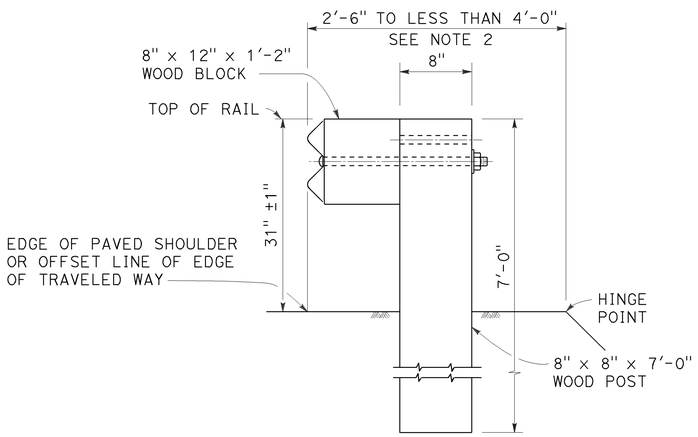

DETAIL B

NARROW ROADWAY INSTALLATION

See Note 1

POST EMBEDMENT

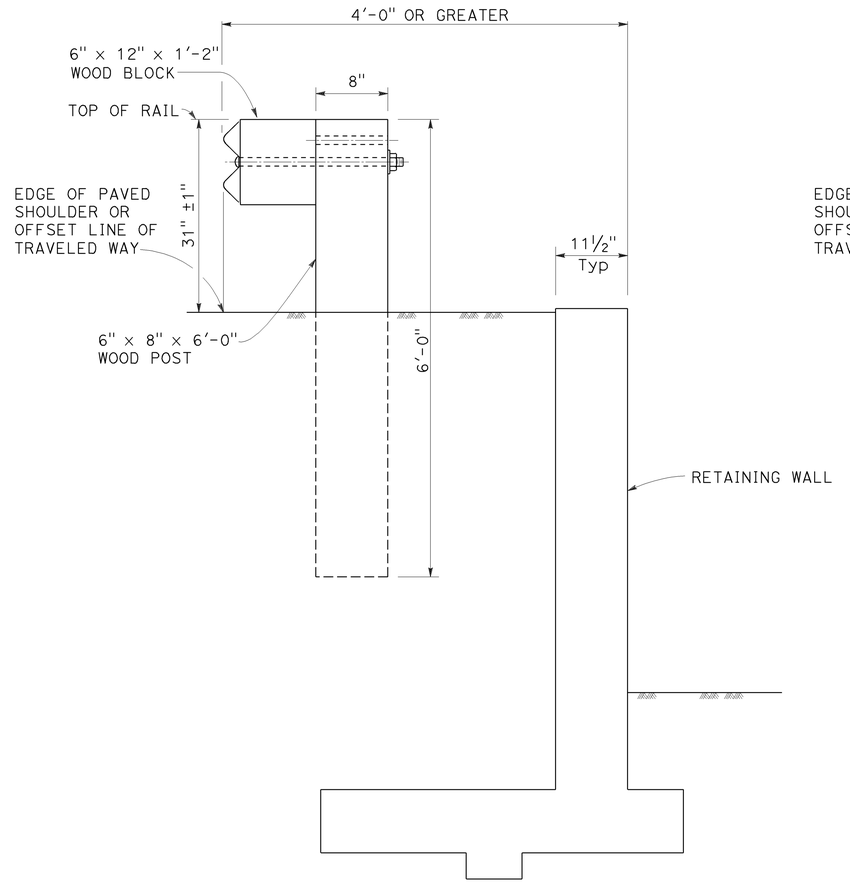

DETAIL C

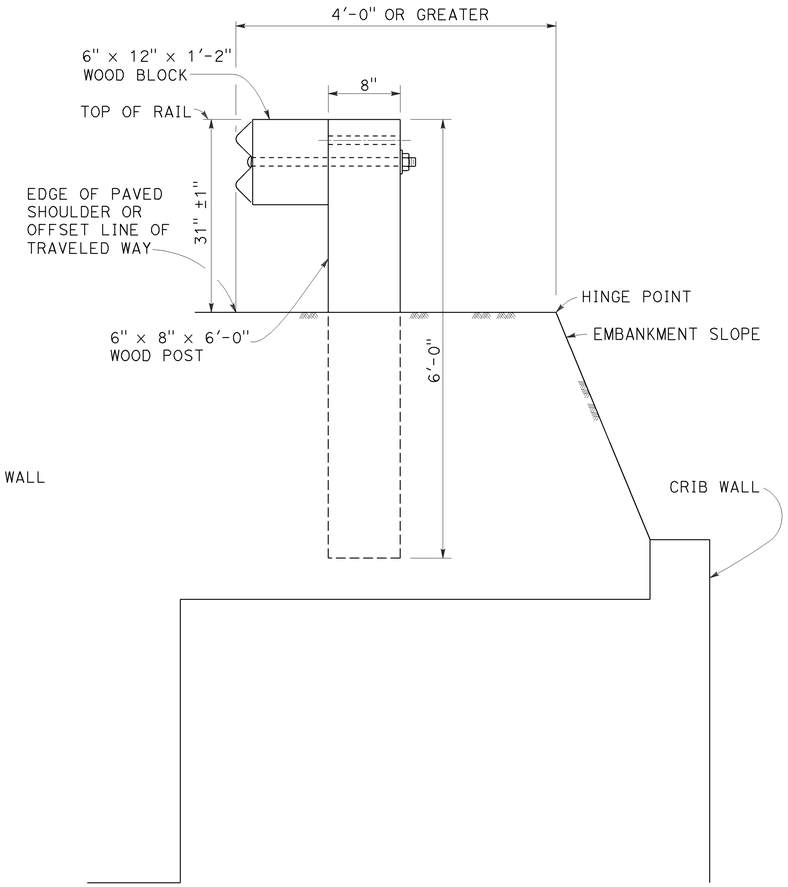

DETAIL D

INSTALLATION AT EARTH RETAINING WALLS

NOTES:

1. These installation details also applicable to steel line post installations. For Detail A, C, and D, where steel line post installations are constructed, W6 x 8.5 or W6 x 9 steel post, 6'-0" in length, with 6" x 12" x 1'-2" notched wood blocks or notched recycled plastic blocks are to be used in place of the size of wood post and wood block shown. For Detail B, where steel line post installations are constructed, or W6 x 15 steel post, 8'-0" in length, with 8" x 12" x 1'-2" notched wood blocks or notched recycled plastic blocks are to be used in place of the size of wood post and wood block shown. For additional installation details, see Revised Standard Plan RSP A77L1 and RSP A77L2.
2. Where the distance between the face of the rail and the hinge point is less than 2'-6", see the Project Plans for special details.
3. For dike positioning with MGS installations, see Revised Standard Plan RSP A77N4.

STATE OF CALIFORNIA
DEPARTMENT OF TRANSPORTATION

MIDWEST GUARDRAIL SYSTEM TYPICAL LINE POST EMBEDMENT AND HINGE POINT OFFSET DETAILS

NO SCALE

RSP A77N3 DATED JULY 19, 2013 SUPPLEMENTS THE STANDARD PLANS BOOK DATED 2010.

REVISED STANDARD PLAN RSP A77N3

Dist	COUNTY	ROUTE	POST MILES TOTAL PROJECT	SHEET No.	TOTAL SHEETS
11	SD	67	R0.0/R5.9	147	204

Randell D. Hiatt
REGISTERED CIVIL ENGINEER

July 19, 2013
PLANS APPROVAL DATE

REGISTERED PROFESSIONAL ENGINEER
Randell D. Hiatt
No. C50200
Exp. 6-30-15
CIVIL
STATE OF CALIFORNIA

THE STATE OF CALIFORNIA OR ITS OFFICERS OR AGENTS SHALL NOT BE RESPONSIBLE FOR THE ACCURACY OR COMPLETENESS OF SCANNED COPIES OF THIS PLAN SHEET.

TO ACCOMPANY PLANS DATED 07-28-14

NOTES:

1. When necessary to place dike more than 7" in front of face of MGS, only Type C dike may be used. For dike details, see Revised Standard Plan RSP A87B.
2. For standard railing post embedment, see Revised Standard Plan RSP A77N3.
3. MGS delineation to be used where shown on the Project Plans.
4. When dike or curb is placed under MGS, the maximum height of the dike or curb shall be 6". Mountable dike should not be used. For dike and curb details, see Revised Standard Plans RSP A87A and RSP A87B.
5. For details of typical distance between the face of rail and hinge point, see Revised Standard Plan RSP A77N3.
6. For steel line posts, use 1/4 - 20 self-tapping screws in 0.22" diameter holes or 1/4" bolts in 9/32" diameter holes.

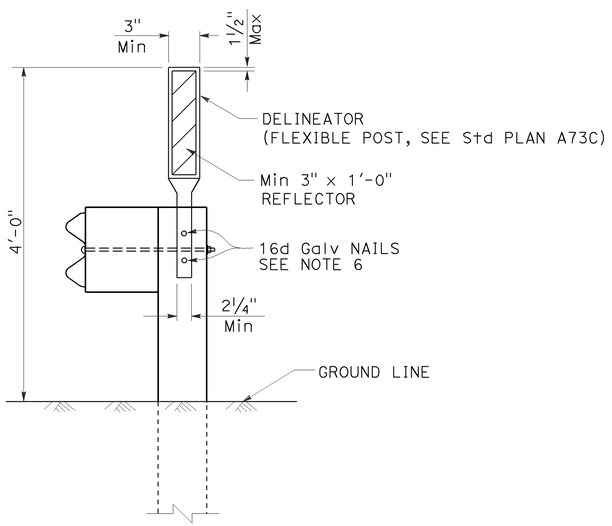

MGS DELINEATION

See Note 3

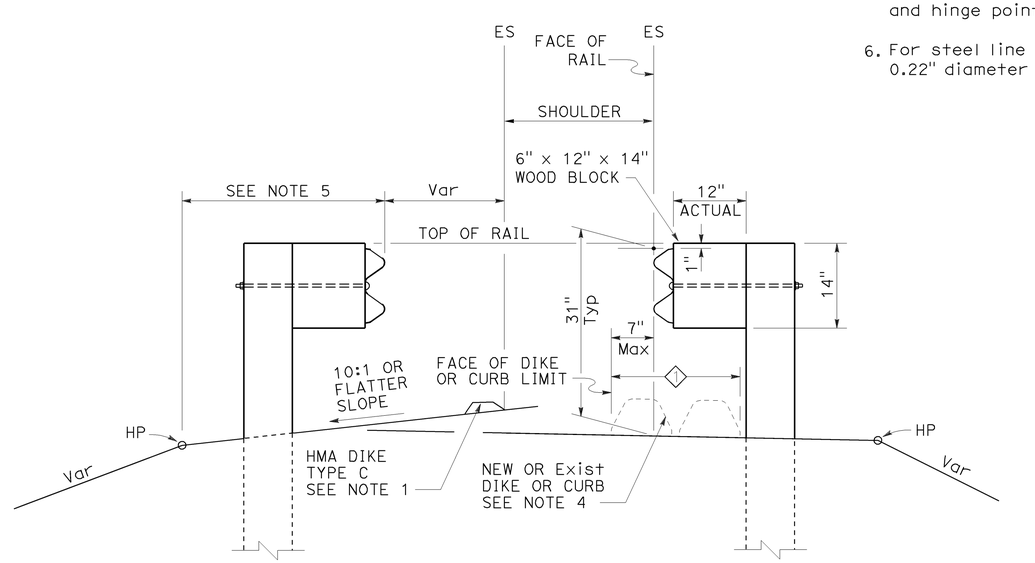

DIKE POSITIONING

See Note 1

1 PERMISSIBLE DIKE OR CURB PLACEMENT AREA

STATE OF CALIFORNIA
DEPARTMENT OF TRANSPORTATION

MIDWEST GUARDRAIL SYSTEM TYPICAL RAILING DELINEATION AND DIKE POSITIONING DETAILS

NO SCALE

RSP A77N4 DATED JULY 19, 2013 SUPPLEMENTS THE STANDARD PLANS BOOK DATED 2010.

REVISED STANDARD PLAN RSP A77N4

2010 REVISED STANDARD PLAN RSP A77N4

7-10-13

Dist	COUNTY	ROUTE	POST MILES TOTAL PROJECT	SHEET No.	TOTAL SHEETS
11	SD	67	R0.0/R5.9	148	204

Randell D. Hiatt
REGISTERED CIVIL ENGINEER

November 15, 2013
PLANS APPROVAL DATE

REGISTERED PROFESSIONAL ENGINEER
Randell D. Hiatt
No. C50200
Exp. 6-30-15
CIVIL
STATE OF CALIFORNIA

THE STATE OF CALIFORNIA OR ITS OFFICERS OR AGENTS SHALL NOT BE RESPONSIBLE FOR THE ACCURACY OR COMPLETENESS OF SCANNED COPIES OF THIS PLAN SHEET.

TO ACCOMPANY PLANS DATED 07-28-14

2010 REVISED STANDARD PLAN RSP A77P1

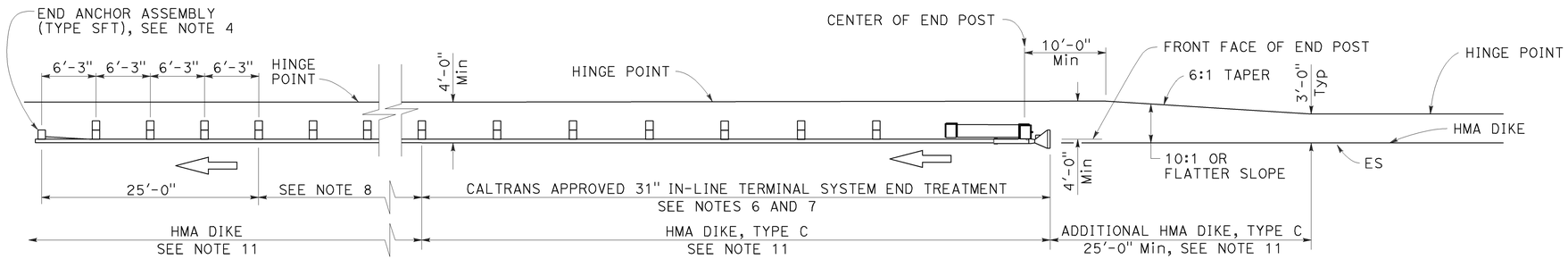

TYPE 11A LAYOUT

(Embankment MGS installation with 31" in-line end treatment at traffic approach end of railing) see Note 5

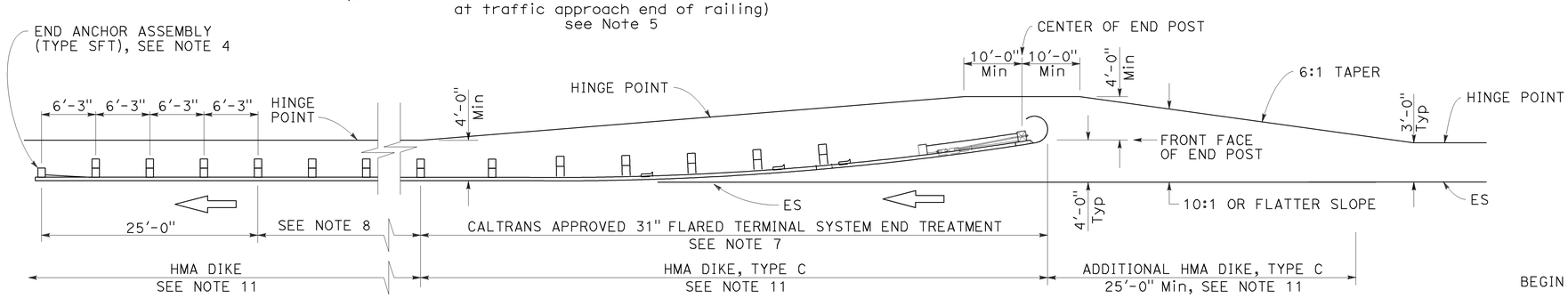

TYPE 11B LAYOUT

(Embankment MGS installation with 31" flared end treatment at traffic approach end of railing) see Note 5

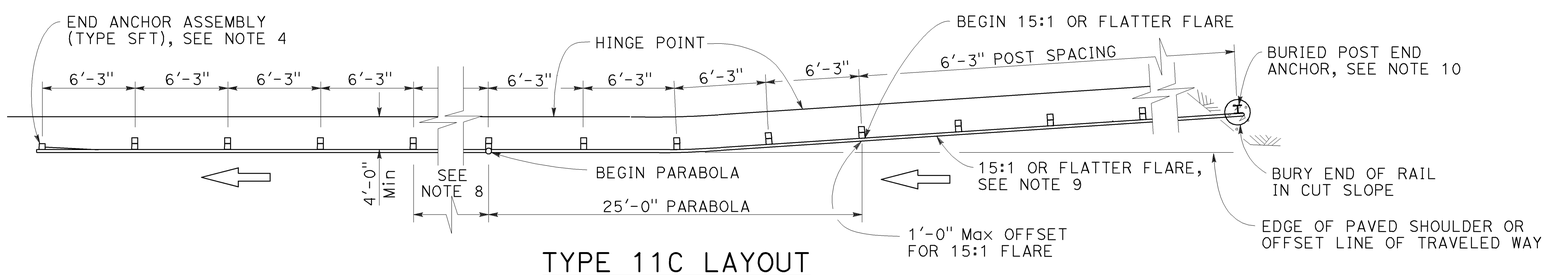

TYPE 11C LAYOUT

(Embankment MGS installation with buried end anchor treatment at traffic approach end of railing) see Notes 5 and 11

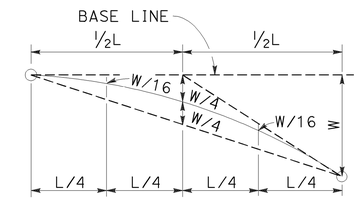

TYPICAL PARABOLIC LAYOUT

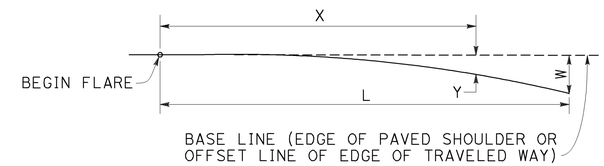

$$Y = \frac{WX^2}{L^2}$$

Y = OFFSET FROM BASE LINE
W = MAXIMUM OFFSET
X = DISTANCE ALONG BASE LINE
L = LENGTH OF FLARE

PARABOLIC FLARE OFFSETS

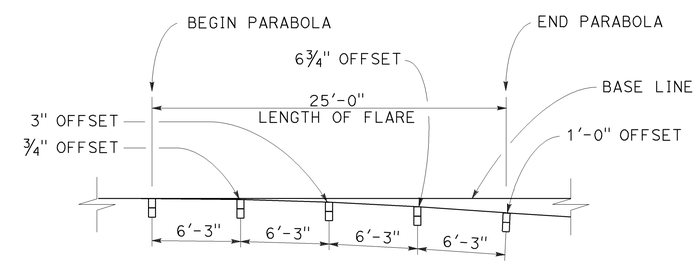

TYPICAL FLARE OFFSETS FOR 1 FOOT Max END OFFSET

NOTES:

1. Line post, blocks and hardware to be used are shown on Revised Standard Plans RSP A77L1, RSP A77L2, RSP A77M1, RSP A77N1 and RSP A77N2.
2. MGS post spacing to be 6'-3" center to center, except as otherwise noted.
3. Except as noted, line posts are 6" x 8" x 6'-0" wood with 6" x 12" x 1'-2" wood blocks. W6 x 8.5 or W6 x 9 steel posts, 6'-0" in length, with 6" x 12" x 1'-2" notched wood blocks or recycled plastic blocks may be used for 6" x 8" x 6'-0" wood post with 6" x 12" x 1'-2" wood blocks where applicable and when specified.
4. For End Anchor Assembly (Type SFT) details, see Revised Standard Plan RSP A77S1.
5. Layout Types 11A, 11B or 11C are typically used where MGS is recommended to shield embankment slopes and a crashworthy end treatment is required for only one direction of traffic.
6. 31" in-line terminal system end treatments are used where site conditions will not accommodate a flared end treatment.
7. The type of 31" terminal system end treatment to be used will be shown on the Project Plans.
8. Dependent on site conditions (embankment height and side slope), construction of additional MGS (length equal to multiples of 12'-6" with 6'-3" post spacing) may be advisable.
9. The 15:1 or flatter flare used with buried end anchors is based on the edge of the paved shoulder or offset line of edge of the traveled way. The length of MGS within the 15:1 or flatter flare is based on site conditions and should be a length equal to multiples of 12'-6".
10. For details of the buried post end anchor used with Type 11C Layout, see Revised Standard Plan RSP A77T2.
11. Where placement of dike is required with MGS installations, see Revised Standard Plan RSP A77N4 for dike positioning details.

STATE OF CALIFORNIA
DEPARTMENT OF TRANSPORTATION

MIDWEST GUARDRAIL SYSTEM TYPICAL LAYOUTS FOR EMBANKMENTS

NO SCALE

RSP A77P1 DATED NOVEMBER 15, 2013 SUPERSEDES RSP A77P1 DATED JULY 19, 2013 THAT SUPPLEMENTS THE STANDARD PLANS BOOK DATED 2010.

REVISED STANDARD PLAN RSP A77P1

10-4-13

Dist	COUNTY	ROUTE	POST MILES TOTAL PROJECT	SHEET No.	TOTAL SHEETS
11	SD	67	R0.0/R5.9	149	204

Randell D. Hiatt
REGISTERED CIVIL ENGINEER

July 19, 2013
PLANS APPROVAL DATE

REGISTERED PROFESSIONAL ENGINEER
Randell D. Hiatt
No. C50200
Exp. 6-30-15
CIVIL
STATE OF CALIFORNIA

THE STATE OF CALIFORNIA OR ITS OFFICERS OR AGENTS SHALL NOT BE RESPONSIBLE FOR THE ACCURACY OR COMPLETENESS OF SCANNED COPIES OF THIS PLAN SHEET.

TO ACCOMPANY PLANS DATED 07-28-14

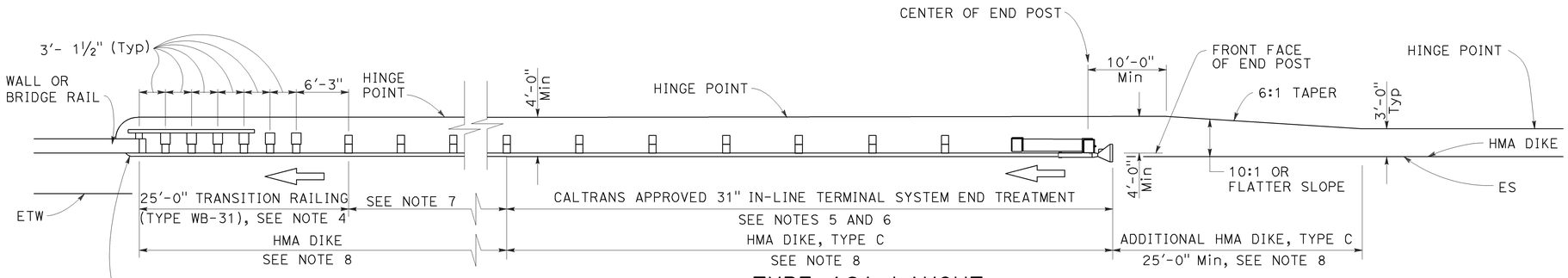

TYPE 12A LAYOUT

(MGS installation at structure approach with
31" In-line end treatment at traffic approach end of railing)
See Notes 9

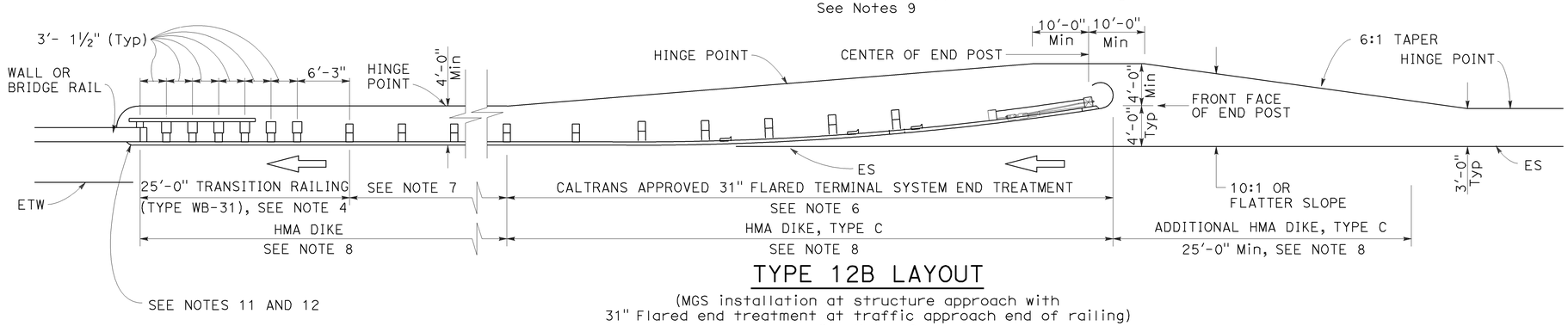

TYPE 12B LAYOUT

(MGS installation at structure approach with
31" Flared end treatment at traffic approach end of railing)
See Notes 9

NOTES:

1. Line post, blocks and hardware to be used are shown on Revised Standard Plans RSP A77L1, RSP A77L2, RSP A77M1, RSP A77N1 and RSP A77N2.
2. MGS post spacing to be 6'-3" center to center, except as otherwise noted.
3. Except as noted, line posts are 6" x 8" x 6'-0" wood with 6" x 12" x 1'-2" wood blocks. W6 x 8.5 or W6 x 9 steel posts, 6'-0" in length, with 6" x 12" x 1'-2" notched wood blocks or plastic blocks may be used for 6" x 8" x 6'-0" wood posts with 6" x 12" x 1'-2" wood blocks where applicable and when specified.
4. For Transition Railing (Type WB-31) details for Types 12A and 12B Layouts, see Revised Standard Plan RSP A77U4.
5. 31" in-line terminal system end treatments are used where site conditions will not accommodate a 31" flared end treatment.
6. The type 31" of terminal system end treatment to be used will be shown on the Project Plans.
7. Dependent on site conditions (embankment height, side slopes, or other fixed objects), it may be advisable to construct additional guard railing (a length equal to multiples of 12'-6" with 6'-3" post spacing) between the transition railing and end treatment. A 12.5 degree angle of departure can be drawn on the Project Plans from the edge of traveled way through the outer most point of the fixed object to determine the additional length of railing needed.
8. Where placement of dike is required with guard railing installations, see Revised Standard Plan RSP A77N4 for dike positioning details.
9. Type 12A or Type 12B Layouts are typically used:
   a. To the right of approaching traffic, at the end of a structure, on two-lane conventional highway where the roadbed width across the structure is less than 40 feet.
   b. To the left of approaching traffic, at the end of a structure, on two-lane conventional highway where the roadbed width across the structure is less than 40 feet.
   c. To the right of approaching traffic at the end of each structure on multilane freeways or expressways with separate adjacent or parallel bridges.
   d. To the right of approaching traffic at the end of the structure on multilane freeways or expressways with decked median on the bridge.
10. See Revised Standard Plan RSP A77Q3 for typical layout used left of approaching traffic at the ends of each structure on multilane freeways or expressways with separate adjacent or parallel bridges.
11. For additional details of typical connections to bridge rail, see Connection Detail AA on Revised Standard Plans RSP A77U1 and RSP A77U2 and Connection Detail FF on Revised Standard Plans RSP A77V1 and RSP A77V2.
12. For additional details of a typical connection to walls or abutments, see Revised Standard Plan RSP A77U3.

STATE OF CALIFORNIA
DEPARTMENT OF TRANSPORTATION

MIDWEST GUARDRAIL SYSTEM TYPICAL LAYOUTS FOR STRUCTURE APPROACH

NO SCALE

RSP A77Q1 DATED JULY 19, 2013 SUPPLEMENTS THE STANDARD PLANS BOOK DATED 2010.

REVISED STANDARD PLAN RSP A77Q1

2010 REVISED STANDARD PLAN RSP A77Q1

6-19-13

Dist	COUNTY	ROUTE	POST MILES TOTAL PROJECT	SHEET No.	TOTAL SHEETS
11	SD	67	R0.0/R5.9	150	204

Randell D. Hiatt
REGISTERED CIVIL ENGINEER

July 19, 2013
PLANS APPROVAL DATE

REGISTERED PROFESSIONAL ENGINEER
Randell D. Hiatt
No. C50200
Exp. 6-30-15
CIVIL
STATE OF CALIFORNIA

THE STATE OF CALIFORNIA OR ITS OFFICERS OR AGENTS SHALL NOT BE RESPONSIBLE FOR THE ACCURACY OR COMPLETENESS OF SCANNED COPIES OF THIS PLAN SHEET.

TO ACCOMPANY PLANS DATED 07-28-14

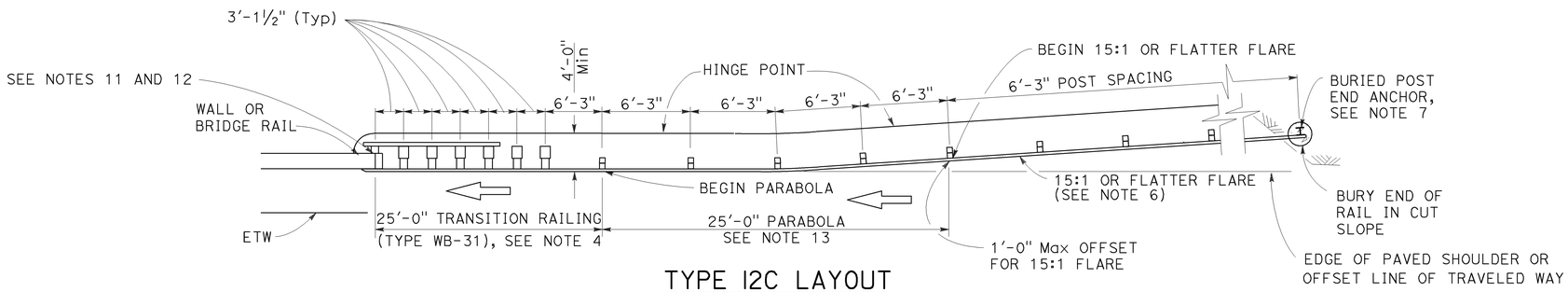

TYPE 12C LAYOUT

(MGS installation at structure approach with a Buried end anchor treatment at traffic approach end of railing)
See Notes 8 and 9

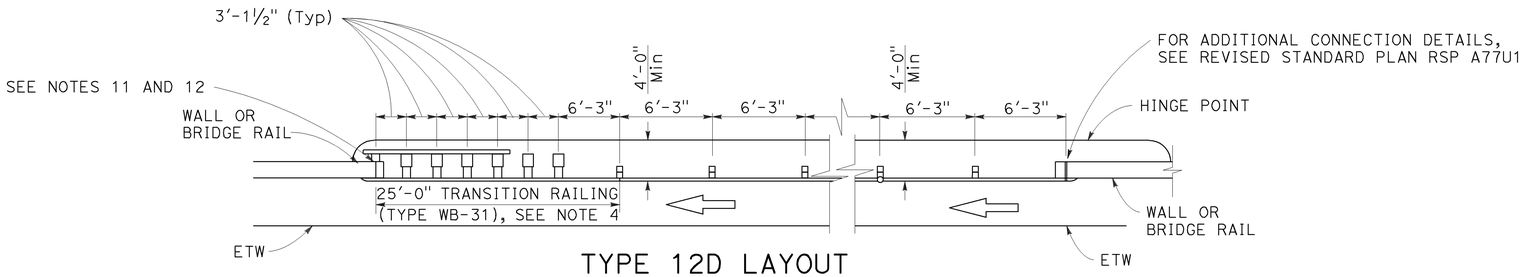

TYPE 12D LAYOUT

(Continuous MGS installation between structures)
See Notes 5 and 9

BASE LINE (EDGE OF PAVED SHOULDER OR OFFSET LINE OF EDGE OF TRAVELED WAY)

$$Y = \frac{WX^2}{L^2}$$

Y = OFFSET FROM BASE LINE
W = MAXIMUM OFFSET
X = DISTANCE ALONG BASE LINE
L = LENGTH OF FLARE

PARABOLIC FLARE OFFSETS

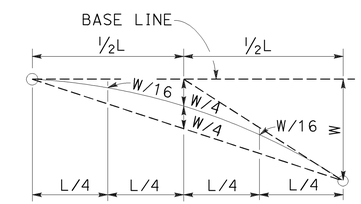

TYPICAL PARABOLIC LAYOUT

NOTES:

1. Line post, blocks and hardware to be used are shown on Revised Standard Plans RSP A77L1, RSP A77L2, RSP A77M1, RSP A77N1 and RSP A77N2.
2. MGS post spacing to be 6'-3" center to center, except as otherwise noted.
3. Except as noted, line posts are 6" x 8" x 6'-0" m wood with 6" x 12" x 1'-2" wood blocks. W6 x 8.5 or W6 x 9 steel posts, 6'-0" in length, with 6" x 12" x 1'-2" notched wood blocks or plastic blocks may be used for 6" x 8" x 6'-0" wood posts with 6" x 12" x 1'-2" wood blocks where applicable and when specified.
4. For Transition Railing (Type WB-31) details for Types 12C and 12D Layouts, see Revised Standard Plan RSP A77U4.
5. Type 12D layout is typically used where continous MGS is recommended between structures.
6. The 15:1 or flatter flare for Type 12C Layout is based on the edge of the paved shoulder or offset line of edge of the traveled way. The length of MGS with the 15:1 or flatter flare is based on site conditions and should be a length equal to multiples of 12'-6".
7. For details of the buried post end anchor used with Type 12C Layout, see Revised Standard Plan RSP A77T2.
8. Where placement of dike is required with MGS installations, see Revised Standard Plan RSP A77N4 for dike positioning details.
9. Type 12C Layout is typically used:
   a. To the right of approaching traffic, at the end of the structure, on two-lane conventional highway where the roadbed width across the structure is less than 40 feet.
   b. To the left of approaching traffic, at each of a structure, on two-lane conventional highway where the roadbed width across the structure is less than 40 feet.
   c. To the right of approaching traffic at the end of each structure on multilane freeways or expressways with separate adjacent or parallel bridges.
   d. To the right of approaching traffic at the end of the structure on multilane freeways or expressways with decked median on the bridge.
10. See Revised Standard Plan RSP A77Q3 for typical layout used left of approaching traffic at the ends of each structure on multilane freeways or expressways with separate adjacent or parallel bridges.
11. For additional details of typical connections to bridge rail, see Connection Detail AA on Revised Standard Plans RSP A77U1 and RSP A77U2 and Connection Detail FF on Revised Standard Plans RSP A77V1 and RSP A77V2.
12. For additional details of a typical connection to walls or abutments, see Revised Standard Plan RSP A77U3.
13. For typical flare offsets for 25'-0" length parabola with maximum offset of 1'-0", see Revised Standard Plan RSP A77P1.

STATE OF CALIFORNIA
DEPARTMENT OF TRANSPORTATION

MIDWEST GUARDRAIL SYSTEM TYPICAL LAYOUTS FOR STRUCTURE APPROACH AND BETWEEN STRUCTURES

NO SCALE

RSP A77Q2 DATED JULY 19, 2013 SUPPLEMENTS THE STANDARD PLANS BOOK DATED 2010.

REVISED STANDARD PLAN RSP A77Q2

2010 REVISED STANDARD PLAN RSP A77Q2

7-8-13

Dist	COUNTY	ROUTE	POST MILES TOTAL PROJECT	SHEET No.	TOTAL SHEETS
11	SD	67	R0.0/R5.9	151	204

Randell D. Hiatt
REGISTERED CIVIL ENGINEER

July 19, 2013
PLANS APPROVAL DATE

REGISTERED PROFESSIONAL ENGINEER
Randell D. Hiatt
No. C50200
Exp. 6-30-15
CIVIL
STATE OF CALIFORNIA

THE STATE OF CALIFORNIA OR ITS OFFICERS OR AGENTS SHALL NOT BE RESPONSIBLE FOR THE ACCURACY OR COMPLETENESS OF SCANNED COPIES OF THIS PLAN SHEET.

TO ACCOMPANY PLANS DATED 07-28-14

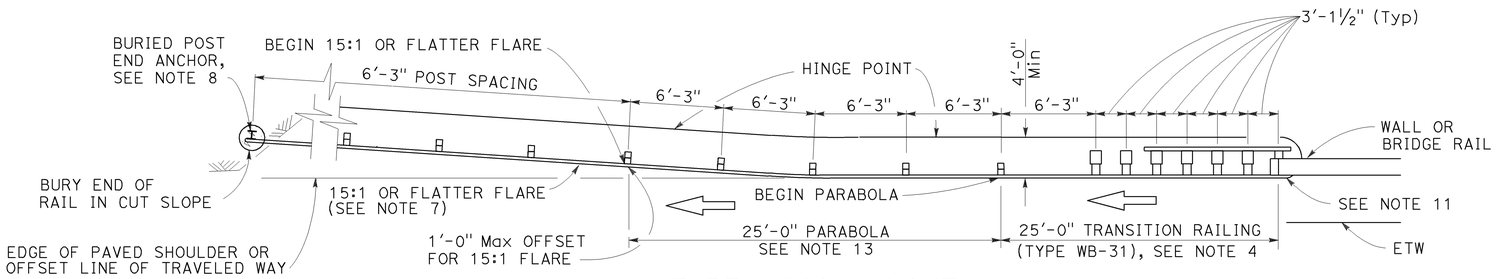

TYPE 12CC LAYOUT

(MGS installation at structure departure with a
Buried end anchor treatment at trailing end of railing)
See Notes 9 and 10

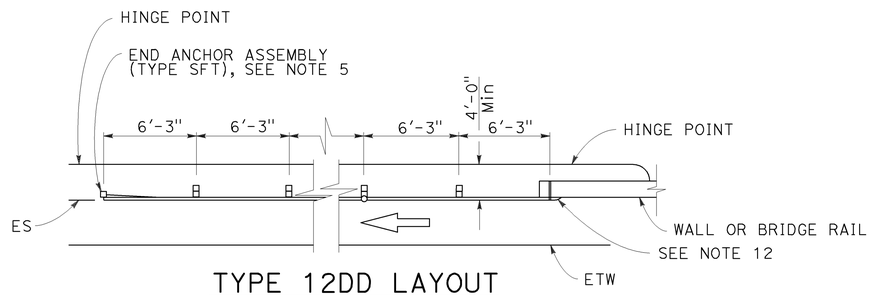

TYPE 12DD LAYOUT

(MGS installation at structure departure
With end anchor assembly at trailing end of railing)
See Notes 6 and 9

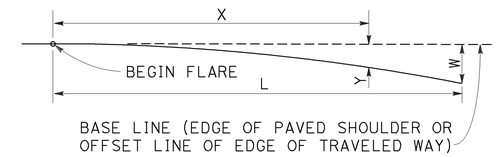

$$Y = \frac{WX^2}{L^2}$$

Y = OFFSET FROM BASE LINE
W = MAXIMUM OFFSET
X = DISTANCE ALONG BASE LINE
L = LENGTH OF FLARE

PARABOLIC FLARE OFFSETS

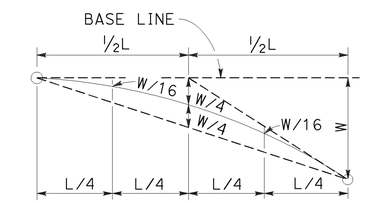

TYPICAL PARABOLIC LAYOUT

NOTES:

1. Line post, blocks and hardware to be used are shown on Revised Standard Plans RSP A77L1, RSP A77L2, RSP A77M1, RSP A77N1 and RSP A77N2.
2. MSG post spacing to be 6'-3" center to center, except as otherwise noted.
3. Except as noted, line posts are 6" x 8" x 6'-0" wood with 6" x 12" x 1'-2" wood blocks. W6 x 8.5 or W6 x 9 steel posts, 6'-0" in length, with 6" x 12" x 1'-2" notched wood blocks or notched recycled plastic blocks may be used for 6" x 8" x 6'-0" wood line posts with 6" x 12" x 1'-2" wood blocks where applicable and when specified.
4. For Transition Railing (Type WB-31) details for Type 12CC Layout, see Revised Standard Plan RSP A77U4.
5. For details of End Anchor Assembly (Type SFT) used with Type 12DD Layout, see Revised Standard Plan RSP A77S1.
6. Type 12DD layout is typically used to the right of traffic departing a structure on two-way conventional highways where the roadbed width across the structure is equal to or greater than 40 feet and MGS is recommended (embankment height, side slopes, other fixed objects). Length of railing to be equal to multiples of 12'-6". For MGS connection details to bridge rail, see Revised Standard Plans RSP A77U1 and RSP A77V1. For MGS connection details to wall, see Revised Standard Plan RSP A77U3.
7. The 15:1 or flatter flare for Type 12CC Layout is based on the edge of the paved shoulder or offset line of edge of the traveled way. The length of MGS within the 15:1 or flatter flare is based on site conditions and should be a length equal to multiples of 12'-6".
8. For details of the buried post end anchor used with Type 12CC Layout, see Revised Standard Plan RSP A77T2.
9. Where placement of dike is required with MGS installations, see Revised Standard Plan RSP A77N4 for dike positioning details.
10. Type 12CC Layout is typically used to the right of traffic departing a structure on two-way conventional highways where the roadbed width across the structure is less than 40 feet.
11. For additional details of a typical connection to bridge rail for Layout Type 12CC, see Connection Detail CC on Revised Standard Plan RSP A77U2 and Connection Detail HH on Revised Standard Plan RSP A77V2.
12. For additional details of a typical connection to bridge rail for Layout Type 12DD, see Connection Detail BB on Revised Standard Plan RSP A77U1 and Connection Detail GG on Revised Standard Plan RSP A77V1.
13. For typical flare offsets for 25'-0" length parabola with maximum offset of 1'-0", see Revised Standard Plan RSP A77P1.

STATE OF CALIFORNIA
DEPARTMENT OF TRANSPORTATION

MIDWEST GUARDRAIL SYSTEM TYPICAL LAYOUTS FOR STRUCTURE DEPARTURE

NO SCALE

RSP A77Q5 DATED JULY 19, 2013 SUPPLEMENTS THE STANDARD PLANS BOOK DATED 2010.

REVISED STANDARD PLAN RSP A77Q5

2010 REVISED STANDARD PLAN RSP A77Q5

6-20-13

Dist	COUNTY	ROUTE	POST MILES TOTAL PROJECT	SHEET No.	TOTAL SHEETS
11	SD	67	R0.0/R5.9	152	204

Randell D. Hiatt
REGISTERED CIVIL ENGINEER

July 19, 2013
PLANS APPROVAL DATE

REGISTERED PROFESSIONAL ENGINEER
Randell D. Hiatt
No. C50200
Exp. 6-30-15
CIVIL
STATE OF CALIFORNIA

THE STATE OF CALIFORNIA OR ITS OFFICERS OR AGENTS SHALL NOT BE RESPONSIBLE FOR THE ACCURACY OR COMPLETENESS OF SCANNED COPIES OF THIS PLAN SHEET.

TO ACCOMPANY PLANS DATED 07-28-14

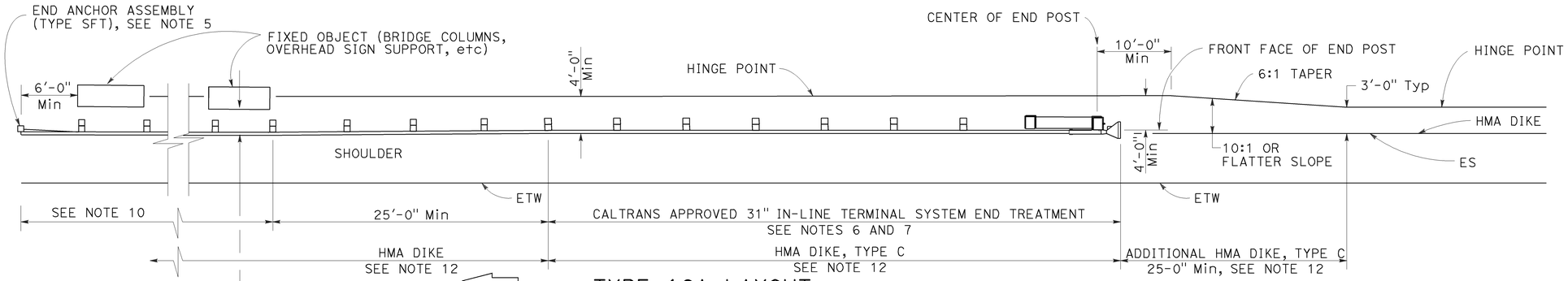

TYPE 16A LAYOUT

(MGS installation at roadside fixed object or objects with 31" in-line end treatment at traffic approach end of railing)
See Notes 11 and 12

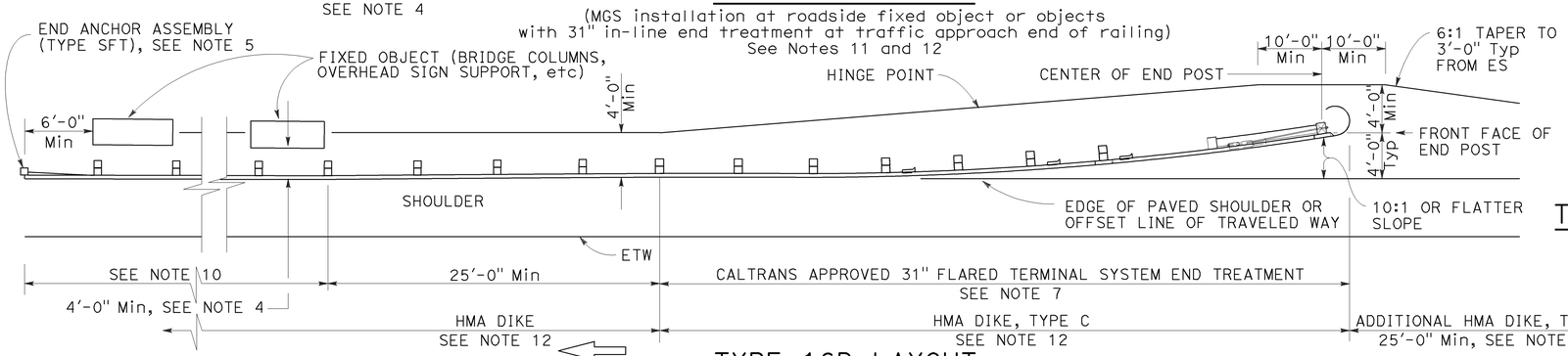

TYPE 16B LAYOUT

(MGS installation at roadside fixed object or objects with 31' flared end treatment at traffic approach end of railing)
See Notes 11 and 12

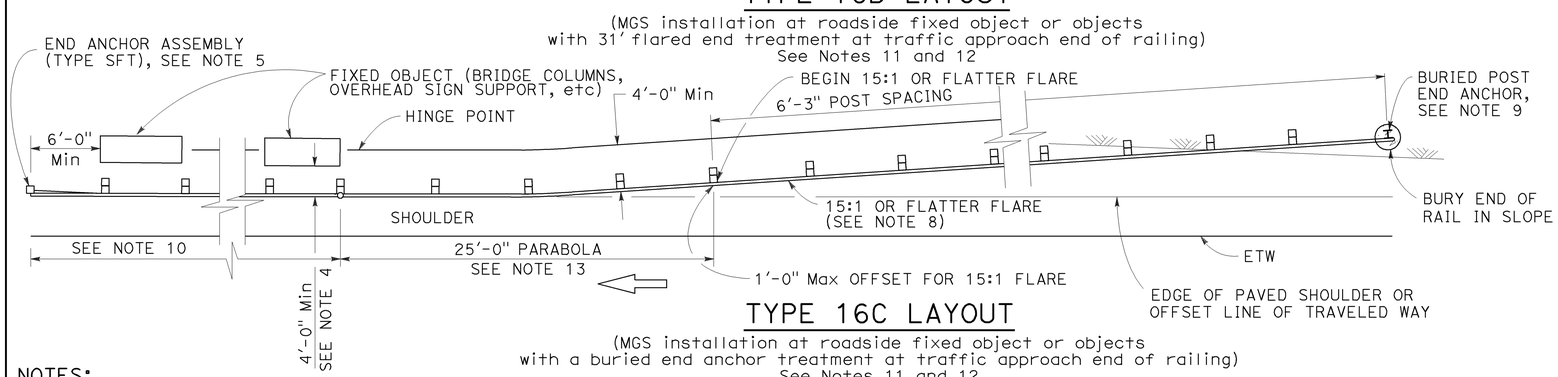

TYPE 16C LAYOUT

(MGS installation at roadside fixed object or objects with a buried end anchor treatment at traffic approach end of railing)
See Notes 11 and 12

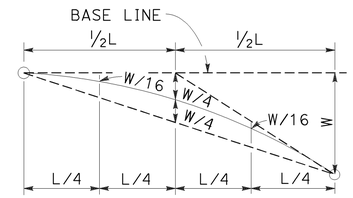

TYPICAL PARABOLIC LAYOUT

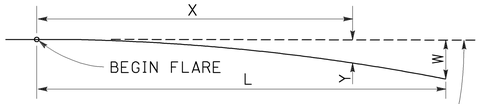

BASE LINE (EDGE OF PAVED SHOULDER OR OFFSET LINE OF EDGE OF TRAVELED WAY)

$$Y = \frac{WX^2}{L^2}$$

Y = OFFSET FROM BASE LINE
W = MAXIMUM OFFSET
X = DISTANCE ALONG BASE LINE
L = LENGTH OF FLARE

PARABOLIC FLARE OFFSETS

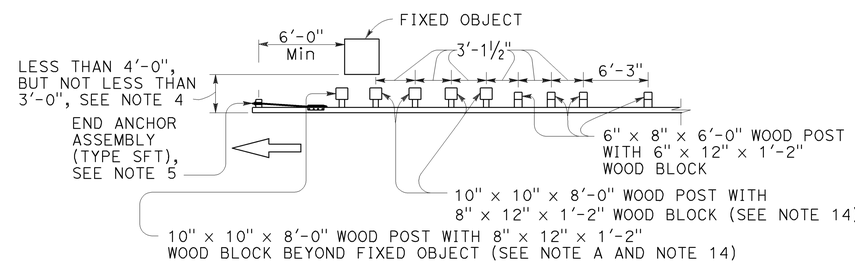

NOTE A: For a series of fixed objects (bridge columns, overhead sign supports, etc.) additional 10" x 10" x 8'-0" wood post with 8" x 12" x 1'-2" wood blocks at 3'-1½" center to center spacing are to be used between fixed objects.

STRENGTHENED MIDWEST GUARDRAIL SYSTEM SECTIONS FOR FIXED OBJECT

Use strengthened MGS sections with Types 16A, 16B or 16C layouts where minimum clearance between the face of the railing and fixed object(s) is less than 4'-0", but not less than 3'-0". See Note 4

NOTES:

1. Line post, blocks and hardware to be used are shown on Revised Standard Plans RSP A77L1, RSP A77L2, RSP A77M1, RSP A77N1 and RSP A77N2.
2. MGS post spacing to be 6'-3" center to center, except as otherwise noted.
3. Except as noted, line posts are 6" x 8" x 6'-0" wood with 6" x 12" x 1'-2" wood blocks. W6 x 8.5 or W6 x 9 steel posts, 6'-0" in length, with 6" x 12" x 1'-2" notched wood blocks or notched recycled plastic blocks may be used for 6" x 8" x 6'-0" wood line posts with 6" x 12" x 1'-2" wood blocks where applicable and when specified.
4. A 4'-0" minimum clearance is required between the face of the railing and the face of a fixed object located directly behind MGS sections with post spacing of 6'-3". Construct MGS as shown in the detail "Strengthened Midwest Guardrail System Sections for Fixed Object" on this plan, where the clearance between the face of the railing and the face of a fixed object is less than 4'-0", but not less than 3'-0". Where the clearance is less than 3'-0", a concrete wall or barrier should be constructed to shield the fixed object(s).
5. For End Anchor Assembly (Type SFT) details, see Revised Standard Plan RSP A77S1.
6. 31" in-line terminal system end treatments are used where site conditions will not accommodate a 31" flared end treatment.
7. The type of 31" terminal system to be used will be shown on the Project Plans.
8. The 15:1 or flatter flare used with Type 16C Layout is based on the edge of the paved shoulder or offset line of edge of the traveled way. The length of MGS within the 15:1 or flatter flare is based on site conditions and should be a length equal to multiples of 12'-6".
9. For details of the Buried Post End Anchor used with Type 16C Layout, see Revised Standard Plan RSP A77T2.
10. As site conditions dictate, construct additional MGS to shield fixed object(s). Additional MGS length equal to multiples of 12'-6". Post spacing at 6'-3" except as specified in Note 4.
11. Layout Types 16A, 16B or 16C are typically used where MGS is recommended to shield roadside fixed object(s) and a crashworthy 31" end treatment is required for only one direction of traffic.
12. Where placement of dike is required with MGS, see Revised Standard Plan RSP A77N4 for dike positioning details.
13. For typical flare offsets for 25'-0" length parabola with maximum offset of 1'-0", see Revised Standard Plan RSP A77P1.
14. W6 x 15 steel post, 8'-0" in length, with 8" x 12" x 1'-2" notched wood block or notched recycled plastic blocks may be used in place of the 10" x 10" x 8'-0" wood post with 8" x 12" x 1'-2" wood block shown in the detail "Strengthened Midwest Guardrail System Sections for Fixed Object".

STATE OF CALIFORNIA
DEPARTMENT OF TRANSPORTATION

MIDWEST GUARDRAIL SYSTEM TYPICAL LAYOUTS FOR ROADSIDE FIXED OBJECTS

NO SCALE

RSP A77R3 DATED JULY 19, 2013 SUPPLEMENTS THE STANDARD PLANS BOOK DATED 2010.

REVISED STANDARD PLAN RSP A77R3

2010 REVISED STANDARD PLAN RSP A77R3

6-20-13

Dist	COUNTY	ROUTE	POST MILES TOTAL PROJECT	SHEET No.	TOTAL SHEETS
11	SD	67	R0.0/R5.9	153	204

Randell D. Hiatt
REGISTERED CIVIL ENGINEER

November 15, 2013
PLANS APPROVAL DATE

REGISTERED PROFESSIONAL ENGINEER
Randell D. Hiatt
No. C50200
Exp. 6-30-15
CIVIL
STATE OF CALIFORNIA

THE STATE OF CALIFORNIA OR ITS OFFICERS OR AGENTS SHALL NOT BE RESPONSIBLE FOR THE ACCURACY OR COMPLETENESS OF SCANNED COPIES OF THIS PLAN SHEET.

TO ACCOMPANY PLANS DATED 07-28-14

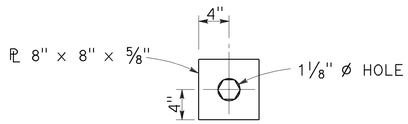

DETAIL "A"
CABLE CONNECTION
END PLATE

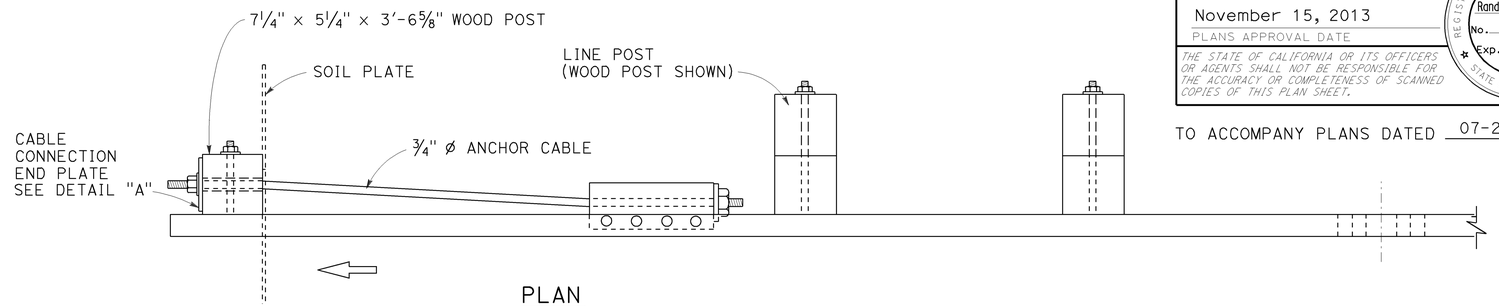

PLAN

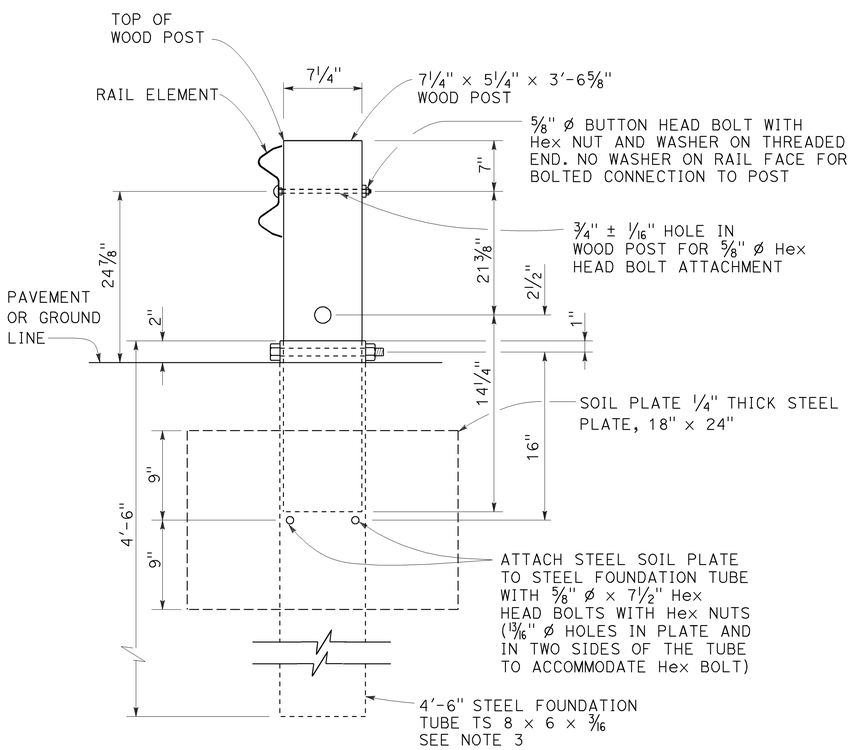

SECTION A-A

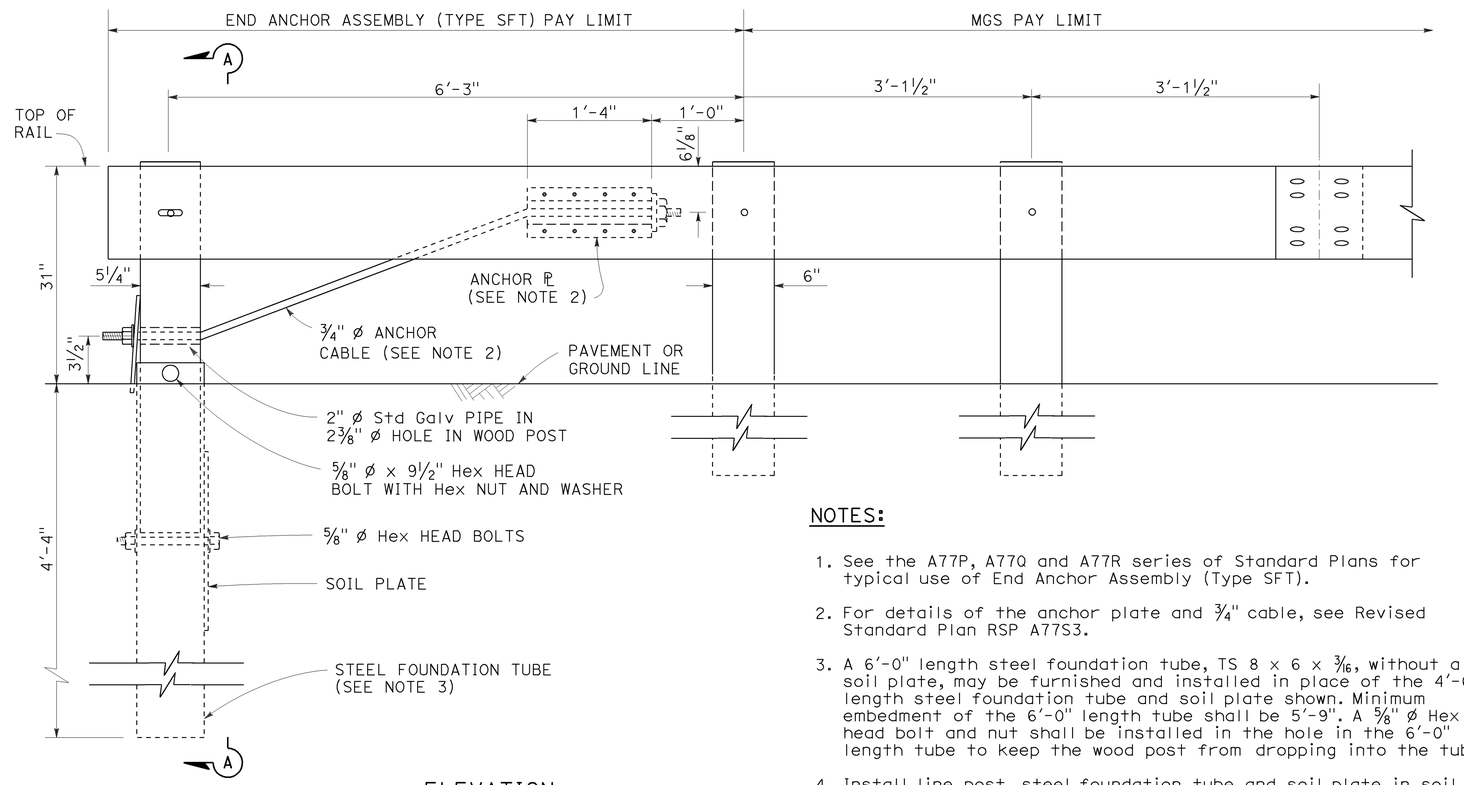

ELEVATION

END ANCHOR
ASSEMBLY (TYPE SFT)
See Note 1

NOTES:

1. See the A77P, A77Q and A77R series of Standard Plans for typical use of End Anchor Assembly (Type SFT).
2. For details of the anchor plate and 3/4" cable, see Revised Standard Plan RSP A77S3.
3. A 6'-0" length steel foundation tube, TS 8 x 6 x 3/16, without a soil plate, may be furnished and installed in place of the 4'-6" length steel foundation tube and soil plate shown. Minimum embedment of the 6'-0" length tube shall be 5'-9". A 5/8" ø Hex head bolt and nut shall be installed in the hole in the 6'-0" length tube to keep the wood post from dropping into the tube.
4. Install line post, steel foundation tube and soil plate in soil.

STATE OF CALIFORNIA
DEPARTMENT OF TRANSPORTATION

MIDWEST GUARDRAIL SYSTEM END ANCHOR ASSEMBLY (TYPE SFT)

NO SCALE

RSP A77S1 DATED NOVEMBER 15, 2013 SUPERSEDES RSP A77S1
DATED JULY 19, 2013 THAT SUPPLEMENTS THE STANDARD PLANS BOOK DATED 2010.

REVISED STANDARD PLAN RSP A77S1

2010 REVISED STANDARD PLAN RSP A77S1

10-4-13

Dist	COUNTY	ROUTE	POST MILES TOTAL PROJECT	SHEET No.	TOTAL SHEETS
11	SD	67	R0.0/R5.9	154	204

Randell D. Hiatt
REGISTERED CIVIL ENGINEER

November 15, 2013
PLANS APPROVAL DATE

REGISTERED PROFESSIONAL ENGINEER
Randell D. Hiatt
No. C50200
Exp. 6-30-15
CIVIL
STATE OF CALIFORNIA

THE STATE OF CALIFORNIA OR ITS OFFICERS OR AGENTS SHALL NOT BE RESPONSIBLE FOR THE ACCURACY OR COMPLETENESS OF SCANNED COPIES OF THIS PLAN SHEET.

TO ACCOMPANY PLANS DATED 07-28-14

NOTE:

See Revised Standard Plans RSP A77S1, RSP A77S2 and RSP A77T1 for typical use of anchor cable and anchor plate.

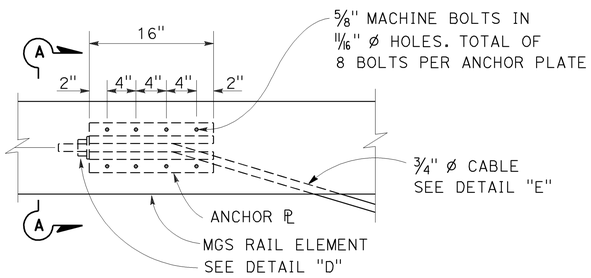

ANCHOR PLATE DETAIL

(MGS shown, TBB similar)

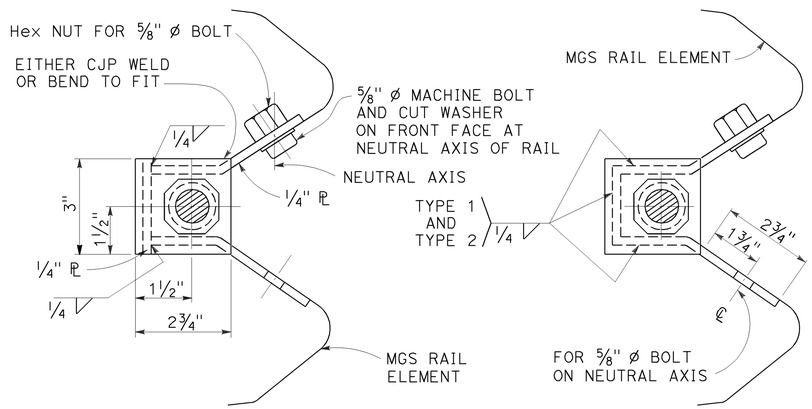

NOTE:

Dimensioning applies to both types.

SECTION A-A
(ALTERNATIVE TYPE 1)

SECTION A-A
(ALTERNATIVE TYPE 2)

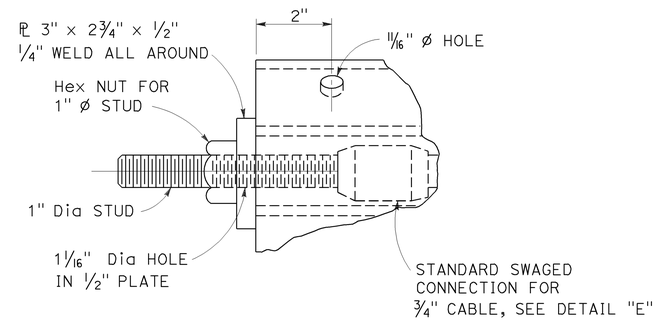

DETAIL "D"

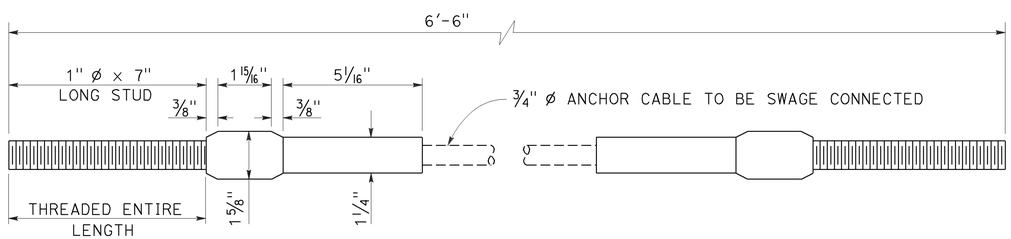

ANCHOR CABLE WITH SWAGED FITTING AND STUD

DETAIL "E"

STATE OF CALIFORNIA
DEPARTMENT OF TRANSPORTATION

METAL RAILING ANCHOR CABLE AND ANCHOR PLATE DETAILS

NO SCALE

RSP A77S3 DATED NOVEMBER 15, 2013 SUPERSEDES RSP A77S3 DATED JULY 19, 2013 THAT SUPPLEMENTS THE STANDARD PLANS BOOK DATED 2010.

REVISED STANDARD PLAN RSP A77S3

2010 REVISED STANDARD PLAN RSP A77S3

10-4-13

Dist	COUNTY	ROUTE	POST MILES TOTAL PROJECT	SHEET No.	TOTAL SHEETS
11	SD	67	R0.0/R5.9	155	204

Randell D. Hiatt
REGISTERED CIVIL ENGINEER

July 19, 2013
PLANS APPROVAL DATE

REGISTERED PROFESSIONAL ENGINEER
Randell D. Hiatt
No. C50200
Exp. 6-30-15
CIVIL
STATE OF CALIFORNIA

THE STATE OF CALIFORNIA OR ITS OFFICERS OR AGENTS SHALL NOT BE RESPONSIBLE FOR THE ACCURACY OR COMPLETENESS OF SCANNED COPIES OF THIS PLAN SHEET.

TO ACCOMPANY PLANS DATED 07-28-14

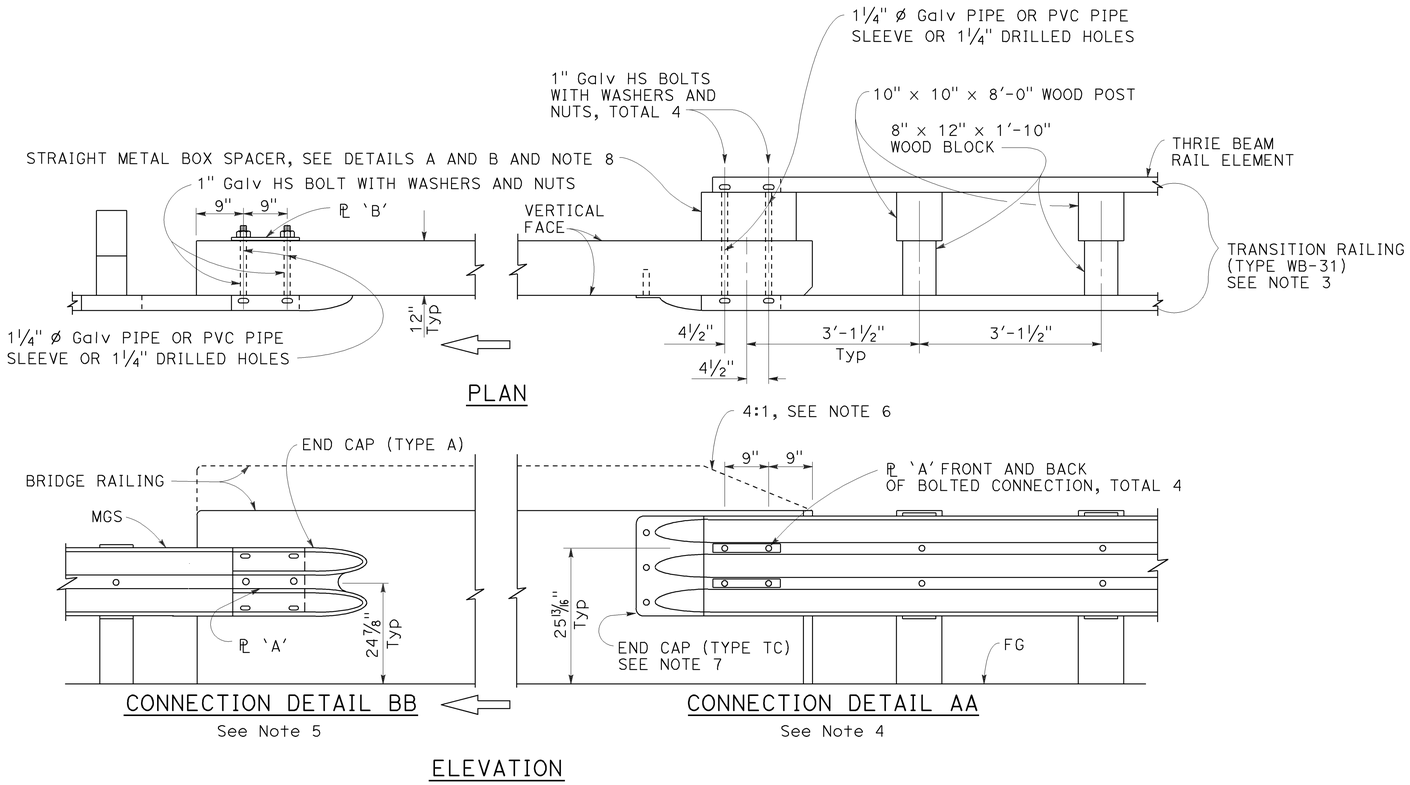

MIDWEST GUARDRAIL SYSTEM CONNECTION TO BRIDGE RAILING WITHOUT SIDEWALK

NOTES:

1. See Revised Standard Plan RSP A77U2 for additional connection details to bridges without sidewalks.
2. Additional details of posts, blocks and hardware are shown on Revised Standard Plans RSP A77M1, RSP A77N1 and RSP A77N2.
3. For additional details of Transition Railing (Type WB-31), see Revised Standard Plan RSP A77U4. Transition Railing (Type WB-31) transitions the 12 gauge MGS railing section to a heavier gage nested thrie beam railing section which is connected to the concrete bridge railing.
4. For typical use of Connection Detail AA, see Layout Types 12A and 12B on Revised Standard Plan RSP A77Q1, Layout Types 12C and 12D on Revised Standard Plan RSP A77Q2, and Layout Type 12E on Revised Standard Plan RSP A77Q3.
5. For typical use of Connection Detail BB, see Layout Type 12D (structure departure railing connection) on Revised Standard Plan RSP A77Q2 and Layout Type 12DD on Revised Standard Plan RSP A77Q5.
6. Where the height of the bridge railing exceeds the height of the thrie beam railing by more than 1" at Connection Detail AA, taper the top of the end of the bridge railing at 4:1 to match the top elevation of the thrie beam rail.
7. For details of End Cap (Type TC), see Revised Standard Plan RSP A77U4.
8. See Revised Standard Plan RSP A77U4 for additional details regarding depth dimension for straight metal box spacer.

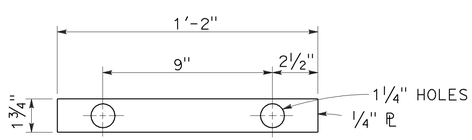

PLATE 'A'

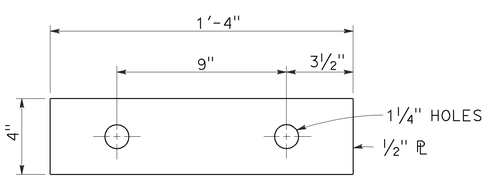

PLATE 'B'
(For backside of connection BB)

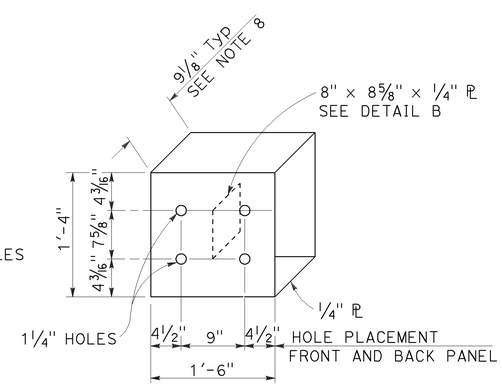

DETAIL A

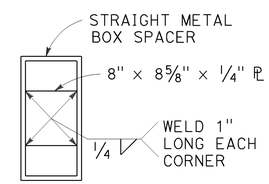

DETAIL B

STRAIGHT METAL BOX SPACER

STATE OF CALIFORNIA
DEPARTMENT OF TRANSPORTATION

MIDWEST GUARDRAIL SYSTEM CONNECTIONS TO BRIDGE RAILINGS WITHOUT SIDEWALKS DETAILS No. 1

NO SCALE

RSP A77U1 DATED JULY 19, 2013 SUPPLEMENTS THE STANDARD PLANS BOOK DATED 2010.

REVISED STANDARD PLAN RSP A77U1

2010 REVISED STANDARD PLAN RSP A77U1

7-8-13

Dist	COUNTY	ROUTE	POST MILES TOTAL PROJECT	SHEET No.	TOTAL SHEETS
11	SD	67	R0.0/R5.9	156	204

Randell D. Hiatt
REGISTERED CIVIL ENGINEER

July 19, 2013
PLANS APPROVAL DATE

REGISTERED PROFESSIONAL ENGINEER
Randell D. Hiatt
No. C50200
Exp. 6-30-15
CIVIL
STATE OF CALIFORNIA

THE STATE OF CALIFORNIA OR ITS OFFICERS OR AGENTS SHALL NOT BE RESPONSIBLE FOR THE ACCURACY OR COMPLETENESS OF SCANNED COPIES OF THIS PLAN SHEET.

TO ACCOMPANY PLANS DATED 07-28-14

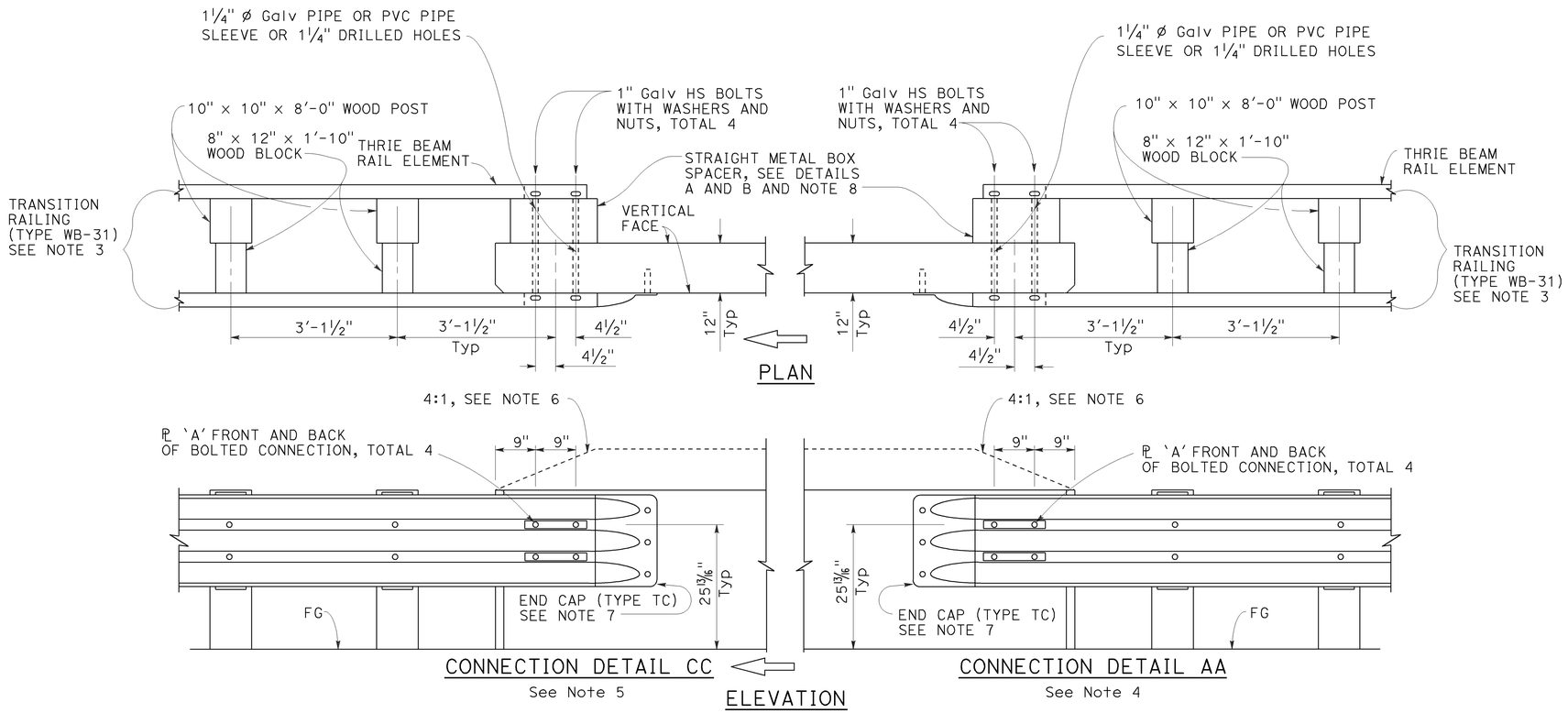

MIDWEST GUARDRAIL SYSTEM CONNECTION TO BRIDGE RAILING WITHOUT SIDEWALK

NOTES:

1. See Revised Standard Plan RSP A77U1 for additional connection details to bridges without sidewalks.
2. Additional details of posts, blocks and hardware are shown on Revised Standard Plans RSP A77M1, RSP A77N1 and RSP A77N2.
3. For additional details of Transition Railing (Type WB-31), see Revised Standard Plan RSP A77U4. Transition Railing (Type WB-31) transitions the 12 gauge MGS railing section to a heavier gage nested thrie beam railing section which is connected to the concrete bridge railing.
4. For typical use of Connection Detail AA, see Layout Types 12A and 12B on Revised Standard Plan RSP A77Q1, Layout Types 12C and 12D on Revised Standard Plan RSP A77Q2, and Layout Type 12E on Revised Standard Plan RSP A77Q3.
5. For typical use of Connection Detail CC, see Layout Types 12AA and 12BB on Revised Standard Plan RSP A77Q4 and Layout Type 12CC on Revised Standard Plan RSP A77Q5.
6. Where the height of the bridge railing exceeds the height of the thrie beam railing by more than 1" at Connection Detail AA and connection Detail CC, taper the top of the end of the bridge railing at 4:1 to match the top elevation of the thrie beam railing.
7. For details of End Cap (Type TC), see Revised Standard Plan RSP A77U4.
8. See Revised Standard Plan RSP A77U4 for additional details regarding depth dimension for straight metal box spacer.

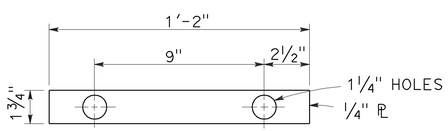

PLATE 'A'

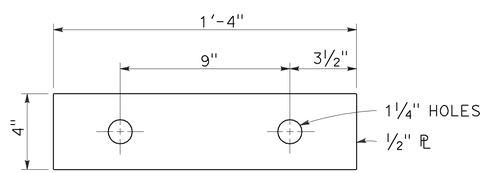

PLATE 'B'
(For backside of connection BB)

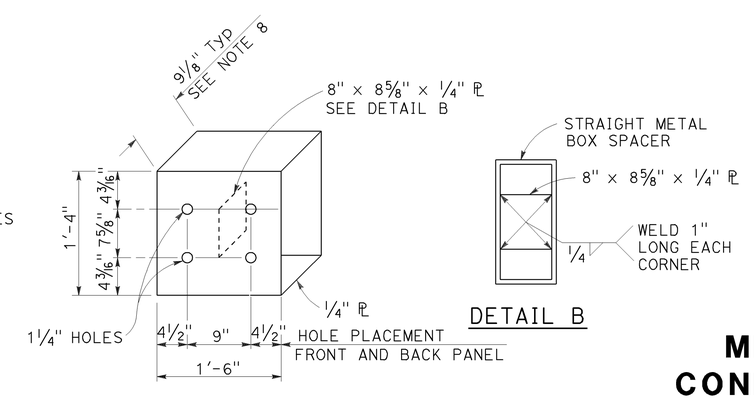

STATE OF CALIFORNIA
DEPARTMENT OF TRANSPORTATION

MIDWEST GUARDRAIL SYSTEM CONNECTIONS TO BRIDGE RAILINGS WITHOUT SIDEWALKS DETAILS No. 2

NO SCALE

RSP A77U2 DATED JULY 19, 2013 SUPPLEMENTS THE STANDARD PLANS BOOK DATED 2010.

REVISED STANDARD PLAN RSP A77U2

2010 REVISED STANDARD PLAN RSP A77U2

6-20-13

Dist	COUNTY	ROUTE	POST MILES TOTAL PROJECT	SHEET No.	TOTAL SHEETS
11	SD	67	R0.0/R5.9	157	204

Randell D. Hiatt
REGISTERED CIVIL ENGINEER

July 19, 2013
PLANS APPROVAL DATE

REGISTERED PROFESSIONAL ENGINEER
Randell D. Hiatt
No. C50200
Exp. 6-30-15
CIVIL
STATE OF CALIFORNIA

THE STATE OF CALIFORNIA OR ITS OFFICERS OR AGENTS SHALL NOT BE RESPONSIBLE FOR THE ACCURACY OR COMPLETENESS OF SCANNED COPIES OF THIS PLAN SHEET.

TO ACCOMPANY PLANS DATED 07-28-14

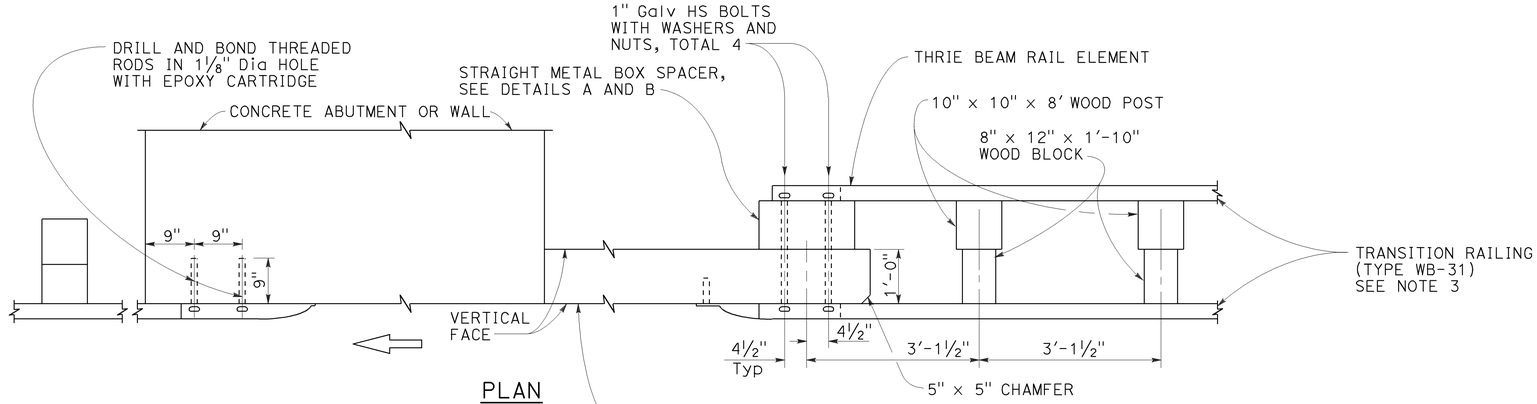

PLAN

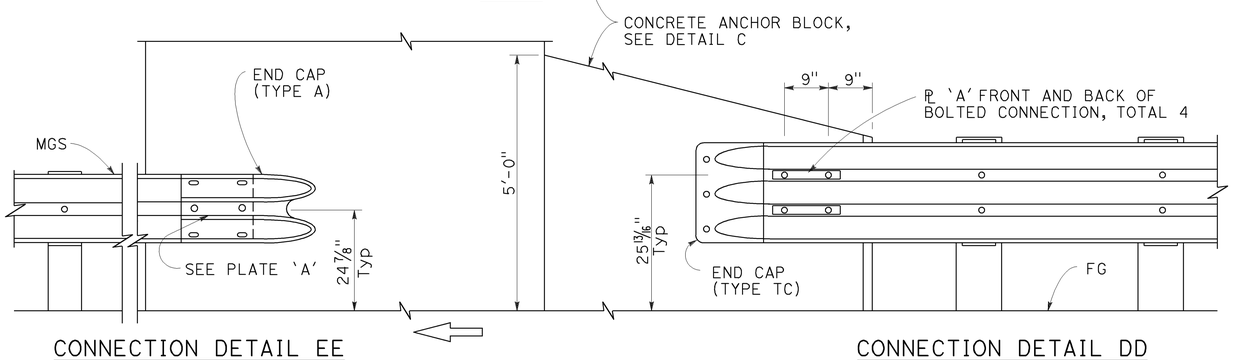

CONNECTION DETAIL EE
See Note 5

CONNECTION DETAIL DD
See Note 4

ELEVATION

MIDWEST GUARDRAIL SYSTEM CONNECTION TO ABUTMENT OR WALL

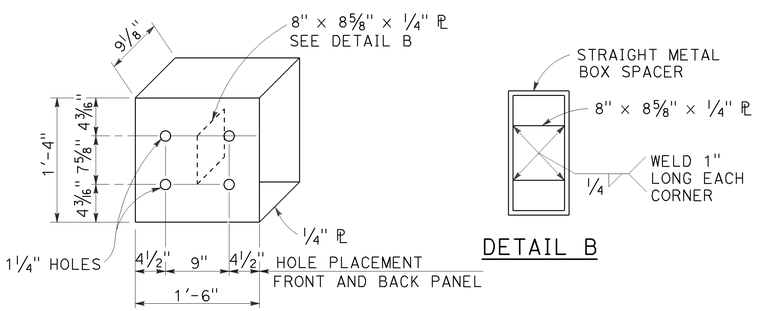

DETAIL A

DETAIL B

STRAIGHT METAL BOX SPACER

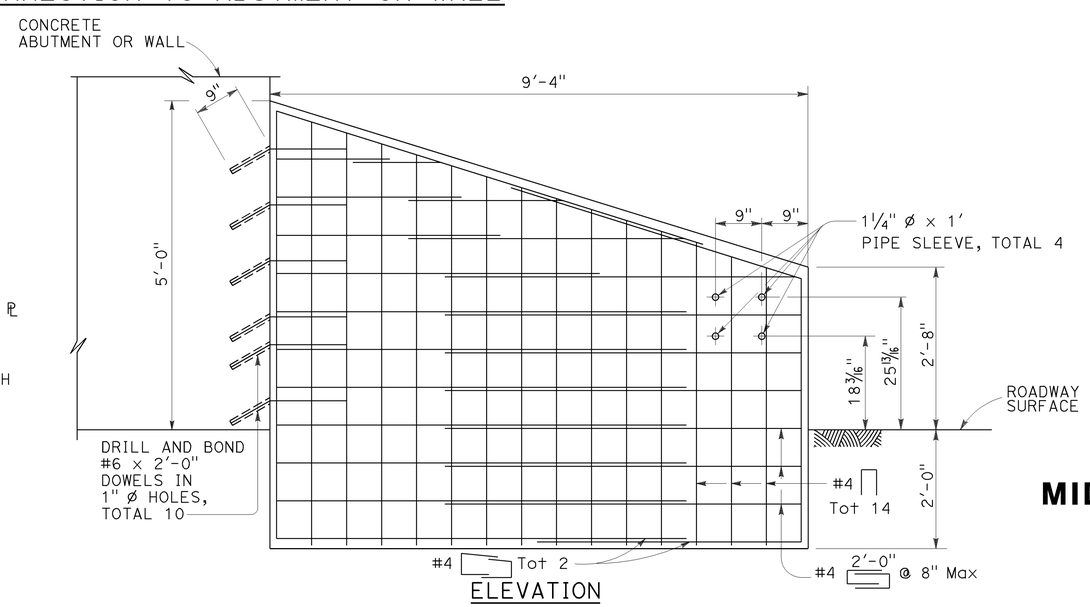

ELEVATION

ANCHOR BLOCK FOR TRANSITION RAILING CONNECTION

DETAIL C

NOTES:

1. These connection details apply to abutments and walls.
2. Additional details of posts, blocks and hardware are shown on Revised Standard Plans RSP A77M1, RSP A77N1 and RSP A77N2.
3. For additional details of Transition Railing (Type WB-31), see Revised Standard Plan RSP A77U4. Transition Railing (Type WB-31) transitions the 12 gauge MGS railing section to a heavier gage nested thrie beam railingsection which is connected to the concrete anchor block.
4. For typical use of Connection Details DD, see Layout Types 12A and 12B on Revised Standard Plan RSP A77Q1 and Layout Types 12C and 12D on Revised Standard Plan RSP A77Q2.
5. For typical use of Connection Detail EE, see Layout Type 12D on Revised Standard Plan RSP A77Q2 and Layout Type 12DD on Revised Standard Plan RSP A77Q5.

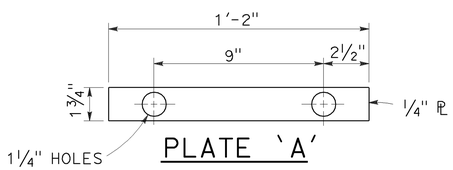

PLATE 'A'

STATE OF CALIFORNIA
DEPARTMENT OF TRANSPORTATION

MIDWEST GUARDRAIL SYSTEM CONNECTIONS TO ABUTMENTS AND WALLS

NO SCALE

RSP A77U3 DATED JULY 19, 2013 SUPPLEMENTS THE STANDARD PLANS BOOK DATED 2010.

REVISED STANDARD PLAN RSP A77U3

2010 REVISED STANDARD PLAN RSP A77U3

7-8-13

Dist	COUNTY	ROUTE	POST MILES TOTAL PROJECT	SHEET No.	TOTAL SHEETS
11	SD	67	R0.0/R5.9	158	204

Randell D. Hiatt
REGISTERED CIVIL ENGINEER

November 15, 2013
PLANS APPROVAL DATE

REGISTERED PROFESSIONAL ENGINEER
Randell D. Hiatt
No. C50200
Exp. 6-30-15
CIVIL
STATE OF CALIFORNIA

THE STATE OF CALIFORNIA OR ITS OFFICERS OR AGENTS SHALL NOT BE RESPONSIBLE FOR THE ACCURACY OR COMPLETENESS OF SCANNED COPIES OF THIS PLAN SHEET.

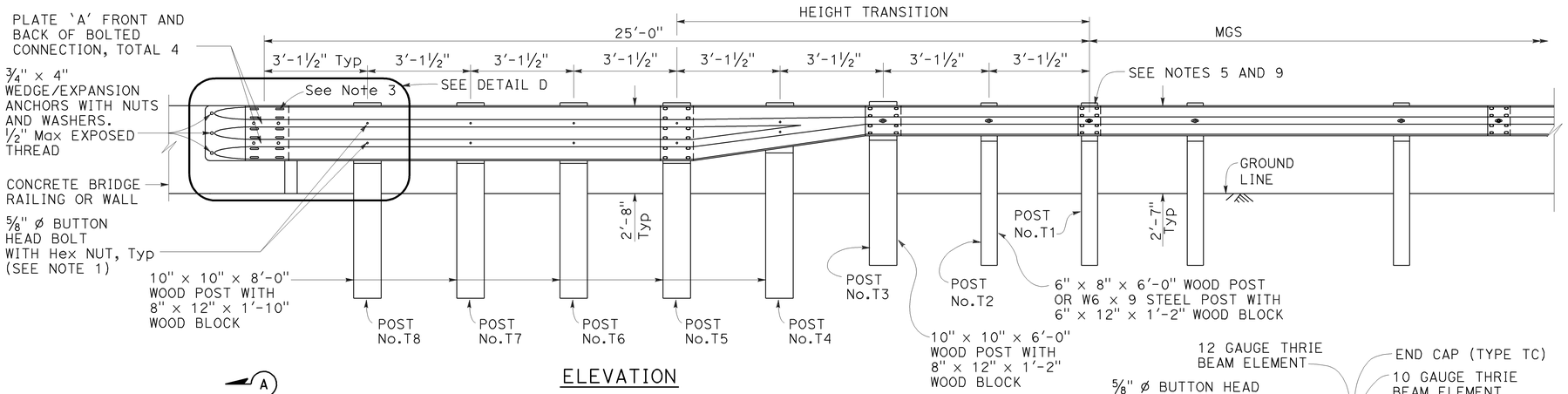

ELEVATION

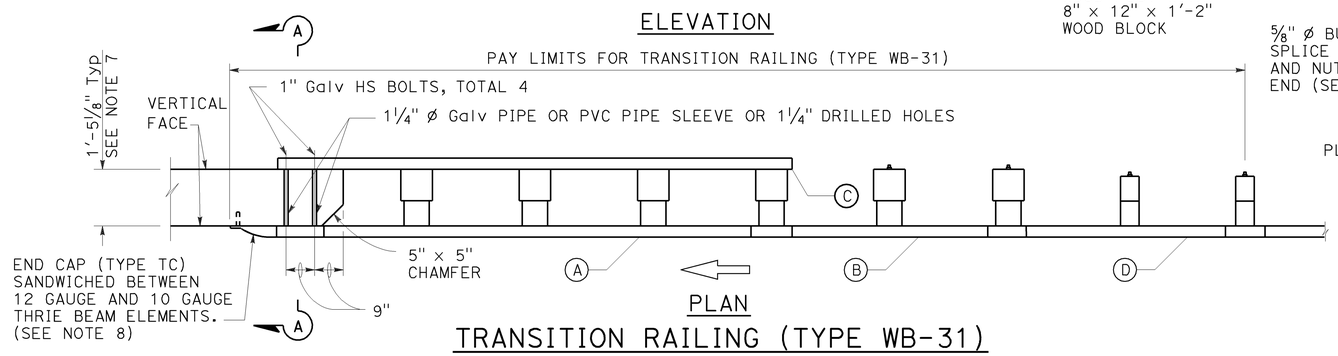

PLAN

TRANSITION RAILING (TYPE WB-31)

(No Blockout Attachment)

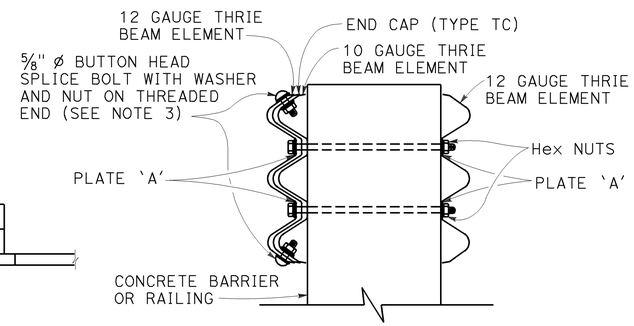

SECTION A-A

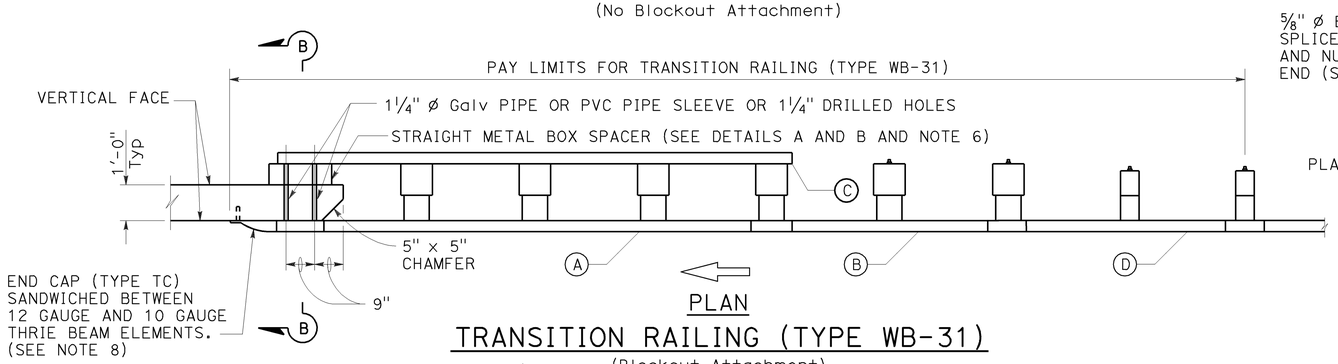

PLAN

TRANSITION RAILING (TYPE WB-31)

(Blockout Attachment)

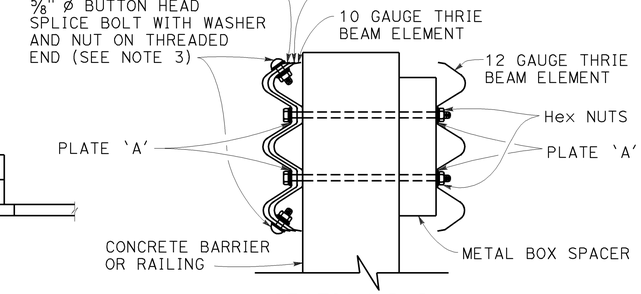

SECTION B-B

NOTES:

TO ACCOMPANY PLANS DATED 07-28-14

1. Use 5/8" ø Button head bolts and hex nuts for connections to posts. No washer on rail face for bolted connections to post.
2. The nested rail elements, end cap, and 'W' beam to thrie beam element may be spliced together prior to bolting the elements to the wood post and concrete barrier or railing.
3. Exterior splice bolt holes for rail element splices at Post No. T5 and the connection to the concrete barrier or railing shall be the standard 29/32" × 1 1/8" slot size. Interior splice bolt holes at these locations may be increased up to 1 1/4" ø. Only the top 4 and the bottom 4 splice bolts with washers and nuts are required for rail splices at Post No. T5 and the connection to the concrete barrier or railing.
4. The top elevation of Posts No. T2 through No. T7 shall not project more than 1" above the top elevation of the rail element.
5. Typically, the railing connected to Transition Railing (Type WB-31) will be either standard railing section of MGS with height transition ratio of 150:1 or a Caltrans approved 31" end treatment attached to Post No. T1.
6. The depth of the metal box spacer varies from the 9 1/8" to 1 1/2" and is dependent on the width of the concrete railing or wall. The combined dimension for the depth of the metal box spacer plus the width of railing or wall is typically 21 1/8". Where the space between the backside of the concrete railing or wall and the rear thrie beam element is less than 1 1/2", metal plates similar to Plate 'A' are to be used as spacers.
7. Where the width of the concrete railing or wall is greater than 17 1/8", wood blocks are to be used to fill the space created between the backside of Posts No. T5 through No. T8 and the rear thrie beam element. These wood blocks shall be 8" in width and 1'-2" in length. The dimension between the front thrie beam element and the rear thrie beam element is to match the width of the concrete railing or wall.
8. End cap may be installed over 12 gauge and 10 gauge thrie beam elements where transition railing is installed on the departure end of bridge railing.
9. Conform standard railing section height to 31" at Post No. T1 using height transition ratio of 150:1.

LEGEND:

(A) NESTED THRIE BEAM ELEMENTS (ONE 12 GAUGE ELEMENT NESTED OVER ONE 10 GAUGE ELEMENT).

(B) ONE ASYMMETRICAL 10 GAUGE "W" BEAM TO THRIE BEAM ELEMENT.

(C) ONE 12 GAUGE THRIE BEAM ELEMENT.

(D) ONE 10 GAUGE "W" BEAM RAIL ELEMENT (7'-3 1/2" LENGTH)

10 GAUGE = 0.138" THICK
12 GAUGE = 0.108" THICK

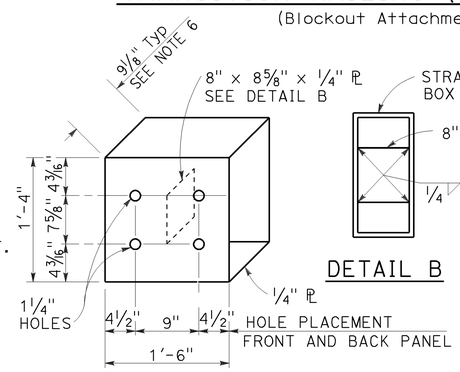

DETAIL A

STRAIGHT METAL BOX SPACER

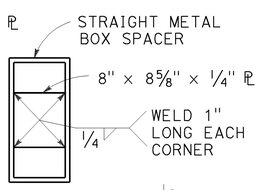

DETAIL B

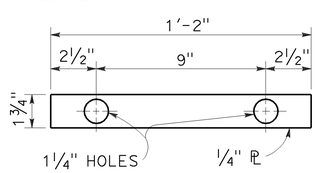

DETAIL C

PLATE 'A'

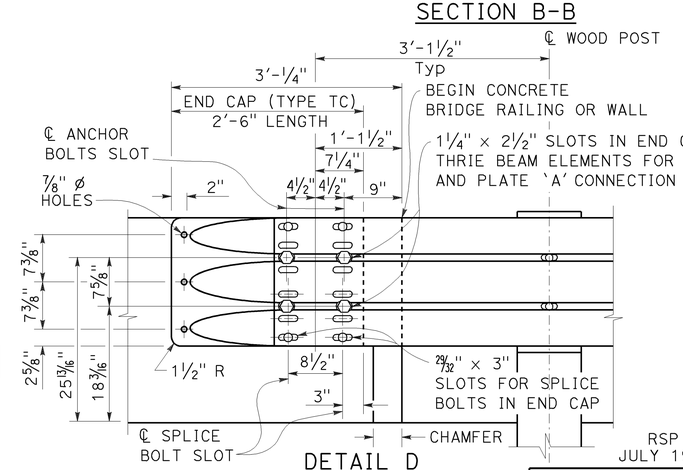

DETAIL D

STATE OF CALIFORNIA
DEPARTMENT OF TRANSPORTATION

MIDWEST GUARDRAIL SYSTEM TRANSITION RAILING (TYPE WB-31)

NO SCALE

RSP A77U4 DATED NOVEMBER 15, 2013 SUPERSEDES RSP A77U4 DATED JULY 19, 2013 THAT SUPPLEMENTS THE STANDARD PLANS BOOK DATED 2010.

REVISED STANDARD PLAN RSP A77U4

2010 REVISED STANDARD PLAN RSP A77U4

10-4-13

Dist	COUNTY	ROUTE	POST MILES TOTAL PROJECT	SHEET No.	TOTAL SHEETS
11	SD	67	R0.0/R5.9	159	204

Randell D. Hiatt
REGISTERED CIVIL ENGINEER

July 19, 2013
PLANS APPROVAL DATE

REGISTERED PROFESSIONAL ENGINEER
Randell D. Hiatt
No. C50200
Exp. 6-30-15
CIVIL
STATE OF CALIFORNIA

THE STATE OF CALIFORNIA OR ITS OFFICERS OR AGENTS SHALL NOT BE RESPONSIBLE FOR THE ACCURACY OR COMPLETENESS OF SCANNED COPIES OF THIS PLAN SHEET.

TO ACCOMPANY PLANS DATED 07-28-14

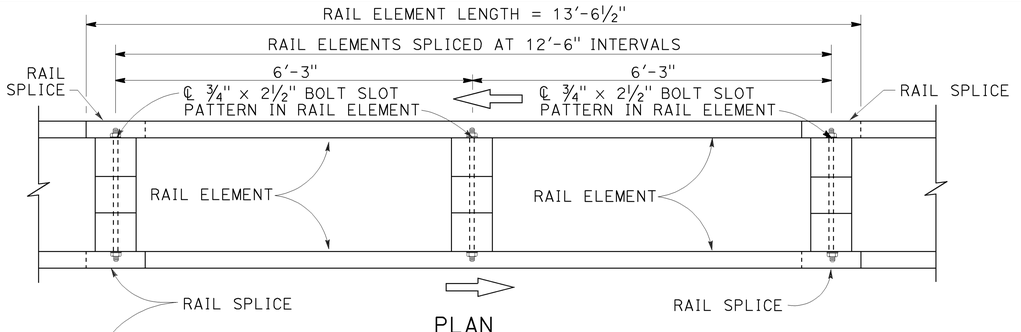

PLAN

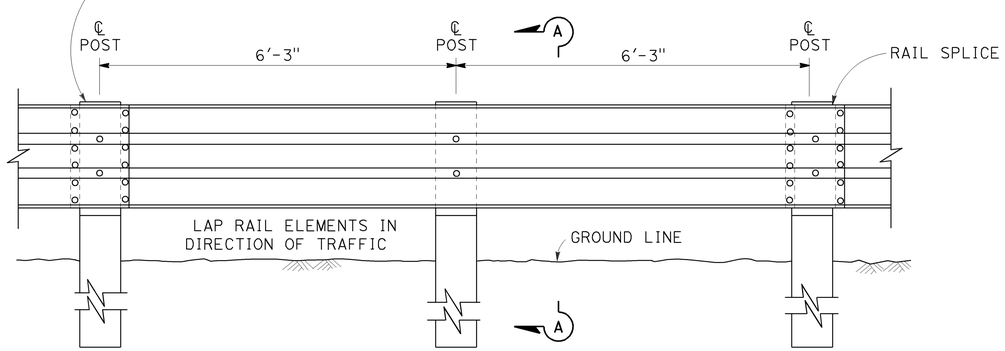

ELEVATION

DOUBLE THRIE BEAM BARRIER

(Wood post and blocks)
See Note 1

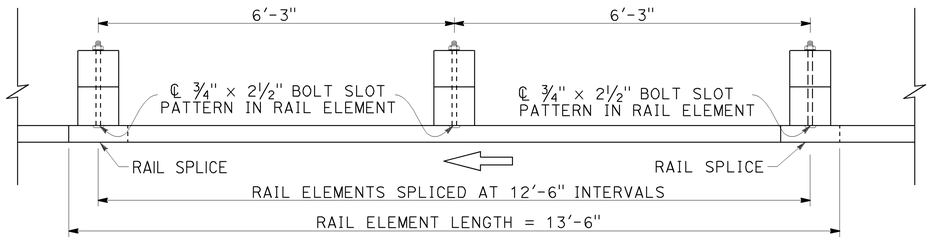

PLAN

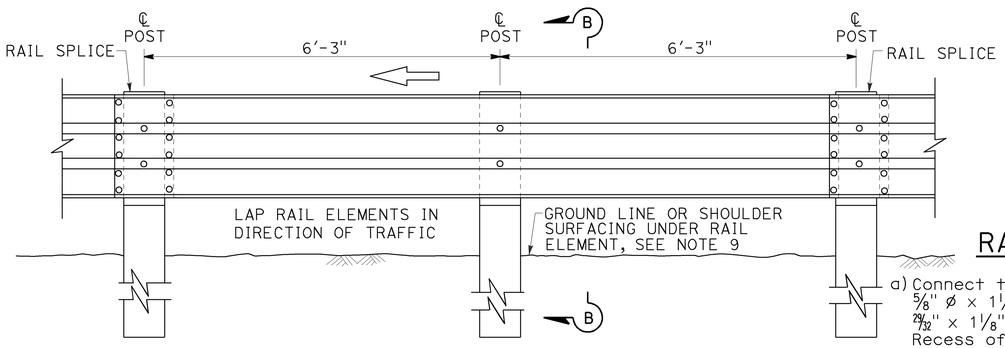

ELEVATION

SINGLE THRIE BEAM BARRIER

(Wood post and blocks)
See Note 1

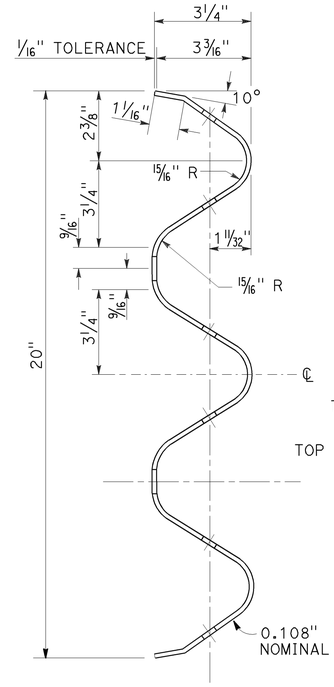

SECTION THRU RAIL ELEMENT

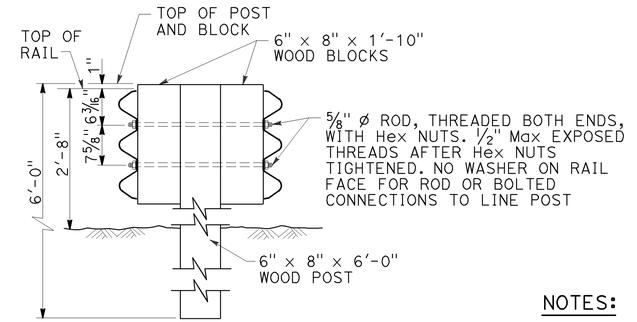

SECTION A-A

TYPICAL WOOD LINE POST INSTALLATION

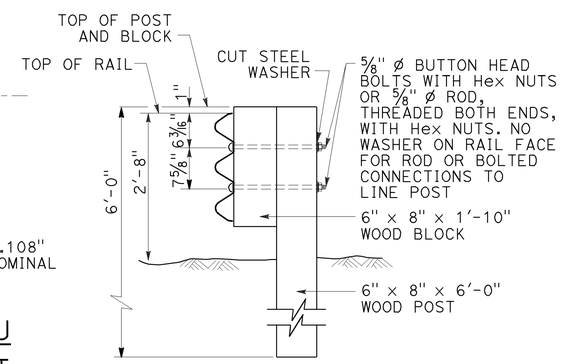

Where bolts are used, install so that the threaded end of the bolts and nuts are placed away from traffic side of rail.

SECTION B-B

TYPICAL WOOD LINE POST INSTALLATION

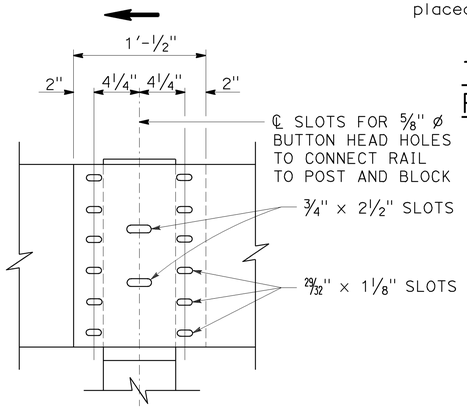

ELEVATION

RAIL ELEMENT SPLICE DETAIL

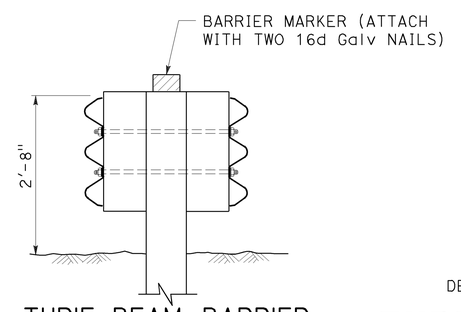

THRIE BEAM BARRIER DELINEATION

See Note 8

a) Connect the overlapped ends of the thrie beam rail elements with ⅝" ø x 1¼" button head oval shoulder bolts inserted into the 29/32" x 1⅛" slots and bolted together with ⅝" ø recessed hex nuts. Recess of hex nut points toward rail element. A total of 12 bolts and nuts are to be used at each rail splice connection.

b) The ends of the rail elements are to be overlapped in the direction of traffic (see details).

c) Where end cap is to be attached to the end of a rail element, a total of 4 of the above described splice bolts and nuts are to be used. Where a return cap is to be attached to the ends of rail elements, a total of 8 of the above described splice bolts and nuts are to be used.

NOTES:

1. For details of steel post thrie beam barrier, see Standard Plan A78B.
2. For details of standard hardware, posts and blocks used to construct thrie beam barrier, see Standard Plan A78C1 and Revised Standard Plan RSP A78C2.
3. Thrie beam barrier post spacing to be 6'-3" center to center, except as otherwise noted.
4. Top of barrier rail to be 2'-8" above ground line or shoulder surfacing under the rail element.
5. For barrier end treatments and barrier connections, see Standard Plans A78E3 and A78G, and Revised Standard Plans RSP A78E1, RSP A78E2 RSP A77Q1, RSP A77Q2 and RSP A78H.
6. For connection to Concrete Barrier (Type 60), see Standard Plans A78I.
7. For details of thrie beam barrier on bridge see Standard Plan A78D2. For details of thrie beam barrier at fixed object, see Revised Standard Plan RSP A78D1.
8. Median barrier delineation to be used when required by the Special Provisions. Spacing of barrier markers to match spacing of raised pavement markers on adjacent median edgeline pavement delineation.
9. Install posts in soil.

STATE OF CALIFORNIA
DEPARTMENT OF TRANSPORTATION

THRIE BEAM BARRIER STANDARD BARRIER RAILING SECTION (WOOD POST WITH WOOD BLOCK)

NO SCALE

RSP A78A DATED JULY 19, 2013 SUPERSEDES STANDARD PLAN A78A DATED MAY 20, 2011 - PAGE 89 OF THE STANDARD PLANS BOOK DATED 2010.

REVISED STANDARD PLAN RSP A78A

2010 REVISED STANDARD PLAN RSP A78A

6-27-13

Dist	COUNTY	ROUTE	POST MILES TOTAL PROJECT	SHEET No.	TOTAL SHEETS
11	SD	67	R0.0/R5.9	160	204

Randell D. Hiatt
REGISTERED CIVIL ENGINEER

July 19, 2013
PLANS APPROVAL DATE

REGISTERED PROFESSIONAL ENGINEER
Randell D. Hiatt
No. C50200
Exp. 6-30-15
CIVIL
STATE OF CALIFORNIA

THE STATE OF CALIFORNIA OR ITS OFFICERS OR AGENTS SHALL NOT BE RESPONSIBLE FOR THE ACCURACY OR COMPLETENESS OF SCANNED COPIES OF THIS PLAN SHEET.

TO ACCOMPANY PLANS DATED 07-28-14

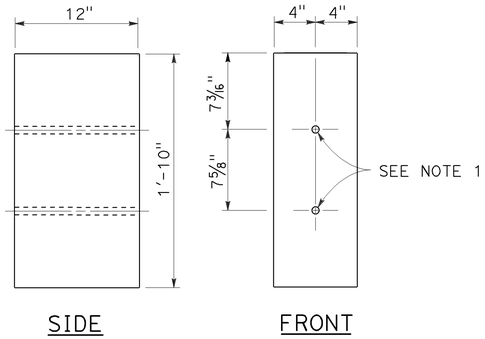

8" x 12"
WOOD BLOCK

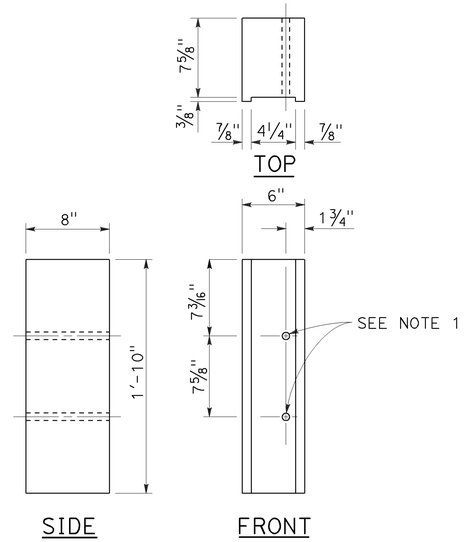

6" x 8"
NOTCHED WOOD BLOCK
See Notes 3 and 5

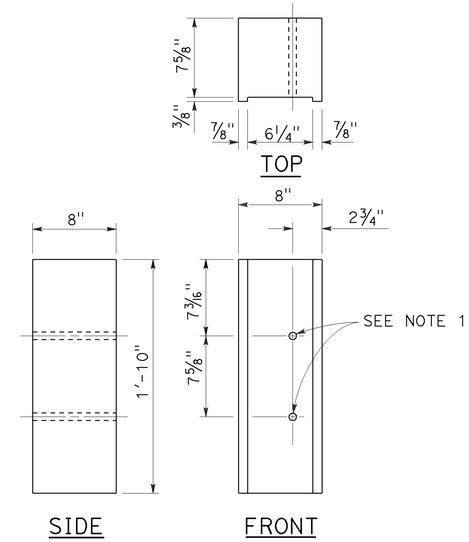

8" x 8"
NOTCHED WOOD BLOCK
See Notes 4 and 5

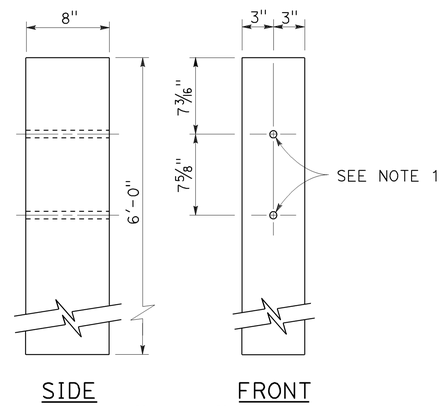

6" x 8"
WOOD POST

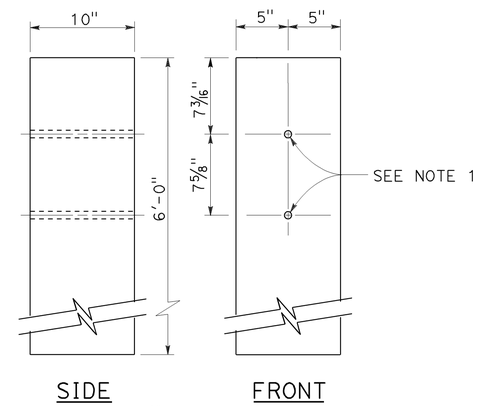

10" x 10"
WOOD POST

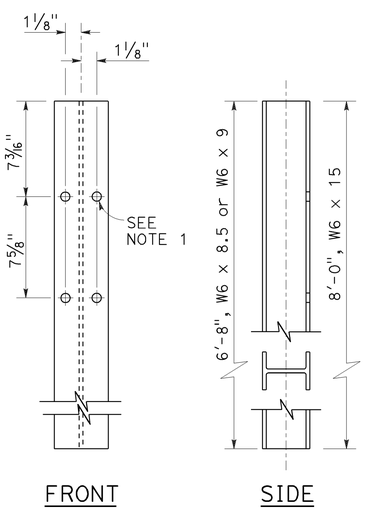

STEEL POST
W6 x 9 or W6 x 8.5 and W6 x 15

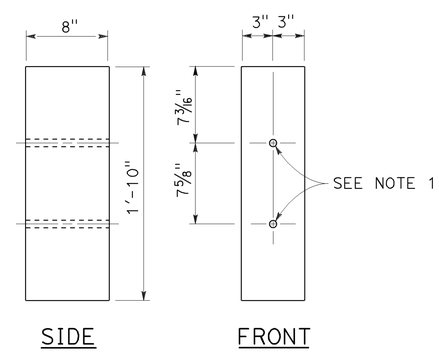

6" x 8"
WOOD BLOCK

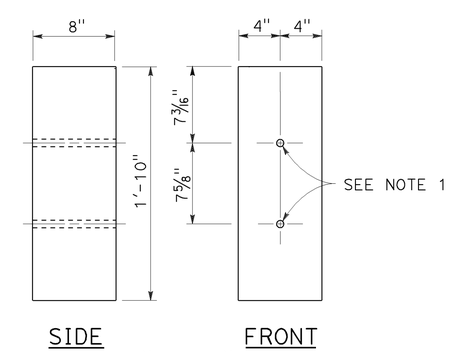

8" x 8"
WOOD BLOCK

NOTES:

1. All holes in steel post to be 13/16" Dia maximum. Holes in wood posts and wood blocks to be 3/4" Dia ±1/16".
2. Dimensions shown for wood post are nominal.
3. For use with W6 x 8.5 or W6 x 9 steel post.
4. For use with W6 x 15 steel post.
5. Notched face of block faces steel post.

STATE OF CALIFORNIA
DEPARTMENT OF TRANSPORTATION

THRIE BEAM BARRIER POST AND BLOCK DETAILS

NO SCALE

RSP A78C2 DATED JULY 19, 2013 SUPERSEDES STANDARD PLAN A78C2 DATED MAY 20, 2011 - PAGE 92 OF THE STANDARD PLANS BOOK DATED 2010.

REVISED STANDARD PLAN RSP A78C2

2010 REVISED STANDARD PLAN RSP A78C2

7-3-13

Dist	COUNTY	ROUTE	POST MILES TOTAL PROJECT	SHEET No.	TOTAL SHEETS
11	SD	67	R0.0/R5.9	161	204

Randell D. Hiatt
REGISTERED CIVIL ENGINEER

July 19, 2013
PLANS APPROVAL DATE

REGISTERED PROFESSIONAL ENGINEER
Randell D. Hiatt
No. C50200
Exp. 6-30-15
CIVIL
STATE OF CALIFORNIA

THE STATE OF CALIFORNIA OR ITS OFFICERS OR AGENTS SHALL NOT BE RESPONSIBLE FOR THE ACCURACY OR COMPLETENESS OF SCANNED COPIES OF THIS PLAN SHEET.

TO ACCOMPANY PLANS DATED 07-28-14

NOTES:

1. Line post, blocks and hardware to be used are shown on Standard Plans A78A, A78B and A78C1 and Revised Standard Plan RSP A78C2.
2. Post spacing to be 6'-3" center to center, except as otherwise noted.
3. Except as noted, line posts are 6" x 8" x 6'-0" wood with 6" x 8" x 1'-10" wood blocks. (W6 x 8.5 or W6 x 9) steel posts, 6'-8" in length, with 6" x 8" x 1'-10" notched wood blocks or notched recycled plastic blocks may be used for 6" x 8" x 6'-0" wood posts with 6" x 8" x 1'-10" wood blocks where applicable and when specified.
4. For Transition Railing (Type DTB) details, see Standard Plan A78K.
5. The 15:1 or flatter flare is measured off of the edge of traveled way.

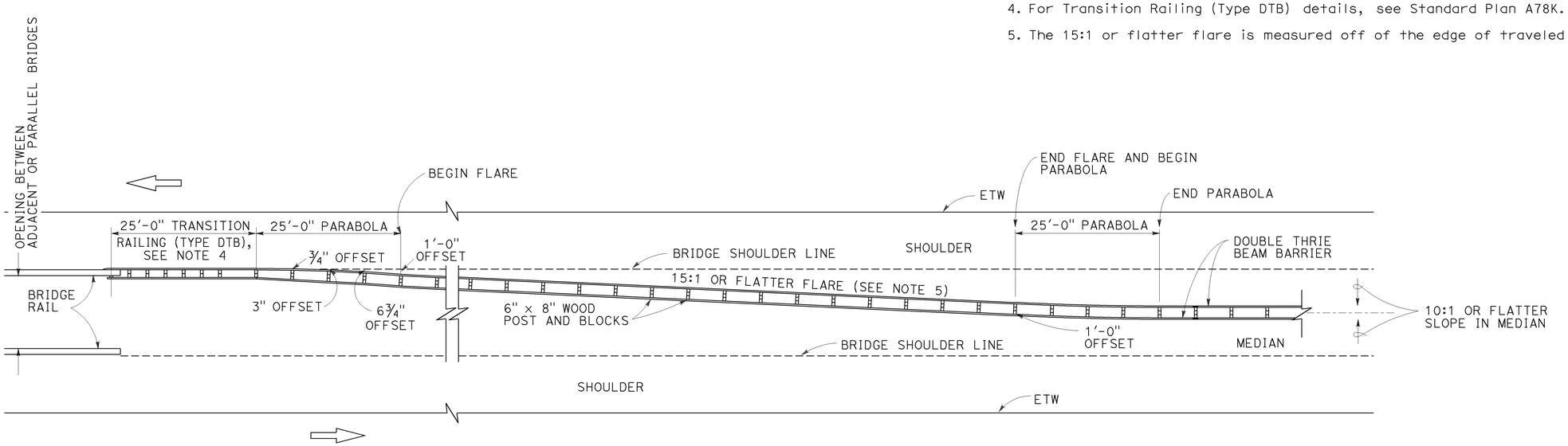

TYPE 25A CONNECTION LAYOUT

STATE OF CALIFORNIA
DEPARTMENT OF TRANSPORTATION

THRIE BEAM BARRIER TYPICAL LAYOUT FOR CONNECTION TO BRIDGE RAILING

NO SCALE

RSP A78H DATED JULY 19, 2013 SUPERSEDES STANDARD PLAN A78H DATED MAY 20, 2011 - PAGE 105 OF THE STANDARD PLANS BOOK DATED 2010.

REVISED STANDARD PLAN RSP A78H

2010 REVISED STANDARD PLAN RSP A78H

6-12-13

Dist	COUNTY	ROUTE	POST MILES TOTAL PROJECT	SHEET No.	TOTAL SHEETS
11	SD	67	R0.0/R5.9	162	204

REGISTERED CIVIL ENGINEER

July 19, 2013
PLANS APPROVAL DATE

REGISTERED PROFESSIONAL ENGINEER Michael Janzen No. 44788 Exp. 03-31-14 CIVIL STATE OF CALIFORNIA

THE STATE OF CALIFORNIA OR ITS OFFICERS OR AGENTS SHALL NOT BE RESPONSIBLE FOR THE ACCURACY OR COMPLETENESS OF SCANNED COPIES OF THIS PLAN SHEET.

TO ACCOMPANY PLANS DATED 07-28-14

2010 REVISED STANDARD PLAN RSP A87A

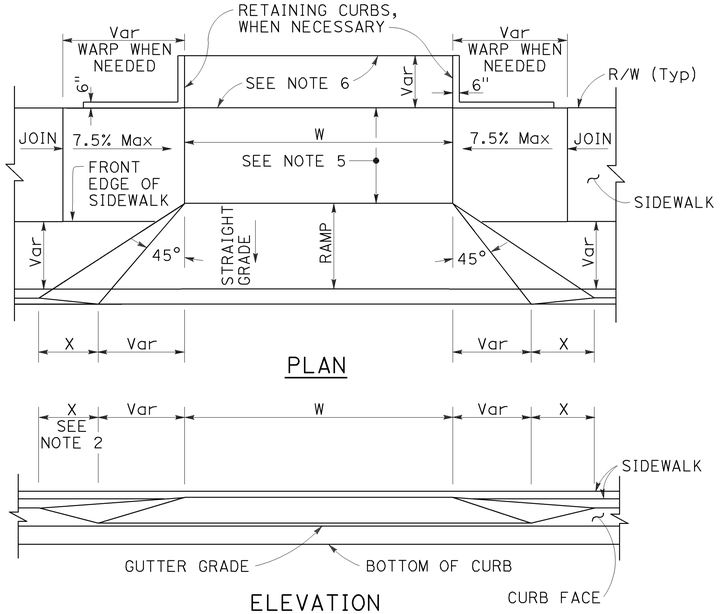

PLAN

ELEVATION

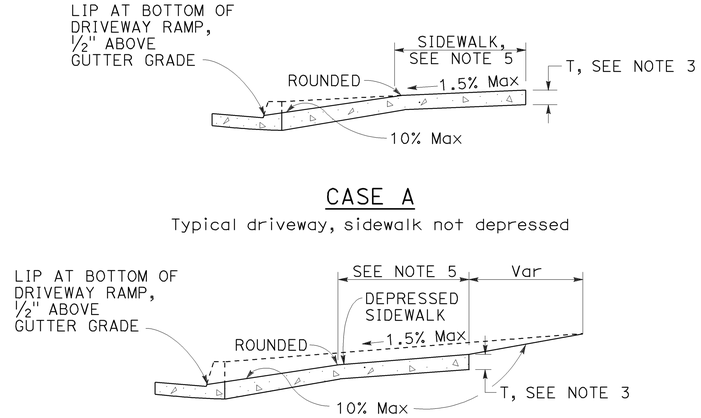

CASE A

Typical driveway, sidewalk not depressed

CASE B

Driveway with depressed sidewalk

SECTIONS

TABLE A

CURB TYPE	DIMENSIONS			
	"H1"	"H2"	"W1"	"W2"
A1-6	1'-2"	6"	7½"	1½"
A1-8	1'-4"	8"	8"	2"
A2-6	1'-0"	6"	2'-7½"	1½"
A2-8	1'-2"	8"	2'-8"	2"
A3-6	6"	5"	7¼"	1¼"
A3-8	8"	7"	7¾"	1¾"
B1-4	1'-0"	4"	7½"	2½"
B1-6	1'-2"	6"	9"	4"
B2-4	10"	4"	2'-7½"	2½"
B2-6	1'-0"	6"	2'-9"	4"
B3-4	4"	3"	7"	2"
B3-6	6"	5"	8½"	3½"
D-4	10"	4"	1'-6"	1'-1"
D-6	1'-0"	6"	2'-2"	1'-9"

CURB QUANTITIES

TYPE	CUBIC YARDS PER LINEAR FOOT
A1-6	0.02585
A1-8	0.03084
A2-6	0.05903
A2-8	0.06379
A3-6	0.01036
A3-8	0.01435
B1-4	0.02185
B1-6	0.02930
B2-4	0.05515
B2-6	0.06171
B3-4	0.00641
B3-6	0.01074
B4	0.05709
D-4	0.04083
D-6	0.06804
E	0.06661

DRIVEWAYS

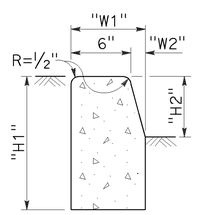

TYPE A1 CURBS

See Table A

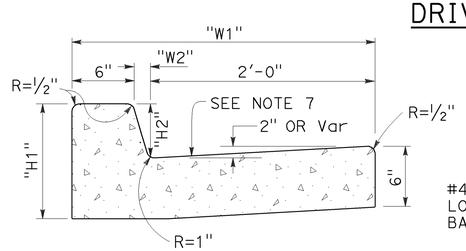

TYPE A2 CURBS

See Table A

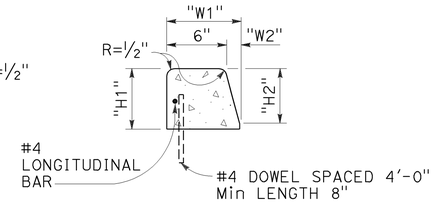

TYPE A3 CURBS

Superimposed on existing pavement
See Table A

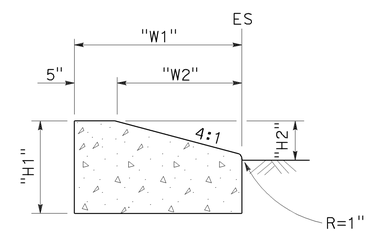

TYPE D CURBS

See Table A

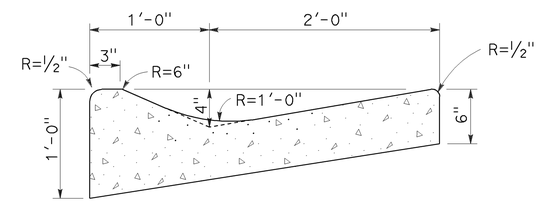

TYPE E CURB

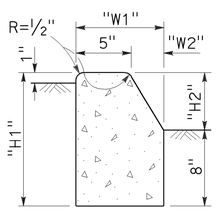

TYPE B1 CURBS

See Table A

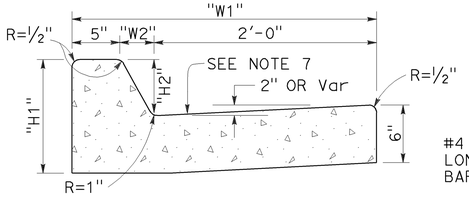

TYPE B2 CURBS

See Table A

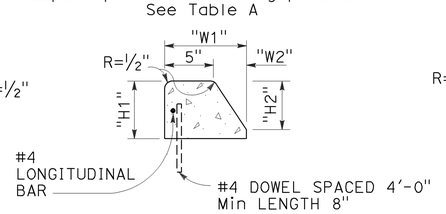

TYPE B3 CURBS

Superimposed on existing pavement
See Table A

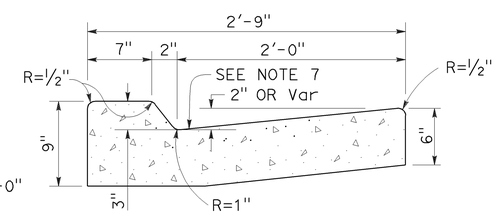

TYPE B4 CURBS

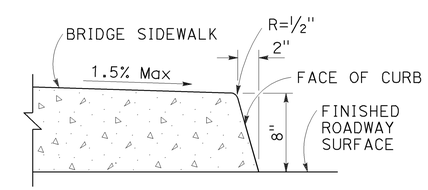

TYPE H CURB

On Bridges

CURBS

NOTES:

1. Case A driveway section typically applies.
2. X=3'-0" except for curb heights over 10" where 4:1 slopes shall be used on curb slope.
3. Sidewalk and ramp thickness "T" at driveway shall be 4" for residental and 6" for commercial.
4. Difference in slope of the driveway ramp and the slope of a line between the gutter and a point on the roadway 5'-0" from gutter line shall not exceed 15%. Reduce driveway ramp slope, not gutter slope, where required.
5. Minimum width of clear passageway for sidewalk shall be 4'-2".
6. Retaining curbs and acquisition of construction easement may be necessary for narrow sidewalks or curb heights in excess of 6".
7. Across the pedestrian route at curb ramp locations, the gutter pan slope shall not exceed 1" of depth for each 2'-0" of width.

STATE OF CALIFORNIA
DEPARTMENT OF TRANSPORTATION

CURBS AND DRIVEWAYS

NO SCALE

RSP A87A DATED JULY 19, 2013 SUPERSEDES STANDARD PLAN A87A
DATED MAY 20, 2011 - PAGE 119 OF THE STANDARD PLANS BOOK DATED 2010.

REVISED STANDARD PLAN RSP A87A

Dist	COUNTY	ROUTE	POST MILES TOTAL PROJECT	SHEET No.	TOTAL SHEETS
11	SD	67	R0.0/R5.9	163	204

REGISTERED CIVIL ENGINEER

July 19, 2013
PLANS APPROVAL DATE

REGISTERED PROFESSIONAL ENGINEER
Michael Janzen
No. 44788
Exp. 03-31-14
CIVIL
STATE OF CALIFORNIA

THE STATE OF CALIFORNIA OR ITS OFFICERS OR AGENTS SHALL NOT BE RESPONSIBLE FOR THE ACCURACY OR COMPLETENESS OF SCANNED COPIES OF THIS PLAN SHEET.

TO ACCOMPANY PLANS DATED 07-28-14

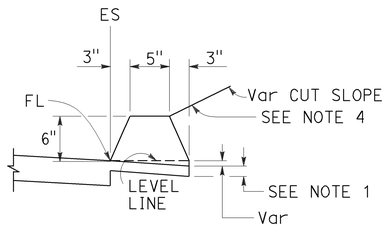

TYPE A
See Note 3

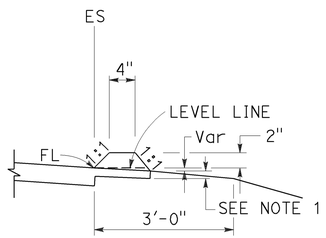

TYPE C

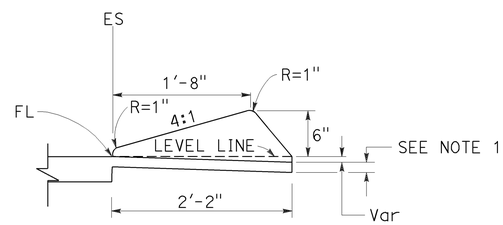

TYPE D

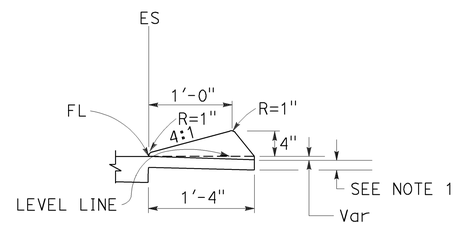

TYPE E

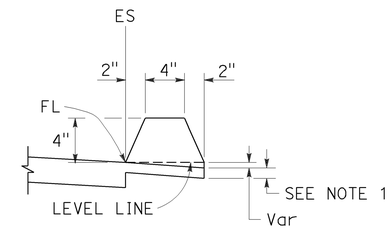

TYPE F
See Note 5

DIKES

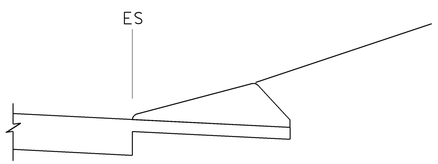

CASE C-1
Cut Slope

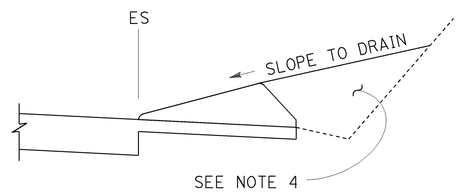

CASE C-2
Cut Slope

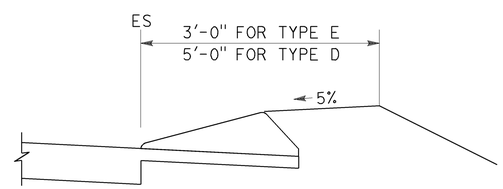

CASE F

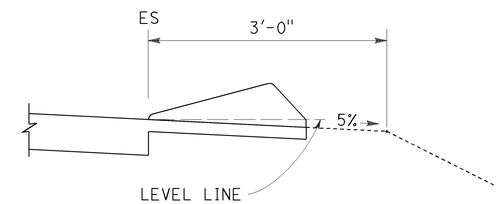

CASE R
See Note 2

TYPE D AND E BACKFILL DETAILS

NOTES:

1. For HMA shoulders only, extend top layer of HMA placed on the shoulder under dike with no joint at the ES. For projects with OGFC shoulders, do not extend OGFC under dike. See project plans for modified dike detail.
2. Case R applies to retrofit only projects where restrictive conditions do not provide enough width for Case F backfill.
3. Type A dike only to be used where restrictive slope conditions do not provide enough width to use Type D or Type E dike.
4. Fill and compact with excavated material to top of dike.
5. Use Type F dike, where dike is required with guard railing installations. See Revised Standard Plan RSP A77N4 for dike positioning details.

DIKE QUANTITIES

TYPE	CUBIC YARDS PER LINEAR FOOT
A	0.0135
C	0.0038
D	0.0293
E	0.0130
F	0.0066

Quantities based on 5% cross slope.

STATE OF CALIFORNIA
DEPARTMENT OF TRANSPORTATION

HOT MIX ASPHALT DIKES

NO SCALE

RSP A87B DATED JULY 19, 2013 SUPERSEDES STANDARD PLAN A87B DATED MAY 20, 2011 - PAGE 120 OF THE STANDARD PLANS BOOK DATED 2010.

REVISED STANDARD PLAN RSP A87B

2010 REVISED STANDARD PLAN RSP A87B

6-27-13

Dist	COUNTY	ROUTE	POST MILES TOTAL PROJECT	SHEET No.	TOTAL SHEETS
11	SD	67	R0.0/R5.9	164	204

REGISTERED CIVIL ENGINEER

March 21, 2014
PLANS APPROVAL DATE

REGISTERED PROFESSIONAL ENGINEER Hector David Cordova No. C41957 Exp. 3-31-14 CIVIL STATE OF CALIFORNIA

THE STATE OF CALIFORNIA OR ITS OFFICERS OR AGENTS SHALL NOT BE RESPONSIBLE FOR THE ACCURACY OR COMPLETENESS OF SCANNED COPIES OF THIS PLAN SHEET.

TO ACCOMPANY PLANS DATED 07-28-14

2010 REVISED STANDARD PLAN RSP A88A

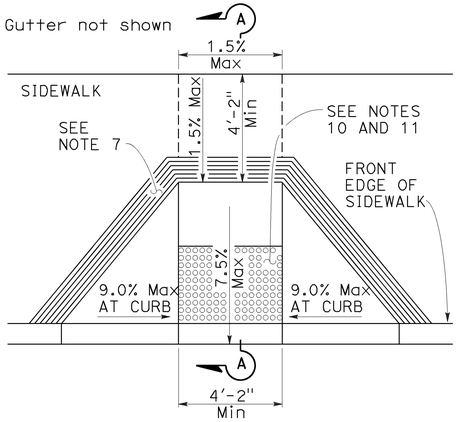

CASE A

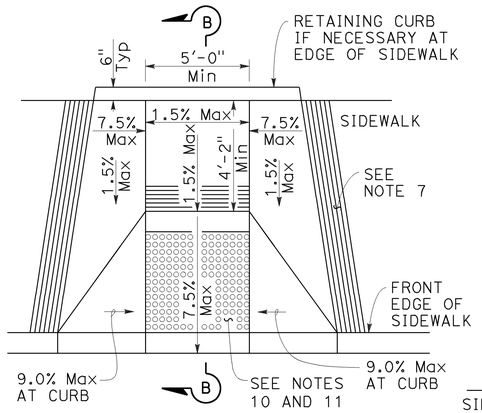

CASE B

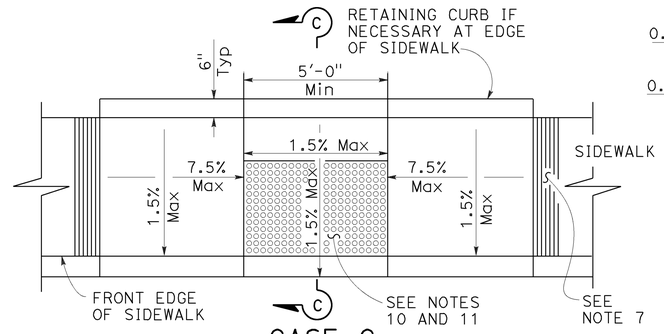

CASE C

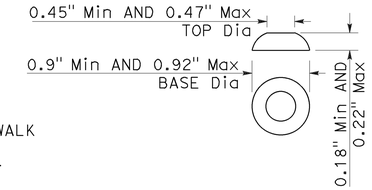

RAISED TRUNCATED DOME

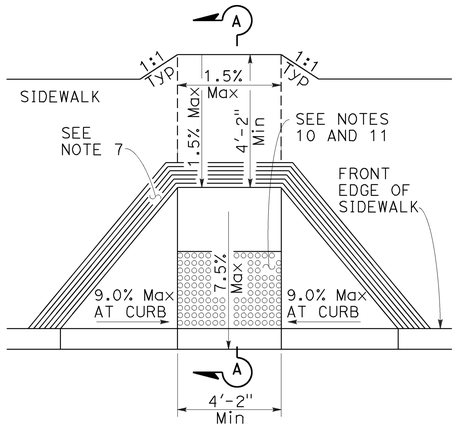

CASE D

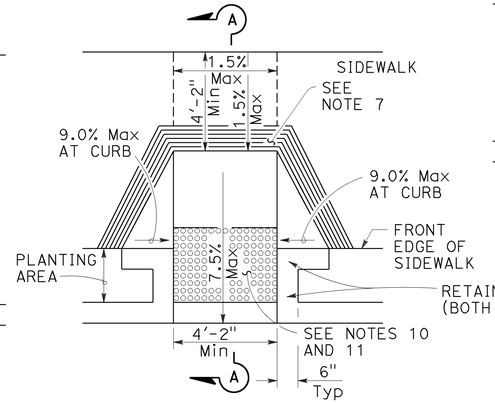

CASE E

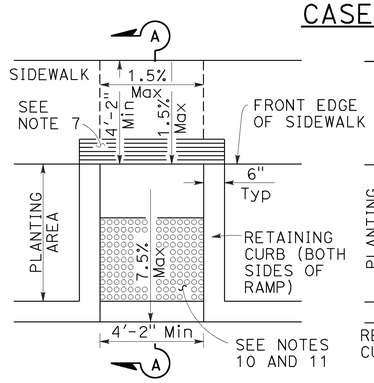

CASE F

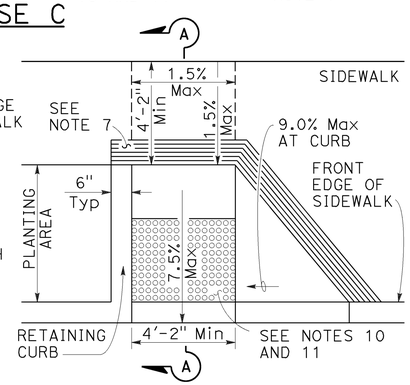

CASE G

See Note 4

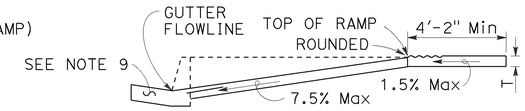

SECTION A-A

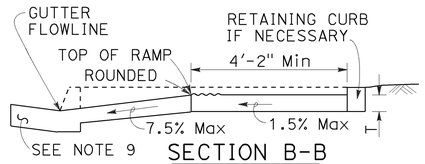

SECTION B-B

Depress entire sidewalk as required

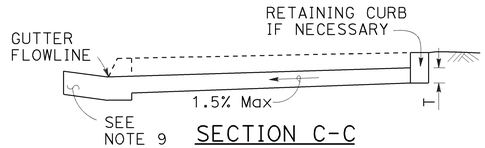

SECTION C-C

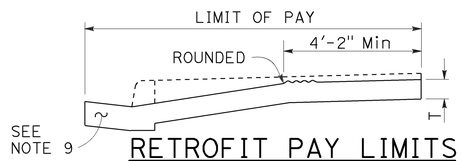

RETROFIT PAY LIMITS

Existing curb and sidewalk

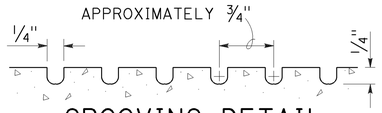

GROOVING DETAIL

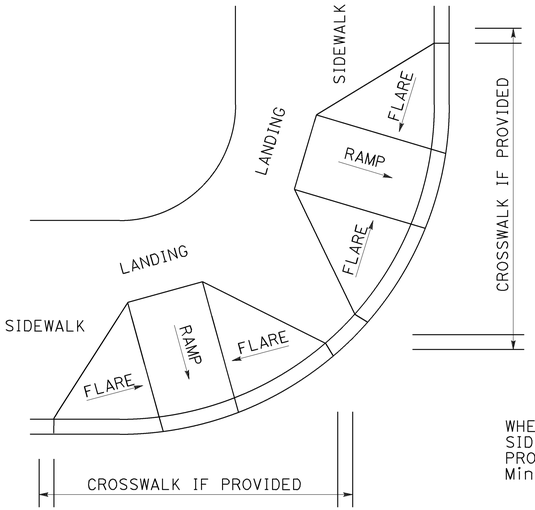

DETAIL A

TYPICAL TWO-RAMP CORNER INSTALLATION

See Note 1

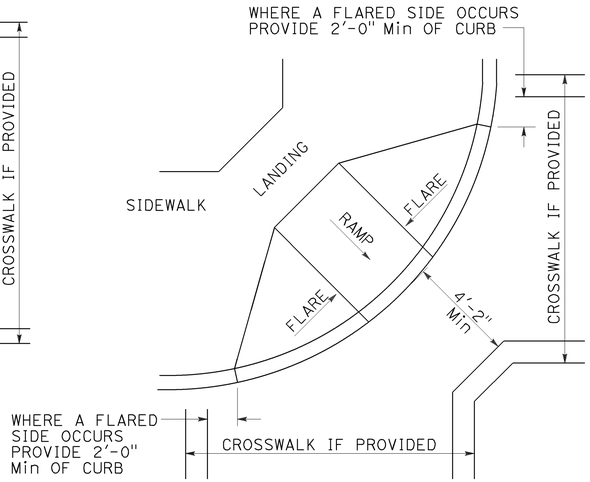

DETAIL B

TYPICAL ONE-RAMP CORNER INSTALLATION

See Notes 1 and 3

NOTES:

1. As site conditions dictate, Case A through Case G curb ramps may be used for corner installations similar to those shown in Detail A and Detail B. The case of curb ramps used in Detail A do not have to be the same. Case A through Case G curb ramps also may be used at mid block locations, as site conditions dictate.
2. If distance from curb to back of sidewalk is too short to accommodate ramp and 4'-2" platform (landing) as shown in Case A, the sidewalk may be depressed longitudinally as in Case B, or C or may be widened as in Case D.
3. When ramp is located in center of curb return, crosswalk configuration must be similar to that shown for Detail B.
4. As site conditions dictate, the retaining curb side and the flared side of the Case G ramp shall be constructed in reversed position.
5. If located on a curve, the sides of the ramp need not be parallel, but the minimum width of the ramp shall be 4'-2".
6. Side slope of ramp flares vary uniformly from a maximum of 9.0% at curb to conform with longitudinal sidewalk slope adjacent to top of the ramp, except in Case C and Case F.
7. The curb ramp shall be outlined, as shown, with a 1'-0" wide border with 1/4" grooves approximately 3/4" on center. See grooving detail.
8. Transitions from ramps and landing to walks, gutters or streets shall be flush (no lip) and free of abrupt changes.
9. Counter slopes of adjoining gutters and road surfaces immediately adjacent to and within 24 inches of the curb ramp shall not be steeper than 1:20 (5.0%). Gutter pan slope shall not exceed 1" of depth for each 2'-0" of width.
10. Curb ramps shall have a detectable warning surface that extends the full width and 3'-0" depth of the ramp. A 4'-0" wide detectable warning surface may be used on a 4'-2" wide curb ramp. Detectable Warning Surfaces shall conform to the requirements in the Standard Specifications.
11. The edge of the detectable warning surface nearest the street shall be between 6" and 8" from the gutter flowline.
12. Sidewalk and ramp thickness, "T", shall be 3 1/2" minimum.
13. Utility pull boxes, manholes, vaults and all other utility facilities within the boundaries of the curb ramp will be relocated or adjusted to grade by the owner prior to, or in conjunction with, curb ramp construction.
14. Detectable warning surface may have to be cut to allow removal of utility covers while maintaining full detectable warning width and depth.

RAISED TRUNCATED DOME PATTERN (IN-LINE)

DETECTABLE WARNING SURFACE

See Note 10

STATE OF CALIFORNIA
DEPARTMENT OF TRANSPORTATION

CURB RAMP DETAILS

NO SCALE

RSP A88A DATED MARCH 21, 2014 SUPERSEDES RSP A88A DATED JULY 19, 2013 AND STANDARD PLAN A88A DATED MAY 20, 2011 - PAGE 121 OF THE STANDARD PLANS BOOK DATED 2010.

REVISED STANDARD PLAN RSP A88A

2-25-14

Dist	COUNTY	ROUTE	POST MILES TOTAL PROJECT	SHEET No.	TOTAL SHEETS
11	SD	67	R0.0/R5.9	165	204

REGISTERED CIVIL ENGINEER

March 21, 2014
PLANS APPROVAL DATE

REGISTERED PROFESSIONAL ENGINEER Hector David Cordova No. C41957 Exp. 3-31-14 CIVIL STATE OF CALIFORNIA

THE STATE OF CALIFORNIA OR ITS OFFICERS OR AGENTS SHALL NOT BE RESPONSIBLE FOR THE ACCURACY OR COMPLETENESS OF SCANNED COPIES OF THIS PLAN SHEET.

TO ACCOMPANY PLANS DATED 07-28-14

Gutter not shown

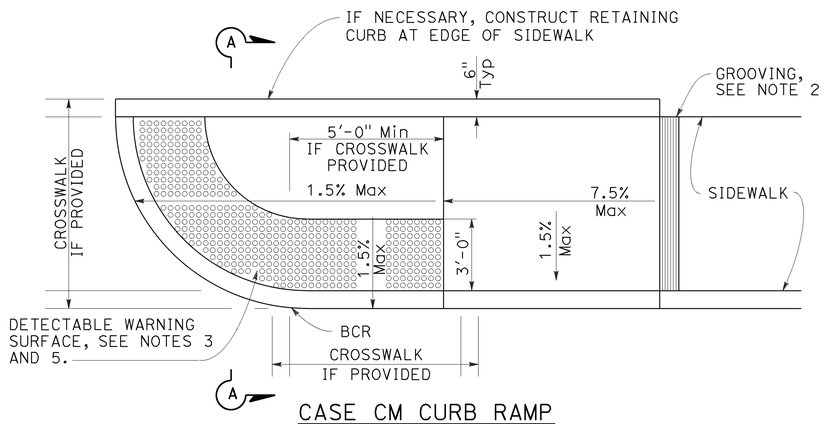

CASE CM CURB RAMP

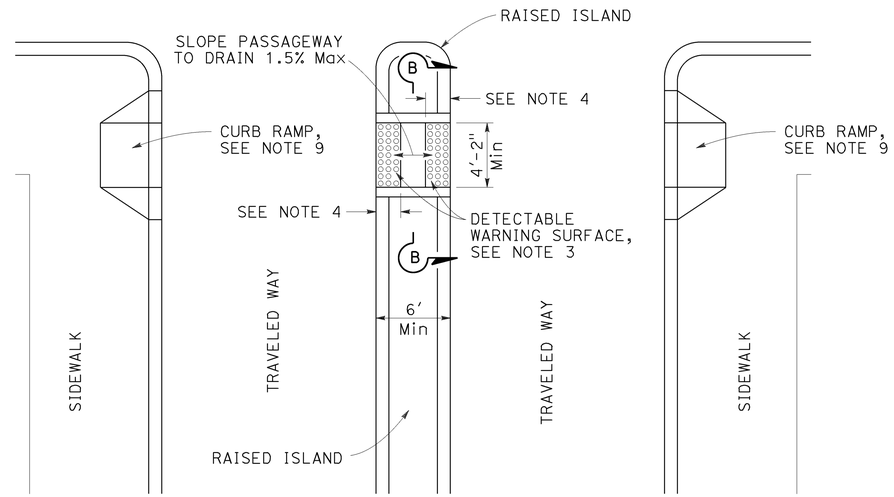

TYPE A PASSAGEWAY

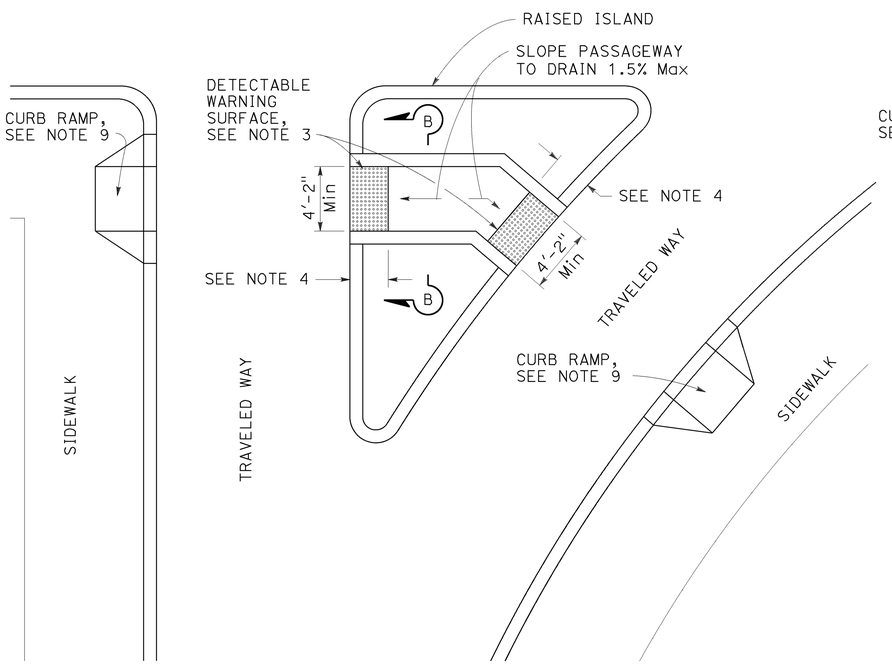

TYPE B PASSAGEWAY

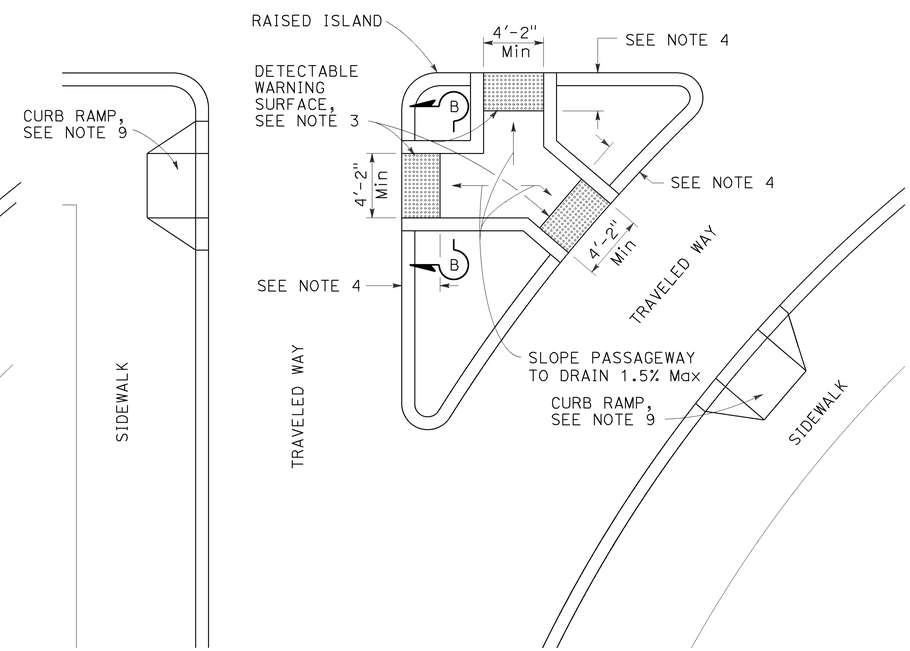

TYPE C PASSAGEWAY

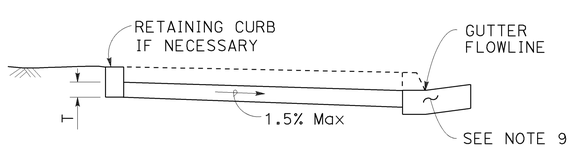

SECTION A-A

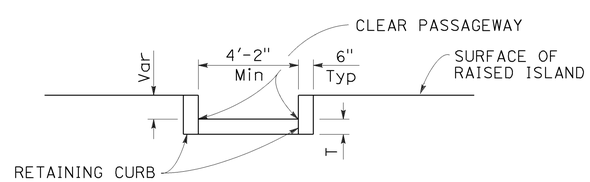

SECTION B-B

NOTES:

1. Sidewalk, ramp and passageway thickness, "T", shall be 3½" minimum.
2. For details of grooving used with Case CM curb ramp, see Revised Standard Plan RSP A88A.
3. For details of detectable warning surfaces, see Revised Standard Plan RSP A88A.
4. Where an island passageway length is greater than or equal to 6'-0", but less than 8'-0", each detectable warning surface shall extend the full width and 2'-0" depth of the passageway length. Where an island passageway length is greater than or equal to 8'-0", each detectable warning surface shall extend the full width and 3'-0" depth of the passageway length. A 4'-0" wide detectable warning surface may be used on a 4'-2" wide island passageway.
5. For Case CM curb ramp, the edge of the detectable warning surface nearest the street shall be between 6" and 8" from the gutter flowline.
6. Transitions from ramps to walks, gutters or streets shall be flush (no lip) and free of abrupt changes.
7. Utility pull boxes, manholes, vaults and all other utility facilities within the boundaries of the curb ramp will be relocated or adjusted to grade by the owner prior to, or in conjunction with, curb ramp construction.
8. Detectable warning surface may have to be cut to allow removal of utility covers while maintaining full detectable warning width and depth.
9. For additional curb ramp details, see Revised Standard Plan RSP A88A.

STATE OF CALIFORNIA
DEPARTMENT OF TRANSPORTATION

CURB RAMP AND ISLAND PASSAGEWAY DETAILS

NO SCALE

RSP A88B DATED MARCH 21, 2014 SUPERSEDES RSP A88B DATED JULY 19, 2013 AND STANDARD PLAN A88B DATED MAY 20, 2011 - PAGE 122 OF THE STANDARD PLANS BOOK DATED 2010.

REVISED STANDARD PLAN RSP A88B

2010 REVISED STANDARD PLAN RSP A88B

2-25-14

Dist	COUNTY	ROUTE	POST MILES TOTAL PROJECT	SHEET No.	TOTAL SHEETS
11	SD	67	R0.0/R5.9	166	204

William K. Farnbach
REGISTERED CIVIL ENGINEER

July 19, 2013
PLANS APPROVAL DATE

REGISTERED PROFESSIONAL ENGINEER
William K. Farnbach
No. C49042
Exp. 9-30-14
CIVIL
STATE OF CALIFORNIA

THE STATE OF CALIFORNIA OR ITS OFFICERS OR AGENTS SHALL NOT BE RESPONSIBLE FOR THE ACCURACY OR COMPLETENESS OF SCANNED COPIES OF THIS PLAN SHEET.

TO ACCOMPANY PLANS DATED 07-28-14

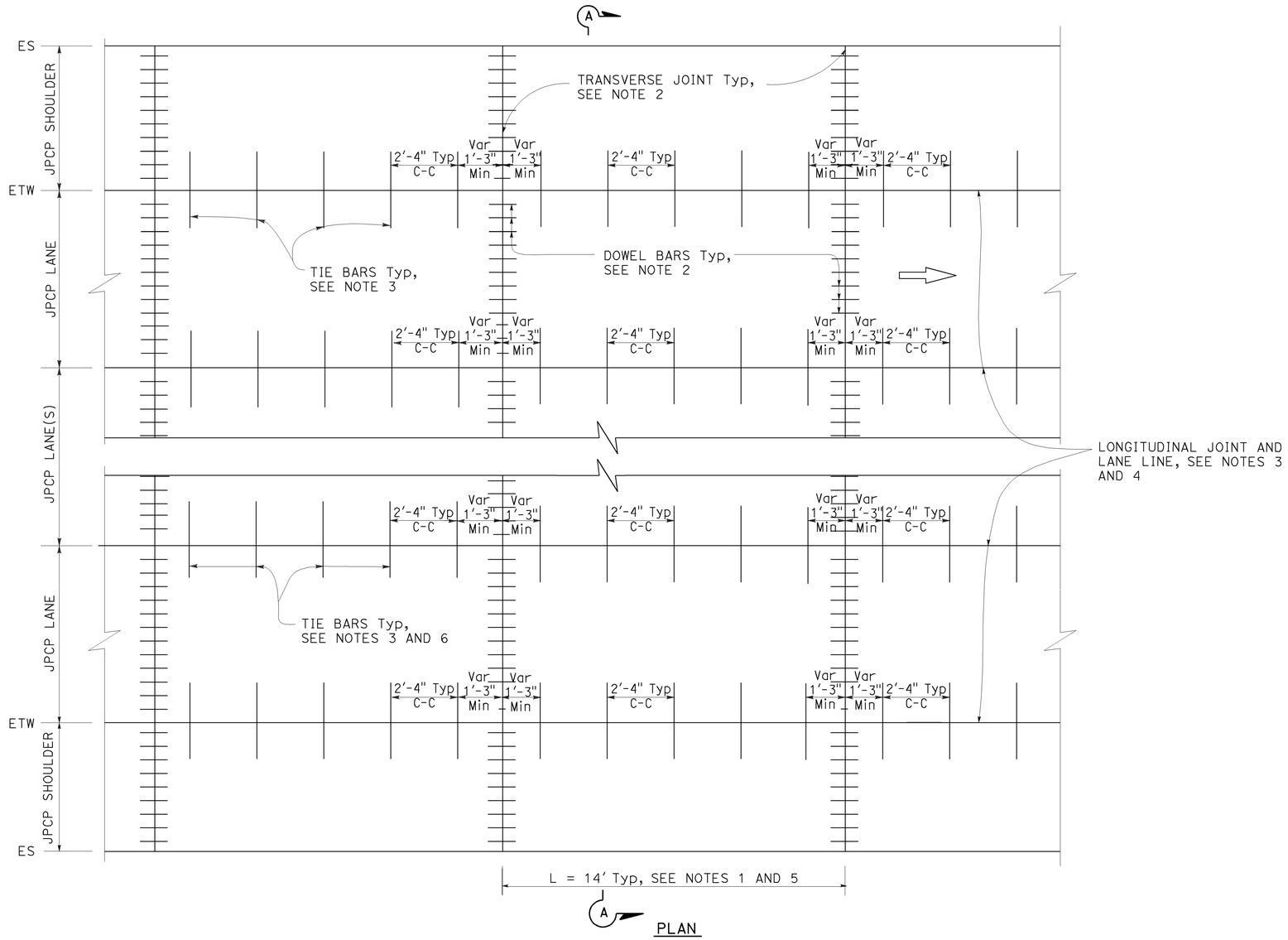

PLAN

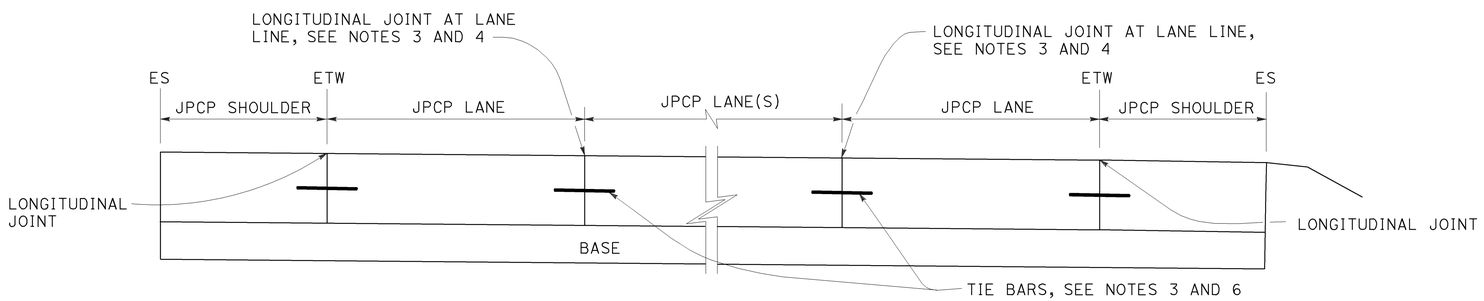

SECTION A-A

NOTES:

1. Transverse joint spacing may be adjusted to no less than 10' and no more than 14' to conform to bridges, change in pavement type, and hardened concrete pavement.
2. For transverse joint and dowel bar details not shown, see Revised Standard Plan RSP P10.
3. For longitudinal joint and tie bar details not shown, see Revised Standard Plan RSP P15.
4. For additional longitudinal joint layout details, see Revised Standard Plan RSP P18.
5. For joint layout at intersections, see Project Plans.
6. For dowel bars at longitudinal joint. see Revised Standard Plan RSP P18.

STATE OF CALIFORNIA
DEPARTMENT OF TRANSPORTATION

JOINTED PLAIN CONCRETE PAVEMENT NEW CONSTRUCTION

NO SCALE

RSP P1 DATED JULY 19, 2013 SUPERSEDES STANDARD PLAN P1
DATED MAY 20, 2011 - PAGE 125 OF THE STANDARD PLANS BOOK DATED 2010.

REVISED STANDARD PLAN RSP P1

2010 REVISED STANDARD PLAN RSP P1

5-31-13

Dist	COUNTY	ROUTE	POST MILES TOTAL PROJECT	SHEET No.	TOTAL SHEETS
11	SD	67	R0.0/R5.9	167	204

William K. Farnbach
REGISTERED CIVIL ENGINEER

July 19, 2013
PLANS APPROVAL DATE

REGISTERED PROFESSIONAL ENGINEER
William K. Farnbach
No. C49042
Exp. 9-30-14
CIVIL
STATE OF CALIFORNIA

THE STATE OF CALIFORNIA OR ITS OFFICERS OR AGENTS SHALL NOT BE RESPONSIBLE FOR THE ACCURACY OR COMPLETENESS OF SCANNED COPIES OF THIS PLAN SHEET.

TO ACCOMPANY PLANS DATED 07-28-14

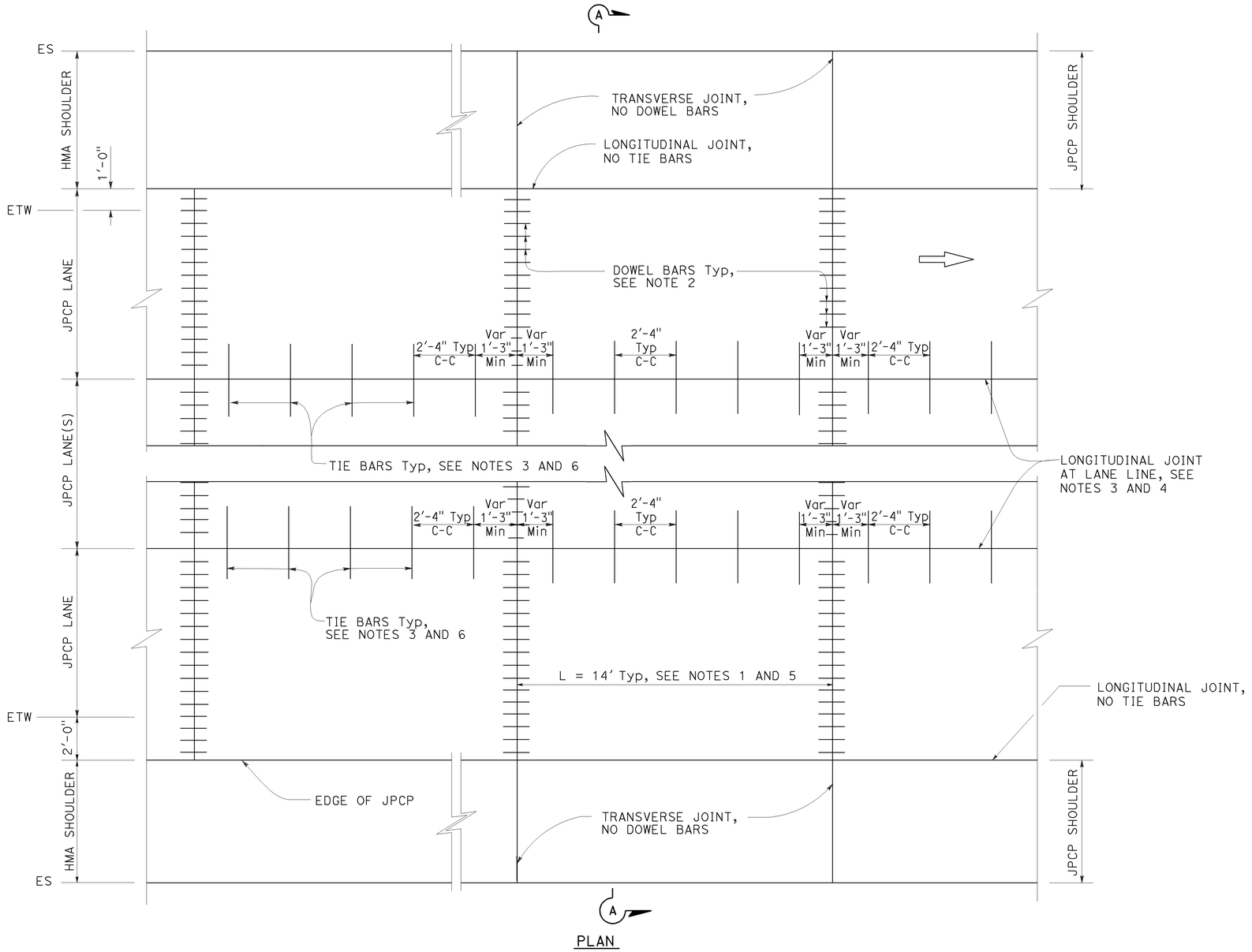

PLAN

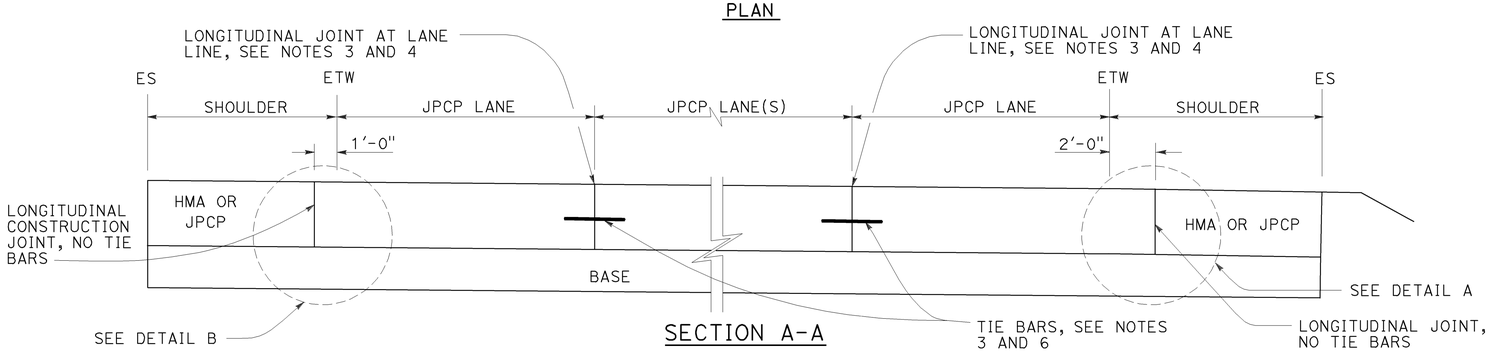

SECTION A-A

NOTES:

1. Transverse joint spacing may be adjusted to no less than 10' and no more than 14' to conform to bridges, change in pavement type, and hardened concrete pavement.
2. For transverse joint and dowel bar details not shown, see Revised Standard Plan RSP P10.
3. For longitudinal joint and tie bar details not shown, see Revised Standard Plan RSP P15.
4. For additional longitudinal joint layout details, see Revised Standard Plan RSP P18.
5. For joint layout at intersections, see Project Plans.
6. For dowel bars at longitudinal joint. see Revised Standard Plan RSP P18.
7. For limits of rumble strips, see Projects Plans.

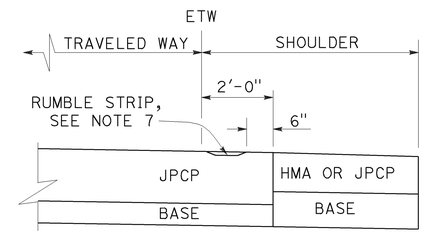

DETAIL A

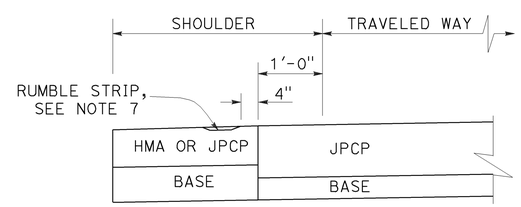

DETAIL B

STATE OF CALIFORNIA
DEPARTMENT OF TRANSPORTATION

JOINTED PLAIN CONCRETE PAVEMENT (WIDENED LANE) NEW CONSTRUCTION

NO SCALE

RSP P2 DATED JULY 19, 2013 SUPERSEDES STANDARD PLAN P2 DATED MAY 20, 2011 - PAGE 126 OF THE STANDARD PLANS BOOK DATED 2010.

REVISED STANDARD PLAN RSP P2

2010 REVISED STANDARD PLAN RSP P2

5-31-13

Dist	COUNTY	ROUTE	POST MILES TOTAL PROJECT	SHEET No.	TOTAL SHEETS
11	SD	67	R0.0/R5.9	168	204

REGISTERED CIVIL ENGINEER

July 19, 2013
PLANS APPROVAL DATE

REGISTERED PROFESSIONAL ENGINEER William K. Farnbach No. C49042 Exp. 9-30-14 CIVIL STATE OF CALIFORNIA

THE STATE OF CALIFORNIA OR ITS OFFICERS OR AGENTS SHALL NOT BE RESPONSIBLE FOR THE ACCURACY OR COMPLETENESS OF SCANNED COPIES OF THIS PLAN SHEET.

TO ACCOMPANY PLANS DATED 07-28-14

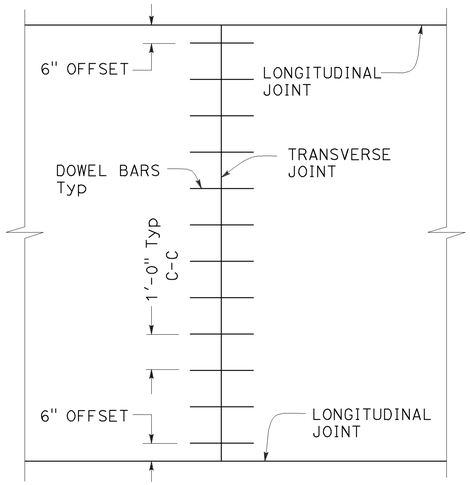

TRANSVERSE JOINT DOWEL BAR LAYOUT

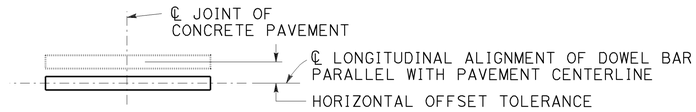

PLAN

HORIZONTAL OFFSET TOLERANCE

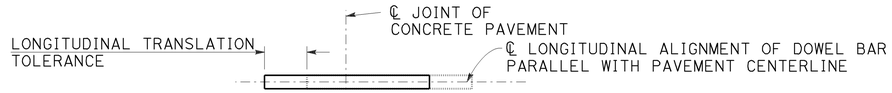

PLAN

LONGITUDINAL TRANSLATION TOLERANCE

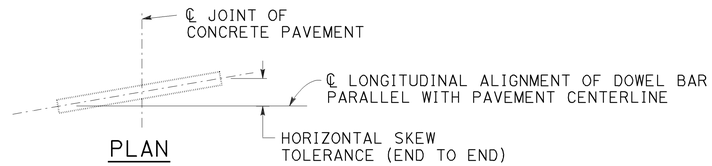

PLAN

HORIZONTAL SKEW TOLERANCE

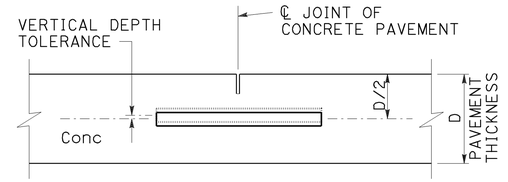

ELEVATION

VERTICAL DEPTH TOLERANCE

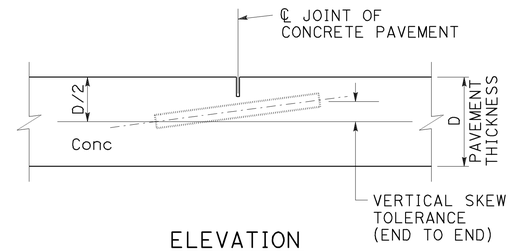

ELEVATION

VERTICAL SKEW TOLERANCE

NOTES:

1. See Revised Standard Plan RSP P1 for typical dowel bar placement and locations.
2. Where fresh concrete pavement is placed against new concrete or existing concrete pavement, rounding the corner of the existing concrete pavement is not required.
3. May also use ¾" Dia dowel bars 2'-4" ± ¼" in length. Center the length of dowel bars at the centerline of longitudinal joint.

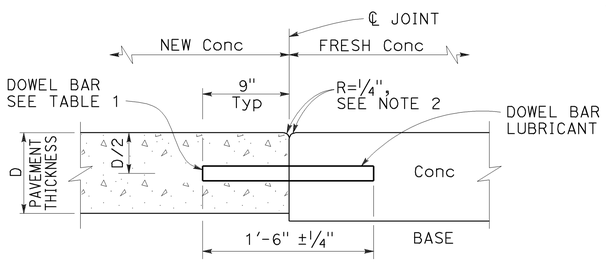

TRANSVERSE CONSTRUCTION JOINT DETAIL

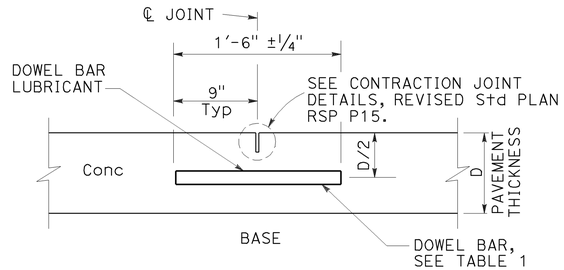

TRANSVERSE CONTRACTION JOINT

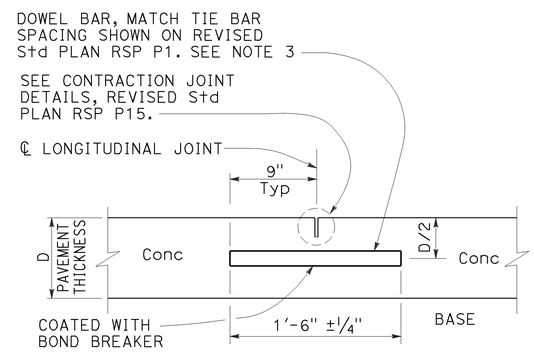

LONGITUDINAL CONTRACTION JOINT WITH DOWEL BARS

See Revised Std Plan RSP P18

TABLE 1

DOWEL BAR DIAMETER TABLE			
PAVEMENT THICKNESS	0.65'	> 0.65' - 0.85'	> 0.85'
MINIMUM DOWEL * BAR DIAMETER	1"	1¼"	1½"

* The drilled hole diameter must be ⅛" to 3/16" larger than the bar diameter.

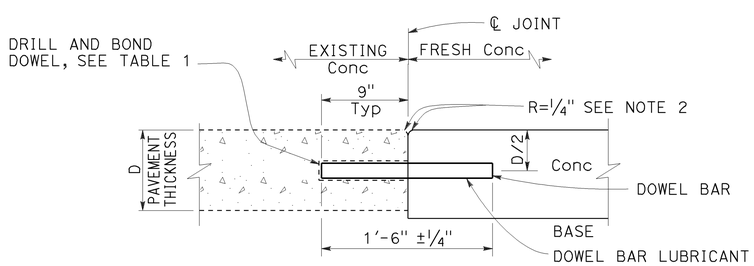

TRANSVERSE CONSTRUCTION JOINT FOR EXISTING CONCRETE PAVEMENT

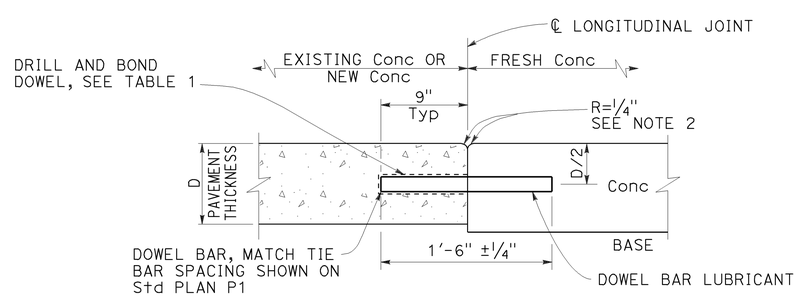

LONGITUDINAL CONSTRUCTION JOINT WITH DOWEL BARS

See Revised Std Plan RSP P18

STATE OF CALIFORNIA
DEPARTMENT OF TRANSPORTATION

CONCRETE PAVEMENT DOWEL BAR DETAILS

NO SCALE

RSP P10 DATED JULY 19, 2013 SUPERSEDES RSP P10 DATED APRIL 20, 2012 AND STANDARD PLAN P10 DATED MAY 20, 2011 - PAGE 131 OF THE STANDARD PLANS BOOK DATED 2010.

REVISED STANDARD PLAN RSP P10

2010 REVISED STANDARD PLAN RSP P10

5-31-13

Dist	COUNTY	ROUTE	POST MILES TOTAL PROJECT	SHEET No.	TOTAL SHEETS
11	SD	67	R0.0/R5.9	169	204

William K. Farnbach
REGISTERED CIVIL ENGINEER

July 19, 2013
PLANS APPROVAL DATE

REGISTERED PROFESSIONAL ENGINEER William K. Farnbach No. C49042 Exp. 9-30-14 CIVIL STATE OF CALIFORNIA

THE STATE OF CALIFORNIA OR ITS OFFICERS OR AGENTS SHALL NOT BE RESPONSIBLE FOR THE ACCURACY OR COMPLETENESS OF SCANNED COPIES OF THIS PLAN SHEET.

TO ACCOMPANY PLANS DATED 07-28-14

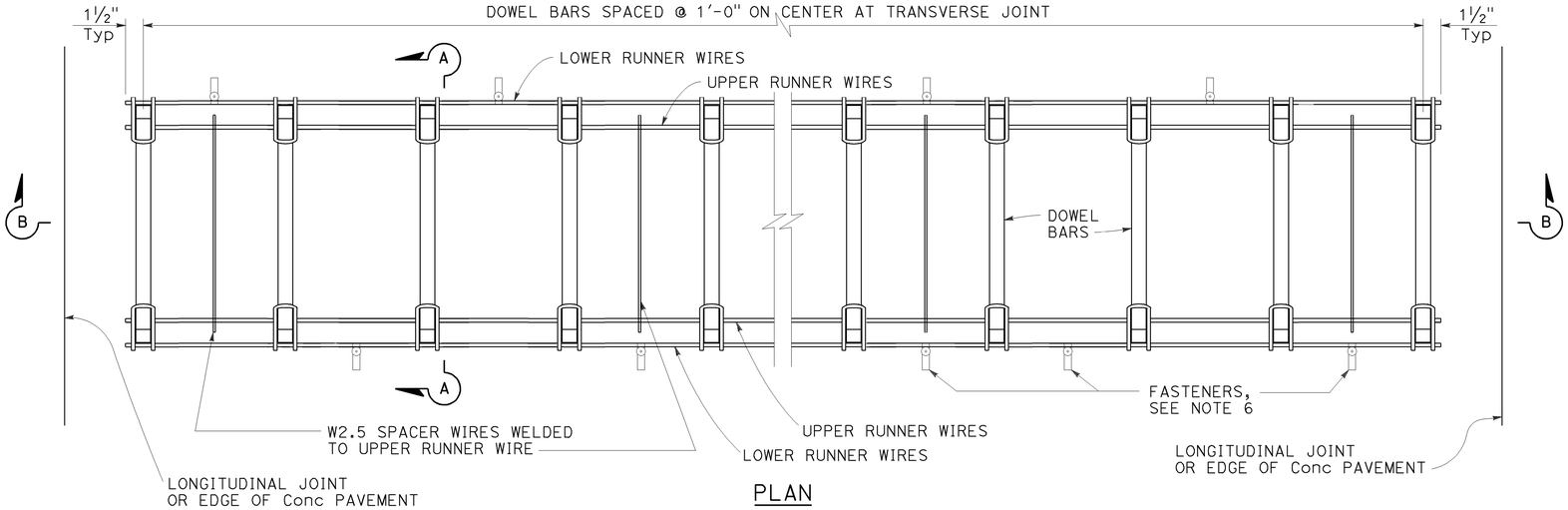

PLAN

DOWEL BAR BASKET (TRANSVERSE JOINT)

See Note 1

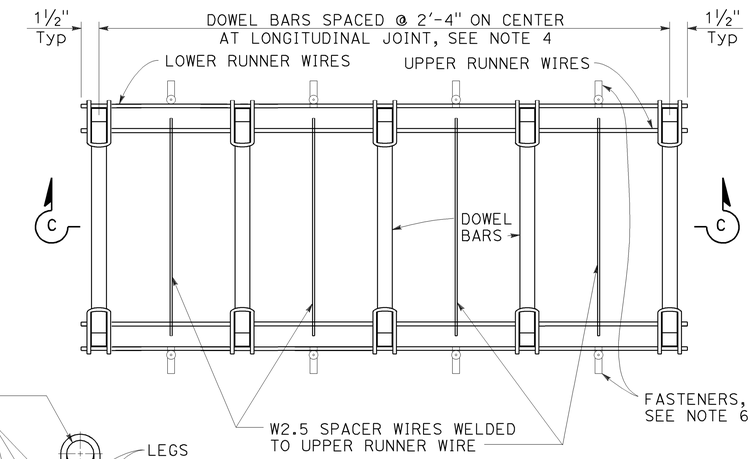

PLAN

DOWEL BAR BASKET (LONGITUDINAL JOINT)

See Note 1

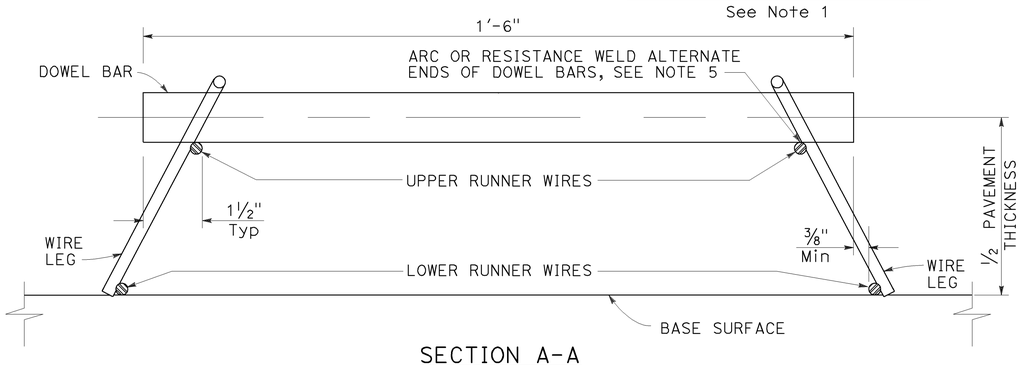

SECTION A-A

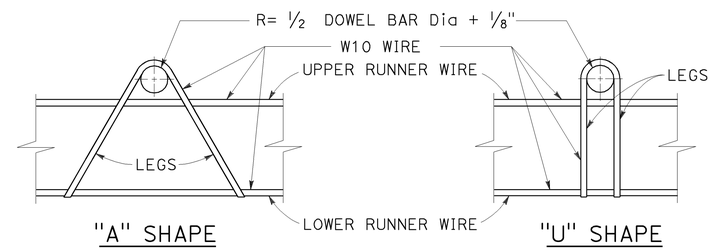

ASSEMBLY FRAME DETAILS

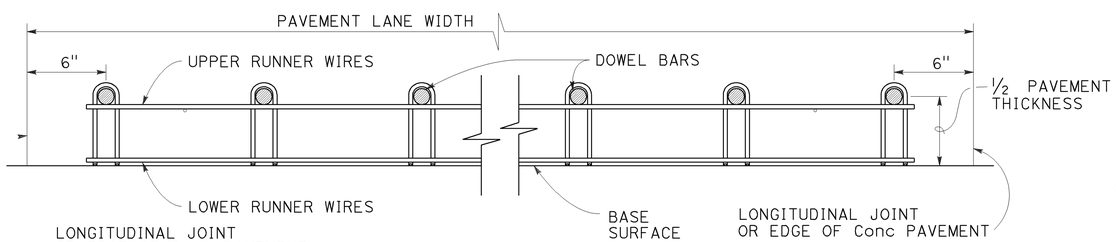

SECTION B-B

See Note 1

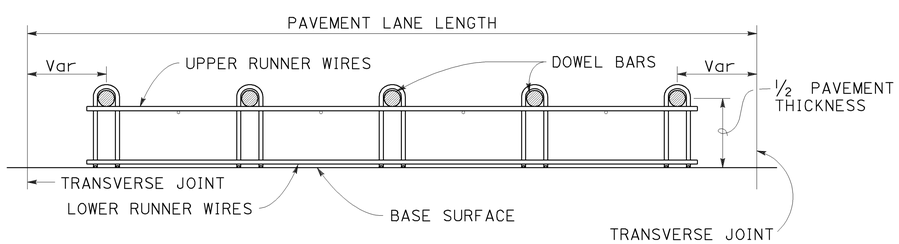

SECTION C-C

See Notes 1 and 4

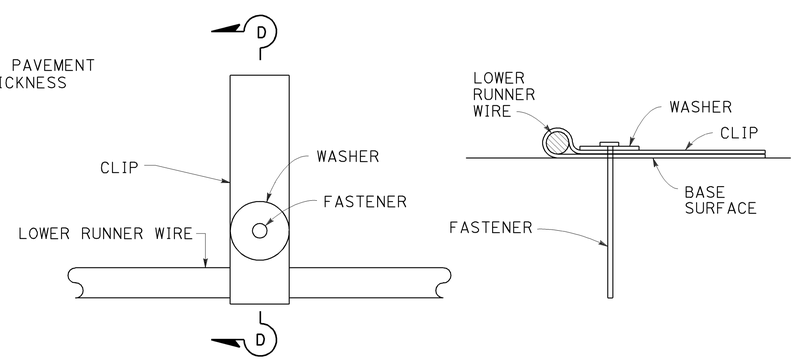

PLAN

SECTION D-D

FASTENER DETAIL

See Note 6

NOTES:

1. "U" frame shape assembly shown. Use either "U" frame shape or "A" frame shape.
2. Wire sizes shown are the minimum required.
3. All wire intersections must be resistance welded.
4. Use tie bar spacing for longitudinal dowel bar locations. See Revised Standard Plans RSP P1, RSP P2, RSP P3A, and RSP P3B for tie bar requirements.
5. Weld may be at the top or bottom of the dowel bar.
6. Use anchor pins where soil or granular base is used. See Revised Standard Plan RSP P17 for Anchor Pin Detail.

STATE OF CALIFORNIA
DEPARTMENT OF TRANSPORTATION

CONCRETE PAVEMENT DOWEL BAR BASKET DETAILS

NO SCALE

RSP P12 DATED JULY 19, 2013 SUPERSEDES STANDARD PLAN P12 DATED MAY 20, 2011 - PAGE 132 OF THE STANDARD PLANS BOOK DATED 2010.

REVISED STANDARD PLAN RSP P12

2010 REVISED STANDARD PLAN RSP P12

5-31-13

Dist	COUNTY	ROUTE	POST MILES TOTAL PROJECT	SHEET No.	TOTAL SHEETS
11	SD	67	R0.0/R5.9	170	204

William K. Farnbach
REGISTERED CIVIL ENGINEER

July 19, 2013
PLANS APPROVAL DATE

REGISTERED PROFESSIONAL ENGINEER
William K. Farnbach
No. C49042
Exp. 9-30-14
CIVIL
STATE OF CALIFORNIA

THE STATE OF CALIFORNIA OR ITS OFFICERS OR AGENTS SHALL NOT BE RESPONSIBLE FOR THE ACCURACY OR COMPLETENESS OF SCANNED COPIES OF THIS PLAN SHEET.

TO ACCOMPANY PLANS DATED 07-28-14

2010 REVISED STANDARD PLAN RSP P15

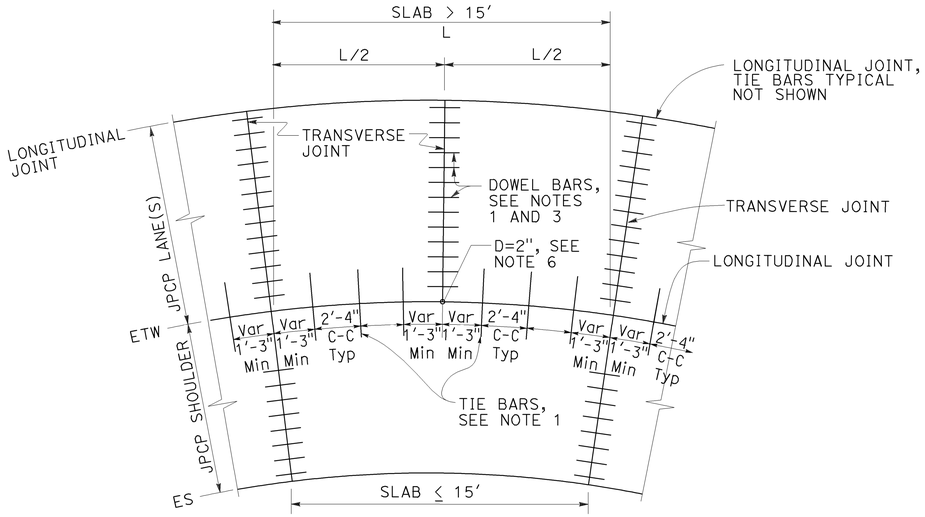

TIE BAR LAYOUT IN CURVED LANES

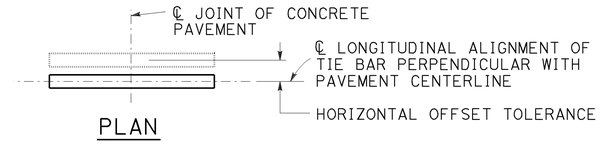

PLAN

HORIZONTAL OFFSET TOLERANCE

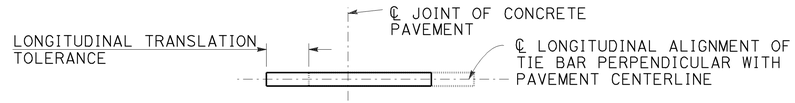

PLAN

LONGITUDINAL TRANSLATION TOLERANCE

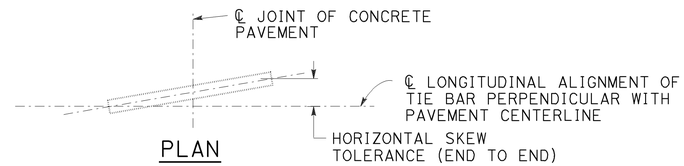

PLAN

HORIZONTAL SKEW TOLERANCE

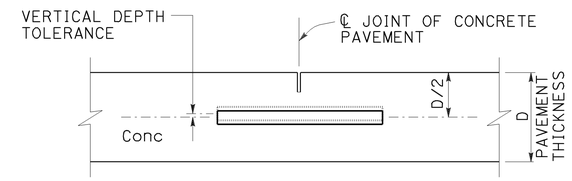

ELEVATION

VERTICAL DEPTH TOLERANCE

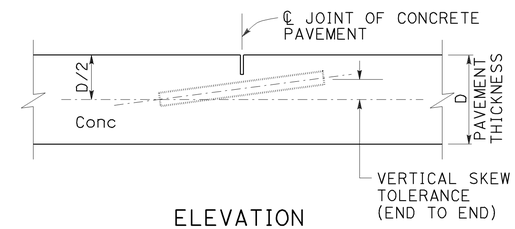

ELEVATION

VERTICAL SKEW TOLERANCE

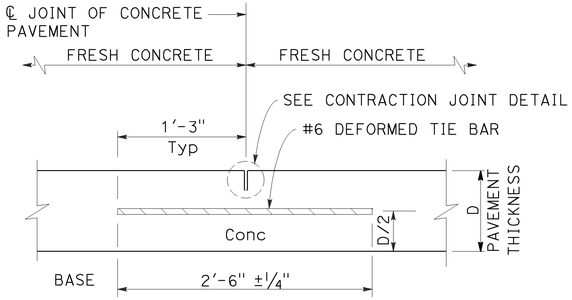

LONGITUDINAL CONTRACTION JOINT

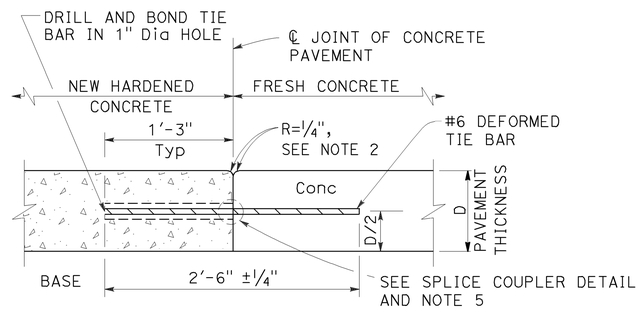

LONGITUDINAL CONSTRUCTION JOINT

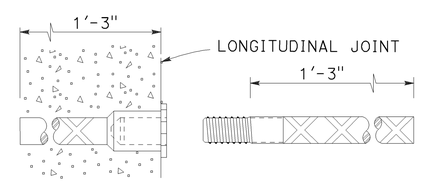

ALTERNATIVE SPLICE COUPLER

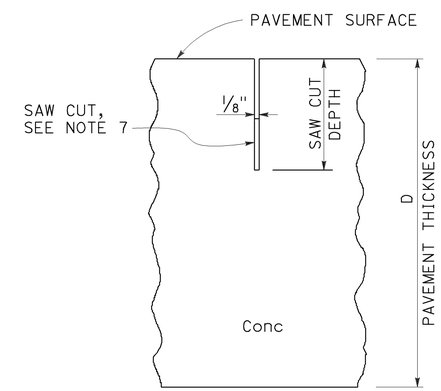

CONTRACTION JOINT DETAIL

NOTES:

1. See Revised Standard Plan RSP P1 for typical dowel bar and tie bar placement and locations.
2. Where new pavement is placed against existing concrete pavement, rounding the corner is not required.
3. For dowel bar sizes, See Revised Standard Plan RSP P10.
4. Tie bar details apply to inside widenings.
5. Use either drill and bond or splice couplers.
6. Full depth drilled hole. Fill hole with filler material.
7. The bottom of the saw cut must be at least 0.5" clear of any dowel bar, tie bar and bar reinforcement.

STATE OF CALIFORNIA
DEPARTMENT OF TRANSPORTATION

CONCRETE PAVEMENT-TIE BAR DETAILS

NO SCALE

RSP P15 DATED JULY 19, 2013 SUPPLEMENTS THE STANDARD PLANS BOOK DATED 2010.

REVISED STANDARD PLAN RSP P15

5-31-13

Dist	COUNTY	ROUTE	POST MILES TOTAL PROJECT	SHEET No.	TOTAL SHEETS
11	SD	67	R0.0/R5.9	171	204

William K. Farnbach
REGISTERED CIVIL ENGINEER

July 19, 2013
PLANS APPROVAL DATE

REGISTERED PROFESSIONAL ENGINEER
William K. Farnbach
No. C49042
Exp. 9-30-14
CIVIL
STATE OF CALIFORNIA

THE STATE OF CALIFORNIA OR ITS OFFICERS OR AGENTS SHALL NOT BE RESPONSIBLE FOR THE ACCURACY OR COMPLETENESS OF SCANNED COPIES OF THIS PLAN SHEET.

TO ACCOMPANY PLANS DATED 07-28-14

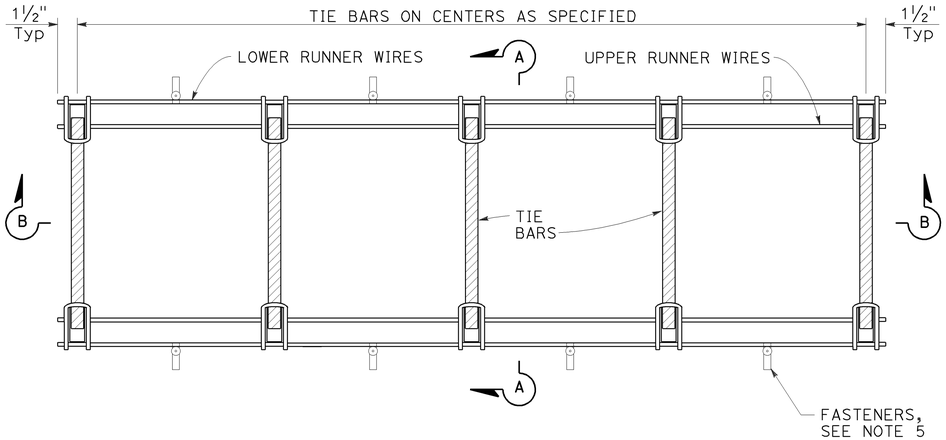

PLAN

TIE BAR BASKET

(Tie bars at longitudinal joint)
See Note 1

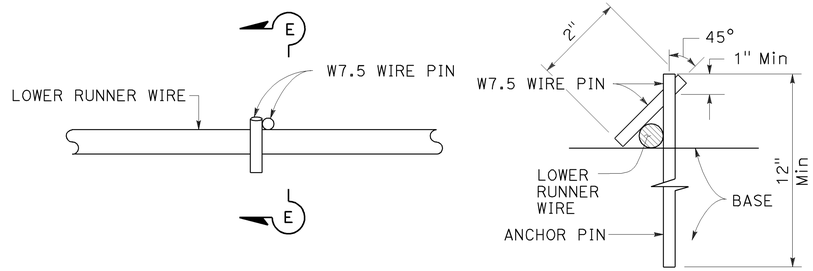

PLAN

SECTION E-E

ANCHOR PIN DETAIL

See Note 5

NOTES:

1. "U" frame shape assembly shown. Use either "U" frame shape or "A" frame shape.
2. Wire sizes shown are the minimum required.
3. All wire intersections must be resistance welded.
4. Weld may be at top or bottom of tie bars.
5. Use anchor pins where soil or granular base is used.

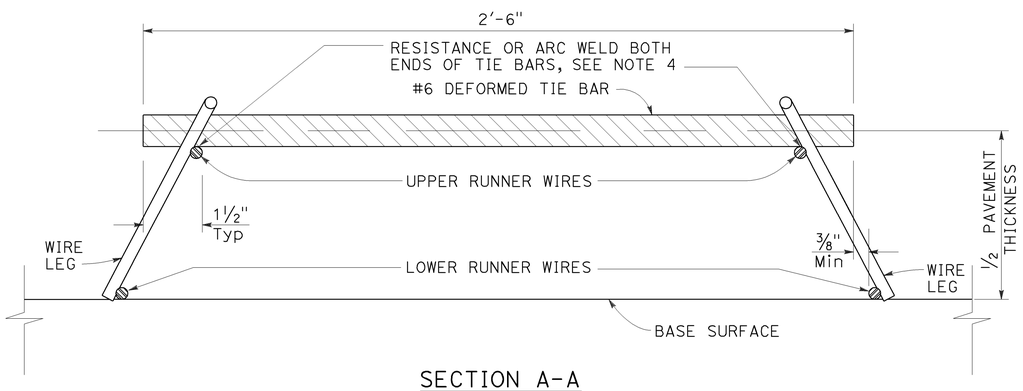

SECTION A-A

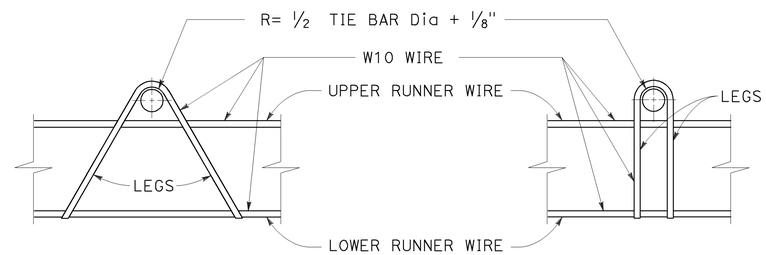

"A" SHAPE

"U" SHAPE

ASSEMBLY FRAME DETAILS

See Note 1

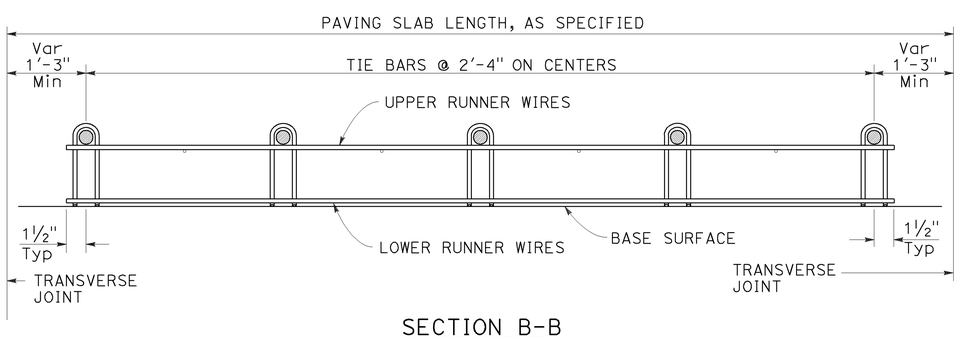

SECTION B-B

See Note 1

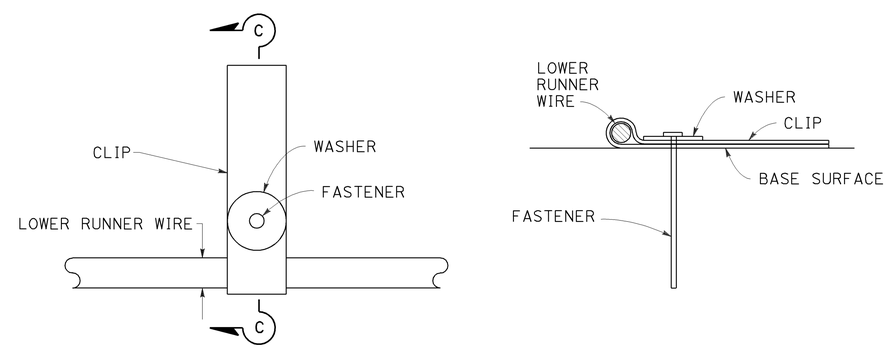

PLAN

SECTION C-C

FASTENER DETAIL

STATE OF CALIFORNIA
DEPARTMENT OF TRANSPORTATION

CONCRETE PAVEMENT TIE BAR BASKET DETAILS

NO SCALE

RSP P17 DATED JULY 19, 2013 SUPERSEDES STANDARD PLAN P17
DATED MAY 20, 2011 - PAGE 134 OF THE STANDARD PLANS BOOK DATED 2010.

REVISED STANDARD PLAN RSP P17

2010 REVISED STANDARD PLAN RSP P17

5-31-13

Dist	COUNTY	ROUTE	POST MILES TOTAL PROJECT	SHEET No.	TOTAL SHEETS
11	SD	67	R0.0/R5.9	172	204

William K. Farnbach
REGISTERED CIVIL ENGINEER

July 19, 2013
PLANS APPROVAL DATE

REGISTERED PROFESSIONAL ENGINEER
William K. Farnbach
No. C49042
Exp. 9-30-14
CIVIL
STATE OF CALIFORNIA

THE STATE OF CALIFORNIA OR ITS OFFICERS OR AGENTS SHALL NOT BE RESPONSIBLE FOR THE ACCURACY OR COMPLETENESS OF SCANNED COPIES OF THIS PLAN SHEET.

TO ACCOMPANY PLANS DATED 07-28-14

2010 REVISED STANDARD PLAN RSP P20

NOTES:

1. Details do not apply to isolation joints and longitudinal construction joints.
2. Tie bars, dowel bars, and bar reinforcement are not shown.
3. Depths are measured from the final concrete pavement surface elevation after any grinding.

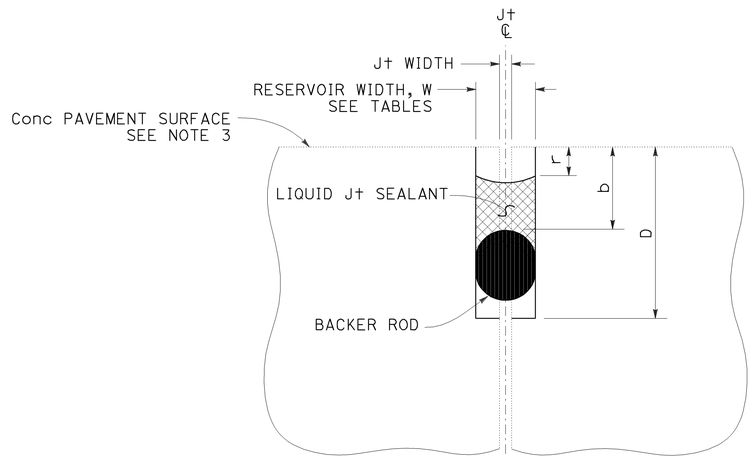

LIQUID JOINT SEALANT

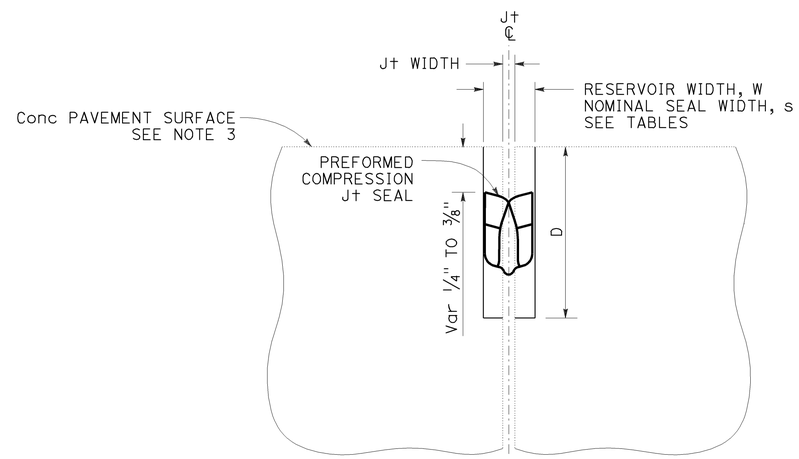

PREFORMED COMPRESSION JOINT SEAL

Const SEASON	Min RESERVOIR WIDTH * W ± 1/16"
WINTER	1/4"
SPRING	3/8"
SUMMER	3/8"
FALL	3/8"

* Minimum reservoir width for replace joint seal = existing joint width + 1/8"

RESERVOIR WIDTH W ±1/16"	LIQUID JOINT SEALANT DIMENSIONS					
	BACKER ROD NOMINAL Dia *	DEPTHS (ASPHALT RUBBER) **		DEPTHS (SILICONE)		
		RESERVOIR D ± 1/4"	BACKER ROD b ± 1/16"	RESERVOIR D ± 1/4"	BACKER ROD b ± 1/16"	RECESS r ± 1/16"
1/4"	3/8"	1 3/4"	7/8"	1 3/8"	1/2"	1/4"
3/8"	1/2"	1 7/8"	7/8"	1 1/2"	1/2"	1/4"
1/2"	3/4"	2"	7/8"	1 3/4"	9/16"	5/16"
5/8"	7/8"	2 1/4"	1"	2"	5/8"	5/16"
3/4"	1"	2 3/4"	1 1/8"	2 1/4"	3/4"	3/8"
7/8"	1 1/4"	3"	1 1/4"	2 1/2"	13/16"	3/8"
1"	1 1/2"	3 1/4"	1 3/8"	2 5/8"	7/8"	3/8"
1 1/8"	1 1/2"	3 1/2"	1 1/2"	2 13/16"	1"	1/2"

* Larger diameter backer rods may be substituted according to manufacturer recommendations if reservoir depth is increased equivalently.

** Asphalt rubber sealant recess depth "r" varies from 1/4" to 3/8"

RESERVOIR WIDTH W ±1/16"	PREFORMED COMPRESSION JOINT SEAL DIMENSIONS	
	NOMINAL SEAL WIDTH s	RESERVOIR DEPTH D ± 1/4"
1/4"	7/16"	1 1/4"
3/8"	11/16"	1 7/16"
1/2"	13/16"	1 11/16"
5/8"	1"	1 7/8"
3/4"	1 1/4"	2 1/8"
7/8"	1 5/8"	2 5/8"
1"	1 5/8"	2 5/8"
1 1/8"	2"	2 7/8"

STATE OF CALIFORNIA
DEPARTMENT OF TRANSPORTATION

JOINT SEALS

NO SCALE

RSP P20 DATED JULY 19, 2013 SUPERSEDES STANDARD PLAN P20
DATED MAY 20, 2011 - PAGE 136 OF THE STANDARD PLANS BOOK DATED 2010.

REVISED STANDARD PLAN RSP P20

Dist	COUNTY	ROUTE	POST MILES TOTAL PROJECT	SHEET No.	TOTAL SHEETS
11	SD	67	R0.0/R5.9	173	204

William K. Farnbach
REGISTERED CIVIL ENGINEER

July 19, 2013
PLANS APPROVAL DATE

REGISTERED PROFESSIONAL ENGINEER William K. Farnbach No. C49042 Exp. 9-30-14 CIVIL STATE OF CALIFORNIA

THE STATE OF CALIFORNIA OR ITS OFFICERS OR AGENTS SHALL NOT BE RESPONSIBLE FOR THE ACCURACY OR COMPLETENESS OF SCANNED COPIES OF THIS PLAN SHEET.

TO ACCOMPANY PLANS DATED 07-28-14

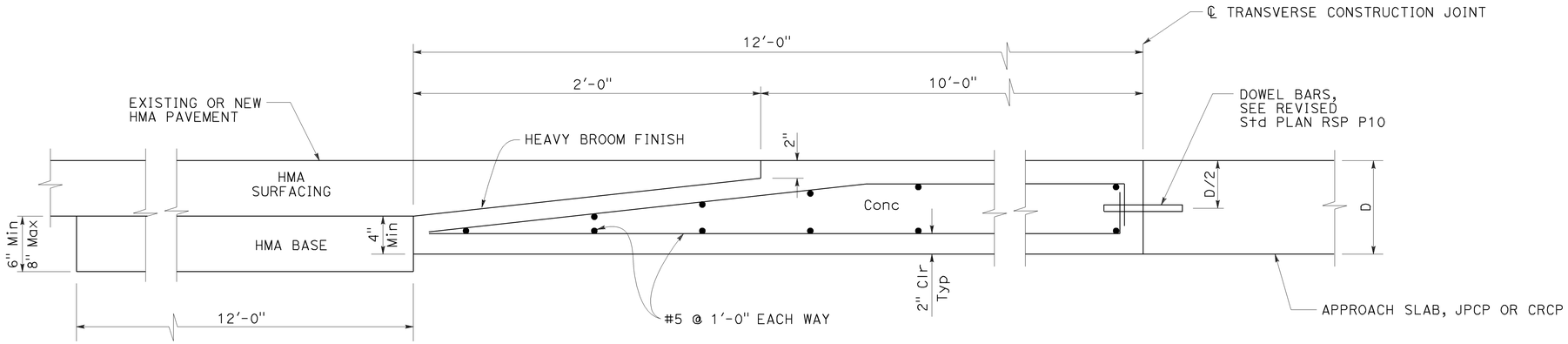

ELEVATION

CONCRETE PAVEMENT TRANSITION PANEL

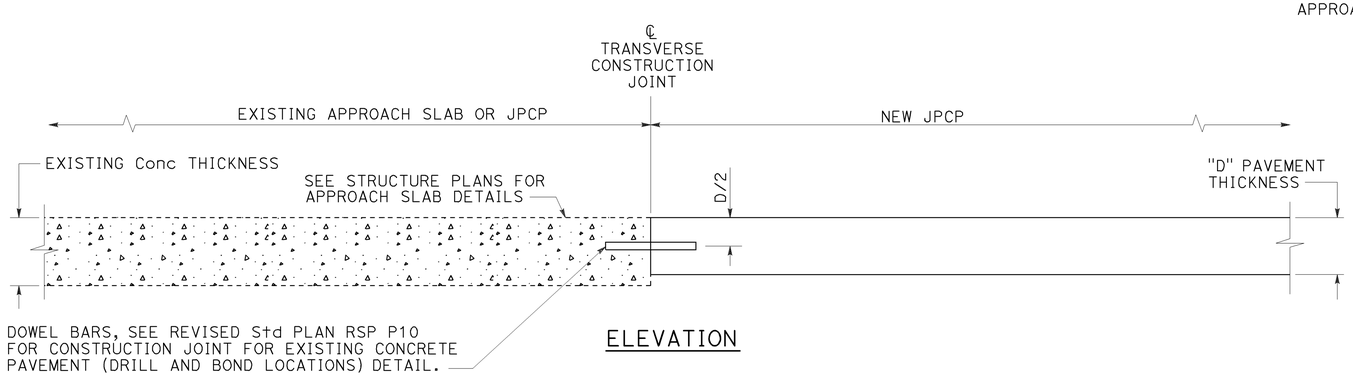

ELEVATION

TERMINAL JOINT TYPE 1

For Exist JPCP or Approach Slab

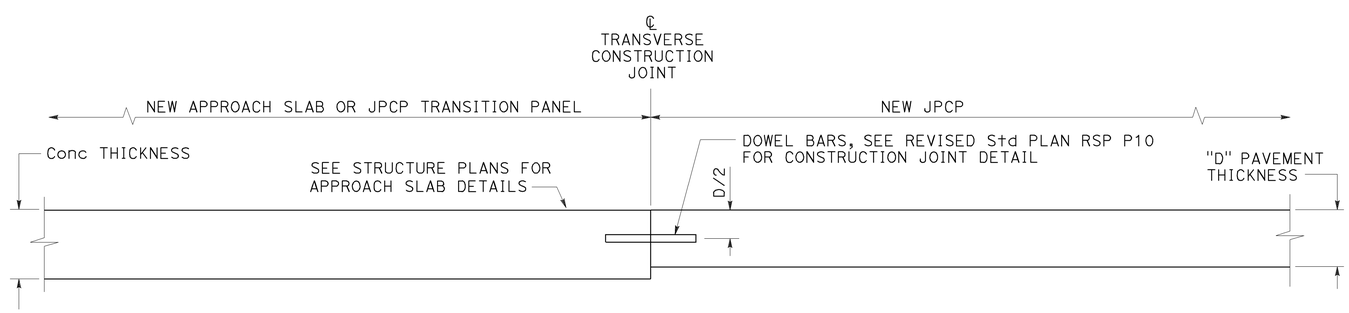

ELEVATION

TERMINAL JOINT TYPE 2

For JPCP Transition Panel or Approach Slab

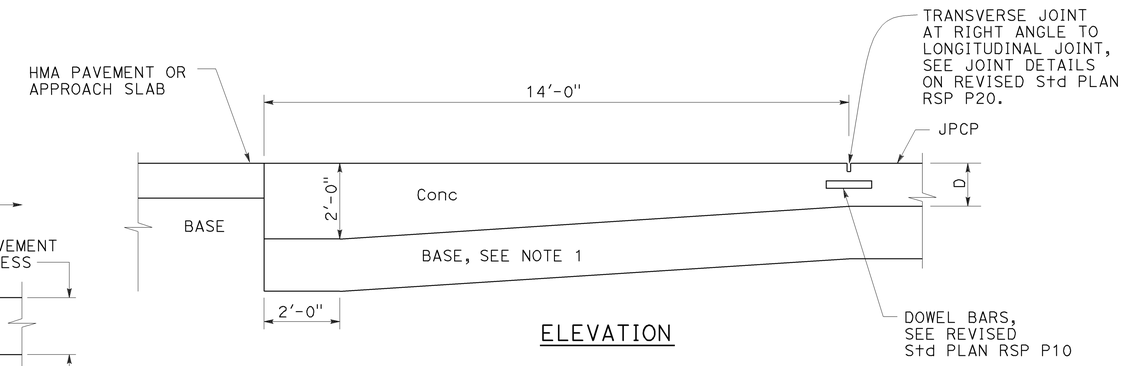

ELEVATION

PAVEMENT END ANCHOR

For HMA Pvmt or Approach Slab

NOTE:

1. Maintain same base thickness as JPCP.

STATE OF CALIFORNIA
DEPARTMENT OF TRANSPORTATION

CONCRETE PAVEMENT-END PANEL PAVEMENT TRANSITIONS

NO SCALE

RSP P30 DATED JULY 19, 2013 SUPERSEDES RSP P30 DATED APRIL 20, 2012 AND STANDARD PLAN P30 DATED MAY 20, 2011 - PAGE 137 OF THE STANDARD PLANS BOOK DATED 2010.

REVISED STANDARD PLAN RSP P30

2010 REVISED STANDARD PLAN RSP P30

3-26-13

DIST	COUNTY	ROUTE	POST MILES TOTAL PROJECT	SHEET No.	TOTAL SHEETS
11	SD	67	R0.0/R5.9	174	204

REGISTERED CIVIL ENGINEER

November 15, 2013
PLANS APPROVAL DATE

REGISTERED PROFESSIONAL ENGINEER
Cornelis M. Hakim
No. C55610
Exp. 12-31-14
CIVIL
STATE OF CALIFORNIA

THE STATE OF CALIFORNIA OR ITS OFFICERS OR AGENTS SHALL NOT BE RESPONSIBLE FOR THE ACCURACY OR COMPLETENESS OF SCANNED COPIES OF THIS PLAN SHEET.

TO ACCOMPANY PLANS DATED 07-28-14

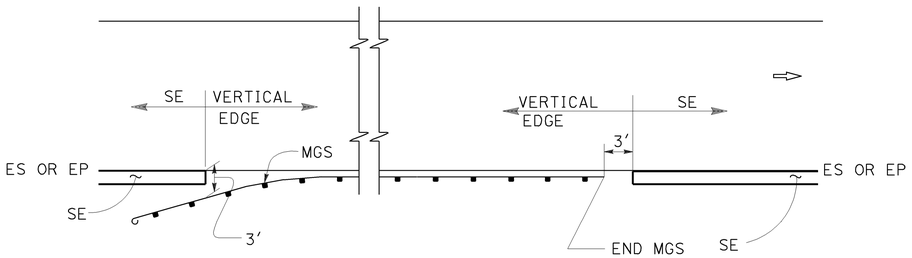

MGS

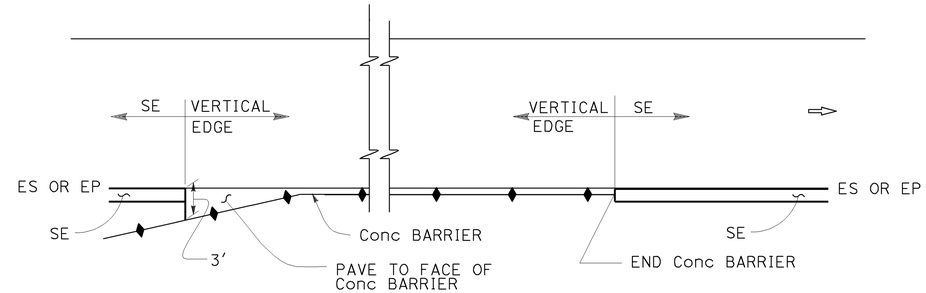

CONCRETE BARRIER

ABBREVIATIONS:

SE SAFETY EDGE

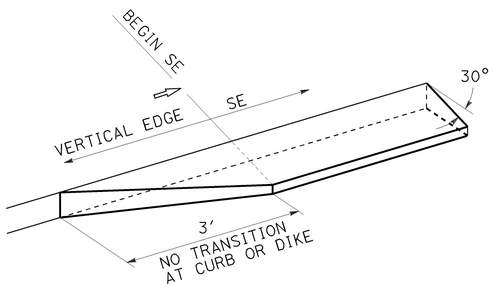

TRANSITION DETAIL FOR CONCRETE ONLY

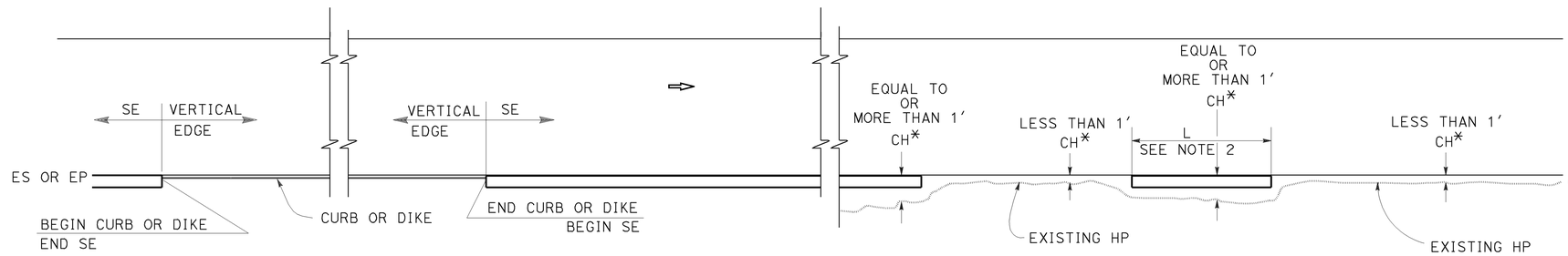

CURB OR DIKE

NARROW SIDE SLOPE

* CH = Distance from ES or EP to existing HP.

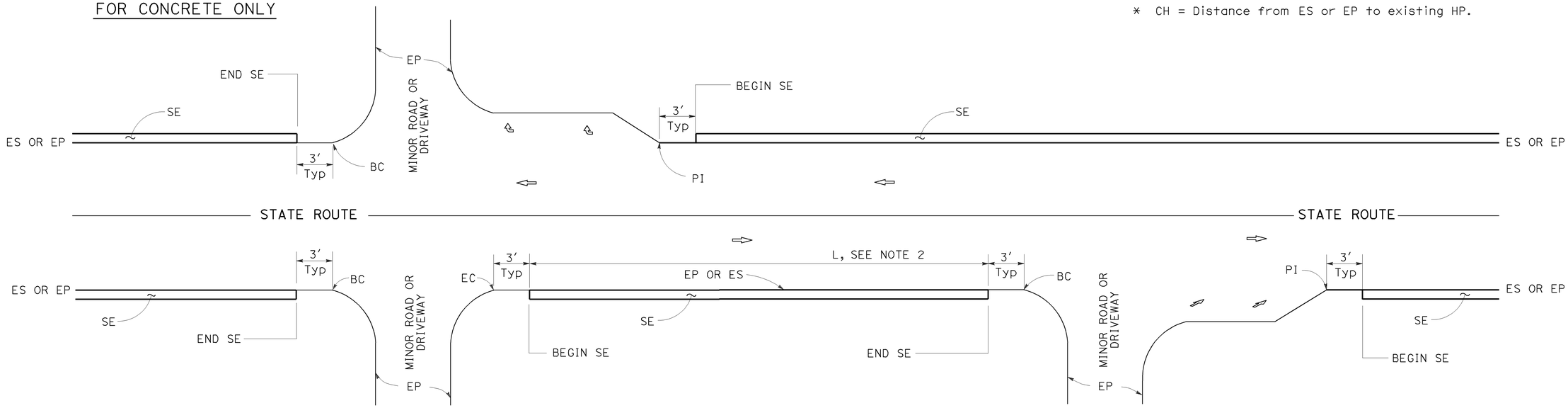

INTERSECTION

MINOR ROADWAY OR DRIVEWAY

DRIVEWAY AND INTERSECTION

NOTES:

1. For details not shown, see Revised Standard Plans RSP P75 and RSP P76.
2. Safety edge is optional when L is less than 30′.

STATE OF CALIFORNIA
DEPARTMENT OF TRANSPORTATION

PAVEMENT EDGE TREATMENTS

NO SCALE

RSP P74 DATED NOVEMBER 15, 2013 SUPERSEDES RSP P74 DATED JANUARY 20, 2012 THAT SUPPLEMENTS THE STANDARD PLANS BOOK DATED 2010.

REVISED STANDARD PLAN RSP P74

2010 REVISED STANDARD PLAN RSP P74

10-11-13

DIST	COUNTY	ROUTE	POST MILES TOTAL PROJECT	SHEET No.	TOTAL SHEETS
11	SD	67	R0.0/R5.9	175	204

REGISTERED CIVIL ENGINEER

November 15, 2013
PLANS APPROVAL DATE

REGISTERED PROFESSIONAL ENGINEER
Cornelis M. Hakim
No. C55610
Exp. 12-31-14
CIVIL
STATE OF CALIFORNIA

THE STATE OF CALIFORNIA OR ITS OFFICERS OR AGENTS SHALL NOT BE RESPONSIBLE FOR THE ACCURACY OR COMPLETENESS OF SCANNED COPIES OF THIS PLAN SHEET.

TO ACCOMPANY PLANS DATED 07-28-14

LEGEND:

- HMA PAVEMENT
- HMA OR CONCRETE PAVEMENT
- CONCRETE PAVEMENT

ABBREVIATIONS:

SE SAFETY EDGE
TT TOTAL THICKNESS OF SE
HW HINGE WIDTH, DISTANCE FROM ES OR EP TO HP

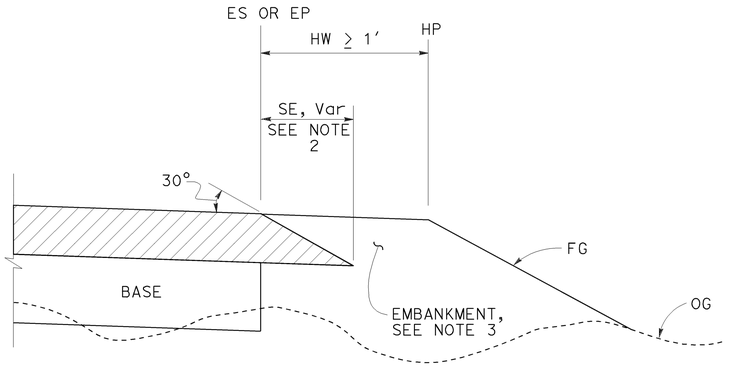

CASE K
Safety Edge - Fill Section, HW ≥ 1′

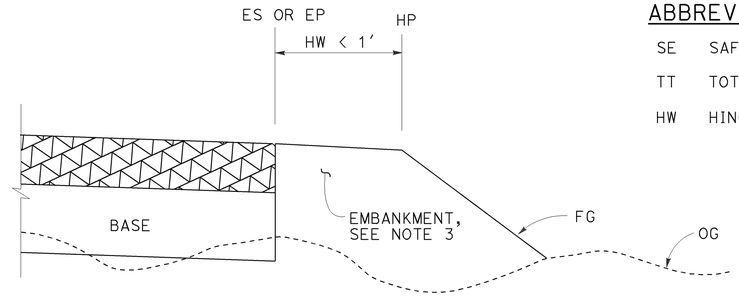

CASE L
Vertical Edge - Fill Section, HW < 1′

FILL SECTION

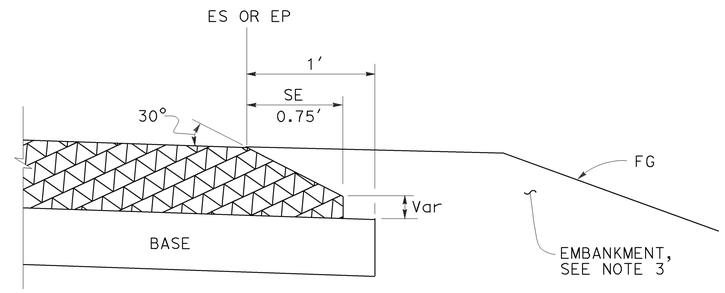

DETAIL "B"
For HMA pavement thickness more than 0.43′ or concrete pavement

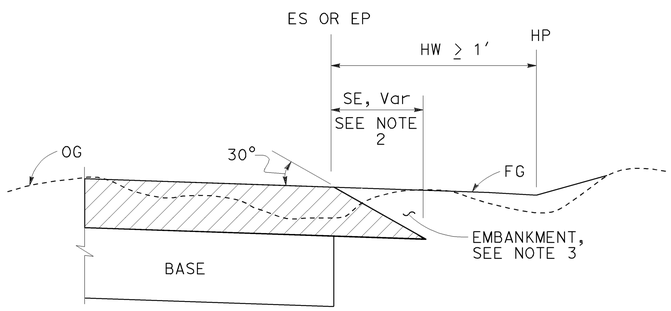

CASE M
Safety Edge - Cut Section, HW ≥ 1′

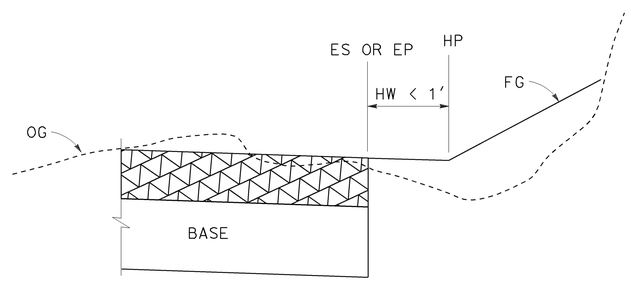

CASE N
Vertical Edge - Cut Section, HW < 1′

CUT SECTION

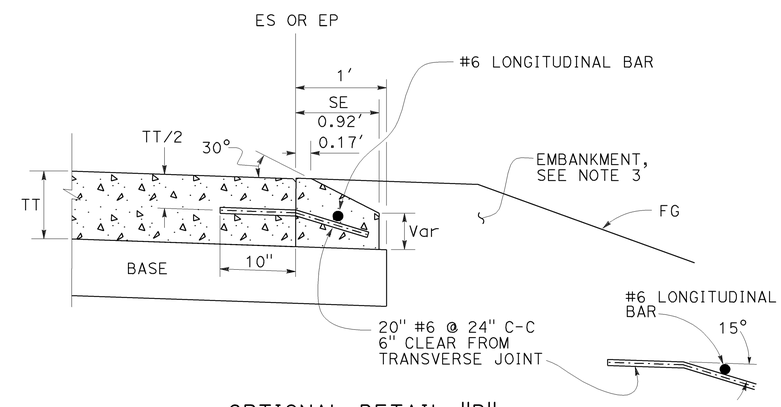

OPTIONAL DETAIL "B"
For concrete pavement
See Note 4

NOTES:

1. For limits of safety edge and vertical edge treatments, see Revised Standard Plan RSP P74
2. Details shown for HMA pavement thickness less than 0.43′. See Detail "B" for HMA pavement thickness more than 0.43′ or concrete pavement.
3. For locations and limits of embankment see project plans.
4. Safety edge transverse joint must match pavement transverse joint. End of #6 longitudinal bar must be 2" ±½" clear from transverse joint.
5. Safety edge is not needed in the area of MGS, barrier, right turn lane and acceleration lane. See Revised Standard Plan RSP P74.

STATE OF CALIFORNIA
DEPARTMENT OF TRANSPORTATION

PAVEMENT EDGE TREATMENTS-NEW CONSTRUCTION

NO SCALE

RSP P76 DATED NOVEMBER 15, 2013 SUPERSEDES RSP P76 DATED JANUARY 20, 2012 THAT SUPPLEMENTS THE STANDARD PLANS BOOK DATED 2010.

REVISED STANDARD PLAN RSP P76

2010 REVISED STANDARD PLAN RSP P76

10-4-13

TO ACCOMPANY PLANS DATED 07-28-14

Dist	COUNTY	ROUTE	POST MILES TOTAL PROJECT	SHEET No.	TOTAL SHEETS
11	SD	67	R0.0/R5.9	176	204

REGISTERED CIVIL ENGINEER

October 19, 2012
PLANS APPROVAL DATE

REGISTERED PROFESSIONAL ENGINEER Glenn DeCou No. C34547 Exp. 9-30-13 CIVIL STATE OF CALIFORNIA

THE STATE OF CALIFORNIA OR ITS OFFICERS OR AGENTS SHALL NOT BE RESPONSIBLE FOR THE ACCURACY OR COMPLETENESS OF SCANNED COPIES OF THIS PLAN SHEET.

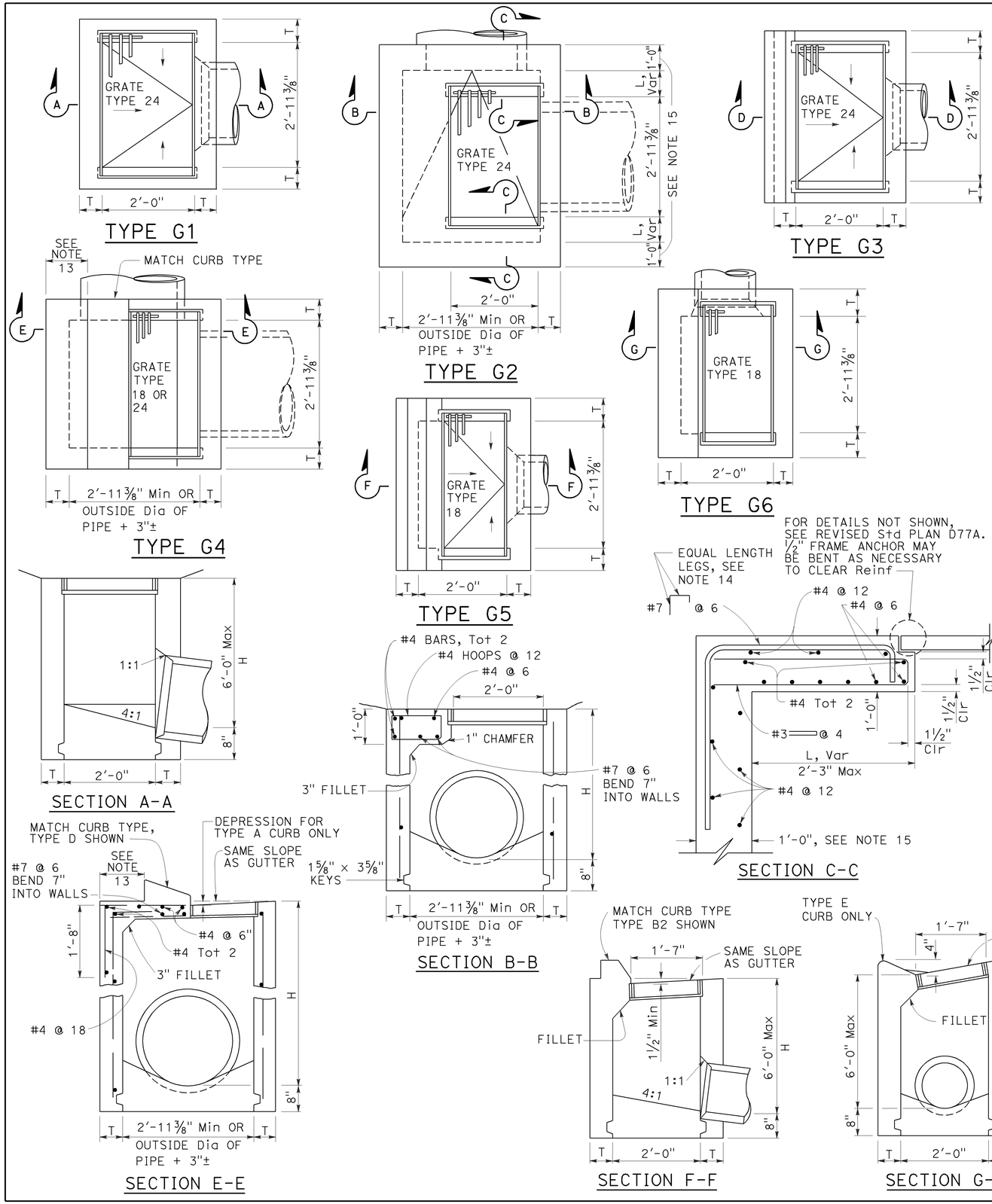

NOTES:

1. "H" is the difference in elevation between the outlet pipe flow line and the normal gutter grade line undepressed.
2. For "T" wall thickness, see Table A below.
3. Wall reinforcing not required when "H" is 8'-0" or less and the unsupported width or length is 7'-0" or less. Walls exceeding these limits shall be reinforced with #4 bars @ 1'-6" ± centers placed 1½" clear to inside of box unless otherwise shown.
4. Inlet bottom reinforcing not required. See Standard Plan D74C for alternative reinforced bottom and alternative half round bottom.
5. Steps-None required where "H" is less than 2'-6". Where "H" is 2'-6" or more, install steps with lowest rung 1'-0" above the floor and highest rung not more than 6" below top of inlet. The distance between steps shall not exceed 1'-0" and shall be uniform throughout the length of the wall. Place steps in the wall without an opening. Steps inserts may be substituted for the bar steps. Step inserts shall comply with State Industrial Safety requirements. See Standard Plan D74C for step details.
6. Details shown apply to both metal and concrete pipe.
7. Pipe(s) can be placed in any wall.
8. Curb section shall match adjacent curb.
9. Basin floors shall have wood trowel finish and a minimum slope of 12:3 from all directions toward outlet pipe.
10. Set inlet so that grate bars are parallel to direction of principal surface flow.
11. See Revised Standard Plans D77A and D77B for grate and frame details and weights of miscellaneous iron and steel.
12. See Standard Plan D78A for gutter depression details.
13. This dimenison will vary with different grates, curbs types, box width and wall thickness.
14. Bar may be rotated as necessary to clear opening. Where "L" is 6" or less, bar may be omitted.
15. Where "L" is 6" or less, wall thickness shall be as shown in Table A.
16. Cast-in-place inlets to be formed around all pipes/stubs intersecting the inlet, and concrete poured in one continuous operation. Precast inlets shall have mortared connections conforming to details for Type GCP Inlet shown on Standard Plan D75B. See Standard Specifications for mortar composition.

TABLE A

CONCRETE QUANTITIES				
TYPE	H=3'-0" TO 8'-0" (T=6")		H=8'-1" TO 20'-0" (T=8")	
	H=3'-0" (CY)	ADDITIONAL PCC PER FOOT (CY)	H=8'-1" (CY)	ADDITIONAL PCC PER FOOT (CY)
G-1	0.95	0.220	See Note A	SEE NOTE A
G-2*	1.31	0.255	3.50	0.357
G-3	1.03	0.220	See Note A	SEE NOTE A
G-4* (TYPE 24)	1.27	0.255	3.48	0.357
G-4* (TYPE 18)	1.30	0.255	3.50	0.357
G-5	1.02	0.220	SEE NOTE A	SEE NOTE A
G-6	1.04	0.220	SEE NOTE A	SEE NOTE A

TABLE BASED ON 8" FLOOR SLAB. NO DEDUCTIONS ARE TO BE MADE TO THESE QUANTITIES BECAUSE OF PIPE OPENINGS, DIFFERENT FLOOR ALTERNATIVES OR DIFFERENT CURB TYPES. * QUANTITIES FOR TYPE G-2 AND G-4 INLETS BASED ON THE MINIMUM INTERIOR DIMENSIONS.

NOTE A:

Maximum allowable height 6'-0".

STATE OF CALIFORNIA
DEPARTMENT OF TRANSPORTATION

DRAINAGE INLETS

NO SCALE

RSP D73 DATED OCTOBER 19, 2012 SUPERSEDES STANDARD PLAN D73 DATED MAY 20, 2011 - PAGE 156 OF THE STANDARD PLANS BOOK DATED 2010.

REVISED STANDARD PLAN RSP D73

2010 REVISED STANDARD PLAN RSP D73

7-19-12

Dist	COUNTY	ROUTE	POST MILES TOTAL PROJECT	SHEET No.	TOTAL SHEETS
11	SD	67	R0.0/R5.9	177	204

Raymond Don Tsztoo
REGISTERED CIVIL ENGINEER

April 19, 2013
PLANS APPROVAL DATE

REGISTERED PROFESSIONAL ENGINEER Raymond Don Tsztoo No. C37332 Exp. 6-30-14 CIVIL STATE OF CALIFORNIA

THE STATE OF CALIFORNIA OR ITS OFFICERS OR AGENTS SHALL NOT BE RESPONSIBLE FOR THE ACCURACY OR COMPLETENESS OF SCANNED COPIES OF THIS PLAN SHEET.

TO ACCOMPANY PLANS DATED 07-28-14

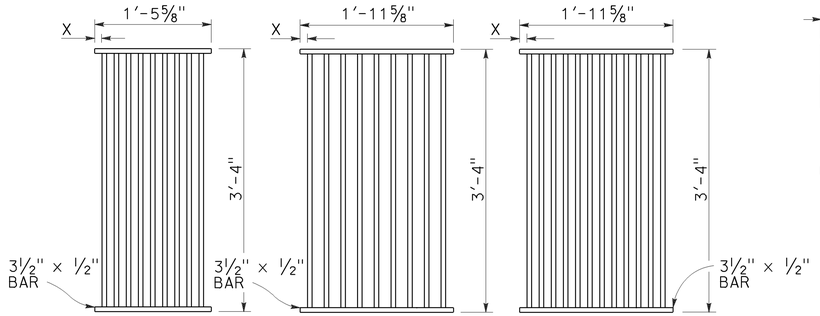

TYPE 18-9

1⅜" Clear spacing. Use within the roadbed on highways where bicycles and pedestrians are excluded.

TYPE 24-9

2" Clear spacing. Use in locations off the roadbed on all types of highways.

TYPE 24-12

1⅜" Clear spacing. Use within the roadbed on highways where bicycles and pedestrians are excluded.

RECTANGULAR GRATE DETAILS

(See table below)

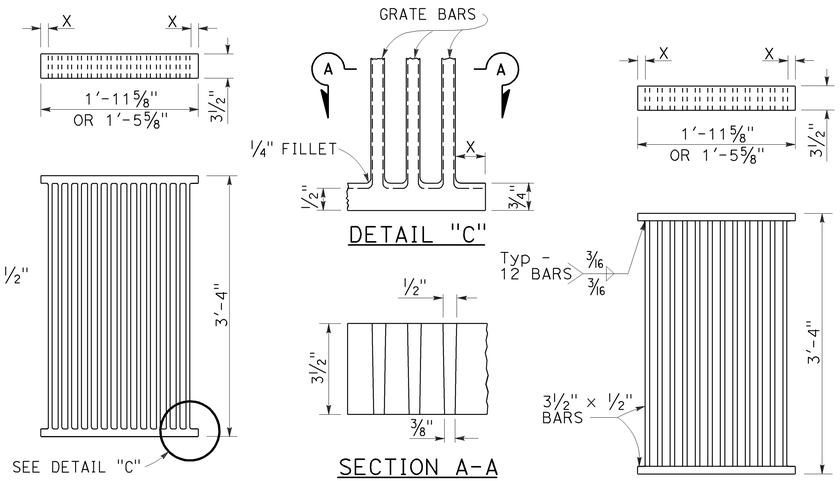

ALTERNATIVE CAST DUCTILE IRON GRATE OR CAST CARBON STEEL GRATE

ALTERNATIVE WELDED GRATE

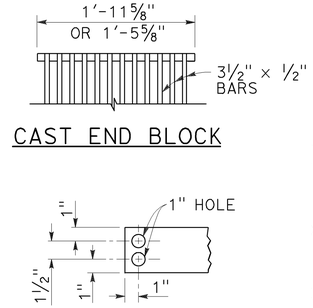

CAST END BLOCK

END OF BAR

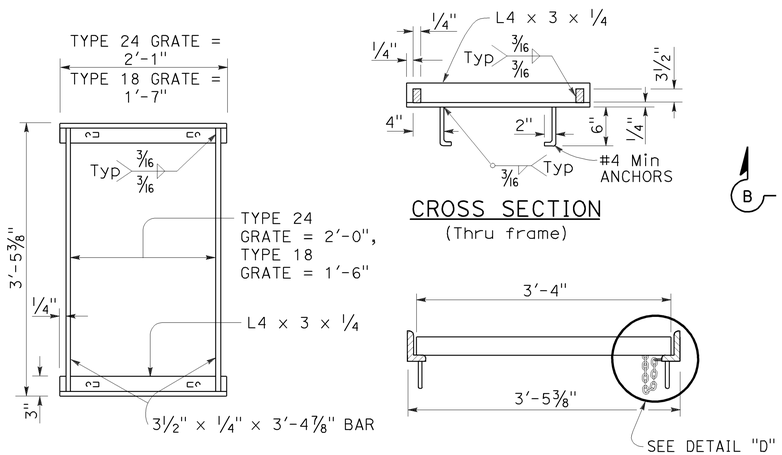

TYPICAL FRAME

CROSS SECTION
(Thru frame)

LONGITUDINAL SECTION
(Thru frame and grate)

RECTANGULAR FRAME DETAILS

(For all rectangular grates)

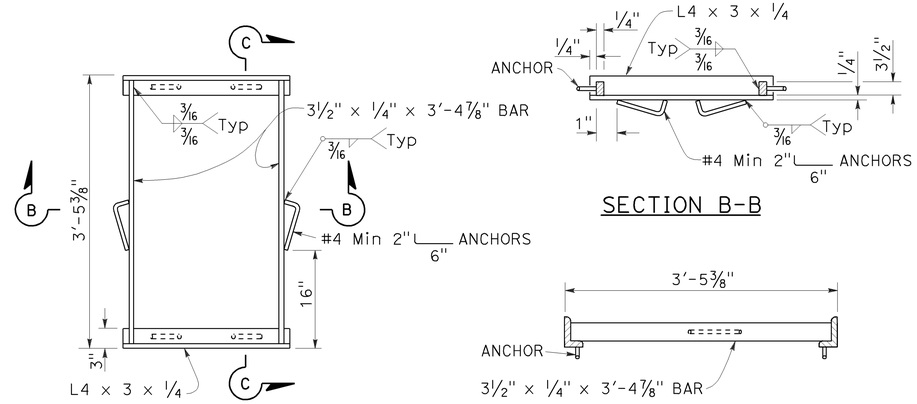

TYPICAL FRAME

SECTION B-B

SECTION C-C

ALTERNATIVE ANCHOR FOR RECTANGULAR FRAME

(For details not shown, See Rectangular Frame Details)

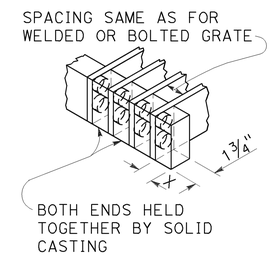

ALTERNATIVE CAST DUCTILE IRON OR CAST CARBON STEEL END BLOCK GRATE

NOTES:

1. Grate type numbers refer to approximate width of grate in inches and number of bars, respectively.
2. Contractor has the option of using cast ductile iron, cast carbon steel, welded, bolted, or cast end block grate.
3. Rounded top of bars optional on all grates.
4. Pipe inlets with a grate shall be placed so that bars parallel direction of principle surface flow.
5. Complete joint penetration butt welds may be substituted for the fillet welds on all anchors.
6. Standard square, hexagon, round or equivalent headed anchors may be substituted for the right angle hooks on the anchors shown on this plan.
7. Grate and frame weights are based on welded grates (weights of face angles, steps, protection bars, etc. are not included).
8. Connect chain to grate and frame only at locations shown on the plans. When chain is required, do not use cast ductile iron grates.

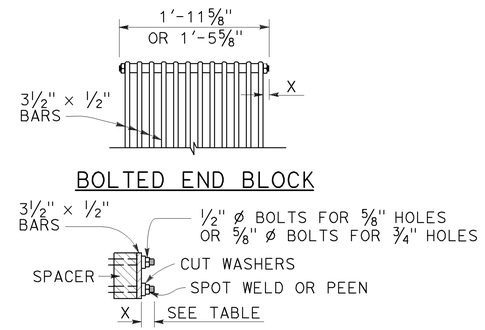

ALTERNATIVE BOLTED GRATE

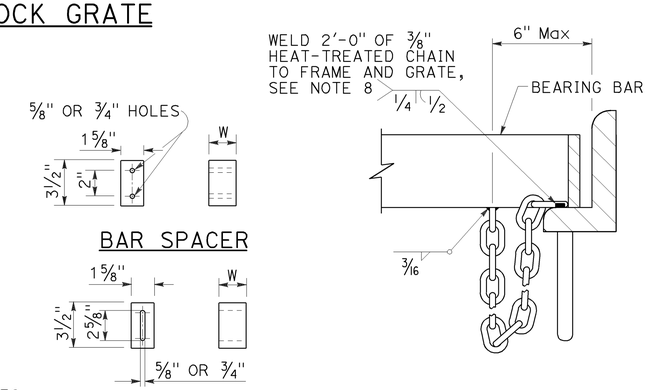

GRATE BAR SPACING TABLE

TYPE	No. OF BARS	CLEAR BAR SPACING	X
18-9	9	1⅜"	1 1/16"
24-9	9	2"	1 9/16"
24-12	12	1⅜"	1¼"

INLET TYPE	COVER TYPE	WEIGHT LB
OS	PLATE	174
OL-7	PLATE	170
OL-10	PLATE	170
OL-14	PLATE	170
OL-21	PLATE	170
OCP	PLATE	112
OCPI	PLATE	112
OCPI	REDWOOD	42
OMP	PLATE	177
OMPI	PLATE	177

INLET TYPE	GRATE TYPE	No. OF GRATES	WEIGHT LB
GDO	24-12	2	634
GOL-7	24-12	1	326
GOL-10	24-12	1	326
GO,G1,G2,G3,G4 (TYPE 24)	24-9	1	263
	24-12	1	326
G4 (TYPE 18),G5,G6	18-9	1	249
GT1	18-9	2	498
GT2	18-9	2	498
GT3	24-12	2	652
GT4	24-12	2	652
TRASH RACK			22
GRATE CHAIN			3

BASIS FOR Misc IRON & STEEL FINAL PAY WEIGHTS FOR DRAINAGE INLETS

(See Note 7)

STATE OF CALIFORNIA
DEPARTMENT OF TRANSPORTATION

GRATE DETAILS No. 1

NO SCALE

RSP D77A DATED APRIL 19, 2013 SUPERSEDES RSP D77A DATED JULY 20, 2012 AND STANDARD PLAN D77A DATED MAY 20, 2011 - PAGE 164 OF THE STANDARD PLANS BOOK DATED 2010.

REVISED STANDARD PLAN RSP D77A

2010 REVISED STANDARD PLAN RSP D77A

4-4-13

Dist	COUNTY	ROUTE	POST MILES TOTAL PROJECT	SHEET No.	TOTAL SHEETS
11	SD	67	R0.0/R5.9	178	204

Raymond Don Tsztoo
REGISTERED CIVIL ENGINEER

April 19, 2013
PLANS APPROVAL DATE

REGISTERED PROFESSIONAL ENGINEER
Raymond Don Tsztoo
No. C37332
Exp. 6-30-14
CIVIL
STATE OF CALIFORNIA

THE STATE OF CALIFORNIA OR ITS OFFICERS OR AGENTS SHALL NOT BE RESPONSIBLE FOR THE ACCURACY OR COMPLETENESS OF SCANNED COPIES OF THIS PLAN SHEET.

TO ACCOMPANY PLANS DATED 07-28-14

2010 REVISED STANDARD PLAN RSP D77B

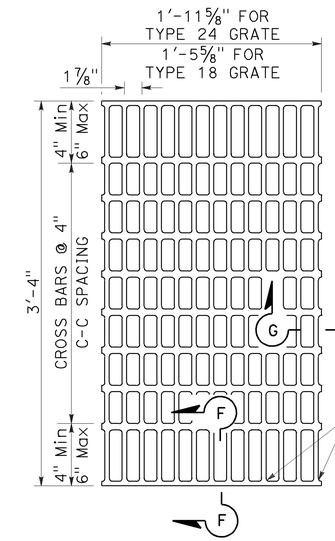

NOTES:

Bearing bars to be 3½" × ¼" bars on 1⅞" centers.

⅜"± ø Cross bars may be fillet welded, resistance welded or electroforged to bearing bars.

Weight of Type 24 grate = 141 LBS.

Weight of Type 18 grate = 107 LBS. (Type 24 grate shown).

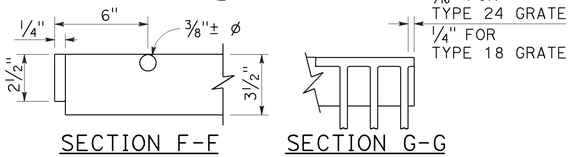

SECTION F-F SECTION G-G

TYPE 18-10 AND 24-13 GRATE

(Welded Steel)

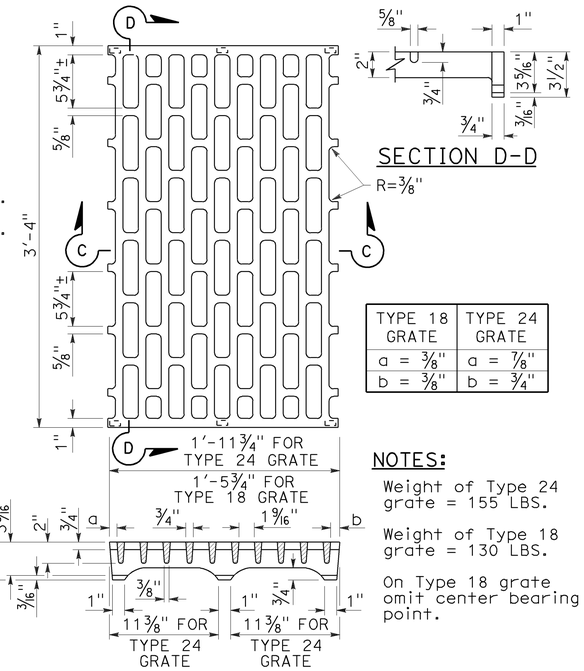

SECTION D-D

TYPE 18 GRATE	TYPE 24 GRATE
a = ⅜"	a = ⅞"
b = ⅜"	b = ¾"

NOTES:

Weight of Type 24 grate = 155 LBS.

Weight of Type 18 grate = 130 LBS.

On Type 18 grate omit center bearing point.

SECTION C-C

TYPE 18-8C AND 24-10C GRATE

(Cast ductile iron)

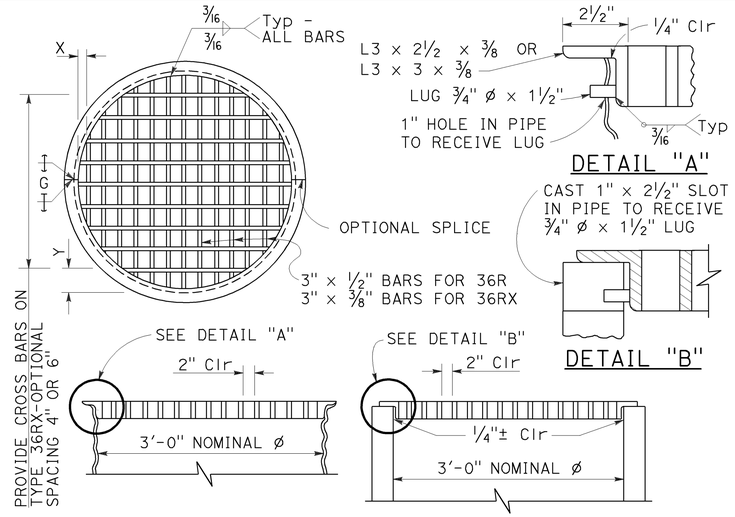

TYPE 36R AND 36RX GRATE DETAILS

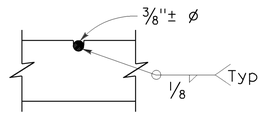

⅜"± ø Cross bars may be fillet welded, resistance welded or electroforged to bearing bars.

CROSS BAR DETAIL TYPE 36RX GRATE (WELDED STEEL)

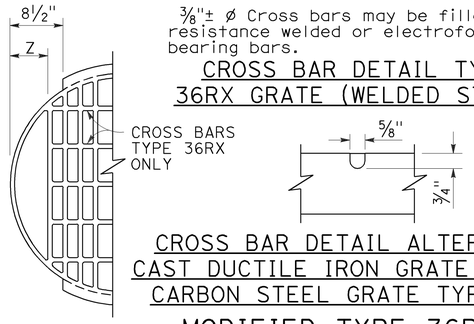

CROSS BAR DETAIL ALTERNATIVE CAST DUCTILE IRON GRATE OR CAST CARBON STEEL GRATE TYPE 36RX

MODIFIED TYPE 36R AND 36RX GRATE FOR ODI INLET

NOTES:

1. When alternative grates are allowed - Final pay based on alternative with the lesser weight.
2. Use frame shown on Standard Plan D74A, D74B or RSP D77A as appropriate.
3. When Type 24-10S, 24-12X or 24-13 grates are used with GDO Inlets, a ¼" × 3½" × 3'-4⅞" steel bar shall be welded across the center of inlet frame to separate the individual grates.
4. See Revised Standard Plan RSP D77A for connecting chain to welded grate and frame. When chain is required, do not use cast ductile iron grate.

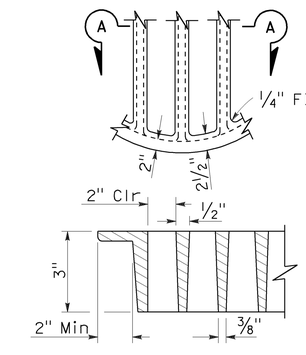

SECTION A-A

ALTERNATIVE CAST DUCTILE IRON GRATE OR CAST CARBON STEEL GRATE TYPE 36R AND 36RX

BASIS FOR Misc IRON AND STEEL FINAL PAY WEIGHTS FOR DRAINAGE INLETS

INLET TYPE	GRATE TYPE	No. OF GRATES	WEIGHT LB
GDO (SEE NOTE 4)	24-10C	2	391
	24-10S	2	456
	24-12X	2	473
	24-13	2	374
G0,G0L,G1,G2, G3,G4 (TYPE 24)	24-10C	1	202
	24-10S	1	229
	24-12X	1	239
	24-13	1	188
G4 (TYPE 18) G5,G6	18-8S	1	187
	18-9X	1	187
	18-10	1	149
GT1,GT2	18-8S	2	374
	18-9X	2	374
	18-10	2	298
GT3,GT4	24-10C	2	404
	24-10S	2	458
	24-12X	2	478
	24-13	2	376
ODI	36RX (Mod)	1	196
GMP,GCP,GCPI	36RX	1	215
ODI	36R (Mod)	1	220
GMP,GCP,GCPI	36R	1	236
TRASH RACK			22
GRATE CHAIN			3

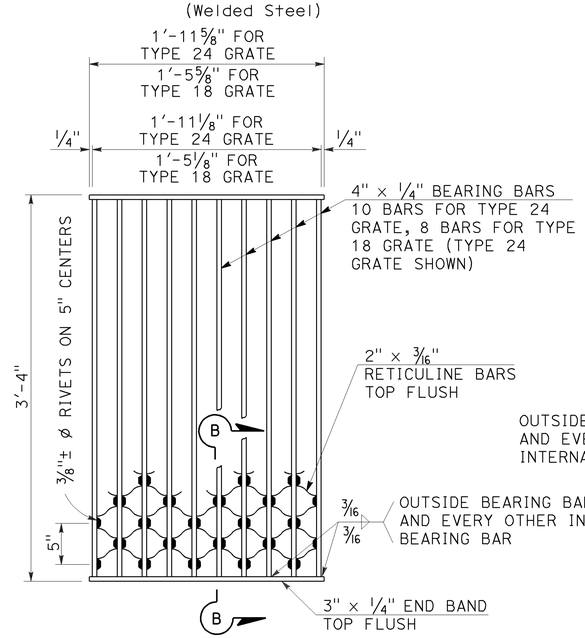

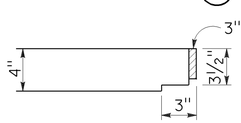

NOTES:

Weight of Type 24 grate = 182 LBS.
Weight of Type 18 grate = 145 LBS.

SECTION B-B

TYPE 18-8S AND 24-10S GRATE

(Welded Steel) Reticuline type

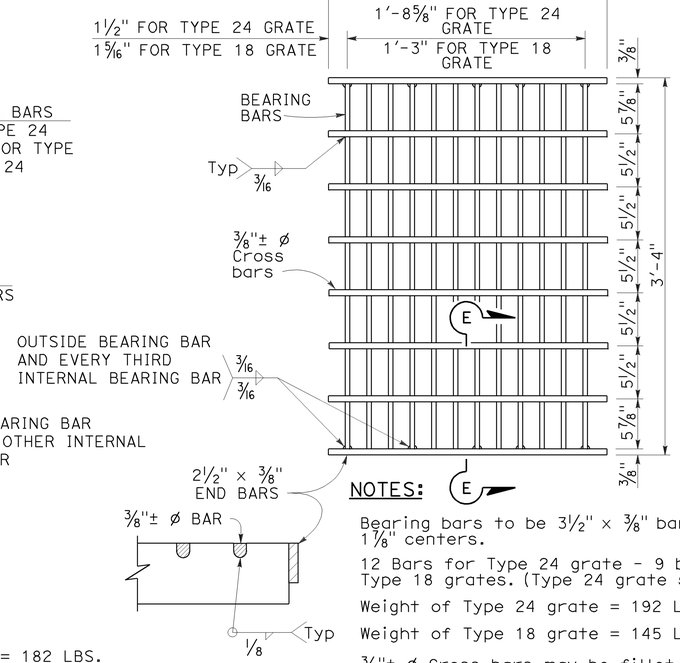

SECTION E-E

NOTES:

Bearing bars to be 3½" × ⅜" bars on 1⅞" centers.

12 Bars for Type 24 grate - 9 bars for Type 18 grates. (Type 24 grate shown).

Weight of Type 24 grate = 192 LBS.

Weight of Type 18 grate = 145 LBS.

⅜"± ø Cross bars may be fillet welded, resistance welded or electroforged to bearing bars.

TYPE 18-9X AND 24-12X GRATE

(Welded Steel)

GRATE BAR SPACING TABLE

TYPE	No. OF BARS	CLEAR BAR SPACING	X	Y 4" SPACING	Y 6" SPACING	Z
36R	13	2"	2⅛"	-	-	-
36RX (STEEL)	15	2"	9/16"	3¾"	5¾"	-
36RX (CAST)	13	2"	2⅛"	3¾"	5¾"	-
36R Mod	12	2"	2⅛"	-	-	5"
36RX Mod (STEEL)	13	2"	9/16"	3¾"	5¾"	5 11/16"
36RX Mod (CAST)	12	2"	2⅛"	3¾"	5¾"	5"

STATE OF CALIFORNIA
DEPARTMENT OF TRANSPORTATION

GRATE DETAILS No. 2

NO SCALE

RSP D77B DATED APRIL 19, 2013 SUPERSEDES RSP D77B DATED JULY 20, 2012 AND STANDARD PLAN D77B DATED MAY 20, 2011 - PAGE 165 OF THE STANDARD PLANS BOOK DATED 2010.

REVISED STANDARD PLAN RSP D77B

4-4-13

Dist	COUNTY	ROUTE	POST MILES TOTAL PROJECT	SHEET No.	TOTAL SHEETS
11	SD	67	R0.0/R5.9	179	204

REGISTERED CIVIL ENGINEER

July 19, 2013
PLANS APPROVAL DATE

REGISTERED PROFESSIONAL ENGINEER
Gurinderpal Bhullar
No. C48815
Exp. 9-30-14
CIVIL
STATE OF CALIFORNIA

THE STATE OF CALIFORNIA OR ITS OFFICERS OR AGENTS SHALL NOT BE RESPONSIBLE FOR THE ACCURACY OR COMPLETENESS OF SCANNED COPIES OF THIS PLAN SHEET.

TO ACCOMPANY PLANS DATED 07-28-14

2010 REVISED STANDARD PLAN RSP T9

TABLE 1

TAPER LENGTH CRITERIA AND CHANNELIZING DEVICE SPACING

SPEED (S)	MINIMUM TAPER LENGTH * FOR WIDTH OF OFFSET 12 FEET (W)				MAXIMUM CHANNELIZING DEVICE SPACING		
					X	Y	Z **
	TANGENT 2L	MERGING L	SHIFTING L/2	SHOULDER L/3	TAPER	TANGENT	CONFLICT
mph	ft	ft	ft	ft	ft	ft	ft
20	160	80	40	27	20	40	10
25	250	125	63	42	25	50	12
30	360	180	90	60	30	60	15
35	490	245	123	82	35	70	17
40	640	320	160	107	40	80	20
45	1080	540	270	180	45	90	22
50	1200	600	300	200	50	100	25
55	1320	660	330	220	55	110	27
60	1440	720	360	240	60	120	30
65	1560	780	390	260	65	130	32
70	1680	840	420	280	70	140	35

* - For other offsets, use the following merging taper length formula for L:
For speed of 40 mph or less, $L = WS^2/60$
For speed of 45 mph or more, $L = WS$

Where: L = Taper length in feet
W = Width of offset in feet
S = Posted speed limit, off-peak 85th-percentile speed prior to work starting, or the anticipated operating speed in mph

** - Use for taper and tangent sections where there are no pavement markings or where there is a conflict between existing pavement markings and channelizers (CA).

TABLE 2

LONGITUDINAL BUFFER SPACE AND FLAGGER STATION SPACING

SPEED *	Min D **	DOWNGRADE Min D ***		
		-3%	-6%	-9%
mph	ft	ft	ft	ft
20	115	116	120	126
25	155	158	165	173
30	200	205	215	227
35	250	257	271	287
40	305	315	333	354
45	360	378	400	427
50	425	446	474	507
55	495	520	553	593
60	570	598	638	686
65	645	682	728	785
70	730	771	825	891

* - Speed is posted speed limit, off-peak 85th-percentile speed prior to work starting, or the anticipated operating speed in mph

** - Longitudinal buffer space or flagger station spacing

*** - Use on sustained downgrade steeper than -3 percent and longer than 1 mile.

TABLE 3

ADVANCE WARNING SIGN SPACING

ROAD TYPE	DISTANCE BETWEEN SIGNS *		
	A	B	C
	ft	ft	ft
URBAN - 25 mph OR LESS	100	100	100
URBAN - MORE THAN 25 mph TO 40 mph	250	250	250
URBAN - MORE THAN 40 mph	350	350	350
RURAL	500	500	500
EXPRESSWAY / FREEWAY	1000	1500	2640

* - The distances are approximate, are intended for guidance purposes only, and should be applied with engineering judgment. These distances should be adjusted by the Engineer for field conditions, if necessary, by increasing or decreasing the recommmended distances.

STATE OF CALIFORNIA
DEPARTMENT OF TRANSPORTATION

TRAFFIC CONTROL SYSTEM TABLES FOR LANE AND RAMP CLOSURES

NO SCALE

RSP T9 DATED JULY 19, 2013 SUPERSEDES RSP T9 DATED APRIL 19, 2013 THAT SUPPLEMENTS THE STANDARD PLANS BOOK DATED 2010.

REVISED STANDARD PLAN RSP T9

Dist	COUNTY	ROUTE	POST MILES TOTAL PROJECT	SHEET No.	TOTAL SHEETS
11	SD	67	R0.0/R5.9	180	204

REGISTERED CIVIL ENGINEER

April 19, 2013
PLANS APPROVAL DATE

REGISTERED PROFESSIONAL ENGINEER Gurinderpal Bhullar No. C48815 Exp. 9-30-14 CIVIL STATE OF CALIFORNIA

THE STATE OF CALIFORNIA OR ITS OFFICERS OR AGENTS SHALL NOT BE RESPONSIBLE FOR THE ACCURACY OR COMPLETENESS OF SCANNED COPIES OF THIS PLAN SHEET.

TO ACCOMPANY PLANS DATED 07-28-14

NOTES:

See Revised Standard Plan RSP T9 for tables.

Use cone spacing X for taper segment, Y for tangent segment or Z for conflict situations, as approriate, per Table 1, unless X, Y, or Z cone spacing is shown on this sheet.

Unless otherwise specified in the special provisions, all temporary warning signs shall have black legend on fluorescent orange background.

California codes are designated by (CA). Otherwise, Federal (MUTCD) codes are shown.

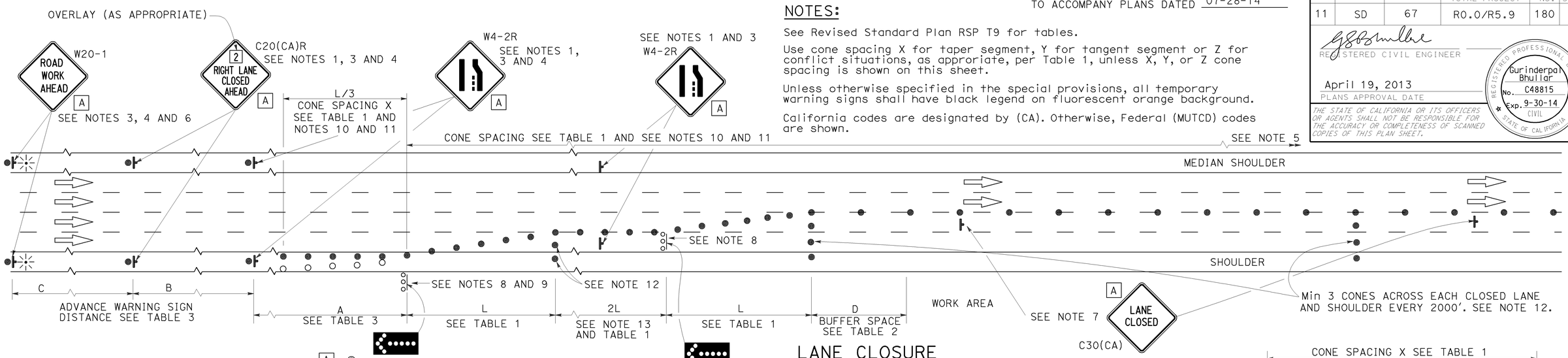

LANE CLOSURE

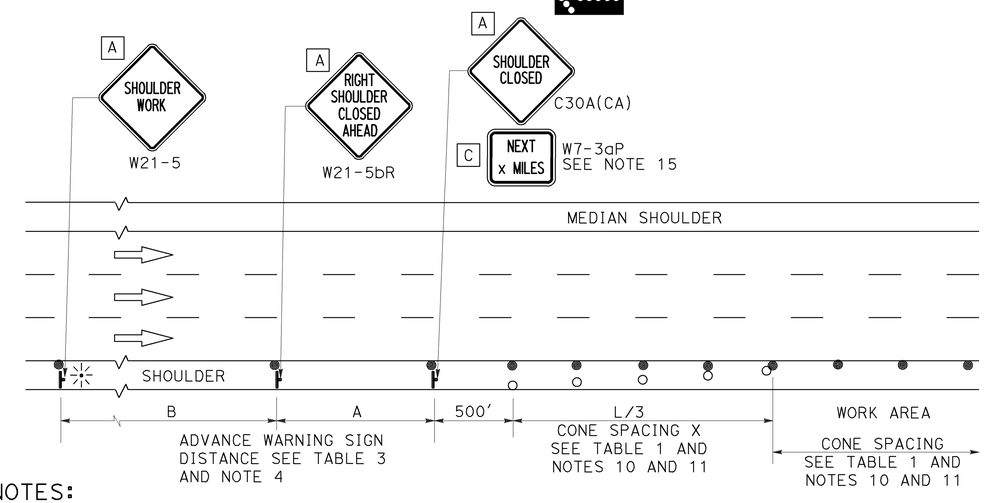

SHOULDER CLOSURE

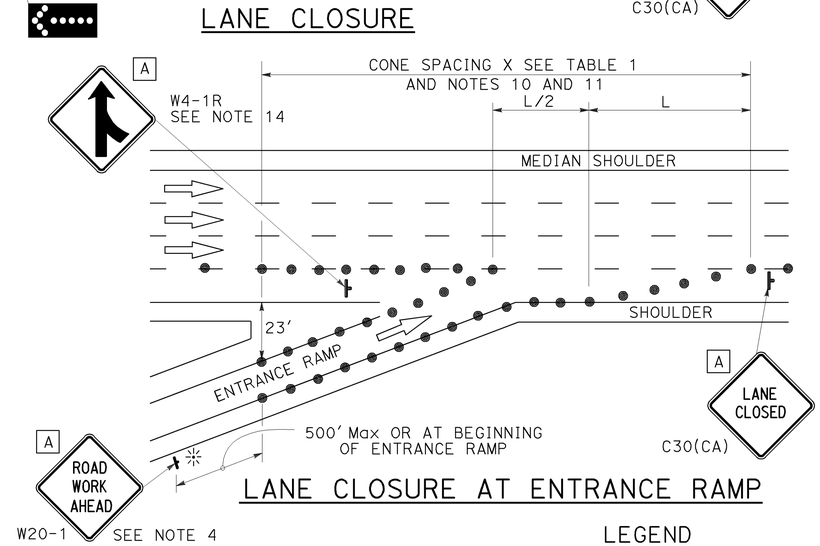

LANE CLOSURE AT ENTRANCE RAMP

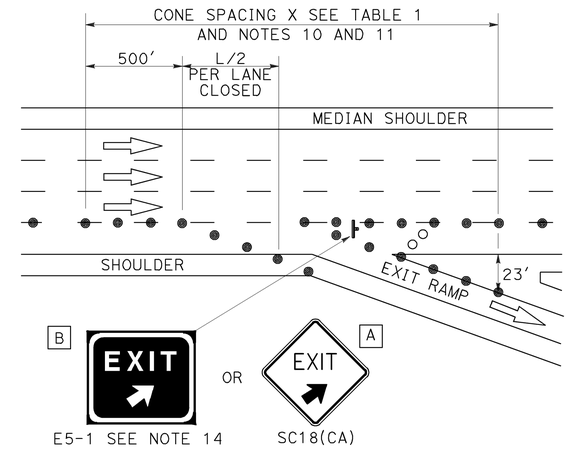

LANE CLOSURE AT EXIT RAMP

NOTES:

1. Median lane closures shall conform to the details as shown except that C20(CA)L and W4-2L signs shall be used.
2. At least one person shall be assigned to provide full time maintenance of traffic control devices for lane closures.
3. Duplicate sign installations are not required:
   a) On opposite shoulder if at least one-half of the available lanes remain open to traffic.
   b) In the median if the width of the median shoulder is less than 8' and the outside lanes are to be closed.
4. Each advance warning sign on each side of the roadway shall be equipped with at least two flags for daytime closure. Each flag shall be at least 16" x 16" in size and shall be orange or fluorescent red-orange in color. Flashing beacons shall be placed at the locations indicated for lane closure during hours of darkness.
5. A G20-2 "END ROAD WORK" sign, with minimum size of 48" x 24" as appropriate, shall be placed at the end of the lane closure unless the end of work area is obvious or ends within a larger project's limits.
6. If the W20-1 sign would follow within 2000' of a stationary W20-1 or G20-1 "ROAD WORK NEXT _____ MILES", use a C20(CA) sign for the first advance warning sign.
7. Place a C30(CA) sign every 2000' throughout length of lane closure.
8. One flashing arrow sign for each lane closed. The flashing arrow signs shall be Type I.
9. A minimum 1500' of sight distance shall be provided where possible for vehicles approaching the first flashing arrow sign. Lane closures shall not begin at top of crest vertical curve or on a horizontal curve.
10. All cones used for lane closures during the hours of darkness shall be fitted with retroreflective bands (or sleeves) as specified in the specifications.
11. Portable delineators, placed at one-half the spacing indicated for traffic cones may be used instead of cones for daytime closures only.
12. Unless otherwise specified in the special provisions, a minimum of 3 cones shall be placed transversely across each closed lane and shoulder at each location where a taper across a traffic lane ends and every 2000' as shown on the "Lane Closure" detail. Two Type II barricades may be used instead of the 3 cones. The transverse alignment of the cones or barricades on the closed shoulder may be shifted from the transverse alignment to provide access to the work.
13. Unless otherwise specified in the special provisions, the 2L tangent shown along lane lines shall be used between the L tapers required for each closed traffic lane.
14. Unless otherwise specified in the special provisions, the E5-1 or SC18(CA) and W4-1 signs shall be used as shown.
15. A W7-3aP "NEXT____ MILES" plaque must be used if theshoulder closure extends beyond the distance that can be perceived by road users.

LEGEND

- TRAFFIC CONE
- TRAFFIC CONE (OPTIONAL TAPER)
- TEMPORARY TRAFFIC CONTROL SIGN
- FLASHING ARROW SIGN (FAS)
- FAS SUPPORT OR TRAILER
- PORTABLE FLASHING BEACON

SIGN PANEL SIZE (Min)

A	48" x 48"
B	72" x 60"
C	36" x 30"

STATE OF CALIFORNIA
DEPARTMENT OF TRANSPORTATION

TRAFFIC CONTROL SYSTEM FOR LANE CLOSURE ON FREEWAYS AND EXPRESSWAYS

NO SCALE

RSP T10 DATED APRIL 19, 2013 SUPERSEDES STANDARD PLAN T10 DATED MAY 20, 2011 - PAGE 237 OF THE STANDARD PLANS BOOK DATED 2010.

REVISED STANDARD PLAN RSP T10

2010 REVISED STANDARD PLAN RSP T10

12-18-12

TO ACCOMPANY PLANS DATED 07-28-14

Dist	COUNTY	ROUTE	POST MILES TOTAL PROJECT	SHEET No.	TOTAL SHEETS
11	SD	67	R0.0/R5.9	181	204

REGISTERED CIVIL ENGINEER

April 19, 2013
PLANS APPROVAL DATE

REGISTERED PROFESSIONAL ENGINEER Gurinderpal Bhullar No. C48815 Exp. 9-30-14 CIVIL STATE OF CALIFORNIA

THE STATE OF CALIFORNIA OR ITS OFFICERS OR AGENTS SHALL NOT BE RESPONSIBLE FOR THE ACCURACY OR COMPLETENESS OF SCANNED COPIES OF THIS PLAN SHEET.

NOTES: See Revised Standard Plan RSP T9 for tables.

Use cone spacing X for taper segment, Y for tangent segment or Z for conflict situations, as approriate, per Table 1, unless X, Y, or Z cone spacing is shown on this sheet.

Unless otherwise specified in the special provisions, all temporary warning signs shall have black legend on fluorescent orange background.

California codes are designated by (CA). Otherwise, Federal (MUTCD) codes are shown.

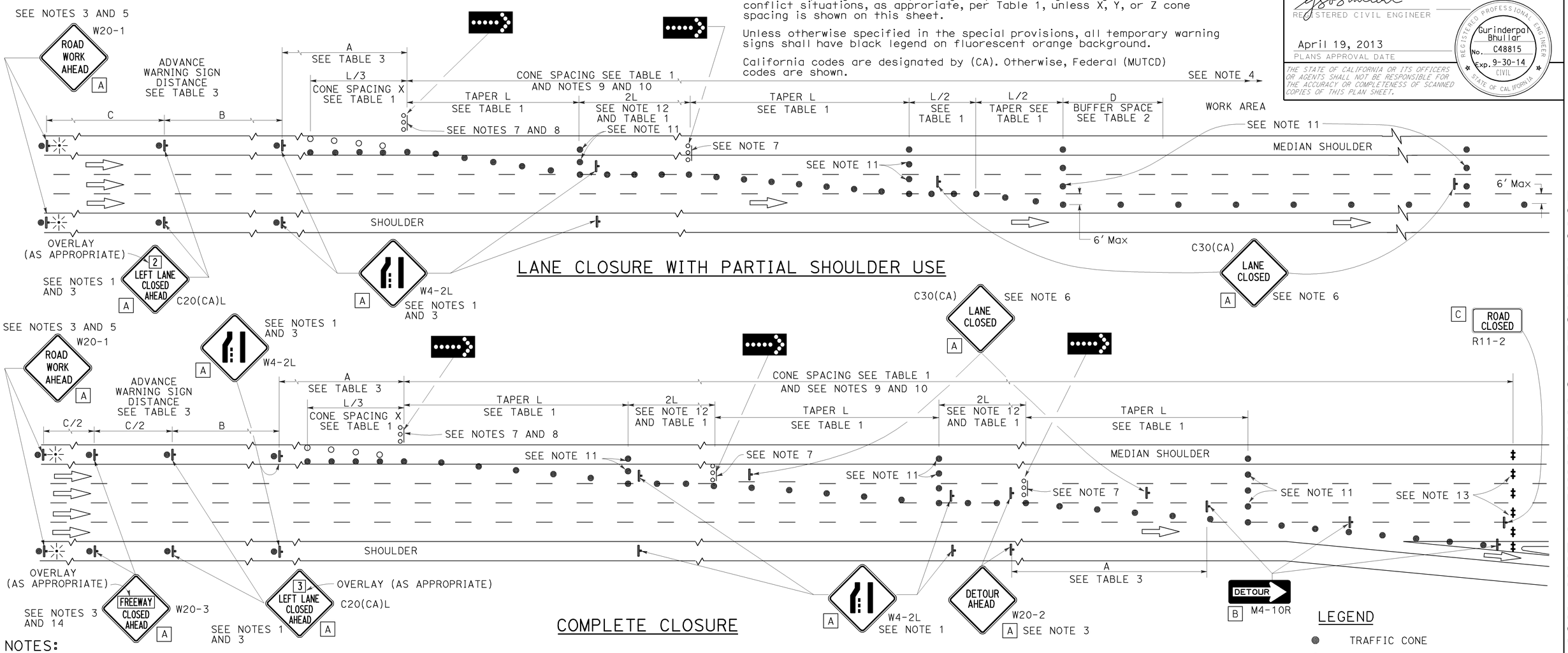

LANE CLOSURE WITH PARTIAL SHOULDER USE

COMPLETE CLOSURE

NOTES:

1. Lane closures on the right side using partial median shoulder as a traffic lane shall conform to the details as shown except that C20(CA)R and W4-2R signs shall be used.
2. At least one person shall be assigned to provide full time maintenance of traffic control devices for lane closures.
3. Each advance warning sign on each side of the roadway shall be equipped with at least two flags for daytime closure. Each flag shall be at least 16" X 16" in size and shall be orange or fluorescent red-orange in color. Flashing beacons shall be placed at the locations indicated for lane closure during hours of darkness.
4. A G20-2 "END ROAD WORK" sign, with minimum size of 48" x 24" as appropriate, shall be placed at the end of the lane closure unless the end of work area is obvious or ends within a larger project's limits.
5. If the W20-1 sign would follow within 2000' of a stationary W20-1 or G20-1 "ROAD WORK NEXT ___ MILES", use a C20(CA) sign for the first advance warning sign.
6. Place a C30(CA) sign every 2000' throughout length of lane closure.
7. One flashing arrow sign for each lane closed. The flashing arrow signs shall be Type I.
8. A minimum 1500' of sight distance shall be provided where possible for vehicles approaching the first flashing arrow sign. Lane closures shall not begin at the top of crest vertical curve or on a horizontal curve.
9. All cones used for lane closures during the hours of darkness shall be fitted with retroreflective bands (or sleeves) as specified in the specifications.
10. Portable delineators, placed at one-half the spacing indicated for traffic cones, may be used instead of cones for daytime closures only.
11. Unless otherwise specified in the special provisions, a minimum of 3 cones shall be placed transversely across each closed lane and shoulder at each location where a taper across a traffic lane ends and every 2000' as shown on the "Lane Closure With Partial Shoulder Use" detail. Two Type II barricades may be used instead of the 3 cones. The transverse alignment of the cones or barricades on the closed shoulder may be shifted from the transverse alignment to provide access to the work.
12. Unless otherwise specified in the special provisions, the 2L tangent shown along lane lines shall be used between the L tapers required for each closed traffic lane.
13. A minimum of Two Type II or III barricades shall be placed across each closed lane and shoulder at the location shown and every 2000' within the complete closure area. Within the complete closure area, the transverse alignment of the barricades on the closed shoulder may be shifted from the transverse alignment to provide access to the work.
14. When specified in the special provisions, a W20-2 "DETOUR AHEAD" sign is to be used in place of the W20-3 "FREEWAY CLOSED AHEAD" sign.

SIGN PANEL SIZE (Min)

A	48" x 48"
B	48" x 18"
C	48" x 30"

LEGEND

- TRAFFIC CONE
- TRAFFIC CONE (OPTIONAL TAPER)
- TEMPORARY TRAFFIC CONTROL SIGN
- FLASHING ARROW SIGN (FAS)
- FAS SUPPORT OR TRAILER
- PORTABLE FLASHING BEACON

STATE OF CALIFORNIA
DEPARTMENT OF TRANSPORTATION

TRAFFIC CONTROL SYSTEM FOR LANE CLOSURES ON FREEWAYS AND EXPRESSWAYS

NO SCALE

RSP T10A DATED APRIL 19, 2013 SUPERSEDES STANDARD PLAN T10A DATED MAY 20, 2011 - PAGE 238 OF THE STANDARD PLANS BOOK DATED 2010.

REVISED STANDARD PLAN RSP T10A

2010 REVISED STANDARD PLAN RSP T10A

12-18-12

Dist	COUNTY	ROUTE	POST MILES TOTAL PROJECT	SHEET No.	TOTAL SHEETS
11	SD	67	R0.0/R5.9	182	204

REGISTERED CIVIL ENGINEER

April 19, 2013
PLANS APPROVAL DATE

REGISTERED PROFESSIONAL ENGINEER
Gurinderpal Bhullar
No. C48815
Exp. 9-30-14
CIVIL
STATE OF CALIFORNIA

THE STATE OF CALIFORNIA OR ITS OFFICERS OR AGENTS SHALL NOT BE RESPONSIBLE FOR THE ACCURACY OR COMPLETENESS OF SCANNED COPIES OF THIS PLAN SHEET.

TO ACCOMPANY PLANS DATED 07-28-14

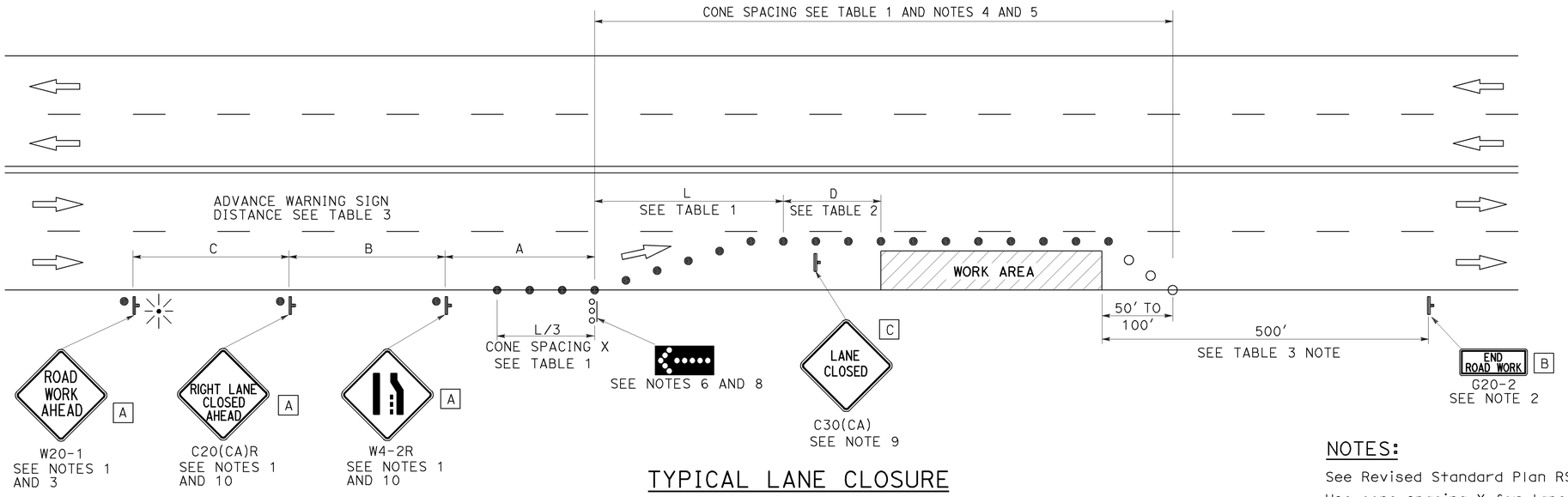

TYPICAL LANE CLOSURE

NOTES:

See Revised Standard Plan RSP T9 for tables.

Use cone spacing X for taper segment, Y for tangent segment or Z for conflict situations, as approriate, per Table 1, unless X, Y, or Z cone spacing is shown on this sheet.

Unless otherwise specified in the special provisions, all temporary warning signs shall have black legend on fluorescent orange background.

California codes are designated by (CA). Otherwise, Federal (MUTCD) codes are shown.

NOTES:

1. Each advance warning sign shall be equipped with at least two flags for daytime closure. Each flag shall be at least 16" x 16" in size and shall be orange or fluorescent red-orange in color. Flashing beacons shall be placed at the locations indicated for lane closure during hours of darkness.
2. A G20-2 "END ROAD WORK" sign, as appropriate, shall be placed at the end of the lane closure unless the end of work area is obvious, or ends within a larger project's limits.
3. If the W20-1 sign would follow within 2000' of a stationary W20-1 or G20-1 "ROAD WORK NEXT _____ MILES", use a C20(CA) sign for the first advance warning sign.
4. All cones used for lane closures during the hours of darkness shall be fitted with retroreflective bands (or sleeves) as specified in the specifications.
5. Portable delineators, placed at one-half the spacing indicated for traffic cones, may be used instead of cones for daytime closures only.
6. Flashing arrow sign shall be either Type I or Type II.
7. For approach speeds over 50 mph, use the "Traffic Control System for Lane Closure On Freeways And Expressways" plan for lane closure details and requirements.
8. A minimum 1500' of sight distance shall be provided where possible for vehicles approaching the first flashing arrow sign. Lane closures shall not begin at the top of crest vertical curve or on a horizontal curve.
9. Place a C30(CA) sign every 2000' throughout length of lane closure.
10. Median lane closures shall conform to the details as shown except that C20(CA)L and W4-2L signs shall be used.
11. At least one person shall be assigned to provide full time maintenance of traffic control devices for lane closure unless, otherwise directed by the Engineer.

LEGEND

- TRAFFIC CONE
- TRAFFIC CONE (OPTIONAL TAPER)
- TEMPORARY TRAFFIC CONTROL SIGN
- FLASHING ARROW SIGN (FAS)
- FAS SUPPORT OR TRAILER
- PORTABLE FLASHING BEACON

SIGN PANEL SIZE (Min)

A	48" x 48"
B	36" x 18"
C	30" x 30"

STATE OF CALIFORNIA
DEPARTMENT OF TRANSPORTATION

TRAFFIC CONTROL SYSTEM FOR LANE CLOSURE ON MULTILANE CONVENTIONAL HIGHWAYS

NO SCALE

RSP T11 DATED APRIL 19, 2013 SUPERSEDES STANDARD PLAN T11 DATED MAY 20, 2011 - PAGE 239 OF THE STANDARD PLANS BOOK DATED 2010.

REVISED STANDARD PLAN RSP T11

2010 REVISED STANDARD PLAN RSP T11

4-2-13

Dist	COUNTY	ROUTE	POST MILES TOTAL PROJECT	SHEET No.	TOTAL SHEETS
11	SD	67	R0.0/R5.9	183	204

REGISTERED CIVIL ENGINEER

July 18, 2014
PLANS APPROVAL DATE

REGISTERED PROFESSIONAL ENGINEER Gurinderpal Bhullar No. C48815 Exp. 9-30-14 CIVIL STATE OF CALIFORNIA

THE STATE OF CALIFORNIA OR ITS OFFICERS OR AGENTS SHALL NOT BE RESPONSIBLE FOR THE ACCURACY OR COMPLETENESS OF SCANNED COPIES OF THIS PLAN SHEET.

TO ACCOMPANY PLANS DATED 07-28-14

NOTES:

See Revised Standard Plan RSP T9 for tables.

Use cone spacing X for taper segment, Y for tangent segment or Z for conflict situations, as approriate, per Table 1, unless X, Y, or Z cone spacing is shown on this sheet.

Unless otherwise specified in the special provisions, all temporary warning signs shall have black legend on fluorescent orange background.

California codes are designated by (CA). Otherwise, Federal (MUTCD) codes are shown.

TYPICAL LANE CLOSURE WITH REVERSIBLE CONTROL

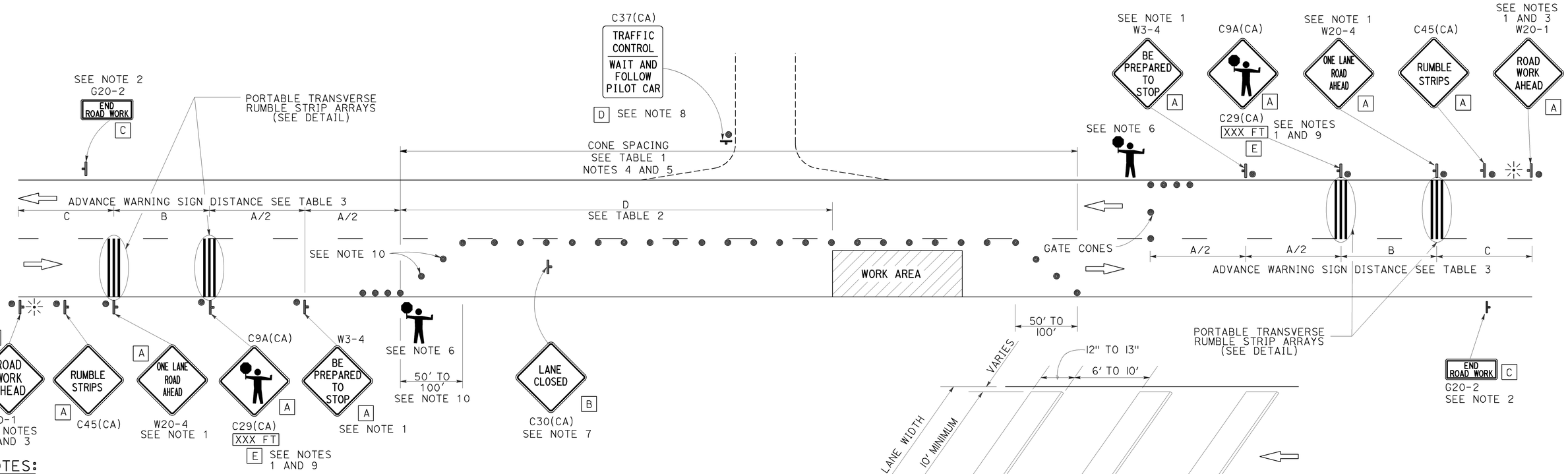

PORTABLE TRANSVERSE RUMBLE STRIP ARRAY DETAIL

NOTES:

1. Each advance warning sign in each direction of travel shall be equipped with at least two flags for daytime closure. Each flag shall be at least 16" x 16" in size and shall be orange or fluorescent red-orange in color. Flashing beacons shall be placed at the locations indicated for lane closure during hours of darkness.
2. A G20-2 "END ROAD WORK" sign, as appropriate, shall be placed at the end of the lane control unless the end of work area is obvious, or ends within a larger project's limits.
3. If the W20-1 sign would follow within 2000' of a stationary W20-1 or G20-1 "ROAD WORK NEXT _____ MILES", use a W20-4 sign for the first advance warning sign.
4. All cones used for lane closures during the hours of darkness shall be fitted with retroreflective bands (or sleeves) as specified in the specifications.
5. Portable delineators, placed at one-half the spacing indicated for traffic cones, may be used instead of cones for daytime closures only.
6. Additional advance flaggers may be required. Flagger should stand in a conspicuous place, be visible to approaching traffic as well as approaching vehicles after the first vehicle has stopped. During the hours of darkness, the flagging-station and flagger shall be illuminated and clearly visible to approaching traffic. The illumination footprint of the lighting on the ground shall be at least 20' in diameter. Place a minimum of four cones at 50' intervals in advance of flagger station as shown.
7. Place C30(CA) "LANE CLOSED" sign at 500' to 1000' intervals throughout extended work areas. They are optional if the work area is visible from the flagger station.
8. When a pilot car is used, place a C37(CA) "TRAFFIC CONTROL-WAIT AND FOLLOW PILOT CAR" sign with black legend on white background at all intersections, driveways and alleys without a flagger within traffic control area. Signs shall be clean and visible at all times. Where traffic can not be effectively self-regulated, at least one flagger shall be used at each intersection within traffic control area.
9. An optional C29(CA) sign may be placed below the C9A(CA) sign.
10. Either traffic cones or barricades shall be placed on the taper. Barricades shall be Type I, II, or III.
11. The color of the portable transverse rumble strips shall be black or orange. Use 2 arrays, each array shall consist of 3 rumble strips.
12. Portable transverse rumble strips shall not be placed on sharp horizontal or vertical curves nor shall they be placed through pedestrian crossings.
13. If the portable transverse rumble strips become out of alignment (skewed) by more than 6 inches, measured from one end to the other, they shall be readjusted to bring the placement back to the original location.

LEGEND

- TRAFFIC CONE
- TEMPORARY TRAFFIC CONTROL SIGN
- PORTABLE FLASHING BEACON
- FLAGGER

SIGN PANEL SIZE (Min)

A	48" x 48"
B	30" x 30"
C	36" x 18"
D	36" x 42"
E	20" x 7"

STATE OF CALIFORNIA
DEPARTMENT OF TRANSPORTATION

TRAFFIC CONTROL SYSTEM FOR LANE CLOSURE ON TWO LANE CONVENTIONAL HIGHWAYS

NO SCALE

RSP T13 DATED JULY 18, 2014 SUPERSEDES RSP T13 DATED APRIL 19, 2013 AND STANDARD PLAN T13 DATED MAY 20, 2011 - PAGE 241 OF THE STANDARD PLANS BOOK DATED 2010.

REVISED STANDARD PLAN RSP T13

2010 REVISED STANDARD PLAN RSP T13

6-19-14

Dist	COUNTY	ROUTE	POST MILES TOTAL PROJECT	SHEET No.	TOTAL SHEETS
11	SD	67	R0.0/R5.9	184	204

REGISTERED CIVIL ENGINEER

April 19, 2013
PLANS APPROVAL DATE

REGISTERED PROFESSIONAL ENGINEER Gurinderpal Bhullar No. C48815 Exp. 9-30-14 CIVIL STATE OF CALIFORNIA

THE STATE OF CALIFORNIA OR ITS OFFICERS OR AGENTS SHALL NOT BE RESPONSIBLE FOR THE ACCURACY OR COMPLETENESS OF SCANNED COPIES OF THIS PLAN SHEET.

TO ACCOMPANY PLANS DATED 07-28-14

TYPICAL RAMP CLOSURES

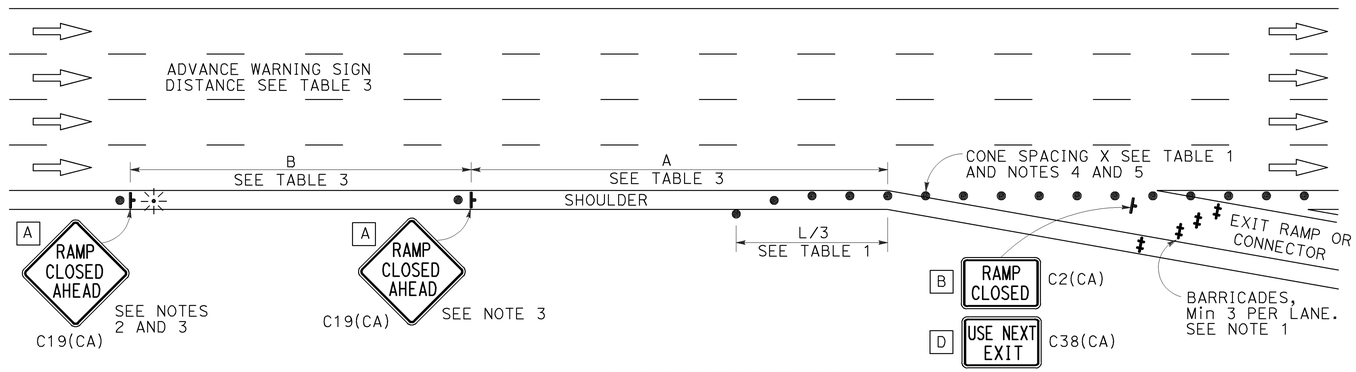

EXIT RAMP OR CONNECTOR

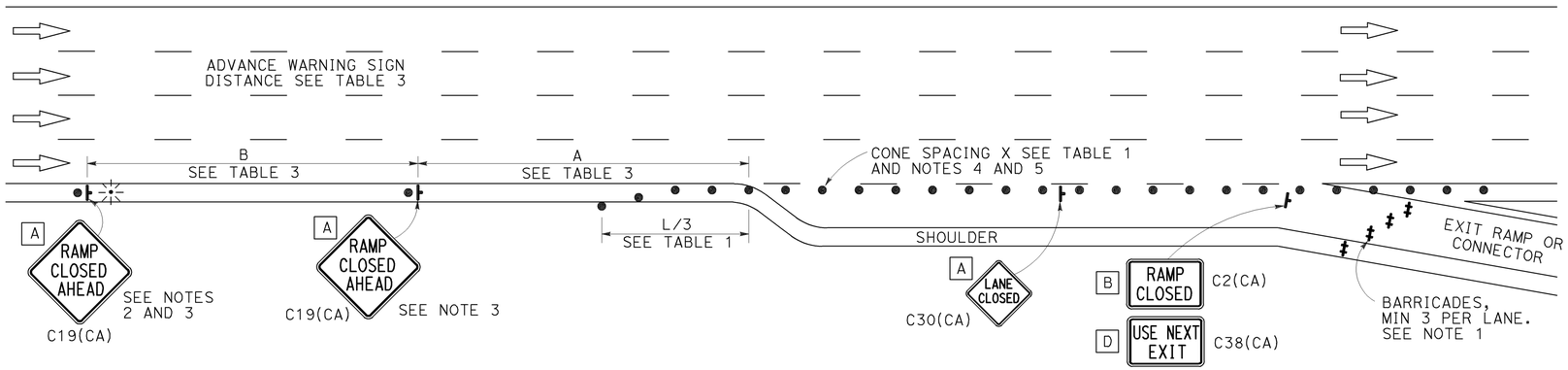

EXIT RAMP OR CONNECTOR WITH ADDITIONAL LANE

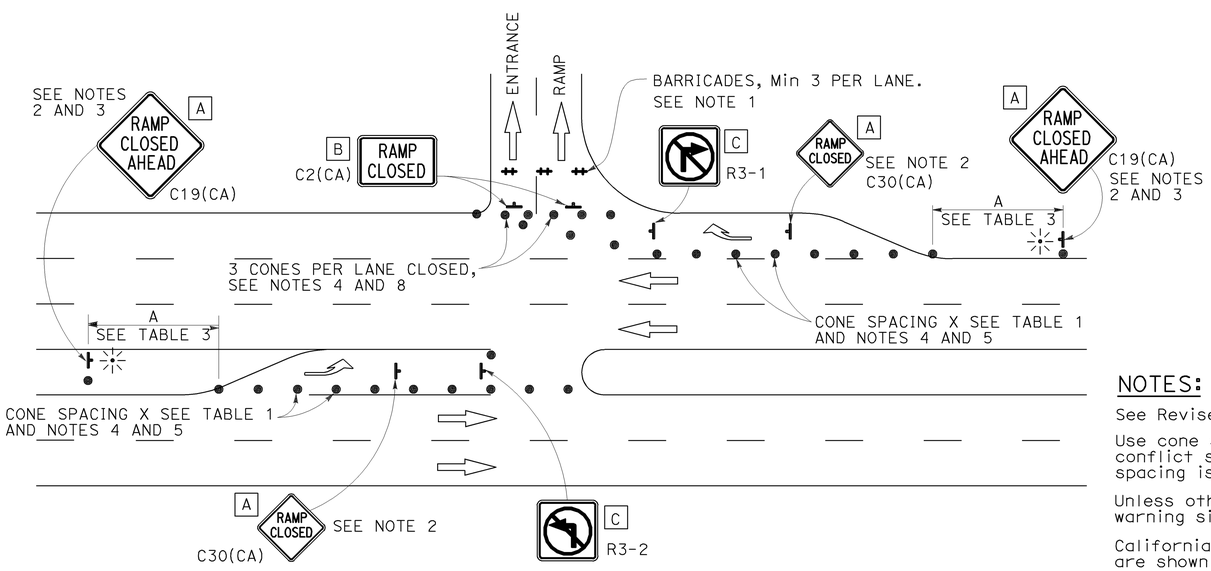

ENTRANCE RAMP WITH TURNING POCKETS

SIGN PANEL SIZE (Min)

- A 48" × 48"
- B 48" × 30"
- C 36" × 36"
- D 48" × 36"

LEGEND

- TRAFFIC CONE
- TEMPORARY TRAFFIC CONTROL SIGN
- BARRICADES
- PORTABLE FLASHING BEACON

NOTES:

1. Barricades shall be Type I, II, or III for closures lasting one week or less and Type III for closures lasting longer than one week.
2. In addition to placing the C19(CA) "RAMP CLOSED AHEAD" and C30(CA) "RAMP CLOSED" signs, black on orange overlay plates with the word "CLOSED" may be mounted, as directed by the Engineer, on all guide signs that refer to the closed ramp. The letter size on the overlay shall be the same as the guide sign.
3. Each advance C19(CA) "RAMP CLOSED AHEAD" sign shall be equipped with at least two flags for daytime closure. Each flag shall be at least 16" × 16" in size and shall be orange or fluorescent red-orange in color. A flashing beacon shall be placed on top of the first C19(CA) sign during hours of darkness.
4. All cones used for ramp closures during the hours of darkness shall be fitted with retroreflective bands (or sleeves) as specified in the specifications.
5. Portable delineators, placed at one-half the spacing indicated for traffic cones, may be used instead of cones for daytime ramp closures only.
6. At least one person shall be assigned to provide full time maintenance of traffic control devices, unless otherwise directed by the Engineer.
7. The existing "EXIT" signs shall be covered during ramp closures.
8. A minimum of 3 cones shall be placed transversely across each closed lane and shoulder.

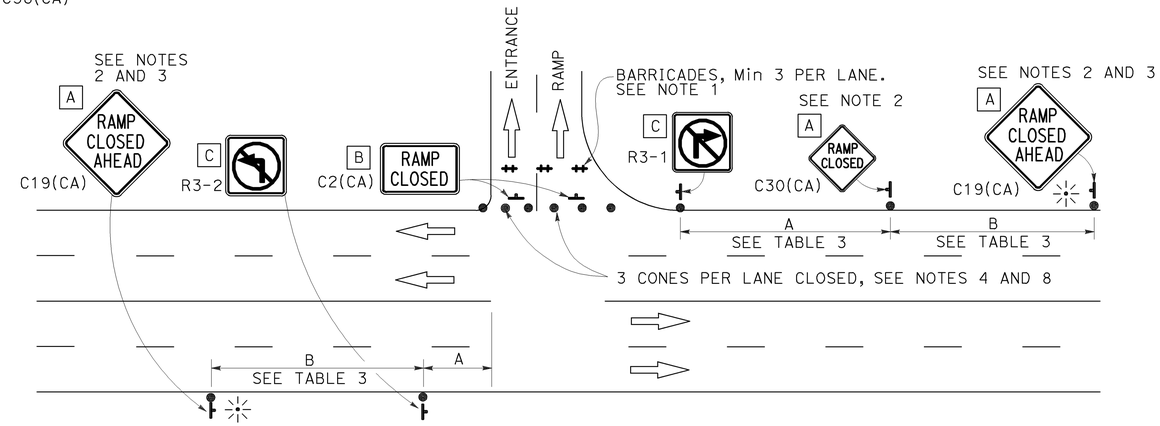

ENTRANCE RAMP WITHOUT TURNING POCKETS

NOTES:

See Revised Standard Plan RSP T9 for tables.

Use cone spacing X for taper segment, Y for tangent segment or Z for conflict situations, as approriate, per Table 1, unless X, Y, or Z cone spacing is shown on this sheet.

Unless otherwise specified in the special provisions, all temporary warning signs shall have black legend on fluorescent orange background.

California codes are designated by (CA). Otherwise, Federal (MUTCD) codes are shown.

STATE OF CALIFORNIA
DEPARTMENT OF TRANSPORTATION

TRAFFIC CONTROL SYSTEM FOR RAMP CLOSURE

NO SCALE

RSP T14 DATED APRIL 19, 2013 SUPERSEDES STANDARD PLAN T14
DATED MAY 20, 2011 - PAGE 242 OF THE STANDARD PLANS BOOK DATED 2010.

REVISED STANDARD PLAN RSP T14

2010 REVISED STANDARD PLAN RSP T14

12-18-12

Dist	COUNTY	ROUTE	POST MILES TOTAL PROJECT	SHEET No.	TOTAL SHEETS
11	SD	67	R0.0/R5.9	185	204

Theresa Gabriel
REGISTERED ELECTRICAL ENGINEER

July 19, 2013
PLANS APPROVAL DATE

REGISTERED PROFESSIONAL ENGINEER
Theresa Aziz Gabriel
No. E15129
Exp. 6-30-14
ELECTRICAL
STATE OF CALIFORNIA

THE STATE OF CALIFORNIA OR ITS OFFICERS OR AGENTS SHALL NOT BE RESPONSIBLE FOR THE ACCURACY OR COMPLETENESS OF SCANNED COPIES OF THIS PLAN SHEET.

TO ACCOMPANY PLANS DATED 07-28-14

LEGEND:

AB	ABANDON. IF APPLIED TO CONDUIT, REMOVE CONDUCTORS
BC	INSTALL PULL BOX IN EXISTING CONDUIT RUN
BP	PEDESTRIAN BARRICADE, TYPE AS INDICATED ON PLAN
CB	INSTALL CONDUIT INTO EXISTING PULL BOX
CC	CONNECT NEW AND EXISTING CONDUIT. REMOVE EXISTING CONDUCTORS AND INSTALL CONDUCTORS AS INDICATED
CF	CONDUIT TO REMAIN FOR FUTURE USE. REMOVE CONDUCTORS. INSTALL PULL TAPE
DH	DETECTOR HANDHOLE
FA	FOUNDATION TO BE ABANDONED
IS	INSTALL SIGN ON SIGNAL MAST ARM
NS	NO SLIP BASE ON STANDARD
PEC	PHOTOELECTRIC CONTROL
PEU	PHOTOELECTRIC UNIT
RC	EQUIPMENT OR MATERIAL TO BE REMOVED AND BECOME THE PROPERTY OF THE CONTRACTOR
RE	REMOVE ELECTROLIER, FUSES AND BALLAST. TAPE ENDS OF CONDUCTORS
RL	RELOCATE EQUIPMENT
RR	REMOVE AND REUSE EQUIPMENT
RS	REMOVE AND SALVAGE EQUIPMENT
SC	SPLICE NEW TO EXISTING CONDUCTORS
SD	SERVICE DISCONNECT
TSP	TELEPHONE SERVICE POINT

ABBREVIATIONS

APS	ACCESSIBLE PEDESTRIAN SIGNAL
BBS	BATTERY BACKUP SYSTEM
BC	BOLT CIRCLE
BPB	BICYCLE PUSH BUTTON
C	CONDUIT
CB	CIRCUIT BREAKER
CCTV	CLOSED CIRCUIT TELEVISION
Ckt	CIRCUIT
CMS	CHANGEABLE MESSAGE SIGN
Ctid	CALTRANS IDENTIFICATION
Comm	COMMUNICATION
DLC	LOOP DETECTOR LEAD-IN CABLE
EMS	EXTINGUISHABLE MESSAGE SIGN
EVUC	EMERGENCY VEHICLE UNIT CABLE
EVUD	EMERGENCY VEHICLE UNIT DETECTOR
FB	FLASHING BEACON
FBCA	FLASHING BEACON CONTROL ASSEMBLY
FBS	FLASHING BEACON WITH SLIP BASE
FO	FIBER OPTIC
G	EQUIPMENT GROUNDING CONDUCTOR
GB	GROUND BUS
GFCI	GROUND FAULT CIRCUIT INTERRUPTER
HAR	HIGHWAY ADVISORY RADIO
Hex	HEXAGONAL
HPS	HIGH PRESSURE SODIUM
IISNS	INTERNALLY ILLUMINATED STREET NAME SIGN
ISL	INDUCTION SIGN LIGHTING
LED	LIGHT EMITTING DIODE
LMA	LUMINAIRE MAST ARM
LPS	LOW PRESSURE SODIUM
Ltg	LIGHTING
Lum	LUMINAIRE
M	METERED
MAT	MAST ARM MOUNTING TOP ATTACHMENT
MAS	MAST ARM MOUNTING SIDE ATTACHMENT
M/M	MULTIPLE TO MULTIPLE TRANSFORMER
Mtg	MOUNTING
MV	MERCURY VAPOR LIGHTING FIXTURE
MVDS	MICROWAVE VEHICLE DETECTION SYSTEM
N	NEUTRAL (GROUNDED CONDUCTOR)
NB	NEUTRAL BUS
NC	NORMALLY CLOSE
NO	NORMALLY OPEN
P	CIRCUIT BREAKER'S POLE
PB	PULL BOX
PBA	PUSH BUTTON ASSEMBLY
PEC	PHOTOELECTRIC CONTROL
Ped	PEDESTRIAN
PEU	PHOTOELECTRIC UNIT
PT	CONDUIT WITH PULL TAPE
RE	RELOCATED EQUIPMENT
RM	RAMP METERING
RWIS	ROADSIDE WEATHER INFORMATION SYSTEM
SB	SLIP BASE
SIC	SIGNAL INTERCONNECT CABLE
Sig	SIGNAL
SMA	SIGNAL MAST ARM
SNS	STREET NAME SIGN
SP	SERVICE POINT
TDC	TELEPHONE DEMARCATION CABINET
TMS	TRAFFIC MONITORING STATION
TOS	TRAFFIC OPERATIONS SYSTEM
Veh	VEHICLE
VIVDS	VIDEO IMAGE VEHICLE DETECTION SYSTEM
WIM	WEIGH-IN-MOTION
Xfmr	TRANSFORMER

SOFFIT AND WALL MOUNTED LUMINAIRES

PENDANT, 70 W HPS UNLESS OTHERWISE SPECIFIED

FLUSH, 70 W HPS UNLESS OTHERWISE SPECIFIED

WALL SURFACE, 70 W HPS UNLESS OTHERWISE SPECIFIED

EXISTING SOFFIT OR WALL LUMINAIRE TO REMAIN UNMODIFIED

EXISTING SOFFIT OR WALL LUMINAIRE TO BE MODIFIED AS SPECIFIED

NOTE:

Arrow indicates "street side" of luminaire.

COMMONLY USED SYMBOLS FOR UNITED STATES CUSTOMARY UNITS OF MEASUREMENT:

SYMBOL USED	DEFINITIONS
Ω	OHMS
min	MINUTE
s	SECOND
bps	BITS PER SECOND
Bps	BYTES PER SECOND
A	AMPERE
V	VOLT
V(dc)	VOLT (DIRECT CURRENT)
V(ac)	VOLT (ALTERNATING CURRENT)
FC	FOOT - CANDLE
W	WATTS
VA	VOLT-AMPERE
M	MEGA
k	KILO
m	MILLI
μ	MICRO
P	PICO
Hz	HERTZ

MISCELLANEOUS ELECTROLIERS

NEW	EXISTING	
		LUMINAIRE ON WOOD POLE
		NON-STANDARD ELECTROLIER (SEE PROJECT NOTES OR PROJECT PLANS)
		CITY ELECTROLIER
		ELECTROLIER FOUNDATION (FUTURE INSTALLATION)

NOTES:

1. HPS luminaires shall be 310 W HPS when installed on Type 21, 21D, 30, 31 and 32 Standards, unless otherwise specified. HPS luminaires shall be 200 W when installed on other type standards or poles, unless otherwise specified.
2. LED luminaires shall be 235 W when installed on Type 21, 21D, 30, 31 and 32 Standards, unless otherwise specified. LED luminaires shall be 165 W when installed on other type standards or poles, unless otherwise specified.
3. Luminaires shall be the cutoff type, ANSI Type III medium cutoff lighting distribution, unless otherwise specified.

STANDARD ELECTROLIER

NEW	EXISTING	STANDARD TYPE
		15
		15D
		15 STRUCTURE
		15D STRUCTURE
		21
		21D
		21 STRUCTURE
		21D STRUCTURE
		30
		31
		32

STATE OF CALIFORNIA
DEPARTMENT OF TRANSPORTATION

ELECTRICAL SYSTEMS (LEGEND AND ABBREVIATIONS)

NO SCALE

RSP ES-1A DATED JULY 19, 2013 SUPERSEDES STANDARD PLAN ES-1A DATED MAY 20, 2011 - PAGE 425 OF THE STANDARD PLANS BOOK DATED 2010.

REVISED STANDARD PLAN RSP ES-1A

2010 REVISED STANDARD PLAN RSP ES-1A

Dist	COUNTY	ROUTE	POST MILES TOTAL PROJECT	SHEET No.	TOTAL SHEETS
11	SD	67	R0.0/R5.9	186	204

Theresa Gabriel
REGISTERED ELECTRICAL ENGINEER

July 19, 2013
PLANS APPROVAL DATE

REGISTERED PROFESSIONAL ENGINEER
Theresa Aziz Gabriel
No. E15129
Exp. 6-30-14
ELECTRICAL
STATE OF CALIFORNIA

THE STATE OF CALIFORNIA OR ITS OFFICERS OR AGENTS SHALL NOT BE RESPONSIBLE FOR THE ACCURACY OR COMPLETENESS OF SCANNED COPIES OF THIS PLAN SHEET.

TO ACCOMPANY PLANS DATED 07-28-14

CONDUIT

NEW	EXISTING	
		LIGHTING CONDUIT, UNLESS OTHERWISE INDICATED OR NOTED
		TRAFFIC SIGNAL CONDUIT
C	c	COMMUNICATION CONDUIT
T	t	TELEPHONE CONDUIT
F	f	FIRE ALARM CONDUIT
FO	fo	FIBER OPTIC CONDUIT
		CONDUIT TERMINATION
R	r	CONDUIT RISER ATTACHED TO THE STRUCTURE OR SERVICE POLE

SERVICE EQUIPMENT

NEW	EXISTING	
OH	oh	OVERHEAD LINES
U	U	WOOD POLE, "U" INDICATES UTILITY OWNED
		POLE GUY WITH ANCHOR
		UTILITY TRANSFORMER - GROUND MOUNTED
III	III	SERVICE EQUIPMENT ENCLOSURE TYPE. DOOR INDICATES FRONT OF ENCLOSURE
T	t	TELEPHONE DEMARCATION CABINET

POLE-MOUNTED SERVICE DESIGNATION

TYPE H SERVICE, 28'-10" — TYPE OF INSTALLATION AND POLE HEIGHT ABOVE GRADE

FLASHING BEACON

NEW	EXISTING	
R	R	FLASHING BEACON (ONE VEHICLE SIGNAL HEAD WITH BACKPLATE AND VISOR) "R" INDICATES RED INDICATION, "Y" INDICATES YELLOW INDICATION
Y Y	Y Y	FLASHING BEACON WITH TYPE 15-FBS STANDARD AND A SIGN.
R R	R R	FLASHING BEACON WITH TYPES 9, 9A OR 9B SIGN UNLESS OTHERWISE SPECIFIED OR INDICATED

SIGNAL EQUIPMENT

NEW	EXISTING	
C	C	PEDESTRIAN SIGNAL HEAD "C" INDICATES COUNTDOWN PEDESTRIAN HEAD
		PUSH BUTTON ASSEMBLY POST
		PEDESTRIAN BARRICADE
		VEHICLE SIGNAL HEAD (WITH BACKPLATE AND 3-SECTIONS: RED, YELLOW AND GREEN)
		VEHICLE SIGNAL HEAD WITH ANGLE VISOR
PV	PV	MODIFICATIONS OF BASIC SYMBOL: "L" INDICATES ALL NON-ARROW SECTIONS LOUVERED "LG" INDICATES LOUVERED GREEN SECTION ONLY "PV" INDICATES ALL 12" SECTIONS PROGRAMMED VISIBILITY "8" INDICATES ALL 8" SECTIONS (ONLY WHEN SPECIFIED)
		VEHICLE SIGNAL HEAD CONSISTING OF RED, YELLOW AND GREEN LEFT ARROW SECTIONS
		VEHICLE SIGNAL HEAD CONSISTING OF RED AND YELLOW SECTIONS WITH AN UP GREEN ARROW SECTION
		VEHICLE SIGNAL HEAD (5 SECTION) CONSISTING OF RED, YELLOW AND GREEN SECTIONS WITH YELLOW AND GREEN RIGHT ARROW SECTIONS
		TYPE 15TS STANDARD WITH VEHICLE SIGNAL HEAD AND LUMINAIRE
		TYPE 21TS STANDARD WITH VEHICLE SIGNAL HEAD AND LUMINAIRE
		STANDARD WITH LUMINAIRE AND SIGNAL MAST ARMS AND ATTACHED VEHICLE SIGNAL HEADS
		TYPE 1 STANDARD WITH ATTACHED VEHICLE SIGNAL HEADS
		STANDARD WITH A SIGNAL MAST ARM, ATTACHED VEHICLE SIGNAL HEADS AND INTERNALLY ILLUMINATED STREET NAME SIGN
		CONTROLLER ASSEMBLY. DOOR INDICATES FRONT OF CABINET

SIGNAL EQUIPMENT Cont

NEW	EXISTING	
		GUARD POST
		TYPE 1 STANDARD WITH RAMP METERING SIGN
		OPTICAL DETECTOR FOR THE EMERGENCY VEHICLE DETECTION SYSTEM

NOTES:

1. All signal sections shall be 12" unless shown otherwise.
2. Signal heads shall be provided with backplates unless shown otherwise.

ILLUMINATED OVERHEAD SIGN

NEW	EXISTING	
		SINGLE POST, SINGLE ILLUMINATED SIGN, BALANCED BUTTERFLY
		SINGLE POST, DOUBLE ILLUMINATED SIGN, BALANCED BUTTERFLY
		SINGLE POST, SINGLE ILLUMINATED SIGN, FULL CANTILEVER
		DOUBLE POST, SINGLE ILLUMINATED SIGN
		SINGLE ILLUMINATED SIGN MOUNTED ON STRUCTURE
		DOUBLE POST, SINGLE ILLUMINATED SIGN WITH ELECTROLIER

STATE OF CALIFORNIA
DEPARTMENT OF TRANSPORTATION

ELECTRICAL SYSTEMS (LEGEND AND ABBREVIATIONS)

NO SCALE

RSP ES-1B DATED JULY 19, 2013 SUPERSEDES STANDARD PLAN ES-1B DATED MAY 20, 2011 - PAGE 426 OF THE STANDARD PLANS BOOK DATED 2010.

REVISED STANDARD PLAN RSP ES-1B

2010 REVISED STANDARD PLAN RSP ES-1B

7-15-13

Dist	COUNTY	ROUTE	POST MILES TOTAL PROJECT	SHEET No.	TOTAL SHEETS
11	SD	67	R0.0/R5.9	187	204

Theresa Gabriel
REGISTERED ELECTRICAL ENGINEER

July 19, 2013
PLANS APPROVAL DATE

REGISTERED PROFESSIONAL ENGINEER
Theresa Aziz Gabriel
No. E15129
Exp. 6-30-14
ELECTRICAL
STATE OF CALIFORNIA

THE STATE OF CALIFORNIA OR ITS OFFICERS OR AGENTS SHALL NOT BE RESPONSIBLE FOR THE ACCURACY OR COMPLETENESS OF SCANNED COPIES OF THIS PLAN SHEET.

TO ACCOMPANY PLANS DATED 07-28-14

EQUIPMENT IDENTIFICATION

ILLUMINATED SIGN IDENTIFICATION NUMBER:

SIGN No. 12345
10 ISL SCI 1.0

- SIGN NUMBER - PLACE ON POST OR STRUCTURE
- TRANSFORMER RATING (kVA)
- LIGHTING CONTROL TYPE
- NUMBER AND TYPE OF FIXTURES

DO NOT PLACE ON STANDARD OR STRUCTURE

ELECTROLIER OR EQUIPMENT IDENTIFICATION NUMBER:

12345 - 15'-0"

- MAST ARM LENGTH, IF SHOWN. DO NOT PLACE ON STANDARD OR STRUCTURE
- EQUIPMENT NUMBER - PLACE ON STANDARD OR STRUCTURE. EXISTING EQUIPMENT NUMBERS ARE SHOWN IN PARENTHESIS

CONDUIT AND CONDUCTOR IDENTIFICATION:

1½"C, 2#10, 15#14, 2 DLC, 12P#18 (PAIR)

- NUMBER AND SIZE OF CONDUCTORS AND CABLES
- SIZE OF CONDUIT IN INCHES

ø1, ø2, ø2P, etc.	TRAFFIC PHASE IDENTIFICATION FOR SIGNAL FACES, DETECTORS AND PHASE DIAGRAMS
1 2 3	LEGEND NUMBERS
A B C	EQUIPMENT, SIGNAL POLES, INSTALLATION OR ITEMS
1 2 3	CONDUIT RUN NUMBERS

SIGNAL AND LIGHTING STANDARD (TYPICAL DESIGNATION):

19A - 3 - 100

- WIND VELOCITY = 100 mph
- CASE 3 ARM LOADING
- STANDARD TYPE
- STANDARD PLAN SHEET NUMBER
- DETAIL, NUMBER, SECTION, TYPE OR ELEVATION

MISCELLANEOUS EQUIPMENT

NEW	EXISTING	
CMS	cms	CHANGEABLE MESSAGE SIGN
		CLOSED CIRCUIT TELEVISION CAMERA
		HIGHWAY ADVISORY RADIO POLE AND ANTENNA
EMS	ems	EXTINGUISHABLE MESSAGE SIGN
M V	m v	DETECTION DEVICE M = MICROWAVE SENSOR V = VIDEO IMAGE SENSOR

WIRING DIAGRAM LEGEND

----	EXTERNAL CONDUCTOR
———	CONDUCTOR OR BUS
	TIE POINT
	CONTACTOR COIL
	CONTACTOR, NO CONTACT
	TERMINAL BLOCKS
	CONTACTOR, NC CONTACT
	ENCLOSURE BOND
	GROUNDING ELECTRODE
	CIRCUIT BREAKER
	RECEPTACLE

PULL BOXES

NEW	EXISTING	
		PULL BOX, No. 5 UNLESS OTHERWISE INDICATED OR NOTED
3	9A(21)	PULL BOX, ADDITIONAL DESIGNATIONS OR DESCRIPTIONS

3 No. 3½ PULL BOX
5 No. 5 PULL BOX
6 No. 6 PULL BOX
7 No. 7 (CEILING PULL BOX)
8 No. 8 (PENDANT SOFFIT PULL BOX)
9 No. 9 PULL BOX
9A No. 9A PULL BOX

(C) COMMUNICATIONS PULL BOX
(E) PULL BOX WITH EXTENSION
(S) SPRINKLER CONTROL PULL BOX
(21) ANCHOR BOLTS AND CONDUIT FOR FUTURE INSTALLATION OF TYPE 21 STANDARD
(T) TRAFFIC PULL BOX

VEHICLE DETECTORS

5 J 9 U

- VEHICLE DETECTOR DESIGNATION
- U = UPPER
  L = LOWER
- SLOT NUMBER IN INPUT FILE
- INPUT FILE (I OR J)
- PHASE

NEW	EXISTING	
		TYPE A DETECTOR LOOP. OUTLINE OF SAWCUT SHOWN
		TYPE B DETECTOR LOOP. OUTLINE OF SAWCUT SHOWN
		TYPE C DETECTOR LOOP. OUTLINE OF SAWCUT SHOWN
		TYPE D DETECTOR LOOP. OUTLINE OF SAWCUT SHOWN
		TYPE E DETECTOR LOOP. OUTLINE OF SAWCUT SHOWN
		TYPE Q DETECTOR LOOP. OUTLINE OF SAWCUT SHOWN
		MAGNETIC DETECTOR
DH	dh	DETECTOR HANDHOLE
		MICROWAVE OR VIDEO DETECTION ZONE

STATE OF CALIFORNIA
DEPARTMENT OF TRANSPORTATION

ELECTRICAL SYSTEMS (LEGEND AND ABBREVIATIONS)

NO SCALE

RSP ES-1C DATED JULY 19, 2013 SUPERSEDES STANDARD PLAN ES-1C DATED MAY 20, 2011 - PAGE 427 OF THE STANDARD PLANS BOOK DATED 2010.

REVISED STANDARD PLAN RSP ES-1C

2010 REVISED STANDARD PLAN RSP ES-1C

7-11-13

Dist	COUNTY	ROUTE	POST MILES TOTAL PROJECT	SHEET No.	TOTAL SHEETS
11	SD	67	R0.0/R5.9	188	204

Theresa Gabriel
REGISTERED ELECTRICAL ENGINEER

July 19, 2013
PLANS APPROVAL DATE

REGISTERED PROFESSIONAL ENGINEER
Theresa Aziz Gabriel
No. E15129
Exp. 6-30-14
ELECTRICAL
STATE OF CALIFORNIA

THE STATE OF CALIFORNIA OR ITS OFFICERS OR AGENTS SHALL NOT BE RESPONSIBLE FOR THE ACCURACY OR COMPLETENESS OF SCANNED COPIES OF THIS PLAN SHEET.

TO ACCOMPANY PLANS DATED 07-28-14

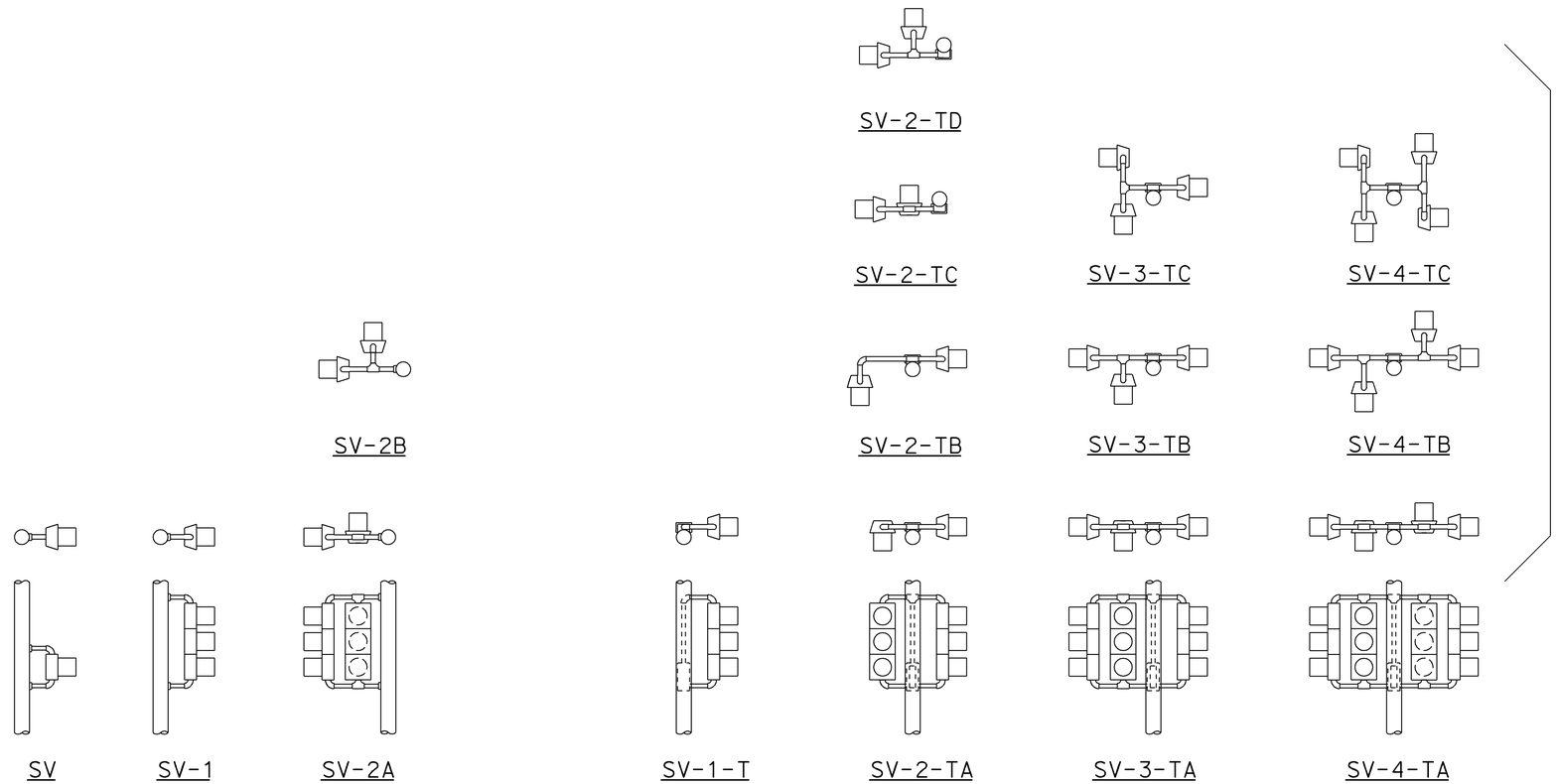

SIDE MOUNTINGS

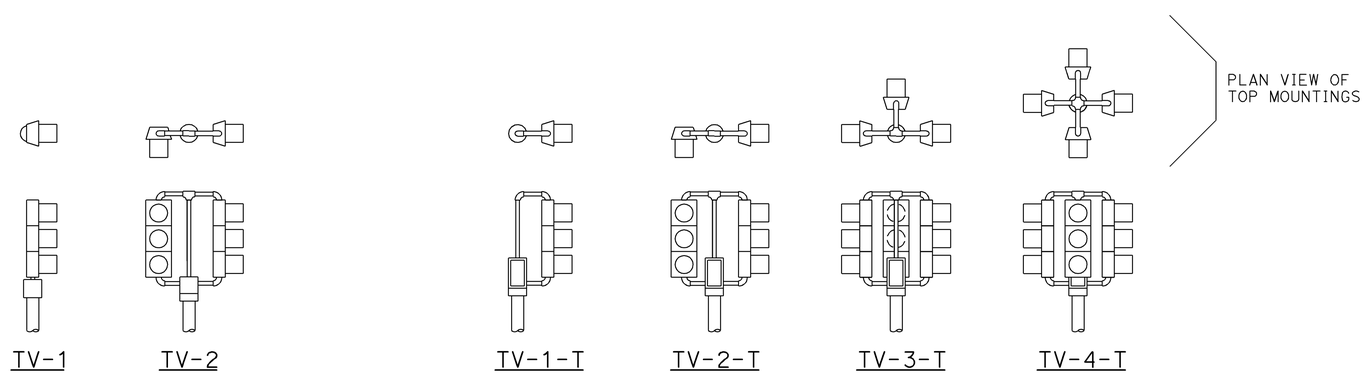

TOP MOUNTINGS

ABBREVIATIONS:

SV	SIDE MOUNTED VEHICLE SIGNALS
T	TERMINAL COMPARTMENT
TV	TOP MOUNTED VEHICLE SIGNALS
1, 2, 3, 4	NUMBER OF SIGNAL FACES (3 - SECTION, UNLESS OTHERWISE INDICATED)
A, B, C, D	CONFIGURATION OF SIGNALS

NOTES:

1. Mountings shall be oriented to provide maximum horizontal clearance to adjacent roadway.
2. Bracket arms shall be long enough to permit proper alignment of signals and backplate installation.
3. See Standard Plans ES-4D and ES-4E for attachment fitting details.

STATE OF CALIFORNIA
DEPARTMENT OF TRANSPORTATION

ELECTRICAL SYSTEMS (VEHICULAR SIGNAL HEADS AND MOUNTINGS)

NO SCALE

RSP ES-4A DATED JULY 19, 2013 SUPERSEDES STANDARD PLAN ES-4A DATED MAY 20, 2011 - PAGE 443 OF THE STANDARD PLANS BOOK DATED 2010.

REVISED STANDARD PLAN RSP ES-4A

2010 REVISED STANDARD PLAN RSP ES-4A

7-9-13

Dist	COUNTY	ROUTE	POST MILES TOTAL PROJECT	SHEET No.	TOTAL SHEETS
11	SD	67	R0.0/R5.9	189	204

Theresa Gabriel
REGISTERED ELECTRICAL ENGINEER

July 19, 2013
PLANS APPROVAL DATE

REGISTERED PROFESSIONAL ENGINEER
Theresa Aziz Gabriel
No. E15129
Exp. 6-30-14
ELECTRICAL
STATE OF CALIFORNIA

THE STATE OF CALIFORNIA OR ITS OFFICERS OR AGENTS SHALL NOT BE RESPONSIBLE FOR THE ACCURACY OR COMPLETENESS OF SCANNED COPIES OF THIS PLAN SHEET.

TO ACCOMPANY PLANS DATED 07-28-14

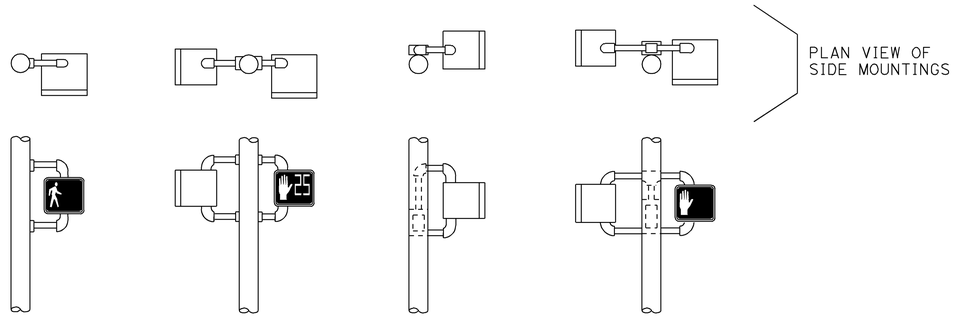

SP-1 SP-2 SP-1-T SP-2-T

SIDE MOUNTINGS

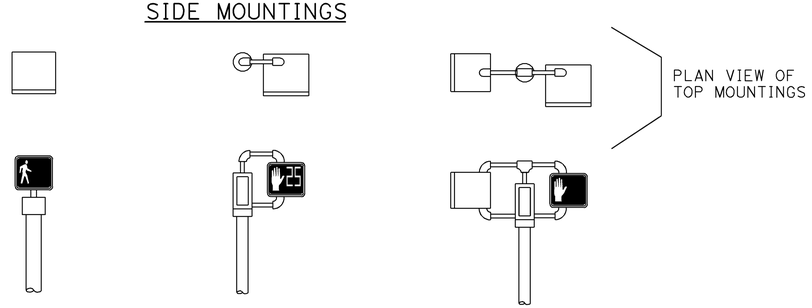

TP-1 TP-1-T TP-2-T

TOP MOUNTINGS

PEDESTRIAN SIGNALS AND MOUNTINGS

DETAIL A

PERSON WALKING INTERVAL FLASHING UPRAISED HAND INTERVAL STEADY UPRAISED HAND INTERVAL

PEDESTRIAN SIGNAL MODULE WITH COUNTDOWN

DETAIL B

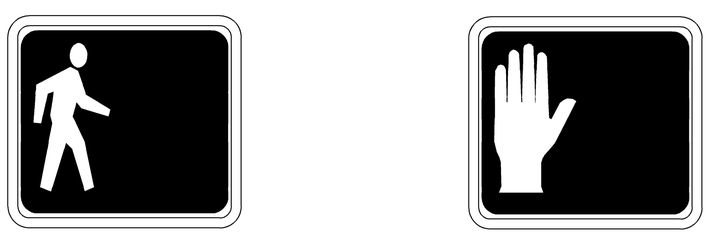

PERSON WALKING INTERVAL STEADY UPRAISED HAND INTERVAL

PEDESTRIAN SIGNAL MODULE WITHOUT COUNTDOWN

DETAIL C

NOTES:

1. Mounting shall be oriented to provide maximum horizontal clearance to adjacent roadway.
2. Bracket arms shall be long enough to permit proper alignment of signals.
3. See Standard Plan ES-4D for attachment fittings details.

ABBREVIATIONS:

1, 2	NUMBER OF SIGNAL FACES
SP	SIDE MOUNTED PEDESTRIAN SIGNAL
T	TERMINAL COMPARTMENT
TP	TOP MOUNTED PEDESTRIAN SIGNAL

RAMP METERING SIGN

DETAIL D

STATE OF CALIFORNIA
DEPARTMENT OF TRANSPORTATION

ELECTRICAL SYSTEMS (PEDESTRIAN SIGNAL AND RAMP METERING SIGN)

NO SCALE

RSP ES-4B DATED JULY 19, 2013 SUPERSEDES STANDARD PLAN ES-4B DATED MAY 20, 2011 - PAGE 444 OF THE STANDARD PLANS BOOK DATED 2010.

REVISED STANDARD PLAN RSP ES-4B

2010 REVISED STANDARD PLAN RSP ES-4B

7-9-13

Dist	COUNTY	ROUTE	POST MILES TOTAL PROJECT	SHEET No.	TOTAL SHEETS
11	SD	67	R0.0/R5.9	190	204

Theresa Gabriel
REGISTERED ELECTRICAL ENGINEER

July 19, 2013
PLANS APPROVAL DATE

REGISTERED PROFESSIONAL ENGINEER Theresa Aziz Gabriel No. E15129 Exp. 6-30-14 ELECTRICAL STATE OF CALIFORNIA

THE STATE OF CALIFORNIA OR ITS OFFICERS OR AGENTS SHALL NOT BE RESPONSIBLE FOR THE ACCURACY OR COMPLETENESS OF SCANNED COPIES OF THIS PLAN SHEET.

TO ACCOMPANY PLANS DATED 07-28-14

VISORS

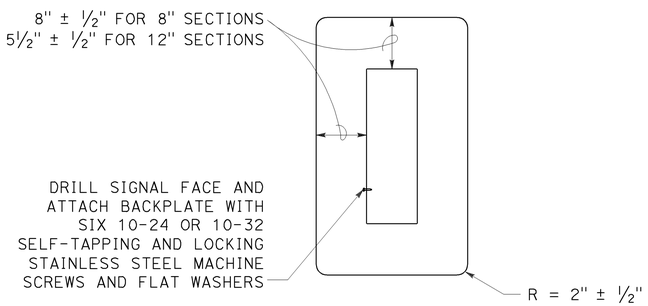

8" AND 12" SECTIONS

BACKPLATE

1/16" minimum thickness
3001-14 aluminum or plastic
when specified

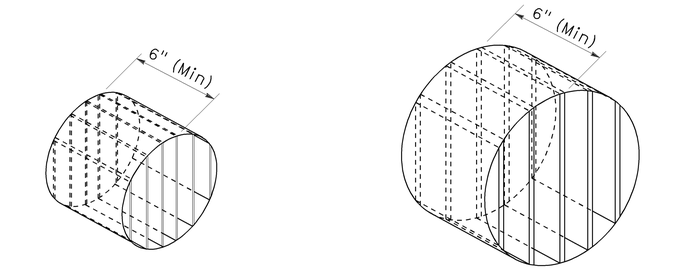

ISOMETRIC VIEW

ISOMETRIC VIEW

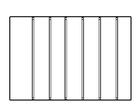

SECTION A-A

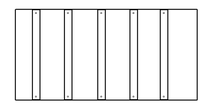

SECTION B-B

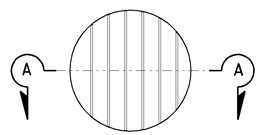

8" DIAMETER FRONT VIEW

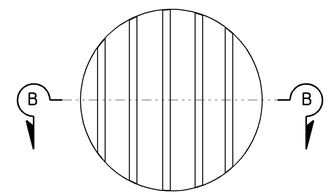

12" DIAMETER FRONT VIEW

DIRECTIONAL LOUVER

Directional louvers shall be oriented as directed by the Engineer and secured in place with one plated brass machine screw and nut.

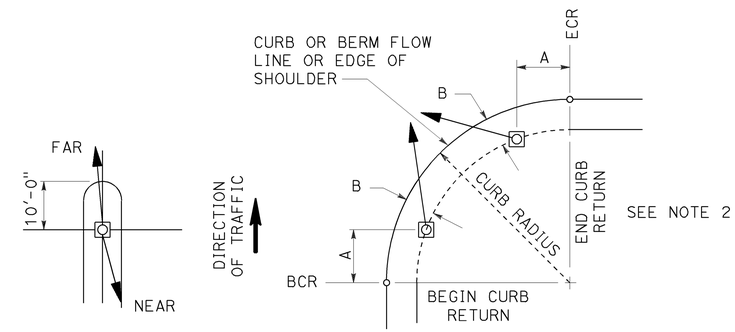

NOTES:

1. Typical signal pole placement unless dimensioned on plans.
2. For A and B dimensions, see Pole Schedule, or as directed by the Engineer.

SIGNAL STANDARD PLACEMENT DIMENSIONS AND EQUIPMENT LOCATIONS

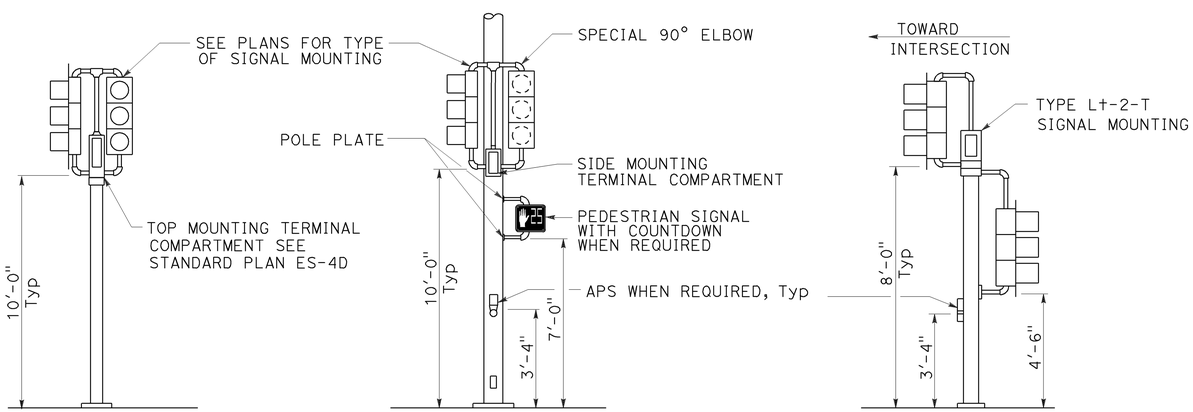

TOP MOUNTED SIGNALS (TV)

Type 1-A, 1-B, 1-C and 1-D standard as indicated on the plans

SIDE MOUNTED SIGNALS (SV AND SP)

Normally used on standards with luminaire or signal mast arm

LEFT TURN LANE SIGNAL

Type 1-A, 1-B, 1-C and 1-D standard as indicated on plans

TYPICAL SIGNAL INSTALLATIONS

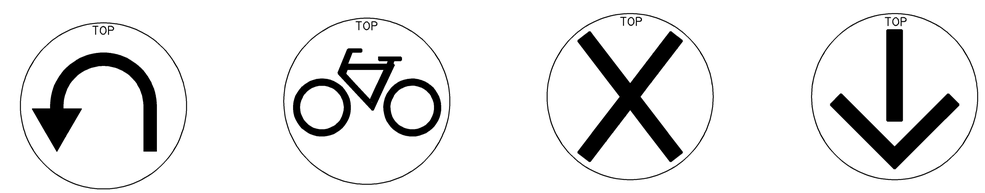

U-TURN

BICYCLE

LANE CONTROL

LANE CONTROL

SIGNAL FACES

STATE OF CALIFORNIA
DEPARTMENT OF TRANSPORTATION

ELECTRICAL SYSTEMS (VEHICULAR SIGNAL HEADS AND MOUNTINGS)

NO SCALE

RSP ES-4C DATED JULY 19, 2013 SUPERSEDES STANDARD PLAN ES-04C DATED MAY 20, 2011 - PAGE 445 OF THE STANDARD PLANS BOOK DATED 2010.

REVISED STANDARD PLAN RSP ES-4C

2010 REVISED STANDARD PLAN RSP ES-4C

7-10-13

Dist	COUNTY	ROUTE	POST MILES TOTAL PROJECT	SHEET No.	TOTAL SHEETS
11	SD	67	R0.0/R5.9	191	204

Theresa Gabriel
REGISTERED ELECTRICAL ENGINEER

July 19, 2013
PLANS APPROVAL DATE

REGISTERED PROFESSIONAL ENGINEER
Theresa Aziz Gabriel
No. E15129
Exp. 6-30-14
ELECTRICAL
STATE OF CALIFORNIA

THE STATE OF CALIFORNIA OR ITS OFFICERS OR AGENTS SHALL NOT BE RESPONSIBLE FOR THE ACCURACY OR COMPLETENESS OF SCANNED COPIES OF THIS PLAN SHEET.

TO ACCOMPANY PLANS DATED 07-28-14

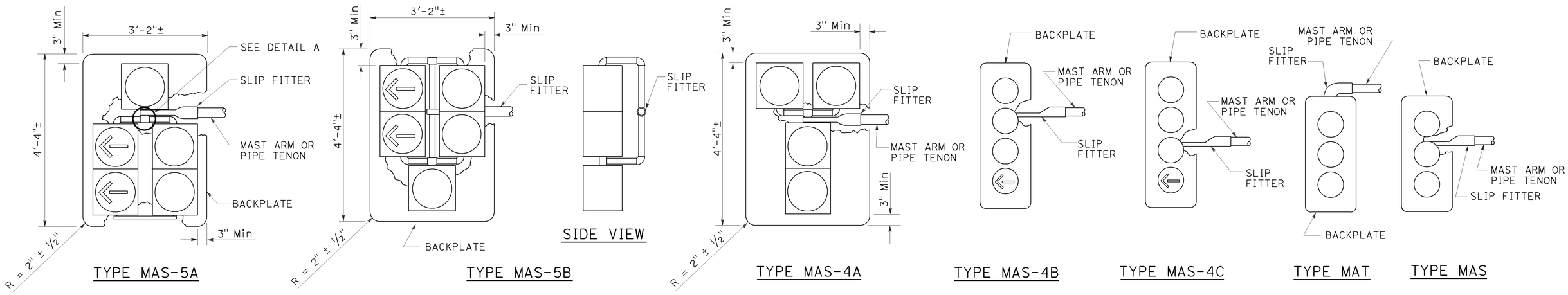

MAST ARM MOUNTINGS

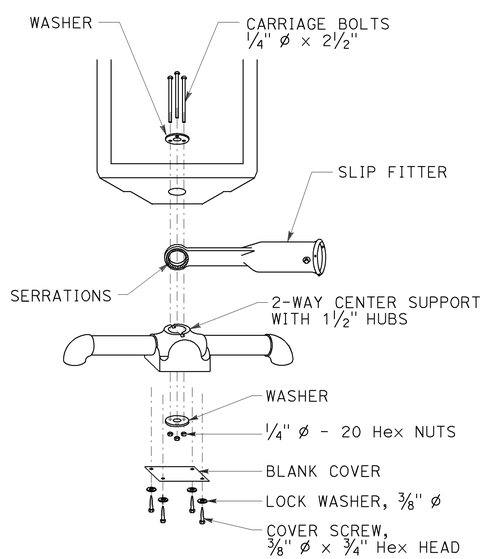

DETAIL A

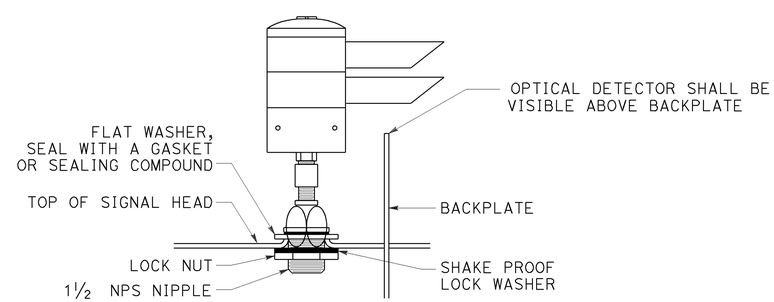

OPTICAL DETECTOR MOUNTING FOR EMERGENCY VEHICLE DETECTION SYSTEM

DETAIL B

STATE OF CALIFORNIA
DEPARTMENT OF TRANSPORTATION

ELECTRICAL SYSTEMS (VEHICULAR SIGNAL HEADS AND OPTICAL DETECTOR MOUNTING)

NO SCALE

RSP ES-4E DATED JULY 19, 2013 SUPERSEDES STANDARD PLAN ES-4E DATED MAY 20, 2011 - 447 OF THE STANDARD PLANS BOOK DATED 2010.

REVISED STANDARD PLAN RSP ES-4E

2010 REVISED STANDARD PLAN RSP ES-4E

Dist	COUNTY	ROUTE	POST MILES TOTAL PROJECT	SHEET No.	TOTAL SHEETS
11	SD	67	R0.0/R5.9	192	204

Theresa Gabriel
REGISTERED ELECTRICAL ENGINEER

July 19, 2013
PLANS APPROVAL DATE

REGISTERED PROFESSIONAL ENGINEER
Theresa Aziz Gabriel
No. E15129
Exp. 6-30-14
ELECTRICAL
STATE OF CALIFORNIA

THE STATE OF CALIFORNIA OR ITS OFFICERS OR AGENTS SHALL NOT BE RESPONSIBLE FOR THE ACCURACY OR COMPLETENESS OF SCANNED COPIES OF THIS PLAN SHEET.

TO ACCOMPANY PLANS DATED 07-28-14

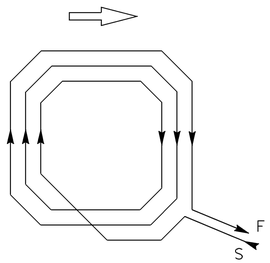

WINDING DETAIL

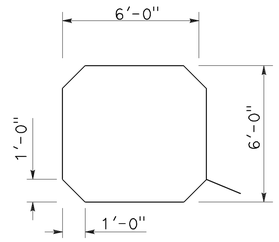

SAWCUT DETAIL

TYPE A LOOP DETECTOR CONFIGURATION

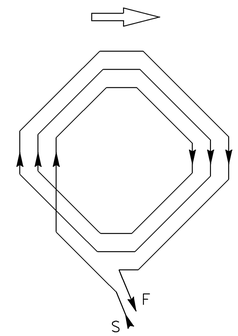

WINDING DETAIL

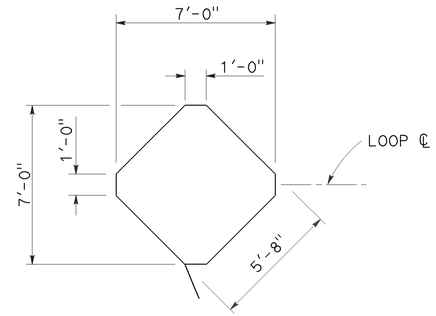

SAWCUT DETAIL

TYPE B LOOP DETECTOR CONFIGURATION

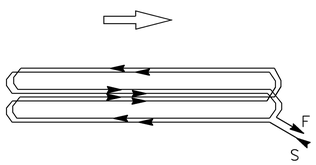

WINDING DETAIL

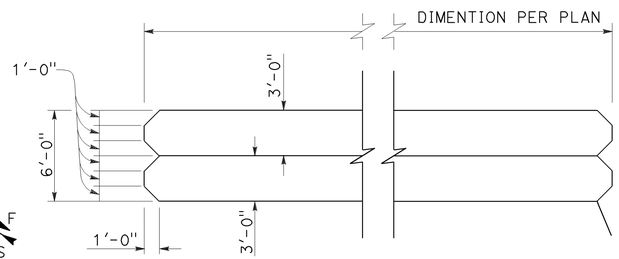

SAWCUT DETAIL

TYPE C LOOP DETECTOR CONFIGURATION

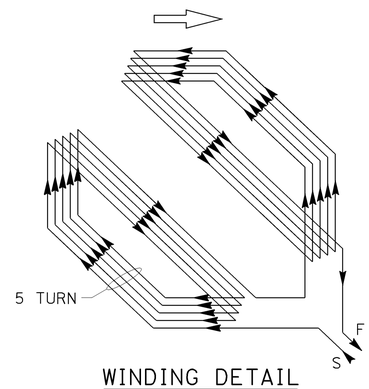

WINDING DETAIL

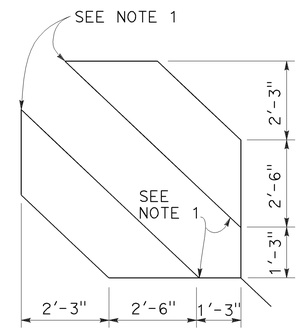

SAWCUT DETAIL

TYPE D LOOP DETECTOR CONFIGURATION

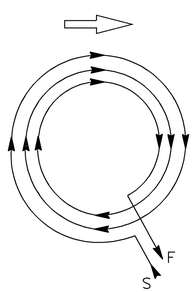

WINDING DETAIL

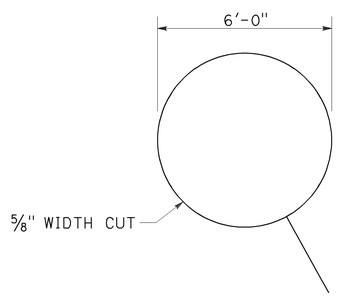

SAWCUT DETAIL

TYPE E LOOP DETECTOR CONFIGURATION

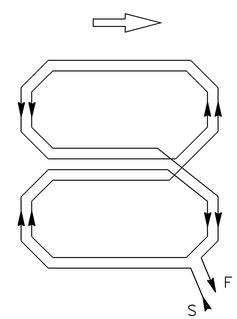

WINDING DETAIL

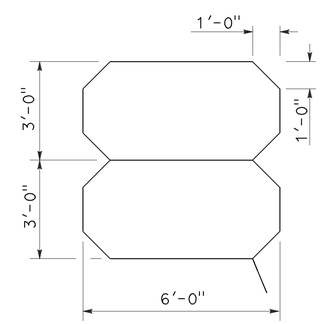

SAWCUT DETAIL

TYPE Q LOOP DETECTOR CONFIGURATION

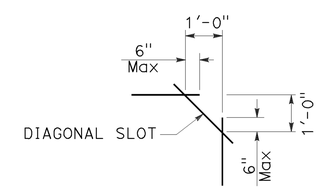

PLAN VIEW OF DIAGONAL SLOT AT CORNERS

NOTES:

1. Round corners of acute angle sawcuts to prevent damage to conductors.
2. Typical distance separating loops from edge to edge is 10' for Type A, B, D and E installation in single lane.

STATE OF CALIFORNIA
DEPARTMENT OF TRANSPORTATION

ELECTRICAL SYSTEMS (DETECTORS)

NO SCALE

RSP ES-5B DATED JULY 19, 2013 SUPERSEDES STANDARD PLAN ES-5B DATED MAY 20, 2011 - PAGE 449 OF THE STANDARD PLANS BOOK DATED 2010.

REVISED STANDARD PLAN RSP ES-5B

2010 REVISED STANDARD PLAN RSP ES-5B

7-9-13

Dist	COUNTY	ROUTE	POST MILES TOTAL PROJECT	SHEET No.	TOTAL SHEETS
11	SD	67	R0.0/R5.9	193	204

Theresa Gabriel
REGISTERED ELECTRICAL ENGINEER

July 19, 2013
PLANS APPROVAL DATE

REGISTERED PROFESSIONAL ENGINEER
Theresa Aziz Gabriel
No. E15129
Exp. 6-30-14
ELECTRICAL
STATE OF CALIFORNIA

THE STATE OF CALIFORNIA OR ITS OFFICERS OR AGENTS SHALL NOT BE RESPONSIBLE FOR THE ACCURACY OR COMPLETENESS OF SCANNED COPIES OF THIS PLAN SHEET.

TO ACCOMPANY PLANS DATED 07-28-14

2010 REVISED STANDARD PLAN RSP ES-5C

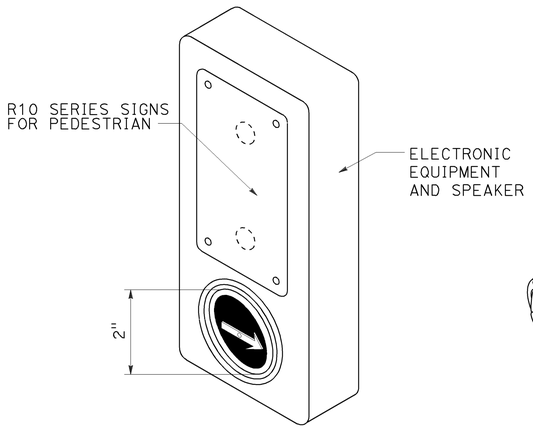

ACCESSIBLE PEDESTRIAN SIGNAL

DETAIL A
(See note 1 to 4)

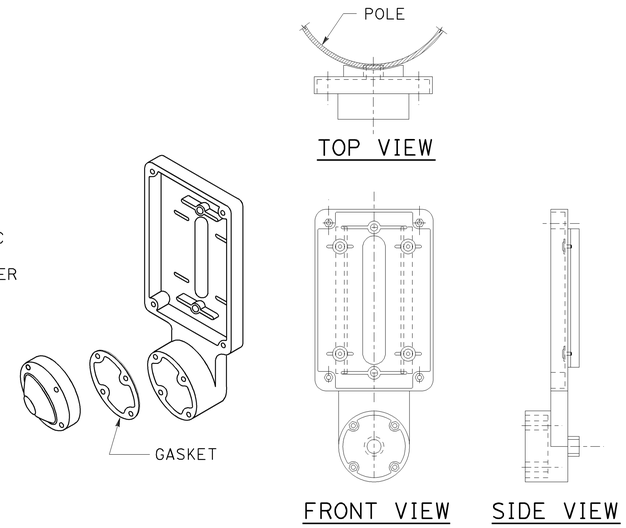

TYPE B PUSH BUTTON ASSEMBLY

DETAIL B
(See note 1 to 4)

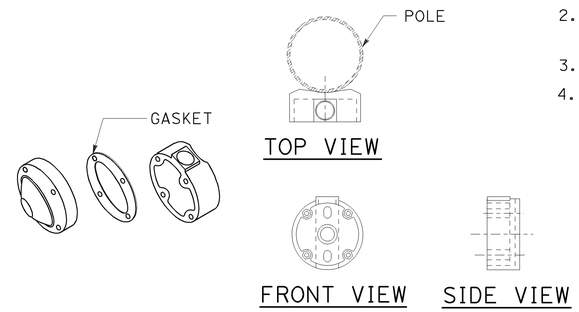

TYPE C PUSH BUTTON ASSEMBLY

DETAIL C
(See note 1 to 4)

NOTES:

1. Back casting shape to fit curvature of pole.
2. Provide cover fitting for top of post, when PBA is mounted on push button assembly post.
3. Install push button on crosswalk side of standard.
4. Use R10 series regulatory signs and plaques for pedestrian and bicycle facilities.

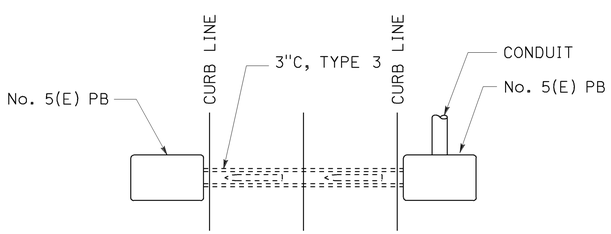

PLAN

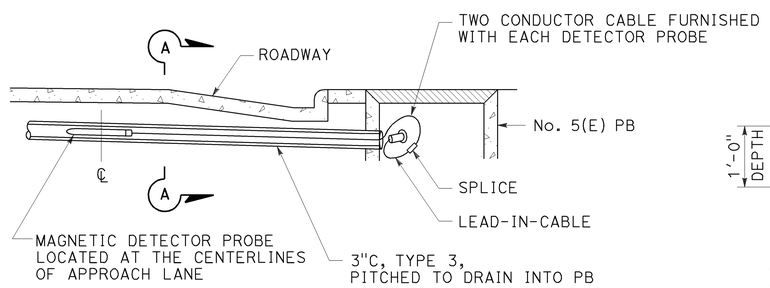

ELEVATION

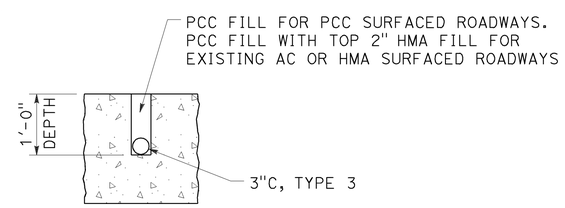

SECTION A-A

MAGNETIC VEHICLE DETECTOR

INSTALLATION DETAILS

DETAIL D

STATE OF CALIFORNIA
DEPARTMENT OF TRANSPORTATION

ELECTRICAL SYSTEMS (ACCESSIBLE PEDESTRIAN SIGNAL, PUSH BUTTON ASSEMBLIES AND MAGNETIC VEHICLE DETECTOR)

NO SCALE

RSP ES-5C DATED JULY 19, 2013 SUPERSEDES STANDARD PLAN ES-5C
DATED MAY 20, 2011 - PAGE 450 OF THE STANDARD PLANS BOOK DATED 2010.

REVISED STANDARD PLAN RSP ES-5C

Dist	COUNTY	ROUTE	POST MILES TOTAL PROJECT	SHEET No.	TOTAL SHEETS
11	SD	67	R0.0/R5.9	194	204

Theresa Gabriel
REGISTERED ELECTRICAL ENGINEER

July 19, 2013
PLANS APPROVAL DATE

REGISTERED PROFESSIONAL ENGINEER Theresa Aziz Gabriel No. E15129 Exp. 6-30-14 ELECTRICAL STATE OF CALIFORNIA

THE STATE OF CALIFORNIA OR ITS OFFICERS OR AGENTS SHALL NOT BE RESPONSIBLE FOR THE ACCURACY OR COMPLETENESS OF SCANNED COPIES OF THIS PLAN SHEET.

TO ACCOMPANY PLANS DATED 07-28-14

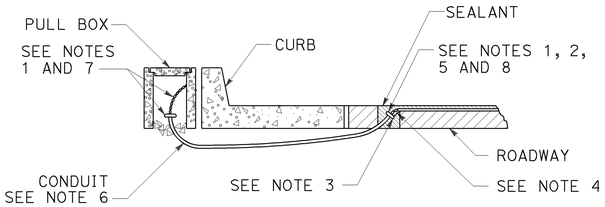

TYPE A
CURB TERMINATION DETAIL

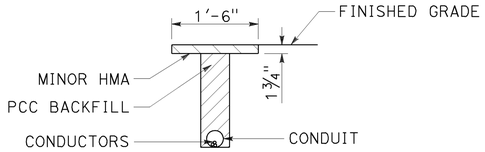

"T" TRENCH
DETAIL T

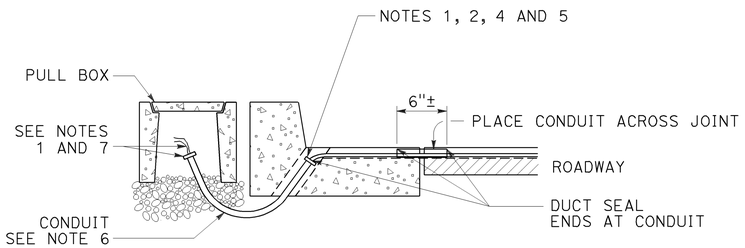

CROSS SECTION

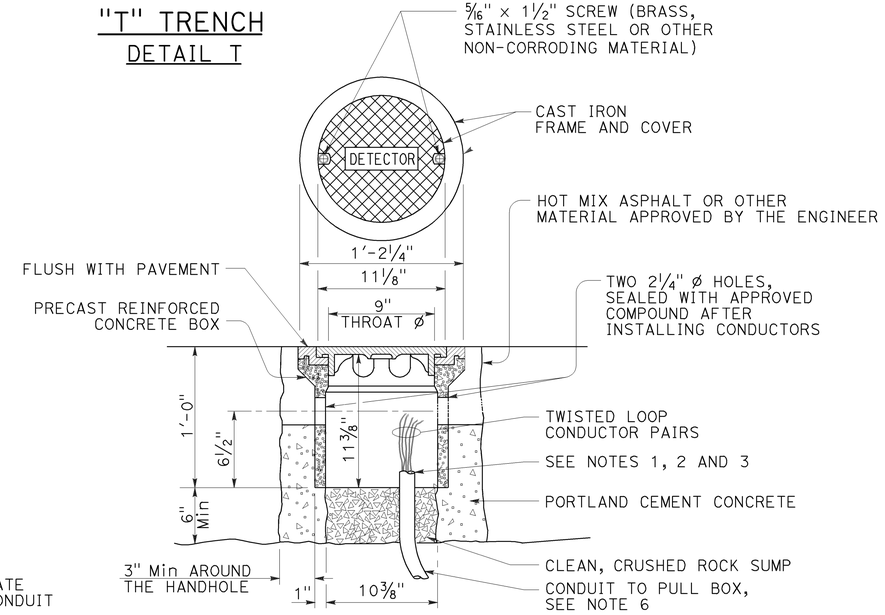

DETECTOR HANDHOLE DETAIL

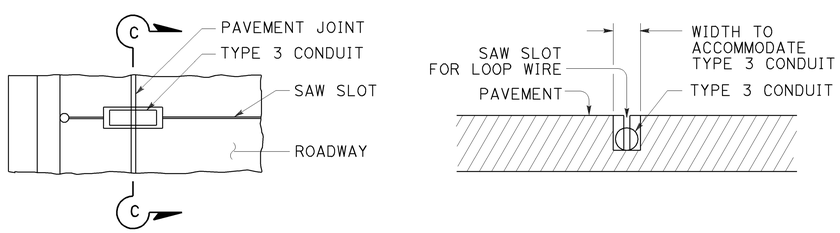

PLAN VIEW

SECTION C-C

TYPE B
CURB TERMINATION DETAIL

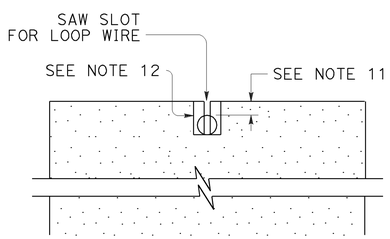

SECTION A-A

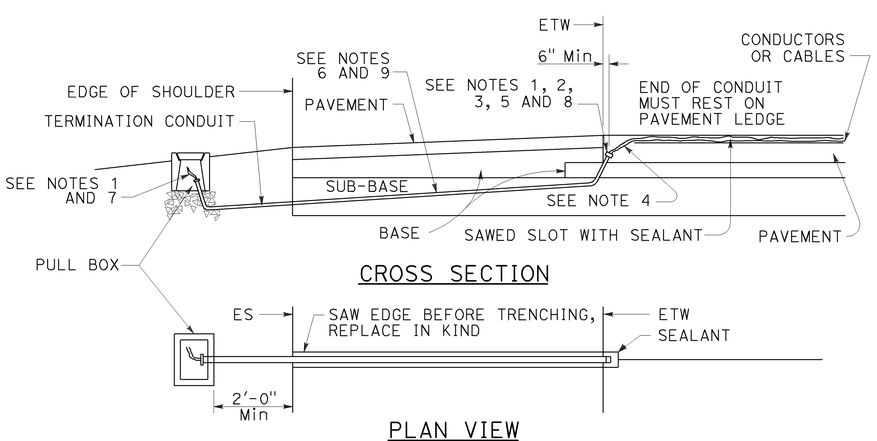

CROSS SECTION

PLAN VIEW

SHOULDER TERMINATION DETAILS

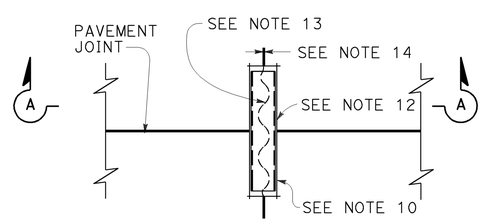

PLAN VIEW

TYPICAL LOOP LEAD-IN DETAIL
AT PAVEMENT JOINT

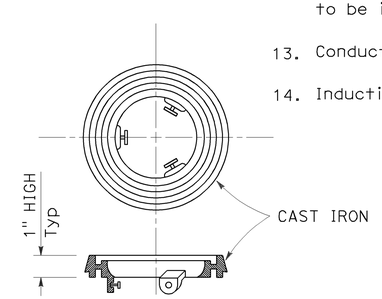

LOCKING GRADE RING

NOTES:

1. Bushing shall be used at end of conduit.
2. Tape detector conductors or cables 3" each side of bushings.
3. Install duct seal compound to each end of termination conduit before installing sealant.
4. Round all sharp edges where detector conductors or cables have to pass.
5. End of conduit shall be 3⅛" below roadway surface.
6.

Conduit size	Loop conductors
1"C minimum	1 to 2 pairs
1½"C minimum	3 to 4 pairs
2"C minimum	5 or more pairs

7. Splice detector conductors or cables to detector lead-in-cable.
8. Location of detector handhole when shown on plans.
9. When the shoulder and traveled way are paved with the same material and there is no joint between them, the conduit shall extend only 2'-0" into the shoulder pavement.
10. ¾"C, Type 3 conduit 6" long minimum, plug both ends with duct compound to keep out sealant.
11. ½" Minimum between top of conduit and pavement surface.
12. Sawcut shall not exceed 1" in width and ⅛" longer than conduit to be installed.
13. Conductors with ½" minimum slack inside conduit.
14. Inductive loop detector saw slot.

STATE OF CALIFORNIA
DEPARTMENT OF TRANSPORTATION

ELECTRICAL SYSTEMS (CURB TERMINATION AND HANDHOLE)

NO SCALE

RSP ES-5D DATED JULY 19, 2013 SUPERSEDES STANDARD PLAN ES-5D DATED MAY 20, 2011 - PAGE 451 OF THE STANDARD PLANS BOOK DATED 2010.

REVISED STANDARD PLAN RSP ES-5D

2010 REVISED STANDARD PLAN RSP ES-5D

7-9-13

Dist	COUNTY	ROUTE	POST MILES TOTAL PROJECT	SHEET No.	TOTAL SHEETS
11	SD	67	R0.0/R5.9	195	204

REGISTERED CIVIL ENGINEER

July 19, 2013
PLANS APPROVAL DATE

REGISTERED PROFESSIONAL ENGINEER
Stanley P. Johnson
No. C57793
Exp. 3-31-14
CIVIL
STATE OF CALIFORNIA

THE STATE OF CALIFORNIA OR ITS OFFICERS OR AGENTS SHALL NOT BE RESPONSIBLE FOR THE ACCURACY OR COMPLETENESS OF SCANNED COPIES OF THIS PLAN SHEET.

TO ACCOMPANY PLANS DATED 07-28-14

2010 REVISED STANDARD PLAN RSP ES-7A

NOTES:

1. For additional notes, details and data for Type 15TS and Type 21TS Standards, see Standard Plan ES-6A.
2. Handhole shall be located on the downstream side of traffic.

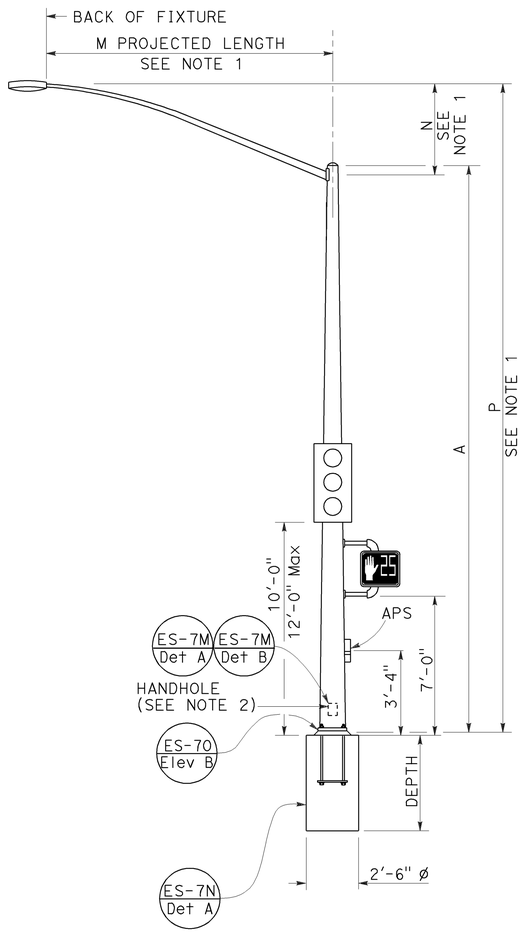

TYPE 15TS AND 21TS STANDARD
ELEVATION A
(See Note 1)

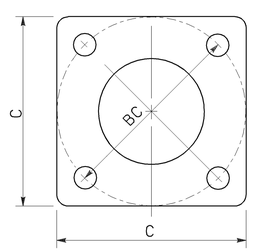

BASE PLATE
TYPE 15TS AND 21TS
DETAIL A

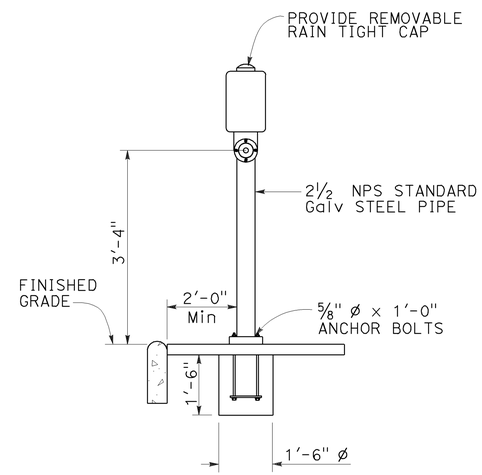

ELEVATION

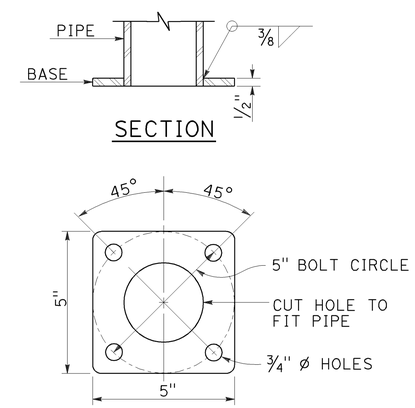

BASE PLATE
PBA POST

PUSH BUTTON ASSEMBLY POST
DETAIL B

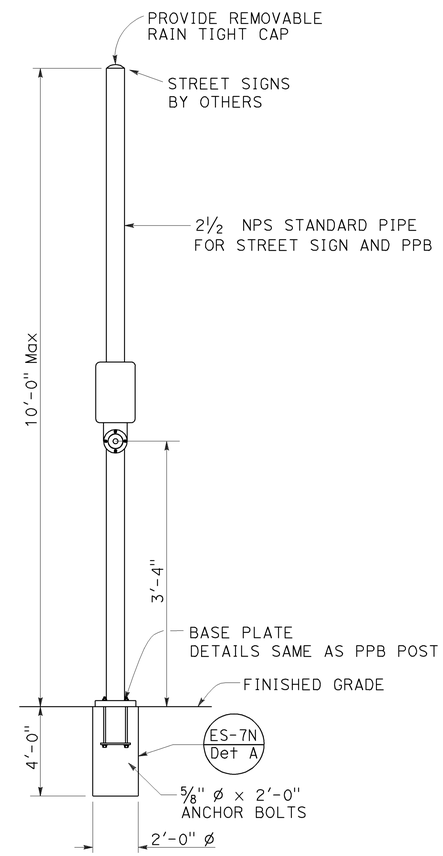

COMBINED STREET SIGN
PUSH BUTTON ASSEMBLY POST
DETAIL C

POLE TYPE	POLE DATA				BASE PLATE DATA				CIDH
	A HEIGHT	Min OD BASE	Min OD TOP	WALL THICKNESS	C	BC = BOLT CIRCLE	THICKNESS	ANCHOR BOLT SIZE	DEPTH
15TS	30'-0"	8"	3 11/16"	0.1793"	1'-1½"	1'-0"	2"	1½" ø x 42"	7'-6"
21TS	35'-0"	9⅜"	3 9/16"		1'-3"	1'-2"			8'-6"

STATE OF CALIFORNIA
DEPARTMENT OF TRANSPORTATION

ELECTRICAL SYSTEMS (SIGNAL AND LIGHTING STANDARD, TYPE TS, AND PUSH BUTTON ASSEMBLY POST)

NO SCALE

RSP ES-7A DATED JULY 19, 2013 SUPERSEDES STANDARD PLAN ES-7A DATED MAY 20, 2011 - PAGE 462 OF THE STANDARD PLANS BOOK DATED 2010.

REVISED STANDARD PLAN RSP ES-7A

Dist	COUNTY	ROUTE	POST MILES TOTAL PROJECT	SHEET No.	TOTAL SHEETS
11	SD	67	R0.0/R5.9	196	204

REGISTERED CIVIL ENGINEER

July 19, 2013
PLANS APPROVAL DATE

REGISTERED PROFESSIONAL ENGINEER Stanley P. Johnson No. C57793 Exp. 3-31-14 CIVIL STATE OF CALIFORNIA

THE STATE OF CALIFORNIA OR ITS OFFICERS OR AGENTS SHALL NOT BE RESPONSIBLE FOR THE ACCURACY OR COMPLETENESS OF SCANNED COPIES OF THIS PLAN SHEET.

TO ACCOMPANY PLANS DATED 07-28-14

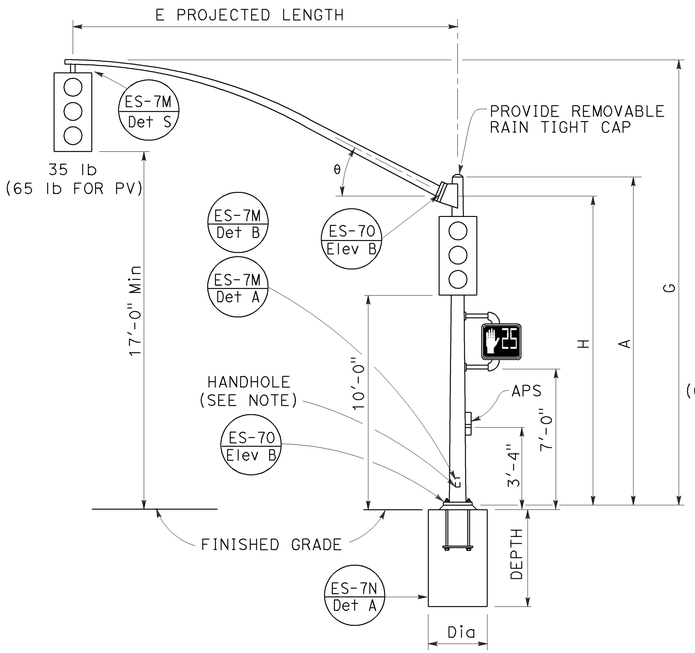

TYPE 16-1-100, 18-1-100

ELEVATION A

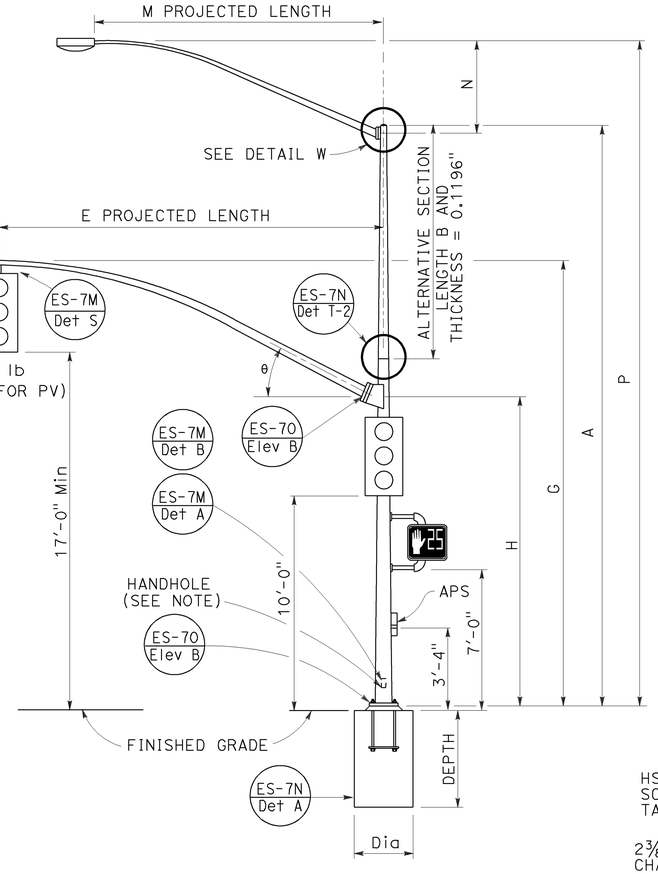

TYPE 19-1-100, 19A-1-100

ELEVATION B

Δ = LUMINAIRE MAST ARM SKEW -90° TO +90°
DEFAULT 0°

NOTE:

Handhole shall be located on the downstream side of traffic.

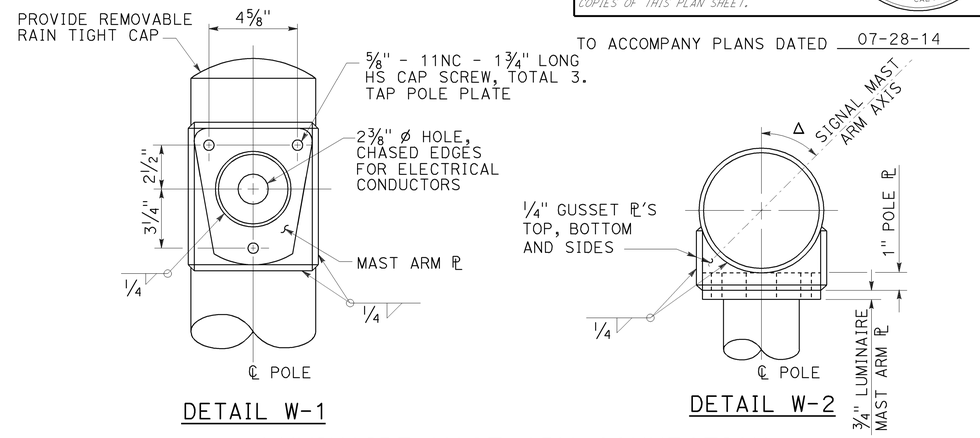

DETAIL W-1 DETAIL W-2

LUMINAIRE MAST ARM CONNECTION

DETAIL W

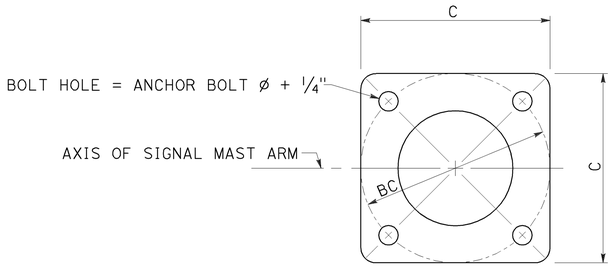

BASE PLATE

DETAIL D

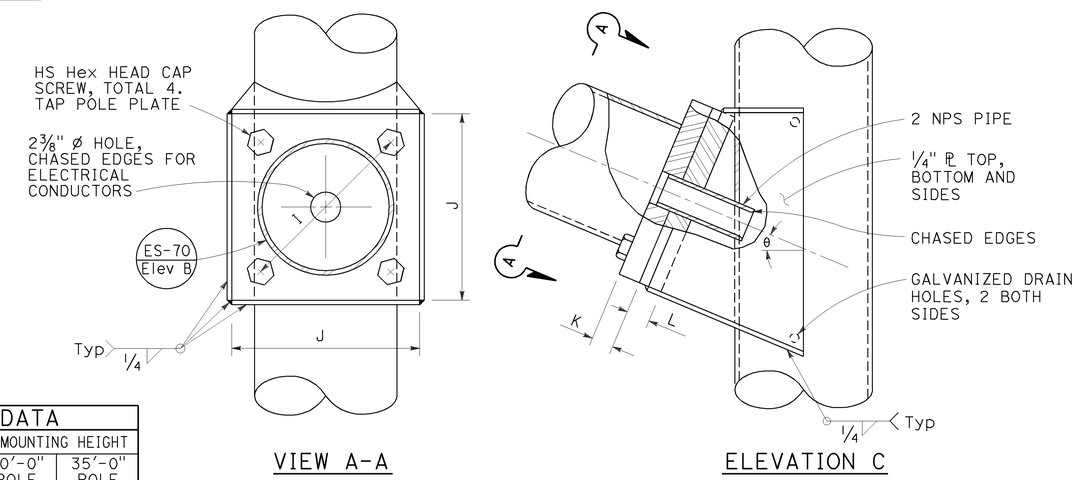

VIEW A-A ELEVATION C

SIGNAL MAST ARM CONNECTION

DETAIL C

SIGNAL MAST ARM DATA										
E PROJECTED LENGTH	G MOUNTING HEIGHT	H	Min OD AT POLE	THICKNESS	I BOLT CIRCLE	HS CAP SCREWS	J PLATE SIZE	K MAST ARM ℄ THICKNESS	L POLE ℄ THICKNESS	θ
15'-0"	21'-8"±	17'-6"	7⅜"	0.1196"	12"	1¼"-7NC-3"	1'-0"	1¼"	1½"	23°
20'-0"										
25'-0"	22'-8"±	16'-0"								
30'-0"	23'-0"±		8"							

LUMINAIRE MAST ARM DATA					
M PROJECTED LENGTH	N RISE	Min OD AT POLE	THICKNESS	P MOUNTING HEIGHT	
				30'-0" POLE	35'-0" POLE
6'-0"	2'-0"±	3¼"	0.1196"	31'-6"±	36'-6"±
8'-0"	2'-6"±	3½"		32'-0"±	37'-0"±
10'-0"	3'-3"±	3⅞"		32'-9"±	37'-9"±
12'-0"	4'-3"±			33'-9"±	38'-9"±
15'-0"	4'-9"±	4¼"		34'-3"±	39'-3"±

POLE TYPE	LOAD CASE	WIND VELOCITY (mph)	POLE DATA						BASE PLATE DATA				LUMINAIRE MAST ARM	SIGNAL MAST ARM	CIDH PILE FOUNDATION		
			A HEIGHT	Min OD		THICKNESS	ALTERNATIVE SECTION			C	BC = BOLT CIRCLE	THICKNESS	ANCHOR BOLT SIZE			DIAMETER	DEPTH	REINFORCED
				BASE	TOP		B LENGTH	BOTTOM	TOP									
16-1-100	1	100	18'-6"	10¾"	8 1/16"	0.1793"	None			1'-5½"	1'-5½"	3"	1½" Ø × 42"	NONE	15'-0", [20'-0"]	2'-6"	9'-0"	YES
18-1-100			17'-0"		8 5/16"		None							NONE				
19-1-100			30'-0"		6 7/16"		10'-0"	7⅞"	6 7/16"					6'-15' [12'-0"]	25'-0", [30'-0"]			
19A-1-100			35'-0"		5 11/16"		15'-0"		5 11/16"					6'-15' [15'-0"]				

[ ] INDICATES MAST ARM LENGTH TO BE USED UNLESS OTHERWISE NOTED ON PLANS.

STATE OF CALIFORNIA
DEPARTMENT OF TRANSPORTATION

ELECTRICAL SYSTEMS (SIGNAL AND LIGHTING STANDARD, CASE 1 SIGNAL MAST ARM LOADING, WIND VELOCITY = 100 MPH AND SIGNAL MAST ARM LENGTHS 15' TO 30')

NO SCALE

RSP ES-7C DATED JULY 19, 2013 SUPERSEDES STANDARD PLAN ES-7C DATED MAY 20, 2011 - PAGE 464 OF THE STANDARD PLANS BOOK DATED 2010.

REVISED STANDARD PLAN RSP ES-7C

2010 REVISED STANDARD PLAN RSP ES-7C

6-18-13

Dist	COUNTY	ROUTE	POST MILES TOTAL PROJECT	SHEET No.	TOTAL SHEETS
11	SD	67	R0.0/R5.9	197	204

REGISTERED CIVIL ENGINEER

July 19, 2013

PLANS APPROVAL DATE

REGISTERED PROFESSIONAL ENGINEER Stanley P. Johnson No. C57793 Exp. 3-31-14 CIVIL STATE OF CALIFORNIA

THE STATE OF CALIFORNIA OR ITS OFFICERS OR AGENTS SHALL NOT BE RESPONSIBLE FOR THE ACCURACY OR COMPLETENESS OF SCANNED COPIES OF THIS PLAN SHEET.

NOTE: TO ACCOMPANY PLANS DATED 07-28-14

Handhole shall be located on the downstream side of traffic.

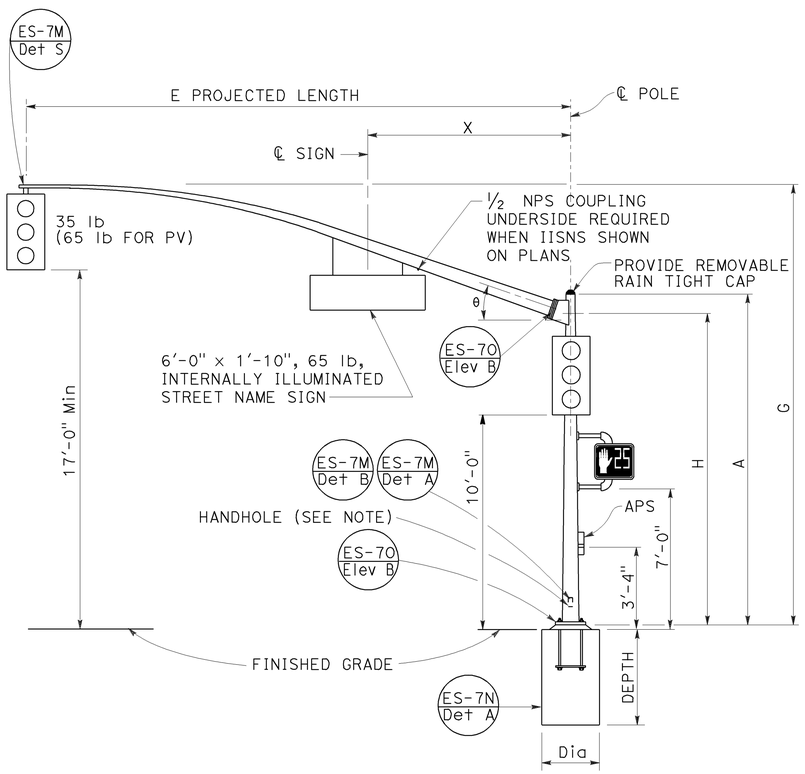

TYPE 16-2-100, 18-2-100

ELEVATION A

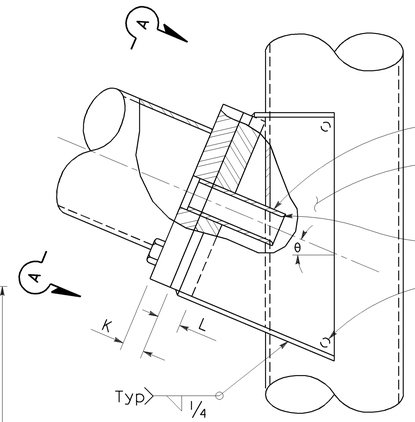

ELEVATION C

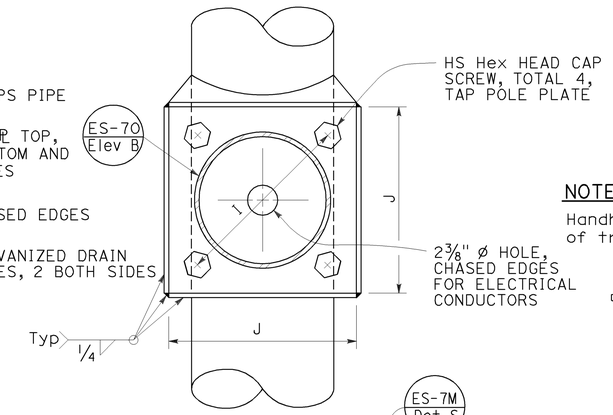

VIEW A-A

SIGNAL MAST ARM CONNECTION

DETAIL A

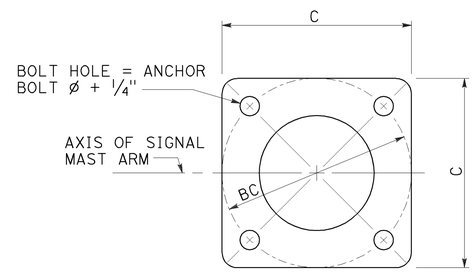

BASE PLATE

DETAIL B

REQUIRED FOR TYPE 17-2-100 TYPE 17A-2-100

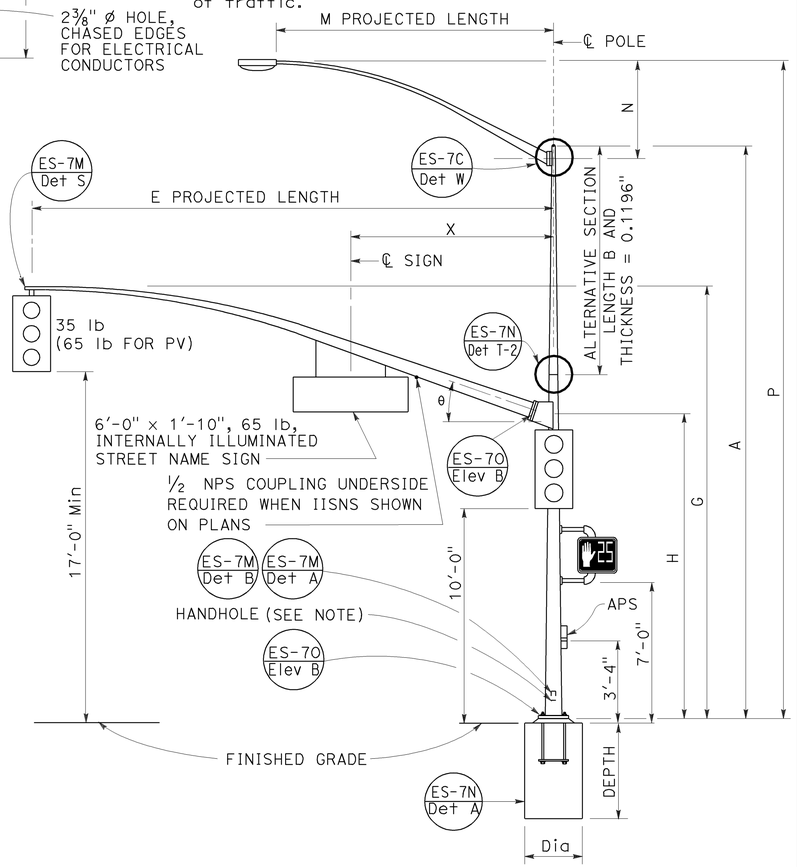

TYPE 17-2-100, 17A-2-100, 19-2-100, 19A-2-100

ELEVATION B

SIGNAL MAST ARM DATA											
E PROJECTED LENGTH	G MOUNTING HEIGHT	H	Min OD AT POLE	THICKNESS	I BOLT CIRCLE	HS CAP SCREWS	J PLATE SIZE	K MAST ARM ℙ THICKNESS	L POLE ℙ THICKNESS	θ	X Max
15'-0"	21'-8"±	17'-6"	7⅜"	0.1793"	12"	1¼"-7NC-3"	1'-0"	1¼"	1½"	23°	10'-6"
20'-0"	21'-8"±		7⅜"								
25'-0"	22'-8"±	16'-0"	7⅜"								
30'-0"	23'-0"±		8"								

LUMINAIRE MAST ARM DATA					
M PROJECTED LENGTH	N RISE	Min OD AT POLE	THICKNESS	P MOUNTING HEIGHT 30'-0" POLE	P MOUNTING HEIGHT 35'-0" POLE
6'-0"	2'-0"±	3¼"	0.1196"	31'-6"±	36'-6"±
8'-0"	2'-6"±	3½"		32'-0"±	37'-0"±
10'-0"	3'-3"±	3⅞"		32'-9"±	37'-9"±
12'-0"	4'-3"±			33'-9"±	38'-9"±
15'-0"	4'-9"±	4¼"		34'-3"±	39'-3"±

POLE TYPE	LOAD CASE	WIND VELOCITY (mph)	POLE DATA A HEIGHT	Min OD BASE	Min OD TOP	THICKNESS	ALTERNATIVE SECTION B LENGTH	ALTERNATIVE SECTION BOTTOM	ALTERNATIVE SECTION TOP	BASE PLATE DATA C	BC = BOLT CIRCLE	THICKNESS	ANCHOR BOLT SIZE	LUMINAIRE MAST ARM	SIGNAL MAST ARM	CIDH PILE FOUNDATION DIAMETER	DEPTH	REINFORCED
16-2-100	2	100	18'-6"	10¾"	8 1/16"	0.1793"	NONE			1'-5½"	1'-5½"	3"	1½"Ø x 42"	NONE	15'-0", 20'-0"	2'-6"	9'-0"	YES
17-2-100			30'-0"		6 7/16"		10'-0"	7⅞"	6 7/16"					6'-15' 12'-0"				
17A-2-100			35'-0"		5 11/16"		15'-0"		5 11/16"					6'-15' 15'-0"				
18-2-100			17'-0"		8 5/16"		NONE							None	25'-0", 30'-0"			
19-2-100			30'-0"		6 7/16"	0.2391"	10'-0"	7⅞"	6 7/16"	1'-7"			2"Ø x 42"	6'-15' 12'-0"			9'-6"	
19A-2-100			35'-0"		5 11/16"		15'-0"		5 11/16"					6'-15' 15'-0"				

INDICATES MAST ARM LENGTH TO BE USED UNLESS OTHERWISE NOTED ON PLANS.

STATE OF CALIFORNIA
DEPARTMENT OF TRANSPORTATION

ELECTRICAL SYSTEMS (SIGNAL AND LIGHTING STANDARD, CASE 2 SIGNAL MAST ARM LOADING, WIND VELOCITY=100 MPH AND SIGNAL MAST ARM LENGTHS 15' TO 30')

NO SCALE

RSP ES-7D DATED JULY 19, 2013 SUPERSEDES STANDARD PLAN ES-7D DATED MAY 20, 2011 - PAGE 465 OF THE STANDARD PLANS BOOK DATED 2010.

REVISED STANDARD PLAN RSP ES-7D

2010 REVISED STANDARD PLAN RSP ES-7D

6-18-13

Dist	COUNTY	ROUTE	POST MILES TOTAL PROJECT	SHEET No.	TOTAL SHEETS
11	SD	67	R0.0/R5.9	198	204

REGISTERED CIVIL ENGINEER

July 19, 2013
PLANS APPROVAL DATE

REGISTERED PROFESSIONAL ENGINEER Stanley P. Johnson No. C57793 Exp. 3-31-14 CIVIL STATE OF CALIFORNIA

THE STATE OF CALIFORNIA OR ITS OFFICERS OR AGENTS SHALL NOT BE RESPONSIBLE FOR THE ACCURACY OR COMPLETENESS OF SCANNED COPIES OF THIS PLAN SHEET.

NOTE:

TO ACCOMPANY PLANS DATED 07-28-14

1. Handhole shall be located on the downstream side of traffic.

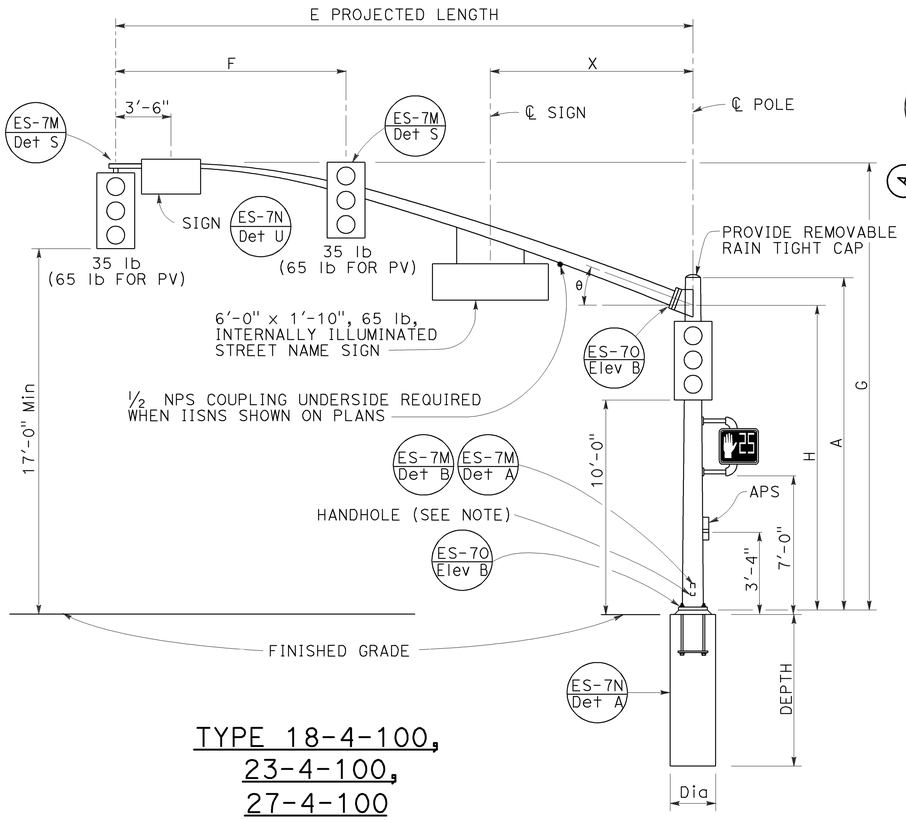

TYPE 18-4-100,
23-4-100,
27-4-100
ELEVATION A

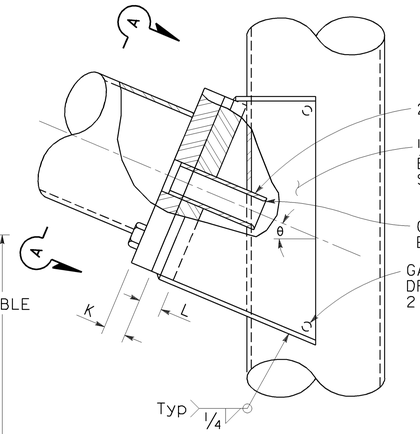

ELEVATION C

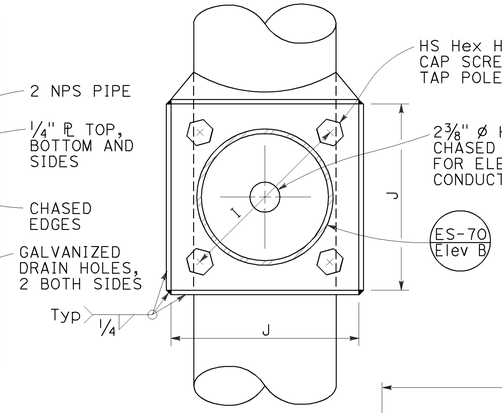

VIEW A-A

SIGNAL MAST ARM CONNECTION
DETAIL A

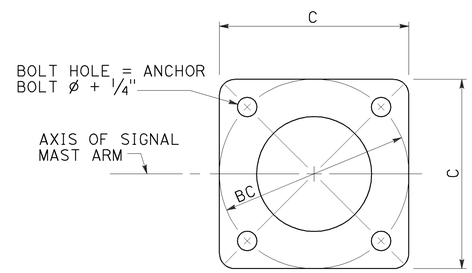

BASE PLATE
DETAIL B

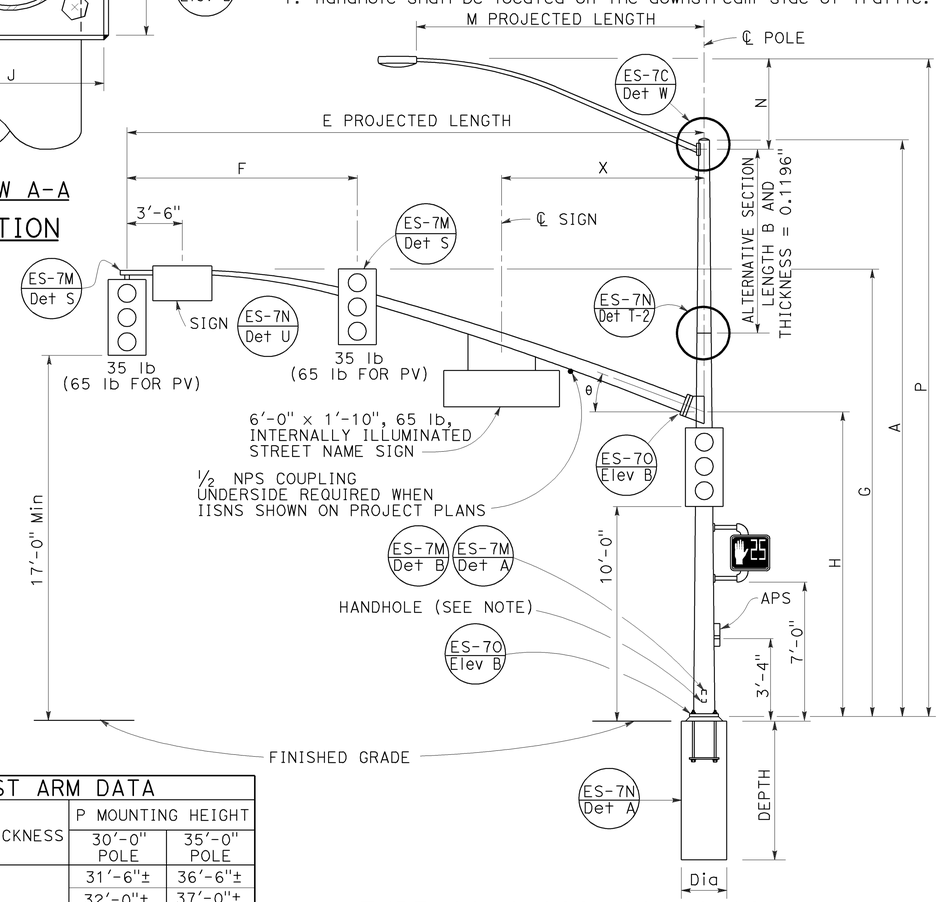

TYPE 19-4-100, 19A-4-100,
24-4-100, 24A-4-100,
26-4-100, 26A-4-100
ELEVATION B

SIGNAL MAST ARM DATA												
E PROJECTED LENGTH	F Min SPACING	G MOUNTING HEIGHT	H	Min OD AT POLE	THICKNESS	I BOLT CIRCLE	HS CAP SCREWS	J PLATE SIZE	K MAST ARM ℄ THICKNESS	L POLE ℄ THICKNESS	θ	X Max
25'-0"	10'-0"	22'-8"±	16'-0"	7⅜"	0.2391"	12"	1¼"-7NC-3"	1'-0"	1¼"	1½"	23°	10'-6"
30'-0"	12'-0"	23'-0"±		8"								
35'-0"	14'-0"			8 11/16"		13½"		1'-1½"	1½"	1¾"	21°	
40'-0"	15'-0"			9⅜"							15°	13'-0"
45'-0"		23'-8"±		10¼"								

LUMINAIRE MAST ARM DATA					
M PROJECTED LENGTH	N RISE	Min OD AT POLE	THICKNESS	P MOUNTING HEIGHT	
				30'-0" POLE	35'-0" POLE
6'-0"	2'-0"±	3¼"	0.1196"	31'-6"±	36'-6"±
8'-0"	2'-6"±	3½"		32'-0"±	37'-0"±
10'-0"	3'-3"±	3⅞"		32'-9"±	37'-9"±
12'-0"	4'-3"±			33'-9"±	38'-9"±
15'-0"	4'-9"±	4¼"		34'-3"±	39'-3"±

POLE TYPE	LOAD CASE	WIND VELOCITY (mph)	POLE DATA							BASE PLATE DATA				LUMINAIRE MAST ARM	SIGNAL MAST ARM	CIDH PILE FOUNDATION		
			A HEIGHT	Min OD BASE	Min OD TOP	THICKNESS	ALTERNATIVE SECTION B LENGTH	ALTERNATIVE SECTION BOTTOM	ALTERNATIVE SECTION TOP	C	BC = BOLT CIRCLE	THICKNESS	ANCHOR BOLT SIZE			Dia	DEPTH	REINFORCED
18-4-100	4	100	17'-0"	12⅛"	9 9/16"	0.3125"	NONE			1'-7"	1'-5½"	3"	2" Ø x 42"	NONE	25'-0", 30'-0"	3'-0"	11'-0"	YES
19-4-100			30'-0"		7 11/16"		10'-0"	9⅛"	7 11/16"					6'-15' 12'-0"				
19A-4-100			35'-0"		6 15/16"		15'-0'		6 15/16"					6'-15' 15'-0"				
23-4-100			17'-0"		9 9/16"		NONE							NONE	35'-0"			
24-4-100			30'-0"		7 11/16"		10'-0"	9⅛"	7 11/16"					6'-15' 12'-0"				
24A-4-100			35'-0"		6 15/16"		15'-0"		6 15/16"					6'-15' 15'-0"				
26-4-100			30'-0"	14"	8 3/16"		10'-0"	9⅝"	8 3/16"	23"	21"		2½" Ø x 42"	6'-15' 12'-0"	40'-0", 45'-0"	3'-6"	12'-0"	
26A-4-100			35'-0"		7 7/16"		15'-0"		7 7/16"					6'-15' 15'-0"				
27-4-100			17'-0"		10 1/16"		NONE							NONE				

☐ INDICATES MAST ARM LENGTH TO BE USED UNLESS OTHERWISE NOTED ON PLANS.

STATE OF CALIFORNIA
DEPARTMENT OF TRANSPORTATION

ELECTRICAL SYSTEMS (SIGNAL AND LIGHTING STANDARD, CASE 4 SIGNAL MAST ARM LOADING, WIND VELOCITY=100 MPH AND SIGNAL MAST ARM LENGTHS 25' TO 45')

NO SCALE

RSP ES-7F DATED JULY 19, 2013 SUPERSEDES STANDARD PLAN ES-7F
DATED MAY 20, 2011 - PAGE 467 OF THE STANDARD PLANS BOOK DATED 2010.

REVISED STANDARD PLAN RSP ES-7F

2010 REVISED STANDARD PLAN RSP ES-7F

6-18-13

Dist	COUNTY	ROUTE	POST MILES TOTAL PROJECT	SHEET No.	TOTAL SHEETS
11	SD	67	R0.0/R5.9	199	204

REGISTERED CIVIL ENGINEER

July 19, 2013
PLANS APPROVAL DATE

REGISTERED PROFESSIONAL ENGINEER Stanley P. Johnson No. C57793 Exp. 3-31-14 CIVIL STATE OF CALIFORNIA

THE STATE OF CALIFORNIA OR ITS OFFICERS OR AGENTS SHALL NOT BE RESPONSIBLE FOR THE ACCURACY OR COMPLETENESS OF SCANNED COPIES OF THIS PLAN SHEET.

TO ACCOMPANY PLANS DATED 07-28-14

NOTE:
Handhole shall be located on the downstream side of traffic.

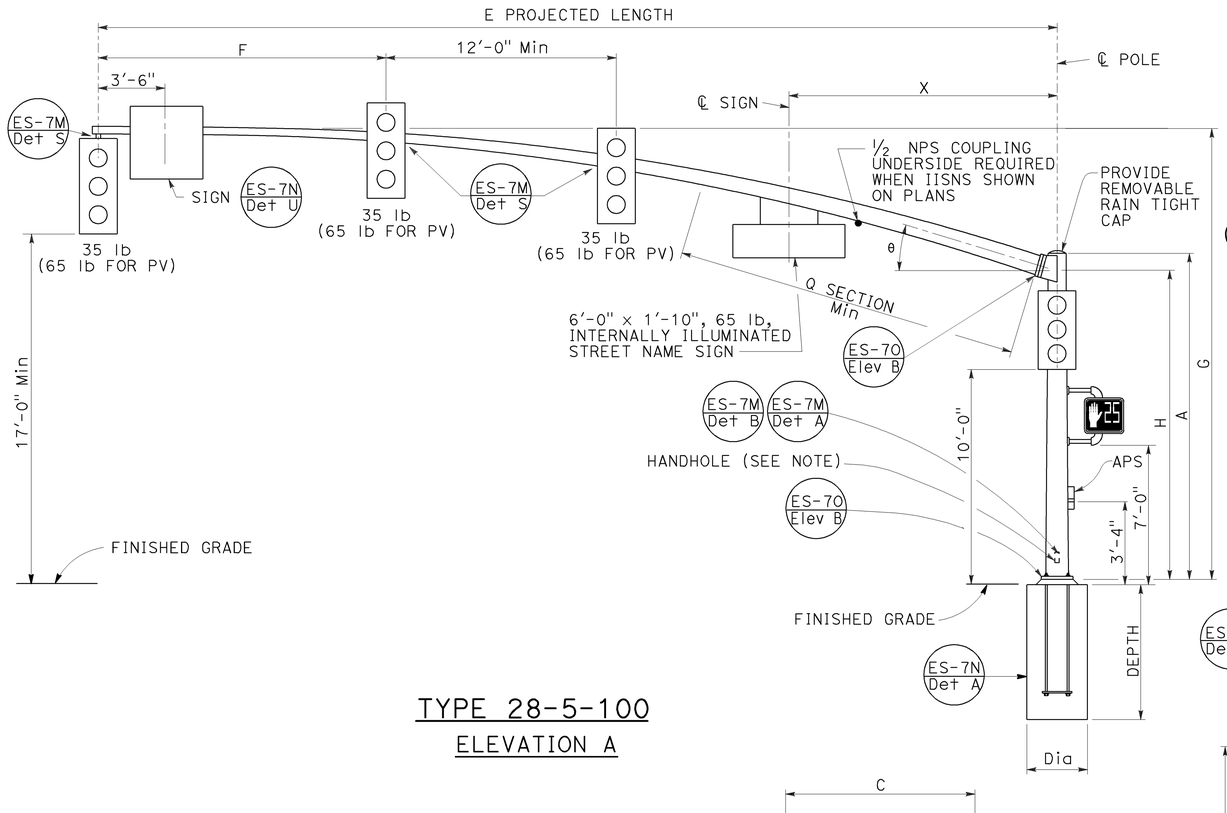

TYPE 28-5-100
ELEVATION A

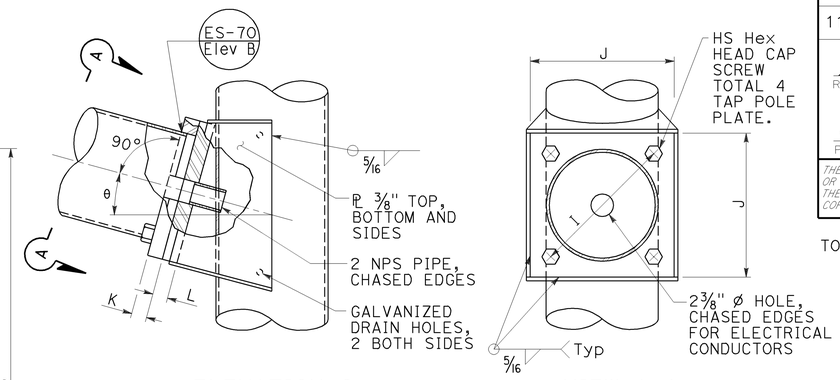

ELEVATION C

VIEW A-A

SIGNAL MAST ARM CONNECTION
DETAIL A

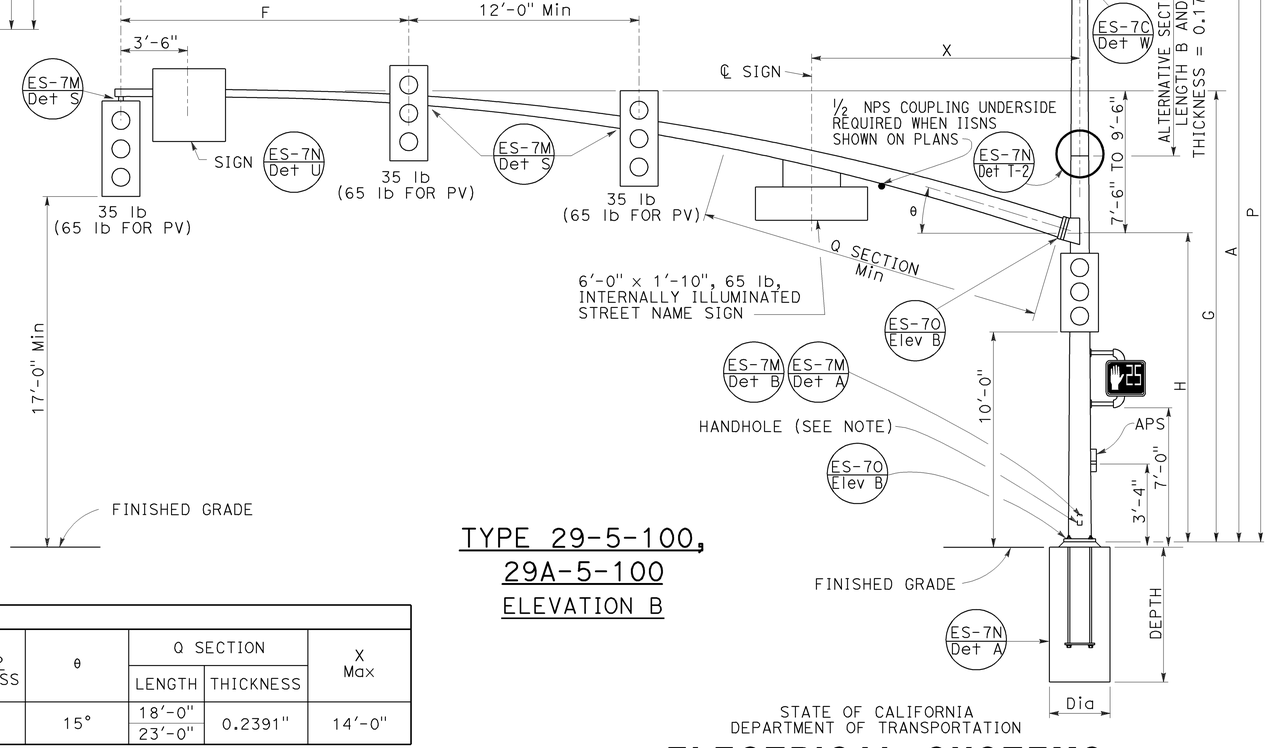

TYPE 29-5-100,
29A-5-100
ELEVATION B

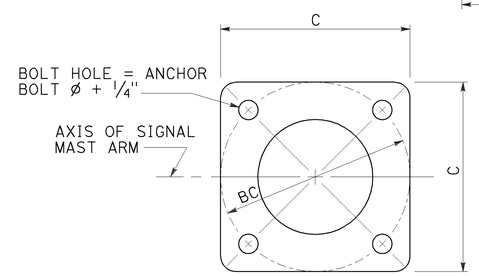

BASE PLATE
DETAIL B

LUMINAIRE MAST ARM DATA					
M PROJECTED LENGTH	N RISE	Min OD AT POLE	THICKNESS	P MOUNTING HEIGHT 30'-0" POLE	P MOUNTING HEIGHT 35'-0" POLE
6'-0"	2'-0"±	3 1/4"	0.1196"	31'-6"±	36'-6"±
8'-0"	2'-6"±	3 1/2"		32'-0"±	37'-0"±
10'-0"	3'-3"±	3 7/8"		32'-9"±	37'-9"±
12'-0"	4'-3"±			33'-9"±	38'-9"±
15'-0"	4'-9"±	4 1/4"		34'-3"±	39'-3"±

SIGNAL MAST ARM DATA														
E PROJECTED LENGTH	F Min SPACING	G MOUNTING HEIGHT	H	Min OD AT POLE	THICKNESS	I BOLT CIRCLE	HS CAP SCREWS	J PLATE SIZE	K MAST ARM ℄ THICKNESS	L POLE ℄ THICKNESS	θ	Q SECTION LENGTH	Q SECTION THICKNESS	X Max
50'-0"	15'-0"	23'-7"± TO 25'-7"±	16'-0"	11 7/16"	0.1793"	16"	1 1/2"-6NC-3 1/4"	1'-4"	1 3/4"	1 3/4"	15°	18'-0"	0.2391"	14'-0"
55'-0"				1'-1 1/4"								23'-0"		

POLE TYPE	LOAD CASE	WIND VELOCITY (mph)	POLE DATA A HEIGHT	Min OD BASE	Min OD TOP	THICKNESS	ALTERNATIVE SECTION B LENGTH	ALTERNATIVE SECTION BOTTOM	ALTERNATIVE SECTION TOP	BASE PLATE DATA C	BC = BOLT CIRCLE	THICKNESS	ANCHOR BOLT SIZE	LUMINAIRE MAST ARM	SIGNAL MAST ARM	CIDH PILE FOUNDATION Dia	DEPTH	REINFORCED
28-5-100	5	100	17'-0"	14"	11 9/16"	0.3125"	NONE	11 1/8"	9 11/16"	23"	21"	3"	2 1/2" ø x 42"	NONE	50'-0", 55'-0"	3'-6"	12'-0"	YES
29-5-100			30'-0"		9 11/16"		10'-0"							6'-15' 15'-0"				
29A-5-100			35'-0"		8 15/16"		15'-0"		8 15/16"									

INDICATES MAST ARM LENGTH TO BE USED UNLESS OTHERWISE NOTED ON PLANS.

STATE OF CALIFORNIA
DEPARTMENT OF TRANSPORTATION

ELECTRICAL SYSTEMS (SIGNAL AND LIGHTING STANDARD, CASE 5 SIGNAL MAST ARM LOADING, WIND VELOCITY=100 MPH AND SIGNAL MAST ARM LENGTHS 50' TO 55')

NO SCALE

RSP ES-7G DATED JULY 19, 2013 SUPERSEDES STANDARD PLAN ES-7G DATED MAY 20, 2011 - PAGE 468 OF THE STANDARD PLANS BOOK DATED 2010.

REVISED STANDARD PLAN RSP ES-7G

2010 REVISED STANDARD PLAN RSP ES-7G

6-18-13

Dist	COUNTY	ROUTE	POST MILES TOTAL PROJECT	SHEET No.	TOTAL SHEETS
11	SD	67	R0.0/R5.9	200	204

REGISTERED CIVIL ENGINEER

July 19, 2013
PLANS APPROVAL DATE

REGISTERED PROFESSIONAL ENGINEER Stanley P. Johnson No. C57793 Exp. 3-31-14 CIVIL STATE OF CALIFORNIA

THE STATE OF CALIFORNIA OR ITS OFFICERS OR AGENTS SHALL NOT BE RESPONSIBLE FOR THE ACCURACY OR COMPLETENESS OF SCANNED COPIES OF THIS PLAN SHEET.

TO ACCOMPANY PLANS DATED 07-28-14

2010 REVISED STANDARD PLAN RSP ES-7J

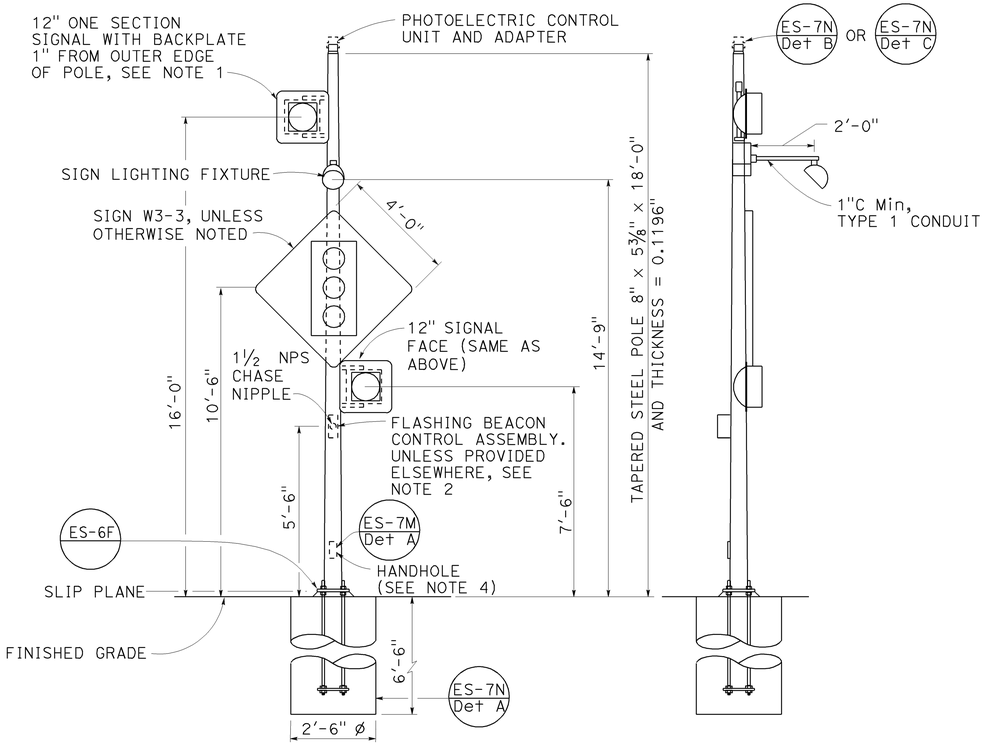

FRONT VIEW

SIDE VIEW

TYPE 15-FBS
ADVANCE FLASHING BEACON WITH SLIP BASE INSTALLATION
DETAIL A

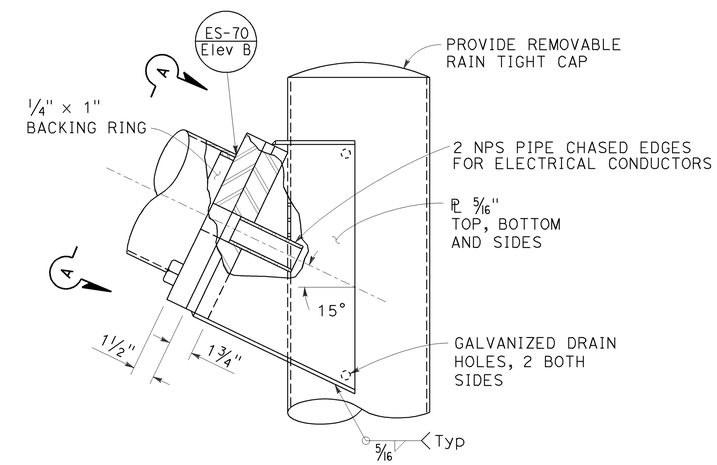

ELEVATION B

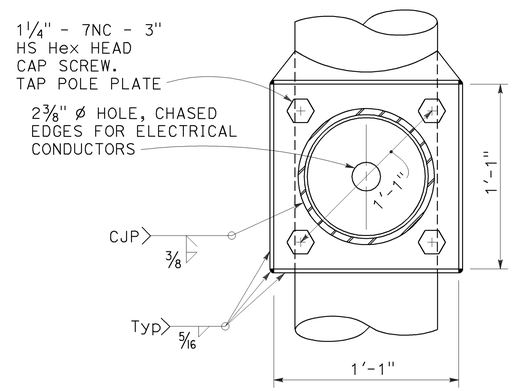

VIEW A-A

FLASHING BEACON MAST ARM CONNECTION DETAIL
DETAIL B

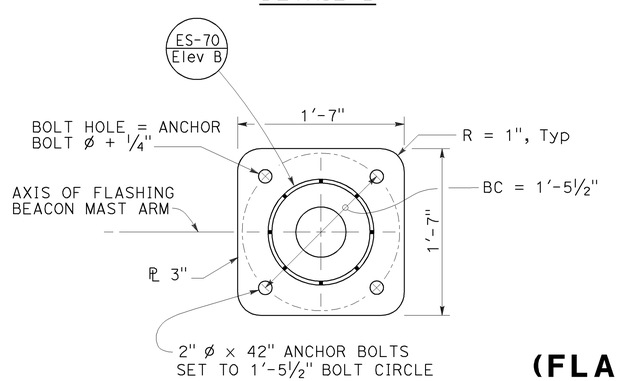

BASE PLATE

DETAIL C

NOTES:

1. See Revised Standard Plan RSP ES-4A and Standard Plan ES-4D for attachment fitting details.
2. For wiring diagram, see Standard Plan ES-14B.
3. For additional notes and details, see Standard Plans ES-7M and ES-7N.
4. Handhole shall be located on the downstream side of traffic.
5. See project plans for type of standard to be installed.

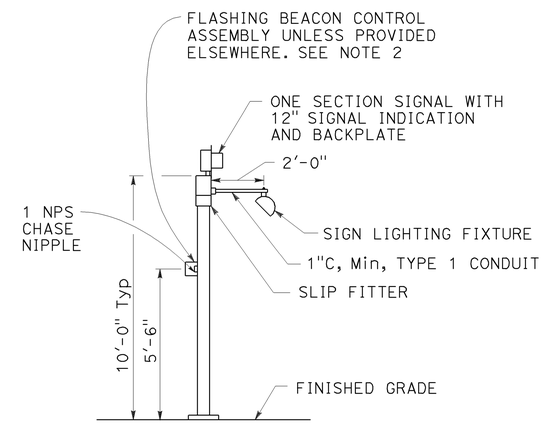

TYPE 1-A, 1-B, 1-C AND 1-D
ADVANCE FLASHING BEACON INSTALLATION
DETAIL D
See Note 5

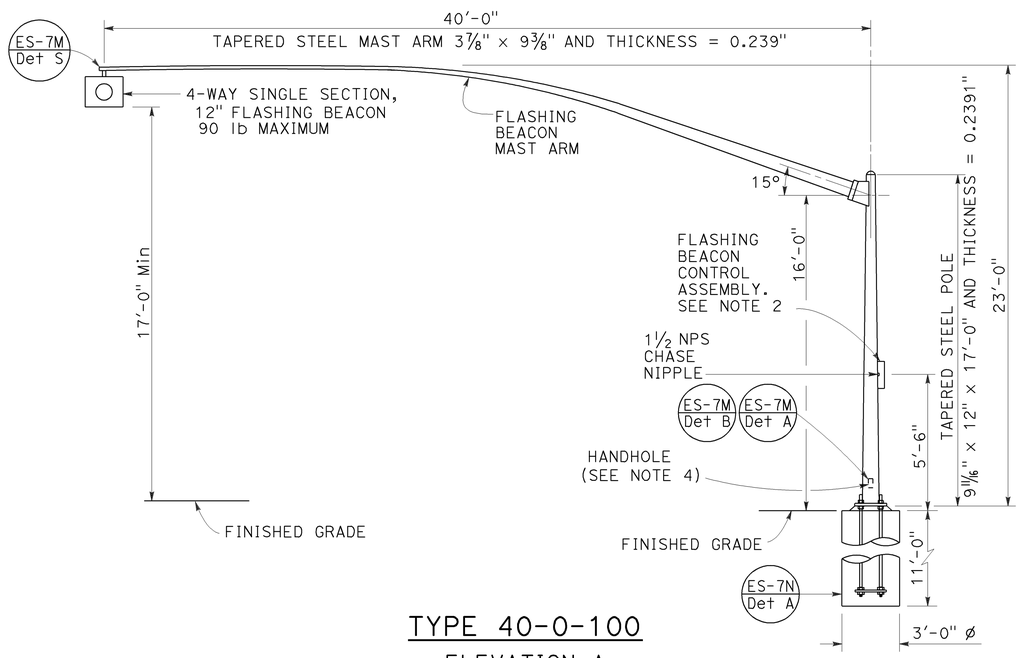

TYPE 40-0-100
ELEVATION A

STATE OF CALIFORNIA
DEPARTMENT OF TRANSPORTATION

ELECTRICAL SYSTEMS (FLASHING BEACON ON A TYPE 1, TYPE 15-FBS AND TYPE 40 STANDARD)

NO SCALE

RSP ES-7J DATED JULY 19, 2013 SUPERSEDES STANDARD PLAN ES-7J DATED MAY 20, 2011 - PAGE 471 OF THE STANDARD PLANS BOOK DATED 2010.

REVISED STANDARD PLAN RSP ES-7J

6-26-13