| Dist | COUNTY | ROUTE | POST MILES TOTAL PROJECT | SHEET No. | TOTAL SHEETS |
|---|---|---|---|---|---|
| 11 | SD | 15, 94, 805 | Var | 101 | 184 |

LICENSED LANDSCAPE ARCHITECT

09-02-14
PLANS APPROVAL DATE

LICENSED LANDSCAPE ARCHITECT
CRISTINA BLANCO-KRAUSS, No. 4895
Signature
01-31-16
Renewal Date
07-08-14
Date
STATE OF CALIFORNIA

*THE STATE OF CALIFORNIA OR ITS OFFICERS OR AGENTS SHALL NOT BE RESPONSIBLE FOR THE ACCURACY OR COMPLETENESS OF SCANNED COPIES OF THIS PLAN SHEET.*

## NOTES:

1. FOR ACCURATE RIGHT OF WAY DATA, CONTACT RIGHT OF WAY ENGINEERING AT THE DISTRICT OFFICE.
2. NO STORAGE OF MATERIALS AND EQUIPMENT IS ALLOWED WITHIN THE DRIPLINE OF Exist TREES AND SHRUBS.
3. FOR TREE AND SHRUB PRUNING NOTES SEE SHEET PR-1.

**SAN DIEGO**

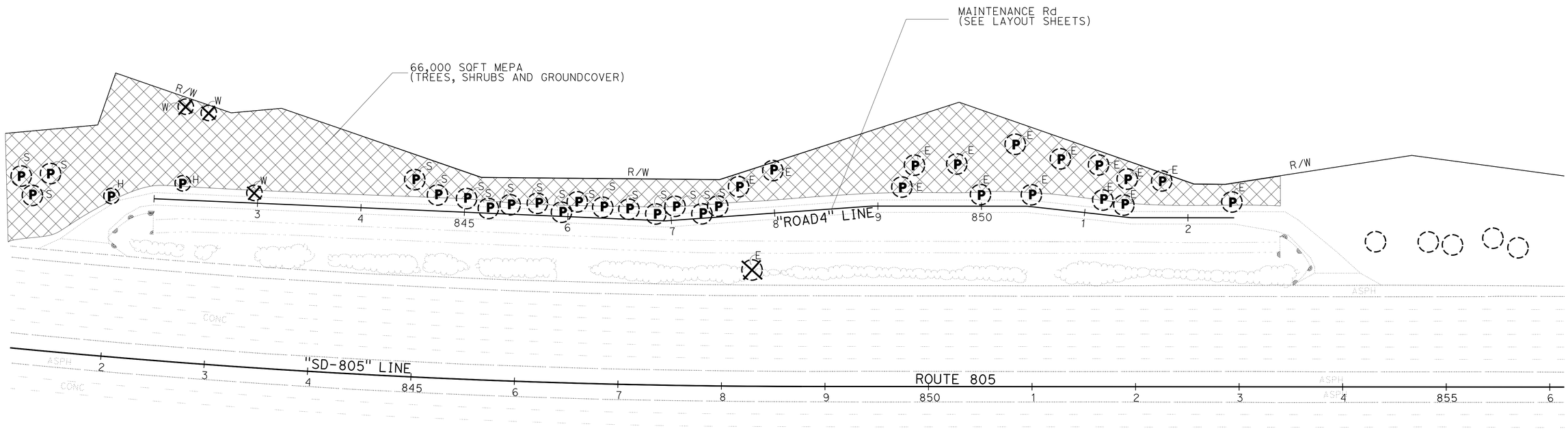


*APPROVED FOR PLANT REMOVAL WORK ONLY*

# PLANT REMOVAL PLAN
## LOCATION 2
SCALE: 1" = 50'

**PR-3**

STATE OF CALIFORNIA - DEPARTMENT OF TRANSPORTATION
Caltrans® LANDSCAPE ARCHITECTURE
SENIOR LANDSCAPE ARCHITECT: STEPHEN ALVAREZ
CALCULATED-DESIGNED BY: CRISTINA BLANCO-KRAUSS
CHECKED BY: BETH HALL
REVISED BY
DATE REVISED

LAST REVISION 08-11-14
DATE PLOTTED => 04-SEP-2014
TIME PLOTTED => 10:45

| Dist | COUNTY | ROUTE | POST MILES TOTAL PROJECT | SHEET No. | TOTAL SHEETS |
|---|---|---|---|---|---|
| 11 | SD | 15, 94, 805 | Var | 102 | 184 |

LICENSED LANDSCAPE ARCHITECT

09-02-14
PLANS APPROVAL DATE

LICENSED LANDSCAPE ARCHITECT
CRISTINA BLANCO-KRAUSS No. 4895
Signature
01-31-16
Renewal Date
07-08-14
Date
STATE OF CALIFORNIA

*THE STATE OF CALIFORNIA OR ITS OFFICERS OR AGENTS SHALL NOT BE RESPONSIBLE FOR THE ACCURACY OR COMPLETENESS OF SCANNED COPIES OF THIS PLAN SHEET.*

## NOTES:

1. FOR ACCURATE RIGHT OF WAY DATA, CONTACT RIGHT OF WAY ENGINEERING AT THE DISTRICT OFFICE.
2. NO STORAGE OF MATERIALS AND EQUIPMENT IS ALLOWED WITHIN THE DRIPLINE OF Exist TREES AND SHRUBS.
3. FOR TREE AND SHRUB PRUNING NOTES SEE SHEET PR-1.

**SAN DIEGO**

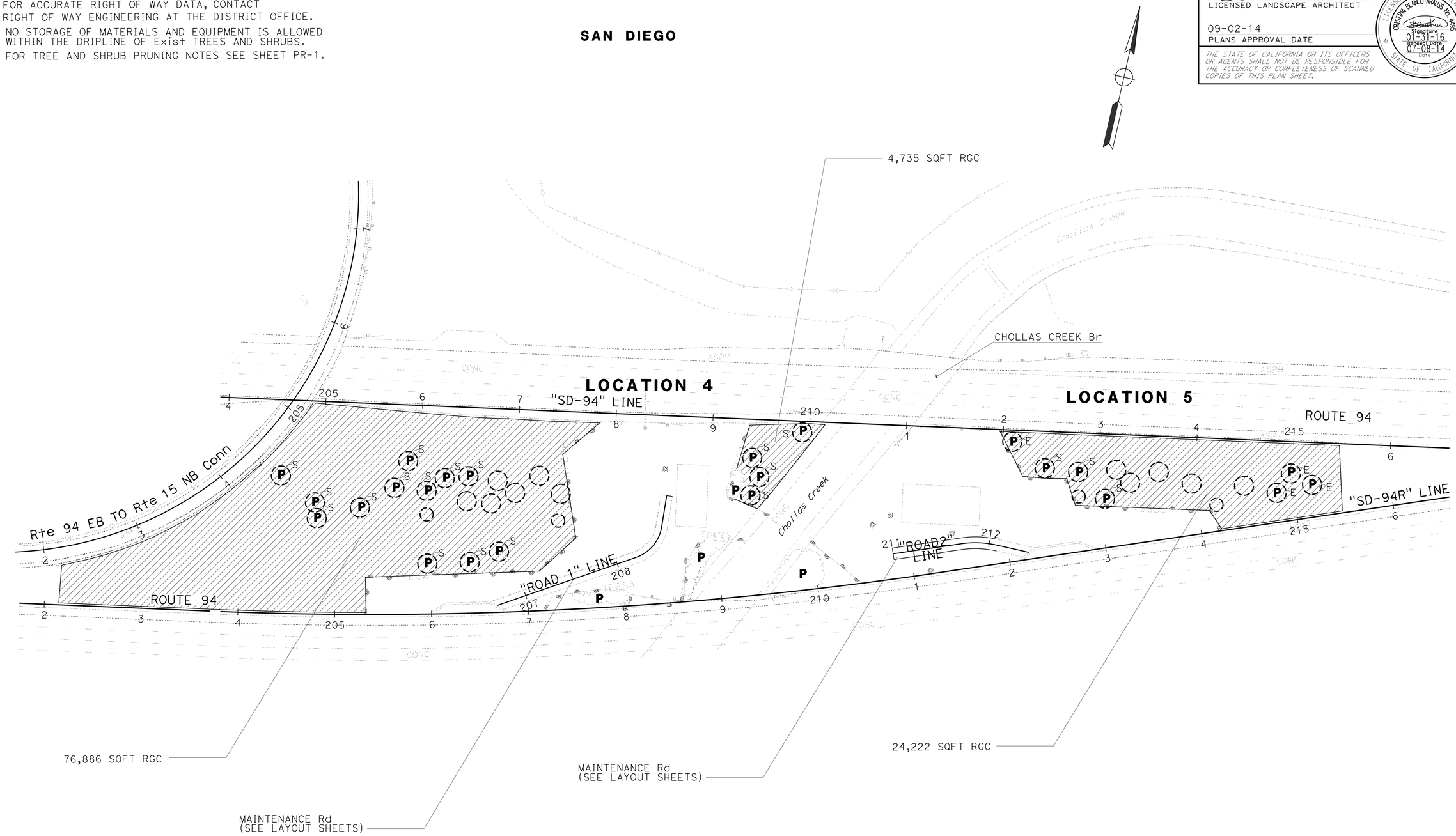


*APPROVED FOR PLANT REMOVAL WORK ONLY*

# PLANT REMOVAL PLAN
## LOCATIONS 4 & 5

SCALE: 1" = 50'

**PR-4**

STATE OF CALIFORNIA - DEPARTMENT OF TRANSPORTATION
Caltrans LANDSCAPE ARCHITECTURE
SENIOR LANDSCAPE ARCHITECT: STEPHEN ALVAREZ
CALCULATED-DESIGNED BY: CRISTINA BLANCO-KRAUSS
CHECKED BY: BETH HALL
REVISED BY
DATE REVISED

LAST REVISION 08-11-14
DATE PLOTTED => 04-SEP-2014
TIME PLOTTED => 10:45

| Dist | COUNTY | ROUTE | POST MILES TOTAL PROJECT | SHEET No. | TOTAL SHEETS |
|---|---|---|---|---|---|
| 11 | SD | 15, 94, 805 | Var | 103 | 184 |

LICENSED LANDSCAPE ARCHITECT

09-02-14
PLANS APPROVAL DATE

LICENSED LANDSCAPE ARCHITECT
CRISTINA BLANCO-KRAUSS No. 4085
Signature
01-31-16
Renewal Date
07-08-14
Date
STATE OF CALIFORNIA

*THE STATE OF CALIFORNIA OR ITS OFFICERS OR AGENTS SHALL NOT BE RESPONSIBLE FOR THE ACCURACY OR COMPLETENESS OF SCANNED COPIES OF THIS PLAN SHEET.*

NOTES:

1. FOR ACCURATE RIGHT OF WAY DATA, CONTACT RIGHT OF WAY ENGINEERING AT THE DISTRICT OFFICE.

**LEMON GROVE**

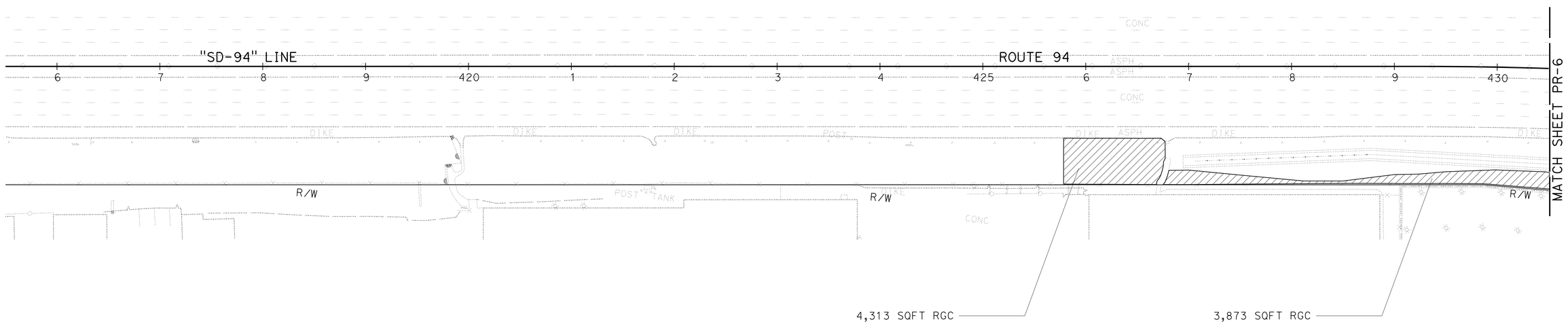


*APPROVED FOR PLANT REMOVAL WORK ONLY*

# PLANT REMOVAL PLAN
## LOCATION 6
## PR-5

SCALE: 1" = 50'

STATE OF CALIFORNIA - DEPARTMENT OF TRANSPORTATION
Caltrans® LANDSCAPE ARCHITECTURE

SENIOR LANDSCAPE ARCHITECT: STEPHEN ALVAREZ
CALCULATED-DESIGNED BY: CRISTINA BLANCO-KRAUSS
CHECKED BY: BETH HALL
REVISED BY
DATE REVISED

LAST REVISION 08-11-14
DATE PLOTTED => 04-SEP-2014
TIME PLOTTED => 10:45

| Dist | COUNTY | ROUTE | POST MILES TOTAL PROJECT | SHEET No. | TOTAL SHEETS |
|---|---|---|---|---|---|
| 11 | SD | 15, 94, 805 | Var | 104 | 184 |

LICENSED LANDSCAPE ARCHITECT

09-02-14
PLANS APPROVAL DATE

LICENSED LANDSCAPE ARCHITECT
CRISTINA BLANCO-KRAUSS No. 4085
Signature
01-31-16
Renewal Date
07-08-14
Date
STATE OF CALIFORNIA

*THE STATE OF CALIFORNIA OR ITS OFFICERS OR AGENTS SHALL NOT BE RESPONSIBLE FOR THE ACCURACY OR COMPLETENESS OF SCANNED COPIES OF THIS PLAN SHEET.*

NOTES:

1. FOR ACCURATE RIGHT OF WAY DATA, CONTACT RIGHT OF WAY ENGINEERING AT THE DISTRICT OFFICE.

## LEMON GROVE

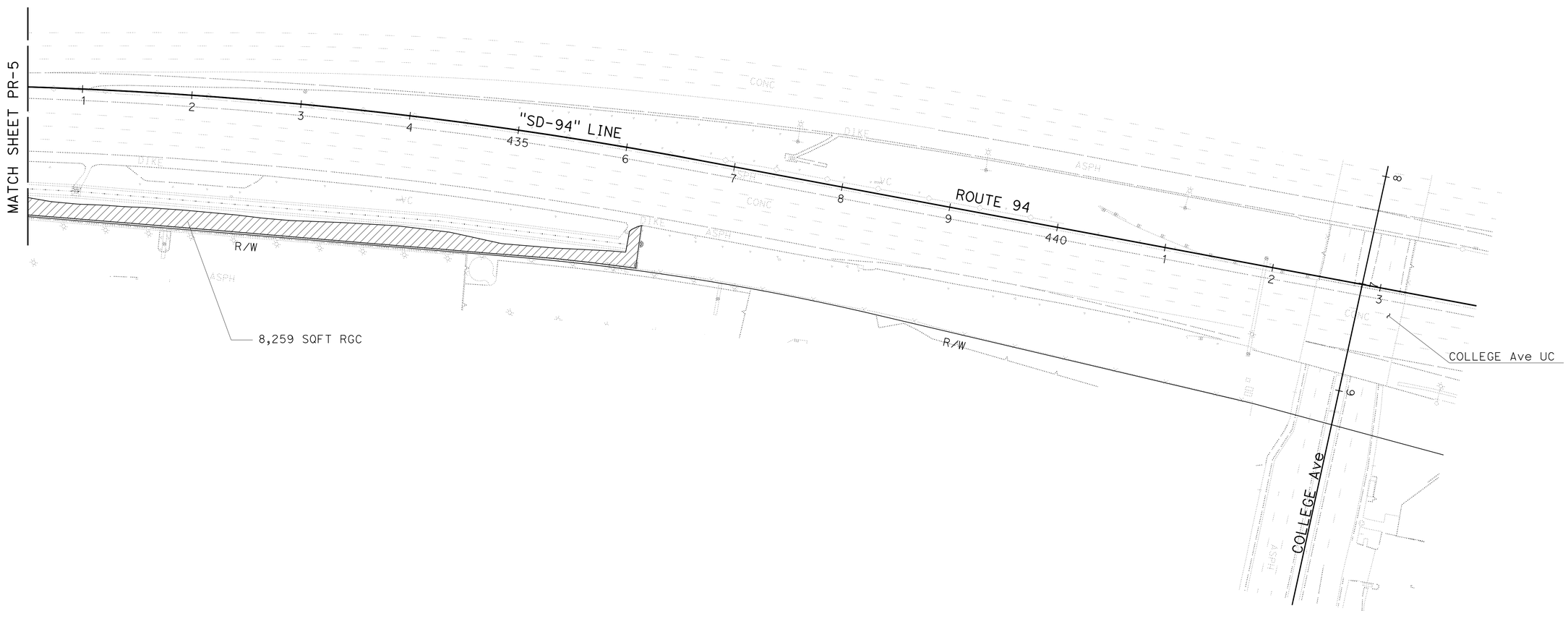


# PLANT REMOVAL PLAN
## LOCATION 6
## PR-6

*APPROVED FOR PLANT REMOVAL WORK ONLY*

SCALE: 1" = 50'

STATE OF CALIFORNIA - DEPARTMENT OF TRANSPORTATION
Caltrans LANDSCAPE ARCHITECTURE

SENIOR LANDSCAPE ARCHITECT: STEPHEN ALVAREZ
CALCULATED-DESIGNED BY: CRISTINA BLANCO-KRAUSS
CHECKED BY: BETH HALL
REVISED BY
DATE REVISED

LAST REVISION 08-11-14
DATE PLOTTED => 04-SEP-2014
TIME PLOTTED => 10:45

| Dist | COUNTY | ROUTE | POST MILES TOTAL PROJECT | SHEET No. | TOTAL SHEETS |
|---|---|---|---|---|---|
| 11 | SD | 15, 94, 805 | Var | 105 | 184 |

LICENSED LANDSCAPE ARCHITECT

09-02-14
PLANS APPROVAL DATE

LICENSED LANDSCAPE ARCHITECT
CRISTINA BLANCO-KRAUSS No. 4895
Signature
01-31-16
Renewal Date
07-08-14
Date
STATE OF CALIFORNIA

*THE STATE OF CALIFORNIA OR ITS OFFICERS OR AGENTS SHALL NOT BE RESPONSIBLE FOR THE ACCURACY OR COMPLETENESS OF SCANNED COPIES OF THIS PLAN SHEET.*

## NOTES:

1. FOR ACCURATE RIGHT OF WAY DATA, CONTACT RIGHT OF WAY ENGINEERING AT THE DISTRICT OFFICE.
2. NO STORAGE OF MATERIALS AND EQUIPMENT IS ALLOWED WITHIN THE DRIPLINE OF Exist TREES AND SHRUBS.
3. FOR SHRUB PRUNING NOTES SEE SHEET PR-1.

**LEMON GROVE**

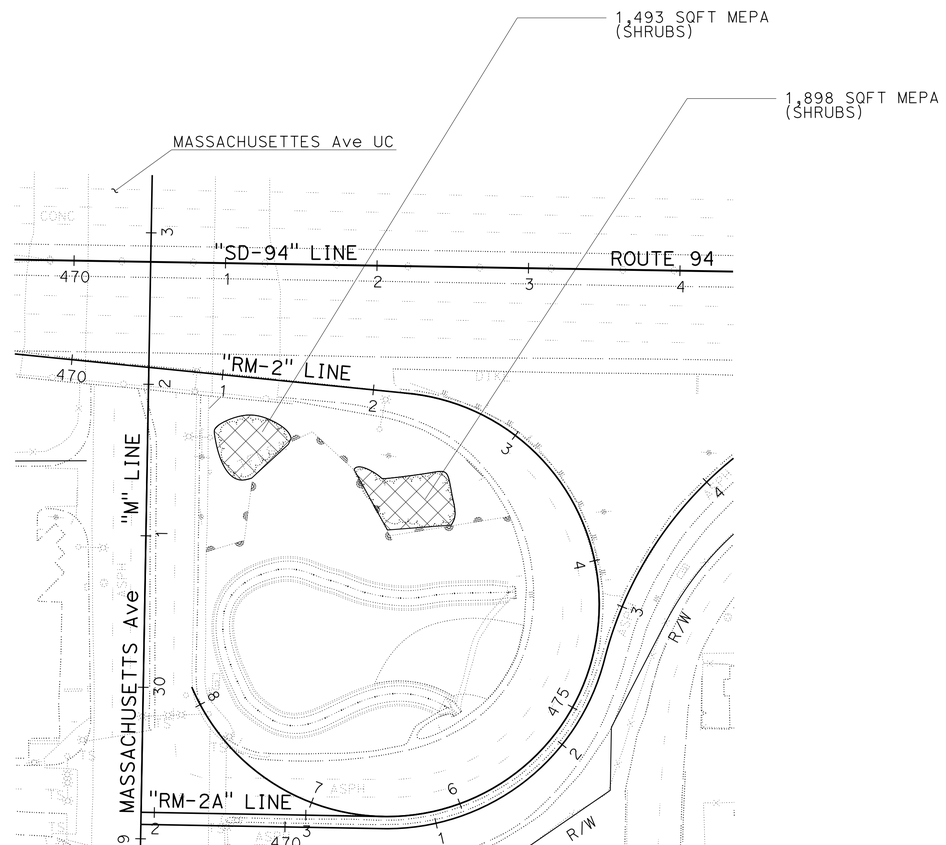


*APPROVED FOR PLANT REMOVAL WORK ONLY*

# PLANT REMOVAL PLAN
## LOCATION 7
## PR-7

SCALE: 1" = 50'

STATE OF CALIFORNIA - DEPARTMENT OF TRANSPORTATION
Caltrans LANDSCAPE ARCHITECTURE

SENIOR LANDSCAPE ARCHITECT: STEPHEN ALVAREZ
CALCULATED-DESIGNED BY: CRISTINA BLANCO-KRAUSS
CHECKED BY: BETH HALL
REVISED BY
DATE REVISED

LAST REVISION 08-11-14
DATE PLOTTED => 04-SEP-2014
TIME PLOTTED => 10:45

| Dist | COUNTY | ROUTE | POST MILES TOTAL PROJECT | SHEET No. | TOTAL SHEETS |
|---|---|---|---|---|---|
| 11 | SD | 15, 94, 805 | Var | 106 | 184 |

LICENSED LANDSCAPE ARCHITECT

09-02-14
PLANS APPROVAL DATE

LICENSED LANDSCAPE ARCHITECT — CRISTINA BLANCO-KRAUSS, No. 4495 — STATE OF CALIFORNIA — Signature 01-31-16 — Expiration Date 07-08-14 — Date

*THE STATE OF CALIFORNIA OR ITS OFFICERS OR AGENTS SHALL NOT BE RESPONSIBLE FOR THE ACCURACY OR COMPLETENESS OF SCANNED COPIES OF THIS PLAN SHEET.*

# IRRIGATION LEGEND

| SYMBOL | DESCRIPTION | SPRAY PATTERN | OPERATING PRESSURE (psi) | PRESSURE COMPENSATING | PLUS/MINUS 5% ② DISCHARGE: GALLONS PER MINUTE (GPM) | GALLONS PER HOUR (GPH) | RADIUS (ft) | WIDTH x LENGTH (ft) | FLOW SHUTOFF DEVICE | INLET CONNECTION (NPT INCH) | POSITIVE-LOCKING Adj ARC STOP | BACKSPLASH PREVENTER | DIFFUSER PIN | DISTANCE CONTROL FLAP | Adj DISCHARGE | SPRINKLER ASSEMBLY: TYPE | RISER: MATERIAL: PLASTIC | GALVANIZED | SIZE (IPS INCH) | HEIGHT (INCH) | ⑥ SWING JOINT | RISER SUPPORT | POP-UP: TYPE | INLET CONNECTION (NPT INCH) | SPRINKLER PROTECTOR (TYPE) | POP-UP HEIGHT (INCH) | TREE WELL: RISER HEIGHT (INCH) | SWING JOINT | REMARKS |
|---|---|---|---|---|---|---|---|---|---|---|---|---|---|---|---|---|---|---|---|---|---|---|---|---|---|---|---|---|---|
| [5] | GEAR DRIVEN | F | 50 | - | 3.5 | - | 40 | - | - | ¾ | - | - | X | - | - | II | X | - | ¾ | 12 | X | - | - | - | - | - | - | - | ③ |
| ⑤ | GEAR DRIVEN | P | 50 | - | 3.5 | - | 40 | - | - | ¾ | - | - | X | - | - | I | X | - | ¾ | 12 | X | - | - | - | - | - | - | - | ③⑦ |
| ⑥ | GEAR DRIVEN | P | 50 | - | 3.5 | - | 40 | - | - | ¾ | - | - | X | - | - | I | X | - | - | | - | - | I | ¾ | I | 12 | - | - | ③⑦ |
| [7] | GEAR DRIVEN | F | 50 | - | 7.5 | - | 48 | - | - | ¾ | - | - | X | - | - | II | X | - | ¾ | 12 | X | - | - | - | - | - | - | - | ③ |
| ⑦ | GEAR DRIVEN | P | 50 | - | 7.5 | - | 48 | - | - | ¾ | - | - | X | - | - | I | X | - | ¾ | 12 | X | - | - | - | - | - | - | - | ③⑦ |
| ▲ | SHRUB SPRAY | F | 30 | - | 3.6 | - | 15 | - | - | ½ | - | - | X | - | X | I | X | - | - | - | - | - | I | ½ | I | 12 | - | - | ⑧ |
| ▲ | SHRUB SPRAY | H | 30 | - | 1.8 | - | 15 | - | - | ½ | - | - | X | - | X | I | X | - | - | - | - | - | I | ½ | I | 12 | - | - | ⑧ |
| ▲ | SHRUB SPRAY | Q | 30 | - | 0.9 | - | 15 | - | - | ½ | - | - | X | - | X | I | X | - | - | - | - | - | I | ½ | I | 12 | - | - | ⑧ |
| ○ | FLOOD BUBBLER | - | 30 | X | 1.0 | - | - | - | - | ½ | - | - | - | - | - | III | X | - | ½ | 8 | X | - | - | - | - | - | - | - | ④⑨⑩ |

X IN BOX DENOTES REQUIREMENT

## APPLICABLE WHEN CIRCLED BELOW:

1 - SEE SPECIAL PROVISIONS.
② - IF A PRESSURE COMPENSATING DEVICE IS SPECIFIED, THE DISCHARGE AND RADII SHOWN REFLECT ITS USE.
③ - MUST HAVE AN INTERNAL OR EXTERNAL CHECK VALVE.
④ - NON-ADJUSTABLE DISCHARGE RATE.
⑤ - REQUIRED ADJACENT TO SHOULDERS, CURBS, SIDEWALKS, AND DIKES.
⑥ - SEE DETAIL.
⑦ - ADJUSTABLE ARC.
⑧ - MATCHED PRECIPITATION RATE NOZZLES.
⑨ - REFER TO PIPE SIZING CHARTS.
⑩ - INSTALL TWO FLOOD BUBBLERS PER No. 15 TREE.

## ABBREVIATIONS:

Adj — ADJUSTABLE
Ft — FEET
GPS — GALLONS PER SECOND
PSI — POUNDS PER SQUARE INCH

## NOTES:

1. ALL LATERAL PLASTIC PIPE (SUPPLY LINE) NOT LABELED MUST BE 1 INCH, OR AS SHOWN ON PIPE SIZING CHARTS.
2. ALL SPRINKLER HEADS, VALVES AND PLASTIC PIPE (SUPPLY LINE) SHOWN NEAR MVP LOCATIONS ARE TO BE INSTALLED OUTSIDE OF THE PAVED MVP AREA. VALVES TO BE INSTALLED AT EXITING END OF THE MVP.

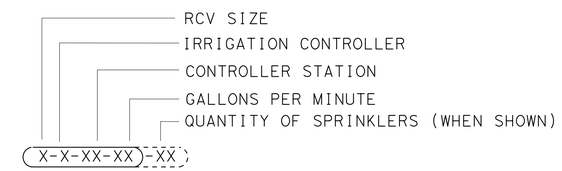


VALVE CODE

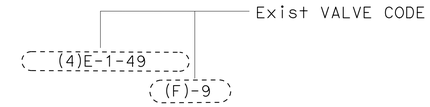


EXISTING VALVE CODE

## LEGEND:

~~SCC~~ Exist SPRINKLER CONTROL CONDUIT
▲ SPRINKLER PROTECTOR (WHERE SHOWN)
Exist PULL BOX

SCHEDULE 40 PIPE
PIPE SIZE (INCHES)

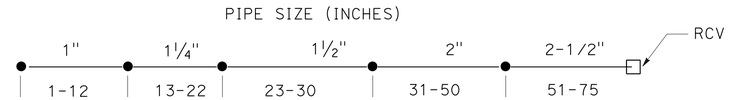


NUMBER OF HEADS @ 1.0 GPM

PIPE SIZING CHART
FLOOD BUBBLERS

# IRRIGATION SPRINKLER SCHEDULE

ISS-1

STATE OF CALIFORNIA - DEPARTMENT OF TRANSPORTATION
Caltrans® LANDSCAPE ARCHITECTURE
SENIOR LANDSCAPE ARCHITECT: STEPHEN ALVAREZ
CALCULATED-DESIGNED BY: CRISTINA BLANCO-KRAUSS
CHECKED BY: BETH HALL
REVISED BY / DATE REVISED

LAST REVISION 08-11-14
DATE PLOTTED => 04-SEP-2014
TIME PLOTTED => 10:45

| Dist | COUNTY | ROUTE | POST MILES TOTAL PROJECT | SHEET No. | TOTAL SHEETS |
|---|---|---|---|---|---|
| 11 | SD | 15, 94, 805 | Var | 107 | 184 |

LICENSED LANDSCAPE ARCHITECT

09-02-14
PLANS APPROVAL DATE

LICENSED LANDSCAPE ARCHITECT
CRISTINA BLANCO-KRAUSS, No. 4895
Signature
01-31-16
Renewal Date
07-08-14
Date
STATE OF CALIFORNIA

*THE STATE OF CALIFORNIA OR ITS OFFICERS OR AGENTS SHALL NOT BE RESPONSIBLE FOR THE ACCURACY OR COMPLETENESS OF SCANNED COPIES OF THIS PLAN SHEET.*

**SAN DIEGO**

## NOTES:

1. FOR ACCURATE RIGHT OF WAY DATA, CONTACT RIGHT OF WAY ENGINEERING AT THE DISTRICT OFFICE.
2. NO STORAGE OF MATERIALS AND EQUIPMENT IS ALLOWED WITHIN THE DRIPLINE OF Exist TREES AND SHRUBS.
3. Exist 2" WM AND BPAE ARE LOCATED AT 2978 38th St.
4. ACTUAL RCV MANIFOLD LOCATION IS ADJACENT TO NORTH SIDE OF Exist ICC-sat '37(B)'.

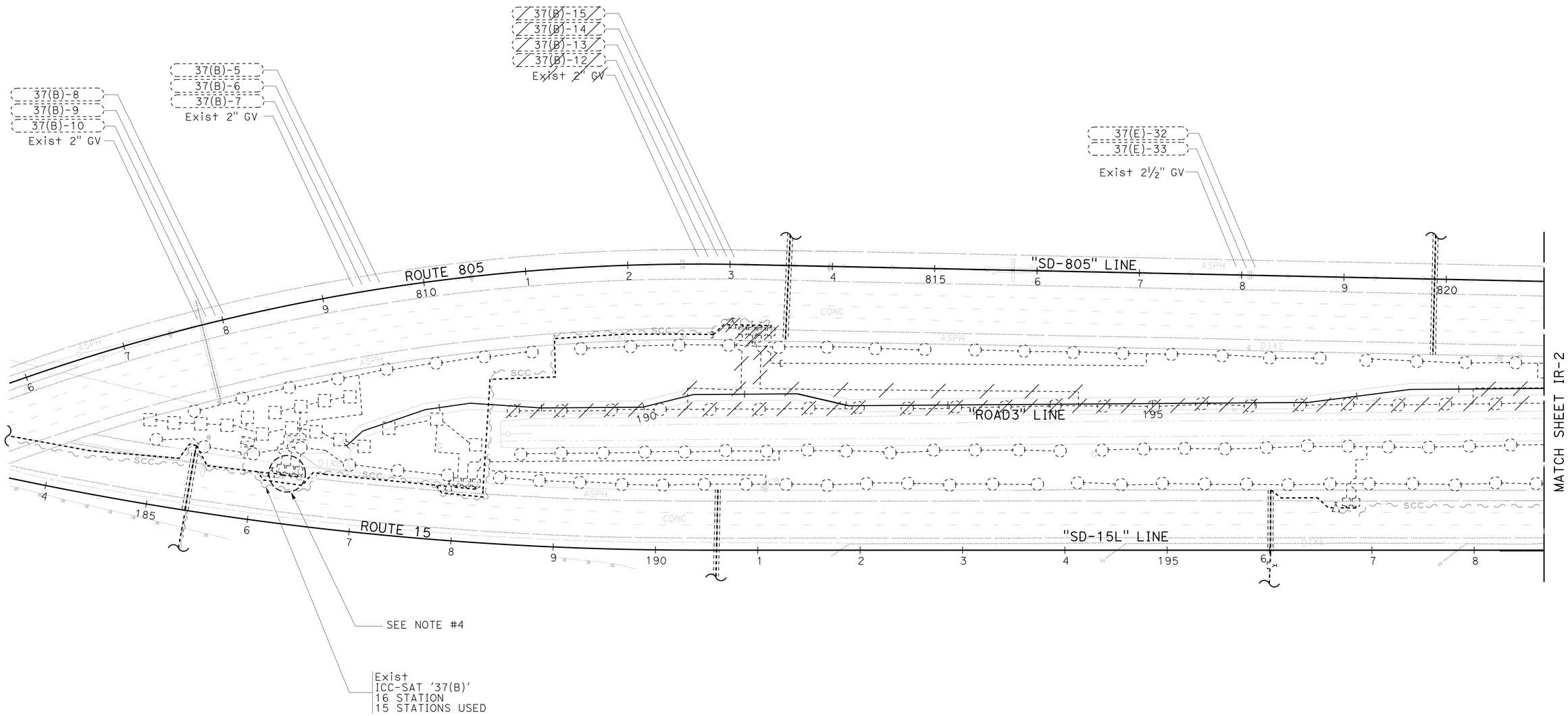


*APPROVED FOR IRRIGATION REMOVAL WORK ONLY*

# IRRIGATION REMOVAL PLAN
## LOCATION 1
## IR-1

SCALE: 1" = 50'

STATE OF CALIFORNIA - DEPARTMENT OF TRANSPORTATION
Caltrans® LANDSCAPE ARCHITECTURE
SENIOR LANDSCAPE ARCHITECT: STEPHEN ALVAREZ
CALCULATED-DESIGNED BY: CRISTINA BLANCO-KRAUSS
CHECKED BY: BETH HALL
REVISED BY
DATE REVISED

LAST REVISION 08-11-14
DATE PLOTTED => 04-SEP-2014
TIME PLOTTED => 10:45

| Dist | COUNTY | ROUTE | POST MILES TOTAL PROJECT | SHEET No. | TOTAL SHEETS |
|---|---|---|---|---|---|
| 11 | SD | 15, 94, 805 | Var | 108 | 184 |

LICENSED LANDSCAPE ARCHITECT

09-02-14
PLANS APPROVAL DATE

*THE STATE OF CALIFORNIA OR ITS OFFICERS OR AGENTS SHALL NOT BE RESPONSIBLE FOR THE ACCURACY OR COMPLETENESS OF SCANNED COPIES OF THIS PLAN SHEET.*

LICENSED LANDSCAPE ARCHITECT
CRISTINA BLANCO-KRAUSS NO. 4895
Signature
01-31-16
Renewal Date
07-08-14
Date
STATE OF CALIFORNIA

## NOTES:

1. FOR ACCURATE RIGHT OF WAY DATA, CONTACT RIGHT OF WAY ENGINEERING AT THE DISTRICT OFFICE.
2. NO STORAGE OF MATERIALS AND EQUIPMENT IS ALLOWED WITHIN THE DRIPLINE OF Exist TREES AND SHRUBS.
3. Exist WM LOCATED AT 2978 38TH St ON WEST SIDE OF ROUTE 805 AT INTERSECTION OF 38TH St AND QUINCE St.
4. Exist ICC-SAT 37(D) IS LOCATED AT THE SOUTHEAST SIDE OF ROUTE 15 & ROUTE 805 CONNECTOR OC (BB 57 0609 G).

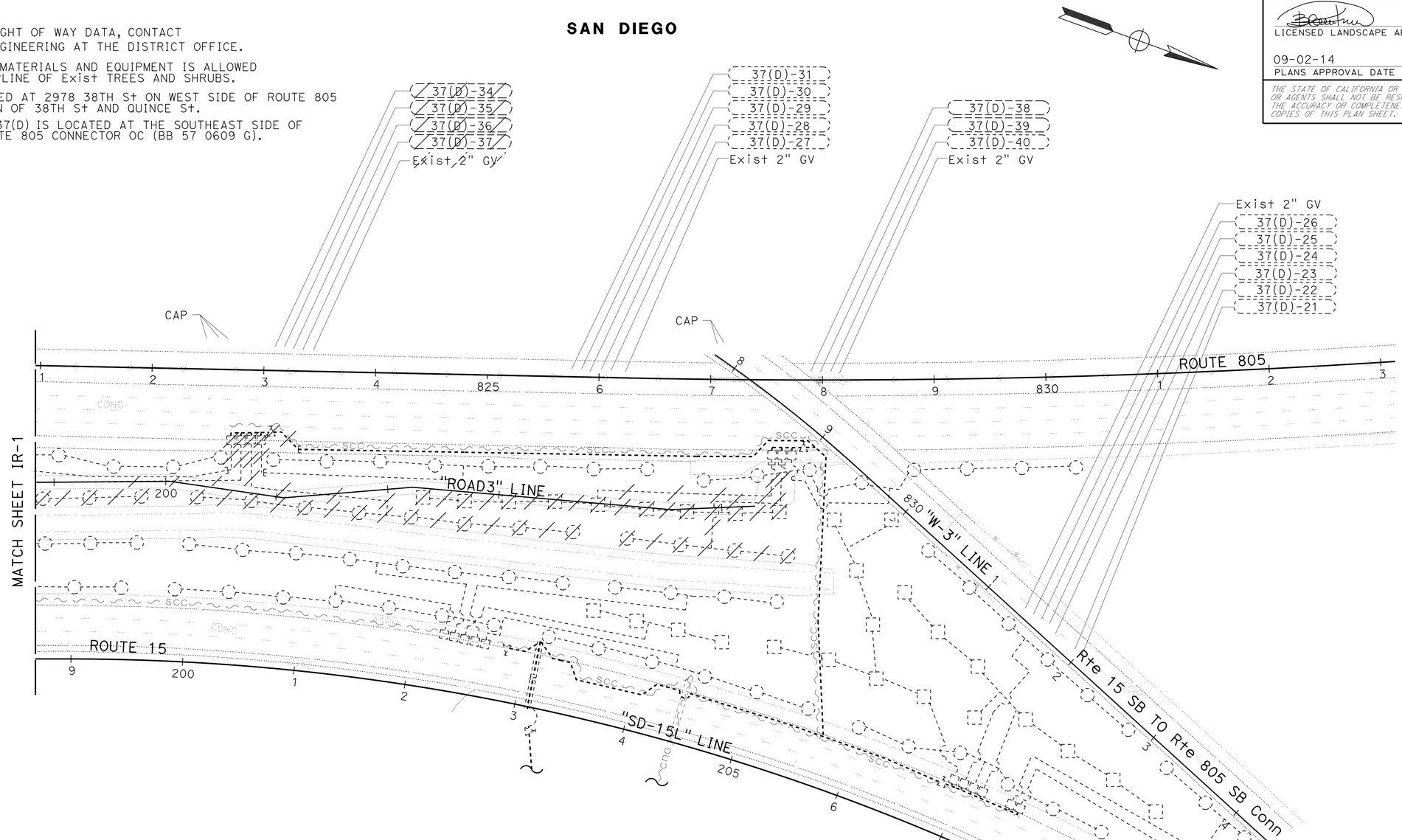


*APPROVED FOR IRRIGATION REMOVAL WORK ONLY*

# IRRIGATION REMOVAL PLAN
## LOCATION 1
## IR-2

SCALE: 1" = 50'

STATE OF CALIFORNIA - DEPARTMENT OF TRANSPORTATION
Caltrans® LANDSCAPE ARCHITECTURE

SENIOR LANDSCAPE ARCHITECT: STEPHEN ALVAREZ
CALCULATED-DESIGNED BY: CRISTINA BLANCO-KRAUSS
CHECKED BY: BETH HALL
REVISED BY
DATE REVISED

LAST REVISION 08-11-14
DATE PLOTTED => 04-SEP-2014
TIME PLOTTED => 10:45

| Dist | COUNTY | ROUTE | POST MILES TOTAL PROJECT | SHEET No. | TOTAL SHEETS |
|---|---|---|---|---|---|
| 11 | SD | 15, 94, 805 | Var | 109 | 184 |

LICENSED LANDSCAPE ARCHITECT

09-02-14
PLANS APPROVAL DATE

LICENSED LANDSCAPE ARCHITECT
CRISTINA BLANCO-KRAUSS, NO. 4895
Signature
01-31-16
Renewal Date
07-08-14
Date
STATE OF CALIFORNIA

*THE STATE OF CALIFORNIA OR ITS OFFICERS OR AGENTS SHALL NOT BE RESPONSIBLE FOR THE ACCURACY OR COMPLETENESS OF SCANNED COPIES OF THIS PLAN SHEET.*

## NOTES:

1. FOR ACCURATE RIGHT OF WAY DATA, CONTACT RIGHT OF WAY ENGINEERING AT THE DISTRICT OFFICE.
2. NO STORAGE OF MATERIALS AND EQUIPMENT IS ALLOWED WITHIN THE DRIPLINE OF Exist TREES AND SHRUBS.
3. Exist 2" WM ASSOCIATED WITH 37(J) CONTROLLER IS LOCATED AT 3635 QUINCE St, AND Exist WM ASSOCIATED WITH 37(I) IS LOCATED AT 3409 LANDIS St.
4. Exist ICC-TYPE B SAT (J) IS LOCATED EAST SIDE OF "W-2" LINE Approx STA 205+50.
5. ACTUAL RCV MANIFOLD LOCATION IS ADJACENT TO NORTH SIDE OF Exist MVP.

**SAN DIEGO**

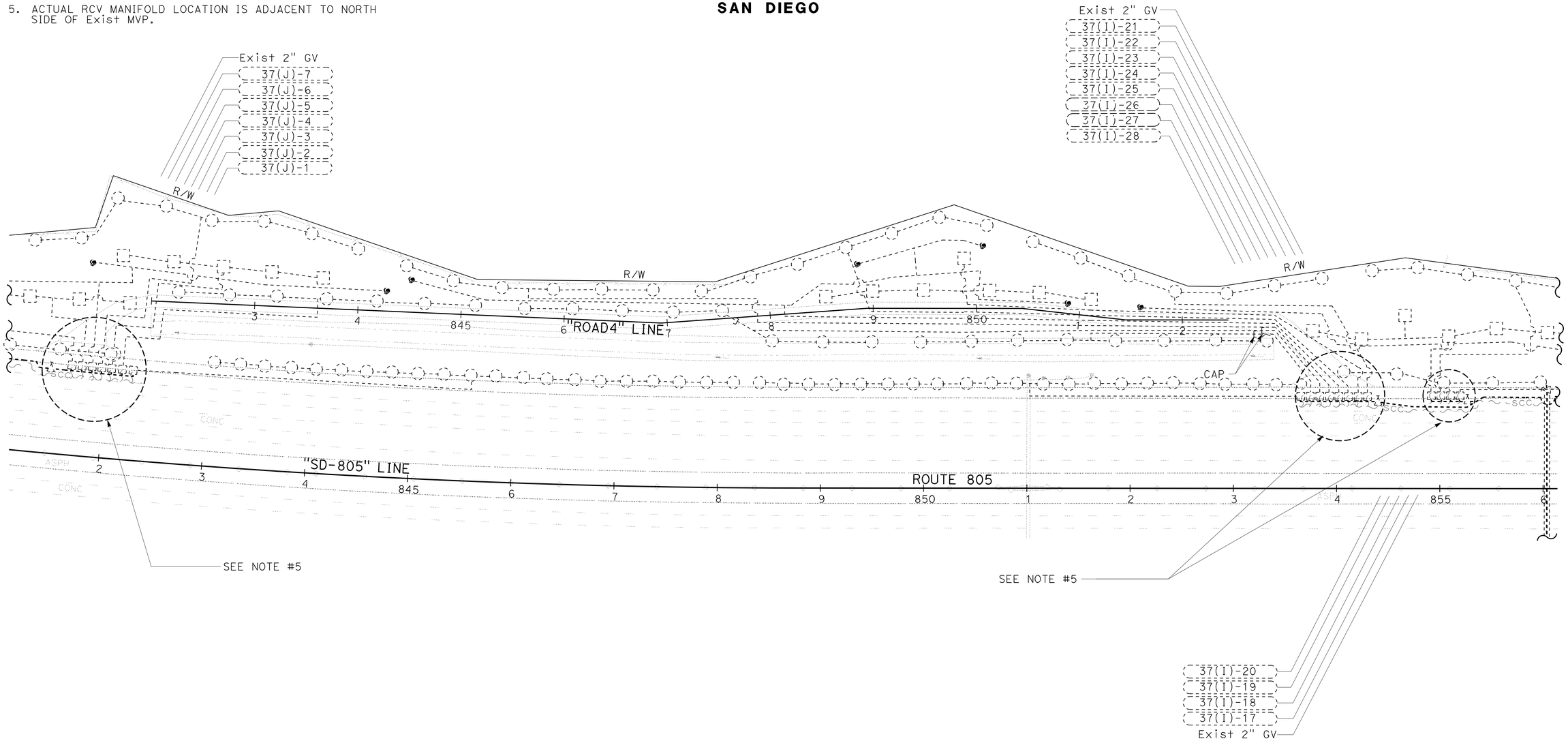


*APPROVED FOR IRRIGATION REMOVAL WORK ONLY*

# IRRIGATION REMOVAL PLAN
## LOCATION 2
## IR-3

SCALE: 1" = 50'

STATE OF CALIFORNIA - DEPARTMENT OF TRANSPORTATION
Caltrans® LANDSCAPE ARCHITECTURE

SENIOR LANDSCAPE ARCHITECT: STEPHEN ALVAREZ
CALCULATED-DESIGNED BY: CRISTINA BLANCO-KRAUSS
CHECKED BY: BETH HALL
REVISED BY
DATE REVISED

LAST REVISION 08-11-14
DATE PLOTTED => 04-SEP-2014
TIME PLOTTED => 10:45

| Dist | COUNTY | ROUTE | POST MILES TOTAL PROJECT | SHEET No. | TOTAL SHEETS |
|---|---|---|---|---|---|
| 11 | SD | 15, 94, 805 | Var | 110 | 184 |

LICENSED LANDSCAPE ARCHITECT

09-02-14
PLANS APPROVAL DATE

LICENSED LANDSCAPE ARCHITECT
CRISTINA BLANCO-KRAUSS No. 4895
Signature
01-31-16
Renewal Date
07-08-14
Date
STATE OF CALIFORNIA

*THE STATE OF CALIFORNIA OR ITS OFFICERS OR AGENTS SHALL NOT BE RESPONSIBLE FOR THE ACCURACY OR COMPLETENESS OF SCANNED COPIES OF THIS PLAN SHEET.*

**SAN DIEGO**

## NOTES:

1. FOR ACCURATE RIGHT OF WAY DATA, CONTACT RIGHT OF WAY ENGINEERING AT THE DISTRICT OFFICE.
2. NO STORAGE OF MATERIALS AND EQUIPMENT IS ALLOWED WITHIN THE DRIPLINE OF Exist TREES AND SHRUBS.
3. Exist 3" WM ASSOCIATED WITH IC E(2) IS LOCATED AT 3298 PICKWICK St. Exist 2-2" WM ASSOCIATED WITH IC-SOLAR 'S' IS LOCATED AT 3687 FEDERAL Blvd.
4. Exist ICC-STA "E" CEC SINGLE IS LOCATED AT 3298 PICKWICK St.

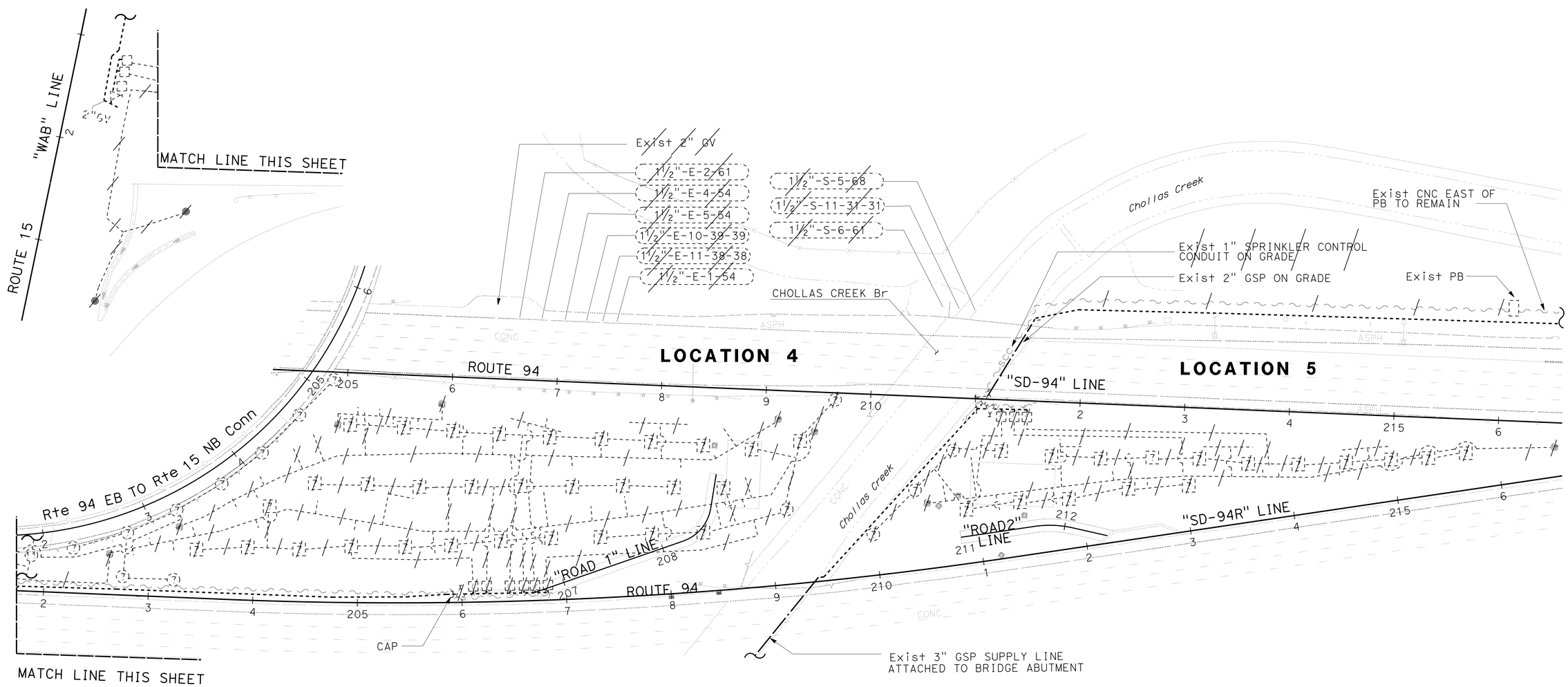


*APPROVED FOR IRRIGATION REMOVAL WORK ONLY*

# IRRIGATION REMOVAL PLAN
## LOCATIONS 4 & 5

SCALE: 1" = 50'

**IR-4**

STATE OF CALIFORNIA - DEPARTMENT OF TRANSPORTATION
Caltrans® LANDSCAPE ARCHITECTURE

SENIOR LANDSCAPE ARCHITECT: STEPHEN ALVAREZ
CALCULATED-DESIGNED BY: CRISTINA BLANCO-KRAUSS
CHECKED BY: BETH HALL
REVISED BY
DATE REVISED

LAST REVISION 08-11-14
DATE PLOTTED => 04-SEP-2014
TIME PLOTTED => 10:45

| Dist | COUNTY | ROUTE | POST MILES TOTAL PROJECT | SHEET No. | TOTAL SHEETS |
|---|---|---|---|---|---|
| 11 | SD | 15, 94, 805 | Var | 111 | 184 |

LICENSED LANDSCAPE ARCHITECT

09-02-14
PLANS APPROVAL DATE

LICENSED LANDSCAPE ARCHITECT
CRISTINA BLANCO-KRAUSS No. 4895
Signature
01-31-16
Renewal Date
07-08-14
Date
STATE OF CALIFORNIA

*THE STATE OF CALIFORNIA OR ITS OFFICERS OR AGENTS SHALL NOT BE RESPONSIBLE FOR THE ACCURACY OR COMPLETENESS OF SCANNED COPIES OF THIS PLAN SHEET.*

## NOTES:

1. FOR ACCURATE RIGHT OF WAY DATA, CONTACT RIGHT OF WAY ENGINEERING AT THE DISTRICT OFFICE.
2. NO STORAGE OF MATERIALS AND EQUIPMENT IS ALLOWED WITHIN THE DRIPLINE OF Exist TREES AND SHRUBS.
3. Exist 2" WM AND DOUBLE 2" BPAE ARE LOCATED ON SOUTHWEST CORNER OF ROUTE 94 AND COLLEGE Ave.
4. Exist RCV 2(6)-3 AND 2(6)-4 ARE LOCATED AT "SD-94" LINE Approx STA 414+00.
5. Exist ICC-MIC 2(6) ARE LOCATED AT CORNER OF KING St AND BROADWAY Ave.

**LEMON GROVE**

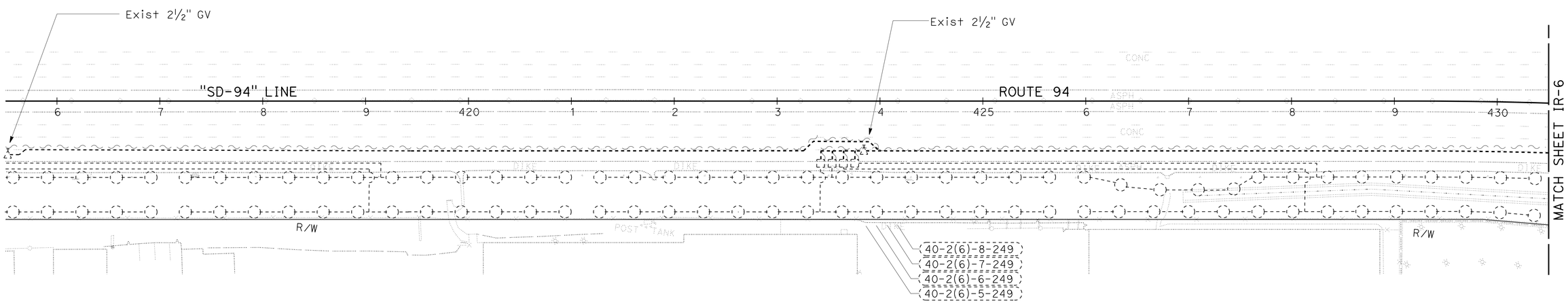


*APPROVED FOR IRRIGATION REMOVAL WORK ONLY*

# IRRIGATION REMOVAL PLAN
## LOCATION 6
## IR-5

SCALE: 1" = 50'

STATE OF CALIFORNIA - DEPARTMENT OF TRANSPORTATION
Caltrans LANDSCAPE ARCHITECTURE

SENIOR LANDSCAPE ARCHITECT: STEPHEN ALVAREZ

CALCULATED-DESIGNED BY: CRISTINA BLANCO-KRAUSS
CHECKED BY: BETH HALL

REVISED BY
DATE REVISED

LAST REVISION 08-11-14
DATE PLOTTED => 04-SEP-2014
TIME PLOTTED => 10:45

| Dist | COUNTY | ROUTE | POST MILES TOTAL PROJECT | SHEET No. | TOTAL SHEETS |
|---|---|---|---|---|---|
| 11 | SD | 15, 94, 805 | Var | 112 | 184 |

LICENSED LANDSCAPE ARCHITECT

09-02-14
PLANS APPROVAL DATE

LICENSED LANDSCAPE ARCHITECT
CRISTINA BLANCO-KRAUSS No. 4085
Signature
01-31-16
Renewal Date
07-08-14
Date
STATE OF CALIFORNIA

*THE STATE OF CALIFORNIA OR ITS OFFICERS OR AGENTS SHALL NOT BE RESPONSIBLE FOR THE ACCURACY OR COMPLETENESS OF SCANNED COPIES OF THIS PLAN SHEET.*

## NOTES:

1. FOR ACCURATE RIGHT OF WAY DATA, CONTACT RIGHT OF WAY ENGINEERING AT THE DISTRICT OFFICE.
2. NO STORAGE OF MATERIALS AND EQUIPMENT IS ALLOWED WITHIN THE DRIPLINE OF Exist TREES AND SHRUBS.
3. Exist WM LOCATED ON THE SOUTHWEST CORNER OF ROUTE 94 AND COLLEGE Ave.
4. Exist ICC-MIC 2(6) LOCATED AT CORNER OF KING St AND BROADWAY Ave.

## LEMON GROVE

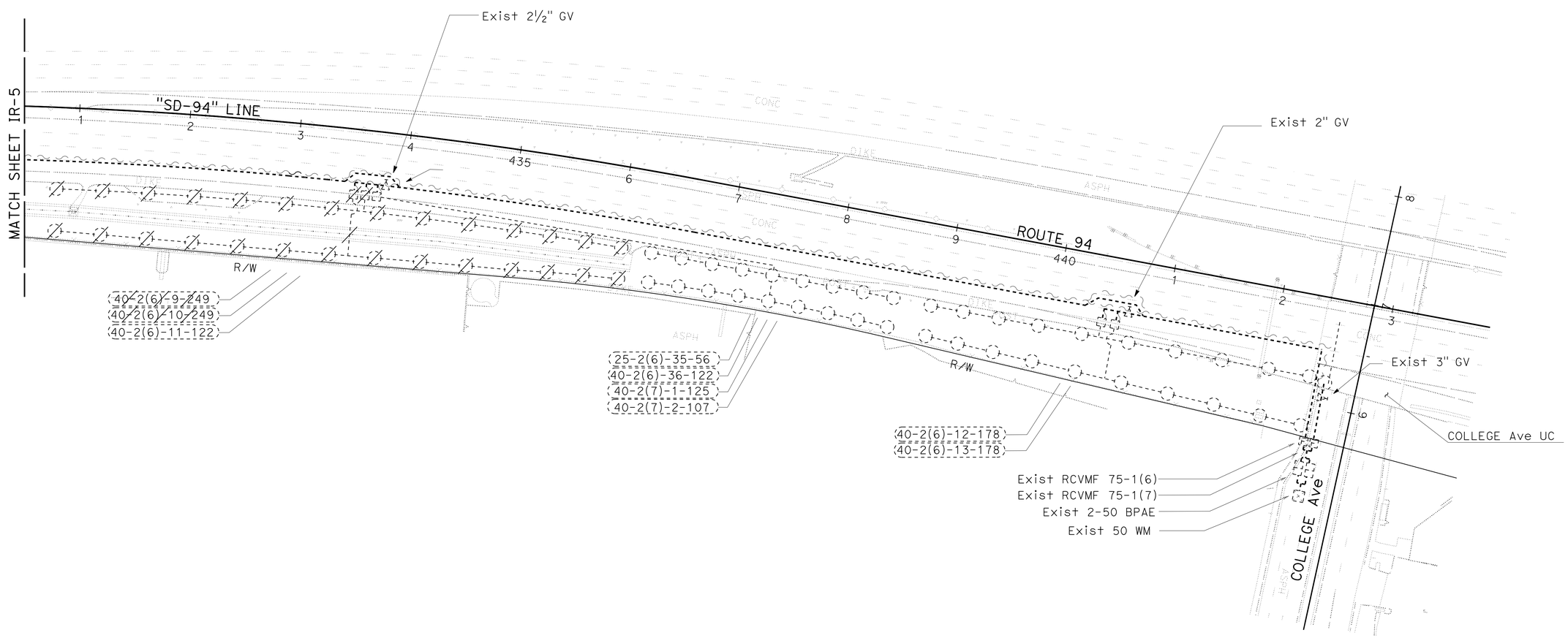


*APPROVED FOR IRRIGATION REMOVAL WORK ONLY*

# IRRIGATION REMOVAL PLAN
## LOCATION 6
## IR-6

SCALE: 1" = 50'

STATE OF CALIFORNIA - DEPARTMENT OF TRANSPORTATION
Caltrans® LANDSCAPE ARCHITECTURE

SENIOR LANDSCAPE ARCHITECT: STEPHEN ALVAREZ
CALCULATED-DESIGNED BY: CRISTINA BLANCO-KRAUSS
CHECKED BY: BETH HALL
REVISED BY
DATE REVISED

LAST REVISION 08-11-14
DATE PLOTTED => 04-SEP-2014
TIME PLOTTED => 10:45

| Dist | COUNTY | ROUTE | POST MILES TOTAL PROJECT | SHEET No. | TOTAL SHEETS |
|---|---|---|---|---|---|
| 11 | SD | 15, 94, 805 | Var | 113 | 184 |

LICENSED LANDSCAPE ARCHITECT

09-02-14
PLANS APPROVAL DATE

*THE STATE OF CALIFORNIA OR ITS OFFICERS OR AGENTS SHALL NOT BE RESPONSIBLE FOR THE ACCURACY OR COMPLETENESS OF SCANNED COPIES OF THIS PLAN SHEET.*

LICENSED LANDSCAPE ARCHITECT
CRISTINA BLANCO-KRAUSS No. 4895
Signature
01-31-16
Renewal Date
07-08-14
Date
STATE OF CALIFORNIA

## NOTES:

1. FOR ACCURATE RIGHT OF WAY DATA, CONTACT RIGHT OF WAY ENGINEERING AT THE DISTRICT OFFICE.
2. NO STORAGE OF MATERIALS AND EQUIPMENT IS ALLOWED WITHIN THE DRIPLINE OF Exist TREES AND SHRUBS.
3. Exist DOUBLE 2" WM, BPAE, AND ICC-AIC 2(5) ARE LOCATED ON SOUTHWEST CORNER OF ROUTE 94 AND WEST SIDE OF WAITE Dr.

## LEMON GROVE

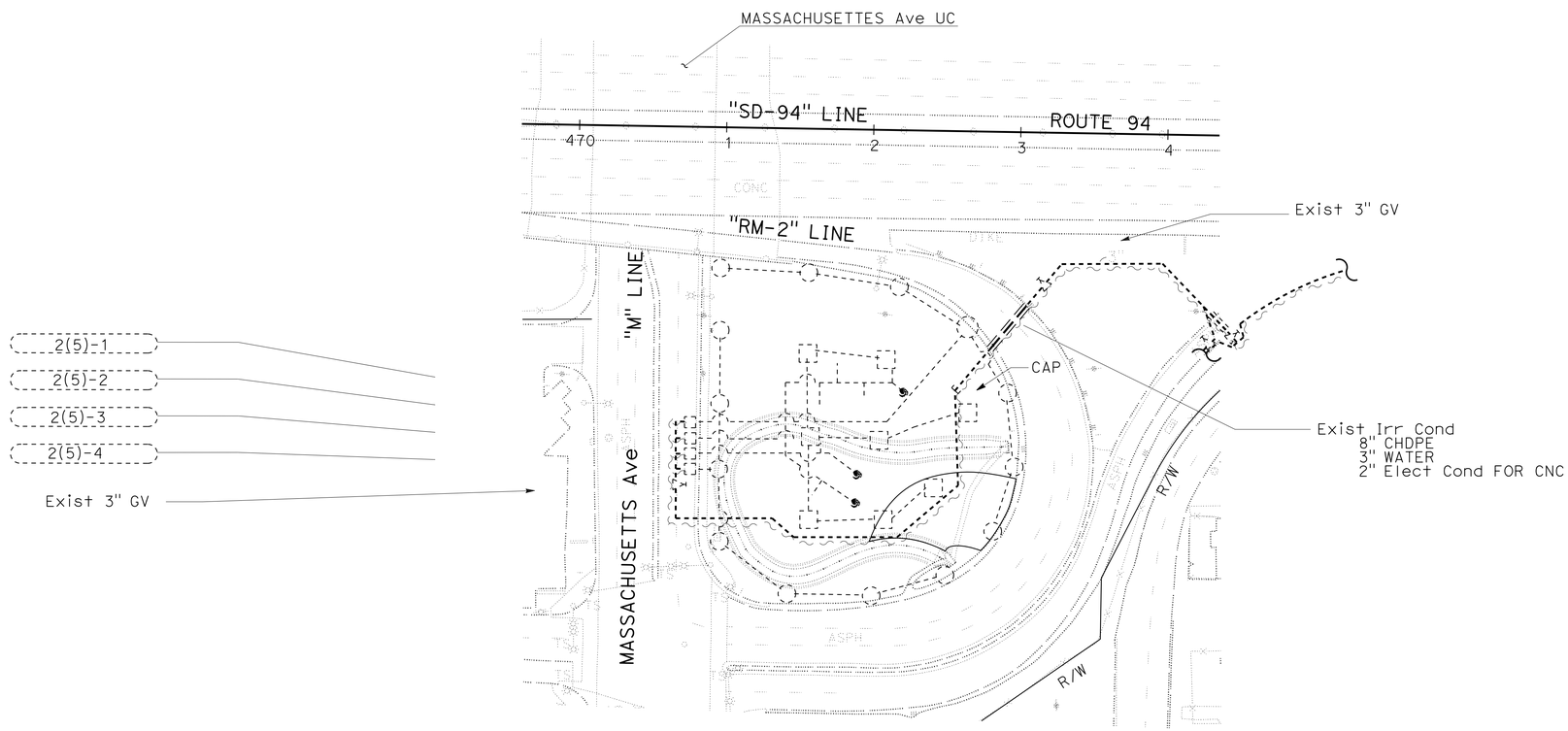


*APPROVED FOR IRRIGATION REMOVAL WORK ONLY*

# IRRIGATION REMOVAL PLAN
## LOCATION 7
## IR-7

SCALE: 1" = 50'

STATE OF CALIFORNIA - DEPARTMENT OF TRANSPORTATION
Caltrans LANDSCAPE ARCHITECTURE

SENIOR LANDSCAPE ARCHITECT: STEPHEN ALVAREZ

CALCULATED-DESIGNED BY: CRISTINA BLANCO-KRAUSS
CHECKED BY: BETH HALL

REVISED BY
DATE REVISED

LAST REVISION 08-11-14
DATE PLOTTED => 04-SEP-2014
TIME PLOTTED => 10:45

| Dist | COUNTY | ROUTE | POST MILES TOTAL PROJECT | SHEET No. | TOTAL SHEETS |
|---|---|---|---|---|---|
| 11 | SD | 15, 94, 805 | Var | 114 | 184 |

LICENSED LANDSCAPE ARCHITECT

09-02-14
PLANS APPROVAL DATE

LICENSED LANDSCAPE ARCHITECT
CRISTINA BLANCO-KRAUSS, No. 4895
Signature
01-31-16
Renewal Date
07-08-14
Date
STATE OF CALIFORNIA

*THE STATE OF CALIFORNIA OR ITS OFFICERS OR AGENTS SHALL NOT BE RESPONSIBLE FOR THE ACCURACY OR COMPLETENESS OF SCANNED COPIES OF THIS PLAN SHEET.*

**SAN DIEGO**

NOTES:

1. FOR ACCURATE RIGHT OF WAY DATA, CONTACT RIGHT OF WAY ENGINEERING AT THE DISTRICT OFFICE.
2. NO STORAGE OF MATERIALS AND EQUIPMENT IS ALLOWED WITHIN THE DRIPLINE OF Exist TREES AND SHRUBS.
3. Exist 2" WM AND BPAE ARE LOCATED AT 2978 38th St.
4. ACTUAL RCV MANIFOLD LOCATION IS ADJACENT TO NORTH SIDE OF Exist ICC-sat '37(B)'.
5. "OPERATE EXISTING IRRIGATION FACILITIES" WORK IS TO BE PERFORMED FOR ALL Exist IRRIGATION SHOWN.

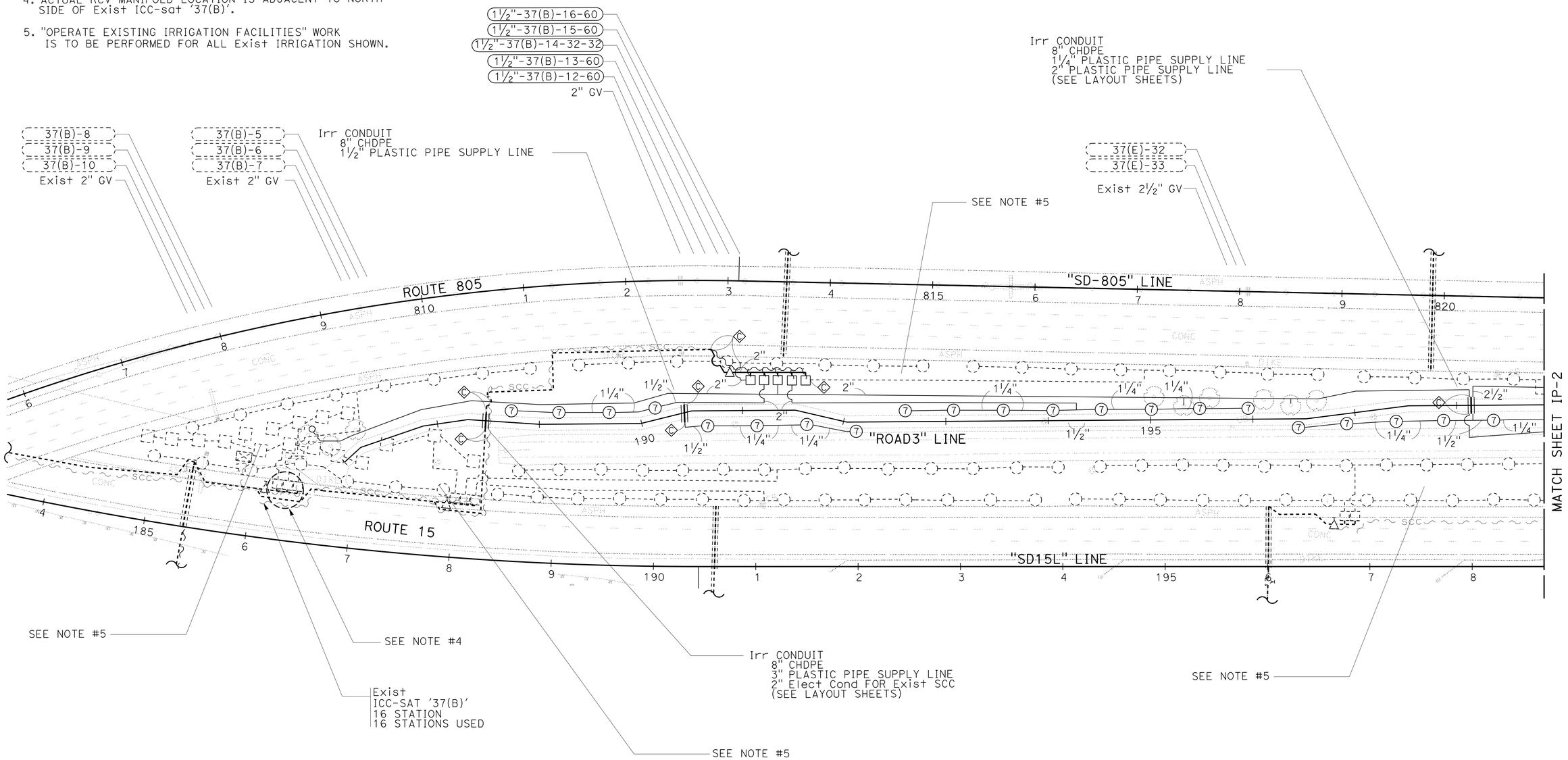


*APPROVED FOR IRRIGATION WORK ONLY*

# IRRIGATION PLAN
## LOCATION 1
SCALE: 1" = 50'

**IP-1**

STATE OF CALIFORNIA - DEPARTMENT OF TRANSPORTATION
Caltrans LANDSCAPE ARCHITECTURE

SENIOR LANDSCAPE ARCHITECT: STEPHEN ALVAREZ
CRISTINA BLANCO-KRAUSS
BETH HALL
CALCULATED-DESIGNED BY
CHECKED BY
REVISED BY
DATE REVISED

LAST REVISION 08-11-14
DATE PLOTTED => 04-SEP-2014
TIME PLOTTED => 10:45

| Dist | COUNTY | ROUTE | POST MILES TOTAL PROJECT | SHEET No. | TOTAL SHEETS |
|---|---|---|---|---|---|
| 11 | SD | 15, 94, 805 | Var | 115 | 184 |

LICENSED LANDSCAPE ARCHITECT

09-02-14
PLANS APPROVAL DATE

LICENSED LANDSCAPE ARCHITECT
CRISTINA BLANCO-KRAUSS No. 4895
Signature 01-31-16
Renewal Date 07-08-14
Date
STATE OF CALIFORNIA

*THE STATE OF CALIFORNIA OR ITS OFFICERS OR AGENTS SHALL NOT BE RESPONSIBLE FOR THE ACCURACY OR COMPLETENESS OF SCANNED COPIES OF THIS PLAN SHEET.*

## NOTES:

1. FOR ACCURATE RIGHT OF WAY DATA, CONTACT RIGHT OF WAY ENGINEERING AT THE DISTRICT OFFICE.
2. NO STORAGE OF MATERIALS AND EQUIPMENT IS ALLOWED WITHIN THE DRIPLINE OF Exist TREES AND SHRUBS.
3. Exist WM LOCATED AT 2978 38TH St ON WEST SIDE OF ROUTE 805 AT INTERSECTION OF 38TH St AND QUINCE St.
4. Exist ICC-SAT 37(D) IS LOCATED AT THE SOUTHEAST SIDE OF NB ROUTE 15 AND AND NB ROUTE 805 CONNECTOR OC (BB 57 0609 G).
5. "OPERATE EXISTING IRRIGATION FACILITIES" WORK IS TO BE PERFORMED FOR ALL Exist IRRIGATION SHOWN.

**SAN DIEGO**

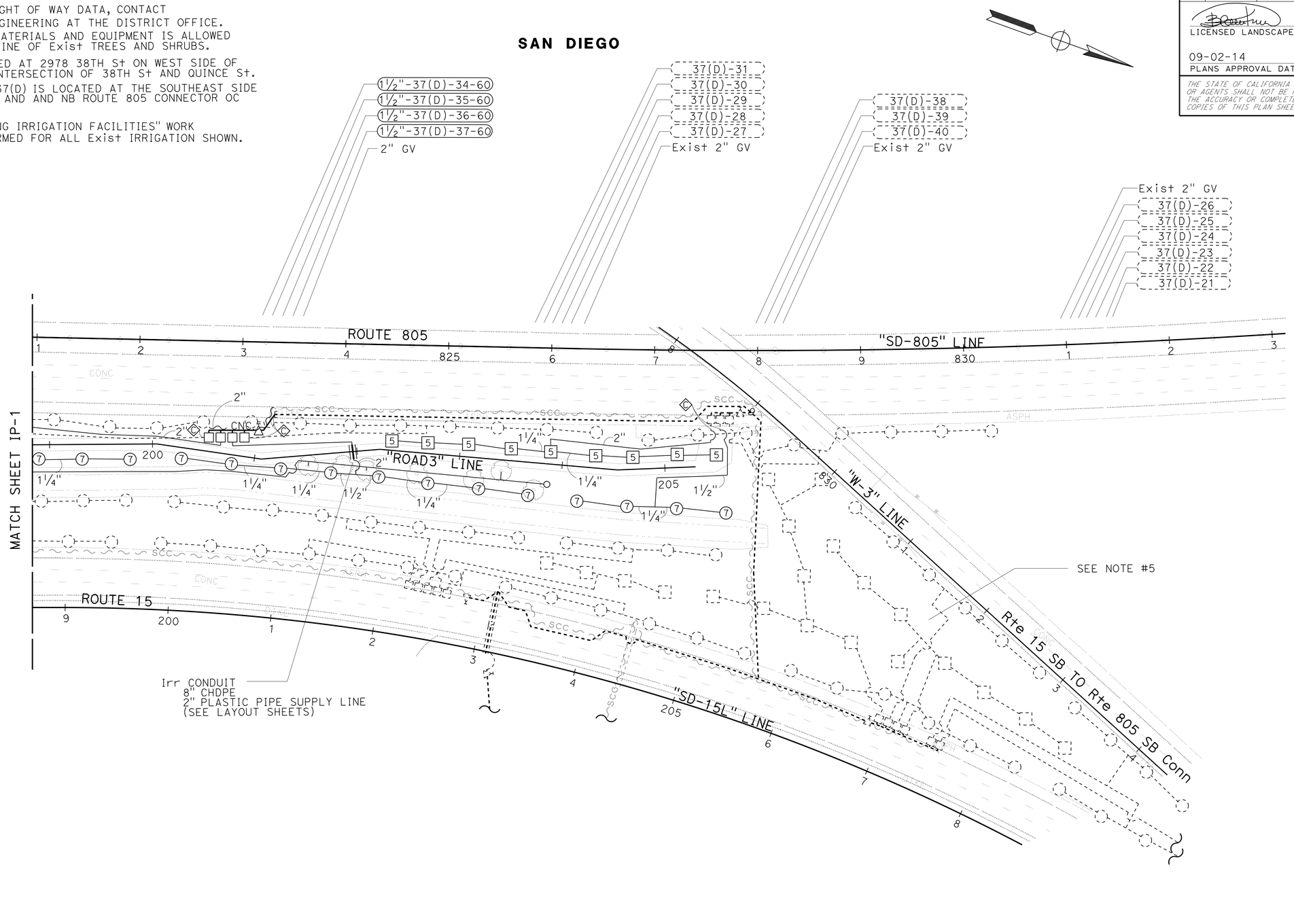


*APPROVED FOR IRRIGATION WORK ONLY*

# IRRIGATION PLAN
## LOCATION 1

SCALE: 1" = 50'

**IP-2**

STATE OF CALIFORNIA - DEPARTMENT OF TRANSPORTATION
Caltrans LANDSCAPE ARCHITECTURE

SENIOR LANDSCAPE ARCHITECT: STEPHEN ALVAREZ
CALCULATED-DESIGNED BY: CRISTINA BLANCO-KRAUSS
CHECKED BY: BETH HALL
REVISED BY
DATE REVISED

LAST REVISION 08-11-14
DATE PLOTTED => 04-SEP-2014
TIME PLOTTED => 10:45

| Dist | COUNTY | ROUTE | POST MILES TOTAL PROJECT | SHEET No. | TOTAL SHEETS |
|---|---|---|---|---|---|
| 11 | SD | 15, 94, 805 | Var | 116 | 184 |

LICENSED LANDSCAPE ARCHITECT

09-02-14
PLANS APPROVAL DATE

LICENSED LANDSCAPE ARCHITECT
CRISTINA BLANCO-KRAUSS, NO. 4895
Signature
01-31-16
Renewal Date
07-08-14
Date
STATE OF CALIFORNIA

*THE STATE OF CALIFORNIA OR ITS OFFICERS OR AGENTS SHALL NOT BE RESPONSIBLE FOR THE ACCURACY OR COMPLETENESS OF SCANNED COPIES OF THIS PLAN SHEET.*

## NOTES:

1. FOR ACCURATE RIGHT OF WAY DATA, CONTACT RIGHT OF WAY ENGINEERING AT THE DISTRICT OFFICE.
2. NO STORAGE OF MATERIALS AND EQUIPMENT IS ALLOWED WITHIN THE DRIPLINE OF Exist TREES AND SHRUBS.
3. Exist 2" WM ASSOCIATED WITH 37(J) CONTROLLER IS LOCATED AT 3635 QUINCE St, AND Exist WM ASSOCIATED WITH 37(I) IS LOCATED AT 3409 LANDIS St.
4. Exist ICC-TYPE B SAT (J) IS LOCATED EAST SIDE OF "W-2" LINE Approx STA 205+50.
5. ACTUAL RCV MANIFOLD LOCATION IS ADJACENT TO NORTH SIDE OF Exist MVP.
6. "OPERATE EXISTING IRRIGATION FACILITIES" WORK IS TO BE PERFORMED FOR ALL Exist IRRIGATION SHOWN.

**SAN DIEGO**

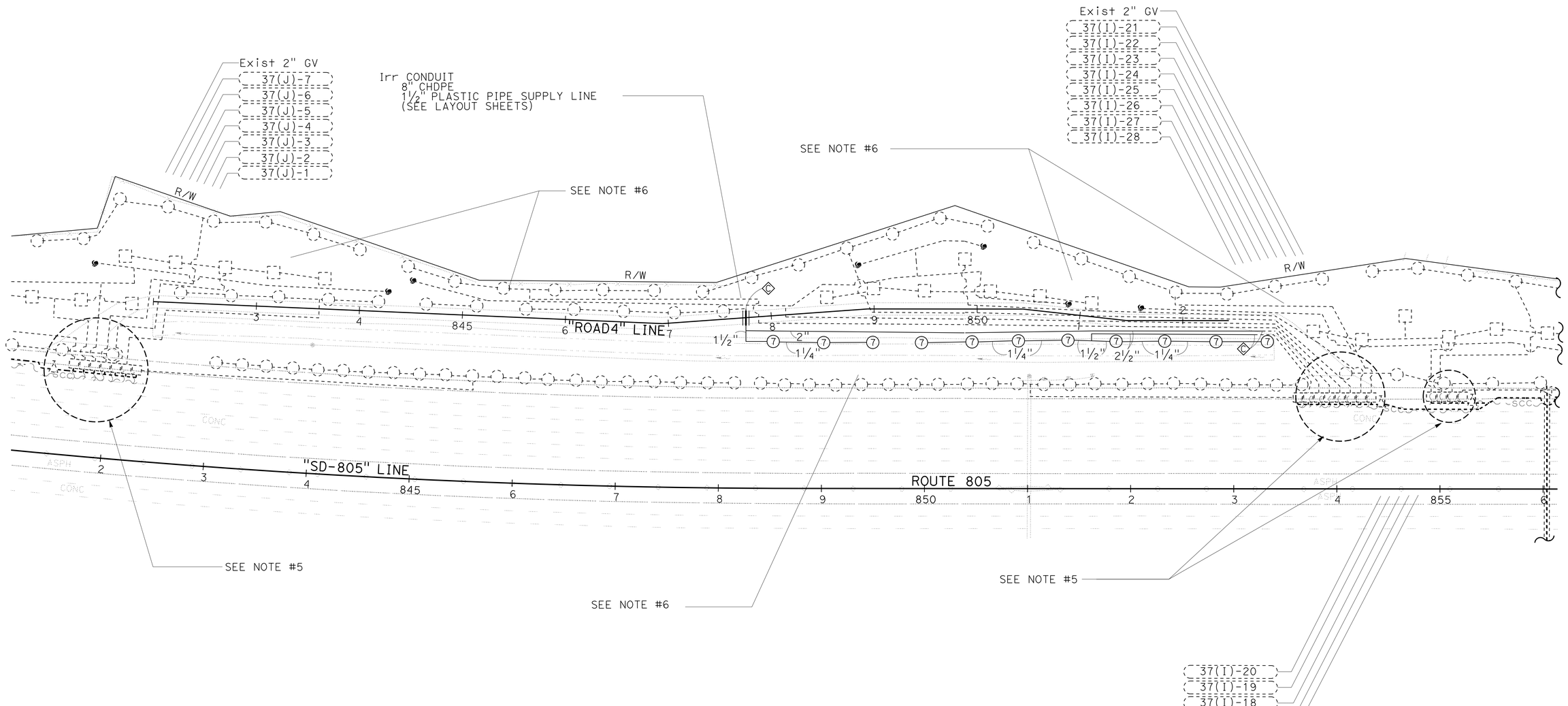


*APPROVED FOR IRRIGATION WORK ONLY*

# IRRIGATION PLAN
## LOCATION 2

SCALE: 1" = 50'

**IP-3**

STATE OF CALIFORNIA - DEPARTMENT OF TRANSPORTATION
Caltrans® LANDSCAPE ARCHITECTURE
SENIOR LANDSCAPE ARCHITECT: STEPHEN ALVAREZ
CALCULATED-DESIGNED BY: CRISTINA BLANCO-KRAUSS
CHECKED BY: BETH HALL
REVISED BY
DATE REVISED

LAST REVISION 08-11-14
DATE PLOTTED => 04-SEP-2014
TIME PLOTTED => 10:45

| Dist | COUNTY | ROUTE | POST MILES TOTAL PROJECT | SHEET No. | TOTAL SHEETS |
|---|---|---|---|---|---|
| 11 | SD | 15, 94, 805 | Var | 117 | 184 |

LICENSED LANDSCAPE ARCHITECT

09-02-14
PLANS APPROVAL DATE

LICENSED LANDSCAPE ARCHITECT
CRISTINA BLANCO-KRAUSS NO. 4895
Signature
01-31-16
Renewal Date
07-08-14
Date
STATE OF CALIFORNIA

*THE STATE OF CALIFORNIA OR ITS OFFICERS OR AGENTS SHALL NOT BE RESPONSIBLE FOR THE ACCURACY OR COMPLETENESS OF SCANNED COPIES OF THIS PLAN SHEET.*

## NOTES:

1. FOR ACCURATE RIGHT OF WAY DATA, CONTACT RIGHT OF WAY ENGINEERING AT THE DISTRICT OFFICE.
2. NO STORAGE OF MATERIALS AND EQUIPMENT IS ALLOWED WITHIN THE DRIPLINE OF Exist TREES AND SHRUBS.
3. FOR LOCATION 4: Exist 3" WM ASSOCIATED WITH IC E(2) IS LOCATED AT 3298 PICKWICK St. FOR LOCATION 5: Exist 2-2" WM ASSOCIATED WITH IC-SOLAR 'S' IS LOCATED AT 3687 FEDERAL Blvd.
4. Exist ICC-STA "E" CEC SINGLE LOCATED AT 3298 PICKWICK St.
5. INSTALL (10) CNC AND (1) COMMON WIRE FROM Exist PB TO IC-S.

**SAN DIEGO**

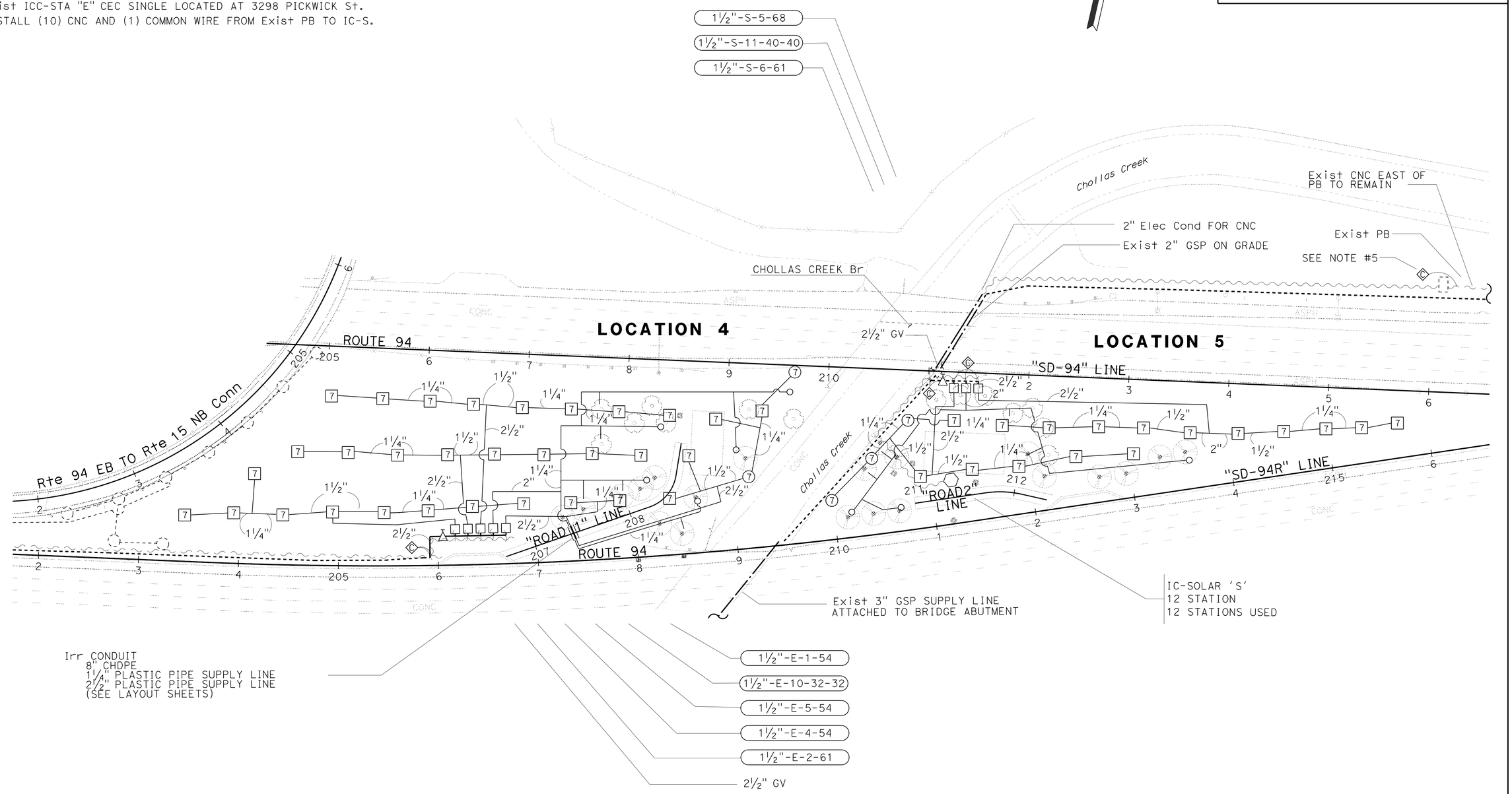


*APPROVED FOR IRRIGATION WORK ONLY*

# IRRIGATION PLAN
## LOCATIONS 4 & 5

SCALE: 1" = 50'

**IP-4**

STATE OF CALIFORNIA - DEPARTMENT OF TRANSPORTATION
Caltrans LANDSCAPE ARCHITECTURE

SENIOR LANDSCAPE ARCHITECT: STEPHEN ALVAREZ

CALCULATED-DESIGNED BY: CRISTINA BLANCO-KRAUSS
CHECKED BY: BETH HALL

REVISED BY
DATE REVISED

LAST REVISION 08-11-14
DATE PLOTTED => 04-SEP-2014
TIME PLOTTED => 10:45

| Dist | COUNTY | ROUTE | POST MILES TOTAL PROJECT | SHEET No. | TOTAL SHEETS |
|---|---|---|---|---|---|
| 11 | SD | 15, 94, 805 | Var | 118 | 184 |

LICENSED LANDSCAPE ARCHITECT

09-02-14
PLANS APPROVAL DATE

LICENSED LANDSCAPE ARCHITECT
CRISTINA BLANCO-KRAUSS No. 4895
Signature
01-31-16
Renewal Date
07-08-14
Date
STATE OF CALIFORNIA

*THE STATE OF CALIFORNIA OR ITS OFFICERS OR AGENTS SHALL NOT BE RESPONSIBLE FOR THE ACCURACY OR COMPLETENESS OF SCANNED COPIES OF THIS PLAN SHEET.*

## NOTES:

1. FOR ACCURATE RIGHT OF WAY DATA, CONTACT RIGHT OF WAY ENGINEERING AT THE DISTRICT OFFICE.
2. NO STORAGE OF MATERIALS AND EQUIPMENT IS ALLOWED WITHIN THE DRIPLINE OF Exist TREES AND SHRUBS.
3. Exist 2" WM AND DOUBLE 2" BPAE LOCATED ON SOUTHWEST CORNER OF ROUTE 94 AND COLLEGE Ave.
4. Exist RCV 2(6)-3 AND 2(6)-4 ARE LOCATED AT "SD-94" LINE Approx STA 414+00.
5. Exist ICC-MIC 2(6) LOCATED AT CORNER OF KING St AND BROADWAY Ave.
6. "OPERATE EXISTING IRRIGATION FACILITIES" WORK IS TO TO BE PERFORMED FOR ALL Exist IRRIGATION SHOWN.

**LEMON GROVE**

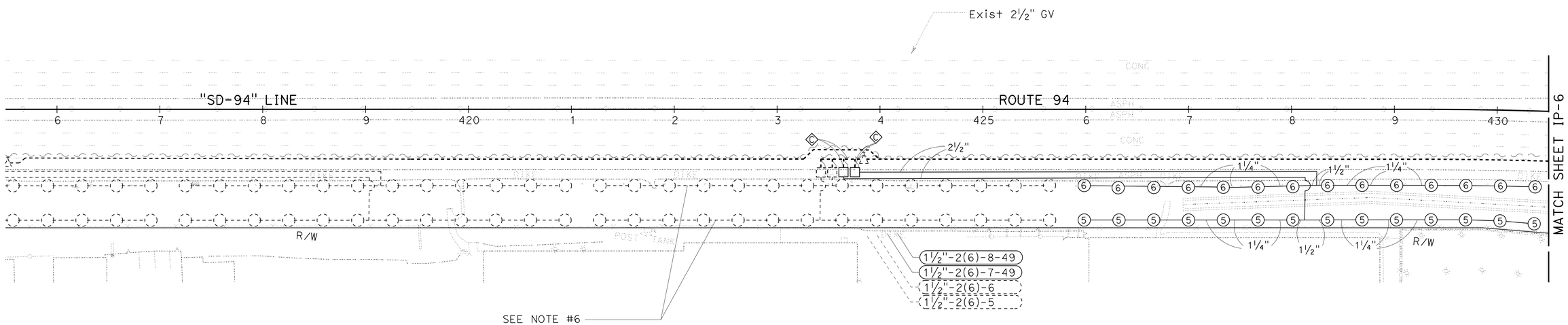


*APPROVED FOR IRRIGATION WORK ONLY*

# IRRIGATION PLAN
## LOCATION 6
SCALE: 1" = 50'

**IP-5**

| REVISED BY | DATE REVISED |
|---|---|
| | |
| | |
| | |
| CRISTINA BLANCO-KRAUSS | BETH HALL |
| CALCULATED-DESIGNED BY | CHECKED BY |
| SENIOR LANDSCAPE ARCHITECT | STEPHEN ALVAREZ |

STATE OF CALIFORNIA - DEPARTMENT OF TRANSPORTATION
Caltrans® LANDSCAPE ARCHITECTURE

LAST REVISION 06-23-14
DATE PLOTTED => 04-SEP-2014
TIME PLOTTED => 10:45

| Dist | COUNTY | ROUTE | POST MILES TOTAL PROJECT | SHEET No. | TOTAL SHEETS |
|---|---|---|---|---|---|
| 11 | SD | 15, 94, 805 | Var | 119 | 184 |

LICENSED LANDSCAPE ARCHITECT

09-02-14
PLANS APPROVAL DATE

LICENSED LANDSCAPE ARCHITECT
CRISTINA BLANCO-KRAUSS No. 4895
Signature
01-31-16
Renewal Date
07-08-14
Date
STATE OF CALIFORNIA

*THE STATE OF CALIFORNIA OR ITS OFFICERS OR AGENTS SHALL NOT BE RESPONSIBLE FOR THE ACCURACY OR COMPLETENESS OF SCANNED COPIES OF THIS PLAN SHEET.*

## NOTES:

1. FOR ACCURATE RIGHT OF WAY DATA, CONTACT RIGHT OF WAY ENGINEERING AT THE DISTRICT OFFICE.
2. NO STORAGE OF MATERIALS AND EQUIPMENT IS ALLOWED WITHIN THE DRIPLINE OF Exist TREES AND SHRUBS.
3. Exist WM LOCATED ON THE SOUTHWEST CORNER OF ROUTE 94 AND COLLEGE Ave.
4. Exist ICC-MIC 2(6) LOCATED AT CORNER OF KING St AND BROADWAY Ave.
5. "OPERATE EXISTING IRRIGATION FACILITIES" WORK IS TO BE PERFORMED FOR ALL Exist IRRIGATION SHOWN.

**LEMON GROVE**

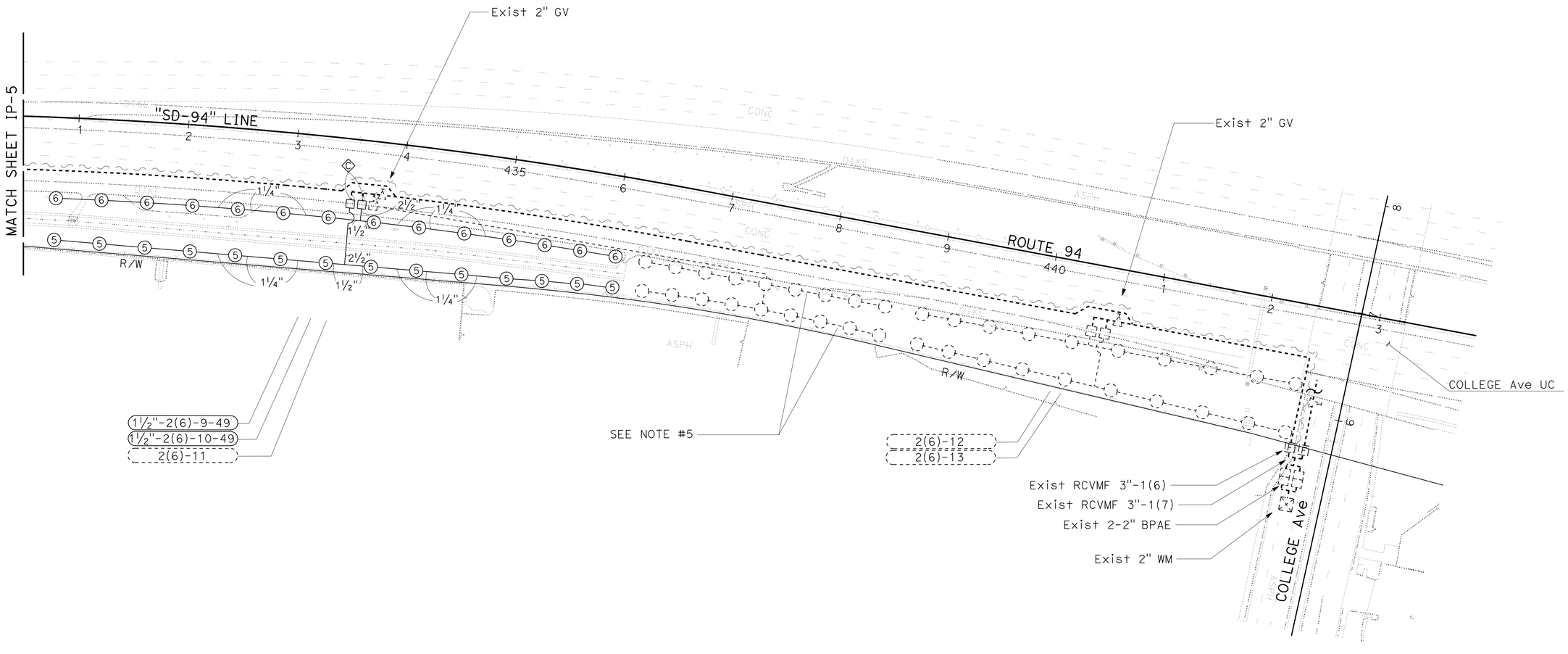


*APPROVED FOR IRRIGATION WORK ONLY*

# IRRIGATION PLAN
## LOCATION 6
## IP-6

SCALE: 1" = 50'

STATE OF CALIFORNIA - DEPARTMENT OF TRANSPORTATION
Caltrans LANDSCAPE ARCHITECTURE

SENIOR LANDSCAPE ARCHITECT: STEPHEN ALVAREZ
CALCULATED-DESIGNED BY: CRISTINA BLANCO-KRAUSS
CHECKED BY: BETH HALL
REVISED BY
DATE REVISED

LAST REVISION 08-11-14
DATE PLOTTED => 04-SEP-2014
TIME PLOTTED => 10:45

| Dist | COUNTY | ROUTE | POST MILES TOTAL PROJECT | SHEET No. | TOTAL SHEETS |
|---|---|---|---|---|---|
| 11 | SD | 15, 94, 805 | Var | 120 | 184 |

LICENSED LANDSCAPE ARCHITECT

09-02-14
PLANS APPROVAL DATE

LICENSED LANDSCAPE ARCHITECT
CRISTINA BLANCO-KRAUSS NO. 4895
Signature
01-31-16
Renewal Date
07-08-14
Date
STATE OF CALIFORNIA

*THE STATE OF CALIFORNIA OR ITS OFFICERS OR AGENTS SHALL NOT BE RESPONSIBLE FOR THE ACCURACY OR COMPLETENESS OF SCANNED COPIES OF THIS PLAN SHEET.*

## NOTES:

1. FOR ACCURATE RIGHT OF WAY DATA, CONTACT RIGHT OF WAY ENGINEERING AT THE DISTRICT OFFICE.
2. NO STORAGE OF MATERIALS AND EQUIPMENT IS ALLOWED WITHIN THE DRIPLINE OF Exist TREES AND SHRUBS.
3. Exist DOUBLE 2" WM, BPAE, AND ICC-AIC 2(5) ARE LOCATED ON SOUTHWEST CORNER OF ROUTE 94 AND WEST SIDE OF WAITE Dr.

# LEMON GROVE

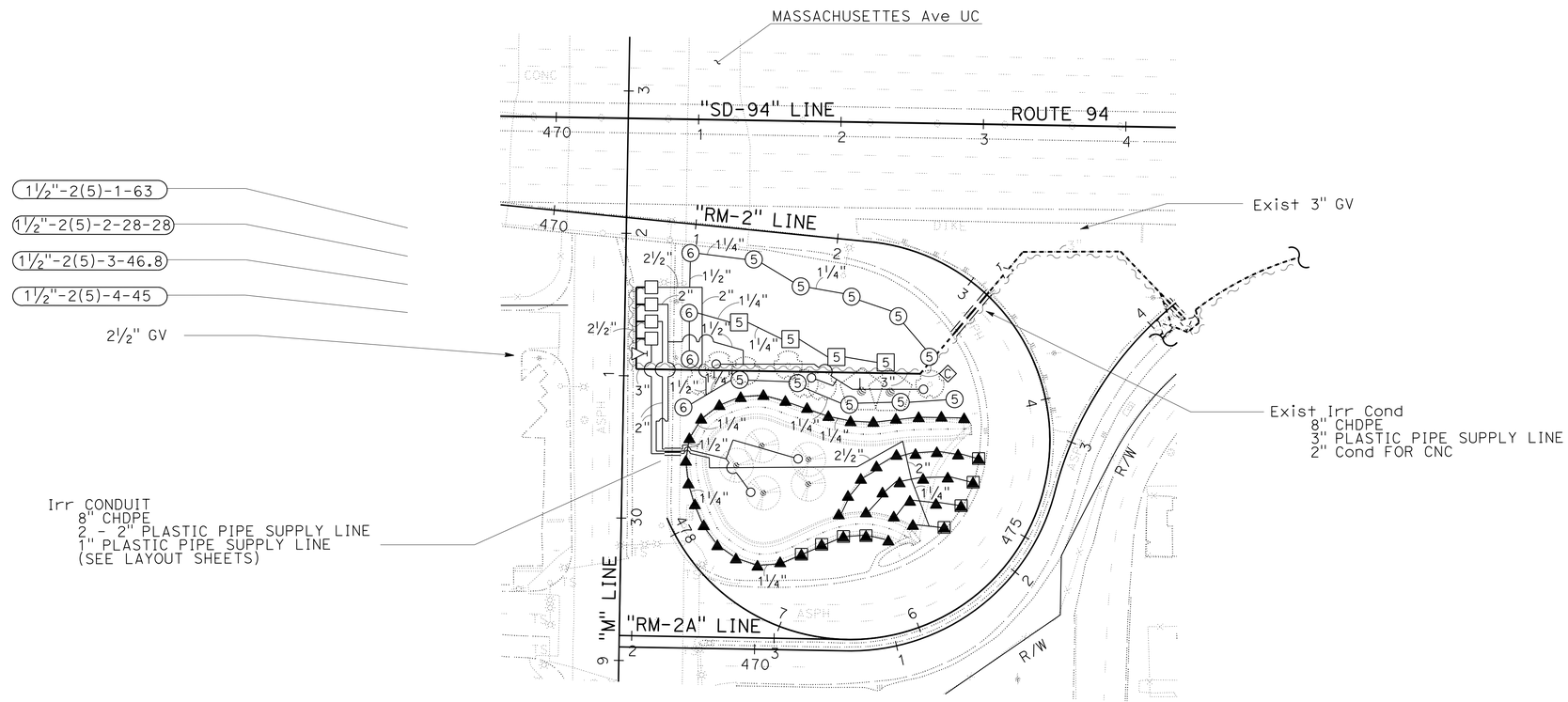


*APPROVED FOR IRRIGATION WORK ONLY*

# IRRIGATION PLAN
## LOCATION 7

SCALE: 1" = 50'

**IP-7**

STATE OF CALIFORNIA - DEPARTMENT OF TRANSPORTATION
Caltrans LANDSCAPE ARCHITECTURE

SENIOR LANDSCAPE ARCHITECT: STEPHEN ALVAREZ

CALCULATED-DESIGNED BY: CRISTINA BLANCO-KRAUSS
CHECKED BY: BETH HALL

REVISED BY
DATE REVISED

LAST REVISION 08-11-14
DATE PLOTTED => 04-SEP-2014
TIME PLOTTED => 10:45

| Dist | COUNTY | ROUTE | POST MILES TOTAL PROJECT | SHEET No. | TOTAL SHEETS |
|---|---|---|---|---|---|
| 11 | SD | 15, 94, 805 | Var | 121 | 184 |

LICENSED LANDSCAPE ARCHITECT

09-02-14
PLANS APPROVAL DATE

LICENSED LANDSCAPE ARCHITECT
CRISTINA BLANCO-KRAUSS, No. 4895
Signature 01-31-16
Renewal Date 07-08-14
Date
STATE OF CALIFORNIA

*THE STATE OF CALIFORNIA OR ITS OFFICERS OR AGENTS SHALL NOT BE RESPONSIBLE FOR THE ACCURACY OR COMPLETENESS OF SCANNED COPIES OF THIS PLAN SHEET.*

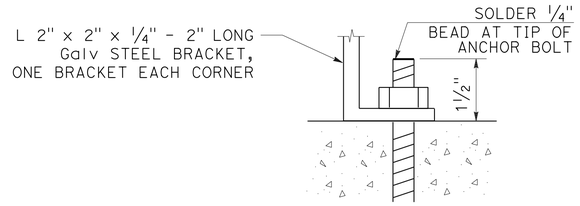


DETAIL "B"

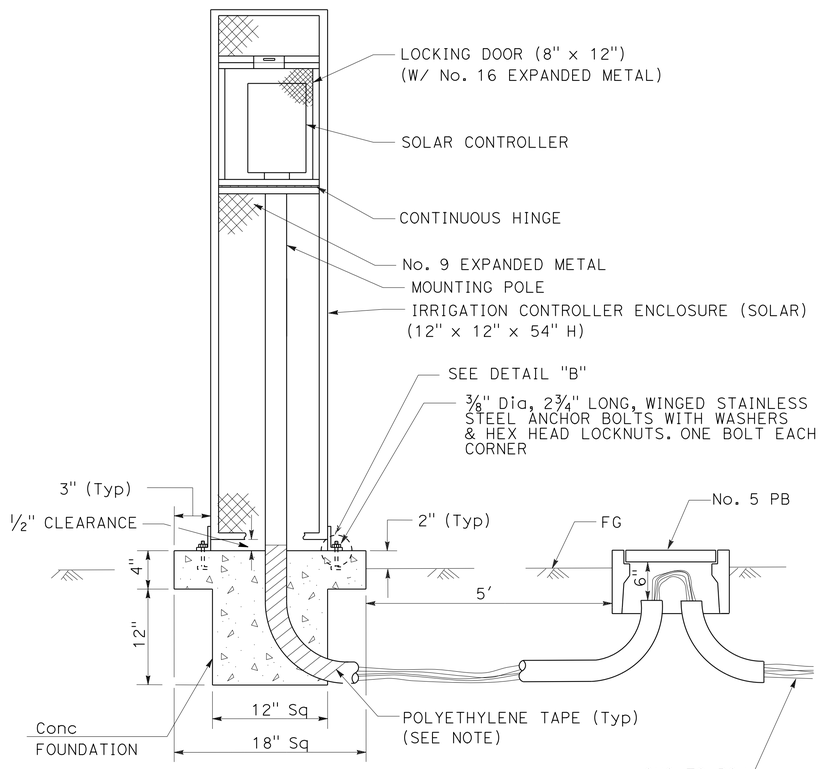


NOTE:

ALL METAL IN CONTACT WITH SOIL AND PCC MUST BE WRAPPED WITH 2" WIDE PLASTIC BACKED ADHESIVE POLYETHYLENE TAPE, 20 MIL THICK WITH 1/2" OVERLAP.

**SOLAR POWERED IRRIGATION CONTROLLER WITH ENCLOSURE**

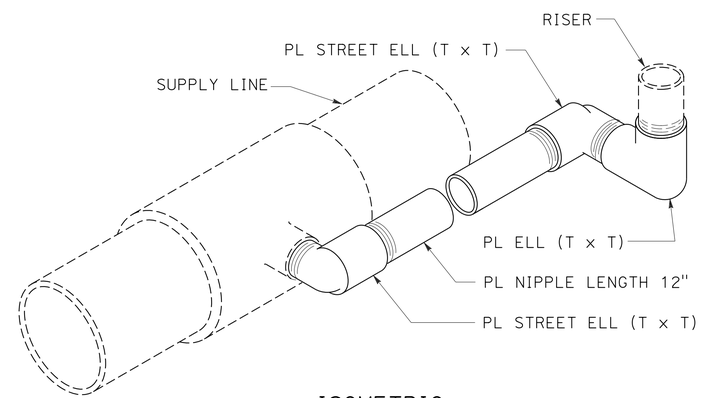


ISOMETRIC

**SWING JOINT (Mod)**

# IRRIGATION DETAILS

NO SCALE

**ID-1**

STATE OF CALIFORNIA - DEPARTMENT OF TRANSPORTATION
Caltrans LANDSCAPE ARCHITECTURE
SENIOR LANDSCAPE ARCHITECT: STEPHEN ALVAREZ
CALCULATED-DESIGNED BY: CRISTINA BLANCO-KRAUSS
CHECKED BY: BETH HALL
REVISED BY
DATE REVISED

LAST REVISION 08-11-14
DATE PLOTTED => 04-SEP-2014
TIME PLOTTED => 10:45

| Dist | COUNTY | ROUTE | POST MILES TOTAL PROJECT | SHEET No. | TOTAL SHEETS |
|---|---|---|---|---|---|
| 11 | SD | 15, 94, 805 | Var | 122 | 184 |

LICENSED LANDSCAPE ARCHITECT

09-02-14
PLANS APPROVAL DATE

LICENSED LANDSCAPE ARCHITECT
CRISTINA BLANCO-KRAUSS No. 4895
Signature
01-31-16
Renewal date
07-08-14
Date
STATE OF CALIFORNIA

*THE STATE OF CALIFORNIA OR ITS OFFICERS OR AGENTS SHALL NOT BE RESPONSIBLE FOR THE ACCURACY OR COMPLETENESS OF SCANNED COPIES OF THIS PLAN SHEET.*

# IRRIGATION QUANTITIES

| SUBTOTALS PER VALVE ON LATERAL SUPPLY SIDE OF CONTROL VALVE | CONTROLLER LETTER | VALVE NUMBER | PLASTIC PIPE (SCHEDULE 40) (SUPPLY LINE) 1" | 1¼" | 1½" | 2" | 2½" | PLASTIC PIPE (CLASS 315) (SUPPLY LINE) 2" | 2½" | 3" | CV ¾" | 1" | 1½" | 2" | SPRINKLER ASSEMBLY TREE WELL | RISER GEAR DRIVEN | POP-UP GEAR DRIVEN | RISER | POP-UP |
|---|---|---|---|---|---|---|---|---|---|---|---|---|---|---|---|---|---|---|---|
| | | | LF | LF | LF | LF | LF | LF | LF | LF | EA | EA | EA | EA | EA | EA | EA | EA | EA |
| | 37(B) | 13 | 96 | 194 | 49 | 141 | 141 | - | - | - | - | - | - | - | - | 8 | - | - | - |
| | | 14 | 581 | 704 | - | 397 | - | - | - | - | - | - | - | - | - | - | - | 32 | - |
| | | 15 | 94 | 194 | 48 | 345 | 345 | - | - | - | - | - | - | - | - | 8 | - | - | - |
| | SUBTOTAL 37(B) | | 771 | 1,092 | 97 | 883 | 486 | - | - | - | - | - | - | - | - | 16 | - | 32 | - |
| | 37(D) | 35 | 94 | 192 | 49 | 292 | 292 | - | - | - | - | - | - | - | - | 8 | - | - | - |
| | | 36 | 97 | 198 | 47 | 168 | 168 | - | - | - | - | - | - | - | - | 8 | - | - | - |
| | | 38 | 234 | 82 | - | 223 | - | - | - | - | - | - | - | - | - | 9 | - | - | - |
| | | 39 | - | 49 | 156 | - | - | - | - | - | - | - | - | - | - | 4 | - | - | - |
| | SUBTOTAL 37(D) | | 425 | 521 | 252 | 683 | 460 | - | - | - | - | - | - | - | - | 29 | - | - | - |
| | 37(I) | 26 | 47 | 50 | 24 | 30 | 497 | - | - | - | - | - | - | - | - | 3 | - | - | - |
| | | 27 | 99 | 95 | 142 | - | 165 | - | - | - | - | - | - | - | - | 8 | - | - | - |
| | SUBTOTAL 37(I) | | 146 | 145 | 166 | 30 | 662 | - | - | - | - | - | - | - | - | 11 | - | - | - |
| | E | 1 | 92 | 167 | 50 | - | 285 | - | - | - | - | - | - | - | - | 8 | - | - | - |
| | | 2 | 139 | 139 | 102 | 10 | 164 | - | - | - | - | - | - | - | - | 9 | - | - | - |
| | | 4 | 50 | 198 | 47 | - | - | - | - | - | - | - | - | - | - | 8 | - | - | - |
| | | 5 | 101 | 189 | 49 | - | 145 | - | - | - | - | - | - | - | - | 8 | - | - | - |
| | | 10 | 767 | 86 | - | 125 | - | - | - | - | - | - | - | - | - | - | - | 32 | - |
| | SUBTOTAL E | | 1,149 | 779 | 248 | 135 | 594 | - | - | - | - | - | - | - | - | 33 | - | 32 | - |
| | S | 5 | 202 | 202 | 34 | - | 60 | - | - | - | - | - | - | - | - | 10 | - | - | - |
| | | 6 | 202 | 40 | 34 | - | - | - | - | - | - | - | - | - | - | 9 | - | - | - |
| | | 11 | 256 | 268 | - | - | - | - | - | - | - | - | - | - | - | - | - | 40 | - |
| | SUBTOTAL S | | 660 | 510 | 68 | - | 60 | - | - | - | - | - | - | - | - | 19 | - | 40 | - |
| | 2(6) | 3 | 101 | 37 | - | - | - | - | - | - | - | - | - | - | - | - | - | - | - |
| | | 4 | 101 | 37 | - | - | - | - | - | - | - | - | - | - | - | - | - | - | - |
| | | 7 | 202 | 202 | 34 | - | 496 | - | - | - | - | - | - | - | - | 14 | - | - | - |
| | | 8 | 202 | 196 | 34 | - | 543 | - | - | - | - | - | - | - | - | - | 14 | - | - |
| | | 9 | 222 | 248 | 42 | 56 | - | - | - | - | - | - | - | - | - | 14 | - | - | - |
| | | 10 | 223 | 249 | 42 | 15 | - | - | - | - | - | - | - | - | - | - | 14 | - | - |
| | SUBTOTAL 2(6) | | 1,051 | 969 | 152 | 71 | 1,039 | - | - | - | - | - | - | - | - | 28 | 28 | - | - |
| | 2(5) | 1 | 233 | 368 | - | 32 | 27 | - | - | - | - | - | - | - | - | 14 | 4 | - | - |
| | | 2 | 728 | - | 52 | 40 | - | - | - | - | - | - | - | - | - | - | - | 28 | - |
| | | 3 | 170 | 226 | 54 | 108 | - | - | - | - | - | - | - | - | - | - | - | - | 27 |
| | | 4 | 321 | 16 | - | 18 | 282 | - | - | - | - | - | - | - | - | - | - | - | 21 |
| | SUBTOTAL 2(5) | | 1,452 | 610 | 106 | 198 | 309 | - | - | - | - | - | - | - | - | 14 | 4 | 28 | 48 |
| TOTAL | | | 5,654 | 4,626 | 1,089 | 2,000 | 3,610 | - | - | - | - | - | - | - | - | 150 | 32 | 132 | 48 |

STATE OF CALIFORNIA - DEPARTMENT OF TRANSPORTATION
Caltrans LANDSCAPE ARCHITECTURE

SENIOR LANDSCAPE ARCHITECT: STEPHEN ALVAREZ
CALCULATED-DESIGNED BY: CRISTINA BLANCO-KRAUSS
CHECKED BY: BETH HALL
REVISED BY
DATE REVISED

# IRRIGATION QUANTITIES
# IQ-1

LAST REVISION 08-11-14
DATE PLOTTED => 04-SEP-2014
TIME PLOTTED => 10:45

| Dist | COUNTY | ROUTE | POST MILES TOTAL PROJECT | SHEET No. | TOTAL SHEETS |
|---|---|---|---|---|---|
| 11 | SD | 15, 94, 805 | Var | 123 | 184 |

LICENSED LANDSCAPE ARCHITECT

09-02-14
PLANS APPROVAL DATE

LICENSED LANDSCAPE ARCHITECT
CRISTINA BLANCO-KRAUSS NO. 4895
Signature
01-31-16
Renewal date
07-08-14
Date
STATE OF CALIFORNIA

*THE STATE OF CALIFORNIA OR ITS OFFICERS OR AGENTS SHALL NOT BE RESPONSIBLE FOR THE ACCURACY OR COMPLETENESS OF SCANNED COPIES OF THIS PLAN SHEET.*

# IRRIGATION QUANTITIES

| SUBTOTALS PER SHEET ON MAIN SUPPLY SIDE OF CONTROL VALVE | IRRIGATION CONTROLLER | | COPPER PIPE (SUPPLY LINE) | | WM | BPA | | | PRV | RCV | | | DVA | | | FS | | GV | | | | BV | | | WS | | | CCA | | PLASTIC PIPE (SCHEDULE 40) (SUPPLY LINE) | | | | | PLASTIC PIPE (CLASS 315) (SUPPLY LINE) | | SPRINKLER ASSEMBLY | | | | |
|---|---|---|---|---|---|---|---|---|---|---|---|---|---|---|---|---|---|---|---|---|---|---|---|---|---|---|---|---|---|---|---|---|---|---|---|---|---|---|---|---|---|
| SHEET NUMBER | 12 STATION SOLAR | ICE | 2" | 3" | 2" | 2" | (N) ENCLOSURE | (N) BLANKET | 2" | 1" | 1½" | 2" | 1" | 1½" | 2" | 1½" | 2" | 1" | 1½" | 2" | 2½" | 1" | 1½" | 2" | 1" | 1½" | 2" | 1" | 1½" | 1" | 1¼" | 1½" | 2" | 2½" | 2½" | 3" | TREE WELL | RISER GEAR DRIVEN | POP-UP GEAR DRIVEN | RISER | POP-UP |
| | EA | EA | LF | LF | EA | EA | EA | EA | EA | EA | EA | EA | EA | EA | EA | EA | EA | | EA | EA | EA | EA | EA | EA | EA | EA | EA | EA | EA | LF | LF | LF | LF | LF | LF | LF | EA | EA | EA | EA | EA |
| IP-1 | - | - | - | - | - | - | - | - | - | - | 5 | - | - | - | - | - | - | - | - | 1 | - | - | - | - | - | - | - | - | - | - | - | - | - | - | - | 26 | | | | | |
| IP-2 | - | - | - | - | - | - | - | - | - | - | 4 | - | - | - | - | - | - | - | - | 1 | - | - | - | - | - | - | - | - | - | - | 92 | - | 105 | - | - | - | | | | | |
| IP-3 | - | - | - | - | - | - | - | - | - | - | - | - | - | - | - | - | - | - | - | - | - | - | - | - | - | - | - | - | - | - | - | - | - | - | - | - | | | | | |
| IP-4 | 1 | 1 | - | - | - | - | - | - | - | - | 8 | - | - | - | - | - | - | - | - | - | 2 | - | - | - | - | - | - | - | - | - | - | - | - | - | 137 | - | | | | | |
| IP-5 | - | - | - | - | - | - | - | - | - | - | 2 | - | - | - | - | - | - | - | - | - | - | - | - | - | - | - | - | - | - | - | - | - | - | - | - | - | | | | | |
| IP-6 | - | - | - | - | - | - | - | - | - | - | 2 | - | - | - | - | - | - | - | - | - | - | - | - | - | - | - | - | - | - | - | - | - | - | - | - | - | | | | | |
| IP-7 | - | - | - | - | - | - | - | - | - | - | 4 | - | - | - | - | - | - | - | - | - | 1 | - | - | - | - | - | - | - | - | - | - | - | - | - | 68 | 210 | | | | | |
| SUBTOTAL '37(B)' | | | | | | | | | | | | | | | | | | | | | | | | | | | | | | 771 | 1,092 | 97 | 883 | 486 | - | - | - | 16 | - | 32 | - |
| SUBTOTAL '37(D)' | | | | | | | | | | | | | | | | | | | | | | | | | | | | | | 425 | 521 | 252 | 683 | 460 | - | - | - | 29 | - | - | - |
| SUBTOTAL '37(I)' | | | | | | | | | | | | | | | | | | | | | | | | | | | | | | 146 | 145 | 166 | 30 | 662 | - | - | - | 11 | - | - | - |
| SUBTOTAL 'E' | | | | | | | | | | | | | | | | | | | | | | | | | | | | | | 1,149 | 779 | 248 | 135 | 594 | - | - | - | 33 | - | 32 | - |
| SUBTOTAL 'S' | | | | | | | | | | | | | | | | | | | | | | | | | | | | | | 660 | 510 | 68 | - | 60 | - | - | - | 19 | - | 40 | - |
| SUBTOTAL '2(6)' | | | | | | | | | | | | | | | | | | | | | | | | | | | | | | 1,051 | 969 | 152 | 71 | 1039 | - | - | - | 28 | 28 | - | - |
| SUBTOTAL '2(5)' | | | | | | | | | | | | | | | | | | | | | | | | | | | | | | 1,452 | 610 | 106 | 198 | 309 | - | - | - | 14 | 4 | 28 | 48 |
| TOTAL | 1 | 1 | | | | | | | | | 25 | | | | | | | | | 2 | 3 | | | | | | | | | 5,654 | 4,626 | 1,089 | 2,000 | 3.610 | 205 | 236 | - | 150 | 32 | 132 | 48 |

CALCULATED-DESIGNED BY: CRISTINA BLANCO-KRAUSS
CHECKED BY: BETH HALL
REVISED BY
DATE REVISED
SENIOR LANDSCAPE ARCHITECT: STEPHEN ALVAREZ

STATE OF CALIFORNIA - DEPARTMENT OF TRANSPORTATION
Caltrans® LANDSCAPE ARCHITECTURE

LAST REVISION 08-11-14
DATE PLOTTED => 04-SEP-2014
TIME PLOTTED => 10:45

# IRRIGATION QUANTITIES
# IQ-2

| Dist | COUNTY | ROUTE | POST MILES TOTAL PROJECT | SHEET No. | TOTAL SHEETS |
|---|---|---|---|---|---|
| 11 | SD | 15, 94, 805 | Var | 124 | 184 |

LICENSED LANDSCAPE ARCHITECT

09-02-14
PLANS APPROVAL DATE

LICENSED LANDSCAPE ARCHITECT
CRISTINA BLANCO-KRAUSS No. 4895
Signature
01-31-16
Renewal Date
07-08-14
Date
STATE OF CALIFORNIA

*THE STATE OF CALIFORNIA OR ITS OFFICERS OR AGENTS SHALL NOT BE RESPONSIBLE FOR THE ACCURACY OR COMPLETENESS OF SCANNED COPIES OF THIS PLAN SHEET.*

NOTE:

UNDERLINED PORTIONS OF BOTANICAL NAMES INDICATE ABBREVIATIONS USED ON PLANTING PLANS.

ABBREVIATIONS:

WC - WOOD CHIP
Weed Germ - WEED GERMINATION

# PLANTING LEGEND

| PLANT GROUP | PLANT No. | SYMBOL | BOTANICAL NAME | COMMON NAME | SIZE | QUANTITY EACH | HOLE SIZE (INCH) Dia | HOLE SIZE (INCH) DEPTH | BASIN TYPE | SOIL AMENDMENT TYPE | SOIL AMENDMENT RATE | IRON SULFATE ① RATE | FERTILIZER ① PLANTING | FERTILIZER ① PLT ESTB | WOOD ① MULCH BASIN TYPE | WOOD ① MULCH BASIN CY | STAKING | PLANTING LIMITS MINIMUM DISTANCE (ft) FROM ETW | Pvmt | FENCE | WALL | PAVED DITCH | EARTH DITCH | ON CENTER (ft) | REMARKS |
|---|---|---|---|---|---|---|---|---|---|---|---|---|---|---|---|---|---|---|---|---|---|---|---|---|---|
| A | 1 | | ACACIA REDOLENS 'LOW BOY' | PROSTRATE ACACIA | No. 1 | 69 | ③ | ③ | I | - | - | 4 oz | 2 Pkt | 8 oz | WC | ⑦ | - | - | 15 | 15 | 15 | 15 | 15 | 8 | SHRUB |
| | 2 | | ROSMARINUS OFFICINALIS 'PROSTRATUS' | PROSTRATE ROSEMARY | No. 1 | 661 | ③ | ③ | I | - | - | 4 oz | 2 Pkt | 8 oz | WC | ⑦ | - | - | - | - | - | 6 | - | 4 | SHRUB |
| B | 3 | | HETEROMELES ARBUTIFOLIA | TOYON | No. 5 | 66 | ③ | ③ | I | - | - | - | 3 Pkt | - | WC | 0.06 | - | - | 15 | 15 | 15 | 10 | 10 | ⑦ | SHRUB |
| | 4 | | XYLOSMA CONGESTUM | SHINY XYLOSMA | No. 5 | 155 | ③ | ③ | I | - | - | - | 3 Pkt | 8 oz | WC | 0.06 | - | - | 15 | 15 | - | - | 10 | ⑦ | SHRUB |
| H | 5 | | CARPOBROTUS EDULIS | HOTTENTOT FIG | CUTTINGS | 242,336 | - | - | - | - | | 10 LB/ 1000 SQFT | 8 LB/ 1000 SQFT | 4 LB/ 1000 SQFT | - | - | - | - | 8 | 3 | 3 | 3 | 3 | 1 | GROUNDCOVER |
| - | 6 | | SOD | SOD | SOD | 2,208 SQYD | - | - | - | - | - | - | - | - | - | - | - | - | 4 | - | - | - | - | - | GROUNDCOVER ⑨ |
| U | 7 | | EUCALYPTUS CLADOCALIX | SUGAR GUM | No. 15 | 2 | ③ | ③ | I | - | - | 8 oz | 5 Pkt | 16 oz | WC | 0.20 | ④ | 35 | 29 | 15 | 15 | 20 | 15 | 20 | TREE |
| | 8 | | PLATANUS RACEMOSA | CALIFORNIA SYCAMORE | No. 15 | 27 | ③ | ③ | I | - | - | 8 oz | 5 Pkt | 16 oz | WC | 0.20 | ④ | 35 | 29 | 15 | 15 | 15 | 15 | 15 | TREE ⑤ |
| | 9 | | SCHINUS MOLLE | CALIFORNIA PEPPER | No. 15 | 37 | ③ | ③ | I | - | - | 8 oz | 5 Pkt | 16 oz | WC | 0.20 | ④ | 35 | 29 | 15 | 15 | 15 | 15 | 20 | TREE ⑤ |

APPLICABLE WHEN CIRCLED:

① - QUANTITIES SHOWN ARE "PER PLANT" UNLESS SHOWN AS SQFT OR SQYD APPLICATION RATES
2 - BASIN MULCH IS INCLUDED WITH MULCH QUANTITIES SHOWN ON PLANTING PLAN
③ - SUFFICIENT TO RECEIVE ROOT BALL AND AMENDMENTS IF REQUIRED
④ - SEE STANDARD PLAN RSP H4
⑤ - MINIMUM DISTANCE FROM INFILTRATION TRENCH: 20'
6 - SEE STANDARD SPECIFICATIONS
⑦ - AS SHOWN ON PLANS
8 - UNLESS OTHERWISE SHOWN ON PLANS
⑨ - 20-25% NASSELLA PULCHRA (PURPLE NEEDLEGRASS)
20-25% HORDEUM CALIFORNICUM (CALIFORNIA BARLEY)
20-25% HORDEUM B. BRACHYANTHERUM (MEADOW BARLEY)
35-40% FESTUCA RUBRA (MOLATA FESCUE)

LEGEND:

WOOD MULCH (WOOD CHIP)
WOOD MULCH (WOOD CHIP) (ACACIA PLANTING AREA)
WOOD MULCH (WOOD CHIP) (ROSMARINUS PLANTING AREA)
GRAVEL MULCH
ROCK BLANKET (TYPE 1)
ROCK BLANKET (TYPE 2)
ROCK MULCH
COMPOST
INCORPORATE MATERIALS
SOD
Exist TREES TO REMAIN
Exist SHRUBS TO REMAIN

## "SOD" - SEQUENCE OF WORK

| SEQUENCE | ITEM | MATERIAL DESCRIPTION | MATERIAL TYPE | APPLICATION RATE | REMARKS |
|---|---|---|---|---|---|
| STEP 1 | IMPORTED TOPSOIL | TOPSOIL | - | - | SEE DRAINAGE PLANS |
| STEP 2 | COMPOST | COMPOST | FINE | 130 CY/ACRE | - |
| STEP 3 | INCORPORATE MATERIALS | TOPSOIL/COMPOST | - | - | 12" DEPTH |
| STEP 4 | WEED GERMINATION | - | - | - | - |
| STEP 5 | SOD | - | - | - | - |

# PLANT LIST

# PL-1

REVISED BY | DATE REVISED
CRISTINA BLANCO-KRAUSS | BETH HALL
CALCULATED-DESIGNED BY | CHECKED BY
SENIOR LANDSCAPE ARCHITECT | STEPHEN ALVAREZ
STATE OF CALIFORNIA - DEPARTMENT OF TRANSPORTATION
Caltrans LANDSCAPE ARCHITECTURE

LAST REVISION 08-11-14 | DATE PLOTTED => 04-SEP-2014 | TIME PLOTTED => 10:45

| Dist | COUNTY | ROUTE | POST MILES TOTAL PROJECT | SHEET No. | TOTAL SHEETS |
|---|---|---|---|---|---|
| 11 | SD | 15, 94, 805 | Var | 125 | 184 |

LICENSED LANDSCAPE ARCHITECT

09-02-14
PLANS APPROVAL DATE

LICENSED LANDSCAPE ARCHITECT
CRISTINA BLANCO-KRAUSS, No. 4895
Signature
01-31-16
Renewal Date
07-08-14
Date
STATE OF CALIFORNIA

*THE STATE OF CALIFORNIA OR ITS OFFICERS OR AGENTS SHALL NOT BE RESPONSIBLE FOR THE ACCURACY OR COMPLETENESS OF SCANNED COPIES OF THIS PLAN SHEET.*

## NOTES:

1. FOR ACCURATE RIGHT OF WAY DATA, CONTACT RIGHT OF WAY ENGINEERING AT THE DISTRICT OFFICE.
2. NO STORAGE OF MATERIALS AND EQUIPMENT IS ALLOWED WITHIN THE DRIPLINE OF Exist TREES AND SHRUBS.

**SAN DIEGO**

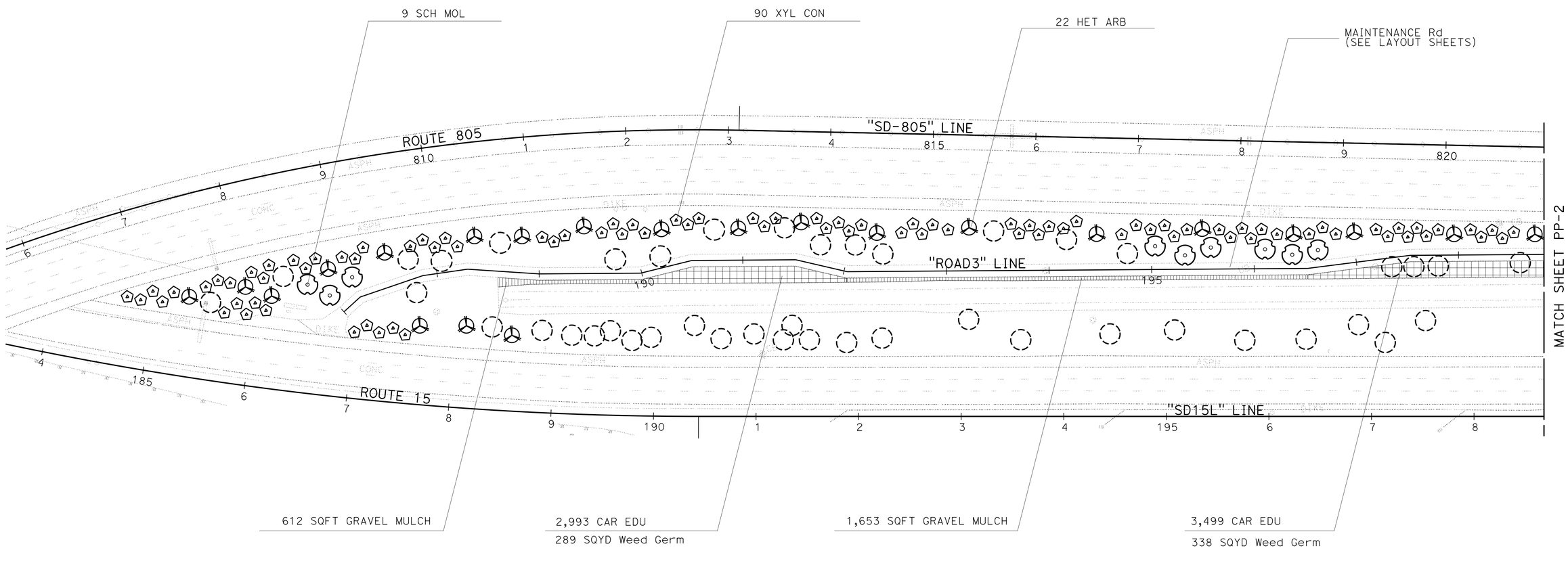


*APPROVED FOR PLANTING WORK ONLY*

# PLANTING PLAN
## LOCATION 1
SCALE: 1" = 50′ **PP-1**

STATE OF CALIFORNIA - DEPARTMENT OF TRANSPORTATION
Caltrans® LANDSCAPE ARCHITECTURE
SENIOR LANDSCAPE ARCHITECT: STEPHEN ALVAREZ
CALCULATED-DESIGNED BY: CRISTINA BLANCO-KRAUSS
CHECKED BY: BETH HALL
REVISED BY
DATE REVISED

LAST REVISION 08-11-14
DATE PLOTTED => 04-SEP-2014
TIME PLOTTED => 10:45

| Dist | COUNTY | ROUTE | POST MILES TOTAL PROJECT | SHEET No. | TOTAL SHEETS |
|---|---|---|---|---|---|
| 11 | SD | 15, 94, 805 | Var | 126 | 184 |

LICENSED LANDSCAPE ARCHITECT

09-02-14
PLANS APPROVAL DATE

LICENSED LANDSCAPE ARCHITECT
CRISTINA BLANCO-KRAUSS, No. 4895
Signature
01-31-16
Renewal Date
07-08-14
Date
STATE OF CALIFORNIA

*THE STATE OF CALIFORNIA OR ITS OFFICERS OR AGENTS SHALL NOT BE RESPONSIBLE FOR THE ACCURACY OR COMPLETENESS OF SCANNED COPIES OF THIS PLAN SHEET.*

## NOTES:

1. FOR ACCURATE RIGHT OF WAY DATA, CONTACT RIGHT OF WAY ENGINEERING AT THE DISTRICT OFFICE.
2. NO STORAGE OF MATERIALS AND EQUIPMENT IS ALLOWED WITHIN THE DRIPLINE OF Exist TREES AND SHRUBS.

**SAN DIEGO**

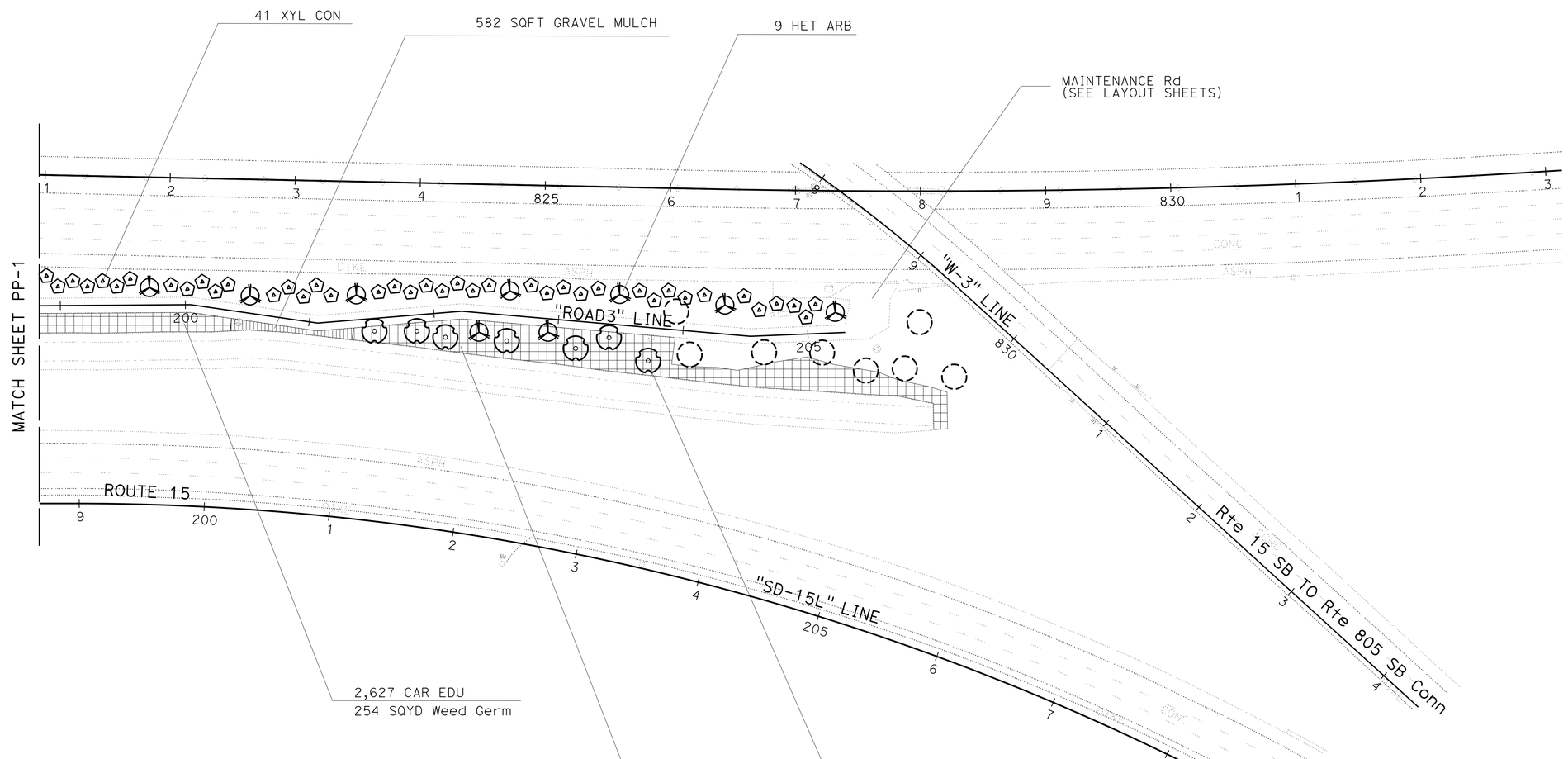


*APPROVED FOR PLANTING WORK ONLY*

# PLANTING PLAN
## LOCATION 1
SCALE: 1" = 50′ **PP-2**

STATE OF CALIFORNIA - DEPARTMENT OF TRANSPORTATION
Caltrans® LANDSCAPE ARCHITECTURE
SENIOR LANDSCAPE ARCHITECT: STEPHEN ALVAREZ
CALCULATED-DESIGNED BY: CRISTINA BLANCO-KRAUSS
CHECKED BY: BETH HALL
REVISED BY
DATE REVISED

LAST REVISION 08-11-14
DATE PLOTTED => 04-SEP-2014
TIME PLOTTED => 10:45

| Dist | COUNTY | ROUTE | POST MILES TOTAL PROJECT | SHEET No. | TOTAL SHEETS |
|---|---|---|---|---|---|
| 11 | SD | 15, 94, 805 | Var | 127 | 184 |

LICENSED LANDSCAPE ARCHITECT

09-02-14
PLANS APPROVAL DATE

LICENSED LANDSCAPE ARCHITECT
CRISTINA BLANCO-KRAUSS, No. 4895
Signature
01-31-16
Renewal Date
07-08-14
Date
STATE OF CALIFORNIA

*THE STATE OF CALIFORNIA OR ITS OFFICERS OR AGENTS SHALL NOT BE RESPONSIBLE FOR THE ACCURACY OR COMPLETENESS OF SCANNED COPIES OF THIS PLAN SHEET.*

## NOTES:

1. FOR ACCURATE RIGHT OF WAY DATA, CONTACT RIGHT OF WAY ENGINEERING AT THE DISTRICT OFFICE.
2. NO STORAGE OF MATERIALS AND EQUIPMENT IS ALLOWED WITHIN THE DRIPLINE OF Exist TREES AND SHRUBS.

**SAN DIEGO**

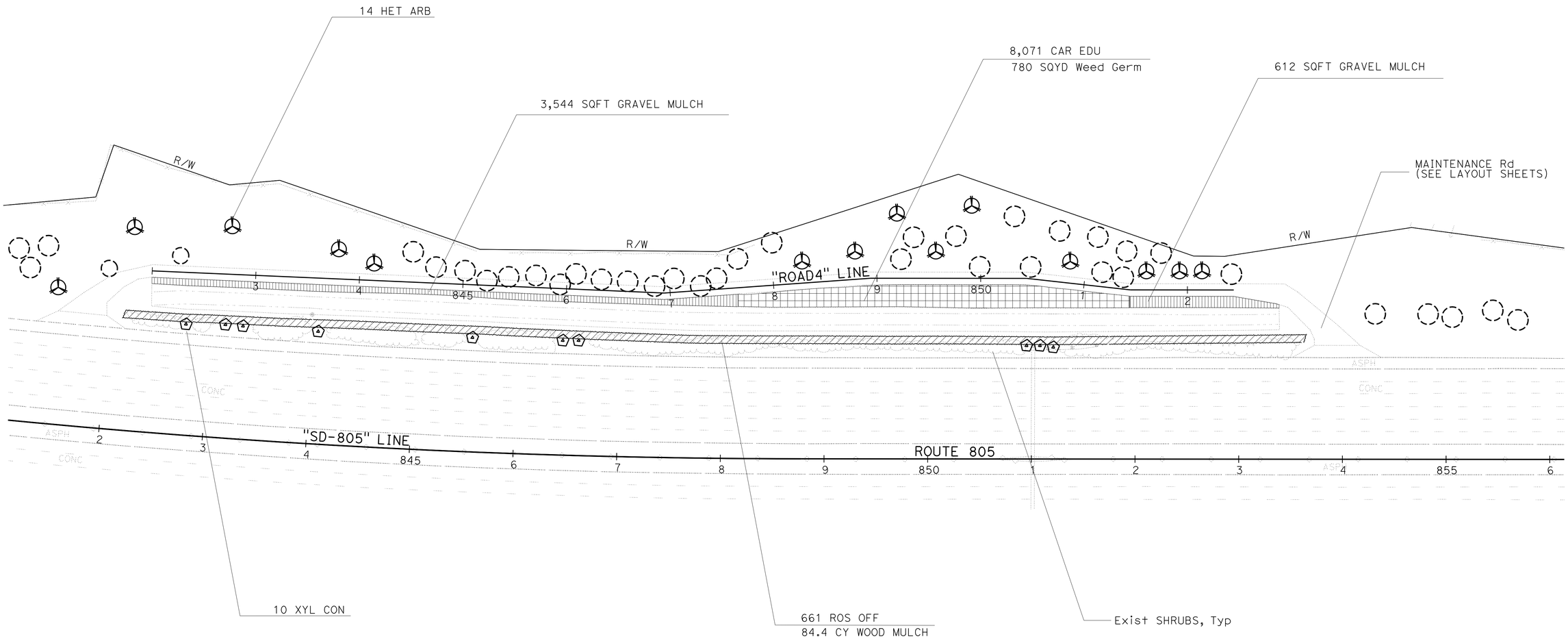


*APPROVED FOR PLANTING WORK ONLY*

# PLANTING PLAN
## LOCATION 2

SCALE: 1" = 50′ **PP-3**

STATE OF CALIFORNIA - DEPARTMENT OF TRANSPORTATION
Caltrans LANDSCAPE ARCHITECTURE
SENIOR LANDSCAPE ARCHITECT: STEPHEN ALVAREZ
CALCULATED-DESIGNED BY: CRISTINA BLANCO-KRAUSS
CHECKED BY: BETH HALL
REVISED BY
DATE REVISED

LAST REVISION 08-11-14
DATE PLOTTED => 04-SEP-2014
TIME PLOTTED => 10:45

| Dist | COUNTY | ROUTE | POST MILES TOTAL PROJECT | SHEET No. | TOTAL SHEETS |
|---|---|---|---|---|---|
| 11 | SD | 15, 94, 805 | Var | 128 | 184 |

LICENSED LANDSCAPE ARCHITECT

09-02-14
PLANS APPROVAL DATE

LICENSED LANDSCAPE ARCHITECT
CRISTINA BLANCO-KRAUSS, No. 4895
Signature
01-31-16
Renewal Date
07-08-14
Date
STATE OF CALIFORNIA

*THE STATE OF CALIFORNIA OR ITS OFFICERS OR AGENTS SHALL NOT BE RESPONSIBLE FOR THE ACCURACY OR COMPLETENESS OF SCANNED COPIES OF THIS PLAN SHEET.*

NOTES:

1. FOR ACCURATE RIGHT OF WAY DATA, CONTACT RIGHT OF WAY ENGINEERING AT THE DISTRICT OFFICE.
2. NO STORAGE OF MATERIALS AND EQUIPMENT IS ALLOWED WITHIN THE DRIPLINE OF Exist TREES AND SHRUBS.

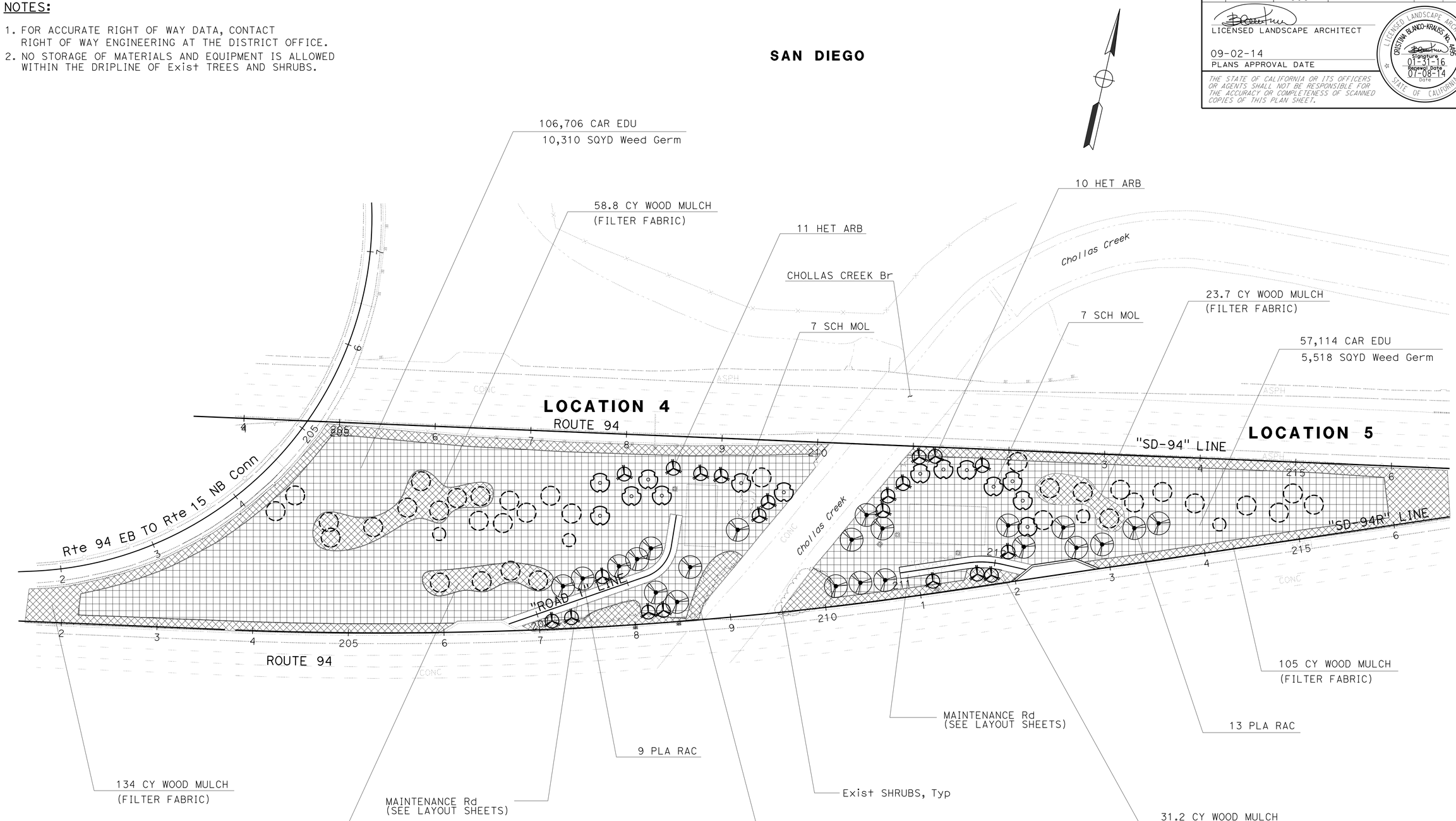


*APPROVED FOR PLANTING WORK ONLY*

# PLANTING PLAN
## LOCATIONS 4 & 5
SCALE: 1" = 50'

**PP-4**

STATE OF CALIFORNIA - DEPARTMENT OF TRANSPORTATION
Caltrans® LANDSCAPE ARCHITECTURE

SENIOR LANDSCAPE ARCHITECT: STEPHEN ALVAREZ

CALCULATED-DESIGNED BY: CRISTINA BLANCO-KRAUSS
CHECKED BY: BETH HALL

REVISED BY
DATE REVISED

LAST REVISION 08-11-14
DATE PLOTTED => 04-SEP-2014
TIME PLOTTED => 10:45

| Dist | COUNTY | ROUTE | POST MILES TOTAL PROJECT | SHEET No. | TOTAL SHEETS |
|---|---|---|---|---|---|
| 11 | SD | 15, 94, 805 | Var | 129 | 184 |

LICENSED LANDSCAPE ARCHITECT

09-02-14
PLANS APPROVAL DATE

LICENSED LANDSCAPE ARCHITECT
CRISTINA BLANCO-KRAUSS NO. 4895
Signature
01-31-16
Renewal Date
07-08-14
Date
STATE OF CALIFORNIA

*THE STATE OF CALIFORNIA OR ITS OFFICERS OR AGENTS SHALL NOT BE RESPONSIBLE FOR THE ACCURACY OR COMPLETENESS OF SCANNED COPIES OF THIS PLAN SHEET.*

NOTES:

1. FOR ACCURATE RIGHT OF WAY DATA, CONTACT RIGHT OF WAY ENGINEERING AT THE DISTRICT OFFICE.
2. NO STORAGE OF MATERIALS AND EQUIPMENT IS ALLOWED WITHIN THE DRIPLINE OF Exist TREES AND SHRUBS.

**LEMON GROVE**

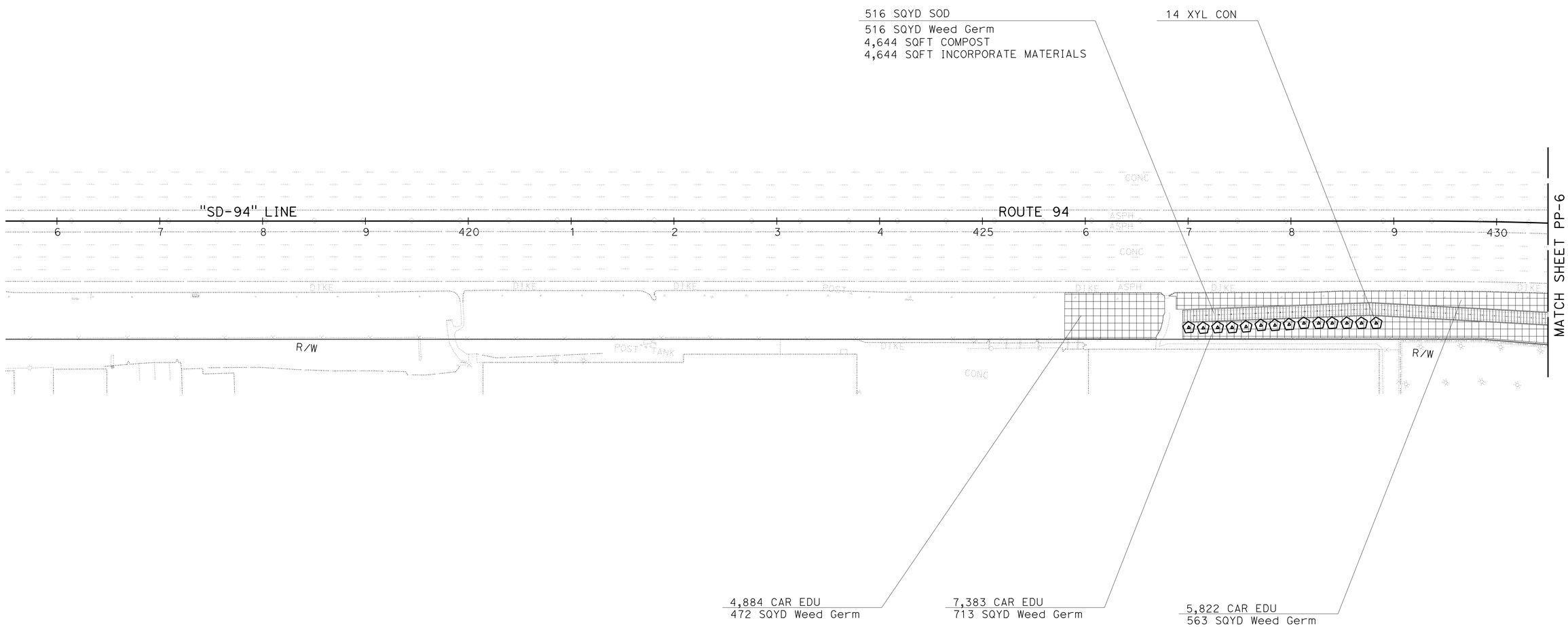


*APPROVED FOR PLANTING WORK ONLY*

# PLANTING PLAN
## LOCATION 6

SCALE: 1" = 50′ **PP-5**

STATE OF CALIFORNIA - DEPARTMENT OF TRANSPORTATION
Caltrans® LANDSCAPE ARCHITECTURE

SENIOR LANDSCAPE ARCHITECT: STEPHEN ALVAREZ

CALCULATED-DESIGNED BY: CRISTINA BLANCO-KRAUSS
CHECKED BY: BETH HALL

REVISED BY
DATE REVISED

LAST REVISION 08-11-14
DATE PLOTTED => 04-SEP-2014
TIME PLOTTED => 10:45

| Dist | COUNTY | ROUTE | POST MILES TOTAL PROJECT | SHEET No. | TOTAL SHEETS |
|---|---|---|---|---|---|
| 11 | SD | 15, 94, 805 | Var | 130 | 184 |

LICENSED LANDSCAPE ARCHITECT

09-02-14
PLANS APPROVAL DATE

LICENSED LANDSCAPE ARCHITECT
CRISTINA BLANCO-KRAUSS NO. 4085
Signature
01-31-16
Renewal Date
07-08-14
Date
STATE OF CALIFORNIA

*THE STATE OF CALIFORNIA OR ITS OFFICERS OR AGENTS SHALL NOT BE RESPONSIBLE FOR THE ACCURACY OR COMPLETENESS OF SCANNED COPIES OF THIS PLAN SHEET.*

## NOTES:

1. FOR ACCURATE RIGHT OF WAY DATA, CONTACT RIGHT OF WAY ENGINEERING AT THE DISTRICT OFFICE.
2. NO STORAGE OF MATERIALS AND EQUIPMENT IS ALLOWED WITHIN THE DRIPLINE OF Exist TREES AND SHRUBS.

# LEMON GROVE

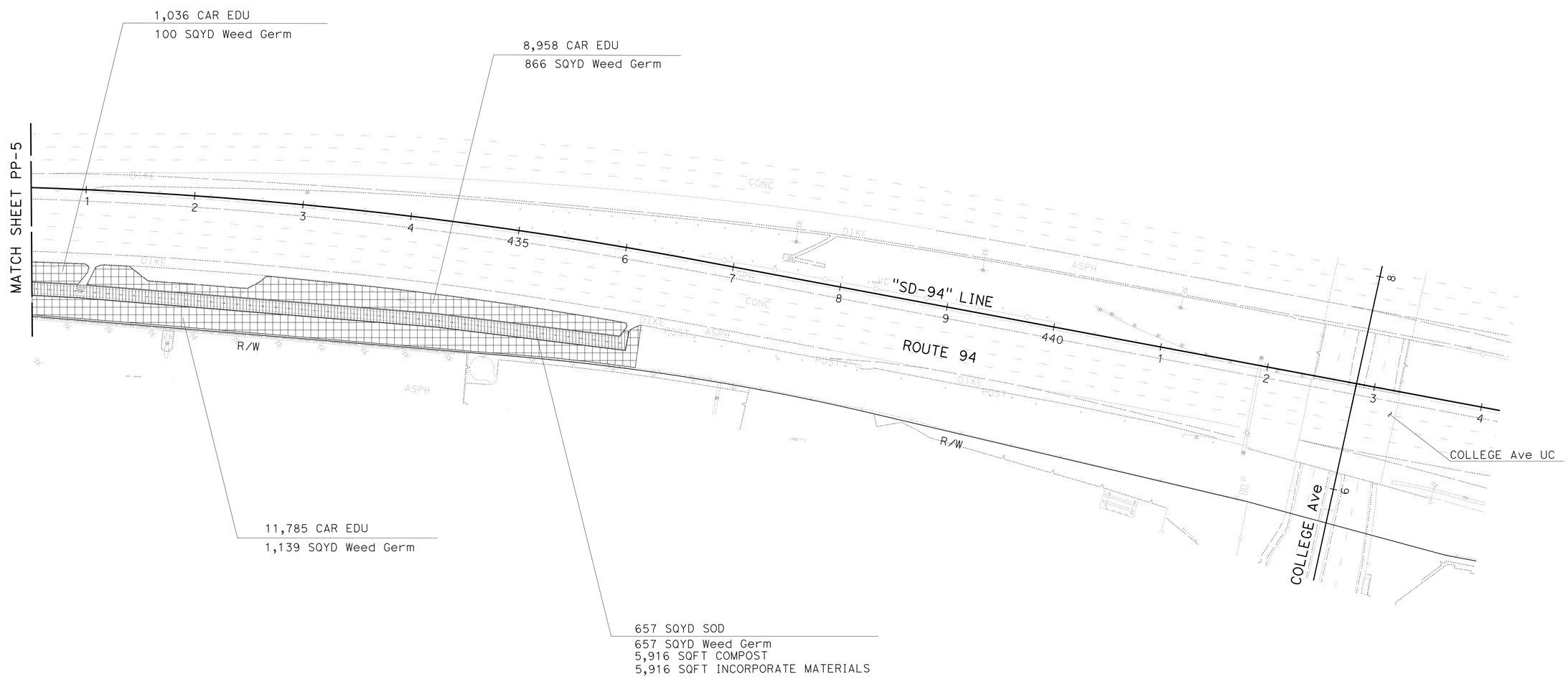


*APPROVED FOR PLANTING WORK ONLY*

# PLANTING PLAN
## LOCATION 6

SCALE: 1" = 50′ **PP-6**

STATE OF CALIFORNIA - DEPARTMENT OF TRANSPORTATION
Caltrans LANDSCAPE ARCHITECTURE
SENIOR LANDSCAPE ARCHITECT: STEPHEN ALVAREZ
CALCULATED-DESIGNED BY: CRISTINA BLANCO-KRAUSS
CHECKED BY: BETH HALL
REVISED BY
DATE REVISED

LAST REVISION 08-11-14
DATE PLOTTED => 04-SEP-2014
TIME PLOTTED => 10:45

| Dist | COUNTY | ROUTE | POST MILES TOTAL PROJECT | SHEET No. | TOTAL SHEETS |
|---|---|---|---|---|---|
| 11 | SD | 15, 94, 805 | Var | 131 | 184 |

LICENSED LANDSCAPE ARCHITECT

09-02-14
PLANS APPROVAL DATE

LICENSED LANDSCAPE ARCHITECT
CRISTINA BLANCO-KRAUSS, No. 4895
Signature
01-31-16
Renewal Date
07-08-14
Date
STATE OF CALIFORNIA

*THE STATE OF CALIFORNIA OR ITS OFFICERS OR AGENTS SHALL NOT BE RESPONSIBLE FOR THE ACCURACY OR COMPLETENESS OF SCANNED COPIES OF THIS PLAN SHEET.*

**NOTES:**

1. FOR ACCURATE RIGHT OF WAY DATA, CONTACT RIGHT OF WAY ENGINEERING AT THE DISTRICT OFFICE.
2. NO STORAGE OF MATERIALS AND EQUIPMENT IS ALLOWED WITHIN THE DRIPLINE OF Exist TREES AND SHRUBS.
3. FOR ROCK BLANKET AND ROCK MULCH LAYOUT SEE SEE LANDSCAPE DETAILS.

**LEMON GROVE**

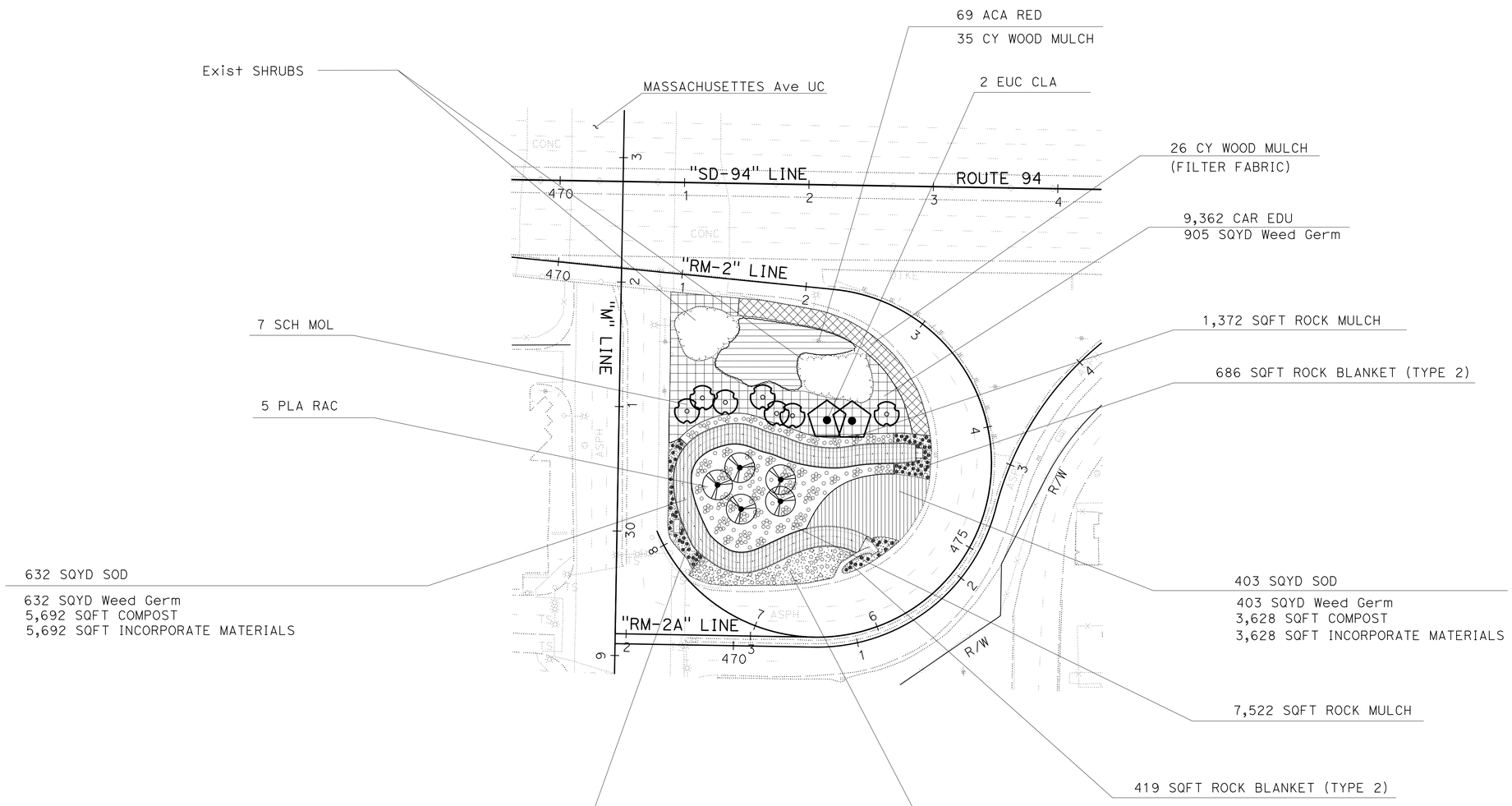


*APPROVED FOR PLANTING WORK ONLY*

# PLANTING PLAN
## LOCATION 7
SCALE: 1" = 50′ **PP-7**

STATE OF CALIFORNIA - DEPARTMENT OF TRANSPORTATION
Caltrans® LANDSCAPE ARCHITECTURE

SENIOR LANDSCAPE ARCHITECT: STEPHEN ALVAREZ
CALCULATED-DESIGNED BY: CRISTINA BLANCO-KRAUSS
CHECKED BY: BETH HALL
REVISED BY
DATE REVISED

LAST REVISION 08-11-14
DATE PLOTTED => 04-SEP-2014
TIME PLOTTED => 10:45

| Dist | COUNTY | ROUTE | POST MILES TOTAL PROJECT | SHEET No. | TOTAL SHEETS |
|---|---|---|---|---|---|
| 11 | SD | 15, 94, 805 | Var | 132 | 184 |

LICENSED LANDSCAPE ARCHITECT

09-02-14
PLANS APPROVAL DATE

LICENSED LANDSCAPE ARCHITECT
CRISTINA BLANCO-KRAUSS No. 4895
REGISTERED DATE 01-31-16
EXPIRATION DATE 07-08-14
DATE
STATE OF CALIFORNIA

*THE STATE OF CALIFORNIA OR ITS OFFICERS OR AGENTS SHALL NOT BE RESPONSIBLE FOR THE ACCURACY OR COMPLETENESS OF SCANNED COPIES OF THIS PLAN SHEET.*

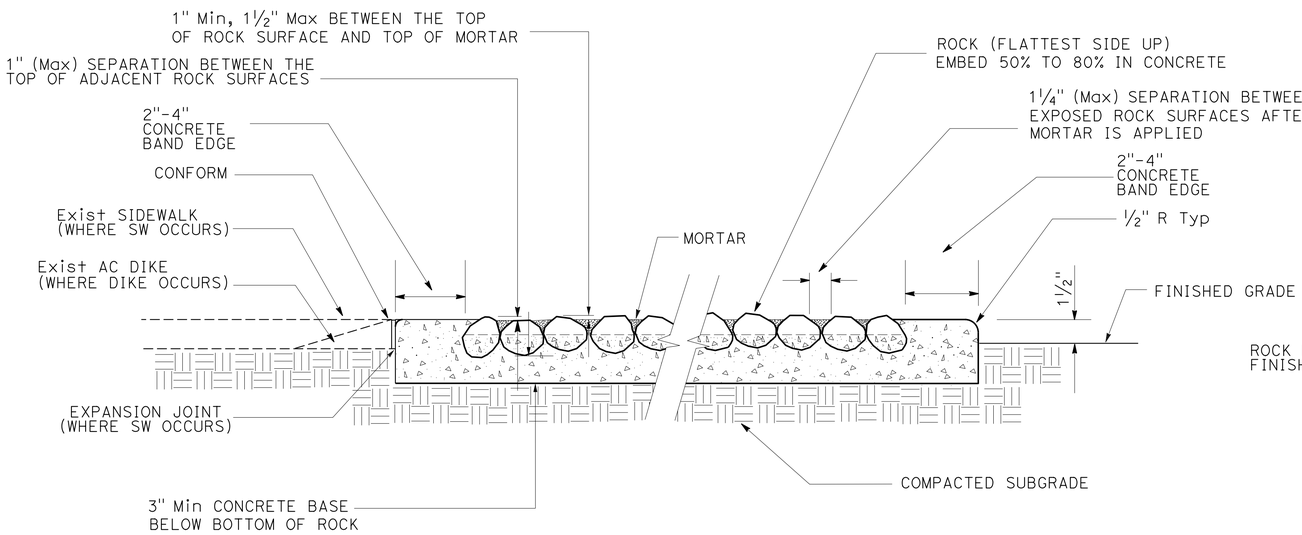


## ROCK BLANKET (TYPE 2)
**Mod**

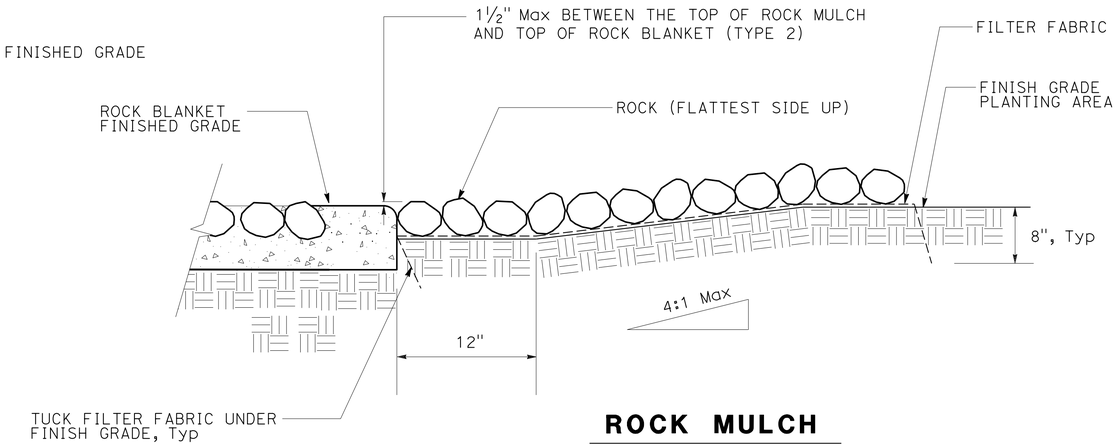


## ROCK MULCH

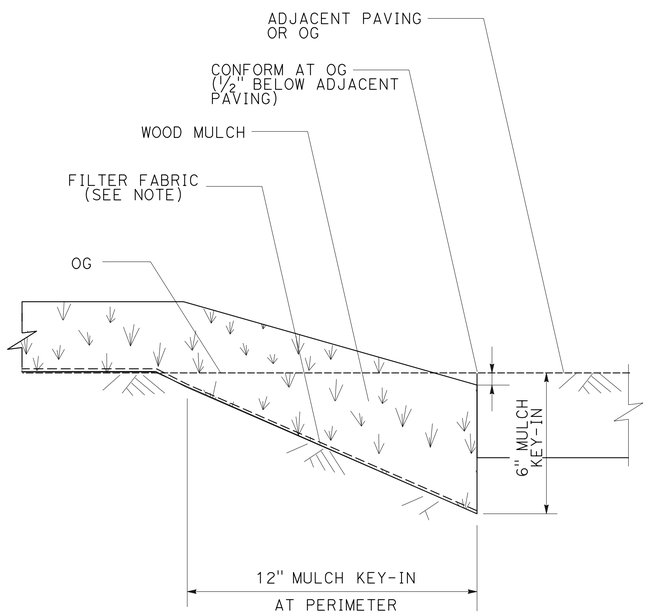


NOTE: INSTALL AT WOOD MULCH AREAS CALLED OUT ON PLANS. DOES NOT APPLY TO PLANT BASIN MULCH

## WOOD MULCH

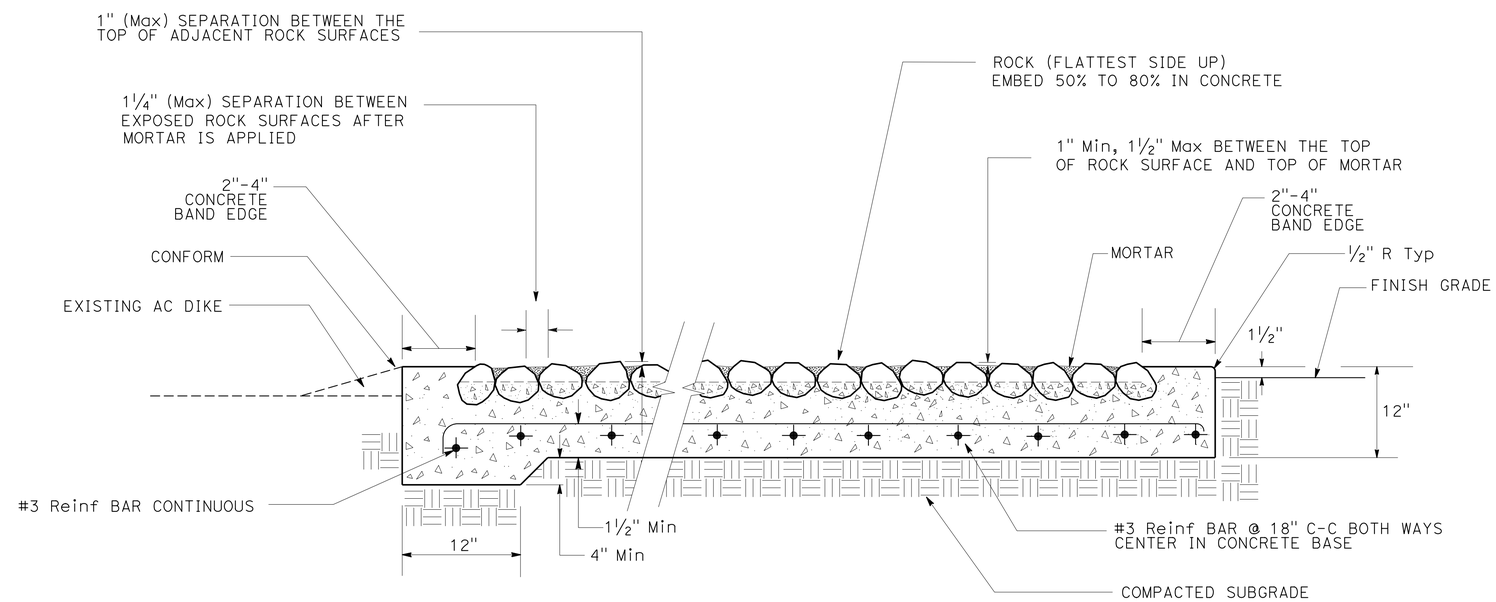


## ROCK BLANKET (TYPE 1)
**Mod**

# LANDSCAPE DETAILS

NO SCALE

**LD- 1**

STATE OF CALIFORNIA - DEPARTMENT OF TRANSPORTATION
Caltrans® LANDSCAPE ARCHITECTURE
SENIOR LANDSCAPE ARCHITECT: STEPHEN ALVAREZ
CALCULATED-DESIGNED BY: CRISTINA BLANCO-KRAUSS
CHECKED BY: BETH HALL
REVISED BY
DATE REVISED

LAST REVISION 06-19-14
DATE PLOTTED => 04-SEP-2014
TIME PLOTTED => 10:45

| Dist | COUNTY | ROUTE | POST MILES TOTAL PROJECT | SHEET No. | TOTAL SHEETS |
|---|---|---|---|---|---|
| 11 | SD | 15, 94, 805 | Var | 133 | 184 |

LICENSED LANDSCAPE ARCHITECT

09-02-14
PLANS APPROVAL DATE

LICENSED LANDSCAPE ARCHITECT
CRISTINA BLANCO-KRAUSS No. 4895
Signature 01-31-16
Renewal Date 07-08-14
Date
STATE OF CALIFORNIA

*THE STATE OF CALIFORNIA OR ITS OFFICERS OR AGENTS SHALL NOT BE RESPONSIBLE FOR THE ACCURACY OR COMPLETENESS OF SCANNED COPIES OF THIS PLAN SHEET.*

## NOTES:

1. FOR ACCURATE RIGHT OF WAY DATA, CONTACT RIGHT OF WAY ENGINEERING AT THE DISTRICT OFFICE.
2. FOR BIOSWALE AND BIOSTRIP DIMENSIONS AND LAYOUT SEE DRAINAGE SHEETS.

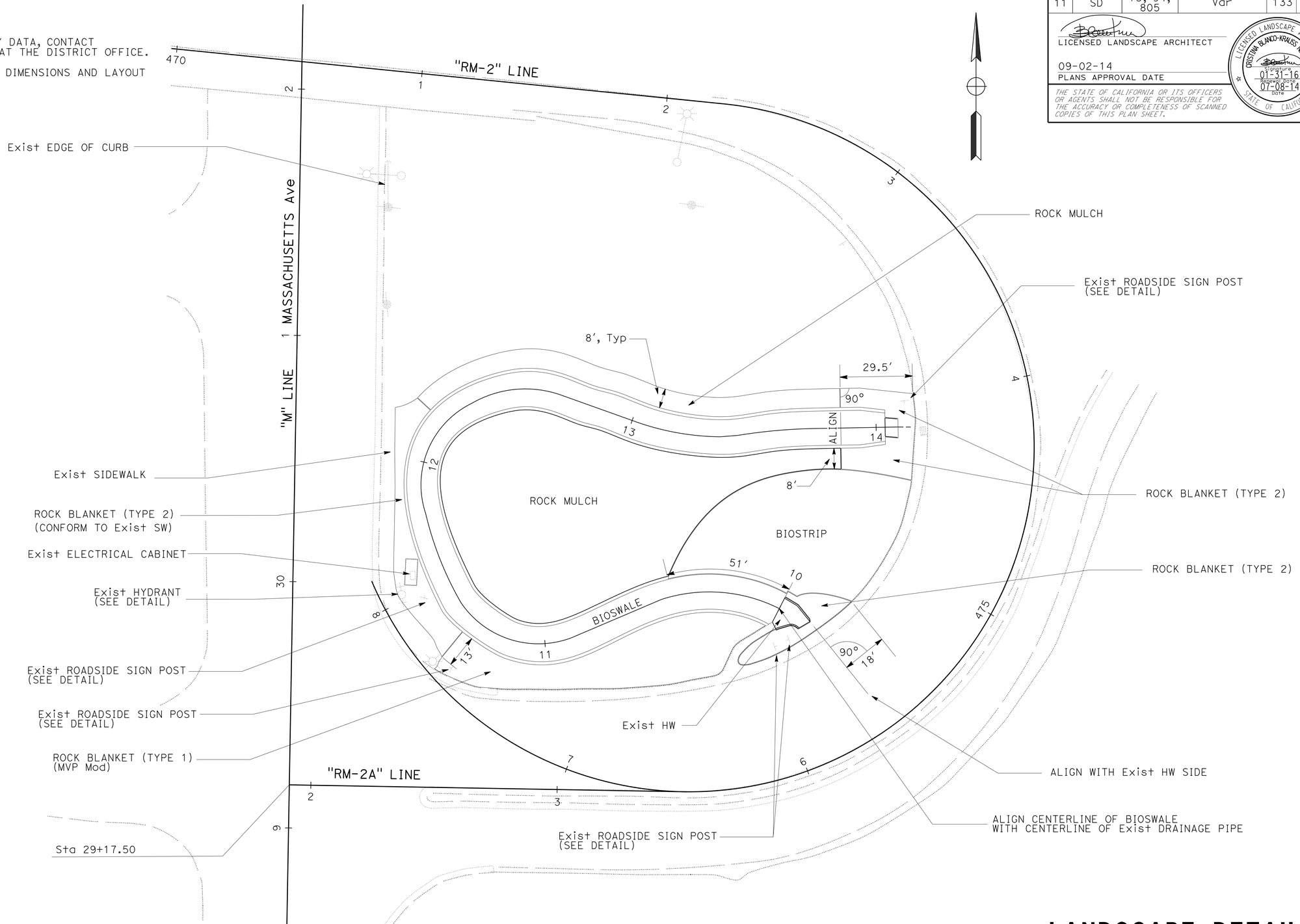


## ROCK BLANKET AND ROCK MULCH LAYOUT

# LANDSCAPE DETAILS

SCALE: 1" = 20'

**LD-2**

STATE OF CALIFORNIA - DEPARTMENT OF TRANSPORTATION
Caltrans® LANDSCAPE ARCHITECTURE

SENIOR LANDSCAPE ARCHITECT: STEPHEN ALVAREZ
CALCULATED-DESIGNED BY: CRISTINA BLANCO-KRAUSS
CHECKED BY: BETH HALL
REVISED BY
DATE REVISED

LAST REVISION 08-11-14
DATE PLOTTED => 04-SEP-2014
TIME PLOTTED => 10:45

| Dist | COUNTY | ROUTE | POST MILES TOTAL PROJECT | SHEET No. | TOTAL SHEETS |
|---|---|---|---|---|---|
| 11 | SD | 15, 94, 805 | Var | 134 | 184 |

LICENSED LANDSCAPE ARCHITECT

09-02-14
PLANS APPROVAL DATE

LICENSED LANDSCAPE ARCHITECT
CRISTINA BLANCO-KRAUSS, No. 4895
Signature Date 01-31-16
Original Date 07-08-14
Date
STATE OF CALIFORNIA

*THE STATE OF CALIFORNIA OR ITS OFFICERS OR AGENTS SHALL NOT BE RESPONSIBLE FOR THE ACCURACY OR COMPLETENESS OF SCANNED COPIES OF THIS PLAN SHEET.*

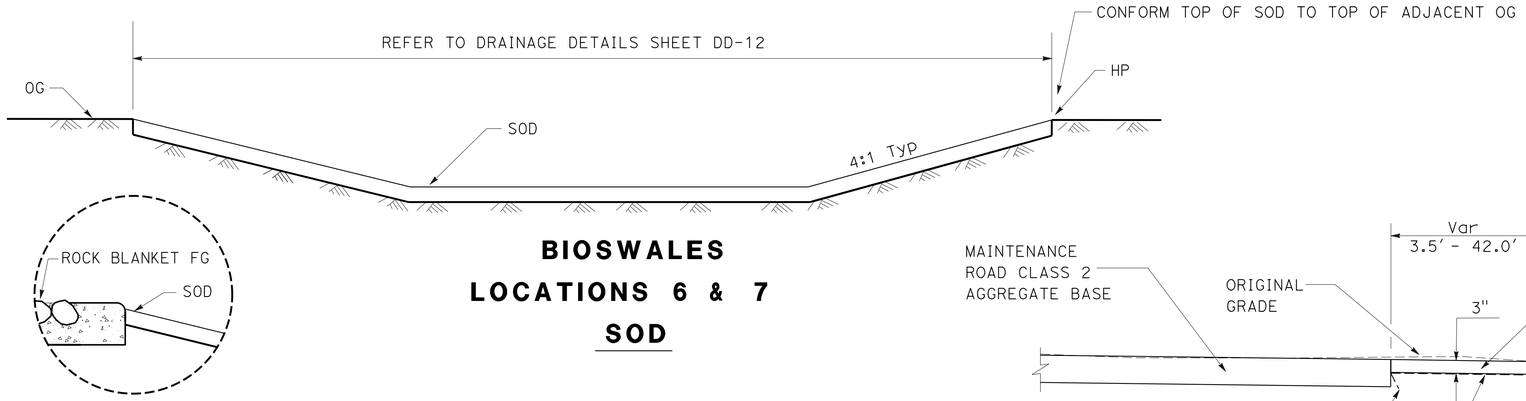


**BIOSWALES**
**LOCATIONS 6 & 7**
**SOD**

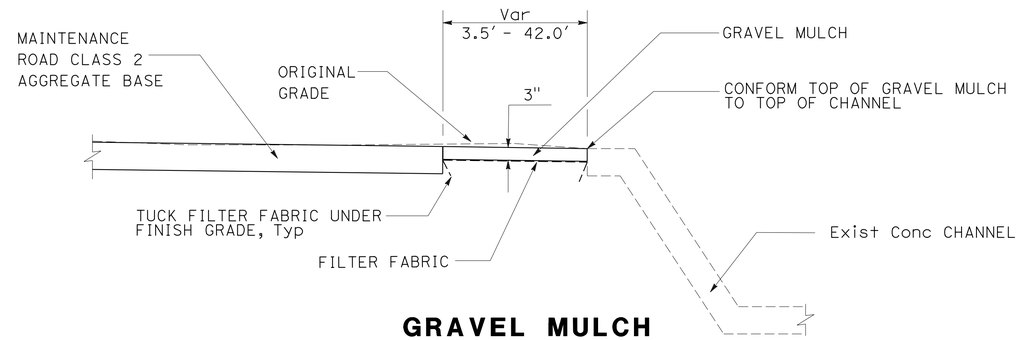


**GRAVEL MULCH**

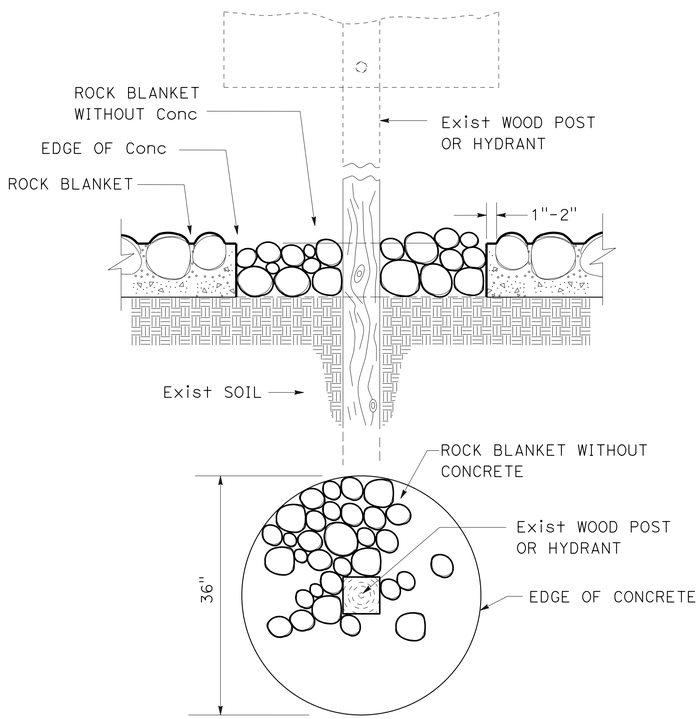


**Exist ROADSIDE SIGN AND HYDRANT**
**IN ROCK BLANKET AREAS DETAIL**

## PLANTING QUANTITIES

| SHEET No. | WOOD MULCH | ROCK MULCH | ROCK BLANKET (TYPE 1) | ROCK BLANKET (TYPE 2) | COMPOST | INCORPORATE MATERIALS | WEED GERMINATION | GRAVEL MULCH |
|---|---|---|---|---|---|---|---|---|
| | CY | SQFT | SQFT | SQFT | SQFT | SQFT | SQYD | SQFT |
| PP-1 | - | - | - | - | - | - | 627 | 2,265 |
| PP-2 | | | - | - | - | - | 1,423 | 582 |
| PP-3 | 84.4 | - | - | - | - | - | 780 | 4,156 |
| PP-4 | 414.3 | - | - | - | - | - | 15,828 | - |
| PP-5 | - | - | - | - | 4,644 | 4,644 | 2,264 | - |
| PP-6 | - | - | - | - | 5,916 | 5,916 | 2,762 | - |
| PP-7 | 61.0 | 8,894 | 2,206 | 1,937 | 9,320 | 9,320 | 1,940 | - |
| BASINS | 26.5 | - | - | - | - | - | - | - |
| TOTAL | 586.2 | 8,894 | 2,206 | 1,937 | 19,880 | 19,880 | 25,624 | 7,003 |

NOTE:
FOR IMPORTED TOPSOIL QUANTITIES REFER TO THE DQ SHEETS.

# LANDSCAPE DETAILS & QUANTITIES
# LD-3

NO SCALE

STATE OF CALIFORNIA - DEPARTMENT OF TRANSPORTATION
Caltrans® LANDSCAPE ARCHITECTURE
SENIOR LANDSCAPE ARCHITECT: STEPHEN ALVAREZ
CALCULATED-DESIGNED BY: CRISTINA BLANCO-KRAUSS
CHECKED BY: BETH HALL
REVISED BY
DATE REVISED

LAST REVISION 06-23-14
DATE PLOTTED => 04-SEP-2014
TIME PLOTTED => 10:45

| Dist | COUNTY | ROUTE | POST MILES TOTAL PROJECT | SHEET No. | TOTAL SHEETS |
|---|---|---|---|---|---|
| 11 | SD | 15,94, 805 | Var | 135 | 184 |

07-11-14
REGISTERED CIVIL ENGINEER DATE

09-02-14
PLANS APPROVAL DATE

REGISTERED PROFESSIONAL ENGINEER
ABDUL MALIKYAR
No. C66169
Exp. 06-30-16
CIVIL
STATE OF CALIFORNIA

*THE STATE OF CALIFORNIA OR ITS OFFICERS OR AGENTS SHALL NOT BE RESPONSIBLE FOR THE ACCURACY OR COMPLETENESS OF SCANNED COPIES OF THIS PLAN SHEET.*

NOTES:

1. FOR ACCURATE RIGHT OF WAY DATA, CONTACT RIGHT OF WAY ENGINEERING AT THE DISTRICT OFFICE.
2. FOR EROSION CONTROL LEGEND SEE EROSION CONTROL QUANTITIES.

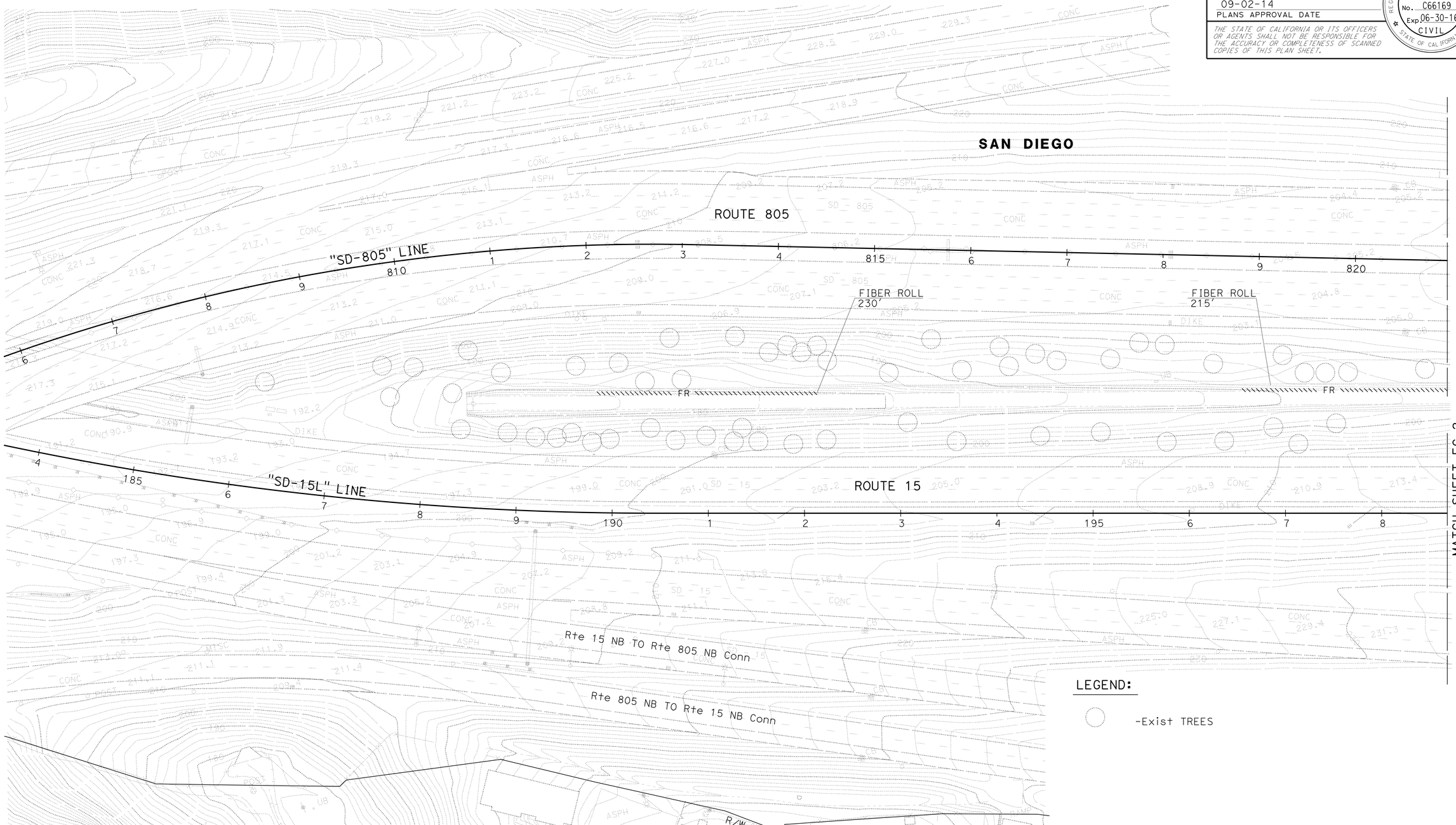


LEGEND:

-Exist TREES

# EROSION CONTROL PLAN
## LOCATION 1

SCALE: 1" = 50'

**EC-1**

*APPROVED FOR EROSION CONTROL WORK ONLY*

STATE OF CALIFORNIA - DEPARTMENT OF TRANSPORTATION
Caltrans
DESIGN

FUNCTIONAL SUPERVISOR: EDWARD HAJJ
CALCULATED-DESIGNED BY: MARCY FULLYLOVE
CHECKED BY: ABDUL MALIKYAR
REVISED BY
DATE REVISED

LAST REVISION 08-11-14
DATE PLOTTED => 04-SEP-2014
TIME PLOTTED => 10:45

| Dist | COUNTY | ROUTE | POST MILES TOTAL PROJECT | SHEET No. | TOTAL SHEETS |
|---|---|---|---|---|---|
| 11 | SD | 15,94, 805 | Var | 136 | 184 |

REGISTERED CIVIL ENGINEER 07-11-14 DATE

09-02-14
PLANS APPROVAL DATE

REGISTERED PROFESSIONAL ENGINEER ABDUL MALIKYAR No. C66169 Exp. 06-30-16 CIVIL STATE OF CALIFORNIA

*THE STATE OF CALIFORNIA OR ITS OFFICERS OR AGENTS SHALL NOT BE RESPONSIBLE FOR THE ACCURACY OR COMPLETENESS OF SCANNED COPIES OF THIS PLAN SHEET.*

NOTE:

1. FOR ACCURATE RIGHT OF WAY DATA, CONTACT RIGHT OF WAY ENGINEERING AT THE DISTRICT OFFICE.

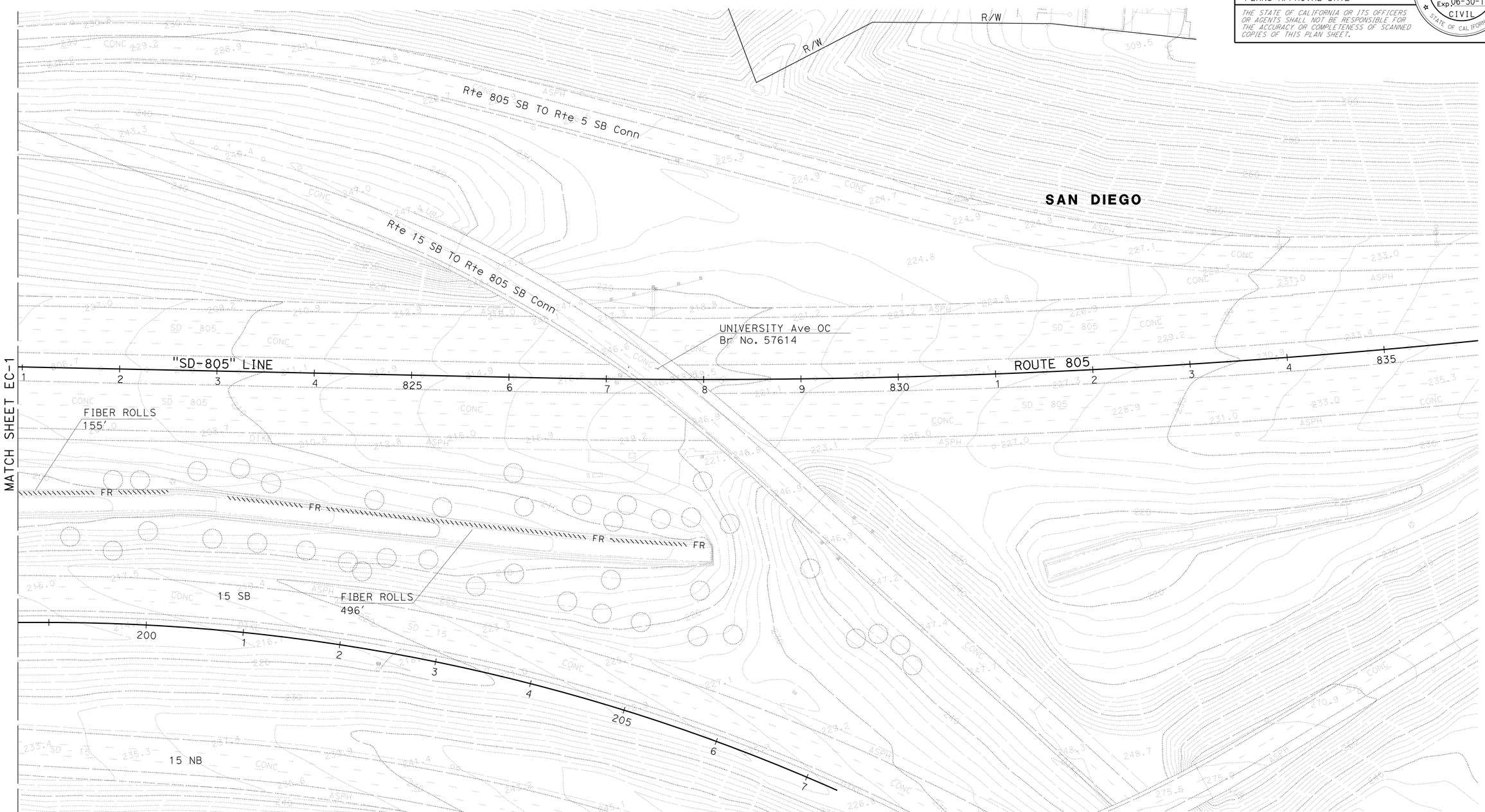


*APPROVED FOR EROSION CONTROL WORK ONLY*

# EROSION CONTROL PLAN
## LOCATION 1

SCALE: 1" = 50'

**EC-2**

STATE OF CALIFORNIA - DEPARTMENT OF TRANSPORTATION
Caltrans®
DESIGN

FUNCTIONAL SUPERVISOR: EDWARD HAJJ
CALCULATED-DESIGNED BY: MARCY FULLYLOVE
CHECKED BY: ABDUL MALIKYAR
REVISED BY
DATE REVISED

LAST REVISION 08-11-14
DATE PLOTTED => 04-SEP-2014
TIME PLOTTED => 10:46

| Dist | COUNTY | ROUTE | POST MILES TOTAL PROJECT | SHEET No. | TOTAL SHEETS |
|---|---|---|---|---|---|
| 11 | SD | 15, 94, 805 | Var | 137 | 184 |

REGISTERED CIVIL ENGINEER 07-11-14 DATE

09-02-14
PLANS APPROVAL DATE

REGISTERED PROFESSIONAL ENGINEER ABDUL MALIKYAR No. C66169 Exp. 06-30-16 CIVIL STATE OF CALIFORNIA

*THE STATE OF CALIFORNIA OR ITS OFFICERS OR AGENTS SHALL NOT BE RESPONSIBLE FOR THE ACCURACY OR COMPLETENESS OF SCANNED COPIES OF THIS PLAN SHEET.*

NOTE:

1. FOR ACCURATE RIGHT OF WAY DATA, CONTACT RIGHT OF WAY ENGINEERING AT THE DISTRICT OFFICE.

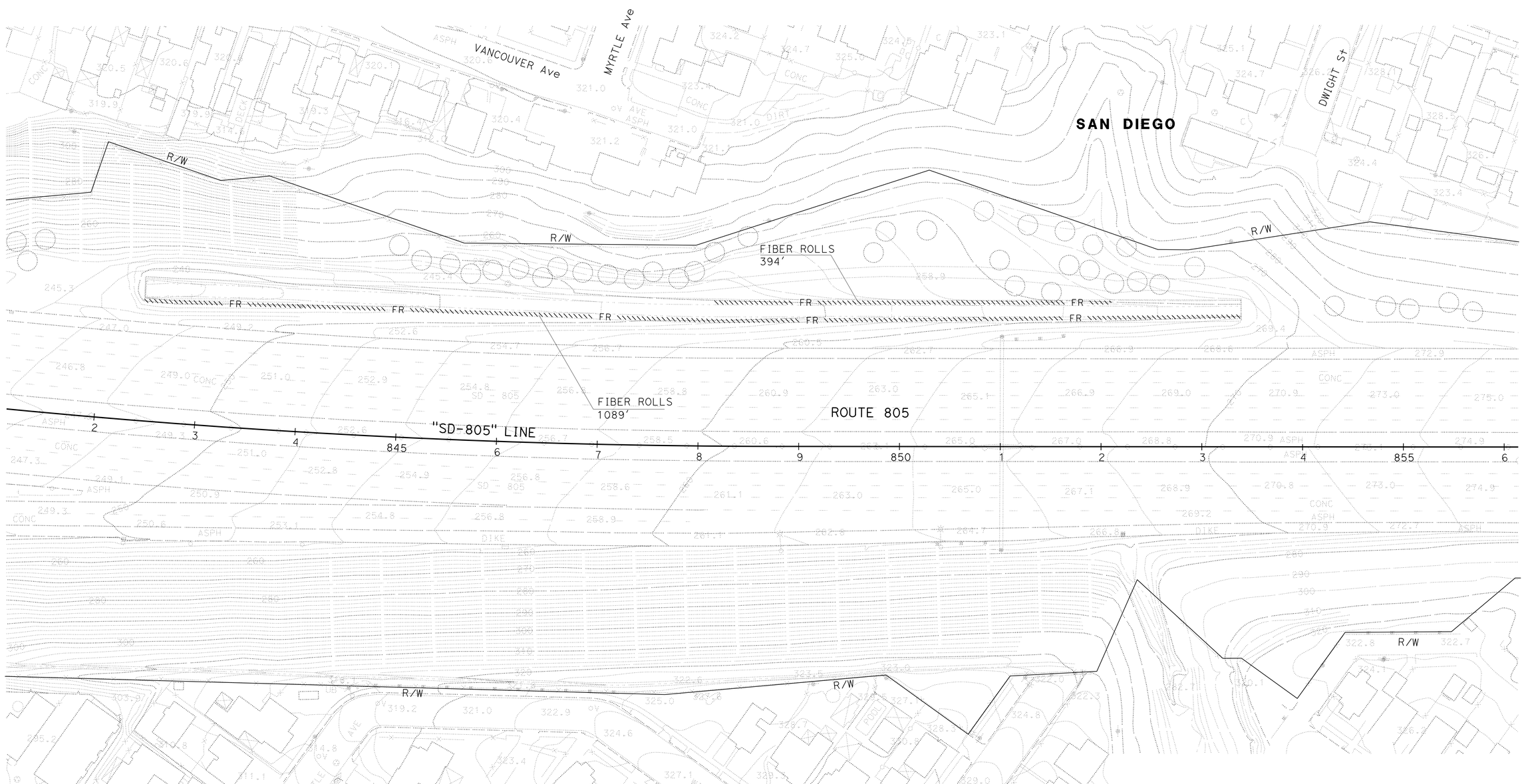


*APPROVED FOR EROSION CONTROL WORK ONLY*

# EROSION CONTROL PLAN
## LOCATION 2

SCALE: 1" = 50'

**EC-3**

STATE OF CALIFORNIA - DEPARTMENT OF TRANSPORTATION
Caltrans
DESIGN

FUNCTIONAL SUPERVISOR: EDWARD HAJJ
CALCULATED-DESIGNED BY: MARCY FULLYLOVE
CHECKED BY: ABDUL MALIKYAR
REVISED BY
DATE REVISED

LAST REVISION 08-12-14
DATE PLOTTED => 04-SEP-2014
TIME PLOTTED => 10:46

| Dist | COUNTY | ROUTE | POST MILES TOTAL PROJECT | SHEET No. | TOTAL SHEETS |
|---|---|---|---|---|---|
| 11 | SD | 15,94, 805 | Var | 138 | 184 |

REGISTERED CIVIL ENGINEER 07-11-14 DATE

09-02-14
PLANS APPROVAL DATE

REGISTERED PROFESSIONAL ENGINEER ABDUL MALIKYAR No. C66169 Exp. 06-30-16 CIVIL STATE OF CALIFORNIA

*THE STATE OF CALIFORNIA OR ITS OFFICERS OR AGENTS SHALL NOT BE RESPONSIBLE FOR THE ACCURACY OR COMPLETENESS OF SCANNED COPIES OF THIS PLAN SHEET.*

NOTE:

1. FOR ACCURATE RIGHT OF WAY DATA, CONTACT RIGHT OF WAY ENGINEERING AT THE DISTRICT OFFICE.

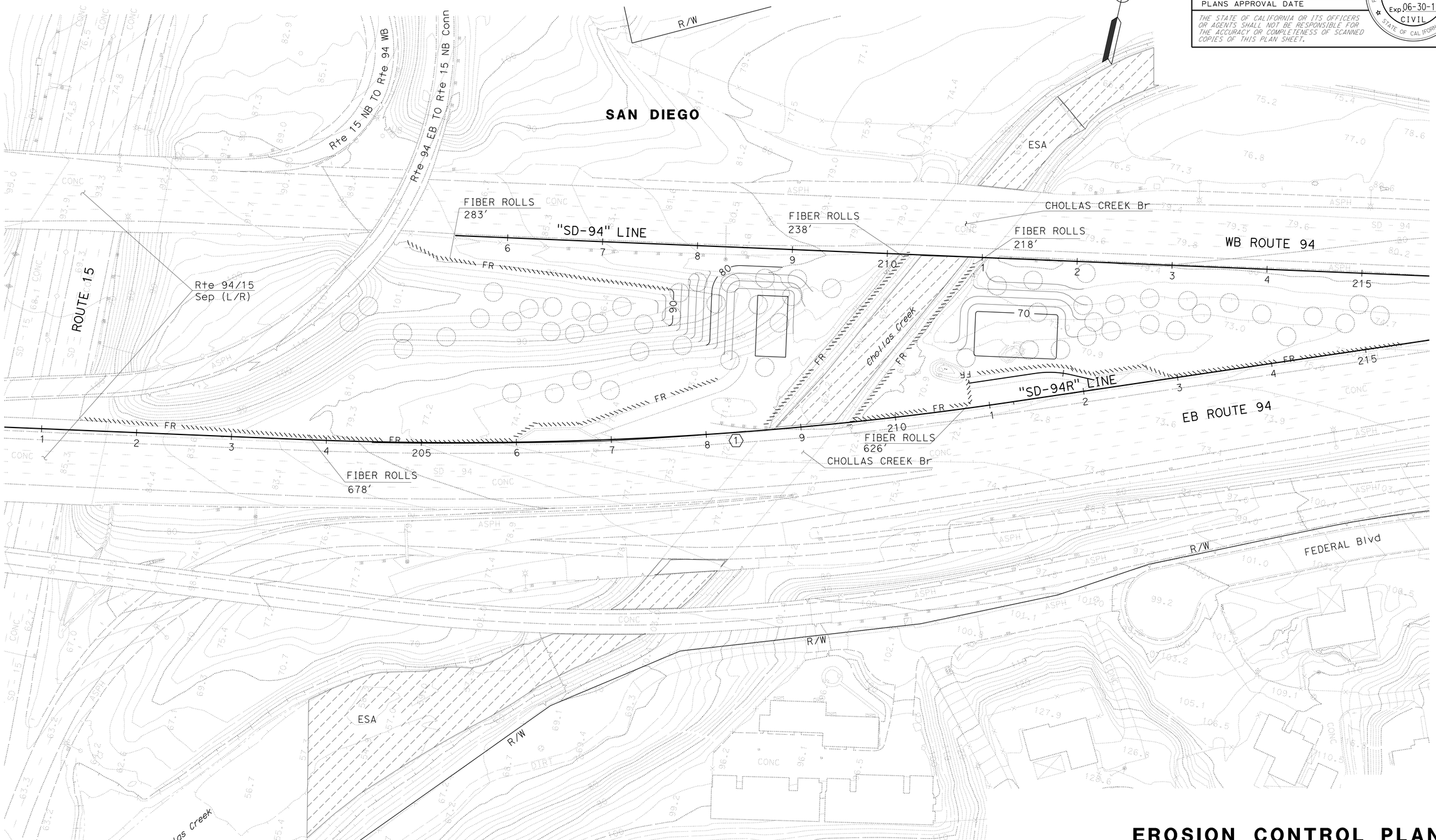


*APPROVED FOR EROSION CONTROL WORK ONLY*

# EROSION CONTROL PLAN
## LOCATION 4 & 5

SCALE: 1" = 50'

**EC-4**

STATE OF CALIFORNIA - DEPARTMENT OF TRANSPORTATION
Caltrans® DESIGN

FUNCTIONAL SUPERVISOR: EDWARD HAJJ
CALCULATED-DESIGNED BY: MARCY FULLYLOVE
CHECKED BY: ABDUL MALIKYAR
REVISED BY
DATE REVISED

LAST REVISION 08-12-14
DATE PLOTTED => 04-SEP-2014
TIME PLOTTED => 10:46

| Dist | COUNTY | ROUTE | POST MILES TOTAL PROJECT | SHEET No. | TOTAL SHEETS |
|---|---|---|---|---|---|
| 11 | SD | 15,94, 805 | Var | 139 | 184 |

REGISTERED CIVIL ENGINEER 07-11-14 DATE

09-02-14
PLANS APPROVAL DATE

REGISTERED PROFESSIONAL ENGINEER ABDUL MALIKYAR No. C66169 Exp. 06-30-16 CIVIL STATE OF CALIFORNIA

*THE STATE OF CALIFORNIA OR ITS OFFICERS OR AGENTS SHALL NOT BE RESPONSIBLE FOR THE ACCURACY OR COMPLETENESS OF SCANNED COPIES OF THIS PLAN SHEET.*

NOTES:

1. FOR ACCURATE RIGHT OF WAY DATA, CONTACT RIGHT OF WAY ENGINEERING AT THE DISTRICT OFFICE.

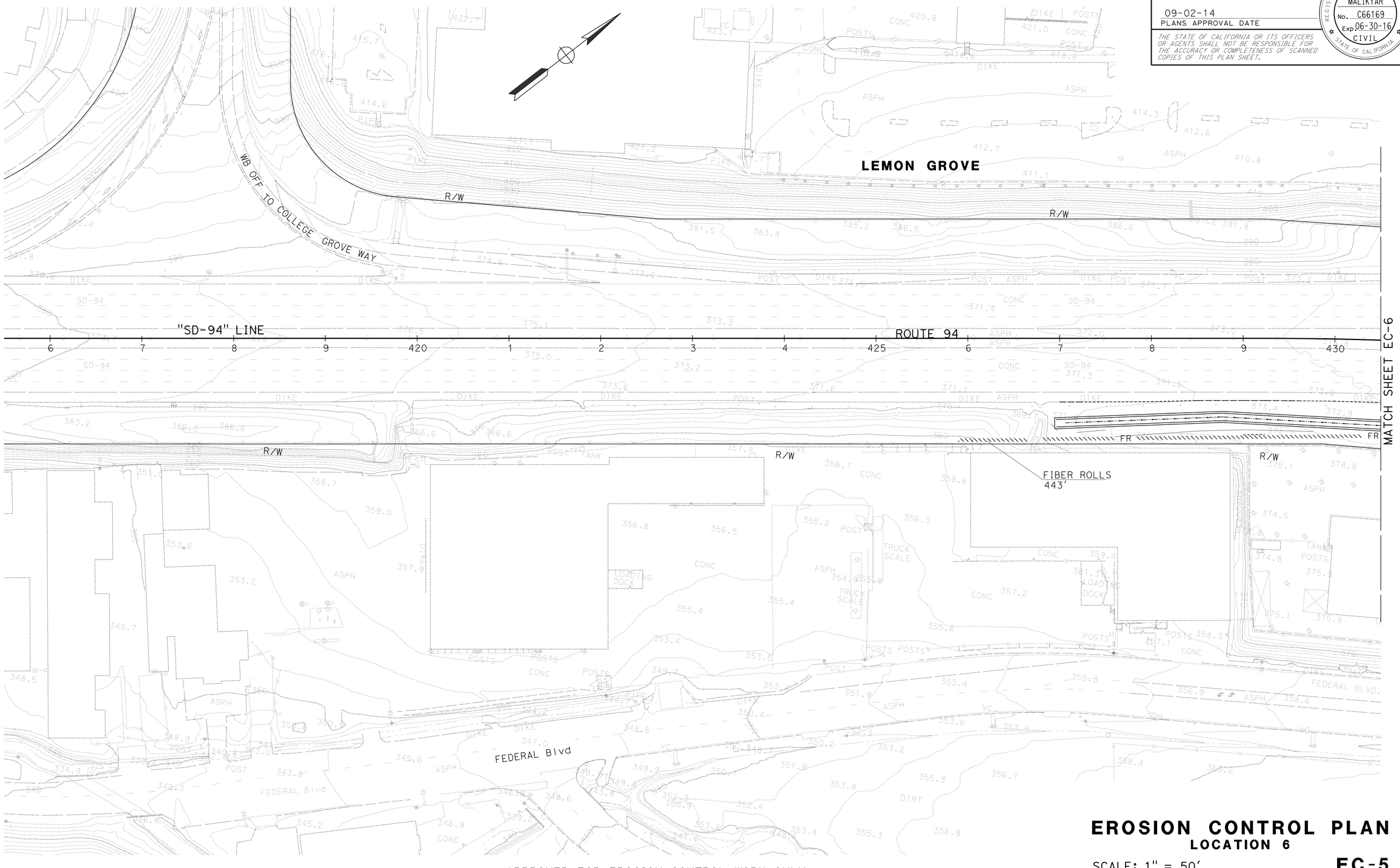


*APPROVED FOR EROSION CONTROL WORK ONLY*

# EROSION CONTROL PLAN
## LOCATION 6

SCALE: 1" = 50'

**EC-5**

STATE OF CALIFORNIA - DEPARTMENT OF TRANSPORTATION
Caltrans®
DESIGN

FUNCTIONAL SUPERVISOR: EDWARD HAJJ

CALCULATED-DESIGNED BY: MARCY FULLYLOVE
CHECKED BY: ABDUL MALIKYAR

REVISED BY
DATE REVISED

LAST REVISION 08-12-14
DATE PLOTTED => 04-SEP-2014
TIME PLOTTED => 10:46

| Dist | COUNTY | ROUTE | POST MILES TOTAL PROJECT | SHEET No. | TOTAL SHEETS |
|---|---|---|---|---|---|
| 11 | SD | 15,94, 805 | Var | 140 | 184 |

REGISTERED CIVIL ENGINEER 07-11-14 DATE

09-02-14
PLANS APPROVAL DATE

REGISTERED PROFESSIONAL ENGINEER
ABDUL MALIKYAR
No. C66169
Exp. 06-30-16
CIVIL
STATE OF CALIFORNIA

*THE STATE OF CALIFORNIA OR ITS OFFICERS OR AGENTS SHALL NOT BE RESPONSIBLE FOR THE ACCURACY OR COMPLETENESS OF SCANNED COPIES OF THIS PLAN SHEET.*

NOTES:

1. FOR ACCURATE RIGHT OF WAY DATA, CONTACT RIGHT OF WAY ENGINEERING AT THE DISTRICT OFFICE.

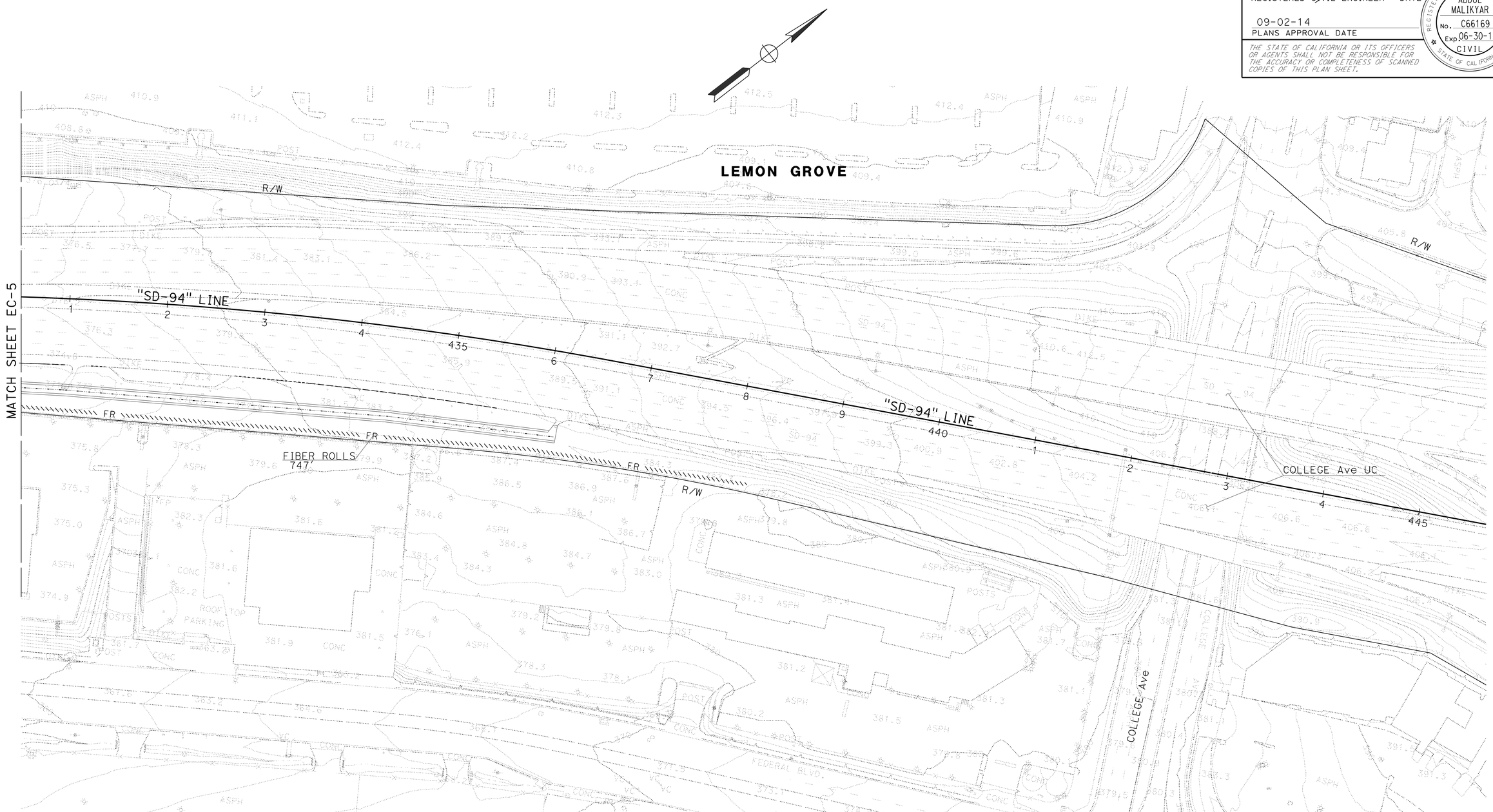


*APPROVED FOR EROSION CONTROL WORK ONLY*

# EROSION CONTROL PLAN
## LOCATION 6

SCALE: 1" = 50'

**EC-6**

STATE OF CALIFORNIA - DEPARTMENT OF TRANSPORTATION
Caltrans
DESIGN

FUNCTIONAL SUPERVISOR: EDWARD HAJJ
CALCULATED-DESIGNED BY: MARCY FULLYLOVE
CHECKED BY: ABDUL MALIKYAR
REVISED BY
DATE REVISED

LAST REVISION 08-12-14
DATE PLOTTED => 04-SEP-2014
TIME PLOTTED => 10:46

| Dist | COUNTY | ROUTE | POST MILES TOTAL PROJECT | SHEET No. | TOTAL SHEETS |
|---|---|---|---|---|---|
| 11 | SD | 15,94, 805 | Var | 141 | 184 |

REGISTERED CIVIL ENGINEER 07-11-14 DATE

09-02-14
PLANS APPROVAL DATE

REGISTERED PROFESSIONAL ENGINEER ABDUL MALIKYAR No. C66169 Exp. 06-30-16 CIVIL STATE OF CALIFORNIA

*THE STATE OF CALIFORNIA OR ITS OFFICERS OR AGENTS SHALL NOT BE RESPONSIBLE FOR THE ACCURACY OR COMPLETENESS OF SCANNED COPIES OF THIS PLAN SHEET.*

NOTES:

1. FOR ACCURATE RIGHT OF WAY DATA, CONTACT RIGHT OF WAY ENGINEERING AT THE DISTRICT OFFICE.

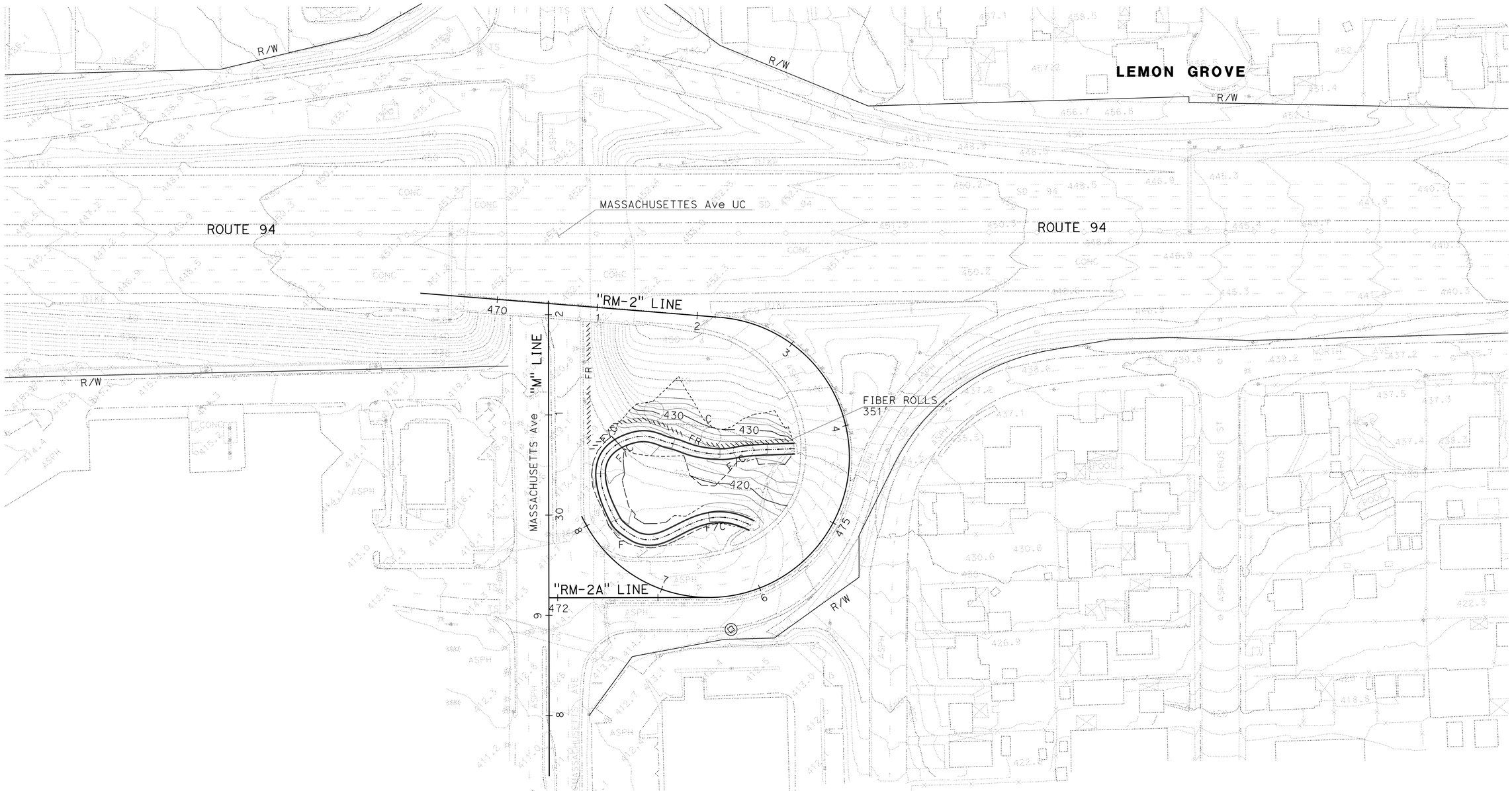


*APPROVED FOR EROSION CONTROL WORK ONLY*

# EROSION CONTROL PLAN

## LOCATION 7

SCALE: 1" = 50'

**EC-7**

STATE OF CALIFORNIA - DEPARTMENT OF TRANSPORTATION

Caltrans® DESIGN

FUNCTIONAL SUPERVISOR: EDWARD HAJJ

CALCULATED-DESIGNED BY: MARCY FULLYLOVE

CHECKED BY: ABDUL MALIKYAR

REVISED BY / DATE REVISED

LAST REVISION 08-12-14 | DATE PLOTTED => 04-SEP-2014 | TIME PLOTTED => 10:46

| Dist | COUNTY | ROUTE | POST MILES TOTAL PROJECT | SHEET No. | TOTAL SHEETS |
|---|---|---|---|---|---|
| 11 | SD | 15,94, 805 | Var | 142 | 184 |

REGISTERED CIVIL ENGINEER 07-11-14 DATE

09-02-14
PLANS APPROVAL DATE

REGISTERED PROFESSIONAL ENGINEER ABDUL MALIKYAR No. C66169 Exp. 06-30-16 CIVIL STATE OF CALIFORNIA

*THE STATE OF CALIFORNIA OR ITS OFFICERS OR AGENTS SHALL NOT BE RESPONSIBLE FOR THE ACCURACY OR COMPLETENESS OF SCANNED COPIES OF THIS PLAN SHEET.*

## FIBER ROLLS

| SHEET | LF |
|---|---|
| EC-1 | 445 |
| EC-2 | 651 |
| EC-3 | 1,483 |
| EC-4 | 2,043 |
| EC-5 | 443 |
| EC-6 | 747 |
| EC-7 | 351 |
| TOTAL | 6,163 |

NOTE:

FOR OTHER EROSION CONTROL QUANTITIES SEE LANDSCAPE DETAILS AND QUANTITIES SHEET.

## FIBER ROLLS

| SEQUENCE | ITEM | MATERIAL | | REMARKS |
|---|---|---|---|---|
| | | DESCRIPTION | TYPE | |
| IN EROSION CONTROL AREAS FIBER ROLLS MUST BE INSTALLED BEFORE PLANTING SHRUBS OR GROUND COVER. | FIBER ROLLS | FIBER ROLL | 10" TO 12" Dia | TYPE 2 FIBER ROLLS INSTALLATION |

# EROSION CONTROL QUANTITIES

# ECQ-1

REVISED BY | DATE REVISED

MARCY FULLYLOVE | ABDUL MALIKYAR

CALCULATED-DESIGNED BY | CHECKED BY

FUNCTIONAL SUPERVISOR: EDWARD HAJJ

STATE OF CALIFORNIA - DEPARTMENT OF TRANSPORTATION

Caltrans DESIGN

LAST REVISION 08-12-14 | DATE PLOTTED => 04-SEP-2014 | TIME PLOTTED => 10:46

| Dist | COUNTY | ROUTE | POST MILES TOTAL PROJECT | SHEET No. | TOTAL SHEETS |
|---|---|---|---|---|---|
| 11 | SD | 15,94, 805 | Var | 143 | 184 |

REGISTERED ELECTRICAL ENGINEER 06-30-14 DATE

09-02-14
PLANS APPROVAL DATE

REGISTERED PROFESSIONAL ENGINEER DANNY D. MCCLURE No. 16074 Exp. 12-31-15 ELECTRICAL STATE OF CALIFORNIA

*THE STATE OF CALIFORNIA OR ITS OFFICERS OR AGENTS SHALL NOT BE RESPONSIBLE FOR THE ACCURACY OR COMPLETENESS OF SCANNED COPIES OF THIS PLAN SHEET.*

## LEGEND:

- S = Exist FIBER OPTIC VAULT WITH SPLICE CLOSURE
- = Exist FIBER OPTIC VAULT WITHOUT SPLICE CLOSURE
- fo = Exist MDCS FOR F/O CABLE
- FO = MDCS FOR F/O CABLE FOR TRENCH DETAILS SEE CONSTRUCTION DETAILS SHEET
- FOA = TYPE A FIBER OPTIC CABLE WITH 60 SINGLEMODE FIBERS (BACKBONE)
- FOB = TYPE B FIBER OPTIC CABLE WITH 48 SINGLEMODE FIBERS (DISTRIBUTION)
- FOC = TYPE C FIBER OPTIC CABLE WITH 6 SINGLEMODE FIBERS(FIELD ELEMENTS)
- foa = Exist FOA
- fob = Exist FOB
- foc = Exist FOC
- TSO = THIS SHEET ONLY
- MDCS = MULTI DUCT CONDUIT SYSTEM
- mdcs = Exist MULTI DUCT CONDUIT SYSTEM
- SIGN = SIGN POWER
- sign = Exist SIGN POWER

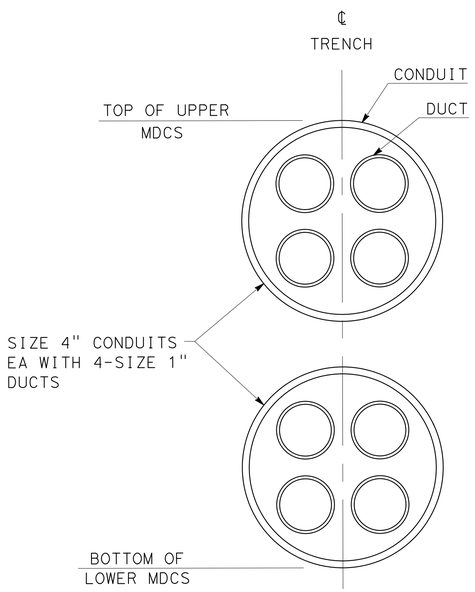


**MDCS (Typ)**
MDCS(8) SHOWN
SEE CONSTRUCTION DETAILS FOR TRENCHING
NO SCALE

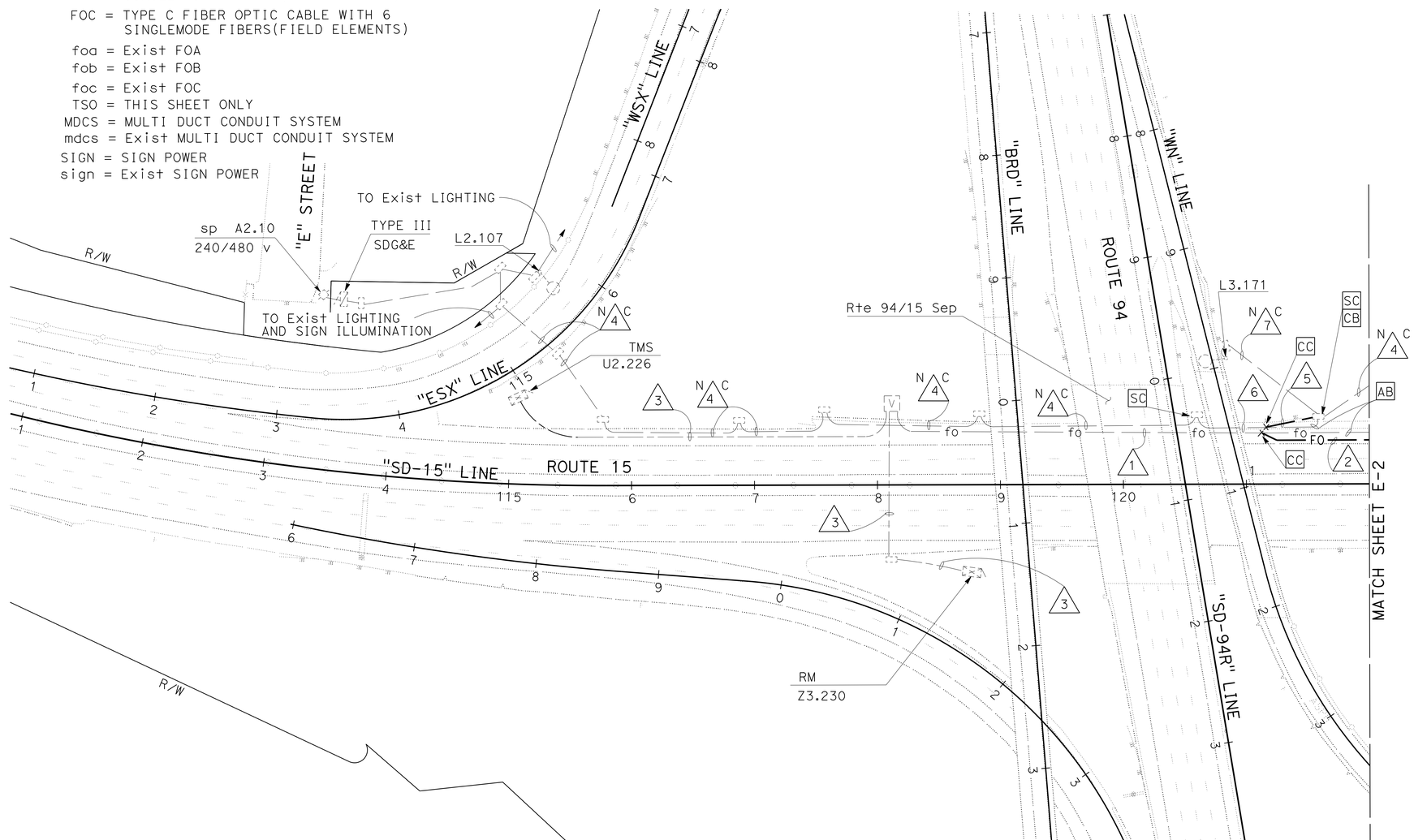


## CONDUIT NOTES (TSO):

1. - Exist MDCS(8), 2 FOC.
   RC 2 foc.
   ADD 2 FOC.
2. - MDCS(8), 2 FOC, PT.
3. - Exist 2-1"C, 1 foc, PT, RC 1 foc.
   ADD 1 FOC.
4. (N/C) - Exist 2"C, 2#8 (Ltg), 2#8 (sign).
5. - 2"C, 2#8 (Ltg), 2#8 (SIGN).
6. - Exist 2"C, 2#8 (Ltg), 2#8 (sign).
   RC 2#8 (Ltg), 2#8 (sign).
   ADD 2#8 (Ltg), 2#8 (SIGN).
7. (N/C) - Exist 2"C, 2#8 (Ltg).

## NOTE (TSO):

1 - FOR ACCURATE RIGHT OF WAY DATA, CONTACT RIGHT OF WAY ENGINEERING AT THE DISTRICT OFFICE.

# MODIFY CLOSED CIRCUIT TELEVISION SYSTEM
# MODIFY LIGHTING

SCALE: 1" = 50'

**E-1**

*APPROVED FOR ELECTRICAL WORK ONLY*

STATE OF CALIFORNIA - DEPARTMENT OF TRANSPORTATION
Caltrans® TRAFFIC ELECTRICAL

FUNCTIONAL SUPERVISOR: RAJPREET SINGH
CALCULATED-DESIGNED BY: ANTONIO A. RODRIGUEZ
CHECKED BY: DANNY MCCLURE
REVISED BY / DATE REVISED

LAST REVISION 08-12-14 | DATE PLOTTED => 04-SEP-2014 | TIME PLOTTED => 15:58

| Dist | COUNTY | ROUTE | POST MILES TOTAL PROJECT | SHEET No. | TOTAL SHEETS |
|---|---|---|---|---|---|
| 11 | SD | 15,94, 805 | Var | 144 | 184 |

REGISTERED ELECTRICAL ENGINEER 06-30-14 DATE

09-02-14
PLANS APPROVAL DATE

REGISTERED PROFESSIONAL ENGINEER
DANNY D. MCCLURE
No. 16074
Exp. 12-31-15
ELECTRICAL
STATE OF CALIFORNIA

*THE STATE OF CALIFORNIA OR ITS OFFICERS OR AGENTS SHALL NOT BE RESPONSIBLE FOR THE ACCURACY OR COMPLETENESS OF SCANNED COPIES OF THIS PLAN SHEET.*

## CONDUIT NOTES (TSO):

- N C 1 - Exist 2"C, 2#8 (Ltg), 2#8 (sign).
- 2 - MDCS(8), 2 FOC, PT.
- N C 3 - Exist mdcs(8), 1 foa, 1 fob.
- N C 4 -Exist 2"C, 2#6(CCTV).
- N C 5 -Exist 2"C, 2#8(Ltg).

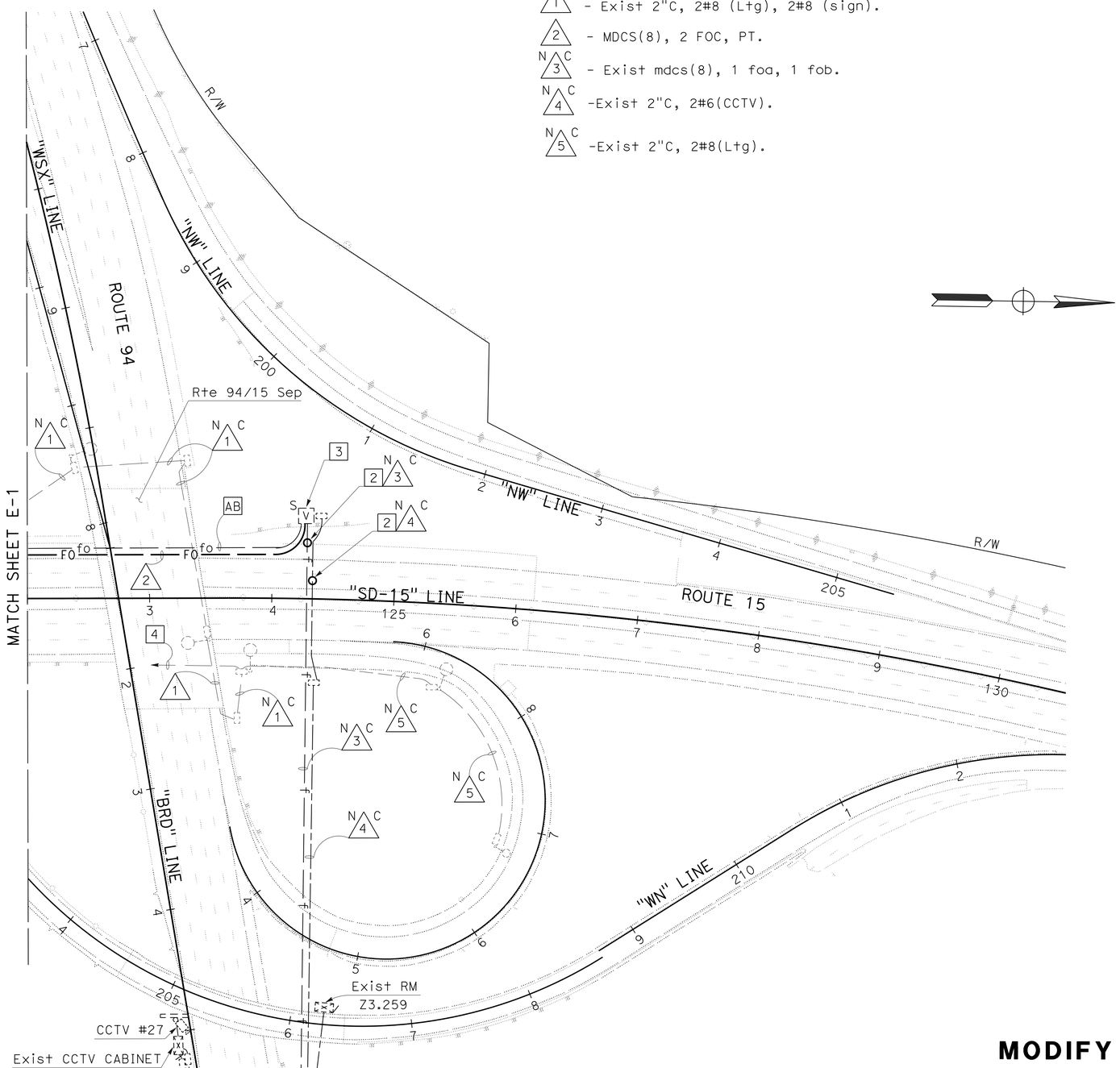


## NOTES (TSO):

1 - FOR ACCURATE RIGHT OF WAY DATA, CONTACT RIGHT OF WAY ENGINEERING AT THE DISTRICT OFFICE.

2 - PROTECT IN PLACE.

3 - SEE E-3 FOR FIBER SPLICING DETAIL.

4 - TO EXISTING LIGHTING AND SIGN ILLUMINATION.

*APPROVED FOR ELECTRICAL WORK ONLY*

# MODIFY CLOSED CICUIT TELEVISION SYSTEM

SCALE: 1" = 50'

**E-2**

STATE OF CALIFORNIA - DEPARTMENT OF TRANSPORTATION
Caltrans® TRAFFIC ELECTRICAL

FUNCTIONAL SUPERVISOR: RAJPREET SINGH
CALCULATED-DESIGNED BY: DANNY MCCLURE
CHECKED BY: ANTONIO A. RODRIGUEZ
REVISED BY
DATE REVISED

LAST REVISION 08-12-14
DATE PLOTTED => 04-SEP-2014
TIME PLOTTED => 15:58

| Dist | COUNTY | ROUTE | POST MILES TOTAL PROJECT | SHEET No. | TOTAL SHEETS |
|---|---|---|---|---|---|
| 11 | SD | 15,94, 805 | Var | 145 | 184 |

REGISTERED ELECTRICAL ENGINEER 06-30-14 DATE

09-02-14
PLANS APPROVAL DATE

REGISTERED PROFESSIONAL ENGINEER DANNY D. MCCLURE No. 16074 Exp. 12-31-15 ELECTRICAL STATE OF CALIFORNIA

*THE STATE OF CALIFORNIA OR ITS OFFICERS OR AGENTS SHALL NOT BE RESPONSIBLE FOR THE ACCURACY OR COMPLETENESS OF SCANNED COPIES OF THIS PLAN SHEET.*

## NOTE:

1. THIS SHEET DOES NOT SHOW ALL THE F/O VAULT AND PULL BOXES. SEE SHEET E-1 AND E-2.

## COLOR CODES FOR BUFFER TUBES AND FIBERS:

| | |
|---|---|
| 1. BLUE (BL) | 7. RED (RD) |
| 2. ORANGE (OR) | 8. BLACK (BK) |
| 3. GREEN (GR) | 9. YELLOW (YL) |
| 4. BROWN (BR) | 10. VIOLET (VL) |
| 5. SLATE (SL) | 11. ROSE (RS) |
| 6. WHITE (WT) | 12. AQUA (AQ) |

## LEGEND:

- SPLICE OF TWO FIBER
- CUT END OF FIBER, NOT SPLICED
- SC FEMALE CONNECTOR ON AN FDU PANEL
- SC MALE CONNECTOR ON AN SMFO PATCHCORD
- SPLICE OF Exist FIBERS TO NEW FIBERS

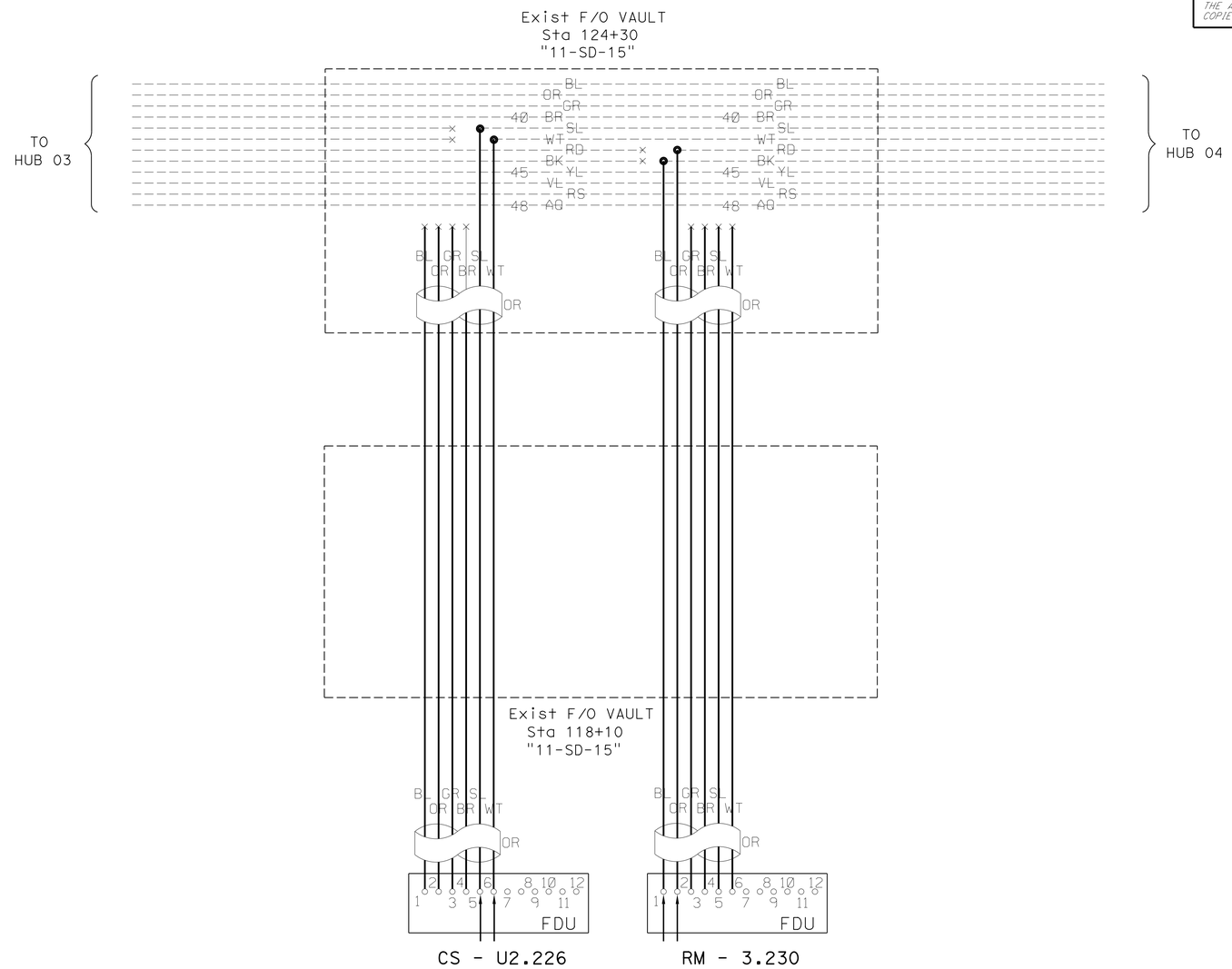


## FIBER OPTIC SPLICE DETAILS

# MODIFY CLOSED CIRCUIT TELEVISION SYSTEM (ELECTRICAL DETAILS)

NO SCALE

**E-3**

*APPROVED FOR ELECTRICAL WORK ONLY*

STATE OF CALIFORNIA - DEPARTMENT OF TRANSPORTATION
Caltrans
TRAFFIC ELECTRICAL

FUNCTIONAL SUPERVISOR: RAJPREET SINGH
CALCULATED-DESIGNED BY: ANTONIO A. RODRIGUEZ
CHECKED BY: DANNY MCCLURE
REVISED BY / DATE REVISED

LAST REVISION 08-12-14 | DATE PLOTTED => 04-SEP-2014 | TIME PLOTTED => 10:46

## M

| | |
|---|---|
| Maint | MAINTENANCE |
| Max | MAXIMUM |
| MB | METAL BEAM |
| MBB | METAL BEAM BARRIER |
| MBGR | METAL BEAM GUARD RAILING |
| Med | MEDIAN |
| MGS | MIDWEST GUARDRAIL SYSTEM |
| MH | MANHOLE |
| Min | MINIMUM |
| Misc | MISCELLANEOUS |
| Misc I & S | MISCELLANEOUS IRON AND STEEL |
| Mkr | MARKER |
| Mod | MODIFIED, |
| | MODIFY |
| Mon | MONUMENT |
| MP | METAL PLATE |
| MPGR | METAL PLATE GUARD RAILING |
| MR | MOVEMENT RATING |
| MSE | MECHANICALLY STABILIZED EMBANKMENT |
| Mt | MOUNTAIN, MOUNT |
| Mtl | MATERIAL |
| MVP | MAINTENANCE VEHICLE PULLOUT |

## N

| | |
|---|---|
| N | NORTH |
| NB | NORTHBOUND |
| No. | NUMBER (MUST HAVE PERIOD) |
| Nos. | NUMBERS (MUST HAVE PERIOD) |
| NPS | NOMINAL PIPE SIZE |
| NS | NEAR SIDE |
| NSP | NEW STANDARD PLAN |
| NTS | NOT TO SCALE |

## O

| | |
|---|---|
| Oblr | OBLITERATE |
| OC | OVERCROSSING |
| OD | OUTSIDE DIAMETER |
| OF | OUTSIDE FACE |
| OG | ORIGINAL GROUND |
| OGAC | OPEN GRADED ASPHALT CONCRETE |
| OGFC | OPEN GRADED FRICTION COURSE |
| OH | OVERHEAD |
| OHWM | ORDINARY HIGH WATER MARK |
| O-O | OUT TO OUT |
| Opp | OPPOSITE |
| OSD | OVERSIDE DRAIN |

## P

| | |
|---|---|
| P | PAGE |
| PAP | PERFORATED ALUMINUM PIPE |
| PB | PULL BOX |
| PC | POINT OF CURVATURE, |
| | PRECAST |
| PCC | POINT OF COMPOUND CURVE, |
| | PORTLAND CEMENT CONCRETE |
| PCMS | PORTABLE CHANGEABLE MESSAGE SIGN |
| PCP | PERFORATED CONCRETE PIPE, |
| | PRESTRESSED CONCRETE PIPE |
| PCVC | POINT OF COMPOUND VERTICAL CURVE |
| PEC | PERMIT TO ENTER AND CONSTRUCT |
| Ped | PEDESTRIAN |
| Ped OC | PEDESTRIAN OVERCROSSING |
| Ped UC | PEDESTRIAN UNDERCROSSING |
| Perm Mtl | PERMEABLE MATERIAL |

## P continued

| | |
|---|---|
| PG | PROFILE GRADE |
| PI | POINT OF INTERSECTION |
| PJP | PARTIAL JOINT PENETRATION |
| Pkwy | PARKWAY |
| ℙ,PL | PLATE |
| P/L | PROPERTY LINE |
| PM | POST MILE, |
| | TIME FROM NOON TO MIDNIGHT |
| PN | PAVING NOTCH |
| POC | POINT OF HORIZONTAL CURVE |
| POT | POINT OF TANGENT |
| POVC | POINT OF VERTICAL CURVE |
| PP | PIPE PILE, |
| | PLASTIC PIPE, |
| | POWER POLE |
| PPL | PREFORMED PERMEABLE LINER |
| PPP | PERFORATED PLASTIC PIPE |
| PRC | POINT OF REVERSE CURVE |
| PRF | PAVEMENT REINFORCING FABRIC |
| PRVC | POINT OF REVERSE VERTICAL CURVE |
| PS&E | PLANS, SPECIFICATIONS AND ESTIMATES |
| PS, P/S | PRESTRESSED |
| PSP | PERFORATED STEEL PIPE |
| PT | POINT OF TANGENCY |
| PVC | POLYVINYL CHLORIDE |
| Pvmt | PAVEMENT |

## Q

| | |
|---|---|
| Qty | QUANTITY |

## R

| | |
|---|---|
| R | RADIUS |
| R & D | REMOVE AND DISPOSE |
| R & S | REMOVE AND SALVAGE |
| R/C | RATE OF CHANGE |
| RCA | REINFORCED CONCRETE ARCH |
| RCB | REINFORCED CONCRETE BOX |
| RCP | REINFORCED CONCRETE PIPE |
| RCPA | REINFORCED CONCRETE PIPE ARCH |
| Rd | ROAD |
| Reinf | REINFORCED, |
| | REINFORCEMENT, |
| | REINFORCING |
| Rel | RELOCATE |
| Repl | REPLACEMENT |
| Ret | RETAINING |
| Rev | REVISED, REVISION |
| Rdwy | ROADWAY |
| RHMA | RUBBERIZED HOT MIX ASPHALT |
| Riv | RIVER |
| RM | ROAD-MIXED |
| RP | RADIUS POINT, |
| | REFERENCE POINT |
| RR | RAILROAD |
| RSP | ROCK SLOPE PROTECTION, |
| | REVISED STANDARD PLAN |
| Rt | RIGHT |
| Rte | ROUTE |
| RW | REDWOOD, |
| | RETAINING WALL |
| R/W | RIGHT OF WAY |
| Rwy | RAILWAY |

## S

| | |
|---|---|
| S | SOUTH, |
| | SUPPLEMENT |
| SAE | STRUCTURE APPROACH EMBANKMENT |
| Salv | SALVAGE |
| SAPP | STRUCTURAL ALUMINUM PLATE PIPE |
| SB | SOUTHBOUND |
| SC | SAND CUSHION |
| SCSP | SLOTTED CORRUGATED STEEL PIPE |
| SD | STORM DRAIN |
| Sec | SECOND, |
| | SECTION |
| Sep | SEPARATION |
| SG | SUBGRADE |
| Shld | SHOULDER |
| Sht | SHEET |
| Sim | SIMILAR |
| ℄ | STATION LINE |
| SM | SELECTED MATERIAL |
| Spec | SPECIAL, |
| | SPECIFICATIONS |
| SPP | SLOTTED PLASTIC PIPE |
| SS | SLOPE STAKE |
| SSBM | STRAP AND SADDLE BRACKET METHOD |
| SSD | STRUCTURAL SECTION DRAIN |
| SSPA | STRUCTURAL STEEL PLATE ARCH |
| SSPP | STRUCTURAL STEEL PLATE PIPE |
| SSPPA | STRUCTURAL STEEL PLATE PIPE ARCH |
| SSRP | STEEL SPIRAL RIB PIPE |
| St | STREET |
| Sta | STATION |
| STBB | SINGLE THRIE BEAM BARRIER |
| Std | STANDARD |
| Str | STRUCTURE |
| Surf | SURFACING |
| SW | SIDEWALK, |
| | SOUND WALL |
| Swr | SEWER |
| Sym | SYMMETRICAL |
| S4S | SURFACE 4 SIDES |

## T

| | |
|---|---|
| T | SEMI-TANGENT |
| Tan | TANGENT |
| TBB | THRIE BEAM BARRIER |
| Tbr | TIMBER |
| TC | TOP OF CURB |
| TCB | TRAFFIC CONTROL BOX |
| TCE | TEMPORARY CONSTRUCTION EASEMENT |
| Tel | TELEPHONE |
| Temp | TEMPORARY |
| TG | TOP OF GRADE |
| Tot | TOTAL |
| TP | TELEPHONE POLE |
| TPB | TREATED PERMEABLE BASE |
| TPM | TREATED PERMEABLE MATERIAL |
| Trans | TRANSITION |

## T continued

| | |
|---|---|
| TS | TRANSVERSE, |
| | TRAFFIC SIGNAL, |
| | TUBULAR STEEL |
| Typ | TYPICAL |

## U

| | |
|---|---|
| UC | UNDERCROSSING |
| UD | UNDERDRAIN |
| UG | UNDERGROUND |
| UON | UNLESS OTHERWISE NOTED |
| UP | UNDERPASS |

## V

| | |
|---|---|
| V | VALVE, |
| | DESIGN SPEED |
| Var | VARIABLE, |
| | VARIES |
| VC | VERTICAL CURVE |
| VCP | VITRIFIED CLAY PIPE |
| Vert | VERTICAL |
| Via | VIADUCT |
| Vol | VOLUME |

## W

| | |
|---|---|
| W | WEST, |
| | WIDTH |
| WB | WESTBOUND |
| WH | WEEP HOLE |
| WM | WIRE MESH |
| WS | WATER SURFACE |
| WSP | WELDED STEEL PIPE |
| Wt | WEIGHT |
| WV | WATER VALVE |
| WW | WINGWALL |
| WWLOL | WINGWALL LAYOUT LINE |

## X

| | |
|---|---|
| X Sec | CROSS SECTION |
| Xing | CROSSING |

## Y

| | |
|---|---|
| Yr | YEAR |
| Yrs | YEARS |

| Dist | COUNTY | ROUTE | POST MILES TOTAL PROJECT | SHEET No. | TOTAL SHEETS |
|---|---|---|---|---|---|
| 11 | SD | 15, 94, 805 | Var | 146 | 184 |

Grace M. Tsushima
REGISTERED CIVIL ENGINEER

July 19, 2013
PLANS APPROVAL DATE

REGISTERED PROFESSIONAL ENGINEER
Grace M. Tsushima
No. C49814
Exp. 9-30-14
CIVIL
STATE OF CALIFORNIA

*THE STATE OF CALIFORNIA OR ITS OFFICERS OR AGENTS SHALL NOT BE RESPONSIBLE FOR THE ACCURACY OR COMPLETENESS OF SCANNED COPIES OF THIS PLAN SHEET.*

TO ACCOMPANY PLANS DATED 09-02-14

### UNIT OF MEASUREMENT SYMBOLS:

Some of the symbols used in the project plan quantity tables and in the Bid Item List are:

TABLE A

| SYMBOL USED | DEFINITIONS |
|---|---|
| ACRE | ACRE |
| CF | CUBIC FOOT |
| CY | CUBIC YARD |
| EA | EACH |
| GAL | GALLON |
| LB | POUND |
| LF | LINEAR FOOT |
| SQFT | SQUARE FOOT |
| SQYD | SQUARE YARD |
| STA | 100 FEET |
| TAB | TABLET |
| TON | 2,000 POUNDS |

Some of the symbols used in the plans other than in the project plan quantity tables are:

TABLE B

| SYMBOL USED | DEFINITIONS |
|---|---|
| ksi | KIPS PER SQUARE INCH |
| ksf | KIPS PER SQUARE FOOT |
| psi | POUNDS PER SQUARE INCH |
| psf | POUNDS PER SQUARE FOOT |
| $lb/ft^3$, pcf | POUNDS PER CUBIC FOOT |
| tsf | TONS PER SQUARE FOOT |
| mph, MPH * | MILES PER HOUR |
| ø | NOMINAL DIAMETER |
| oz | OUNCE |
| lb | POUND |
| kip | 1,000 POUNDS |
| cal | CALORIE |
| ft | FOOT OR FEET |
| gal | GALLON |

* For use on a sign panel only

STATE OF CALIFORNIA
DEPARTMENT OF TRANSPORTATION

# ABBREVIATIONS (SHEET 2 OF 2)

NO SCALE

RSP A10B DATED JULY 19, 2013 SUPERSEDES STANDARD PLAN A10B DATED MAY 20, 2011 - PAGE 2 OF THE STANDARD PLANS BOOK DATED 2010.

**REVISED STANDARD PLAN RSP A10B**

**2010 REVISED STANDARD PLAN RSP A10B**

6-7-13

| Dist | COUNTY | ROUTE | POST MILES TOTAL PROJECT | SHEET No. | TOTAL SHEETS |
|---|---|---|---|---|---|
| 11 | SD | 15, 94, 805 | Var | 147 | 184 |

REGISTERED CIVIL ENGINEER

July 19, 2013
PLANS APPROVAL DATE

REGISTERED PROFESSIONAL ENGINEER Roberta L. McLaughlin No. C40375 Exp. 3-31-15 CIVIL STATE OF CALIFORNIA

*THE STATE OF CALIFORNIA OR ITS OFFICERS OR AGENTS SHALL NOT BE RESPONSIBLE FOR THE ACCURACY OR COMPLETENESS OF SCANNED COPIES OF THIS PLAN SHEET.*

TO ACCOMPANY PLANS DATED 09-02-14

## EXIT RAMP NEUTRAL AREA (GORE) TREATMENT

DETAIL 36

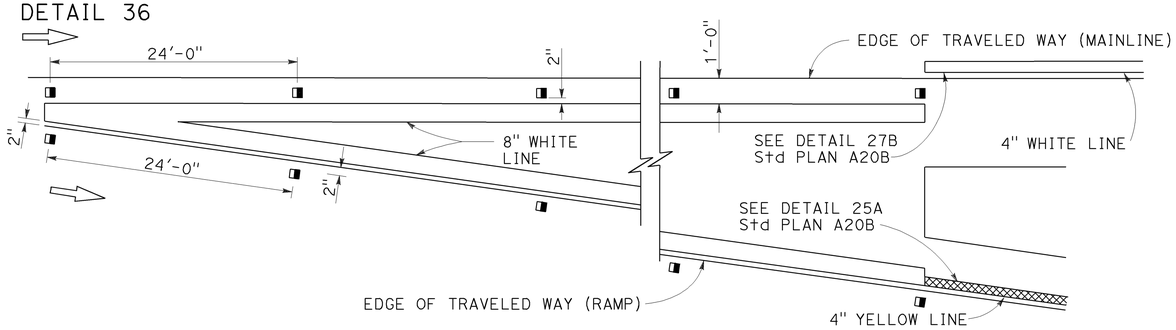


## ENTRANCE RAMP NEUTRAL AREA (MERGE) TREATMENT

DETAIL 36A

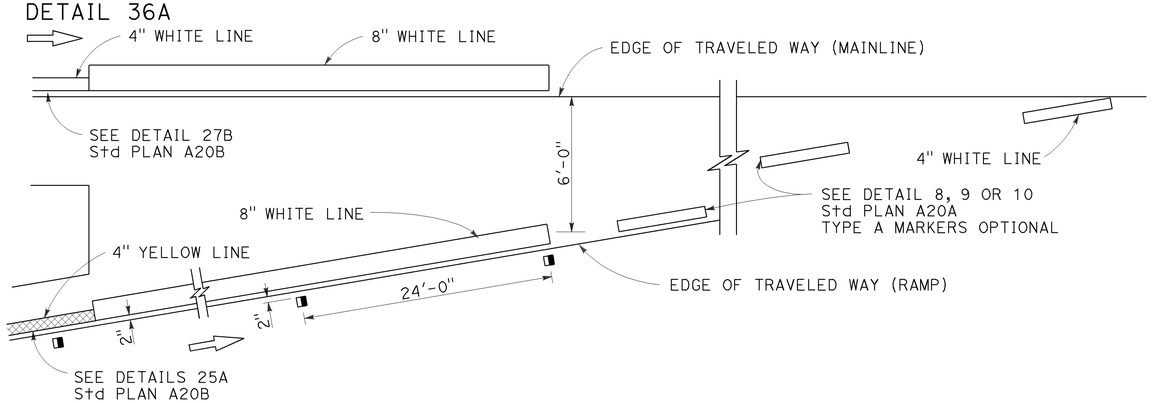


## ENTRANCE RAMP NEUTRAL AREA (ACCELERATION LANE) TREATMENT

DETAIL 36B

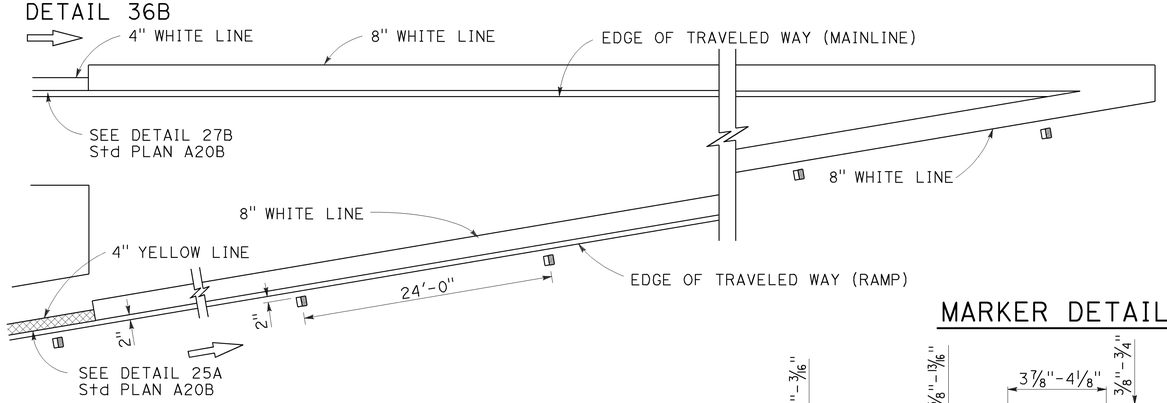


## MARKER DETAILS

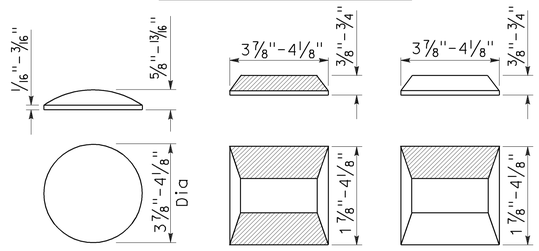


RETROREFLECTIVE FACE

**LEGEND:**

MARKERS

- TYPE A WHITE NON-REFLECTIVE
- TYPE C RED-CLEAR RETROREFLECTIVE
- TYPE G ONE-WAY CLEAR RETROREFLECTIVE

## LANE DROP AT EXIT RAMPS

DETAIL 37

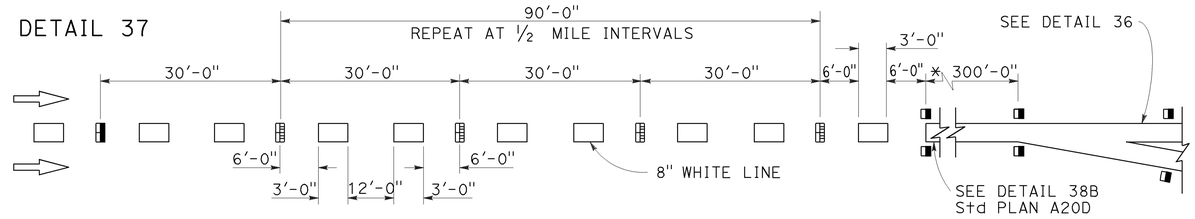


DETAIL 37A

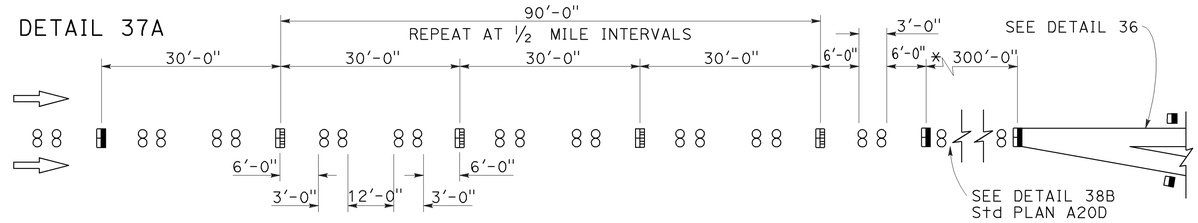


* The solid channelizing line shown may be omitted on short auxiliary lanes where weaving length is critical.

## LANE DROP AT INTERSECTIONS

DETAIL 37B

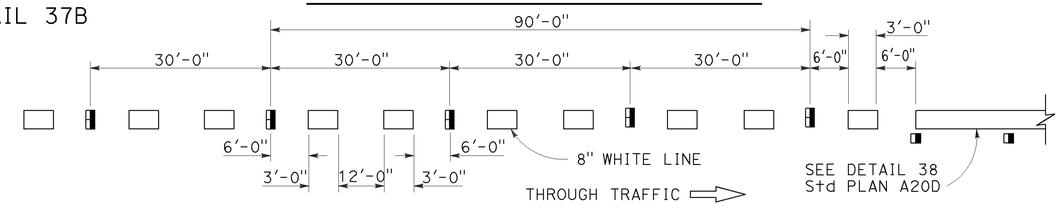


DETAIL 37C

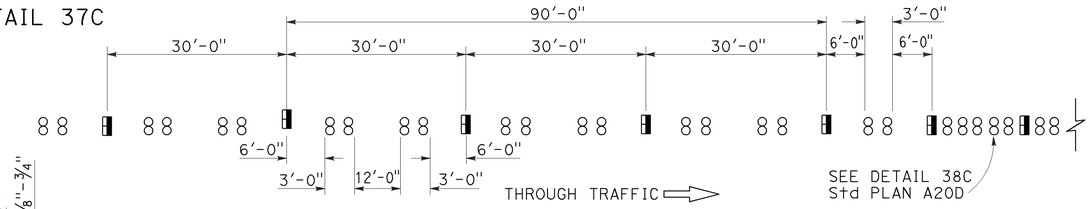


STATE OF CALIFORNIA
DEPARTMENT OF TRANSPORTATION

# PAVEMENT MARKERS AND TRAFFIC LINE TYPICAL DETAILS

NO SCALE

RSP A20C DATED JULY 19, 2013 SUPERSEDES STANDARD PLAN A20C DATED MAY 20, 2011 - PAGE 11 OF THE STANDARD PLANS BOOK DATED 2010.

**REVISED STANDARD PLAN RSP A20C**

**2010 REVISED STANDARD PLAN RSP A20C**

4-29-13

| Dist | COUNTY | ROUTE | POST MILES TOTAL PROJECT | SHEET No. | TOTAL SHEETS |
|---|---|---|---|---|---|
| 11 | SD | 15, 94, 805 | Var | 148 | 184 |

REGISTERED CIVIL ENGINEER

July 18, 2014
PLANS APPROVAL DATE

REGISTERED PROFESSIONAL ENGINEER
Carl M. Duan
No. C59976
Exp. 6-30-16
CIVIL
STATE OF CALIFORNIA

*THE STATE OF CALIFORNIA OR ITS OFFICERS OR AGENTS SHALL NOT BE RESPONSIBLE FOR THE ACCURACY OR COMPLETENESS OF SCANNED COPIES OF THIS PLAN SHEET.*

TO ACCOMPANY PLANS DATED 09-02-14

## DESIGN NOTES:

Design: AASHTO LRFD Bridge Design Specifications, 4th edition with California Amendments. ACPA DESIGN DATA 1, October 2007. INDIRECT DESIGN METHOD

Soil: w Fe = 162 pcf Installation Type 1
w Fe = 168 pcf Installation Types 2 & 3
w = Unit weight of soil (pcf)
Fe = Soil-structure interaction factor

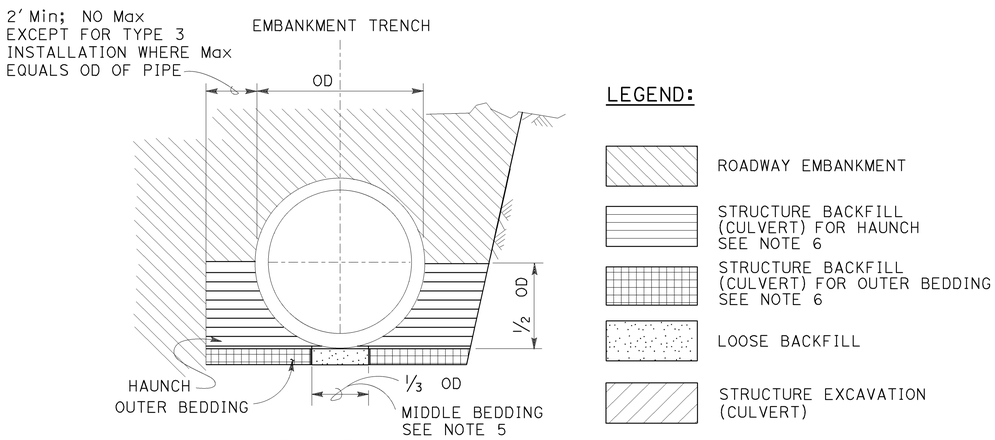


BACKFILL

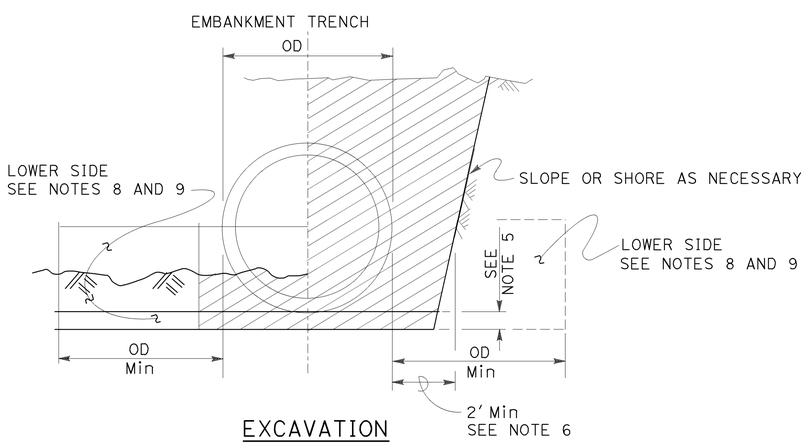


EXCAVATION

## INSTALLATION TYPE 1:

The haunch and outer bedding shall be compacted to a minimum 90 percent relative compaction. In addition, the minimum sand equivalent in these areas shall be 30 and the maximum percentage passing the No. 200 sieve size shall be 12.

## INSTALLATION TYPE 2:

The haunch and outer bedding shall be compacted to a minimum 90 percent relative compaction. In addition, the minimum sand equivalent in these areas shall be 25.

## INSTALLATION TYPE 3:

The haunch and outer bedding shall be compacted to a minimum 85 percent relative compaction. 90 percent relative compaction will be required where the fill over the pipe is less than 4′-0″ or ½ OD. In addition, the minimum sand equivalent in these areas shall be 25 and the material shall not contain rocks, broken concrete, or other solid material exceeding 3″ in greatest dimension.

### INSTALLATION TYPE 1

| MINIMUM CLASS AND D-LOAD | COVER | |
|---|---|---|
| | 60″ Dia AND SMALLER | OVER 60″ Dia TO 120″ Dia Max |
| CLASS II 1000D | 14.9′ | 12.9′ |
| CLASS III 1350D | 15.0′ - 21.9′ | 13.0′ - 18.9′ |
| CLASS III SPECIAL 1700D | 22.0′ - 27.9′ | 19.0′ - 24.9′ |
| CLASS IV 2000D | 28.0′ - 32.9′ | 25.0′ - 29.9′ |
| CLASS IV SPECIAL 2500D | 33.0′ - 41.9′ | 30.0′ - 38.9′ |
| CLASS V 3000D | 42.0′ - 49.9′ | 39.0′ - 46.9′ |
| CLASS V SPECIAL 3600D | 50.0′ - 60.0′ | 47.0′ - 58.0′ |

### INSTALLATION TYPE 2

| MINIMUM CLASS AND D-LOAD | COVER | |
|---|---|---|
| | 60″ Dia AND SMALLER | OVER 60″ Dia TO 120″ Dia Max |
| CLASS II 1000D | 11.9′ | 9.9′ |
| CLASS III 1350D | 12.0′ - 15.9′ | 10.0′ - 14.9′ |
| CLASS III SPECIAL 1700D | 16.0′ - 20.9′ | 15.0′ - 19.9′ |
| CLASS IV 2000D | 21.0′ - 24.9′ | 20.0′ - 23.9′ |
| CLASS IV SPECIAL 2500D | 25.0′ - 31.9′ | 24.0′ - 30.9′ |
| CLASS V 3000D | 32.0′ - 37.9′ | 31.0′ - 37.9′ |
| CLASS V SPECIAL 3600D | 38.0′ - 46.0′ | 38.0′ - 46.0′ |

### INSTALLATION TYPE 3

| MINIMUM CLASS AND D-LOAD | COVER | |
|---|---|---|
| | 60″ Dia AND SMALLER | OVER 60″ Dia TO 120″ Dia Max |
| CLASS II 1000D | 8.9′ | 5.9′ |
| CLASS III 1350D | 9.0′ - 11.9′ | 6.0′ - 10.9′ |
| CLASS III SPECIAL 1700D | 12.0′ - 15.9′ | 11.0′ - 13.9′ |
| CLASS IV 2000D | 16.0′ - 18.9′ | 14.0′ - 17.9′ |
| CLASS IV SPECIAL 2500D | 19.0′ - 24.9′ | 18.0′ - 22.9′ |
| CLASS V 3000D | 25.0′ - 29.9′ | 23.0′ - 28.9′ |
| CLASS V SPECIAL 3600D | 30.0′ - 36.0′ | 29.0′ - 35.0′ |

## NOTES:

1. Unless otherwise shown on the plans or specified in the special provision, the Contractor shall have the option of selecting the class of RCP and the type of installation to be used, provided the height of cover does not exceed the value shown for the RCP selected.
   Example: 24″ RCP culvert with maximum cover of 24′-0″ the options are:
   a) Class III Special or stronger with Installation Type 1.
   b) Class IV or stronger with Installation Type 2.
   c) Class IV Special or stronger with Installation Type 3.
   Cover is defined as the maximum vertical distance from top of the pipe to finished grade within the length of any given culvert.
2. The class of RCP and Installation Type selected shall be the same throughout the length of any given culvert.
3. The "length of any culvert" is defined as the culvert between:
   a) Successive drainage structure (inlets, junction boxes, headwalls, etc.).
   b) A drainage structure and the inlet or outlet end of the culvert.
   c) The inlet and outlet end of the culvert when there are no intervening drainage structures.
4. Oval and arch shaped RCP shall not be used.
5. Bedding depth: 1/25 OD Min, not less than 3″.
6. Slurry cement backfill may be substituted for backfill in the outer bedding and haunch areas. If slurry is used, the outer and middle beddings shall be omitted. Prior to installation, the soil under the middle ⅓ of the outside diameter of the pipe shall be softened by scarifying or other means to a minimum depth of 1/25 OD, but not less than 3″. Where slurry cement backfill is used, clear distance to trench wall may be reduced as set forth in the Standard Specifications.
7. Backfill shall be placed full width of excavation except where dimensions are shown for backfill width or thickness. Dimensions shown are minimum.
8. Lower side shall be suitable material as determined by the Engineer. Otherwise it shall be considered unsuitable as set forth in of the Standard Specifications. See Note 9.
9. Where the pipe is placed in a trench, if the trench walls are sloped at 5 vertical to 1 horizontal or steeper for at least 90 percent of the trench height or up to not less than 12″ from the grading plane, the firmness of the soil in the lower side need not be considered.
10. Non-reinforced precast concrete pipe sizes 3′-0″ or smaller may be placed under installation Types 1, 2 or 3.

STATE OF CALIFORNIA
DEPARTMENT OF TRANSPORTATION

# EXCAVATION AND BACKFILL CONCRETE PIPE CULVERTS INDIRECT DESIGN METHOD

NO SCALE

RSP A62DA DATED JULY 18, 2014 SUPERSEDES STANDARD PLAN A62DA DATED MAY 20, 2011 - PAGE 24 OF THE STANDARD PLANS BOOK DATED 2010.

**REVISED STANDARD PLAN RSP A62DA**

**2010 REVISED STANDARD PLAN RSP A62DA**

5-13-14

| Dist | COUNTY | ROUTE | POST MILES TOTAL PROJECT | SHEET No. | TOTAL SHEETS |
|---|---|---|---|---|---|
| 11 | SD | 15, 94, 805 | Var | 149 | 184 |

Randell D. Hiatt
REGISTERED CIVIL ENGINEER

July 19, 2013
PLANS APPROVAL DATE

REGISTERED PROFESSIONAL ENGINEER
Randell D. Hiatt
No. C50200
Exp. 6-30-15
CIVIL
STATE OF CALIFORNIA

*THE STATE OF CALIFORNIA OR ITS OFFICERS OR AGENTS SHALL NOT BE RESPONSIBLE FOR THE ACCURACY OR COMPLETENESS OF SCANNED COPIES OF THIS PLAN SHEET.*

TO ACCOMPANY PLANS DATED 09-02-14

**2010 REVISED STANDARD PLAN RSP A77L1**

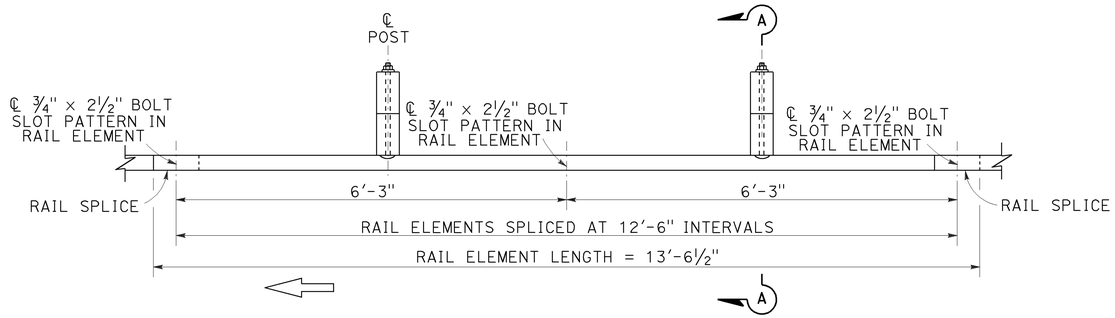


PLAN

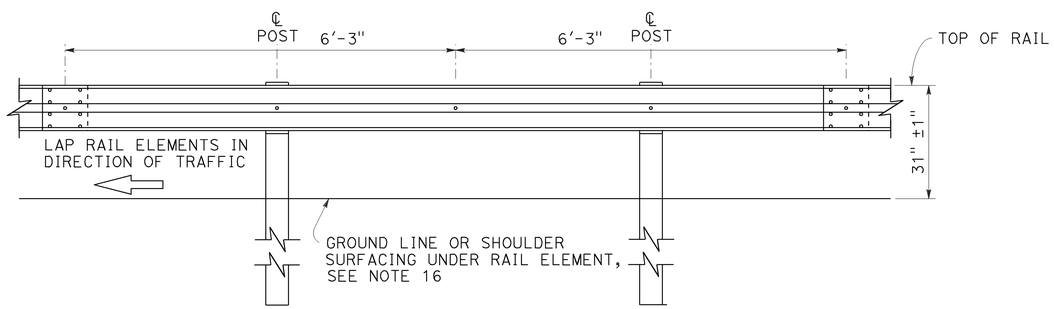


ELEVATION

## MIDWEST GUARDRAIL SYSTEM WITH WOOD POST AND BLOCKS

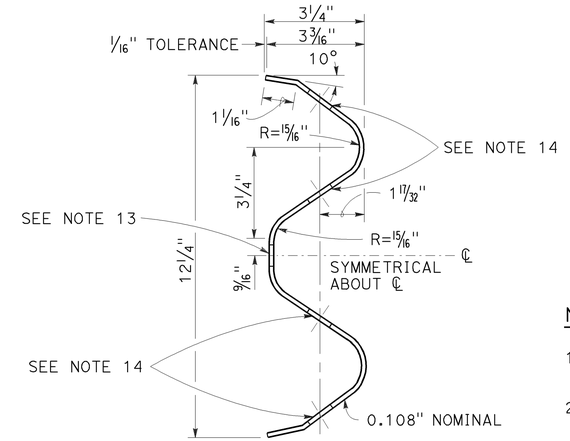


SECTION THRU RAIL ELEMENT

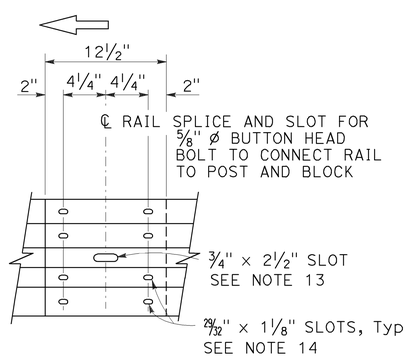


ELEVATION

## RAIL ELEMENT SPLICE DETAIL

a) Connect the over lapped end of the rail elements with ⅝" ø × 1⅜" button head oval shoulder splice bolts inserted into the 29⁄32" × 1⅛" slots and bolted together with ⅝" ø recessed hex nuts. Recess of hex nut points toward rail element. A total of 8 bolts and nuts are to be used at each rail splice connection.

b) The ends of the rail elements are to be overlapped in the direction of traffic (see details).

c) Where end cap is to be attached to the end of a rail element, a total of 4 of the above described splice bolts and nuts are to be used.

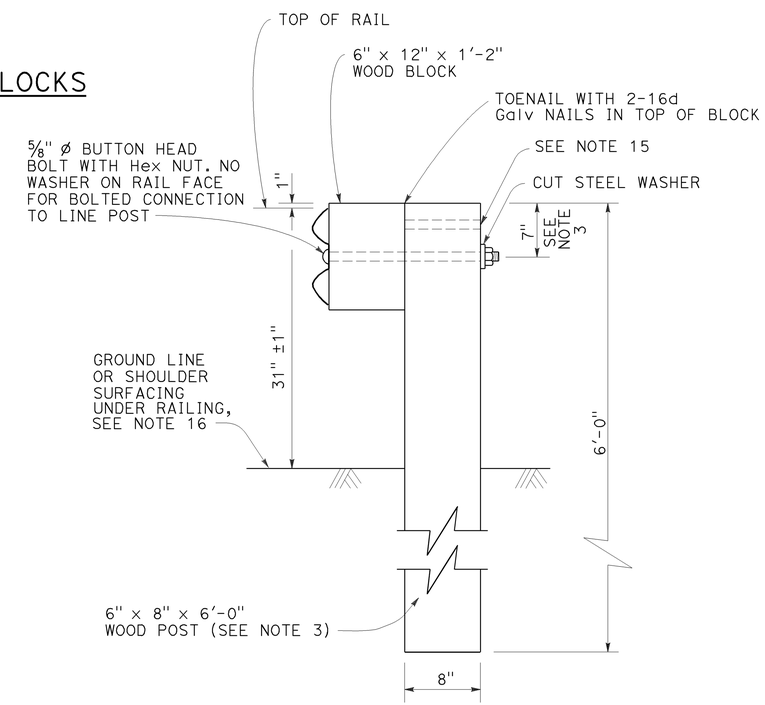


SECTION A-A

TYPICAL WOOD LINE POST INSTALLATION

See Note 4

## NOTES:

1. For details of steel post installations, see Revised Standard Plan RSP A77L2.
2. For details of standard hardware used to construct MGS, see Revised Standard Plan RSP A77M1.
3. For details of wood posts and wood blocks used to construct MGS, see Revised Standard Plan RSP A77N1.
4. For additional installation details, see Revised Standard Plan RSP A77N3.
5. MGS post spacing to be 6'-3" center to center, except as otherwise noted.
6. For MGS typical layouts, see the A77P, A77Q and A77R Series of Standard Plans.
7. If railing is connected to terminal system end treatment, use 31" height terminal system end treatment.
8. For MGS end anchor details, see Revised Standard Plans RSP A77S1 and RSP A77T2.
9. For details of MGS transition to bridge railing, see Revised Standard Plan RSP A77U4.
10. For additional details of MSG connection to bridge railing, see Revised Standard Plans RSP A77U1, RSP A77U2 and RSP A77V1.
11. For MGS connection details to abutments and walls, see Revised Standard Plan RSP A77U3.
12. For typical MGS delineation and dike positioning details, see Revised Standard Plan RSP A77N4.
13. Slotted hole for bolted connection of rail element to block and post. See "Section Thru Rail Element".
14. Slotted holes for splice bolts to overlap ends of rail element. See "Section Thru Rail Element".
15. Additional hole in uppermost portion of line post is for potential future adjustments of railing height. See Revised Standard Plan RSP A77N1.
16. Install posts in soil.

STATE OF CALIFORNIA
DEPARTMENT OF TRANSPORTATION

# MIDWEST GUARDRAIL SYSTEM STANDARD RAILING SECTION (WOOD POST WITH WOOD BLOCK)

NO SCALE

RSP A77L1 DATED JULY 19, 2013 SUPPLEMENTS STANDARD PLANS BOOK DATED 2010.

**REVISED STANDARD PLAN RSP A77L1**

| Dist | COUNTY | ROUTE | POST MILES TOTAL PROJECT | SHEET No. | TOTAL SHEETS |
|---|---|---|---|---|---|
| 11 | SD | 15, 94, 805 | Var | 150 | 184 |

Randell D. Hiatt
REGISTERED CIVIL ENGINEER

July 19, 2013
PLANS APPROVAL DATE

REGISTERED PROFESSIONAL ENGINEER
Randell D. Hiatt
No. C50200
Exp. 6-30-15
CIVIL
STATE OF CALIFORNIA

*THE STATE OF CALIFORNIA OR ITS OFFICERS OR AGENTS SHALL NOT BE RESPONSIBLE FOR THE ACCURACY OR COMPLETENESS OF SCANNED COPIES OF THIS PLAN SHEET.*

TO ACCOMPANY PLANS DATED 09-02-14

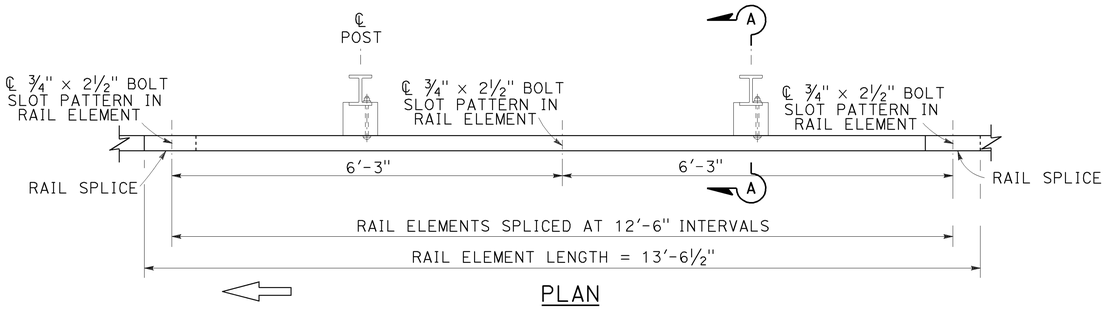


PLAN

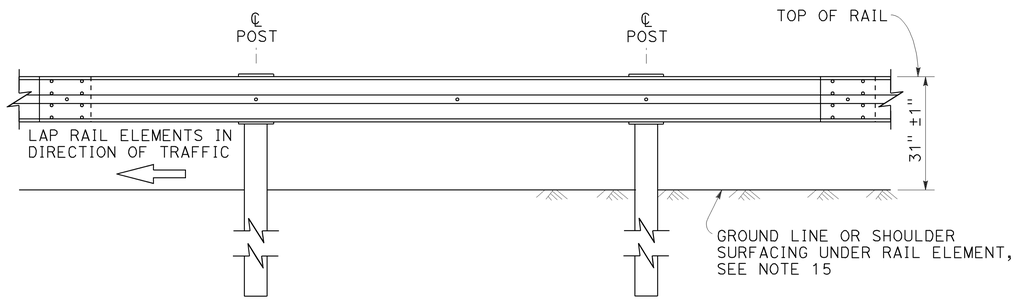


ELEVATION

## MIDWEST GUARDRAIL SYSTEM WITH STEEL POSTS AND NOTCHED WOOD OR NOTCHED RECYCLED PLASTIC BLOCKS

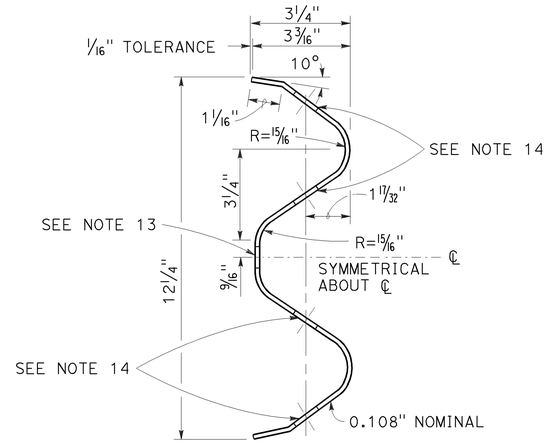


SECTION THRU RAIL ELEMENT

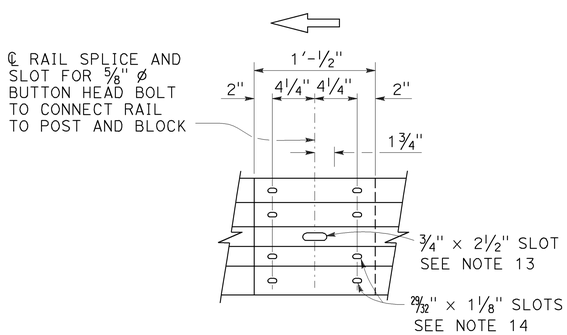


ELEVATION

## RAIL ELEMENT SPLICE DETAIL

a) Connect the over lapped end of the rail elements with ⅝" ø × 1⅜" button head oval shoulder splice bolts inserted into the 29⁄32" × 1⅛" slots and bolted together with ⅝" ø recessed hex nuts. Recess of hex nut points toward rail element. A total of 8 bolts and nuts are to be used at each rail splice connection.

b) The ends of the rail elements are to be overlapped in the direction of traffic (see details).

c) Where end cap is to be attached to the end of a rail element, a total of 4 of the above described splice bolts and nuts are to be used.

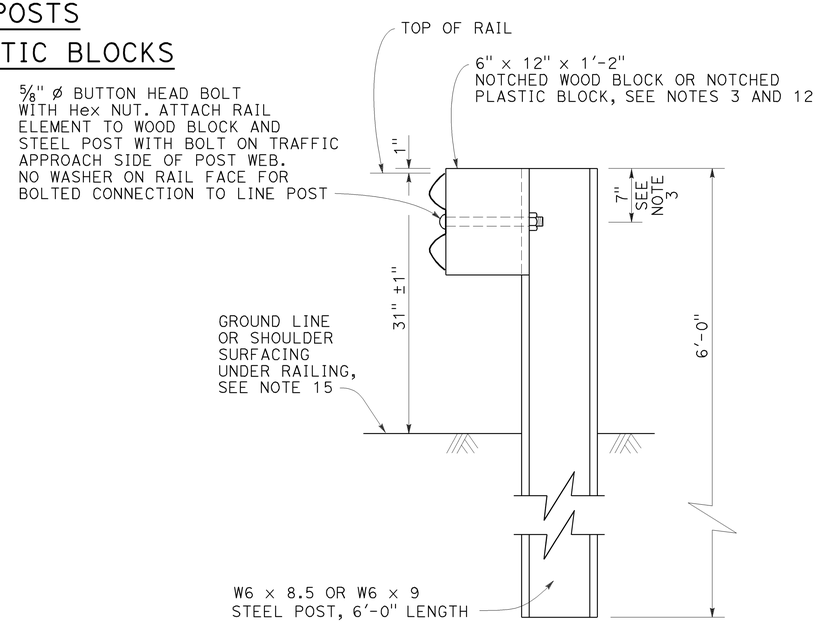


SECTION A-A

## TYPICAL STEEL LINE POST INSTALLATION

See Note 4

NOTES:

1. For details of wood post installations, see Revised Standard Plan RSP A77L1.
2. For details of standard hardware used to construct MGS, see Revised Standard Plan RSP A77M1.
3. For details of steel posts and notched wood blocks used to construct MGS, see Revised Standard Plan RSP A77N2.
4. For additional installation details, see Revised Standard Plan RSP A77N3.
5. MGS post spacing to be 6'-3" center to center, except as otherwise noted.
6. For MGS typical layouts, see the A77P, A77Q and A77R Series of Standard Plans.
7. If railing is connected to terminal system end treatment, use 31" height terminal system end treatment.
8. For MGS end anchor details, see Revised Standard Plans RSP A77S1 and RSP A77T2.
9. For details of MGS transition to bridge railing, see Revised Standard Plan RSP A77U4.
10. For additional details of MGS connection to bridge railings, see Revised Standard Plans RSP A77U1, RSP A77U2 and RSP A77V1.
11. For dike positioning and MGS delineation details, see Revised Standard Plan RSP A77N4.
12. Notched face of block faces steel post.
13. Slotted hole for bolted connection of rail element to block and post. See "Section Thru Rail Element".
14. Slotted holes for splice bolts to overlap ends of rail element. See "Section Thru Rail Element".
15. Install posts in soil.

STATE OF CALIFORNIA
DEPARTMENT OF TRANSPORTATION

# MIDWEST GUARDRAIL SYSTEM STANDARD RAILING SECTION (STEEL POST WITH NOTCHED WOOD OR NOTCHED RECYCLED PLASTIC BLOCK)

NO SCALE

RSP A77L2 DATED JULY 19, 2013 SUPPLEMENTS THE STANDARD PLANS BOOK DATED 2010.

**REVISED STANDARD PLAN RSP A77L2**

**2010 REVISED STANDARD PLAN RSP A77L2**

7-3-13

| Dist | COUNTY | ROUTE | POST MILES TOTAL PROJECT | SHEET No. | TOTAL SHEETS |
|---|---|---|---|---|---|
| 11 | SD | 15, 94, 805 | Var | 151 | 184 |

Randell D. Hiatt
REGISTERED CIVIL ENGINEER

July 19, 2013
PLANS APPROVAL DATE

REGISTERED PROFESSIONAL ENGINEER
Randell D. Hiatt
No. C50200
Exp. 6-30-15
CIVIL
STATE OF CALIFORNIA

*THE STATE OF CALIFORNIA OR ITS OFFICERS OR AGENTS SHALL NOT BE RESPONSIBLE FOR THE ACCURACY OR COMPLETENESS OF SCANNED COPIES OF THIS PLAN SHEET.*

TO ACCOMPANY PLANS DATED 09-02-14

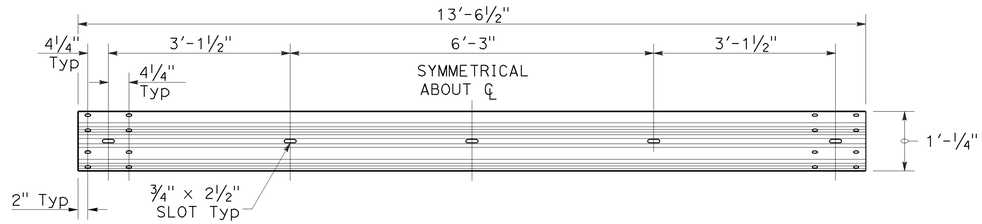


TYPICAL RAIL ELEMENT

NOTE:

1. Slotted holes for splice bolts to overlap ends of rail element.

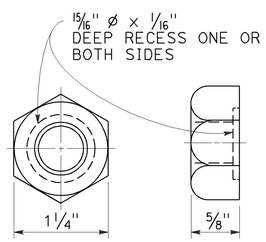


⅝" ø RECESS NUT

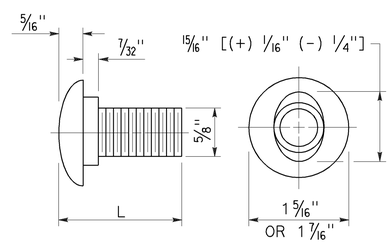


⅝" ø BUTTON HEAD BOLT

BUTTON HEAD BOLT

| L | THREAD LENGTH |
|---|---|
| 1⅜" | FULL THREAD LENGTH |
| 2" | FULL THREAD LENGTH |
| 10" | 4" Min THREAD LENGTH |
| 18" | 4" Min THREAD LENGTH |
| 20" | 4" Min THREAD LENGTH |
| 22" | 4" Min THREAD LENGTH |
| 26" | 4" Min THREAD LENGTH |
| 36" | 4" Min THREAD LENGTH |
| ** 2¾" | 2" Min THREAD LENGTH |
| ** 19" | 4" Min THREAD LENGTH |

** For nested rail applications.

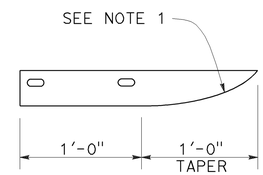


PLAN

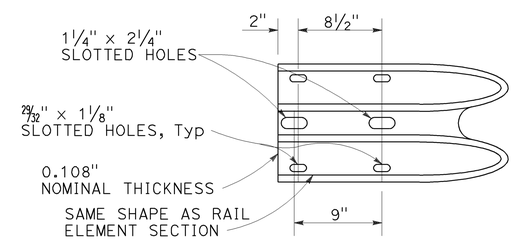


ELEVATION

END CAP
(TYPE A)

STATE OF CALIFORNIA
DEPARTMENT OF TRANSPORTATION

# MIDWEST GUARDRAIL SYSTEM STANDARD HARDWARE

NO SCALE

RSP A77M1 DATED JULY 19, 2013 SUPPLEMENTS THE STANDARD PLANS BOOK DATED 2010.

**REVISED STANDARD PLAN RSP A77M1**

**2010 REVISED STANDARD PLAN RSP A77M1**

7-3-13

| Dist | COUNTY | ROUTE | POST MILES TOTAL PROJECT | SHEET No. | TOTAL SHEETS |
|---|---|---|---|---|---|
| 11 | SD | 15, 94, 805 | Var | 152 | 184 |

Randell D. Hiatt
REGISTERED CIVIL ENGINEER

July 19, 2013
PLANS APPROVAL DATE

REGISTERED PROFESSIONAL ENGINEER
Randell D. Hiatt
No. C50200
Exp. 6-30-15
CIVIL
STATE OF CALIFORNIA

*THE STATE OF CALIFORNIA OR ITS OFFICERS OR AGENTS SHALL NOT BE RESPONSIBLE FOR THE ACCURACY OR COMPLETENESS OF SCANNED COPIES OF THIS PLAN SHEET.*

TO ACCOMPANY PLANS DATED 09-02-14

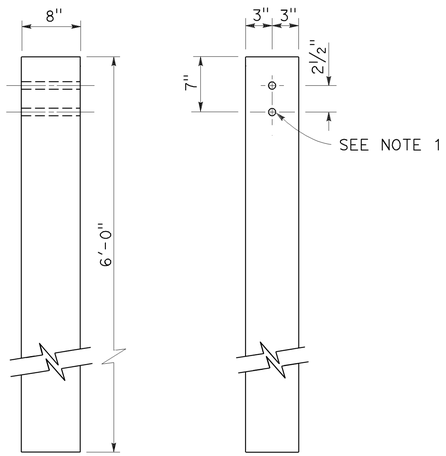


SIDE FRONT

6" x 8" WOOD POST
See Note 3

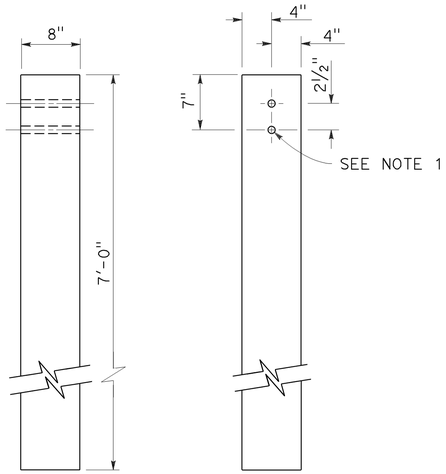


SIDE FRONT

8" x 8" WOOD POST
See Note 4

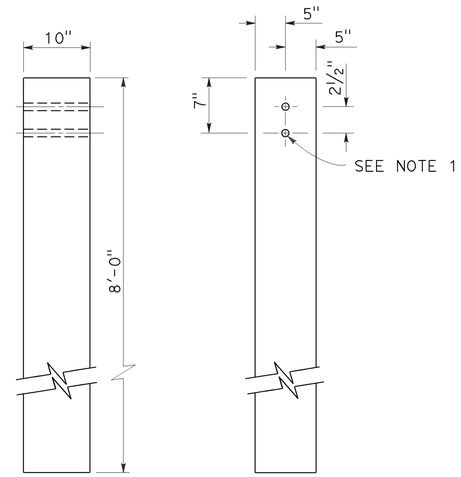


SIDE FRONT

10" x 10" WOOD POST
See Note 5

## NOTES:

1. All holes in wood posts and blocks shall be ¾" Dia ± 1/16".
2. Dimensions shown for wood post are nominal.
3. This post and block combination used for standard line post sections of MGS.
4. This post and 8" x 12" block combination used for line post sections of MGS on narrow roadways.
5. This post and 8" x 12" block combination is typically used where strengthened line post sections of MGS are warranted to shield fixed objects.
6. See Revised Standard Plan RSP A77L3 for use of 6" x 8" and 8" x 8" wood blocks.

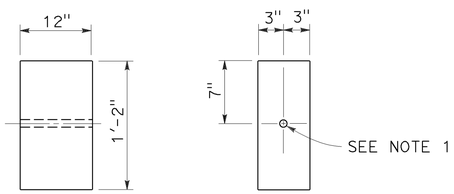


SIDE FRONT

6" x 12" WOOD BLOCK
See Note 3

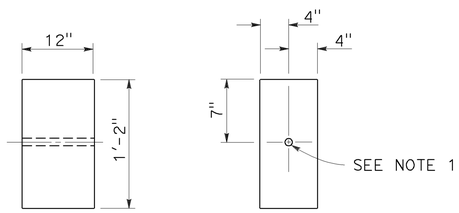


SIDE FRONT

8" x 12" WOOD BLOCK

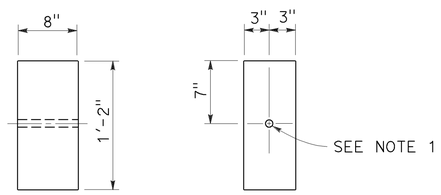


SIDE FRONT

6" x 8" WOOD BLOCK
Only for use with metal beam guard rail see Note 6

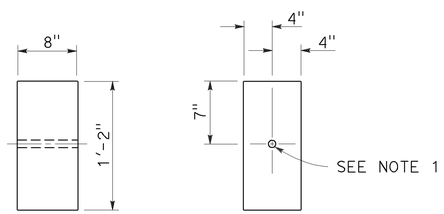


SIDE FRONT

8" x 8" WOOD BLOCK
Only for use with metal beam guard rail see Note 6

STATE OF CALIFORNIA
DEPARTMENT OF TRANSPORTATION

# MIDWEST GUARDRAIL SYSTEM WOOD POST AND WOOD BLOCK DETAILS

NO SCALE

RSP A77N1 DATED JULY 19, 2013 SUPPLEMENTS THE STANDARD PLANS BOOK DATED 2010.

**REVISED STANDARD PLAN RSP A77N1**

**2010 REVISED STANDARD PLAN RSP A77N1**

7-3-13

| Dist | COUNTY | ROUTE | POST MILES TOTAL PROJECT | SHEET No. | TOTAL SHEETS |
|---|---|---|---|---|---|
| 11 | SD | 15, 94, 805 | Var | 153 | 184 |

Randell D. Hiatt
REGISTERED CIVIL ENGINEER

November 15, 2013
PLANS APPROVAL DATE

REGISTERED PROFESSIONAL ENGINEER
Randell D. Hiatt
No. C50200
Exp. 6-30-15
CIVIL
STATE OF CALIFORNIA

*THE STATE OF CALIFORNIA OR ITS OFFICERS OR AGENTS SHALL NOT BE RESPONSIBLE FOR THE ACCURACY OR COMPLETENESS OF SCANNED COPIES OF THIS PLAN SHEET.*

TO ACCOMPANY PLANS DATED 09-02-14

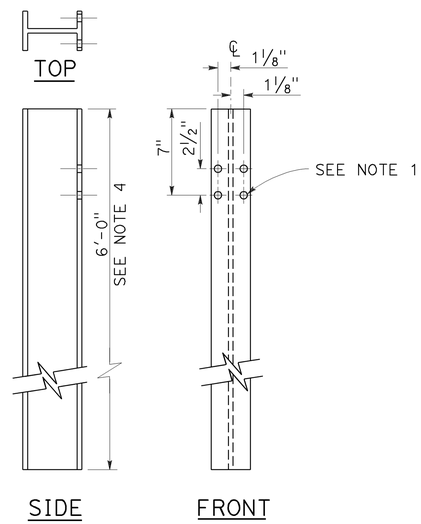


W6 x 9 OR W6 x 8.5
STEEL POST
See Note 4

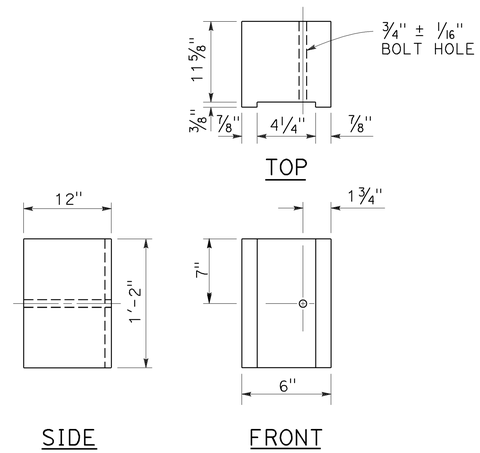


6" x 12"
NOTCHED WOOD BLOCK
See Notes 2 and 3

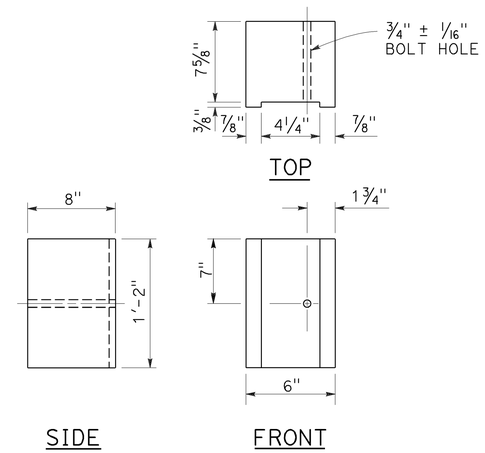


6" x 8"
NOTCHED WOOD BLOCK
Only for use with metal beam guard railing. See Note 5

## NOTES:

1. All holes in steel post shall be 13/16" Dia maximum.
2. Dimensions shown for wood block are nominal.
3. Notched face of block faces steel post.
4. 6'-0" length posts to be used for typical roadway installation. See Revised Standard Plan RSP A77N3.
5. See Revised Standard Plan RSP A77L3 for use of 6" x 8" and 8" x 8" notched wood blocks.
6. This post and 8" x 12" block combination to be used for line post sections of MGS on narrow roadways and where strengthened line post sections of MGS are warranted to shield fixed objects.

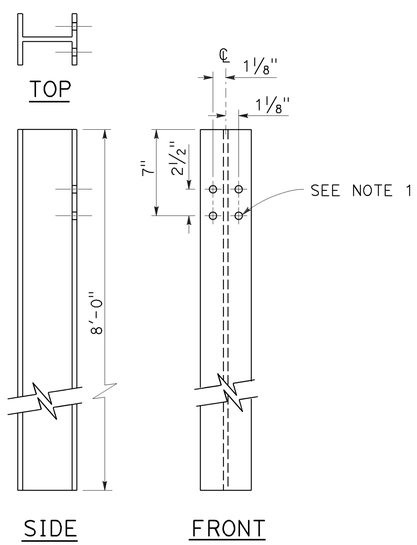


W6 x 15
STEEL POST
See Note 6

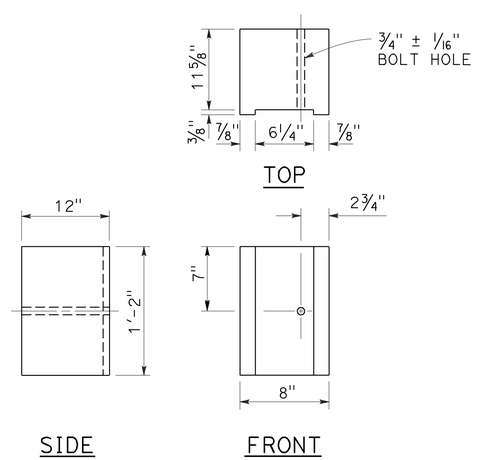


8" x 12"
NOTCHED WOOD BLOCK
See Notes 2 and 3

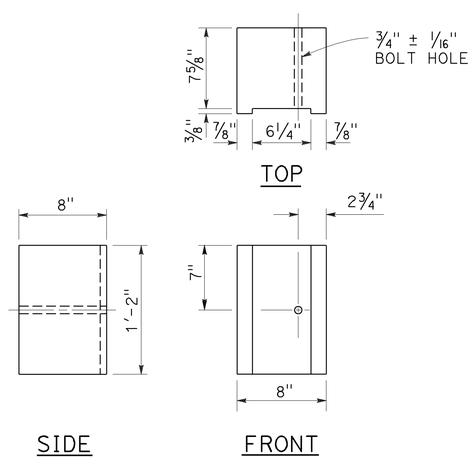


8" x 8"
NOTCHED WOOD BLOCK
Only for use with metal beam guard railing. See Note 5

STATE OF CALIFORNIA
DEPARTMENT OF TRANSPORTATION

# MIDWEST GUARDRAIL SYSTEM STEEL POST AND NOTCHED WOOD BLOCK DETAILS

NO SCALE

RSP A77N2 DATED NOVEMBER 15, 2013 SUPERSEDES RSP A77N2
DATED JULY 19, 2013 THAT SUPPLEMENTS THE STANDARD PLANS BOOK DATED 2010.

**REVISED STANDARD PLAN RSP A77N2**

**2010 REVISED STANDARD PLAN RSP A77N2**

10-29-13

| Dist | COUNTY | ROUTE | POST MILES TOTAL PROJECT | SHEET No. | TOTAL SHEETS |
|---|---|---|---|---|---|
| 11 | SD | 15, 94, 805 | Var | 154 | 184 |

Randell D. Hiatt
REGISTERED CIVIL ENGINEER

November 15, 2013
PLANS APPROVAL DATE

REGISTERED PROFESSIONAL ENGINEER
Randell D. Hiatt
No. C50200
Exp. 6-30-15
CIVIL
STATE OF CALIFORNIA

*THE STATE OF CALIFORNIA OR ITS OFFICERS OR AGENTS SHALL NOT BE RESPONSIBLE FOR THE ACCURACY OR COMPLETENESS OF SCANNED COPIES OF THIS PLAN SHEET.*

TO ACCOMPANY PLANS DATED 09-02-14

**2010 REVISED STANDARD PLAN RSP A77N3**

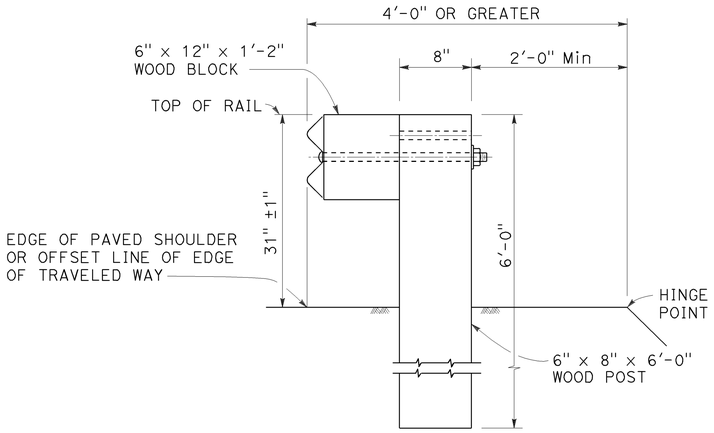


DETAIL A

TYPICAL ROADWAY INSTALLATION

See Note 1

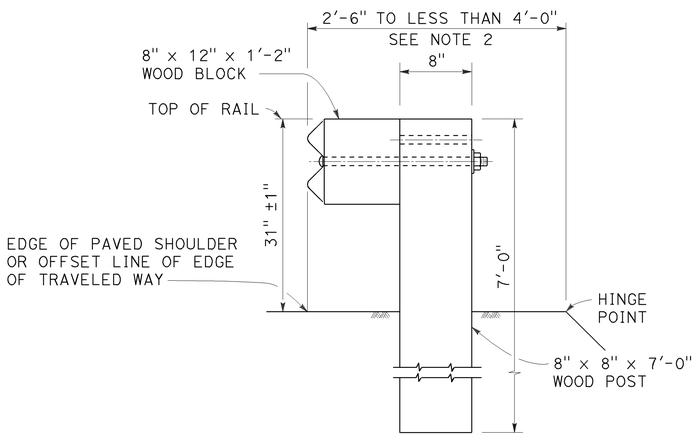


DETAIL B

NARROW ROADWAY INSTALLATION

See Note 1

## POST EMBEDMENT

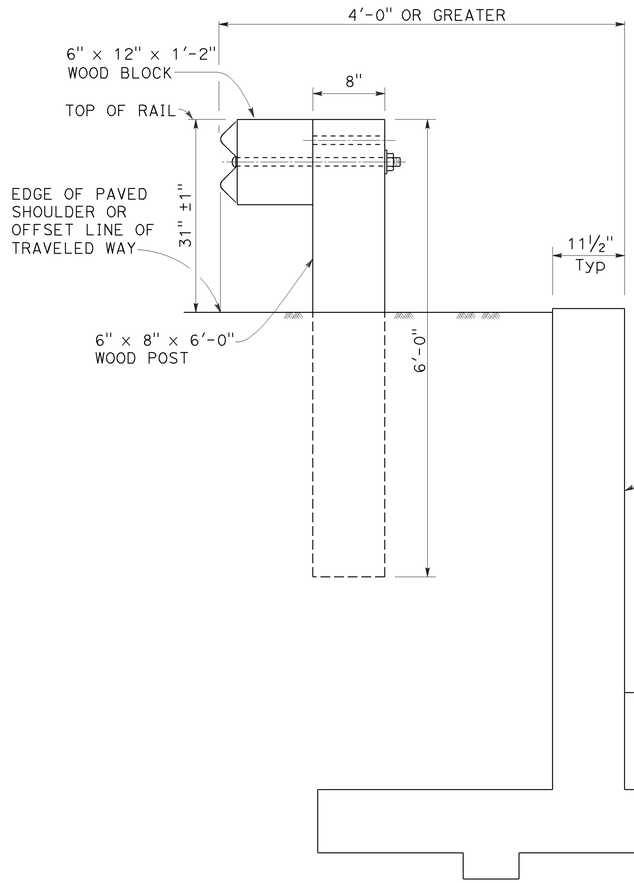


DETAIL C

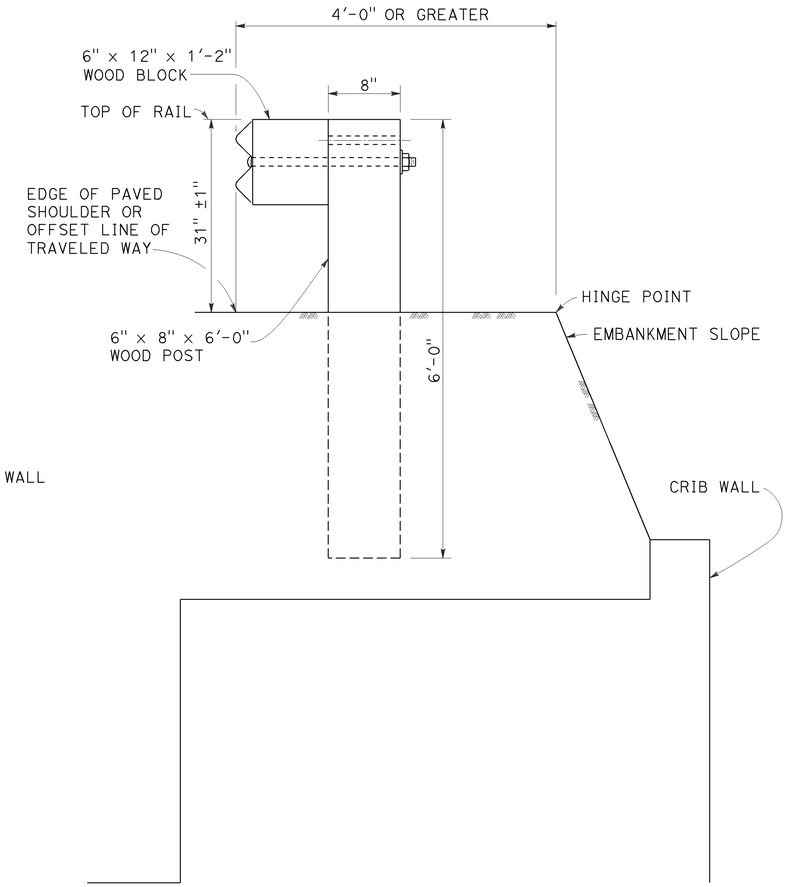


DETAIL D

## INSTALLATION AT EARTH RETAINING WALLS

NOTES:

1. These installation details also applicable to steel line post installations. For Detail A, C, and D, where steel line post installations are constructed, W6 x 8.5 or W6 x 9 steel post, 6'-0" in length, with 6" x 12" x 1'-2" notched wood blocks or notched recycled plastic blocks are to be used in place of the size of wood post and wood block shown. For Detail B, where steel line post installations are constructed, W6 x 15 steel post, 8'-0" in length, with 8" x 12" x 1'-2" notched wood blocks or notched recycled plastic blocks are to be used in place of the size of wood post and wood block shown. For additional installation details, see Revised Standard Plan RSP A77L1 and RSP A77L2.
2. Where the distance between the face of the rail and the hinge point is less than 2'-6", see the Project Plans for special details.
3. For dike positioning with MGS installations, see Revised Standard Plan RSP A77N4.

STATE OF CALIFORNIA
DEPARTMENT OF TRANSPORTATION

# MIDWEST GUARDRAIL SYSTEM TYPICAL LINE POST EMBEDMENT AND HINGE POINT OFFSET DETAILS

NO SCALE

RSP A77N3 DATED NOVEMBER 15, 2013 SUPERSEDES RSP A77N3
DATED JULY 19, 2013 THAT SUPPLEMENTS THE STANDARD PLANS BOOK DATED 2010.

**REVISED STANDARD PLAN RSP A77N3**

| Dist | COUNTY | ROUTE | POST MILES TOTAL PROJECT | SHEET No. | TOTAL SHEETS |
|---|---|---|---|---|---|
| 11 | SD | 15, 94, 805 | Var | 155 | 184 |

Randell D. Hiatt
REGISTERED CIVIL ENGINEER

July 19, 2013
PLANS APPROVAL DATE

REGISTERED PROFESSIONAL ENGINEER
Randell D. Hiatt
No. C50200
Exp. 6-30-15
CIVIL
STATE OF CALIFORNIA

THE STATE OF CALIFORNIA OR ITS OFFICERS OR AGENTS SHALL NOT BE RESPONSIBLE FOR THE ACCURACY OR COMPLETENESS OF SCANNED COPIES OF THIS PLAN SHEET.

TO ACCOMPANY PLANS DATED 09-02-14

## NOTES:

1. When necessary to place dike more than 7" in front of face of MGS, only Type C dike may be used. For dike details, see Revised Standard Plan RSP A87B.
2. For standard railing post embedment, see Revised Standard Plan RSP A77N3.
3. MGS delineation to be used where shown on the Project Plans.
4. When dike or curb is placed under MGS, the maximum height of the dike or curb shall be 6". Mountable dike should not be used. For dike and curb details, see Revised Standard Plans RSP A87A and RSP A87B.
5. For details of typical distance between the face of rail and hinge point, see Revised Standard Plan RSP A77N3.
6. For steel line posts, use 1/4 - 20 self-tapping screws in 0.22" diameter holes or 1/4" bolts in 9/32" diameter holes.

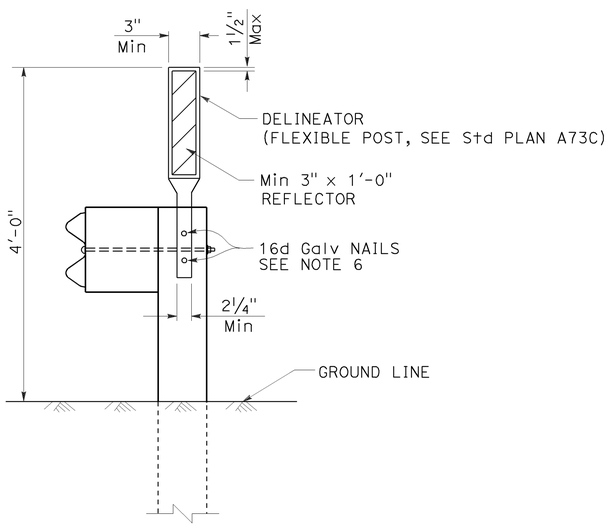


## MGS DELINEATION

See Note 3

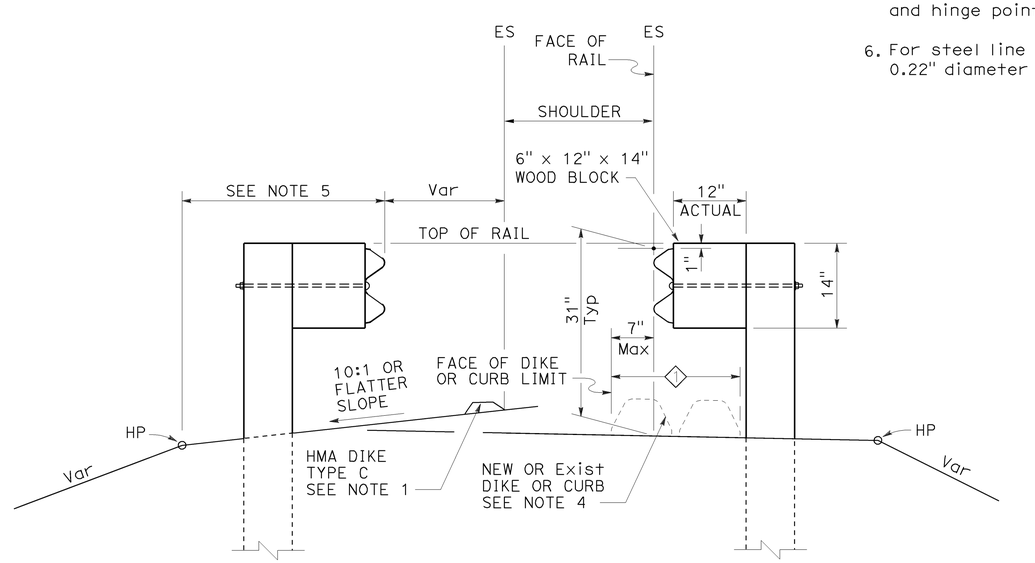


## DIKE POSITIONING

See Note 1

1 PERMISSIBLE DIKE OR CURB PLACEMENT AREA

STATE OF CALIFORNIA
DEPARTMENT OF TRANSPORTATION

# MIDWEST GUARDRAIL SYSTEM TYPICAL RAILING DELINEATION AND DIKE POSITIONING DETAILS

NO SCALE

RSP A77N4 DATED JULY 19, 2013 SUPPLEMENTS THE STANDARD PLANS BOOK DATED 2010.

**REVISED STANDARD PLAN RSP A77N4**

2010 REVISED STANDARD PLAN RSP A77N4

7-10-13

| Dist | COUNTY | ROUTE | POST MILES TOTAL PROJECT | SHEET No. | TOTAL SHEETS |
|---|---|---|---|---|---|
| 11 | SD | 15, 94, 805 | Var | 156 | 184 |

Randell D. Hiatt
REGISTERED CIVIL ENGINEER

July 19, 2013
PLANS APPROVAL DATE

REGISTERED PROFESSIONAL ENGINEER
Randell D. Hiatt
No. C50200
Exp. 6-30-15
CIVIL
STATE OF CALIFORNIA

THE STATE OF CALIFORNIA OR ITS OFFICERS OR AGENTS SHALL NOT BE RESPONSIBLE FOR THE ACCURACY OR COMPLETENESS OF SCANNED COPIES OF THIS PLAN SHEET.

TO ACCOMPANY PLANS DATED 09-02-14

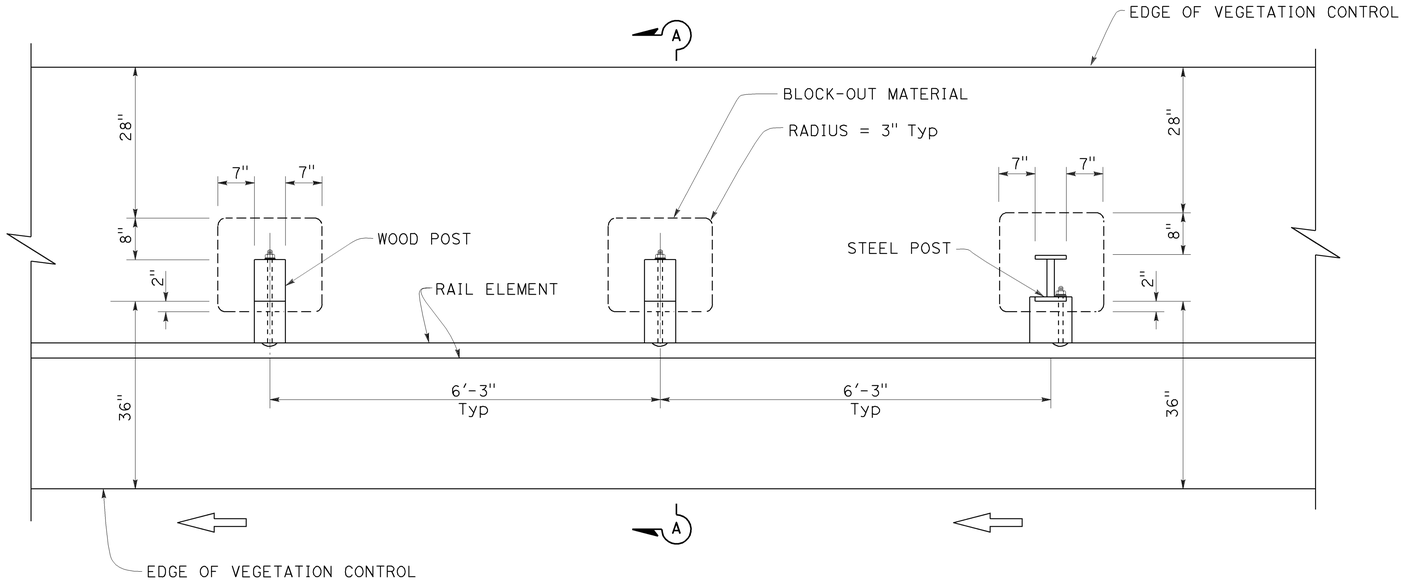


PLAN

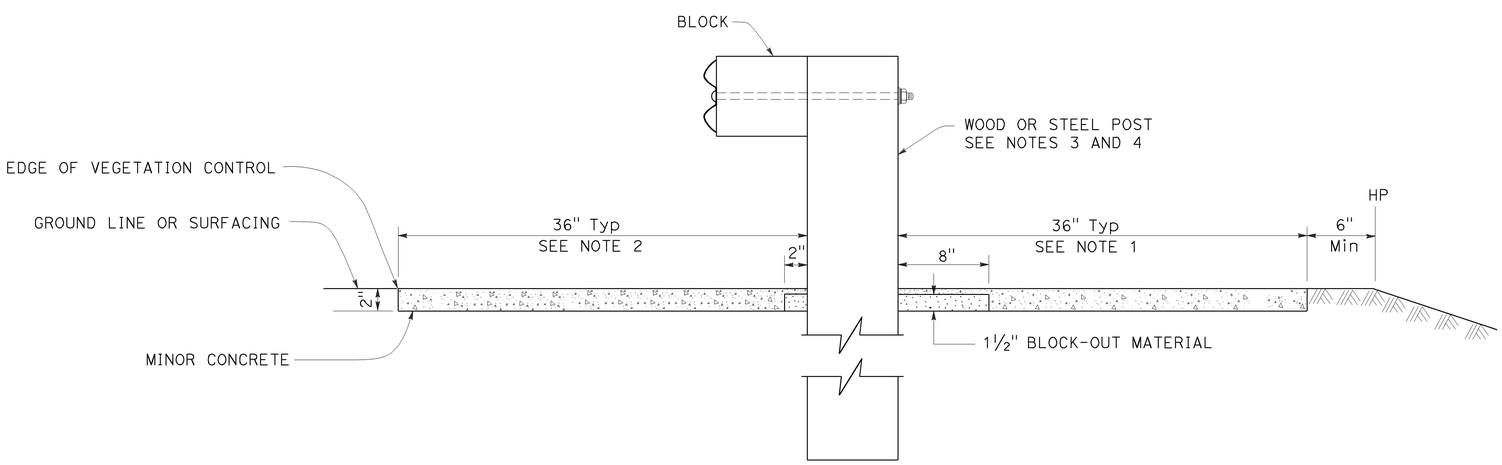


SECTION A-A

NOTES:

1. Where the distance between back of post and hinge point is less than 42", construct vegetation control to 6" from hinge point while maintaining the 8" block-out at back of post. If the 8" block-out at back of post can not be maintained, construct vegetation control flush with the back edge of post.
2. Where dike is constructed under railing, construct vegetation control to back edge of dike. Where paved shoulder is constructed within 36" in front of the post, construct vegetation control to the edge of paved shoulder.
3. For wood post sizes, see Revised Standard Plan RSP A77N1.
4. For steel post sizes, see Revised Standard Plan RSP A77N2.
5. For details not shown, see Revised Standard Plans RSP A77L1 and RSP A77L2.

STATE OF CALIFORNIA
DEPARTMENT OF TRANSPORTATION

# MIDWEST GUARDRAIL SYSTEM TYPICAL VEGETATION CONTROL STANDARD RAILING SECTION

NO SCALE

RSP A77N5 DATED JULY 19, 2013 SUPPLEMENTS THE STANDARD PLANS BOOK DATED 2010.

**REVISED STANDARD PLAN RSP A77N5**

2010 REVISED STANDARD PLAN RSP A77N5

7-3-13

| Dist | COUNTY | ROUTE | POST MILES TOTAL PROJECT | SHEET No. | TOTAL SHEETS |
|---|---|---|---|---|---|
| 11 | SD | 15, 94, 805 | Var | 157 | 184 |

Randell D. Hiatt
REGISTERED CIVIL ENGINEER

July 19, 2013
PLANS APPROVAL DATE

REGISTERED PROFESSIONAL ENGINEER
Randell D. Hiatt
No. C50200
Exp. 6-30-15
CIVIL
STATE OF CALIFORNIA

*THE STATE OF CALIFORNIA OR ITS OFFICERS OR AGENTS SHALL NOT BE RESPONSIBLE FOR THE ACCURACY OR COMPLETENESS OF SCANNED COPIES OF THIS PLAN SHEET.*

TO ACCOMPANY PLANS DATED 09-02-14

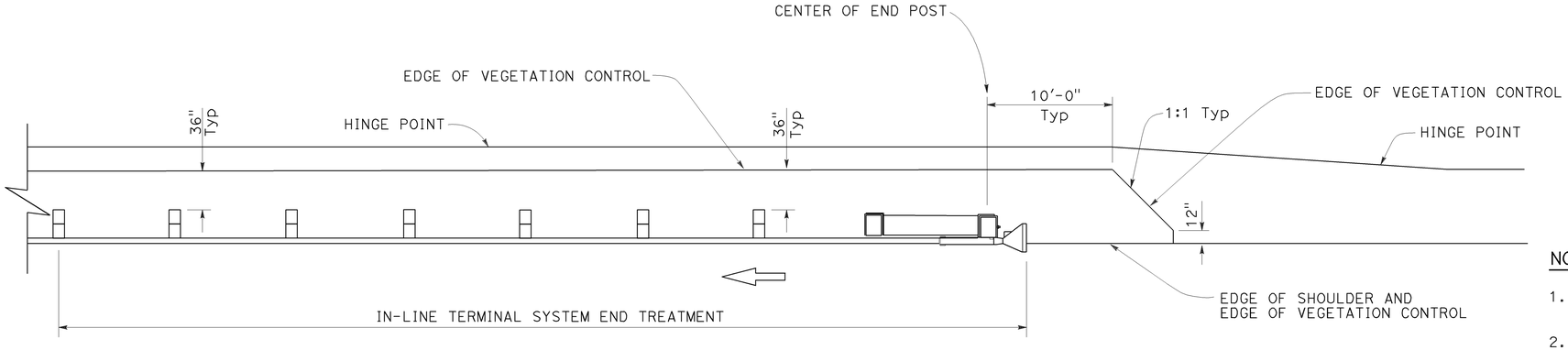


PLAN

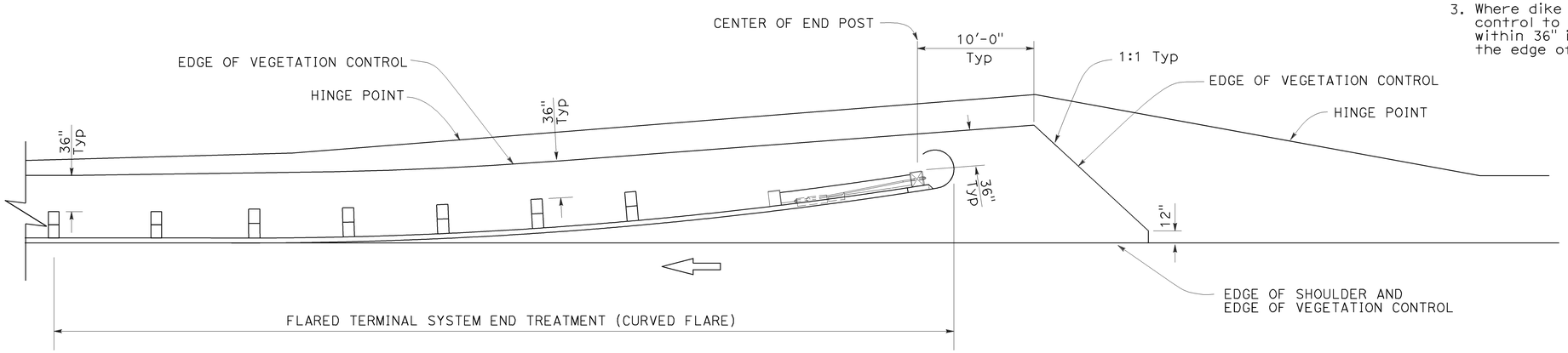


PLAN

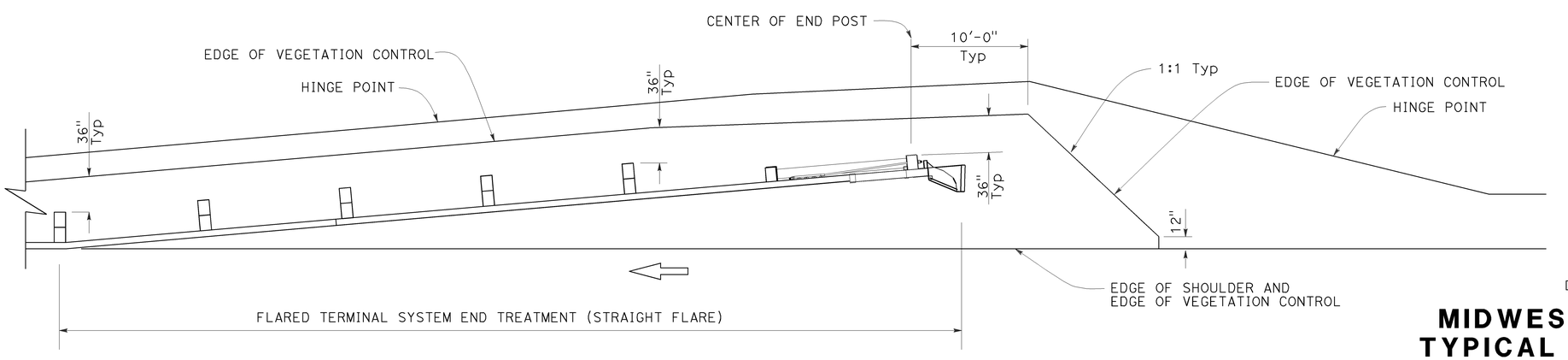


PLAN

## NOTES:

1. See Revised Standard Plan RSP A77N5 for additional vegetation control details.
2. Where the distance between back of post and hinge point is less than 42", construct vegetation control to 6" from hinge point while maintaining the 8" block-out at back of post. If the 8" block-out at back of post can not be maintained, construct vegetation control flush with the back edge of post.
3. Where dike is constructed under railing, construct vegetation control to back edge of dike. Where paved shoulder is constructed within 36" in front of the post, construct vegetation control to the edge of paved shoulder.

STATE OF CALIFORNIA
DEPARTMENT OF TRANSPORTATION

# MIDWEST GUARDRAIL SYSTEM TYPICAL VEGETATION CONTROL FOR TERMINAL SYSTEM END TREATMENTS

NO SCALE

RSP A77N6 DATED JULY 19, 2013 SUPPLEMENTS THE STANDARD PLANS BOOK DATED 2010.

**REVISED STANDARD PLAN RSP A77N6**

**2010 REVISED STANDARD PLAN RSP A77N6**

6-12-13

| Dist | COUNTY | ROUTE | POST MILES TOTAL PROJECT | SHEET No. | TOTAL SHEETS |
|---|---|---|---|---|---|
| 11 | SD | 15, 94, 805 | Var | 158 | 184 |

Randell D. Hiatt
REGISTERED CIVIL ENGINEER

July 19, 2013
PLANS APPROVAL DATE

REGISTERED PROFESSIONAL ENGINEER
Randell D. Hiatt
No. C50200
Exp. 6-30-15
CIVIL
STATE OF CALIFORNIA

*THE STATE OF CALIFORNIA OR ITS OFFICERS OR AGENTS SHALL NOT BE RESPONSIBLE FOR THE ACCURACY OR COMPLETENESS OF SCANNED COPIES OF THIS PLAN SHEET.*

TO ACCOMPANY PLANS DATED 09-02-14

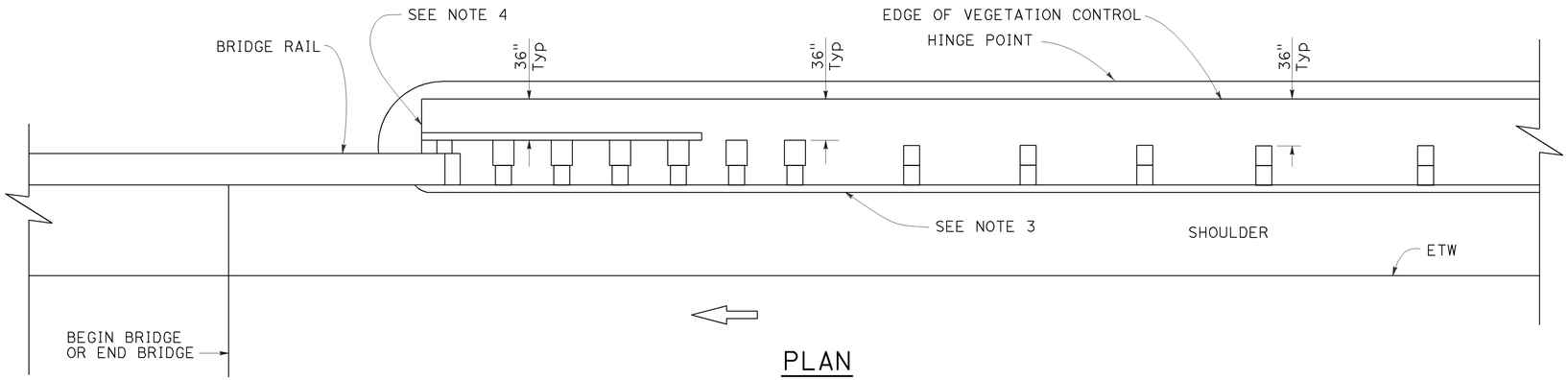


PLAN

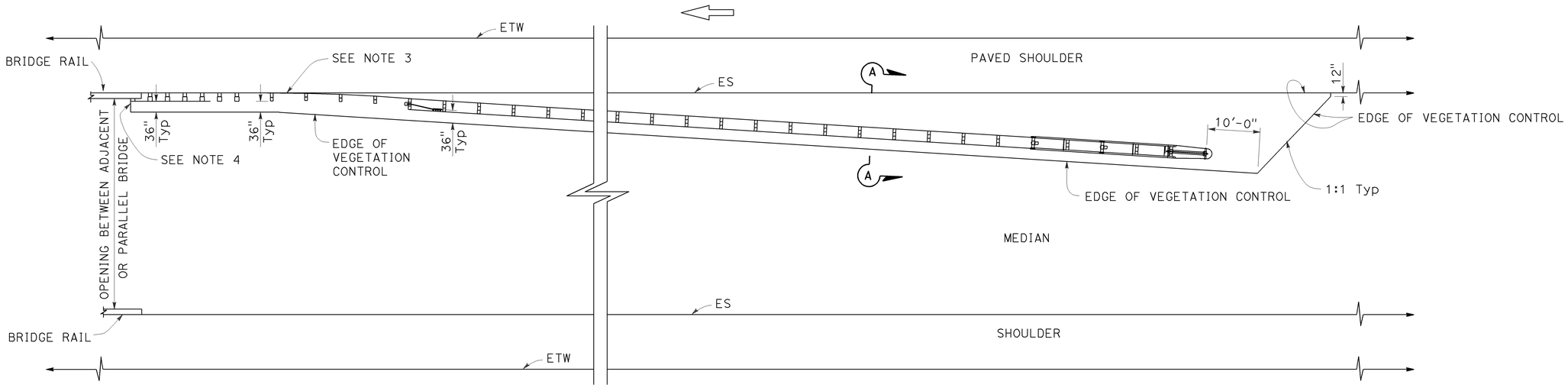


PLAN

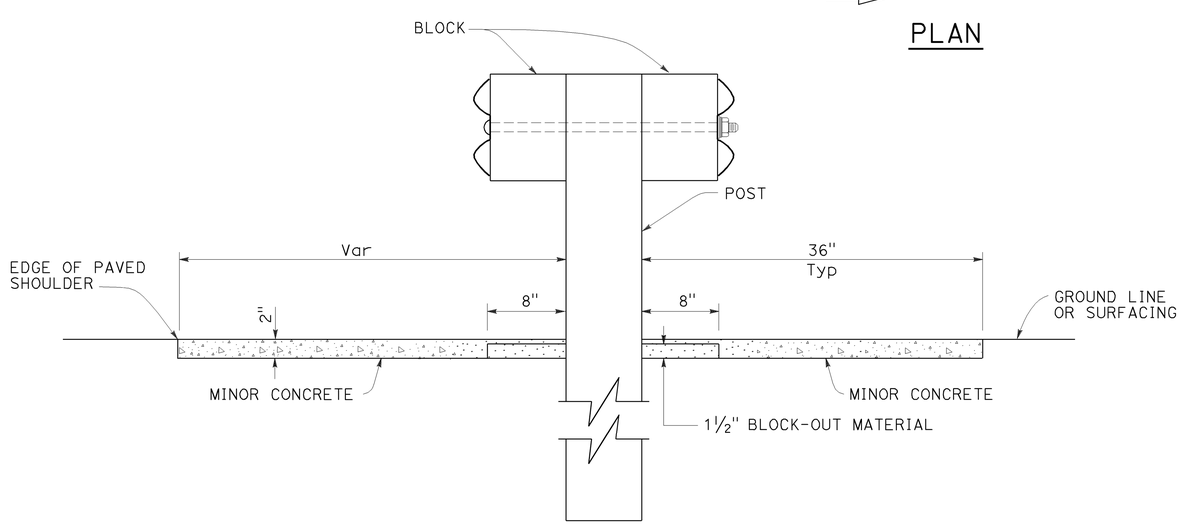


SECTION A-A

NOTES:

1. See Revised Standard Plan RSP A77N5 for additional vegetation control details.
2. Where the distance between back of post and hinge point is less than 42", construct vegetation control to 6" from hinge point while maintaining the 8" block-out at back of post. If the 8" block-out at back of post can not be maintained, construct vegetation control flush with the back edge of post.
3. Where dike is constructed under railing, construct vegetation control to back edge of dike. Where paved shoulder is constructed within 36" in front of the post, construct vegetation control to the edge of paved shoulder.
4. End vegetation control at end of backside rail element.

STATE OF CALIFORNIA
DEPARTMENT OF TRANSPORTATION

# MIDWEST GUARDRAIL SYSTEM TYPICAL VEGETATION CONTROL AT STRUCTURE APPROACH

NO SCALE

RSP A77N7 DATED JULY 19, 2013 SUPPLEMENTS THE STANDARD PLANS BOOK DATED 2010.

**REVISED STANDARD PLAN RSP A77N7**

**2010 REVISED STANDARD PLAN RSP A77N7**

6-12-13

| Dist | COUNTY | ROUTE | POST MILES TOTAL PROJECT | SHEET No. | TOTAL SHEETS |
|---|---|---|---|---|---|
| 11 | SD | 15, 94, 805 | Var | 159 | 184 |

Randell D. Hiatt
REGISTERED CIVIL ENGINEER

July 19, 2013
PLANS APPROVAL DATE

REGISTERED PROFESSIONAL ENGINEER
Randell D. Hiatt
No. C50200
Exp. 6-30-15
CIVIL
STATE OF CALIFORNIA

*THE STATE OF CALIFORNIA OR ITS OFFICERS OR AGENTS SHALL NOT BE RESPONSIBLE FOR THE ACCURACY OR COMPLETENESS OF SCANNED COPIES OF THIS PLAN SHEET.*

TO ACCOMPANY PLANS DATED 09-02-14

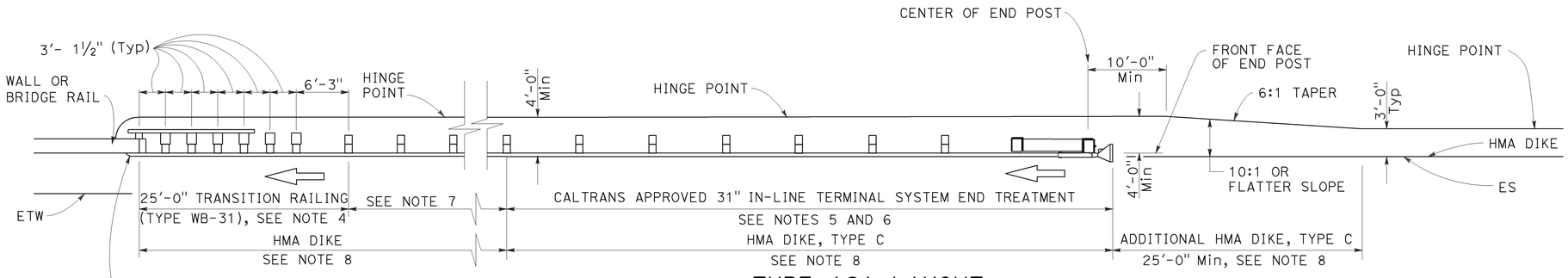


## TYPE 12A LAYOUT

(MGS installation at structure approach with
31" In-line end treatment at traffic approach end of railing)
See Notes 9

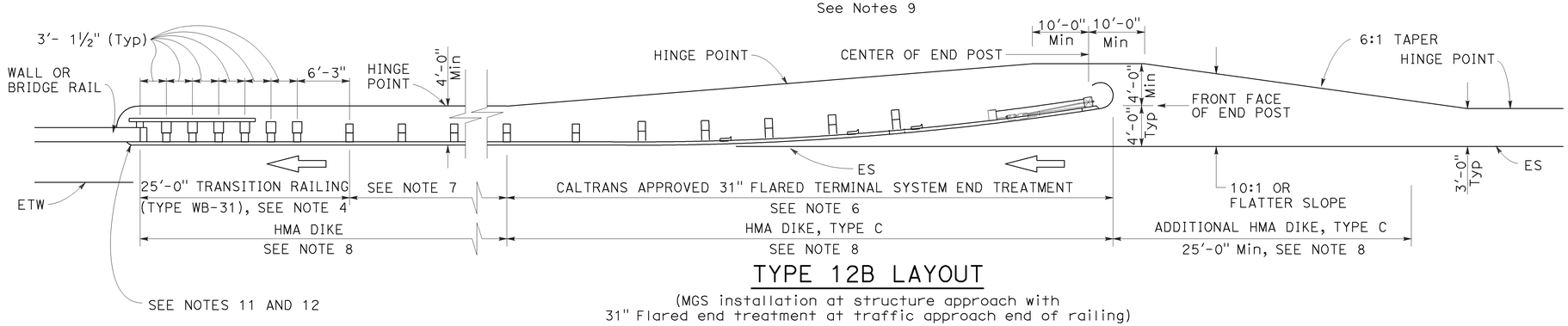


## TYPE 12B LAYOUT

(MGS installation at structure approach with
31" Flared end treatment at traffic approach end of railing)
See Notes 9

## NOTES:

1. Line post, blocks and hardware to be used are shown on Revised Standard Plans RSP A77L1, RSP A77L2, RSP A77M1, RSP A77N1 and RSP A77N2.
2. MGS post spacing to be 6'-3" center to center, except as otherwise noted.
3. Except as noted, line posts are 6" x 8" x 6'-0" wood with 6" x 12" x 1'-2" wood blocks. W6 x 8.5 or W6 x 9 steel posts, 6'-0" in length, with 6" x 12" x 1'-2" notched wood blocks or plastic blocks may be used for 6" x 8" x 6'-0" wood posts with 6" x 12" x 1'-2" wood blocks where applicable and when specified.
4. For Transition Railing (Type WB-31) details for Types 12A and 12B Layouts, see Revised Standard Plan RSP A77U4.
5. 31" in-line terminal system end treatments are used where site conditions will not accommodate a 31" flared end treatment.
6. The type 31" of terminal system end treatment to be used will be shown on the Project Plans.
7. Dependent on site conditions (embankment height, side slopes, or other fixed objects), it may be advisable to construct additional guard railing (a length equal to multiples of 12'-6" with 6'-3" post spacing) between the transition railing and end treatment. A 12.5 degree angle of departure can be drawn on the Project Plans from the edge of traveled way through the outer most point of the fixed object to determine the additional length of railing needed.
8. Where placement of dike is required with guard railing installations, see Revised Standard Plan RSP A77N4 for dike positioning details.
9. Type 12A or Type 12B Layouts are typically used:
   a. To the right of approaching traffic, at the end of a structure, on two-lane conventional highway where the roadbed width across the structure is less than 40 feet.
   b. To the left of approaching traffic, at the end of a structure, on two-lane conventional highway where the roadbed width across the structure is less than 40 feet.
   c. To the right of approaching traffic at the end of each structure on multilane freeways or expressways with separate adjacent or parallel bridges.
   d. To the right of approaching traffic at the end of the structure on multilane freeways or expressways with decked median on the bridge.
10. See Revised Standard Plan RSP A77Q3 for typical layout used left of approaching traffic at the ends of each structure on multilane freeways or expressways with separate adjacent or parallel bridges.
11. For additional details of typical connections to bridge rail, see Connection Detail AA on Revised Standard Plans RSP A77U1 and RSP A77U2 and Connection Detail FF on Revised Standard Plans RSP A77V1 and RSP A77V2.
12. For additional details of a typical connection to walls or abutments, see Revised Standard Plan RSP A77U3.

STATE OF CALIFORNIA
DEPARTMENT OF TRANSPORTATION

# MIDWEST GUARDRAIL SYSTEM TYPICAL LAYOUTS FOR STRUCTURE APPROACH

NO SCALE

RSP A77Q1 DATED JULY 19, 2013 SUPPLEMENTS THE STANDARD PLANS BOOK DATED 2010.

**REVISED STANDARD PLAN RSP A77Q1**

**2010 REVISED STANDARD PLAN RSP A77Q1**

| Dist | COUNTY | ROUTE | POST MILES TOTAL PROJECT | SHEET No. | TOTAL SHEETS |
|---|---|---|---|---|---|
| 11 | SD | 15, 94, 805 | Var | 160 | 184 |

Randell D. Hiatt
REGISTERED CIVIL ENGINEER

November 15, 2013
PLANS APPROVAL DATE

REGISTERED PROFESSIONAL ENGINEER
Randell D. Hiatt
No. C50200
Exp. 6-30-15
CIVIL
STATE OF CALIFORNIA

*THE STATE OF CALIFORNIA OR ITS OFFICERS OR AGENTS SHALL NOT BE RESPONSIBLE FOR THE ACCURACY OR COMPLETENESS OF SCANNED COPIES OF THIS PLAN SHEET.*

TO ACCOMPANY PLANS DATED 09-02-14

**2010 REVISED STANDARD PLAN RSP A77S3**

NOTE:

See Revised Standard Plans RSP A77S1, RSP A77S2 and RSP A77T1 for typical use of anchor cable and anchor plate.

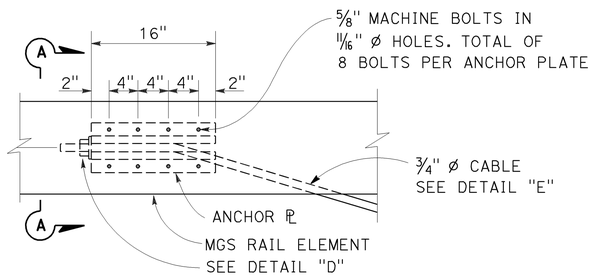


ANCHOR PLATE DETAIL
(MGS shown, TBB similar)

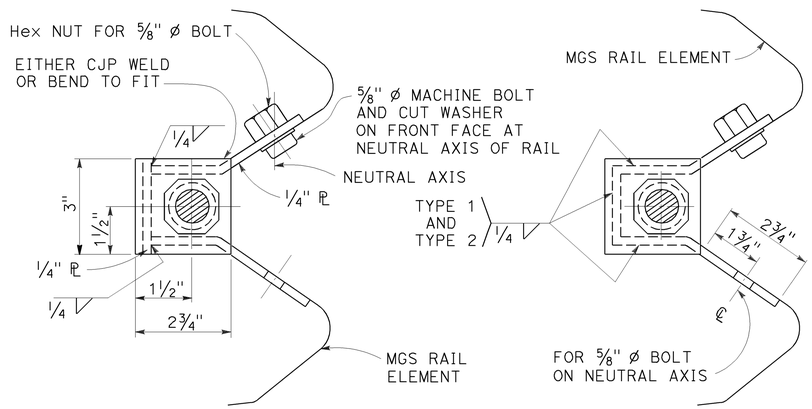


NOTE:
Dimensioning applies to both types.

SECTION A-A
(ALTERNATIVE TYPE 1)

SECTION A-A
(ALTERNATIVE TYPE 2)

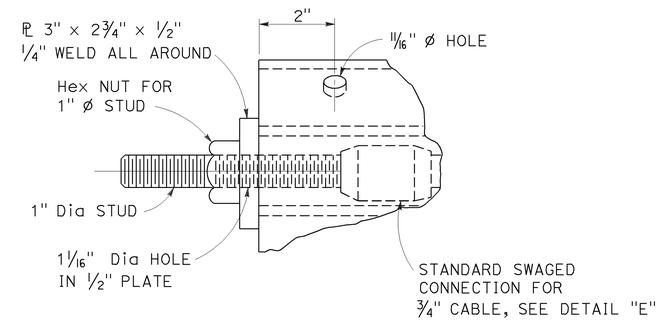


DETAIL "D"

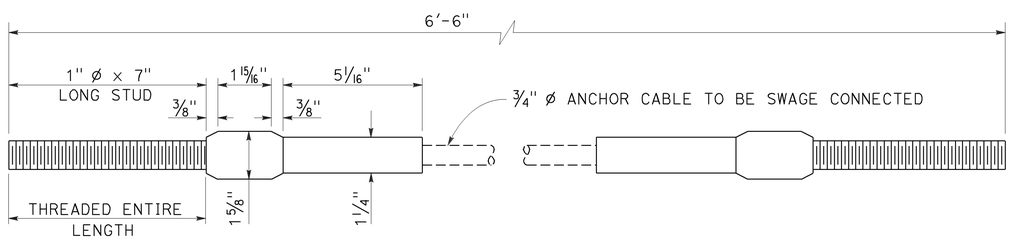


ANCHOR CABLE WITH
SWAGED FITTING AND STUD
DETAIL "E"

STATE OF CALIFORNIA
DEPARTMENT OF TRANSPORTATION

# METAL RAILING ANCHOR CABLE AND ANCHOR PLATE DETAILS

NO SCALE

RSP A77S3 DATED NOVEMBER 15, 2013 SUPERSEDES RSP A77S3
DATED JULY 19, 2013 THAT SUPPLEMENTS THE STANDARD PLANS BOOK DATED 2010.

**REVISED STANDARD PLAN RSP A77S3**

10-4-13

| Dist | COUNTY | ROUTE | POST MILES TOTAL PROJECT | SHEET No. | TOTAL SHEETS |
|---|---|---|---|---|---|
| 11 | SD | 15, 94, 805 | Var | 161 | 184 |

Randell D. Hiatt
REGISTERED CIVIL ENGINEER

July 19, 2013
PLANS APPROVAL DATE

REGISTERED PROFESSIONAL ENGINEER
Randell D. Hiatt
No. C50200
Exp. 6-30-15
CIVIL
STATE OF CALIFORNIA

*THE STATE OF CALIFORNIA OR ITS OFFICERS OR AGENTS SHALL NOT BE RESPONSIBLE FOR THE ACCURACY OR COMPLETENESS OF SCANNED COPIES OF THIS PLAN SHEET.*

TO ACCOMPANY PLANS DATED 09-02-14

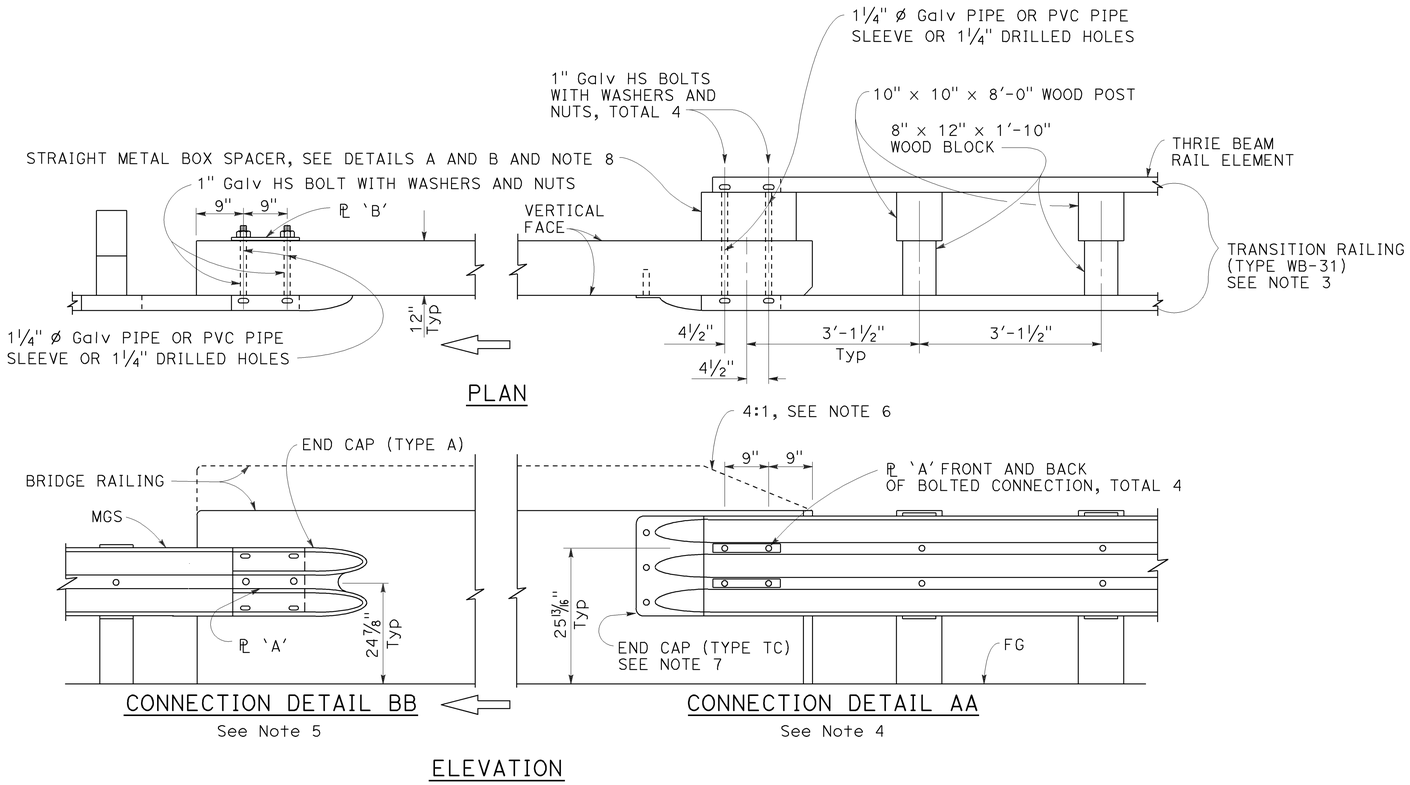


MIDWEST GUARDRAIL SYSTEM CONNECTION TO BRIDGE RAILING WITHOUT SIDEWALK

## NOTES:

1. See Revised Standard Plan RSP A77U2 for additional connection details to bridges without sidewalks.
2. Additional details of posts, blocks and hardware are shown on Revised Standard Plans RSP A77M1, RSP A77N1 and RSP A77N2.
3. For additional details of Transition Railing (Type WB-31), see Revised Standard Plan RSP A77U4. Transition Railing (Type WB-31) transitions the 12 gauge MGS railing section to a heavier gage nested thrie beam railing section which is connected to the concrete bridge railing.
4. For typical use of Connection Detail AA, see Layout Types 12A and 12B on Revised Standard Plan RSP A77Q1, Layout Types 12C and 12D on Revised Standard Plan RSP A77Q2, and Layout Type 12E on Revised Standard Plan RSP A77Q3.
5. For typical use of Connection Detail BB, see Layout Type 12D (structure departure railing connection) on Revised Standard Plan RSP A77Q2 and Layout Type 12DD on Revised Standard Plan RSP A77Q5.
6. Where the height of the bridge railing exceeds the height of the thrie beam railing by more than 1" at Connection Detail AA, taper the top of the end of the bridge railing at 4:1 to match the top elevation of the thrie beam rail.
7. For details of End Cap (Type TC), see Revised Standard Plan RSP A77U4.
8. See Revised Standard Plan RSP A77U4 for additional details regarding depth dimension for straight metal box spacer.

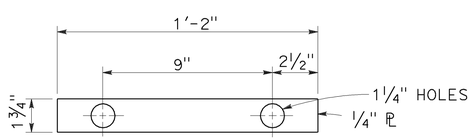


PLATE 'A'

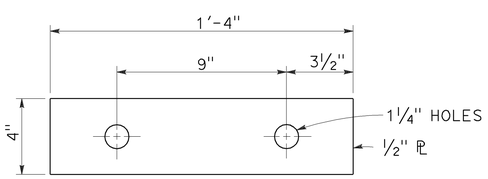


PLATE 'B'
(For backside of connection BB)

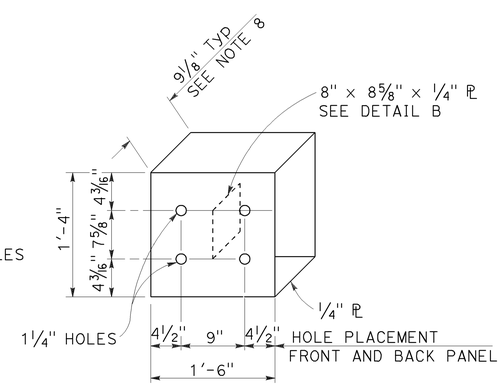


DETAIL A

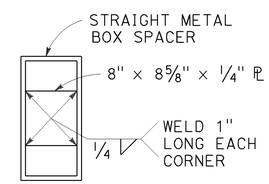


DETAIL B

STRAIGHT METAL BOX SPACER

STATE OF CALIFORNIA
DEPARTMENT OF TRANSPORTATION

# MIDWEST GUARDRAIL SYSTEM CONNECTIONS TO BRIDGE RAILINGS WITHOUT SIDEWALKS DETAILS No. 1

NO SCALE

RSP A77U1 DATED JULY 19, 2013 SUPPLEMENTS THE STANDARD PLANS BOOK DATED 2010.

**REVISED STANDARD PLAN RSP A77U1**

**2010 REVISED STANDARD PLAN RSP A77U1**

7-8-13

| Dist | COUNTY | ROUTE | POST MILES TOTAL PROJECT | SHEET No. | TOTAL SHEETS |
|---|---|---|---|---|---|
| 11 | SD | 15, 94, 805 | Var | 162 | 184 |

Randell D. Hiatt
REGISTERED CIVIL ENGINEER

July 19, 2013
PLANS APPROVAL DATE

REGISTERED PROFESSIONAL ENGINEER
Randell D. Hiatt
No. C50200
Exp. 6-30-15
CIVIL
STATE OF CALIFORNIA

*THE STATE OF CALIFORNIA OR ITS OFFICERS OR AGENTS SHALL NOT BE RESPONSIBLE FOR THE ACCURACY OR COMPLETENESS OF SCANNED COPIES OF THIS PLAN SHEET.*

TO ACCOMPANY PLANS DATED 09-02-14

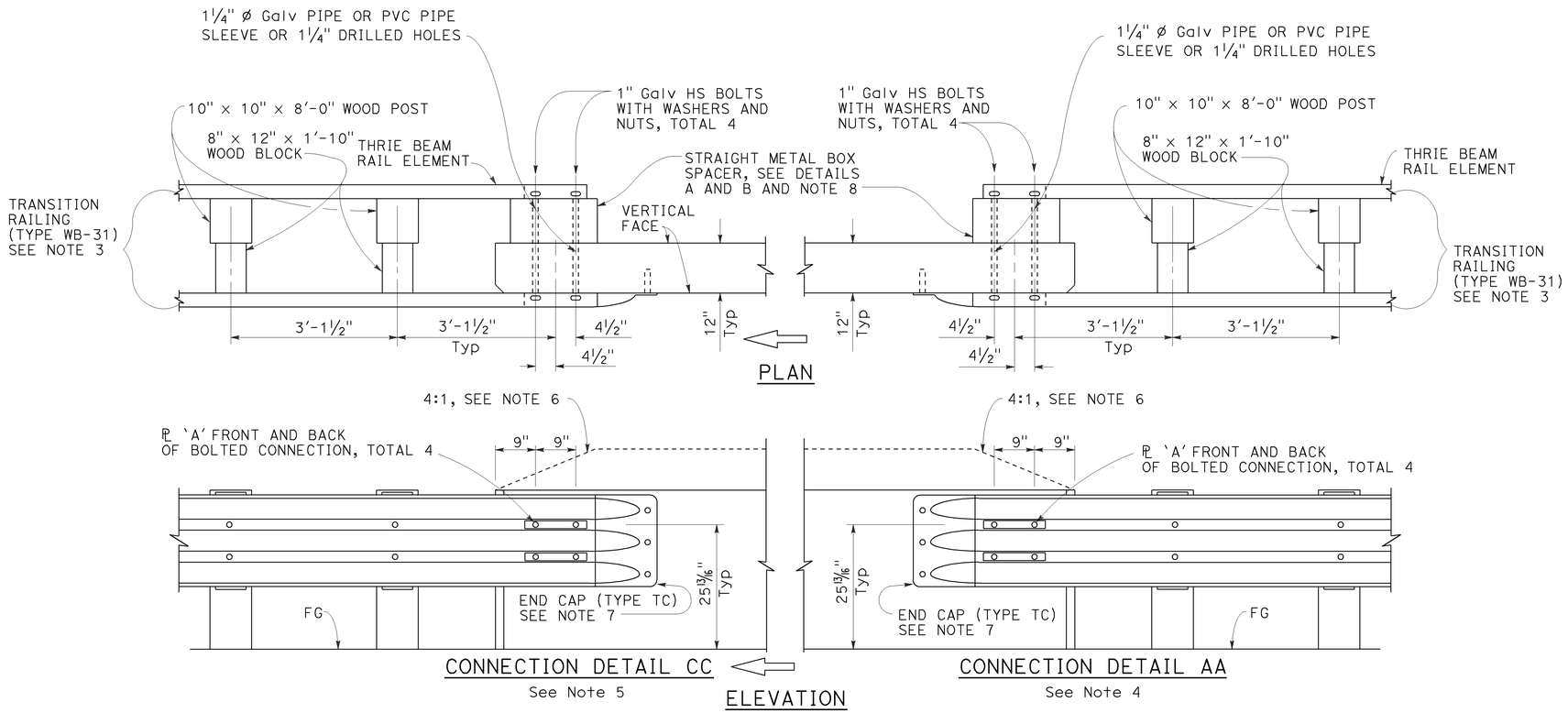


MIDWEST GUARDRAIL SYSTEM CONNECTION TO BRIDGE RAILING WITHOUT SIDEWALK

## NOTES:

1. See Revised Standard Plan RSP A77U1 for additional connection details to bridges without sidewalks.
2. Additional details of posts, blocks and hardware are shown on Revised Standard Plans RSP A77M1, RSP A77N1 and RSP A77N2.
3. For additional details of Transition Railing (Type WB-31), see Revised Standard Plan RSP A77U4. Transition Railing (Type WB-31) transitions the 12 gauge MGS railing section to a heavier gage nested thrie beam railing section which is connected to the concrete bridge railing.
4. For typical use of Connection Detail AA, see Layout Types 12A and 12B on Revised Standard Plan RSP A77Q1, Layout Types 12C and 12D on Revised Standard Plan RSP A77Q2, and Layout Type 12E on Revised Standard Plan RSP A77Q3.
5. For typical use of Connection Detail CC, see Layout Types 12AA and 12BB on Revised Standard Plan RSP A77Q4 and Layout Type 12CC on Revised Standard Plan RSP A77Q5.
6. Where the height of the bridge railing exceeds the height of the thrie beam railing by more than 1" at Connection Detail AA and connection Detail CC, taper the top of the end of the bridge railing at 4:1 to match the top elevation of the thrie beam railing.
7. For details of End Cap (Type TC), see Revised Standard Plan RSP A77U4.
8. See Revised Standard Plan RSP A77U4 for additional details regarding depth dimension for straight metal box spacer.

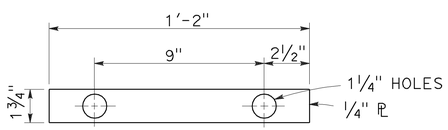


PLATE 'A'

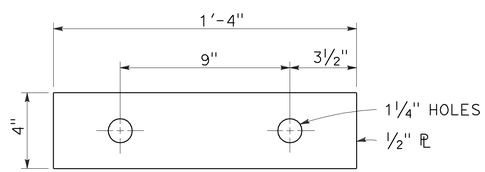


PLATE 'B'
(For backside of connection BB)

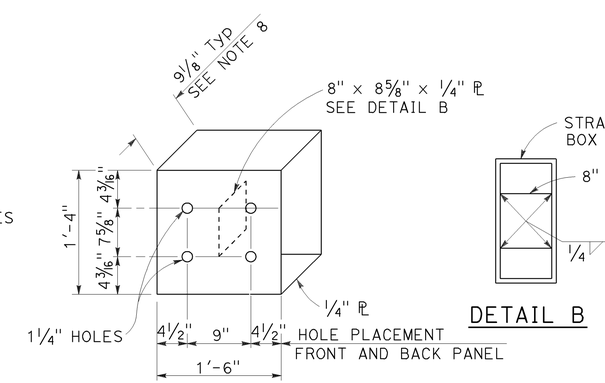


DETAIL A

STRAIGHT METAL BOX SPACER

STATE OF CALIFORNIA
DEPARTMENT OF TRANSPORTATION

# MIDWEST GUARDRAIL SYSTEM CONNECTIONS TO BRIDGE RAILINGS WITHOUT SIDEWALKS DETAILS No. 2

NO SCALE

RSP A77U2 DATED JULY 19, 2013 SUPPLEMENTS THE STANDARD PLANS BOOK DATED 2010.

**REVISED STANDARD PLAN RSP A77U2**

**2010 REVISED STANDARD PLAN RSP A77U2**

6-20-13

| Dist | COUNTY | ROUTE | POST MILES TOTAL PROJECT | SHEET No. | TOTAL SHEETS |
|---|---|---|---|---|---|
| 11 | SD | 15, 94, 805 | Var | 163 | 184 |

Randell D. Hiatt
REGISTERED CIVIL ENGINEER

November 15, 2013
PLANS APPROVAL DATE

REGISTERED PROFESSIONAL ENGINEER
Randell D. Hiatt
No. C50200
Exp. 6-30-15
CIVIL
STATE OF CALIFORNIA

*THE STATE OF CALIFORNIA OR ITS OFFICERS OR AGENTS SHALL NOT BE RESPONSIBLE FOR THE ACCURACY OR COMPLETENESS OF SCANNED COPIES OF THIS PLAN SHEET.*

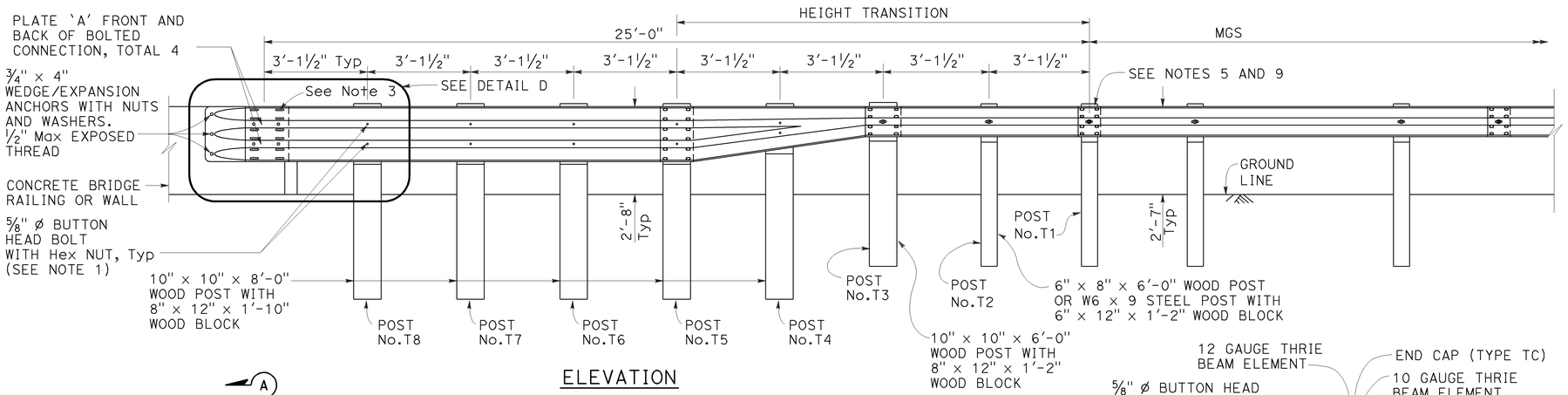


ELEVATION

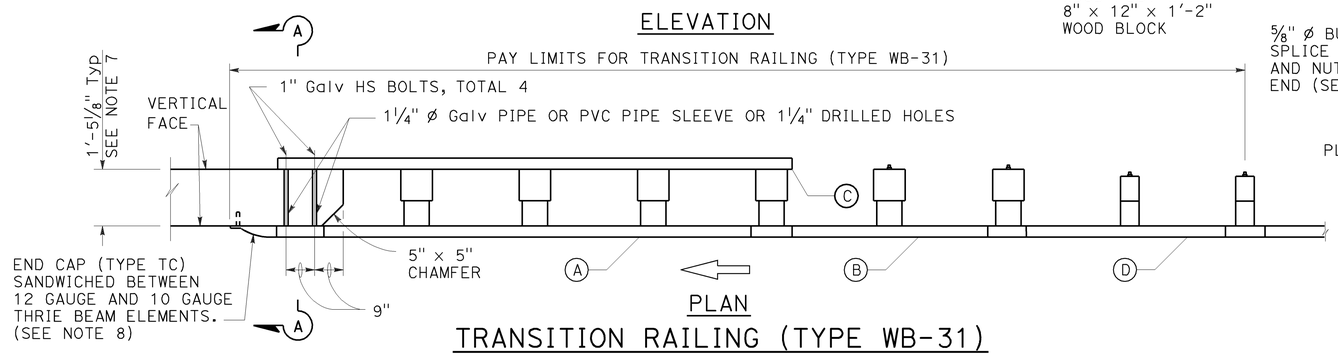


PLAN

## TRANSITION RAILING (TYPE WB-31)

(No Blockout Attachment)

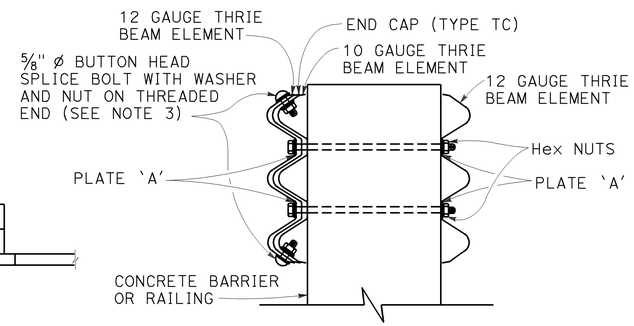


SECTION A-A

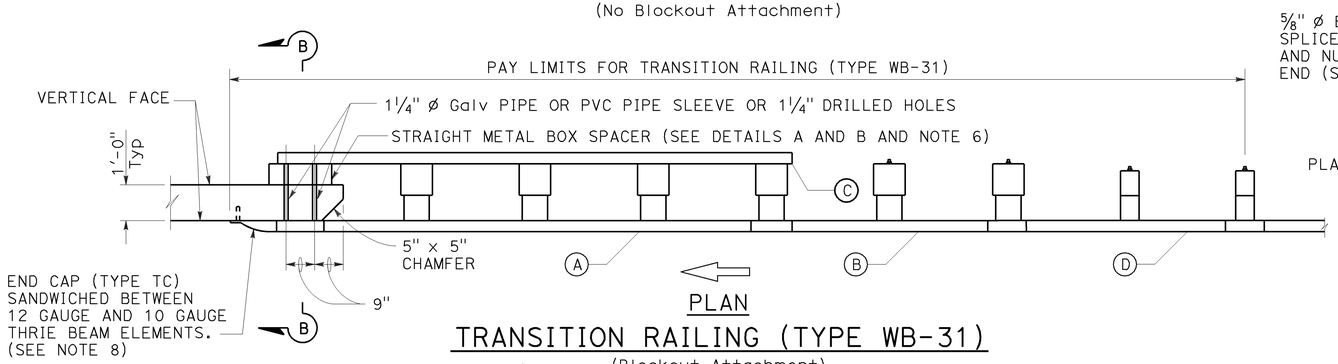


PLAN

## TRANSITION RAILING (TYPE WB-31)

(Blockout Attachment)

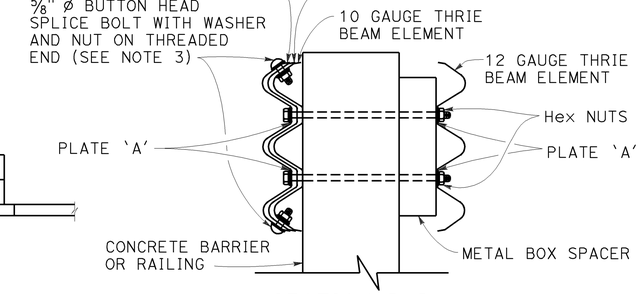


SECTION B-B

## LEGEND:

(A) NESTED THRIE BEAM ELEMENTS (ONE 12 GAUGE ELEMENT NESTED OVER ONE 10 GAUGE ELEMENT).

(B) ONE ASYMMETRICAL 10 GAUGE "W" BEAM TO THRIE BEAM ELEMENT.

(C) ONE 12 GAUGE THRIE BEAM ELEMENT.

(D) ONE 10 GAUGE "W" BEAM RAIL ELEMENT (7'-3 1/2"LENGTH)

10 GAUGE = 0.138" THICK
12 GAUGE = 0.108" THICK

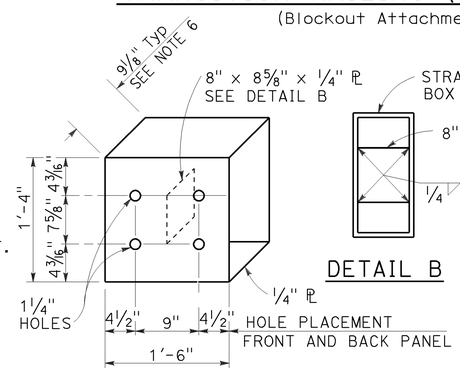


DETAIL A

STRAIGHT METAL BOX SPACER

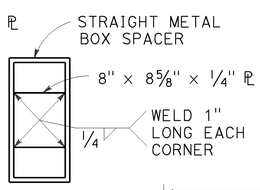


DETAIL B

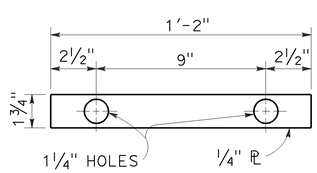


DETAIL C

PLATE 'A'

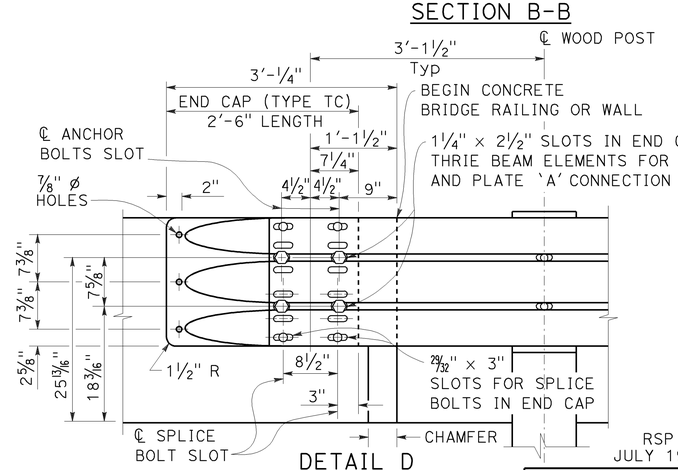


DETAIL D

## NOTES:

TO ACCOMPANY PLANS DATED 09-02-14

1. Use 5/8" ø Button head bolts and hex nuts for connections to posts. No washer on rail face for bolted connections to post.
2. The nested rail elements, end cap, and 'W' beam to thrie beam element may be spliced together prior to bolting the elements to the wood post and concrete barrier or railing.
3. Exterior splice bolt holes for rail element splices at Post No. T5 and the connection to the concrete barrier or railing shall be the standard 29/32" x 1 1/8" slot size. Interior splice bolt holes at these locations may be increased up to 1 1/4" ø. Only the top 4 and the bottom 4 splice bolts with washers and nuts are required for rail splices at Post No. T5 and the connection to the concrete barrier or railing.
4. The top elevation of Posts No. T2 through No. T7 shall not project more than 1" above the top elevation of the rail element.
5. Typically, the railing connected to Transition Railing (Type WB-31) will be either standard railing section of MGS with height transition ratio of 150:1 or a Caltrans approved 31" end treatment attached to Post No. T1.
6. The depth of the metal box spacer varies from the 9 1/8" to 1 1/2" and is dependent on the width of the concrete railing or wall. The combined dimension for the depth of the metal box spacer plus the width of railing or wall is typically 21 1/8". Where the space between the backside of the concrete railing or wall and the rear thrie beam element is less than 1 1/2", metal plates similar to Plate 'A' are to be used as spacers.
7. Where the width of the concrete railing or wall is greater than 17 1/8", wood blocks are to be used to fill the space created between the backside of Posts No. T5 through No. T8 and the rear thrie beam element. These wood blocks shall be 8" in width and 1'-2" in length. The dimension between the front thrie beam element and the rear thrie beam element is to match the width of the concrete railing or wall.
8. End cap may be installed over 12 gauge and 10 gauge thrie beam elements where transition railing is installed on the departure end of bridge railing.
9. Conform standard railing section height to 31" at Post No. T1 using height transition ratio of 150:1.

STATE OF CALIFORNIA
DEPARTMENT OF TRANSPORTATION

# MIDWEST GUARDRAIL SYSTEM TRANSITION RAILING (TYPE WB-31)

NO SCALE

RSP A77U4 DATED NOVEMBER 15, 2013 SUPERSEDES RSP A77U4 DATED JULY 19, 2013 THAT SUPPLEMENTS THE STANDARD PLANS BOOK DATED 2010.

**REVISED STANDARD PLAN RSP A77U4**

**2010 REVISED STANDARD PLAN RSP A77U4**

10-4-13

| Dist | COUNTY | ROUTE | POST MILES TOTAL PROJECT | SHEET No. | TOTAL SHEETS |
|---|---|---|---|---|---|
| 11 | SD | 15, 94, 805 | Var | 164 | 184 |

REGISTERED CIVIL ENGINEER

July 18, 2014
PLANS APPROVAL DATE

REGISTERED PROFESSIONAL ENGINEER Glenn DeCou No. C34547 Exp. 9-30-15 CIVIL STATE OF CALIFORNIA

THE STATE OF CALIFORNIA OR ITS OFFICERS OR AGENTS SHALL NOT BE RESPONSIBLE FOR THE ACCURACY OR COMPLETENESS OF SCANNED COPIES OF THIS PLAN SHEET.

TO ACCOMPANY PLANS DATED 09-02-14

**2010 REVISED STANDARD PLAN RSP A85**

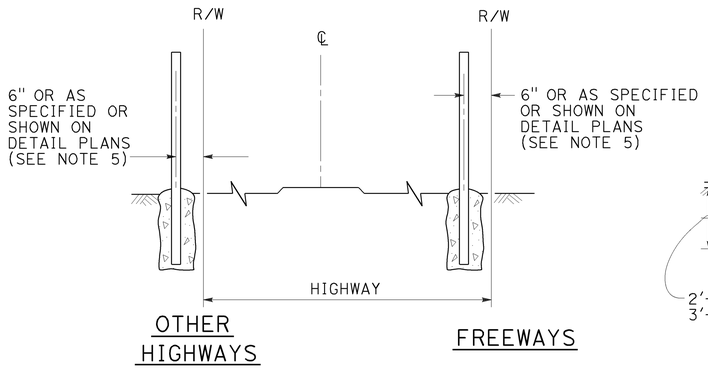


## FENCE LOCATION

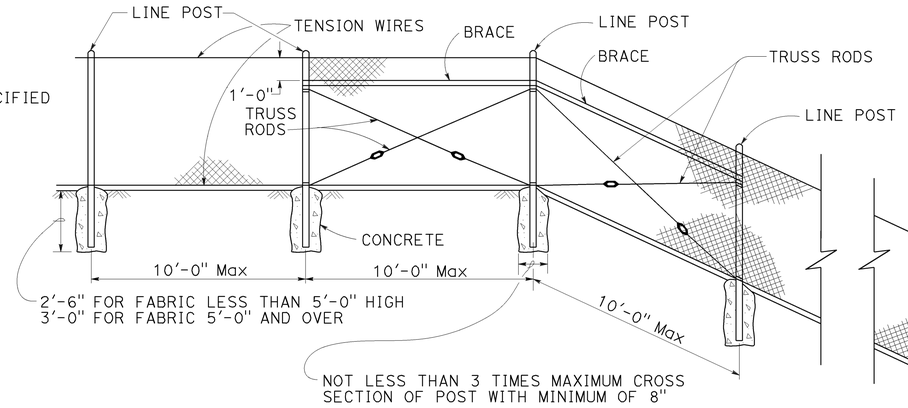


## CHAIN LINK FENCE ON SHARP BREAK IN GRADE

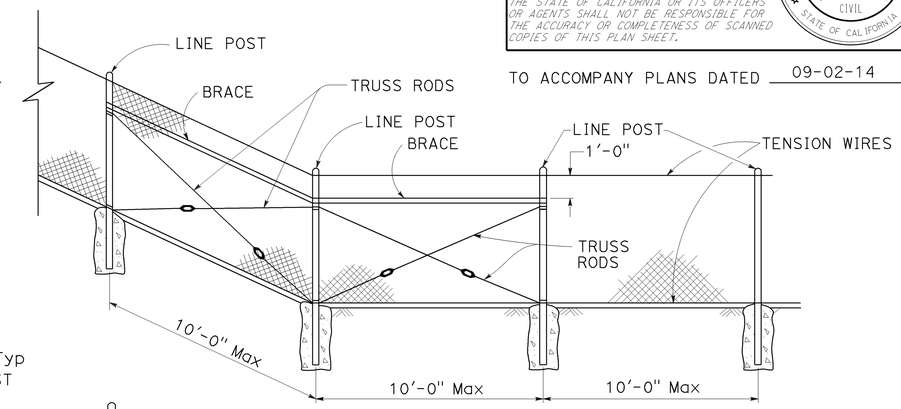


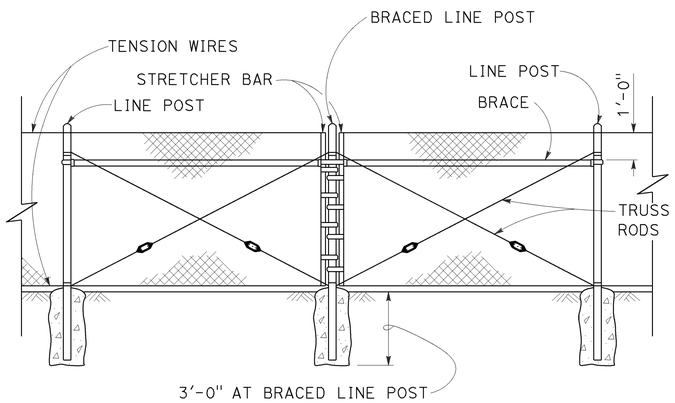


## BRACED LINE POST INSTALLATION

Braced line post at intervals not exceeding 1000'

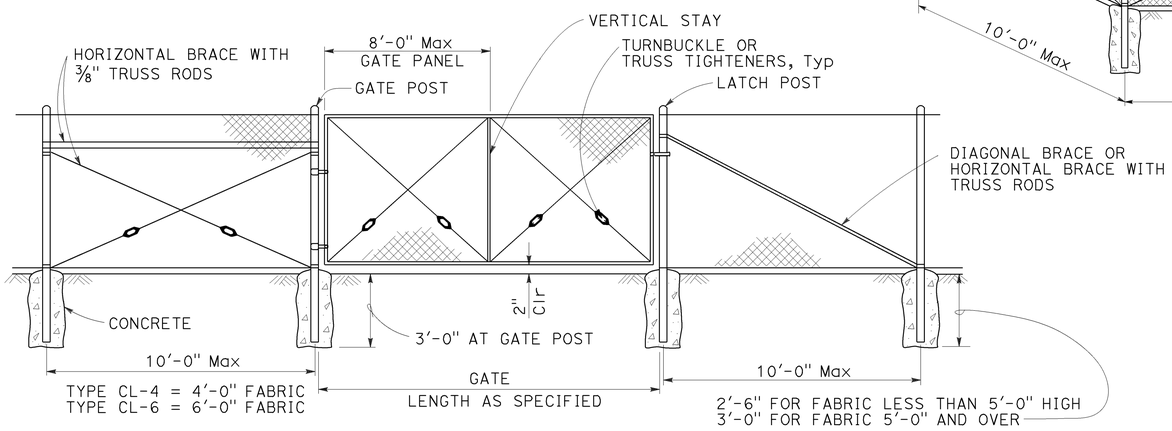


## CHAIN LINK GATE INSTALLATION

| GATE POST | | | |
|---|---|---|---|
| FENCE HEIGHT | GATE WIDTHS | ROUND OD PIPE | WEIGHT (lb/ft) |
| 6'-0" AND LESS | UP THRU 6'-0" | 2.875" | 5.80 |
| | OVER 6'-0" THRU 12'-0" | 4.500" | 10.80 |
| | OVER 12'-0" THRU 18'-0" | 5.563" | 14.63 |
| | OVER 18'-0" TO 24'-0" Max | 6.625" | 18.99 |
| OVER 6'-0" TO 8'-0" Max | UP THRU 6'-0" | 3.500" | 7.58 |
| | OVER 6'-0" THRU 12'-0" | 5.563" | 14.63 |
| | OVER 12'-0" THRU 18'-0" | 6.625" | 18.99 |
| | OVER 18'-0" TO 24'-0" Max | 8.625" | 28.58 |

Above post dimensions and weights are minimums. Larger sizes may be used upon approval.

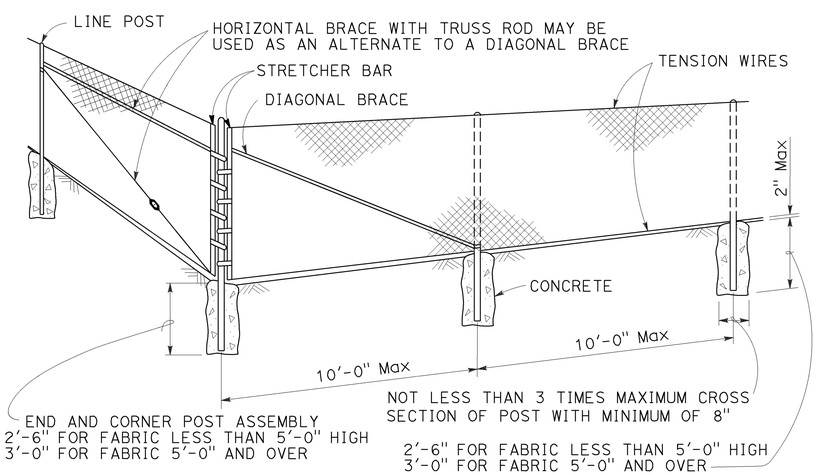


## CORNER POST

NOTES:

1. The table below shows minimum sized posts and braces complying with the specifications. Larger or heavier post and brace sizes may be used upon approval.
2. Sections shown in the tables must also comply with the strength requirements and other provisions of the Specifications.
3. Other sections which comply with the strength requirements and other provisions of the Specifications may be used upon approval.
4. Options exercised shall be uniform on any one project.
5. Offset to be 2'-0" at monument locations, measured at right angles to R/W lines. Taper to achieve offset to be at least 20'-0" long.
6. See Revised Standard Plan RSP A85B for Brace, Stretcher Bar, and Truss Tightener Details.

| TYPICAL MEMBER DIMENSIONS (See Notes) | | | | | | | | | | |
|---|---|---|---|---|---|---|---|---|---|---|
| FENCE HEIGHT | LINE POSTS | | | | END, LATCH AND CORNER POSTS | | BRACES | | | |
| | ROUND OD PIPE | WEIGHT (lb/ft) | ROLL FORMED | | ROUND OD PIPE | WEIGHT (lb/ft) | ROUND OD PIPE | WEIGHT (lb/ft) | ROLL FORMED | |
| | | | SECTION | WEIGHT (lb/ft) | | | | | SECTION | WEIGHT (lb/ft) |
| 6'-0" AND LESS | 1.900" | 2.72 | 1.875" x 1.625" | 1.85 | 2.375" | 3.65 | 1.66" | 2.27 | 1.625" x 1.25" | 1.35 |
| OVER 6'-0" TO 8'-0" Max | 2.375" | 3.65 | 2.25" x 1.70" | 2.78 | 2.875" | 5.80 | 1.66" | 2.27 | 1.625" x 1.25" | 1.35 |

STATE OF CALIFORNIA
DEPARTMENT OF TRANSPORTATION

# CHAIN LINK FENCE

NO SCALE

RSP A85 DATED JULY 18, 2014 SUPERSEDES STANDARD PLAN A85 DATED MAY 20, 2011 - PAGE 112 OF THE STANDARD PLANS BOOK DATED 2010.

**REVISED STANDARD PLAN RSP A85**

| Dist | COUNTY | ROUTE | POST MILES TOTAL PROJECT | SHEET No. | TOTAL SHEETS |
|---|---|---|---|---|---|
| 11 | SD | 15, 94, 805 | Var | 165 | 184 |

REGISTERED CIVIL ENGINEER

October 19, 2012
PLANS APPROVAL DATE

REGISTERED PROFESSIONAL ENGINEER Glenn DeCou No. C34547 Exp. 9-30-13 CIVIL STATE OF CALIFORNIA

*THE STATE OF CALIFORNIA OR ITS OFFICERS OR AGENTS SHALL NOT BE RESPONSIBLE FOR THE ACCURACY OR COMPLETENESS OF SCANNED COPIES OF THIS PLAN SHEET.*

TO ACCOMPANY PLANS DATED 09-02-14

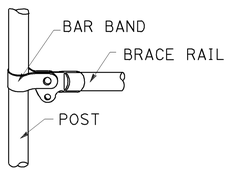


BRACE RAIL

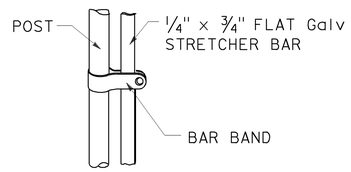


STRETCHER BAR

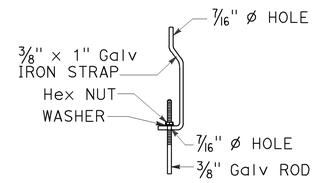


TRUSS TIGHTENER

## NOTES:

1. All material for abutment connection to be galvanized.
2. The chain link fabric shall be replaced by barbed wire strands at 12" maximum centers between the double posts.
3. When the width of the culvert makes it necessary to anchor a post to the top of the culvert, a cast iron shoe or other device approved by the Engineer shall be used.
4. Fencing over stream and around headwall may also use Barbed Wire or Wire Mesh fencing with either wood post or steel post installation.
5. See Standard Plan A85 for Chain Link fence dimensions. See Standard Plan A86 for Barbed Wire and Wire Mesh fence dimensions and for wood post and steel post installation.

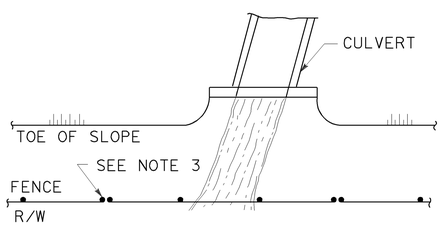


PLAN

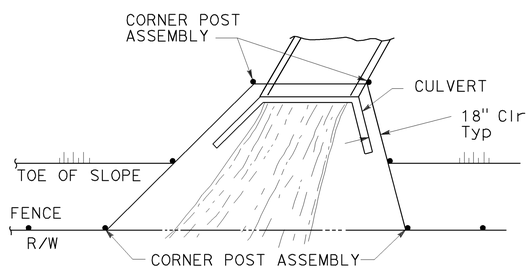


PLAN

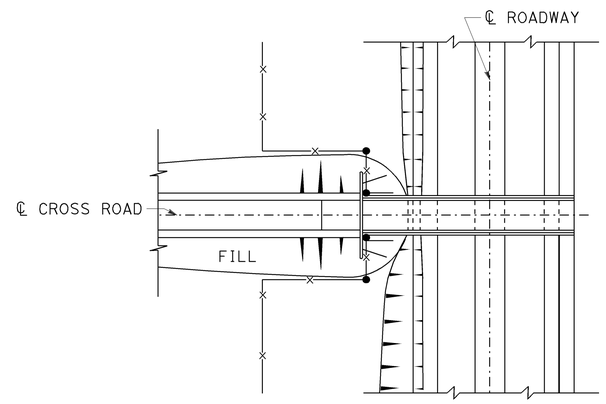


PLAN OF ROADWAY - OVERCROSSING

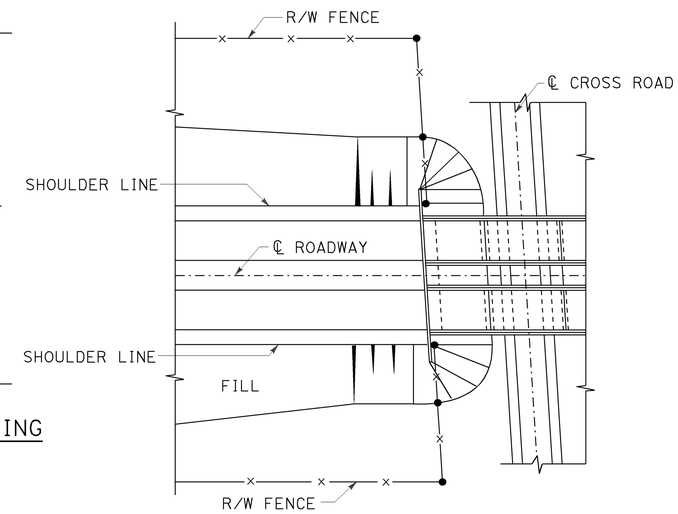


PLAN OF ROADWAY - UNDERCROSSING

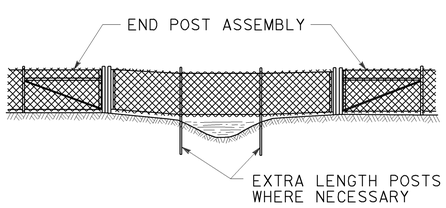


ELEVATION

INSTALLATION OVER STREAM

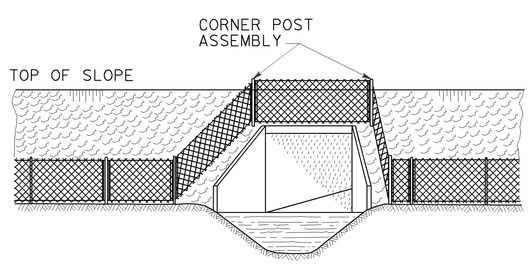


ELEVATION

INSTALLATION AROUND HEADWALL

See Note 4

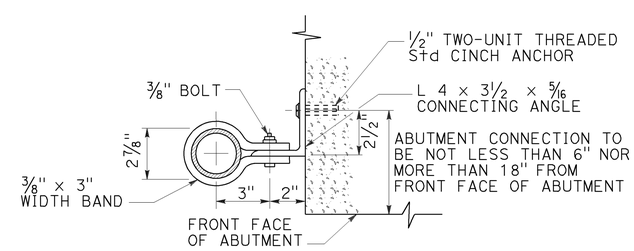


ABUTMENT CONNECTION

TYPICAL INSTALLATION AT BRIDGES

STATE OF CALIFORNIA
DEPARTMENT OF TRANSPORTATION

# CHAIN LINK FENCE DETAILS

NO SCALE

RSP A85B DATED OCTOBER 19, 2012 SUPERSEDES STANDARD PLAN A85B DATED MAY 20, 2011 - PAGE 114 OF THE STANDARD PLANS BOOK DATED 2010.

**REVISED STANDARD PLAN RSP A85B**

**2010 REVISED STANDARD PLAN RSP A85B**

7-19-12

| Dist | COUNTY | ROUTE | POST MILES TOTAL PROJECT | SHEET No. | TOTAL SHEETS |
|---|---|---|---|---|---|
| 11 | SD | 15, 94, 805 | Var | 166 | 184 |

REGISTERED CIVIL ENGINEER

July 19, 2013
PLANS APPROVAL DATE

REGISTERED PROFESSIONAL ENGINEER
Michael Janzen
No. 44788
Exp. 03-31-14
CIVIL
STATE OF CALIFORNIA

*THE STATE OF CALIFORNIA OR ITS OFFICERS OR AGENTS SHALL NOT BE RESPONSIBLE FOR THE ACCURACY OR COMPLETENESS OF SCANNED COPIES OF THIS PLAN SHEET.*

TO ACCOMPANY PLANS DATED 09-02-14

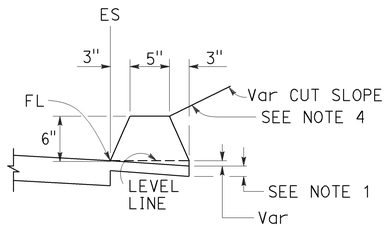


TYPE A
See Note 3

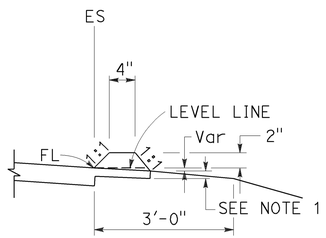


TYPE C

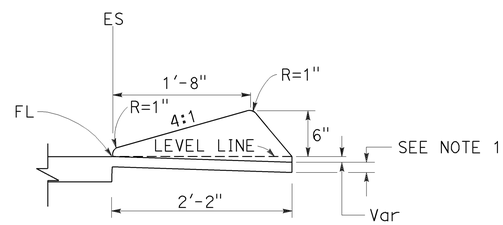


TYPE D

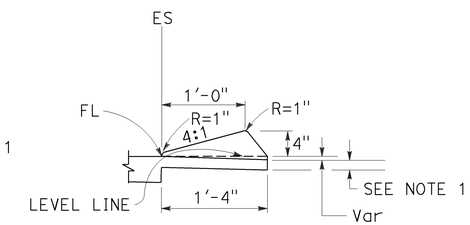


TYPE E

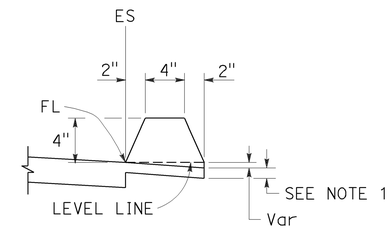


TYPE F
See Note 5

## DIKES

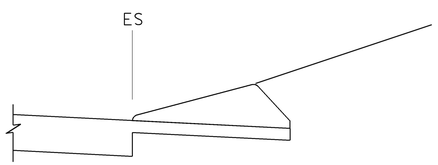


CASE C-1
Cut Slope

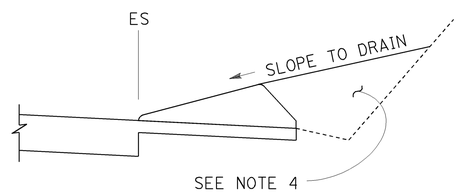


CASE C-2
Cut Slope

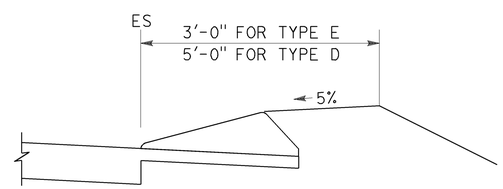


CASE F

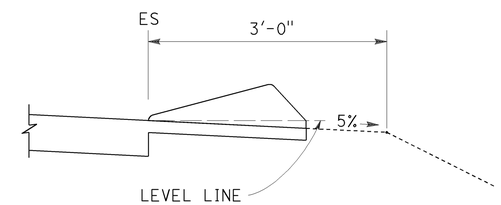


CASE R
See Note 2

## TYPE D AND E BACKFILL DETAILS

### NOTES:

1. For HMA shoulders only, extend top layer of HMA placed on the shoulder under dike with no joint at the ES. For projects with OGFC shoulders, do not extend OGFC under dike. See project plans for modified dike detail.
2. Case R applies to retrofit only projects where restrictive conditions do not provide enough width for Case F backfill.
3. Type A dike only to be used where restrictive slope conditions do not provide enough width to use Type D or Type E dike.
4. Fill and compact with excavated material to top of dike.
5. Use Type F dike, where dike is required with guard railing installations. See Revised Standard Plan RSP A77N4 for dike positioning details.

### DIKE QUANTITIES

| TYPE | CUBIC YARDS PER LINEAR FOOT |
|---|---|
| A | 0.0135 |
| C | 0.0038 |
| D | 0.0293 |
| E | 0.0130 |
| F | 0.0066 |

Quantities based on 5% cross slope.

STATE OF CALIFORNIA
DEPARTMENT OF TRANSPORTATION

# HOT MIX ASPHALT DIKES

NO SCALE

RSP A87B DATED JULY 19, 2013 SUPERSEDES STANDARD PLAN A87B DATED MAY 20, 2011 - PAGE 120 OF THE STANDARD PLANS BOOK DATED 2010.

**REVISED STANDARD PLAN RSP A87B**

**2010 REVISED STANDARD PLAN RSP A87B**

6-27-13

TO ACCOMPANY PLANS DATED 09-02-14

| Dist | COUNTY | ROUTE | POST MILES TOTAL PROJECT | SHEET No. | TOTAL SHEETS |
|---|---|---|---|---|---|
| 11 | SD | 15,94, 805 | Var | 167 | 184 |

Glenn DeCou
REGISTERED CIVIL ENGINEER

October 19, 2012
PLANS APPROVAL DATE

REGISTERED PROFESSIONAL ENGINEER Glenn DeCou No. C34547 Exp. 9-30-13 CIVIL STATE OF CALIFORNIA

THE STATE OF CALIFORNIA OR ITS OFFICERS OR AGENTS SHALL NOT BE RESPONSIBLE FOR THE ACCURACY OR COMPLETENESS OF SCANNED COPIES OF THIS PLAN SHEET.

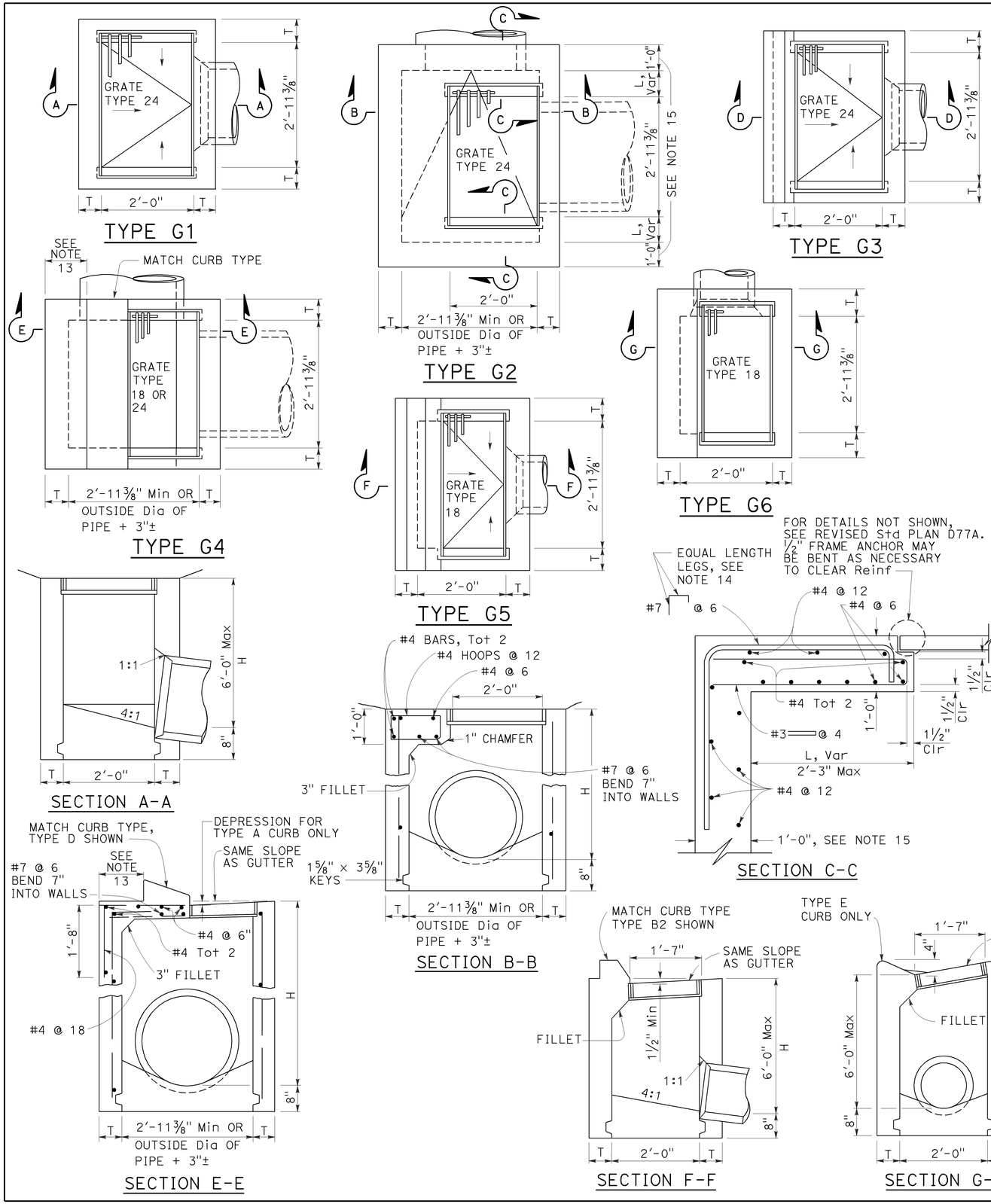


## NOTES:

1. "H" is the difference in elevation between the outlet pipe flow line and the normal gutter grade line undepressed.
2. For "T" wall thickness, see Table A below.
3. Wall reinforcing not required when "H" is 8'-0" or less and the unsupported width or length is 7'-0" or less. Walls exceeding these limits shall be reinforced with #4 bars @ 1'-6" ± centers placed 1½" clear to inside of box unless otherwise shown.
4. Inlet bottom reinforcing not required. See Standard Plan D74C for alternative reinforced bottom and alternative half round bottom.
5. Steps-None required where "H" is less than 2'-6". Where "H" is 2'-6" or more, install steps with lowest rung 1'-0" above the floor and highest rung not more than 6" below top of inlet. The distance between steps shall not exceed 1'-0" and shall be uniform throughout the length of the wall. Place steps in the wall without an opening. Steps inserts may be substituted for the bar steps. Step inserts shall comply with State Industrial Safety requirements. See Standard Plan D74C for step details.
6. Details shown apply to both metal and concrete pipe.
7. Pipe(s) can be placed in any wall.
8. Curb section shall match adjacent curb.
9. Basin floors shall have wood trowel finish and a minimum slope of 12:3 from all directions toward outlet pipe.
10. Set inlet so that grate bars are parallel to direction of principal surface flow.
11. See Revised Standard Plans D77A and D77B for grate and frame details and weights of miscellaneous iron and steel.
12. See Standard Plan D78A for gutter depression details.
13. This dimenison will vary with different grates, curbs types, box width and wall thickness.
14. Bar may be rotated as necessary to clear opening. Where "L" is 6" or less, bar may be omitted.
15. Where "L" is 6" or less, wall thickness shall be as shown in Table A.
16. Cast-in-place inlets to be formed around all pipes/stubs intersecting the inlet, and concrete poured in one continuous operation. Precast inlets shall have mortared connections conforming to details for Type GCP Inlet shown on Standard Plan D75B. See Standard Specifications for mortar composition.

TABLE A

| CONCRETE QUANTITIES | | | | |
|---|---|---|---|---|
| TYPE | H=3'-0" TO 8'-0" (T=6") | | H=8'-1" TO 20'-0" (T=8") | |
| | H=3'-0" (CY) | ADDITIONAL PCC PER FOOT (CY) | H=8'-1" (CY) | ADDITIONAL PCC PER FOOT (CY) |
| G-1 | 0.95 | 0.220 | See Note A | SEE NOTE A |
| G-2* | 1.31 | 0.255 | 3.50 | 0.357 |
| G-3 | 1.03 | 0.220 | See Note A | SEE NOTE A |
| G-4* (TYPE 24) | 1.27 | 0.255 | 3.48 | 0.357 |
| G-4* (TYPE 18) | 1.30 | 0.255 | 3.50 | 0.357 |
| G-5 | 1.02 | 0.220 | SEE NOTE A | SEE NOTE A |
| G-6 | 1.04 | 0.220 | SEE NOTE A | SEE NOTE A |

TABLE BASED ON 8" FLOOR SLAB. NO DEDUCTIONS ARE TO BE MADE TO THESE QUANTITIES BECAUSE OF PIPE OPENINGS, DIFFERENT FLOOR ALTERNATIVES OR DIFFERENT CURB TYPES. * QUANTITIES FOR TYPE G-2 AND G-4 INLETS BASED ON THE MINIMUM INTERIOR DIMENSIONS.

NOTE A:

Maximum allowable height 6'-0".

STATE OF CALIFORNIA
DEPARTMENT OF TRANSPORTATION

# DRAINAGE INLETS

NO SCALE

RSP D73 DATED OCTOBER 19, 2012 SUPERSEDES STANDARD PLAN D73 DATED MAY 20, 2011 - PAGE 156 OF THE STANDARD PLANS BOOK DATED 2010.

**REVISED STANDARD PLAN RSP D73**

**2010 REVISED STANDARD PLAN RSP D73**

7-19-12

| Dist | COUNTY | ROUTE | POST MILES TOTAL PROJECT | SHEET No. | TOTAL SHEETS |
|---|---|---|---|---|---|
| 11 | SD | 15, 94, 805 | Var | 168 | 184 |

REGISTERED CIVIL ENGINEER

April 19, 2013
PLANS APPROVAL DATE

Raymond Don Tsztoo No. C37332 Exp. 6-30-14 CIVIL STATE OF CALIFORNIA REGISTERED PROFESSIONAL ENGINEER

*THE STATE OF CALIFORNIA OR ITS OFFICERS OR AGENTS SHALL NOT BE RESPONSIBLE FOR THE ACCURACY OR COMPLETENESS OF SCANNED COPIES OF THIS PLAN SHEET.*

TO ACCOMPANY PLANS DATED 09-02-14

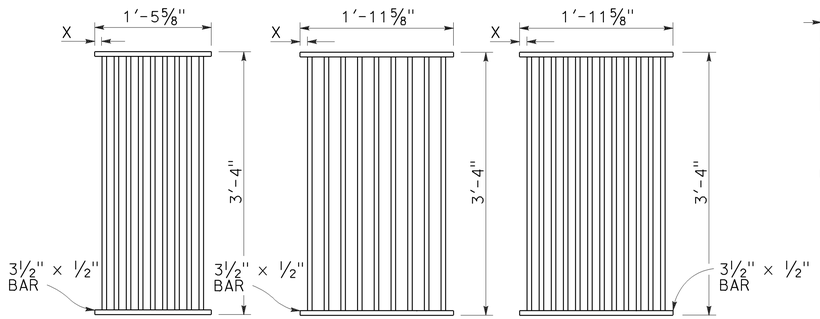


TYPE 18-9

1⅜" Clear spacing. Use within the roadbed on highways where bicycles and pedestrians are excluded.

TYPE 24-9

2" Clear spacing. Use in locations off the roadbed on all types of highways.

TYPE 24-12

1⅜" Clear spacing. Use within the roadbed on highways where bicycles and pedestrians are excluded.

## RECTANGULAR GRATE DETAILS

(See table below)

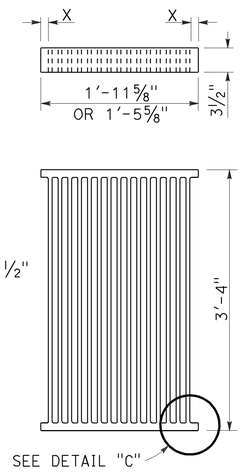


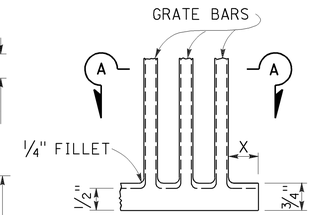


DETAIL "C"

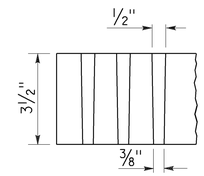


SECTION A-A

## ALTERNATIVE CAST DUCTILE IRON GRATE OR CAST CARBON STEEL GRATE

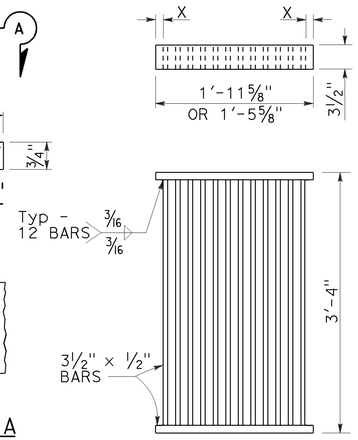


## ALTERNATIVE WELDED GRATE

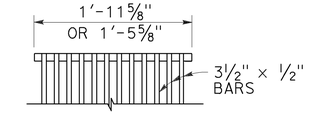


CAST END BLOCK

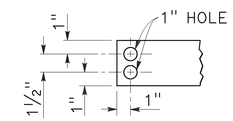


END OF BAR

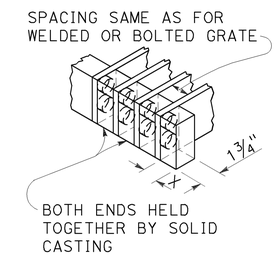


## ALTERNATIVE CAST DUCTILE IRON OR CAST CARBON STEEL END BLOCK GRATE

### NOTES:

1. Grate type numbers refer to approximate width of grate in inches and number of bars, respectively.
2. Contractor has the option of using cast ductile iron, cast carbon steel, welded, bolted, or cast end block grate.
3. Rounded top of bars optional on all grates.
4. Pipe inlets with a grate shall be placed so that bars parallel direction of principle surface flow.
5. Complete joint penetration butt welds may be substituted for the fillet welds on all anchors.
6. Standard square, hexagon, round or equivalent headed anchors may be substituted for the right angle hooks on the anchors shown on this plan.
7. Grate and frame weights are based on welded grates (weights of face angles, steps, protection bars, etc. are not included).
8. Connect chain to grate and frame only at locations shown on the plans. When chain is required, do not use cast ductile iron grates.

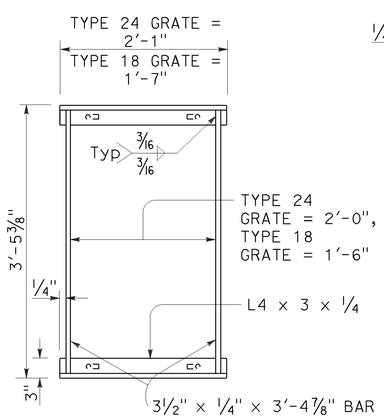


TYPICAL FRAME

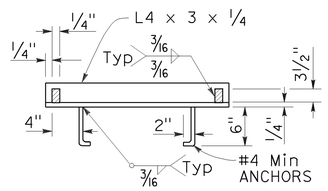


CROSS SECTION

(Thru frame)

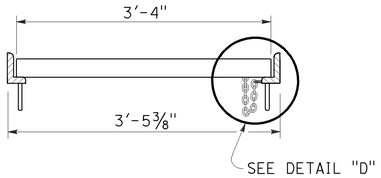


LONGITUDINAL SECTION

(Thru frame and grate)

## RECTANGULAR FRAME DETAILS

(For all rectangular grates)

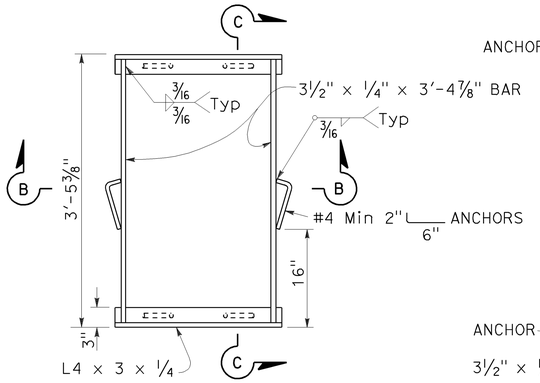


TYPICAL FRAME

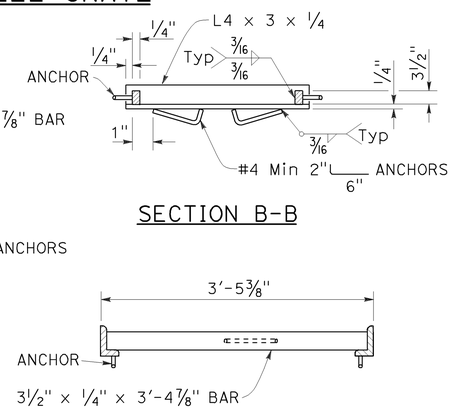


SECTION B-B

SECTION C-C

## ALTERNATIVE ANCHOR FOR RECTANGULAR FRAME

(For details not shown, See Rectangular Frame Details)

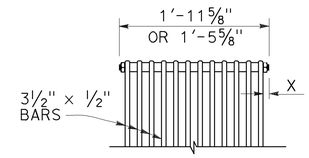


BOLTED END BLOCK

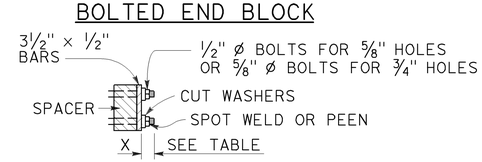


BOLTING DETAIL

## ALTERNATIVE BOLTED GRATE

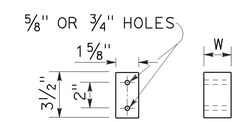


BAR SPACER

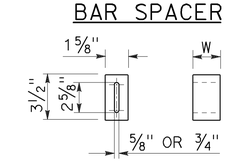


ALTERNATIVE SPACER

W = 1⅜" or 2"

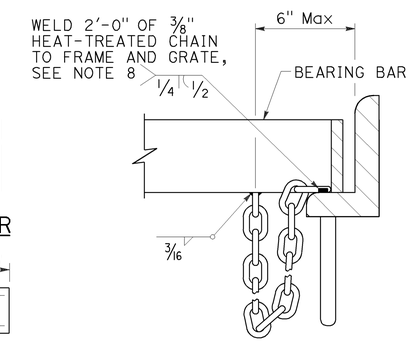


DETAIL "D"

(Steel grates only)

### GRATE BAR SPACING TABLE

| TYPE | No. OF BARS | CLEAR BAR SPACING | X |
|---|---|---|---|
| 18-9 | 9 | 1⅜" | 1 1/16" |
| 24-9 | 9 | 2" | 1 9/16" |
| 24-12 | 12 | 1⅜" | 1¼" |

| INLET TYPE | COVER TYPE | WEIGHT LB |
|---|---|---|
| OS | PLATE | 174 |
| OL-7 | PLATE | 170 |
| OL-10 | PLATE | 170 |
| OL-14 | PLATE | 170 |
| OL-21 | PLATE | 170 |
| OCP | PLATE | 112 |
| OCPI | PLATE | 112 |
| OCPI | REDWOOD | 42 |
| OMP | PLATE | 177 |
| OMPI | PLATE | 177 |

| INLET TYPE | GRATE TYPE | No. OF GRATES | WEIGHT LB |
|---|---|---|---|
| GDO | 24-12 | 2 | 634 |
| | | | |
| GOL-7 | 24-12 | 1 | 326 |
| | | | |
| GOL-10 | 24-12 | 1 | 326 |
| | | | |
| GO,G1,G2,G3,G4 (TYPE 24) | 24-9 | 1 | 263 |
| | 24-12 | 1 | 326 |
| | | | |
| G4 (TYPE 18),G5,G6 | 18-9 | 1 | 249 |
| GT1 | 18-9 | 2 | 498 |
| GT2 | 18-9 | 2 | 498 |
| GT3 | 24-12 | 2 | 652 |
| | | | |
| GT4 | 24-12 | 2 | 652 |
| | | | |
| TRASH RACK | | | 22 |
| GRATE CHAIN | | | 3 |

## BASIS FOR Misc IRON & STEEL FINAL PAY WEIGHTS FOR DRAINAGE INLETS

(See Note 7)

STATE OF CALIFORNIA
DEPARTMENT OF TRANSPORTATION

# GRATE DETAILS No. 1

NO SCALE

RSP D77A DATED APRIL 19, 2013 SUPERSEDES RSP D77A DATED JULY 20, 2012 AND STANDARD PLAN D77A DATED MAY 20, 2011 - PAGE 164 OF THE STANDARD PLANS BOOK DATED 2010.

**REVISED STANDARD PLAN RSP D77A**

**2010 REVISED STANDARD PLAN RSP D77A**

4-4-13

| Dist | COUNTY | ROUTE | POST MILES TOTAL PROJECT | SHEET No. | TOTAL SHEETS |
|---|---|---|---|---|---|
| 11 | SD | 15,94, 805 | Var | 169 | 184 |

Raymond Don Tsztoo
REGISTERED CIVIL ENGINEER

April 19, 2013
PLANS APPROVAL DATE

REGISTERED PROFESSIONAL ENGINEER Raymond Don Tsztoo No. C37332 Exp. 6-30-14 CIVIL STATE OF CALIFORNIA

THE STATE OF CALIFORNIA OR ITS OFFICERS OR AGENTS SHALL NOT BE RESPONSIBLE FOR THE ACCURACY OR COMPLETENESS OF SCANNED COPIES OF THIS PLAN SHEET.

TO ACCOMPANY PLANS DATED 09-02-14

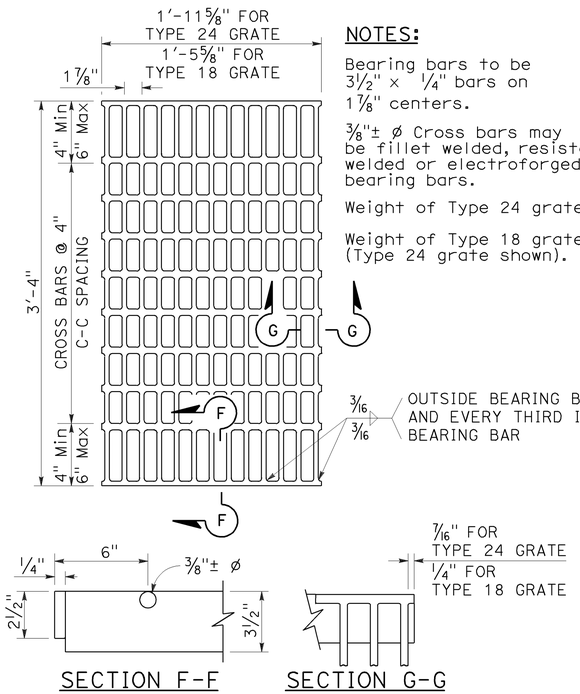


SECTION F-F SECTION G-G

## TYPE 18-10 AND 24-13 GRATE

(Welded Steel)

NOTES:

Bearing bars to be 3½" × ¼" bars on 1⅞" centers.

⅜"± ø Cross bars may be fillet welded, resistance welded or electroforged to bearing bars.

Weight of Type 24 grate = 141 LBS.

Weight of Type 18 grate = 107 LBS. (Type 24 grate shown).

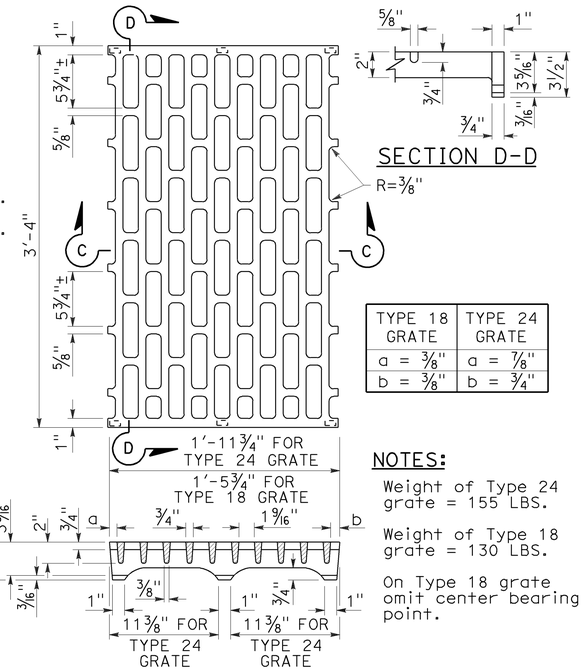


SECTION D-D

| TYPE 18 GRATE | TYPE 24 GRATE |
|---|---|
| a = ⅜" | a = ⅞" |
| b = ⅜" | b = ¾" |

NOTES:

Weight of Type 24 grate = 155 LBS.

Weight of Type 18 grate = 130 LBS.

On Type 18 grate omit center bearing point.

SECTION C-C

## TYPE 18-8C AND 24-10C GRATE

(Cast ductile iron)

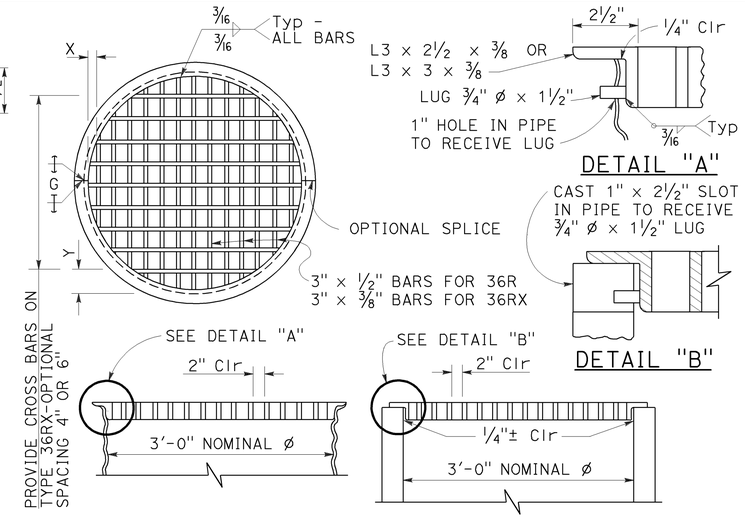


## TYPE 36R AND 36RX GRATE DETAILS

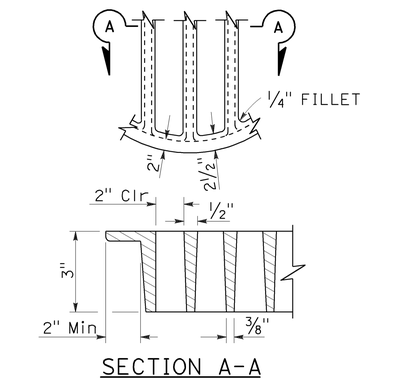


SECTION A-A

## ALTERNATIVE CAST DUCTILE IRON GRATE OR CAST CARBON STEEL GRATE TYPE 36R AND 36RX

BASIS FOR Misc IRON AND STEEL FINAL PAY WEIGHTS FOR DRAINAGE INLETS

| INLET TYPE | GRATE TYPE | No. OF GRATES | WEIGHT LB |
|---|---|---|---|
| GDO (SEE NOTE 4) | 24-10C | 2 | 391 |
| | 24-10S | 2 | 456 |
| | 24-12X | 2 | 473 |
| | 24-13 | 2 | 374 |
| GO,GOL,G1,G2, G3,G4 (TYPE 24) | 24-10C | 1 | 202 |
| | 24-10S | 1 | 229 |
| | 24-12X | 1 | 239 |
| | 24-13 | 1 | 188 |
| G4 (TYPE 18) G5,G6 | 18-8S | 1 | 187 |
| | 18-9X | 1 | 187 |
| | 18-10 | 1 | 149 |
| GT1,GT2 | 18-8S | 2 | 374 |
| | 18-9X | 2 | 374 |
| | 18-10 | 2 | 298 |
| GT3,GT4 | 24-10C | 2 | 404 |
| | 24-10S | 2 | 458 |
| | 24-12X | 2 | 478 |
| | 24-13 | 2 | 376 |
| ODI | 36RX (Mod) | 1 | 196 |
| GMP,GCP,GCPI | 36RX | 1 | 215 |
| ODI | 36R (Mod) | 1 | 220 |
| GMP,GCP,GCPI | 36R | 1 | 236 |
| TRASH RACK | | | 22 |
| GRATE CHAIN | | | 3 |

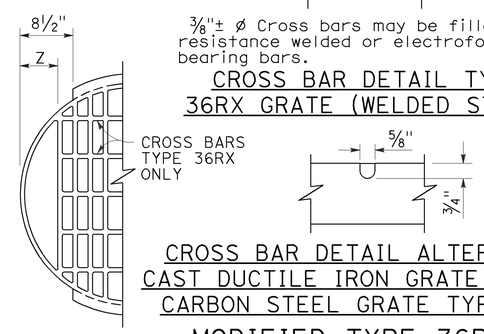


CROSS BAR DETAIL TYPE 36RX GRATE (WELDED STEEL)

CROSS BAR DETAIL ALTERNATIVE CAST DUCTILE IRON GRATE OR CAST CARBON STEEL GRATE TYPE 36RX

## MODIFIED TYPE 36R AND 36RX GRATE FOR ODI INLET

NOTES:

1. When alternative grates are allowed - Final pay based on alternative with the lesser weight.
2. Use frame shown on Standard Plan D74A, D74B or RSP D77A as appropriate.
3. When Type 24-10S, 24-12X or 24-13 grates are used with GDO Inlets, a ¼" × 3½" × 3'-4⅞" steel bar shall be welded across the center of inlet frame to separate the individual grates.
4. See Revised Standard Plan RSP D77A for connecting chain to welded grate and frame. When chain is required, do not use cast ductile iron grate.

GRATE BAR SPACING TABLE

| TYPE | No. OF BARS | CLEAR BAR SPACING | X | Y 4" SPACING | Y 6" SPACING | Z |
|---|---|---|---|---|---|---|
| 36R | 13 | 2" | 2⅛" | - | - | - |
| 36RX (STEEL) | 15 | 2" | 9/16" | 3¾" | 5¾" | - |
| 36RX (CAST) | 13 | 2" | 2⅛" | 3¾" | 5¾" | - |
| 36R Mod | 12 | 2" | 2⅛" | - | - | 5" |
| 36RX Mod (STEEL) | 13 | 2" | 9/16" | 3¾" | 5¾" | 5 11/16" |
| 36RX Mod (CAST) | 12 | 2" | 2⅛" | 3¾" | 5¾" | 5" |

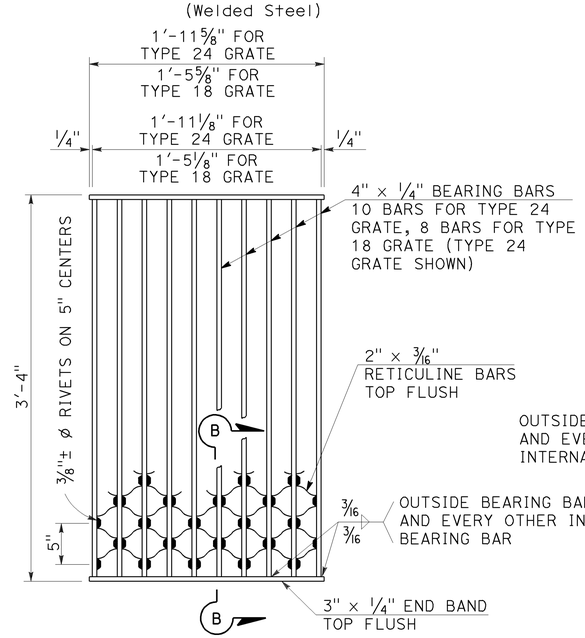


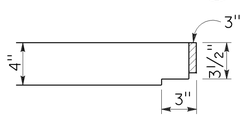


SECTION B-B

NOTES:

Weight of Type 24 grate = 182 LBS.
Weight of Type 18 grate = 145 LBS.

## TYPE 18-8S AND 24-10S GRATE

(Welded Steel) Reticuline type

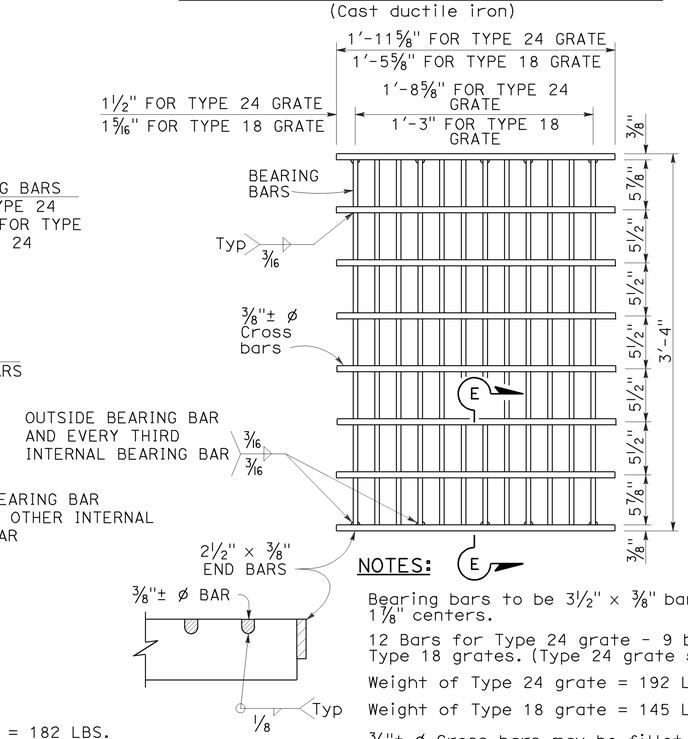


SECTION E-E

NOTES:

Bearing bars to be 3½" × ⅜" bars on 1⅞" centers.

12 Bars for Type 24 grate - 9 bars for Type 18 grates. (Type 24 grate shown).

Weight of Type 24 grate = 192 LBS.

Weight of Type 18 grate = 145 LBS.

⅜"± ø Cross bars may be fillet welded, resistance welded or electroforged to bearing bars.

## TYPE 18-9X AND 24-12X GRATE

(Welded Steel)

STATE OF CALIFORNIA
DEPARTMENT OF TRANSPORTATION

# GRATE DETAILS No. 2

NO SCALE

RSP D77B DATED APRIL 19, 2013 SUPERSEDES RSP D77B DATED JULY 20, 2012 AND STANDARD PLAN D77B DATED MAY 20, 2011 - PAGE 165 OF THE STANDARD PLANS BOOK DATED 2010.

**REVISED STANDARD PLAN RSP D77B**

**2010 REVISED STANDARD PLAN RSP D77B**

4-4-13

| Dist | COUNTY | ROUTE | POST MILES TOTAL PROJECT | SHEET No. | TOTAL SHEETS |
|---|---|---|---|---|---|
| 11 | SD | 15, 94, 805 | Var | 170 | 184 |

LICENSED LANDSCAPE ARCHITECT

July 19, 2013
PLANS APPROVAL DATE

*THE STATE OF CALIFORNIA OR ITS OFFICERS OR AGENTS SHALL NOT BE RESPONSIBLE FOR THE ACCURACY OR COMPLETENESS OF SCANNED COPIES OF THIS PLAN SHEET.*

LICENSED LANDSCAPE ARCHITECT — Gregory A. Balzer — 2576 — 10-31-14 — 2-28-15 — 7-19-13 — STATE OF CALIFORNIA

TO ACCOMPANY PLANS DATED 09-02-14

## A

| | |
|---|---|
| AB | AGGREGATE BASE |
| ABS | ACRYLONITRILE-BUTADIENE-STYRENE |
| AC | ASPHALT CONCRETE |
| ACC | ARMOR-CLAD CONDUCTORS |
| Adj | ADJACENT/ADJUSTABLE |
| AIC | AUXILIARY IRRIGATION CONTROLLER |
| Alt | ALTERNATIVE |
| AMEND | AMENDMENT |
| ARV | AIR RELEASE VALVE |
| AUTO | AUTOMATIC |
| AUX | AUXILIARY |
| AVB | ATMOSPHERIC VACUUM BREAKER |

## B

| | |
|---|---|
| B&B | BALLED AND BURLAPPED |
| B/B | BRASS/BRONZE |
| B/B/PL | BRASS/BRONZE/PLASTIC |
| B/PL | BRASS/PLASTIC |
| BFM | BONDED FIBER MATRIX |
| Bit Ctd | BITUMINOUS COATED |
| BP | BOOSTER PUMP |
| BPA | BACKFLOW PREVENTER ASSEMBLY |
| BPE | BACKFLOW PREVENTER ENCLOSURE |
| BV | BALL VALVE |

## C

| | |
|---|---|
| C | CONDUIT |
| CAP | CORRUGATED ALUMINUM PIPE |
| CARV | COMBINATION AIR RELEASE VALVE |
| CB | COUPLING BAND |
| CCA | CAM COUPLER ASSEMBLY |
| CEC | CONTROLLER ENCLOSURE CABINET |
| CHDPE | CORRUGATED HIGH DENSITY POLYETHYLENE |
| CL | CHAIN LINK |
| CNC | CONTROL AND NEUTRAL CONDUCTORS |
| Conc | CONCRETE |
| CP | COPPER PIPE |
| CS | COMPOST SOCK |
| CSP | CORRUGATED STEEL PIPE |
| CST | CENTER STRIP |
| CV | CHECK VALVE |

## D

| | |
|---|---|
| Dia | DIAMETER |
| DIP | DUCTILE IRON PIPE |
| DIT | DRIP IRRIGATION TUBING |
| DG | DECOMPOSED GRANITE |
| DN | DIAMETER NOMINAL |
| DVA | DRIP VALVE ASSEMBLY |

## E

| | |
|---|---|
| EC | EROSION CONTROL |
| ECTC | EROSION CONTROL TECHNOLOGY COUNCIL |
| Elect | ELECTRIC/ELECTRICAL |
| Elev | ELEVATION |
| ELL | ELBOW |
| ENCL | ENCLOSURE |
| EP | EDGE OF PAVEMENT |
| ES | EDGE OF SHOULDER |
| EST | END STRIP |
| ESTB | ESTABLISHMENT |
| ETW | EDGE OF TRAVELED WAY |

## F

| | |
|---|---|
| F | FULL CIRCLE |
| F/P | FULL/PART CIRCLE |
| FCV | FLOW CONTROL VALVE |
| FERT | FERTILIZER |
| FG | FINISHED GRADE |
| FH | FLEXIBLE HOSE |
| FIPT | FEMALE IRON PIPE THREAD |
| FIS | FERTILIZER INJECTOR SYSTEM |
| FL | FLOW LINE |
| FR | FIBER ROLL |
| FS | FLOW SENSOR |
| FSC | FLOW SENSOR CABLE |
| FV | FLUSH VALVE |

## G

| | |
|---|---|
| Galv | GALVANIZED |
| GARV | GARDEN VALVE |
| GARVA | GARDEN VALVE ASSEMBLY |
| GM | GRAVEL MULCH |
| GPH | GALLONS PER HOUR |
| GPM | GALLONS PER MINUTE |
| GSP | GALVANIZED STEEL PIPE |
| GV | GATE VALVE |

## H

| | |
|---|---|
| H | HALF CIRCLE |
| HDPE | HIGH DENSITY POLYETHYLENE |
| HP | HORSEPOWER/HINGE POINT |
| HPL | HIGH PRESSURE LINE |
| Hwy | HIGHWAY |

## I

| | |
|---|---|
| IC | IRRIGATION CONTROLLER |
| ICC | IRRIGATION CONTROLLER(S) IN CONTROLLER ENCLOSURE CABINET |
| ID | INSIDE DIAMETER |
| IFS | IRRIGATION FILTRATION SYSTEM |
| IPS | IRON PIPE SIZE |
| IPT | IRON PIPE THREAD |
| Irr | IRRIGATION |

## L

| | |
|---|---|
| L | LENGTH |

## M

| | |
|---|---|
| Max | MAXIMUM |
| MBGR | METAL BEAM GUARD RAILING |
| MCV | MANUAL CONTROL VALVE |
| MIC | MASTER IRRIGATION CONTROLLER |
| Min | MINIMUM |
| MIPT | MALE IRON PIPE THREAD |
| Misc | MISCELLANEOUS |
| Mtl | MATERIAL |
| MVP | MAINTENANCE VEHICLE PULLOUT |

## N

| | |
|---|---|
| NCN | NO COMMON NAME |
| NL | NOZZLE LINE |
| No. | NUMBER |
| NPT | NATIONAL PIPE THREAD |

## O

| | |
|---|---|
| O/C | ON CENTER |
| OD | OUTSIDE DIAMETER |
| OL | OVERLAP |

## P

| | |
|---|---|
| P | PART CIRCLE |
| PB | PULL BOX |
| PCC | PORTLAND CEMENT CONCRETE |
| PE | POLYETHYLENE |
| Pkt | PACKET |
| PL | PLASTIC |
| PLS | PURE LIVE SEED |
| PLT | PLANT/PLANTING |
| PLT ESTB | PLANT ESTABLISHMENT |
| PM | POST MILE |
| PR | PRESSURE RATED |
| PRLV | PRESSURE RELIEF VALVE |
| PRV | PRESSURE REGULATING VALVE |
| PVC | POLYVINYL CHLORIDE |
| Pvmt | PAVEMENT |

## Q

| | |
|---|---|
| Q | QUARTER CIRCLE |
| QCV | QUICK COUPLING VALVE |

## R

| | |
|---|---|
| R | RADIUS |
| RCP | REINFORCED CONCRETE PIPE |
| RCV | REMOTE CONTROL VALVE |
| RCVM | REMOTE CONTROL VALVE (MASTER) |
| RCVMF | REMOTE CONTROL VALVE (MASTER) W/FLOW SENSOR |
| RCVP | REMOTE CONTROL VALVE W/PRESSURE REGULATOR |
| RCW | RECYCLED WATER |
| RECP | ROLLED EROSION CONTROL PRODUCT |
| REQ | REQUIRED |
| RICS | REMOTE IRRIGATION CONTROL SYSTEM |
| R/W | RIGHT OF WAY |

## S

| | |
|---|---|
| S | SLIP |
| SCH | SCHEDULE |
| SF | STATE-FURNISHED |
| Shld | SHOULDER |
| Sq | SQUARE |
| SST | SIDE STRIP |
| Sta | STATION |
| Std | STANDARD |
| SW | SIDEWALK/SOUND WALL |

## T

| | |
|---|---|
| T | THIRD CIRCLE/THREAD |
| TLS | TRUCK LOADING STANDPIPE |
| TQ | THREE QUARTER CIRCLE |
| TRM | TURF REINFORCEMENT MAT |
| TT | TWO-THIRDS CIRCLE |
| TWSA | TREE WELL SPRINKLER ASSEMBLY |
| Typ | TYPICAL |

## U

| | |
|---|---|
| UG | UNDERGROUND |

## W

| | |
|---|---|
| W | WIDTH |
| W/ | WITH |
| WM | WATER METER |
| WS | WYE STRAINER |
| WSA | WYE STRAINER ASSEMBLY |
| WSP | WELDED STEEL PIPE |
| WWM | WELDED WIRE MESH |

**NOTE:**
For additional abbreviations, see Standard Plans A10A and A10B.

STATE OF CALIFORNIA
DEPARTMENT OF TRANSPORTATION

# LANDSCAPE AND EROSION CONTROL ABBREVIATIONS

NO SCALE

RSP H1 DATED JULY 19, 2013 SUPERSEDES STANDARD PLAN H1 DATED MAY 20, 2011 - PAGE 218 OF THE STANDARD PLANS BOOK DATED 2010.

**REVISED STANDARD PLAN RSP H1**

**2010 REVISED STANDARD PLAN RSP H1**

6-28-13

| Dist | COUNTY | ROUTE | POST MILES TOTAL PROJECT | SHEET No. | TOTAL SHEETS |
|---|---|---|---|---|---|
| 11 | SD | 15, 94, 805 | Var | 171 | 184 |

LICENSED LANDSCAPE ARCHITECT

November 15, 2013
PLANS APPROVAL DATE

LICENSED LANDSCAPE ARCHITECT — Gregory A. Balzer — 2516 — 02-28-15 Renewal Date — 11-15-13 Date — STATE OF CALIFORNIA

*THE STATE OF CALIFORNIA OR ITS OFFICERS OR AGENTS SHALL NOT BE RESPONSIBLE FOR THE ACCURACY OR COMPLETENESS OF SCANNED COPIES OF THIS PLAN SHEET.*

TO ACCOMPANY PLANS DATED 09-02-14

| EXISTING | NEW | ITEM DESCRIPTION |
|---|---|---|
| | | WATER METER (WM) |
| | | BACKFLOW PREVENTER ASSEMBLY (BPA) |
| | | BACKFLOW PREVENTER ENCLOSURE (BPE) |
| | | BOOSTER PUMP (BP) |
| | | TRUCK LOADING STANDPIPE (TLS) |
| | FS | FLOW SENSOR (FS) |
| X | X | MASTER IRRIGATION CONTROLLER (MIC) |
| | | AUXILIARY IRRIGATION CONTROLLER (AIC) |
| | | IRRIGATION CONTROLLER (IC)<br>IRRIGATION CONTROLLER (IC) (BATTERY)<br>IRRIGATION CONTROLLER (IC) (SOLAR)<br>IRRIGATION CONTROLLER (IC) (TWO WIRE) |
| | | IRRIGATION CONTROLLER(S) IN CONTROLLER ENCLOSURE CABINET (ICC) |
| acc | ACC | ARMOR-CLAD CONDUCTORS (ACC) |
| cnc | CNC | CONTROL AND NEUTRAL CONDUCTORS (CNC) |
| | | IRRIGATION CONDUIT |
| | | EXTEND IRRIGATION CONDUIT |
| dip | DIP | DUCTILE IRON PIPE (SUPPLY LINE) (MAIN) (DIP) |
| | | GALVANIZED STEEL PIPE (SUPPLY LINE) (MAIN) (GSP) |
| | | GALVANIZED STEEL PIPE (SUPPLY LINE) (LATERAL) (GSP) |
| | | PLASTIC PIPE (SUPPLY LINE) (MAIN) |
| | | PLASTIC PIPE (SUPPLY LINE) (LATERAL) |
| cp | CP | COPPER PIPE (SUPPLY LINE) |
| dit | DIT | DRIP IRRIGATION TUBING |
| | | REMOTE CONTROL VALVE (RCV)<br>REMOTE CONTROL VALVE (MASTER) (RCVM)<br>REMOTE CONTROL VALVE (MASTER) W/FLOW METER (RCVMF) |
| P | P | REMOTE CONTROL VALVE W/PRESSURE REGULATOR (RCVP) |
| | | EXISTING MANUAL CONTROL VALVE (MCV) |
| | V | DRIP VALVE ASSEMBLY (DVA) |
| | Y | WYE STRAINER ASSEMBLY (WSA) |

| EXISTING | NEW | ITEM DESCRIPTION |
|---|---|---|
| | | GATE VALVE (GV) |
| | | BALL VALVE (BV) |
| | | QUICK COUPLING VALVE (QCV) |
| | | CAM COUPLER ASSEMBLY (CCA) |
| | | GARDEN VALVE ASSEMBLY (GARVA) |
| | | PRESSURE REGULATING VALVE (PRV) |
| | | PRESSURE RELIEF VALVE (PRLV) |
| | | FLOW CONTROL VALVE (FCV) |
| | | COMBINATION AIR RELEASE VALVE (CARV) |
| | | CHECK VALVE (CV) |
| | | FLUSH VALVE (FV) |
| | | EXISTING NOZZLE LINE W/TURNING UNION |
| | | EXISTING IRRIGATION SYSTEM |
| | | EXISTING IRRIGATION SYSTEM TO BE REMOVED |
| | | CHAIN LINK GATE |
| | | QUICK COUPLING VALVE W/SPRINKLER PROTECTOR |
| 3 | 3 | SPRINKLER W/SPRINKLER PROTECTOR |
| | C | CONNECT TO EXISTING SYSTEM |
| | | CAP |
| | | CAP EXISTING |
| | \\\FR\\\ | FIBER ROLL |
| | \\\CS\\\ | COMPOST SOCK |

- RCV SIZE
- IRRIGATION CONTROLLER
- CONTROLLER STATION
- VALVE IN PARALLEL (IF APPLICABLE)
- GPM
- QUANTITY OF SPRINKLERS (WHEN SHOWN)

* 2½"-A-2b-40-60

## VALVE CODE

* VALVE CODES FOR EXISTING VALVES ARE SHOWN IN A DASHED ENCLOSURE.

STATE OF CALIFORNIA
DEPARTMENT OF TRANSPORTATION

# LANDSCAPE AND EROSION CONTROL SYMBOLS

NO SCALE

RSP H2 DATED NOVEMBER 15, 2013 SUPERSEDES RSP H2 DATED JULY 19, 2013 AND STANDARD PLAN H2 DATED MAY 20, 2011 - PAGE 219 OF THE STANDARD PLANS BOOK DATED 2010.

**REVISED STANDARD PLAN RSP H2**

**2010 REVISED STANDARD PLAN RSP H2**

10-9-13

| Dist | COUNTY | ROUTE | POST MILES TOTAL PROJECT | SHEET No. | TOTAL SHEETS |
|---|---|---|---|---|---|
| 11 | SD | 15, 94, 805 | Var | 172 | 184 |

LICENSED LANDSCAPE ARCHITECT

July 19, 2013
PLANS APPROVAL DATE

*THE STATE OF CALIFORNIA OR ITS OFFICERS OR AGENTS SHALL NOT BE RESPONSIBLE FOR THE ACCURACY OR COMPLETENESS OF SCANNED COPIES OF THIS PLAN SHEET.*

LICENSED LANDSCAPE ARCHITECT — Gregory A. Balzer — 2576 — Expiration Date 2-28-15 — Renewal Date 7-19-13 — Date — STATE OF CALIFORNIA

TO ACCOMPANY PLANS DATED 09-02-14

**2010 REVISED STANDARD PLAN RSP H4**

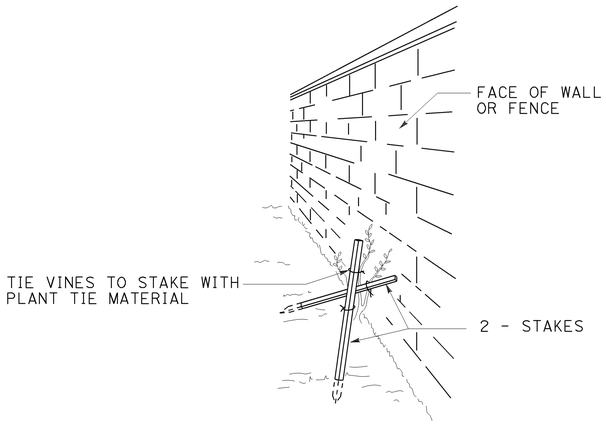


PERSPECTIVE
## VINE STAKING

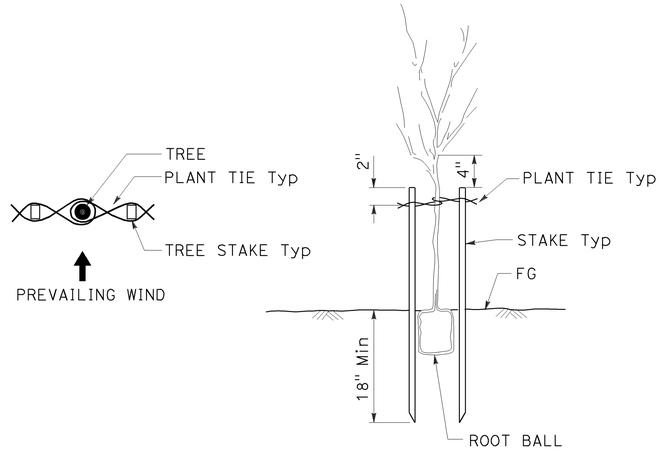


## TREE STAKING

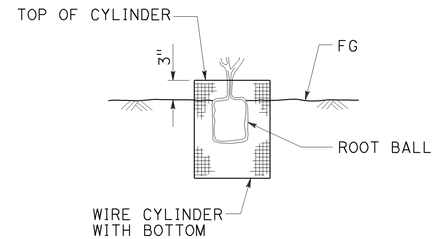


SECTION
## ROOT PROTECTOR

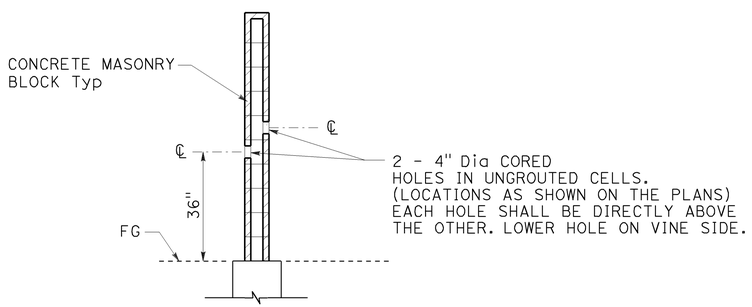


SECTION
## CORE HOLE (VINE)

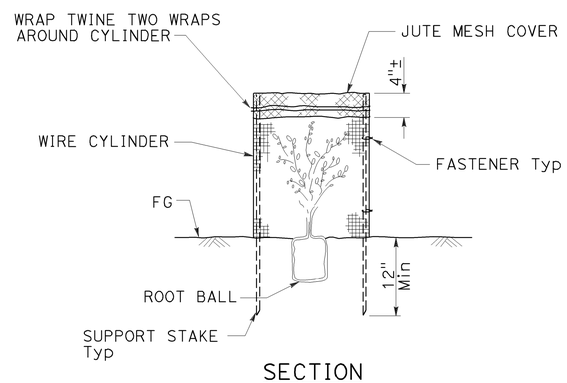


SECTION
## FOLIAGE PROTECTOR

STATE OF CALIFORNIA
DEPARTMENT OF TRANSPORTATION

# LANDSCAPE DETAILS

NO SCALE

RSP H4 DATED JULY 19, 2013 SUPERSEDES STANDARD PLAN H4
DATED MAY 20, 2011 - PAGE 221 OF THE STANDARD PLANS BOOK DATED 2010.

**REVISED STANDARD PLAN RSP H4**

6-28-13

| Dist | COUNTY | ROUTE | POST MILES TOTAL PROJECT | SHEET No. | TOTAL SHEETS |
|---|---|---|---|---|---|
| 11 | SD | 15, 94, 805 | Var | 173 | 184 |

LICENSED LANDSCAPE ARCHITECT

July 19, 2013
PLANS APPROVAL DATE

*THE STATE OF CALIFORNIA OR ITS OFFICERS OR AGENTS SHALL NOT BE RESPONSIBLE FOR THE ACCURACY OR COMPLETENESS OF SCANNED COPIES OF THIS PLAN SHEET.*

LICENSED LANDSCAPE ARCHITECT — Gregory A. Balzer — 2576 — 02-28-15 Renewal Date — 7-19-13 Date — STATE OF CALIFORNIA

TO ACCOMPANY PLANS DATED 09-02-14

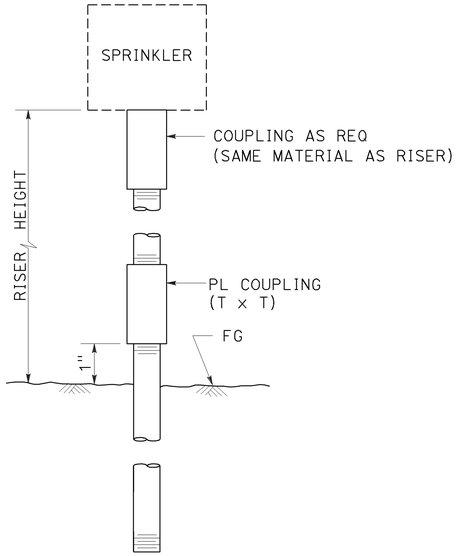


ELEVATION

RISER SPRINKLER ASSEMBLY TYPE I

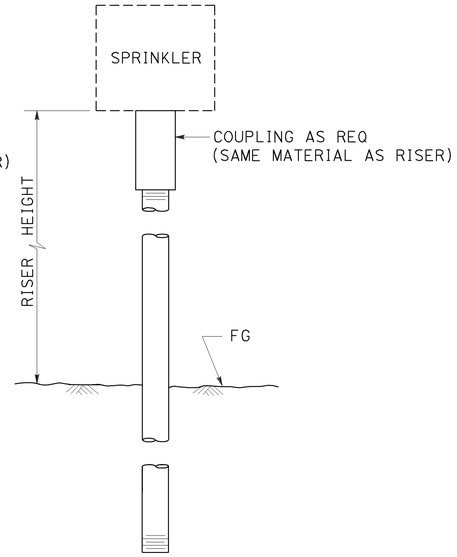


ELEVATION

RISER SPRINKLER ASSEMBLY TYPE II

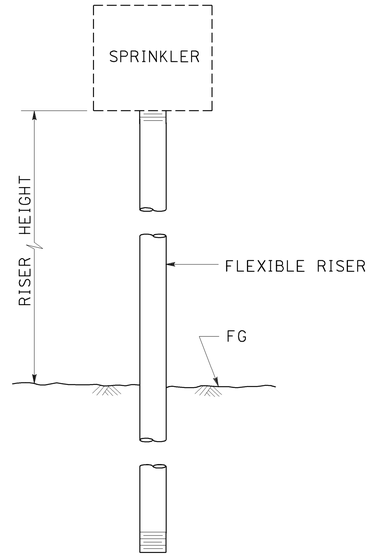


ELEVATION

RISER SPRINKLER ASSEMBLY TYPE III

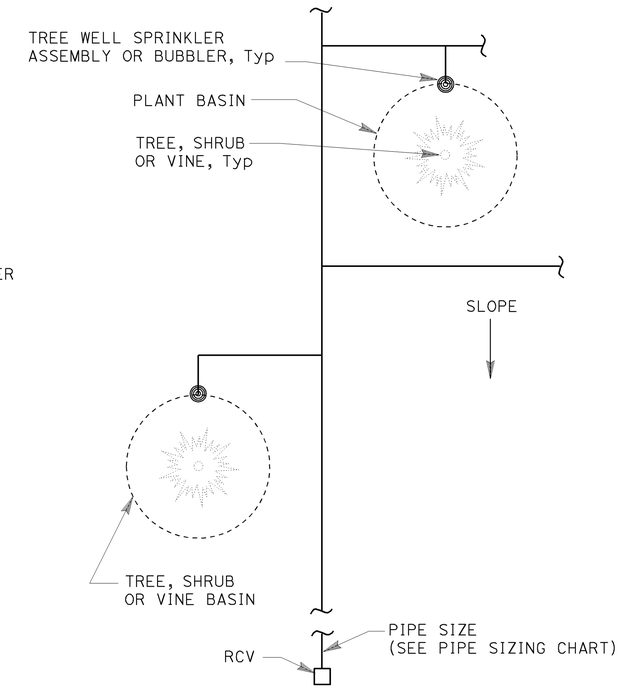


PLAN

## NOTES:

1. Install tree well sprinkler assembly on up-hill side of plant when on slope.
2. Install bubbler within basin.

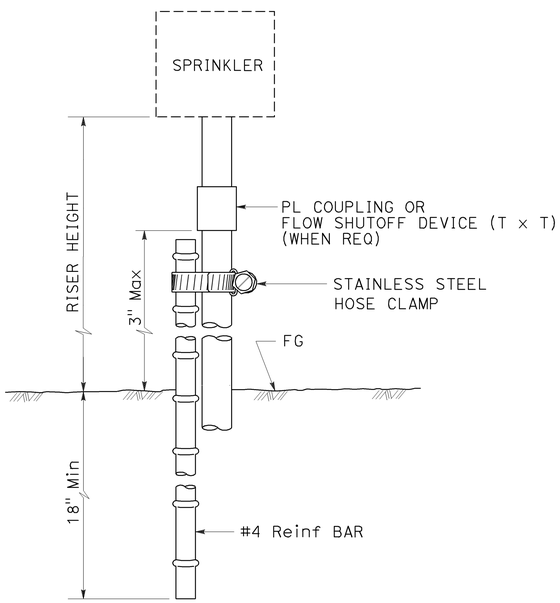


ELEVATION

RISER SPRINKLER ASSEMBLY TYPE IV

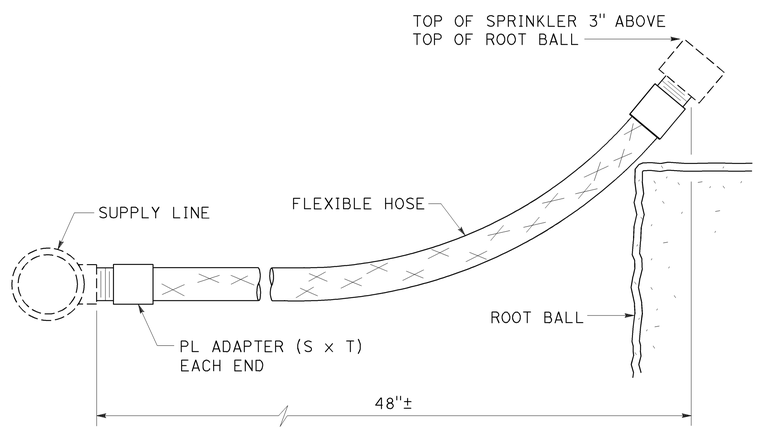


ELEVATION

RISER SPRINKLER ASSEMBLY TYPE V

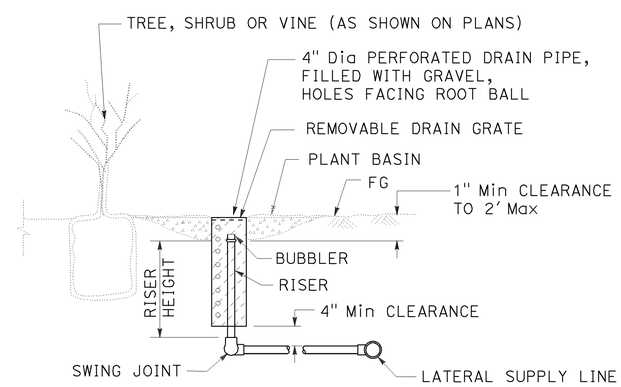


SECTION

TREE WELL SPRINKLER ASSEMBLY

STATE OF CALIFORNIA
DEPARTMENT OF TRANSPORTATION

# LANDSCAPE DETAILS

NO SCALE

RSP H5 DATED JULY 19, 2013 SUPERSEDES STANDARD PLAN H5
DATED MAY 20, 2011 - PAGE 222 OF THE STANDARD PLANS BOOK DATED 2010.

**REVISED STANDARD PLAN RSP H5**

**2010 REVISED STANDARD PLAN RSP H5**

6-28-13

| Dist | COUNTY | ROUTE | POST MILES TOTAL PROJECT | SHEET No. | TOTAL SHEETS |
|---|---|---|---|---|---|
| 11 | SD | 15, 94, 805 | Var | 174 | 184 |

LICENSED LANDSCAPE ARCHITECT

July 19, 2013
PLANS APPROVAL DATE

LICENSED LANDSCAPE ARCHITECT
Gregory A. Balzer 2576
Expiration Date 2-28-15
Renewal Date 7-19-13
Date
STATE OF CALIFORNIA

*THE STATE OF CALIFORNIA OR ITS OFFICERS OR AGENTS SHALL NOT BE RESPONSIBLE FOR THE ACCURACY OR COMPLETENESS OF SCANNED COPIES OF THIS PLAN SHEET.*

TO ACCOMPANY PLANS DATED 09-02-14

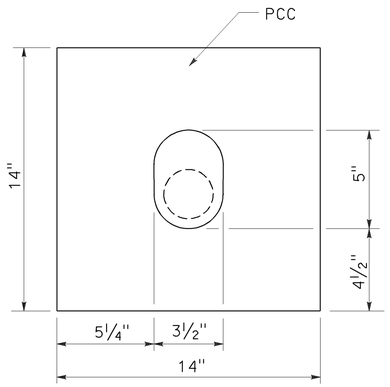


PLAN

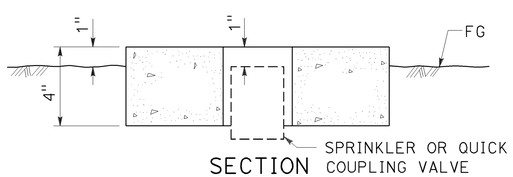


SECTION

## SPRINKLER PROTECTOR TYPE I

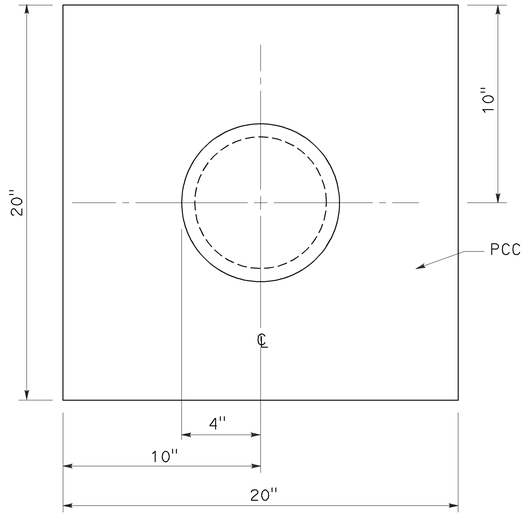


PLAN

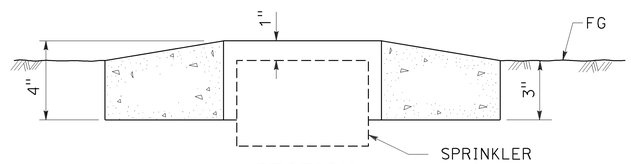


SECTION

## SPRINKLER PROTECTOR TYPE II

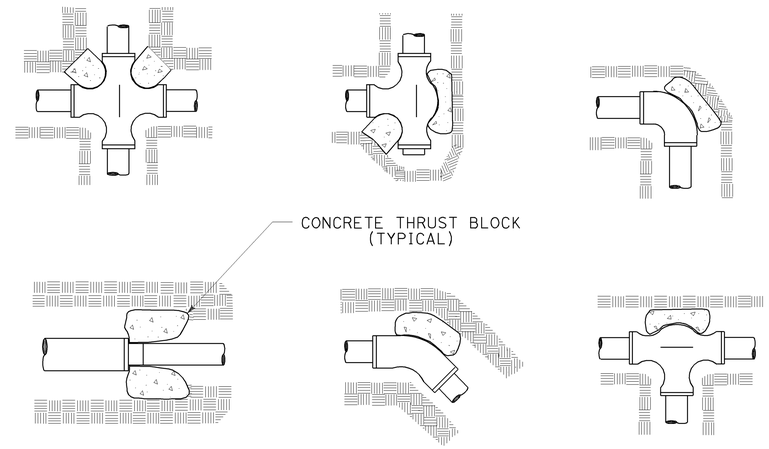


## TYPICAL THRUST BLOCKS

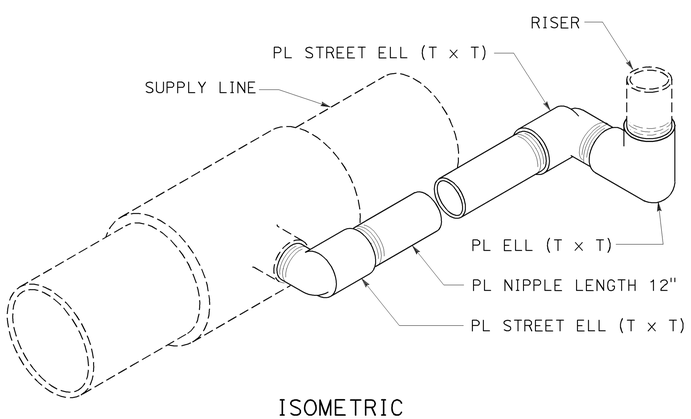


ISOMETRIC

## POP-UP SPRINKLER ASSEMBLY TYPE I

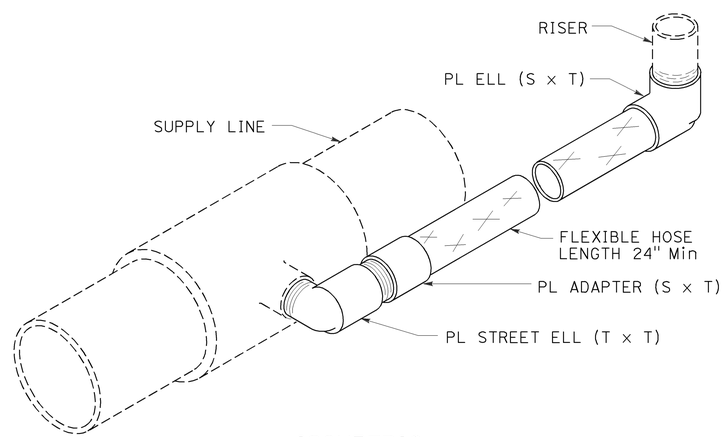


ISOMETRIC

## POP-UP SPRINKLER ASSEMBLY TYPE II

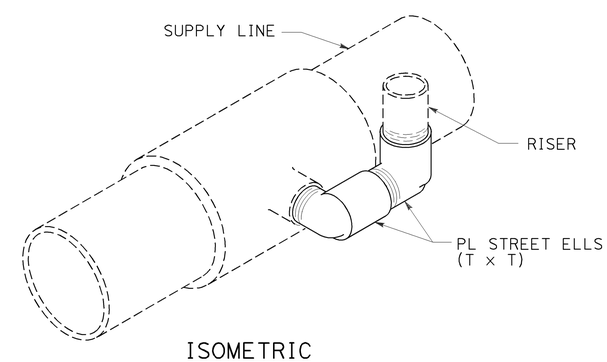


ISOMETRIC

## POP-UP SPRINKLER ASSEMBLY TYPE III

STATE OF CALIFORNIA
DEPARTMENT OF TRANSPORTATION

# LANDSCAPE DETAILS

NO SCALE

RSP H6 DATED JULY 19, 2013 SUPERSEDES STANDARD PLAN H6
DATED MAY 20, 2011 - PAGE 223 OF THE STANDARD PLANS BOOK DATED 2010.

**REVISED STANDARD PLAN RSP H6**

**2010 REVISED STANDARD PLAN RSP H6**

6-28-13

| Dist | COUNTY | ROUTE | POST MILES TOTAL PROJECT | SHEET No. | TOTAL SHEETS |
|---|---|---|---|---|---|
| 11 | SD | 15, 94, 805 | Var | 175 | 184 |

LICENSED LANDSCAPE ARCHITECT

July 19, 2013
PLANS APPROVAL DATE

*THE STATE OF CALIFORNIA OR ITS OFFICERS OR AGENTS SHALL NOT BE RESPONSIBLE FOR THE ACCURACY OR COMPLETENESS OF SCANNED COPIES OF THIS PLAN SHEET.*

LICENSED LANDSCAPE ARCHITECT — Gregory A. Balzer — 2516 — 2-28-15 Renewal Date — 7-19-13 Date — STATE OF CALIFORNIA

TO ACCOMPANY PLANS DATED 09-02-14

**2010 REVISED STANDARD PLAN RSP H7**

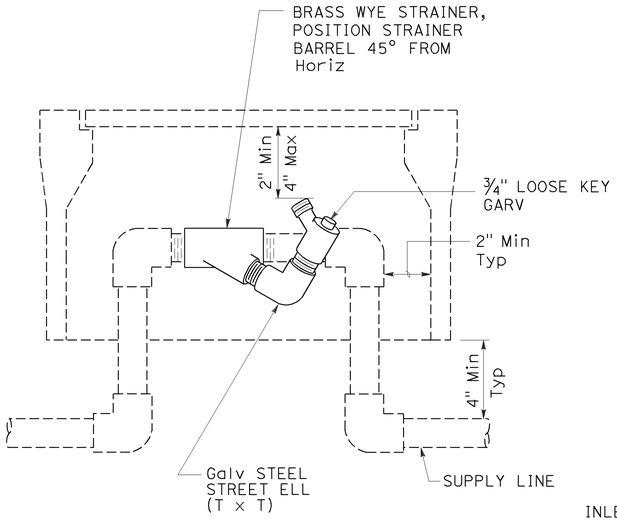


ELEVATION
## WYE STRAINER ASSEMBLY

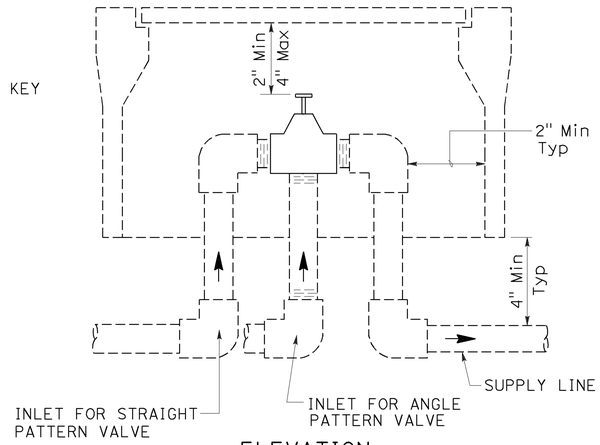


ELEVATION
## VALVE

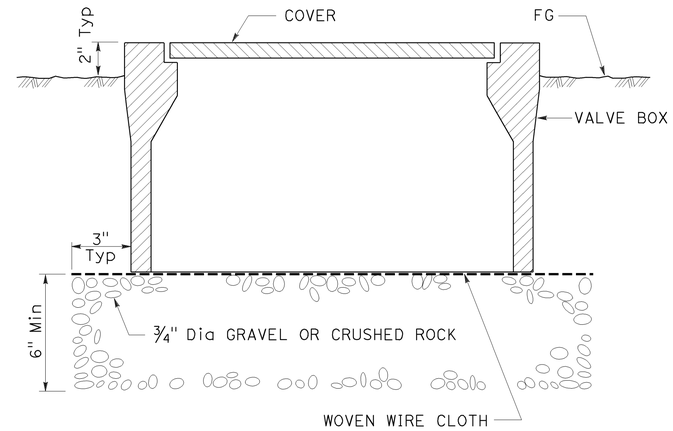


SECTION
## VALVE BOX

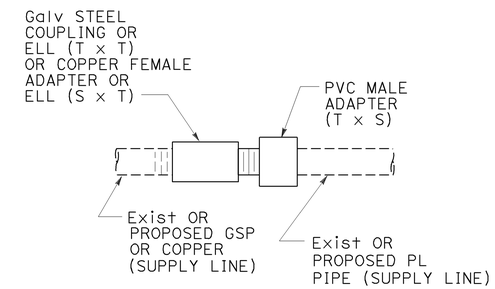


## GALVANIZED OR COPPER PIPE CONNECTION TO PLASTIC PIPE

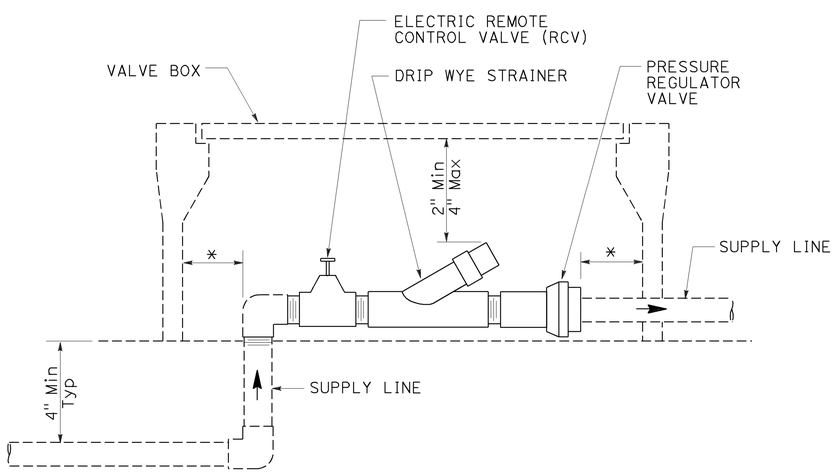


ELEVATION
## DRIP VALVE ASSEMBLY

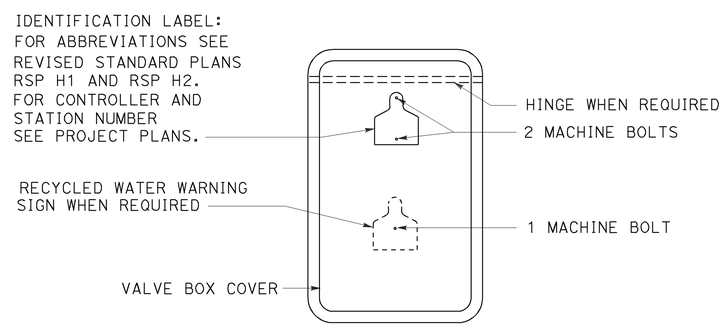


PLAN

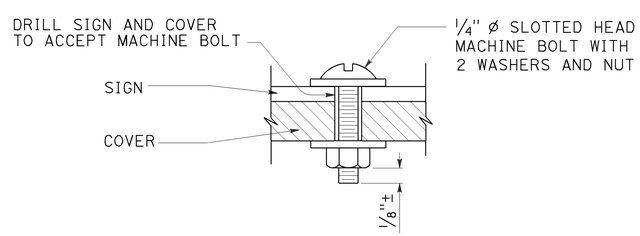


SECTION
## VALVE BOX IDENTIFICATION

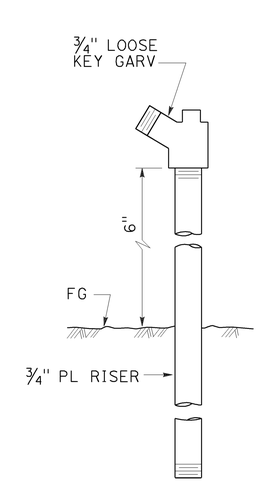


ELEVATION
GARDEN VALVE ASSEMBLY

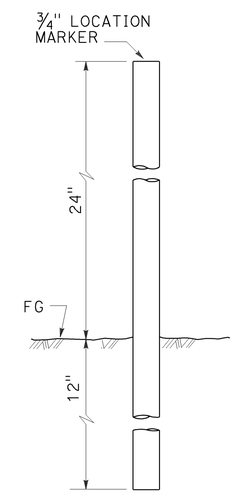


ELEVATION
LOCATION MARKER

## GARDEN VALVE ASSEMBLY

STATE OF CALIFORNIA
DEPARTMENT OF TRANSPORTATION

# LANDSCAPE DETAILS

NO SCALE

RSP H7 DATED JULY 19, 2013 SUPERSEDES STANDARD PLAN H7
DATED MAY 20, 2011 - PAGE 224 OF THE STANDARD PLANS BOOK DATED 2010.

# REVISED STANDARD PLAN RSP H7

6-20-13

| Dist | COUNTY | ROUTE | POST MILES TOTAL PROJECT | SHEET No. | TOTAL SHEETS |
|---|---|---|---|---|---|
| 11 | SD | 15, 94, 805 | Var | 176 | 184 |

LICENSED LANDSCAPE ARCHITECT

July 19, 2013
PLANS APPROVAL DATE

*THE STATE OF CALIFORNIA OR ITS OFFICERS OR AGENTS SHALL NOT BE RESPONSIBLE FOR THE ACCURACY OR COMPLETENESS OF SCANNED COPIES OF THIS PLAN SHEET.*

LICENSED LANDSCAPE ARCHITECT
Gregory A. Balzer 2576
2-28-15
Renewal Date
7-19-13
Date
STATE OF CALIFORNIA

TO ACCOMPANY PLANS DATED 09-02-14

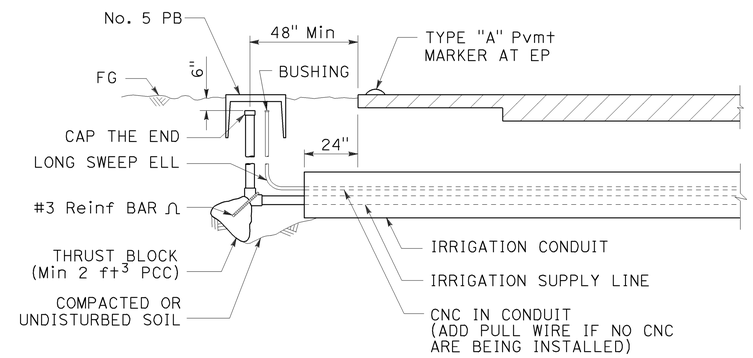


SECTION

## IRRIGATION CONDUIT

UNDER TRAVELED WAY

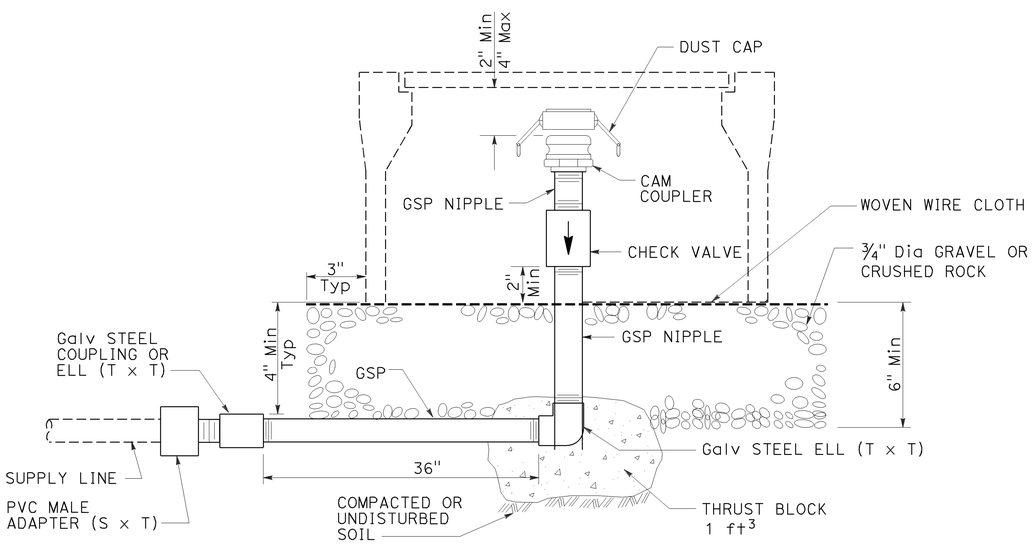


ELEVATION

## CAM COUPLER ASSEMBLY

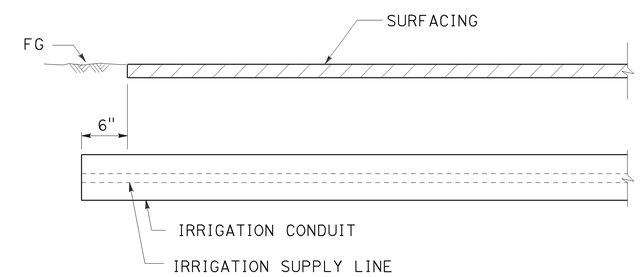


SECTION

## IRRIGATION CONDUIT

UNDER SIDEWALKS, DRIVEWAYS AND PATHS

STATE OF CALIFORNIA
DEPARTMENT OF TRANSPORTATION

# LANDSCAPE DETAILS

NO SCALE

RSP H9 DATED JULY 19, 2013 SUPERSEDES STANDARD PLAN H9
DATED MAY 20, 2011 - PAGE 226 OF THE STANDARD PLANS BOOK DATED 2010.

**REVISED STANDARD PLAN RSP H9**

**2010 REVISED STANDARD PLAN RSP H9**

6-28-13

| Dist | COUNTY | ROUTE | POST MILES TOTAL PROJECT | SHEET No. | TOTAL SHEETS |
|---|---|---|---|---|---|
| 11 | SD | 15, 94, 805 | Var | 177 | 184 |

LICENSED LANDSCAPE ARCHITECT

July 19, 2013
PLANS APPROVAL DATE

LICENSED LANDSCAPE ARCHITECT
Gregory A. Balzer 2576
Renewal Date 2-28-15
7-19-13
Date
STATE OF CALIFORNIA

*THE STATE OF CALIFORNIA OR ITS OFFICERS OR AGENTS SHALL NOT BE RESPONSIBLE FOR THE ACCURACY OR COMPLETENESS OF SCANNED COPIES OF THIS PLAN SHEET.*

TO ACCOMPANY PLANS DATED 09-02-14

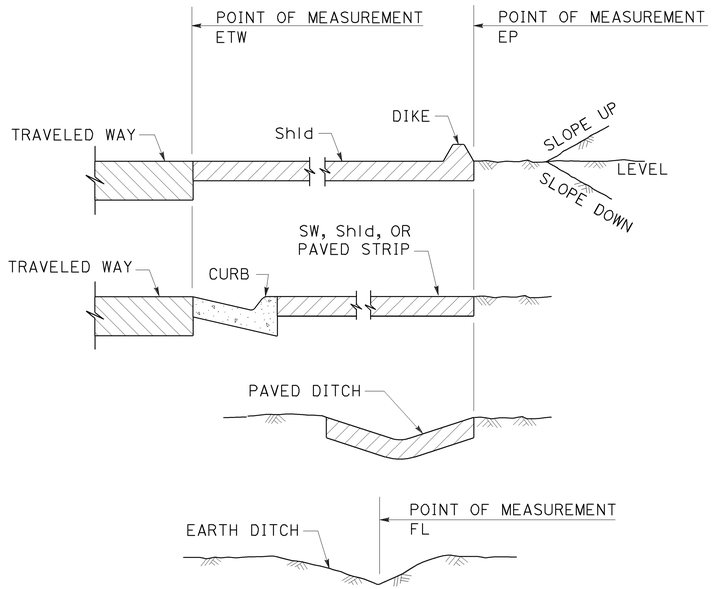


SECTION
POINTS OF MEASUREMENT

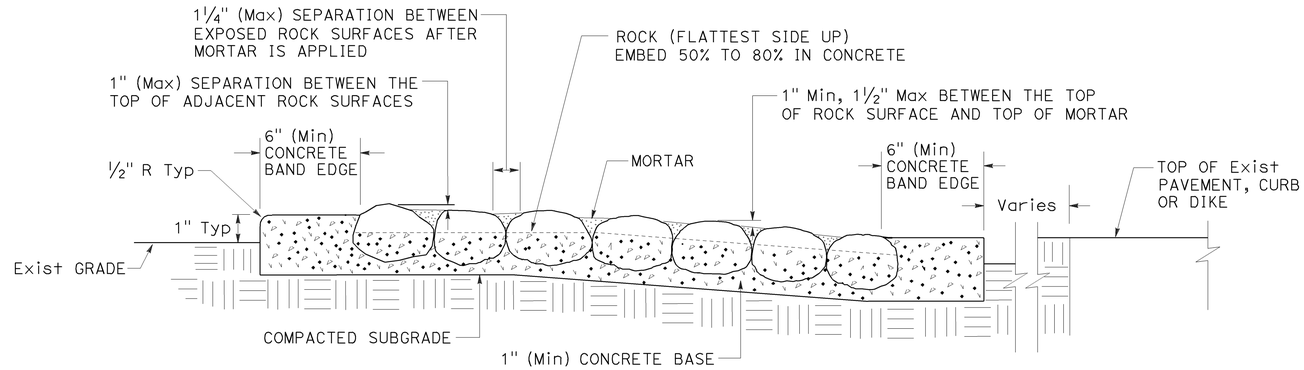


SECTION
ROCK BLANKET

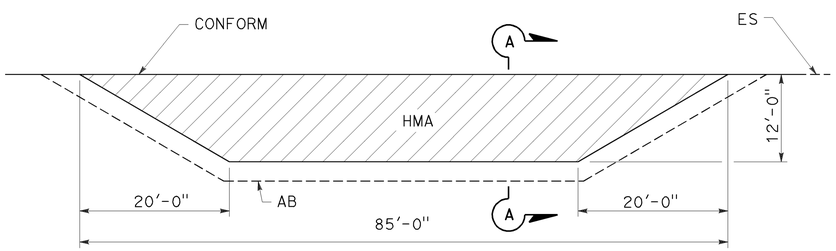


PLAN

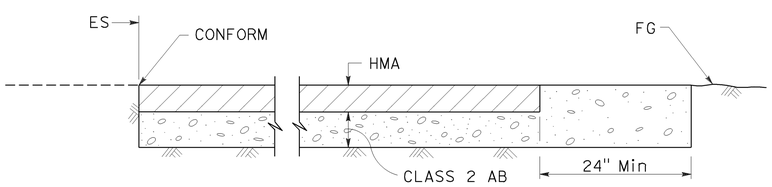


SECTION A-A
MAINTENANCE VEHICLE PULLOUT

STATE OF CALIFORNIA
DEPARTMENT OF TRANSPORTATION

# LANDSCAPE DETAILS

NO SCALE

RSP H9A DATED JULY 19, 2013 SUPPLEMENTS THE STANDARD PLANS BOOK DATED 2010.

**REVISED STANDARD PLAN RSP H9A**

**2010 REVISED STANDARD PLAN RSP H9A**

6-21-13

| Dist | COUNTY | ROUTE | POST MILES TOTAL PROJECT | SHEET No. | TOTAL SHEETS |
|---|---|---|---|---|---|
| 11 | SD | 15, 94, 805 | Var | 178 | 184 |

REGISTERED CIVIL ENGINEER

July 19, 2013
PLANS APPROVAL DATE

REGISTERED PROFESSIONAL ENGINEER
Gurinderpal Bhullar
No. C48815
Exp. 9-30-14
CIVIL
STATE OF CALIFORNIA

THE STATE OF CALIFORNIA OR ITS OFFICERS OR AGENTS SHALL NOT BE RESPONSIBLE FOR THE ACCURACY OR COMPLETENESS OF SCANNED COPIES OF THIS PLAN SHEET.

TO ACCOMPANY PLANS DATED 09-02-14

2010 REVISED STANDARD PLAN RSP T9

## TABLE 1

### TAPER LENGTH CRITERIA AND CHANNELIZING DEVICE SPACING

| SPEED (S) | MINIMUM TAPER LENGTH * FOR WIDTH OF OFFSET 12 FEET (W) | | | | MAXIMUM CHANNELIZING DEVICE SPACING | | |
|---|---|---|---|---|---|---|---|
| | | | | | X | Y | Z ** |
| | TANGENT 2L | MERGING L | SHIFTING L/2 | SHOULDER L/3 | TAPER | TANGENT | CONFLICT |
| mph | ft | ft | ft | ft | ft | ft | ft |
| 20 | 160 | 80 | 40 | 27 | 20 | 40 | 10 |
| 25 | 250 | 125 | 63 | 42 | 25 | 50 | 12 |
| 30 | 360 | 180 | 90 | 60 | 30 | 60 | 15 |
| 35 | 490 | 245 | 123 | 82 | 35 | 70 | 17 |
| 40 | 640 | 320 | 160 | 107 | 40 | 80 | 20 |
| 45 | 1080 | 540 | 270 | 180 | 45 | 90 | 22 |
| 50 | 1200 | 600 | 300 | 200 | 50 | 100 | 25 |
| 55 | 1320 | 660 | 330 | 220 | 55 | 110 | 27 |
| 60 | 1440 | 720 | 360 | 240 | 60 | 120 | 30 |
| 65 | 1560 | 780 | 390 | 260 | 65 | 130 | 32 |
| 70 | 1680 | 840 | 420 | 280 | 70 | 140 | 35 |

* - For other offsets, use the following merging taper length formula for L:
For speed of 40 mph or less, $L = WS^2/60$
For speed of 45 mph or more, $L = WS$

Where: L = Taper length in feet
W = Width of offset in feet
S = Posted speed limit, off-peak 85th-percentile speed prior to work starting, or the anticipated operating speed in mph

** - Use for taper and tangent sections where there are no pavement markings or where there is a conflict between existing pavement markings and channelizers (CA).

## TABLE 2

### LONGITUDINAL BUFFER SPACE AND FLAGGER STATION SPACING

| SPEED * | Min D ** | DOWNGRADE Min D *** | | |
|---|---|---|---|---|
| | | -3% | -6% | -9% |
| mph | ft | ft | ft | ft |
| 20 | 115 | 116 | 120 | 126 |
| 25 | 155 | 158 | 165 | 173 |
| 30 | 200 | 205 | 215 | 227 |
| 35 | 250 | 257 | 271 | 287 |
| 40 | 305 | 315 | 333 | 354 |
| 45 | 360 | 378 | 400 | 427 |
| 50 | 425 | 446 | 474 | 507 |
| 55 | 495 | 520 | 553 | 593 |
| 60 | 570 | 598 | 638 | 686 |
| 65 | 645 | 682 | 728 | 785 |
| 70 | 730 | 771 | 825 | 891 |

* - Speed is posted speed limit, off-peak 85th-percentile speed prior to work starting, or the anticipated operating speed in mph

** - Longitudinal buffer space or flagger station spacing

*** - Use on sustained downgrade steeper than -3 percent and longer than 1 mile.

## TABLE 3

### ADVANCE WARNING SIGN SPACING

| ROAD TYPE | DISTANCE BETWEEN SIGNS * | | |
|---|---|---|---|
| | A | B | C |
| | ft | ft | ft |
| URBAN - 25 mph OR LESS | 100 | 100 | 100 |
| URBAN - MORE THAN 25 mph TO 40 mph | 250 | 250 | 250 |
| URBAN - MORE THAN 40 mph | 350 | 350 | 350 |
| RURAL | 500 | 500 | 500 |
| EXPRESSWAY / FREEWAY | 1000 | 1500 | 2640 |

* - The distances are approximate, are intended for guidance purposes only, and should be applied with engineering judgment. These distances should be adjusted by the Engineer for field conditions, if necessary, by increasing or decreasing the recommmended distances.

STATE OF CALIFORNIA
DEPARTMENT OF TRANSPORTATION

# TRAFFIC CONTROL SYSTEM TABLES FOR LANE AND RAMP CLOSURES

NO SCALE

RSP T9 DATED JULY 19, 2013 SUPERSEDES RSP T9 DATED APRIL 19, 2013 THAT SUPPLEMENTS THE STANDARD PLANS BOOK DATED 2010.

**REVISED STANDARD PLAN RSP T9**

| Dist | COUNTY | ROUTE | POST MILES TOTAL PROJECT | SHEET No. | TOTAL SHEETS |
|---|---|---|---|---|---|
| 11 | SD | 15, 94, 805 | Var | 179 | 184 |

REGISTERED CIVIL ENGINEER

April 19, 2013
PLANS APPROVAL DATE

REGISTERED PROFESSIONAL ENGINEER Gurinderpal Bhullar No. C48815 Exp. 9-30-14 CIVIL STATE OF CALIFORNIA

*THE STATE OF CALIFORNIA OR ITS OFFICERS OR AGENTS SHALL NOT BE RESPONSIBLE FOR THE ACCURACY OR COMPLETENESS OF SCANNED COPIES OF THIS PLAN SHEET.*

TO ACCOMPANY PLANS DATED 09-02-14

## NOTES:

See Revised Standard Plan RSP T9 for tables.

Use cone spacing X for taper segment, Y for tangent segment or Z for conflict situations, as approriate, per Table 1, unless X, Y, or Z cone spacing is shown on this sheet.

Unless otherwise specified in the special provisions, all temporary warning signs shall have black legend on fluorescent orange background.

California codes are designated by (CA). Otherwise, Federal (MUTCD) codes are shown.

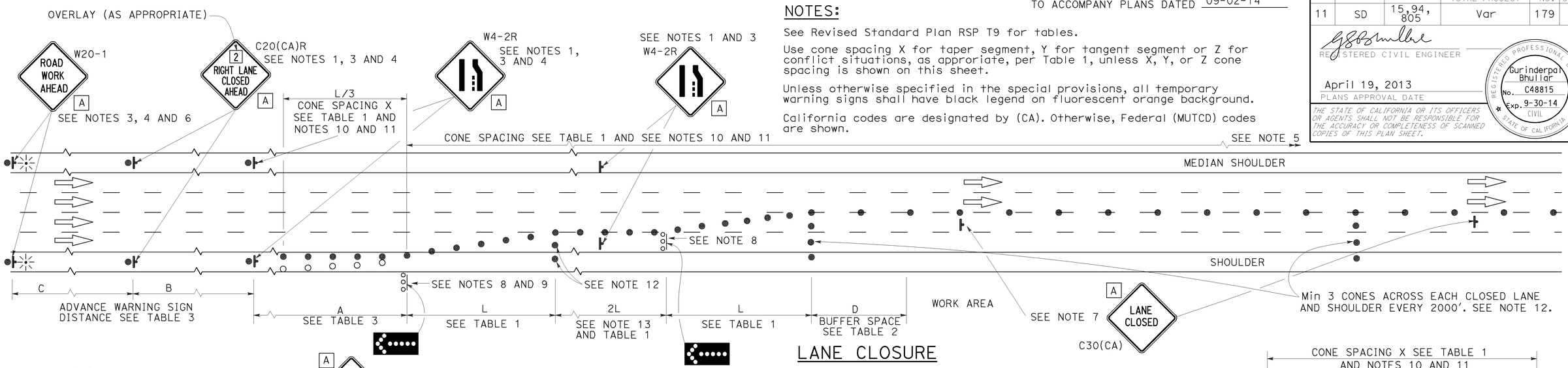


## LANE CLOSURE

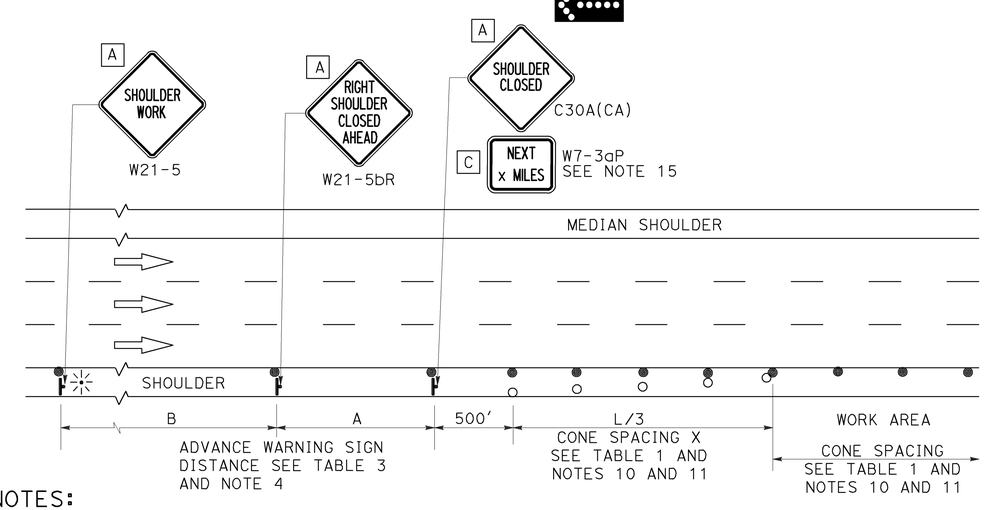


## SHOULDER CLOSURE

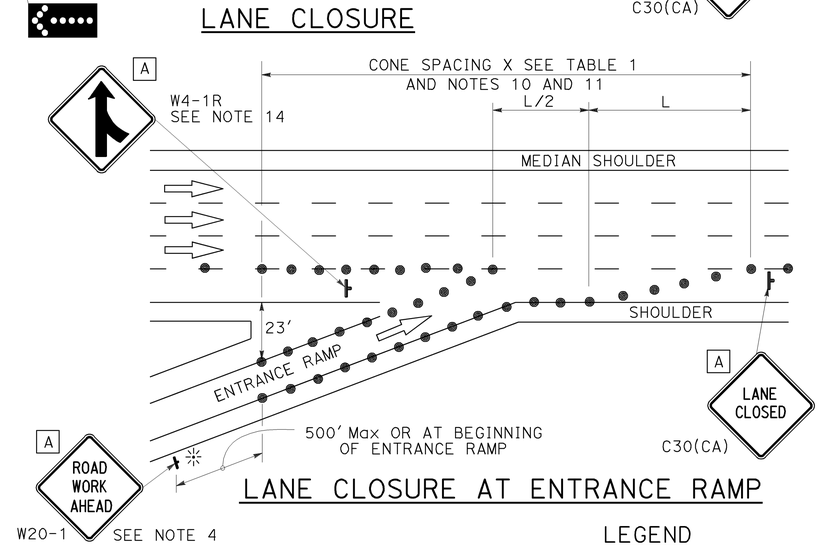


## LANE CLOSURE AT ENTRANCE RAMP

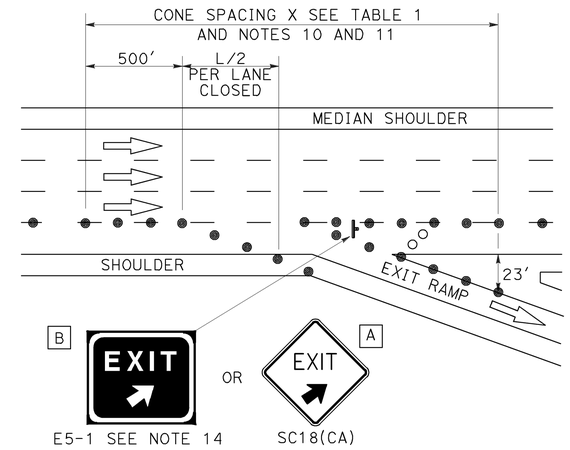


## LANE CLOSURE AT EXIT RAMP

## NOTES:

1. Median lane closures shall conform to the details as shown except that C20(CA)L and W4-2L signs shall be used.
2. At least one person shall be assigned to provide full time maintenance of traffic control devices for lane closures.
3. Duplicate sign installations are not required:
   a) On opposite shoulder if at least one-half of the available lanes remain open to traffic.
   b) In the median if the width of the median shoulder is less than 8' and the outside lanes are to be closed.
4. Each advance warning sign on each side of the roadway shall be equipped with at least two flags for daytime closure. Each flag shall be at least 16" x 16" in size and shall be orange or fluorescent red-orange in color. Flashing beacons shall be placed at the locations indicated for lane closure during hours of darkness.
5. A G20-2 "END ROAD WORK" sign, with minimum size of 48" x 24" as appropriate, shall be placed at the end of the lane closure unless the end of work area is obvious or ends within a larger project's limits.
6. If the W20-1 sign would follow within 2000' of a stationary W20-1 or G20-1 "ROAD WORK NEXT _____ MILES", use a C20(CA) sign for the first advance warning sign.
7. Place a C30(CA) sign every 2000' throughout length of lane closure.
8. One flashing arrow sign for each lane closed. The flashing arrow signs shall be Type I.
9. A minimum 1500' of sight distance shall be provided where possible for vehicles approaching the first flashing arrow sign. Lane closures shall not begin at top of crest vertical curve or on a horizontal curve.
10. All cones used for lane closures during the hours of darkness shall be fitted with retroreflective bands (or sleeves) as specified in the specifications.
11. Portable delineators, placed at one-half the spacing indicated for traffic cones may be used instead of cones for daytime closures only.
12. Unless otherwise specified in the special provisions, a minimum of 3 cones shall be placed transversely across each closed lane and shoulder at each location where a taper across a traffic lane ends and every 2000' as shown on the "Lane Closure" detail. Two Type II barricades may be used instead of the 3 cones. The transverse alignment of the cones or barricades on the closed shoulder may be shifted from the transverse alignment to provide access to the work.
13. Unless otherwise specified in the special provisions, the 2L tangent shown along lane lines shall be used between the L tapers required for each closed traffic lane.
14. Unless otherwise specified in the special provisions, the E5-1 or SC18(CA) and W4-1 signs shall be used as shown.
15. A W7-3aP "NEXT____ MILES" plaque must be used if theshoulder closure extends beyond the distance that can be perceived by road users.

## LEGEND

- TRAFFIC CONE
- TRAFFIC CONE (OPTIONAL TAPER)
- TEMPORARY TRAFFIC CONTROL SIGN
- FLASHING ARROW SIGN (FAS)
- FAS SUPPORT OR TRAILER
- PORTABLE FLASHING BEACON

## SIGN PANEL SIZE (Min)

| | |
|---|---|
| A | 48" x 48" |
| B | 72" x 60" |
| C | 36" x 30" |

STATE OF CALIFORNIA
DEPARTMENT OF TRANSPORTATION

# TRAFFIC CONTROL SYSTEM FOR LANE CLOSURE ON FREEWAYS AND EXPRESSWAYS

NO SCALE

RSP T10 DATED APRIL 19, 2013 SUPERSEDES STANDARD PLAN T10 DATED MAY 20, 2011 - PAGE 237 OF THE STANDARD PLANS BOOK DATED 2010.

**REVISED STANDARD PLAN RSP T10**

**2010 REVISED STANDARD PLAN RSP T10**

12-18-12

| Dist | COUNTY | ROUTE | POST MILES TOTAL PROJECT | SHEET No. | TOTAL SHEETS |
|---|---|---|---|---|---|
| 11 | SD | 15, 94, 805 | Var | 180 | 184 |

REGISTERED CIVIL ENGINEER

April 19, 2013
PLANS APPROVAL DATE

REGISTERED PROFESSIONAL ENGINEER Gurinderpal Bhullar No. C48815 Exp. 9-30-14 CIVIL STATE OF CALIFORNIA

THE STATE OF CALIFORNIA OR ITS OFFICERS OR AGENTS SHALL NOT BE RESPONSIBLE FOR THE ACCURACY OR COMPLETENESS OF SCANNED COPIES OF THIS PLAN SHEET.

TO ACCOMPANY PLANS DATED 09-02-14

# TYPICAL RAMP CLOSURES

## SIGN PANEL SIZE (Min)

- A 48" × 48"
- B 48" × 30"
- C 36" × 36"
- D 48" × 36"

## LEGEND

- TRAFFIC CONE
- TEMPORARY TRAFFIC CONTROL SIGN
- BARRICADES
- PORTABLE FLASHING BEACON

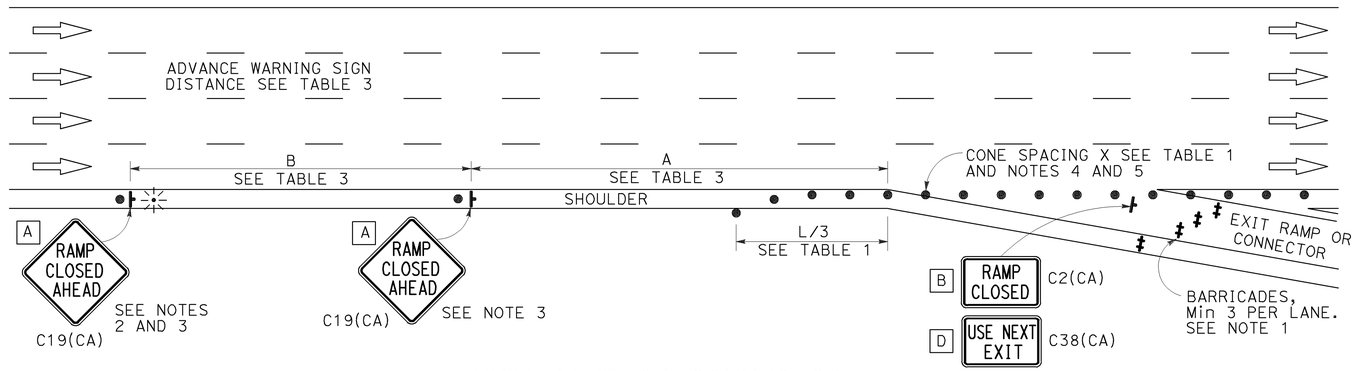


EXIT RAMP OR CONNECTOR

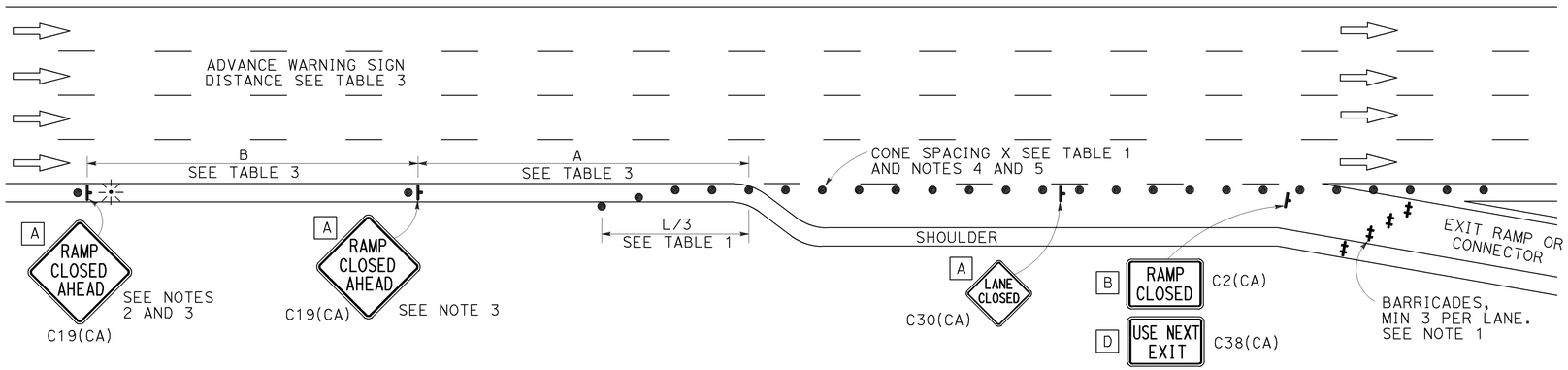


EXIT RAMP OR CONNECTOR WITH ADDITIONAL LANE

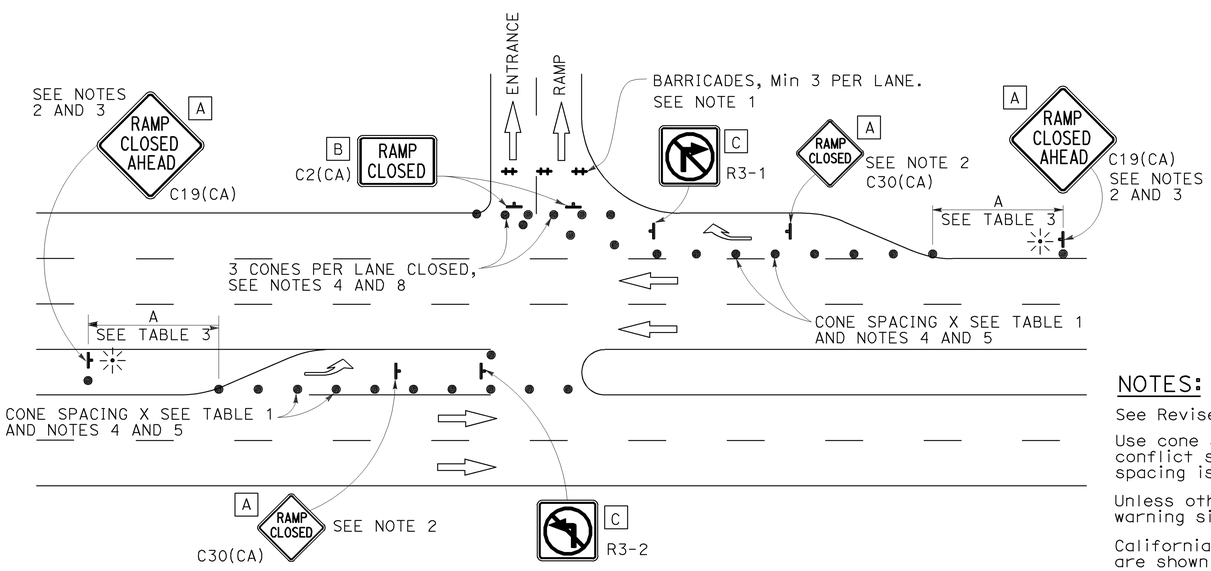


ENTRANCE RAMP WITH TURNING POCKETS

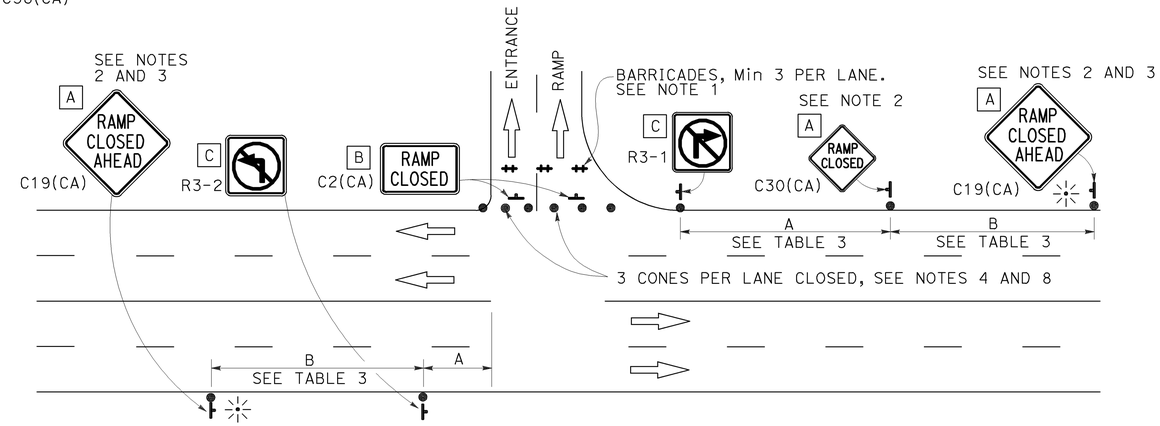


ENTRANCE RAMP WITHOUT TURNING POCKETS

## NOTES:

1. Barricades shall be Type I, II, or III for closures lasting one week or less and Type III for closures lasting longer than one week.
2. In addition to placing the C19(CA) "RAMP CLOSED AHEAD" and C30(CA) "RAMP CLOSED" signs, black on orange overlay plates with the word "CLOSED" may be mounted, as directed by the Engineer, on all guide signs that refer to the closed ramp. The letter size on the overlay shall be the same as the guide sign.
3. Each advance C19(CA) "RAMP CLOSED AHEAD" sign shall be equipped with at least two flags for daytime closure. Each flag shall be at least 16" × 16" in size and shall be orange or fluorescent red-orange in color. A flashing beacon shall be placed on top of the first C19(CA) sign during hours of darkness.
4. All cones used for ramp closures during the hours of darkness shall be fitted with retroreflective bands (or sleeves) as specified in the specifications.
5. Portable delineators, placed at one-half the spacing indicated for traffic cones, may be used instead of cones for daytime ramp closures only.
6. At least one person shall be assigned to provide full time maintenance of traffic control devices, unless otherwise directed by the Engineer.
7. The existing "EXIT" signs shall be covered during ramp closures.
8. A minimum of 3 cones shall be placed transversely across each closed lane and shoulder.

## NOTES:

See Revised Standard Plan RSP T9 for tables.

Use cone spacing X for taper segment, Y for tangent segment or Z for conflict situations, as approriate, per Table 1, unless X, Y, or Z cone spacing is shown on this sheet.

Unless otherwise specified in the special provisions, all temporary warning signs shall have black legend on fluorescent orange background.

California codes are designated by (CA). Otherwise, Federal (MUTCD) codes are shown.

STATE OF CALIFORNIA
DEPARTMENT OF TRANSPORTATION

# TRAFFIC CONTROL SYSTEM FOR RAMP CLOSURE

NO SCALE

RSP T14 DATED APRIL 19, 2013 SUPERSEDES STANDARD PLAN T14 DATED MAY 20, 2011 - PAGE 242 OF THE STANDARD PLANS BOOK DATED 2010.

**REVISED STANDARD PLAN RSP T14**

**2010 REVISED STANDARD PLAN RSP T14**

12-18-12

| Dist | COUNTY | ROUTE | POST MILES TOTAL PROJECT | SHEET No. | TOTAL SHEETS |
|---|---|---|---|---|---|
| 11 | SD | 15, 94, 805 | Var | 181 | 184 |

Theresa Gabriel
REGISTERED ELECTRICAL ENGINEER

July 19, 2013
PLANS APPROVAL DATE

REGISTERED PROFESSIONAL ENGINEER Theresa Aziz Gabriel No. E15129 Exp. 6-30-14 ELECTRICAL STATE OF CALIFORNIA

*THE STATE OF CALIFORNIA OR ITS OFFICERS OR AGENTS SHALL NOT BE RESPONSIBLE FOR THE ACCURACY OR COMPLETENESS OF SCANNED COPIES OF THIS PLAN SHEET.*

TO ACCOMPANY PLANS DATED 09-02-14

## LEGEND:

| | |
|---|---|
| AB | ABANDON. IF APPLIED TO CONDUIT, REMOVE CONDUCTORS |
| BC | INSTALL PULL BOX IN EXISTING CONDUIT RUN |
| BP | PEDESTRIAN BARRICADE, TYPE AS INDICATED ON PLAN |
| CB | INSTALL CONDUIT INTO EXISTING PULL BOX |
| CC | CONNECT NEW AND EXISTING CONDUIT. REMOVE EXISTING CONDUCTORS AND INSTALL CONDUCTORS AS INDICATED |
| CF | CONDUIT TO REMAIN FOR FUTURE USE. REMOVE CONDUCTORS. INSTALL PULL TAPE |
| DH | DETECTOR HANDHOLE |
| FA | FOUNDATION TO BE ABANDONED |
| IS | INSTALL SIGN ON SIGNAL MAST ARM |
| NS | NO SLIP BASE ON STANDARD |
| PEC | PHOTOELECTRIC CONTROL |
| PEU | PHOTOELECTRIC UNIT |
| RC | EQUIPMENT OR MATERIAL TO BE REMOVED AND BECOME THE PROPERTY OF THE CONTRACTOR |
| RE | REMOVE ELECTROLIER, FUSES AND BALLAST. TAPE ENDS OF CONDUCTORS |
| RL | RELOCATE EQUIPMENT |
| RR | REMOVE AND REUSE EQUIPMENT |
| RS | REMOVE AND SALVAGE EQUIPMENT |
| SC | SPLICE NEW TO EXISTING CONDUCTORS |
| SD | SERVICE DISCONNECT |
| TSP | TELEPHONE SERVICE POINT |

## ABBREVIATIONS

| | |
|---|---|
| APS | ACCESSIBLE PEDESTRIAN SIGNAL |
| BBS | BATTERY BACKUP SYSTEM |
| BC | BOLT CIRCLE |
| BPB | BICYCLE PUSH BUTTON |
| C | CONDUIT |
| CB | CIRCUIT BREAKER |
| CCTV | CLOSED CIRCUIT TELEVISION |
| Ckt | CIRCUIT |
| CMS | CHANGEABLE MESSAGE SIGN |
| Ctid | CALTRANS IDENTIFICATION |
| Comm | COMMUNICATION |
| DLC | LOOP DETECTOR LEAD-IN CABLE |
| EMS | EXTINGUISHABLE MESSAGE SIGN |
| EVUC | EMERGENCY VEHICLE UNIT CABLE |
| EVUD | EMERGENCY VEHICLE UNIT DETECTOR |
| FB | FLASHING BEACON |
| FBCA | FLASHING BEACON CONTROL ASSEMBLY |
| FBS | FLASHING BEACON WITH SLIP BASE |
| FO | FIBER OPTIC |
| G | EQUIPMENT GROUNDING CONDUCTOR |
| GB | GROUND BUS |
| GFCI | GROUND FAULT CIRCUIT INTERRUPTER |
| HAR | HIGHWAY ADVISORY RADIO |
| Hex | HEXAGONAL |
| HPS | HIGH PRESSURE SODIUM |
| IISNS | INTERNALLY ILLUMINATED STREET NAME SIGN |
| ISL | INDUCTION SIGN LIGHTING |
| LED | LIGHT EMITTING DIODE |
| LMA | LUMINAIRE MAST ARM |
| LPS | LOW PRESSURE SODIUM |
| Ltg | LIGHTING |
| Lum | LUMINAIRE |
| M | METERED |
| MAT | MAST ARM MOUNTING TOP ATTACHMENT |
| MAS | MAST ARM MOUNTING SIDE ATTACHMENT |
| M/M | MULTIPLE TO MULTIPLE TRANSFORMER |
| Mtg | MOUNTING |
| MV | MERCURY VAPOR LIGHTING FIXTURE |
| MVDS | MICROWAVE VEHICLE DETECTION SYSTEM |
| N | NEUTRAL (GROUNDED CONDUCTOR) |
| NB | NEUTRAL BUS |
| NC | NORMALLY CLOSE |
| NO | NORMALLY OPEN |
| P | CIRCUIT BREAKER'S POLE |
| PB | PULL BOX |
| PBA | PUSH BUTTON ASSEMBLY |
| PEC | PHOTOELECTRIC CONTROL |
| Ped | PEDESTRIAN |
| PEU | PHOTOELECTRIC UNIT |
| PT | CONDUIT WITH PULL TAPE |
| RE | RELOCATED EQUIPMENT |
| RM | RAMP METERING |
| RWIS | ROADSIDE WEATHER INFORMATION SYSTEM |
| SB | SLIP BASE |
| SIC | SIGNAL INTERCONNECT CABLE |
| Sig | SIGNAL |
| SMA | SIGNAL MAST ARM |
| SNS | STREET NAME SIGN |
| SP | SERVICE POINT |
| TDC | TELEPHONE DEMARCATION CABINET |
| TMS | TRAFFIC MONITORING STATION |
| TOS | TRAFFIC OPERATIONS SYSTEM |
| Veh | VEHICLE |
| VIVDS | VIDEO IMAGE VEHICLE DETECTION SYSTEM |
| WIM | WEIGH-IN-MOTION |
| Xfmr | TRANSFORMER |

## SOFFIT AND WALL MOUNTED LUMINAIRES

PENDANT, 70 W HPS UNLESS OTHERWISE SPECIFIED

FLUSH, 70 W HPS UNLESS OTHERWISE SPECIFIED

WALL SURFACE, 70 W HPS UNLESS OTHERWISE SPECIFIED

EXISTING SOFFIT OR WALL LUMINAIRE TO REMAIN UNMODIFIED

EXISTING SOFFIT OR WALL LUMINAIRE TO BE MODIFIED AS SPECIFIED

**NOTE:**

Arrow indicates "street side" of luminaire.

## MISCELLANEOUS ELECTROLIERS

| NEW | EXISTING | |
|---|---|---|
| | | LUMINAIRE ON WOOD POLE |
| | | NON-STANDARD ELECTROLIER (SEE PROJECT NOTES OR PROJECT PLANS) |
| | | CITY ELECTROLIER |
| | | ELECTROLIER FOUNDATION (FUTURE INSTALLATION) |

**NOTES:**

1. HPS luminaires shall be 310 W HPS when installed on Type 21, 21D, 30, 31 and 32 Standards, unless otherwise specified. HPS luminaires shall be 200 W when installed on other type standards or poles, unless otherwise specified.
2. LED luminaires shall be 235 W when installed on Type 21, 21D, 30, 31 and 32 Standards, unless otherwise specified. LED luminaires shall be 165 W when installed on other type standards or poles, unless otherwise specified.
3. Luminaires shall be the cutoff type, ANSI Type III medium cutoff lighting distribution, unless otherwise specified.

## STANDARD ELECTROLIER

| NEW | EXISTING | STANDARD TYPE |
|---|---|---|
| | | 15 |
| | | 15D |
| | | 15 STRUCTURE |
| | | 15D STRUCTURE |
| | | 21 |
| | | 21D |
| | | 21 STRUCTURE |
| | | 21D STRUCTURE |
| | | 30 |
| | | 31 |
| | | 32 |

COMMONLY USED SYMBOLS FOR UNITED STATES CUSTOMARY UNITS OF MEASUREMENT:

| SYMBOL USED | DEFINITIONS |
|---|---|
| Ω | OHMS |
| min | MINUTE |
| s | SECOND |
| bps | BITS PER SECOND |
| Bps | BYTES PER SECOND |
| A | AMPERE |
| V | VOLT |
| V(dc) | VOLT (DIRECT CURRENT) |
| V(ac) | VOLT (ALTERNATING CURRENT) |
| FC | FOOT - CANDLE |
| W | WATTS |
| VA | VOLT-AMPERE |
| M | MEGA |
| k | KILO |
| m | MILLI |
| μ | MICRO |
| P | PICO |
| Hz | HERTZ |

STATE OF CALIFORNIA
DEPARTMENT OF TRANSPORTATION

# ELECTRICAL SYSTEMS (LEGEND AND ABBREVIATIONS)

NO SCALE

RSP ES-1A DATED JULY 19, 2013 SUPERSEDES STANDARD PLAN ES-1A DATED MAY 20, 2011 - PAGE 425 OF THE STANDARD PLANS BOOK DATED 2010.

**REVISED STANDARD PLAN RSP ES-1A**

**2010 REVISED STANDARD PLAN RSP ES-1A**

| Dist | COUNTY | ROUTE | POST MILES TOTAL PROJECT | SHEET No. | TOTAL SHEETS |
|---|---|---|---|---|---|
| 11 | SD | 15, 94, 805 | Var | 182 | 184 |

Theresa Gabriel
REGISTERED ELECTRICAL ENGINEER

July 19, 2013
PLANS APPROVAL DATE

REGISTERED PROFESSIONAL ENGINEER Theresa Aziz Gabriel No. E15129 Exp. 6-30-14 ELECTRICAL STATE OF CALIFORNIA

*THE STATE OF CALIFORNIA OR ITS OFFICERS OR AGENTS SHALL NOT BE RESPONSIBLE FOR THE ACCURACY OR COMPLETENESS OF SCANNED COPIES OF THIS PLAN SHEET.*

TO ACCOMPANY PLANS DATED 09-02-14

## CONDUIT

| NEW | EXISTING | |
|---|---|---|
| | | LIGHTING CONDUIT, UNLESS OTHERWISE INDICATED OR NOTED |
| | | TRAFFIC SIGNAL CONDUIT |
| C | c | COMMUNICATION CONDUIT |
| T | t | TELEPHONE CONDUIT |
| F | f | FIRE ALARM CONDUIT |
| FO | fo | FIBER OPTIC CONDUIT |
| | | CONDUIT TERMINATION |
| R | r | CONDUIT RISER ATTACHED TO THE STRUCTURE OR SERVICE POLE |

## SERVICE EQUIPMENT

| NEW | EXISTING | |
|---|---|---|
| OH | oh | OVERHEAD LINES |
| U | U | WOOD POLE, "U" INDICATES UTILITY OWNED |
| | | POLE GUY WITH ANCHOR |
| | | UTILITY TRANSFORMER - GROUND MOUNTED |
| III | III | SERVICE EQUIPMENT ENCLOSURE TYPE. DOOR INDICATES FRONT OF ENCLOSURE |
| T | t | TELEPHONE DEMARCATION CABINET |

## POLE-MOUNTED SERVICE DESIGNATION

TYPE H SERVICE, 28'-10" — TYPE OF INSTALLATION AND POLE HEIGHT ABOVE GRADE

## FLASHING BEACON

| NEW | EXISTING | |
|---|---|---|
| R | R | FLASHING BEACON (ONE VEHICLE SIGNAL HEAD WITH BACKPLATE AND VISOR) "R" INDICATES RED INDICATION, "Y" INDICATES YELLOW INDICATION |
| Y Y | Y Y | FLASHING BEACON WITH TYPE 15-FBS STANDARD AND A SIGN. |
| R R | R R | FLASHING BEACON WITH TYPES 9, 9A OR 9B SIGN UNLESS OTHERWISE SPECIFIED OR INDICATED |

## SIGNAL EQUIPMENT

| NEW | EXISTING | |
|---|---|---|
| C | C | PEDESTRIAN SIGNAL HEAD "C" INDICATES COUNTDOWN PEDESTRIAN HEAD |
| | | PUSH BUTTON ASSEMBLY POST |
| | | PEDESTRIAN BARRICADE |
| | | VEHICLE SIGNAL HEAD (WITH BACKPLATE AND 3-SECTIONS: RED, YELLOW AND GREEN) |
| | | VEHICLE SIGNAL HEAD WITH ANGLE VISOR |
| PV | PV | MODIFICATIONS OF BASIC SYMBOL: "L" INDICATES ALL NON-ARROW SECTIONS LOUVERED "LG" INDICATES LOUVERED GREEN SECTION ONLY "PV" INDICATES ALL 12" SECTIONS PROGRAMMED VISIBILITY "8" INDICATES ALL 8" SECTIONS (ONLY WHEN SPECIFIED) |
| | | VEHICLE SIGNAL HEAD CONSISTING OF RED, YELLOW AND GREEN LEFT ARROW SECTIONS |
| | | VEHICLE SIGNAL HEAD CONSISTING OF RED AND YELLOW SECTIONS WITH AN UP GREEN ARROW SECTION |
| | | VEHICLE SIGNAL HEAD (5 SECTION) CONSISTING OF RED, YELLOW AND GREEN SECTIONS WITH YELLOW AND GREEN RIGHT ARROW SECTIONS |
| | | TYPE 15TS STANDARD WITH VEHICLE SIGNAL HEAD AND LUMINAIRE |
| | | TYPE 21TS STANDARD WITH VEHICLE SIGNAL HEAD AND LUMINAIRE |
| | | STANDARD WITH LUMINAIRE AND SIGNAL MAST ARMS AND ATTACHED VEHICLE SIGNAL HEADS |
| | | TYPE 1 STANDARD WITH ATTACHED VEHICLE SIGNAL HEADS |
| | | STANDARD WITH A SIGNAL MAST ARM, ATTACHED VEHICLE SIGNAL HEADS AND INTERNALLY ILLUMINATED STREET NAME SIGN |
| | | CONTROLLER ASSEMBLY. DOOR INDICATES FRONT OF CABINET |

## SIGNAL EQUIPMENT Cont

| NEW | EXISTING | |
|---|---|---|
| | | GUARD POST |
| | | TYPE 1 STANDARD WITH RAMP METERING SIGN |
| | | OPTICAL DETECTOR FOR THE EMERGENCY VEHICLE DETECTION SYSTEM |

### NOTES:

1. All signal sections shall be 12" unless shown otherwise.
2. Signal heads shall be provided with backplates unless shown otherwise.

## ILLUMINATED OVERHEAD SIGN

| NEW | EXISTING | |
|---|---|---|
| | | SINGLE POST, SINGLE ILLUMINATED SIGN, BALANCED BUTTERFLY |
| | | SINGLE POST, DOUBLE ILLUMINATED SIGN, BALANCED BUTTERFLY |
| | | SINGLE POST, SINGLE ILLUMINATED SIGN, FULL CANTILEVER |
| | | DOUBLE POST, SINGLE ILLUMINATED SIGN |
| | | SINGLE ILLUMINATED SIGN MOUNTED ON STRUCTURE |
| | | DOUBLE POST, SINGLE ILLUMINATED SIGN WITH ELECTROLIER |

STATE OF CALIFORNIA
DEPARTMENT OF TRANSPORTATION

# ELECTRICAL SYSTEMS (LEGEND AND ABBREVIATIONS)

NO SCALE

RSP ES-1B DATED JULY 19, 2013 SUPERSEDES STANDARD PLAN ES-1B DATED MAY 20, 2011 - PAGE 426 OF THE STANDARD PLANS BOOK DATED 2010.

**REVISED STANDARD PLAN RSP ES-1B**

**2010 REVISED STANDARD PLAN RSP ES-1B**

7-15-13

| Dist | COUNTY | ROUTE | POST MILES TOTAL PROJECT | SHEET No. | TOTAL SHEETS |
|---|---|---|---|---|---|
| 11 | SD | 15, 94, 805 | Var | 183 | 184 |

Theresa Gabriel
REGISTERED ELECTRICAL ENGINEER

July 19, 2013
PLANS APPROVAL DATE

REGISTERED PROFESSIONAL ENGINEER
Theresa Aziz Gabriel
No. E15129
Exp. 6-30-14
ELECTRICAL
STATE OF CALIFORNIA

*THE STATE OF CALIFORNIA OR ITS OFFICERS OR AGENTS SHALL NOT BE RESPONSIBLE FOR THE ACCURACY OR COMPLETENESS OF SCANNED COPIES OF THIS PLAN SHEET.*

TO ACCOMPANY PLANS DATED 09-02-14

# EQUIPMENT IDENTIFICATION

## ILLUMINATED SIGN IDENTIFICATION NUMBER:

SIGN No. 12345
10 ISL SCI 1.0

- SIGN NUMBER - PLACE ON POST OR STRUCTURE
- TRANSFORMER RATING (kVA)
- LIGHTING CONTROL TYPE
- NUMBER AND TYPE OF FIXTURES

DO NOT PLACE ON STANDARD OR STRUCTURE

## ELECTROLIER OR EQUIPMENT IDENTIFICATION NUMBER:

12345 - 15'-0"

- MAST ARM LENGTH, IF SHOWN. DO NOT PLACE ON STANDARD OR STRUCTURE
- EQUIPMENT NUMBER - PLACE ON STANDARD OR STRUCTURE. EXISTING EQUIPMENT NUMBERS ARE SHOWN IN PARENTHESIS

## CONDUIT AND CONDUCTOR IDENTIFICATION:

1½"C, 2#10, 15#14, 2 DLC, 12P#18

- PAIR
- NUMBER AND SIZE OF CONDUCTORS AND CABLES
- SIZE OF CONDUIT IN INCHES

| | |
|---|---|
| ø1, ø2, ø2P, etc. | TRAFFIC PHASE IDENTIFICATION FOR SIGNAL FACES, DETECTORS AND PHASE DIAGRAMS |
| 1 2 3 | LEGEND NUMBERS |
| A B C | EQUIPMENT, SIGNAL POLES, INSTALLATION OR ITEMS |
| 1 2 3 | CONDUIT RUN NUMBERS |

## SIGNAL AND LIGHTING STANDARD (TYPICAL DESIGNATION):

19A - 3 - 100

- WIND VELOCITY = 100 mph
- CASE 3 ARM LOADING
- STANDARD TYPE
- STANDARD PLAN SHEET NUMBER
- DETAIL, NUMBER, SECTION, TYPE OR ELEVATION

# MISCELLANEOUS EQUIPMENT

| NEW | EXISTING | |
|---|---|---|
| CMS | cms | CHANGEABLE MESSAGE SIGN |
| | | CLOSED CIRCUIT TELEVISION CAMERA |
| | | HIGHWAY ADVISORY RADIO POLE AND ANTENNA |
| EMS | ems | EXTINGUISHABLE MESSAGE SIGN |
| M V | m v | DETECTION DEVICE<br>M = MICROWAVE SENSOR<br>V = VIDEO IMAGE SENSOR |

# WIRING DIAGRAM LEGEND

| | |
|---|---|
| ---- | EXTERNAL CONDUCTOR |
| | CONDUCTOR OR BUS |
| | TIE POINT |
| | CONTACTOR COIL |
| | CONTACTOR, NO CONTACT |
| | TERMINAL BLOCKS |
| | CONTACTOR, NC CONTACT |
| | ENCLOSURE BOND |
| | GROUNDING ELECTRODE |
| | CIRCUIT BREAKER |
| | RECEPTACLE |

# PULL BOXES

| NEW | EXISTING | |
|---|---|---|
| | | PULL BOX, No. 5 UNLESS OTHERWISE INDICATED OR NOTED |
| 3 | 9A(21) | PULL BOX, ADDITIONAL DESIGNATIONS OR DESCRIPTIONS |

3 No. 3½ PULL BOX
5 No. 5 PULL BOX
6 No. 6 PULL BOX
7 No. 7 (CEILING PULL BOX)
8 No. 8 (PENDANT SOFFIT PULL BOX)
9 No. 9 PULL BOX
9A No. 9A PULL BOX

(C) COMMUNICATIONS PULL BOX
(E) PULL BOX WITH EXTENSION
(S) SPRINKLER CONTROL PULL BOX
(21) ANCHOR BOLTS AND CONDUIT FOR FUTURE INSTALLATION OF TYPE 21 STANDARD
(T) TRAFFIC PULL BOX

# VEHICLE DETECTORS

5 J 9 U

- VEHICLE DETECTOR DESIGNATION
- U = UPPER
  L = LOWER
- SLOT NUMBER IN INPUT FILE
- INPUT FILE (I OR J)
- PHASE

| NEW | EXISTING | |
|---|---|---|
| | | TYPE A DETECTOR LOOP. OUTLINE OF SAWCUT SHOWN |
| | | TYPE B DETECTOR LOOP. OUTLINE OF SAWCUT SHOWN |
| | | TYPE C DETECTOR LOOP. OUTLINE OF SAWCUT SHOWN |
| | | TYPE D DETECTOR LOOP. OUTLINE OF SAWCUT SHOWN |
| | | TYPE E DETECTOR LOOP. OUTLINE OF SAWCUT SHOWN |
| | | TYPE Q DETECTOR LOOP. OUTLINE OF SAWCUT SHOWN |
| | | MAGNETIC DETECTOR |
| DH | dh | DETECTOR HANDHOLE |
| | | MICROWAVE OR VIDEO DETECTION ZONE |

STATE OF CALIFORNIA
DEPARTMENT OF TRANSPORTATION

# ELECTRICAL SYSTEMS (LEGEND AND ABBREVIATIONS)

NO SCALE

RSP ES-1C DATED JULY 19, 2013 SUPERSEDES STANDARD PLAN ES-1C DATED MAY 20, 2011 - PAGE 427 OF THE STANDARD PLANS BOOK DATED 2010.

**REVISED STANDARD PLAN RSP ES-1C**

**2010 REVISED STANDARD PLAN RSP ES-1C**

7-11-13

| DIST | COUNTY | ROUTE | POST MILES TOTAL PROJECT | SHEET NO. | TOTAL SHEETS |
|---|---|---|---|---|---|
| 11 | SD | 15, 94, 805 | Var | 184 | 184 |

Theresa Gabriel
REGISTERED ELECTRICAL ENGINEER

July 19, 2013
PLANS APPROVAL DATE

REGISTERED PROFESSIONAL ENGINEER Theresa Aziz Gabriel No. E15129 Exp. 6-30-14 ELECTRICAL STATE OF CALIFORNIA

*THE STATE OF CALIFORNIA OR ITS OFFICERS OR AGENTS SHALL NOT BE RESPONSIBLE FOR THE ACCURACY OR COMPLETENESS OF SCANNED COPIES OF THIS PLAN SHEET.*

TO ACCOMPANY PLANS DATED 09-02-14

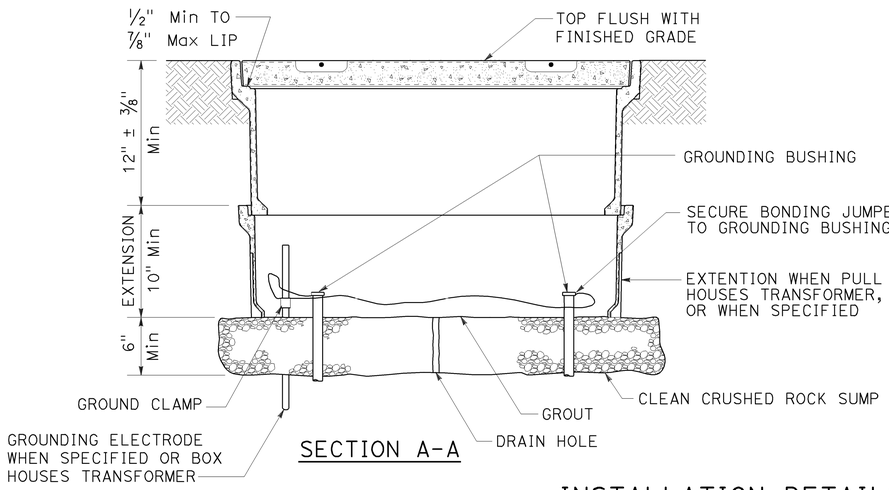


SECTION A-A

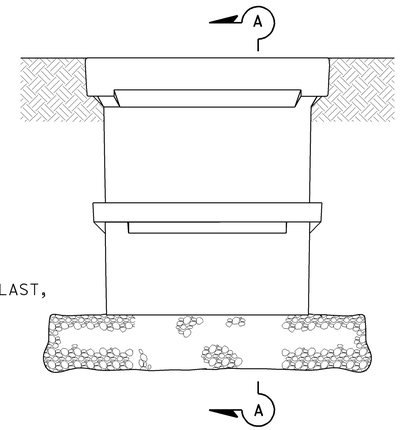


SIDE VIEW

## INSTALLATION DETAILS

### DETAIL A

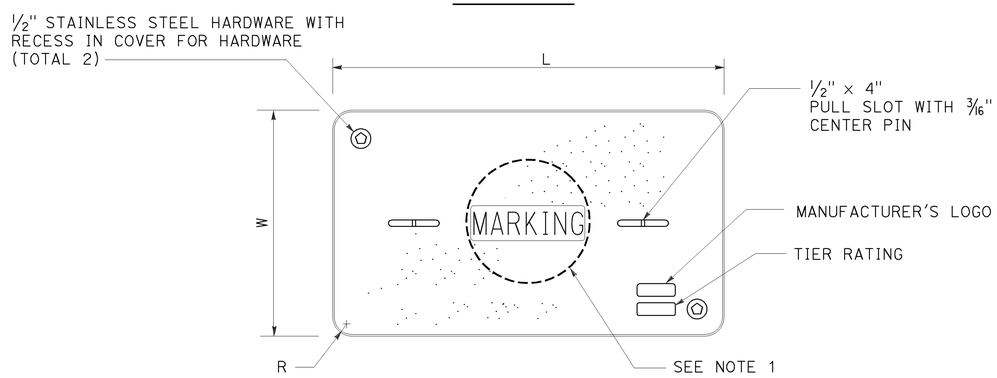


COVER TOP VIEW

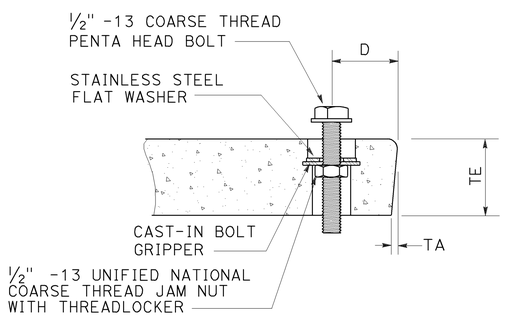


TYPICAL COVER CAPTIVE BOLT

OR SIMILAR

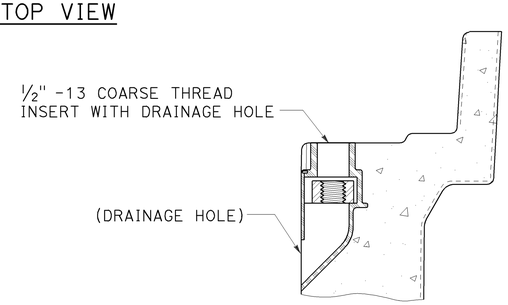


TYPICAL THREADED INSERT

OR SIMILAR

### DIMENSION TABLE

| PULL BOX | PULL BOX | | | COVER | | | | | | |
|---|---|---|---|---|---|---|---|---|---|---|
| | MINIMUM DEPTH BOX | MINIMUM DEPTH EXTENSION | MAXIMUM WEIGHT | L | W | R | TE | TA | D | MAXIMUM WEIGHT |
| No. 3½ | 12" | N/A | 40 lb | 1′ - 3⅜" | 10⅛" | 1⅜" | 2" | ⅛" | 1¾" | 30 lb |
| No. 5 | 12" | 10" | 55 lb | 1′ - 11¼" | 1′ - 1¾" | 1⅜" | 2" | ⅛" | 1¾" | 60 lb |
| No. 6 | 12" | 10" | 70 lb | 2′ - 6½" | 1′ - 5½" | 1⅜" | 2" | ⅛" | 2" | 85 lb |

## NOTES:

1. Pull box covers shall be marked as follows: "SERVICE" Service circuits between service point and service disconnect; "SPRINKLER-CONTROL" sprinkler control circuits, 50 V or less; "CALTRANS" on all pull boxes, except pull boxes marked "SPRINKLER-CONTROL"; and "TELEPHONE" Telephone service;

   A) No. 3½ pull box.
      1) "SIGNAL" - Traffic signal circuits with or without lighting or sign lighting circuits.
      2) "LIGHTING" - Lighting or sign lighting circuits where voltage is under 600 V.

   B) No. 5, 6, 9 or 9A pull box.
      1) "TRAFFIC SIGNAL" - Traffic signal circuits with or without lighting or sign lighting circuits.
      2) "LIGHTING" - Lighting or sign lighting circuits where voltage is under 600 V.
      3) "LIGHTING-HIGH VOLTAGE" - Lighting or sign lighting circuits where voltage is above 600 V.
      4) "IRRIGATION" - Circuits to irrigation controller 120 V or more.
      5) "RAMP METER" - Ramp meter circuits.
      6) "COUNT STATION" - Count or speed monitor circuits.
      7) "COMMUNICATIONS" - Communication circuits.
      8) "TOS COMMUNICATIONS" - TOS communication line.
      9) "TOS POWER" - TOS power.
      10) "TDC POWER" - Telephone demarcation cabinet power.
      11) "CCTV" - Closed circuit television circuits.
      12) "TMS" - Traffic monitoring station circuits.
      13) "CMS" - Changeable message sign circuits.
      14) "HAR" - Highway advisory radio circuits.
      15) "BOOSTER PUMP" - Booster pump circuit.

2. The nominal dimensions of the opening in which the cover sets shall be the same as the cover dimensions except the length and width dimensions shall be ⅛" greater.

3. Covers and boxes shall be interchangeable with California standard male and female gages. When interchanged with a standard male or female gage, the top surfaces shall be flush within ⅛". Top outside radius of covers and pull boxes shall have a ⅛" radius.

4. Pull box extension may be another pull box as long as the bottom edge of the pull box can fit into the cover opening.

5. All dimensions for the cover for non-traffic pull box are nominal values.

STATE OF CALIFORNIA
DEPARTMENT OF TRANSPORTATION

# ELECTRICAL SYSTEMS (NON-TRAFFIC PULL BOX)

NO SCALE

RSP ES-8A DATED JULY 19, 2013 SUPERSEDES RSP ES-8A DATED JANUARY 20, 2012 THAT SUPPLEMENTS THE STANDARD PLANS BOOK DATED 2010.

**REVISED STANDARD PLAN RSP ES-8A**

**2010 REVISED STANDARD PLAN RSP ES-8A**

7-15-13