Dist	COUNTY	ROUTE	POST MILES TOTAL PROJECT	SHEET No.	TOTAL SHEETS
11	SD	94	32.8/40.3	1	31

STATE OF CALIFORNIA

HSNHPG-P094(060)E

DEPARTMENT OF TRANSPORTATION

PROJECT PLANS FOR CONSTRUCTION ON

STATE HIGHWAY

IN SAN DIEGO COUNTY AT VARIOUS LOCATIONS FROM 1.0 MILE WEST OF COCHERA VIA DRIVE TO 1.0 MILE WEST OF POTRERO VALLEY ROAD

TO BE SUPPLEMENTED BY STANDARD PLANS DATED 2010

INDEX OF PLANS

SHEET No.	DESCRIPTION
1	TITLE AND LOCATION MAP
2	PROJECT CONTROL
3-18	CONSTRUCTION DETAILS
19-20	WATER POLLUTION CONTROL PLANS AND QUANTITIES
21	CONSTRUCTION AREA SIGNS
22-24	STAGE CONSTRUCTION AND TRAFFIC HANDLING PLANS AND QUANTITIES
25	PAVEMENT DELINEATION QUANTITIES
26	SUMMARY OF QUANTITIES
27-31	REVISED STANDARD PLANS

THE STANDARD PLANS LIST APPLICABLE TO THIS CONTRACT IS INCLUDED IN THE NOTICE TO BIDDERS AND SPECIAL PROVISIONS BOOK.

LOCATION MAP

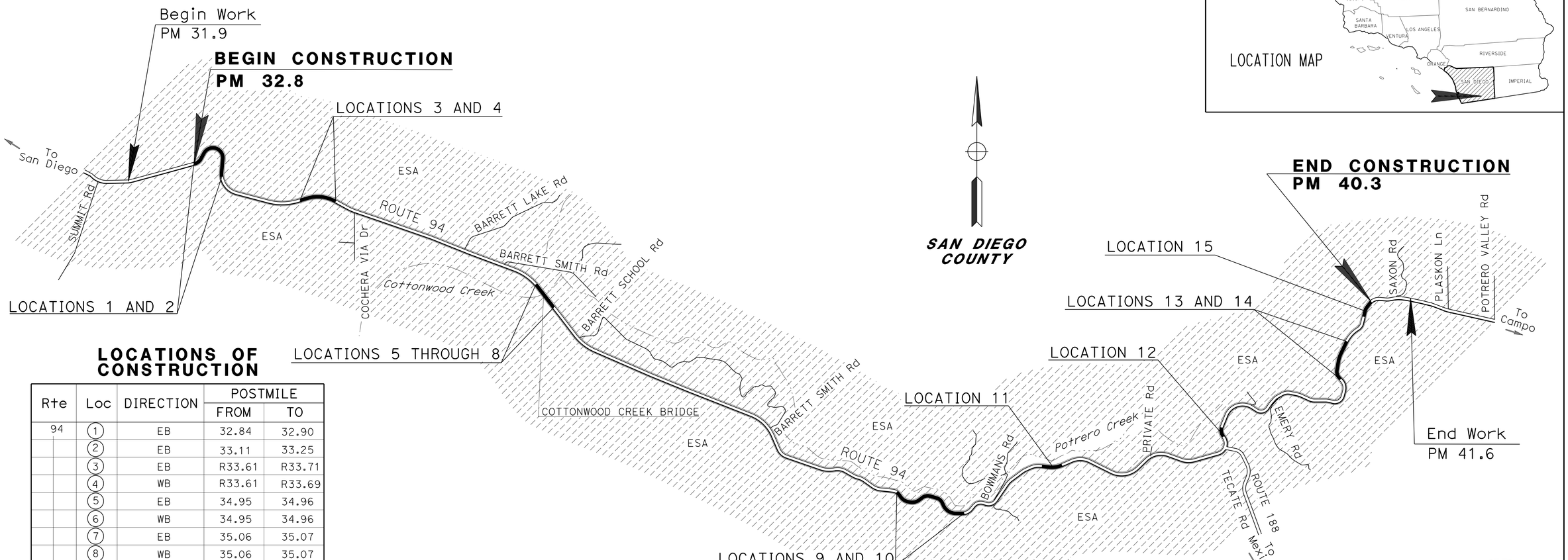

LOCATIONS OF CONSTRUCTION

Rte	Loc	DIRECTION	POSTMILE FROM	POSTMILE TO
94	1	EB	32.84	32.90
	2	EB	33.11	33.25
	3	EB	R33.61	R33.71
	4	WB	R33.61	R33.69
	5	EB	34.95	34.96
	6	WB	34.95	34.96
	7	EB	35.06	35.07
	8	WB	35.06	35.07
	9	WB	36.64	37.22
	10	WB	37.29	37.39
	11	WB	38.01	38.27
	12	WB	39.06	39.11
	13	WB	39.87	39.91
	14	WB	40.02	40.14
	15	WB	40.29	40.32

THE CONTRACTOR SHALL POSSESS THE CLASS (OR CLASSES) OF LICENSE AS SPECIFIED IN THE "NOTICE TO BIDDERS."

NO SCALE

PROJECT MANAGER: RICHARD ESTRADA

DESIGN ENGINEER: BARZAN ARAN

06-25-13
PROJECT ENGINEER REGISTERED CIVIL ENGINEER — DATE

August 5, 2013
PLANS APPROVAL DATE

REGISTERED PROFESSIONAL ENGINEER — BARZAN ARAN No. 75167 Exp. 12-31-13 CIVIL — STATE OF CALIFORNIA

THE STATE OF CALIFORNIA OR ITS OFFICERS OR AGENTS SHALL NOT BE RESPONSIBLE FOR THE ACCURACY OR COMPLETENESS OF SCANNED COPIES OF THIS PLAN SHEET.

CONTRACT No.	**11-287904**
PROJECT ID	**1100000346**

LAST REVISION 06-27-13 | DATE PLOTTED => 19-AUG-2013 TIME PLOTTED => 08:42

Dist	COUNTY	ROUTE	POST MILES TOTAL PROJECT	SHEET No.	TOTAL SHEETS
11	SD	94	32.8/40.3	2	31

George J. Schuh 06-24-13
REGISTERED CIVIL ENGINEER DATE

08-05-13
PLANS APPROVAL DATE

PROFESSIONAL LAND SURVEYOR GEORGE J. SCHUH L.S. 7121 Exp. 12/31/2014 STATE OF CALIFORNIA

THE STATE OF CALIFORNIA OR ITS OFFICERS OR AGENTS SHALL NOT BE RESPONSIBLE FOR THE ACCURACY OR COMPLETENESS OF SCANNED COPIES OF THIS PLAN SHEET.

NOTES:

FOR COMPLETE PROJECT CONTROL AND MONUMENTATION DATA, SEE THE SURVEY RECORDS ON FILE AT DISTRICT 11 SURVEYS.

BASIS OF BEARINGS AND COORDINATES

FOR THIS PROJECT IS THE CALIFORNIA COORDINATE SYSTEM OF 1983 HGPN (1991.35 EPOCH) ZONE 6. PROJECT CONTROL STATIONS WERE ESTABLISHED ACCORDING TO CRITERIA SET FORTH IN THE FEDERAL GEODETIC CONTROL SUBCOMMITTEE'S "GEOMETRIC GEODETIC ACCURACY STANDARDS AND SPECIFICATIONS FOR USING GPS RELATIVE POSITIONING TECHNIQUES" REPRINTED AUGUST 1, 1989.

BASIS OF ELEVATIONS

FOR THIS PROJECT IS THE NORTH AMERICAN VERTICAL DATUM OF 1988 (NAVD88). ELEVATIONS WERE ESTABLISHED BY GPS FAST STATIC SURVEY.

ABBREVIATIONS:

CADT CALIFORNIA DEPARTMENT OF TRANSPORTATION
CDH CALIFORNIA DIVISION OF HIGHWAYS

LEGEND:

(1) 1ST ORDER STATION
(2) 2ND ORDER STATION

CONTROL FOR DESIGN AND CONSTRUCTION

STATION DESIGNATION	ORDER	NORTHING	EASTING	ELEVATION	DESCRIPTION
94-34.49	2ND	1802860.89	6420566.52	881.70	2¼" CADT BRASS DISK
BARRETT OS	1ST	1802361.14	6422174.90	897.53	2" CDH DISK
94-35.25	2ND	1800462.91	6423767.37	951.70	2¼" CADT BRASS DISK

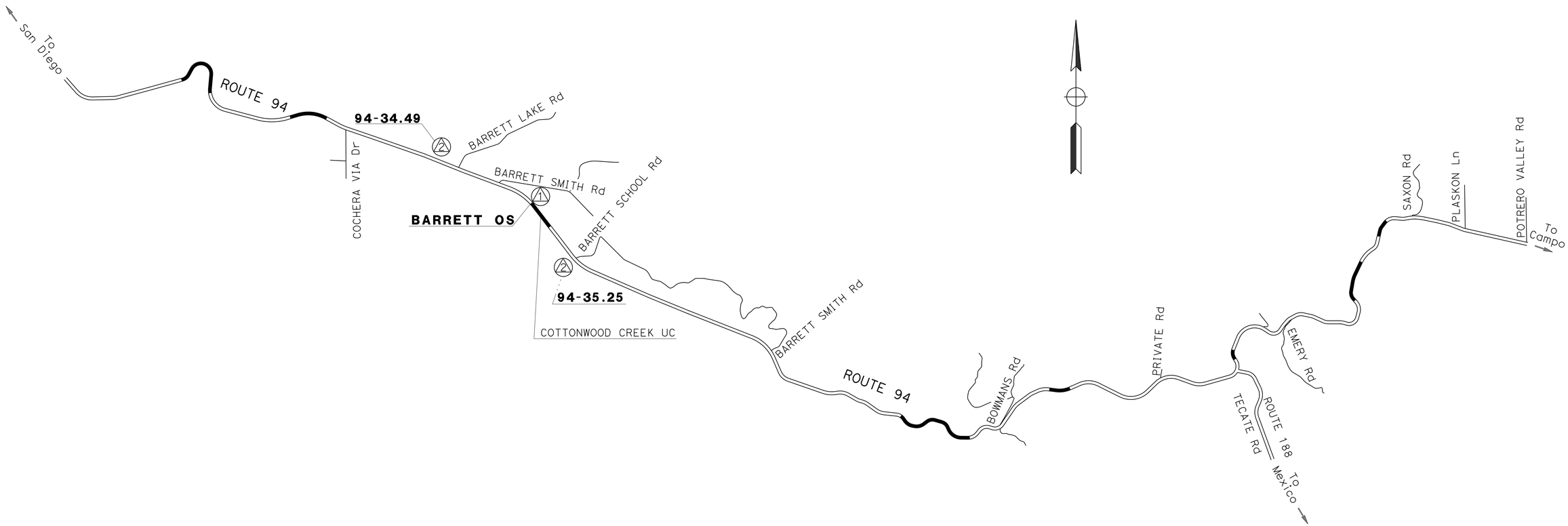

PROJECT CONTROL

NO SCALE

PC-1

APPROVED FOR PROJECT CONTROL INFORMATION ONLY

STATE OF CALIFORNIA - DEPARTMENT OF TRANSPORTATION
Caltrans LAND SURVEYS DIVISION

FUNCTIONAL SUPERVISOR: BRUCE URQUHART
DESIGNED-DRAWN BY: ANDREW SUI
CHECKED BY: GEORGE SCHUH
REVISED BY
DATE REVISED

LAST REVISION 06-28-13 | DATE PLOTTED => 07-AUG-2013 | TIME PLOTTED => 14:20

Dist	COUNTY	ROUTE	POST MILES TOTAL PROJECT	SHEET No.	TOTAL SHEETS
11	SD	94	32.8/40.3	3	31

REGISTERED CIVIL ENGINEER DATE 06-24-13

08-05-13
PLANS APPROVAL DATE

REGISTERED PROFESSIONAL ENGINEER
BARZAN ARAN
No. 75167
Exp. 12-31-13
CIVIL
STATE OF CALIFORNIA

THE STATE OF CALIFORNIA OR ITS OFFICERS OR AGENTS SHALL NOT BE RESPONSIBLE FOR THE ACCURACY OR COMPLETENESS OF SCANNED COPIES OF THIS PLAN SHEET.

NOTES:

1. FOR ACCURATE RIGHT OF WAY DATA, CONTACT RIGHT OF WAY ENGINEERING AT THE DISTRICT OFFICE.
2. SEE SUMMARY OF QUANTITIES SHEETS FOR ADDITIONAL MBGR, DIKE AND OVERSIDE DRAIN INFORMATION.

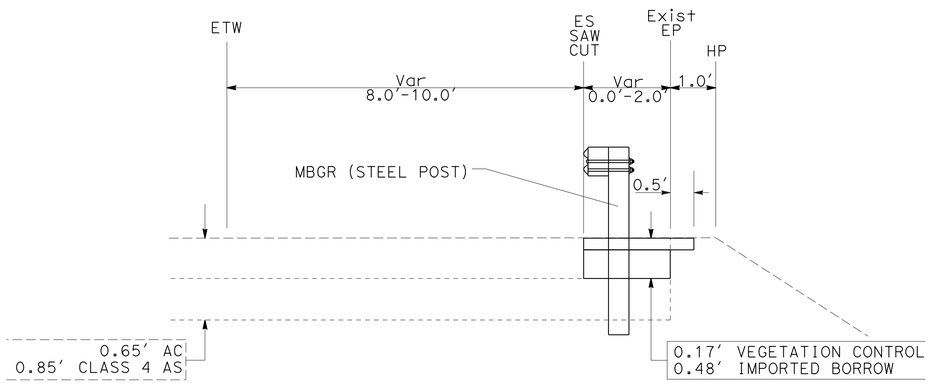

SECTION 'A-A'

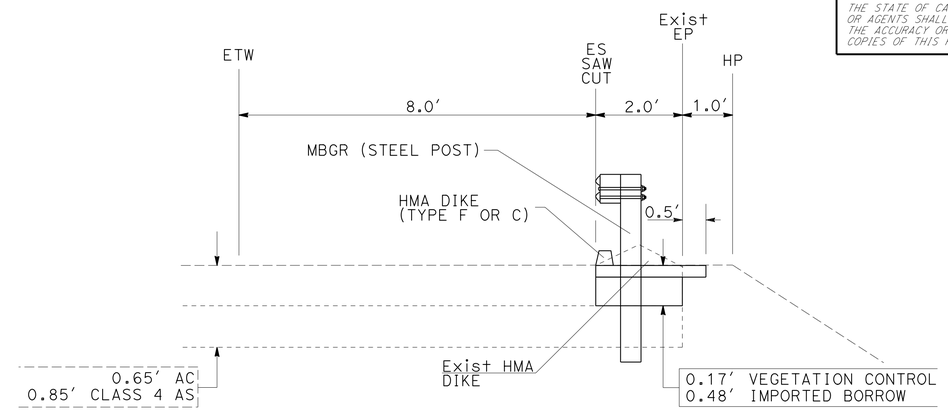

SECTION 'B-B'

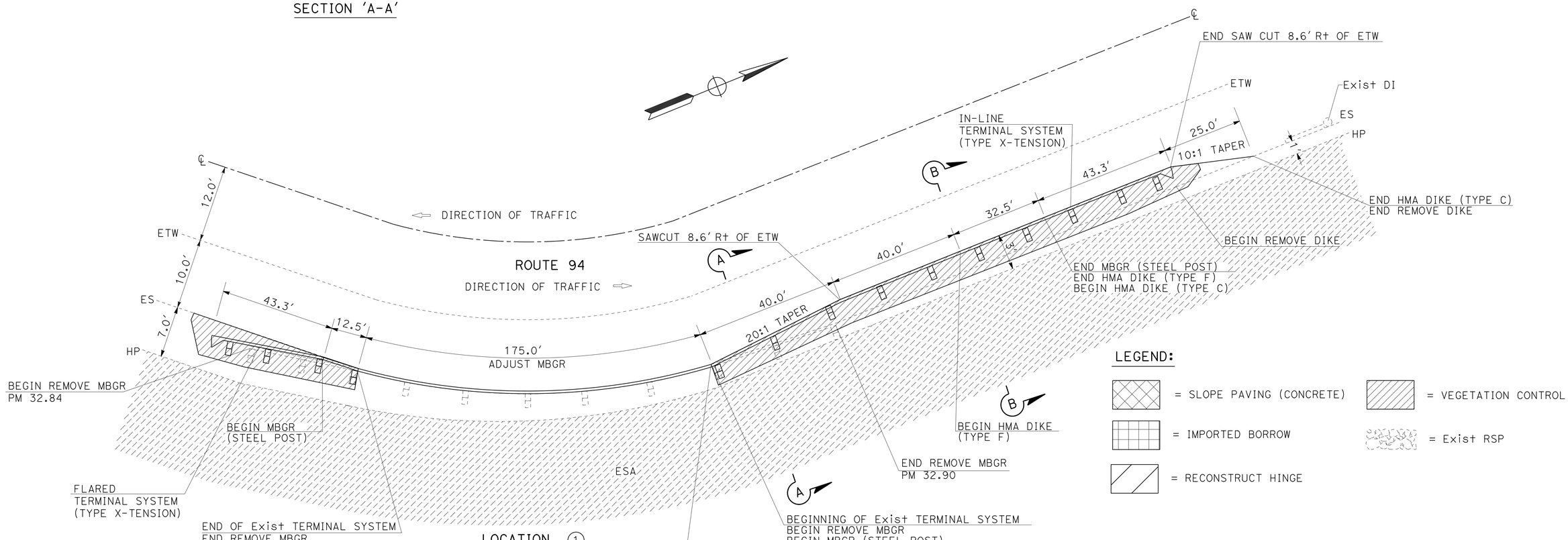

LOCATION 1

MBGR LAYOUT

CONSTRUCTION DETAILS

NO SCALE

C-1

STATE OF CALIFORNIA - DEPARTMENT OF TRANSPORTATION
Caltrans PROJECT DEVELOPMENT
TRAFFIC

FUNCTIONAL SUPERVISOR: RICHARD ESTRADA
CALCULATED-DESIGNED BY: BETHNAY DES JARDINS
CHECKED BY: BARZAN ARAN
REVISED BY / DATE REVISED

LAST REVISION 07-01-13
DATE PLOTTED => 07-AUG-2013
TIME PLOTTED => 14:20

Dist	COUNTY	ROUTE	POST MILES TOTAL PROJECT	SHEET No.	TOTAL SHEETS
11	SD	94	32.8/40.3	4	31

06-24-13
REGISTERED CIVIL ENGINEER DATE

08-05-13
PLANS APPROVAL DATE

REGISTERED PROFESSIONAL ENGINEER
BARZAN ARAN
No. 75167
Exp. 12-31-13
CIVIL
STATE OF CALIFORNIA

THE STATE OF CALIFORNIA OR ITS OFFICERS OR AGENTS SHALL NOT BE RESPONSIBLE FOR THE ACCURACY OR COMPLETENESS OF SCANNED COPIES OF THIS PLAN SHEET.

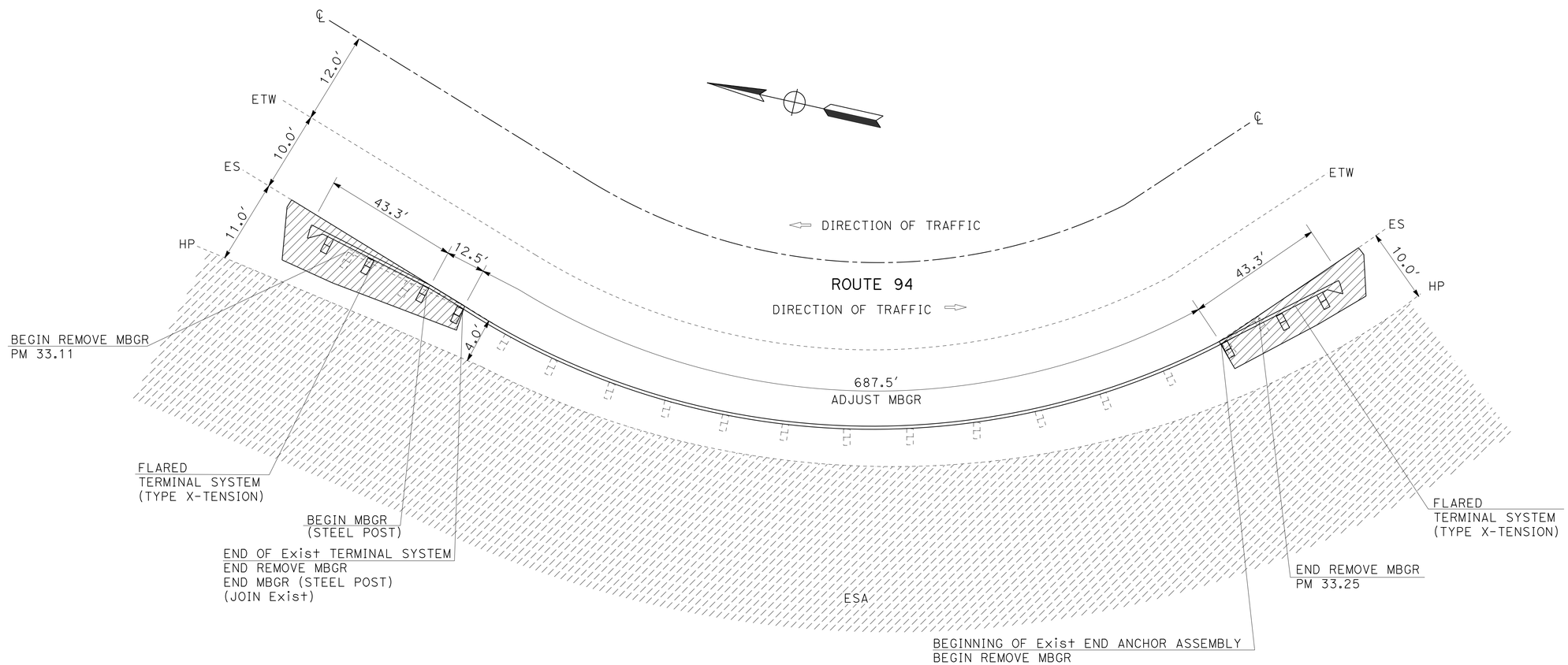

LOCATION (2)

MBGR LAYOUT

CONSTRUCTION DETAILS

NO SCALE

C-2

STATE OF CALIFORNIA - DEPARTMENT OF TRANSPORTATION
Caltrans PROJECT DEVELOPMENT
TRAFFIC

FUNCTIONAL SUPERVISOR: RICHARD ESTRADA
CALCULATED-DESIGNED BY: BARZAN ARAN
CHECKED BY:
REVISED BY:
DATE REVISED:
BETHNAY DES JARDINS

LAST REVISION 07-01-13
DATE PLOTTED => 07-AUG-2013
TIME PLOTTED => 14:21

Dist	COUNTY	ROUTE	POST MILES TOTAL PROJECT	SHEET No.	TOTAL SHEETS
11	SD	94	32.8/40.3	5	31

REGISTERED CIVIL ENGINEER 06-24-13 DATE

08-05-13
PLANS APPROVAL DATE

REGISTERED PROFESSIONAL ENGINEER
BARZAN ARAN
No. 75167
Exp. 12-31-13
CIVIL
STATE OF CALIFORNIA

THE STATE OF CALIFORNIA OR ITS OFFICERS OR AGENTS SHALL NOT BE RESPONSIBLE FOR THE ACCURACY OR COMPLETENESS OF SCANNED COPIES OF THIS PLAN SHEET.

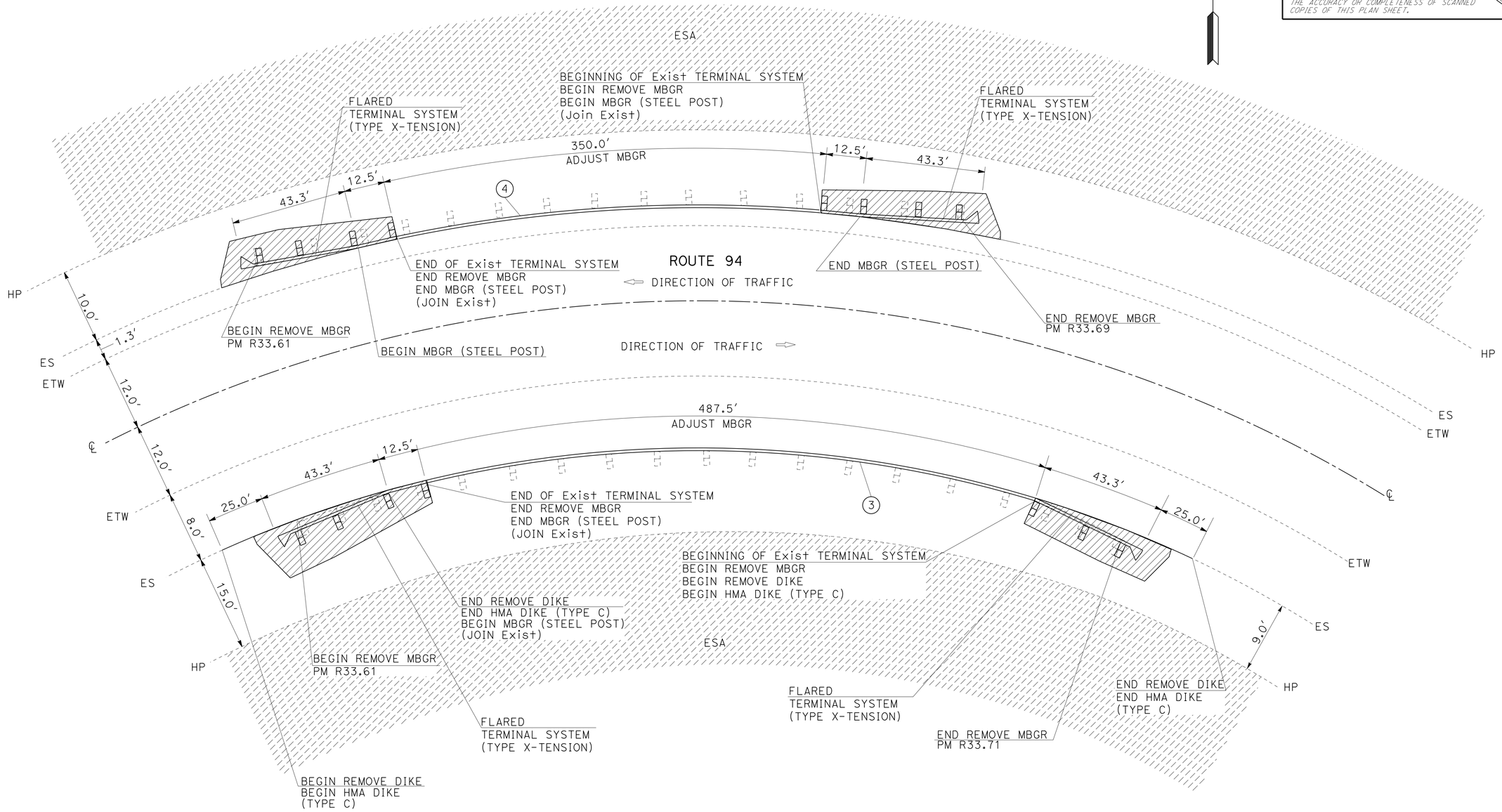

LOCATIONS 3 4

MBGR LAYOUT

CONSTRUCTION DETAILS

NO SCALE

C-3

STATE OF CALIFORNIA - DEPARTMENT OF TRANSPORTATION
Caltrans PROJECT DEVELOPMENT
TRAFFIC

FUNCTIONAL SUPERVISOR: RICHARD ESTRADA
CALCULATED-DESIGNED BY: BETHNAY DES JARDINS
CHECKED BY: BARZAN ARAN
REVISED BY
DATE REVISED

LAST REVISION 07-01-13
DATE PLOTTED => 07-AUG-2013
TIME PLOTTED => 14:21

Dist	COUNTY	ROUTE	POST MILES TOTAL PROJECT	SHEET No.	TOTAL SHEETS
11	SD	94	32.8/40.3	6	31

REGISTERED CIVIL ENGINEER 06-24-13 DATE

08-05-13
PLANS APPROVAL DATE

REGISTERED PROFESSIONAL ENGINEER BARZAN ARAN No. 75167 Exp. 12-31-13 CIVIL STATE OF CALIFORNIA

THE STATE OF CALIFORNIA OR ITS OFFICERS OR AGENTS SHALL NOT BE RESPONSIBLE FOR THE ACCURACY OR COMPLETENESS OF SCANNED COPIES OF THIS PLAN SHEET.

NOTE: REMOVE OVERSIDE DRAIN AND REPLACE IN-KIND.

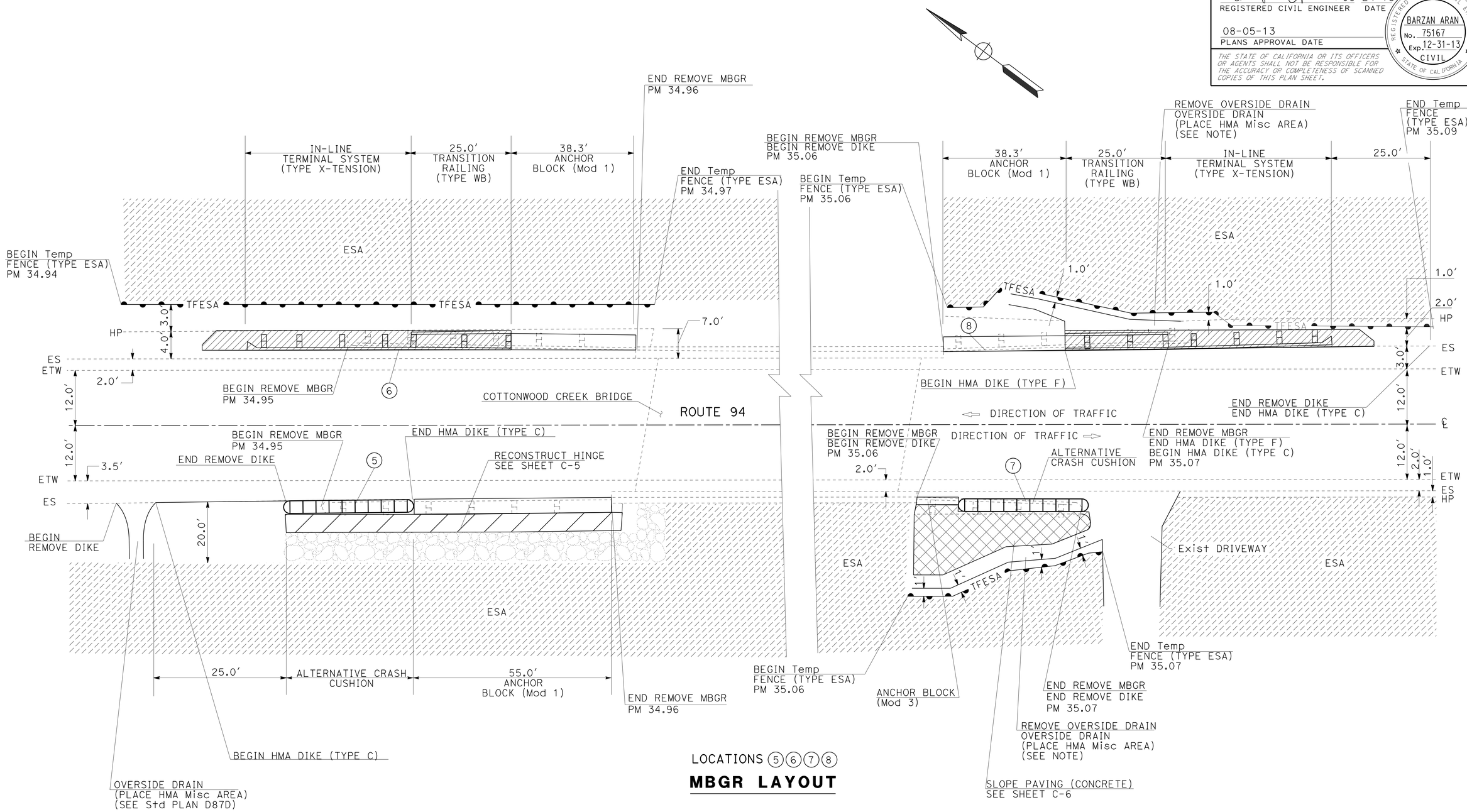

LOCATIONS 5 6 7 8

MBGR LAYOUT

CONSTRUCTION DETAILS

NO SCALE

C-4

STATE OF CALIFORNIA - DEPARTMENT OF TRANSPORTATION
Caltrans PROJECT DEVELOPMENT
TRAFFIC

FUNCTIONAL SUPERVISOR: RICHARD ESTRADA
CALCULATED-DESIGNED BY: BARZAN ARAN
CHECKED BY: BETHNAY DES JARDINS
REVISED BY
DATE REVISED

LAST REVISION 07-01-13
DATE PLOTTED => 07-AUG-2013
TIME PLOTTED => 14:21

Dist	COUNTY	ROUTE	POST MILES TOTAL PROJECT	SHEET No.	TOTAL SHEETS
11	SD	94	32.8/40.3	7	31

REGISTERED CIVIL ENGINEER 06-24-13 DATE

08-05-13
PLANS APPROVAL DATE

REGISTERED PROFESSIONAL ENGINEER
BARZAN ARAN
No. 75167
Exp. 12-31-13
CIVIL
STATE OF CALIFORNIA

THE STATE OF CALIFORNIA OR ITS OFFICERS OR AGENTS SHALL NOT BE RESPONSIBLE FOR THE ACCURACY OR COMPLETENESS OF SCANNED COPIES OF THIS PLAN SHEET.

NOTE:

FOR ACCURATE RIGHT OF WAY DATA, CONTACT RIGHT OF WAY ENGINEERING AT THE DISTRICT OFFICE.

CURVE DATA

No. (#)	R	Δ	T	L
1	1500′	32°09′00″	432.25′	841.69′

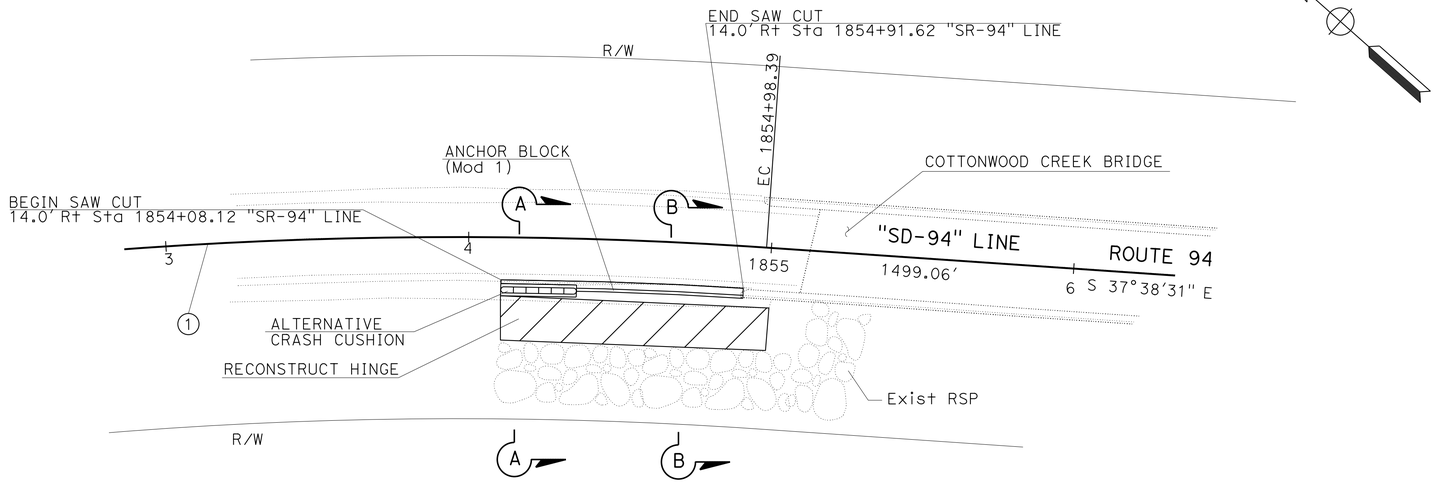

PLAN

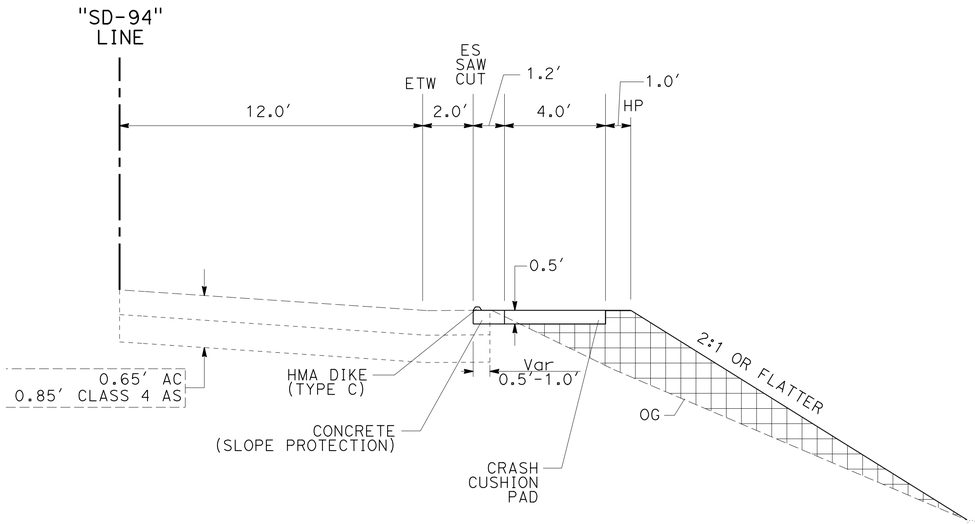

SECTION 'A-A'

Sta 1854+08.12 TO 1854+38.12 "SD-94" LINE

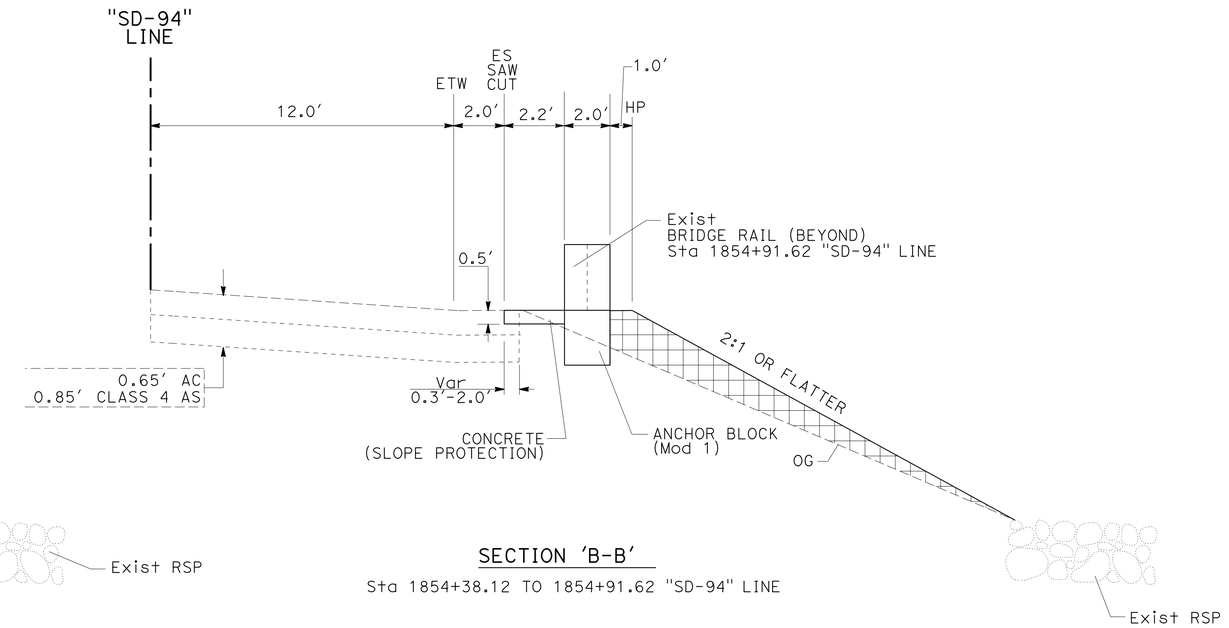

SECTION 'B-B'

Sta 1854+38.12 TO 1854+91.62 "SD-94" LINE

LOCATION (5)

HINGE DETAILS

CONSTRUCTION DETAILS

NO SCALE

C-5

STATE OF CALIFORNIA - DEPARTMENT OF TRANSPORTATION
Caltrans PROJECT DEVELOPMENT
TRAFFIC

FUNCTIONAL SUPERVISOR: RICHARD ESTRADA
CALCULATED-DESIGNED BY: BETHNAY DES JARDINS
CHECKED BY: BARZAN ARAN
REVISED BY
DATE REVISED

LAST REVISION 07-01-13
DATE PLOTTED => 07-AUG-2013
TIME PLOTTED => 14:21

Dist	COUNTY	ROUTE	POST MILES TOTAL PROJECT	SHEET No.	TOTAL SHEETS
11	SD	94	32.8/40.3	8	31

REGISTERED CIVIL ENGINEER DATE 06-24-13

08-05-13
PLANS APPROVAL DATE

REGISTERED PROFESSIONAL ENGINEER BARZAN ARAN No. 75167 Exp. 12-31-13 CIVIL STATE OF CALIFORNIA

THE STATE OF CALIFORNIA OR ITS OFFICERS OR AGENTS SHALL NOT BE RESPONSIBLE FOR THE ACCURACY OR COMPLETENESS OF SCANNED COPIES OF THIS PLAN SHEET.

NOTE:

FOR ACCURATE RIGHT OF WAY DATA, CONTACT RIGHT OF WAY ENGINEERING AT THE DISTRICT OFFICE.

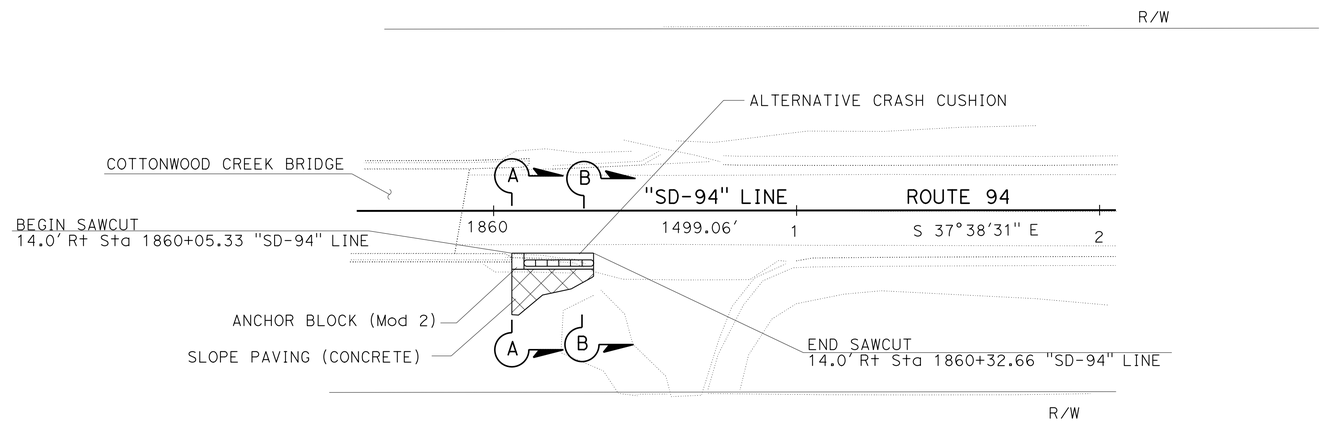

PLAN

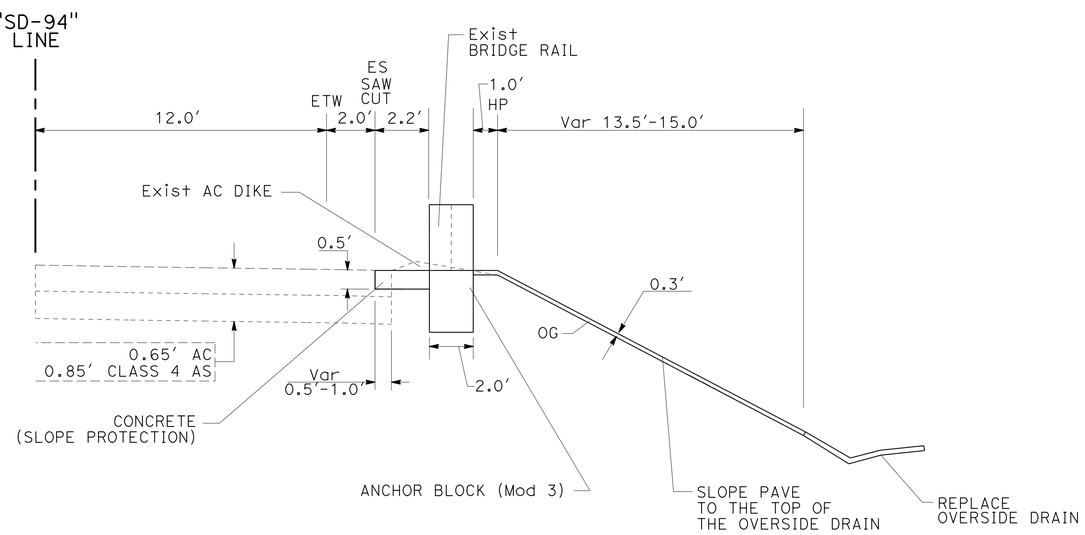

SECTION 'A-A'

Sta 1860+05.33 TO 1860+09.66 "SD-94" LINE

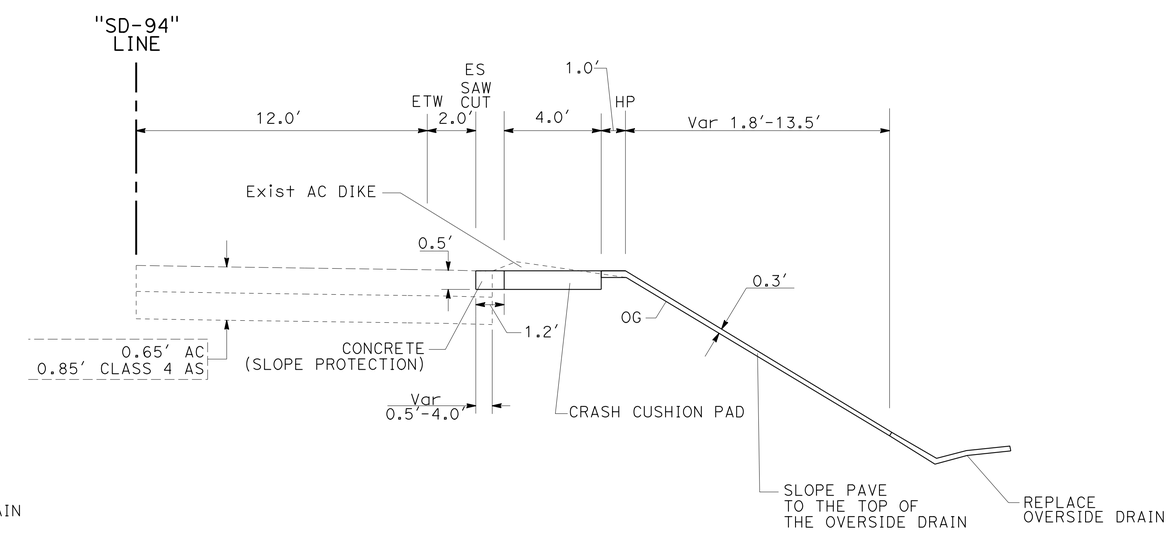

SECTION 'B-B'

Sta 1860+09.66 TO 1860+32.66 "SD-94" LINE

LOCATION (7)

SLOPE PAVING DETAILS

CONSTRUCTION DETAILS

NO SCALE

C-6

STATE OF CALIFORNIA - DEPARTMENT OF TRANSPORTATION
Caltrans PROJECT DEVELOPMENT
TRAFFIC

FUNCTIONAL SUPERVISOR: RICHARD ESTRADA
CALCULATED-DESIGNED BY: BETHNAY DES JARDINS
CHECKED BY: BARZAN ARAN
REVISED BY
DATE REVISED

LAST REVISION 07-02-13 DATE PLOTTED => 07-AUG-2013 TIME PLOTTED => 14:21

Dist	COUNTY	ROUTE	POST MILES TOTAL PROJECT	SHEET No.	TOTAL SHEETS
11	SD	94	32.8/40.3	9	31

REGISTERED CIVIL ENGINEER 06-24-13 DATE

08-05-13
PLANS APPROVAL DATE

REGISTERED PROFESSIONAL ENGINEER BARZAN ARAN No. 75167 Exp. 12-31-13 CIVIL STATE OF CALIFORNIA

THE STATE OF CALIFORNIA OR ITS OFFICERS OR AGENTS SHALL NOT BE RESPONSIBLE FOR THE ACCURACY OR COMPLETENESS OF SCANNED COPIES OF THIS PLAN SHEET.

NOTES:

1. FOR DETAILS NOT SHOWN, SEE STANDARD PLAN A77J3.
2. DEPENDENT DIMENSIONS SHALL BE VERIFIED IN THE FIELD BEFORE FABRICATING ANY END CONNECTION TO CONFORM WITH EXISTING PAVED CONDITIONS.
3. TAPER THE TOP OF BRIDGE RAILING TRANSITION AT 4:1 TO MATCH THE TOP ELEVATION OF THE TRANSITION RAILING TYPE (WB).
4. IF REINFORCING STEEL IS PRESENT IN THE SIDEWALK SECTION, PROTECT IN PLACE.

LEGEND:

LIMITS OF CONCRETE REMOVAL

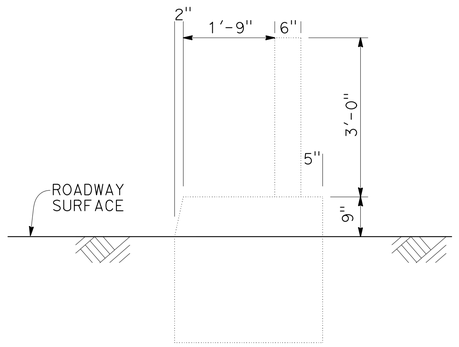

ELEVATION
TYPICAL EXISTING SECTION FOR BRIDGE RAIL APPROACH

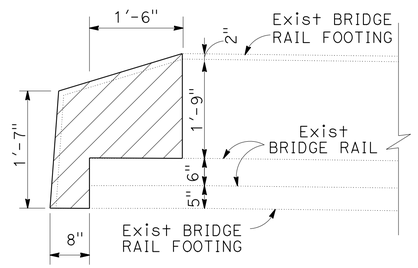

CONCRETE REMOVAL DETAIL
PLAN

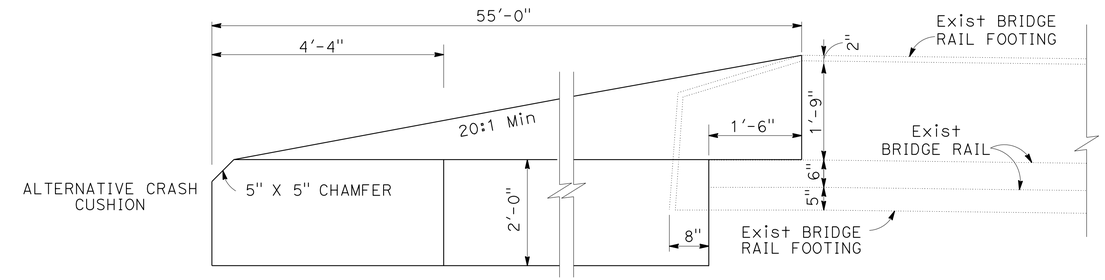

BRIDGE RAILING TRANSITION
PLAN

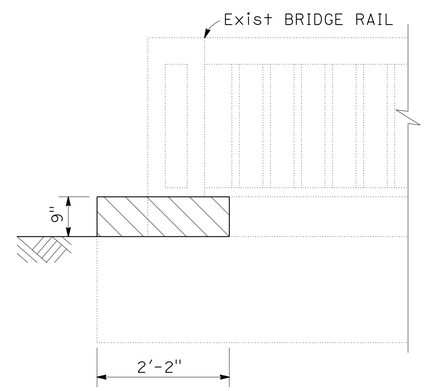

CONCRETE REMOVAL DETAIL
ELEVATION

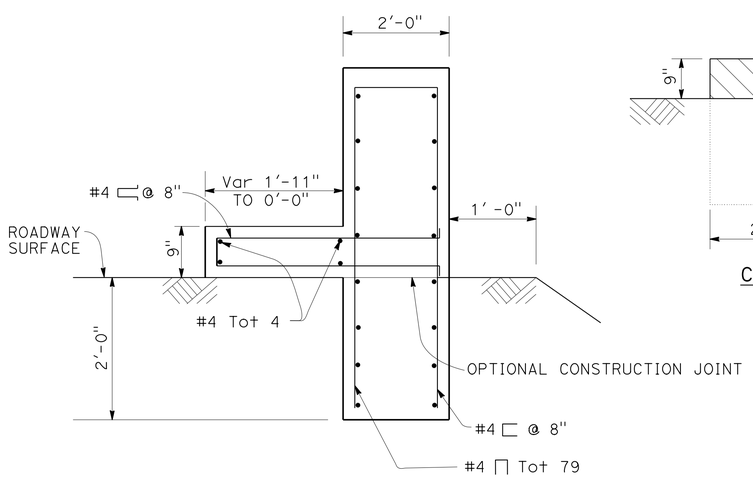

SECTION A-A

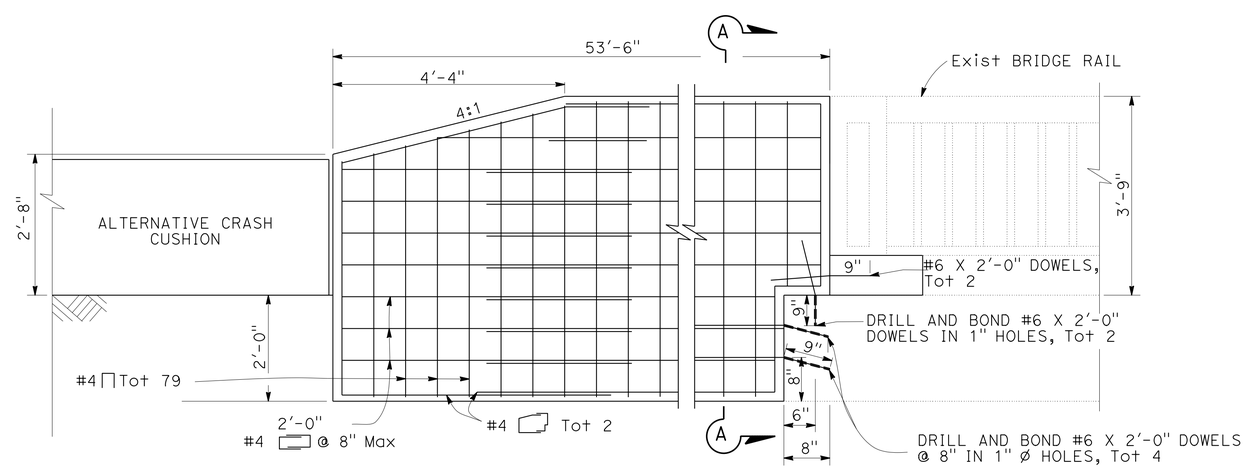

ELEVATION
BRIDGE RAILING TRANSITION

LOCATIONS 5

COTTONWOOD CREEK BRIDGE
BRIDGE RAILING TRANSITION DETAILS

ANCHOR BLOCK (Mod 1)

CONSTRUCTION DETAILS

NO SCALE

C-7

STATE OF CALIFORNIA - DEPARTMENT OF TRANSPORTATION
Caltrans PROJECT DEVELOPMENT TRAFFIC

FUNCTIONAL SUPERVISOR: RICHARD ESTRADA
CALCULATED-DESIGNED BY: BETHNAY DES JARDINS
CHECKED BY: BARZAN ARAN
REVISED BY
DATE REVISED

LAST REVISION 07-02-13
DATE PLOTTED => 07-AUG-2013
TIME PLOTTED => 14:21

Dist	COUNTY	ROUTE	POST MILES TOTAL PROJECT	SHEET No.	TOTAL SHEETS
11	SD	94	32.8/40.3	10	31

REGISTERED CIVIL ENGINEER 06-24-13 DATE

08-05-13
PLANS APPROVAL DATE

REGISTERED PROFESSIONAL ENGINEER BARZAN ARAN No. 75167 Exp. 12-31-13 CIVIL STATE OF CALIFORNIA

THE STATE OF CALIFORNIA OR ITS OFFICERS OR AGENTS SHALL NOT BE RESPONSIBLE FOR THE ACCURACY OR COMPLETENESS OF SCANNED COPIES OF THIS PLAN SHEET.

NOTES:

1. FOR DETAILS NOT SHOWN, SEE STANDARD PLAN A77J3.
2. DEPENDENT DIMENSIONS SHALL BE VERIFIED IN THE FIELD BEFORE FABRICATING ANY END CONNECTION TO CONFORM WITH EXISTING PAVED CONDITIONS.
3. TAPER THE TOP OF BRIDGE RAILING TRANSITION AT 4:1 TO MATCH THE TOP ELEVATION OF THE TRANSITION RAILING TYPE (WB).
4. IF REINFORCING STEEL IS PRESENT IN THE SIDEWALK SECTION, PROTECT IN PLACE.

LEGEND:

LIMITS OF CONCRETE REMOVAL

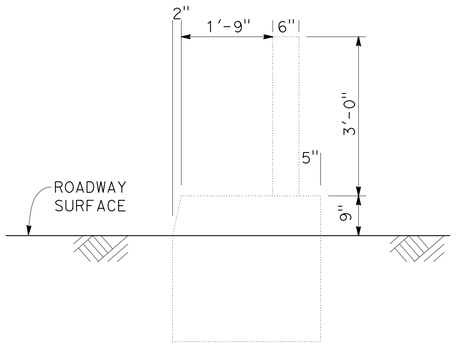

ELEVATION
TYPICAL EXISTING SECTION FOR BRIDGE RAIL APPROACH

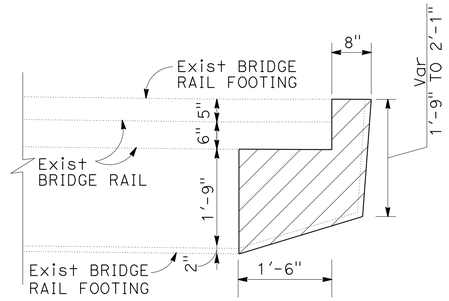

CONCRETE REMOVAL DETAIL
PLAN

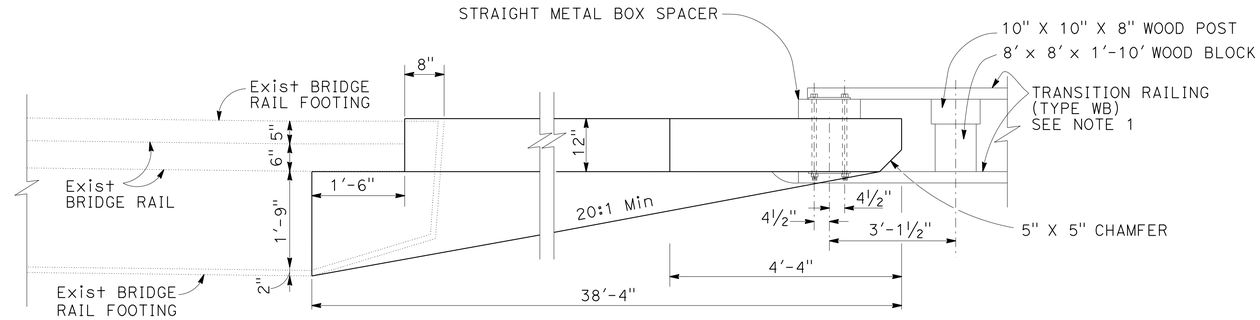

PLAN
BRIDGE RAILING TRANSITION

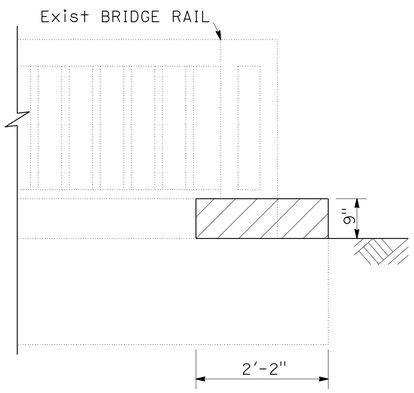

CONCRETE REMOVAL DETAIL
ELEVATION

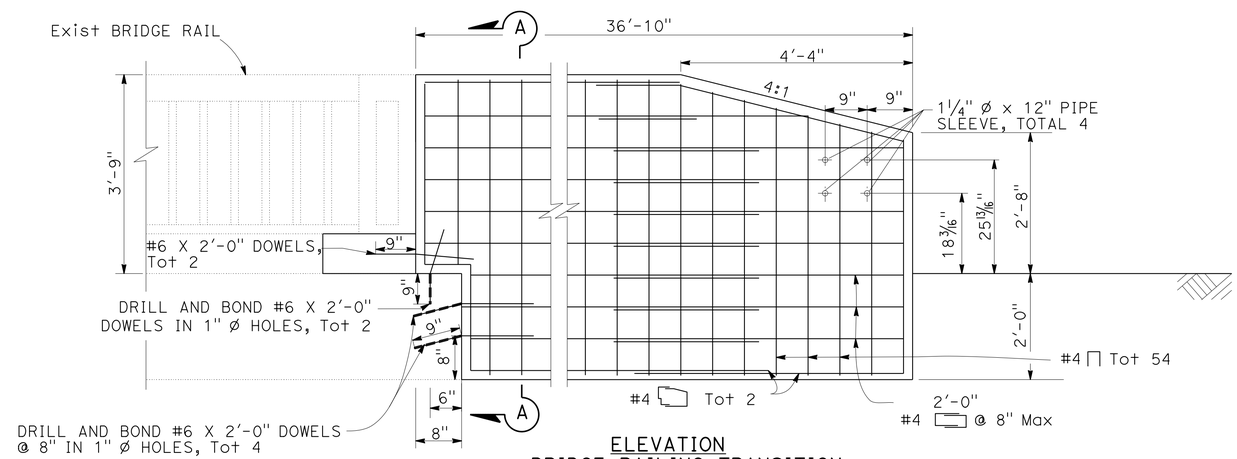

ELEVATION
BRIDGE RAILING TRANSITION

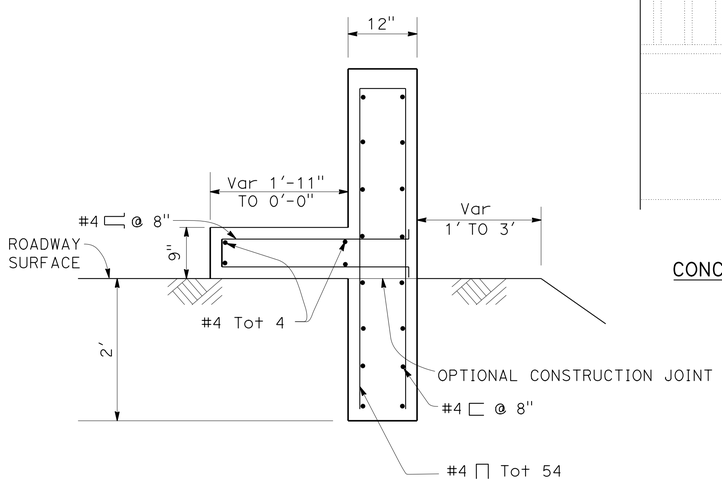

SECTION A-A

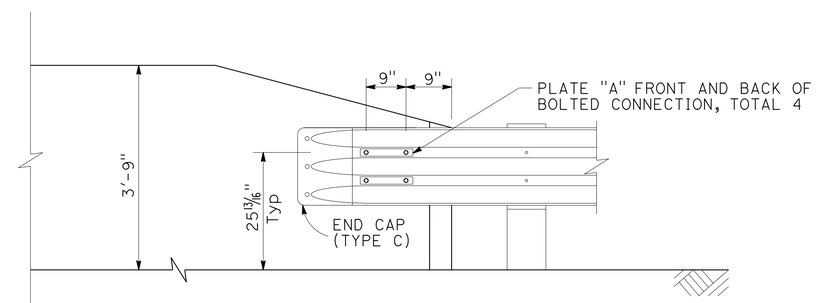

ELEVATION
CONNECTION DETAIL

LOCATIONS ⑥ & ⑧

COTTONWOOD CREEK BRIDGE
BRIDGE RAILING TRANSITION DETAILS

ANCHOR BLOCK (Mod 2)

CONSTRUCTION DETAILS

NO SCALE

C-8

STATE OF CALIFORNIA - DEPARTMENT OF TRANSPORTATION
Caltrans TRAFFIC PROJECT DEVELOPMENT

FUNCTIONAL SUPERVISOR: RICHARD ESTRADA
CALCULATED-DESIGNED BY: BETHNAY DES JARDINS
CHECKED BY: BARZAN ARAN
REVISED BY / DATE REVISED

LAST REVISION 07-02-13 | DATE PLOTTED => 07-AUG-2013 | TIME PLOTTED => 14:21

Dist	COUNTY	ROUTE	POST MILES TOTAL PROJECT	SHEET No.	TOTAL SHEETS
11	SD	94	32.8/40.3	11	31

REGISTERED CIVIL ENGINEER DATE 06-24-13

08-05-13
PLANS APPROVAL DATE

REGISTERED PROFESSIONAL ENGINEER BARZAN ARAN No. 75167 Exp. 12-31-13 CIVIL STATE OF CALIFORNIA

THE STATE OF CALIFORNIA OR ITS OFFICERS OR AGENTS SHALL NOT BE RESPONSIBLE FOR THE ACCURACY OR COMPLETENESS OF SCANNED COPIES OF THIS PLAN SHEET.

NOTES:

1. FOR DETAILS NOT SHOWN, SEE STANDARD PLAN A77J3.
2. DEPENDENT DIMENSIONS SHALL BE VERIFIED IN THE FIELD BEFORE FABRICATING ANY END CONNECTION TO CONFORM WITH EXISTING PAVED CONDITIONS.
3. TAPER THE TOP OF THE END OF THE CONCRETE RAILING TRANSITION AT 4:1 TO MATCH THE TOP ELEVATION OF THE BRIDGE RAILING.
4. IF REINFORCING STEEL IS PRESENT IN THE SIDEWALK SECTION, PROTECT IN PLACE.

LEGEND:

LIMITS OF CONCRETE REMOVAL

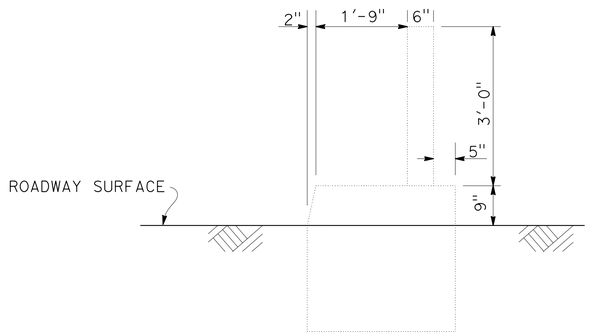

ELEVATION
TYPICAL EXISTING SECTION FOR BRIDGE RAIL APPROACH

CONCRETE REMOVAL DETAIL
PLAN

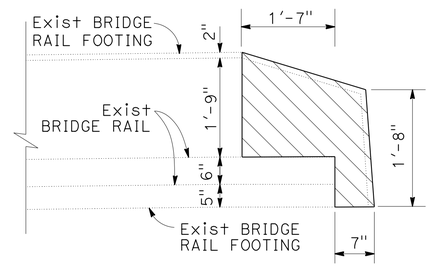

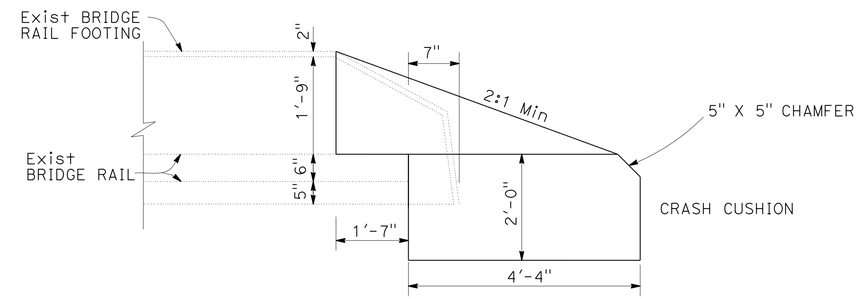

PLAN
BRIDGE RAILING TRANSITION

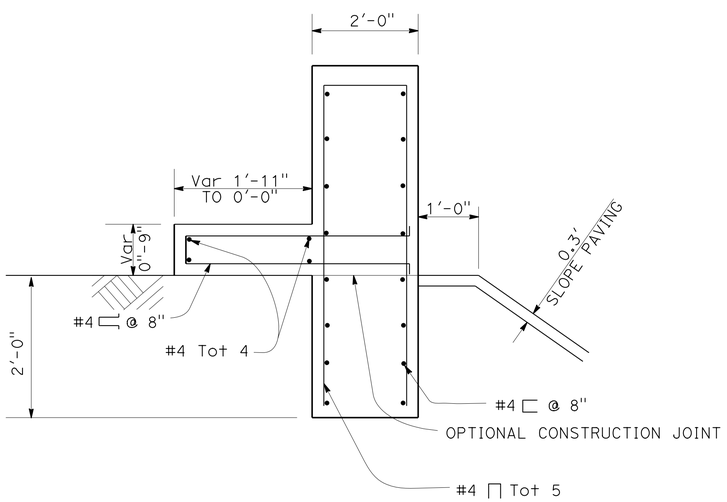

SECTION A-A

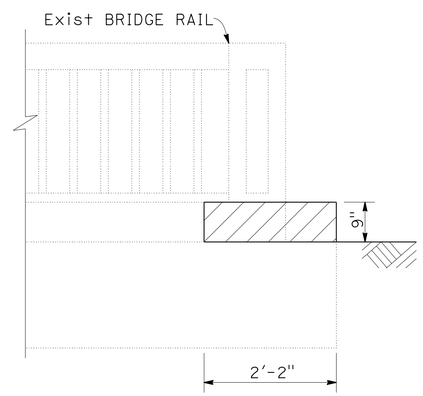

CONCRETE REMOVAL DETAIL
ELEVATION

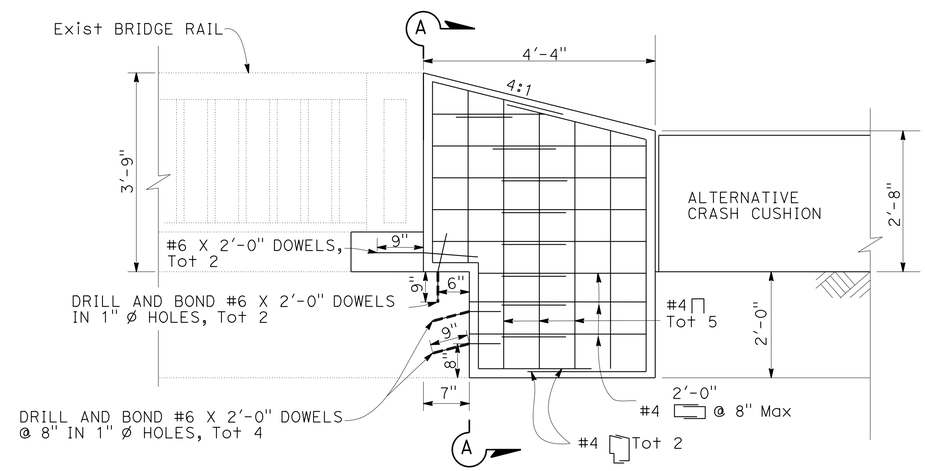

ELEVATION
BRIDGE RAILING TRANSITION

LOCATION ⑦

COTTONWOOD CREEK BRIDGE
BRIDGE RAILING TRANSITION DETAILS

ANCHOR BLOCK (Mod 3)

CONSTRUCTION DETAILS
NO SCALE

C-9

STATE OF CALIFORNIA - DEPARTMENT OF TRANSPORTATION
Caltrans PROJECT DEVELOPMENT
TRAFFIC

FUNCTIONAL SUPERVISOR: RICHARD ESTRADA
CALCULATED-DESIGNED BY: BETHNAY DES JARDINS
CHECKED BY: BARZAN ARAN
REVISED BY
DATE REVISED

LAST REVISION 07-02-13
DATE PLOTTED => 07-AUG-2013
TIME PLOTTED => 14:21

Dist	COUNTY	ROUTE	POST MILES TOTAL PROJECT	SHEET No.	TOTAL SHEETS
11	SD	94	32.8/40.3	12	31

REGISTERED CIVIL ENGINEER 06-24-13 DATE

08-05-13
PLANS APPROVAL DATE

REGISTERED PROFESSIONAL ENGINEER
BARZAN ARAN
No. 75167
Exp. 12-31-13
CIVIL
STATE OF CALIFORNIA

THE STATE OF CALIFORNIA OR ITS OFFICERS OR AGENTS SHALL NOT BE RESPONSIBLE FOR THE ACCURACY OR COMPLETENESS OF SCANNED COPIES OF THIS PLAN SHEET.

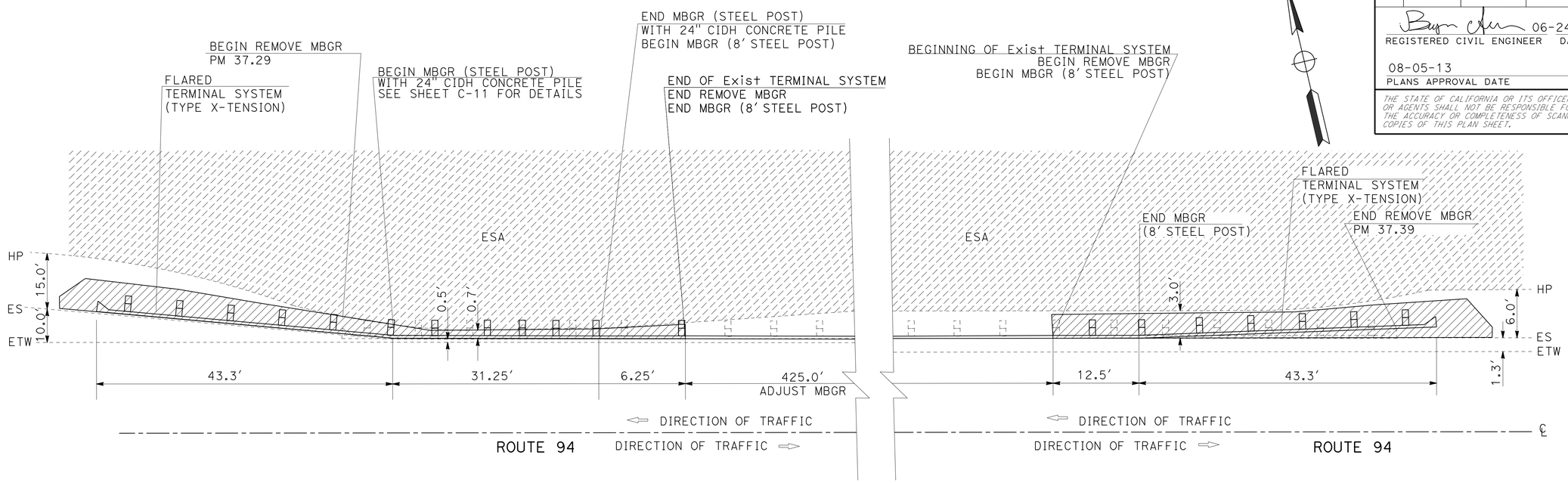

LOCATION (10)

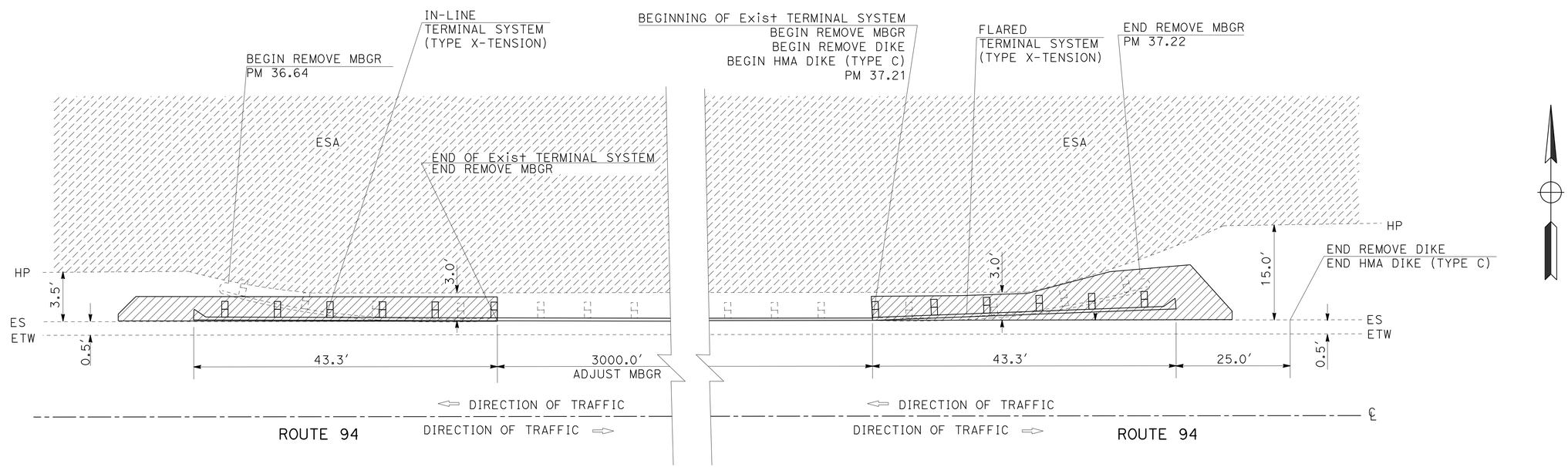

LOCATION (9)

MBGR LAYOUT

CONSTRUCTION DETAILS

NO SCALE

C-10

STATE OF CALIFORNIA - DEPARTMENT OF TRANSPORTATION
Caltrans PROJECT DEVELOPMENT TRAFFIC

FUNCTIONAL SUPERVISOR: RICHARD ESTRADA
CALCULATED-DESIGNED BY: BETHNAY DES JARDINS
CHECKED BY: BARZAN ARAN
REVISED BY
DATE REVISED

LAST REVISION 07-02-13
DATE PLOTTED => 07-AUG-2013
TIME PLOTTED => 14:21

Dist	COUNTY	ROUTE	POST MILES TOTAL PROJECT	SHEET No.	TOTAL SHEETS
11	SD	94	32.8/40.3	13	31

REGISTERED CIVIL ENGINEER 06-24-13 DATE

08-05-13
PLANS APPROVAL DATE

REGISTERED PROFESSIONAL ENGINEER BARZAN ARAN No. 75167 Exp. 12-31-13 CIVIL STATE OF CALIFORNIA

THE STATE OF CALIFORNIA OR ITS OFFICERS OR AGENTS SHALL NOT BE RESPONSIBLE FOR THE ACCURACY OR COMPLETENESS OF SCANNED COPIES OF THIS PLAN SHEET.

NOTES:

1. LAPPED SPLICES IN SPIRAL PILE REINFORCEMENT SHALL BE LAPPED AT LEAST 80 WIRE/BAR DIAMETERS. SPIRAL PILE REINFORCEMENT AT SPLICES AND AT ENDS SHALL BE TERMINATED WITH A 135° HOOK WITH A 6" TAIL HOOKED AROUND A LONGITUDINAL BAR.
2. FOR ADDITIONAL DIMENSIONS AND INFORMATION ON THE 24" CIDH CONCRETE PILE, SEE STANDARD PLAN B2-3.
3. PILE SPACING 6' 3" CENTER-CENTER.
4. MAXIMUM 6 POSTS ON CIDH PILES PER LOCATION.

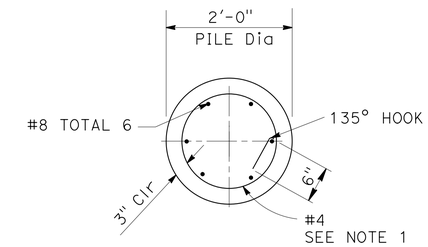

SECTION A-A

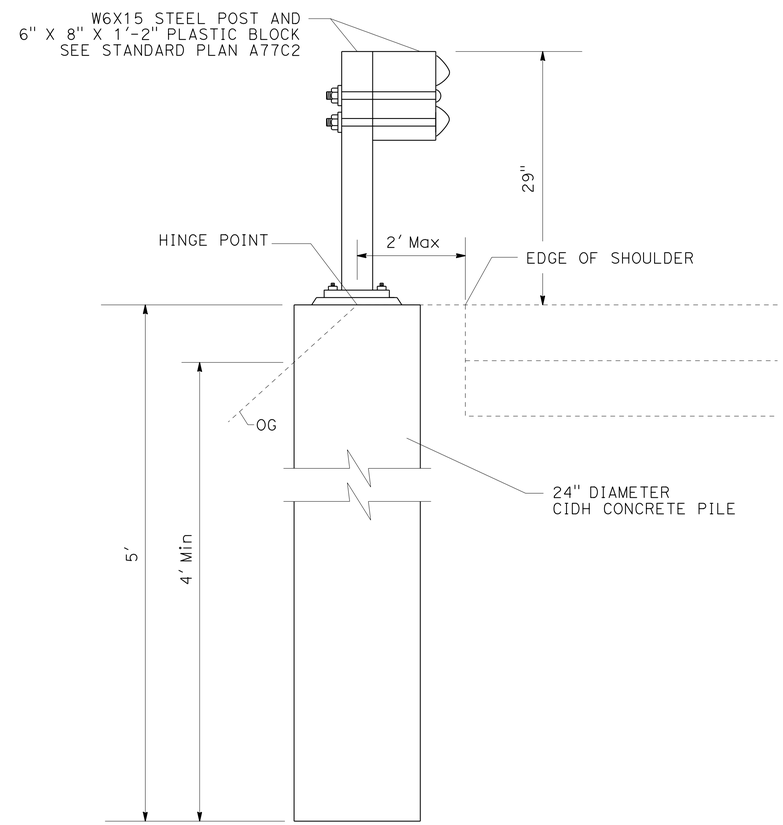

ELEVATION

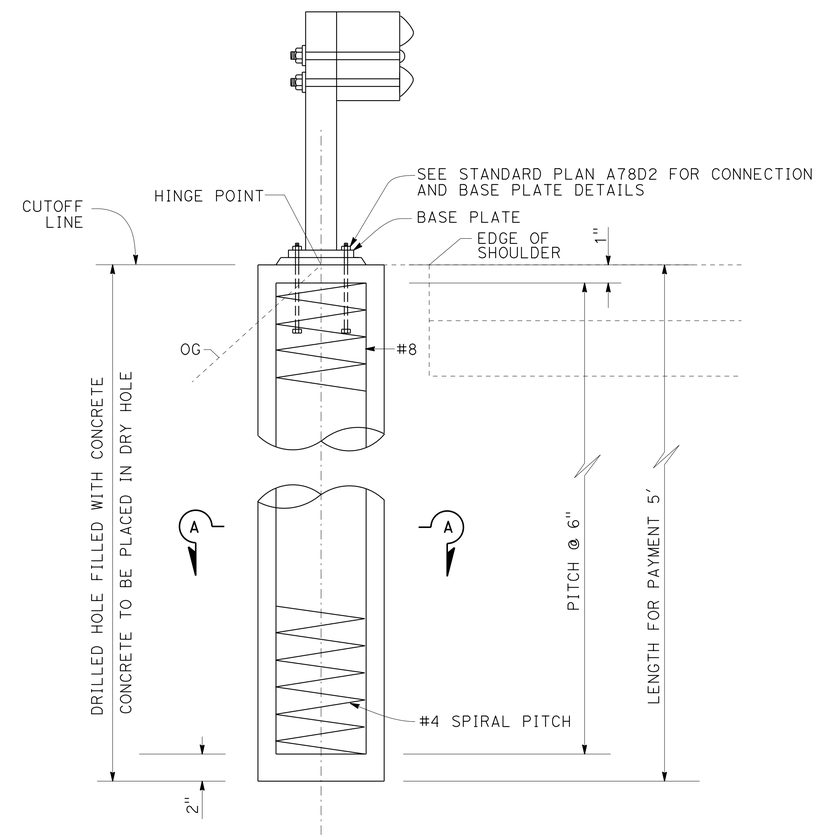

24" DIAMETER CIDH PILE WITH MBGR
ELEVATION

LOCATION (10)

MBGR WITH 24" CIDH PILE DETAILS

CONSTRUCTION DETAILS

NO SCALE

C-11

STATE OF CALIFORNIA - DEPARTMENT OF TRANSPORTATION
Caltrans PROJECT DEVELOPMENT
TRAFFIC

FUNCTIONAL SUPERVISOR: RICHARD ESTRADA
CALCULATED-DESIGNED BY: BARZAN ARAN
CHECKED BY: BETHNAY DES JARDINS
REVISED BY
DATE REVISED

LAST REVISION 06-17-13
DATE PLOTTED => 07-AUG-2013
TIME PLOTTED => 14:21

Dist	COUNTY	ROUTE	POST MILES TOTAL PROJECT	SHEET No.	TOTAL SHEETS
11	SD	94	32.8/40.3	14	31

REGISTERED CIVIL ENGINEER 06-24-13 DATE

08-05-13
PLANS APPROVAL DATE

REGISTERED PROFESSIONAL ENGINEER
BARZAN ARAN
No. 75167
Exp. 12-31-13
CIVIL
STATE OF CALIFORNIA

THE STATE OF CALIFORNIA OR ITS OFFICERS OR AGENTS SHALL NOT BE RESPONSIBLE FOR THE ACCURACY OR COMPLETENESS OF SCANNED COPIES OF THIS PLAN SHEET.

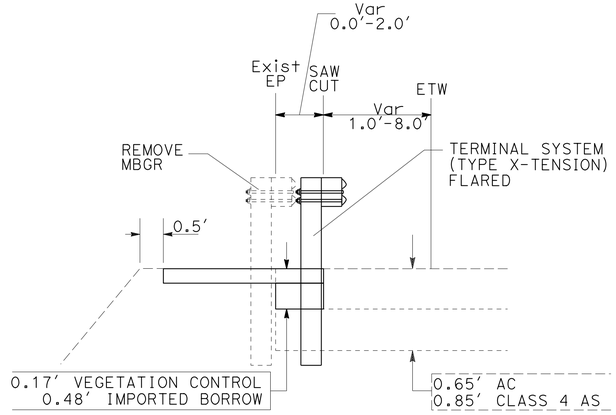

SECTION A-A

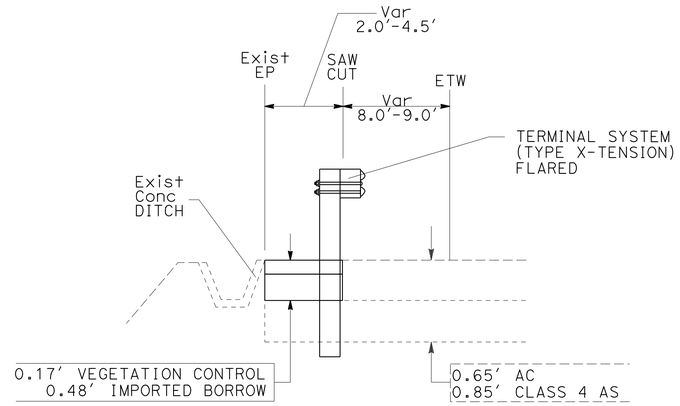

SECTION B-B

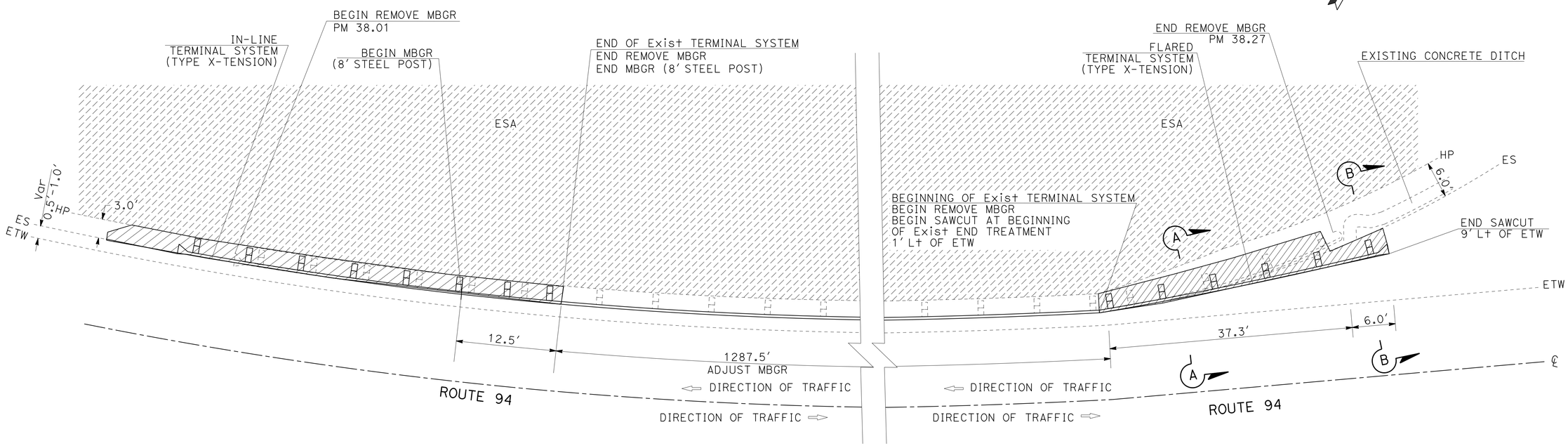

LOCATION (11)

MBGR LAYOUT

CONSTRUCTION DETAILS

NO SCALE

C-12

STATE OF CALIFORNIA - DEPARTMENT OF TRANSPORTATION
Caltrans PROJECT DEVELOPMENT
TRAFFIC

FUNCTIONAL SUPERVISOR: RICHARD ESTRADA
CALCULATED-DESIGNED BY: BARZAN ARAN
CHECKED BY:
REVISED BY:
DATE REVISED:

BETHNAY DES JARDINS

LAST REVISION 07-02-13 | DATE PLOTTED => 07-AUG-2013 | TIME PLOTTED => 14:21

Dist	COUNTY	ROUTE	POST MILES TOTAL PROJECT	SHEET No.	TOTAL SHEETS
11	SD	94	32.8/40.3	15	31

REGISTERED CIVIL ENGINEER 06-24-13 DATE

08-05-13
PLANS APPROVAL DATE

REGISTERED PROFESSIONAL ENGINEER
BARZAN ARAN
No. 75167
Exp. 12-31-13
CIVIL
STATE OF CALIFORNIA

THE STATE OF CALIFORNIA OR ITS OFFICERS OR AGENTS SHALL NOT BE RESPONSIBLE FOR THE ACCURACY OR COMPLETENESS OF SCANNED COPIES OF THIS PLAN SHEET.

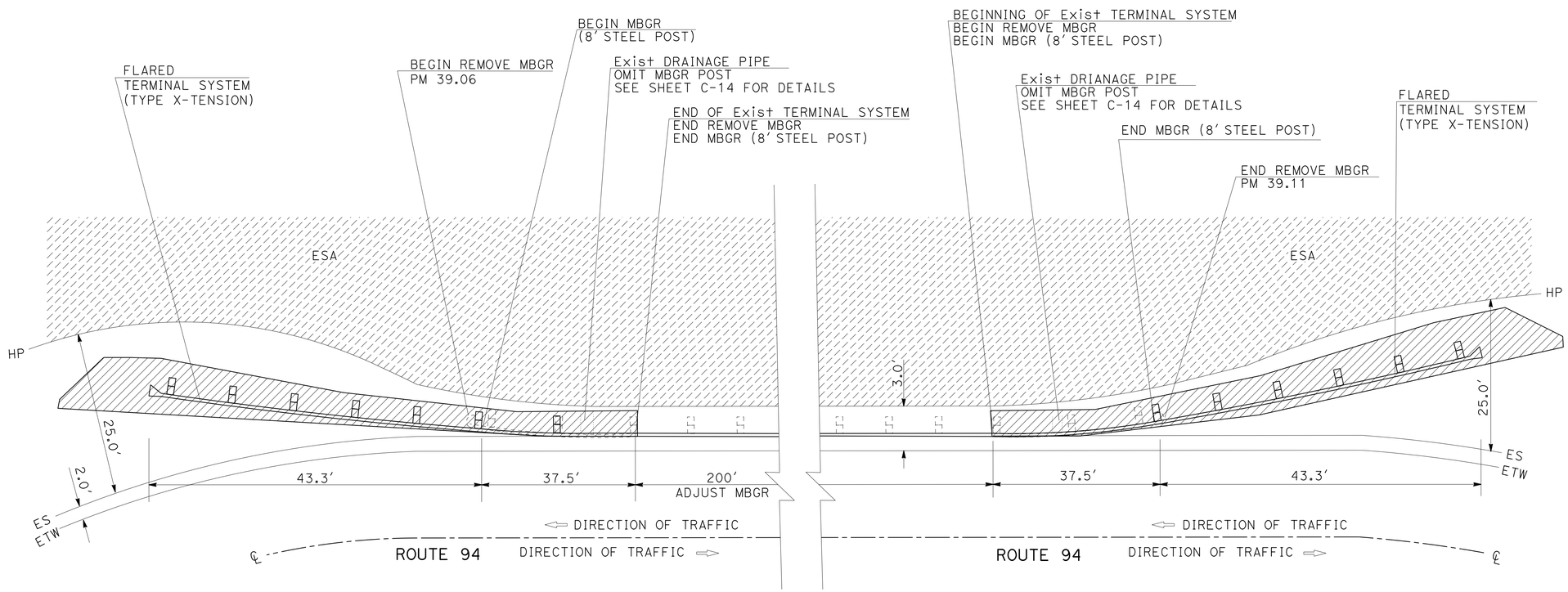

LOCATION (12)

MBGR LAYOUT

CONSTRUCTION DETAILS

NO SCALE

C-13

STATE OF CALIFORNIA - DEPARTMENT OF TRANSPORTATION
Caltrans PROJECT DEVELOPMENT
TRAFFIC

FUNCTIONAL SUPERVISOR: RICHARD ESTRADA
CALCULATED-DESIGNED BY: BARZAN ARAN
CHECKED BY
REVISED BY
DATE REVISED

BETHNAY DES JARDINS

LAST REVISION 07-02-13
DATE PLOTTED => 08-AUG-2013
TIME PLOTTED => 08:52

Dist	COUNTY	ROUTE	POST MILES TOTAL PROJECT	SHEET No.	TOTAL SHEETS
11	SD	94	32.8/40.3	16	31

REGISTERED CIVIL ENGINEER 06-24-13 DATE

08-05-13
PLANS APPROVAL DATE

REGISTERED PROFESSIONAL ENGINEER BARZAN ARAN No. 75167 Exp. 12-31-13 CIVIL STATE OF CALIFORNIA

THE STATE OF CALIFORNIA OR ITS OFFICERS OR AGENTS SHALL NOT BE RESPONSIBLE FOR THE ACCURACY OR COMPLETENESS OF SCANNED COPIES OF THIS PLAN SHEET.

NOTES:

1. SEE STANDARD PLANS FOR DETAILS NOT SHOWN.
2. USE EITHER DETAIL 1 OR DETAIL 2 AS FIELD CONDITIONS REQUIRE.

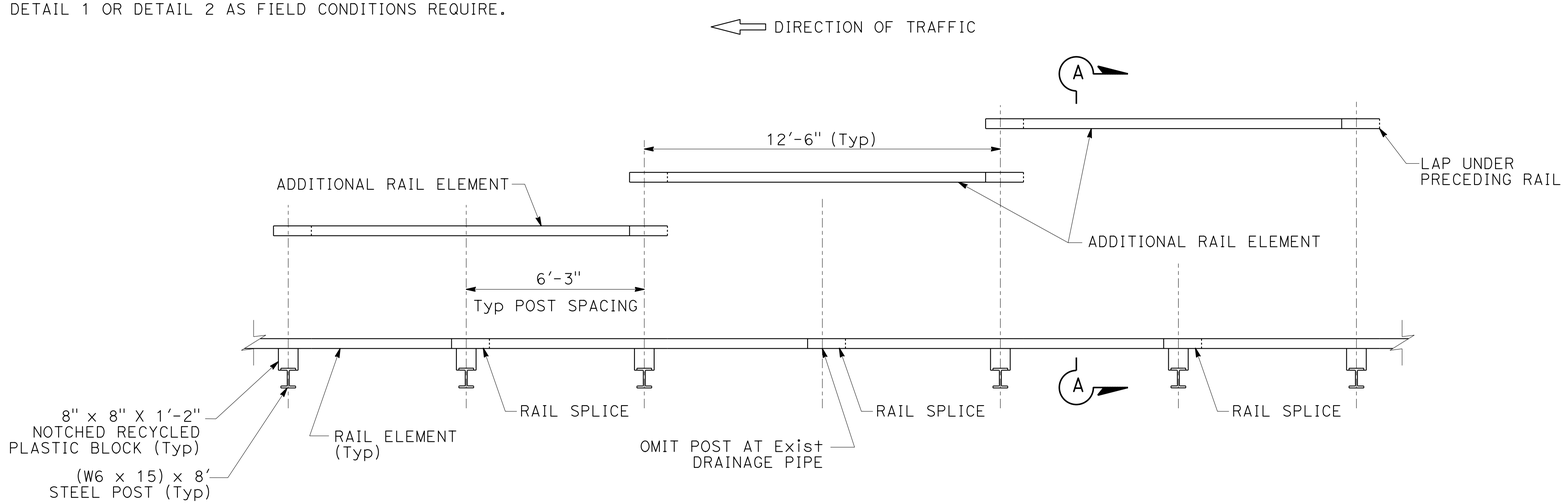

DETAIL 1

MBGR WITH ONE POST OMITTED AT RAIL SPLICE

PLAN

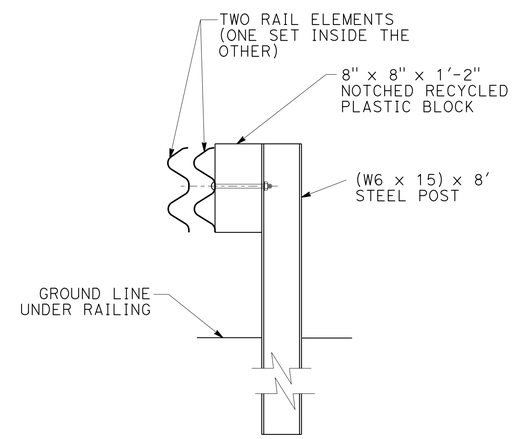

SECTION A-A

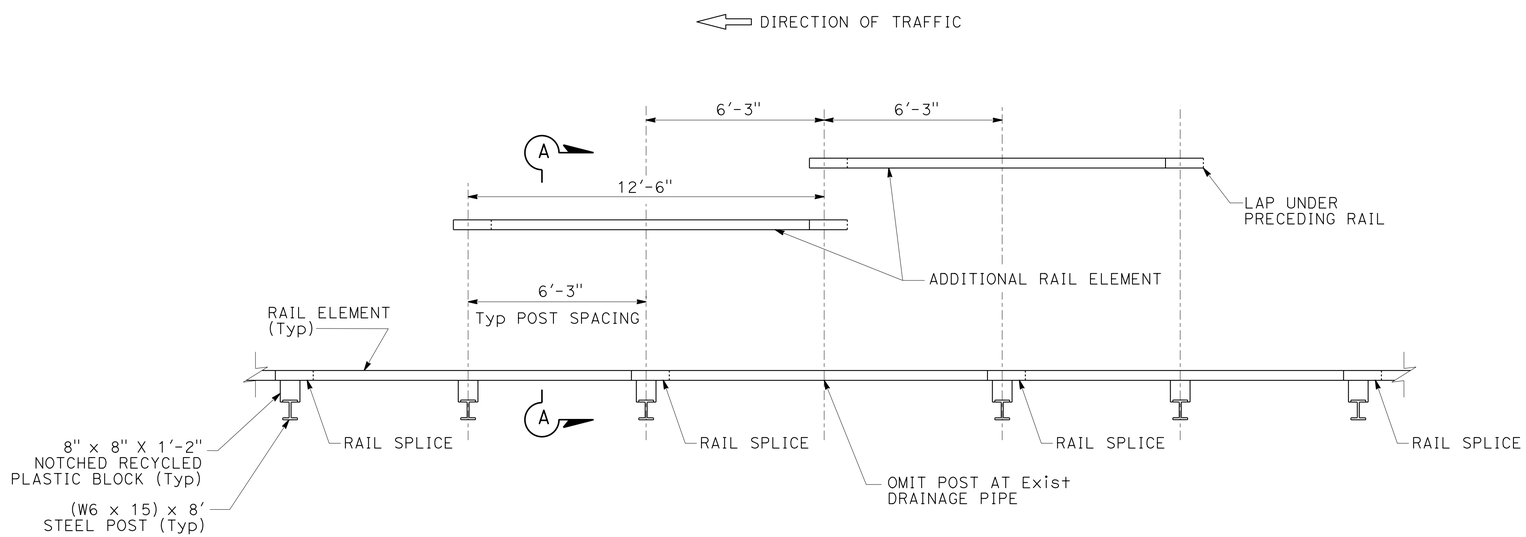

DETAIL 2

MBGR WITH ONE POST OMITTED AT MID-RAIL SPAN

PLAN

LOCATION (12)

METAL BEAM GUARD RAILING WITH ONE POST OMITTED

CONSTRUCTION DETAILS

NO SCALE

C-14

STATE OF CALIFORNIA - DEPARTMENT OF TRANSPORTATION
Caltrans TRAFFIC PROJECT DEVELOPMENT

FUNCTIONAL SUPERVISOR: RICHARD ESTRADA
CALCULATED-DESIGNED BY: BETHNAY DES JARDINS
CHECKED BY: BARZAN ARAN
REVISED BY
DATE REVISED

LAST REVISION 07-02-13 | DATE PLOTTED => 07-AUG-2013 | TIME PLOTTED => 14:21

Dist	COUNTY	ROUTE	POST MILES TOTAL PROJECT	SHEET No.	TOTAL SHEETS
11	SD	94	32.8/40.3	17	31

REGISTERED CIVIL ENGINEER DATE 06-24-13

08-05-13
PLANS APPROVAL DATE

REGISTERED PROFESSIONAL ENGINEER
BARZAN ARAN
No. 75167
Exp. 12-31-13
CIVIL
STATE OF CALIFORNIA

THE STATE OF CALIFORNIA OR ITS OFFICERS OR AGENTS SHALL NOT BE RESPONSIBLE FOR THE ACCURACY OR COMPLETENESS OF SCANNED COPIES OF THIS PLAN SHEET.

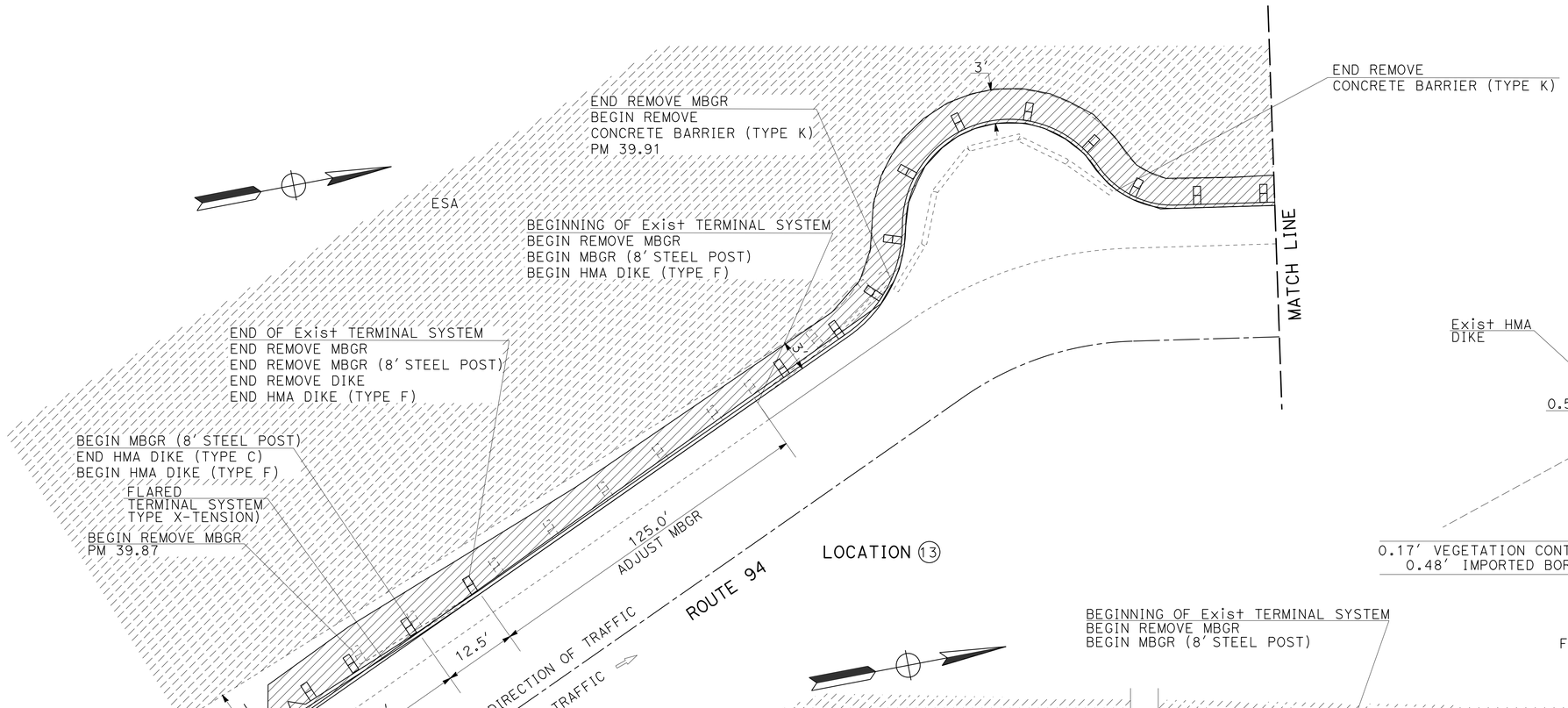

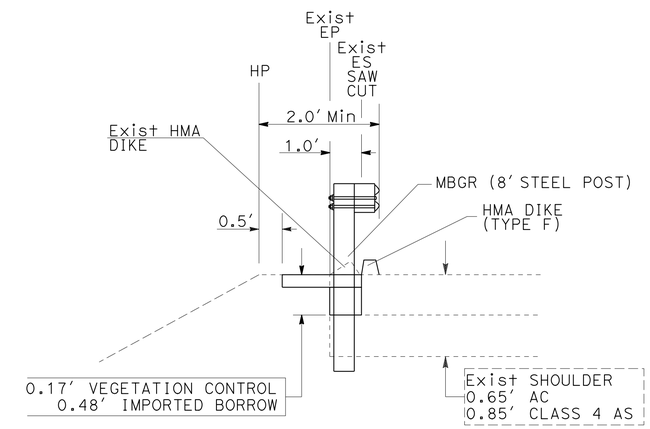

SECTION 'A-A'

FROM PM 39.91 TO PM 40.02

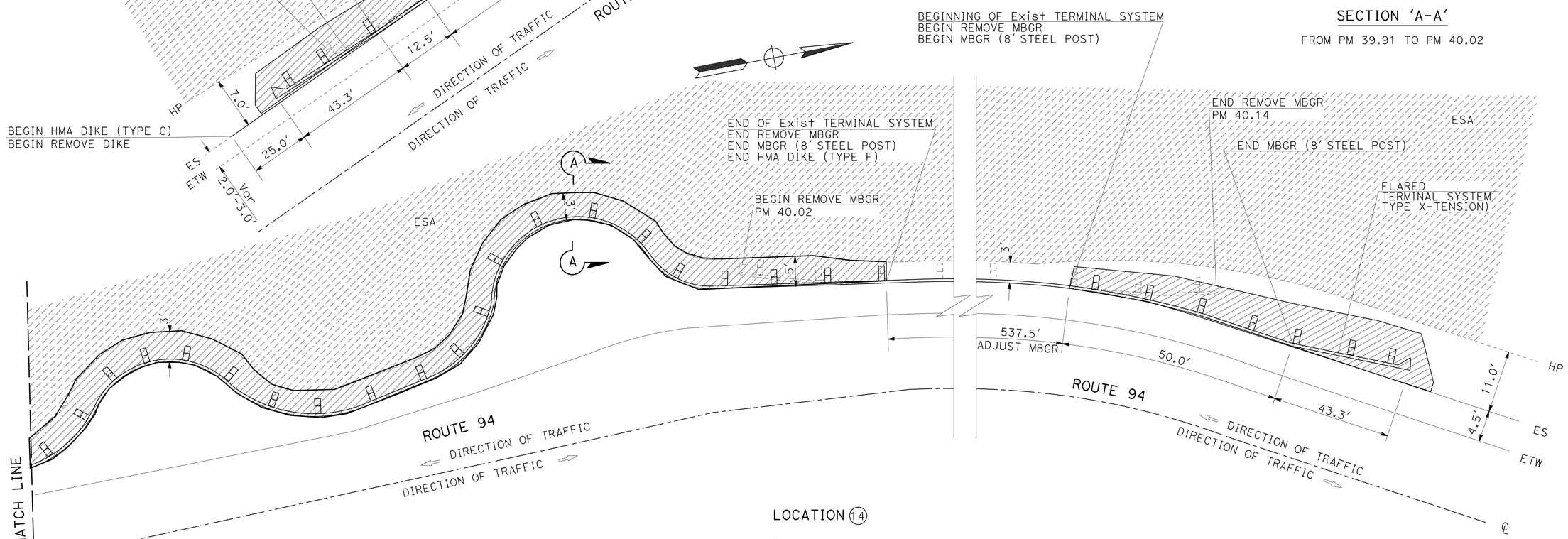

LOCATION (14)

MBGR LAYOUT

CONSTRUCTION DETAILS

NO SCALE

C-15

STATE OF CALIFORNIA - DEPARTMENT OF TRANSPORTATION
Caltrans PROJECT DEVELOPMENT
TRAFFIC

FUNCTIONAL SUPERVISOR: RICHARD ESTRADA
CALCULATED-DESIGNED BY: BARZAN ARAN
CHECKED BY
REVISED BY
DATE REVISED

BETHNAY DES JARDINS

LAST REVISION 07-03-13
DATE PLOTTED => 07-AUG-2013
TIME PLOTTED => 14:21

Dist	COUNTY	ROUTE	POST MILES TOTAL PROJECT	SHEET No.	TOTAL SHEETS
11	SD	94	32.8/40.3	18	31

REGISTERED CIVIL ENGINEER 06-24-13 DATE

08-05-13
PLANS APPROVAL DATE

REGISTERED PROFESSIONAL ENGINEER
BARZAN ARAN
No. 75167
Exp. 12-31-13
CIVIL
STATE OF CALIFORNIA

THE STATE OF CALIFORNIA OR ITS OFFICERS OR AGENTS SHALL NOT BE RESPONSIBLE FOR THE ACCURACY OR COMPLETENESS OF SCANNED COPIES OF THIS PLAN SHEET.

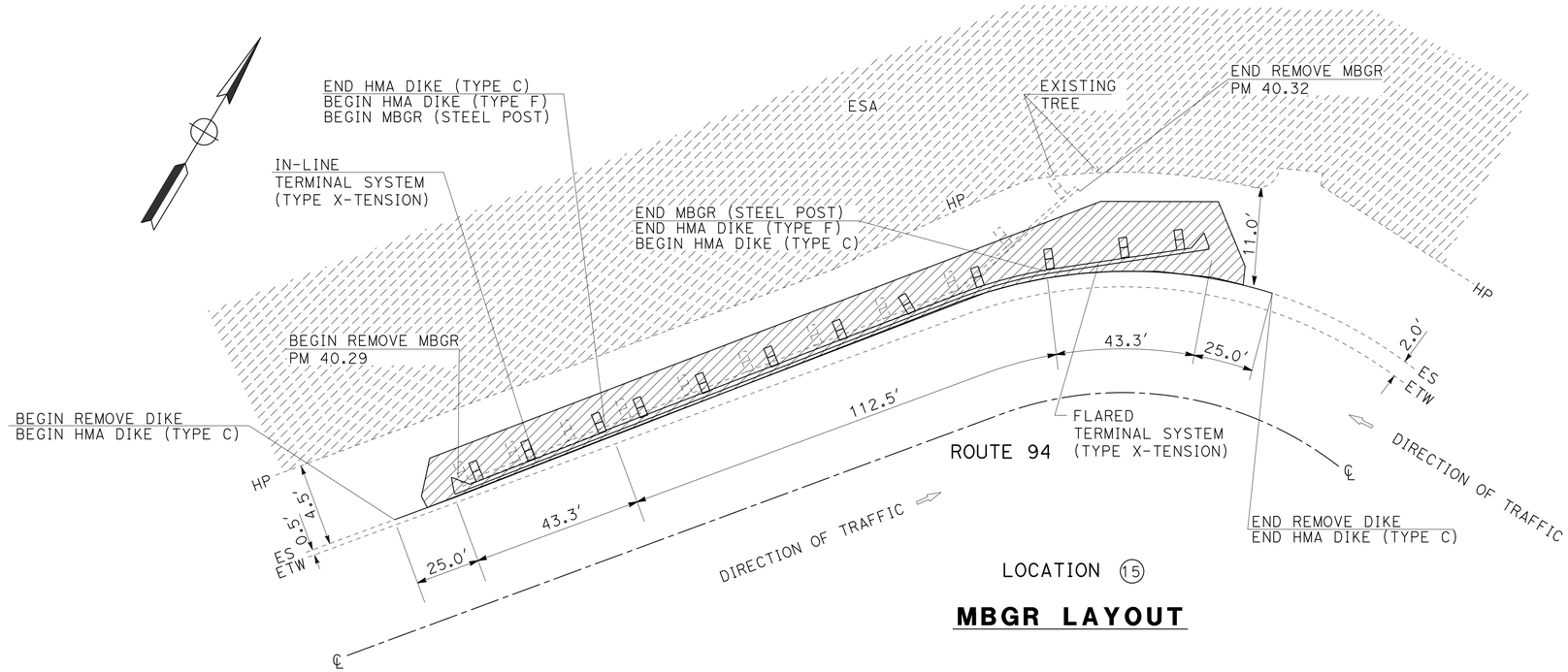

LOCATION (15)

MBGR LAYOUT

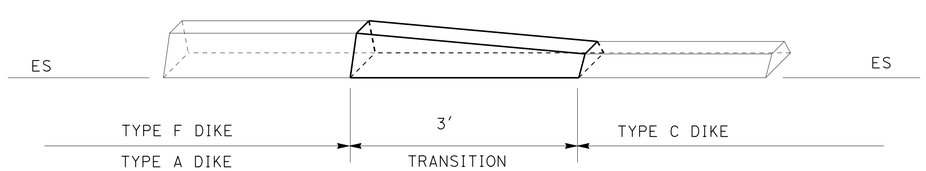

TYPE A OR F TO TYPE C

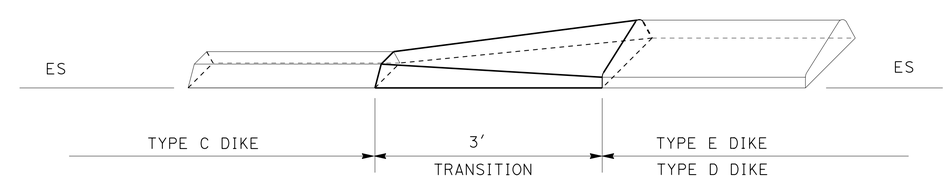

TYPE C TO TYPE E OR D

HMA DIKE TRANSITION DETAILS

(ISOMETRIC)

CONSTRUCTION DETAILS

NO SCALE

C-16

STATE OF CALIFORNIA - DEPARTMENT OF TRANSPORTATION
Caltrans PROJECT DEVELOPMENT
TRAFFIC

FUNCTIONAL SUPERVISOR: RICHARD ESTRADA
CALCULATED-DESIGNED BY: BETHNAY DES JARDINS
CHECKED BY: BARZAN ARAN
REVISED BY
DATE REVISED

LAST REVISION 07-03-13
DATE PLOTTED => 07-AUG-2013
TIME PLOTTED => 14:21

Dist	COUNTY	ROUTE	POST MILES TOTAL PROJECT	SHEET No.	TOTAL SHEETS
11	SD	94	32.8/40.3	19	31

06-24-13
REGISTERED CIVIL ENGINEER DATE

08-05-13
PLANS APPROVAL DATE

REGISTERED PROFESSIONAL ENGINEER
BARZAN ARAN
No. 75167
Exp. 12-31-13
CIVIL
STATE OF CALIFORNIA

THE STATE OF CALIFORNIA OR ITS OFFICERS OR AGENTS SHALL NOT BE RESPONSIBLE FOR THE ACCURACY OR COMPLETENESS OF SCANNED COPIES OF THIS PLAN SHEET.

NOTE:

FOR ACCURATE RIGHT OF WAY DATA, CONTACT RIGHT OF WAY ENGINEERING AT THE DISTRICT OFFICE.

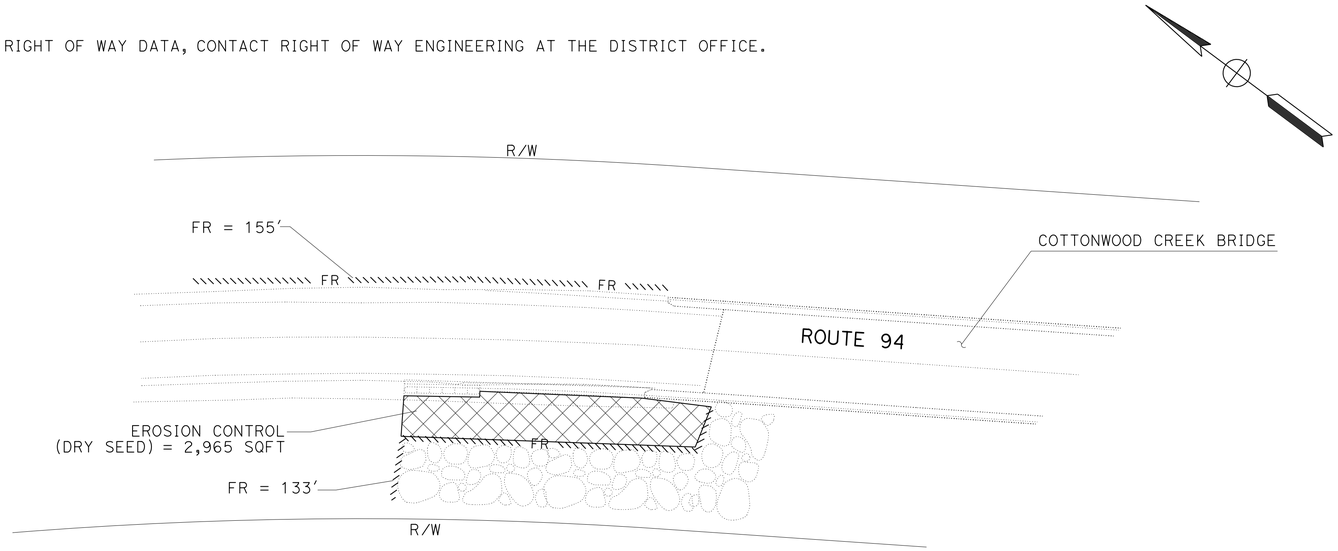

LOCATIONS 5 6

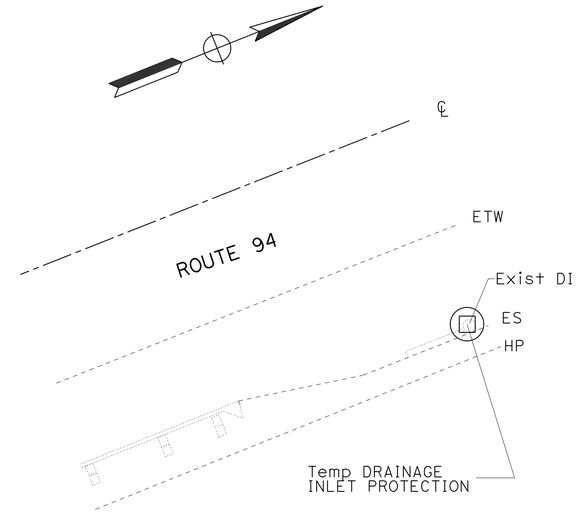

LOCATION 1

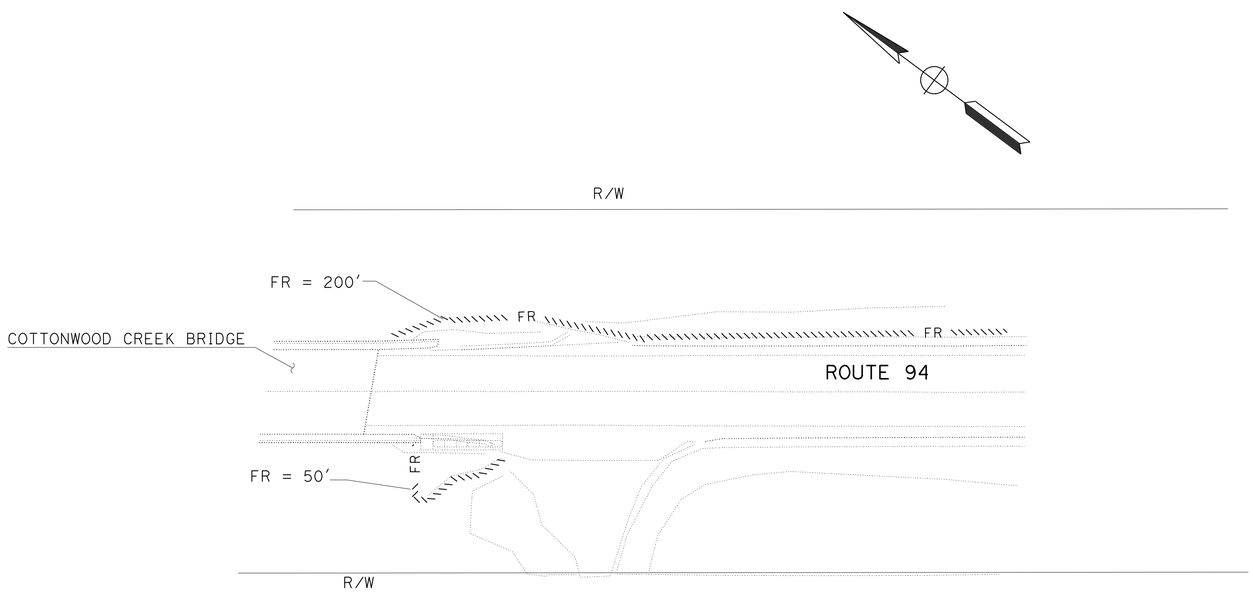

LOCATIONS 7 8

LEGEND:

- EROSION CONTROL (DRY SEED)

WATER POLLUTION CONTROL PLAN

APPROVED FOR WATER POLLUTION CONTROL WORK ONLY

NO SCALE

W-1

STATE OF CALIFORNIA - DEPARTMENT OF TRANSPORTATION
Caltrans PROJECT DEVELOPMENT
TRAFFIC

FUNCTIONAL SUPERVISOR: RICHARD ESTRADA
CALCULATED-DESIGNED BY: BETHNAY DES JARDINS
CHECKED BY: BARZAN ARAN
REVISED BY
DATE REVISED

LAST REVISION 07-03-13
DATE PLOTTED => 07-AUG-2013
TIME PLOTTED => 14:21

Dist	COUNTY	ROUTE	POST MILES TOTAL PROJECT	SHEET No.	TOTAL SHEETS
11	SD	94	32.8/40.3	20	31

06-24-13
REGISTERED CIVIL ENGINEER DATE

08-05-13
PLANS APPROVAL DATE

REGISTERED PROFESSIONAL ENGINEER
BARZAN ARAN
No. 75167
Exp. 12-31-13
CIVIL
STATE OF CALIFORNIA

THE STATE OF CALIFORNIA OR ITS OFFICERS OR AGENTS SHALL NOT BE RESPONSIBLE FOR THE ACCURACY OR COMPLETENESS OF SCANNED COPIES OF THIS PLAN SHEET.

EROSION CONTROL QUANTITIES

LOCATION	SHEET	FIBER ROLLS	EROSION CONTROL (DRY SEED)
		LF	SQFT
5	W-1	133	2,965
6	W-1	155	
7	W-1	50	
8	W-1	200	
TOTAL		538	2,965

TEMPORARY WATER POLLUTION CONTROL QUANTITIES

LOCATION	SHEET	TEMPORARY DRAINAGE INLET PROTECTION
		EA
1	W-1	1
TOTAL		1

SEED (N)

SEED MIX	BOTANICAL NAME (COMMON NAME)	PERCENT GERMINATION (MINIMUM)	POUNDS PURE LIVE SEED PER ACRE (SLOPE MEASUREMENT)
MIX	BACCHARIS PILULARIS[1] (COYOTE BUSH)	30	0.5
	CASTILLEJA EXSERTA[1] (OWL'S CLOVER)	40	2.0
	DEINANDRA FASCICULATA[1] (FASCICLED TARPLANT)	15	3.0
	ERIOGONUM FASCICULATUM VAR FASCICULATUM[1] (FLAT-TOP BUCKWHEAT)	55	4.0
	LASTHENIA CALIFORNICA[1] (DWARF GOLDFIELDS)	50	2.0
	LOTUS SCOPARIUS[1] (DEERWEED)	50	5.0
	NASELLA PULCHRA[1] (PURPLE NEEDLEGRASS) (DEAWNED)	40	10.0
	VIGUIERA LACINIATA[1] (SAN DIEGO SUNFLOWER)	40	1.5
	ZSCHSCHOLIZIA CALIFORNICA[1] (CALIFORNIA POPPY)	40	2.0
		TOTAL	30.0

[1] SEED SOURCES FROM SAN DIEGO AND ORANGE COUNTY ONLY

(N) = NOT A SEPARATE PAY ITEM, FOR INFORMATION ONLY.

WATER POLLUTION CONTROL QUANTITIES
WQ-1

REVISED BY | DATE REVISED
BETHNAY DES JARDINS | BARZAN ARAN
CALCULATED-DESIGNED BY | CHECKED BY
FUNCTIONAL SUPERVISOR: RICHARD ESTRADA
STATE OF CALIFORNIA - DEPARTMENT OF TRANSPORTATION
Caltrans TRAFFIC PROJECT DEVELOPMENT

LAST REVISION 07-03-13 | DATE PLOTTED => 08-AUG-2013 | TIME PLOTTED => 14:06

Dist	COUNTY	ROUTE	POST MILES TOTAL PROJECT	SHEET No.	TOTAL SHEETS
11	SD	94	32.8/40.3	21	31

REGISTERED CIVIL ENGINEER 06-25-13 DATE

08-05-13
PLANS APPROVAL DATE

REGISTERED PROFESSIONAL ENGINEER
SHAHIN T. ADIBI
No. 54839
Exp. 6-30-14
CIVIL
STATE OF CALIFORNIA

THE STATE OF CALIFORNIA OR ITS OFFICERS OR AGENTS SHALL NOT BE RESPONSIBLE FOR THE ACCURACY OR COMPLETENESS OF SCANNED COPIES OF THIS PLAN SHEET.

LEGEND:

(XX) - CONSTRUCTION AREA SIGNS

CONSTRUCTION AREA SIGNS

SIGN	CODE	PANEL SIZE (In)	No. OF POST AND SIZE (In)	No. OF SIGNS
A	C40 (CA)	72" x 36"	2 - 4" x 6"	2
B	G20-1 (9 MILES)	36" x 18"	1 - 4" x 4"	2
C	C14 (CA)	36" x 18"	1 - 4" x 4"	2
D	W20-1	36" x 36"	1 - 4" x 4"	2
E	G20-1 (7 MILES)	36" x 18"	1 - 4" x 4"	2

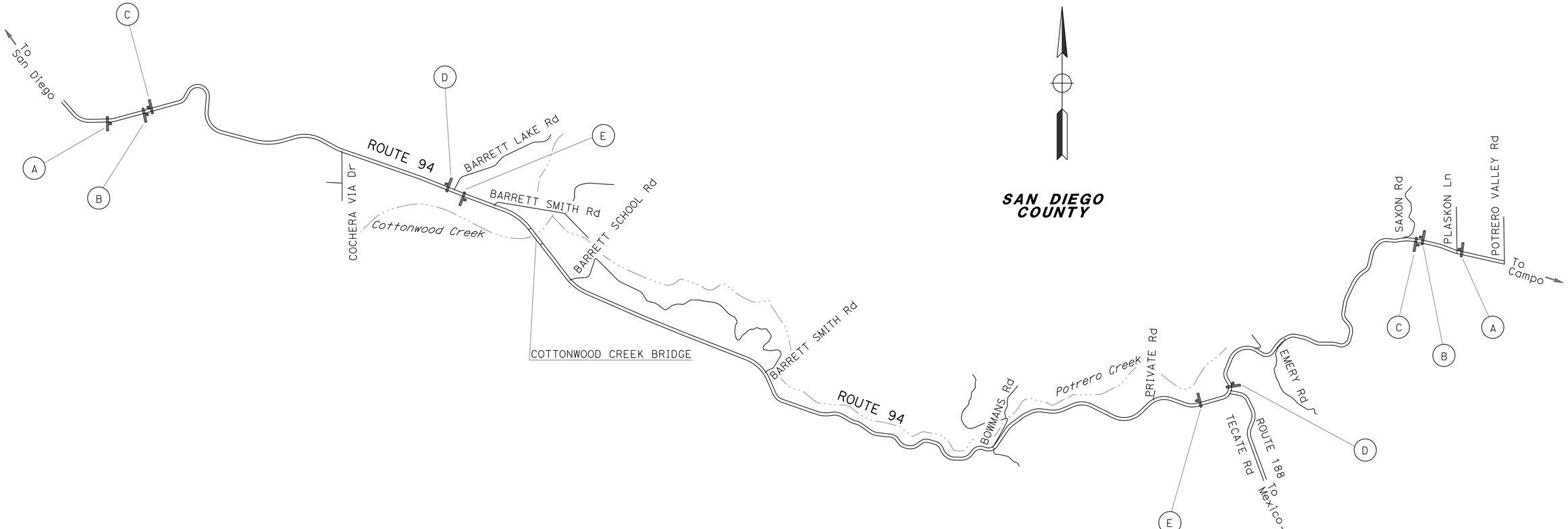

NOTES:

1. EXACT LOCATION OF CONSTRUCTION AREA SIGNS WILL BE DETERMINED BY THE ENGINEER.
2. SEE STAGE CONSTRUCTION AND TRAFFIC HANDLING PLANS FOR ADDITIONAL CONSTRUCTION AREA SIGNS.
3. FEDERAL MANUAL ON UNIFORM TRAFFIC CONTROL DEVICES (MUTCD) SIGN CODES ARE SHOWN UNLESS DESIGNATED BY (CA), INDICATING CALIFORNIA MUTCD.
4. EXISTING UTILITIES ARE NOT SHOWN ON THESE PLAN SHEETS. THE CONTRACTOR SHALL VERIFY LOCATIONS OF EXISTING UTILITIES AND ADJUST THE FIELD LOCATION OF THE SIGN POSTS IN CONSULTATION WITH THE ENGINEER.

APPROVED FOR CONSTRUCTION AREA SIGN WORK ONLY

CONSTRUCTION AREA SIGNS

NO SCALE

CS-1

REVISED BY | DATE REVISED
MARY BETH HAYES | SHAHIN ADIBI
CALCULATED-DESIGNED BY | CHECKED BY
FUNCTIONAL SUPERVISOR
CAMILLE ABOUFADEL

STATE OF CALIFORNIA - DEPARTMENT OF TRANSPORTATION
Caltrans
TRAFFIC DESIGN

LAST REVISION 07-03-13 | DATE PLOTTED => 07-AUG-2013 | TIME PLOTTED => 14:21

Dist	COUNTY	ROUTE	POST MILES TOTAL PROJECT	SHEET No.	TOTAL SHEETS
11	SD	94	32.8/40.3	22	31

REGISTERED CIVIL ENGINEER 06-24-13 DATE

08-05-13
PLANS APPROVAL DATE

REGISTERED PROFESSIONAL ENGINEER
BARZAN ARAN
No. 75167
Exp. 12-31-13
CIVIL
STATE OF CALIFORNIA

THE STATE OF CALIFORNIA OR ITS OFFICERS OR AGENTS SHALL NOT BE RESPONSIBLE FOR THE ACCURACY OR COMPLETENESS OF SCANNED COPIES OF THIS PLAN SHEET.

NOTE:

FOR ACCURATE RIGHT OF WAY DATA, CONTACT RIGHT OF WAY ENGINEERING AT THE DISTRICT OFFICE.

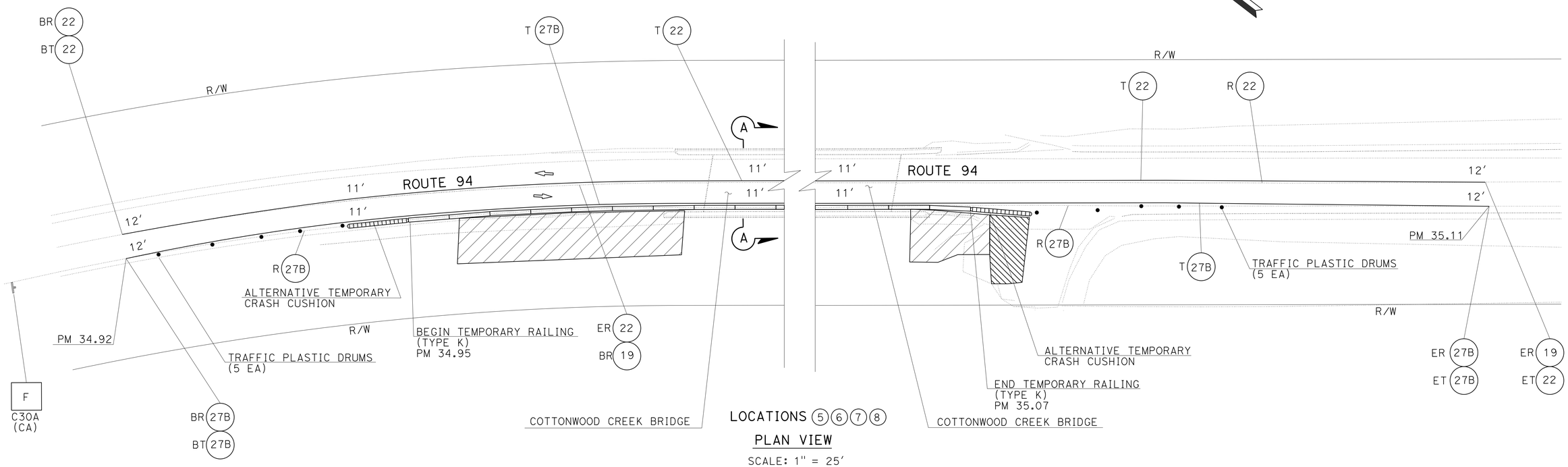

LOCATIONS 5 6 7 8

PLAN VIEW

SCALE: 1" = 25′

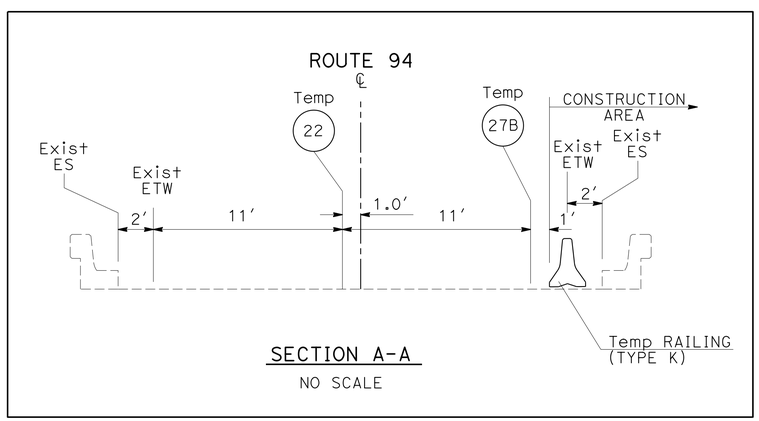

SECTION A-A

NO SCALE

LEGEND:

CONSTRUCTION WORK AREA

DIRECTION OF TRAFFIC

B XX — BEGIN PAVEMENT DELINEATION DETAIL

E XX — END PAVEMENT DELINEATION DETAIL

BR XX — BEGIN REMOVE PAVEMENT DELINEATION DETAIL

ER XX — END REMOVE PAVEMENT DELINEATION DETAIL

T XX — TEMPORARY PAVEMENT DELINEATION DETAIL

RT XX — REMOVE TEMPORARY PAVEMENT DELINEATION DETAIL

AREA FOR CONTRACTOR'S USE

BRT XX — BEGIN REMOVE TEMPORARY PAVEMENT DELINEATION DETAIL

ERT XX — END REMOVE TEMPORARY PAVEMENT DELINEATION DETAIL

BT XX — BEGIN TEMPORARY PAVEMENT DELINEATION DETAIL

ET XX — END TEMPORARY PAVEMENT DELINEATION DETAIL

XX — CONSTRUCTION AREA SIGN

ALL STRIPING TO BE REPLACED IN KIND.

APPROVED FOR STAGE CONSTRUCTION AND TRAFFIC HANDLING WORK ONLY

(STAGE 1)

STAGE CONSTRUCTION AND TRAFFIC HANDLING PLAN

SCALE AS SHOWN

SC-1

STATE OF CALIFORNIA - DEPARTMENT OF TRANSPORTATION
Caltrans TRAFFIC PROJECT DEVELOPMENT

FUNCTIONAL SUPERVISOR: RICHARD ESTRADA

CALCULATED-DESIGNED BY: BETHNAY DES JARDINS
CHECKED BY: BARZAN ARAN

REVISED BY
DATE REVISED

LAST REVISION 07-03-13
DATE PLOTTED => 07-AUG-2013
TIME PLOTTED => 14:21

Dist	COUNTY	ROUTE	POST MILES TOTAL PROJECT	SHEET No.	TOTAL SHEETS
11	SD	94	32.8/40.3	23	31

REGISTERED CIVIL ENGINEER 06-24-13 DATE

08-05-13
PLANS APPROVAL DATE

REGISTERED PROFESSIONAL ENGINEER
BARZAN ARAN
No. 75167
Exp. 12-31-13
CIVIL
STATE OF CALIFORNIA

THE STATE OF CALIFORNIA OR ITS OFFICERS OR AGENTS SHALL NOT BE RESPONSIBLE FOR THE ACCURACY OR COMPLETENESS OF SCANNED COPIES OF THIS PLAN SHEET.

NOTE:

FOR ACCURATE RIGHT OF WAY DATA, CONTACT RIGHT OF WAY ENGINEERING AT THE DISTRICT OFFICE.

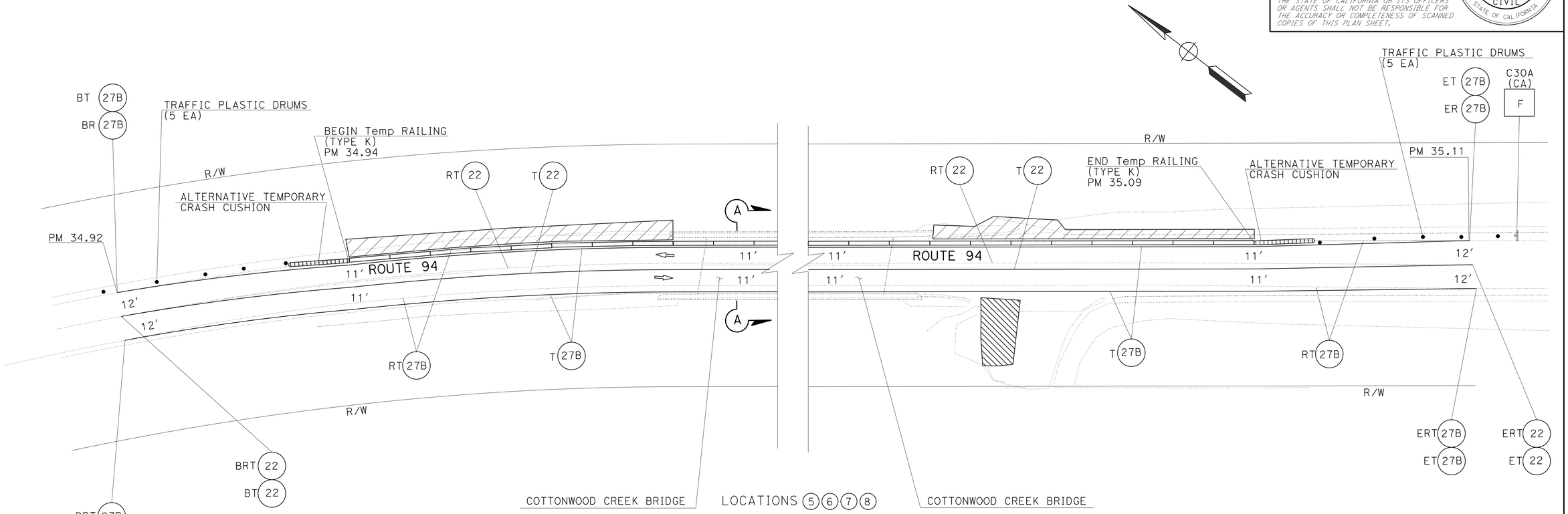

PLAN VIEW

SCALE: 1" = 25′

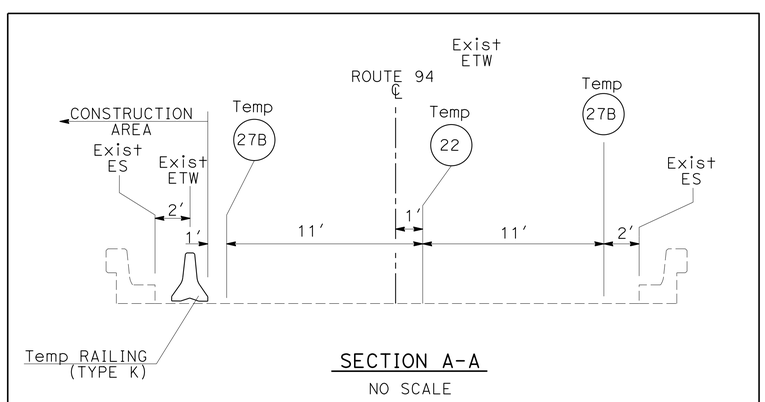

SECTION A-A

NO SCALE

TYPICAL PLACEMENT OF TRAFFIC PLASTIC DRUM

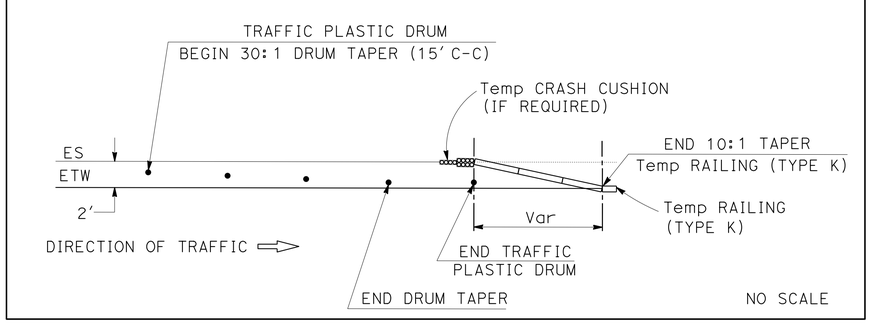

APPROVED FOR STAGE CONSTRUCTION AND TRAFFIC HANDLING WORK ONLY

(STAGE 2)

STAGE CONSTRUCTION AND TRAFFIC HANDLING PLAN

SCALE AS SHOWN

SC-2

STATE OF CALIFORNIA - DEPARTMENT OF TRANSPORTATION
Caltrans PROJECT DEVELOPMENT
TRAFFIC

FUNCTIONAL SUPERVISOR: RICHARD ESTRADA
CALCULATED-DESIGNED BY: BETHNAY DES JARDINS
CHECKED BY: BARZAN ARAN
REVISED BY
DATE REVISED

LAST REVISION 07-03-13
DATE PLOTTED => 07-AUG-2013
TIME PLOTTED => 14:21

Dist	COUNTY	ROUTE	POST MILES TOTAL PROJECT	SHEET No.	TOTAL SHEETS
11	SD	94	32.8/40.3	24	31

REGISTERED CIVIL ENGINEER 06-24-13 DATE

08-05-13
PLANS APPROVAL DATE

REGISTERED PROFESSIONAL ENGINEER BARZAN ARAN No. 75167 Exp. 12-31-13 CIVIL STATE OF CALIFORNIA

THE STATE OF CALIFORNIA OR ITS OFFICERS OR AGENTS SHALL NOT BE RESPONSIBLE FOR THE ACCURACY OR COMPLETENESS OF SCANNED COPIES OF THIS PLAN SHEET.

TEMPORARY PAVEMENT DELINEATION

ROUTE	SHEET	DETAIL No.	TEMPORARY PAVEMENT MARKER (EA) RETROREFLECTIVE TYPE D YELLOW	TEMPORARY TRAFFIC STRIPE PAINT (LF) 4 In
94	SC-1	22	82	1,055
	SC-1	27B		1,055
	SC-2	22	82	1,055
	SC-2	27B		2,110
		TOTAL	164	5,275

REMOVE PAINTED TRAFFIC STRIPE

SHEET	TYPE	LF
SC-1	DETAILS 19 & 22	1,490
SC-2	DETAIL 27B	2,110
	TOTAL	3,600

TEMPORARY RAILING (TYPE K)

SHEET	LF
SC-1	660
SC-2	840
TOTAL	1,500

REMOVE PAVEMENT MARKER (N)

Rte	SHEET	DETAIL NUMBER	(RETROREFLECTIVE) (EA) TYPE H YELLOW	TYPE D YELLOW
94	SC-1	19	36	18
		22		20
		SUBTOTAL	36	38
		TOTAL	74	

ALTERNATIVE TEMPORARY CRASH CUSHION

SHEET	EA
SC-1	2
SC-2	2
TOTAL	4

TRAFFIC PLASTIC DRUM

SHEET	EA
SC-1	10
SC-2	10
TOTAL	20

CONSTRUCTION AREA SIGNS

SIGN	TYPE	PANEL SIZE (In)	No. OF POST AND SIZE (In)	No. OF SIGNS
F	C30A (CA)	48 X 48	1-4 X 6 (s)	2
			TOTAL	2*

(S) DENOTES STATIONARY MOUNTED SIGN.
* SEE SHEET CS-1 FOR ADDITIONAL QUANTITIES.

(N) = NOT A SEPARATE PAY ITEM, FOR INFORMATION ONLY.

STAGE CONSTRUCTION AND TRAFFIC HANDLING QUANTITIES SCQ-1

REVISED BY | DATE REVISED
BETHNAY DES JARDINS | BARZAN ARAN
CALCULATED-DESIGNED BY | CHECKED BY
FUNCTIONAL SUPERVISOR | RICHARD ESTRADA
STATE OF CALIFORNIA - DEPARTMENT OF TRANSPORTATION
Caltrans PROJECT DEVELOPMENT
TRAFFIC

LAST REVISION 07-03-13 | DATE PLOTTED => 07-AUG-2013 TIME PLOTTED => 14:21

Dist	COUNTY	ROUTE	POST MILES TOTAL PROJECT	SHEET No.	TOTAL SHEETS
11	SD	94	32.8/40.3	25	31

REGISTERED CIVIL ENGINEER DATE 06-24-13

08-05-13
PLANS APPROVAL DATE

REGISTERED PROFESSIONAL ENGINEER
BARZAN ARAN
No. 75167
Exp. 12-31-13
CIVIL
STATE OF CALIFORNIA

THE STATE OF CALIFORNIA OR ITS OFFICERS OR AGENTS SHALL NOT BE RESPONSIBLE FOR THE ACCURACY OR COMPLETENESS OF SCANNED COPIES OF THIS PLAN SHEET.

PAVEMENT MARKER SUMMARY / TRAFFIC STRIPE SUMMARY

Rte	DETAIL NUMBER	(RETROREFLECTIVE) (EA) TYPE H YELLOW	(RETROREFLECTIVE) (EA) TYPE D YELLOW	THERMOPLASTIC (ENHANCED WET NIGHT VISIBILITY) (LF) 4"	THERMOPLASTIC (ENHANCED WET NIGHT VISIBILITY) (LF) 4" (BROKEN 36-12)
94	19	36	18	830	210
	22		20	450	
	27B			2,110	
SUBTOTAL		36	38	3,390	210
TOTAL		74		3,390	210

ALL STRIPING TO BE REPLACED IN-KIND.

PAVEMENT DELINEATION QUANTITIES

PDQ-1

STATE OF CALIFORNIA - DEPARTMENT OF TRANSPORTATION
Caltrans PROJECT DEVELOPMENT
TRAFFIC

FUNCTIONAL SUPERVISOR: RICHARD ESTRADA
CALCULATED-DESIGNED BY: BETHNAY DES JARDINS
CHECKED BY: BARZAN ARAN
REVISED BY
DATE REVISED

LAST REVISION 07-03-13
DATE PLOTTED => 07-AUG-2013
TIME PLOTTED => 14:21

Dist	COUNTY	ROUTE	POST MILES TOTAL PROJECT	SHEET No.	TOTAL SHEETS
11	SD	94	32.8/40.3	26	31

REGISTERED CIVIL ENGINEER 06-24-13 DATE

08-05-13
PLANS APPROVAL DATE

REGISTERED PROFESSIONAL ENGINEER BARZAN ARAN No. 75167 Exp. 12-31-13 CIVIL STATE OF CALIFORNIA

THE STATE OF CALIFORNIA OR ITS OFFICERS OR AGENTS SHALL NOT BE RESPONSIBLE FOR THE ACCURACY OR COMPLETENESS OF SCANNED COPIES OF THIS PLAN SHEET.

DIKE QUANTITIES

LOCATION	PLACE HMA DIKE (TYPE C) (LF)	PLACE HMA DIKE (TYPE F) (LF)	MINOR HMA TON	REMOVE ASPHALT CONCRETE DIKE LF
1	68.33	32.50	0.95	25.00
3	136.60		1.04	136.60
5	48.10		0.37	38.00
7				23.00
8	68.33	25.00	0.85	131.60
9	68.33		0.52	68.33
13	68.33	612.50	8.60	80.80
15	136.66	112.50	2.52	249.10
TOTAL	594.68	782.50	14.85	752.43

VEGETATION CONTROL

LOCATION	SHEET	(MINOR CONCRETE) SQYD
1	C-1	125.4
2	C-2	83.7
3	C-3	83.7
4	C-3	90.2
6	C-4	35.0
8	C-4	35.0
9	C-9	60.6
10	C-9	103.2
11	C-11	67.1
12	C-12	116.2
13 & 14	C-14	420.8
15	C-15	119.0
TOTAL		1,339.9

EARTHWORK QUANTITIES

LOCATION	IMPORTED BORROW (CY)	ROADWAY EXCAVATION (CY)
1	4.9	6.5
5	1.7	0.2
7		0.1
11	1.7	2.3
13 & 14	32.2	43.3
TOTAL	40.5	52.4

MINOR CONCRETE (MINOR STRUCTURE) (CY)

LOCATION	ANCHOR BLOCK (Mod 1)	ANCHOR BLOCK (Mod 2)	ANCHOR BLOCK (Mod 3)
5	24.0		
6		8.8	
7			1.7
8		8.8	
SUBTOTAL	24.0	17.6	1.7
TOTAL	43.3		

SLOPE PAVING (CONCRETE)

LOCATION	SHEET	CY
7	C-4	5.7
TOTAL		5.7

REMOVE CONCRETE CURB

LOCATION	SHEET	CY
5	C-5	0.09
6	C-5	0.09
7	C-5	0.09
8	C-5	0.09
TOTAL		0.36

CONCRETE (SLOPE PROTECTION)

LOCATION	SHEET	CY
5	C-5	2.8
7	C-6	0.7
TOTAL		3.5

OVERSIDE DRAIN SUMMARY

LOCATION	SHEET	PLACE HMA (Misc AREA) SQYD	MINOR HMA TON	REMOVE OVERSIDE DRAIN EA
5	C-4	7.7	1.28	
7	C-4	13.8	2.30	1
8	C-4	20.9	3.49	1
TOTAL		42.4	7.07	2

TEMPORARY FENCE (TYPE ESA)

LOCATION	SHEET	LF
6	C-4	150
7	C-4	45
8	C-4	150
TOTAL		345

24" CIDH CONCRETE PILING

LOCATION	SHEET	LF
10	C-9	30.0
TOTAL		30.0

REMOVE CONCRETE BARRIER (TYPE K)

LOCATION	SHEET	LF
13	C-14	100.0
TOTAL		100.0

METAL BEAM GUARD RAILING

ROUTE	LOCATION	Beg POST MILE	END POST MILE	DIRECTION	LAYOUT TYPE (N)	REMOVE MBGR LF	TREATED WOOD WASTE LB	MBGR (8' STEEL POST) LF	MBGR (STEEL POST) LF	ADJUST MBGR LF	TERMINAL SYSTEM (TYPE X-TENSION) IN-LINE EA	TERMINAL SYSTEM (TYPE X-TENSION) FLARED EA	ALTERNATIVE CRASH CUSHION	END CAP (TYPE A) (N) EA	TRANSITION RAILING (TYPE WB) EA	REMOVE TERMINAL SYSTEM (N) TYPE ET EA	REMOVE TERMINAL SYSTEM (N) TYPE SRT EA	REMOVE END ANCHOR ASSEMBLY (N) TYPE SFT	REMOVE CABLE ANCHOR ASSEMBLY (N) EA	GUARD RAILING DELINEATOR (TYPE F) EA
94	1	32.84	32.90	EB	11H	100.00	1,312.40		125.00	175.00	1	1				2			2	3
	2	33.11	33.25	EB	11E	56.25	738.22		12.50	687.50		2				1		1	2	2
	3	R33.61	R33.71	EB	11E	87.50	1,312.40		12.50	487.50		2				1	1		2	2
	4	R33.61	R33.69	WB	11E	75.00	1,312.40		25.00	350.00		2					2		2	3
	5	34.95	34.96	EB		66.00	1,066.32						1				1		1	1
	6	34.95	34.96	WB	12AA	64.00	1,066.32				1			1	1		1		1	1
	7	35.06	35.07	EB		24.00	574.17						1				1		1	1
	8	35.06	35.07	WB	12A	63.00	1,066.32				1			1	1		1		1	1
	9	36.64	37.22	WB	11H	75.00	1,312.40			3,000.00	1	1					2		2	2
	10	37.29	37.39	WB	11E	100.00	1,312.40	18.75	31.25	425.00		2				2			2	3
	11	38.01	38.27	WB	11H	87.50	1,312.40	12.50		1,287.50	1	1				1	1		2	2
	12	39.06	39.11	WB	11E	75.00	1,312.40	75.00		200.00		2					2		2	2
	13	39.87	39.91	WB	11E	87.50	1,312.40	600.00		125.00		1				1	1		2	3
	14	40.02	40.14	WB	11E	75.00	1,312.40	50.00		537.50		1					2		2	2
	15	40.29	40.32	WB	11H	137.50	1,968.60		112.50		1	1					2		2	3
TOTAL						1,173.25	18,291.55	756.25	318.75	7275.00	6	16	2		2					31

(N) = NOT A SEPARATE PAY ITEM, FOR INFORMATION ONLY.

SUMMARY OF QUANTITIES

Q-1

STATE OF CALIFORNIA - DEPARTMENT OF TRANSPORTATION
Caltrans PROJECT DEVELOPMENT
TRAFFIC

FUNCTIONAL SUPERVISOR: RICHARD ESTRADA
CALCULATED-DESIGNED BY: BETHNAY DES JARDINS
CHECKED BY: BARZAN ARAN
REVISED BY / DATE REVISED

LAST REVISION 07-03-13
DATE PLOTTED => 07-AUG-2013
TIME PLOTTED => 14:21

Dist	COUNTY	ROUTE	POST MILES TOTAL PROJECT	SHEET No.	TOTAL SHEETS
11	SD	94	32.8/40.3	27	31

Randell D. Hiatt
REGISTERED CIVIL ENGINEER

October 19, 2012
PLANS APPROVAL DATE

REGISTERED PROFESSIONAL ENGINEER
Randell D. Hiatt
No. C50200
Exp. 6-30-13
CIVIL
STATE OF CALIFORNIA

THE STATE OF CALIFORNIA OR ITS OFFICERS OR AGENTS SHALL NOT BE RESPONSIBLE FOR THE ACCURACY OR COMPLETENESS OF SCANNED COPIES OF THIS PLAN SHEET.

TO ACCOMPANY PLANS DATED 08-05-13

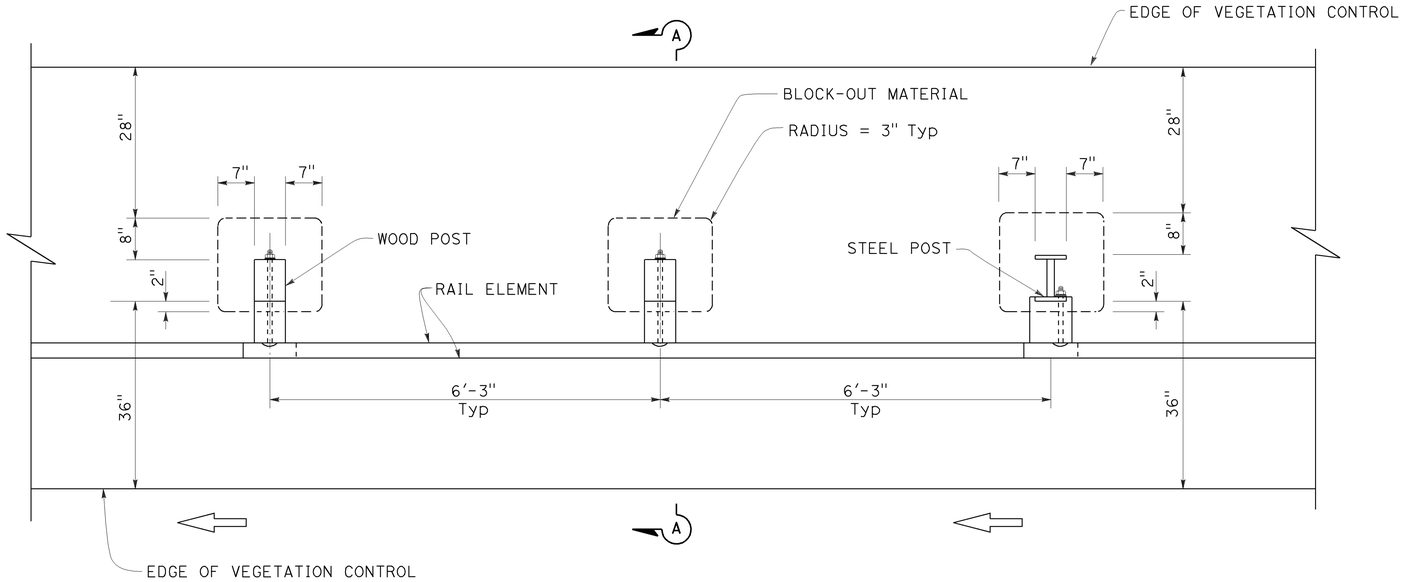

PLAN

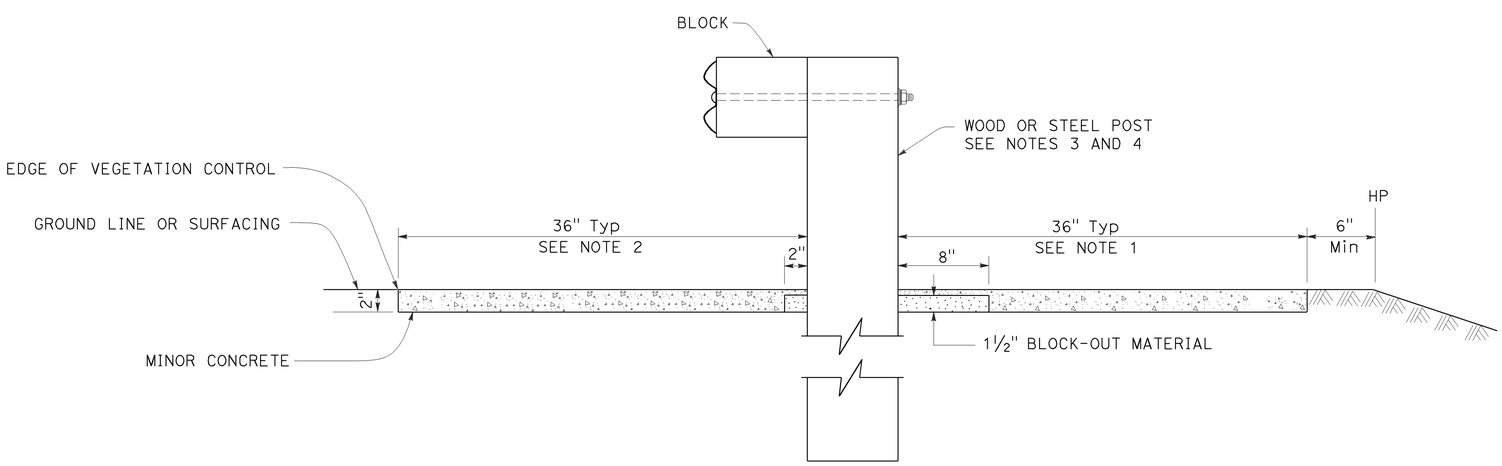

SECTION A-A

NOTES:

1. Where the distance between back of post and hinge point is less than 42", construct vegetation control to 6" from hinge point while maintaining the 8" block-out at back of post. If the 8" block-out at back of post can not be maintained, construct vegetation control flush with the back edge of post.
2. Where dike is constructed under railing, construct vegetation control to back edge of dike. Where paved shoulder is constructed within 36" in front of the post, construct vegetation control to the edge of paved shoulder.
3. For wood post sizes, see Standard Plan A77C1.
4. For steel post sizes, see Standard Plan A77C2.
5. For details not shown, see Standard Plans A77A1 and A77A2.

STATE OF CALIFORNIA
DEPARTMENT OF TRANSPORTATION

METAL BEAM GUARD RAILING TYPICAL VEGETATION CONTROL STANDARD RAILING SECTION

NO SCALE

RSP A77C5 DATED OCTOBER 19, 2012 SUPERSEDES STANDARD PLAN A77C5 DATED MAY 20, 2011 - PAGE 53 OF THE STANDARD PLANS BOOK DATED 2010.

REVISED STANDARD PLAN RSP A77C5

2010 REVISED STANDARD PLAN RSP A77C5

9-26-12

Dist	COUNTY	ROUTE	POST MILES TOTAL PROJECT	SHEET No.	TOTAL SHEETS
11	SD	94	32.8/40.3	28	31

Randell D. Hiatt
REGISTERED CIVIL ENGINEER

October 19, 2012
PLANS APPROVAL DATE

REGISTERED PROFESSIONAL ENGINEER
Randell D. Hiatt
No. C50200
Exp. 6-30-13
CIVIL
STATE OF CALIFORNIA

THE STATE OF CALIFORNIA OR ITS OFFICERS OR AGENTS SHALL NOT BE RESPONSIBLE FOR THE ACCURACY OR COMPLETENESS OF SCANNED COPIES OF THIS PLAN SHEET.

TO ACCOMPANY PLANS DATED 08-05-13

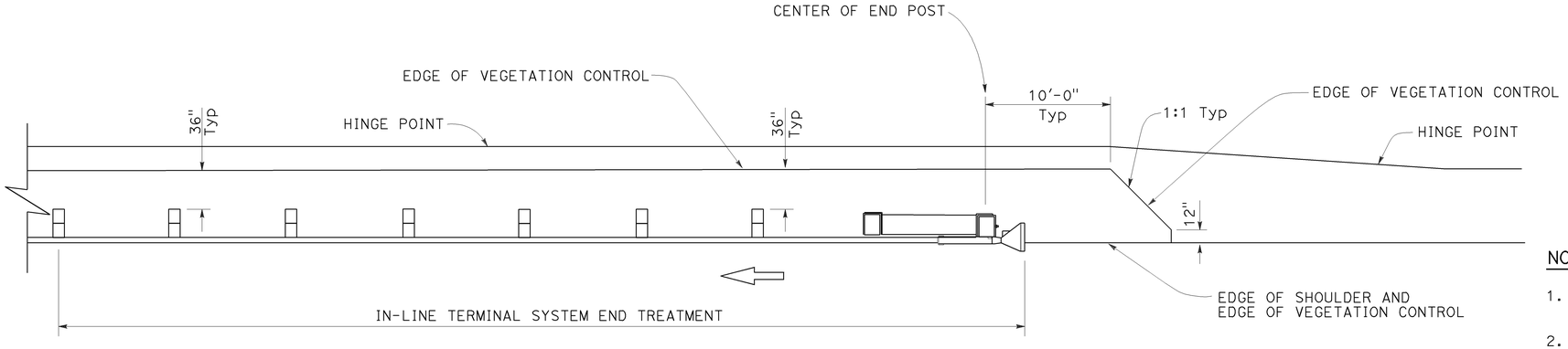

PLAN

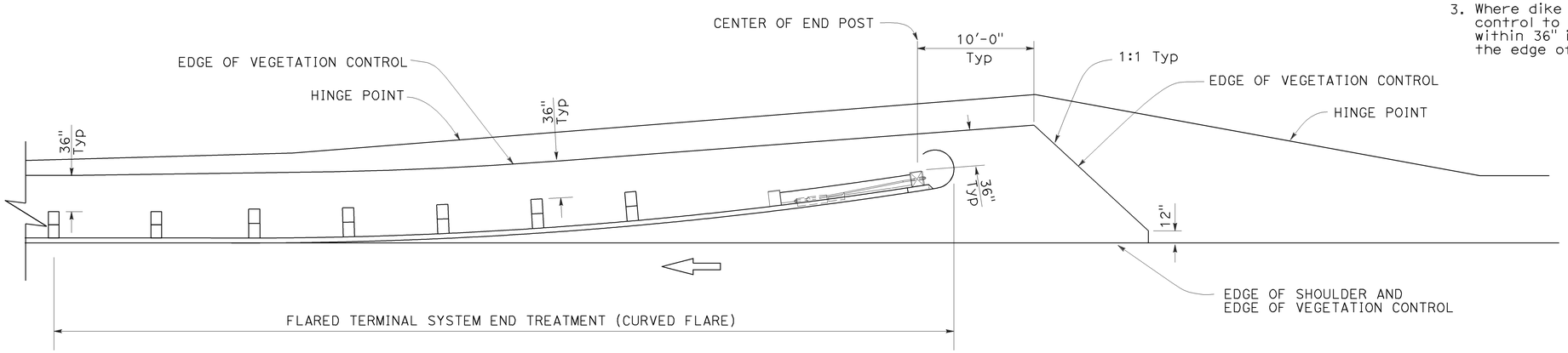

PLAN

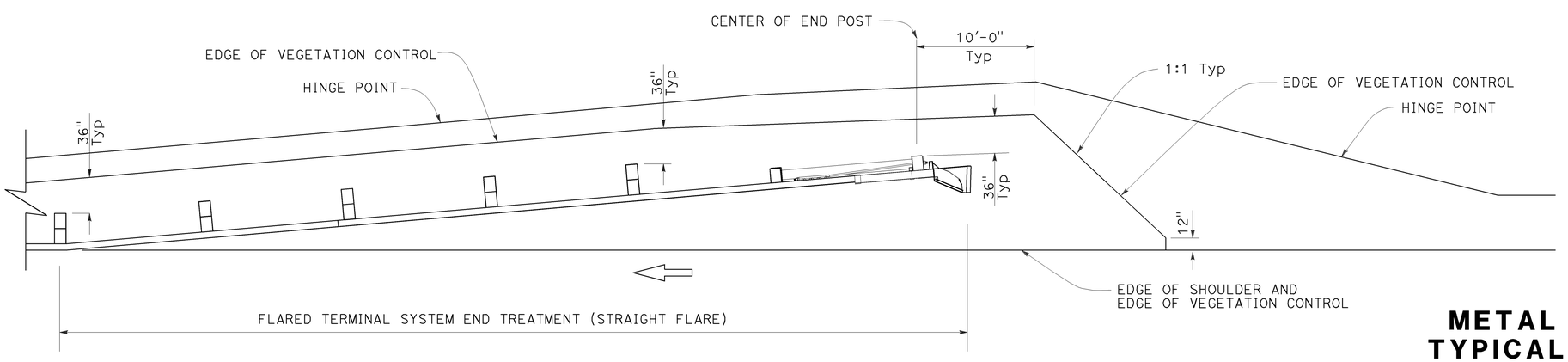

PLAN

NOTES:

1. See Revised Standard Plan RSP A77C5 for additional vegetation control details.
2. Where the distance between back of post and hinge point is less than 42", construct vegetation control to 6" from hinge point while maintaining the 8" block-out at back of post. If the 8" block-out at back of post can not be maintained, construct vegetation control flush with the back edge of post.
3. Where dike is constructed under railing, construct vegetation control to back edge of dike. Where paved shoulder is constructed within 36" in front of the post, construct vegetation control to the edge of paved shoulder.

STATE OF CALIFORNIA
DEPARTMENT OF TRANSPORTATION

METAL BEAM GUARD RAILING TYPICAL VEGETATION CONTROL FOR TERMINAL SYSTEM END TREATMENTS

NO SCALE

RSP A77C6 DATED OCTOBER 19, 2012 SUPERSEDES STANDARD PLAN A77C6 DATED MAY 20, 2011 - PAGE 54 OF THE STANDARD PLANS BOOK DATED 2010.

REVISED STANDARD PLAN RSP A77C6

2010 REVISED STANDARD PLAN RSP A77C6

9-26-12

Dist	COUNTY	ROUTE	POST MILES TOTAL PROJECT	SHEET No.	TOTAL SHEETS
11	SD	94	32.8/40.3	29	31

Randell D. Hiatt
REGISTERED CIVIL ENGINEER

October 19, 2012
PLANS APPROVAL DATE

REGISTERED PROFESSIONAL ENGINEER
Randell D. Hiatt
No. C50200
Exp. 6-30-13
CIVIL
STATE OF CALIFORNIA

THE STATE OF CALIFORNIA OR ITS OFFICERS OR AGENTS SHALL NOT BE RESPONSIBLE FOR THE ACCURACY OR COMPLETENESS OF SCANNED COPIES OF THIS PLAN SHEET.

TO ACCOMPANY PLANS DATED 08-05-13

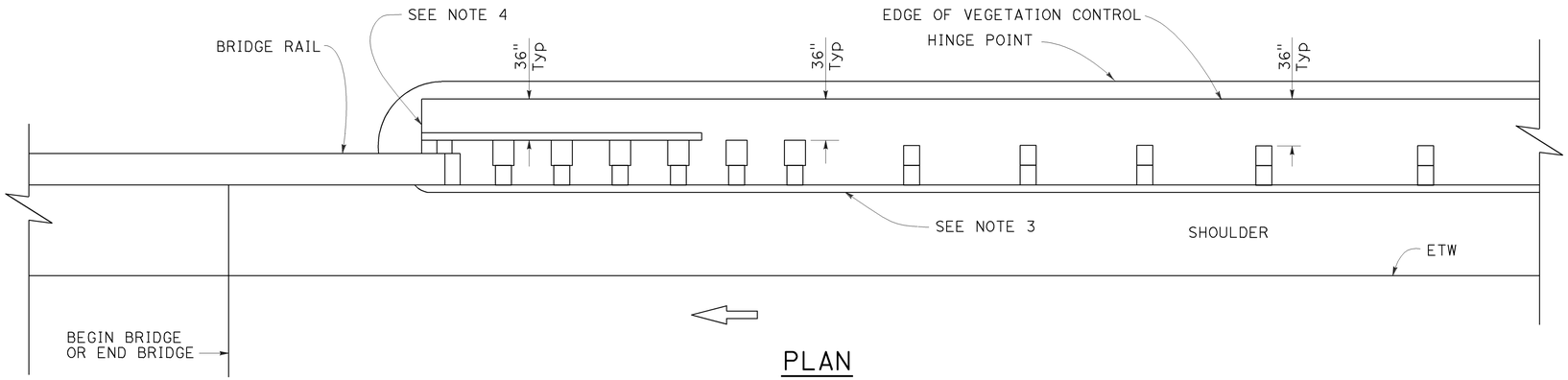

PLAN

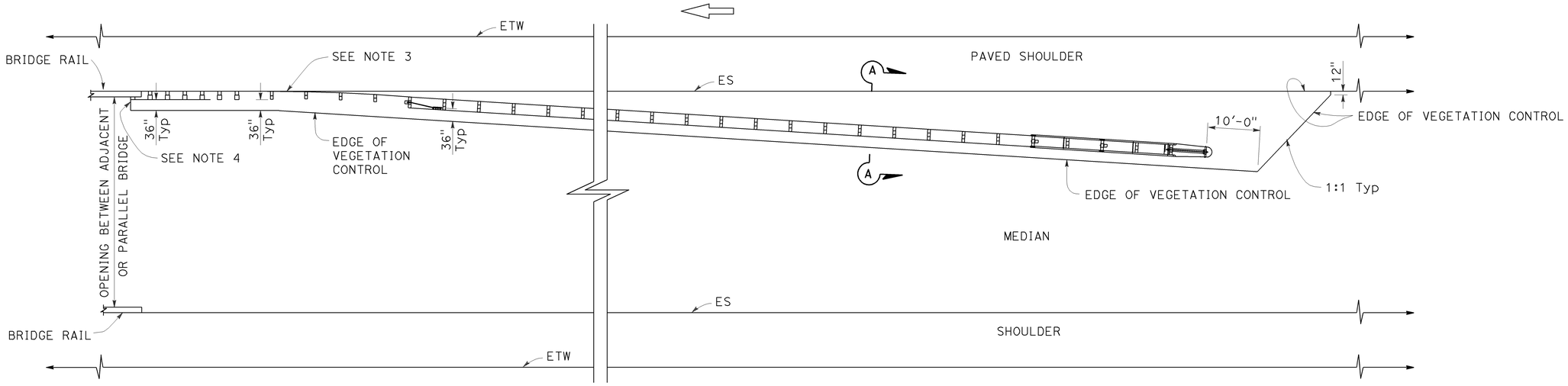

PLAN

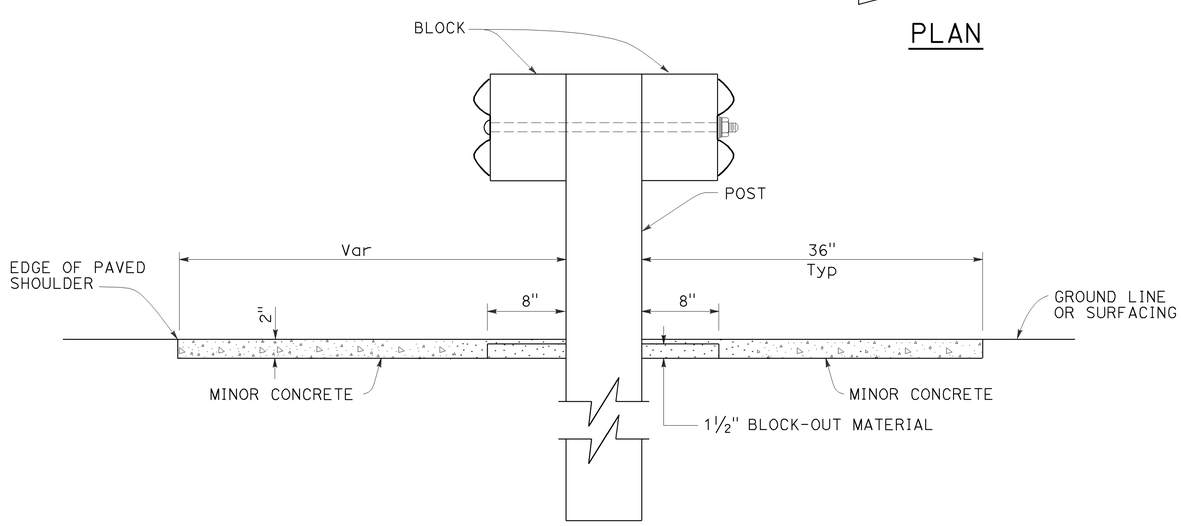

SECTION A-A

NOTES:

1. See Revised Standard Plan RSP A77C5 for additional vegetation control details.
2. Where the distance between back of post and hinge point is less than 42", construct vegetation control to 6" from hinge point while maintaining the 8" block-out at back of post. If the 8" block-out at back of post can not be maintained, construct vegetation control flush with the back edge of post.
3. Where dike is constructed under railing, construct vegetation control to back edge of dike. Where paved shoulder is constructed within 36" in front of the post, construct vegetation control to the edge of paved shoulder.
4. End vegetation control at end of backside rail element.

STATE OF CALIFORNIA
DEPARTMENT OF TRANSPORTATION

METAL BEAM GUARD RAILING TYPICAL VEGETATION CONTROL AT STRUCTURE APPROACH

NO SCALE

RSP A77C7 DATED OCTOBER 19, 2012 SUPERSEDES STANDARD PLAN A77C7
DATED MAY 20, 2011 - PAGE 55 OF THE STANDARD PLANS BOOK DATED 2010.

REVISED STANDARD PLAN RSP A77C7

2010 REVISED STANDARD PLAN RSP A77C7

9-26-12

Dist	COUNTY	ROUTE	POST MILES TOTAL PROJECT	SHEET No.	TOTAL SHEETS
11	SD	94	32.8/40.3	30	31

REGISTERED CIVIL ENGINEER

April 19, 2013
PLANS APPROVAL DATE

REGISTERED PROFESSIONAL ENGINEER
Gurinderpal Bhullar
No. C48815
Exp. 9-30-14
CIVIL
STATE OF CALIFORNIA

THE STATE OF CALIFORNIA OR ITS OFFICERS OR AGENTS SHALL NOT BE RESPONSIBLE FOR THE ACCURACY OR COMPLETENESS OF SCANNED COPIES OF THIS PLAN SHEET.

TO ACCOMPANY PLANS DATED 08-05-13

TABLE 1

TAPER LENGTH CRITERIA AND CHANNELIZING DEVICE SPACING

SPEED (S)	MINIMUM TAPER LENGTH * FOR WIDTH OF OFFSET 12 FEET (W)				MAXIMUM CHANNELIZING DEVICE SPACING		
					X	Y	Z **
	TANGENT 2L	MERGING L	SHIFTING L/2	SHOULDER L/3	TAPER	TANGENT	CONFLICT
mph	ft	ft	ft	ft	ft	ft	ft
20	160	80	40	27	20	40	10
25	250	125	63	42	25	50	12
30	360	180	90	60	30	60	15
35	490	245	123	82	35	70	17
40	640	320	160	107	40	80	20
45	1080	540	270	180	45	90	22
50	1200	600	300	200	50	100	25
55	1320	660	330	220	55	110	27
60	1440	720	360	240	60	120	30
65	1560	780	390	260	65	130	32
70	1680	840	420	280	70	140	35

* - For other offsets, use the following merging taper length formula for L:
For speed of 40 mph or less, $L = WS^2/60$
For speed of 45 mph or more, $L = WS$

Where: L = Taper length in feet
W = Width of offset in feet
S = Posted speed limit, off-peak 85th-percentile speed prior to work starting, or the anticipated operating speed in mph

** - Use for taper and tangent sections where there are no pavement markings or where there is a conflict between existing pavement markings and channelizers (CA).

TABLE 2

LONGITUDINAL BUFFER SPACE AND FLAGGER STATION SPACING

SPEED *	Min D **	DOWNGRADE Min D ***		
		-3%	-6%	-9%
mph	ft	ft	ft	ft
20	115	116	120	126
25	155	158	165	173
30	200	205	215	227
35	250	257	271	287
40	305	315	333	354
45	360	378	400	427
50	425	446	474	507
55	495	520	553	593
60	570	598	638	686
65	645	682	728	785
70	730	771	825	891

* - Speed is posted speed limit, off-peak 85th-percentile speed prior to work starting, or the anticipated operating speed in mph

** - Longitudinal buffer space or flagger station spacing

*** - Use on sustained downgrade steeper than -3 percent and longer than 1 mile.

TABLE 3

ADVANCE WARNING SIGN SPACING

ROAD TYPE	DISTANCE BETWEEN SIGNS *		
	A	B	C
	ft	ft	ft
URBAN - 25 mph OR LESS	100	100	100
URBAN - MORE THAN 25 mph TO 40 mph	250	250	250
URBAN - MORE THAN 40 mph	350	350	350
RURAL	500	500	500
EXPRESSWAY / FREEWAY	1000	1500	2640

* - The distances are approximate, are intended for guidance purposes only, and should be applied with engineering judgment. These distances should be adjusted by the Engineer for field conditions, if necessary, by increasing or decreasing the recommmended distances.

STATE OF CALIFORNIA
DEPARTMENT OF TRANSPORTATION

TRAFFIC CONTROL SYSTEM FOR LANE CLOSURE ON FREEWAYS AND EXPRESSWAYS

NO SCALE

RSP T9 DATED APRIL 19, 2013 SUPPLEMENTS THE STANDARD PLANS BOOK DATED 2010.

REVISED STANDARD PLAN RSP T9

2010 REVISED STANDARD PLAN RSP T9

1-23-13

Dist	COUNTY	ROUTE	POST MILES TOTAL PROJECT	SHEET No.	TOTAL SHEETS
11	SD	94	32.8/40.3	31	31

REGISTERED CIVIL ENGINEER

April 19, 2013
PLANS APPROVAL DATE

REGISTERED PROFESSIONAL ENGINEER Gurinderpal Bhullar No. C48815 Exp. 9-30-14 CIVIL STATE OF CALIFORNIA

THE STATE OF CALIFORNIA OR ITS OFFICERS OR AGENTS SHALL NOT BE RESPONSIBLE FOR THE ACCURACY OR COMPLETENESS OF SCANNED COPIES OF THIS PLAN SHEET.

TO ACCOMPANY PLANS DATED 08-05-13

NOTES:

See Revised Standard Plan RSP T9 for tables.

Use cone spacing X for taper segment, Y for tangent segment or Z for conflict situations, as approriate, per Table 1, unless X, Y, or Z cone spacing is shown on this sheet.

Unless otherwise specified in the special provisions, all temporary warning signs shall have black legend on fluorescent orange background.

California codes are designated by (CA). Otherwise, Federal (MUTCD) codes are shown.

TYPICAL LANE CLOSURE WITH REVERSIBLE CONTROL

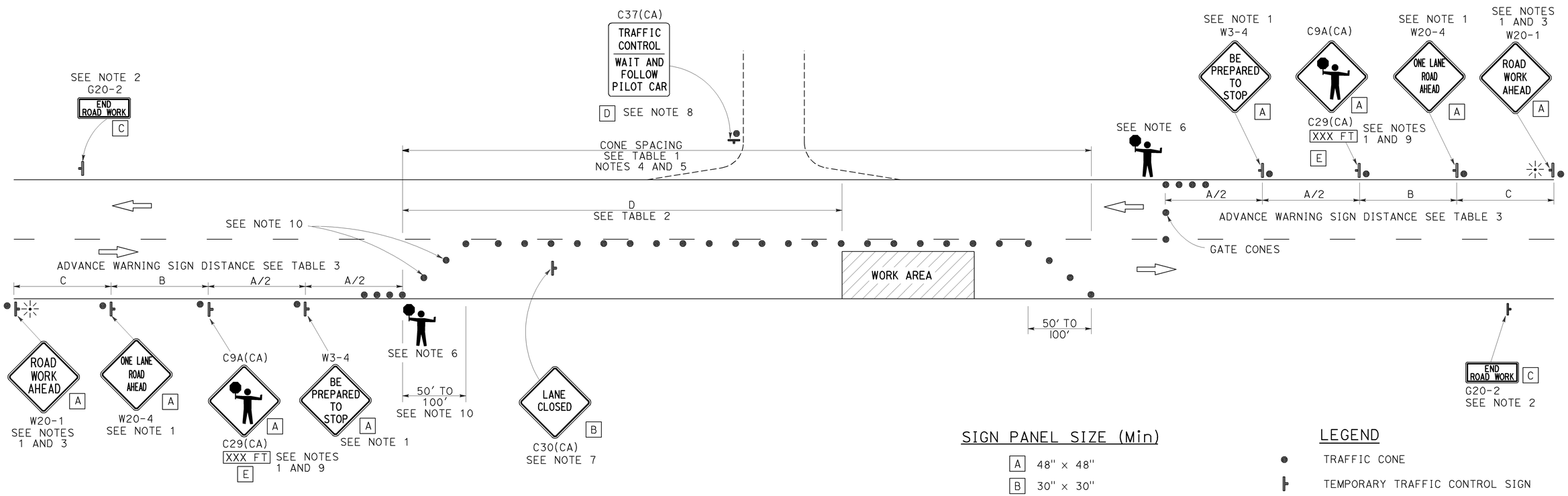

SIGN PANEL SIZE (Min)

A	48" × 48"
B	30" × 30"
C	36" × 18"
D	36" × 42"
E	20" × 7"

LEGEND

- TRAFFIC CONE
- TEMPORARY TRAFFIC CONTROL SIGN
- PORTABLE FLASHING BEACON
- FLAGGER

NOTES:

1. Each advance warning sign in each direction of travel shall be equipped with at least two flags for daytime closure. Each flag shall be at least 16" x 16" in size and shall be orange or fluorescent red-orange in color. Flashing beacons shall be placed at the locations indicated for lane closure during hours of darkness.
2. A G20-2 "END ROAD WORK" sign, as appropriate, shall be placed at the end of the lane control unless the end of work area is obvious, or ends within a larger project's limits.
3. If the W20-1 sign would follow within 2000' of a stationary W20-1 or G20-1 "ROAD WORK NEXT _____ MILES", use a W20-4 sign for the first advance warning sign.
4. All cones used for lane closures during the hours of darkness shall be fitted with retroreflective bands (or sleeves) as specified in the specifications.
5. Portable delineators, placed at one-half the spacing indicated for traffic cones, may be used instead of cones for daytime closures only.
6. Additional advance flaggers may be required. Flagger should stand in a conspicuous place, be visible to approaching traffic as well as approaching vehicles after the first vehicle has stopped. During the hours of darkness, the flagging-station and flagger shall be illuminated and clearly visible to approaching traffic. The illumination footprint of the lighting on the ground shall be at least 20' in diameter. Place a minimum of four cones at 50' intervals in advance of flagger station as shown.
7. Place C30(CA) "LANE CLOSED" sign at 500' to 1000' intervals throughout extended work areas. They are optional if the work area is visible from the flagger station.
8. When a pilot car is used, place a C37(CA) "TRAFFIC CONTROL-WAIT AND FOLLOW PILOT CAR" sign with black legend on white background at all intersections, driveways and alleys without a flagger within traffic control area. Signs shall be clean and visible at all times. Where traffic can not be effectively self-regulated, at least one flagger shall be used at each intersection within traffic control area.
9. An optional C29(CA) sign may be placed below the C9A(CA) sign.
10. Either traffic cones or barricades shall be placed on the taper. Barricades shall be Type I, II, or III.

STATE OF CALIFORNIA
DEPARTMENT OF TRANSPORTATION

TRAFFIC CONTROL SYSTEM FOR LANE CLOSURE ON TWO LANE CONVENTIONAL HIGHWAYS

NO SCALE

RSP T13 DATED APRIL 19, 2013 SUPERSEDES STANDARD PLAN T13 DATED MAY 20, 2011 - PAGE 241 OF THE STANDARD PLANS BOOK DATED 2010.

REVISED STANDARD PLAN RSP T13

2010 REVISED STANDARD PLAN RSP T13

4-2-13