Dist	COUNTY	ROUTE	POST MILES TOTAL PROJECT	SHEET No.	TOTAL SHEETS
11	SD	75, 805	9.0, 20.2	1	76

STATE OF CALIFORNIA **ACBRSTP-X073(099)E**

DEPARTMENT OF TRANSPORTATION

PROJECT PLANS FOR CONSTRUCTION ON

STATE HIGHWAY

IN SAN DIEGO COUNTY IN SAN DIEGO
ON ROUTE 75 AT E75-N5 CONNECTOR OVERCROSSING
AND ON ROUTE 805 AT KEARNY VILLA ROAD OVERCROSSING

TO BE SUPPLEMENTED BY STANDARD PLANS DATED MAY 2006

INDEX OF PLANS

SHEET NO.	DESCRIPTION
1	TITLE AND LOCATION MAP
2-4	TYPICAL CROSS SECTIONS
5-7	LAYOUT
8-10	CONSTRUCTION DETAILS
11-13	WATER POLLUTION CONTROL PLAN
14-15	UTILITY PLAN
16	CONSTRUCTION AREA SIGNS
17-20	TRAFFIC HANDLING PLAN
21-23	SUMMARY OF QUANTITIES
24-29	HIGHWAY PLANTING
30	ELECTRICAL PLAN
31-60	REVISED AND NEW STANDARD PLANS
	STRUCTURE PLANS
61-69	KEARNY VILLA ROAD OC (SEISMIC RETROFIT)
70-76	E75/N5 CONNECTOR OC (SEISMIC RETROFIT)

THE STANDARD PLANS LIST APPLICABLE TO THIS CONTRACT IS INCLUDED IN THE NOTICE TO BIDDERS AND SPECIAL PROVISIONS BOOK.

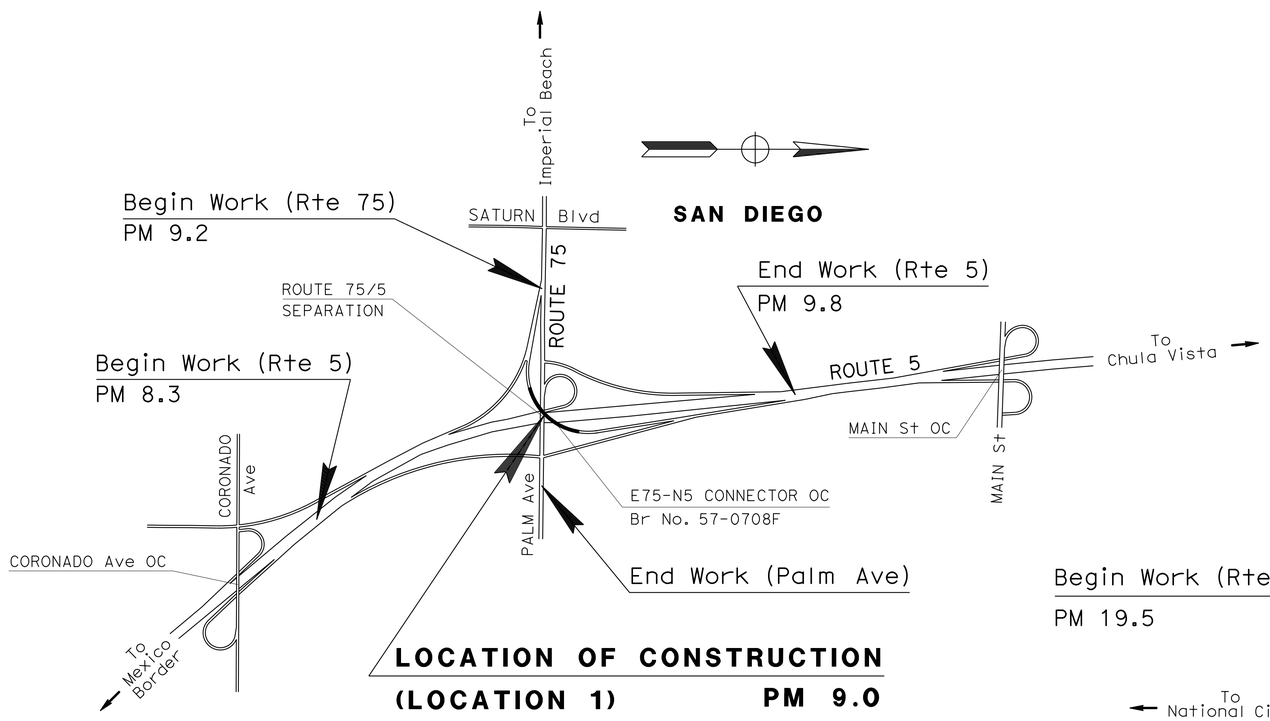

LOCATION OF CONSTRUCTION
(LOCATION 1) PM 9.0

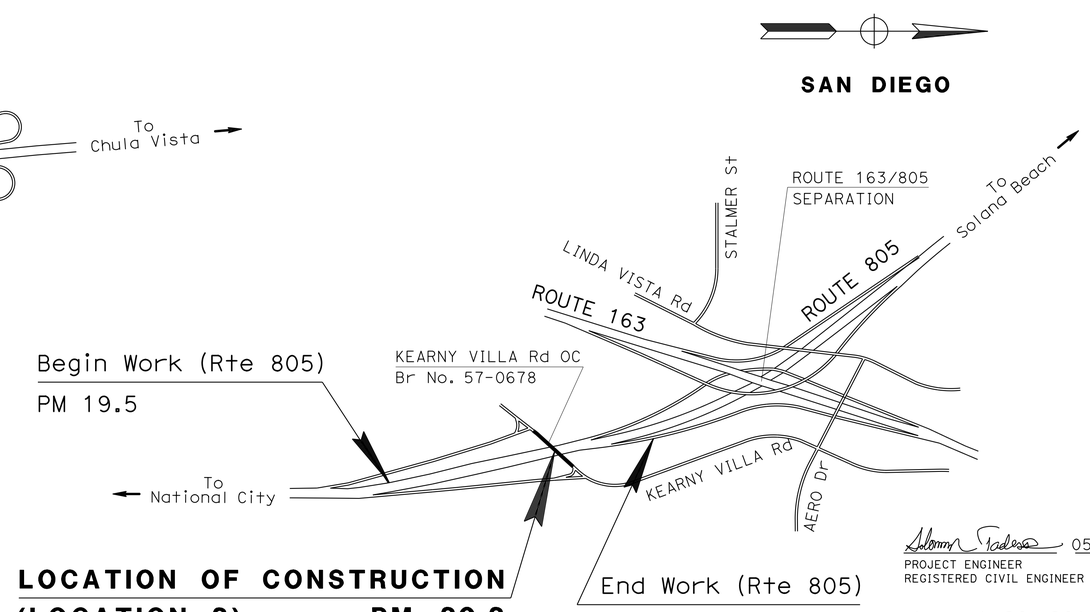

LOCATION OF CONSTRUCTION
(LOCATION 2) PM 20.2

05-08-12
PROJECT ENGINEER DATE
REGISTERED CIVIL ENGINEER

August 20, 2012
PLANS APPROVAL DATE

REGISTERED PROFESSIONAL ENGINEER SOLOMON TADESSE No. 62773 Exp. 06-30-12 CIVIL STATE OF CALIFORNIA

THE STATE OF CALIFORNIA OR ITS OFFICERS OR AGENTS SHALL NOT BE RESPONSIBLE FOR THE ACCURACY OR COMPLETENESS OF SCANNED COPIES OF THIS PLAN SHEET.

PROJECT MANAGER BRUCE LAMBERT

DESIGN ENGINEER KAZIM MAMDANI

THE CONTRACTOR SHALL POSSESS THE CLASS (OR CLASSES) OF LICENSE AS SPECIFIED IN THE "NOTICE TO BIDDERS."

CONTRACT No.	11-290304
PROJECT ID	1100000359

LAST REVISION 05-10-12 DATE PLOTTED => 30-AUG-2012 TIME PLOTTED => 11:10

Dist	COUNTY	ROUTE	POST MILES TOTAL PROJECT	SHEET No.	TOTAL SHEETS
11	SD	75, 805	9.0, 20.2	2	76

REGISTERED CIVIL ENGINEER 05-08-12 DATE

08-20-12
PLANS APPROVAL DATE

REGISTERED PROFESSIONAL ENGINEER SOLOMON TADESSE No. 62773 Exp. 06-30-12 CIVIL STATE OF CALIFORNIA

THE STATE OF CALIFORNIA OR ITS OFFICERS OR AGENTS SHALL NOT BE RESPONSIBLE FOR THE ACCURACY OR COMPLETENESS OF SCANNED COPIES OF THIS PLAN SHEET.

NOTES:

1. DIMENSIONS OF THE PAVEMENT STRUCTURES (STRUCTURAL SECTIONS) ARE SUBJECT TO TOLERANCES SPECIFIED IN THE STANDARD SPECIFICATIONS.
2. FOR MBGR AND DIKE REPLACEMENT LOCATIONS, SEE LAYOUT SHEETS AND SUMMMARY OF QUANTITIES SHEETS.

LEGEND:

* MATCH EXISTING

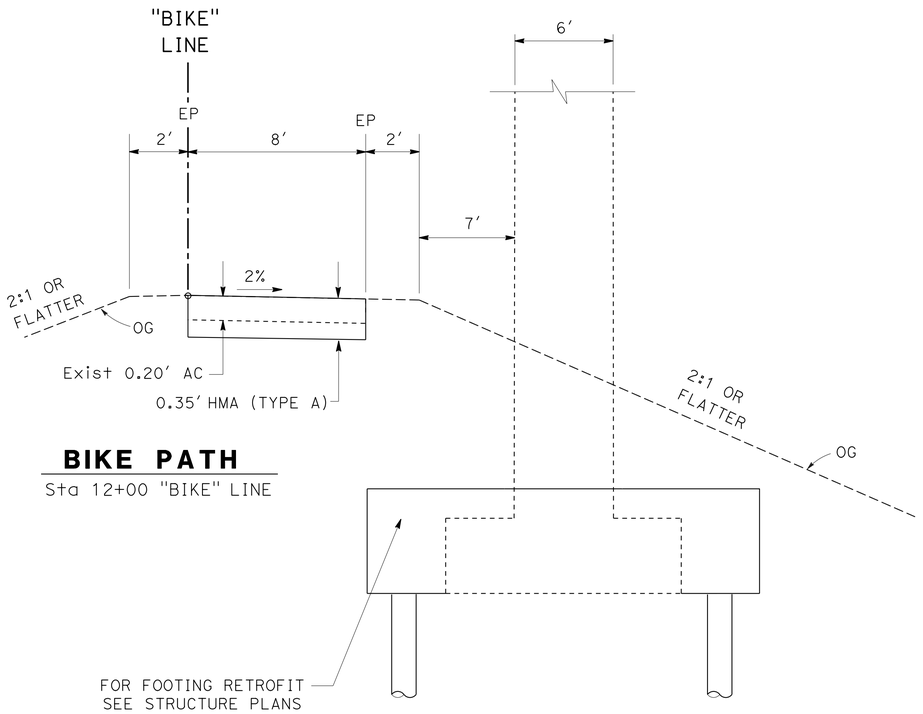

BIKE PATH

Sta 12+00 "BIKE" LINE

BENT 2

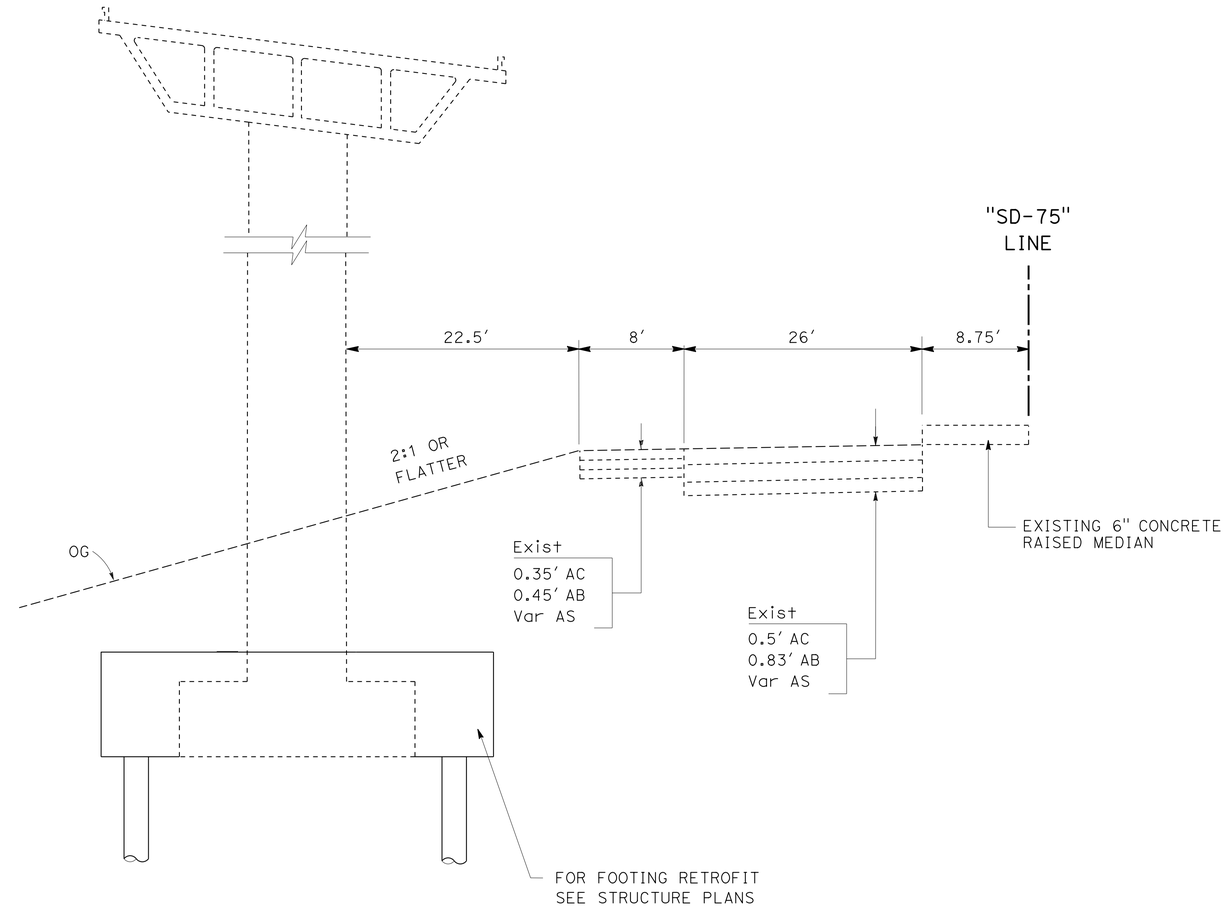

BENT 2

Sta 510+74.7 "SD-75"

ROUTE 75
LOCATION 1

TYPICAL CROSS SECTIONS

NO SCALE

X-1

STATE OF CALIFORNIA - DEPARTMENT OF TRANSPORTATION
Caltrans PROJECT DEVELOPMENT

FUNCTIONAL SUPERVISOR: KAZIM MAMDANI
CALCULATED-DESIGNED BY: DEVANGI DAVE
CHECKED BY: SOLOMON TADESSE
REVISED BY
DATE REVISED

LAST REVISION 05-14-12
DATE PLOTTED => 30-AUG-2012
TIME PLOTTED => 11:10

Dist	COUNTY	ROUTE	POST MILES TOTAL PROJECT	SHEET No.	TOTAL SHEETS
11	SD	75, 805	9.0, 20.2	3	76

REGISTERED CIVIL ENGINEER 05-08-12 DATE

08-20-12
PLANS APPROVAL DATE

REGISTERED PROFESSIONAL ENGINEER SOLOMON TADESSE No. 62773 Exp. 06-30-12 CIVIL STATE OF CALIFORNIA

THE STATE OF CALIFORNIA OR ITS OFFICERS OR AGENTS SHALL NOT BE RESPONSIBLE FOR THE ACCURACY OR COMPLETENESS OF SCANNED COPIES OF THIS PLAN SHEET.

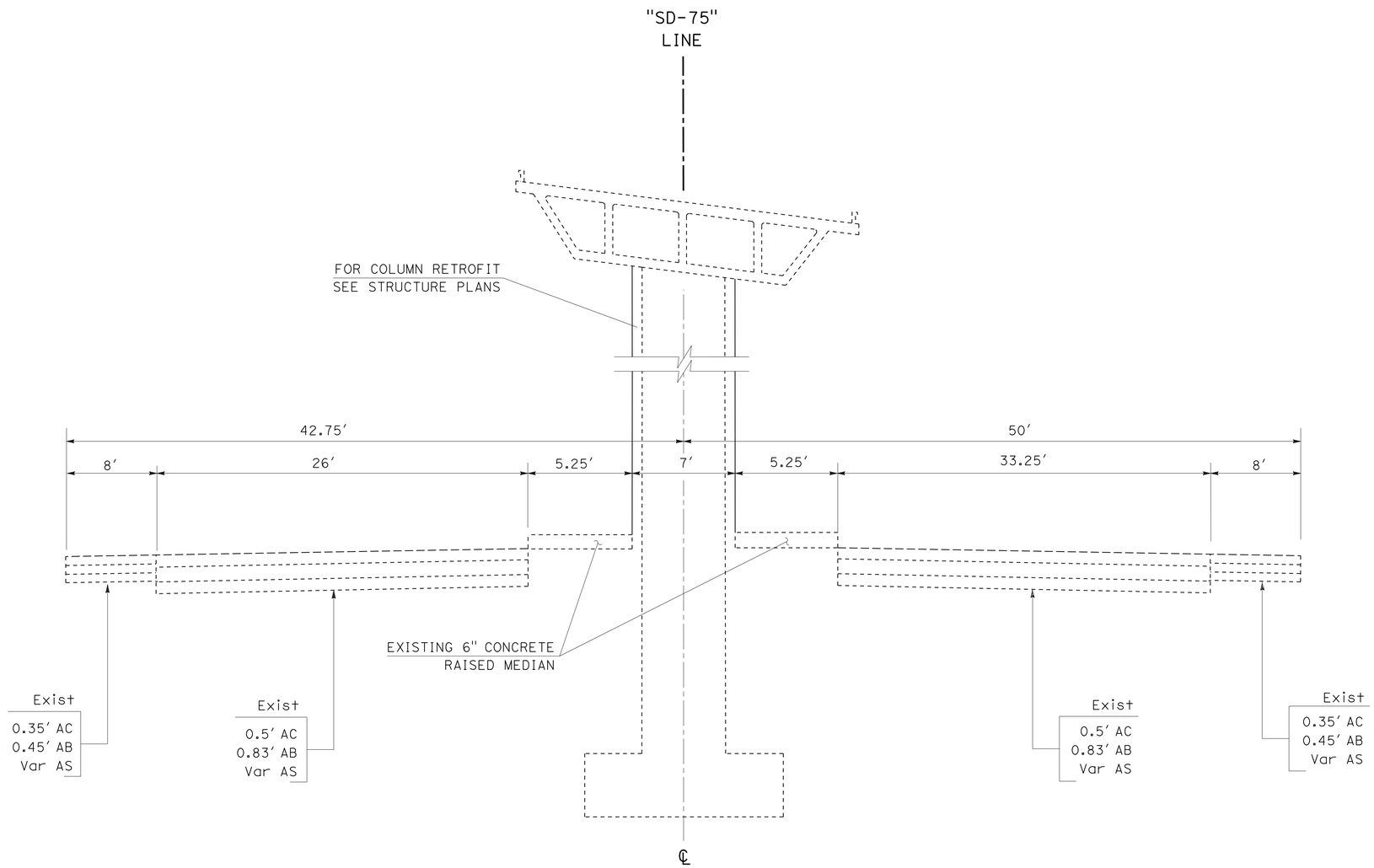

BENT 3

Sta 509+44.48 "SD-75"

ROUTE 75
LOCATION 1

TYPICAL CROSS SECTIONS

NO SCALE

X-2

STATE OF CALIFORNIA - DEPARTMENT OF TRANSPORTATION
Caltrans PROJECT DEVELOPMENT

FUNCTIONAL SUPERVISOR: KAZIM MAMDANI

CALCULATED-DESIGNED BY: DEVANGI DAVE
CHECKED BY: SOLOMON TADESSE

REVISED BY
DATE REVISED

LAST REVISION 05-14-12
DATE PLOTTED => 30-AUG-2012
TIME PLOTTED => 11:10

Dist	COUNTY	ROUTE	POST MILES TOTAL PROJECT	SHEET No.	TOTAL SHEETS
11	SD	75, 805	9.0, 20.2	4	76

REGISTERED CIVIL ENGINEER 05-08-12 DATE

08-20-12
PLANS APPROVAL DATE

REGISTERED PROFESSIONAL ENGINEER SOLOMON TADESSE No. 62773 Exp. 06-30-12 CIVIL STATE OF CALIFORNIA

THE STATE OF CALIFORNIA OR ITS OFFICERS OR AGENTS SHALL NOT BE RESPONSIBLE FOR THE ACCURACY OR COMPLETENESS OF SCANNED COPIES OF THIS PLAN SHEET.

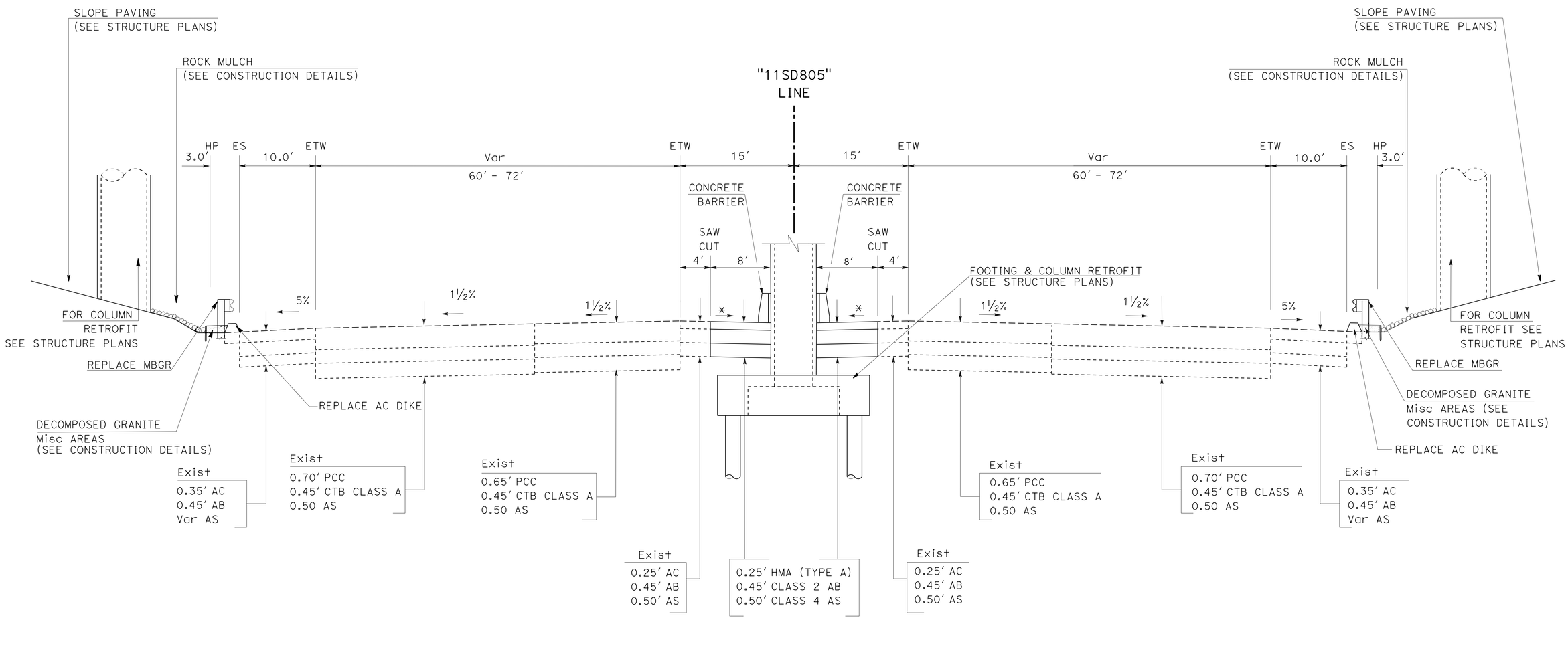

SOUTHBOUND

NORTHBOUND

ROUTE 805

LOCATION 2: "11SD805" PM 20.23
KEARNY VILLA ROAD OC
(BRIDGE No. 57-0678)

TYPICAL CROSS SECTIONS

NO SCALE

X-3

REVISED BY | DATE REVISED

DEVANGI DAVE | SOLOMON TADESSE

CALCULATED-DESIGNED BY | CHECKED BY

FUNCTIONAL SUPERVISOR: KAZIM MAMDANI

STATE OF CALIFORNIA - DEPARTMENT OF TRANSPORTATION
Caltrans PROJECT DEVELOPMENT

LAST REVISION 05-14-12 | DATE PLOTTED => 30-AUG-2012 | TIME PLOTTED => 11:10

Dist	COUNTY	ROUTE	POST MILES TOTAL PROJECT	SHEET No.	TOTAL SHEETS
11	SD	75, 805	9.0, 20.2	5	76

REGISTERED CIVIL ENGINEER 05-08-12 DATE

08-20-12
PLANS APPROVAL DATE

REGISTERED PROFESSIONAL ENGINEER SOLOMON TADESSE No. 62773 Exp. 06-30-12 CIVIL STATE OF CALIFORNIA

THE STATE OF CALIFORNIA OR ITS OFFICERS OR AGENTS SHALL NOT BE RESPONSIBLE FOR THE ACCURACY OR COMPLETENESS OF SCANNED COPIES OF THIS PLAN SHEET.

NOTES:

1. FOR ACCURATE RIGHT OF WAY DATA, CONTACT RIGHT OF WAY ENGINEERING AT THE DISTRICT OFFICE.
2. FOR DETAILS NOT SHOWN, SEE CONSTRUCTION DETAIL SHEETS.
3. FOR "BIKE"LINE ALIGNMENT DATA , SEE CONSTRUCTION DETAIL SHEETS.

LEGEND:

AREA FOR CONTRACTOR'S USE

SLOPE PAVING

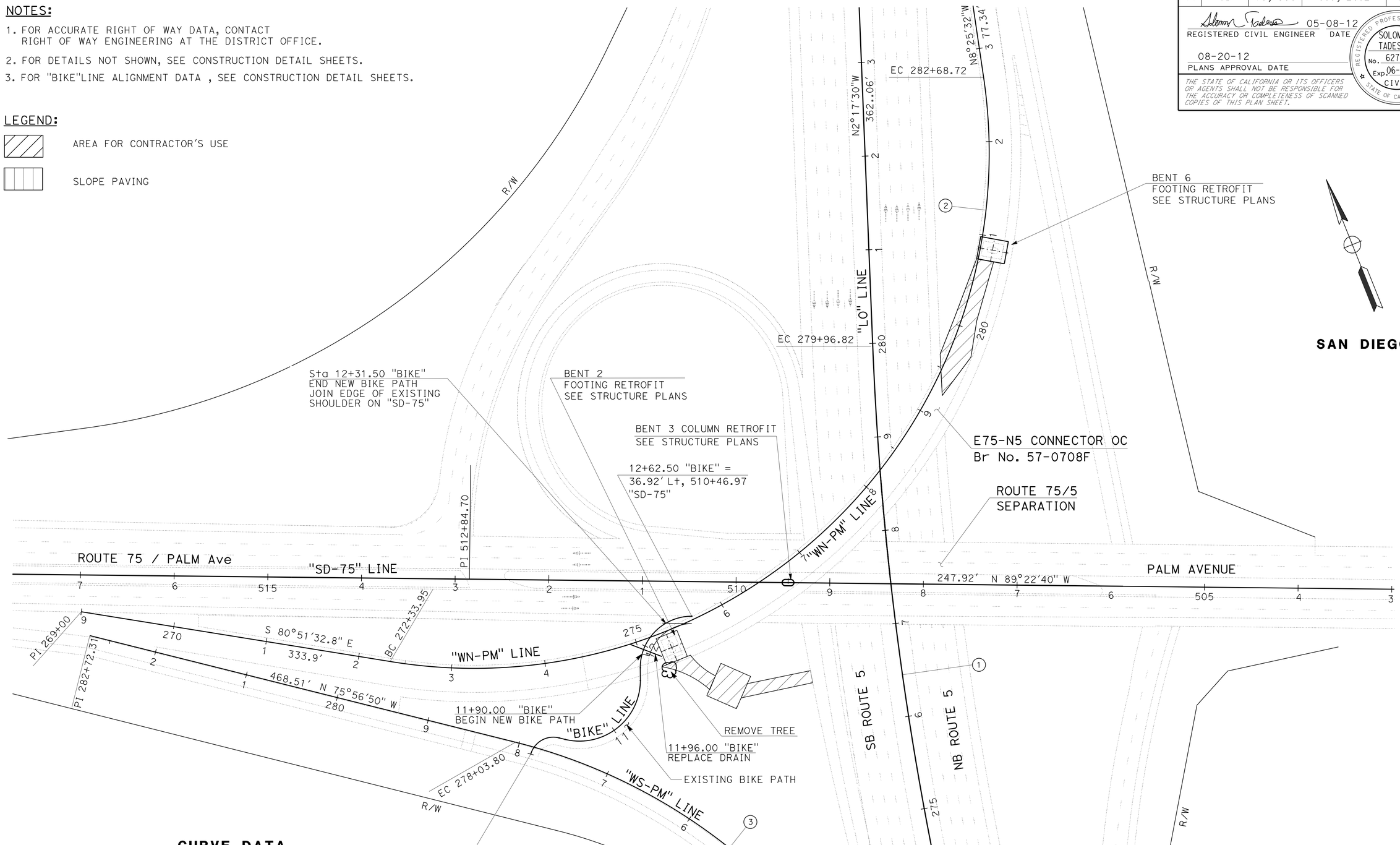

CURVE DATA

No.	R	Δ	T	L
1	3500.07'	10°37'30.9"	325.46'	648.07'
2	550.00'	107°47'45"	754.18'	1034.77'
3	600.01'	52°59'53"	299.13	555.00'

LAYOUT
LOCATION 1
L-1

SCALE: 1" = 50'

STATE OF CALIFORNIA - DEPARTMENT OF TRANSPORTATION
Caltrans PROJECT DEVELOPMENT

FUNCTIONAL SUPERVISOR: KAZIM MAMDANI
CALCULATED-DESIGNED BY: DEVANGI DAVE
CHECKED BY: SOLOMON TADESSE
REVISED BY
DATE REVISED

LAST REVISION 05-15-12
DATE PLOTTED => 30-AUG-2012
TIME PLOTTED => 11:10

Dist	COUNTY	ROUTE	POST MILES TOTAL PROJECT	SHEET No.	TOTAL SHEETS
11	SD	75, 805	9.0, 20.2	6	76

REGISTERED CIVIL ENGINEER 05-08-12 DATE

08-20-12
PLANS APPROVAL DATE

REGISTERED PROFESSIONAL ENGINEER SOLOMON TADESSE No. 62773 Exp. 06-30-12 CIVIL STATE OF CALIFORNIA

THE STATE OF CALIFORNIA OR ITS OFFICERS OR AGENTS SHALL NOT BE RESPONSIBLE FOR THE ACCURACY OR COMPLETENESS OF SCANNED COPIES OF THIS PLAN SHEET.

NOTE:

FOR ACCURATE RIGHT OF WAY DATA, CONTACT RIGHT OF WAY ENGINEERING AT THE DISTRICT OFFICE.

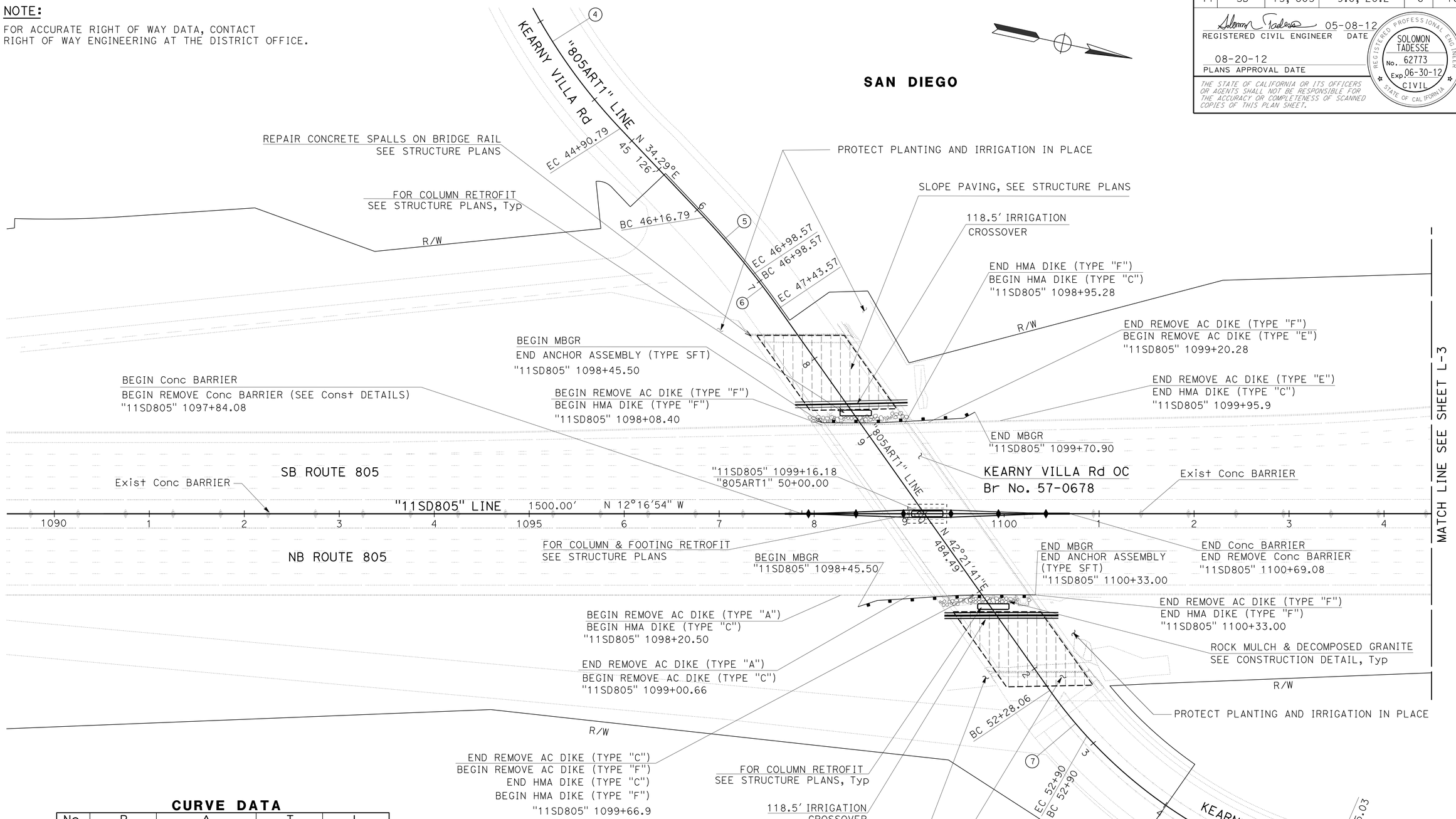

CURVE DATA

No.	R	Δ	T	L
4	600.00'	15°0'15"	79.01'	157.12'
5	900.50'	5°12'11"	40.92'	81.78'	
6	906.94'	2°50'35"	22.51'	45.00'
7	500.00'	7°5'52"	31.01'	61.94'
8	500.00'	33°48'30"	151.95'	295.03'

LAYOUT
LOCATION 2
L-2

SCALE: 1" = 50'

STATE OF CALIFORNIA - DEPARTMENT OF TRANSPORTATION
Caltrans PROJECT DEVELOPMENT

FUNCTIONAL SUPERVISOR: KAZIM MAMDANI
CALCULATED-DESIGNED BY: DEVANGI DAVE
CHECKED BY: SOLOMON TADESSE
REVISED BY
DATE REVISED

LAST REVISION 05-15-12
DATE PLOTTED => 30-AUG-2012
TIME PLOTTED => 11:10

Dist	COUNTY	ROUTE	POST MILES TOTAL PROJECT	SHEET No.	TOTAL SHEETS
11	SD	75, 805	9.0, 20.2	7	76

REGISTERED CIVIL ENGINEER 05-08-12 DATE

08-20-12
PLANS APPROVAL DATE

REGISTERED PROFESSIONAL ENGINEER SOLOMON TADESSE No. 62773 Exp. 06-30-12 CIVIL STATE OF CALIFORNIA

THE STATE OF CALIFORNIA OR ITS OFFICERS OR AGENTS SHALL NOT BE RESPONSIBLE FOR THE ACCURACY OR COMPLETENESS OF SCANNED COPIES OF THIS PLAN SHEET.

NOTE:

FOR ACCURATE RIGHT OF WAY DATA, CONTACT RIGHT OF WAY ENGINEERING AT THE DISTRICT OFFICE.

CURVE DATA

No.	R	Δ	T	L
9	4000.01′	20°41′08"	730.01′	1444.13′

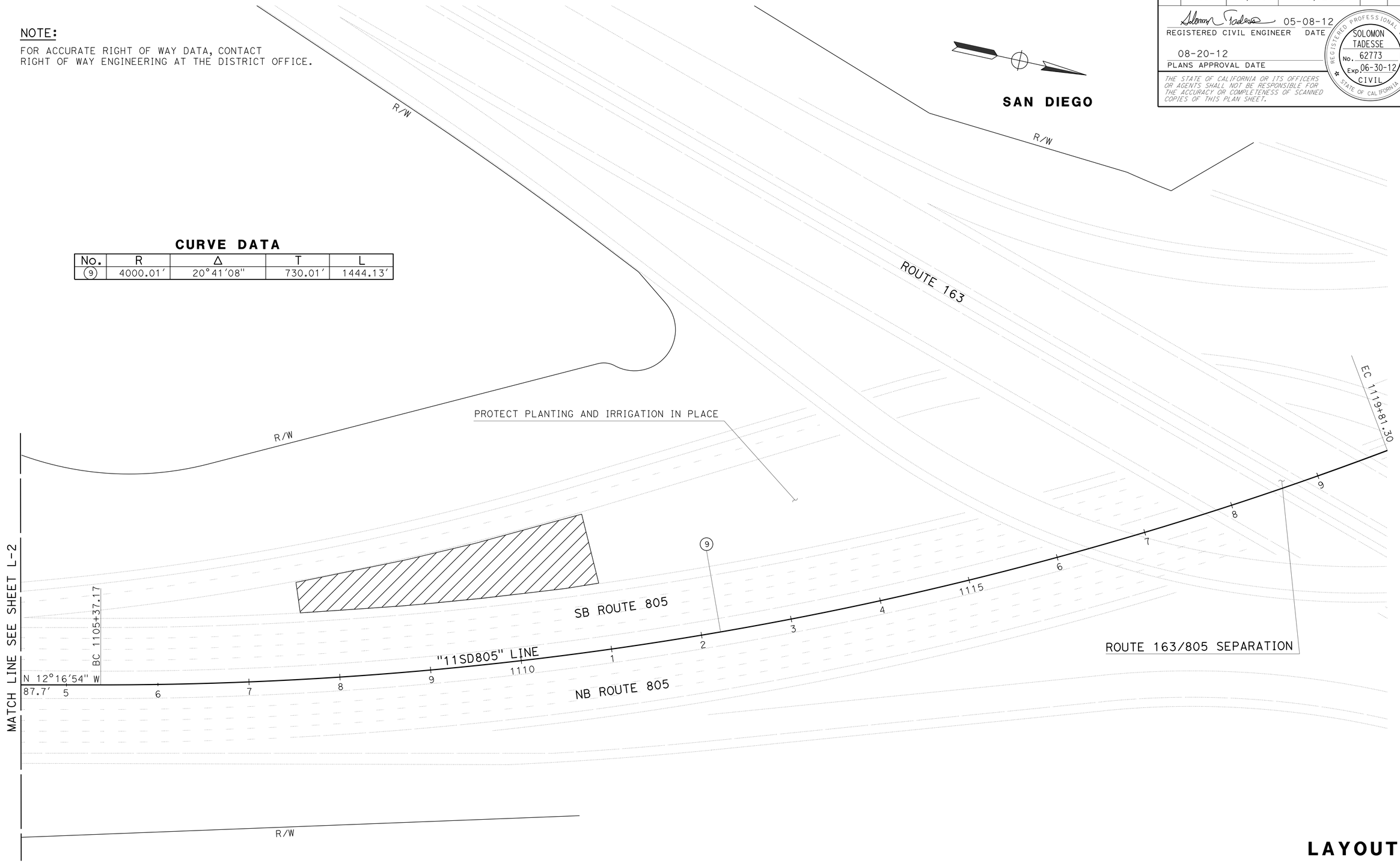

LAYOUT
LOCATION 2
L-3

SCALE: 1" = 50′

STATE OF CALIFORNIA - DEPARTMENT OF TRANSPORTATION
Caltrans PROJECT DEVELOPMENT

FUNCTIONAL SUPERVISOR: KAZIM MAMDANI
CALCULATED-DESIGNED BY: DEVANGI DAVE
CHECKED BY: SOLOMON TADESSE
REVISED BY
DATE REVISED

LAST REVISION 05-16-12
DATE PLOTTED => 30-AUG-2012
TIME PLOTTED => 11:10

Dist	COUNTY	ROUTE	POST MILES TOTAL PROJECT	SHEET No.	TOTAL SHEETS
11	SD	75, 805	9.0, 20.2	8	76

REGISTERED CIVIL ENGINEER 05-08-12 DATE

08-20-12
PLANS APPROVAL DATE

REGISTERED PROFESSIONAL ENGINEER SOLOMON TADESSE No. 62773 Exp. 06-30-12 CIVIL STATE OF CALIFORNIA

THE STATE OF CALIFORNIA OR ITS OFFICERS OR AGENTS SHALL NOT BE RESPONSIBLE FOR THE ACCURACY OR COMPLETENESS OF SCANNED COPIES OF THIS PLAN SHEET.

NOTES:

1. REDUCE MBGR POST SPACING BY HALF ACCORDING TO STANDARD PLAN SHEET A77G3 (STRENGTHENED RAILING SECTIONS FOR FIXED OBJECT) DETAIL.
2. FILL SPACE BELOW TYPE 60F BARRIER CREATED BY REMOVAL OF TYPE 50E BARRIER WITH WELL COMPACTED CLASS 2 AGGREGEATE BASE.

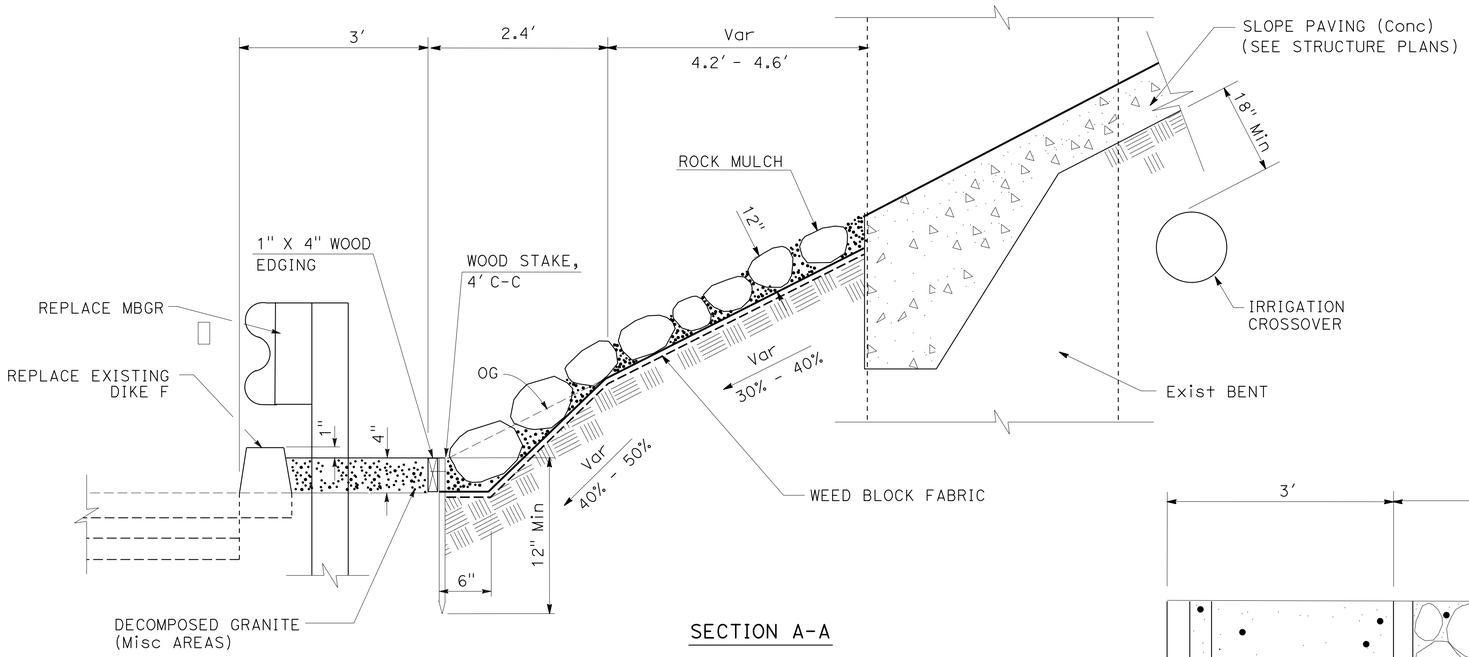

SECTION A-A

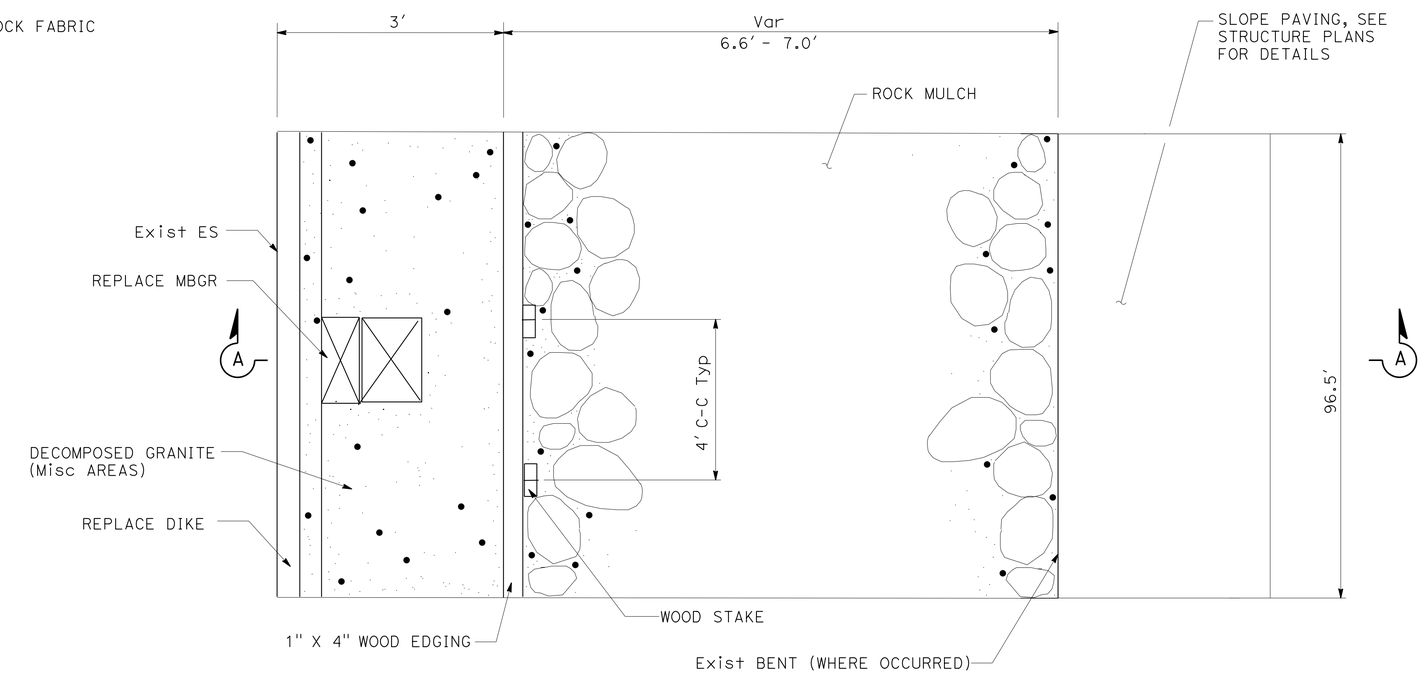

PLAN

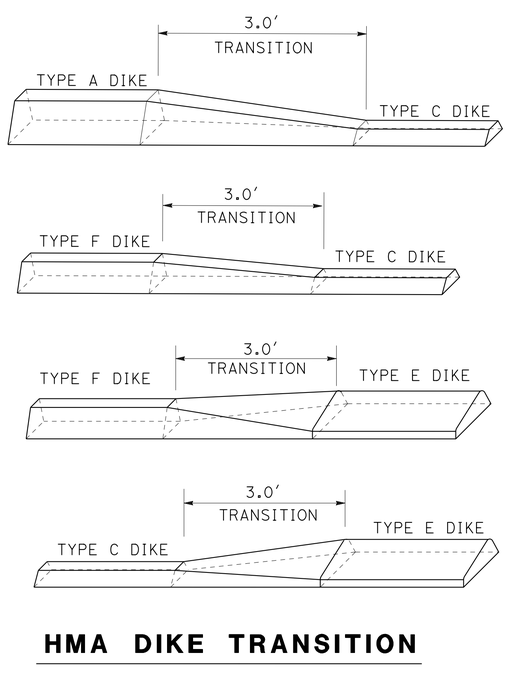

HMA DIKE TRANSITION

ROCK MULCH AND DECOMPOSED GRANITE DETAIL

CONSTRUCTION DETAILS

NO SCALE

C-1

STATE OF CALIFORNIA - DEPARTMENT OF TRANSPORTATION
Caltrans PROJECT DEVELOPMENT

FUNCTIONAL SUPERVISOR: KAZIM MAMDANI
CALCULATED-DESIGNED BY: DEVANGI DAVE
CHECKED BY: SOLOMON TADESSE
REVISED BY
DATE REVISED

LAST REVISION 05-17-12
DATE PLOTTED => 30-AUG-2012
TIME PLOTTED => 11:10

Dist	COUNTY	ROUTE	POST MILES TOTAL PROJECT	SHEET No.	TOTAL SHEETS
11	SD	75, 805	9.0, 20.2	9	76

REGISTERED CIVIL ENGINEER 05-08-12 DATE

08-20-12
PLANS APPROVAL DATE

REGISTERED PROFESSIONAL ENGINEER SOLOMON TADESSE No. 62773 Exp. 06-30-12 CIVIL STATE OF CALIFORNIA

THE STATE OF CALIFORNIA OR ITS OFFICERS OR AGENTS SHALL NOT BE RESPONSIBLE FOR THE ACCURACY OR COMPLETENESS OF SCANNED COPIES OF THIS PLAN SHEET.

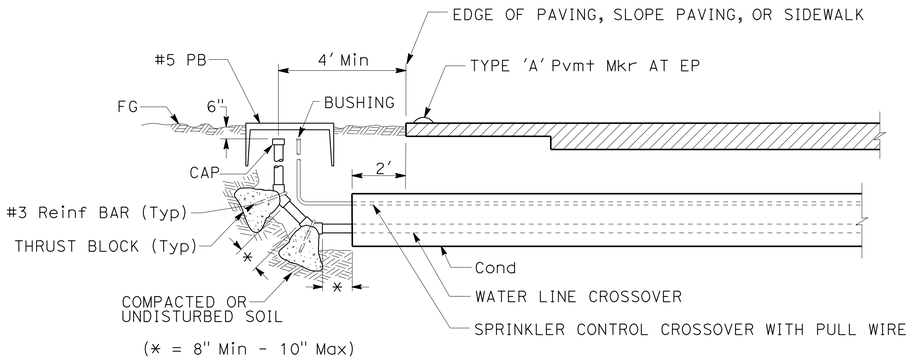

SECTION

IRRIGATION CROSSOVER

(MODIFIED)
NO SCALE

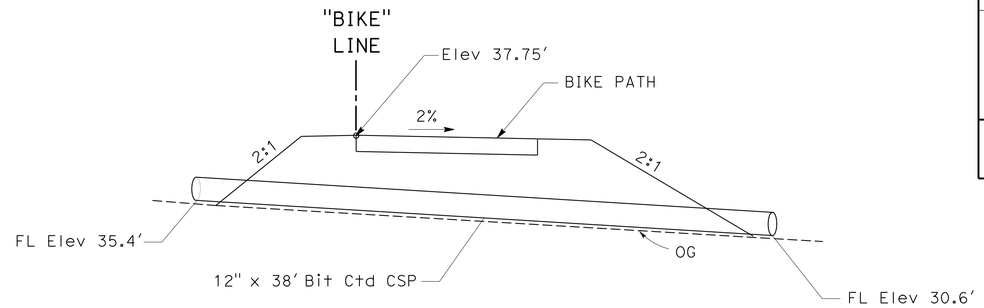

REPLACE DRAIN "BIKE LINE" 11+96.00

NO SCALE

CURVE DATA

No.	R	Δ	T	L
10	25.00'	88°23'45"	24.31'	38.57'
11	65.00'	103°25'43"	82.35'	117.34'
12	55.00'	90°0'00"	55.00'	86.39'

THRUST BLOCK DETAIL

INSTALLATION	TYPE FITTING	INSTALLATION	TYPE FITTING
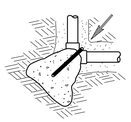	90° ELL	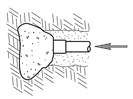	DEAD END
	BEND 45° 22.5° 11.25°		GATE VALVE
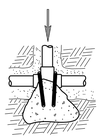	TEE		VERTICAL BEND (TYPE I) 45° 22.5° 11.25°
		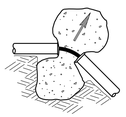	OR VERTICAL BEND (TYPE II) 45° 22.5° 11.25°

NOTES:

Min 1 CF PCC FOR 1½" PIPE SIZE AND SMALLER.
Min 2 CF PCC FOR 2" PIPE SIZE.
Min 3 CF PCC FOR 3" AND 4" PIPE SIZE.
USE #3 REINFORCING BAR WHERE SHOWN.

NO SCALE

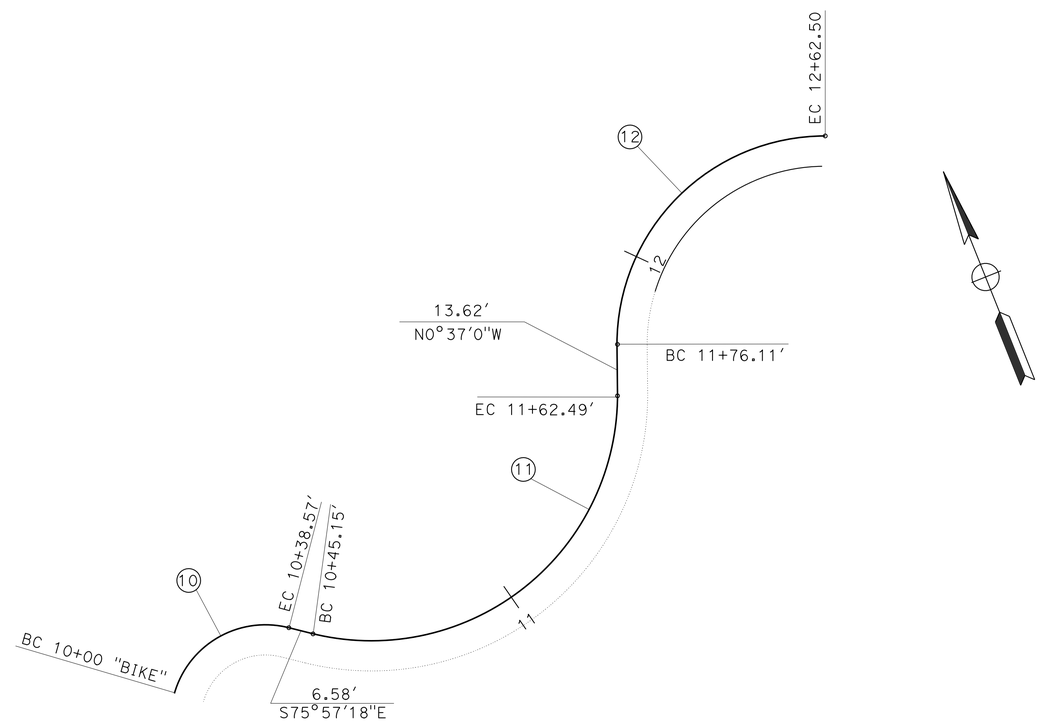

"BIKE" LINE ALIGNMENT DATA

SCALE: 1" = 20'

CONSTRUCTION DETAILS

SCALE AS SHOWN

C-2

STATE OF CALIFORNIA - DEPARTMENT OF TRANSPORTATION
Caltrans PROJECT DEVELOPMENT

FUNCTIONAL SUPERVISOR: KAZIM MAMDANI
CALCULATED-DESIGNED BY: DEVANGI DAVE
CHECKED BY: SOLOMON TADESSE
REVISED BY
DATE REVISED

LAST REVISION 05-17-12
DATE PLOTTED => 30-AUG-2012
TIME PLOTTED => 11:10

Dist	COUNTY	ROUTE	POST MILES TOTAL PROJECT	SHEET No.	TOTAL SHEETS
11	SD	75, 805	9.0, 20.2	10	76

REGISTERED CIVIL ENGINEER 05-08-12 DATE

08-20-12
PLANS APPROVAL DATE

REGISTERED PROFESSIONAL ENGINEER SOLOMON TADESSE No. 62773 Exp. 06-30-12 CIVIL STATE OF CALIFORNIA

THE STATE OF CALIFORNIA OR ITS OFFICERS OR AGENTS SHALL NOT BE RESPONSIBLE FOR THE ACCURACY OR COMPLETENESS OF SCANNED COPIES OF THIS PLAN SHEET.

LEGEND:

0.25′ HMA (TYPE A)
0.45′ CLASS 2 AB
0.50′ CLASS 4 AS

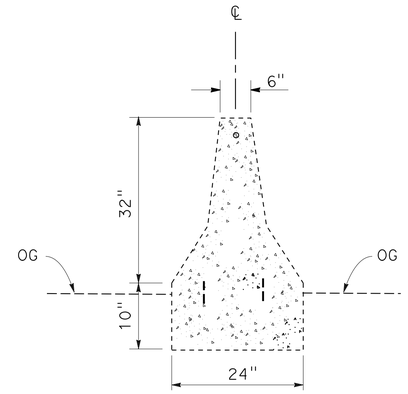

EXISTING CONCRETE BARRIER

(TYPE 50)
NO SCALE

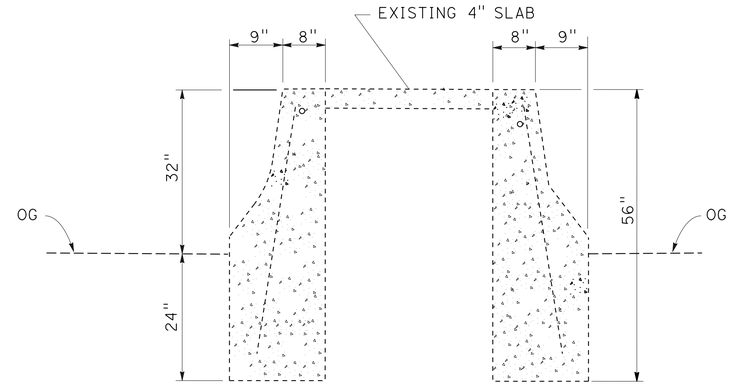

EXISTING CONCRETE BARRIER

(TYPE 50 E)
NO SCALE

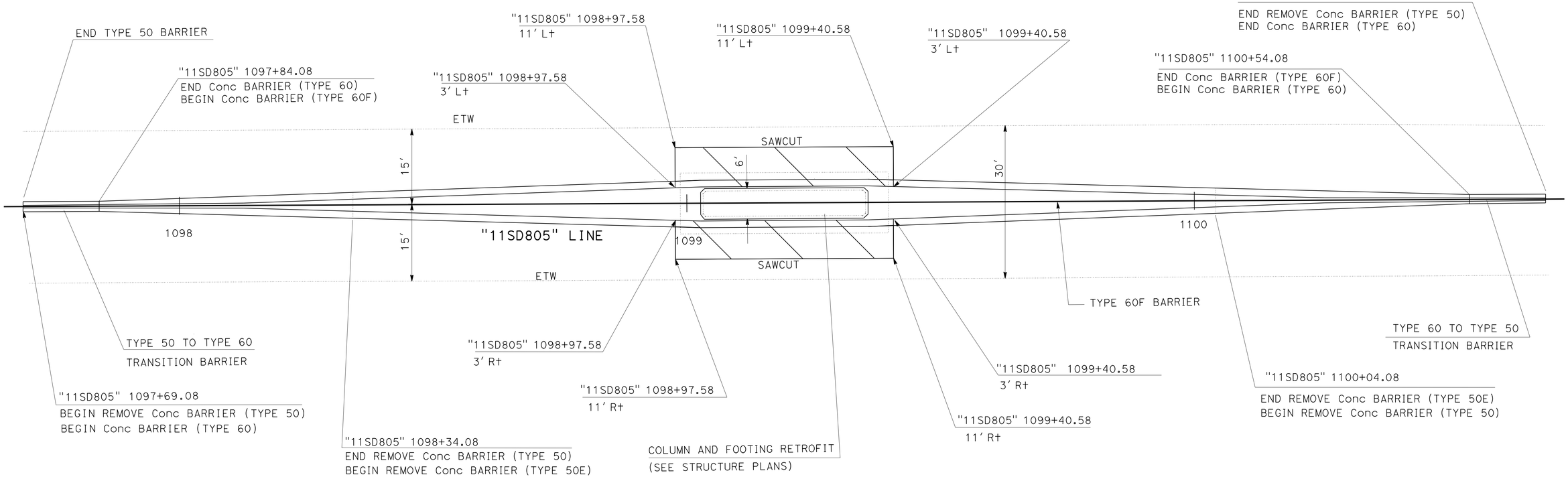

PLAN

CONCRETE BARRIER/MEDIAN SHOULDER PAVING DETAIL

SCALE: 1" = 10′

CONSTRUCTION DETAILS

SCALE AS SHOWN

C-3

REVISED BY | DATE REVISED
DEVANGI DAVE | SOLOMON TADESSE
CALCULATED-DESIGNED BY | CHECKED BY
FUNCTIONAL SUPERVISOR: KAZIM MAMDANI
STATE OF CALIFORNIA - DEPARTMENT OF TRANSPORTATION
Caltrans PROJECT DEVELOPMENT

LAST REVISION 05-17-12 | DATE PLOTTED => 30-AUG-2012 | TIME PLOTTED => 11:10

Dist	COUNTY	ROUTE	POST MILES TOTAL PROJECT	SHEET No.	TOTAL SHEETS
11	SD	75, 805	9.0, 20.2	11	76

REGISTERED CIVIL ENGINEER 05-08-12 DATE

08-20-12
PLANS APPROVAL DATE

REGISTERED PROFESSIONAL ENGINEER SOLOMON TADESSE No. 62773 Exp. 06-30-12 CIVIL STATE OF CALIFORNIA

THE STATE OF CALIFORNIA OR ITS OFFICERS OR AGENTS SHALL NOT BE RESPONSIBLE FOR THE ACCURACY OR COMPLETENESS OF SCANNED COPIES OF THIS PLAN SHEET.

NOTES:

1. FOR ACCURATE RIGHT OF WAY DATA, CONTACT RIGHT OF WAY ENGINEERING AT THE DISTRICT OFFICE.
2. FOR WATER POLLUTION CONTROL QUANTITIES, SEE SUMMARY OF QUANTITIES.

ABBREVIATIONS:

EC(BFM) = EROSION CONTROL(BONDED FIBER MATRIX)

LEGEND:

- TFR — TEMPORARY FIBER ROLL
- PCC WASH PCC — TEMPORARY CONCRETE WASHOUT BIN
- TEMPORARY CONSTRUCTION ENTRANCE (TYPE 2)
- TEMPORARY DRAINAGE INLET PROTECTION (TYPE 5)
- BFM — EROSION CONTROL (BONDED FIBER MATRIX)

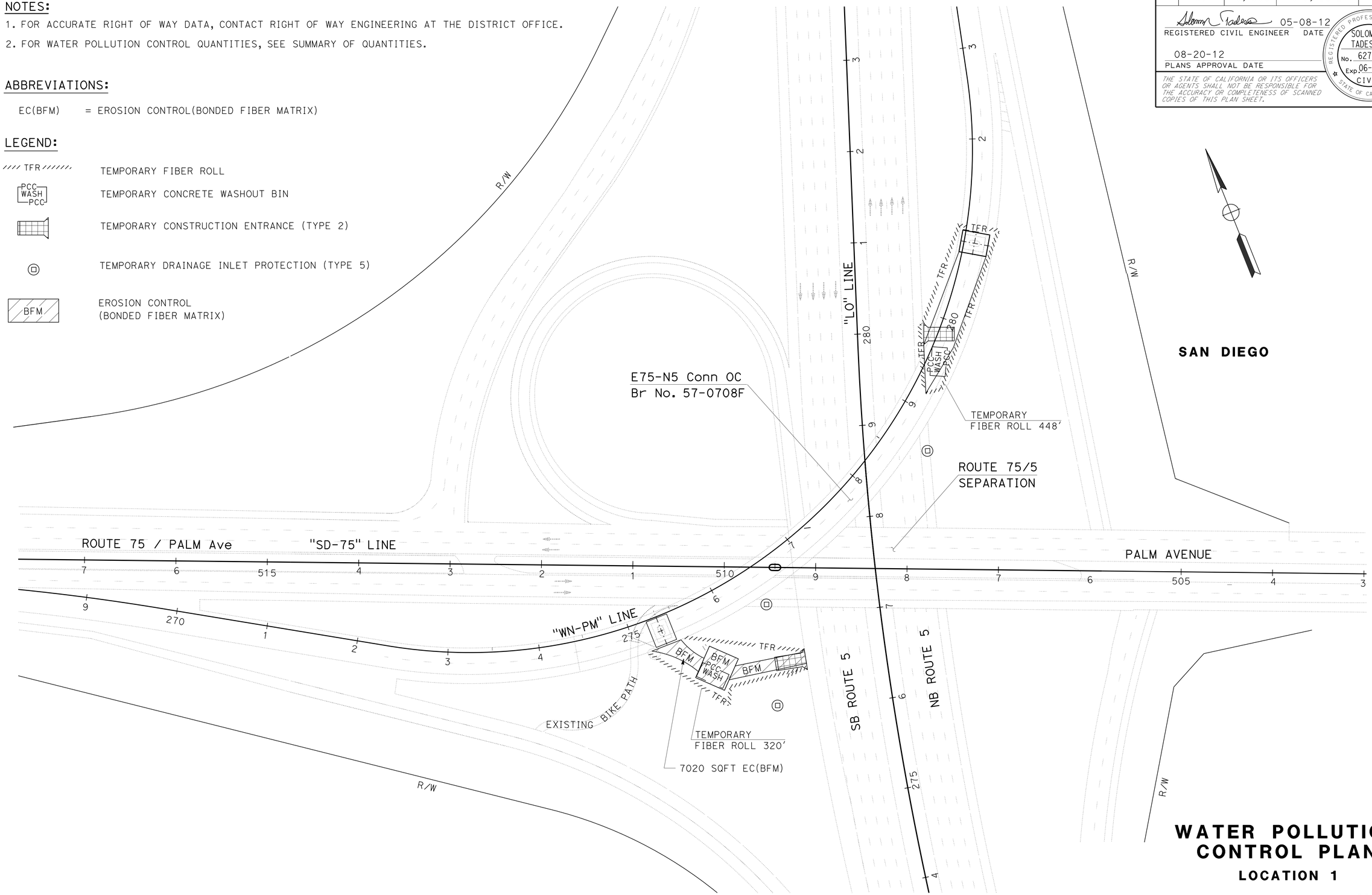

APPROVED FOR WATER POLLUTION CONTROL WORK ONLY

WATER POLLUTION CONTROL PLAN

LOCATION 1

SCALE: 1" = 50'

W-1

STATE OF CALIFORNIA - DEPARTMENT OF TRANSPORTATION
Caltrans PROJECT DEVELOPMENT

FUNCTIONAL SUPERVISOR: KAZIM MAMDANI
CALCULATED-DESIGNED BY: SOLOMON TADESSE
CHECKED BY: DEVANGI DAVE
REVISED BY
DATE REVISED

LAST REVISION 05-15-12
DATE PLOTTED => 30-AUG-2012
TIME PLOTTED => 11:10

Dist	COUNTY	ROUTE	POST MILES TOTAL PROJECT	SHEET No.	TOTAL SHEETS
11	SD	75, 805	9.0, 20.2	12	76

REGISTERED CIVIL ENGINEER 05-08-12 DATE

08-20-12
PLANS APPROVAL DATE

REGISTERED PROFESSIONAL ENGINEER SOLOMON TADESSE No. 62773 Exp. 06-30-12 CIVIL STATE OF CALIFORNIA

THE STATE OF CALIFORNIA OR ITS OFFICERS OR AGENTS SHALL NOT BE RESPONSIBLE FOR THE ACCURACY OR COMPLETENESS OF SCANNED COPIES OF THIS PLAN SHEET.

NOTES:

1. FOR ACCURATE RIGHT OF WAY DATA, CONTACT RIGHT OF WAY ENGINEERING AT THE DISTRICT OFFICE.
2. THERE IS NO PERMANENT WATER POLLUTION CONTROL WORK ON THIS SHEET.

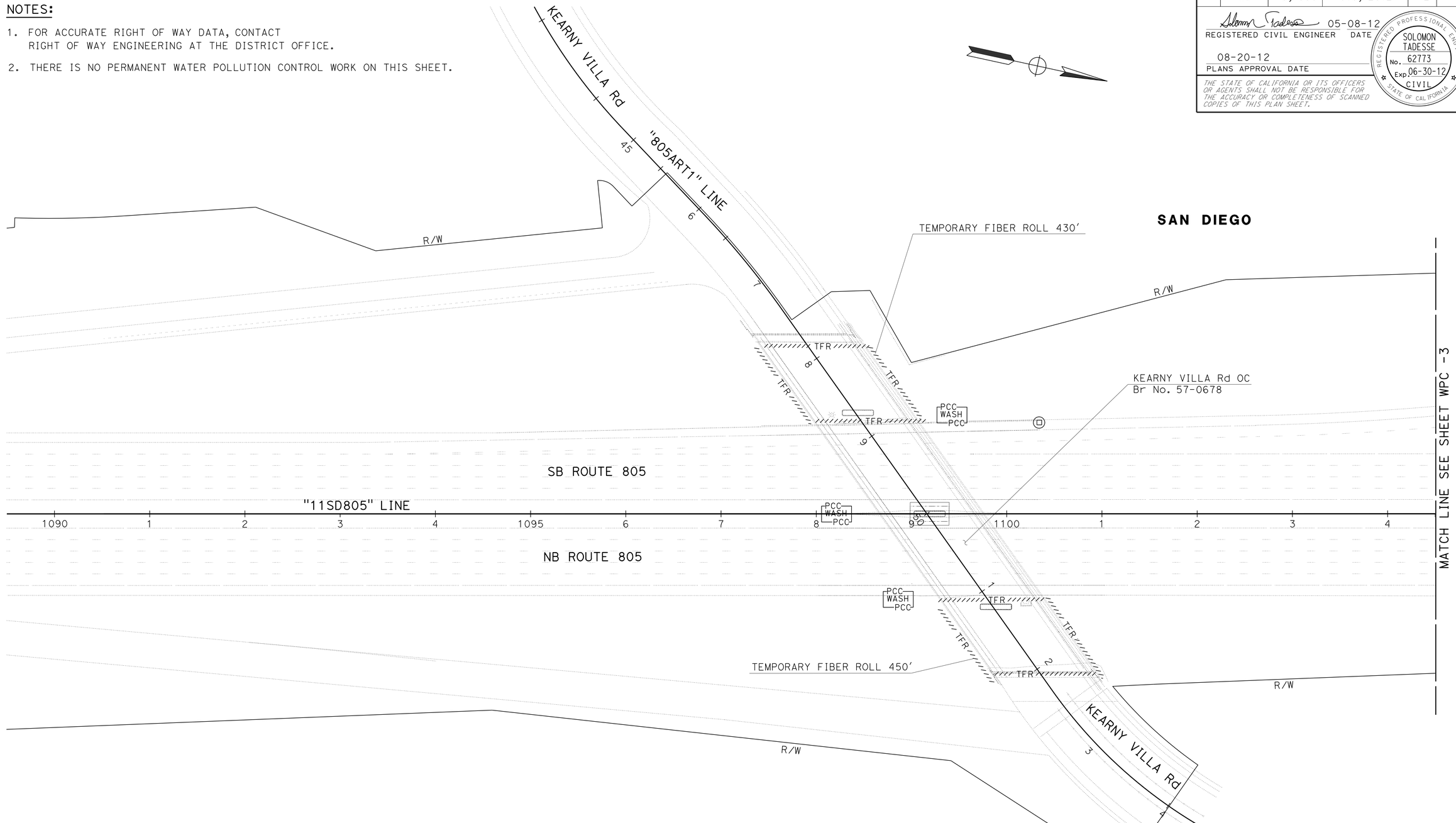

WATER POLLUTION CONTROL PLAN

LOCATION 2

APPROVED FOR WATER POLLUTION CONTROL WORK ONLY

SCALE: 1" = 50'

W-2

STATE OF CALIFORNIA - DEPARTMENT OF TRANSPORTATION
Caltrans PROJECT DEVELOPMENT

FUNCTIONAL SUPERVISOR: KAZIM MAMDANI

CALCULATED-DESIGNED BY: DEVANGI DAVE
CHECKED BY: SOLOMON TADESS

REVISED BY
DATE REVISED

LAST REVISION 05-17-12
DATE PLOTTED => 30-AUG-2012
TIME PLOTTED => 11:10

Dist	COUNTY	ROUTE	POST MILES TOTAL PROJECT	SHEET No.	TOTAL SHEETS
11	SD	75, 805	9.0, 20.2	13	76

REGISTERED CIVIL ENGINEER 05-08-12 DATE

08-20-12
PLANS APPROVAL DATE

REGISTERED PROFESSIONAL ENGINEER SOLOMON TADESSE No. 62773 Exp. 06-30-12 CIVIL STATE OF CALIFORNIA

THE STATE OF CALIFORNIA OR ITS OFFICERS OR AGENTS SHALL NOT BE RESPONSIBLE FOR THE ACCURACY OR COMPLETENESS OF SCANNED COPIES OF THIS PLAN SHEET.

NOTES:

1. FOR ACCURATE RIGHT OF WAY DATA, CONTACT RIGHT OF WAY ENGINEERING AT THE DISTRICT OFFICE.
2. THERE IS NO PERMANENT WATER POLLUTION CONTROL WORK ON THIS SHEET.

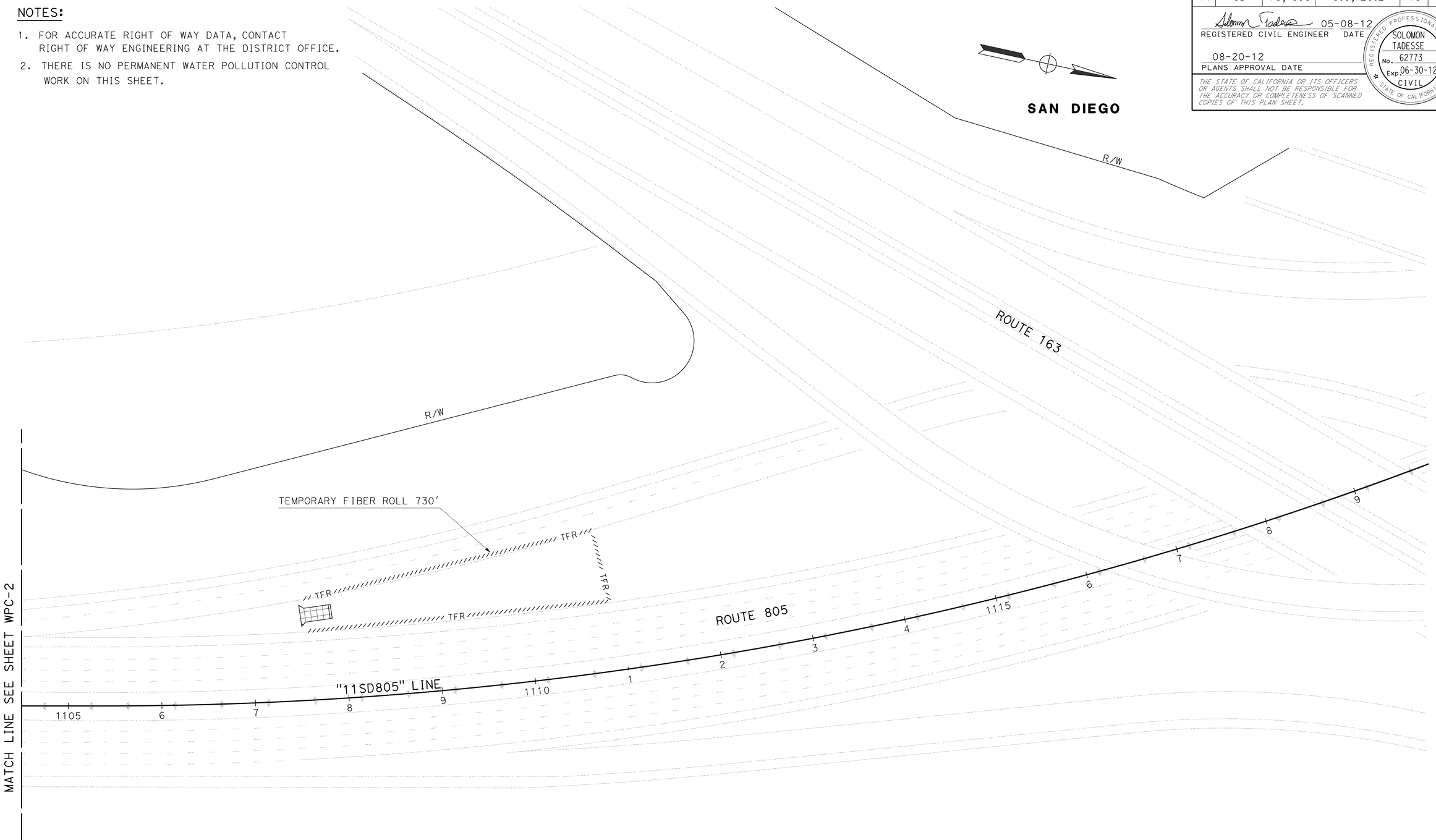

WATER POLLUTION CONTROL PLAN
LOCATION 2

SCALE: 1" = 50'

W-3

APPROVED FOR WATER POLLUTION CONTROL WORK ONLY

REVISED BY | DATE REVISED

DEVANGI DAVE | SOLOMON TADESSE

CALCULATED-DESIGNED BY | CHECKED BY

FUNCTIONAL SUPERVISOR | KAZIM MAMDANI

Caltrans PROJECT DEVELOPMENT

LAST REVISION 05-17-12 | DATE PLOTTED => 30-AUG-2012 | TIME PLOTTED => 11:10

Dist	COUNTY	ROUTE	POST MILES TOTAL PROJECT	SHEET No.	TOTAL SHEETS
11	SD	75, 805	9.0, 20.2	14	76

REGISTERED CIVIL ENGINEER 05-08-12 DATE

08-20-12
PLANS APPROVAL DATE

REGISTERED PROFESSIONAL ENGINEER MICHAEL PEDERSEN No. 74073 Exp. 06-30-13 CIVIL STATE OF CALIFORNIA

THE STATE OF CALIFORNIA OR ITS OFFICERS OR AGENTS SHALL NOT BE RESPONSIBLE FOR THE ACCURACY OR COMPLETENESS OF SCANNED COPIES OF THIS PLAN SHEET.

LEGEND:

SYMBOL	UTILITY	OWNER
—— -e—— ——— -e—	ELECTRIC	SAN DIEGO GAS ELECTRIC
—— -e—— ——— -(oh)-	ELECTRIC OH	SAN DIEGO GAS ELECTRIC
—— -g—— - ——— -g—	GAS	SAN DIEGO GAS ELECTRIC
—— --t—— ——— --t—	TELEPHONE	AT&T, MCI/VERIZON
—— -- t —— ——— - -(oh)-	TELEPHONE OH	AT&T
—--- tv —— —— —— --(oh)	TV OH	TIME WARNER COMMUNICATIONS
- —— w —— —— —— w—	WATER	CITY OF SAN DIEGO
—— --s—— -- ——— --s	SEWER	CITY OF SAN DIEGO
—---tv—— —— —— ---tv—	TV UG	COX COMMUNICATIONS

NOTES:

1. FOR ACCURATE RIGHT OF WAY DATA, CONTACT RIGHT OF WAY ENGINEERING AT THE DISTRICT OFFICE.
2. LOCATION OF UTILITY FACILITIES SHOWN ON THESE PLANS WERE OBTAINED EITHER FROM THE OWNER'S RECORDS AND/OR FROM STATE SURVEYS.
3. LOCATION OF UTILITY LINES SHOWN ON THESE PLANS ARE APPROXIMATE. THE CONTRACTOR IS TO FIELD VERIFY OR POTHOLE IN ORDER TO DETERMINE EXACT LOCATION.

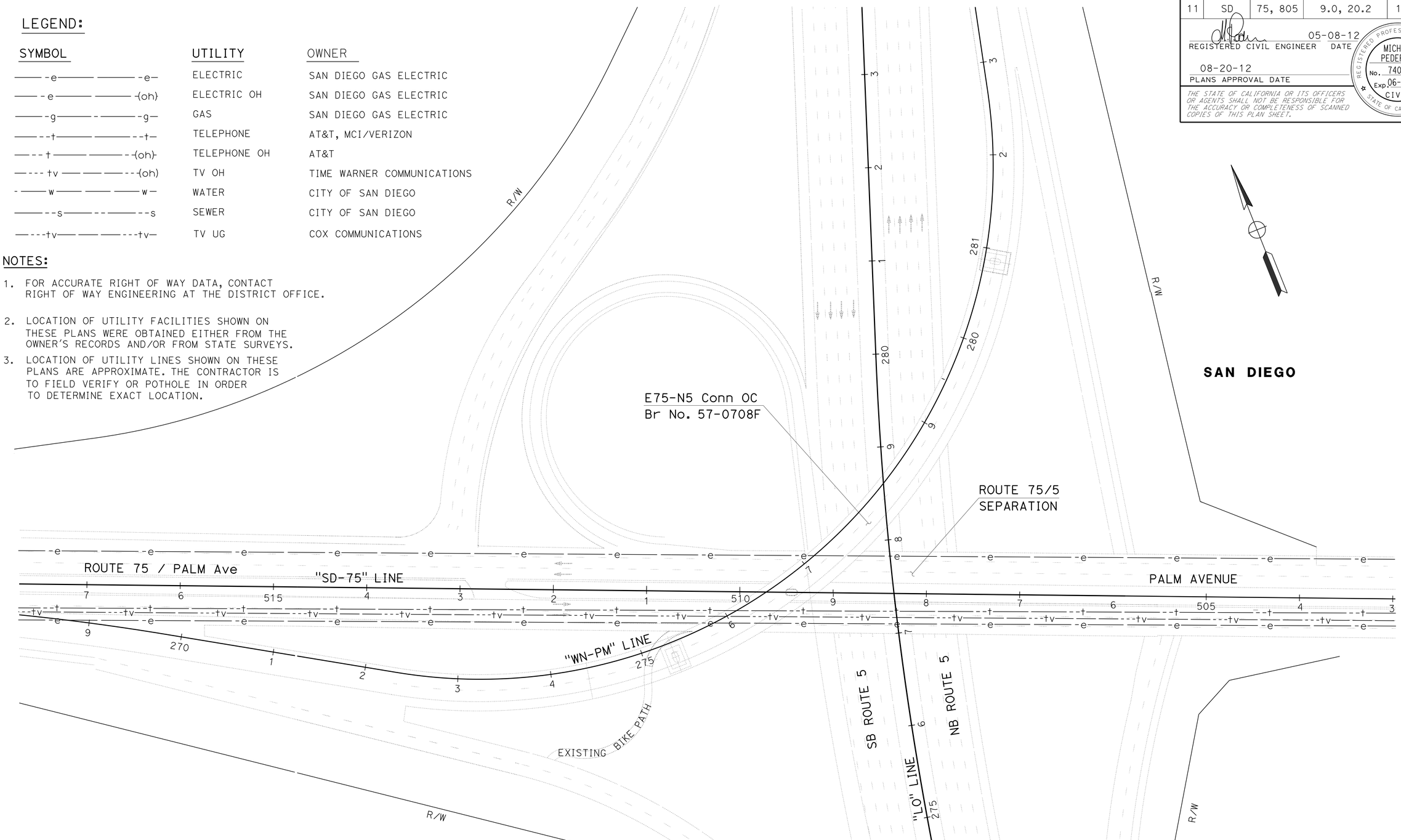

UTILITY PLAN
LOCATION 1

APPROVED FOR UTILITY INFORMATION ONLY

SCALE: 1" = 50'

U-1

STATE OF CALIFORNIA - DEPARTMENT OF TRANSPORTATION
Caltrans PROJECT DEVELOPMENT

FUNCTIONAL SUPERVISOR: KAZIM MAMDANI
CALCULATED-DESIGNED BY: MICHAEL PEDERSEN
CHECKED BY: SOLOMON TADESSE
REVISED BY / DATE REVISED

LAST REVISION 05-17-12
DATE PLOTTED => 30-AUG-2012
TIME PLOTTED => 11:10

Dist	COUNTY	ROUTE	POST MILES TOTAL PROJECT	SHEET No.	TOTAL SHEETS
11	SD	75, 805	9.0, 20.2	15	76

REGISTERED CIVIL ENGINEER 05-08-12 DATE

08-20-12
PLANS APPROVAL DATE

REGISTERED PROFESSIONAL ENGINEER MICHAEL PEDERSEN No. 74073 Exp. 06-30-13 CIVIL STATE OF CALIFORNIA

THE STATE OF CALIFORNIA OR ITS OFFICERS OR AGENTS SHALL NOT BE RESPONSIBLE FOR THE ACCURACY OR COMPLETENESS OF SCANNED COPIES OF THIS PLAN SHEET.

NOTE:
FOR ACCURATE RIGHT OF WAY DATA, CONTACT RIGHT OF WAY ENGINEERING AT THE DISTRICT OFFICE.

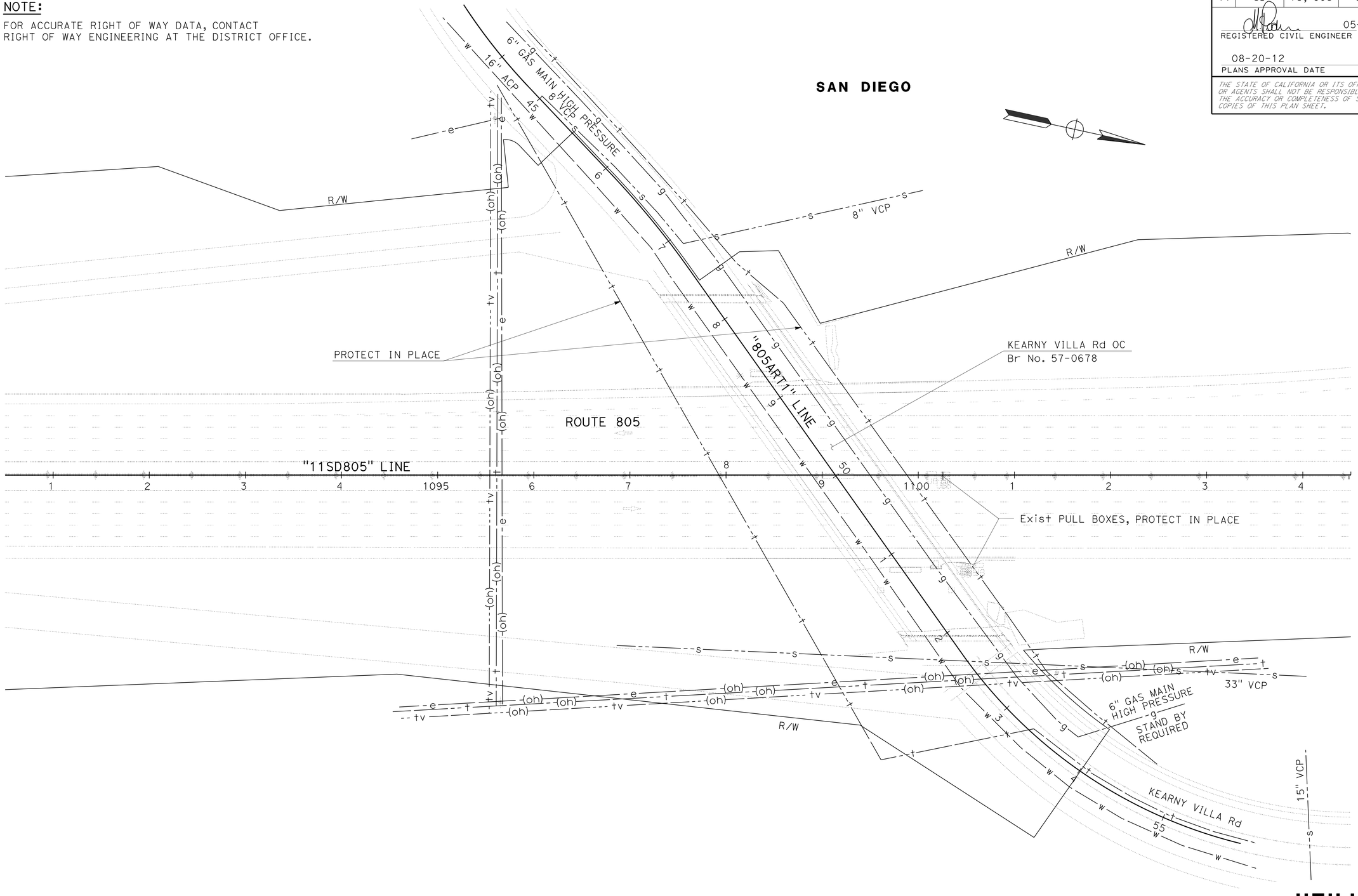

UTILITY PLAN
LOCATION 2

APPROVED FOR UTILITY INFORMATION ONLY

SCALE: 1" = 50'

U-2

STATE OF CALIFORNIA - DEPARTMENT OF TRANSPORTATION
Caltrans PROJECT DEVELOPMENT

FUNCTIONAL SUPERVISOR: KAZIM MAMDANI

CALCULATED-DESIGNED BY: MICHAEL PEDERSEN
CHECKED BY: SOLOMON TADESSE

REVISED BY | DATE REVISED

LAST REVISION 05-17-12 | DATE PLOTTED => 30-AUG-2012 | TIME PLOTTED => 11:10

Dist	COUNTY	ROUTE	POST MILES TOTAL PROJECT	SHEET No.	TOTAL SHEETS
11	SD	75, 805	9.0, 20.2	16	76

05-08-12
REGISTERED CIVIL ENGINEER DATE

08-20-12
PLANS APPROVAL DATE

REGISTERED PROFESSIONAL ENGINEER
SHAHIN T. ADIBI
No. 54839
Exp. 06-30-12
CIVIL
STATE OF CALIFORNIA

THE STATE OF CALIFORNIA OR ITS OFFICERS OR AGENTS SHALL NOT BE RESPONSIBLE FOR THE ACCURACY OR COMPLETENESS OF SCANNED COPIES OF THIS PLAN SHEET.

NOTES:

1. EXACT LOCATION OF CONSTRUCTION AREA SIGNS WILL BE DETERMINED BY THE ENGINEER.
2. FEDERAL MANUAL ON UNIFORM TRAFFIC CONTROL DEVICES (MUTCD) SIGN CODES ARE SHOWN UNLESS DESIGNATED BY (CA), INDICATING CALIFORNIA MUTCD.
3. EXISTING UTILITIES ARE NOT SHOWN ON THESE PLAN SHEETS. THE CONTRACTOR SHALL VERIFY LOCATIONS OF EXISTING UTILITIES AND ADJUST THE FIELD LOCATION OF THE SIGN POSTS IN CONSULTATION WITH THE ENGINEER.
4. SEE TRAFFIC HANDLING PLAN SHEETS FOR ADDITIONAL CONSTRUCTION AREA SIGNS.

LEGEND:

XX = CONSTRUCTION AREA SIGN

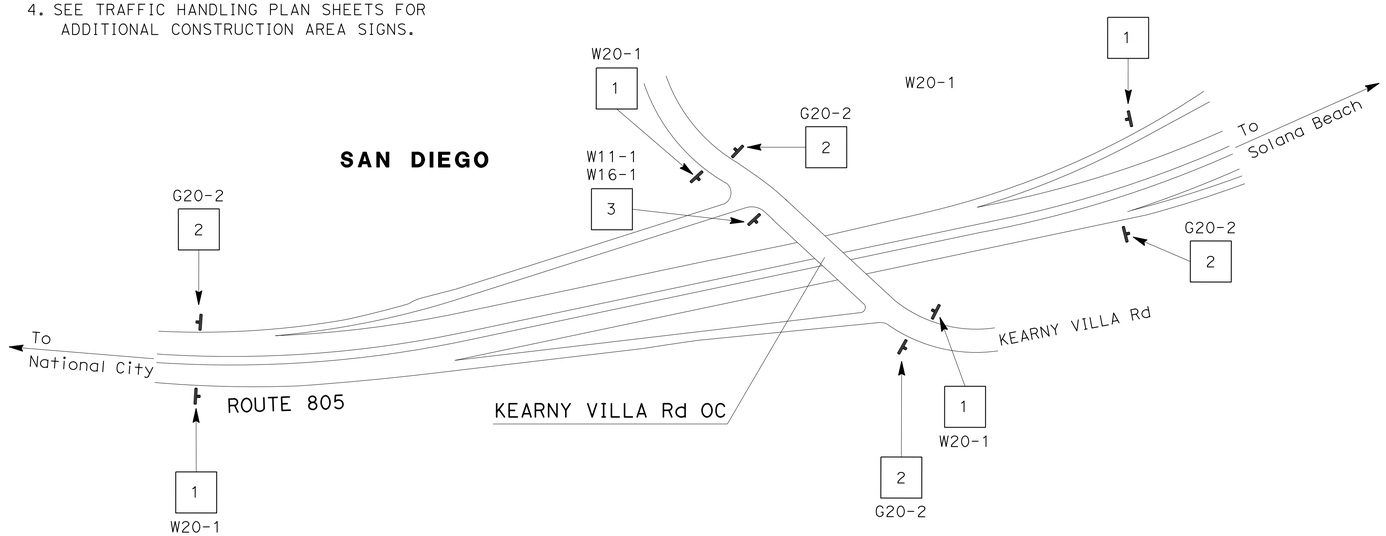

LOCATION 2

CONSTRUCTION AREA SIGNS

SIGN No.	TYPE	PANEL SIZE (In)	No. OF POST AND SIZE (In)	No. OF SIGNS
1	W20-1	48 X 48	1-4 X 6 (S)	8
2	G20-2	48 X 24	1-4 X 4 (S)	8
3	W11-1	24 X 24	1-4 X 6 (S)	1
	W16-1	18 X 24		

(S) DENOTES STATIONARY MOUNTED SIGN

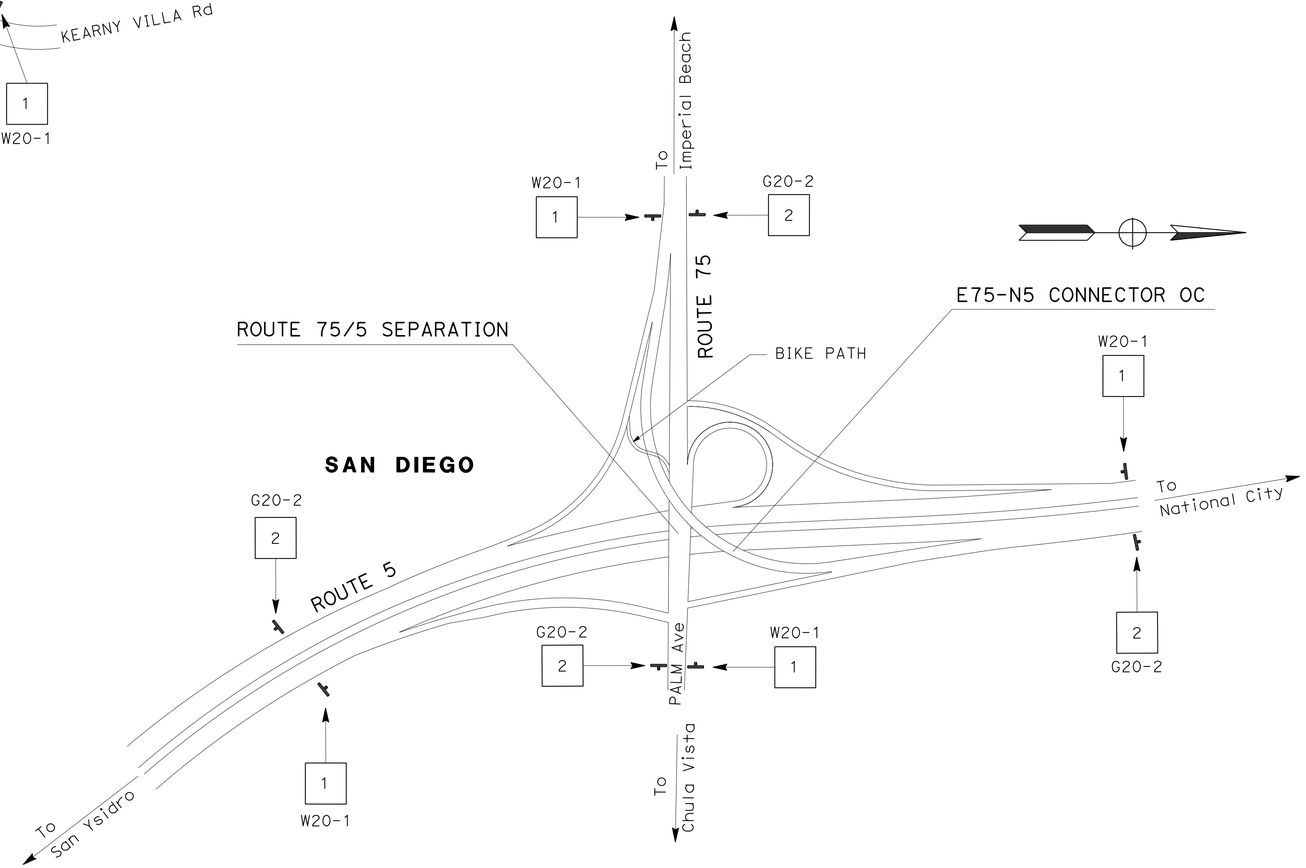

LOCATION 1

APPROVED FOR CONSTRUCTION AREA SIGN WORK ONLY

CONSTRUCTION AREA SIGNS

NO SCALE

CS-1

STATE OF CALIFORNIA - DEPARTMENT OF TRANSPORTATION
Caltrans
TRAFFIC DESIGN

FUNCTIONAL SUPERVISOR: CAMILLE ABOU FADEL
CALCULATED-DESIGNED BY: ROBERT EDEJER
CHECKED BY: SHAHIN T ADIBI
REVISED BY
DATE REVISED

LAST REVISION 05-17-12
DATE PLOTTED => 30-AUG-2012
TIME PLOTTED => 11:10

Dist	COUNTY	ROUTE	POST MILES TOTAL PROJECT	SHEET No.	TOTAL SHEETS
11	SD	75, 805	9.0, 20.2	17	76

REGISTERED CIVIL ENGINEER 05-08-12 DATE

08-20-12
PLANS APPROVAL DATE

REGISTERED PROFESSIONAL ENGINEER SOLOMON TADESSE No. 62773 Exp. 06-30-12 CIVIL STATE OF CALIFORNIA

THE STATE OF CALIFORNIA OR ITS OFFICERS OR AGENTS SHALL NOT BE RESPONSIBLE FOR THE ACCURACY OR COMPLETENESS OF SCANNED COPIES OF THIS PLAN SHEET.

NOTES:

1. FOR ACCURATE RIGHT OF WAY DATA, CONTACT RIGHT OF WAY ENGINEERING AT THE DISTRICT OFFICE.
2. EXACT LOCATION OF CONSTRUCTION AREA SIGNS SHALL BE DETERMINED BY THE ENGINEER.
3. FEDERAL MANUAL ON UNIFORM TRAFFIC CONTROL DEVICES (MUTCD) SIGN CODES ARE SHOWN UNLESS DESIGNATED BY (CA), INDICATING CALIFORNIA MUTCD.
4. ROTATE ARROW ON M4-9c PANEL TO REFLECT DIRECTION OF DETOUR.
5. FOR ADDITIONAL CONSTRUCTION AREA SIGNS, SEE CS SHEET.

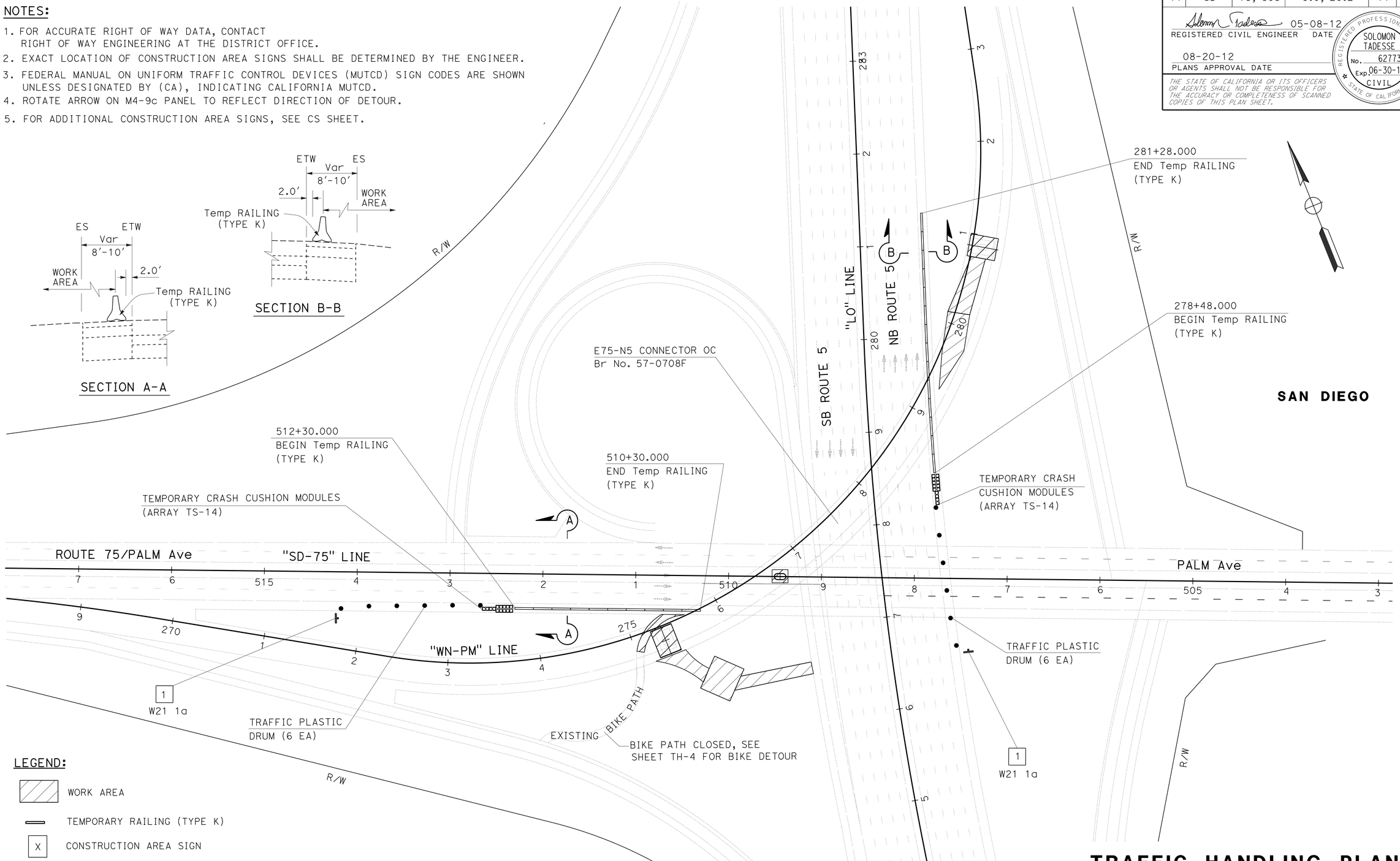

LEGEND:

- WORK AREA
- TEMPORARY RAILING (TYPE K)
- CONSTRUCTION AREA SIGN
- TRAFFIC PLASTIC DRUM
- TEMPORARY CRUSH CUSHION MODULE
- = DETOUR DIRECTION OF TRAVEL

APPROVED FOR TRAFFIC HANDLING WORK ONLY

TRAFFIC HANDLING PLAN
LOCATION 1

SCALE: 1" = 50'

TH-1

STATE OF CALIFORNIA - DEPARTMENT OF TRANSPORTATION
Caltrans PROJECT DEVELOPMENT

FUNCTIONAL SUPERVISOR: KAZIM MAMDANI
CALCULATED-DESIGNED BY: DEVANGI DAVE
CHECKED BY: SOLOMON TADESSE
REVISED BY
DATE REVISED

LAST REVISION 05-18-12
DATE PLOTTED => 30-AUG-2012
TIME PLOTTED => 11:10

Dist	COUNTY	ROUTE	POST MILES TOTAL PROJECT	SHEET No.	TOTAL SHEETS
11	SD	75, 805	9.0, 20.2	18	76

REGISTERED CIVIL ENGINEER 05-08-12 DATE

08-20-12
PLANS APPROVAL DATE

REGISTERED PROFESSIONAL ENGINEER SOLOMON TADESSE No. 62773 Exp. 06-30-12 CIVIL STATE OF CALIFORNIA

THE STATE OF CALIFORNIA OR ITS OFFICERS OR AGENTS SHALL NOT BE RESPONSIBLE FOR THE ACCURACY OR COMPLETENESS OF SCANNED COPIES OF THIS PLAN SHEET.

NOTES:

1. FOR ACCURATE RIGHT OF WAY DATA, CONTACT RIGHT OF WAY ENGINEERING AT THE DISTRICT OFFICE.

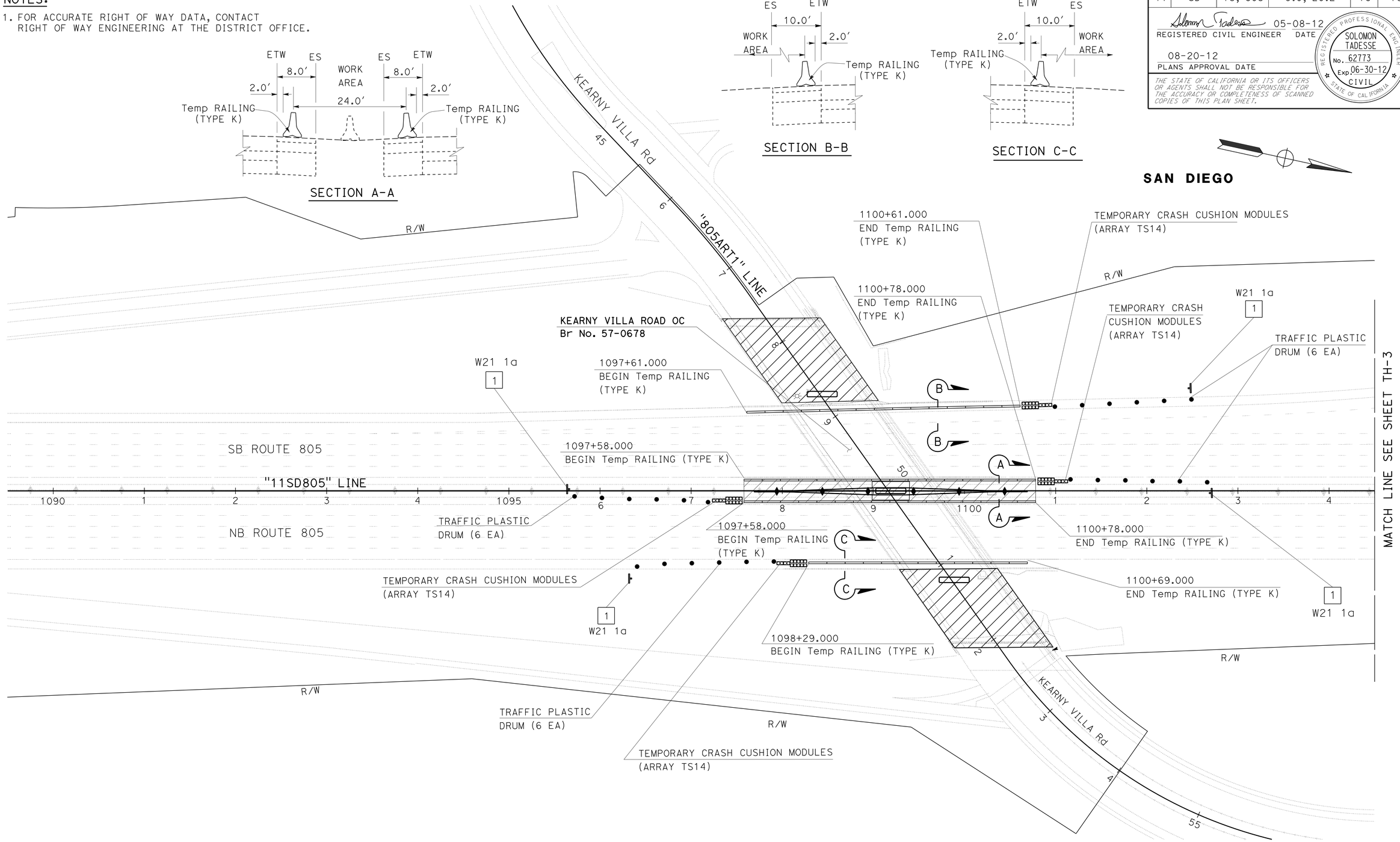

TRAFFIC HANDLING PLAN
LOCATION 2

APPROVED FOR TRAFFIC HANDLING WORK ONLY

SCALE: 1" = 50′

TH-2

STATE OF CALIFORNIA - DEPARTMENT OF TRANSPORTATION
Caltrans PROJECT DEVELOPMENT

FUNCTIONAL SUPERVISOR: KAZIM MAMDANI

CALCULATED-DESIGNED BY: DEVANGI DAVE
CHECKED BY: SOLOMON TADESSE

REVISED BY
DATE REVISED

LAST REVISION 05-18-12
DATE PLOTTED => 30-AUG-2012
TIME PLOTTED => 11:10

Dist	COUNTY	ROUTE	POST MILES TOTAL PROJECT	SHEET No.	TOTAL SHEETS
11	SD	75, 805	9.0, 20.2	19	76

REGISTERED CIVIL ENGINEER 05-08-12 DATE

08-20-12
PLANS APPROVAL DATE

REGISTERED PROFESSIONAL ENGINEER
SOLOMON TADESSE
No. 62773
Exp. 06-30-12
CIVIL
STATE OF CALIFORNIA

THE STATE OF CALIFORNIA OR ITS OFFICERS OR AGENTS SHALL NOT BE RESPONSIBLE FOR THE ACCURACY OR COMPLETENESS OF SCANNED COPIES OF THIS PLAN SHEET.

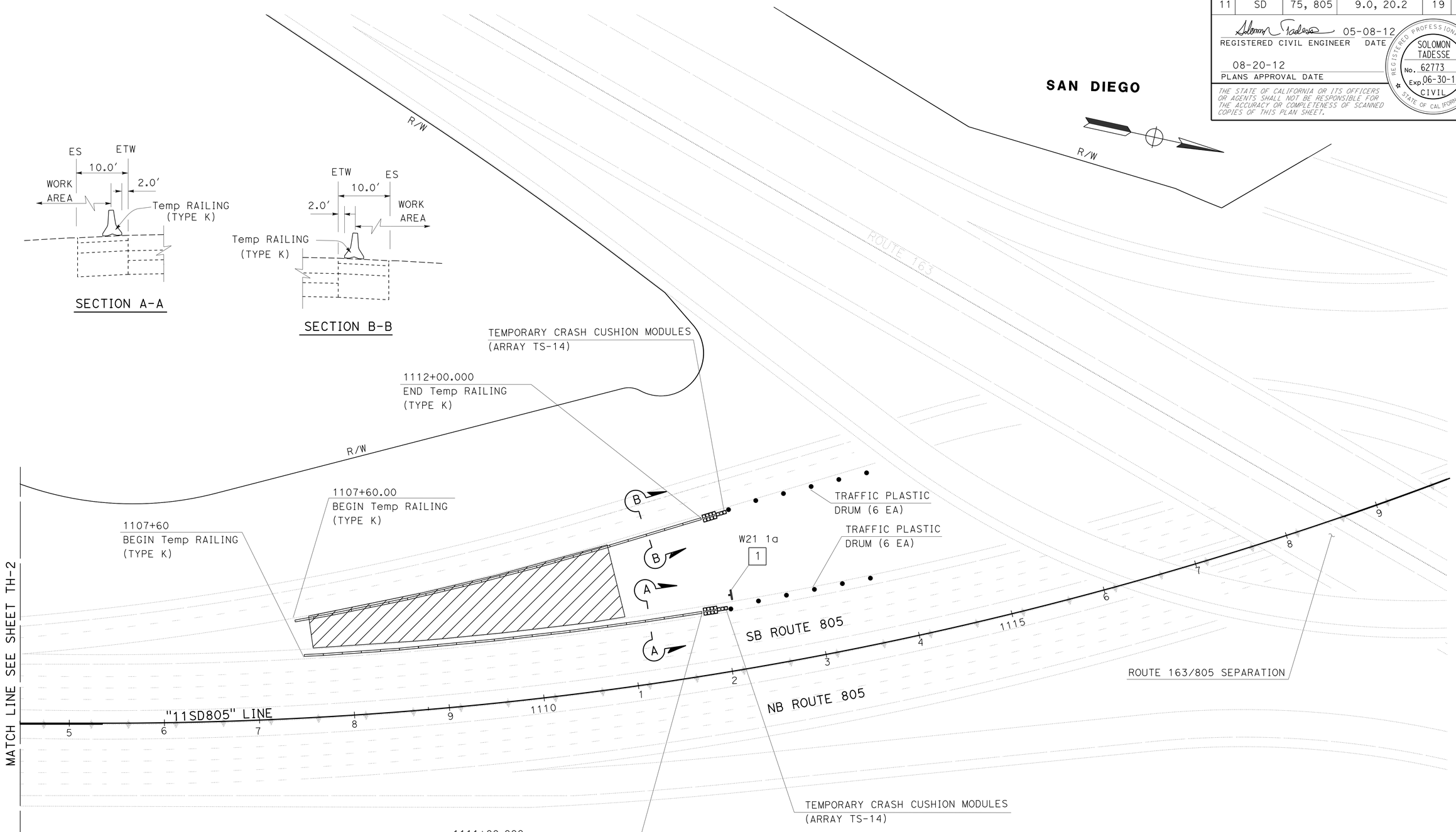

TRAFFIC HANDLING PLAN
LOCATION 2

SCALE: 1" = 50′

TH-3

APPROVED FOR TRAFFIC HANDLING WORK ONLY

STATE OF CALIFORNIA - DEPARTMENT OF TRANSPORTATION
Caltrans PROJECT DEVELOPMENT

FUNCTIONAL SUPERVISOR: KAZIM MAMDANI

CALCULATED-DESIGNED BY: DEVANGI DAVE
CHECKED BY: SOLOMON TADESSE

REVISED BY | DATE REVISED

LAST REVISION 05-18-12 | DATE PLOTTED => 30-AUG-2012 | TIME PLOTTED => 11:10

Dist	COUNTY	ROUTE	POST MILES TOTAL PROJECT	SHEET No.	TOTAL SHEETS
11	SD	75, 805	9.0, 20.2	20	76

REGISTERED CIVIL ENGINEER 05-08-12 DATE

08-20-12
PLANS APPROVAL DATE

REGISTERED PROFESSIONAL ENGINEER SOLOMON TADESSE No. C69855 Exp. 09-30-12 CIVIL STATE OF CALIFORNIA

THE STATE OF CALIFORNIA OR ITS OFFICERS OR AGENTS SHALL NOT BE RESPONSIBLE FOR THE ACCURACY OR COMPLETENESS OF SCANNED COPIES OF THIS PLAN SHEET.

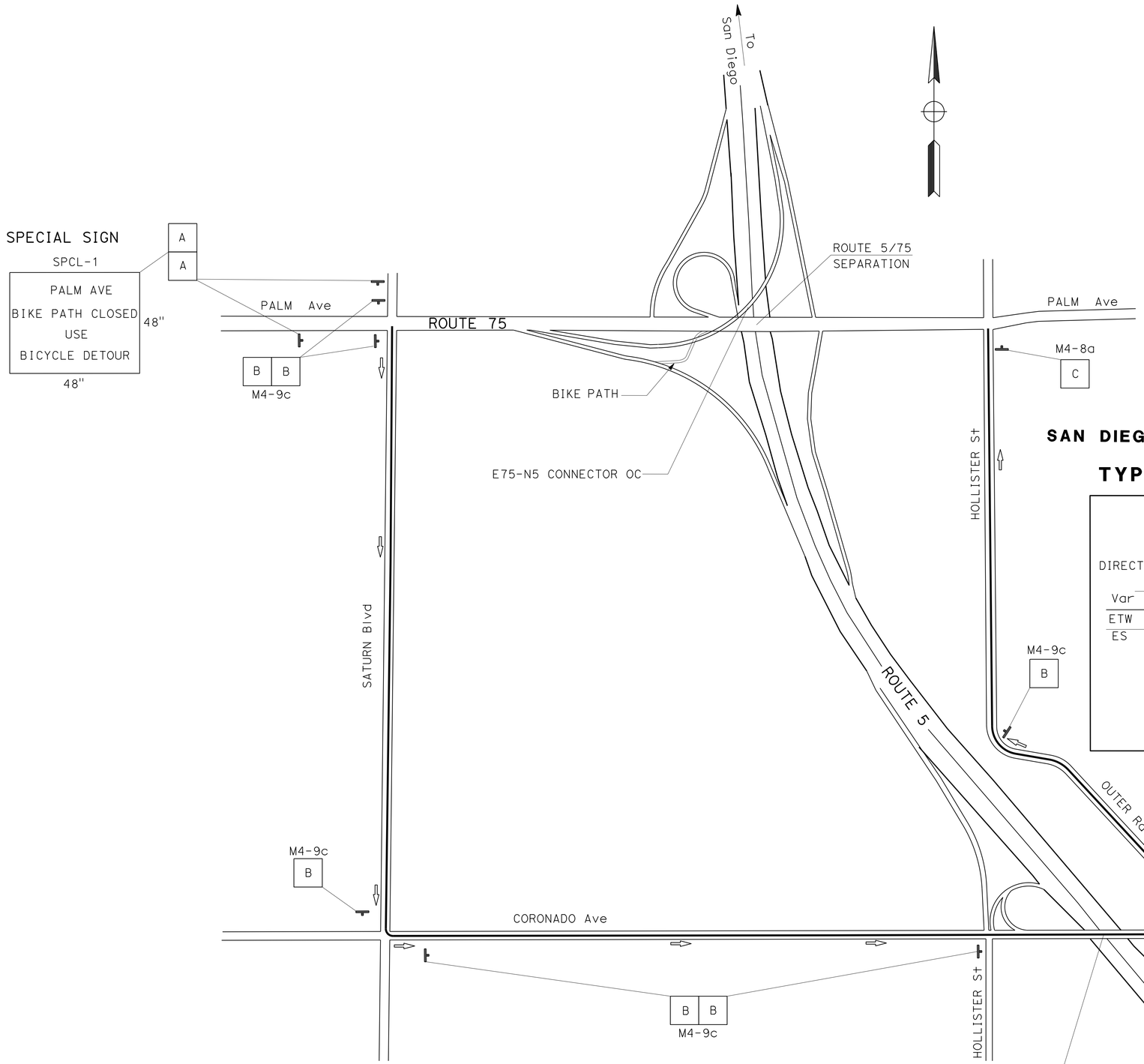

CONSTRUCTION AREA SIGNS

SIGN No.	CODE	PANEL SIZE (In)	No. OF POST AND SIZE (In)	No. OF SIGNS	REMARK
A	SPCL-1	48 X 48	1-4 X 6 (S)	2	
B	M4-9c	30 X 24	1-4 X 4 (S)	8	
C	M4-8a	24 X 18	1-4 X 4 (S)	1	
1	W20-1	36 X 36	1-4 X 6 (S)	7	

(S) DENOTES STATIONARY MOUNTED SIGN

SAN DIEGO

TYPICAL PLACEMENT OF TRAFFIC PLASTIC DRUM

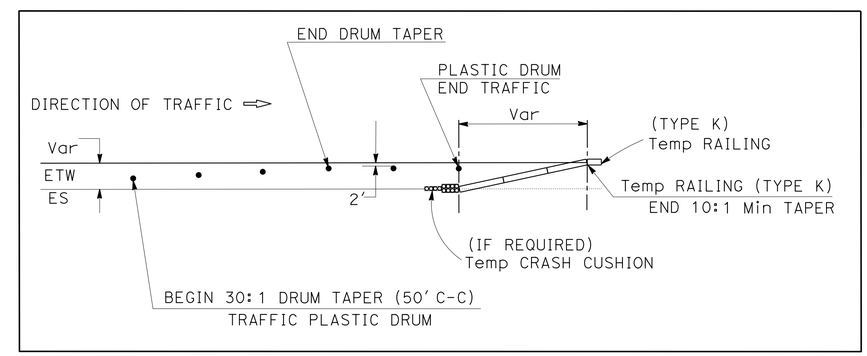

APPROVED FOR TRAFFIC HANDLING WORK ONLY

TRAFFIC HANDLING PLAN
LOCATION 1 / BIKE DETOUR

NO SCALE

TH-4

STATE OF CALIFORNIA - DEPARTMENT OF TRANSPORTATION
Caltrans PROJECT DEVELOPMENT

FUNCTIONAL SUPERVISOR: KAZIM MAMDANI
CALCULATED-DESIGNED BY: JIM ALSHEIKH
CHECKED BY: SOLOMON TADESSE
REVISED BY
DATE REVISED

LAST REVISION 05-18-12
DATE PLOTTED => 30-AUG-2012
TIME PLOTTED => 11:10

Dist	COUNTY	ROUTE	POST MILES TOTAL PROJECT	SHEET No.	TOTAL SHEETS
11	SD	75, 805	9.0, 20.2	21	76

REGISTERED CIVIL ENGINEER 05-08-12 DATE

08-20-12
PLANS APPROVAL DATE

REGISTERED PROFESSIONAL ENGINEER SOLOMON TADESSE No. 62773 Exp. 06-30-12 CIVIL STATE OF CALIFORNIA

THE STATE OF CALIFORNIA OR ITS OFFICERS OR AGENTS SHALL NOT BE RESPONSIBLE FOR THE ACCURACY OR COMPLETENESS OF SCANNED COPIES OF THIS PLAN SHEET.

TRAFFIC HANDLING

SHEET	STATION	LINE	R+ / L+	TEMPORARY RAILING (TYPE K)	TEMPORARY CRASH CUSHION MODULE	TRAFFIC PLASTIC DRUM
				LF	EA	EA
TH-1	510+30 - 512+30	"SD-75"	L+	200	14	6
TH-1	278+48 - 281+28	"LO"	R+	280	14	6
TH-2	1097+61 - 1100+61	"11SD805"	L+	300	14	6
TH-2	1097+58 - 1100+78	"11SD805"	L+	320	14	6
TH-2	1097+58 - 1100+78	"11SD805"	R+	320	14	6
TH-2	1098+29 - 1100+69	"11SD805"	R+	240	14	6
TH-3	1107+60 - 1112+00	"11SD805"	L+	440	14	6
TH-3	1107+60 - 1111+80	"11SD805"	L+	420	14	6
			TOTAL	2520	112	48

CONCRETE BARRIER

LINE	STATION		TYPE 60F	TYPE 60	REMOVE	
					TYPE 50	TYPE 50E
	FROM	TO	LF	LF	LF	LF
"11SD805"	1097+69.08	1097+84.08	-	15	-	-
"11SD805"	1097+84.08	1100+54.08	270	-	-	-
"11SD805"	1100+54.08	1100+69.08	-	15	-	-
"11SD805"	1097+69.08	1098+34.08	-	-	65	-
"11SD805"	1098+34.08	1100+04.08	-	-	-	170
"11SD805"	1100+04.08	1100+69.08	-	-	65	-
		TOTAL	270	30	300	

(N) NOT A SEPARATE ITEM OR PAY ITEM, FOR INFORMATION ONLY

HOT MIX ASPHALT (TYPE A)

SHEET	LINE	CF (N)	TON
C-3	"11SD805"	172	12.7
L-1	"BIKE"	117.6	8.7
		TOTAL	21.4

CLASS 2 AGGREGATE BASE

SHEET	LINE/STATION	SQFT (N)	CY
C-3	"11SD805"	688	11.5
C-3	1098+98.58-1097+84.08	624	27
C-3	1100+54.08-1099+39.58	624	27
		TOTAL	65.5

ASPHALTIC EMULSION (FOG SEAL COAT)

SHEET	LINE	SQYD (N)	TON (N)
C-3	"11SD805"	76.5	0.015

CLASS 4 AGGREGATE SUBBASE

SHEET	LINE	SQFT (N)	CY
C-3	"11SD805"	688	12.7
		TOTAL	12.7

SUMMARY OF QUANTITIES
Q-1

REVISED BY | DATE REVISED
DEVANGI DAVE | SOLOMON TADESSE
CALCULATED-DESIGNED BY | CHECKED BY
FUNCTIONAL SUPERVISOR: KAZIM MAMDANI

STATE OF CALIFORNIA - DEPARTMENT OF TRANSPORTATION
Caltrans® PROJECT DEVELOPMENT

LAST REVISION 05-18-12 | DATE PLOTTED => 30-AUG-2012 | TIME PLOTTED => 11:10

Dist	COUNTY	ROUTE	POST MILES TOTAL PROJECT	SHEET No.	TOTAL SHEETS
11	SD	75, 805	9.0, 20.2	22	76

REGISTERED CIVIL ENGINEER 05-08-12 DATE

08-20-12
PLANS APPROVAL DATE

REGISTERED PROFESSIONAL ENGINEER SOLOMON TADESSE No. 62773 Exp. 06-30-12 CIVIL STATE OF CALIFORNIA

THE STATE OF CALIFORNIA OR ITS OFFICERS OR AGENTS SHALL NOT BE RESPONSIBLE FOR THE ACCURACY OR COMPLETENESS OF SCANNED COPIES OF THIS PLAN SHEET.

TEMPORARY WATER POLLUTION CONTROL

SHEET	TEMPORARY FIBER ROLL	TEMPORARY CONSTRUCTION ENTRANCE (TYPE 2)	TEMPORARY CONCRETE WASHOUT BIN	TEMPORARY DRAINAGE INLET PROTECTION (TYPE 5)
	LF	EA	EA	EA
W-1	768	2	2	3
W-2	880	-	3	1
W-3	730	1	-	-
TOTAL	2378	3	5	4

IRRIGATION CROSSOVERS

LOCATION			SIDE		CONDUIT	CONDUIT TYPE ③ SIZE (DN)			(N) WATER LINE CROSSOVER SIZE (In) DN	(N) SPRINKLER CONTROL CROSSOVER SIZE (In) DN	REMARKS
SHEET	LINE	STATION	R+	L+	LENGTH (LF)	8 In	10 In	12 In			
L-2	"805ART1"	51+25	X	X	118.5		X		3	2	
L-2	"805ART1"	48+50	X	X	118.5		X		3	2	
TOTAL					237.0						

(N) - NOT A SEPARATE PAY ITEM FOR INFORMATION ONLY
DN - DIAMETER NOMINAL
X - DENOTES REQUIREMENT

CONDUIT TYPE
(APPLICABLE WHEN CIRCLED BELOW AND SHOWN UNDER THE 'CONDUIT TYPE' COLUMN HEADING)
1 BITUMINOUS COATED CORRUGATED STEEL PIPE (0.064" THICK)
2 WELDED STEEL PIPE (0.25" THICK)
③ CORRUGATED HIGH DENSITY POLYETHYLENE PIPE
4 ALTERNATIVE CONDUIT

EROSION CONTROL (BFM)

SHEET	(SQFT)
W-1	7020
TOTAL	7020

ROCK MULCH

ROUTE	DIRECTION	(SQYD)
805	NB	75.05
805	SB	70.76
	TOTAL	145.81

DECOMPOSED GRANITE (Misc AREAS)

ROUTE	DIRECTION	(SQFT)
805	NB	289.5
805	SB	289.5
	TOTAL	579

DRAINAGE QUANTITIES

SHEET	CULVERTS			DESCRIPTION	STATION
	12" Bit Ctd CSP (0.064" THICK)	PIPE JOINT TYPE (N)	MAXIMUM HEIGHT COVER (N)		
	LF	-	LF		
C-2	38	S	6	12" x 38' Bit ctd CSP	"BIKE" 11+96.00
TOTAL	38	-	-		

NOTES:

1. (N) - NOT A SEPARATE PAY ITEM, FOR INFORMATION ONLY.
2. PIPE JOINT TYPES:
   S - STANDARD
   P - POSITIVE

SUMMARY OF QUANTITIES
Q-2

STATE OF CALIFORNIA - DEPARTMENT OF TRANSPORTATION
Caltrans PROJECT DEVELOPMENT
FUNCTIONAL SUPERVISOR: KAZIM MAMDANI
CALCULATED-DESIGNED BY: DEVANGI DAVE
CHECKED BY: SOLOMON TADESSE
REVISED BY
DATE REVISED

LAST REVISION 05-18-12 DATE PLOTTED => 30-AUG-2012 TIME PLOTTED => 11:10

Dist	COUNTY	ROUTE	POST MILES TOTAL PROJECT	SHEET No.	TOTAL SHEETS
11	SD	75, 805	9.0, 20.2	23	76

REGISTERED CIVIL ENGINEER 05-08-12 DATE

08-20-12
PLANS APPROVAL DATE

REGISTERED PROFESSIONAL ENGINEER SOLOMON TADESSE No. 62773 EXP 06-30-12 CIVIL STATE OF CALIFORNIA

THE STATE OF CALIFORNIA OR ITS OFFICERS OR AGENTS SHALL NOT BE RESPONSIBLE FOR THE ACCURACY OR COMPLETENESS OF SCANNED COPIES OF THIS PLAN SHEET.

METAL BEAM GUARD RAILING

DIRECTION	LINE	STATION	LAYOUT TYPE	EXISTING MBGR (N)	REMOVE METAL BEAM GUARD RAILING	METAL BEAM GUARD RAILING	END ANCHOR ASSEMBLY (TYPE SFT)	BURIED POST END ANCHOR (N)	GUARD RAILING DELINEATOR (CLASS 1, TYPE E)	REMARKS
				(LF)	(LF)	(LF)	(EA)	(EA)	(EA)*	
NB	"11SD805"	1098+45.50 - 1100+33.00	16C	89.29	89.29	187.5	1	1	16	
SB	"11SD805"	1098+08.40 - 1099+70.90	16C	77.46	77.46	162.5	1	1	14	
TOTAL				166.75	166.75	350.0	2	2	30	

(N) NOT A PAY ITEM, FOR INFORMATION ONLY

* GUARD RAILING DELINEATOR TO BE PLACED AT 12 FT MAXIMUM SPACING.

HMA DIKE

DIRECTION	LINE	BEGIN STATION	END STATION	REMOVE AC DIKE	PLACE HMA DIKE TYPE C	PLACE HMA DIKE TYPE F	MINOR HMA
				LF	LF	LF	TON
NB	"11SD805"	1098+20.50	1099+66.90	146.40	146.40		1.10
NB	"11SD805"	1099+66.9	1100+33.00	66.10		66.10	0.88
SB	"11SD805"	1098+08.40	1098+95.28	86.88		86.88	1.14
SB	"11SD805"	1098+95.28	1099+95.90	100.62	100.62		0.76
TOTAL				400.00	247.02	152.98	3.88

SUMMARY OF QUANTITIES
Q-3

REVISED BY | DATE REVISED
JIM ALSHEIKH | SOLOMON TADESSE
CALCULATED-DESIGNED BY | CHECKED BY
FUNCTIONAL SUPERVISOR
KAZIM MAMDANI
STATE OF CALIFORNIA - DEPARTMENT OF TRANSPORTATION
Caltrans PROJECT DEVELOPMENT

LAST REVISION 05-18-12 | DATE PLOTTED => 30-AUG-2012 | TIME PLOTTED => 11:10

Dist	COUNTY	ROUTE	POST MILES TOTAL PROJECT	SHEET No.	TOTAL SHEETS
11	SD	75, 805	9.0, 20.2	24	76

LICENSED LANDSCAPE ARCHITECT

08-20-12
PLANS APPROVAL DATE

LICENSED LANDSCAPE ARCHITECT
KENNETH L. MAH No. 3042
Expiration Date 02-28-14
Renewal Date 05-18-12
Date
STATE OF CALIFORNIA

THE STATE OF CALIFORNIA OR ITS OFFICERS OR AGENTS SHALL NOT BE RESPONSIBLE FOR THE ACCURACY OR COMPLETENESS OF SCANNED COPIES OF THIS PLAN SHEET.

ABBREVIATIONS:

AMEND — AMENDMENT
B&B — BALLED AND BURLAPPED
Dia — DIAMETER
EA — EACH
lb — POUND
Oz — OUNCE
F+ — FOOT/FEET
SQFT — SQUARE FOOT
CF — CUBIC FOOT
SQYD — SQUARE YARD
CY — CUBIC YARD
Max — MAXIMUM
Min — MINIMUM
NCN — NO COMMON NAME
No. — NUMBER
Pk+ — PACKET
PLT ESTB — PLANT ESTABLISHMENT
Pvm+ — PAVEMENT
R/W — RIGHT OF WAY
SF — STATE-FURNISHED
TAB — TABLET(S)
TRVD — TRAVELED

APPLICABLE WHEN CIRCLED:

1 - QUANTITIES SHOWN ARE 'PER PLANT' UNLESS SHOWN AS SQFT APPLICATION RATES.
2 - SUFFICIENT TO RECEIVED ROOT BALL.
3 - DOES NOT APPLY TO MULCH AREAS.
4 - AS SHOWN ON PLANS.
5 - UNLESS OTHERWISE SHOWN ON PLANS.
6 - SEE DETAIL.
7 - SEE SPECIAL PROVISIONS.
8 - SEE STANDARD SPECIFICATIONS.

PLANT LIST AND PLANTING SPECIFICATIONS

PLANT GROUP	PLANT No.	SYMBOL	BOTANICAL NAME	COMMON NAME	SIZE	QUANTITY EACH	HOLE SIZE (INCH)		BASIN TYPE	IRON SULFATE 1	SOIL AMEND 1	COMMERCIAL FERTILIZER 1		BASIN MULCH (CY)	STAKING	PLANTING LIMITS							REMARKS
																MINIMUM DISTANCE (F+) FROM						ON CENTER (F+)	
							Dia	DEPTH				PLANTING	PLT ESTB			TRVD WAY	Pvm+	FENCE	WALL	PAVED DITCH	EARTH DITCH		
H	1		CARPOBROTUS EDULIS	HOTTENTOT FIG	CUTTING	20,800	-	-	-	-	-	8 lb/ 1,000 SQFT	4 lb/ 1,000 SQFT	-	-	-	6	-	-	-	-	1.0	GROUND COVER

NOTE:

UNDERLINED PORTIONS OF BOTANICAL NAMES INDICATE ABBREVIATIONS USED ON PLANTING PLANS.

CULTIVATE

SHEET NUMBER	SQYD (N)
PI-2	2,100
-	-
TOTAL	2,100

(N) - NOT A SEPARATE PAY ITEM, FOR INFORMATION ONLY.

PLANT LIST PL-1

REVISED BY | DATE REVISED
KENNY MAH | MARLENE GROS
CALCULATED-DESIGNED BY | CHECKED BY
SENIOR LANDSCAPE ARCHITECT
STEPHEN ALVAREZ

STATE OF CALIFORNIA - DEPARTMENT OF TRANSPORTATION
Caltrans LANDSCAPE ARCHITECTURE

LAST REVISION 05-15-12 | DATE PLOTTED => 30-AUG-2012 | TIME PLOTTED => 11:10

Dist	COUNTY	ROUTE	POST MILES TOTAL PROJECT	SHEET No.	TOTAL SHEETS
11	SD	75, 805	9.0, 20.2	25	76

LICENSED LANDSCAPE ARCHITECT

08-20-12
PLANS APPROVAL DATE

THE STATE OF CALIFORNIA OR ITS OFFICERS OR AGENTS SHALL NOT BE RESPONSIBLE FOR THE ACCURACY OR COMPLETENESS OF SCANNED COPIES OF THIS PLAN SHEET.

LICENSED LANDSCAPE ARCHITECT
KENNETH L. MAH No. 2412
Expiration Date 02-28-14
05-18-12
Date
STATE OF CALIFORNIA

NOTE:

FOR ACCURATE RIGHT OF WAY DATA, CONTACT RIGHT OF WAY ENGINEERING AT THE DISTRICT OFFICE.

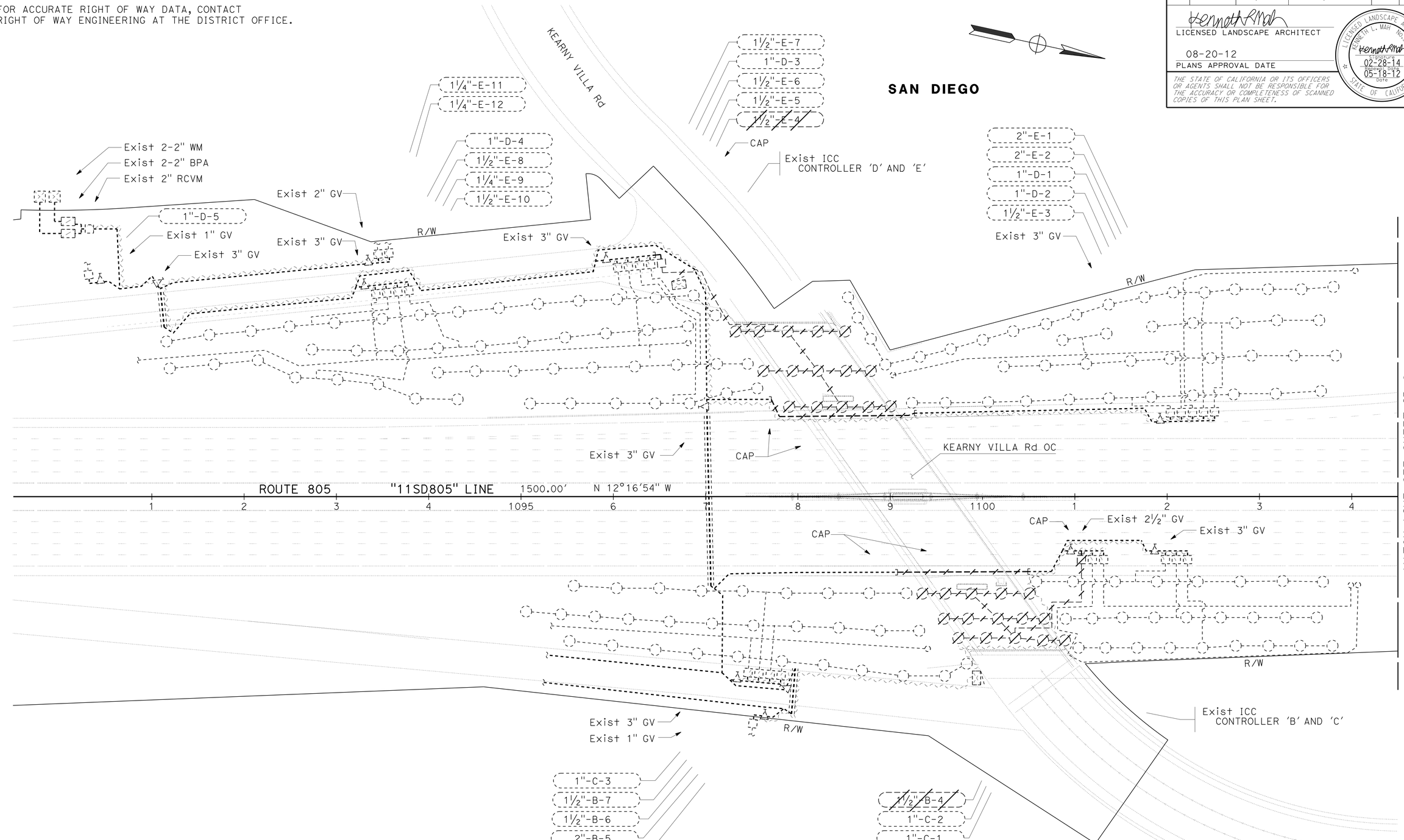

APPROVED FOR IRRIGATION REMOVAL WORK ONLY

IRRIGATION REMOVAL PLAN
LOCATION 2

SCALE: 1" = 50'

IR-1

REVISED BY	DATE REVISED
KENNY MAH	MARLENE GROS

CALCULATED-DESIGNED BY	CHECKED BY

SENIOR LANDSCAPE ARCHITECT: STEPHEN ALVAREZ

STATE OF CALIFORNIA - DEPARTMENT OF TRANSPORTATION
Caltrans® LANDSCAPE ARCHITECTURE

LAST REVISION 05-18-12 | DATE PLOTTED => 30-AUG-2012 | TIME PLOTTED => 11:10

Dist	COUNTY	ROUTE	POST MILES TOTAL PROJECT	SHEET No.	TOTAL SHEETS
11	SD	75, 805	9.0, 20.2	26	76

LICENSED LANDSCAPE ARCHITECT

08-20-12
PLANS APPROVAL DATE

LICENSED LANDSCAPE ARCHITECT
KENNETH L. MAH No. 3042
Expiration Date 02-28-14
Renewal Date 05-18-12
Date
STATE OF CALIFORNIA

THE STATE OF CALIFORNIA OR ITS OFFICERS OR AGENTS SHALL NOT BE RESPONSIBLE FOR THE ACCURACY OR COMPLETENESS OF SCANNED COPIES OF THIS PLAN SHEET.

NOTES:

1. FOR ACCURATE RIGHT OF WAY DATA, CONTACT RIGHT OF WAY ENGINEERING AT THE DISTRICT OFFICE.
2. Exist 2-2" WM AND BPA LOCATED ON SOUTHBOUND LINDA VISTA Rd NORTH OF STALMER St.

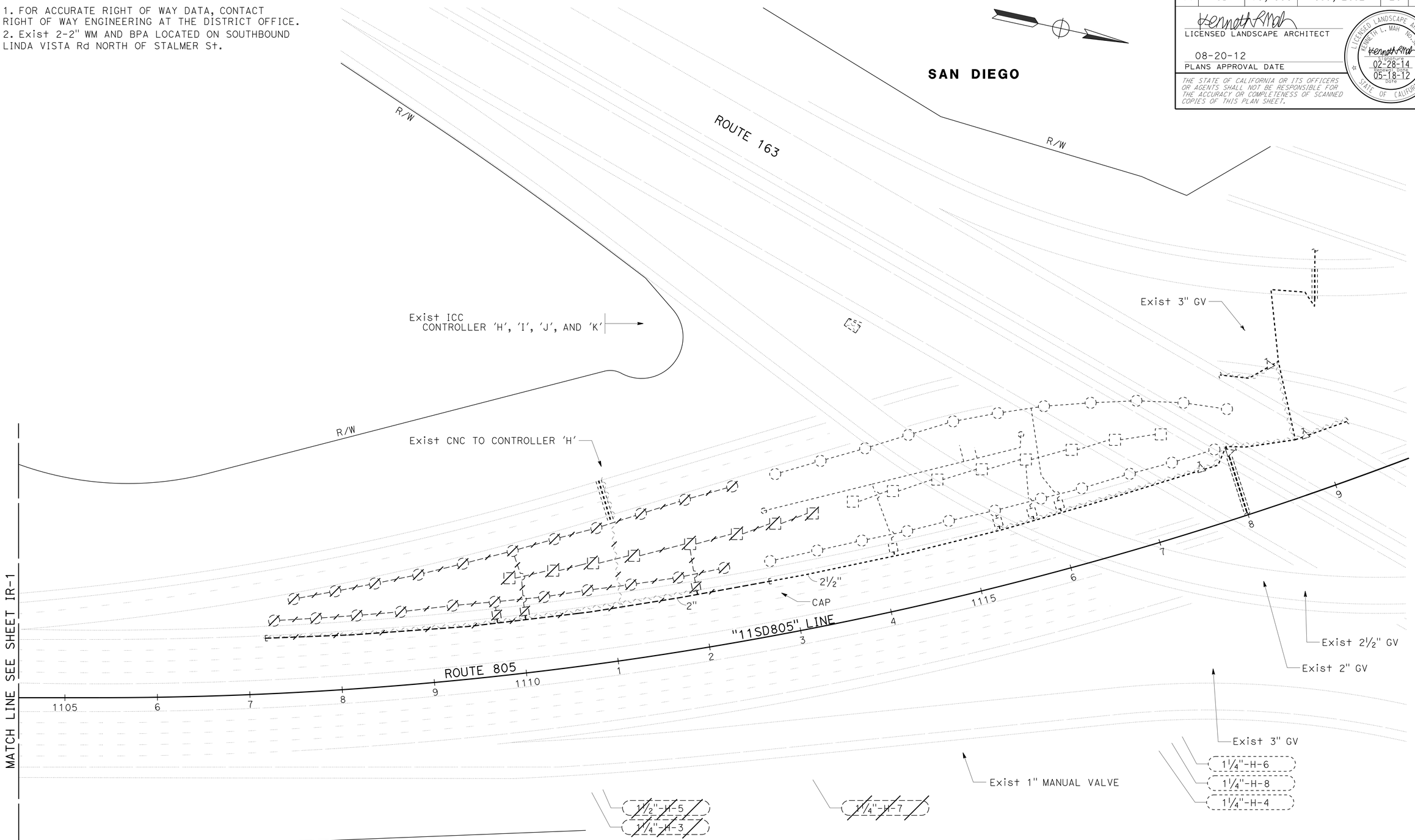

APPROVED FOR IRRIGATION REMOVAL WORK ONLY

IRRIGATION REMOVAL PLAN
LOCATION 2

SCALE: 1" = 50'

IR-2

STATE OF CALIFORNIA - DEPARTMENT OF TRANSPORTATION
Caltrans® LANDSCAPE ARCHITECTURE

SENIOR LANDSCAPE ARCHITECT: STEPHEN ALVAREZ
CALCULATED-DESIGNED BY: KENNY MAH
CHECKED BY: MARLENE GROS
REVISED BY
DATE REVISED

LAST REVISION 05-18-12
DATE PLOTTED => 30-AUG-2012
TIME PLOTTED => 11:10

Dist	COUNTY	ROUTE	POST MILES TOTAL PROJECT	SHEET No.	TOTAL SHEETS
11	SD	75, 805	9.0, 20.2	27	76

LICENSED LANDSCAPE ARCHITECT

08-20-12
PLANS APPROVAL DATE

THE STATE OF CALIFORNIA OR ITS OFFICERS OR AGENTS SHALL NOT BE RESPONSIBLE FOR THE ACCURACY OR COMPLETENESS OF SCANNED COPIES OF THIS PLAN SHEET.

LICENSED LANDSCAPE ARCHITECT
KENNETH L. MAH No. 3042
Expiration Date 02-28-14
Renewal Date 05-18-12
STATE OF CALIFORNIA

NOTES:

FOR ACCURATE RIGHT OF WAY DATA, CONTACT RIGHT OF WAY ENGINEERING AT THE DISTRICT OFFICE.

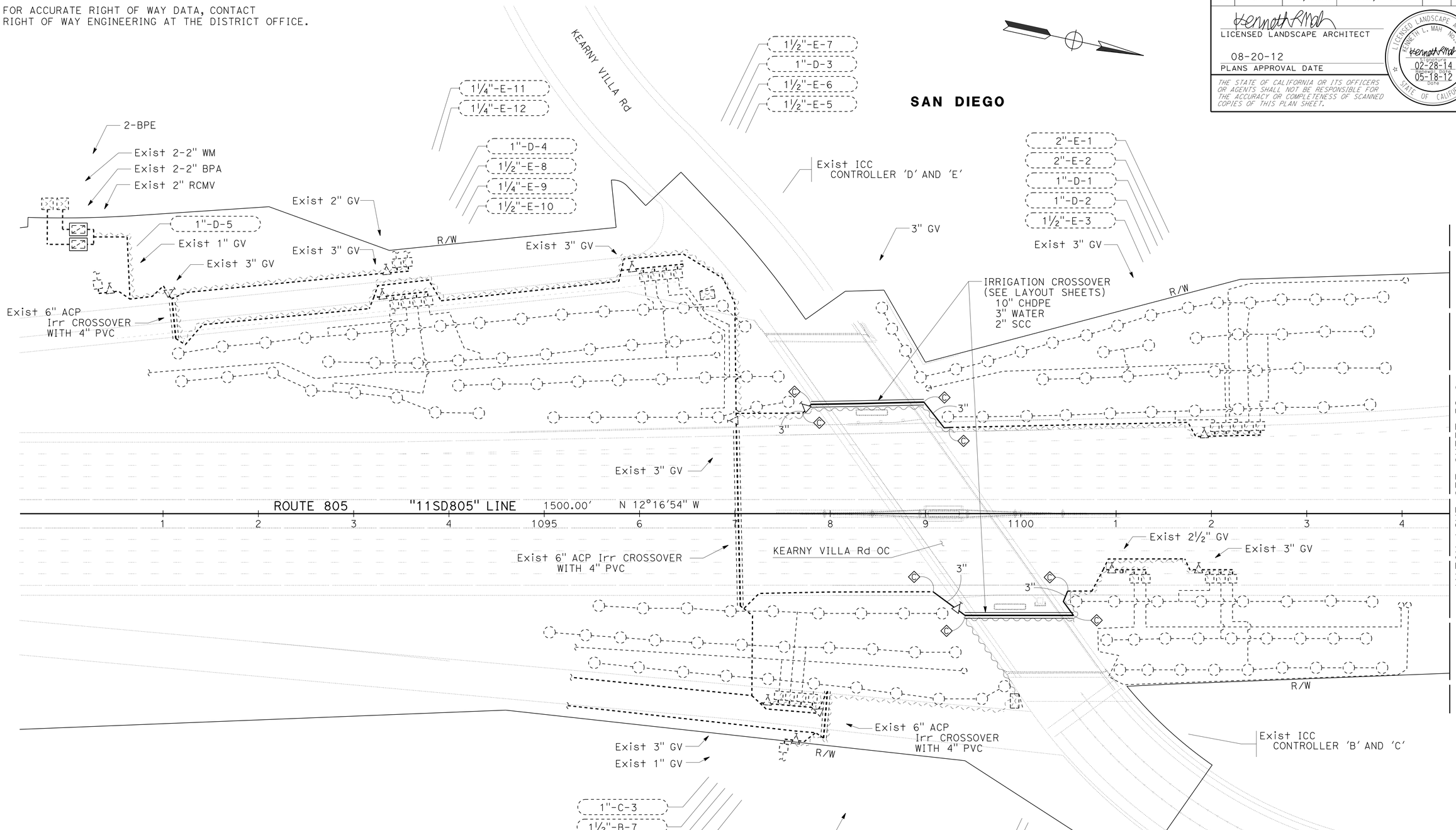

APPROVED FOR PLANTING AND IRRIGATION WORK ONLY

PLANTING AND IRRIGATION PLAN
LOCATION 2

SCALE: 1" = 50'

PI-1

REVISED BY	DATE REVISED
KENNY MAH	MARLENE GROS
CALCULATED-DESIGNED BY	CHECKED BY
SENIOR LANDSCAPE ARCHITECT	STEPHEN ALVAREZ

STATE OF CALIFORNIA - DEPARTMENT OF TRANSPORTATION
Caltrans® LANDSCAPE ARCHITECTURE

LAST REVISION 05-18-12
DATE PLOTTED => 30-AUG-2012
TIME PLOTTED => 11:10

Dist	COUNTY	ROUTE	POST MILES TOTAL PROJECT	SHEET No.	TOTAL SHEETS
11	SD	75, 805	9.0, 20.2	28	76

LICENSED LANDSCAPE ARCHITECT

08-20-12
PLANS APPROVAL DATE

LICENSED LANDSCAPE ARCHITECT
KENNETH L. MAH No. 3042
Signature
02-28-14
Expiration Date
05-18-12
Date
STATE OF CALIFORNIA

THE STATE OF CALIFORNIA OR ITS OFFICERS OR AGENTS SHALL NOT BE RESPONSIBLE FOR THE ACCURACY OR COMPLETENESS OF SCANNED COPIES OF THIS PLAN SHEET.

NOTES:

1. FOR ACCURATE RIGHT OF WAY DATA, CONTACT RIGHT OF WAY ENGINEERING AT THE DISTRICT OFFICE.
2. Exist 2-2" WM AND BPA LOCATED ON SOUTHBOUND LINDA VISTA Rd NORTH OF STALMER St.

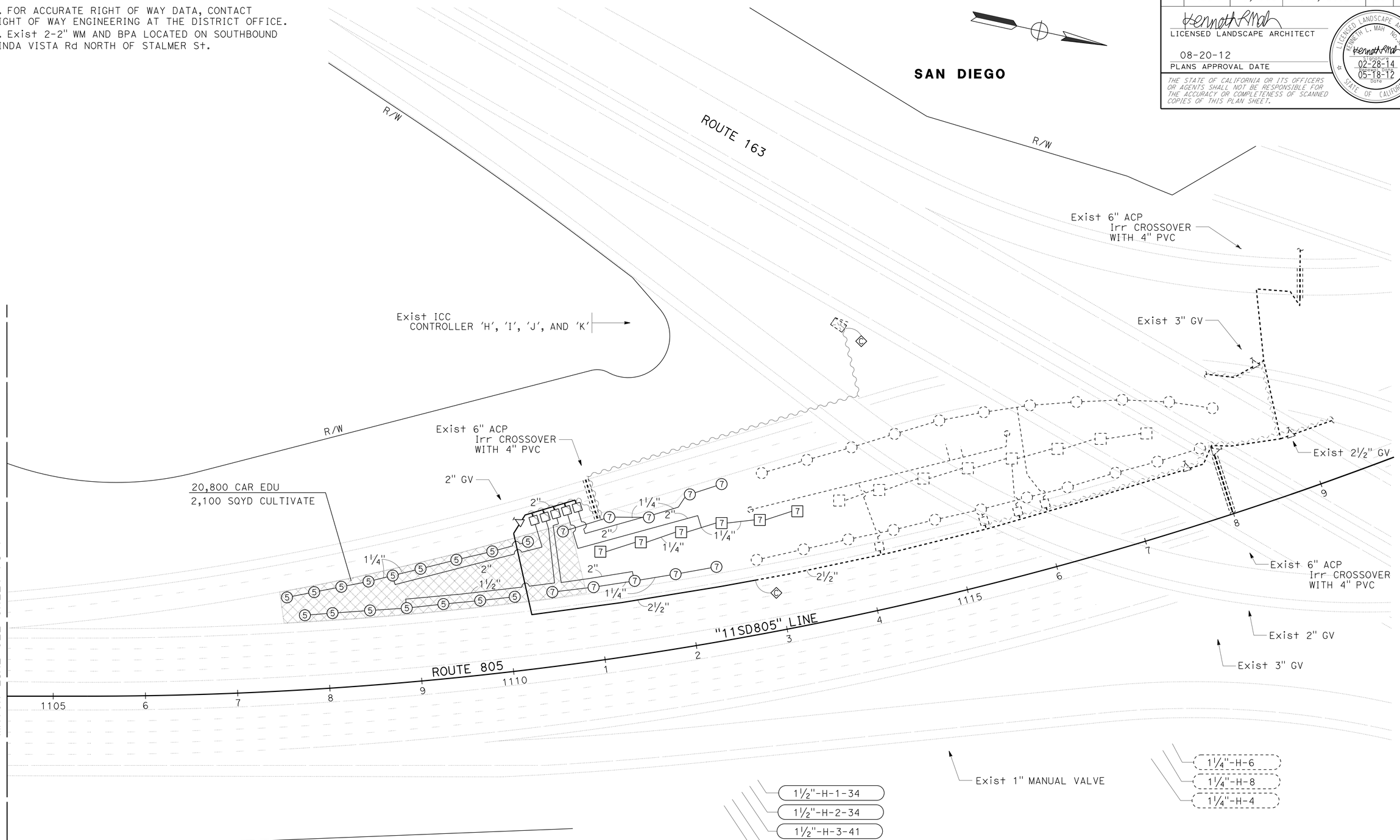

APPROVED FOR PLANTING AND IRRIGATION WORK ONLY

PLANTING AND IRRIGATION PLAN
LOCATION 2

SCALE: 1" = 50'

PI-2

STATE OF CALIFORNIA - DEPARTMENT OF TRANSPORTATION
Caltrans® LANDSCAPE ARCHITECTURE

SENIOR LANDSCAPE ARCHITECT: STEPHEN ALVAREZ
CALCULATED-DESIGNED BY: KENNY MAH
CHECKED BY: MARLENE GROS
REVISED BY
DATE REVISED

LAST REVISION 05-18-12
DATE PLOTTED => 30-AUG-2012
TIME PLOTTED => 11:10

Dist	COUNTY	ROUTE	POST MILES TOTAL PROJECT	SHEET No.	TOTAL SHEETS
11	SD	75, 805	9.0, 20.2	29	76

LICENSED LANDSCAPE ARCHITECT

08-20-12
PLANS APPROVAL DATE

LICENSED LANDSCAPE ARCHITECT
KENNETH L. MAH No. 2142
STATE OF CALIFORNIA
Registration Expires 02-28-14
Renewal Expires 05-18-12
Date

THE STATE OF CALIFORNIA OR ITS OFFICERS OR AGENTS SHALL NOT BE RESPONSIBLE FOR THE ACCURACY OR COMPLETENESS OF SCANNED COPIES OF THIS PLAN SHEET.

SPRINKLER SCHEDULE

SYMBOL	TYPE	DESCRIPTION	SPRAY PATTERN	OPERATING PRESSURE (PSI)	PRESSURE COMPENSATING	PLUS / MINUS 5% DISCHARGE: GALLONS PER SECOND (GPS)	GALLONS PER MINUTE (GPM)	GALLONS PER HOUR (GPH)	RADIUS (Ft)	WIDTH x LENGTH (Ft)	MATERIAL	NOZZLE SIZE (INCH)	INLET CONNECTION (NPT) (DN IN INCHES)(INCH)	POSITIVE-LOCKING ADJ ARC STOP	BACKSPLASH PREVENTER	DIFFUSER PIN	DISTANCE CONTROL FLAP	ADJ DISCHARGE	RISER: TYPE	MATERIAL: PLASTIC	GALVANIZED	SIZE (IPS) (INCH)	HEIGHT (INCH)	FLOW SHUTOFF DEVICE	SWING JOINT (TYPE)	RISER SUPPORT	SPRINKLER PROTECTOR (TYPE)	REMARKS
⑤	A-5	GEAR DRIVEN	P	50	-	-	3.5	-	40	-	PL	-	¾	-	-	X	-	-	I	X	-	¾	6	-	I	-	-	③⑦
⑦	A-7	GEAR DRIVEN	P	50	-	-	6.8	-	48	-	PL	-	¾	-	-	X	-	-	I	X	-	¾	6	-	I	-	-	③⑦
7	A-7	GEAR DRIVEN	F	50	-	-	6.8	-	48	-	PL	-	¾	-	-	X	-	-	I	X	-	¾	6	-	I	-	-	③

X IN BOX DENOTES REQUIREMENT

APPLICABLE WHEN CIRCLED BELOW:

1 - SEE SPECIAL PROVISIONS.
2 - IF A PRESSURE COMPENSATING DEVICE IS SPECIFIED, THE DISCHARGE AND RADII SHOWN REFLECT ITS USE.
③ - SHALL HAVE AN INTERNAL OR EXTERNAL CHECK VALVE.
4 - NON-ADJUSTABLE DISCHARGE RATE.
5 - REQUIRED ADJACENT TO SHOULDERS, CURBS, SIDEWALKS, AND DIKES.
6 - UNLESS OTHERWISE SHOWN ON PLANS.
⑦ - ADJUSTABLE ARC.
8 - MATCHED PRECIPITATION RATE NOZZLES.
9 - REFER TO PIPE SIZING CHARTS.

ABBREVIATIONS

Adj — ADJUSTABLE
B/B — BRASS/BRONZE
B/B/PL — BRASS/BRONZE/PLASTIC
B/PL — BRASS/PLASTIC
CST — CENTER STRIP
DN — DIAMETER NOMINAL
EST — END STRIP
Ft — FEET
F — FULL CIRCLE
F/P — FULL/PART CIRCLE
GPH — GALLONS PER HOUR
GPM — GALLONS PER MINUTE
GPS — GALLONS PER SECOND
H — HALF CIRCLE
IPS — IRON PIPE SIZE
NPT — NATIONAL PIPE THREAD
P — PART CIRCLE
PL — PLASTIC
PSI — POUNDS PER SQUARE INCH
Q — QUARTER CIRCLE
SST — SIDE STRIP
T — THIRD CIRCLE
TQ — THREE QUARTER CIRCLE
TT — TWO THIRDS CIRCLE

NOTES:

1. ALL LATERAL PIPE NOT LABELED SHALL BE 1 INCH.
2. ALL SPRINKLER HEADS, VALVES, MAINLINE AND LATERAL LINE NEAR MVP LOCATIONS ARE TO BE INSTALLED OUTSIDE OF THE MVP AREA. VALVES TO BE INSTALLED AT EXITING END OF MVP. HEADS TO BE INSTALLED 6.5 FEET FROM ENTRANCE AND EXIT EDGES.
3. PULL TWO ADDITIONAL CNC WIRES FROM CONTROLLER 'H' TO VALVE MANIFOLD LOCATED Approx Sta "11SD 805" 1111+25 (FOR FUTURE USE).

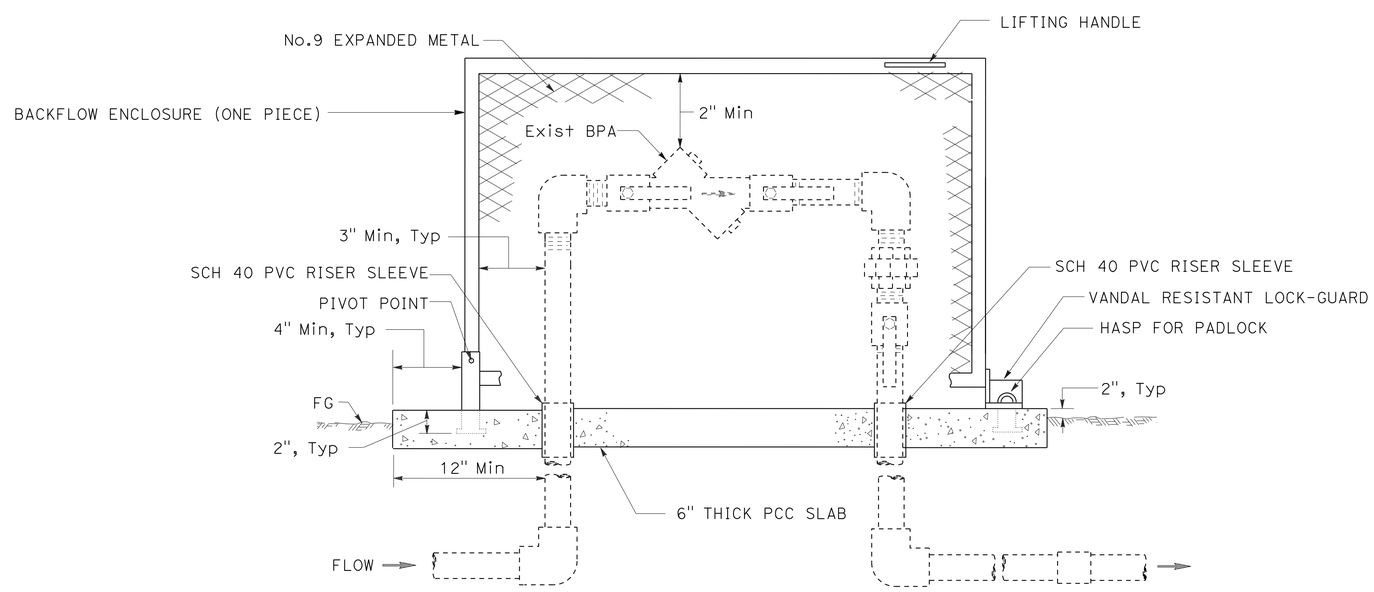

ELEVATION

BACKFLOW PREVENTER ENCLOSURE (BPE)

LANDSCAPE DETAILS

NO SCALE

LD-1

STATE OF CALIFORNIA - DEPARTMENT OF TRANSPORTATION
Caltrans® LANDSCAPE ARCHITECTURE
SENIOR LANDSCAPE ARCHITECT: STEPHEN ALVAREZ
CALCULATED-DESIGNED BY: KENNY MAH
CHECKED BY: MARLENE GROS
REVISED BY
DATE REVISED

LAST REVISION 05-15-12
DATE PLOTTED => 30-AUG-2012
TIME PLOTTED => 11:11

Dist	COUNTY	ROUTE	POST MILES TOTAL PROJECT	SHEET No.	TOTAL SHEETS
11	SD	75,805	9.0,20.2	30	76

REGISTERED ELECTRICAL ENGINEER 05-08-12 DATE

PLANS APPROVAL DATE 08-20-12

REGISTERED PROFESSIONAL ENGINEER JOSEPH RAND No. 11131 Exp. 06-30-13 ELECTRICAL STATE OF CALIFORNIA

THE STATE OF CALIFORNIA OR ITS OFFICERS OR AGENTS SHALL NOT BE RESPONSIBLE FOR THE ACCURACY OR COMPLETENESS OF SCANNED COPIES OF THIS PLAN SHEET.

NOTES:

1 - FOR COMPLETE RIGHT OF WAY AND ACCURATE ACCESS DATA, SEE RIGHT OF WAY RECORD MAPS AT DISTRICT OFFICE.

2 - RL TYPE 31 ELECTROLIER 15' SOUTH DURING CONSTRUCTION, FOUNDATION TO REMAIN.

3 - FA RL TYPE 31 ELECTROLIER WHEN DIRECTED BY THE ENGINEER.

LEGEND:

NC = EXISTING CONDUIT NO CHANGE

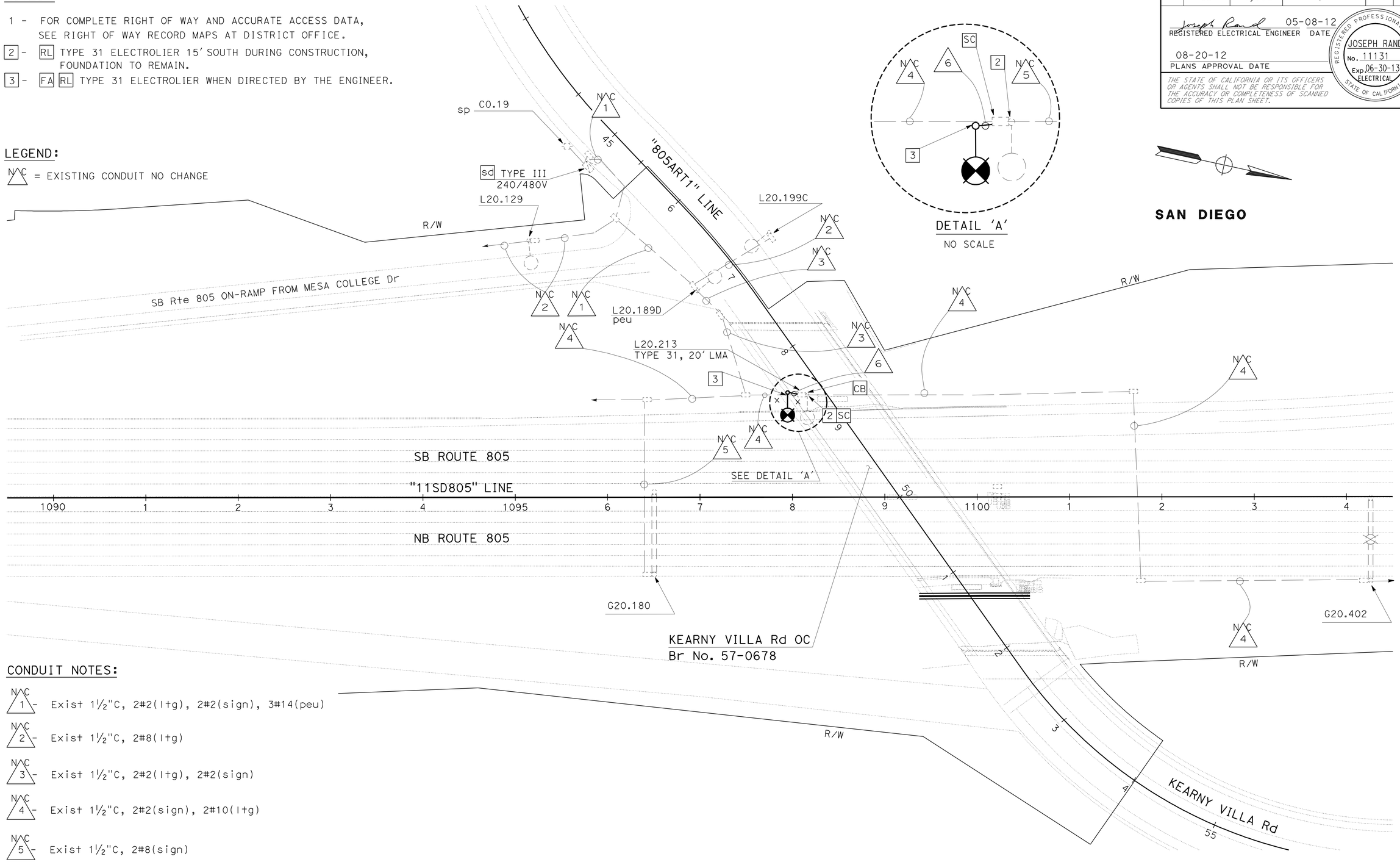

CONDUIT NOTES:

NC 1 - Exist 1½"C, 2#2(ltg), 2#2(sign), 3#14(peu)

NC 2 - Exist 1½"C, 2#8(ltg)

NC 3 - Exist 1½"C, 2#2(ltg), 2#2(sign)

NC 4 - Exist 1½"C, 2#2(sign), 2#10(ltg)

NC 5 - Exist 1½"C, 2#8(sign)

6 - 2"C, 2#8(LTG)

APPROVED FOR ELECTRICAL WORK ONLY

SCALE: 1" = 50'

MODIFY LIGHTING

E-1

STATE OF CALIFORNIA - DEPARTMENT OF TRANSPORTATION

Caltrans® TRAFFIC ELECTRICAL

FUNCTIONAL SUPERVISOR: BRIAN PECUS

CALCULATED-DESIGNED BY: JOSEPH RAND

CHECKED BY: ENRIQUE BERNAL

REVISED BY / DATE REVISED

LAST REVISION 04-02-13

DATE PLOTTED => 24-APR-2013

TIME PLOTTED => 10:48

DIST	COUNTY	ROUTE	POST MILES TOTAL PROJECT	SHEET NO.	TOTAL SHEETS
11	SD	75, 805	9.0, 20.2	31	76

Randell D. Hiatt
REGISTERED CIVIL ENGINEER

June 6, 2008
PLANS APPROVAL DATE

REGISTERED PROFESSIONAL ENGINEER
Randell D. Hiatt
No. C50200
Exp. 6-30-09
CIVIL
STATE OF CALIFORNIA

The State of California or its officers or agents shall not be responsible for the accuracy or completeness of electronic copies of this plan sheet.

To accompany plans dated 08-20-12

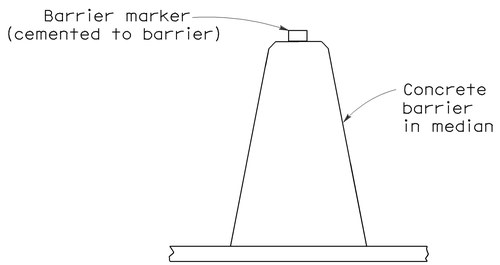

CONCRETE BARRIER TYPE 60 DELINEATION

See Notes 7 and 8

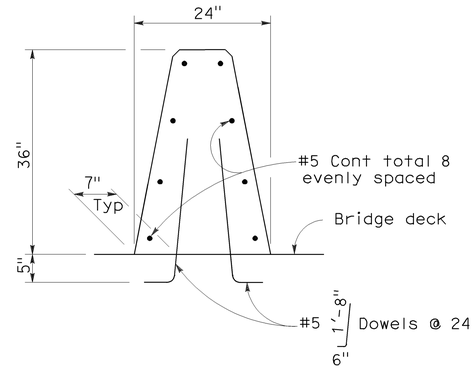

CONCRETE BARRIER TYPE 60A

Details similar to Type 60 except as noted.

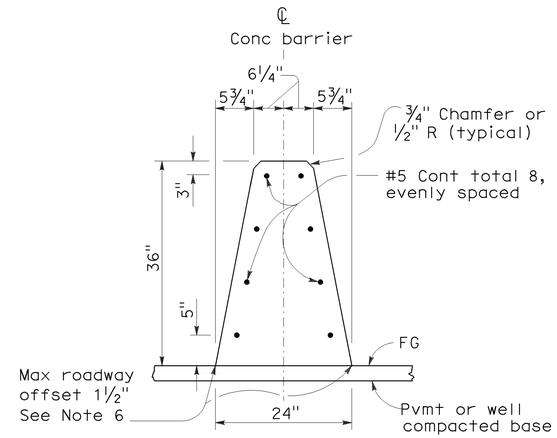

CONCRETE BARRIER TYPE 60

NOTES:

1. See Standard Plan A76B for details of Concrete Barrier Type 60 end anchors, connection to structures and transitions to Concrete Barrier Type 50 and Concrete Barrier Type 60S.
2. See Standard Plan A76C for Concrete Barrier Type 60 transitions at bridge column and sign pedestals.
3. Where glare screen is required on Concrete Barrier Type 60, use Concrete Barrier Type 60G.
4. Where the concrete barrier is added to the face of existing concrete structure, match existing weep holes.
5. Expansion joints in concrete barrier shall be located at all deck, pavement and principal wall joints. Expansion joint filler material shall be the same size as joint or ½" minimum.
6. Where roadway offset is greater than 1½", see Concrete Barrier Type 60C.
7. Barrier delineation to be used when required by the Special Provisions.
8. Spacing of barrier markers to match spacing of raised pavement markers on the adjacent median edgeline pavement delineation.
9. Reinforcing stirrup not required for roadway offsets less than 1'-0".
10. For roadway surfaces offset greater than 1½" to 3", no rebars required. For roadway surfaces offset greater than 3" to 8" use two #4 rebars at 3" above the lower roadway surface. For roadway surfaces offset greater than 8" to 12", use two #4 rebars at 3" above the lower roadway surface and two #4 rebars at 8" above the lower roadway surface. For roadway surfaces offset greater than 12" to 36", use two #4 rebars at 3" above the lower roadway surface and two #4 rebars at every 8" increment vertical spacing above the first two #4 rebars.

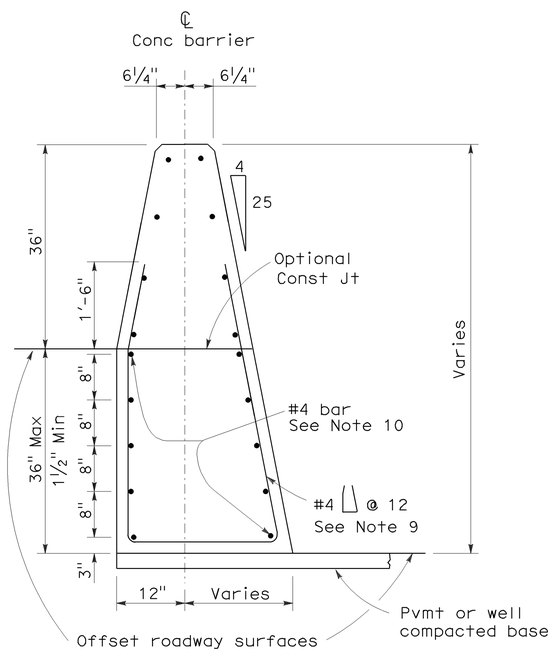

CONCRETE BARRIER TYPE 60C

Details similar to Type 60 except as noted.
Concrete barrier end anchor when necessary.
36" roadway surfaces offset shown.

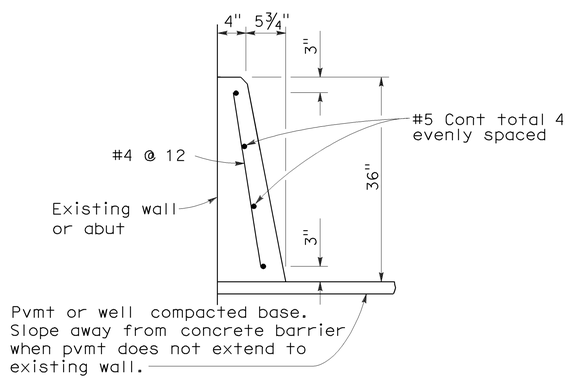

CONCRETE BARRIER TYPE 60D

STATE OF CALIFORNIA
DEPARTMENT OF TRANSPORTATION

CONCRETE BARRIER TYPE 60

NO SCALE

RSP A76A DATED JUNE 6, 2008 SUPERSEDES STANDARD PLAN A76A
DATED MAY 1, 2006 - PAGE 29 OF THE STANDARD PLANS BOOK DATED MAY 2006.

REVISED STANDARD PLAN RSP A76A

2006 REVISED STANDARD PLAN RSP A76A

5-21-08

Dist	COUNTY	ROUTE	POST MILES TOTAL PROJECT	SHEET No.	TOTAL SHEETS
11	SD	75, 805	9.0, 20.2	32	76

Randell D. Hiatt
REGISTERED CIVIL ENGINEER

May 20, 2011
PLANS APPROVAL DATE

REGISTERED PROFESSIONAL ENGINEER
Randell D. Hiatt
No. C50200
Exp. 6-30-11
CIVIL
STATE OF CALIFORNIA

The State of California or its officers or agents shall not be responsible for the accuracy or completeness of electronic copies of this plan sheet.

To accompany plans dated 08-20-12

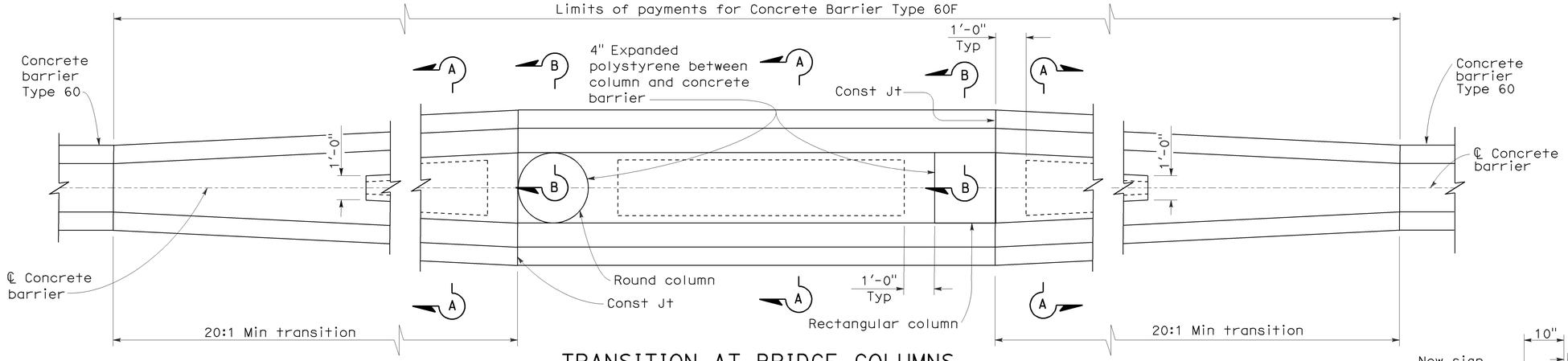

TRANSITION AT BRIDGE COLUMNS

CONCRETE BARRIER TYPE 60F
SEE NOTE 7

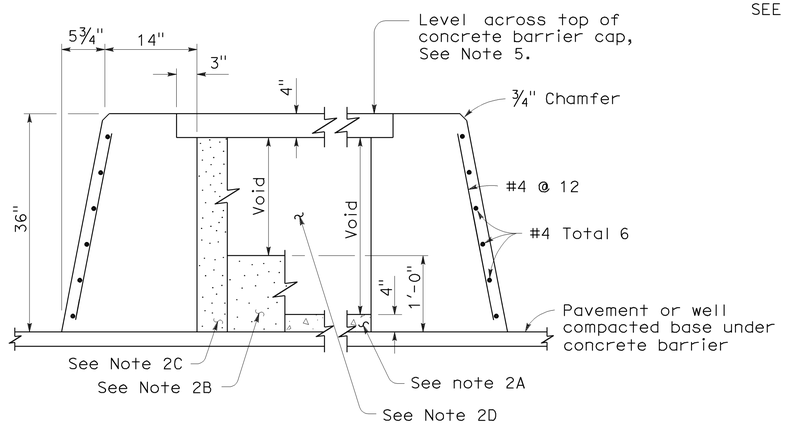

SECTION A-A

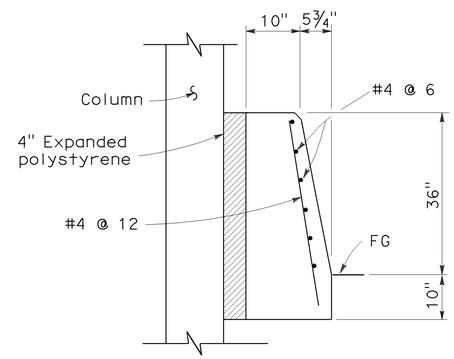

SECTION B-B

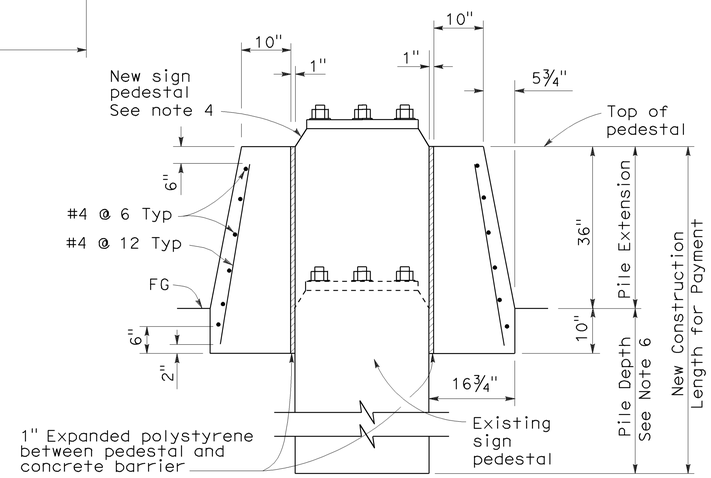

SECTION C-C

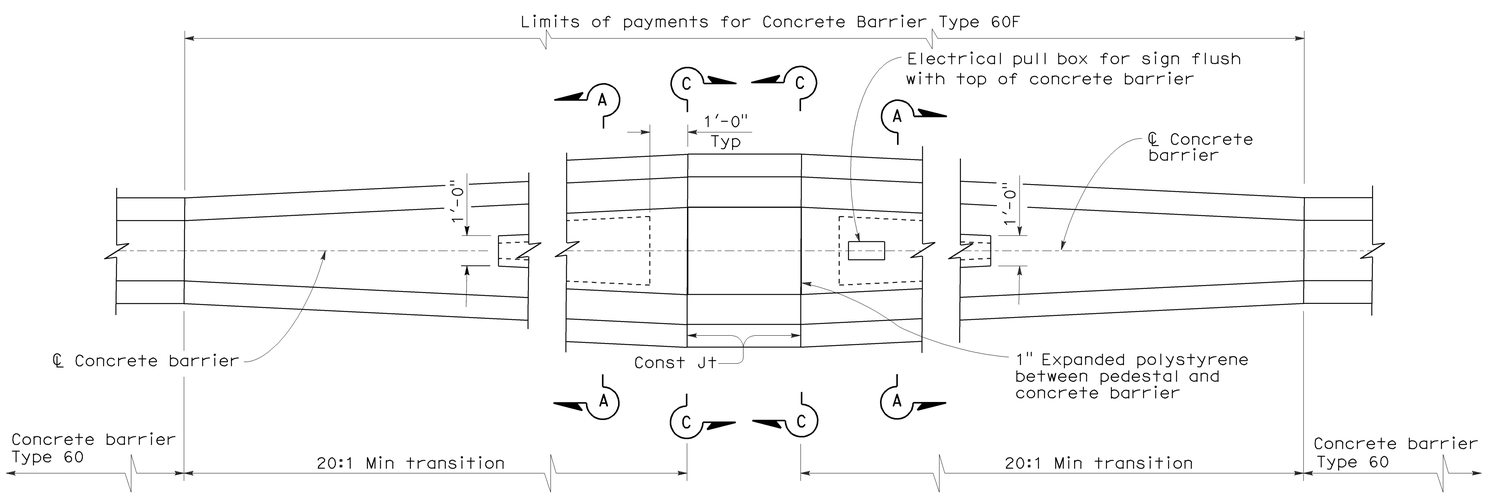

TRANSITION AT SIGN PEDESTAL

CONCRETE BARRIER TYPE 60F
SEE NOTE 7

NOTES:

1. See Revised Standard Plan RSP A76A for Concrete Barrier Type 60.
2. Contractor options for fill between concrete barrier walls:
   A. Place 4" PCC at base between concrete barrier walls.
   B. Place 1'-0" of granular material at base between walls.
   C. Place granular material from base to bottom of 4" cap.
   D. Monolithic concrete with foam blockouts is not permitted.
3. Reinforcing steel shall extend continuous through construction joints.
4. See "Overhead Sign" plans for sign pedestal elevations on new construction.
5. Adjust height of concrete barrier wall on low side of offset or superelevated roadways to provide level grade across top of concrete barrier cap.
6. See Overhead Signs Standard Plan Pile Foundation Tables.
7. All locations with limited shoulder width available for barrier, see Revised Standard Plan RSP A76F for use of Concrete Barrier Type 60GE.

STATE OF CALIFORNIA
DEPARTMENT OF TRANSPORTATION

CONCRETE BARRIER TYPE 60F

NO SCALE

RSP A76C DATED MAY 20, 2011 SUPERSEDES STANDARD PLAN A76C
DATED MAY 1, 2006 - PAGE 31 OF THE STANDARD PLANS BOOK DATED MAY 2006.

REVISED STANDARD PLAN RSP A76C

2006 REVISED STANDARD PLAN RSP A76C

4-6-11

Dist	COUNTY	ROUTE	POST MILES TOTAL PROJECT	SHEET No.	TOTAL SHEETS
11	SD	75, 805	9.0, 20.2	33	76

Randell D. Hiatt
REGISTERED CIVIL ENGINEER

May 20, 2011
PLANS APPROVAL DATE

REGISTERED PROFESSIONAL ENGINEER
Randell D. Hiatt
No. C50200
Exp. 6-30-11
CIVIL
STATE OF CALIFORNIA

The State of California or its officers or agents shall not be responsible for the accuracy or completeness of electronic copies of this plan sheet.

To accompany plans dated 08-20-12

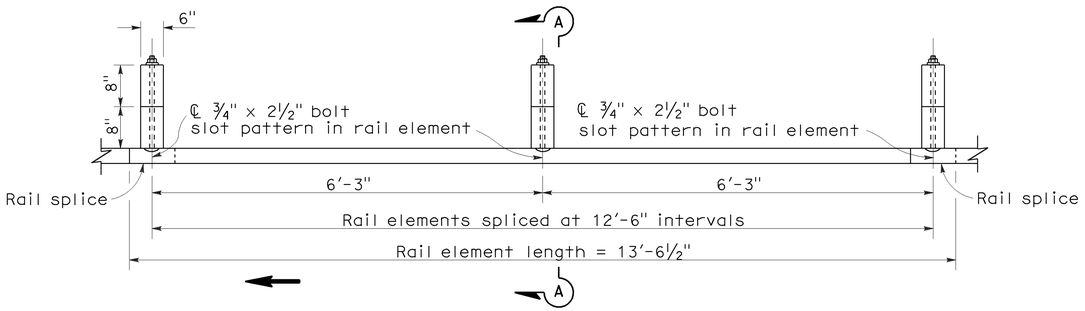

PLAN

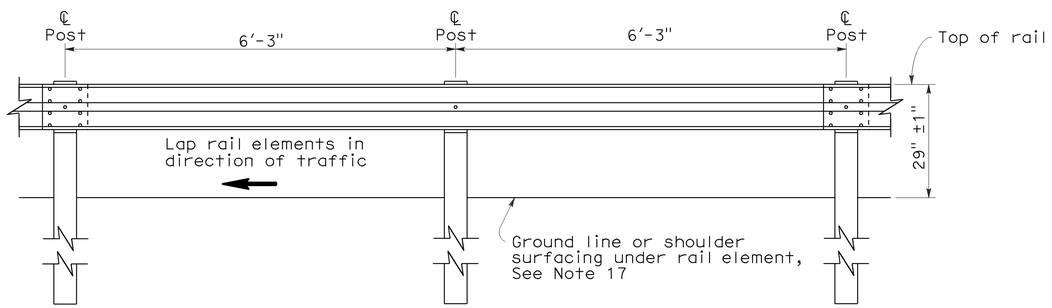

ELEVATION

METAL BEAM GUARD RAILING WITH WOOD POST AND BLOCKS

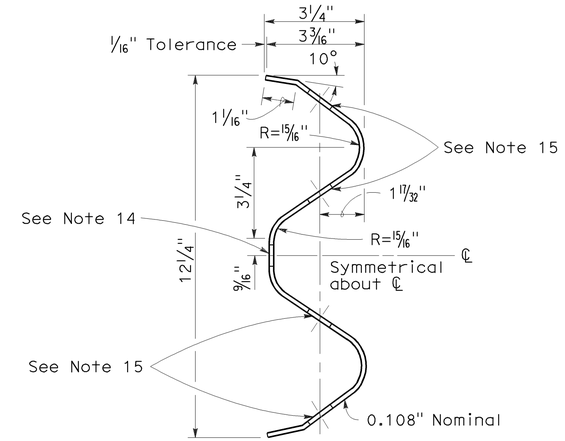

SECTION THRU RAIL ELEMENT

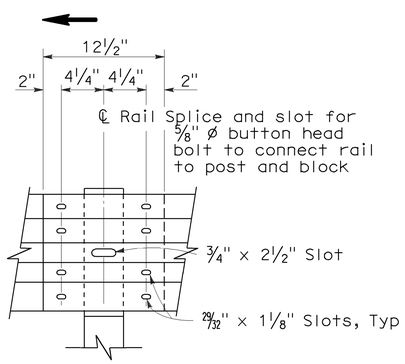

ELEVATION

RAIL ELEMENT SPLICE DETAIL

a) Connect the over lapped end of the rail elements with ⅝" ø x 1⅜" button head oval shoulder splice bolts inserted into the 29⁄32" x 1⅛" slots and bolted together with ⅝" ø recessed hex nuts. Recess of hex nut points toward rail element. A total of 8 bolts and nuts are to be used at each rail splice connection.

b) The ends of the rail elements are to be overlapped in the direction of traffic (see details).

c) Where end cap is to be attached to the end of a rail element, a total of 4 of the above described splice bolts and nuts are to be used.

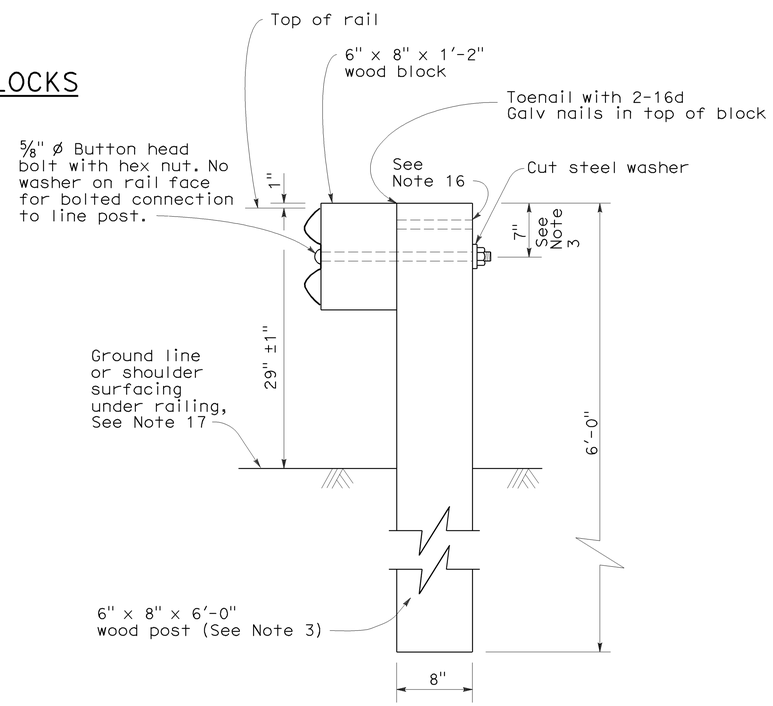

SECTION A-A

TYPICAL WOOD LINE POST INSTALLATION

See Note 4

NOTES:

1. For details of steel post installations, see Standard Plan A77A2.
2. For details of standard hardware used to construct guard railing, see Standard Plan A77B1.
3. For details of wood posts and wood blocks used to construct guard railing, see Standard Plan A77C1.
4. For additional installation details, see Standard Plan A77C3.
5. Guard railing post spacing to be 6'-3" center to center, except as otherwise noted.
6. For guard railing typical layouts, see the A77E, A77F and A77G Series of Standard Plans.
7. For terminal system end treatment details, see the A77L Series of Standard Plans. To connect railing to terminal system end treatment, transition the top of railing height at a ratio of 120:1 to terminal system end treatment height plus one 12'-6" standard railing section at the transitioned height for a horizontal connection to the end treatment.
8. For guard railing end anchor details, see Standard Plans A77H1 and A77I2.
9. For details of guard railing transition to bridge railing, see Standard Plan A77J4.
10. For additional details of guard railing connection to bridge railings, see Standard Plans A77J1, A77J2 and A77K1.
11. For guard railing connection details to abutments and walls, see Standard Plan A77J3.
12. Direction of adjacent traffic indicated by ➡.
13. For typical guard railing delineation and dike positioning details, see Standard Plan A77C4.
14. Slotted hole for bolted connection of rail element to block and post. See "Section Thru Rail Element".
15. Slotted holes for splice bolts to overlap ends of rail element. See "Section Thru Rail Element".
16. Additional hole in uppermost portion of line post is for potential future adjustments of railing height. See Standard Plan A77C1.
17. Install posts in soil.

STATE OF CALIFORNIA
DEPARTMENT OF TRANSPORTATION

METAL BEAM GUARD RAILING STANDARD RAILING SECTION (WOOD POST WITH WOOD BLOCK)

NO SCALE

RSP A77A1 DATED MAY 20, 2011 SUPERSEDES STANDARD PLAN A77A1
DATED MAY 1, 2006 - PAGE 41 OF THE STANDARD PLANS BOOK DATED MAY 2006.

REVISED STANDARD PLAN RSP A77A1

2006 REVISED STANDARD PLAN RSP A77A1

3-10-11

To accompany plans dated 08-20-12

Dist	COUNTY	ROUTE	POST MILES TOTAL PROJECT	SHEET No.	TOTAL SHEETS
11	SD	75, 805	9.0, 20.2	34	76

Randell D. Hiatt
REGISTERED CIVIL ENGINEER

May 20, 2011
PLANS APPROVAL DATE

REGISTERED PROFESSIONAL ENGINEER
Randell D. Hiatt
No. C50200
Exp. 6-30-11
CIVIL
STATE OF CALIFORNIA

The State of California or its officers or agents shall not be responsible for the accuracy or completeness of electronic copies of this plan sheet.

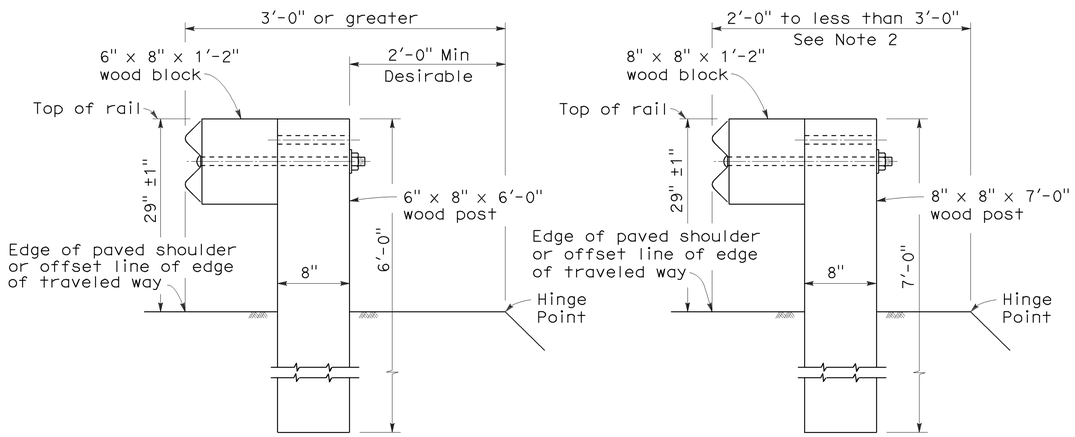

DETAIL A
TYPICAL ROADWAY INSTALLATION
See Note 1

DETAIL B
NARROW ROADWAY INSTALLATION
See Note 1

POST EMBEDMENT

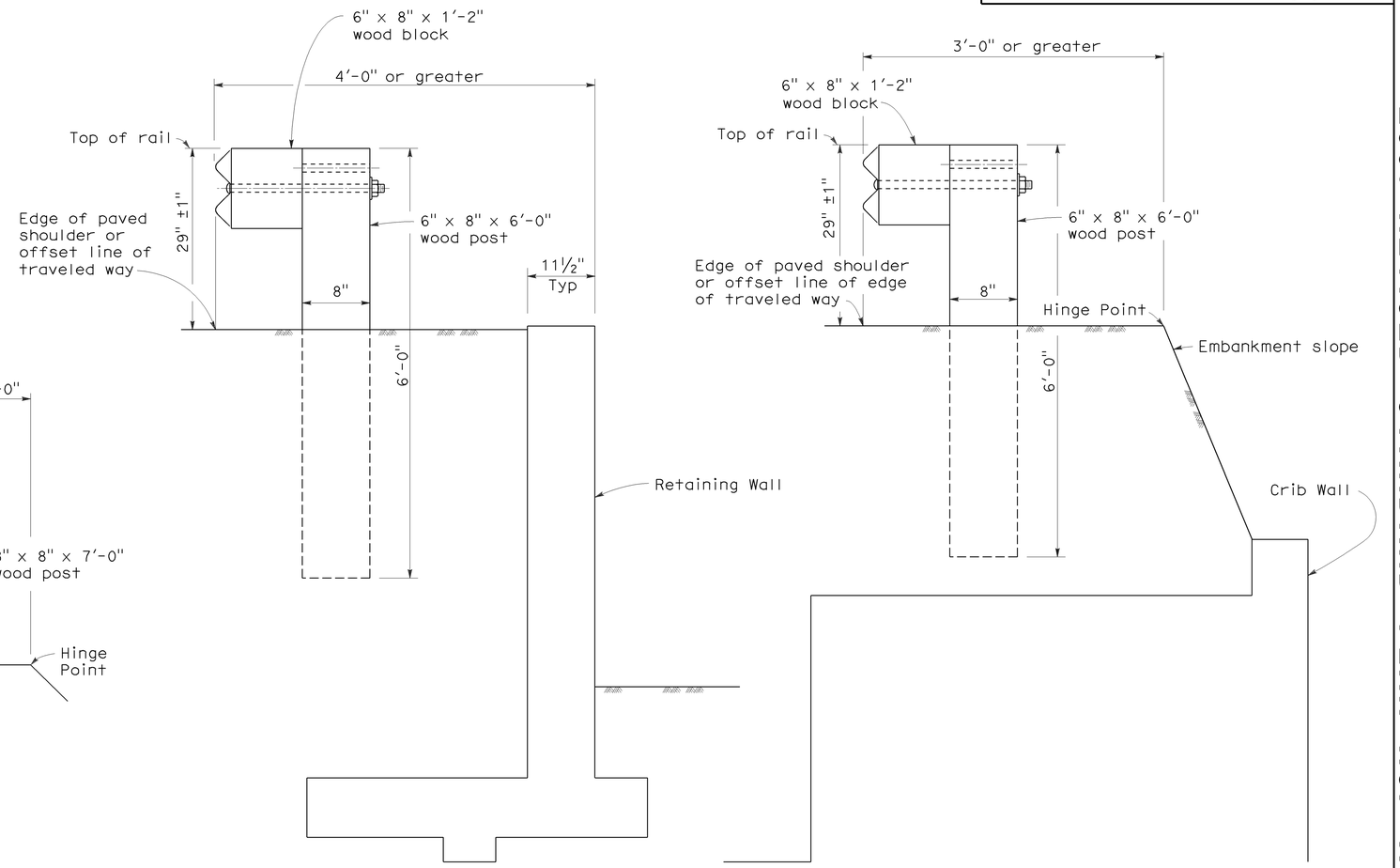

DETAIL C

DETAIL D

INSTALLATION AT EARTH RETAINING WALLS

NOTES:

1. These installation details also applicable to steel line post installations. For Detail A, C, and D, where steel line post installations are constructed, W6 x 9 steel post, 6'-0" in length, with 6" x 8" x 1'-2" notched wood blocks or notched recycled plastic blocks are to be used in place of the size of wood post and wood block shown. For Detail B, where steel line post installations are constructed, W6 x 9 steel post, 7'-0" in length, with 6" x 8" x 1'-2" notched wood blocks or notched recycled plastic blocks are to be used in place of the size of wood post and wood block shown. For additional installation details, see Standard Plans A77A1 and A77A2.
2. Where the distance between the face of the rail and the hinge point is less than 2'-0", see the Project Plans for special details.
3. For dike positioning with guard railing installations, see Standard Plan A77C4.

STATE OF CALIFORNIA
DEPARTMENT OF TRANSPORTATION

METAL BEAM GUARD RAILING TYPICAL LINE POST EMBEDMENT AND HINGE POINT OFFSET DETAILS

NO SCALE

RSP A77C3 DATED MAY 20, 2011 SUPERSEDES STANDARD PLAN A77C3
DATED MAY 1, 2006 - PAGE 46 OF THE STANDARD PLANS BOOK DATED MAY 2006.

REVISED STANDARD PLAN RSP A77C3

2006 REVISED STANDARD PLAN RSP A77C3

3-10-11

Dist	COUNTY	ROUTE	POST MILES TOTAL PROJECT	SHEET No.	TOTAL SHEETS
11	SD	75, 805	9.0, 20.2	35	76

Randell D. Hiatt
REGISTERED CIVIL ENGINEER

May 20, 2011
PLANS APPROVAL DATE

REGISTERED PROFESSIONAL ENGINEER
Randell D. Hiatt
No. C50200
Exp. 6-30-11
CIVIL
STATE OF CALIFORNIA

The State of California or its officers or agents shall not be responsible for the accuracy or completeness of electronic copies of this plan sheet.

To accompany plans dated 08-20-12

NOTES:

1. When necessary to place dike in front of face of guard railing, only Type C dike may be used. For dike details, see Standard Plan A87B.
2. For standard railing post embedment, see Standard Plans A77C3.
3. Guard railing delineation to be used where shown on the Project Plans.
4. When dike or curb is placed under guard railing, the maximum height of the dike or curb shall be 4". Mountable dike should not be used. For dike and curb details, see Standard Plans A87A and A87B.
5. For details of typical distance between the face of rail and hinge point, see Standard Plan A77C3.
6. For steel line posts, use ¼ - 20 self-tapping screws in 0.22" diameter holes or ¼" bolts in 9/32" diameter holes.

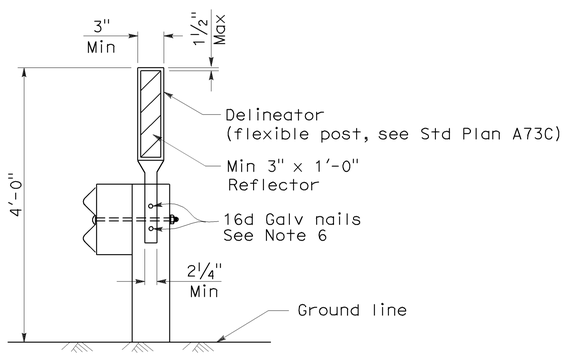

GUARD RAILING DELINEATION

See Note 3

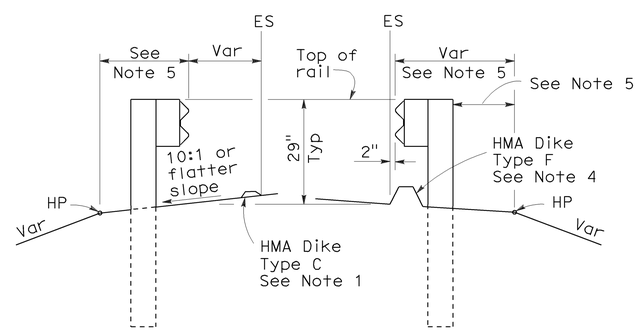

DIKE POSITIONING

See Note 1

STATE OF CALIFORNIA
DEPARTMENT OF TRANSPORTATION

METAL BEAM GUARD RAILING TYPICAL RAILING DELINEATION AND DIKE POSITIONING DETAILS

NO SCALE

RSP A77C4 DATED MAY 20, 2011 SUPERSEDES RSP A77C4 DATED JUNE 6, 2008 AND STANDARD PLAN A77C4 DATED MAY 1, 2006 - PAGE 47 OF THE STANDARD PLANS BOOK DATED MAY 2006.

REVISED STANDARD PLAN RSP A77C4

2006 REVISED STANDARD PLAN RSP A77C4

3-10-11

DIST	COUNTY	ROUTE	POST MILES TOTAL PROJECT	SHEET NO.	TOTAL SHEETS
11	SD	75, 805	9.0, 20.2	36	76

Randell D. Hiatt
REGISTERED CIVIL ENGINEER

June 6, 2008
PLANS APPROVAL DATE

REGISTERED PROFESSIONAL ENGINEER Randell D. Hiatt No. C50200 Exp. 6-30-09 CIVIL STATE OF CALIFORNIA

The State of California or its officers or agents shall not be responsible for the accuracy or completeness of electronic copies of this plan sheet.

To accompany plans dated 08-20-12

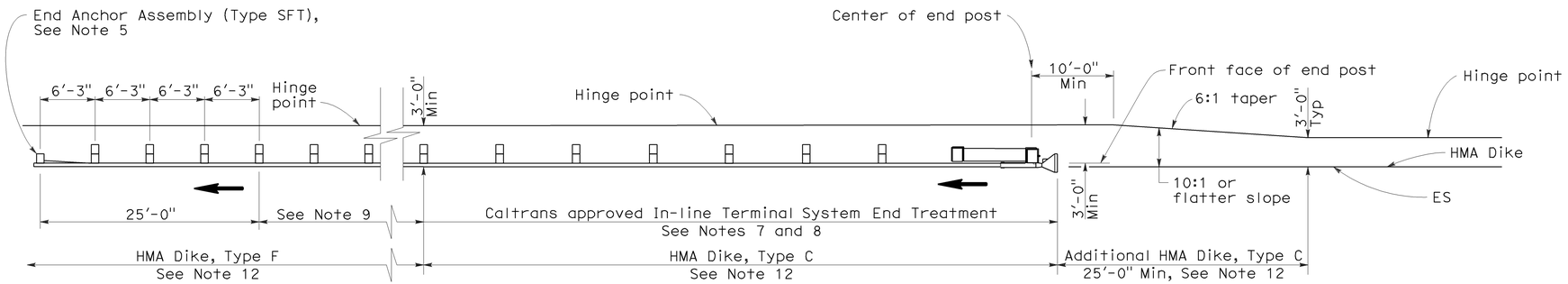

TYPE 11A LAYOUT

(EMBANKMENT GUARD INSTALLATION WITH IN-LINE END TREATMENT AT TRAFFIC APPROACH END OF RAILING)
See Note 6

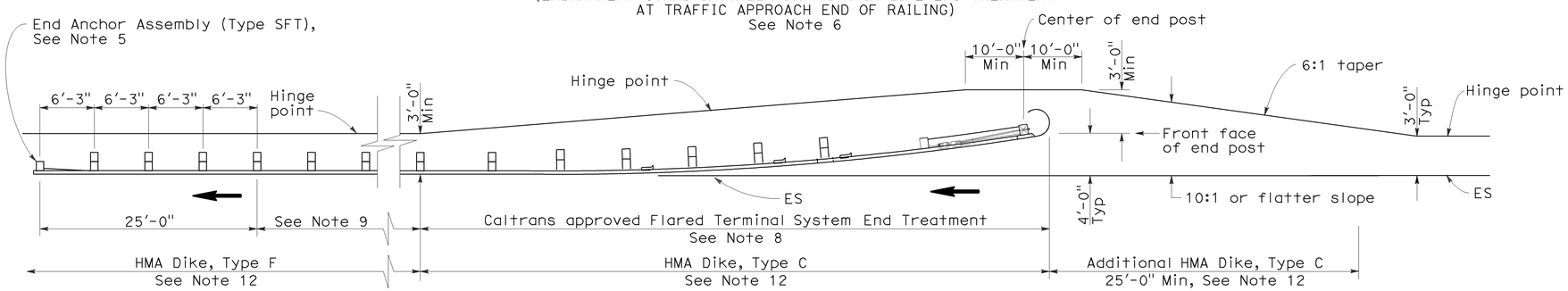

TYPE 11B LAYOUT

(EMBANKMENT GUARD RAILING INSTALLATION WITH FLARED END TREATMENT AT TRAFFIC APPROACH END OF RAILING)
See Note 6

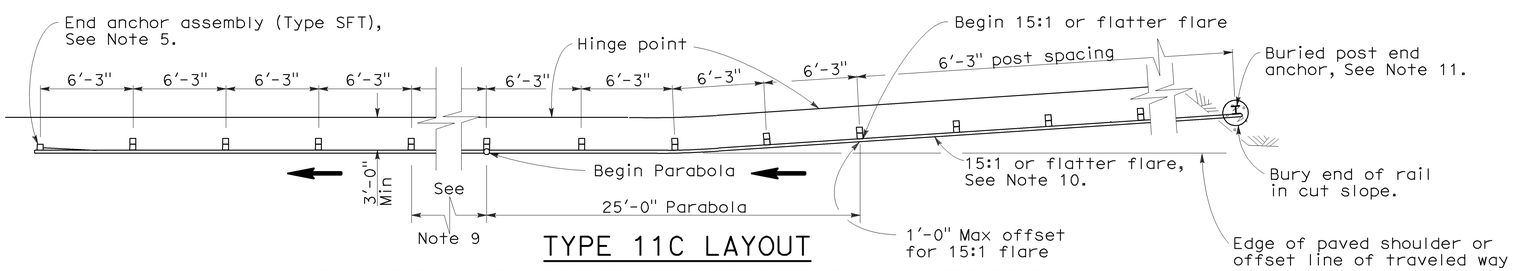

TYPE 11C LAYOUT

(EMBANKMENT GUARD RAILING INSTALLATION WITH BURIED END ANCHOR TREATMENT AT TRAFFIC APPROACH END OF RAILING)
See Notes 6 and 12

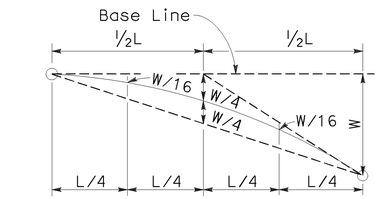

TYPICAL PARABOLIC LAYOUT

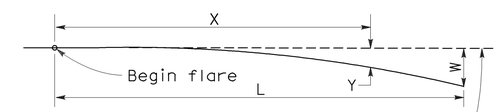

Base Line (Edge of paved shoulder or offset line of edge of traveled way)

$$Y = \frac{WX^2}{L^2}$$

Y = Offset from base line
W = Maximum offset
X = Distance along base line
L = Length of flare

PARABOLIC FLARE OFFSETS

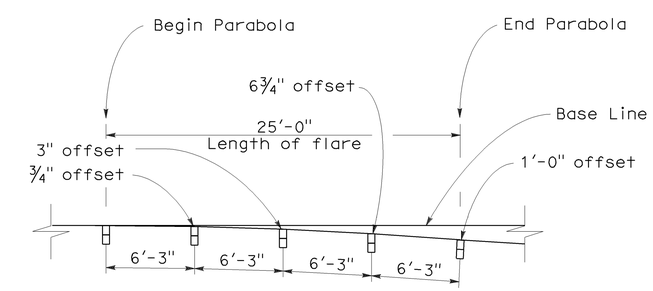

TYPICAL FLARE OFFSETS FOR 1 FOOT MAX END OFFSET

NOTES:

1. Line post, blocks and hardware to be used are shown on Standard Plans A77A1, A77A2, A77B1, A77C1, and A77C2.
2. Guard rail post spacing to be 6'-3" center to center, except as otherwise noted.
3. Except as noted, line posts are 6" x 8" x 6'-0" wood with 6" x 8" x 1'-2" wood blocks. W6 x 9 steel posts, 6'-0" in length, with 6" x 8" x 1'-2" notched wood blocks or recycled plastic blocks may be used for 6" x 8" x 6'-0" wood post with 6" x 8" x 1'-2" wood blocks where applicable and when specified.
4. Direction of adjacent traffic indicated by ⟶.
5. For End Anchor Assembly (Type SFT) details, see Standard Plan A77H1.
6. Layout Types 11A, 11B or 11C are typically used where guard railing is recommended to shield embankment slopes and a crashworthy end treatment is required for only one direction of traffic.
7. In-line Terminal System End Treatments are used where site conditions will not accommodate a flared end treatment.
8. The type of terminal system end treatment to be used will be shown on the Project Plans.
9. Dependent on site conditions (embankment height and side slope), construction of additional guard railing (length equal to multiples of 12'-6" with 6'-3" post spacing) may be advisable.
10. The 15:1 or flatter flare used with buried end anchors is based on the edge of the paved shoulder or offset line of edge of the traveled way. The length of guard railing within the 15:1 or flatter flare is based on site conditions and should be a length equal to multiples of 12'-6".
11. For details of the buried post end anchor used with Type 11C Layout, see Standard Plan A77I2.
12. Where placement of dike is required with guard railing installations, see Revised Standard Plan RSP A77C4 for dike positioning details.

STATE OF CALIFORNIA
DEPARTMENT OF TRANSPORTATION

METAL BEAM GUARD RAILING TYPICAL LAYOUTS FOR EMBANKMENTS

NO SCALE

RSP A77E1 DATED JUNE 6, 2008 SUPERSEDES STANDARD PLAN A77E1
DATED MAY 1, 2006 - PAGE 48 OF THE STANDARD PLANS BOOK DATED MAY 2006.

REVISED STANDARD PLAN RSP A77E1

2006 REVISED STANDARD PLAN RSP A77E1

12-10-07

DIST	COUNTY	ROUTE	POST MILES TOTAL PROJECT	SHEET NO.	TOTAL SHEETS
11	SD	75, 805	9.0, 20.2	37	76

Randell D. Hiatt
REGISTERED CIVIL ENGINEER

June 6, 2008
PLANS APPROVAL DATE

REGISTERED PROFESSIONAL ENGINEER Randell D. Hiatt No. C50200 Exp. 6-30-09 CIVIL STATE OF CALIFORNIA

The State of California or its officers or agents shall not be responsible for the accuracy or completeness of electronic copies of this plan sheet.

To accompany plans dated 08-20-12

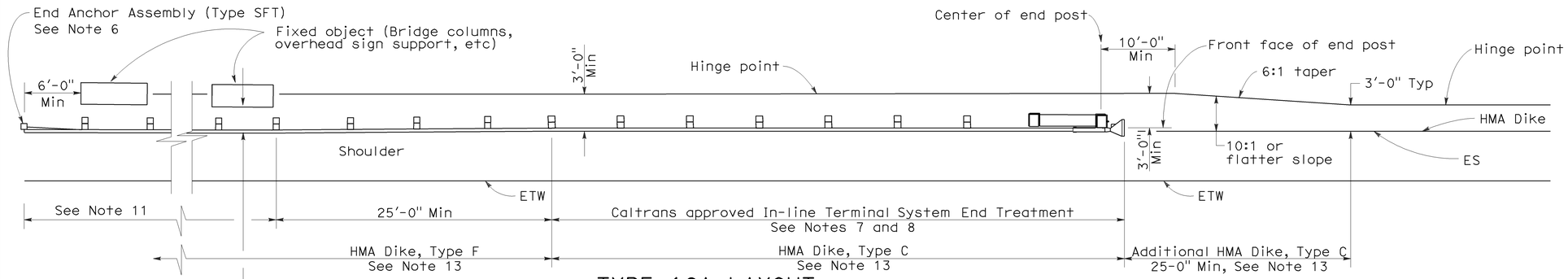

TYPE 16A LAYOUT

(GUARD RAILING INSTALLATION AT ROADSIDE FIXED OBJECT OR OBJECTS WITH AN IN-LINE END TREATMENT AT TRAFFIC APPROACH END OF RAILING)
See Notes 12 and 13

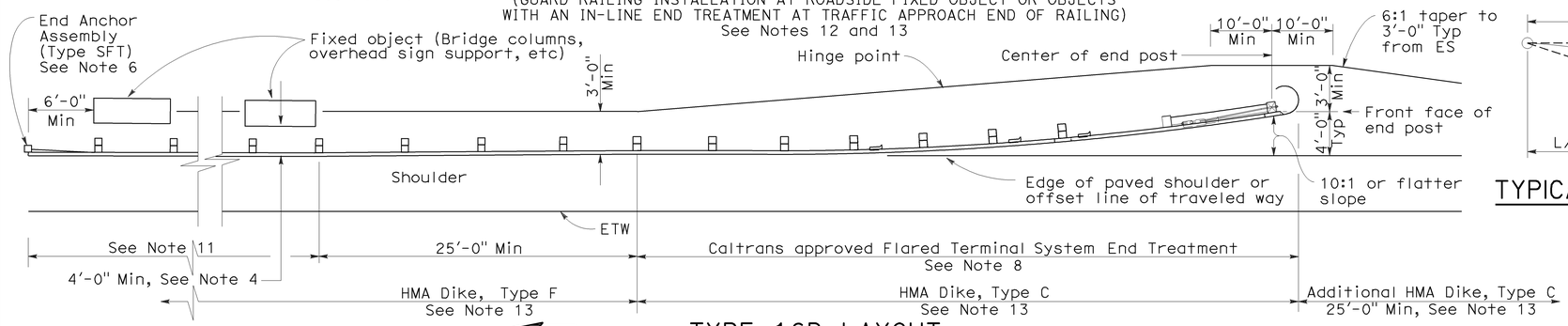

TYPE 16B LAYOUT

(GUARD RAILING INSTALLATION AT ROADSIDE FIXED OBJECT OR OBJECTS WITH A FLARED END TREATMENT AT TRAFFIC APPROACH END OF RAILING)
See Notes 12 and 13

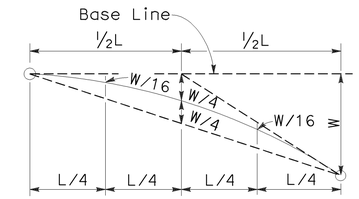

TYPICAL PARABOLIC LAYOUT

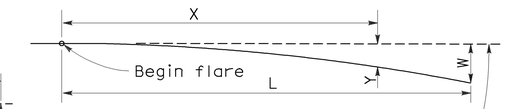

Base Line (Edge of paved shoulder or offset line of edge of traveled way)

$$Y = \frac{WX^2}{L^2}$$

Y = Offset from base line
W = Maximum offset
X = Distance along base line
L = Length of flare

PARABOLIC FLARE OFFSETS

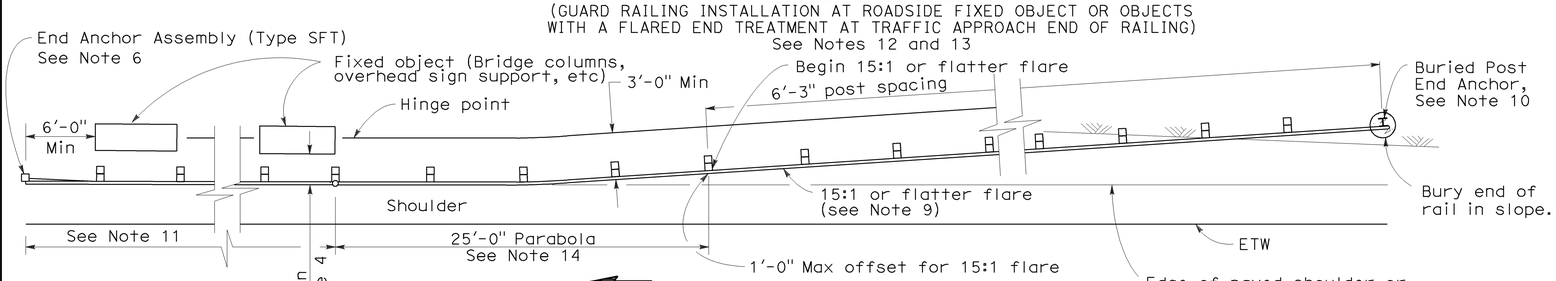

TYPE 16C LAYOUT

(GUARD RAILING INSTALLATION AT ROADSIDE FIXED OBJECT OR OBJECTS WITH A BURIED END ANCHOR TREATMENT AT TRAFFIC APPROACH END OF RAILING)
See Notes 12 and 13

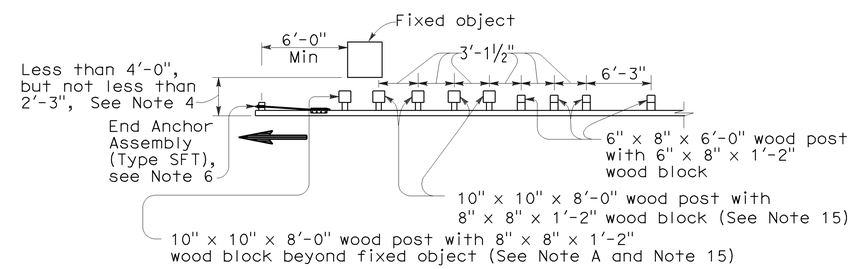

NOTE A: For a series of fixed objects (bridge columns, overhead sign supports, etc.) additional 10" x 10" x 8'-0" wood post with 8" x 8" x 1'-2" wood blocks at 3'-1½" center to center spacing are to be used between fixed objects.

STRENGTHENED RAILING SECTIONS FOR FIXED OBJECT

Use strengthened railing sections with Types 16A, 16B or 16C Layouts where minimum clearance between the face of the guard railing and fixed object(s) is less than 4'-0", but not less than 2'-3". See Note 4

NOTES:

1. Line post, blocks and hardware to be used are shown on Revised Standard Plans A77A1, A77A2, A77B1, A77C1 and A77C2.
2. Guard railing post spacing to be 6'-3" center to center, except as otherwise noted.
3. Except as noted, line posts are 6" x 8" x 6'-0" wood with 6" x 8" x 1'-2" wood blocks. W6 x 9 steel posts, 6'-0" in length, with 6" x 8" x 1'-2" notched wood blocks or notched recycled plastic blocks may be used for 6" x 8" x 6'-0" wood line posts with 6" x 8" x 1'-2" wood blocks where applicable and when specified.
4. A 4'-0" minimum clearance is required between the face of the railing and the face of a fixed object located directly behind standard guard railing sections with post spacing of 6'-3". Construct guard railing as shown in the detail "Strengthened Railing Sections for Fixed Objects" on this plan, where the clearance between the face of the railing and the face of a fixed object is less than 4'-0", but not less than 2'-3". Where the clearance is less than 2'-3", a concrete wall or barrier should be constructed to shield the fixed object(s).
5. Direction of adjacent traffic indicated by ⟶.
6. For End Anchor Assembly (Type SFT) details, see Standard Plan A77H1.
7. In-line Terminal System End Treatments are used where site conditions will not accommodate a flared end treatment.
8. The type of terminal system to be used will be shown on the Project Plans.
9. The 15:1 or flatter flare used with Type 16C Layout is based on the edge of the paved shoulder or offset line of edge of the traveled way. The length of guard railing within the 15:1 or flatter flare is based on site conditions and should be a length equal to multiples of 12'-6".
10. For details of the Buried Post End Anchor used with Type 16C Layout, see Standard Plan A77I2.
11. As site conditions dictate, construct additional guard railing to shield fixed object(s). Additional guard railing length equal to multiples of 12'-6". Post spacing at 6'-3" except as specified in Note 4.
12. Layout Types 16A, 16B or 16C are typically used where guard railing is recommended to shield roadside fixed object(s) and a crashworthy end treatment is required for only one direction of traffic.
13. Where placement of dike is required with guard railing, see Revised Standard Plan RSP A77C4 for dike positioning details.
14. For typical flare offsets for 25'-0" length parabola with maximum offset of 1'-0", see Revised Standard Plan RSP A77E1.
15. W6 x 15 steel post, 8'-0" in length, with 8" x 8" x 1'-2" notched wood block or notched recycled plastic blocks may be used in place of the 10" x 10" x 8'-0" wood post with 8" x 8" x 1'-2" wood block shown in the "Strengthened Railing Sections Detail".

STATE OF CALIFORNIA
DEPARTMENT OF TRANSPORTATION

METAL BEAM GUARD RAILING TYPICAL LAYOUTS FOR ROADSIDE FIXED OBJECTS

NO SCALE

RSP A77G3 DATED JUNE 6, 2008 SUPERSEDES STANDARD PLAN A77G3 DATED MAY 1, 2006 - PAGE 61 OF THE STANDARD PLANS BOOK DATED MAY 2006.

REVISED STANDARD PLAN RSP A77G3

2006 REVISED STANDARD PLAN RSP A77G3

12-10-07

Dist	COUNTY	ROUTE	POST MILES TOTAL PROJECT	SHEET No.	TOTAL SHEETS
11	SD	75, 805	9.0, 20.2	38	76

Randell D. Hiatt
REGISTERED CIVIL ENGINEER

May 20, 2011
PLANS APPROVAL DATE

REGISTERED PROFESSIONAL ENGINEER
Randell D. Hiatt
No. C50200
Exp. 6-30-11
CIVIL
STATE OF CALIFORNIA

The State of California or its officers or agents shall not be responsible for the accuracy or completeness of electronic copies of this plan sheet.

To accompany plans dated 08-20-12

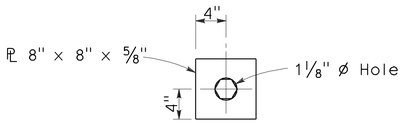

DETAIL A
CABLE CONNECTION
END PLATE

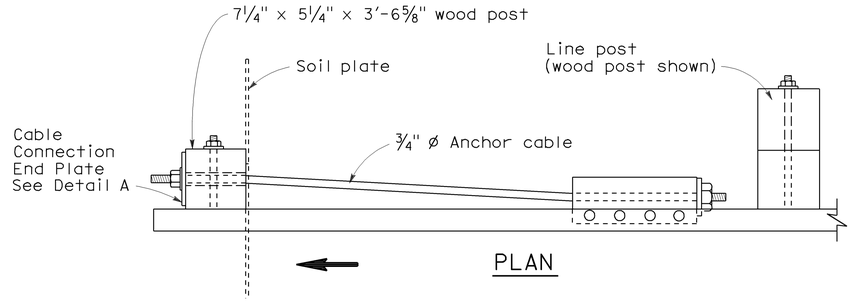

PLAN

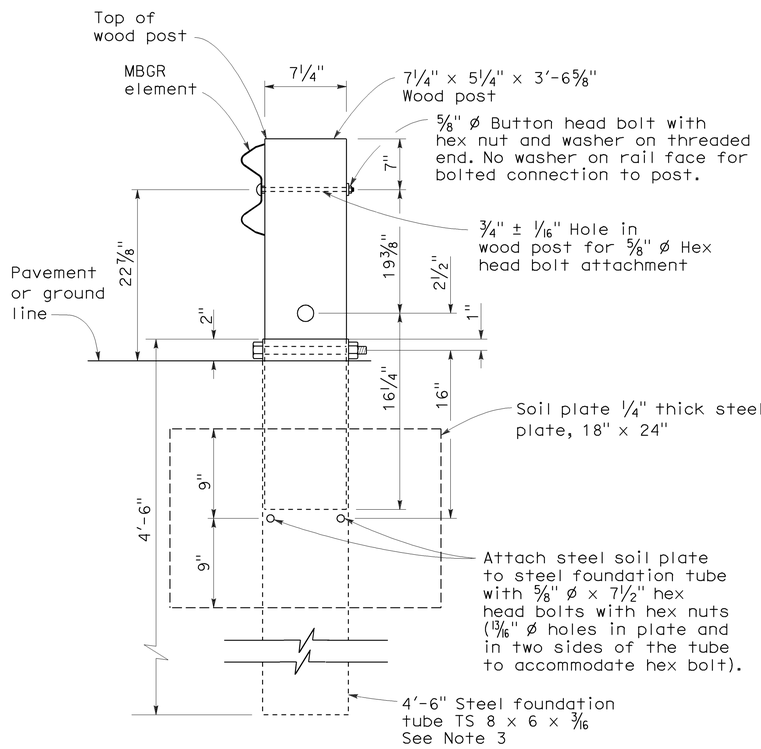

SECTION A-A

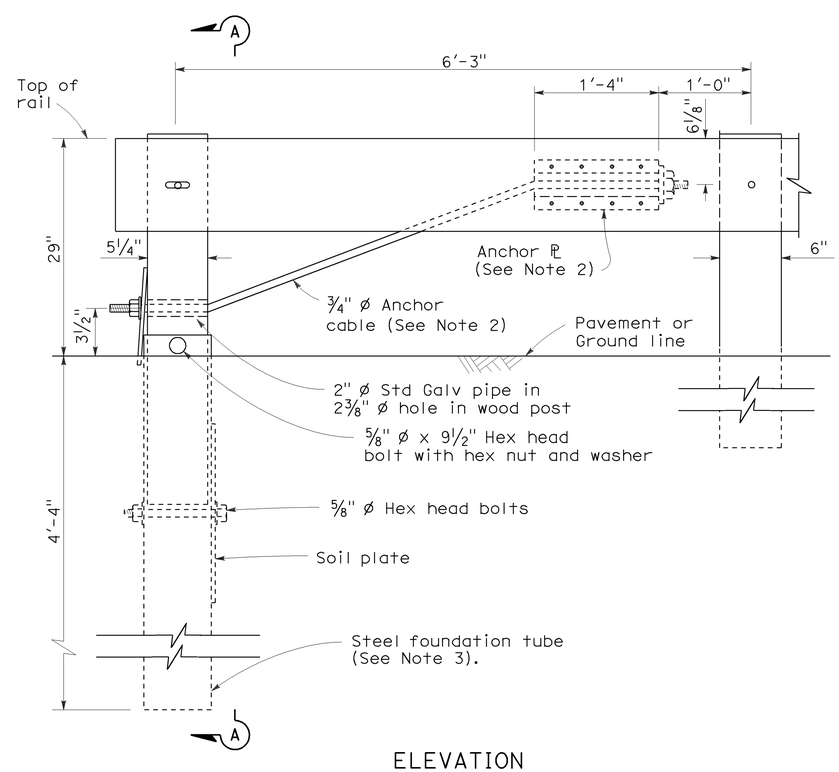

ELEVATION
END ANCHOR
ASSEMBLY (TYPE SFT)
See Note 1

NOTES:

1. See the A77E, A77F and A77G series of Standard Plans for typical use of End Anchor Assembly (Type SFT).
2. For details of the anchor plate and 3/4" cable, see Standard Plan A77H3.
3. A 6'-0" length steel foundation tube, TS 8 x 6 x 3/16, without a soil plate, may be furnished and installed in place of the 4'-6" length steel foundation tube and soil plate shown. Minimum embedment of the 6'-0" length tube shall be 5'-9". A 5/8" Ø hex head bolt and nut shall be installed in the hole in the 6'-0" length tube to keep the wood post from dropping into the tube.
4. Direction of traffic indicated by ⟹.
5. Install line post, steel foundation tube and soil plate in soil.

STATE OF CALIFORNIA
DEPARTMENT OF TRANSPORTATION

METAL RAILING END ANCHOR ASSEMBLY (TYPE SFT)

NO SCALE

RSP A77H1 DATED MAY 20, 2011 SUPERSEDES STANDARD PLAN A77H1
DATED MAY 1, 2006 - PAGE 67 OF THE STANDARD PLANS BOOK DATED MAY 2006.

REVISED STANDARD PLAN RSP A77H1

2006 REVISED STANDARD PLAN RSP A77H1

DIST	COUNTY	ROUTE	POST MILES TOTAL PROJECT	SHEET NO.	TOTAL SHEETS
11	SD	75, 805	9.0, 20.2	39	76

Randell D. Hiatt
REGISTERED CIVIL ENGINEER

June 6, 2008
PLANS APPROVAL DATE

REGISTERED PROFESSIONAL ENGINEER
Randell D. Hiatt
No. C50200
Exp. 6-30-09
CIVIL
STATE OF CALIFORNIA

The State of California or its officers or agents shall not be responsible for the accuracy or completeness of electronic copies of this plan sheet.

To accompany plans dated 08-20-12

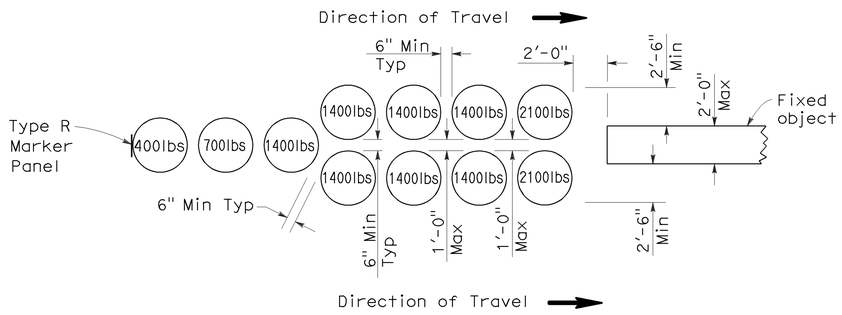

ARRAY 'U11'

Approach speed less than 45 mph

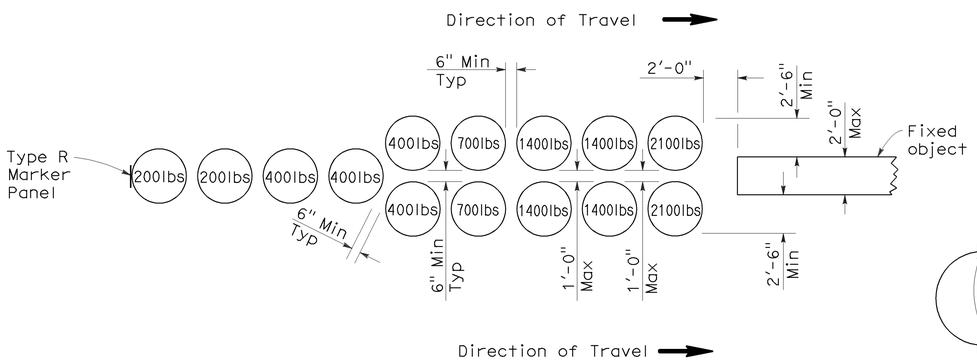

ARRAY 'U14'

Approach speed 45 mph or more

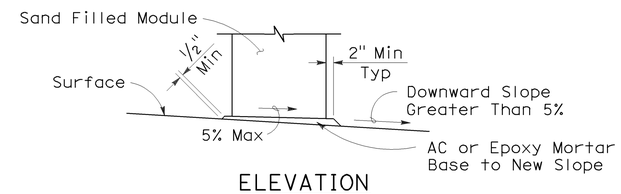

ELEVATION

SLOPED SEAT DETAIL

(See Note 4)

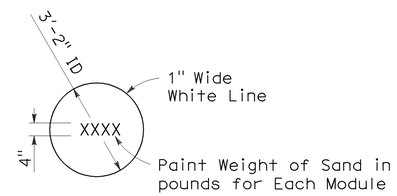

PAINTING DETAIL

(See Note 5)

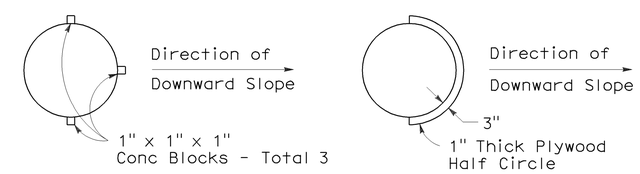

ALTERNATIVE 1

ALTERNATIVE 2

PLAN

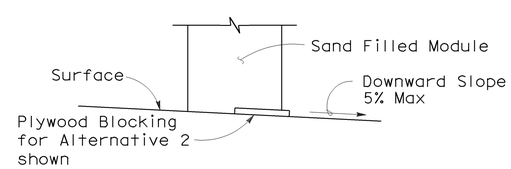

ELEVATION

BRIDGE DECK MODULE BLOCKING DETAILS

(See Note 6)

NOTES:

1. (XXX) Indicates module location and mass of sand in pounds for each module. Module spacing is based on the greater diameter of the modules.
2. All sand weights are nominal.
3. Each module is to contain amount of sand indicated, supported according to the manufacturer's instructions.
4. Modules shall be placed on asphalt concrete, epoxy mortar or concrete surface. Modules to be placed on surfacing with greater than 5% downward slope shall be seated as shown.
5. Mass of sand and outline of each module shall be painted on the surface at each module location.
6. Module blocking, epoxied to the deck surface, is required for all modules placed on bridge decks. Two acceptable alternatives are shown. Other alternatives recommended by the manufacturer and approved by the Engineer will be accepted.
7. Place the top of the Type R marker panel 1" below the module lid.
8. Approach speeds indicated conform to NCHRP Report criteria.

STATE OF CALIFORNIA
DEPARTMENT OF TRANSPORTATION

CRASH CUSHION, SAND FILLED (UNIDIRECTIONAL)

NO SCALE

RSP A81A DATED JUNE 6, 2008 SUPERSEDES STANDARD PLAN A81A
DATED MAY 1, 2006 - PAGE 99 OF THE STANDARD PLANS BOOK DATED MAY 2006.

REVISED STANDARD PLAN RSP A81A

2006 REVISED STANDARD PLAN RSP A81A

5-15-08

DIST	COUNTY	ROUTE	POST MILES TOTAL PROJECT	SHEET NO.	TOTAL SHEETS
11	SD	75, 805	9.0, 20.2	40	76

Randell D. Hiatt
REGISTERED CIVIL ENGINEER

June 6, 2008
PLANS APPROVAL DATE

REGISTERED PROFESSIONAL ENGINEER
Randell D. Hiatt
No. C50200
Exp. 6-30-09
CIVIL
STATE OF CALIFORNIA

The State of California or its officers or agents shall not be responsible for the accuracy or completeness of electronic copies of this plan sheet.

To accompany plans dated 08-20-12

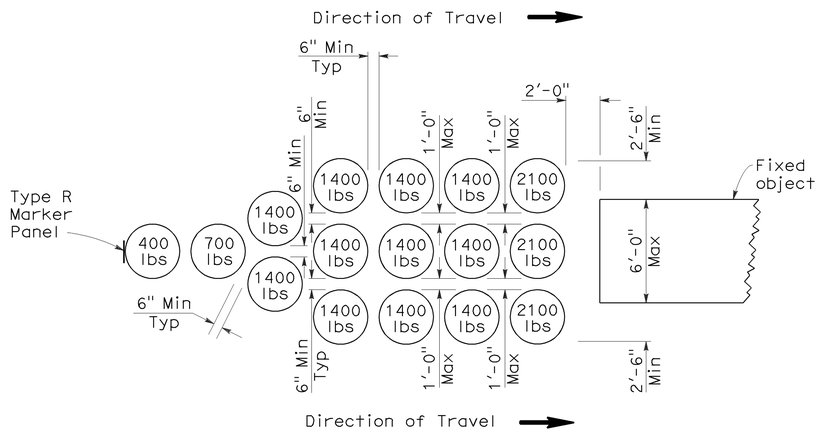

ARRAY 'U16'

Approach speed less than 45 mph

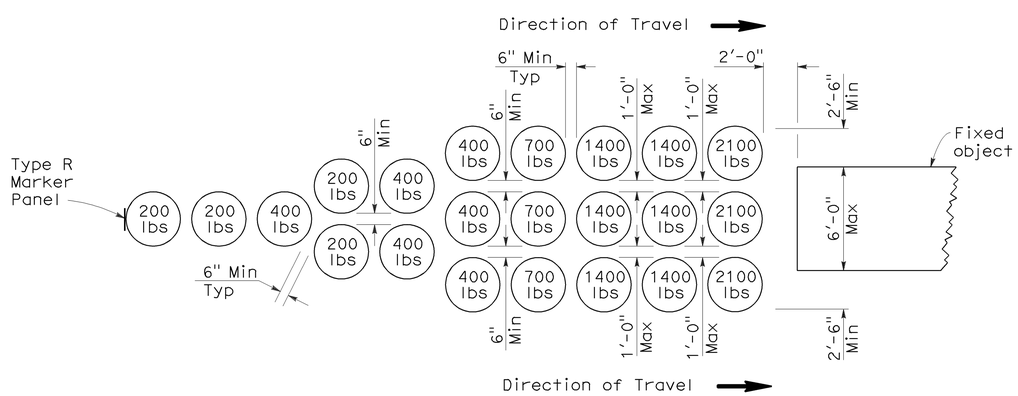

ARRAY 'U21'

Approach speed 45 mph or more

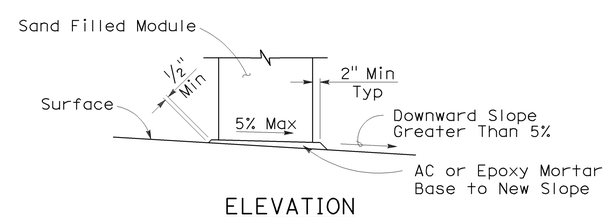

ELEVATION

SLOPED SEAT DETAIL

(See Note 4)

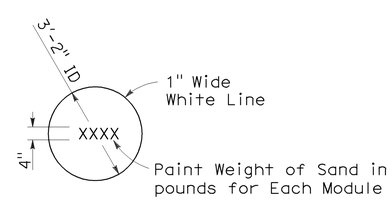

PAINTING DETAIL

(See Note 5)

NOTES:

1. (XXX) Indicates module location and weight of sand in pounds for each module. Module spacing is based on the greater diameter of the modules.
2. All sand weights are nominal.
3. Each module is to contain amount of sand indicated, supported according to the manufacturer's instructions.
4. Modules shall be placed on asphalt concrete, epoxy mortar or concrete surface. Modules to be placed on surfacing with greater than 5% downward slope shall be seated as shown.
5. Mass of sand and outline of each module shall be painted on the surface at each module location.
6. Module blocking, epoxied to the deck surface, is required for all modules placed on bridge decks. Two acceptable alternatives are shown. Other alternatives recommended by the manufacturer and approved by the Engineer will be accepted.
7. Place the top of the Type R marker panel 1" below the module lid.
8. Approach speeds indicated conform to NCHRP Report criteria.

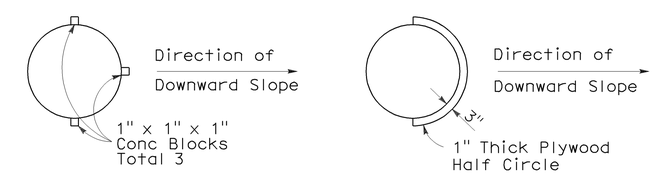

ALTERNATIVE 1

ALTERNATIVE 2

PLAN

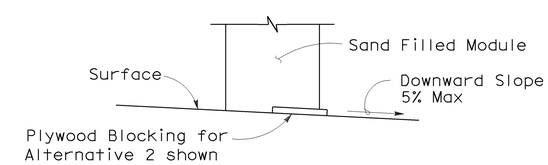

ELEVATION

BRIDGE DECK MODULE BLOCKING DETAILS

(See Note 6)

STATE OF CALIFORNIA
DEPARTMENT OF TRANSPORTATION

CRASH CUSHION, SAND FILLED (UNIDIRECTIONAL)

NO SCALE

RSP A81B DATED JUNE 6, 2008 SUPERSEDES STANDARD PLAN A81B
DATED MAY 1, 2006 - PAGE 100 OF THE STANDARD PLANS BOOK DATED MAY 2006.

REVISED STANDARD PLAN RSP A81B

2006 REVISED STANDARD PLAN RSP A81B

5-15-08

DIST	COUNTY	ROUTE	POST MILES TOTAL PROJECT	SHEET NO.	TOTAL SHEETS
11	SD	75, 805	9.0, 20.2	41	76

REGISTERED CIVIL ENGINEER

November 17, 2006
PLANS APPROVAL DATE

REGISTERED PROFESSIONAL ENGINEER Michael Janzen No. 44788 Exp. 03-31-08 CIVIL STATE OF CALIFORNIA

The State of California or its officers or agents shall not be responsible for the accuracy or completeness of electronic copies of this plan sheet.

To accompany plans dated 08-20-12

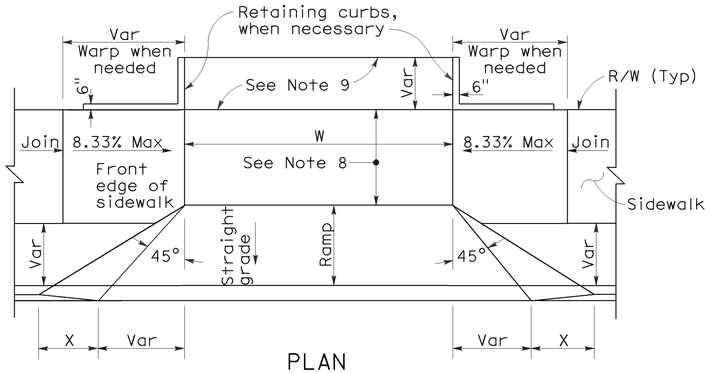

PLAN

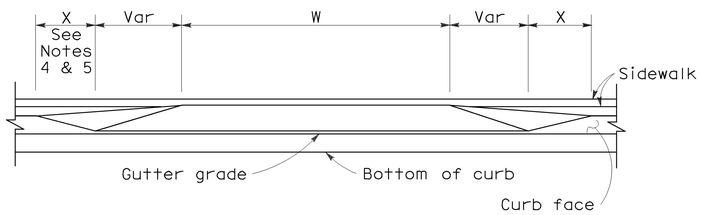

ELEVATION

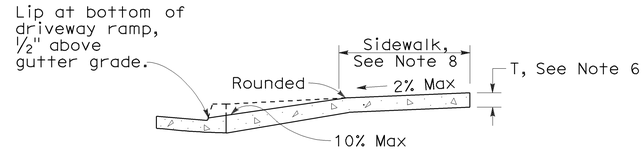

CASE A

Typical driveway, sidewalk not depressed

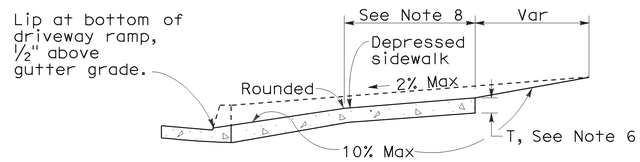

CASE B

Driveway with depressed sidewalk

SECTIONS

CURB QUANTITIES

TYPE	CUBIC YARDS PER LINEAR FOOT
A1-6	0.02585
A1-8	0.03084
A2-6	0.05903
A2-8	0.06379
A3-6	0.01036
A3-8	0.01435
B1-4	0.02185
B1-6	0.02930
B2-4	0.05515
B2-6	0.06171
B3-4	0.00641
B3-6	0.01074
B4	0.05709
D-4	0.04083
D-6	0.06804
E	0.06661

TABLE A

CURB TYPE	DIMENSIONS "H1"	"H2"	"W1"	"W2"
A1-6	1'-2"	6"	7½"	1½"
A1-8	1'-4"	8"	8"	2"
A2-6	1'-0"	6"	2'-7½"	1½"
A2-8	1'-2"	8"	2'-8"	2"
A3-6	6"	5"	7¼"	1¼"
A3-8	8"	7"	7¾"	1¾"
B1-4	1'-0"	4"	7½"	2½"
B1-6	1'-2"	6"	9"	4"
B2-4	10"	4"	2'-7½"	2½"
B2-6	1'-0"	6"	2'-9"	4"
B3-4	4"	3"	7"	2"
B3-6	6"	5"	8½"	3½"
D-4	10"	4"	1'-6"	1'-1"
D-6	1'-0"	6"	2'-2"	1'-8"

DRIVEWAYS

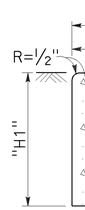

TYPE A1 CURBS

See Table A

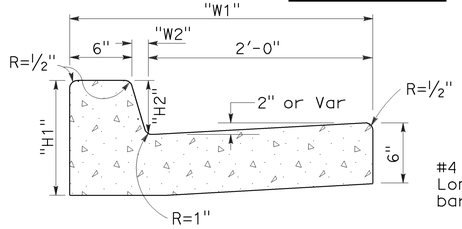

TYPE A2 CURBS

See Table A

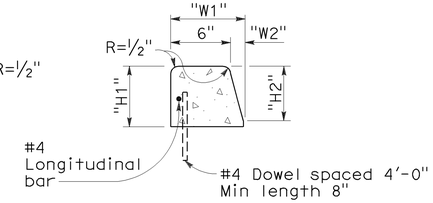

TYPE A3 CURBS

Superimposed on existing pavement
See Table A

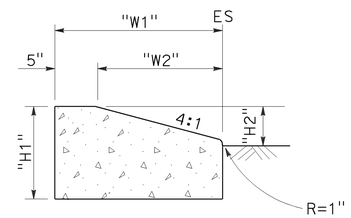

TYPE D CURBS

See Table A

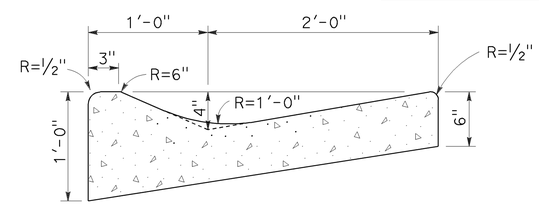

TYPE E CURB

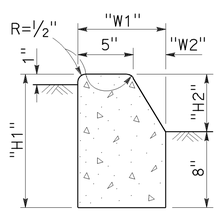

TYPE B1 CURBS

See Table A

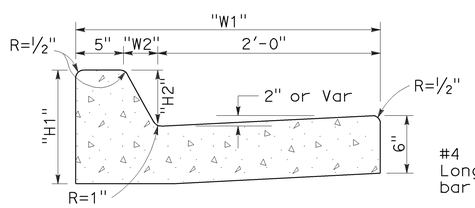

TYPE B2 CURBS

See Table A

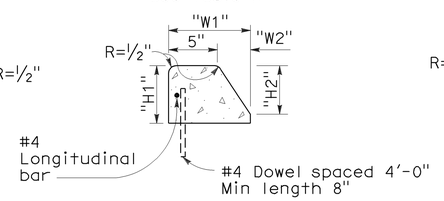

TYPE B3 CURBS

Superimposed on existing pavement
See Table A

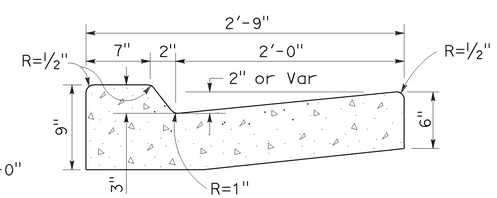

TYPE B4 CURBS

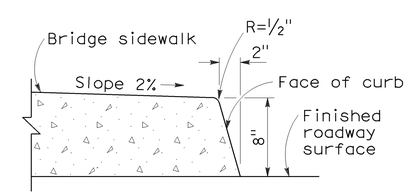

TYPE H CURB

On Bridges

CURBS

NOTES:

1. Case A driveway section typically applies.
2. Use Case B driveway section when ramp slopes would exceed 10% in Case A.
3. Use Case B driveway section when sidewalk cross slope would exceed 2% in Case A.
4. X=3'-0" except for curb heights over 10" where 4:1 slopes shall be used on curb slope.
5. X is a variable when sidewalk is located where wheelchairs may traverse the surface. Slopes shall not exceed 8.33%.
6. Sidewalk and ramp thickness "T" at driveway shall be 4" for residental and 6" for commercial.
7. Difference in slope of the driveway ramp and the slope of a line between the gutter and a point on the roadway 5'-0" from gutter line shall not exceed 15%. Reduce driveway ramp slope, not gutter slope, where required.
8. Minimum width of clear passageway for sidewalk shall be 4'-0".
9. Retaining curbs and acquisition of construction easement may be necessary for narrow sidewalks or curb heights in excess of 6".
10. Across the pedestrian route at curb ramp locations, the gutter pan slope shall not exceed 1" of depth for each 2'-0" of width.

STATE OF CALIFORNIA
DEPARTMENT OF TRANSPORTATION

CURBS AND DRIVEWAYS

NO SCALE

RSP A87A DATED NOVEMBER 17, 2006 SUPERSEDES STANDARD PLAN A87A DATED MAY 1, 2006 - PAGE 113 OF THE STANDARD PLANS BOOK DATED MAY 2006.

REVISED STANDARD PLAN RSP A87A

2006 REVISED STANDARD PLAN RSP A87A

10-25-06

DIST	COUNTY	ROUTE	POST MILES TOTAL PROJECT	SHEET NO.	TOTAL SHEETS
11	SD	75, 805	9.0, 20.2	42	76

LICENSED LANDSCAPE ARCHITECT

June 5, 2009
PLANS APPROVAL DATE

The State of California or its officers or agents shall not be responsible for the accuracy or completeness of electronic copies of this plan sheet.

LICENSED LANDSCAPE ARCHITECT
Gregory A. Balzer 2576
09
Renewal Date
2-28-11
Renewal Date
5-14-09
Date
STATE OF CALIFORNIA

To accompany plans dated 08-20-12

A

AB	aggregate base
ABS	acrylonitrile-butadiene-styrene
AC	asphalt concrete
Adj	adjacent/adjustable
AIC	auxiliary irrigation controller
Alt	alternative
AMEND	amendment
ARV	air release valve
AUTO	automatic
AUX	auxiliary
AVB	atmospheric vacuum breaker

B

B&B	balled and burlapped
B/B	brass/bronze
B/B/PL	brass/bronze/plastic
B/PL	brass/plastic
BFM	bonded fiber matrix
Bit Ctd	bituminous coated
BP	booster pump
BPA	backflow preventer assembly
BPAE	backflow preventer assembly in enclosure
BPE	backflow preventer enclosure
BV	ball valve

C

CAP	corrugated aluminum pipe
CARV	combination air release valve
CCA	cam coupler assembly
CEC	controller enclosure cabinet
CHDPE	corrugated high density polyethylene
CL	chain link
CNC	control and neutral conductors
Conc	concrete
Cond	conduit
CSP	corrugated steel pipe
CST	center strip
CV	check valve

D

Dia	diameter
DIP	ductile iron pipe
DN	diameter nominal

E

EA	each
Elect	electric/electrical
Elev	elevation
ENCL	enclosure
EP	edge of pavement
ES	edge of shoulder
EST	end strip
ESTB	establishment
ETW	edge of traveled way

F

F	full circle
F/P	full/part circle
FAU	filter assembly unit
FCV	flow control valve
FERT	fertilizer
FG	finished grade
FIPT	female iron pipe thread
FIS	fertilizer injector system
FL	flow line
FM	flow monitor
FS	flow sensor
Ft	foot/feet
FV	flush valve

G

GAL	Gallon(s)
Galv	galvanized
GARV	garden valve
GPH	gallons per hour
GPM	gallons per minute
GSP	galvanized steel pipe
GV	gate valve

H

H	half circle
HB	hose bib
HDPE	high density polyethylene
HP	horsepower/hinge point
HPL	high pressure line
Hwy	highway

I

IC	irrigation controller
ICC	irrigation controller(s) in controller enclosure cabinet
ID	inside diameter
In	inches
IFS	irrigation filtration system
IPS	iron pipe size
IPT	iron pipe thread
Irr	irrigation

L

L	length
LF	linear foot

M

Max	maximum
MBGR	metal beam guard railing
MCV	manual control valve
MIC	master irrigation controller
Min	minimum
MIPT	male iron pipe thread
Misc	miscellaneous
Mtl	material
MVP	maintenance vehicle pullout

N

NCN	no common name
NL	nozzle line
No.	number
NPT	national pipe thread

O

O/C	on center
OD	outside diameter
Oz	ounce

P

P	part circle
PB	pull box
PCC	portland cement concrete
PE	polyethylene
Pkt	packet
PL	plastic
PLT	plant/planting
PLT ESTB	plant establishment
PM	post mile
PR	pressure rated
PRLV	pressure relief valve
PSFM	polymer stabilized fiber matrix
PSI	pounds per square inch
PRV	pressure reducing valve
PVC	polyvinyl chloride
Pvmt	pavement

Q

Q	quarter circle
QCV	quick coupling valve

R

R	radius
RCP	reinforced concrete pipe
RCV	remote control valve
RCVM	remote control valve (master)
RCVMF	remote control valve (master) w/ flow meter
RCW	recycled/reclaimed water
RECP	rolled erosion control product
REQ	required
R/W	right of way

S

S	slip
SCC	sprinkler control conduit
SCH	schedule
SF	state-furnished
Shld	shoulder
SQFT	square foot/feet
SQYD	square yard(s)
SST	side strip
Sta	station
Std	standard
SW	sidewalk/sound wall

T

T	third circle/thread
TLS	truck loading standpipe
TQ	three quarter circle
TRM	turf reinforcement mat
TRVD	traveled
TT	two third circle
Typ	typical

U

UG	underground

V

VAU	valve assembly unit

W

W	width
W/	with
WM	water meter
WS	wye strainer
WSP	welded steel pipe
WWM	welded wire mesh

NOTE:

FOR ADDITIONAL ABBREVIATIONS, SEE STANDARD PLANS A10A AND A10B.

STATE OF CALIFORNIA
DEPARTMENT OF TRANSPORTATION

PLANTING AND IRRIGATION ABBREVIATIONS

NO SCALE

RSP H1 DATED JUNE 5, 2009 SUPERSEDES STANDARD PLAN H1
DATED MAY 1, 2006 - PAGE 201 OF THE STANDARD PLANS BOOK DATED MAY 2006.

REVISED STANDARD PLAN RSP H1

2006 REVISED STANDARD PLAN RSP H1

DIST	COUNTY	ROUTE	POST MILES TOTAL PROJECT	SHEET NO.	TOTAL SHEETS
11	SD	75, 805	9.0, 20.2	43	76

LICENSED LANDSCAPE ARCHITECT

June 5, 2009
PLANS APPROVAL DATE

The State of California or its officers or agents shall not be responsible for the accuracy or completeness of electronic copies of this plan sheet.

LICENSED LANDSCAPE ARCHITECT — Gregory A. Balzer — 2576 — 10-29-09 Renewal Date — 2-28-11 Renewal Date — 5-14-09 Date — STATE OF CALIFORNIA

To accompany plans dated 08-20-12

EXISTING	PROPOSED	ITEM DESCRIPTION
		WATER METER (WM)
		BACKFLOW PREVENTER ASSEMBLY (BPA)
		BACKFLOW PREVENTER ASSEMBLY IN ENCLOSURE (BPAE)
		BACKFLOW PREVENTER ENCLOSURE (BPE)
		BOOSTER PUMP (BP)
		TRUCK LOADING STANDPIPE (TLS)
	FS	FLOW SENSOR (FS)
X	X	MASTER IRRIGATION CONTROLLER (MIC)
		AUXILIARY IRRIGATION CONTROLLER (AIC)
		IRRIGATION CONTROLLER (IC)/ IRRIGATION CONTROLLER (IC) (BATTERY) IRRIGATION CONTROLLER (IC) (SOLAR)
		IRRIGATION CONTROLLER(S) IN CONTROLLER ENCLOSURE CABINET (ICC)
		CONTROL AND NEUTRAL CONDUCTORS (CNC)
SCC	SCC	SPRINKLER CONTROL CONDUIT (SCC)
		IRRIGATION CROSSOVER
		EXTEND IRRIGATION CROSSOVER
		IRRIGATION SLEEVE
dip	DIP	DUCTILE IRON PIPE (SUPPLY LINE) (MAIN) (DIP)
		GALVANIZED STEEL PIPE (SUPPLY LINE) (MAIN) (GSP)
		GALVANIZED STEEL PIPE (SUPPLY LINE) (LATERAL) (GSP)
		PLASTIC PIPE (PR 200) (SUPPLY LINE) (MAIN)
		PLASTIC PIPE (PR 200) (SUPPLY LINE) (LATERAL)
		PLASTIC PIPE (IRRIGATION LINE)
		REMOTE CONTROL VALVE (RCV) REMOTE CONTROL VALVE (MASTER) (RCVM) REMOTE CONTROL VALVE (MASTER) W/FLOW METER (RCVMF)
		MANUAL CONTROL VALVE (MCV)
		VALVE ASSEMBLY UNIT (VAU)
		WYE STRAINER (WS)
		FILTER ASSEMBLY UNIT (FAU)
		GATE VALVE (GV)
		BALL VALVE (BV)

EXISTING	PROPOSED	ITEM DESCRIPTION
		QUICK COUPLING VALVE (QCV)
		CAM COUPLER ASSEMBLY (CCA)
		PRESSURE REDUCING VALVE (PRV)
		PRESSURE RELIEF VALVE (PRLV)
		FLOW CONTROL VALVE (FCV)
		COMBINATION AIR RELEASE VALVE (CARV)
		CHECK VALVE (CV)
		FLUSH VALVE (FV)
		NOZZLE LINE W/TURNING UNION
		IRRIGATION SYSTEM
		IRRIGATION SYSTEM TO BE REMOVED
		CHAIN LINK GATE
		QUICK COUPLING VALVE W/SPRINKLER PROTECTOR
3	3	SPRINKLER W/SPRINKLER PROTECTOR
	C	CONNECT TO EXISTING SYSTEM
		CAP
		CAP EXISTING

VALVE CODE

RCV SIZE
IRRIGATION CONTROLLER
CONTROLLER STATION
VALVE IN PARALLEL (IF APPLICABLE)
GPM
QUANTITY OF SPRINKLERS (WHEN SHOWN)

* 2½"-A-2b-40 -60

MCV SIZE
VALVE NUMBER
GPM
QUANTITY OF TYPE SPRINKLERS (WHEN SHOWN)

* 2"-3-30 -50

* VALVE CODES FOR EXISTING VALVES ARE SHOWN IN A DASHED ENCLOSURE.

STATE OF CALIFORNIA
DEPARTMENT OF TRANSPORTATION

PLANTING AND IRRIGATION SYMBOLS

NO SCALE

RSP H2 DATED JUNE 5, 2009 SUPERSEDES RSP H2 DATED MARCH 7, 2008 AND STANDARD PLAN H2 DATED MAY 1, 2006 - PAGE 202 OF THE STANDARD PLANS BOOK DATED MAY 2006.

REVISED STANDARD PLAN RSP H2

2006 REVISED STANDARD PLAN RSP H2

5-11-09

DIST	COUNTY	ROUTE	POST MILES TOTAL PROJECT	SHEET NO.	TOTAL SHEETS
11	SD	75, 805	9.0, 20.2	44	76

LICENSED LANDSCAPE ARCHITECT

June 5, 2009
PLANS APPROVAL DATE

Gregory A. Balzer 2576
10-31-09 Renewal Date
2-28-11 Renewal Date
5-14-09 Date
LICENSED LANDSCAPE ARCHITECT
STATE OF CALIFORNIA

The State of California or its officers or agents shall not be responsible for the accuracy or completeness of electronic copies of this plan sheet.

To accompany plans dated 08-20-12

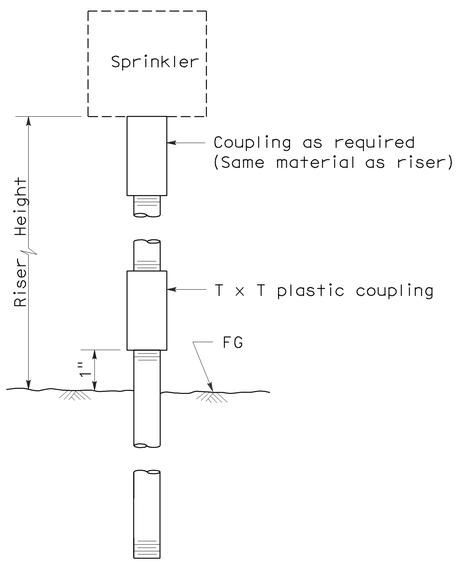

ELEVATION
RISER TYPE I

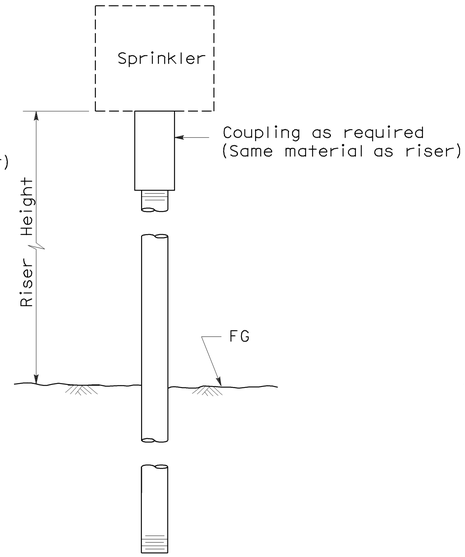

ELEVATION
RISER TYPE II

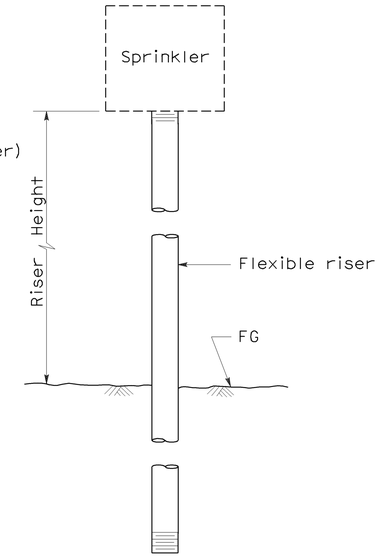

ELEVATION
RISER TYPE III

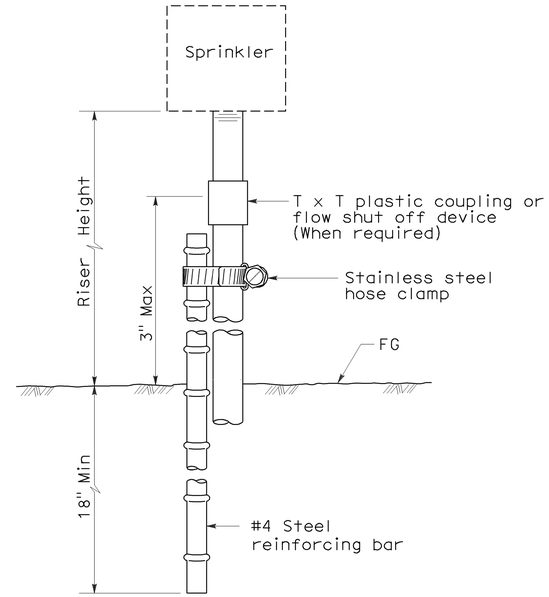

ELEVATION
RISER TYPE IV

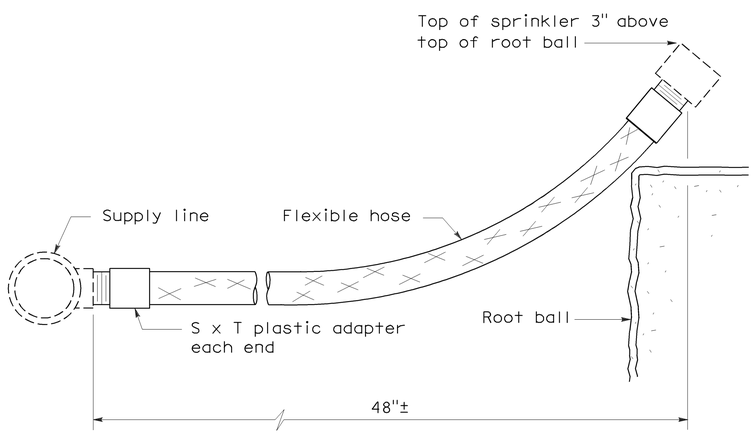

ELEVATION
RISER TYPE V

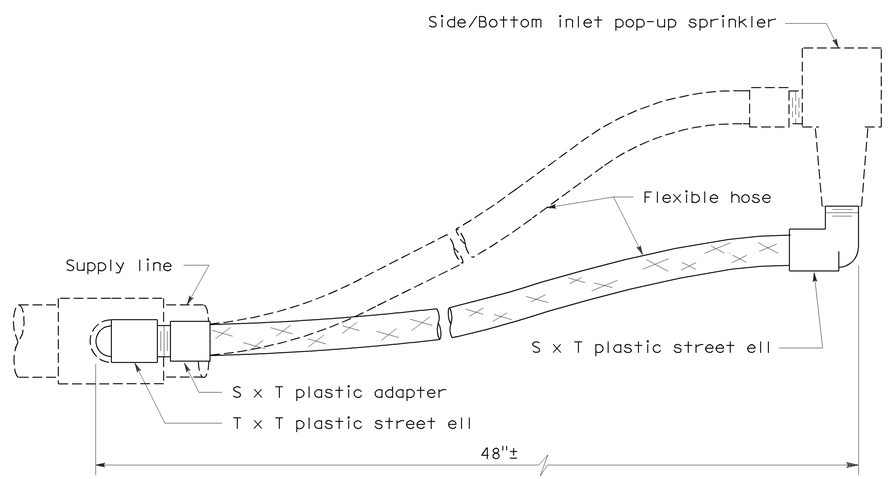

ELEVATION
RISER TYPE VI

STATE OF CALIFORNIA
DEPARTMENT OF TRANSPORTATION

PLANTING AND IRRIGATION DETAILS

NO SCALE

RSP H5 DATED JUNE 5, 2009 SUPERSEDES STANDARD PLAN H5
DATED MAY 1, 2006 - PAGE 205 OF THE STANDARD PLANS BOOK DATED MAY 2006.

REVISED STANDARD PLAN RSP H5

2006 REVISED STANDARD PLAN RSP H5

5-28-09

DIST	COUNTY	ROUTE	POST MILES TOTAL PROJECT	SHEET NO.	TOTAL SHEETS
11	SD	75, 805	9.0, 20.2	45	76

Gregory A. Balzer
LICENSED LANDSCAPE ARCHITECT

June 5, 2009
PLANS APPROVAL DATE

LICENSED LANDSCAPE ARCHITECT Gregory A. Balzer 2576 STATE OF CALIFORNIA
10-29-09 renewal date
2-28-11 renewal date
5-14-09 date

The State of California or its officers or agents shall not be responsible for the accuracy or completeness of electronic copies of this plan sheet.

To accompany plans dated 08-20-12

2006 REVISED STANDARD PLAN RSP H7

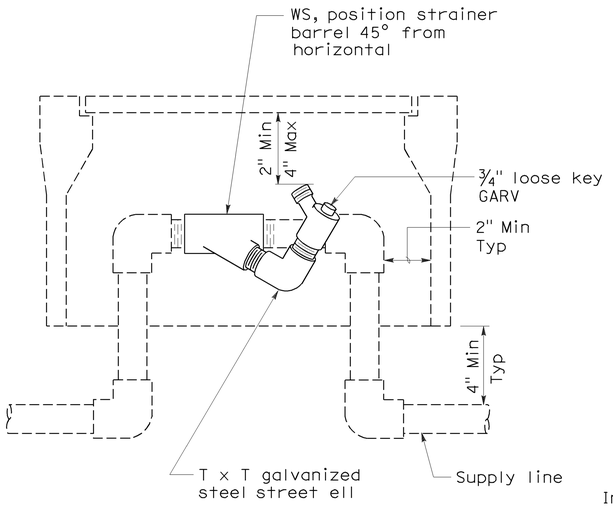

ELEVATION
WYE STRAINER

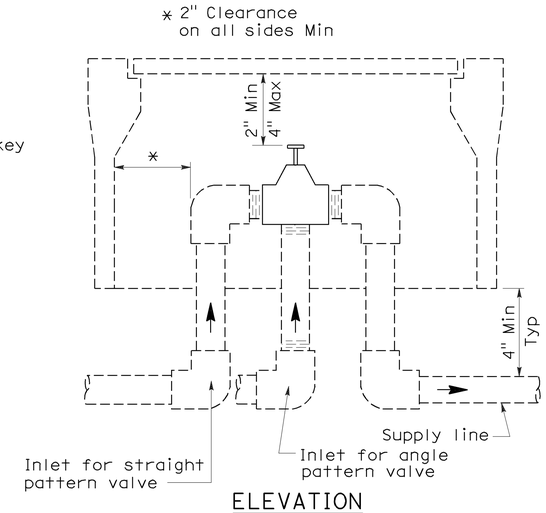

ELEVATION
VALVE

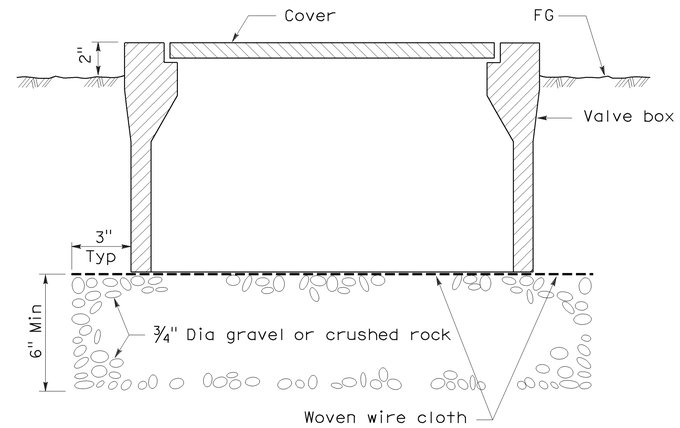

SECTION
VALVE BOX

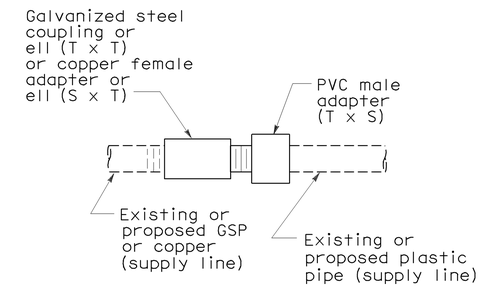

PLAN
GALVANIZED OR COPPER PIPE CONNECTION TO PLASTIC PIPE

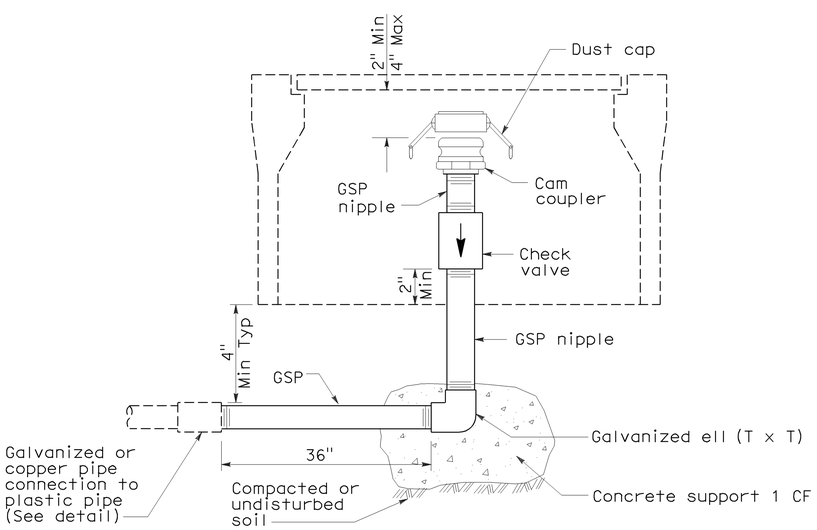

ELEVATION
CAM COUPLER ASSEMBLY

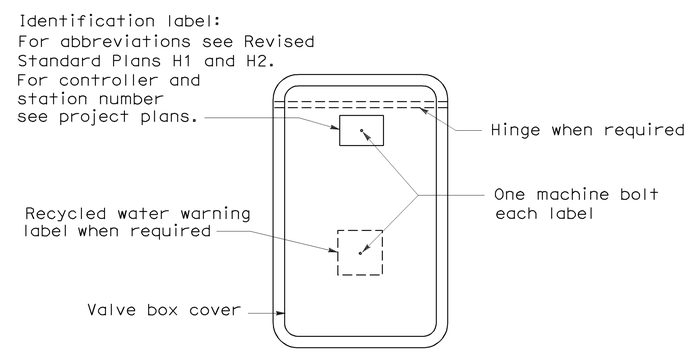

PLAN

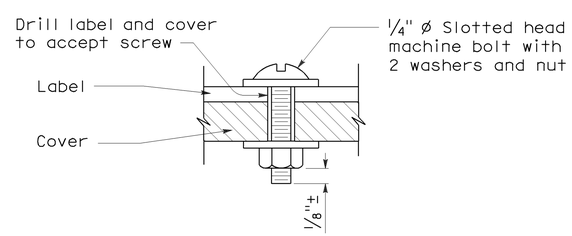

SECTION
VALVE BOX IDENTIFICATION

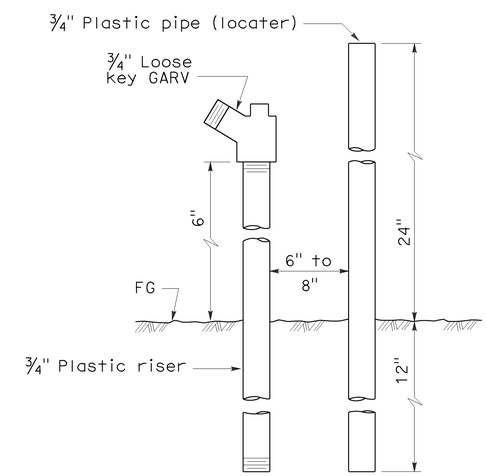

ELEVATION
FLUSH VALVE

STATE OF CALIFORNIA
DEPARTMENT OF TRANSPORTATION

PLANTING AND IRRIGATION DETAILS

NO SCALE

RSP H7 DATED JUNE 5, 2009 SUPERSEDES STANDARD PLAN H7
DATED MAY 1, 2006 - PAGE 207 OF THE STANDARD PLANS BOOK DATED MAY 2006.

REVISED STANDARD PLAN RSP H7

5-28-09

DIST	COUNTY	ROUTE	POST MILES TOTAL PROJECT	SHEET NO.	TOTAL SHEETS
11	SD	75, 805	9.0, 20.2	46	76

LICENSED LANDSCAPE ARCHITECT

April 3, 2009
PLANS APPROVAL DATE

The State of California or its officers or agents shall not be responsible for the accuracy or completeness of electronic copies of this plan sheet.

LICENSED LANDSCAPE ARCHITECT — Gregory A. Balzer — 02-28-11 Renewal Date — 03-04-09 Date — STATE OF CALIFORNIA

To accompany plans dated 08-20-12

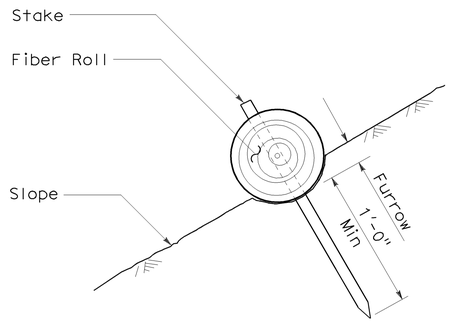

SECTION

FIBER ROLL (TYPE 1)

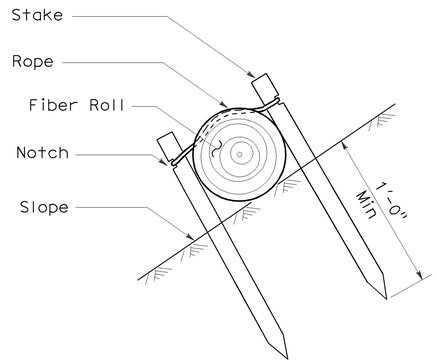

SECTION

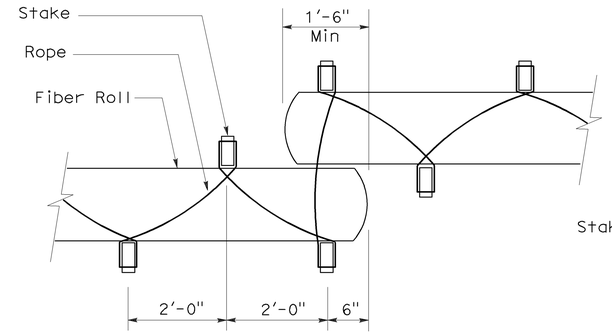

PLAN

FIBER ROLL (TYPE 2)

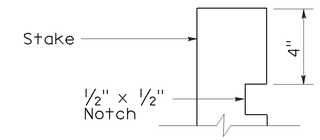

ELEVATION

STAKE NOTCH DETAIL

NOTES:

1. Fiber roll spacing varies depending upon slope inclination.
2. Installations shown in the perspectives are for slope inclination of 10:1 and steeper.

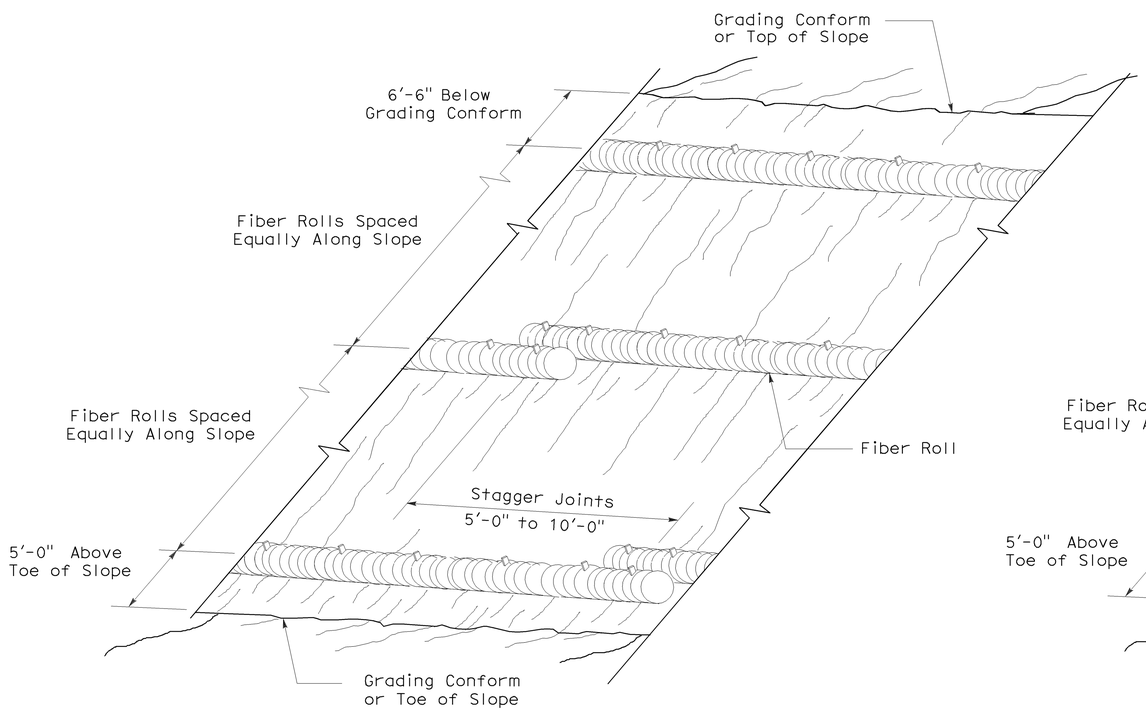

PERSPECTIVE

FIBER ROLL (TYPE 1)

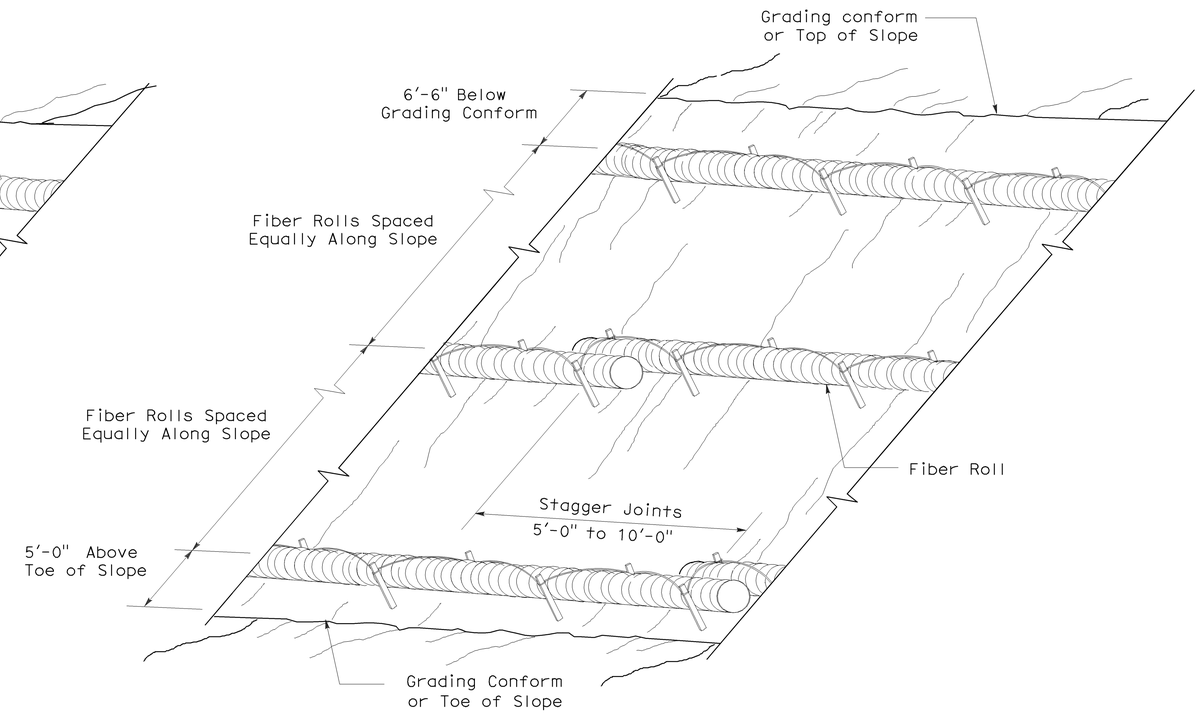

PERSPECTIVE

FIBER ROLL (TYPE 2)

STATE OF CALIFORNIA
DEPARTMENT OF TRANSPORTATION

EROSION CONTROL DETAILS (FIBER ROLL)

NO SCALE

RNSP H51 DATED APRIL 3, 2009 SUPERSEDES NSP H51 DATED DECEMBER 1, 2006 THAT SUPPLEMENTS THE STANDARD PLANS BOOK DATED MAY 2006.

REVISED NEW STANDARD PLAN RNSP H51

2006 REVISED NEW STANDARD PLAN RNSP H51

DIST	COUNTY	ROUTE	POST MILES TOTAL PROJECT	SHEET NO.	TOTAL SHEETS
11	SD	75, 805	9.0, 20.2	47	76

LICENSED LANDSCAPE ARCHITECT

April 3, 2009
PLANS APPROVAL DATE

The State of California or its officers or agents shall not be responsible for the accuracy or completeness of electronic copies of this plan sheet.

LICENSED LANDSCAPE ARCHITECT — Gregory A. Balzer — 02-28-11 Renewal Date — 03-04-09 Date — STATE OF CALIFORNIA

To accompany plans dated 08-20-12

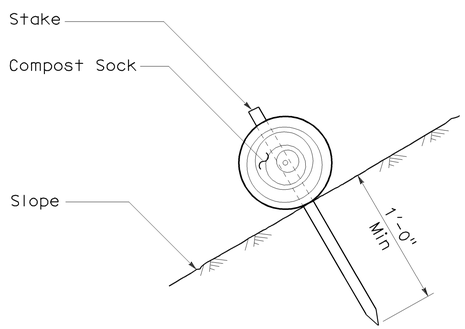

SECTION

COMPOST SOCK (TYPE 1)

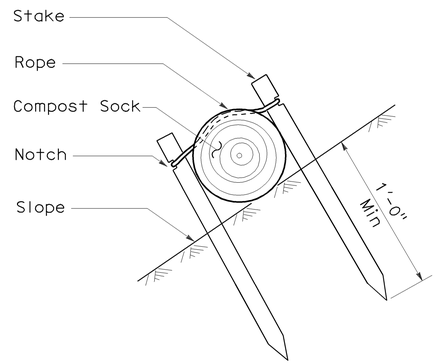

SECTION

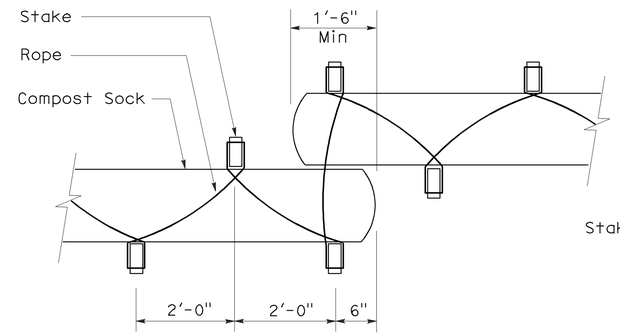

PLAN

COMPOST SOCK (TYPE 2)

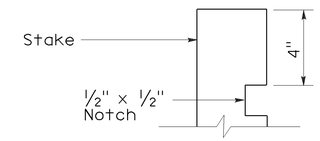

ELEVATION

STAKE NOTCH DETAIL

NOTE:

Compost sock spacing varies depending upon slope inclination.

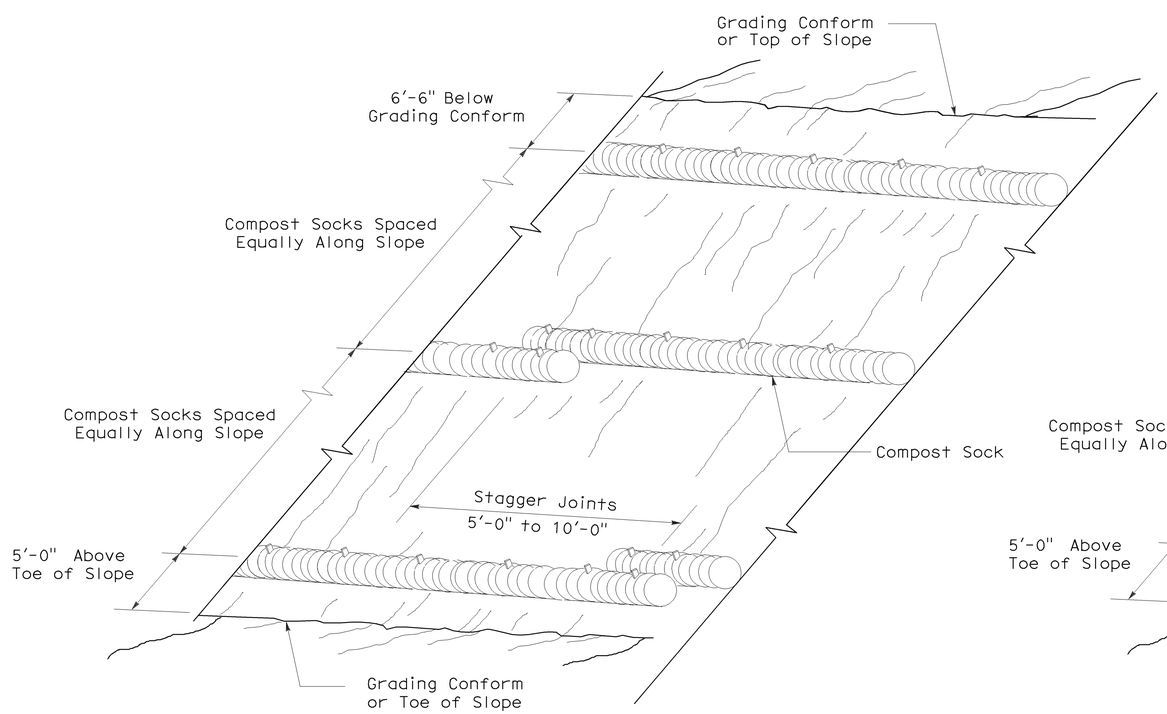

PERSPECTIVE

COMPOST SOCK (TYPE 1)

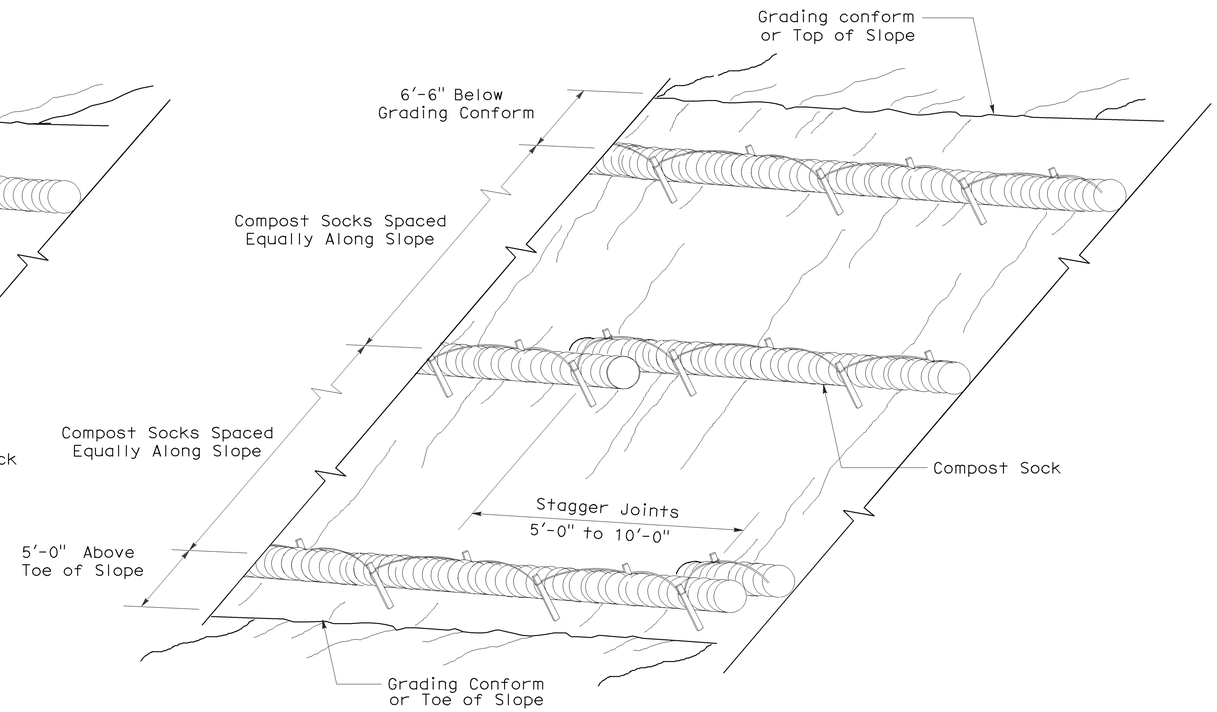

PERSPECTIVE

COMPOST SOCK (TYPE 2)

STATE OF CALIFORNIA
DEPARTMENT OF TRANSPORTATION

EROSION CONTROL DETAILS (COMPOST SOCK)

NO SCALE

NSP H52 DATED APRIL 3, 2009 SUPPLEMENTS
THE STANDARD PLANS BOOK DATED MAY 2006.

NEW STANDARD PLAN NSP H52

2006 NEW STANDARD PLAN NSP H52

3-3-09

DIST	COUNTY	ROUTE	POST MILES TOTAL PROJECT	SHEET NO.	TOTAL SHEETS
11	SD	75, 805	9.0, 20.2	48	76

Randell D. Hiatt
REGISTERED CIVIL ENGINEER

June 6, 2008
PLANS APPROVAL DATE

REGISTERED PROFESSIONAL ENGINEER
Randell D. Hiatt
No. C50200
Exp. 6-30-09
CIVIL
STATE OF CALIFORNIA

The State of California or its officers or agents shall not be responsible for the accuracy or completeness of electronic copies of this plan sheet.

To accompany plans dated 08-20-12

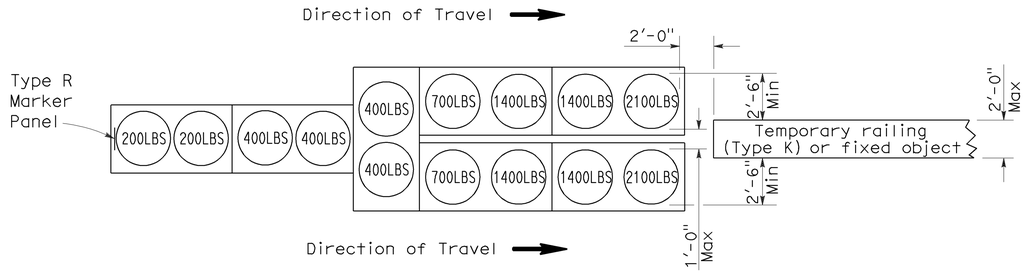

ARRAY 'TU14'

Approach speed 45 mph or more

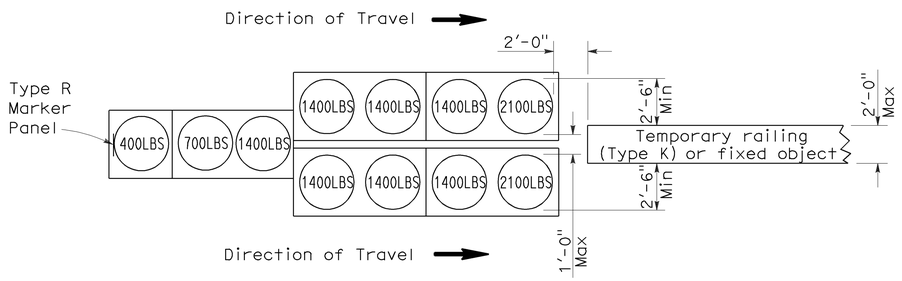

ARRAY 'TU11'

Approach speed less than 45 mph

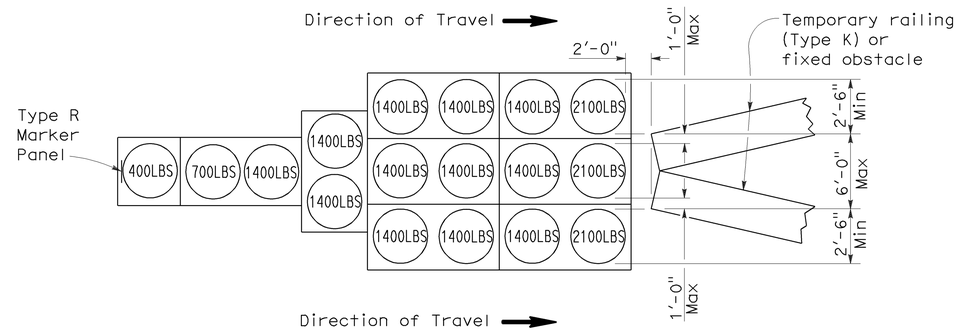

ARRAY 'TU17'

Approach speed less than 45 mph

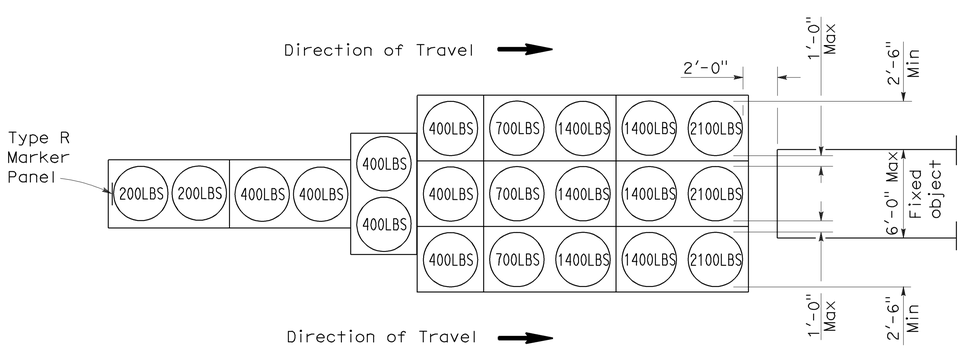

ARRAY 'TU21'

Approach speed 45 mph or more

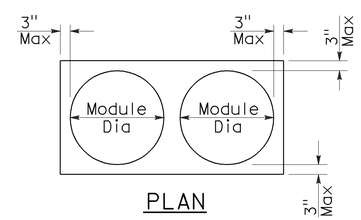

PLAN

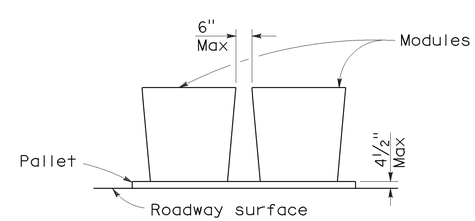

ELEVATION

CRASH CUSHION PALLET DETAIL

See Note 7

NOTES:

1. (XXX) Indicates sand filled module location and weight of sand in pounds for each module. Module spacing is based on the greater diameter of the module.
2. All sand weights are nominal.
3. Temporary crash cushion arrays shall not encroach on the traveled way.
4. Place the top of Type R marker panel 1" below the module lid.
5. Refer to Standard Plan A73B for marker details.
6. Approach speeds indicated conform to NCHRP 350 Report criteria.
7. Use of pallets is optional.

STATE OF CALIFORNIA
DEPARTMENT OF TRANSPORTATION

TEMPORARY CRASH CUSHION, SAND FILLED (UNIDIRECTIONAL)

NO SCALE

RSP T1A DATED JUNE 6, 2008 SUPERSEDES STANDARD PLAN T1A
DATED MAY 1, 2006 - PAGE 211 OF THE STANDARD PLANS BOOK DATED MAY 2006.

REVISED STANDARD PLAN RSP T1A

2006 REVISED STANDARD PLAN RSP T1A

DIST	COUNTY	ROUTE	POST MILES TOTAL PROJECT	SHEET NO.	TOTAL SHEETS
11	SD	75, 805	9.0, 20.2	49	76

Randell D. Hiatt
REGISTERED CIVIL ENGINEER

June 6, 2008
PLANS APPROVAL DATE

REGISTERED PROFESSIONAL ENGINEER
Randell D. Hiatt
No. C50200
Exp. 6-30-09
CIVIL
STATE OF CALIFORNIA

The State of California or its officers or agents shall not be responsible for the accuracy or completeness of electronic copies of this plan sheet.

To accompany plans dated 08-20-12

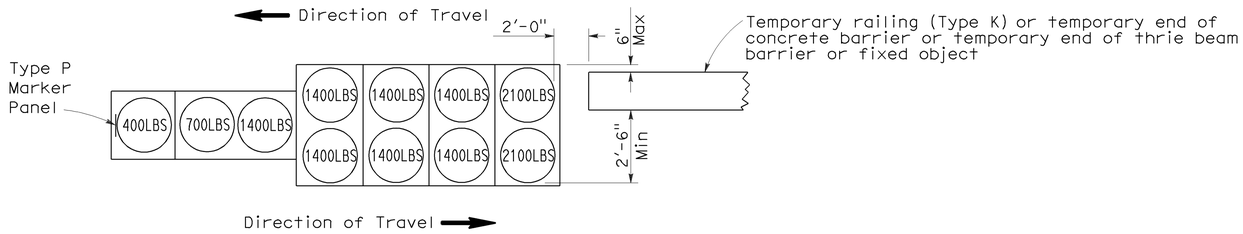

ARRAY 'TB11'

Approach speed less than 45 mph

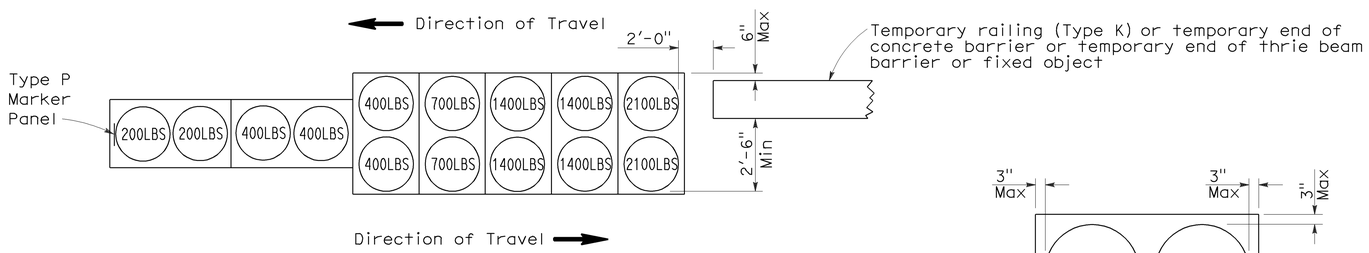

ARRAY 'TB14'

Approach speed 45 mph or more

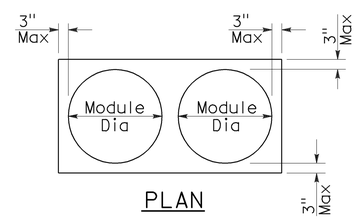

PLAN

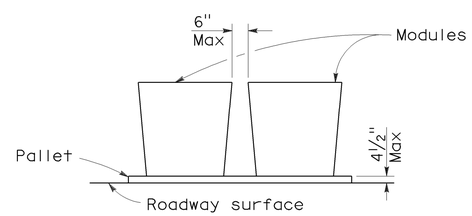

ELEVATION

CRASH CUSHION PALLET DETAIL

See Note 7

NOTES:

1. (XXX) Indicates sand filled module location and weight of sand in pounds for each module. Module spacing is based on the greater diameter of the module.
2. All sand weights are nominal.
3. Temporary crash cushion arrays shall not encroach on the traveled way.
4. Place the Type P marker panel so that the bottom of the panel rests upon the pallet.
5. Refer to Standard Plan A73B for marker details.
6. Approach speeds indicated conform to NCHRP 350 Report criteria.
7. Use of pallets is optional.

STATE OF CALIFORNIA
DEPARTMENT OF TRANSPORTATION

TEMPORARY CRASH CUSHION, SAND FILLED (BIDIRECTIONAL)

NO SCALE

RSP T1B DATED JUNE 6, 2008 SUPERSEDES STANDARD PLAN T1B
DATED MAY 1, 2006 - PAGE 212 OF THE STANDARD PLANS BOOK DATED MAY 2006.

REVISED STANDARD PLAN RSP T1B

2006 REVISED STANDARD PLAN RSP T1B

5-15-08

DIST	COUNTY	ROUTE	POST MILES TOTAL PROJECT	SHEET NO.	TOTAL SHEETS
11	SD	75, 805	9.0, 20.2	50	76

Randell D. Hiatt
REGISTERED CIVIL ENGINEER

June 6, 2008
PLANS APPROVAL DATE

REGISTERED PROFESSIONAL ENGINEER
Randell D. Hiatt
No. C50200
Exp. 6-30-09
CIVIL
STATE OF CALIFORNIA

The State of California or its officers or agents shall not be responsible for the accuracy or completeness of electronic copies of this plan sheet.

To accompany plans dated 08-20-12

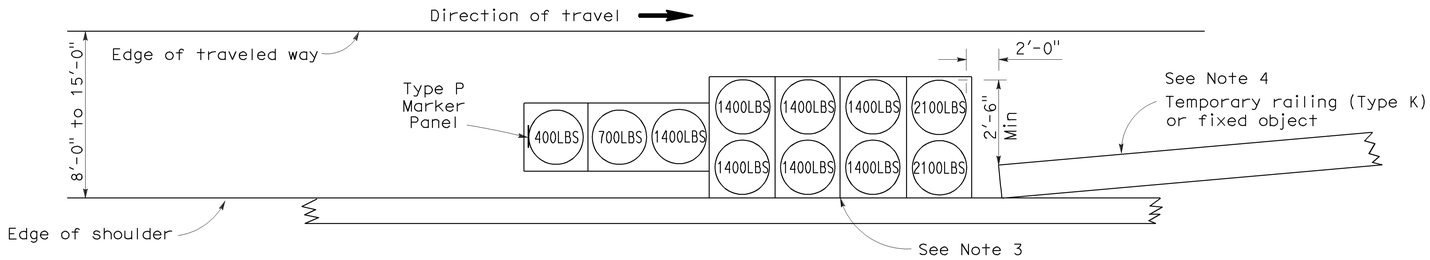

ARRAY 'TS11'

Approach speed less than 45 mph
See Note 9

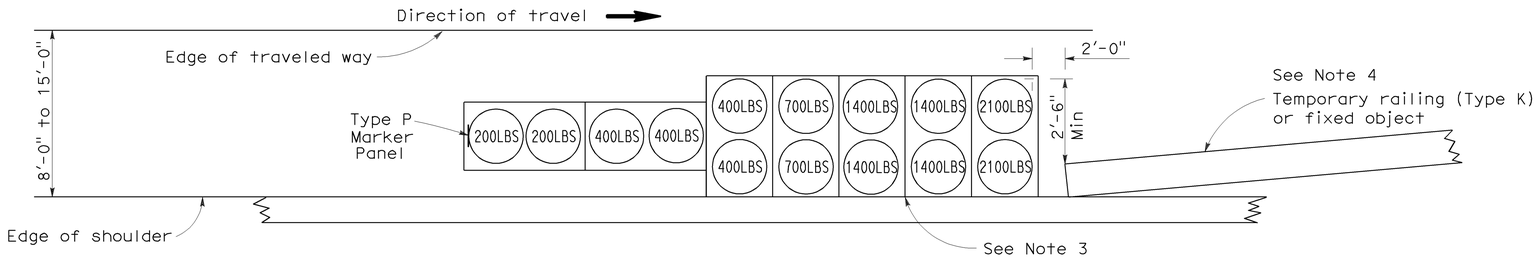

ARRAY 'TS14'

Approach speed 45 mph or more
See Note 9

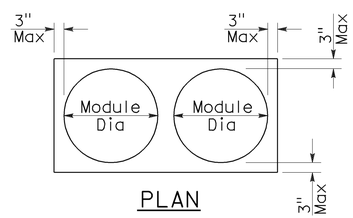

PLAN

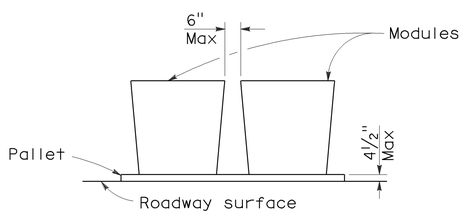

ELEVATION

CRASH CUSHION PALLET DETAIL

See Note 11

NOTES:

1. (XXX) Indicates sand filled module location and weight of sand in pounds for each module. Module spacing is based on the greater diameter of the module.
2. All sand weights are nominal.
3. The temporary crash cushion arrays shown on this plan shall be used only in locations where there will be traffic on one side of the temporary crash cushion array.
4. If the fixed object or approach end of the temporary railing is less than 15'-0" from the edge of traveled way, a temporary crash cushion is required in a construction or work zone.
5. Temporary crash cushion arrays shall not encroach on the traveled way.
6. Arrays for median shoulders shall conform to details shown on this plan for outside shoulders.
7. Place the Type P marker panel so that the bottom of the panel rests upon the pallet and faces traffic.
8. Refer to Standard Plan A73B for marker details.
9. For shoulder widths less than 8'-0", appropriate approved crash cushion protection, other than sand filled modules, shall be provided at fixed objects and at approach ends of temporary railing. The specific type of crash cushion shall be as shown on the project plans or as specified in the Special Provisions, or if not shown on the project plans or specified in the Special Provisions, shall be as approved by the Engineer.
10. Approach speeds indicated conform to NCHRP 350 Report criteria.
11. Use of pallets is optional.

STATE OF CALIFORNIA
DEPARTMENT OF TRANSPORTATION

TEMPORARY CRASH CUSHION, SAND FILLED (SHOULDER INSTALLATIONS)

NO SCALE

RSP T2 DATED JUNE 6, 2008 SUPERSEDES STANDARD PLAN T2
DATED MAY 1, 2006 - PAGE 213 OF THE STANDARD PLANS BOOK DATED MAY 2006.

REVISED STANDARD PLAN RSP T2

2006 REVISED STANDARD PLAN RSP T2

5-15-08

Dist	COUNTY	ROUTE	POST MILES TOTAL PROJECT	SHEET No.	TOTAL SHEETS
11	SD	75, 805	9.0, 20.2	51	76

Randell D. Hiatt
REGISTERED CIVIL ENGINEER

May 20, 2011
PLANS APPROVAL DATE

REGISTERED PROFESSIONAL ENGINEER
Randell D. Hiatt
No. C50200
Exp. 6-30-11
CIVIL
STATE OF CALIFORNIA

The State of California or its officers or agents shall not be responsible for the accuracy or completeness of electronic copies of this plan sheet.

To accompany plans dated 08-20-12

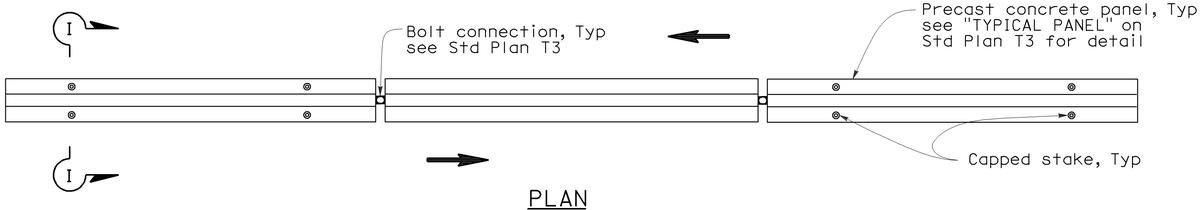

PLAN

RAILING STAKING CONFIGURATION FOR TWO-WAY TRAFFIC

See Note 1

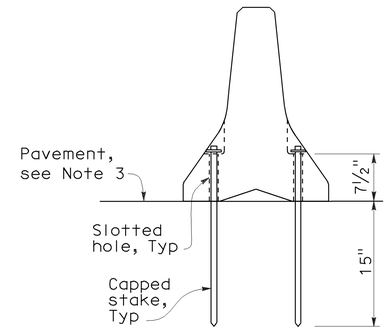

SECTION I-I

NOTES:

1. Where Type K Temporary Railing is placed as a temporary or long term barrier in two-way traffic on highways with less than 24" from the edge of traveled way, use four capped stakes per every other panel with end panels staked.
2. Where Type K Temporary Railing is placed 3" to 24" from the edge of an excavation on highways, use two capped stakes per panel along the traffic side.
3. Staked Type K Temporary Railing must be supported by at least 4" thick concrete, hot mix asphalt or existing asphalt concrete pavement.
4. The minimum yield strength for the washer must be 60,000 psi.
5. Direction of adjacent traffic indicated by ⟹.

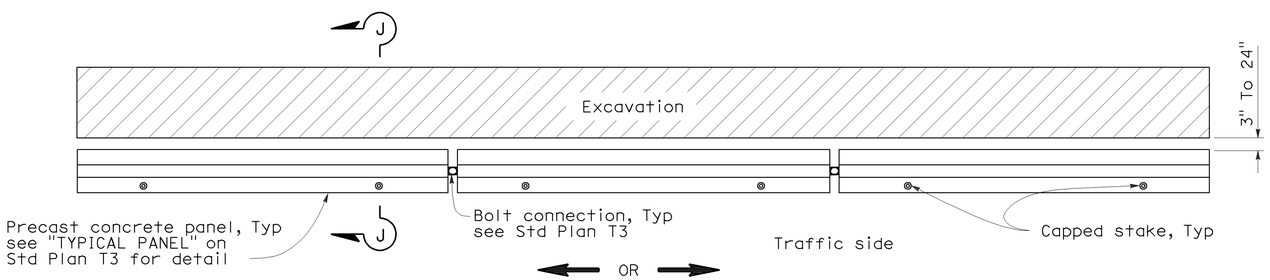

PLAN

RAILING STAKING CONFIGURATION ADJACENT TO AN EXCAVATION

See Note 2

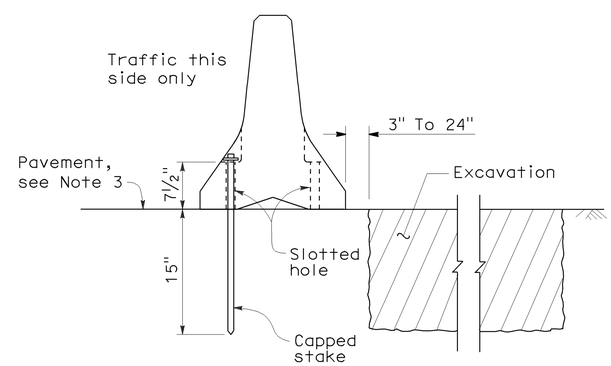

SECTION J-J

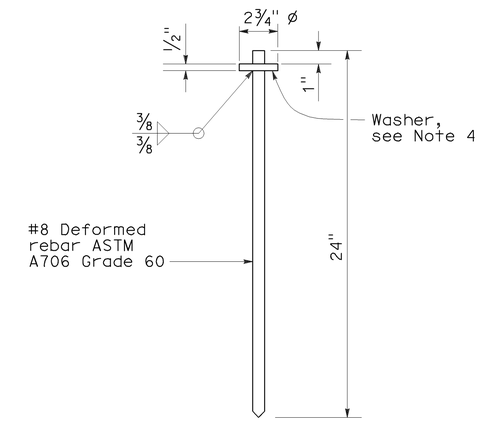

CAPPED STAKE DETAIL

STATE OF CALIFORNIA
DEPARTMENT OF TRANSPORTATION

TEMPORARY RAILING (TYPE K)

NO SCALE

NSP T3A DATED MAY 20, 2011 SUPPLEMENTS
THE STANDARD PLANS BOOK DATED MAY 2006.

NEW STANDARD PLAN NSP T3A

2006 NEW STANDARD PLAN NSP T3A

DIST	COUNTY	ROUTE	POST MILES TOTAL PROJECT	SHEET NO.	TOTAL SHEETS
11	SD	75, 805	9.0, 20.2	52	76

Robert B. Schott
LICENSED LANDSCAPE ARCHITECT

April 3, 2009
PLANS APPROVAL DATE

The State of California or its officers or agents shall not be responsible for the accuracy or completeness of electronic copies of this plan sheet.

LICENSED LANDSCAPE ARCHITECT — Robert B. Schott 3635 — Renewal Date 11-30-10 — Date 2-25-09 — STATE OF CALIFORNIA

To accompany plans dated 08-20-12

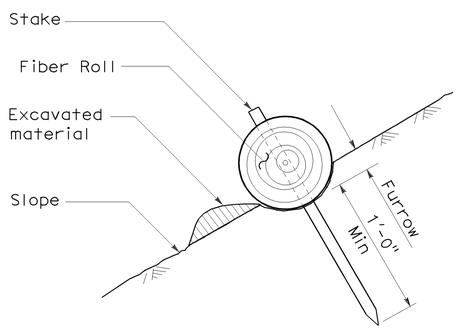

SECTION

TEMPORARY FIBER ROLL (TYPE 1)

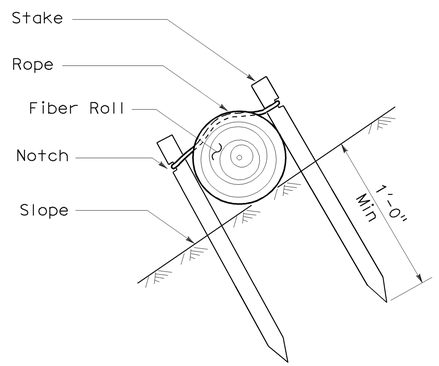

SECTION

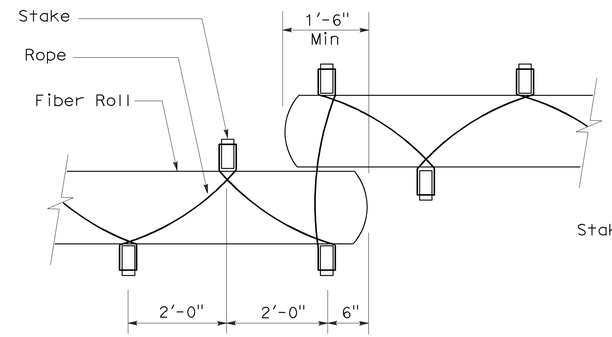

PLAN

TEMPORARY FIBER ROLL (TYPE 2)

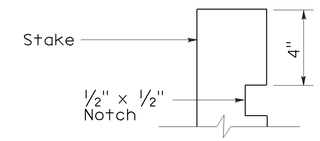

ELEVATION

STAKE NOTCH DETAIL

NOTES:

1. Temporary fiber roll spacing varies depending upon slope inclination.
2. Installations shown in the perspectives are for slope inclination of 10:1 and steeper.

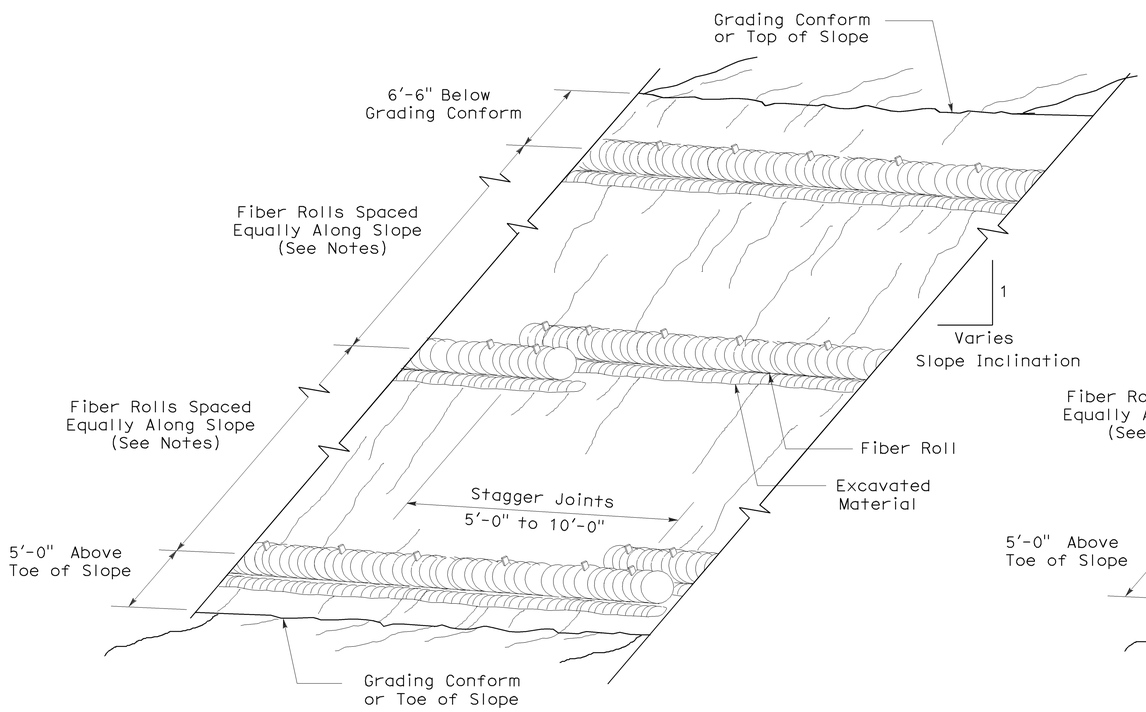

PERSPECTIVE

TEMPORARY FIBER ROLL (TYPE 1)

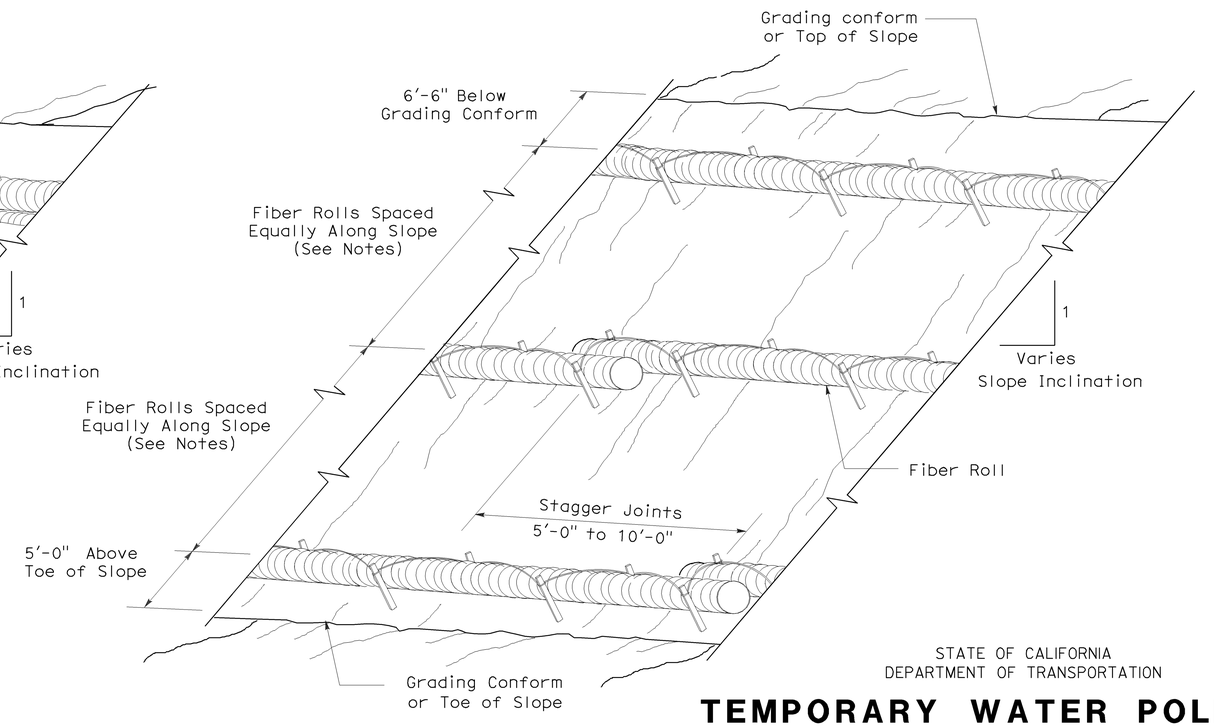

PERSPECTIVE

TEMPORARY FIBER ROLL (TYPE 2)

STATE OF CALIFORNIA
DEPARTMENT OF TRANSPORTATION

TEMPORARY WATER POLLUTION CONTROL DETAILS (TEMPORARY FIBER ROLL)

NO SCALE

RSP T56 DATED APRIL 3, 2009 SUPERSEDES STANDARD PLAN T56
DATED MAY 1, 2006 - PAGE 232 OF THE STANDARD PLANS BOOK DATED MAY 2006.

REVISED STANDARD PLAN RSP T56

2006 REVISED STANDARD PLAN RSP T56

2-23-09

DIST	COUNTY	ROUTE	POST MILES TOTAL PROJECT	SHEET NO.	TOTAL SHEETS
11	SD	75, 805	9.0, 20.2	53	76

LICENSED LANDSCAPE ARCHITECT

August 15, 2008
PLANS Approval DATE

The State of California or its officers or agents shall not be responsible for the accuracy or completeness of electronic copies of this plan sheet.

LICENSED LANDSCAPE ARCHITECT Robert B. Schott 3635 Signature 11-04-08 Renewal Date 08-11-08 Date STATE OF CALIFORNIA

To accompany plans dated 08-20-12

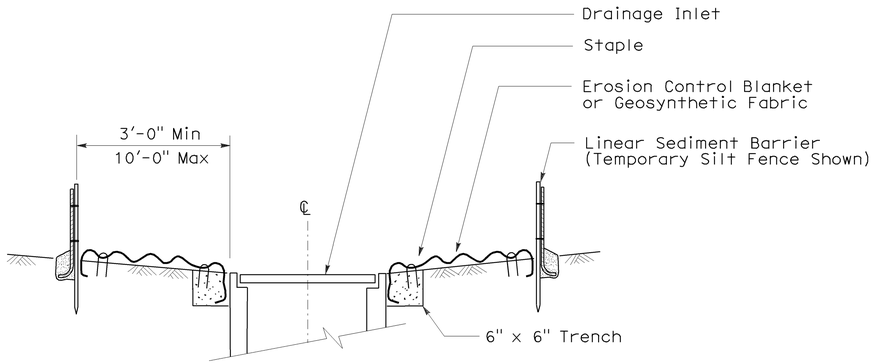

SECTION A-A

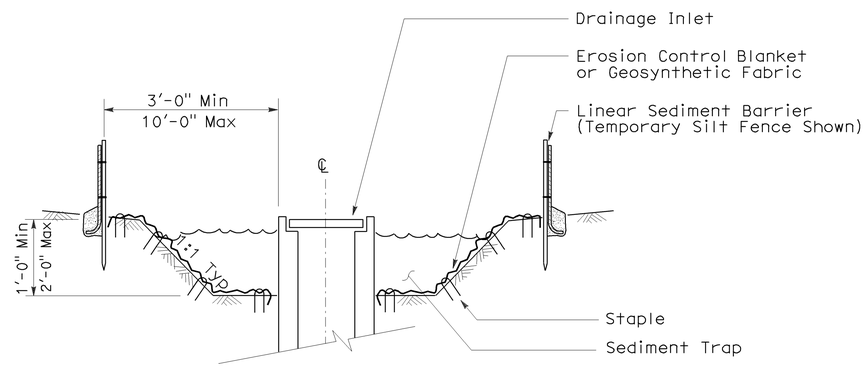

SECTION B-B

NOTES:

1. See Standard Plan T51 for Temporary Silt Fence.
2. Dimensions may vary to fit field conditions.

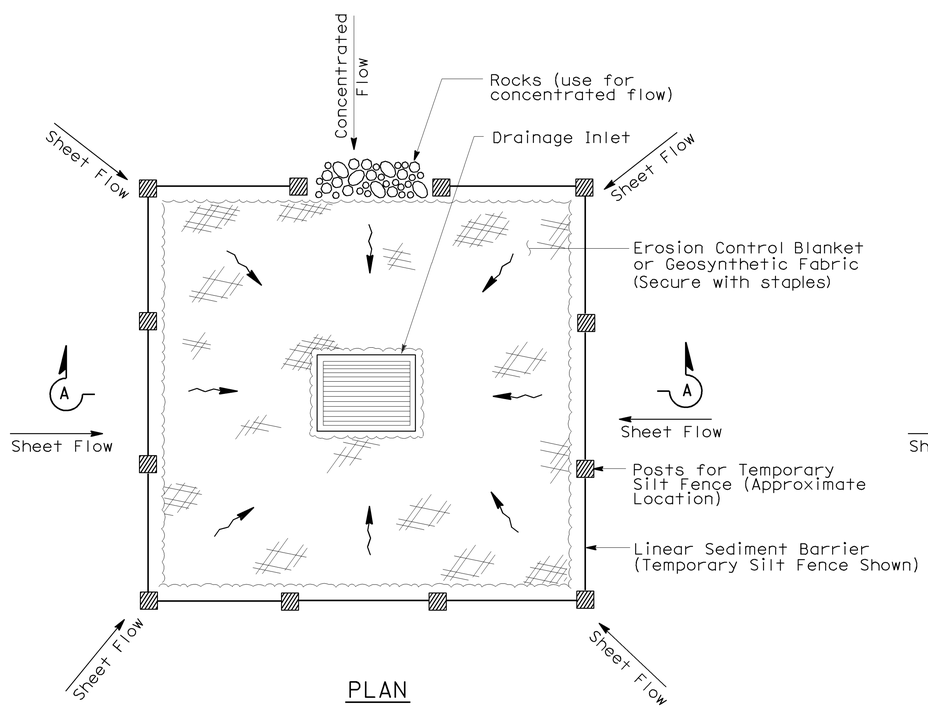

PLAN

TEMPORARY DRAINAGE INLET PROTECTION (TYPE 1)

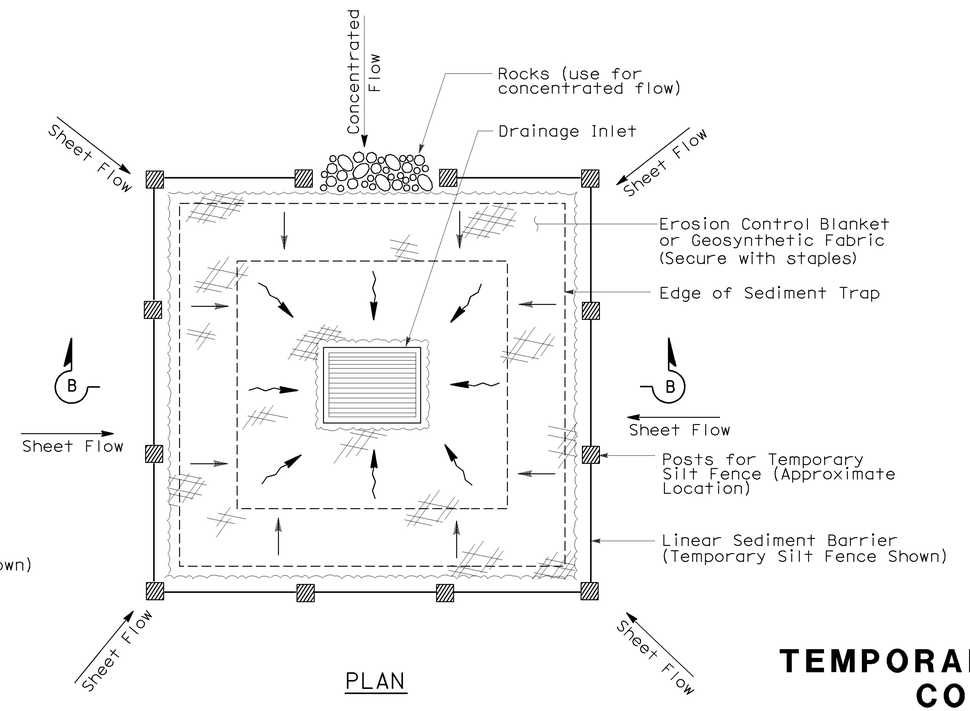

PLAN

TEMPORARY DRAINAGE INLET PROTECTION (TYPE 2) (EXCAVATED SEDIMENT TRAP)

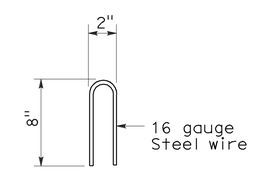

STAPLE DETAIL

STATE OF CALIFORNIA
DEPARTMENT OF TRANSPORTATION

TEMPORARY WATER POLLUTION CONTROL DETAILS (TEMPORARY DRAINAGE INLET PROTECTION)

NO SCALE

NSP T61 DATED AUGUST 15, 2008 SUPPLEMENTS THE STANDARD PLANS BOOK DATED MAY 2006.

NEW STANDARD PLAN NSP T61

2006 NEW STANDARD PLAN NSP T61

7-11-08

DIST	COUNTY	ROUTE	POST MILES TOTAL PROJECT	SHEET NO.	TOTAL SHEETS
11	SD	75, 805	9.0, 20.2	54	76

LICENSED LANDSCAPE ARCHITECT

August 15, 2008
PLANS APPROVAL DATE

The State of California or its officers or agents shall not be responsible for the accuracy or completeness of electronic copies of this plan sheet.

LICENSED LANDSCAPE ARCHITECT — Robert B. Schott 3635 — Signature — 11-04-08 Renewal Date — 08-11-08 Date — STATE OF CALIFORNIA

To accompany plans dated 08-20-12

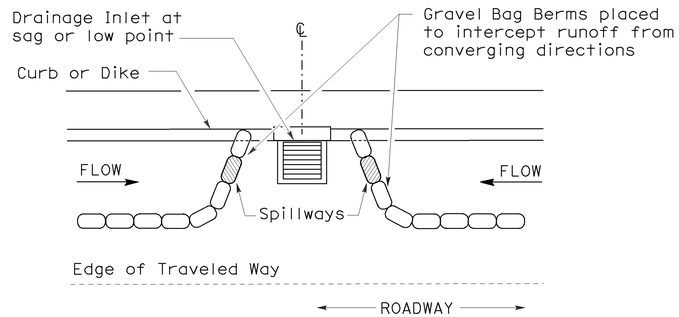

PLAN

CONFIGURATION FOR SAG POINT INLET (GRAVEL BAG BERM)

GRAVEL BAG BERM (TYPE 3A) SPACING TABLE

SLOPE OF ROADWAY (PERCENT)	1 to 3.9	4 to 5.9	6 to 7.9	8 to 10	10+
INTERVAL BETWEEN BERM	100′	75′	50′	25′	12′

For slope of less than 1%, install barriers only if erosion/sediment is prevalent

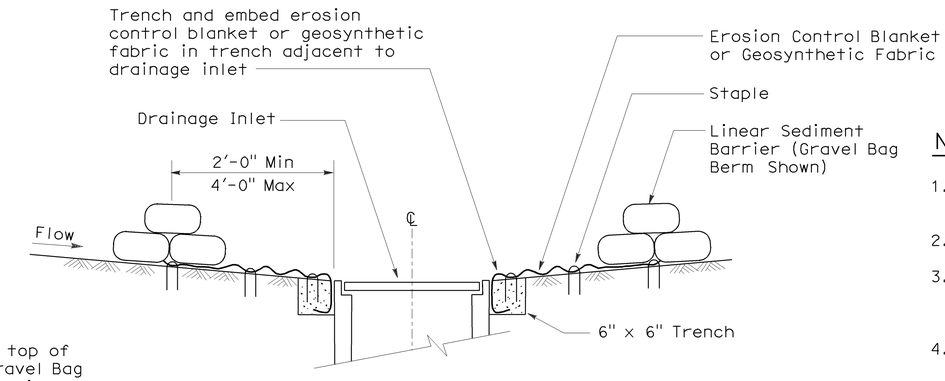

SECTION A-A

NOTES:

1. Place safety cones adjacent to drainage inlet protection.
2. Dimensions may vary to fit field conditions.
3. Install a minimum of 3 gravel bag berms upstream of each drainage inlet to be protected.
4. Position erosion control blanket or geosynthetic fabric at edge of concrete apron and secure in trench.
5. Erosion control blanket or geosynthetic fabric is not required if the area adjacent to the drainage inlet is vegetated or paved.

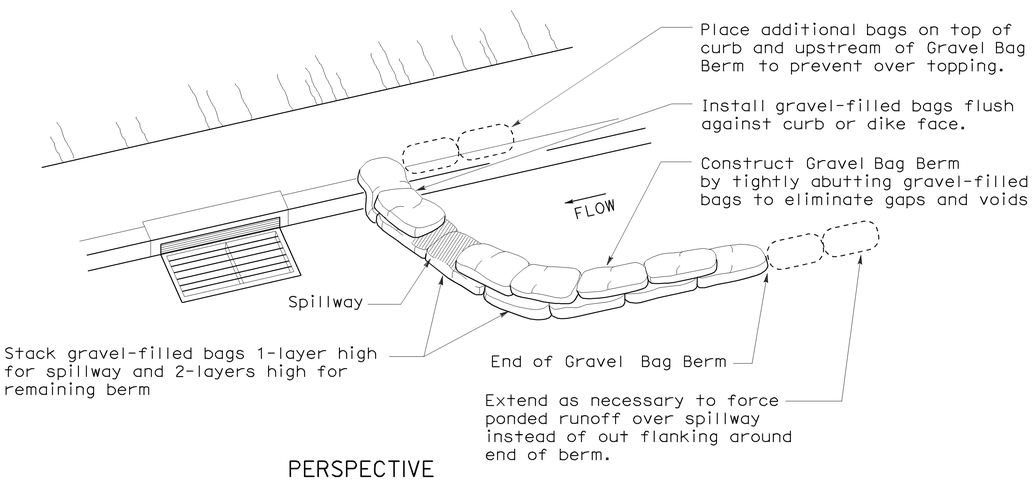

PERSPECTIVE

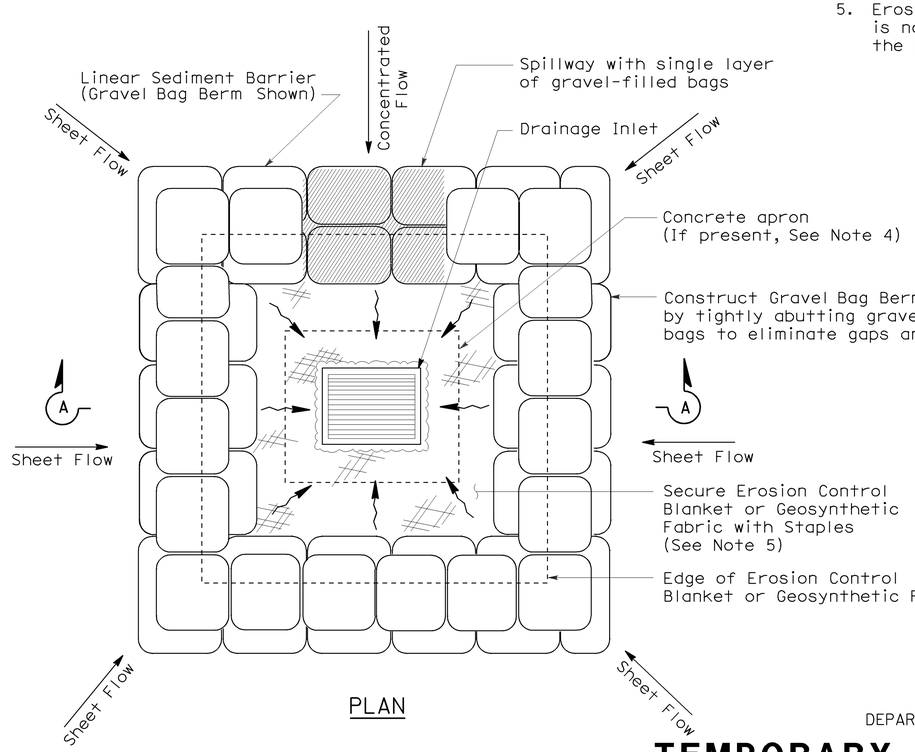

PLAN

TEMPORARY DRAINAGE INLET PROTECTION (TYPE 3B)

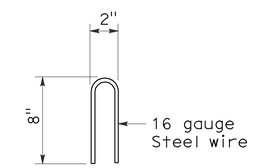

STAPLE DETAIL

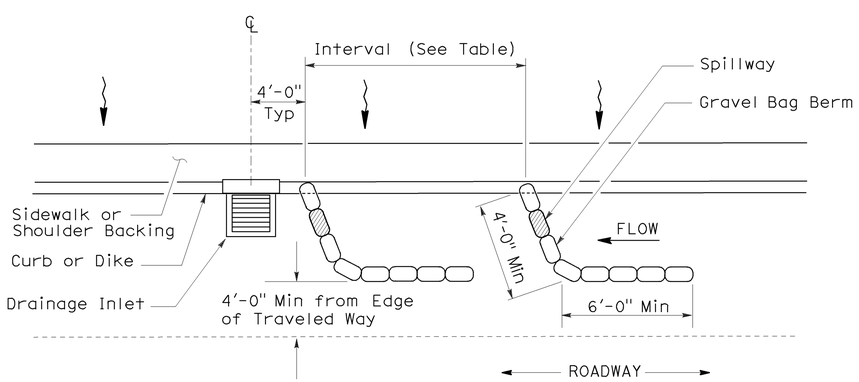

PLAN

TEMPORARY DRAINAGE INLET PROTECTION (TYPE 3A) (GRAVEL BAG BERM)

STATE OF CALIFORNIA
DEPARTMENT OF TRANSPORTATION

TEMPORARY WATER POLLUTION CONTROL DETAILS (TEMPORARY DRAINAGE INLET PROTECTION)

NO SCALE

NSP T62 DATED AUGUST 15, 2008 SUPPLEMENTS THE STANDARD PLANS BOOK DATED MAY 2006.

NEW STANDARD PLAN NSP T62

2006 NEW STANDARD PLAN NSP T62

7-11-08

DIST	COUNTY	ROUTE	POST MILES TOTAL PROJECT	SHEET NO.	TOTAL SHEETS
11	SD	75, 805	9.0, 20.2	55	76

Robert B. Schott
LICENSED LANDSCAPE ARCHITECT

August 15, 2008
PLANS APPROVAL DATE

The State of California or its officers or agents shall not be responsible for the accuracy or completeness of electronic copies of this plan sheet.

LICENSED LANDSCAPE ARCHITECT — Robert B. Schott 3635 — Signature — 11-04-08 Renewal Date — 08-11-08 Date — STATE OF CALIFORNIA

To accompany plans dated 08-20-12

FLEXIBLE SEDIMENT BARRIER SPACING TABLE

SLOPE OF ROADWAY (PERCENT)	0 to 0.9	1 to 1.9	2 to 2.9	3 to 4	5+
INTERVAL BETWEEN BARRIERS	50′	35′	30′	25′	20′
ANGLE FROM FACE OF CURB	70°	70°	70°	45°	45°
SUGGESTED BARRIER LENGTH	6′	6′	6′	6′	6′

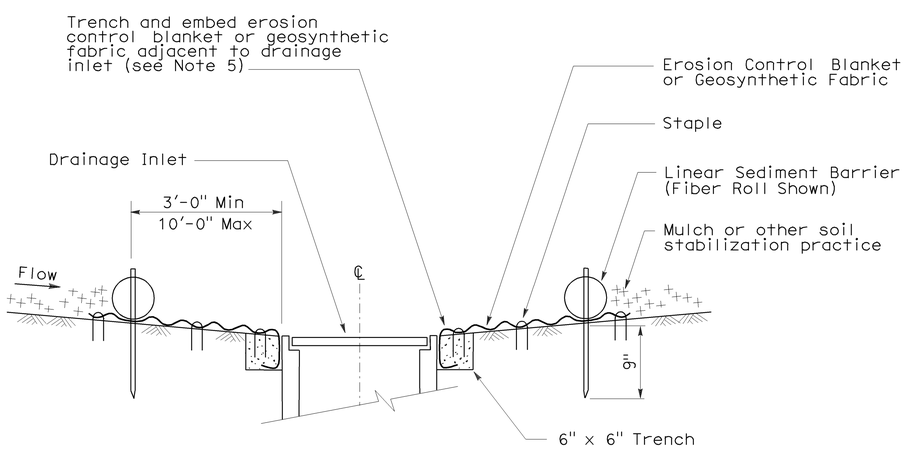

SECTION A-A

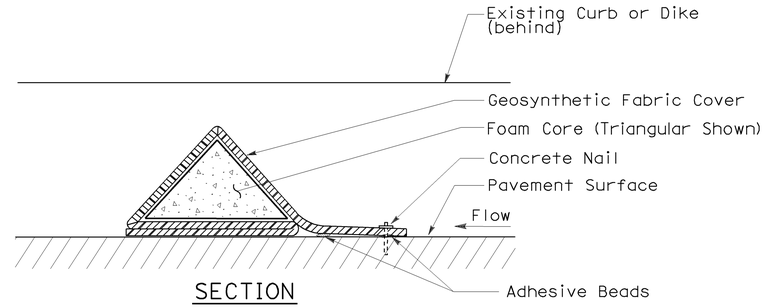

SECTION

FLEXIBLE SEDIMENT BARRIER DETAIL (FOAM BARRIER SHOWN)

NOTES:

1. See Standard Plan T51 for Temporary Silt Fence.
2. Dimensions may vary to fit field conditions.
3. Install a minimum of 3 flexible sediment barriers upstream of each drainage inlet to be protected.
4. Position erosion control blanket or geosynthetic fabric at edge of concrete apron and secure in trench.
5. Erosion control blanket or geosynthetic fabric is not required if the area adjacent to the drainage inlet is vegetated.

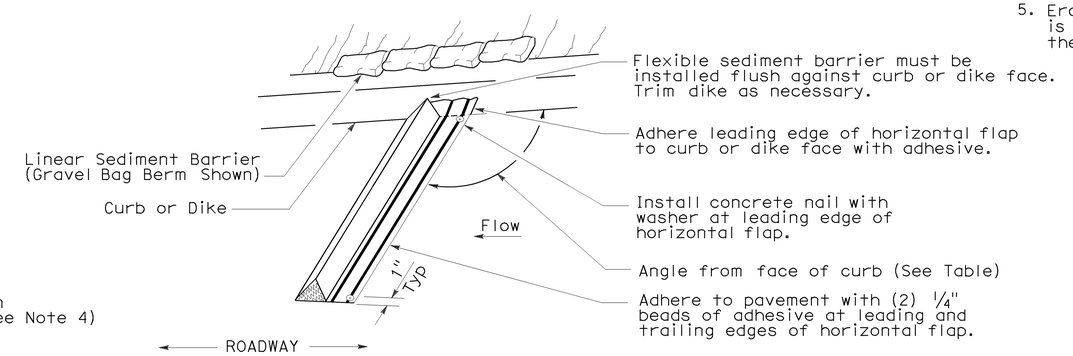

PERSPECTIVE

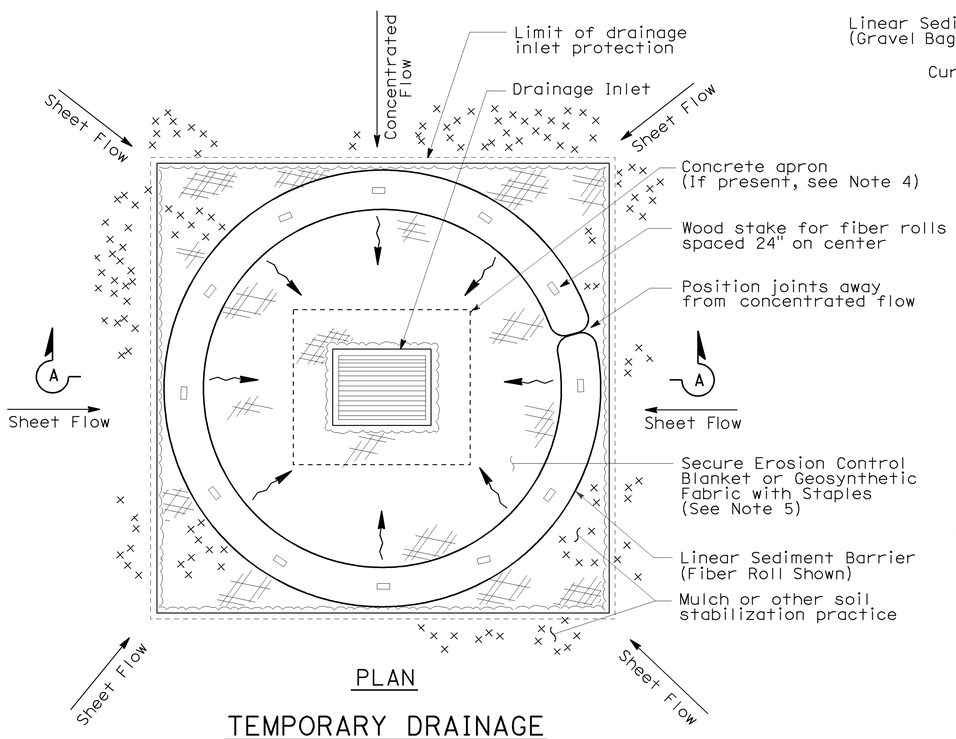

PLAN

TEMPORARY DRAINAGE INLET PROTECTION (TYPE 4A)

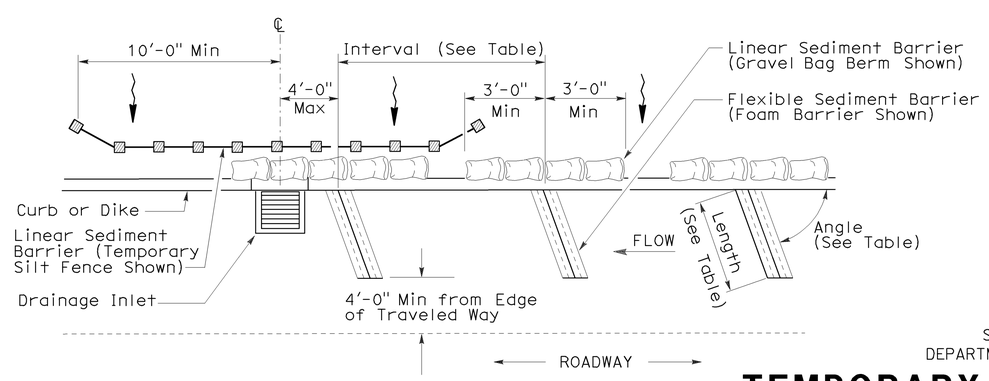

PLAN

TEMPORARY DRAINAGE INLET PROTECTION (TYPE 4B) FLEXIBLE SEDIMENT BARRIER

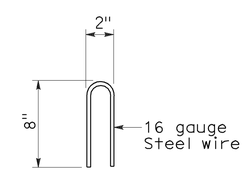

STAPLE DETAIL

STATE OF CALIFORNIA
DEPARTMENT OF TRANSPORTATION

TEMPORARY WATER POLLUTION CONTROL DETAILS (TEMPORARY DRAINAGE INLET PROTECTION)

NO SCALE

NSP T63 DATED AUGUST 15, 2008 SUPPLEMENTS THE STANDARD PLANS BOOK DATED MAY 2006.

NEW STANDARD PLAN NSP T63

2006 NEW STANDARD PLAN NSP T63

7-11-08

DIST	COUNTY	ROUTE	POST MILES TOTAL PROJECT	SHEET NO.	TOTAL SHEETS
11	SD	75, 805	9.0, 20.2	56	76

LICENSED LANDSCAPE ARCHITECT

August 15, 2008
PLANS APPROVAL DATE

LICENSED LANDSCAPE ARCHITECT
Robert B. Schott 3635
Signature
11-04-08
Renewal Date
08-11-08
Date
STATE OF CALIFORNIA

The State of California or its officers or agents shall not be responsible for the accuracy or completeness of electronic copies of this plan sheet.

To accompany plans dated 08-20-12

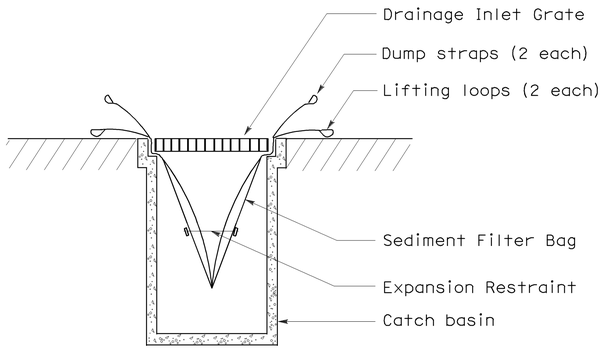

SECTION B-B

SEDIMENT FILTER BAG DETAIL

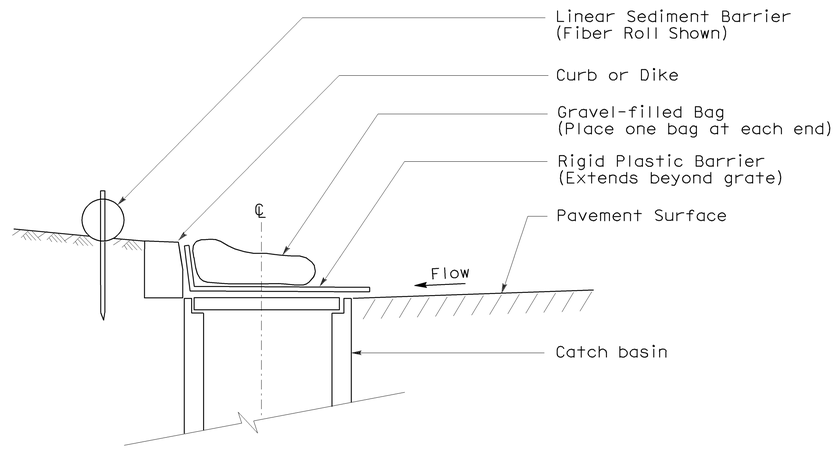

SECTION

TEMPORARY DRAINAGE INLET PROTECTION (TYPE 6A) (CATCH BASIN WITH GRATE)

NOTES:

1. See Standard Plan T51 for Temporary Silt Fence.
2. Dimensions may vary to fit field conditions.

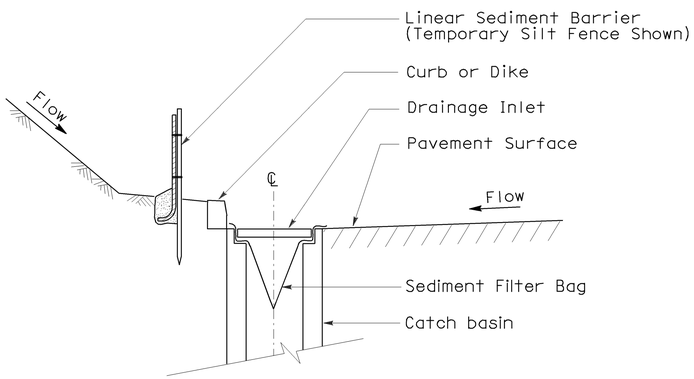

SECTION A-A

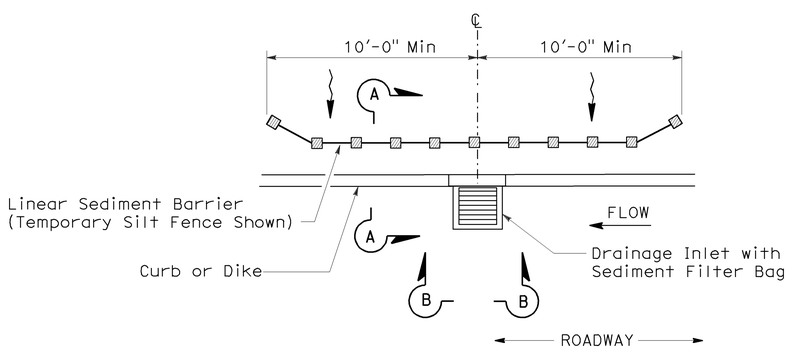

PLAN

TEMPORARY DRAINAGE INLET PROTECTION (TYPE 5) (SEDIMENT FILTER BAG)

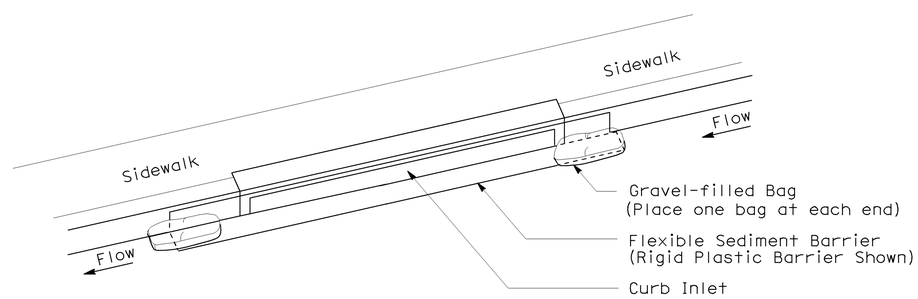

PERSPECTIVE

TEMPORARY DRAINAGE INLET PROTECTION (TYPE 6B) (CURB INLET WITHOUT GRATE)

STATE OF CALIFORNIA
DEPARTMENT OF TRANSPORTATION

TEMPORARY WATER POLLUTION CONTROL DETAILS (TEMPORARY DRAINAGE INLET PROTECTION)

NO SCALE

NSP T64 DATED AUGUST 15, 2008 SUPPLEMENTS
THE STANDARD PLANS BOOK DATED MAY 2006.

NEW STANDARD PLAN NSP T64

2006 NEW STANDARD PLAN NSP T64

7-11-08

DIST	COUNTY	ROUTE	POST MILES TOTAL PROJECT	SHEET NO.	TOTAL SHEETS
11	SD	75, 805	9.0, 20.2	57	76

REGISTERED ELECTRICAL ENGINEER

October 5, 2007
PLANS APPROVAL DATE

REGISTERED PROFESSIONAL ENGINEER Jeffery G. McRae No. E14512 Exp. 6-30-08 ELECTRICAL STATE OF CALIFORNIA

The State of California or its officers or agents shall not be responsible for the accuracy or completeness of electronic copies of this plan sheet.

To accompany plans dated 08-20-12

ELECTROLIERS

STANDARD TYPES
15, 15D
15 STRUCTURE
21, 21D STRUCTURE
30
31
32
35
36-20A

High mast light pole

Double Arm lighting standard

Existing electrolier

Electrolier foundation (Future installation)

NOTES:

1. Luminaires shall be 310 W HPS when installed on Type 21, 21D, 30, 31, 32, 35 and 36-20A Standards, unless otherwise specified. Luminaires shall be 200 W HPS when installed on other type standards or poles, unless otherwise specified.
2. Luminaires shall be the cutoff type, ANSI Type Ⅲ medium cutoff lighting distribution, unless otherwise specified.
3. Variations noted adjacent to symbol on project plans.

Electrolier (see project notes or project plans)

Luminaire on wood pole

STANDARD NOTES:

- AB — Abandon. If applied to conduit, remove conductors.
- BC — Install pull box in existing conduit run.
- BP — Pedestrian barricade, type as indicated on plan.
- CB — Install conduit into existing pull box.
- CC — Connect new and existing conduit. Remove existing conductors and install conductors as indicated.
- CF — Conduit to remain for future use. Remove conductors. Install pull wire or rope.
- DH — Detector handhole.
- FA — Foundation to be abandoned.
- IS — Install sign on signal mast arm.
- NS — No slip base on standard.
- PEC — Photoelectric control.
- PEU — Photoelectric unit.
- RC — Equipment or material to be removed and become the property of the Contractor.
- RE — Remove electrolier, fuses and ballast. Tape ends of conductors.
- RL — Relocate equipment.
- RR — Remove and reuse equipment.
- RS — Remove and salvage equipment.
- SC — Splice new to existing conductors.
- SD — Service disconnect.
- SF — Standard to remain for future use. Remove luminaire, pole conductors, fuses and ballast.
- TSP — Telephone service point.

ABBREVIATIONS AND EQUIPMENT DESIGNATIONS

PROPOSED	EXISTING	
BBS	bbs	Battery backup system
BC	bc	Bolt circle
C	C	Conduit
CCTV	cctv	Closed circuit television
CKT	ckt	Circuit
CMS	cms	Changeable message sign
DLC	dlc	Loop detector lead-in cable
EMS	ems	Extinguishable message sign
EVC	evc	Emergency vehicle cable
EVD	evd	Emergency vehicle detector
FB	fb	Flashing beacon
FBCA	fbca	Flashing beacon control assembly
FBS	fbs	Flashing beacon with slip base
FO	fo	Fiber optic
G	G	Ground (Equipment Grounding Conductor)
GFCI	GFCI	Ground fault circuit interrupt
HAR	har	Highway advisory radio
HEX	hex	Hexagonal
HPS	hps	High pressure sodium
IISNS	iisns	Internally illuminated street name sign
ISL	isl	Induction sign lighting
LED	led	Light emitting diode
LMA	lma	Luminaire mast arm
LPS	lps	Low pressure sodium
LTG	ltg	Lighting
LUM	lum	Luminaire
MAT	mat	Mast arm mounting vehicle signal faces, top attachment
MAS	mas	Mast arm mounting vehicle signal faces, side attachment
MAS-4A	mas-4A	Mast arm mounting vehicle signal faces, side attachment - 4 signal section
MAS-4B	mas-4B	
MAS-4C	mas-4C	
MAS-5A	mas-5A	Mast arm mounting vehicle signal faces, side attachment - 5 signal section
MAS-5B	mas-5B	
MC	mc	Mercury contactor
M/M	m/m	Multiple to multiple transformer
MT	mt	Conduit with pull wire or rope only
MTG	mtg	Mounting
	mv	Mercury vapor lighting fixture
N	N	Neutral (Grounded Conductor)
NC	NC	Normally closed
NO	NO	Normally open
PB	pb	Pull box
PEC	pec	Photoelectric control (Type Ⅰ, Ⅱ, Ⅲ, Ⅳ or Ⅴ as shown)
PED	ped	Pedestrian
PEU	peu	Photoelectric unit
PPB	ppb	Pedestrian push button
RL		Relocated equipment
RM	rm	Ramp metering
SB	sb	Slip base
SIC	sic	Signal interconnect cable
SIG	sig	Signal
SMA	sma	Signal mast arm
SNS	sns	Street name sign
SP	sp	Service point
TDC	tdc	Telephone demarcation cabinet
TMS	tms	Traffic monitoring station
TOS	tos	Traffic Operations System
VEH	veh	Vehicle
XFMR	xfmr	Transformer
COMM	comm	Communication
RWIS	rwis	Roadway weather information system

SOFFIT AND WALL MOUNTED LUMINAIRES

Pendant, 70 W HPS unless otherwise specified.

Flush, 70 W HPS unless otherwise specified.

Wall surface, 70 W HPS unless otherwise specified.

Existing soffit or wall luminaire to remain unmodified.

Existing soffit or wall luminaire to be modified as specified.

NOTE:

Arrow indicates "street side" of luminaire.

STATE OF CALIFORNIA
DEPARTMENT OF TRANSPORTATION

ELECTRICAL SYSTEMS (SYMBOLS AND ABBREVIATIONS)

NO SCALE

RSP ES-1A DATED OCTOBER 5, 2007 SUPERSEDES STANDARD PLAN ES-1A DATED MAY 1, 2006 - PAGE 400 OF THE STANDARD PLANS BOOK DATED MAY 2006.

REVISED STANDARD PLAN RSP ES-1A

2006 REVISED STANDARD PLAN RSP ES-1A

DIST	COUNTY	ROUTE	POST MILES TOTAL PROJECT	SHEET NO.	TOTAL SHEETS
11	SD	75, 805	9.0, 20.2	58	76

REGISTERED ELECTRICAL ENGINEER

October 5, 2007
PLANS APPROVAL DATE

REGISTERED PROFESSIONAL ENGINEER Jeffery G. McRae No. E14512 Exp. 6-30-08 ELECTRICAL STATE OF CALIFORNIA

The State of California or its officers or agents shall not be responsible for the accuracy or completeness of electronic copies of this plan sheet.

To accompany plans dated 08-20-12

CONDUIT

PROPOSED	EXISTING	
		Lighting Conduit, unless otherwise indicated or noted
		Traffic signal conduit
C	c	Communication conduit
T	t	Telephone conduit
F	f	Fire alarm conduit
FO	fo	Fiber optic conduit
		Conduit termination (RSP ES-9A C)
R	r	Conduit riser in/on structure or service pole

SERVICE EQUIPMENT

PROPOSED	EXISTING	
OH	oh	Overhead lines
U	U	Wood pole "U" indicates utility owned
		Pole guy with anchor
		Utility transformer - ground mounted
III		Service equipment enclosure type
		Service equipment enclosure door indicates front of enclosure
T	t	Telephone demarcation cabinet

POLE-MOUNTED SERVICE DESIGNATION

Type of installation

TYPE H SERVICE - 28'-10" ← Pole height above grade

ILLUMINATED OVERHEAD SIGN

PROPOSED	EXISTING	
		Overhead sign - Single post
		Overhead sign - Two post
		Overhead sign - Mounted on structure
		Overhead sign with electrolier

SIGNAL EQUIPMENT

PROPOSED	EXISTING	
		Pedestrian signal face
		Pedestrian push button post
		Pedestrian barricade
		Vehicle signal face (with backplate, 3-Section: red, yellow and green)
		Vehicle signal face with angle visors
PV	PV	Modifications of basic symbols: "L" Indicates all non-arrow sections louvered "LG" Indicates louvered green section only "PV" indicates 12" programmed visibility sections "8" indicates all 8" sections (only when specified)
		Type 15TS and Vehicle signal face
		Vehicle signal face with red, yellow and green left arrow sections
		Vehicle signal face with red and yellow sections and up green arrow
		Vehicle signal face (5 Section) with red, yellow and green sections and yellow and green right arrows
		Type 1 Standard and attached vehicle signal faces
		Standard with signal mast arm only and attached vehicle signal faces and internally illuminated street name sign
		Type 33 Standard, Left-turn vehicle signal face and sign
		Standard with luminaire and signal mast arms and attached vehicle signal faces
		Cantilever flashing beacon Type 9 Frame, with a sign unless otherwise specified or indicated
		Type 15-FBS Standard with two vehicle signal face sections with lens, backplate and visor with a sign
R	Y	Flashing beacon. One vehicle signal face section with lens, backplate and visor. "R" indicates red indication, "Y" indicates yellow indication
		Controller assembly. Door indicates front of cabinet

SIGNAL EQUIPMENT Cont

PROPOSED	EXISTING	
		Guard post
		Type 1 Standard with "Meter On" sign
		Emergency Vehicle detector

NOTES:

1. All signal sections shall be 12" unless shown otherwise.
2. Signal heads shall be provided with backplates unless shown otherwise.
3. Signal indication shall be LED.

STATE OF CALIFORNIA
DEPARTMENT OF TRANSPORTATION

ELECTRICAL SYSTEMS (SYMBOLS AND ABBREVIATIONS)

NO SCALE

RSP ES-1B DATED OCTOBER 5, 2007 SUPERCEDES STANDARD PLAN ES-1B DATED MAY 1, 2006 - PAGE 401 OF THE STANDARD PLANS BOOK DATED MAY 2006.

REVISED STANDARD PLAN RSP ES-1B

2006 REVISED STANDARD PLAN RSP ES-1B

DIST	COUNTY	ROUTE	POST MILES TOTAL PROJECT	SHEET NO.	TOTAL SHEETS
11	SD	75, 805	9.0, 20.2	59	76

REGISTERED ELECTRICAL ENGINEER

October 5, 2007
PLANS APPROVAL DATE

REGISTERED PROFESSIONAL ENGINEER
Jeffery G. McRae
No. E14512
Exp. 6-30-08
ELECTRICAL
STATE OF CALIFORNIA

The State of California or its officers or agents shall not be responsible for the accuracy or completeness of electronic copies of this plan sheet.

To accompany plans dated 08-20-12

EQUIPMENT IDENTIFICATION

ILLUMINATED SIGN IDENTIFICATION NUMBER:

Sign No. 12345

10 ISL SCI 1.0

- Sign number - Place on post or structure
- Transformer rating (kVA)
- Lighting control type
- Number and type of fixtures

Do NOT place on standard or structure

ELECTROLIER OR EQUIPMENT IDENTIFICATION NUMBER:

12345 - 15'-0"

- Mast arm length, if shown. Do not place on standard or structure.
- Equipment number - Place on standard or structure. Existing equipment numbers are shown in parenthesis

CONDUIT AND CONDUCTOR IDENTIFICATION:

1½"C, 2#10, 15#14, 2 DLC

- Number and size of conductors and cables
- Size of conduit in inches

ø1, ø2, ø2P, etc.	Traffic phase identification for signal faces, detectors and phase diagrams
1 2 3	Project note numbers
A B C	Equipment description, installation or item numbers
1 2 3	Conduit run numbers

SIGNAL AND LIGHTING STANDARD (TYPICAL DESIGNATION):

19A - 3 - 100

- Wind velocity = 100 mph
- Case 3 arm loading
- Standard type
- Standard Plan sheet number
- Detail number or letter

MISCELLANEOUS EQUIPMENT

PROPOSED	EXISTING	
CMS	cms	Changeable message sign
		Closed circuit television camera
		Highway advisory radio pole and antenna
EMS	ems	Extinguishable message sign
M V	m v	Detection device M = Microwave sensor V = Video image sensor

WIRING DIAGRAM LEGEND

P	Pole
CB	Circuit breaker
A	Ampere
V	Volt
M	Metered
UM	Unmetered
NB	Neutral bus
GB	Ground bus
G	Equipment grounding conductor
N	Grounded conductor (Neutral)

- External conductor
- Conductor or bus
- Tie point
- Contactor coil
- Contactor, Contact NO
- Terminal blocks
- Contactor, Contact NC
- Enclosure bond
- Grounding electrode
- Circuit breaker
- Receptacle

PULL BOXES

PROPOSED EXISTING

Pull box-No. 5 unless otherwise indicated or noted.

3 9A(21)

Pull box-Additional designations or descriptions

3 = No. 3½ pull box
5 = No. 5 pull box
6 = No. 6 pull box
7 = No. 7 (Ceiling pull box)
8 = No. 8 (Pendant soffit pull box)
9 = No. 9 pull box
9A = No. 9A pull box

(C) = Communications pull box
(E) = Pull box with extension
(S) = Sprinkler control pull box
(21) = Anchor bolts and conduit for future installation of Type 21 Standard
(T) = Traffic pull box

VEHICLE DETECTORS

5 J 9 U

- U = Upper
- L = Lower
- Slot number in input file
- Input file (I or J)
- Phase

PROPOSED	EXISTING	
		Type A detector loop. Outline of sawcut shown.
		Type B detector loop. Outline of sawcut shown.
		Type C detector loop. Outline of sawcut shown.
		Type D detector loop. Outline of sawcut shown.
		Type E detector loop. Outline of sawcut shown.
		Type Q detector loop. Outline of sawcut shown.
		Magnetic detector
DH	dh	Detector handhole
		Microwave or video detection zone

STATE OF CALIFORNIA
DEPARTMENT OF TRANSPORTATION

ELECTRICAL SYSTEMS (SYMBOLS AND ABBREVIATIONS)

NO SCALE

RSP ES-1C DATED OCTOBER 5, 2007 SUPERCEDES STANDARD PLAN ES-1C DATED MAY 1, 2006 - PAGE 402 OF THE STANDARD PLANS BOOK DATED MAY 2006.

REVISED STANDARD PLAN RSP ES-1C

2006 REVISED STANDARD PLAN RSP ES-1C

DIST	COUNTY	ROUTE	POST MILES TOTAL PROJECT	SHEET NO.	TOTAL SHEETS
11	SD	75, 805	9.0, 20.2	60	76

REGISTERED CIVIL ENGINEER

January 18, 2008
PLANS APPROVAL DATE

REGISTERED PROFESSIONAL ENGINEER
Stanley P. Johnson
No. C57793
Exp. 03-31-08
CIVIL
STATE OF CALIFORNIA

The State of California or its officers or agents shall not be responsible for the accuracy or completeness of electronic copies of this plan sheet.

To accompany plans dated 08-20-12

LUMINAIRE ARM DATA

PROJECTED LENGTH	THICKNESS	MINIMUM OD @ POLE	MOUNTING HEIGHT
* 6'-0"	0.1196"	3¼"	36'-9"±
8'-0"		3½"	37'-3"±
10'-0"		3¾"	38'-0"±
12'-0"		3¾"	39'-0"±
15'-0"		4¼"	39'-6"±
** 20'-0"	0.1793"	5"	37'-0"±

* Type 30 - arm length 6'-0" - 15'-0" maximum
** Type 31 - arm lengths 20'-0"

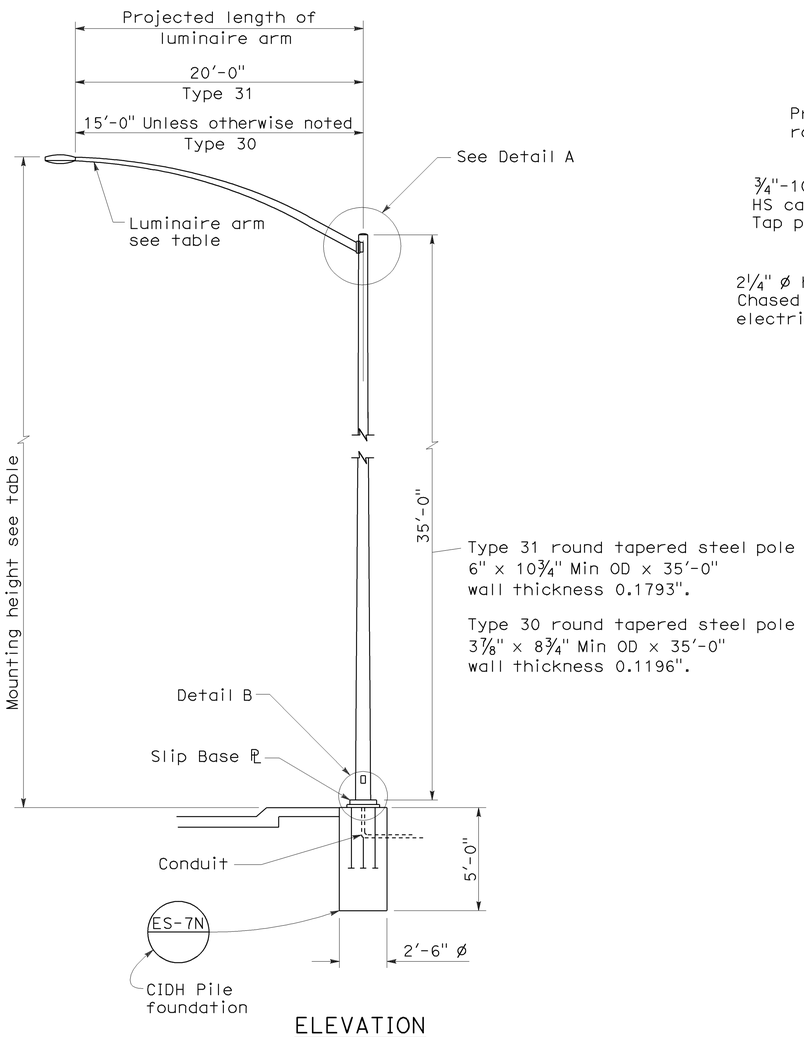

ELEVATION

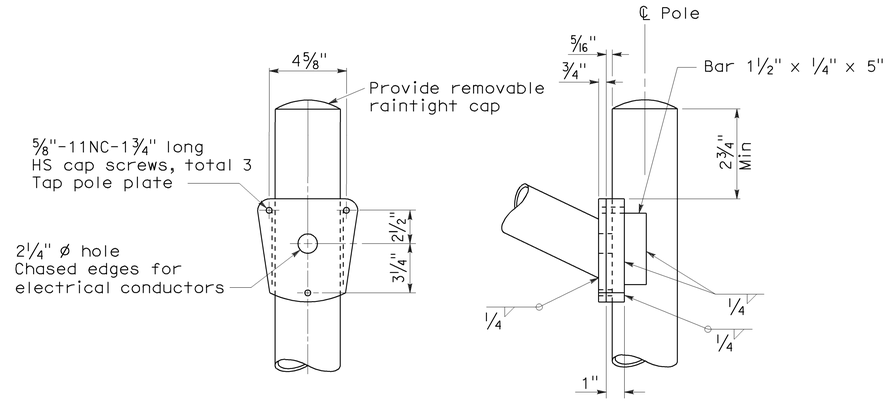

DETAIL A - TYPE 30

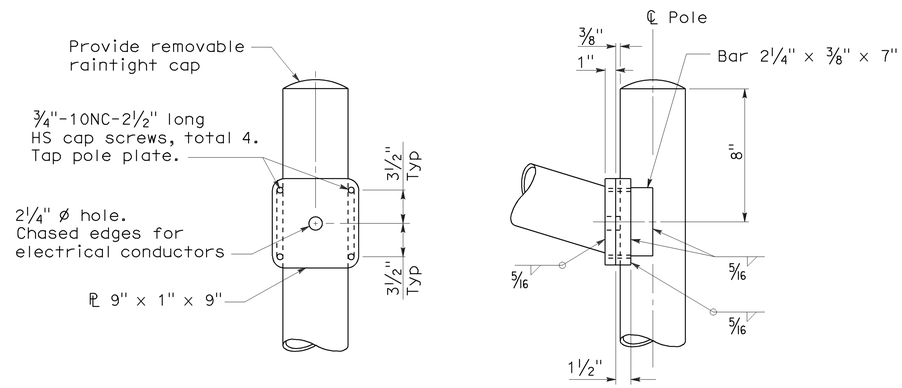

DETAIL A - TYPE 31

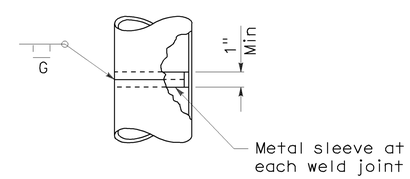

POLE SPLICE

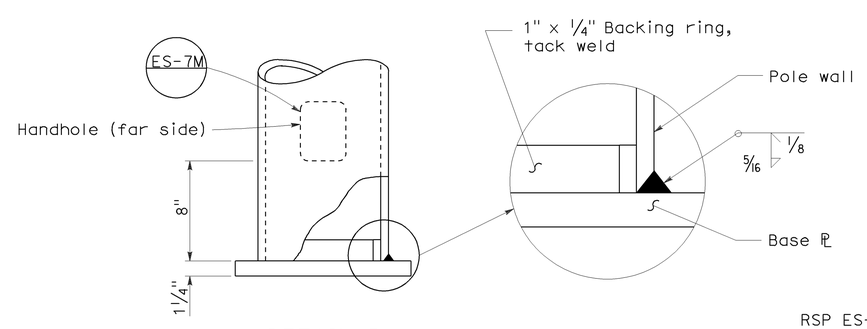

DETAIL B

NOTES:

1. Sheet steel shall have a minimum yield of 48,000 psi.
2. For slip base details see Standard Plan ES-6F.
3. For Type 30 fixed base use Type 15 base plate, and foundation shown on Revised Standard Plan RSP ES-6A. Use 1¼" Dia x 3'-6" x 4" anchor bolts.
4. For Type 31 fixed base use Type 32 base plate, anchor bolts and foundation on Standard Plan ES-6G.
5. Handhole shall be located on downstream side of traffic unless noted otherwise on plans.
6. For additional general notes refer to Standard Plan ES-7M.

STATE OF CALIFORNIA
DEPARTMENT OF TRANSPORTATION

ELECTRICAL SYSTEMS (LIGHTING STANDARD TYPES 30 AND 31)

NO SCALE

RSP ES-6E DATED JANUARY 18, 2008 SUPERCEDES STANDARD PLAN ES-6E DATED MAY 1, 2006 - PAGE 430 OF THE STANDARD PLANS BOOK DATED MAY 2006.

REVISED STANDARD PLAN RSP ES-6E

2006 REVISED STANDARD PLAN RSP ES-6E

11-19-07

DIST	COUNTY	ROUTE	POST MILES TOTAL PROJECT	SHEET No.	TOTAL SHEETS
11	SD	75, 805	9.0, 20.2	61	76

REGISTERED CIVIL ENGINEER — DATE 12/29/11

08-20-12
PLANS APPROVAL DATE

REGISTERED PROFESSIONAL ENGINEER — Douglas C. Menzmer — No. C 63498 — Exp. 09/30/2012 — CIVIL — STATE OF CALIFORNIA

The State of California or its officers or agents shall not be responsible for the accuracy or completeness of electronic copies of this plan sheet.

EXISTING UTILITIES

Ⓐ 6" Gas Main in 10" casing, S.D.G. & E. Co.
Ⓑ 16" Water Main.
Ⓒ 28"x 21" Utility Opening, S.D.G. & E. Co.

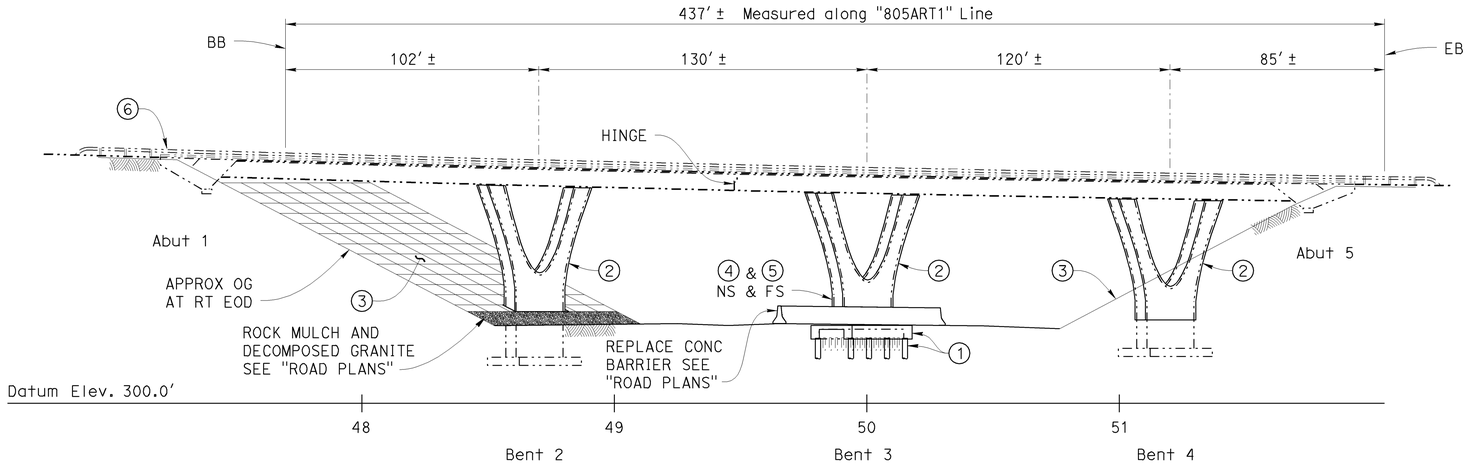

ELEVATION
1" = 30'

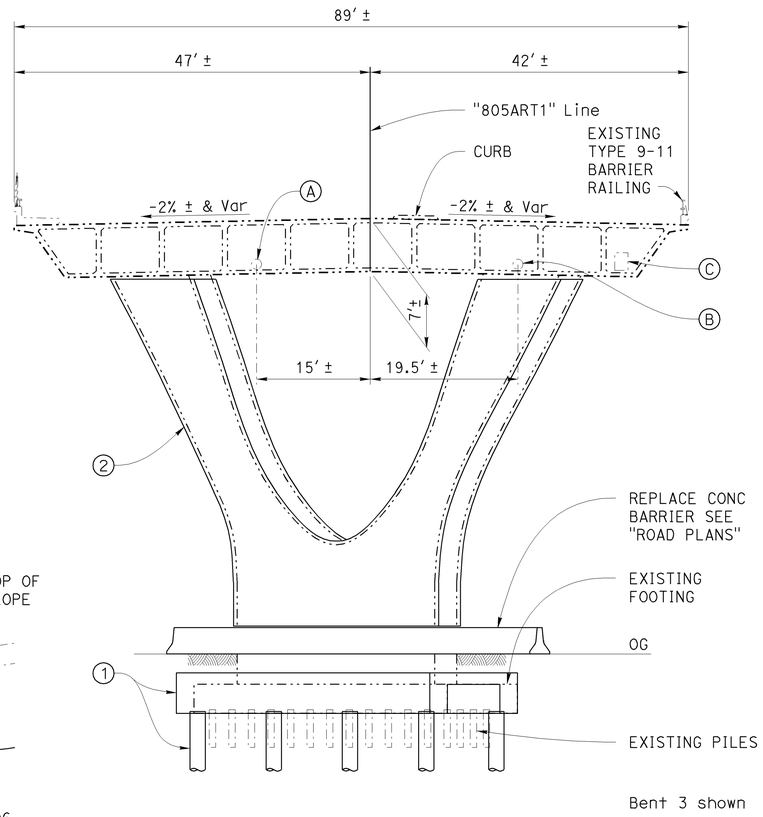

TYPICAL SECTION
1" = 10'

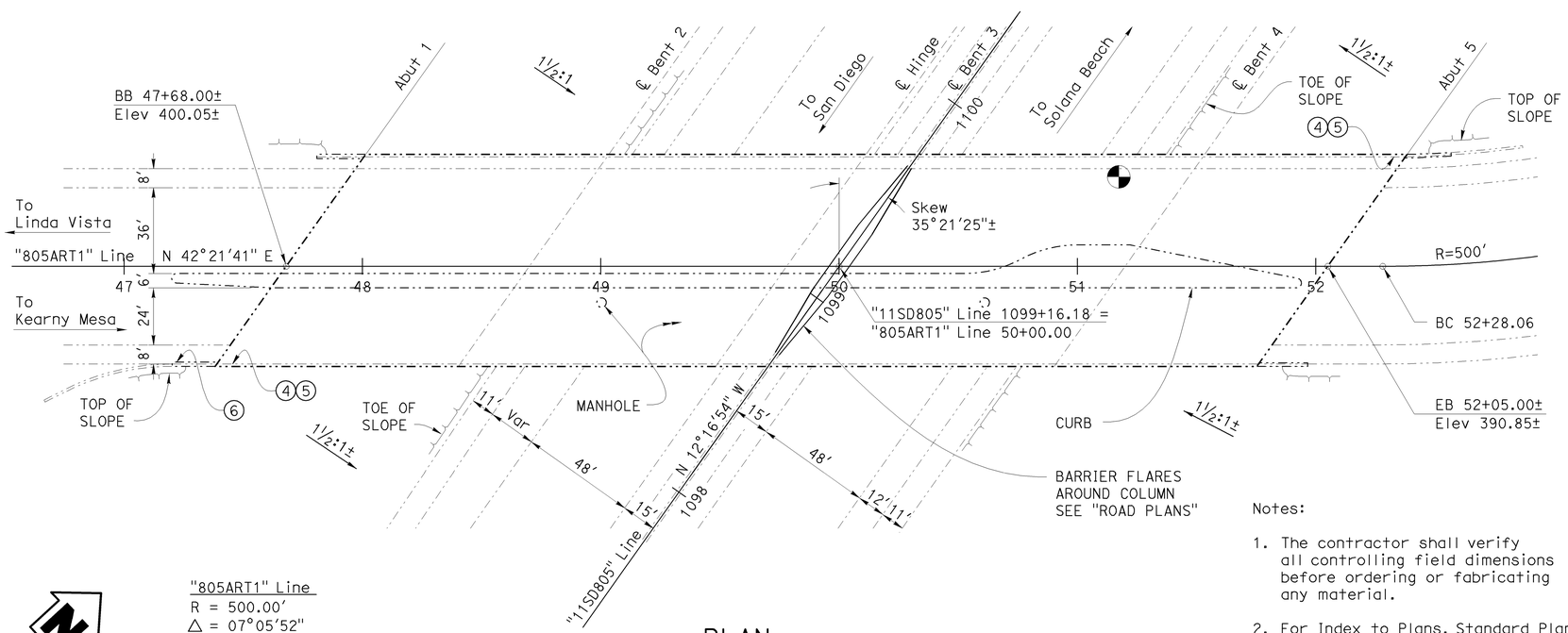

"805ART1" Line
R = 500.00'
△ = 07°05'52"
T = 31.01'
L = 61.94'

PLAN
1" = 30'

Notes:

1. The contractor shall verify all controlling field dimensions before ordering or fabricating any material.
2. For Index to Plans, Standard Plan List, General Notes and Quantities see "Index To Plans" sheet.

LEGEND

1. Footing Retrofit: New Piles and Enlarged Footing.
2. Column Retrofit: Concrete Column Casing.
3. Full Slope Paving
4. Paint Bridge name: "Kearny Villa Road OC".
5. Paint: "Br. No. 57-0678".
6. Repair Concrete Barrier

Indicates existing structure.
Indicates retrofit construction.
Point of minimum vertical clearance. (48.4'±)

Matt Holm
DESIGN ENGINEER

	BY	CHECKED			
DESIGN	D. Menzmer	C. Hensel			
DETAILS	T. Mason	D. Menzmer	LAYOUT	D. Menzmer	CHECKED
QUANTITIES	D. Menzmer	C. Hensel	SPECIFICATIONS	BY	PLANS AND SPECS COMPARED

ORIGINAL SCALE IN INCHES FOR REDUCED PLANS 0 1 2 3

STATE OF CALIFORNIA
DEPARTMENT OF TRANSPORTATION

DIVISION OF ENGINEERING SERVICES
STRUCTURE DESIGN
DESIGN BRANCH 12

BRIDGE NO. 57-0678
POST MILE 20.23

KEARNY VILLA ROAD OC (SEISMIC RETROFIT)
GENERAL PLAN

UNIT: 2786
PROJECT NUMBER & PHASE: 1100000359
CONTRACT NO.: 11-290301

DISREGARD PRINTS BEARING EARLIER REVISION DATES
REVISION DATES: 10-26-11 4-19-12
SHEET 1 OF 9

STRUCTURES DESIGN GENERAL PLAN SHEET (ENGLISH) (REV.09-01-10)

FILE => 57-0678-a-gp.dgn

USERNAME => s126699 DATE PLOTTED => 27-AUG-2012 TIME PLOTTED => 09:30

DIST	COUNTY	ROUTE	POST MILES TOTAL PROJECT	SHEET No.	TOTAL SHEETS
11	SD	75, 805	9.0, 20.2	62	76

REGISTERED CIVIL ENGINEER 12/29/11 DATE

08-20-12
PLANS APPROVAL DATE

REGISTERED PROFESSIONAL ENGINEER Douglas C. Menzmer No. C 63498 Exp. 09/30/2012 CIVIL STATE OF CALIFORNIA

The State of California or its officers or agents shall not be responsible for the accuracy or completeness of electronic copies of this plan sheet.

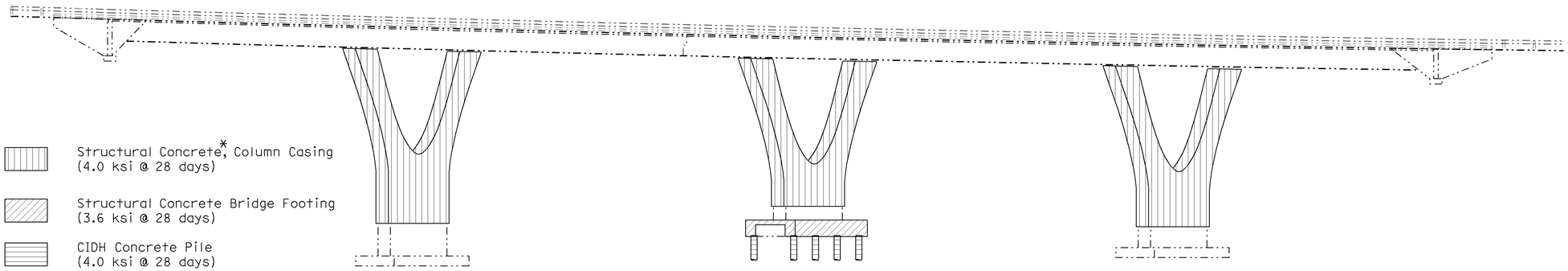

* Shotcrete of equivalent compressive strength may be used in lieu of structural concrete.

CONCRETE STRENGTH AND TYPE LIMITS

no scale

INDEX TO PLANS

1. GENERAL PLAN
2. INDEX TO PLANS
3. FOUNDATION PLAN
4. EXISTING BENT LAYOUT
5. BENT 3 FOOTING DETAILS
6. COLUMN CASING DETAILS
7. EXCAVATION AND BACKFILL
8. SLOPE PAVING
9. LOG OF TEST BORINGS

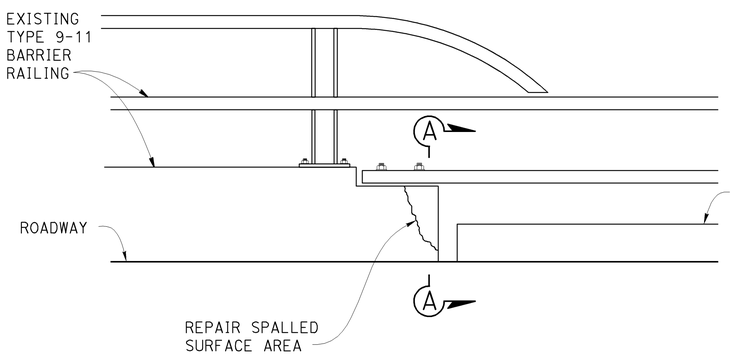

INSIDE VIEW RIGHT SIDE BARRIER NEAR BB

no scale

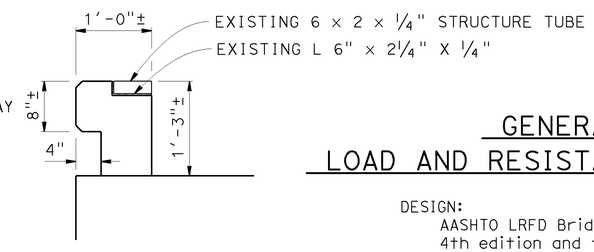

SECTION A-A

no scale

GENERAL NOTES
LOAD AND RESISTANCE FACTOR DESIGN

DESIGN:
AASHTO LRFD Bridge Design Specifications, 4th edition and the California Amendments preface dated September 2010.

SEISMIC DESIGN:
Caltrans Seismic Design Criteria (SDC), Version 1.6 dated November 2010.

SEISMIC LOADING:
See: "Site Specific ARS Curve"

CONCRETE:
fy = 60 ksi
f'c = 3.6 ksi, 4.0 ksi
n = 8

STANDARD PLANS 2006

A10A	ACRONYMS AND ABBREVIATIONS (SHEET 1 OF 2)
A10B	ACRONYMS AND ABBREVIATIONS (SHEET 2 OF 2)
RSP A76C	CONCRETE BARRIER TYPE 60F
B2-3	16" AND 24" CAST IN DRILLED HOLE CONCRETE PILE

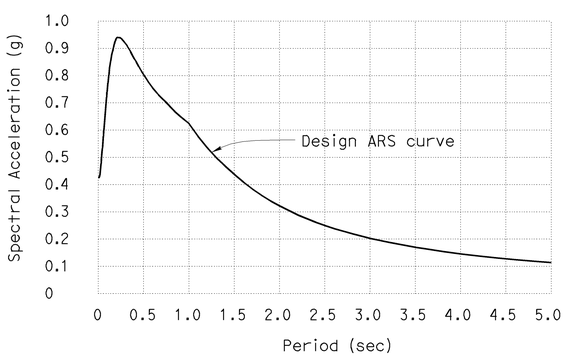

Acceleration Response Spectra (with 5% damping)

SITE SPECIFIC ARS CURVE

no scale

CIDH PILE DATA

LOCATION	PILE TYPE	NOMINAL RESISTANCE		DESIGN TIP ELEVATION	SPECIFIED TIP ELEVATION
		COMPRESSION	TENSION		
Bent 3	24" CIDH	370 kips	110 kips	294.9' (a-II) 308.9' (b-II)	294.9'

Design tip elevation is controlled by the following demands:
(a-II) Compression, (Extreme Event)
(b-II) Tension, (Extreme Event)

QUANTITIES

BRIDGE REMOVAL (PORTION), LOCATION A	LUMP	SUM
STRUCTURE EXCAVATION (BRIDGE)	190	CY
STRUCTURE BACKFILL (BRIDGE)	100	CY
24" CAST-IN-DRILLED-HOLE CONCRETE PILING	262	LF
STRUCTURAL CONCRETE, BRIDGE FOOTING	85	CY
STRUCTURAL CONCRETE, COLUMN CASING	195	CY
DRILL AND BOND DOWEL	170	LF
REPAIR SPALLED SURFACE AREA	1	SQFT
BAR REINFORCING STEEL (BRIDGE)	110,000	LB
SLOPE PAVING (EXPOSED AGGREGATE)	220	CY

The contractor shall verify all controlling field dimensions before ordering or fabricating any material.

DESIGN	BY D. Menzmer	CHECKED C. Hensel	
DETAILS	BY T. Mason	CHECKED D. Menzmer	
QUANTITIES	BY D. Menzmer	CHECKED C. Hensel	

STATE OF CALIFORNIA
DEPARTMENT OF TRANSPORTATION

DIVISION OF ENGINEERING SERVICES
STRUCTURE DESIGN
DESIGN BRANCH 12

BRIDGE NO. 57-0678
POST MILE 20.23

KEARNY VILLA ROAD OC (SEISMIC RETROFIT)
INDEX TO PLANS

STRUCTURES DESIGN DETAIL SHEET (ENGLISH) (REV. 09-01-10)

ORIGINAL SCALE IN INCHES FOR REDUCED PLANS 0 1 2 3

UNIT: 2786
PROJECT NUMBER & PHASE: 1100000359
CONTRACT NO.: 11-290301

DISREGARD PRINTS BEARING EARLIER REVISION DATES

REVISION DATES: 10-20-11 1-3-12 4-19-12

SHEET 2 OF 9

FILE => 57-0678-a-itp.dgn

USERNAME => s126699 DATE PLOTTED => 27-AUG-2012 TIME PLOTTED => 09:30

DIST	COUNTY	ROUTE	POST MILES TOTAL PROJECT	SHEET No.	TOTAL SHEETS
11	SD	75, 805	9.0, 20.2	63	76

REGISTERED CIVIL ENGINEER — DATE 12/29/11

08-20-12
PLANS APPROVAL DATE

REGISTERED PROFESSIONAL ENGINEER — Douglas C. Menzmer — No. C 63498 — Exp. 09/30/2012 — CIVIL — STATE OF CALIFORNIA

The State of California or its officers or agents shall not be responsible for the accuracy or completeness of electronic copies of this plan sheet.

CURVE DATA				
No.	R	Δ	T	L
6	500.00	07°05′52″	31.01	61.94

Bridge Location
1 - 40.66 Lt. ℄, Sta.47+97.06, Elev.=398.269 ±
2 - 40.61 Rt. ℄, Sta.47+39.50, Elev.=400.340 ±
3 - 41.32 Lt. ℄, Sta.52+34.82, Elev.=388.272 ±
4 - 40.27 Rt. ℄, Sta.51+78.24, Elev.=392.331 ±

5 50+00.00 "805ART1" LINE =
STA.1099+16.18 "11SD805" LINE

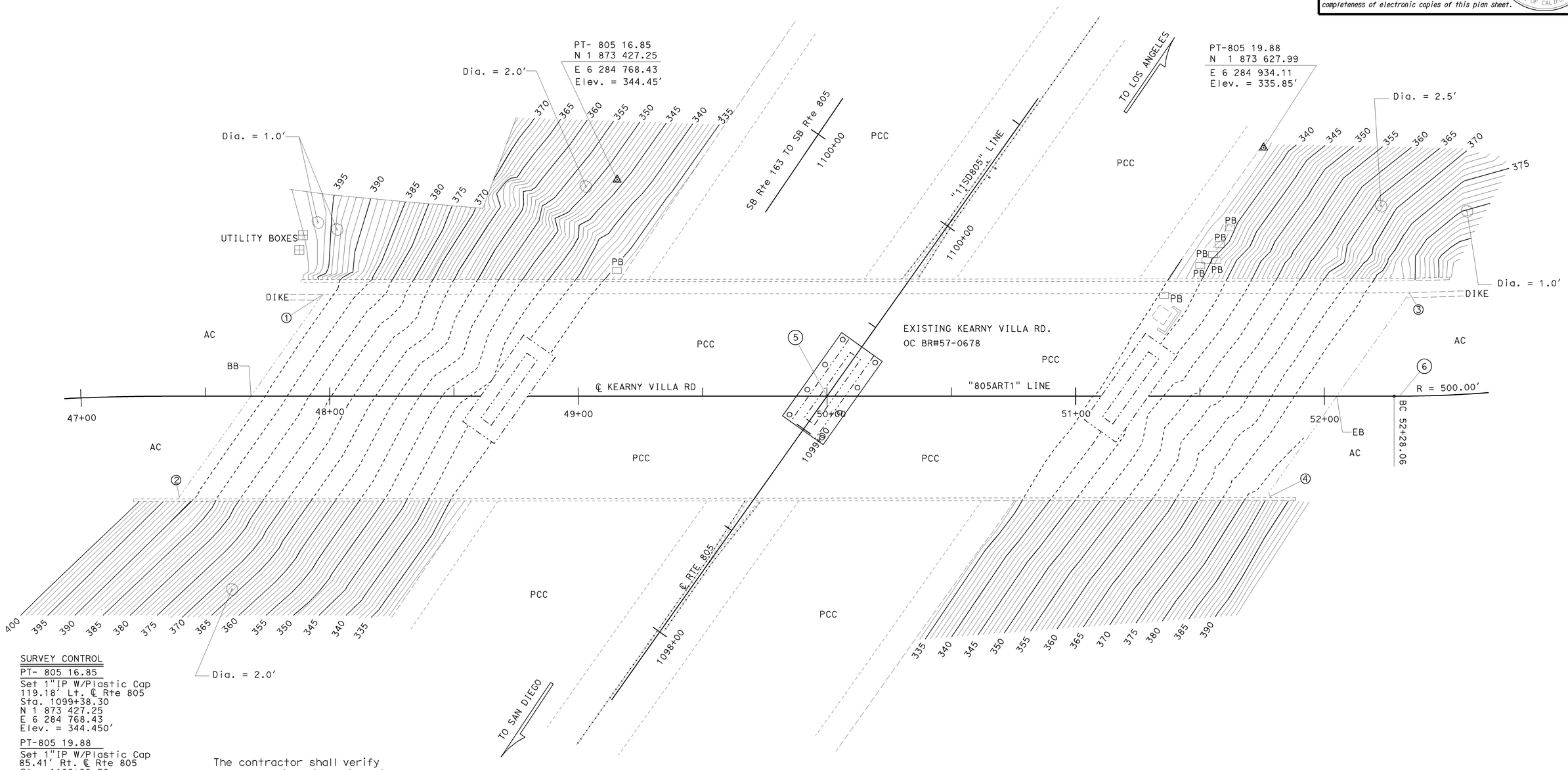

SURVEY CONTROL

PT- 805 16.85
Set 1"IP W/Plastic Cap
119.18′ Lt. ℄ Rte 805
Sta. 1099+38.30
N 1 873 427.25
E 6 284 768.43
Elev. = 344.450′

PT-805 19.88
Set 1"IP W/Plastic Cap
85.41′ Rt. ℄ Rte 805
Sta. 1100+99.20
N 1 873 627.99
E 6 284 934.11
Elev. = 335.850′

The contractor shall verify all controlling field dimensions before ordering or fabricating any material.

PRELIMINARY INVESTIGATION SECTION

SCALE	VERT.DATUM NAVD 88	PHOTOGRAMMETRY AS OF:			
1"=20′	HORZ.DATUM NAD 83 (1991.35)	SURVEYED	BY C.STEWART / T.PHUNG	CHECKED	BY C. STEWART 5/2011
ALIGNMENT TIES Dist. Traverse Sheet		DRAFTED	BY S. ABASSY 5/2011	CHECKED	BY S. ALIVIO 5/2011

	BY	CHECKED
DESIGN	D. Menzmer	C. Hensel
DETAILS	T. Mason	D. Menzmer
QUANTITIES	D. Menzmer	C. Hensel

STATE OF CALIFORNIA
DEPARTMENT OF TRANSPORTATION

DIVISION OF ENGINEERING SERVICES
STRUCTURE DESIGN
DESIGN BRANCH 12

BRIDGE NO. 57-0678
POST MILE 20.23

KEARNY VILLA ROAD OC (SEISMIC RETROFIT)
FOUNDATION PLAN

STRUCTURES FOUNDATION PLAN SHEET (ENGLISH) (REV. 09-01-10)

ORIGINAL SCALE IN INCHES FOR REDUCED PLANS 0 1 2 3

UNIT: 3647
PROJECT NUMBER & PHASE: 1100000359 - 1 CONTRACT NO.: 11-290301

DISREGARD PRINTS BEARING EARLIER REVISION DATES → REVISION DATES 03/31/2011 10-20-11

SHEET 3 OF 9

FILE => 57-0678-e-fdpl.dgn

USERNAME => s126699 DATE PLOTTED => 27-AUG-2012 TIME PLOTTED => 09:30

DIST	COUNTY	ROUTE	POST MILES TOTAL PROJECT	SHEET No.	TOTAL SHEETS
11	SD	75, 805	9.0, 20.2	64	76

REGISTERED CIVIL ENGINEER 12/29/11 DATE

08-20-12
PLANS APPROVAL DATE

REGISTERED PROFESSIONAL ENGINEER Douglas C. Menzmer No. C 63498 Exp. 09/30/2012 CIVIL STATE OF CALIFORNIA

The State of California or its officers or agents shall not be responsible for the accuracy or completeness of electronic copies of this plan sheet.

BENT ELEVATIONS

Location	"D" Elevation	OG Elevation	Bottom of Footing Elev.
Bent 2	396.79 ±		
Bent 3	393.60 ±	334.70 ±	327.45 ±
Bent 4	391.64 ±		

The contractor shall verify all controlling field dimensions before ordering or fabricating any material.

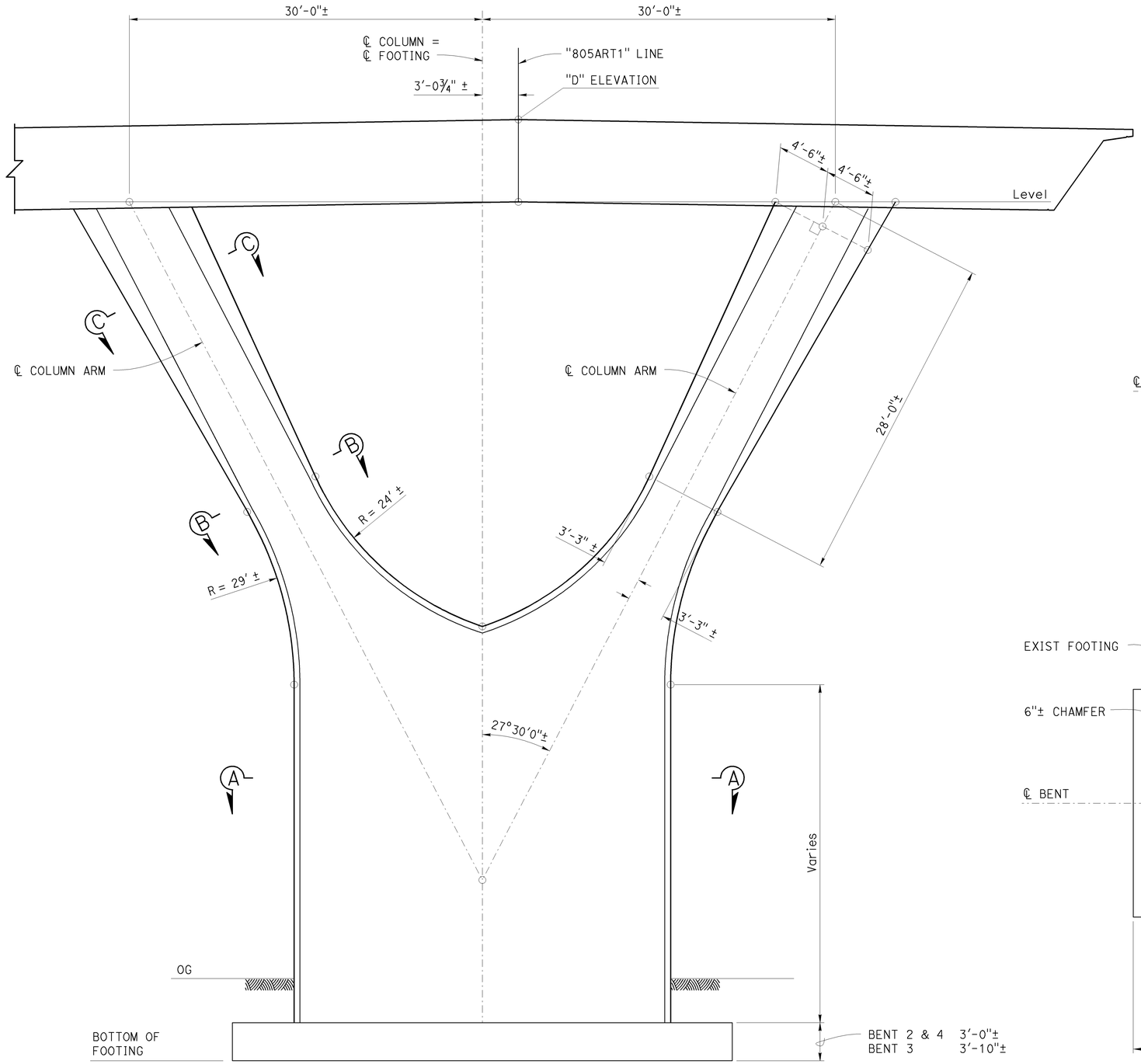

EXISTING BENT GEOMETRY
1" = 5'

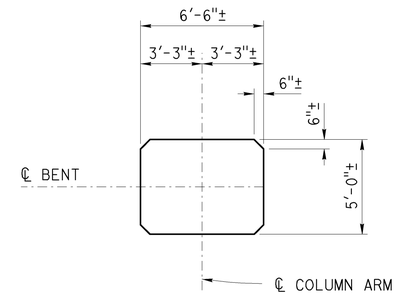

SECTION B-B
¼" = 1'-0"

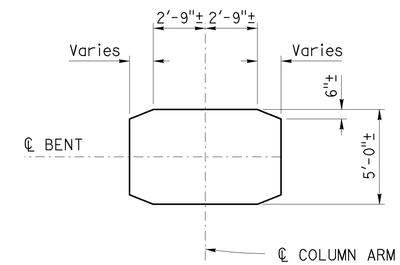

SECTION C-C
¼" = 1'-0"

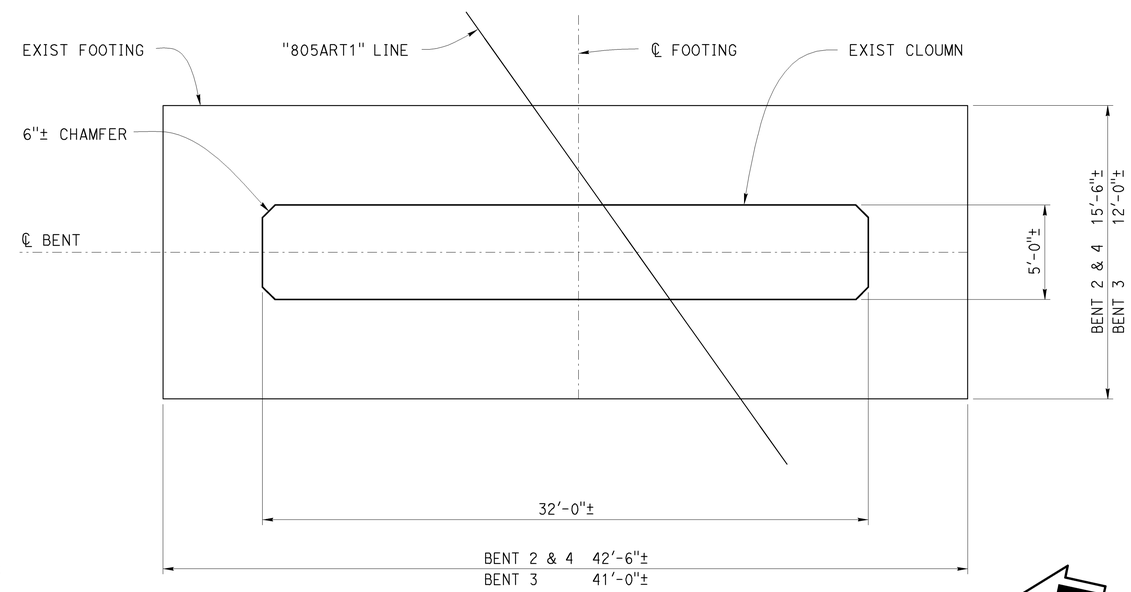

SECTION A-A
¼" = 1'-0"

DESIGN	BY D. Menzmer	CHECKED C. Hensel	
DETAILS	BY T. Mason	CHECKED D. Menzmer	
QUANTITIES	BY D. Menzmer	CHECKED C. Hensel	

STATE OF CALIFORNIA
DEPARTMENT OF TRANSPORTATION

DIVISION OF ENGINEERING SERVICES
STRUCTURE DESIGN
DESIGN BRANCH 12

BRIDGE NO. 57-0678
POST MILE 20.23

KEARNY VILLA ROAD OC (SEISMIC RETROFIT)
EXISTING BENT LAYOUT

STRUCTURES DESIGN DETAIL SHEET (ENGLISH) (REV. 09-01-10)

ORIGINAL SCALE IN INCHES FOR REDUCED PLANS 0 1 2 3

UNIT: 2786
PROJECT NUMBER & PHASE: 1100000359
CONTRACT NO.: 11-290301

DISREGARD PRINTS BEARING EARLIER REVISION DATES

REVISION DATES 10-20-11

SHEET 4 OF 9

FILE => 57-0678-n-b_10.dgn

USERNAME => s126699 DATE PLOTTED => 27-AUG-2012 TIME PLOTTED => 09:30

DIST	COUNTY	ROUTE	POST MILES TOTAL PROJECT	SHEET No.	TOTAL SHEETS
11	SD	75, 805	9.0, 20.2	65	76

REGISTERED CIVIL ENGINEER 12/29/11 DATE

08-20-12
PLANS APPROVAL DATE

REGISTERED PROFESSIONAL ENGINEER Douglas C. Menzmer No. C 63498 Exp. 09/30/2012 CIVIL STATE OF CALIFORNIA

The State of California or its officers or agents shall not be responsible for the accuracy or completeness of electronic copies of this plan sheet.

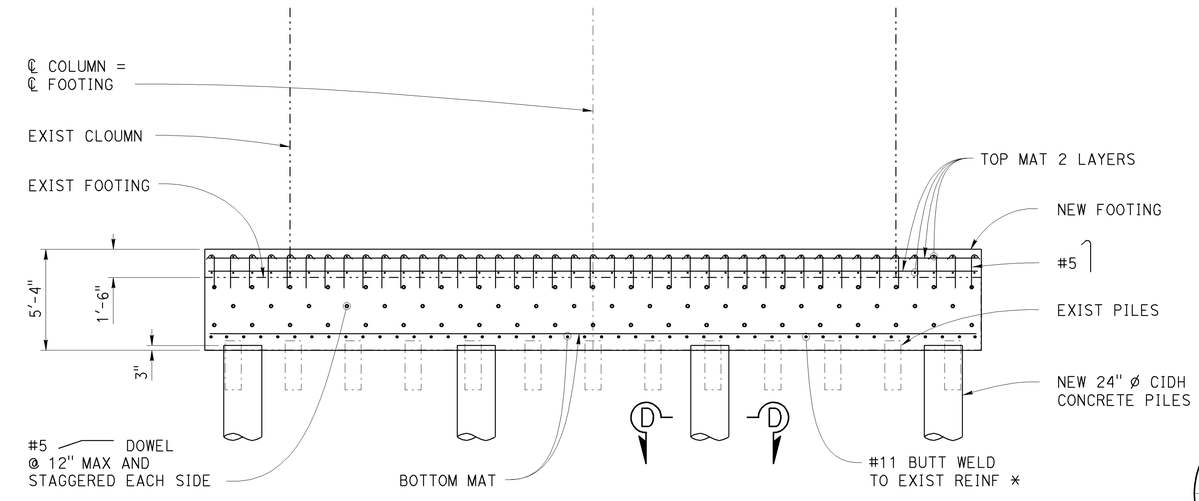

The contractor shall verify all controlling field dimensions before ordering or fabricating any material.

ELEVATION

* MECHANICAL BUTT SPLICE MAY BE USED IN LIEU OF BUTT WELDS.

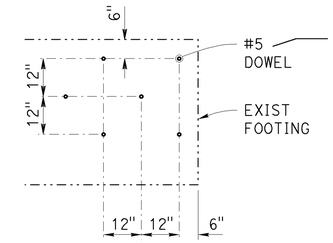

DOWEL LAYOUT
½" = 1'-0"

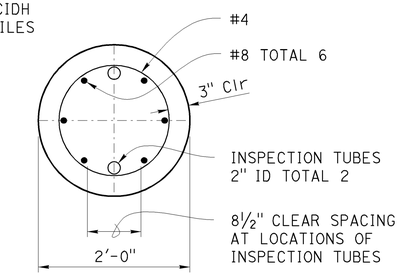

PILE SECTION D-D
no scale

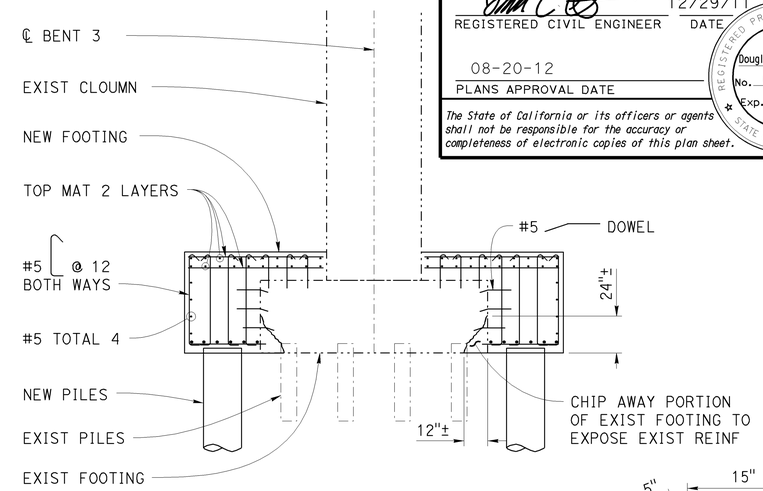

SECTION E-E
¼" = 1'-0"

EXISTING REINF NOT SHOWN AND SHALL REMAIN IN PLACE AND UNDAMAGED

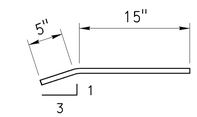

DRILL AND BOND INTO 5" DEEP HOLE

DOWEL DETAIL
no scale

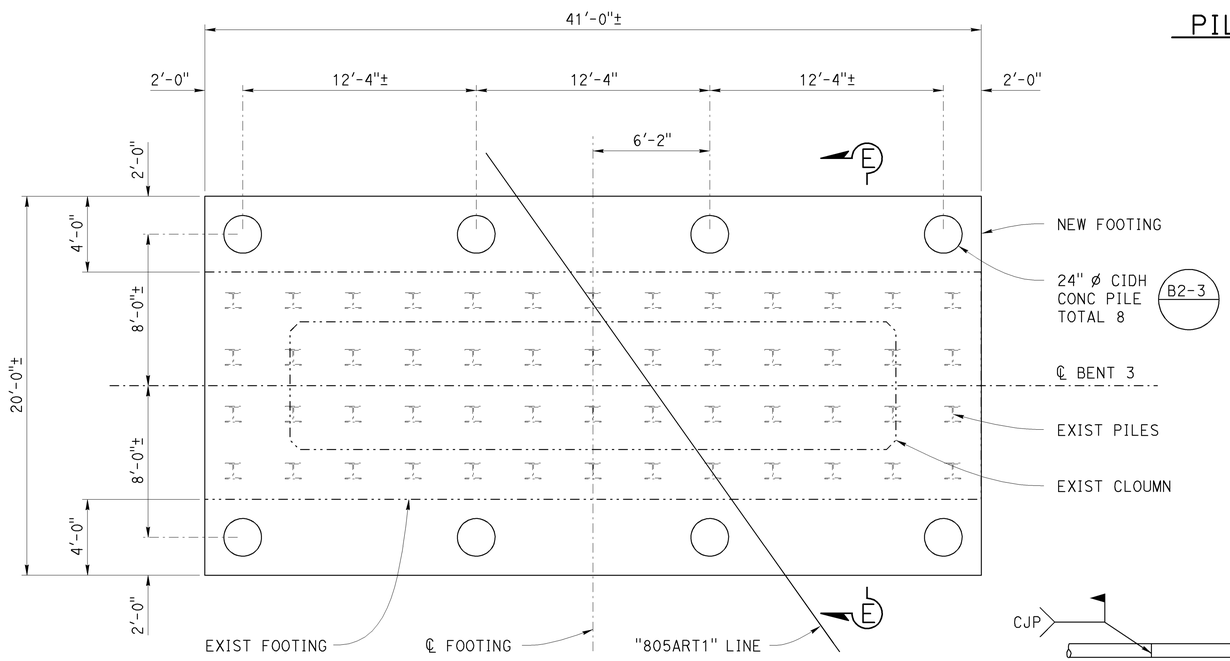

PLAN

BENT 3 FOOTING
¼" = 1'-0"

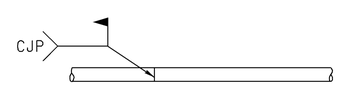

Reinforcement made continuous with 100% penetration welds.

BUTT WELD DETAIL
no scale

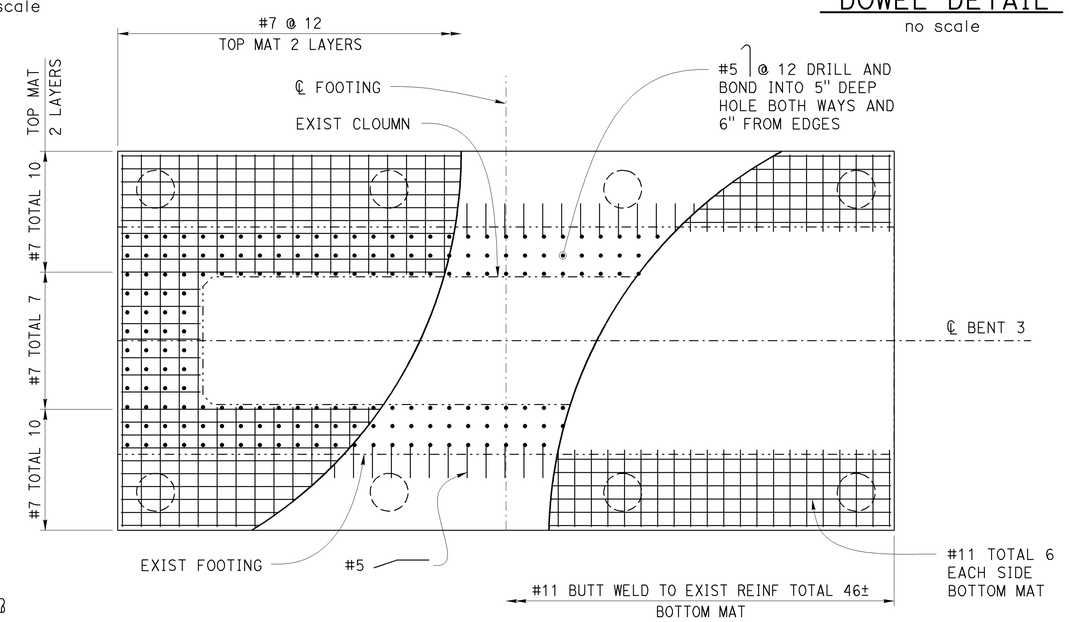

TOP REINF

BOTTOM REINF

FOOTING REINFORCEMENT
¼" = 1'-0"

FOOTING REINF SHALL HAVE 3" OF CONCRETE COVER

DESIGN	BY D. Menzmer	CHECKED C. Hensel	
DETAILS	BY T. Mason	CHECKED D. Menzmer	
QUANTITIES	BY D. Menzmer	CHECKED C. Hensel	

STATE OF CALIFORNIA
DEPARTMENT OF TRANSPORTATION

DIVISION OF ENGINEERING SERVICES
STRUCTURE DESIGN
DESIGN BRANCH 12

BRIDGE NO. 57-0678
POST MILE 20.23

KEARNY VILLA ROAD OC (SEISMIC RETROFIT)
BENT 3 FOOTING DETAILS

STRUCTURES DESIGN DETAIL SHEET (ENGLISH) (REV. 09-01-10)

ORIGINAL SCALE IN INCHES FOR REDUCED PLANS 0 1 2 3

UNIT: 2786
PROJECT NUMBER & PHASE: 1100000359
CONTRACT NO.: 11-290301

DISREGARD PRINTS BEARING EARLIER REVISION DATES

REVISION DATES 10-20-11

SHEET 5 OF 9

FILE => 57-0678-n-bfdt.dgn

USERNAME => s126699 DATE PLOTTED => 27-AUG-2012 TIME PLOTTED => 09:30

DIST	COUNTY	ROUTE	POST MILES TOTAL PROJECT	SHEET No.	TOTAL SHEETS
11	SD	75, 805	9.0, 20.2	66	76

REGISTERED CIVIL ENGINEER 12/29/11 DATE

08-20-12
PLANS APPROVAL DATE

REGISTERED PROFESSIONAL ENGINEER Douglas C. Menzmer No. C 63498 Exp. 09/30/2012 CIVIL STATE OF CALIFORNIA

The State of California or its officers or agents shall not be responsible for the accuracy or completeness of electronic copies of this plan sheet.

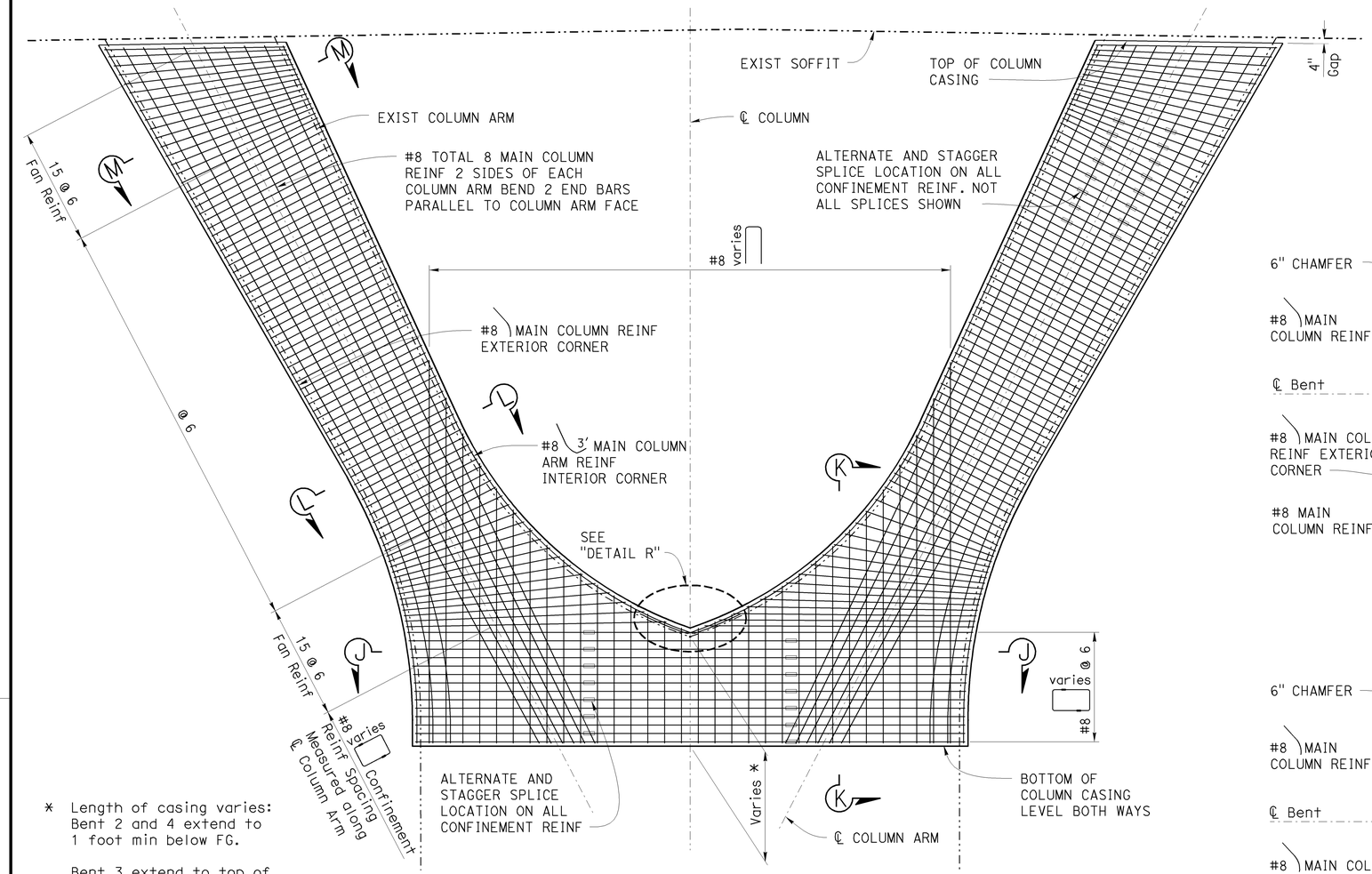

* Length of casing varies: Bent 2 and 4 extend to 1 foot min below FG.

Bent 3 extend to top of concrete barrier. See "Excavation and Backfill" sheet for details.

COLUMN CASING REINFORCEMENT ELEVATION

1/4" = 1'-0"

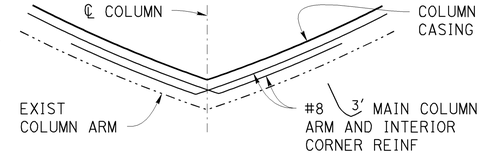

DETAIL R

no scale

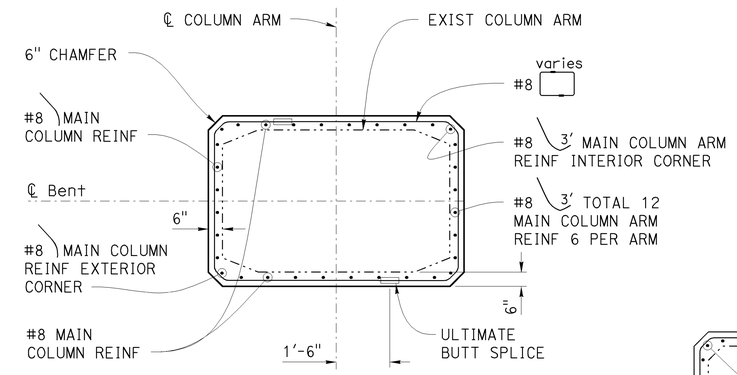

ARM SECTION M-M

3/8" = 1'-0"

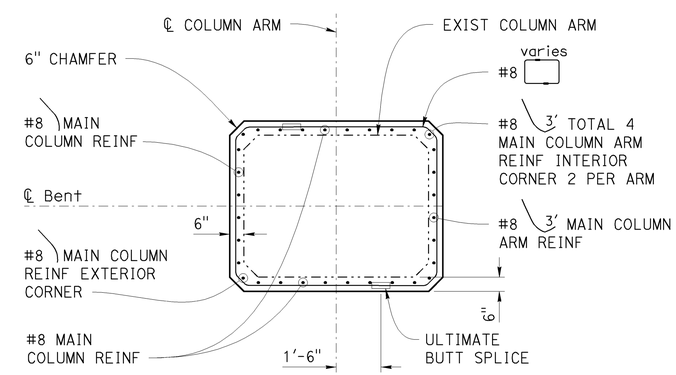

ARM SECTION L-L

3/8" = 1'-0"

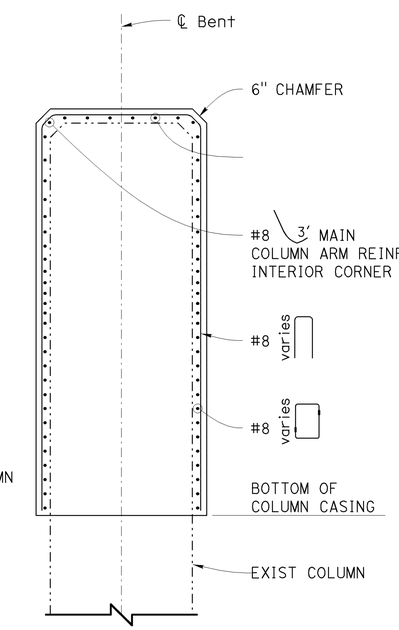

COLUMN SECTION K-K

3/8" = 1'-0"

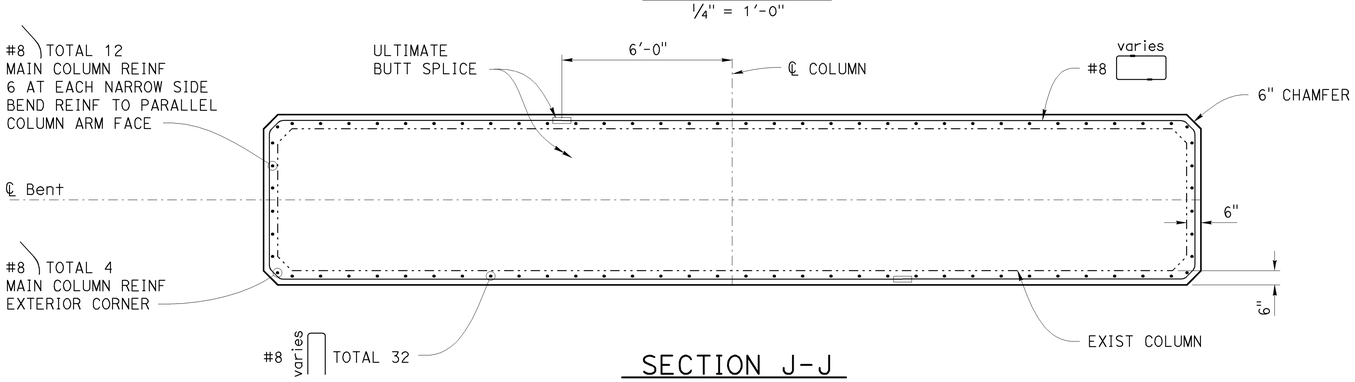

SECTION J-J

3/8" = 1'-0"

Notes:

1. No splices allowed in Main Column reinforcement.
2. All reinforcement shall have 2" of concrete cover.
3. Confinement reinforcement shall be made continuous with Ultimate Butt Splices.
4. The contractor shall verify all controlling field dimensions before ordering or fabricating any material.
5. Roughen surface of existing column concrete to 1/4" amplitude at all contact surfaces with new column casing.

DESIGN	BY D. Menzmer	CHECKED C. Hensel	
DETAILS	BY T. Mason	CHECKED D. Menzmer	
QUANTITIES	BY D. Menzmer	CHECKED C. Hensel	

STATE OF CALIFORNIA
DEPARTMENT OF TRANSPORTATION

DIVISION OF ENGINEERING SERVICES
STRUCTURE DESIGN
DESIGN BRANCH 12

BRIDGE NO. 57-0678
POST MILE 20.23

KEARNY VILLA ROAD OC (SEISMIC RETROFIT)
COLUMN CASING DETAILS

STRUCTURES DESIGN DETAIL SHEET (ENGLISH) (REV. 09-01-10)

ORIGINAL SCALE IN INCHES FOR REDUCED PLANS 0 1 2 3

UNIT: 2786
PROJECT NUMBER & PHASE: 1100000359
CONTRACT NO.: 11-290301

DISREGARD PRINTS BEARING EARLIER REVISION DATES

REVISION DATES 10-20-11

SHEET 6 OF 9

FILE => 57-0678-j-cdet.dgn

USERNAME => s126699 DATE PLOTTED => 27-AUG-2012 TIME PLOTTED => 09:30

DIST	COUNTY	ROUTE	POST MILES TOTAL PROJECT	SHEET No.	TOTAL SHEETS
11	SD	75, 805	9.0, 20.2	67	76

REGISTERED CIVIL ENGINEER — DATE 12/29/11

08-20-12
PLANS APPROVAL DATE

The State of California or its officers or agents shall not be responsible for the accuracy or completeness of electronic copies of this plan sheet.

REGISTERED PROFESSIONAL ENGINEER — Douglas C. Menzmer — No. C 63498 — Exp. 09/30/2012 — CIVIL — STATE OF CALIFORNIA

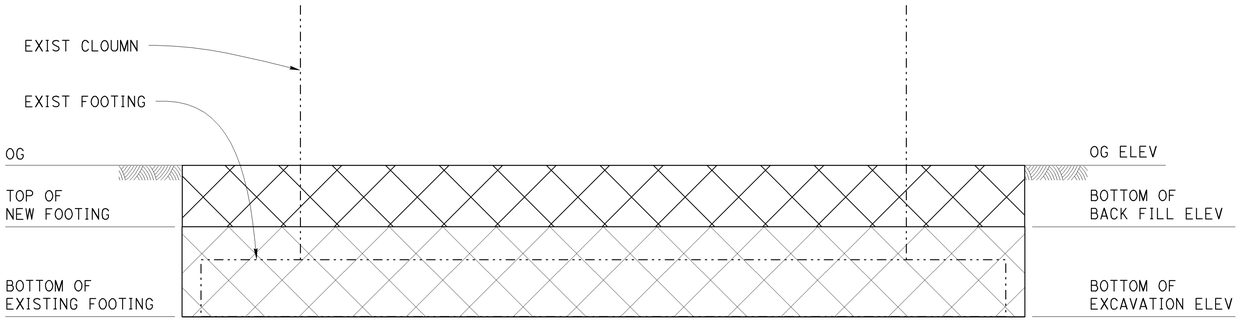

BENT FOOTING ELEVATION
1/4" = 1'-0"

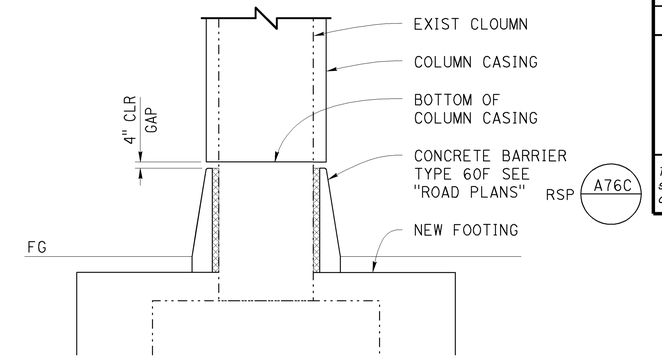

SECTION X-X
1/4" = 1'-0"

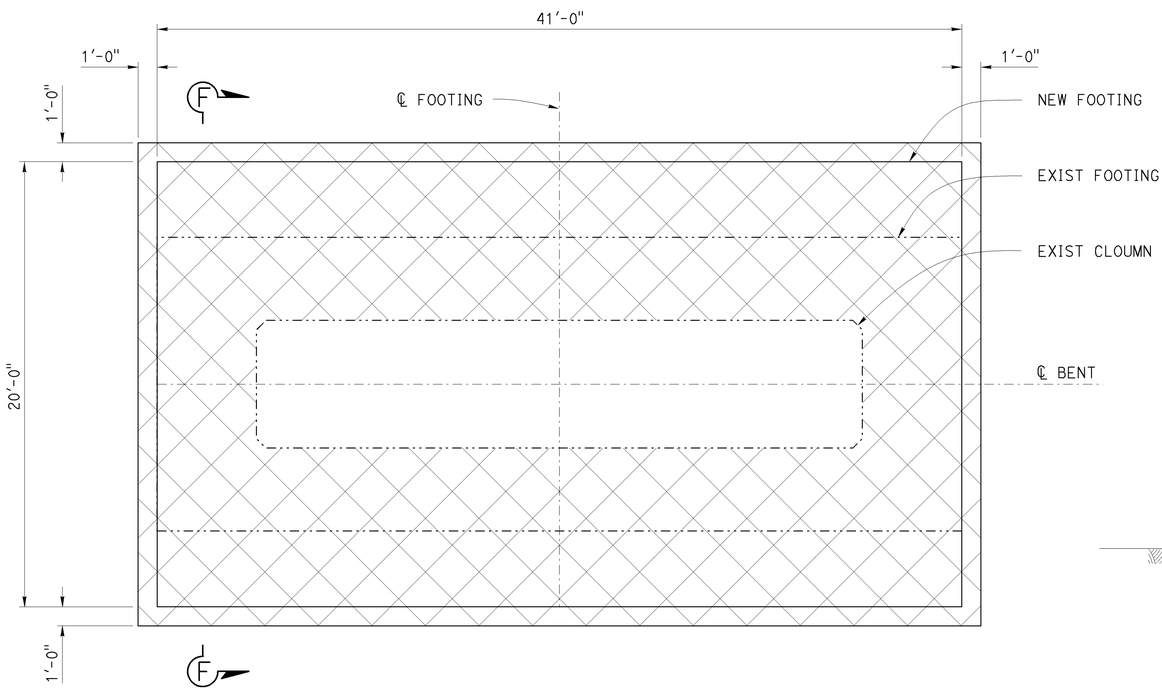

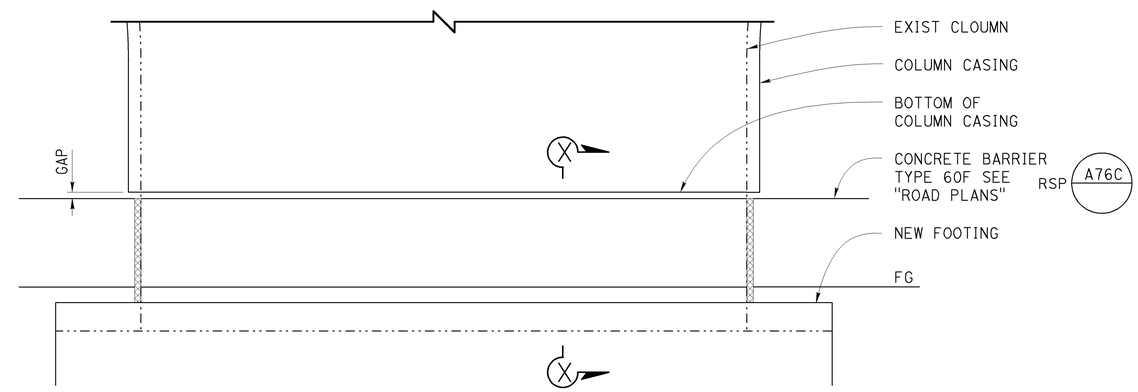

CONCRETE BARRIER DETAILS AT BENT 3
1/4" = 1'-0"

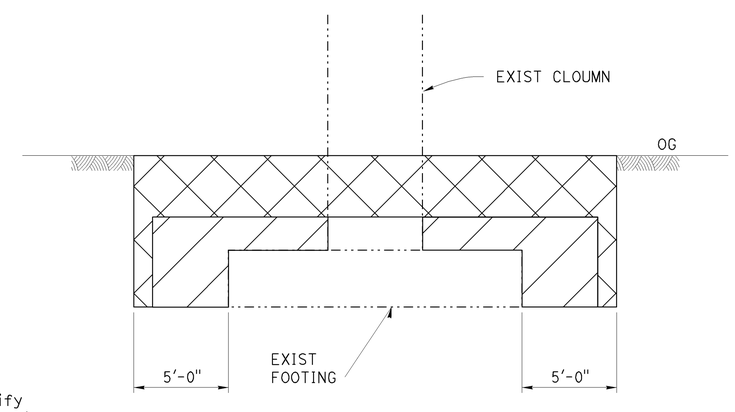

FOOTING SECTION F-F
1/4" = 1'-0"

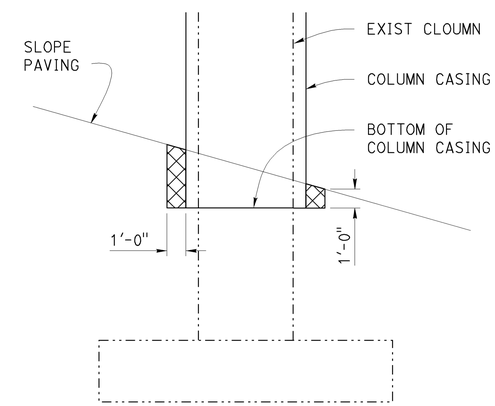

AT BENT 2 AND 4 SLOPE PAVING
no scale

LEGEND

Limits of Payment for Structure Excavation (Bridge)

Limits of Payment for Structure Backfill (Bridge)

BENT FOOTING PLAN
1/4" = 1'-0"

The contractor shall verify all controlling field dimensions before ordering or fabricating any material.

	BY	CHECKED
DESIGN	D. Menzmer	C. Hensel
DETAILS	T. Mason	D. Menzmer
QUANTITIES	D. Menzmer	C. Hensel

STATE OF CALIFORNIA
DEPARTMENT OF TRANSPORTATION

DIVISION OF ENGINEERING SERVICES
STRUCTURE DESIGN
DESIGN BRANCH 12

BRIDGE NO. 57-0678
POST MILE 20.23

KEARNY VILLA ROAD OC (SEISMIC RETROFIT)
EXCAVATION AND BACKFILL

STRUCTURES DESIGN DETAIL SHEET (ENGLISH) (REV. 09-01-10)

ORIGINAL SCALE IN INCHES FOR REDUCED PLANS 0 1 2 3

UNIT: 2786
PROJECT NUMBER & PHASE: 1100000359
CONTRACT NO.: 11-290301

DISREGARD PRINTS BEARING EARLIER REVISION DATES

REVISION DATES: 10-26-11, 4-19-12

SHEET 7 OF 9

FILE => 57-0678-u-exbk.dgn

USERNAME => s136699 DATE PLOTTED => 27-AUG-2012 TIME PLOTTED => 09:30

DIST	COUNTY	ROUTE	POST MILES TOTAL PROJECT	SHEET No.	TOTAL SHEETS
11	SD	75, 805	9.0, 20.2	68	76

REGISTERED CIVIL ENGINEER — DATE 12/29/11

08-20-12
PLANS APPROVAL DATE

REGISTERED PROFESSIONAL ENGINEER — Douglas C. Menzmer — No. C 63498 — Exp. 09/30/2012 — CIVIL — STATE OF CALIFORNIA

The State of California or its officers or agents shall not be responsible for the accuracy or completeness of electronic copies of this plan sheet.

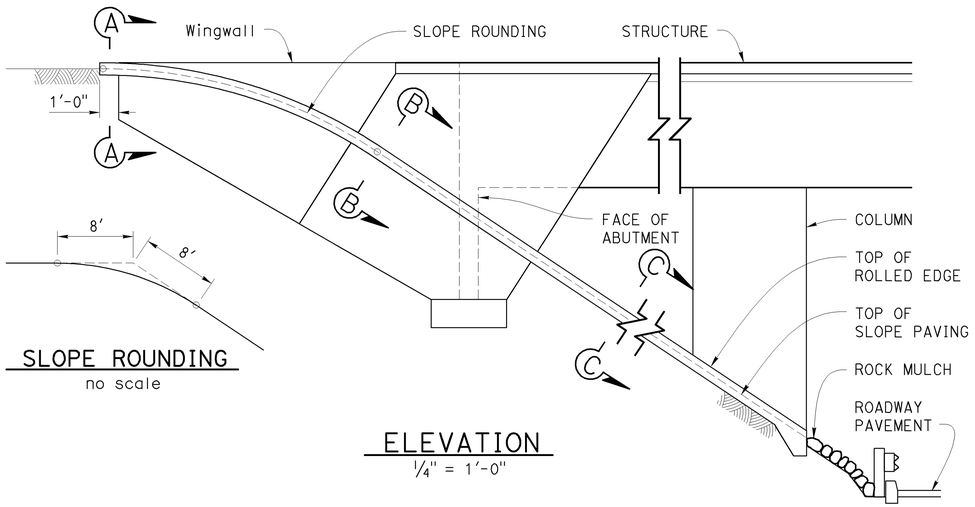

SLOPE ROUNDING
no scale

ELEVATION
1/4" = 1'-0"

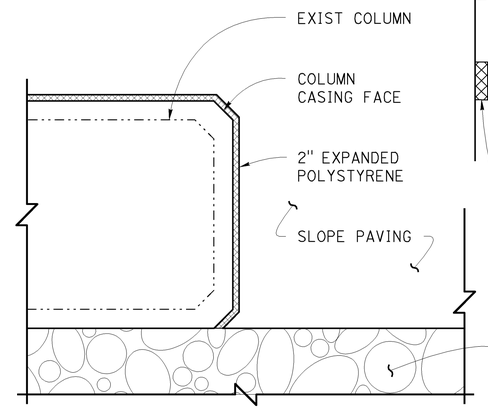

SLOPE PAVING AROUND COLUMN
1/2" = 1'-0"

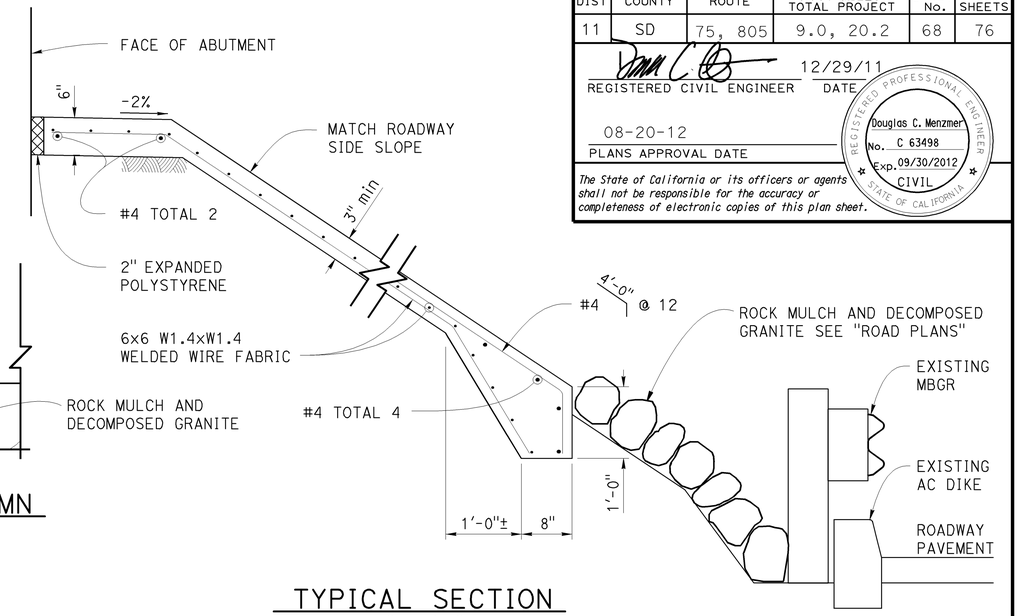

TYPICAL SECTION
1" = 1'-0"

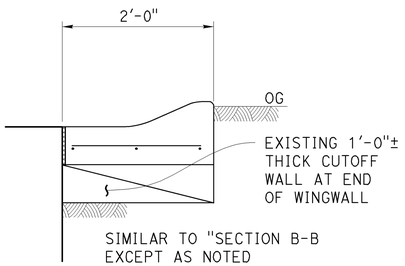

SIMILAR TO "SECTION B-B EXCEPT AS NOTED

SECTION A-A
1" = 1'-0"

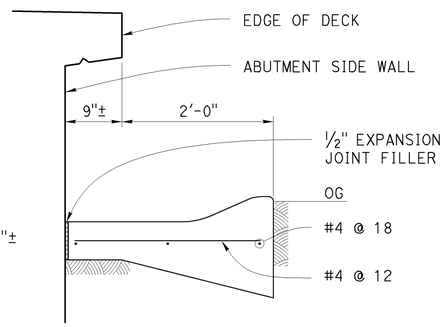

FOR DIMENSIONS NOT SHOWN SEE "SECTION C-C"

SECTION B-B
1" = 1'-0"

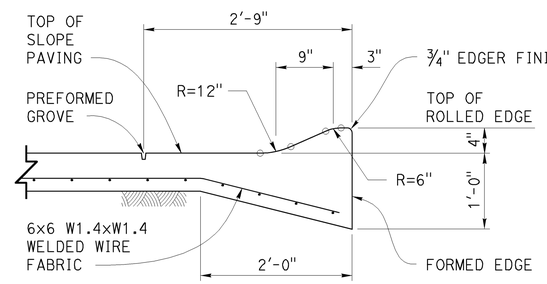

SECTION C-C
1" = 1'-0"

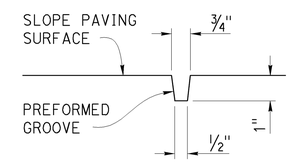

PREFORMED GROOVE
3" = 1'-0"

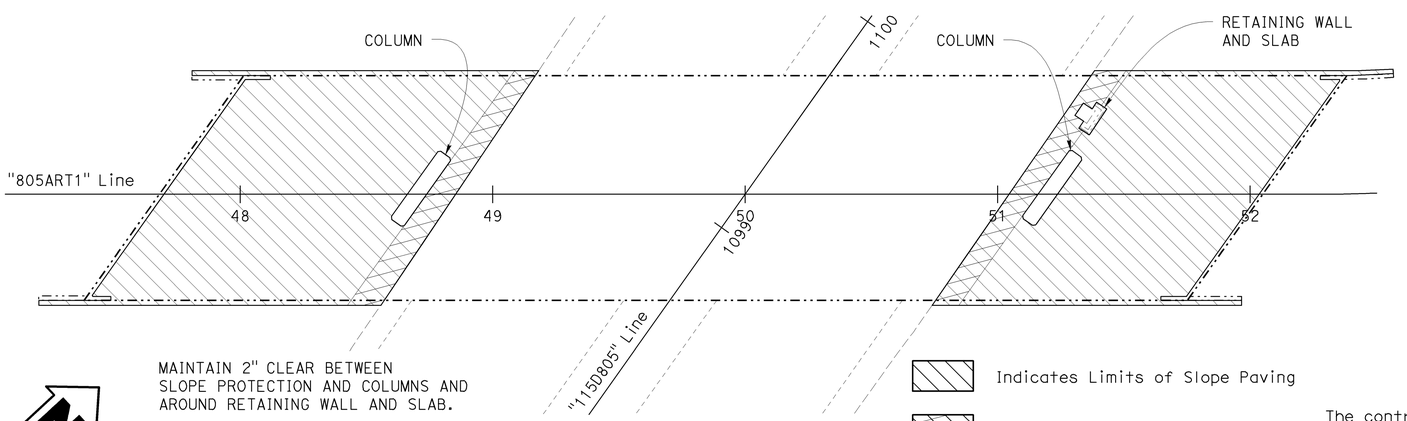

MAINTAIN 2" CLEAR BETWEEN SLOPE PROTECTION AND COLUMNS AND AROUND RETAINING WALL AND SLAB.

LIMITS OF SLOPE PAVING
1" = 30'

Indicates Limits of Slope Paving

Indicates Limits of Rock Mulch and Decomposed Granite see "Road Plans"

The contractor shall verify all controlling field dimensions before ordering or fabricating any material.

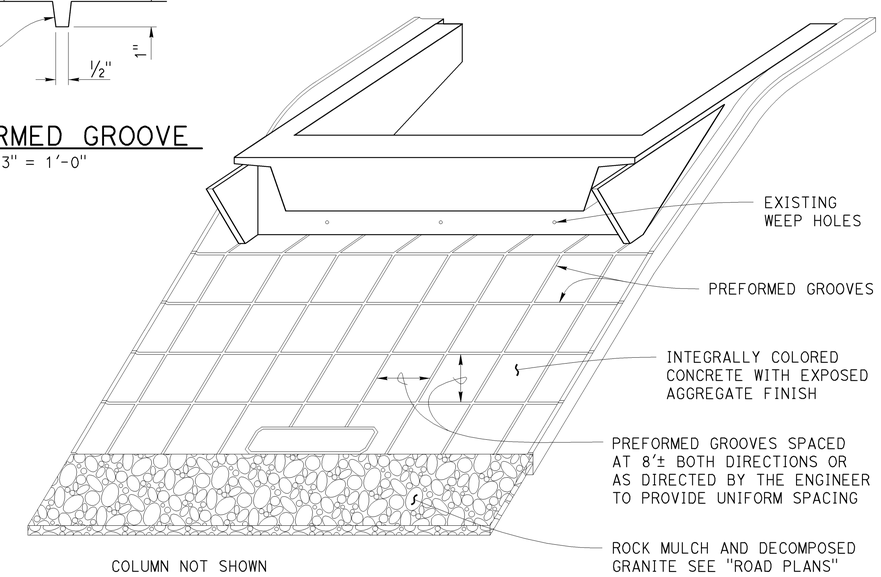

COLUMN NOT SHOWN

PICTORIAL VIEW OF TYPICAL INSTALLATION
no scale

	BY	CHECKED
DESIGN	D. Menzmer	C. Hensel
DETAILS	T. Mason	D. Menzmer
QUANTITIES	D. Menzmer	C. Hensel

STATE OF CALIFORNIA
DEPARTMENT OF TRANSPORTATION

DIVISION OF ENGINEERING SERVICES
STRUCTURE DESIGN
DESIGN BRANCH 12

BRIDGE NO. 57-0678
POST MILE 20.23

KEARNY VILLA ROAD OC (SEISMIC RETROFIT)
SLOPE PAVING

STRUCTURES DESIGN DETAIL SHEET (ENGLISH) (REV. 09-01-10)

ORIGINAL SCALE IN INCHES FOR REDUCED PLANS 0 1 2 3

UNIT: 2786
PROJECT NUMBER & PHASE: 1100000359
CONTRACT NO.: 11-290301

DISREGARD PRINTS BEARING EARLIER REVISION DATES

REVISION DATES: 10-20-11 4-19-12

SHEET 8 OF 9

FILE => 57-0678-u-slpv.dgn

USERNAME => s126699 DATE PLOTTED => 27-AUG-2012 TIME PLOTTED => 09:30

DIST.	COUNTY	ROUTE	POST MILE
11	SD	805	9.0

June 2, 1969

BENCH MARK

BM Elev. 906.38
Set BM Chis. ☐ NE Cor P.I.
on W side Berger Ave about
365 Lt. 1106 + 40 ± ℄ "A"

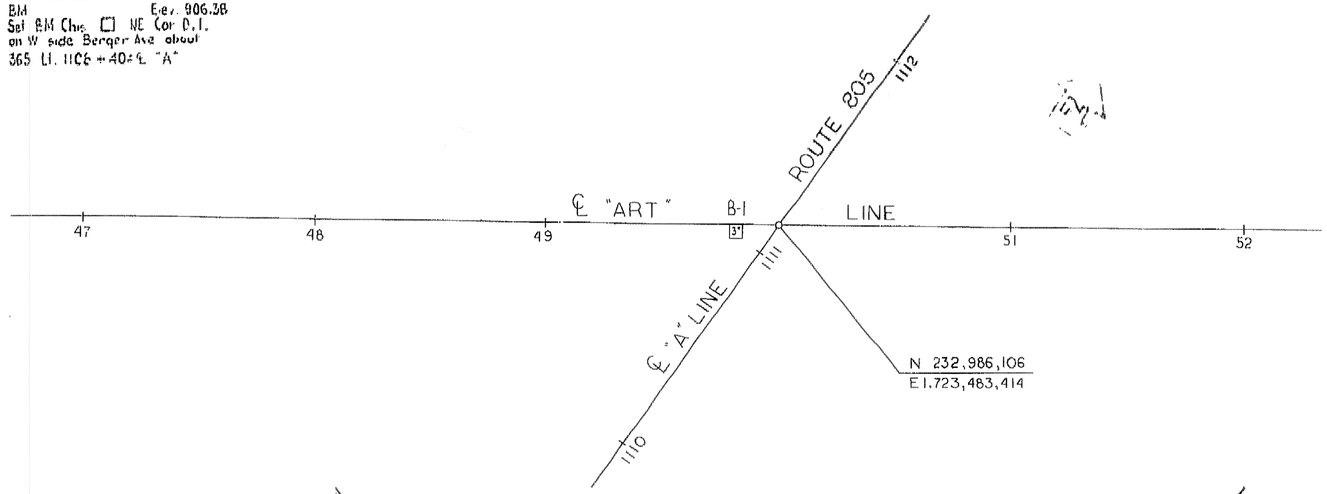

PLAN
Scale 1" = 30'

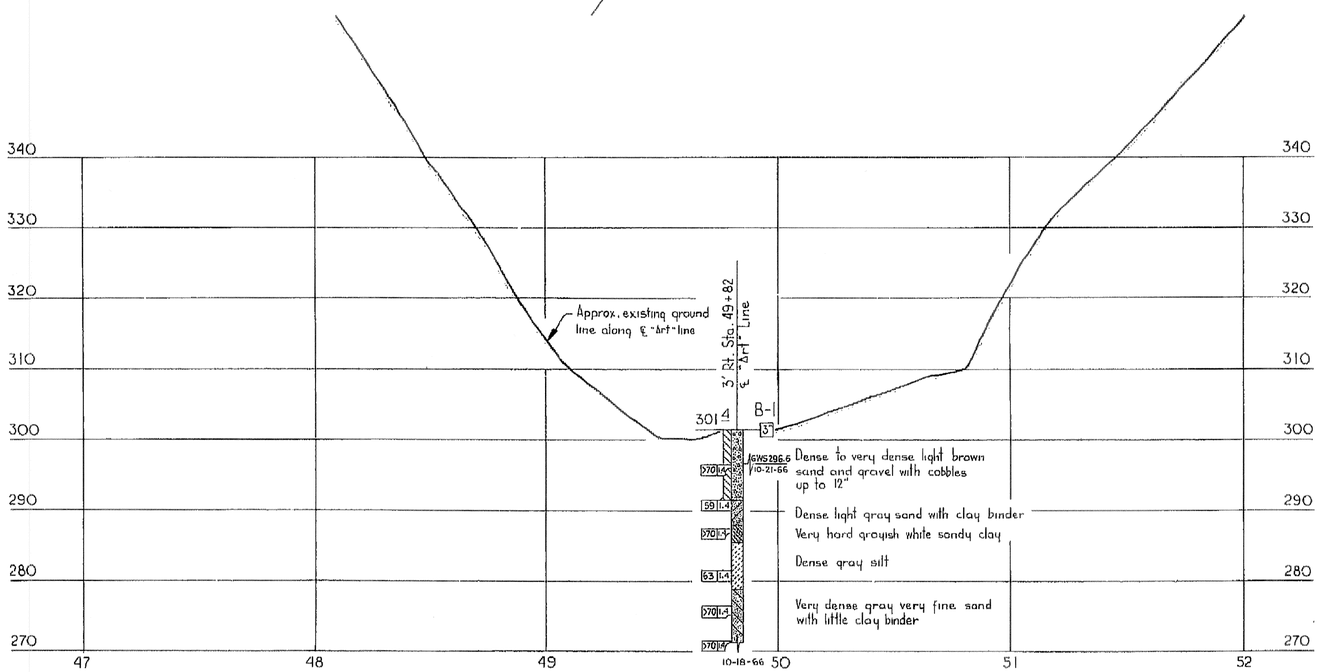

PROFILE
Scale: Vert. 1 = 10
Horiz. 1 = 30

DIVISION OF ENGINEERING SERVICES - MATERIALS AND GEOTECHNICAL SERVICES

As-Built Log of Test Borings sheet is considered an informational document only. As such, the State of California registration seal with signature, license number and registration certificate expiration date confirm that this is a true and accurate copy of the original document. It does not attest to the accuracy or validity of the information contained in the original document. This drawing is available and presented only for the convenience of any bidder, contractor or other interested party.

DIST.	COUNTY	ROUTE	POST MILE-TOTAL PROJECT	Sheet No.	Total Sheets
11	SD	75,805	9.0, 20.2	69	76

Erich Neupert 12/28/11
PROFESSIONAL GEOLOGIST DATE

PROFESSIONAL GEOLOGIST
Erich Neupert
No. 8137
Exp. 2-28-14
STATE OF CALIFORNIA

KEARNY VILLA ROAD OC (SEISMIC RETROFIT)
LOG OF TEST BORINGS

UNIT: 3643	CONTRACT No.	BRIDGE No.
PROJ. No. & PHASE: 11000003591	11-290301	57-0678

AS-BUILT VERT DATUM: CONVERSION: Sheet 9 of 9

NOTE: A COPY OF THIS LOG OF TEST BORINGS IS AVAILABLE AT OFFICE OF STRUCTURE MAINTENANCE AND INVESTIGATIONS, SACRAMENTO, CALIFORNIA

LEGEND OF BORING

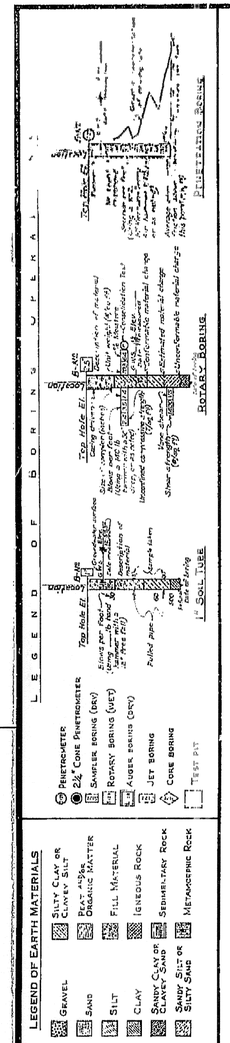

LEGEND OF EARTH MATERIALS

Gravel; Sand; Silt; Clay; Silty Clay or Clayey Silt; Peat & Organic Matter; Fill Material; Igneous Rock; Sandy Clay or Silty Clay; Sedimentary Rock; Sandy Silt or Silty Sand; Metamorphic Rock

CLASSIFICATION OF MATERIAL BASED ON STANDARD GRADE SIZE LIMITS

Diagram showing the base five estimates of grade size distribution used in letter-identification of class names. If gravel is present in appreciable quantities (over 10 percent), it should be added to the class name, viz., "Sandy Silt with Gravel". The terms "Trace", "Little", "Some", "Very" when used to describe sand, silt and gravel, refer to standard grade size limits.

NOTE: Classification of earth material as shown on this sheet is based upon field inspection and is not to be construed to imply mechanical analysis.

FIELD STUDY by V. MIKES 11-3-66
DRAWN by V. SESTOKAS 11-30-66
CHECKED by O. MIKES 12-21-66
Approval Recommended by [signature] Engineering Geologist

BRIDGE DEPARTMENT
ENGINEERING GEOLOGY SECTION

AS BUILT PLANS
Contract No. 11-045864
Date Completed
Document No. 40002485

Charge 11201
W.A. 045861

Disregard prints bearing earlier numbers

PREL. DRAWING No. PR-

SHEET 18 OF 21

STATE OF CALIFORNIA
DEPARTMENT OF PUBLIC WORKS
DIVISION OF HIGHWAYS

ARTILLERY DRIVE OVERCROSSING

LOG OF TEST BORINGS

SCALE As Noted | BRIDGE 57-678 | FILE | DRAWING 57-678-15

DIST	COUNTY	ROUTE	POST MILES TOTAL PROJECT	SHEET No.	TOTAL SHEETS
11	SD	75, 805	9.0, 20.2	70	76

REGISTERED CIVIL ENGINEER — DATE 12/29/11

08-20-12
PLANS APPROVAL DATE

REGISTERED PROFESSIONAL ENGINEER — Douglas C. Menzmer — No. C 63498 — Exp. 09/30/2012 — CIVIL — STATE OF CALIFORNIA

The State of California or its officers or agents shall not be responsible for the accuracy or completeness of electronic copies of this plan sheet.

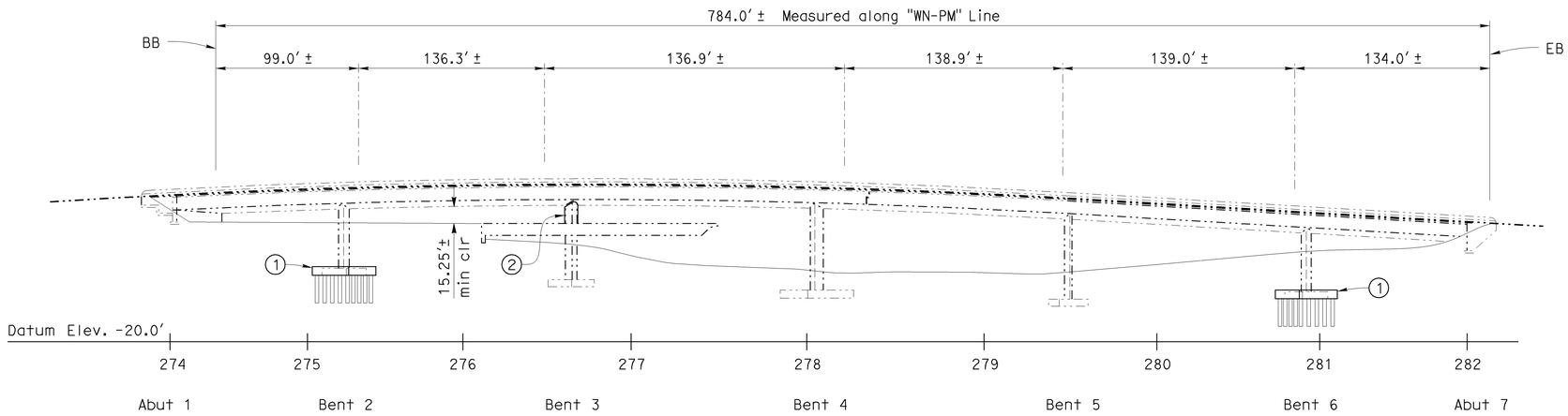

ELEVATION
1" = 40′

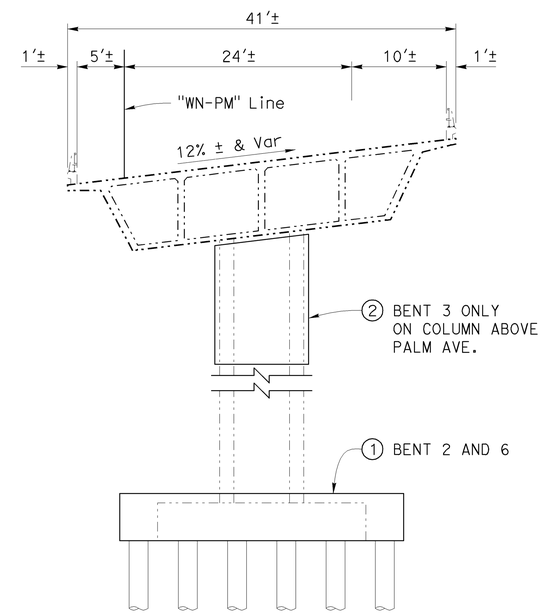

TYPICAL SECTION
1/8" = 1′-0"

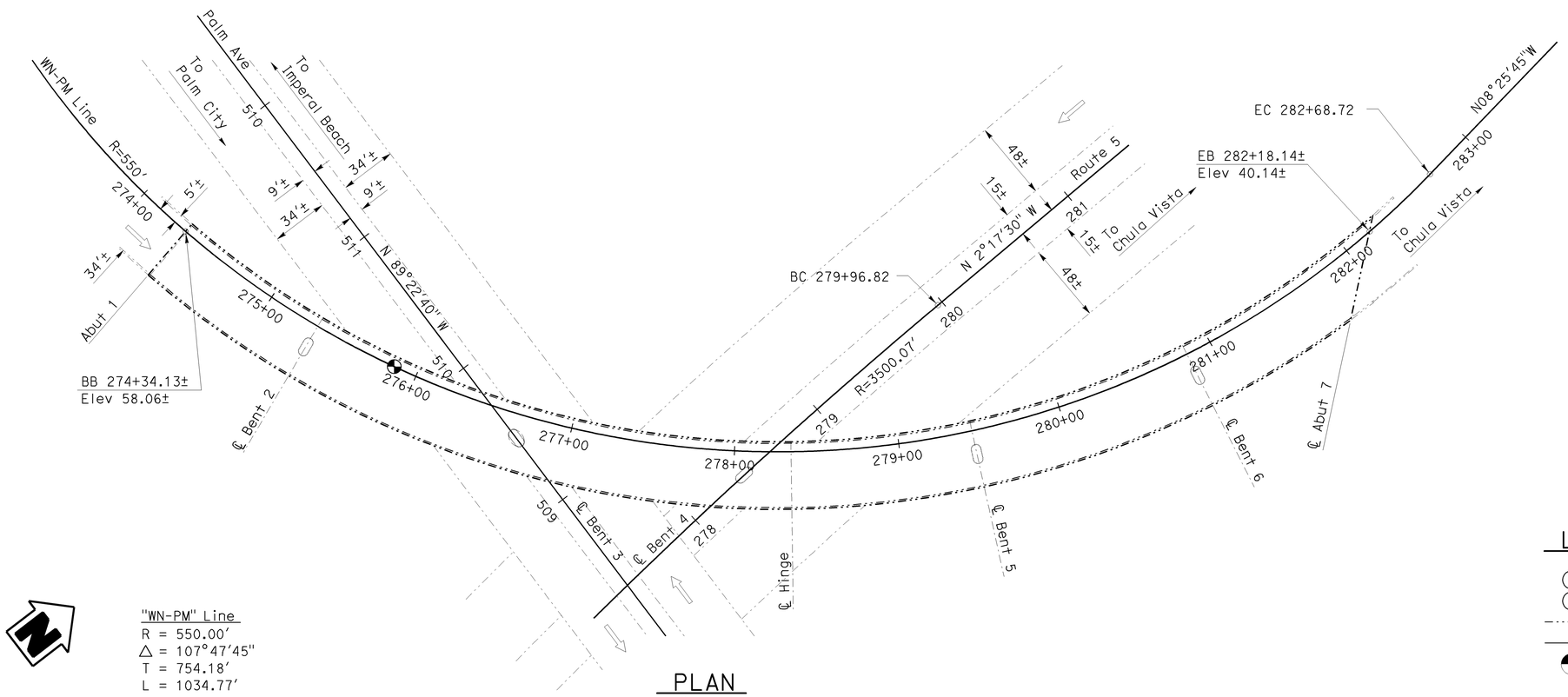

"WN-PM" Line
R = 550.00′
△ = 107°47′45"
T = 754.18′
L = 754.77′

PLAN
1" = 40′

The contractor shall verify all controlling field dimensions before ordering or fabricating any material.

For Index to Plans, Standard Plan List, General Notes and Quantities see "Index To Plans" sheet.

LEGEND

1 Footing Retrofit: New Piles and Enlarged Footing.
2 Column Retrofit: Steel Column Casing.
-·-·-·- Indicates existing structure.
——— Indicates retrofit construction.
Point of minimum vertical clearance.

Matt Holm
DESIGN ENGINEER

	BY	CHECKED		
DESIGN	C. Hensel	D. Menzmer	LOAD & RESISTANCE FACTOR DESIGN	LIVE LOADING: HL93 W/"LOW-BOY"; PERMIT DESIGN VEHICLE
DETAILS	T. Mason	C. Hensel	LAYOUT: D. Menzmer	CHECKED
QUANTITIES	C. Hensel	D. Menzmer	SPECIFICATIONS BY	PLANS AND SPECS COMPARED

ORIGINAL SCALE IN INCHES FOR REDUCED PLANS 0 1 2 3

STATE OF CALIFORNIA
DEPARTMENT OF TRANSPORTATION

DIVISION OF ENGINEERING SERVICES
STRUCTURE DESIGN
DESIGN BRANCH 12

BRIDGE NO. 57-0708F
POST MILE 4.66

E75/N5 CONNECTOR OC (SEISMIC RETROFIT)
GENERAL PLAN

UNIT: 2786
PROJECT NUMBER & PHASE: 1100000359
CONTRACT NO.: 11-290301

DISREGARD PRINTS BEARING EARLIER REVISION DATES

REVISION DATES: 10-20-11, 4-19-12

SHEET 1 OF 7

USERNAME => s1126899 DATE PLOTTED => 27-AUG-2012 TIME PLOTTED => 09:31

STRUCTURES DESIGN GENERAL PLAN SHEET (ENGLISH) (REV.09-01-10)

FILE => 57-0708f-a-gp.dgn

DIST	COUNTY	ROUTE	POST MILES TOTAL PROJECT	SHEET No.	TOTAL SHEETS
11	SD	75, 805	9.0, 20.2	71	76

REGISTERED CIVIL ENGINEER — DATE 12/29/11

08-20-12
PLANS APPROVAL DATE

REGISTERED PROFESSIONAL ENGINEER — Douglas C. Menzmer — No. C 63498 — Exp. 09/30/2012 — CIVIL — STATE OF CALIFORNIA

The State of California or its officers or agents shall not be responsible for the accuracy or completeness of electronic copies of this plan sheet.

GENERAL NOTES
LOAD AND RESISTANCE FACTOR DESIGN

DESIGN:
AASHTO LRFD Bridge Design Specifications, 4th edition and the California Amendments preface dated September 2010.

SEISMIC DESIGN:
Caltrans Seismic Design Criteria (SDC), Version 1.6 dated November 2010.

SEISMIC LOADING:
See: "Site Specific ARS Curve"

CONCRETE:
fy = 60 ksi
f'c = 3.6 ksi, 4.0 ksi
n = 8

INDEX TO PLANS

1. GENERAL PLAN
2. INDEX TO PLANS
3. BENTS 2 & 6 FOOTING DETAILS
4. EXCAVATION AND BACKFILL
5. BENTS 3 COLUMN CASING DETAILS
6. LOG OF TEST BORINGS 1 OF 2
7. LOG OF TEST BORINGS 2 OF 2

STANDARD PLANS 2006

A10A ACRONYMS AND ABBREVIATIONS (SHEET 1 OF 2)
A10B ACRONYMS AND ABBREVIATIONS (SHEET 2 OF 2)
B2-3 16" AND 24" CAST IN DRILLED HOLE CONCRETE PILE

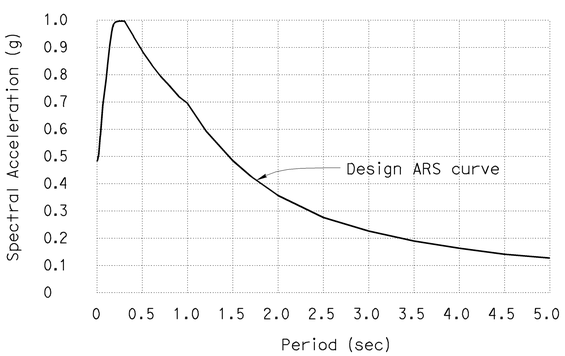

Acceleration Response Spectra (with 5% damping)

SITE SPECIFIC ARS CURVE
no scale

CIDH PILE DATA

LOCATION	PILE TYPE	NOMINAL RESISTANCE		DESIGN TIP ELEVATION	SPECIFIED TIP ELEVATION
		COMPRESSION	TENSION		
Bent 2	24" CIDH	360 kips	110 kips	-15.0' (a-II) 0.0' (b-II)	-15.0'
Bent 6	24" CIDH	390 kips	90 kips	-32.0' (a-II) -11.0' (b-II)	-32.0'

Design tip elevation is controlled by the following demands:
(a-II) Compression, (Extreme Event)
(b-II) Tension, (Extreme Event)

QUANTITIES

BRIDGE REMOVAL (PORTION), LOCATION B	LUMP	SUM
STRUCTURE EXCAVATION (TYPE D)	1,090	CY
STRUCTURE BACKFILL (BRIDGE)	930	CY
24" CAST-IN-DRILLED-HOLE CONCRETE PILING	1,529	LF
STRUCTURAL CONCRETE, BRIDGE FOOTING	160	CY
DRILL AND BOND DOWEL	330	LF
BAR REINFORCING STEEL (BRIDGE)	32,000	LB
COLUMN CASING	8,000	LB

The contractor shall verify all controlling field dimensions before ordering or fabricating any material.

	BY	CHECKED
DESIGN	C. Hensel	D. Menzmer
DETAILS	T. Mason	C. Hensel
QUANTITIES	C. Hensel	D. Menzmer

STATE OF CALIFORNIA
DEPARTMENT OF TRANSPORTATION

DIVISION OF ENGINEERING SERVICES
STRUCTURE DESIGN
DESIGN BRANCH 12

BRIDGE NO. 57-0708F
POST MILE 4.66

E75/N5 CONNECTOR OC (SEISMIC RETROFIT)
INDEX TO PLANS

STRUCTURES DESIGN DETAIL SHEET (ENGLISH) (REV. 09-01-10)

ORIGINAL SCALE IN INCHES FOR REDUCED PLANS 0 1 2 3

UNIT: 2786
PROJECT NUMBER & PHASE: 1100000359
CONTRACT NO.: 11-290301

DISREGARD PRINTS BEARING EARLIER REVISION DATES
REVISION DATES: 10-20-11 4-19-12

SHEET 2 OF 7

FILE => 57-0708f-a-itp.dgn

USERNAME => s126699 DATE PLOTTED => 27-AUG-2012 TIME PLOTTED => 09:31

DIST	COUNTY	ROUTE	POST MILES TOTAL PROJECT	SHEET No.	TOTAL SHEETS
11	SD	75, 805	9.0, 20.2	72	76

REGISTERED CIVIL ENGINEER 12/29/11 DATE

08-20-12
PLANS APPROVAL DATE

REGISTERED PROFESSIONAL ENGINEER Douglas C. Menzmer No. C 63498 Exp. 09/30/2012 CIVIL STATE OF CALIFORNIA

The State of California or its officers or agents shall not be responsible for the accuracy or completeness of electronic copies of this plan sheet.

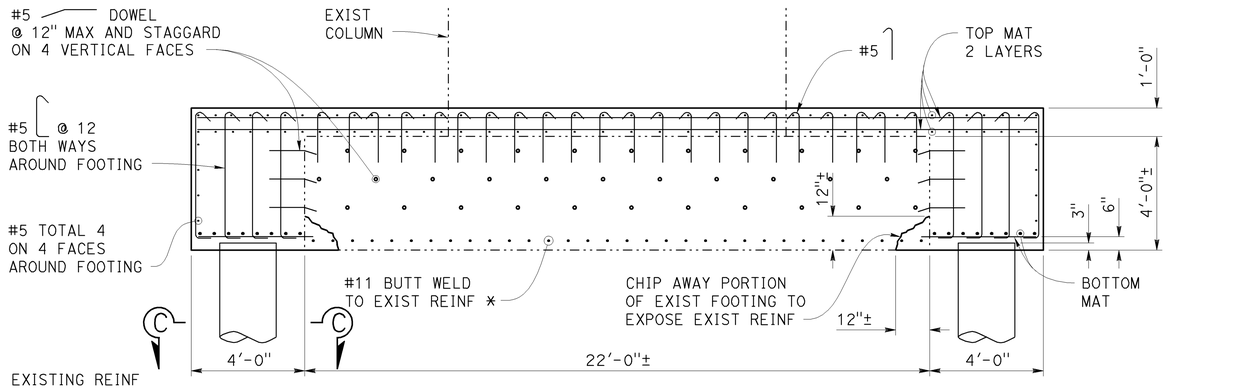

EXISTING REINF NOT SHOWN AND SHALL REMAIN IN PLACE AND UNDAMAGED

FOOTING SECTION A-A

3/8" = 1'-0"

* MECHANICAL BUTT SPLICE MAY BE USED IN LIEU OF BUTT WELDS.

FOOTING REINF SHALL HAVE 3" OF CONCRETE COVER

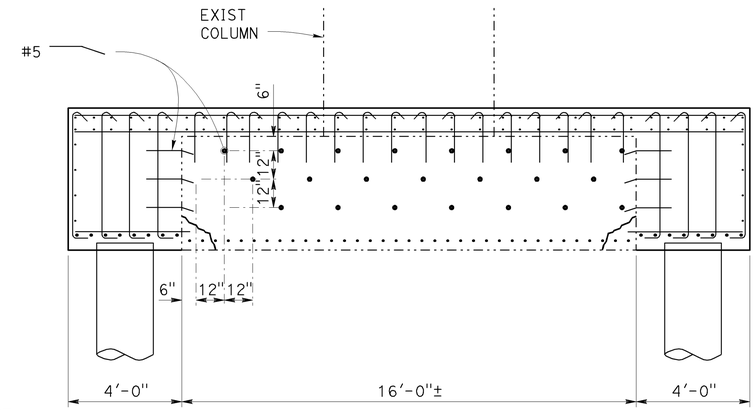

FOOTING SECTION B-B

3/8" = 1'-0"

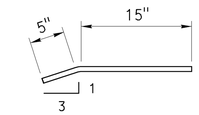

DRILL AND BOND INTO 5" DEEP HOLE

DOWEL DETAIL

no scale

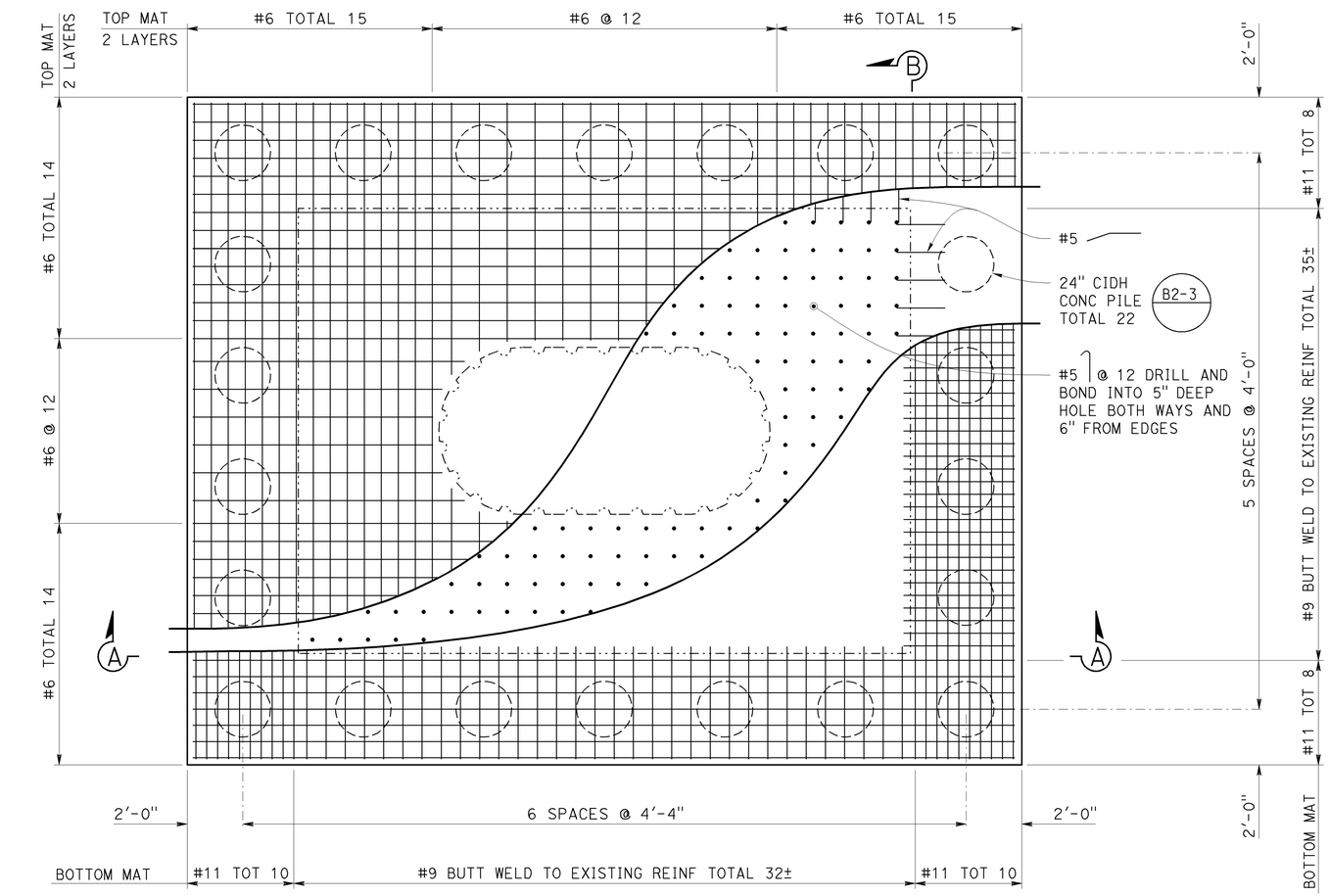

FOOTING PLAN

3/8" = 1'-0"

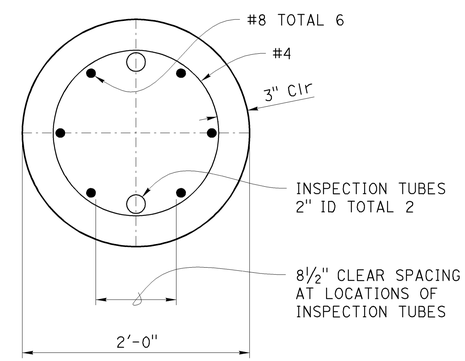

PILE SECTION C-C

no scale

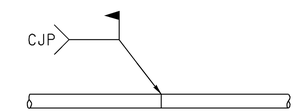

Reinforcement made continuous with 100% penetration welds.

BUTT WELD DETAIL

no scale

The contractor shall verify all controlling field dimensions before ordering or fabricating any material.

	BY	CHECKED
DESIGN	C. Hensel	D. Menzmer
DETAILS	T. Mason	C. Hensel
QUANTITIES	C. Hensel	D. Menzmer

STATE OF CALIFORNIA DEPARTMENT OF TRANSPORTATION

DIVISION OF ENGINEERING SERVICES STRUCTURE DESIGN DESIGN BRANCH 12

BRIDGE NO. 57-0708F POST MILE 4.66

E75/N5 CONNECTOR OC (SEISMIC RETROFIT)

BENTS 2 & 6 FOOTING DETAILS

STRUCTURES DESIGN DETAIL SHEET (ENGLISH) (REV. 09-01-10)

ORIGINAL SCALE IN INCHES FOR REDUCED PLANS 0 1 2 3

UNIT: 2786
PROJECT NUMBER & PHASE: 1100000359 CONTRACT NO.: 11-290301

DISREGARD PRINTS BEARING EARLIER REVISION DATES

REVISION DATES: 10-20-11 4-19-12

SHEET 3 OF 7

FILE => 57-0708f-h-bfdt.dgn

USERNAME => s126639 DATE PLOTTED => 27-AUG-2012 TIME PLOTTED => 09:31

DIST	COUNTY	ROUTE	POST MILES TOTAL PROJECT	SHEET No.	TOTAL SHEETS
11	SD	75, 805	9.0, 20.2	73	76

REGISTERED CIVIL ENGINEER 12/29/11 DATE

08-20-12
PLANS APPROVAL DATE

REGISTERED PROFESSIONAL ENGINEER Douglas C. Menzmer No. C 63498 Exp. 09/30/2012 CIVIL STATE OF CALIFORNIA

The State of California or its officers or agents shall not be responsible for the accuracy or completeness of electronic copies of this plan sheet.

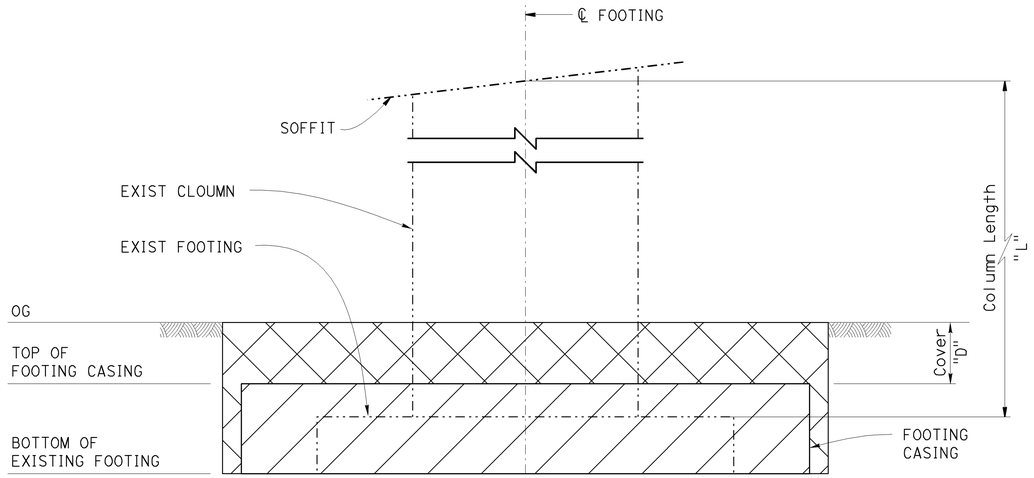

BENT FOOTING ELEVATION

1/4" = 1'-0"

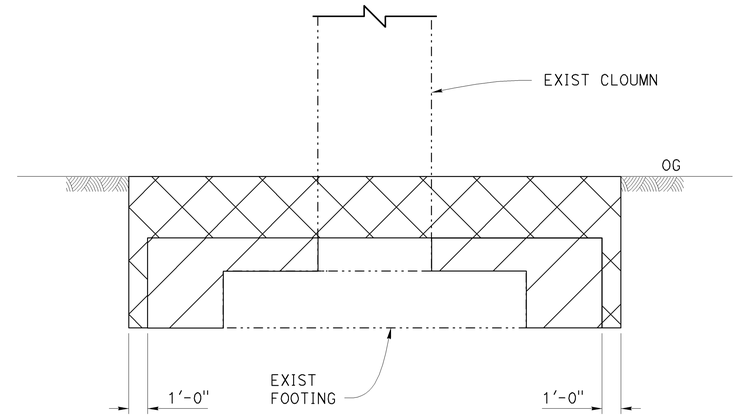

FOOTING SECTION F-F

1/4" = 1'-0"

Location	Cover "D"	Bottom of Footing Elev	Column Length "L"
Bent 2	12.75' ±	17'	34.1' ±
Bent 6	18' ±	5'	32.5' ±

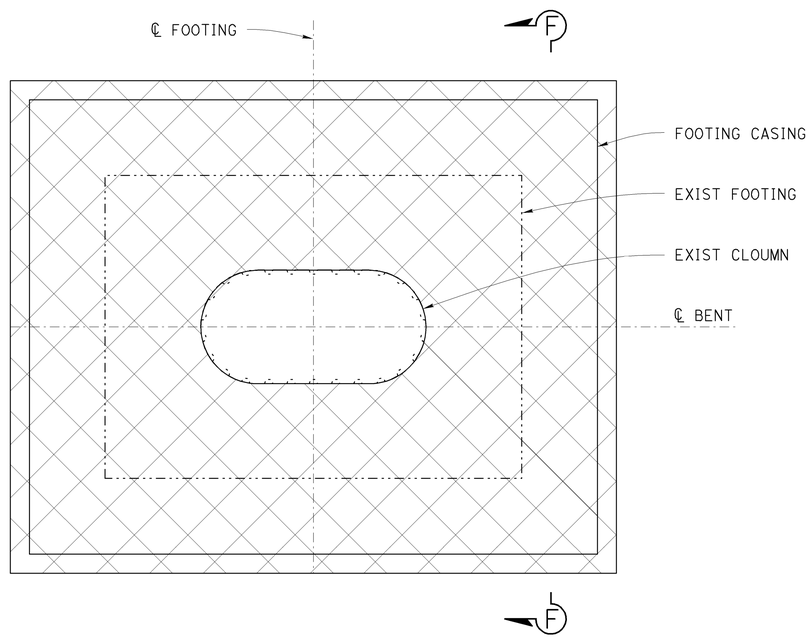

BENT FOOTING PLAN

1/4" = 1'-0"

The contractor shall verify all controlling field dimensions before ordering or fabricating any material.

LIMITS OF PAYMENT FOR STRUCTURE EXCAVATION (TYPE D)

LEGEND

Limits of Payment for Structure Excavation (TYPE D)

Limits of Payment for Structure Backfill (Bridge)

	BY	CHECKED
DESIGN	C. Hensel	D. Menzmer
DETAILS	T. Mason	C. Hensel
QUANTITIES	C. Hensel	D. Menzmer

STATE OF CALIFORNIA DEPARTMENT OF TRANSPORTATION

DIVISION OF ENGINEERING SERVICES STRUCTURE DESIGN DESIGN BRANCH 12

BRIDGE NO. 57-0708F
POST MILE 4.66

E75/N5 CONNECTOR OC (SEISMIC RETROFIT)

EXCAVATION AND BACKFILL

STRUCTURES DESIGN DETAIL SHEET (ENGLISH) (REV. 09-01-10)

ORIGINAL SCALE IN INCHES FOR REDUCED PLANS 0 1 2 3

UNIT: 2786
PROJECT NUMBER & PHASE: 1100000359
CONTRACT NO.: 11-290301

DISREGARD PRINTS BEARING EARLIER REVISION DATES

REVISION DATES: ~~10-20-11~~ 4-19-12

SHEET 4 OF 7

FILE => 57-0708f-u-exbk.dgn

USERNAME => s126639 DATE PLOTTED => 27-AUG-2012 TIME PLOTTED => 09:31

DIST	COUNTY	ROUTE	POST MILES TOTAL PROJECT	SHEET No.	TOTAL SHEETS
11	SD	75, 805	9.0, 20.2	74	76

REGISTERED CIVIL ENGINEER — DATE 12/29/11

08-20-12
PLANS APPROVAL DATE

REGISTERED PROFESSIONAL ENGINEER — Douglas C. Menzmer — No. C 63498 — Exp. 09/30/2012 — CIVIL — STATE OF CALIFORNIA

The State of California or its officers or agents shall not be responsible for the accuracy or completeness of electronic copies of this plan sheet.

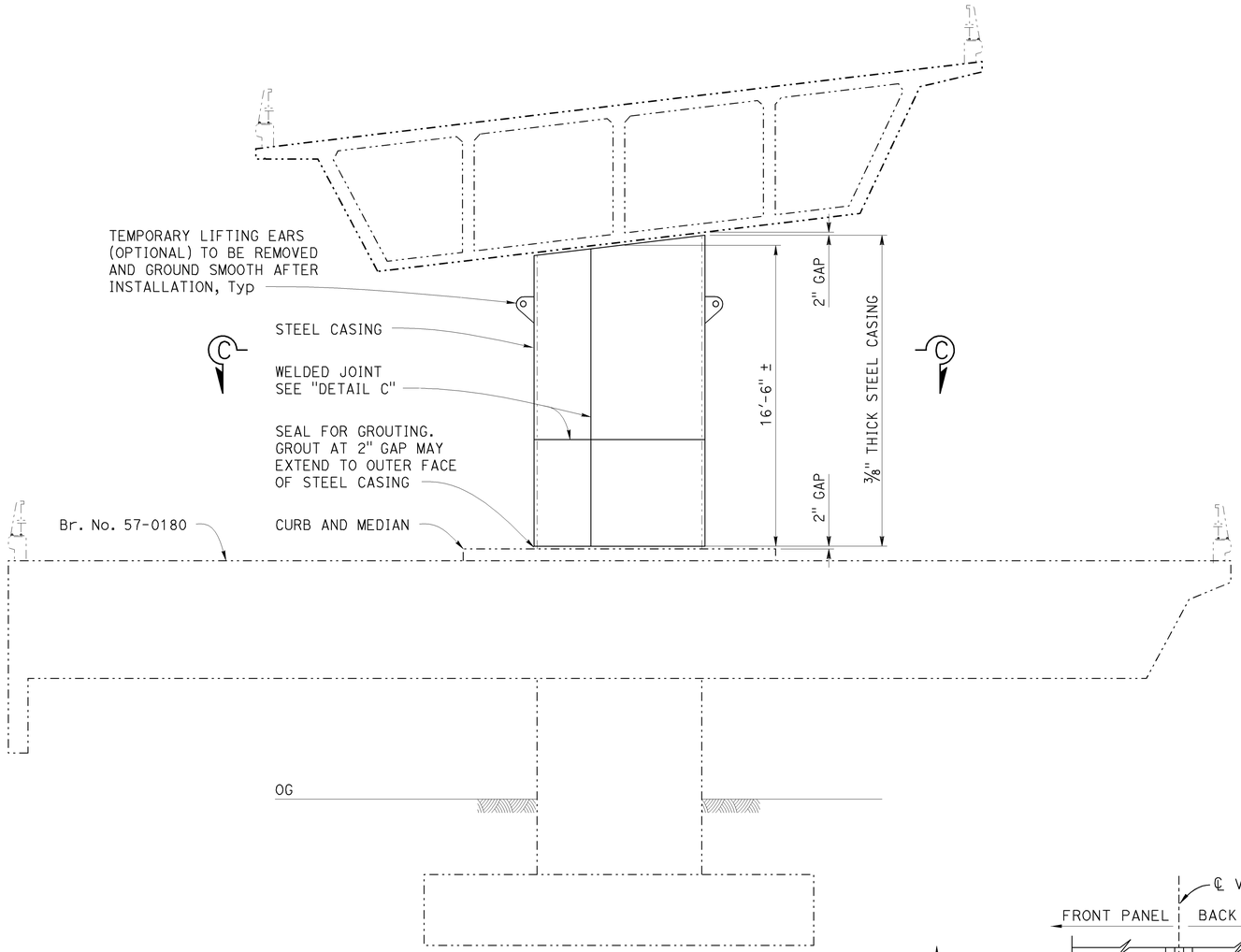

BENT 3 COLUMN ELEVATION

1/4" = 1'-0"

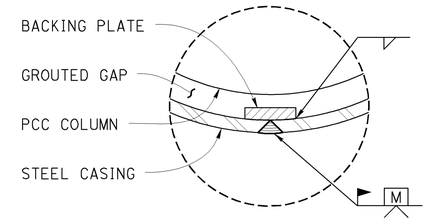

MINIMUM INSIDE DIAMETER OF STEEL CASING = 3/4" GREATER THAN COLUMN DIAMETER

DETAIL D

no scale

STEEL CASING CURVE DATA

"L1" Arc	"L2" Arc
R = 7'-10 3/8"±	R = 3'-0 3/4"±
△ = 77°19'11"±	△ = 102°40'48"±
T = 6'-3 1/2"±	T = 3'-10"±
L = 10'-7 3/8"±	L = 5'-5 7/8"±

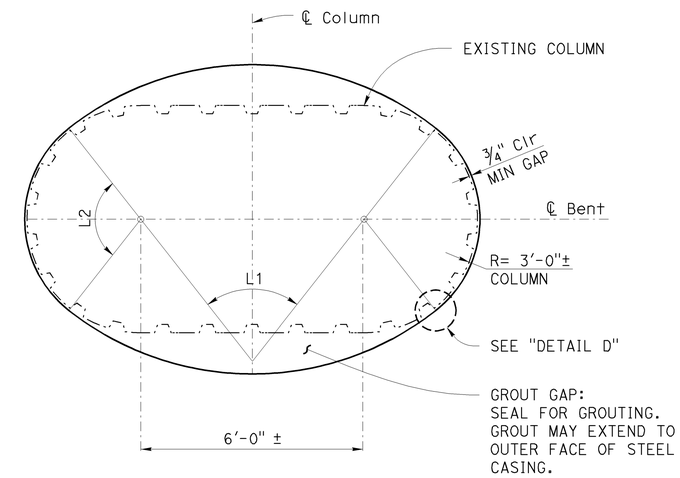

COLUMN SECTION C-C

1/2" = 1'-0"

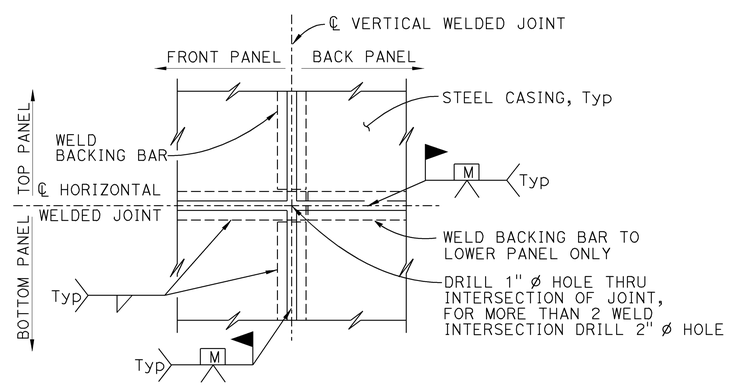

(TWO WELD INTERSECTION JOINT)

DETAIL C

no scale

Notes:

1. Location and number of vertical and horizontal welds to be determined by the Contractor and subject to the approval of the Engineer. The location of casing welds are for illustration. No skip welds allowed.
2. All voids between steel casing and PCC column to be presured grouted.
3. Appropriate injection nozzles to be provided on casing, removed and ground flush following completion of grouting operation.
4. For varying thickness, steel casing inside surface to remain flush. Minimum clearance from PCC column to casing shall be maintained.
5. Backing plates to be the same thickness as casing.
6. Paint steel casing.

The contractor shall verify all controlling field dimensions before ordering or fabricating any material.

	BY	CHECKED
DESIGN	C. Hensel	D. Menzmer
DETAILS	T. Mason	C. Hensel
QUANTITIES	C. Hensel	D. Menzmer

STATE OF CALIFORNIA
DEPARTMENT OF TRANSPORTATION

DIVISION OF ENGINEERING SERVICES
STRUCTURE DESIGN
DESIGN BRANCH 12

BRIDGE NO. 57-0708F
POST MILE 4.66

E75/N5 CONNECTOR OC (SEISMIC RETROFIT)

BENT 3 COLUMN CASING

STRUCTURES DESIGN DETAIL SHEET (ENGLISH) (REV. 09-01-10)

ORIGINAL SCALE IN INCHES FOR REDUCED PLANS 0 1 2 3

UNIT: 2786
PROJECT NUMBER & PHASE: 1100000359
CONTRACT NO.: 11-290301

DISREGARD PRINTS BEARING EARLIER REVISION DATES

REVISION DATES: 10-25-11 4-19-12

SHEET 5 OF 7

FILE => 57-0708f-u-scol.dgn

USERNAME => s126659 DATE PLOTTED => 27-AUG-2012 TIME PLOTTED => 09:31

DIST.	COUNTY	ROUTE	POST MILES TOTAL PROJECT	SHEET NO.	TOTAL SHEETS
11	SD	5	R1.0/4.7	30	31

W. C. Cain 732
CERTIFIED ENGINEERING GEOLOGIST

REGISTERED GEOLOGIST — W. C. CAIN No. 732 Exp. 6-30-92 — CERTIFIED ENGINEERING GEOLOGIST — STATE OF CALIFORNIA

9-14-92
PLANS APPROVAL DATE

1) DIFFERING SITE CONDITIONS ENCOUNTERED (GROUND WATER). SEE CCO #9 & #15

2) ⊕ DENOTES TEMP. WELL POINT. ALL WELLS WERE 24"OD × 20'-24 DEEP.

NOTE:
NO GROUND WATER ENCOUNTERED DURING FIELD INVESTIGATION.

BENCH MARK

TBM @ ABUT 1 ELEV. 58.06
THE PAVING NOTCH ELEVATION @ INTERSECTION OF BB AND "WN-PM" LINE @ STA. 256+22.92 (AS BUILT, 1970)
TBM @ ABUT 7 ELEV. 40.14
THE PAVING NOTCH ELEVATION @ INTERSECTION OF EB AND "WN-PM" LINE @ STA. 264+04.48 (AS BUILT, 1970)

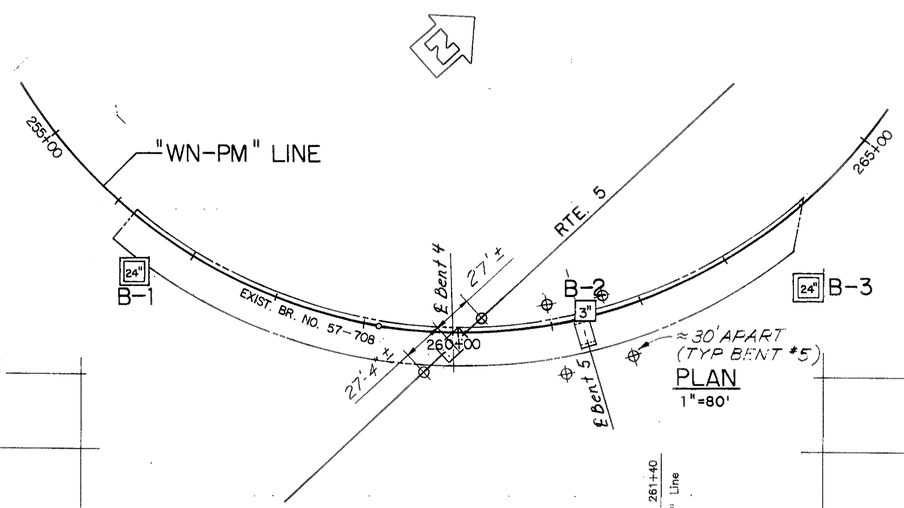

PLAN
1"=80'

B-1

57' Rt. Sta. 256+60 "WN-PM" Line

38.3 — 24"

40: Dark brown, plastic SANDY CLAY with scattered GRAVEL and small COBBLES (diameter 3"–4") (fill material); slightly moist. Light brown, CLAYEY SAND with scattered COBBLES (diameter 4"–9") (fill material); slightly moist.

30: Dark brown, plastic SANDY CLAY with scattered COBBLES. Pieces of asphalt found @ elev. 20 to 16 (fill material); moist.

20

10: Brown and gray, loosely packed SANDY COBBLES of up to 6" as measured in the longest dimension; dry to slightly moist.

0

NOTE:
HOLE STARTED TO CAVE @ ELEV. 17.5; @ THE BOTTOM OF THE HOLE ABOUT 44" DIAMETER BELLING WAS OBSERVED.

10-15-91

B-2

6' Lt. Sta. 261+40 "WN-PM" Line

10.5 — 3"

Asphalt pavement and base material.

Dense to very dense, brown, CLAYEY SANDY GRAVEL with abundant COBBLES. COBBLES consist primarily of metavolcanic/igneous origin, up to 9" as measured in the longest dimension. A stiff, light brown CLAY layer is found between elev. -9 to -12.

Very dense, olive gray, micaceous SILTY coarse SAND with scattered GRAVEL; moist.

Very dense to dense, reddish brown, low plasticity CLAYEY SAND with occasional thin interlayers of GRAVEL and COBBLES.

Dense, olive brown, micaceous, CLAYEY SILT and SILTY CLAY; moist.

Very dense, dark gray, micaceous, fine to medium SAND with lenses of CLAY; saturated.

Blows	Penetration (in)
57	1.4
>70	1.4
>70	1.4
49	1.4
17	1.4
>70	1.4
>70	1.4
35	1.4
56	1.4
>70	1.4
>70	1.4

10-23-91

B-3

74' Rt. Sta. 263+57 "WN-PM" Line

42.9 — 24"

Asphalt and base material.

Reddish brown, SILTY coarse SAND with scattered GRAVEL and COBBLES; angular rock fragments are also found (fill material); dry.

Dark brown, SANDY coarse GRAVEL with scattered COBBLES (fill material); dry.

Reddish brown to light brown, SANDY COBBLES, average size of COBBLES are 6" to 10" as measured in the longest dimension.

10-23-91

NOTE:
HOLE STARTED TO BELL @ ABOUT ELEVATION 32.9' (HOLE DIAM. 36"), AND @ THE BOTTOM OF THE HOLE. DIAM. WAS 54".

40 30 20 10 0 -10 -20 -30 -40 -50 -60 -70 -80

255+00 257+50 260+00 262+50 265+00

AS BUILT

CORRECTIONS BY D.S. WILKERSON
CONTRACT NO. 11-086874
DATE 12-1-93
FRS 4/26/94

PROFILE

HOR. 1"=50', VERT. 1=10'

DIVISION OF ENGINEERING SERVICES - MATERIALS AND GEOTECHNICAL SERVICES

As-Built Log of Test Borings sheet is considered an informational document only. As such, the State of California registration seal with signature, license number and registration certificate expiration date confirm that this is a true and accurate copy of the original document. It does not attest to the accuracy or validity of the information contained in the original document. This drawing is available and presented only for the convenience of any bidder, contractor or other interested party.

DIST.	COUNTY	ROUTE	POST MILE-TOTAL PROJECT	Sheet No.	Total Sheets
11	SD	75,805	9.0, 20.2	75	76

Erich Neupert — PROFESSIONAL GEOLOGIST — DATE 12/23/11

PROFESSIONAL GEOLOGIST — Erich Neupert No. 8137 Exp. 2-28-14 — STATE OF CALIFORNIA

E75/N5 CONNECTOR OC (SEISMIC RETROFIT)
LOG OF TEST BORINGS 1 OF 2

UNIT: 3643 — CONTRACT No. 11-290301 — BRIDGE No. 57-0708F
PROJ. No. & PHASE: 11000003591
AS-BUILT VERT DATUM: CONVERSION: — Sheet 6 of 7
NOTE: A COPY OF THIS LOG OF TEST BORINGS IS AVAILABLE AT OFFICE OF STRUCTURE MAINTENANCE AND INVESTIGATIONS, SACRAMENTO, CALIFORNIA

LEGEND OF BORING OPERATIONS

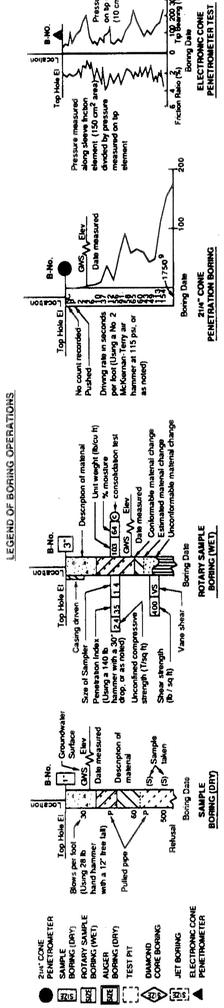

LEGEND OF EARTH MATERIALS

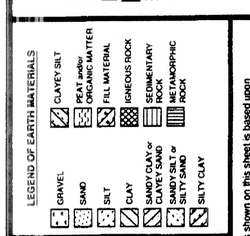

CONSISTENCY CLASSIFICATION FOR SOILS

According to the Standard Penetration Test

Penetration Resistance (Blows / Ft)	Granular	Cohesive
0-4	Very loose	Very soft
5-9	Loose	Soft
10-19	Slightly compact	Very stiff
20-34	Compact	Hard
35-69	Dense	Very hard
>70	Very dense	

NOTE: Classification of earth material as shown on this sheet is based upon field inspection and is not to be construed to imply mechanical analysis.

OFFICE OF TRANSPORTATION MATERIALS & RESEARCH	ENGINEERING GEOLOGY BRANCH
DRAWN BY LEONY L. LOPEZ	12/91
CHECKED BY Faramarz Gerami	1/92

FIELD INVESTIGATION BY: F. GERAMI

State of CALIFORNIA DEPARTMENT OF TRANSPORTATION

DIVISION OF STRUCTURES STRUCTURE DESIGN

BRIDGE NO. 57-708
POST MILE 4.6

EARTHQUAKE RETROFIT PROJECT NO. 585
PALM CONNECTOR OVERCROSSING
LOG OF TEST BORINGS 1 OF 2

ORIGINAL SCALE IN INCHES FOR REDUCED PLANS 0 1 2 3

CU 11205
EA 086871

DISREGARD PRINTS BEARING EARLIER REVISION DATES 3/3/92

REVISION DATES (PRELIMINARY STAGE ONLY) — SHEET 7 OF 8

TL 6051 REV. 3/90 DD 56358

DIST.	COUNTY	ROUTE	POST MILES—TOTAL PROJECT	SHEET NO.	TOTAL SHEETS
11	SD	5	4.4/9.0	293	437

District Bridge Engineer — Registered Civil Engineer No. 7584

Date approved: July 27, 1970

LEGEND OF BORING OPERATIONS

- Penetrometer
- 2½" Cone Penetrometer
- Sampler Boring (Dry)
- Rotary Boring (Wet)
- Auger Boring (Dry)
- Jet Boring
- Core Boring
- Test Pit

Penetration Boring — Rotary Boring — 1" Soil Tube

LEGEND OF EARTH MATERIALS

- Gravel
- Sand
- Silt
- Clay
- Silty Clay or Clayey Silt
- Peat and/or Organic Matter
- Fill Material
- Igneous Rock
- Sandy Clay or Clayey Sand
- Sandy Silt or Silty Sand
- Sedimentary Rock
- Metamorphic Rock

CLASSIFICATION OF MATERIAL BASED ON STANDARD GRADE SIZE LIMITS

Diagram showing the basis for estimated or grade size distribution used in determining material of glass sand. Approximate percentages of gravel, sand, silt and clay are added to the class name, viz. "Sandy Silt." The terms "Gravelly" may be used to describe sand, silt and gravel, refer to standard grade size limits.

NOTE: Classification of earth material as shown on this sheet is based upon field inspection and is not to be construed to imply mechanical analysis.

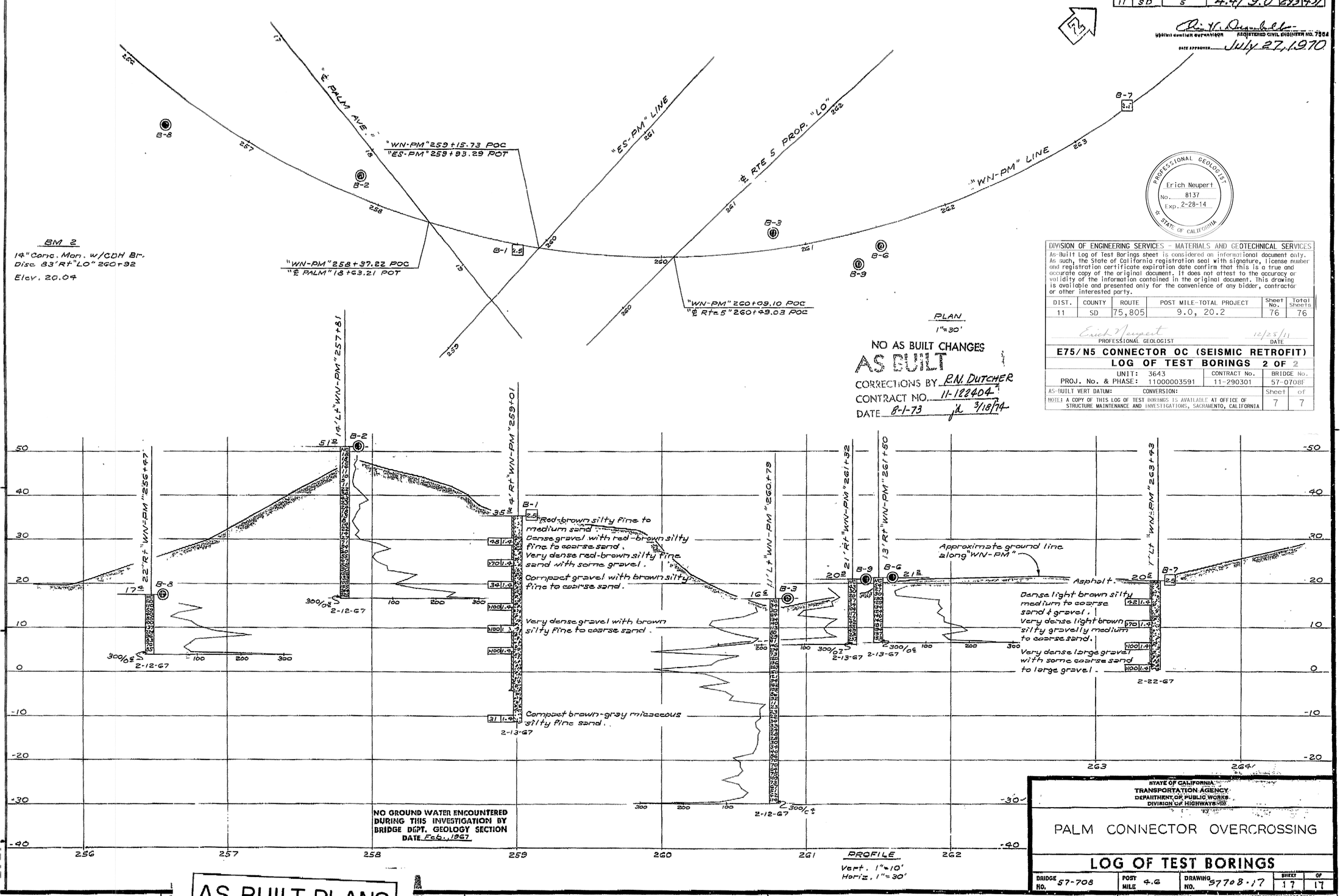

PROFESSIONAL GEOLOGIST — Erich Neupert — No. 8137 — Exp. 2-28-14 — STATE OF CALIFORNIA

DIVISION OF ENGINEERING SERVICES - MATERIALS AND GEOTECHNICAL SERVICES

As-Built Log of Test Borings sheet is considered an informational document only. As such, the State of California registration seal with signature, license number and registration certificate expiration date confirm that this is a true and accurate copy of the original document. It does not attest to the accuracy or validity of the information contained in the original document. This drawing is available and presented only for the convenience of any bidder, contractor or other interested party.

DIST.	COUNTY	ROUTE	POST MILE-TOTAL PROJECT	Sheet No.	Total Sheets
11	SD	75,805	9.0, 20.2	76	76

Erich Neupert — PROFESSIONAL GEOLOGIST — DATE 12/28/11

E75/N5 CONNECTOR OC (SEISMIC RETROFIT)

LOG OF TEST BORINGS 2 OF 2

UNIT: 3643 — CONTRACT No. 11-290301 — BRIDGE No. 57-0708F

PROJ. No. & PHASE: 11000003591

AS-BUILT VERT DATUM: CONVERSION: — Sheet 7 of 7

NOTE: A COPY OF THIS LOG OF TEST BORINGS IS AVAILABLE AT OFFICE OF STRUCTURE MAINTENANCE AND INVESTIGATIONS, SACRAMENTO, CALIFORNIA

STATE OF CALIFORNIA
TRANSPORTATION AGENCY
DEPARTMENT OF PUBLIC WORKS
DIVISION OF HIGHWAYS

PALM CONNECTOR OVERCROSSING

LOG OF TEST BORINGS

BRIDGE NO.	POST MILE	DRAWING NO.	SHEET	OF
57-708	4.6	57708-17	17	17

REVISION DATES (PRELIMINARY STAGE ONLY): 3/1/67

Disregard prints bearing earlier revision dates

WO 086071
CU 11208

FIELD STUDY	R. Williams 2-67
DRAWN	K. Endow 3-7-67
CHECKED	R. Williams 3-12-67

Approved Recommended by: Engineering Geologist

BRIDGE DEPARTMENT
ENGINEERING GEOLOGY SECTION

293

AS BUILT PLANS
Contract No. 11-122404
Date Completed