Dist	COUNTY	ROUTE	POST MILES TOTAL PROJECT	SHEET No.	TOTAL SHEETS
11	SD	805	0.9/1.1, 2.5/2.9	1	59

STATE OF CALIFORNIA

DEPARTMENT OF TRANSPORTATION

ACSTPI-805-1(628)E

PROJECT PLANS FOR CONSTRUCTION ON

STATE HIGHWAY

IN SAN DIEGO COUNTY IN SAN DIEGO FROM SAN YSIDRO UNDERPASS TO BEYER BOULEVARD OVERCROSSING AND FROM 0.3 MILE NORTH OF DEL SOL BOULEVARD UNDERCROSSING TO PALM AVENUE OVERCROSSING

TO BE SUPPLEMENTED BY STANDARD PLANS DATED 2010

INDEX OF PLANS

SHEET NO.	DESCRIPTION
1	TITLE AND LOCATION MAP
2-4	LAYOUT
5	CONSTRUCTION DETAILS
6-9	TEMPORARY WATER POLLUTION CONTROL PLAN AND QUANTITIES
10-13	DRAINAGE PLAN, PROFILE, DETAILS, AND QUANTITIES
14-16	UTILITY PLAN
17	CONSTRUCTION AREA SIGNS
18	SUMMARY OF QUANTITIES
19-21	PLANT REMOVAL PLAN
22	IRRIGATION SPRINKLER SCHEDULE
23-25	IRRIGATION REMOVAL PLAN
26-33	IRRIGATION PLAN, DETAILS, AND QUANTITIES
34-35	PLANT LIST
36-38	PLANTING PLAN
39-41	LANDSCAPE DETAILS AND QUANTITIES
42	ELECTRICAL PLAN
43-59	REVISED STANDARD PLAN

THE STANDARD PLANS LIST APPLICABLE TO THIS CONTRACT IS INCLUDED IN THE NOTICE TO BIDDERS AND SPECIAL PROVISIONS BOOK.

LOCATION MAP

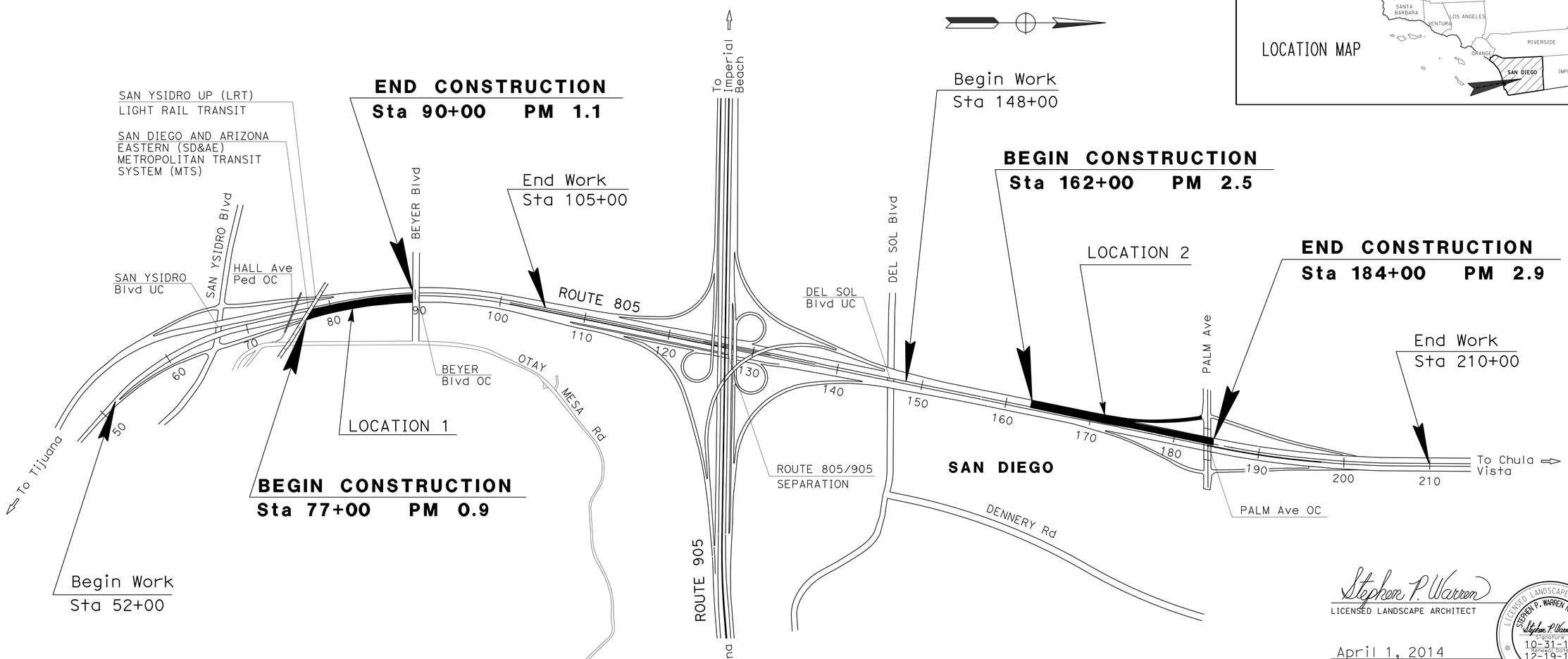

Stephen P. Warren
LICENSED LANDSCAPE ARCHITECT

April 1, 2014
PLANS APPROVAL DATE

THE STATE OF CALIFORNIA OR ITS OFFICERS OR AGENTS SHALL NOT BE RESPONSIBLE FOR THE ACCURACY OR COMPLETENESS OF SCANNED COPIES OF THIS PLAN SHEET.

LICENSED LANDSCAPE ARCHITECT — STEPHEN P. WARREN No. 3492 — Signature 10-31-14 — Renewal Date 12-19-13 — Date — STATE OF CALIFORNIA

THE CONTRACTOR SHALL POSSESS THE CLASS (OR CLASSES) OF LICENSE AS SPECIFIED IN THE "NOTICE TO BIDDERS."

NO SCALE

CONTRACT No.	11-292304
PROJECT ID	1100020311

PROJECT MANAGER: LOU MELENDEZ
SENIOR LANDSCAPE ARCHITECT: STEPHEN ALVAREZ

LAST REVISION 01-22-14 — DATE PLOTTED => 07-APR-2014 — TIME PLOTTED => 09:25

Dist	COUNTY	ROUTE	POST MILES TOTAL PROJECT	SHEET No.	TOTAL SHEETS
11	SD	805	0.9/1.1, 2.5/2.9	2	59

Bahman Yazdani 12-19-13
REGISTERED CIVIL ENGINEER DATE

04-01-14
PLANS APPROVAL DATE

REGISTERED PROFESSIONAL ENGINEER
BAHMAN YAZDANI
No. C58322
Exp 06-30-14
CIVIL
STATE OF CALIFORNIA

THE STATE OF CALIFORNIA OR ITS OFFICERS OR AGENTS SHALL NOT BE RESPONSIBLE FOR THE ACCURACY OR COMPLETENESS OF SCANNED COPIES OF THIS PLAN SHEET.

NOTES:

1. FOR ACCURATE RIGHT OF WAY DATA, CONTACT RIGHT OF WAY ENGINEERING AT THE DISTRICT OFFICE.
2. ASPHALTIC EMULSION (FOG SEAL COAT) AT SHOULDER ONLY.

SAN DIEGO

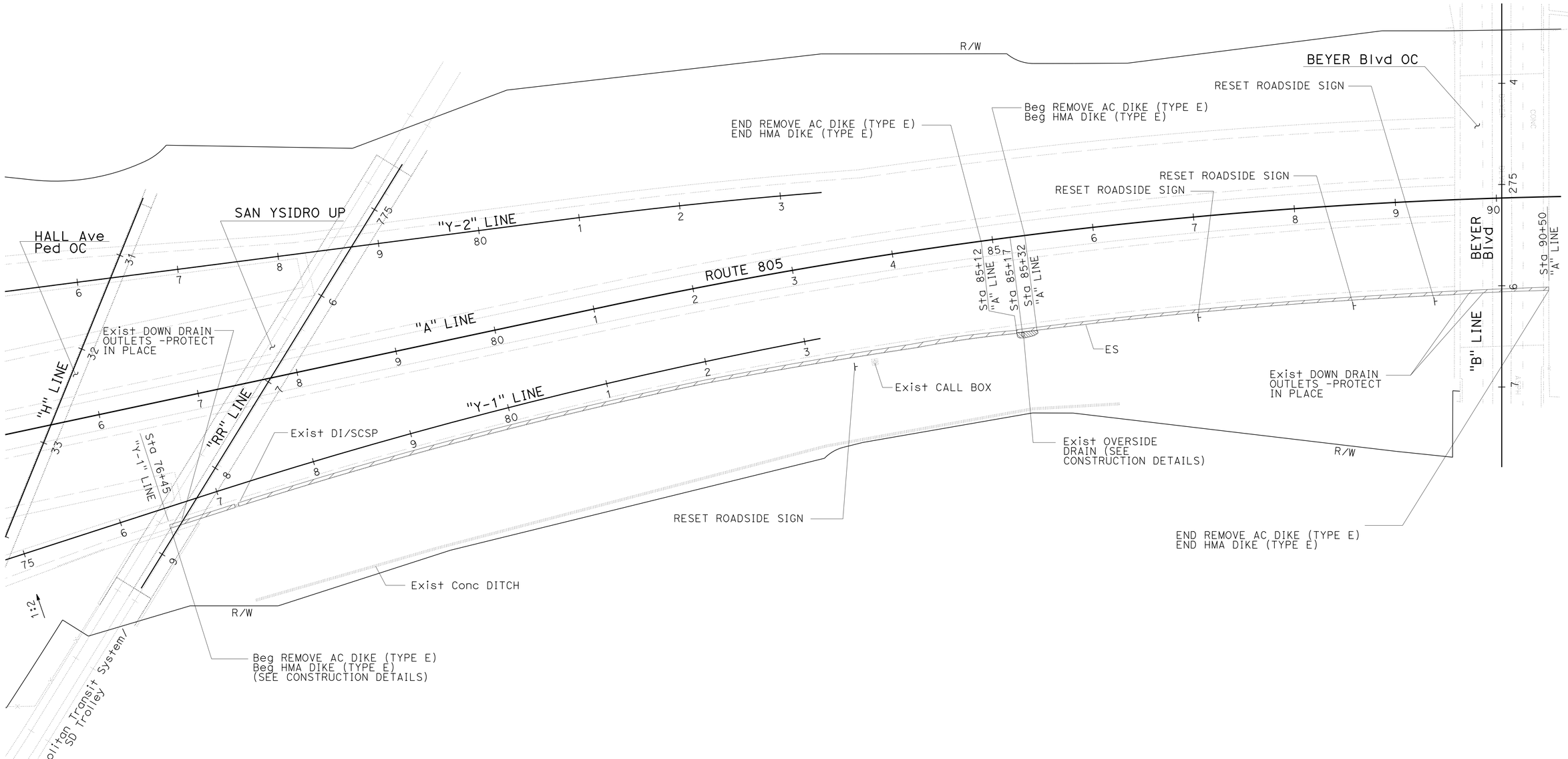

LAYOUT
LOCATION 1

SCALE: 1" = 50'

L-1

STATE OF CALIFORNIA - DEPARTMENT OF TRANSPORTATION
Caltrans
DESIGN

FUNCTIONAL SUPERVISOR: CHRIS THOMAS
CALCULATED-DESIGNED BY: JOEL HORTIZUELA
CHECKED BY: BAHMAN YAZDANI
REVISED BY
DATE REVISED

LAST REVISION 01-22-14
DATE PLOTTED => 07-APR-2014
TIME PLOTTED => 09:25

Dist	COUNTY	ROUTE	POST MILES TOTAL PROJECT	SHEET No.	TOTAL SHEETS
11	SD	805	0.9/1.1, 2.5/2.9	3	59

Bahman Yazdani 12-19-13
REGISTERED CIVIL ENGINEER DATE

04-01-14
PLANS APPROVAL DATE

REGISTERED PROFESSIONAL ENGINEER BAHMAN YAZDANI No. C58322 Exp. 06-30-14 CIVIL STATE OF CALIFORNIA

THE STATE OF CALIFORNIA OR ITS OFFICERS OR AGENTS SHALL NOT BE RESPONSIBLE FOR THE ACCURACY OR COMPLETENESS OF SCANNED COPIES OF THIS PLAN SHEET.

NOTE:

FOR ACCURATE RIGHT OF WAY DATA, CONTACT RIGHT OF WAY ENGINEERING AT THE DISTRICT OFFICE.

SAN DIEGO

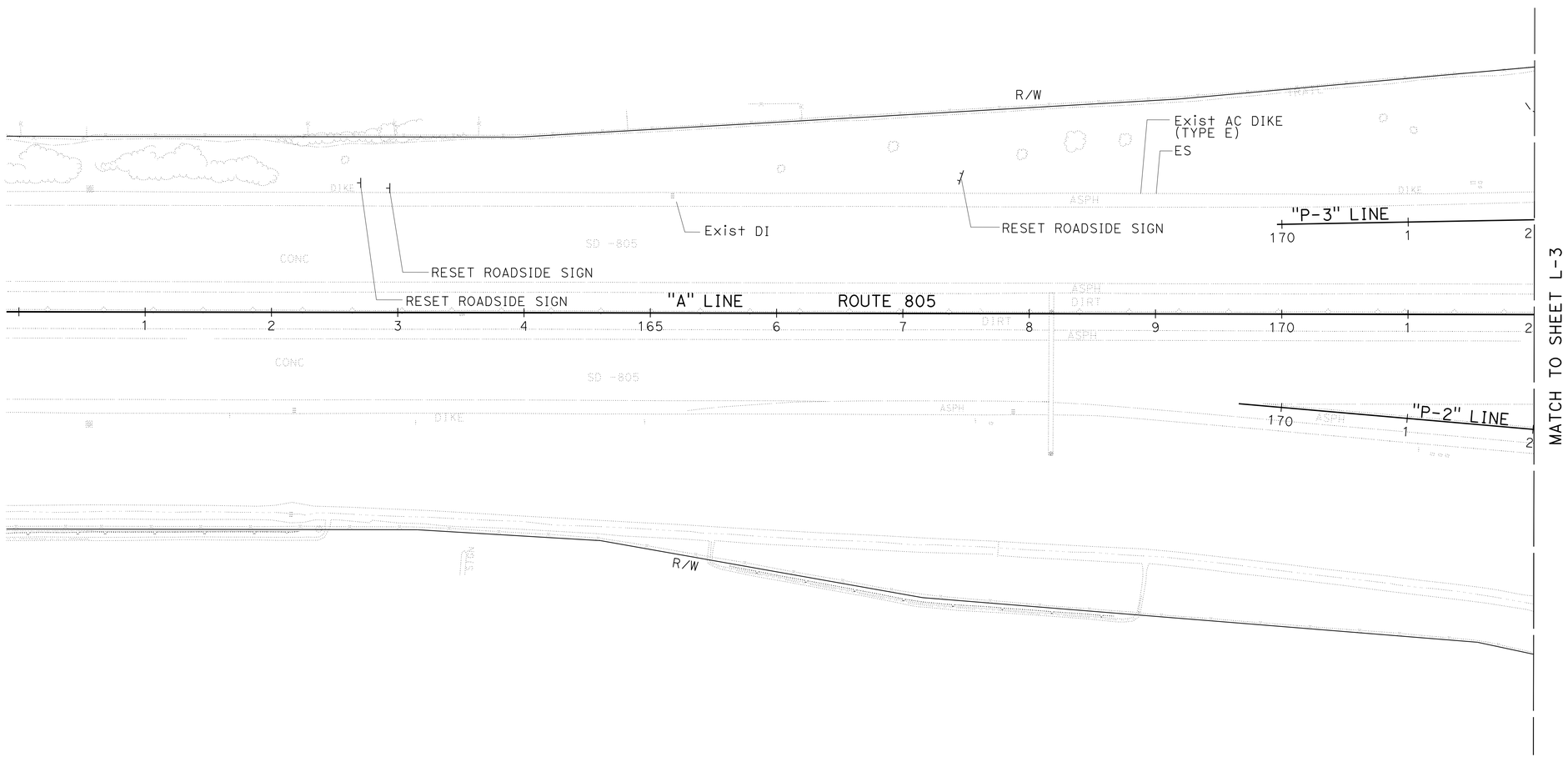

SCALE: 1" = 50'

LAYOUT
LOCATION 2
L-2

REVISED BY	DATE REVISED

CALCULATED-DESIGNED BY	CHECKED BY
JOEL HORTIZUELA	BAHMAN YAZDANI

FUNCTIONAL SUPERVISOR: CHRIS THOMAS

STATE OF CALIFORNIA - DEPARTMENT OF TRANSPORTATION
Caltrans®
DESIGN

LAST REVISION 01-22-14 | DATE PLOTTED => 07-APR-2014 | TIME PLOTTED => 09:25

Dist	COUNTY	ROUTE	POST MILES TOTAL PROJECT	SHEET No.	TOTAL SHEETS
11	SD	805	0.9/1.1, 2.5/2.9	4	59

Bahman Yazdani 12-19-13
REGISTERED CIVIL ENGINEER DATE

04-01-14
PLANS APPROVAL DATE

REGISTERED PROFESSIONAL ENGINEER BAHMAN YAZDANI No. C58322 Exp 06-30-14 CIVIL STATE OF CALIFORNIA

THE STATE OF CALIFORNIA OR ITS OFFICERS OR AGENTS SHALL NOT BE RESPONSIBLE FOR THE ACCURACY OR COMPLETENESS OF SCANNED COPIES OF THIS PLAN SHEET.

NOTE:

FOR ACCURATE RIGHT OF WAY DATA, CONTACT RIGHT OF WAY ENGINEERING AT THE DISTRICT OFFICE.

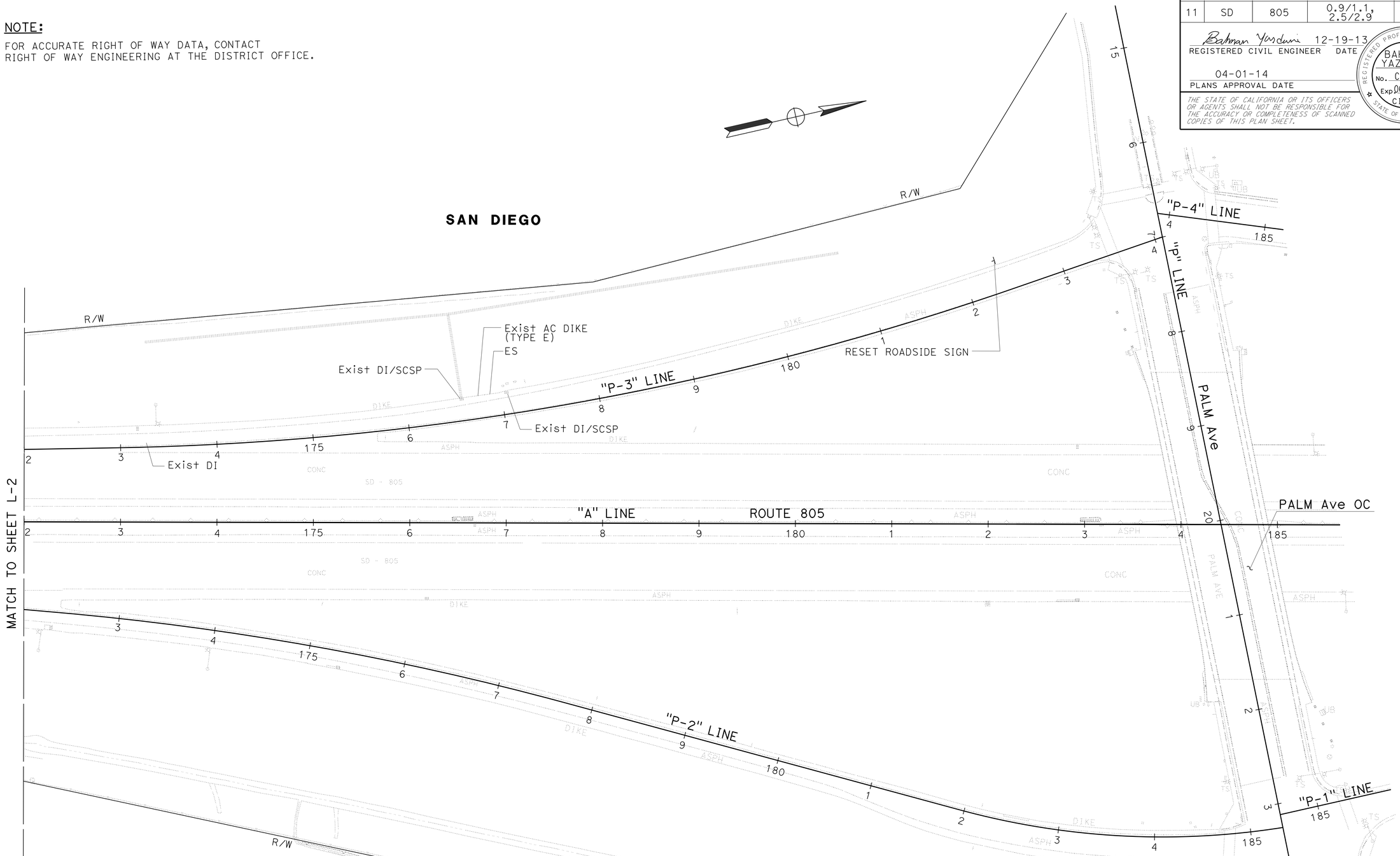

LAYOUT
LOCATION 2
L-3

SCALE: 1" = 50'

STATE OF CALIFORNIA - DEPARTMENT OF TRANSPORTATION
Caltrans
DESIGN

FUNCTIONAL SUPERVISOR: CHRIS THOMAS
CALCULATED-DESIGNED BY: JOEL HORTIZUELA
CHECKED BY: BAHMAN YAZDANI
REVISED BY
DATE REVISED

LAST REVISION 01-22-14
DATE PLOTTED => 07-APR-2014
TIME PLOTTED => 09:25

Dist	COUNTY	ROUTE	POST MILES TOTAL PROJECT	SHEET No.	TOTAL SHEETS
11	SD	805	0.9/1.1, 2.5/2.9	5	59

Bahman Yazdani 12-19-13
REGISTERED CIVIL ENGINEER DATE

04-01-14
PLANS APPROVAL DATE

REGISTERED PROFESSIONAL ENGINEER BAHMAN YAZDANI No. C58322 Exp. 06-30-14 CIVIL STATE OF CALIFORNIA

THE STATE OF CALIFORNIA OR ITS OFFICERS OR AGENTS SHALL NOT BE RESPONSIBLE FOR THE ACCURACY OR COMPLETENESS OF SCANNED COPIES OF THIS PLAN SHEET.

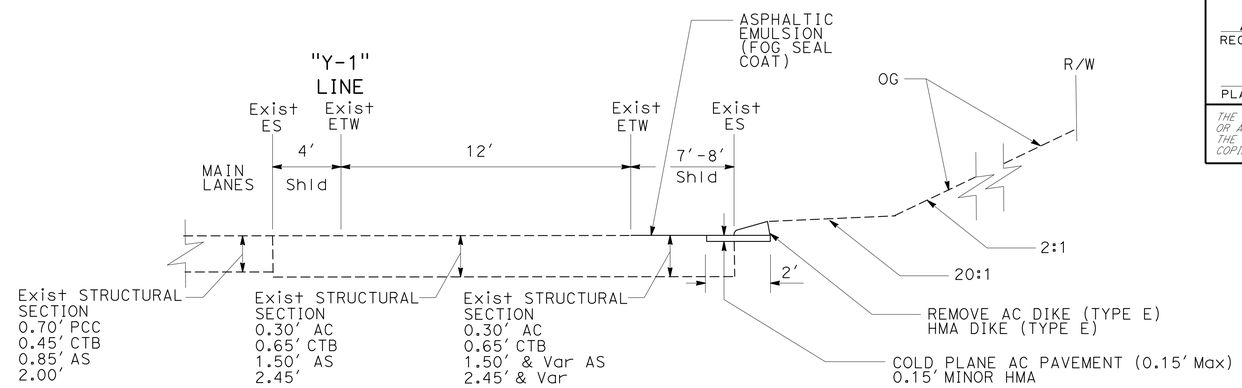

TYPICAL CROSS SECTION

STA 76+45 TO 83+15 "Y-1" LINE
STA 83+15 TO 90+50 "A" LINE

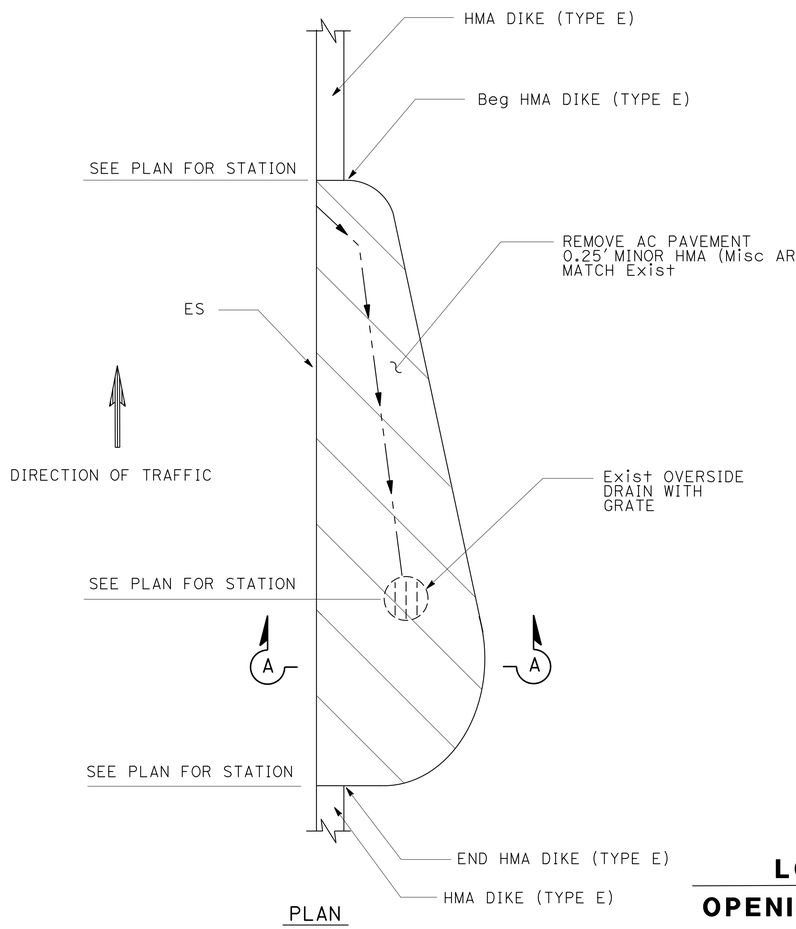

PLAN

LOCATION 1
OPENING AT HMA DIKE

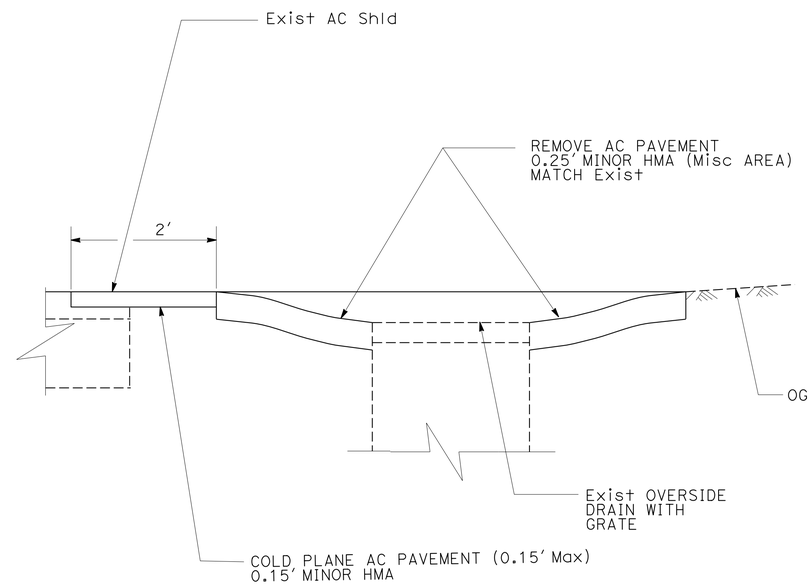

SECTION A-A

CONSTRUCTION DETAILS

NO SCALE

C-1

STATE OF CALIFORNIA - DEPARTMENT OF TRANSPORTATION
Caltrans®
DESIGN
FUNCTIONAL SUPERVISOR: CHRIS THOMAS
CALCULATED-DESIGNED BY: JOEL HORTIZUELA
CHECKED BY: BAHMAN YAZDANI
REVISED BY
DATE REVISED

LAST REVISION 01-22-14
DATE PLOTTED => 07-APR-2014
TIME PLOTTED => 09:25

Dist	COUNTY	ROUTE	POST MILES TOTAL PROJECT	SHEET No.	TOTAL SHEETS
11	SD	805	0.9/1.1, 2.5/2.9	6	59

Stephen P. Warren
LICENSED LANDSCAPE ARCHITECT

04-01-14
PLANS APPROVAL DATE

LICENSED LANDSCAPE ARCHITECT
STEPHEN P. WARREN No. 3442
Signature
10-31-14
Renewal Date
12-19-13
Date
STATE OF CALIFORNIA

THE STATE OF CALIFORNIA OR ITS OFFICERS OR AGENTS SHALL NOT BE RESPONSIBLE FOR THE ACCURACY OR COMPLETENESS OF SCANNED COPIES OF THIS PLAN SHEET.

NOTE:

FOR ACCURATE RIGHT OF WAY DATA, CONTACT RIGHT OF WAY ENGINEERING AT THE DISTRICT OFFICE.

LEGEND:

2:1 → SURFACE FLOW DIRECTION (Horiz::Vert)

SAN DIEGO

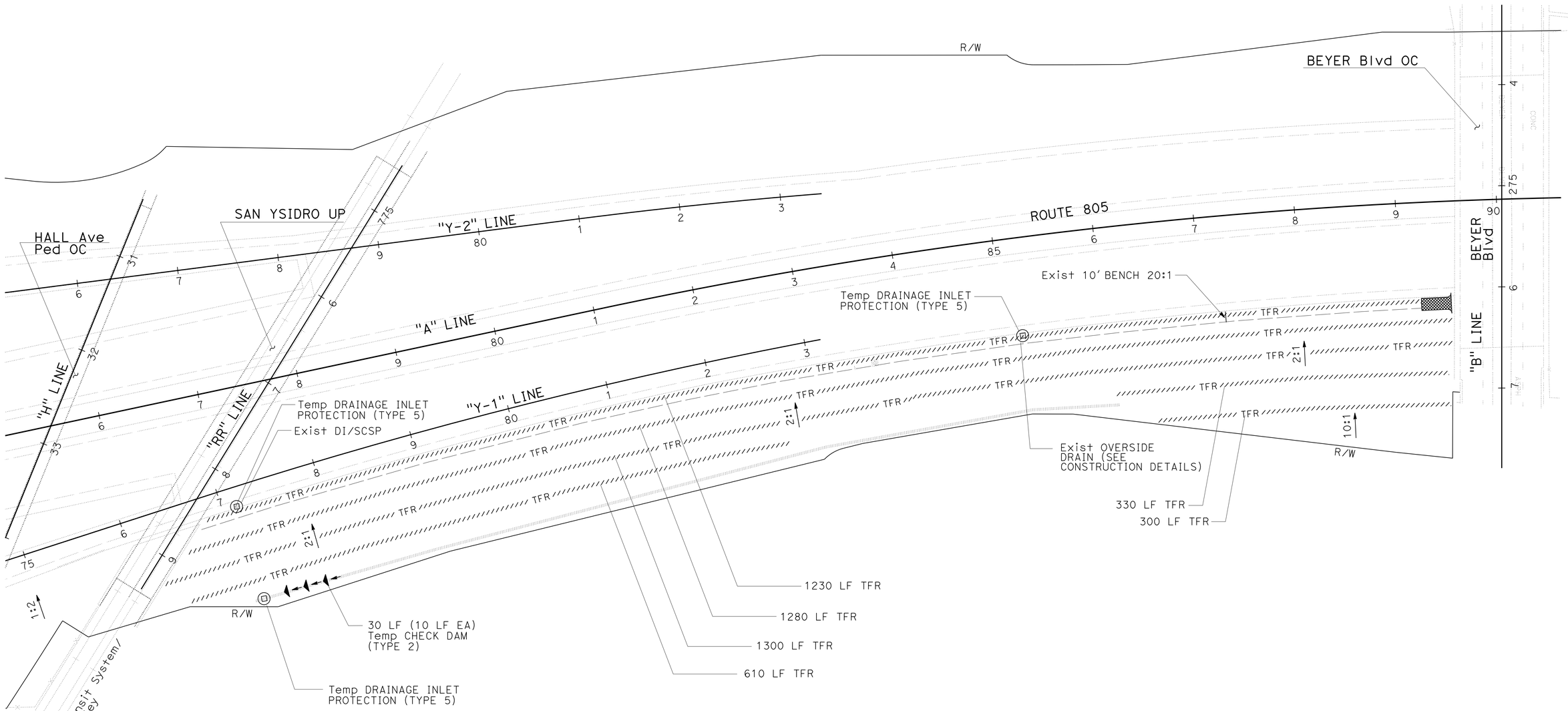

TEMPORARY WATER POLLUTION CONTROL PLAN
LOCATION 1

APPROVED FOR TEMPORARY WATER POLLUTION CONTROL WORK ONLY

SCALE: 1" = 50'

WPC-1

STATE OF CALIFORNIA - DEPARTMENT OF TRANSPORTATION
Caltrans® LANDSCAPE ARCHITECTURE

SENIOR LANDSCAPE ARCHITECT: STEPHEN ALVAREZ
CALCULATED-DESIGNED BY: JOEL HORTIZUELA
CHECKED BY: STEVE WARREN
REVISED BY
DATE REVISED

LAST REVISION 01-22-14
DATE PLOTTED => 07-APR-2014
TIME PLOTTED => 09:25

Dist	COUNTY	ROUTE	POST MILES TOTAL PROJECT	SHEET No.	TOTAL SHEETS
11	SD	805	0.9/1.1, 2.5/2.9	7	59

Stephen P. Warren
LICENSED LANDSCAPE ARCHITECT

04-01-14
PLANS APPROVAL DATE

LICENSED LANDSCAPE ARCHITECT
STEPHEN P. WARREN No. 3442
Signature
10-31-14
Renewal date
12-19-13
Date
STATE OF CALIFORNIA

THE STATE OF CALIFORNIA OR ITS OFFICERS OR AGENTS SHALL NOT BE RESPONSIBLE FOR THE ACCURACY OR COMPLETENESS OF SCANNED COPIES OF THIS PLAN SHEET.

NOTE:

FOR ACCURATE RIGHT OF WAY DATA, CONTACT RIGHT OF WAY ENGINEERING AT THE DISTRICT OFFICE.

SAN DIEGO

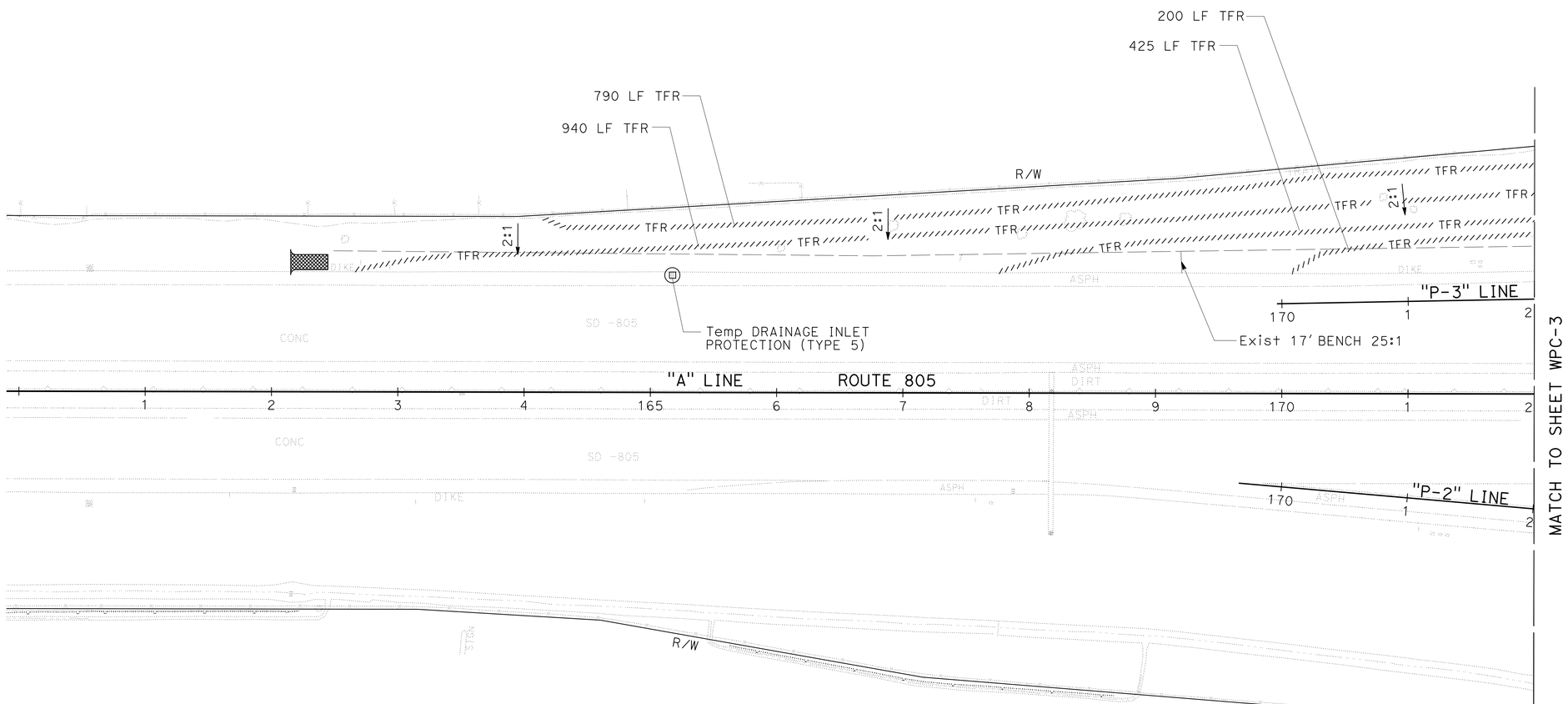

APPROVED FOR TEMPORARY WATER POLLUTION CONTROL WORK ONLY

TEMPORARY WATER POLLUTION CONTROL PLAN
LOCATION 2

SCALE: 1" = 50'

WPC-2

STATE OF CALIFORNIA - DEPARTMENT OF TRANSPORTATION
Caltrans LANDSCAPE ARCHITECTURE

SENIOR LANDSCAPE ARCHITECT: STEPHEN ALVAREZ
CALCULATED-DESIGNED BY: JOEL HORTIZUELA
CHECKED BY: STEVE WARREN
REVISED BY
DATE REVISED

LAST REVISION 01-23-14
DATE PLOTTED => 07-APR-2014
TIME PLOTTED => 09:25

Dist	COUNTY	ROUTE	POST MILES TOTAL PROJECT	SHEET No.	TOTAL SHEETS
11	SD	805	0.9/1.1, 2.5/2.9	8	59

Stephen P. Warren
LICENSED LANDSCAPE ARCHITECT

04-01-14
PLANS APPROVAL DATE

LICENSED LANDSCAPE ARCHITECT
STEPHEN P. WARREN No. 3442
Signature
10-31-14
Renewal Date
12-19-13
Date
STATE OF CALIFORNIA

THE STATE OF CALIFORNIA OR ITS OFFICERS OR AGENTS SHALL NOT BE RESPONSIBLE FOR THE ACCURACY OR COMPLETENESS OF SCANNED COPIES OF THIS PLAN SHEET.

NOTE:

FOR ACCURATE RIGHT OF WAY DATA, CONTACT RIGHT OF WAY ENGINEERING AT THE DISTRICT OFFICE.

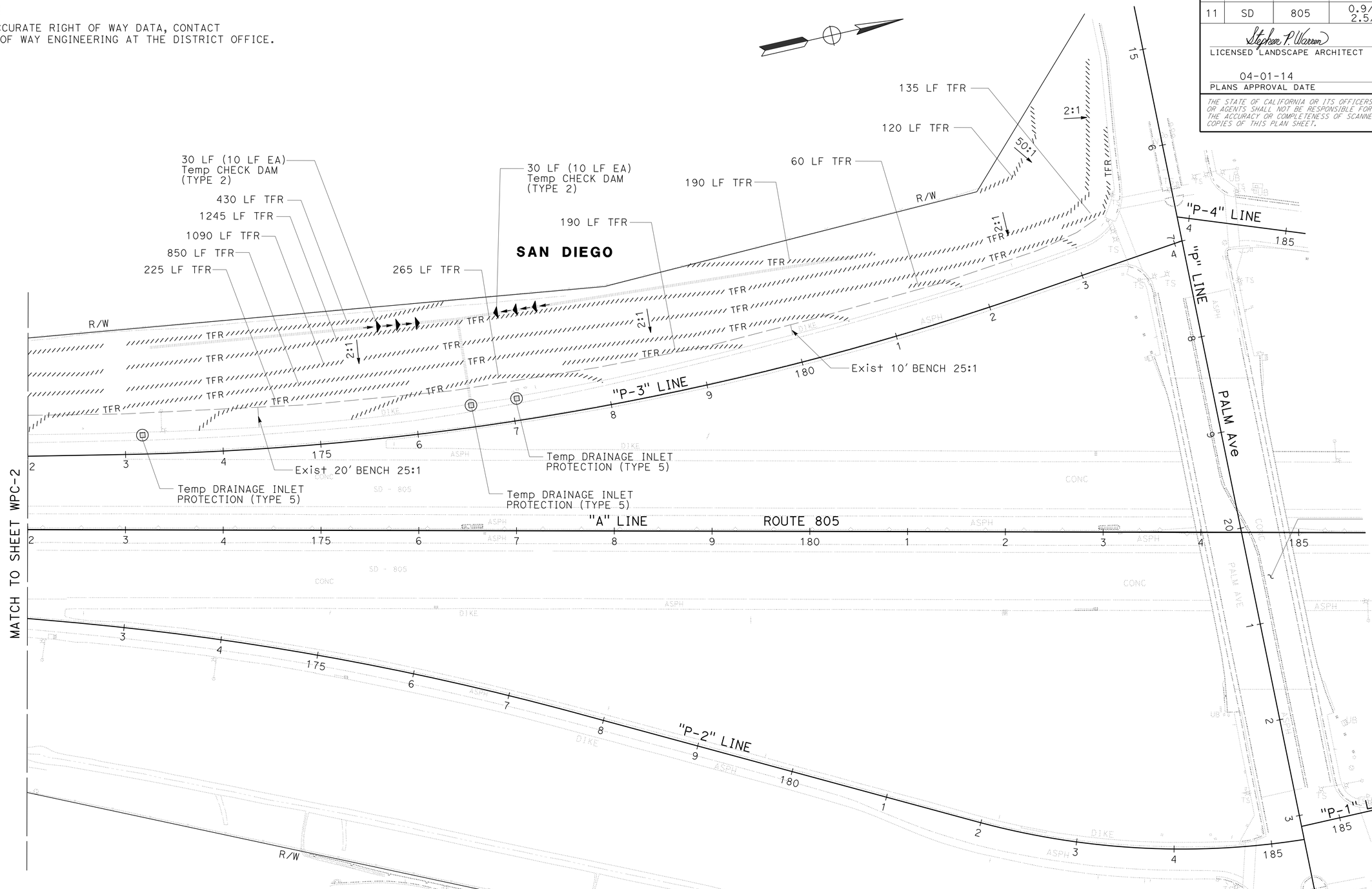

APPROVED FOR TEMPORARY WATER POLLUTION CONTROL WORK ONLY

TEMPORARY WATER POLLUTION CONTROL PLAN
LOCATION 2

SCALE: 1" = 50'

WPC-3

STATE OF CALIFORNIA - DEPARTMENT OF TRANSPORTATION
Caltrans LANDSCAPE ARCHITECTURE

SENIOR LANDSCAPE ARCHITECT: STEPHEN ALVAREZ
CALCULATED-DESIGNED BY: JOEL HORTIZUELA
CHECKED BY: STEVE WARREN
REVISED BY
DATE REVISED

LAST REVISION 01-23-14
DATE PLOTTED => 07-APR-2014
TIME PLOTTED => 09:25

Dist	COUNTY	ROUTE	POST MILES TOTAL PROJECT	SHEET No.	TOTAL SHEETS
11	SD	805	0.9/1.1, 2.5/2.9	9	59

Stephen P. Warren
LICENSED LANDSCAPE ARCHITECT

04-01-14
PLANS APPROVAL DATE

LICENSED LANDSCAPE ARCHITECT
STEPHEN P. WARREN No. 3442
Signature
10-31-14
Renewal Date
12-19-13
Date
STATE OF CALIFORNIA

THE STATE OF CALIFORNIA OR ITS OFFICERS OR AGENTS SHALL NOT BE RESPONSIBLE FOR THE ACCURACY OR COMPLETENESS OF SCANNED COPIES OF THIS PLAN SHEET.

TEMPORARY WATER POLLUTION CONTROL QUANTITIES

SHEET	TEMPORARY FIBER ROLL (LF)	TEMPORARY CHECK DAM (LF)	TEMPORARY CONSTRUCTION ENTRANCE (EA)	TEMPORARY DRAINAGE INLET PROTECTION (TYPE 5)
WPC-1	5,050	30	1	3
WPC-2	2,355	-	1	1
WPC-3	4,800	60	-	3
SUBTOTAL	-	-	-	-
TOTAL	12,205	90	2	7

TEMPORARY WATER POLLUTION CONTROL QUANTITIES

WPCQ-1

STATE OF CALIFORNIA - DEPARTMENT OF TRANSPORTATION
Caltrans LANDSCAPE ARCHITECTURE

SENIOR LANDSCAPE ARCHITECT: STEPHEN ALVAREZ
CALCULATED-DESIGNED BY: JOEL HORTIZUELA
CHECKED BY: STEVE WARREN
REVISED BY
DATE REVISED

LAST REVISION 01-23-14
DATE PLOTTED => 07-APR-2014
TIME PLOTTED => 09:25

Dist	COUNTY	ROUTE	POST MILES TOTAL PROJECT	SHEET No.	TOTAL SHEETS
11	SD	805	0.9/1.1, 2.5/2.9	10	59

Bahman Yazdani 12-19-13
REGISTERED CIVIL ENGINEER DATE

04-01-14
PLANS APPROVAL DATE

REGISTERED PROFESSIONAL ENGINEER BAHMAN YAZDANI No. C58322 Exp. 06-30-14 CIVIL STATE OF CALIFORNIA

THE STATE OF CALIFORNIA OR ITS OFFICERS OR AGENTS SHALL NOT BE RESPONSIBLE FOR THE ACCURACY OR COMPLETENESS OF SCANNED COPIES OF THIS PLAN SHEET.

NOTE:

FOR ACCURATE RIGHT OF WAY DATA, CONTACT RIGHT OF WAY ENGINEERING AT THE DISTRICT OFFICE.

1 DRAINAGE SYSTEM

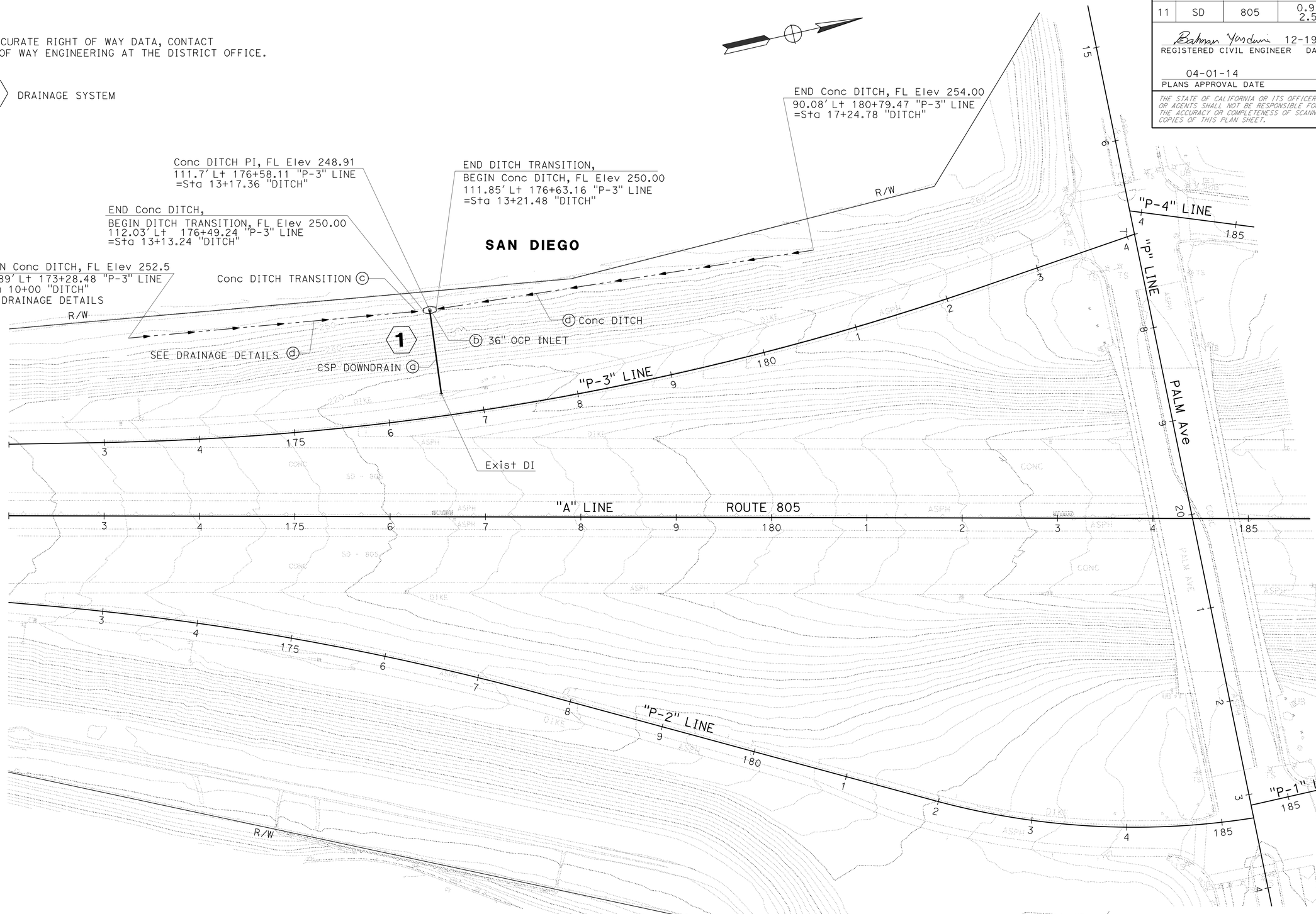

APPROVED FOR DRAINAGE WORK ONLY

SCALE: 1" = 50'

DRAINAGE PLAN
LOCATION 2

D-1

STATE OF CALIFORNIA - DEPARTMENT OF TRANSPORTATION
Caltrans
DESIGN

FUNCTIONAL SUPERVISOR: CHRIS THOMAS
CALCULATED-DESIGNED BY: RAFAEL AMBROSI
CHECKED BY: BAHMAN YAZDANI
REVISED BY
DATE REVISED

LAST REVISION 01-23-14
DATE PLOTTED => 07-APR-2014
TIME PLOTTED => 09:25

Dist	COUNTY	ROUTE	POST MILES TOTAL PROJECT	SHEET No.	TOTAL SHEETS
11	SD	805	0.9/1.1, 2.5/2.9	11	59

Bahman Yazdani 12-19-13
REGISTERED CIVIL ENGINEER DATE

04-01-14
PLANS APPROVAL DATE

REGISTERED PROFESSIONAL ENGINEER
BAHMAN YAZDANI
No. C58322
Exp 06-30-14
CIVIL
STATE OF CALIFORNIA

THE STATE OF CALIFORNIA OR ITS OFFICERS OR AGENTS SHALL NOT BE RESPONSIBLE FOR THE ACCURACY OR COMPLETENESS OF SCANNED COPIES OF THIS PLAN SHEET.

DRAINAGE SYSTEM (1)

(a) 18" x 94.8' BITUMINOUS COATED CSP DOWNDRAIN (0.064" THICK) WITH TYPE L-3 COLLAR (SEE DRAINAGE DETAILS)

(b) 36" OCP INLET
H= 4.3'

(c) CONCRETE DITCH TRANSITION (SEE DRAINAGE DETAILS)

(d) CONCRETE DITCH (NOT SHOWN, SEE DRAINAGE PLAN)

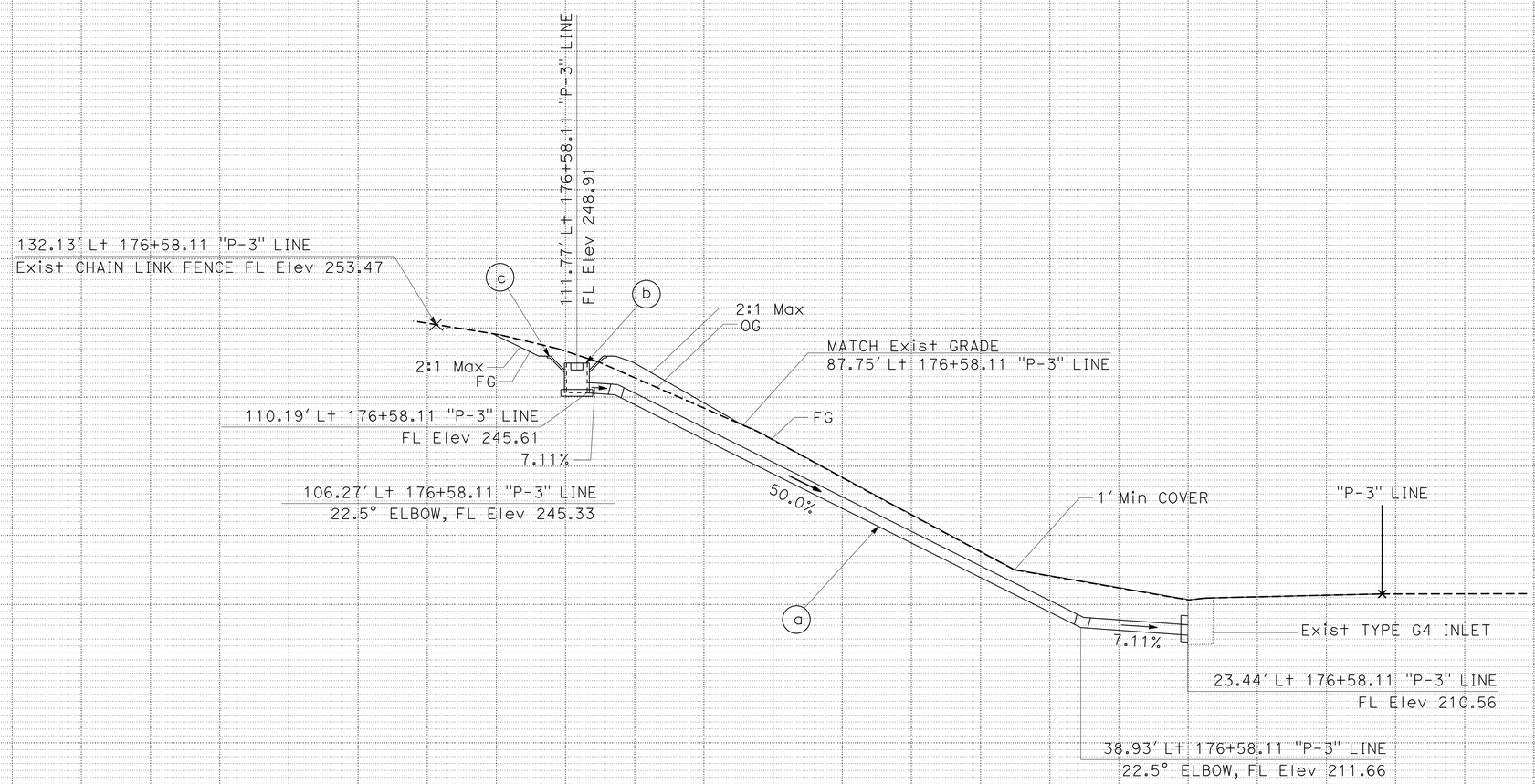

DRAINAGE PROFILE

SCALE: Horiz 1" = 10'
Vert 1" = 10'

DP- 1

STATE OF CALIFORNIA - DEPARTMENT OF TRANSPORTATION
Caltrans
DESIGN
FUNCTIONAL SUPERVISOR: CHRIS THOMAS
CALCULATED-DESIGNED BY: RAFAEL AMBROSI
CHECKED BY: BAHMAN YAZDANI
REVISED BY
DATE REVISED

LAST REVISION 01-23-14
DATE PLOTTED => 07-APR-2014
TIME PLOTTED => 09:25

Dist	COUNTY	ROUTE	POST MILES TOTAL PROJECT	SHEET No.	TOTAL SHEETS
11	SD	805	0.9/1.1, 2.5/2.9	12	59

Bahman Yazdani 12-19-13
REGISTERED CIVIL ENGINEER DATE

04-01-14
PLANS APPROVAL DATE

REGISTERED PROFESSIONAL ENGINEER BAHMAN YAZDANI No. C58322 Exp 06-30-14 CIVIL STATE OF CALIFORNIA

THE STATE OF CALIFORNIA OR ITS OFFICERS OR AGENTS SHALL NOT BE RESPONSIBLE FOR THE ACCURACY OR COMPLETENESS OF SCANNED COPIES OF THIS PLAN SHEET.

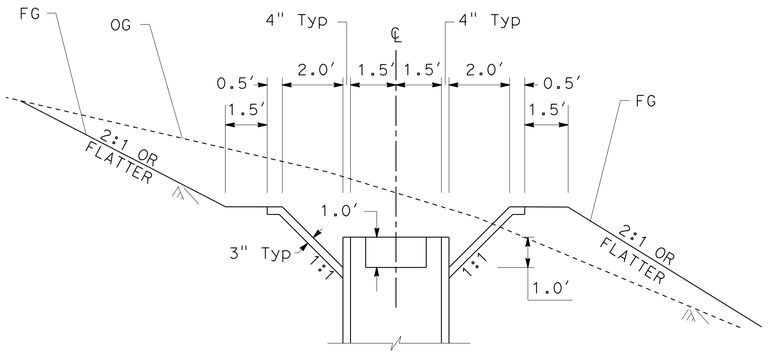

SECTION A-A

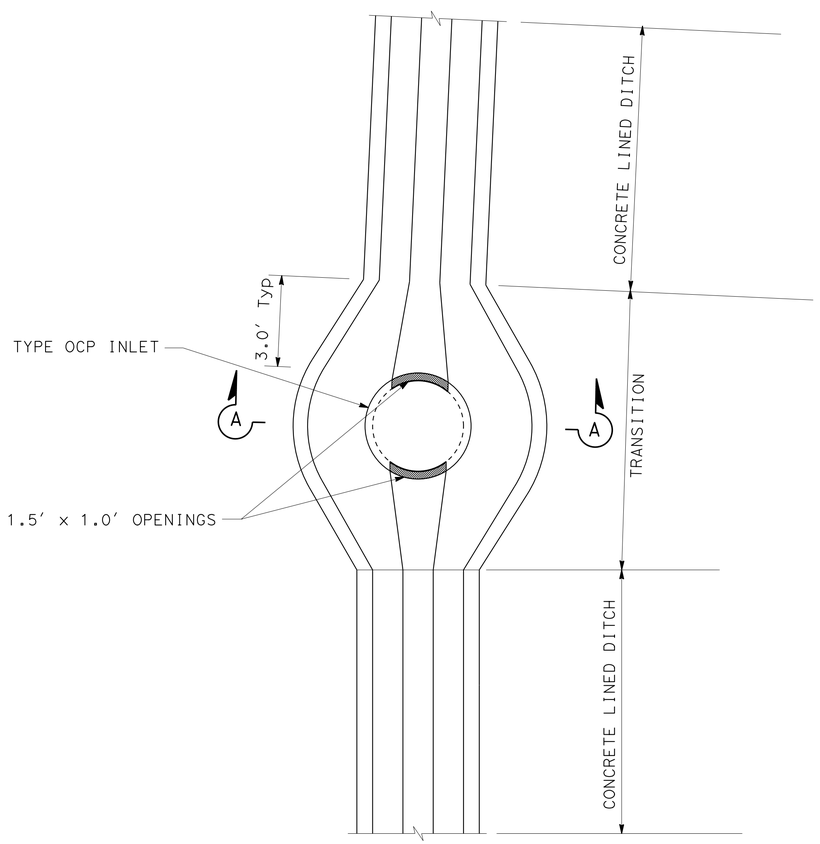

PLAN

CONCRETE DITCH TRANSITION

1 C

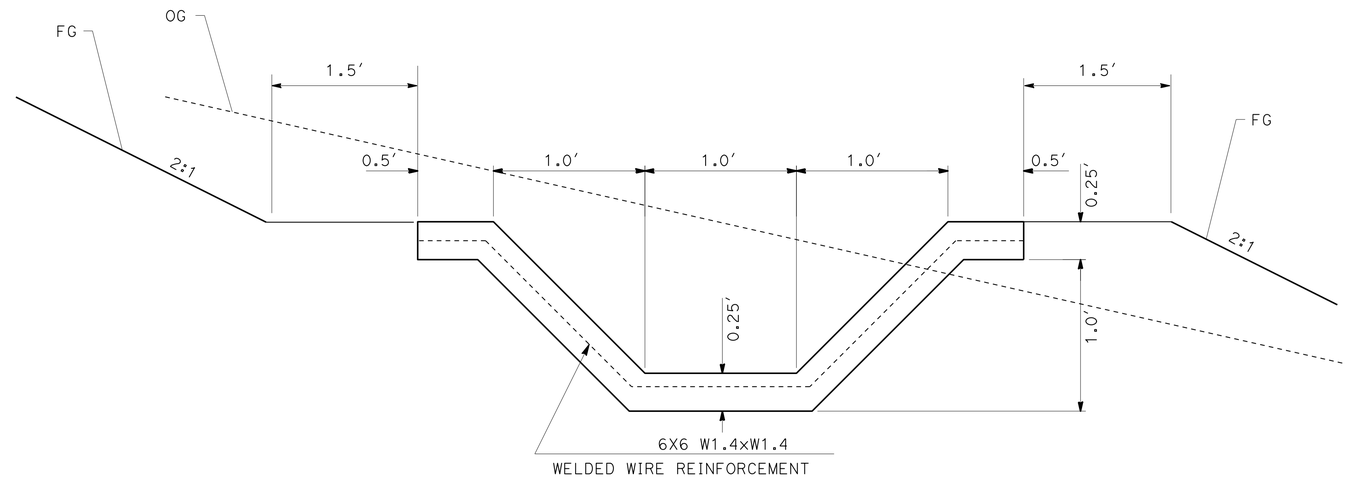

CONCRETE LINED DITCH

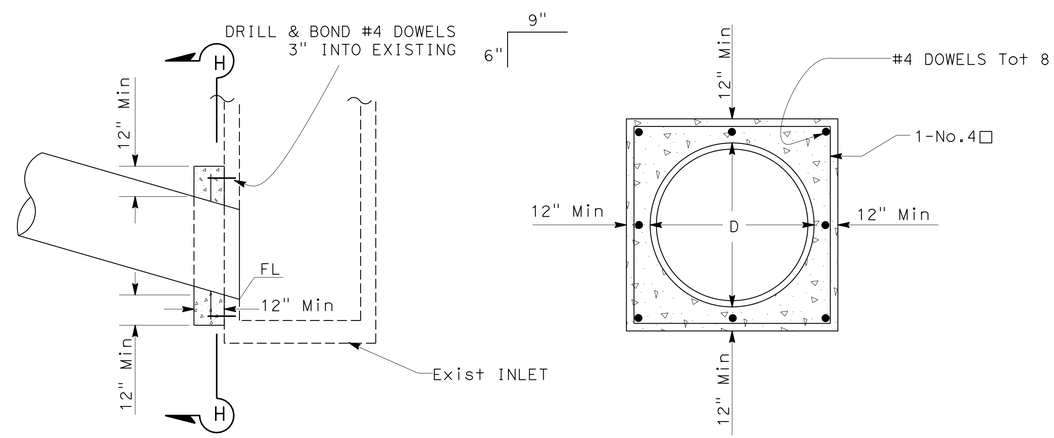

SECTION H-H

NOTE: BEND EXPOSED REINFORCED BAR INTO CONCRETE COLLAR.

TYPE L-3 COLLAR

DRAINAGE DETAILS

NO SCALE

DD- 1

REVISED BY	DATE REVISED

CALCULATED-DESIGNED BY	RAFAEL AMBROSI
CHECKED BY	BAHMAN YAZDANI
FUNCTIONAL SUPERVISOR	CHRIS THOMAS

STATE OF CALIFORNIA - DEPARTMENT OF TRANSPORTATION
Caltrans
DESIGN

LAST REVISION 01-23-14 | DATE PLOTTED => 07-APR-2014 | TIME PLOTTED => 09:25

Dist	COUNTY	ROUTE	POST MILES TOTAL PROJECT	SHEET No.	TOTAL SHEETS
11	SD	805	0.9/1.1, 2.5/2.9	13	59

Bahman Yazdani 12-19-13
REGISTERED CIVIL ENGINEER DATE

04-01-14
PLANS APPROVAL DATE

REGISTERED PROFESSIONAL ENGINEER BAHMAN YAZDANI No. C58322 Exp. 06-30-14 CIVIL STATE OF CALIFORNIA

THE STATE OF CALIFORNIA OR ITS OFFICERS OR AGENTS SHALL NOT BE RESPONSIBLE FOR THE ACCURACY OR COMPLETENESS OF SCANNED COPIES OF THIS PLAN SHEET.

DRAINAGE QUANTITIES

DRAINAGE SYSTEM No.	UNIT No.	PLAN SHEET No.	MISCELLANEOUS IRON AND STEEL (LB)	18" BITUMINOUS COATED CORRUGATED STEEL PIPE DOWNDRAIN (.064" THICK) (LF)	CONCRETE (DITCH LINING) (CY)	DITCH EXCAVATION (CY)	MINOR CONCRETE (MINOR STRUCTURE) (CY)	CONCRETE COLLAR(N) (EA)	36" PRECAST CONCRETE PIPE INLET (LF)	PIPE JOINT CLASSIFICATION (N)	MAXIMUM COVER (N)	DESCRIPTION	STATION	PLAN SHEET No.	DRAINAGE SYSTEM No.	DRAINAGE UNIT No.
1	a	D-1		94.8				1		D	4.0	18" BITUMINOUS COATED CSP DOWNDRAIN WITH TYPE L3 COLLAR		D-1	1	a
	b		115				0.5		4.8			36" OCP PIPE INLET, H=4.3' W/ STEEL PLATE COVER & CHAIN	"P3" LINE 176+58.11			b
	c				1.5	6						CONCRETE DITCH TRANSITION (L=9')				c
	d				33.0	114						CONCRETE LINED DITCH (L=716')	10+00 "DITCH" TO 17+24.78 "DITCH"			-
TOTAL			115	94.8	34.5	120	0.5		4.8							

NOTES:

1. JOINT TYPE: P=POSITIVE, D-DOWNDRAIN, S=STANDARD
2. (N) - NOT A SEPARATE PAY ITEM, FOR INFORMATION ONLY

DRAINAGE QUANTITIES

DQ- 1

REVISED BY | DATE REVISED
RAFAEL AMBROSI | BAHMAN YAZDANI
CALCULATED-DESIGNED BY | CHECKED BY
FUNCTIONAL SUPERVISOR
CHRIS THOMAS
STATE OF CALIFORNIA - DEPARTMENT OF TRANSPORTATION
Caltrans
DESIGN

LAST REVISION 01-23-14 | DATE PLOTTED => 07-APR-2014 | TIME PLOTTED => 09:25

Dist	COUNTY	ROUTE	POST MILES TOTAL PROJECT	SHEET No.	TOTAL SHEETS
11	SD	805	0.9/1.1, 2.5/2.9	14	59

George H. Mamaghani 12-19-13
REGISTERED CIVIL ENGINEER DATE

04-01-14
PLANS APPROVAL DATE

REGISTERED PROFESSIONAL ENGINEER GEORGE H. MAMAGHANI No. 44842 Exp. 3-31-16 CIVIL STATE OF CALIFORNIA

THE STATE OF CALIFORNIA OR ITS OFFICERS OR AGENTS SHALL NOT BE RESPONSIBLE FOR THE ACCURACY OR COMPLETENESS OF SCANNED COPIES OF THIS PLAN SHEET.

LEGEND:

EXISTING UTILITIES	FACILITY	OWNER
-——w—— ——w——	WATER	- CITY OF SAN DIEGO & AMERICAN WATER
——--s——-- ——--s——--—	SEWER	- CITY OF SAN DIEGO
——-g——- ——-g——-—	GAS	- SAN DIEGO GAS & ELECTRIC
——-e—— ——-e——	ELECTRIC	- SAN DIEGO GAS & ELECTRIC
—— fo —— —— fo ——	FIBER OPTIC LINE	- SPRINT NEXTEL & NEXTG
——--t—— ——--t——	TELEPHONE	- ATT/PACBELL

ABBREVIATIONS:

RCSC - REINFORCED CONCRETE STEEL CYLINDER
CMLCS - CEMENT MORTAR LINED & COATED STEEL
SCRW - STEEL CYLINDER ROD WRAPPED

NOTES:

1. FOR ACCURATE RIGHT OF WAY DATA, CONTACT RIGHT OF WAY ENGINEERING AT THE DISTRICT OFFICE.
2. ALL UTILITIES TO BE FIELD VERIFIED.
3. LOCATION OF EXISTING UTILITY FACILITIES ARE LOCATED BASED ON OWNER'S RECORDS AND/OR STATE SURVEY.

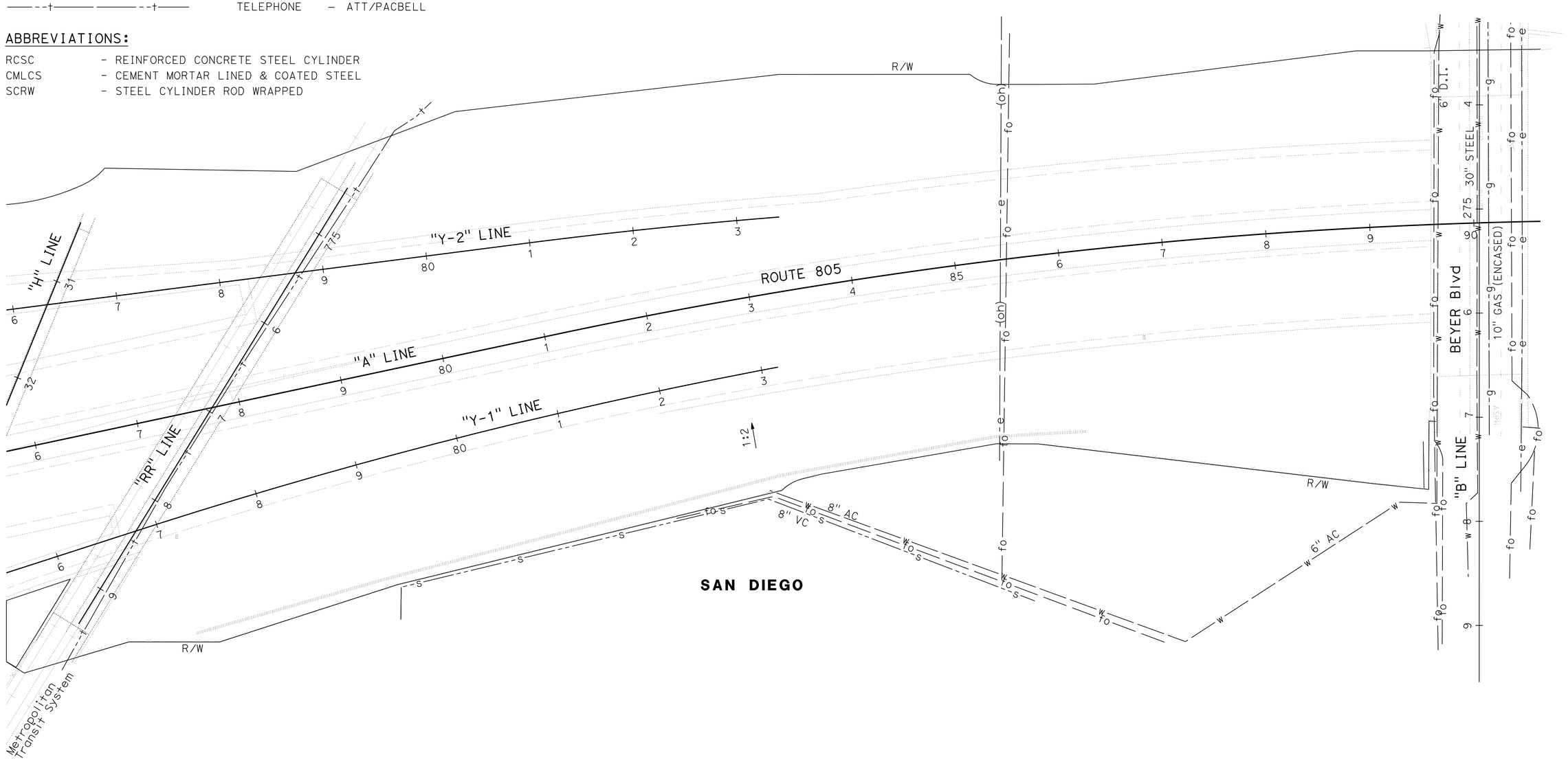

UTILITY PLAN

APPROVED FOR UTILITY INFORMATION ONLY

SCALE: 1" = 50'

U-1

STATE OF CALIFORNIA - DEPARTMENT OF TRANSPORTATION
Caltrans
DESIGN
FUNCTIONAL SUPERVISOR: ABU-BAKR AL-JAFRI
CALCULATED-DESIGNED BY: GEORGE H. MAMAGHANI
CHECKED BY: SIMON TSE
REVISED BY
DATE REVISED

LAST REVISION 01-24-14
DATE PLOTTED => 07-APR-2014
TIME PLOTTED => 09:25

Dist	COUNTY	ROUTE	POST MILES TOTAL PROJECT	SHEET No.	TOTAL SHEETS
11	SD	805	0.9/1.1, 2.5/2.9	15	59

REGISTERED CIVIL ENGINEER 12-19-13 DATE

04-01-14
PLANS APPROVAL DATE

REGISTERED PROFESSIONAL ENGINEER GEORGE H. MAMAGHANI No. 44842 Exp. 3-31-16 CIVIL STATE OF CALIFORNIA

THE STATE OF CALIFORNIA OR ITS OFFICERS OR AGENTS SHALL NOT BE RESPONSIBLE FOR THE ACCURACY OR COMPLETENESS OF SCANNED COPIES OF THIS PLAN SHEET.

NOTE:

FOR ACCURATE RIGHT OF WAY DATA, CONTACT RIGHT OF WAY ENGINEERING AT THE DISTRICT OFFICE.

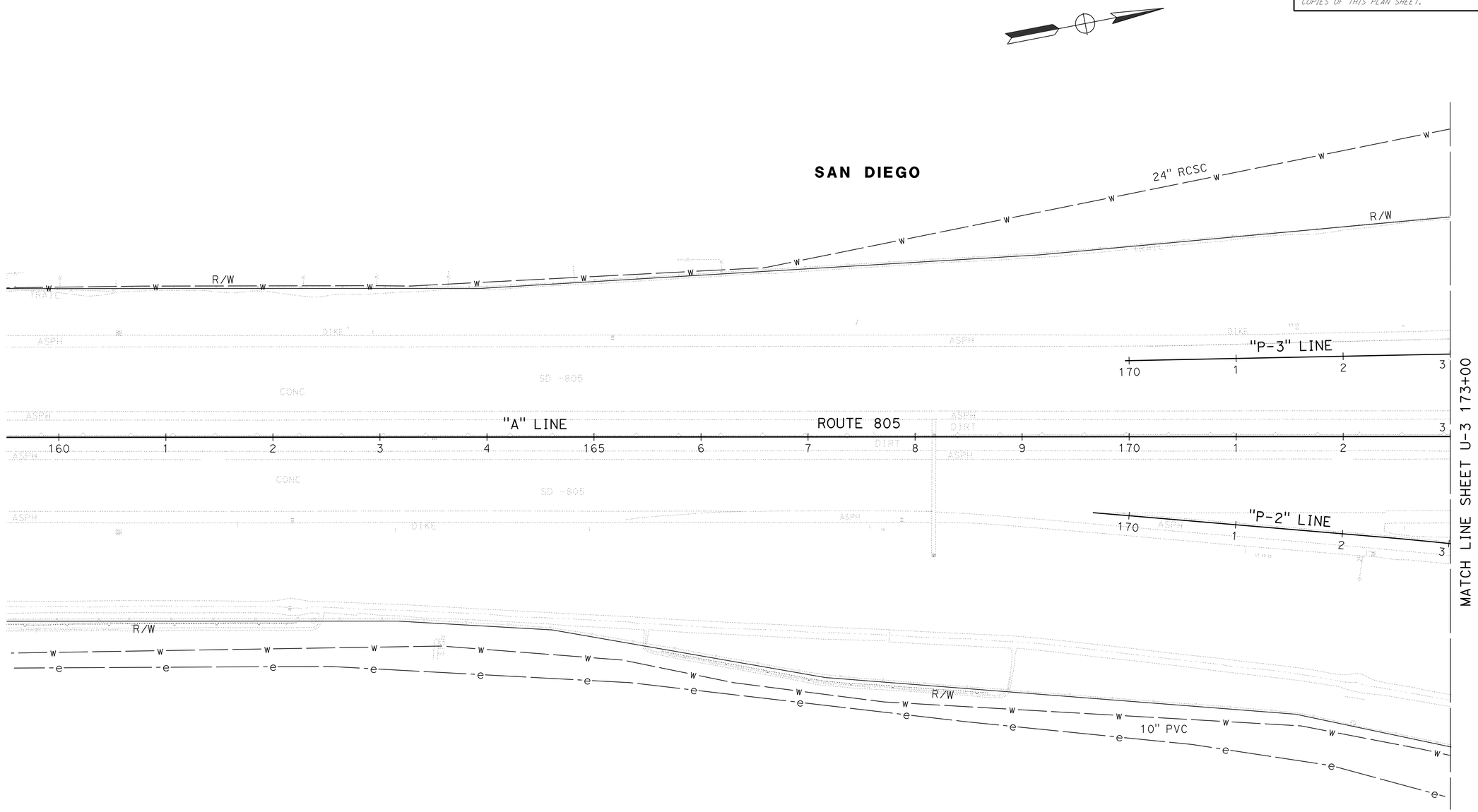

APPROVED FOR UTILITY INFORMATION ONLY

SCALE: 1" = 50'

UTILITY PLAN

U-2

REVISED BY	DATE REVISED

GEORGE H. MAMAGHANI — SIMON TSE

CALCULATED-DESIGNED BY — CHECKED BY

FUNCTIONAL SUPERVISOR: ABU-BAKR AL-JAFRI

STATE OF CALIFORNIA - DEPARTMENT OF TRANSPORTATION

Caltrans® DESIGN

LAST REVISION 01-24-14 | DATE PLOTTED => 07-APR-2014 | TIME PLOTTED => 09:25

Dist	COUNTY	ROUTE	POST MILES TOTAL PROJECT	SHEET No.	TOTAL SHEETS
11	SD	805	0.9/1.1, 2.5/2.9	16	59

REGISTERED CIVIL ENGINEER 12-19-13 DATE

04-01-14
PLANS APPROVAL DATE

GEORGE H. MAMAGHANI No. 44842 Exp. 3-31-16 CIVIL
REGISTERED PROFESSIONAL ENGINEER
STATE OF CALIFORNIA

THE STATE OF CALIFORNIA OR ITS OFFICERS OR AGENTS SHALL NOT BE RESPONSIBLE FOR THE ACCURACY OR COMPLETENESS OF SCANNED COPIES OF THIS PLAN SHEET.

NOTE:
FOR ACCURATE RIGHT OF WAY DATA, CONTACT RIGHT OF WAY ENGINEERING AT THE DISTRICT OFFICE.

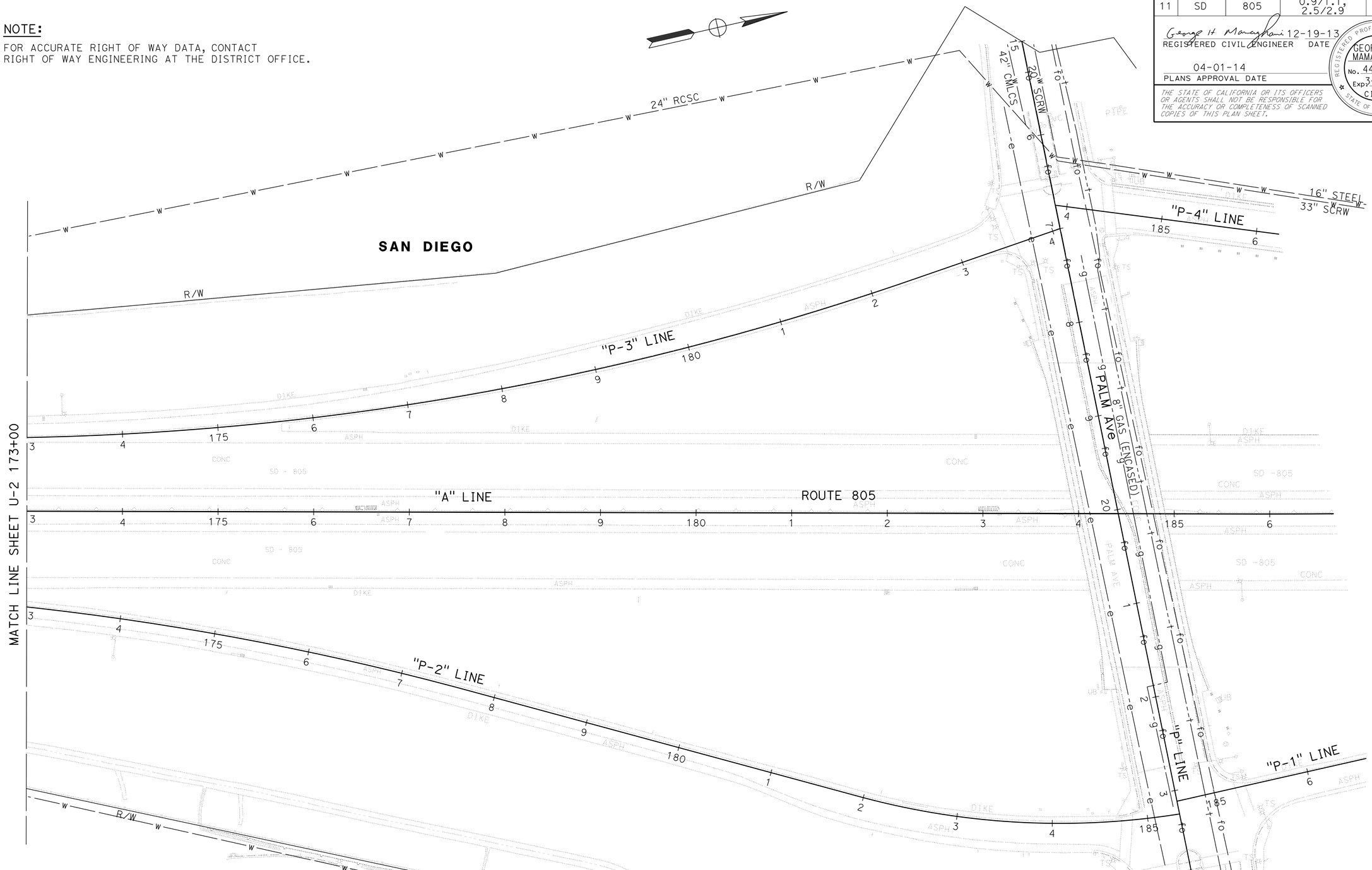

APPROVED FOR UTILITY INFORMATION ONLY

SCALE: 1" = 50'

UTILITY PLAN
U-3

STATE OF CALIFORNIA - DEPARTMENT OF TRANSPORTATION
Caltrans®
DESIGN

FUNCTIONAL SUPERVISOR: ABU-BAKR AL-JAFRI
CALCULATED-DESIGNED BY: GEORGE H. MAMAGHANI
CHECKED BY: SIMON TSE
REVISED BY
DATE REVISED

LAST REVISION 01-24-14
DATE PLOTTED => 07-APR-2014
TIME PLOTTED => 09:25

Dist	COUNTY	ROUTE	POST MILES TOTAL PROJECT	SHEET No.	TOTAL SHEETS
11	SD	805	0.9/1.1, 2.5/2.9	17	59

12-19-13
REGISTERED CIVIL ENGINEER DATE

04-01-14
PLANS APPROVAL DATE

REGISTERED PROFESSIONAL ENGINEER SHAHIN T ADIBI No. 54839 Exp. 06/30/14 CIVIL STATE OF CALIFORNIA

THE STATE OF CALIFORNIA OR ITS OFFICERS OR AGENTS SHALL NOT BE RESPONSIBLE FOR THE ACCURACY OR COMPLETENESS OF SCANNED COPIES OF THIS PLAN SHEET.

NOTES:

1. EXACT LOCATION OF CONSTRUCTION AREA SIGNS WILL BE DETERMINED BY THE ENGINEER.
2. FEDERAL MANUAL ON UNIFORM TRAFFIC CONTROL DEVICES (MUTCD) SIGN CODES ARE SHOWN UNLESS DESIGNATED BY (CA), INDICATING CALIFORNIA SIGN SPECIFICATIONS ARE USED.
3. EXISTING UTILITIES ARE NOT SHOWN ON THESE PLAN SHEETS. THE CONTRACTOR SHALL VERIFY LOCATIONS OF EXISTING UTILITIES AND ADJUST THE FIELD LOCATION OF THE SIGN POSTS IN CONSULTATION WITH THE ENGINEER.

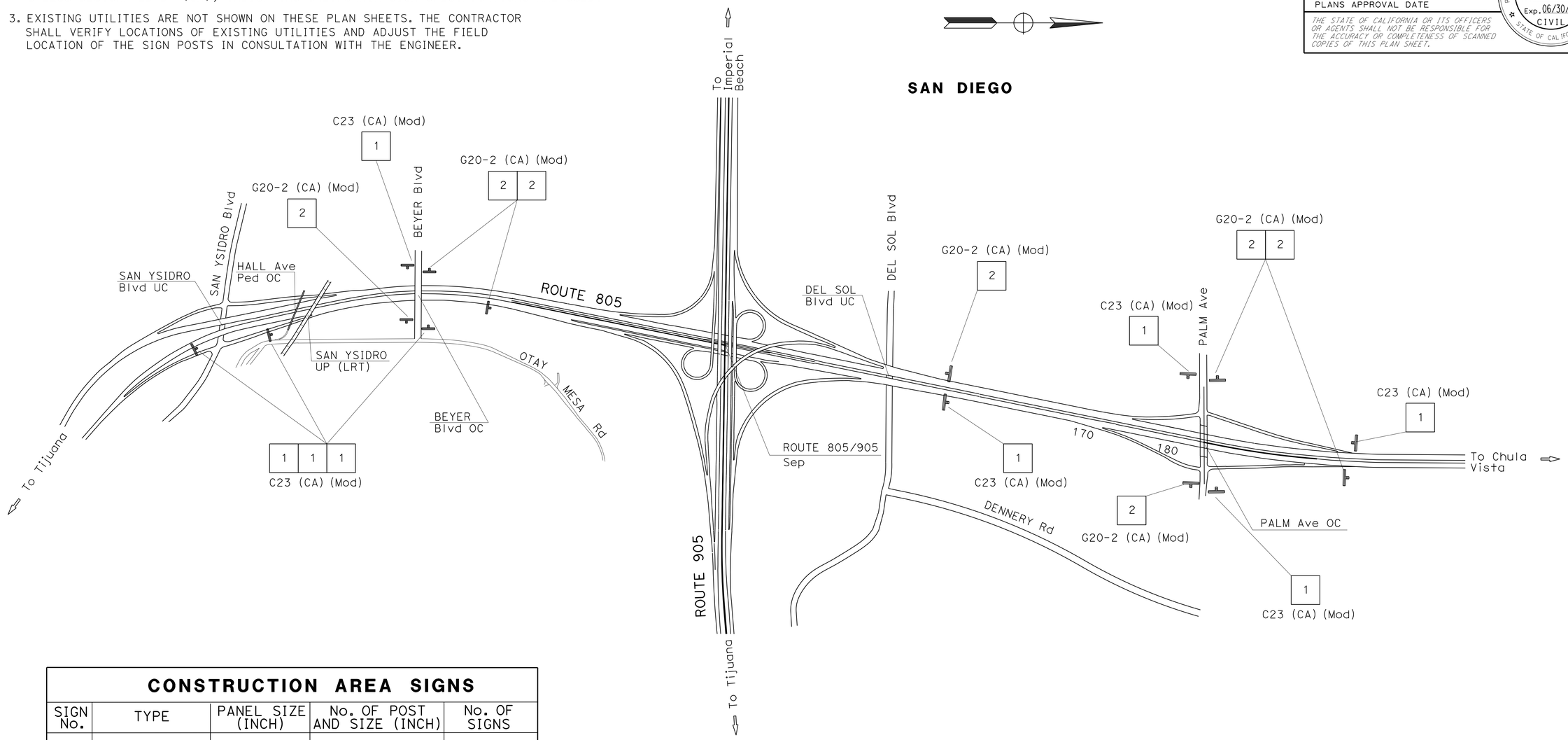

CONSTRUCTION AREA SIGNS

SIGN No.	TYPE	PANEL SIZE (INCH)	No. OF POST AND SIZE (INCH)	No. OF SIGNS
1	C23 (CA) (Mod)	36 X 36	1-4 X 6 (S)	8
2	G20-2 (CA) (Mod)	18 X 36	1-4 X 4 (S)	7
			TOTAL	15

(S) DENOTES STATIONARY MOUNTED SIGN

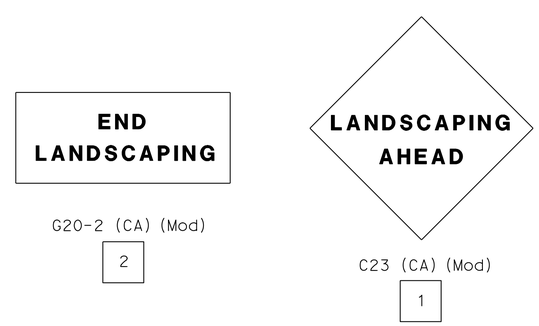

APPROVED FOR CONSTRUCTION AREA SIGN WORK ONLY

CONSTRUCTION AREA SIGNS

NO SCALE

CS-1

STATE OF CALIFORNIA - DEPARTMENT OF TRANSPORTATION
Caltrans TRAFFIC DESIGN

FUNCTIONAL SUPERVISOR: CAMILLE ABOUFADEL
CALCULATED-DESIGNED BY: NOEL TAPIA
CHECKED BY: SHAHIN ADIBI
REVISED BY
DATE REVISED

LAST REVISION 01-24-14
DATE PLOTTED => 07-APR-2014
TIME PLOTTED => 09:25

Dist	COUNTY	ROUTE	POST MILES TOTAL PROJECT	SHEET No.	TOTAL SHEETS
11	SD	805	0.9/1.1, 2.5/2.9	18	59

Bahman Yazdani 12-19-13
REGISTERED CIVIL ENGINEER DATE

04-01-14
PLANS APPROVAL DATE

REGISTERED PROFESSIONAL ENGINEER BAHMAN YAZDANI No. C58322 Exp. 06-30-14 CIVIL STATE OF CALIFORNIA

THE STATE OF CALIFORNIA OR ITS OFFICERS OR AGENTS SHALL NOT BE RESPONSIBLE FOR THE ACCURACY OR COMPLETENESS OF SCANNED COPIES OF THIS PLAN SHEET.

HMA DIKE

SHEET	DIRECTION	Rte	SIDE	LINE	Beg Sta	END Sta	REMOVE AC DIKE	PLACE HMA DIKE (TYPE E)
							LF	LF
L-1	NB	805	Rt	"Y-1"/"A"	76+75	85+12	867.0	867.0
L-1	NB	805	Rt	"A"	85+32	90+50	518.0	518.0
						TOTAL	1,385.0	1,385.0

ROADWAY QUANTITIES

SHEET	LOCATION			LINE	Rt SHOULDER (N) Avg WIDTH	COLD PLANE WIDTH (N)	COLD PLANE AC PAVEMENT	REMOVE AC PAVEMENT	PLACE HMA (Misc AREA)	MINOR HMA		TACK COAT	ASPHALTIC EMULSION (FOG SEAL COAT)
	DIRECTION Rte	Beg Sta	END Sta							(COLD PLANE)	(Misc AREA)		
					FT	FT	SQYD	SQFT	SQYD	TON	TON	TON	TON
L-1	NB 805	76+45	90+50	"Y-1"/"A"	8.0	2.0	312.2	-	-	31.20	-	0.1	0.39
L-1	NB 805	85+12	85+32	"A"	-	-	-	120	13.33	-	2.20	-	0.01
SUBTOTAL							-	-	-	33.40		-	-
HMA DIKE							-	-	-	36.00		-	-
TOTAL							312.2	120	13.33	69.40		0.1	0.4

(N) - NOT A SEPARATE PAY ITEM, FOR INFORMATION ONLY

RESET ROADSIDE SIGN

SHEET	LINE	Sta	Lt/Rt	EA
L-1	"A"	83+45	Rt	1
L-1	"A"	86+95	Rt	1
L-1	"A"	88+52	Rt	1
L-1	"A"	89+33	Rt	1
L-2	"A"	162+70	Lt	1
L-2	"A"	162+95	Lt	1
L-2	"A"	167+45	Lt	1
L-3	"P-3"	182+35	Lt	1
TOTAL				8

SUMMARY OF QUANTITIES

Q-1

REVISED BY | DATE REVISED
JOEL HORTIZUELA | BAHMAN YAZDANI
CALCULATED-DESIGNED BY | CHECKED BY
FUNCTIONAL SUPERVISOR | CHRIS THOMAS
STATE OF CALIFORNIA - DEPARTMENT OF TRANSPORTATION
Caltrans DESIGN

LAST REVISION 01-24-14 | DATE PLOTTED => 07-APR-2014 | TIME PLOTTED => 09:25

Dist	COUNTY	ROUTE	POST MILES TOTAL PROJECT	SHEET No.	TOTAL SHEETS
11	SD	805	0.9/1.1, 2.5/2.9	19	59

Stephen P. Warren
LICENSED LANDSCAPE ARCHITECT

04-01-14
PLANS APPROVAL DATE

LICENSED LANDSCAPE ARCHITECT
STEPHEN P. WARREN No. 3442
Signature
10-31-14
Renewal date
12-19-13
Date
STATE OF CALIFORNIA

THE STATE OF CALIFORNIA OR ITS OFFICERS OR AGENTS SHALL NOT BE RESPONSIBLE FOR THE ACCURACY OR COMPLETENESS OF SCANNED COPIES OF THIS PLAN SHEET.

SAN DIEGO

NOTE:

FOR ACCURATE RIGHT OF WAY DATA, CONTACT RIGHT OF WAY ENGINEERING AT THE DISTRICT OFFICE.

LEGEND:

Exist TREE TO REMAIN

Exist SHRUB OR SHRUB MASS TO REMAIN

ROADSIDE CLEARING
Exist TREE TO BE REMOVED
Exist GROUNDCOVER & SHRUB OR SHRUB MASS TO BE REMOVED
(INCLUDING SMALL SHRUBS NOT SHOWN)

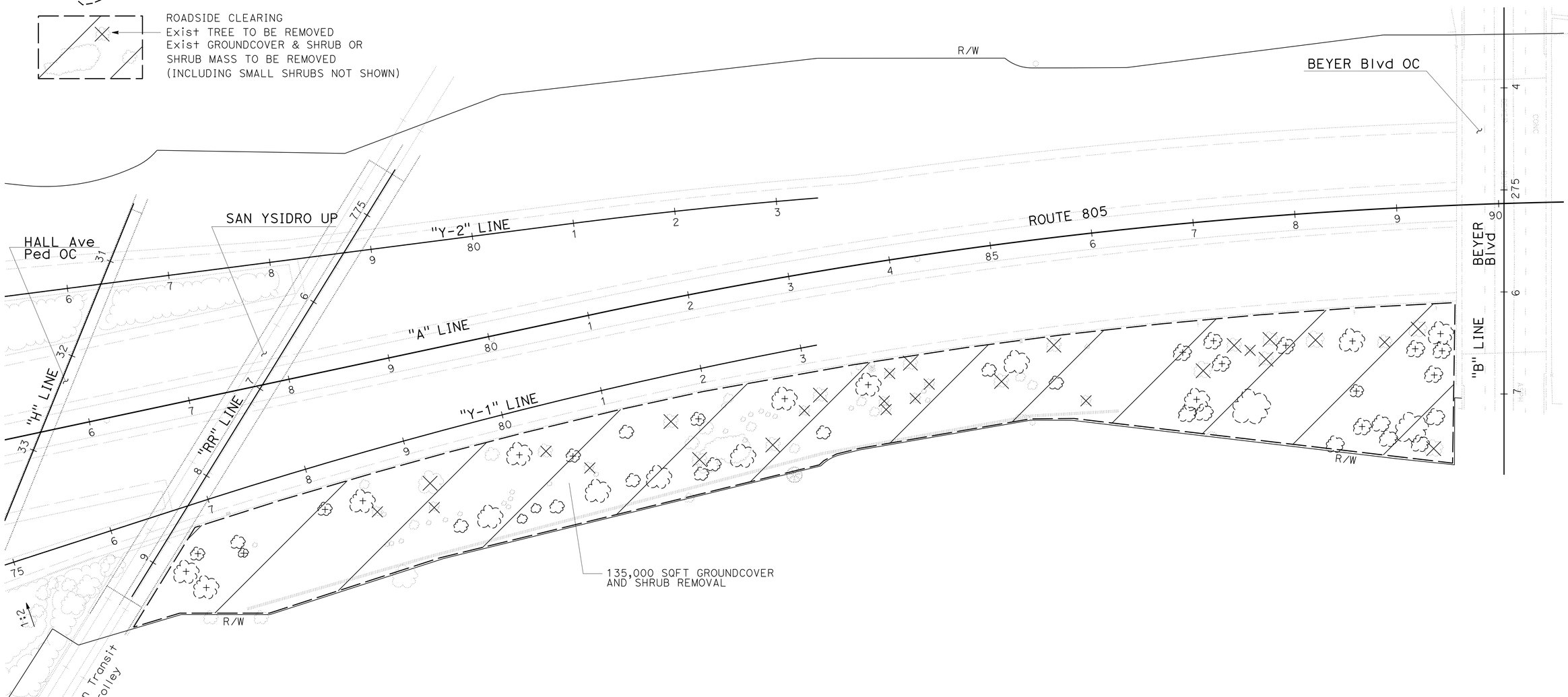

APPROVED FOR PLANT REMOVAL WORK ONLY

PLANT REMOVAL PLAN
LOCATION 1

SCALE: 1" = 50'

PR-1

STATE OF CALIFORNIA - DEPARTMENT OF TRANSPORTATION
Caltrans LANDSCAPE ARCHITECTURE

SENIOR LANDSCAPE ARCHITECT: STEPHEN ALVAREZ
CALCULATED-DESIGNED BY: JOEL HORTIZUELA
CHECKED BY: STEVE WARREN
REVISED BY
DATE REVISED

LAST REVISION 01-24-14
DATE PLOTTED => 07-APR-2014
TIME PLOTTED => 09:25

Dist	COUNTY	ROUTE	POST MILES TOTAL PROJECT	SHEET No.	TOTAL SHEETS
11	SD	805	0.9/1.1, 2.5/2.9	20	59

Stephen P. Warren
LICENSED LANDSCAPE ARCHITECT

04-01-14
PLANS APPROVAL DATE

LICENSED LANDSCAPE ARCHITECT
STEPHEN P. WARREN No. 3442
Signature
10-31-14
Renewal date
12-19-13
Date
STATE OF CALIFORNIA

THE STATE OF CALIFORNIA OR ITS OFFICERS OR AGENTS SHALL NOT BE RESPONSIBLE FOR THE ACCURACY OR COMPLETENESS OF SCANNED COPIES OF THIS PLAN SHEET.

NOTE:

FOR ACCURATE RIGHT OF WAY DATA, CONTACT RIGHT OF WAY ENGINEERING AT THE DISTRICT OFFICE.

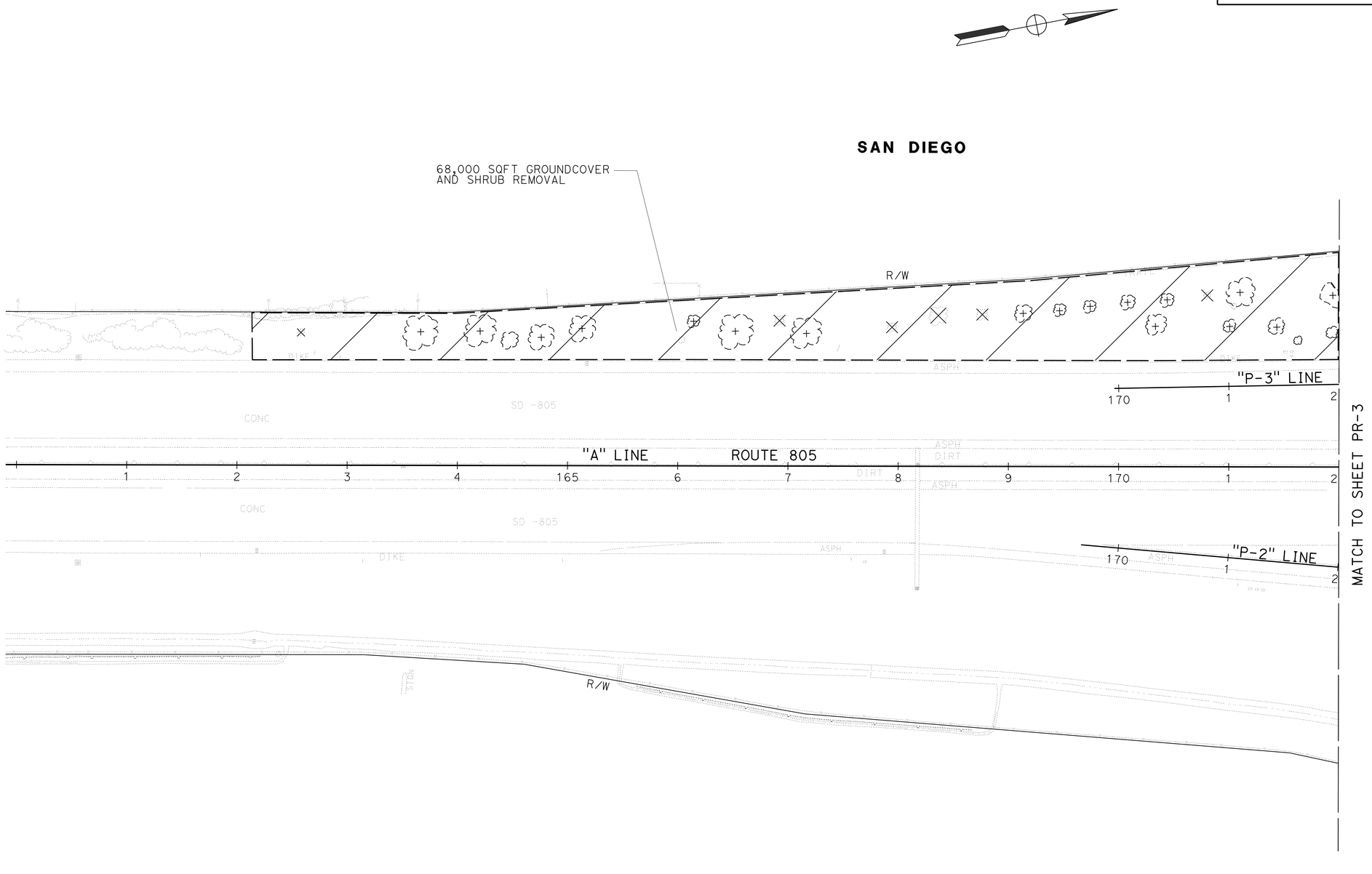

APPROVED FOR PLANT REMOVAL WORK ONLY

PLANT REMOVAL PLAN
LOCATION 2

SCALE: 1" = 50'

PR-2

STATE OF CALIFORNIA - DEPARTMENT OF TRANSPORTATION
Caltrans LANDSCAPE ARCHITECTURE

SENIOR LANDSCAPE ARCHITECT: STEPHEN ALVAREZ

CALCULATED-DESIGNED BY: JOEL HORTIZUELA
CHECKED BY: STEVE WARREN

REVISED BY
DATE REVISED

LAST REVISION 01-24-14
DATE PLOTTED => 07-APR-2014
TIME PLOTTED => 09:26

Dist	COUNTY	ROUTE	POST MILES TOTAL PROJECT	SHEET No.	TOTAL SHEETS
11	SD	805	0.9/1.1, 2.5/2.9	21	59

Stephen P. Warren
LICENSED LANDSCAPE ARCHITECT

04-01-14
PLANS APPROVAL DATE

LICENSED LANDSCAPE ARCHITECT
STEPHEN P. WARREN No. 3442
Signature
10-31-14
Renewal Date
12-19-13
Date
STATE OF CALIFORNIA

THE STATE OF CALIFORNIA OR ITS OFFICERS OR AGENTS SHALL NOT BE RESPONSIBLE FOR THE ACCURACY OR COMPLETENESS OF SCANNED COPIES OF THIS PLAN SHEET.

NOTE:

FOR ACCURATE RIGHT OF WAY DATA, CONTACT RIGHT OF WAY ENGINEERING AT THE DISTRICT OFFICE.

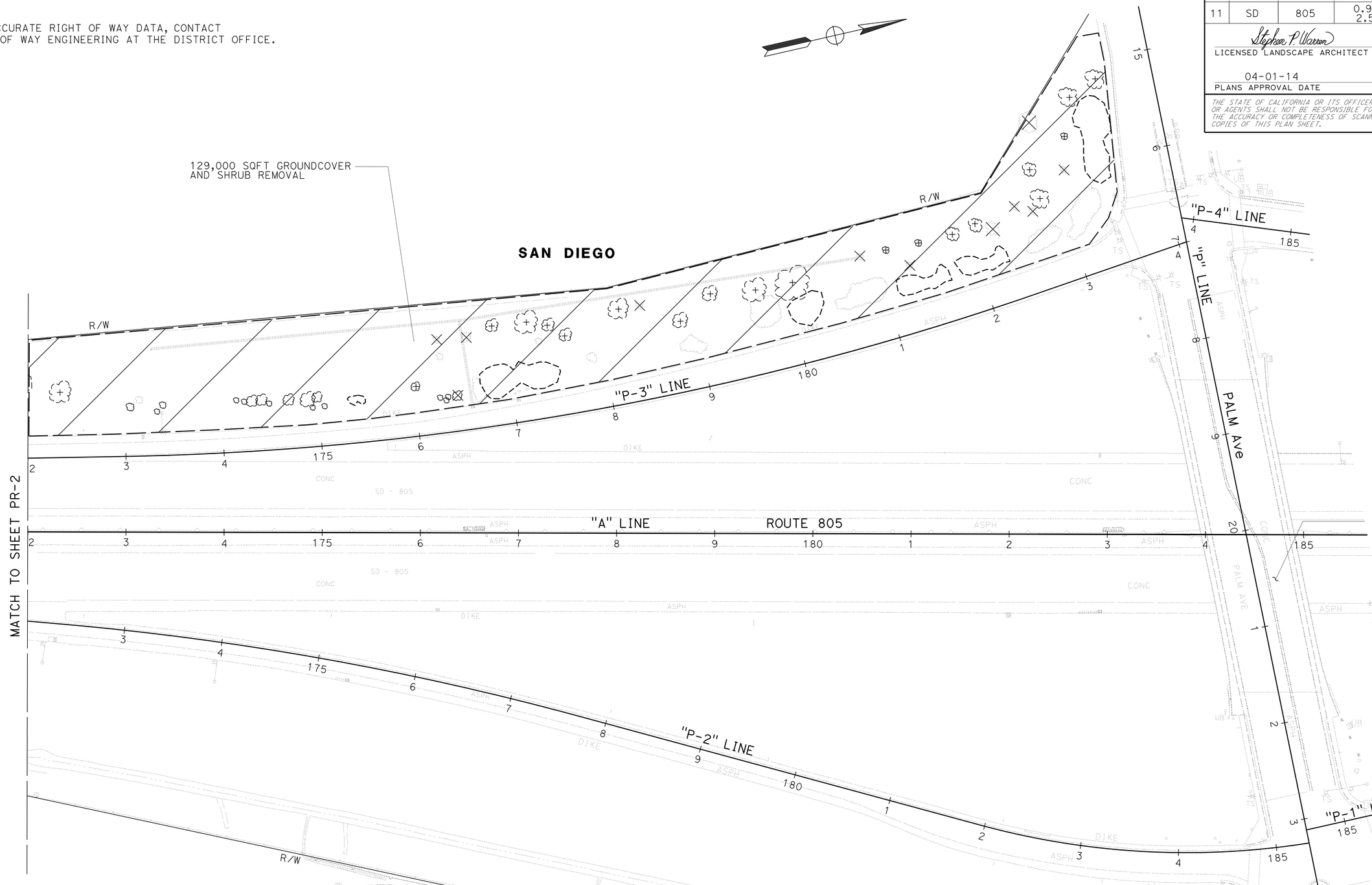

APPROVED FOR PLANT REMOVAL WORK ONLY

PLANT REMOVAL PLAN
LOCATION 2

SCALE: 1" = 50'

PR-3

STATE OF CALIFORNIA - DEPARTMENT OF TRANSPORTATION
Caltrans LANDSCAPE ARCHITECTURE

SENIOR LANDSCAPE ARCHITECT: STEPHEN ALVAREZ
CALCULATED-DESIGNED BY: JOEL HORTIZUELA
CHECKED BY: STEVE WARREN
REVISED BY
DATE REVISED

LAST REVISION 01-24-14
DATE PLOTTED => 07-APR-2014
TIME PLOTTED => 09:26

Dist	COUNTY	ROUTE	POST MILES TOTAL PROJECT	SHEET No.	TOTAL SHEETS
11	SD	805	0.9/1.1, 2.5/2.9	22	59

Stephen P. Warren
LICENSED LANDSCAPE ARCHITECT

04-01-14
PLANS APPROVAL DATE

LICENSED LANDSCAPE ARCHITECT
STEPHEN P. WARREN No. 3442
Signature
10-31-14
Renewal Date
12-19-13
Date
STATE OF CALIFORNIA

THE STATE OF CALIFORNIA OR ITS OFFICERS OR AGENTS SHALL NOT BE RESPONSIBLE FOR THE ACCURACY OR COMPLETENESS OF SCANNED COPIES OF THIS PLAN SHEET.

IRRIGATION LEGEND

SYMBOL	DESCRIPTION	SPRAY PATTERN	OPERATING PRESSURE (psi)	PRESSURE COMPENSATING	PLUS/MINUS 5% ② DISCHARGE: GALLONS PER MINUTE (GPM)	GALLONS PER HOUR (GPH)	RADIUS (ft)	WIDTH x LENGTH (ft)	FLOW SHUTOFF DEVICE	INLET CONNECTION (NPT INCH)	POSITIVE-LOCKING Adj ARC STOP	BACKSPLASH PREVENTER	DIFFUSER PIN	DISTANCE CONTROL FLAP	Adj DISCHARGE	SPRINKLER ASSEMBLY: RISER: MATERIAL: TYPE	PLASTIC	GALVANIZED	SIZE (IPS INCH)	HEIGHT (INCH)	SWING JOINT ⑥	RISER SUPPORT ⑥	POP-UP: TYPE	INLET CONNECTION (NPT INCH)	SPRINKLER PROTECTOR (TYPE)	POP-UP HEIGHT (INCH)	TREE WELL: SWING JOINT ⑥	REMARKS
[5]	GEAR DRIVEN	F	50	-	3.5	-	40	-	-	¾	-	-	X	-	-	⑥	X	-	¾	10	X	X	-	-	-	-	-	③
⑤	GEAR DRIVEN	P	50	-	3.5	-	40	-	-	¾	-	-	X	-	-	I	X	-	¾	10	X	-	-	-	-	-	-	③⑦
⑥	GEAR DRIVEN	P	50	-	3.5	-	40	-	-	¾	-	-	X	-	-	-	-	-	-	-	-	-	1	¾	1	12	-	③⑦
[7]	GEAR DRIVEN	F	50	-	7.5	-	48	-	-	¾	-	-	X	-	-	⑥	X	-	¾	10	X	X	-	-	-	-	-	③
⑦	GEAR DRIVEN	P	50	-	7.5	-	48	-	-	¾	-	-	X	-	-	I	X	-	¾	10	X	-	-	-	-	-	-	③⑦
⑧	GEAR DRIVEN	P	50	-	7.5	-	48	-	-	¾	-	-	X	-	-	-	-	-	-	-	-	-	1	¾	1	12	-	③⑦
△	SHRUB SPRAY	H	30	-	1.8	-	15	-	-	½	-	-	X	-	X	I	X	-	½	12	X	-	-	-	-	-	-	⑧
△	SHRUB SPRAY	Q	30	-	0.9	-	15	-	-	½	-	-	X	-	X	I	X	-	½	12	X	-	-	-	-	-	-	⑧
●	FLOOD BUBBLER	-	30	X	0.5	-	-	-	-	½	-	-	-	-	-	-	-	-	-	-	-	-	-	-	-	-	X	④⑨⑩⑪

X IN BOX DENOTES REQUIREMENT

APPLICABLE WHEN CIRCLED BELOW:

1 - SEE SPECIAL PROVISIONS.
② - IF A PRESSURE COMPENSATING DEVICE IS SPECIFIED, THE DISCHARGE AND RADII SHOWN REFLECT ITS USE.
③ - SHALL HAVE AN INTERNAL OR EXTERNAL CHECK VALVE.
④ - NON-ADJUSTABLE DISCHARGE RATE.
5 - REQUIRED ADJACENT TO SHOULDERS, CURBS, SIDEWALKS, AND DIKES.
⑥ - SEE DETAIL.
⑦ - ADJUSTABLE ARC.
⑧ - MATCHED PRECIPITATION RATE NOZZLES.
⑨ - REFER TO PIPE SIZING CHARTS.
⑩ - INSTALL ONE FLOOD BUBBLER PER No. 15 TREE
⑪ - PRESSURE COMPENSATING

ABBREVIATIONS

Adj — ADJUSTABLE
ft — FEET
psi — POUNDS PER SQUARE INCH

NOTES:

1. ALL LATERAL PIPE NOT LABELED MUST BE 1 INCH, OR AS SHOWN ON PIPE SIZING CHARTS.

2. ALL SPRINKLER HEADS, VALVES AND PLASTIC PIPE (SUPPLY LINE) SHOWN NEAR MVP LOCATIONS ARE TO BE INSTALLED OUTSIDE OF THE PAVED MVP AREA. VALVES TO BE INSTALLED AT EXITING END OF THE MVP.

3. PULL ONE ADDITIONAL CNC WIRE FROM CONTROLLER 'B' TO THE LAST VALVE BOX AT EACH VALVE MANIFOLD. (FOR FUTURE USE)

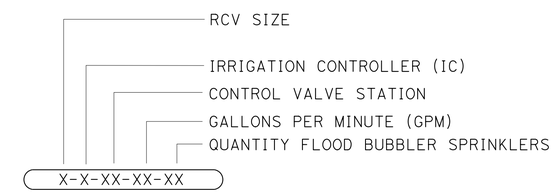

VALVE CODE

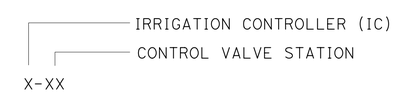

RCVM CODE

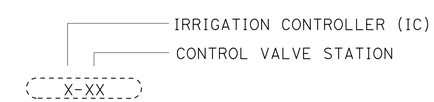

Exist VALVE CODE

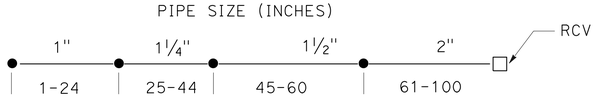

NUMBER OF HEADS @ 0.5 GPM

PIPE SIZING CHART
FLOOD BUBBLER SPRINKLER

IRRIGATION SPRINKLER SCHEDULE

ISS-1

STATE OF CALIFORNIA - DEPARTMENT OF TRANSPORTATION
Caltrans LANDSCAPE ARCHITECTURE
SENIOR LANDSCAPE ARCHITECT: STEPHEN ALVAREZ
CALCULATED-DESIGNED BY: JOEL HORTIZUELA
CHECKED BY: STEVE WARREN
REVISED BY
DATE REVISED

LAST REVISION 01-27-14
DATE PLOTTED => 07-APR-2014
TIME PLOTTED => 09:26

Dist	COUNTY	ROUTE	POST MILES TOTAL PROJECT	SHEET No.	TOTAL SHEETS
11	SD	805	0.9/1.1, 2.5/2.9	23	59

Stephen P. Warren
LICENSED LANDSCAPE ARCHITECT

04-01-14
PLANS APPROVAL DATE

LICENSED LANDSCAPE ARCHITECT
STEPHEN P. WARREN No. 3442
Stephen P. Warren
Signature
10-31-14
Renewal Date
12-19-13
Date
STATE OF CALIFORNIA

THE STATE OF CALIFORNIA OR ITS OFFICERS OR AGENTS SHALL NOT BE RESPONSIBLE FOR THE ACCURACY OR COMPLETENESS OF SCANNED COPIES OF THIS PLAN SHEET.

NOTES:

1. FOR ACCURATE RIGHT OF WAY DATA, CONTACT RIGHT OF WAY ENGINEERING AT THE DISTRICT OFFICE.
2. Exist 4" WATER METER IS LOCATED AT 1729 ALAQUINAS Dr APPROXIMATE STATION 116+00 (L) "A" LINE. WATER METER # 05772513. ACCOUNT # 190011021.
3. Exist ICC & Exist 'A' ARE LOCATED AT APPROXIMATE STATION 96+50 (L) "A" LINE.
4. Exist Irr CONDUITS ARE LOCATED AT APPROXIMATE STATIONS 74+70, 94+00 & 100+00 "A" LINE.
5. Exist Irr CONDUITS SHOWN ON PLANS ARE:
   8" ACP
   3" WATER
   2" CONDUIT FOR CNC

SAN DIEGO

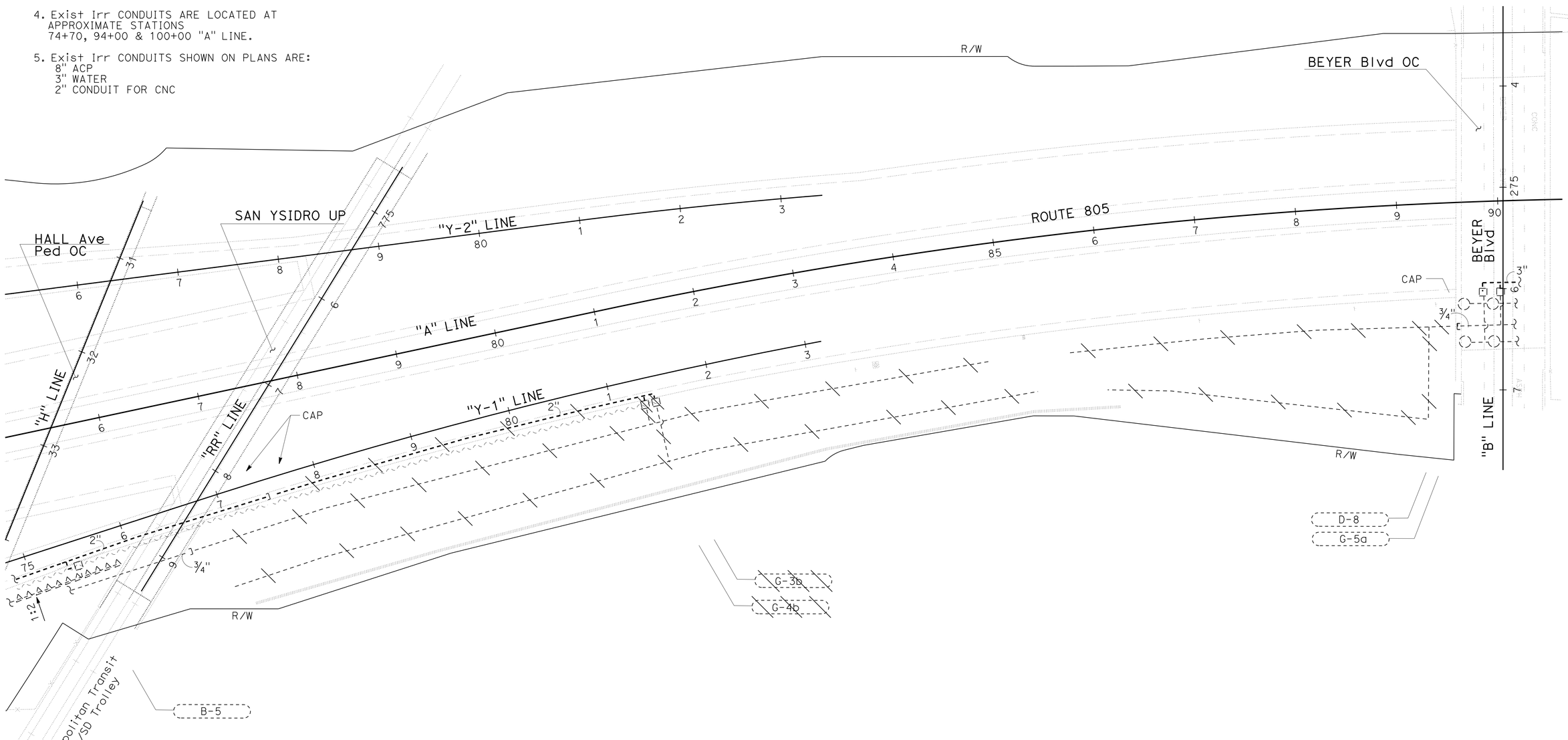

IRRIGATION REMOVAL PLAN
LOCATION 1

SCALE: 1" = 50'

IR-1

APPROVED FOR IRRIGATION REMOVAL WORK ONLY

STATE OF CALIFORNIA - DEPARTMENT OF TRANSPORTATION
Caltrans LANDSCAPE ARCHITECTURE

SENIOR LANDSCAPE ARCHITECT: STEPHEN ALVAREZ
CALCULATED-DESIGNED BY: JOEL HORTIZUELA
CHECKED BY: STEVE WARREN
REVISED BY
DATE REVISED

LAST REVISION 01-27-14
DATE PLOTTED => 07-APR-2014
TIME PLOTTED => 09:26

Dist	COUNTY	ROUTE	POST MILES TOTAL PROJECT	SHEET No.	TOTAL SHEETS
11	SD	805	0.9/1.1, 2.5/2.9	24	59

Stephen P. Warren
LICENSED LANDSCAPE ARCHITECT

04-01-14
PLANS APPROVAL DATE

LICENSED LANDSCAPE ARCHITECT
STEPHEN P. WARREN No. 3442
Signature
10-31-14
Renewal Date
12-19-13
Date
STATE OF CALIFORNIA

THE STATE OF CALIFORNIA OR ITS OFFICERS OR AGENTS SHALL NOT BE RESPONSIBLE FOR THE ACCURACY OR COMPLETENESS OF SCANNED COPIES OF THIS PLAN SHEET.

NOTE:

FOR ACCURATE RIGHT OF WAY DATA, CONTACT RIGHT OF WAY ENGINEERING AT THE DISTRICT OFFICE.

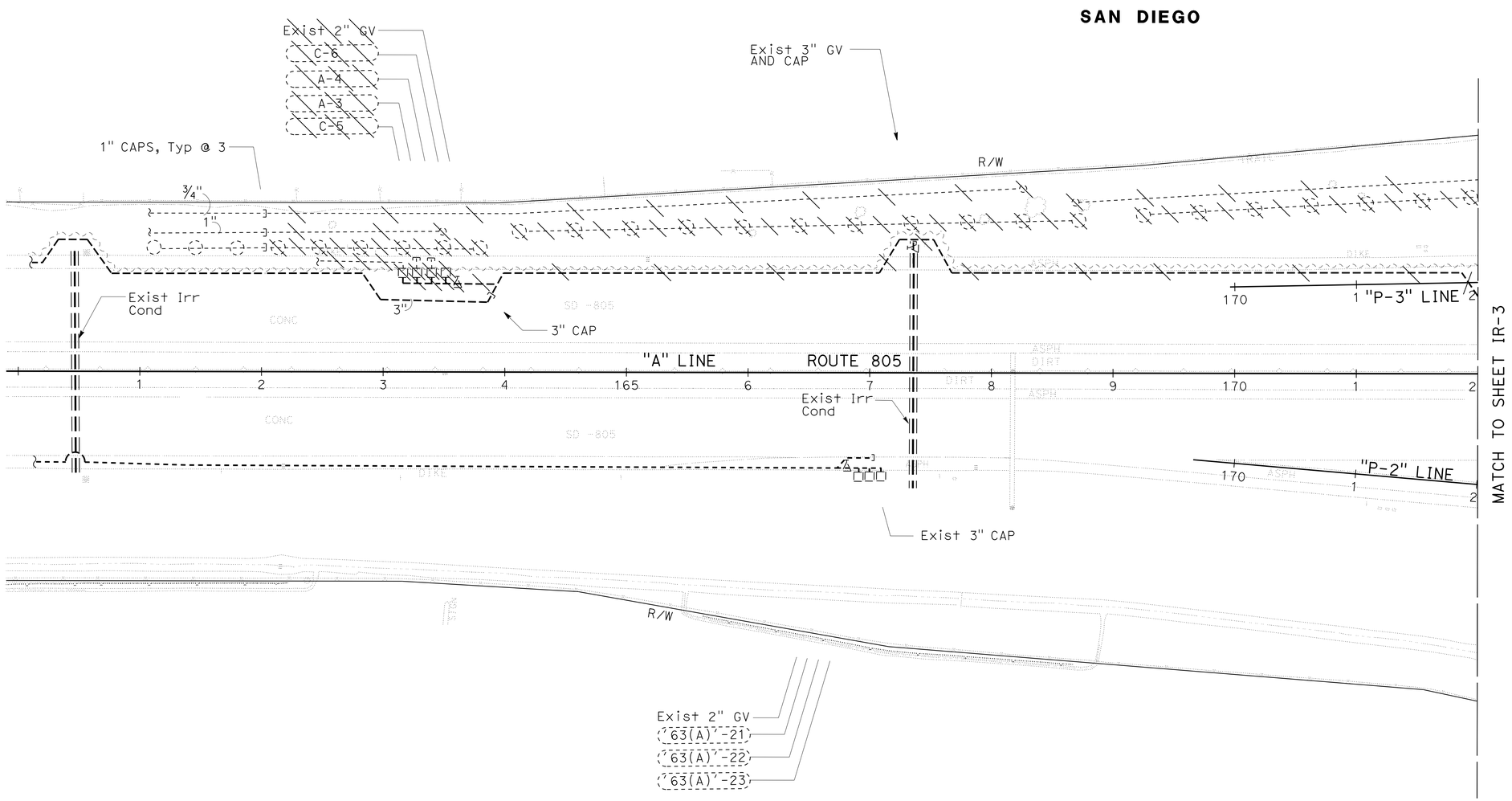

APPROVED FOR IRRIGATION REMOVAL WORK ONLY

IRRIGATION REMOVAL PLAN
LOCATION 2

SCALE: 1" = 50'

IR-2

STATE OF CALIFORNIA - DEPARTMENT OF TRANSPORTATION
Caltrans® LANDSCAPE ARCHITECTURE

SENIOR LANDSCAPE ARCHITECT: STEPHEN ALVAREZ
CALCULATED-DESIGNED BY: JOEL HORTIZUELA
CHECKED BY: STEVE WARREN
REVISED BY
DATE REVISED

LAST REVISION 01-27-14
DATE PLOTTED => 07-APR-2014
TIME PLOTTED => 09:26

Dist	COUNTY	ROUTE	POST MILES TOTAL PROJECT	SHEET No.	TOTAL SHEETS
11	SD	805	0.9/1.1, 2.5/2.9	25	59

Stephen P. Warren
LICENSED LANDSCAPE ARCHITECT

04-01-14
PLANS APPROVAL DATE

LICENSED LANDSCAPE ARCHITECT
STEPHEN P. WARREN No. 3442
Signature
10-31-14
Renewal Date
12-19-13
Date
STATE OF CALIFORNIA

THE STATE OF CALIFORNIA OR ITS OFFICERS OR AGENTS SHALL NOT BE RESPONSIBLE FOR THE ACCURACY OR COMPLETENESS OF SCANNED COPIES OF THIS PLAN SHEET.

NOTE:

FOR ACCURATE RIGHT OF WAY DATA, CONTACT RIGHT OF WAY ENGINEERING AT THE DISTRICT OFFICE.

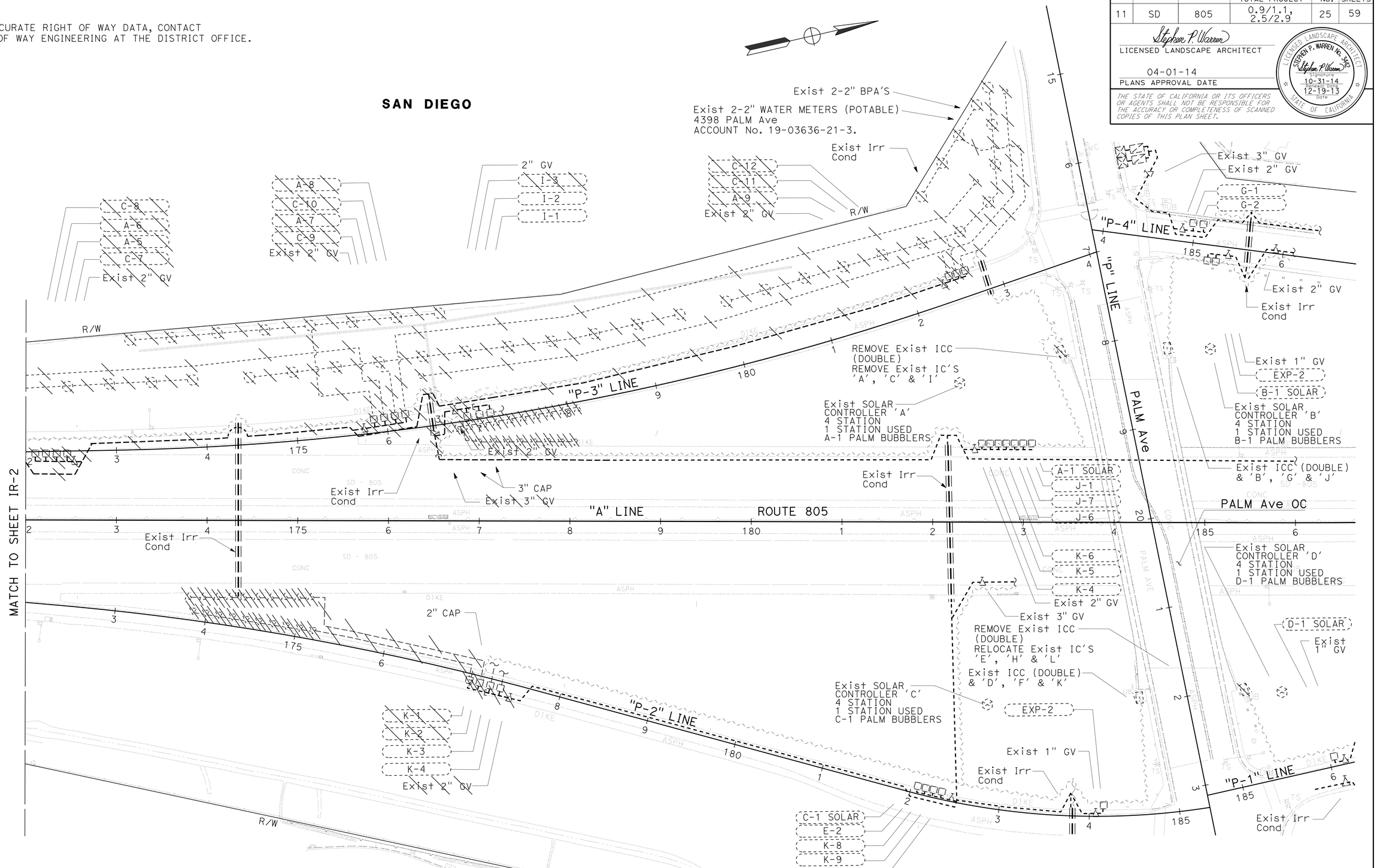

IRRIGATION REMOVAL PLAN
LOCATION 2

SCALE: 1" = 50'

IR-3

APPROVED FOR IRRIGATION REMOVAL WORK ONLY

STATE OF CALIFORNIA - DEPARTMENT OF TRANSPORTATION
Caltrans LANDSCAPE ARCHITECTURE

SENIOR LANDSCAPE ARCHITECT: STEPHEN ALVAREZ
CALCULATED-DESIGNED BY: JOEL HORTIZUELA
CHECKED BY: STEVE WARREN
REVISED BY
DATE REVISED

LAST REVISION 01-27-14
DATE PLOTTED => 07-APR-2014
TIME PLOTTED => 09:26

Dist	COUNTY	ROUTE	POST MILES TOTAL PROJECT	SHEET No.	TOTAL SHEETS
11	SD	805	0.9/1.1, 2.5/2.9	26	59

Stephen P. Warren
LICENSED LANDSCAPE ARCHITECT

04-01-14
PLANS APPROVAL DATE

LICENSED LANDSCAPE ARCHITECT
STEPHEN P. WARREN No. 3442
Stephen P. Warren
Signature
10-31-14
Renewal Date
12-19-13
Date
STATE OF CALIFORNIA

THE STATE OF CALIFORNIA OR ITS OFFICERS OR AGENTS SHALL NOT BE RESPONSIBLE FOR THE ACCURACY OR COMPLETENESS OF SCANNED COPIES OF THIS PLAN SHEET.

SAN DIEGO

NOTE:

1. FOR ACCURATE RIGHT OF WAY DATA, CONTACT RIGHT OF WAY ENGINEERING AT THE DISTRICT OFFICE.
2. Exist 4" WATER METER IS LOCATED AT 1729 ALAQUINAS Dr APPROXIMATE STATION 116+00 (L) "A" LINE. WATER METER # 05772513. ACCOUNT # 190011021.
3. Exist ICC & Exist 'A' ARE LOCATED AT APPROXIMATE STATION 96+50 (L) "A" LINE.
4. Exist Irr CONDUITS ARE LOCATED AT APPROXIMATE STATIONS 74+70, 94+00 & 100+00 "A" LINE.
5. Exist Irr CONDUITS SHOWN ON PLANS ARE:
   8" ACP
   3" WATER
   2" CONDUIT FOR CNC

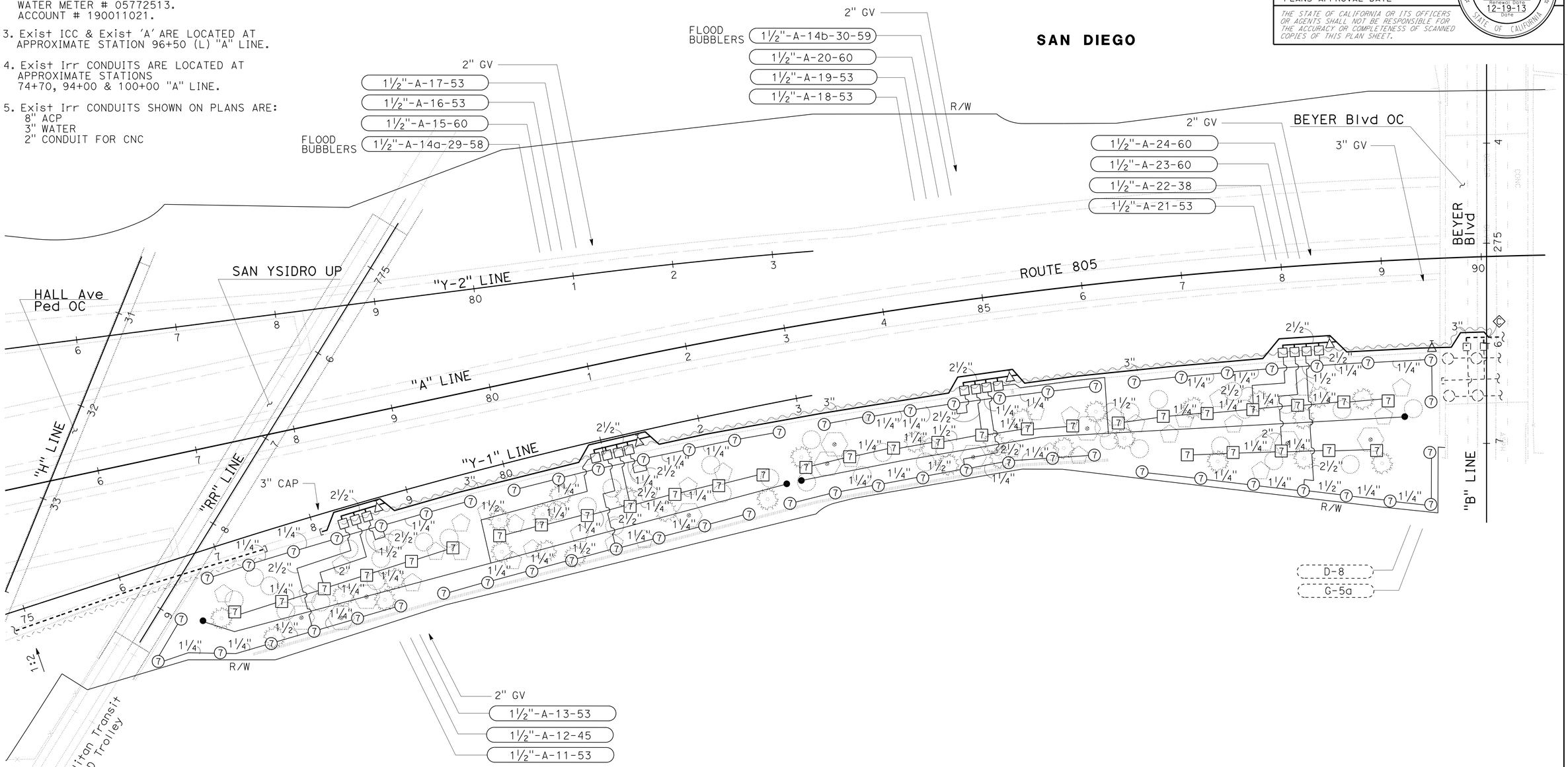

APPROVED FOR IRRIGATION WORK ONLY

IRRIGATION PLAN
LOCATION 1

SCALE: 1" = 50'

IP-1

STATE OF CALIFORNIA - DEPARTMENT OF TRANSPORTATION
Caltrans® LANDSCAPE ARCHITECTURE

SENIOR LANDSCAPE ARCHITECT: STEPHEN ALVAREZ
CALCULATED-DESIGNED BY: JOEL HORTIZUELA
CHECKED BY: STEVE WARREN
REVISED BY
DATE REVISED

LAST REVISION 01-27-14
DATE PLOTTED => 07-APR-2014
TIME PLOTTED => 09:26

Dist	COUNTY	ROUTE	POST MILES TOTAL PROJECT	SHEET No.	TOTAL SHEETS
11	SD	805	0.9/1.1, 2.5/2.9	27	59

Stephen P. Warren
LICENSED LANDSCAPE ARCHITECT

04-01-14
PLANS APPROVAL DATE

LICENSED LANDSCAPE ARCHITECT
STEPHEN P. WARREN No. 3442
Signature
10-31-14
Renewal Date
12-19-13
Date
STATE OF CALIFORNIA

THE STATE OF CALIFORNIA OR ITS OFFICERS OR AGENTS SHALL NOT BE RESPONSIBLE FOR THE ACCURACY OR COMPLETENESS OF SCANNED COPIES OF THIS PLAN SHEET.

NOTE:

FOR ACCURATE RIGHT OF WAY DATA, CONTACT RIGHT OF WAY ENGINEERING AT THE DISTRICT OFFICE.

SAN DIEGO

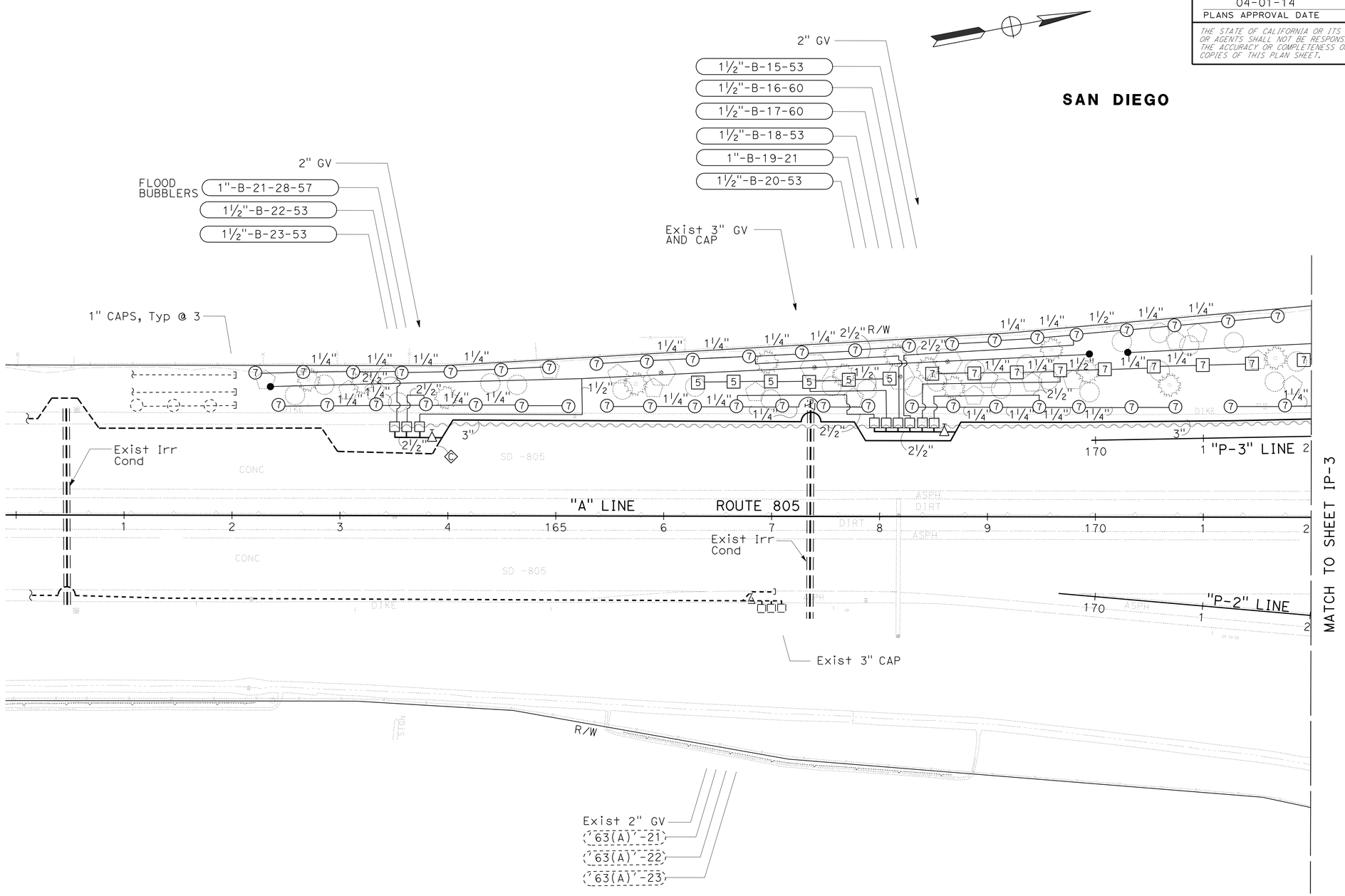

APPROVED FOR IRRIGATION WORK ONLY

SCALE: 1" = 50'

IRRIGATION PLAN
LOCATION 2

IP-2

STATE OF CALIFORNIA - DEPARTMENT OF TRANSPORTATION
Caltrans® LANDSCAPE ARCHITECTURE

SENIOR LANDSCAPE ARCHITECT: STEPHEN ALVAREZ
CALCULATED-DESIGNED BY: JOEL HORTIZUELA
CHECKED BY: STEVE WARREN
REVISED BY
DATE REVISED

LAST REVISION 01-27-14
DATE PLOTTED => 07-APR-2014
TIME PLOTTED => 09:26

Dist	COUNTY	ROUTE	POST MILES TOTAL PROJECT	SHEET No.	TOTAL SHEETS
11	SD	805	0.9/1.1, 2.5/2.9	28	59

Stephen P. Warren
LICENSED LANDSCAPE ARCHITECT

04-01-14
PLANS APPROVAL DATE

LICENSED LANDSCAPE ARCHITECT STEPHEN P. WARREN No. 3442 Signature 10-31-14 Renewal date 12-19-13 Date STATE OF CALIFORNIA

THE STATE OF CALIFORNIA OR ITS OFFICERS OR AGENTS SHALL NOT BE RESPONSIBLE FOR THE ACCURACY OR COMPLETENESS OF SCANNED COPIES OF THIS PLAN SHEET.

NOTES:

1. FOR ACCURATE RIGHT OF WAY DATA, CONTACT RIGHT OF WAY ENGINEERING AT THE DISTRICT OFFICE.
2. 'EXP' REFERS TO ORIGINAL VALVE ASSEMBLY UNITS THAT ARE RESERVED AS 'EXPERIMENTAL' TEST SITES

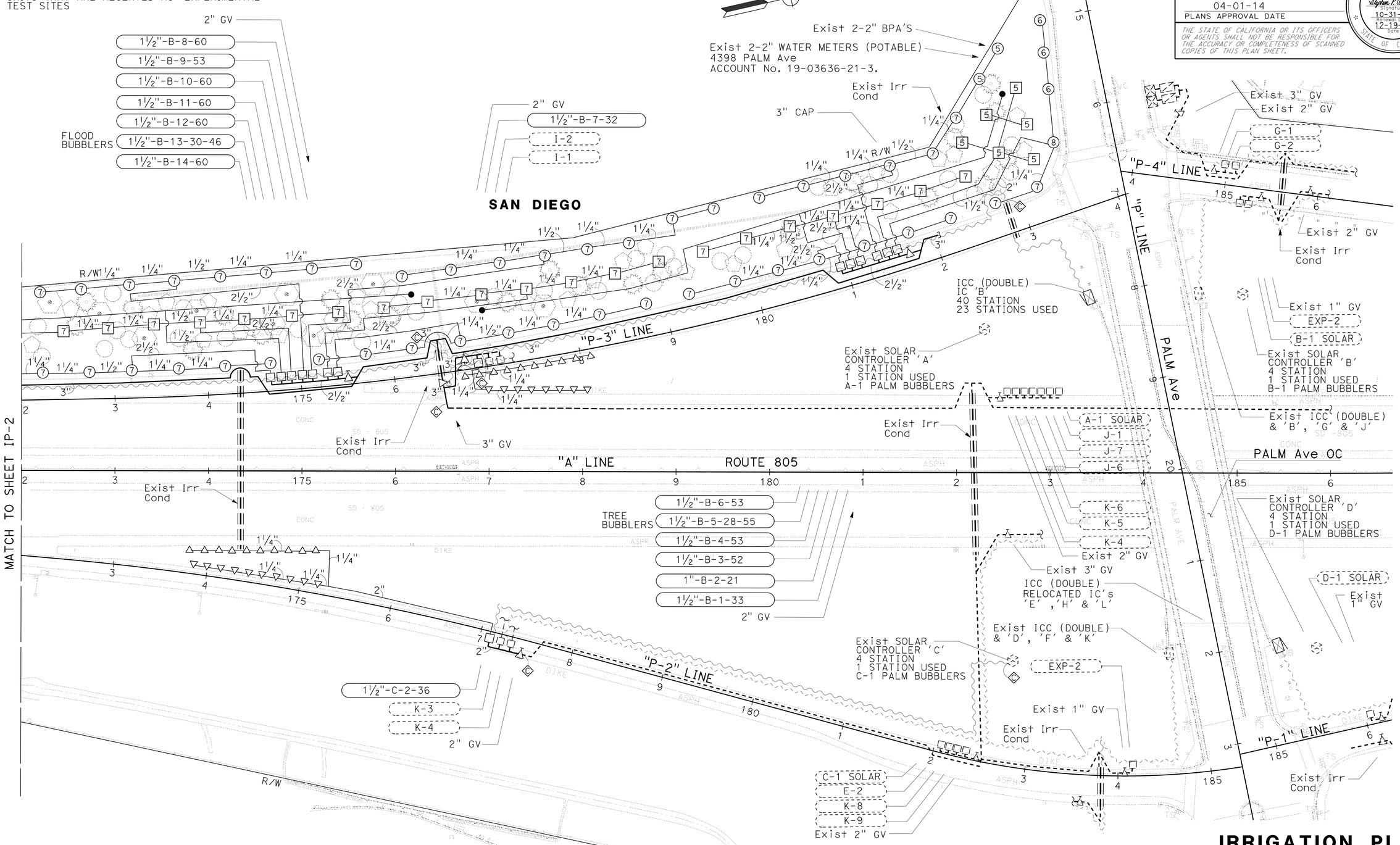

APPROVED FOR IRRIGATION WORK ONLY

IRRIGATION PLAN
LOCATION 2

SCALE: 1" = 50'

IP-3

REVISED BY	DATE REVISED

CALCULATED-DESIGNED BY	CHECKED BY
JOEL HORTIZUELA	STEVE WARREN

SENIOR LANDSCAPE ARCHITECT: STEPHEN ALVAREZ

STATE OF CALIFORNIA - DEPARTMENT OF TRANSPORTATION
Caltrans® LANDSCAPE ARCHITECTURE

LAST REVISION 01-27-14 | DATE PLOTTED => 07-APR-2014 | TIME PLOTTED => 09:26

Dist	COUNTY	ROUTE	POST MILES TOTAL PROJECT	SHEET No.	TOTAL SHEETS
11	SD	805	0.9/1.1, 2.5/2.9	29	59

LICENSED LANDSCAPE ARCHITECT

04-01-14
PLANS APPROVAL DATE

THE STATE OF CALIFORNIA OR ITS OFFICERS OR AGENTS SHALL NOT BE RESPONSIBLE FOR THE ACCURACY OR COMPLETENESS OF SCANNED COPIES OF THIS PLAN SHEET.

LICENSED LANDSCAPE ARCHITECT — STEPHEN P. WARREN No. 3442 — Signature — Renewal Date 10-31-14 — 12-19-13 Date — STATE OF CALIFORNIA

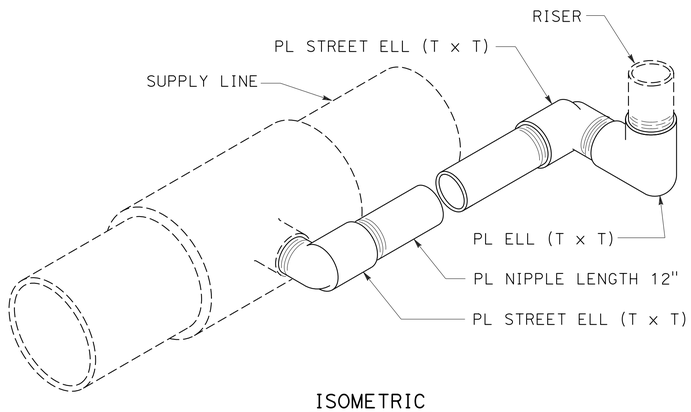

ISOMETRIC

SWING JOINT
(Mod)

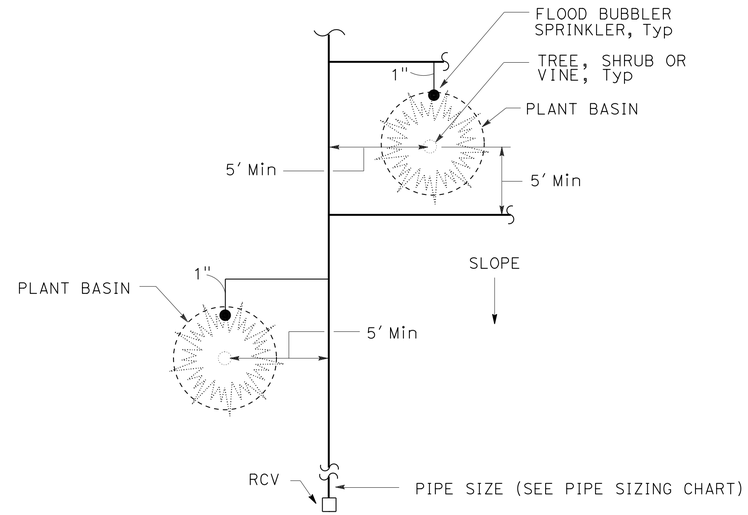

PLAN

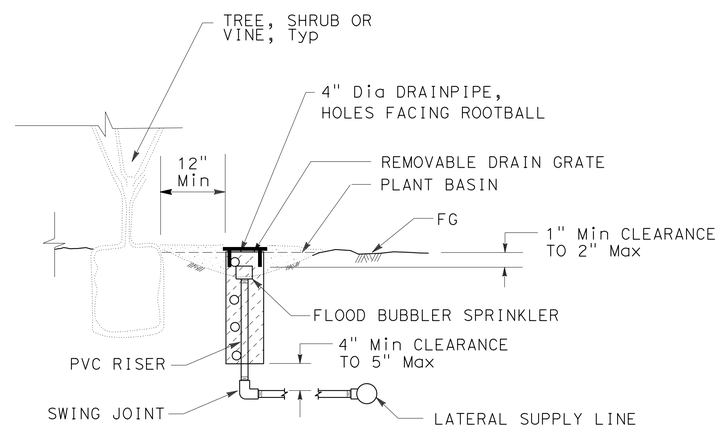

SECTION

NOTE:

1. INSTALL TREE WELL SPRINKLER ASSEMBLY (Mod) ON UPHILL SIDE OF PLANT WHEN ON SLOPE

TREE WELL SPRINKLER ASSEMBLY
(Mod)

INSTALLATION	TYPE FITTING	INSTALLATION	TYPE FITTING
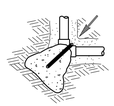	90° ELL	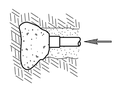	DEAD END
	BEND 45° 22.5° 11.25°		GATE VALVE
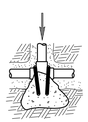	TEE		VERTICAL BEND (TYPE I) 45° 22.5° 11.25°
		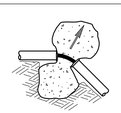	OR VERTICAL BEND (TYPE II) 45° 22.5° 11.25°

NOTES:

Min 1 CF PCC FOR 1½" PIPE SIZE AND SMALLER.
Min 2 CF PCC FOR 2" PIPE SIZE.
Min 2 CF PCC FOR 3" AND 4" PIPE SIZE.
Min 3 CF PCC FOR 6" PIPE SIZE.
Min 4 CF PCC FOR 8" PIPE SIZE.
USE #3 REINFORCING BAR WHERE SHOWN.

THRUST BLOCKS
(Mod)

IRRIGATION DETAILS

NO SCALE

ID-1

STATE OF CALIFORNIA - DEPARTMENT OF TRANSPORTATION
Caltrans® LANDSCAPE ARCHITECTURE

SENIOR LANDSCAPE ARCHITECT: STEPHEN ALVAREZ
CALCULATED-DESIGNED BY: JOEL HORTIZUELA
CHECKED BY: STEVE WARREN
REVISED BY
DATE REVISED

LAST REVISION 01-27-14
DATE PLOTTED => 07-APR-2014
TIME PLOTTED => 09:26

Dist	COUNTY	ROUTE	POST MILES TOTAL PROJECT	SHEET No.	TOTAL SHEETS
11	SD	805	0.9/1.1, 2.5/2.9	30	59

Stephen P. Warren
LICENSED LANDSCAPE ARCHITECT

04-01-14
PLANS APPROVAL DATE

LICENSED LANDSCAPE ARCHITECT
STEPHEN P. WARREN No. 3442
Stephen P. Warren
Signature
10-31-14
Renewal Date
12-19-13
Date
STATE OF CALIFORNIA

THE STATE OF CALIFORNIA OR ITS OFFICERS OR AGENTS SHALL NOT BE RESPONSIBLE FOR THE ACCURACY OR COMPLETENESS OF SCANNED COPIES OF THIS PLAN SHEET.

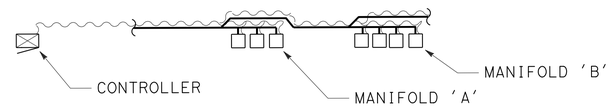

EXAMPLE:
MANIFOLD 'A' - INSTALL 4 CNC AND 1 ADDITIONAL WIRE FROM CONTROLLER TO LAST VALVE BOX IN MANIFOLD 'A'.
MANIFOLD 'B' - INSTALL 5 CNC AND 1 ADDITIONAL WIRE FROM CONTROLLER TO LAST VALVE BOX IN MANIFOLD 'B'.

CONTROL AND NEUTRAL CONDUCTORS

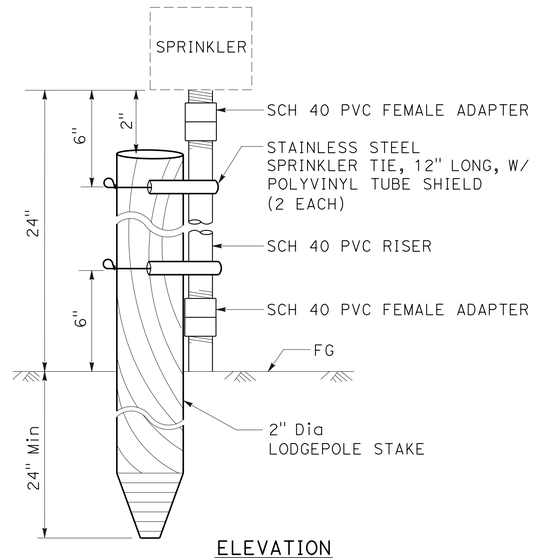

ELEVATION

RISER SPRINKLER ASSEMBLY AND RISER SUPPORT

IRRIGATION DETAILS

NO SCALE

ID-2

STATE OF CALIFORNIA - DEPARTMENT OF TRANSPORTATION
Caltrans® LANDSCAPE ARCHITECTURE

SENIOR LANDSCAPE ARCHITECT: STEPHEN ALVAREZ
CALCULATED-DESIGNED BY: JOEL HORTIZUELA
CHECKED BY: STEVE WARREN
REVISED BY
DATE REVISED

LAST REVISION 01-27-14
DATE PLOTTED => 07-APR-2014
TIME PLOTTED => 09:26

Dist	COUNTY	ROUTE	POST MILES TOTAL PROJECT	SHEET No.	TOTAL SHEETS
11	SD	805	0.9/1.1, 2.5/2.9	31	59

Stephen P. Warren
LICENSED LANDSCAPE ARCHITECT

04-01-14
PLANS APPROVAL DATE

LICENSED LANDSCAPE ARCHITECT STEPHEN P. WARREN No. 3442 Signature 10-31-14 Renewal date 12-19-13 Date STATE OF CALIFORNIA

THE STATE OF CALIFORNIA OR ITS OFFICERS OR AGENTS SHALL NOT BE RESPONSIBLE FOR THE ACCURACY OR COMPLETENESS OF SCANNED COPIES OF THIS PLAN SHEET.

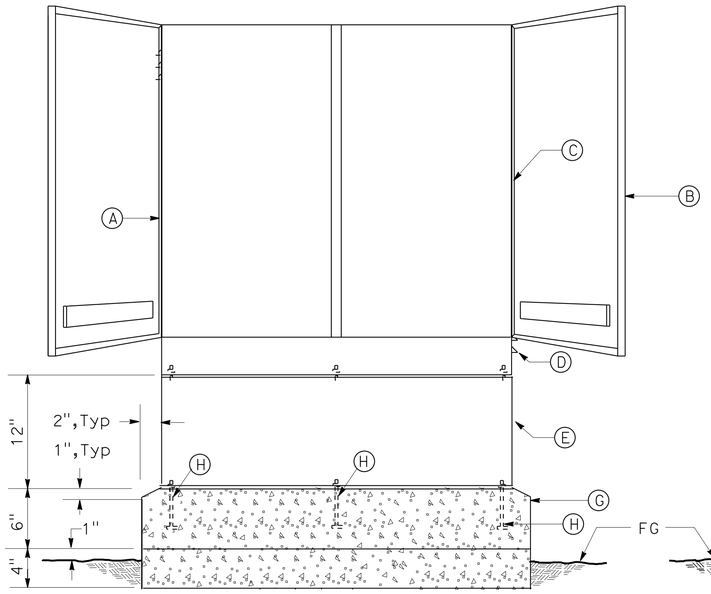

FRONT ELEVATION

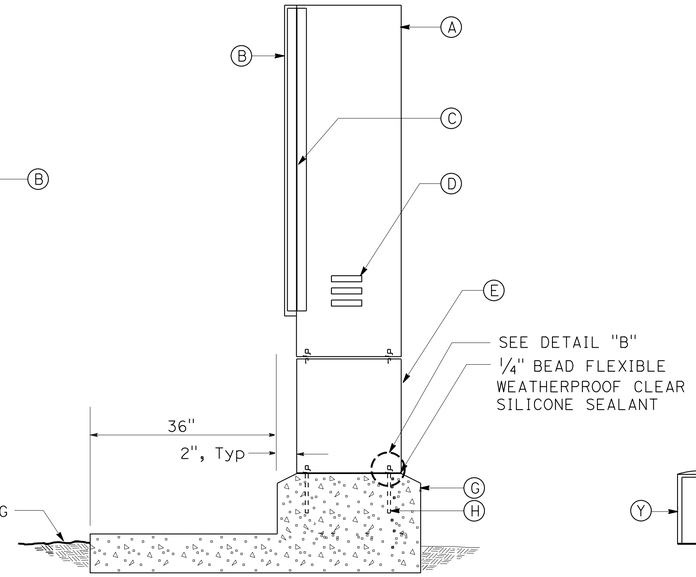

SIDE SECTION

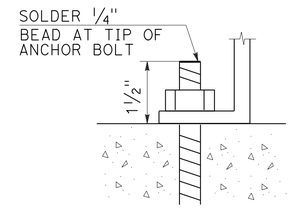

DETAIL "B"

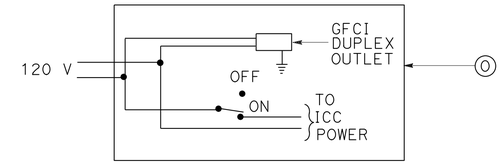

DETAIL "A"

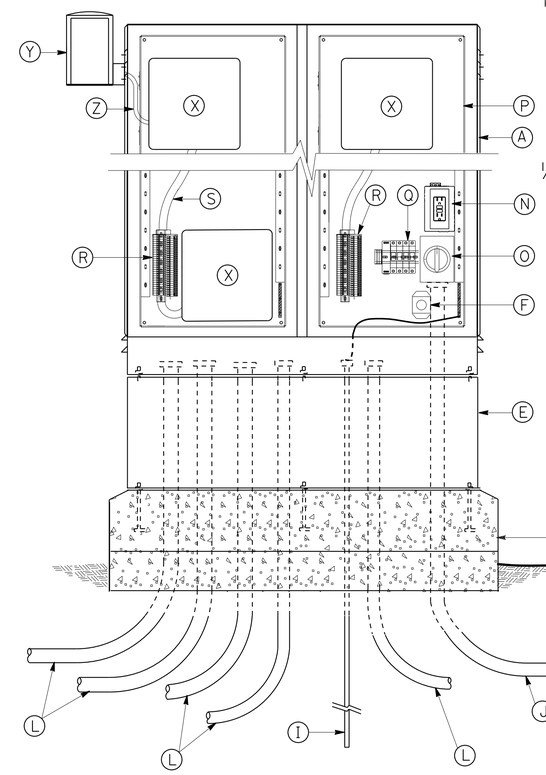

IC LAYOUT

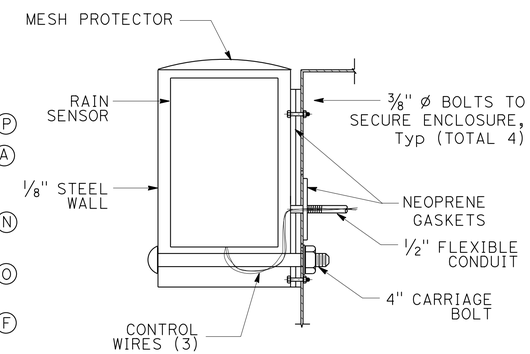

RAIN SENSOR UNIT

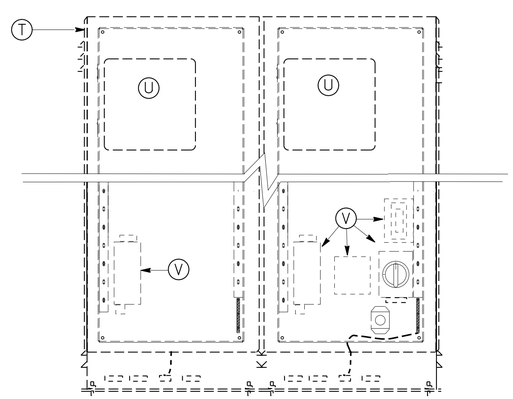

EXISTING DOUBLE CONTROL CABINET

LEGEND:

- Ⓐ STAINLESS STEEL CONTROLLER ENCLOSURE CABINET
- Ⓑ DOOR WITH THREE POINT LOCKING MECHANISM, FLUSH-MOUNTED ACCESS HANDLE FOR PADLOCK, AND STORAGE FOR PLANS
- Ⓒ CONTINUOUS STAINLESS STEEL PIANO HINGE
- Ⓓ LOUVERS AT TOP AND BOTTOM FOR CROSS VENTILATION
- Ⓔ 12" HIGH STAINLESS STEEL PEDESTAL (ATTACH TO ENCLOSURE CABINET)
- Ⓕ SURGE PROTECTION
- Ⓖ PCC PAD AND FOUNDATION
- Ⓗ 3/8" DIAMETER, 2 3/4" LONG, WINGED STAINLESS STEEL ANCHOR BOLTS WITH WASHERS AND HEX HEAD LOCKNUTS (4 BOLTS FOR SINGLE, 6 BOLTS FOR DOUBLE)
- Ⓘ 5/8" X 10' LONG COPPER CLAD STEEL ROD GROUND ELECTRODE AND GROUND CLAMP WITH No. 8 AWG GROUND CONDUCTOR.
- Ⓙ SIZE 1", TYPE 3 CONDUIT FOR ELECTRICAL SERVICE (2 FOR CABINET WITH TELEPHONE SERVICE)
- Ⓛ SIZE 2", TYPE 3 CONDUIT FOR LOW VOLTAGE WIRING
- Ⓝ 2 GANG WEATHER PROOF BOX WITH GROUND FAULT PROTECTED RECEPTACLE
- Ⓞ DIAL ON-OFF SWITCH, SEE DETAIL "A" ON THIS SHEET
- Ⓟ STAINLESS STEEL BACK BOARD (3/16" Min THICKNESS), ATTACHED TO ENCLOSURE
- Ⓠ CIRCUIT BREAKERS
- Ⓡ TERMINAL STRIPS FOR LOW VOLTAGE WIRE CONNECTIONS
- Ⓢ 1 1/2" FLEXIBLE CONDUIT FOR CONTROL WIRES
- Ⓣ EXISTING IRRIGATION CONTROLLER CABINET, PCC PAD, FOUNDATION, GROUND ROD, AND CONDUITS
- Ⓤ EXISTING IRRIGATION CONTROLLER AND BACKBOARD
- Ⓥ EXISTING ON-OFF SWITCH, CIRCUIT BREAKERS, SURGE PROTECTOR, TERMINAL STRIPS, WEATHER PROOF BOX WITH GROUND FAULT PROTECTOR AND CONDUITS
- Ⓧ NEW OR RELOCATED IRRIGATION CONTROLLER(S) (IC) WALL MOUNTED (QUANTITIES SHOWN ON PLANS)

LEGEND CONTINUED:

- Ⓨ VANDAL RESISTANT ENCLOSURE FOR RAIN SENSOR
- Ⓩ 1/2" FLEXIBLE CONDUIT FOR CONTROL WIRES (3)

IRRIGATION (DOUBLE) CONTROLLER ENCLOSURE CABINET

IRRIGATION DETAILS

NO SCALE

ID-3

REVISED BY	DATE REVISED
JOEL HORTIZUELA	STEVE WARREN
CALCULATED-DESIGNED BY	CHECKED BY
SENIOR LANDSCAPE ARCHITECT	STEPHEN ALVAREZ

STATE OF CALIFORNIA - DEPARTMENT OF TRANSPORTATION
Caltrans LANDSCAPE ARCHITECTURE

LAST REVISION 01-27-14 | DATE PLOTTED => 07-APR-2014 | TIME PLOTTED => 09:26

Dist	COUNTY	ROUTE	POST MILES TOTAL PROJECT	SHEET No.	TOTAL SHEETS
11	SD	805	0.9/1.1, 2.5/2.9	32	59

Stephen P. Warren
LICENSED LANDSCAPE ARCHITECT

04-01-14
PLANS APPROVAL DATE

LICENSED LANDSCAPE ARCHITECT
STEPHEN P. WARREN No. 3442
Signature 10-31-14
Renewal Date
12-19-13
Date
STATE OF CALIFORNIA

THE STATE OF CALIFORNIA OR ITS OFFICERS OR AGENTS SHALL NOT BE RESPONSIBLE FOR THE ACCURACY OR COMPLETENESS OF SCANNED COPIES OF THIS PLAN SHEET.

SUBTOTALS PER VALVE ON LATERAL SUPPLY SIDE OF CONTROL VALVE

VALVE OR ASSEMBLY NUMBER FOR EXISTING IC-A (24 STATION)

DESCRIPTION		UNIT	1	2	3	4	5	6	7	8	9	10	11	12	13	14a	15	16	17	18	19	20	14b	21	22	23	24	26	27	28	29	30	31	32	33	34	35	36	37	38	39	40	SUBTOTALS	UNIT	DESCRIPTION	
PLASTIC PIPE SUPPLY LINE SCH 40	1 INCH	LF	-	-	-	-	-	-	-	-	-	-	95	95	95	740	95	95	95	95	90	90	790	95	95	110	95																	2770	LF	1 INCH	PLASTIC PIPE SUPPLY LINE SCH 40
	1¼ INCH	LF	-	-	-	-	-	-	-	-	-	-	145	135	140	-	180	185	180	185	140	180	-	185	95	190	205																	2145	LF	1¼ INCH	
	1½ INCH	LF	-	-	-	-	-	-	-	-	-	-	45	-	45	190	50	-	-	-	-	45	150	-	-	45	45																	615	LF	1½ INCH	
	2 INCH	LF	-	-	-	-	-	-	-	-	-	-	-	100	-	-	-	-	-	-	-	-	-	-	105	-	-																	205	LF	2 INCH	
PLASTIC PIPE SUPPLY LINE PR 315	2½ INCH	LF	EXISTING	EXISTING	EXISTING	EXISTING	EXISTING	EXISTING	EXISTING	EXISTING	EXISTING	EXISTING	140	-	15	-	100	50	20	20	40	110	-	85	-	140	10																730	LF	2½ INCH	PLASTIC PIPE SUPPLY LINE PR 315
	3 INCH	LF											-	-	-	-	-	-	-	-	-	-	-	-	-	-	-																	-	LF	3 INCH	
DIP GSP																																														DIP GSP
SPRINKLER TYPE	⑤ 5	EA	-	-	-	-	-	-	-	-	-	-	-	-	-	-	-	-	-	-	-	-	-	-	-	-	-																-	EA	⑤ 5	SPRINKLER TYPE
	⑥	EA	-	-	-	-	-	-	-	-	-	-	-	-	-	-	-	-	-	-	-	-	-	-	-	-	-																-	EA	⑥	
	⑦ 7	EA	-	-	-	-	-	-	-	-	-	-	7	6	7	-	8	7	7	7	7	8	-	7	5	8	8																92	EA	⑦ 7	
	⑧	EA	-	-	-	-	-	-	-	-	-	-	-	-	-	-	-	-	-	-	-	-	-	-	-	-	-																-	EA	⑧	
	⑪ 11	EA	-	-	-	-	-	-	-	-	-	-	-	-	-	-	-	-	-	-	-	-	-	-	-	-	-																-	EA	⑪ 11	
	⑫	EA	-	-	-	-	-	-	-	-	-	-	-	-	-	-	-	-	-	-	-	-	-	-	-	-	-																-	EA	⑫	
	△	EA	-	-	-	-	-	-	-	-	-	-	-	-	-	-	-	-	-	-	-	-	-	-	-	-	-																-	EA	△	
	▲	EA	-	-	-	-	-	-	-	-	-	-	-	-	-	-	-	-	-	-	-	-	-	-	-	-	-																-	EA	▲	
	○	EA	-	-	-	-	-	-	-	-	-	-	-	-	-	-	-	-	-	-	-	-	-	-	-	-	-																-	EA	○	
	●	EA	-	-	-	-	-	-	-	-	-	-	-	-	-	58	-	-	-	-	-	-	59	-	-	-	-																117	EA	●	

VALVE OR ASSEMBLY NUMBER FOR IC-B (40 STATION)

DESCRIPTION		UNIT	1	2	3	4	5	6	7	8	9	10	11	12	13	14	15	16	17	18	19	20	21	22	23	24-	40
PLASTIC PIPE SUPPLY LINE SCH 40	1 INCH	LF	185	200	140	100	820	100	190	105	100	100	90	100	770	100	80	85	90	100	180	80	990	90	90	-	-
	1¼ INCH	LF	55	-	140	195	-	195	90	205	205	215	200	200	-	200	165	170	170	195	-	165	-	180	185	-	-
	1½ INCH	LF	-	185	50	-	100	-	-	55	-	45	-	50	190	50	-	40	50	-	100	-	180	-	-	-	-
	2 INCH	LF	235	-	-	-	-	-	30	-	-	-	-	-	-	-	-	-	-	-	-	-	-	-	-	-	-
PLASTIC PIPE SUPPLY LINE PR 315	2½ INCH	LF	-	-	120	65	-	30	-	160	270	340	330	150	-	165	120	165	215	195	-	150	-	30	35	OPEN	OPEN
	3 INCH	LF	-	-	-	-	-	-	-	-	-	-	-	-	-	-	-	-	-	-	-	-	-	-	-		
DIP GSP																											
DIP																											
SPRINKLER TYPE	⑤ 5	EA	-	6	2	-	-	-	-	-	-	-	-	-	-	-	-	-	-	-	6	-	-	-	-	-	-
	⑥	EA	3	-	-	-	-	-	-	-	-	-	-	-	-	-	-	-	-	-	-	-	-	-	-	-	-
	⑦ 7	EA	2	-	6	7	-	7	-	8	7	8	8	8	-	8	7	8	8	7	-	7	-	7	7	-	-
	⑧	EA	1	-	-	-	-	-	-	-	-	-	-	-	-	-	-	-	-	-	-	-	-	-	-	-	-
	⑪ 11	EA	-	-	-	-	-	-	-	-	-	-	-	-	-	-	-	-	-	-	-	-	-	-	-	-	-
	⑫	EA	-	-	-	-	-	-	-	-	-	-	-	-	-	-	-	-	-	-	-	-	-	-	-	-	-
	△	EA	-	-	-	-	-	-	18	-	-	-	-	-	-	-	-	-	-	-	-	-	-	-	-	-	-
	▲	EA	-	-	-	-	-	-	-	-	-	-	-	-	-	-	-	-	-	-	-	-	-	-	-	-	-
	○	EA	-	-	-	-	-	-	-	-	-	-	-	-	-	-	-	-	-	-	-	-	-	-	-	-	-
	●	EA	-	-	-	-	55	-	-	-	-	-	-	-	46	-	-	-	-	-	-	-	57	-	-	-	-

VALVE NUMBER FOR Exist IC-C (4 STATION)

1	2	3	4	SUBTOTALS	UNIT	DESCRIPTION	
-	180	-	-	5065	LF	1 INCH	PLASTIC PIPE SUPPLY LINE SCH 40
-	155	-	-	3285	LF	1¼ INCH	
-	-	-	-	1095	LF	1½ INCH	
-	190	-	-	455	LF	2 INCH	
EXISTING	-	OPEN	OPEN	2540	LF	2½ INCH	PLASTIC PIPE SUPPLY LINE PR 315
	-			-	LF	3 INCH	
							DIP GSP
							DIP
-	-	-	-	14	EA	⑤ 5	SPRINKLER TYPE
-	-	-	-	3	EA	⑥	
-	-	-	-	120	EA	⑦ 7	
-	-	-	-	1	EA	⑧	
-	-	-	-	-	EA	⑪ 11	
-	-	-	-	-	EA	⑫	
-	20	-	-	38	EA	△	
-	-	-	-	-	EA	▲	
-	-	-	-	-	EA	○	
-	-	-	-	158	EA	●	

IRRIGATION QUANTITIES
IQ-1

REVISED BY | DATE REVISED
JOEL HORTIZUELA | STEVE WARREN
CALCULATED-DESIGNED BY | CHECKED BY
SENIOR LANDSCAPE ARCHITECT | STEPHEN ALVAREZ

STATE OF CALIFORNIA - DEPARTMENT OF TRANSPORTATION
Caltrans LANDSCAPE ARCHITECTURE

LAST REVISION 01-27-14 | DATE PLOTTED => 07-APR-2014 | TIME PLOTTED => 09:26

Dist	COUNTY	ROUTE	POST MILES TOTAL PROJECT	SHEET No.	TOTAL SHEETS
11	SD	805	0.9/1.1, 2.5/2.9	33	59

Stephen P. Warren
LICENSED LANDSCAPE ARCHITECT

04-01-14
PLANS APPROVAL DATE

LICENSED LANDSCAPE ARCHITECT
STEPHEN P. WARREN No. 3442
Signature
10-31-14
Renewal Date
12-19-13
Date
STATE OF CALIFORNIA

THE STATE OF CALIFORNIA OR ITS OFFICERS OR AGENTS SHALL NOT BE RESPONSIBLE FOR THE ACCURACY OR COMPLETENESS OF SCANNED COPIES OF THIS PLAN SHEET.

SUBTOTALS PER PLAN SHEET ON MAIN SUPPLY SIDE OF CONTROL VALVE

DESCRIPTION			UNIT	SHEET NUMBER IP-1	IP-2	IP-3				SUBTOTALS
BPA		1 INCH	EA	-	-	-				-
BPA		2 INCH	EA	-	-	-				-
BPA		3 INCH	EA	-	-	-				-
BPA		ENCLOSURE	EA	-	-	-				-
WATER METER		1 INCH	EA	-	-	-				-
WATER METER		2 INCH	EA	-	-	-				-
WATER METER		3 INCH	EA	-	-	-				-
BOOSTER PUMP			EA	-	-	-				-
IRRIGATION CONTROLLER	CCU	6 CHANNEL	EA	-	-	-				-
IRRIGATION CONTROLLER	CCU	28 CHANNEL	EA	-	-	-				-
IRRIGATION CONTROLLER		RELOCATE	EA	-	-	3				3
IRRIGATION CONTROLLER	IC	24 STATION	EA	-	-	-				-
IRRIGATION CONTROLLER	IC	32 STATION	EA	-	-	-				-
IRRIGATION CONTROLLER	IC	40 STATION	EA	-	-	1				1
IRRIGATION CONTROLLER	CEC	SINGLE	EA	-	-	-				-
IRRIGATION CONTROLLER	CEC	DOUBLE	EA	-	-	2				2
VALVES AND ASSEMBLIES	RCVMF	2 INCH	EA	-	-	-				-
VALVES AND ASSEMBLIES	RCVMF	3 INCH	EA	-	-	-				-
VALVES AND ASSEMBLIES	RCV	1 INCH	EA	-	2	1				3
VALVES AND ASSEMBLIES	RCV	1½ INCH	EA	15	7	14				36
VALVES AND ASSEMBLIES	RCV	2 INCH	EA	-	-	-				-
VALVES AND ASSEMBLIES	GV	1 INCH	EA	-	-	-				-
VALVES AND ASSEMBLIES	GV	1¼ INCH	EA	-	-	-				-
VALVES AND ASSEMBLIES	GV	1½ INCH	EA	-	-	-				-
VALVES AND ASSEMBLIES	GV	2 INCH	EA	4	2	4				10
VALVES AND ASSEMBLIES	GV	3 INCH	EA	1	-	1				2
VALVES AND ASSEMBLIES	QCV	1 INCH	EA	-	-	-				-
VALVES AND ASSEMBLIES	QCV	1½ INCH	EA	-	-	-				-
VALVES AND ASSEMBLIES	FIA									
VALVES AND ASSEMBLIES	FAU									
CONDUIT	CSP									
CONDUIT	WSP									
PLASTIC PIPE SUPPLY LINE	SCH 40	1 INCH	LF	-	-	-				-
PLASTIC PIPE SUPPLY LINE	SCH 40	1¼ INCH	LF	-	-	-				-
PLASTIC PIPE SUPPLY LINE	SCH 40	1½ INCH	LF	-	-	-				-
PLASTIC PIPE SUPPLY LINE	SCH 40	2 INCH	LF	-	-	50				50
PLASTIC PIPE SUPPLY LINE	SCH 40	4 INCH	LF	-	-	-				-
PLASTIC PIPE SUPPLY LINE	SCH 40	6 INCH	LF	-	-	-				-
PLASTIC PIPE SUPPLY LINE	SCH 40	8 INCH	LF	-	-	-				-
PLASTIC PIPE SUPPLY LINE	PR 315	2½ INCH	LF	40	25	30				95
PLASTIC PIPE SUPPLY LINE	PR 315	3 INCH	LF	1,200	830	1,060				3,090
PLASTIC PIPE SUPPLY LINE	PR 315	4 INCH	LF	-	-	-				-
GSP										
DIP										

TOTAL QUANTITIES

TOTALS	UNIT	DESCRIPTION		
-	EA	1 INCH		BPA
-	EA	2 INCH		BPA
-	EA	3 INCH		BPA
-	EA	ENCLOSURE		BPA
-	EA	1 INCH		WATER METER
-	EA	2 INCH		WATER METER
-	EA	3 INCH		WATER METER
-	EA	BOOSTER PUMP		
-	EA	6 CHANNEL	CCU	IRRIGATION CONTROLLER
-	EA	28 CHANNEL	CCU	IRRIGATION CONTROLLER
3	EA	RELOCATE		IRRIGATION CONTROLLER
-	EA	24 STATION	IC	IRRIGATION CONTROLLER
-	EA	32 STATION	IC	IRRIGATION CONTROLLER
1	EA	40 STATION	IC	IRRIGATION CONTROLLER
-	EA	SINGLE	CEC	IRRIGATION CONTROLLER
2	EA	DOUBLE	CEC	IRRIGATION CONTROLLER
-	EA	2 INCH	RCVMF	VALVES AND ASSEMBLIES
-	EA	3 INCH	RCVMF	VALVES AND ASSEMBLIES
3	EA	1 INCH	RCV	VALVES AND ASSEMBLIES
36	EA	1½ INCH	RCV	VALVES AND ASSEMBLIES
-	EA	2 INCH	RCV	VALVES AND ASSEMBLIES
-	EA	1 INCH	GV	VALVES AND ASSEMBLIES
-	EA	1¼ INCH	GV	VALVES AND ASSEMBLIES
-	EA	1½ INCH	GV	VALVES AND ASSEMBLIES
10	EA	2 INCH	GV	VALVES AND ASSEMBLIES
2	EA	3 INCH	GV	VALVES AND ASSEMBLIES
-	EA	1 INCH	QCV	VALVES AND ASSEMBLIES
-	EA	1½ INCH	QCV	VALVES AND ASSEMBLIES
			FIA	VALVES AND ASSEMBLIES
			FAU	VALVES AND ASSEMBLIES
			CSP	CONDUIT
			WSP	CONDUIT
7,835	LF	1 INCH	SCH 40	PLASTIC PIPE SUPPLY LINE
5,430	LF	1¼ INCH	SCH 40	PLASTIC PIPE SUPPLY LINE
1,710	LF	1½ INCH	SCH 40	PLASTIC PIPE SUPPLY LINE
710	LF	2 INCH	SCH 40	PLASTIC PIPE SUPPLY LINE
-	LF	4 INCH	SCH 40	PLASTIC PIPE SUPPLY LINE
-	LF	6 INCH	SCH 40	PLASTIC PIPE SUPPLY LINE
-	LF	8 INCH	SCH 40	PLASTIC PIPE SUPPLY LINE
3,365	LF	2½ INCH	PR 315	PLASTIC PIPE SUPPLY LINE
3,090	LF	3 INCH	PR 315	PLASTIC PIPE SUPPLY LINE
-	LF	4 INCH	PR 315	PLASTIC PIPE SUPPLY LINE
				GSP
				DIP

TOTAL QUANTITIES SPRINKLER ASSEMBLIES

SPRINKLER SYMBOL	SPRINKLER ASSEMBLY (EA) RISER (GEAR DRIVEN)	RISER	POP-UP (GEAR DRIVEN)	POP-UP	TREE WELL
⑤ [5]	14	-	-	-	-
⑥	-	-	3	-	-
⑦ [7]	212	-	-	-	-
⑧	-	-	1	-	-
△	-	38	-	-	-
●	-	-	-	-	275
TOTALS	226	38	4	-	275

IRRIGATION QUANTITIES
IQ-2

STATE OF CALIFORNIA - DEPARTMENT OF TRANSPORTATION
Caltrans LANDSCAPE ARCHITECTURE
SENIOR LANDSCAPE ARCHITECT: STEPHEN ALVAREZ
CALCULATED-DESIGNED BY: JOEL HORTIZUELA
CHECKED BY: STEVE WARREN
REVISED BY
DATE REVISED

LAST REVISION 01-27-14
DATE PLOTTED => 07-APR-2014
TIME PLOTTED => 09:26

Dist	COUNTY	ROUTE	POST MILES TOTAL PROJECT	SHEET No.	TOTAL SHEETS
11	SD	805	0.9/1.1, 2.5/2.9	34	59

Stephen P. Warren
LICENSED LANDSCAPE ARCHITECT

04-01-14
PLANS APPROVAL DATE

LICENSED LANDSCAPE ARCHITECT
STEPHEN P. WARREN No. 3442
Signature
10-31-14
Renewal Date
12-19-13
Date
STATE OF CALIFORNIA

THE STATE OF CALIFORNIA OR ITS OFFICERS OR AGENTS SHALL NOT BE RESPONSIBLE FOR THE ACCURACY OR COMPLETENESS OF SCANNED COPIES OF THIS PLAN SHEET.

ABBREVIATIONS:

CF — CUBIC FOOT
CY — CUBIC YARD
EA — EACH
Ft — FOOT/FEET
Lb — POUND
oz — OUNCE
SQFT — SQUARE FOOT
SQYD — SQUARE YARD

NOTE:

UNDERLINED PORTIONS OF BOTANICAL NAMES INDICATE ABBREVIATIONS USED ON PLANTING PLANS.

APPLICABLE WHEN CIRCLED:

1 - QUANTITIES SHOWN ARE 'PER PLANT' UNLESS SHOWN AS SQYD APPLICATION RATES.
2 - SUFFICIENT TO RECEIVE ROOT BALL.
3 - INCLUDED WITH AREA MULCH.
4 - AS SHOWN ON PLANS.
5 - UNLESS OTHERWISE SHOWN ON PLANS.
6 - PER STANDARD PLAN H4
7 - SEE SPECIAL PROVISIONS.
8 - WOOD MULCH IS SHREDDED BARK MULCH.
9 - RANDOMLY MIXED THROUGHOUT ENTIRE DESIGNATED AREA
10 - MAINTAIN EXISTING PLANTED AREAS WORK.

PLANTING LEGEND

PLANT GROUP	PLANT No.	SYMBOL	BOTANICAL NAME	COMMON NAME	SIZE	QUANTITY EACH	HOLE SIZE (INCH) Dia	HOLE SIZE (INCH) DEPTH	BASIN TYPE	IRON SULFATE 1	SOIL Amend 1	FERTILIZER 1 PLANTING	FERTILIZER 1 PLT ESTB	WOOD MULCH BASIN 1 8 (CY)	STAKING	PLANTING LIMITS MINIMUM DISTANCE (Ft) FROM ETW	PVMT	FENCE	WALL	PAVED DITCH	EARTH DITCH	ON CENTER (Ft)	REMARKS
A	1		ARTEMISIA CALIFORNICA	CALIFORNIA SAGEBRUSH	No. 1	951	2	2	I	4 Oz	-	1 Pkt	8 Oz	0.03	-	-	4	3	3	3	4	15	SHRUB 9
	2		BACCHARIS PILULARIS 'PIGEON POINT'	DWARF COYOTE BRUSH	No. 1	2737	2	2	I	4 Oz	-	1 Pkt	8 Oz	3	-	-	4	3	3	3	4	3	SHRUB 9
	3		BACCHARIS SAROTHROIDES	DESERT BROOM	No. 1	300	2	2	I	4 Oz	-	1 Pkt	8 Oz	0.03	-	-	4	3	3	3	4	35	SHRUB 9
	4		ENCELIA CALIFORNICA	BUSH SUNFLOWER	No. 1	1584	2	2	I	4 Oz	-	1 Pkt	8 Oz	0.03	-	-	4	3	3	3	4	10	SHRUB 9
	5		ERIOGONUM FASCICULATUM	CALIFORNIA BUCKWHEAT	No. 1	2168	2	2	I	4 Oz	-	1 Pkt	8 Oz	0.03	-	-	4	3	3	3	4	13	SHRUB 9
	6		MALOSMA LAURINA	LAUREL SUMAC	No. 1	700	2	2	I	4 Oz	-	1 Pkt	8 Oz	0.03	-	-	4	3	3	3	4	25	SHRUB 9
	7		ROMNEYA COULTERI	MATILIJA POPPY	No. 1	335	2	2	I	4 Oz	-	1 Pkt	8 Oz	0.03	-	-	4	3	3	3	4	30	SHRUB 9
	8		SALVIA APIANA	CALIFORNIA WHITE SAGE	No. 1	951	2	2	I	4 Oz	-	1 Pkt	8 Oz	0.03	-	-	4	3	3	3	4	20	SHRUB 9
	9		SALVIA MELLIFERA	CALIFORNIA BLACK SAGE	No. 1	1000	2	2	I	4 Oz	-	1 Pkt	8 Oz	0.03	-	-	4	3	3	3	4	20	SHRUB 9
	10		VIGUIERA LACINIATA	SAN DIEGO SUNFLOWER	No. 1	1200	2	2	I	4 Oz	-	1 Pkt	8 Oz	0.03	-	-	4	3	3	3	4	18	SHRUB 9
B	11		HETEROMELES ARBUTIFOLIA	TOYON	No. 5	316	2	2	I	4 Oz	-	2 Pkt	8 Oz	0.05	-	-	4	3	3	3	4	25	SHRUB 9
	12		RHUS INTEGRIFOLIA	LEMONADE BERRY	No. 5	432	2	2	I	4 Oz	-	2 Pkt	8 Oz	0.05	-	-	4	3	3	3	4	30	SHRUB 9
	13		RHUS OVATA	SUGAR BUSH	No. 5	200	2	2	I	4 Oz	-	2 Pkt	8 Oz	0.05	-	-	4	3	3	3	4	35	SHRUB 9
U	14		QUERCUS AGRIFOLIA	COAST LIVE OAK	No. 15	67	2	2	I	8 Oz	-	5 Pkt	16 Oz	0.07	6	40	24	8	8	5	5	4	TREE
	15		RHUS INTEGRIFOLIA	LEMONADE BERRY	No. 15	84	2	2	I	8 Oz	-	5 Pkt	16 Oz	0.07	6	40	24	8	8	5	5	4	TREE
	16		RHUS OVATA	SUGAR BUSH	No. 15	98	2	2	I	8 Oz	-	5 Pkt	16 Oz	0.07	6	40	24	8	8	5	5	4	TREE
	17		SCHINUS MOLLE	CALIFORNIA PEPPER	No. 15	26	2	2	I	8 Oz	-	5 Pkt	16 Oz	0.07	6	40	24	8	8	5	5	4	TREE
-	18		EXISTING	ALOES	-	-	-	-	-	-	-	-	8 LBS/ 1000 SQFT	-	-	-	-	-	-	-	-	-	10
	19		EXISTING	MEXICAN FAN PALM	-	-	-	-	-	-	-	-	24 Oz	-	-	-	-	-	-	-	-	-	10

LEGEND:

EROSION CONTROL (TYPE 1) WITH SLOPE REPAIR EC (TYPE 1)

EROSION CONTROL (TYPE 1) EC (TYPE 1)

WEED GERMINATION

Exist TREE TO REMAIN

Exist SHRUB OR SHRUB MASS TO REMAIN

EROSION CONTROL (TYPE 2) EC (TYPE 2)

WOOD MULCH

WOOD MULCH

MAINTAIN Exist PLANTED AREAS (ALOES)

MAINTAIN Exist PLANTED AREAS (PALMS)

PLANT LIST
PL-1

REVISED BY | DATE REVISED
JOEL HORTIZUELA | STEVE WARREN
CALCULATED-DESIGNED BY | CHECKED BY
SENIOR LANDSCAPE ARCHITECT | STEPHEN ALVAREZ
STATE OF CALIFORNIA - DEPARTMENT OF TRANSPORTATION
Caltrans LANDSCAPE ARCHITECTURE

LAST REVISION 01-27-14 | DATE PLOTTED => 07-APR-2014 | TIME PLOTTED => 09:26

Dist	COUNTY	ROUTE	POST MILES TOTAL PROJECT	SHEET No.	TOTAL SHEETS
11	SD	805	0.9/1.1, 2.5/2.9	35	59

Stephen P. Warren
LICENSED LANDSCAPE ARCHITECT

04-01-14
PLANS APPROVAL DATE

LICENSED LANDSCAPE ARCHITECT
STEPHEN P. WARREN No. 3442
Stephen P. Warren
Signature
10-31-14
Renewal Date
12-19-13
Date
STATE OF CALIFORNIA

THE STATE OF CALIFORNIA OR ITS OFFICERS OR AGENTS SHALL NOT BE RESPONSIBLE FOR THE ACCURACY OR COMPLETENESS OF SCANNED COPIES OF THIS PLAN SHEET.

EROSION CONTROL (TYPE 1) LEGEND

SYMBOL	SEQUENCE	ITEM	MATERIAL DESCRIPTION	MATERIAL TYPE	APPLICATION RATE	REMARKS
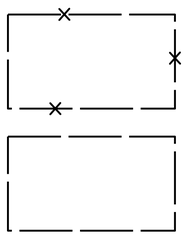	STEP 1	ROADSIDE CLEARING	SEE PLANT REMOVAL PLANS		-	-
	STEP 2	SLOPE REPAIR	Exist SOIL	-	-	WHERE SHOWN
	STEP 3	IMPORTED TOPSOIL	TOPSOIL	IMPORTED	585 CY/ACRE 737 CY/ACRE WHERE NOTED	-
		COMPOST	COMPOST	MEDIUM	142 CY/ACRE	-
	STEP 4	INCORPORATE MATERIALS	TOPSOIL	-	-	INCORPORATE 12" DEPTH
			COMPOST	-	-	
	STEP 5	STRAW	STRAW	WHEAT	2 TONS/ACRE	WEED FREE
	STEP 6	INCORPORATE MATERIALS	STRAW	-	-	4" DEPTH PUNCHED

EROSION CONTROL (TYPE 2) LEGEND

SYMBOL	SEQUENCE	ITEM	MATERIAL DESCRIPTION	MATERIAL TYPE	APPLICATION RATE	REMARKS
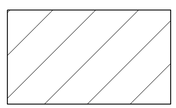	STEP 1	IRRIGATION (VARIOUS)	SEE IRRIGATION PLANS		-	-
	STEP 2	FIBER ROLLS	8-10" DIAMETER	TYPE B	-	INSTALLATION TYPE 1
	STEP 3	WEED GERMINATION	SEE PLANTING PLANS		-	-
	STEP 4	PLANTING (VARIOUS)	SEE PLANTING PLANS		-	-
	STEP 5	COMPOST	COMPOST	MEDIUM	100 CY/ACRE	-
	STEP 6	EROSION CONTROL (BFM)	FIBER	-	2500 LB/ACRE FOR SLOPES $\leq$ 4:1 (Horiz:Vert) 3000 LB/ACRE FOR SLOPES > 4:1 AND $\leq$ 3:1 (Horiz:Vert) 3500 LB/ACRE FOR SLOPES > 3:1 AND $\leq$ 2:1 (Horiz:Vert) 4000 LB/ACRE FOR SLOPES > 2:1 AND $\leq$ 1:1 (Horiz:Vert) 4500 LB/ACRE FOR SLOPES > 1:1 (Horiz:Vert)	APPLICATION RATE IS FOR FIBER AND TACKIFIER COMBINED
			TACKIFIER	-		
			SEED	MIX 1	24 LB/ACRE	-
	STEP 7	EROSION CONTROL (BFM)	FIBER	-	500 LB/ACRE	APPLICATION RATE IS FOR FIBER AND TACKIFIER COMBINED
			TACKIFIER	-		

SEED MIX 1

BOTANICAL NAME (COMMON NAME)	PERCENT GERMINATION (MINIMUM)	POUNDS PURE LIVE SEED PER ACRE (SLOPE MEASUREMENT)
ERIOGONUM FASCICULATUM [1] (CALIFORNIA BUCKWHEAT)	35	3.0
ESCHSCHOLZIA CALIFORNICA [1] (CALIFORNIA POPPY)	60	2.0
LASTHENIA CALIFORNICA [1] (GOLDFIELDS)	35	2.0
LOTUS SCOPARIUS [1] (DEERWEED)	35	2.0
LUPINUS SUCCULENTUS [1] (ARROYO LUPINE)	50	4.0
NASSELLA PULCHRA [1] (PURPLE NEEDLEGRASS)	35	6.0
VULPIA MICROSTACHYS [1] (SMALL FESUE)	40	5.0
	TOTAL	24

1 SEED SOURCES FROM SAN DIEGO AND ORANGE COUNTY ONLY

PLANT LIST
PL-2

REVISED BY | DATE REVISED
JOEL HORTIZUELA | STEVE WARREN
CALCULATED-DESIGNED BY | CHECKED BY
SENIOR LANDSCAPE ARCHITECT | STEPHEN ALVAREZ
STATE OF CALIFORNIA - DEPARTMENT OF TRANSPORTATION
Caltrans LANDSCAPE ARCHITECTURE

LAST REVISION 01-27-14 | DATE PLOTTED => 07-APR-2014 | TIME PLOTTED => 09:26

Dist	COUNTY	ROUTE	POST MILES TOTAL PROJECT	SHEET No.	TOTAL SHEETS
11	SD	805	0.9/1.1, 2.5/2.9	36	59

Stephen P. Warren
LICENSED LANDSCAPE ARCHITECT

04-01-14
PLANS APPROVAL DATE

LICENSED LANDSCAPE ARCHITECT STEPHEN P. WARREN No. 3442 Signature 10-31-14 Renewal Date 12-19-13 Date STATE OF CALIFORNIA

THE STATE OF CALIFORNIA OR ITS OFFICERS OR AGENTS SHALL NOT BE RESPONSIBLE FOR THE ACCURACY OR COMPLETENESS OF SCANNED COPIES OF THIS PLAN SHEET.

SAN DIEGO

NOTES:

1. FOR ACCURATE RIGHT OF WAY DATA, CONTACT RIGHT OF WAY ENGINEERING AT THE DISTRICT OFFICE
2. ALL Exist EUCALYPTUS SPECIES & SCHINUS MOLLE TREES TO REMAIN MUST BE PRUNED. SEE LANDSCAPE DETAILS. Typ AT BOTH LOCATIONS.

LEGEND:

ALTERNATIVE TEMPORARY CRASH CUSHION

TRAFFIC PLASTIC DRUM

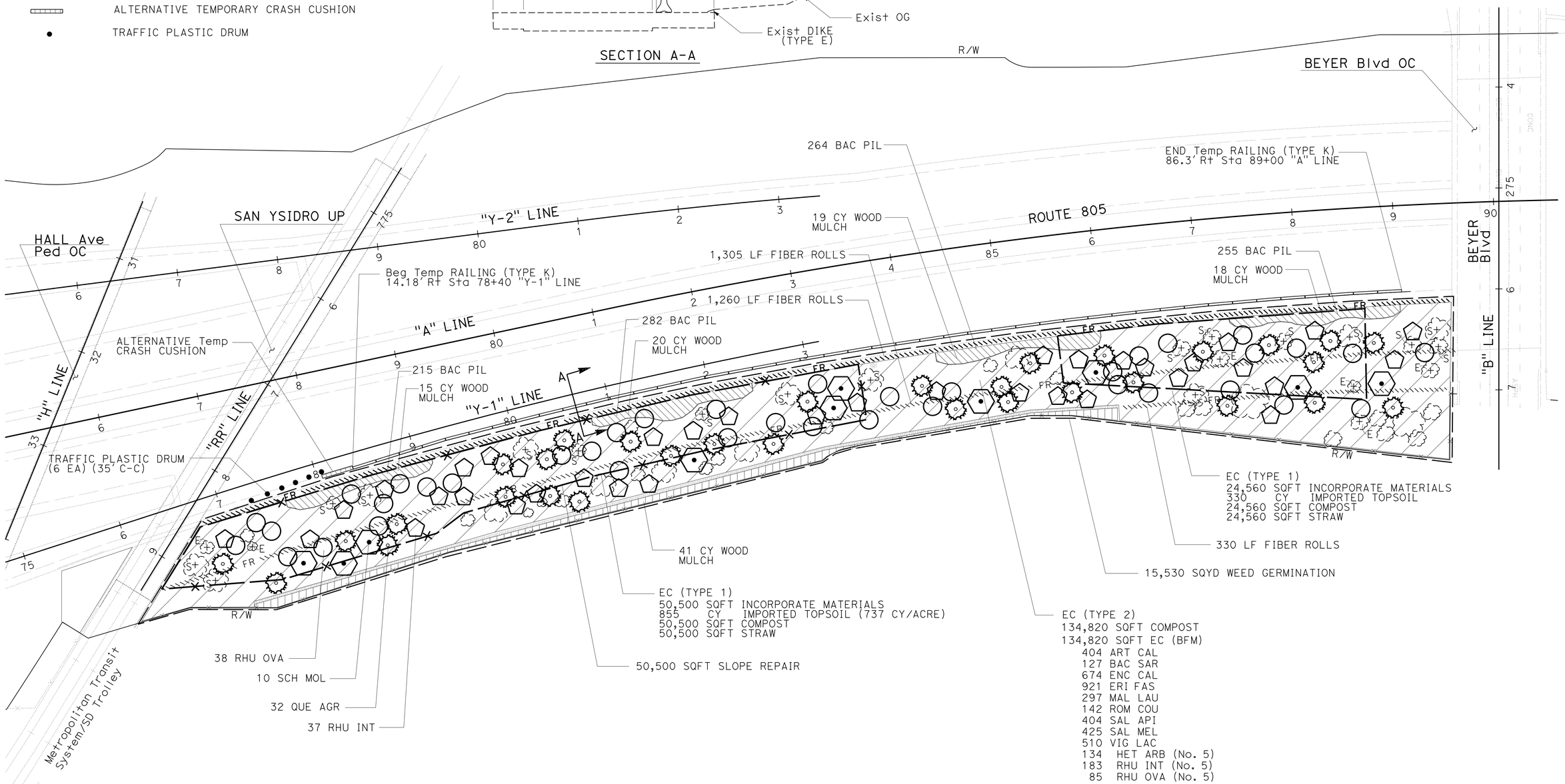

APPROVED FOR PLANTING WORK ONLY

PLANTING PLAN
LOCATION 1

SCALE: 1" = 50'

PP-1

STATE OF CALIFORNIA - DEPARTMENT OF TRANSPORTATION
Caltrans® LANDSCAPE ARCHITECTURE

SENIOR LANDSCAPE ARCHITECT: STEPHEN ALVAREZ
CALCULATED-DESIGNED BY: JOEL HORTIZUELA
CHECKED BY: STEVE WARREN
REVISED BY
DATE REVISED

LAST REVISION 01-27-14
DATE PLOTTED => 07-APR-2014
TIME PLOTTED => 09:26

Dist	COUNTY	ROUTE	POST MILES TOTAL PROJECT	SHEET No.	TOTAL SHEETS
11	SD	805	0.9/1.1, 2.5/2.9	37	59

LICENSED LANDSCAPE ARCHITECT

04-01-14
PLANS APPROVAL DATE

LICENSED LANDSCAPE ARCHITECT
STEPHEN P. WARREN No. 3442
Signature
10-31-14
Renewal Date
12-19-13
Date
STATE OF CALIFORNIA

THE STATE OF CALIFORNIA OR ITS OFFICERS OR AGENTS SHALL NOT BE RESPONSIBLE FOR THE ACCURACY OR COMPLETENESS OF SCANNED COPIES OF THIS PLAN SHEET.

NOTE:

FOR ACCURATE RIGHT OF WAY DATA, CONTACT RIGHT OF WAY ENGINEERING AT THE DISTRICT OFFICE.

SAN DIEGO

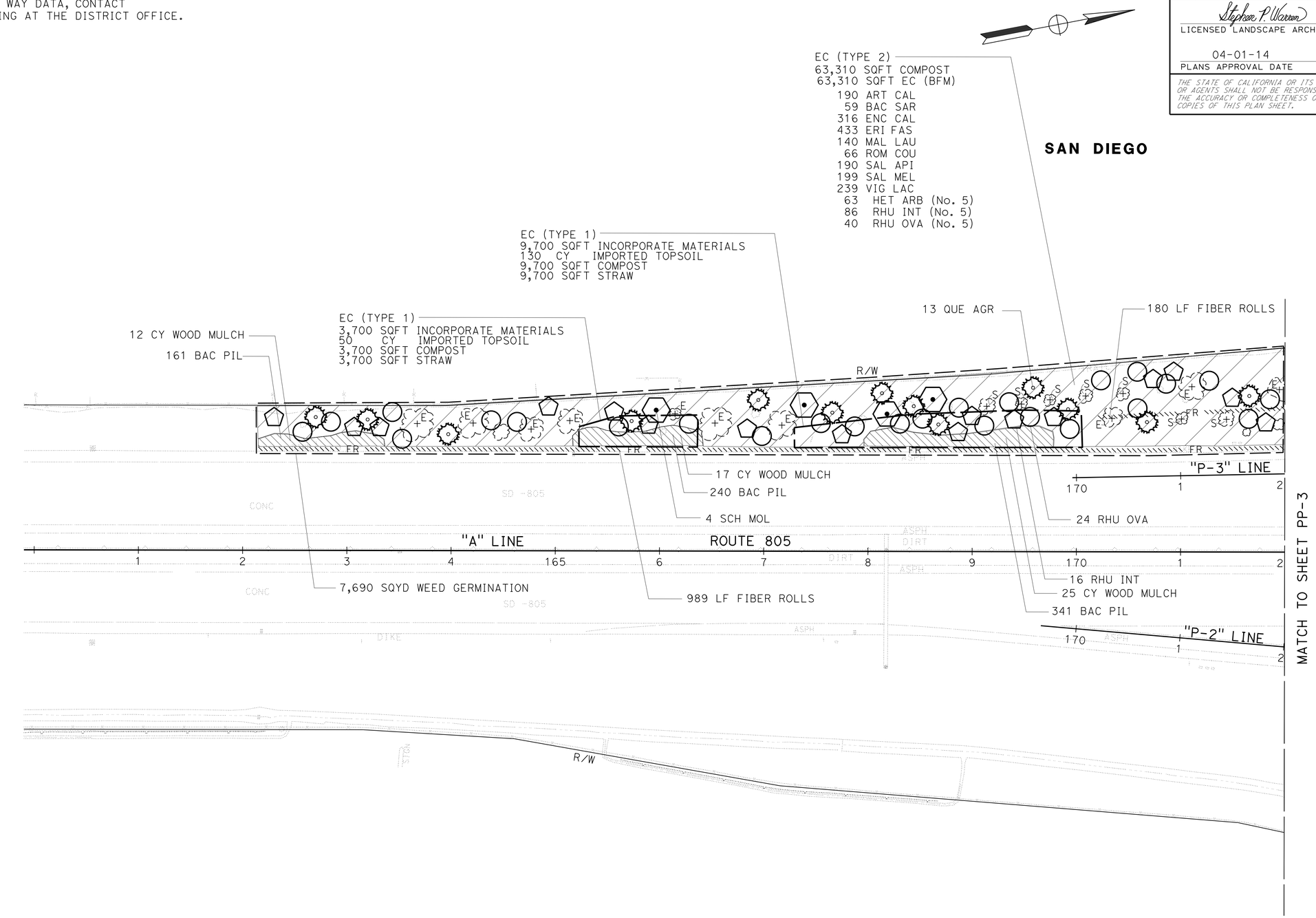

APPROVED FOR PLANTING WORK ONLY

SCALE: 1" = 50'

PLANTING PLAN
LOCATION 2

PP-2

STATE OF CALIFORNIA - DEPARTMENT OF TRANSPORTATION
Caltrans® LANDSCAPE ARCHITECTURE

SENIOR LANDSCAPE ARCHITECT: STEPHEN ALVAREZ
CALCULATED-DESIGNED BY: JOEL HORTIZUELA
CHECKED BY: STEVE WARREN
REVISED BY
DATE REVISED

LAST REVISION 01-27-14
DATE PLOTTED => 07-APR-2014
TIME PLOTTED => 09:26

Dist	COUNTY	ROUTE	POST MILES TOTAL PROJECT	SHEET No.	TOTAL SHEETS
11	SD	805	0.9/1.1, 2.5/2.9	38	59

Stephen P. Warren
LICENSED LANDSCAPE ARCHITECT

04-01-14
PLANS APPROVAL DATE

LICENSED LANDSCAPE ARCHITECT STEPHEN P. WARREN No. 3442 Signature 10-31-14 Renewal Date 12-19-13 Date STATE OF CALIFORNIA

THE STATE OF CALIFORNIA OR ITS OFFICERS OR AGENTS SHALL NOT BE RESPONSIBLE FOR THE ACCURACY OR COMPLETENESS OF SCANNED COPIES OF THIS PLAN SHEET.

NOTE:

FOR ACCURATE RIGHT OF WAY DATA, CONTACT RIGHT OF WAY ENGINEERING AT THE DISTRICT OFFICE.

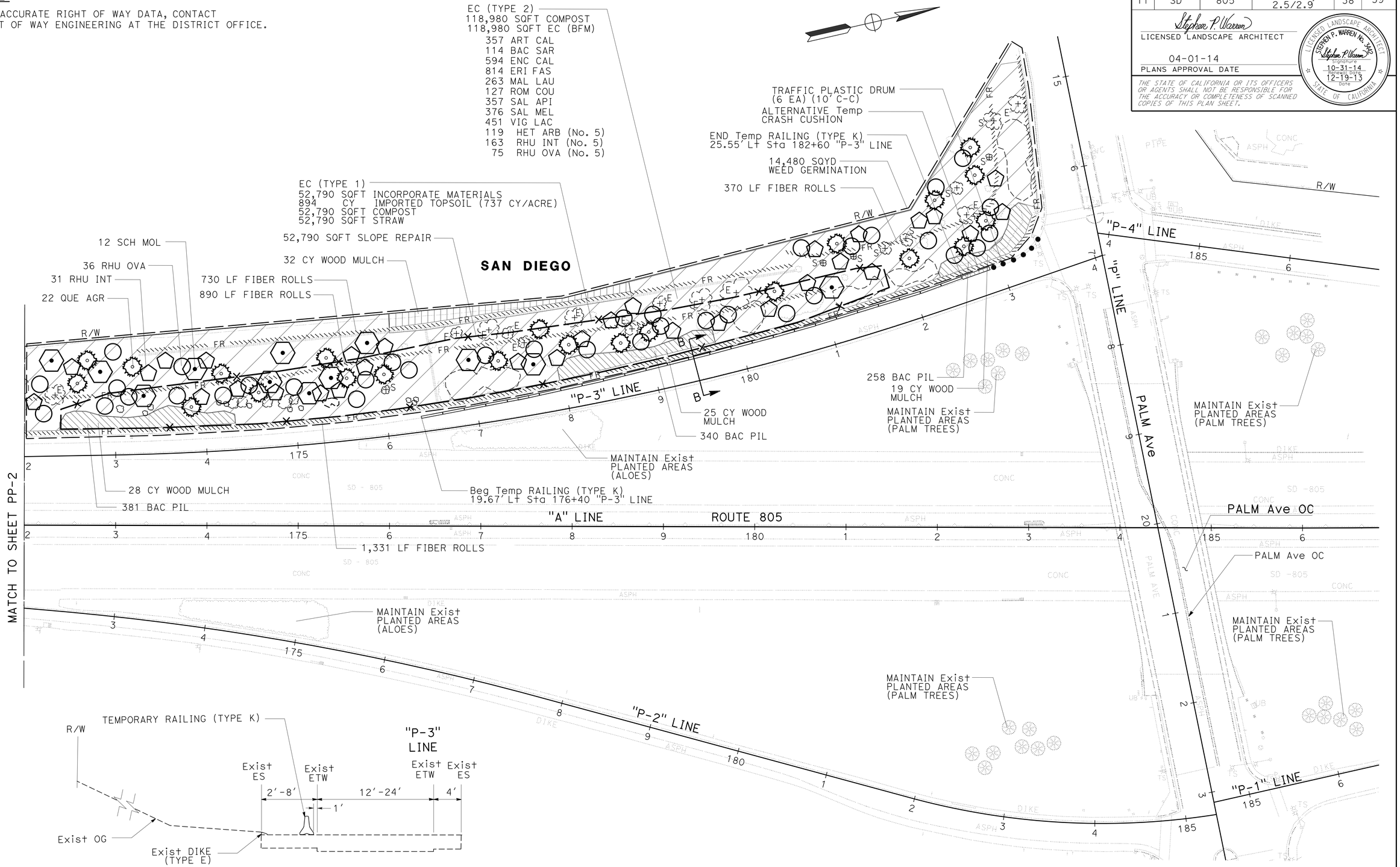

APPROVED FOR PLANTING WORK ONLY

PLANTING PLAN
LOCATION 2

SCALE: 1" = 50'

PP-3

STATE OF CALIFORNIA - DEPARTMENT OF TRANSPORTATION
Caltrans® LANDSCAPE ARCHITECTURE

SENIOR LANDSCAPE ARCHITECT: STEPHEN ALVAREZ
CALCULATED-DESIGNED BY: JOEL HORTIZUELA
CHECKED BY: STEVE WARREN
REVISED BY / DATE REVISED

LAST REVISION 01-27-14
DATE PLOTTED => 07-APR-2014
TIME PLOTTED => 09:26

Dist	COUNTY	ROUTE	POST MILES TOTAL PROJECT	SHEET No.	TOTAL SHEETS
11	SD	805	0.9/1.1, 2.5/2.9	39	59

Stephen P. Warren
LICENSED LANDSCAPE ARCHITECT

04-01-14
PLANS APPROVAL DATE

LICENSED LANDSCAPE ARCHITECT
STEPHEN P. WARREN No. 3442
Stephen P. Warren
Signature
10-31-14
Renewal Date
12-19-13
Date
STATE OF CALIFORNIA

THE STATE OF CALIFORNIA OR ITS OFFICERS OR AGENTS SHALL NOT BE RESPONSIBLE FOR THE ACCURACY OR COMPLETENESS OF SCANNED COPIES OF THIS PLAN SHEET.

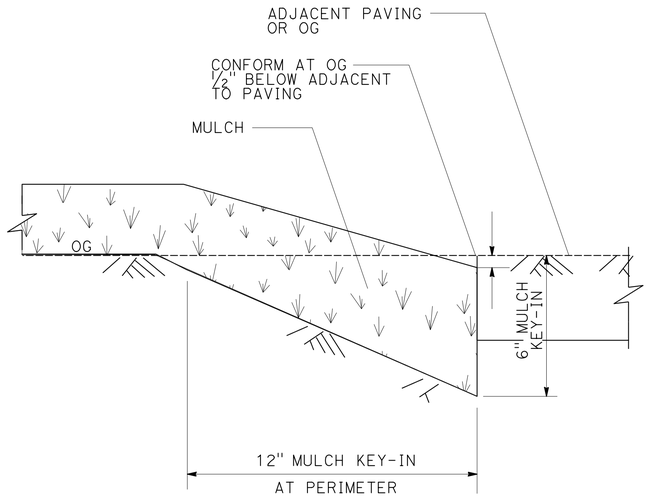

NOTE: INSTALL AT MULCH AREAS CALLED OUT ON PLAN. DOES NOT APPLY TO PLANT BASIN MULCH

MULCH

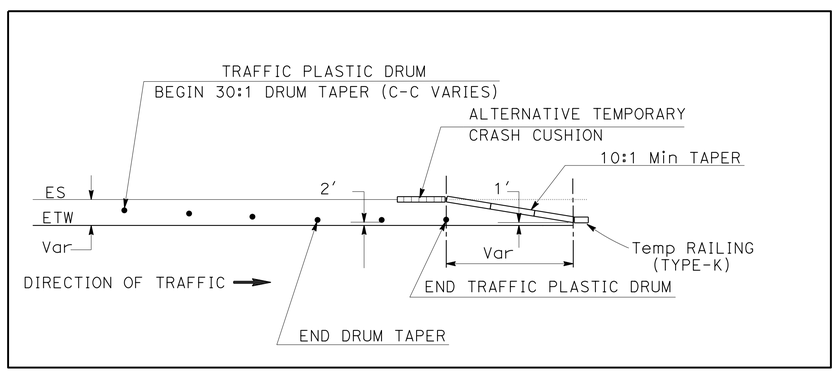

TYPICAL- PLACEMENT OF TRAFFIC PLASTIC DRUM

S SCHINUS MOLLE (CALIFORNIA PEPPER TREE)

CLEAN- REMOVE DEAD, DISEASED AND BROKEN BRANCHES.

STRUCTURAL- REMOVE INTERFERING, OVEREXTENDED, AND DEFECTIVE WEAK BRANCHES 1" AND LARGER.

THIN 30% OF BRANCHES RESULTING IN EVEN DISTRIBUTION OF BRANCHES THROUGHOUT THE CROWN.

RAISE- REMOVE LOWER BRANCHES FOR CLEARANCE OF 25% OF THE OVERALL HEIGHT OF THE TREE.

E EUCALYPTUS SPECIES

CLEAN- REMOVE DEAD, DISEASED AND BROKEN BRANCHES.

STRUCTURAL- REMOVE INTERFERING, OVEREXTENDED, AND DEFECTIVE WEAK BRANCHES 1" AND LARGER.

THIN 20% OF BRANCHES RESULTING IN EVEN DISTRIBUTION OF BRANCHES THROUGHOUT THE CROWN.

RAISE- REMOVE LOWER BRANCHES FOR CLEARANCE OF 40% OF THE OVERALL HEIGHT OF THE TREE.

NOTE:
THESE NOTES DO NOT REPLACE THE REVISED STANDARD SPECIFICATIONS REFERENCE TO ANSI A300 "PRUNING" PUBLISHED BY THE TREE CARE INDUSTRY ASSOCIATION

TREE PRUNING NOTES

LANDSCAPE DETAILS

NO SCALE

LD-1

STATE OF CALIFORNIA - DEPARTMENT OF TRANSPORTATION
Caltrans® LANDSCAPE ARCHITECTURE
SENIOR LANDSCAPE ARCHITECT: STEPHEN ALVAREZ
CALCULATED-DESIGNED BY: JOEL HORTIZUELA
CHECKED BY: STEVE WARREN
REVISED BY
DATE REVISED

LAST REVISION 01-27-14
DATE PLOTTED => 07-APR-2014
TIME PLOTTED => 09:26

Dist	COUNTY	ROUTE	POST MILES TOTAL PROJECT	SHEET No.	TOTAL SHEETS
11	SD	805	0.9/1.1, 2.5/2.9	40	59

Stephen P. Warren
LICENSED LANDSCAPE ARCHITECT

04-01-14
PLANS APPROVAL DATE

LICENSED LANDSCAPE ARCHITECT
STEPHEN P. WARREN No. 3442
Signature
10-31-14
Renewal date
02-20-14
Date
STATE OF CALIFORNIA

THE STATE OF CALIFORNIA OR ITS OFFICERS OR AGENTS SHALL NOT BE RESPONSIBLE FOR THE ACCURACY OR COMPLETENESS OF SCANNED COPIES OF THIS PLAN SHEET.

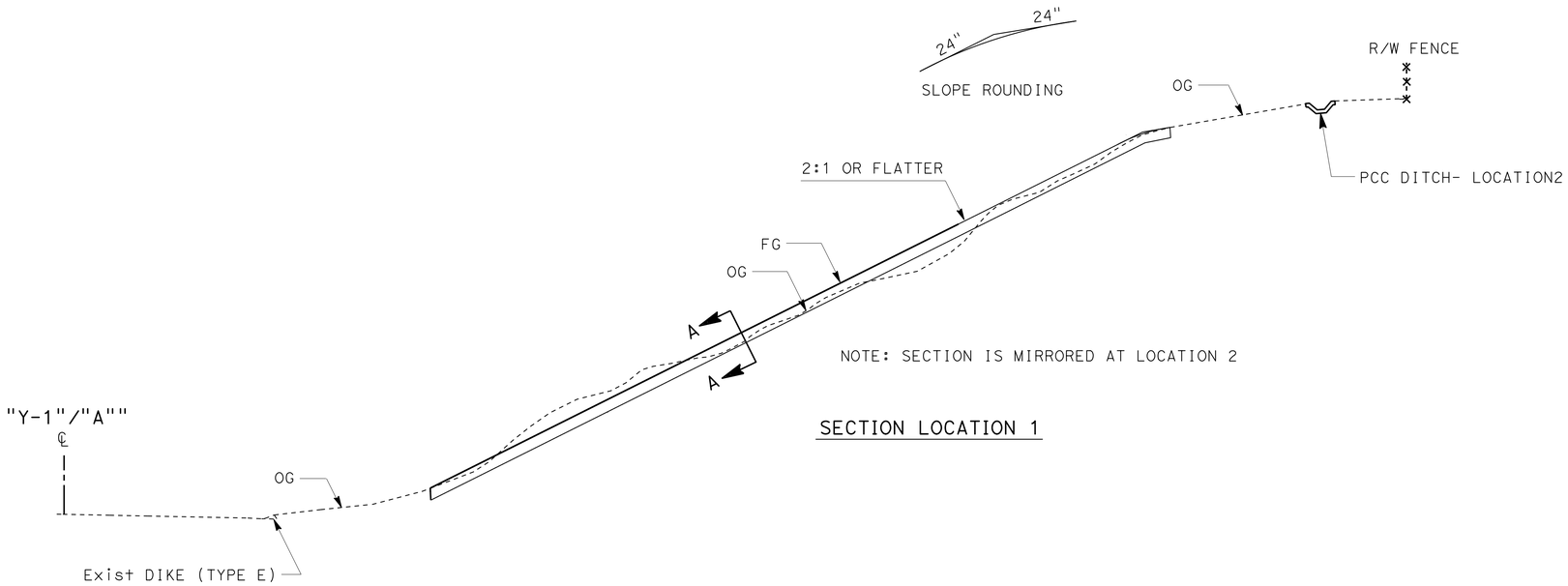

NOTE: SECTION IS MIRRORED AT LOCATION 2

SECTION LOCATION 1

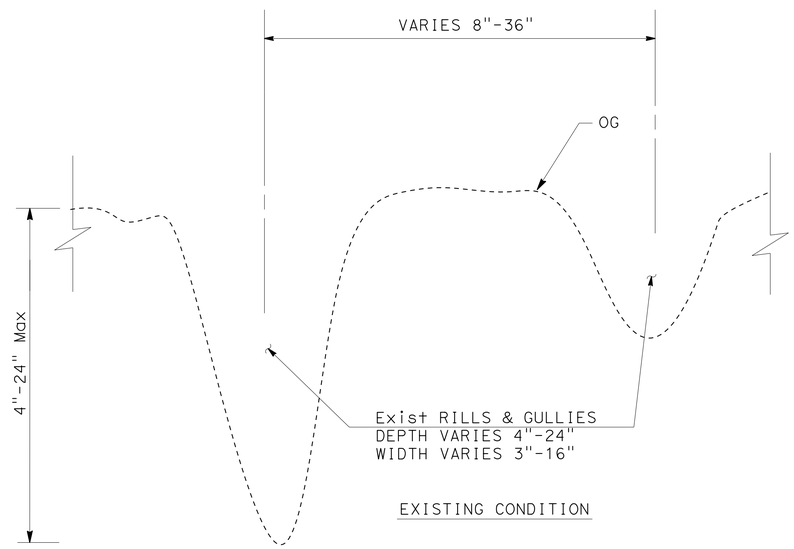

EXISTING CONDITION

SECTION A-A

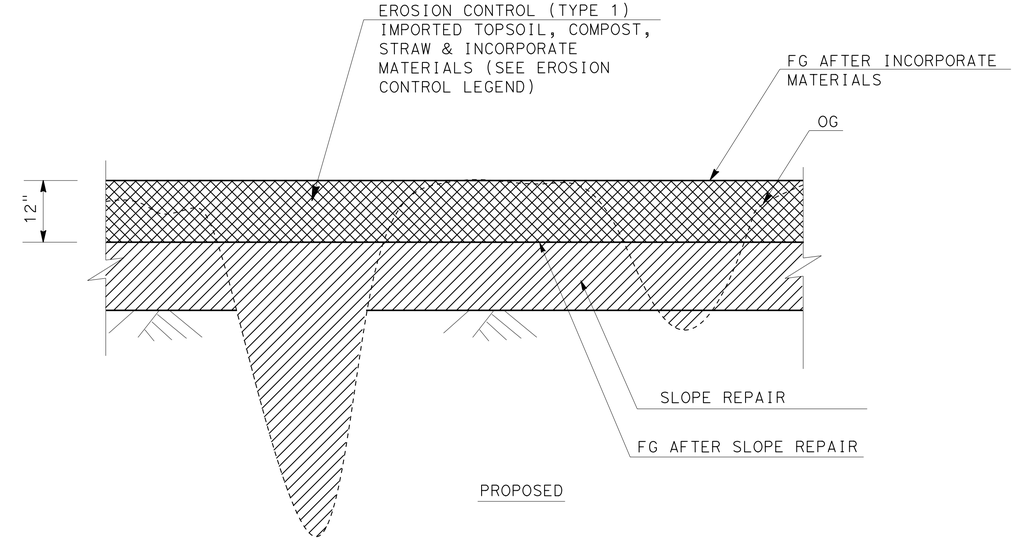

PROPOSED

SECTION A-A

SLOPE REPAIR/EROSION CONTROL (TYPE 1)

LANDSCAPE DETAILS

NO SCALE

LD-2

STATE OF CALIFORNIA - DEPARTMENT OF TRANSPORTATION
Caltrans® LANDSCAPE ARCHITECTURE

SENIOR LANDSCAPE ARCHITECT: STEPHEN ALVAREZ
CALCULATED-DESIGNED BY: JOEL HORTIZUELA
CHECKED BY: STEVE WARREN
REVISED BY
DATE REVISED

LAST REVISION 02-24-14
DATE PLOTTED => 07-APR-2014
TIME PLOTTED => 09:26

Dist	COUNTY	ROUTE	POST MILES TOTAL PROJECT	SHEET No.	TOTAL SHEETS
11	SD	805	0.9/1.1, 2.5/2.9	41	59

Stephen P. Warren
LICENSED LANDSCAPE ARCHITECT

04-01-14
PLANS APPROVAL DATE

LICENSED LANDSCAPE ARCHITECT
STEPHEN P. WARREN No. 3442
Signature 10-31-14
Renewal Date 12-19-13
Date
STATE OF CALIFORNIA

THE STATE OF CALIFORNIA OR ITS OFFICERS OR AGENTS SHALL NOT BE RESPONSIBLE FOR THE ACCURACY OR COMPLETENESS OF SCANNED COPIES OF THIS PLAN SHEET.

EROSION CONTROL

SHEET	DESCRIPTION	IMPORTED TOPSOIL	COMPOST	STRAW	INCORPORATE MATERIALS	EROSION CONTROL (BONDED FIBER MATRIX)	FIBER ROLLS
		CY	SQFT	SQFT	SQFT	SQFT	LF
PP-1	EC TYPE 1	1,185	75,060	75,060	75,060	-	-
	EC TYPE 2	-	134,820	-	-	134,820	-
	FIBER ROLLS	-	-	-	-	-	2,895
PP-2	EC TYPE 1	180	13,400	13,400	13,400	-	-
	EC TYPE 2	-	63,310	-	-	63,310	-
	FIBER ROLLS	-	-	-	-	-	1,169
PP-3	EC TYPE 1	894	52,790	52,790	52,790	-	-
	EC TYPE 2	-	118,980	-	-	118,980	-
	FIBER ROLLS	-	-	-	-	-	3,321
	TOTAL	2,259	458,360	141,250	141,250	317,110	7,385

WOOD MULCH

SHEET	CY
PP-1	113
PP-2	54
PP-3	104
PLANT BASINS	343
TOTAL	614

WEED GERMINATION

SHEET	SQYD
PP-1	15,530
PP-2	7,690
PP-3	14,480
TOTAL	37,700

SLOPE REPAIR

SHEET	SQFT
PP-1	50,500
PP-3	52,790
TOTAL	103,290

TRAFFIC PLASTIC DRUM

SHEET	EA
L-1	6
L-2	6
TOTAL	12

ALTERNATIVE TEMPORARY CRASH CUSHION

LINE	SIDE	STATION	QUANTITY (EA)
"Y-1"/"A"	R†	78+30	1
"P-3"	L†	182+55	1
		TOTAL	2

TEMPORARY RAILING (TYPE K)

LINE	SIDE	STATION LIMITS	LENGTH (LF)
"Y-1"/"A"	R†	78+40 TO 89+00	1060
"P-3"	L†	176+40 TO 182+60	620
		TOTAL	1,680

LANDSCAPE QUANTITIES

LQ-1

REVISED BY | DATE REVISED
JOEL HORTIZUELA | STEVE WARREN
CALCULATED-DESIGNED BY | CHECKED BY
SENIOR LANDSCAPE ARCHITECT | STEPHEN ALVAREZ
STATE OF CALIFORNIA - DEPARTMENT OF TRANSPORTATION
Caltrans® LANDSCAPE ARCHITECTURE

LAST REVISION 01-27-14
DATE PLOTTED => 07-APR-2014
TIME PLOTTED => 09:26

Dist	COUNTY	ROUTE	POST MILES TOTAL PROJECT	SHEET No.	TOTAL SHEETS
11	SD	805	0.9/1.1, 2.5/2.9	42	59

REGISTERED ELECTRICAL ENGINEER — DATE 12-19-13

04-01-14
PLANS APPROVAL DATE

REGISTERED PROFESSIONAL ENGINEER — DANNY McCLURE No. 11131 Exp. 12-31-15 ELECTRICAL — STATE OF CALIFORNIA

THE STATE OF CALIFORNIA OR ITS OFFICERS OR AGENTS SHALL NOT BE RESPONSIBLE FOR THE ACCURACY OR COMPLETENESS OF SCANNED COPIES OF THIS PLAN SHEET.

NOTES:

1 - IRRIGATION CONTROLLER CABINET.
SEE IRRIGATION PLAN. ADD SERVICE CONDUCTORS.

2 - RC SERVICE CONDUCTORS.
SEE IRRIGATION PLAN FOR CABINET.

3 - FOR ACCURATE RIGHT OF WAY DATA, CONTACT RIGHT OF WAY ENGINEERING AT THE DISTRICT OFFICE.

4 - CONDUIT PER IRRIGATION PLAN DETAIL, 2#10 (CEC).

CONDUIT NOTES:

N 1 C - Exist 1½"C, 3#4 CONDUCTORS BY SDG&E.

N 2 C - Exist 1½"C, 2#12 (cec), 2#8 (ltg), 2#8 (sign), 4#14-(2-peu's).

N 3 C - Exist 1½"C, 2#12 (cec), 2#8 (ltg), 2#8 (sign).

N 4 C - Exist 1½"C, 2#12 (cec).

N 5 C - Exist 2 "C, 2#12 (cec).

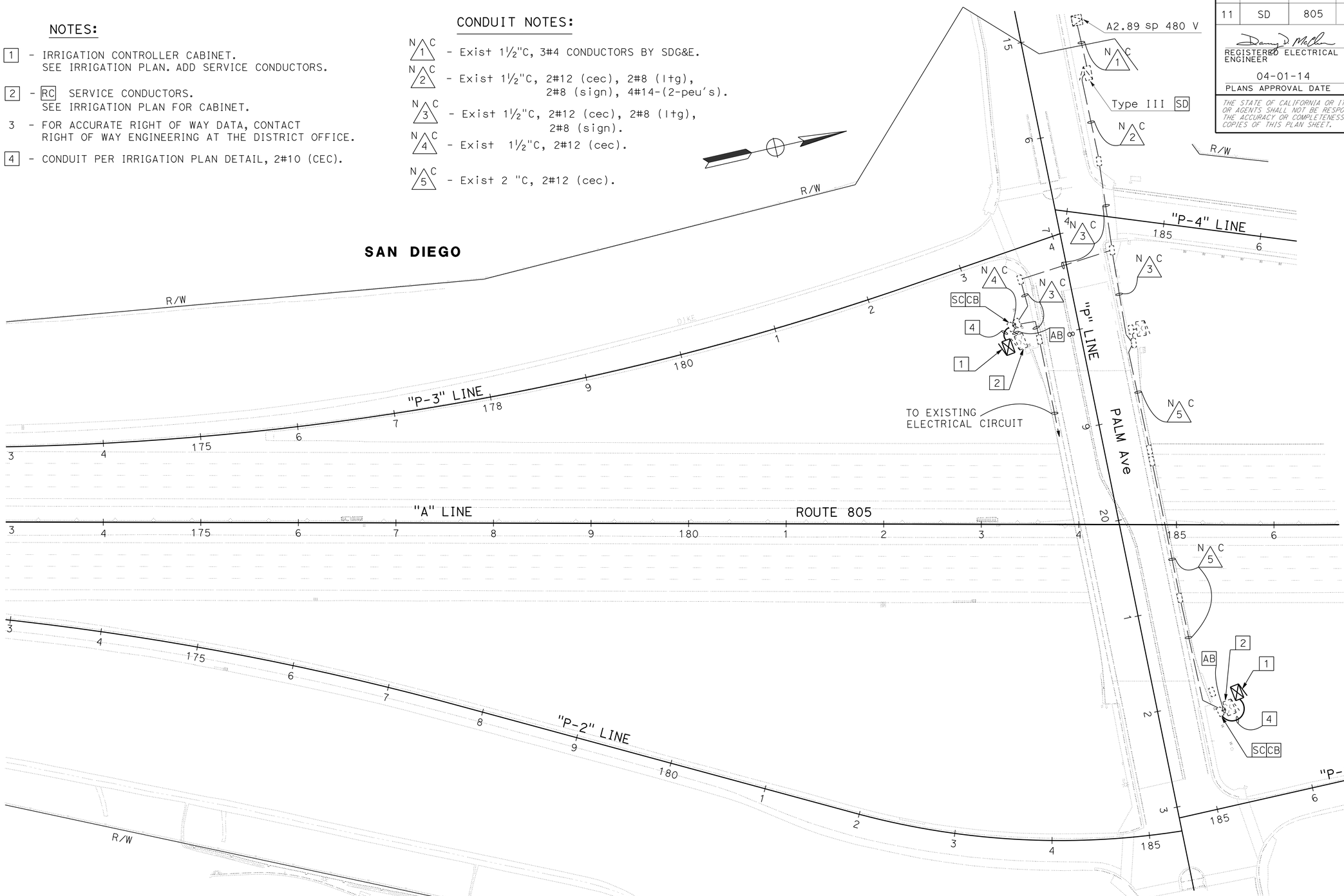

ELECTRICAL SERVICE (IRRIGATION)

APPROVED FOR ELECTRICAL WORK ONLY

SCALE: 1" = 50'

E-1

STATE OF CALIFORNIA - DEPARTMENT OF TRANSPORTATION
Caltrans®
TRAFFIC ELECTRICAL

FUNCTIONAL SUPERVISOR: RAJPREET SINGH
CALCULATED-DESIGNED BY: ANTONIO RODRIGUEZ
CHECKED BY: DANNY McCLURE
REVISED BY / DATE REVISED

LAST REVISION 01-27-14
DATE PLOTTED => 07-APR-2014
TIME PLOTTED => 09:26

M

Maint	MAINTENANCE
Max	MAXIMUM
MB	METAL BEAM
MBB	METAL BEAM BARRIER
MBGR	METAL BEAM GUARD RAILING
Med	MEDIAN
MGS	MIDWEST GUARDRAIL SYSTEM
MH	MANHOLE
Min	MINIMUM
Misc	MISCELLANEOUS
Misc I & S	MISCELLANEOUS IRON AND STEEL
Mkr	MARKER
Mod	MODIFIED,
	MODIFY
Mon	MONUMENT
MP	METAL PLATE
MPGR	METAL PLATE GUARD RAILING
MR	MOVEMENT RATING
MSE	MECHANICALLY STABILIZED EMBANKMENT
Mt	MOUNTAIN, MOUNT
Mtl	MATERIAL
MVP	MAINTENANCE VEHICLE PULLOUT

N

N	NORTH
NB	NORTHBOUND
No.	NUMBER (MUST HAVE PERIOD)
Nos.	NUMBERS (MUST HAVE PERIOD)
NPS	NOMINAL PIPE SIZE
NS	NEAR SIDE
NSP	NEW STANDARD PLAN
NTS	NOT TO SCALE

O

Oblr	OBLITERATE
OC	OVERCROSSING
OD	OUTSIDE DIAMETER
OF	OUTSIDE FACE
OG	ORIGINAL GROUND
OGAC	OPEN GRADED ASPHALT CONCRETE
OGFC	OPEN GRADED FRICTION COURSE
OH	OVERHEAD
OHWM	ORDINARY HIGH WATER MARK
O-O	OUT TO OUT
Opp	OPPOSITE
OSD	OVERSIDE DRAIN

P

P	PAGE
PAP	PERFORATED ALUMINUM PIPE
PB	PULL BOX
PC	POINT OF CURVATURE,
	PRECAST
PCC	POINT OF COMPOUND CURVE,
	PORTLAND CEMENT CONCRETE
PCMS	PORTABLE CHANGEABLE MESSAGE SIGN
PCP	PERFORATED CONCRETE PIPE,
	PRESTRESSED CONCRETE PIPE
PCVC	POINT OF COMPOUND VERTICAL CURVE
PEC	PERMIT TO ENTER AND CONSTRUCT
Ped	PEDESTRIAN
Ped OC	PEDESTRIAN OVERCROSSING
Ped UC	PEDESTRIAN UNDERCROSSING
Perm Mtl	PERMEABLE MATERIAL

P continued

PG	PROFILE GRADE
PI	POINT OF INTERSECTION
PJP	PARTIAL JOINT PENETRATION
Pkwy	PARKWAY
ℙ,PL	PLATE
P/L	PROPERTY LINE
PM	POST MILE,
	TIME FROM NOON TO MIDNIGHT
PN	PAVING NOTCH
POC	POINT OF HORIZONTAL CURVE
POT	POINT OF TANGENT
POVC	POINT OF VERTICAL CURVE
PP	PIPE PILE,
	PLASTIC PIPE,
	POWER POLE
PPL	PREFORMED PERMEABLE LINER
PPP	PERFORATED PLASTIC PIPE
PRC	POINT OF REVERSE CURVE
PRF	PAVEMENT REINFORCING FABRIC
PRVC	POINT OF REVERSE VERTICAL CURVE
PS&E	PLANS, SPECIFICATIONS AND ESTIMATES
PS, P/S	PRESTRESSED
PSP	PERFORATED STEEL PIPE
PT	POINT OF TANGENCY
PVC	POLYVINYL CHLORIDE
Pvmt	PAVEMENT

Q

Qty	QUANTITY

R

R	RADIUS
R & D	REMOVE AND DISPOSE
R & S	REMOVE AND SALVAGE
R/C	RATE OF CHANGE
RCA	REINFORCED CONCRETE ARCH
RCB	REINFORCED CONCRETE BOX
RCP	REINFORCED CONCRETE PIPE
RCPA	REINFORCED CONCRETE PIPE ARCH
Rd	ROAD
Reinf	REINFORCED,
	REINFORCEMENT,
	REINFORCING
Rel	RELOCATE
Repl	REPLACEMENT
Ret	RETAINING
Rev	REVISED, REVISION
Rdwy	ROADWAY
RHMA	RUBBERIZED HOT MIX ASPHALT
Riv	RIVER
RM	ROAD-MIXED
RP	RADIUS POINT,
	REFERENCE POINT
RR	RAILROAD
RSP	ROCK SLOPE PROTECTION,
	REVISED STANDARD PLAN
Rt	RIGHT
Rte	ROUTE
RW	REDWOOD,
	RETAINING WALL
R/W	RIGHT OF WAY
Rwy	RAILWAY

S

S	SOUTH,
	SUPPLEMENT
SAE	STRUCTURE APPROACH EMBANKMENT
Salv	SALVAGE
SAPP	STRUCTURAL ALUMINUM PLATE PIPE
SB	SOUTHBOUND
SC	SAND CUSHION
SCSP	SLOTTED CORRUGATED STEEL PIPE
SD	STORM DRAIN
Sec	SECOND,
	SECTION
Sep	SEPARATION
SG	SUBGRADE
Shld	SHOULDER
Sht	SHEET
Sim	SIMILAR
℄	STATION LINE
SM	SELECTED MATERIAL
Spec	SPECIAL,
	SPECIFICATIONS
SPP	SLOTTED PLASTIC PIPE
SS	SLOPE STAKE
SSBM	STRAP AND SADDLE BRACKET METHOD
SSD	STRUCTURAL SECTION DRAIN
SSPA	STRUCTURAL STEEL PLATE ARCH
SSPP	STRUCTURAL STEEL PLATE PIPE
SSPPA	STRUCTURAL STEEL PLATE PIPE ARCH
SSRP	STEEL SPIRAL RIB PIPE
St	STREET
Sta	STATION
STBB	SINGLE THRIE BEAM BARRIER
Std	STANDARD
Str	STRUCTURE
Surf	SURFACING
SW	SIDEWALK,
	SOUND WALL
Swr	SEWER
Sym	SYMMETRICAL
S4S	SURFACE 4 SIDES

T

T	SEMI-TANGENT
Tan	TANGENT
TBB	THRIE BEAM BARRIER
Tbr	TIMBER
TC	TOP OF CURB
TCB	TRAFFIC CONTROL BOX
TCE	TEMPORARY CONSTRUCTION EASEMENT
Tel	TELEPHONE
Temp	TEMPORARY
TG	TOP OF GRADE
Tot	TOTAL
TP	TELEPHONE POLE
TPB	TREATED PERMEABLE BASE
TPM	TREATED PERMEABLE MATERIAL
Trans	TRANSITION

T continued

TS	TRANSVERSE,
	TRAFFIC SIGNAL,
	TUBULAR STEEL
Typ	TYPICAL

U

UC	UNDERCROSSING
UD	UNDERDRAIN
UG	UNDERGROUND
UON	UNLESS OTHERWISE NOTED
UP	UNDERPASS

V

V	VALVE,
	DESIGN SPEED
Var	VARIABLE,
	VARIES
VC	VERTICAL CURVE
VCP	VITRIFIED CLAY PIPE
Vert	VERTICAL
Via	VIADUCT
Vol	VOLUME

W

W	WEST,
	WIDTH
WB	WESTBOUND
WH	WEEP HOLE
WM	WIRE MESH
WS	WATER SURFACE
WSP	WELDED STEEL PIPE
Wt	WEIGHT
WV	WATER VALVE
WW	WINGWALL
WWLOL	WINGWALL LAYOUT LINE

X

X Sec	CROSS SECTION
Xing	CROSSING

Y

Yr	YEAR
Yrs	YEARS

Dist	COUNTY	ROUTE	POST MILES TOTAL PROJECT	SHEET No.	TOTAL SHEETS
11	SD	805	0.9/1.1, 2.5/2.9	43	59

Grace M. Tsushima
REGISTERED CIVIL ENGINEER

July 19, 2013
PLANS APPROVAL DATE

REGISTERED PROFESSIONAL ENGINEER
Grace M. Tsushima
No. C49814
Exp. 9-30-14
CIVIL
STATE OF CALIFORNIA

THE STATE OF CALIFORNIA OR ITS OFFICERS OR AGENTS SHALL NOT BE RESPONSIBLE FOR THE ACCURACY OR COMPLETENESS OF SCANNED COPIES OF THIS PLAN SHEET.

TO ACCOMPANY PLANS DATED 04-01-14

UNIT OF MEASUREMENT SYMBOLS:

Some of the symbols used in the project plan quantity tables and in the Bid Item List are:

TABLE A

SYMBOL USED	DEFINITIONS
ACRE	ACRE
CF	CUBIC FOOT
CY	CUBIC YARD
EA	EACH
GAL	GALLON
LB	POUND
LF	LINEAR FOOT
SQFT	SQUARE FOOT
SQYD	SQUARE YARD
STA	100 FEET
TAB	TABLET
TON	2,000 POUNDS

Some of the symbols used in the plans other than in the project plan quantity tables are:

TABLE B

SYMBOL USED	DEFINITIONS
ksi	KIPS PER SQUARE INCH
ksf	KIPS PER SQUARE FOOT
psi	POUNDS PER SQUARE INCH
psf	POUNDS PER SQUARE FOOT
lb/ft^3, pcf	POUNDS PER CUBIC FOOT
tsf	TONS PER SQUARE FOOT
mph, MPH *	MILES PER HOUR
ø	NOMINAL DIAMETER
oz	OUNCE
lb	POUND
kip	1,000 POUNDS
cal	CALORIE
ft	FOOT OR FEET
gal	GALLON

* For use on a sign panel only

STATE OF CALIFORNIA
DEPARTMENT OF TRANSPORTATION

ABBREVIATIONS (SHEET 2 OF 2)

NO SCALE

RSP A10B DATED JULY 19, 2013 SUPERSEDES STANDARD PLAN A10B DATED MAY 20, 2011 - PAGE 2 OF THE STANDARD PLANS BOOK DATED 2010.

REVISED STANDARD PLAN RSP A10B

2010 REVISED STANDARD PLAN RSP A10B

6-7-13

Dist	COUNTY	ROUTE	POST MILES TOTAL PROJECT	SHEET No.	TOTAL SHEETS
11	SD	805	0.9/1.1, 2.5/2.9	44	59

REGISTERED CIVIL ENGINEER

July 19, 2013
PLANS APPROVAL DATE

REGISTERED PROFESSIONAL ENGINEER
Michael Janzen
No. 44788
Exp. 03-31-14
CIVIL
STATE OF CALIFORNIA

THE STATE OF CALIFORNIA OR ITS OFFICERS OR AGENTS SHALL NOT BE RESPONSIBLE FOR THE ACCURACY OR COMPLETENESS OF SCANNED COPIES OF THIS PLAN SHEET.

TO ACCOMPANY PLANS DATED 04-01-14

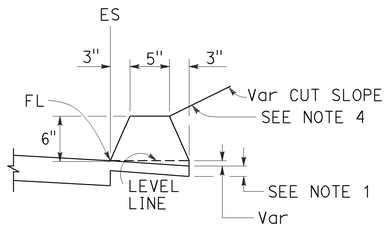

TYPE A
See Note 3

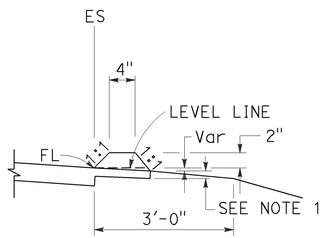

TYPE C

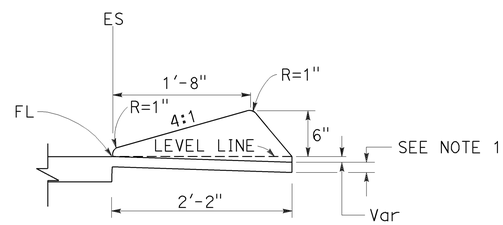

TYPE D

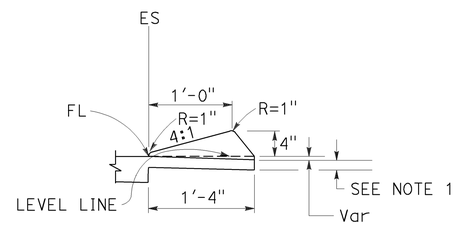

TYPE E

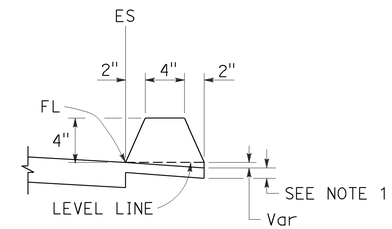

TYPE F
See Note 5

DIKES

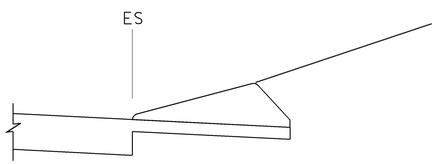

CASE C-1
Cut Slope

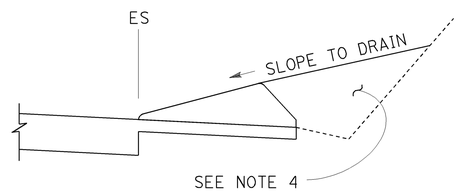

CASE C-2
Cut Slope

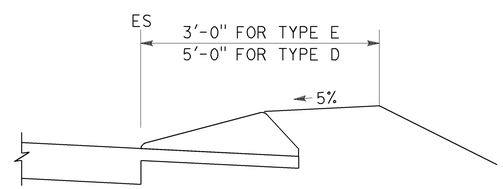

CASE F

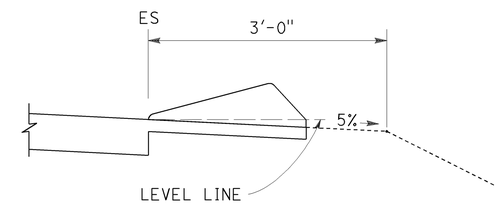

CASE R
See Note 2

TYPE D AND E BACKFILL DETAILS

NOTES:

1. For HMA shoulders only, extend top layer of HMA placed on the shoulder under dike with no joint at the ES. For projects with OGFC shoulders, do not extend OGFC under dike. See project plans for modified dike detail.
2. Case R applies to retrofit only projects where restrictive conditions do not provide enough width for Case F backfill.
3. Type A dike only to be used where restrictive slope conditions do not provide enough width to use Type D or Type E dike.
4. Fill and compact with excavated material to top of dike.
5. Use Type F dike, where dike is required with guard railing installations. See Revised Standard Plan RSP A77N4 for dike positioning details.

DIKE QUANTITIES

TYPE	CUBIC YARDS PER LINEAR FOOT
A	0.0135
C	0.0038
D	0.0293
E	0.0130
F	0.0066

Quantities based on 5% cross slope.

STATE OF CALIFORNIA
DEPARTMENT OF TRANSPORTATION

HOT MIX ASPHALT DIKES

NO SCALE

RSP A87B DATED JULY 19, 2013 SUPERSEDES STANDARD PLAN A87B DATED MAY 20, 2011 - PAGE 120 OF THE STANDARD PLANS BOOK DATED 2010.

REVISED STANDARD PLAN RSP A87B

2010 REVISED STANDARD PLAN RSP A87B

6-27-13

Dist	COUNTY	ROUTE	POST MILES TOTAL PROJECT	SHEET No.	TOTAL SHEETS
11	SD	805	0.9/1.1, 2.5/2.9	45	59

Raymond Don Tsztoo
REGISTERED CIVIL ENGINEER

April 19, 2013
PLANS APPROVAL DATE

REGISTERED PROFESSIONAL ENGINEER Raymond Don Tsztoo No. C37332 Exp. 6-30-14 CIVIL STATE OF CALIFORNIA

THE STATE OF CALIFORNIA OR ITS OFFICERS OR AGENTS SHALL NOT BE RESPONSIBLE FOR THE ACCURACY OR COMPLETENESS OF SCANNED COPIES OF THIS PLAN SHEET.

TO ACCOMPANY PLANS DATED 04-01-14

2010 REVISED STANDARD PLAN RSP D77A

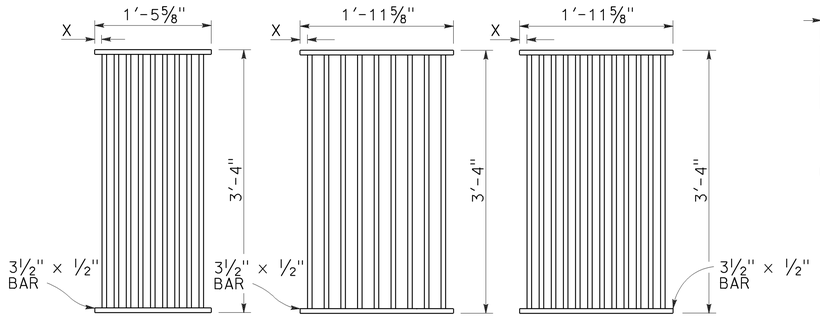

TYPE 18-9

1⅜" Clear spacing. Use within the roadbed on highways where bicycles and pedestrians are excluded.

TYPE 24-9

2" Clear spacing. Use in locations off the roadbed on all types of highways.

TYPE 24-12

1⅜" Clear spacing. Use within the roadbed on highways where bicycles and pedestrians are excluded.

RECTANGULAR GRATE DETAILS

(See table below)

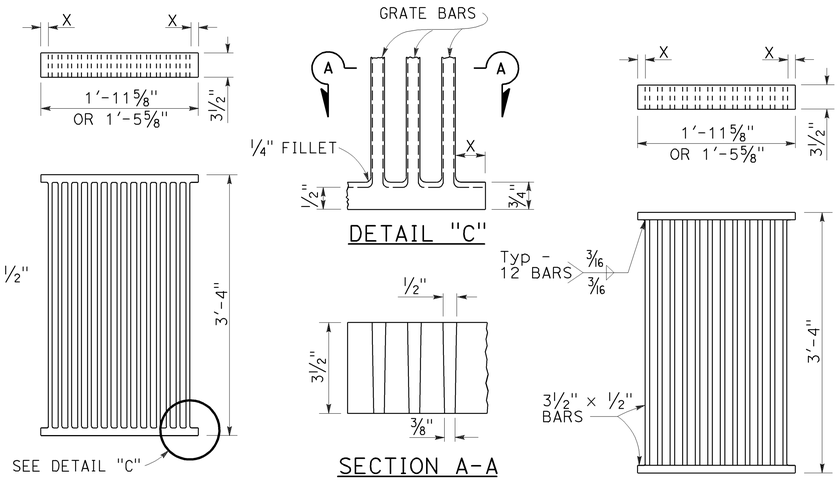

ALTERNATIVE CAST DUCTILE IRON GRATE OR CAST CARBON STEEL GRATE

ALTERNATIVE WELDED GRATE

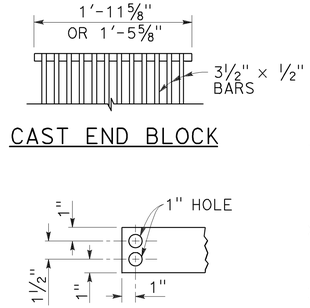

CAST END BLOCK

END OF BAR

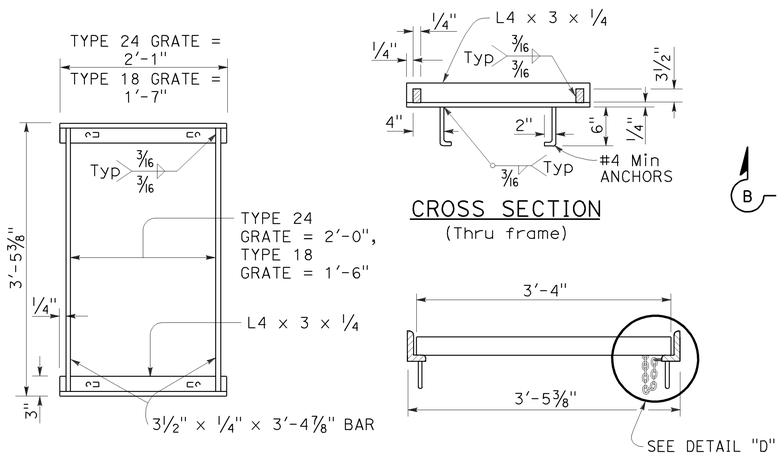

TYPICAL FRAME

CROSS SECTION
(Thru frame)

LONGITUDINAL SECTION
(Thru frame and grate)

RECTANGULAR FRAME DETAILS

(For all rectangular grates)

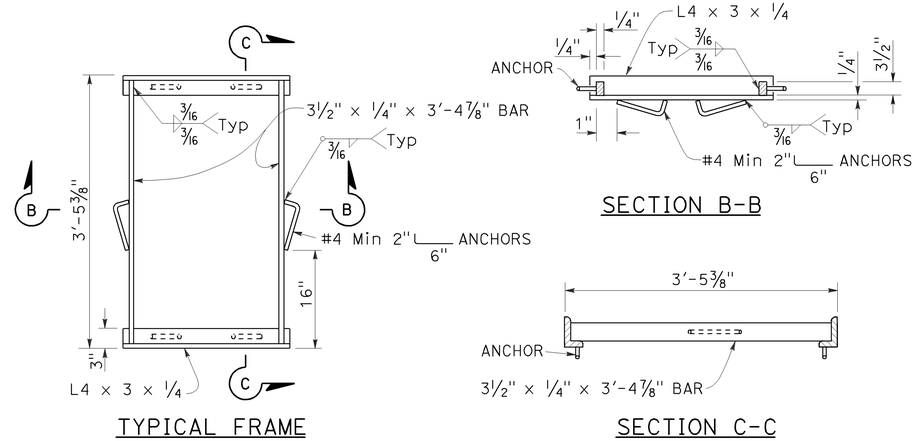

TYPICAL FRAME

SECTION B-B

SECTION C-C

ALTERNATIVE ANCHOR FOR RECTANGULAR FRAME

(For details not shown, See Rectangular Frame Details)

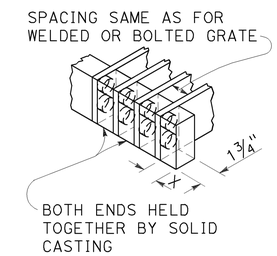

ALTERNATIVE CAST DUCTILE IRON OR CAST CARBON STEEL END BLOCK GRATE

NOTES:

1. Grate type numbers refer to approximate width of grate in inches and number of bars, respectively.
2. Contractor has the option of using cast ductile iron, cast carbon steel, welded, bolted, or cast end block grate.
3. Rounded top of bars optional on all grates.
4. Pipe inlets with a grate shall be placed so that bars parallel direction of principle surface flow.
5. Complete joint penetration butt welds may be substituted for the fillet welds on all anchors.
6. Standard square, hexagon, round or equivalent headed anchors may be substituted for the right angle hooks on the anchors shown on this plan.
7. Grate and frame weights are based on welded grates (weights of face angles, steps, protection bars, etc. are not included).
8. Connect chain to grate and frame only at locations shown on the plans. When chain is required, do not use cast ductile iron grates.

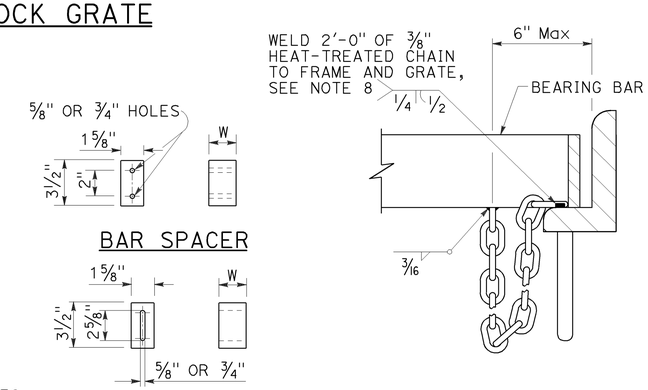

GRATE BAR SPACING TABLE

TYPE	No. OF BARS	CLEAR BAR SPACING	X
18-9	9	1⅜"	1 1/16"
24-9	9	2"	1 9/16"
24-12	12	1⅜"	1¼"

INLET TYPE	COVER TYPE	WEIGHT LB
OS	PLATE	174
OL-7	PLATE	170
OL-10	PLATE	170
OL-14	PLATE	170
OL-21	PLATE	170
OCP	PLATE	112
OCPI	PLATE	112
OCPI	REDWOOD	42
OMP	PLATE	177
OMPI	PLATE	177

INLET TYPE	GRATE TYPE	No. OF GRATES	WEIGHT LB
GDO	24-12	2	634
GOL-7	24-12	1	326
GOL-10	24-12	1	326
GO,G1,G2,G3,G4 (TYPE 24)	24-9	1	263
	24-12	1	326
G4 (TYPE 18),G5,G6	18-9	1	249
GT1	18-9	2	498
GT2	18-9	2	498
GT3	24-12	2	652
GT4	24-12	2	652
TRASH RACK			22
GRATE CHAIN			3

BASIS FOR Misc IRON & STEEL FINAL PAY WEIGHTS FOR DRAINAGE INLETS

(See Note 7)

STATE OF CALIFORNIA
DEPARTMENT OF TRANSPORTATION

GRATE DETAILS No. 1

NO SCALE

RSP D77A DATED APRIL 19, 2013 SUPERSEDES RSP D77A DATED JULY 20, 2012 AND STANDARD PLAN D77A DATED MAY 20, 2011 - PAGE 164 OF THE STANDARD PLANS BOOK DATED 2010.

REVISED STANDARD PLAN RSP D77A

4-4-13

Dist	COUNTY	ROUTE	POST MILES TOTAL PROJECT	SHEET No.	TOTAL SHEETS
11	SD	805	0.9/1.1, 2.5/2.9	46	59

LICENSED LANDSCAPE ARCHITECT

July 19, 2013
PLANS APPROVAL DATE

THE STATE OF CALIFORNIA OR ITS OFFICERS OR AGENTS SHALL NOT BE RESPONSIBLE FOR THE ACCURACY OR COMPLETENESS OF SCANNED COPIES OF THIS PLAN SHEET.

LICENSED LANDSCAPE ARCHITECT — Gregory A. Balzer — 2516 — 02-28-15 Renewal Date — 7-19-13 Date — STATE OF CALIFORNIA

TO ACCOMPANY PLANS DATED 04-01-14

A

AB	AGGREGATE BASE
ABS	ACRYLONITRILE-BUTADIENE-STYRENE
AC	ASPHALT CONCRETE
ACC	ARMOR-CLAD CONDUCTORS
Adj	ADJACENT/ADJUSTABLE
AIC	AUXILIARY IRRIGATION CONTROLLER
Alt	ALTERNATIVE
AMEND	AMENDMENT
ARV	AIR RELEASE VALVE
AUTO	AUTOMATIC
AUX	AUXILIARY
AVB	ATMOSPHERIC VACUUM BREAKER

B

B&B	BALLED AND BURLAPPED
B/B	BRASS/BRONZE
B/B/PL	BRASS/BRONZE/PLASTIC
B/PL	BRASS/PLASTIC
BFM	BONDED FIBER MATRIX
Bit Ctd	BITUMINOUS COATED
BP	BOOSTER PUMP
BPA	BACKFLOW PREVENTER ASSEMBLY
BPE	BACKFLOW PREVENTER ENCLOSURE
BV	BALL VALVE

C

C	CONDUIT
CAP	CORRUGATED ALUMINUM PIPE
CARV	COMBINATION AIR RELEASE VALVE
CB	COUPLING BAND
CCA	CAM COUPLER ASSEMBLY
CEC	CONTROLLER ENCLOSURE CABINET
CHDPE	CORRUGATED HIGH DENSITY POLYETHYLENE
CL	CHAIN LINK
CNC	CONTROL AND NEUTRAL CONDUCTORS
Conc	CONCRETE
CP	COPPER PIPE
CS	COMPOST SOCK
CSP	CORRUGATED STEEL PIPE
CST	CENTER STRIP
CV	CHECK VALVE

D

Dia	DIAMETER
DIP	DUCTILE IRON PIPE
DIT	DRIP IRRIGATION TUBING
DG	DECOMPOSED GRANITE
DN	DIAMETER NOMINAL
DVA	DRIP VALVE ASSEMBLY

E

EC	EROSION CONTROL
ECTC	EROSION CONTROL TECHNOLOGY COUNCIL
Elect	ELECTRIC/ELECTRICAL
Elev	ELEVATION
ELL	ELBOW
ENCL	ENCLOSURE
EP	EDGE OF PAVEMENT
ES	EDGE OF SHOULDER
EST	END STRIP
ESTB	ESTABLISHMENT
ETW	EDGE OF TRAVELED WAY

F

F	FULL CIRCLE
F/P	FULL/PART CIRCLE
FCV	FLOW CONTROL VALVE
FERT	FERTILIZER
FG	FINISHED GRADE
FH	FLEXIBLE HOSE
FIPT	FEMALE IRON PIPE THREAD
FIS	FERTILIZER INJECTOR SYSTEM
FL	FLOW LINE
FR	FIBER ROLL
FS	FLOW SENSOR
FSC	FLOW SENSOR CABLE
FV	FLUSH VALVE

G

Galv	GALVANIZED
GARV	GARDEN VALVE
GARVA	GARDEN VALVE ASSEMBLY
GM	GRAVEL MULCH
GPH	GALLONS PER HOUR
GPM	GALLONS PER MINUTE
GSP	GALVANIZED STEEL PIPE
GV	GATE VALVE

H

H	HALF CIRCLE
HDPE	HIGH DENSITY POLYETHYLENE
HP	HORSEPOWER/HINGE POINT
HPL	HIGH PRESSURE LINE
Hwy	HIGHWAY

I

IC	IRRIGATION CONTROLLER
ICC	IRRIGATION CONTROLLER(S) IN CONTROLLER ENCLOSURE CABINET
ID	INSIDE DIAMETER
IFS	IRRIGATION FILTRATION SYSTEM
IPS	IRON PIPE SIZE
IPT	IRON PIPE THREAD
Irr	IRRIGATION

L

L	LENGTH

M

Max	MAXIMUM
MBGR	METAL BEAM GUARD RAILING
MCV	MANUAL CONTROL VALVE
MIC	MASTER IRRIGATION CONTROLLER
Min	MINIMUM
MIPT	MALE IRON PIPE THREAD
Misc	MISCELLANEOUS
Mtl	MATERIAL
MVP	MAINTENANCE VEHICLE PULLOUT

N

NCN	NO COMMON NAME
NL	NOZZLE LINE
No.	NUMBER
NPT	NATIONAL PIPE THREAD

O

O/C	ON CENTER
OD	OUTSIDE DIAMETER
OL	OVERLAP

P

P	PART CIRCLE
PB	PULL BOX
PCC	PORTLAND CEMENT CONCRETE
PE	POLYETHYLENE
Pkt	PACKET
PL	PLASTIC
PLS	PURE LIVE SEED
PLT	PLANT/PLANTING
PLT ESTB	PLANT ESTABLISHMENT
PM	POST MILE
PR	PRESSURE RATED
PRLV	PRESSURE RELIEF VALVE
PRV	PRESSURE REGULATING VALVE
PVC	POLYVINYL CHLORIDE
Pvmt	PAVEMENT

Q

Q	QUARTER CIRCLE
QCV	QUICK COUPLING VALVE

R

R	RADIUS
RCP	REINFORCED CONCRETE PIPE
RCV	REMOTE CONTROL VALVE
RCVM	REMOTE CONTROL VALVE (MASTER)
RCVMF	REMOTE CONTROL VALVE (MASTER) W/FLOW SENSOR
RCVP	REMOTE CONTROL VALVE W/PRESSURE REGULATOR
RCW	RECYCLED WATER
RECP	ROLLED EROSION CONTROL PRODUCT
REQ	REQUIRED
RICS	REMOTE IRRIGATION CONTROL SYSTEM
R/W	RIGHT OF WAY

S

S	SLIP
SCH	SCHEDULE
SF	STATE-FURNISHED
Shld	SHOULDER
Sq	SQUARE
SST	SIDE STRIP
Sta	STATION
Std	STANDARD
SW	SIDEWALK/SOUND WALL

T

T	THIRD CIRCLE/THREAD
TLS	TRUCK LOADING STANDPIPE
TQ	THREE QUARTER CIRCLE
TRM	TURF REINFORCEMENT MAT
TT	TWO-THIRDS CIRCLE
TWSA	TREE WELL SPRINKLER ASSEMBLY
Typ	TYPICAL

U

UG	UNDERGROUND

W

W	WIDTH
W/	WITH
WM	WATER METER
WS	WYE STRAINER
WSA	WYE STRAINER ASSEMBLY
WSP	WELDED STEEL PIPE
WWM	WELDED WIRE MESH

NOTE:
For additional abbreviations, see Standard Plans A10A and A10B.

STATE OF CALIFORNIA
DEPARTMENT OF TRANSPORTATION

LANDSCAPE AND EROSION CONTROL ABBREVIATIONS

NO SCALE

RSP H1 DATED JULY 19, 2013 SUPERSEDES STANDARD PLAN H1 DATED MAY 20, 2011 - PAGE 218 OF THE STANDARD PLANS BOOK DATED 2010.

REVISED STANDARD PLAN RSP H1

2010 REVISED STANDARD PLAN RSP H1

6-28-13

Dist	COUNTY	ROUTE	POST MILES TOTAL PROJECT	SHEET No.	TOTAL SHEETS
11	SD	805	0.9/1.1, 2.5/2.9	47	59

Gregory A. Balzer
LICENSED LANDSCAPE ARCHITECT

JULY 19, 2013
PLANS APPROVAL DATE

LICENSED LANDSCAPE ARCHITECT
Gregory A. Balzer 2576
Signature
2-28-15
Renewal Date
7-19-13
Date
STATE OF CALIFORNIA

THE STATE OF CALIFORNIA OR ITS OFFICERS OR AGENTS SHALL NOT BE RESPONSIBLE FOR THE ACCURACY OR COMPLETENESS OF SCANNED COPIES OF THIS PLAN SHEET.

TO ACCOMPANY PLANS DATED 04-01-14

EXISTING	NEW	ITEM DESCRIPTION
		WATER METER (WM)
		BACKFLOW PREVENTER ASSEMBLY (BPA)
		BACKFLOW PREVENTER ENCLOSURE (BPE)
		BOOSTER PUMP (BP)
		TRUCK LOADING STANDPIPE (TLS)
FS	FS	FLOW SENSOR (FS)
X	X	MASTER IRRIGATION CONTROLLER (MIC)
		AUXILIARY IRRIGATION CONTROLLER (AIC)
		IRRIGATION CONTROLLER (IC) IRRIGATION CONTROLLER (IC) (BATTERY) IRRIGATION CONTROLLER (IC) (SOLAR) IRRIGATION CONTROLLER (IC) (TWO WIRE) IRRIGATION CONTROLLER(S) IN CONTROLLER ENCLOSURE CABINET (ICC)
acc	ACC	ARMOR-CLAD CONDUCTORS (ACC)
cnc	CNC	CONTROL AND NEUTRAL CONDUCTORS (CNC)
		IRRIGATION CONDUIT
		EXTEND IRRIGATION CROSSOVER
dip	DIP	DUCTILE IRON PIPE (SUPPLY LINE) (MAIN) (DIP)
		GALVANIZED STEEL PIPE (SUPPLY LINE) (MAIN) (GSP)
		GALVANIZED STEEL PIPE (SUPPLY LINE) (LATERAL) (GSP)
		PLASTIC PIPE (SUPPLY LINE) (MAIN)
		PLASTIC PIPE (SUPPLY LINE) (LATERAL)
cp	CP	COPPER PIPE (SUPPLY LINE)
dit	DIT	DRIP IRRIGATION TUBING
		REMOTE CONTROL VALVE (RCV) REMOTE CONTROL VALVE (MASTER) (RCVM) REMOTE CONTROL VALVE (MASTER) W/FLOW METER (RCVMF)
P	P	REMOTE CONTROL VALVE W/PRESSURE REGULATOR (RCVP)
		EXISTING MANUAL CONTROL VALVE (MCV)
		DRIP VALVE ASSEMBLY (DVA)
		WYE STRAINER ASSEMBLY (WSA)

EXISTING	NEW	ITEM DESCRIPTION
		GATE VALVE (GV)
		BALL VALVE (BV)
		QUICK COUPLING VALVE (QCV)
		CAM COUPLER ASSEMBLY (CCA)
		GARDEN VALVE ASSEMBLY (GARVA)
		PRESSURE REGULATING VALVE (PRV)
		PRESSURE RELIEF VALVE (PRLV)
		FLOW CONTROL VALVE (FCV)
		COMBINATION AIR RELEASE VALVE (CARV)
		CHECK VALVE (CV)
		FLUSH VALVE (FV)
		EXISTING NOZZLE LINE W/TURNING UNION
		EXISTING IRRIGATION SYSTEM
		EXISTING IRRIGATION SYSTEM TO BE REMOVED
		CHAIN LINK GATE
		QUICK COUPLING VALVE W/SPRINKLER PROTECTOR
3	3	SPRINKLER W/SPRINKLER PROTECTOR
	C	CONNECT TO EXISTING SYSTEM
		CAP
		CAP EXISTING
	\\\FR\\\	FIBER ROLL
	\\\CS\\\	COMPOST SOCK

RCV SIZE
IRRIGATION CONTROLLER
CONTROLLER STATION
VALVE IN PARALLEL (IF APPLICABLE)
GPM
QUANTITY OF SPRINKLERS (WHEN SHOWN)

* 2½"-A-2b-40-60

VALVE CODE

* VALVE CODES FOR EXISTING VALVES ARE SHOWN IN A DASHED ENCLOSURE.

STATE OF CALIFORNIA
DEPARTMENT OF TRANSPORTATION

LANDSCAPE AND EROSION CONTROL SYMBOLS

NO SCALE

RSP H2 DATED JULY 19, 2013 SUPERSEDES STANDARD PLAN H2
DATED MAY 20, 2011 - PAGE 219 OF THE STANDARD PLANS BOOK DATED 2010.

REVISED STANDARD PLAN RSP H2

2010 REVISED STANDARD PLAN RSP H2

6-28-13

Dist	COUNTY	ROUTE	POST MILES TOTAL PROJECT	SHEET No.	TOTAL SHEETS
11	SD	805	0.9/1.1, 2.5/2.9	48	59

Gregory A. Balzer
LICENSED LANDSCAPE ARCHITECT

July 19, 2013
PLANS APPROVAL DATE

LICENSED LANDSCAPE ARCHITECT
Gregory A. Balzer 2576
Renewal Date 2-28-15
Renewal Date 7-19-13
Date
STATE OF CALIFORNIA

THE STATE OF CALIFORNIA OR ITS OFFICERS OR AGENTS SHALL NOT BE RESPONSIBLE FOR THE ACCURACY OR COMPLETENESS OF SCANNED COPIES OF THIS PLAN SHEET.

TO ACCOMPANY PLANS DATED 04-01-14

2010 REVISED STANDARD PLAN RSP H4

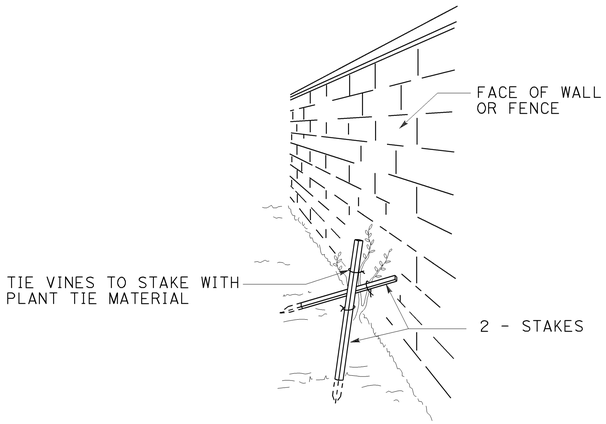

PERSPECTIVE
VINE STAKING

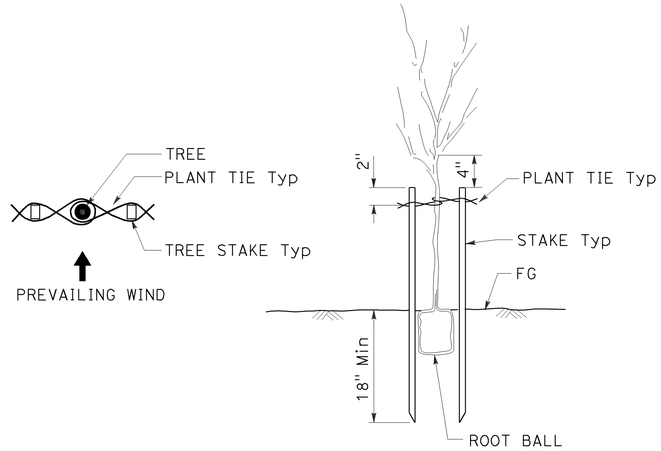

TREE STAKING

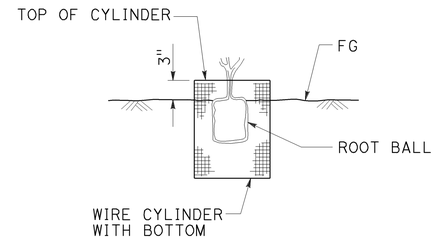

SECTION
ROOT PROTECTOR

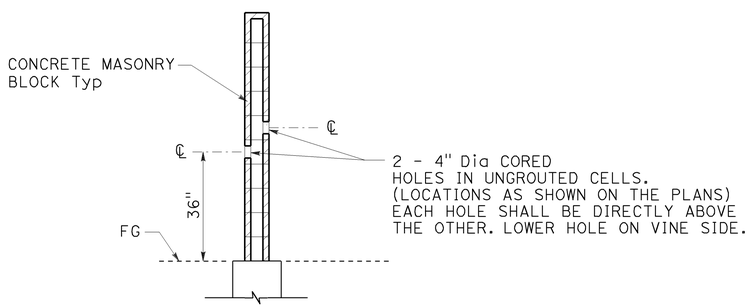

SECTION
CORE HOLE (VINE)

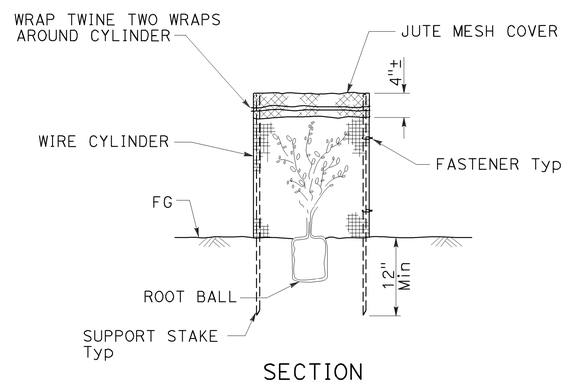

SECTION
FOLIAGE PROTECTOR

STATE OF CALIFORNIA
DEPARTMENT OF TRANSPORTATION

LANDSCAPE DETAILS

NO SCALE

RSP H4 DATED JULY 19, 2013 SUPERSEDES STANDARD PLAN H4
DATED MAY 20, 2011 - PAGE 221 OF THE STANDARD PLANS BOOK DATED 2010.

REVISED STANDARD PLAN RSP H4

6-28-13

Dist	COUNTY	ROUTE	POST MILES TOTAL PROJECT	SHEET No.	TOTAL SHEETS
11	SD	805	0.9/1.1, 2.5/2.9	49	59

Gregory A. Balzer
LICENSED LANDSCAPE ARCHITECT

July 19, 2013
PLANS APPROVAL DATE

LICENSED LANDSCAPE ARCHITECT
Gregory A. Balzer 2576
Signature
2-28-15
Renewal Date
7-19-13
Date
STATE OF CALIFORNIA

THE STATE OF CALIFORNIA OR ITS OFFICERS OR AGENTS SHALL NOT BE RESPONSIBLE FOR THE ACCURACY OR COMPLETENESS OF SCANNED COPIES OF THIS PLAN SHEET.

TO ACCOMPANY PLANS DATED 04-01-14

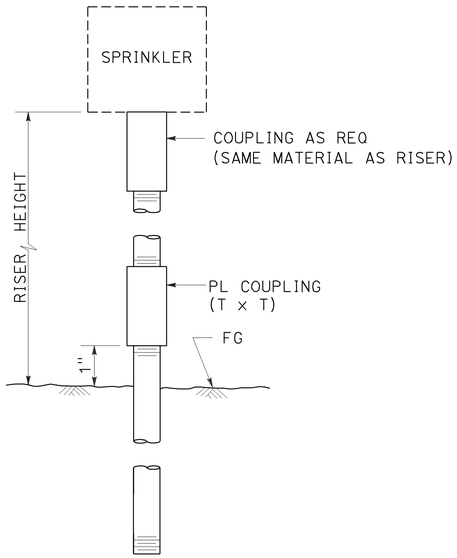

ELEVATION

RISER SPRINKLER ASSEMBLY TYPE I

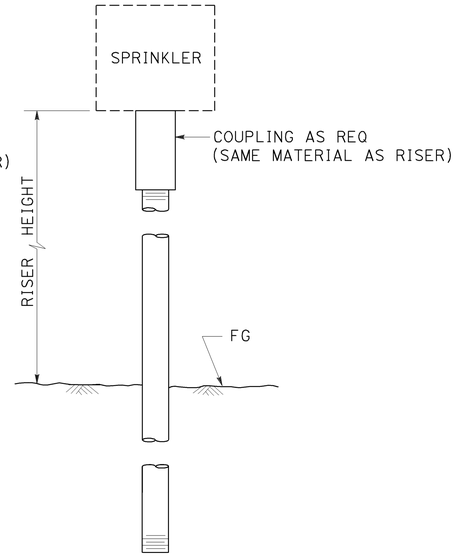

ELEVATION

RISER SPRINKLER ASSEMBLY TYPE II

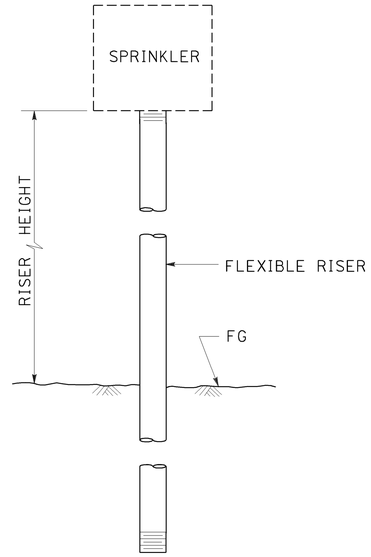

ELEVATION

RISER SPRINKLER ASSEMBLY TYPE III

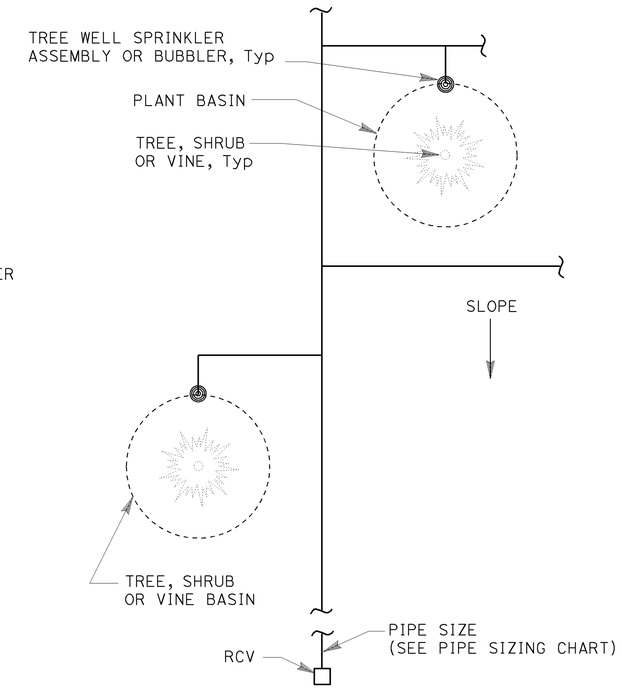

PLAN

NOTES:

1. Install tree well sprinkler assembly on up-hill side of plant when on slope.
2. Install bubbler within basin.

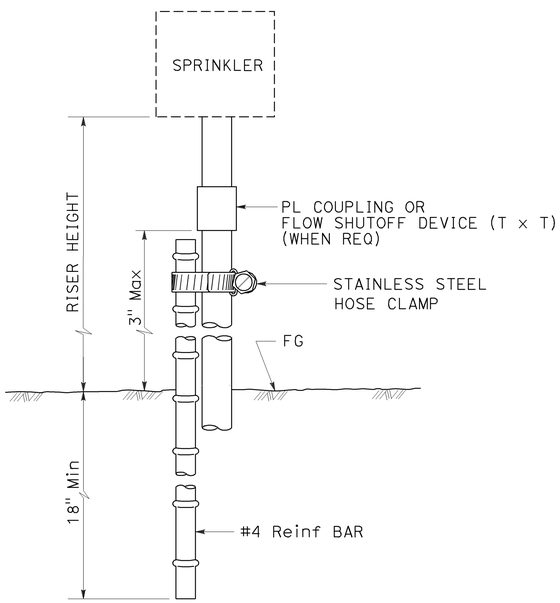

ELEVATION

RISER SPRINKLER ASSEMBLY TYPE IV

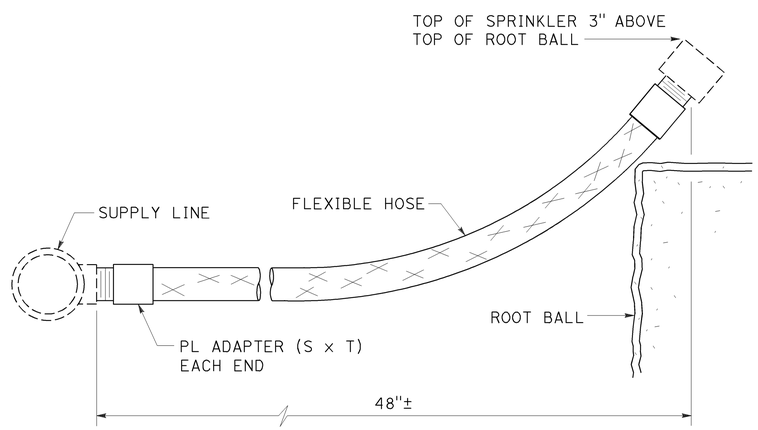

ELEVATION

RISER SPRINKLER ASSEMBLY TYPE V

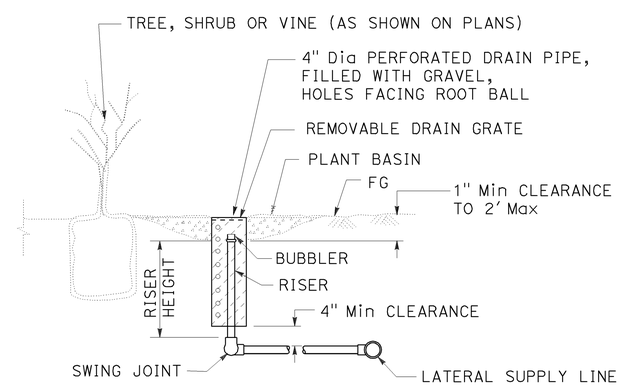

SECTION

TREE WELL SPRINKLER ASSEMBLY

STATE OF CALIFORNIA
DEPARTMENT OF TRANSPORTATION

LANDSCAPE DETAILS

NO SCALE

RSP H5 DATED JULY 19, 2013 SUPERSEDES STANDARD PLAN H5
DATED MAY 20, 2011 - PAGE 222 OF THE STANDARD PLANS BOOK DATED 2010.

REVISED STANDARD PLAN RSP H5

2010 REVISED STANDARD PLAN RSP H5

6-28-13

Dist	COUNTY	ROUTE	POST MILES TOTAL PROJECT	SHEET No.	TOTAL SHEETS
11	SD	805	0.9/1.1, 2.5/2.9	50	59

Gregory A. Balzer
LICENSED LANDSCAPE ARCHITECT

July 19, 2013
PLANS APPROVAL DATE

LICENSED LANDSCAPE ARCHITECT
Gregory A. Balzer 2576
Signature
2-28-15
Renewal Date
7-19-13
Date
STATE OF CALIFORNIA

THE STATE OF CALIFORNIA OR ITS OFFICERS OR AGENTS SHALL NOT BE RESPONSIBLE FOR THE ACCURACY OR COMPLETENESS OF SCANNED COPIES OF THIS PLAN SHEET.

TO ACCOMPANY PLANS DATED 04-01-14

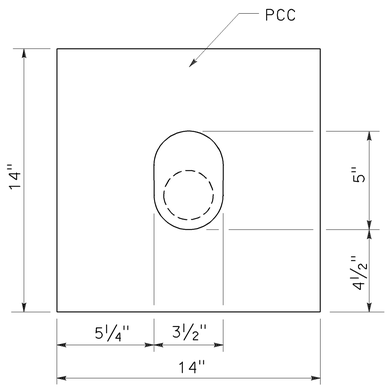

PLAN

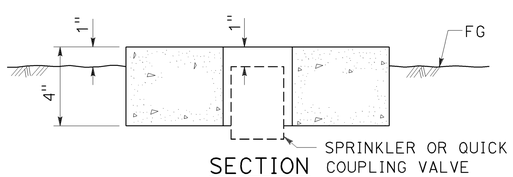

SECTION
SPRINKLER PROTECTOR TYPE I

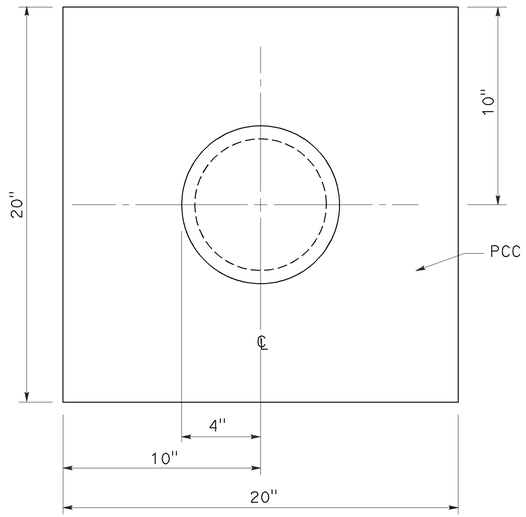

PLAN

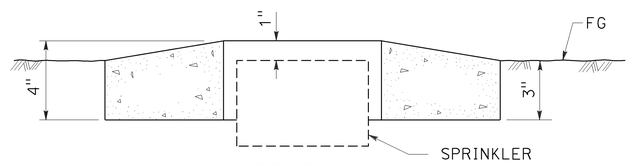

SECTION
SPRINKLER PROTECTOR TYPE II

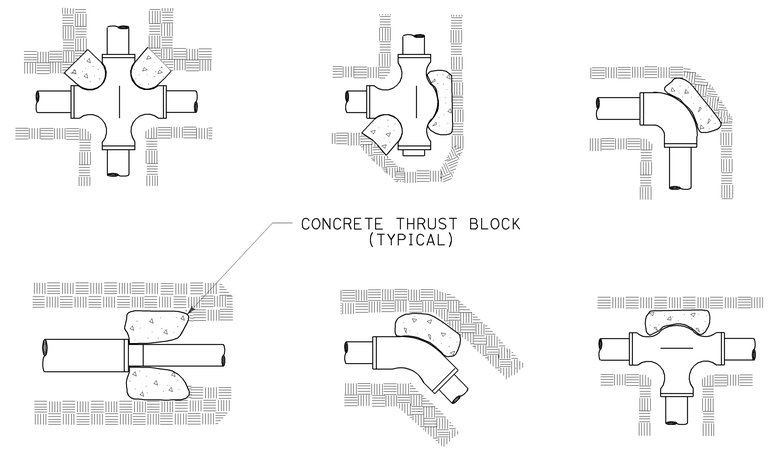

TYPICAL THRUST BLOCKS

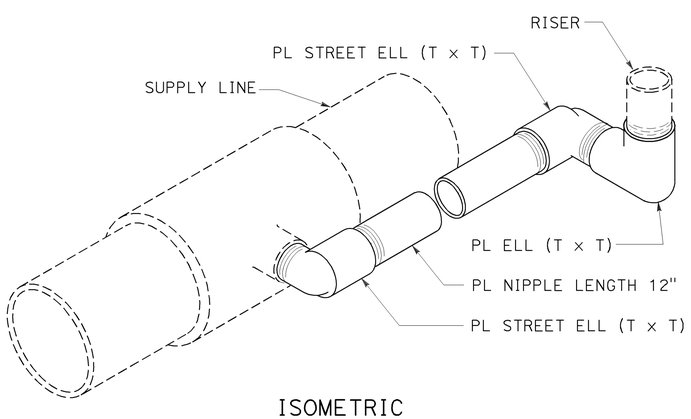

ISOMETRIC
POP-UP SPRINKLER ASSEMBLY TYPE I

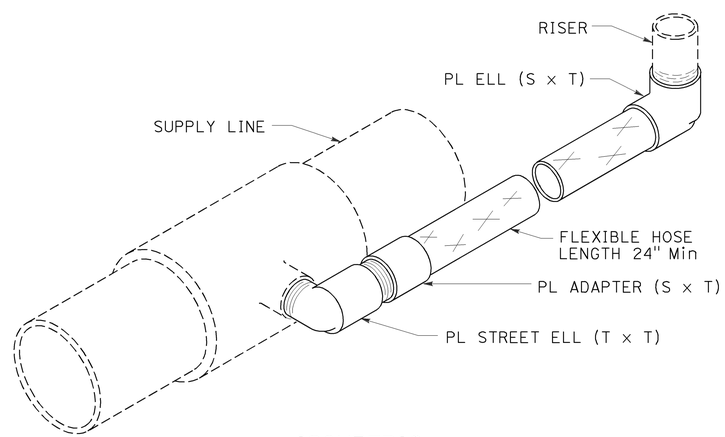

ISOMETRIC
POP-UP SPRINKLER ASSEMBLY TYPE II

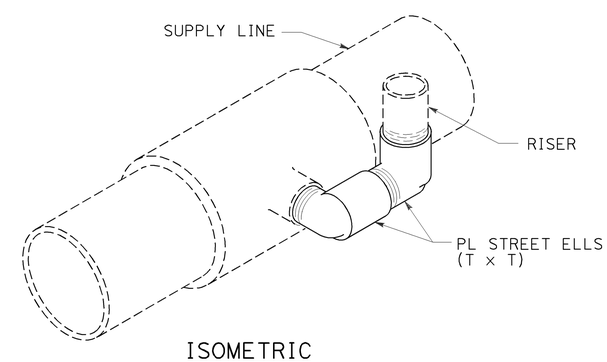

ISOMETRIC
POP-UP SPRINKLER ASSEMBLY TYPE III

STATE OF CALIFORNIA
DEPARTMENT OF TRANSPORTATION

LANDSCAPE DETAILS

NO SCALE

RSP H6 DATED JULY 19, 2013 SUPERSEDES STANDARD PLAN H6
DATED MAY 20, 2011 - PAGE 223 OF THE STANDARD PLANS BOOK DATED 2010.

REVISED STANDARD PLAN RSP H6

2010 REVISED STANDARD PLAN RSP H6

6-28-13

Dist	COUNTY	ROUTE	POST MILES TOTAL PROJECT	SHEET No.	TOTAL SHEETS
11	SD	805	0.9/1.1, 2.5/2.9	51	59

Gregory A. Balzer
LICENSED LANDSCAPE ARCHITECT

July 19, 2013
PLANS APPROVAL DATE

THE STATE OF CALIFORNIA OR ITS OFFICERS OR AGENTS SHALL NOT BE RESPONSIBLE FOR THE ACCURACY OR COMPLETENESS OF SCANNED COPIES OF THIS PLAN SHEET.

LICENSED LANDSCAPE ARCHITECT — Gregory A. Balzer — 2516 — Expiration Date 2-28-15 — Renewal Date 7-19-13 — Date — STATE OF CALIFORNIA

TO ACCOMPANY PLANS DATED 04-01-14

2010 REVISED STANDARD PLAN RSP H7

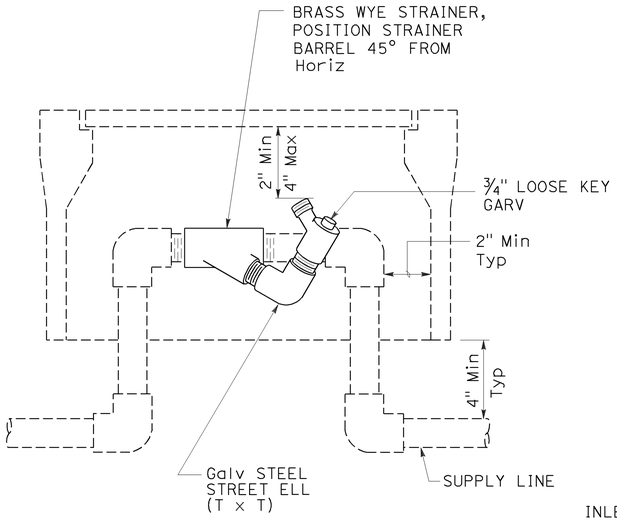

ELEVATION
WYE STRAINER ASSEMBLY

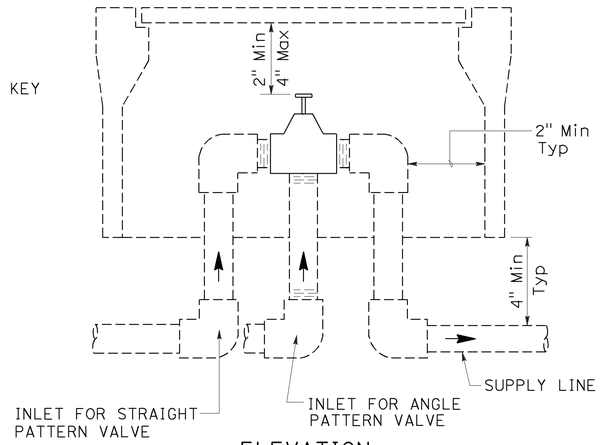

ELEVATION
VALVE

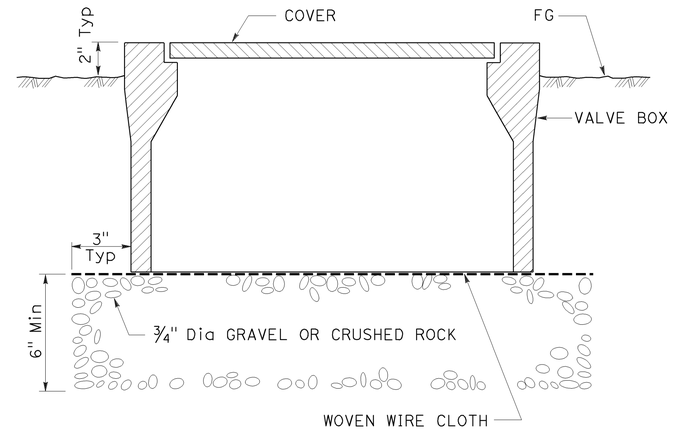

SECTION
VALVE BOX

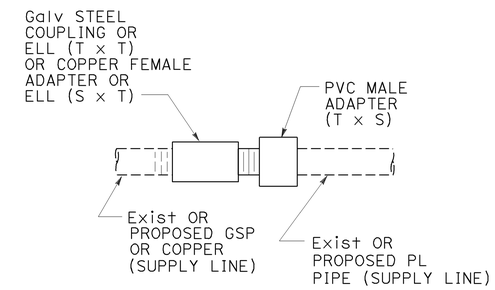

GALVANIZED OR COPPER PIPE CONNECTION TO PLASTIC PIPE

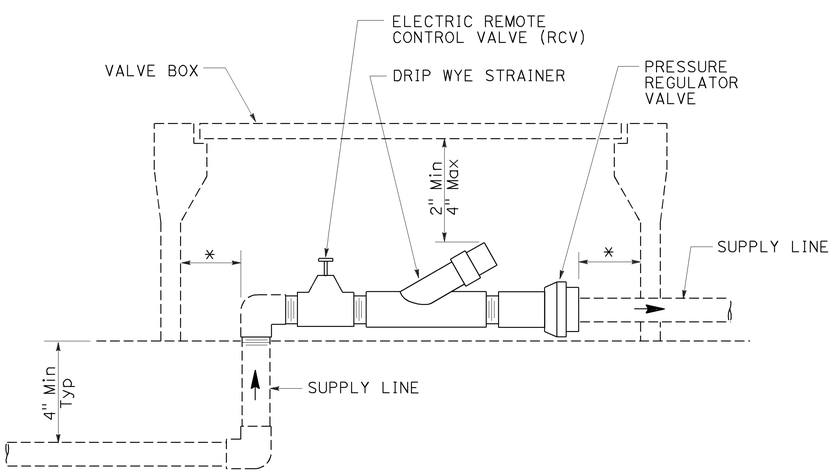

ELEVATION
DRIP VALVE ASSEMBLY

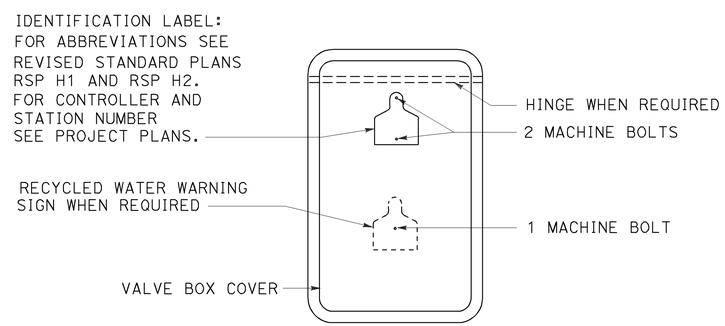

PLAN

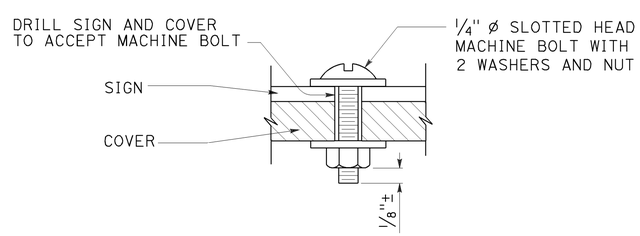

SECTION
VALVE BOX IDENTIFICATION

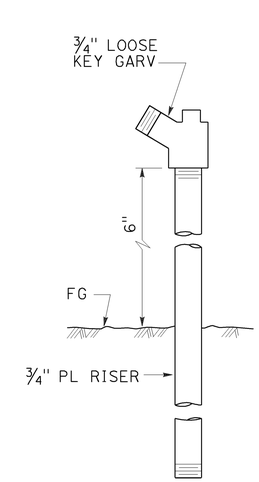

ELEVATION
GARDEN VALVE ASSEMBLY

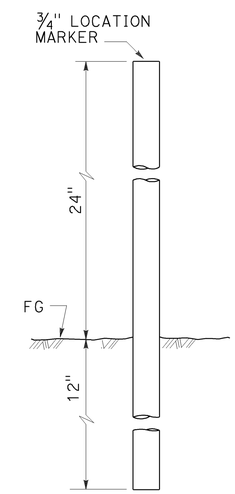

ELEVATION
LOCATION MARKER

GARDEN VALVE ASSEMBLY

STATE OF CALIFORNIA
DEPARTMENT OF TRANSPORTATION

LANDSCAPE DETAILS

NO SCALE

RSP H7 DATED JULY 19, 2013 SUPERSEDES STANDARD PLAN H7
DATED MAY 20, 2011 - PAGE 224 OF THE STANDARD PLANS BOOK DATED 2010.

REVISED STANDARD PLAN RSP H7

6-20-13

Dist	COUNTY	ROUTE	POST MILES TOTAL PROJECT	SHEET No.	TOTAL SHEETS
11	SD	805	0.9/1.1, 2.5/2.9	52	59

Gregory A. Balzer
LICENSED LANDSCAPE ARCHITECT

July 19, 2013
PLANS APPROVAL DATE

LICENSED LANDSCAPE ARCHITECT
Gregory A. Balzer 2576
Signature
2-28-15
Renewal Date
7-19-13
Date
STATE OF CALIFORNIA

THE STATE OF CALIFORNIA OR ITS OFFICERS OR AGENTS SHALL NOT BE RESPONSIBLE FOR THE ACCURACY OR COMPLETENESS OF SCANNED COPIES OF THIS PLAN SHEET.

TO ACCOMPANY PLANS DATED 04-01-14

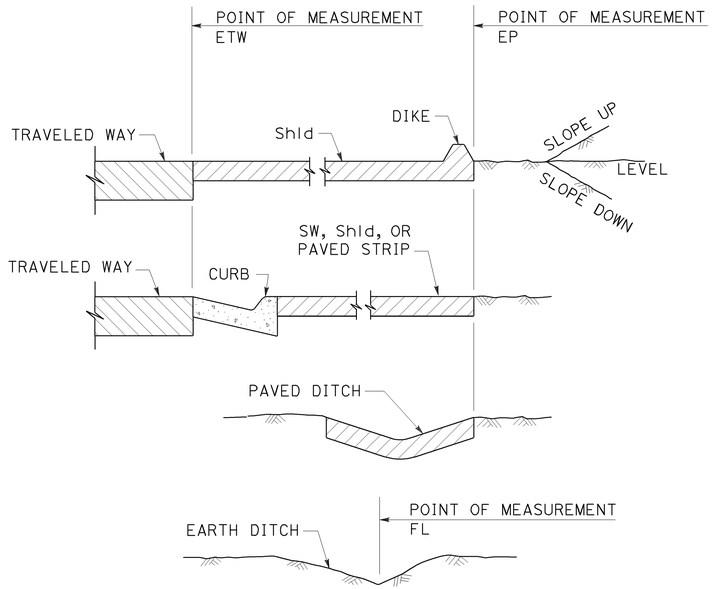

SECTION
POINTS OF MEASUREMENT

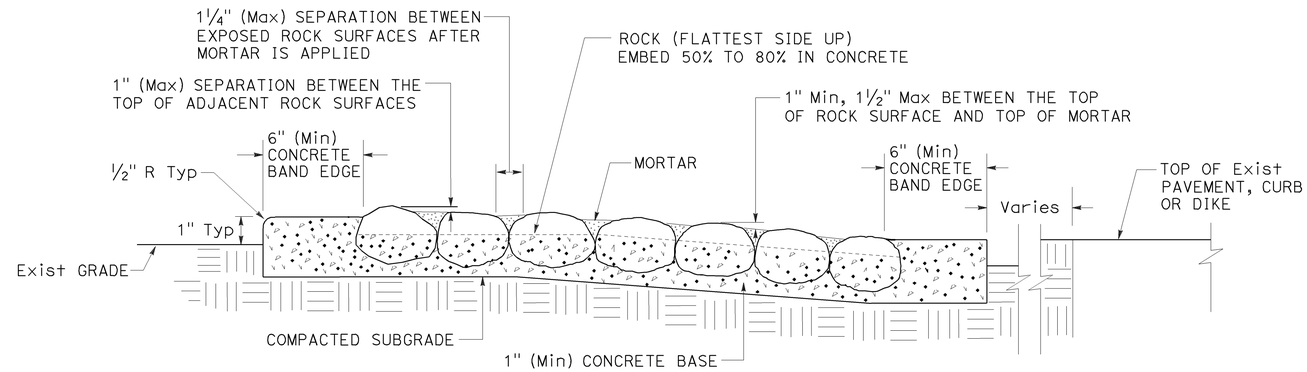

SECTION
ROCK BLANKET

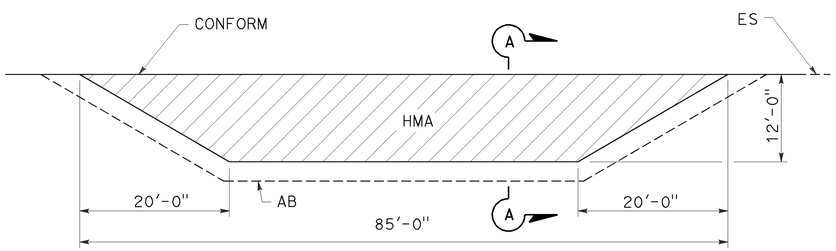

PLAN

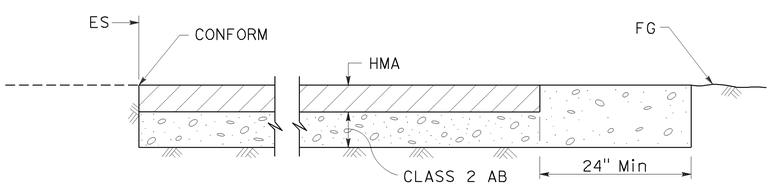

SECTION A-A
MAINTENANCE VEHICLE PULLOUT

STATE OF CALIFORNIA
DEPARTMENT OF TRANSPORTATION

LANDSCAPE DETAILS

NO SCALE

RSP H9A DATED JULY 19, 2013 SUPPLEMENTS THE STANDARD PLANS BOOK DATED 2010.

REVISED STANDARD PLAN RSP H9A

2010 REVISED STANDARD PLAN RSP H9A

6-21-13

Dist	COUNTY	ROUTE	POST MILES TOTAL PROJECT	SHEET No.	TOTAL SHEETS
11	SD	805	0.9/1.1, 2.5/2.9	53	59

REGISTERED CIVIL ENGINEER

July 19, 2013
PLANS APPROVAL DATE

REGISTERED PROFESSIONAL ENGINEER
Gurinderpal Bhullar
No. C48815
Exp. 9-30-14
CIVIL
STATE OF CALIFORNIA

THE STATE OF CALIFORNIA OR ITS OFFICERS OR AGENTS SHALL NOT BE RESPONSIBLE FOR THE ACCURACY OR COMPLETENESS OF SCANNED COPIES OF THIS PLAN SHEET.

TO ACCOMPANY PLANS DATED 04-01-14

2010 REVISED STANDARD PLAN RSP T9

TABLE 1

TAPER LENGTH CRITERIA AND CHANNELIZING DEVICE SPACING

SPEED (S)	MINIMUM TAPER LENGTH * FOR WIDTH OF OFFSET 12 FEET (W)				MAXIMUM CHANNELIZING DEVICE SPACING		
					X	Y	Z **
	TANGENT 2L	MERGING L	SHIFTING L/2	SHOULDER L/3	TAPER	TANGENT	CONFLICT
mph	ft	ft	ft	ft	ft	ft	ft
20	160	80	40	27	20	40	10
25	250	125	63	42	25	50	12
30	360	180	90	60	30	60	15
35	490	245	123	82	35	70	17
40	640	320	160	107	40	80	20
45	1080	540	270	180	45	90	22
50	1200	600	300	200	50	100	25
55	1320	660	330	220	55	110	27
60	1440	720	360	240	60	120	30
65	1560	780	390	260	65	130	32
70	1680	840	420	280	70	140	35

* - For other offsets, use the following merging taper length formula for L:
For speed of 40 mph or less, $L = WS^2/60$
For speed of 45 mph or more, $L = WS$

Where: L = Taper length in feet
W = Width of offset in feet
S = Posted speed limit, off-peak 85th-percentile speed prior to work starting, or the anticipated operating speed in mph

** - Use for taper and tangent sections where there are no pavement markings or where there is a conflict between existing pavement markings and channelizers (CA).

TABLE 2

LONGITUDINAL BUFFER SPACE AND FLAGGER STATION SPACING

SPEED *	Min D **	DOWNGRADE Min D ***		
		-3%	-6%	-9%
mph	ft	ft	ft	ft
20	115	116	120	126
25	155	158	165	173
30	200	205	215	227
35	250	257	271	287
40	305	315	333	354
45	360	378	400	427
50	425	446	474	507
55	495	520	553	593
60	570	598	638	686
65	645	682	728	785
70	730	771	825	891

* - Speed is posted speed limit, off-peak 85th-percentile speed prior to work starting, or the anticipated operating speed in mph

** - Longitudinal buffer space or flagger station spacing

*** - Use on sustained downgrade steeper than -3 percent and longer than 1 mile.

TABLE 3

ADVANCE WARNING SIGN SPACING

ROAD TYPE	DISTANCE BETWEEN SIGNS *		
	A	B	C
	ft	ft	ft
URBAN - 25 mph OR LESS	100	100	100
URBAN - MORE THAN 25 mph TO 40 mph	250	250	250
URBAN - MORE THAN 40 mph	350	350	350
RURAL	500	500	500
EXPRESSWAY / FREEWAY	1000	1500	2640

* - The distances are approximate, are intended for guidance purposes only, and should be applied with engineering judgment. These distances should be adjusted by the Engineer for field conditions, if necessary, by increasing or decreasing the recommmended distances.

STATE OF CALIFORNIA
DEPARTMENT OF TRANSPORTATION

TRAFFIC CONTROL SYSTEM TABLES FOR LANE AND RAMP CLOSURES

NO SCALE

RSP T9 DATED JULY 19, 2013 SUPERSEDES RSP T9 DATED APRIL 19, 2013 THAT SUPPLEMENTS THE STANDARD PLANS BOOK DATED 2010.

REVISED STANDARD PLAN RSP T9

Dist	COUNTY	ROUTE	POST MILES TOTAL PROJECT	SHEET No.	TOTAL SHEETS
11	SD	805	0.9/1.1, 2.5/2.9	54	59

REGISTERED CIVIL ENGINEER

April 19, 2013
PLANS APPROVAL DATE

REGISTERED PROFESSIONAL ENGINEER Gurinderpal Bhullar No. C48815 Exp. 9-30-14 CIVIL STATE OF CALIFORNIA

THE STATE OF CALIFORNIA OR ITS OFFICERS OR AGENTS SHALL NOT BE RESPONSIBLE FOR THE ACCURACY OR COMPLETENESS OF SCANNED COPIES OF THIS PLAN SHEET.

TO ACCOMPANY PLANS DATED 04-01-14

NOTES:

See Revised Standard Plan RSP T9 for tables.

Use cone spacing X for taper segment, Y for tangent segment or Z for conflict situations, as approriate, per Table 1, unless X, Y, or Z cone spacing is shown on this sheet.

Unless otherwise specified in the special provisions, all temporary warning signs shall have black legend on fluorescent orange background.

California codes are designated by (CA). Otherwise, Federal (MUTCD) codes are shown.

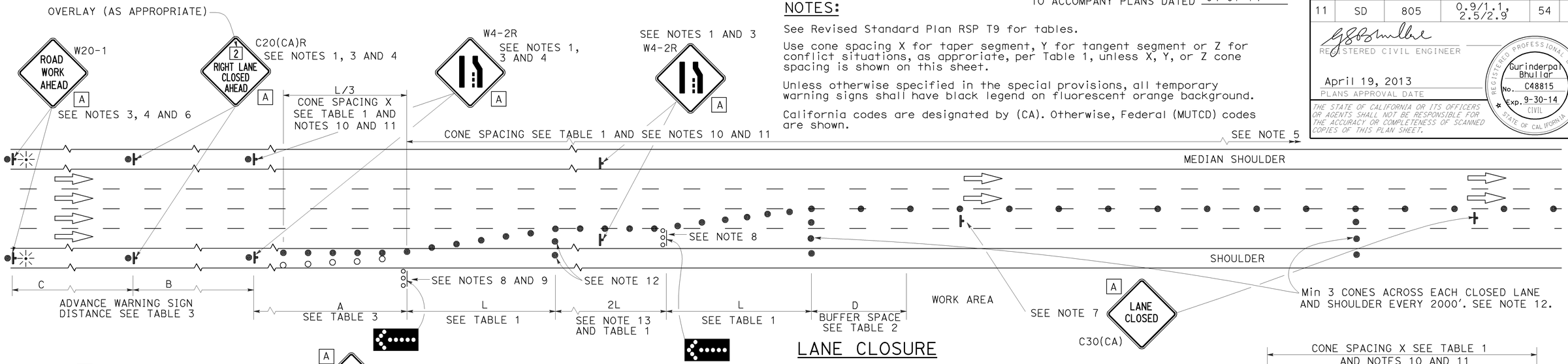

LANE CLOSURE

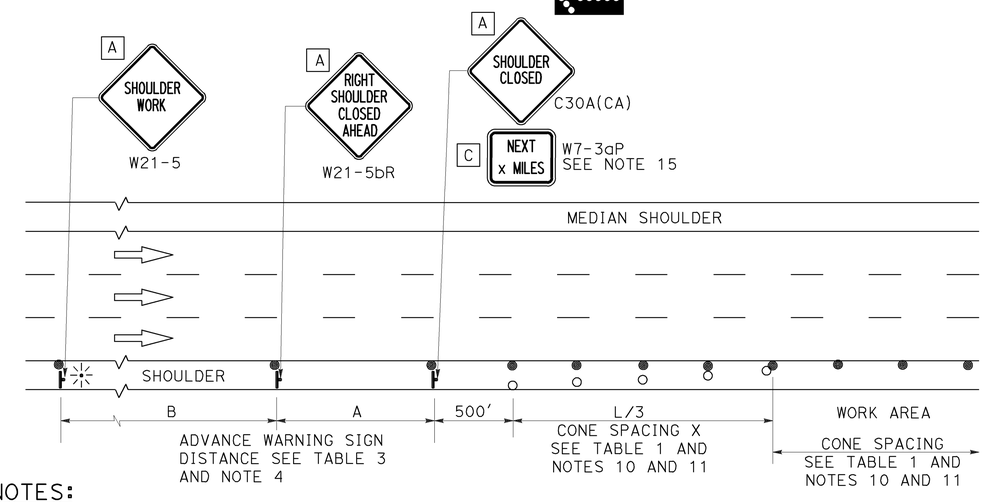

SHOULDER CLOSURE

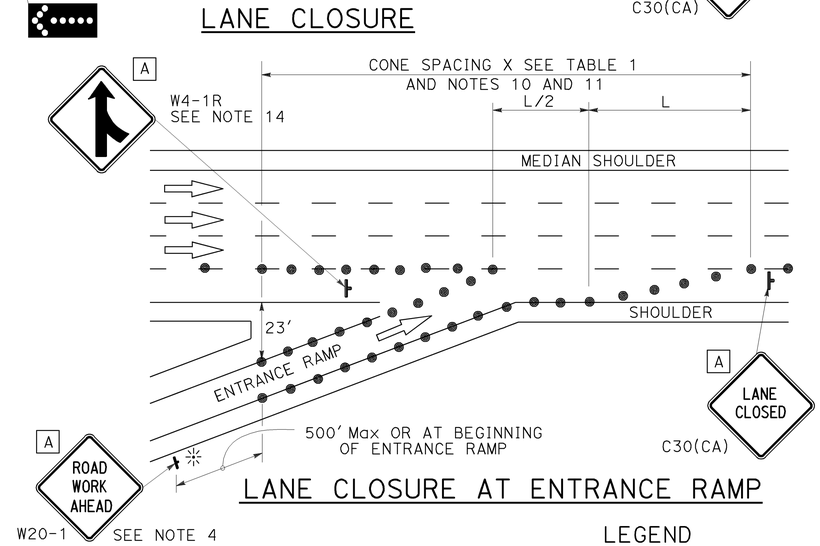

LANE CLOSURE AT ENTRANCE RAMP

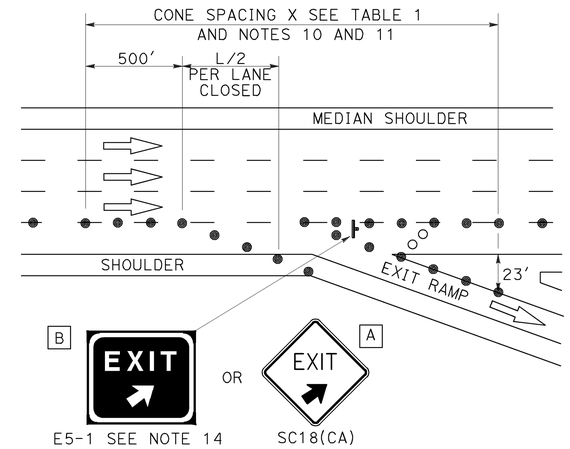

LANE CLOSURE AT EXIT RAMP

NOTES:

1. Median lane closures shall conform to the details as shown except that C20(CA)L and W4-2L signs shall be used.
2. At least one person shall be assigned to provide full time maintenance of traffic control devices for lane closures.
3. Duplicate sign installations are not required:
   a) On opposite shoulder if at least one-half of the available lanes remain open to traffic.
   b) In the median if the width of the median shoulder is less than 8' and the outside lanes are to be closed.
4. Each advance warning sign on each side of the roadway shall be equipped with at least two flags for daytime closure. Each flag shall be at least 16" x 16" in size and shall be orange or fluorescent red-orange in color. Flashing beacons shall be placed at the locations indicated for lane closure during hours of darkness.
5. A G20-2 "END ROAD WORK" sign, with minimum size of 48" x 24" as appropriate, shall be placed at the end of the lane closure unless the end of work area is obvious or ends within a larger project's limits.
6. If the W20-1 sign would follow within 2000' of a stationary W20-1 or G20-1 "ROAD WORK NEXT _____ MILES", use a C20(CA) sign for the first advance warning sign.
7. Place a C30(CA) sign every 2000' throughout length of lane closure.
8. One flashing arrow sign for each lane closed. The flashing arrow signs shall be Type I.
9. A minimum 1500' of sight distance shall be provided where possible for vehicles approaching the first flashing arrow sign. Lane closures shall not begin at top of crest vertical curve or on a horizontal curve.
10. All cones used for lane closures during the hours of darkness shall be fitted with retroreflective bands (or sleeves) as specified in the specifications.
11. Portable delineators, placed at one-half the spacing indicated for traffic cones may be used instead of cones for daytime closures only.
12. Unless otherwise specified in the special provisions, a minimum of 3 cones shall be placed transversely across each closed lane and shoulder at each location where a taper across a traffic lane ends and every 2000' as shown on the "Lane Closure" detail. Two Type II barricades may be used instead of the 3 cones. The transverse alignment of the cones or barricades on the closed shoulder may be shifted from the transverse alignment to provide access to the work.
13. Unless otherwise specified in the special provisions, the 2L tangent shown along lane lines shall be used between the L tapers required for each closed traffic lane.
14. Unless otherwise specified in the special provisions, the E5-1 or SC18(CA) and W4-1 signs shall be used as shown.
15. A W7-3aP "NEXT____ MILES" plaque must be used if theshoulder closure extends beyond the distance that can be perceived by road users.

LEGEND

- TRAFFIC CONE
- TRAFFIC CONE (OPTIONAL TAPER)
- TEMPORARY TRAFFIC CONTROL SIGN
- FLASHING ARROW SIGN (FAS)
- FAS SUPPORT OR TRAILER
- PORTABLE FLASHING BEACON

SIGN PANEL SIZE (Min)

A	48" x 48"
B	72" x 60"
C	36" x 30"

STATE OF CALIFORNIA
DEPARTMENT OF TRANSPORTATION

TRAFFIC CONTROL SYSTEM FOR LANE CLOSURE ON FREEWAYS AND EXPRESSWAYS

NO SCALE

RSP T10 DATED APRIL 19, 2013 SUPERSEDES STANDARD PLAN T10 DATED MAY 20, 2011 - PAGE 237 OF THE STANDARD PLANS BOOK DATED 2010.

REVISED STANDARD PLAN RSP T10

2010 REVISED STANDARD PLAN RSP T10

12-18-12

Dist	COUNTY	ROUTE	POST MILES TOTAL PROJECT	SHEET No.	TOTAL SHEETS
11	SD	805	0.9/1.1, 2.5/2.9	55	59

REGISTERED CIVIL ENGINEER

April 19, 2013
PLANS APPROVAL DATE

REGISTERED PROFESSIONAL ENGINEER Gurinderpal Bhullar No. C48815 Exp. 9-30-14 CIVIL STATE OF CALIFORNIA

THE STATE OF CALIFORNIA OR ITS OFFICERS OR AGENTS SHALL NOT BE RESPONSIBLE FOR THE ACCURACY OR COMPLETENESS OF SCANNED COPIES OF THIS PLAN SHEET.

TO ACCOMPANY PLANS DATED 04-01-14

TYPICAL RAMP CLOSURES

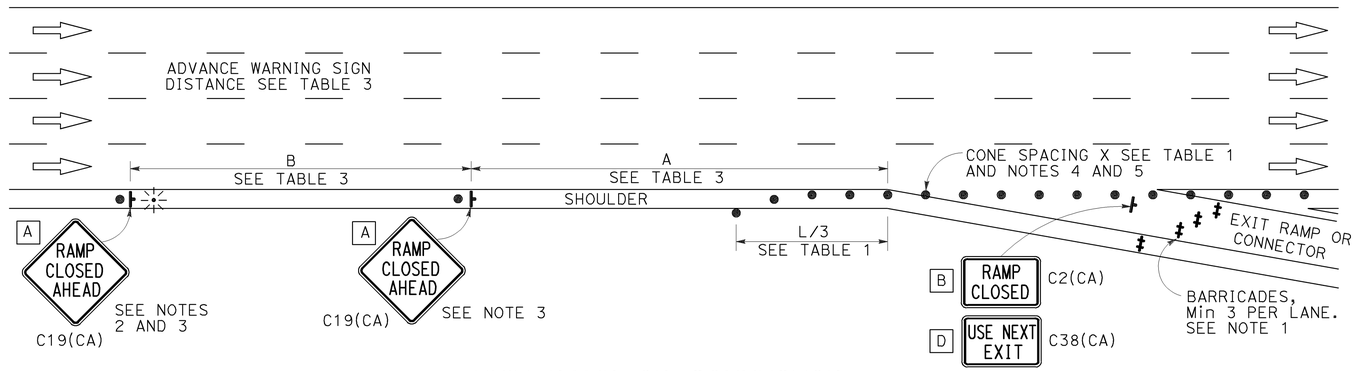

EXIT RAMP OR CONNECTOR

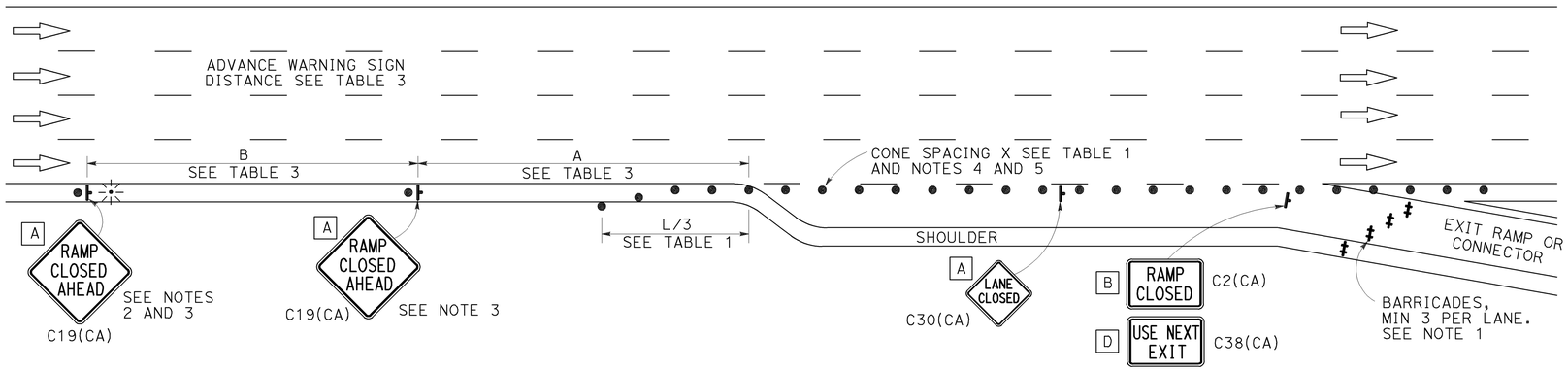

EXIT RAMP OR CONNECTOR WITH ADDITIONAL LANE

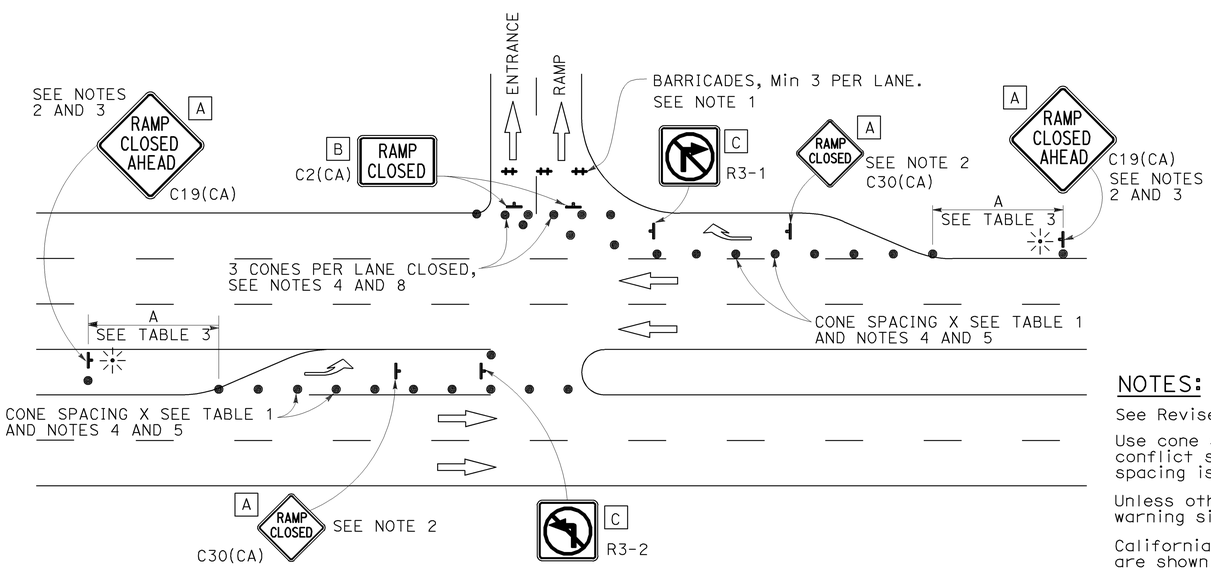

ENTRANCE RAMP WITH TURNING POCKETS

SIGN PANEL SIZE (Min)

- A 48" × 48"
- B 48" × 30"
- C 36" × 36"
- D 48" × 36"

LEGEND

- TRAFFIC CONE
- TEMPORARY TRAFFIC CONTROL SIGN
- BARRICADES
- PORTABLE FLASHING BEACON

NOTES:

1. Barricades shall be Type I, II, or III for closures lasting one week or less and Type III for closures lasting longer than one week.
2. In addition to placing the C19(CA) "RAMP CLOSED AHEAD" and C30(CA) "RAMP CLOSED" signs, black on orange overlay plates with the word "CLOSED" may be mounted, as directed by the Engineer, on all guide signs that refer to the closed ramp. The letter size on the overlay shall be the same as the guide sign.
3. Each advance C19(CA) "RAMP CLOSED AHEAD" sign shall be equipped with at least two flags for daytime closure. Each flag shall be at least 16" × 16" in size and shall be orange or fluorescent red-orange in color. A flashing beacon shall be placed on top of the first C19(CA) sign during hours of darkness.
4. All cones used for ramp closures during the hours of darkness shall be fitted with retroreflective bands (or sleeves) as specified in the specifications.
5. Portable delineators, placed at one-half the spacing indicated for traffic cones, may be used instead of cones for daytime ramp closures only.
6. At least one person shall be assigned to provide full time maintenance of traffic control devices, unless otherwise directed by the Engineer.
7. The existing "EXIT" signs shall be covered during ramp closures.
8. A minimum of 3 cones shall be placed transversely across each closed lane and shoulder.

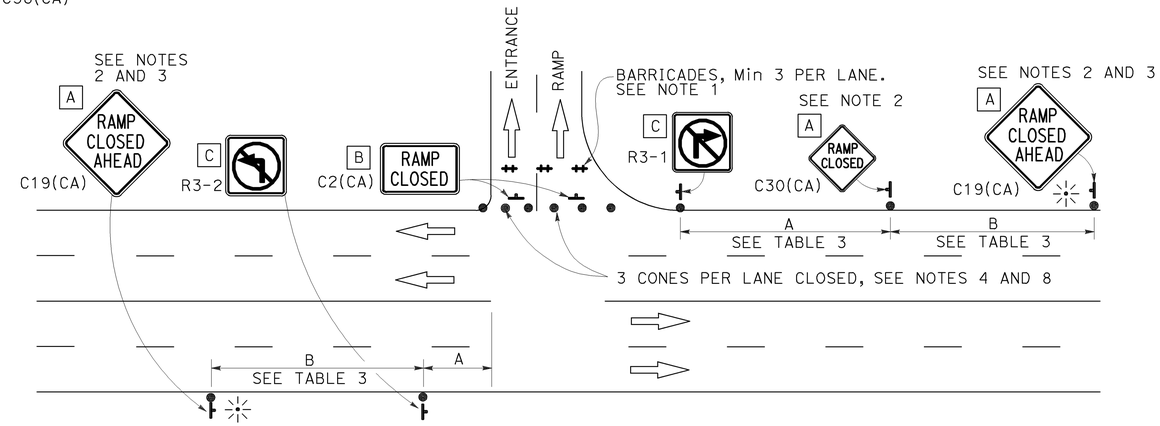

ENTRANCE RAMP WITHOUT TURNING POCKETS

NOTES:

See Revised Standard Plan RSP T9 for tables.

Use cone spacing X for taper segment, Y for tangent segment or Z for conflict situations, as approriate, per Table 1, unless X, Y, or Z cone spacing is shown on this sheet.

Unless otherwise specified in the special provisions, all temporary warning signs shall have black legend on fluorescent orange background.

California codes are designated by (CA). Otherwise, Federal (MUTCD) codes are shown.

STATE OF CALIFORNIA
DEPARTMENT OF TRANSPORTATION

TRAFFIC CONTROL SYSTEM FOR RAMP CLOSURE

NO SCALE

RSP T14 DATED APRIL 19, 2013 SUPERSEDES STANDARD PLAN T14 DATED MAY 20, 2011 - PAGE 242 OF THE STANDARD PLANS BOOK DATED 2010.

REVISED STANDARD PLAN RSP T14

2010 REVISED STANDARD PLAN RSP T14

12-18-12

Dist	COUNTY	ROUTE	POST MILES TOTAL PROJECT	SHEET No.	TOTAL SHEETS
11	SD	805	0.9/1.1, 2.5/2.9	56	59

Theresa Gabriel
REGISTERED ELECTRICAL ENGINEER

July 19, 2013
PLANS APPROVAL DATE

REGISTERED PROFESSIONAL ENGINEER Theresa Aziz Gabriel No. E15129 Exp. 6-30-14 ELECTRICAL STATE OF CALIFORNIA

THE STATE OF CALIFORNIA OR ITS OFFICERS OR AGENTS SHALL NOT BE RESPONSIBLE FOR THE ACCURACY OR COMPLETENESS OF SCANNED COPIES OF THIS PLAN SHEET.

TO ACCOMPANY PLANS DATED 04-01-14

LEGEND:

AB	ABANDON. IF APPLIED TO CONDUIT, REMOVE CONDUCTORS
BC	INSTALL PULL BOX IN EXISTING CONDUIT RUN
BP	PEDESTRIAN BARRICADE, TYPE AS INDICATED ON PLAN
CB	INSTALL CONDUIT INTO EXISTING PULL BOX
CC	CONNECT NEW AND EXISTING CONDUIT. REMOVE EXISTING CONDUCTORS AND INSTALL CONDUCTORS AS INDICATED
CF	CONDUIT TO REMAIN FOR FUTURE USE. REMOVE CONDUCTORS. INSTALL PULL TAPE
DH	DETECTOR HANDHOLE
FA	FOUNDATION TO BE ABANDONED
IS	INSTALL SIGN ON SIGNAL MAST ARM
NS	NO SLIP BASE ON STANDARD
PEC	PHOTOELECTRIC CONTROL
PEU	PHOTOELECTRIC UNIT
RC	EQUIPMENT OR MATERIAL TO BE REMOVED AND BECOME THE PROPERTY OF THE CONTRACTOR
RE	REMOVE ELECTROLIER, FUSES AND BALLAST. TAPE ENDS OF CONDUCTORS
RL	RELOCATE EQUIPMENT
RR	REMOVE AND REUSE EQUIPMENT
RS	REMOVE AND SALVAGE EQUIPMENT
SC	SPLICE NEW TO EXISTING CONDUCTORS
SD	SERVICE DISCONNECT
TSP	TELEPHONE SERVICE POINT

ABBREVIATIONS

APS	ACCESSIBLE PEDESTRIAN SIGNAL
BBS	BATTERY BACKUP SYSTEM
BC	BOLT CIRCLE
BPB	BICYCLE PUSH BUTTON
C	CONDUIT
CB	CIRCUIT BREAKER
CCTV	CLOSED CIRCUIT TELEVISION
Ckt	CIRCUIT
CMS	CHANGEABLE MESSAGE SIGN
Ctid	CALTRANS IDENTIFICATION
Comm	COMMUNICATION
DLC	LOOP DETECTOR LEAD-IN CABLE
EMS	EXTINGUISHABLE MESSAGE SIGN
EVUC	EMERGENCY VEHICLE UNIT CABLE
EVUD	EMERGENCY VEHICLE UNIT DETECTOR
FB	FLASHING BEACON
FBCA	FLASHING BEACON CONTROL ASSEMBLY
FBS	FLASHING BEACON WITH SLIP BASE
FO	FIBER OPTIC
G	EQUIPMENT GROUNDING CONDUCTOR
GB	GROUND BUS
GFCI	GROUND FAULT CIRCUIT INTERRUPTER
HAR	HIGHWAY ADVISORY RADIO
Hex	HEXAGONAL
HPS	HIGH PRESSURE SODIUM
IISNS	INTERNALLY ILLUMINATED STREET NAME SIGN
ISL	INDUCTION SIGN LIGHTING
LED	LIGHT EMITTING DIODE
LMA	LUMINAIRE MAST ARM
LPS	LOW PRESSURE SODIUM
Ltg	LIGHTING
Lum	LUMINAIRE
M	METERED
MAT	MAST ARM MOUNTING TOP ATTACHMENT
MAS	MAST ARM MOUNTING SIDE ATTACHMENT
M/M	MULTIPLE TO MULTIPLE TRANSFORMER
Mtg	MOUNTING
MV	MERCURY VAPOR LIGHTING FIXTURE
MVDS	MICROWAVE VEHICLE DETECTION SYSTEM
N	NEUTRAL (GROUNDED CONDUCTOR)
NB	NEUTRAL BUS
NC	NORMALLY CLOSE
NO	NORMALLY OPEN
P	CIRCUIT BREAKER'S POLE
PB	PULL BOX
PBA	PUSH BUTTON ASSEMBLY
PEC	PHOTOELECTRIC CONTROL
Ped	PEDESTRIAN
PEU	PHOTOELECTRIC UNIT
PT	CONDUIT WITH PULL TAPE
RE	RELOCATED EQUIPMENT
RM	RAMP METERING
RWIS	ROADSIDE WEATHER INFORMATION SYSTEM
SB	SLIP BASE
SIC	SIGNAL INTERCONNECT CABLE
Sig	SIGNAL
SMA	SIGNAL MAST ARM
SNS	STREET NAME SIGN
SP	SERVICE POINT
TDC	TELEPHONE DEMARCATION CABINET
TMS	TRAFFIC MONITORING STATION
TOS	TRAFFIC OPERATIONS SYSTEM
Veh	VEHICLE
VIVDS	VIDEO IMAGE VEHICLE DETECTION SYSTEM
WIM	WEIGH-IN-MOTION
Xfmr	TRANSFORMER

SOFFIT AND WALL MOUNTED LUMINAIRES

PENDANT, 70 W HPS UNLESS OTHERWISE SPECIFIED

FLUSH, 70 W HPS UNLESS OTHERWISE SPECIFIED

WALL SURFACE, 70 W HPS UNLESS OTHERWISE SPECIFIED

EXISTING SOFFIT OR WALL LUMINAIRE TO REMAIN UNMODIFIED

EXISTING SOFFIT OR WALL LUMINAIRE TO BE MODIFIED AS SPECIFIED

NOTE:

Arrow indicates "street side" of luminaire.

COMMONLY USED SYMBOLS FOR UNITED STATES CUSTOMARY UNITS OF MEASUREMENT:

SYMBOL USED	DEFINITIONS
Ω	OHMS
min	MINUTE
s	SECOND
bps	BITS PER SECOND
Bps	BYTES PER SECOND
A	AMPERE
V	VOLT
V(dc)	VOLT (DIRECT CURRENT)
V(ac)	VOLT (ALTERNATING CURRENT)
FC	FOOT - CANDLE
W	WATTS
VA	VOLT-AMPERE
M	MEGA
k	KILO
m	MILLI
μ	MICRO
P	PICO
Hz	HERTZ

MISCELLANEOUS ELECTROLIERS

NEW	EXISTING	
		LUMINAIRE ON WOOD POLE
		NON-STANDARD ELECTROLIER (SEE PROJECT NOTES OR PROJECT PLANS)
		CITY ELECTROLIER
		ELECTROLIER FOUNDATION (FUTURE INSTALLATION)

NOTES:

1. HPS luminaires shall be 310 W HPS when installed on Type 21, 21D, 30, 31 and 32 Standards, unless otherwise specified. HPS luminaires shall be 200 W when installed on other type standards or poles, unless otherwise specified.
2. LED luminaires shall be 235 W when installed on Type 21, 21D, 30, 31 and 32 Standards, unless otherwise specified. LED luminaires shall be 165 W when installed on other type standards or poles, unless otherwise specified.
3. Luminaires shall be the cutoff type, ANSI Type III medium cutoff lighting distribution, unless otherwise specified.

STANDARD ELECTROLIER

NEW	EXISTING	STANDARD TYPE
		15
		15D
		15 STRUCTURE
		15D STRUCTURE
		21
		21D
		21 STRUCTURE
		21D STRUCTURE
		30
		31
		32

STATE OF CALIFORNIA
DEPARTMENT OF TRANSPORTATION

ELECTRICAL SYSTEMS (LEGEND AND ABBREVIATIONS)

NO SCALE

RSP ES-1A DATED JULY 19, 2013 SUPERSEDES STANDARD PLAN ES-1A DATED MAY 20, 2011 - PAGE 425 OF THE STANDARD PLANS BOOK DATED 2010.

REVISED STANDARD PLAN RSP ES-1A

2010 REVISED STANDARD PLAN RSP ES-1A

Dist	COUNTY	ROUTE	POST MILES TOTAL PROJECT	SHEET No.	TOTAL SHEETS
11	SD	805	0.9/1.1, 2.5/2.9	57	59

Theresa Gabriel
REGISTERED ELECTRICAL ENGINEER

July 19, 2013
PLANS APPROVAL DATE

REGISTERED PROFESSIONAL ENGINEER Theresa Aziz Gabriel No. E15129 Exp. 6-30-14 ELECTRICAL STATE OF CALIFORNIA

THE STATE OF CALIFORNIA OR ITS OFFICERS OR AGENTS SHALL NOT BE RESPONSIBLE FOR THE ACCURACY OR COMPLETENESS OF SCANNED COPIES OF THIS PLAN SHEET.

TO ACCOMPANY PLANS DATED 04-01-14

CONDUIT

NEW	EXISTING	
		LIGHTING CONDUIT, UNLESS OTHERWISE INDICATED OR NOTED
		TRAFFIC SIGNAL CONDUIT
C	c	COMMUNICATION CONDUIT
T	t	TELEPHONE CONDUIT
F	f	FIRE ALARM CONDUIT
FO	fo	FIBER OPTIC CONDUIT
		CONDUIT TERMINATION
R	r	CONDUIT RISER ATTACHED TO THE STRUCTURE OR SERVICE POLE

SERVICE EQUIPMENT

NEW	EXISTING	
OH	oh	OVERHEAD LINES
U	U	WOOD POLE, "U" INDICATES UTILITY OWNED
		POLE GUY WITH ANCHOR
		UTILITY TRANSFORMER - GROUND MOUNTED
III	III	SERVICE EQUIPMENT ENCLOSURE TYPE. DOOR INDICATES FRONT OF ENCLOSURE
T	t	TELEPHONE DEMARCATION CABINET

POLE-MOUNTED SERVICE DESIGNATION

TYPE H SERVICE, 28'-10" — TYPE OF INSTALLATION AND POLE HEIGHT ABOVE GRADE

FLASHING BEACON

NEW	EXISTING	
R	R	FLASHING BEACON (ONE VEHICLE SIGNAL HEAD WITH BACKPLATE AND VISOR) "R" INDICATES RED INDICATION, "Y" INDICATES YELLOW INDICATION
Y Y	Y Y	FLASHING BEACON WITH TYPE 15-FBS STANDARD AND A SIGN.
R R	R R	FLASHING BEACON WITH TYPES 9, 9A OR 9B SIGN UNLESS OTHERWISE SPECIFIED OR INDICATED

SIGNAL EQUIPMENT

NEW	EXISTING	
C	C	PEDESTRIAN SIGNAL HEAD "C" INDICATES COUNTDOWN PEDESTRIAN HEAD
		PUSH BUTTON ASSEMBLY POST
		PEDESTRIAN BARRICADE
		VEHICLE SIGNAL HEAD (WITH BACKPLATE AND 3-SECTIONS: RED, YELLOW AND GREEN)
		VEHICLE SIGNAL HEAD WITH ANGLE VISOR
PV	PV	MODIFICATIONS OF BASIC SYMBOL: "L" INDICATES ALL NON-ARROW SECTIONS LOUVERED "LG" INDICATES LOUVERED GREEN SECTION ONLY "PV" INDICATES ALL 12" SECTIONS PROGRAMMED VISIBILITY "8" INDICATES ALL 8" SECTIONS (ONLY WHEN SPECIFIED)
		VEHICLE SIGNAL HEAD CONSISTING OF RED, YELLOW AND GREEN LEFT ARROW SECTIONS
		VEHICLE SIGNAL HEAD CONSISTING OF RED AND YELLOW SECTIONS WITH AN UP GREEN ARROW SECTION
		VEHICLE SIGNAL HEAD (5 SECTION) CONSISTING OF RED, YELLOW AND GREEN SECTIONS WITH YELLOW AND GREEN RIGHT ARROW SECTIONS
		TYPE 15TS STANDARD WITH VEHICLE SIGNAL HEAD AND LUMINAIRE
		TYPE 21TS STANDARD WITH VEHICLE SIGNAL HEAD AND LUMINAIRE
		STANDARD WITH LUMINAIRE AND SIGNAL MAST ARMS AND ATTACHED VEHICLE SIGNAL HEADS
		TYPE 1 STANDARD WITH ATTACHED VEHICLE SIGNAL HEADS
		STANDARD WITH A SIGNAL MAST ARM, ATTACHED VEHICLE SIGNAL HEADS AND INTERNALLY ILLUMINATED STREET NAME SIGN
		CONTROLLER ASSEMBLY. DOOR INDICATES FRONT OF CABINET

SIGNAL EQUIPMENT Cont

NEW	EXISTING	
		GUARD POST
		TYPE 1 STANDARD WITH RAMP METERING SIGN
		OPTICAL DETECTOR FOR THE EMERGENCY VEHICLE DETECTION SYSTEM

NOTES:

1. All signal sections shall be 12" unless shown otherwise.
2. Signal heads shall be provided with backplates unless shown otherwise.

ILLUMINATED OVERHEAD SIGN

NEW	EXISTING	
		SINGLE POST, SINGLE ILLUMINATED SIGN, BALANCED BUTTERFLY
		SINGLE POST, DOUBLE ILLUMINATED SIGN, BALANCED BUTTERFLY
		SINGLE POST, SINGLE ILLUMINATED SIGN, FULL CANTILEVER
		DOUBLE POST, SINGLE ILLUMINATED SIGN
		SINGLE ILLUMINATED SIGN MOUNTED ON STRUCTURE
		DOUBLE POST, SINGLE ILLUMINATED SIGN WITH ELECTROLIER

STATE OF CALIFORNIA
DEPARTMENT OF TRANSPORTATION

ELECTRICAL SYSTEMS (LEGEND AND ABBREVIATIONS)

NO SCALE

RSP ES-1B DATED JULY 19, 2013 SUPERSEDES STANDARD PLAN ES-1B DATED MAY 20, 2011 - PAGE 426 OF THE STANDARD PLANS BOOK DATED 2010.

REVISED STANDARD PLAN RSP ES-1B

2010 REVISED STANDARD PLAN RSP ES-1B

7-15-13

Dist	COUNTY	ROUTE	POST MILES TOTAL PROJECT	SHEET No.	TOTAL SHEETS
11	SD	805	0.9/1.1, 2.5/2.9	58	59

Theresa Gabriel
REGISTERED ELECTRICAL ENGINEER

July 19, 2013
PLANS APPROVAL DATE

REGISTERED PROFESSIONAL ENGINEER
Theresa Aziz Gabriel
No. E15129
Exp. 6-30-14
ELECTRICAL
STATE OF CALIFORNIA

THE STATE OF CALIFORNIA OR ITS OFFICERS OR AGENTS SHALL NOT BE RESPONSIBLE FOR THE ACCURACY OR COMPLETENESS OF SCANNED COPIES OF THIS PLAN SHEET.

TO ACCOMPANY PLANS DATED 04-01-14

EQUIPMENT IDENTIFICATION

ILLUMINATED SIGN IDENTIFICATION NUMBER:

SIGN No. 12345
10 ISL SCI 1.0

- SIGN NUMBER - PLACE ON POST OR STRUCTURE
- TRANSFORMER RATING (kVA)
- LIGHTING CONTROL TYPE
- NUMBER AND TYPE OF FIXTURES

DO NOT PLACE ON STANDARD OR STRUCTURE

ELECTROLIER OR EQUIPMENT IDENTIFICATION NUMBER:

12345 - 15'-0"

- MAST ARM LENGTH, IF SHOWN. DO NOT PLACE ON STANDARD OR STRUCTURE
- EQUIPMENT NUMBER - PLACE ON STANDARD OR STRUCTURE. EXISTING EQUIPMENT NUMBERS ARE SHOWN IN PARENTHESIS

CONDUIT AND CONDUCTOR IDENTIFICATION:

1½"C, 2#10, 15#14, 2 DLC, 12P#18

- PAIR
- NUMBER AND SIZE OF CONDUCTORS AND CABLES
- SIZE OF CONDUIT IN INCHES

ø1, ø2, ø2P, etc.	TRAFFIC PHASE IDENTIFICATION FOR SIGNAL FACES, DETECTORS AND PHASE DIAGRAMS
1 2 3	LEGEND NUMBERS
A B C	EQUIPMENT, SIGNAL POLES, INSTALLATION OR ITEMS
1 2 3	CONDUIT RUN NUMBERS

SIGNAL AND LIGHTING STANDARD (TYPICAL DESIGNATION):

19A - 3 - 100

- WIND VELOCITY = 100 mph
- CASE 3 ARM LOADING
- STANDARD TYPE
- STANDARD PLAN SHEET NUMBER
- DETAIL, NUMBER, SECTION, TYPE OR ELEVATION

MISCELLANEOUS EQUIPMENT

NEW	EXISTING	
CMS	cms	CHANGEABLE MESSAGE SIGN
		CLOSED CIRCUIT TELEVISION CAMERA
		HIGHWAY ADVISORY RADIO POLE AND ANTENNA
EMS	ems	EXTINGUISHABLE MESSAGE SIGN
M V	m v	DETECTION DEVICE M = MICROWAVE SENSOR V = VIDEO IMAGE SENSOR

WIRING DIAGRAM LEGEND

----	EXTERNAL CONDUCTOR
———	CONDUCTOR OR BUS
	TIE POINT
	CONTACTOR COIL
	CONTACTOR, NO CONTACT
	TERMINAL BLOCKS
	CONTACTOR, NC CONTACT
	ENCLOSURE BOND
	GROUNDING ELECTRODE
	CIRCUIT BREAKER
	RECEPTACLE

PULL BOXES

NEW	EXISTING	
		PULL BOX, No. 5 UNLESS OTHERWISE INDICATED OR NOTED
3	9A(21)	PULL BOX, ADDITIONAL DESIGNATIONS OR DESCRIPTIONS

3 No. 3½ PULL BOX
5 No. 5 PULL BOX
6 No. 6 PULL BOX
7 No. 7 (CEILING PULL BOX)
8 No. 8 (PENDANT SOFFIT PULL BOX)
9 No. 9 PULL BOX
9A No. 9A PULL BOX

(C) COMMUNICATIONS PULL BOX
(E) PULL BOX WITH EXTENSION
(S) SPRINKLER CONTROL PULL BOX
(21) ANCHOR BOLTS AND CONDUIT FOR FUTURE INSTALLATION OF TYPE 21 STANDARD
(T) TRAFFIC PULL BOX

VEHICLE DETECTORS

5 J 9 U

- VEHICLE DETECTOR DESIGNATION
- U = UPPER
  L = LOWER
- SLOT NUMBER IN INPUT FILE
- INPUT FILE (I OR J)
- PHASE

NEW	EXISTING	
		TYPE A DETECTOR LOOP. OUTLINE OF SAWCUT SHOWN
		TYPE B DETECTOR LOOP. OUTLINE OF SAWCUT SHOWN
		TYPE C DETECTOR LOOP. OUTLINE OF SAWCUT SHOWN
		TYPE D DETECTOR LOOP. OUTLINE OF SAWCUT SHOWN
		TYPE E DETECTOR LOOP. OUTLINE OF SAWCUT SHOWN
		TYPE Q DETECTOR LOOP. OUTLINE OF SAWCUT SHOWN
		MAGNETIC DETECTOR
DH	dh	DETECTOR HANDHOLE
		MICROWAVE OR VIDEO DETECTION ZONE

STATE OF CALIFORNIA
DEPARTMENT OF TRANSPORTATION

ELECTRICAL SYSTEMS (LEGEND AND ABBREVIATIONS)

NO SCALE

RSP ES-1C DATED JULY 19, 2013 SUPERSEDES STANDARD PLAN ES-1C DATED MAY 20, 2011 - PAGE 427 OF THE STANDARD PLANS BOOK DATED 2010.

REVISED STANDARD PLAN RSP ES-1C

2010 REVISED STANDARD PLAN RSP ES-1C

7-11-13

DIST	COUNTY	ROUTE	POST MILES TOTAL PROJECT	SHEET NO.	TOTAL SHEETS
11	SD	805	0.9/1.1, 2.5/2.9	59	59

Theresa Gabriel
REGISTERED ELECTRICAL ENGINEER

July 19, 2013
PLANS APPROVAL DATE

REGISTERED PROFESSIONAL ENGINEER Theresa Aziz Gabriel No. E15129 Exp. 6-30-14 ELECTRICAL STATE OF CALIFORNIA

THE STATE OF CALIFORNIA OR ITS OFFICERS OR AGENTS SHALL NOT BE RESPONSIBLE FOR THE ACCURACY OR COMPLETENESS OF SCANNED COPIES OF THIS PLAN SHEET.

TO ACCOMPANY PLANS DATED 04-01-14

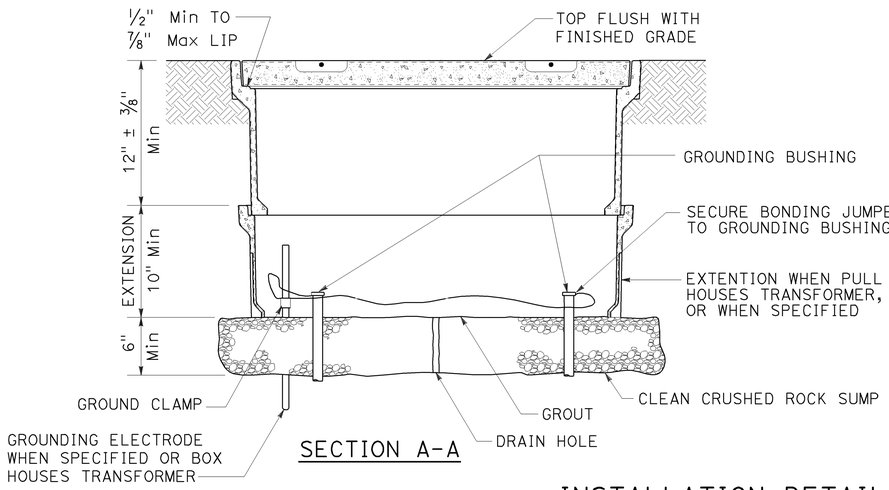

SECTION A-A

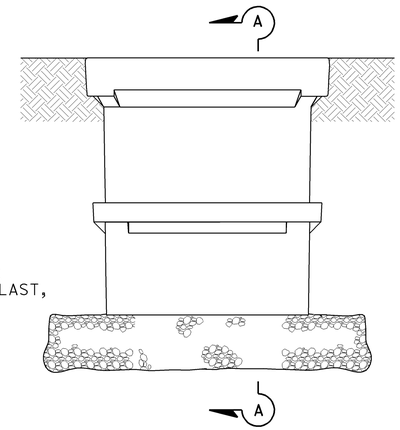

SIDE VIEW

INSTALLATION DETAILS

DETAIL A

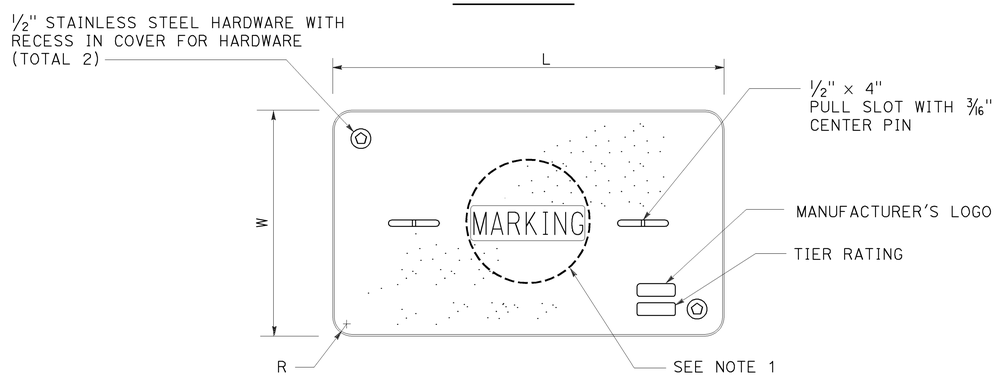

COVER TOP VIEW

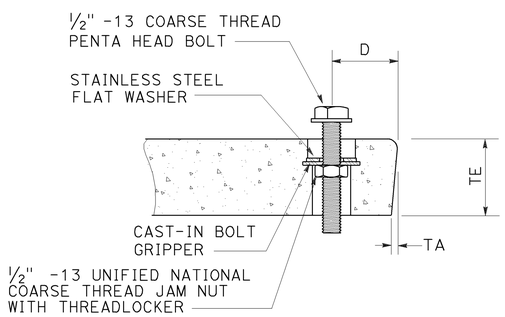

TYPICAL COVER CAPTIVE BOLT

OR SIMILAR

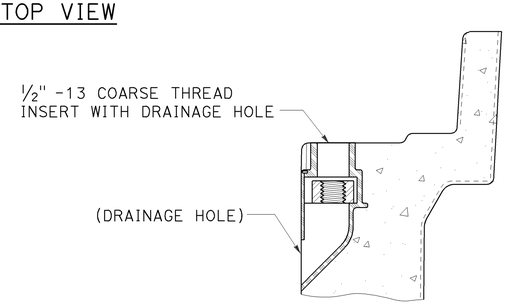

TYPICAL THREADED INSERT

OR SIMILAR

DIMENSION TABLE										
PULL BOX	PULL BOX			COVER						
	MINIMUM DEPTH BOX	MINIMUM DEPTH EXTENSION	MAXIMUM WEIGHT	L	W	R	TE	TA	D	MAXIMUM WEIGHT
No. 3 1/2	12"	N/A	40 lb	1' - 3 3/8"	10 1/8"	1 3/8"	2"	1/8"	1 3/4"	30 lb
No. 5	12"	10"	55 lb	1' - 11 1/4"	1' - 1 3/4"	1 3/8"	2"	1/8"	1 3/4"	60 lb
No. 6	12"	10"	70 lb	2' - 6 1/2"	1' - 5 1/2"	1 3/8"	2"	1/8"	2"	85 lb

NOTES:

1. Pull box covers shall be marked as follows: "SERVICE" Service circuits between service point and service disconnect; "SPRINKLER-CONTROL" sprinkler control circuits, 50 V or less; "CALTRANS" on all pull boxes, except pull boxes marked "SPRINKLER-CONTROL"; and "TELEPHONE" Telephone service;
   - A) No. 3 1/2 pull box.
     - 1) "SIGNAL" - Traffic signal circuits with or without lighting or sign lighting circuits.
     - 2) "LIGHTING" - Lighting or sign lighting circuits where voltage is under 600 V.
   - B) No. 5, 6, 9 or 9A pull box.
     - 1) "TRAFFIC SIGNAL" - Traffic signal circuits with or without lighting or sign lighting circuits.
     - 2) "LIGHTING" - Lighting or sign lighting circuits where voltage is under 600 V.
     - 3) "LIGHTING-HIGH VOLTAGE" - Lighting or sign lighting circuits where voltage is above 600 V.
     - 4) "IRRIGATION" - Circuits to irrigation controller 120 V or more.
     - 5) "RAMP METER" - Ramp meter circuits.
     - 6) "COUNT STATION" - Count or speed monitor circuits.
     - 7) "COMMUNICATIONS" - Communication circuits.
     - 8) "TOS COMMUNICATIONS" - TOS communication line.
     - 9) "TOS POWER" - TOS power.
     - 10) "TDC POWER" - Telephone demarcation cabinet power.
     - 11) "CCTV" - Closed circuit television circuits.
     - 12) "TMS" - Traffic monitoring station circuits.
     - 13) "CMS" - Changeable message sign circuits.
     - 14) "HAR" - Highway advisory radio circuits.
     - 15) "BOOSTER PUMP" - Booster pump circuit.
2. The nominal dimensions of the opening in which the cover sets shall be the same as the cover dimensions except the length and width dimensions shall be 1/8" greater.
3. Covers and boxes shall be interchangeable with California standard male and female gages. When interchanged with a standard male or female gage, the top surfaces shall be flush within 1/8". Top outside radius of covers and pull boxes shall have a 1/8" radius.
4. Pull box extension may be another pull box as long as the bottom edge of the pull box can fit into the cover opening.
5. All dimensions for the cover for non-traffic pull box are nominal values.

STATE OF CALIFORNIA
DEPARTMENT OF TRANSPORTATION

ELECTRICAL SYSTEMS (NON-TRAFFIC PULL BOX)

NO SCALE

RSP ES-8A DATED JULY 19, 2013 SUPERSEDES RSP ES-8A DATED JANUARY 20, 2012 THAT SUPPLEMENTS THE STANDARD PLANS BOOK DATED 2010.

REVISED STANDARD PLAN RSP ES-8A

2010 REVISED STANDARD PLAN RSP ES-8A

7-15-13