Dist	COUNTY	ROUTE	POST MILES TOTAL PROJECT	SHEET No.	TOTAL SHEETS
11	SD	94	13.8/14.4	1	55

ACNH-P094(058)E

STATE OF CALIFORNIA
DEPARTMENT OF TRANSPORTATION

PROJECT PLANS FOR CONSTRUCTION ON
STATE HIGHWAY
IN SAN DIEGO COUNTY
NEAR LEMON GROVE
FROM VIA MERCADO
TO 0.1 MILE EAST OF JAMACHA BOULEVARD

TO BE SUPPLEMENTED BY STANDARD PLANS DATED MAY 2006

INDEX OF PLANS

SHEET NO.	DESCRIPTION
1	TITLE AND LOCATION MAP
2-4	TYPICAL CROSS SECTIONS
5	PROJECT CONTROL
6-12	LAYOUT
13-14	CONSTRUCTION DETAILS
15-23	DRAINAGE PLAN, PROFILES, DETAILS, AND QUANTITIES
24	CONSTRUCTION AREA SIGNS
25-31	STAGE CONSTRUCTION PLAN AND QUANTITIES
32-37	PAVEMENT DELINEATION PLAN AND QUANTITIES
38-39	SUMMARY OF QUANTITIES
40-55	REVISED AND NEW STANDARD PLANS

THE STANDARD PLANS LIST APPLICABLE TO THIS CONTRACT IS INCLUDED IN THE NOTICE TO BIDDERS AND SPECIAL PROVISIONS BOOK.

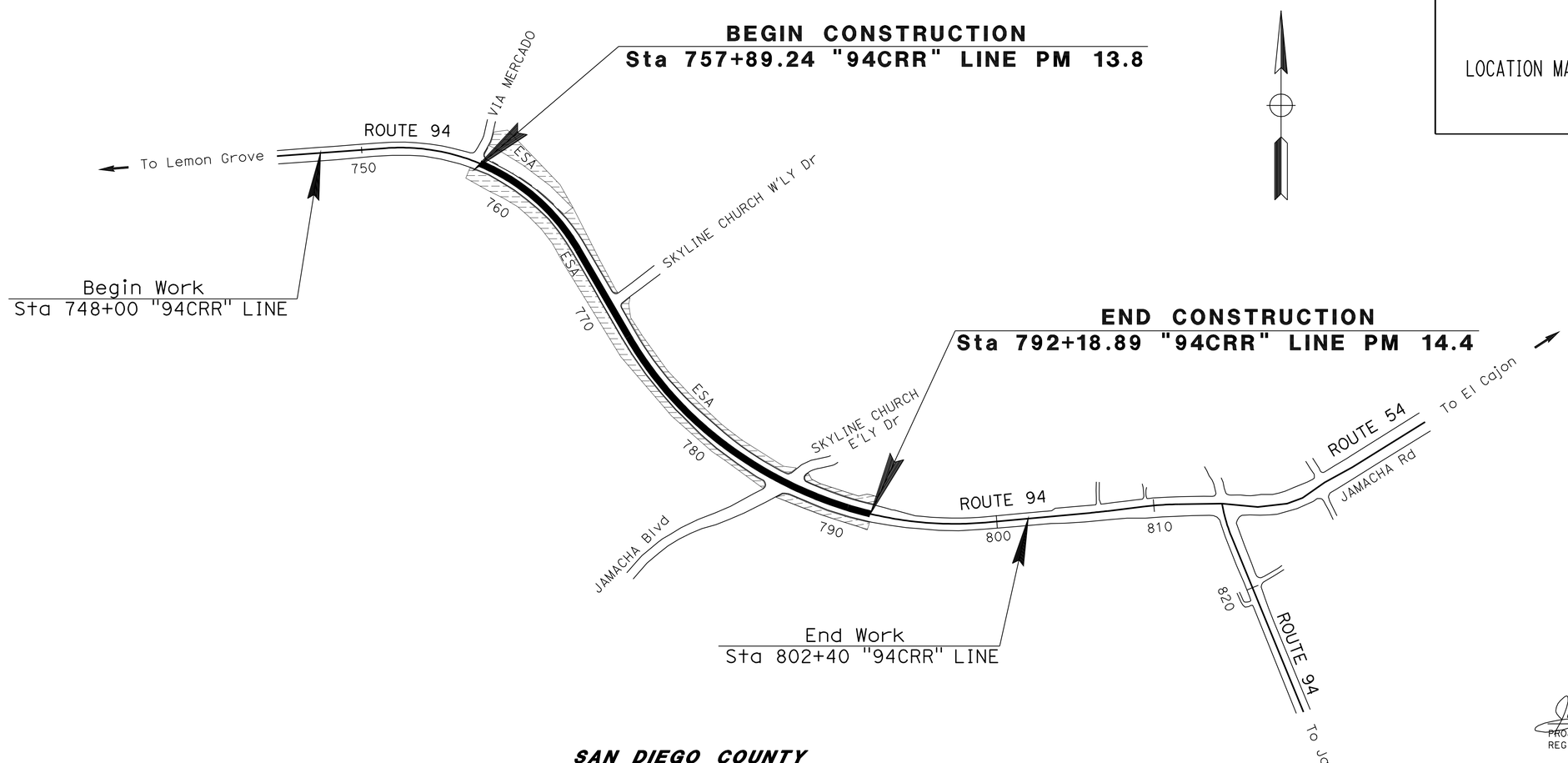

SAN DIEGO COUNTY

ESA - ENVIRONMENTALLY SENSITIVE AREA

THE CONTRACTOR SHALL POSSESS THE CLASS (OR CLASSES) OF LICENSE AS SPECIFIED IN THE "NOTICE TO BIDDERS."

NO SCALE

PROJECT MANAGER: RICHARD ESTRADA

DESIGN ENGINEER: JOSE LUIS ROBLES

12-27-11
PROJECT ENGINEER REGISTERED CIVIL ENGINEER — DATE

REGISTERED PROFESSIONAL ENGINEER — JOSE L. ROBLES No. C 64402 Exp. 06-30-13 CIVIL — STATE OF CALIFORNIA

March 26, 2012
PLANS APPROVAL DATE

THE STATE OF CALIFORNIA OR ITS OFFICERS OR AGENTS SHALL NOT BE RESPONSIBLE FOR THE ACCURACY OR COMPLETENESS OF SCANNED COPIES OF THIS PLAN SHEET.

CONTRACT No.	11-298004
PROJECT ID	1100000415

LAST REVISION 01-09-12 — DATE PLOTTED => 23-MAR-2012 TIME PLOTTED => 10:11

Dist	COUNTY	ROUTE	POST MILES TOTAL PROJECT	SHEET No.	TOTAL SHEETS
11	SD	94	13.8/14.4	2	55

REGISTERED CIVIL ENGINEER 12-27-11 DATE

03-26-12
PLANS APPROVAL DATE

REGISTERED PROFESSIONAL ENGINEER JOSE L. ROBLES No. C 64402 Exp. 06-30-13 CIVIL STATE OF CALIFORNIA

THE STATE OF CALIFORNIA OR ITS OFFICERS OR AGENTS SHALL NOT BE RESPONSIBLE FOR THE ACCURACY OR COMPLETENESS OF SCANNED COPIES OF THIS PLAN SHEET.

NOTE:

1. DIMENSIONS OF THE PAVEMENT STRUCTURES (STRUCTURAL SECTIONS) ARE SUBJECT TO TOLERANCES SPECIFIED IN THE STANDARD SPECIFICATIONS.

LEGEND

S/C - SAWCUT

ESA - ENVIRONMENTALLY SENSITIVE AREA

TFESA - TEMPORARY FENCE (TYPE ESA)

DESIGN DESIGNATION (ROUTE 94)

2008 ADT = 59,036	D = 57%
2030 ADT = 71,000	T = 4.6%
DHV = 5,050	V = N/A

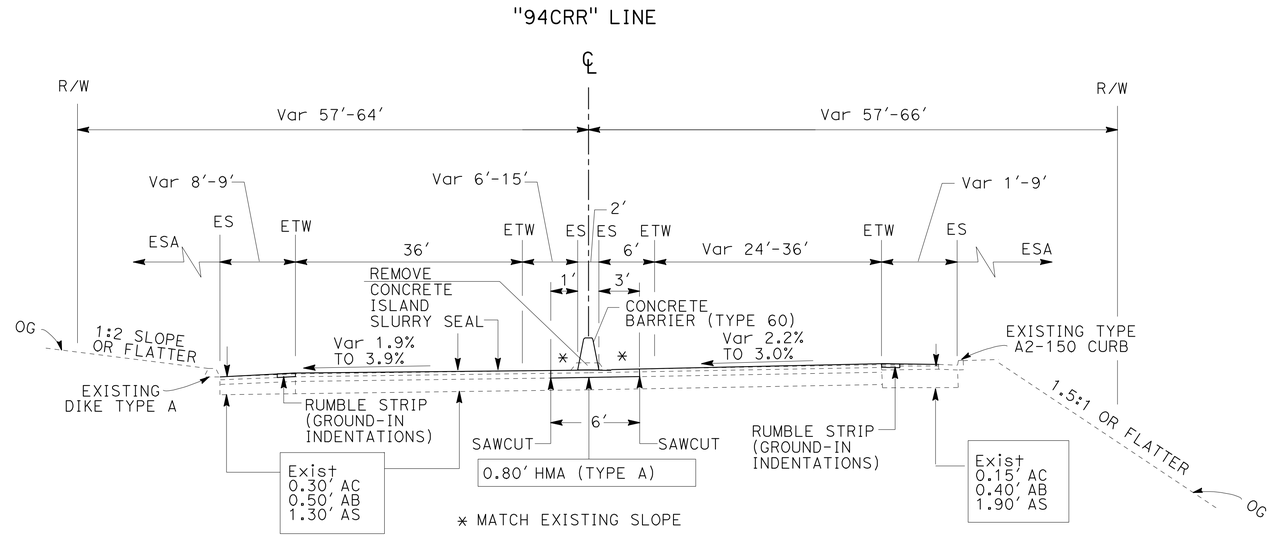

ROUTE 94

Sta 768+38.00 TO Sta 778+85.00 "94CRR" LINE

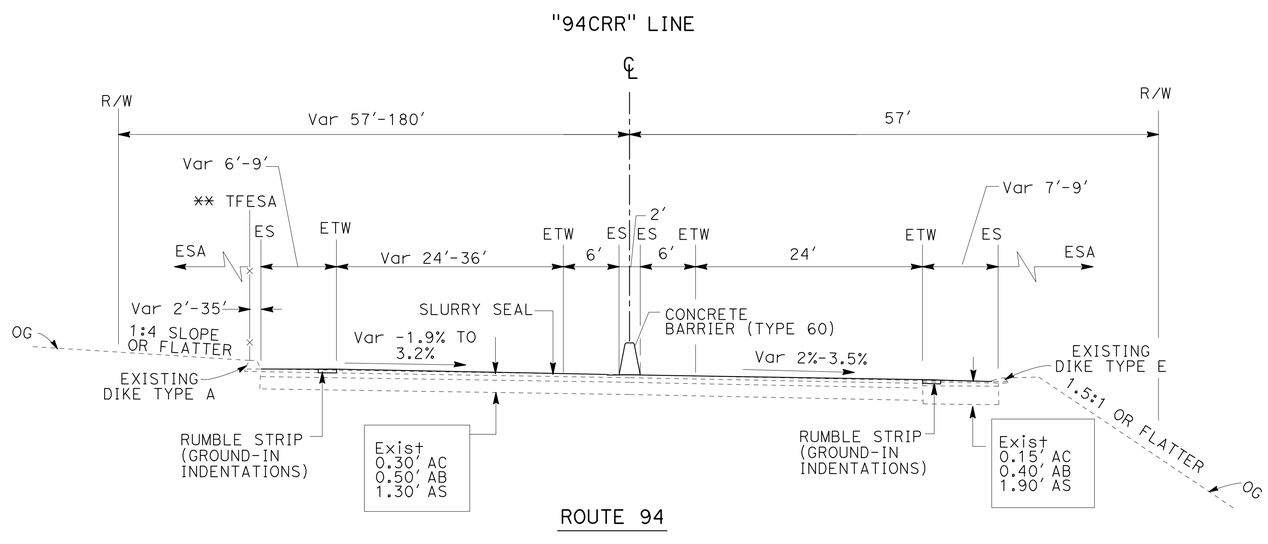

ROUTE 94

Sta 757+89.24 TO Sta 768+38.00 "94CRR" LINE

** TFESA Sta 757+69.57 TO Sta 761+00.00

TYPICAL CROSS SECTIONS

NO SCALE

X-1

STATE OF CALIFORNIA - DEPARTMENT OF TRANSPORTATION
Caltrans PROJECT DEVELOPMENT TRAFFIC

FUNCTIONAL SUPERVISOR: RICHARD ESTRADA

CALCULATED-DESIGNED BY: HUNG TRAN
CHECKED BY: JOSE L. ROBLES

REVISED BY | DATE REVISED

LAST REVISION 01-09-12 | DATE PLOTTED => 23-MAR-2012 | TIME PLOTTED => 10:11

Dist	COUNTY	ROUTE	POST MILES TOTAL PROJECT	SHEET No.	TOTAL SHEETS
11	SD	94	13.8/14.4	3	55

REGISTERED CIVIL ENGINEER 12-27-11 DATE

03-26-12
PLANS APPROVAL DATE

REGISTERED PROFESSIONAL ENGINEER JOSE L. ROBLES No. C 64402 Exp. 06-30-13 CIVIL STATE OF CALIFORNIA

THE STATE OF CALIFORNIA OR ITS OFFICERS OR AGENTS SHALL NOT BE RESPONSIBLE FOR THE ACCURACY OR COMPLETENESS OF SCANNED COPIES OF THIS PLAN SHEET.

"94CRR" LINE

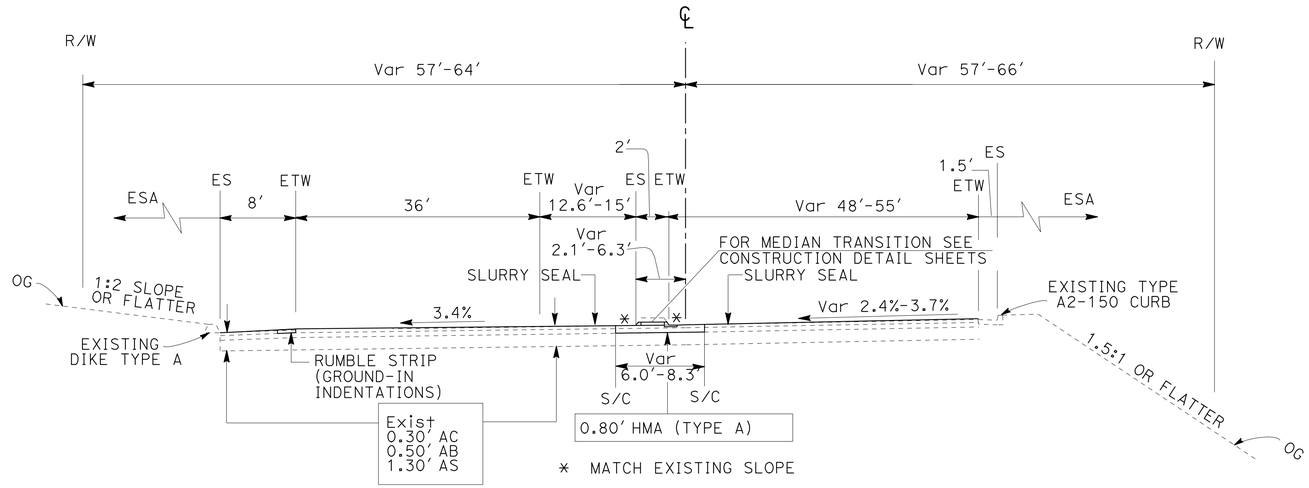

ROUTE 94

Sta 779+11.00 TO Sta 779+39.10 "94CRR" LINE

"94CRR" LINE

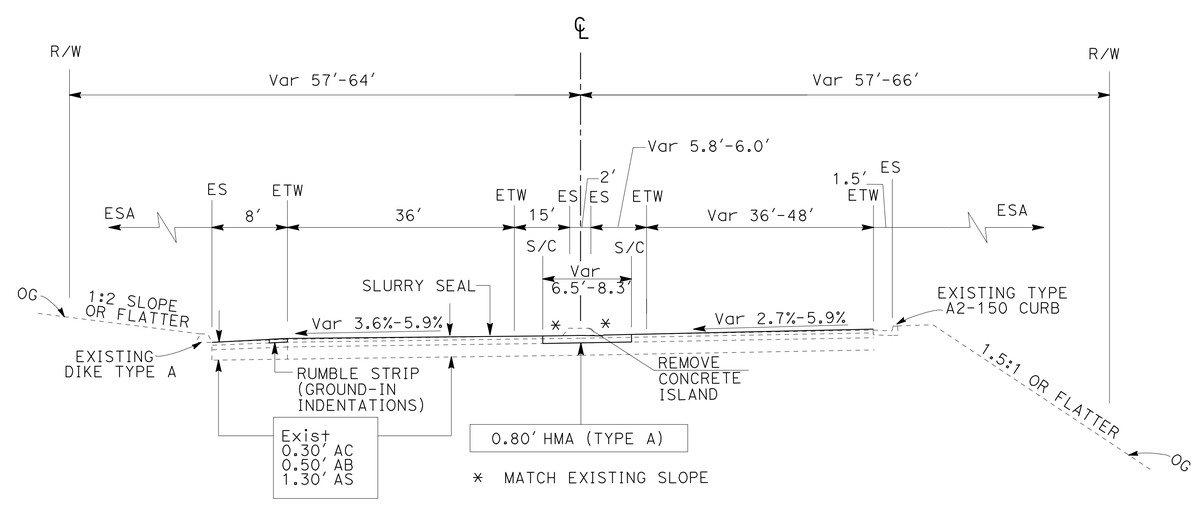

ROUTE 94

Sta 778+85.00 TO Sta 779+11.00 "94CRR" LINE

TYPICAL CROSS SECTIONS

NO SCALE

X-2

STATE OF CALIFORNIA - DEPARTMENT OF TRANSPORTATION
Caltrans PROJECT DEVELOPMENT
TRAFFIC

FUNCTIONAL SUPERVISOR: RICHARD ESTRADA
CALCULATED-DESIGNED BY: HUNG TRAN
CHECKED BY: JOSE L. ROBLES
REVISED BY
DATE REVISED

LAST REVISION 01-10-12
DATE PLOTTED => 23-MAR-2012
TIME PLOTTED => 10:12

Dist	COUNTY	ROUTE	POST MILES TOTAL PROJECT	SHEET No.	TOTAL SHEETS
11	SD	94	13.8/14.4	4	55

REGISTERED CIVIL ENGINEER 12-27-11 DATE

03-26-12
PLANS APPROVAL DATE

REGISTERED PROFESSIONAL ENGINEER JOSE L. ROBLES No. C 64402 Exp. 06-30-13 CIVIL STATE OF CALIFORNIA

THE STATE OF CALIFORNIA OR ITS OFFICERS OR AGENTS SHALL NOT BE RESPONSIBLE FOR THE ACCURACY OR COMPLETENESS OF SCANNED COPIES OF THIS PLAN SHEET.

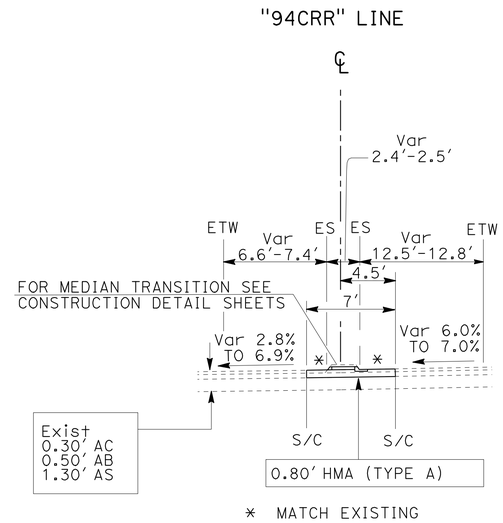

ROUTE 94

Sta 791+90.03 TO Sta 792+18.20 "94CRR" LINE

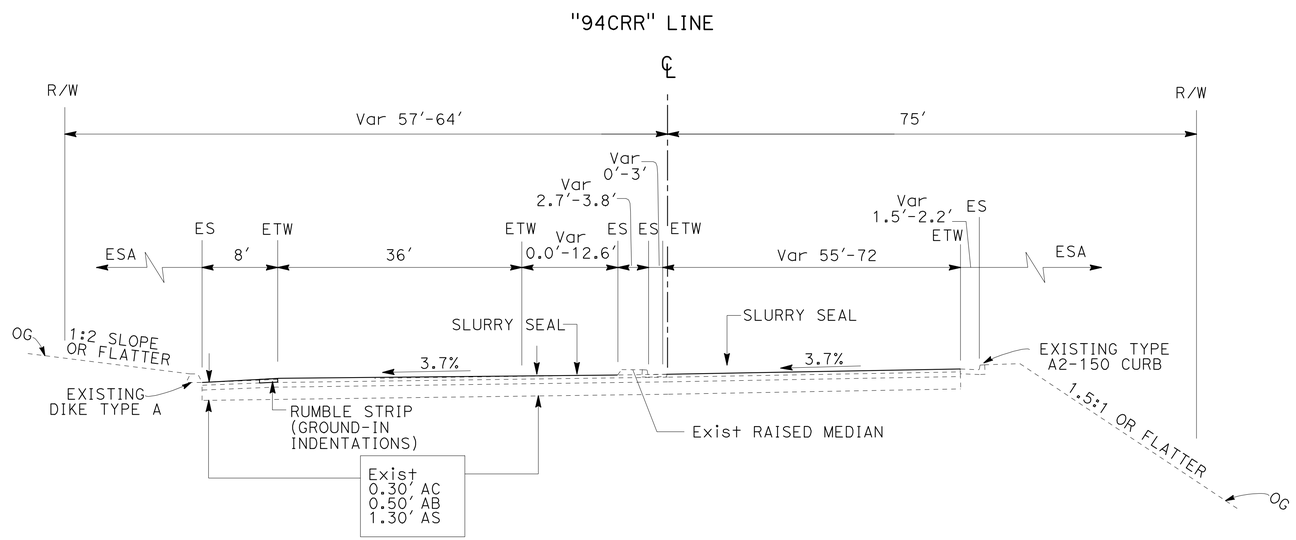

ROUTE 94

Sta 779+39.10 TO Sta 785+85.75 "94CRR" LINE

TYPICAL CROSS SECTIONS

NO SCALE

X-3

STATE OF CALIFORNIA - DEPARTMENT OF TRANSPORTATION
Caltrans PROJECT DEVELOPMENT
TRAFFIC

FUNCTIONAL SUPERVISOR: RICHARD ESTRADA
CALCULATED-DESIGNED BY: HUNG TRAN
CHECKED BY: JOSE L. ROBLES
REVISED BY
DATE REVISED

LAST REVISION 01-10-12
DATE PLOTTED => 23-MAR-2012
TIME PLOTTED => 10:12

Dist	COUNTY	ROUTE	POST MILES TOTAL PROJECT	SHEET No.	TOTAL SHEETS
11	SD	94	13.8/14.4	5	55

PROFESSIONAL LAND SURVEYOR DATE 01-03-12

PLANS APPROVAL DATE 03-26-12

PROFESSIONAL LAND SURVEYOR MARK D. PHELAN L.S.7111 EXP:12-31-12 STATE OF CALIFORNIA

THE STATE OF CALIFORNIA OR ITS OFFICERS OR AGENTS SHALL NOT BE RESPONSIBLE FOR THE ACCURACY OR COMPLETENESS OF SCANNED COPIES OF THIS PLAN SHEET.

NOTES:

CONTACT DISTRICT 11'S LAND SURVEY DIVISION, PHONE (858)467-4305, FOR ADDITIONAL INFORMATION OR QUERIES REGARDING THIS SURVEY PROJECT CONTROL.

BASIS OF BEARINGS AND COORDINATES

FOR THIS PROJECT IS THE CALIFORNIA COORDINATE SYSTEM OF 1983, HPGN EPOCH ADJUSTMENT [CCS 83 (1991.35)], ZONE 6. 3RD ORDER PROJECT CONTROL STATIONS WERE ESTABLISHED IN JUNE 2009 ACCORDING TO CRITERIA SET FORTH IN THE FEDERAL GEODETIC CONTROL SUBCOMMITTEE'S "GEOMETRIC GEODETIC ACCURACY STANDARDS AND SPECIFICATIONS FOR USING GPS RELATIVE POSITIONING TECHNIQUES" REPRINTED AUGUST 1, 1989.

THIS GPS FAST STATIC SURVEY WAS CONSTRAINED TO THE FOLLOWING HPGN STATIONS "94-13.4 L" & "94-16.8".

BASIS OF ELEVATIONS

FOR THIS PROJECT IS THE NORTH AMERICAN VERTICAL DATUM OF 1988 (NAVD88). ELEVATIONS WERE ESTABLISHED BY TRIGONOMETRIC LEVELS CONSTRAINING TO STATION "94 586 L".

IN THE EVENT GPS MACHINE CONTROL/GUIDANCE IS USED FOR THIS PROJECT, THE CONTRACTOR SHALL CONTACT OR MEET WITH DISTRICT 11 LAND SURVEY DIVISION TO OBTAIN THE CONTROL NECESSARY TO ESTABLISH A PROJECT CALIBRATION COMPATIBLE FOR ALL USERS.

ABBREVIATIONS:

CADT	CALIFORNIA DEPARTMENT OF TRANSPORTATION
IP	IRON PIPE
PK	PARKER-KALON NAIL

LEGEND:

(2) 2ND ORDER STATION

(3) 3RD ORDER STATION

CONTROL FOR DESIGN AND CONSTRUCTION

STATION DESIGNATION	ORDER	NORTHING	EASTING	ELEVATION	DESCRIPTION
94 586 L	3RD	1,851,850.09	6,344,090.84	524.33	2¼" CADT BRASS DISK IN 1½" IP
94-13.4 L	2ND	1,851,651.34	6,342,088.72	580.13	2¼" CADT BRASS DISK IN BRIDGE DECK
94-13.82 R	3RD	1,851,309.66	6,344,526.68	498.09	2¼" CADT BRASS DISK IN DRAIN
94 14.1 R	3RD	1,850,751.30	6,344,856.12	476.43	PK & WASHER IN DRAIN STRUCTURE
94 14.2 R	3RD	1,850,209.77	6,345,236.07	463.34	PK & WASHER IN TOP OF CURB
94 14.3 R	3RD	1,849,734.76	6,345,785.65	445.11	PK & WASHER IN SIDEWALK
94 14.4 R	3RD	1,849,497.89	6,346,374.00	421.72	PK & WASHER IN TOP OF CURB
94-16.8	2ND	1,844,333.77	6,356,308.15	494.84	2¼" CADT BRASS DISK IN 2" IP

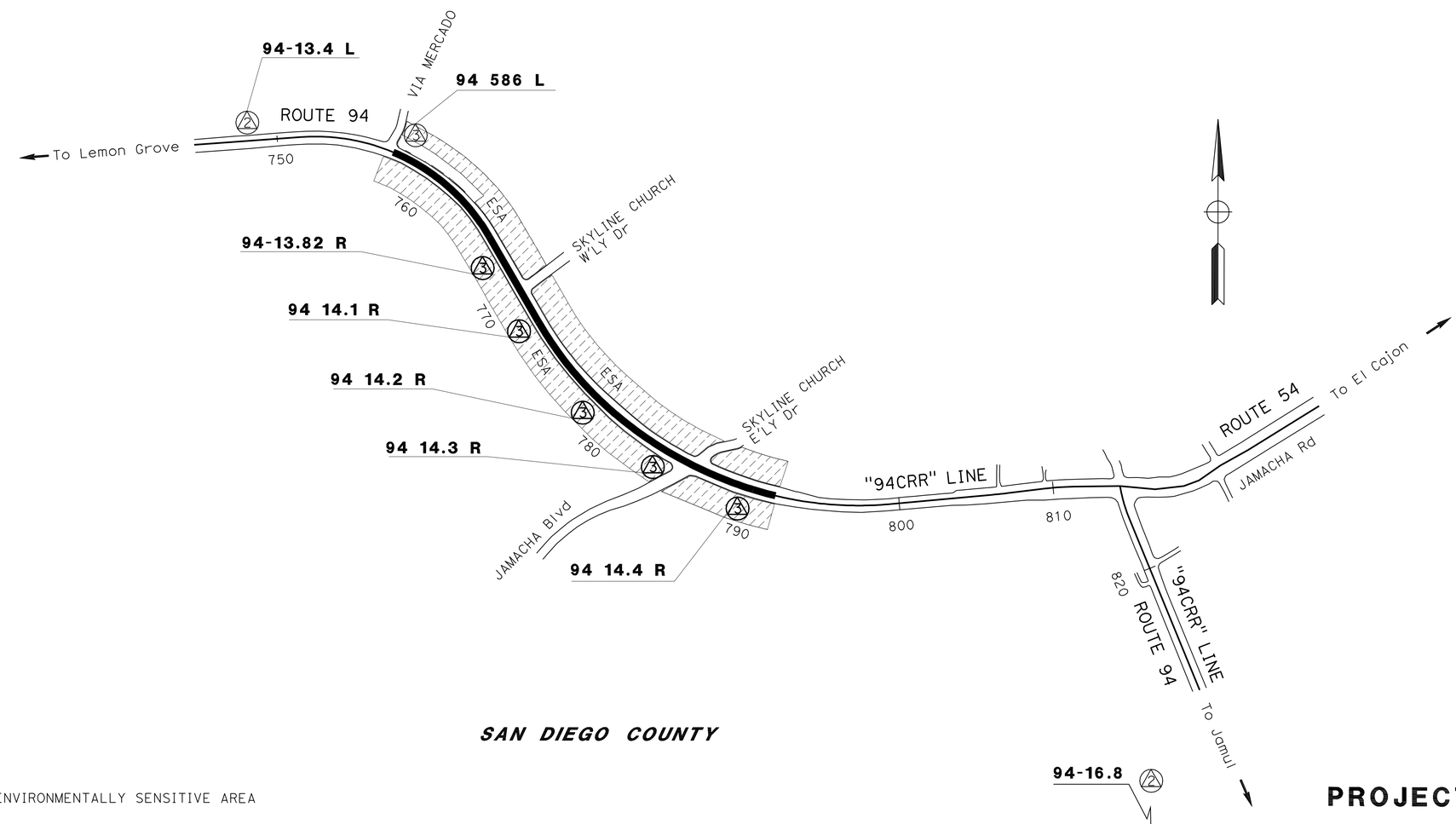

SAN DIEGO COUNTY

ESA - ENVIRONMENTALLY SENSITIVE AREA

APPROVED FOR PROJECT CONTROL INFORMATION ONLY

PROJECT CONTROL

NO SCALE

PC-1

STATE OF CALIFORNIA - DEPARTMENT OF TRANSPORTATION
Caltrans LAND SURVEYS DIVISION

FUNCTIONAL SUPERVISOR: BRUCE URQUHART

CALCULATED-DESIGNED BY: MARK PHELAN
CHECKED BY: NED SALMAN

REVISED BY | DATE REVISED

LAST REVISION 01-10-12 | DATE PLOTTED => 23-MAR-2012 | TIME PLOTTED => 10:12

Dist	COUNTY	ROUTE	POST MILES TOTAL PROJECT	SHEET No.	TOTAL SHEETS
11	SD	94	13.8/14.4	6	55

REGISTERED CIVIL ENGINEER DATE 12-27-11

03-26-12
PLANS APPROVAL DATE

REGISTERED PROFESSIONAL ENGINEER JOSE L. ROBLES No. C 64402 Exp. 06-30-13 CIVIL STATE OF CALIFORNIA

THE STATE OF CALIFORNIA OR ITS OFFICERS OR AGENTS SHALL NOT BE RESPONSIBLE FOR THE ACCURACY OR COMPLETENESS OF SCANNED COPIES OF THIS PLAN SHEET.

NOTES:

1. FOR ACCURATE RIGHT OF WAY DATA, CONTACT RIGHT OF WAY ENGINEERING AT THE DISTRICT OFFICE.
2. LOCATION OF UTILITY FACILITIES SHOWN ON THESE PLANS WERE OBTAINED FROM OWNERS RECORDS AND/OR FROM STATE SURVEYS.
3. FOR CURB RAMP IMPROVEMENTS, SEE CONSTRUCTION DETAILS SHEET.

CURVE TABLE

No.	R	△	T	L
1	1300.05′	39°04′51″	461.40′	886.75′

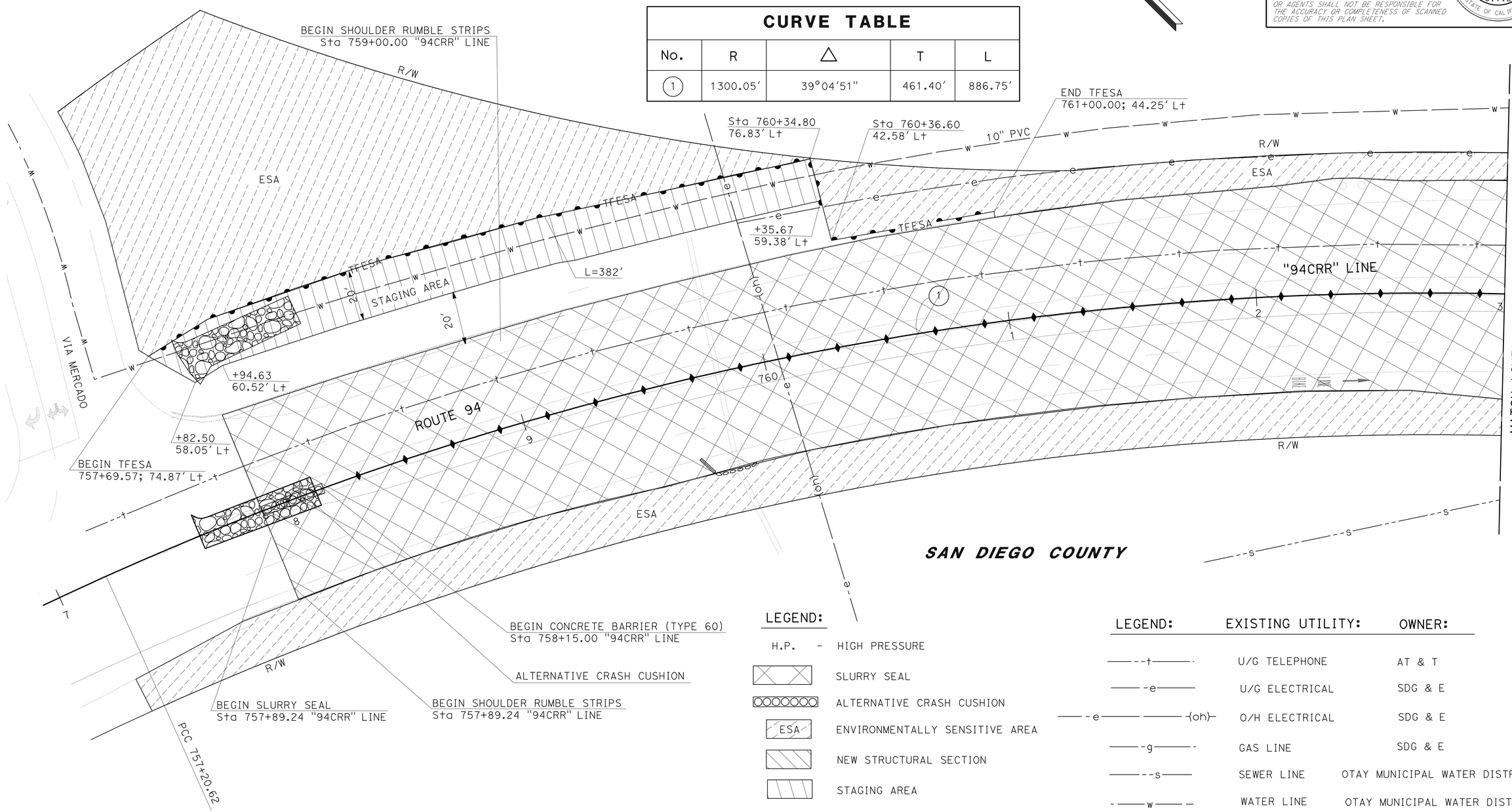

LEGEND:

H.P.	HIGH PRESSURE
	SLURRY SEAL
	ALTERNATIVE CRASH CUSHION
ESA	ENVIRONMENTALLY SENSITIVE AREA
	NEW STRUCTURAL SECTION
	STAGING AREA
TFESA	TEMPORARY FENCE (TYPE ESA)
	TEMPORARY DRAINAGE INLET PROTECTION (TYPE 4B)
	TEMPORARY CONSTRUCTION ENTRANCE

LEGEND:	EXISTING UTILITY:	OWNER:
—t—	U/G TELEPHONE	AT & T
—e—	U/G ELECTRICAL	SDG & E
—e— —(oh)—	O/H ELECTRICAL	SDG & E
—g—	GAS LINE	SDG & E
—s—	SEWER LINE	OTAY MUNICIPAL WATER DISTRICT
—w—	WATER LINE	OTAY MUNICIPAL WATER DISTRICT

LAYOUT L-1

SCALE: 1" = 20′

STATE OF CALIFORNIA - DEPARTMENT OF TRANSPORTATION
Caltrans PROJECT DEVELOPMENT
TRAFFIC

FUNCTIONAL SUPERVISOR: RICHARD ESTRADA
CALCULATED-DESIGNED BY: HUNG TRAN
CHECKED BY: JOSE L. ROBLES
REVISED BY / DATE REVISED

LAST REVISION 01-10-12
DATE PLOTTED => 23-MAR-2012
TIME PLOTTED => 10:12

Dist	COUNTY	ROUTE	POST MILES TOTAL PROJECT	SHEET No.	TOTAL SHEETS
11	SD	94	13.8/14.4	7	55

REGISTERED CIVIL ENGINEER DATE 12-27-11

03-26-12
PLANS APPROVAL DATE

REGISTERED PROFESSIONAL ENGINEER
JOSE L. ROBLES
No. C 64402
Exp. 06-30-13
CIVIL
STATE OF CALIFORNIA

THE STATE OF CALIFORNIA OR ITS OFFICERS OR AGENTS SHALL NOT BE RESPONSIBLE FOR THE ACCURACY OR COMPLETENESS OF SCANNED COPIES OF THIS PLAN SHEET.

NOTES:

1. FOR ACCURATE RIGHT OF WAY DATA, CONTACT RIGHT OF WAY ENGINEERING AT THE DISTRICT OFFICE.
2. LOCATION OF UTILITY FACILITIES SHOWN ON THESE PLANS WERE OBTAINED FROM OWNERS RECORDS AND/OR FROM STATE SURVEYS.
3. FOR CURB RAMP IMPROVEMENTS, SEE CONSTRUCTION DETAILS SHEET.

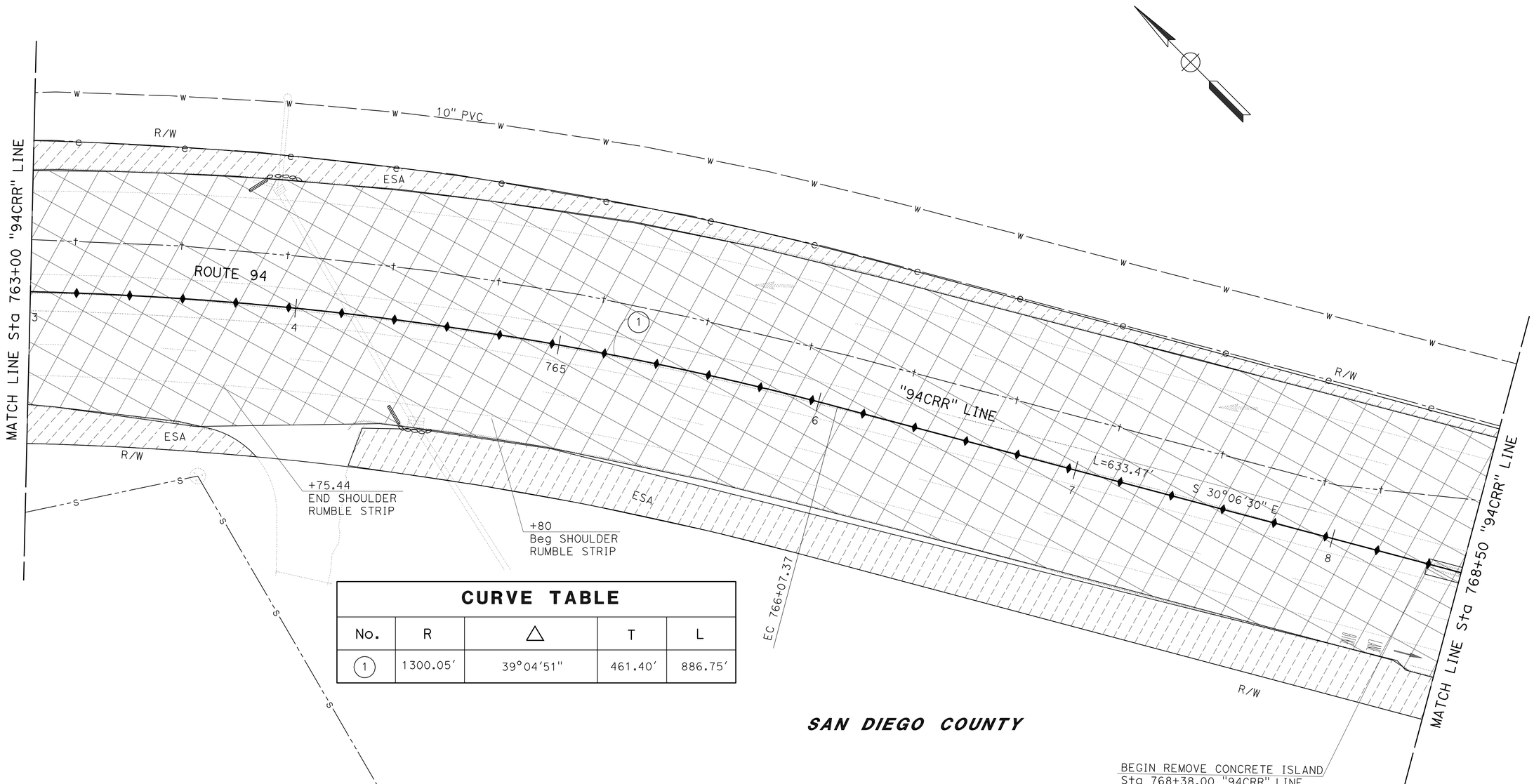

CURVE TABLE

No.	R	△	T	L
1	1300.05'	39°04'51"	461.40'	886.75'

LAYOUT

SCALE: 1" = 20'

L-2

STATE OF CALIFORNIA - DEPARTMENT OF TRANSPORTATION
Caltrans PROJECT DEVELOPMENT
TRAFFIC

FUNCTIONAL SUPERVISOR: RICHARD ESTRADA
CALCULATED-DESIGNED BY: HUNG TRAN
CHECKED BY: JOSE L. ROBLES
REVISED BY
DATE REVISED

LAST REVISION 01-10-12
DATE PLOTTED => 23-MAR-2012
TIME PLOTTED => 10:12

Dist	COUNTY	ROUTE	POST MILES TOTAL PROJECT	SHEET No.	TOTAL SHEETS
11	SD	94	13.8/14.4	8	55

REGISTERED CIVIL ENGINEER 12-27-11 DATE

03-26-12
PLANS APPROVAL DATE

REGISTERED PROFESSIONAL ENGINEER JOSE L. ROBLES No. C 64402 Exp. 06-30-13 CIVIL STATE OF CALIFORNIA

THE STATE OF CALIFORNIA OR ITS OFFICERS OR AGENTS SHALL NOT BE RESPONSIBLE FOR THE ACCURACY OR COMPLETENESS OF SCANNED COPIES OF THIS PLAN SHEET.

NOTES:

1. FOR ACCURATE RIGHT OF WAY DATA, CONTACT RIGHT OF WAY ENGINEERING AT THE DISTRICT OFFICE.
2. LOCATION OF UTILITY FACILITIES SHOWN ON THESE PLANS WERE OBTAINED FROM OWNERS RECORDS AND/OR FROM STATE SURVEYS.
3. FOR CURB RAMP IMPROVEMENTS, SEE CONSTRUCTION DETAILS SHEET.

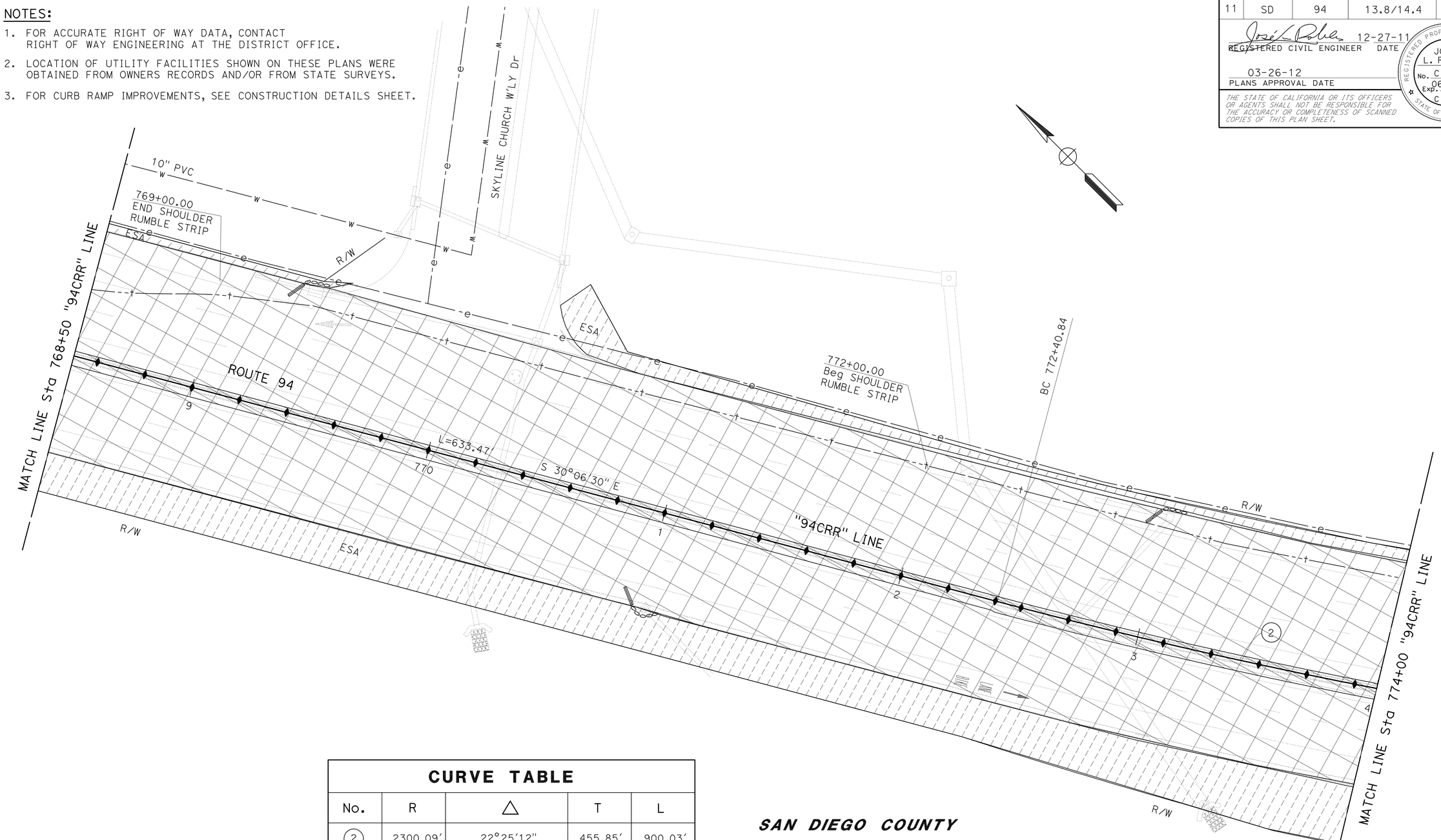

CURVE TABLE				
No.	R	△	T	L
2	2300.09'	22°25'12"	455.85'	900.03'

SAN DIEGO COUNTY

LAYOUT

SCALE: 1" = 20' **L-3**

STATE OF CALIFORNIA - DEPARTMENT OF TRANSPORTATION
Caltrans PROJECT DEVELOPMENT
TRAFFIC

FUNCTIONAL SUPERVISOR: RICHARD ESTRADA
CALCULATED-DESIGNED BY: HUNG TRAN
CHECKED BY: JOSE L. ROBLES
REVISED BY
DATE REVISED

LAST REVISION 01-10-12
DATE PLOTTED => 23-MAR-2012
TIME PLOTTED => 10:12

Dist	COUNTY	ROUTE	POST MILES TOTAL PROJECT	SHEET No.	TOTAL SHEETS
11	SD	94	13.8/14.4	9	55

REGISTERED CIVIL ENGINEER 12-27-11 DATE

03-26-12
PLANS APPROVAL DATE

REGISTERED PROFESSIONAL ENGINEER JOSE L. ROBLES No. C 64402 Exp. 06-30-13 CIVIL STATE OF CALIFORNIA

THE STATE OF CALIFORNIA OR ITS OFFICERS OR AGENTS SHALL NOT BE RESPONSIBLE FOR THE ACCURACY OR COMPLETENESS OF SCANNED COPIES OF THIS PLAN SHEET.

NOTES:

1. FOR ACCURATE RIGHT OF WAY DATA, CONTACT RIGHT OF WAY ENGINEERING AT THE DISTRICT OFFICE.
2. LOCATION OF UTILITY FACILITIES SHOWN ON THESE PLANS WERE OBTAINED FROM OWNERS RECORDS AND/OR FROM STATE SURVEYS.
3. FOR CURB RAMP IMPROVEMENTS, SEE CONSTRUCTION DETAILS SHEET.

CURVE TABLE

No.	R	△	T	L
2	2300.09′	22°25′12"	455.85′	900.03′

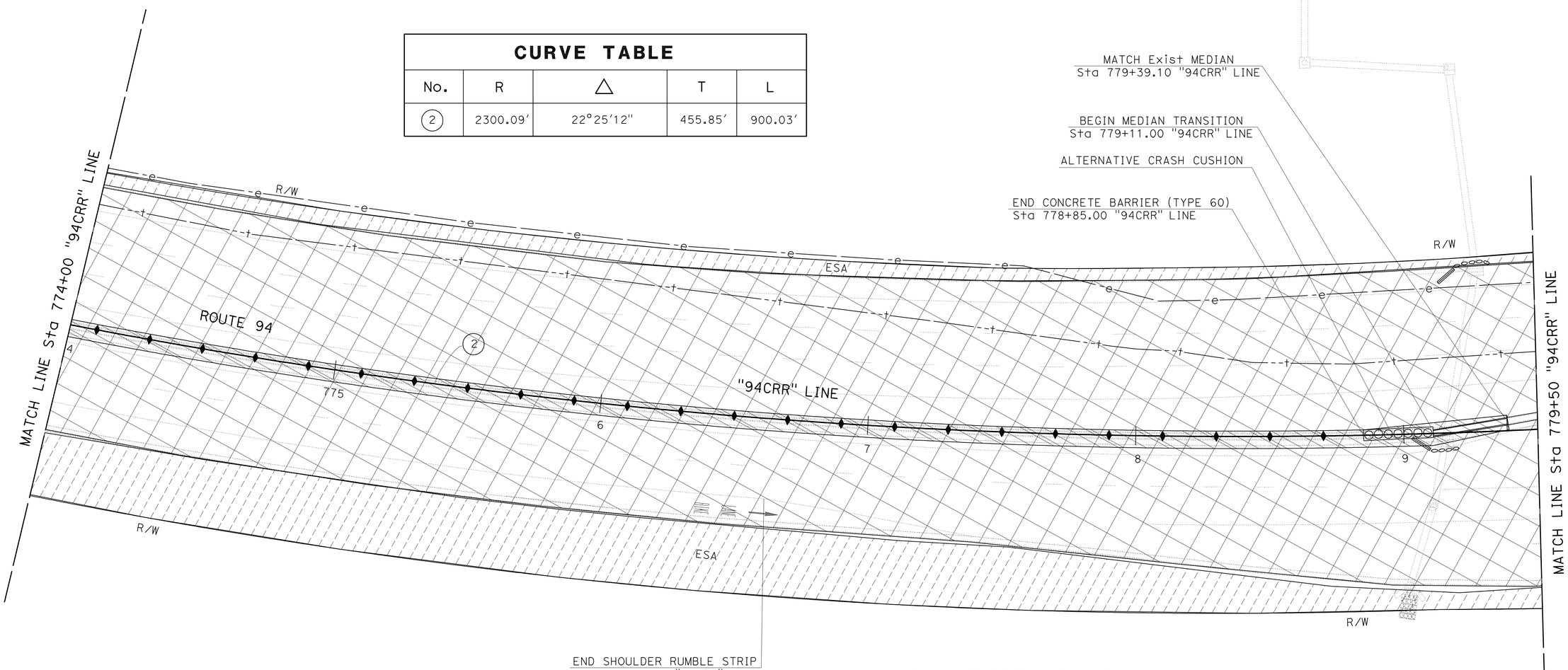

SAN DIEGO COUNTY

LAYOUT

SCALE: 1" = 20′ **L-4**

STATE OF CALIFORNIA - DEPARTMENT OF TRANSPORTATION
Caltrans PROJECT DEVELOPMENT
TRAFFIC

FUNCTIONAL SUPERVISOR: RICHARD ESTRADA
CALCULATED-DESIGNED BY: HUNG TRAN
CHECKED BY: JOSE L. ROBLES
REVISED BY
DATE REVISED

LAST REVISION 01-10-12
DATE PLOTTED => 23-MAR-2012
TIME PLOTTED => 10:12

Dist	COUNTY	ROUTE	POST MILES TOTAL PROJECT	SHEET No.	TOTAL SHEETS
11	SD	94	13.8/14.4	10	55

REGISTERED CIVIL ENGINEER DATE 12-27-11

03-26-12
PLANS APPROVAL DATE

REGISTERED PROFESSIONAL ENGINEER
JOSE L. ROBLES
No. C 64402
Exp. 06-30-13
CIVIL
STATE OF CALIFORNIA

THE STATE OF CALIFORNIA OR ITS OFFICERS OR AGENTS SHALL NOT BE RESPONSIBLE FOR THE ACCURACY OR COMPLETENESS OF SCANNED COPIES OF THIS PLAN SHEET.

NOTES:

1. FOR ACCURATE RIGHT OF WAY DATA, CONTACT RIGHT OF WAY ENGINEERING AT THE DISTRICT OFFICE.
2. LOCATION OF UTILITY FACILITIES SHOWN ON THESE PLANS WERE OBTAINED FROM OWNERS RECORDS AND/OR FROM STATE SURVEYS.
3. FOR CURB RAMP IMPROVEMENTS, SEE CONSTRUCTION DETAILS SHEET.

CURVE TABLE

No.	R	△	T	L
2	2300.09′	22°25′12"	455.85′	900.03′
3	2550.10′	11°01′32"	246.12′	490.72′

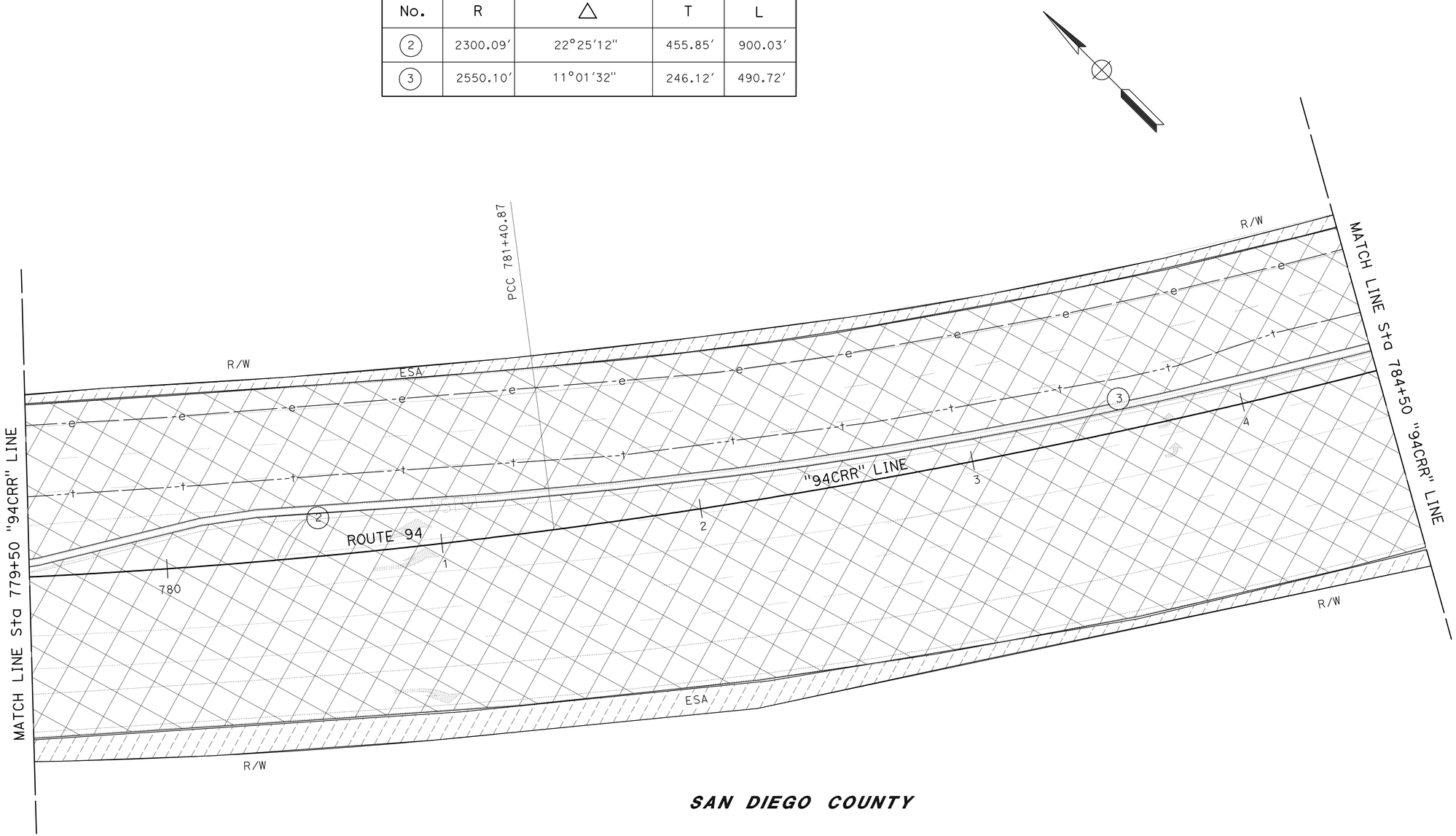

SAN DIEGO COUNTY

LAYOUT

SCALE: 1" = 20′

L-5

STATE OF CALIFORNIA - DEPARTMENT OF TRANSPORTATION
Caltrans PROJECT DEVELOPMENT
TRAFFIC

FUNCTIONAL SUPERVISOR: RICHARD ESTRADA
CALCULATED-DESIGNED BY: HUNG TRAN
CHECKED BY: JOSE L. ROBLES
REVISED BY
DATE REVISED

LAST REVISION 01-11-12
DATE PLOTTED => 23-MAR-2012
TIME PLOTTED => 10:12

Dist	COUNTY	ROUTE	POST MILES TOTAL PROJECT	SHEET No.	TOTAL SHEETS
11	SD	94	13.8/14.4	11	55

REGISTERED CIVIL ENGINEER 12-27-11 DATE

03-26-12
PLANS APPROVAL DATE

REGISTERED PROFESSIONAL ENGINEER JOSE L. ROBLES No. C 64402 Exp. 06-30-13 CIVIL STATE OF CALIFORNIA

THE STATE OF CALIFORNIA OR ITS OFFICERS OR AGENTS SHALL NOT BE RESPONSIBLE FOR THE ACCURACY OR COMPLETENESS OF SCANNED COPIES OF THIS PLAN SHEET.

NOTES:

1. FOR ACCURATE RIGHT OF WAY DATA, CONTACT RIGHT OF WAY ENGINEERING AT THE DISTRICT OFFICE.
2. LOCATION OF UTILITY FACILITIES SHOWN ON THESE PLANS WERE OBTAINED FROM OWNERS RECORDS AND/OR FROM STATE SURVEYS.
3. FOR CURB RAMP IMPROVEMENTS, SEE CONSTRUCTION DETAILS SHEET.

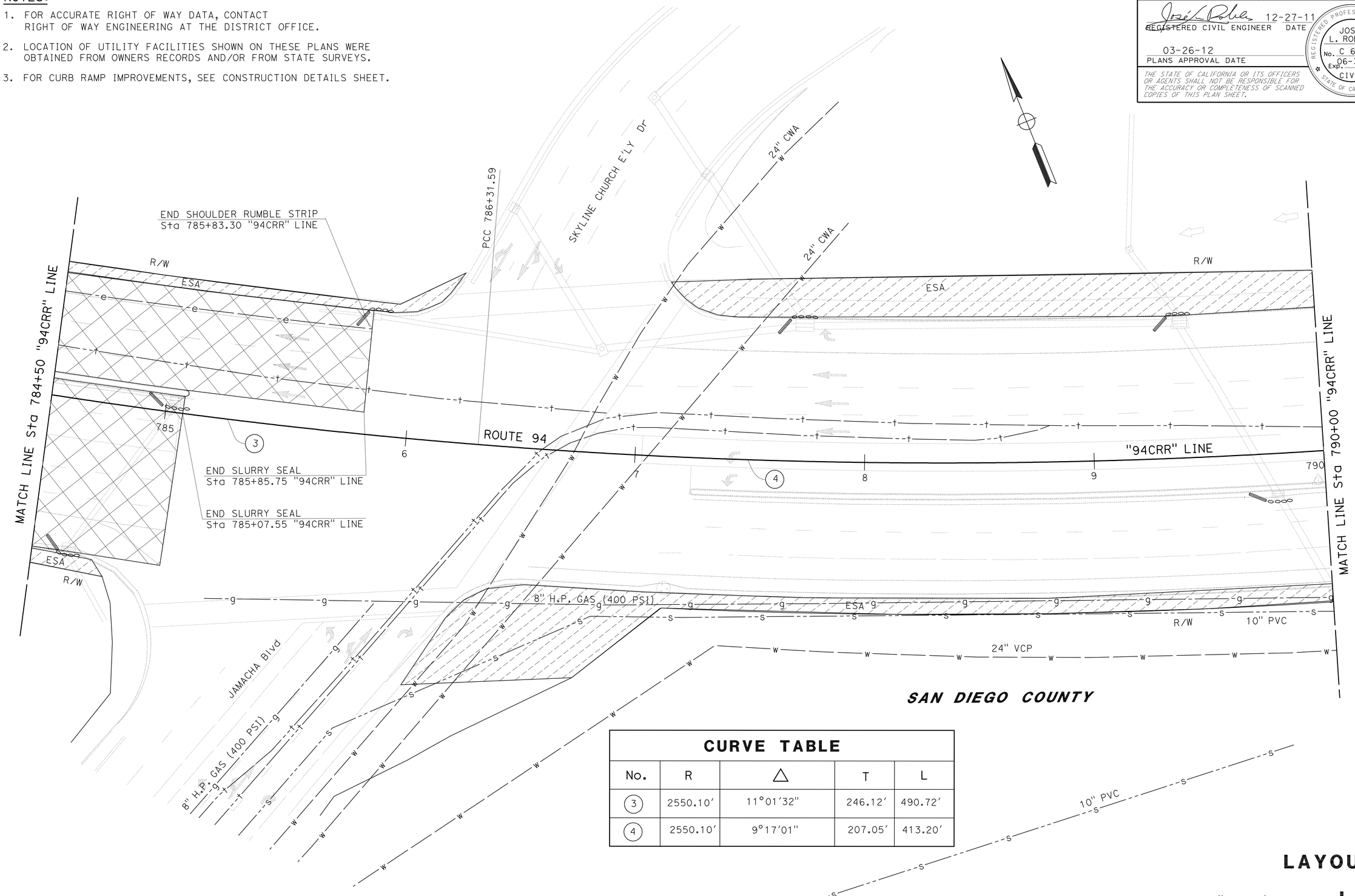

CURVE TABLE

No.	R	△	T	L
3	2550.10′	11°01′32"	246.12′	490.72′
4	2550.10′	9°17′01"	207.05′	413.20′

LAYOUT

SCALE: 1" = 20′

L-6

STATE OF CALIFORNIA - DEPARTMENT OF TRANSPORTATION
Caltrans PROJECT DEVELOPMENT
TRAFFIC

FUNCTIONAL SUPERVISOR: RICHARD ESTRADA
CALCULATED-DESIGNED BY: HUNG TRAN
CHECKED BY: JOSE L. ROBLES
REVISED BY
DATE REVISED

LAST REVISION 01-11-12
DATE PLOTTED => 23-MAR-2012
TIME PLOTTED => 10:12

Dist	COUNTY	ROUTE	POST MILES TOTAL PROJECT	SHEET No.	TOTAL SHEETS
11	SD	94	13.8/14.4	12	55

REGISTERED CIVIL ENGINEER DATE 12-27-11

03-26-12
PLANS APPROVAL DATE

REGISTERED PROFESSIONAL ENGINEER JOSE L. ROBLES No. C 64402 Exp. 06-30-13 CIVIL STATE OF CALIFORNIA

THE STATE OF CALIFORNIA OR ITS OFFICERS OR AGENTS SHALL NOT BE RESPONSIBLE FOR THE ACCURACY OR COMPLETENESS OF SCANNED COPIES OF THIS PLAN SHEET.

NOTES:

1. FOR ACCURATE RIGHT OF WAY DATA, CONTACT RIGHT OF WAY ENGINEERING AT THE DISTRICT OFFICE.
2. LOCATION OF UTILITY FACILITIES SHOWN ON THESE PLANS WERE OBTAINED FROM OWNERS RECORDS AND/OR FROM STATE SURVEYS.
3. FOR CURB RAMP IMPROVEMENTS, SEE CONSTRUCTION DETAILS SHEET.

CURVE TABLE

No.	R	△	T	L
4	2550.10′	9°17′01"	207.05′	413.20′
5	2300.09′	22°26′31"	456.30′	900.91′

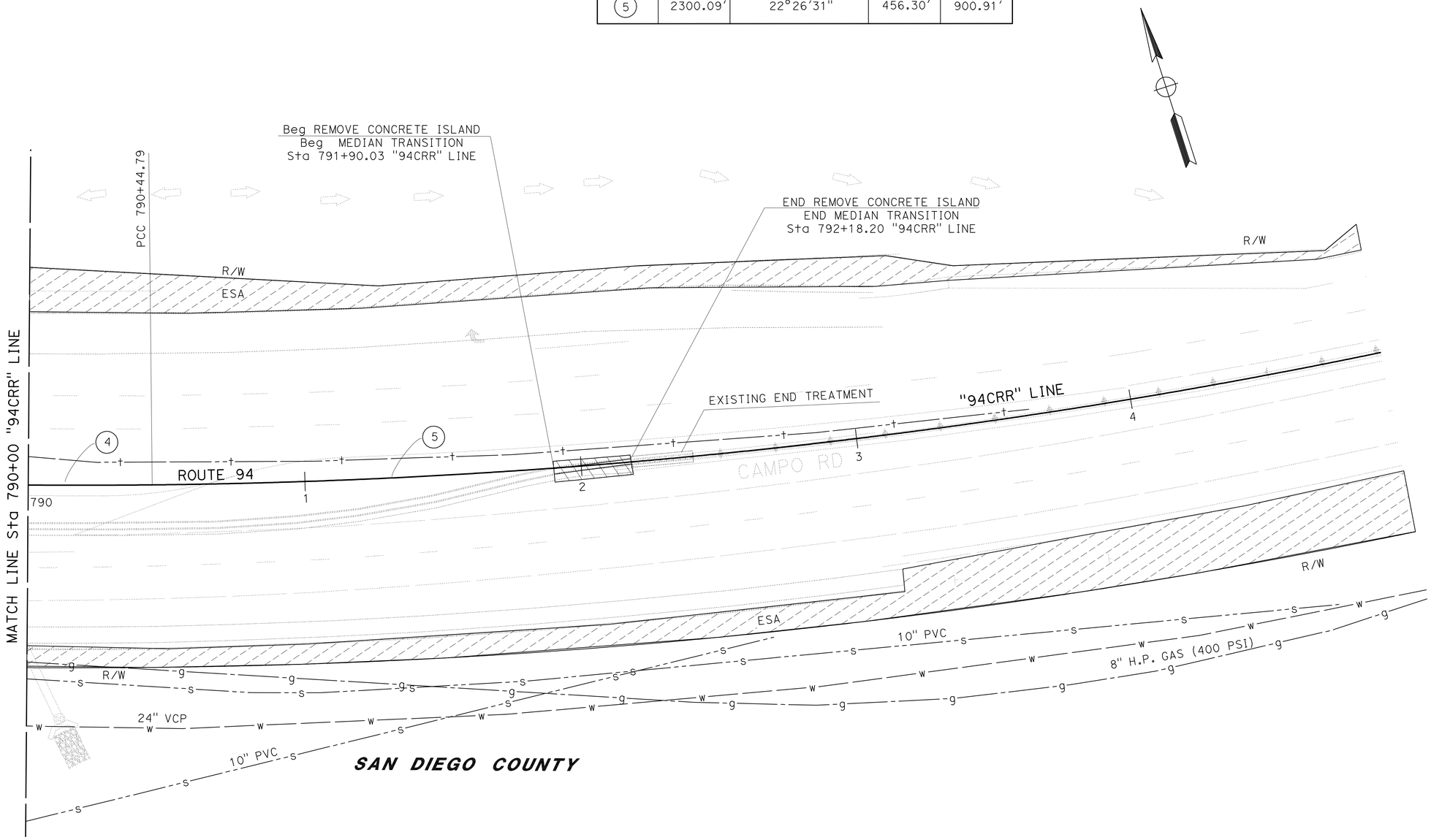

LAYOUT

SCALE: 1" = 20′ **L-7**

STATE OF CALIFORNIA - DEPARTMENT OF TRANSPORTATION
Caltrans PROJECT DEVELOPMENT
TRAFFIC

FUNCTIONAL SUPERVISOR: RICHARD ESTRADA
CALCULATED-DESIGNED BY: HUNG TRAN
CHECKED BY: JOSE L. ROBLES
REVISED BY
DATE REVISED

LAST REVISION 01-11-12
DATE PLOTTED => 23-MAR-2012
TIME PLOTTED => 10:12

Dist	COUNTY	ROUTE	POST MILES TOTAL PROJECT	SHEET No.	TOTAL SHEETS
11	SD	94	13.8/14.4	13	55

REGISTERED CIVIL ENGINEER 12-27-11 DATE

03-26-12
PLANS APPROVAL DATE

REGISTERED PROFESSIONAL ENGINEER JOSE L. ROBLES No. C 64402 Exp. 06-30-13 CIVIL STATE OF CALIFORNIA

THE STATE OF CALIFORNIA OR ITS OFFICERS OR AGENTS SHALL NOT BE RESPONSIBLE FOR THE ACCURACY OR COMPLETENESS OF SCANNED COPIES OF THIS PLAN SHEET.

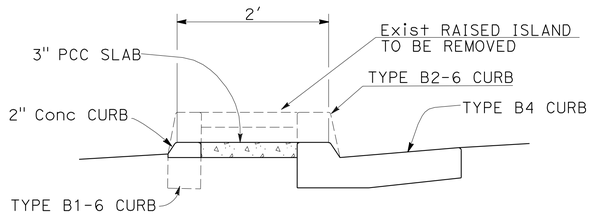

SECTION A-A

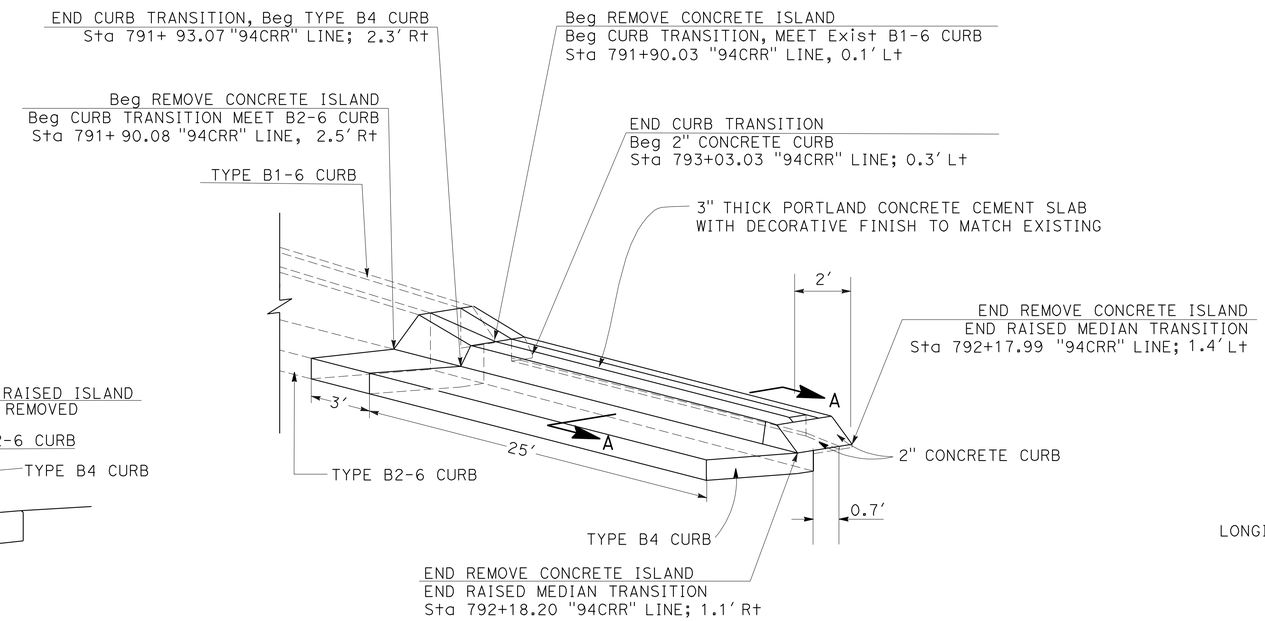

MEDIAN TRANSITION Sta 791+90.08

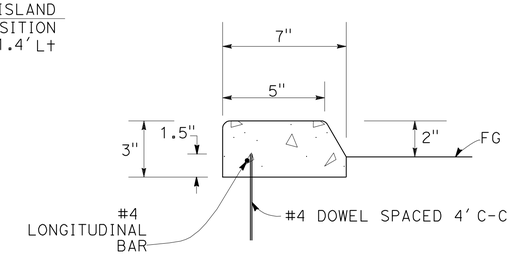

2" CONCRETE CURB

FOR DIMENSIONS, DETAILS, AND NOTES NOT SHOWN SEE STANDARD PLAN A87A

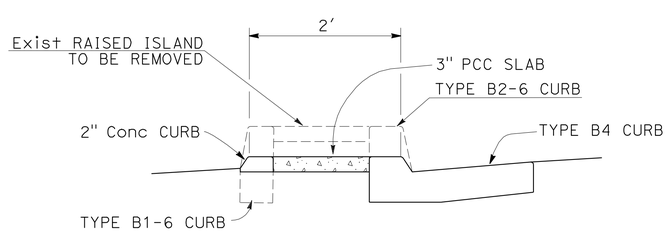

SECTION B-B

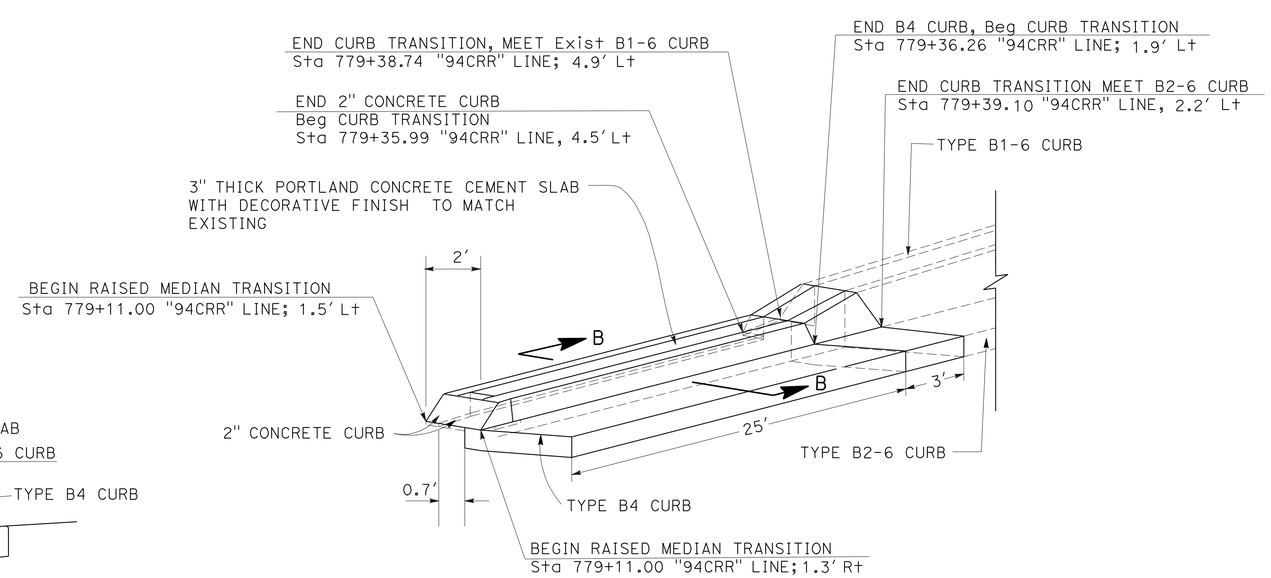

MEDIAN TRANSITION Sta 779+11.00

CONSTRUCTION DETAILS

NO SCALE

C-1

STATE OF CALIFORNIA - DEPARTMENT OF TRANSPORTATION
Caltrans PROJECT DEVELOPMENT
TRAFFIC

FUNCTIONAL SUPERVISOR: RICHARD ESTRADA
CALCULATED-DESIGNED BY: HUNG TRAN
CHECKED BY: JOSE L. ROBLES
REVISED BY
DATE REVISED

LAST REVISION 01-11-12
DATE PLOTTED => 23-MAR-2012
TIME PLOTTED => 10:12

Dist	COUNTY	ROUTE	POST MILES TOTAL PROJECT	SHEET No.	TOTAL SHEETS
11	SD	94	13.8/14.4	14	55

REGISTERED CIVIL ENGINEER DATE 12-27-11

03-26-12
PLANS APPROVAL DATE

REGISTERED PROFESSIONAL ENGINEER
JOSE L. ROBLES
No. C 64402
Exp. 06-30-13
CIVIL
STATE OF CALIFORNIA

THE STATE OF CALIFORNIA OR ITS OFFICERS OR AGENTS SHALL NOT BE RESPONSIBLE FOR THE ACCURACY OR COMPLETENESS OF SCANNED COPIES OF THIS PLAN SHEET.

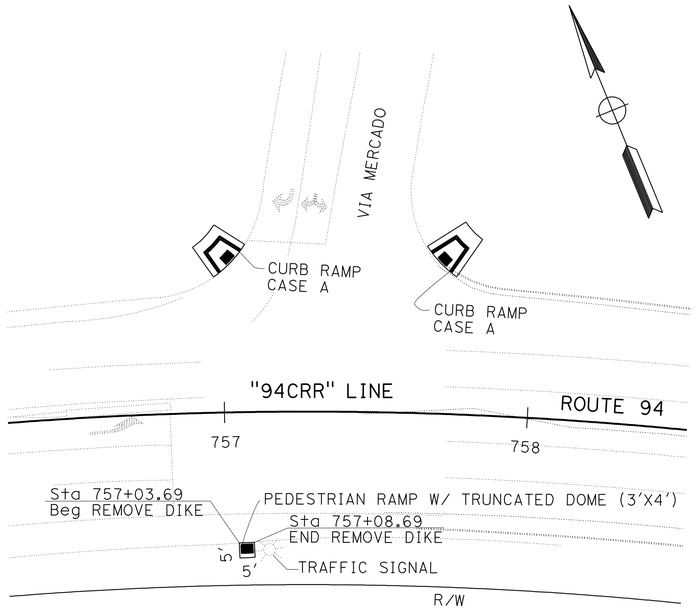

ROUTE 94 & VIA MERCADO INTERSECTION

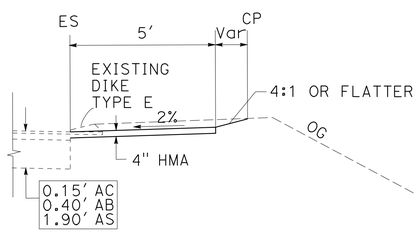

PEDESTRIAN RAMP DETAIL

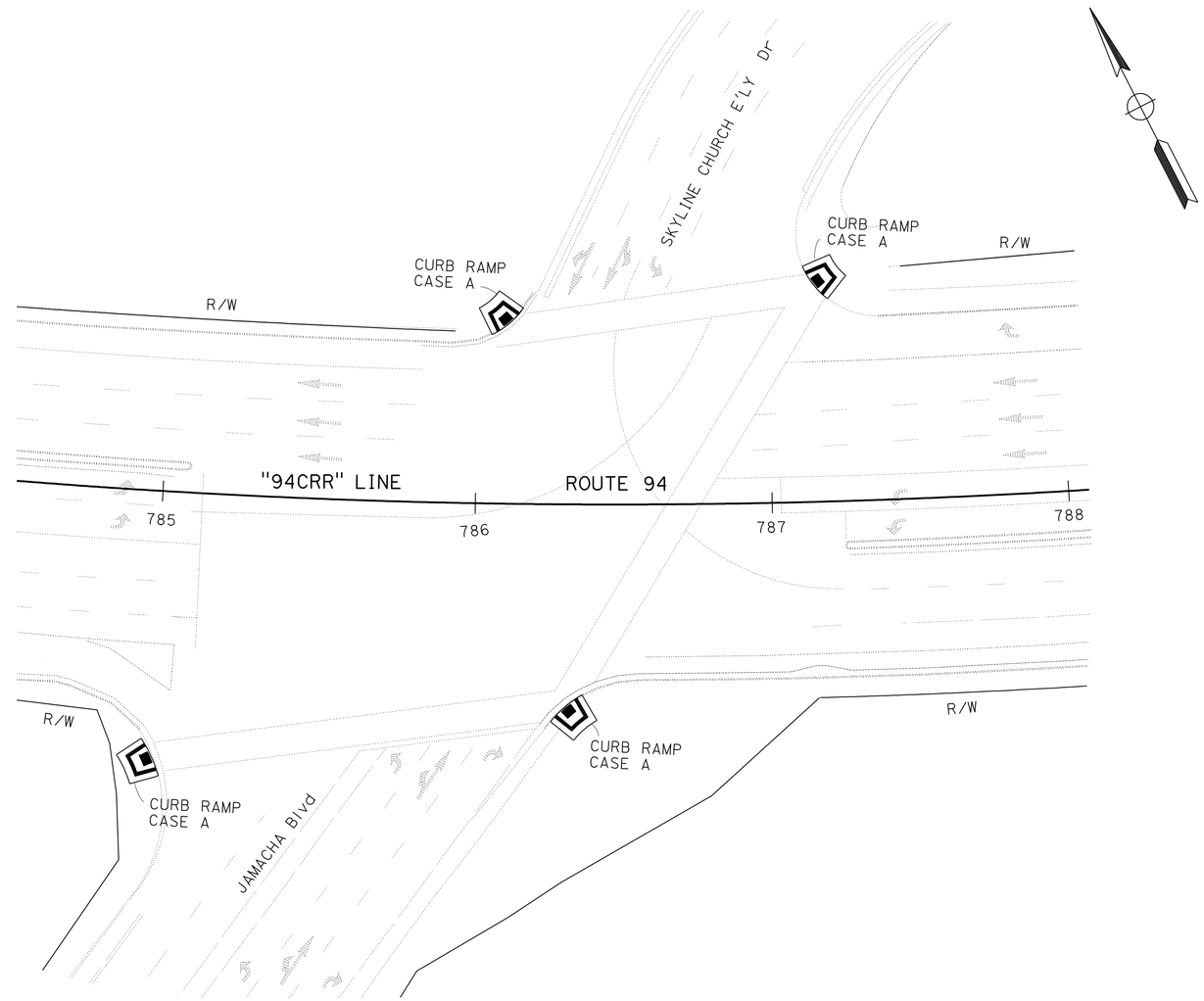

ROUTE 94 & JAMACHA Blvd INTERSECTION

CONSTRUCTION DETAILS

NO SCALE

C-2

STATE OF CALIFORNIA - DEPARTMENT OF TRANSPORTATION
Caltrans PROJECT DEVELOPMENT
TRAFFIC

FUNCTIONAL SUPERVISOR: RICHARD ESTRADA
CALCULATED-DESIGNED BY: HUNG TRAN
CHECKED BY: JOSE L. ROBLES
REVISED BY
DATE REVISED

LAST REVISION 01-11-12
DATE PLOTTED => 23-MAR-2012
TIME PLOTTED => 10:13

Dist	COUNTY	ROUTE	POST MILES TOTAL PROJECT	SHEET No.	TOTAL SHEETS
11	SD	94	13.8/14.4	15	55

REGISTERED CIVIL ENGINEER DATE 12-27-11

03-26-12
PLANS APPROVAL DATE

REGISTERED PROFESSIONAL ENGINEER
JOSE L. ROBLES
No. C 64402
Exp. 06-30-13
CIVIL
STATE OF CALIFORNIA

THE STATE OF CALIFORNIA OR ITS OFFICERS OR AGENTS SHALL NOT BE RESPONSIBLE FOR THE ACCURACY OR COMPLETENESS OF SCANNED COPIES OF THIS PLAN SHEET.

NOTE:

FOR ACCURATE RIGHT OF WAY DATA, CONTACT RIGHT OF WAY ENGINEERING AT THE DISTRICT OFFICE.

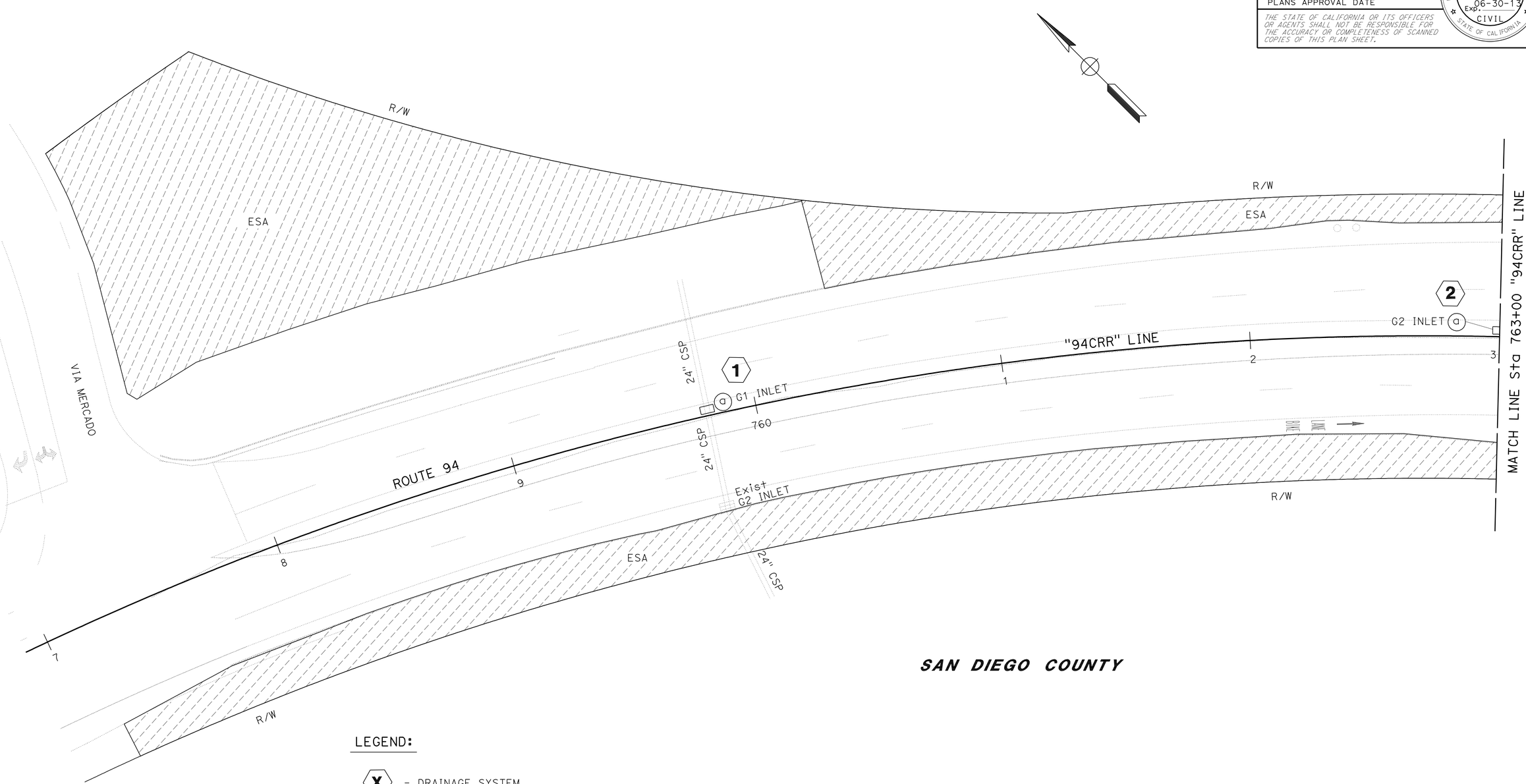

SAN DIEGO COUNTY

LEGEND:

X - DRAINAGE SYSTEM

X - DRAINAGE UNIT

ESA - ENVIRONMENTALLY SENSITIVE AREA

APPROVED FOR DRAINAGE WORK ONLY

DRAINAGE PLAN

SCALE: 1" = 20'

D-1

STATE OF CALIFORNIA - DEPARTMENT OF TRANSPORTATION
Caltrans PROJECT DEVELOPMENT
TRAFFIC

FUNCTIONAL SUPERVISOR: RICHARD ESTRADA
CALCULATED-DESIGNED BY: HUNG TRAN
CHECKED BY: JOSE L. ROBLES
REVISED BY
DATE REVISED

LAST REVISION 01-12-12
DATE PLOTTED => 23-MAR-2012
TIME PLOTTED => 10:13

Dist	COUNTY	ROUTE	POST MILES TOTAL PROJECT	SHEET No.	TOTAL SHEETS
11	SD	94	13.8/14.4	16	55

REGISTERED CIVIL ENGINEER DATE 12-27-11

03-26-12
PLANS APPROVAL DATE

REGISTERED PROFESSIONAL ENGINEER JOSE L. ROBLES No. C 64402 Exp. 06-30-13 CIVIL STATE OF CALIFORNIA

THE STATE OF CALIFORNIA OR ITS OFFICERS OR AGENTS SHALL NOT BE RESPONSIBLE FOR THE ACCURACY OR COMPLETENESS OF SCANNED COPIES OF THIS PLAN SHEET.

NOTE:

FOR ACCURATE RIGHT OF WAY DATA, CONTACT RIGHT OF WAY ENGINEERING AT THE DISTRICT OFFICE.

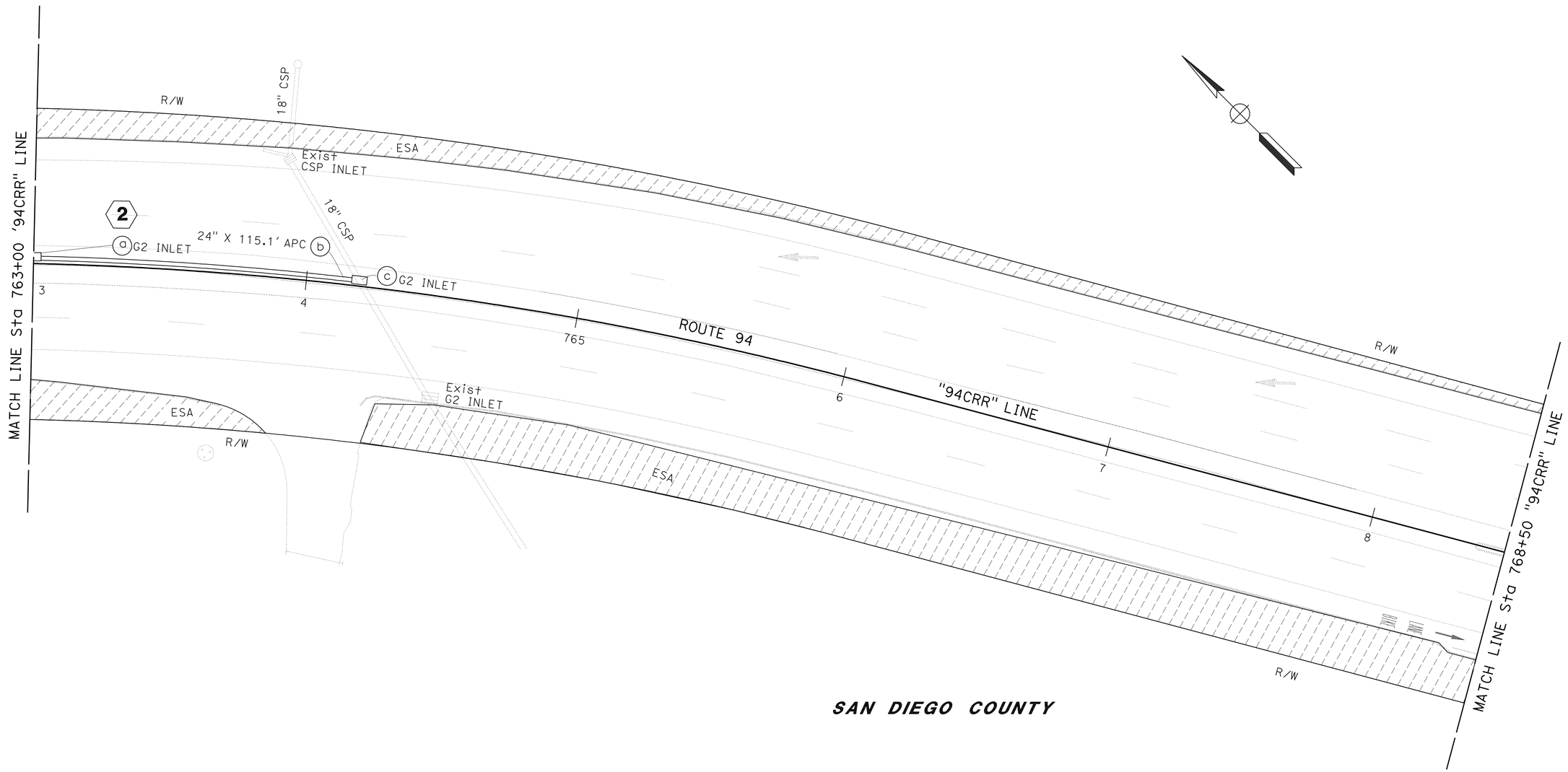

APPROVED FOR DRAINAGE WORK ONLY

DRAINAGE PLAN

SCALE: 1" = 20'

D-2

STATE OF CALIFORNIA - DEPARTMENT OF TRANSPORTATION
Caltrans PROJECT DEVELOPMENT
TRAFFIC

FUNCTIONAL SUPERVISOR: RICHARD ESTRADA
CALCULATED-DESIGNED BY: HUNG TRAN
CHECKED BY: JOSE L. ROBLES
REVISED BY
DATE REVISED

LAST REVISION 01-12-12
DATE PLOTTED => 23-MAR-2012
TIME PLOTTED => 10:13

Dist	COUNTY	ROUTE	POST MILES TOTAL PROJECT	SHEET No.	TOTAL SHEETS
11	SD	94	13.8/14.4	17	55

REGISTERED CIVIL ENGINEER DATE 12-27-11

03-26-12
PLANS APPROVAL DATE

REGISTERED PROFESSIONAL ENGINEER JOSE L. ROBLES No. C 64402 Exp. 06-30-13 CIVIL STATE OF CALIFORNIA

THE STATE OF CALIFORNIA OR ITS OFFICERS OR AGENTS SHALL NOT BE RESPONSIBLE FOR THE ACCURACY OR COMPLETENESS OF SCANNED COPIES OF THIS PLAN SHEET.

NOTE:

FOR ACCURATE RIGHT OF WAY DATA, CONTACT RIGHT OF WAY ENGINEERING AT THE DISTRICT OFFICE.

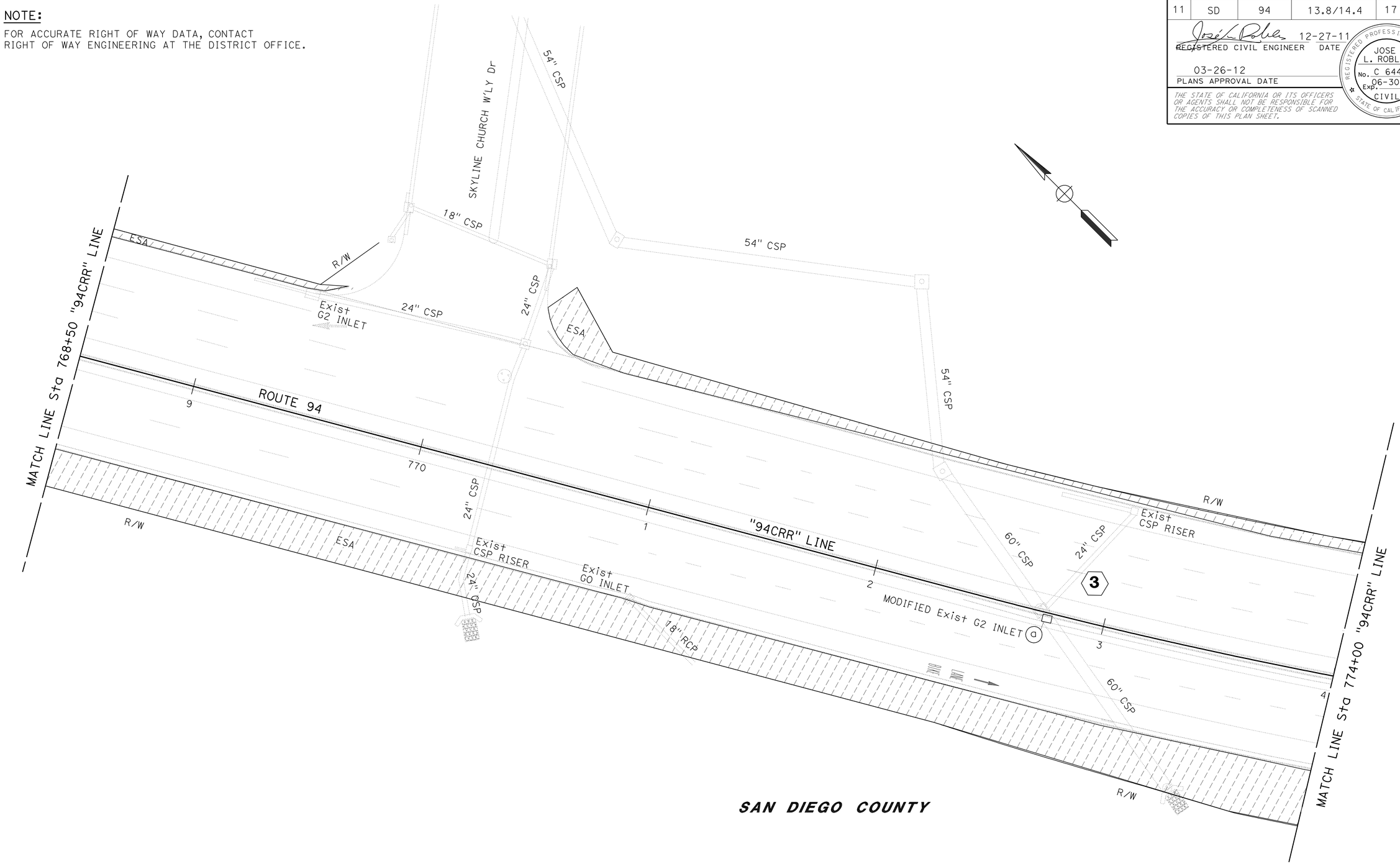

SAN DIEGO COUNTY

DRAINAGE PLAN

APPROVED FOR DRAINAGE WORK ONLY

SCALE: 1" = 20'

D-3

STATE OF CALIFORNIA - DEPARTMENT OF TRANSPORTATION
Caltrans PROJECT DEVELOPMENT
TRAFFIC

FUNCTIONAL SUPERVISOR: RICHARD ESTRADA
CALCULATED-DESIGNED BY: HUNG TRAN
CHECKED BY: JOSE L. ROBLES
REVISED BY
DATE REVISED

LAST REVISION 01-12-12
DATE PLOTTED => 23-MAR-2012
TIME PLOTTED => 10:13

Dist	COUNTY	ROUTE	POST MILES TOTAL PROJECT	SHEET No.	TOTAL SHEETS
11	SD	94	13.8/14.4	18	55

REGISTERED CIVIL ENGINEER DATE 12-27-11

03-26-12
PLANS APPROVAL DATE

REGISTERED PROFESSIONAL ENGINEER
JOSE L. ROBLES
No. C 64402
Exp. 06-30-13
CIVIL
STATE OF CALIFORNIA

THE STATE OF CALIFORNIA OR ITS OFFICERS OR AGENTS SHALL NOT BE RESPONSIBLE FOR THE ACCURACY OR COMPLETENESS OF SCANNED COPIES OF THIS PLAN SHEET.

NOTE:

FOR ACCURATE RIGHT OF WAY DATA, CONTACT RIGHT OF WAY ENGINEERING AT THE DISTRICT OFFICE.

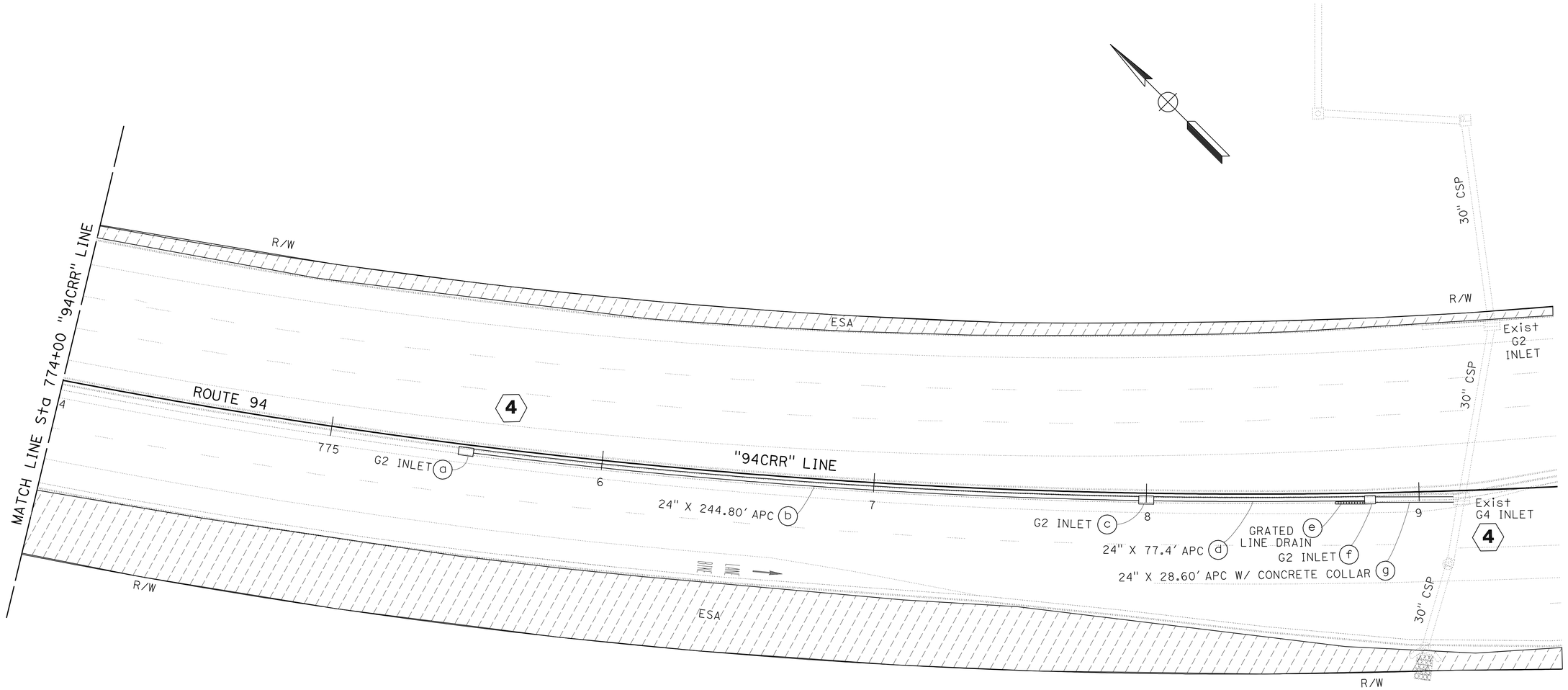

SAN DIEGO COUNTY

APPROVED FOR DRAINAGE WORK ONLY

DRAINAGE PLAN

SCALE: 1" = 20'

D-4

STATE OF CALIFORNIA - DEPARTMENT OF TRANSPORTATION
Caltrans PROJECT DEVELOPMENT
TRAFFIC

FUNCTIONAL SUPERVISOR: RICHARD ESTRADA
CALCULATED-DESIGNED BY: HUNG TRAN
CHECKED BY: JOSE L. ROBLES
REVISED BY
DATE REVISED

LAST REVISION 01-12-12
DATE PLOTTED => 23-MAR-2012
TIME PLOTTED => 10:13

Dist	COUNTY	ROUTE	POST MILES TOTAL PROJECT	SHEET No.	TOTAL SHEETS
11	SD	94	13.8/14.4	19	55

REGISTERED CIVIL ENGINEER 12-27-11 DATE

03-26-12
PLANS APPROVAL DATE

REGISTERED PROFESSIONAL ENGINEER JOSE L. ROBLES No. C 64402 Exp. 06-30-13 CIVIL STATE OF CALIFORNIA

THE STATE OF CALIFORNIA OR ITS OFFICERS OR AGENTS SHALL NOT BE RESPONSIBLE FOR THE ACCURACY OR COMPLETENESS OF SCANNED COPIES OF THIS PLAN SHEET.

NOTE:

FOR ACCURATE RIGHT OF WAY DATA, CONTACT RIGHT OF WAY ENGINEERING AT THE DISTRICT OFFICE.

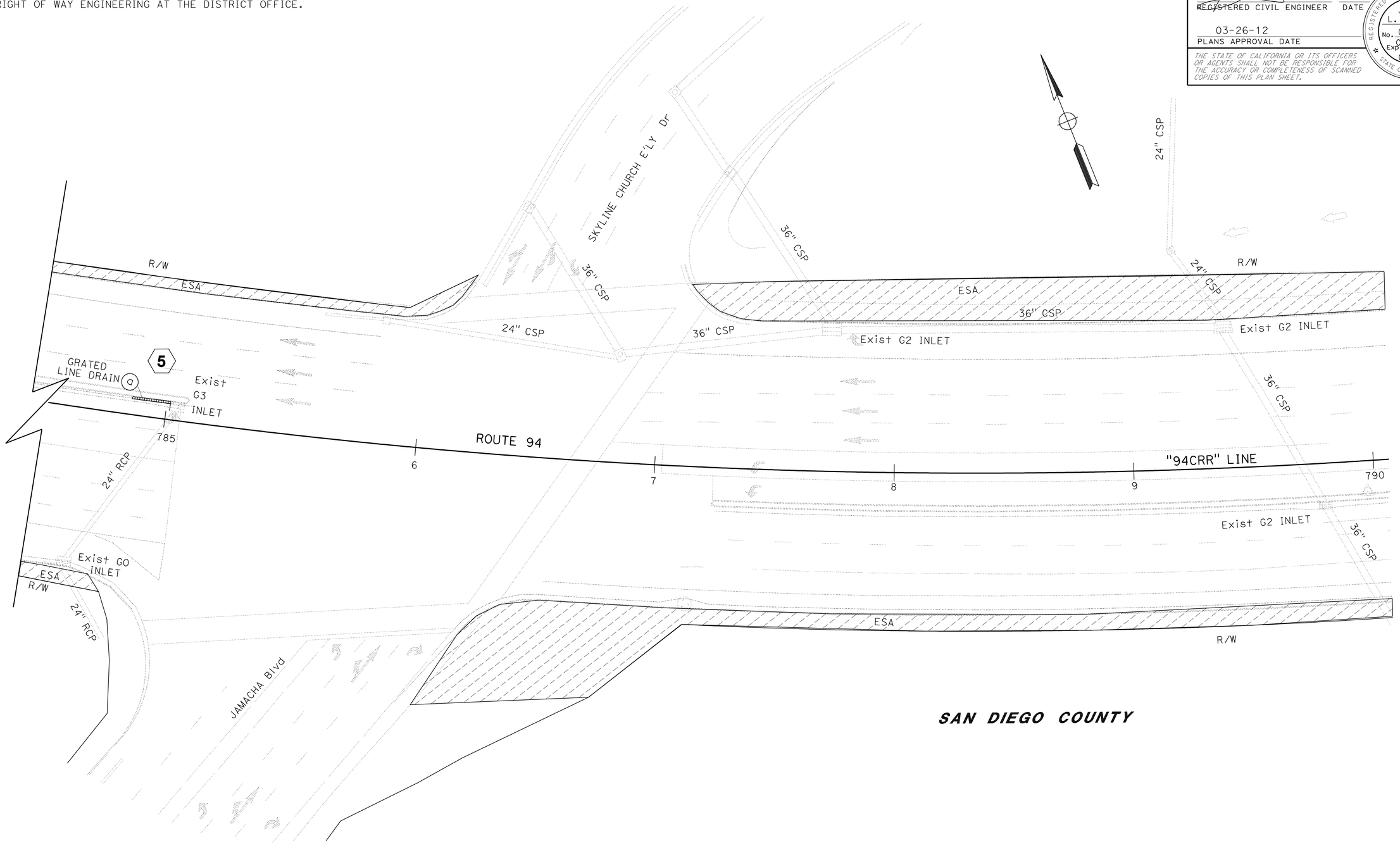

DRAINAGE PLAN

SCALE: 1" = 20'

D-5

APPROVED FOR DRAINAGE WORK ONLY

STATE OF CALIFORNIA - DEPARTMENT OF TRANSPORTATION

Caltrans PROJECT DEVELOPMENT TRAFFIC

FUNCTIONAL SUPERVISOR: RICHARD ESTRADA

CALCULATED-DESIGNED BY: HUNG TRAN

CHECKED BY: JOSE L. ROBLES

REVISED BY

DATE REVISED

LAST REVISION 01-12-12

DATE PLOTTED => 23-MAR-2012

TIME PLOTTED => 10:13

Dist	COUNTY	ROUTE	POST MILES TOTAL PROJECT	SHEET No.	TOTAL SHEETS
11	SD	94	13.8/14.4	20	55

REGISTERED CIVIL ENGINEER DATE 12-27-11

03-26-12
PLANS APPROVAL DATE

REGISTERED PROFESSIONAL ENGINEER JOSE L. ROBLES No. C 64402 Exp. 06-30-13 CIVIL STATE OF CALIFORNIA

THE STATE OF CALIFORNIA OR ITS OFFICERS OR AGENTS SHALL NOT BE RESPONSIBLE FOR THE ACCURACY OR COMPLETENESS OF SCANNED COPIES OF THIS PLAN SHEET.

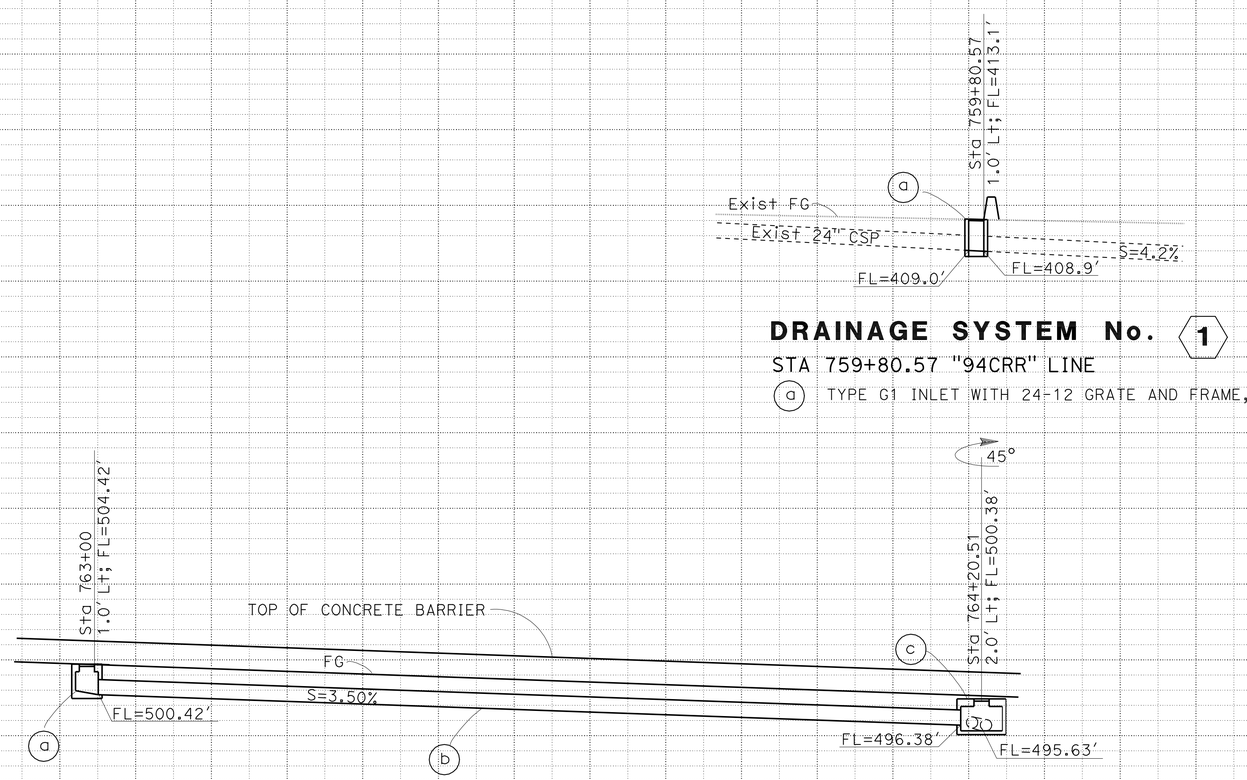

DRAINAGE SYSTEM No. 1

STA 759+80.57 "94CRR" LINE

(a) TYPE G1 INLET WITH 24-12 GRATE AND FRAME, H=4.2'

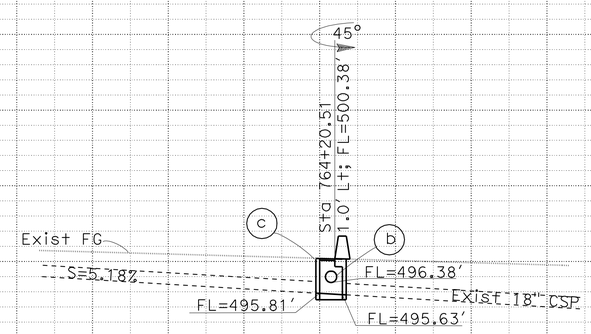

DRAINAGE SYSTEM No. 2

STA 764+20.51 "94CRR" LINE

(a) TYPE G2 INLET WITH 24-12 GRATE AND FRAME, H=4.0'

(b) 24" X 115.1' APC

(c) TYPE G2 INLET WITH 24-12 GRATE AND FRAME, H=4.8', L=1.5'

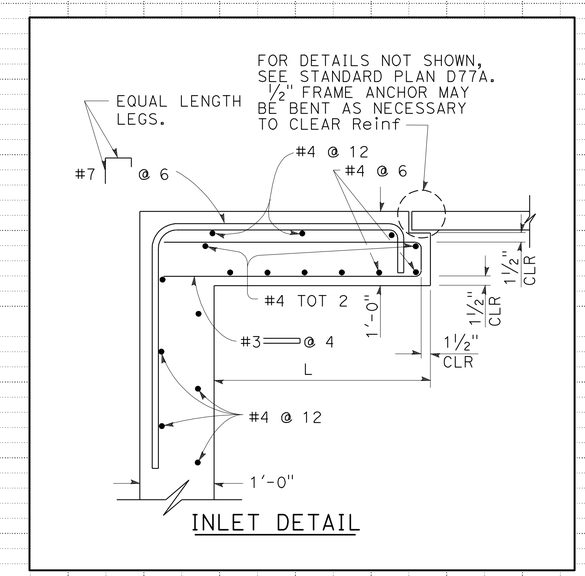

INLET DETAIL

DRAINAGE PROFILES

SCALE: 1" = 10' Horiz
1" = 10' Vert

DP-1

REVISED BY | DATE REVISED

HUNG TRAN | JOSE L. ROBLES

CALCULATED-DESIGNED BY | CHECKED BY

FUNCTIONAL SUPERVISOR: RICHARD ESTRADA

STATE OF CALIFORNIA - DEPARTMENT OF TRANSPORTATION
Caltrans PROJECT DEVELOPMENT
TRAFFIC

LAST REVISION 01-12-12 | DATE PLOTTED => 23-MAR-2012 | TIME PLOTTED => 10:13

Dist	COUNTY	ROUTE	POST MILES TOTAL PROJECT	SHEET No.	TOTAL SHEETS
11	SD	94	13.8/14.4	21	55

REGISTERED CIVIL ENGINEER DATE 12-27-11

03-26-12
PLANS APPROVAL DATE

REGISTERED PROFESSIONAL ENGINEER JOSE L. ROBLES No. C 64402 Exp. 06-30-13 CIVIL STATE OF CALIFORNIA

THE STATE OF CALIFORNIA OR ITS OFFICERS OR AGENTS SHALL NOT BE RESPONSIBLE FOR THE ACCURACY OR COMPLETENESS OF SCANNED COPIES OF THIS PLAN SHEET.

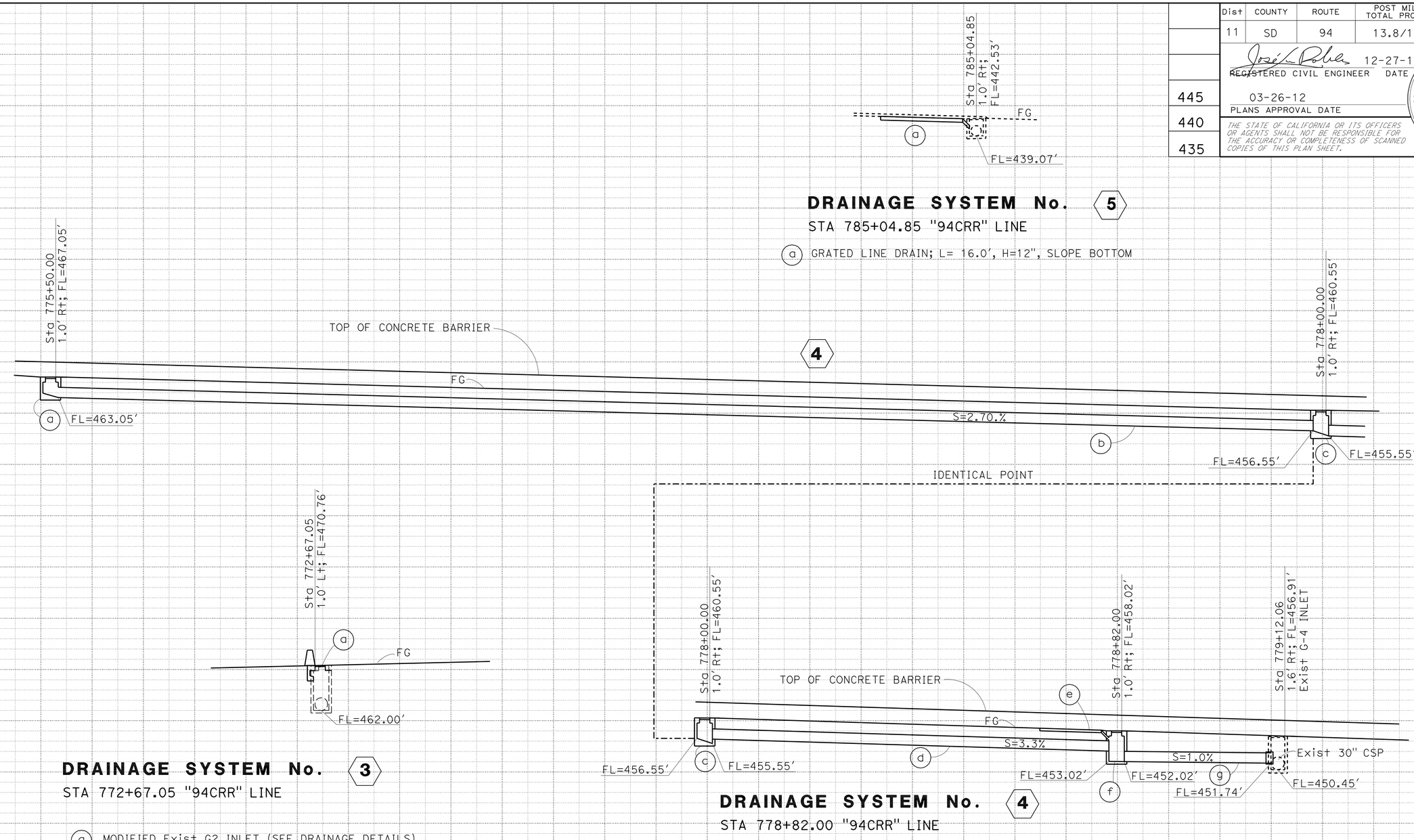

a TYPE G2 INLET WITH 24-12 GRATE AND FRAME, H=4.00'

b 24" X 244.80' APC

c TYPE G2 INLET WITH 24-12 GRATE AND FRAME, H=5.00'

d 24" X 77.4' APC

e GRATED LINE DRAIN; L= 12.0', H=12", SLOPE BOTTOM

f TYPE G2 INLET WITH 24-12 GRATE AND FRAME, H=6.00'

g 24" X 28.6' APC W/ CONCRETE COLLAR (SEE DRAINAGE DETAILS)

DRAINAGE PROFILES

SCALE: 1" = 10' Horiz
1" = 10' Vert

DP-2

REVISED BY	DATE REVISED
HUNG TRAN	JOSE L. ROBLES
CALCULATED-DESIGNED BY	CHECKED BY
FUNCTIONAL SUPERVISOR	RICHARD ESTRADA

STATE OF CALIFORNIA - DEPARTMENT OF TRANSPORTATION
Caltrans PROJECT TRAFFIC DEVELOPMENT

LAST REVISION 01-12-12 | DATE PLOTTED => 23-MAR-2012 | TIME PLOTTED => 10:13

Dist	COUNTY	ROUTE	POST MILES TOTAL PROJECT	SHEET No.	TOTAL SHEETS
11	SD	94	13.8/14.4	22	55

REGISTERED CIVIL ENGINEER DATE 12-27-11

03-26-12
PLANS APPROVAL DATE

REGISTERED PROFESSIONAL ENGINEER JOSE L. ROBLES No. C 64402 Exp. 06-30-13 CIVIL STATE OF CALIFORNIA

THE STATE OF CALIFORNIA OR ITS OFFICERS OR AGENTS SHALL NOT BE RESPONSIBLE FOR THE ACCURACY OR COMPLETENESS OF SCANNED COPIES OF THIS PLAN SHEET.

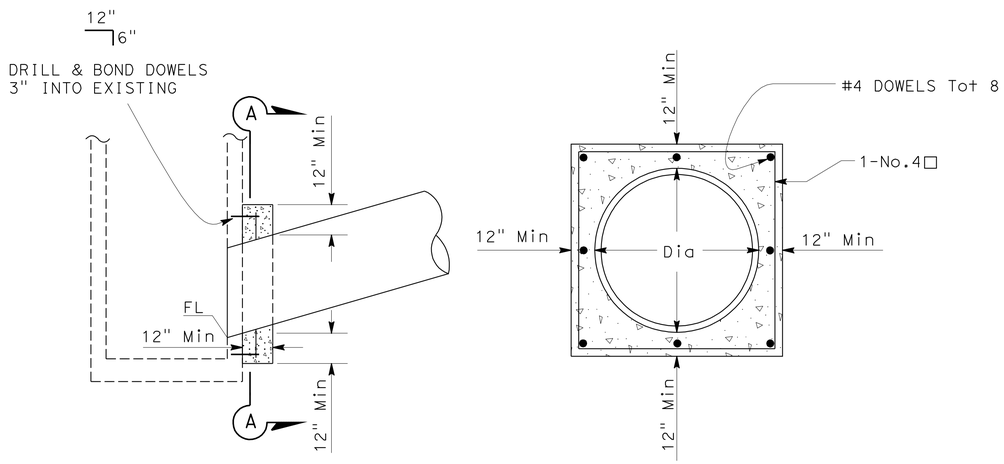

SECTION A-A

NOTE: BEND EXPOSED Reinf INTO CONCRETE COLLAR.

TYPE L-3 COLLAR

4 g

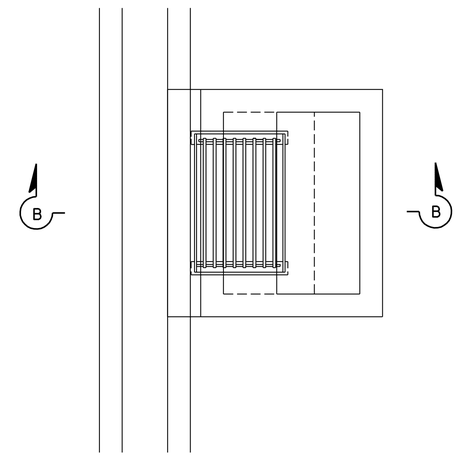

MODIFY G2 INLET

3 a

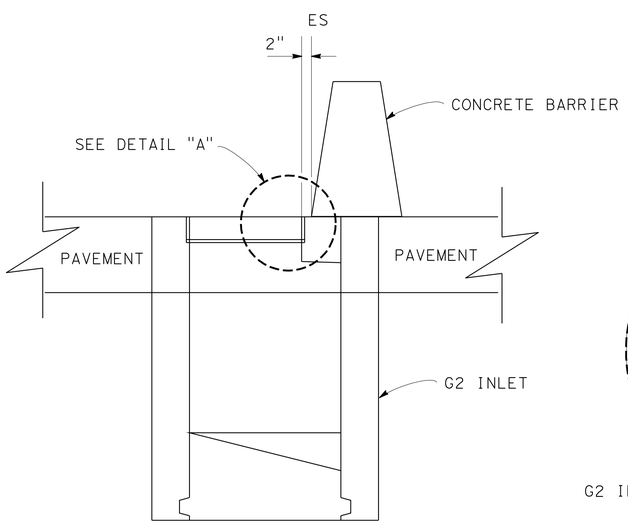

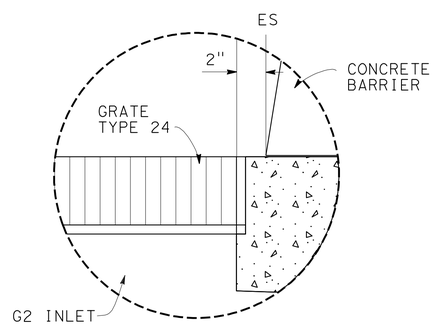

DETAIL "A"

G2 INLET AT BARRIER

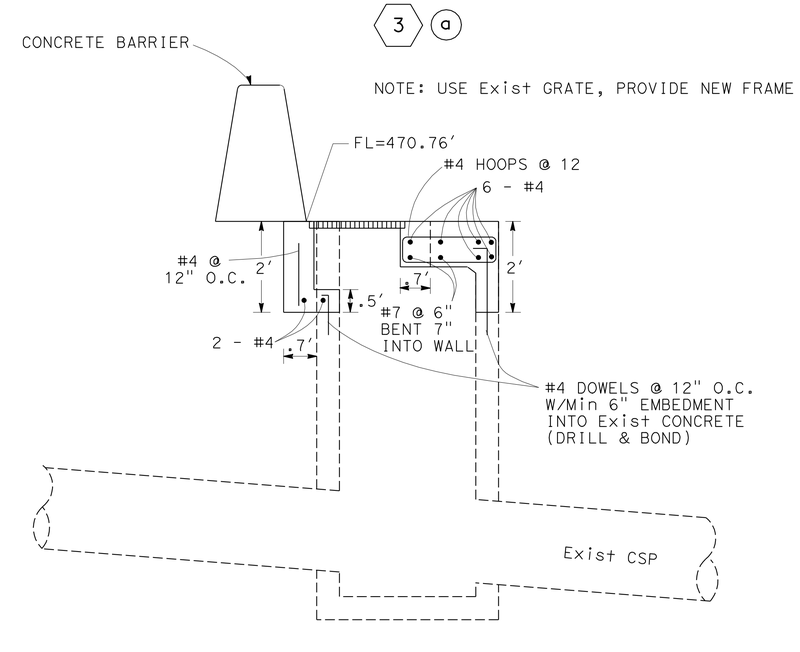

SECTION B-B

DRAINAGE DETAILS

NO SCALE

DD-1

STATE OF CALIFORNIA - DEPARTMENT OF TRANSPORTATION
Caltrans PROJECT DEVELOPMENT
TRAFFIC

FUNCTIONAL SUPERVISOR: RICHARD ESTRADA
CALCULATED-DESIGNED BY: HUNG TRAN
CHECKED BY: JOSE L. ROBLES
REVISED BY
DATE REVISED

LAST REVISION 01-12-12
DATE PLOTTED => 23-MAR-2012
TIME PLOTTED => 10:13

Dist	COUNTY	ROUTE	POST MILES TOTAL PROJECT	SHEET No.	TOTAL SHEETS
11	SD	94	13.8/14.4	23	55

REGISTERED CIVIL ENGINEER 12-27-11 DATE

03-26-12
PLANS APPROVAL DATE

REGISTERED PROFESSIONAL ENGINEER JOSE L. ROBLES No. C 64402 Exp. 06-30-13 CIVIL STATE OF CALIFORNIA

THE STATE OF CALIFORNIA OR ITS OFFICERS OR AGENTS SHALL NOT BE RESPONSIBLE FOR THE ACCURACY OR COMPLETENESS OF SCANNED COPIES OF THIS PLAN SHEET.

DRAINAGE SYSTEM	UNIT	24" APC LF	CONCRETE COLLAR (N) EA	MINOR Conc (MINOR STRUCTURE) CY	Misc IRON AND STEEL LB	HEIGHT OF INLET (N) LF	GRATED LINE DRAIN LF	PIPE COVER HEIGHT (N) LF	PIPE JOINT CLASSIFICATION (N)	DESCRIPTION	STATION	DRAINAGE SHEET No.
1	a			1.21	326	4.2				TYPE G1 INLET WITH 24-12 GRATE AND FRAME, H=4.2′	759+80.57 "94CRR" LINE	D-1
2	a			1.57	326	4.0				TYPE G2 INLET WITH 24-12 GRATE AND FRAME, H=4.0′	763+00.00 "94CRR" LINE	D-2
	b	115.1						2.0	S	24" X 115.1′ APC		D-2
	c			2.20	326	4.8				TYPE G2 INLET WITH 24-12 GRATE AND FRAME, H=4.8′; L=1.5′	764+20.51 "94CRR" LINE	D-2
3	a			1.31	45	3.0				MODIFY Exist G2 INLET WITH FRAME, H=3.0′; USE Exist 24-12 GRATE	772+67.05 "94CRR" LINE	D-3
4	a			1.57	326	4.0				TYPE G2 INLET WITH 24-12 GRATE AND FRAME, H=4.0′	775+50.00 "94CRR" LINE	D-4
	b	244.8						2.0	S	24" X 244.80′ APC		D-4
	c			1.82	326	5.0				TYPE G2 INLET WITH 24-12 GRATE AND FRAME, H=5.0′	778+00.00 "94CRR" LINE	D-4
	d	77.4						2.04	S	24" X 77.40′ APC		D-4
	e						12.0			GRATED LINE DRAIN, H=12", SLOPE BOTTOM		D-4
	f			2.08	326	6.0				TYPE G2 INLET WITH 24-12 GRATE AND FRAME, H=6.00′	778+82.00 "94CRR" LINE	D-4
	g	28.6	1					3.36	S	24" X 28.60′ APC W/ CONCRETE COLLAR		D-4
5	a						16.0			GRATED LINE DRAIN, H=12", SLOPE BOTTOM	785+04.85 "94CRR" LINE	D-5
TOTAL		465.9		11.76	2001		28.0					

(N) - NOT A SEPARATE PAY ITEM, FOR INFORMATION ONLY.
S - STANDARD JOINT TYPE

APC ALLOWABLE PIPE MATERIALS

DESIGNATION	Bit Ctd CSP		Plastic Pipe
	SIZE	THICKNESS	SIZE
24" APC	24"	0.079"	24"

DRAINAGE QUANTITIES

DQ-1

STATE OF CALIFORNIA - DEPARTMENT OF TRANSPORTATION
Caltrans PROJECT DEVELOPMENT
TRAFFIC

FUNCTIONAL SUPERVISOR: RICHARD ESTRADA
CALCULATED-DESIGNED BY: JOSE L. ROBLES
CHECKED BY: HUNG TRAN
REVISED BY
DATE REVISED

LAST REVISION 01-12-12
DATE PLOTTED => 23-MAR-2012
TIME PLOTTED => 10:14

Dist	COUNTY	ROUTE	POST MILES TOTAL PROJECT	SHEET No.	TOTAL SHEETS
11	SD	94	13.8/14.4	24	55

REGISTERED CIVIL ENGINEER 01-03-12 DATE

03-26-12
PLANS APPROVAL DATE

REGISTERED PROFESSIONAL ENGINEER SHAHIN ADIBI No. 54839 Exp. 06-30-12 CIVIL STATE OF CALIFORNIA

THE STATE OF CALIFORNIA OR ITS OFFICERS OR AGENTS SHALL NOT BE RESPONSIBLE FOR THE ACCURACY OR COMPLETENESS OF SCANNED COPIES OF THIS PLAN SHEET.

NOTES:

1. EXACT LOCATION OF CONSTRUCTION AREA SIGNS WILL BE DETERMINED BY THE ENGINEER.
2. FEDERAL MANUAL ON UNIFORM TRAFFIC CONTROL DEVICES (MUTCD) SIGN CODES ARE SHOWN UNLESS DESIGNATED BY (CA), INDICATING CALIFORNIA MUTCD.
3. SEE TRAFFIC HANDLING PLANS FOR ADDITIONAL CONSTRUCTION AREA SIGNS.
4. EXISTING UTILITIES ARE NOT SHOWN ON THESE PLAN SHEETS. THE CONTRACTOR SHALL VERIFY LOCATIONS OF EXISTING UTILITIES AND ADJUST THE FIELD LOCATION OF SIGN POSTS IN CONSULTATION WITH THE ENGINEER.

LEGEND:

X = CONSTRUCTION AREA SIGNS

TYPICAL PLACEMENT OF TRAFFIC PLASTIC DRUM

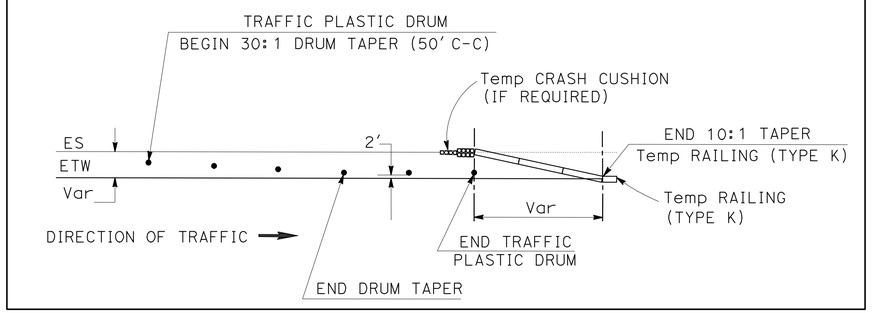

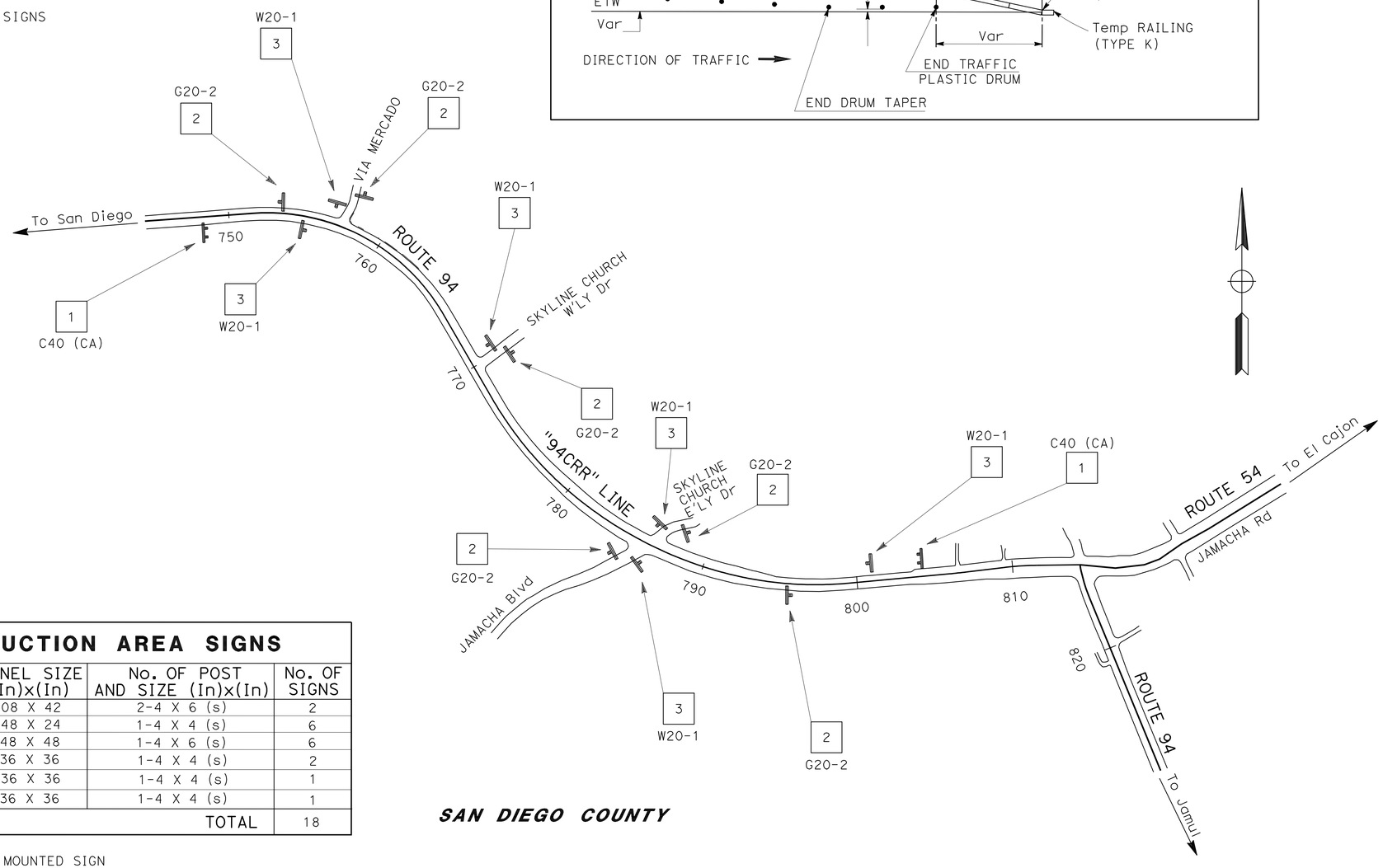

CONSTRUCTION AREA SIGNS

SIGN No.	TYPE	PANEL SIZE (In)x(In)	No. OF POST AND SIZE (In)x(In)	No. OF SIGNS
1	C40 (CA)	108 X 42	2-4 X 6 (s)	2
2	G20-2	48 X 24	1-4 X 4 (s)	6
3	W20-1	48 X 48	1-4 X 6 (s)	6
4	C31A (CA)	36 X 36	1-4 X 4 (s)	2
5	W21-5bL	36 X 36	1-4 X 4 (s)	1
6	C-30A (CA)	36 X 36	1-4 X 4 (s)	1
			TOTAL	18

(s) DENOTES STATIONARY MOUNTED SIGN

SAN DIEGO COUNTY

APPROVED FOR CONSTRUCTION AREA SIGN WORK ONLY

CONSTRUCTION AREA SIGNS

NO SCALE

CS-1

STATE OF CALIFORNIA - DEPARTMENT OF TRANSPORTATION
Caltrans
TRAFFIC DESIGN

FUNCTIONAL SUPERVISOR: CAMILLE ABOU-FADEL
CALCULATED-DESIGNED BY: SHAHIN ADIBI
CHECKED BY: RYAN CHAO
REVISED BY
DATE REVISED

LAST REVISION 01-12-12
DATE PLOTTED => 23-MAR-2012
TIME PLOTTED => 10:14

Dist	COUNTY	ROUTE	POST MILES TOTAL PROJECT	SHEET No.	TOTAL SHEETS
11	SD	94	13.8/14.4	25	55

REGISTERED CIVIL ENGINEER 12-27-11 DATE

03-26-12
PLANS APPROVAL DATE

REGISTERED PROFESSIONAL ENGINEER JOSE L. ROBLES No. C 64402 Exp. 06-30-13 CIVIL STATE OF CALIFORNIA

THE STATE OF CALIFORNIA OR ITS OFFICERS OR AGENTS SHALL NOT BE RESPONSIBLE FOR THE ACCURACY OR COMPLETENESS OF SCANNED COPIES OF THIS PLAN SHEET.

NOTE:

FOR ACCURATE RIGHT OF WAY DATA, CONTACT RIGHT OF WAY ENGINEERING AT THE DISTRICT OFFICE.

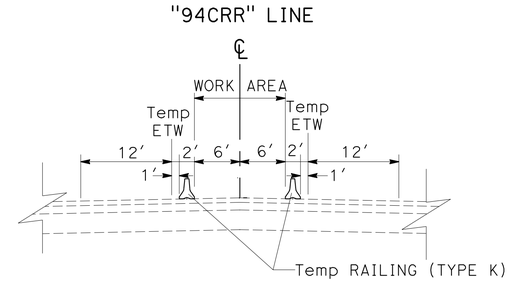

SECTION A-A
Sta 757+73.00 TO Sta 768+39.35
NO SCALE

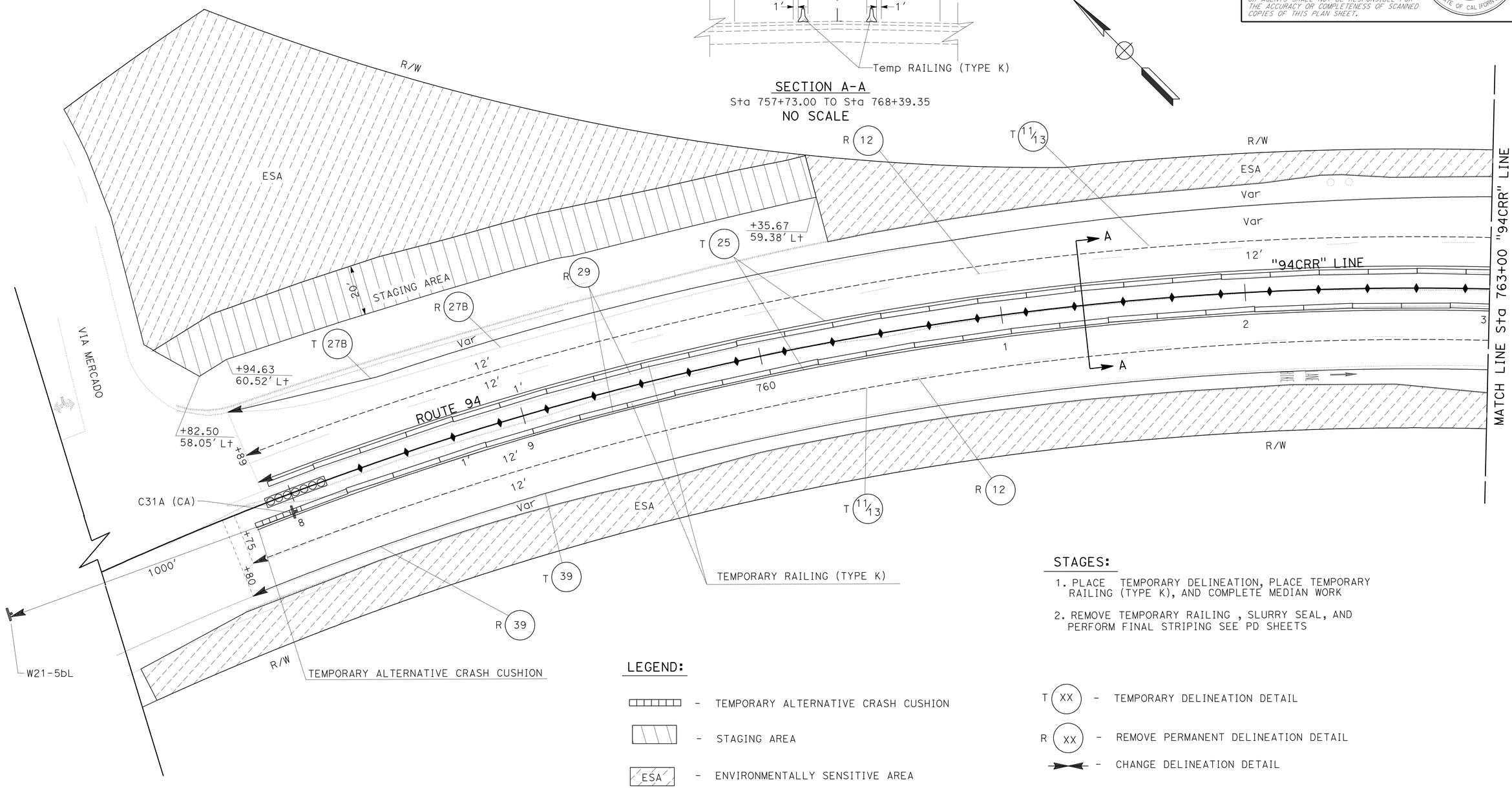

STAGES:

1. PLACE TEMPORARY DELINEATION, PLACE TEMPORARY RAILING (TYPE K), AND COMPLETE MEDIAN WORK
2. REMOVE TEMPORARY RAILING , SLURRY SEAL, AND PERFORM FINAL STRIPING SEE PD SHEETS

LEGEND:

- TEMPORARY ALTERNATIVE CRASH CUSHION
- STAGING AREA
- ESA — ENVIRONMENTALLY SENSITIVE AREA
- TRAFFIC PLASTIC DRUMS
- TEMPORARY SIGN
- T (XX) — TEMPORARY DELINEATION DETAIL
- R (XX) — REMOVE PERMANENT DELINEATION DETAIL
- CHANGE DELINEATION DETAIL

APPROVED FOR STAGE CONSTRUCTION WORK ONLY

STAGE CONSTRUCTION

SCALE: 1" = 20′

SC-1

STATE OF CALIFORNIA - DEPARTMENT OF TRANSPORTATION
Caltrans PROJECT TRAFFIC DEVELOPMENT

FUNCTIONAL SUPERVISOR: RICHARD ESTRADA
CALCULATED-DESIGNED BY: HUNG TRAN
CHECKED BY: JOSE L. ROBLES
REVISED BY
DATE REVISED

LAST REVISION 01-12-12
DATE PLOTTED => 23-MAR-2012
TIME PLOTTED => 10:14

Dist	COUNTY	ROUTE	POST MILES TOTAL PROJECT	SHEET No.	TOTAL SHEETS
11	SD	94	13.8/14.4	26	55

REGISTERED CIVIL ENGINEER DATE 12-27-11

03-26-12
PLANS APPROVAL DATE

REGISTERED PROFESSIONAL ENGINEER
JOSE L. ROBLES
No. C 64402
Exp. 06-30-13
CIVIL
STATE OF CALIFORNIA

THE STATE OF CALIFORNIA OR ITS OFFICERS OR AGENTS SHALL NOT BE RESPONSIBLE FOR THE ACCURACY OR COMPLETENESS OF SCANNED COPIES OF THIS PLAN SHEET.

NOTE:

FOR ACCURATE RIGHT OF WAY DATA, CONTACT RIGHT OF WAY ENGINEERING AT THE DISTRICT OFFICE.

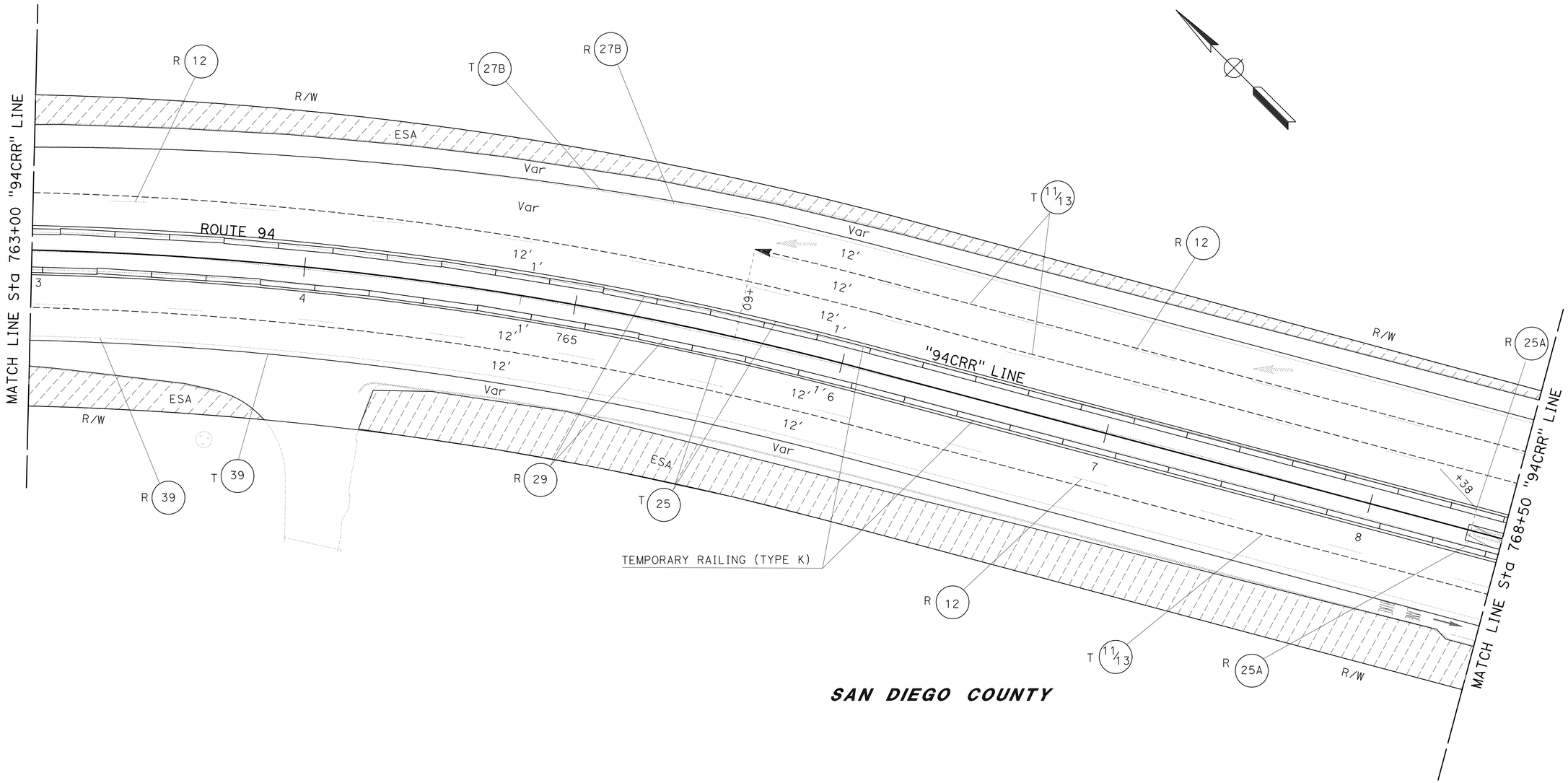

SAN DIEGO COUNTY

STAGE CONSTRUCTION

SCALE: 1" = 20'

SC-2

APPROVED FOR STAGE CONSTRUCTION WORK ONLY

STATE OF CALIFORNIA - DEPARTMENT OF TRANSPORTATION
Caltrans PROJECT DEVELOPMENT
TRAFFIC

FUNCTIONAL SUPERVISOR: RICHARD ESTRADA
CALCULATED-DESIGNED BY: HUNG TRAN
CHECKED BY: JOSE L. ROBLES
REVISED BY
DATE REVISED

LAST REVISION DATE PLOTTED => 23-MAR-2012
01-12-12 TIME PLOTTED => 10:14

Dist	COUNTY	ROUTE	POST MILES TOTAL PROJECT	SHEET No.	TOTAL SHEETS
11	SD	94	13.8/14.4	27	55

REGISTERED CIVIL ENGINEER 12-27-11 DATE

03-26-12
PLANS APPROVAL DATE

REGISTERED PROFESSIONAL ENGINEER JOSE L. ROBLES No. C 64402 Exp. 06-30-13 CIVIL STATE OF CALIFORNIA

THE STATE OF CALIFORNIA OR ITS OFFICERS OR AGENTS SHALL NOT BE RESPONSIBLE FOR THE ACCURACY OR COMPLETENESS OF SCANNED COPIES OF THIS PLAN SHEET.

NOTE:

FOR ACCURATE RIGHT OF WAY DATA, CONTACT RIGHT OF WAY ENGINEERING AT THE DISTRICT OFFICE.

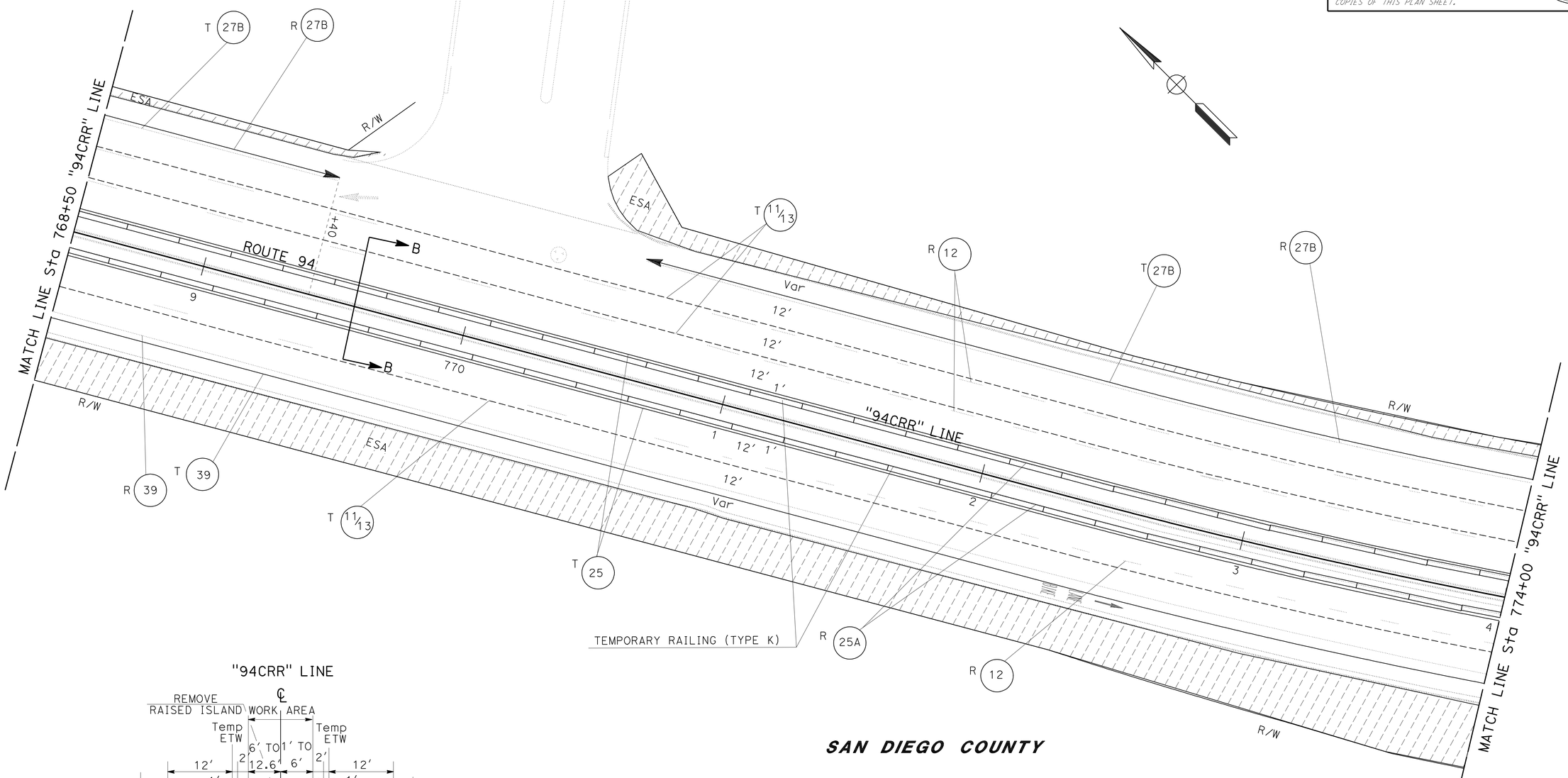

SAN DIEGO COUNTY

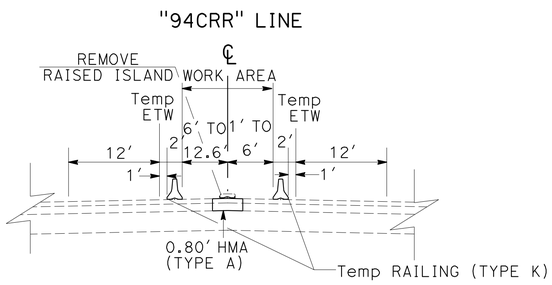

SECTION B-B
Sta 770+50.00 TO Sta 779+50.00
NO SCALE

APPROVED FOR STAGE CONSTRUCTION WORK ONLY

STAGE CONSTRUCTION

SCALE: 1" = 20'

SC-3

STATE OF CALIFORNIA - DEPARTMENT OF TRANSPORTATION
Caltrans PROJECT DEVELOPMENT
TRAFFIC

FUNCTIONAL SUPERVISOR: RICHARD ESTRADA
CALCULATED-DESIGNED BY: HUNG TRAN
CHECKED BY: JOSE L. ROBLES
REVISED BY
DATE REVISED

LAST REVISION DATE PLOTTED => 23-MAR-2012
01-12-12 TIME PLOTTED => 10:14

Dist	COUNTY	ROUTE	POST MILES TOTAL PROJECT	SHEET No.	TOTAL SHEETS
11	SD	94	13.8/14.4	28	55

REGISTERED CIVIL ENGINEER 12-27-11 DATE

03-26-12
PLANS APPROVAL DATE

REGISTERED PROFESSIONAL ENGINEER JOSE L. ROBLES No. C 64402 Exp. 06-30-13 CIVIL STATE OF CALIFORNIA

THE STATE OF CALIFORNIA OR ITS OFFICERS OR AGENTS SHALL NOT BE RESPONSIBLE FOR THE ACCURACY OR COMPLETENESS OF SCANNED COPIES OF THIS PLAN SHEET.

NOTE:

FOR ACCURATE RIGHT OF WAY DATA, CONTACT RIGHT OF WAY ENGINEERING AT THE DISTRICT OFFICE.

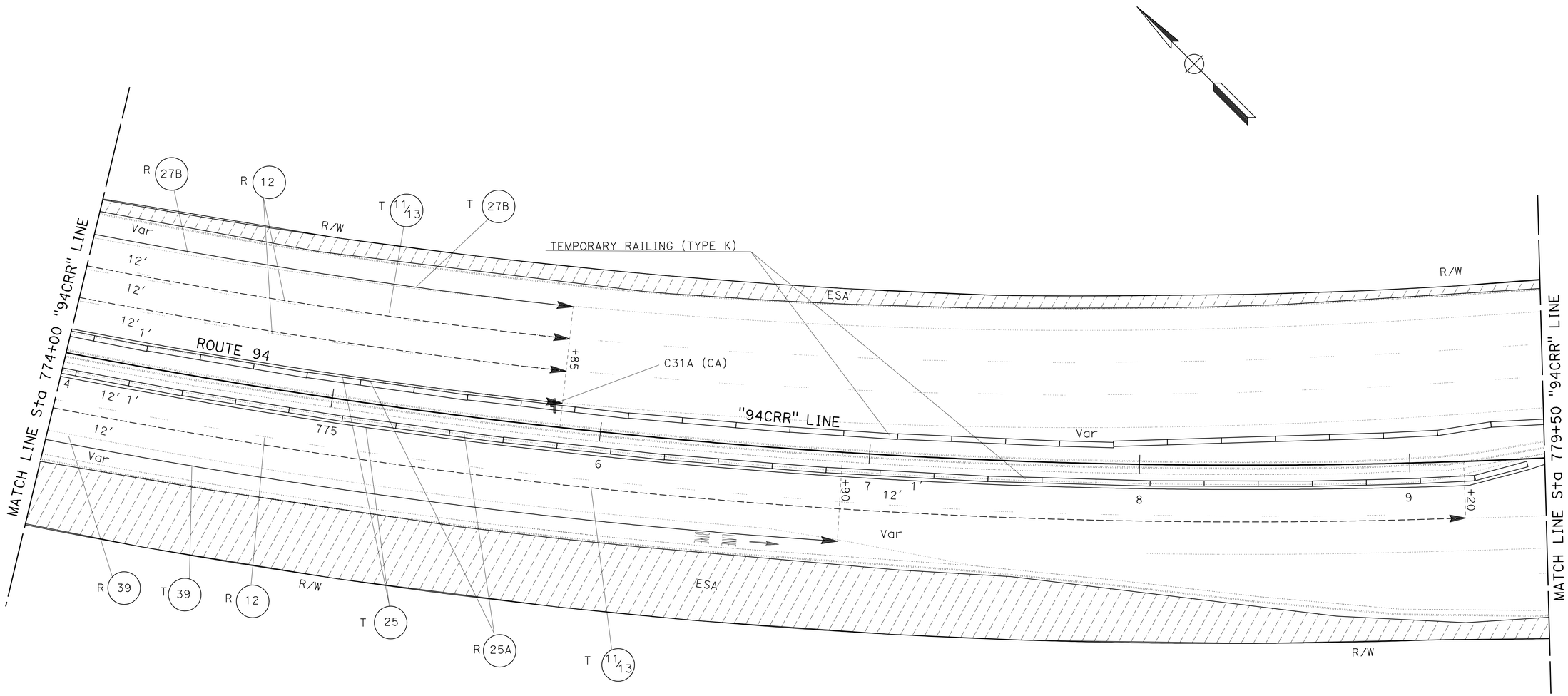

SAN DIEGO COUNTY

APPROVED FOR STAGE CONSTRUCTION WORK ONLY

STAGE CONSTRUCTION

SCALE: 1" = 20'

SC-4

STATE OF CALIFORNIA - DEPARTMENT OF TRANSPORTATION
Caltrans PROJECT DEVELOPMENT
TRAFFIC

FUNCTIONAL SUPERVISOR: RICHARD ESTRADA
CALCULATED-DESIGNED BY: JOSE L. ROBLES
CHECKED BY: HUNG TRAN
REVISED BY
DATE REVISED

LAST REVISION 01-12-12
DATE PLOTTED => 23-MAR-2012
TIME PLOTTED => 10:14

Dist	COUNTY	ROUTE	POST MILES TOTAL PROJECT	SHEET No.	TOTAL SHEETS
11	SD	94	13.8/14.4	29	55

REGISTERED CIVIL ENGINEER DATE 12-27-11

03-26-12
PLANS APPROVAL DATE

REGISTERED PROFESSIONAL ENGINEER
JOSE L. ROBLES
No. C 64402
Exp. 06-30-13
CIVIL
STATE OF CALIFORNIA

THE STATE OF CALIFORNIA OR ITS OFFICERS OR AGENTS SHALL NOT BE RESPONSIBLE FOR THE ACCURACY OR COMPLETENESS OF SCANNED COPIES OF THIS PLAN SHEET.

NOTE:

FOR ACCURATE RIGHT OF WAY DATA, CONTACT RIGHT OF WAY ENGINEERING AT THE DISTRICT OFFICE.

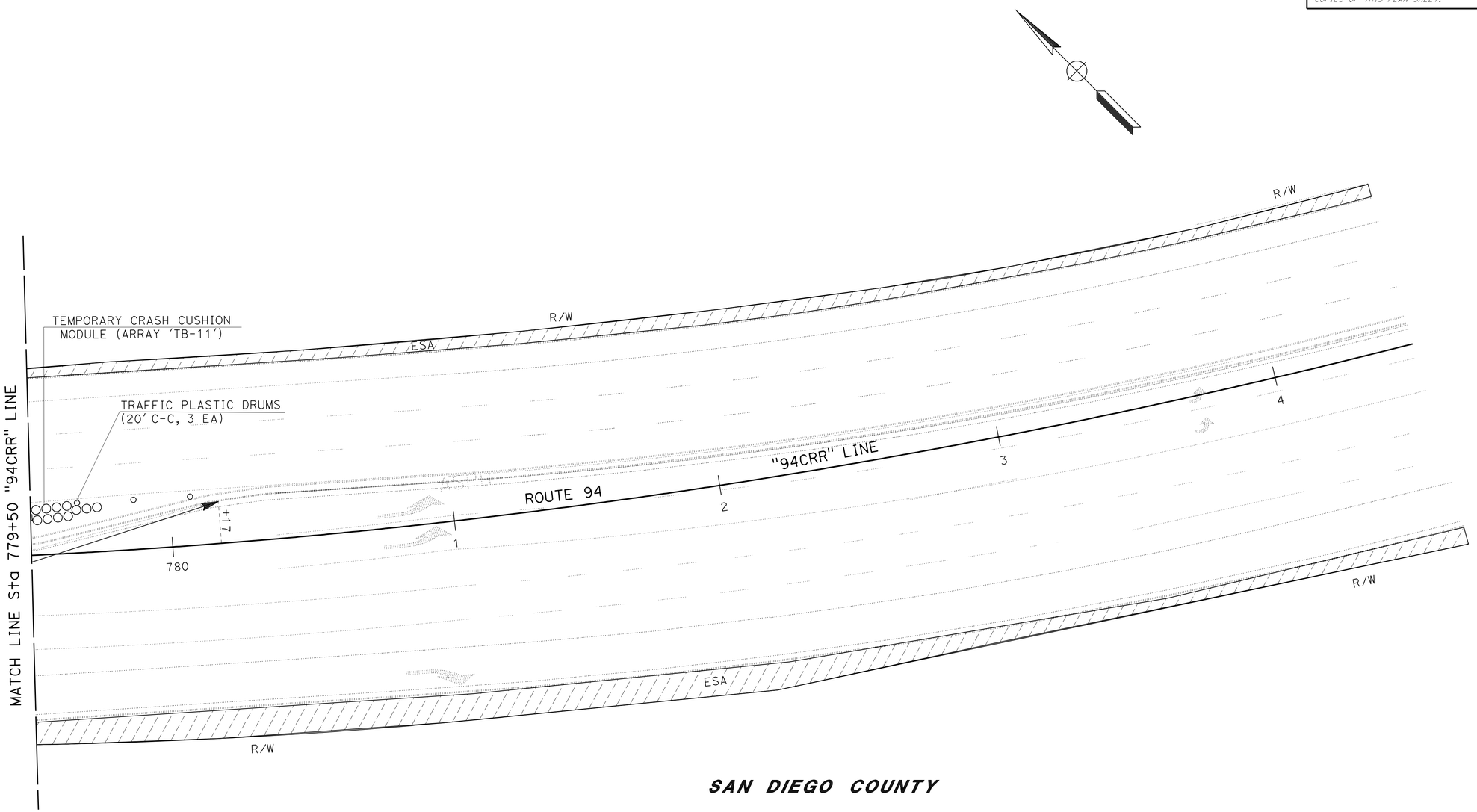

SAN DIEGO COUNTY

APPROVED FOR STAGE CONSTRUCTION WORK ONLY

STAGE CONSTRUCTION

SCALE: 1" = 20'

SC-5

STATE OF CALIFORNIA - DEPARTMENT OF TRANSPORTATION
Caltrans PROJECT DEVELOPMENT
TRAFFIC

FUNCTIONAL SUPERVISOR: RICHARD ESTRADA
CALCULATED-DESIGNED BY: HUNG TRAN
CHECKED BY: JOSE L. ROBLES
REVISED BY
DATE REVISED

LAST REVISION 01-12-12
DATE PLOTTED => 23-MAR-2012
TIME PLOTTED => 10:14

Dist	COUNTY	ROUTE	POST MILES TOTAL PROJECT	SHEET No.	TOTAL SHEETS
11	SD	94	13.8/14.4	30	55

REGISTERED CIVIL ENGINEER 12-27-11 DATE

03-26-12
PLANS APPROVAL DATE

REGISTERED PROFESSIONAL ENGINEER JOSE L. ROBLES No. C 64402 Exp. 06-30-13 CIVIL STATE OF CALIFORNIA

THE STATE OF CALIFORNIA OR ITS OFFICERS OR AGENTS SHALL NOT BE RESPONSIBLE FOR THE ACCURACY OR COMPLETENESS OF SCANNED COPIES OF THIS PLAN SHEET.

NOTE:

FOR ACCURATE RIGHT OF WAY DATA, CONTACT RIGHT OF WAY ENGINEERING AT THE DISTRICT OFFICE.

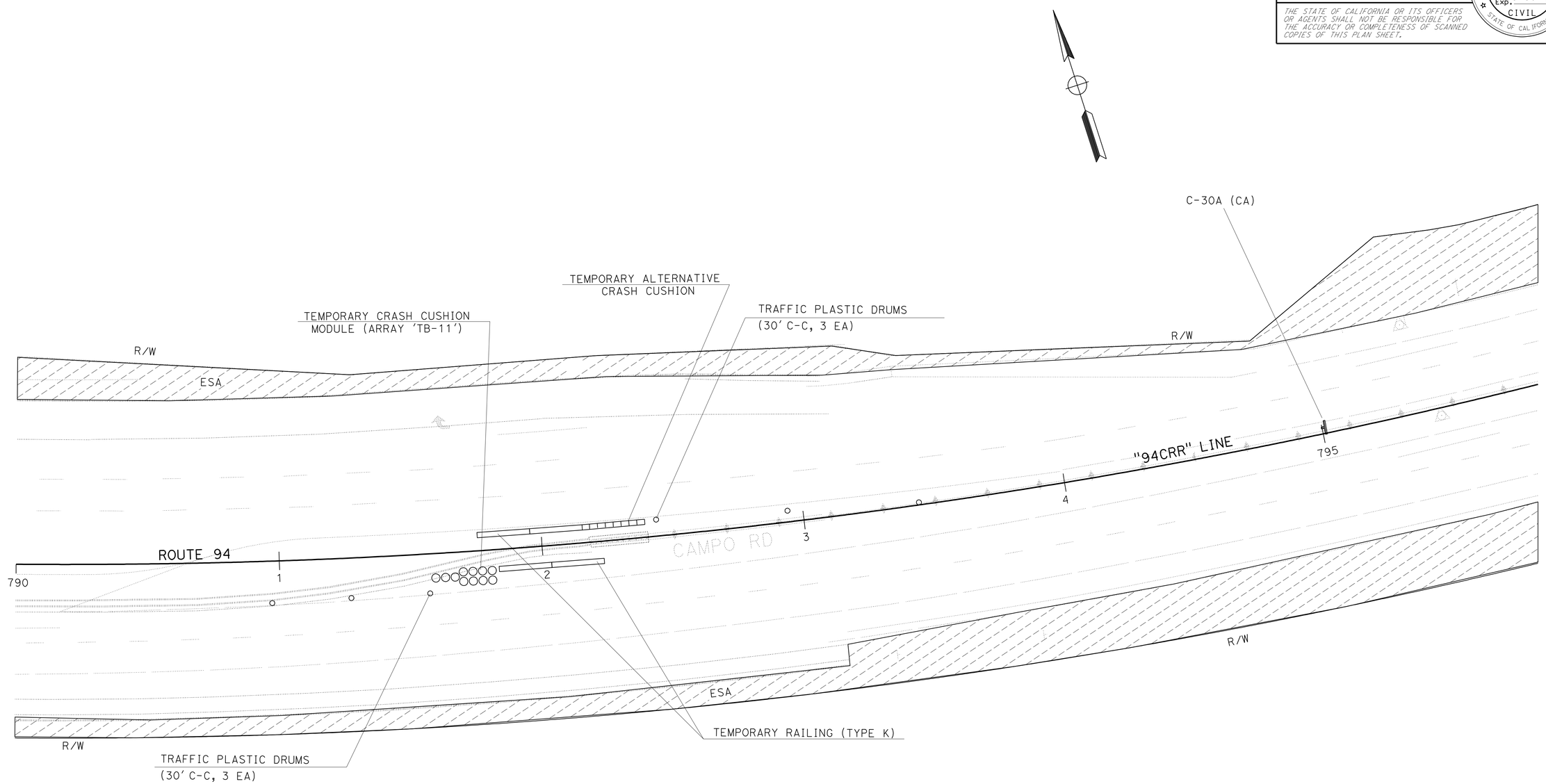

SAN DIEGO COUNTY

APPROVED FOR STAGE CONSTRUCTION WORK ONLY

STAGE CONSTRUCTION

SCALE: 1" = 20'

SC-6

STATE OF CALIFORNIA - DEPARTMENT OF TRANSPORTATION
Caltrans PROJECT DEVELOPMENT
TRAFFIC

FUNCTIONAL SUPERVISOR: RICHARD ESTRADA

CALCULATED-DESIGNED BY: HUNG TRAN
CHECKED BY: JOSE L. ROBLES

REVISED BY
DATE REVISED

LAST REVISION 01-12-12
DATE PLOTTED => 23-MAR-2012
TIME PLOTTED => 10:14

Dist	COUNTY	ROUTE	POST MILES TOTAL PROJECT	SHEET No.	TOTAL SHEETS
11	SD	94	13.8/14.4	31	55

REGISTERED CIVIL ENGINEER 12-27-11 DATE

03-26-12
PLANS APPROVAL DATE

REGISTERED PROFESSIONAL ENGINEER JOSE L. ROBLES No. C 64402 Exp. 06-30-13 CIVIL STATE OF CALIFORNIA

THE STATE OF CALIFORNIA OR ITS OFFICERS OR AGENTS SHALL NOT BE RESPONSIBLE FOR THE ACCURACY OR COMPLETENESS OF SCANNED COPIES OF THIS PLAN SHEET.

TEMPORARY RAILING (TYPE K)

SHEET	LF
SC-1	1,000
SC-2	1,140
SC-3	1,080
SC-4	1,100
SC-5	---
SC-6	80
TOTAL	4,400

TEMPORARY PAVEMENT MARKER / TEMPORARY TRAFFIC STRIPE

ROUTE	LINE	LOCATION FROM STATION	LOCATION TO STATION	DETAIL No.	(EA) TYPE H YELLOW	(EA) TYPE A WHITE	(EA) TYPE G CLEAR	(EA) TYPE D YELLOW	PAINT (LF) 4"	PAINT (LF) 6"
94	"94CRR"	757+89.00	780+17.00	25	85				4,024	
94	"94CRR"	757+80.00	776+90.00	39						1,900
94	"94CRR"	757+75.00	779+20.00	11/13		388	97		4,629	
94	"94CRR"	757+89.00	775+85.00	27B					1,177	
SUBTOTAL					85	388	97		9,830	1,900
TOTAL					570				11,730	

TEMPORARY ALTERNATIVE CRASH CUSHION

SHEET	EA
SC-1	1
SC-6	1
TOTAL	2

REMOVE PAINTED TRAFFIC STRIPE

ROUTE	LINE	SHEET	TYPE	LF	REMARKS
94	"94CRR"	SC-1 THROUGH SC-4	DETAIL 27B	1,177	
94	"94CRR"	SC-1 THROUGH SC-4	DETAIL 39	1,900	
94	"94CRR"	SC-1 THROUGH SC-4	DETAIL 12	4,629	
			TOTAL	7,706	

NOTE: SEE PD SHEETS FOR ADDITIONAL REMOVAL.

REMOVE YELLOW PAINTED TRAFFIC STRIPE (HAZARDOUS WASTE)

ROUTE	LINE	SHEET	TYPE	LF	REMARKS
94	"94CRR"	SC-1 THROUGH SC-4	DETAIL 29	2,366	INCLUDES THE 3" BLACK PAINT STRIPE
94	"94CRR"	SC-1 THROUGH SC-4	DETAIL 25A	1,600	
			TOTAL	2,966	

TRAFFIC PLASTIC DRUM

SHEET	EA
SC-1	---
SC-2	---
SC-3	---
SC-4	---
SC-5	3
SC-6	6
TOTAL	9

REMOVE PAVEMENT MARKER (N)

ROUTE	LINE	SHEET	TYPE	EA
94	"94CRR"	SC-1 THROUGH SC-4	DETAIL 12	97
94	"94CRR"	SC-1 THROUGH SC-4	DETAIL 25A	68
94	"94CRR"	SC-1 THROUGH SC-4	DETAIL 29	200
			TOTAL	365

(N) - NOT A SEPARATE PAY ITEM, FOR INFORMATION ONLY

NOTE: SEE PD SHEETS FOR ADDITIONAL REMOVAL.

TEMPORARY CRASH CUSHION MODULE

SHEET	EA
SC-5	11
SC-7	11
TOTAL	22

STAGE CONSTRUCTION QUANTITIES

SCQ-1

REVISED BY | DATE REVISED
HUNG TRAN | JOSE L. ROBLES
CALCULATED-DESIGNED BY | CHECKED BY
FUNCTIONAL SUPERVISOR: RICHARD ESTRADA

STATE OF CALIFORNIA - DEPARTMENT OF TRANSPORTATION
Caltrans PROJECT DEVELOPMENT
TRAFFIC

LAST REVISION 01-12-12 | DATE PLOTTED => 23-MAR-2012 | TIME PLOTTED => 10:14

Dist	COUNTY	ROUTE	POST MILES TOTAL PROJECT	SHEET No.	TOTAL SHEETS
11	SD	94	13.8/14.4	32	55

REGISTERED CIVIL ENGINEER 01-03-12 DATE

03-26-12
PLANS APPROVAL DATE

REGISTERED PROFESSIONAL ENGINEER
SHAHIN T ADIBI
No. 54839
Exp. 06/30/12
CIVIL
STATE OF CALIFORNIA

THE STATE OF CALIFORNIA OR ITS OFFICERS OR AGENTS SHALL NOT BE RESPONSIBLE FOR THE ACCURACY OR COMPLETENESS OF SCANNED COPIES OF THIS PLAN SHEET.

NOTE:

FOR ACCURATE RIGHT OF WAY DATA, CONTACT RIGHT OF WAY ENGINEERING AT THE DISTRICT OFFICE.

LEGEND:

- = CHANGE OF DELINEATION DETAIL
- (XX) = PERMANENT PAVEMENT DELINEATION DETAIL
- R (XX) = REMOVE PERMANENT PAVEMENT DELINEATION DETAIL

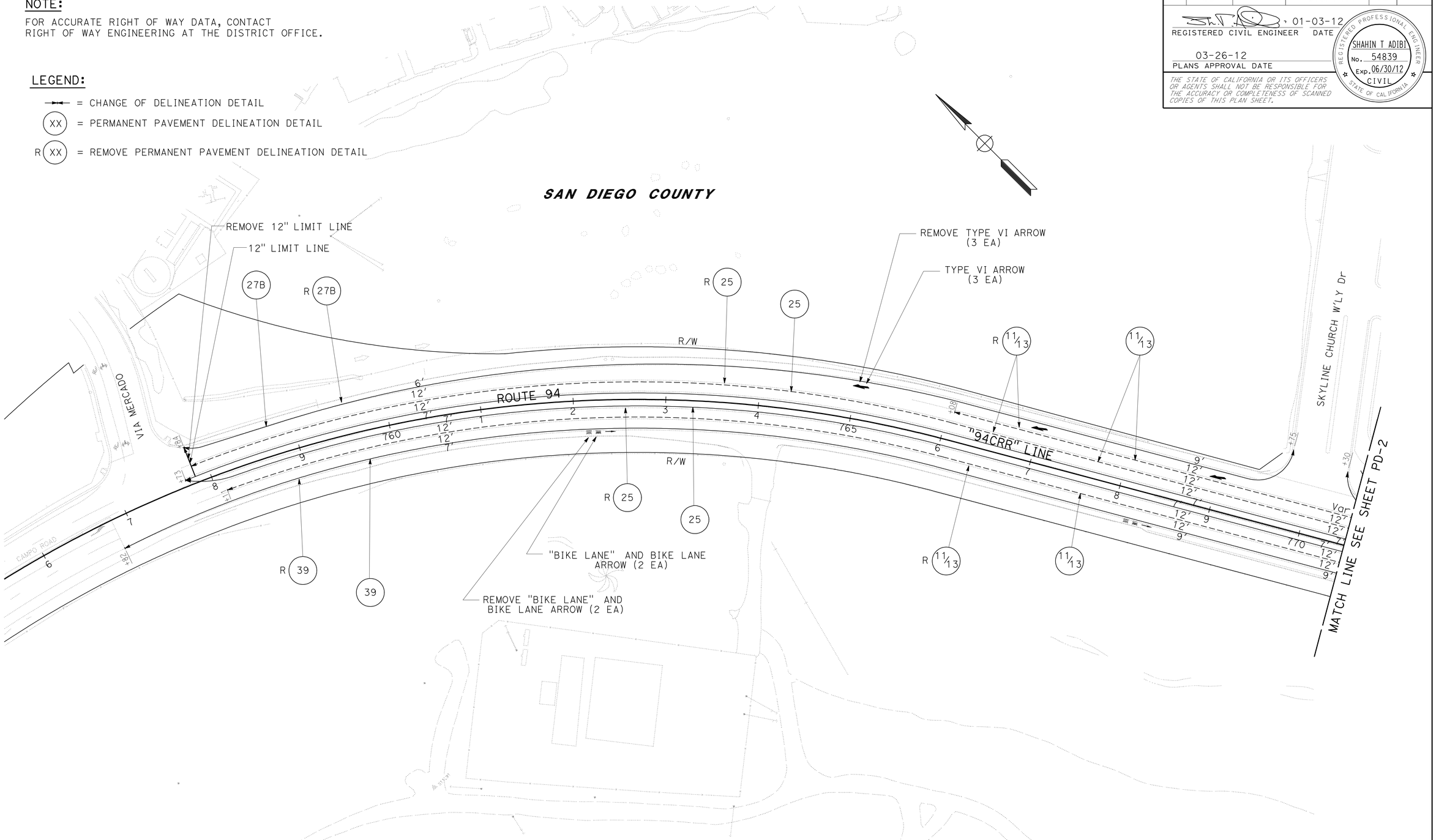

APPROVED FOR PAVEMENT DELINEATION WORK ONLY

PAVEMENT DELINEATION PLAN

SCALE: 1" = 50'

PD-1

STATE OF CALIFORNIA - DEPARTMENT OF TRANSPORTATION
Caltrans® **TRAFFIC DESIGN**

FUNCTIONAL SUPERVISOR: CAMILLE ABOUFADEL
CALCULATED-DESIGNED BY: NOEL TAPIA
CHECKED BY: SHAHIN ADIBI
REVISED BY
DATE REVISED

LAST REVISION DATE PLOTTED => 23-MAR-2012
01-12-12 TIME PLOTTED => 10:15

Dist	COUNTY	ROUTE	POST MILES TOTAL PROJECT	SHEET No.	TOTAL SHEETS
11	SD	94	13.8/14.4	33	55

REGISTERED CIVIL ENGINEER 01-03-12 DATE

03-26-12
PLANS APPROVAL DATE

REGISTERED PROFESSIONAL ENGINEER
SHAHIN T ADIBI
No. 54839
Exp. 06/30/12
CIVIL
STATE OF CALIFORNIA

THE STATE OF CALIFORNIA OR ITS OFFICERS OR AGENTS SHALL NOT BE RESPONSIBLE FOR THE ACCURACY OR COMPLETENESS OF SCANNED COPIES OF THIS PLAN SHEET.

NOTE:

FOR ACCURATE RIGHT OF WAY DATA, CONTACT RIGHT OF WAY ENGINEERING AT THE DISTRICT OFFICE.

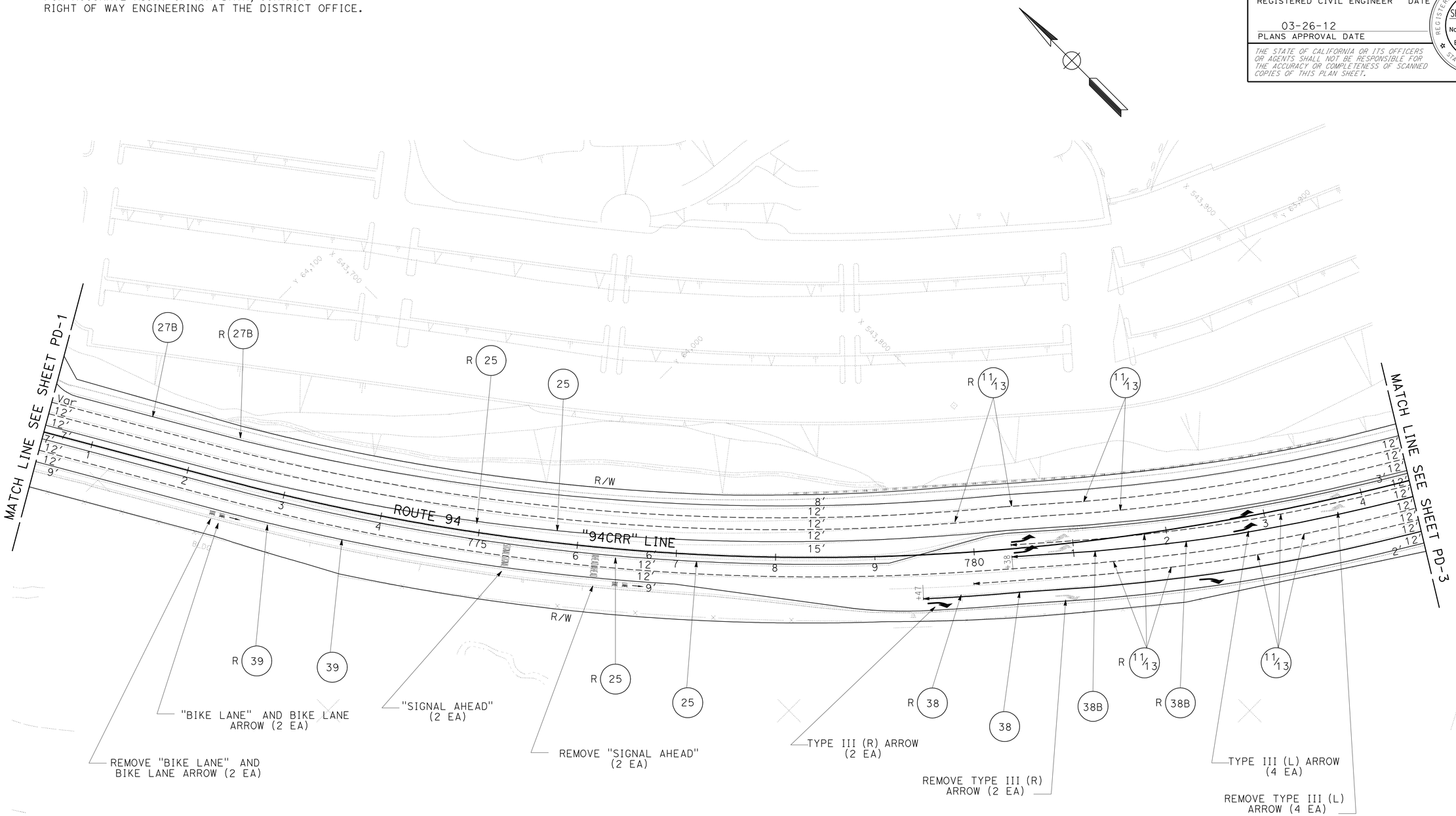

SAN DIEGO COUNTY

APPROVED FOR PAVEMENT DELINEATION WORK ONLY

PAVEMENT DELINEATION PLAN

SCALE: 1" = 50'

PD-2

STATE OF CALIFORNIA - DEPARTMENT OF TRANSPORTATION
Caltrans® **TRAFFIC DESIGN**

FUNCTIONAL SUPERVISOR: CAMILLE ABOUFADEL

CALCULATED-DESIGNED BY: NOEL TAPIA
CHECKED BY: SHAHIN ADIBI

REVISED BY
DATE REVISED

LAST REVISION 01-12-12
DATE PLOTTED => 23-MAR-2012
TIME PLOTTED => 10:15

Dist	COUNTY	ROUTE	POST MILES TOTAL PROJECT	SHEET No.	TOTAL SHEETS
11	SD	94	13.8/14.4	34	55

REGISTERED CIVIL ENGINEER 01-03-12 DATE

03-26-12
PLANS APPROVAL DATE

REGISTERED PROFESSIONAL ENGINEER
SHAHIN T ADIBI
No. 54839
Exp. 06/30/12
CIVIL
STATE OF CALIFORNIA

THE STATE OF CALIFORNIA OR ITS OFFICERS OR AGENTS SHALL NOT BE RESPONSIBLE FOR THE ACCURACY OR COMPLETENESS OF SCANNED COPIES OF THIS PLAN SHEET.

NOTE:

FOR ACCURATE RIGHT OF WAY DATA, CONTACT
RIGHT OF WAY ENGINEERING AT THE DISTRICT OFFICE.

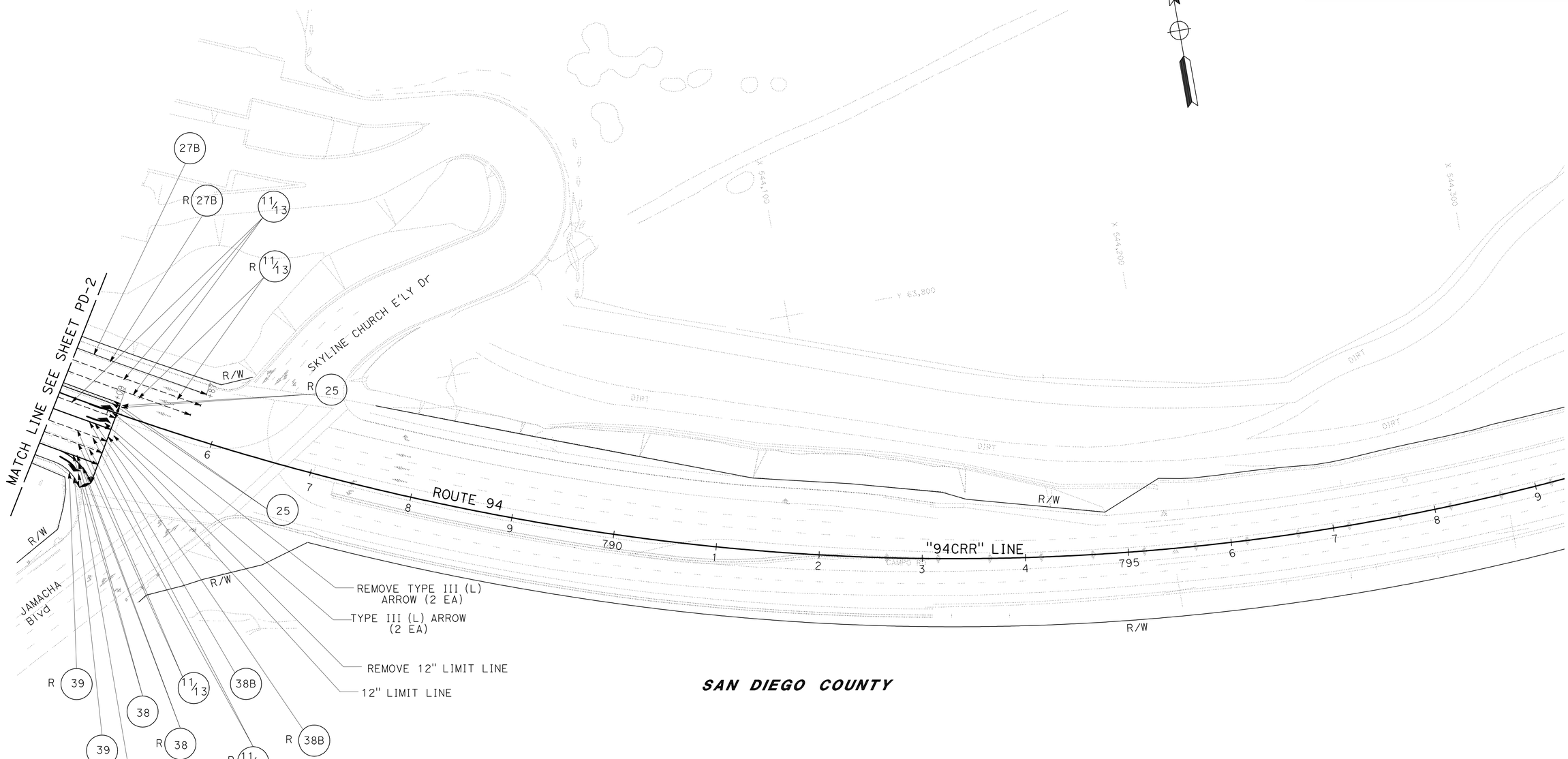

SAN DIEGO COUNTY

APPROVED FOR PAVEMENT DELINEATION WORK ONLY

PAVEMENT DELINEATION PLAN

SCALE: 1" = 50'

PD-3

STATE OF CALIFORNIA - DEPARTMENT OF TRANSPORTATION
Caltrans
TRAFFIC DESIGN

FUNCTIONAL SUPERVISOR: CAMILLE ABOUFADEL
CALCULATED-DESIGNED BY: NOEL TAPIA
CHECKED BY: SHAHIN ADIBI
REVISED BY
DATE REVISED

LAST REVISION 01-12-12 | DATE PLOTTED => 23-MAR-2012 | TIME PLOTTED => 10:15

Dist	COUNTY	ROUTE	POST MILES TOTAL PROJECT	SHEET No.	TOTAL SHEETS
11	SD	94	13.8/14.4	35	55

REGISTERED CIVIL ENGINEER 01-03-12 DATE

03-26-12
PLANS APPROVAL DATE

REGISTERED PROFESSIONAL ENGINEER
SHAHIN T ADIBI
No. 54839
Exp. 06/30/12
CIVIL
STATE OF CALIFORNIA

THE STATE OF CALIFORNIA OR ITS OFFICERS OR AGENTS SHALL NOT BE RESPONSIBLE FOR THE ACCURACY OR COMPLETENESS OF SCANNED COPIES OF THIS PLAN SHEET.

LOCATION					PAVEMENT MARKER SUMMARY			TRAFFIC STRIPE SUMMARY				REMOVE PAVEMENT MARKER SUMMARY [N]	REMOVE TRAFFIC STRIPE SUMMARY			REMARKS
					PAVEMENT MARKER (EA)			THERMOPLASTIC (LF)					PAINT STRIPE		THERMOPLASTIC STRIPE	
					NON-REFLECTIVE	RETROREFLECTIVE		4"		6"	8"					
SHEET	Rte	FROM STA	TO STA	DETAIL No.	TYPE A	TYPE G	TYPE H	SOLID	BROKEN	SOLID	SOLID		4"	6"	8"	
					WHITE	CLEAR	YELLOW	4"	36'-12'	6"	8"	(EA)	(LF)	(LF)	(LF)	
PD-1	94	757+84	770+50	27B				1,266								
PD-1	94	757+84	770+50	27B									1,266			
PD-1	94	757+84	770+50	11/13	106	28			1,266							
PD-1	94	757+84	770+50	11/13								134	317			L=1266
PD-1	94	766+08	770+50	11/13	37	11			442							
PD-1	94	765+08	770+50	11/13								59	136			L=442
PD-1	94	757+73	770+50	25			55	2,554								
PD-1	94	757+73	770+50	25								55	2,554			
PD-1	94	758+11	770+50	11/13	104	27			1,239							
PD-1	94	757+73	770+50	11/13								135	320			L=1236
PD-1	94	756+82	770+50	39						1,368						
PD-1	94	757+84	770+50	39										1,899		L=1266
PD-2	94	770+50	784+50	27B				1,400								
PD-2	94	770+50	784+50	27B									1,400			
PD-2	94	770+50	784+50	39						1,400						
PD-2	94	770+50	784+50	39										2,100		L=1400
PD-2	94	770+50	784+50	25			61	2,800								
PD-2	94	770+50	784+50	25								61	2,800			
PD-2	94	770+50	784+50	11/13	351	91			4,200							
PD-2	94	770+50	784+50	11/13								442	1,050			L=4200
PD-2	94	780+00	784+50	11/13	38	11			450							
PD-2	94	780+00	784+50	11/13								49	113			L=450
PD-2	94	780+30	784+50	11/13	35	10			420							
PD-2	94	779+47	784+50	11/13								54	126			L=420
PD-2	94	770+50	784+50	38B		119					1,400	119			2,800	L=1400
PD-2	94	770+50	784+50	38B		119					1,400	119			2,800	L=1400
PD-3	94	784+50	785+87	27B				137								
PD-3	94	784+50	785+87	27B									137			
PD-3	94	784+50	785+87	11/13	24	7			274							
PD-3	94	784+50	785+87	11/13								31	70			
					695	423	116	8,157	8,291	2,768	2,800	1,258	10,289	3,999	5,600	
SUB-TOTAL 1					695	539		8,157	8,291	2,768	2,800	1,258	14,288		5,600	

(N) - NOT A SEPARATE PAY ITEM, FOR INFORMATION ONLY

NOTE: SEE SCQ SHEETS FOR ADDITIONAL QUANTITIES.

PAVEMENT DELINEATION QUANTITIES

PDQ-1

STATE OF CALIFORNIA - DEPARTMENT OF TRANSPORTATION
Caltrans® TRAFFIC DESIGN

FUNCTIONAL SUPERVISOR: CAMILLE ABOUFADEL
CALCULATED-DESIGNED BY: NOEL TAPIA
CHECKED BY: SHAHIN ADIBI
REVISED BY
DATE REVISED

LAST REVISION 01-12-12
DATE PLOTTED => 23-MAR-2012
TIME PLOTTED => 10:15

Dist	COUNTY	ROUTE	POST MILES TOTAL PROJECT	SHEET No.	TOTAL SHEETS
11	SD	94	13.8/14.4	36	55

REGISTERED CIVIL ENGINEER 01-03-12 DATE

03-26-12
PLANS APPROVAL DATE

REGISTERED PROFESSIONAL ENGINEER
SHAHIN T ADIBI
No. 54839
Exp. 06/30/12
CIVIL
STATE OF CALIFORNIA

THE STATE OF CALIFORNIA OR ITS OFFICERS OR AGENTS SHALL NOT BE RESPONSIBLE FOR THE ACCURACY OR COMPLETENESS OF SCANNED COPIES OF THIS PLAN SHEET.

LOCATION					PAVEMENT MARKER SUMMARY			TRAFFIC STRIPE SUMMARY				REMOVE PAVEMENT MARKER SUMMARY [N]	REMOVE TRAFFIC STRIPE SUMMARY			REMARKS
					PAVEMENT MARKER (EA)			THERMOPLASTIC (LF)					PAINT STRIPE		THERMOPLASTIC STRIPE	
					NON-REFLECTIVE	RETROREFLECTIVE		4"		6"	8"					
SHEET	Rte	FROM STA	TO STA	DETAIL No.	TYPE A	TYPE G	TYPE H	SOLID	BROKEN	SOLID	SOLID		4"	6"	8"	
					WHITE	CLEAR	YELLOW	4"	36'-12'	6"	8"	(EA)	(LF)	(LF)	(LF)	
PD-3	94	784+50	785+09	25			5	118								
PD-3	94	784+50	785+09	25								5	118			
PD-3	94	784+50	785+09	11/13	15	7			177							
PD-3	94	784+50	785+09	11/13								22	45			L=177
PD-3	94	784+50	785+09	38B		12					118	12			236	L=118
PD-3	94	784+70	785+09	38B		6					39	6			78	L=39
PD-3	94	784+50	785+54	27B				104								
PD-3	94	784+50	785+54	27B									104			
SUB-TOTAL 2					15	30		222	177		157	45	267		314	
SUB-TOTAL 1					695	539		8,157	8,291	2,768	2,800	1,258	14,288		5,600	
TOTAL					710	569		8,379	8,468	2,768	2,957	1,303	14,555		5,914	

(N) - NOT A SEPARATE PAY ITEM, FOR INFORMATION ONLY

NOTE: SEE SCQ SHEETS FOR ADDITIONAL QUANTITIES.

DETAIL 11/13 COMBINATION

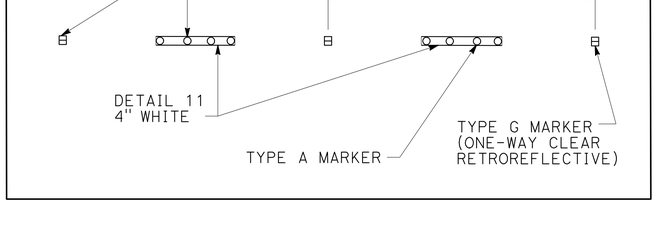

PAVEMENT DELINEATION QUANTITIES

PDQ-2

REVISED BY | DATE REVISED
NOEL TAPIA | SHAHIN ADIBI
CALCULATED-DESIGNED BY | CHECKED BY
FUNCTIONAL SUPERVISOR
CAMILLE ABOUFADEL

STATE OF CALIFORNIA - DEPARTMENT OF TRANSPORTATION
Caltrans TRAFFIC DESIGN

LAST REVISION 01-12-12 | DATE PLOTTED => 23-MAR-2012 | TIME PLOTTED => 10:15

Dist	COUNTY	ROUTE	POST MILES TOTAL PROJECT	SHEET No.	TOTAL SHEETS
11	SD	94	13.8/14.4	37	55

REGISTERED CIVIL ENGINEER 01-03-12 DATE

03-26-12
PLANS APPROVAL DATE

REGISTERED PROFESSIONAL ENGINEER
SHAHIN T ADIBI
No. 54839
Exp. 06/30/12
CIVIL
STATE OF CALIFORNIA

THE STATE OF CALIFORNIA OR ITS OFFICERS OR AGENTS SHALL NOT BE RESPONSIBLE FOR THE ACCURACY OR COMPLETENESS OF SCANNED COPIES OF THIS PLAN SHEET.

THERMOPLASTIC PAVEMENT MARKING

ROUTE	SHEET No.	12" CROSSWALK / LIMIT LINE SQFT	TYPE VI ARROW SQFT	"SIGNAL" SQFT	"AHEAD" SQFT	TYPE III (L) ARROW SQFT	TYPE III (R) ARROW SQFT	"BIKE" SQFT	"LANE" SQFT	BIKE LANE ARROW SQFT
94	PD-1	34.00	126.00					10.00	12.00	7.00
94	PD-2			64.00	62.00	168.00	84.00	10.00	12.00	7.00
94	PD-3	92.00				84.00	42.00			
	SUBTOTAL	126.00	126.00	64.00	62.00	252.00	126.00	20.00	24.00	14.00
	TOTAL	814 SQFT								

REMOVE THERMOPLASTIC PAVEMENT MARKING

ROUTE	SHEET No.	12" CROSSWALK / LIMIT LINE SQFT	TYPE VI ARROW SQFT	"SIGNAL" SQFT	"AHEAD" SQFT	TYPE III (L) ARROW SQFT	TYPE III (R) ARROW SQFT	"BIKE" SQFT	"LANE" SQFT	BIKE LANE ARROW SQFT
94	PD-1	34.00	126.00					10.00	12.00	7.00
94	PD-2			64.00	62.00	168.00	84.00	10.00	12.00	7.00
94	PD-3	92.00				84.00	42.00			
	SUBTOTAL	126.00	126.00	64.00	62.00	252.00	126.00	20.00	24.00	14.00
	TOTAL	814 SQFT								

PAVEMENT DELINEATION QUANTITIES

PDQ-3

REVISED BY | DATE REVISED
NOEL TAPIA | SHAHIN ADIBI
CALCULATED-DESIGNED BY | CHECKED BY
FUNCTIONAL SUPERVISOR
CAMILLE ABOUFADEL

STATE OF CALIFORNIA - DEPARTMENT OF TRANSPORTATION
Caltrans® TRAFFIC DESIGN

LAST REVISION 01-12-12
DATE PLOTTED => 23-MAR-2012
TIME PLOTTED => 10:15

Dist	COUNTY	ROUTE	POST MILES TOTAL PROJECT	SHEET No.	TOTAL SHEETS
11	SD	94	13.8/14.4	38	55

REGISTERED CIVIL ENGINEER DATE 12-27-11

03-26-12
PLANS APPROVAL DATE

REGISTERED PROFESSIONAL ENGINEER JOSE L. ROBLES No. C 64402 Exp. 06-30-13 CIVIL STATE OF CALIFORNIA

THE STATE OF CALIFORNIA OR ITS OFFICERS OR AGENTS SHALL NOT BE RESPONSIBLE FOR THE ACCURACY OR COMPLETENESS OF SCANNED COPIES OF THIS PLAN SHEET.

EARTHWORK QUANTITIES

LOCATION	SIDE	ROADWAY EXCAVATION (CY)	ROADWAY EMBANKMENT (CY) (N)
Sta 768+38.00 TO 779+39.10 "94CRR" LINE	---	207.6	0
Sta 791+90.03 TO 792+18.20 "94CRR" LINE	---	5.6	0
TOTAL		213.2	0

(N) NOT A SEPARATE PAY ITEM, FOR INFORMATION ONLY.

STRUCTURAL SECTION QUANTITIES

STATION	SIDE	HOT MIX ASPHALT (TYPE A) (TON)
Sta 768+38.00 TO 779+39.10 "94CRR" LINE	---	415.2
Sta 791+90.03 TO 792+18.20 "94CRR" LINE	---	11.3
Sta 757+06.19 RIGHT "94CRR" LINE (PEDESTRIAN RAMP)	Rt	0.6
TOTAL		427.1

MINOR CONCRETE (Misc CONSTRUCTION)

STATION	TYPE	(CY)
Sta 779+11.00 TO 779+39.10 "94CRR" LINE	MEDIAN TRANSITION	8.1
Sta 791+90.03 TO 792+18.20 "94CRR" LINE	MEDIAN TRANSITION	9.3
Sta 757+00 LEFT "94CRR" LINE	CURB RAMP CASE A	1.9
Sta 757+70 LEFT "94CRR" LINE	CURB RAMP CASE A	2.0
Sta 785+00 RIGHT "94CRR" LINE	CURB RAMP CASE A	1.5
Sta 786+10 LEFT "94CRR" LINE	CURB RAMP CASE A	1.4
Sta 786+40 RIGHT "94CRR" LINE	CURB RAMP CASE A	1.5
Sta 787+10 LEFT "94CRR" LINE	CURB RAMP CASE A	1.4
TOTAL		27.1

SHOULDER RUMBLE STRIP (HMA, GROUND-IN INDENTATIONS)

STATION	SIDE	(STA)
Sta 757+89.24 TO 763+75.44 "94CRR" LINE	Rt	5.9
Sta 764+80 TO 776+64 "94CRR" LINE	Rt	11.8
Sta 759+00 TO 769+00 "94CRR" LINE	Lt	10.0
Sta 772+00 TO 785+83.30 "94CRR" LINE	Lt	13.8
TOTAL		41.5

SLURRY SEAL

LOCATION	SIDE	WEIGHT (TON)
Sta 757+89.24 TO 785+83.30 "94CRR" LINE	BOTH	427.6
TOTAL		427.6

CONCRETE BARRIER (TYPE 60)

LOCATION	(LF)
Sta 758+15.00 TO 778+85.00 "94CRR" LINE	2070.0
TOTAL	2070.0

ALTERNATIVE CRASH CUSHION

LOCATION	(EA)
Sta 757+88.40 "94CRR" LINE	1
Sta 778+85.00 "94CRR" LINE	1
TOTAL	2

REMOVE CONCRETE

LOCATION	SIDE	CY
Sta 768+38.00 TO 779+39.10 (CONCRETE ISLAND) "94CRR" LINE	---	87.6
Sta 791+90.03 TO 792+18.20 (CONCRETE ISLAND) "94CRR" LINE	---	2.5
Sta 757+00 (CURB RAMP) "94CRR" LINE	Lt	1.9
Sta 757+70 (CURB RAMP) "94CRR" LINE	Lt	2.0
Sta 785+00 (CURB RAMP) "94CRR" LINE	Rt	1.5
Sta 786+10 (CURB RAMP) "94CRR" LINE	Lt	1.4
Sta 786+40 (CURB RAMP) "94CRR" LINE	Rt	1.5
Sta 787+10 (CURB RAMP) "94CRR" LINE	Lt	1.4
TOTAL		99.8

SUMMARY OF QUANTITIES

Q-1

STATE OF CALIFORNIA - DEPARTMENT OF TRANSPORTATION
Caltrans TRAFFIC PROJECT DEVELOPMENT

FUNCTIONAL SUPERVISOR: RICHARD ESTRADA
CALCULATED-DESIGNED BY: HUNG TRAN
CHECKED BY: JOSE L. ROBLES
REVISED BY
DATE REVISED

LAST REVISION 01-12-12 | DATE PLOTTED => 23-MAR-2012 | TIME PLOTTED => 10:15

Dist	COUNTY	ROUTE	POST MILES TOTAL PROJECT	SHEET No.	TOTAL SHEETS
11	SD	94	13.8/14.4	39	55

REGISTERED CIVIL ENGINEER 12-27-11 DATE

03-26-12
PLANS APPROVAL DATE

REGISTERED PROFESSIONAL ENGINEER JOSE L. ROBLES No. C 64402 Exp. 06-30-13 CIVIL STATE OF CALIFORNIA

THE STATE OF CALIFORNIA OR ITS OFFICERS OR AGENTS SHALL NOT BE RESPONSIBLE FOR THE ACCURACY OR COMPLETENESS OF SCANNED COPIES OF THIS PLAN SHEET.

TEMPORARY WATER POLLUTION QUANTITY SUMMARY

SHEET	TEMPORARY DRAINAGE INLET PROTECTION	TEMPORARY CONSTRUCTION ENTRANCE	TEMPORARY FENCE
	(TYPE 4B) EA	(TYPE 2) EA	(TYPE ESA) LF
L-1	1	2	382
L-2	2	---	
L-3	3	---	
L-4	2	---	
L-5	---	---	
L-6	6	---	
L-7	---	---	
TOTAL	14	2	382

TACK COAT

LOCATION	WEIGHT (TON)
Sta 768+38.00 TO 779+39.23 "94CRR" LINE	0.62
Sta 791+90.05 TO 792+18.89 "94CRR" LINE	0.02
TOTAL	0.64

SUMMARY OF QUANTITIES

Q-2

STATE OF CALIFORNIA - DEPARTMENT OF TRANSPORTATION
Caltrans PROJECT DEVELOPMENT
TRAFFIC

FUNCTIONAL SUPERVISOR: RICHARD ESTRADA
CALCULATED-DESIGNED BY: JOSE L. ROBLES
CHECKED BY: HUNG TRAN
REVISED BY
DATE REVISED

LAST REVISION 01-12-12
DATE PLOTTED => 23-MAR-2012
TIME PLOTTED => 10:15

DIST	COUNTY	ROUTE	POST MILES TOTAL PROJECT	SHEET NO.	TOTAL SHEETS
11	SD	94	13.8/14.4	40	55

Randell D. Hiatt
REGISTERED CIVIL ENGINEER

June 6, 2008
PLANS APPROVAL DATE

REGISTERED PROFESSIONAL ENGINEER
Randell D. Hiatt
No. C50200
Exp. 6-30-09
CIVIL
STATE OF CALIFORNIA

The State of California or its officers or agents shall not be responsible for the accuracy or completeness of electronic copies of this plan sheet.

To accompany plans dated 03-26-12

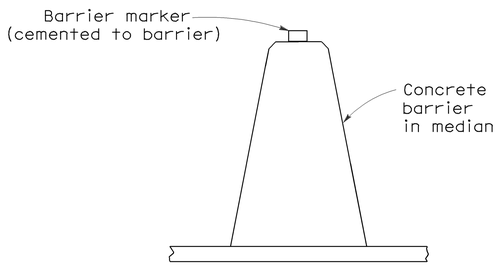

CONCRETE BARRIER TYPE 60 DELINEATION

See Notes 7 and 8

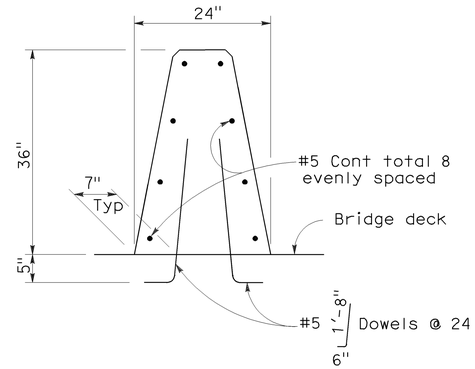

CONCRETE BARRIER TYPE 60A

Details similar to Type 60 except as noted.

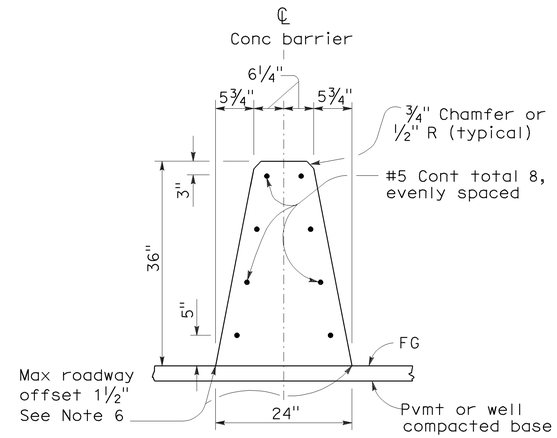

CONCRETE BARRIER TYPE 60

NOTES:

1. See Standard Plan A76B for details of Concrete Barrier Type 60 end anchors, connection to structures and transitions to Concrete Barrier Type 50 and Concrete Barrier Type 60S.
2. See Standard Plan A76C for Concrete Barrier Type 60 transitions at bridge column and sign pedestals.
3. Where glare screen is required on Concrete Barrier Type 60, use Concrete Barrier Type 60G.
4. Where the concrete barrier is added to the face of existing concrete structure, match existing weep holes.
5. Expansion joints in concrete barrier shall be located at all deck, pavement and principal wall joints. Expansion joint filler material shall be the same size as joint or ½" minimum.
6. Where roadway offset is greater than 1½", see Concrete Barrier Type 60C.
7. Barrier delineation to be used when required by the Special Provisions.
8. Spacing of barrier markers to match spacing of raised pavement markers on the adjacent median edgeline pavement delineation.
9. Reinforcing stirrup not required for roadway offsets less than 1'-0".
10. For roadway surfaces offset greater than 1½" to 3", no rebars required. For roadway surfaces offset greater than 3" to 8" use two #4 rebars at 3" above the lower roadway surface. For roadway surfaces offset greater than 8" to 12", use two #4 rebars at 3" above the lower roadway surface and two #4 rebars at 8" above the lower roadway surface. For roadway surfaces offset greater than 12" to 36", use two #4 rebars at 3" above the lower roadway surface and two #4 rebars at every 8" increment vertical spacing above the first two #4 rebars.

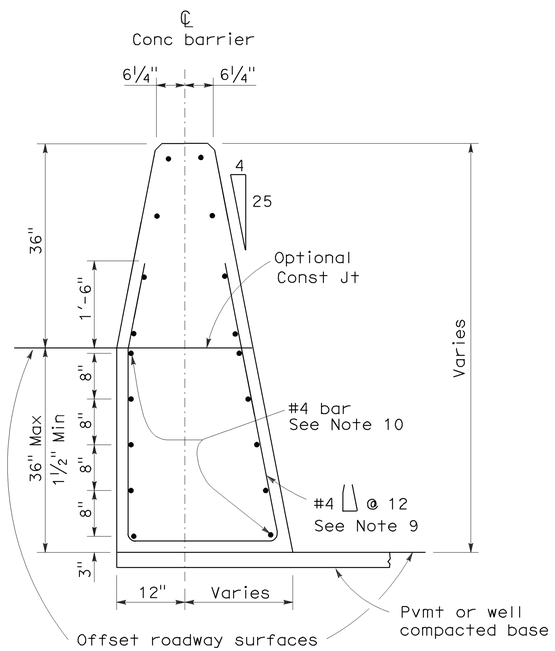

CONCRETE BARRIER TYPE 60C

Details similar to Type 60 except as noted.
Concrete barrier end anchor when necessary.
36" roadway surfaces offset shown.

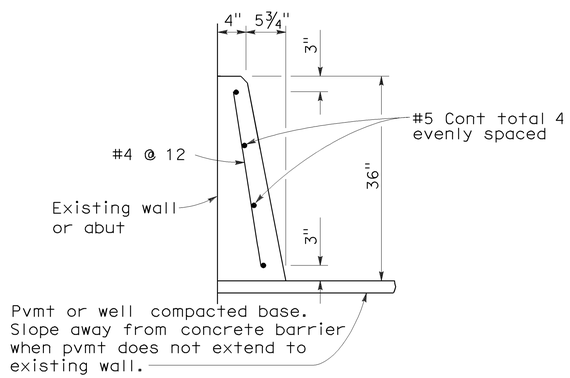

CONCRETE BARRIER TYPE 60D

STATE OF CALIFORNIA
DEPARTMENT OF TRANSPORTATION

CONCRETE BARRIER TYPE 60

NO SCALE

RSP A76A DATED JUNE 6, 2008 SUPERSEDES STANDARD PLAN A76A
DATED MAY 1, 2006 - PAGE 29 OF THE STANDARD PLANS BOOK DATED MAY 2006.

REVISED STANDARD PLAN RSP A76A

2006 REVISED STANDARD PLAN RSP A76A

5-21-08

DIST	COUNTY	ROUTE	POST MILES TOTAL PROJECT	SHEET NO.	TOTAL SHEETS
11	SD	94	13.8/14.4	41	55

Randell D. Hiatt
REGISTERED CIVIL ENGINEER

October 20, 2006
PLANS APPROVAL DATE

REGISTERED PROFESSIONAL ENGINEER
Randell D. Hiatt
No. C50200
Exp. 6-30-07
CIVIL
STATE OF CALIFORNIA

The State of California or its officers or agents shall not be responsible for the accuracy or completeness of electronic copies of this plan sheet.

To accompany plans dated 03-26-12

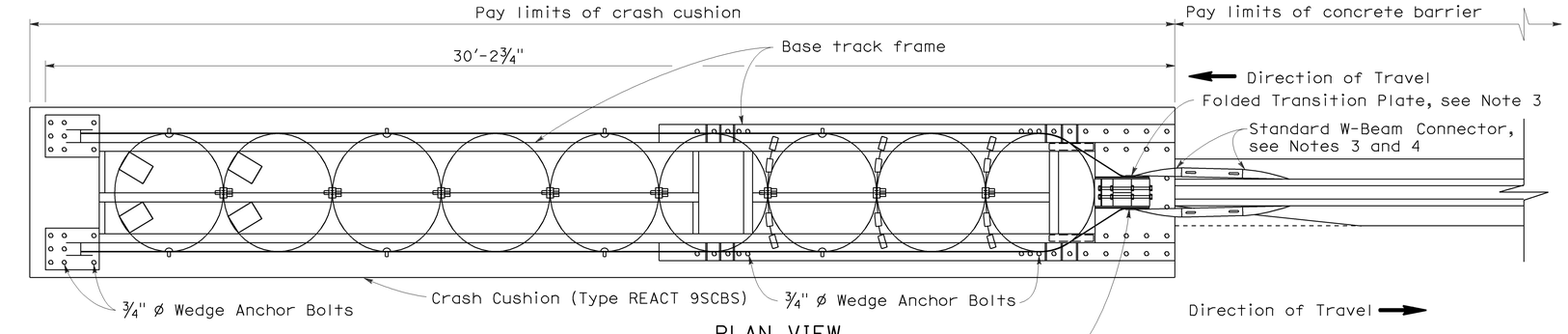

PLAN VIEW

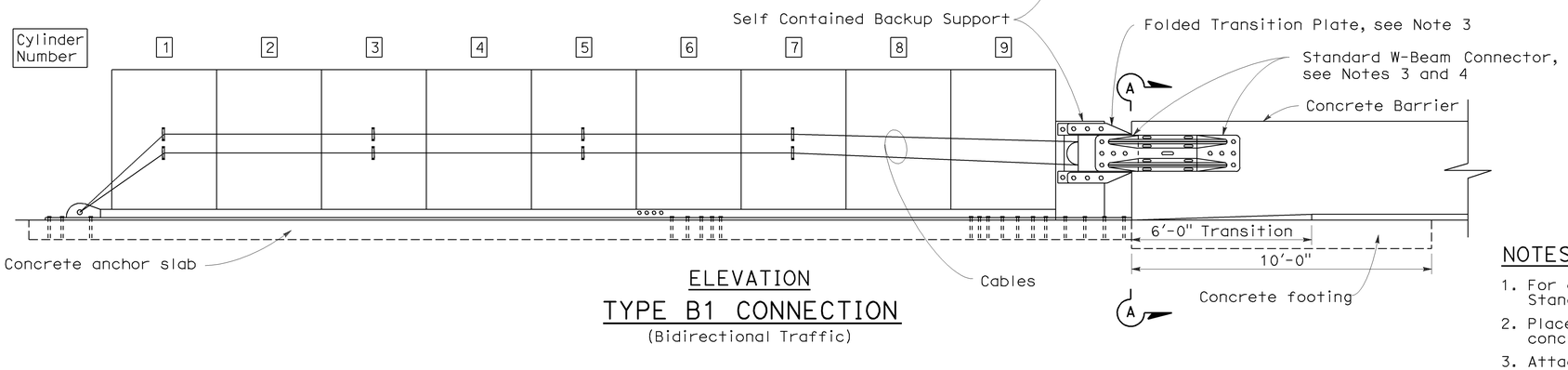

ELEVATION

TYPE B1 CONNECTION

(Bidirectional Traffic)

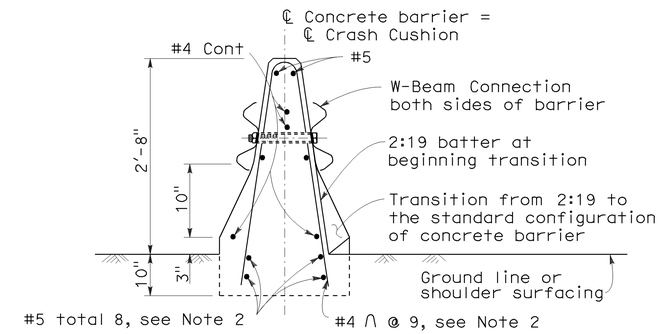

SECTION A-A

(Type 50 Barrier shown)

NOTES:

1. For additional details of Crash Cushion (Type REACT 9SCBS), see Standard Plan A82D1.
2. Place this reinforcement for the full 10'-0" length of the terminus of the concrete barrier.
3. Attach manufacturer supplied folded transition plates and W-Beam connectors to backup support with manufacturer supplied bolts.
4. Attach W-Beam Connectors to barrier with manufacturer supplied anchor bolts in the manner recommended by the manufacturer.

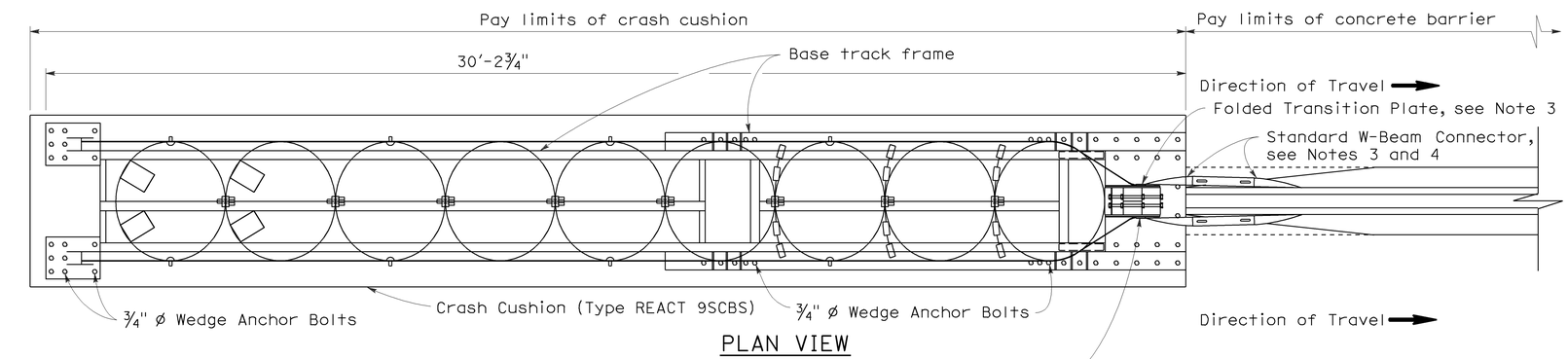

PLAN VIEW

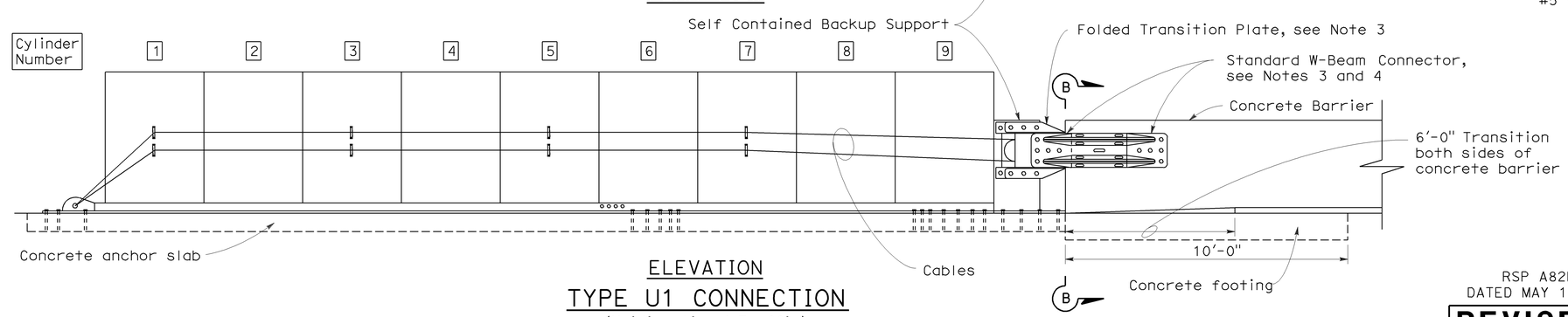

ELEVATION

TYPE U1 CONNECTION

(Unidirectional Traffic)

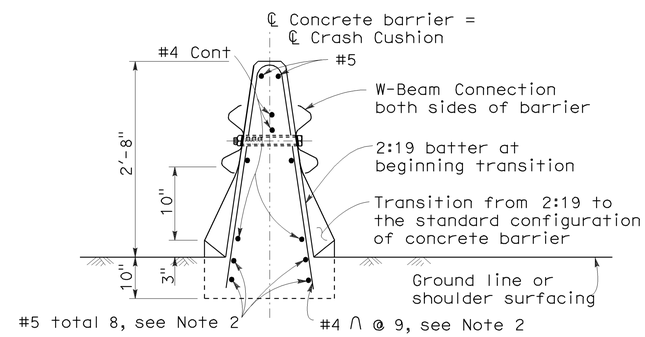

SECTION B-B

(Type 50 Barrier shown)

STATE OF CALIFORNIA
DEPARTMENT OF TRANSPORTATION

CRASH CUSHION (TYPE REACT 9SCBS) CONNECTION TO CONCRETE BARRIER

NO SCALE

RSP A82D2 DATED OCTOBER 20, 2006 SUPERSEDES STANDARD PLAN A82D2 DATED MAY 1, 2006 - PAGE 108 OF THE STANDARD PLANS BOOK DATED MAY 2006.

REVISED STANDARD PLAN RSP A82D2

2006 REVISED STANDARD PLAN RSP A82D2

9-13-06

DIST	COUNTY	ROUTE	POST MILES TOTAL PROJECT	SHEET NO.	TOTAL SHEETS
11	SD	94	13.8/14.4	42	55

REGISTERED CIVIL ENGINEER

November 17, 2006
PLANS APPROVAL DATE

REGISTERED PROFESSIONAL ENGINEER Michael Janzen No. 44788 Exp. 03-31-08 CIVIL STATE OF CALIFORNIA

The State of California or its officers or agents shall not be responsible for the accuracy or completeness of electronic copies of this plan sheet.

To accompany plans dated 03-26-12

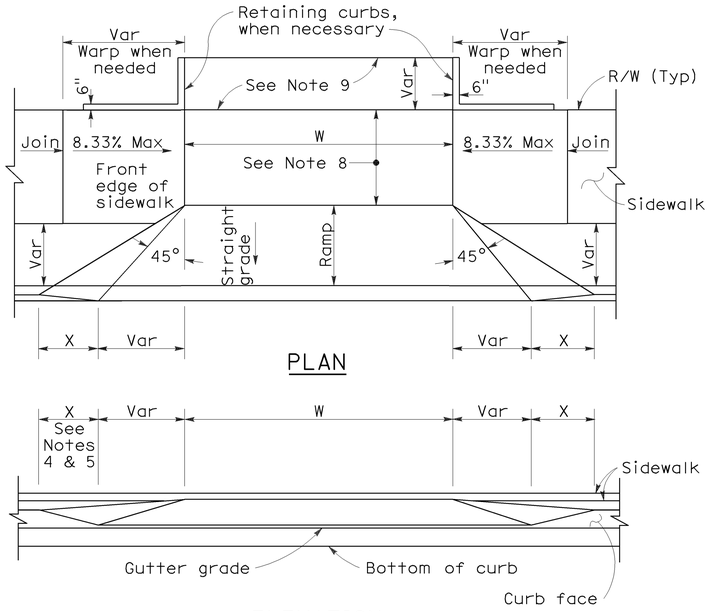

PLAN

ELEVATION

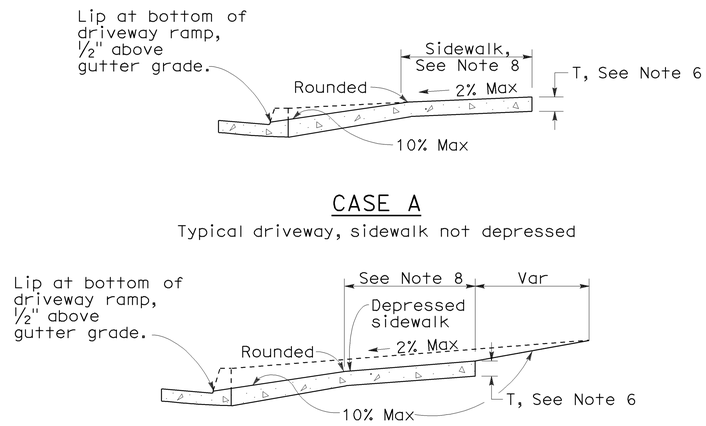

CASE A

Typical driveway, sidewalk not depressed

CASE B

Driveway with depressed sidewalk

SECTIONS

CURB QUANTITIES

TYPE	CUBIC YARDS PER LINEAR FOOT
A1-6	0.02585
A1-8	0.03084
A2-6	0.05903
A2-8	0.06379
A3-6	0.01036
A3-8	0.01435
B1-4	0.02185
B1-6	0.02930
B2-4	0.05515
B2-6	0.06171
B3-4	0.00641
B3-6	0.01074
B4	0.05709
D-4	0.04083
D-6	0.06804
E	0.06661

TABLE A

CURB TYPE	DIMENSIONS "H1"	"H2"	"W1"	"W2"
A1-6	1'-2"	6"	7½"	1½"
A1-8	1'-4"	8"	8"	2"
A2-6	1'-0"	6"	2'-7½"	1½"
A2-8	1'-2"	8"	2'-8"	2"
A3-6	6"	5"	7¼"	1¼"
A3-8	8"	7"	7¾"	1¾"
B1-4	1'-0"	4"	7½"	2½"
B1-6	1'-2"	6"	9"	4"
B2-4	10"	4"	2'-7½"	2½"
B2-6	1'-0"	6"	2'-9"	4"
B3-4	4"	3"	7"	2"
B3-6	6"	5"	8½"	3½"
D-4	10"	4"	1'-6"	1'-1"
D-6	1'-0"	6"	2'-2"	1'-8"

DRIVEWAYS

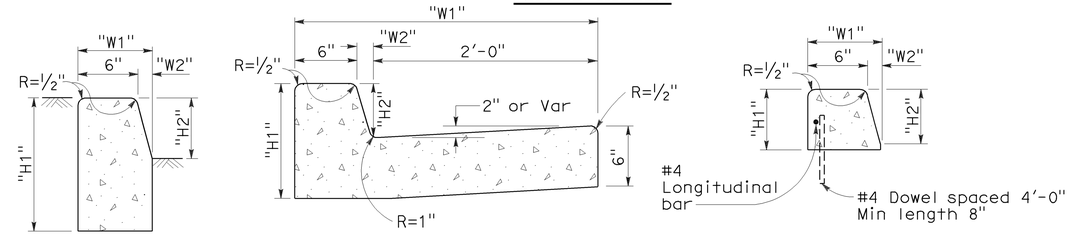

TYPE A1 CURBS
See Table A

TYPE A2 CURBS
See Table A

TYPE A3 CURBS
Superimposed on existing pavement
See Table A

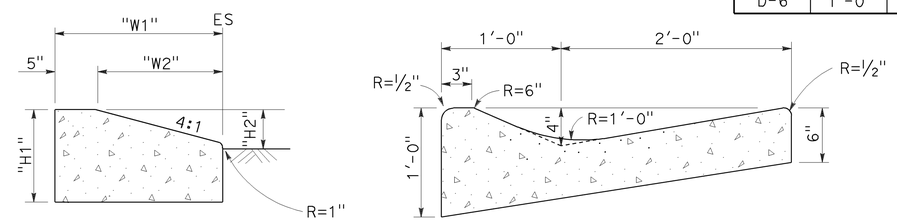

TYPE D CURBS
See Table A

TYPE E CURB

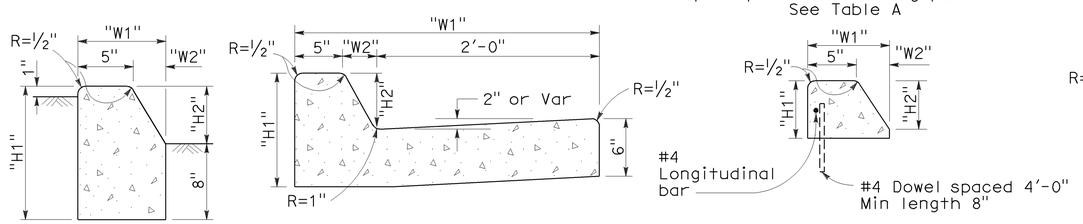

TYPE B1 CURBS
See Table A

TYPE B2 CURBS
See Table A

TYPE B3 CURBS
Superimposed on existing pavement
See Table A

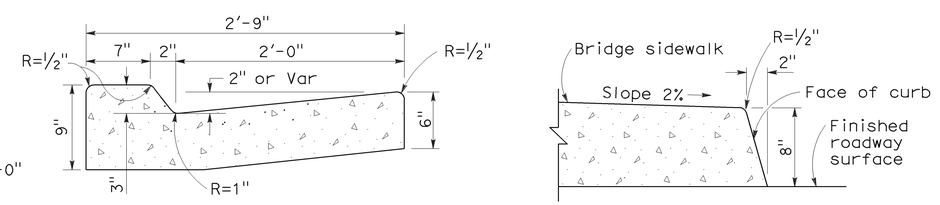

TYPE B4 CURBS

TYPE H CURB
On Bridges

CURBS

NOTES:

1. Case A driveway section typically applies.
2. Use Case B driveway section when ramp slopes would exceed 10% in Case A.
3. Use Case B driveway section when sidewalk cross slope would exceed 2% in Case A.
4. X=3'-0" except for curb heights over 10" where 4:1 slopes shall be used on curb slope.
5. X is a variable when sidewalk is located where wheelchairs may traverse the surface. Slopes shall not exceed 8.33%.
6. Sidewalk and ramp thickness "T" at driveway shall be 4" for residental and 6" for commercial.
7. Difference in slope of the driveway ramp and the slope of a line between the gutter and a point on the roadway 5'-0" from gutter line shall not exceed 15%. Reduce driveway ramp slope, not gutter slope, where required.
8. Minimum width of clear passageway for sidewalk shall be 4'-0".
9. Retaining curbs and acquisition of construction easement may be necessary for narrow sidewalks or curb heights in excess of 6".
10. Across the pedestrian route at curb ramp locations, the gutter pan slope shall not exceed 1" of depth for each 2'-0" of width.

STATE OF CALIFORNIA
DEPARTMENT OF TRANSPORTATION

CURBS AND DRIVEWAYS

NO SCALE

RSP A87A DATED NOVEMBER 17, 2006 SUPERSEDES STANDARD PLAN A87A DATED MAY 1, 2006 - PAGE 113 OF THE STANDARD PLANS BOOK DATED MAY 2006.

REVISED STANDARD PLAN RSP A87A

2006 REVISED STANDARD PLAN RSP A87A

10-25-06

DIST	COUNTY	ROUTE	POST MILES TOTAL PROJECT	SHEET NO.	TOTAL SHEETS
11	SD	94	13.8/14.4	43	55

REGISTERED CIVIL ENGINEER

September 1, 2006
PLANS APPROVAL DATE

REGISTERED PROFESSIONAL ENGINEER Hector David Cordova No. C41957 Exp. 3-31-08 CIVIL STATE OF CALIFORNIA

The State of California or its officers or agents shall not be responsible for the accuracy or completeness of electronic copies of this plan sheet.

To accompany plans dated 03-26-12

2006 REVISED STANDARD PLAN RSP A88A

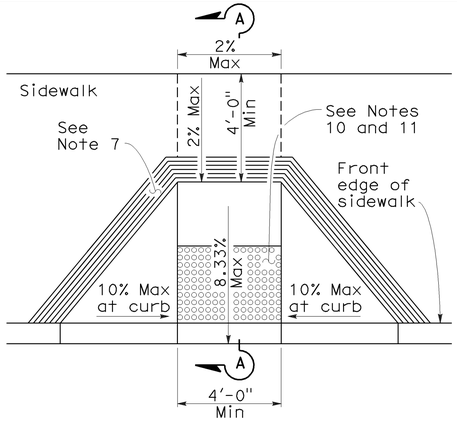

CASE A

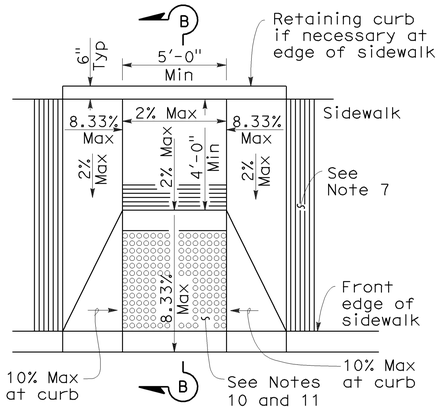

CASE B

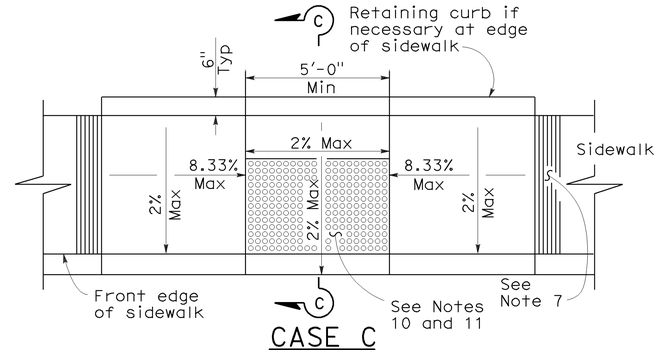

CASE C

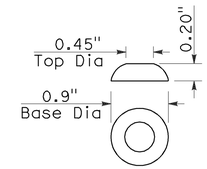

RAISED TRUNCATED DOME

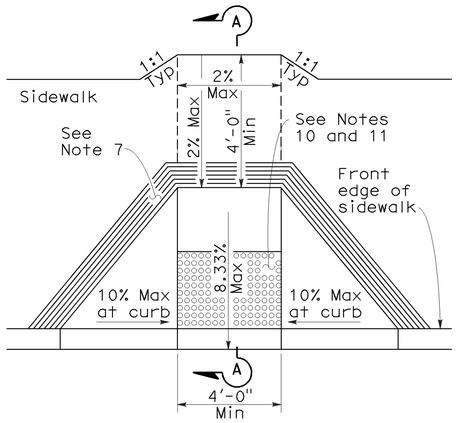

CASE D

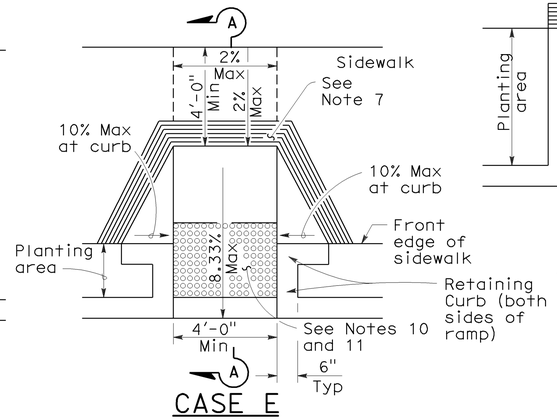

CASE E

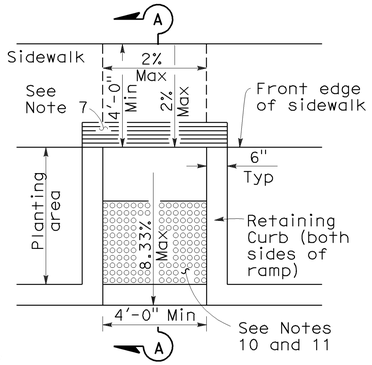

CASE F

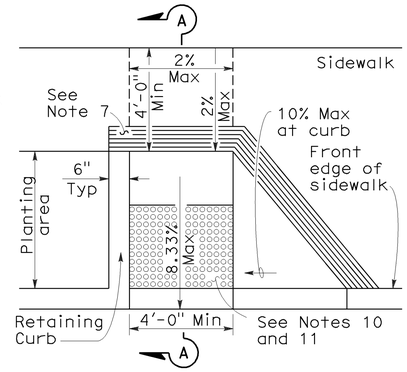

CASE G
See Note 4

SECTION A-A

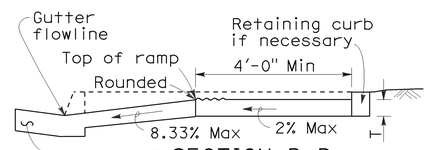

SECTION B-B
Depress entire sidewalk as required

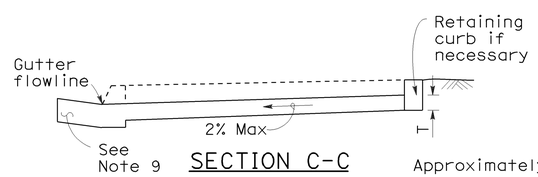

SECTION C-C

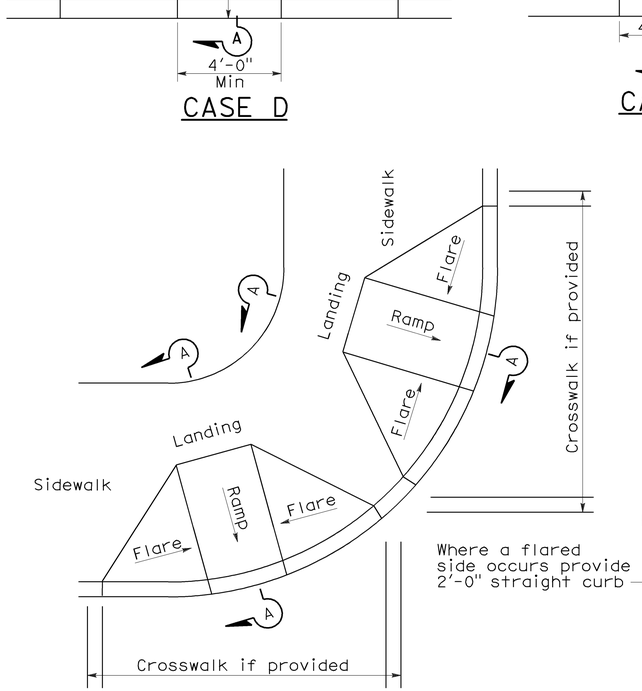

DETAIL A

TYPICAL TWO-RAMP CORNER INSTALLATION
See Note 1

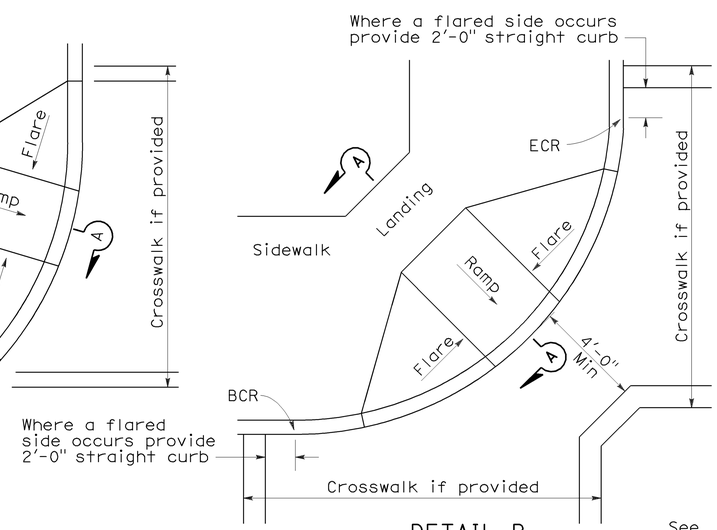

DETAIL B

TYPICAL ONE-RAMP CORNER INSTALLATION
See Notes 1 and 3

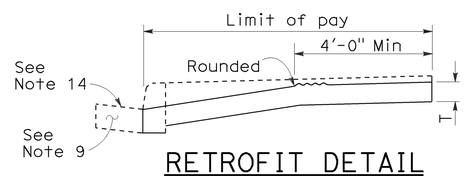

RETROFIT DETAIL
Existing curb and sidewalk

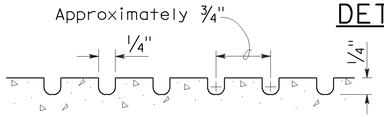

GROOVING DETAIL

NOTES:

1. As site conditions dictate, Case A through Case G curb ramps may be used for corner installations similar to those shown in Detail A and Detail B. The case of curb ramps used in Detail A do not have to be the same. Case A through Case G curb ramps also may be used at mid block locations, as site conditions dictate.
2. If distance from curb to back of sidewalk is too short to accommodate ramp and 4'-0" platform (landing) as shown in Case A, the sidewalk may be depressed longitudinally as in Case B, or C or may be widened as in Case D.
3. When ramp is located in center of curb return, crosswalk configuration must be similar to that shown for Detail B.
4. As site conditions dictate, the retaining curb side and the flared side of the Case G ramp shall be constructed in reversed position.
5. If located on a curve, the sides of the ramp need not be parallel, but the minimum width of the ramp shall be 4'-0".
6. Side slope of ramp flares vary uniformly from a maximum of 10% at curb to conform with longitudinal sidewalk slope adjacent to top of the ramp, except in Case C and Case F.
7. The curb ramp shall be outlined, as shown, with a 1'-0" wide border with 1/4" grooves approximately 3/4" on center. See grooving detail.
8. Transitions from ramps and landing to walks, gutters or streets shall be flush and free of abrupt changes.
9. Maximum slopes of adjoining gutters, the road surface immediately adjacent to the curb ramp or accessible route shall not exceed 5 percent within 4'-0" of the top and bottom of the curb ramp.
10. Curb ramps shall have a detectable warning surface that extends the full width and 3'-0" depth of the ramp. Detectable Warning Surfaces shall conform to the details on this plan and the requirements in the Special Provisions.
11. The edge of the detectable warning surface nearest the street shall be between 6" and 8" from the gutter flowline.
12. Sidewalk and ramp thickness, "T", shall be 3½" minimum.
13. Utility pull boxes, manholes, vaults and all other utility facilities within the boundaries of the curb ramp will be relocated or adjusted to grade by the owner prior to, or in conjunction with, curb ramp construction.
14. For retrofit conditions, removal and replacement of curb apron will be at the Contractor's option, unless otherwise shown on project plans.

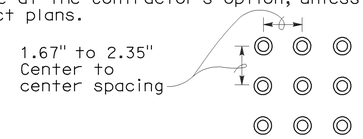

RAISED TRUNCATED DOME PATTERN (IN-LINE)

DETECTABLE WARNING SURFACE
See Note 10

STATE OF CALIFORNIA
DEPARTMENT OF TRANSPORTATION

CURB RAMP DETAILS

NO SCALE

RSP A88A DATED SEPTEMBER 1, 2006 SUPERSEDES STANDARD PLAN A88A DATED MAY 1, 2006 - PAGE 115 OF THE STANDARD PLANS BOOK DATED MAY 2006.

REVISED STANDARD PLAN RSP A88A

8-3-06

DIST	COUNTY	ROUTE	POST MILES TOTAL PROJECT	SHEET NO.	TOTAL SHEETS
11	SD	94	13.8/14.4	44	55

REGISTERED CIVIL ENGINEER

June 5, 2009
PLANS APPROVAL DATE

Glenn DeCou No. C34547 Exp. 9-30-09 CIVIL
REGISTERED PROFESSIONAL ENGINEER
STATE OF CALIFORNIA

The State of California or its officers or agents shall not be responsible for the accuracy or completeness of electronic copies of this plan sheet.

To accompany plans dated 03-26-12

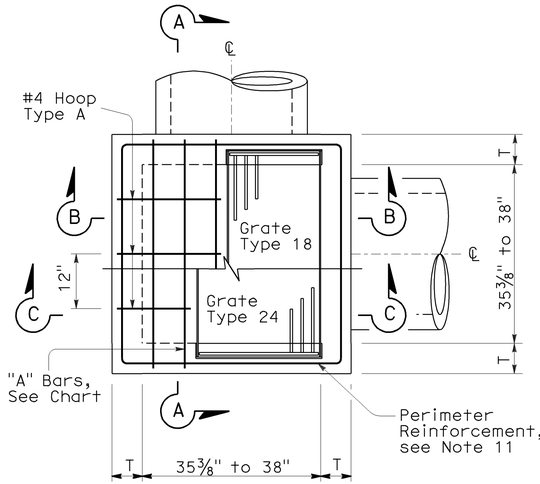

STANDARD TYPE G2 OR G4

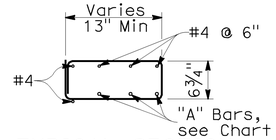

TYPICAL SECTION
(HOOP TYPE A)

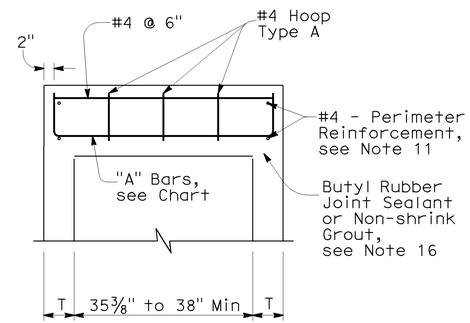

SECTION A-A

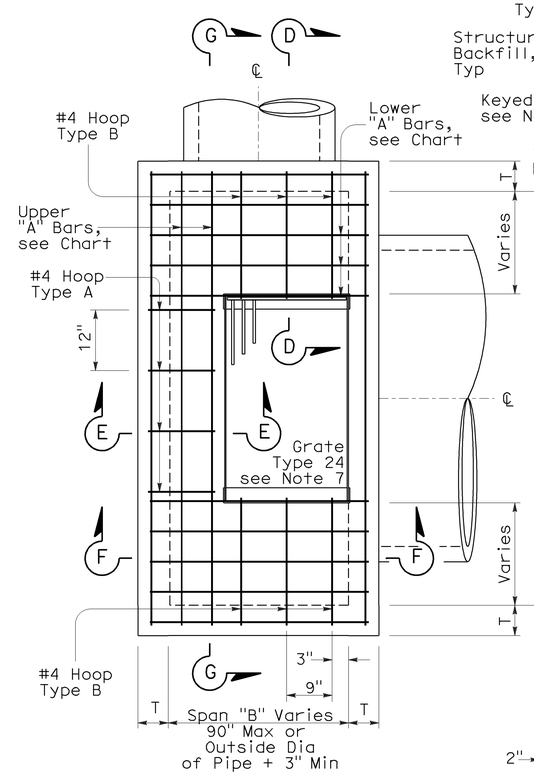

EXPANDED TYPE G2 OR G4
(Top Rebar Not Shown)

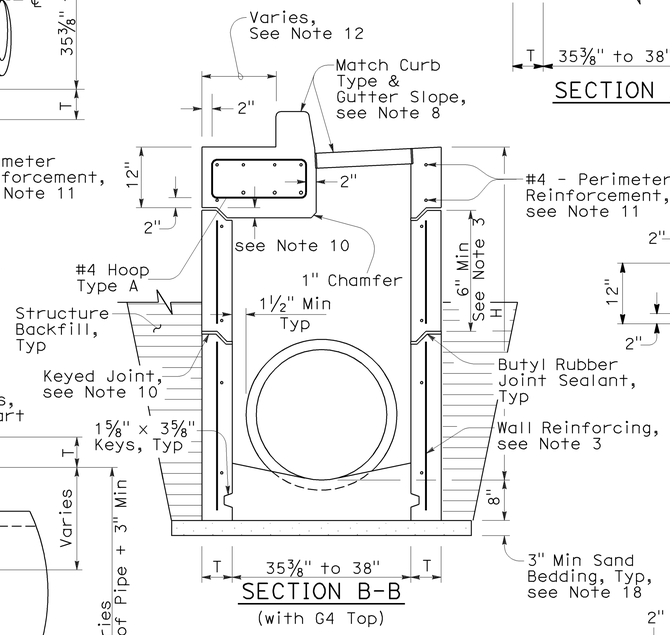

SECTION B-B
(with G4 Top)

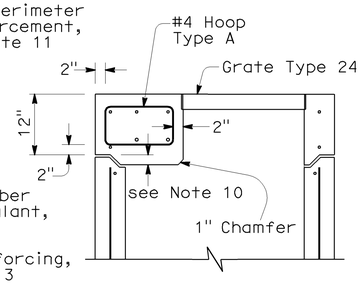

SECTION C-C
(with G2 Top)

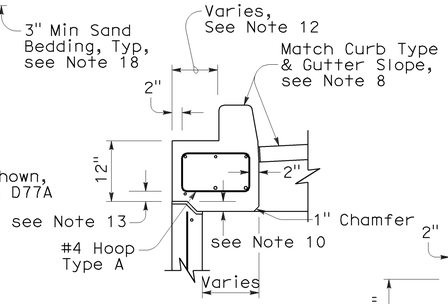

SECTION E-E
(with G4 Top)

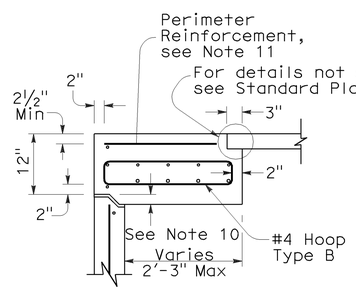

SECTION D-D

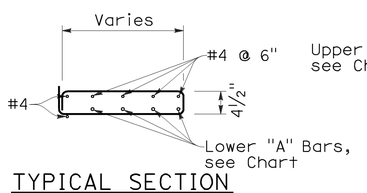

TYPICAL SECTION
(HOOP TYPE B)

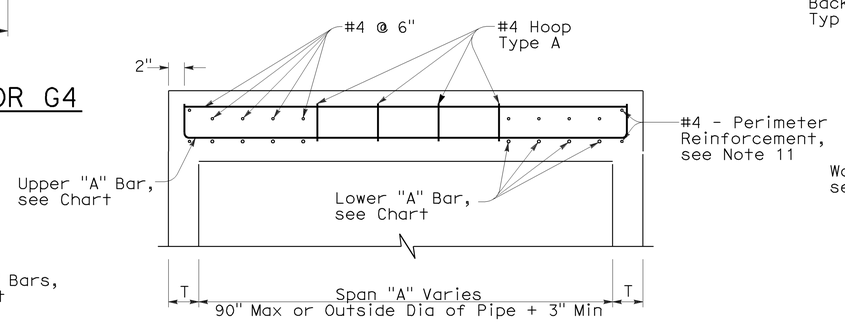

SECTION G-G

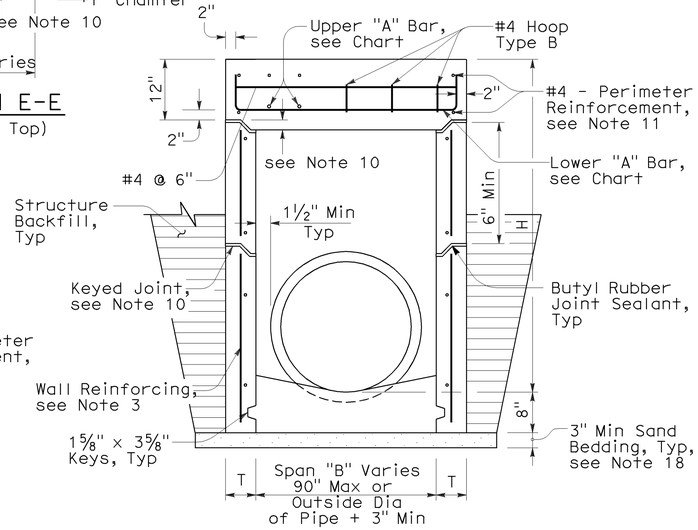

SECTION F-F
(with G2 Top)

NOTES:

1. "H" is the difference in elevation between the outlet pipe flow line and the normal gutter grade line undepressed.
2. For "T" wall thickness: T=6" when "H" is 8' or less. T=8" when "H" is over 8'.
3. Wall reinforcing not required when "H" is 8' or less and the unsupported width or length is 6'-0" or less. Reinforce wall exceeding these limits with #4 bars @ 1'-6" ± centers placed 2" clear to the inside of inlet unless otherwise shown. Short independent wall sections or height adjustment rings 6" to 24" high must have a minimum of two #4 horizontal bars.
4. Seal pre-cast inlets connection openings between wall and pipe with non-shrink grout or resilient connectors as specified in the Special Provisions.
5. Steps - None required where "H" is less than 2'-6". Where "H" is 2'-6" or more, install steps with lowest rung 1'-0" above the floor and highest rung not more than 6" below bottom of lid. The distance between steps must not exceed 1'-0" and be uniform throughout the length of the wall. Place steps in the wall without an opening. Steps inserts may be substituted for the bar steps. Step inserts must comply with State Industrial Safety Requirements. See Standard Plan D74C for step details.
6. Pipe(s) can be placed in any wall.
7. Set inlet so that grate bars are parallel to direction of principal surface flow.
8. Type G4 inlet can use Grate Type 18 or 24. Type G2 inlet uses Grate Type 24. See Revised Standard Plan RSP D77A and Standard Plan D77B for grate and frame details and weights of miscellaneous Iron and Steel.
9. G4 inlet details are the same as the G2 with the addition of a curb and sloped grate that matches the adjacent curb and gutter depression. See Standard Plans D78A & D78B for gutter and inlet depresssion details. See Revised Standard Plan RSP A87A & Standard Plan A87B for Curb and Dike Details.
10. Provide pre-cast inlets with separate top sections for final grade adjustment under Standard Specifcation Section 51-1.02. Provide keyed joints between the top and wall and multiple wall sections. Joint design may vary but must be 1" to 3" in depth.
11. Perimeter reinforcement serves as a rigid frame to position and attach the required structural reinforcement and may be tack welded at outer corners when using ASTM A706 weldable bars.
12. This dimension will vary with different grates, curbs types, box width and wall thickness.
13. 2" unless inlet is expanded in the Span "A" direction, then clearance is 2" plus the diameter of the lower "A" bar.
14. Place "A" Bars at an angle so hooked ends will maintain 2" clear coverage.
15. Refer to Standard Plan D73, Table A for concrete quantities.
16. Non-shrink grout can be used for upper most joint to facilitate final top grade adjustment.
17. Slope inlet floors 4:1 towards the outlet pipe. Pre-cast inlets may have monolithic sloped floors, flat floors, or no floors in which case a sloped floor must be cast in the field. Inlet floors do not require reinforcing.
18. Extend sand bedding under all structure backfill.

TOP REINFORCEMENT CHART

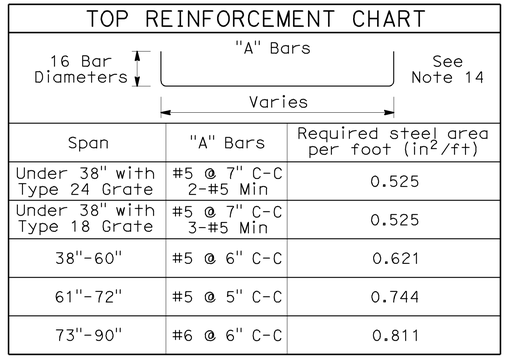

Span	"A" Bars	Required steel area per foot (in^2/ft)
Under 38" with Type 24 Grate	#5 @ 7" C-C 2-#5 Min	0.525
Under 38" with Type 18 Grate	#5 @ 7" C-C 3-#5 Min	0.525
38"-60"	#5 @ 6" C-C	0.621
61"-72"	#5 @ 5" C-C	0.744
73"-90"	#6 @ 6" C-C	0.811

STATE OF CALIFORNIA
DEPARTMENT OF TRANSPORTATION

DRAINAGE INLETS (PRECAST)

NO SCALE

NSP D73A DATED JUNE 5, 2009 SUPPLEMENTS THE STANDARD PLANS BOOK DATED MAY 2006.

NEW STANDARD PLAN NSP D73A

2006 NEW STANDARD PLAN NSP D73A

3-16-09

DIST	COUNTY	ROUTE	POST MILES TOTAL PROJECT	SHEET NO.	TOTAL SHEETS
11	SD	94	13.8/14.4	45	55

Raymond Don Tsztoo
REGISTERED CIVIL ENGINEER

January 18, 2008
PLANS APPROVAL DATE

REGISTERED PROFESSIONAL ENGINEER
Raymond Don Tsztoo
No. C37332
Exp. 6-30-08
CIVIL
STATE OF CALIFORNIA

The State of California or its officers or agents shall not be responsible for the accuracy or completeness of electronic copies of this plan sheet.

To accompany plans dated 03-26-12

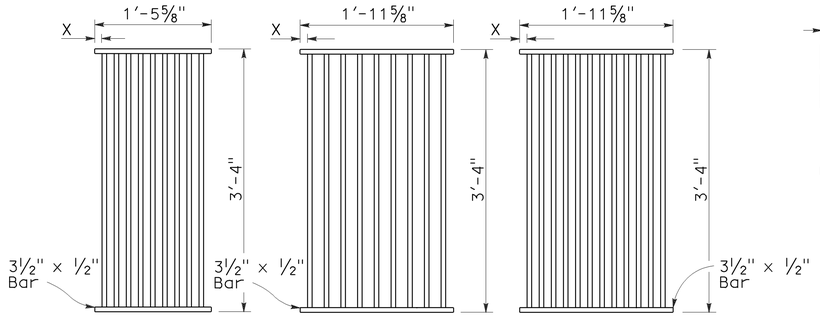

TYPE 18-9

1⅜" Clear spacing. Use within the roadbed on highways where bicycles and pedestrians are excluded.

TYPE 24-9

2" Clear spacing. Use in locations off the roadbed on all types of highways.

TYPE 24-12

1⅜" Clear spacing. Use within the roadbed on highways where bicycles and pedestrians are excluded.

RECTANGULAR GRATE DETAILS

(See table below)

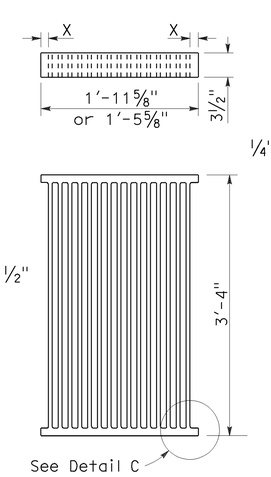

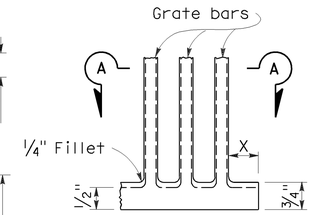

DETAIL C

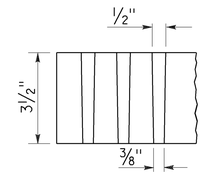

SECTION A-A

ALTERNATIVE CAST NODULAR IRON GRATE OR CAST STEEL GRATE

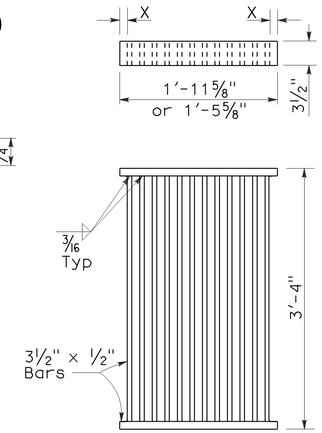

ALTERNATIVE WELDED GRATE

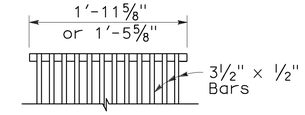

CAST END BLOCK

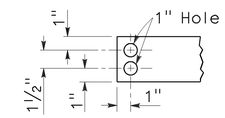

END OF BAR

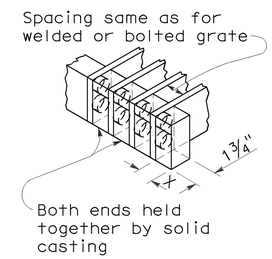

ALTERNATIVE CAST NODULAR IRON OR CAST STEEL END BLOCK GRATE

NOTES:

1. Grate type numbers refer to approximate width of grate in inches and number of bars, respectively.
2. Contractor has the option of using cast nodular iron, cast steel, welded, bolted, or cast end block grate.
3. See Special Provisions for requirements pertaining to galvanizing or asphalt dipping of grates and frames.
4. Rounded top of bars optional on all grates.
5. Pipe inlets with a grate shall be placed so that bars parallel direction of principle surface flow.
6. Full penetration butt welds may be substituted for the fillet welds on all anchors.
7. Standard square, hexagon, round or equivalent headed anchors may be substituted for the right angle hooks on the anchors shown on this plan.
8. Grate and frame weights are based on welded grates (weights of face angles, steps, protection bars, etc. are not included).

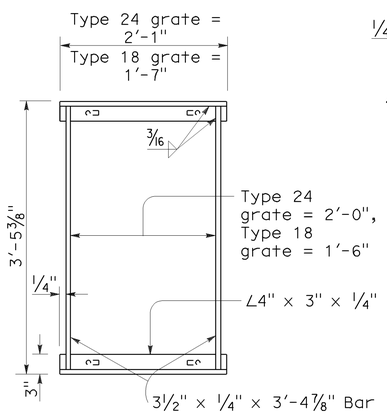

TYPICAL FRAME

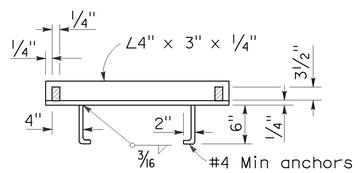

CROSS SECTION

(Thru frame)

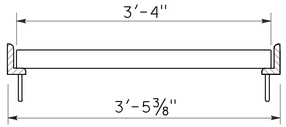

LONGITUDINAL SECTION

(Thru frame and grate)

RECTANGULAR FRAME DETAILS

(For all rectangular grates)

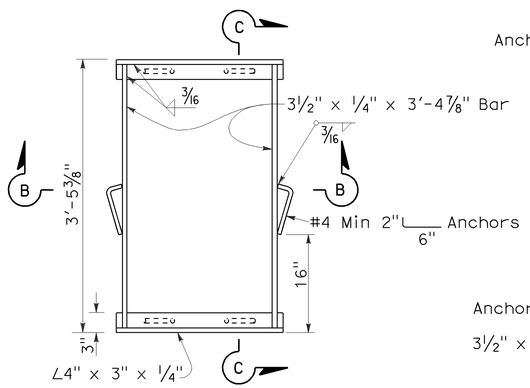

TYPICAL FRAME

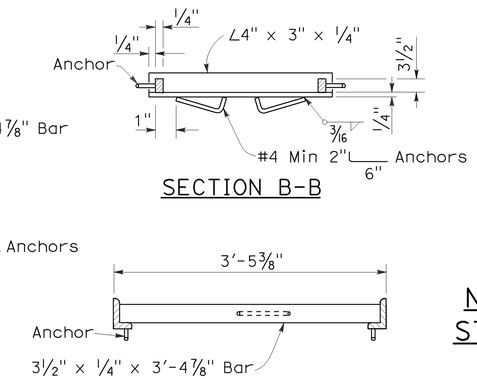

SECTION B-B

SECTION C-C

ALTERNATIVE ANCHOR FOR RECTANGULAR FRAME

(For details not shown, See Rectangular Frame Details)

INLET TYPE	GRATE TYPE	No. OF GRATES	WEIGHT LB
GDO	24-12	2	634
GOL-7	24-12	1	326
GOL-10	24-12	1	326
GO,G1,G2,G3,G4 (TYPE 24)	24-9	1	263
	24-12	1	326
G4 (TYPE 18),G5,G6	18-9	1	249
GT1	18-9	2	498
GT2	18-9	2	498
GT3	24-12	2	652
GT4	24-12	2	652
TRASH RACK			22

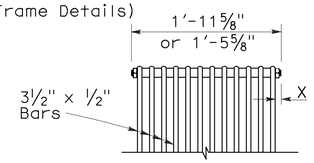

BOLTED END BLOCK

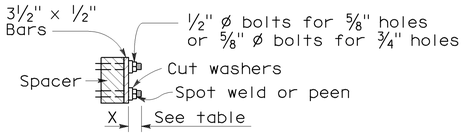

BOLTING DETAIL

ALTERNATIVE BOLTED GRATE

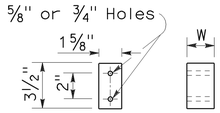

BAR SPACER

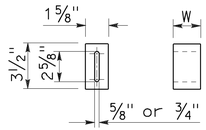

ALTERNATIVE SPACER

W = 1⅜" or 2"

GRATE BAR SPACING TABLE

TYPE	No. OF BARS	CLEAR BAR SPACING	X
18-9	9	1⅜"	1 1/16"
24-9	9	2"	1 9/16"
24-12	12	1⅜"	1¼"

INLET TYPE	COVER TYPE	WEIGHT LB
OS	PLATE	174
OL-7	PLATE	170
OL-10	PLATE	170
OL-14	PLATE	170
OL-21	PLATE	170
OCP	PLATE	112
OCPI	PLATE	112
OCPI	REDWOOD	42
OMP	PLATE	177
OMPI	PLATE	177

BASIS FOR MISC IRON & STEEL FINAL PAY WEIGHTS FOR DRAINAGE INLETS

(See General Notes, No 8)

STATE OF CALIFORNIA
DEPARTMENT OF TRANSPORTATION

GRATE DETAILS

NO SCALE

RSP D77A DATED JANUARY 18, 2008 SUPERSEDES STANDARD PLAN D77A DATED MAY 1, 2006 - PAGE 155 OF THE STANDARD PLANS BOOK DATED MAY 2006.

REVISED STANDARD PLAN RSP D77A

2006 REVISED STANDARD PLAN RSP D77A

12-14-07

DIST	COUNTY	ROUTE	POST MILES TOTAL PROJECT	SHEET NO.	TOTAL SHEETS
11	SD	94	13.8/14.4	46	55

Raymond Don Tsztoo
REGISTERED CIVIL ENGINEER

June 6, 2008
PLANS APPROVAL DATE

REGISTERED PROFESSIONAL ENGINEER
Raymond Don Tsztoo
No. C37332
Exp. 6-30-08
CIVIL
STATE OF CALIFORNIA

The State of California or its officers or agents shall not be responsible for the accuracy or completeness of electronic copies of this plan sheet.

To accompany plans dated 03-26-12

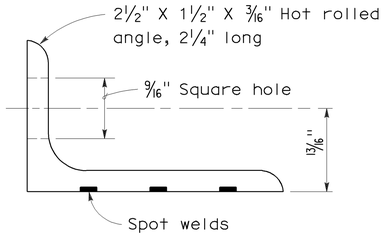

ANGLE

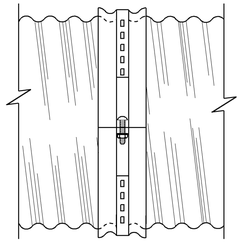

SIDE VIEW
ANGLE

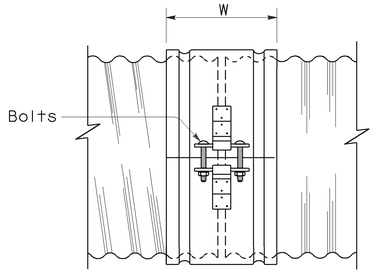

SIDE VIEW
SINGLE BAR AND STRAP

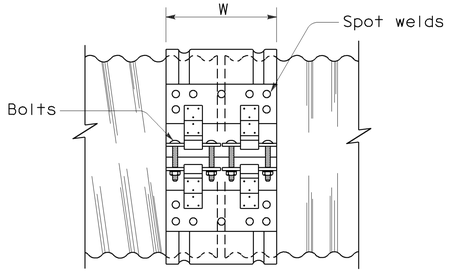

SIDE VIEW
DOUBLE BAR AND STRAP

NOTES:

1. All ferrous metal coupling band connection hardware shall be galvanized or electroplated in accordance with the Standard Specifications.
2. Dimensions and thicknesses shown are minimum.
3. Spot welds shall develop minimum required strength of strap.
4. Fillet welds of equivalent strength may be substituted for spot welds or rivets.
5. Dimension depends upon whether end condition is lips up or lips down.

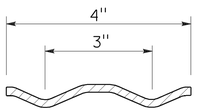

SECTION

H-4 HUGGER BAND

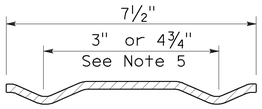

SECTION

H-7 HUGGER BAND

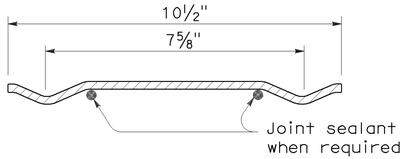

SECTION

H-10 HUGGER BAND

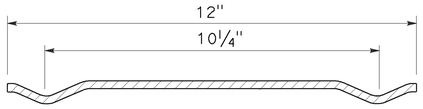

SECTION

H-12 HUGGER BAND

HUGGER COUPLING BANDS

STATE OF CALIFORNIA
DEPARTMENT OF TRANSPORTATION

CORRUGATED METAL PIPE COUPLING DETAILS No. 4 HUGGER COUPLING BANDS

NO SCALE

RSP D97D DATED JUNE 6, 2008 SUPERSEDES STANDARD PLAN D97D
DATED MAY 1, 2006 - PAGE 186 OF THE STANDARD PLANS BOOK DATED MAY 2006.

REVISED STANDARD PLAN RSP D97D

2006 REVISED STANDARD PLAN RSP D97D

3-24-08

DIST	COUNTY	ROUTE	POST MILES TOTAL PROJECT	SHEET NO.	TOTAL SHEETS
11	SD	94	13.8/14.4	47	55

Raymond Don Tsztoo
REGISTERED CIVIL ENGINEER

June 6, 2008
PLANS APPROVAL DATE

REGISTERED PROFESSIONAL ENGINEER Raymond Don Tsztoo No. C37332 Exp. 6-30-08 CIVIL STATE OF CALIFORNIA

The State of California or its officers or agents shall not be responsible for the accuracy or completeness of electronic copies of this plan sheet.

ANNULAR AND HELICAL PROFILE

COUPLING TYPE	PIPE CORRUGATION	PIPE SIZE	W OR A	PIPE WALL THICKNESS CSP	PIPE WALL THICKNESS CAP	BAND THICKNESS CSP	BAND THICKNESS CAP	BAR AND STRAP (CSP ONLY) STRAP THICKNESS	BOLTS Dia	BAR Dia	BAR YIELD STRENGTH	ANGLE DIMENSIONS CSP	ANGLE DIMENSIONS CAP	BOLTS (No.- Dia) CSP	BOLTS (No.- Dia) CAP	RIVETS ANGLE TO BAND CSP	RIVETS ANGLE TO BAND CAP	SPOT WELDS ANGLE TO BAND CSP
TWO PIECE INTEGRAL FLANGE	1½′ × ¼"	6"-10"	7"	0.052"-0.079"	0.048"-0.060"	0.052"	0.060"							2-⅜"	2-⅜"			
		12"-18"	7"	0.052"-0.079"		0.064"								2-½"				
	2⅔" × ½"	12"-24"	7"	0.052"-0.079"	0.060"-0.105"	0.064"	0.060"							2-½"	2-½"			
UNIVERSAL	2⅔" × ½"	THROUGH 36"	12"	0.052"-0.138"	0.060"-0.135"	0.052"	0.060"					2" × 2" × 3/16"	2" × 2" × 3/16"	3-½"	3-½"	3-⅜"	3-⅜"	3-½"
		42"-60"	12"	0.052"-0.168"	0.075"-0.164"	0.052"	0.060"					2" × 2" × 3/16"	2" × 2" × 3/16"	3-½"	3-½"	3-⅜"	3-⅜"	5-½"
		THROUGH 72"	12"	0.052"-0.168"	0.164"	0.052"	0.105"	0.079"	½"	⅞"	32 ksi	2" × 2" × 3/16"	2" × 2" × 3/16"	3-½"	3-½"	3-⅜"	3-⅜"	5-½"
		78"-84"	16¼"	0.168"		0.079"		DOUBLE 0.079"	½"	⅞"	32 ksi							
ANNULAR	2⅔" × ½"	THROUGH 36"	7"	0.064"-0.138"	0.060"-0.135"	0.052"	0.060"	0.079"	½"	⅞"	32 ksi	2" × 2" × 3/16"	2" × 2" × 3/16"	2-½"	2-½"	3-⅜"	3-⅜"	3-½"
		42"-72"	12"	0.064"-0.168"	0.075"-0.164"	0.052"	0.105"	0.079"	½"	⅞"	32 ksi	2" × 2" × 3/16"	2" × 2" × 3/16"	3-½"	3-½"	3-⅜"	3-⅜"	5-½"
		78"-84"	12"	0.168"		0.079"		0.109"	½"	⅞"	45 ksi	2" × 2" × 3/16"		3-½"		3-⅜"		5-½"
	3" × 1"	48"-90"	14"	0.064"-0.109"		0.052"		0.079"	½"	⅞"	32 ksi	2" × 2" × 3/16"		3-½"		3-⅜"		5-½"
		96"-120"	14"	0.079"-0.109"		0.052"		0.109"	½"	⅞"	45 ksi	2" × 2" × 3/16"		3-½"		4-⅜"		
		42"-108"	14"		0.060"-0.135"		0.060"						2" × 2" × 3/16"		3-½"		3-⅜"	
HELICAL	2⅔" × ½"	THROUGH 36"	12"	0.052"-0.138"	0.060"-0.135"	0.052"	0.060"	0.079"	½"	⅞"	32 ksi	2" × 2" × 3/16"	2" × 2" × 3/16"	3-½"	3-½"	3-⅜"	3-⅜"	3-½"
		42"-72"	12"	0.052"-0.168"	0.075"-0.164"	0.052"	0.060"	0.079"	½"	⅞"	32 ksi	2" × 2" × 3/16"	2" × 2" × 3/16"	3-½"	3-½"	3-⅜"	3-⅜"	5-½"
		78"-84"	12"	0.168"		0.079"		0.109"	½"	⅞"	45 ksi	2" × 2" × 3/16"		3-½"		3-⅜"		5-½"
	3" × 1"	48"-90"	14"	0.064"-0.109"		0.052"		0.079"	½"	⅞"	32 ksi	2" × 2" × 3/16"		3-½"		3-⅜"		5-½"
		96"-120"	14"	0.079"-0.109"		0.052"		0.109"	½"	⅞"	45 ksi	2" × 2" × 3/16"		3-½"		4-⅜"		
		42"-108"	14"		0.060"-0.135"		0.060"						2" × 2" × 3/16"		3-½"		3-⅜"	
HUGGER	2⅔" × ½" REROLLED END	12"-54"	4"	0.052"-0.109"		0.052"						2½" × 1½" × 3/16"	2½" × 1½" × 3/16"	1-½"				3-½"
		60"-66"	4"	0.109"		0.064"						2½" × 1½" × 3/16"	2½" × 1½" × 3/16"	1-½"				3-½"
		36"-48"	4"	0.138"		0.064"						2½" × 1½" × 3/16"	2½" × 1½" × 3/16"	1-½"				3-½"
		THROUGH 72"	10½"	0.052"-0.168"		0.052"		0.079"	½"	⅞"	32 ksi							
		78"-84"	10½"	0.168"		0.079"		0.109"	½"	⅞"	45 ksi							
	3" × 1" REROLLED END	48"-90"	10½"	0.064"-0.109"		0.052"		0.079"	½"	⅞"	32 ksi							
		96"-120"	10½"	0.079"-0.109"		0.052"		0.109"	½"	⅞"	45 ksi							
	5" × 1" REROLLED END	48"-66"	7½"	0.064"-0.109"		0.064"		0.079"	½"	⅞"	32 ksi	2½" × 1½" × 3/16"	2½" × 1½" × 3/16"	1-½"				3-½"
		72"-90"	7½"	0.064"-0.079"		0.064"		0.079"	½"	⅞"	32 ksi	2½" × 1½" × 3/16"	2½" × 1½" × 3/16"	1-½"				3-½"
		48"-90"	7½"	0.064"-0.138"		0.064"		0.079"	½"	⅞"	32 ksi							
		48"-120"	12" SEE	0.064"-0.109"		0.064"		0.079"	½"	⅞"	32 ksi							
		48"-84"	12" NOTE	0.138"		0.064"		0.079"	½"	⅞"	32 ksi							
		90"-120"	12" 11	0.138"		0.064"		DOUBLE 0.079"	½"	⅞"	32 ksi							

SPIRAL RIB PROFILE

COUPLING TYPE	PIPE CORRUGATION	PIPE SIZE	W	PIPE WALL THICKNESS SSRP	PIPE WALL THICKNESS ASRP	BAND THICKNESS SSRP	BAND THICKNESS ASRP	BAR AND STRAP (SSRP ONLY) STRAP THICKNESS	BOLTS Dia	BAR Dia	BAR YIELD STRENGTH	ANGLE DIMENSIONS SSRP	ANGLE DIMENSIONS ASRP	BOLTS (No.- Dia) SSRP	BOLTS (No.- Dia) ASRP	RIVETS ANGLE TO BAND SSRP	RIVETS ANGLE TO BAND ASRP	SPOT WELDS ANGLE TO BAND SSRP
ANNULAR	2⅔" × ½" * REROLLED END	24"-36"	12"	0.064"-0.109"	0.060"-0.105"	0.052"	0.060"	0.079"	½"	⅞"	32 ksi	2" × 2" × 3/16"	2" × 2" × 3/16"	3-½"	3-½"	3-⅜"	3-⅜"	5-½"
		42"-60"	12"	0.064"-0.109"	0.075"-0.105"	0.052"	0.105"	0.079"	½"	⅞"	32 ksi	2" × 2" × 3/16"	2" × 2" × 3/16"	3-½"	3-½"	3-⅜"	3-⅜"	5-½"
		66"-72"	12"	0.064"-0.109"		0.052"		0.079"	½"	⅞"	32 ksi	2" × 2" × 3/16"	2" × 2" × 3/16"	3-½"	3-½"	3-⅜"	3-⅜"	5-½"
		78"-114"	12"	0.079"-0.109"		0.079"		0.109"	½"	⅞"	45 ksi	2" × 2" × 3/16"	2" × 2" × 3/16"	3-½"	3-½"	3-⅜"	3-⅜"	5-½"
HUGGER	2⅔" × ½" * REROLLED END	24"-72"	10½"	0.064"-0.109"		0.052"		0.079"	½"	⅞"	32 ksi							
		78"-84"	10½"	0.109"		0.079"		0.109"	½"	⅞"	45 ksi							

* See Note 14.

14. All profiles of Spiral Rib Pipe (¾" × ¾" ribs at 7½" pitch and ¾" × 1" ribs at 11½" pitch in both steel and aluminum and ¾" × 1" ribs at 8½" pitch in steel only) shall be manufactured with rerolled ends. Corrugation profile of the rerolled ends shall be 2⅔" × ½" annual corrugations with a minimum of two full corrugations at each end.

NOTES:

To accompany plans dated 03-26-12

1. All ferrous metal coupling band connection hardware shall be galvanized or electro-plated in accordance with the Standard Specifications.
2. For helically corrugated coupling bands, the connection angles may be oriented parallel to the pipe axis, provided connecting holes are slotted lengthwise sufficiently to allow adjustment for the helix angle.
3. Tension strap may be connected to band with either spot welds or fillet welds that develop minimum required strength of strap.
4. Use 1¼" gage line dimension on attached angle leg for rivets and spot welds.
5. Band thickness shall not be less than:
   a. 3 standard thicknesses lighter than the thickness of the pipe for Corrugated Steel Pipe.
   b. 2 standard thicknesses lighter than the thickness of the pipe and in no case lighter than 0.060" for Corrugated Aluminum Pipe.
6. Dimensions, thicknesses and strengths shown are minimum.
7. For pipe arches use same width band as for round pipe of equal periphery.
8. Fillet welds of equivalent strenght may be substituted for spot welds or rivets.
9. Spot welds shall develop minimum required strength of strap.
10. Pipe with rerolled ends having at least two 2⅔" × ½" annular corrugations at each end with or without an upturned flange may be connected with any of the annular coupling bands shown for pipe of the same diameter and wall thickness and having 2⅔" × ½" corrugations.
11. In the case of H-12 huggerbands, two piece bands are required for diameters through 96" and three piece bands are required for diameters 102" through 120".
12. Two piece bands are required for pipes greater than 42" diameter.
13. The 2¼" × 2" × 0.109" thick galvanized die-formed angle connector may be used in lieu of the 2" × 2" × 3/16" angle connector for standard joints only on pipes through 72" diameter.

STATE OF CALIFORNIA
DEPARTMENT OF TRANSPORTATION

CORRUGATED METAL PIPE COUPLING DETAILS No. 5 STANDARD JOINT

NO SCALE

RSP D97E DATED JUNE 6, 2008 SUPERSEDES STANDARD PLAN D97E
DATED MAY 1, 2006 - PAGE 187 OF THE STANDARD PLANS BOOK DATED MAY 2006.

REVISED STANDARD PLAN RSP D97E

2006 REVISED STANDARD PLAN RSP D97E

4-2-08

DIST	COUNTY	ROUTE	POST MILES TOTAL PROJECT	SHEET NO.	TOTAL SHEETS
11	SD	94	13.8/14.4	48	55

Raymond Don Tsztoo
REGISTERED CIVIL ENGINEER

March 7, 2008
PLANS APPROVAL DATE

REGISTERED PROFESSIONAL ENGINEER
Raymond Don Tsztoo
No. C37332
Exp. 6-30-08
CIVIL
STATE OF CALIFORNIA

The State of California or its officers or agents shall not be responsible for the accuracy or completeness of electronic copies of this plan sheet.

To accompany plans dated 03-26-12

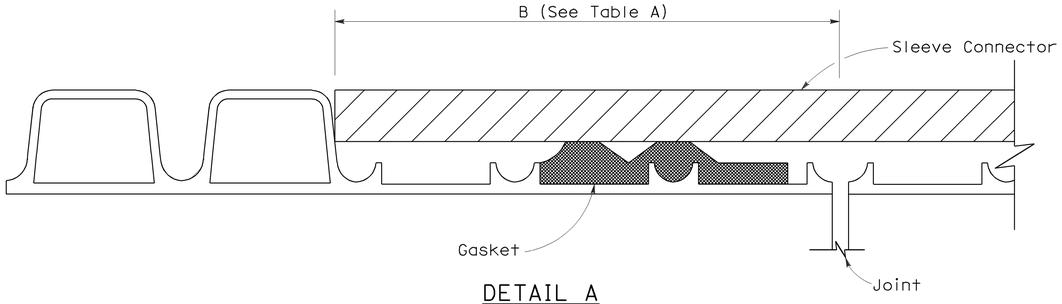

DETAIL A

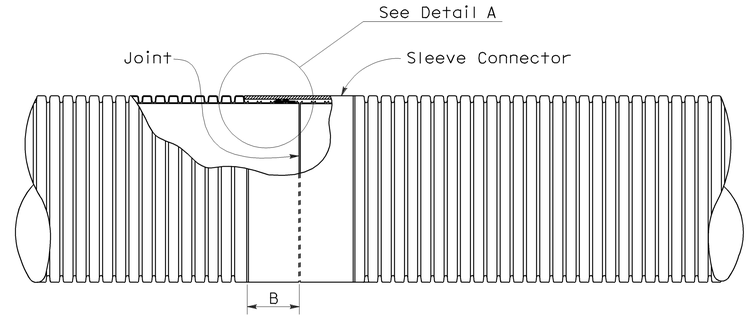

PLAN VIEW
Liner Insert
See Note 4

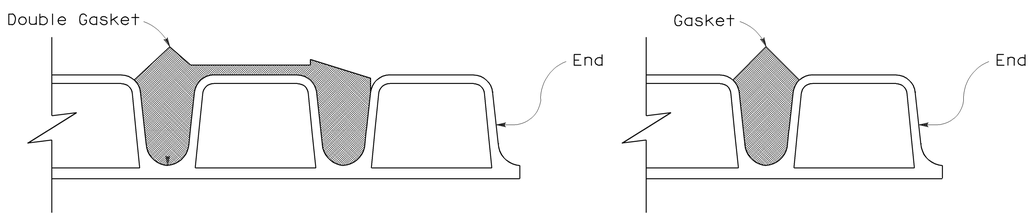

Double Gasket

Single Gasket

DETAIL B

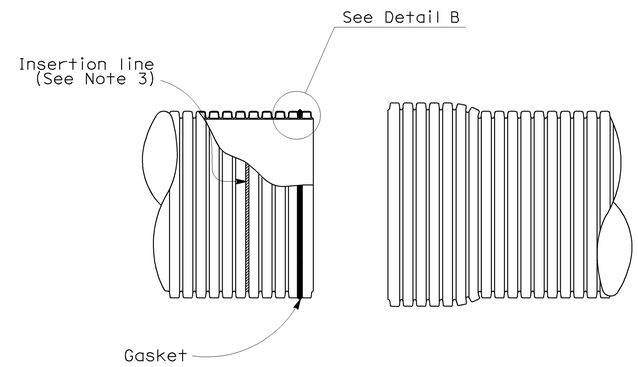

SPIGOT

BELL

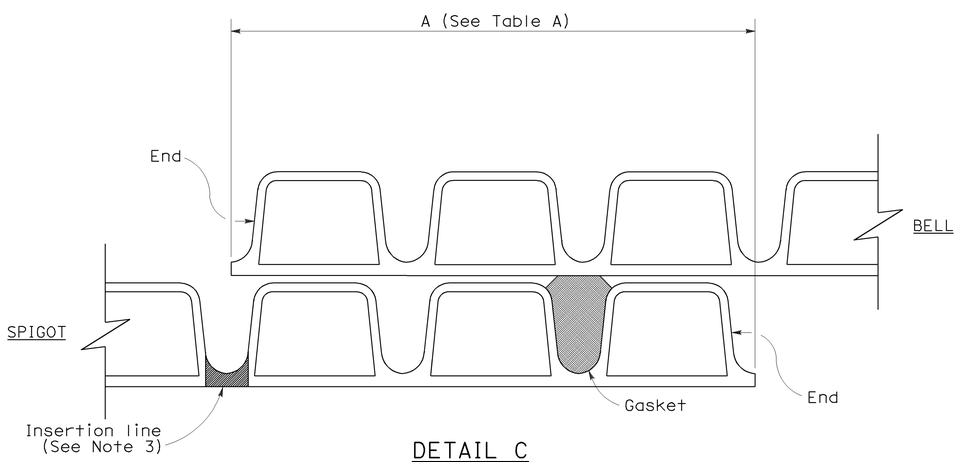

DETAIL C
(Single gasket shown)

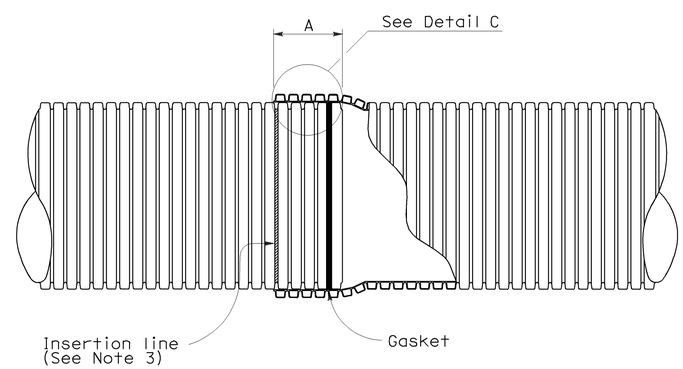

BELL AND SPIGOT JOINT

NOTES:

1. For pipe sections installed on straight alignment, the pipe sections shall be joined to achieve maxium joint overlap at all points on the periphery as indicated in Table A where the plans call for positive or watertight joints. Maxium joint overlap is recommended where the plans call for standard joints, but in no case shall the joint overlap be less than 3½".

2. For pipe sections installed on curved alignment, the maxium angle of deflection from straight alignment at any joint shall not exceed two degrees. Where the plans call for watertightness, field testing for compliance is required. Where plans call for positive joints, the pipe sections shall be joined to achieve Table A Dimensions on one side of the joint. Joints classified as standard shall have no less than 3½" joint overlap at any point on the periphery.

3. Factory applied insertion line limit shall be placed on spigot.

4. Liner insert to be used inside of existing pipe.

TABLE A

JOINT OVERLAP DIMENSIONS		
PIPE Dia (NOMINAL)	A	B
12"	5¾"	4¼"
15"	6¾"	5⅝"
18"	6¾"	5⅝"
21"	8½"	5⅝"
24"	8½"	6⅛"
30"	8½"	7⅛"
36"	8½"	8⅛"

STATE OF CALIFORNIA
DEPARTMENT OF TRANSPORTATION

CORRUGATED POLYVINYL CHLORIDE PIPE WITH SMOOTH INTERIOR STANDARD AND POSITIVE JOINTS

NO SCALE

NSP D97I DATED MARCH 7, 2008 SUPPLEMENTS THE STANDARD PLANS BOOK DATED MAY 2006.

NEW STANDARD PLAN NSP D97I

2006 NEW STANDARD PLAN NSP D97I

2-13-08

DIST	COUNTY	ROUTE	POST MILES TOTAL PROJECT	SHEET NO.	TOTAL SHEETS
11	SD	94	13.8/14.4	49	55

Randell D. Hiatt
REGISTERED CIVIL ENGINEER

June 6, 2008
PLANS APPROVAL DATE

REGISTERED PROFESSIONAL ENGINEER
Randell D. Hiatt
No. C50200
Exp. 6-30-09
CIVIL
STATE OF CALIFORNIA

The State of California or its officers or agents shall not be responsible for the accuracy or completeness of electronic copies of this plan sheet.

To accompany plans dated 03-26-12

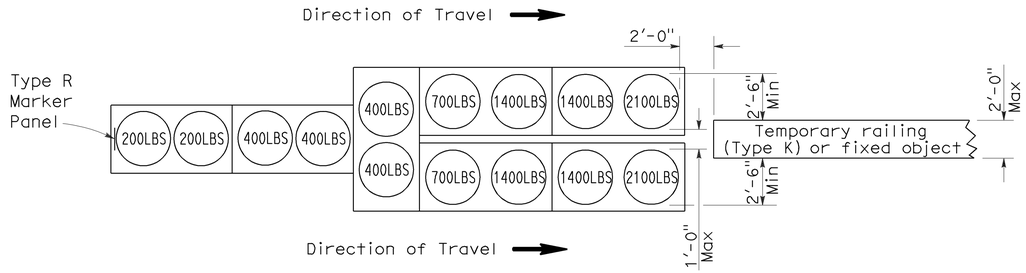

ARRAY 'TU14'

Approach speed 45 mph or more

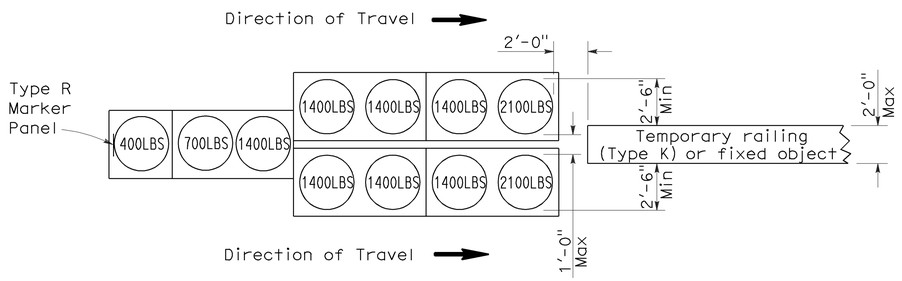

ARRAY 'TU11'

Approach speed less than 45 mph

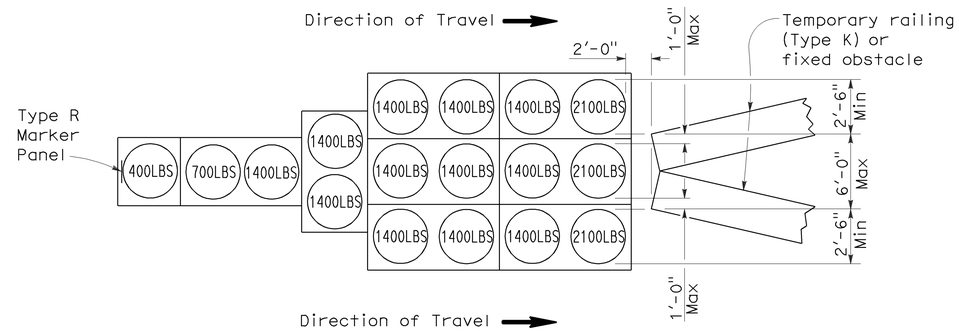

ARRAY 'TU17'

Approach speed less than 45 mph

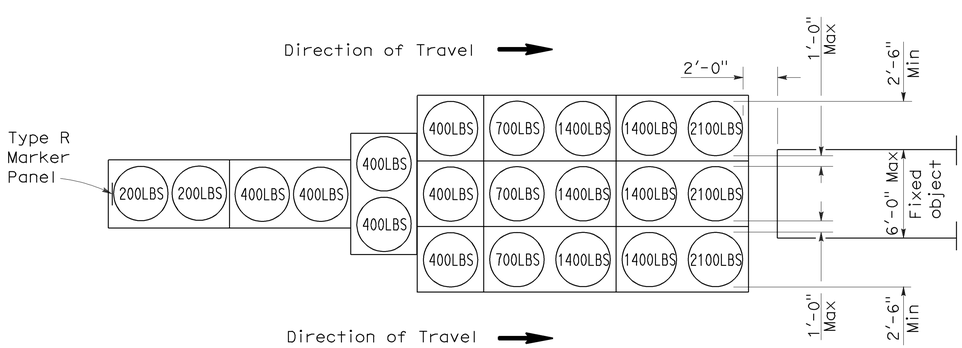

ARRAY 'TU21'

Approach speed 45 mph or more

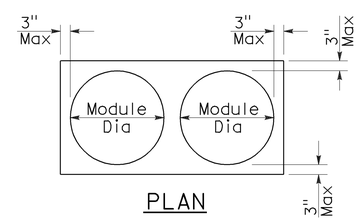

PLAN

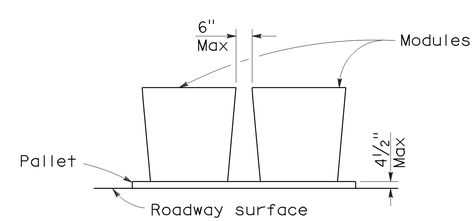

ELEVATION

CRASH CUSHION PALLET DETAIL

See Note 7

NOTES:

1. (XXX) Indicates sand filled module location and weight of sand in pounds for each module. Module spacing is based on the greater diameter of the module.
2. All sand weights are nominal.
3. Temporary crash cushion arrays shall not encroach on the traveled way.
4. Place the top of Type R marker panel 1" below the module lid.
5. Refer to Standard Plan A73B for marker details.
6. Approach speeds indicated conform to NCHRP 350 Report criteria.
7. Use of pallets is optional.

STATE OF CALIFORNIA
DEPARTMENT OF TRANSPORTATION

TEMPORARY CRASH CUSHION, SAND FILLED (UNIDIRECTIONAL)

NO SCALE

RSP T1A DATED JUNE 6, 2008 SUPERSEDES STANDARD PLAN T1A
DATED MAY 1, 2006 - PAGE 211 OF THE STANDARD PLANS BOOK DATED MAY 2006.

REVISED STANDARD PLAN RSP T1A

2006 REVISED STANDARD PLAN RSP T1A

DIST	COUNTY	ROUTE	POST MILES TOTAL PROJECT	SHEET NO.	TOTAL SHEETS
11	SD	94	13.8/14.4	50	55

Randell D. Hiatt
REGISTERED CIVIL ENGINEER

June 6, 2008
PLANS APPROVAL DATE

REGISTERED PROFESSIONAL ENGINEER
Randell D. Hiatt
No. C50200
Exp. 6-30-09
CIVIL
STATE OF CALIFORNIA

The State of California or its officers or agents shall not be responsible for the accuracy or completeness of electronic copies of this plan sheet.

To accompany plans dated 03-26-12

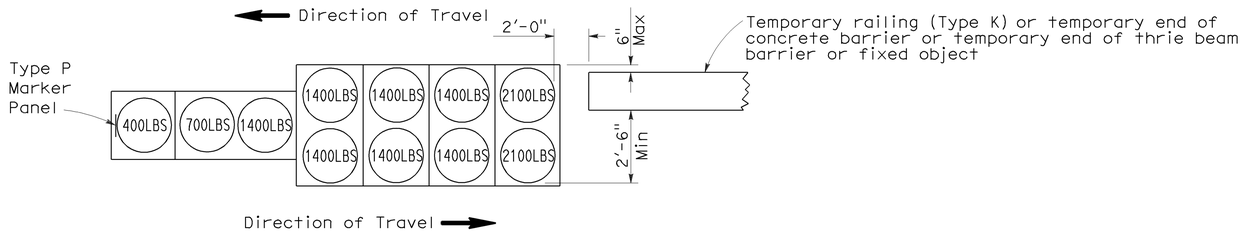

ARRAY 'TB11'

Approach speed less than 45 mph

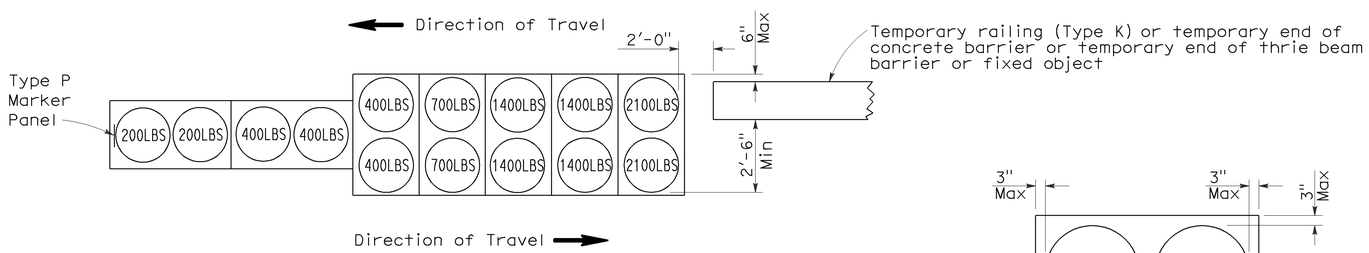

ARRAY 'TB14'

Approach speed 45 mph or more

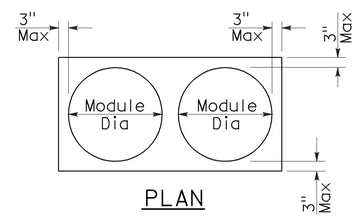

PLAN

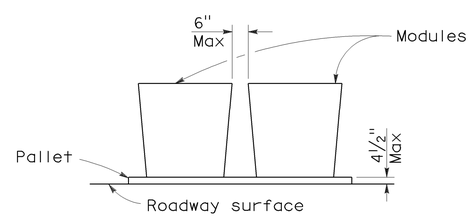

ELEVATION

CRASH CUSHION PALLET DETAIL

See Note 7

NOTES:

1. (XXX) Indicates sand filled module location and weight of sand in pounds for each module. Module spacing is based on the greater diameter of the module.
2. All sand weights are nominal.
3. Temporary crash cushion arrays shall not encroach on the traveled way.
4. Place the Type P marker panel so that the bottom of the panel rests upon the pallet.
5. Refer to Standard Plan A73B for marker details.
6. Approach speeds indicated conform to NCHRP 350 Report criteria.
7. Use of pallets is optional.

STATE OF CALIFORNIA
DEPARTMENT OF TRANSPORTATION

TEMPORARY CRASH CUSHION, SAND FILLED (BIDIRECTIONAL)

NO SCALE

RSP T1B DATED JUNE 6, 2008 SUPERSEDES STANDARD PLAN T1B
DATED MAY 1, 2006 - PAGE 212 OF THE STANDARD PLANS BOOK DATED MAY 2006.

REVISED STANDARD PLAN RSP T1B

2006 REVISED STANDARD PLAN RSP T1B

5-15-08

DIST	COUNTY	ROUTE	POST MILES TOTAL PROJECT	SHEET NO.	TOTAL SHEETS
11	SD	94	13.8/14.4	51	55

Randell D. Hiatt
REGISTERED CIVIL ENGINEER

June 6, 2008
PLANS APPROVAL DATE

REGISTERED PROFESSIONAL ENGINEER
Randell D. Hiatt
No. C50200
Exp. 6-30-09
CIVIL
STATE OF CALIFORNIA

The State of California or its officers or agents shall not be responsible for the accuracy or completeness of electronic copies of this plan sheet.

To accompany plans dated 03-26-12

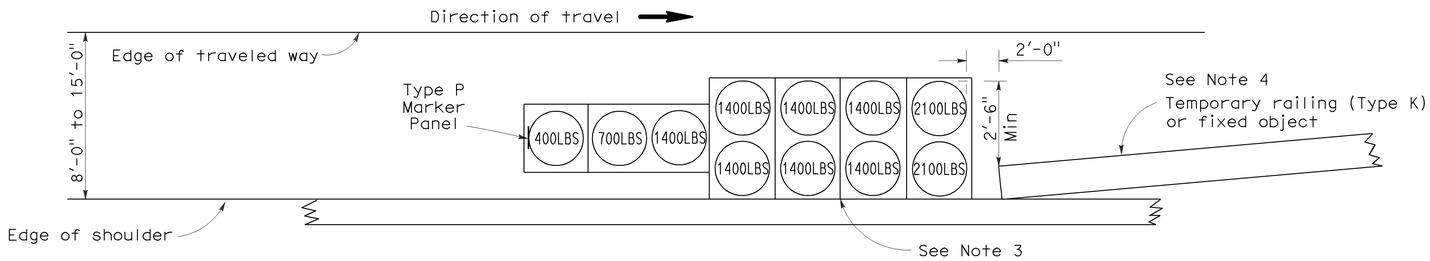

ARRAY 'TS11'

Approach speed less than 45 mph
See Note 9

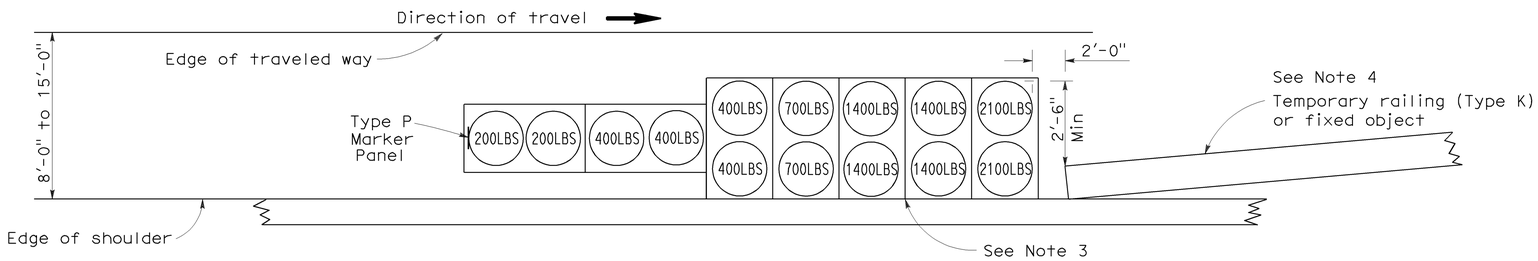

ARRAY 'TS14'

Approach speed 45 mph or more
See Note 9

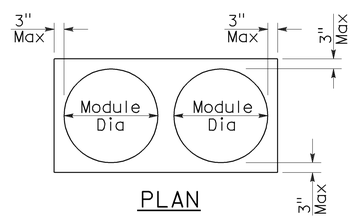

PLAN

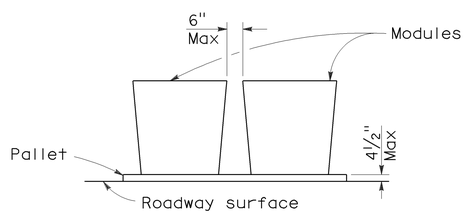

ELEVATION

CRASH CUSHION PALLET DETAIL

See Note 11

NOTES:

1. (XXX) Indicates sand filled module location and weight of sand in pounds for each module. Module spacing is based on the greater diameter of the module.
2. All sand weights are nominal.
3. The temporary crash cushion arrays shown on this plan shall be used only in locations where there will be traffic on one side of the temporary crash cushion array.
4. If the fixed object or approach end of the temporary railing is less than 15'-0" from the edge of traveled way, a temporary crash cushion is required in a construction or work zone.
5. Temporary crash cushion arrays shall not encroach on the traveled way.
6. Arrays for median shoulders shall conform to details shown on this plan for outside shoulders.
7. Place the Type P marker panel so that the bottom of the panel rests upon the pallet and faces traffic.
8. Refer to Standard Plan A73B for marker details.
9. For shoulder widths less than 8'-0", appropriate approved crash cushion protection, other than sand filled modules, shall be provided at fixed objects and at approach ends of temporary railing. The specific type of crash cushion shall be as shown on the project plans or as specified in the Special Provisions, or if not shown on the project plans or specified in the Special Provisions, shall be as approved by the Engineer.
10. Approach speeds indicated conform to NCHRP 350 Report criteria.
11. Use of pallets is optional.

STATE OF CALIFORNIA
DEPARTMENT OF TRANSPORTATION

TEMPORARY CRASH CUSHION, SAND FILLED (SHOULDER INSTALLATIONS)

NO SCALE

RSP T2 DATED JUNE 6, 2008 SUPERSEDES STANDARD PLAN T2
DATED MAY 1, 2006 - PAGE 213 OF THE STANDARD PLANS BOOK DATED MAY 2006.

REVISED STANDARD PLAN RSP T2

2006 REVISED STANDARD PLAN RSP T2

5-15-08

Dist	COUNTY	ROUTE	POST MILES TOTAL PROJECT	SHEET No.	TOTAL SHEETS
11	SD	94	13.8/14.4	52	55

Randell D. Hiatt
REGISTERED CIVIL ENGINEER

May 20, 2011
PLANS APPROVAL DATE

REGISTERED PROFESSIONAL ENGINEER
Randell D. Hiatt
No. C50200
Exp. 6-30-11
CIVIL
STATE OF CALIFORNIA

The State of California or its officers or agents shall not be responsible for the accuracy or completeness of electronic copies of this plan sheet.

To accompany plans dated 03-26-12

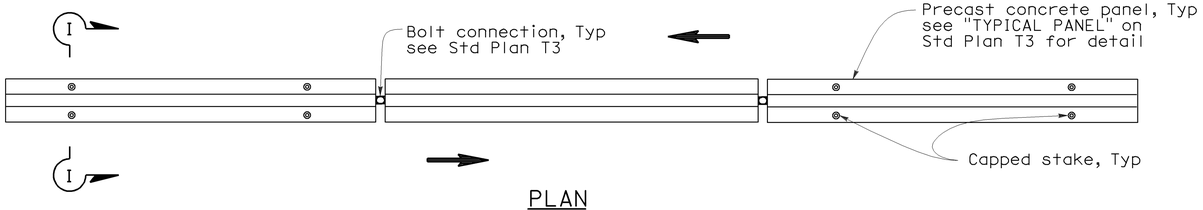

PLAN

RAILING STAKING CONFIGURATION FOR TWO-WAY TRAFFIC

See Note 1

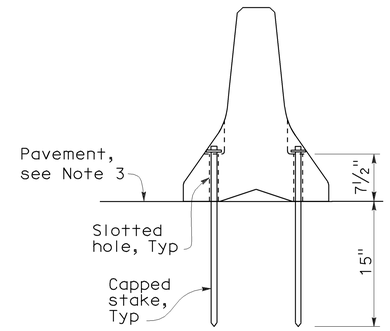

SECTION I-I

NOTES:

1. Where Type K Temporary Railing is placed as a temporary or long term barrier in two-way traffic on highways with less than 24" from the edge of traveled way, use four capped stakes per every other panel with end panels staked.
2. Where Type K Temporary Railing is placed 3" to 24" from the edge of an excavation on highways, use two capped stakes per panel along the traffic side.
3. Staked Type K Temporary Railing must be supported by at least 4" thick concrete, hot mix asphalt or existing asphalt concrete pavement.
4. The minimum yield strength for the washer must be 60,000 psi.
5. Direction of adjacent traffic indicated by ⟹.

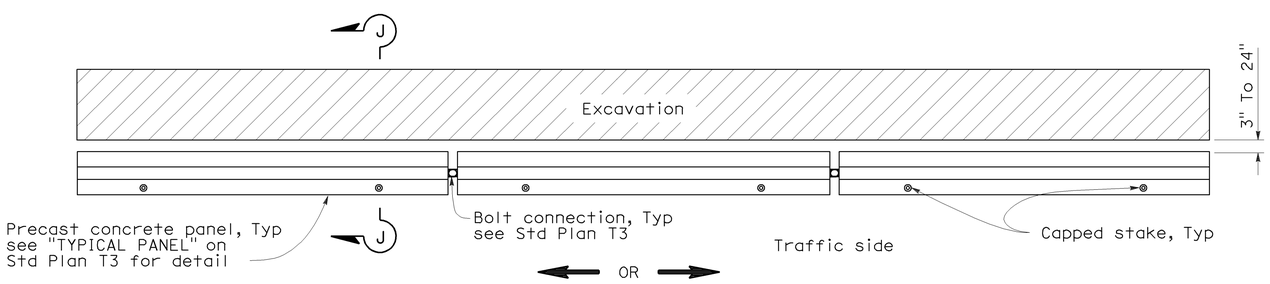

PLAN

RAILING STAKING CONFIGURATION ADJACENT TO AN EXCAVATION

See Note 2

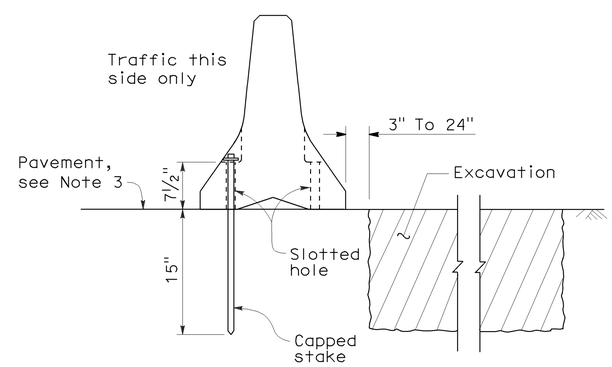

SECTION J-J

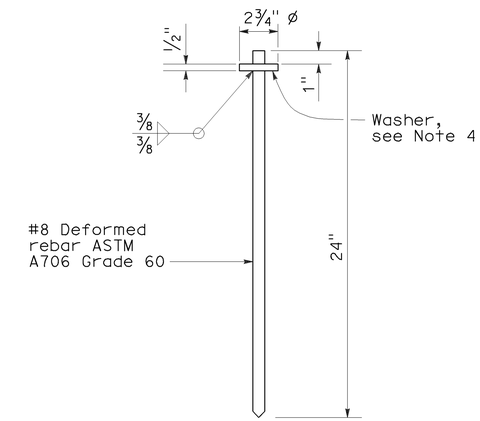

CAPPED STAKE DETAIL

STATE OF CALIFORNIA
DEPARTMENT OF TRANSPORTATION

TEMPORARY RAILING (TYPE K)

NO SCALE

NSP T3A DATED MAY 20, 2011 SUPPLEMENTS
THE STANDARD PLANS BOOK DATED MAY 2006.

NEW STANDARD PLAN NSP T3A

2006 NEW STANDARD PLAN NSP T3A

DIST	COUNTY	ROUTE	POST MILES TOTAL PROJECT	SHEET NO.	TOTAL SHEETS
11	SD	94	13.8/14.4	53	55

REGISTERED CIVIL ENGINEER

November 17, 2006
PLANS APPROVAL DATE

REGISTERED PROFESSIONAL ENGINEER — Greg W. Edwards — No. C36386 — Exp. 6-30-08 — CIVIL — STATE OF CALIFORNIA

The State of California or its officers or agents shall not be responsible for the accuracy or completeness of electronic copies of this plan sheet.

To accompany plans dated 03-26-12

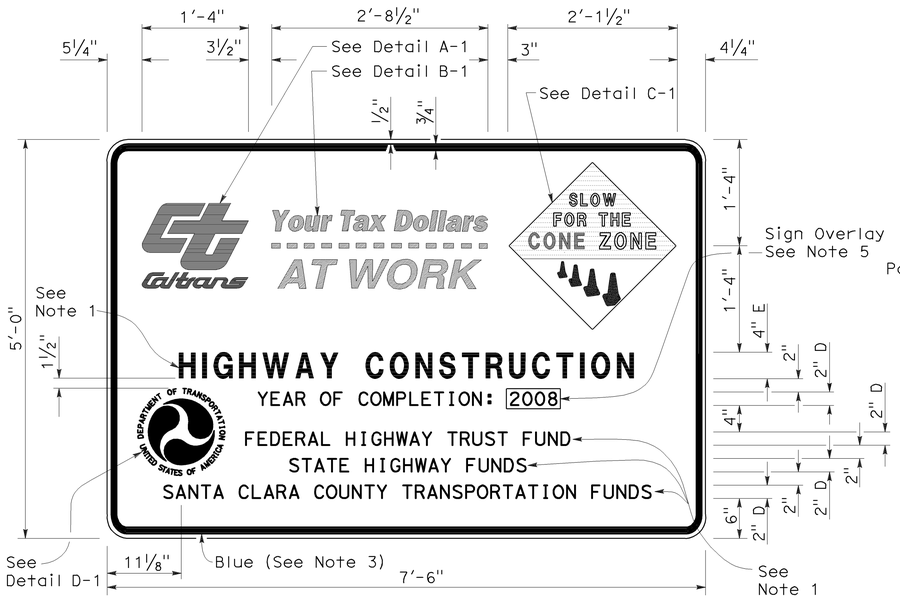

TYPE 1

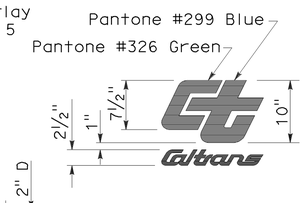

DETAIL A-1

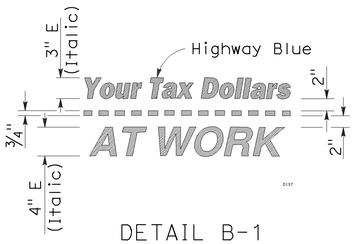

DETAIL B-1
(See Note 3)

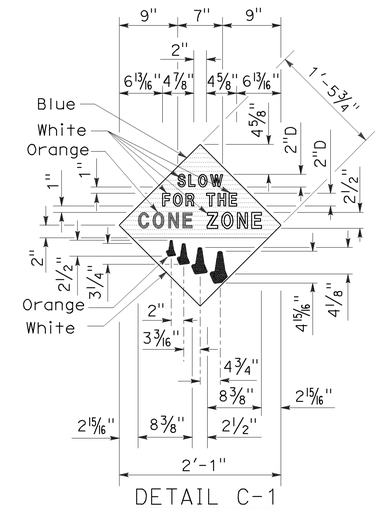

DETAIL C-1
(See Note 4)

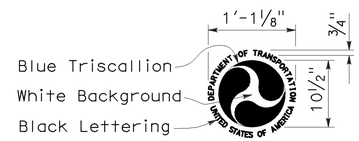

DETAIL D-1
(See Note 6)

NOTES:

1. The sign messages shown for type of project and fund types are examples only. See the Special Provisions for the applicable type of project and fund type messages to be used.
2. Except as otherwise shown, the legend of sign shall be black on a white background (non-reflective).
3. The border of the signs and details "B-1" and "B-2" shall be blue (non-reflective).
4. The diamond in details "C-1" and "C-2" shall be blue for the background of message, " SLOW FOR THE CONE ZONE", and white background for the orange cones. The color and type of font for the "SLOW FOR THE CONE ZONE" message shall be: "SLOW" white D; "FOR THE" white D; "CONE" orange Arial font; "ZONE" white Arial font.
5. Year of completion of project construction shown on the overlay is an example only. See the Special Provisions.
6. Use when the Project involves Federal Highway Trust Fund.

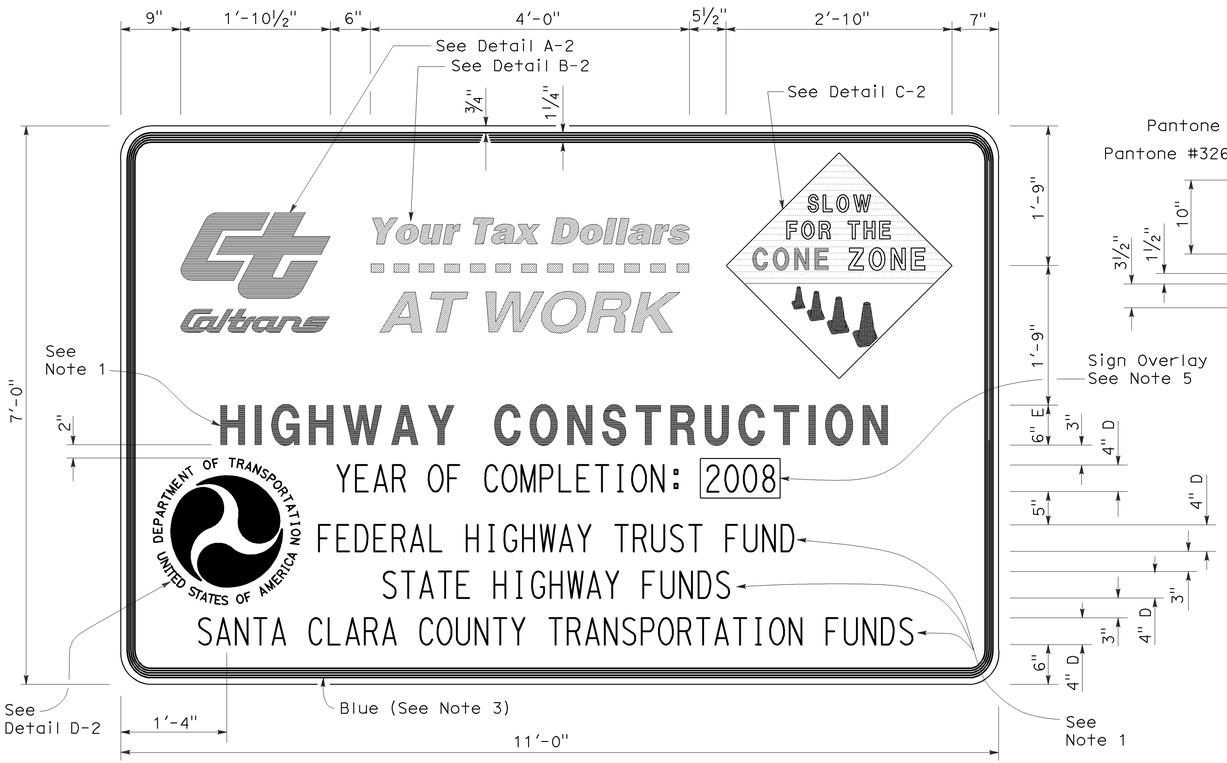

TYPE 2

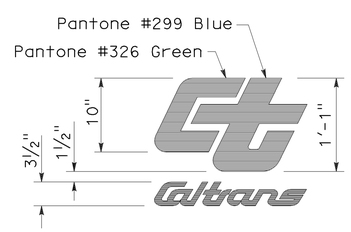

DETAIL A-2

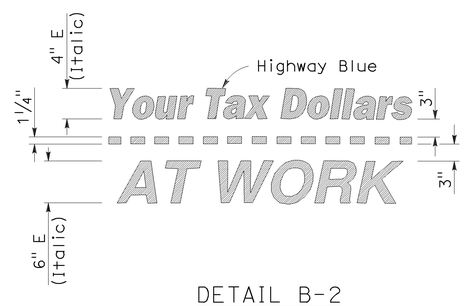

DETAIL B-2
(See Note 3)

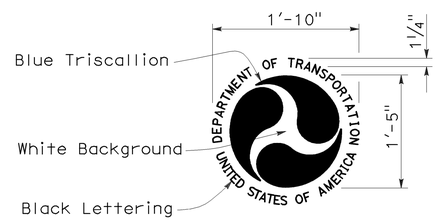

DETAIL D-2
(See Note 6)

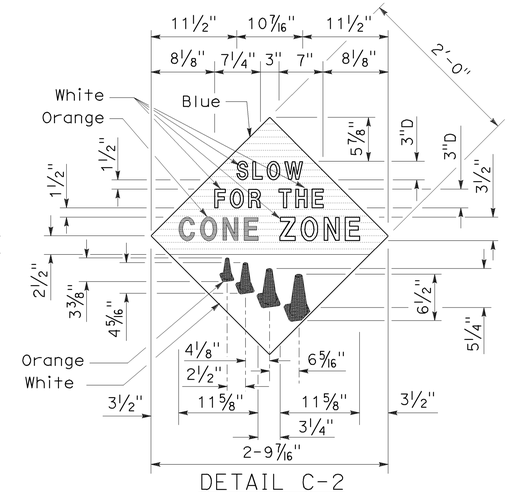

DETAIL C-2
(See Note 4)

STATE OF CALIFORNIA
DEPARTMENT OF TRANSPORTATION

CONSTRUCTION PROJECT FUNDING IDENTIFICATION SIGNS

NO SCALE

RSP T7 DATED NOVEMBER 17, 2006 SUPERSEDES STANDARD PLAN T7
DATED MAY 1, 2006 - PAGE 217 OF THE STANDARD PLANS BOOK DATED MAY 2006.

REVISED STANDARD PLAN RSP T7

2006 REVISED STANDARD PLAN RSP T7

9-7-06

DIST	COUNTY	ROUTE	POST MILES TOTAL PROJECT	SHEET NO.	TOTAL SHEETS
11	SD	94	13.8/14.4	54	55

LICENSED LANDSCAPE ARCHITECT

August 15, 2008
PLANS APPROVAL DATE

LICENSED LANDSCAPE ARCHITECT — Robert B. Schott — 3635 — Signature — 11-04-08 Renewal Date — 08-11-08 Date — STATE OF CALIFORNIA

The State of California or its officers or agents shall not be responsible for the accuracy or completeness of electronic copies of this plan sheet.

To accompany plans dated 03-26-12

FLEXIBLE SEDIMENT BARRIER SPACING TABLE

SLOPE OF ROADWAY (PERCENT)	0 to 0.9	1 to 1.9	2 to 2.9	3 to 4	5+
INTERVAL BETWEEN BARRIERS	50′	35′	30′	25′	20′
ANGLE FROM FACE OF CURB	70°	70°	70°	45°	45°
SUGGESTED BARRIER LENGTH	6′	6′	6′	6′	6′

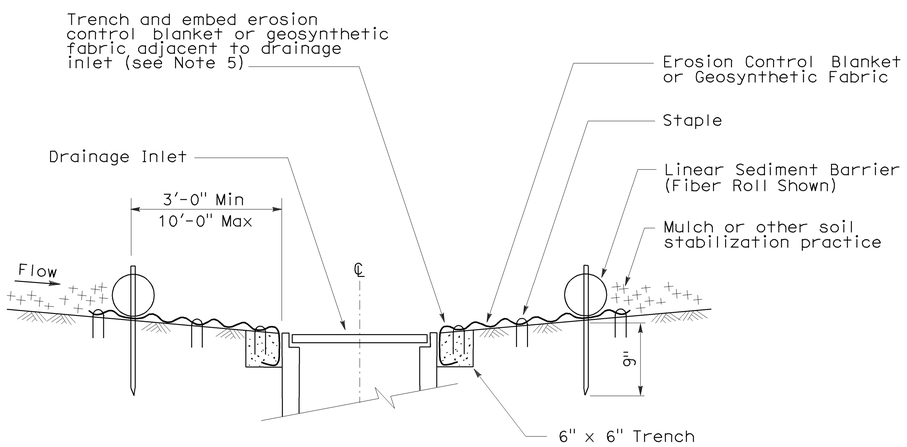

SECTION A-A

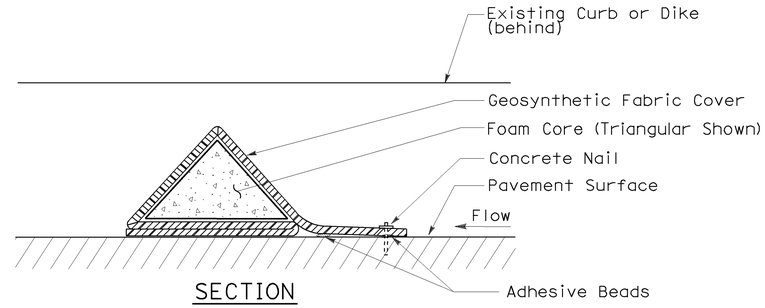

SECTION

FLEXIBLE SEDIMENT BARRIER DETAIL (FOAM BARRIER SHOWN)

NOTES:

1. See Standard Plan T51 for Temporary Silt Fence.
2. Dimensions may vary to fit field conditions.
3. Install a minimum of 3 flexible sediment barriers upstream of each drainage inlet to be protected.
4. Position erosion control blanket or geosynthetic fabric at edge of concrete apron and secure in trench.
5. Erosion control blanket or geosynthetic fabric is not required if the area adjacent to the drainage inlet is vegetated.

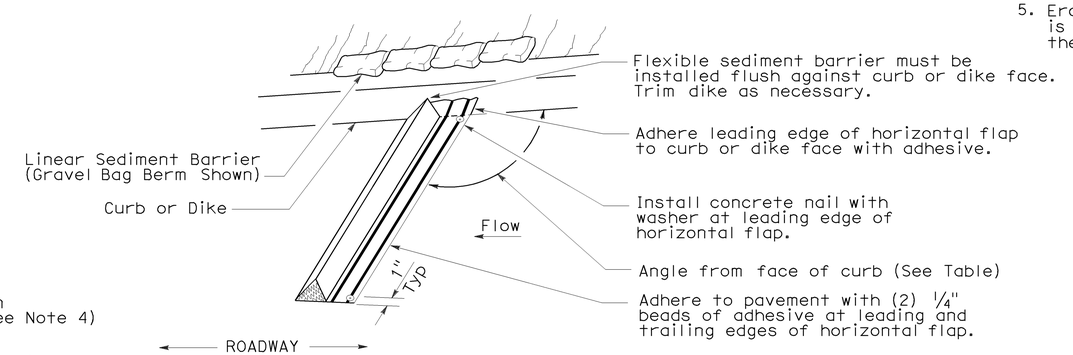

PERSPECTIVE

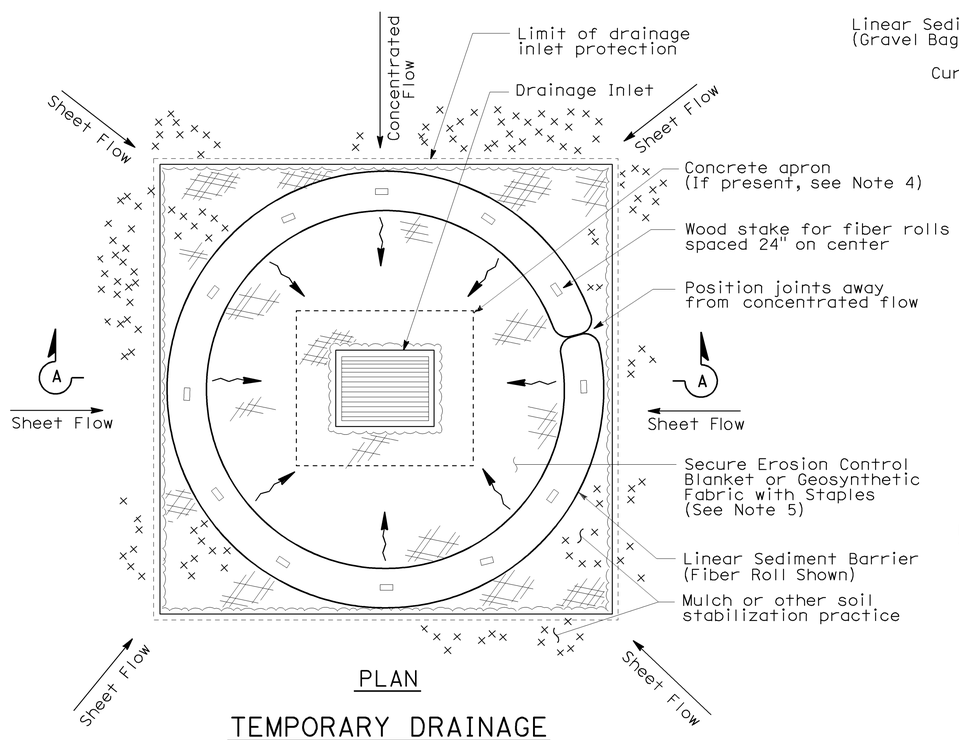

PLAN

TEMPORARY DRAINAGE INLET PROTECTION (TYPE 4A)

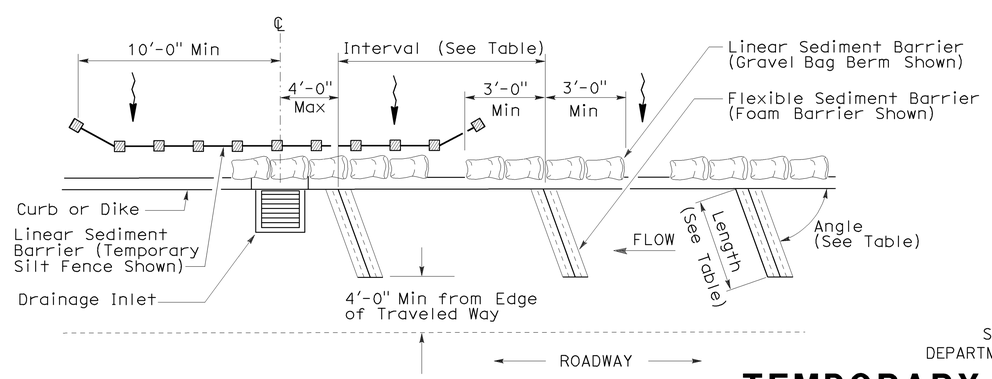

PLAN

TEMPORARY DRAINAGE INLET PROTECTION (TYPE 4B) FLEXIBLE SEDIMENT BARRIER

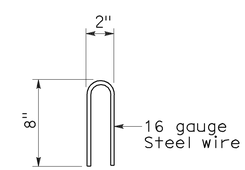

STAPLE DETAIL

STATE OF CALIFORNIA
DEPARTMENT OF TRANSPORTATION

TEMPORARY WATER POLLUTION CONTROL DETAILS (TEMPORARY DRAINAGE INLET PROTECTION)

NO SCALE

NSP T63 DATED AUGUST 15, 2008 SUPPLEMENTS THE STANDARD PLANS BOOK DATED MAY 2006.

NEW STANDARD PLAN NSP T63

2006 NEW STANDARD PLAN NSP T63

7-11-08

DIST	COUNTY	ROUTE	POST MILES TOTAL PROJECT	SHEET NO.	TOTAL SHEETS
11	SD	94	13.8/14.4	55	55

LICENSED LANDSCAPE ARCHITECT

April 3, 2009
PLANS APPROVAL DATE

The State of California or its officers or agents shall not be responsible for the accuracy or completeness of electronic copies of this plan sheet.

LICENSED LANDSCAPE ARCHITECT — Robert B. Schott 3635 — Signature — 11-30-10 Renewal Date — 2-25-09 Date — STATE OF CALIFORNIA

To accompany plans dated 03-26-12

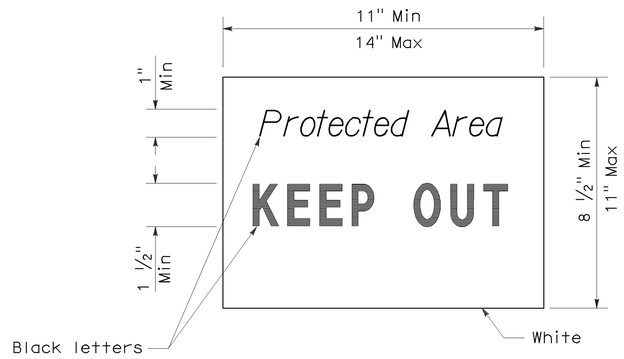

SIGN DETAIL

NOTE:

1. Temporary silt fence and temporary straw bale barrier shown for reference purposes only.

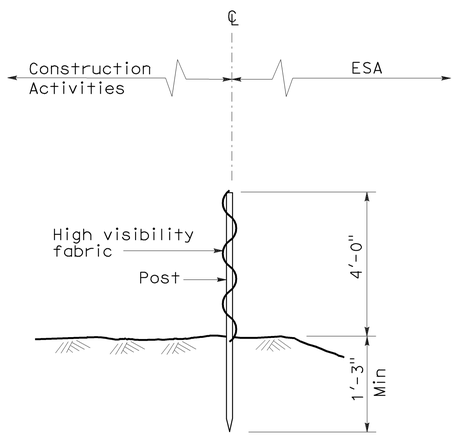

SECTION
TEMPORARY FENCE (TYPE ESA)

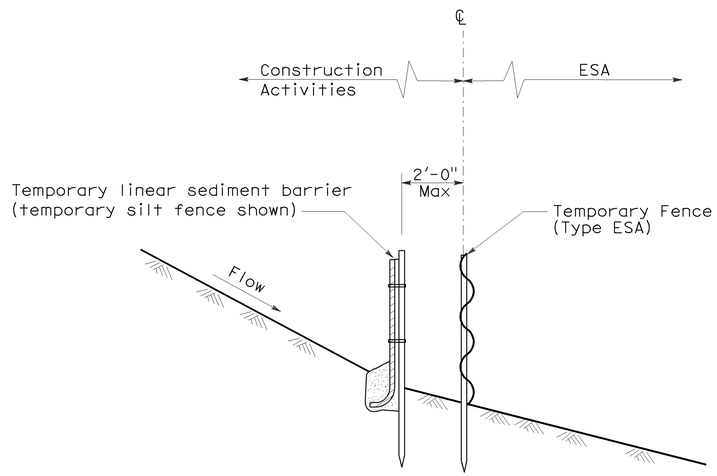

SECTION
PLACEMENT DETAIL
FOR TEMPORARY LINEAR SEDIMENT BARRIER
USED WITH TEMPORARY
FENCE (TYPE ESA)
(See Note 1)

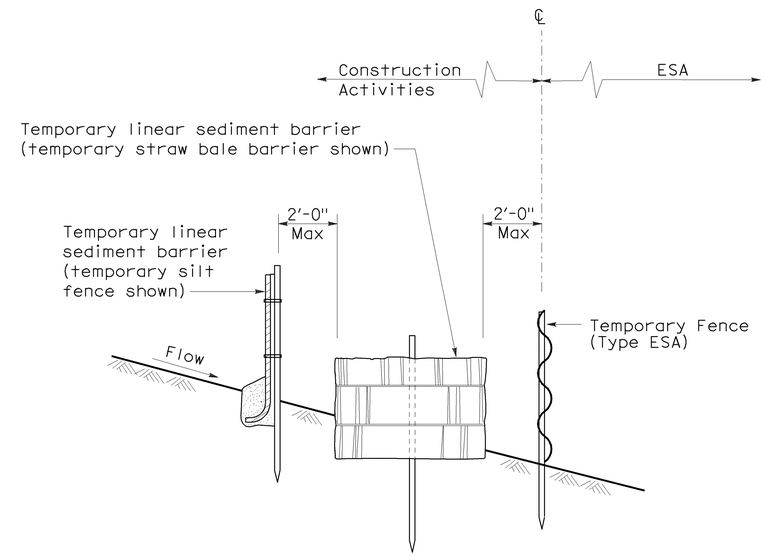

SECTION
PLACEMENT DETAIL
FOR TEMPORARY SILT FENCE
AND TEMPORARY STRAW BALE BARRIER
USED WITH TEMPORARY FENCE (TYPE ESA)
(See Note 1)

STATE OF CALIFORNIA
DEPARTMENT OF TRANSPORTATION

TEMPORARY WATER POLLUTION CONTROL DETAILS [TEMPORARY FENCE (TYPE ESA)]

NO SCALE

NSP T65 DATED APRIL 3, 2009 SUPPLEMENTS
THE STANDARD PLANS BOOK DATED MAY 2006.

NEW STANDARD PLAN NSP T65

2006 NEW STANDARD PLAN NSP T65